Dist	COUNTY	ROUTE	POST MILES TOTAL PROJECT	SHEET No.	TOTAL SHEETS
08	SBd	15	12.8	1	122

ACIM-015-5(160)120E

STATE OF CALIFORNIA
DEPARTMENT OF TRANSPORTATION

PROJECT PLANS FOR CONSTRUCTION ON
STATE HIGHWAY
IN SAN BERNARDINO COUNTY
IN THE CITY OF FONTANA
AT SIERRA AVENUE UNDERCROSSING TO
1.9 MILES SOUTH OF GLEN HELEN PARKWAY UNDERCROSSING

TO BE SUPPLEMENTED BY 2010 STANDARD PLANS

INDEX OF PLANS

SHEET No.	DESCRIPTION
1	TITLE AND LOCATION MAP
2-4	TYPICAL CROSS SECTIONS
5	KEY MAP AND LINE INDEX
6-10	LAYOUTS
11-12	PROFILES AND SUPERELEVATION DIAGRAM
13-19	CONSTRUCTION DETAILS
20-24	EROSION CONTROL PLAN AND QUANTITIES
25-32	DRAINAGE PLANS, PROFILES, DETAILS AND QUANTITIES
33-35	SANITARY SEWER PLAN, PROFILES, DETAILS AND QUANTITIES
36-39	UTILITY PLANS
40	CONSTRUCTION AREA SIGNS
41-43	STAGE CONSTRUCTION PLANS
44-56	TRAFFIC HANDLING PLANS AND QUANTITIES
57-58	DETOUR PLANS
59-69	PAVEMENT DELINEATION PLANS AND SIGN PLANS AND QUANTITIES
70-71	SUMMARY OF QUANTITIES
72-84	SIGNAL LIGHTING AND DETAILS
85-122	REVISED STANDARD PLANS

THE STANDARD PLANS LIST APPLICABLE TO THIS CONTRACT IS INCLUDED IN THE NOTICE TO BIDDERS AND SPECIAL PROVISIONS BOOK.

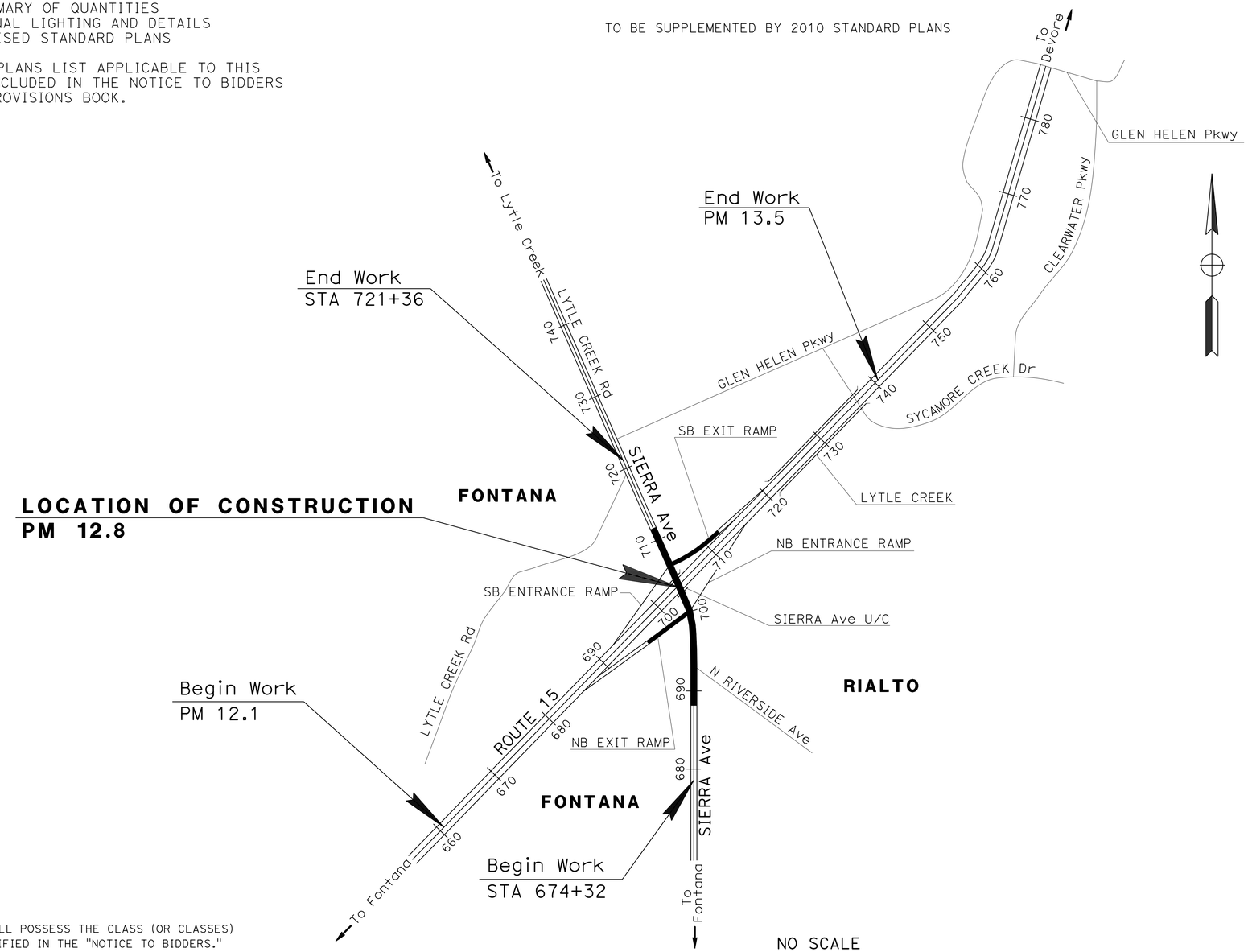

THE CONTRACTOR SHALL POSSESS THE CLASS (OR CLASSES) OF LICENSE AS SPECIFIED IN THE "NOTICE TO BIDDERS."

NO SCALE

PROJECT MANAGER: MELECIO CHALCO
DESIGN ENGINEER: TSUNG WANG

PROJECT ENGINEER REGISTERED CIVIL ENGINEER — DATE 12-12-12

August 19, 2013
PLANS APPROVAL DATE

REGISTERED PROFESSIONAL ENGINEER — SERGIO E. AVILA — No. 60951 — Exp. 12-31-12 — CIVIL — STATE OF CALIFORNIA

THE STATE OF CALIFORNIA OR ITS OFFICERS OR AGENTS SHALL NOT BE RESPONSIBLE FOR THE ACCURACY OR COMPLETENESS OF SCANNED COPIES OF THIS PLAN SHEET.

CONTRACT No.	08-0G2904
PROJECT ID	0800020108

LAST REVISION 12-12-12 — DATE PLOTTED => 11-DEC-2013 — TIME PLOTTED => 05:36

Dist	COUNTY	ROUTE	POST MILES TOTAL PROJECT	SHEET No.	TOTAL SHEETS
08	SBd	15	12.8	2	122

REGISTERED CIVIL ENGINEER 5-7-13 DATE

8-19-13
PLANS APPROVAL DATE

REGISTERED PROFESSIONAL ENGINEER SERGIO E. AVILA No. 60951 Exp. 12-31-14 CIVIL STATE OF CALIFORNIA

THE STATE OF CALIFORNIA OR ITS OFFICERS OR AGENTS SHALL NOT BE RESPONSIBLE FOR THE ACCURACY OR COMPLETENESS OF SCANNED COPIES OF THIS PLAN SHEET.

NOTES:

1. DIMENSIONS OF THE PAVEMENT STRUCTURES (STRUCTURAL SECTIONS) ARE SUBJECT TO TOLERANCES SPECIFIED IN THE STANDARD SPECIFICATIONS.
2. FOR ROADWAY EXCAVATION AND FULL DEPTH PAVEMENT STRUCTURE SECTION LOCATIONS, REFER TO LAYOUT AND QUANTITY SHEETS.
3. SUPERELEVATION IS SHOWN ON THE SUPERELEVATION DIAGRAM.
4. EXACT LOCATION AND TYPES OF HMA DIKE, CURB, AND SIDEWALK ARE SHOWN ON THE LAYOUTS AND SUMMARY OF QUANTITIES SHEET.

ABBREVIATIONS:

HMA-C HOT MIX ASPHALT (TYPE C)
HMABB HOT MIX ASPHALT BOND BREAKER
RHMA-G RUBBERIZED HOT MIX ASPHALT DENSED GRADED

DESIGN DESIGNATION

SOUTHBOUND EXIT RAMP
2013 ADT = 4,400, DHV = 420, T.I. = 9.0
2053 ADT = 7,700, DHV = 730, T.I. = 12.0

NORTHBOUND EXIT RAMP
2013 ADT = 7,600, DHV = 630, T.I. = 9.0
2053 ADT = 13,200, DHV = 1,100, T.I. = 12.0

SIERRA AVENUE
2013 ADT = 17,700, DHV = 1,480, T.I. = 9.0
2033 ADT = 25,400, DHV = 2,120, T.I. = 11.5
V = 60 mph

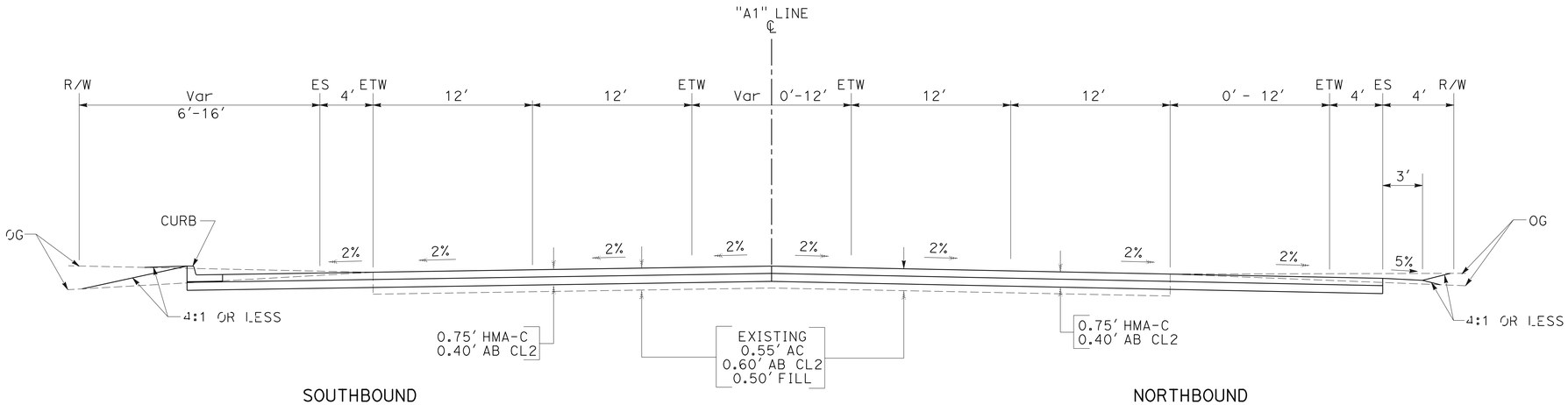

SOUTHBOUND
STA 692+43.27 TO 699+31.18

NORTHBOUND
STA 693+08.29 TO 699+31.18

SIERRA AVENUE

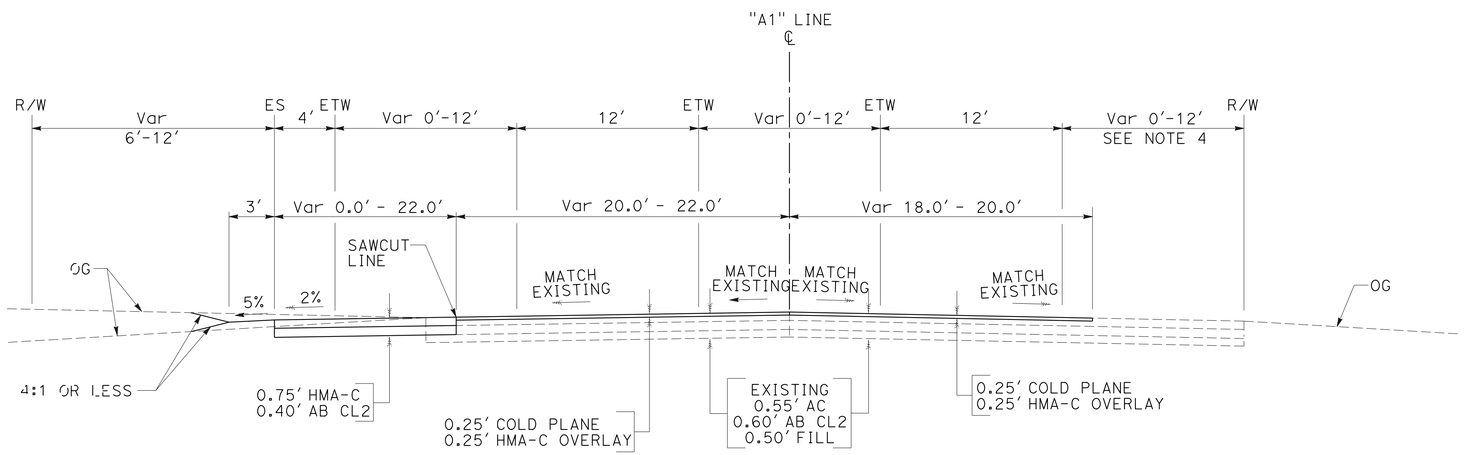

SOUTHBOUND
STA 685+98.84 TO 692+43.27

NORTHBOUND
STA 685+98.84 TO 693+08.29

SIERRA AVENUE

TYPICAL CROSS SECTION

NO SCALE

X-1

STATE OF CALIFORNIA - DEPARTMENT OF TRANSPORTATION
Caltrans® **DESIGN**

FUNCTIONAL SUPERVISOR: SERGIO E. AVILA
CALCULATED-DESIGNED BY: TSUNG WANG
CHECKED BY: SIDHARTHA CHOWDHURY
REVISED BY
DATE REVISED

LAST REVISION 05-07-13 | DATE PLOTTED => 11-DEC-2013 | TIME PLOTTED => 15:08

Dist	COUNTY	ROUTE	POST MILES TOTAL PROJECT	SHEET No.	TOTAL SHEETS
08	SBd	15	12.8	3	122

REGISTERED CIVIL ENGINEER 5-7-13 DATE

8-19-13
PLANS APPROVAL DATE

REGISTERED PROFESSIONAL ENGINEER SERGIO E. AVILA No. 60951 Exp. 12-31-14 CIVIL STATE OF CALIFORNIA

THE STATE OF CALIFORNIA OR ITS OFFICERS OR AGENTS SHALL NOT BE RESPONSIBLE FOR THE ACCURACY OR COMPLETENESS OF SCANNED COPIES OF THIS PLAN SHEET.

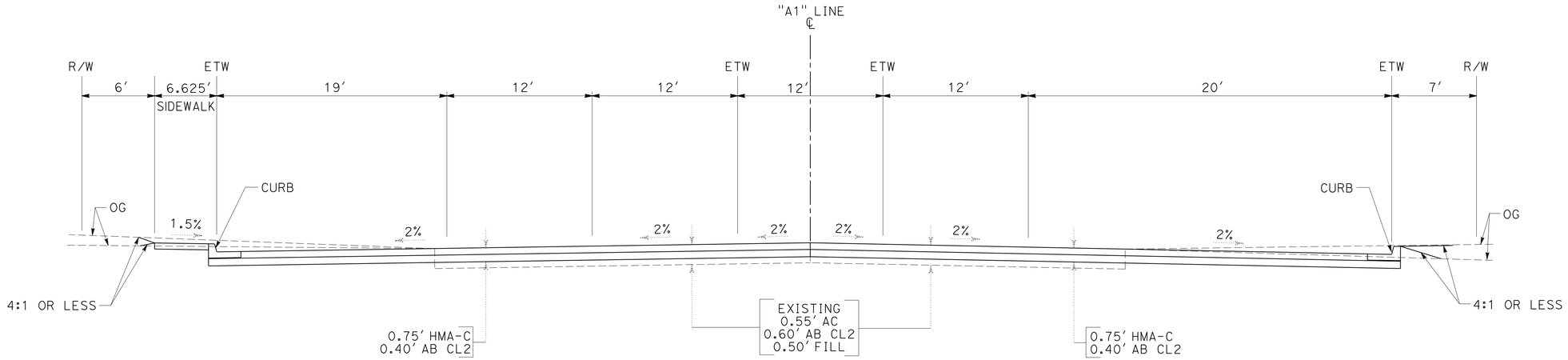

SOUTHBOUND
STA 705+53.71 TO 707+78.47

NORTHBOUND
STA 705+53.71 TO 711+35.92

SIERRA AVENUE

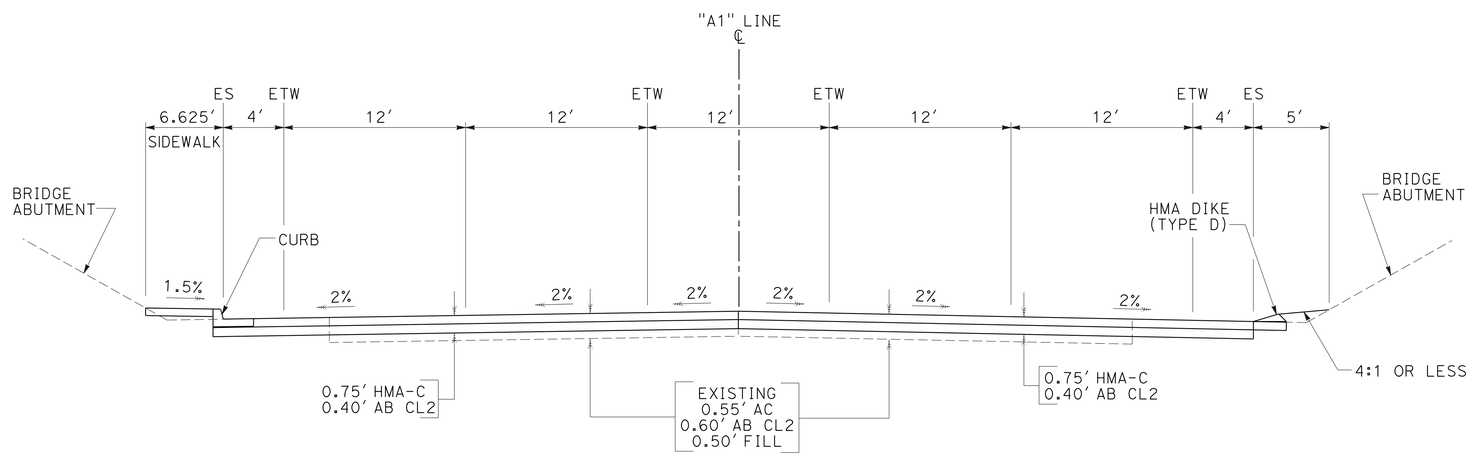

SOUTHBOUND

NORTHBOUND

SIERRA AVENUE

STA 699+31.18 TO 705+53.71

TYPICAL CROSS SECTION

NO SCALE

X-2

STATE OF CALIFORNIA - DEPARTMENT OF TRANSPORTATION
Caltrans
DESIGN

FUNCTIONAL SUPERVISOR: SERGIO E. AVILA
CALCULATED-DESIGNED BY: TSUNG WANG
CHECKED BY: SIDHARTHA CHOWDHURY
REVISED BY
DATE REVISED

LAST REVISION 05-07-13
DATE PLOTTED => 26-AUG-2013
TIME PLOTTED => 14:29

Dist	COUNTY	ROUTE	POST MILES TOTAL PROJECT	SHEET No.	TOTAL SHEETS
08	SBd	15	12.8	4	122

REGISTERED CIVIL ENGINEER 5-7-13 DATE

8-19-13
PLANS APPROVAL DATE

REGISTERED PROFESSIONAL ENGINEER SERGIO E. AVILA No. 60951 Exp. 12-31-14 CIVIL STATE OF CALIFORNIA

THE STATE OF CALIFORNIA OR ITS OFFICERS OR AGENTS SHALL NOT BE RESPONSIBLE FOR THE ACCURACY OR COMPLETENESS OF SCANNED COPIES OF THIS PLAN SHEET.

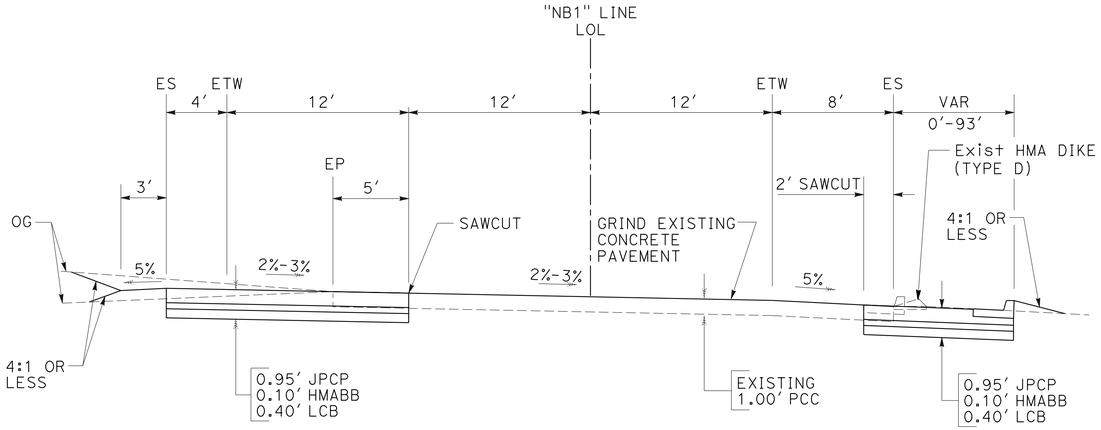

NORTHBOUND EXIT RAMP "SIERRA AVENUE"
RAMP TERMINI
STA 112+54.31 TO 113+94.10

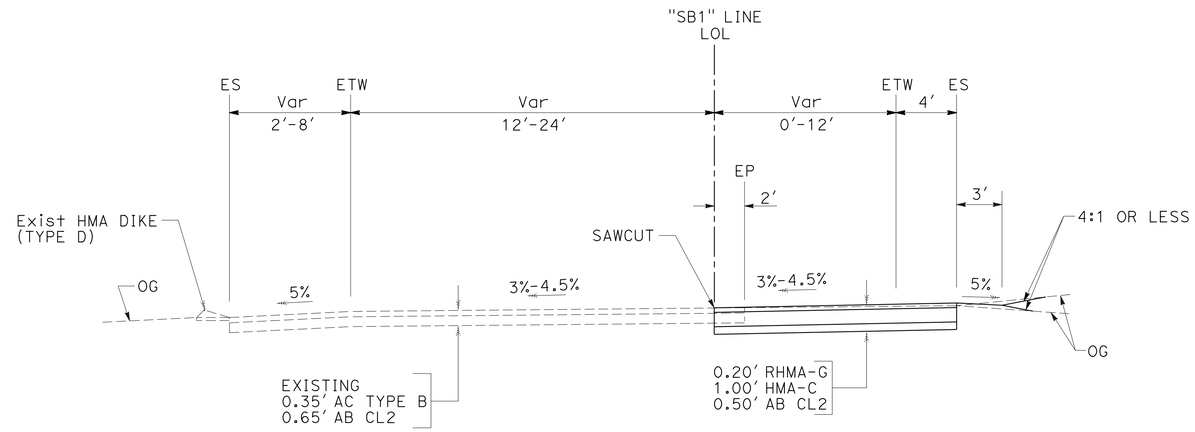

SOUTHBOUND EXIT RAMP "SIERRA AVENUE"
STA 202+13.65 TO 204+78.76

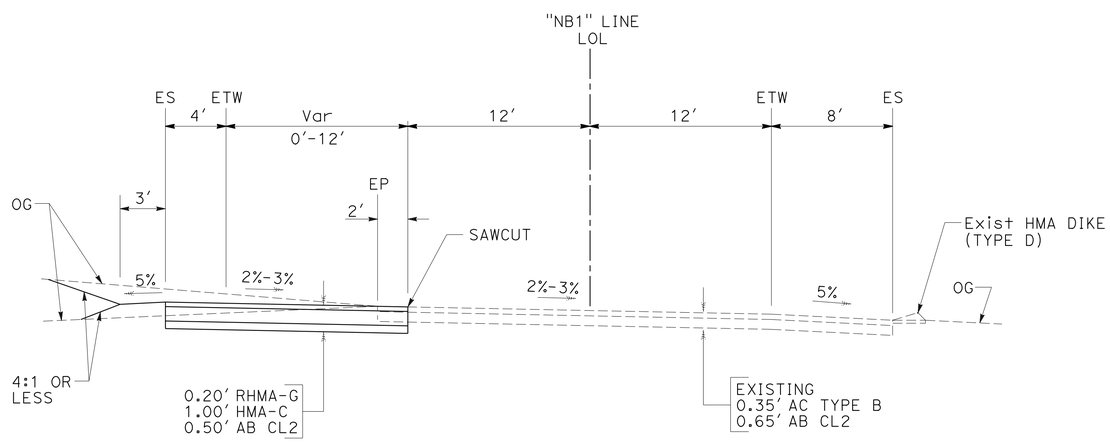

NORTHBOUND EXIT RAMP "SIERRA AVENUE"
STA 108+75.84 TO 112+54.31

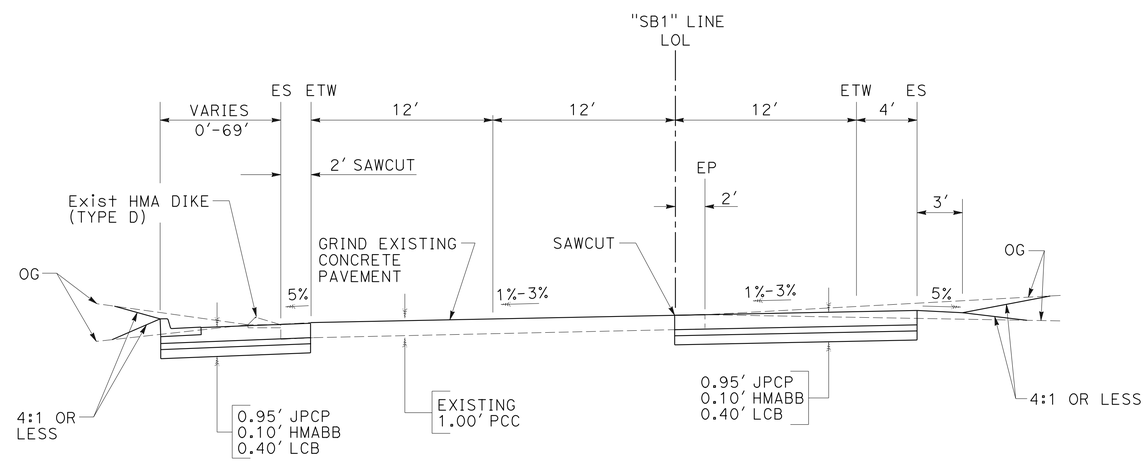

SOUTHBOUND EXIT RAMP "SIERRA AVENUE"
RAMP TERMINI
STA 200+37.25 TO 202+13.65

TYPICAL CROSS SECTION
NO SCALE

X-3

REVISED BY	DATE REVISED
TSUNG WANG	SIDHARTHA CHOWDHURY
CALCULATED-DESIGNED BY	CHECKED BY
FUNCTIONAL SUPERVISOR	SERGIO E. AVILA

STATE OF CALIFORNIA - DEPARTMENT OF TRANSPORTATION
Caltrans® DESIGN

LAST REVISION 05-07-13 | DATE PLOTTED => 26-AUG-2013 | TIME PLOTTED => 14:29

Dist	COUNTY	ROUTE	POST MILES TOTAL PROJECT	SHEET No.	TOTAL SHEETS
08	SBd	15	12.8	5	122

REGISTERED CIVIL ENGINEER 12-12-12 DATE

8-19-13
PLANS APPROVAL DATE

REGISTERED PROFESSIONAL ENGINEER
SERGIO E. AVILA
No. 60951
Exp. 12-31-12
CIVIL
STATE OF CALIFORNIA

THE STATE OF CALIFORNIA OR ITS OFFICERS OR AGENTS SHALL NOT BE RESPONSIBLE FOR THE ACCURACY OR COMPLETENESS OF SCANNED COPIES OF THIS PLAN SHEET.

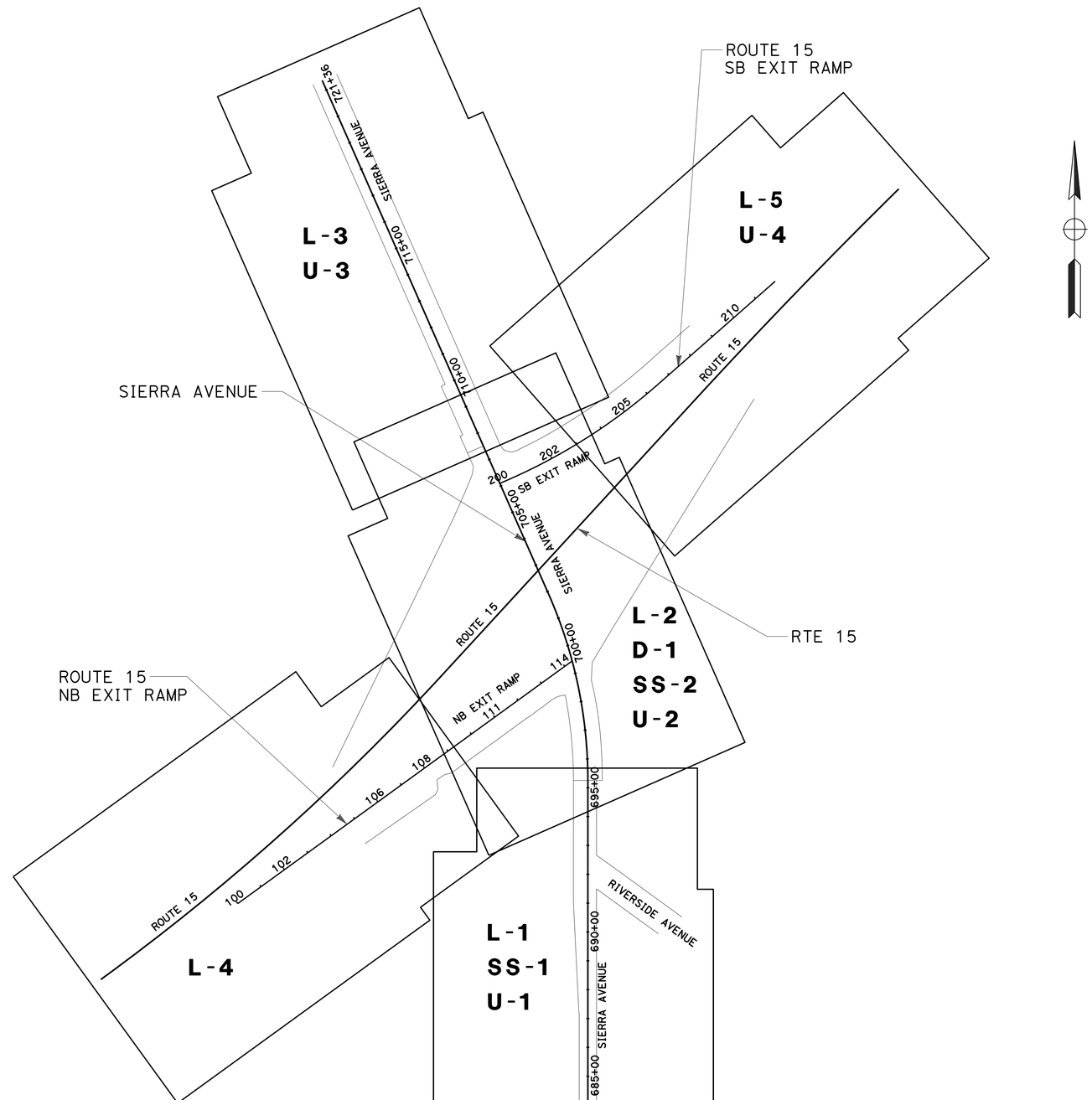

KEY MAP AND LINE INDEX

NO SCALE

K-1

STATE OF CALIFORNIA - DEPARTMENT OF TRANSPORTATION
Caltrans
DESIGN

FUNCTIONAL SUPERVISOR: SERGIO E. AVILA
CALCULATED-DESIGNED BY: TSUNG WANG
CHECKED BY: SIDHARTHA CHOWDHURY
REVISED BY
DATE REVISED

LAST REVISION 12-12-12 | DATE PLOTTED => 26-AUG-2013 | TIME PLOTTED => 14:29

Dist	COUNTY	ROUTE	POST MILES TOTAL PROJECT	SHEET No.	TOTAL SHEETS
08	SBd	15	12.8	6	122

REGISTERED CIVIL ENGINEER 12-12-12 DATE

8-19-13
PLANS APPROVAL DATE

REGISTERED PROFESSIONAL ENGINEER SERGIO E. AVILA No. 60951 Exp. 12-31-12 CIVIL STATE OF CALIFORNIA

THE STATE OF CALIFORNIA OR ITS OFFICERS OR AGENTS SHALL NOT BE RESPONSIBLE FOR THE ACCURACY OR COMPLETENESS OF SCANNED COPIES OF THIS PLAN SHEET.

NOTES:

1. FOR ACCURATE RIGHT OF WAY DATA, CONTACT RIGHT OF WAY ENGINEERING AT THE DISTRICT OFFICE.
2. FOR CURB RAMP DETAILS, REFER TO CONSTRUCTION DETAILS C-1 THRU C-4.
3. CURB & GUTTER 10′ TRANSITION BETWEEN TYPE A2-6 AND EXISTING, FROM STATION 711+25.92 TO 711+35.92.

LEGEND:

- ⇨ DIRECTION OF TRAVEL
- 1,2... LANE NUMBERS
- ROADWAY EXCAVATION & CONSTRUCT NEW PAVEMENT (JPCP)
- HMABB HOT MIX ASPHALT BOND BREAKER
- —×——× ESA FENCE

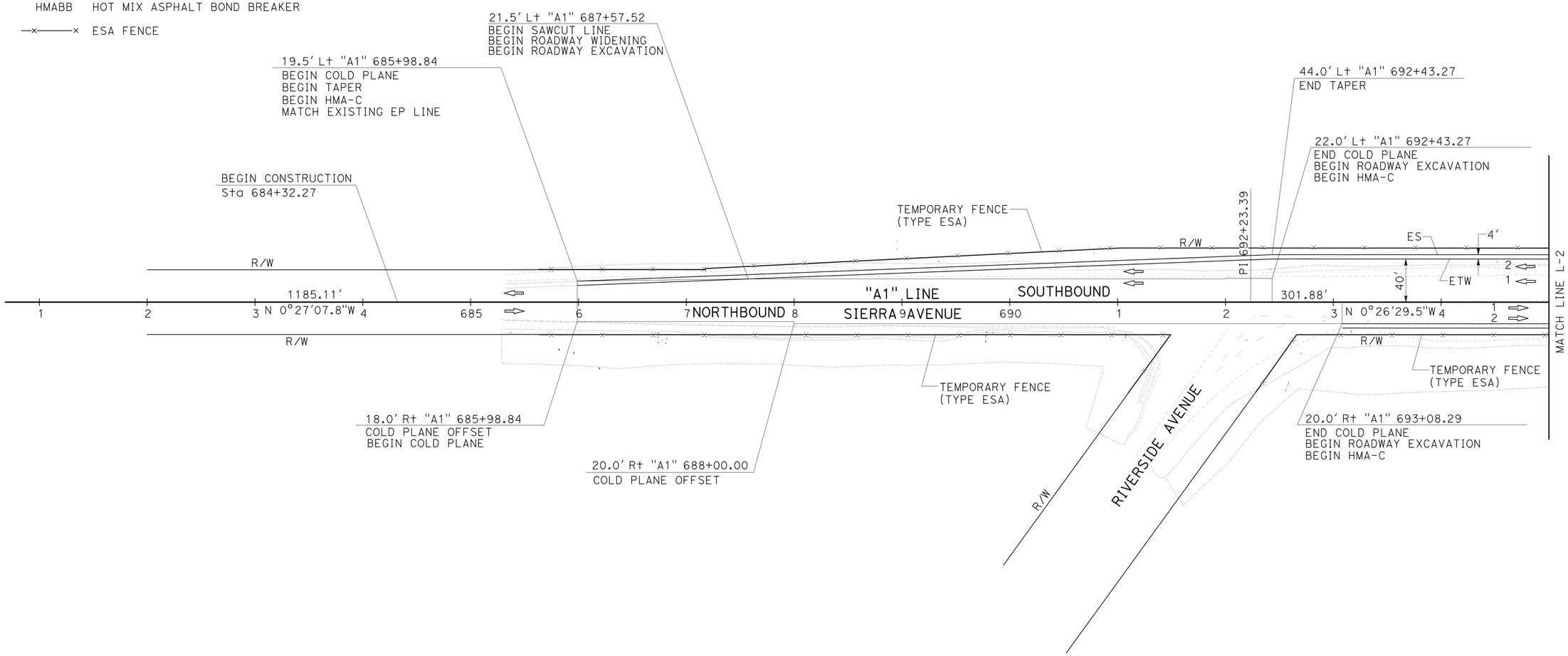

LAYOUT

SCALE: 1" = 50′ **L-1**

STATE OF CALIFORNIA - DEPARTMENT OF TRANSPORTATION
Caltrans® **DESIGN**

FUNCTIONAL SUPERVISOR: SERGIO E. AVILA
CALCULATED-DESIGNED BY: TSUNG WANG
CHECKED BY: SIDHARTHA CHOWDHURY
REVISED BY
DATE REVISED

LAST REVISION 12-12-12 | DATE PLOTTED => 26-AUG-2013 | TIME PLOTTED => 14:29

Dist	COUNTY	ROUTE	POST MILES TOTAL PROJECT	SHEET No.	TOTAL SHEETS
08	SBd	15	12.8	7	122

REGISTERED CIVIL ENGINEER 5-7-13 DATE

8-19-13
PLANS APPROVAL DATE

REGISTERED PROFESSIONAL ENGINEER SERGIO E. AVILA No. 60951 Exp. 12-31-14 CIVIL STATE OF CALIFORNIA

THE STATE OF CALIFORNIA OR ITS OFFICERS OR AGENTS SHALL NOT BE RESPONSIBLE FOR THE ACCURACY OR COMPLETENESS OF SCANNED COPIES OF THIS PLAN SHEET.

NOTE:

FOR ACCURATE RIGHT OF WAY DATA, CONTACT RIGHT OF WAY ENGINEERING AT THE DISTRICT OFFICE.

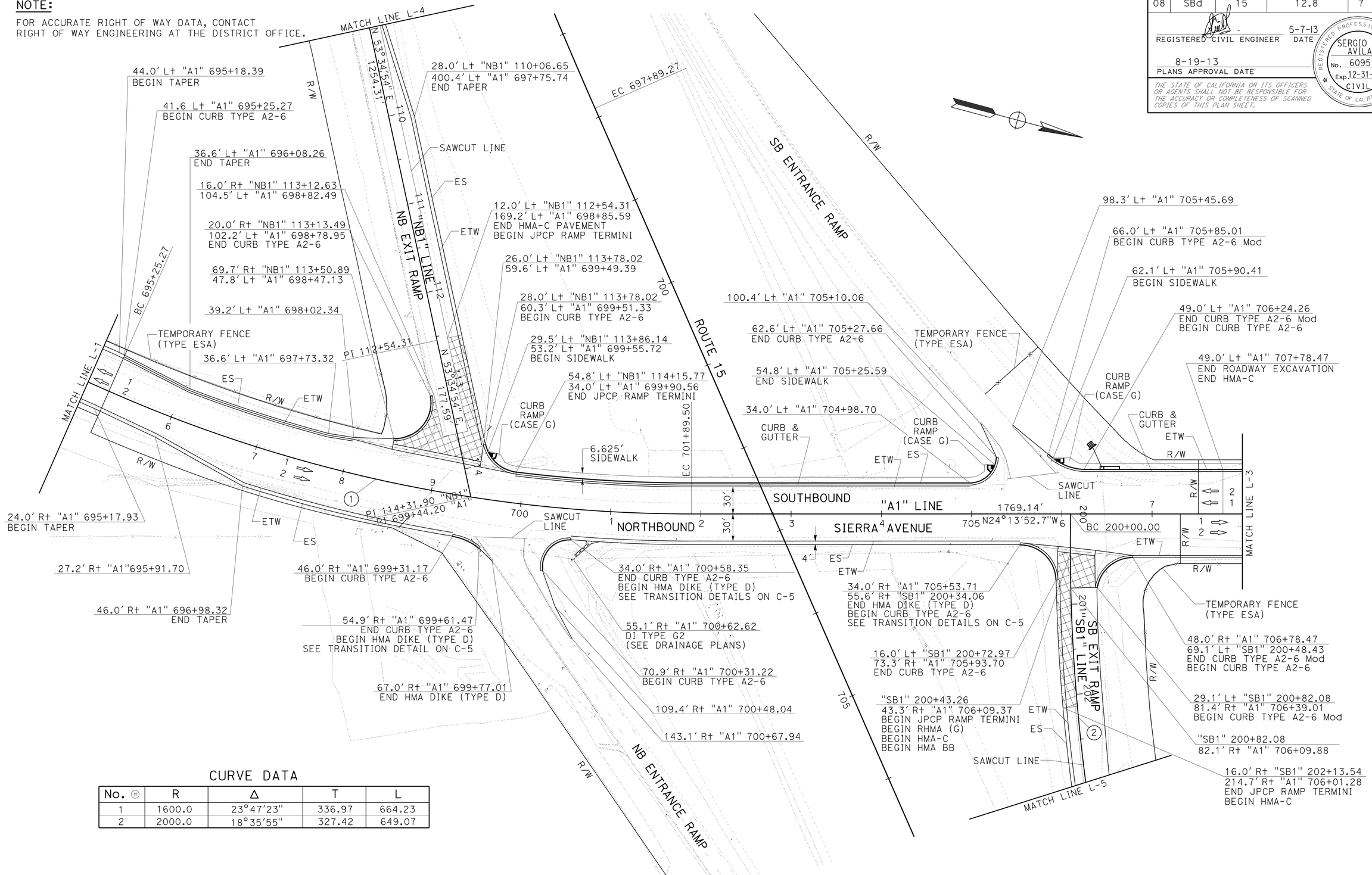

CURVE DATA

No. ⊕	R	Δ	T	L
1	1600.0	23°47'23"	336.97	664.23
2	2000.0	18°35'55"	327.42	649.07

LAYOUT

SCALE: 1" = 50'

L-2

REVISED BY	DATE REVISED
TSUNG WANG	SIDHARTHA CHOWDHURY
CALCULATED-DESIGNED BY	CHECKED BY
FUNCTIONAL SUPERVISOR	SERGIO E. AVILA

STATE OF CALIFORNIA - DEPARTMENT OF TRANSPORTATION

DESIGN

Caltrans

LAST REVISION 05-07-13 | DATE PLOTTED => 26-AUG-2013 | TIME PLOTTED => 14:29

Dist	COUNTY	ROUTE	POST MILES TOTAL PROJECT	SHEET No.	TOTAL SHEETS
08	SBd	15	12.8	8	122

REGISTERED CIVIL ENGINEER 5-7-13 DATE

8-19-13
PLANS APPROVAL DATE

REGISTERED PROFESSIONAL ENGINEER SERGIO E. AVILA No. 60951 Exp. 12-31-14 CIVIL STATE OF CALIFORNIA

THE STATE OF CALIFORNIA OR ITS OFFICERS OR AGENTS SHALL NOT BE RESPONSIBLE FOR THE ACCURACY OR COMPLETENESS OF SCANNED COPIES OF THIS PLAN SHEET.

NOTE:

FOR ACCURATE RIGHT OF WAY DATA, CONTACT
RIGHT OF WAY ENGINEERING AT THE DISTRICT OFFICE.

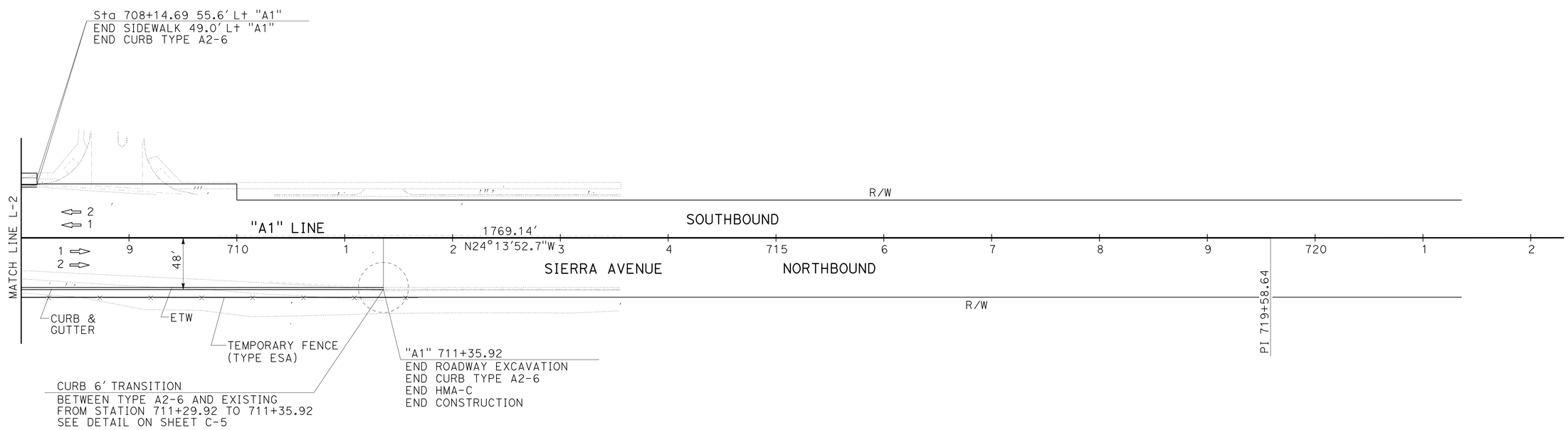

LAYOUT

SCALE: 1" = 50' **L-3**

STATE OF CALIFORNIA - DEPARTMENT OF TRANSPORTATION
Caltrans® **DESIGN**

FUNCTIONAL SUPERVISOR: SERGIO E. AVILA
CALCULATED-DESIGNED BY: TSUNG WANG
CHECKED BY: SIDHARTHA CHOWDHURY
REVISED BY
DATE REVISED

LAST REVISION 05-07-13
DATE PLOTTED => 26-AUG-2013
TIME PLOTTED => 14:29

Dist	COUNTY	ROUTE	POST MILES TOTAL PROJECT	SHEET No.	TOTAL SHEETS
08	SBd	15	12.8	9	122

REGISTERED CIVIL ENGINEER 12-12-12 DATE

8-19-13
PLANS APPROVAL DATE

REGISTERED PROFESSIONAL ENGINEER SERGIO E. AVILA No. 60951 Exp. 12-31-12 CIVIL STATE OF CALIFORNIA

THE STATE OF CALIFORNIA OR ITS OFFICERS OR AGENTS SHALL NOT BE RESPONSIBLE FOR THE ACCURACY OR COMPLETENESS OF SCANNED COPIES OF THIS PLAN SHEET.

NOTE:

FOR ACCURATE RIGHT OF WAY DATA, CONTACT
RIGHT OF WAY ENGINEERING AT THE DISTRICT OFFICE.

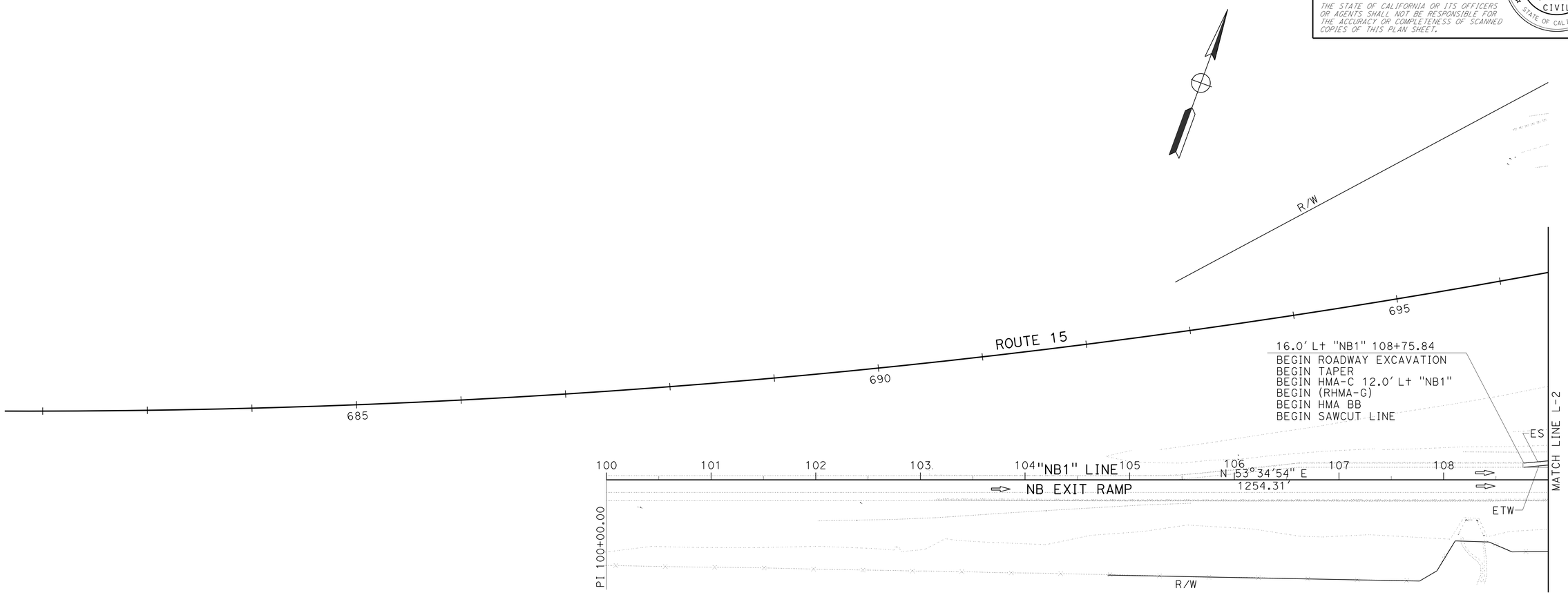

LAYOUT

SCALE: 1" = 50' **L-4**

REVISED BY	DATE REVISED

CALCULATED-DESIGNED BY: TSUNG WANG
CHECKED BY: SIDHARTHA CHOWDHURY

FUNCTIONAL SUPERVISOR: SERGIO E. AVILA

STATE OF CALIFORNIA - DEPARTMENT OF TRANSPORTATION
Caltrans® **DESIGN**

LAST REVISION 12-12-12 | DATE PLOTTED => 26-AUG-2013 | TIME PLOTTED => 14:29

Dist	COUNTY	ROUTE	POST MILES TOTAL PROJECT	SHEET No.	TOTAL SHEETS
08	SBd	15	12.8	10	122

REGISTERED CIVIL ENGINEER 12-12-12 DATE

8-19-13
PLANS APPROVAL DATE

REGISTERED PROFESSIONAL ENGINEER SERGIO E. AVILA No. 60951 Exp. 12-31-12 CIVIL STATE OF CALIFORNIA

THE STATE OF CALIFORNIA OR ITS OFFICERS OR AGENTS SHALL NOT BE RESPONSIBLE FOR THE ACCURACY OR COMPLETENESS OF SCANNED COPIES OF THIS PLAN SHEET.

NOTE:

FOR ACCURATE RIGHT OF WAY DATA, CONTACT
RIGHT OF WAY ENGINEERING AT THE DISTRICT OFFICE.

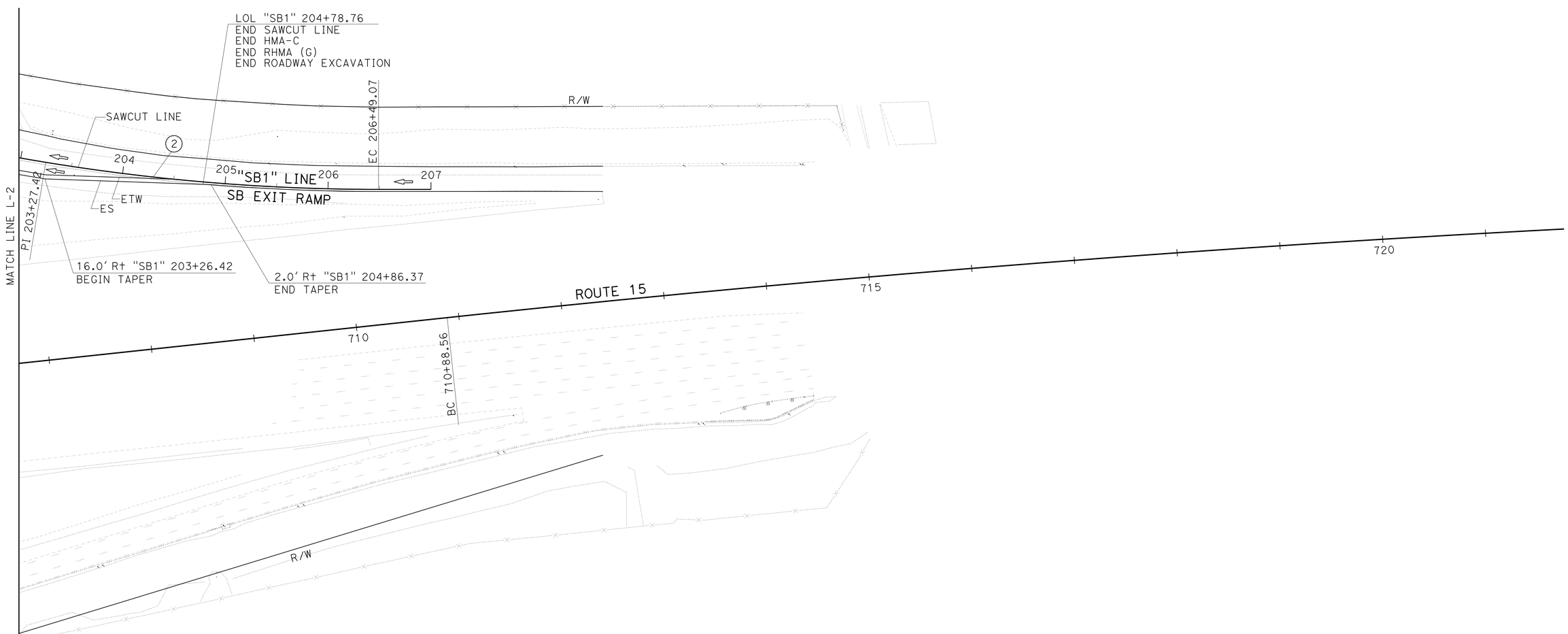

LAYOUT
SCALE: 1" = 50' **L-5**

REVISED BY	DATE REVISED

CALCULATED-DESIGNED BY	CHECKED BY
TSUNG WANG	SIDHARTHA CHOWDHURY

FUNCTIONAL SUPERVISOR: SERGIO E. AVILA

STATE OF CALIFORNIA - DEPARTMENT OF TRANSPORTATION
Caltrans
DESIGN

LAST REVISION 12-12-12 | DATE PLOTTED => 26-AUG-2013 | TIME PLOTTED => 14:30

Dist	COUNTY	ROUTE	POST MILES TOTAL PROJECT	SHEET No.	TOTAL SHEETS
08	SBd	15	12.8	11	122

REGISTERED CIVIL ENGINEER 12-12-12 DATE

8-19-13
PLANS APPROVAL DATE

REGISTERED PROFESSIONAL ENGINEER SERGIO E. AVILA No. 60951 Exp. 12-31-12 CIVIL STATE OF CALIFORNIA

THE STATE OF CALIFORNIA OR ITS OFFICERS OR AGENTS SHALL NOT BE RESPONSIBLE FOR THE ACCURACY OR COMPLETENESS OF SCANNED COPIES OF THIS PLAN SHEET.

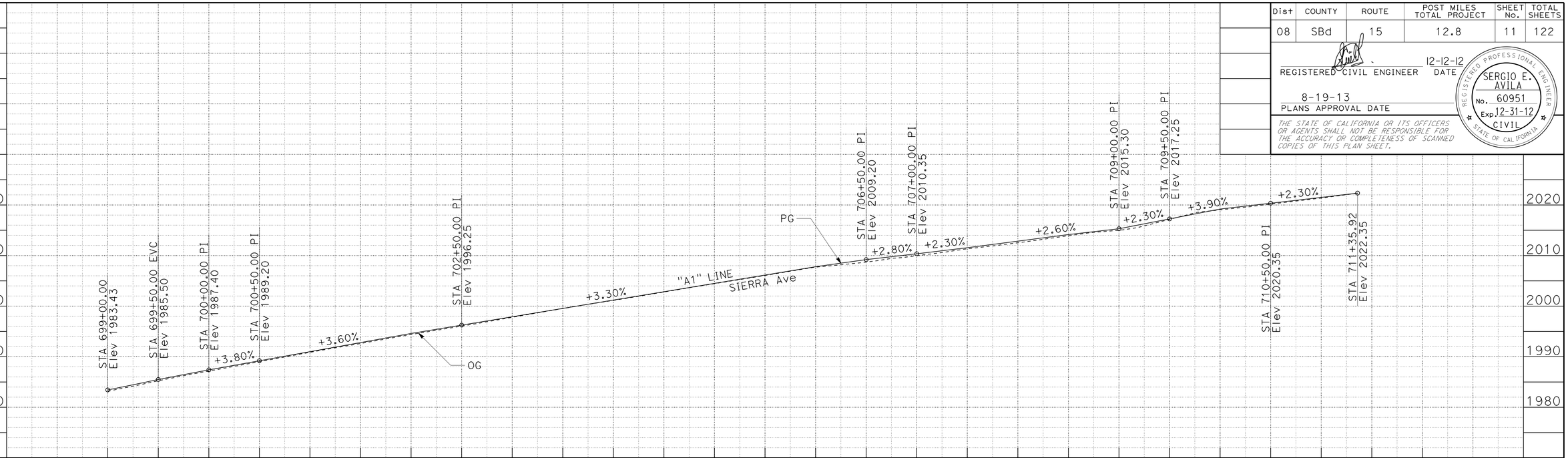

STATION	699	700	701	702	703	704	705	706	707	708	709	710	711	712	TOTAL
CY Exc	303														303
CY Emb	3272														3272

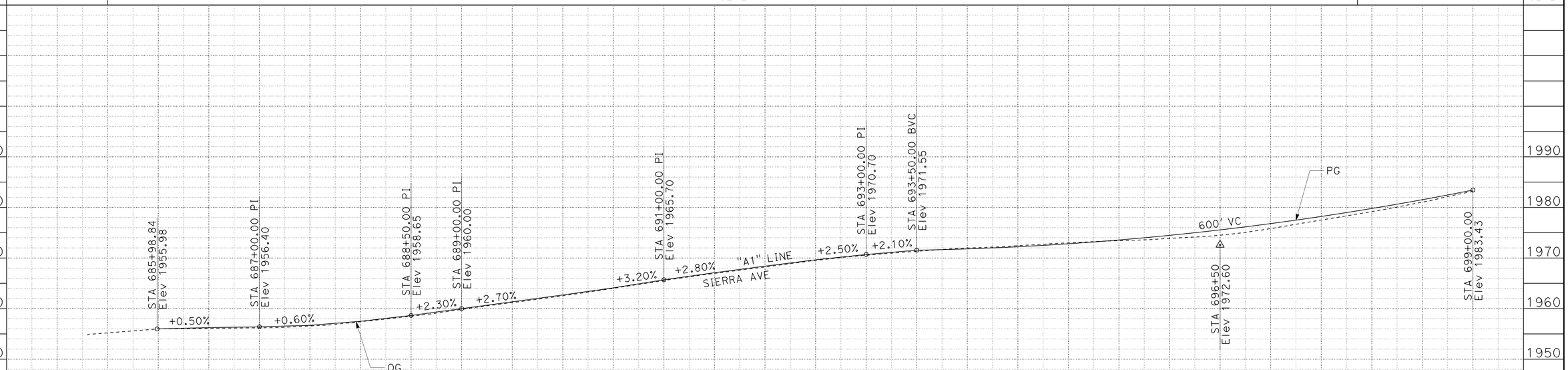

STATION	685	686	687	688	689	690	691	692	693	694	695	696	697	698	699	TOTAL
CY Exc	230															230
CY Emb	2044															2044

SIERRA AVENUE
"A1" LINE

PROFILE
SCALE: Horiz 1" = 50'
Vert 1" = 5'

P-1

REVISED BY | DATE REVISED
TSUNG WANG | SIDHARTHA CHOWDHURY
CALCULATED-DESIGNED BY | CHECKED BY
FUNCTIONAL SUPERVISOR: SERGIO E. AVILA

STATE OF CALIFORNIA - DEPARTMENT OF TRANSPORTATION
Caltrans
DESIGN

LAST REVISION 12-12-12 | DATE PLOTTED => 26-AUG-2013 | TIME PLOTTED => 14:30

Dist	COUNTY	ROUTE	POST MILES TOTAL PROJECT	SHEET No.	TOTAL SHEETS
08	SBd	15	12.8	12	122

REGISTERED CIVIL ENGINEER 12-12-12 DATE

8-19-13
PLANS APPROVAL DATE

REGISTERED PROFESSIONAL ENGINEER SERGIO E. AVILA No. 60951 Exp. 12-31-12 CIVIL STATE OF CALIFORNIA

THE STATE OF CALIFORNIA OR ITS OFFICERS OR AGENTS SHALL NOT BE RESPONSIBLE FOR THE ACCURACY OR COMPLETENESS OF SCANNED COPIES OF THIS PLAN SHEET.

NOTE:

1. ALL ELEVATIONS ARE BASED ON NAVD 1988

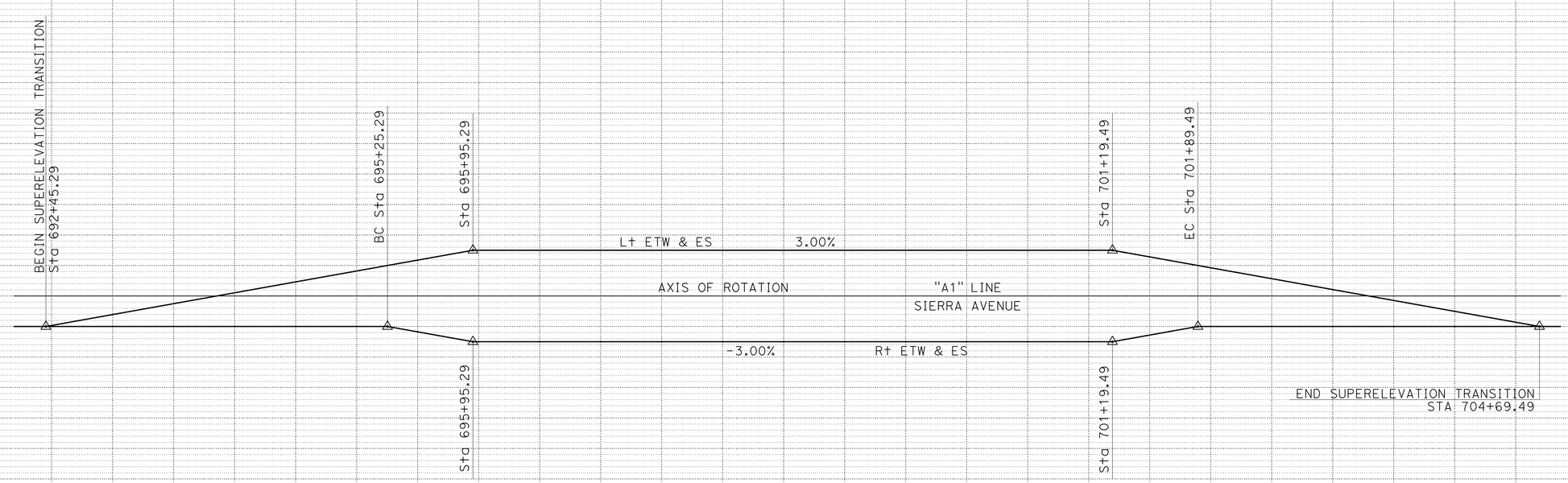

SUPERELEVATION DIAGRAM
PROFILE
SIERRA AVENUE
"A1" LINE

SUPERELEVATION DIAGRAM

SCALE: Horiz 1" = 50'
Vert 1" = 5'

SE-1

STATION	692	693	694	695	696	697	698	699	700	701	702	703	704	705	TOTAL
CY Exc															
CY Emb															

STATE OF CALIFORNIA - DEPARTMENT OF TRANSPORTATION
Caltrans® DESIGN

CALCULATED-DESIGNED BY TSUNG WANG
CHECKED BY SIDHARTHA CHOWDHURY
FUNCTIONAL SUPERVISOR SERGIO E. AVILA
REVISED BY
DATE REVISED

LAST REVISION 12-12-12
DATE PLOTTED => 26-AUG-2013
TIME PLOTTED => 14:30

Dist	COUNTY	ROUTE	POST MILES TOTAL PROJECT	SHEET No.	TOTAL SHEETS
08	SBd	15	12.8	13	122

REGISTERED CIVIL ENGINEER 5-7-13 DATE

8-19-13
PLANS APPROVAL DATE

REGISTERED PROFESSIONAL ENGINEER SERGIO E. AVILA No. 60951 Exp. 12-31-14 CIVIL STATE OF CALIFORNIA

THE STATE OF CALIFORNIA OR ITS OFFICERS OR AGENTS SHALL NOT BE RESPONSIBLE FOR THE ACCURACY OR COMPLETENESS OF SCANNED COPIES OF THIS PLAN SHEET.

NOTES:

1. YELLOW DETECTABLE WARNING SURFACE FOR ALL CURB RAMPS SHALL BE CONSTRUCTED WITH CONCRETE PAVERS.
2. CURB RAMP (CASE G) DETAILS SHOWN IN SECTION A-A. FOR DETAILS NOT SHOWN SEE REVISED Std PLAN RSP A88A.
3. FOR PEDESTRIAN BARRICADE TYPE I DETAIL SEE Std PLAN ES-7Q.
4. FOR JPCP JOINT LOCATIONS SEE SHEET C-6.
5. CURB RAMP ELEVATIONS MIGHT REQUIRE ADJUSTMENTS TO ACCOMMODATE SITE CONDITIONS.
6. FOR ACCURATE RIGHT OF WAY DATA, CONTACT RIGHT OF WAY ENGINEERING AT THE DISTRICT OFFICE.

CURVE DATA

No. ⊕	R	Δ	T	L
1	40.0	102°8'02"	49.51	71.30
2	40.0	70°41'16"	28.37	49.35

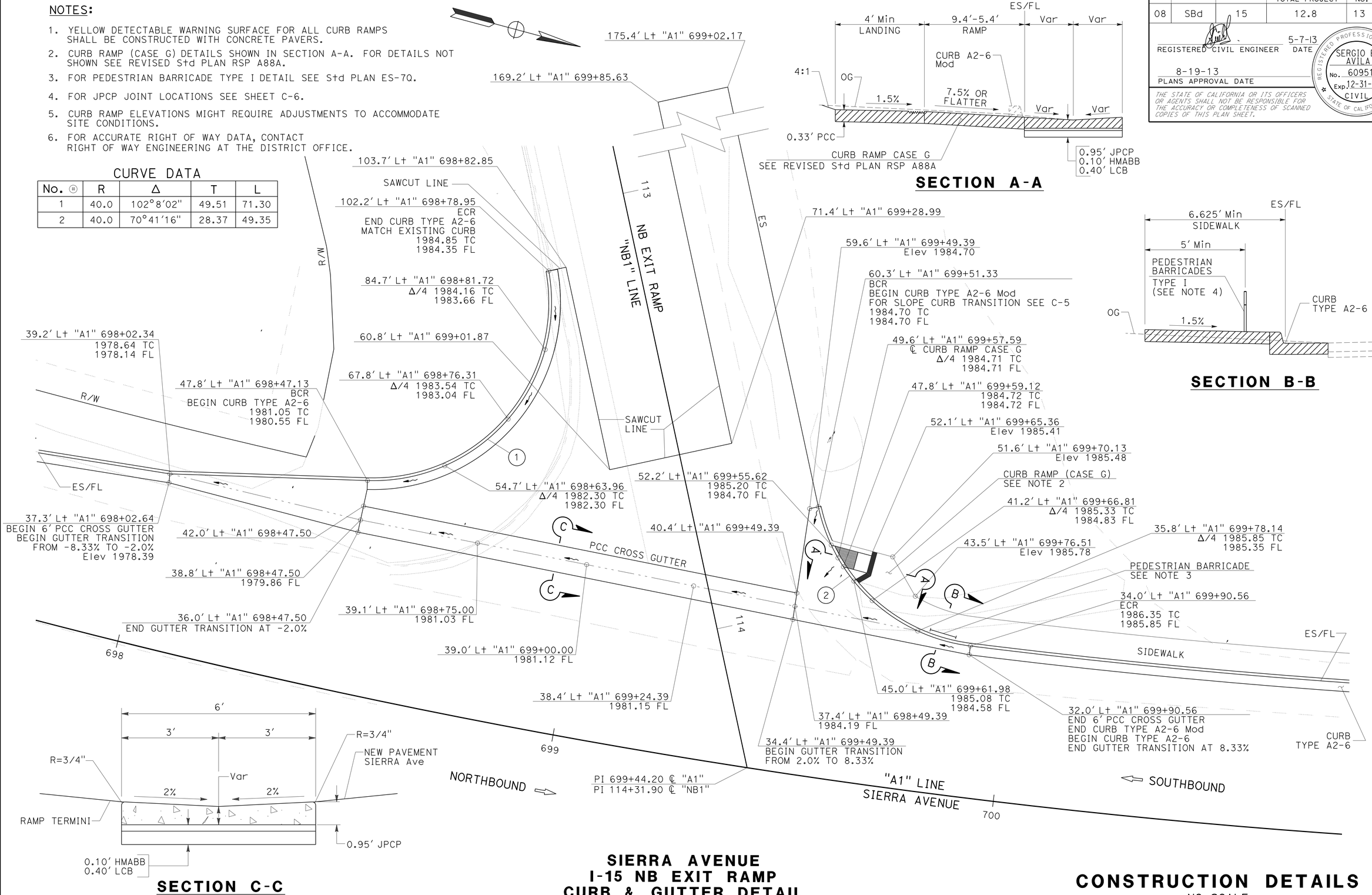

SECTION A-A

SECTION B-B

SECTION C-C

SIERRA AVENUE
I-15 NB EXIT RAMP
CURB & GUTTER DETAIL

CONSTRUCTION DETAILS

NO SCALE

C-1

STATE OF CALIFORNIA - DEPARTMENT OF TRANSPORTATION
Caltrans® DESIGN

FUNCTIONAL SUPERVISOR: SERGIO E. AVILA
CALCULATED-DESIGNED BY: TSUNG WANG
CHECKED BY: SIDHARTHA CHOWDHURY
REVISED BY
DATE REVISED

LAST REVISION 05-07-13
DATE PLOTTED => 26-AUG-2013
TIME PLOTTED => 14:30

Dist	COUNTY	ROUTE	POST MILES TOTAL PROJECT	SHEET No.	TOTAL SHEETS
08	SBd	15	12.8	14	122

REGISTERED CIVIL ENGINEER 5-7-13 DATE

8-19-13
PLANS APPROVAL DATE

REGISTERED PROFESSIONAL ENGINEER SERGIO E. AVILA No. 60951 Exp. 12-31-14 CIVIL STATE OF CALIFORNIA

THE STATE OF CALIFORNIA OR ITS OFFICERS OR AGENTS SHALL NOT BE RESPONSIBLE FOR THE ACCURACY OR COMPLETENESS OF SCANNED COPIES OF THIS PLAN SHEET.

NOTES:

1. YELLOW DETECTABLE WARNING SURFACE FOR ALL CURB RAMPS SHALL BE CONSTRUCTED WITH CONCRETE PAVERS.
2. FOR DETAILS NOT SHOWN IN CURB RAMP (CASE G), SEE REVISED Std PLAN RSP A88A.
3. FOR PEDESTRIAN BARRICADE TYPE I DETAIL SEE Std PLAN ES-7Q.
4. FOR JPCP JOINT LOCATIONS SEE SHEET C-6.
5. CURB RAMP ELEVATIONS MIGHT REQUIRE ADJUSTMENTS TO ACCOMMODATE SITE CONDITIONS.
6. FOR ACCURATE RIGHT OF WAY DATA, CONTACT RIGHT OF WAY ENGINEERING AT THE DISTRICT OFFICE.

CURVE DATA

No. ⊕	R	Δ	T	L
3	30.0	85°28'06"	27.72	44.75
4	60.0	41°45'21"	22.89	43.73

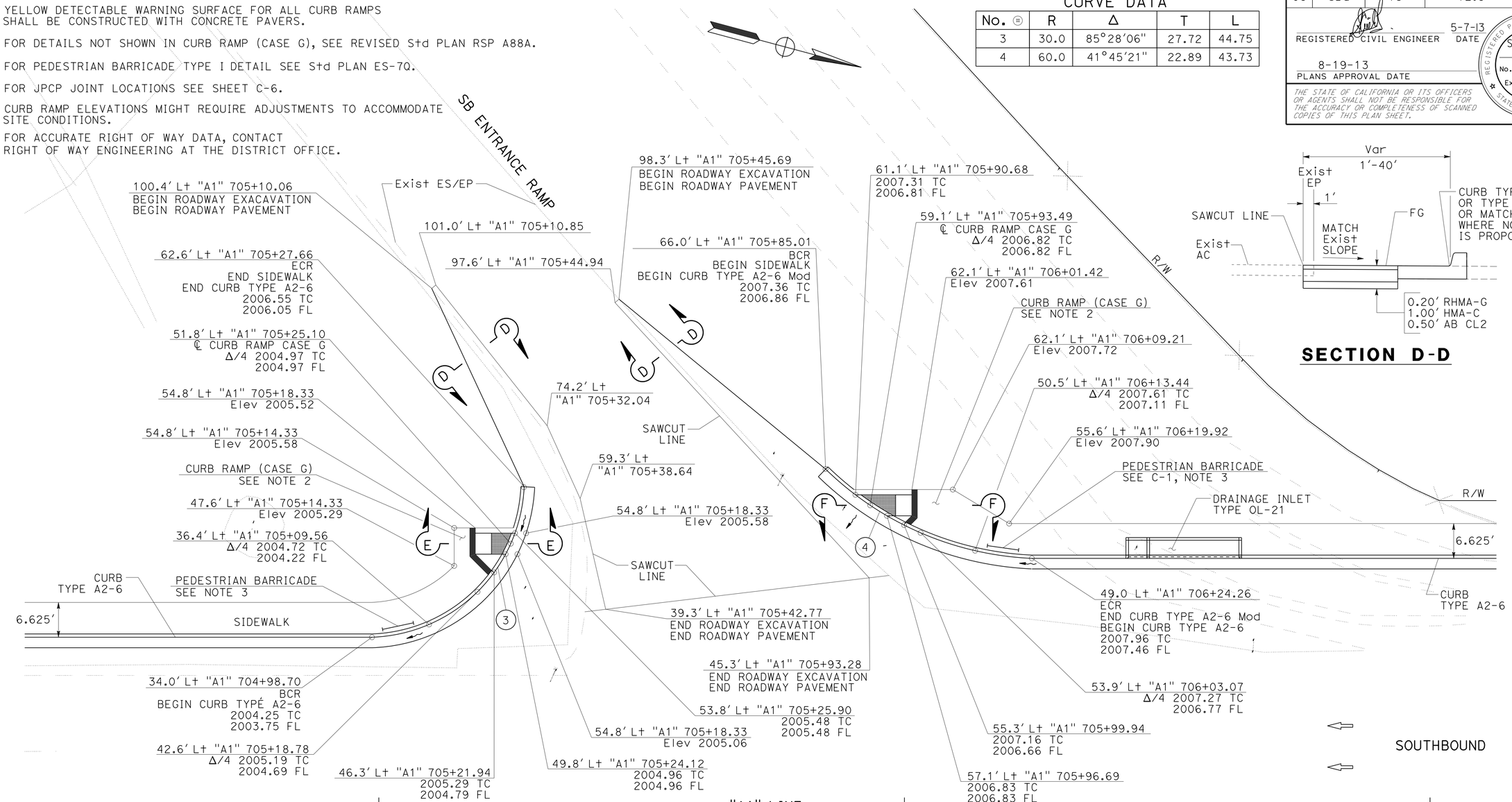

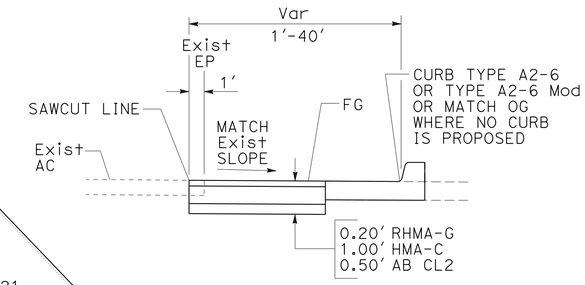

SECTION D-D

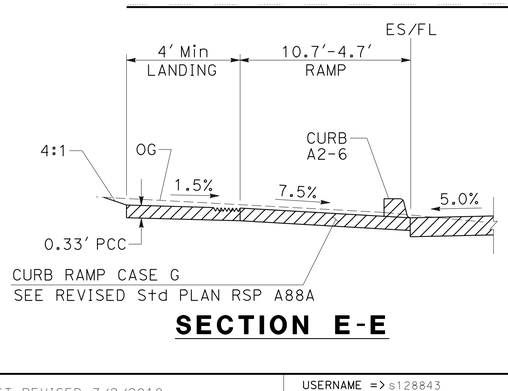

SECTION E-E

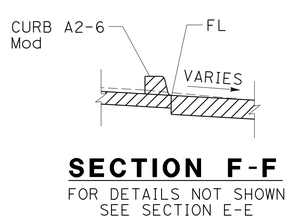

SECTION F-F

FOR DETAILS NOT SHOWN
SEE SECTION E-E

SIERRA AVENUE
ROUTE 15 SB ENTRANCE RAMP
CURB AND GUTTER DETAIL

CONSTRUCTION DETAILS
NO SCALE

C-2

STATE OF CALIFORNIA - DEPARTMENT OF TRANSPORTATION
Caltrans DESIGN

FUNCTIONAL SUPERVISOR: SERGIO E. AVILA
CALCULATED-DESIGNED BY: TSUNG WANG
CHECKED BY: SIDHARTHA CHOWDHURY
REVISED BY
DATE REVISED

LAST REVISION 05-07-13
DATE PLOTTED => 26-AUG-2013
TIME PLOTTED => 14:30

Dist	COUNTY	ROUTE	POST MILES TOTAL PROJECT	SHEET No.	TOTAL SHEETS
08	SBd	15	12.8	15	122

REGISTERED CIVIL ENGINEER 5-7-13 DATE

8-19-13
PLANS APPROVAL DATE

REGISTERED PROFESSIONAL ENGINEER SERGIO E. AVILA No. 60951 Exp. 12-31-14 CIVIL STATE OF CALIFORNIA

THE STATE OF CALIFORNIA OR ITS OFFICERS OR AGENTS SHALL NOT BE RESPONSIBLE FOR THE ACCURACY OR COMPLETENESS OF SCANNED COPIES OF THIS PLAN SHEET.

NOTE:

FOR ACCURATE RIGHT OF WAY DATA, CONTACT RIGHT OF WAY ENGINEERING AT THE DISTRICT OFFICE.

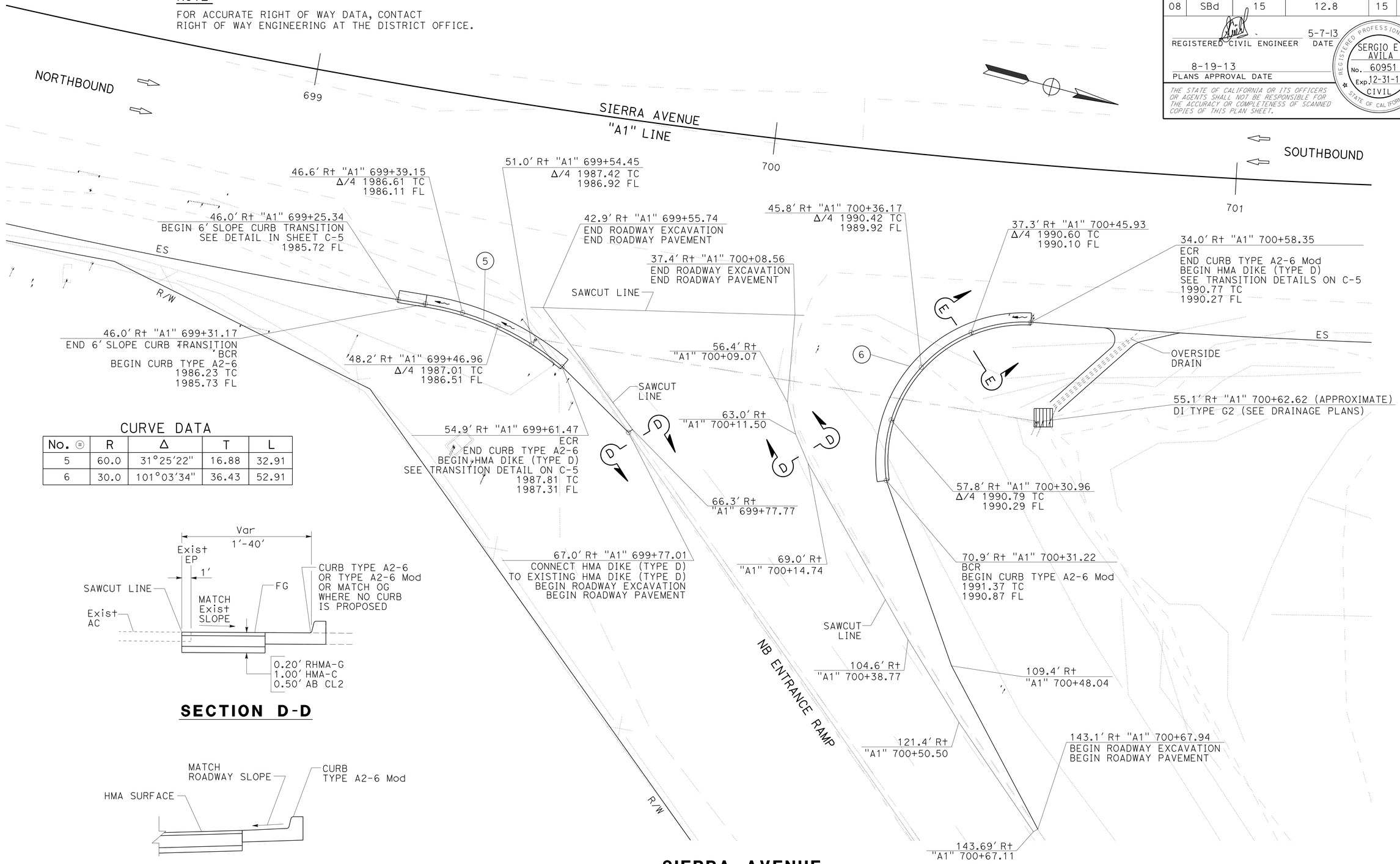

CURVE DATA

No.	R	Δ	T	L
5	60.0	31°25'22"	16.88	32.91
6	30.0	101°03'34"	36.43	52.91

SECTION D-D

SECTION E-E

SIERRA AVENUE
ROUTE 15 NB ENTRANCE RAMP
CURB AND GUTTER DETAIL

CONSTRUCTION DETAILS

NO SCALE

C-3

STATE OF CALIFORNIA - DEPARTMENT OF TRANSPORTATION
Caltrans
DESIGN

FUNCTIONAL SUPERVISOR: SERGIO E. AVILA
CALCULATED-DESIGNED BY: TSUNG WANG
CHECKED BY: SIDHARTHA CHOWDHURY
REVISED BY
DATE REVISED

LAST REVISION 05-07-13
DATE PLOTTED => 26-AUG-2013
TIME PLOTTED => 14:30

Dist	COUNTY	ROUTE	POST MILES TOTAL PROJECT	SHEET No.	TOTAL SHEETS
08	SBd	15	12.8	16	122

REGISTERED CIVIL ENGINEER 5-7-13 DATE

8-19-13
PLANS APPROVAL DATE

REGISTERED PROFESSIONAL ENGINEER SERGIO E. AVILA No. 60951 Exp. 12-31-14 CIVIL STATE OF CALIFORNIA

THE STATE OF CALIFORNIA OR ITS OFFICERS OR AGENTS SHALL NOT BE RESPONSIBLE FOR THE ACCURACY OR COMPLETENESS OF SCANNED COPIES OF THIS PLAN SHEET.

NOTES:

1. SEE CROSS GUTTER SECTION ON SHEET C-1.
2. FOR SLOPE CURB DETAIL, REFER TO SHEET C-5 FOR MORE INFORMATION.
3. FOR ACCURATE RIGHT OF WAY DATA, CONTACT RIGHT OF WAY ENGINEERING AT THE DISTRICT OFFICE.

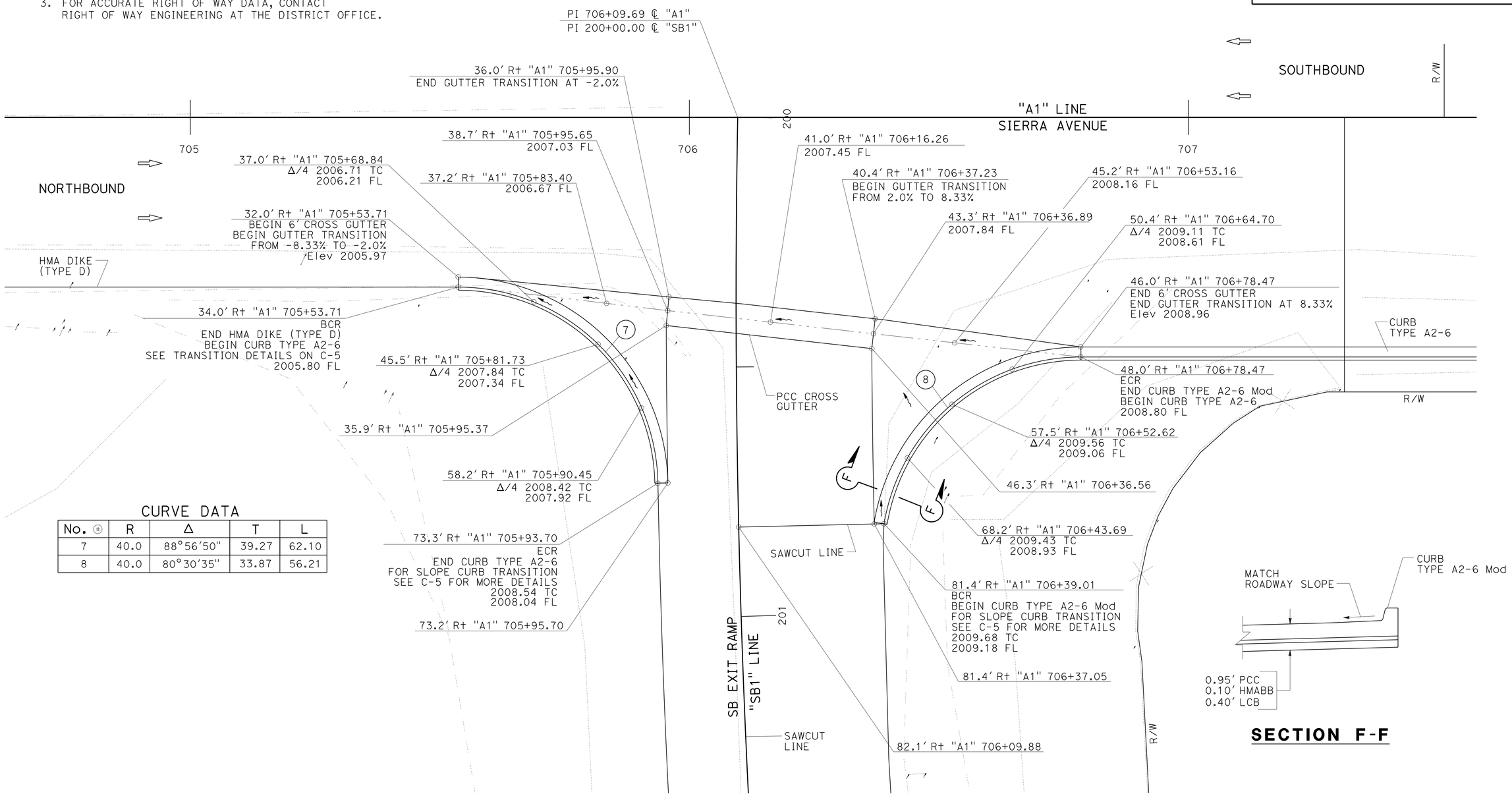

CURVE DATA

No. ⊕	R	Δ	T	L
7	40.0	88°56′50″	39.27	62.10
8	40.0	80°30′35″	33.87	56.21

SIERRA AVENUE
ROUTE 15 SB EXIT RAMP
CURB AND GUTTER DETAIL

CONSTRUCTION DETAILS
NO SCALE

C-4

STATE OF CALIFORNIA - DEPARTMENT OF TRANSPORTATION
Caltrans® DESIGN

FUNCTIONAL SUPERVISOR: SERGIO E. AVILA
CALCULATED-DESIGNED BY: TSUNG WANG
CHECKED BY: SIDHARTHA CHOWDHURY
REVISED BY
DATE REVISED

LAST REVISION 05-07-13
DATE PLOTTED => 26-AUG-2013
TIME PLOTTED => 14:30

Dist	COUNTY	ROUTE	POST MILES TOTAL PROJECT	SHEET No.	TOTAL SHEETS
08	SBd	15	12.8	17	122

REGISTERED CIVIL ENGINEER 5-7-13 DATE

8-19-13
PLANS APPROVAL DATE

REGISTERED PROFESSIONAL ENGINEER SERGIO E. AVILA No. 60951 Exp. 12-31-14 CIVIL STATE OF CALIFORNIA

THE STATE OF CALIFORNIA OR ITS OFFICERS OR AGENTS SHALL NOT BE RESPONSIBLE FOR THE ACCURACY OR COMPLETENESS OF SCANNED COPIES OF THIS PLAN SHEET.

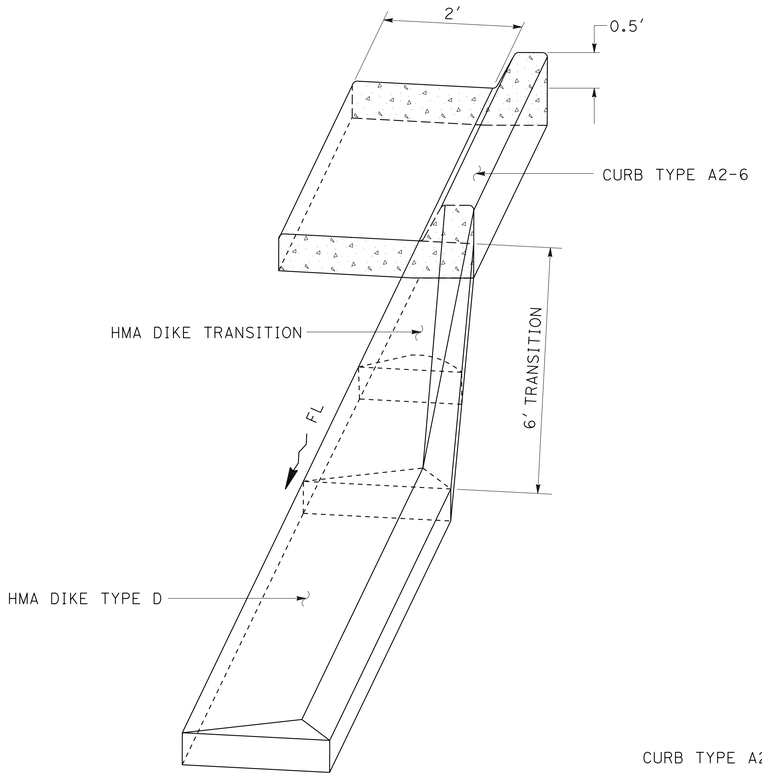

CURB TO HMA DIKE (TYPE D) TRANSITION DETAIL NB SIERRA AVENUE

STA 699+61.47, 700+58.35, & 705+53.71

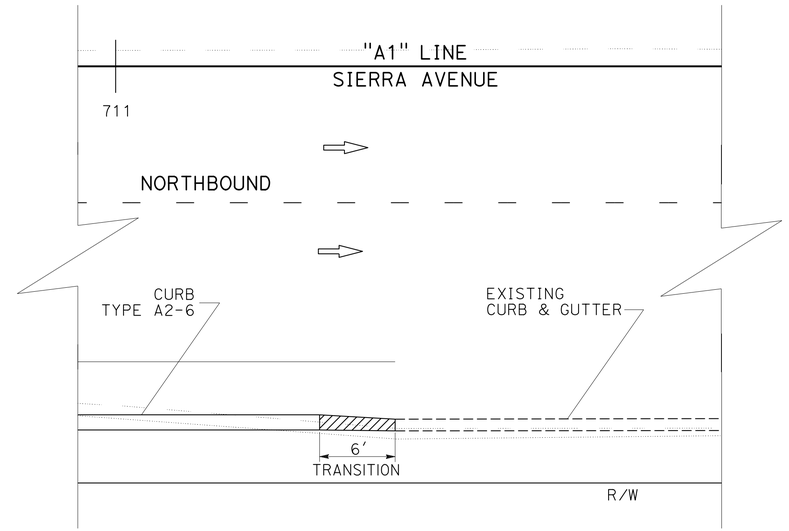

CURB TRANSITION NB SIERRA AVENUE

STA 711+29.92 TO 711+35.92

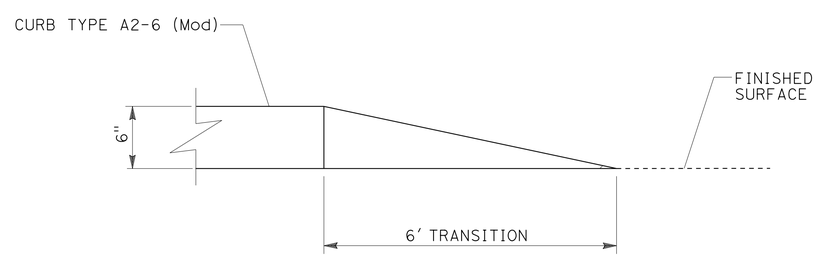

SLOPE CURB TRANSITION DETAIL

STA 699+25.34, 699+51.33, 705+93.70, & 706+39.01

CONSTRUCTION DETAILS

NO SCALE

C-5

STATE OF CALIFORNIA - DEPARTMENT OF TRANSPORTATION
Caltrans DESIGN

FUNCTIONAL SUPERVISOR: SERGIO E. AVILA
CALCULATED-DESIGNED BY: TSUNG WANG
CHECKED BY: SIDHARTHA CHOWDHURY
REVISED BY
DATE REVISED

LAST REVISION 05-07-13
DATE PLOTTED => 26-AUG-2013
TIME PLOTTED => 14:30

Dist	COUNTY	ROUTE	POST MILES TOTAL PROJECT	SHEET No.	TOTAL SHEETS
08	SBd	15	12.8	18	122

REGISTERED CIVIL ENGINEER 5-7-13 DATE

8-19-13
PLANS APPROVAL DATE

REGISTERED PROFESSIONAL ENGINEER SERGIO E. AVILA No. 60951 Exp. 12-31-14 CIVIL STATE OF CALIFORNIA

THE STATE OF CALIFORNIA OR ITS OFFICERS OR AGENTS SHALL NOT BE RESPONSIBLE FOR THE ACCURACY OR COMPLETENESS OF SCANNED COPIES OF THIS PLAN SHEET.

NOTE:

1. REFER TO 2010 CT STD PLAN P1 AND P18 FOR LONGITUDINAL AND TRANSVERSE JOINTS PATTERNS, SPACING INTERVALS, AND ADDITIONAL PAVING DETAILS.

LEGEND:

- ISOLATION JOINT WITHOUT TIE BARS
- TRANSVERSE JOINT WITH DOWEL BARS
- LONGITUDINAL JOINT WITH TIE BARS

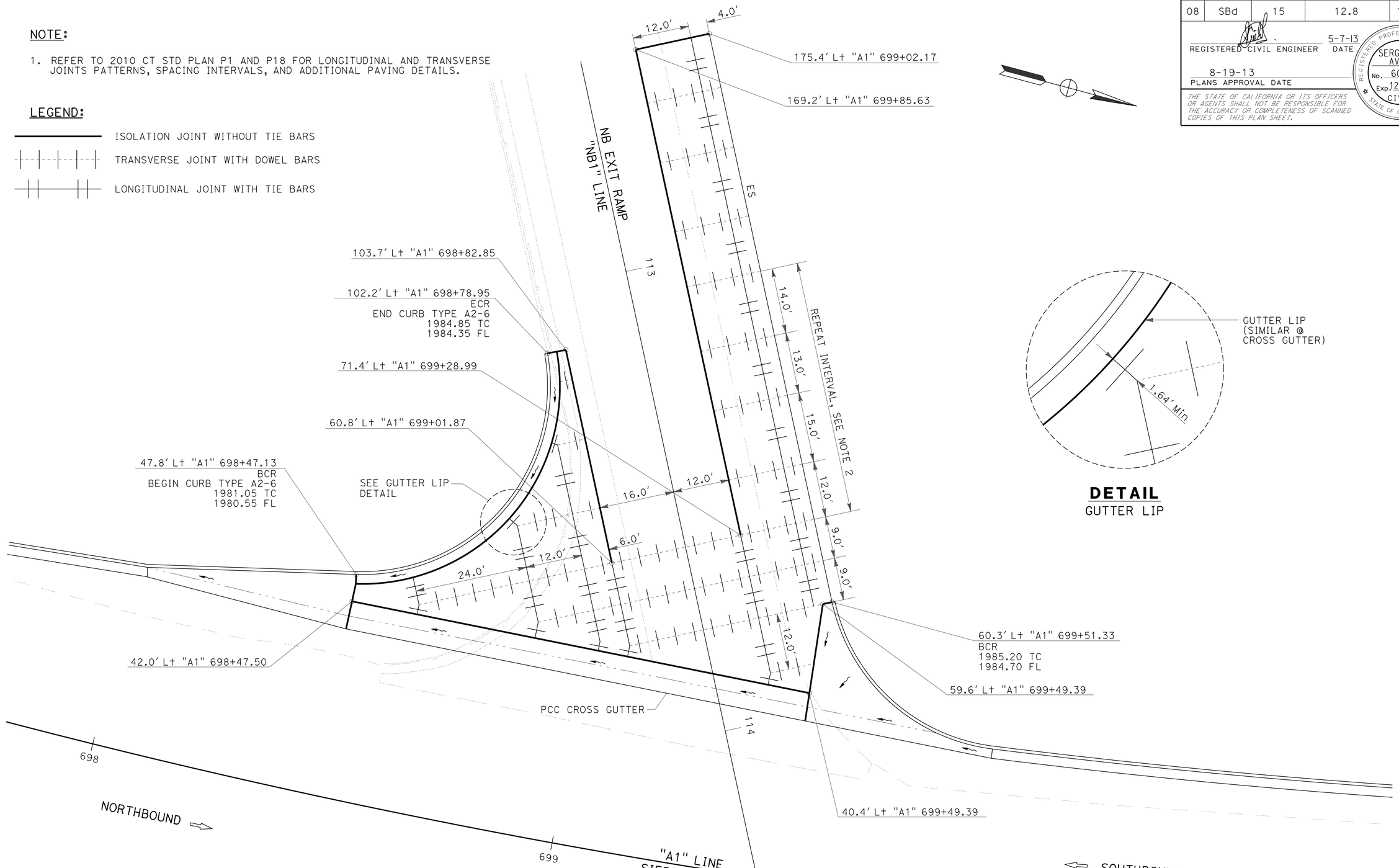

SIERRA Ave, ROUTE 15 NB EXIT RAMP
LONGITUDINAL & TRANSVERSE JOINT DETAILS

CONSTRUCTION DETAILS
NO SCALE

C-6

STATE OF CALIFORNIA - DEPARTMENT OF TRANSPORTATION
Caltrans DESIGN

FUNCTIONAL SUPERVISOR: SERGIO E. AVILA
CALCULATED-DESIGNED BY: TSUNG WANG
CHECKED BY: SIDHARTHA CHOWDHURY
REVISED BY
DATE REVISED

LAST REVISION 05-07-13
DATE PLOTTED => 26-AUG-2013
TIME PLOTTED => 14:30

Dist	COUNTY	ROUTE	POST MILES TOTAL PROJECT	SHEET No.	TOTAL SHEETS
08	SBd	15	12.8	19	122

REGISTERED CIVIL ENGINEER 5-7-13 DATE

8-19-13
PLANS APPROVAL DATE

REGISTERED PROFESSIONAL ENGINEER SERGIO E. AVILA No. 60951 Exp. 12-31-14 CIVIL STATE OF CALIFORNIA

THE STATE OF CALIFORNIA OR ITS OFFICERS OR AGENTS SHALL NOT BE RESPONSIBLE FOR THE ACCURACY OR COMPLETENESS OF SCANNED COPIES OF THIS PLAN SHEET.

NOTE:

1. REFER TO 2010 CT STD PLN P1 AND P18 FOR LONGITUDINAL AND TRANSVERSE JOINTS PATTERNS, SPACING INTERVALS, AND ADDITIONAL PAVING DETAILS.
2. FOR ACCURATE RIGHT OF WAY DATA, CONTACT RIGHT OF WAY ENGINEERING AT THE DISTRICT OFFICE.

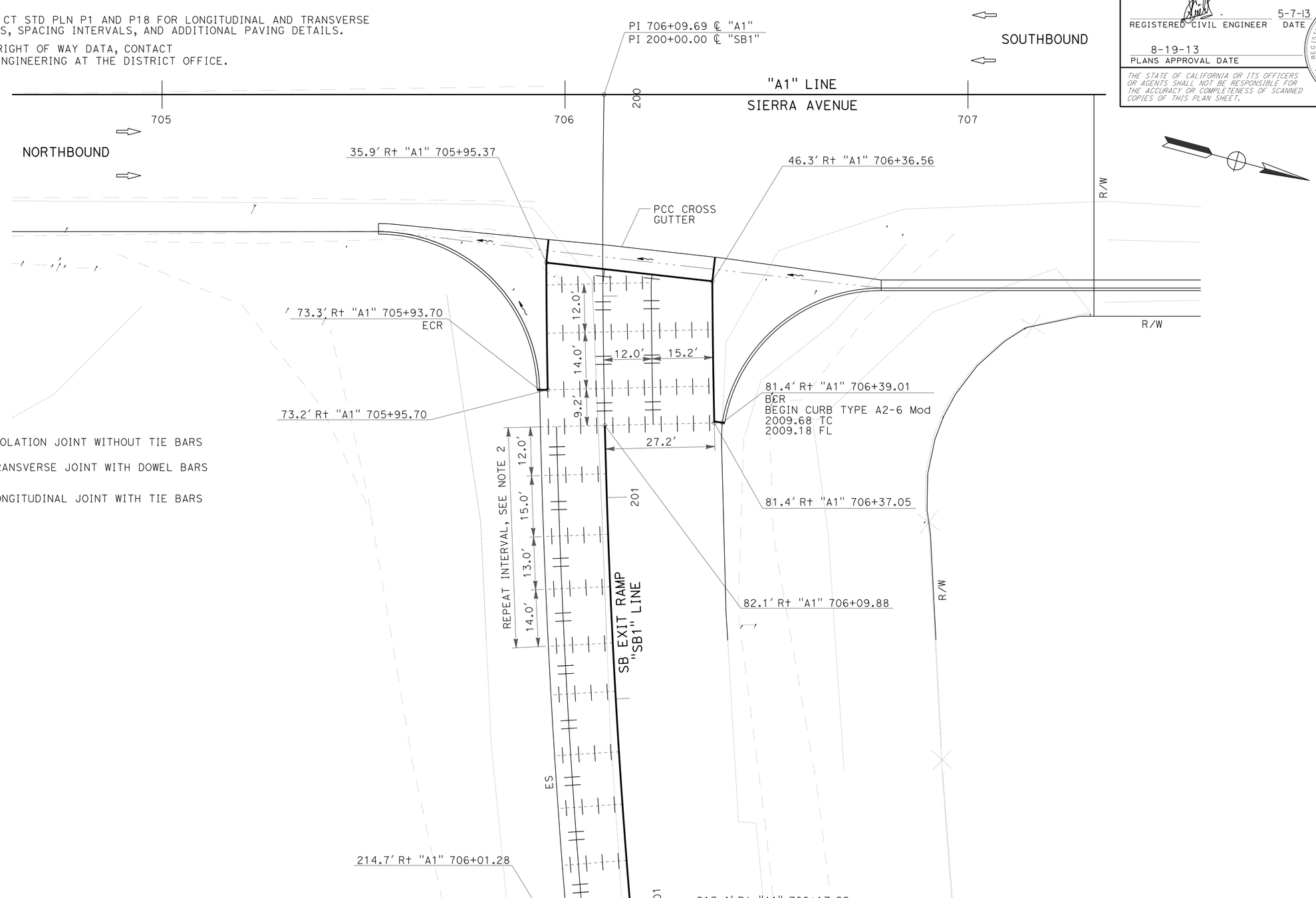

LEGEND:

ISOLATION JOINT WITHOUT TIE BARS

TRANSVERSE JOINT WITH DOWEL BARS

LONGITUDINAL JOINT WITH TIE BARS

SIERRA Ave, ROUTE 15 SB EXIT RAMP
LONGITUDINAL & TRANSVERSE JOINT DETAILS

CONSTRUCTION DETAILS
NO SCALE

C-7

REVISED BY | DATE REVISED
TSUNG WANG | SIDHARTHA CHOWDHURY
CALCULATED-DESIGNED BY | CHECKED BY
FUNCTIONAL SUPERVISOR | SERGIO E. AVILA
STATE OF CALIFORNIA - DEPARTMENT OF TRANSPORTATION
Caltrans® DESIGN

LAST REVISION 05-07-13 | DATE PLOTTED => 26-AUG-2013 | TIME PLOTTED => 14:30

Dist	COUNTY	ROUTE	POST MILES TOTAL PROJECT	SHEET No.	TOTAL SHEETS
08	SBd	15	12.8	20	122

LICENSED LANDSCAPE ARCHITECT

8-19-13
PLANS APPROVAL DATE

LICENSED LANDSCAPE ARCHITECT
Matthew Perry Hall No. 6360
Signature
10-31-13
Renewal Date
12-12-12
Date
STATE OF CALIFORNIA

THE STATE OF CALIFORNIA OR ITS OFFICERS OR AGENTS SHALL NOT BE RESPONSIBLE FOR THE ACCURACY OR COMPLETENESS OF SCANNED COPIES OF THIS PLAN SHEET.

NOTE:

FOR ACCURATE RIGHT OF WAY DATA, CONTACT
RIGHT OF WAY ENGINEERING AT THE DISTRICT OFFICE.

LEGEND:

EROSION CONTROL (TYPE 1)

EROSION CONTROL (TYPE 2)

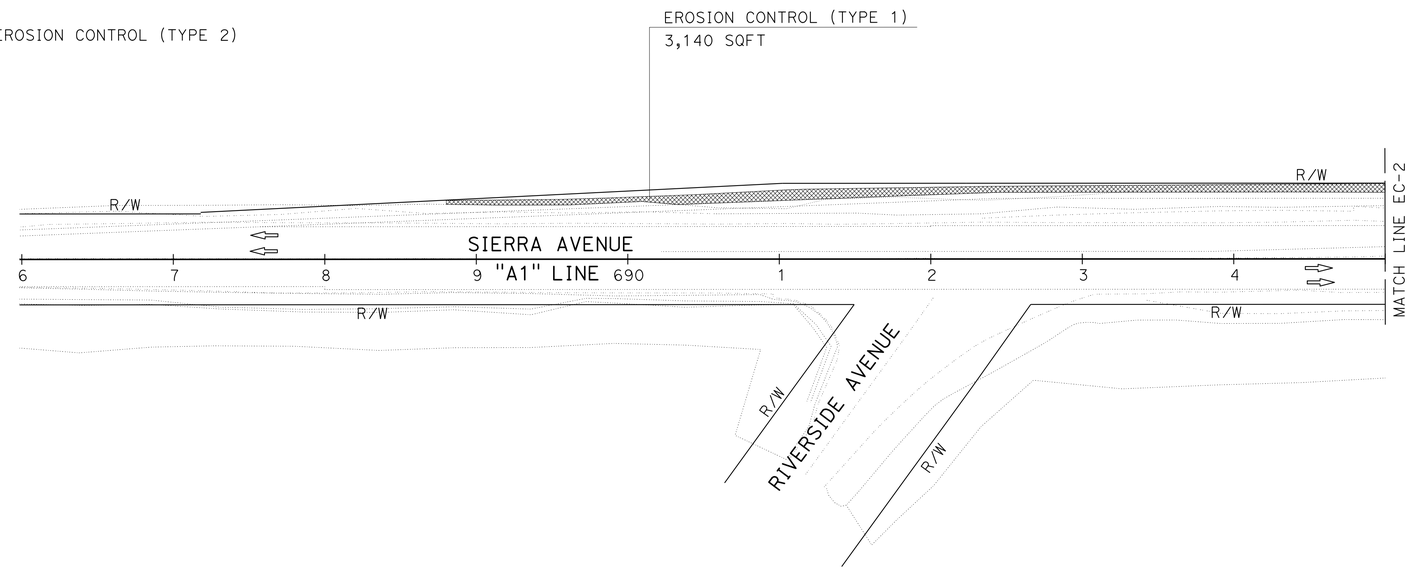

SEED MIX

SEED	BOTANICAL NAME (COMMON NAME)	PERCENT GERMINATION (MINIMUM)	POUNDS PURE LIVE SEED PER ACRE (SLOPE MEASUREMENT)
MIX 1	Eriogonum fasciculatum (California Buckwheat)	50	0.5
	Eriophyllum confertiflorum (Golden Yarrow)	30	0.50
	Eschscholzia californica (California Poppy)	40	3.0
	Lasthenia californica (Dwarf goldfields)	30	0.10
	Lupinus bicolor (Miniature lupine)	40	4.0
	Lupinus truncatus (Nuttall)	20	4.00
	Lotus scoparius (Deerweed)	30	1.0
	Plantago Erecta (California Plantain)	40	1.0
		TOTAL	14.10

EROSION CONTROL QUANTITIES

TYPE	COMPOST (SQFT)	HYDROSEED (SQFT)	RECP (SQFT)
EROSION CONTROL (TYPE 1)		30,702	
EROSION CONTROL (TYPE 2)	3,000	3,000	3,000
TOTAL	3,000	33,702	3,000

EROSION CONTROL (TYPE 1)

SEQUENCE	BID ITEM	MATERIALS		APPLICATION RATE
		DESCRIPTION	TYPE	
1	HYDROSEED	SEED	MIX 1	14.10 LBS/ACRE
		FIBER	WOOD	1200 LBS/ACRE
		TACKIFIER	BFM	30 LBS/ACRE

EROSION CONTROL (TYPE 2)

SEQUENCE	BID ITEM	MATERIALS		APPLICATION RATE
		DESCRIPTION	TYPE	
1	COMPOST	-	-	2" DEEP
2	HYDROSEED	SEED	MIX 1	14.10 LBS/ACRE
		FIBER	WOOD	1200 LBS/ACRE
		TACKIFIER	BFM	30 LBS/ACRE
3	RECP	EC NETTING	NETTING	-

EROSION CONTROL PLAN

SCALE: 1" = 50'

EC-1

APPROVED FOR EROSION CONTROL WORK ONLY

REVISED BY | DATE REVISED
LORENA SALVADOR | MATTHEW HALL
CALCULATED-DESIGNED BY | CHECKED BY
SENIOR LANDSCAPE ARCHITECT
BYRON STROUT
STATE OF CALIFORNIA - DEPARTMENT OF TRANSPORTATION
Caltrans LANDSCAPE ARCHITECTURE A

LAST REVISION 12-12-12 | DATE PLOTTED => 26-AUG-2013 | TIME PLOTTED => 14:30

Dist	COUNTY	ROUTE	POST MILES TOTAL PROJECT	SHEET No.	TOTAL SHEETS
08	SBd	15	12.8	21	122

LICENSED LANDSCAPE ARCHITECT

8-19-13
PLANS APPROVAL DATE

LICENSED LANDSCAPE ARCHITECT
Matthew Perry Hall No. 5350
Signature
10-31-13
Renewal Date
12-12-12
Date
STATE OF CALIFORNIA

THE STATE OF CALIFORNIA OR ITS OFFICERS OR AGENTS SHALL NOT BE RESPONSIBLE FOR THE ACCURACY OR COMPLETENESS OF SCANNED COPIES OF THIS PLAN SHEET.

NOTE:

FOR ACCURATE RIGHT OF WAY DATA, CONTACT RIGHT OF WAY ENGINEERING AT THE DISTRICT OFFICE.

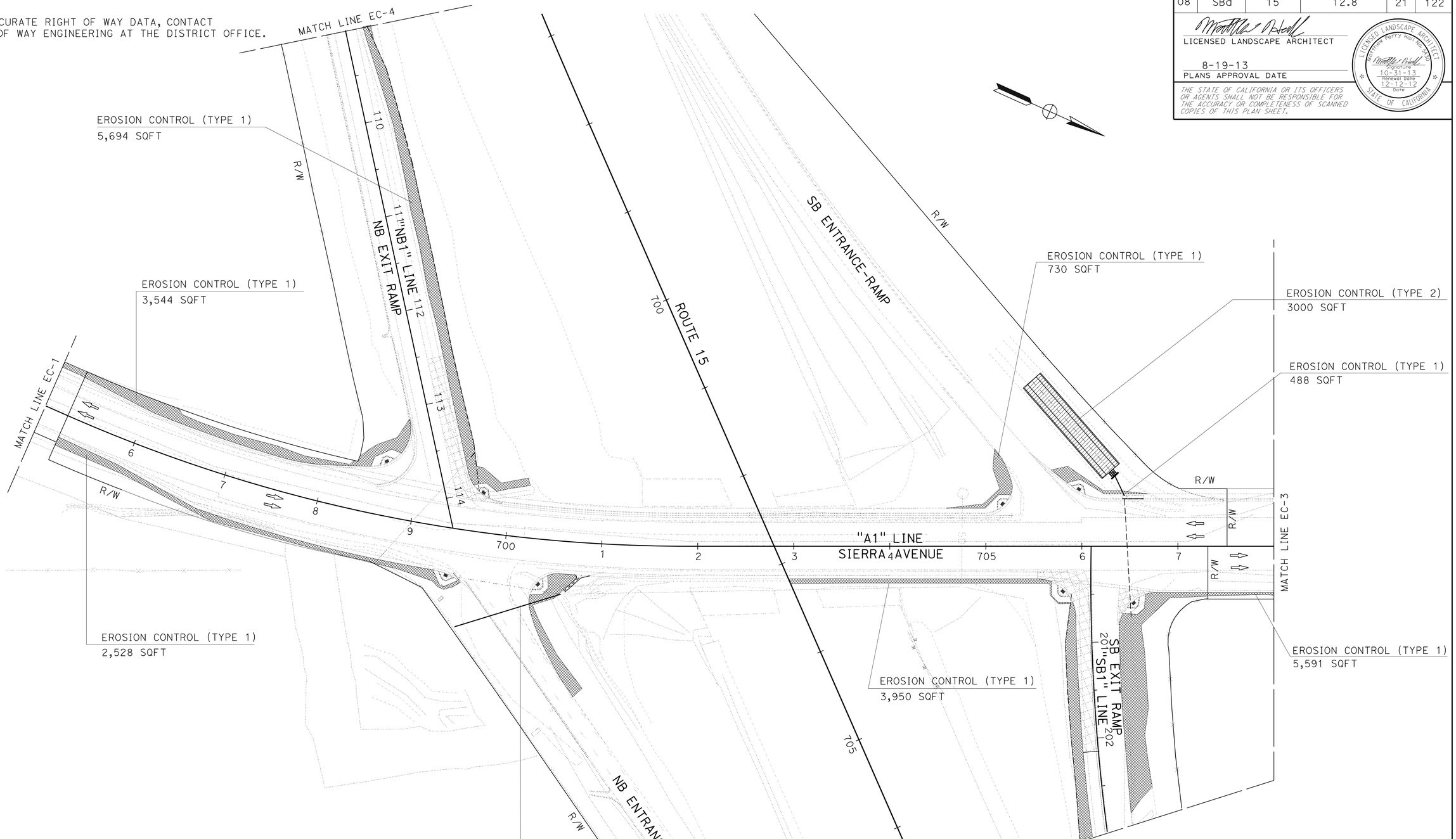

EROSION CONTROL PLAN

SCALE: 1" = 50'

EC-2

APPROVED FOR EROSION CONTROL WORK ONLY

REVISED BY	
DATE REVISED	
LORENA SALVADOR	
MATTHEW HALL	
CALCULATED-DESIGNED BY	
CHECKED BY	
SENIOR LANDSCAPE ARCHITECT	
BYRON STROUT	

STATE OF CALIFORNIA - DEPARTMENT OF TRANSPORTATION
Caltrans® LANDSCAPE ARCHITECTURE A

LAST REVISION 12-12-12
DATE PLOTTED => 26-AUG-2013
TIME PLOTTED => 14:44

Dist	COUNTY	ROUTE	POST MILES TOTAL PROJECT	SHEET No.	TOTAL SHEETS
08	SBd	15	12.8	22	122

LICENSED LANDSCAPE ARCHITECT

8-19-13
PLANS APPROVAL DATE

LICENSED LANDSCAPE ARCHITECT
Matthew Perry Hall No. 6360
Signature
10-31-13
Renewal Date
12-12-12
Date
STATE OF CALIFORNIA

THE STATE OF CALIFORNIA OR ITS OFFICERS OR AGENTS SHALL NOT BE RESPONSIBLE FOR THE ACCURACY OR COMPLETENESS OF SCANNED COPIES OF THIS PLAN SHEET.

NOTE:

FOR ACCURATE RIGHT OF WAY DATA, CONTACT
RIGHT OF WAY ENGINEERING AT THE DISTRICT OFFICE.

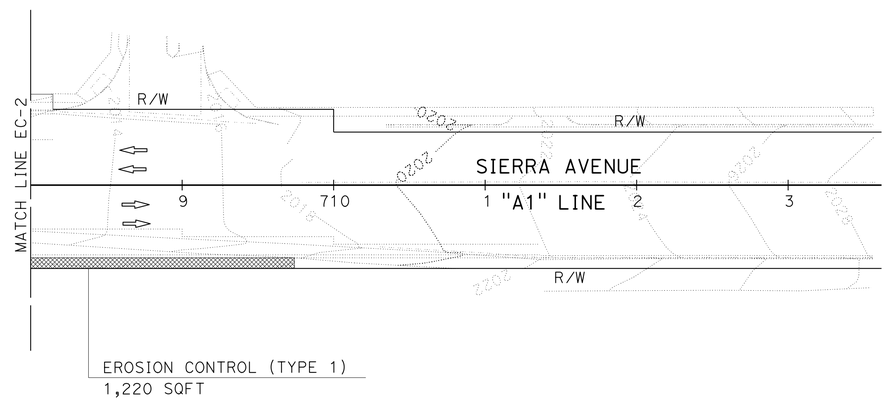

EROSION CONTROL PLAN

SCALE: 1" = 50'

EC-3

APPROVED FOR EROSION CONTROL WORK ONLY

STATE OF CALIFORNIA - DEPARTMENT OF TRANSPORTATION
Caltrans® LANDSCAPE ARCHITECTURE A

SENIOR LANDSCAPE ARCHITECT: BYRON STROUT
CALCULATED-DESIGNED BY: LORENA SALVADOR
CHECKED BY: MATTHEW HALL
REVISED BY
DATE REVISED

LAST REVISION 12-12-12
DATE PLOTTED => 26-AUG-2013
TIME PLOTTED => 14:44

Dist	COUNTY	ROUTE	POST MILES TOTAL PROJECT	SHEET No.	TOTAL SHEETS
08	SBd	15	12.8	23	122

LICENSED LANDSCAPE ARCHITECT

8-19-13
PLANS APPROVAL DATE

LICENSED LANDSCAPE ARCHITECT
Matthew Perry Hall No. 6360
Signature
10-31-13
Renewal Date
12-12-12
Date
STATE OF CALIFORNIA

THE STATE OF CALIFORNIA OR ITS OFFICERS OR AGENTS SHALL NOT BE RESPONSIBLE FOR THE ACCURACY OR COMPLETENESS OF SCANNED COPIES OF THIS PLAN SHEET.

NOTE:

FOR ACCURATE RIGHT OF WAY DATA, CONTACT
RIGHT OF WAY ENGINEERING AT THE DISTRICT OFFICE.

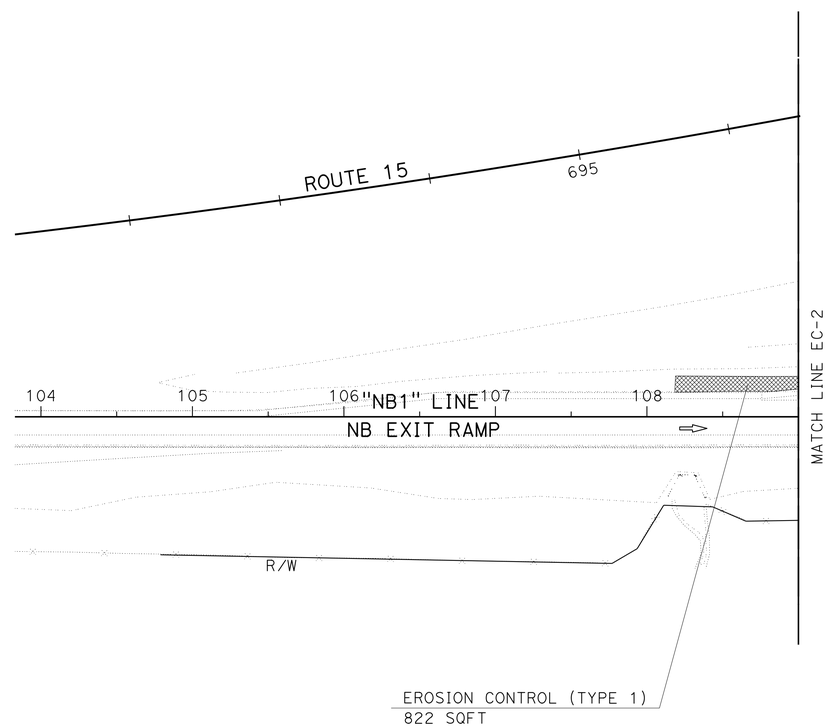

APPROVED FOR EROSION CONTROL WORK ONLY

EROSION CONTROL PLAN

SCALE: 1" = 50'

EC-4

STATE OF CALIFORNIA - DEPARTMENT OF TRANSPORTATION
Caltrans LANDSCAPE ARCHITECTURE A

SENIOR LANDSCAPE ARCHITECT: BYRON STROUT
CALCULATED-DESIGNED BY: LORENA SALVADOR
CHECKED BY: MATTHEW HALL
REVISED BY
DATE REVISED

LAST REVISION 12-12-12
DATE PLOTTED => 26-AUG-2013
TIME PLOTTED => 14:48

Dist	COUNTY	ROUTE	POST MILES TOTAL PROJECT	SHEET No.	TOTAL SHEETS
08	SBd	15	12.8	24	122

LICENSED LANDSCAPE ARCHITECT

8-19-13
PLANS APPROVAL DATE

LICENSED LANDSCAPE ARCHITECT
Matthew Perry Hall No. 6360
Signature
10-31-13
Renewal Date
12-12-12
Date
STATE OF CALIFORNIA

THE STATE OF CALIFORNIA OR ITS OFFICERS OR AGENTS SHALL NOT BE RESPONSIBLE FOR THE ACCURACY OR COMPLETENESS OF SCANNED COPIES OF THIS PLAN SHEET.

NOTE:

FOR ACCURATE RIGHT OF WAY DATA, CONTACT
RIGHT OF WAY ENGINEERING AT THE DISTRICT OFFICE.

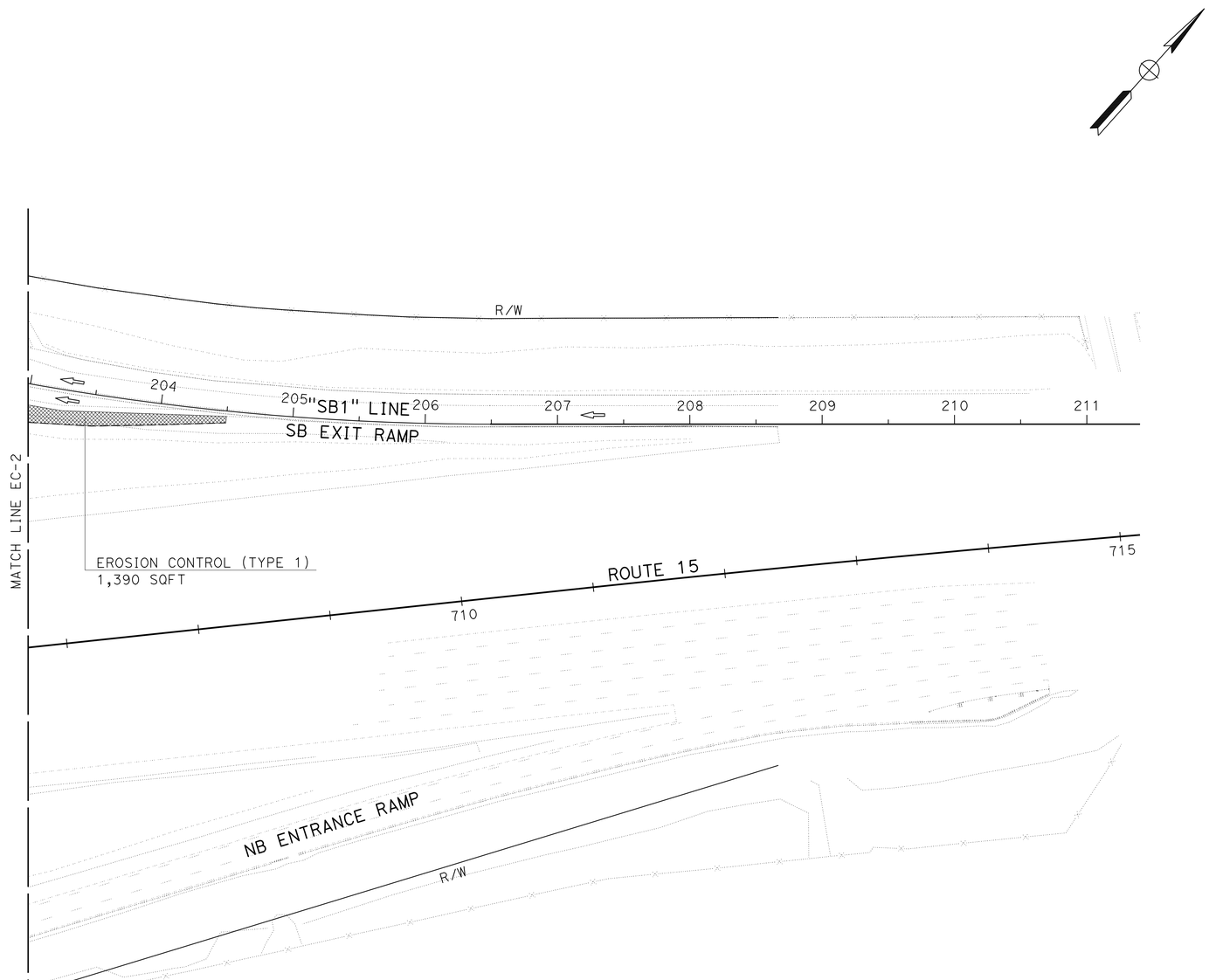

EROSION CONTROL PLAN

SCALE: 1" = 50'

EC-5

APPROVED FOR EROSION CONTROL WORK ONLY

STATE OF CALIFORNIA - DEPARTMENT OF TRANSPORTATION
Caltrans LANDSCAPE ARCHITECTURE A

SENIOR LANDSCAPE ARCHITECT: BYRON STROUT
CALCULATED-DESIGNED BY: LORENA SALVADOR
CHECKED BY: MATTHEW HALL
REVISED BY
DATE REVISED

LAST REVISION 12-12-12
DATE PLOTTED => 26-AUG-2013
TIME PLOTTED => 14:45

Dist	COUNTY	ROUTE	POST MILES TOTAL PROJECT	SHEET No.	TOTAL SHEETS
08	SBd	15	12.8	25	122

REGISTERED CIVIL ENGINEER — DATE 12-12-12

PLANS APPROVAL DATE 8-19-13

REGISTERED PROFESSIONAL ENGINEER SIDHARTHA CHOWDHURRY No. 55418 Exp. 12-31-12 CIVIL STATE OF CALIFORNIA

THE STATE OF CALIFORNIA OR ITS OFFICERS OR AGENTS SHALL NOT BE RESPONSIBLE FOR THE ACCURACY OR COMPLETENESS OF SCANNED COPIES OF THIS PLAN SHEET.

STORM DRAIN IMPROVEMENT NOTES

1. ALL WORK SHALL BE IN ACCORDANCE WITH THESE PLANS, CALTRANS AND THE CITY OF FONTANA STANDARD PLANS, THE CONTRACT SPECIAL PROVISIONS AND THE STANDARD SPECIFICATIONS FOR PUBLIC WORKS CONSTRUCTION ("GREEN BOOK"). ALL REFERENCE SPECIFICATIONS AND STANDARDS SHALL BE THE LATEST EDITION UNLESS OTHERWISE NOTED.
2. WHEN A TECHNICAL CONFLICT IS FOUND TO EXIST IN THE CONTRACT DOCUMENTS THAT CAN NOT BE RESOLVED BY REFERENCE TO PRECEDENCE PROVISIONS IN THE SPECIAL PROVISIONS, THE CONTRACTOR SHALL IMMEDIATELY REPORT SAID CONFLICT TO THE ENGINEER FOR RESOLUTION.
3. ALL MATERIALS AND METHODS ARE SUBJECT TO THE APPROVAL OF THE ENGINEER.
4. ADVANCE CONSTRUCTION SIGNING INDICATING DURATION OF PROJECT SHALL BE IN PLACE ONE WEEK PRIOR OF THE BEGINNING OF CONSTRUCTION.
5. CONSTRUCTION PERMITS SHALL BE OBTAINED FROM THE CITY OF FONTANA COMMUNITY DEVELOPMENT DEPARTMENT, ENGINEERING DIVISION PRIOR TO THE START OF ANY WORK. INSPECTION COORDINATION SHALL BE REQUESTED AT LEAST TWO WORKING DAYS PRIOR TO THE START OF ANY WORK IN PUBLIC RIGHT-OF-WAY WITHIN THE CITY LIMITS. CALL (909) 350-7610.
6. THE CONTRACTOR SHALL CONFORM TO ALL TRAFFIC CONTROL POLICIES, METHODS AND PROCEDURES DESCRIBED IN THE STATE OF CALIFORNIA MANUAL OF TRAFFIC CONTROLS, LATEST NON-METRIC EDITION UNLESS OTHERWISE DIRECTED BY THE ENGINEER.
7. IT SHALL BE THE RESPONSIBILITY OF THE CONTRACTOR TO MAINTAIN BARRICADES, DELINEATORS OR OTHER TRAFFIC CONTROL DEVICES AT ALL TIMES.
8. THE CONTRACTOR SHALL OBTAIN A PERMIT TO PERFORM EXCAVATION OR TRENCH WORK FOR TRENCHES 5 FEET OR GREATER IN DEPTH FROM THE CALIFORNIA STATE DIVISION OF INDUSTRIAL SAFETY.
9. THE WALLS AND FACES OF ALL EXCAVATIONS GREATER THAN FIVE (5) FEET IN DEPTH SHALL BE GUARDED BY SHORING, SLOPING OF THE GROUND OR OTHER APPROVED MEANS PURSUANT TO THE REQUIREMENTS OF THE DIVISION OF INDUSTRIAL SAFETY OF THE STATE OF CALIFORNIA. TRENCHES LESS THAN FIVE (5) FEET SHALL ALSO BE GUARDED WHEN THE POTENTIAL EXISTS FOR GROUND MOVEMENT.
10. NO MATERIAL OR EQUIPMENT SHALL BE STORED IN THE PUBLIC RIGHT OF WAY WITHOUT OBTAINING A SEPARATE PERMIT FOR THAT PURPOSE.
11. THE LOCATIONS OF UTILITIES SHOWN HAVE BEEN DETERMINED FROM AVAILABLE INFORMATION, HOWEVER, IT SHALL BE THE RESPONSIBILITY OF THE CONTRACTOR TO DETERMINE, IN THE FIELD, THE TRUE LOCATION AND ELEVATION OF ANY EXISTING UTILITIES, AND TO EXERCISE PROPER PRECAUTION TO AVOID DAMAGE THERETO. THE CONTRACTOR SHALL CONTACT UNDERGROUND SERVICE ALERT AT 1-800-227-2600 TWO WORKING DAYS BEFORE EXCAVATION.
12. THE CONTRACTOR SHALL COORDINATE CONSTRUCTION WITH ALL UTILITY COMPANIES INCLUDING, BUT NOT LIMITED TO, GAS, TELEPHONE, ELECTRIC, CABLE TELEVISION, LANDSCAPING, LANDSCAPE IRRIGATION, DOMESTIC WATER, RECLAIMED WATER, SEWER, STORM DRAIN, FLOOD CONTROL AND CALTRANS. ALL UTILITY COMPANIES SHALL BE GIVEN TWO WORKING DAYS NOTICE PRIOR TO WORK AROUND THEIR FACILITIES.
13. THE CONTRACTOR SHALL NOT OPERATE ANY FIRE HYDRANT OR WATER MAIN VALVES WITHOUT APPROPRIATE AGENCY AUTHORIZATION. CONTRACTOR SHALL COORDINATE WITH THE APPROPRIATE WATER COMPANY FOR VALVE OPERATION AND WATER REQUIREMENTS.
14. STATIONING REFERS TO THE CENTERLINE OF SIERRA AVENUE EXCEPT WHERE OTHERWISE NOTED.
15. ADEQUATE CONSTRUCTION CONTROL STAKES SHALL BE SET BY THE ENGINEER TO ENABLE THE CONTRACTOR TO CONSTRUCT THE WORK TO THE PLAN GRADES. THE CONTRACTOR SHALL BE RESPONSIBLE FOR THE PRESERVATION OF BENCHMARKS AND CONSTRUCTION CONTROL STAKING DURING CONSTRUCTION.
16. THE CONTRACTOR SHALL NOT DISTURB EXISTING SURVEY MONUMENTS, MONUMENT TIES OR BENCH MARKS WITHOUT PRIOR NOTIFICATION TO THE ENGINEER.
17. BIOSWALE NO BS-1 AND BS-2 ARE BUILT BY OTHERS. EXACT LOCATIONS TO DETERMINE BY OTHERS.

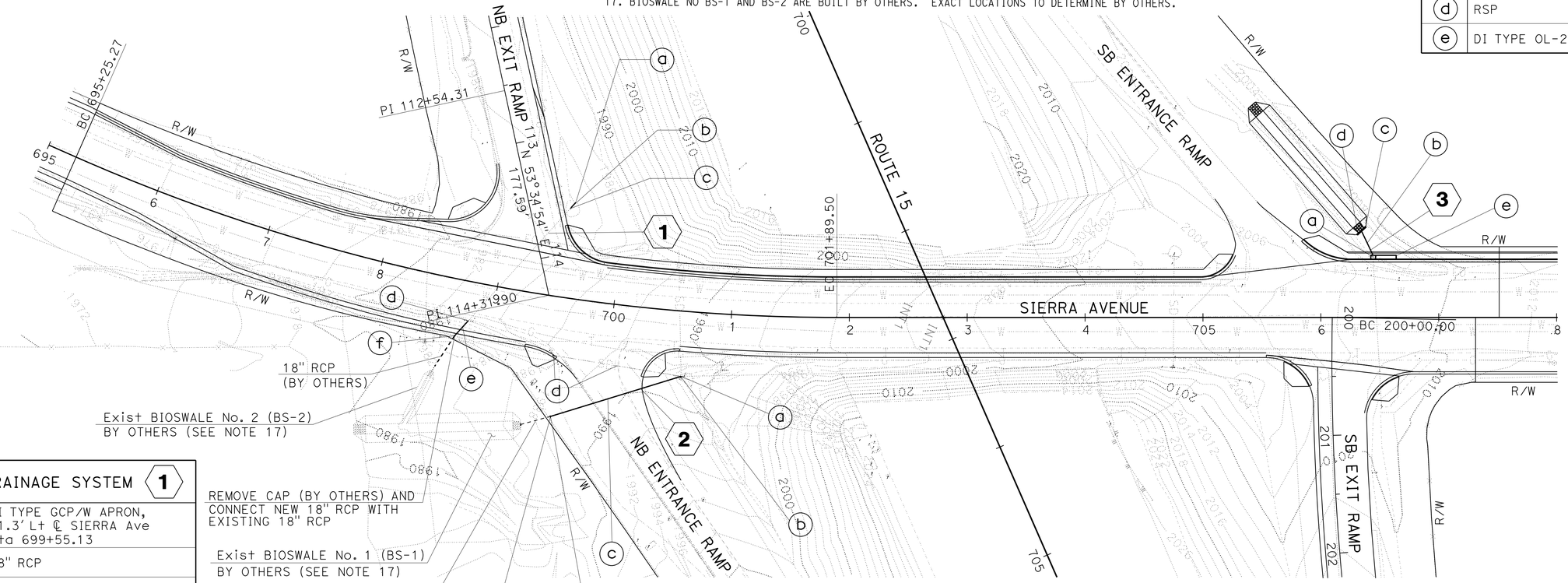

UNIT	DRAINAGE SYSTEM 1
a	DI TYPE GCP/W APRON, 81.3' Lt ℄ SIERRA Ave Sta 699+55.13
b	18" RCP
c	REMOVE EXISTING DI
d	REMOVE HEADWALL
e	18" RCP
f	CONCRETE COLLAR No.1 48' Rt ℄ SIERRA Ave Sta 698+72.41

UNIT	DRAINAGE SYSTEM 2
a	DI TYPE G2 W/APRON
b	REMOVE EXISTING DI
c	36" RCP
d	REMOVE HEADWALL, ABANDON PIPE
e	CONCRETE COLLAR

UNIT	DRAINAGE SYSTEM 3
a	REMOVE HEADWALL
b	24" RCP
c	HEADWALL, 73.4' Lt Sta 706+34.40 ℄ SIERRA Ave
d	RSP
e	DI TYPE OL-21

NOTE:

FOR ACCURATE RIGHT OF WAY DATA, CONTACT RIGHT OF WAY ENGINEERING AT THE DISTRICT OFFICE.

APPROVED FOR DRAINAGE WORK ONLY

DRAINAGE PLAN

SCALE: 1" = 50'

D-1

STATE OF CALIFORNIA - DEPARTMENT OF TRANSPORTATION

Caltrans

DESIGN

FUNCTIONAL SUPERVISOR: SERGIO E. AVILA

CALCULATED-DESIGNED BY: TSUNG WANG

CHECKED BY: SIDHARTHA CHOWDHURY

REVISED BY / DATE REVISED

LAST REVISION 12-12-12 | DATE PLOTTED => 26-AUG-2013 | TIME PLOTTED => 14:45

Dist	COUNTY	ROUTE	POST MILES TOTAL PROJECT	SHEET No.	TOTAL SHEETS
08	SBd	15	12.8	26	122

REGISTERED CIVIL ENGINEER 12-12-12 DATE

8-19-13
PLANS APPROVAL DATE

REGISTERED PROFESSIONAL ENGINEER SIDHARTHA CHOWDHURRY No. 55418 Exp. 12-31-12 CIVIL STATE OF CALIFORNIA

THE STATE OF CALIFORNIA OR ITS OFFICERS OR AGENTS SHALL NOT BE RESPONSIBLE FOR THE ACCURACY OR COMPLETENESS OF SCANNED COPIES OF THIS PLAN SHEET.

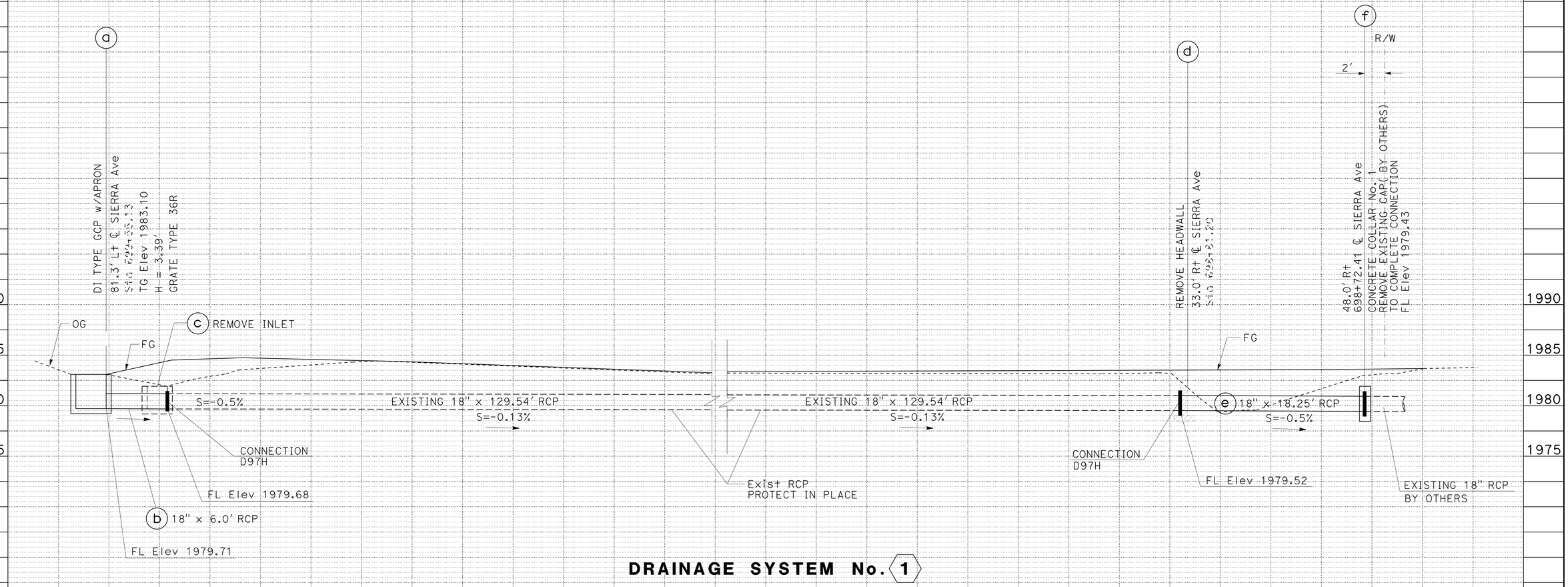

DRAINAGE SYSTEM No. 1

DRAINAGE PROFILE

SCALE: 1" = 5'

DP-1

STATION		
CY	Exc	
	Emb	

TOTAL

STATE OF CALIFORNIA - DEPARTMENT OF TRANSPORTATION
Caltrans DESIGN

FUNCTIONAL SUPERVISOR: SERGIO E. AVILA
CALCULATED-DESIGNED BY: TSUNG WANG
CHECKED BY: SIDHARTHA CHOWDHURY
REVISED BY / DATE REVISED

LAST REVISION DATE PLOTTED => 26-AUG-2013
12-12-12 TIME PLOTTED => 14:45

Dist	COUNTY	ROUTE	POST MILES TOTAL PROJECT	SHEET No.	TOTAL SHEETS
08	SBd	15	12.8	27	122

Sidhartha Chowdhury 12-12-12
REGISTERED CIVIL ENGINEER DATE

8-19-13
PLANS APPROVAL DATE

REGISTERED PROFESSIONAL ENGINEER
SIDHARTHA CHOWDHURRY
No. 55418
Exp. 12-31-12
CIVIL
STATE OF CALIFORNIA

THE STATE OF CALIFORNIA OR ITS OFFICERS OR AGENTS SHALL NOT BE RESPONSIBLE FOR THE ACCURACY OR COMPLETENESS OF SCANNED COPIES OF THIS PLAN SHEET.

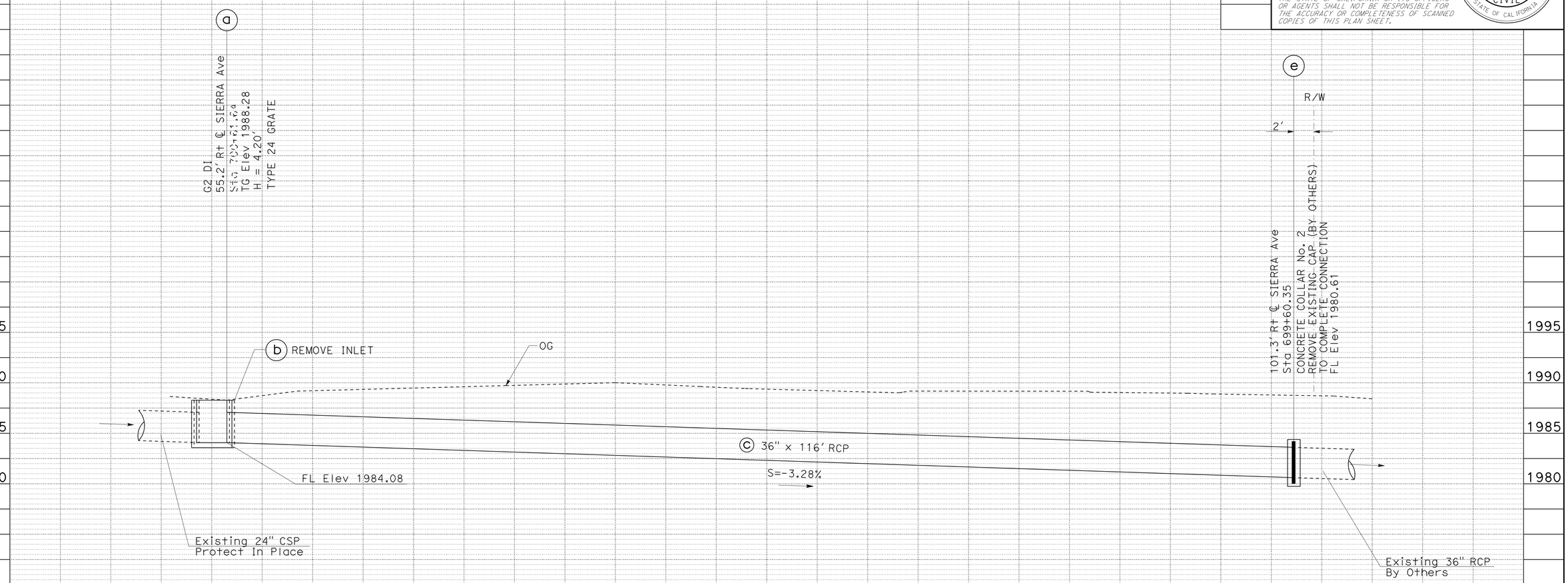

DRAINAGE SYSTEM No. 2

DRAINAGE PROFILE

SCALE: 1" = 5'

DP-2

STATION		TOTAL
CY	Exc	
	Emb	

REVISED BY | DATE REVISED
TSUNG WANG | SIDHARTHA CHOWDHURY
CALCULATED-DESIGNED BY | CHECKED BY
FUNCTIONAL SUPERVISOR
SERGIO E. AVILA

STATE OF CALIFORNIA - DEPARTMENT OF TRANSPORTATION
Caltrans
DESIGN

LAST REVISION 12-12-12
DATE PLOTTED => 26-AUG-2013
TIME PLOTTED => 14:45

Dist	COUNTY	ROUTE	POST MILES TOTAL PROJECT	SHEET No.	TOTAL SHEETS
08	SBd	15	12.8	28	122

REGISTERED CIVIL ENGINEER 12-12-12 DATE

8-19-13
PLANS APPROVAL DATE

REGISTERED PROFESSIONAL ENGINEER
SIDHARTHA CHOWDHURRY
No. 55418
Exp. 12-31-12
CIVIL
STATE OF CALIFORNIA

THE STATE OF CALIFORNIA OR ITS OFFICERS OR AGENTS SHALL NOT BE RESPONSIBLE FOR THE ACCURACY OR COMPLETENESS OF SCANNED COPIES OF THIS PLAN SHEET.

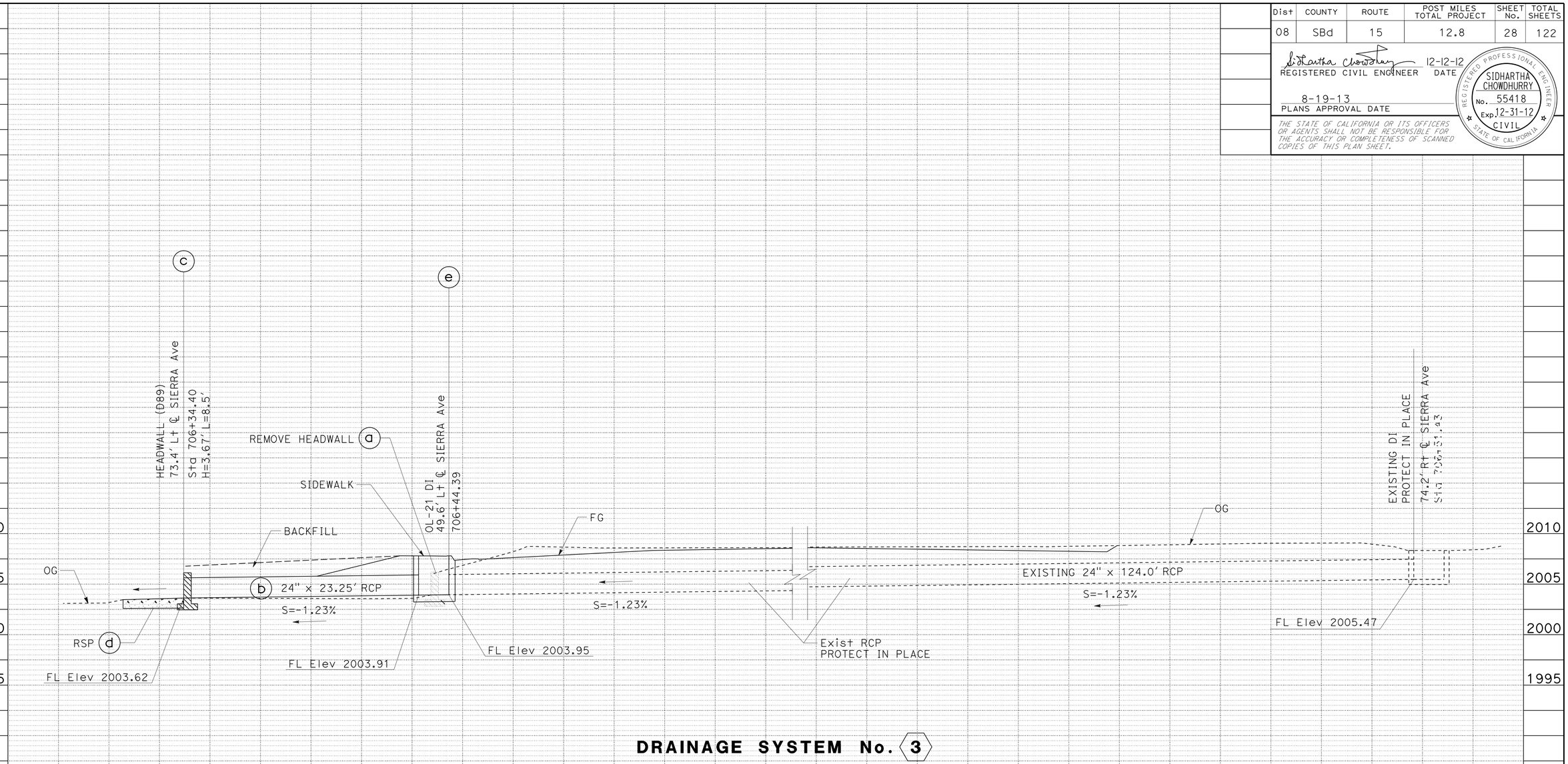

DRAINAGE SYSTEM No. 3

DRAINAGE PROFILE

SCALE: 1" = 5'

DP-3

STATE OF CALIFORNIA - DEPARTMENT OF TRANSPORTATION
Caltrans® DESIGN

FUNCTIONAL SUPERVISOR: SERGIO E. AVILA
CALCULATED-DESIGNED BY: TSUNG WANG
CHECKED BY: SIDHARTHA CHOWDHURY
REVISED BY
DATE REVISED

STATION		TOTAL
CY	Exc	
	Emb	

LAST REVISION 12-12-12
DATE PLOTTED => 26-AUG-2013
TIME PLOTTED => 14:45

Dist	COUNTY	ROUTE	POST MILES TOTAL PROJECT	SHEET No.	TOTAL SHEETS
08	SBd	15	12.8	29	122

REGISTERED CIVIL ENGINEER 12-12-12 DATE

8-19-13
PLANS APPROVAL DATE

REGISTERED PROFESSIONAL ENGINEER
SIDHARTHA CHOWDHURRY
No. 55418
Exp. 12-31-12
CIVIL
STATE OF CALIFORNIA

THE STATE OF CALIFORNIA OR ITS OFFICERS OR AGENTS SHALL NOT BE RESPONSIBLE FOR THE ACCURACY OR COMPLETENESS OF SCANNED COPIES OF THIS PLAN SHEET.

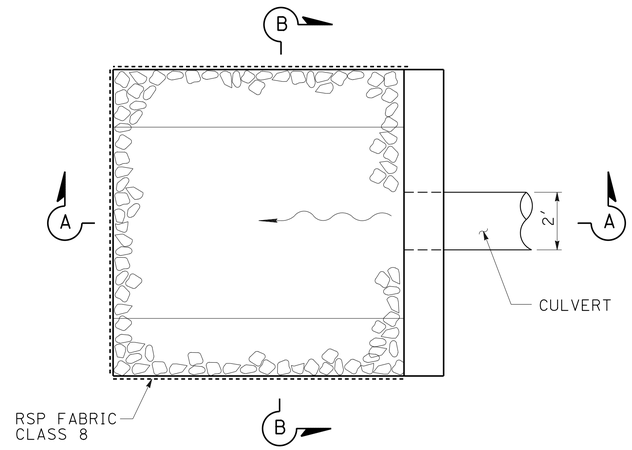

PLAN VIEW

ROCK SLOPE PROTECTION AT PIPE OUTLET

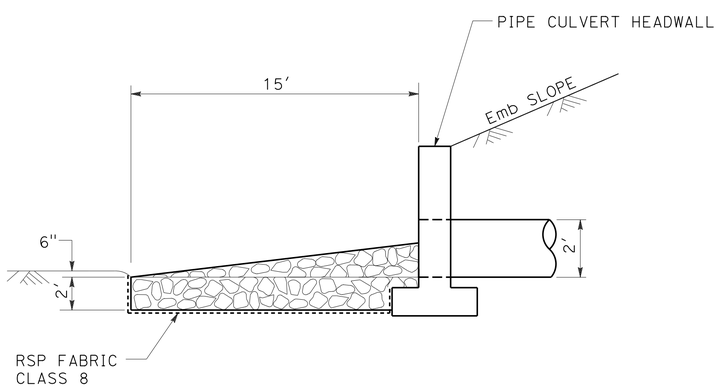

SECTION A-A

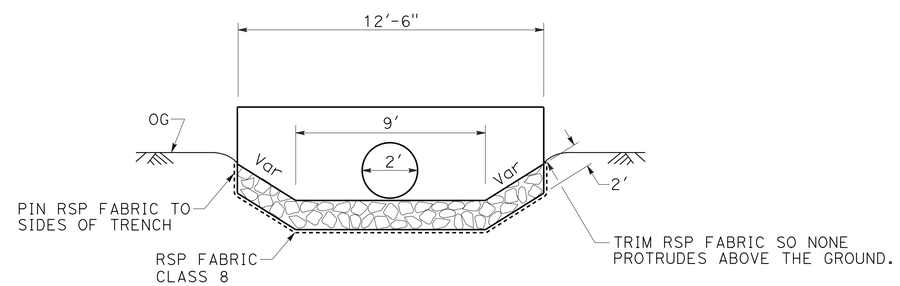

SECTION B-B

DRAINAGE DETAIL

NO SCALE

DD-1

STATE OF CALIFORNIA - DEPARTMENT OF TRANSPORTATION
Caltrans®
DESIGN

FUNCTIONAL SUPERVISOR: SERGIO E. AVILA
CALCULATED-DESIGNED BY: TSUNG WANG
CHECKED BY: SIDHARTHA CHOWDHURY
REVISED BY
DATE REVISED

LAST REVISION 12-12-12
DATE PLOTTED => 26-AUG-2013
TIME PLOTTED => 14:45

Dist	COUNTY	ROUTE	POST MILES TOTAL PROJECT	SHEET No.	TOTAL SHEETS
08	SBd	15	12.8	30	122

REGISTERED CIVIL ENGINEER 12-12-12 DATE

8-19-13
PLANS APPROVAL DATE

REGISTERED PROFESSIONAL ENGINEER SIDHARTHA CHOWDHURRY No. 55418 Exp. 12-31-12 CIVIL STATE OF CALIFORNIA

THE STATE OF CALIFORNIA OR ITS OFFICERS OR AGENTS SHALL NOT BE RESPONSIBLE FOR THE ACCURACY OR COMPLETENESS OF SCANNED COPIES OF THIS PLAN SHEET.

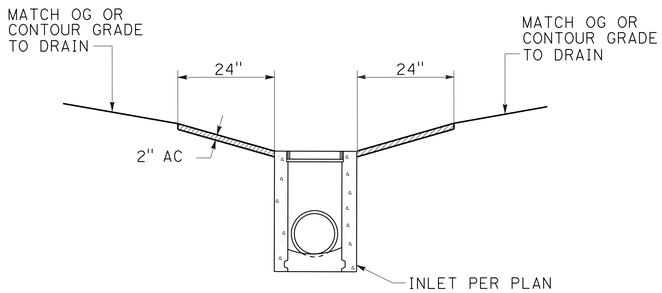

SECTION B-B

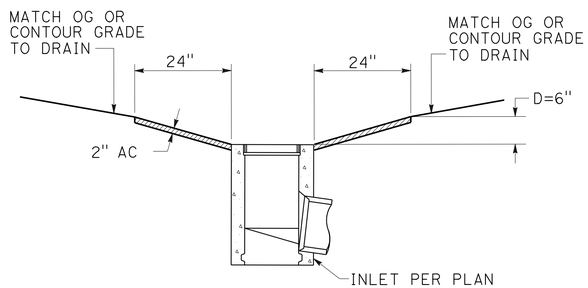

SECTION A-A

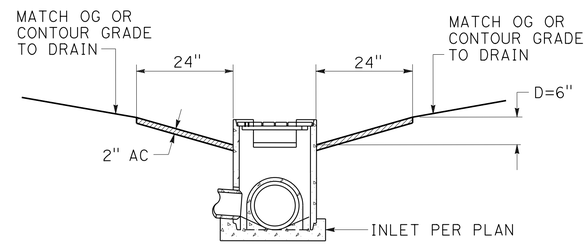

SECTION C-C

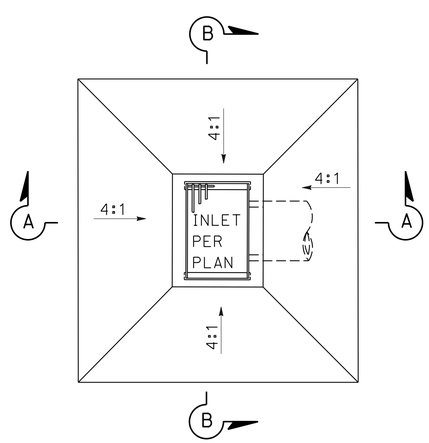

PLAN RECTANGULAR

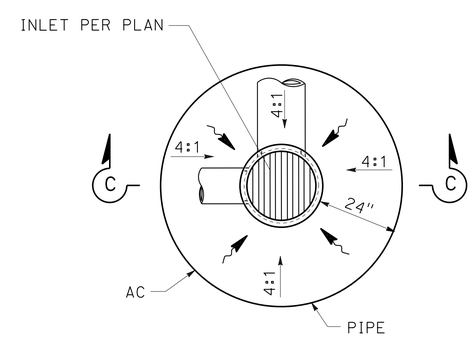

PLAN CIRCULAR

INLET APRON

DRAINAGE DETAIL
NO SCALE
DD-2

STATE OF CALIFORNIA - DEPARTMENT OF TRANSPORTATION
Caltrans® **DESIGN**
FUNCTIONAL SUPERVISOR: SERGIO E. AVILA
CALCULATED-DESIGNED BY: TSUNG WANG
CHECKED BY: SIDHARTHA CHOWDHURY
REVISED BY
DATE REVISED

LAST REVISION 12-12-12
DATE PLOTTED => 26-AUG-2013
TIME PLOTTED => 14:45

Dist	COUNTY	ROUTE	POST MILES TOTAL PROJECT	SHEET No.	TOTAL SHEETS
08	SBd	15	12.8	31	122

REGISTERED CIVIL ENGINEER 12-12-12 DATE

8-19-13
PLANS APPROVAL DATE

REGISTERED PROFESSIONAL ENGINEER SIDHARTHA CHOWDHURRY No. 55418 Exp. 12-31-12 CIVIL STATE OF CALIFORNIA

THE STATE OF CALIFORNIA OR ITS OFFICERS OR AGENTS SHALL NOT BE RESPONSIBLE FOR THE ACCURACY OR COMPLETENESS OF SCANNED COPIES OF THIS PLAN SHEET.

NOTES:

1. A CONCRETE COLLAR IS REQUIRED WHERE A NEW PIPE IS CONNECTED WITH AN EXISTING PIPE.
2. WHERE PIPES OF DIFFERENT DIAMETERS ARE JOINED WITH A CONCRETE COLLAR, 'L' AND 'T' SHALL BE THOSE OF THE LARGER PIPE.
3. FOR PIPE SIZE NOT LISTED USE NEXT SIZE LARGER SIZE.
4. OMIT REINFORCING ON PIPES 24" AND LESS IN DIAMETER AND ON ALL PIPES WHERE ANGLE 'A' IS LESS THAN 10°.
5. WHERE REINFORCING IS REQUIRED, THE DIAMETER OF THE CIRCULAR TIES SHALL BE D + (2 X WALL THICKNESS) + 8".
6. CONCRETE COLLARS ARE NEEDED FOR DRAINAGE SYSTEMS 1 AND 2.

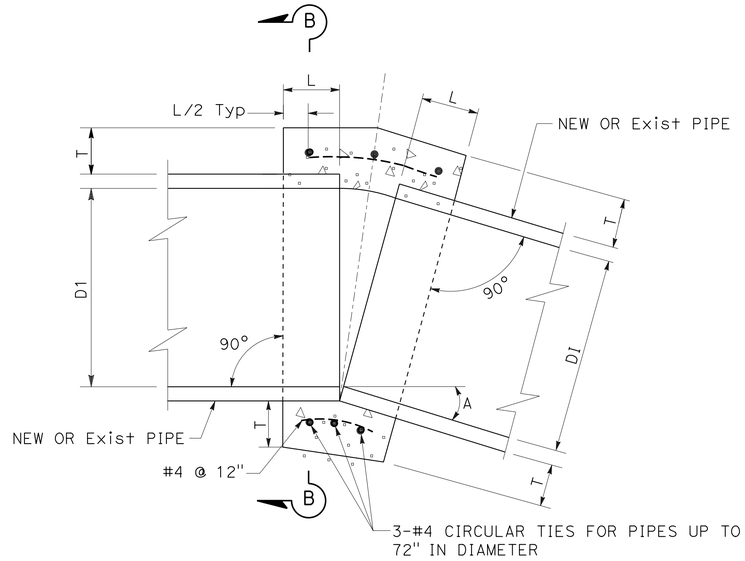

CONCRETE COLLAR DIMENSIONS

D	L	T
18"	12"	5"
24"	12"	6"
36"	18"	8"

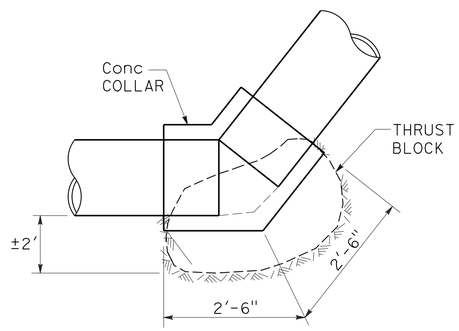

PIPE THRUST BLOCK

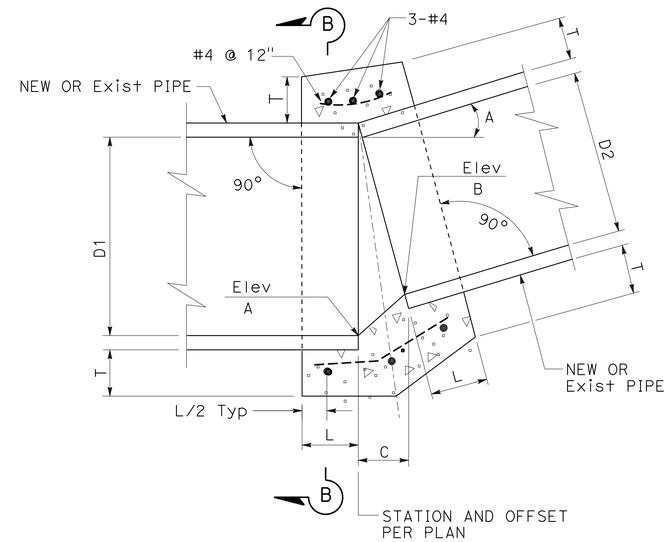

CONCRETE COLLAR (DIFFERENT PIPE DIAMETER)

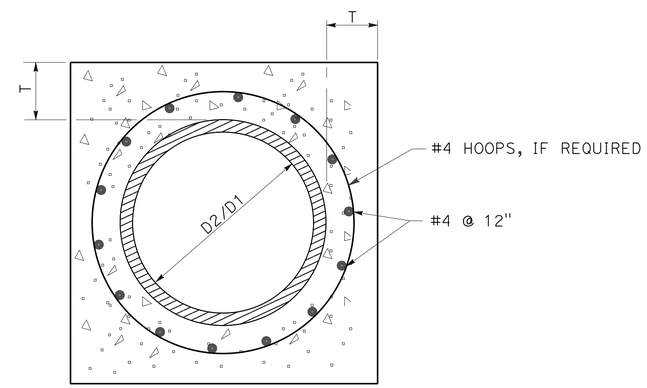

SECTION B-B

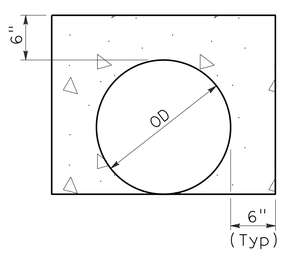

CONCRETE BACKFILL

DRAINAGE DETAIL

NO SCALE

DD-3

STATE OF CALIFORNIA - DEPARTMENT OF TRANSPORTATION
Caltrans® DESIGN

FUNCTIONAL SUPERVISOR: SERGIO E. AVILA
CALCULATED-DESIGNED BY: TSUNG WANG
CHECKED BY: SIDHARTHA CHOWDHURY
REVISED BY
DATE REVISED

LAST REVISION 12-12-12 | DATE PLOTTED => 26-AUG-2013 | TIME PLOTTED => 14:41

Dist	COUNTY	ROUTE	POST MILES TOTAL PROJECT	SHEET No.	TOTAL SHEETS
08	SBd	15	12.8	32	122

REGISTERED CIVIL ENGINEER 12-12-12 DATE

8-19-13
PLANS APPROVAL DATE

REGISTERED PROFESSIONAL ENGINEER SIDHARTHA CHOWDHURRY No. 55418 Exp. 12-31-12 CIVIL STATE OF CALIFORNIA

THE STATE OF CALIFORNIA OR ITS OFFICERS OR AGENTS SHALL NOT BE RESPONSIBLE FOR THE ACCURACY OR COMPLETENESS OF SCANNED COPIES OF THIS PLAN SHEET.

DRAINAGE QUANTITIES

DRAINAGE SHEET No.	DRAINAGE SYSTEM No. ⬡	DRAINAGE UNIT No. ○	REMOVE INLET EA	(N) SALVAGE EXISTING FRAME & GRATE EA	REMOVE HEADWALL EA	18" RCP LF	24" RCP LF	36" RCP LF	MINOR CONCRETE (MINOR STRUCTURE) HDWL CY	MINOR CONCRETE (MINOR STRUCTURE) DI CY	Misc IRON AND STEEL LB	RSP FABRIC (CLASS 8) SQYD	RSP (LIGHT, METHOD B) CY	(N) HEIGHT OF INLET "H" LF	(N) MAXIMUM PIPE COVER LF	(N) FRAME AND GRATE EA	(N) ABANDON PIPE LF	SAND BACKFILL CY	DESCRIPTION	STATION	DRAINAGE SHEET No.	DRAINAGE SYSTEM No. ⬡	DRAINAGE UNIT No. ○
D-1	1														3.39				TYPE GCP DI	81.3' Lt ℄ 699+55.13	D-1	1	
		a				3.0				0.55	236			3.39		1			TYPE GCP DI/36R GRATE w/Apron				a
		b				6.0													18" RCP				b
		c	1	1															REMOVE INLET				c
		d			1														REMOVE HEADWALL	33' Rt ℄ 698+81.20			d
		e				19.0													18" RCP				e
		f																	CONCRETE COLLAR No. 1	48' Rt ℄ 698+72.41			f
D-1	2														4.20				TYPE G2 DI	55.3' Rt ℄ 700+60.25	D-1	2	
		a								1.55	263			4.20		1			TYPE G2 DI/24-9 GRATE w/APRON	55.2' Rt ℄ 700+61.64			a
		b	1	1															REMOVE INLET				b
		c						116											36" RCP				c
		d			1												116	25.35	REMOVE HEADWALL AND ABANDON PIPE				d
		e																	CONCRETE COLLAR No. 2	101.3' Rt ℄ 699+60.33			e
D-1	3	a			1														REMOVE HEADWALL		D-1	3	a
		b					25.0												24" RCP				b
		c							1.20										HEADWALL	73.4' Lt ℄ 706+34.40			c
		d										42	14						RSP				d
		e								4.7	170								TYPE OL-21 D-1	49.6' Lt ℄ 706+44.39			e
TOTAL			2	2	3	28.0	25.0	116	8.00		669	42	14	7.59	7.59	2	116	25.35					

(N) - NOT A SEPARATE PAY ITEM, FOR INFORMATION ONLY

TSUNG WANG — CALCULATED-DESIGNED BY
SIDHARTHA CHOWDHURY — CHECKED BY
REVISED BY — DATE REVISED
SERGIO E. AVILA — FUNCTIONAL SUPERVISOR

STATE OF CALIFORNIA - DEPARTMENT OF TRANSPORTATION
Caltrans DESIGN

DRAINAGE QUANTITIES
DQ-1

LAST REVISION 12-12-12 | DATE PLOTTED => 26-AUG-2013 | TIME PLOTTED => 14:42

Dist	COUNTY	ROUTE	POST MILES TOTAL PROJECT	SHEET No.	TOTAL SHEETS
08	SBd	15	12.8	33	122

Sidhartha Chowdhury 6-18-13
REGISTERED CIVIL ENGINEER DATE

8-19-13
PLANS APPROVAL DATE

REGISTERED PROFESSIONAL ENGINEER SIDHARTHA CHOWDHURRY No. 55418 Exp. 12-31-14 CIVIL STATE OF CALIFORNIA

THE STATE OF CALIFORNIA OR ITS OFFICERS OR AGENTS SHALL NOT BE RESPONSIBLE FOR THE ACCURACY OR COMPLETENESS OF SCANNED COPIES OF THIS PLAN SHEET.

LEGEND:

SSMH SANITARY SEWER MANHOLE

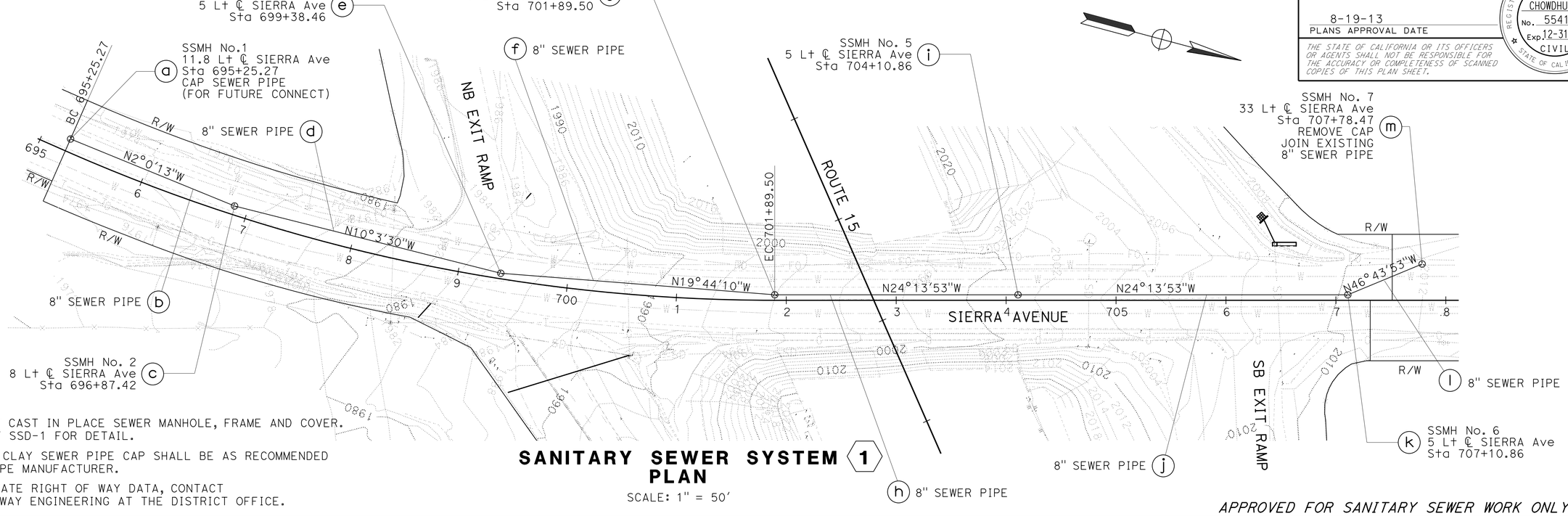

NOTES:

1. CONSTRUCT CAST IN PLACE SEWER MANHOLE, FRAME AND COVER. SEE SHEET SSD-1 FOR DETAIL.
2. VITRIFIED CLAY SEWER PIPE CAP SHALL BE AS RECOMMENDED BY THE PIPE MANUFACTURER.
3. FOR ACCURATE RIGHT OF WAY DATA, CONTACT RIGHT OF WAY ENGINEERING AT THE DISTRICT OFFICE.

SANITARY SEWER SYSTEM 1 PLAN

SCALE: 1" = 50'

APPROVED FOR SANITARY SEWER WORK ONLY

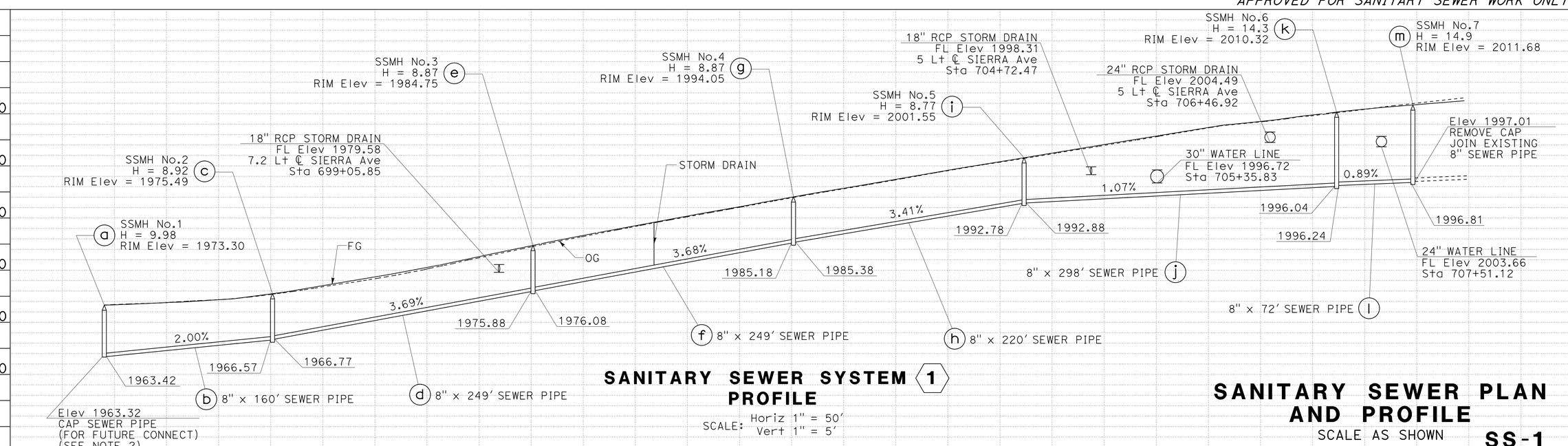

SANITARY SEWER SYSTEM 1 PROFILE

SCALE: Horiz 1" = 50'
Vert 1" = 5'

SANITARY SEWER PLAN AND PROFILE

SCALE AS SHOWN

SS-1

STATION		TOTAL
CY	Exc	
	Emb	

STATE OF CALIFORNIA - DEPARTMENT OF TRANSPORTATION
Caltrans® DESIGN
FUNCTIONAL SUPERVISOR: SERGIO E. AVILA
CALCULATED-DESIGNED BY: TSUNG WANG
CHECKED BY: SIDHARTHA CHOWDHURY
REVISED BY / DATE REVISED

LAST REVISION 06-18-13
DATE PLOTTED => 26-AUG-2013
TIME PLOTTED => 14:42

Dist	COUNTY	ROUTE	POST MILES TOTAL PROJECT	SHEET No.	TOTAL SHEETS
08	SBd	15	12.8	34	122

REGISTERED CIVIL ENGINEER — DATE 12-12-12

8-19-13
PLANS APPROVAL DATE

REGISTERED PROFESSIONAL ENGINEER SIDHARTHA CHOWDHURRY No. 55418 Exp. 12-31-12 CIVIL STATE OF CALIFORNIA

THE STATE OF CALIFORNIA OR ITS OFFICERS OR AGENTS SHALL NOT BE RESPONSIBLE FOR THE ACCURACY OR COMPLETENESS OF SCANNED COPIES OF THIS PLAN SHEET.

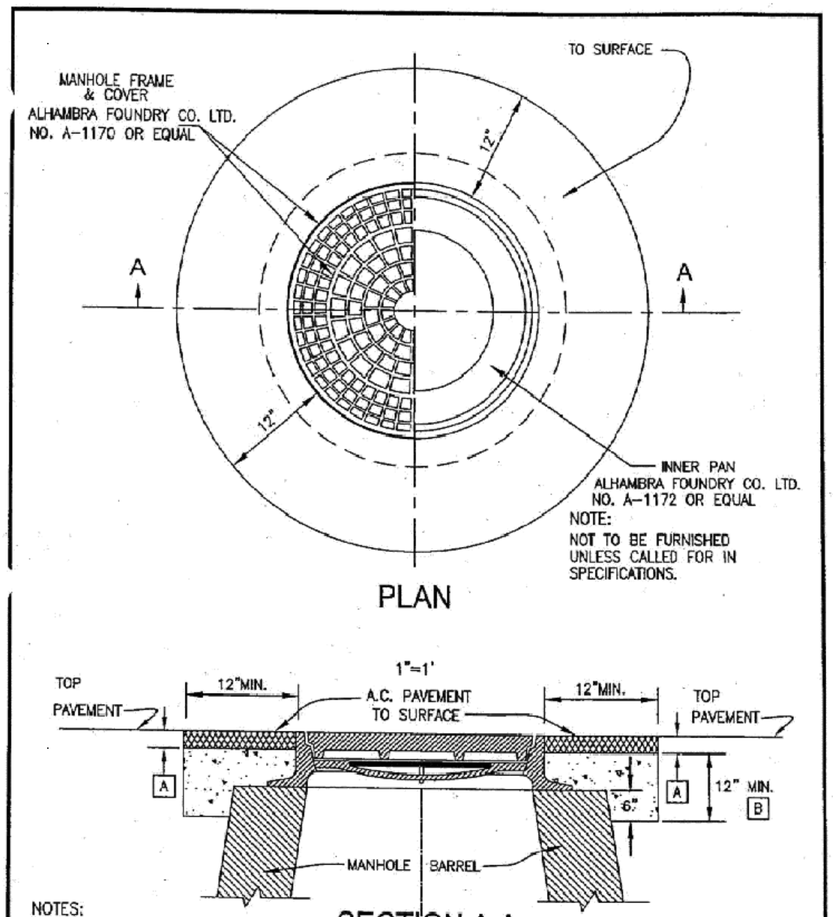

NOTES:

[A] SAME AS EXISTING – 1" MIN.

[B] NO MORE THAN 12" OF GRADE RINGS ALLOWED FOR A MAXIMUM OF 18" FROM TOP OF MANHOLE BARREL. CONCRETE SHALL BE PLACED FROM 2" BELOW GRADE RING TO 2" BELOW MANHOLE BARRELL AND SHALL ENCAPSULATE ALL GRADE RINGS.

REGISTERED PROFESSIONAL ENGINEER RICARDO SANDOVAL No. 51152 EXP. 9/30/07 CIVIL STATE OF CALIFORNIA

APPROVED BY: 10-18-06
CITY ENGINEER — DATE
RICARDO SANDOVAL
REVIEWED BY: DG
REVISION NUMBER:

CITY OF FONTANA

STD. MANHOLE FRAME & COVER AND REINFORCED CONCRETE COLLAR

07/10/06

STD. PLAN NO. 2000 — SHT 1 OF 1

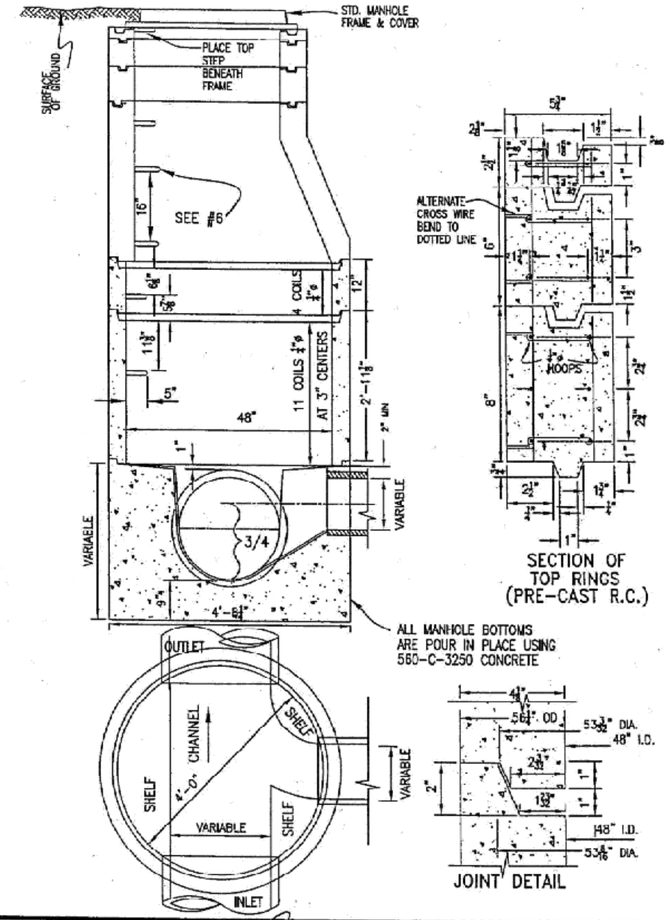

REGISTERED PROFESSIONAL ENGINEER RICARDO SANDOVAL No. 51152 EXP. 9/30/07 CIVIL STATE OF CALIFORNIA

APPROVED BY: 10-18-06
CITY ENGINEER — DATE
RICARDO SANDOVAL
REVIEWED BY: DG
REVISION NUMBER:

CITY OF FONTANA

STANDARD CAST IN PLACE MANHOLE FOR SEWER

07/10/06

STD. PLAN NO. 2001 — SHT 1 OF 2

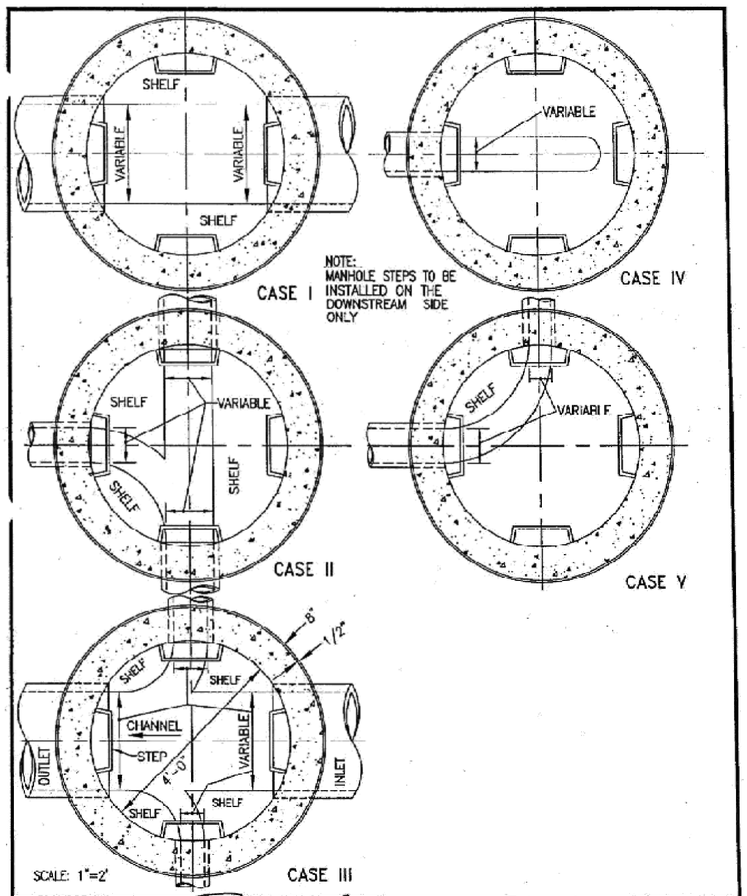

REGISTERED PROFESSIONAL ENGINEER RICARDO SANDOVAL No. 51152 EXP. 9/30/07 CIVIL STATE OF CALIFORNIA

APPROVED BY: 10-18-06
CITY ENGINEER — DATE
RICARDO SANDOVAL
REVIEWED BY: DG
REVISION NUMBER:

CITY OF FONTANA

TYPICAL SEWER MANHOLE BASES

07/10/06

STD. PLAN NO. 2003 — SHT 1 OF 1

NOTE:

1. ECCENTRIC CONE MAY BE USED IN LIEU OF CONCENTRIC CONES.
2. THE LOWEST MANHOLE STEP SHALL BE PLACED NOT LESS THAN 16", NOT MORE THAN 24" ABOVE SHELF.
3. THE UPPER MANHOLE STEP SHALL BE PLACED BETWEEN THE TOP OF THE MAHOLE AND THE MANHOLE COVER FRAME, AND SHALL PROJECT NOT MORE THAN 3" INSIDE MANHOLE.
4. ALL JOINTS SHALL BE MORTARED.
5. ¾" DIAMETER GALVANIZED IRON STEP OR PLASTIC STEPS PER ASTM A-82, ASTM C-478, ASTM TYPE II GRADE 43758.

SANITARY SEWER DETAILS

NO SCALE

SSD-1

STATE OF CALIFORNIA - DEPARTMENT OF TRANSPORTATION
DESIGN
Caltrans

FUNCTIONAL SUPERVISOR: SERGIO E. AVILA
CALCULATED-DESIGNED BY: TSUNG WANG
CHECKED BY: SIDHARTHA CHOWDHURY
REVISED BY
DATE REVISED

LAST REVISION 12-12-12
DATE PLOTTED => 26-AUG-2013
TIME PLOTTED => 14:42

Dist	COUNTY	ROUTE	POST MILES TOTAL PROJECT	SHEET No.	TOTAL SHEETS
08	SBd	15	12.8	35	122

Sidhartha Chowdhury 6-18-13
REGISTERED CIVIL ENGINEER DATE

8-19-13
PLANS APPROVAL DATE

REGISTERED PROFESSIONAL ENGINEER SIDHARTHA CHOWDHURRY No. 55418 Exp. 12-31-14 CIVIL STATE OF CALIFORNIA

THE STATE OF CALIFORNIA OR ITS OFFICERS OR AGENTS SHALL NOT BE RESPONSIBLE FOR THE ACCURACY OR COMPLETENESS OF SCANNED COPIES OF THIS PLAN SHEET.

SANITARY SEWER IMPROVEMENT NOTES

1. ALL WORK SHALL BE IN ACCORDANCE WITH THESE PLANS, THE CITY OF FONTANA STANDARD PLANS, THE CONTRACT PROVISIONS AND THE STANDARD SPECIFICATIONS FOR PUBLIC WORKS CONSTRUCTION ("GREEN BOOK"). ALL REFERENCE SPECIFICATIONS AND STANDARDS SHALL BE THE LATEST EDITION UNLESS OTHERWISE NOTED.
2. WHEN A TECHNICAL CONFLICT IS FOUND TO EXIST IN THE CONTRACT DOCUMENTS THAT CAN NOT BE RESOLVED BY REFERENCE TO PRECEDENCE PROVISIONS IN THE "GREEN BOOK", THE CONTRACTOR SHALL IMMEDIATELY REPORT SAID CONFLICT TO THE ENGINEER FOR RESOLUTION.
3. ALL MATERIALS AND METHODS ARE SUBJECT TO THE APPROVAL OF THE ENGINEER.
4. CONSTRUCTION PERMITS SHALL BE OBTAINED FROM THE CITY OF FONTANA COMMUNITY DEVELOPMENT DEPARTMENT, ENGINEERING DIVISION PRIOR TO THE START OF ANY WORK. INSPECTION COORDINATION SHALL BE REQUESTED AT LEAST TWO WORKING DAYS PRIOR TO THE START OF ANY WORK IN PUBLIC RIGHT-OF-WAY WITHIN THE CITY LIMITS. CALL (909) 350-7610.
5. THE CONTRACTOR SHALL CONFORM TO ALL TRAFFIC CONTROL POLICIES, METHODS AND PROCEDURES DESCRIBED IN THE STATE OF CALIFORNIA MANUAL OF TRAFFIC CONTROLS, LATEST NON-METRIC EDITION UNLESS OTHERWISE DIRECTED BY THE ENGINEER.
6. IT SHALL BE THE RESPONSIBILITY OF THE CONTRACTOR TO MAINTAIN BARRICADES, DELINEATORS OR OTHER TRAFFIC CONTROL DEVICES AT ALL TIMES.
7. THE CONTRACTOR SHALL OBTAIN A PERMIT TO PERFORM EXCAVATION OR TRENCH WORK FOR TRENCHES 5 FEET OR GREATER IN DEPTH FROM THE CALIFORNIA STATE DIVISION OF INDUSTRIAL SAFETY.
8. THE WALLS AND FACES OF ALL EXCAVATIONS GREATER THAN FIVE (5) FEET IN DEPTH SHALL BE GUARDED BY SHORING, SLOPING OF THE GROUND OR OTHER APPROVED MEANS PURSUANT TO THE REQUIREMENTS OF THE DIVISION OF INDUSTRIAL SAFETY OF THE STATE OF CALIFORNIA. TRENCHES LESS THAN FIVE (5) FEET SHALL ALSO BE GUARDED WHEN THE POTENTIAL EXISTS FOR GROUND MOVEMENT.
9. NO MATERIAL OR EQUIPMENT SHALL BE STORED IN THE PUBLIC RIGHT OF WAY WITHOUT OBTAINING A SEPARATE PERMIT FOR THAT PURPOSE.
10. THE LOCATIONS OF UTILITIES SHOWN HAVE BEEN DETERMINED FROM AVAILABLE INFORMATION, HOWEVER, IT SHALL BE THE RESPONSIBILITY OF THE CONTRACTOR TO DETERMINE, IN THE FIELD, THE TRUE LOCATION AND ELEVATION OF ANY EXISTING UTILITIES, AND TO EXERCISE PROPER PRECAUTION TO AVOID DAMAGE THERETO. THE CONTRACTOR SHALL CONTACT UNDERGROUND SERVICE ALERT AT 1-800-227-2600 TWO WORKING DAYS BEFORE EXCAVATION.
11. THE CONTRACTOR SHALL COORDINATE CONSTRUCTION WITH ALL UTILITY COMPANIES INCLUDING, BUT NOT LIMITED TO, GAS, TELEPHONE, ELECTRIC, CABLE TELEVISION, LANDSCAPING, LANDSCAPE IRRIGATION, DOMESTIC WATER, RECLAIMED WATER, SEWER, STORM DRAIN, FLOOD CONTROL AND CALTRANS. ALL UTILITY COMPANIES SHALL BE GIVEN TWO WORKING DAYS NOTICE PRIOR TO WORK AROUND THEIR FACILITIES.
12. THE CONTRACTOR SHALL NOT OPERATE ANY FIRE HYDRANT OR WATER MAIN VALVES WITHOUT APPROPRIATE AGENCY AUTHORIZATION. CONTRACTOR SHALL COORDINATE WITH THE APPROPRIATE WATER COMPANY FOR VALVE OPERATION AND WATER REQUIREMENTS.
13. STATIONING REFERS TO THE CENTERLINE OF SEWER EXCEPT WHERE OTHERWISE NOTED.
14. ADEQUATE CONSTRUCTION CONTROL STAKES SHALL BE SET BY THE ENGINEER TO ENABLE THE CONTRACTOR TO CONSTRUCT THE WORK TO THE PLAN GRADES. THE CONTRACTOR SHALL BE RESPONSIBLE FOR THE PRESERVATION OF BENCHMARKS AND CONSTRUCTION CONTROL STAKING DURING CONSTRUCTION.
15. THE CONTRACTOR SHALL NOT DISTURB EXISTING SURVEY MONUMENTS, MONUMENT TIES OR BENCH MARKS WITHOUT PRIOR NOTIFICATION TO THE ENGINEER.
16. REMOVAL AND REPLACEMENT OF EXISTING SURVEYCONTROL, INCLUDING SURVEY MONUMENTS, MONUMENT TIES AND BENCH MARKS, SHALL BE DONE BY A REGISTERED CIVIL ENGINEER OR LICENSED LAND SURVEYOR. SURVEY MONUMENTS THAT WILL BE DESTROYED AS A RESULT OF THIS CONSTRUCTION SHALL BE REPLACED. THE CONTRACTOR SHALL NOTIFY THE ENGINEER ONE WEEK PRIOR TO CONSTRUCTION SO THAT TIES TO MONUMENTS CAN BE ESTABLISHED FOR LATER REPLACEMENT OF THE MONUMENT.
17. THE CONTRACTOR SHALL MAINTAIN ACCESS FOR LOCAL RESIDENTS AND BUSINESSES AT ALL TIMES. A MINIMUM 12 FOOT LANE SHALL BE MAINTAINED AT ALL TIMES IN THE CONSTRUCTION AREA FOR RESIDENTS AND EMERGENCY VEHICLES.
18. THE CONTRACTOR SHALL PROVIDE AND MAINTAIN AN EFFECTIVE MEANS OF DUST CONTROL, INCLUDING ADEQUATE WATERING, AT ALL TIMES.
19. THE CONTRACTOR SHALL NOT CAUSE ANY EXCAVATED MATERIAL, MUD, SILT OR DEBRIS TO BE DEPOSITED ONTO PUBLIC OR PRIVATE PROPERTY ADJACENT TO THE RIGHT OF WAY DURING CONSTRUCTION WITHOUT PRIOR WRITTEN APPROVAL.
20. NO TRENCH BACKFILL SHALL TAKE PLACE WITHOUT PRIOR APPROVAL OF THE INSPECTOR.
21. A GEOTECHNICAL ENGINEER SHALL CERTIFY ALL BACKFILL COMPACTION. FAILURE TO OBTAIN THE REQUIRED DENSITY SHALL REQUIRE RE-WORKING OF THAT PORTION OF THE WORK UNTIL THE SPECIFIED DENSITY IS OBTAINED.
22. CARE SHOULD BE TAKEN TO PREVENT GRADES, DITCHES, AND SWALES FROM UNDERMINING STREET IMPROVEMENTS. UPON INSPECTION OF THE SITE, THE CITY ENGINEER MAY REQUIRE TEMPORARY NON-ERODEABLE SWALES ENTERING OR LEAVING IMPROVEMENTS.
23. ALL EXPOSED CONCRETE SURFACES SHALL CONFORM IN GRADE, COLOR AND FINISH TO MATCH EXISTING CONCRETE.
24. IF SEWER CONSTRUCTION IS TO BE DONE IN PHASES, THE CONTRACTOR SHALL PROVIDE A TERMINAL CLEANOUT AT THE PHASE BOUNDARY, NOT MORE THAN 150 FEET FROM THE DOWNSTREAM MANHOLE, SEE CITY OF FONTANA STANDARD DETAIL FOR TERMINAL CLEANOUT.
25. SANITARY SEWER LINES SHALL BE CONSTRUCTED OF BELL AND SPIGOT OR BAND SEAL TYPE VITRIFIED CLAY PIPE (V.C.P.) EXTRA STRENGTH CLASS AND SHALL CONFORM TO THE PROVISIONS OF THE ASTM DESIGNATION C700 FOR V.C.P.
26. NO OPEN TRENCH SHALL BE ALLOWED AT THE END OF THE DAY WITHOUT PRIOR APPROVAL OF THE ENGINEER.

SANITARY SEWER IMPROVEMENT NOTES (Cont)

27. SHORT VCP STUBS WITH FLEXIBLE COMPRESSION JOINTS SHALL BE USED AT MANHOLE WALLS TO ALLOW FOR MINOR DEFLECTIONS IN ALIGNMENT.
28. PRIOR TO CONSTRUCTION, THE CONTRACTOR SHALL EXPOSE EXISTING FACILITIES, AND VERIFY ELEVATION AND LOCATION OF CONNECTIONS. ENGINEER APPROVAL OF CONNECTIONS TO EXISTING FACILITIES DOES NOT IMPLY CORRECTNESS OF ELEVATIONS OR LOCATIONS SHOWN ON THE PLANS.

CONTRACTOR SHALL NOTIFY THE ENGINEER AND ALL AFFECTED AGENCIES IMMEDIATELY.

30. NO CONCRETE SHALL BE PLACED UNTIL THE FORMS AND REINFORCING STEEL HAVE PLACED, INSPECTED AND APPROVED.
29. IF EXISTING UTILITIES OR ANY OTHER FACILITIES CONFLICT WITH THE PROPOSED IMPROVEMENTS, THE
31. ALL UNDERGROUND UTILITIES SHALL BE INSTALLED, TESTED AND APPROVED PRIOR TO PLACEMENT.
32. APPROVED SOIL STERILANT IS REQUIRED UNDER ALL NEW ASPHALT PAVING PRIOR TO PLACEMENT.
33. ALL MANHOLES, CLEANOUT FRAMES, COVERS AND VALVE BOXES SHALL BE RAISED TO FINISHED GRADE BY THE PAVING CONTRACTOR UPON COMPLETION OF PAVING.
34. UPON COMPLETION OF CONSTRUCTION, CONTRACTOR SHALL RESTORE ALL SIGNING, STRIPING, BARRICADES, AND OTHER TRAFFIC CONTROL DEVICES TO THE SATISFACTION OF THE ENGINEER.
35. AS-BUILT DRAWINGS SHALL BE PROVIDED BY THE CONTRACTOR TO THE ENGINEER OF RECORD, WHO SHALL PROVIDE RECORD DRAWINGS TO THE ENGINEER.
36. VITRIFIED CLAY SEWER PIPE CAP SHALL BE AS RECOMMENDED BY PIPE MANUFACTURER.

LEGEND:

SSMH SANITARY SEWER MANHOLE

SANITARY SEWER QUANTITIES

SANITARY SEWER SHEET No.	SANITARY SEWER SYSTEM No. ⬡	SANITARY SEWER UNIT No. ○	8" VCP SEWER PIPE	48" PRECAST CONCRETE PIPE MANHOLE	(N) HEIGHT OF MANHOLE	DESCRIPTION	STATION/OFFSET (FOR MANHOLES ONLY)	SANITARY SEWER SYSTEM No. ⬡	SANITARY SEWER UNIT No. ○
			LF	EA	LF				
SS-1	1	a		1	9.98	INSTALL SSMH PER CITY OF FONTANA 2006 Std Det No. 2001 SEE SHEET SSD-1.	"D" 695+25.27 11.8' Lt	1	a
		b	160						b
		c		1	8.92	INSTALL SSMH PER CITY OF FONTANA 2006 Std Det No. 2001 SEE SHEET SSD-1.	"D" 696+87.42 8' Lt	1	c
		d	249						d
		e		1	8.87	INSTALL SSMH PER CITY OF FONTANA 2006 Std Det No. 2001 SEE SHEET SSD-1.	"D" 699+38.46 5' Lt	1	e
		f	249						f
		g		1	8.87	INSTALL SSMH PER CITY OF FONTANA 2006 Std Det No. 2001 SEE SHEET SSD-1.	"D" 701+89.50 5' Lt	1	g
		h	220						h
		i		1	8.77	INSTALL SSMH PER CITY OF FONTANA 2006 Std Det No. 2001 SEE SHEET SSD-1.	"D" 704+10.86 5' Lt	1	i
		j	298						j
		k		1	14.30	INSTALL SSMH PER CITY OF FONTANA 2006 Std Det No. 2001 SEE SHEET SSD-1.	"D" 707+10.86 5' Lt	1	k
		l	72						l
		m		1	14.90	INSTALL SSMH PER CITY OF FONTANA 2006 Std Det No. 2001 SEE SHEET SSD-1.	"D" 707+78.47 33' Lt	1	m
	TOTAL		1248	7					

(N) - NOT A SEPARATE PAY ITEM, FOR INFORMATION ONLY

SANITARY SEWER QUANTITIES
SSQ-1

STATE OF CALIFORNIA - DEPARTMENT OF TRANSPORTATION
Caltrans® DESIGN
FUNCTIONAL SUPERVISOR: SERGIO E. AVILA
CALCULATED-DESIGNED BY: TSUNG WANG
CHECKED BY: SIDHARTHA CHOWDHURY
REVISED BY / DATE REVISED

LAST REVISION 06-18-13 | DATE PLOTTED => 26-AUG-2013 | TIME PLOTTED => 14:42

Dist	COUNTY	ROUTE	POST MILES TOTAL PROJECT	SHEET No.	TOTAL SHEETS
08	SBd	15	12.8	36	122

REGISTERED CIVIL ENGINEER 12-12-12 DATE

8-19-13
PLANS APPROVAL DATE

REGISTERED PROFESSIONAL ENGINEER SERGIO E. AVILA No. 60951 Exp. 12-31-12 CIVIL STATE OF CALIFORNIA

THE STATE OF CALIFORNIA OR ITS OFFICERS OR AGENTS SHALL NOT BE RESPONSIBLE FOR THE ACCURACY OR COMPLETENESS OF SCANNED COPIES OF THIS PLAN SHEET.

NOTES:

1. FOR ACCURATE RIGHT OF WAY DATA, CONTACT RIGHT OF WAY ENGINEERING AT THE DISTRICT OFFICE.
2. LOCATIONS OF UTILITY FACILITIES SHOWN ON THESE PLANS ARE APPROXIMATE AND SHALL BE VERIFIED BY THE CONTRACTOR PRIOR TO CONSTRUCTION.

ABBREVIATIONS:

TGC	THE GAS COMPANY
SCE	SOUTHERN CALIFORNIA EDISON
AT&T	AT&T TELECOMMUNICATION
TWC	TIME WARNER CABLE (WILTEL)
CFS	CITY OF FONTANA SEWER
SGVWC	SAN GABRIEL VALLEY WATER COMPANY
WVWD	WEST VALLEY WATER DISTRICT

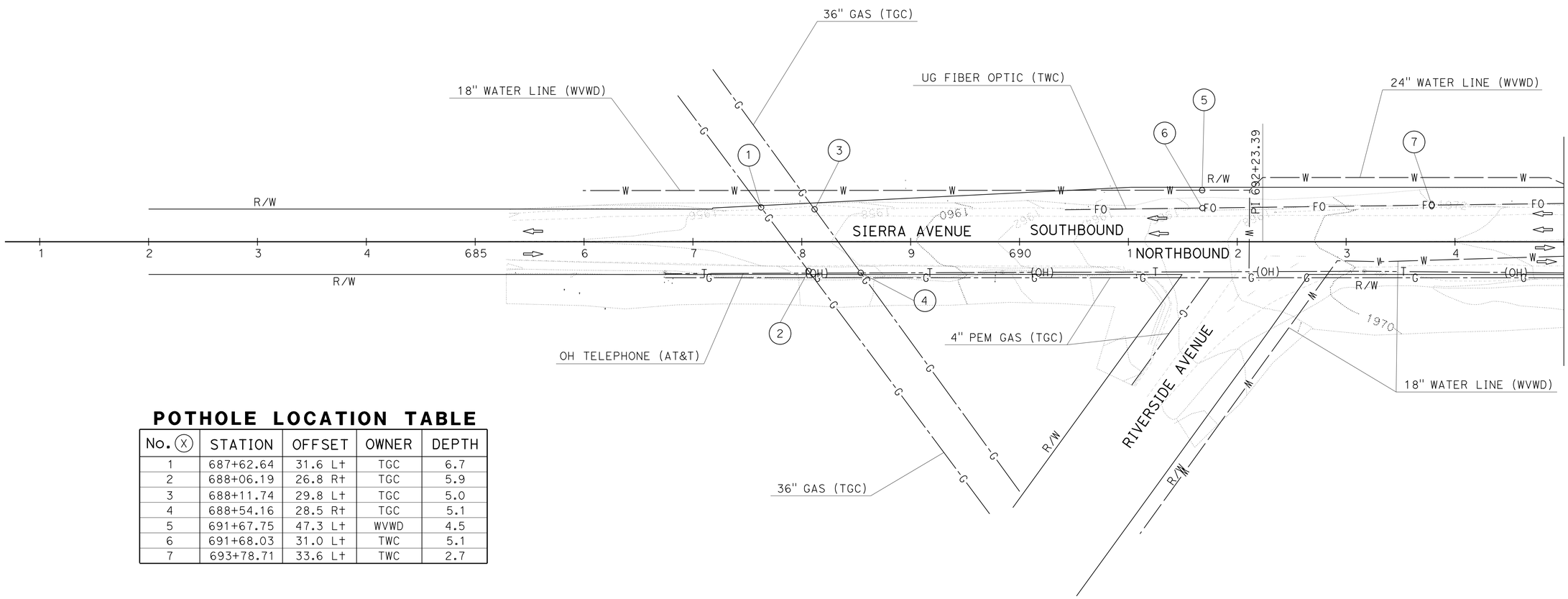

POTHOLE LOCATION TABLE

No. (X)	STATION	OFFSET	OWNER	DEPTH
1	687+62.64	31.6 L+	TGC	6.7
2	688+06.19	26.8 R+	TGC	5.9
3	688+11.74	29.8 L+	TGC	5.0
4	688+54.16	28.5 R+	TGC	5.1
5	691+67.75	47.3 L+	WVWD	4.5
6	691+68.03	31.0 L+	TWC	5.1
7	693+78.71	33.6 L+	TWC	2.7

UTILITY

SCALE: 1" = 50'

U-1

APPROVED FOR UTILITY INFORMATION ONLY

STATE OF CALIFORNIA - DEPARTMENT OF TRANSPORTATION
Caltrans
DESIGN

FUNCTIONAL SUPERVISOR: SERGIO E. AVILA
CALCULATED-DESIGNED BY: TSUNG WANG
CHECKED BY: SIDHARTHA CHOWDHURY
REVISED BY
DATE REVISED

LAST REVISION 12-12-12
DATE PLOTTED => 26-AUG-2013
TIME PLOTTED => 14:42

Dist	COUNTY	ROUTE	POST MILES TOTAL PROJECT	SHEET No.	TOTAL SHEETS
08	SBd	15	12.8	37	122

REGISTERED CIVIL ENGINEER 12-12-12 DATE

8-19-13
PLANS APPROVAL DATE

REGISTERED PROFESSIONAL ENGINEER SERGIO E. AVILA No. 60951 Exp. 12-31-12 CIVIL STATE OF CALIFORNIA

THE STATE OF CALIFORNIA OR ITS OFFICERS OR AGENTS SHALL NOT BE RESPONSIBLE FOR THE ACCURACY OR COMPLETENESS OF SCANNED COPIES OF THIS PLAN SHEET.

NOTE:
FOR ACCURATE RIGHT OF WAY DATA, CONTACT RIGHT OF WAY ENGINEERING AT THE DISTRICT OFFICE.

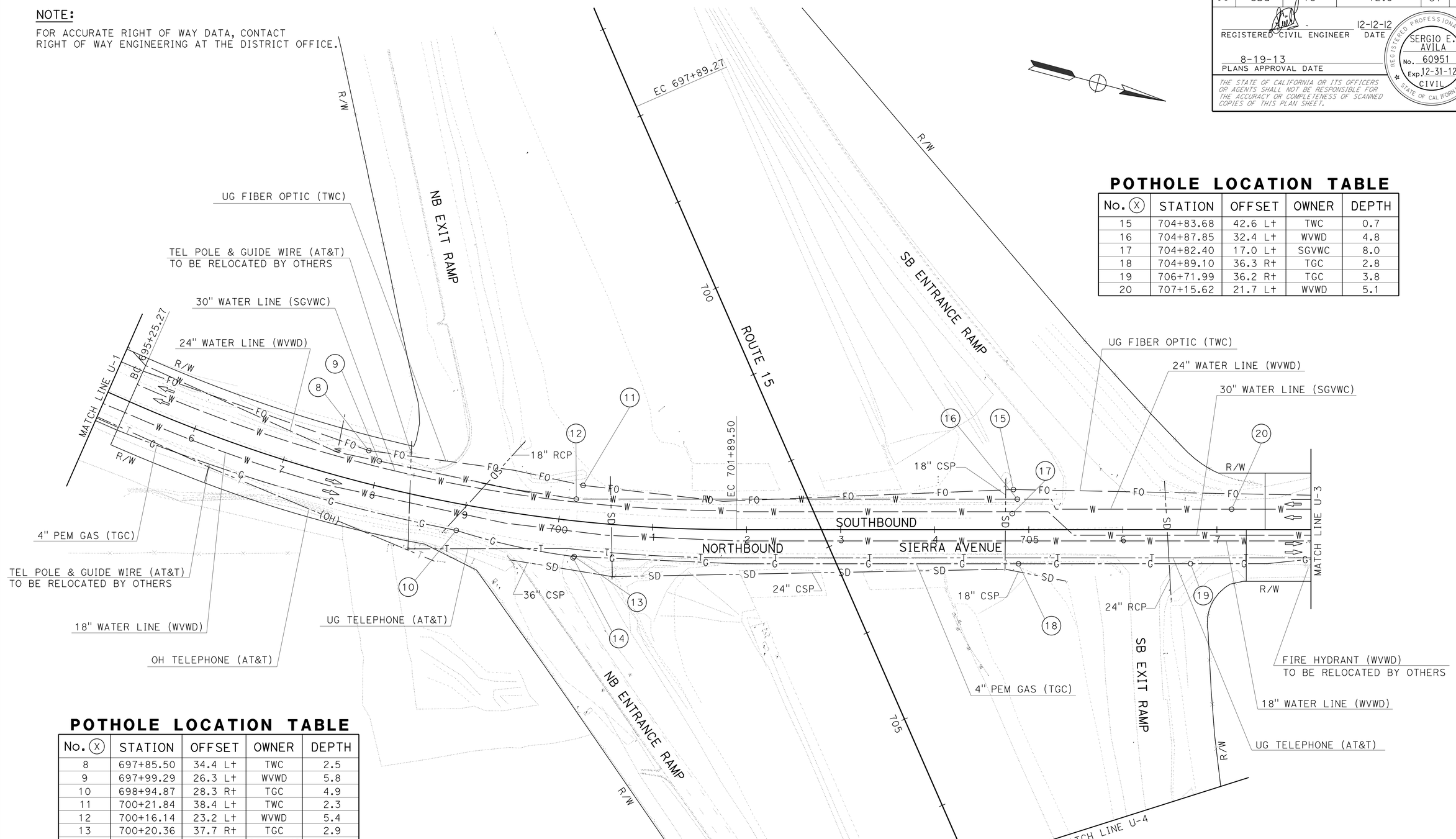

POTHOLE LOCATION TABLE

No. (X)	STATION	OFFSET	OWNER	DEPTH
15	704+83.68	42.6 Lt	TWC	0.7
16	704+87.85	32.4 Lt	WVWD	4.8
17	704+82.40	17.0 Lt	SGVWC	8.0
18	704+89.10	36.3 Rt	TGC	2.8
19	706+71.99	36.2 Rt	TGC	3.8
20	707+15.62	21.7 Lt	WVWD	5.1

POTHOLE LOCATION TABLE

No. (X)	STATION	OFFSET	OWNER	DEPTH
8	697+85.50	34.4 Lt	TWC	2.5
9	697+99.29	26.3 Lt	WVWD	5.8
10	698+94.87	28.3 Rt	TGC	4.9
11	700+21.84	38.4 Lt	TWC	2.3
12	700+16.14	23.2 Lt	WVWD	5.4
13	700+20.36	37.7 Rt	TGC	2.9
14	700+19.41	39.2 Rt	CALTRANS	4.1

APPROVED FOR UTILITY INFORMATION ONLY

UTILITY
SCALE: 1" = 50'

U-2

STATE OF CALIFORNIA - DEPARTMENT OF TRANSPORTATION
Caltrans
DESIGN

FUNCTIONAL SUPERVISOR: SERGIO E. AVILA
CALCULATED-DESIGNED BY: TSUNG WANG
CHECKED BY: SIDHARTHA CHOWDHURY
REVISED BY
DATE REVISED

LAST REVISION 12-12-12
DATE PLOTTED => 26-AUG-2013
TIME PLOTTED => 14:42

Dist	COUNTY	ROUTE	POST MILES TOTAL PROJECT	SHEET No.	TOTAL SHEETS
08	SBd	15	12.8	38	122

REGISTERED CIVIL ENGINEER 12-12-12 DATE

8-19-13
PLANS APPROVAL DATE

REGISTERED PROFESSIONAL ENGINEER SERGIO E. AVILA No. 60951 Exp. 12-31-12 CIVIL STATE OF CALIFORNIA

THE STATE OF CALIFORNIA OR ITS OFFICERS OR AGENTS SHALL NOT BE RESPONSIBLE FOR THE ACCURACY OR COMPLETENESS OF SCANNED COPIES OF THIS PLAN SHEET.

NOTE:

FOR ACCURATE RIGHT OF WAY DATA, CONTACT
RIGHT OF WAY ENGINEERING AT THE DISTRICT OFFICE.

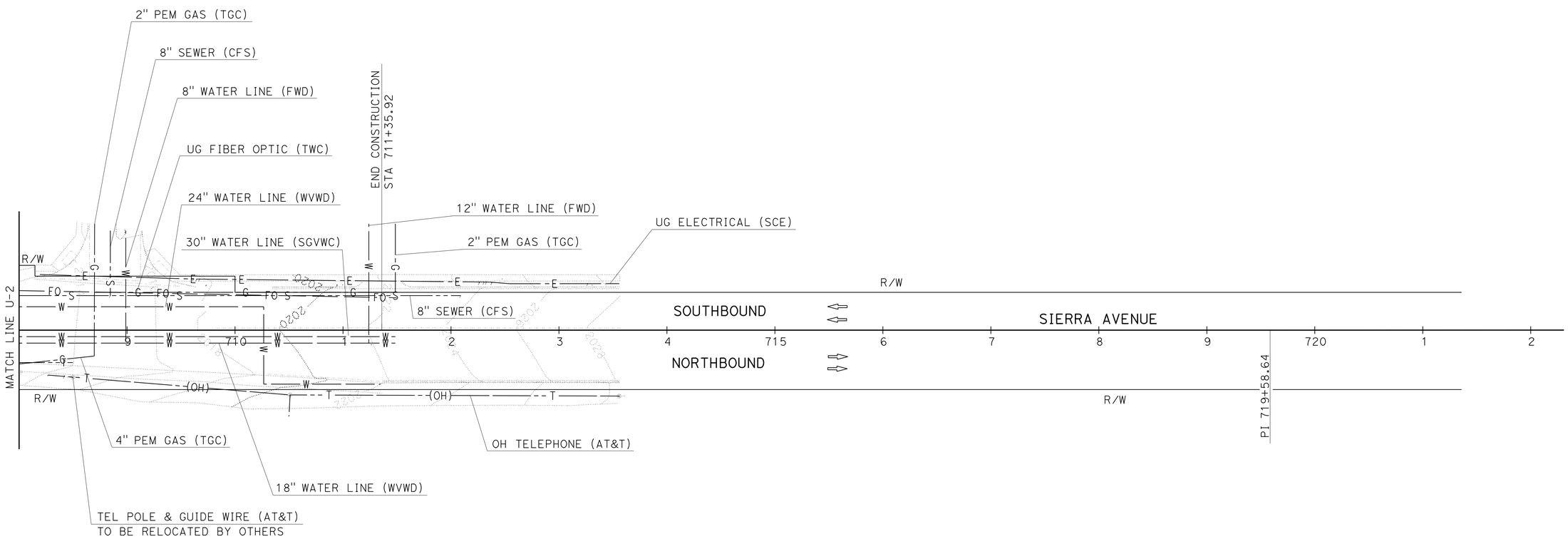

UTILITY
SCALE: 1" = 50'

U-3

APPROVED FOR UTILITY INFORMATION ONLY

STATE OF CALIFORNIA - DEPARTMENT OF TRANSPORTATION
Caltrans
DESIGN

FUNCTIONAL SUPERVISOR: SERGIO E. AVILA
CALCULATED-DESIGNED BY: TSUNG WANG
CHECKED BY: SIDHARTHA CHOWDHURY
REVISED BY
DATE REVISED

LAST REVISION 12-12-12
DATE PLOTTED => 26-AUG-2013
TIME PLOTTED => 14:42

Dist	COUNTY	ROUTE	POST MILES TOTAL PROJECT	SHEET No.	TOTAL SHEETS
08	SBd	15	12.8	39	122

REGISTERED CIVIL ENGINEER 12-12-12 DATE

8-19-13
PLANS APPROVAL DATE

REGISTERED PROFESSIONAL ENGINEER SERGIO E. AVILA No. 60951 Exp. 12-31-12 CIVIL STATE OF CALIFORNIA

THE STATE OF CALIFORNIA OR ITS OFFICERS OR AGENTS SHALL NOT BE RESPONSIBLE FOR THE ACCURACY OR COMPLETENESS OF SCANNED COPIES OF THIS PLAN SHEET.

NOTE:

FOR ACCURATE RIGHT OF WAY DATA, CONTACT RIGHT OF WAY ENGINEERING AT THE DISTRICT OFFICE.

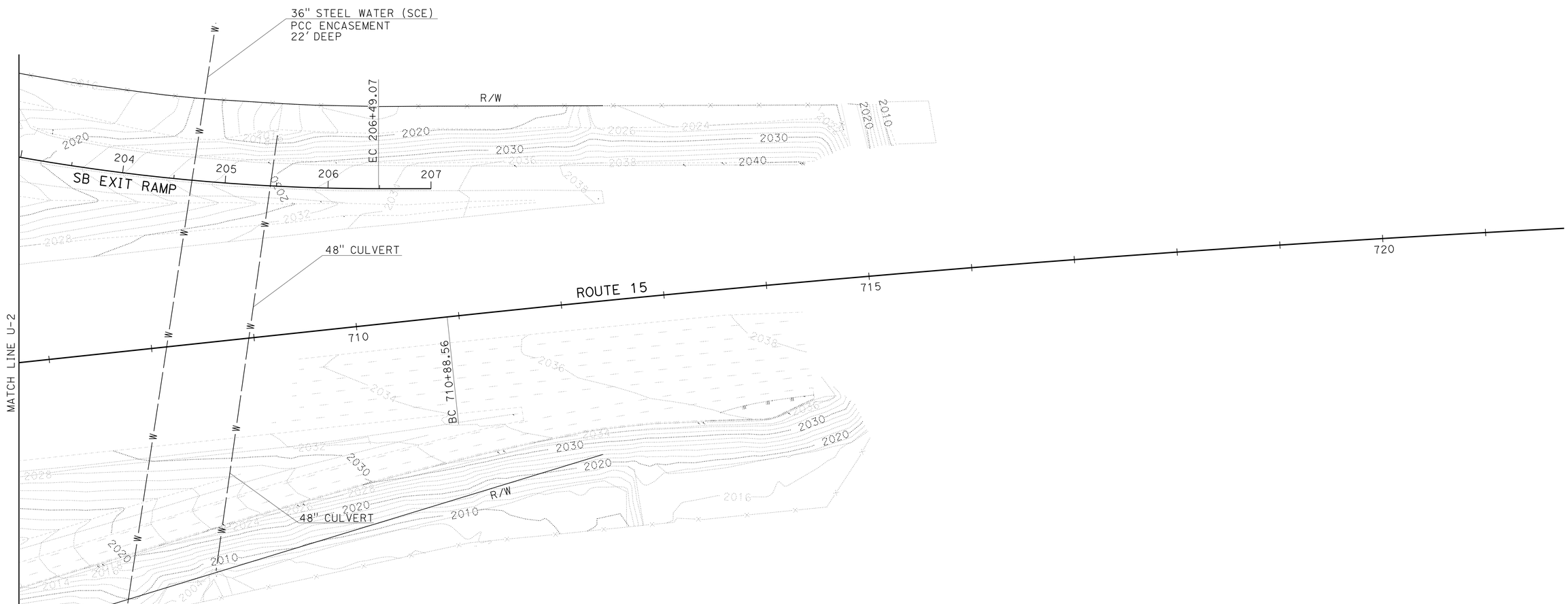

UTILITY
SCALE: 1" = 50'

U-4

APPROVED FOR UTILITY INFORMATION ONLY

STATE OF CALIFORNIA - DEPARTMENT OF TRANSPORTATION
Caltrans
DESIGN

FUNCTIONAL SUPERVISOR: SERGIO E. AVILA
CALCULATED-DESIGNED BY: TSUNG WANG
CHECKED BY: SIDHARTHA CHOWDHURY
REVISED BY
DATE REVISED

LAST REVISION 12-12-12
DATE PLOTTED => 26-AUG-2013
TIME PLOTTED => 14:44

Dist	COUNTY	ROUTE	POST MILES TOTAL PROJECT	SHEET No.	TOTAL SHEETS
08	SBd	15	12.8	40	122

REGISTERED CIVIL ENGINEER 12-12-12 DATE

8-19-13
PLANS APPROVAL DATE

REGISTERED PROFESSIONAL ENGINEER SIDHARTHA CHOWDHURRY No. 55418 Exp. 12-31-12 CIVIL STATE OF CALIFORNIA

THE STATE OF CALIFORNIA OR ITS OFFICERS OR AGENTS SHALL NOT BE RESPONSIBLE FOR THE ACCURACY OR COMPLETENESS OF SCANNED COPIES OF THIS PLAN SHEET.

LEGEND:

- (X) CONSTRUCTION AREA SIGN No.
- ONE POST SIGN
- TWO POST SIGN
- AREA OF CONSTRUCTION
- PORTABLE CHANGEABLE MESSAGE SIGN

NOTES:

1. LOCATION OF CONSTRUCTION AREA SIGNS ARE APPROXIMATE. EXACT LOCATIONS SHALL BE DETERMINED BY THE ENGINEER.
2. REFER TO STANDARD PLANS T13, T14 AND T17 FOR LANE CLOSURE REQUIREMENTS.
3. MESSAGES ON PCMS SIGNS SHALL BE AS DETERMINED BY THE ENGINEER.
4. FOR ADDITIONAL CONSTRUCTION AREA SIGNS, SEE SHEET DE-1 THROUGH DE-2, AND SHEET THQ-3.
5. FOR ADDITIONAL PCMS SIGNS, SEE SHEET THQ-2 AND DE-1

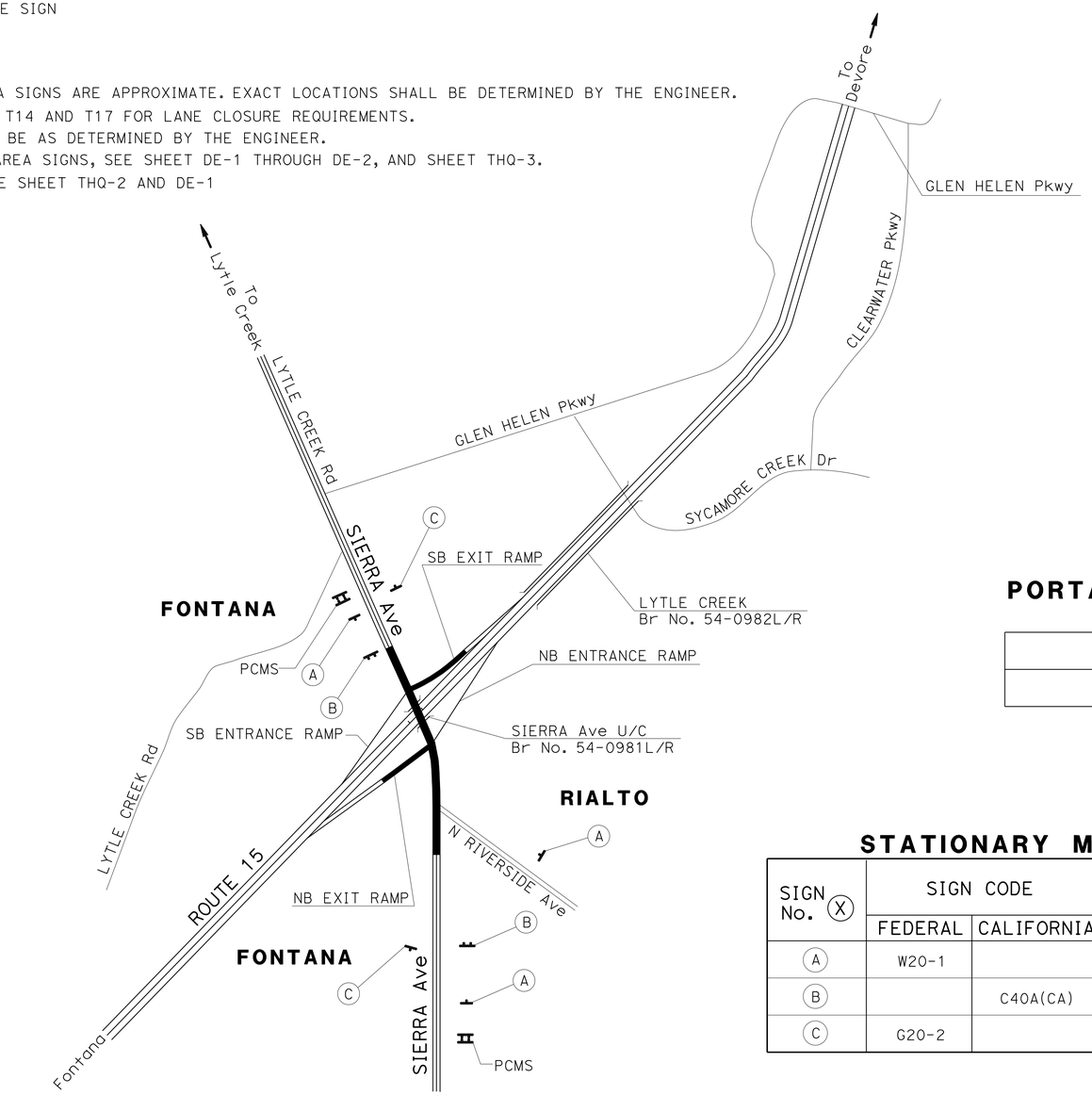

PORTABLE CHANGEABLE MESSAGE SIGNS (PCMS)

(EA)
2

STATIONARY MOUNTED CONSTRUCTION AREA SIGNS

SIGN No. (X)	SIGN CODE		PANEL SIZE	SIGN MESSAGE	NUMBER OF POSTS AND SIZE	No. OF SIGNS
	FEDERAL	CALIFORNIA				
(A)	W20-1		48" x 48"	ROAD WORK AHEAD	1 - 6" x 6"	3
(B)		C40A(CA)	48" x 48"	TRAFFIC FINES DOUBLED IN WORK ZONES	2 - 6" x 6"	2
(C)	G20-2		36" x 18"	END ROAD WORK	1 - 4" x 4"	2

CONSTRUCTION AREA SIGNS

NO SCALE

CS-1

APPROVED FOR CONSTRUCTION AREA SIGN WORK ONLY

STATE OF CALIFORNIA - DEPARTMENT OF TRANSPORTATION
Caltrans TRAFFIC DESIGN B

FUNCTIONAL SUPERVISOR: LARRY SARTORI
CALCULATED-DESIGNED BY: SIDHARTHA CHOWDHURY
CHECKED BY: LARRY SARTORI
REVISED BY
DATE REVISED

LAST REVISION 12-12-12
DATE PLOTTED => 26-AUG-2013
TIME PLOTTED => 14:44

Dist	COUNTY	ROUTE	POST MILES TOTAL PROJECT	SHEET No.	TOTAL SHEETS
08	SBd	15	12.8	41	122

REGISTERED CIVIL ENGINEER 7-17-13 DATE

8-19-13
PLANS APPROVAL DATE

REGISTERED PROFESSIONAL ENGINEER SERGIO E. AVILA No. 60951 Exp. 12-31-14 CIVIL STATE OF CALIFORNIA

THE STATE OF CALIFORNIA OR ITS OFFICERS OR AGENTS SHALL NOT BE RESPONSIBLE FOR THE ACCURACY OR COMPLETENESS OF SCANNED COPIES OF THIS PLAN SHEET.

LEGEND:

- CONSTRUCT STAGE 1
- CONSTRUCT STAGE 1A
- CONSTRUCT DURING 10 DAY RAMP CLOSURE ONLY

PROJECT STAGE NOTES:

1 CONSTRUCT HMA PAVEMENT AT SB SIERRA Ave, PARTIAL RAMP CORNERS, AND DRAINAGE SYSTEMS 1 & 2.

1A CONSTRUCT HMA PAVEMENT AND JPCP TERMINI AT NB EXIT RAMP, AND CONSTRUCT HMA PAVEMENT AT SB ENTRANCE RAMP.

* SEWER LINE CONSTRUCTION TO BE COMPLETED BEFORE ANY STAGING WORK ON SURFACE STREET AND/OR FREEWAY RAMPS.

++ [Sta 692+43 TO 695+00 = 7′ TO ℄ Sta 695+00 TO 700+00 = 3′-7′ TO ℄ Sta 700+00 TO 707+12 = 3′ TO ℄]

+++ TEMPORARY RAILINGS (TYPE K) ARE FOR INFORMATION ONLY, SEE SHEET THQ-2.

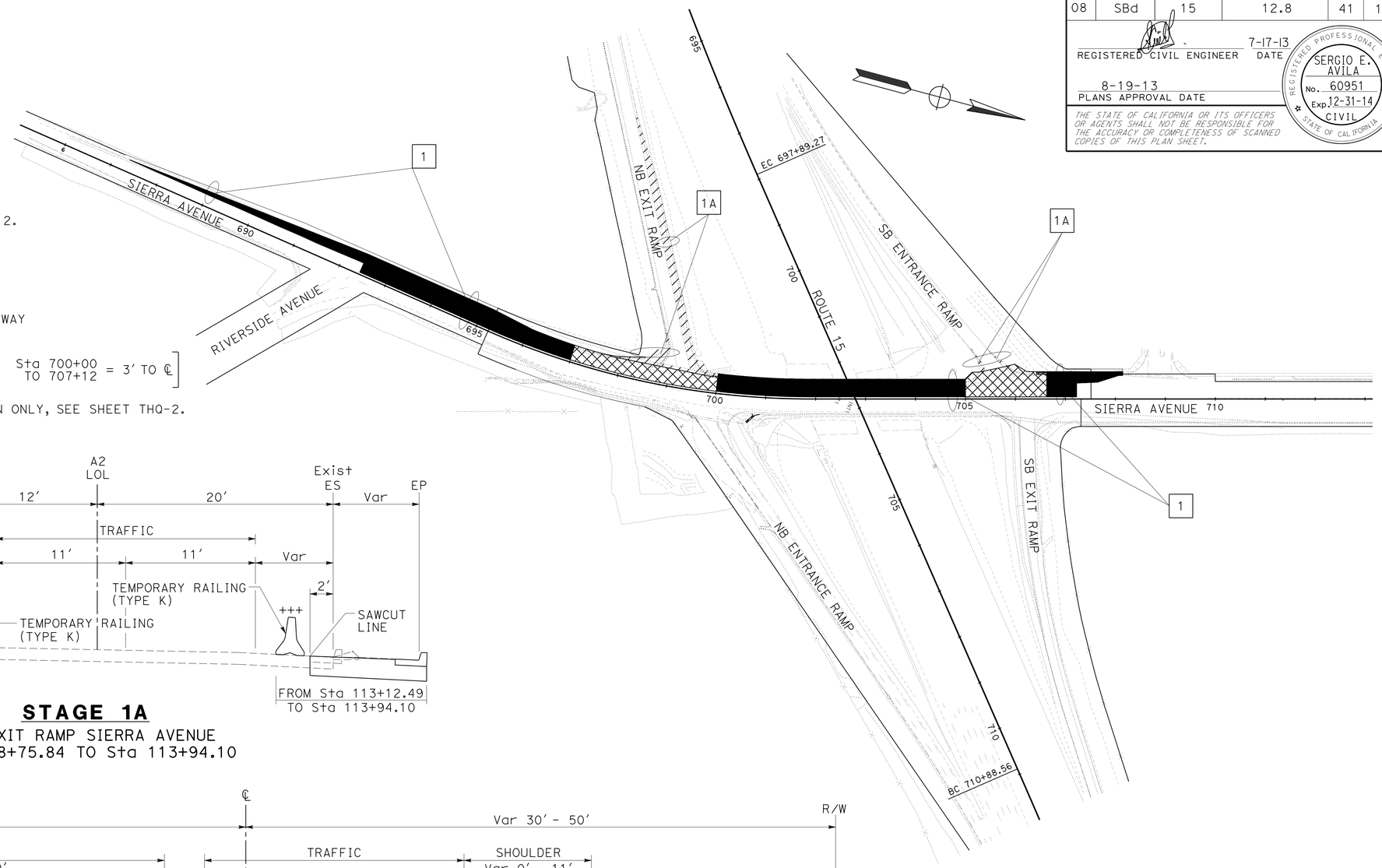

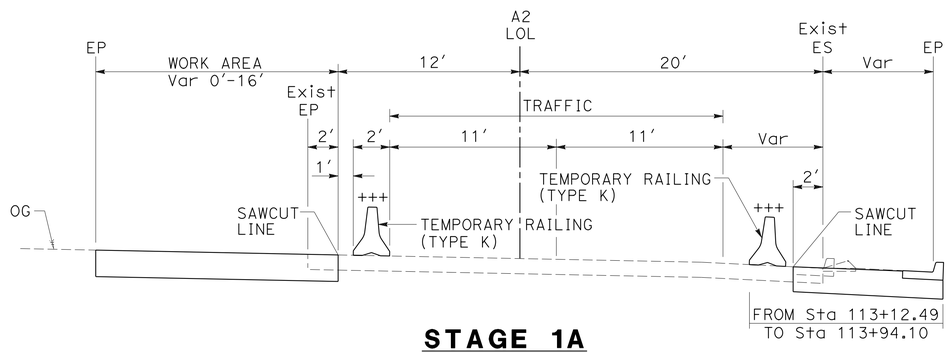

STAGE 1A

NB EXIT RAMP SIERRA AVENUE
Sta 108+75.84 TO Sta 113+94.10

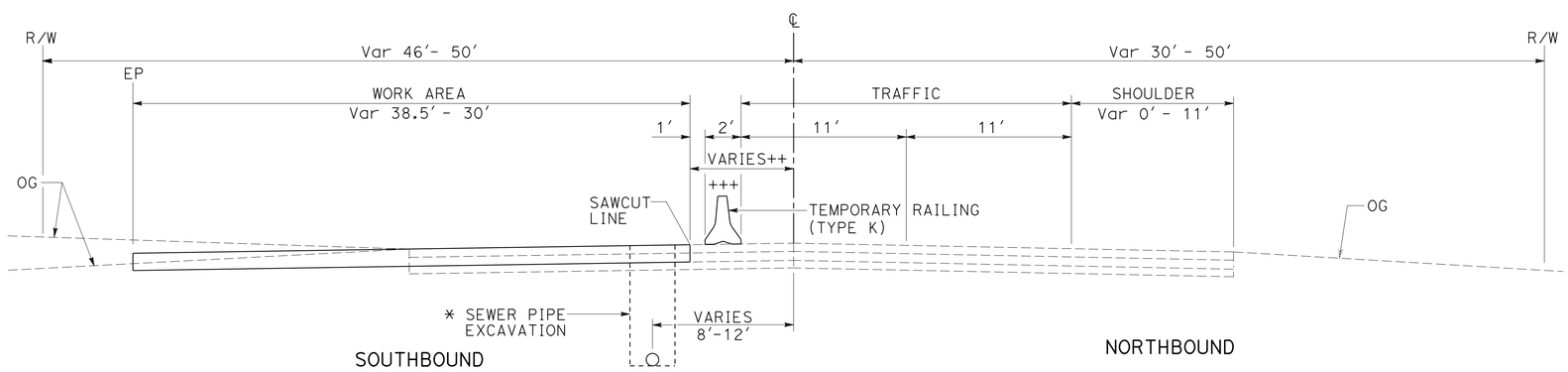

STAGE 1

SOUTHBOUND SIERRA AVENUE
Sta 690+22.10 TO Sta 707+10.86
TEMPORARY RAILING (TYPE K) PLACEMENT

APPROVED FOR STAGE CONSTRUCTION WORK ONLY

STAGE CONSTRUCTION

NO SCALE

SC-1

STATE OF CALIFORNIA - DEPARTMENT OF TRANSPORTATION
Caltrans® DESIGN

FUNCTIONAL SUPERVISOR: SERGIO E. AVILA
CALCULATED-DESIGNED BY: TSUNG WANG
CHECKED BY: SIDHARTHA CHOWDHURY
REVISED BY
DATE REVISED

LAST REVISION 07-17-13 | DATE PLOTTED => 26-AUG-2013 | TIME PLOTTED => 14:44

Dist	COUNTY	ROUTE	POST MILES TOTAL PROJECT	SHEET No.	TOTAL SHEETS
08	SBd	15	12.8	42	122

REGISTERED CIVIL ENGINEER 7-17-13 DATE

8-19-13
PLANS APPROVAL DATE

REGISTERED PROFESSIONAL ENGINEER SERGIO E. AVILA No. 60951 Exp. 12-31-14 CIVIL STATE OF CALIFORNIA

THE STATE OF CALIFORNIA OR ITS OFFICERS OR AGENTS SHALL NOT BE RESPONSIBLE FOR THE ACCURACY OR COMPLETENESS OF SCANNED COPIES OF THIS PLAN SHEET.

LEGEND:

- CONSTRUCT STAGE 2
- CONSTRUCT STAGE 2A
- CONSTRUCT DURING 10 DAY RAMP CLOSURE ONLY

PROJECT STAGE NOTES:

2 CONSTRUCT HMA PAVEMENT AT NB SIERRA Ave, PARTIAL RAMP CORNERS, AND DRAINAGE SYSTEMS 1, 2, & 3.

2A CONSTRUCT HMA PAVEMENT AND JPCP TERMINI AT SB EXIT RAMP, AND CONSTRUCT HMA PAVEMENT AT NB ENTRANCE RAMP.

* [Sta 693+08 TO 695+00 = 7′ TO ℄ Sta 695+00 TO 700+00 = 3′-7′ TO ℄ Sta 700+00 TO 711+36 = 3′ TO ℄]

+++ TEMPORARY RAILINGS (TYPE K) ARE FOR INFORMATION ONLY, SEE SHEET THQ-2.

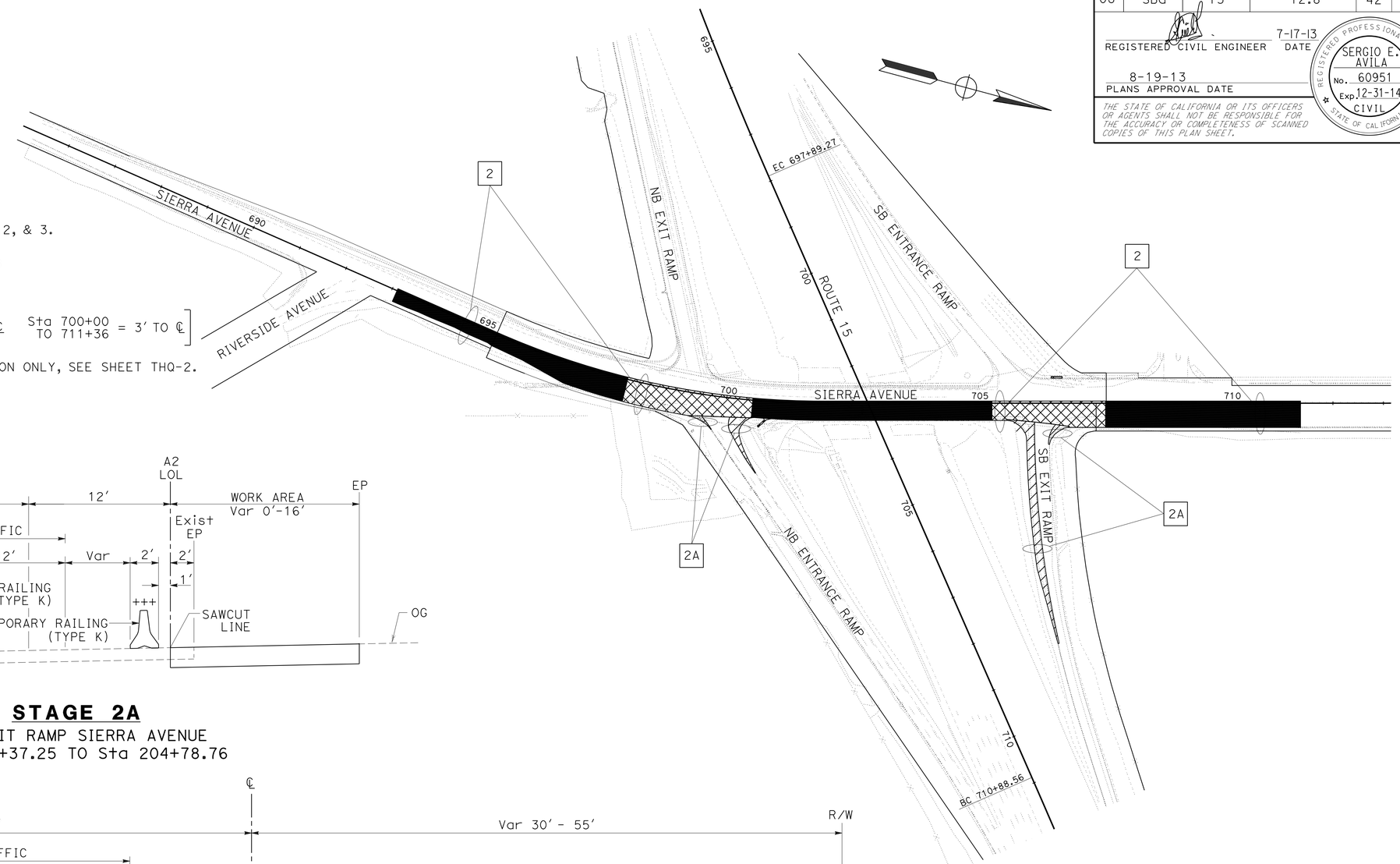

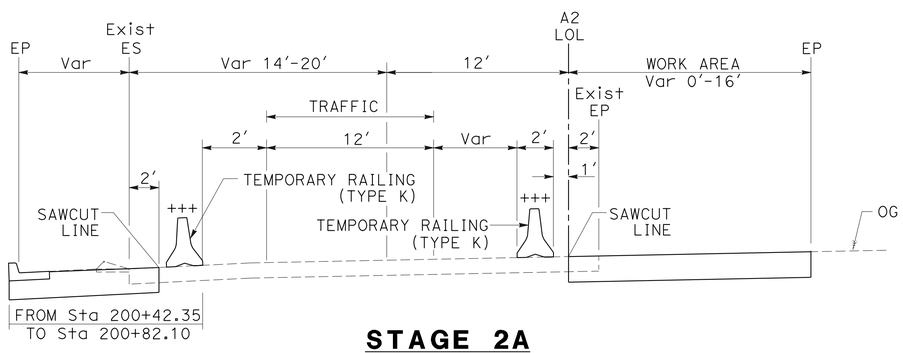

STAGE 2A

SB EXIT RAMP SIERRA AVENUE
Sta 200+37.25 TO Sta 204+78.76

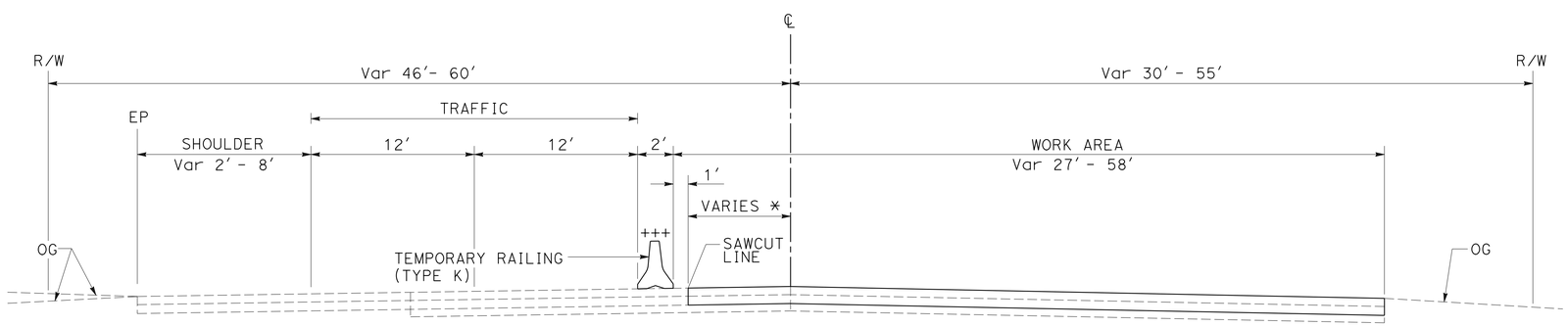

STAGE 2

NORTHBOUND SIERRA AVENUE
Sta 693+08.29 TO Sta 711+35.92
TEMPORARY RAILING (TYPE K) PLACEMENT

APPROVED FOR STAGE CONSTRUCTION WORK ONLY

STAGE CONSTRUCTION

NO SCALE

SC-2

STATE OF CALIFORNIA - DEPARTMENT OF TRANSPORTATION
Caltrans
DESIGN
FUNCTIONAL SUPERVISOR: SERGIO E. AVILA
CALCULATED-DESIGNED BY: TSUNG WANG
CHECKED BY: SIDHARTHA CHOWDHURY
REVISED BY
DATE REVISED

LAST REVISION 07-17-13
DATE PLOTTED => 26-AUG-2013
TIME PLOTTED => 14:44

Dist	COUNTY	ROUTE	POST MILES TOTAL PROJECT	SHEET No.	TOTAL SHEETS
08	SBd	15	12.8	43	122

REGISTERED CIVIL ENGINEER 7-17-13 DATE

8-19-13
PLANS APPROVAL DATE

REGISTERED PROFESSIONAL ENGINEER SERGIO E. AVILA No. 60951 Exp. 12-31-14 CIVIL STATE OF CALIFORNIA

THE STATE OF CALIFORNIA OR ITS OFFICERS OR AGENTS SHALL NOT BE RESPONSIBLE FOR THE ACCURACY OR COMPLETENESS OF SCANNED COPIES OF THIS PLAN SHEET.

LEGEND:

CONSTRUCT STAGE 3

PROJECT STAGE NOTES:

3 COLD PLANE SB & NB SIERRA Ave.

4 OVERLAY AND BRING PAVEMENT STRUCTURAL SECTION TO SURFACE GRADE ON SB & NB SIERRA Ave.

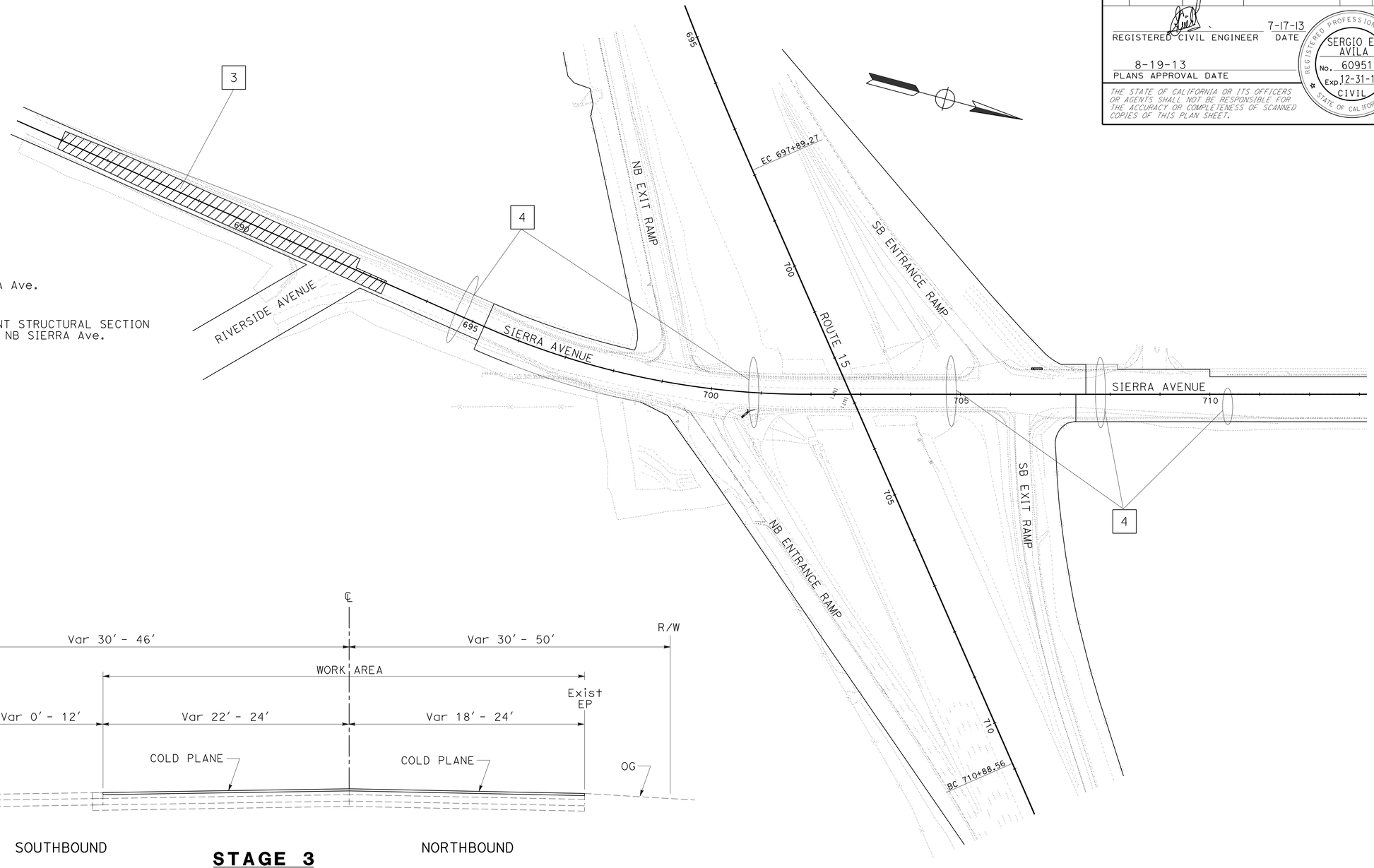

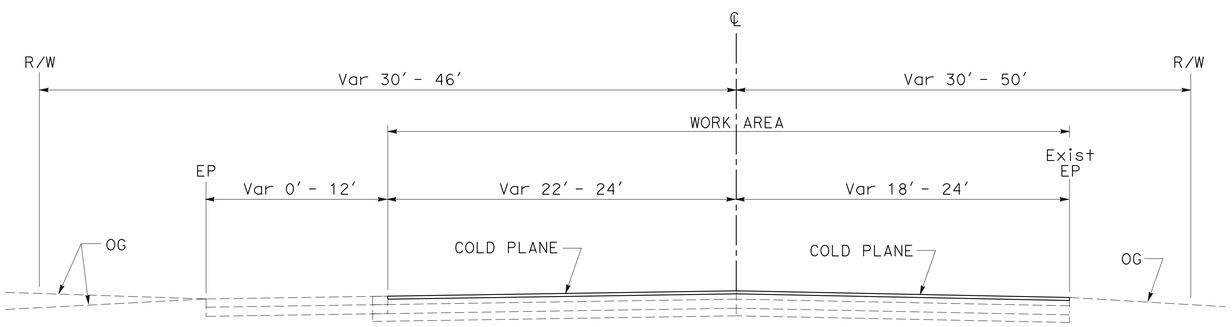

SOUTHBOUND NORTHBOUND

STAGE 3

SIERRA AVENUE
Sta 685+98.84 TO Sta 693+08.29

STAGE CONSTRUCTION

NO SCALE

SC-3

APPROVED FOR STAGE CONSTRUCTION WORK ONLY

STATE OF CALIFORNIA - DEPARTMENT OF TRANSPORTATION
Caltrans
DESIGN

FUNCTIONAL SUPERVISOR: SERGIO E. AVILA
CALCULATED-DESIGNED BY: TSUNG WANG
CHECKED BY: SIDHARTHA CHOWDHURY
REVISED BY
DATE REVISED

LAST REVISION 07-17-13
DATE PLOTTED => 26-AUG-2013
TIME PLOTTED => 14:45

Dist	COUNTY	ROUTE	POST MILES TOTAL PROJECT	SHEET No.	TOTAL SHEETS
08	SBd	15	12.8	44	122

REGISTERED CIVIL ENGINEER 12-12-12 DATE

8-19-13
PLANS APPROVAL DATE

REGISTERED PROFESSIONAL ENGINEER OSCAR ALEJANDRE No. 70863 Exp. 6-30-13 CIVIL STATE OF CALIFORNIA

THE STATE OF CALIFORNIA OR ITS OFFICERS OR AGENTS SHALL NOT BE RESPONSIBLE FOR THE ACCURACY OR COMPLETENESS OF SCANNED COPIES OF THIS PLAN SHEET.

LEGEND:

- CONSTRUCTION AREA
- T XX — TEMPORARY TRAFFIC STRIPE DETAIL (PAINT)
- R XX — REMOVE PAVEMENT DELINEATION
- BR XX — BEGIN REMOVE TRAFFIC STRIPE
- ER XX — END REMOVE TRAFFIC STRIPE
- PORTABLE CHANGEABLE MESSAGE SIGN
- BT XX — BEGIN TEMPORARY TRAFFIC STRIPE (PAINT)
- ET XX — END TEMPORARY TRAFFIC STRIPE (PAINT)
- CHANNELIZER (SURFACE MOUNTED)

NOTES:

1. COVER EXISTING CONFLICTING SIGNS.
2. DISPLAY THE FOLLOWING MESSAGE ON THE PCMS: (REDUCE SPEED AHEAD)
3. FOR ACCURATE RIGHT OF WAY DATA, CONTACT RIGHT OF WAY ENGINEERING AT THE DISTRICT OFFICE.

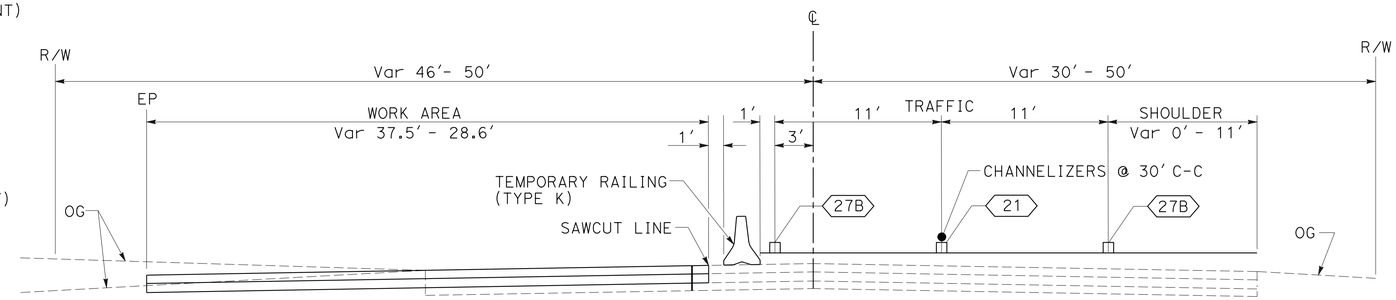

STAGE 1

TEMPORARY RAILING (TYPE K) PLACEMENT
Sta 690+22 TO Sta 695+00
NOT TO SCALE

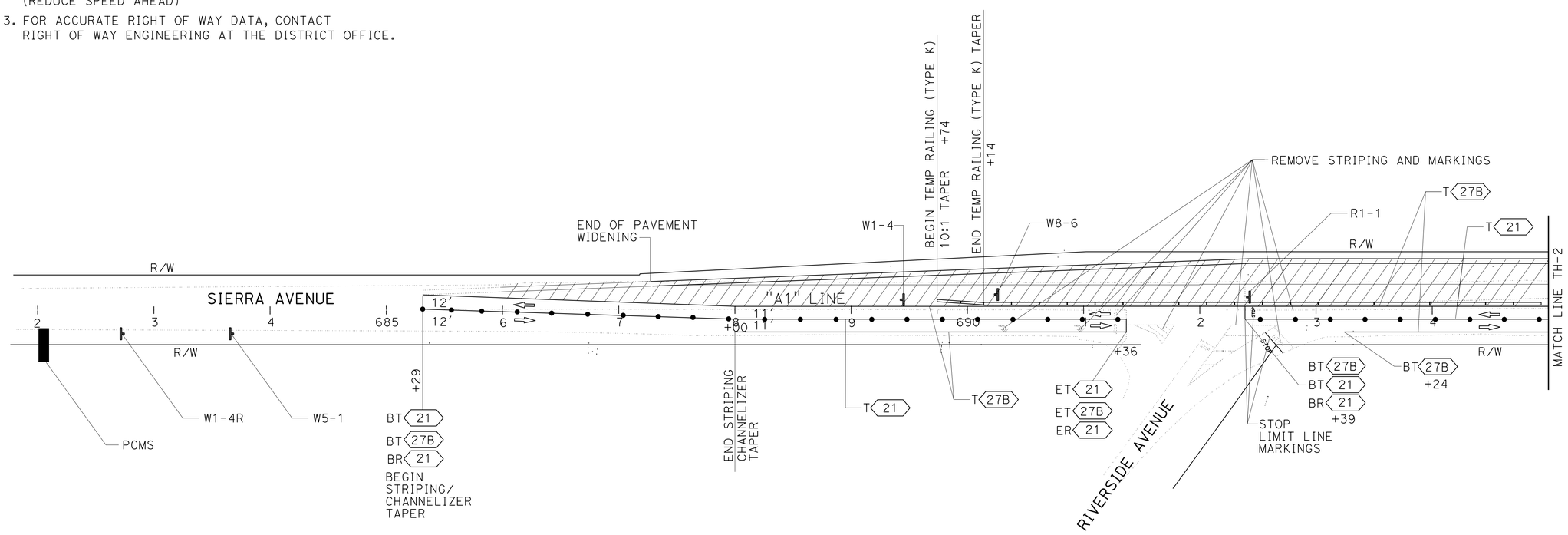

STAGE 1
TRAFFIC HANDLING PLAN
SCALE: 1" = 50'

TH-1

APPROVED FOR TRAFFIC HANDLING WORK ONLY

STATE OF CALIFORNIA - DEPARTMENT OF TRANSPORTATION
Caltrans TRAFFIC DESIGN A
FUNCTIONAL SUPERVISOR: BILL WASSER
CALCULATED-DESIGNED BY: OSCAR ALEJANDRE
CHECKED BY: SIDHARTHA CHOWDHURY
REVISED BY / DATE REVISED

LAST REVISION 12-12-12 | DATE PLOTTED => 26-AUG-2013 | TIME PLOTTED => 14:45

Dist	COUNTY	ROUTE	POST MILES TOTAL PROJECT	SHEET No.	TOTAL SHEETS
08	SBd	15	12.8	45	122

REGISTERED CIVIL ENGINEER 7-17-13 DATE

8-19-13
PLANS APPROVAL DATE

REGISTERED PROFESSIONAL ENGINEER OSCAR ALEJANDRE No. 70863 Exp. 6-30-15 CIVIL STATE OF CALIFORNIA

THE STATE OF CALIFORNIA OR ITS OFFICERS OR AGENTS SHALL NOT BE RESPONSIBLE FOR THE ACCURACY OR COMPLETENESS OF SCANNED COPIES OF THIS PLAN SHEET.

NOTE:

FOR ACCURATE RIGHT OF WAY DATA, CONTACT RIGHT OF WAY ENGINEERING AT THE DISTRICT OFFICE.

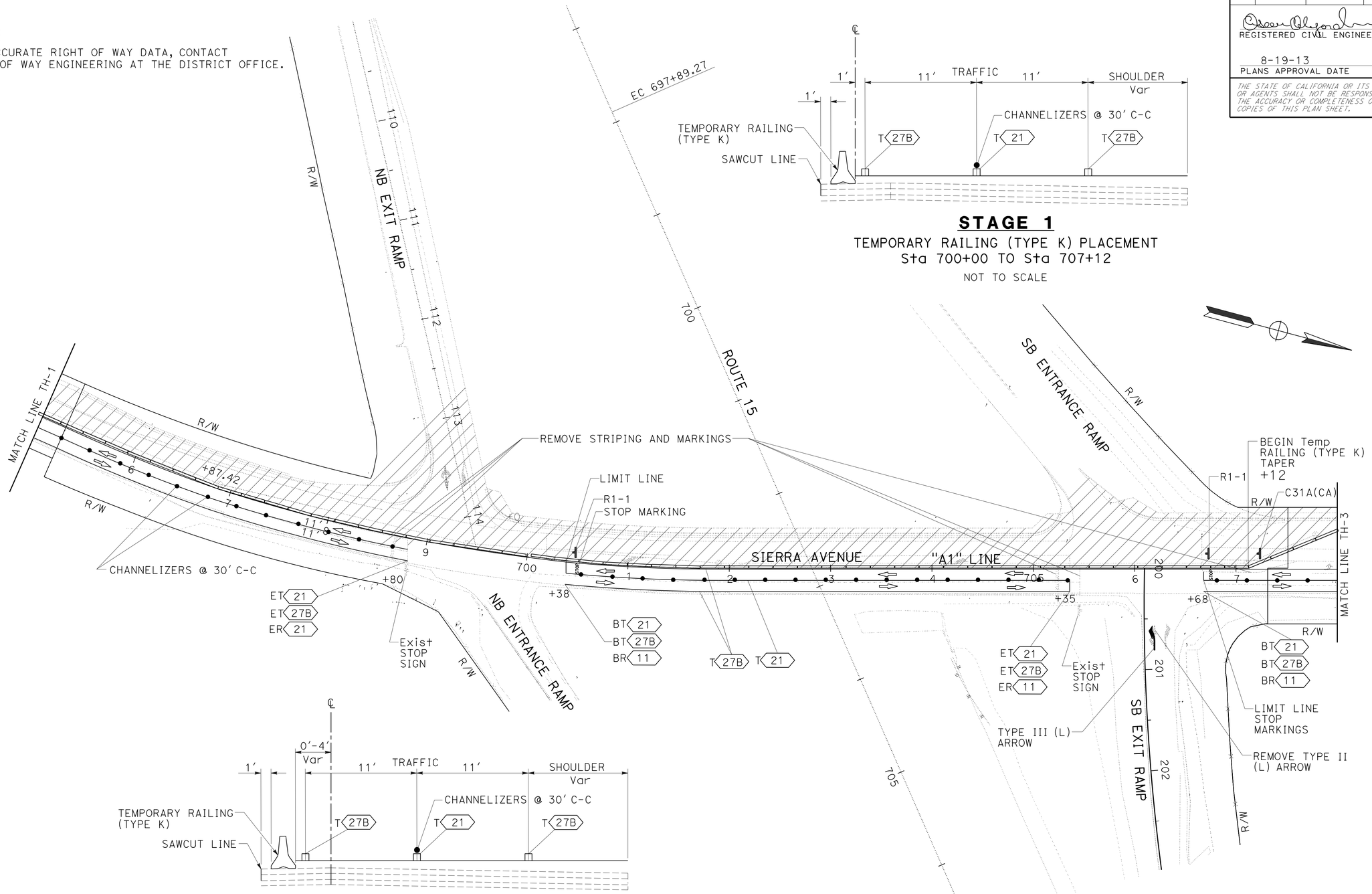

STAGE 1

TEMPORARY RAILING (TYPE K) PLACEMENT
Sta 695+00 TO Sta 700+00

NOT TO SCALE

STAGE 1

TEMPORARY RAILING (TYPE K) PLACEMENT
Sta 700+00 TO Sta 707+12

NOT TO SCALE

STAGE 1
TRAFFIC HANDLING PLAN
SCALE: 1" = 50'

TH-2

APPROVED FOR TRAFFIC HANDLING WORK ONLY

STATE OF CALIFORNIA - DEPARTMENT OF TRANSPORTATION
Caltrans TRAFFIC DESIGN A

FUNCTIONAL SUPERVISOR: BILL WASSER
CALCULATED-DESIGNED BY: OSCAR ALEJANDRE
CHECKED BY: SIDHARTHA CHOWDHURY
REVISED BY
DATE REVISED

LAST REVISION 07-17-13 | DATE PLOTTED => 26-AUG-2013 | TIME PLOTTED => 14:45

Dist	COUNTY	ROUTE	POST MILES TOTAL PROJECT	SHEET No.	TOTAL SHEETS
08	SBd	15	12.8	46	122

REGISTERED CIVIL ENGINEER 12-12-12 DATE

8-19-13
PLANS APPROVAL DATE

REGISTERED PROFESSIONAL ENGINEER OSCAR ALEJANDRE No. 70863 Exp. 6-30-13 CIVIL STATE OF CALIFORNIA

THE STATE OF CALIFORNIA OR ITS OFFICERS OR AGENTS SHALL NOT BE RESPONSIBLE FOR THE ACCURACY OR COMPLETENESS OF SCANNED COPIES OF THIS PLAN SHEET.

NOTES:

1. DISPLAY THE FOLLOWING MESSAGE ON THE PCMS:
   (REDUCE SPEED AHEAD)
2. FOR ACCURATE RIGHT OF WAY DATA, CONTACT
   RIGHT OF WAY ENGINEERING AT THE DISTRICT OFFICE.

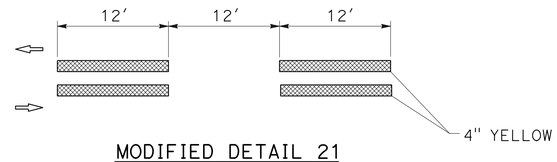

MODIFIED DETAIL 21

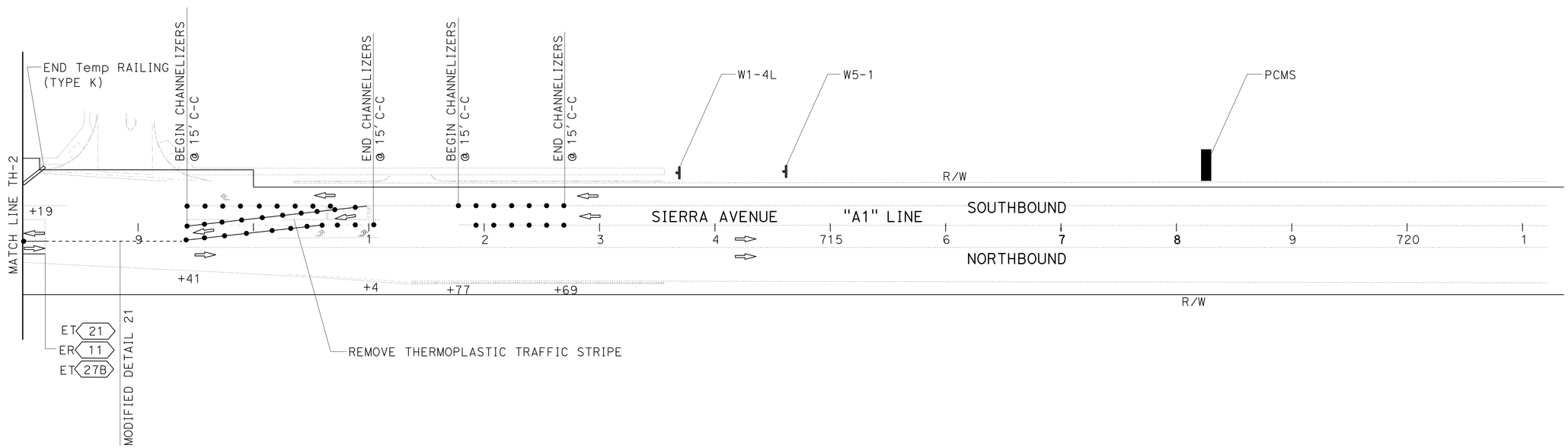

STAGE 1
TRAFFIC HANDLING PLAN

SCALE: 1" = 50′

TH-3

APPROVED FOR TRAFFIC HANDLING WORK ONLY

STATE OF CALIFORNIA - DEPARTMENT OF TRANSPORTATION
Caltrans® TRAFFIC DESIGN A

FUNCTIONAL SUPERVISOR: BILL WASSER
CALCULATED-DESIGNED BY: OSCAR ALEJANDRE
CHECKED BY: SIDHARTHA CHOWDHURY
REVISED BY
DATE REVISED

LAST REVISION 12-12-12 | DATE PLOTTED => 26-AUG-2013 | TIME PLOTTED => 14:45

Dist	COUNTY	ROUTE	POST MILES TOTAL PROJECT	SHEET No.	TOTAL SHEETS
08	SBd	15	12.8	47	122

REGISTERED CIVIL ENGINEER 7-17-13 DATE

8-19-13
PLANS APPROVAL DATE

REGISTERED PROFESSIONAL ENGINEER OSCAR ALEJANDRE No. 70863 Exp. 6-30-15 CIVIL STATE OF CALIFORNIA

THE STATE OF CALIFORNIA OR ITS OFFICERS OR AGENTS SHALL NOT BE RESPONSIBLE FOR THE ACCURACY OR COMPLETENESS OF SCANNED COPIES OF THIS PLAN SHEET.

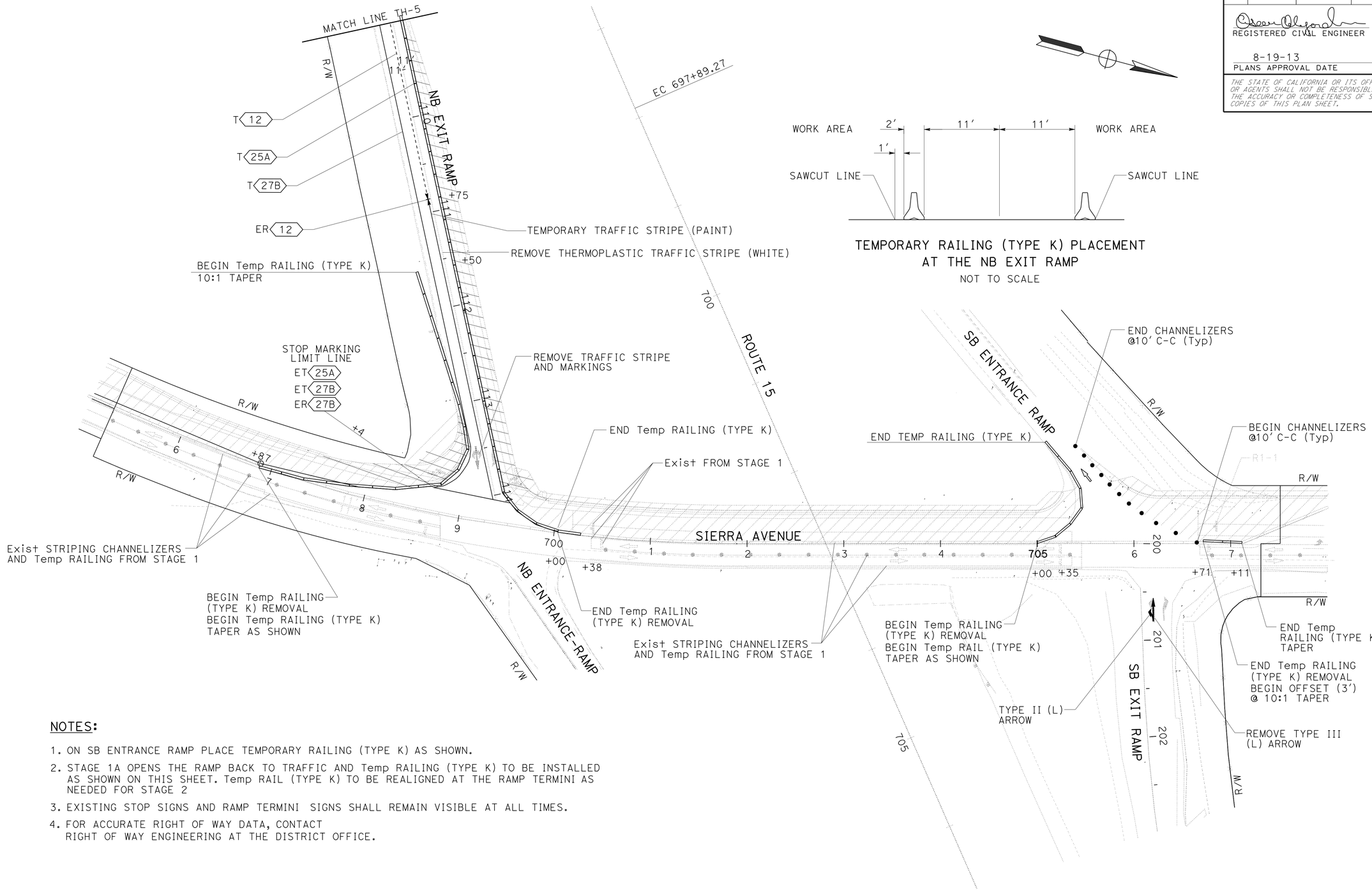

TEMPORARY RAILING (TYPE K) PLACEMENT
AT THE NB EXIT RAMP
NOT TO SCALE

NOTES:

1. ON SB ENTRANCE RAMP PLACE TEMPORARY RAILING (TYPE K) AS SHOWN.
2. STAGE 1A OPENS THE RAMP BACK TO TRAFFIC AND Temp RAILING (TYPE K) TO BE INSTALLED AS SHOWN ON THIS SHEET. Temp RAIL (TYPE K) TO BE REALIGNED AT THE RAMP TERMINI AS NEEDED FOR STAGE 2
3. EXISTING STOP SIGNS AND RAMP TERMINI SIGNS SHALL REMAIN VISIBLE AT ALL TIMES.
4. FOR ACCURATE RIGHT OF WAY DATA, CONTACT RIGHT OF WAY ENGINEERING AT THE DISTRICT OFFICE.

APPROVED FOR TRAFFIC HANDLING WORK ONLY

STAGE 1A
TRAFFIC HANDLING PLAN

SCALE: 1" = 50'

TH-4

STATE OF CALIFORNIA - DEPARTMENT OF TRANSPORTATION
Caltrans TRAFFIC DESIGN A

FUNCTIONAL SUPERVISOR: BILL WASSER
CALCULATED-DESIGNED BY: OSCAR ALEJANDRE
CHECKED BY: SIDHARTHA CHOWDHURY
REVISED BY
DATE REVISED

LAST REVISION 07-17-13
DATE PLOTTED => 26-AUG-2013
TIME PLOTTED => 14:45

Dist	COUNTY	ROUTE	POST MILES TOTAL PROJECT	SHEET No.	TOTAL SHEETS
08	SBd	15	12.8	48	122

REGISTERED CIVIL ENGINEER 12-12-12 DATE

8-19-13
PLANS APPROVAL DATE

REGISTERED PROFESSIONAL ENGINEER OSCAR ALEJANDRE No. 70863 Exp. 6-30-13 CIVIL STATE OF CALIFORNIA

THE STATE OF CALIFORNIA OR ITS OFFICERS OR AGENTS SHALL NOT BE RESPONSIBLE FOR THE ACCURACY OR COMPLETENESS OF SCANNED COPIES OF THIS PLAN SHEET.

NOTE:

FOR ACCURATE RIGHT OF WAY DATA, CONTACT RIGHT OF WAY ENGINEERING AT THE DISTRICT OFFICE.

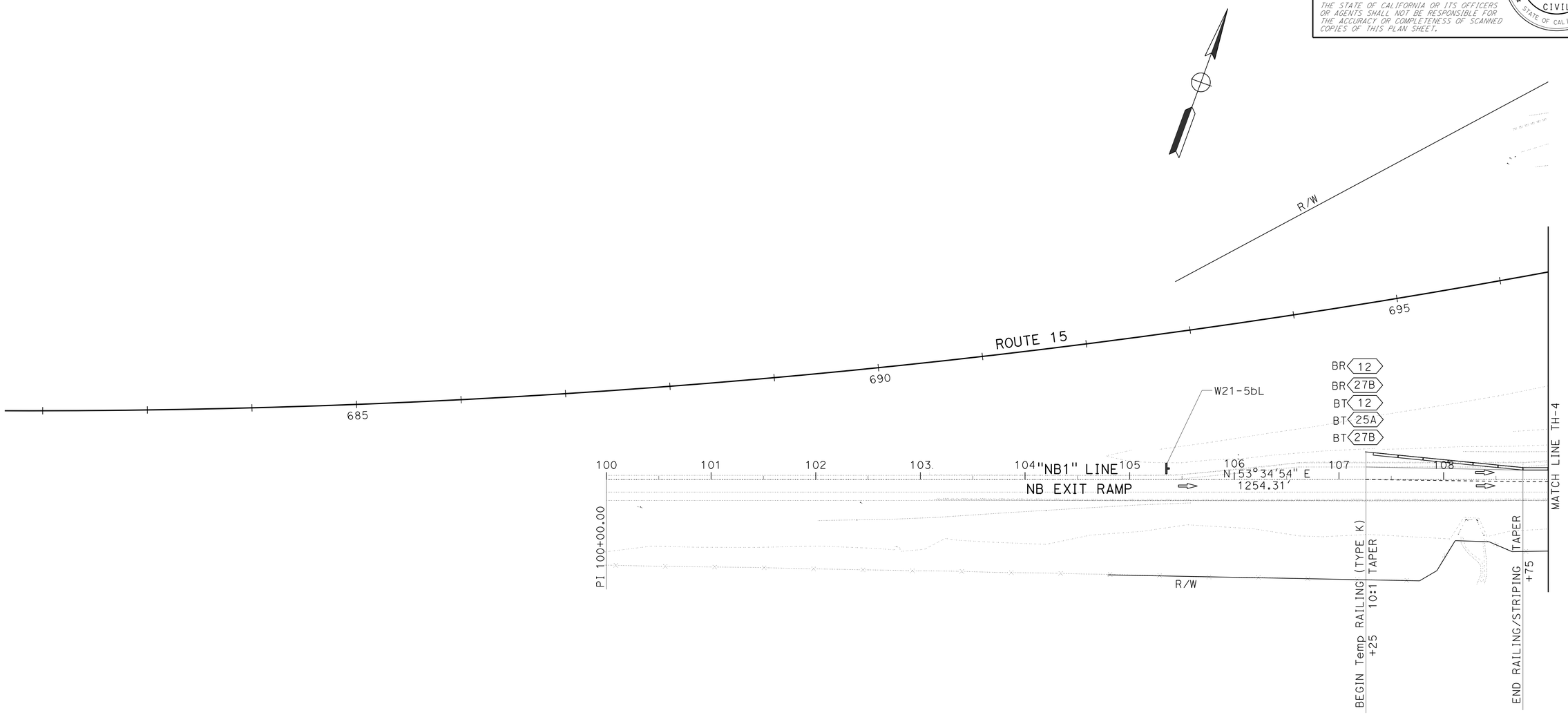

STAGE 1A
TRAFFIC HANDLING PLAN

SCALE: 1" = 50'

TH-5

APPROVED FOR TRAFFIC HANDLING WORK ONLY

STATE OF CALIFORNIA - DEPARTMENT OF TRANSPORTATION
Caltrans® **TRAFFIC DESIGN A**

FUNCTIONAL SUPERVISOR: BILL WASSER

CALCULATED-DESIGNED BY: OSCAR ALEJANDRE
CHECKED BY: SIDHARTHA CHOWDHURY

REVISED BY
DATE REVISED

LAST REVISION 12-12-12 | DATE PLOTTED => 26-AUG-2013 | TIME PLOTTED => 14:45

Dist	COUNTY	ROUTE	POST MILES TOTAL PROJECT	SHEET No.	TOTAL SHEETS
08	SBd	15	12.8	49	122

Oscar Alejandre 12-12-12
REGISTERED CIVIL ENGINEER DATE

8-19-13
PLANS APPROVAL DATE

REGISTERED PROFESSIONAL ENGINEER OSCAR ALEJANDRE No. 70863 Exp. 6-30-13 CIVIL STATE OF CALIFORNIA

THE STATE OF CALIFORNIA OR ITS OFFICERS OR AGENTS SHALL NOT BE RESPONSIBLE FOR THE ACCURACY OR COMPLETENESS OF SCANNED COPIES OF THIS PLAN SHEET.

LEGEND:

- CONSTRUCTION AREA
- T XX — TEMPORARY TRAFFIC STRIPE DETAIL (PAINT)
- R XX — REMOVE PAVEMENT DELINEATION
- BR XX — BEGIN REMOVE TRAFFIC STRIPE
- ER XX — END REMOVE TRAFFIC STRIPE
- PORTABLE CHANGEABLE MESSAGE SIGN
- BT XX — BEGIN TEMPORARY TRAFFIC STRIPE (PAINT)
- ET XX — END TEMPORARY TRAFFIC STRIPE (PAINT)
- CHANNELIZER (SURFACE MOUNTED)

NOTES:

1. COVER EXISTING CONFLICTING SIGNS.
2. DISPLAY THE FOLLOWING MESSAGE ON THE PCMS: (REDUCE SPEED AHEAD)
3. FOR ACCURATE RIGHT OF WAY DATA, CONTACT RIGHT OF WAY ENGINEERING AT THE DISTRICT OFFICE.

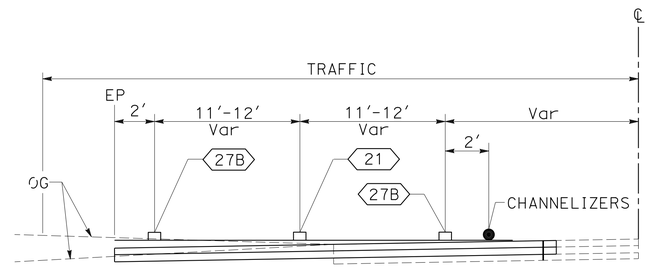

STAGE 2
Sta 685+28 TO Sta 690+87
NOT TO SCALE

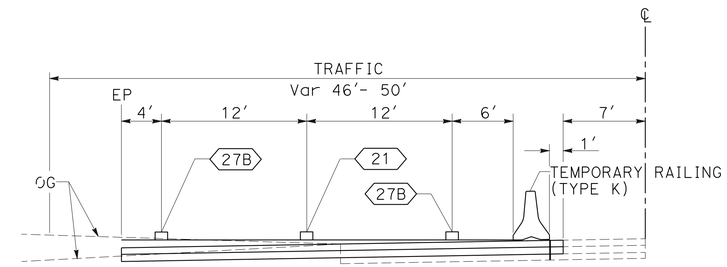

STAGE 2
TEMPORARY RAILING (TYPE K) PLACEMENT
Sta 693+08 TO Sta 695+25
NOT TO SCALE

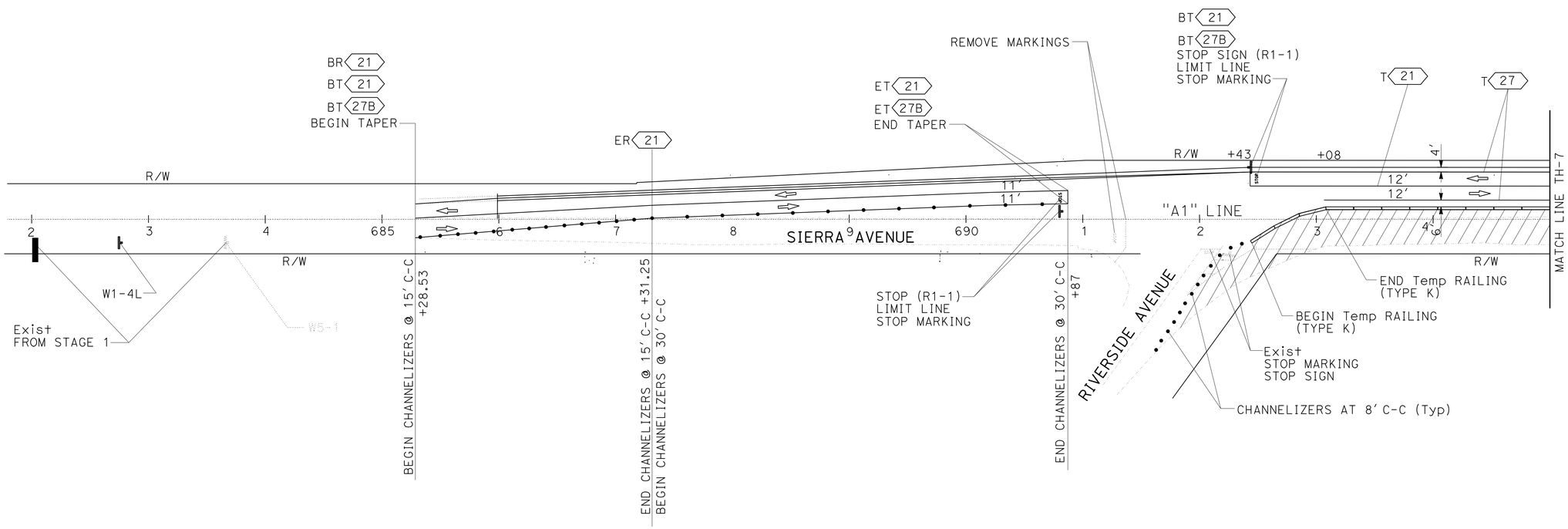

STAGE 2
TRAFFIC HANDLING PLAN
SCALE: 1" = 50′

TH-6

APPROVED FOR TRAFFIC HANDLING WORK ONLY

REVISED BY	DATE REVISED

CALCULATED-DESIGNED BY	CHECKED BY
OSCAR ALEJANDRE	SIDHARTHA CHOWDHURY

FUNCTIONAL SUPERVISOR: BILL WASSER

STATE OF CALIFORNIA - DEPARTMENT OF TRANSPORTATION
Caltrans® **TRAFFIC DESIGN A**

LAST REVISION 12-12-12 | DATE PLOTTED => 26-AUG-2013 | TIME PLOTTED => 14:45

Dist	COUNTY	ROUTE	POST MILES TOTAL PROJECT	SHEET No.	TOTAL SHEETS
08	SBd	15	12.8	50	122

REGISTERED CIVIL ENGINEER 12-12-12 DATE

8-19-13
PLANS APPROVAL DATE

REGISTERED PROFESSIONAL ENGINEER OSCAR ALEJANDRE No. 70863 Exp. 6-30-13 CIVIL STATE OF CALIFORNIA

THE STATE OF CALIFORNIA OR ITS OFFICERS OR AGENTS SHALL NOT BE RESPONSIBLE FOR THE ACCURACY OR COMPLETENESS OF SCANNED COPIES OF THIS PLAN SHEET.

NOTE:

FOR ACCURATE RIGHT OF WAY DATA, CONTACT RIGHT OF WAY ENGINEERING AT THE DISTRICT OFFICE.

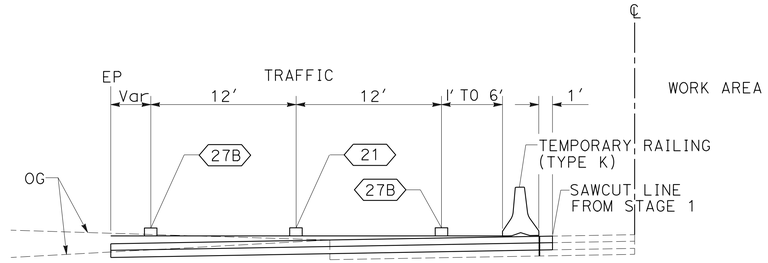

STAGE 2

TEMPORARY RAILING (TYPE K) PLACEMENT
Sta 695+17 TO 697+00

NOT TO SCALE

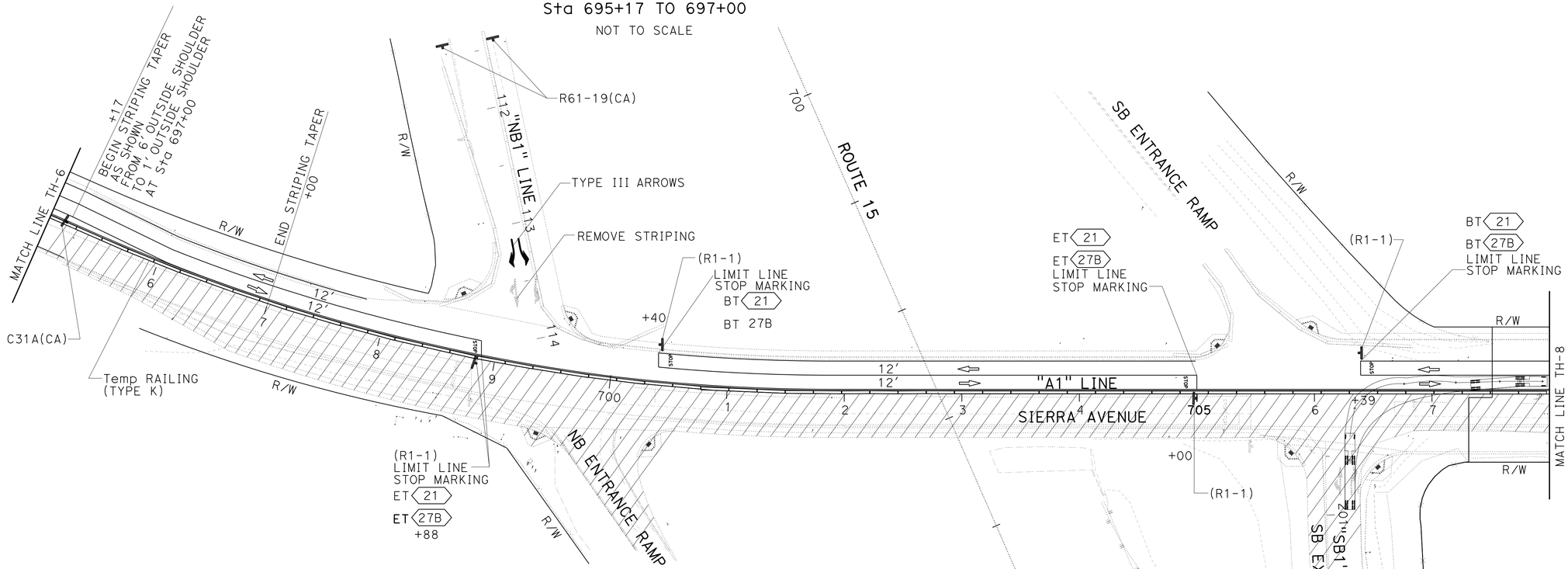

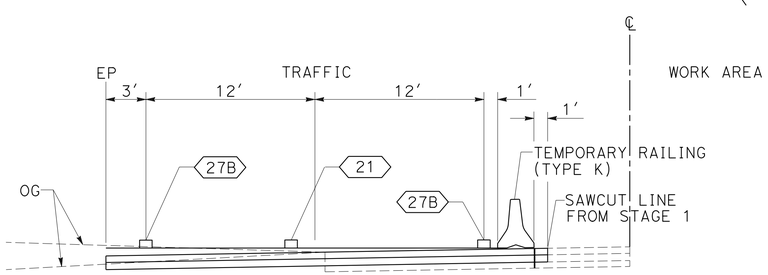

STAGE 2

TEMPORARY RAILING (TYPE K) PLACEMENT
Sta 697+00 TO 707+12

NOT TO SCALE

APPROVED FOR TRAFFIC HANDLING WORK ONLY

STAGE 2
TRAFFIC HANDLING PLAN
SCALE: 1" = 50'

TH-7

STATE OF CALIFORNIA - DEPARTMENT OF TRANSPORTATION
Caltrans TRAFFIC DESIGN A

FUNCTIONAL SUPERVISOR: BILL WASSER
CALCULATED-DESIGNED BY: OSCAR ALEJANDRE
CHECKED BY: SIDHARTHA CHOWDHURY
REVISED BY / DATE REVISED

LAST REVISION 12-12-12 | DATE PLOTTED => 26-AUG-2013 | TIME PLOTTED => 14:45

Dist	COUNTY	ROUTE	POST MILES TOTAL PROJECT	SHEET No.	TOTAL SHEETS
08	SBd	15	12.8	51	122

REGISTERED CIVIL ENGINEER 12-12-12 DATE

8-19-13
PLANS APPROVAL DATE

REGISTERED PROFESSIONAL ENGINEER OSCAR ALEJANDRE No. 70863 Exp. 6-30-13 CIVIL STATE OF CALIFORNIA

THE STATE OF CALIFORNIA OR ITS OFFICERS OR AGENTS SHALL NOT BE RESPONSIBLE FOR THE ACCURACY OR COMPLETENESS OF SCANNED COPIES OF THIS PLAN SHEET.

NOTE:

FOR ACCURATE RIGHT OF WAY DATA, CONTACT RIGHT OF WAY ENGINEERING AT THE DISTRICT OFFICE.

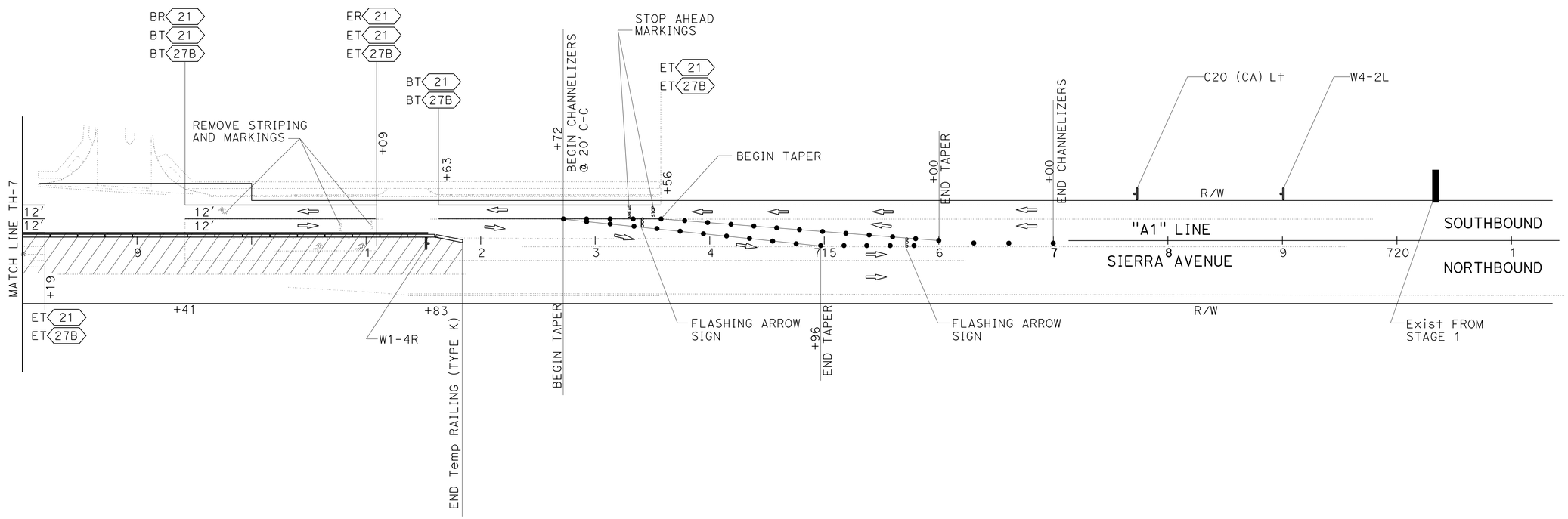

STATE OF CALIFORNIA - DEPARTMENT OF TRANSPORTATION

Caltrans TRAFFIC DESIGN A

FUNCTIONAL SUPERVISOR: BILL WASSER

CALCULATED-DESIGNED BY: OSCAR ALEJANDRE

CHECKED BY: SIDHARTHA CHOWDHURY

REVISED BY

DATE REVISED

STAGE 2
TRAFFIC HANDLING PLAN

SCALE: 1" = 50'

TH-8

APPROVED FOR TRAFFIC HANDLING WORK ONLY

LAST REVISION 12-12-12

DATE PLOTTED => 26-AUG-2013
TIME PLOTTED => 14:46

Dist	COUNTY	ROUTE	POST MILES TOTAL PROJECT	SHEET No.	TOTAL SHEETS
08	SBd	15	12.8	52	122

REGISTERED CIVIL ENGINEER 12-12-12 DATE

8-19-13
PLANS APPROVAL DATE

REGISTERED PROFESSIONAL ENGINEER OSCAR ALEJANDRE No. 70863 Exp. 6-30-13 CIVIL STATE OF CALIFORNIA

THE STATE OF CALIFORNIA OR ITS OFFICERS OR AGENTS SHALL NOT BE RESPONSIBLE FOR THE ACCURACY OR COMPLETENESS OF SCANNED COPIES OF THIS PLAN SHEET.

NOTES:

1. PLACE Temp RAILING (TYPE K) AT THE RAMP TERMINI AS SHOWN
2. RAMP TERMINI SIGNS SHALL REMAIN VISIBLE AT ALL TIMES.
3. FOR ACCURATE RIGHT OF WAY DATA, CONTACT RIGHT OF WAY ENGINEERING AT THE DISTRICT OFFICE.

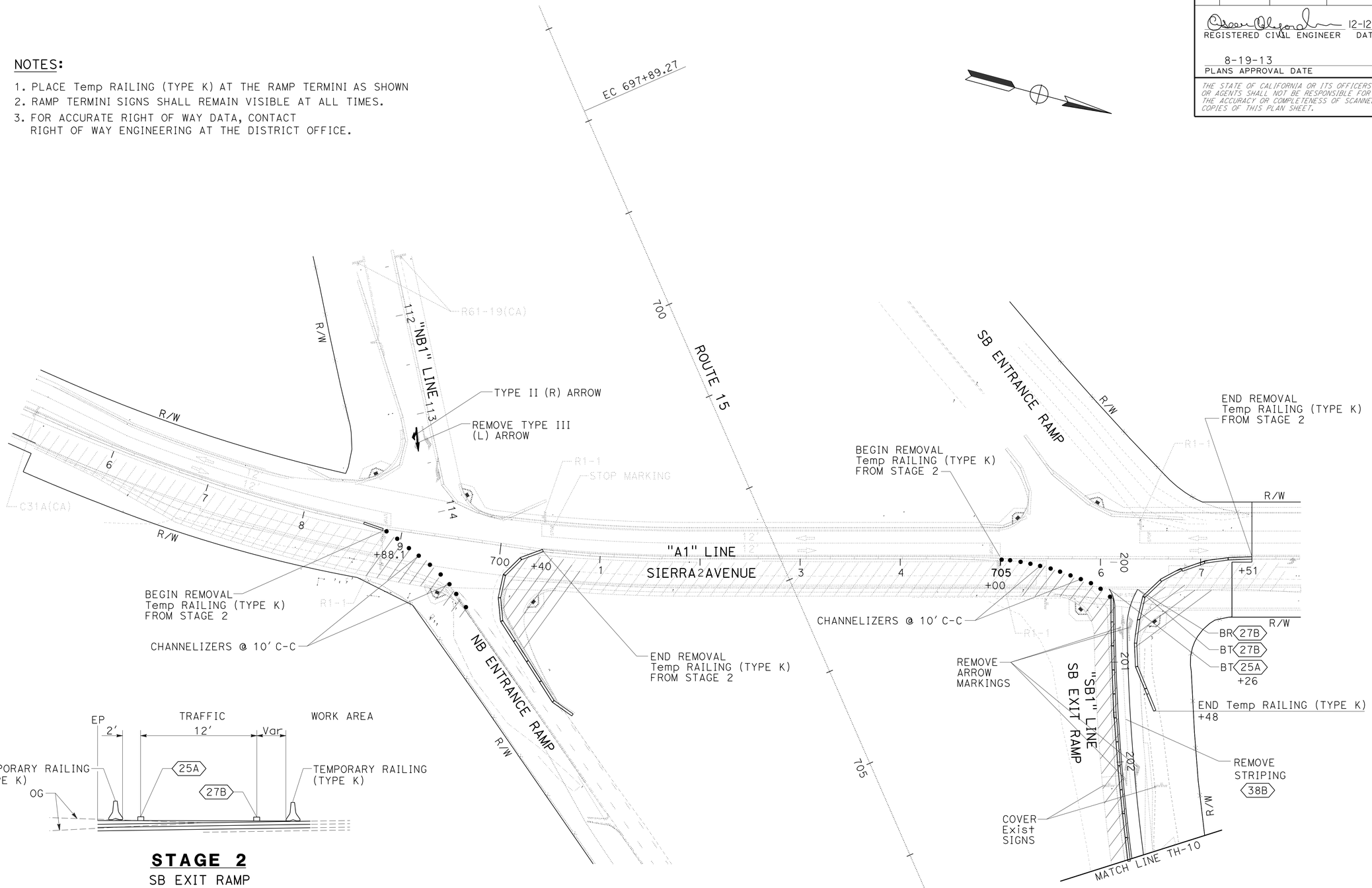

STAGE 2
SB EXIT RAMP
Sta 200+43 TO 204+89
NOT TO SCALE

STAGE 2A
TRAFFIC HANDLING PLAN
SCALE: 1" = 50'

TH-9

APPROVED FOR TRAFFIC HANDLING WORK ONLY

STATE OF CALIFORNIA - DEPARTMENT OF TRANSPORTATION
Caltrans® **TRAFFIC DESIGN A**

FUNCTIONAL SUPERVISOR: BILL WASSER
CALCULATED-DESIGNED BY: OSCAR ALEJANDRE
CHECKED BY: SIDHARTHA CHOWDHURY
REVISED BY
DATE REVISED

LAST REVISION 12-12-12
DATE PLOTTED => 26-AUG-2013
TIME PLOTTED => 14:46

Dist	COUNTY	ROUTE	POST MILES TOTAL PROJECT	SHEET No.	TOTAL SHEETS
08	SBd	15	12.8	53	122

REGISTERED CIVIL ENGINEER 12-12-12 DATE

8-19-13
PLANS APPROVAL DATE

REGISTERED PROFESSIONAL ENGINEER OSCAR ALEJANDRE No. 70863 Exp. 6-30-13 CIVIL STATE OF CALIFORNIA

THE STATE OF CALIFORNIA OR ITS OFFICERS OR AGENTS SHALL NOT BE RESPONSIBLE FOR THE ACCURACY OR COMPLETENESS OF SCANNED COPIES OF THIS PLAN SHEET.

NOTE:

FOR ACCURATE RIGHT OF WAY DATA, CONTACT
RIGHT OF WAY ENGINEERING AT THE DISTRICT OFFICE.

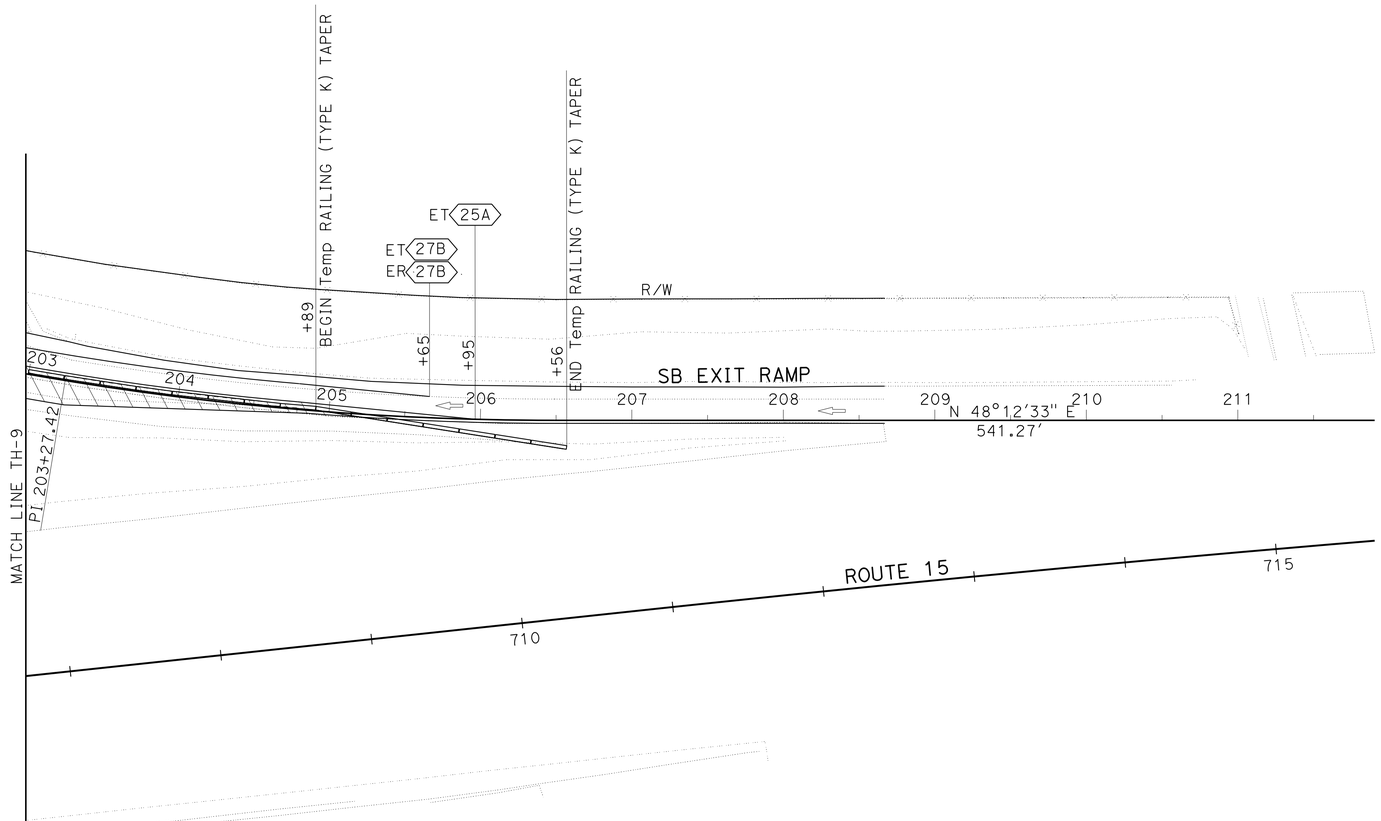

STAGE 2A
TRAFFIC HANDLING PLAN
SCALE: 1" = 50'

TH-10

APPROVED FOR TRAFFIC HANDLING WORK ONLY

STATE OF CALIFORNIA - DEPARTMENT OF TRANSPORTATION
Caltrans® **TRAFFIC DESIGN A**

FUNCTIONAL SUPERVISOR: BILL WASSER
CALCULATED-DESIGNED BY: OSCAR ALEJANDRE
CHECKED BY: SIDHARTHA CHOWDHURY
REVISED BY
DATE REVISED

LAST REVISION DATE PLOTTED => 26-AUG-2013
12-12-12 TIME PLOTTED => 14:46

Dist	COUNTY	ROUTE	POST MILES TOTAL PROJECT	SHEET No.	TOTAL SHEETS
08	SBd	15	12.8	54	122

REGISTERED CIVIL ENGINEER 12-12-12 DATE

8-19-13
PLANS APPROVAL DATE

REGISTERED PROFESSIONAL ENGINEER OSCAR ALEJANDRE No. 70863 Exp. 6-30-13 CIVIL STATE OF CALIFORNIA

THE STATE OF CALIFORNIA OR ITS OFFICERS OR AGENTS SHALL NOT BE RESPONSIBLE FOR THE ACCURACY OR COMPLETENESS OF SCANNED COPIES OF THIS PLAN SHEET.

NOTE:

1. FOR ADDITIONAL REMOVE THERMOPLASTIC PAVEMENT MARKING, REMOVE THERMOPLASTIC TRAFFIC STRIPE, AND REMOVE PAVEMENT MARKER SEE SHEET PDQ-1, AND PDQ-2

TRAFFIC HANDLING QUANTITIES

SHEET No. /STAGE	STATION/LOCATION	DETAIL	REMOVE THERMOPLASTIC PAVEMENT MARKING	REMOVE PAVEMENT MARKER	REMOVE THERMOPLASTIC TRAFFIC STRIPE		PAVEMENT MARKER RETROREFLECTIVE			TEMPORARY TRAFFIC STRIPE (PAINT)		TEMPORARY PAVEMENT MARKING (PAINT)
					4" YELLOW	4" WHITE	TYPE G	TYPE D	TYPE H	4" YELLOW	4" WHITE	
			SQFT	EA	LF	LF	EA	EA	EA	LF	LF	SQFT
STAGE 1												
TH-1	685+29 TO 691+37	21			2432					608		
TH-1	685+29 TO 691+37	27B									1216	
TH-1	RIVERSIDE Ave	TYPE IV ARROW	30									
TH-1		STOP	42									44
TH-1		ISLAND MARKING	400									
TH-1		12" LIMIT LINE	36									36
TH-1/TH-2	692+38 TO 698+81	27B									1286	
TH-1/TH-2	692+38 TO 698+81	21			2572					643		
TH-2	NB ENTRANCE RAMP	STOP										22
TH-2		12" LIMIT LINE	22									12
TH-2		4" SOLID LINE	14			200						
TH-2	700+38 TO 705+36	11				199						
TH-2	700+38 TO 705+36	21								498		
TH-2	700+38 TO 705+36	27B									498	
TH-2	SB EXIT RAMP	STOP										22
TH-2		12" LIMIT LINE	22									24
TH-2		TYPE II ARROW	50									
TH-2		TYPE III ARROW	45									45
TH-2/TH-3	706+68 TO 708+18	11				60						
TH-2/TH-3	706+68 TO 708+18	21			300					150		
TH-2/TH-3	706+68 TO 708+18	27B									150	
TH-3	708+20 TO 709+41	MOD 21								121		
TH-3	709+41 TO 710+04	Var			300							
STAGE 1A												
TH-4	SB EXIT RAMP	TYPE II LEFT ARROW				84					300	45
TH-4/TH-5	107+25 TO 110+75	12		9			9					
TH-4/TH-5	107+25 TO 114+05	25A							28	680		
TH-4/TH-5	107+25 TO 114+05	27B				680					680	
TH-5	107+25 TO 114+05	4" SOLID STRIPE				330					330	
TH-5	NB EXIT RAMP	TYPE II LEFT ARROW	14									
TH-5		12" LIMIT LINE										80
SUBTOTAL			675	9	5604	1553	9		28	2700	4460	330
SHEET TOTAL			675	9	7157		37			7160		330

STATE OF CALIFORNIA - DEPARTMENT OF TRANSPORTATION
Caltrans® TRAFFIC DESIGN A

FUNCTIONAL SUPERVISOR: BILL WASSER
CALCULATED-DESIGNED BY: OSCAR ALEJANDRE
CHECKED BY: SIDHARTHA CHOWDHURY
REVISED BY
DATE REVISED

TRAFFIC HANDLING QUANTITIES

THQ-1

LAST REVISION 12-12-12
DATE PLOTTED => 26-AUG-2013
TIME PLOTTED => 14:46

Dist	COUNTY	ROUTE	POST MILES TOTAL PROJECT	SHEET No.	TOTAL SHEETS
08	SBd	15	12.8	55	122

REGISTERED CIVIL ENGINEER 12-12-12 DATE

8-19-13
PLANS APPROVAL DATE

REGISTERED PROFESSIONAL ENGINEER OSCAR ALEJANDRE No. 70863 Exp. 6-30-13 CIVIL STATE OF CALIFORNIA

THE STATE OF CALIFORNIA OR ITS OFFICERS OR AGENTS SHALL NOT BE RESPONSIBLE FOR THE ACCURACY OR COMPLETENESS OF SCANNED COPIES OF THIS PLAN SHEET.

TRAFFIC HANDLING QUANTITIES

SHEET No. /STAGE	STATION/LOCATION	DETAIL	REMOVE THERMOPLASTIC PAVEMENT MARKING	REMOVE PAVEMENT MARKER	REMOVE THERMOPLASTIC TRAFFIC STRIPE		PAVEMENT MARKER RETROREFLECTIVE			TEMPORARY TRAFFIC STRIPE (PAINT)		TEMPORARY PAVEMENT MARKING (PAINT)
					4" YELLOW	4" WHITE	TYPE G	TYPE D	TYPE H	4" YELLOW	4" WHITE	
			SQFT	EA	LF	LF	EA	EA	EA	LF	LF	SQFT
STAGE 2												
TH-6	685+28 TO 687+32	21			408							
TH-6	685+28 TO 690+87	21								559	1198	
TH-6	685+28 TO 690+87	27B										
TH-6	RIVERSIDE Ave	12" LIMIT LINE	36									24
TH-6		STOP	22									44
TH-6/TH-7	692+43 TO 698+88	21								645		
TH-6/TH-7	692+43 TO 698+88	27B									645	
TH-7	NB EXIT RAMP	12" LIMIT LINE										24
TH-7		STOP										44
TH-7		TYPE II (R) ARROW	45									
TH-7		TYPE III (L & R) ARROW										84
TH-7	700+40 TO 705+00	21								460		
TH-7	700+40 TO 705+00	27B									460	24
TH-7	SB EXIT RAMP	12" LIMIT LINE										44
TH-7		STOP										
TH-7/TH-8	706+39 TO 708+20	21								181		
TH-7/TH-8	706+39 TO 708+20	27B									181	
TH-8	709+41 TO 711+09	21								168		
TH-8	709+41 TO 711+09	21			336							
TH-8	709+41 TO 711+09	27B									168	
TH-8	711+63 TO 713+57	21								194		
TH-8	711+63 TO 713+57	27B									194	
TH-8	SB SIERRA Ave	TYPE IV (R) ARROW	15									
TH-8		STOP AHEAD	53									
TH-8		STOP AHEAD										53
STAGE 2A												
TH-9/TH10	200+26 TO 205+96	25A							26	570		
TH-9/TH10	200+26 TO 205+96	27B				570					570	
TH-9	SB EXIT RAMP	TYPE III (R) ARROW	84									
TH-9		TYPE II (L) ARROW	90									
TH-9	NB EXIT RAMP	TYPE III (R) ARROW	42									
TH-9		TYPE II (R) ARROW										45
SUBTOTAL			387		744	570			26	2777	3416	386
TOTAL			387		1314		26			6193		386
THQ-1 TOTAL			675	9	7157		37			7160		330
GRAND TOTAL			1062	9	8471		63			13353		716

CHANNELIZER (SURFACE MOUNTED)	TEMPORARY RAILING (TYPE K)	PORTABLE CHANGEABLE MESSAGE SIGN	FLASHING ARROW SIGN
EA	LF	EA	EA
225	6130	2	2

TRAFFIC HANDLING QUANTITIES

THQ-2

STATE OF CALIFORNIA - DEPARTMENT OF TRANSPORTATION
Caltrans® TRAFFIC DESIGN A

FUNCTIONAL SUPERVISOR: BILL WASSER
CALCULATED-DESIGNED BY: OSCAR ALEJANDRE
CHECKED BY: SIDHARTHA CHOWDHURY
REVISED BY
DATE REVISED

LAST REVISION 12-12-12 | DATE PLOTTED => 26-AUG-2013 | TIME PLOTTED => 14:46

Dist	COUNTY	ROUTE	POST MILES TOTAL PROJECT	SHEET No.	TOTAL SHEETS
08	SBd	15	12.8	56	122

REGISTERED CIVIL ENGINEER 12-12-12 DATE

8-19-13
PLANS APPROVAL DATE

REGISTERED PROFESSIONAL ENGINEER OSCAR ALEJANDRE No. 70863 Exp. 6-30-13 CIVIL STATE OF CALIFORNIA

THE STATE OF CALIFORNIA OR ITS OFFICERS OR AGENTS SHALL NOT BE RESPONSIBLE FOR THE ACCURACY OR COMPLETENESS OF SCANNED COPIES OF THIS PLAN SHEET.

STATIONARY MOUNTED CONSTRUCTION AREA SIGNS

SHEET No./STAGE	SIGN CODE		PANEL SIZE	SIGN MESSAGE	NUMBER OF POSTS AND SIZE	No. OF SIGNS
	FEDERAL	CALIFORNIA				
STAGE 1						
TH-1	W1-4R		48′ x 48"	REVERSE CURVE	1 - 4" x 4"	2
TH-1	W5-1		48′ x 48"	ROAD NARROWS	1 - 4" x 4"	1
TH-1	W8-6		48′ x 48"	TRUCK CROSSING	1 - 4" x 4"	1
TH-1	R1-1		48′ x 48"	STOP	1 - 6" x 6"	1
TH-2	R1-1		48′ x 48"	STOP	1 - 6" x 6"	2
TH-2		C31A (CA)	48′ x 48"	NO SHOULDER	1 - 4" x 4"	1
TH-3	W5-1		48′ x 48"	ROAD NARROWS	1 - 4" x 4"	1
TH-3	W1-4L		48′ x 48"	REVERSE CURVE	1 - 4" x 4"	1
STAGE 1A						
TH-5	W21-5bL		48′ x 48"	LEFT SHOULDER CLOSED AHEAD	1 - 4" x 4"	1
STAGE 2						
TH-6	R1-1		48′ x 48"	STOP	1 - 6" x 6"	2
TH-6	W1-4L		48′ x 48"	REVERSE CURVE	1 - 4" x 4"	1
TH-7	R1-1		48′ x 48"	STOP	1 - 6" x 6"	4
TH-7		R61-19 (CA)	48′ x 36"	INTERSECTION LANE CONTROL	1 - 4" x 6"	2
TH-7		C31A (CA)	48′ x 48"	NO SHOULDER	1 - 4" x 4"	1
STAGE 2A						
TH-8	W1-4R		48′ x 48"	LANE ENDS	1 - 4" x 4"	1
TH-8		C20 (CA) L+	48′ x 48"	LEFT LANE CLOSED AHEAD	1 - 4" x 4"	1
TH-8	W4-2L		48′ x 48"	LANE ENDS	1 - 4" x 4"	1

TRAFFIC HANDLING QUANTITIES

THQ-3

REVISED BY | DATE REVISED
OSCAR ALEJANDRE | SIDHARTHA CHOWDHURY
CALCULATED-DESIGNED BY | CHECKED BY
FUNCTIONAL SUPERVISOR: BILL WASSER

STATE OF CALIFORNIA - DEPARTMENT OF TRANSPORTATION
Caltrans® TRAFFIC DESIGN A

LAST REVISION 12-12-12 | DATE PLOTTED => 26-AUG-2013 | TIME PLOTTED => 14:46

Dist	COUNTY	ROUTE	POST MILES TOTAL PROJECT	SHEET No.	TOTAL SHEETS
08	SBd	15	12.8	57	122

REGISTERED CIVIL ENGINEER 12-12-12 DATE

8-19-13
PLANS APPROVAL DATE

REGISTERED PROFESSIONAL ENGINEER OSCAR ALEJANDRE No. 70863 Exp. 6-30-13 CIVIL STATE OF CALIFORNIA

THE STATE OF CALIFORNIA OR ITS OFFICERS OR AGENTS SHALL NOT BE RESPONSIBLE FOR THE ACCURACY OR COMPLETENESS OF SCANNED COPIES OF THIS PLAN SHEET.

LEGEND:

PORTABLE CHANGEABLE MESSAGE SYSTEM

DIRECTION OF DETOUR

NOTES:

1. DURING SB ENTRANCE RAMP CLOSURE. PCMS MESSAGE AT SIERRA SHOULD READ.

SB ON RAMP CLOSED	USE NB ON RAMP
1ST FRAME	2ND FRAME

2. DURING NB EXIT RAMP CLOSURE. PCMS MESSAGE AT I-15 SHOULD READ.

SIERRA AVE CLOSED	USE DETOUR AHEAD

3. PCMS'S TO BE REUSED FOR NEXT DETOUR, SEE SHEET DE-2
4. FOR ADDITIONAL CONSTRUCTION AREA SIGNS SEE SHEETS CS-1 AND THQ-3.

TRAFFIC DETOUR PLAN

SB ENTRANCE RAMP CLOSED AT SIERRA Ave
TAKE THE NB ON RAMP AND
USE NEXT EXIT TO TURN AROUND

TRAFFIC DETOUR PLAN

NB EXIT RAMP CLOSED AT SIERRA Ave
TAKE GLEN HELEN Pkwy
EXIT AND TURN AROUND

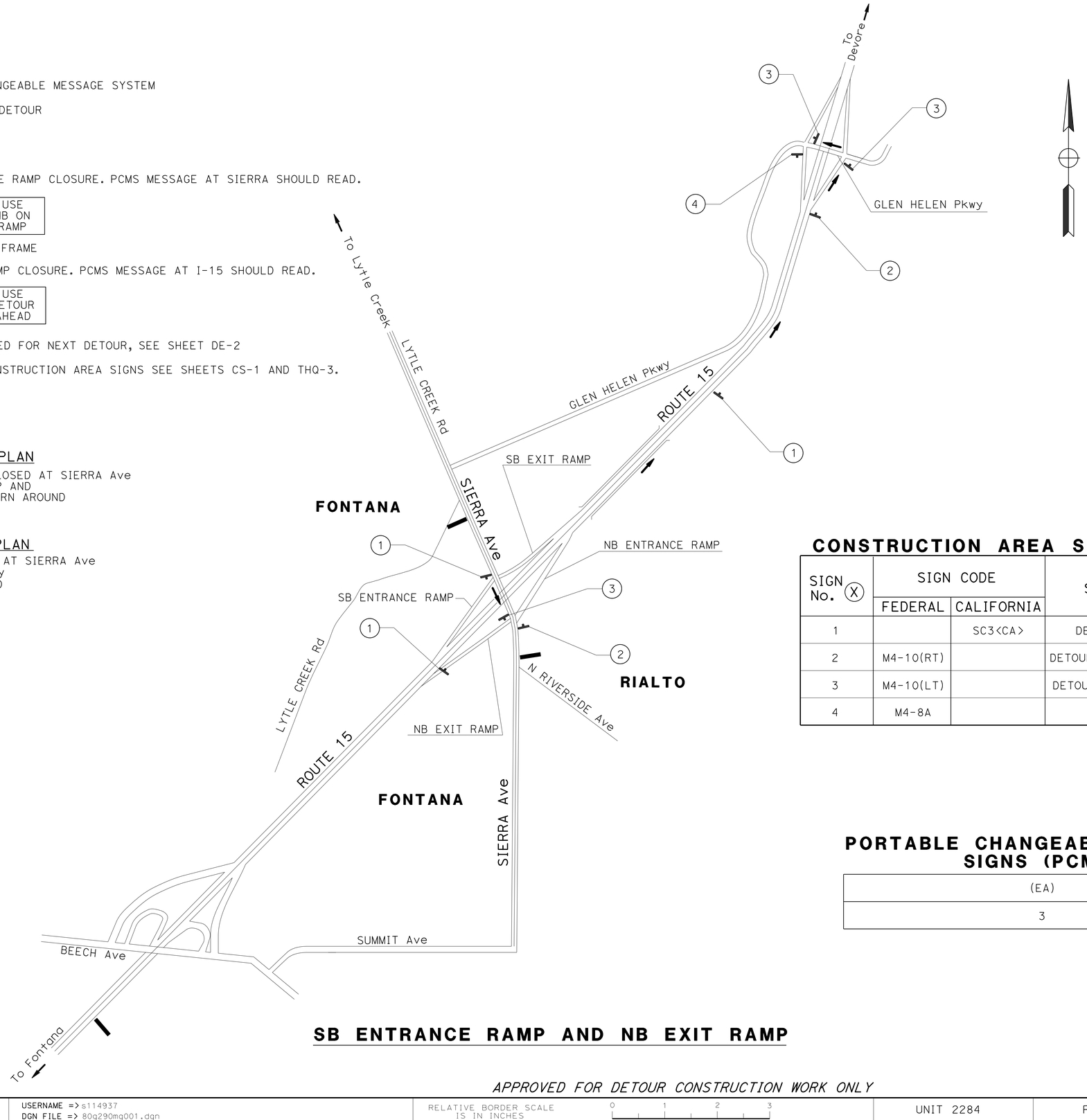

CONSTRUCTION AREA SIGNS (PORTABLE)

SIGN No. (X)	SIGN CODE		SIGN MESSAGE	No. OF SIGNS
	FEDERAL	CALIFORNIA		
1		SC3<CA>	DETOUR WITH ARROW	3
2	M4-10(RT)		DETOUR WITH ARROW (RIGHT)	2
3	M4-10(LT)		DETOUR WITH ARROW (LEFT)	3
4	M4-8A		END DETOUR	1

PORTABLE CHANGEABLE MESSAGE SIGNS (PCMS)

(EA)
3

SB ENTRANCE RAMP AND NB EXIT RAMP

APPROVED FOR DETOUR CONSTRUCTION WORK ONLY

DETOUR PLAN

NO SCALE

DE-1

STATE OF CALIFORNIA - DEPARTMENT OF TRANSPORTATION
Caltrans TRAFFIC DESIGN A

FUNCTIONAL SUPERVISOR: BILL WASSER
CALCULATED-DESIGNED BY: OSCAR ALEJANDRE
CHECKED BY: SIDHARTHA CHOWDHURY
REVISED BY
DATE REVISED

LAST REVISION 12-12-12
DATE PLOTTED => 26-AUG-2013
TIME PLOTTED => 14:46

Dist	COUNTY	ROUTE	POST MILES TOTAL PROJECT	SHEET No.	TOTAL SHEETS
08	SBd	15	12.8	58	122

REGISTERED CIVIL ENGINEER 12-12-12 DATE

8-19-13
PLANS APPROVAL DATE

REGISTERED PROFESSIONAL ENGINEER OSCAR ALEJANDRE No. 70863 Exp. 6-30-13 CIVIL STATE OF CALIFORNIA

THE STATE OF CALIFORNIA OR ITS OFFICERS OR AGENTS SHALL NOT BE RESPONSIBLE FOR THE ACCURACY OR COMPLETENESS OF SCANNED COPIES OF THIS PLAN SHEET.

LEGEND:

PORTABLE CHANGEABLE MESSAGE SYSTEM

DIRECTION OF DETOUR

NOTES:

1. DURING SB EXIT RAMP CLOSURE, PCMS MESSAGE AT ROUTE 15 SHOULD READ:

NEXT OFF RAMP CLOSED	USE BEECH AVE
1ST FRAME	2ND FRAME

2. DURING NB ENTRANCE RAMP CLOSURE, PCMS MESSAGE AT SIERRA Ave SHOULD READ:

NB ON RAMP CLOSED	USE DETOUR AHEAD

TRAFFIC DETOUR PLAN

SB EXIT RAMP CLOSED AT SIERRA Ave
STAY ON FREEWAY AND USE
NEXT EXIT BEECH Ave TO TURN AROUND

TRAFFIC DETOUR PLAN

NB ENTRANCE RAMP CLOSED AT SIERRA Ave
TAKE GLEN HELEN Pkwy
TO THE NEXT ENTRANCE RAMP

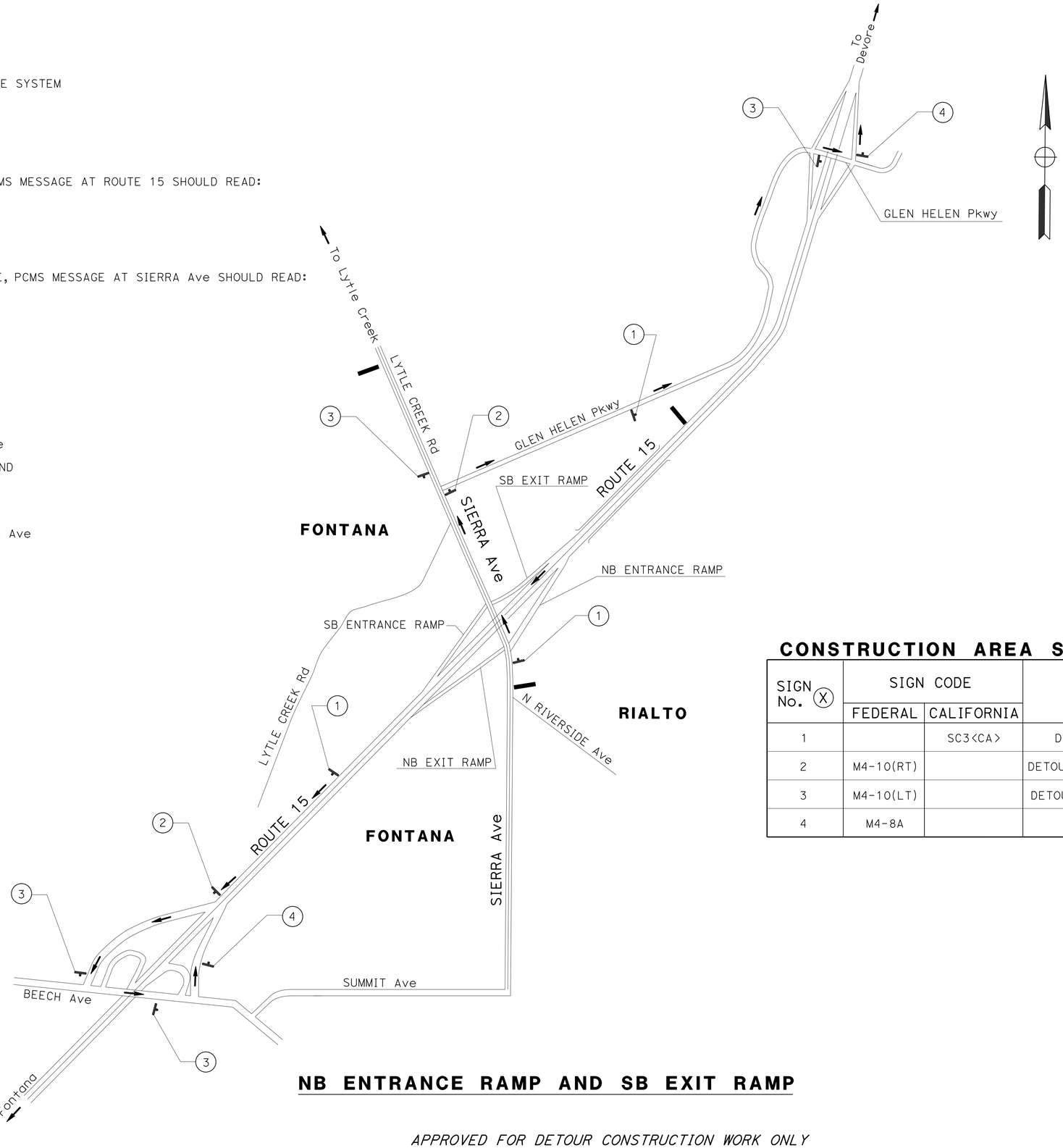

CONSTRUCTION AREA SIGNS (PORTABLE)

SIGN No. (X)	SIGN CODE		SIGN MESSAGE	No. OF SIGNS
	FEDERAL	CALIFORNIA		
1		SC3<CA>	DETOUR WITH ARROW	3
2	M4-10(RT)		DETOUR WITH ARROW (RIGHT)	2
3	M4-10(LT)		DETOUR WITH ARROW (LEFT)	4
4	M4-8A		END DETOUR	2

NB ENTRANCE RAMP AND SB EXIT RAMP

APPROVED FOR DETOUR CONSTRUCTION WORK ONLY

DETOUR PLAN

NO SCALE

DE-2

STATE OF CALIFORNIA - DEPARTMENT OF TRANSPORTATION
Caltrans® TRAFFIC DESIGN A

FUNCTIONAL SUPERVISOR: BILL WASSER
CALCULATED-DESIGNED BY: OSCAR ALEJANDRE
CHECKED BY: SIDHARTHA CHOWDHURY
REVISED BY / DATE REVISED

LAST REVISION 12-12-12 | DATE PLOTTED => 26-AUG-2013 | TIME PLOTTED => 14:46

Dist	COUNTY	ROUTE	POST MILES TOTAL PROJECT	SHEET No.	TOTAL SHEETS
08	SBd	15	12.8	59	122

REGISTERED CIVIL ENGINEER 12-12-12 DATE

8-19-13
PLANS APPROVAL DATE

REGISTERED PROFESSIONAL ENGINEER
SIDHARTHA CHOWDHURRY
No. 55418
Exp. 12-31-12
CIVIL
STATE OF CALIFORNIA

THE STATE OF CALIFORNIA OR ITS OFFICERS OR AGENTS SHALL NOT BE RESPONSIBLE FOR THE ACCURACY OR COMPLETENESS OF SCANNED COPIES OF THIS PLAN SHEET.

NOTE:

FOR ACCURATE RIGHT OF WAY DATA, CONTACT
RIGHT OF WAY ENGINEERING AT THE DISTRICT OFFICE.

LEGEND:

- DIRECTION OF TRAVEL
- XX STRIPING DETAIL No.
- XX SIGN No.

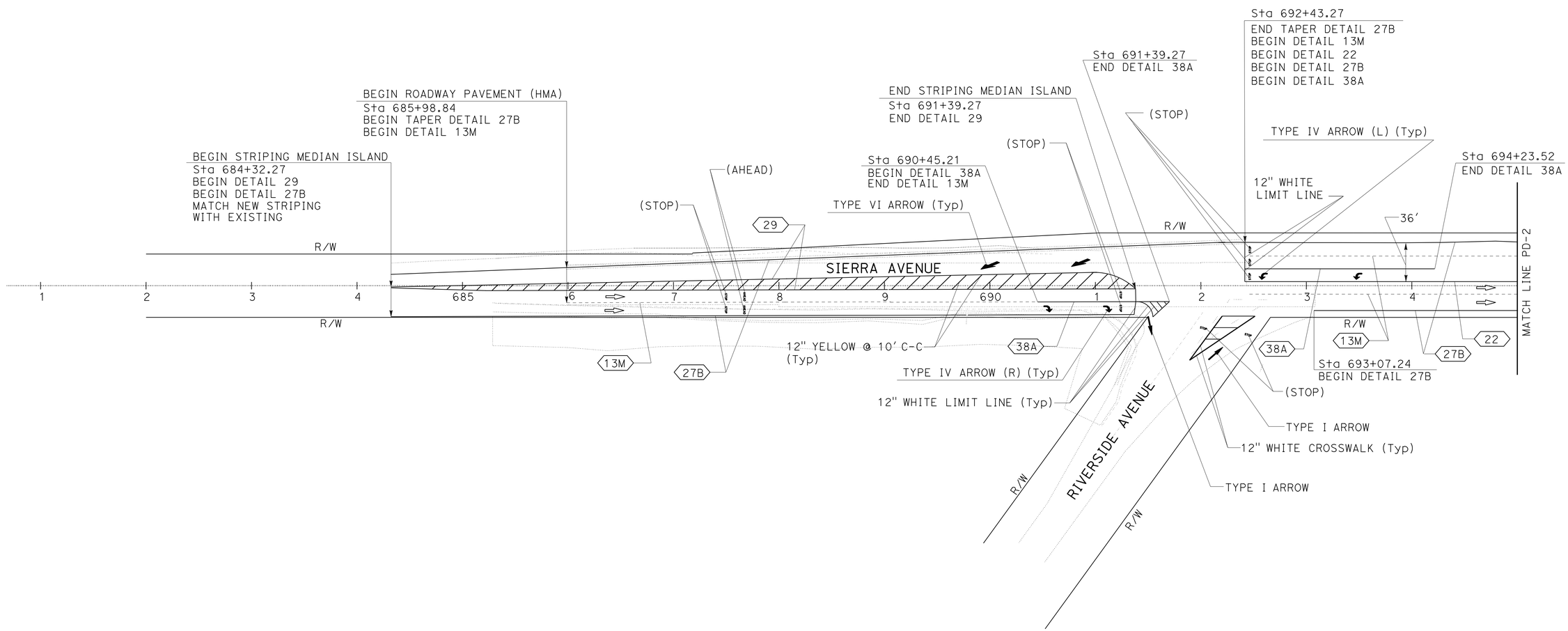

PAVEMENT DELINEATION AND SIGN PLAN

SCALE: 1" = 50'

PD-1

APPROVED FOR PAVEMENT DELINEATION AND SIGN WORK ONLY

STATE OF CALIFORNIA - DEPARTMENT OF TRANSPORTATION
Caltrans® TRAFFIC DESIGN B

FUNCTIONAL SUPERVISOR: LARRY SARTORI
CALCULATED-DESIGNED BY: SIDHARTHA CHOWDHURY
CHECKED BY: LARRY SARTORI
REVISED BY
DATE REVISED

LAST REVISION 12-12-12
DATE PLOTTED => 26-AUG-2013
TIME PLOTTED => 15:06

Dist	COUNTY	ROUTE	POST MILES TOTAL PROJECT	SHEET No.	TOTAL SHEETS
08	SBd	15	12.8	60	122

REGISTERED CIVIL ENGINEER 7-17-13 DATE

8-19-13
PLANS APPROVAL DATE

REGISTERED PROFESSIONAL ENGINEER SIDHARTHA CHOWDHURRY No. 55418 Exp. 12-31-14 CIVIL STATE OF CALIFORNIA

THE STATE OF CALIFORNIA OR ITS OFFICERS OR AGENTS SHALL NOT BE RESPONSIBLE FOR THE ACCURACY OR COMPLETENESS OF SCANNED COPIES OF THIS PLAN SHEET.

NOTE:

1. PAVEMENT MARKERS SHALL BE PLACED BEFORE SPRAYABLE THERMOPLASTIC STRIPE IS APPLIED.

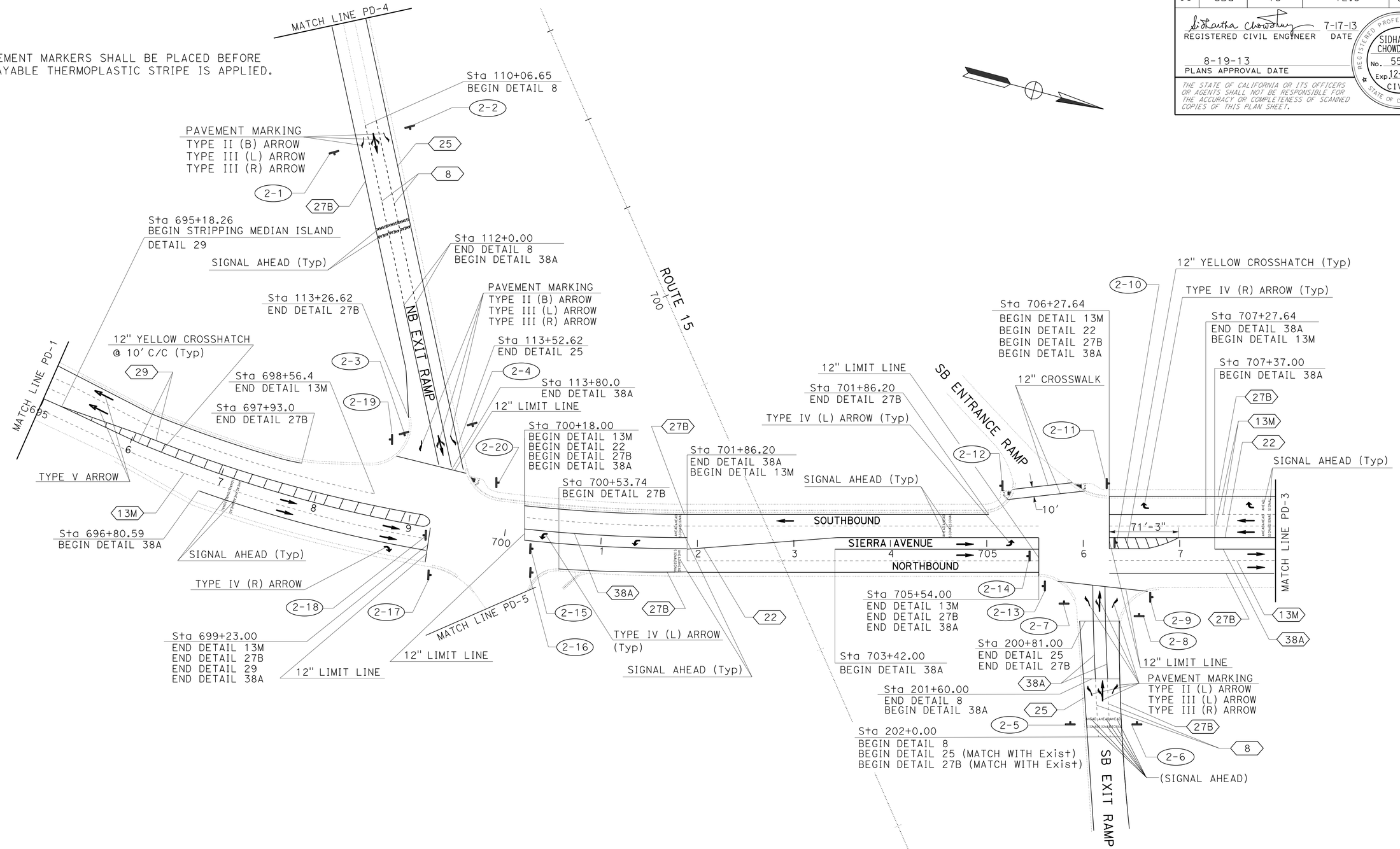

PAVEMENT DELINEATION AND SIGN PLAN

NO SCALE

PD-2

APPROVED FOR PAVEMENT DELINEATION AND SIGN WORK ONLY

STATE OF CALIFORNIA - DEPARTMENT OF TRANSPORTATION
Caltrans® TRAFFIC DESIGN B

FUNCTIONAL SUPERVISOR: LARRY SARTORI
CALCULATED-DESIGNED BY: SIDHARTHA CHOWDHURY
CHECKED BY: LARRY SARTORI
REVISED BY
DATE REVISED

LAST REVISION 07-17-13
DATE PLOTTED => 26-AUG-2013
TIME PLOTTED => 15:06

Dist	COUNTY	ROUTE	POST MILES TOTAL PROJECT	SHEET No.	TOTAL SHEETS
08	SBd	15	12.8	61	122

REGISTERED CIVIL ENGINEER 12-12-12 DATE

8-19-13
PLANS APPROVAL DATE

REGISTERED PROFESSIONAL ENGINEER
SIDHARTHA CHOWDHURRY
No. 55418
Exp. 12-31-12
CIVIL
STATE OF CALIFORNIA

THE STATE OF CALIFORNIA OR ITS OFFICERS OR AGENTS SHALL NOT BE RESPONSIBLE FOR THE ACCURACY OR COMPLETENESS OF SCANNED COPIES OF THIS PLAN SHEET.

NOTE:

FOR ACCURATE RIGHT OF WAY DATA, CONTACT
RIGHT OF WAY ENGINEERING AT THE DISTRICT OFFICE.

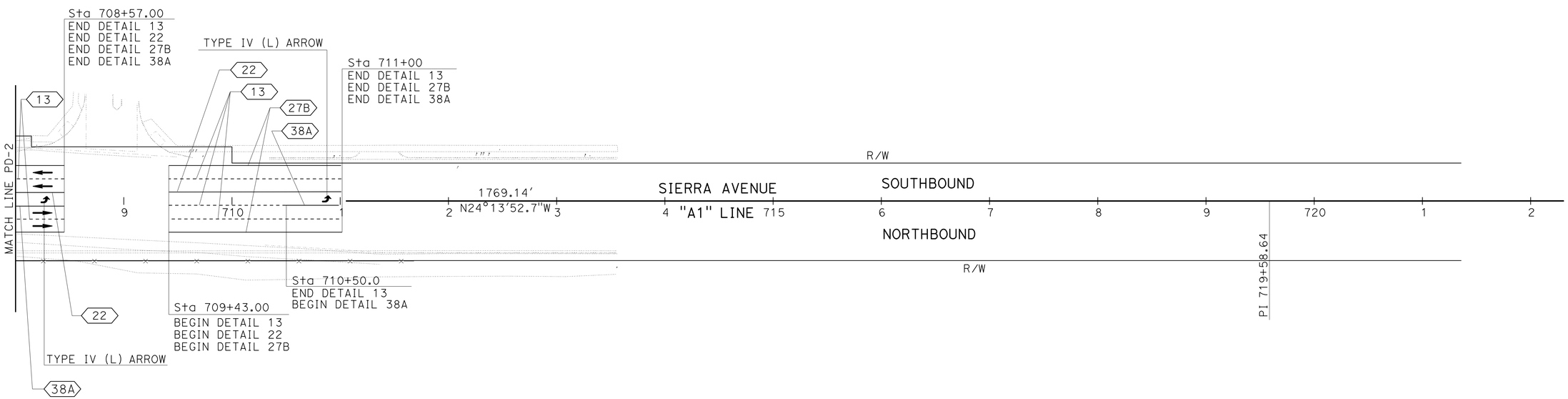

PAVEMENT DELINEATION AND SIGN PLAN

NO SCALE

PD-3

APPROVED FOR PAVEMENT DELINEATION AND SIGN WORK ONLY

STATE OF CALIFORNIA - DEPARTMENT OF TRANSPORTATION
Caltrans TRAFFIC DESIGN B

FUNCTIONAL SUPERVISOR: LARRY SARTORI
CALCULATED-DESIGNED BY: SIDHARTHA CHOWDHURY
CHECKED BY: LARRY SARTORI
REVISED BY
DATE REVISED

LAST REVISION 12-12-12
DATE PLOTTED => 26-AUG-2013
TIME PLOTTED => 15:06

Dist	COUNTY	ROUTE	POST MILES TOTAL PROJECT	SHEET No.	TOTAL SHEETS
08	SBd	15	12.8	62	122

REGISTERED CIVIL ENGINEER 12-12-12 DATE

8-19-13
PLANS APPROVAL DATE

REGISTERED PROFESSIONAL ENGINEER
SIDHARTHA CHOWDHURRY
No. 55418
Exp. 12-31-12
CIVIL
STATE OF CALIFORNIA

THE STATE OF CALIFORNIA OR ITS OFFICERS OR AGENTS SHALL NOT BE RESPONSIBLE FOR THE ACCURACY OR COMPLETENESS OF SCANNED COPIES OF THIS PLAN SHEET.

NOTE:

FOR ACCURATE RIGHT OF WAY DATA, CONTACT
RIGHT OF WAY ENGINEERING AT THE DISTRICT OFFICE.

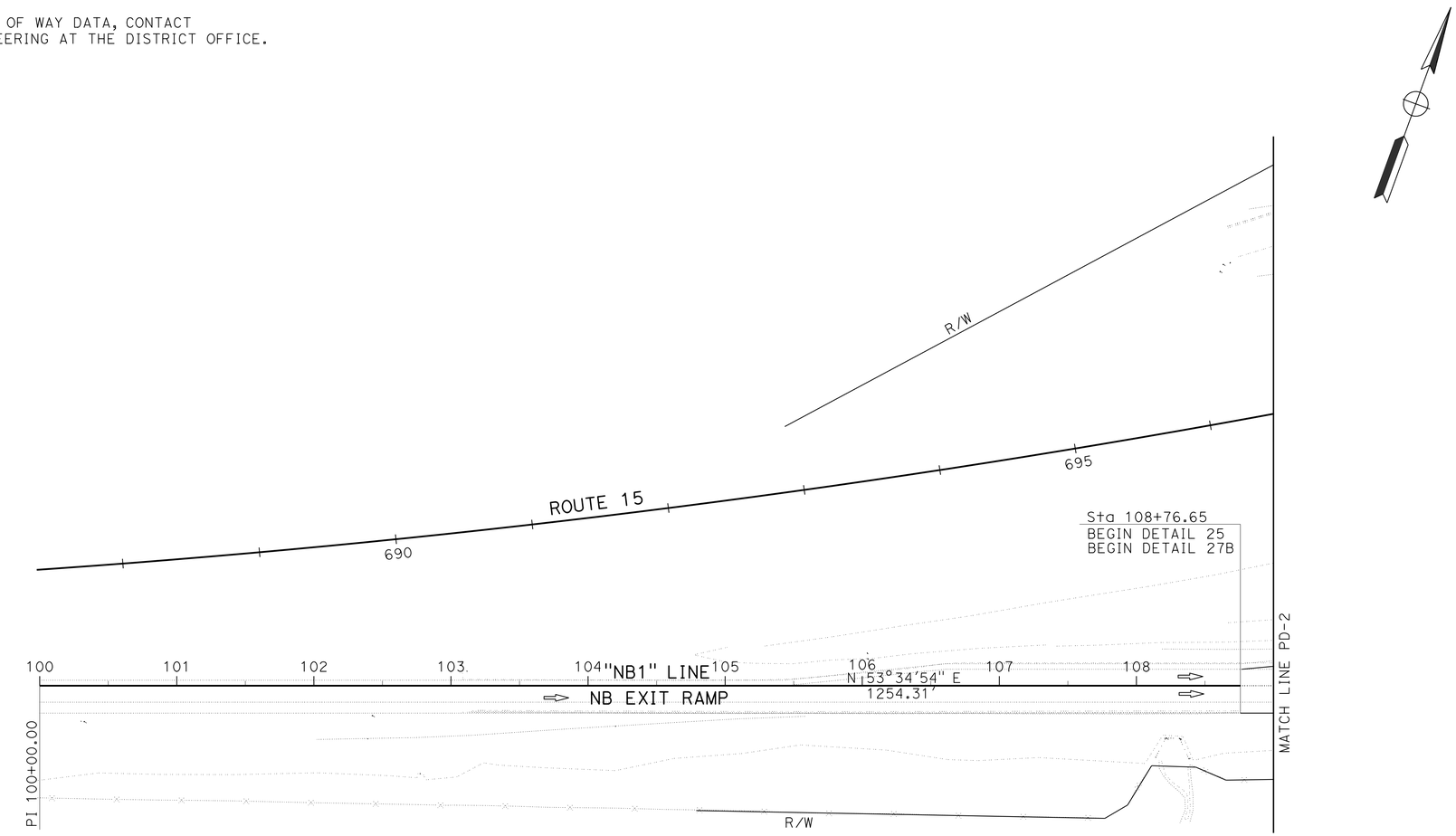

PAVEMENT DELINEATION AND SIGN PLAN

NO SCALE

PD-4

APPROVED FOR PAVEMENT DELINEATION AND SIGN WORK ONLY

STATE OF CALIFORNIA - DEPARTMENT OF TRANSPORTATION
Caltrans TRAFFIC DESIGN B

FUNCTIONAL SUPERVISOR: LARRY SARTORI
CALCULATED-DESIGNED BY: SIDHARTHA CHOWDHURY
CHECKED BY: LARRY SARTORI
REVISED BY
DATE REVISED

LAST REVISION 12-12-12
DATE PLOTTED => 26-AUG-2013
TIME PLOTTED => 15:06

Dist	COUNTY	ROUTE	POST MILES TOTAL PROJECT	SHEET No.	TOTAL SHEETS
08	SBd	15	12.8	63	122

REGISTERED CIVIL ENGINEER 12-12-12 DATE

8-19-13
PLANS APPROVAL DATE

REGISTERED PROFESSIONAL ENGINEER
SIDHARTHA CHOWDHURRY
No. 55418
Exp. 12-31-12
CIVIL
STATE OF CALIFORNIA

THE STATE OF CALIFORNIA OR ITS OFFICERS OR AGENTS SHALL NOT BE RESPONSIBLE FOR THE ACCURACY OR COMPLETENESS OF SCANNED COPIES OF THIS PLAN SHEET.

NOTE:

1. CONTRACTOR SHALL INSTALL R89(CA) ON THE RAMP METERING POST.

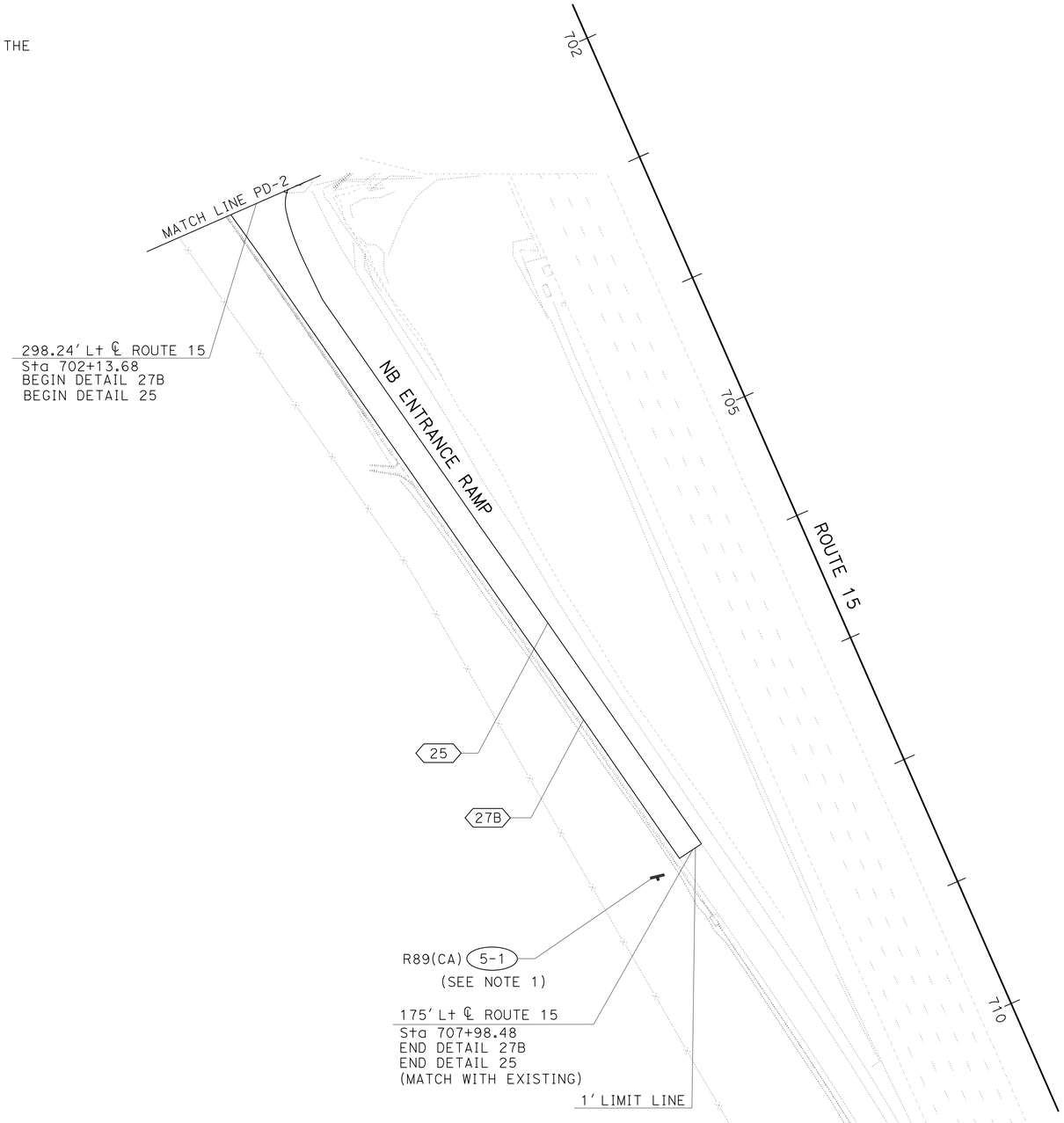

PAVEMENT DELINEATION AND SIGN PLAN

NO SCALE

PD-5

APPROVED FOR PAVEMENT DELINEATION AND SIGN WORK ONLY

STATE OF CALIFORNIA - DEPARTMENT OF TRANSPORTATION
Caltrans® TRAFFIC DESIGN B

FUNCTIONAL SUPERVISOR: SERGIO ORTAVILA
CALCULATED-DESIGNED BY: SIDHARTHA CHOWDHURY
CHECKED BY: LARRY SARTORI
REVISED BY
DATE REVISED

LAST REVISION 12-12-12 | DATE PLOTTED => 26-AUG-2013 | TIME PLOTTED => 15:07

Dist	COUNTY	ROUTE	POST MILES TOTAL PROJECT	SHEET No.	TOTAL SHEETS
08	SBd	15	12.8	64	122

REGISTERED CIVIL ENGINEER 12-12-12 DATE

8-19-13
PLANS APPROVAL DATE

REGISTERED PROFESSIONAL ENGINEER SIDHARTHA CHOWDHURRY No. 55418 Exp. 12-31-12 CIVIL STATE OF CALIFORNIA

THE STATE OF CALIFORNIA OR ITS OFFICERS OR AGENTS SHALL NOT BE RESPONSIBLE FOR THE ACCURACY OR COMPLETENESS OF SCANNED COPIES OF THIS PLAN SHEET.

NOTES:

1. PAVEMENT MARKERS SHALL BE PLACED BEFORE SPRAYABLE THERMOPLASTIC STRIPE IS APPLIED.
2. FOR ADDITIONAL REMOVE THERMOPLASTIC PAVEMENT MARKING, REMOVE THERMOPLASTIC TRAFFIC STRIPE, AND REMOVE PAVEMENT MARKER SEE SHEET THQ-1

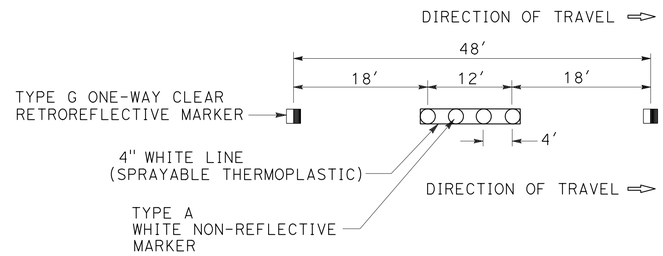

DETAIL 13 MODIFIED (13M)

NO SCALE

PAVEMENT DELINEATION QUANTITIES

LOCATION	STATION/LOCATION	DETAIL No.	REMOVE THERMOPLASTIC TRAFFIC STRIPE			THERMOPLASTIC TRAFFIC STRIPE (SPRAYABLE)			REMOVE PAVEMENT MARKER	PAVEMENT MARKER			
										RETROREFLECTIVE			NON-REFLECTIVE
			4" WHITE	8" WHITE	4" YELLOW	4" WHITE	8" WHITE	4" YELLOW		TYPE D	TYPE G	TYPE H	TYPE A
			LF	LF	LF	LF	LF	LF	EA	EA	EA	EA	EA
SIERRA AVENUE SB/NB	684+32.27 TO 695+00	13M				960					20		80
		22						257		22			
		27B				1775							
		29						1414		118			
		38A					275						
	695+00 TO 699+23	13M				1022					22		88
		29						846		72			
		27B				780							
	700+18.0 TO 705+54	13M				1284					27		108
		22						170		14			
		27B				1072							
		38A					170						
	706+27.64 TO 708+57	13M				590					12		48
		22						144		12			
		27B				460							
		38A					220						
	709+43.0 TO 711+00	13M				364					8		32
		27B				314							
		38A					50						
ROUTE 15 ENTRANCE/ EXIT RAMPS	NORTHBOUND EXIT RAMP TO SIERRA AVENUE	8	148			387							
		25			453			453	10			10	
		27B	427			427							
		38A		180			360						
	SOUTHBOUND ENTRANCE RAMP TO SIERRA AVENUE	8	148			148							
		25			119			119	3			3	
		27B	119			119							
		38A		120			240						
	NORTHBOUND ENTRANCE RAMP FROM SIERRA AVENUE	25			521								
		27B	521			521							
	SUBTOTAL		1363	300	1093	10223	1315	3403		238	89	13	356
	TOTAL		2756			14941			13	340			356

STATE OF CALIFORNIA - DEPARTMENT OF TRANSPORTATION
Caltrans® TRAFFIC DESIGN B

FUNCTIONAL SUPERVISOR: LARRY SARTORI
CALCULATED-DESIGNED BY: SIDHARTHA CHOWDHURY
CHECKED BY: LARRY SARTORI
REVISED BY
DATE REVISED

PAVEMENT DELINEATION QUANTITIES
PDQ-1

LAST REVISION 12-12-12
DATE PLOTTED => 26-AUG-2013
TIME PLOTTED => 15:07

Dist	COUNTY	ROUTE	POST MILES TOTAL PROJECT	SHEET No.	TOTAL SHEETS
08	SBd	15	12.8	65	122

REGISTERED CIVIL ENGINEER 7-17-13 DATE

8-19-13
PLANS APPROVAL DATE

REGISTERED PROFESSIONAL ENGINEER SIDHARTHA CHOWDHURRY No. 55418 Exp. 12-31-14 CIVIL STATE OF CALIFORNIA

THE STATE OF CALIFORNIA OR ITS OFFICERS OR AGENTS SHALL NOT BE RESPONSIBLE FOR THE ACCURACY OR COMPLETENESS OF SCANNED COPIES OF THIS PLAN SHEET.

PAVEMENT DELINEATION QUANTITIES

LOCATION	STATION	REMOVE THERMOPLASTIC PAVEMENT MARKING		THERMOPLASTIC PAVEMENT MARKING	
		DESCRIPTION	SQFT	DESCRIPTION	SQFT
SIERRA AVENUE	684+32.27 TO 695+00	TYPE I ARROW	50	TYPE I ARROW	50
		TYPE IV ARROW	60	TYPE IV ARROW	60
		12" YELLOW CROSSHATCH	564	TYPE VI ARROW	84
		STOP	198	12" YELLOW CROSSHATCH	564
		AHEAD	93	STOP	198
		12" WHITE LIMIT LINE	48	AHEAD	93
	695+00 TO 711+00			TYPE II (B) ARROW	236
				TYPE III ARROW	336
				TYPE IV ARROW	120
				TYPE V ARROW	66
				SIGNAL AHEAD	1200
				12" WHITE CROSSWALK/LIMIT LINE	467
				12" YELLOW CROSSHATCH	224
				TOTAL	3698
	NORTHBOUND EXIT RAMP	TYPE II (B) ARROW	118		
		TYPE III (L) (R) ARROW	84		
		STOP	88		
		AHEAD	62		
		12" WHITE LIMIT LINE	42		
	SOUTHBOUND EXIT RAMP	TYPE II (B) ARROW	118		
		TYPE III (L) (R) ARROW	84		
		STOP	88		
		AHEAD	62		
		12" WHITE LIMIT LINE	42		
		TOTAL	1801		

REVISED BY | DATE REVISED

SIDHARTHA CHOWDHURY | LARRY SARTORI

CALCULATED-DESIGNED BY | CHECKED BY

FUNCTIONAL SUPERVISOR: LARRY SARTORI

STATE OF CALIFORNIA - DEPARTMENT OF TRANSPORTATION

Caltrans® TRAFFIC DESIGN B

PAVEMENT DELINEATION QUANTITIES
PDQ-2

LAST REVISION 07-17-13 | DATE PLOTTED => 26-AUG-2013 | TIME PLOTTED => 15:07

Dist	COUNTY	ROUTE	POST MILES TOTAL PROJECT	SHEET No.	TOTAL SHEETS
08	SBd	15	12.8	66	122

REGISTERED CIVIL ENGINEER 12-12-12 DATE

8-19-13
PLANS APPROVAL DATE

REGISTERED PROFESSIONAL ENGINEER SIDHARTHA CHOWDHURRY No. 55418 Exp. 12-31-12 CIVIL STATE OF CALIFORNIA

THE STATE OF CALIFORNIA OR ITS OFFICERS OR AGENTS SHALL NOT BE RESPONSIBLE FOR THE ACCURACY OR COMPLETENESS OF SCANNED COPIES OF THIS PLAN SHEET.

NOTE:

1. THE FINAL LOCATION OF THE SIGNS TO BE RELOCATED SHALL BE AS DIRECTED BY THE ENGINEER.

LIST OF SIGNS TO BE RELOCATED

LOCATION	SIGN No.	SIGN MESSAGE	No. OF POSTS	EA 1 POST	EA 2 POST
JUNCTION SB SIERRA Ave/RIVERSIDE Ave	1	STOP	1	1	
SB SIERRA AVENUE SOUTH OF RIVERSIDE AVENUE	2	NO PARKING	1	1	
SB ROUTE 15 ENTRANCE RAMP	3	FREEWAY ENTRANCE INTERSTATE 15 south	1	2	
SB ROUTE 15 EXIT RAMP	4	STOP	1	1	
	5	Fontana Rialto	2		1
	6	LYTLE CREEK RECREATION AREA D9-1 D9-8 D9-3A D9-7	2		1
	7	DO NOT ENTER WRONG WAY	1	2	
	8	ONE WAY	1	2	
NB ROUTE 15 ENTRANCE RAMP	9	STOP	1	1	
	10	FREEWAY ENTRANCE INTERSTATE 15 north	1	2	
			SUBTOTAL	12	2

LIST OF SIGNS TO BE RELOCATED

LOCATION	SIGN No.	SIGN MESSAGE	No. OF POSTS	EA 1 POST	EA 2 POST
NB ROUTE 15 EXIT RAMP	11	STOP	1	1	
	12	DO NOT ENTER WRONG WAY	1	2	
	13	ONE WAY	1	2	
			TOTAL	17	2

LIST OF SIGNS TO BE REMOVED

LOCATION	SIGN No.	SIGN MESSAGE	No. OF POSTS	EA
SB ROUTE 15 EXIT RAMP	1	٢ ٢ ONLY	1	2
		TOTAL		2

APPROVED FOR SIGN WORK ONLY

SIGN DETAILS
SD-1

STATE OF CALIFORNIA - DEPARTMENT OF TRANSPORTATION
Caltrans TRAFFIC DESIGN B

FUNCTIONAL SUPERVISOR: LARRY SARTORI
CALCULATED-DESIGNED BY: SIDHARTHA CHOWDHURY
CHECKED BY: LARRY SARTORI
REVISED BY / DATE REVISED

LAST REVISION 12-12-12
DATE PLOTTED => 26-AUG-2013
TIME PLOTTED => 15:07

Dist	COUNTY	ROUTE	POST MILES TOTAL PROJECT	SHEET No.	TOTAL SHEETS
08	SBd	15	12.8	67	122

REGISTERED CIVIL ENGINEER 12-12-12 DATE

8-19-13
PLANS APPROVAL DATE

REGISTERED PROFESSIONAL ENGINEER SIDHARTHA CHOWDHURRY No. 55418 Exp. 12-31-12 CIVIL STATE OF CALIFORNIA

THE STATE OF CALIFORNIA OR ITS OFFICERS OR AGENTS SHALL NOT BE RESPONSIBLE FOR THE ACCURACY OR COMPLETENESS OF SCANNED COPIES OF THIS PLAN SHEET.

ROADSIDE SIGN QUANTITIES

SIGN No.	SHEET No.	SIGN CODE	SIGN SIZE L X D	POST LENGTH	POST SIZE 4" x 4"	ROADSIDE SIGN ONE POST	ROADSIDE SIGN REMOVE	ROADSIDE SIGN RELOCATE ONE POST	ROADSIDE SIGN RELOCATE TWO POST	REMARKS
				FT		EA	EA	EA	EA	
2-1	PD-2	R61-28 (CA)	48" X 30"	17	X	1				
2-2	PD-2	R61-28 (CA)	48" X 30"	17	X	1				
2-3	PD-2	R61-28 (CA)	48" X 30"	17	X	1				
2-4	PD-2	R61-28 (CA)	48" X 30"	17	X	1				
2-5	PD-2	R61-15 (CA)	48" X 30"	17	X	1				
2-6	PD-2	R61-15 (CA)	48" X 30"	17	X	1				
2-7	PD-2	R61-15 (CA)	48" X 30"	17	X	1				
2-8	PD-2	R61-15 (CA)	48" X 30"	17	X	1				
2-9	PD-2	R9-3a	24" X 24"							SEE SHEET E-1 AND E-3 FOR EXACT LOCATIONS
2-10	PD-2	R3-4	24" X 24"							INSTALL AT MAST ARM OF LIGHT POLE
2-11	PD-2	R9-3a	24" X 24"							SEE SHEET E-1 AND E-3 FOR EXACT LOCATIONS
2-12	PD-2	R9-3a	24" X 24"							SEE SHEET E-1 AND E-3 FOR EXACT LOCATIONS
2-13	PD-2	R9-3a	24" X 24"							SEE SHEET E-1 AND E-3 FOR EXACT LOCATIONS
2-14	PD-2	R3-4	24" X 24"							INSTALL AT MAST ARM OF LIGHT POLE
2-15	PD-2	R3-4	24" X 24"							INSTALL AT MAST ARM OF LIGHT POLE
2-16	PD-2	R9-3a	24" X 24"							SEE SHEET E-1 AND E-3 FOR EXACT LOCATIONS
2-17	PD-2	R9-3a	24" X 24"							SEE SHEET E-1 AND E-3 FOR EXACT LOCATIONS
2-18	PD-2	R3-4	24" X 24"							INSTALL AT MAST ARM OF LIGHT POLE
2-19	PD-2	R9-3a	24" X 24"							SEE SHEET E-1 AND E-3 FOR EXACT LOCATIONS
2-20	PD-2	R9-3a	24" X 24"							SEE SHEET E-1 AND E-3 FOR EXACT LOCATIONS
5-1	PD-5	R89(CA)	24" X 6"							INSTALL AT RAMP METERING POST
	SD-1	R61-7				8	2	17	2	
					TOTAL	8	2	17	2	

SIGN QUANTITIES
SQ-1

STATE OF CALIFORNIA - DEPARTMENT OF TRANSPORTATION
Caltrans® TRAFFIC DESIGN B

FUNCTIONAL SUPERVISOR: LARRY SARTORI
CALCULATED-DESIGNED BY: SIDHARTHA CHOWDHURY
CHECKED BY: LARRY SARTORI
REVISED BY
DATE REVISED

LAST REVISION 12-12-12
DATE PLOTTED => 26-AUG-2013
TIME PLOTTED => 15:07

Dist	COUNTY	ROUTE	POST MILES TOTAL PROJECT	SHEET No.	TOTAL SHEETS
08	SBd	15	12.8	68	122

REGISTERED CIVIL ENGINEER 12-12-12 DATE

8-19-13
PLANS APPROVAL DATE

REGISTERED PROFESSIONAL ENGINEER SIDHARTHA CHOWDHURRY No. 55418 Exp. 12-31-12 CIVIL STATE OF CALIFORNIA

THE STATE OF CALIFORNIA OR ITS OFFICERS OR AGENTS SHALL NOT BE RESPONSIBLE FOR THE ACCURACY OR COMPLETENESS OF SCANNED COPIES OF THIS PLAN SHEET.

SIGN PANEL MATERIAL SUMMARY

SIGN LOCATION	SIGN No.	SIGN CODE	SIGN SIZE L x D	SINGLE FACED	BACKGROUND SHEETING COLOR	BACKGROUND RETROREFLECTIVE ASTM TYPE	LEGEND SHEETING COLOR	LEGEND RETROREFLECTIVE ASTM TYPE	GRAFFITI FILM PREMIUM	FURNISH SINGLE SHEET ALUMINUM SIGN UNFRAMED 0.080" SQFT	FURNISH LAMINATED SIGN PANEL (1" - TYPE A) SQFT	SIGN MESSAGE/ REMARKS
NB EXIT RAMP	2-1	R61-28 (CA)	48" X 30"	X	WHITE	IV	BLACK	IV	X	10		
NB EXIT RAMP	2-2	R61-28 (CA)	48" X 30"	X	WHITE	IV	BLACK	IV	X	10		
NB EXIT RAMP	2-3	R61-28 (CA)	48" X 30"	X	WHITE	IV	BLACK	IV	X	10		ONE CAR PER GREEN
NB EXIT RAMP	2-4	R61-28 (CA)	48" X 30"	X	WHITE	IV	BLACK	IV	X	10		
SB EXIT RAMP	2-5	R61-15 (CA)	48" X 30"	X	WHITE	IV	BLACK	IV	X	10		
SB EXIT RAMP	2-6	R61-15 (CA)	48" X 30"	X	WHITE	IV	BLACK	IV	X	10		
SB EXIT RAMP	2-7	R61-15 (CA)	48" X 30"	X	WHITE	IV	BLACK	IV	X	10		
SB EXIT RAMP	2-8	R61-15 (CA)	48" X 30"	X	WHITE	IV	BLACK	IV	X	10		
NB EXIT RAMP	5-1	R89 (CA)	24" X 6"	X	WHITE	IV	BLACK	IV	X	1		AT RAMP METERING POST
NB EXIT RAMP	2-9	R9-3a	24" X 24"	X	WHITE	IV	RED	IV	X	4		NO PEDESTRIAN CROSSING (SYMBOL)
SIERRA AVENUE	2-10	R3-4	24" X 24"	X	WHITE	IV	RED	IV	X		4	TURN PROHIBITION SYMBOL
SB ENTRANCE RAMP	2-11	R9-3a	24" X 24"	X	WHITE	IV	RED	IV	X	4		NO PEDESTRIAN CROSSING (SYMBOL)
SB ENTRANCE RAMP	2-12	R9-3a	24" X 24"	X	WHITE	IV	RED	IV	X	4		NO PEDESTRIAN CROSSING (SYMBOL)
NB EXIT RAMP	2-13	R9-3a	24" X 24"	X	WHITE	IV	RED	IV	X	4		NO PEDESTRIAN CROSSING (SYMBOL)
SIERRA AVENUE	2-14	R3-4	24" X 24"	X	WHITE	IV	RED	IV	X		4	TURN PROHIBITION SYMBOL
SIERRA AVENUE	2-15	R3-4	24" X 24"	X	WHITE	IV	RED	IV	X		4	TURN PROHIBITION SYMBOL
NB ENTRANCE RAMP	2-16	R9-3a	24" X 24"	X	WHITE	IV	RED	IV	X			NO PEDESTRIAN CROSSING (SYMBOL)
NB ENTRANCE RAMP	2-17	R9-3a	24" X 24"	X	WHITE	IV	RED	IV	X	4		NO PEDESTRIAN CROSSING (SYMBOL)
SIERRA AVENUE	2-18	R3-4	24" X 24"	X	WHITE	IV	RED	IV	X		4	TURN PROHIBITION SYMBOL
NB EXIT RAMP	2-19	R9-3a	24" X 24"	X	WHITE	IV	RED	IV	X	4		NO PEDESTRIAN CROSSING (SYMBOL)
NB EXIT RAMP	2-20	R9-3a	24" X 24"	X	WHITE	IV	RED	IV	X	4		NO PEDESTRIAN CROSSING (SYMBOL)
									TOTAL	109	16	

SIGN QUANTITIES
SQ-2

REVISED BY | DATE REVISED
SIDHARTHA CHOWDHURY | LARRY SARTORI
CALCULATED-DESIGNED BY | CHECKED BY
FUNCTIONAL SUPERVISOR
LARRY SARTORI

STATE OF CALIFORNIA - DEPARTMENT OF TRANSPORTATION
Caltrans® TRAFFIC DESIGN B

LAST REVISION 12-12-12 | DATE PLOTTED => 26-AUG-2013 | TIME PLOTTED => 15:07

Dist	COUNTY	ROUTE	POST MILES TOTAL PROJECT	SHEET No.	TOTAL SHEETS
08	SBd	15	12.8	69	122

REGISTERED CIVIL ENGINEER 12-12-12 DATE

8-19-13
PLANS APPROVAL DATE

REGISTERED PROFESSIONAL ENGINEER SIDHARTHA CHOWDHURRY No. 55418 Exp. 12-31-12 CIVIL STATE OF CALIFORNIA

THE STATE OF CALIFORNIA OR ITS OFFICERS OR AGENTS SHALL NOT BE RESPONSIBLE FOR THE ACCURACY OR COMPLETENESS OF SCANNED COPIES OF THIS PLAN SHEET.

NOTES:

1. IF THE MESSAGE WOULD NOT FIT THE SIGN VENDOR CAN REDUCE THE SPACING UP TO 20% TO BE ABLE TO FIT THE MESSAGE.
2. IF SPACE REDUCTION DOES NOT WORK I HAVE ALTERED THE MESSAGES (SEE BELOW) TO FIT THE MESSAGE.
3. DO NOT REDUCE THE TEXT SIZE (LARGER TEXT SIZE IS OKAY IF THE MESSAGE FITS).
4. THE WIDTH AND THE DEPTH OF THE SIGN SHALL BE AS SHOWN ON THE PLAN.

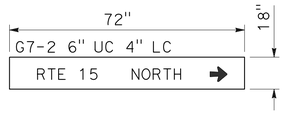

INSTALL ON POLE B ON E-1(FWBT)(FRONT)

SPECIAL SIGN (A)

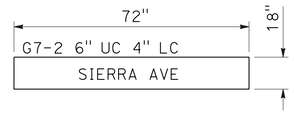

INSTALL ON POLE G ON E-3

SPECIAL SIGN (B)

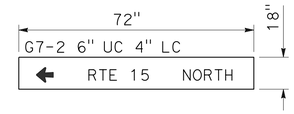

INSTALL ON POLE E ON E-1(FEBT)(FRONT)

SPECIAL SIGN (C)

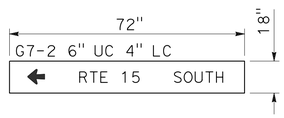

INSTALL ON POLE B ON E-3(FWBT)(FRONT)

SPECIAL SIGN (D)

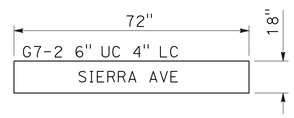

INSTALL ON POLE C ON E-1

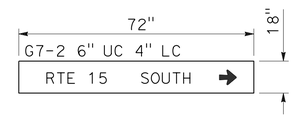

INSTALL ON POLE F ON E-2(FEBT)(FRONT)

SPECIAL SIGN (E)

SIGN QUANTITIES

SIGN CODE	No. OF SIGNS (EA)	SIGN SIZE L x D	SINGLE FACE	BACKGROUND SHEETING COLOR	LEGEND SHEETING COLOR	RETROREFLECTIVE ASTM TYPE	FURNISH SINGLE SHEET ALUMINUM SIGN UNFRAMED 0.125" (SQFT)	(N) INSTALL SIGN MAST ARM HANGER ASSEMBLY	DESCRIPTION/REMARKS
SPECIAL SIGN (A)	1	72" x 18"	X	GREEN	WHITE	1	9	1	Rte 15 NORTH →
SPECIAL SIGN (B)	2	72" x 18"	X	GREEN	WHITE	1	18	1	SIERRA Ave
SPECIAL SIGN (C)	1	72" x 18"	X	GREEN	WHITE	1	9	1	← Rte 15 NORTH
SPECIAL SIGN (D)	1	72" x 18"	X	GREEN	WHITE	1	9	1	← Rte 15 SOUTH
SPECIAL SIGN (E)	1	72" x 18"	X	GREEN	WHITE	1	9	1	Rte 15 SOUTH →
TOTAL	6						54		

(N) - NOT A SEPARATE PAY ITEM, FOR INFORMATION ONLY

STATE OF CALIFORNIA - DEPARTMENT OF TRANSPORTATION
Caltrans TRAFFIC DESIGN B

FUNCTIONAL SUPERVISOR: LARRY SARTORI
CALCULATED-DESIGNED BY: SIDHARTHA CHOWDHURY
CHECKED BY: LARRY SARTORI
REVISED BY
DATE REVISED

SIGN QUANTITIES
SQ-3

LAST REVISION 12-12-12
DATE PLOTTED => 26-AUG-2013
TIME PLOTTED => 15:07

Dist	COUNTY	ROUTE	POST MILES TOTAL PROJECT	SHEET No.	TOTAL SHEETS
08	SBd	15	12.8	70	122

REGISTERED CIVIL ENGINEER 5-7-13 DATE

8-19-13
PLANS APPROVAL DATE

REGISTERED PROFESSIONAL ENGINEER SERGIO E. AVILA No. 60951 Exp. 12-31-14 CIVIL STATE OF CALIFORNIA

THE STATE OF CALIFORNIA OR ITS OFFICERS OR AGENTS SHALL NOT BE RESPONSIBLE FOR THE ACCURACY OR COMPLETENESS OF SCANNED COPIES OF THIS PLAN SHEET.

PAVEMENT STRUCTURE QUANTITIES

SHEET No.	LOCATION	DIRECTION	STATION	COLD PLANE AC PAVEMENT	HOT MIX ASPHALT (TYPE C)	RUBBERIZED HMA (GAP GRADED)	HOT MXI ASPHALT BOND BREAKER	TACK COAT	LIQUID ASPHALT (PRIME COAT)	CLASS 2 AGGREGATE BASE	JOINTED PLAIN CONCRETE PAVEMENT	LEAN CONCRETE BASE	ROADWAY EXCAVATION	(N) EMBANKMENT	GRIND EXISTING CONCRETE PAVEMENT
				SQYD	TON	TON	TON	TON	TON	CY	CY	CY	CY	CY	SQYD
L-1	SIERRA Ave	SOUTHBOUND	685+98.84 TO 692+43.27	1524	274										
L-1	SIERRA Ave	NORTHBOUND	685+98.84 TO 693+08.29	1532	275										
L-1 THRU L-3	SIERRA Ave	SOUTHBOUND	692+43.27 TO 708+14.69		3355			9.3	7.3	930			5257	694	
L-1 THRU L-3	SIERRA Ave	NORTHBOUND	693+08.29 TO 711+35.92		3796			10.5	8.1	1042					
L-4 & L-2	NB EXIT RAMP	N/A	108+75.84 TO 113+94.10		383	77	41	1.7	0.6	98	196	83	519	106	354
L-2	NB ENTRANCE RAMP	N/A	N/A		120	24		0.5	0.2	31			104	52	
L-2 & L-5	SB EXIT RAMP	N/A	200+37.25 TO 204+78.76		223	45	36	1.1	0.4	57	175	74	341	76	431
L-2	SB ENTRANCE RAMP	N/A	N/A		91	18		0.4	0.1	23			79	39	
TOTAL				3056	8517	164	77	23.5	16.7	2181	371	157	6300	967	785

(N) - NOT A SEPARATE PAY ITEM, FOR INFORMATION ONLY

MINOR CONCRETE
MISCELLANEOUS CONSTRUCTION

SHEET No.	CURB & GUTTER (TYPE A2-6 AND MODIFIED)		CURB RAMP (CASE G)		SIDEWALK		CROSS GUTTER	
	STATION/LOCATION	CY	STATION/LOCATION	CY	STATION/LOCATION	CY	STATION/LOCATION	CY
L-2	ON SOUTHBOUND SIERRA Ave 695+25.27 TO 698+78.95	22.8					ON SOUTHBOUND SIERRA Ave 697+77.23 TO 699+90.56, 6' WIDE CROSS GUTTER AT END OF I-15 NB EXIT RAMP	7.8
L-2	ON SOUTHBOUND SIERRA Ave 699+51.33 TO 705+27.66	35.3	ON SOUTHBOUND SIERRA Ave 699+60.22 AT CORNER OF I-15 NB EXIT RAMP	2.0	ON SOUTHBOUND SIERRA Ave 699+73.79 TO 705+01.42, FROM I-15 NB EXIT RAMP TO SB ENTRANCE RAMP	43.6		
L-2 & L-3	ON SOUTHBOUND SIERRA Ave 705+85.01 TO 708+14.69	13.8	ON SOUTHBOUND SIERRA Ave 705+15.91 AT CORNER OF I-15 SB ENTRANCE RAMP	1.2	ON SOUTHBOUND SIERRA Ave 706+19.92 TO 708+14.69, FROM I-15 SB ENTRANCE RAMP TO GASOLINE STATION	15.8		
L-2	ON NORTHBOUND SIERRA Ave 699+31.17 TO 699+61.47	1.9	ON SOUTHBOUND SIERRA Ave 706+01.09 AT CORNER OF I-15 SB ENTRANCE RAMP	2.6				
L-2	ON NORTHBOUND SIERRA Ave 700+31.22 TO 700+58.35	3.1						
L-2	ON NORTHBOUND SIERRA Ave 705+53.71 TO 705+93.70	3.7						
L-2							ON NORTHBOUND SIERRA Ave 705+53.71 TO 706+92.96, 6' WIDE CROSS GUTTER AT END OF I-15 SB EXIT RAMP	12.0
L-2 & L-3	ON NORTHBOUND SIERRA Ave 706+39.01 TO 711+35.92	30.4						
SUBTOTAL		111.0		5.8		59.4		19.8
TOTAL		196.0						

SUMMARY OF QUANTITIES
Q-1

STATE OF CALIFORNIA - DEPARTMENT OF TRANSPORTATION
Caltrans DESIGN

FUNCTIONAL SUPERVISOR: SERGIO E. AVILA
CALCULATED-DESIGNED BY: TSUNG WANG
CHECKED BY: SIDHARTHA CHOWDHURY
REVISED BY
DATE REVISED

LAST REVISION 05-07-13
DATE PLOTTED => 26-AUG-2013
TIME PLOTTED => 15:07

Dist	COUNTY	ROUTE	POST MILES TOTAL PROJECT	SHEET No.	TOTAL SHEETS
08	SBd	15	12.8	71	122

REGISTERED CIVIL ENGINEER 5-7-13 DATE

8-19-13
PLANS APPROVAL DATE

REGISTERED PROFESSIONAL ENGINEER SERGIO E. AVILA No. 60951 Exp. 12-31-14 CIVIL STATE OF CALIFORNIA

THE STATE OF CALIFORNIA OR ITS OFFICERS OR AGENTS SHALL NOT BE RESPONSIBLE FOR THE ACCURACY OR COMPLETENESS OF SCANNED COPIES OF THIS PLAN SHEET.

PLACE HOT MIX ASPHALT DIKE

SHEET No.	LOCATION	DIRECTION	BEGIN STATION	END STATION	TYPE D	HMA (TYPE A)
					LF	TON
L-2	SIERRA Ave	NORTHBOUND	700+58.35	705+53.71	499	29
L-2	SIERRA Ave	NORTHBOUND	699+61.47	699+77.01	20	1
TOTAL					519	30

PLACE HOT MIX ASPHALT (MISCELLANEOUS AREA)

SHEET No.	LOCATION	DIRECTION	STATION	DESCRIPTION	OFFSET	SQYD	(N) TON
L-2	SIERRA Ave	NORTHBOUND	700+81.56	OVERSIDE DRAIN	34.0 R+	11.7	1.90
		SOUTHBOUND	699+55.31	INLET APRON	81.3 L+	3.40	0.40
		NORTHBOUND	700+61.58	INLET APRON	55.2 R+	3.11	0.35
		NORTHBOUND	704+74.84	INLET APRON	40.5 R+	3.40	0.40
		SOUTHBOUND	704+75.58	INLET APRON	53.2 L+	3.40	0.40
		NORTHBOUND	706+51.43	INLET APRON	74.2 R+	3.40	0.40
TOTAL						28.4	3.9

(N) - NOT A SEPARATE PAY ITEM, FOR INFORMATION ONLY

TEMPORARY FENCE (TYPE ESA)

SHEET No.	LOCATION	DIRECTION	LF
L-1	SIERRA Ave	SOUTHBOUND	960
L-1	SIERRA Ave	NORTHBOUND	1010
L-2	SIERRA Ave	SOUTHBOUND	340
L-2	SB RAMP	ENTRANCE	70
L-2	SIERRA Ave	NORTHBOUND	176
L-3	SIERRA Ave	NORTHBOUND	344
TOTAL			2900

SURVEY MONUMENT (TYPE B)

LOCATION	EA
Var	9

NOTE:

1. EXACT LOCATION SHALL BE DETERMINED BY THE ENGINEER.

SUMMARY OF QUANTITIES
Q-2

STATE OF CALIFORNIA - DEPARTMENT OF TRANSPORTATION
Caltrans DESIGN

FUNCTIONAL SUPERVISOR: SERGIO E. AVILA
CALCULATED-DESIGNED BY: TSUNG WANG
CHECKED BY: SIDHARTHA CHOWDHURY
REVISED BY
DATE REVISED

LAST REVISION 05-07-13
DATE PLOTTED => 26-AUG-2013
TIME PLOTTED => 15:08

Dist	COUNTY	ROUTE	POST MILES TOTAL PROJECT	SHEET No.	TOTAL SHEETS
08	SBd	15	12.8	72	122

REGISTERED ELECTRICAL ENGINEER 07-17-13 DATE

8-19-13
PLANS APPROVAL DATE

REGISTERED PROFESSIONAL ENGINEER FERDINAND DE LA CRUZ No. E 17215 Exp. 6-30-14 ELECTRICAL STATE OF CALIFORNIA

THE STATE OF CALIFORNIA OR ITS OFFICERS OR AGENTS SHALL NOT BE RESPONSIBLE FOR THE ACCURACY OR COMPLETENESS OF SCANNED COPIES OF THIS PLAN SHEET.

NOTE:

FOR ACCURATE RIGHT OF WAY DATA, CONTACT RIGHT OF WAY ENGINEERING AT THE DISTRICT OFFICE.

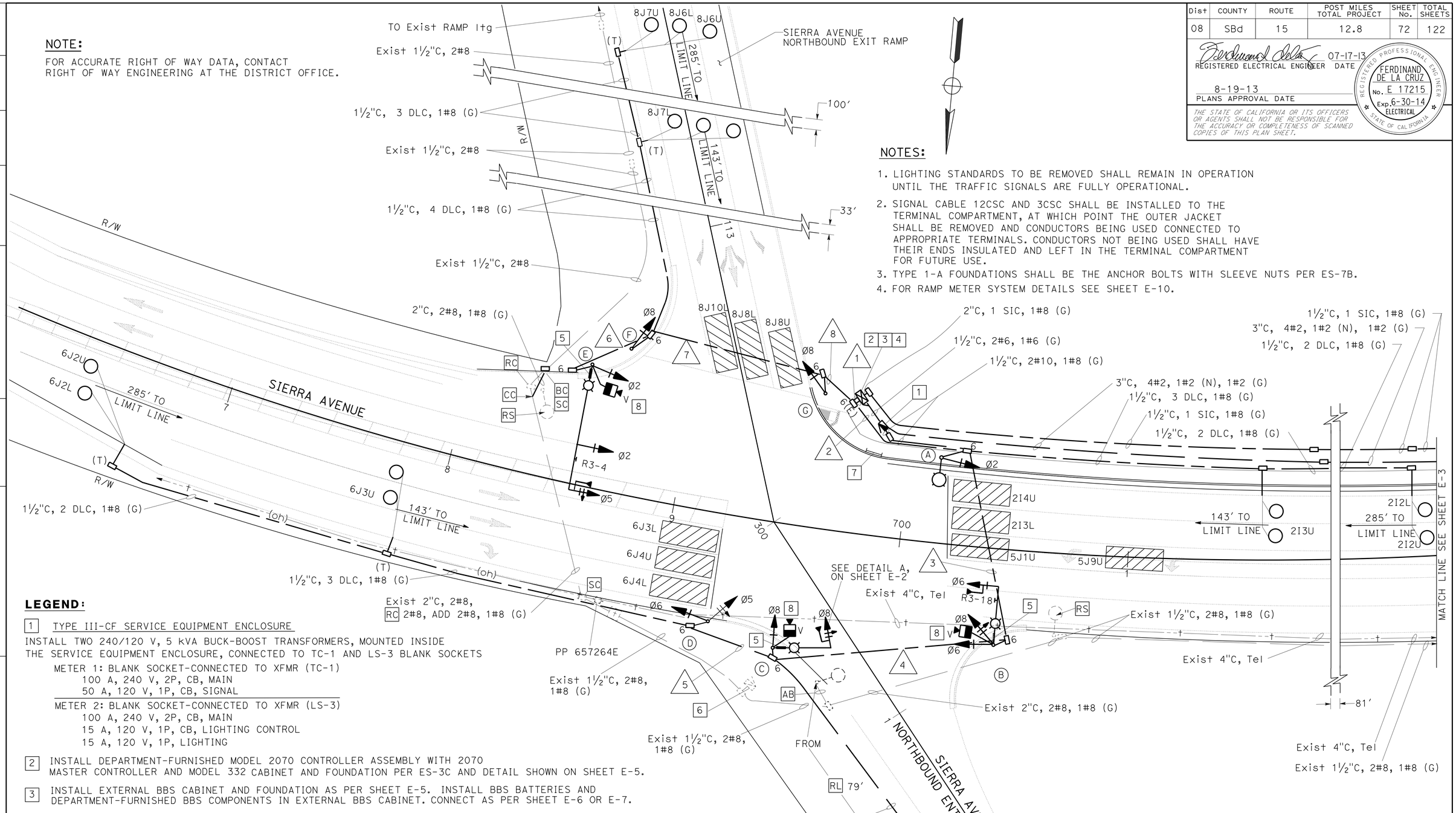

NOTES:

1. LIGHTING STANDARDS TO BE REMOVED SHALL REMAIN IN OPERATION UNTIL THE TRAFFIC SIGNALS ARE FULLY OPERATIONAL.
2. SIGNAL CABLE 12CSC AND 3CSC SHALL BE INSTALLED TO THE TERMINAL COMPARTMENT, AT WHICH POINT THE OUTER JACKET SHALL BE REMOVED AND CONDUCTORS BEING USED CONNECTED TO APPROPRIATE TERMINALS. CONDUCTORS NOT BEING USED SHALL HAVE THEIR ENDS INSULATED AND LEFT IN THE TERMINAL COMPARTMENT FOR FUTURE USE.
3. TYPE 1-A FOUNDATIONS SHALL BE THE ANCHOR BOLTS WITH SLEEVE NUTS PER ES-7B.
4. FOR RAMP METER SYSTEM DETAILS SEE SHEET E-10.

LEGEND:

1 TYPE III-CF SERVICE EQUIPMENT ENCLOSURE

INSTALL TWO 240/120 V, 5 kVA BUCK-BOOST TRANSFORMERS, MOUNTED INSIDE THE SERVICE EQUIPMENT ENCLOSURE, CONNECTED TO TC-1 AND LS-3 BLANK SOCKETS

METER 1: BLANK SOCKET-CONNECTED TO XFMR (TC-1)
100 A, 240 V, 2P, CB, MAIN
50 A, 120 V, 1P, CB, SIGNAL

METER 2: BLANK SOCKET-CONNECTED TO XFMR (LS-3)
100 A, 240 V, 2P, CB, MAIN
15 A, 120 V, 1P, CB, LIGHTING CONTROL
15 A, 120 V, 1P, LIGHTING

2 INSTALL DEPARTMENT-FURNISHED MODEL 2070 CONTROLLER ASSEMBLY WITH 2070 MASTER CONTROLLER AND MODEL 332 CABINET AND FOUNDATION PER ES-3C AND DETAIL SHOWN ON SHEET E-5.

3 INSTALL EXTERNAL BBS CABINET AND FOUNDATION AS PER SHEET E-5. INSTALL BBS BATTERIES AND DEPARTMENT-FURNISHED BBS COMPONENTS IN EXTERNAL BBS CABINET. CONNECT AS PER SHEET E-6 OR E-7.

4 EVP EQUIPMENT WILL BE DEPARTMENT-FURNISHED. THE CONTRACTOR SHALL CONTACT THE ENGINEER FIVE WORKING DAYS PRIOR TO INSTALLING THE CONDUCTORS AND EVP SYSTEM.

5 INSTALL D3-1 STREET NAME SIGN, SEE SHEET E-2 FOR NOTES.

6 Exist TYPE III-CF SERVICE EQUIPMENT ENCLOSURE. SEE SHEET E-8 FOR DETAILS.

7 INSTALL TYPE I PEDESTRIAN BARRICADE PER STANDARD PLAN ES-7Q.

8 INSTALL VIVDS CAMERA PER STANDARD PLAN ES-7R, DETAIL D, TWO FEET ABOVE SIGNAL MASTARM.

SIGNAL AND LIGHTING
(LOCATION 1)
SCALE: 1" = 20'

E-1

APPROVED FOR ELECTRICAL WORK ONLY

STATE OF CALIFORNIA - DEPARTMENT OF TRANSPORTATION
Caltrans® ELECTRICAL DESIGN B

FUNCTIONAL SUPERVISOR: FERDINAND DE LA CRUZ
CALCULATED-DESIGNED BY: ED CIESLIK
CHECKED BY: FERDINAND DE LA CRUZ
REVISED BY
DATE REVISED

LAST REVISION 07-17-13
DATE PLOTTED => 26-AUG-2013
TIME PLOTTED => 15:08

Dist	COUNTY	ROUTE	POST MILES TOTAL PROJECT	SHEET No.	TOTAL SHEETS
08	SBd	15	12.8	73	122

REGISTERED ELECTRICAL ENGINEER 7-17-13 DATE

8-19-13
PLANS APPROVAL DATE

REGISTERED PROFESSIONAL ENGINEER FERDINAND DE LA CRUZ No. E 17215 Exp. 6-30-14 ELECTRICAL STATE OF CALIFORNIA

THE STATE OF CALIFORNIA OR ITS OFFICERS OR AGENTS SHALL NOT BE RESPONSIBLE FOR THE ACCURACY OR COMPLETENESS OF SCANNED COPIES OF THIS PLAN SHEET.

CONDUCTOR SCHEDULE

CONDUCTOR DESIGNATION			NUMBER OF CONDUCTORS							
CABLE TYPE	STD	PHASE	RUN NUMBER 1	2	3	4	5	6	7	8
VEH-PED 12CSC / PPB 3CSC	(A)	Ø2 *	1	1						
	(B)	Ø6,Ø8 *	1	1	1					
	(C)	Ø8 *	1	1	1	1				
	(D)	Ø5,Ø6 *	1	1	1	1	1			
	(E)	Ø2,Ø5 *	1	1				1	1	1
	(F)	Ø8 *	1	1					1	1
	(G)	Ø8 *	1	1						1
TOTAL CABLES 12/3 CONDUCTORS			7/7	4/4	3/3	2/2	1/1	1/1	2/2	3/3
#10	STREET LIGHTING			2	2	2		2	2	2
#8	GROUND		1	1	1	1	1	1	1	1
DLC		Ø2	3	3						
		Ø6	3	3	3	3	3			
		Ø8	4						4	4
TOTAL DLC's PER RUN			10	6	3	3	3		4	4
#10 SPARE				2	2	2		2	2	2
EVP CABLE			3	2	2	1		1	1	1
VIVIDS POWER CABLE			3	2	2	1		1	1	1
VIVIDS VIDEO CABLE			3	2	2	1		1	1	1
CONDUIT SIZE			2-4"	4"	4"	4"	2"	3"	3"	4"

* 3CSC FOR FUTURE CROSSWALKS

POLE AND EQUIPMENT SCHEDULE

No.	STANDARD TYPE	SMA	LMA	VEH SIG MTG Mast ARM	POLE	PED SIGNAL	PPB Ø	ARROW	LED LUMINAIRE	SPECIAL REQUIREMENTS **
(A)	15TS		15'		SV-1-T				165 W	R9-3A
(B)	19A-4-100	25'	15'	1-MAT	SV-2-T				235 W	Rte 15 NORTH, R3-18, R9-3A
(C)	19A-4-100	25'	15'	1-MAT	SV-1-T				235 W	SIERRA Ave, R3-4, R9-3A
(D)	1-A				TV-2-T					R9-3A
(E)	29A-5-100	55'	15'	1-MAS 1-MAT	SV-1-T				235 W	Rte 15 NORTH, R3-4, R9-3A
(F)	1-A				TV-1-T					
(G)	1-A				TV-1-T					

** ALL SIGNS SHALL BE REFLECTIVE SHEETING. SEE SHEET SQ-1 FOR ADDITIONAL SIGN DETAILS.

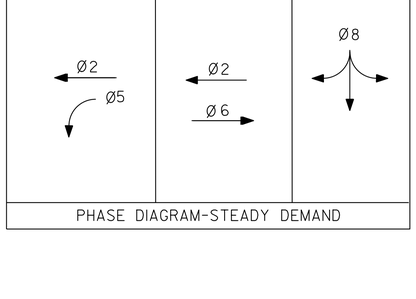

PHASE DIAGRAM-STEADY DEMAND

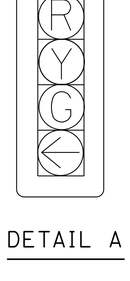

DETAIL A

SIGNAL AND LIGHTING (LOCATION 1)

E-2

REVISED BY | DATE REVISED
ED CIESLIK | FERDINAND DE LA CRUZ
CALCULATED-DESIGNED BY | CHECKED BY
FUNCTIONAL SUPERVISOR | FERDINAND DE LA CRUZ
STATE OF CALIFORNIA - DEPARTMENT OF TRANSPORTATION
Caltrans ELECTRICAL DESIGN B

LAST REVISION 07-17-13 | DATE PLOTTED => 26-AUG-2013 | TIME PLOTTED => 15:08

Dist	COUNTY	ROUTE	POST MILES TOTAL PROJECT	SHEET No.	TOTAL SHEETS
08	SBd	15	12.8	74	122

REGISTERED ELECTRICAL ENGINEER 7-17-13 DATE

8-19-13
PLANS APPROVAL DATE

REGISTERED PROFESSIONAL ENGINEER FERDINAND DE LA CRUZ No. E 17215 Exp. 6-30-14 ELECTRICAL STATE OF CALIFORNIA

THE STATE OF CALIFORNIA OR ITS OFFICERS OR AGENTS SHALL NOT BE RESPONSIBLE FOR THE ACCURACY OR COMPLETENESS OF SCANNED COPIES OF THIS PLAN SHEET.

NOTE:

FOR ACCURATE RIGHT OF WAY DATA, CONTACT RIGHT OF WAY ENGINEERING AT THE DISTRICT OFFICE.

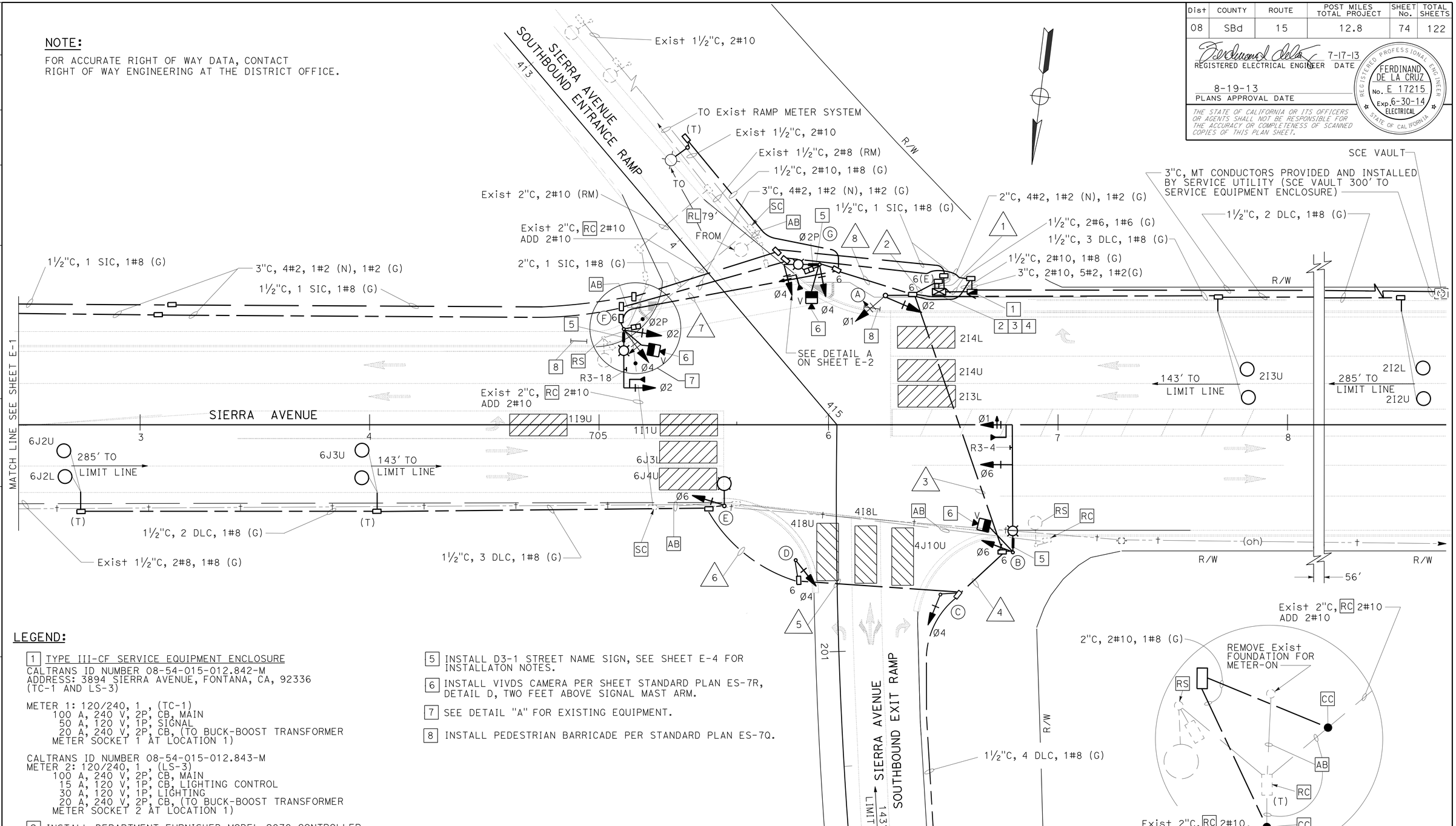

LEGEND:

1. TYPE III-CF SERVICE EQUIPMENT ENCLOSURE
CALTRANS ID NUMBER 08-54-015-012.842-M
ADDRESS: 3894 SIERRA AVENUE, FONTANA, CA, 92336
(TC-1 AND LS-3)

METER 1: 120/240, 1 , (TC-1)
100 A, 240 V, 2P, CB, MAIN
50 A, 120 V, 1P, SIGNAL
20 A, 240 V, 2P, CB, (TO BUCK-BOOST TRANSFORMER METER SOCKET 1 AT LOCATION 1)

CALTRANS ID NUMBER 08-54-015-012.843-M
METER 2: 120/240, 1 , (LS-3)
100 A, 240 V, 2P, CB, MAIN
15 A, 120 V, 1P, CB, LIGHTING CONTROL
30 A, 120 V, 1P, LIGHTING
20 A, 240 V, 2P, CB, (TO BUCK-BOOST TRANSFORMER METER SOCKET 2 AT LOCATION 1)

2. INSTALL DEPARTMENT-FURNISHED MODEL 2070 CONTROLLER ASSEMBLY AND MODEL 332 CABINET AND FOUNDATION PER ES-3C AND DETAIL SHOWN ON SHEET E-5.

3. INSTALL EXTERNAL BBS CABINET AND FOUNDATION AS PER SHEET E-5. INSTALL BBS BATTERIES AND DEPARTMENT-FURNISHED BBS COMPONENTS IN EXTERNAL BBS CABINET. CONNECT AS PER SHEET E-6 OR E-7.

4. EVP EQUIPMENT WILL BE DEPARTMENT-FURNIAHED. THE CONTRACTOR SHALL CONTACT THE ENGINEER FIVE WORKING DAYS PRIOR TO INSTALLING THE CONDUCTORS AND EVP SYSTEM.

5. INSTALL D3-1 STREET NAME SIGN, SEE SHEET E-4 FOR INSTALLATON NOTES.

6. INSTALL VIVDS CAMERA PER SHEET STANDARD PLAN ES-7R, DETAIL D, TWO FEET ABOVE SIGNAL MAST ARM.

7. SEE DETAIL "A" FOR EXISTING EQUIPMENT.

8. INSTALL PEDESTRIAN BARRICADE PER STANDARD PLAN ES-7Q.

APPROVED FOR ELECTRICAL WORK ONLY

SIGNAL AND LIGHTING (LOCATION 2)

SCALE: 1" = 20'

E-3

STATE OF CALIFORNIA - DEPARTMENT OF TRANSPORTATION
Caltrans ELECTRICAL DESIGN B

FUNCTIONAL SUPERVISOR: FERDINAND DE LA CRUZ
CALCULATED-DESIGNED BY: ED CIESLIK
CHECKED BY: FERDINAND DE LA CRUZ
REVISED BY / DATE REVISED

LAST REVISION 07-17-13 | DATE PLOTTED => 26-AUG-2013 | TIME PLOTTED => 15:08

Dist	COUNTY	ROUTE	POST MILES TOTAL PROJECT	SHEET No.	TOTAL SHEETS
08	SBd	15	12.8	75	122

REGISTERED ELECTRICAL ENGINEER 12-12-12 DATE

8-19-13
PLANS APPROVAL DATE

REGISTERED PROFESSIONAL ENGINEER FERDINAND DE LA CRUZ No. E 17215 Exp. 6-30-14 ELECTRICAL STATE OF CALIFORNIA

THE STATE OF CALIFORNIA OR ITS OFFICERS OR AGENTS SHALL NOT BE RESPONSIBLE FOR THE ACCURACY OR COMPLETENESS OF SCANNED COPIES OF THIS PLAN SHEET.

CONDUCTOR SCHEDULE

CONDUCTOR DESIGNATION			NUMBER OF CONDUCTORS							
CABLE TYPE	STD	PHASE	RUN NUMBER							
			1	2	3	4	5	6	7	8
VEH-PED 12CSC / PPB 3CSC	(A)	Ø1, Ø2 *	1 / 1	1 / 1						
	(B)	Ø1, Ø6 *	1 / 1	1 / 1	1 / 1					
	(C)	Ø4 *	1 / 1	1 / 1	1 / 1	1 / 1				
	(D)	Ø4 *	1 / 1	1 / 1	1 / 1	1 / 1	1 / 1			
	(E)	Ø6 *	1 / 1	1 / 1	1 / 1	1 / 1	1 / 1	1 / 1		
	(F)	Ø2, Ø4, Ø2P / Ø2PPB	1 / 1	1 / 1					1 / 1	1 / 1
	(G)	Ø4, Ø2P / Ø2PPB	1 / 1	1 / 1						1 / 1
TOTAL CABLES 12/3 CONDUCTORS			7 / 7	7 / 7	4 / 4	3 / 3	2 / 2	1 / 1	1 / 1	2 / 2
#10	LIGHTING				2	2	2	2	2	2
#8	GROUND		1	1	1	1	1	1	1	1
DLC	Ø2		3	3						
	Ø4		4	4	4	4				
	Ø6		3	3	3	3	3	3		
TOTAL DLC's PER RUN			10	10	7	7	3	3		
#10 SPARE					2	2			2	2
EVP CABLE			3	3	1				1	2
VIVIDS POWER CABLE			3	3	1				1	2
VIVIDS VIDEO CABLE			3	3	1				1	2
CONDUIT SIZE			2-4"	2-4"	4"	3"	3"	2½"	2½"	3"

* 3CSC FOR FUTURE CROSSWALKS

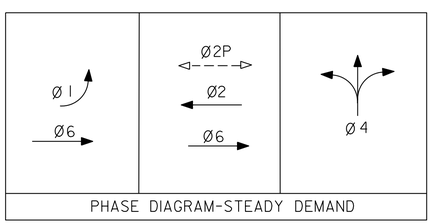

PHASE DIAGRAM-STEADY DEMAND

POLE AND EQUIPMENT SCHEDULE

No.	STANDARD TYPE	STANDARD SMA	STANDARD LMA	VEH SIG MTG Mast ARM	VEH SIG MTG POLE	PED SIGNAL	PPB Ø	PPB ARROW	LED LUMINAIRE	SPECIAL REQUIREMENTS **
(A)	1-A				TV-2-T					R9-3A
(B)	29A-5-100	55'	15'	1-MAS 1-MAT	SV-1-T				235 W	Rte 15 SOUTH, R3-3A, R9-3A
(C)	1-A				TV-1-T					
(D)	1-A				TV-1-T					
(E)	15TS		15'		SV-1-T				165 W	R9-3A
(F)	19A-4-100	25'	15'	1-MAT	SV-2-T	SP-1-T	2	→	235 W	Rte 15 SOUTH, R3-18, R9-3A
(G)	17A-4-100	15'	15'	1-MAS	SV-1-T	SP-1-T	2	←	235 W	SIERRA Ave

** ALL SIGNS SHALL BE REFLECTIVE SHEETING. SEE SHEET SQ-1 FOR ADDITIONAL SIGN DETAILS.

SIGNAL AND LIGHTING
(LOCATION 2)

E-4

STATE OF CALIFORNIA - DEPARTMENT OF TRANSPORTATION
Caltrans ELECTRICAL DESIGN B

FUNCTIONAL SUPERVISOR: FERDINAND DE LA CRUZ
CALCULATED-DESIGNED BY: ED CIESLIK
CHECKED BY: FERDINAND DE LA CRUZ
REVISED BY
DATE REVISED

LAST REVISION 12-12-12
DATE PLOTTED => 26-AUG-2013
TIME PLOTTED => 15:08

Dist	COUNTY	ROUTE	POST MILES TOTAL PROJECT	SHEET No.	TOTAL SHEETS
08	SBd	15	12.8	76	122

REGISTERED ELECTRICAL ENGINEER 12-12-12 DATE

8-19-13
PLANS APPROVAL DATE

REGISTERED PROFESSIONAL ENGINEER FERDINAND DE LA CRUZ No. E 17215 Exp. 6-30-14 ELECTRICAL STATE OF CALIFORNIA

THE STATE OF CALIFORNIA OR ITS OFFICERS OR AGENTS SHALL NOT BE RESPONSIBLE FOR THE ACCURACY OR COMPLETENESS OF SCANNED COPIES OF THIS PLAN SHEET.

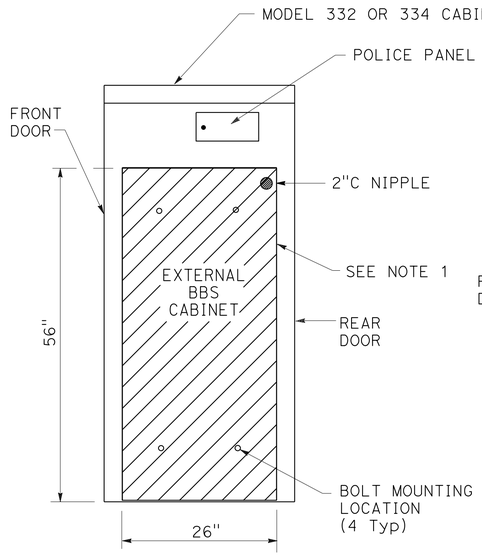

SIDE VIEW

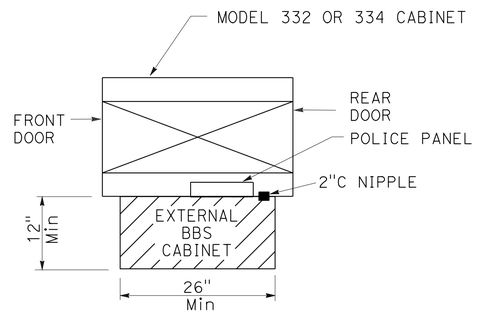

TOP VIEW

EXTERNAL BBS CABINET MOUNTED TO THE MODEL 332 OR 334 CABINET

NOTES (THIS SHEET ONLY):

1. THE EXTERNAL BBS CABINET SHALL BE MOUNTED TO THE MODEL 332 OR 334 CABINET WITH FOUR 18-8 STAINLESS STEEL HEX HEAD, FULLY-THREADED, ⅜"-16 X 1" BOLTS; TWO WASHERS PER BOLT, DESIGNED FOR ⅜" BOLTS AND ARE 18-8 STAINLESS STEEL, 1" OUTSIDE DIAMETER, ROUND, AND FLAT; AND ONE K-LOCK NUT PER BOLT THAT IS 18-8 STAINLESS STEEL AND A HEX-NUT. THE ENGINEER WILL HAVE TO APPROVE THE BOLT MOUNTING LOCATION PRIOR TO INSTALLATION.
2. THE ANCHOR BOLTS SHALL BE ¾" Dia X 15" WITH A 2"-90° BEND. THE CABINET MANUFACTURER'S SPECIFICATION SHALL DETERMINE THE LOCATION OF THE ANCHOR BOLTS IN THE FOUNDATION. THE ENGINEER WILL HAVE TO APPROVE THE ANCHOR BOLTS AND ITS LOCATION IN THE FOUNDATION PRIOR TO CONSTRUCTION.
3. THE CONTRACTOR SHALL VERIFY THE DIMENSIONS OF THE BBS CABINET PRIOR TO CONSTRUCTING THE FOUNDATION OF THE MODIFIED PORTION OF THE Std MODEL 332 AND 334 CABINET FOUNDATION. THE ENGINEER WILL HAVE TO APPROVE ANY NECESSARY DEVIATIONS PRIOR TO CONSTRUCTION.
4. ALL DIMENSIONS ARE NOMINAL.

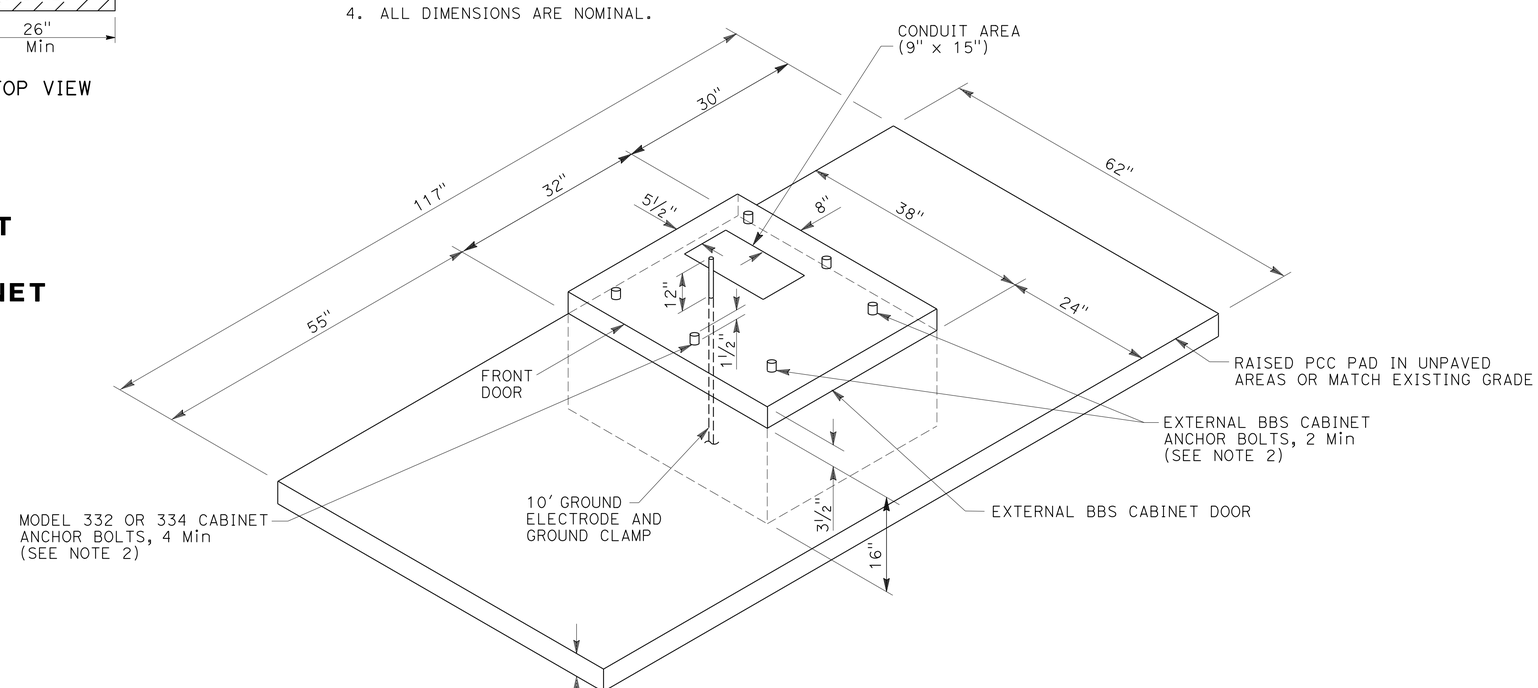

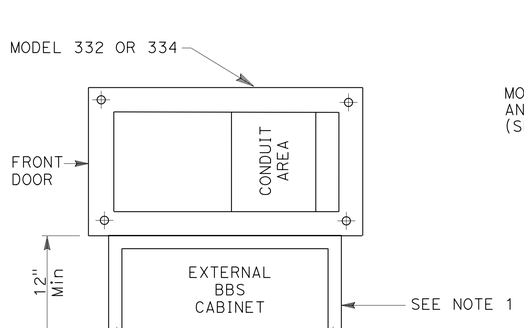

BASE PLAN FOR BBS MOUNTED TO THE MODEL 332 OR 334 CABINET

(FOR DIMENSIONS AND DETAILS NOT SHOWN, SEE SHEET A6-1 TO A6-4, CABINET HOUSING DETAILS OF THE TRANSPORTATION ELECTRICAL EQUIPMENT SPECIFICATION (TEES))

MODIFIED MODEL 332 AND 334 CABINET FOUNDATION DETAIL FOR BATTERY BACKUP SYSTEM (BBS)

(FOR DIMENSIONS AND DETAILS NOT SHOWN AND ADDITIONAL NOTES, SEE SHEET ES-3C OF THE STANDARD PLANS FOR MODEL 332 AND 334 CABINETS)

BBS FOUNDATION DETAILS

ELECTRICAL DETAILS

NO SCALE

E-5

STATE OF CALIFORNIA - DEPARTMENT OF TRANSPORTATION
Caltrans ELECTRICAL DESIGN B
FUNCTIONAL SUPERVISOR: FERDINAND DE LA CRUZ
CALCULATED-DESIGNED BY: ED CIESLIK
CHECKED BY: FERDINAND DE LA CRUZ
REVISED BY
DATE REVISED

LAST REVISION 12-12-12 | DATE PLOTTED => 26-AUG-2013 | TIME PLOTTED => 15:08

Dist	COUNTY	ROUTE	POST MILES TOTAL PROJECT	SHEET No.	TOTAL SHEETS
08	SBd	15	12.8	77	122

Theresa Gabriel 12-12-12
REGISTERED ELECTRICAL ENGINEER DATE

8-19-13
PLANS APPROVAL DATE

REGISTERED PROFESSIONAL ENGINEER THERESA A. GABRIEL No. E15129 Exp. 6-30-14 ELECTRICAL STATE OF CALIFORNIA

THE STATE OF CALIFORNIA OR ITS OFFICERS OR AGENTS SHALL NOT BE RESPONSIBLE FOR THE ACCURACY OR COMPLETENESS OF SCANNED COPIES OF THIS PLAN SHEET.

LEGEND: (THIS SHEET ONLY)

PTS = POWER TRANSFER SWITCH
UPS = UNINTERRUPTIBLE POWER SUPPLY
UPSC = UNINTERRUPTIBLE POWER SUPPLY CONTROLLER
UPSM = UPS MODE
BP = BYPASS
MBPS = MANUAL BYPASS SWITCH
AC+ = UNGROUNDED CONDUCTOR
AC- = GROUNDED CONDUCTOR
C = COMMON
Grn = GREEN
Blk = BLACK
Wht = WHITE
SF = STATE-FURNISHED
Batt = BATTERY
Temp = TEMPERATURE
TB = TERMINAL BOARD
Cntl = CONTROL
Gnd = GROUND

NOTES: (THIS SHEET ONLY)

1. TYPE B REFERS TO THE BBS EQUIPMENT FROM MANUFACTURER B.
2. CASE-1 REFERS TO THE SITUATION WHEN THE ENTIRE BBS EQUIPMENT INCLUDING THE BATTERIES ARE INSTALLED IN THE BBS CABINET.
3. THE LOCATION OF THE 2"C NIPPLE WILL BE DETERMINED BY THE ENGINEER IN THE FIELD.
4. THE CONTRACTOR SHALL FURNISH AND INSTALL A NEMA-1 ENCLOSURE WITH 30 A, 1P, 120/240 VOLTS RATED CIRCUIT BREAKER MANUFACTURED PER UL STANDARD 489.
5. A TEMPERATURE PROBE SHALL BE ATTACHED TO THE BATTERY BY TAPE OR ATTACHED TO THE NEGATIVE TERMINAL OF THE BATTERY.
6. THE ELECTRICAL POWER FOR THE COOLING FAN FOR THE BBS CABINET SHALL BE TAPPED FROM THE BOTTOM OF THE TB IN THE 332 CABINET.
7. THE CONTRACTOR SHALL PROVIDE A 9-WIRE WIRING HARNESS OR BUNDLED 9 MULTICOLOR CONDUCTORS, #18 AWG WIRES FROM THE RELAY ON THE INVERTER/CHARGER UNIT TO THE CONTROLLER. THE ENDS OF THE CONDUCTORS SHALL BE INSULATED WITH TAPE AND A SIX-FOOT COIL ON EACH END.

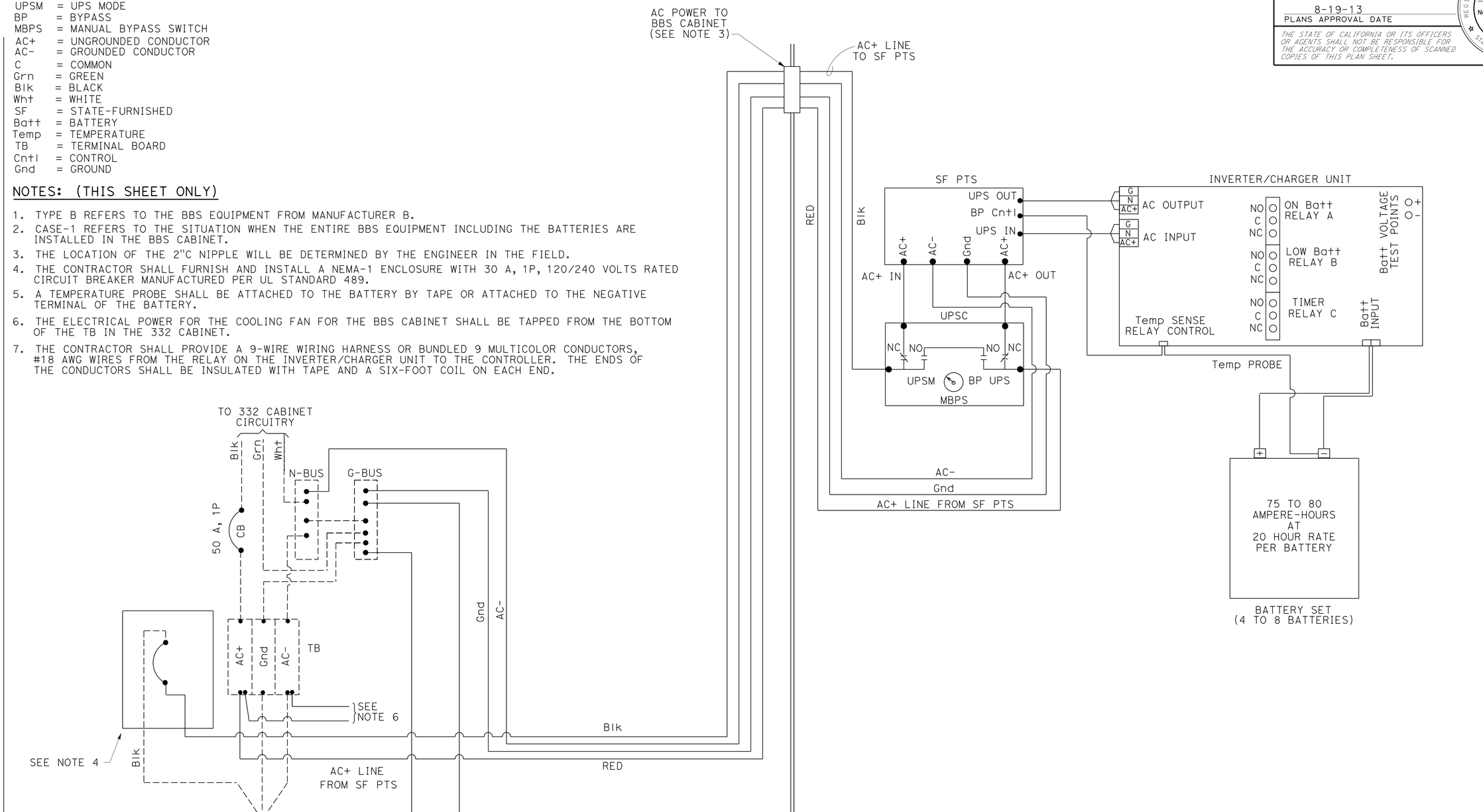

BBS POWER CONNECTION DIAGRAM, TYPE B, CASE-1

ELECTRICAL DETAILS

NO SCALE

E-6

STATE OF CALIFORNIA - DEPARTMENT OF TRANSPORTATION
Caltrans ELECTRICAL DESIGN B

FUNCTIONAL SUPERVISOR: FERDINAND DE LA CRUZ
CALCULATED-DESIGNED BY: THERESA A. GABRIEL
CHECKED BY: FERDINAND DE LA CRUZ
REVISED BY
DATE REVISED

LAST REVISION DATE PLOTTED => 26-AUG-2013
12-12-12 TIME PLOTTED => 15:08

Dist	COUNTY	ROUTE	POST MILES TOTAL PROJECT	SHEET No.	TOTAL SHEETS
08	SBd	15	12.8	78	122

Theresa Gabriel 12-12-12
REGISTERED ELECTRICAL ENGINEER DATE

8-19-13
PLANS APPROVAL DATE

REGISTERED PROFESSIONAL ENGINEER THERESA A. GABRIEL No. E15129 Exp. 6-30-14 ELECTRICAL STATE OF CALIFORNIA

THE STATE OF CALIFORNIA OR ITS OFFICERS OR AGENTS SHALL NOT BE RESPONSIBLE FOR THE ACCURACY OR COMPLETENESS OF SCANNED COPIES OF THIS PLAN SHEET.

LEGEND: (THIS SHEET ONLY)

PTS = POWER TRANSFER SWITCH
UPS = UNINTERRUPTIBLE POWER SUPPLY
UPSC = UNINTERRUPTIBLE POWER SUPPLY CONTROLLER
UPSM = UPS MODE
BP = BYPASS
MBPS = MANUAL BYPASS SWITCH
AC+ = UNGROUNDED CONDUCTOR
AC- = GROUNDED CONDUCTOR
C = COMMON
Grn = GREEN
Blk = BLACK
Wht = WHITE
SF = STATE-FURNISHED
TB = TERMINAL BOARD
Cntl = CONTROL
Gnd = GROUND
Temp = TEMPERATURE
Batt = BATTERY

NOTES: (THIS SHEET ONLY)

1. TYPE A REFERS TO THE BBS EQUIPMENT FROM MANUFACTURER A.
2. CASE-1 REFERS TO THE SITUATION WHEN THE ENTIRE BBS EQUIPMENT INCLUDING THE BATTERIES ARE INSTALLED IN THE BBS CABINET.
3. THE LOCATION OF THE 2"C NIPPLE WILL BE DETERMINED BY THE ENGINEER IN THE FIELD.
4. THE CONTRACTOR SHALL FURNISH AND INSTALL A NEMA-1 ENCLOSURE WITH 30 A, 1P, 120/240 VOLTS RATED CIRCUIT BREAKER MANUFACTURED PER UL STANDARD 489.
5. A TEMPERATURE PROBE SHALL BE ATTACHED TO THE BATTERY BY TAPE OR ATTACHED TO THE NEGATIVE TERMINAL OF THE BATTERY.
6. THE ELECTRICAL POWER FOR THE COOLING FAN FOR THE BBS CABINET SHALL BE TAPPED FROM THE BOTTOM OF THE TB IN THE 332 CABINET.
7. THE CONTRACTOR SHALL PROVIDE A 9-WIRE WIRING HARNESS OR BUNDLED 9 MULTICOLOR CONDUCTORS, #18 AWG WIRES FROM THE RELAY ON THE INVERTER/CHARGER UNIT TO THE CONTROLLER. THE ENDS OF THE CONDUCTORS SHALL BE INSULATED WITH TAPE AND A SIX-FOOT COIL ON EACH END.

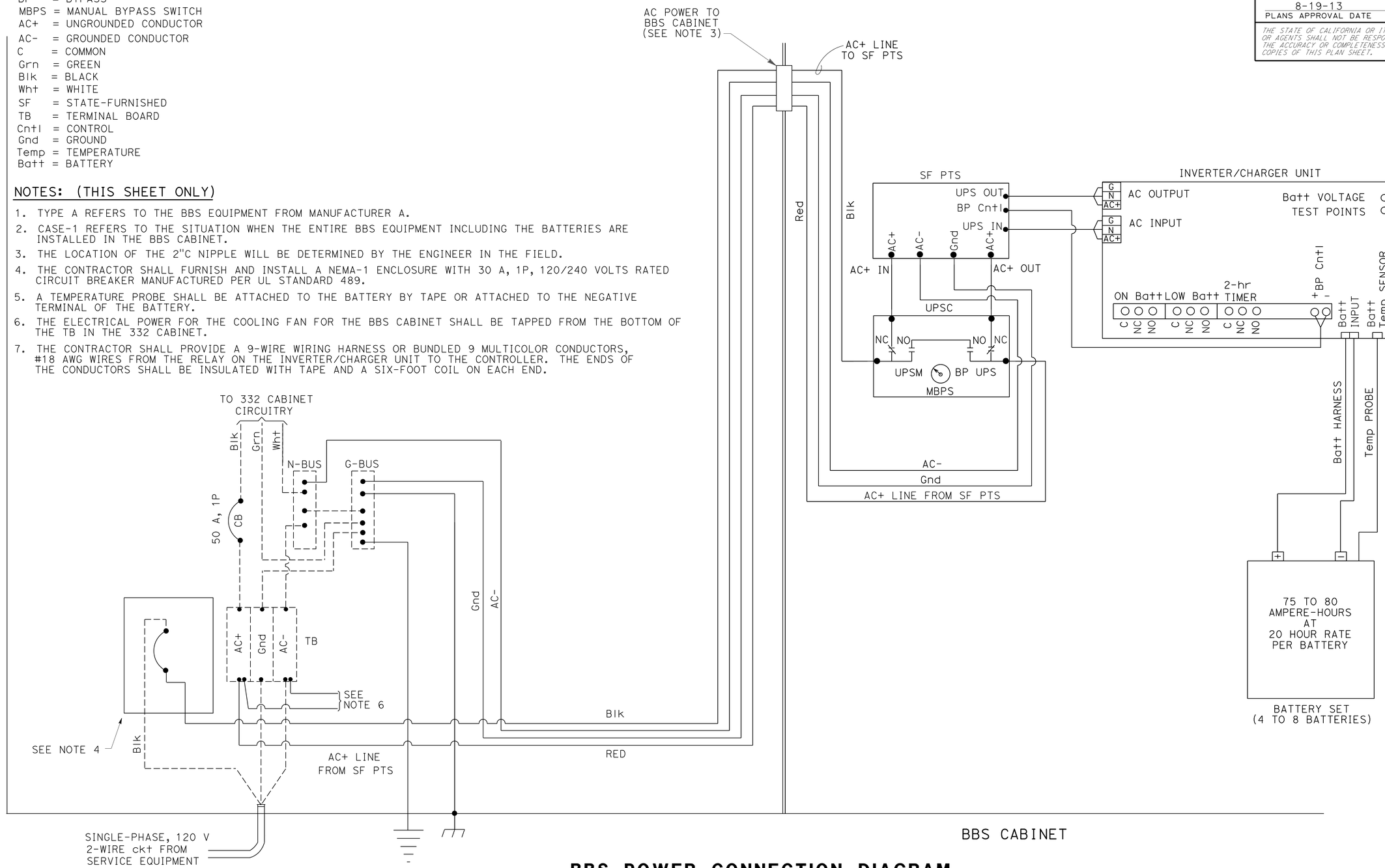

BBS POWER CONNECTION DIAGRAM, TYPE A, CASE-1

APPROVED FOR ELECTRICAL WORK ONLY

ELECTRICAL DETAILS

NO SCALE

E-7

STATE OF CALIFORNIA - DEPARTMENT OF TRANSPORTATION
Caltrans® ELECTRICAL DESIGN B
FUNCTIONAL SUPERVISOR: FERDINAND DE LA CRUZ
CALCULATED-DESIGNED BY: THERESA A. GABRIEL
CHECKED BY: FERDINAND DE LA CRUZ
REVISED BY
DATE REVISED

LAST REVISION 12-12-12 DATE PLOTTED => 26-AUG-2013 TIME PLOTTED => 15:09

Dist	COUNTY	ROUTE	POST MILES TOTAL PROJECT	SHEET No.	TOTAL SHEETS
08	SBd	15	12.8	79	122

REGISTERED ELECTRICAL ENGINEER 1-23-13 DATE

8-19-13
PLANS APPROVAL DATE

REGISTERED PROFESSIONAL ENGINEER FERDINAND DE LA CRUZ No. E 17215 Exp. 6-30-14 ELECTRICAL STATE OF CALIFORNIA

THE STATE OF CALIFORNIA OR ITS OFFICERS OR AGENTS SHALL NOT BE RESPONSIBLE FOR THE ACCURACY OR COMPLETENESS OF SCANNED COPIES OF THIS PLAN SHEET.

CONDUCTOR AND CONDUIT SCHEDULE

AWG OR CABLE	CONDUCTOR RUN	1	2	3	4	5	6	7	8	9	10	11	12	13
12CSC	RAMP SIGNAL	1	1	1										
3CSC	METER-ON SIGN	2							2	1				
#8	GROUND	1	1	1	1	1	1	1	1	1	1	1	1	
#6	RM CABINET SERVICE													3
LOOP WIRES						8		8						
DLC	QUEUE DETECTOR	1							1					
	DEMAND DETECTOR	1	1											
	PASSAGE DETECTOR	1	1											
	MAIN LOOP DETECTOR	16	16	16	16	8	8	8						
	EXIT RAMP DETECTOR	2							2		2	2	2	
	TOTAL	21	18	16	16	8	8	8	3		2	2	2	
CONDUIT SIZE		2-3"	3"	3"	3"	3"	3"	3"	2"	1½"	1½"	3"	1½"	1½"

NOTE:

FOR ACCURATE RIGHT OF WAY DATA, CONTACT RIGHT OF WAY ENGINEERING AT THE DISTRICT OFFICE.

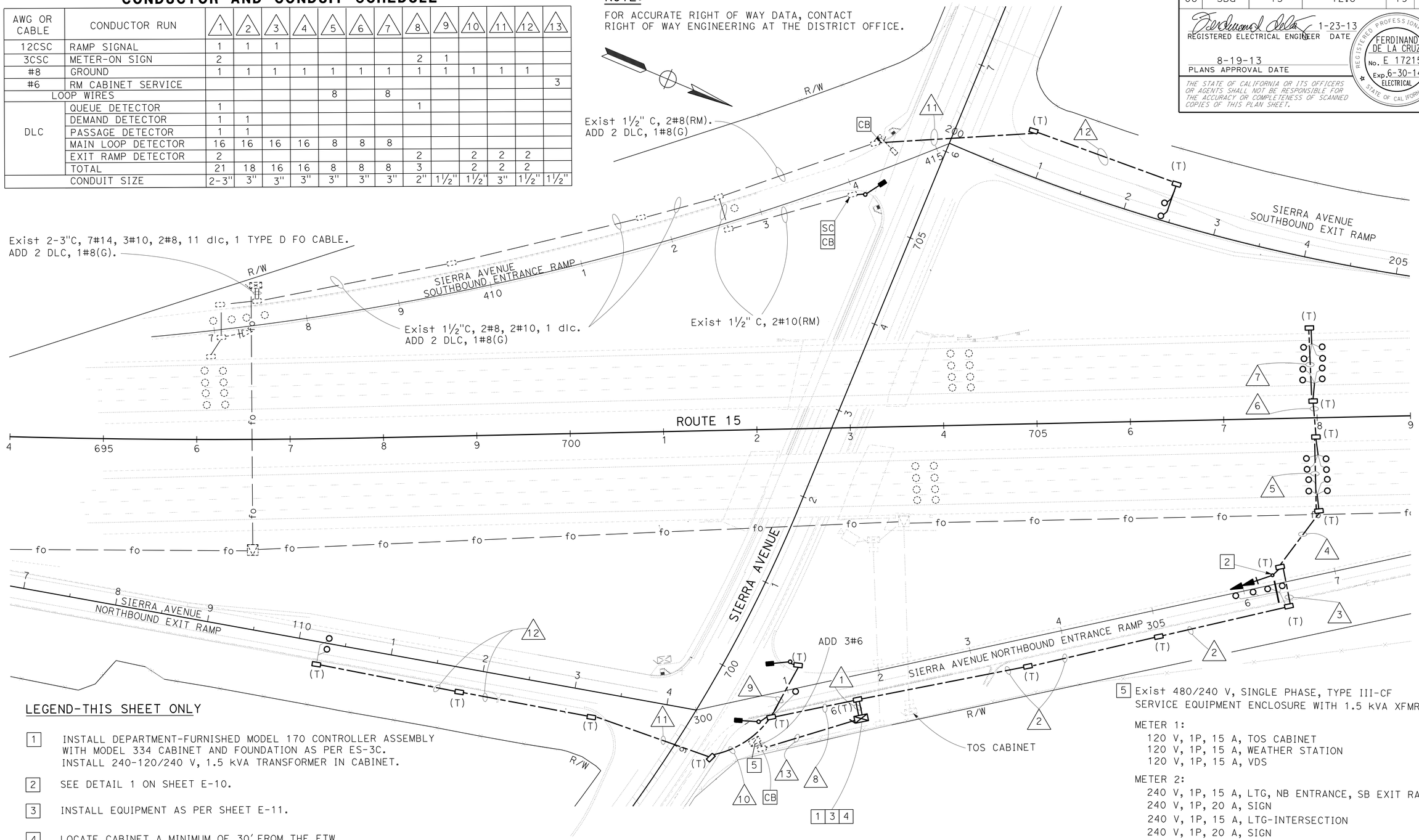

LEGEND-THIS SHEET ONLY

1. INSTALL DEPARTMENT-FURNISHED MODEL 170 CONTROLLER ASSEMBLY WITH MODEL 334 CABINET AND FOUNDATION AS PER ES-3C. INSTALL 240-120/240 V, 1.5 kVA TRANSFORMER IN CABINET.
2. SEE DETAIL 1 ON SHEET E-10.
3. INSTALL EQUIPMENT AS PER SHEET E-11.
4. LOCATE CABINET A MINIMUM OF 30' FROM THE ETW.

NOTE-THIS SHEET ONLY

1. ALL PULL BOXES (EXCEPT THOSE BEHIND CURB) SHALL BE RECESSED 6" BELOW FINISHED GRADE. THE CONTRACTOR SHALL MARK THE LOCATION OF THE PULL BOXES WITH GPS COORDINATES IN DEGREES, MINUTES, SECONDS.

RAMP METERING EQUIPMENT:

RAMP METER, STANDARD, SEE SHEET E-10

5 Exist 480/240 V, SINGLE PHASE, TYPE III-CF SERVICE EQUIPMENT ENCLOSURE WITH 1.5 kVA XFMR

METER 1:
- 120 V, 1P, 15 A, TOS CABINET
- 120 V, 1P, 15 A, WEATHER STATION
- 120 V, 1P, 15 A, VDS

METER 2:
- 240 V, 1P, 15 A, LTG, NB ENTRANCE, SB EXIT RAMP
- 240 V, 1P, 20 A, SIGN
- 240 V, 1P, 15 A, LTG-INTERSECTION
- 240 V, 1P, 20 A, SIGN
- 240 V, 1P, 15 A, CCTV
- 240 V, 1P, 20 A, RAMP METER-SOUTHBOUND
- **INSTALL: 240 V, 1P, 20 A, RAMP METER-NORTHBOUND**

RAMP METERING SYSTEM

NO SCALE

E-8

APPROVED FOR ELECTRICAL WORK ONLY

STATE OF CALIFORNIA - DEPARTMENT OF TRANSPORTATION
Caltrans ELECTRICAL DESIGN B

FUNCTIONAL SUPERVISOR: FERDINAND DE LA CRUZ
CALCULATED-DESIGNED BY: ED CIESLIK
CHECKED BY: FERDINAND DE LA CRUZ
REVISED BY
DATE REVISED

LAST REVISION 01-23-13
DATE PLOTTED => 26-AUG-2013
TIME PLOTTED => 15:09

Dist	COUNTY	ROUTE	POST MILES TOTAL PROJECT	SHEET No.	TOTAL SHEETS
08	SBd	15	12.8	80	122

REGISTERED ELECTRICAL ENGINEER 1-23-13 DATE

8-19-13
PLANS APPROVAL DATE

REGISTERED PROFESSIONAL ENGINEER FERDINAND DE LA CRUZ No. E 17215 Exp. 6-30-14 ELECTRICAL STATE OF CALIFORNIA

THE STATE OF CALIFORNIA OR ITS OFFICERS OR AGENTS SHALL NOT BE RESPONSIBLE FOR THE ACCURACY OR COMPLETENESS OF SCANNED COPIES OF THIS PLAN SHEET.

NOTE:

FOR ACCURATE RIGHT OF WAY DATA, CONTACT RIGHT OF WAY ENGINEERING AT THE DISTRICT OFFICE.

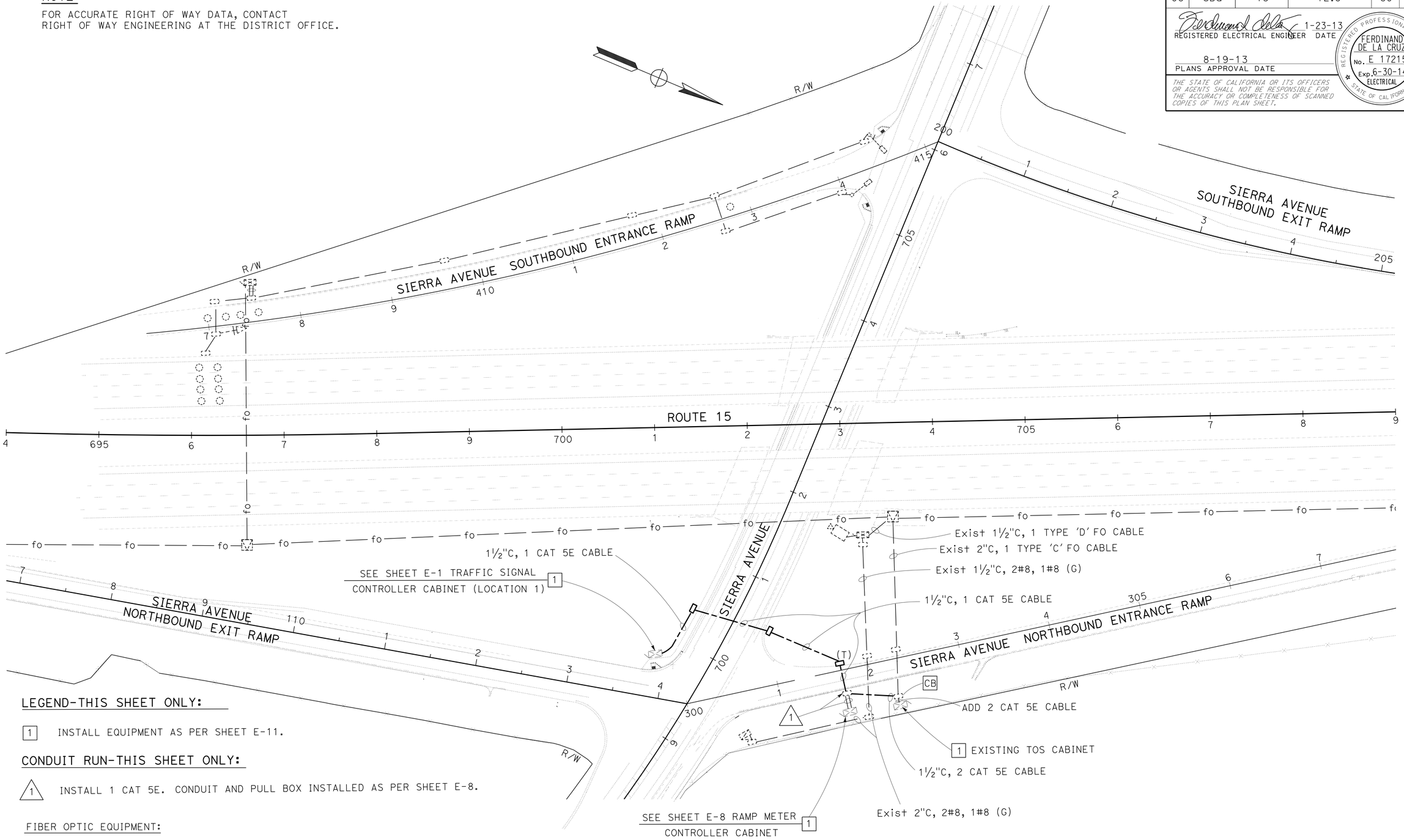

LEGEND-THIS SHEET ONLY:

1 INSTALL EQUIPMENT AS PER SHEET E-11.

CONDUIT RUN-THIS SHEET ONLY:

1 INSTALL 1 CAT 5E. CONDUIT AND PULL BOX INSTALLED AS PER SHEET E-8.

FIBER OPTIC EQUIPMENT:

EXISTING FIBER OPTIC SPLICE VAULT

—— fo —— EXISTING 4" CONDUIT WITH 4-1" INNERDUCTS AND ONE TYPE A, B, AND C FO CABLES IN SEPARATE INNERDUCTS.

MODIFY COMMUNICATION SYSTEM

NO SCALE

E-9

APPROVED FOR ELECTRICAL WORK ONLY

STATE OF CALIFORNIA - DEPARTMENT OF TRANSPORTATION
Caltrans® ELECTRICAL DESIGN B

FUNCTIONAL SUPERVISOR: FERDINAND DE LA CRUZ
CALCULATED-DESIGNED BY: ED CIESLIK
CHECKED BY: FERDINAND DE LA CRUZ
REVISED BY
DATE REVISED

LAST REVISION 01-23-13
DATE PLOTTED => 26-AUG-2013
TIME PLOTTED => 15:09

Dist	COUNTY	ROUTE	POST MILES TOTAL PROJECT	SHEET No.	TOTAL SHEETS
08	SBd	15	12.8	81	122

REGISTERED ELECTRICAL ENGINEER 1-23-13 DATE

8-19-13
PLANS APPROVAL DATE

REGISTERED PROFESSIONAL ENGINEER FERDINAND DE LA CRUZ No. E 17215 Exp. 6-30-14 ELECTRICAL STATE OF CALIFORNIA

THE STATE OF CALIFORNIA OR ITS OFFICERS OR AGENTS SHALL NOT BE RESPONSIBLE FOR THE ACCURACY OR COMPLETENESS OF SCANNED COPIES OF THIS PLAN SHEET.

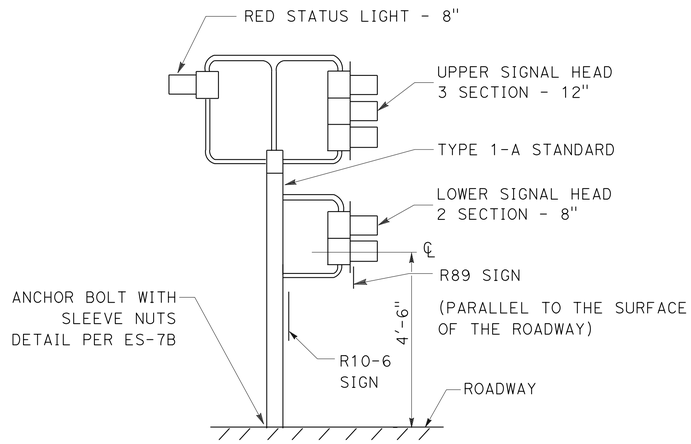

SIDE ELEVATION

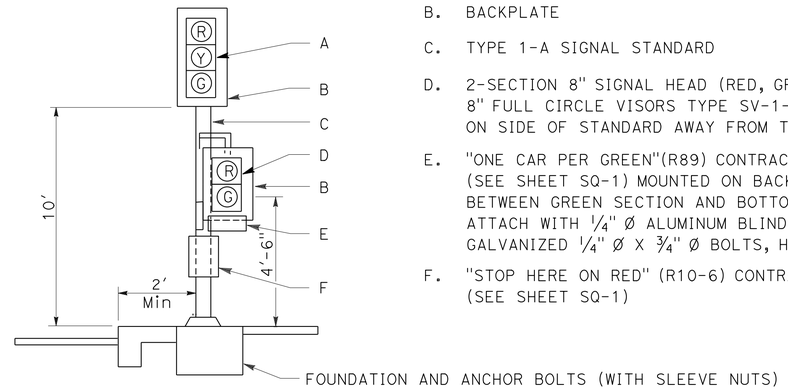

FRONT ELEVATION

A. 3-SECTION 12" SIGNAL HEAD (RED, YELLOW, GREEN), 12" FULL 18" X 8" ANGLED VISORS ARE REQUIRED WHERE SHOWN ON PLANS.

B. BACKPLATE

C. TYPE 1-A SIGNAL STANDARD

D. 2-SECTION 8" SIGNAL HEAD (RED, GREEN), 8" FULL CIRCLE VISORS TYPE SV-1-T BRACKET MOUNTING ON SIDE OF STANDARD AWAY FROM THE RAMP TRAFFIC.

E. "ONE CAR PER GREEN"(R89) CONTRACTOR-FURNISHED SIGN (SEE SHEET SQ-1) MOUNTED ON BACKPLATE AND CENTERED BETWEEN GREEN SECTION AND BOTTOM OF BACKPLATES AND SIDES. ATTACH WITH 1/4" Ø ALUMINUM BLIND RIVETS OR GALVANIZED 1/4" Ø X 3/4" Ø BOLTS, HEX NUTS PLAIN AND LOCK WASHERS.

F. "STOP HERE ON RED" (R10-6) CONTRACTOR-FURNISHED SIGN. (SEE SHEET SQ-1)

DETAIL 1
RAMP METER SIGNAL

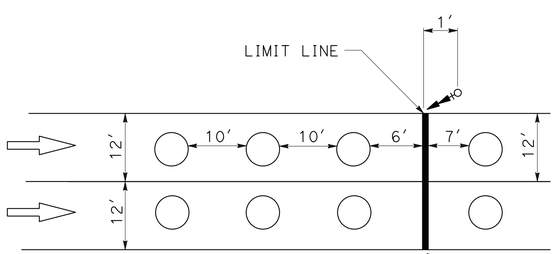

DETAIL 2
2-LANE ON RAMP LOOP INSTALLATION

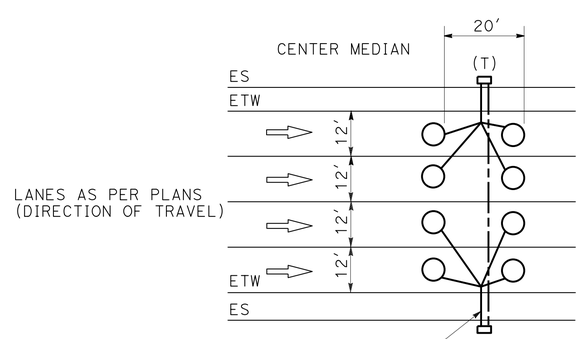

DETAIL 3
MAINLINE LOOP INSTALLATION

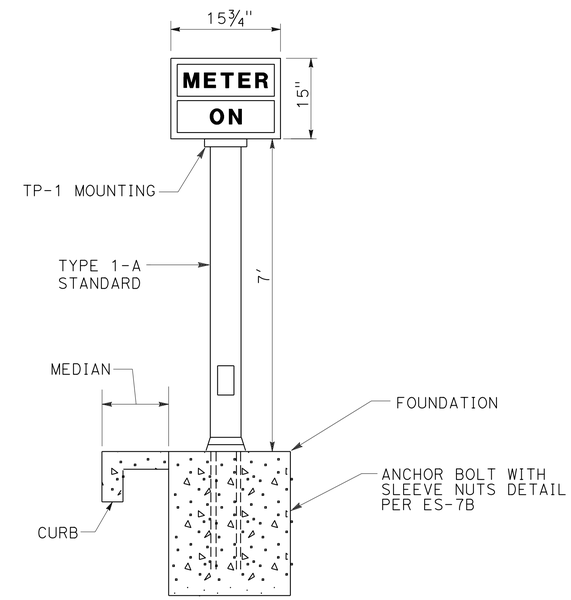

FRONT ELEVATION

DETAIL 4
"METER ON" SIGN

ELECTRICAL DETAILS

NO SCALE **E-10**

STATE OF CALIFORNIA - DEPARTMENT OF TRANSPORTATION
Caltrans® ELECTRICAL DESIGN B

FUNCTIONAL SUPERVISOR: FERDINAND DE LA CRUZ
CALCULATED-DESIGNED BY: ED CIESLIK
CHECKED BY: FERDINAND DE LA CRUZ
REVISED BY
DATE REVISED

LAST REVISION 01-23-13 | DATE PLOTTED => 26-AUG-2013 | TIME PLOTTED => 15:09

Dist	COUNTY	ROUTE	POST MILES TOTAL PROJECT	SHEET No.	TOTAL SHEETS
08	SBd	15	12.8	82	122

REGISTERED ELECTRICAL ENGINEER 1-23-13 DATE

8-19-13
PLANS APPROVAL DATE

REGISTERED PROFESSIONAL ENGINEER
FERDINAND DE LA CRUZ
No. E 17215
Exp. 6-30-14
ELECTRICAL
STATE OF CALIFORNIA

THE STATE OF CALIFORNIA OR ITS OFFICERS OR AGENTS SHALL NOT BE RESPONSIBLE FOR THE ACCURACY OR COMPLETENESS OF SCANNED COPIES OF THIS PLAN SHEET.

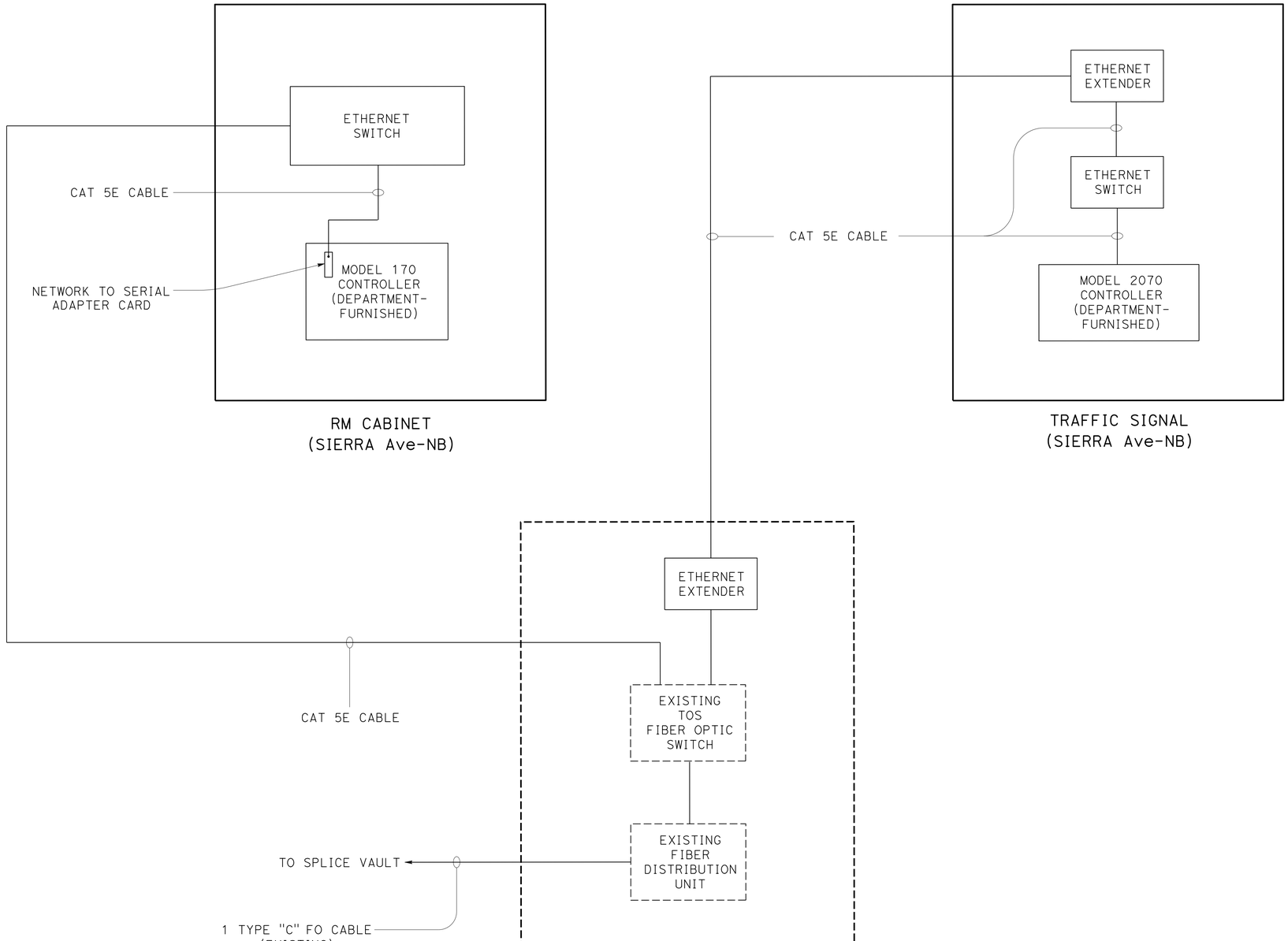

ELECTRICAL DETAILS

NO SCALE

E-11

STATE OF CALIFORNIA - DEPARTMENT OF TRANSPORTATION
Caltrans® ELECTRICAL DESIGN B

FUNCTIONAL SUPERVISOR: FERDINAND DE LA CRUZ
CALCULATED-DESIGNED BY: ED CIESLIK
CHECKED BY: FERDINAND DE LA CRUZ
REVISED BY
DATE REVISED

LAST REVISION 01-23-13
DATE PLOTTED => 26-AUG-2013
TIME PLOTTED => 15:09

Dist	COUNTY	ROUTE	POST MILES TOTAL PROJECT	SHEET No.	TOTAL SHEETS
08	SBd	15	12.8	83	122

REGISTERED ELECTRICAL ENGINEER 1-23-13 DATE

8-19-13
PLANS APPROVAL DATE

REGISTERED PROFESSIONAL ENGINEER
FERDINAND DE LA CRUZ
No. E 17215
Exp. 6-30-14
ELECTRICAL
STATE OF CALIFORNIA

THE STATE OF CALIFORNIA OR ITS OFFICERS OR AGENTS SHALL NOT BE RESPONSIBLE FOR THE ACCURACY OR COMPLETENESS OF SCANNED COPIES OF THIS PLAN SHEET.

LEFT RIGHT BOTH

PEDESTRIAN PUSH BUTTON SIGNS (R10-3)

DETAIL A

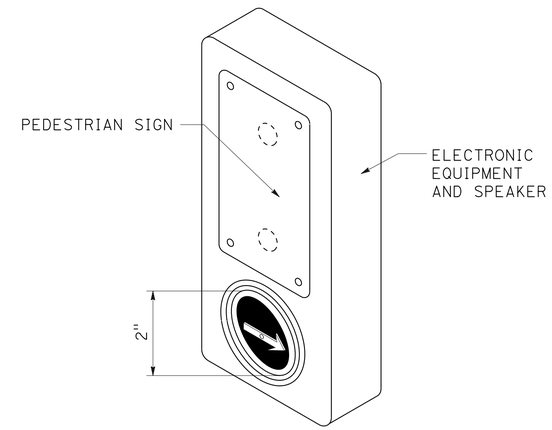

ACCESSIBLE PEDESTRIAN SIGNAL PEDESTRIAN PUSH BUTTON DETAIL

DETAIL B

PERSON WALKING INTERVAL

FLASHING UPRAISED HAND INTERVAL

STEADY UPRAISED HAND INTERVAL

PEDESTRIAN SIGNAL FACE

DETAIL C

ELECTRICAL DETAILS

NO SCALE

E-12

STATE OF CALIFORNIA - DEPARTMENT OF TRANSPORTATION
Caltrans ELECTRICAL DESIGN B

FUNCTIONAL SUPERVISOR: FERDINAND DE LA CRUZ
CALCULATED-DESIGNED BY: ED CIESLIK
CHECKED BY: FERDINAND DE LA CRUZ
REVISED BY
DATE REVISED

LAST REVISION 01-23-13
DATE PLOTTED => 26-AUG-2013
TIME PLOTTED => 15:09

Dist	COUNTY	ROUTE	POST MILES TOTAL PROJECT	SHEET No.	TOTAL SHEETS
08	SBd	15	12.8	84	122

REGISTERED ELECTRICAL ENGINEER 1-23-13 DATE

8-19-13
PLANS APPROVAL DATE

REGISTERED PROFESSIONAL ENGINEER FERDINAND DE LA CRUZ No. E 17215 Exp. 6-30-14 ELECTRICAL STATE OF CALIFORNIA

THE STATE OF CALIFORNIA OR ITS OFFICERS OR AGENTS SHALL NOT BE RESPONSIBLE FOR THE ACCURACY OR COMPLETENESS OF SCANNED COPIES OF THIS PLAN SHEET.

NOTE:

1. THE QUANTITIES ON THIS SHEET ARE APPROXIMATE MEASUREMENTS.

SIGNAL AND LIGHTING (LOCATION 1)

SHEET No.	(N) 1½"C TYPE 3	(N) 2"C TYPE 3	(N) 3"C TYPE 3	(N) 4"C TYPE 3	(N) No. 5 PB	(N) No. 5(T) PB	(N) No. 6 PB	(N) No. 6(E) PB	(N) No. 10 CONDUCTOR	(N) No. 8 (G)	(N) No. 6 CONDUCTOR	(N) 3CSC CABLE	(N) 12CSC CABLE	(N) EVP CABLE	(N) VIVIDS POWER CABLE	(N) VIVIDS VIDEO CABLE	(N) TYPE D LOOPS	(N) TYPE E LOOPS
	LF	LF	LF	LF	EA	EA	EA	EA	LF	LF	LF	LF	LF	LF	LF	LF	EA	EA
E-1	1400	50	150	400	9	4	6	1	600	1600	30	800	800	650	650	650	0	14

SHEET No.	(N) TYPE III-CF SERVICE ENCLOSURE	(N) SERVICE ENCLOSURE FOUNDATION	(N) MODEL 332 CABINET	(N) MODEL 332 CABINET FOUNDATION	(N) 1-A POLES	(N) 15TS POLES	(N) 19A-4-100 POLES	(N) 29A-5-100 POLES	(N) FOUNDATION 1-A	(N) STANDARD FOUNDATION CASE 4	(N) STANDARD FOUNDATION CASE 5	(N) PEDESTRIAN BARRICADE	(N) BATTERY BACK-UP SYSTEM	(N) No. 2 (G) (N)	(N) SIC CABLE	(N) No. 2	(N) No. 6	(N) No. 8
	EA	EA	EA	EA	EA	EA	EA	EA	EA	EA	EA	EA	EA	LF	LF	LF	LF	LF
E-1	1	1	1	1	3	1	2	1	3	2	1	1	1	350	400	1900	400	1000

(N) = NOT A SEPARATE PAY ITEM, FOR INFORMATION ONLY.

SIGNAL AND LIGHTING (LOCATION 2)

SHEET No.	(N) 1½"C TYPE 3	(N) 2½"C TYPE 3	(N) 3"C TYPE 3	(N) 4"C TYPE 3	(N) No. 5 PB	(N) No. 5(T) PB	(N) No. 6 PB	(N) No. 6(E) PB	(N) No. 10 CONDUCTOR	(N) No. 8 (G)	(N) No. 6 CONDUCTOR	(N) 3CSC CABLE	(N) 12CSC CABLE	(N) EVP CABLE	(N) POWER CABLE	(N) VIVIDS VIDEO CABLE	(N) TYPE D LOOPS	(N) TYPE E LOOPS
	LF	LF	LF	LF	EA	EA	EA	EA	LF	LF	LF	LF	LF	LF	LF	LF	EA	EA
E-3	1500	180	150	200	12	5	5	1	400	1700	50	800	800	500	500	500	0	14

SHEET No.	(N) TYPE III-CF SERVICE ENCLOSURE	(N) SERVICE ENCLOSURE FOUNDATION	(N) MODEL 332 CABINET	(N) MODEL 332 CABINET FOUNDATION	(N) 1-A POLES	(N) 15TS POLES	(N) 17A-4-100 POLE	(N) 19A-4-100 POLES	(N) 29A-5-100 POLE	(N) FOUNDATION 1-A	(N) STANDARD FOUNDATION CASE 4	(N) STANDARD FOUNDATION CASE 5	(N) PEDESTRIAN BARRICADE	(N) BATTERY BACK-UP SYSTEM	(N) No. 2 (G) (N)	(N) SIC CABLE
	EA	EA	EA	EA	EA	EA	EA	EA	EA	EA	EA	EA	EA	EA	LF	LF
E-3	1	1	1	1	3	1	1	1	1	3	2	1	2	1	2805	500

(N) = NOT A SEPARATE PAY ITEM, FOR INFORMATION ONLY.

RAMP METERING SYSTEM

SHEET No.	(N) 1½"C TYPE 3	(N) 2"C TYPE 3	(N) 3"C TYPE 3	(N) No. 5(T) PB	(N) No. 6(T) PB	(N) No. 8 (G)	(N) No. 6 CONDUCTOR	(N) 3CSC CABLE	(N) 12CSC CABLE	(N) TYPE E LOOPS	(N) MODEL 334 CABINET	(N) MODEL 334 CABINET FOUNDATION	(N) 1-A POLES	(N) FOUNDATION 1-A
	LF	LF	LF	EA	EA	LF	LF	LF	LF	EA	EA	EA	EA	EA
E-8	1000	250	1200	17	1	2300	350	300	600	25	1	1	4	4

(N) = NOT A SEPARATE PAY ITEM, FOR INFORMATION ONLY.

MODIFY COMMUNICATION SYSTEM

SHEET No.	(N) 1½"C TYPE 3	(N) CAT 5E CABLE	(N) No. 5 PB
	LF	LF	EA
E-9	400	500	3

(N) = NOT A SEPARATE PAY ITEM, FOR INFORMATION ONLY.

ELECTRICAL QUANTITIES

E-13

REVISED BY | DATE REVISED
ED CIESLIK | FERDINAND DE LA CRUZ
CALCULATED-DESIGNED BY | CHECKED BY
FUNCTIONAL SUPERVISOR | FERDINAND DE LA CRUZ
STATE OF CALIFORNIA - DEPARTMENT OF TRANSPORTATION
Caltrans ELECTRICAL DESIGN B

LAST REVISION 01-23-13 | DATE PLOTTED => 26-AUG-2013 | TIME PLOTTED => 15:09

M

Maint	MAINTENANCE
Max	MAXIMUM
MB	METAL BEAM
MBB	METAL BEAM BARRIER
MBGR	METAL BEAM GUARD RAILING
Med	MEDIAN
MGS	MIDWEST GUARDRAIL SYSTEM
MH	MANHOLE
Min	MINIMUM
Misc	MISCELLANEOUS
Misc I & S	MISCELLANEOUS IRON AND STEEL
Mkr	MARKER
Mod	MODIFIED, MODIFY
Mon	MONUMENT
MP	METAL PLATE
MPGR	METAL PLATE GUARD RAILING
MR	MOVEMENT RATING
MSE	MECHANICALLY STABILIZED EMBANKMENT
Mt	MOUNTAIN, MOUNT
Mtl	MATERIAL
MVP	MAINTENANCE VEHICLE PULLOUT

N

N	NORTH
NB	NORTHBOUND
No.	NUMBER (MUST HAVE PERIOD)
Nos.	NUMBERS (MUST HAVE PERIOD)
NPS	NOMINAL PIPE SIZE
NS	NEAR SIDE
NSP	NEW STANDARD PLAN
NTS	NOT TO SCALE

O

Oblr	OBLITERATE
OC	OVERCROSSING
OD	OUTSIDE DIAMETER
OF	OUTSIDE FACE
OG	ORIGINAL GROUND
OGAC	OPEN GRADED ASPHALT CONCRETE
OGFC	OPEN GRADED FRICTION COURSE
OH	OVERHEAD
OHWM	ORDINARY HIGH WATER MARK
O-O	OUT TO OUT
Opp	OPPOSITE
OSD	OVERSIDE DRAIN

P

P	PAGE
PAP	PERFORATED ALUMINUM PIPE
PB	PULL BOX
PC	POINT OF CURVATURE, PRECAST
PCC	POINT OF COMPOUND CURVE, PORTLAND CEMENT CONCRETE
PCMS	PORTABLE CHANGEABLE MESSAGE SIGN
PCP	PERFORATED CONCRETE PIPE, PRESTRESSED CONCRETE PIPE
PCVC	POINT OF COMPOUND VERTICAL CURVE
PEC	PERMIT TO ENTER AND CONSTRUCT
Ped	PEDESTRIAN
Ped OC	PEDESTRIAN OVERCROSSING
Ped UC	PEDESTRIAN UNDERCROSSING
Perm Mtl	PERMEABLE MATERIAL

P continued

PG	PROFILE GRADE
PI	POINT OF INTERSECTION
PJP	PARTIAL JOINT PENETRATION
Pkwy	PARKWAY
₱,PL	PLATE
P/L	PROPERTY LINE
PM	POST MILE, TIME FROM NOON TO MIDNIGHT
PN	PAVING NOTCH
POC	POINT OF HORIZONTAL CURVE
POT	POINT OF TANGENT
POVC	POINT OF VERTICAL CURVE
PP	PIPE PILE, PLASTIC PIPE, POWER POLE
PPL	PREFORMED PERMEABLE LINER
PPP	PERFORATED PLASTIC PIPE
PRC	POINT OF REVERSE CURVE
PRF	PAVEMENT REINFORCING FABRIC
PRVC	POINT OF REVERSE VERTICAL CURVE
PS&E	PLANS, SPECIFICATIONS AND ESTIMATES
PS, P/S	PRESTRESSED
PSP	PERFORATED STEEL PIPE
PT	POINT OF TANGENCY
PVC	POLYVINYL CHLORIDE
Pvmt	PAVEMENT

Q

Qty	QUANTITY

R

R	RADIUS
R & D	REMOVE AND DISPOSE
R & S	REMOVE AND SALVAGE
R/C	RATE OF CHANGE
RCA	REINFORCED CONCRETE ARCH
RCB	REINFORCED CONCRETE BOX
RCP	REINFORCED CONCRETE PIPE
RCPA	REINFORCED CONCRETE PIPE ARCH
Rd	ROAD
Reinf	REINFORCED, REINFORCEMENT, REINFORCING
Rel	RELOCATE
Repl	REPLACEMENT
Ret	RETAINING
Rev	REVISED, REVISION
Rdwy	ROADWAY
RHMA	RUBBERIZED HOT MIX ASPHALT
Riv	RIVER
RM	ROAD-MIXED
RP	RADIUS POINT, REFERENCE POINT
RR	RAILROAD
RSP	ROCK SLOPE PROTECTION, REVISED STANDARD PLAN
Rt	RIGHT
Rte	ROUTE
RW	REDWOOD, RETAINING WALL
R/W	RIGHT OF WAY
Rwy	RAILWAY

S

S	SOUTH, SUPPLEMENT
SAE	STRUCTURE APPROACH EMBANKMENT
Salv	SALVAGE
SAPP	STRUCTURAL ALUMINUM PLATE PIPE
SB	SOUTHBOUND
SC	SAND CUSHION
SCSP	SLOTTED CORRUGATED STEEL PIPE
SD	STORM DRAIN
Sec	SECOND, SECTION
Sep	SEPARATION
SG	SUBGRADE
Shld	SHOULDER
Sht	SHEET
Sim	SIMILAR
₺	STATION LINE
SM	SELECTED MATERIAL
Spec	SPECIAL, SPECIFICATIONS
SPP	SLOTTED PLASTIC PIPE
SS	SLOPE STAKE
SSBM	STRAP AND SADDLE BRACKET METHOD
SSD	STRUCTURAL SECTION DRAIN
SSPA	STRUCTURAL STEEL PLATE ARCH
SSPP	STRUCTURAL STEEL PLATE PIPE
SSPPA	STRUCTURAL STEEL PLATE PIPE ARCH
SSRP	STEEL SPIRAL RIB PIPE
St	STREET
Sta	STATION
STBB	SINGLE THRIE BEAM BARRIER
Std	STANDARD
Str	STRUCTURE
Surf	SURFACING
SW	SIDEWALK, SOUND WALL
Swr	SEWER
Sym	SYMMETRICAL
S4S	SURFACE 4 SIDES

T

T	SEMI-TANGENT
Tan	TANGENT
TBB	THRIE BEAM BARRIER
Tbr	TIMBER
TC	TOP OF CURB
TCB	TRAFFIC CONTROL BOX
TCE	TEMPORARY CONSTRUCTION EASEMENT
Tel	TELEPHONE
Temp	TEMPORARY
TG	TOP OF GRADE
Tot	TOTAL
TP	TELEPHONE POLE
TPB	TREATED PERMEABLE BASE
TPM	TREATED PERMEABLE MATERIAL
Trans	TRANSITION

T continued

TS	TRANSVERSE, TRAFFIC SIGNAL, TUBULAR STEEL
Typ	TYPICAL

U

UC	UNDERCROSSING
UD	UNDERDRAIN
UG	UNDERGROUND
UON	UNLESS OTHERWISE NOTED
UP	UNDERPASS

V

V	VALVE, DESIGN SPEED
Var	VARIABLE, VARIES
VC	VERTICAL CURVE
VCP	VITRIFIED CLAY PIPE
Vert	VERTICAL
Via	VIADUCT
Vol	VOLUME

W

W	WEST, WIDTH
WB	WESTBOUND
WH	WEEP HOLE
WM	WIRE MESH
WS	WATER SURFACE
WSP	WELDED STEEL PIPE
Wt	WEIGHT
WV	WATER VALVE
WW	WINGWALL
WWLOL	WINGWALL LAYOUT LINE

X

X Sec	CROSS SECTION
Xing	CROSSING

Y

Yr	YEAR
Yrs	YEARS

Dist	COUNTY	ROUTE	POST MILES TOTAL PROJECT	SHEET No.	TOTAL SHEETS
08	SBd	15	12.8	85	122

Grace M. Tsushima
REGISTERED CIVIL ENGINEER

July 19, 2013
PLANS APPROVAL DATE

REGISTERED PROFESSIONAL ENGINEER
Grace M. Tsushima
No. C49814
Exp. 9-30-14
CIVIL
STATE OF CALIFORNIA

THE STATE OF CALIFORNIA OR ITS OFFICERS OR AGENTS SHALL NOT BE RESPONSIBLE FOR THE ACCURACY OR COMPLETENESS OF SCANNED COPIES OF THIS PLAN SHEET.

TO ACCOMPANY PLANS DATED 8-19-13

UNIT OF MEASUREMENT SYMBOLS:

Some of the symbols used in the project plan quantity tables and in the Bid Item List are:

TABLE A

SYMBOL USED	DEFINITIONS
ACRE	ACRE
CF	CUBIC FOOT
CY	CUBIC YARD
EA	EACH
GAL	GALLON
LB	POUND
LF	LINEAR FOOT
SQFT	SQUARE FOOT
SQYD	SQUARE YARD
STA	100 FEET
TAB	TABLET
TON	2,000 POUNDS

Some of the symbols used in the plans other than in the project plan quantity tables are:

TABLE B

SYMBOL USED	DEFINITIONS
ksi	KIPS PER SQUARE INCH
ksf	KIPS PER SQUARE FOOT
psi	POUNDS PER SQUARE INCH
psf	POUNDS PER SQUARE FOOT
lb/ft^3, pcf	POUNDS PER CUBIC FOOT
tsf	TONS PER SQUARE FOOT
mph, MPH *	MILES PER HOUR
ø	NOMINAL DIAMETER
oz	OUNCE
lb	POUND
kip	1,000 POUNDS
cal	CALORIE
ft	FOOT OR FEET
gal	GALLON

* For use on a sign panel only

STATE OF CALIFORNIA
DEPARTMENT OF TRANSPORTATION

ABBREVIATIONS (SHEET 2 OF 2)

NO SCALE

RSP A10B DATED JULY 19, 2013 SUPERSEDES STANDARD PLAN A10B DATED MAY 20, 2011 - PAGE 2 OF THE STANDARD PLANS BOOK DATED 2010.

REVISED STANDARD PLAN RSP A10B

2010 REVISED STANDARD PLAN RSP A10B

6-7-13

Dist	COUNTY	ROUTE	POST MILES TOTAL PROJECT	SHEET No.	TOTAL SHEETS
08	SBd	15	12.8	86	122

REGISTERED CIVIL ENGINEER

July 19, 2013
PLANS APPROVAL DATE

REGISTERED PROFESSIONAL ENGINEER Roberta L. McLaughlin No. C40375 Exp. 3-31-15 CIVIL STATE OF CALIFORNIA

THE STATE OF CALIFORNIA OR ITS OFFICERS OR AGENTS SHALL NOT BE RESPONSIBLE FOR THE ACCURACY OR COMPLETENESS OF SCANNED COPIES OF THIS PLAN SHEET.

TO ACCOMPANY PLANS DATED 8-19-13

EXIT RAMP NEUTRAL AREA (GORE) TREATMENT

DETAIL 36

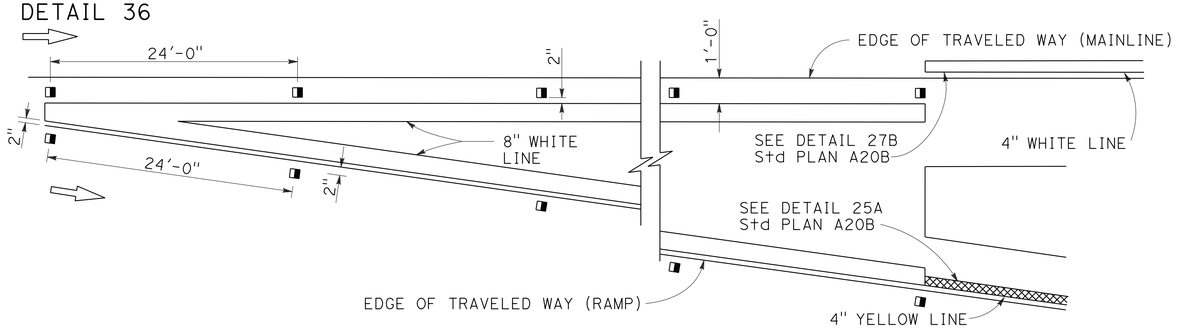

ENTRANCE RAMP NEUTRAL AREA (MERGE) TREATMENT

DETAIL 36A

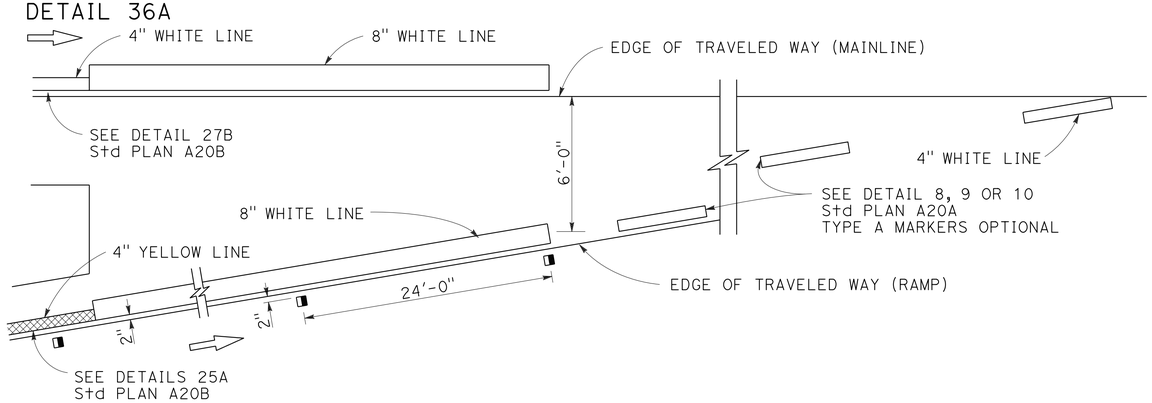

ENTRANCE RAMP NEUTRAL AREA (ACCELERATION LANE) TREATMENT

DETAIL 36B

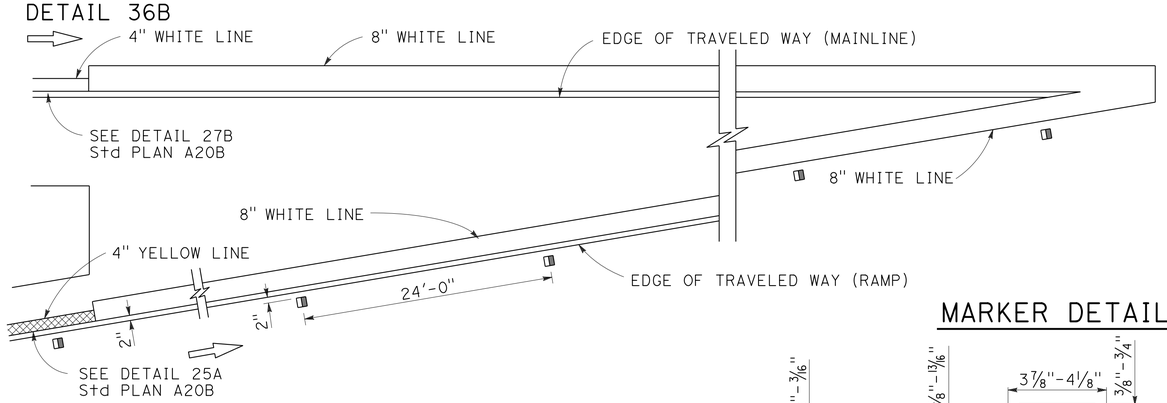

MARKER DETAILS

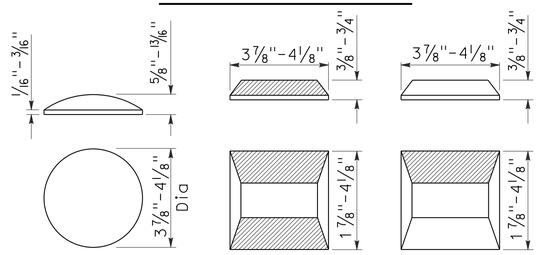

RETROREFLECTIVE FACE

LEGEND:

MARKERS

- TYPE A WHITE NON-REFLECTIVE
- TYPE C RED-CLEAR RETROREFLECTIVE
- TYPE G ONE-WAY CLEAR RETROREFLECTIVE

LANE DROP AT EXIT RAMPS

DETAIL 37

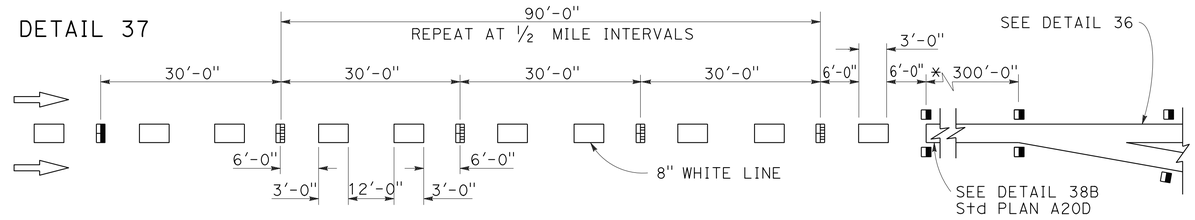

DETAIL 37A

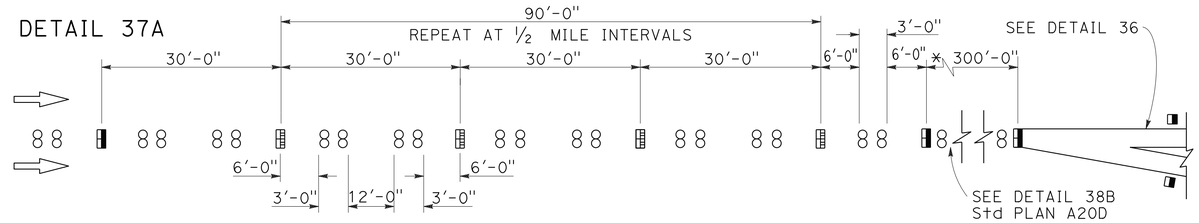

* The solid channelizing line shown may be omitted on short auxiliary lanes where weaving length is critical.

LANE DROP AT INTERSECTIONS

DETAIL 37B

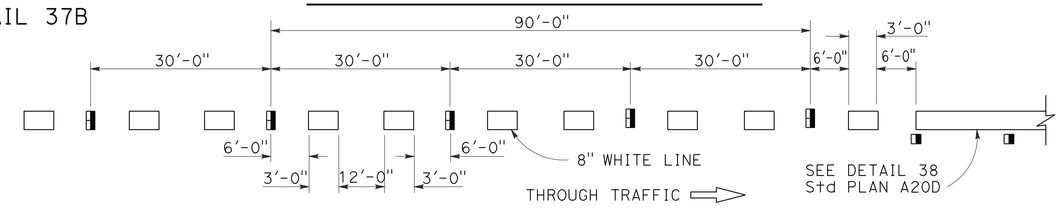

DETAIL 37C

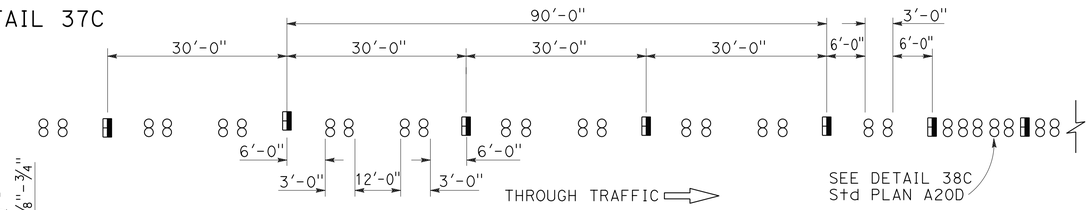

STATE OF CALIFORNIA
DEPARTMENT OF TRANSPORTATION

PAVEMENT MARKERS AND TRAFFIC LINE TYPICAL DETAILS

NO SCALE

RSP A20C DATED JULY 19, 2013 SUPERSEDES STANDARD PLAN A20C DATED MAY 20, 2011 - PAGE 11 OF THE STANDARD PLANS BOOK DATED 2010.

REVISED STANDARD PLAN RSP A20C

2010 REVISED STANDARD PLAN RSP A20C

4-29-13

Dist	COUNTY	ROUTE	POST MILES TOTAL PROJECT	SHEET No.	TOTAL SHEETS
08	SBd	15	12.8	87	122

REGISTERED CIVIL ENGINEER

April 20, 2012
PLANS APPROVAL DATE

REGISTERED PROFESSIONAL ENGINEER
Roberta L. McLaughlin
No. C40375
Exp. 3-31-13
CIVIL
STATE OF CALIFORNIA

THE STATE OF CALIFORNIA OR ITS OFFICERS OR AGENTS SHALL NOT BE RESPONSIBLE FOR THE ACCURACY OR COMPLETENESS OF SCANNED COPIES OF THIS PLAN SHEET.

TO ACCOMPANY PLANS DATED 8-19-13

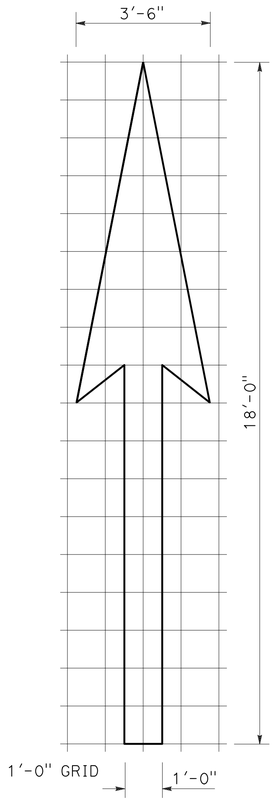

A=25 ft^2

TYPE I 18'-0" ARROW

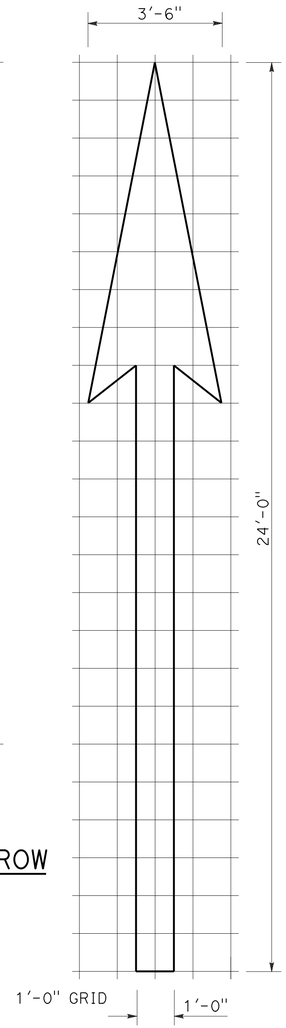

A=31 ft^2

TYPE I 24'-0" ARROW

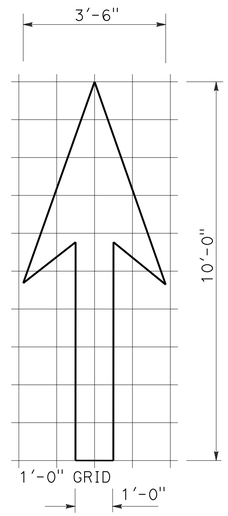

A=14 ft^2

TYPE I 10'-0" ARROW

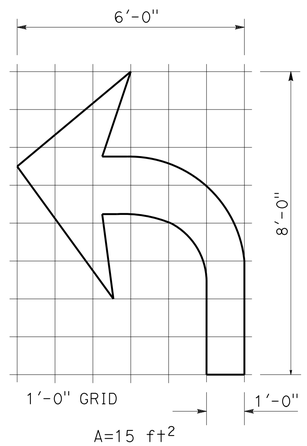

A=15 ft^2

TYPE IV (L) ARROW

(For Type IV (R) arrow, use mirror image)

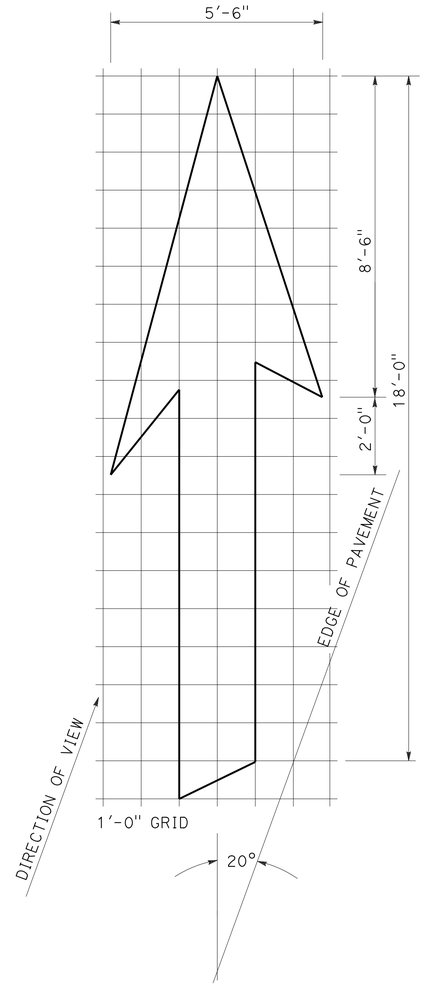

A=42 ft^2

TYPE VI ARROW

Right lane drop arrow
(For left lane, use mirror image)

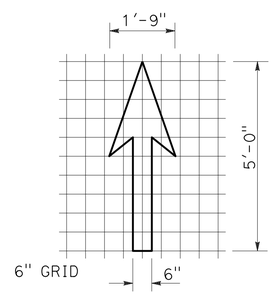

A=3.5 ft^2

BIKE LANE ARROW

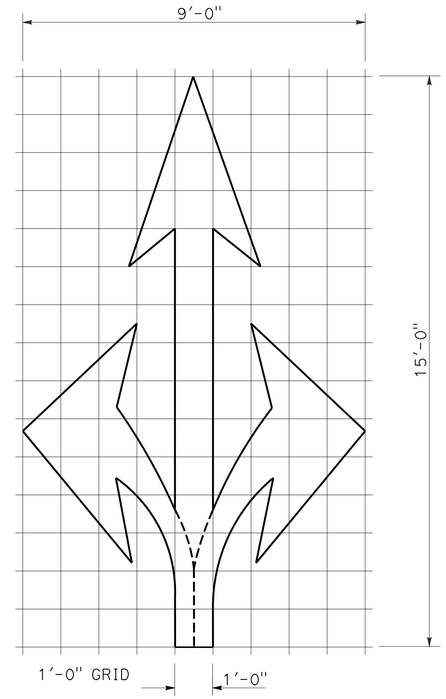

A=36 ft^2

TYPE VIII ARROW

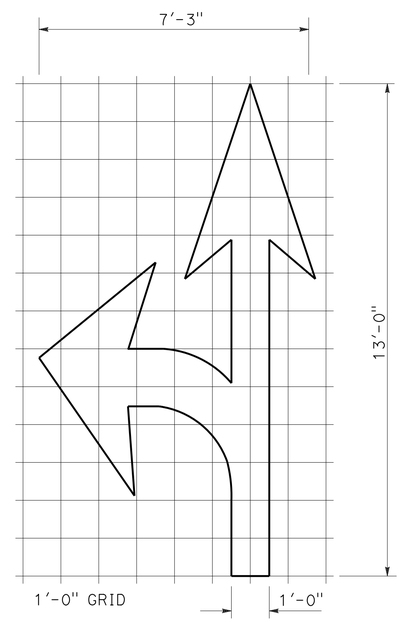

A=27 ft^2

TYPE VII (L) ARROW

(For Type VII (R) arrow, use mirror image)

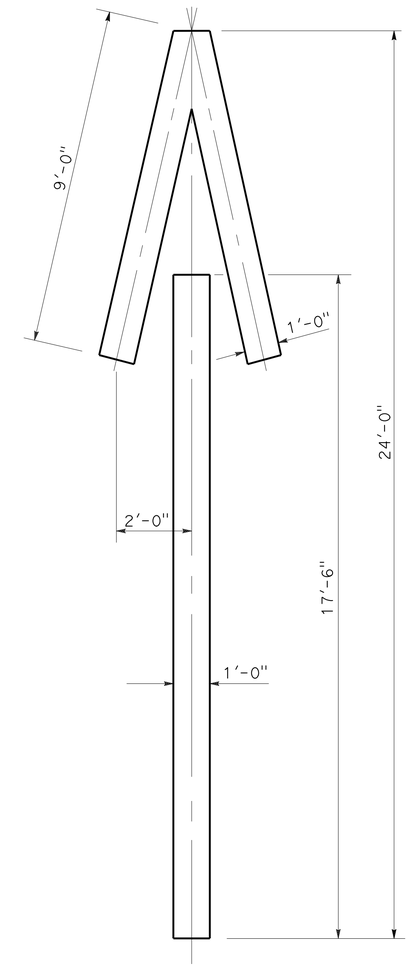

A=33 ft^2

TYPE V ARROW

NOTE:
Minor variations in dimensions may be accepted by the Engineer.

STATE OF CALIFORNIA
DEPARTMENT OF TRANSPORTATION

PAVEMENT MARKINGS ARROWS

NO SCALE

RSP A24A DATED APRIL 20, 2012 SUPERSEDES STANDARD PLAN A24A DATED MAY 20, 2011 - PAGE 13 OF THE STANDARD PLANS BOOK DATED 2010.

REVISED STANDARD PLAN RSP A24A

2010 REVISED STANDARD PLAN RSP A24A

3-14-12

Dist	COUNTY	ROUTE	POST MILES TOTAL PROJECT	SHEET No.	TOTAL SHEETS
08	SBd	15	12.8	88	122

REGISTERED CIVIL ENGINEER

July 20, 2012
PLANS APPROVAL DATE

REGISTERED PROFESSIONAL ENGINEER
Roberta L. McLaughlin
No. C40375
Exp. 3-31-13
CIVIL
STATE OF CALIFORNIA

THE STATE OF CALIFORNIA OR ITS OFFICERS OR AGENTS SHALL NOT BE RESPONSIBLE FOR THE ACCURACY OR COMPLETENESS OF SCANNED COPIES OF THIS PLAN SHEET.

TO ACCOMPANY PLANS DATED 8-19-13

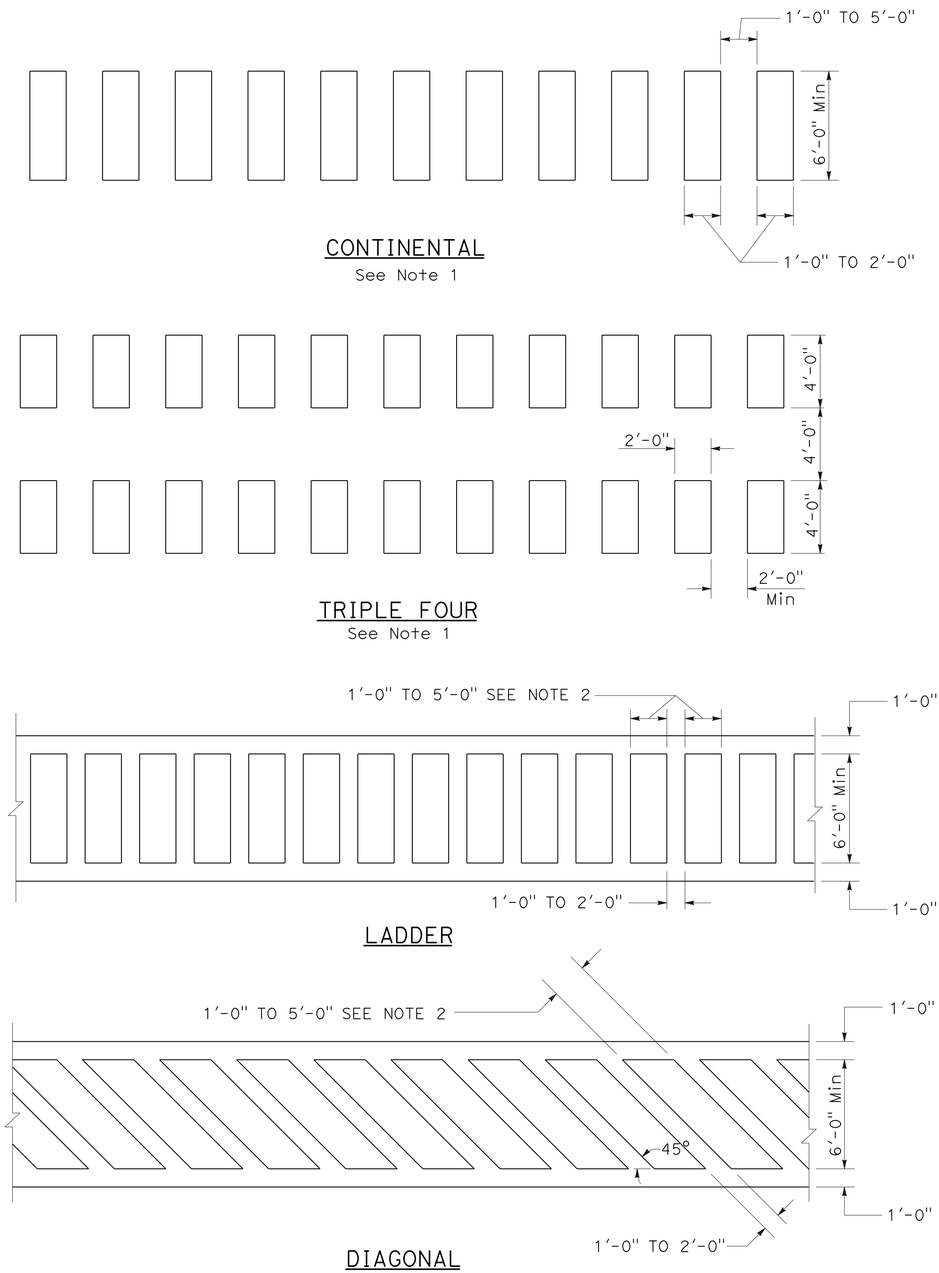

HIGHER VISIBILITY CROSSWALKS

NOTES:

1. Spaces between markings should be placed in wheel tracks of each lane.
2. Spacings not to exceed 2.5 times width of longitudinal line.
3. All crosswalk markings must be white except for those near schools must be yellow.

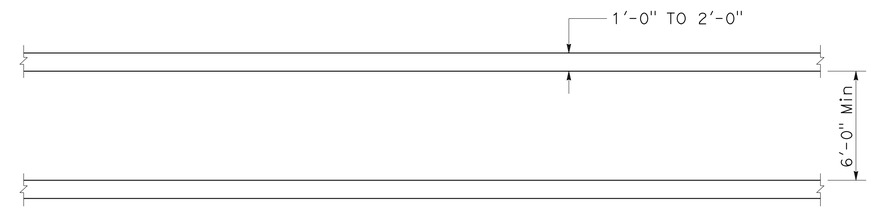

BASIC

STATE OF CALIFORNIA
DEPARTMENT OF TRANSPORTATION

PAVEMENT MARKINGS CROSSWALKS

NO SCALE

RSP A24F DATED JULY 20, 2012 SUPPLEMENTS THE STANDARD PLANS BOOK DATED 2010.

REVISED STANDARD PLAN RSP A24F

2010 REVISED STANDARD PLAN RSP A24F

6-28-12

Dist	COUNTY	ROUTE	POST MILES TOTAL PROJECT	SHEET No.	TOTAL SHEETS
08	SBd	15	12.8	89	122

REGISTERED CIVIL ENGINEER

July 19, 2013
PLANS APPROVAL DATE

REGISTERED PROFESSIONAL ENGINEER Michael Janzen No. 44788 Exp. 03-31-14 CIVIL STATE OF CALIFORNIA

THE STATE OF CALIFORNIA OR ITS OFFICERS OR AGENTS SHALL NOT BE RESPONSIBLE FOR THE ACCURACY OR COMPLETENESS OF SCANNED COPIES OF THIS PLAN SHEET.

TO ACCOMPANY PLANS DATED 8-19-13

2010 REVISED STANDARD PLAN RSP A87A

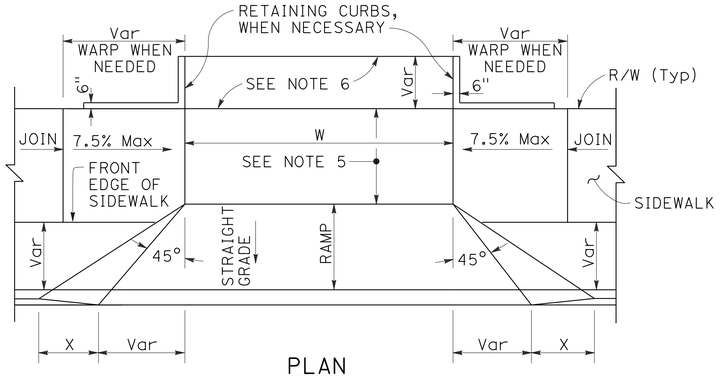

PLAN

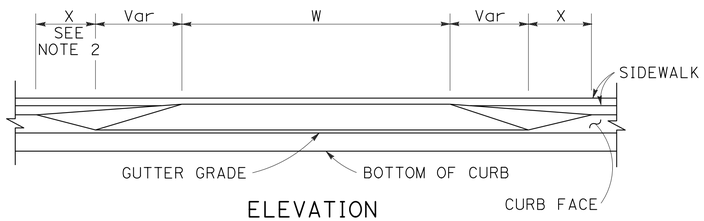

ELEVATION

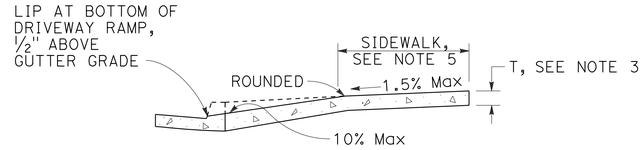

CASE A

Typical driveway, sidewalk not depressed

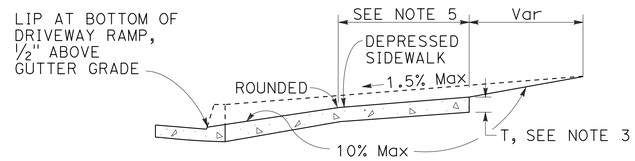

CASE B

Driveway with depressed sidewalk

SECTIONS

TABLE A

CURB TYPE	DIMENSIONS			
	"H1"	"H2"	"W1"	"W2"
A1-6	1'-2"	6"	7½"	1½"
A1-8	1'-4"	8"	8"	2"
A2-6	1'-0"	6"	2'-7½"	1½"
A2-8	1'-2"	8"	2'-8"	2"
A3-6	6"	5"	7¼"	1¼"
A3-8	8"	7"	7¾"	1¾"
B1-4	1'-0"	4"	7½"	2½"
B1-6	1'-2"	6"	9"	4"
B2-4	10"	4"	2'-7½"	2½"
B2-6	1'-0"	6"	2'-9"	4"
B3-4	4"	3"	7"	2"
B3-6	6"	5"	8½"	3½"
D-4	10"	4"	1'-6"	1'-1"
D-6	1'-0"	6"	2'-2"	1'-9"

CURB QUANTITIES

TYPE	CUBIC YARDS PER LINEAR FOOT
A1-6	0.02585
A1-8	0.03084
A2-6	0.05903
A2-8	0.06379
A3-6	0.01036
A3-8	0.01435
B1-4	0.02185
B1-6	0.02930
B2-4	0.05515
B2-6	0.06171
B3-4	0.00641
B3-6	0.01074
B4	0.05709
D-4	0.04083
D-6	0.06804
E	0.06661

DRIVEWAYS

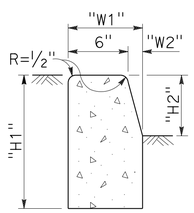

TYPE A1 CURBS

See Table A

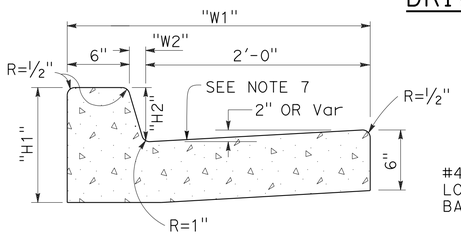

TYPE A2 CURBS

See Table A

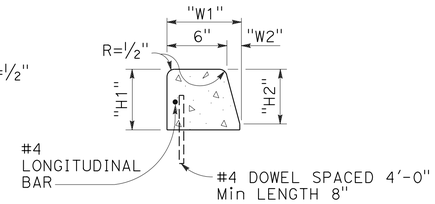

TYPE A3 CURBS

Superimposed on existing pavement
See Table A

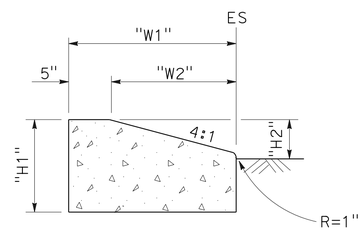

TYPE D CURBS

See Table A

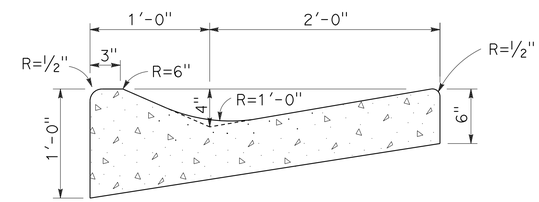

TYPE E CURB

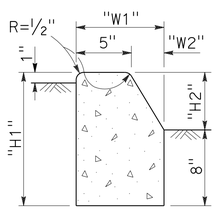

TYPE B1 CURBS

See Table A

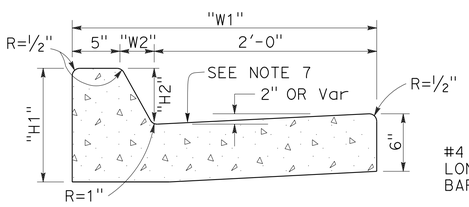

TYPE B2 CURBS

See Table A

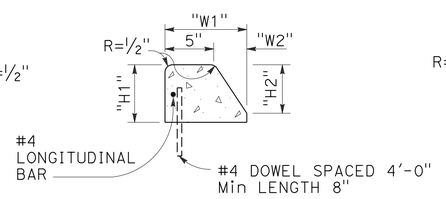

TYPE B3 CURBS

Superimposed on existing pavement
See Table A

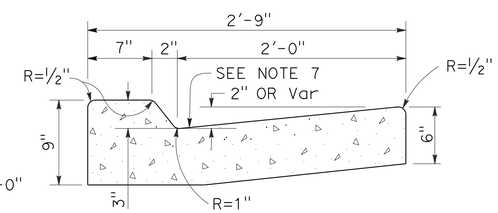

TYPE B4 CURBS

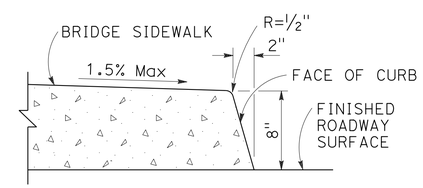

TYPE H CURB

On Bridges

CURBS

NOTES:

1. Case A driveway section typically applies.
2. X=3'-0" except for curb heights over 10" where 4:1 slopes shall be used on curb slope.
3. Sidewalk and ramp thickness "T" at driveway shall be 4" for residental and 6" for commercial.
4. Difference in slope of the driveway ramp and the slope of a line between the gutter and a point on the roadway 5'-0" from gutter line shall not exceed 15%. Reduce driveway ramp slope, not gutter slope, where required.
5. Minimum width of clear passageway for sidewalk shall be 4'-2".
6. Retaining curbs and acquisition of construction easement may be necessary for narrow sidewalks or curb heights in excess of 6".
7. Across the pedestrian route at curb ramp locations, the gutter pan slope shall not exceed 1" of depth for each 2'-0" of width.

STATE OF CALIFORNIA
DEPARTMENT OF TRANSPORTATION

CURBS AND DRIVEWAYS

NO SCALE

RSP A87A DATED JULY 19, 2013 SUPERSEDES STANDARD PLAN A87A
DATED MAY 20, 2011 - PAGE 119 OF THE STANDARD PLANS BOOK DATED 2010.

REVISED STANDARD PLAN RSP A87A

7-8-13

Dist	COUNTY	ROUTE	POST MILES TOTAL PROJECT	SHEET No.	TOTAL SHEETS
08	SBd	15	12.8	90	122

REGISTERED CIVIL ENGINEER

July 19, 2013
PLANS APPROVAL DATE

REGISTERED PROFESSIONAL ENGINEER
Michael Janzen
No. 44788
Exp. 03-31-14
CIVIL
STATE OF CALIFORNIA

THE STATE OF CALIFORNIA OR ITS OFFICERS OR AGENTS SHALL NOT BE RESPONSIBLE FOR THE ACCURACY OR COMPLETENESS OF SCANNED COPIES OF THIS PLAN SHEET.

TO ACCOMPANY PLANS DATED 8-19-13

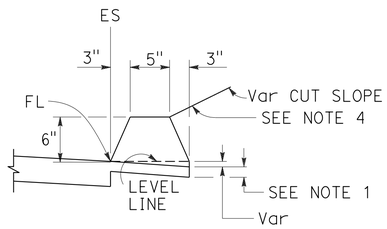

TYPE A
See Note 3

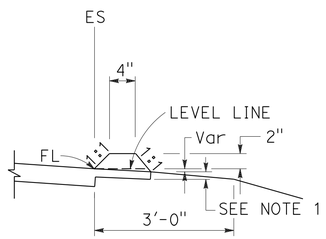

TYPE C

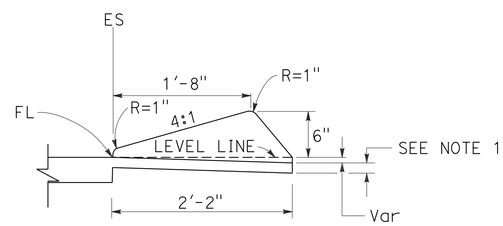

TYPE D

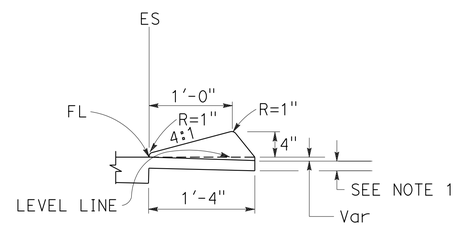

TYPE E

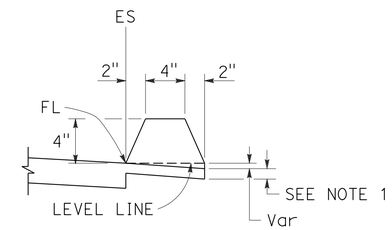

TYPE F
See Note 5

DIKES

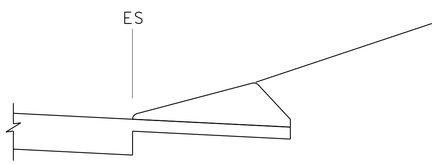

CASE C-1
Cut Slope

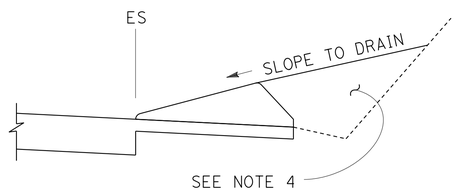

CASE C-2
Cut Slope

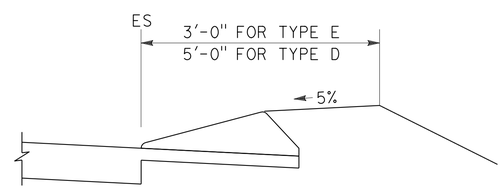

CASE F

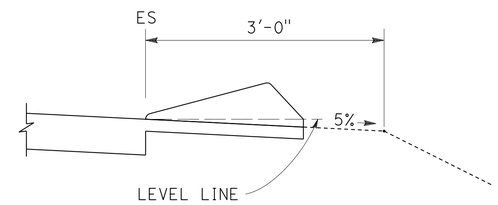

CASE R
See Note 2

TYPE D AND E BACKFILL DETAILS

NOTES:

1. For HMA shoulders only, extend top layer of HMA placed on the shoulder under dike with no joint at the ES. For projects with OGFC shoulders, do not extend OGFC under dike. See project plans for modified dike detail.
2. Case R applies to retrofit only projects where restrictive conditions do not provide enough width for Case F backfill.
3. Type A dike only to be used where restrictive slope conditions do not provide enough width to use Type D or Type E dike.
4. Fill and compact with excavated material to top of dike.
5. Use Type F dike, where dike is required with guard railing installations. See Revised Standard Plan RSP A77N4 for dike positioning details.

DIKE QUANTITIES

TYPE	CUBIC YARDS PER LINEAR FOOT
A	0.0135
C	0.0038
D	0.0293
E	0.0130
F	0.0066

Quantities based on 5% cross slope.

STATE OF CALIFORNIA
DEPARTMENT OF TRANSPORTATION

HOT MIX ASPHALT DIKES

NO SCALE

RSP A87B DATED JULY 19, 2013 SUPERSEDES STANDARD PLAN A87B DATED MAY 20, 2011 - PAGE 120 OF THE STANDARD PLANS BOOK DATED 2010.

REVISED STANDARD PLAN RSP A87B

2010 REVISED STANDARD PLAN RSP A87B

6-27-13

Dist	COUNTY	ROUTE	POST MILES TOTAL PROJECT	SHEET No.	TOTAL SHEETS
08	SBd	15	12.8	91	122

REGISTERED CIVIL ENGINEER

July 19, 2013
PLANS APPROVAL DATE

Hector David Cordova No. C41957 Exp. 3-31-14 CIVIL — REGISTERED PROFESSIONAL ENGINEER — STATE OF CALIFORNIA

THE STATE OF CALIFORNIA OR ITS OFFICERS OR AGENTS SHALL NOT BE RESPONSIBLE FOR THE ACCURACY OR COMPLETENESS OF SCANNED COPIES OF THIS PLAN SHEET.

TO ACCOMPANY PLANS DATED 8-19-13

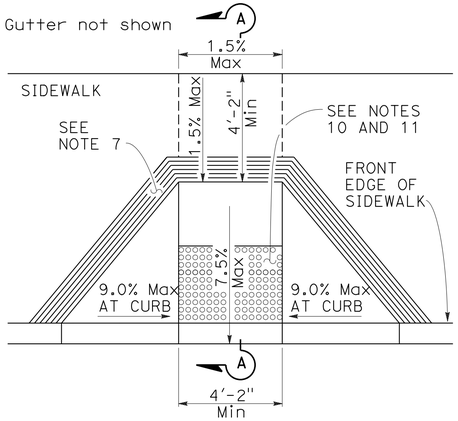

CASE A

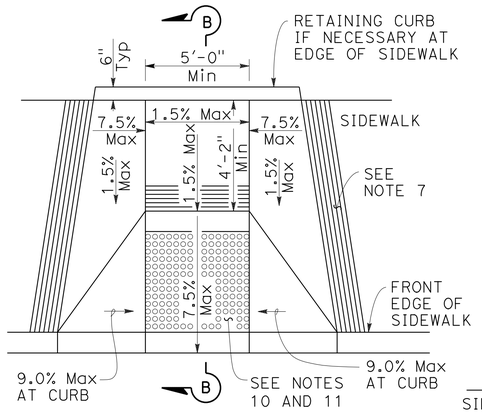

CASE B

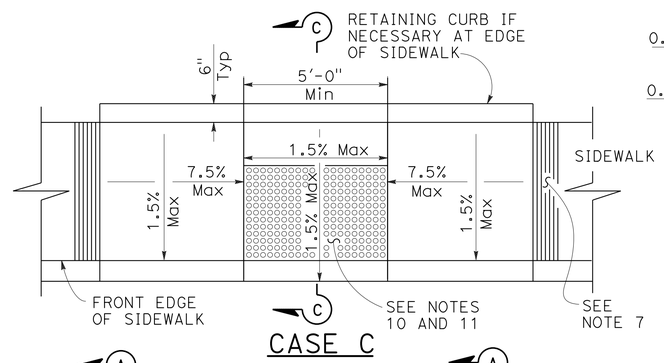

CASE C

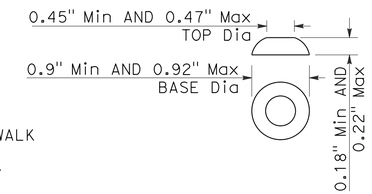

RAISED TRUNCATED DOME

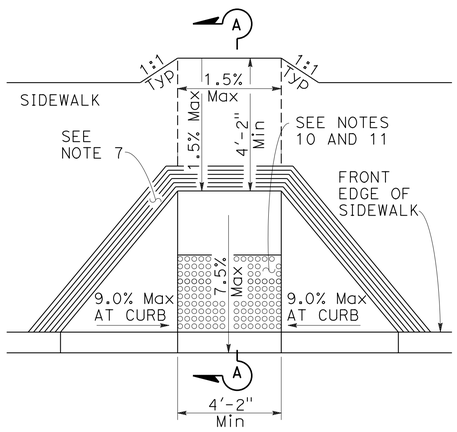

CASE D

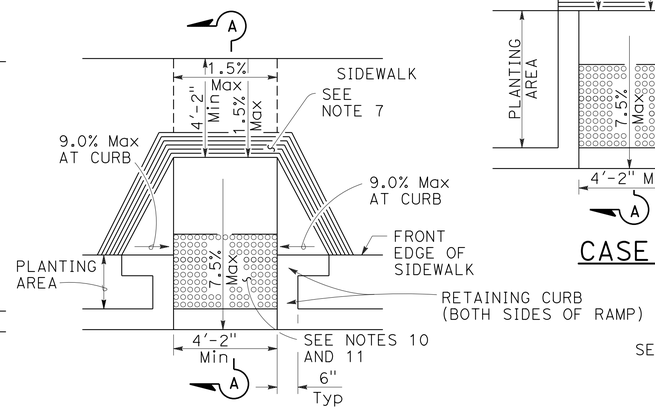

CASE E

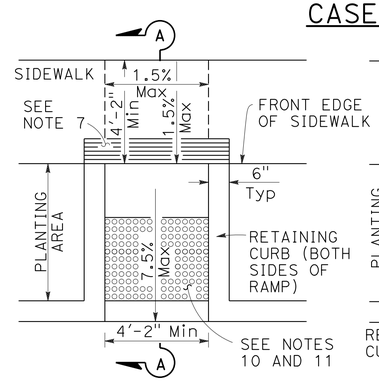

CASE F

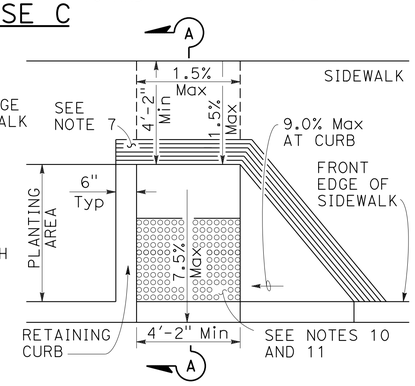

CASE G

See Note 4

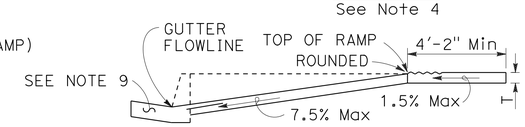

SECTION A-A

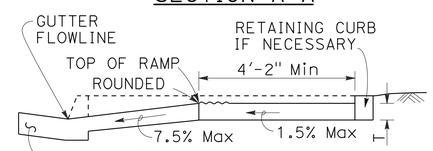

SECTION B-B

Depress entire sidewalk as required

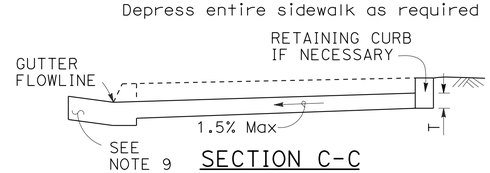

SECTION C-C

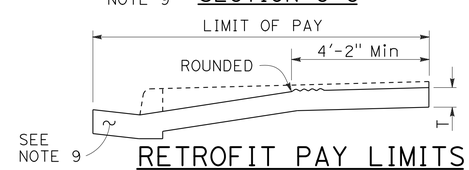

RETROFIT PAY LIMITS

Existing curb and sidewalk

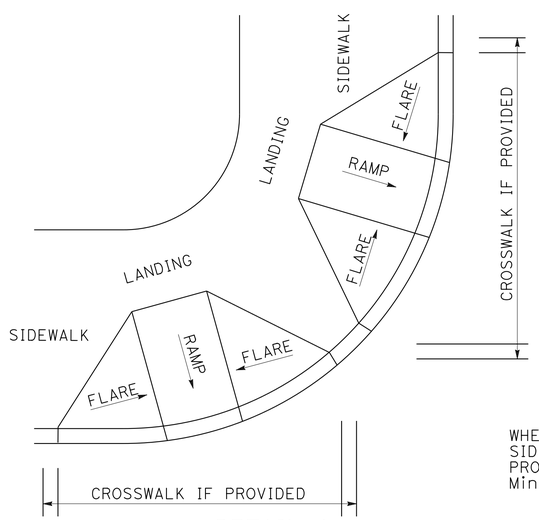

DETAIL A

TYPICAL TWO-RAMP CORNER INSTALLATION

See Note 1

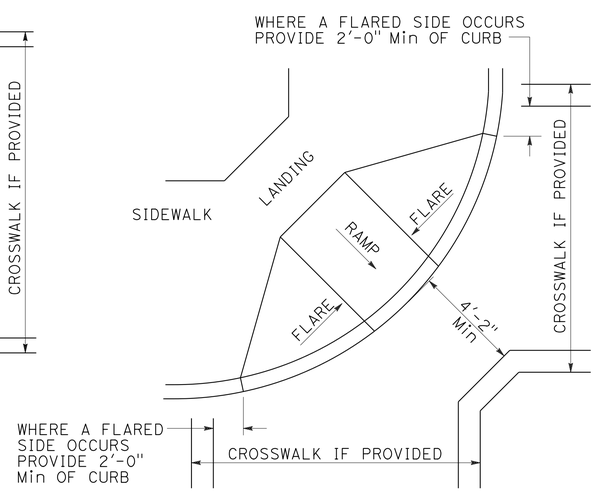

DETAIL B

TYPICAL ONE-RAMP CORNER INSTALLATION

See Notes 1 and 3

GROOVING DETAIL

NOTES:

1. As site conditions dictate, Case A through Case G curb ramps may be used for corner installations similar to those shown in Detail A and Detail B. The case of curb ramps used in Detail A do not have to be the same. Case A through Case G curb ramps also may be used at mid block locations, as site conditions dictate.
2. If distance from curb to back of sidewalk is too short to accommodate ramp and 4'-2" platform (landing) as shown in Case A, the sidewalk may be depressed longitudinally as in Case B, or C or may be widened as in Case D.
3. When ramp is located in center of curb return, crosswalk configuration must be similar to that shown for Detail B.
4. As site conditions dictate, the retaining curb side and the flared side of the Case G ramp shall be constructed in reversed position.
5. If located on a curve, the sides of the ramp need not be parallel, but the minimum width of the ramp shall be 4'-2".
6. Side slope of ramp flares vary uniformly from a maximum of 9.0% at curb to conform with longitudinal sidewalk slope adjacent to top of the ramp, except in Case C and Case F.
7. The curb ramp shall be outlined, as shown, with a 1'-0" wide border with 1/4" grooves approximately 3/4" on center. See grooving detail.
8. Transitions from ramps and landing to walks, gutters or streets shall be flush (no lip) and free of abrupt changes.
9. Counter slopes of adjoining gutters and road surfaces immediately adjacent to and within 24 inches of the curb ramp shall not be steeper than 1:20 (5.0%). Gutter pan slope shall not exceed 1" of depth for each 2'-0" of width.
10. Curb ramps shall have a detectable warning surface that extends the full width and 3'-0" depth of the ramp. Detectable Warning Surfaces shall conform to the details on this plan and the requirements in the Standard Specifications.
11. The edge of the detectable warning surface nearest the street shall be between 6" and 8" from the gutter flowline.
12. Sidewalk and ramp thickness, "T", shall be 3 1/2" minimum.
13. Utility pull boxes, manholes, vaults and all other utility facilities within the boundaries of the curb ramp will be relocated or adjusted to grade by the owner prior to, or in conjunction with, curb ramp construction.
14. Detectable warning surface may have to be cut to allow removal of utility covers while maintaining full detectable warning width and depth.

RAISED TRUNCATED DOME PATTERN (IN-LINE)

DETECTABLE WARNING SURFACE

See Note 10

STATE OF CALIFORNIA
DEPARTMENT OF TRANSPORTATION

CURB RAMP DETAILS

NO SCALE

RSP A88A DATED JULY 19, 2013 SUPERSEDES STANDARD PLAN A88A
DATED MAY 20, 2011 - PAGE 121 OF THE STANDARD PLANS BOOK DATED 2010.

REVISED STANDARD PLAN RSP A88A

2010 REVISED STANDARD PLAN RSP A88A

7-8-13

Dist	COUNTY	ROUTE	POST MILES TOTAL PROJECT	SHEET No.	TOTAL SHEETS
08	SBd	15	12.8	92	122

REGISTERED CIVIL ENGINEER

July 19, 2013
PLANS APPROVAL DATE

REGISTERED PROFESSIONAL ENGINEER
Hector David Cordova
No. C41957
Exp. 3-31-14
CIVIL
STATE OF CALIFORNIA

THE STATE OF CALIFORNIA OR ITS OFFICERS OR AGENTS SHALL NOT BE RESPONSIBLE FOR THE ACCURACY OR COMPLETENESS OF SCANNED COPIES OF THIS PLAN SHEET.

TO ACCOMPANY PLANS DATED 8-19-13

Gutter not shown

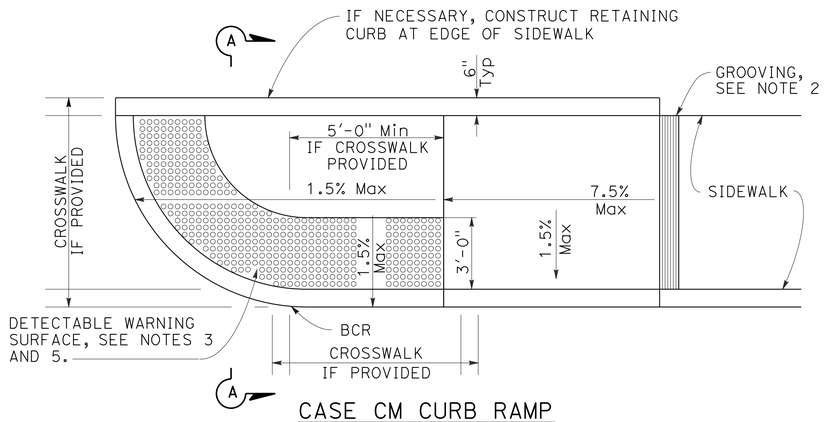

CASE CM CURB RAMP

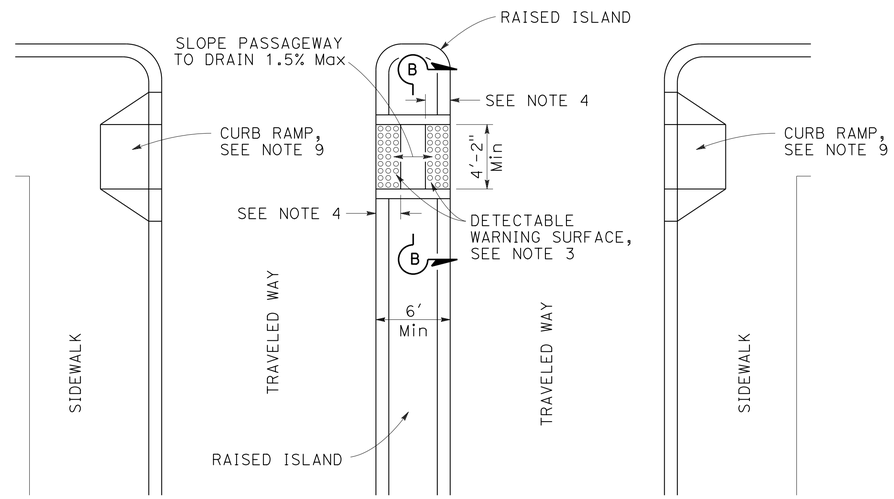

TYPE A PASSAGEWAY

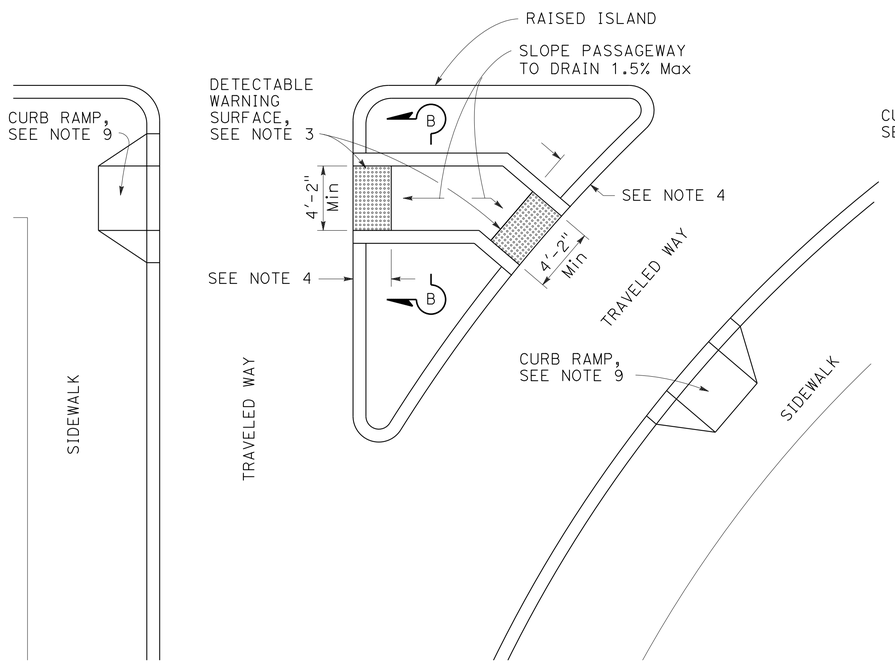

TYPE B PASSAGEWAY

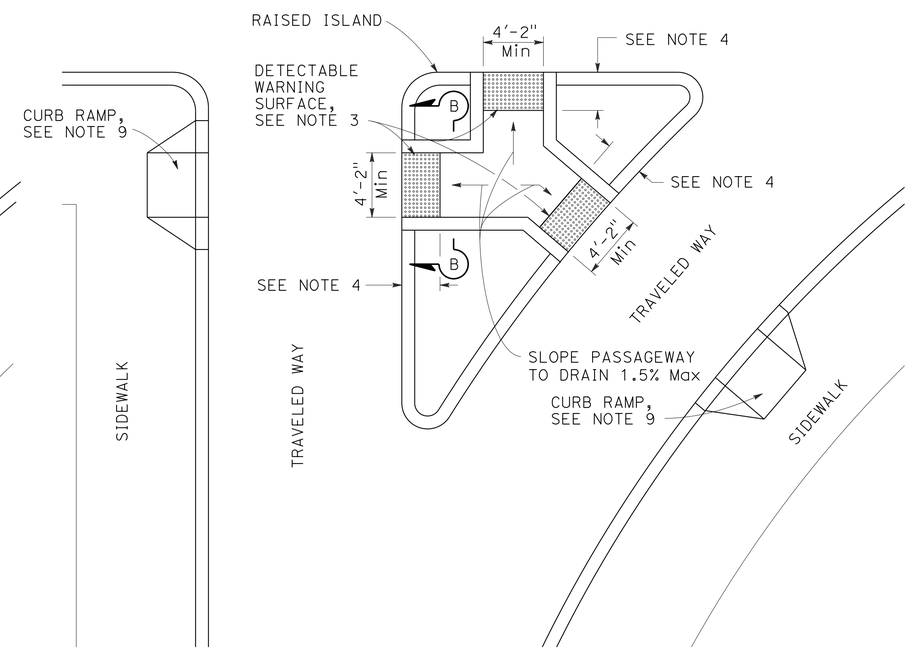

TYPE C PASSAGEWAY

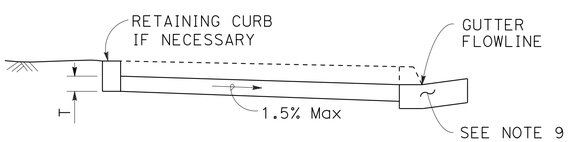

SECTION A-A

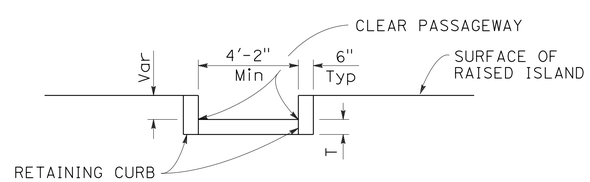

SECTION B-B

NOTES:

1. Sidewalk, ramp and passageway thickness, "T", shall be 3½" minimum.
2. For details of grooving used with Case CM curb ramp, see Revised Standard Plan RSP A88A.
3. For details of detectable warning surfaces, see Revised Standard Plan RSP A88A.
4. Where an island passageway length is greater than or equal to 6'-0", but less than 8'-0", each detectable warning surface shall extend the full width and 2'-0" depth of the passageway length. Where an island passageway length is greater than or equal to 8'-0", each detectable warning surface shall extend the full width and 3'-0" depth of the passageway length.
5. For Case CM curb ramp, the edge of the detectable warning surface nearest the street shall be between 6" and 8" from the gutter flowline.
6. Transitions from ramps to walks, gutters or streets shall be flush (no lip) and free of abrupt changes.
7. Utility pull boxes, manholes, vaults and all other utility facilities within the boundaries of the curb ramp will be relocated or adjusted to grade by the owner prior to, or in conjunction with, curb ramp construction.
8. Detectable warning surface may have to be cut to allow removal of utility covers while maintaining full detectable warning width and depth.
9. For additional curb ramp details, see Revised Standard Plan RSP A88A.

STATE OF CALIFORNIA
DEPARTMENT OF TRANSPORTATION

CURB RAMP AND ISLAND PASSAGEWAY DETAILS

NO SCALE

RSP A88B DATED JULY 19, 2013 SUPERSEDES STANDARD PLAN A88B DATED MAY 20, 2011 - PAGE 122 OF THE STANDARD PLANS BOOK DATED 2010.

REVISED STANDARD PLAN RSP A88B

2010 REVISED STANDARD PLAN RSP A88B

6-25-13

Dist	COUNTY	ROUTE	POST MILES TOTAL PROJECT	SHEET No.	TOTAL SHEETS
08	SBd	15	12.8	93	122

William K. Farnbach
REGISTERED CIVIL ENGINEER

July 19, 2013
PLANS APPROVAL DATE

REGISTERED PROFESSIONAL ENGINEER
William K. Farnbach
No. C49042
Exp. 9-30-14
CIVIL
STATE OF CALIFORNIA

THE STATE OF CALIFORNIA OR ITS OFFICERS OR AGENTS SHALL NOT BE RESPONSIBLE FOR THE ACCURACY OR COMPLETENESS OF SCANNED COPIES OF THIS PLAN SHEET.

TO ACCOMPANY PLANS DATED 8-19-13

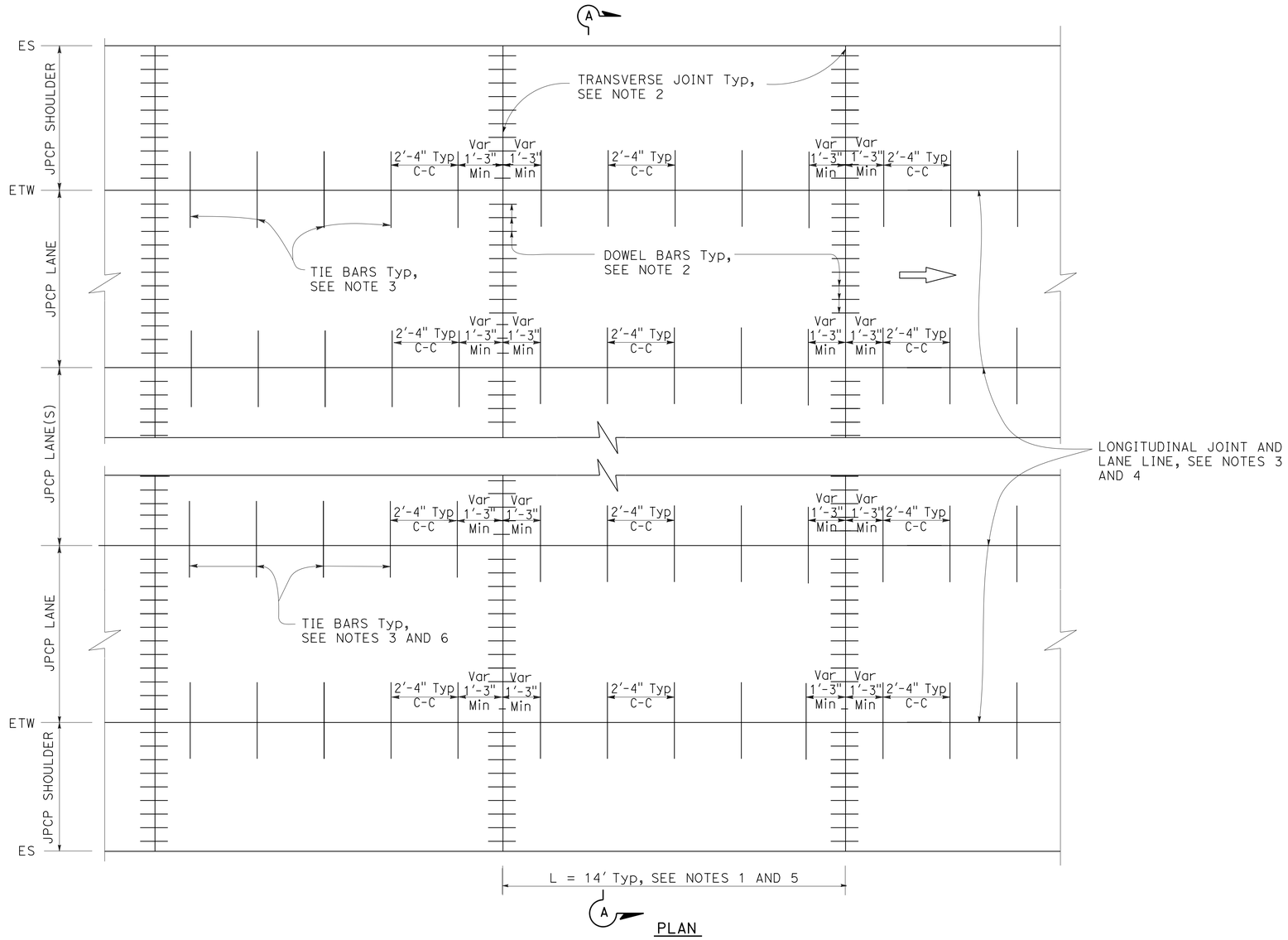

PLAN

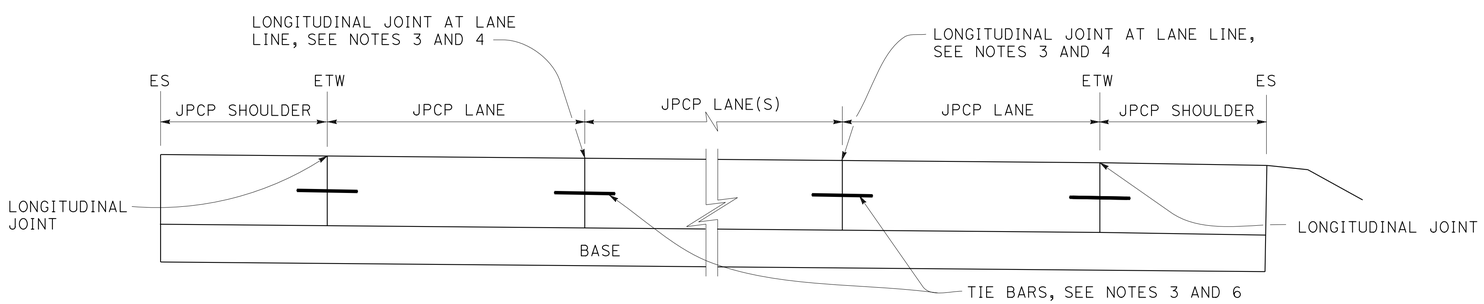

SECTION A-A

NOTES:

1. Transverse joint spacing may be adjusted to no less than 10' and no more than 14' to conform to bridges, change in pavement type, and hardened concrete pavement.
2. For transverse joint and dowel bar details not shown, see Revised Standard Plan RSP P10.
3. For longitudinal joint and tie bar details not shown, see Revised Standard Plan RSP P15.
4. For additional longitudinal joint layout details, see Revised Standard Plan RSP P18.
5. For joint layout at intersections, see Project Plans.
6. For dowel bars at longitudinal joint. see Revised Standard Plan RSP P18.

STATE OF CALIFORNIA
DEPARTMENT OF TRANSPORTATION

JOINTED PLAIN CONCRETE PAVEMENT NEW CONSTRUCTION

NO SCALE

RSP P1 DATED JULY 19, 2013 SUPERSEDES STANDARD PLAN P1
DATED MAY 20, 2011 - PAGE 125 OF THE STANDARD PLANS BOOK DATED 2010.

REVISED STANDARD PLAN RSP P1

2010 REVISED STANDARD PLAN RSP P1

5-31-13

Dist	COUNTY	ROUTE	POST MILES TOTAL PROJECT	SHEET No.	TOTAL SHEETS
08	SBd	15	12.8	94	122

William K. Farnbach
REGISTERED CIVIL ENGINEER

July 19, 2013
PLANS APPROVAL DATE

REGISTERED PROFESSIONAL ENGINEER
William K. Farnbach
No. C49042
Exp. 9-30-14
CIVIL
STATE OF CALIFORNIA

THE STATE OF CALIFORNIA OR ITS OFFICERS OR AGENTS SHALL NOT BE RESPONSIBLE FOR THE ACCURACY OR COMPLETENESS OF SCANNED COPIES OF THIS PLAN SHEET.

TO ACCOMPANY PLANS DATED 8-19-13

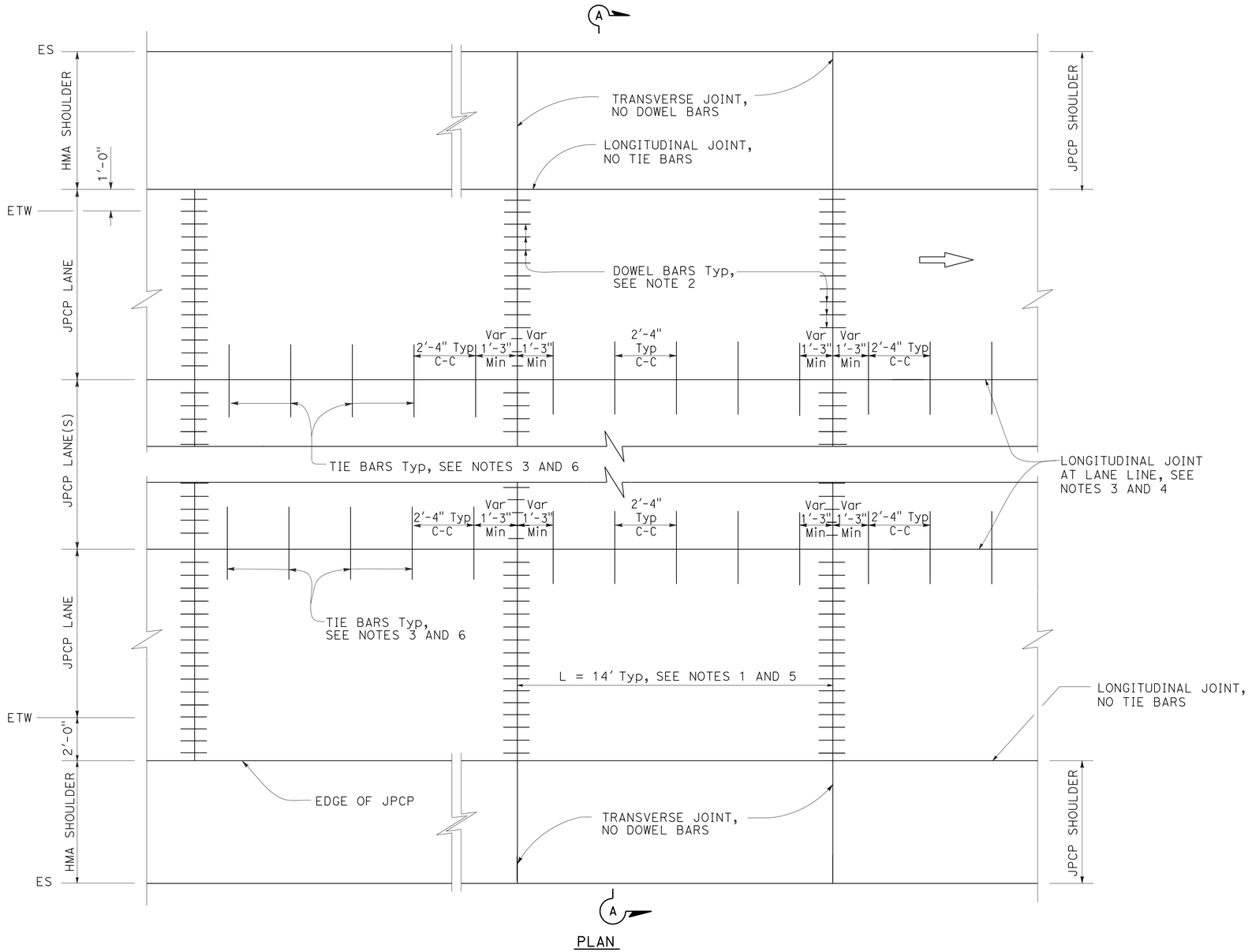

PLAN

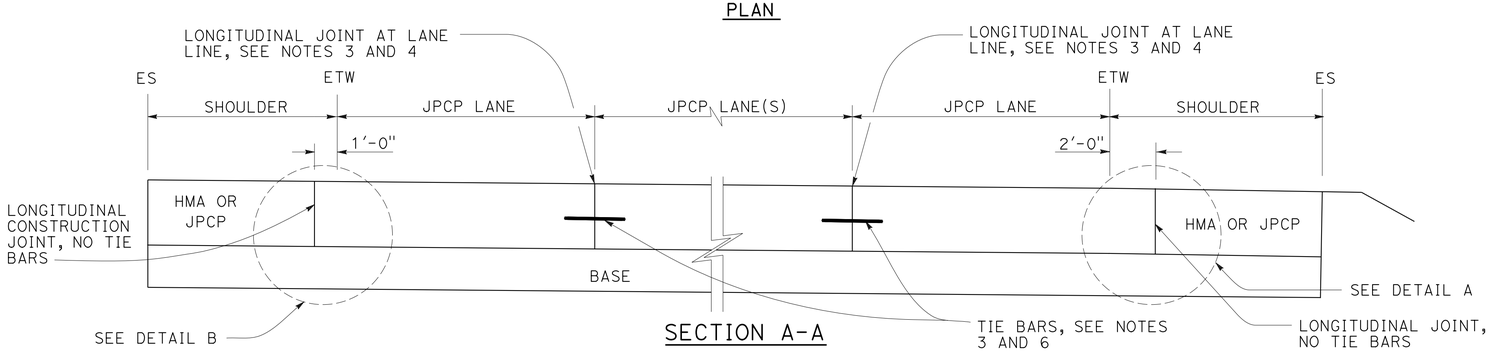

SECTION A-A

NOTES:

1. Transverse joint spacing may be adjusted to no less than 10' and no more than 14' to conform to bridges, change in pavement type, and hardened concrete pavement.
2. For transverse joint and dowel bar details not shown, see Revised Standard Plan RSP P10.
3. For longitudinal joint and tie bar details not shown, see Revised Standard Plan RSP P15.
4. For additional longitudinal joint layout details, see Revised Standard Plan RSP P18.
5. For joint layout at intersections, see Project Plans.
6. For dowel bars at longitudinal joint. see Revised Standard Plan RSP P18.
7. For limits of rumble strips, see Projects Plans.

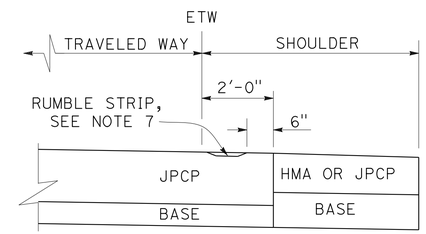

DETAIL A

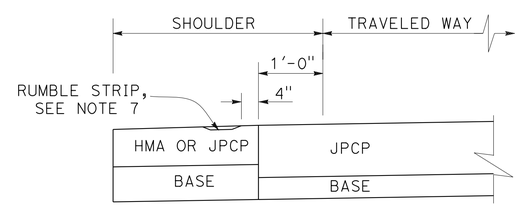

DETAIL B

STATE OF CALIFORNIA
DEPARTMENT OF TRANSPORTATION

JOINTED PLAIN CONCRETE PAVEMENT (WIDENED LANE) NEW CONSTRUCTION

NO SCALE

RSP P2 DATED JULY 19, 2013 SUPERSEDES STANDARD PLAN P2
DATED MAY 20, 2011 - PAGE 126 OF THE STANDARD PLANS BOOK DATED 2010.

REVISED STANDARD PLAN RSP P2

2010 REVISED STANDARD PLAN RSP P2

5-31-13

Dist	COUNTY	ROUTE	POST MILES TOTAL PROJECT	SHEET No.	TOTAL SHEETS
08	SBd	15	12.8	95	122

William K. Farnbach
REGISTERED CIVIL ENGINEER

July 19, 2013
PLANS APPROVAL DATE

REGISTERED PROFESSIONAL ENGINEER
William K. Farnbach
No. C49042
Exp. 9-30-14
CIVIL
STATE OF CALIFORNIA

THE STATE OF CALIFORNIA OR ITS OFFICERS OR AGENTS SHALL NOT BE RESPONSIBLE FOR THE ACCURACY OR COMPLETENESS OF SCANNED COPIES OF THIS PLAN SHEET.

TO ACCOMPANY PLANS DATED 8-19-13

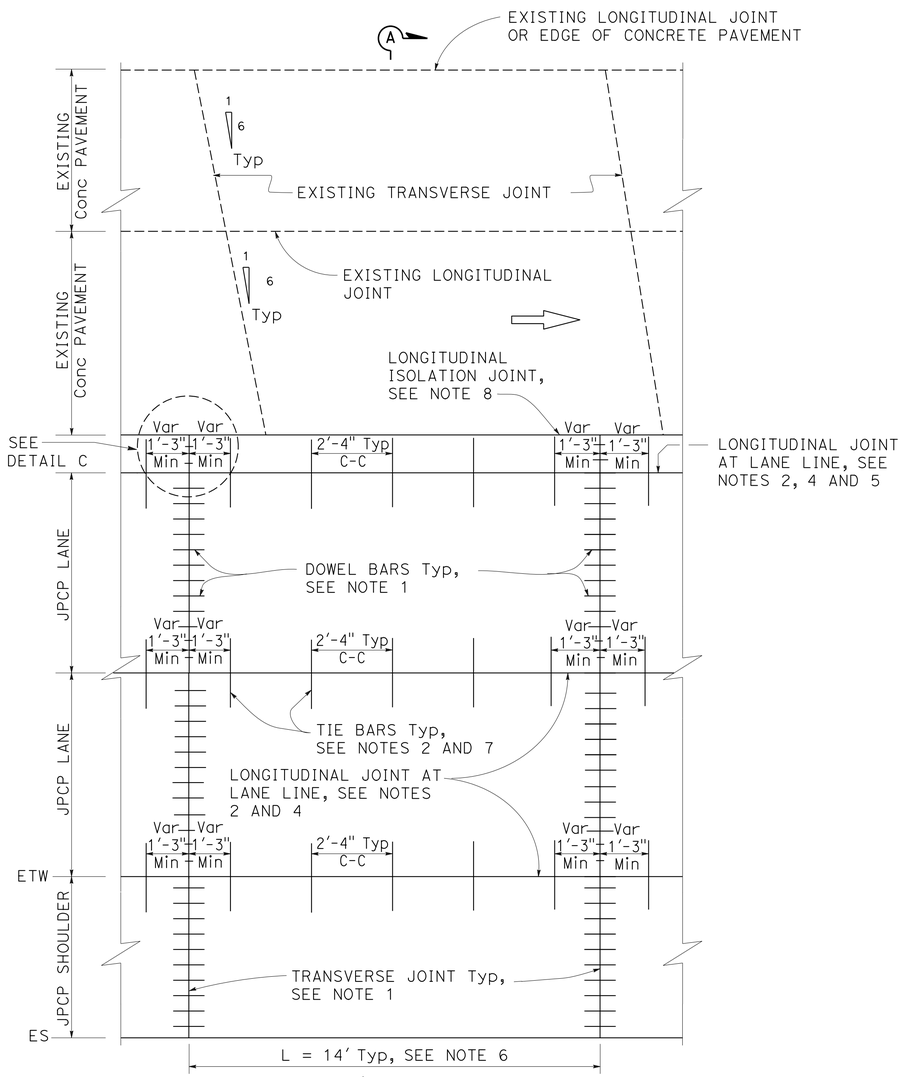

PLAN
ISOLATED
See Note 3

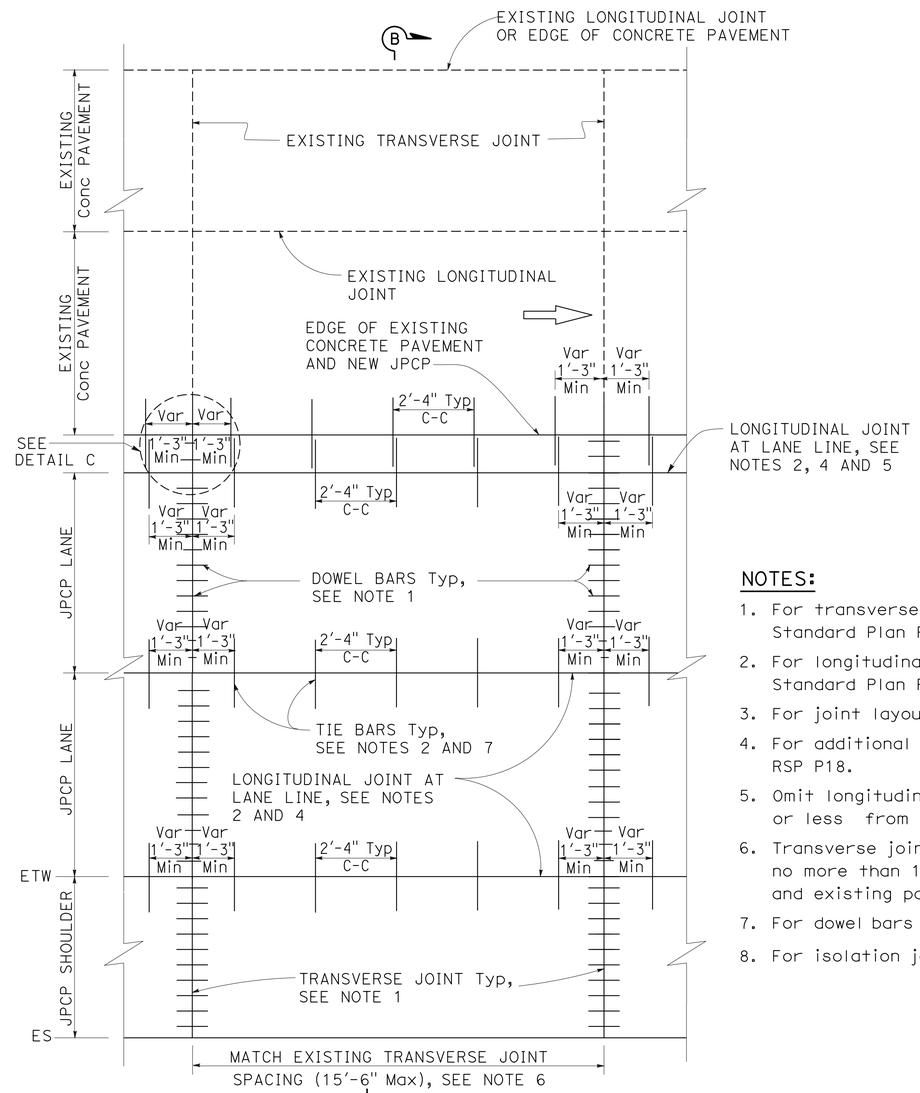

PLAN
TIED
See Note 3

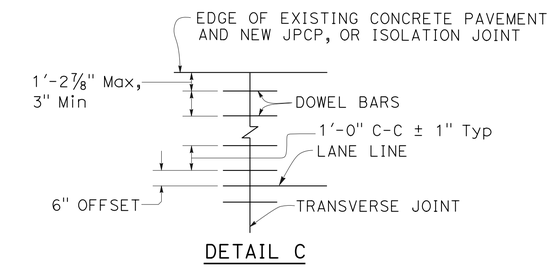

DETAIL C

NOTES:

1. For transverse joint and dowel bar details not shown, see Revised Standard Plan RSP P10.
2. For longitudinal joint and tie bar details not shown, see Revised Standard Plan RSP P15.
3. For joint layout at intersections, see Project Plans.
4. For additional longitudinal joint details, see Revised Standard Plan RSP P18.
5. Omit longitudinal joint when edge of new concrete pavement is 3'-3" or less from JPCP lane line.
6. Transverse joint spacing may be adjusted to no less than 10' and no more than 15'-6" to conform to bridges, change in pavement type and existing pavement.
7. For dowel bars at longitudinal joint. see Revised Standard Plan RSP P18.
8. For isolation joints, see Detail A on Revised Standard Plan RSP P18.

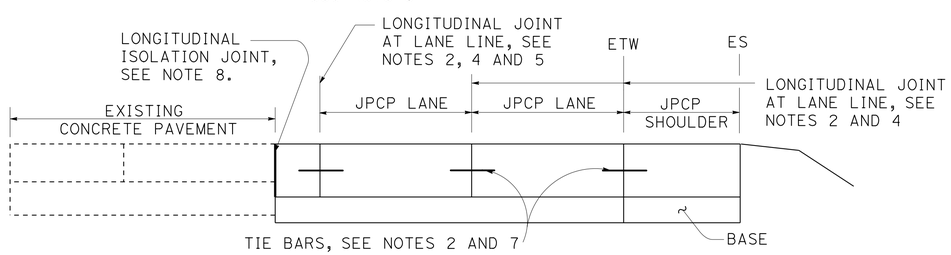

SECTION A-A

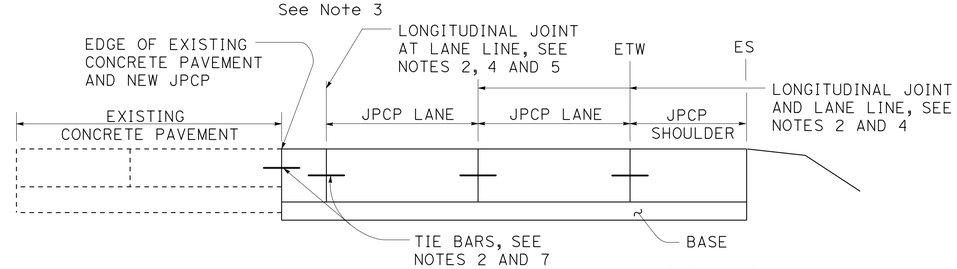

SECTION B-B

STATE OF CALIFORNIA
DEPARTMENT OF TRANSPORTATION

JOINTED PLAIN CONCRETE PAVEMENT LANE & SHOULDER ADDITION OR REPLACEMENT

NO SCALE

RSP P3A DATED JULY 19, 2013 SUPPLEMENTS THE STANDARD PLANS BOOK DATED 2010.

REVISED STANDARD PLAN RSP P3A

2010 REVISED STANDARD PLAN RSP P3A

5-31-13

Dist	COUNTY	ROUTE	POST MILES TOTAL PROJECT	SHEET No.	TOTAL SHEETS
08	SBd	15	12.8	96	122

William K. Farnbach
REGISTERED CIVIL ENGINEER

July 19, 2013
PLANS APPROVAL DATE

REGISTERED PROFESSIONAL ENGINEER William K. Farnbach No. C49042 Exp. 9-30-14 CIVIL STATE OF CALIFORNIA

THE STATE OF CALIFORNIA OR ITS OFFICERS OR AGENTS SHALL NOT BE RESPONSIBLE FOR THE ACCURACY OR COMPLETENESS OF SCANNED COPIES OF THIS PLAN SHEET.

TO ACCOMPANY PLANS DATED 8-19-13

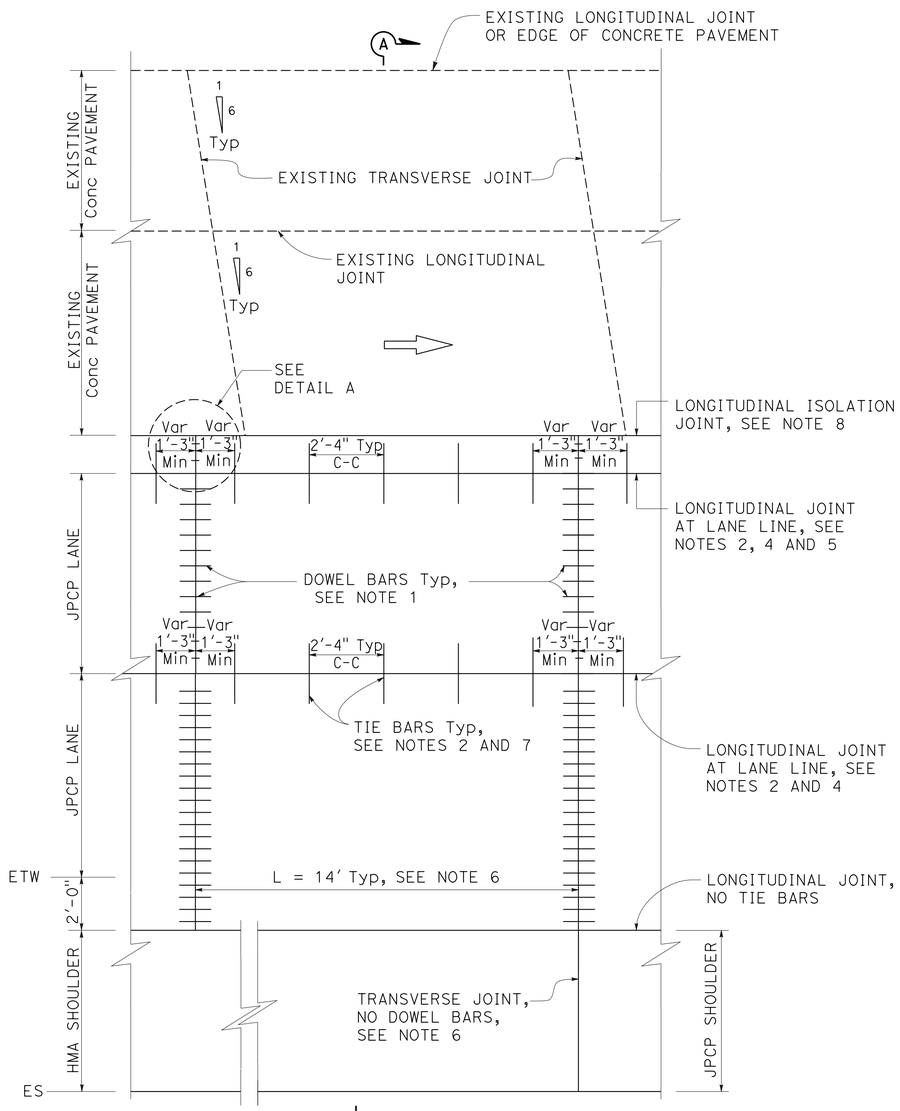

A PLAN
ISOLATED
See Note 3

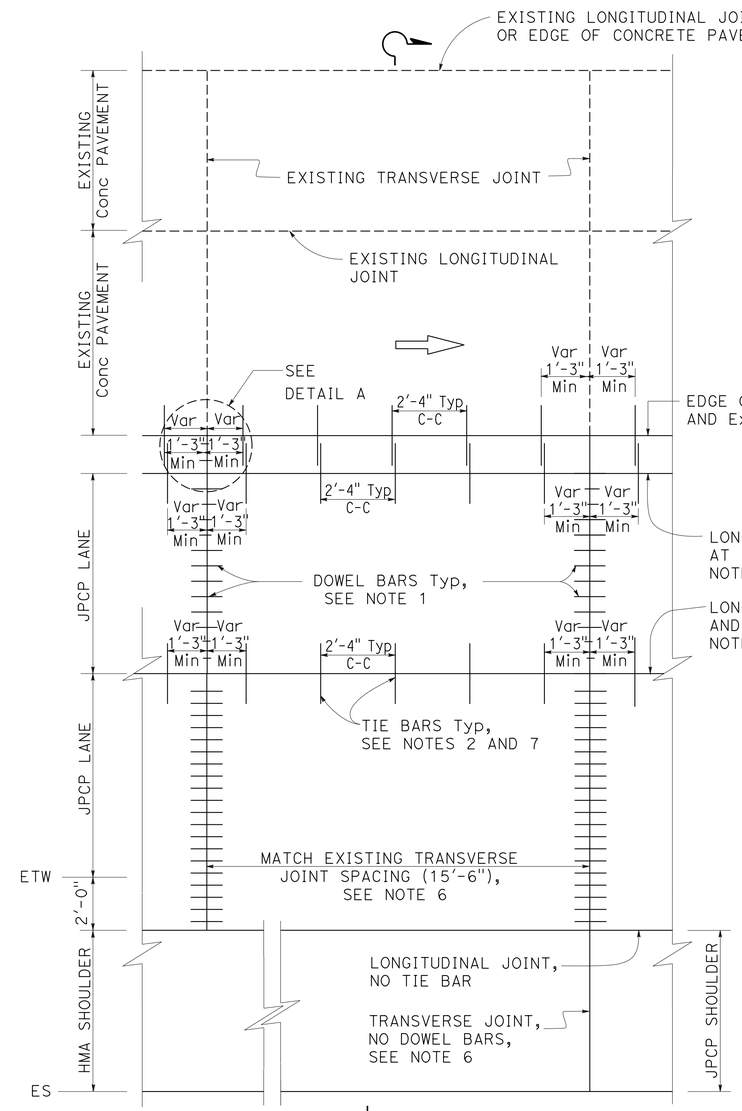

B PLAN
TIED
See Note 3

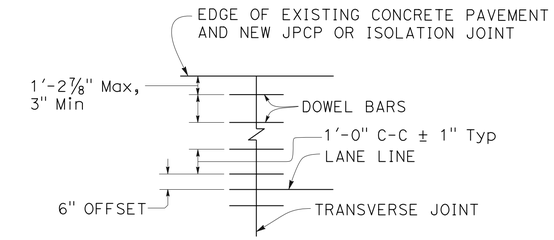

DETAIL A

NOTES:

1. For transverse joint and dowel bar details not shown, see Revised Standard Plan RSP P10.
2. For longitudinal joint and tie bar details not shown, see Revised Standard Plan RSP P15.
3. For joint layout at intersections, see Project Plans.
4. For additional longitudinal joint details, see Revised Standard Plan RSP P18.
5. Omit longitudinal joint when edge of new concrete pavement is 3'-3" or less from JPCP lane line.
6. Transverse joint spacing may be adjusted to no less than 10' and no more than 15'-6" to conform to bridges, change in pavement type and existing pavement.
7. For dowel bars at longitudinal joint. see Revised Standard Plan RSP P18.
8. For isolation joints, see Detail A on Revised Standard Plan RSP P18.

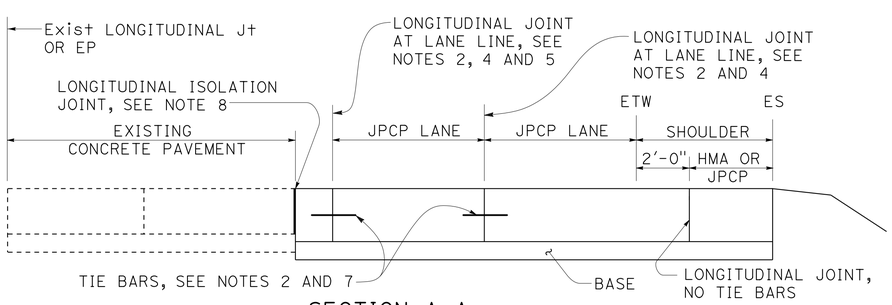

SECTION A-A

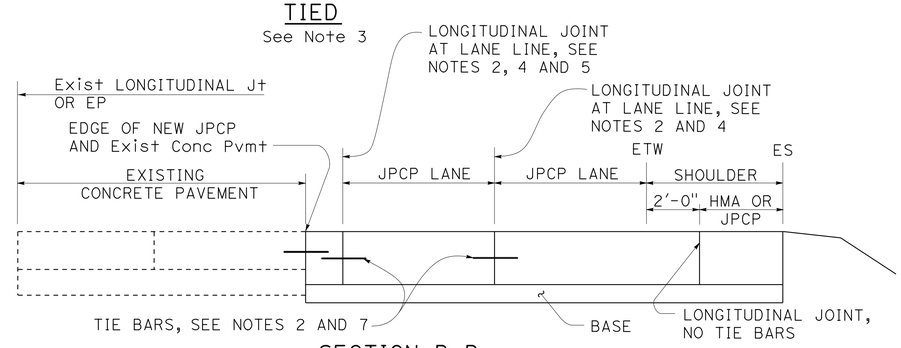

SECTION B-B

STATE OF CALIFORNIA
DEPARTMENT OF TRANSPORTATION

JOINTED PLAIN CONCRETE PAVEMENT (WIDENED LANE) LANE AND SHOULDER ADDITION OR REPLACEMENT

NO SCALE

RSP P3B DATED JULY 19, 2013 SUPPLEMENTS THE STANDARD PLANS BOOK DATED 2010.

REVISED STANDARD PLAN RSP P3B

2010 REVISED STANDARD PLAN RSP P3B

5-31-13

Dist	COUNTY	ROUTE	POST MILES TOTAL PROJECT	SHEET No.	TOTAL SHEETS
08	SBd	15	12.8	97	122

William K. Farnbach
REGISTERED CIVIL ENGINEER

July 19, 2013
PLANS APPROVAL DATE

REGISTERED PROFESSIONAL ENGINEER William K. Farnbach No. C49042 Exp. 9-30-14 CIVIL STATE OF CALIFORNIA

THE STATE OF CALIFORNIA OR ITS OFFICERS OR AGENTS SHALL NOT BE RESPONSIBLE FOR THE ACCURACY OR COMPLETENESS OF SCANNED COPIES OF THIS PLAN SHEET.

TO ACCOMPANY PLANS DATED 8-19-13

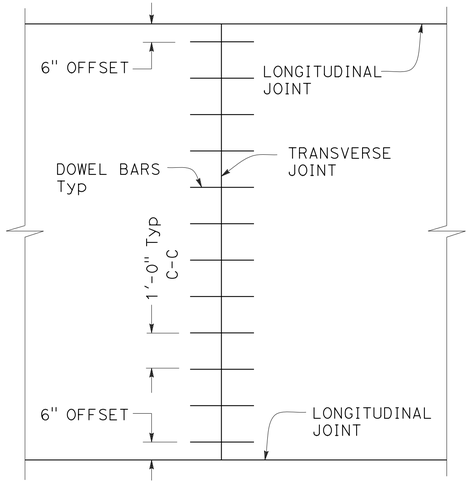

TRANSVERSE JOINT DOWEL BAR LAYOUT

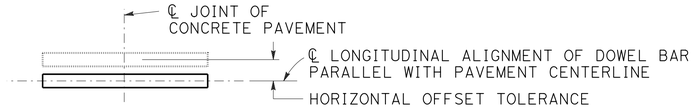

PLAN

HORIZONTAL OFFSET TOLERANCE

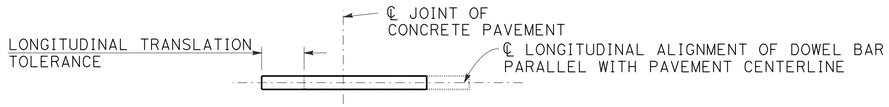

PLAN

LONGITUDINAL TRANSLATION TOLERANCE

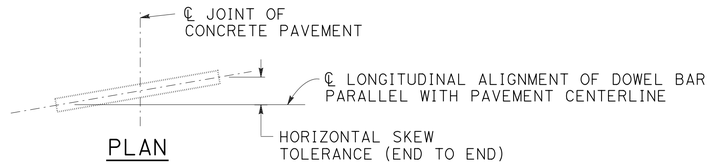

PLAN

HORIZONTAL SKEW TOLERANCE

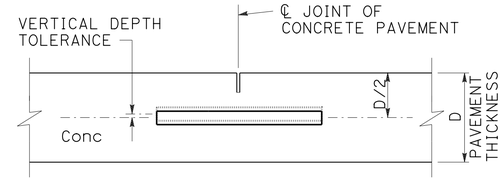

ELEVATION

VERTICAL DEPTH TOLERANCE

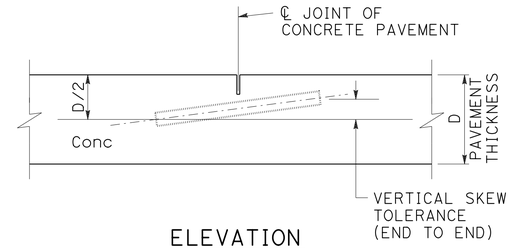

ELEVATION

VERTICAL SKEW TOLERANCE

NOTES:

1. See Revised Standard Plan RSP P1 for typical dowel bar placement and locations.
2. Where fresh concrete pavement is placed against new concrete or existing concrete pavement, rounding the corner of the existing concrete pavement is not required.
3. May also use ¾" Dia dowel bars 2'-4" ± ¼" in length. Center the length of dowel bars at the centerline of longitudinal joint.

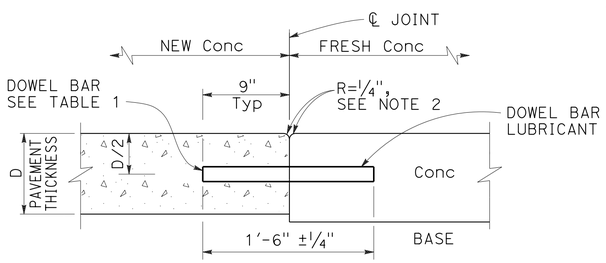

TRANSVERSE CONSTRUCTION JOINT DETAIL

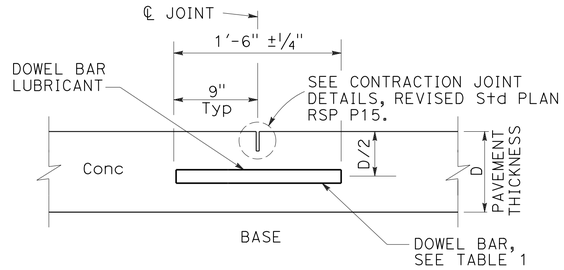

TRANSVERSE CONTRACTION JOINT

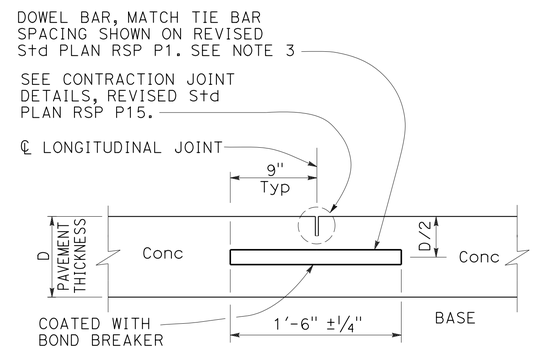

LONGITUDINAL CONTRACTION JOINT WITH DOWEL BARS

See Revised Std Plan RSP P18

TABLE 1

DOWEL BAR DIAMETER TABLE			
PAVEMENT THICKNESS	0.65'	> 0.65' - 0.85'	> 0.85'
MINIMUM DOWEL * BAR DIAMETER	1"	1¼"	1½"

* The drilled hole diameter must be ⅛" to 3/16" larger than the bar diameter.

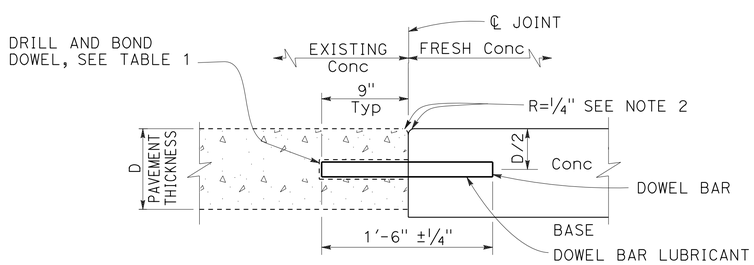

TRANSVERSE CONSTRUCTION JOINT FOR EXISTING CONCRETE PAVEMENT

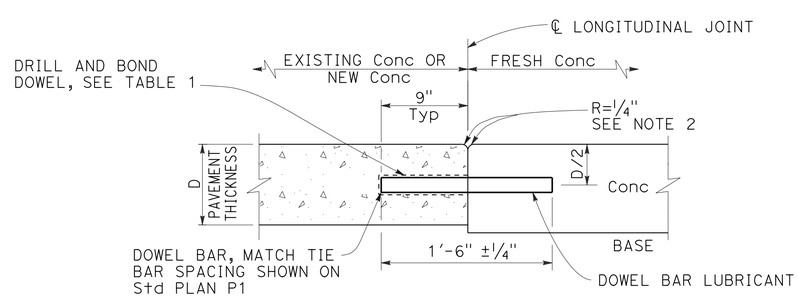

LONGITUDINAL CONSTRUCTION JOINT WITH DOWEL BARS

See Revised Std Plan RSP P18

STATE OF CALIFORNIA
DEPARTMENT OF TRANSPORTATION

CONCRETE PAVEMENT DOWEL BAR DETAILS

NO SCALE

RSP P10 DATED JULY 19, 2013 SUPERSEDES RSP P10 DATED APRIL 20, 2012 AND STANDARD PLAN P10 DATED MAY 20, 2011 - PAGE 131 OF THE STANDARD PLANS BOOK DATED 2010.

REVISED STANDARD PLAN RSP P10

2010 REVISED STANDARD PLAN RSP P10

5-31-13

Dist	COUNTY	ROUTE	POST MILES TOTAL PROJECT	SHEET No.	TOTAL SHEETS
08	SBd	15	12.8	98	122

William K. Farnbach
REGISTERED CIVIL ENGINEER

July 19, 2013
PLANS APPROVAL DATE

REGISTERED PROFESSIONAL ENGINEER — William K. Farnbach — No. C49042 — Exp. 9-30-14 — CIVIL — STATE OF CALIFORNIA

THE STATE OF CALIFORNIA OR ITS OFFICERS OR AGENTS SHALL NOT BE RESPONSIBLE FOR THE ACCURACY OR COMPLETENESS OF SCANNED COPIES OF THIS PLAN SHEET.

TO ACCOMPANY PLANS DATED 8-19-13

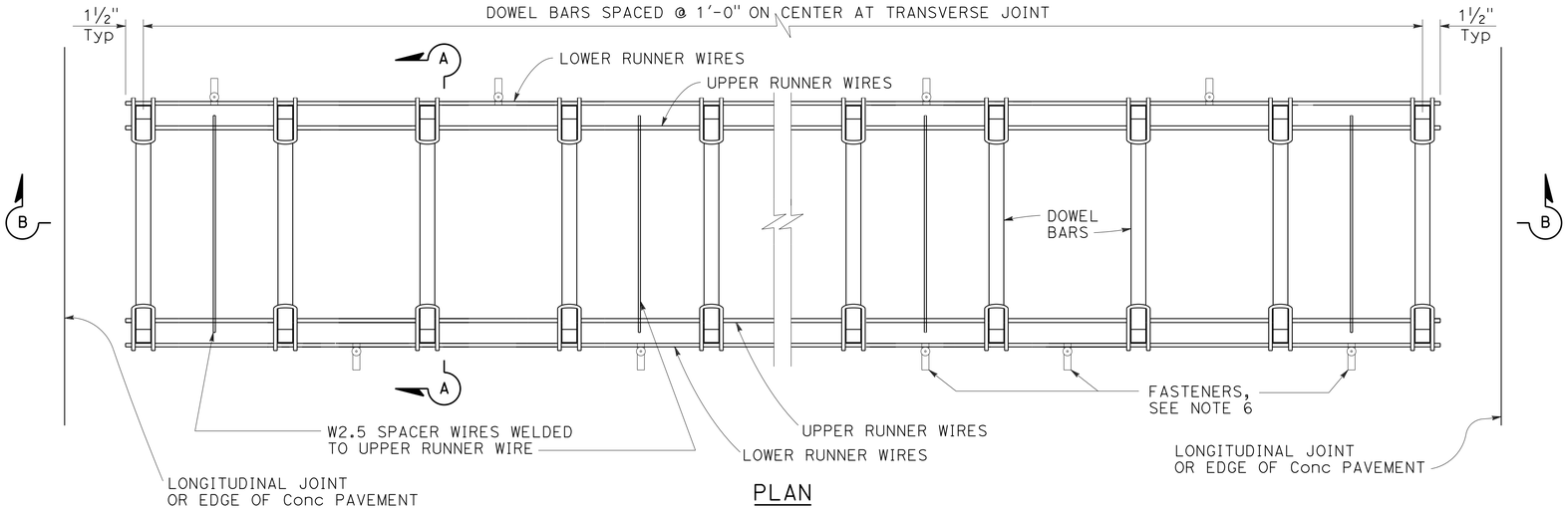

PLAN

DOWEL BAR BASKET (TRANSVERSE JOINT)

See Note 1

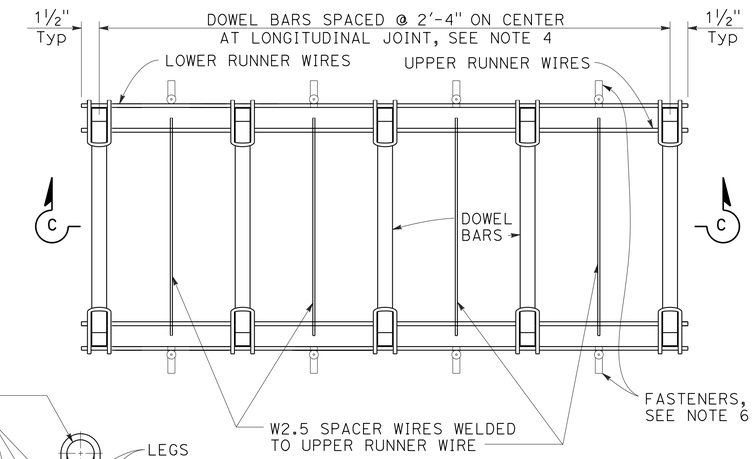

PLAN

DOWEL BAR BASKET (LONGITUDINAL JOINT)

See Note 1

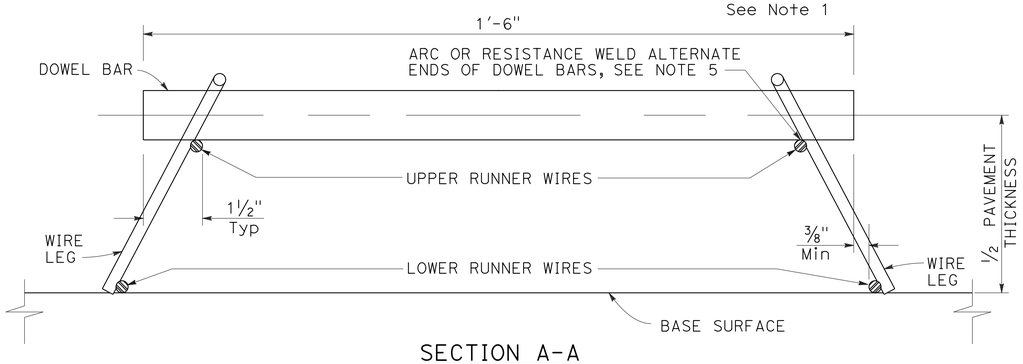

SECTION A-A

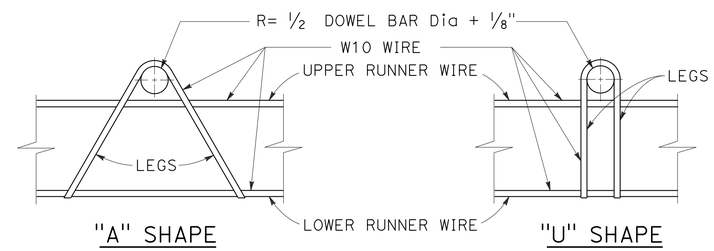

ASSEMBLY FRAME DETAILS

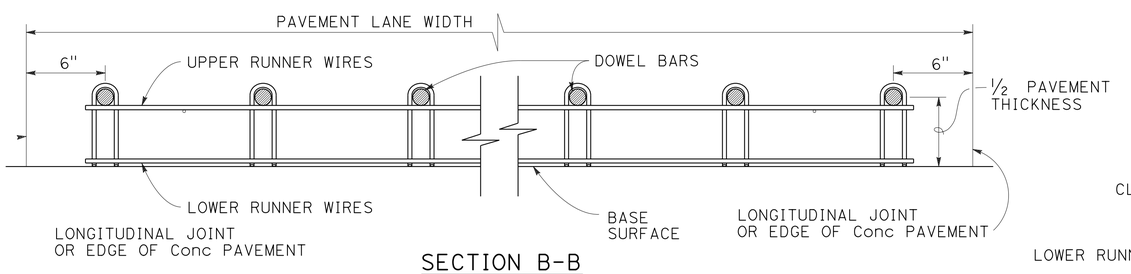

SECTION B-B

See Note 1

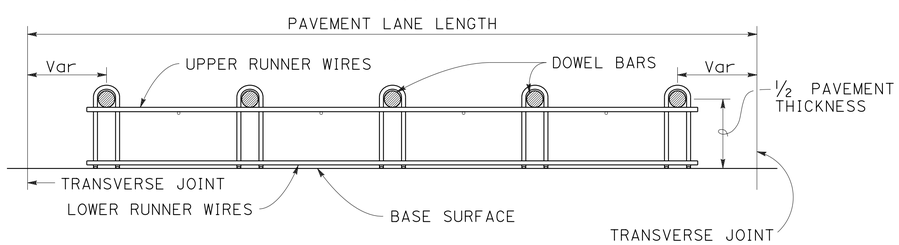

SECTION C-C

See Notes 1 and 4

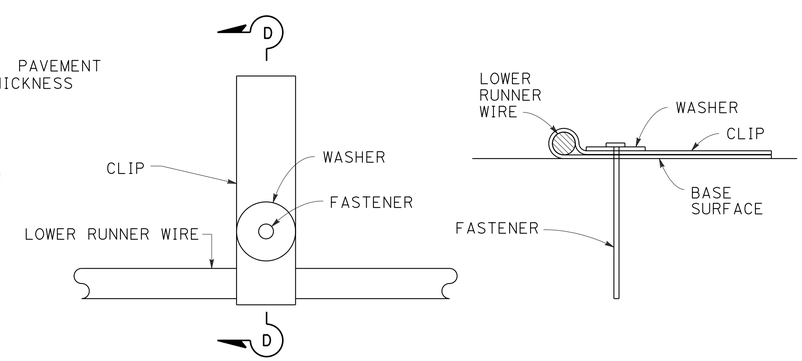

PLAN

SECTION D-D

FASTENER DETAIL

See Note 6

NOTES:

1. "U" frame shape assembly shown. Use either "U" frame shape or "A" frame shape.
2. Wire sizes shown are the minimum required.
3. All wire intersections must be resistance welded.
4. Use tie bar spacing for longitudinal dowel bar locations. See Revised Standard Plans RSP P1, RSP P2, RSP P3A, and RSP P3B for tie bar requirements.
5. Weld may be at the top or bottom of the dowel bar.
6. Use anchor pins where soil or granular base is used. See Revised Standard Plan RSP P17 for Anchor Pin Detail.

STATE OF CALIFORNIA
DEPARTMENT OF TRANSPORTATION

CONCRETE PAVEMENT DOWEL BAR BASKET DETAILS

NO SCALE

RSP P12 DATED JULY 19, 2013 SUPERSEDES STANDARD PLAN P12
DATED MAY 20, 2011 - PAGE 132 OF THE STANDARD PLANS BOOK DATED 2010.

REVISED STANDARD PLAN RSP P12

2010 REVISED STANDARD PLAN RSP P12

5-31-13

Dist	COUNTY	ROUTE	POST MILES TOTAL PROJECT	SHEET No.	TOTAL SHEETS
08	SBd	15	12.8	99	122

William K. Farnbach
REGISTERED CIVIL ENGINEER

July 19, 2013
PLANS APPROVAL DATE

REGISTERED PROFESSIONAL ENGINEER
William K. Farnbach
No. C49042
Exp. 9-30-14
CIVIL
STATE OF CALIFORNIA

THE STATE OF CALIFORNIA OR ITS OFFICERS OR AGENTS SHALL NOT BE RESPONSIBLE FOR THE ACCURACY OR COMPLETENESS OF SCANNED COPIES OF THIS PLAN SHEET.

TO ACCOMPANY PLANS DATED 8-19-13

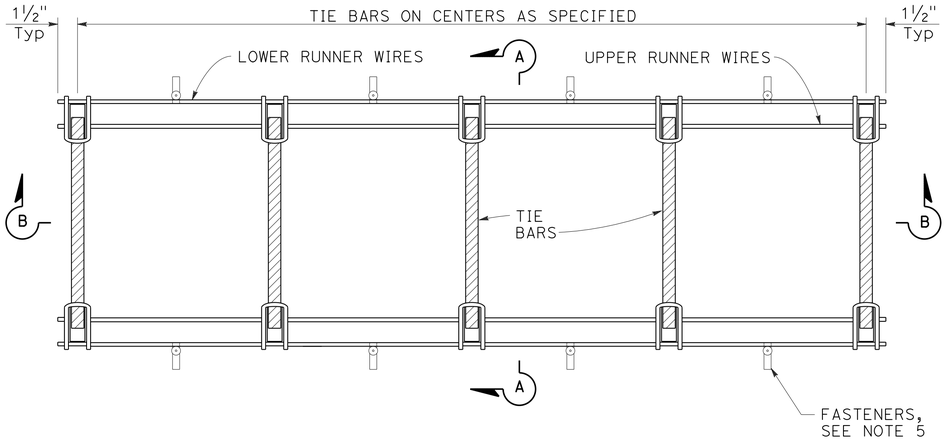

PLAN

TIE BAR BASKET

(Tie bars at longitudinal joint)
See Note 1

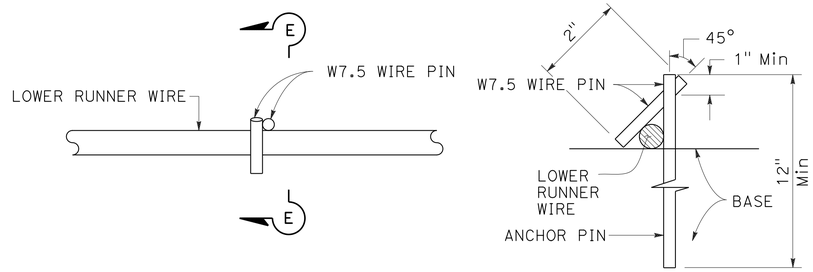

PLAN

SECTION E-E

ANCHOR PIN DETAIL

See Note 5

NOTES:

1. "U" frame shape assembly shown. Use either "U" frame shape or "A" frame shape.
2. Wire sizes shown are the minimum required.
3. All wire intersections must be resistance welded.
4. Weld may be at top or bottom of tie bars.
5. Use anchor pins where soil or granular base is used.

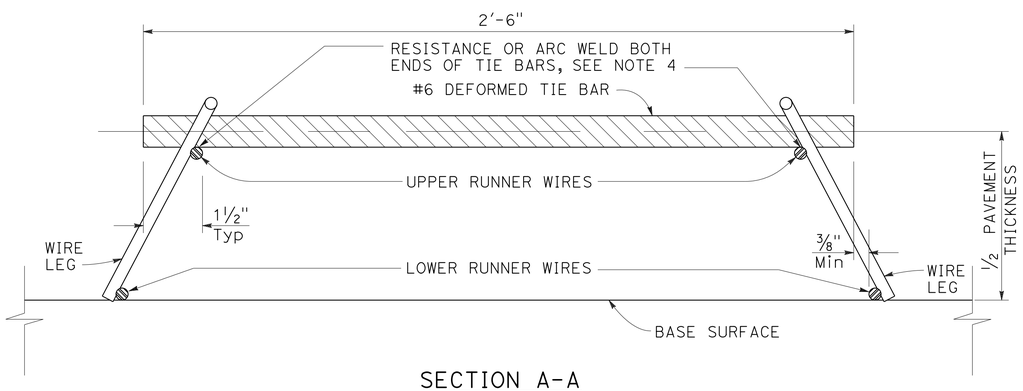

SECTION A-A

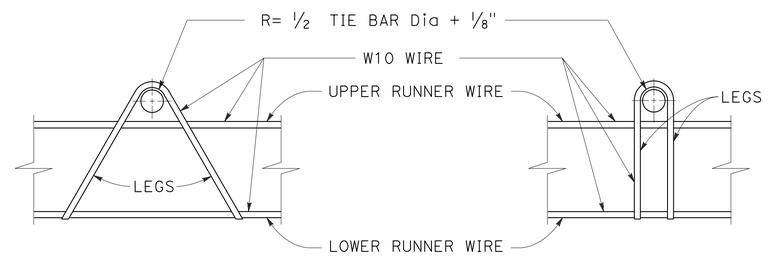

"A" SHAPE

"U" SHAPE

ASSEMBLY FRAME DETAILS

See Note 1

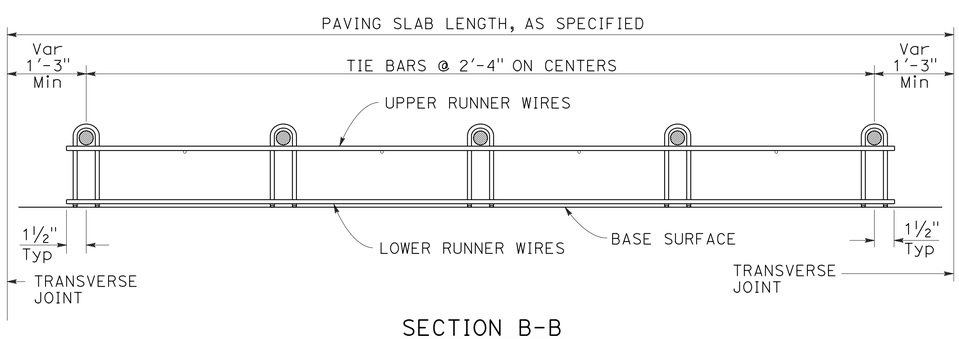

SECTION B-B

See Note 1

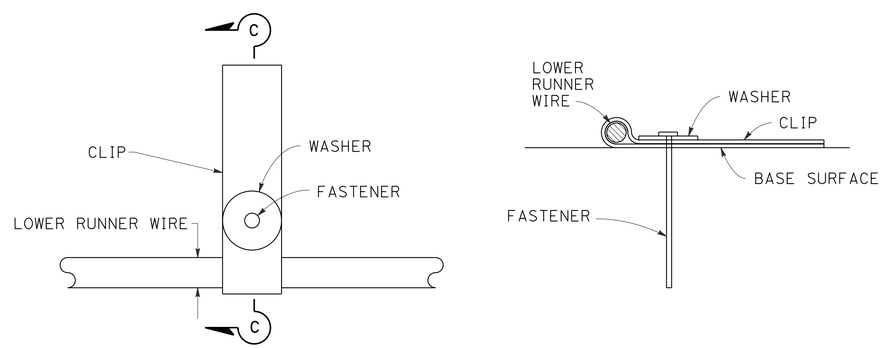

PLAN

SECTION C-C

FASTENER DETAIL

STATE OF CALIFORNIA
DEPARTMENT OF TRANSPORTATION

CONCRETE PAVEMENT TIE BAR BASKET DETAILS

NO SCALE

RSP P17 DATED JULY 19, 2013 SUPERSEDES STANDARD PLAN P17
DATED MAY 20, 2011 - PAGE 134 OF THE STANDARD PLANS BOOK DATED 2010.

REVISED STANDARD PLAN RSP P17

2010 REVISED STANDARD PLAN RSP P17

5-31-13

Dist	COUNTY	ROUTE	POST MILES TOTAL PROJECT	SHEET No.	TOTAL SHEETS
08	SBd	15	12.8	100	122

William K. Farnbach
REGISTERED CIVIL ENGINEER

July 19, 2013
PLANS APPROVAL DATE

REGISTERED PROFESSIONAL ENGINEER William K. Farnbach No. C49042 Exp. 9-30-14 CIVIL STATE OF CALIFORNIA

THE STATE OF CALIFORNIA OR ITS OFFICERS OR AGENTS SHALL NOT BE RESPONSIBLE FOR THE ACCURACY OR COMPLETENESS OF SCANNED COPIES OF THIS PLAN SHEET.

TO ACCOMPANY PLANS DATED 8-19-13

2010 REVISED STANDARD PLAN RSP P18

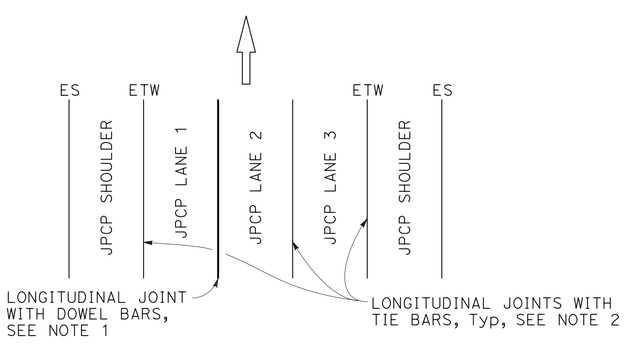

3 LANES WITH CONCRETE SHOULDERS
PLAN

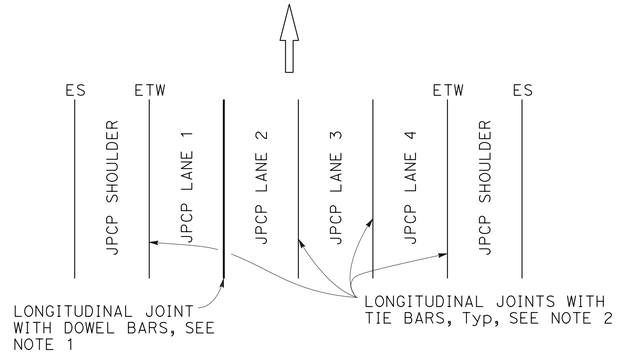

4 LANES WITH CONCRETE SHOULDERS
PLAN

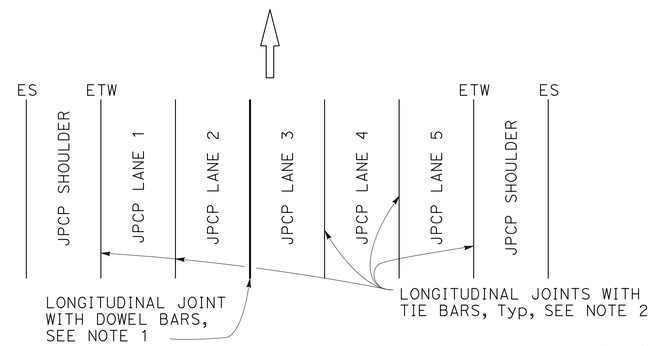

5 LANES WITH CONCRETE SHOULDERS
PLAN

NOTES:

1. See Revised Standard Plan RSP P10 for longitudinal joint with dowel bars.
2. See Revised Standard Plan RSP P15 for longitudinal joint with tie bars.
3. S= Reservoir depth.
   S= 7/8" ± 1/16" for asphalt rubber seals
   S= 9/16" ± 1/16" for silicone seals
   Preformed compression seals must be 13/16" wide and S= 1 11/16" ± 1/16"

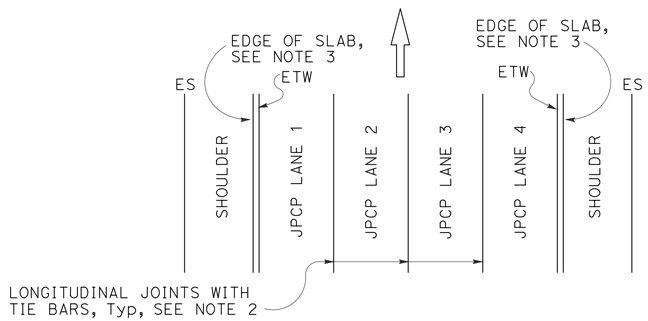

4 LANES OR LESS WITH AC SHOULDERS
PLAN

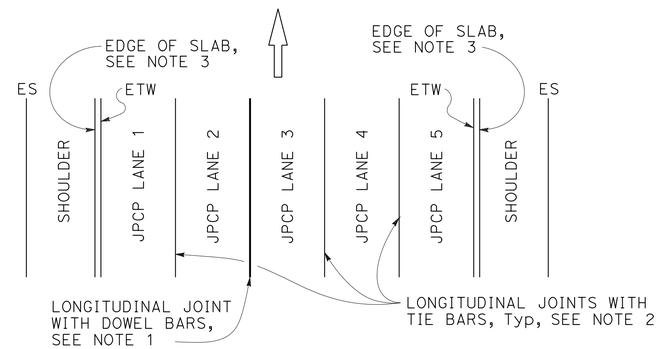

5 LANES WITH AC SHOULDERS
PLAN

NEW CONSTRUCTION

Location of Longitudinal Joints
For JPCP

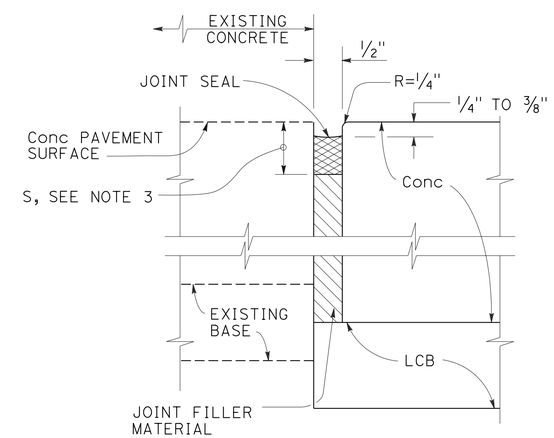

DETAIL "A"

ISOLATION JOINT

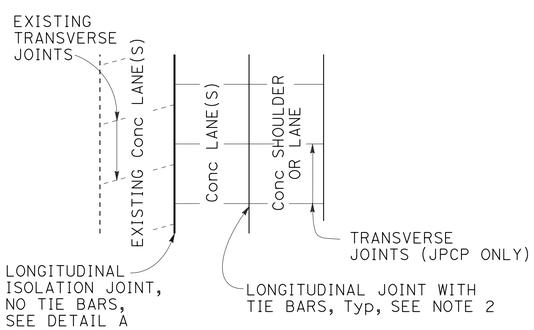

CASE 1
PLAN

Transverse Joints do not align between new and existing.

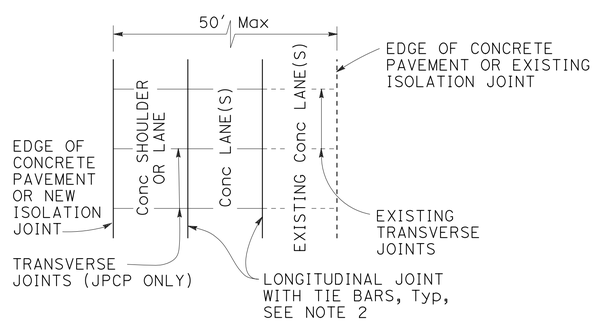

CASE 2
PLAN

Transverse Joints align between new and existing. (For JPCP only)

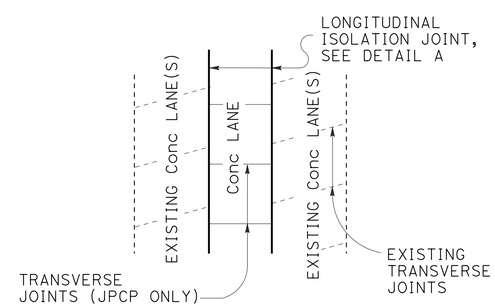

CASE 3 (INTERIOR LANE REPLACEMENT)
PLAN

Transverse Joints do not align between new and existing.

LANE/SHOULDER ADDITION OR RECONSTRUCTION

For JPCP and CRCP

STATE OF CALIFORNIA
DEPARTMENT OF TRANSPORTATION

CONCRETE PAVEMENT LANE SCHEMATICS AND ISOLATION JOINT DETAIL

NO SCALE

RSP P18 DATED JULY 19, 2013 SUPERSEDES RSP P18 DATED APRIL 20, 2012 AND STANDARD PLAN P18 DATED MAY 20, 2011 - PAGE 135 OF THE STANDARD PLANS BOOK DATED 2010.

REVISED STANDARD PLAN RSP P18

5-31-13

Dist	COUNTY	ROUTE	POST MILES TOTAL PROJECT	SHEET No.	TOTAL SHEETS
08	SBd	15	12.8	101	122

William K. Farnbach
REGISTERED CIVIL ENGINEER

July 19, 2013
PLANS APPROVAL DATE

REGISTERED PROFESSIONAL ENGINEER
William K. Farnbach
No. C49042
Exp. 9-30-14
CIVIL
STATE OF CALIFORNIA

THE STATE OF CALIFORNIA OR ITS OFFICERS OR AGENTS SHALL NOT BE RESPONSIBLE FOR THE ACCURACY OR COMPLETENESS OF SCANNED COPIES OF THIS PLAN SHEET.

TO ACCOMPANY PLANS DATED 8-19-13

2010 REVISED STANDARD PLAN RSP P20

NOTES:

1. Details do not apply to isolation joints and longitudinal construction joints.
2. Tie bars, dowel bars, and bar reinforcement are not shown.
3. Depths are measured from the final concrete pavement surface elevation after any grinding.

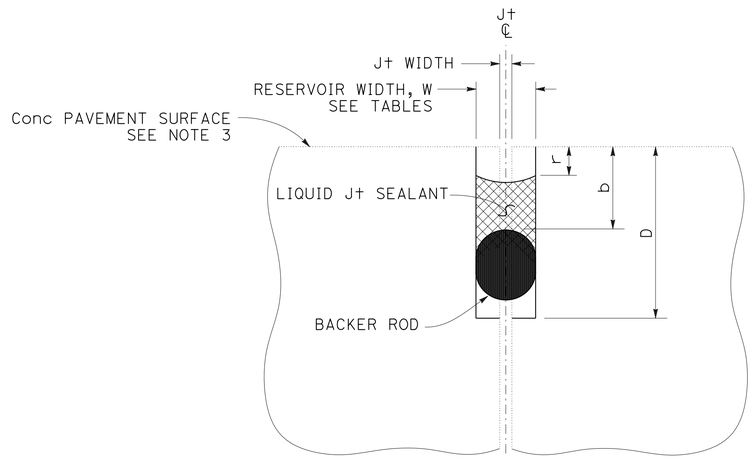

LIQUID JOINT SEALANT

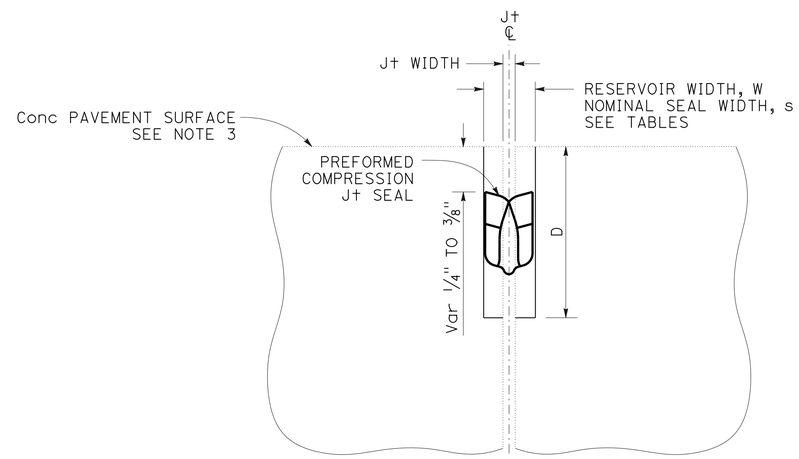

PREFORMED COMPRESSION JOINT SEAL

Const SEASON	Min RESERVOIR WIDTH * W ± 1/16"
WINTER	1/4"
SPRING	3/8"
SUMMER	3/8"
FALL	3/8"

* Minimum reservoir width for replace joint seal = existing joint width + 1/8"

RESERVOIR WIDTH W ±1/16"	LIQUID JOINT SEALANT DIMENSIONS					
	BACKER ROD NOMINAL Dia *	DEPTHS (ASPHALT RUBBER) **		DEPTHS (SILICONE)		
		RESERVOIR D ± 1/4"	BACKER ROD b ± 1/16"	RESERVOIR D ± 1/4"	BACKER ROD b ± 1/16"	RECESS r ± 1/16"
1/4"	3/8"	1 3/4"	7/8"	1 3/8"	1/2"	1/4"
3/8"	1/2"	1 7/8"	7/8"	1 1/2"	1/2"	1/4"
1/2"	3/4"	2"	7/8"	1 3/4"	9/16"	5/16"
5/8"	7/8"	2 1/4"	1"	2"	5/8"	5/16"
3/4"	1"	2 3/4"	1 1/8"	2 1/4"	3/4"	3/8"
7/8"	1 1/4"	3"	1 1/4"	2 1/2"	13/16"	3/8"
1"	1 1/2"	3 1/4"	1 3/8"	2 5/8"	7/8"	3/8"
1 1/8"	1 1/2"	3 1/2"	1 1/2"	2 13/16"	1"	1/2"

* Larger diameter backer rods may be substituted according to manufacturer recommendations if reservoir depth is increased equivalently.

** Asphalt rubber sealant recess depth "r" varies from 1/4" to 3/8"

RESERVOIR WIDTH W ±1/16"	PREFORMED COMPRESSION JOINT SEAL DIMENSIONS	
	NOMINAL SEAL WIDTH s	RESERVOIR DEPTH D ± 1/4"
1/4"	7/16"	1 1/4"
3/8"	11/16"	1 7/16"
1/2"	13/16"	1 11/16"
5/8"	1"	1 7/8"
3/4"	1 1/4"	2 1/8"
7/8"	1 5/8"	2 5/8"
1"	1 5/8"	2 5/8"
1 1/8"	2"	2 7/8"

STATE OF CALIFORNIA
DEPARTMENT OF TRANSPORTATION

JOINT SEALS

NO SCALE

RSP P20 DATED JULY 19, 2013 SUPERSEDES STANDARD PLAN P20
DATED MAY 20, 2011 - PAGE 136 OF THE STANDARD PLANS BOOK DATED 2010.

REVISED STANDARD PLAN RSP P20

6-17-13

TO ACCOMPANY PLANS DATED 8-19-13

Dist	COUNTY	ROUTE	POST MILES TOTAL PROJECT	SHEET No.	TOTAL SHEETS
08	SBd	15	12.8	102	122

REGISTERED CIVIL ENGINEER

October 19, 2012
PLANS APPROVAL DATE

REGISTERED PROFESSIONAL ENGINEER Glenn DeCou No. C34547 Exp. 9-30-13 CIVIL STATE OF CALIFORNIA

THE STATE OF CALIFORNIA OR ITS OFFICERS OR AGENTS SHALL NOT BE RESPONSIBLE FOR THE ACCURACY OR COMPLETENESS OF SCANNED COPIES OF THIS PLAN SHEET.

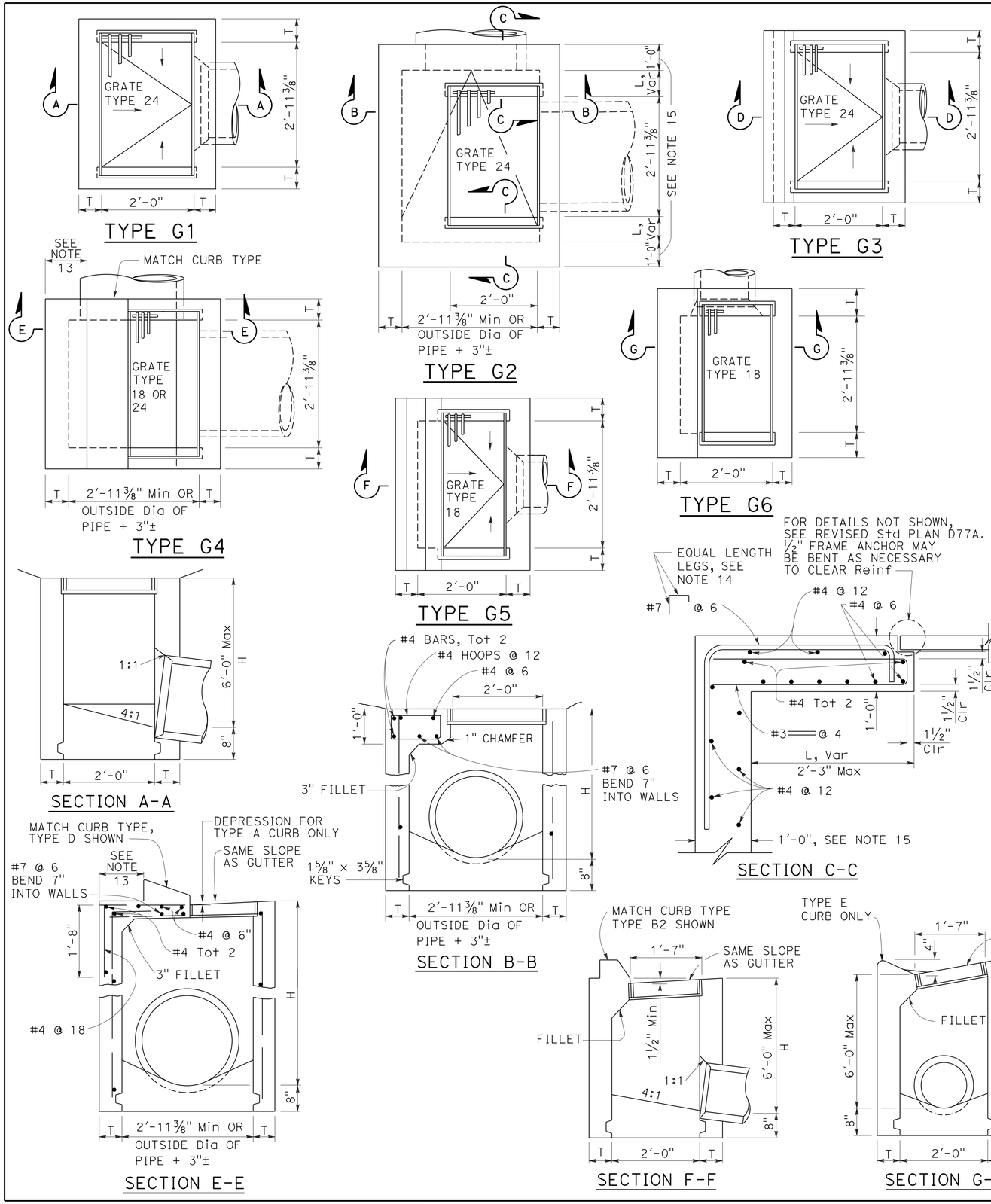

NOTES:

1. "H" is the difference in elevation between the outlet pipe flow line and the normal gutter grade line undepressed.
2. For "T" wall thickness, see Table A below.
3. Wall reinforcing not required when "H" is 8'-0" or less and the unsupported width or length is 7'-0" or less. Walls exceeding these limits shall be reinforced with #4 bars @ 1'-6" ± centers placed 1½" clear to inside of box unless otherwise shown.
4. Inlet bottom reinforcing not required. See Standard Plan D74C for alternative reinforced bottom and alternative half round bottom.
5. Steps-None required where "H" is less than 2'-6". Where "H" is 2'-6" or more, install steps with lowest rung 1'-0" above the floor and highest rung not more than 6" below top of inlet. The distance between steps shall not exceed 1'-0" and shall be uniform throughout the length of the wall. Place steps in the wall without an opening. Steps inserts may be substituted for the bar steps. Step inserts shall comply with State Industrial Safety requirements. See Standard Plan D74C for step details.
6. Details shown apply to both metal and concrete pipe.
7. Pipe(s) can be placed in any wall.
8. Curb section shall match adjacent curb.
9. Basin floors shall have wood trowel finish and a minimum slope of 12:3 from all directions toward outlet pipe.
10. Set inlet so that grate bars are parallel to direction of principal surface flow.
11. See Revised Standard Plans D77A and D77B for grate and frame details and weights of miscellaneous iron and steel.
12. See Standard Plan D78A for gutter depression details.
13. This dimenison will vary with different grates, curbs types, box width and wall thickness.
14. Bar may be rotated as necessary to clear opening. Where "L" is 6" or less, bar may be omitted.
15. Where "L" is 6" or less, wall thickness shall be as shown in Table A.
16. Cast-in-place inlets to be formed around all pipes/stubs intersecting the inlet, and concrete poured in one continuous operation. Precast inlets shall have mortared connections conforming to details for Type GCP Inlet shown on Standard Plan D75B. See Standard Specifications for mortar composition.

TABLE A

CONCRETE QUANTITIES				
TYPE	H=3'-0" TO 8'-0" (T=6")		H=8'-1" TO 20'-0" (T=8")	
	H=3'-0" (CY)	ADDITIONAL PCC PER FOOT (CY)	H=8'-1" (CY)	ADDITIONAL PCC PER FOOT (CY)
G-1	0.95	0.220	See Note A	SEE NOTE A
G-2*	1.31	0.255	3.50	0.357
G-3	1.03	0.220	See Note A	SEE NOTE A
G-4* (TYPE 24)	1.27	0.255	3.48	0.357
G-4* (TYPE 18)	1.30	0.255	3.50	0.357
G-5	1.02	0.220	SEE NOTE A	SEE NOTE A
G-6	1.04	0.220	SEE NOTE A	SEE NOTE A

TABLE BASED ON 8" FLOOR SLAB. NO DEDUCTIONS ARE TO BE MADE TO THESE QUANTITIES BECAUSE OF PIPE OPENINGS, DIFFERENT FLOOR ALTERNATIVES OR DIFFERENT CURB TYPES. * QUANTITIES FOR TYPE G-2 AND G-4 INLETS BASED ON THE MINIMUM INTERIOR DIMENSIONS.

NOTE A:

Maximum allowable height 6'-0".

STATE OF CALIFORNIA
DEPARTMENT OF TRANSPORTATION

DRAINAGE INLETS

NO SCALE

RSP D73 DATED OCTOBER 19, 2012 SUPERSEDES STANDARD PLAN D73 DATED MAY 20, 2011 - PAGE 156 OF THE STANDARD PLANS BOOK DATED 2010.

REVISED STANDARD PLAN RSP D73

2010 REVISED STANDARD PLAN RSP D73

7-19-12

Dist	COUNTY	ROUTE	POST MILES TOTAL PROJECT	SHEET No.	TOTAL SHEETS
08	SBd	15	12.8	103	122

Raymond Don Tsztoo
REGISTERED CIVIL ENGINEER

April 19, 2013
PLANS APPROVAL DATE

REGISTERED PROFESSIONAL ENGINEER Raymond Don Tsztoo No. C37332 Exp. 6-30-14 CIVIL STATE OF CALIFORNIA

THE STATE OF CALIFORNIA OR ITS OFFICERS OR AGENTS SHALL NOT BE RESPONSIBLE FOR THE ACCURACY OR COMPLETENESS OF SCANNED COPIES OF THIS PLAN SHEET.

TO ACCOMPANY PLANS DATED 8-19-13

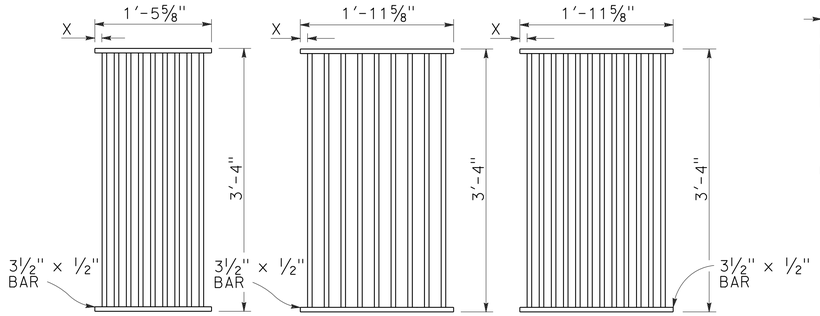

TYPE 18-9

1⅜" Clear spacing. Use within the roadbed on highways where bicycles and pedestrians are excluded.

TYPE 24-9

2" Clear spacing. Use in locations off the roadbed on all types of highways.

TYPE 24-12

1⅜" Clear spacing. Use within the roadbed on highways where bicycles and pedestrians are excluded.

RECTANGULAR GRATE DETAILS

(See table below)

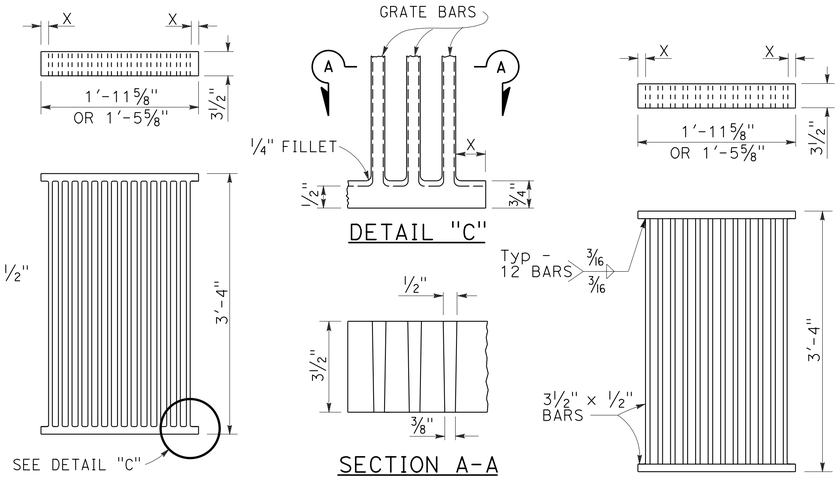

ALTERNATIVE CAST DUCTILE IRON GRATE OR CAST CARBON STEEL GRATE

ALTERNATIVE WELDED GRATE

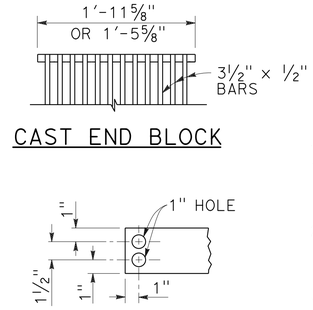

CAST END BLOCK

END OF BAR

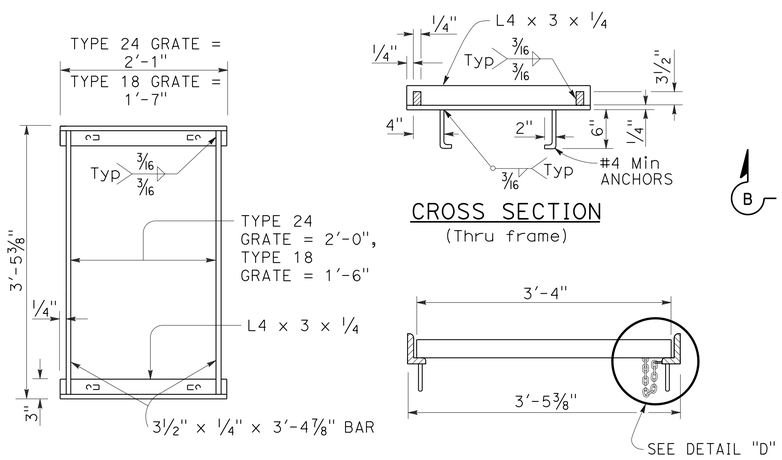

TYPICAL FRAME

CROSS SECTION
(Thru frame)

LONGITUDINAL SECTION
(Thru frame and grate)

RECTANGULAR FRAME DETAILS

(For all rectangular grates)

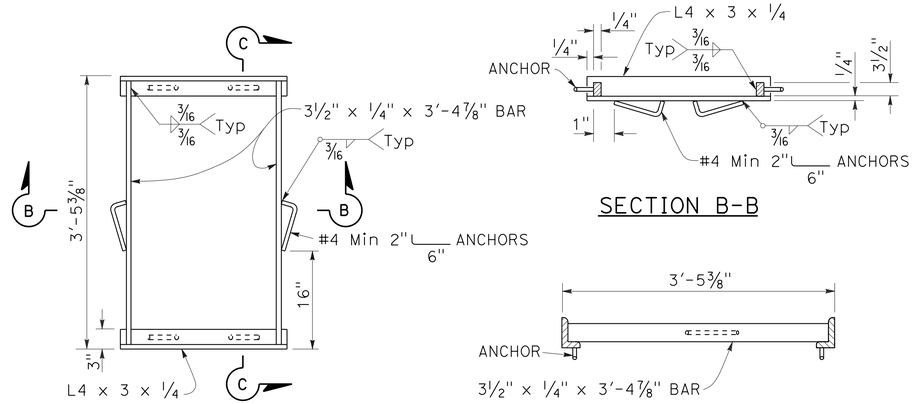

TYPICAL FRAME

SECTION B-B

SECTION C-C

ALTERNATIVE ANCHOR FOR RECTANGULAR FRAME

(For details not shown, See Rectangular Frame Details)

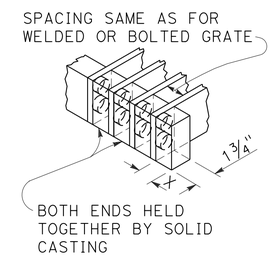

ALTERNATIVE CAST DUCTILE IRON OR CAST CARBON STEEL END BLOCK GRATE

NOTES:

1. Grate type numbers refer to approximate width of grate in inches and number of bars, respectively.
2. Contractor has the option of using cast ductile iron, cast carbon steel, welded, bolted, or cast end block grate.
3. Rounded top of bars optional on all grates.
4. Pipe inlets with a grate shall be placed so that bars parallel direction of principle surface flow.
5. Complete joint penetration butt welds may be substituted for the fillet welds on all anchors.
6. Standard square, hexagon, round or equivalent headed anchors may be substituted for the right angle hooks on the anchors shown on this plan.
7. Grate and frame weights are based on welded grates (weights of face angles, steps, protection bars, etc. are not included).
8. Connect chain to grate and frame only at locations shown on the plans. When chain is required, do not use cast ductile iron grates.

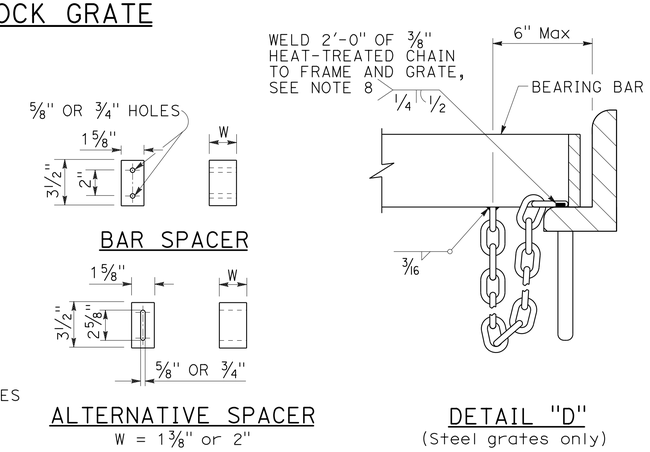

BAR SPACER

ALTERNATIVE SPACER
W = 1⅜" or 2"

DETAIL "D"
(Steel grates only)

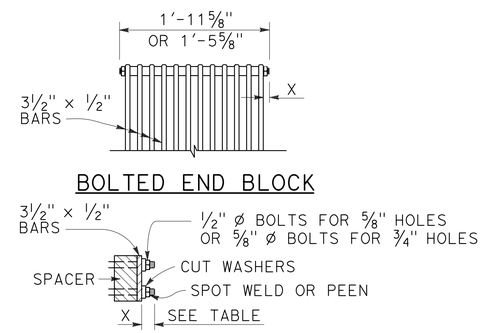

BOLTED END BLOCK

BOLTING DETAIL

ALTERNATIVE BOLTED GRATE

GRATE BAR SPACING TABLE

TYPE	No. OF BARS	CLEAR BAR SPACING	X
18-9	9	1⅜"	1 1/16"
24-9	9	2"	1 9/16"
24-12	12	1⅜"	1¼"

INLET TYPE	COVER TYPE	WEIGHT LB
OS	PLATE	174
OL-7	PLATE	170
OL-10	PLATE	170
OL-14	PLATE	170
OL-21	PLATE	170
OCP	PLATE	112
OCPI	PLATE	112
OCPI	REDWOOD	42
OMP	PLATE	177
OMPI	PLATE	177

INLET TYPE	GRATE TYPE	No. OF GRATES	WEIGHT LB
GDO	24-12	2	634
GOL-7	24-12	1	326
GOL-10	24-12	1	326
GO,G1,G2,G3,G4 (TYPE 24)	24-9	1	263
	24-12	1	326
G4 (TYPE 18),G5,G6	18-9	1	249
GT1	18-9	2	498
GT2	18-9	2	498
GT3	24-12	2	652
GT4	24-12	2	652
TRASH RACK			22
GRATE CHAIN			3

BASIS FOR Misc IRON & STEEL FINAL PAY WEIGHTS FOR DRAINAGE INLETS

(See Note 7)

STATE OF CALIFORNIA
DEPARTMENT OF TRANSPORTATION

GRATE DETAILS No. 1

NO SCALE

RSP D77A DATED APRIL 19, 2013 SUPERSEDES RSP D77A DATED JULY 20, 2012 AND STANDARD PLAN D77A DATED MAY 20, 2011 - PAGE 164 OF THE STANDARD PLANS BOOK DATED 2010.

REVISED STANDARD PLAN RSP D77A

2010 REVISED STANDARD PLAN RSP D77A

4-4-13

Dist	COUNTY	ROUTE	POST MILES TOTAL PROJECT	SHEET No.	TOTAL SHEETS
08	SBd	15	12.8	104	122

REGISTERED CIVIL ENGINEER

April 19, 2013
PLANS APPROVAL DATE

REGISTERED PROFESSIONAL ENGINEER Raymond Don Tsztoo No. C37332 Exp. 6-30-14 CIVIL STATE OF CALIFORNIA

THE STATE OF CALIFORNIA OR ITS OFFICERS OR AGENTS SHALL NOT BE RESPONSIBLE FOR THE ACCURACY OR COMPLETENESS OF SCANNED COPIES OF THIS PLAN SHEET.

TO ACCOMPANY PLANS DATED 8-19-13

2010 REVISED STANDARD PLAN RSP D77B

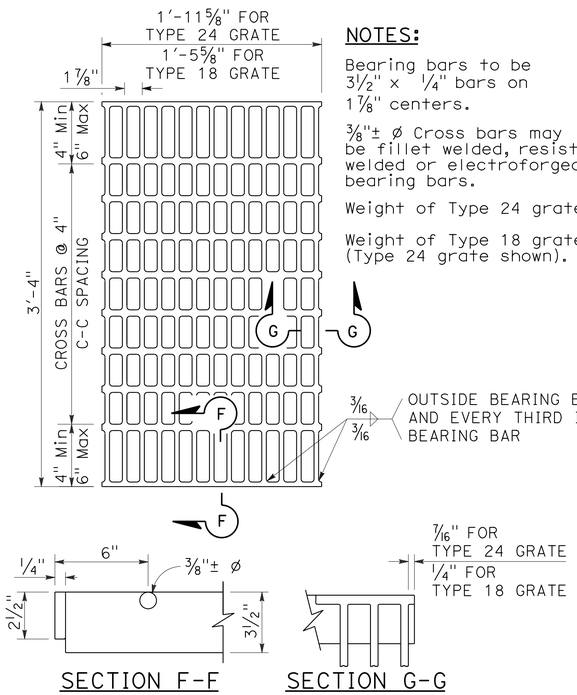

SECTION F-F SECTION G-G

TYPE 18-10 AND 24-13 GRATE

(Welded Steel)

NOTES:

Bearing bars to be 3½" x ¼" bars on 1⅞" centers.

⅜"± ø Cross bars may be fillet welded, resistance welded or electroforged to bearing bars.

Weight of Type 24 grate = 141 LBS.

Weight of Type 18 grate = 107 LBS. (Type 24 grate shown).

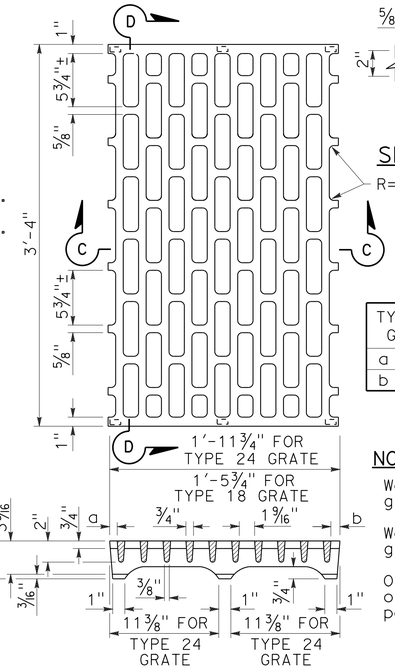

SECTION D-D

TYPE 18 GRATE	TYPE 24 GRATE
a = ⅜"	a = ⅞"
b = ⅜"	b = ¾"

NOTES:

Weight of Type 24 grate = 155 LBS.

Weight of Type 18 grate = 130 LBS.

On Type 18 grate omit center bearing point.

SECTION C-C

TYPE 18-8C AND 24-10C GRATE

(Cast ductile iron)

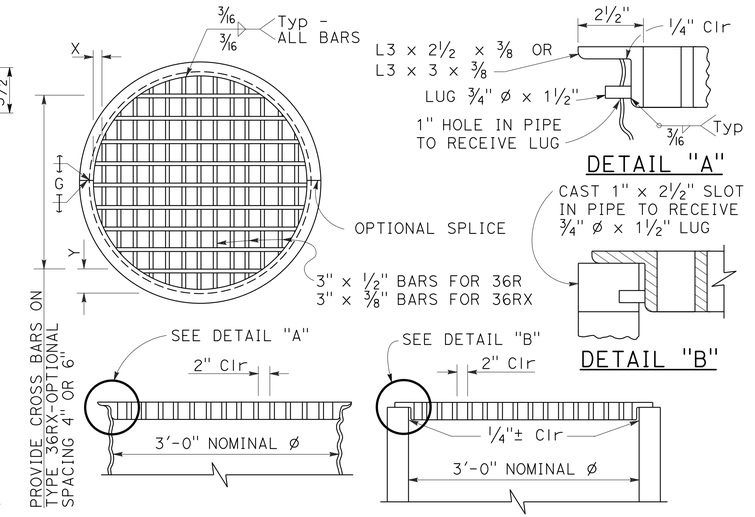

TYPE 36R AND 36RX GRATE DETAILS

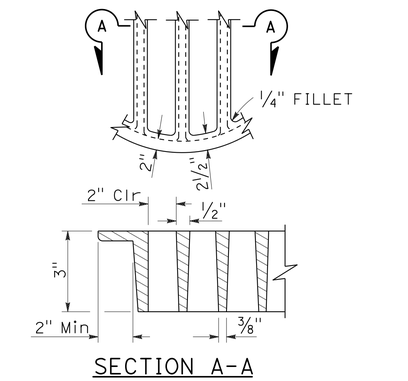

SECTION A-A

ALTERNATIVE CAST DUCTILE IRON GRATE OR CAST CARBON STEEL GRATE TYPE 36R AND 36RX

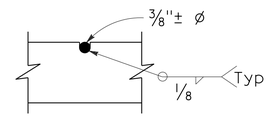

⅜"± ø Cross bars may be fillet welded, resistance welded or electroforged to bearing bars.

CROSS BAR DETAIL TYPE 36RX GRATE (WELDED STEEL)

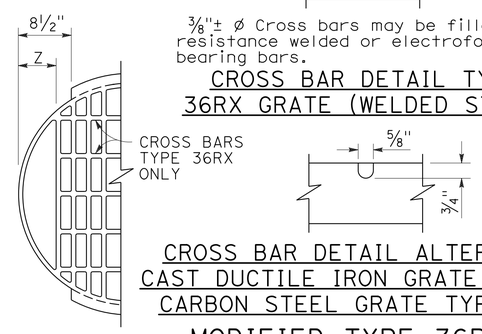

CROSS BAR DETAIL ALTERNATIVE CAST DUCTILE IRON GRATE OR CAST CARBON STEEL GRATE TYPE 36RX

MODIFIED TYPE 36R AND 36RX GRATE FOR ODI INLET

NOTES:

1. When alternative grates are allowed - Final pay based on alternative with the lesser weight.
2. Use frame shown on Standard Plan D74A, D74B or RSP D77A as appropriate.
3. When Type 24-10S, 24-12X or 24-13 grates are used with GDO Inlets, a ¼" x 3½" x 3'-4⅞" steel bar shall be welded across the center of inlet frame to separate the individual grates.
4. See Revised Standard Plan RSP D77A for connecting chain to welded grate and frame. When chain is required, do not use cast ductile iron grate.

BASIS FOR Misc IRON AND STEEL FINAL PAY WEIGHTS FOR DRAINAGE INLETS

INLET TYPE	GRATE TYPE	No. OF GRATES	WEIGHT LB
GDO (SEE NOTE 4)	24-10C	2	391
	24-10S	2	456
	24-12X	2	473
	24-13	2	374
GO,GOL,G1,G2, G3,G4 (TYPE 24)	24-10C	1	202
	24-10S	1	229
	24-12X	1	239
	24-13	1	188
G4 (TYPE 18) G5,G6	18-8S	1	187
	18-9X	1	187
	18-10	1	149
GT1,GT2	18-8S	2	374
	18-9X	2	374
	18-10	2	298
GT3,GT4	24-10C	2	404
	24-10S	2	458
	24-12X	2	478
	24-13	2	376
ODI	36RX (Mod)	1	196
GMP,GCP,GCPI	36RX	1	215
ODI	36R (Mod)	1	220
GMP,GCP,GCPI	36R	1	236
TRASH RACK			22
GRATE CHAIN			3

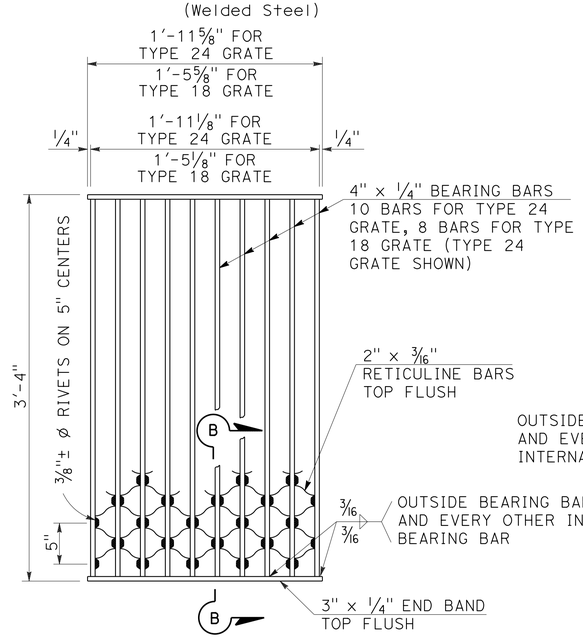

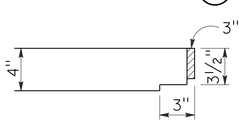

SECTION B-B

NOTES:

Weight of Type 24 grate = 182 LBS.
Weight of Type 18 grate = 145 LBS.

TYPE 18-8S AND 24-10S GRATE

(Welded Steel) Reticuline type

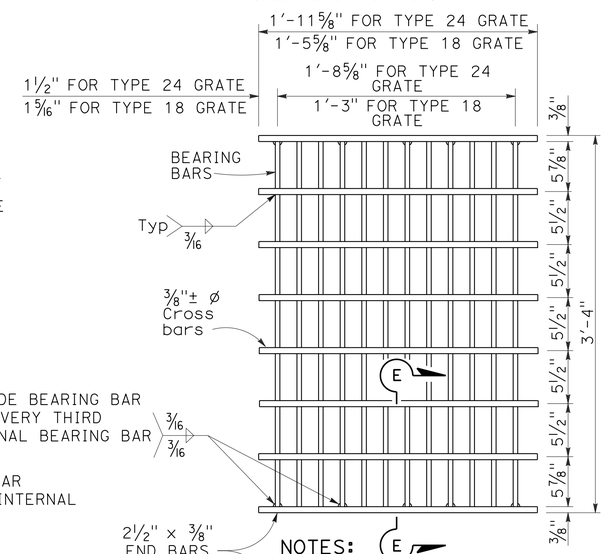

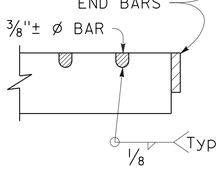

SECTION E-E

NOTES:

Bearing bars to be 3½" x ⅜" bars on 1⅞" centers.

12 Bars for Type 24 grate - 9 bars for Type 18 grates. (Type 24 grate shown).

Weight of Type 24 grate = 192 LBS.

Weight of Type 18 grate = 145 LBS.

⅜"± ø Cross bars may be fillet welded, resistance welded or electroforged to bearing bars.

TYPE 18-9X AND 24-12X GRATE

(Welded Steel)

GRATE BAR SPACING TABLE

TYPE	No. OF BARS	CLEAR BAR SPACING	X	Y 4" SPACING	Y 6" SPACING	Z
36R	13	2"	2⅛"	-	-	-
36RX (STEEL)	15	2"	9/16"	3¾"	5¾"	-
36RX (CAST)	13	2"	2⅛"	3¾"	5¾"	-
36R Mod	12	2"	2⅛"	-	-	5"
36RX Mod (STEEL)	13	2"	9/16"	3¾"	5¾"	5 11/16"
36RX Mod (CAST)	12	2"	2⅛"	3¾"	5¾"	5"

STATE OF CALIFORNIA
DEPARTMENT OF TRANSPORTATION

GRATE DETAILS No. 2

NO SCALE

RSP D77B DATED APRIL 19, 2013 SUPERSEDES RSP D77B DATED JULY 20, 2012 AND STANDARD PLAN D77B DATED MAY 20, 2011 - PAGE 165 OF THE STANDARD PLANS BOOK DATED 2010.

REVISED STANDARD PLAN RSP D77B

4-4-13

Dist	COUNTY	ROUTE	POST MILES TOTAL PROJECT	SHEET No.	TOTAL SHEETS
08	SBd	15	12.8	105	122

Gregory A. Balzer
LICENSED LANDSCAPE ARCHITECT

July 19, 2013
PLANS APPROVAL DATE

LICENSED LANDSCAPE ARCHITECT Gregory A. Balzer 2576 STATE OF CALIFORNIA
08-SBd-15-12.8
2-28-15
Renewal Date
7-19-13
Date

THE STATE OF CALIFORNIA OR ITS OFFICERS OR AGENTS SHALL NOT BE RESPONSIBLE FOR THE ACCURACY OR COMPLETENESS OF SCANNED COPIES OF THIS PLAN SHEET.

TO ACCOMPANY PLANS DATED 8-19-13

A

AB	AGGREGATE BASE
ABS	ACRYLONITRILE-BUTADIENE-STYRENE
AC	ASPHALT CONCRETE
ACC	ARMOR-CLAD CONDUCTORS
Adj	ADJACENT/ADJUSTABLE
AIC	AUXILIARY IRRIGATION CONTROLLER
Alt	ALTERNATIVE
AMEND	AMENDMENT
ARV	AIR RELEASE VALVE
AUTO	AUTOMATIC
AUX	AUXILIARY
AVB	ATMOSPHERIC VACUUM BREAKER

B

B&B	BALLED AND BURLAPPED
B/B	BRASS/BRONZE
B/B/PL	BRASS/BRONZE/PLASTIC
B/PL	BRASS/PLASTIC
BFM	BONDED FIBER MATRIX
Bit Ctd	BITUMINOUS COATED
BP	BOOSTER PUMP
BPA	BACKFLOW PREVENTER ASSEMBLY
BPE	BACKFLOW PREVENTER ENCLOSURE
BV	BALL VALVE

C

C	CONDUIT
CAP	CORRUGATED ALUMINUM PIPE
CARV	COMBINATION AIR RELEASE VALVE
CB	COUPLING BAND
CCA	CAM COUPLER ASSEMBLY
CEC	CONTROLLER ENCLOSURE CABINET
CHDPE	CORRUGATED HIGH DENSITY POLYETHYLENE
CL	CHAIN LINK
CNC	CONTROL AND NEUTRAL CONDUCTORS
Conc	CONCRETE
CP	COPPER PIPE
CS	COMPOST SOCK
CSP	CORRUGATED STEEL PIPE
CST	CENTER STRIP
CV	CHECK VALVE

D

Dia	DIAMETER
DIP	DUCTILE IRON PIPE
DIT	DRIP IRRIGATION TUBING
DG	DECOMPOSED GRANITE
DN	DIAMETER NOMINAL
DVA	DRIP VALVE ASSEMBLY

E

EC	EROSION CONTROL
ECTC	EROSION CONTROL TECHNOLOGY COUNCIL
Elect	ELECTRIC/ELECTRICAL
Elev	ELEVATION
ELL	ELBOW
ENCL	ENCLOSURE
EP	EDGE OF PAVEMENT
ES	EDGE OF SHOULDER
EST	END STRIP
ESTB	ESTABLISHMENT
ETW	EDGE OF TRAVELED WAY

F

F	FULL CIRCLE
F/P	FULL/PART CIRCLE
FCV	FLOW CONTROL VALVE
FERT	FERTILIZER
FG	FINISHED GRADE
FH	FLEXIBLE HOSE
FIPT	FEMALE IRON PIPE THREAD
FIS	FERTILIZER INJECTOR SYSTEM
FL	FLOW LINE
FR	FIBER ROLL
FS	FLOW SENSOR
FSC	FLOW SENSOR CABLE
FV	FLUSH VALVE

G

Galv	GALVANIZED
GARV	GARDEN VALVE
GARVA	GARDEN VALVE ASSEMBLY
GM	GRAVEL MULCH
GPH	GALLONS PER HOUR
GPM	GALLONS PER MINUTE
GSP	GALVANIZED STEEL PIPE
GV	GATE VALVE

H

H	HALF CIRCLE
HDPE	HIGH DENSITY POLYETHYLENE
HP	HORSEPOWER/HINGE POINT
HPL	HIGH PRESSURE LINE
Hwy	HIGHWAY

I

IC	IRRIGATION CONTROLLER
ICC	IRRIGATION CONTROLLER(S) IN CONTROLLER ENCLOSURE CABINET
ID	INSIDE DIAMETER
IFS	IRRIGATION FILTRATION SYSTEM
IPS	IRON PIPE SIZE
IPT	IRON PIPE THREAD
Irr	IRRIGATION

L

L	LENGTH

M

Max	MAXIMUM
MBGR	METAL BEAM GUARD RAILING
MCV	MANUAL CONTROL VALVE
MIC	MASTER IRRIGATION CONTROLLER
Min	MINIMUM
MIPT	MALE IRON PIPE THREAD
Misc	MISCELLANEOUS
Mtl	MATERIAL
MVP	MAINTENANCE VEHICLE PULLOUT

N

NCN	NO COMMON NAME
NL	NOZZLE LINE
No.	NUMBER
NPT	NATIONAL PIPE THREAD

O

O/C	ON CENTER
OD	OUTSIDE DIAMETER
OL	OVERLAP

P

P	PART CIRCLE
PB	PULL BOX
PCC	PORTLAND CEMENT CONCRETE
PE	POLYETHYLENE
Pkt	PACKET
PL	PLASTIC
PLS	PURE LIVE SEED
PLT	PLANT/PLANTING
PLT ESTB	PLANT ESTABLISHMENT
PM	POST MILE
PR	PRESSURE RATED
PRLV	PRESSURE RELIEF VALVE
PRV	PRESSURE REGULATING VALVE
PVC	POLYVINYL CHLORIDE
Pvmt	PAVEMENT

Q

Q	QUARTER CIRCLE
QCV	QUICK COUPLING VALVE

R

R	RADIUS
RCP	REINFORCED CONCRETE PIPE
RCV	REMOTE CONTROL VALVE
RCVM	REMOTE CONTROL VALVE (MASTER)
RCVMF	REMOTE CONTROL VALVE (MASTER) W/FLOW SENSOR
RCVP	REMOTE CONTROL VALVE W/PRESSURE REGULATOR
RCW	RECYCLED WATER
RECP	ROLLED EROSION CONTROL PRODUCT
REQ	REQUIRED
RICS	REMOTE IRRIGATION CONTROL SYSTEM
R/W	RIGHT OF WAY

S

S	SLIP
SCH	SCHEDULE
SF	STATE-FURNISHED
Shld	SHOULDER
Sq	SQUARE
SST	SIDE STRIP
Sta	STATION
Std	STANDARD
SW	SIDEWALK/SOUND WALL

T

T	THIRD CIRCLE/THREAD
TLS	TRUCK LOADING STANDPIPE
TQ	THREE QUARTER CIRCLE
TRM	TURF REINFORCEMENT MAT
TT	TWO-THIRDS CIRCLE
TWSA	TREE WELL SPRINKLER ASSEMBLY
Typ	TYPICAL

U

UG	UNDERGROUND

W

W	WIDTH
W/	WITH
WM	WATER METER
WS	WYE STRAINER
WSA	WYE STRAINER ASSEMBLY
WSP	WELDED STEEL PIPE
WWM	WELDED WIRE MESH

NOTE:

For additional abbreviations, see Standard Plans A10A and A10B.

STATE OF CALIFORNIA
DEPARTMENT OF TRANSPORTATION

LANDSCAPE AND EROSION CONTROL ABBREVIATIONS

NO SCALE

RSP H1 DATED JULY 19, 2013 SUPERSEDES STANDARD PLAN H1 DATED MAY 20, 2011 - PAGE 218 OF THE STANDARD PLANS BOOK DATED 2010.

REVISED STANDARD PLAN RSP H1

2010 REVISED STANDARD PLAN RSP H1

6-28-13

Dist	COUNTY	ROUTE	POST MILES TOTAL PROJECT	SHEET No.	TOTAL SHEETS
08	SBd	15	12.8	106	122

Theresa Gabriel
REGISTERED ELECTRICAL ENGINEER

July 19, 2013
PLANS APPROVAL DATE

REGISTERED PROFESSIONAL ENGINEER Theresa Aziz Gabriel No. E15129 Exp. 6-30-14 ELECTRICAL STATE OF CALIFORNIA

THE STATE OF CALIFORNIA OR ITS OFFICERS OR AGENTS SHALL NOT BE RESPONSIBLE FOR THE ACCURACY OR COMPLETENESS OF SCANNED COPIES OF THIS PLAN SHEET.

TO ACCOMPANY PLANS DATED 8-19-13

2010 REVISED STANDARD PLAN RSP ES-1A

LEGEND:

AB	ABANDON. IF APPLIED TO CONDUIT, REMOVE CONDUCTORS
BC	INSTALL PULL BOX IN EXISTING CONDUIT RUN
BP	PEDESTRIAN BARRICADE, TYPE AS INDICATED ON PLAN
CB	INSTALL CONDUIT INTO EXISTING PULL BOX
CC	CONNECT NEW AND EXISTING CONDUIT. REMOVE EXISTING CONDUCTORS AND INSTALL CONDUCTORS AS INDICATED
CF	CONDUIT TO REMAIN FOR FUTURE USE. REMOVE CONDUCTORS. INSTALL PULL TAPE
DH	DETECTOR HANDHOLE
FA	FOUNDATION TO BE ABANDONED
IS	INSTALL SIGN ON SIGNAL MAST ARM
NS	NO SLIP BASE ON STANDARD
PEC	PHOTOELECTRIC CONTROL
PEU	PHOTOELECTRIC UNIT
RC	EQUIPMENT OR MATERIAL TO BE REMOVED AND BECOME THE PROPERTY OF THE CONTRACTOR
RE	REMOVE ELECTROLIER, FUSES AND BALLAST. TAPE ENDS OF CONDUCTORS
RL	RELOCATE EQUIPMENT
RR	REMOVE AND REUSE EQUIPMENT
RS	REMOVE AND SALVAGE EQUIPMENT
SC	SPLICE NEW TO EXISTING CONDUCTORS
SD	SERVICE DISCONNECT
TSP	TELEPHONE SERVICE POINT

ABBREVIATIONS

APS	ACCESSIBLE PEDESTRIAN SIGNAL
BBS	BATTERY BACKUP SYSTEM
BC	BOLT CIRCLE
BPB	BICYCLE PUSH BUTTON
C	CONDUIT
CB	CIRCUIT BREAKER
CCTV	CLOSED CIRCUIT TELEVISION
Ckt	CIRCUIT
CMS	CHANGEABLE MESSAGE SIGN
Ctid	CALTRANS IDENTIFICATION
Comm	COMMUNICATION
DLC	LOOP DETECTOR LEAD-IN CABLE
EMS	EXTINGUISHABLE MESSAGE SIGN
EVUC	EMERGENCY VEHICLE UNIT CABLE
EVUD	EMERGENCY VEHICLE UNIT DETECTOR
FB	FLASHING BEACON
FBCA	FLASHING BEACON CONTROL ASSEMBLY
FBS	FLASHING BEACON WITH SLIP BASE
FO	FIBER OPTIC
G	EQUIPMENT GROUNDING CONDUCTOR
GB	GROUND BUS
GFCI	GROUND FAULT CIRCUIT INTERRUPTER
HAR	HIGHWAY ADVISORY RADIO
Hex	HEXAGONAL
HPS	HIGH PRESSURE SODIUM
IISNS	INTERNALLY ILLUMINATED STREET NAME SIGN
ISL	INDUCTION SIGN LIGHTING
LED	LIGHT EMITTING DIODE
LMA	LUMINAIRE MAST ARM
LPS	LOW PRESSURE SODIUM
Ltg	LIGHTING
Lum	LUMINAIRE
M	METERED
MAT	MAST ARM MOUNTING TOP ATTACHMENT
MAS	MAST ARM MOUNTING SIDE ATTACHMENT
M/M	MULTIPLE TO MULTIPLE TRANSFORMER
Mtg	MOUNTING
MV	MERCURY VAPOR LIGHTING FIXTURE
MVDS	MICROWAVE VEHICLE DETECTION SYSTEM
N	NEUTRAL (GROUNDED CONDUCTOR)
NB	NEUTRAL BUS
NC	NORMALLY CLOSE
NO	NORMALLY OPEN
P	CIRCUIT BREAKER'S POLE
PB	PULL BOX
PBA	PUSH BUTTON ASSEMBLY
PEC	PHOTOELECTRIC CONTROL
Ped	PEDESTRIAN
PEU	PHOTOELECTRIC UNIT
PT	CONDUIT WITH PULL TAPE
RE	RELOCATED EQUIPMENT
RM	RAMP METERING
RWIS	ROADSIDE WEATHER INFORMATION SYSTEM
SB	SLIP BASE
SIC	SIGNAL INTERCONNECT CABLE
Sig	SIGNAL
SMA	SIGNAL MAST ARM
SNS	STREET NAME SIGN
SP	SERVICE POINT
TDC	TELEPHONE DEMARCATION CABINET
TMS	TRAFFIC MONITORING STATION
TOS	TRAFFIC OPERATIONS SYSTEM
Veh	VEHICLE
VIVDS	VIDEO IMAGE VEHICLE DETECTION SYSTEM
WIM	WEIGH-IN-MOTION
Xfmr	TRANSFORMER

SOFFIT AND WALL MOUNTED LUMINAIRES

PENDANT, 70 W HPS UNLESS OTHERWISE SPECIFIED

FLUSH, 70 W HPS UNLESS OTHERWISE SPECIFIED

WALL SURFACE, 70 W HPS UNLESS OTHERWISE SPECIFIED

EXISTING SOFFIT OR WALL LUMINAIRE TO REMAIN UNMODIFIED

EXISTING SOFFIT OR WALL LUMINAIRE TO BE MODIFIED AS SPECIFIED

NOTE:

Arrow indicates "street side" of luminaire.

COMMONLY USED SYMBOLS FOR UNITED STATES CUSTOMARY UNITS OF MEASUREMENT:

SYMBOL USED	DEFINITIONS
Ω	OHMS
min	MINUTE
s	SECOND
bps	BITS PER SECOND
Bps	BYTES PER SECOND
A	AMPERE
V	VOLT
V(dc)	VOLT (DIRECT CURRENT)
V(ac)	VOLT (ALTERNATING CURRENT)
FC	FOOT - CANDLE
W	WATTS
VA	VOLT-AMPERE
M	MEGA
k	KILO
m	MILLI
μ	MICRO
P	PICO
Hz	HERTZ

MISCELLANEOUS ELECTROLIERS

NEW	EXISTING	
		LUMINAIRE ON WOOD POLE
		NON-STANDARD ELECTROLIER (SEE PROJECT NOTES OR PROJECT PLANS)
		CITY ELECTROLIER
		ELECTROLIER FOUNDATION (FUTURE INSTALLATION)

NOTES:

1. HPS luminaires shall be 310 W HPS when installed on Type 21, 21D, 30, 31 and 32 Standards, unless otherwise specified. HPS luminaires shall be 200 W when installed on other type standards or poles, unless otherwise specified.
2. LED luminaires shall be 235 W when installed on Type 21, 21D, 30, 31 and 32 Standards, unless otherwise specified. LED luminaires shall be 165 W when installed on other type standards or poles, unless otherwise specified.
3. Luminaires shall be the cutoff type, ANSI Type III medium cutoff lighting distribution, unless otherwise specified.

STANDARD ELECTROLIER

NEW	EXISTING	STANDARD TYPE
		15
		15D
		15 STRUCTURE
		15D STRUCTURE
		21
		21D
		21 STRUCTURE
		21D STRUCTURE
		30
		31
		32

STATE OF CALIFORNIA
DEPARTMENT OF TRANSPORTATION

ELECTRICAL SYSTEMS (LEGEND AND ABBREVIATIONS)

NO SCALE

RSP ES-1A DATED JULY 19, 2013 SUPERSEDES STANDARD PLAN ES-1A DATED MAY 20, 2011 - PAGE 425 OF THE STANDARD PLANS BOOK DATED 2010.

REVISED STANDARD PLAN RSP ES-1A

Dist	COUNTY	ROUTE	POST MILES TOTAL PROJECT	SHEET No.	TOTAL SHEETS
08	SBd	15	12.8	107	122

Theresa Gabriel
REGISTERED ELECTRICAL ENGINEER

July 19, 2013
PLANS APPROVAL DATE

REGISTERED PROFESSIONAL ENGINEER Theresa Aziz Gabriel No. E15129 Exp. 6-30-14 ELECTRICAL STATE OF CALIFORNIA

THE STATE OF CALIFORNIA OR ITS OFFICERS OR AGENTS SHALL NOT BE RESPONSIBLE FOR THE ACCURACY OR COMPLETENESS OF SCANNED COPIES OF THIS PLAN SHEET.

TO ACCOMPANY PLANS DATED 8-19-13

CONDUIT

NEW	EXISTING	
		LIGHTING CONDUIT, UNLESS OTHERWISE INDICATED OR NOTED
		TRAFFIC SIGNAL CONDUIT
C	c	COMMUNICATION CONDUIT
T	t	TELEPHONE CONDUIT
F	f	FIRE ALARM CONDUIT
FO	fo	FIBER OPTIC CONDUIT
		CONDUIT TERMINATION
R	r	CONDUIT RISER ATTACHED TO THE STRUCTURE OR SERVICE POLE

SERVICE EQUIPMENT

NEW	EXISTING	
OH	oh	OVERHEAD LINES
U	U	WOOD POLE, "U" INDICATES UTILITY OWNED
		POLE GUY WITH ANCHOR
		UTILITY TRANSFORMER - GROUND MOUNTED
III	III	SERVICE EQUIPMENT ENCLOSURE TYPE. DOOR INDICATES FRONT OF ENCLOSURE
T	t	TELEPHONE DEMARCATION CABINET

POLE-MOUNTED SERVICE DESIGNATION

TYPE H SERVICE, 28'-10" — TYPE OF INSTALLATION AND POLE HEIGHT ABOVE GRADE

FLASHING BEACON

NEW	EXISTING	
R	R	FLASHING BEACON (ONE VEHICLE SIGNAL HEAD WITH BACKPLATE AND VISOR) "R" INDICATES RED INDICATION, "Y" INDICATES YELLOW INDICATION
Y Y	Y Y	FLASHING BEACON WITH TYPE 15-FBS STANDARD AND A SIGN.
R R	R R	FLASHING BEACON WITH TYPES 9, 9A OR 9B SIGN UNLESS OTHERWISE SPECIFIED OR INDICATED

SIGNAL EQUIPMENT

NEW	EXISTING	
C	C	PEDESTRIAN SIGNAL HEAD "C" INDICATES COUNTDOWN PEDESTRIAN HEAD
		PUSH BUTTON ASSEMBLY POST
		PEDESTRIAN BARRICADE
		VEHICLE SIGNAL HEAD (WITH BACKPLATE AND 3-SECTIONS: RED, YELLOW AND GREEN)
		VEHICLE SIGNAL HEAD WITH ANGLE VISOR
PV	PV	MODIFICATIONS OF BASIC SYMBOL: "L" INDICATES ALL NON-ARROW SECTIONS LOUVERED "LG" INDICATES LOUVERED GREEN SECTION ONLY "PV" INDICATES ALL 12" SECTIONS PROGRAMMED VISIBILITY "8" INDICATES ALL 8" SECTIONS (ONLY WHEN SPECIFIED)
		VEHICLE SIGNAL HEAD CONSISTING OF RED, YELLOW AND GREEN LEFT ARROW SECTIONS
		VEHICLE SIGNAL HEAD CONSISTING OF RED AND YELLOW SECTIONS WITH AN UP GREEN ARROW SECTION
		VEHICLE SIGNAL HEAD (5 SECTION) CONSISTING OF RED, YELLOW AND GREEN SECTIONS WITH YELLOW AND GREEN RIGHT ARROW SECTIONS
		TYPE 15TS STANDARD WITH VEHICLE SIGNAL HEAD AND LUMINAIRE
		TYPE 21TS STANDARD WITH VEHICLE SIGNAL HEAD AND LUMINAIRE
		STANDARD WITH LUMINAIRE AND SIGNAL MAST ARMS AND ATTACHED VEHICLE SIGNAL HEADS
		TYPE 1 STANDARD WITH ATTACHED VEHICLE SIGNAL HEADS
		STANDARD WITH A SIGNAL MAST ARM, ATTACHED VEHICLE SIGNAL HEADS AND INTERNALLY ILLUMINATED STREET NAME SIGN
		CONTROLLER ASSEMBLY. DOOR INDICATES FRONT OF CABINET

SIGNAL EQUIPMENT Cont

NEW	EXISTING	
		GUARD POST
		TYPE 1 STANDARD WITH RAMP METERING SIGN
		OPTICAL DETECTOR FOR THE EMERGENCY VEHICLE DETECTION SYSTEM

NOTES:

1. All signal sections shall be 12" unless shown otherwise.
2. Signal heads shall be provided with backplates unless shown otherwise.

ILLUMINATED OVERHEAD SIGN

NEW	EXISTING	
		SINGLE POST, SINGLE ILLUMINATED SIGN, BALANCED BUTTERFLY
		SINGLE POST, DOUBLE ILLUMINATED SIGN, BALANCED BUTTERFLY
		SINGLE POST, SINGLE ILLUMINATED SIGN, FULL CANTILEVER
		DOUBLE POST, SINGLE ILLUMINATED SIGN
		SINGLE ILLUMINATED SIGN MOUNTED ON STRUCTURE
		DOUBLE POST, SINGLE ILLUMINATED SIGN WITH ELECTROLIER

STATE OF CALIFORNIA
DEPARTMENT OF TRANSPORTATION

ELECTRICAL SYSTEMS (LEGEND AND ABBREVIATIONS)

NO SCALE

RSP ES-1B DATED JULY 19, 2013 SUPERSEDES STANDARD PLAN ES-1B DATED MAY 20, 2011 - PAGE 426 OF THE STANDARD PLANS BOOK DATED 2010.

REVISED STANDARD PLAN RSP ES-1B

2010 REVISED STANDARD PLAN RSP ES-1B

7-15-13

Dist	COUNTY	ROUTE	POST MILES TOTAL PROJECT	SHEET No.	TOTAL SHEETS
08	SBd	15	12.8	108	122

Theresa Gabriel
REGISTERED ELECTRICAL ENGINEER

July 19, 2013
PLANS APPROVAL DATE

REGISTERED PROFESSIONAL ENGINEER
Theresa Aziz Gabriel
No. E15129
Exp. 6-30-14
ELECTRICAL
STATE OF CALIFORNIA

THE STATE OF CALIFORNIA OR ITS OFFICERS OR AGENTS SHALL NOT BE RESPONSIBLE FOR THE ACCURACY OR COMPLETENESS OF SCANNED COPIES OF THIS PLAN SHEET.

TO ACCOMPANY PLANS DATED 8-19-13

EQUIPMENT IDENTIFICATION

ILLUMINATED SIGN IDENTIFICATION NUMBER:

SIGN No. 12345

10 ISL SCI 1.0

- SIGN NUMBER - PLACE ON POST OR STRUCTURE
- TRANSFORMER RATING (kVA)
- LIGHTING CONTROL TYPE
- NUMBER AND TYPE OF FIXTURES

} DO NOT PLACE ON STANDARD OR STRUCTURE

ELECTROLIER OR EQUIPMENT IDENTIFICATION NUMBER:

12345 - 15'-0"

- MAST ARM LENGTH, IF SHOWN. DO NOT PLACE ON STANDARD OR STRUCTURE
- EQUIPMENT NUMBER - PLACE ON STANDARD OR STRUCTURE. EXISTING EQUIPMENT NUMBERS ARE SHOWN IN PARENTHESIS

CONDUIT AND CONDUCTOR IDENTIFICATION:

1½"C, 2#10, 15#14, 2 DLC, 12P#18

- PAIR
- NUMBER AND SIZE OF CONDUCTORS AND CABLES
- SIZE OF CONDUIT IN INCHES

Ø1, Ø2, Ø2P, etc.	TRAFFIC PHASE IDENTIFICATION FOR SIGNAL FACES, DETECTORS AND PHASE DIAGRAMS
1 2 3	LEGEND NUMBERS
A B C	EQUIPMENT, SIGNAL POLES, INSTALLATION OR ITEMS
1 2 3	CONDUIT RUN NUMBERS

SIGNAL AND LIGHTING STANDARD (TYPICAL DESIGNATION):

19A - 3 - 100

- WIND VELOCITY = 100 mph
- CASE 3 ARM LOADING
- STANDARD TYPE
- STANDARD PLAN SHEET NUMBER
- DETAIL, NUMBER, SECTION, TYPE OR ELEVATION

MISCELLANEOUS EQUIPMENT

NEW	EXISTING	
CMS	cms	CHANGEABLE MESSAGE SIGN
		CLOSED CIRCUIT TELEVISION CAMERA
		HIGHWAY ADVISORY RADIO POLE AND ANTENNA
EMS	ems	EXTINGUISHABLE MESSAGE SIGN
M V	m v	DETECTION DEVICE M = MICROWAVE SENSOR V = VIDEO IMAGE SENSOR

WIRING DIAGRAM LEGEND

----	EXTERNAL CONDUCTOR
	CONDUCTOR OR BUS
	TIE POINT
	CONTACTOR COIL
	CONTACTOR, NO CONTACT
	TERMINAL BLOCKS
	CONTACTOR, NC CONTACT
	ENCLOSURE BOND
	GROUNDING ELECTRODE
	CIRCUIT BREAKER
	RECEPTACLE

PULL BOXES

NEW	EXISTING	
		PULL BOX, No. 5 UNLESS OTHERWISE INDICATED OR NOTED
3	9A(21)	PULL BOX, ADDITIONAL DESIGNATIONS OR DESCRIPTIONS

3 No. 3½ PULL BOX
5 No. 5 PULL BOX
6 No. 6 PULL BOX
7 No. 7 (CEILING PULL BOX)
8 No. 8 (PENDANT SOFFIT PULL BOX)
9 No. 9 PULL BOX
9A No. 9A PULL BOX

(C) COMMUNICATIONS PULL BOX
(E) PULL BOX WITH EXTENSION
(S) SPRINKLER CONTROL PULL BOX
(21) ANCHOR BOLTS AND CONDUIT FOR FUTURE INSTALLATION OF TYPE 21 STANDARD
(T) TRAFFIC PULL BOX

VEHICLE DETECTORS

5 J 9 U

- VEHICLE DETECTOR DESIGNATION
- U = UPPER
  L = LOWER
- SLOT NUMBER IN INPUT FILE
- INPUT FILE (I OR J)
- PHASE

NEW	EXISTING	
		TYPE A DETECTOR LOOP. OUTLINE OF SAWCUT SHOWN
		TYPE B DETECTOR LOOP. OUTLINE OF SAWCUT SHOWN
		TYPE C DETECTOR LOOP. OUTLINE OF SAWCUT SHOWN
		TYPE D DETECTOR LOOP. OUTLINE OF SAWCUT SHOWN
		TYPE E DETECTOR LOOP. OUTLINE OF SAWCUT SHOWN
		TYPE Q DETECTOR LOOP. OUTLINE OF SAWCUT SHOWN
		MAGNETIC DETECTOR
DH	dh	DETECTOR HANDHOLE
		MICROWAVE OR VIDEO DETECTION ZONE

STATE OF CALIFORNIA
DEPARTMENT OF TRANSPORTATION

ELECTRICAL SYSTEMS (LEGEND AND ABBREVIATIONS)

NO SCALE

RSP ES-1C DATED JULY 19, 2013 SUPERSEDES STANDARD PLAN ES-1C DATED MAY 20, 2011 - PAGE 427 OF THE STANDARD PLANS BOOK DATED 2010.

REVISED STANDARD PLAN RSP ES-1C

2010 REVISED STANDARD PLAN RSP ES-1C

7-11-13

Dist	COUNTY	ROUTE	POST MILES TOTAL PROJECT	SHEET No.	TOTAL SHEETS
08	SBd	15	12.8	109	122

Theresa Gabriel
REGISTERED ELECTRICAL ENGINEER

July 19, 2013
PLANS APPROVAL DATE

REGISTERED PROFESSIONAL ENGINEER
Theresa Aziz Gabriel
No. E15129
Exp. 6-30-14
ELECTRICAL
STATE OF CALIFORNIA

THE STATE OF CALIFORNIA OR ITS OFFICERS OR AGENTS SHALL NOT BE RESPONSIBLE FOR THE ACCURACY OR COMPLETENESS OF SCANNED COPIES OF THIS PLAN SHEET.

TO ACCOMPANY PLANS DATED 8-19-13

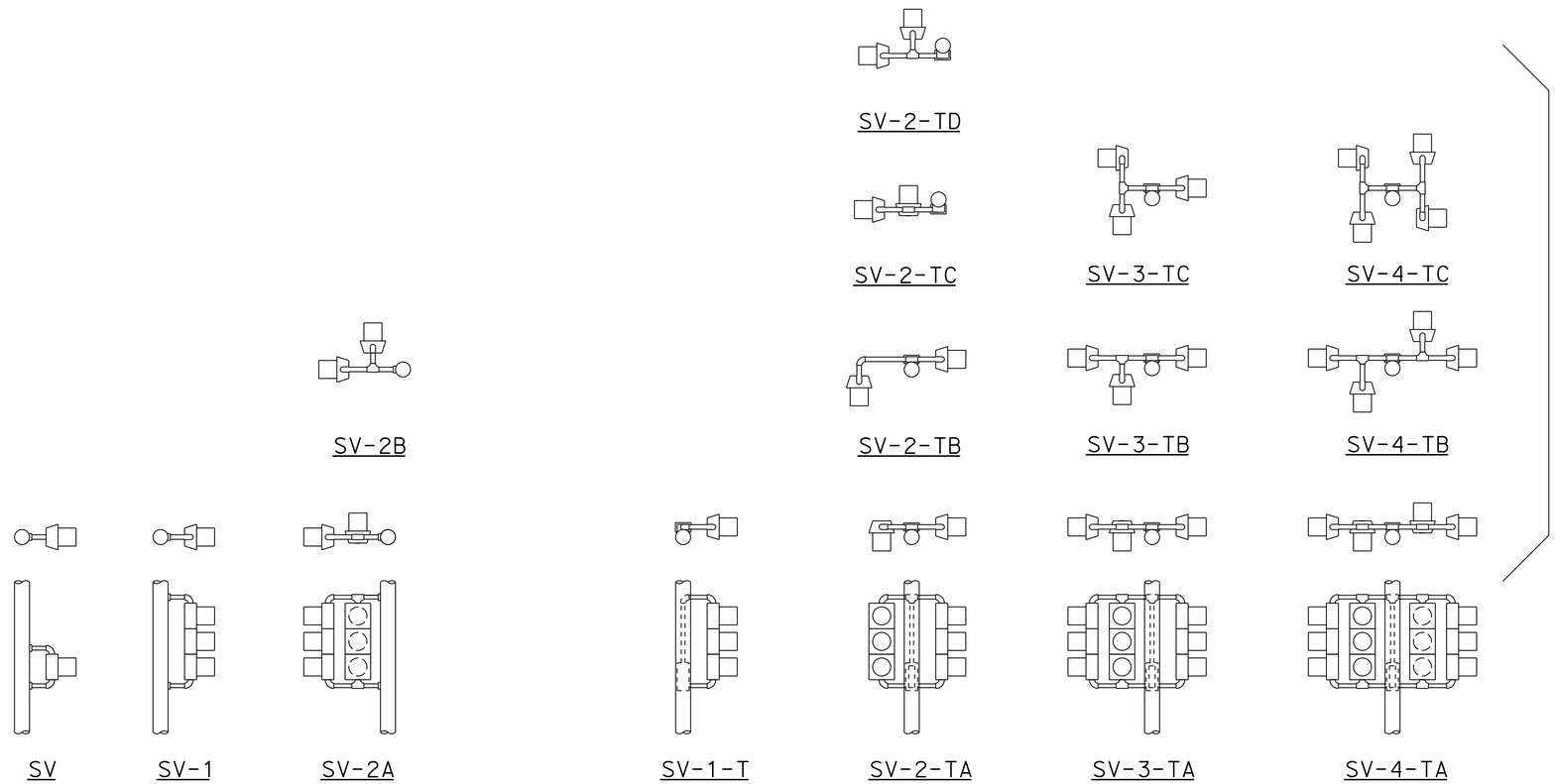

SIDE MOUNTINGS

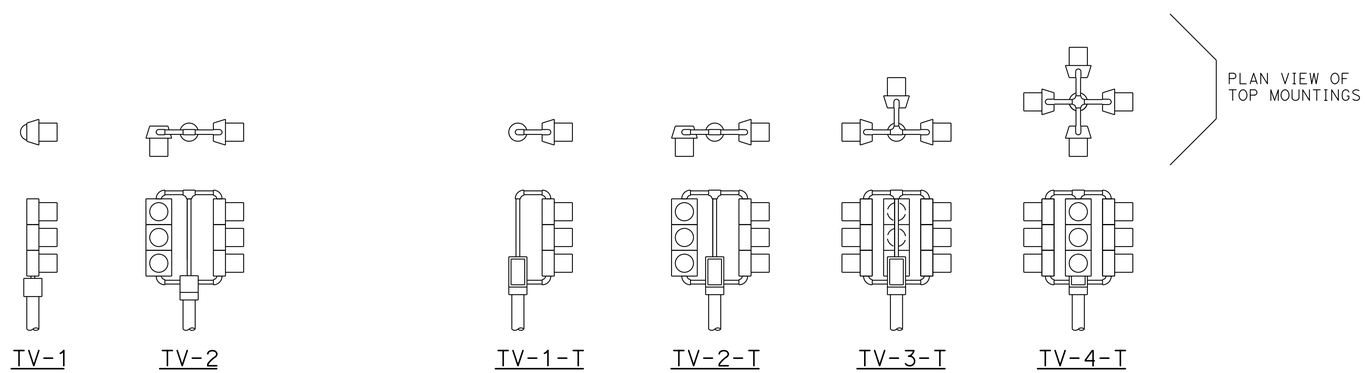

TOP MOUNTINGS

ABBREVIATIONS:

SV	SIDE MOUNTED VEHICLE SIGNALS
T	TERMINAL COMPARTMENT
TV	TOP MOUNTED VEHICLE SIGNALS
1, 2, 3, 4	NUMBER OF SIGNAL FACES (3 - SECTION, UNLESS OTHERWISE INDICATED)
A, B, C, D	CONFIGURATION OF SIGNALS

NOTES:

1. Mountings shall be oriented to provide maximum horizontal clearance to adjacent roadway.
2. Bracket arms shall be long enough to permit proper alignment of signals and backplate installation.
3. See Standard Plans ES-4D and ES-4E for attachment fitting details.

STATE OF CALIFORNIA
DEPARTMENT OF TRANSPORTATION

ELECTRICAL SYSTEMS (VEHICULAR SIGNAL HEADS AND MOUNTINGS)

NO SCALE

RSP ES-4A DATED JULY 19, 2013 SUPERSEDES STANDARD PLAN ES-4A DATED MAY 20, 2011 - PAGE 443 OF THE STANDARD PLANS BOOK DATED 2010.

REVISED STANDARD PLAN RSP ES-4A

2010 REVISED STANDARD PLAN RSP ES-4A

Dist	COUNTY	ROUTE	POST MILES TOTAL PROJECT	SHEET No.	TOTAL SHEETS
08	SBd	15	12.8	110	122

Theresa Gabriel
REGISTERED ELECTRICAL ENGINEER

July 19, 2013
PLANS APPROVAL DATE

REGISTERED PROFESSIONAL ENGINEER
Theresa Aziz Gabriel
No. E15129
Exp. 6-30-14
ELECTRICAL
STATE OF CALIFORNIA

THE STATE OF CALIFORNIA OR ITS OFFICERS OR AGENTS SHALL NOT BE RESPONSIBLE FOR THE ACCURACY OR COMPLETENESS OF SCANNED COPIES OF THIS PLAN SHEET.

TO ACCOMPANY PLANS DATED 8-19-13

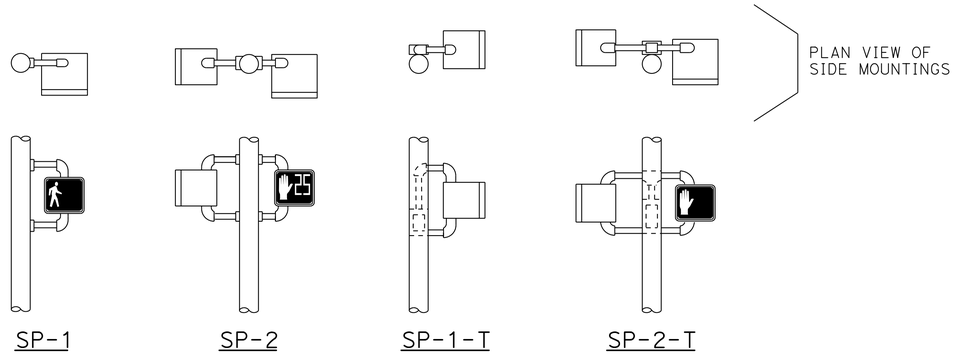

SIDE MOUNTINGS

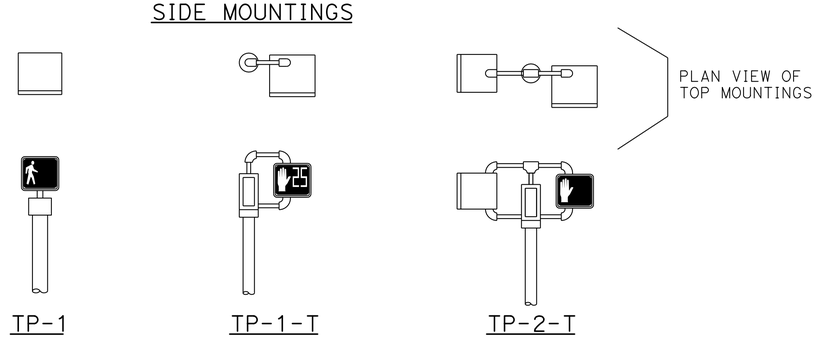

TOP MOUNTINGS

PEDESTRIAN SIGNALS AND MOUNTINGS

DETAIL A

PERSON WALKING INTERVAL FLASHING UPRAISED HAND INTERVAL STEADY UPRAISED HAND INTERVAL

PEDESTRIAN SIGNAL MODULE WITH COUNTDOWN

DETAIL B

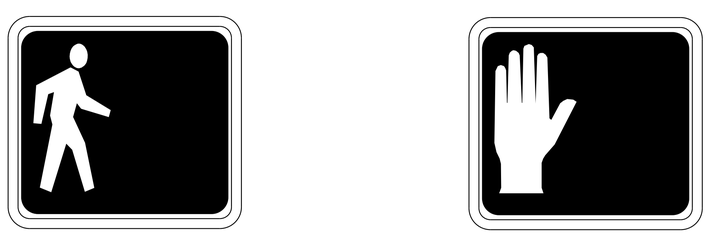

PERSON WALKING INTERVAL STEADY UPRAISED HAND INTERVAL

PEDESTRIAN SIGNAL MODULE WITHOUT COUNTDOWN

DETAIL C

NOTES:

1. Mounting shall be oriented to provide maximum horizontal clearance to adjacent roadway.
2. Bracket arms shall be long enough to permit proper alignment of signals.
3. See Standard Plan ES-4D for attachment fittings details.

ABBREVIATIONS:

1, 2	NUMBER OF SIGNAL FACES
SP	SIDE MOUNTED PEDESTRIAN SIGNAL
T	TERMINAL COMPARTMENT
TP	TOP MOUNTED PEDESTRIAN SIGNAL

RAMP METERING SIGN

DETAIL D

STATE OF CALIFORNIA
DEPARTMENT OF TRANSPORTATION

ELECTRICAL SYSTEMS (PEDESTRIAN SIGNAL AND RAMP METERING SIGN)

NO SCALE

RSP ES-4B DATED JULY 19, 2013 SUPERSEDES STANDARD PLAN ES-4B DATED MAY 20, 2011 - PAGE 444 OF THE STANDARD PLANS BOOK DATED 2010.

REVISED STANDARD PLAN RSP ES-4B

2010 REVISED STANDARD PLAN RSP ES-4B

7-9-13

Dist	COUNTY	ROUTE	POST MILES TOTAL PROJECT	SHEET No.	TOTAL SHEETS
08	SBd	15	12.8	111	122

Theresa Gabriel
REGISTERED ELECTRICAL ENGINEER

July 19, 2013
PLANS APPROVAL DATE

REGISTERED PROFESSIONAL ENGINEER Theresa Aziz Gabriel No. E15129 Exp. 6-30-14 ELECTRICAL STATE OF CALIFORNIA

THE STATE OF CALIFORNIA OR ITS OFFICERS OR AGENTS SHALL NOT BE RESPONSIBLE FOR THE ACCURACY OR COMPLETENESS OF SCANNED COPIES OF THIS PLAN SHEET.

TO ACCOMPANY PLANS DATED 8-19-13

2010 REVISED STANDARD PLAN RSP ES-4C

VISORS

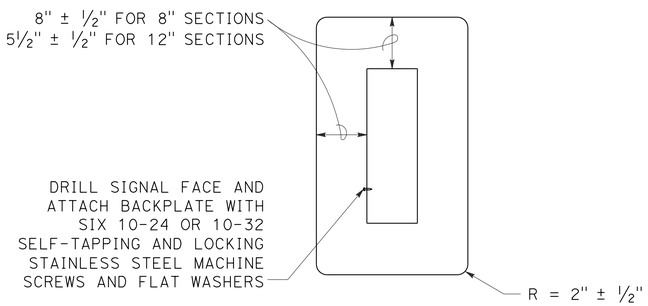

8" AND 12" SECTIONS

BACKPLATE

1/16" minimum thickness
3001-14 aluminum or plastic
when specified

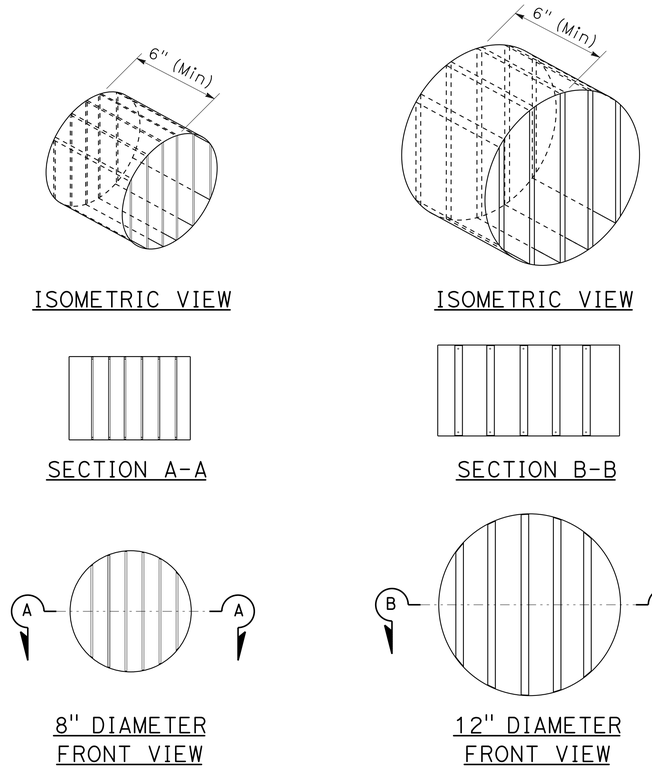

DIRECTIONAL LOUVER

Directional louvers shall be oriented as directed by the Engineer and secured in place with one plated brass machine screw and nut.

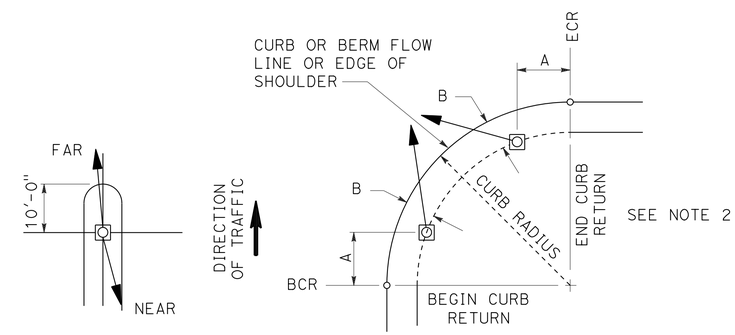

NOTES:

1. Typical signal pole placement unless dimensioned on plans.
2. For A and B dimensions, see Pole Schedule, or as directed by the Engineer.

SIGNAL STANDARD PLACEMENT DIMENSIONS AND EQUIPMENT LOCATIONS

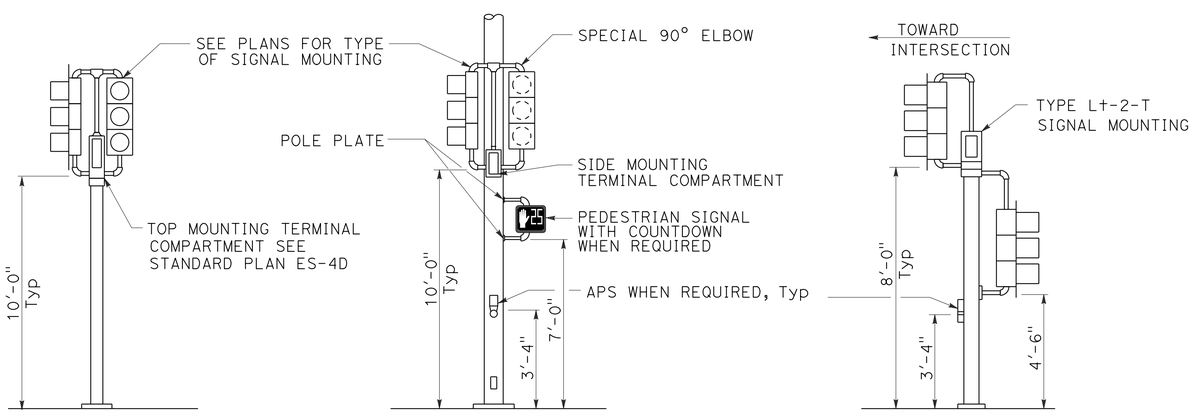

TOP MOUNTED SIGNALS (TV)
Type 1-A, 1-B, 1-C and 1-D standard as indicated on the plans

SIDE MOUNTED SIGNALS (SV AND SP)
Normally used on standards with luminaire or signal mast arm

LEFT TURN LANE SIGNAL
Type 1-A, 1-B, 1-C and 1-D standard as indicated on plans

TYPICAL SIGNAL INSTALLATIONS

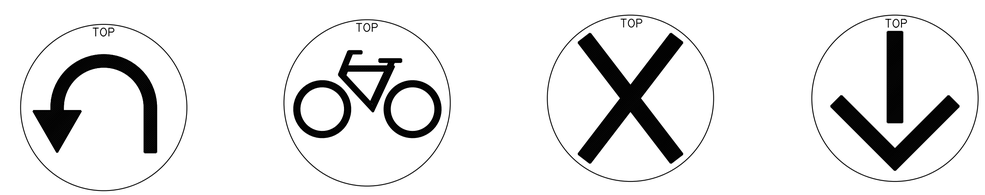

U-TURN | BICYCLE | LANE CONTROL | LANE CONTROL

SIGNAL FACES

STATE OF CALIFORNIA
DEPARTMENT OF TRANSPORTATION

ELECTRICAL SYSTEMS (VEHICULAR SIGNAL HEADS AND MOUNTINGS)

NO SCALE

RSP ES-4C DATED JULY 19, 2013 SUPERSEDES STANDARD PLAN ES-04C
DATED MAY 20, 2011 - PAGE 445 OF THE STANDARD PLANS BOOK DATED 2010.

REVISED STANDARD PLAN RSP ES-4C

7-10-13

Dist	COUNTY	ROUTE	POST MILES TOTAL PROJECT	SHEET No.	TOTAL SHEETS
08	SBd	15	12.8	112	122

Theresa Gabriel
REGISTERED ELECTRICAL ENGINEER

July 19, 2013
PLANS APPROVAL DATE

REGISTERED PROFESSIONAL ENGINEER
Theresa Aziz Gabriel
No. E15129
Exp. 6-30-14
ELECTRICAL
STATE OF CALIFORNIA

THE STATE OF CALIFORNIA OR ITS OFFICERS OR AGENTS SHALL NOT BE RESPONSIBLE FOR THE ACCURACY OR COMPLETENESS OF SCANNED COPIES OF THIS PLAN SHEET.

TO ACCOMPANY PLANS DATED 8-19-13

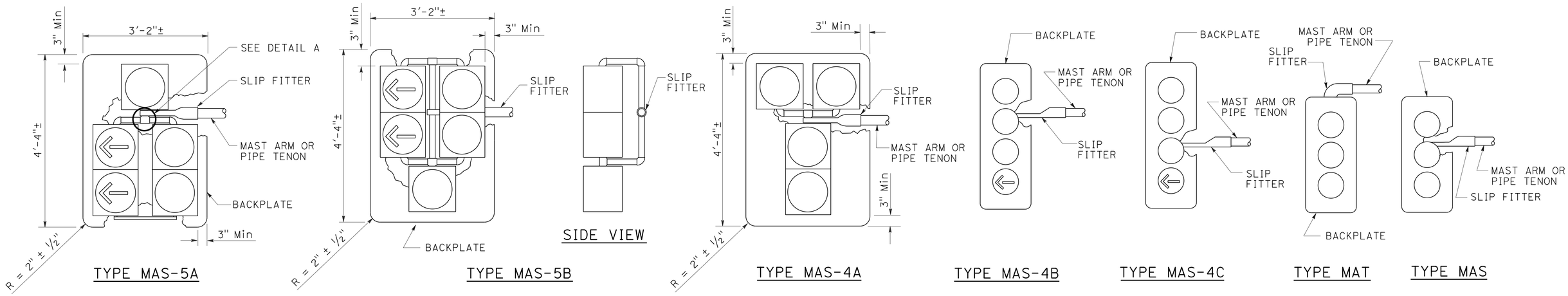

MAST ARM MOUNTINGS

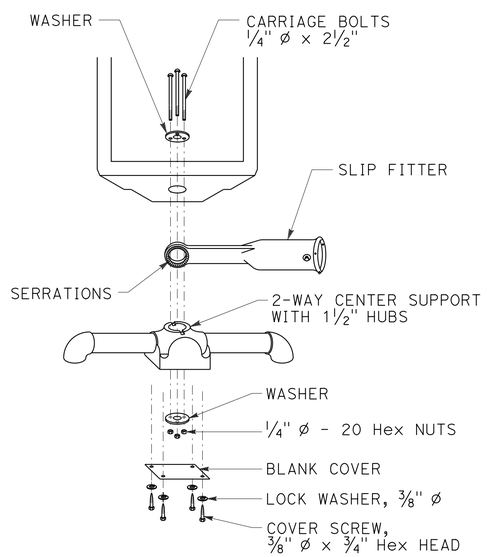

DETAIL A

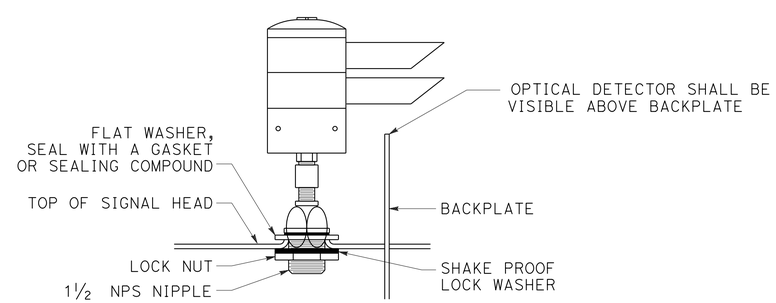

OPTICAL DETECTOR MOUNTING FOR EMERGENCY VEHICLE DETECTION SYSTEM

DETAIL B

STATE OF CALIFORNIA
DEPARTMENT OF TRANSPORTATION

ELECTRICAL SYSTEMS (VEHICULAR SIGNAL HEADS AND OPTICAL DETECTOR MOUNTING)

NO SCALE

RSP ES-4E DATED JULY 19, 2013 SUPERSEDES STANDARD PLAN ES-4E DATED MAY 20, 2011 - 447 OF THE STANDARD PLANS BOOK DATED 2010.

REVISED STANDARD PLAN RSP ES-4E

2010 REVISED STANDARD PLAN RSP ES-4E

Dist	COUNTY	ROUTE	POST MILES TOTAL PROJECT	SHEET No.	TOTAL SHEETS
08	SBd	15	12.8	113	122

Theresa Gabriel
REGISTERED ELECTRICAL ENGINEER

July 19, 2013
PLANS APPROVAL DATE

REGISTERED PROFESSIONAL ENGINEER
Theresa Aziz Gabriel
No. E15129
Exp. 6-30-14
ELECTRICAL
STATE OF CALIFORNIA

THE STATE OF CALIFORNIA OR ITS OFFICERS OR AGENTS SHALL NOT BE RESPONSIBLE FOR THE ACCURACY OR COMPLETENESS OF SCANNED COPIES OF THIS PLAN SHEET.

TO ACCOMPANY PLANS DATED 8-19-13

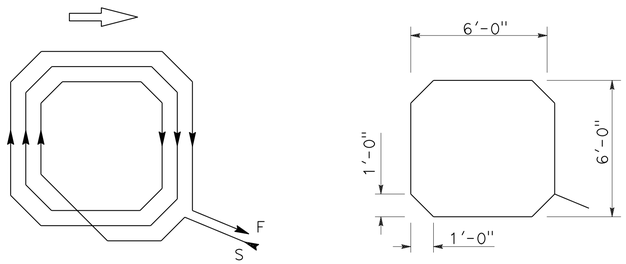

WINDING DETAIL SAWCUT DETAIL

TYPE A LOOP DETECTOR CONFIGURATION

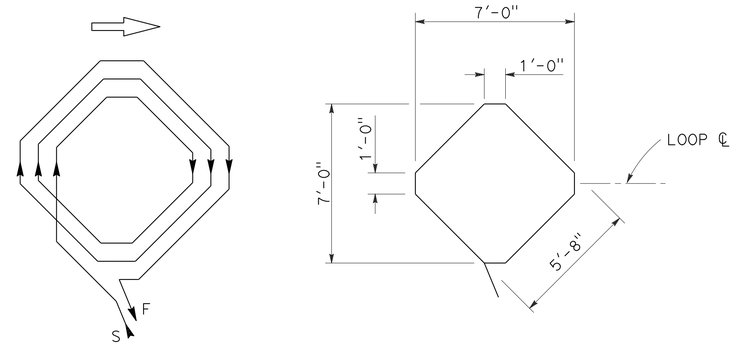

WINDING DETAIL SAWCUT DETAIL

TYPE B LOOP DETECTOR CONFIGURATION

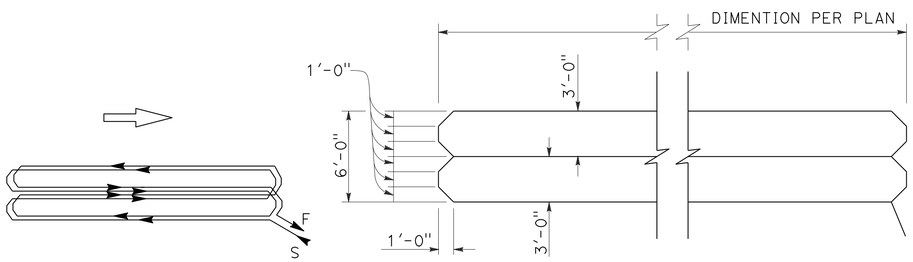

WINDING DETAIL SAWCUT DETAIL

TYPE C LOOP DETECTOR CONFIGURATION

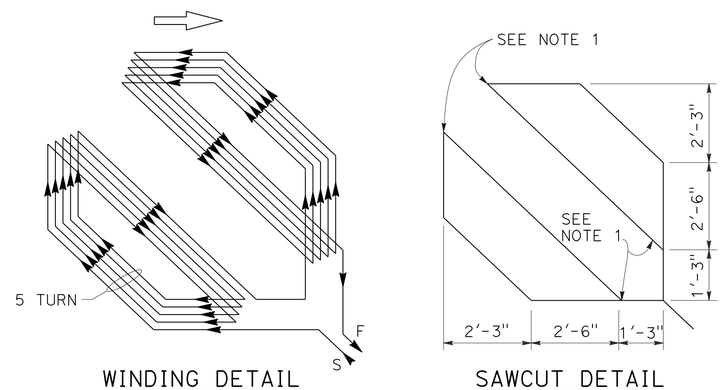

WINDING DETAIL SAWCUT DETAIL

TYPE D LOOP DETECTOR CONFIGURATION

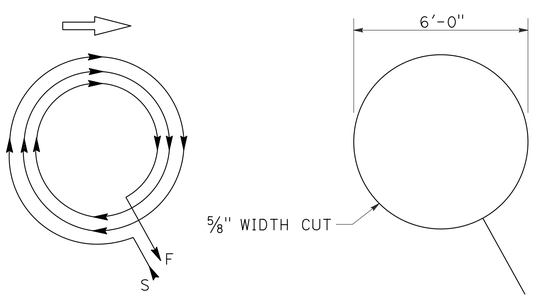

WINDING DETAIL SAWCUT DETAIL

TYPE E LOOP DETECTOR CONFIGURATION

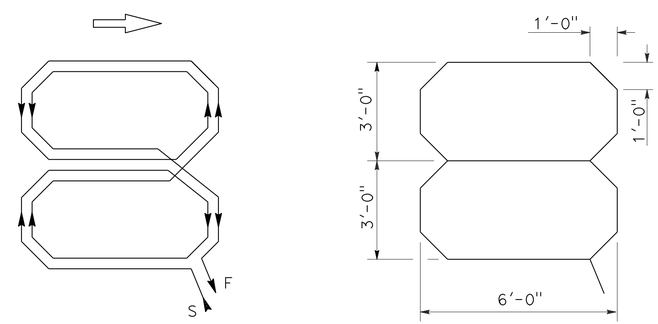

WINDING DETAIL SAWCUT DETAIL

TYPE Q LOOP DETECTOR CONFIGURATION

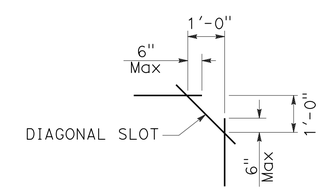

PLAN VIEW OF DIAGONAL SLOT AT CORNERS

NOTES:

1. Round corners of acute angle sawcuts to prevent damage to conductors.
2. Typical distance separating loops from edge to edge is 10' for Type A, B, D and E installation in single lane.

STATE OF CALIFORNIA
DEPARTMENT OF TRANSPORTATION

ELECTRICAL SYSTEMS (DETECTORS)

NO SCALE

RSP ES-5B DATED JULY 19, 2013 SUPERSEDES STANDARD PLAN ES-5B DATED MAY 20, 2011 - PAGE 449 OF THE STANDARD PLANS BOOK DATED 2010.

REVISED STANDARD PLAN RSP ES-5B

2010 REVISED STANDARD PLAN RSP ES-5B

7-9-13

Dist	COUNTY	ROUTE	POST MILES TOTAL PROJECT	SHEET No.	TOTAL SHEETS
08	SBd	15	12.8	114	122

Theresa Gabriel
REGISTERED ELECTRICAL ENGINEER

July 19, 2013
PLANS APPROVAL DATE

REGISTERED PROFESSIONAL ENGINEER
Theresa Aziz Gabriel
No. E15129
Exp. 6-30-14
ELECTRICAL
STATE OF CALIFORNIA

THE STATE OF CALIFORNIA OR ITS OFFICERS OR AGENTS SHALL NOT BE RESPONSIBLE FOR THE ACCURACY OR COMPLETENESS OF SCANNED COPIES OF THIS PLAN SHEET.

TO ACCOMPANY PLANS DATED 8-19-13

2010 REVISED STANDARD PLAN RSP ES-5C

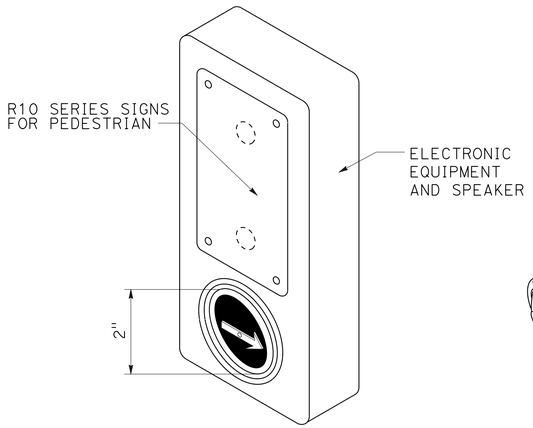

ACCESSIBLE PEDESTRIAN SIGNAL

DETAIL A
(See note 1 to 4)

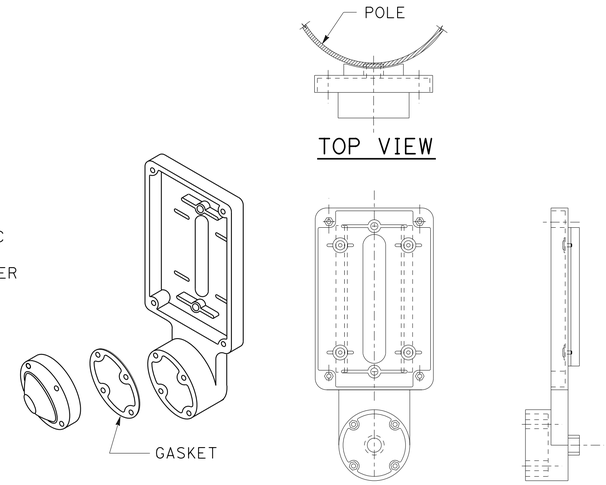

TYPE B PUSH BUTTON ASSEMBLY

DETAIL B
(See note 1 to 4)

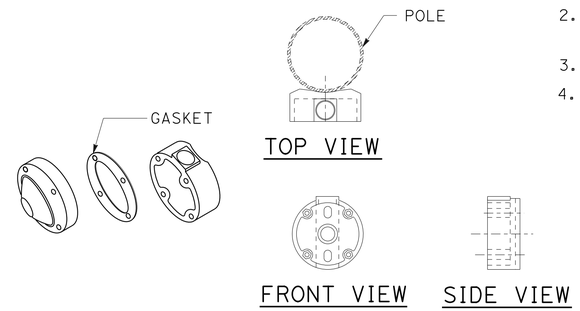

TYPE C PUSH BUTTON ASSEMBLY

DETAIL C
(See note 1 to 4)

NOTES:

1. Back casting shape to fit curvature of pole.
2. Provide cover fitting for top of post, when PBA is mounted on push button assembly post.
3. Install push button on crosswalk side of standard.
4. Use R10 series regulatory signs and plaques for pedestrian and bicycle facilities.

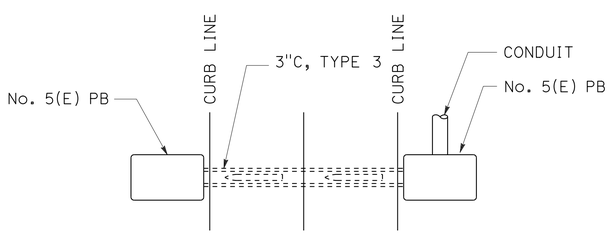

PLAN

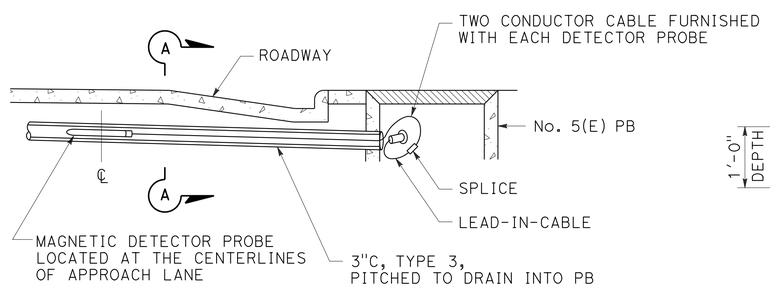

ELEVATION

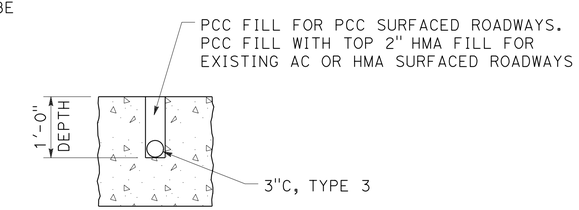

SECTION A-A

MAGNETIC VEHICLE DETECTOR INSTALLATION DETAILS

DETAIL D

STATE OF CALIFORNIA
DEPARTMENT OF TRANSPORTATION

ELECTRICAL SYSTEMS (ACCESSIBLE PEDESTRIAN SIGNAL, PUSH BUTTON ASSEMBLIES AND MAGNETIC VEHICLE DETECTOR)

NO SCALE

RSP ES-5C DATED JULY 19, 2013 SUPERSEDES STANDARD PLAN ES-5C
DATED MAY 20, 2011 - PAGE 450 OF THE STANDARD PLANS BOOK DATED 2010.

REVISED STANDARD PLAN RSP ES-5C

Dist	COUNTY	ROUTE	POST MILES TOTAL PROJECT	SHEET No.	TOTAL SHEETS
08	SBd	15	12.8	115	122

Theresa Gabriel
REGISTERED ELECTRICAL ENGINEER

July 19, 2013
PLANS APPROVAL DATE

REGISTERED PROFESSIONAL ENGINEER Theresa Aziz Gabriel No. E15129 Exp. 6-30-14 ELECTRICAL STATE OF CALIFORNIA

THE STATE OF CALIFORNIA OR ITS OFFICERS OR AGENTS SHALL NOT BE RESPONSIBLE FOR THE ACCURACY OR COMPLETENESS OF SCANNED COPIES OF THIS PLAN SHEET.

TO ACCOMPANY PLANS DATED 8-19-13

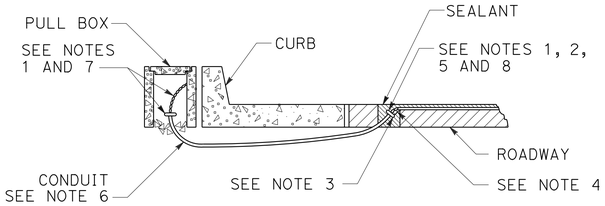

TYPE A
CURB TERMINATION DETAIL

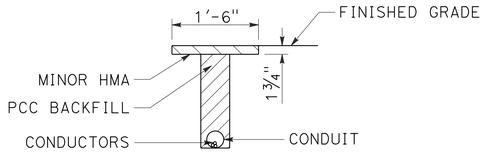

"T" TRENCH
DETAIL T

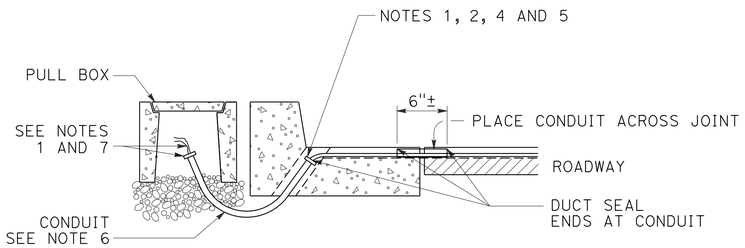

CROSS SECTION

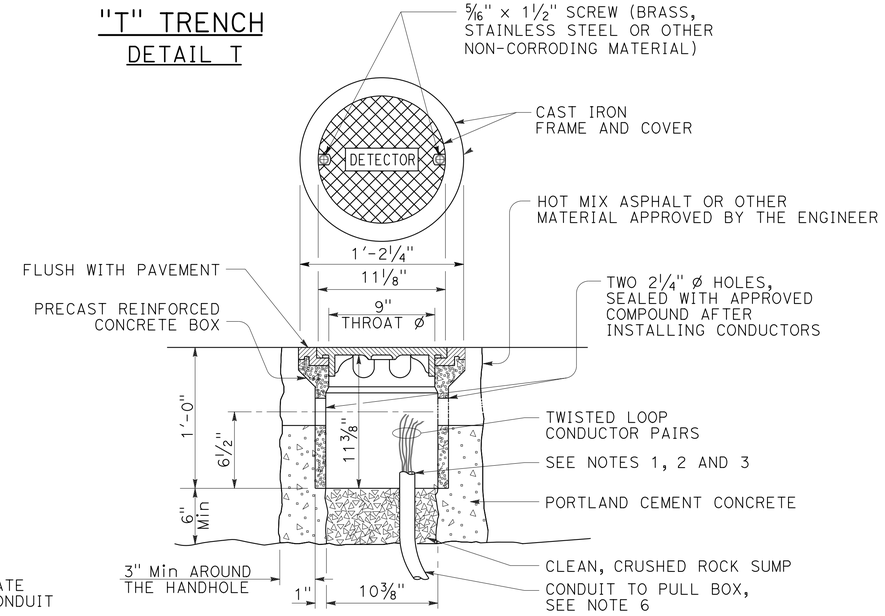

DETECTOR HANDHOLE DETAIL

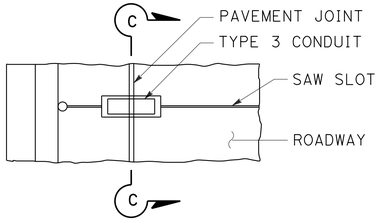

PLAN VIEW

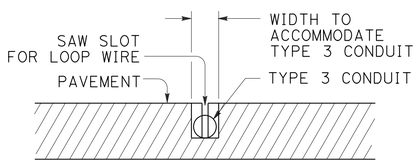

SECTION C-C

TYPE B
CURB TERMINATION DETAIL

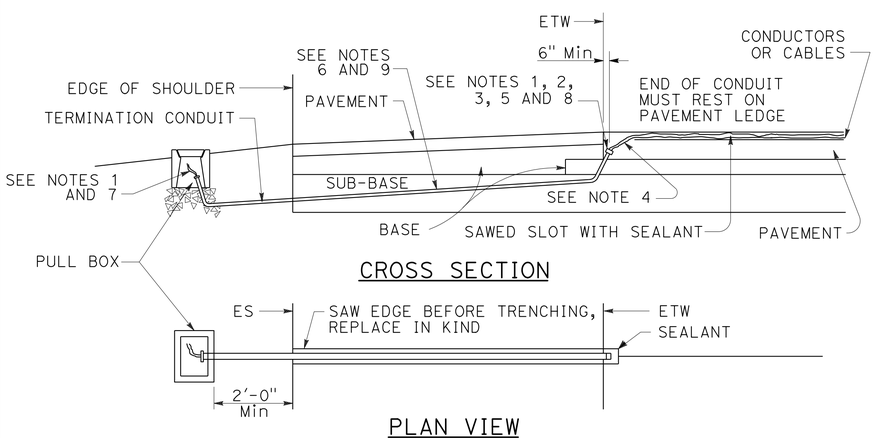

CROSS SECTION

PLAN VIEW

SHOULDER TERMINATION DETAILS

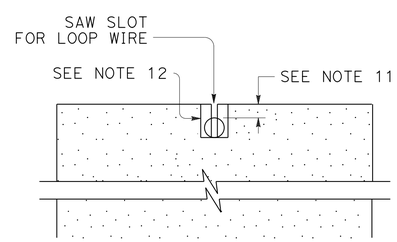

SECTION A-A

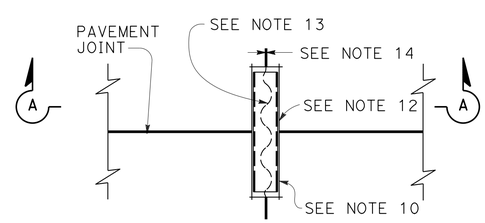

PLAN VIEW

TYPICAL LOOP LEAD-IN DETAIL AT PAVEMENT JOINT

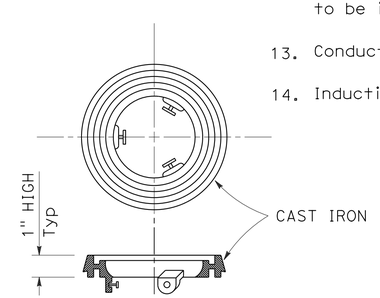

LOCKING GRADE RING

NOTES:

1. Bushing shall be used at end of conduit.
2. Tape detector conductors or cables 3" each side of bushings.
3. Install duct seal compound to each end of termination conduit before installing sealant.
4. Round all sharp edges where detector conductors or cables have to pass.
5. End of conduit shall be 3⅛" below roadway surface.
6.

Conduit size	Loop conductors
1"C minimum	1 to 2 pairs
1½"C minimum	3 to 4 pairs
2"C minimum	5 or more pairs

7. Splice detector conductors or cables to detector lead-in-cable.
8. Location of detector handhole when shown on plans.
9. When the shoulder and traveled way are paved with the same material and there is no joint between them, the conduit shall extend only 2'-0" into the shoulder pavement.
10. ¾"C, Type 3 conduit 6" long minimum, plug both ends with duct compound to keep out sealant.
11. ½" Minimum between top of conduit and pavement surface.
12. Sawcut shall not exceed 1" in width and ⅛" longer than conduit to be installed.
13. Conductors with ½" minimum slack inside conduit.
14. Inductive loop detector saw slot.

STATE OF CALIFORNIA
DEPARTMENT OF TRANSPORTATION

ELECTRICAL SYSTEMS (CURB TERMINATION AND HANDHOLE)

NO SCALE

RSP ES-5D DATED JULY 19, 2013 SUPERSEDES STANDARD PLAN ES-5D DATED MAY 20, 2011 - PAGE 451 OF THE STANDARD PLANS BOOK DATED 2010.

REVISED STANDARD PLAN RSP ES-5D

2010 REVISED STANDARD PLAN RSP ES-5D

7-9-13

Dist	COUNTY	ROUTE	POST MILES TOTAL PROJECT	SHEET No.	TOTAL SHEETS
08	SBd	15	12.8	116	122

REGISTERED CIVIL ENGINEER

July 19, 2013
PLANS APPROVAL DATE

REGISTERED PROFESSIONAL ENGINEER
Stanley P. Johnson
No. C57793
Exp. 3-31-14
CIVIL
STATE OF CALIFORNIA

THE STATE OF CALIFORNIA OR ITS OFFICERS OR AGENTS SHALL NOT BE RESPONSIBLE FOR THE ACCURACY OR COMPLETENESS OF SCANNED COPIES OF THIS PLAN SHEET.

TO ACCOMPANY PLANS DATED 8-19-13

2010 REVISED STANDARD PLAN RSP ES-7A

NOTES:

1. For additional notes, details and data for Type 15TS and Type 21TS Standards, see Standard Plan ES-6A.
2. Handhole shall be located on the downstream side of traffic.

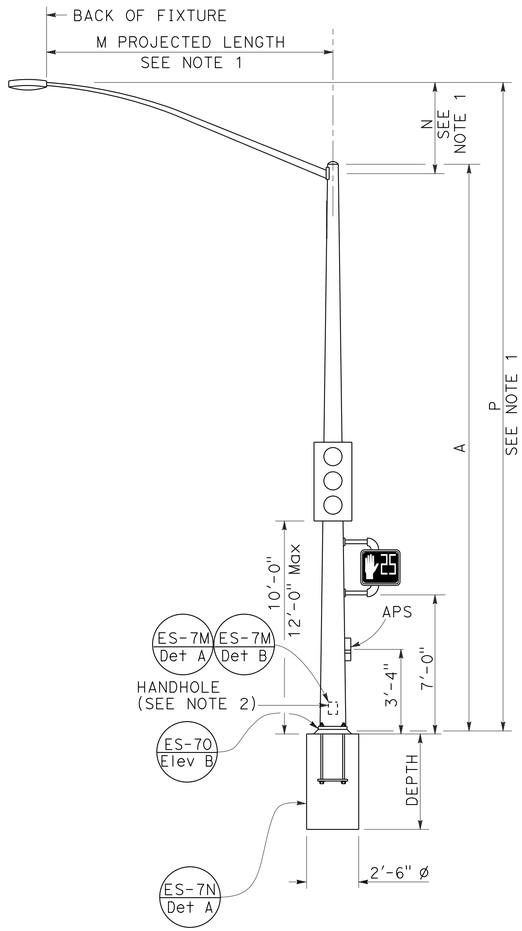

TYPE 15TS AND 21TS STANDARD

ELEVATION A

(See Note 1)

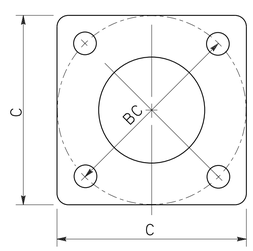

BASE PLATE

TYPE 15TS AND 21TS

DETAIL A

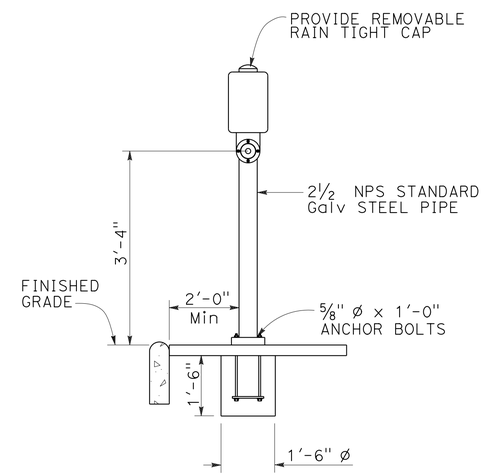

ELEVATION

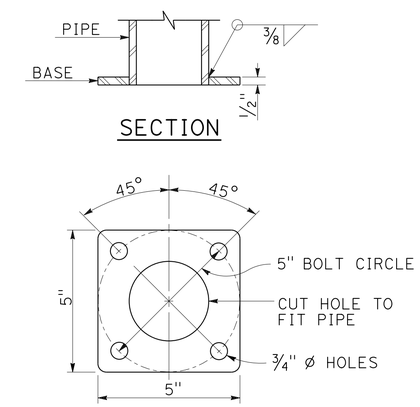

BASE PLATE

PBA POST

PUSH BUTTON ASSEMBLY POST

DETAIL B

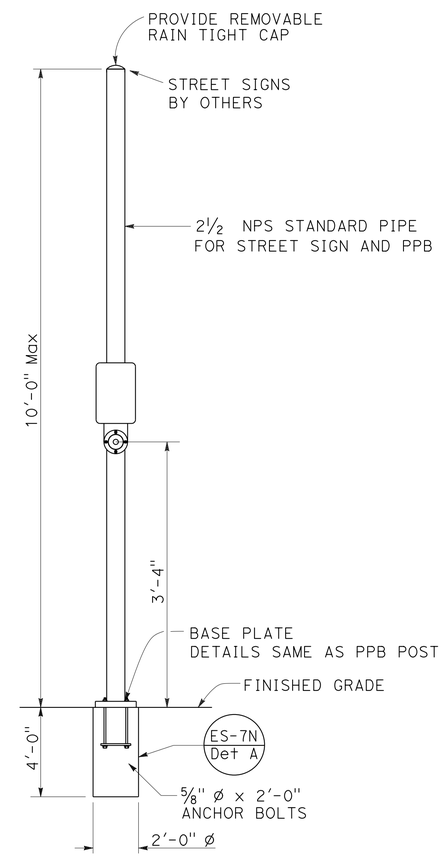

COMBINED STREET SIGN
PUSH BUTTON ASSEMBLY POST

DETAIL C

POLE TYPE	POLE DATA				BASE PLATE DATA				CIDH
	A HEIGHT	Min OD BASE	Min OD TOP	WALL THICKNESS	C	BC = BOLT CIRCLE	THICKNESS	ANCHOR BOLT SIZE	DEPTH
15TS	30'-0"	8"	3 11/16"	0.1793"	1'-1½"	1'-0"	2"	1½" ø x 42"	7'-6"
21TS	35'-0"	9⅜"	3 9/16"		1'-3"	1'-2"			8'-6"

STATE OF CALIFORNIA
DEPARTMENT OF TRANSPORTATION

ELECTRICAL SYSTEMS (SIGNAL AND LIGHTING STANDARD, TYPE TS, AND PUSH BUTTON ASSEMBLY POST)

NO SCALE

RSP ES-7A DATED JULY 19, 2013 SUPERSEDES STANDARD PLAN ES-7A DATED MAY 20, 2011 - PAGE 462 OF THE STANDARD PLANS BOOK DATED 2010.

REVISED STANDARD PLAN RSP ES-7A

Dist	COUNTY	ROUTE	POST MILES TOTAL PROJECT	SHEET No.	TOTAL SHEETS
08	SBd	15	12.8	117	122

REGISTERED CIVIL ENGINEER

July 19, 2013
PLANS APPROVAL DATE

REGISTERED PROFESSIONAL ENGINEER
Stanley P. Johnson
No. C57793
Exp. 3-31-14
CIVIL
STATE OF CALIFORNIA

THE STATE OF CALIFORNIA OR ITS OFFICERS OR AGENTS SHALL NOT BE RESPONSIBLE FOR THE ACCURACY OR COMPLETENESS OF SCANNED COPIES OF THIS PLAN SHEET.

NOTE:

1. Handhole shall be located on the downstream side of traffic.

TO ACCOMPANY PLANS DATED 8-19-13

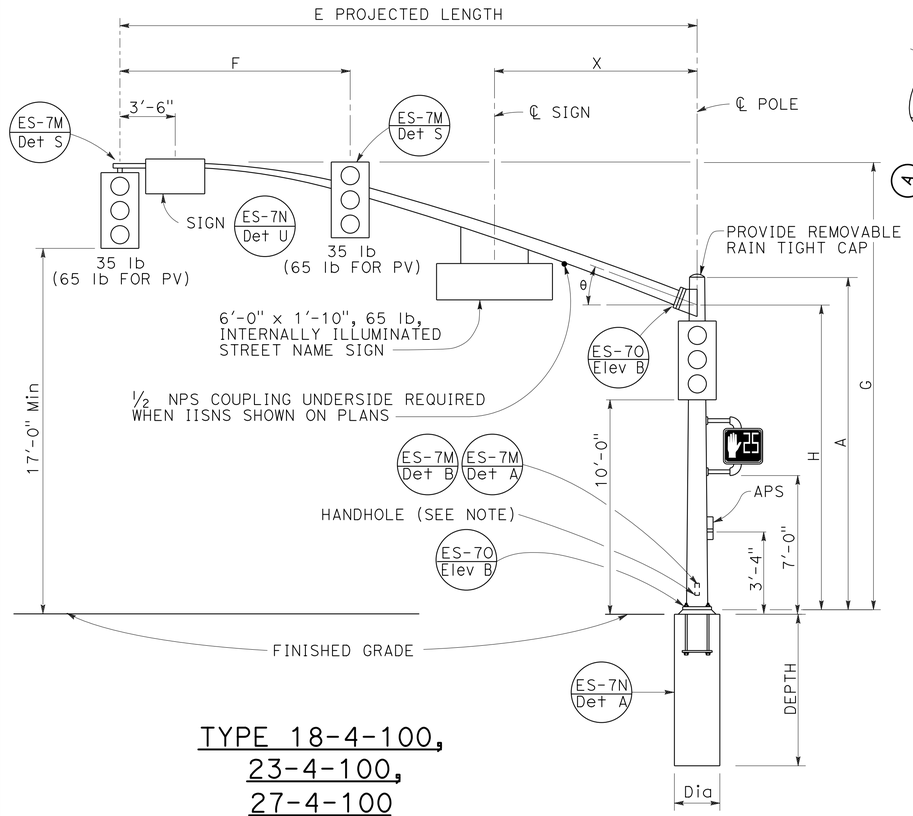

TYPE 18-4-100,
23-4-100,
27-4-100
ELEVATION A

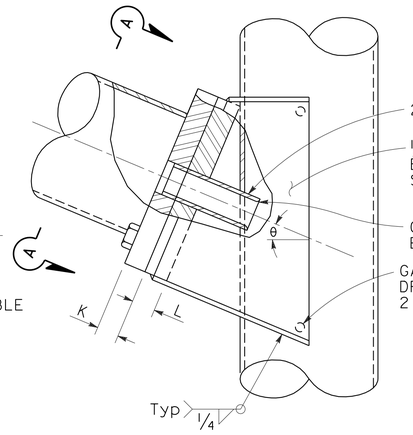

ELEVATION C

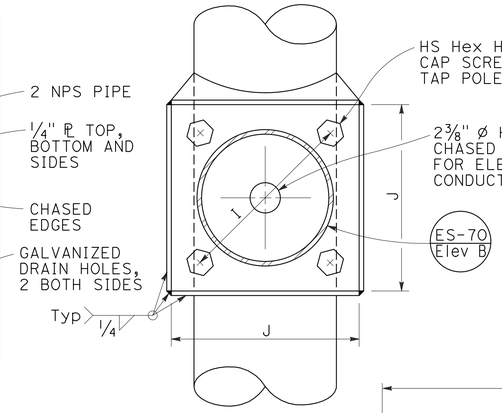

VIEW A-A

SIGNAL MAST ARM CONNECTION
DETAIL A

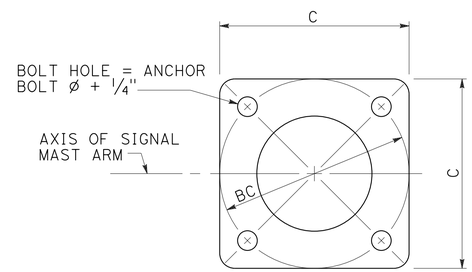

BASE PLATE
DETAIL B

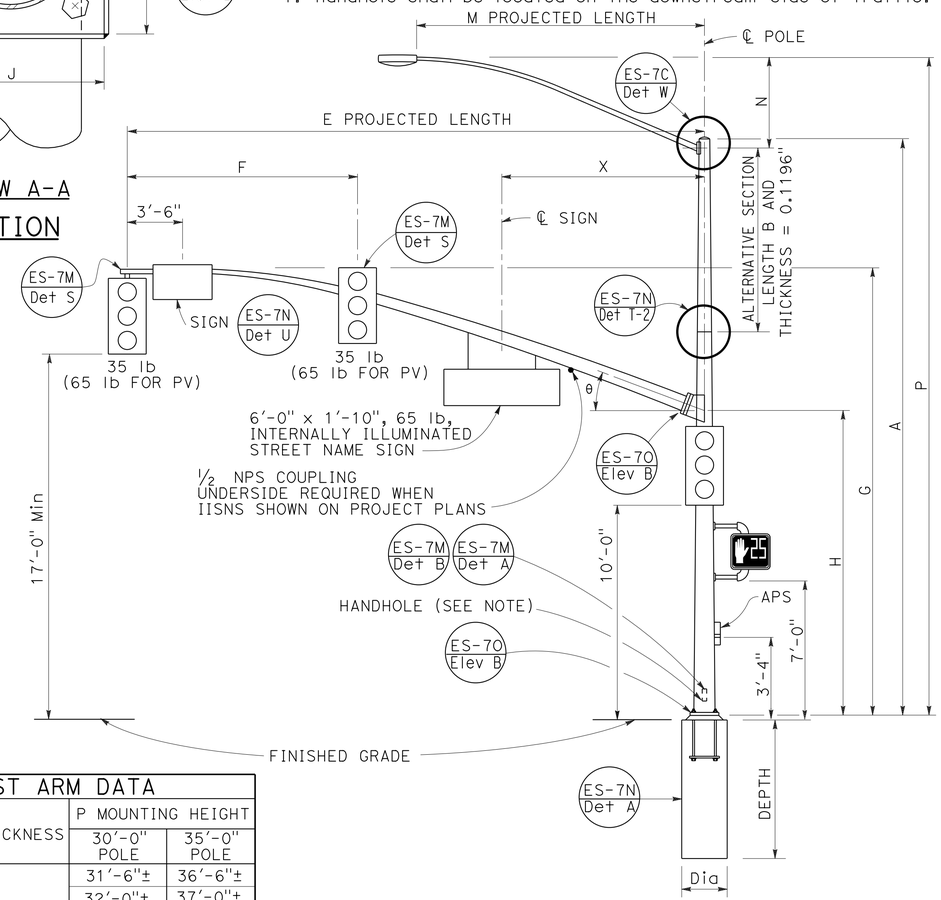

TYPE 19-4-100, 19A-4-100,
24-4-100, 24A-4-100,
26-4-100, 26A-4-100
ELEVATION B

SIGNAL MAST ARM DATA												
E PROJECTED LENGTH	F Min SPACING	G MOUNTING HEIGHT	H	Min OD AT POLE	THICKNESS	I BOLT CIRCLE	HS CAP SCREWS	J PLATE SIZE	K MAST ARM ℙ THICKNESS	L POLE ℙ THICKNESS	θ	X Max
25'-0"	10'-0"	22'-8"±	16'-0"	7⅜"	0.2391"	12"	1¼"-7NC-3"	1'-0"	1¼"	1½"	23°	10'-6"
30'-0"	12'-0"	23'-0"±		8"								
35'-0"	14'-0"			8 11/16"		13½"		1'-1½"	1½"	1¾"	21°	
40'-0"	15'-0"			9⅜"							15°	13'-0"
45'-0"		23'-8"±		10¼"								

LUMINAIRE MAST ARM DATA					
M PROJECTED LENGTH	N RISE	Min OD AT POLE	THICKNESS	P MOUNTING HEIGHT	
				30'-0" POLE	35'-0" POLE
6'-0"	2'-0"±	3¼"	0.1196"	31'-6"±	36'-6"±
8'-0"	2'-6"±	3½"		32'-0"±	37'-0"±
10'-0"	3'-3"±	3⅞"		32'-9"±	37'-9"±
12'-0"	4'-3"±			33'-9"±	38'-9"±
15'-0"	4'-9"±	4¼"		34'-3"±	39'-3"±

POLE TYPE	LOAD CASE	WIND VELOCITY (mph)	POLE DATA							BASE PLATE DATA				LUMINAIRE MAST ARM	SIGNAL MAST ARM	CIDH PILE FOUNDATION		
			A HEIGHT	Min OD BASE	Min OD TOP	THICKNESS	ALTERNATIVE SECTION B LENGTH	ALTERNATIVE SECTION BOTTOM	ALTERNATIVE SECTION TOP	C	BC = BOLT CIRCLE	THICKNESS	ANCHOR BOLT SIZE			Dia	DEPTH	REINFORCED
18-4-100	4	100	17'-0"	12⅛"	9 9/16"	0.3125"	NONE			1'-7"	1'-5½"	3"	2" Ø x 42"	NONE	25'-0", 30'-0"	3'-0"	11'-0"	YES
19-4-100			30'-0"		7 11/16"		10'-0"	9⅛"	7 11/16"					6'-15' 12'-0"				
19A-4-100			35'-0"		6 15/16"		15'-0'		6 15/16"					6'-15' 15'-0"				
23-4-100			17'-0"		9 9/16"		NONE							NONE	35'-0"			
24-4-100			30'-0"		7 11/16"		10'-0"	9⅛"	7 11/16"					6'-15' 12'-0"				
24A-4-100			35'-0"		6 15/16"		15'-0"		6 15/16"					6'-15' 15'-0"				
26-4-100			30'-0"	14"	8 3/16"		10'-0"	9⅝"	8 3/16"		21"		2½" Ø x 42"	6'-15' 12'-0"	40'-0", 45'-0"	3'-6"	12'-0"	
26A-4-100			35'-0"		7 7/16"		15'-0"		7 7/16"	23"				6'-15' 15'-0"				
27-4-100			17'-0"		10 1/16"		NONE							NONE				

☐ INDICATES MAST ARM LENGTH TO BE USED UNLESS OTHERWISE NOTED ON PLANS.

STATE OF CALIFORNIA
DEPARTMENT OF TRANSPORTATION

ELECTRICAL SYSTEMS (SIGNAL AND LIGHTING STANDARD, CASE 4 SIGNAL MAST ARM LOADING, WIND VELOCITY=100 MPH AND SIGNAL MAST ARM LENGTHS 25' TO 45')

NO SCALE

RSP ES-7F DATED JULY 19, 2013 SUPERSEDES STANDARD PLAN ES-7F
DATED MAY 20, 2011 - PAGE 467 OF THE STANDARD PLANS BOOK DATED 2010.

REVISED STANDARD PLAN RSP ES-7F

2010 REVISED STANDARD PLAN RSP ES-7F

6-18-13

Dist	COUNTY	ROUTE	POST MILES TOTAL PROJECT	SHEET No.	TOTAL SHEETS
08	SBd	15	12.8	118	122

REGISTERED CIVIL ENGINEER

July 19, 2013
PLANS APPROVAL DATE

REGISTERED PROFESSIONAL ENGINEER Stanley P. Johnson No. C57793 Exp. 3-31-14 CIVIL STATE OF CALIFORNIA

THE STATE OF CALIFORNIA OR ITS OFFICERS OR AGENTS SHALL NOT BE RESPONSIBLE FOR THE ACCURACY OR COMPLETENESS OF SCANNED COPIES OF THIS PLAN SHEET.

TO ACCOMPANY PLANS DATED 8-19-13

NOTE:
Handhole shall be located on the downstream side of traffic.

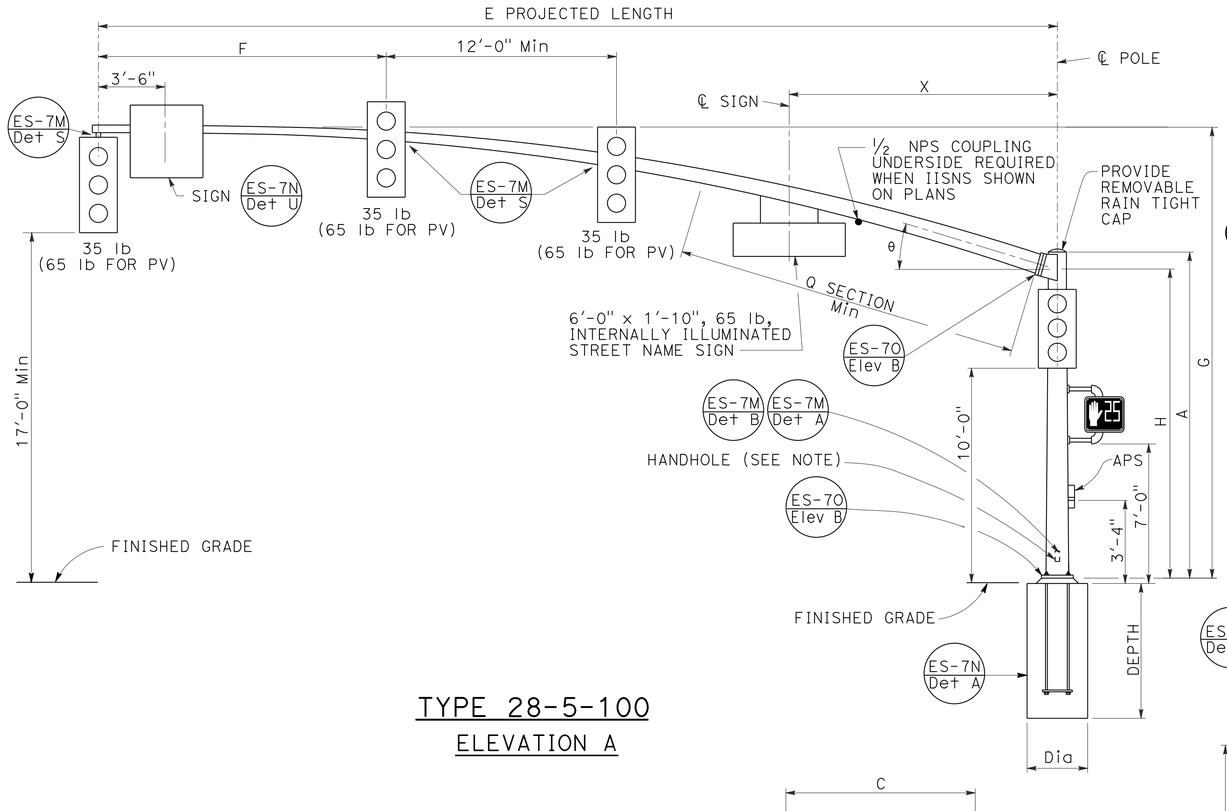

TYPE 28-5-100
ELEVATION A

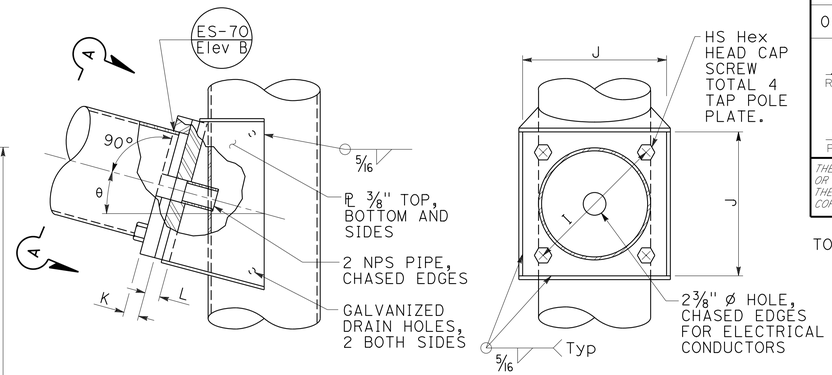

ELEVATION C

VIEW A-A

SIGNAL MAST ARM CONNECTION
DETAIL A

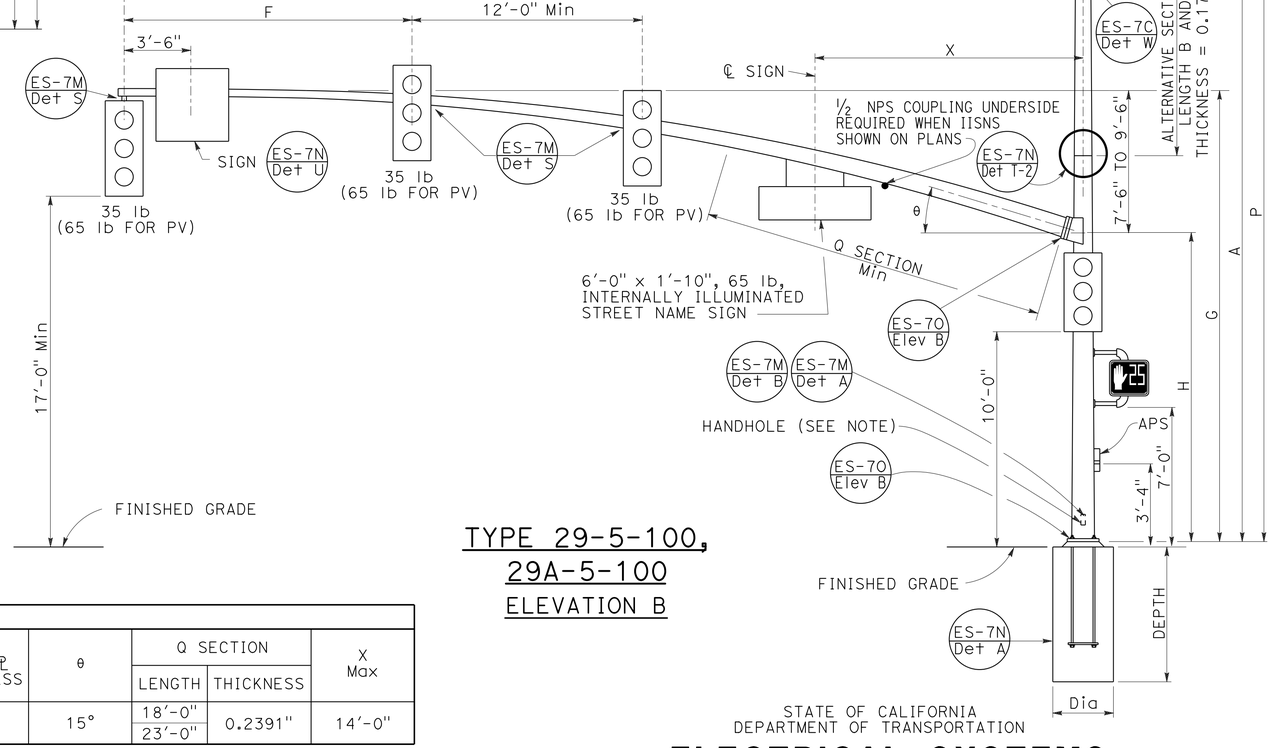

TYPE 29-5-100,
29A-5-100
ELEVATION B

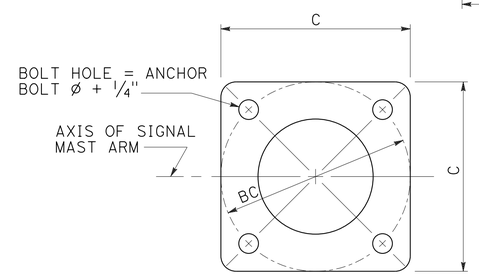

BASE PLATE
DETAIL B

LUMINAIRE MAST ARM DATA					
M PROJECTED LENGTH	N RISE	Min OD AT POLE	THICKNESS	P MOUNTING HEIGHT 30'-0" POLE	P MOUNTING HEIGHT 35'-0" POLE
6'-0"	2'-0"±	3 1/4"	0.1196"	31'-6"±	36'-6"±
8'-0"	2'-6"±	3 1/2"		32'-0"±	37'-0"±
10'-0"	3'-3"±	3 7/8"		32'-9"±	37'-9"±
12'-0"	4'-3"±			33'-9"±	38'-9"±
15'-0"	4'-9"±	4 1/4"		34'-3"±	39'-3"±

SIGNAL MAST ARM DATA														
E PROJECTED LENGTH	F Min SPACING	G MOUNTING HEIGHT	H	Min OD AT POLE	THICKNESS	I BOLT CIRCLE	HS CAP SCREWS	J PLATE SIZE	K MAST ARM ℄ THICKNESS	L POLE ℄ THICKNESS	θ	Q SECTION LENGTH	Q SECTION THICKNESS	X Max
50'-0"	15'-0"	23'-7"± TO 25'-7"±	16'-0"	11 7/16"	0.1793"	16"	1 1/2"-6NC-3 1/4"	1'-4"	1 3/4"	1 3/4"	15°	18'-0"	0.2391"	14'-0"
55'-0"				1'-1/4"								23'-0"		

POLE TYPE	LOAD CASE	WIND VELOCITY (mph)	POLE DATA A HEIGHT	Min OD BASE	Min OD TOP	THICKNESS	ALTERNATIVE SECTION B LENGTH	ALTERNATIVE SECTION BOTTOM	ALTERNATIVE SECTION TOP	BASE PLATE DATA C	BC = BOLT CIRCLE	THICKNESS	ANCHOR BOLT SIZE	LUMINAIRE MAST ARM	SIGNAL MAST ARM	CIDH PILE FOUNDATION Dia	DEPTH	REINFORCED
28-5-100	5	100	17'-0"	14"	11 9/16"	0.3125"	NONE	11 1/8"	9 11/16"	23"	21"	3"	2 1/2" ø x 42"	NONE	50'-0", 55'-0"	3'-6"	12'-0"	YES
29-5-100			30'-0"		9 11/16"		10'-0"							6'-15' 15'-0"				
29A-5-100			35'-0"		8 15/16"		15'-0"		8 15/16"									

INDICATES MAST ARM LENGTH TO BE USED UNLESS OTHERWISE NOTED ON PLANS.

STATE OF CALIFORNIA
DEPARTMENT OF TRANSPORTATION

ELECTRICAL SYSTEMS (SIGNAL AND LIGHTING STANDARD, CASE 5 SIGNAL MAST ARM LOADING, WIND VELOCITY=100 MPH AND SIGNAL MAST ARM LENGTHS 50' TO 55')

NO SCALE

RSP ES-7G DATED JULY 19, 2013 SUPERSEDES STANDARD PLAN ES-7G
DATED MAY 20, 2011 - PAGE 468 OF THE STANDARD PLANS BOOK DATED 2010.

REVISED STANDARD PLAN RSP ES-7G

2010 REVISED STANDARD PLAN RSP ES-7G

6-18-13

Dist	COUNTY	ROUTE	POST MILES TOTAL PROJECT	SHEET No.	TOTAL SHEETS
08	SBd	15	12.8	119	122

REGISTERED CIVIL ENGINEER

July 19, 2013
PLANS APPROVAL DATE

REGISTERED PROFESSIONAL ENGINEER
Stanley P. Johnson
No. C57793
Exp. 3-31-14
CIVIL
STATE OF CALIFORNIA

THE STATE OF CALIFORNIA OR ITS OFFICERS OR AGENTS SHALL NOT BE RESPONSIBLE FOR THE ACCURACY OR COMPLETENESS OF SCANNED COPIES OF THIS PLAN SHEET.

TO ACCOMPANY PLANS DATED 8-19-13

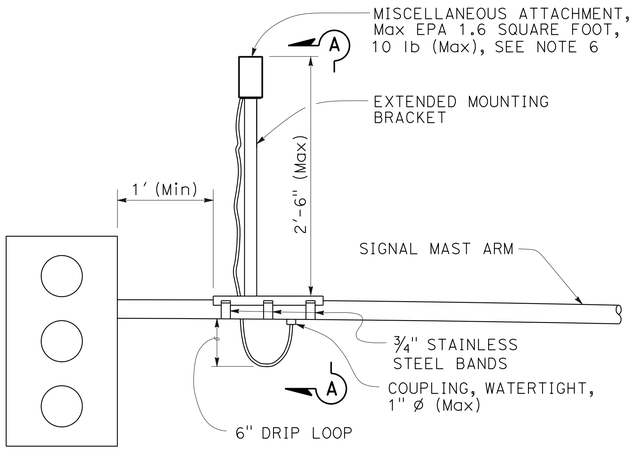

SIGNAL MAST ARM MOUNT

DETAIL A

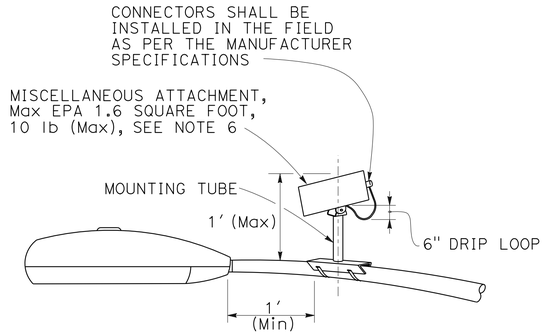

LUMINAIRE MAST ARM MOUNT

DETAIL B

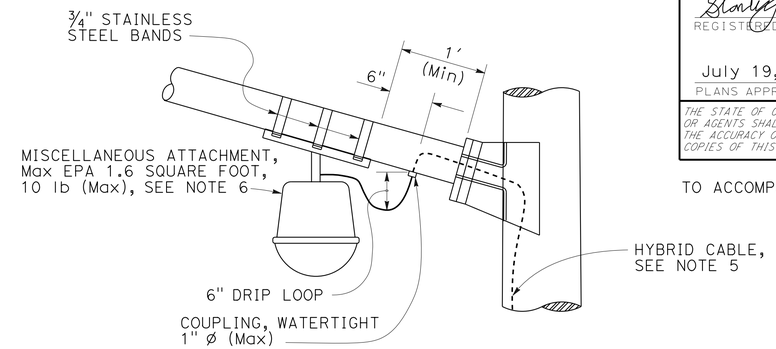

LUMINAIRE MAST ARM MOUNT

DETAIL C

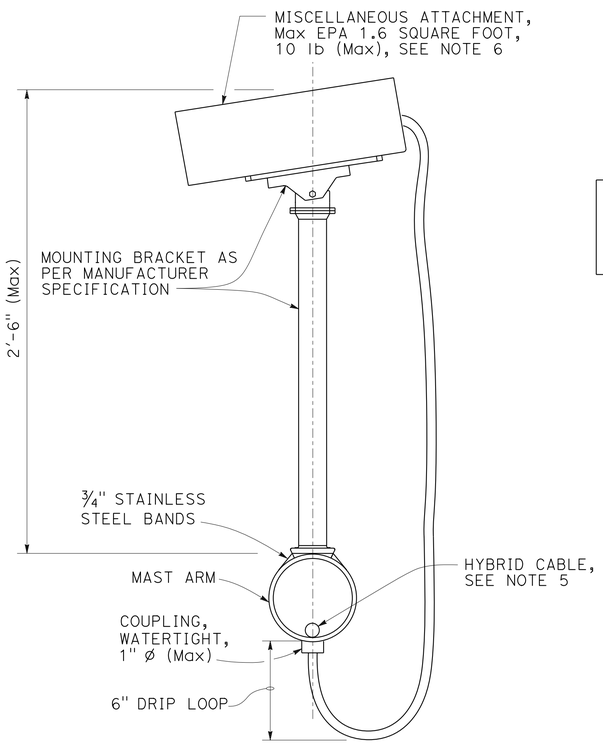

SECTION A-A

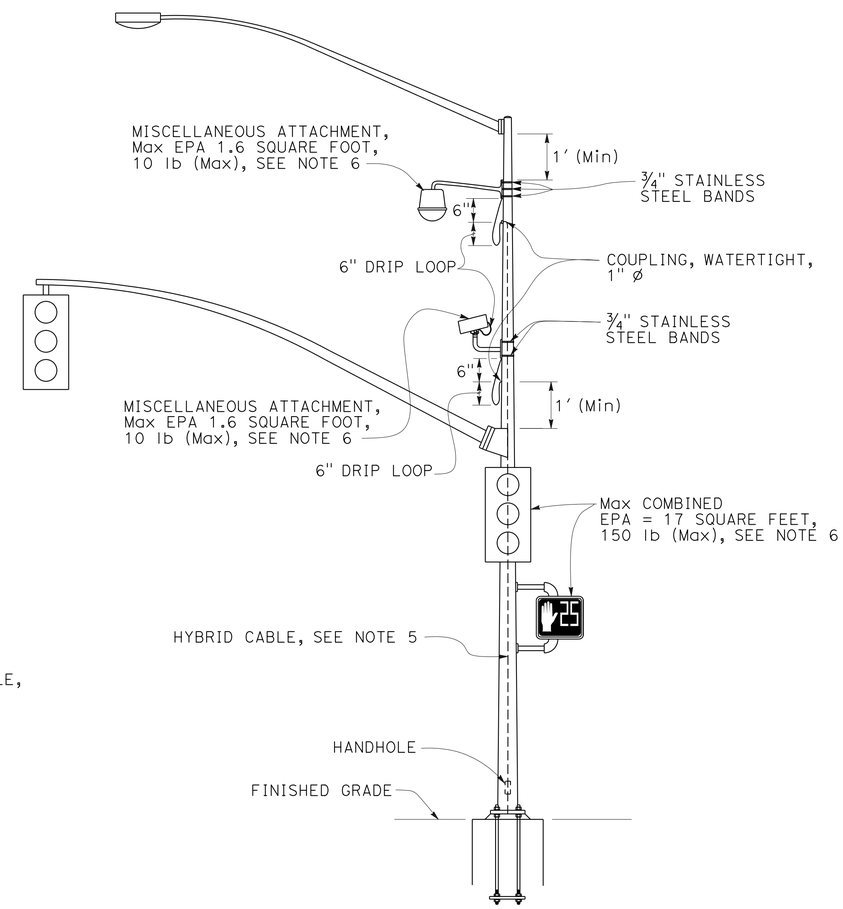

SIGNAL POLE MOUNT

DETAIL D

NOTES:

1. Exact mounting location of miscellaneous attachment and bracket shall be approved by the Engineer per manufacturer's recommendation.
2. Location of cable entrances on signal pole shall be a minimum of 1′ from any flange or base plate.
3. Hybrid cable entrances on signal pole shall be drilled for weathertight coupling as required.
4. Hybrid cable shall have a drip loop at the entrance into signal pole, luminaire mast arm and signal mast arm.
5. A single hybrid cable shall run continuous and shall not be twisted from the miscellaneous attachment to the controller cabinet. No splices shall be allowed.
6. Use the manufacturer's Effective Projected Area (EPA) for miscellaneous attachment. The maximum EPA for each miscellaneous attachment shall be 1.6 square feet.
7. Maximum of two miscellaneous attachments per traffic signal structure.
8. Maximum of one miscellaneous attachment per mast arm.
9. Miscellaneous attachment shall be mounted using clamping devices.

STATE OF CALIFORNIA
DEPARTMENT OF TRANSPORTATION

ELECTRICAL SYSTEMS (SIGNAL AND LIGHTING, MISCELLANEOUS ATTACHMENT)

NO SCALE

RSP ES-7R DATED JULY 19, 2013 SUPERSEDES STANDARD PLAN ES-7R
DATED MAY 20, 2011 - PAGE 479 OF THE STANDARD PLANS BOOK DATED 2010.

REVISED STANDARD PLAN RSP ES-7R

2010 REVISED STANDARD PLAN RSP ES-7R

6-17-13

DIST	COUNTY	ROUTE	POST MILES TOTAL PROJECT	SHEET NO.	TOTAL SHEETS
08	SBd	15	12.8	120	122

Theresa Gabriel
REGISTERED ELECTRICAL ENGINEER

July 19, 2013
PLANS APPROVAL DATE

REGISTERED PROFESSIONAL ENGINEER Theresa Aziz Gabriel No. E15129 Exp. 6-30-14 ELECTRICAL STATE OF CALIFORNIA

THE STATE OF CALIFORNIA OR ITS OFFICERS OR AGENTS SHALL NOT BE RESPONSIBLE FOR THE ACCURACY OR COMPLETENESS OF SCANNED COPIES OF THIS PLAN SHEET.

TO ACCOMPANY PLANS DATED 8-19-13

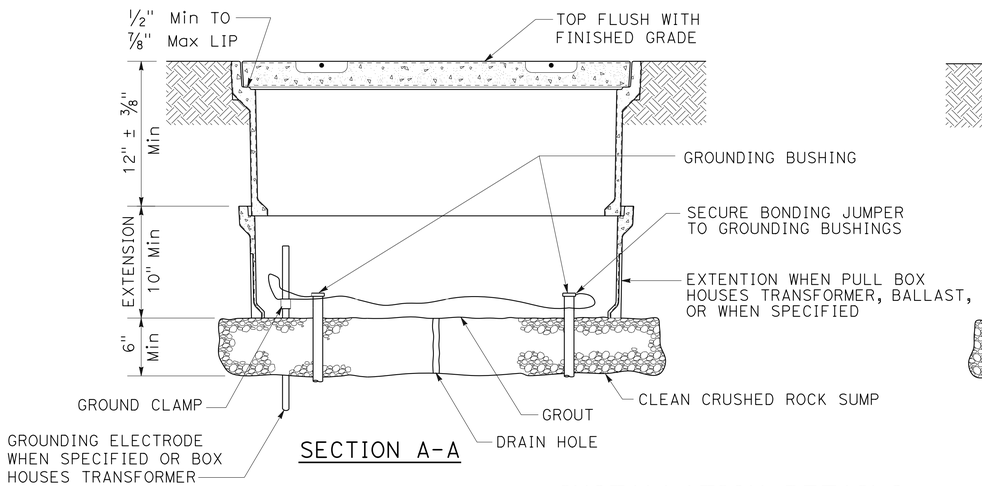

SECTION A-A

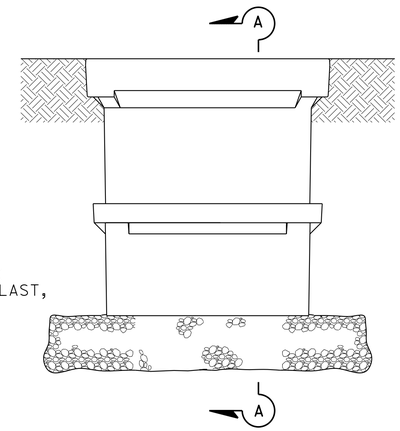

SIDE VIEW

INSTALLATION DETAILS

DETAIL A

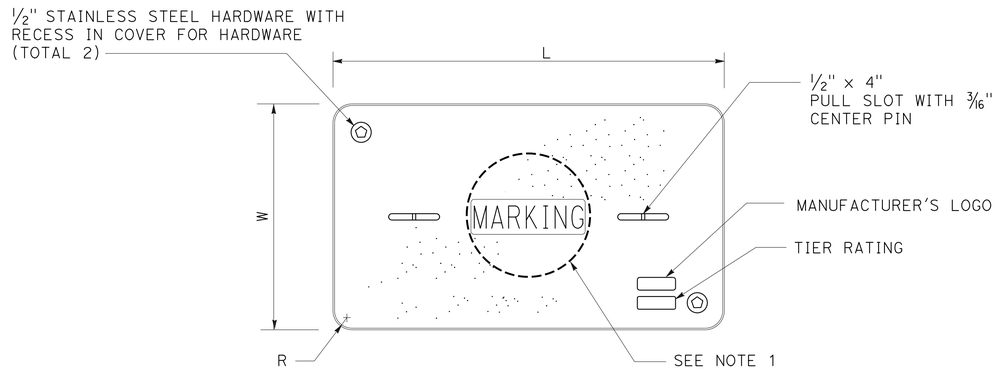

COVER TOP VIEW

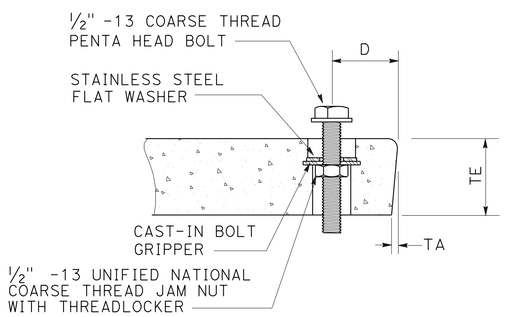

TYPICAL COVER CAPTIVE BOLT

OR SIMILAR

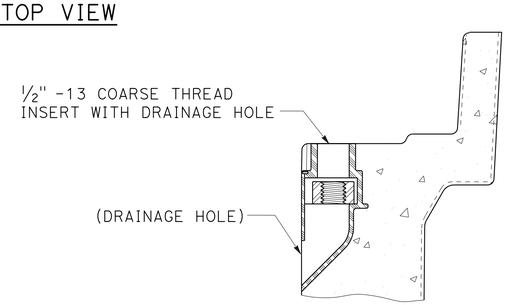

TYPICAL THREADED INSERT

OR SIMILAR

DIMENSION TABLE

PULL BOX	PULL BOX			COVER						
	MINIMUM DEPTH BOX	MINIMUM DEPTH EXTENSION	MAXIMUM WEIGHT	L	W	R	TE	TA	D	MAXIMUM WEIGHT
No. 3½	12"	N/A	40 lb	1′ - 3⅜"	10⅛"	1⅜"	2"	⅛"	1¾"	30 lb
No. 5	12"	10"	55 lb	1′ - 11¼"	1′ - 1¾"	1⅜"	2"	⅛"	1¾"	60 lb
No. 6	12"	10"	70 lb	2′ - 6½"	1′ - 5½"	1⅜"	2"	⅛"	2"	85 lb

NOTES:

1. Pull box covers shall be marked as follows: "SERVICE" Service circuits between service point and service disconnect; "SPRINKLER-CONTROL" sprinkler control circuits, 50 V or less; "CALTRANS" on all pull boxes, except pull boxes marked "SPRINKLER-CONTROL"; and "TELEPHONE" Telephone service;
   - A) No. 3½ pull box.
     - 1) "SIGNAL" - Traffic signal circuits with or without lighting or sign lighting circuits.
     - 2) "LIGHTING" - Lighting or sign lighting circuits where voltage is under 600 V.
   - B) No. 5, 6, 9 or 9A pull box.
     - 1) "TRAFFIC SIGNAL" - Traffic signal circuits with or without lighting or sign lighting circuits.
     - 2) "LIGHTING" - Lighting or sign lighting circuits where voltage is under 600 V.
     - 3) "LIGHTING-HIGH VOLTAGE" - Lighting or sign lighting circuits where voltage is above 600 V.
     - 4) "IRRIGATION" - Circuits to irrigation controller 120 V or more.
     - 5) "RAMP METER" - Ramp meter circuits.
     - 6) "COUNT STATION" - Count or speed monitor circuits.
     - 7) "COMMUNICATIONS" - Communication circuits.
     - 8) "TOS COMMUNICATIONS" - TOS communication line.
     - 9) "TOS POWER" - TOS power.
     - 10) "TDC POWER" - Telephone demarcation cabinet power.
     - 11) "CCTV" - Closed circuit television circuits.
     - 12) "TMS" - Traffic monitoring station circuits.
     - 13) "CMS" - Changeable message sign circuits.
     - 14) "HAR" - Highway advisory radio circuits.
     - 15) "BOOSTER PUMP" - Booster pump circuit.
2. The nominal dimensions of the opening in which the cover sets shall be the same as the cover dimensions except the length and width dimensions shall be ⅛" greater.
3. Covers and boxes shall be interchangeable with California standard male and female gages. When interchanged with a standard male or female gage, the top surfaces shall be flush within ⅛". Top outside radius of covers and pull boxes shall have a ⅛" radius.
4. Pull box extension may be another pull box as long as the bottom edge of the pull box can fit into the cover opening.
5. All dimensions for the cover for non-traffic pull box are nominal values.

STATE OF CALIFORNIA
DEPARTMENT OF TRANSPORTATION

ELECTRICAL SYSTEMS (NON-TRAFFIC PULL BOX)

NO SCALE

RSP ES-8A DATED JULY 19, 2013 SUPERSEDES RSP ES-8A DATED JANUARY 20, 2012 THAT SUPPLEMENTS THE STANDARD PLANS BOOK DATED 2010.

REVISED STANDARD PLAN RSP ES-8A

2010 REVISED STANDARD PLAN RSP ES-8A

7-15-13

DIST	COUNTY	ROUTE	POST MILES TOTAL PROJECT	SHEET NO.	TOTAL SHEETS
08	SBd	15	12.8	121	122

Theresa Gabriel
REGISTERED ELECTRICAL ENGINEER

July 19, 2013
PLANS APPROVAL DATE

REGISTERED PROFESSIONAL ENGINEER Theresa Aziz Gabriel No. E15129 Exp. 6-30-14 ELECTRICAL STATE OF CALIFORNIA

THE STATE OF CALIFORNIA OR ITS OFFICERS OR AGENTS SHALL NOT BE RESPONSIBLE FOR THE ACCURACY OR COMPLETENESS OF SCANNED COPIES OF THIS PLAN SHEET.

TO ACCOMPANY PLANS DATED 8-19-13

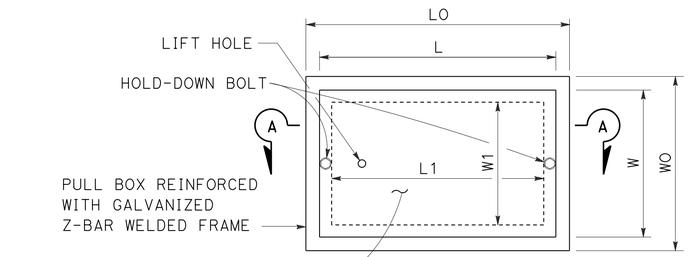

TOP VIEW

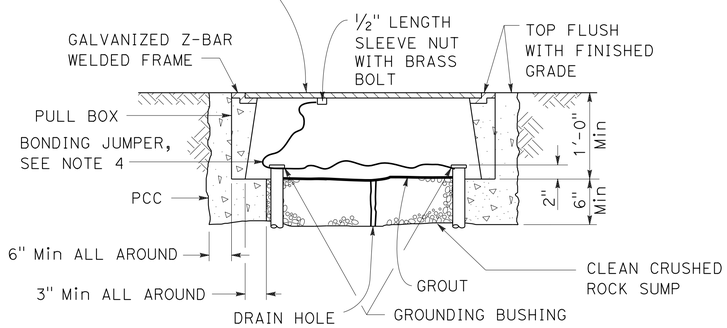

SECTION A-A

No. 3½(T), No. 5(T) AND No. 6(T) TRAFFIC PULL BOX

NOTES:

1. Traffic pull box shall be provided with steel cover and special concrete footing. Steel cover shall have embossed non-skid pattern.
2. Steel reinforcing shall be as regularly used in the standard products of the respective manufacturer.
3. Pull box covers shall be marked as follows: "SERVICE" Service circuits between service point and service disconnect; "SPRINKLER-CONTROL" Sprinkler control circuits, 50 V or less; "CALTRANS" On all pull boxes, except pull boxes marked "SPRINKLER-CONTROL"; and "TELEPHONE" Telephone service.
   - A) No. 3½(T) pull box.
     - 1) "SIGNAL" - Traffic signal circuits with or without lighting or sign lighting circuits.
     - 2) "LIGHTING" - Lighting or sign lighting circuits where voltage is under 600 V.
   - B) No. 5(T) or 6(T) pull box.
     - 1) "TRAFFIC SIGNAL" - Traffic signal circuits with or without lighting or sign lighting circuits.
     - 2) "LIGHTING" - Lighting or sign lighting circuits where voltage is under 600 V.
     - 3) "LIGHTING-HIGH VOLTAGE" - Lighting or sign lighting circuits where voltage is above 600 V.
     - 4) "IRRIGATION" - Circuits to irrigation controller 120 V or more.
     - 5) "RAMP METER" - Ramp meter circuits.
     - 6) "COUNT STATION" - Count or speed monitor circuits.
     - 7) "COMMUNICATION" - Communication circuits.
     - 8) "TOS COMMUNICATIONS" - TOS communications line.
     - 9) "TOS POWER" - TOS power.
     - 10) "TDC POWER" - Telephone demarcation cabinet power.
     - 11) "CCTV" - Closed circuit television circuits.
     - 12) "TMS" - Traffic monitoring station circuits.
     - 13) "CMS" - Changeable message sign circuits.
     - 14) "HAR" - Highway advisory radio circuits.
     - 15) "BOOSTER PUMP" - Booster pump circuit.
4. Bonding jumper for metal covers shall be 3' long, minimum.
5. The nominal dimensions of the opening in which the cover sets shall be the same as the cover dimensions except the length and width dimensions shall be ⅛" greater.
6. Covers and boxes shall be interchangeable with California standard male and female gages. When interchanged with a standard male or female gage, the top surfaces shall be flush within ⅛".

DIMENSION TABLE

PULL BOX	PULL BOX						COVER				
	MINIMUM * THICKNESS	MINIMUM DEPTH BOX AND EXTENSION	WO	LO	L1	W1	L **	W **	R	EDGE THICKNESS	EDGE TAPER
No. 3½(T)	1½"	1'-0"	1'-5"± 1"	1'-8⅞"±	1'-2½"±	10⅝"± 1"	1'-8"±	1'-1¾"±	0"	½"	NONE
No. 5(T)	1¾"	1'-0"	1'-11½"± 1"	2'-5½"±	1'-7"±	1'-1"± 1"	2'-3"±	1'-4"±	0"	½"	NONE
No. 6(T)	2"	1'-0"	2'-6"± 1"	2'-11½"±	1'-11½"±	1'-5"± 1"	2'-9"±	1'-8"±	0"	½"	NONE

* EXCLUDING CONDUIT WEB ** TOP DIMENSION

STATE OF CALIFORNIA
DEPARTMENT OF TRANSPORTATION

ELECTRICAL SYSTEMS (TRAFFIC PULL BOX)

NO SCALE

RSP ES-8B DATED JULY 19, 2013 SUPERSEDES RSP ES-8B DATED JANUARY 20, 2012 THAT SUPPLEMENTS THE STANDARD PLANS BOOK DATED 2010.

REVISED STANDARD PLAN RSP ES-8B

2010 REVISED STANDARD PLAN RSP ES-8B

7-15-13

Dist	COUNTY	ROUTE	POST MILES TOTAL PROJECT	SHEET No.	TOTAL SHEETS
08	SBd	15	12.8	122	122

Theresa Gabriel
REGISTERED ELECTRICAL ENGINEER

July 19, 2013
PLANS APPROVAL DATE

REGISTERED PROFESSIONAL ENGINEER
Theresa Aziz Gabriel
No. E15129
Exp. 6-30-14
ELECTRICAL
STATE OF CALIFORNIA

THE STATE OF CALIFORNIA OR ITS OFFICERS OR AGENTS SHALL NOT BE RESPONSIBLE FOR THE ACCURACY OR COMPLETENESS OF SCANNED COPIES OF THIS PLAN SHEET.

TO ACCOMPANY PLANS DATED 8-19-13

ISOFOOTCANDLE CURVE - MINIMUM

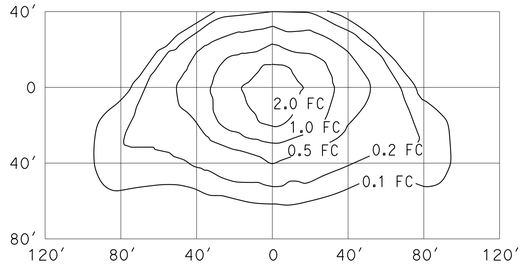

TYPE III MEDIUM CUTOFF

Cutoff Luminaire
34′ Mounting Height
Lamp operated at 22,000 lm
200-W high pressure sodium lamp
ANSI Designation S66

ISOFOOTCANDLE CURVE - MINIMUM

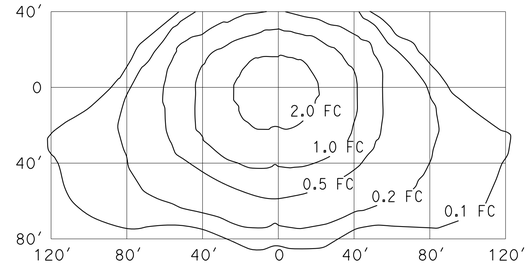

TYPE III MEDIUM CUTOFF

Cutoff Luminaire
40′ Mounting Height
Lamp operated at 37,000 lm
310-W high pressure sodium lamp
ANSI Designation S67

ISOFOOTCANDLE CURVE - MINIMUM

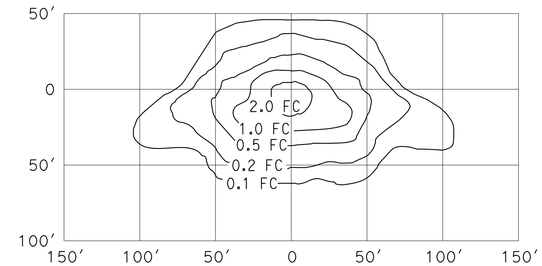

TYPE III MEDIUM CUTOFF

Cutoff Luminaire
30′ Mounting Height
Lamp operated at 16,000 lm
150-W high pressure sodium lamp
ANSI Designation S55

ISOFOOTCANDLE CURVE - MINIMUM

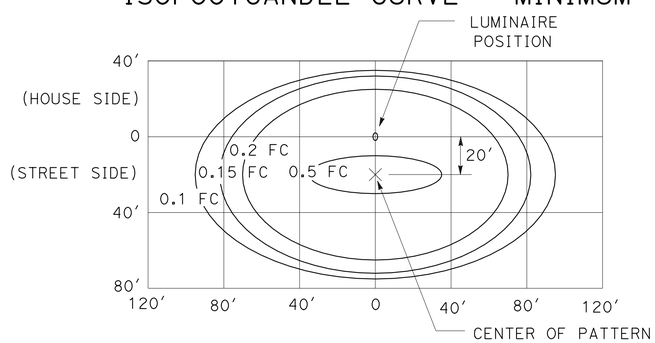

LED LUMINAIRE ROADWAY 1

165-W at 34′ Mounting Height

ISOFOOTCANDLE CURVE - MINIMUM

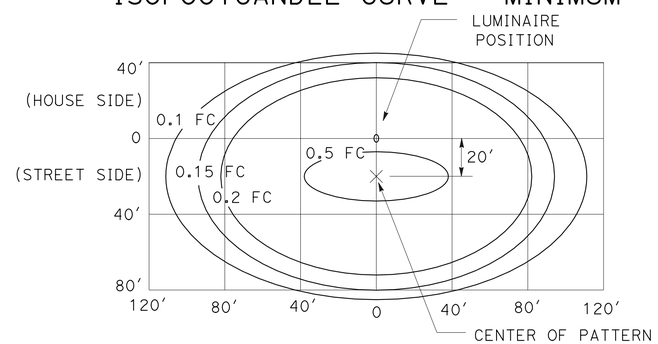

LED LUMINAIRE ROADWAY 2

235-W at 40′ Mounting Height

ISOFOOTCANDLE CURVE - MINIMUM

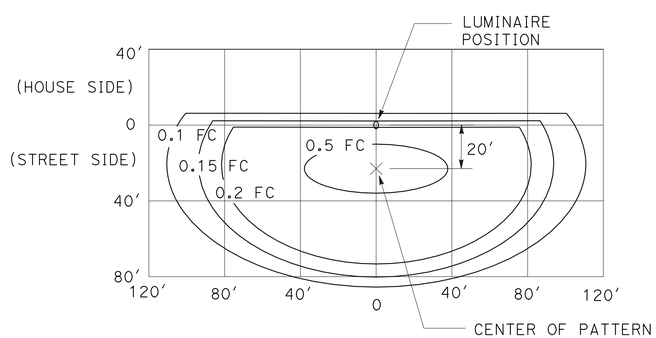

LED LUMINAIRE ROADWAY 3

235-W at 40′ Mounting Height
with back side control

ISOFOOTCANDLE CURVE - MINIMUM

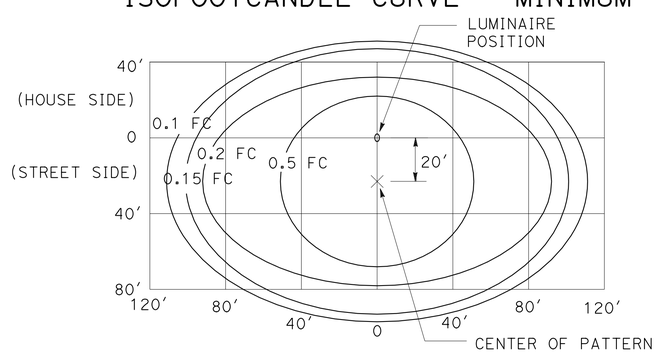

LED LUMINAIRE ROADWAY 4

300-W at 40′ Mounting Height

ISOFOOTCANDLE CURVE - MINIMUM

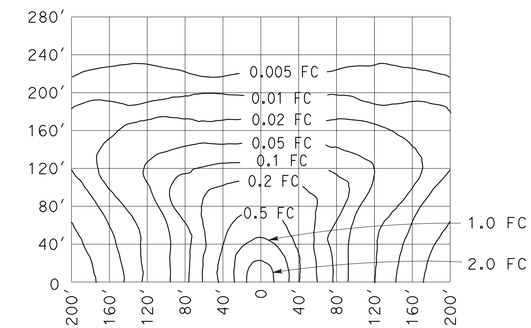

LOW PRESSURE SODIUM LUMINAIRE

40′ Mounting Height
Lamp operated at 33,000 lm
180-W low pressure sodium lamp

STATE OF CALIFORNIA
DEPARTMENT OF TRANSPORTATION

ELECTRICAL SYSTEMS (ISOFOOTCANDLE DIAGRAMS)

NO SCALE

RSP ES-10A DATED JULY 19, 2013 SUPERSEDES RSP ES-10A DATED JULY 20, 2012 THAT SUPPLEMENTS THE STANDARD PLANS BOOK DATED 2010.

REVISED STANDARD PLAN RSP ES-10A

2010 REVISED STANDARD PLAN RSP ES-10A

7-9-13