Dist	COUNTY	ROUTE	POST MILES TOTAL PROJECT	SHEET No.	TOTAL SHEETS
07	LA	405	1.2, 2.3	1	20

INDEX OF PLANS

SHEET No.	DESCRIPTION
1	TITLE AND LOCATION MAP
2	CONSTRUCTION AREA SIGNS
3-6	TRAFFIC HANDLING DETAILS
7-10	SIGN PLANS, DETAILS AND QUANTITIES
11	SUMMARY OF QUANTITIES
12	MODIFY SIGN ILLUMINATION
13-20	REVISED STANDARD PLANS

THE STANDARD PLANS LIST APPLICABLE TO THIS CONTRACT IS INCLUDED IN THE NOTICE TO BIDDERS AND SPECIAL PROVISIONS BOOK.

STATE OF CALIFORNIA

DEPARTMENT OF TRANSPORTATION

PROJECT PLANS FOR CONSTRUCTION ON

STATE HIGHWAY

IN LOS ANGELES COUNTY
IN LONG BEACH AT 0.1 MILE NORTH OF PALO VERDE AVENUE UNDERCROSSING AND AT BELLFLOWER UNDERCROSSING

TO BE SUPPLEMENTED BY STANDARD PLANS DATED MAY 2006

LOCATION OF CONSTRUCTION
PM 1.2

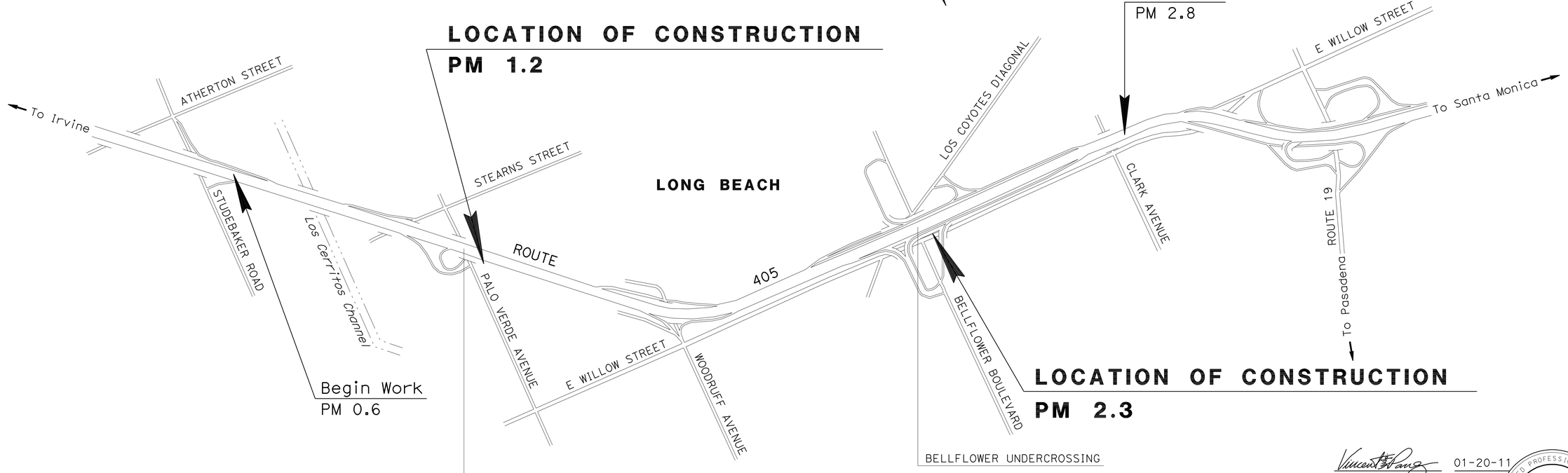

NO SCALE

THE CONTRACTOR SHALL POSSESS THE CLASS (OR CLASSES) OF LICENSE AS SPECIFIED IN THE "NOTICE TO BIDDERS."

Vincent T. Pang 01-20-11
PROJECT ENGINEER DATE
REGISTERED CIVIL ENGINEER

REGISTERED PROFESSIONAL ENGINEER — VINCENT PANG — No. 69963 — Exp. 9-30-12 — CIVIL — STATE OF CALIFORNIA

February 22, 2011
PLANS APPROVAL DATE

THE STATE OF CALIFORNIA OR ITS OFFICERS OR AGENTS SHALL NOT BE RESPONSIBLE FOR THE ACCURACY OR COMPLETENESS OF SCANNED COPIES OF THIS PLAN SHEET.

PROJECT MANAGER	CHRISTIAN SAM
DESIGN ENGINEER	LARRY WIERING

CONTRACT No.	07-4Y6904
PROJECT ID	0700001890

LAST REVISION 02-22-11
DATE PLOTTED => 18-FEB-2011
TIME PLOTTED => 11:03

Dist	COUNTY	ROUTE	POST MILES TOTAL PROJECT	SHEET No.	TOTAL SHEETS
07	LA	405	1.2, 2.3	2	20

Vincent Pang 01-20-11
REGISTERED CIVIL ENGINEER DATE

02-22-11
PLANS APPROVAL DATE

REGISTERED PROFESSIONAL ENGINEER
VINCENT PANG
No. 69963
Exp. 9-30-12
CIVIL
STATE OF CALIFORNIA

THE STATE OF CALIFORNIA OR ITS OFFICERS OR AGENTS SHALL NOT BE RESPONSIBLE FOR THE ACCURACY OR COMPLETENESS OF SCANNED COPIES OF THIS PLAN SHEET.

NOTES:

1. LOCATIONS OF CONSTRUCTION AREA SIGNS SHOWN ARE APPROXIMATE. EXACT LOCATIONS WILL BE DETERMINED BY THE ENGINEER.
2. EXISTING UTILITY FACILITIES HAVE NOT BEEN PLOTTED ON THESE PLANS

STATIONARY MOUNTED CONSTRUCTION AREA SIGNS

SIGN NUMBER	SIGN CODE	PANEL SIZE	SIGN MESSAGE	NUMBER OF POSTS AND SIZE	NUMBER OF SIGNS
Ⓐ	C40 (CA)	108" x 42"	TRAFFIC FINES DOUBLED IN CONSTRUCTION ZONES	2 - 6" x 6"	1
Ⓑ	W20-1	48" x 48"	ROAD WORK AHEAD	1 - 6" x 6"	4
Ⓒ	G20-2	48" x 24"	END ROAD WORK	1 - 4" x 6"	4
Ⓓ	W20-1	36" x 36"	ROAD WORK AHEAD	1 - 4" x 6"	1
Ⓔ	G20-2	36" x 18"	END ROAD WORK	1 - 4" x 4"	1

CONSTRUCTION AREA SIGNS

NO SCALE

CS-1

THIS PLAN ACCURATE FOR CONSTRUCTION AREA SIGNS ONLY.

VINCENT PANG — CALCULATED-DESIGNED BY
LARRY WIERING — CHECKED BY
REVISED BY — DATE REVISED
FUNCTIONAL SUPERVISOR: LARRR WIERING
STATE OF CALIFORNIA - DEPARTMENT OF TRANSPORTATION
Caltrans® MAINTENANCE ENGINEERING

LAST REVISION DATE PLOTTED => 18-FEB-2011
TIME PLOTTED => 11:03

BORDER LAST REVISED 7/2/2010
USERNAME => s122436
DGN FILE => 07000018901a001.dgn
RELATIVE BORDER SCALE IS IN INCHES 0 1 2 3
UNIT 1963
PROJECT NUMBER & PHASE 07000018901

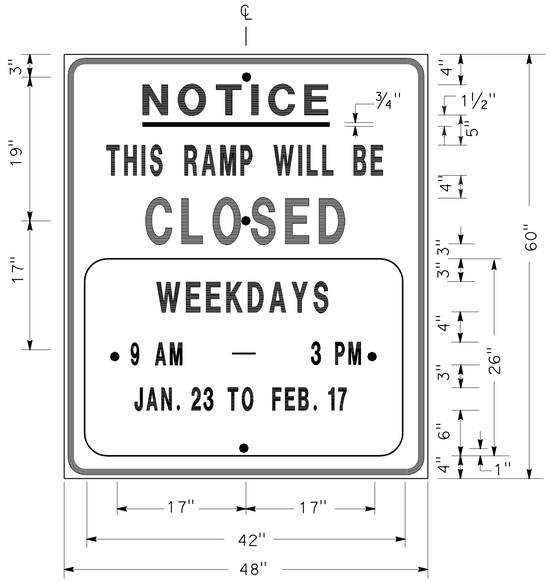

SIGN SP-1

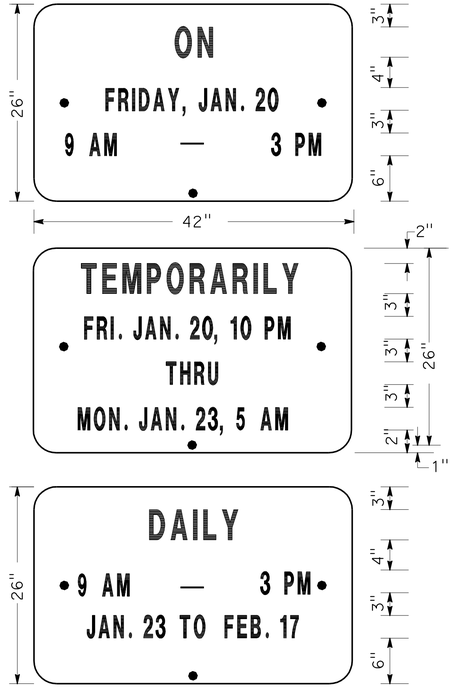

ALTERNATE OVERLAY PANELS (TYPICAL)

SPECIAL ADVANCE NOTICE PUBLICITY SIGN

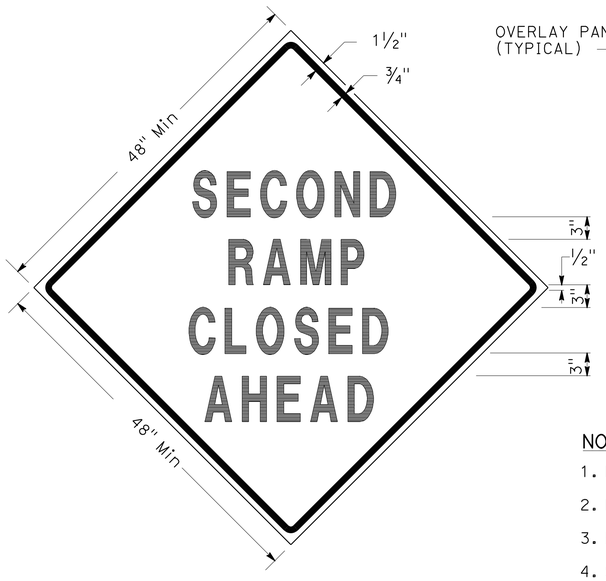

SIGN SP-3

SIGN SP-5

NOTES: (SIGNS SP-3 & SP-5)

1. LETTERS - 6" SERIES D.
2. LETTERS AND BORDERS - BLACK ON RETROREFLECTORIZED ORANGE BACKGROUND.
3. BASE MATERIAL SHALL BE ALUMINUM (MINIMUM 0.06").
4. SIGNS SHALL BE MOUNTED WITH BOTTOMS OF SIGNS A MINIMUM OF 6′ ABOVE GROUND.

SPECIAL SIGN FOR EXIT RAMP CLOSURES

NOTES: (SIGN SP-1)

1. SIGNS SHALL HAVE ORANGE RETROREFLECTORIZED BACKGROUND WITH BLACK BORDER AND LETTERS.
2. BOLT HOLES SHALL BE 3/8" DIAMETER.
3. BASE MATERIAL SHALL BE ALUMINUM (MINIMUM 0.06").
4. SIGNS SHALL BE MOUNTED WITH BOTTOMS OF SIGNS A MINIMUM OF 6′ ABOVE GROUND.

SIZE	BORDER WIDTH	MARGIN WIDTH	LETTER SIZE					CORNER RADIUS
			LINE 1	LINE 2*	LINE 3	LINE 4	LINE 5,6 & 7*	
48"x60"	1 1/4"	3/4"	4E	4D	6E	4D		3"
42"x26"	OVERLAY						3D	1 1/2"
* CONDENSED SPACING IF NECESSARY								

SIGN SP-4

NOTES: (SIGN SP-4)

1. LETTERS - 6" SERIES C.
2. LETTERS AND BORDERS - BLACK ON RETROREFLECTORIZED WHITE BACKGROUND.
3. BASE MATERIAL SHALL BE ALUMINUM (MINIMUM 0.06").
4. SIGNS SHALL BE PLACED AT RAMP ENTRANCES IN ADDITION TO SIGNS POSTED IN ACCORDANCE WITH STANDARD PLAN T14.

SPECIAL SIGN FOR ENTRANCE RAMP CLOSURES

TRAFFIC HANDLING DETAILS
TRAFFIC CONTROL SYSTEM FOR RAMP CLOSURES, DETOUR SIGNS AND MISCELLANEOUS DETAILS

SHEET 1 OF 2

NO SCALE

THD-1

Dist	COUNTY	ROUTE	POST MILES TOTAL PROJECT	SHEET No.	TOTAL SHEETS
07	LA	405	1.2, 2.3	3	20

Denis Katayama 02-16-11
REGISTERED CIVIL ENGINEER DATE

02-22-11
PLANS APPROVAL DATE

REGISTERED PROFESSIONAL ENGINEER — D. S. KATAYAMA — No. C50648 — Exp. 9-30-11 — CIVIL — STATE OF CALIFORNIA

THE STATE OF CALIFORNIA OR ITS OFFICERS OR AGENTS SHALL NOT BE RESPONSIBLE FOR THE ACCURACY OR COMPLETENESS OF SCANNED COPIES OF THIS PLAN SHEET.

CALCULATED-DESIGNED BY: ALBERT K YU
CHECKED BY: JOCELYN C CHIANG
FUNCTIONAL SUPERVISOR: JOHN YANG
REVISED BY: JC
DATE REVISED: 7/10

STATE OF CALIFORNIA - DEPARTMENT OF TRANSPORTATION
DTM
Caltrans®

LAST REVISION: DATE PLOTTED => 18-FEB-2011
02-22-11 TIME PLOTTED => 11:03

BORDER LAST REVISED 7/2/2010
USERNAME => s122436
DGN FILE => 0700001890me001.dgn
RELATIVE BORDER SCALE IS IN INCHES 0 1 2 3
UNIT 1882
PROJECT NUMBER & PHASE 07000018901

Dist	COUNTY	ROUTE	POST MILES TOTAL PROJECT	SHEET No.	TOTAL SHEETS
07	LA	405	1.2, 2.3	4	20

Denis Katayama 02-16-11
REGISTERED CIVIL ENGINEER DATE

02-22-11
PLANS APPROVAL DATE

D. S. KATAYAMA No. C50648 Exp. 9-30-11 CIVIL — REGISTERED PROFESSIONAL ENGINEER — STATE OF CALIFORNIA

THE STATE OF CALIFORNIA OR ITS OFFICERS OR AGENTS SHALL NOT BE RESPONSIBLE FOR THE ACCURACY OR COMPLETENESS OF SCANNED COPIES OF THIS PLAN SHEET.

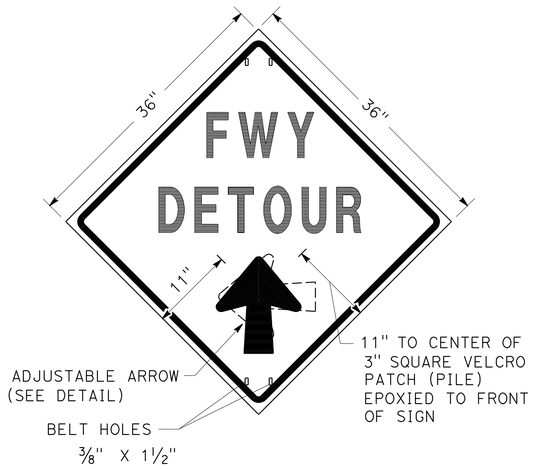

SIGN SP-2

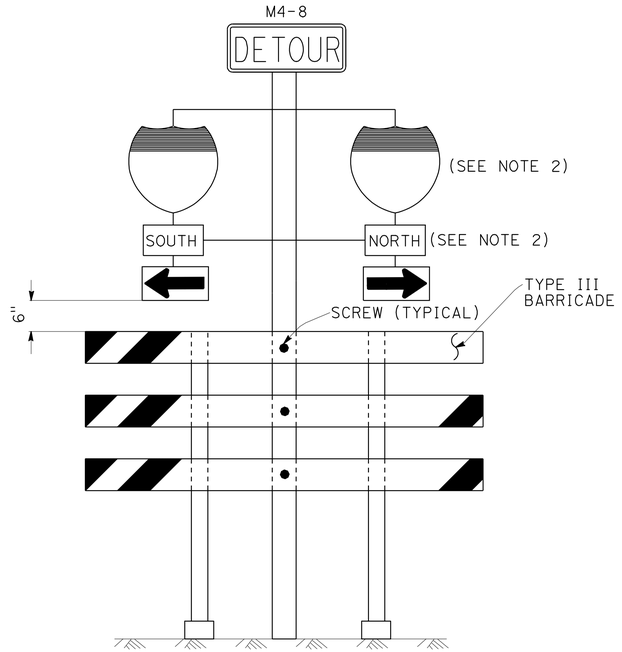

SIGN SP-6 (SEE NOTE 1)

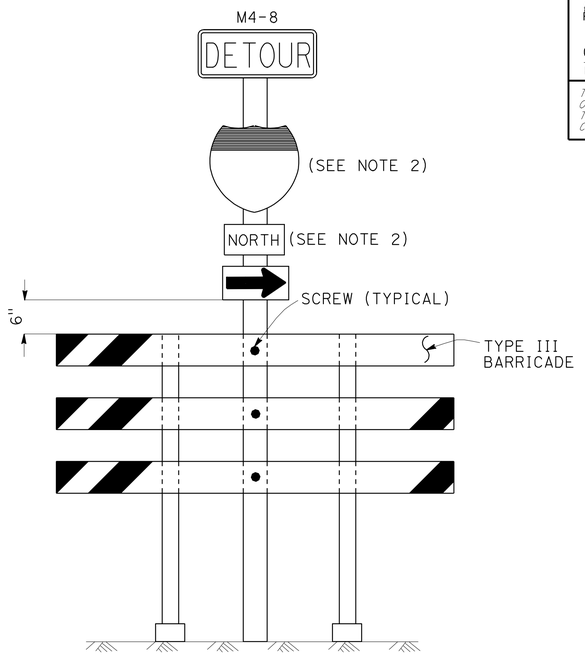

SIGN SP-7 (SEE NOTE 1)

NOTES: (SIGN SP-2)

1. LETTERS -6" SERIES E.
2. LETTERS, BORDER AND ARROW - BLACK ON RETROREFLECTORIZED ORANGE BACKGROUND.
3. BASE MATERIAL FOR SIGNS AND ARROWS SHALL BE ALUMINUM (MINIMUM 0.06").
4. BELTS (LUGGAGE STRAPS) SHALL BE 1" WIDE BY 48" LONG, MADE OF COTTON OR POLYPROPYLENE WEB MATERIAL.
5. SIGNS SHALL BE MOUNTED WITH BOTTOMS OF SIGNS A MINIMUM OF 6' ABOVE GROUND EXCEPT AS OTHERWISE SHOWN ON OTHER TRAFFIC HANDLING DETAILS PLANS.

ABBREVIATION

(CA) CALIFORNIA CODE

NOTES: (SIGNS SP-6 & SP-7)

1. IN LIEU OF PLACING SIGNS ON TYPE III BARRICADES, SIGNS, INCLUDING POSTS, MAY BE PLACED INTO THE GROUND OR FASTENED ONTO ELECTROLIERS.
2. USE APPROPRIATE ROUTE SHIELD [G26-2(CA), G27-2(CA), G28-2(CA)] AND CARDINAL DIRECTION [NORTH (M3-1), SOUTH (M3-3), EAST (M3-2), WEST (M3-4)]

SPECIAL PORTABLE FREEWAY DETOUR SIGNS

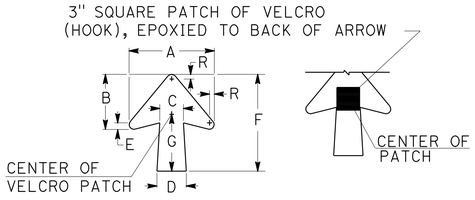

DIMENSIONS							
A	B	C	D	E	F	G	R
11 1/4"	7 1/4"	3 1/8"	4"	7/8"	13"	7 1/2"	5/8"

SPECIAL PORTABLE FREEWAY DETOUR SIGN

ADJUSTABLE ARROW DETAIL

TRAFFIC HANDLING DETAILS

TRAFFIC CONTROL SYSTEM FOR RAMP CLOSURES, DETOUR SIGNS AND MISCELLANEOUS DETAILS

SHEET 2 OF 2

NO SCALE

THD-2

CALCULATED-DESIGNED BY	ALBERT K YU	JC	7/10
CHECKED BY	JOCELYN C CHIANG	REVISED BY	DATE REVISED
FUNCTIONAL SUPERVISOR	JOHN YANG		
STATE OF CALIFORNIA - DEPARTMENT OF TRANSPORTATION	DTM		

LAST REVISION DATE PLOTTED => 18-FEB-2011
02-22-11 TIME PLOTTED => 11:04

BORDER LAST REVISED 7/2/2010 | USERNAME => s122436 | DGN FILE => 070000189Ome002.dgn | RELATIVE BORDER SCALE IS IN INCHES 0 1 2 3 | UNIT 1882 | PROJECT NUMBER & PHASE 07000018901

Dist	COUNTY	ROUTE	POST MILES TOTAL PROJECT	SHEET No.	TOTAL SHEETS
07	LA	405	1.2, 2.3	5	20

Denis Katayama 02-16-11
REGISTERED CIVIL ENGINEER DATE

02-22-11
PLANS APPROVAL DATE

REGISTERED PROFESSIONAL ENGINEER
D. S. KATAYAMA
No. C50648
Exp. 9-30-11
CIVIL
STATE OF CALIFORNIA

THE STATE OF CALIFORNIA OR ITS OFFICERS OR AGENTS SHALL NOT BE RESPONSIBLE FOR THE ACCURACY OR COMPLETENESS OF SCANNED COPIES OF THIS PLAN SHEET.

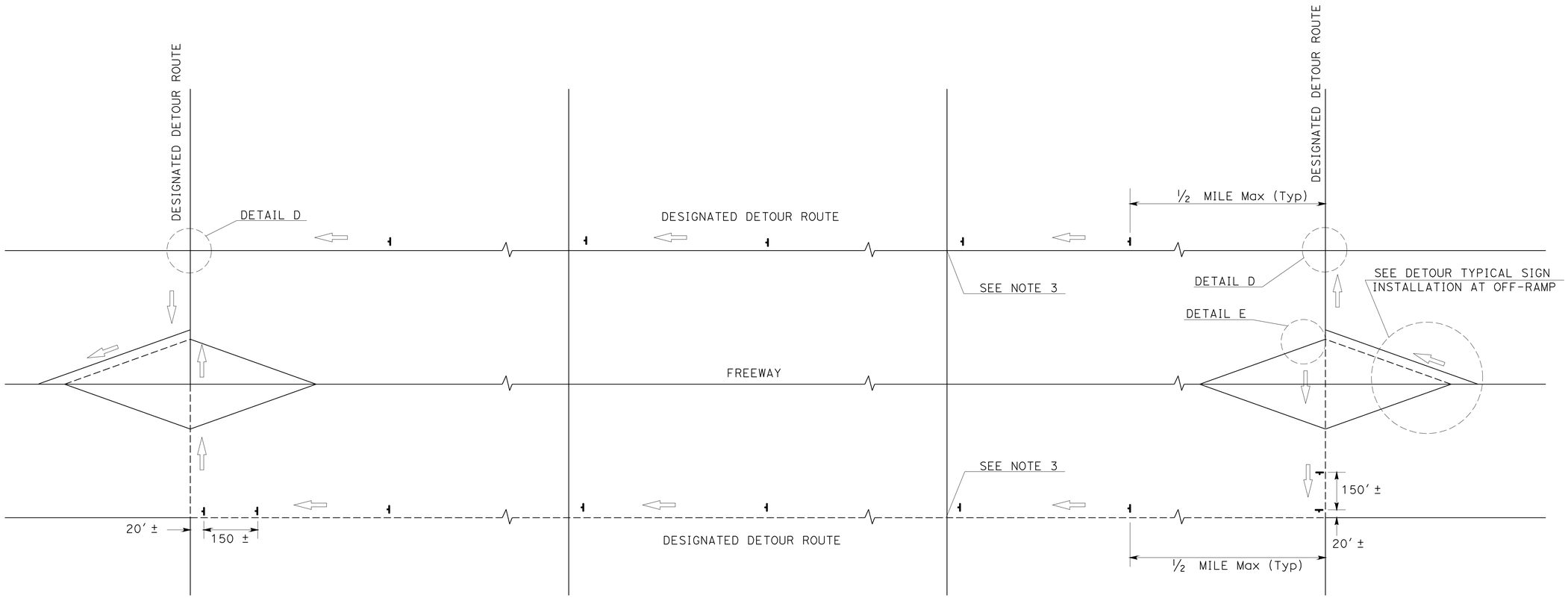

TYPICAL DETOUR SIGN INSTALLATION ALONG DESIGNATED DETOUR ROUTE

LEGEND

⊣	TEMPORARY SIGN (SP-2)
AND/OR	DESIGNATED DETOUR ROUTE
⇨	DIRECTION OF TRAVEL

NOTES:

1. SP-2 SIGNS SHALL NOT BE INSTALLED ON BARRICADES EXCEPT AS OTHERWISE SHOWN.
2. SIGN LOCATIONS ARE APPROXIMATE. EXACT LOCATIONS WILL BE DETERMINED BY THE ENGINEER.
3. SP-2 SIGNS SHALL BE POSTED AT SIGNALIZED INTERSECTIONS ALONG THE DESIGNATED DETOUR ROUTE OR ½ MILE MAXIMUM APART.

TRAFFIC HANDLING DETAILS

TRAFFIC CONTROL SYSTEM FOR DETOUR SIGN INSTALLATION ALONG DESIGNATED DETOUR ROUTE

SHEET 1 OF 2

NO SCALE

THD-3

STATE OF CALIFORNIA - DEPARTMENT OF TRANSPORTATION
DTM

FUNCTIONAL SUPERVISOR: JOHN YANG

CALCULATED-DESIGNED BY: ALBERT K YU
CHECKED BY: JOCELYN C CHIANG

REVISED BY: JC
DATE REVISED: 7/10

LAST REVISION
DATE PLOTTED => 18-FEB-2011
TIME PLOTTED => 11:04
02-22-11

BORDER LAST REVISED 7/2/2010

USERNAME => s122436
DGN FILE => 0700001890me003.dgn

RELATIVE BORDER SCALE IS IN INCHES 0 1 2 3

UNIT 1882

PROJECT NUMBER & PHASE 07000018901

Dist	COUNTY	ROUTE	POST MILES TOTAL PROJECT	SHEET No.	TOTAL SHEETS
07	LA	405	1.2, 2.3	6	20

Denis Katayama 02-16-11
REGISTERED CIVIL ENGINEER DATE

02-22-11
PLANS APPROVAL DATE

REGISTERED PROFESSIONAL ENGINEER D. S. KATAYAMA No. C50648 Exp. 9-30-11 CIVIL STATE OF CALIFORNIA

THE STATE OF CALIFORNIA OR ITS OFFICERS OR AGENTS SHALL NOT BE RESPONSIBLE FOR THE ACCURACY OR COMPLETENESS OF SCANNED COPIES OF THIS PLAN SHEET.

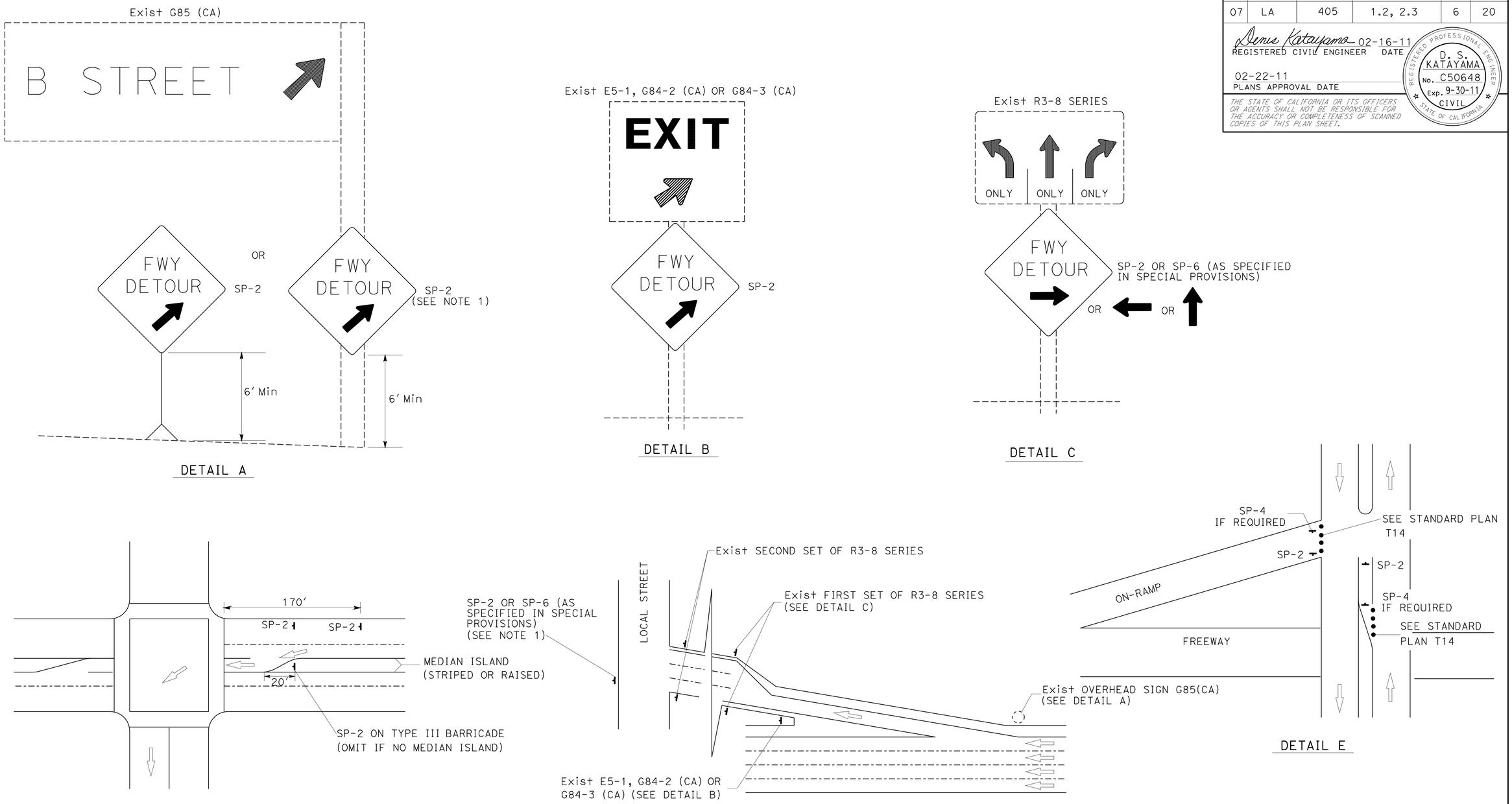

TYPICAL DETOUR SIGN INSTALLATION AT OFF-RAMP

NOTES:

1. TEMPORARY SIGNS MAY BE STRAPPED ON EXISTING ELECTROLIER, SIGNAL POSTS, OR SIGN POSTS.
2. OMIT DETAIL A AND DETAIL B FOR FULL FREEWAY CLOSURES.
3. SEE TRAFFIC HANDLING DETAILS PLAN-TRAFFIC CONTROL SYSTEM FOR RAMP CLOSURES, DETOUR SIGNS AND MISCELLANEOUS DETAILS SHEET 2 OF 2 FOR SP-6.

ABBREVIATIONS

(CA) CALIFORNIA CODE

LEGENDS

- TRAFFIC CONE
- TEMPORARY SIGN
- DIRECTION OF TRAVEL
- EXISTING OVERHEAD SIGN

TRAFFIC HANDLING DETAILS
TRAFFIC CONTROL SYSTEM FOR DETOUR SIGN INSTALLATION ALONG DESIGNATED DETOUR ROUTE
SHEET 2 OF 2

NO SCALE

THD-4

STATE OF CALIFORNIA - DEPARTMENT OF TRANSPORTATION
Caltrans DTM

FUNCTIONAL SUPERVISOR: JOHN YANG
CALCULATED-DESIGNED BY: ALBERT K YU
CHECKED BY: JOCELYN C CHIANG
REVISED BY: JC
DATE REVISED: 8/10

LAST REVISION 02-22-11
DATE PLOTTED => 18-FEB-2011
TIME PLOTTED => 11:04

Dist	COUNTY	ROUTE	POST MILES TOTAL PROJECT	SHEET No.	TOTAL SHEETS
07	LA	405	1.2, 2.3	7	20

REGISTERED CIVIL ENGINEER — DATE 01-20-11

ESTHER M. KIM No. 48363 Exp. 6/30/12 CIVIL — REGISTERED PROFESSIONAL ENGINEER — STATE OF CALIFORNIA

02-22-11
PLANS APPROVAL DATE

THE STATE OF CALIFORNIA OR ITS OFFICERS OR AGENTS SHALL NOT BE RESPONSIBLE FOR THE ACCURACY OR COMPLETENESS OF SCANNED COPIES OF THIS PLAN SHEET.

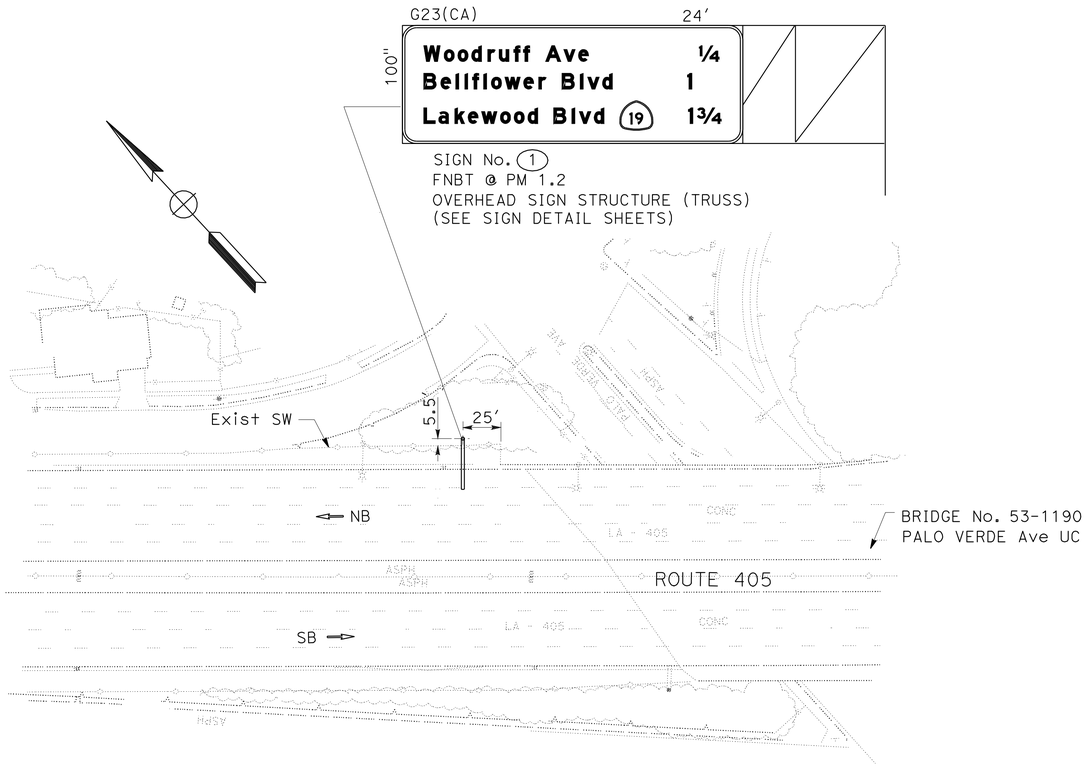

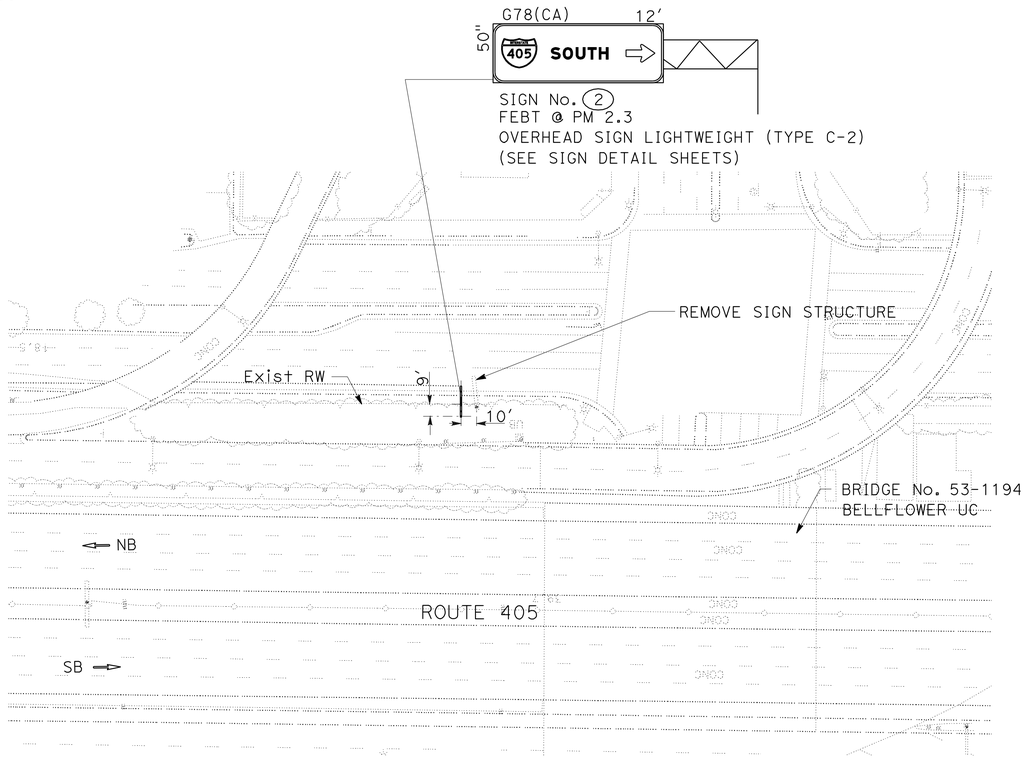

NOTES:

1. SIGN CODE SHALL BE PER CALIFORNIA MUTCD (MANUAL ON UNIFORM TRAFFIC CONTROL DEVICES) CODE UNLESS OTHERWISE NOTED ON PLANS.
1. (CA) DENOTES CALIFORNIA CODED SIGNS.

SIGN PLAN

NO SCALE

THIS PLAN ACCURATE FOR SIGN WORK ONLY.

S-1

STATE OF CALIFORNIA - DEPARTMENT OF TRANSPORTATION
TRAFFIC DESIGN
FUNCTIONAL SUPERVISOR: MOHAMMED CHOWDHURY
CALCULATED-DESIGNED BY: SULIASTI SUTANTO
CHECKED BY: ESTHER M. KIM
REVISED BY / DATE REVISED

LAST REVISION | DATE PLOTTED => 18-FEB-2011 | TIME PLOTTED => 11:04
02-22-11

BORDER LAST REVISED 7/2/2010
USERNAME => s122436
DGN FILE => 0700001890oa001.dgn
RELATIVE BORDER SCALE IS IN INCHES 0 1 2 3
UNIT 2124
PROJECT NUMBER & PHASE 07000018901

Dist	COUNTY	ROUTE	POST MILES TOTAL PROJECT	SHEET No.	TOTAL SHEETS
07	LA	405	1.2, 2.3	8	20

REGISTERED CIVIL ENGINEER — DATE 01-20-11

02-22-11
PLANS APPROVAL DATE

REGISTERED PROFESSIONAL ENGINEER — ESTHER M. KIM — No. 48363 — Exp 6/30/12 — CIVIL — STATE OF CALIFORNIA

THE STATE OF CALIFORNIA OR ITS OFFICERS OR AGENTS SHALL NOT BE RESPONSIBLE FOR THE ACCURACY OR COMPLETENESS OF SCANNED COPIES OF THIS PLAN SHEET.

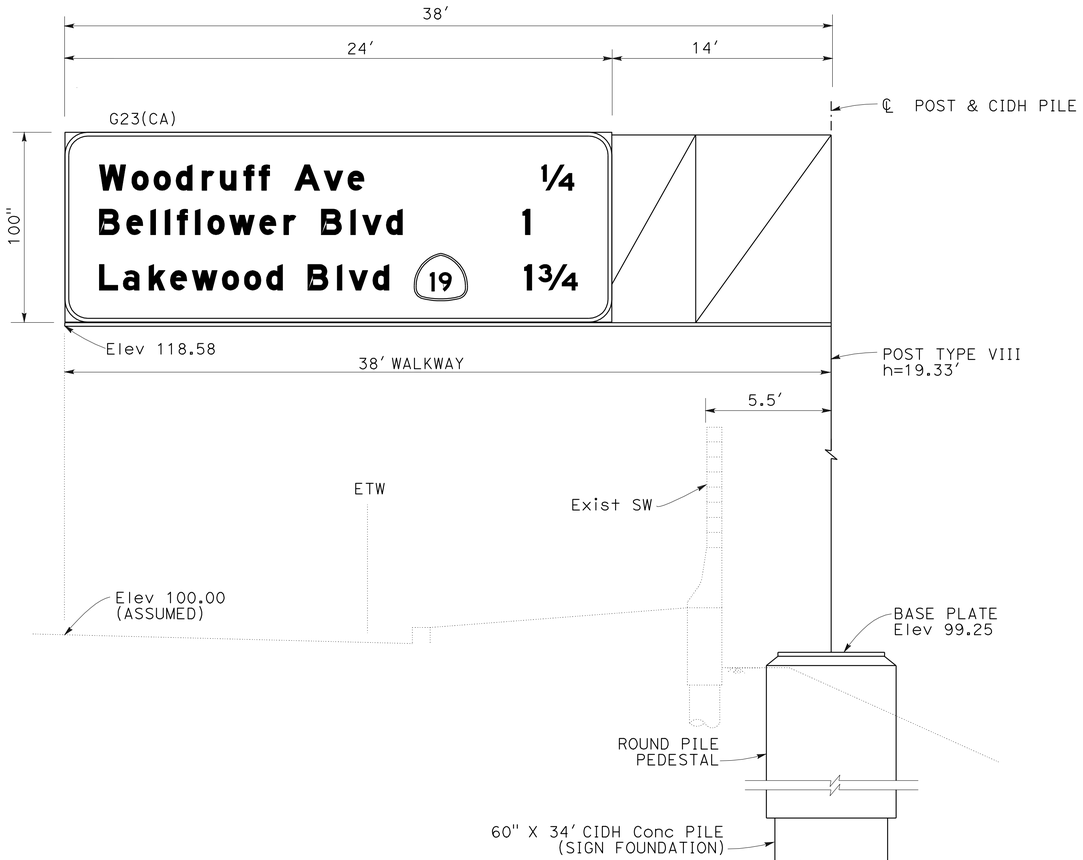

SIGN No. 1

FNBT @ PM 1.2

1. FURNISH AND INSTALL SIGN STRUCTURE (TRUSS), INCLUDING REMOVABLE SIGN PANEL FRAME.
2. INSTALL FORMED SIGN PANEL.
3. ILLUMINATION AND WALKWAY ARE REQUIRED.

NOTES:

1. BASE PLATE ELEVATIONS SHALL BE DETERMINED IN THE FIELD TO PROVIDE A VERTICAL CLEARANCE OF 18′-5" MINIMUM FROM BOTTOM OF WALKWAY BEAM OR LIGHTING FIXTURE TO THE ROADBED.
2. THE CONTRACTOR SHALL VERIFY CONTROLLING DIMENSIONS BEFORE ORDERING OR FABRICATING MATERIALS.
3. FOR SIGN ILLUMINATION SEE ELECTRICAL PLANS.

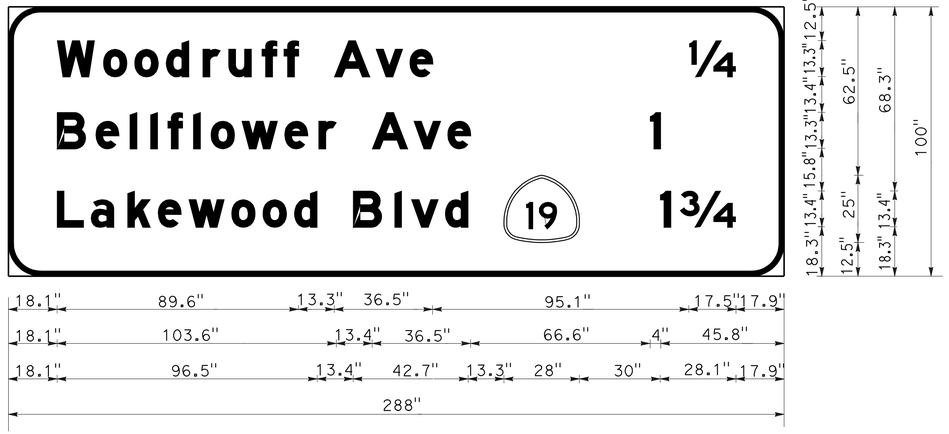

12.0" RADIUS, 2.0" BORDER, WHITE ON GREEN

LEGEND					ROUTE SHIELD SIZE
LINE #	UC	LC	NUMBERS		
			WHOLE	FRACTION	
1	13.3E(Mod)	10E(Mod)	13.3	10	
2	13.3E(Mod)	10E(Mod)	13.3	10	
3	13.3E(Mod)	10E(Mod)	13.3	10	28" X 25" 10E

SIGN DETAILS

NO SCALE

SD-1

REVISED BY | DATE REVISED

CALCULATED-DESIGNED BY: SULIASTI SUTANTO
CHECKED BY: ESTHER M. KIM
FUNCTIONAL SUPERVISOR: MOHAMMED CHOWDHURY

STATE OF CALIFORNIA - DEPARTMENT OF TRANSPORTATION
Caltrans® TRAFFIC DESIGN

LAST REVISION | DATE PLOTTED => 18-FEB-2011
02-22-11 | TIME PLOTTED => 11:05

Dist	COUNTY	ROUTE	POST MILES TOTAL PROJECT	SHEET No.	TOTAL SHEETS
07	LA	405	1.2, 2.3	9	20

01-20-11
REGISTERED CIVIL ENGINEER DATE

02-22-11
PLANS APPROVAL DATE

ESTHER M. KIM No. 48363 Exp 6/30/12 CIVIL — REGISTERED PROFESSIONAL ENGINEER — STATE OF CALIFORNIA

THE STATE OF CALIFORNIA OR ITS OFFICERS OR AGENTS SHALL NOT BE RESPONSIBLE FOR THE ACCURACY OR COMPLETENESS OF SCANNED COPIES OF THIS PLAN SHEET.

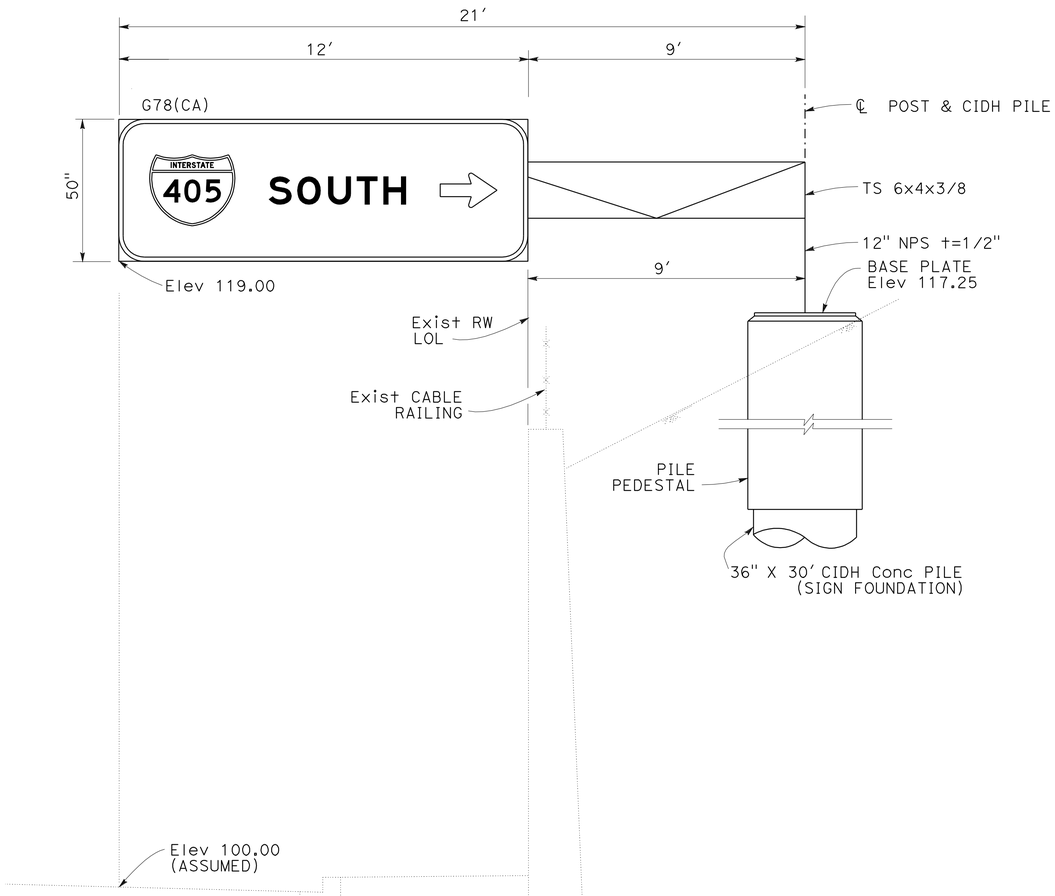

SIGN No. (2)

FEBT @ PM 2.3

1. FURNISH AND INSTALL SIGN LIGHTWEIGHT (TYPE C-2).
2. INSTALL LAMINATED PANEL-TYPE A.

NOTES:

1. FOR NOTES SEE SD-1 SHEET.

9.0" RADIUS, 1.5" BORDER, WHITE ON GREEN

LEGEND		ARROW DEGREE	ROUTE SHIELD SIZE
LINE #	UC		
1	10E	Horiz	30" x 25" 8E

SIGN DETAILS

NO SCALE

SD-2

STATE OF CALIFORNIA - DEPARTMENT OF TRANSPORTATION
TRAFFIC DESIGN
FUNCTIONAL SUPERVISOR: MOHAMMED CHOWDHURY
CALCULATED-DESIGNED BY: SULIASTI SUTANTO
CHECKED BY: ESTHER M. KIM
REVISED BY / DATE REVISED

LAST REVISION 02-22-11
DATE PLOTTED => 18-FEB-2011
TIME PLOTTED => 11:05

Dist	COUNTY	ROUTE	POST MILES TOTAL PROJECT	SHEET No.	TOTAL SHEETS
07	LA	405	1.2, 2.3	10	20

REGISTERED CIVIL ENGINEER — DATE: 01-20-11

ESTHER M. KIM No. 48363 Exp 6/30/12 CIVIL — REGISTERED PROFESSIONAL ENGINEER — STATE OF CALIFORNIA

02-22-11
PLANS APPROVAL DATE

THE STATE OF CALIFORNIA OR ITS OFFICERS OR AGENTS SHALL NOT BE RESPONSIBLE FOR THE ACCURACY OR COMPLETENESS OF SCANNED COPIES OF THIS PLAN SHEET.

NOTES:

1. FOR NOTES SEE S-1 SHEET.

LEGEND

L : LENGTH OF SIGN
D : DEPTH OF SIGN
RSPF: REMOVEABLE SIGN PANEL FRAME

OVERHEAD SIGN QUANTITIES

SHEET No.	SIGN ID ◯	DIRECTION	CAST-IN-DRILLED HOLE CONCRETE PILE (SIGN FOUNDATION)		SIGN STRUCTURE (TRUSS)		SIGN STRUCTURE (LIGHTWEIGHT)		REMOVE SIGN STRUCTURE
					FURNISH	INSTALL	FURNISH	INSTALL	
			60" Dia	36" Dia	LB	LB	LB	LB	EA
SD-1	1	FNBT	34 LF		21,800	21,800			
SD-2	2	FEBT		30 LF			3,352	3,352	1
TOTAL			34 LF	30 LF	21,800	21,800	3,352	3,352	1

CONTRACTOR FURNISHED SIGN QUANTITIES

MATERIAL SUMMARY															
SHEET No.	SIGN CODE	SIGN No. ◯	SIGN SIZE L X D	SIGN AREA	SINGLE FACED	SIGN FACING MATERIAL: BACKGROUND SHEETING COLOR	SIGN FACING MATERIAL: BACKGROUND RETRO-REFLECTIVE ASTM TYPE	SIGN FACING MATERIAL: LEGEND SHEETING COLOR	SIGN FACING MATERIAL: LEGEND RETRO-REFLECTIVE ASTM TYPE	PREMIUM GRAFFITI FILM	OVERHEAD: LAMINATED (1" TYPE A)	OVERHEAD: FORMED W/O RSPF	OVERHEAD: FORMED WITH RSPF	FURNISH FORMED PANEL SIGN (OVERHEAD)	FURNISH LAMINATED PANEL SIGN (1" - TYPE A)	REMARKS
				SQFT										SQFT	SQFT	
SD-1	G23 (CA)	1	24′ X 8.33′	200	•	GREEN	IV	WHITE	IV	•			•	200		OVERHEAD SIGN STRUCTURE
SD-2	G78 (CA)	2	12′ X 4.17′	50	•	GREEN	IV	WHITE	IV	•	•				50	LIGHTWEIGHT OVERHEAD SIGN STRUCTURE
TOTAL														200	50	

SIGN QUANTITIES

SQ-1

STATE OF CALIFORNIA - DEPARTMENT OF TRANSPORTATION
Caltrans® TRAFFIC DESIGN

FUNCTIONAL SUPERVISOR: MOHAMMED CHOWDHURY
CALCULATED-DESIGNED BY: SULIASTI SUTANTO
CHECKED BY: ESTHER M. KIM
REVISED BY
DATE REVISED

LAST REVISION 02-22-11
DATE PLOTTED => 18-FEB-2011
TIME PLOTTED => 11:05

BORDER LAST REVISED 7/2/2010
USERNAME => s122436
DGN FILE => 0700001890oc001.dgn
RELATIVE BORDER SCALE IS IN INCHES 0 1 2 3
UNIT 2124
PROJECT NUMBER & PHASE 07000018901

Dist	COUNTY	ROUTE	POST MILES TOTAL PROJECT	SHEET No.	TOTAL SHEETS
07	LA	405	1.2, 2.3	11	20

Vincent Pang 02-09-11
REGISTERED CIVIL ENGINEER DATE

02-22-11
PLANS APPROVAL DATE

REGISTERED PROFESSIONAL ENGINEER
VINCENT PANG
No. 69963
Exp. 9-30-11
CIVIL
STATE OF CALIFORNIA

THE STATE OF CALIFORNIA OR ITS OFFICERS OR AGENTS SHALL NOT BE RESPONSIBLE FOR THE ACCURACY OR COMPLETENESS OF SCANNED COPIES OF THIS PLAN SHEET.

ROADWAY QUANTITIES

LOCATION	SIGN ID ◯	TEMPORARY FIBER ROLL	TEMPORARY GRAVEL BAG BERM	TEMPORARY COVER	STRUCTURAL ECAVATION (TYPE Z-2) (AERIALLY DEPOSITED LEAD)
		LF	LF	SQYD	CY
PALO VERDE AVE	(1)	240	50	12	2.9
WILLOW ST/BELLFLOWER BLVD	(2)	60	25	6	1.0
TOTAL:		300	75	18	3.9

SUMMARY OF QUANTITIES
NO SCALE

Q-1

THIS PLAN ACCURATE FOR CONSTRUCTION AREA SIGNS ONLY

REVISED BY | DATE REVISED

CALCULATED-DESIGNED BY: VINCENT PANG
CHECKED BY: LARRY WIERING

FUNCTIONAL SUPERVISOR: HECTOR OBESO

STATE OF CALIFORNIA - DEPARTMENT OF TRANSPORTATION
Caltrans® MAINTENANCE ENGINEERING

LAST REVISION 02-22-11 | DATE PLOTTED => 18-FEB-2011 | TIME PLOTTED => 11:05

BORDER LAST REVISED 7/2/2010

USERNAME => s122436
DGN FILE => 0700001890pa001.dgn

RELATIVE BORDER SCALE IS IN INCHES 0 1 2 3

UNIT 1963

PROJECT NUMBER & PHASE 07000018901

Dist	COUNTY	ROUTE	POST MILES TOTAL PROJECT	SHEET No.	TOTAL SHEETS
07	LA	405	1.2, 2.3	12	20

Stanley L. Johnson 02-2-11
REGISTERED ELECTRICAL ENGINEER DATE

02-22-11
PLANS APPROVAL DATE

REGISTERED PROFESSIONAL ENGINEER
STANLEY L. JOHNSON
No. E16761
Exp. 09/30/12
ELECTRICAL
STATE OF CALIFORNIA

THE STATE OF CALIFORNIA OR ITS OFFICERS OR AGENTS SHALL NOT BE RESPONSIBLE FOR THE ACCURACY OR COMPLETENESS OF SCANNED COPIES OF THIS PLAN SHEET.

FOR ACCURATE RIGHT OF WAY DATA, CONTACT RIGHT OF WAY ENGINEERING AT THE DISTRICT OFFICE.

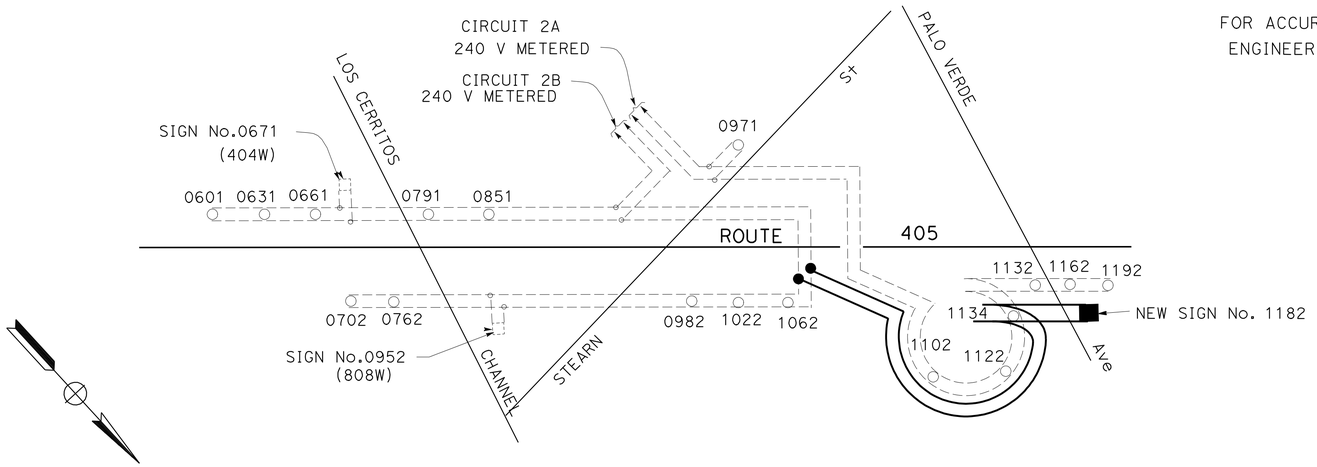

PROJECT NOTE

[1] EXISTING 2"C, 2#8,
INSTALL 2#8, 1#8G

WIRING DIAGRAM LEGEND

- INSTALL 85 W ISL FIXTURES
- SPLICE CONDUCTOR
- EXISTING SPLICE
- EXISTING CONDUCTOR TO REMAIN
- INSTALL NEW CONDUCTORS
- EXISTING LUMINAIRE
- EXISTING SIGN LIGHTING

EXISTING 120/240 V TYPE III-BF
SERVICE EQUIPMENT ENCLOSURE
PP No. 255194E
ID No. 07-53-4050000.960

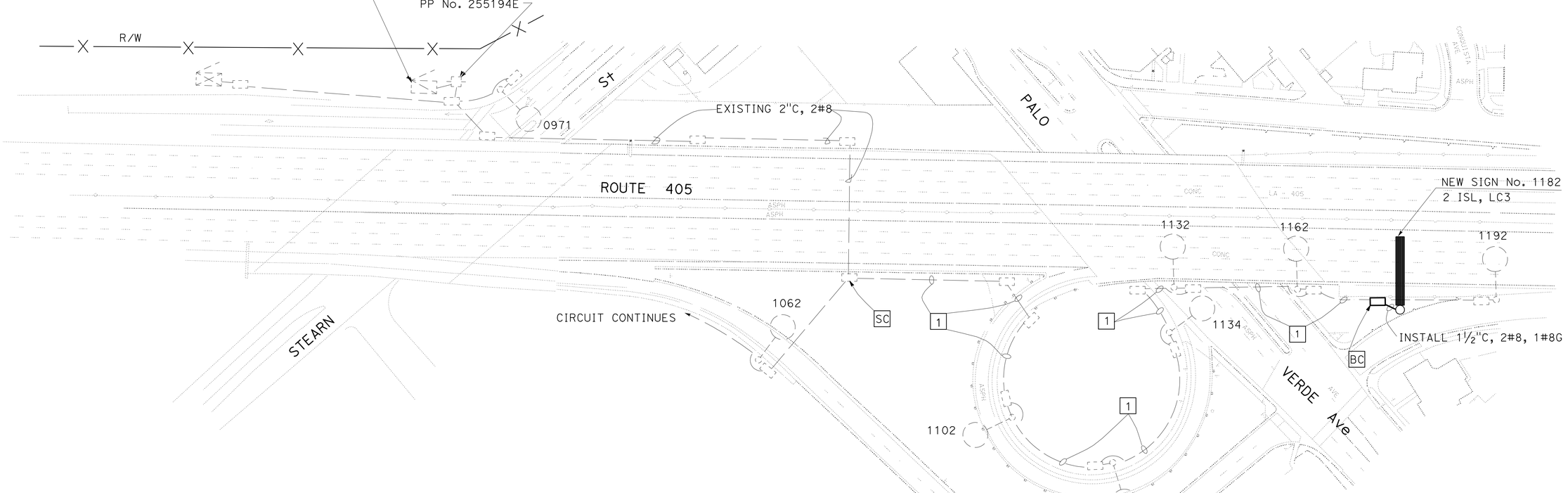

SIGN ILLUMINATION

NO SCALE

E-1

THIS PLAN IS ACCURATE FOR ELECTRICAL WORK ONLY.

REVISED BY | DATE REVISED
CALCULATED-DESIGNED BY: MARTY MORTAZEVI
CHECKED BY: STANLEY L. JOHNSON
FUNCTIONAL SUPERVISOR: HASSAN MANNAA
STATE OF CALIFORNIA - DEPARTMENT OF TRANSPORTATION
Caltrans® TRAFFIC DESIGN

LAST REVISION | DATE PLOTTED => 18-FEB-2011
02-22-11 | TIME PLOTTED => 11:05

BORDER LAST REVISED 7/2/2010
USERNAME => s122436
DGN FILE => 0700001890ua001.dgn
RELATIVE BORDER SCALE IS IN INCHES 0 1 2 3
UNIT 1879
PROJECT NUMBER & PHASE 07000018901

DIST	COUNTY	ROUTE	POST MILES TOTAL PROJECT	SHEET NO.	TOTAL SHEETS
07	LA	405	1.2, 2.3	13	20

Jeffrey G. McRae
REGISTERED ELECTRICAL ENGINEER

October 5, 2007
PLANS APPROVAL DATE

REGISTERED PROFESSIONAL ENGINEER
Jeffery G. McRae
No. E14512
Exp. 6-30-08
ELECTRICAL
STATE OF CALIFORNIA

The State of California or its officers or agents shall not be responsible for the accuracy or completeness of electronic copies of this plan sheet.

To accompany plans dated 02-22-11

ELECTROLIERS

STANDARD TYPES
15, 15D
15 STRUCTURE
21, 21D STRUCTURE
30
31
32
35
36-20A

High mast light pole

Double Arm lighting standard

Existing electrolier

Electrolier foundation (Future installation)

NOTES:

1. Luminaires shall be 310 W HPS when installed on Type 21, 21D, 30, 31, 32, 35 and 36-20A Standards, unless otherwise specified. Luminaires shall be 200 W HPS when installed on other type standards or poles, unless otherwise specified.
2. Luminaires shall be the cutoff type, ANSI Type III medium cutoff lighting distribution, unless otherwise specified.
3. Variations noted adjacent to symbol on project plans.

Electrolier (see project notes or project plans)

Luminaire on wood pole

STANDARD NOTES:

- AB Abandon. If applied to conduit, remove conductors.
- BC Install pull box in existing conduit run.
- BP Pedestrian barricade, type as indicated on plan.
- CB Install conduit into existing pull box.
- CC Connect new and existing conduit. Remove existing conductors and install conductors as indicated.
- CF Conduit to remain for future use. Remove conductors. Install pull wire or rope.
- DH Detector handhole.
- FA Foundation to be abandoned.
- IS Install sign on signal mast arm.
- NS No slip base on standard.
- PEC Photoelectric control.
- PEU Photoelectric unit.
- RC Equipment or material to be removed and become the property of the Contractor.
- RE Remove electrolier, fuses and ballast. Tape ends of conductors.
- RL Relocate equipment.
- RR Remove and reuse equipment.
- RS Remove and salvage equipment.
- SC Splice new to existing conductors.
- SD Service disconnect.
- SF Standard to remain for future use. Remove luminaire, pole conductors, fuses and ballast.
- TSP Telephone service point.

ABBREVIATIONS AND EQUIPMENT DESIGNATIONS

PROPOSED	EXISTING	
BBS	bbs	Battery backup system
BC	bc	Bolt circle
C	C	Conduit
CCTV	cctv	Closed circuit television
CKT	ckt	Circuit
CMS	cms	Changeable message sign
DLC	dlc	Loop detector lead-in cable
EMS	ems	Extinguishable message sign
EVC	evc	Emergency vehicle cable
EVD	evd	Emergency vehicle detector
FB	fb	Flashing beacon
FBCA	fbca	Flashing beacon control assembly
FBS	fbs	Flashing beacon with slip base
FO	fo	Fiber optic
G	G	Ground (Equipment Grounding Conductor)
GFCI	GFCI	Ground fault circuit interrupt
HAR	har	Highway advisory radio
HEX	hex	Hexagonal
HPS	hps	High pressure sodium
IISNS	iisns	Internally illuminated street name sign
ISL	isl	Induction sign lighting
LED	led	Light emitting diode
LMA	lma	Luminaire mast arm
LPS	lps	Low pressure sodium
LTG	ltg	Lighting
LUM	lum	Luminaire
MAT	mat	Mast arm mounting vehicle signal faces, top attachment
MAS	mas	Mast arm mounting vehicle signal faces, side attachment
MAS-4A	mas-4A	Mast arm mounting vehicle signal faces,
MAS-4B	mas-4B	side attachment - 4 signal section
MAS-4C	mas-4C	
MAS-5A	mas-5A	Mast arm mounting vehicle signal faces,
MAS-5B	mas-5B	side attachment - 5 signal section
MC	mc	Mercury contactor
M/M	m/m	Multiple to multiple transformer
MT	mt	Conduit with pull wire or rope only
MTG	mtg	Mounting
	mv	Mercury vapor lighting fixture
N	N	Neutral (Grounded Conductor)
NC	NC	Normally closed
NO	NO	Normally open
PB	pb	Pull box
PEC	pec	Photoelectric control (Type I, II, III, IV or V as shown)
PED	ped	Pedestrian
PEU	peu	Photoelectric unit
PPB	ppb	Pedestrian push button
RL		Relocated equipment
RM	rm	Ramp metering
SB	sb	Slip base
SIC	sic	Signal interconnect cable
SIG	sig	Signal
SMA	sma	Signal mast arm
SNS	sns	Street name sign
SP	sp	Service point
TDC	tdc	Telephone demarcation cabinet
TMS	tms	Traffic monitoring station
TOS	tos	Traffic Operations System
VEH	veh	Vehicle
XFMR	xfmr	Transformer
COMM	comm	Communication
RWIS	rwis	Roadway weather information system

SOFFIT AND WALL MOUNTED LUMINAIRES

- Pendant, 70 W HPS unless otherwise specified.
- Flush, 70 W HPS unless otherwise specified.
- Wall surface, 70 W HPS unless otherwise specified.
- Existing soffit or wall luminaire to remain unmodified.
- (M) Existing soffit or wall luminaire to be modified as specified.

NOTE:
Arrow indicates "street side" of luminaire.

STATE OF CALIFORNIA
DEPARTMENT OF TRANSPORTATION

ELECTRICAL SYSTEMS (SYMBOLS AND ABBREVIATIONS)

NO SCALE

RSP ES-1A DATED OCTOBER 5, 2007 SUPERSEDES STANDARD PLAN ES-1A
DATED MAY 1, 2006 - PAGE 400 OF THE STANDARD PLANS BOOK DATED MAY 2006.

REVISED STANDARD PLAN RSP ES-1A

2006 REVISED STANDARD PLAN RSP ES-1A

7-10-07

DIST	COUNTY	ROUTE	POST MILES TOTAL PROJECT	SHEET NO.	TOTAL SHEETS
07	LA	405	1.2, 2.3	14	20

Jeffery G. McRae
REGISTERED ELECTRICAL ENGINEER

October 5, 2007
PLANS APPROVAL DATE

REGISTERED PROFESSIONAL ENGINEER — Jeffery G. McRae — No. E14512 — Exp. 6-30-08 — ELECTRICAL — STATE OF CALIFORNIA

The State of California or its officers or agents shall not be responsible for the accuracy or completeness of electronic copies of this plan sheet.

To accompany plans dated 02-22-11

CONDUIT

PROPOSED	EXISTING	
— — —	— — —	Lighting Conduit, unless otherwise indicated or noted
— - — - —	— - — - —	Traffic signal conduit
—C— —	—c— —	Communication conduit
—T— —	—t— —	Telephone conduit
—F— —	—f— —	Fire alarm conduit
—FO— —	—fo— —	Fiber optic conduit
— — —]	— — —]	Conduit termination (RSP ES-9A C)
R	r	Conduit riser in/on structure or service pole

SERVICE EQUIPMENT

PROPOSED	EXISTING	
—OH—	—oh—	Overhead lines
U	U	Wood pole "U" indicates utility owned
		Pole guy with anchor
		Utility transformer - ground mounted
III		Service equipment enclosure type
		Service equipment enclosure door indicates front of enclosure
T	t	Telephone demarcation cabinet

POLE-MOUNTED SERVICE DESIGNATION

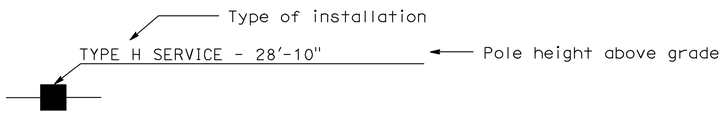

ILLUMINATED OVERHEAD SIGN

PROPOSED	EXISTING	
		Overhead sign - Single post
		Overhead sign - Two post
		Overhead sign - Mounted on structure
		Overhead sign with electrolier

SIGNAL EQUIPMENT

PROPOSED	EXISTING	
		Pedestrian signal face
		Pedestrian push button post
		Pedestrian barricade
		Vehicle signal face (with backplate, 3-Section: red, yellow and green)
		Vehicle signal face with angle visors
PV	PV	Modifications of basic symbols: "L" Indicates all non-arrow sections louvered "LG" Indicates louvered green section only "PV" Indicates 12" programmed visibility sections "8" indicates all 8" sections (only when specified)
		Type 15TS and Vehicle signal face
		Vehicle signal face with red, yellow and green left arrow sections
		Vehicle signal face with red and yellow sections and up green arrow
		Vehicle signal face (5 Section) with red, yellow and green sections and yellow and green right arrows
		Type 1 Standard and attached vehicle signal faces
		Standard with signal mast arm only and attached vehicle signal faces and internally illuminated street name sign
		Type 33 Standard, Left-turn vehicle signal face and sign
		Standard with luminaire and signal mast arms and attached vehicle signal faces
		Cantilever flashing beacon Type 9 Frame, with a sign unless otherwise specified or indicated
		Type 15-FBS Standard with two vehicle signal face sections with lens, backplate and visor with a sign
R	Y	Flashing beacon. One vehicle signal face section with lens, backplate and visor. "R" indicates red indication, "Y" indicates yellow indication
		Controller assembly. Door indicates front of cabinet

SIGNAL EQUIPMENT Cont

PROPOSED	EXISTING	
		Guard post
		Type 1 Standard with "Meter On" sign
		Emergency Vehicle detector

NOTES:

1. All signal sections shall be 12" unless shown otherwise.
2. Signal heads shall be provided with backplates unless shown otherwise.
3. Signal indication shall be LED.

STATE OF CALIFORNIA
DEPARTMENT OF TRANSPORTATION

ELECTRICAL SYSTEMS (SYMBOLS AND ABBREVIATIONS)

NO SCALE

RSP ES-1B DATED OCTOBER 5, 2007 SUPERCEDES STANDARD PLAN ES-1B DATED MAY 1, 2006 - PAGE 401 OF THE STANDARD PLANS BOOK DATED MAY 2006.

REVISED STANDARD PLAN RSP ES-1B

2006 REVISED STANDARD PLAN RSP ES-1B

7-10-07

DIST	COUNTY	ROUTE	POST MILES TOTAL PROJECT	SHEET NO.	TOTAL SHEETS
07	LA	405	1.2, 2.3	15	20

Jeffery G. McRae
REGISTERED ELECTRICAL ENGINEER

October 5, 2007
PLANS APPROVAL DATE

Jeffery G. McRae No. E14512 Exp. 6-30-08 ELECTRICAL — REGISTERED PROFESSIONAL ENGINEER — STATE OF CALIFORNIA

The State of California or its officers or agents shall not be responsible for the accuracy or completeness of electronic copies of this plan sheet.

To accompany plans dated 02-22-11

EQUIPMENT IDENTIFICATION

ILLUMINATED SIGN IDENTIFICATION NUMBER:

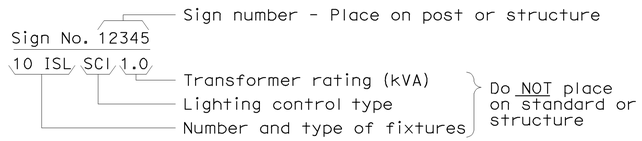

ELECTROLIER OR EQUIPMENT IDENTIFICATION NUMBER:

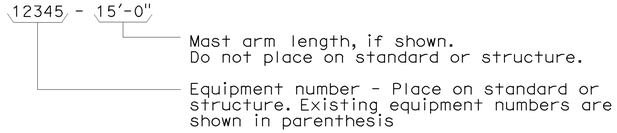

CONDUIT AND CONDUCTOR IDENTIFICATION:

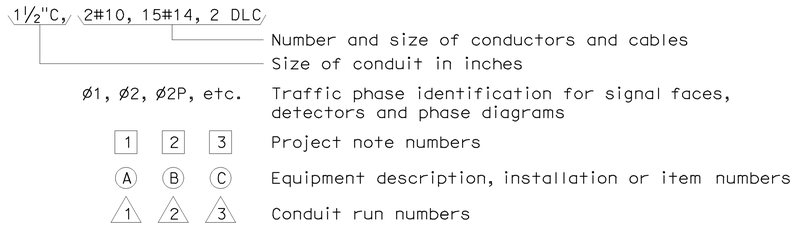

SIGNAL AND LIGHTING STANDARD (TYPICAL DESIGNATION):

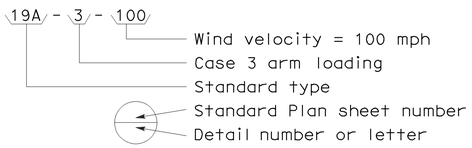

WIRING DIAGRAM LEGEND

P	Pole
CB	Circuit breaker
A	Ampere
V	Volt
M	Metered
UM	Unmetered
NB	Neutral bus
GB	Ground bus
G	Equipment grounding conductor
N	Grounded conductor (Neutral)

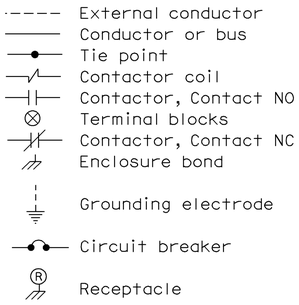

PULL BOXES

PROPOSED EXISTING

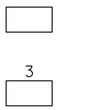

Pull box-No. 5 unless otherwise indicated or noted.

Pull box-Additional designations or descriptions

(C) = Communications pull box
(E) = Pull box with extension
(S) = Sprinkler control pull box
(21) = Anchor bolts and conduit for future installation of Type 21 Standard
(T) = Traffic pull box

3 = No. 3½ pull box
5 = No. 5 pull box
6 = No. 6 pull box
7 = No. 7 (Ceiling pull box)
8 = No. 8 (Pendant soffit pull box)
9 = No. 9 pull box
9A = No. 9A pull box

VEHICLE DETECTORS

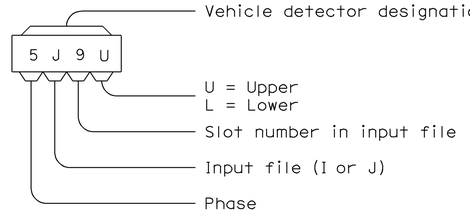

PROPOSED EXISTING

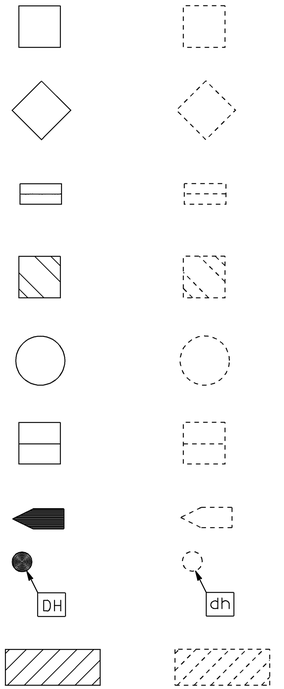

MISCELLANEOUS EQUIPMENT

PROPOSED EXISTING

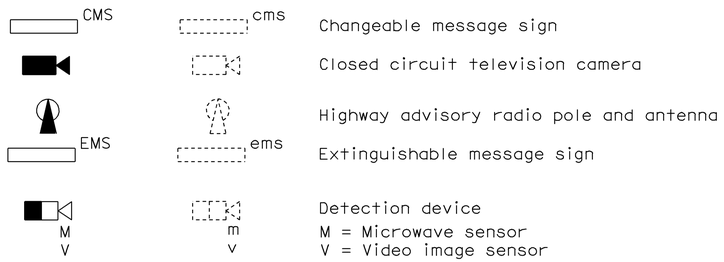

STATE OF CALIFORNIA
DEPARTMENT OF TRANSPORTATION

ELECTRICAL SYSTEMS (SYMBOLS AND ABBREVIATIONS)

NO SCALE

RSP ES-1C DATED OCTOBER 5, 2007 SUPERCEDES STANDARD PLAN ES-1C
DATED MAY 1, 2006 - PAGE 402 OF THE STANDARD PLANS BOOK DATED MAY 2006.

REVISED STANDARD PLAN RSP ES-1C

2006 REVISED STANDARD PLAN RSP ES-1C

7-10-07

DIST	COUNTY	ROUTE	POST MILES TOTAL PROJECT	SHEET NO.	TOTAL SHEETS
07	LA	405	1.2, 2.3	16	20

REGISTERED ELECTRICAL ENGINEER

October 5, 2007
PLANS APPROVAL DATE

REGISTERED PROFESSIONAL ENGINEER
Jeffery G. McRae
No. E14512
Exp. 6-30-08
ELECTRICAL
STATE OF CALIFORNIA

The State of California or its officers or agents shall not be responsible for the accuracy or completeness of electronic copies of this plan sheet.

To accompany plans dated 02-22-11

NOTES: (FOR LIGHTING AND SIGN ILLUMINATION CONTROL)

1. The ballast voltages of lighting fixtures and luminaires shall match line service voltages.
2. Voltage rating of photoelectric controls shall conform to the service voltage indicated on the plans.
3. Terminal strip shall be provided for wiring to fixtures.
4. Type SC1A, SC2A, SC3A controls are similar to Types SC1, SC2 and SC3 controls respectively except test switch and wiring are not required.

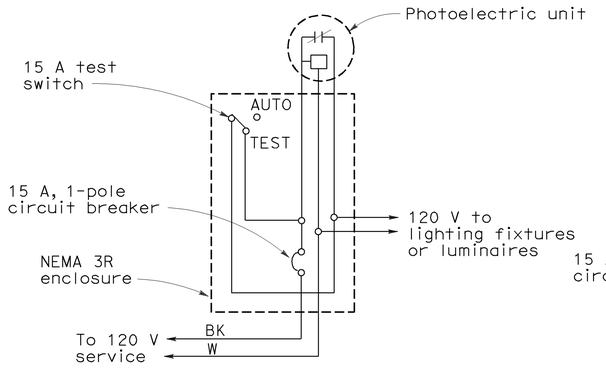

TYPE LC1 CONTROL

For 120 V unswitched circuit with no more than 800 W load.

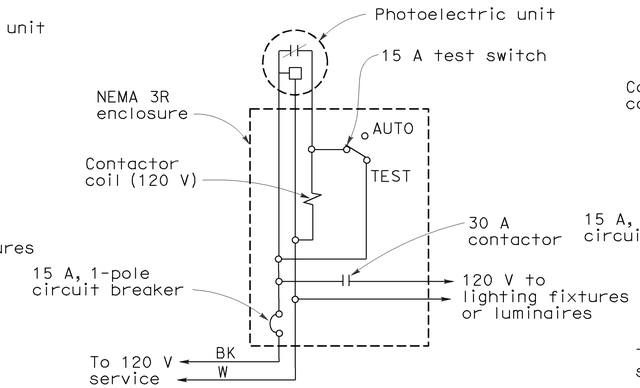

TYPE LC2 CONTROL

For 120 V unswitched circuit

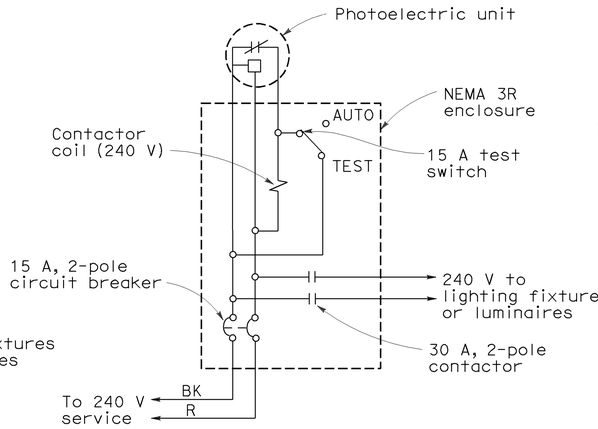

TYPE LC3 CONTROL

For 240 V and 480 V unswitched circuits

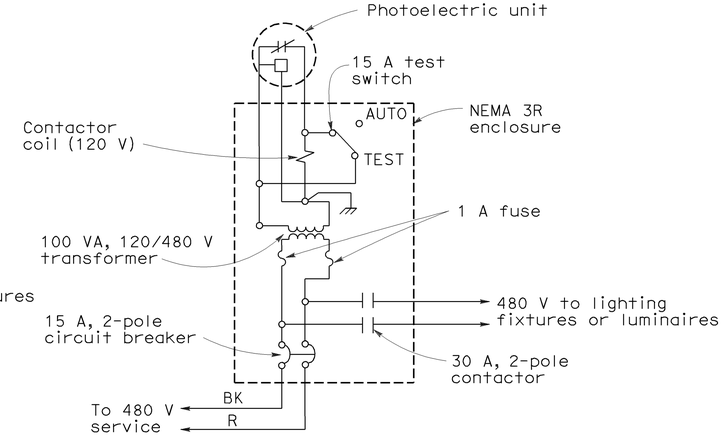

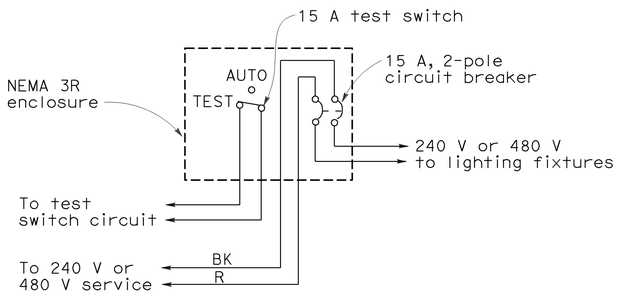

TYPE SC1 CONTROL

For 240 V or 480 V switched circuit, see Note 4 for Type SC1A

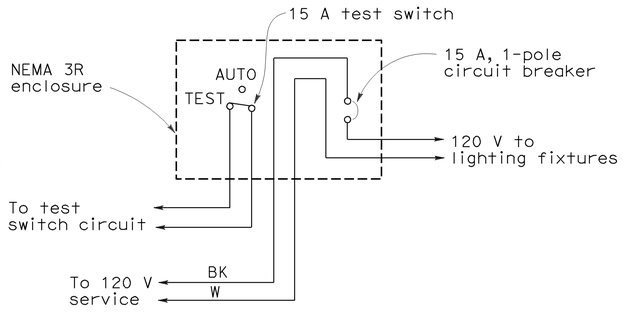

TYPE SC2 CONTROL

For 120 V switched circuit, see Note 4 for Type SC2A

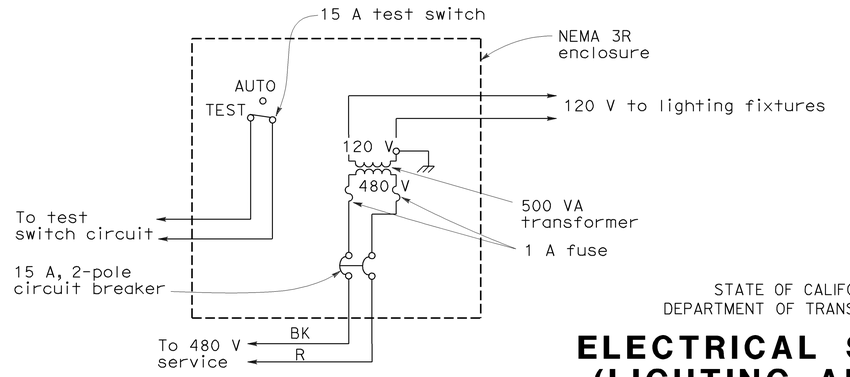

TYPE SC3 CONTROL

For 480 V switched sign circuit, see Note 4 for Type SC3A

STATE OF CALIFORNIA
DEPARTMENT OF TRANSPORTATION

ELECTRICAL SYSTEMS (LIGHTING AND SIGN ILLUMINATION CONTROL)

NO SCALE

RSP ES-15D DATED OCTOBER 5, 2007 SUPERCEDES STANDARD PLAN ES-15D DATED MAY 1, 2006 - PAGE 472 OF THE STANDARD PLANS BOOK DATED MAY 2006.

REVISED STANDARD PLAN RSP ES-15D

2006 REVISED STANDARD PLAN RSP ES-15D

9-10-07

DIST	COUNTY	ROUTE	POST MILES TOTAL PROJECT	SHEET NO.	TOTAL SHEETS
07	LA	405	1.2, 2.3	17	20

Randell D. Hiatt
REGISTERED CIVIL ENGINEER

June 6, 2008
PLANS APPROVAL DATE

REGISTERED PROFESSIONAL ENGINEER
Randell D. Hiatt
No. C50200
Exp. 6-30-09
CIVIL
STATE OF CALIFORNIA

The State of California or its officers or agents shall not be responsible for the accuracy or completeness of electronic copies of this plan sheet.

To accompany plans dated 02-22-11

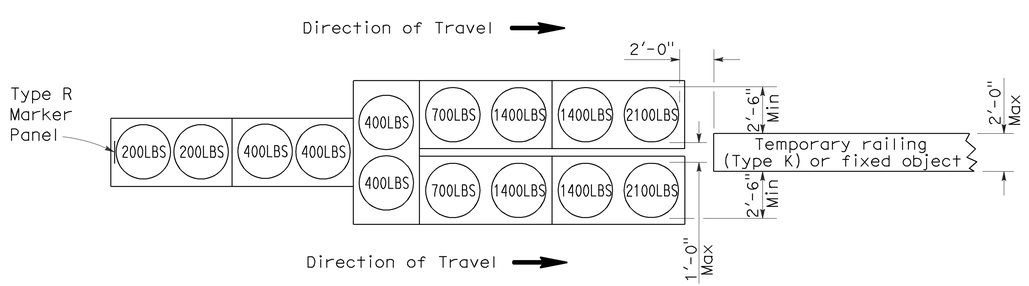

ARRAY 'TU14'

Approach speed 45 mph or more

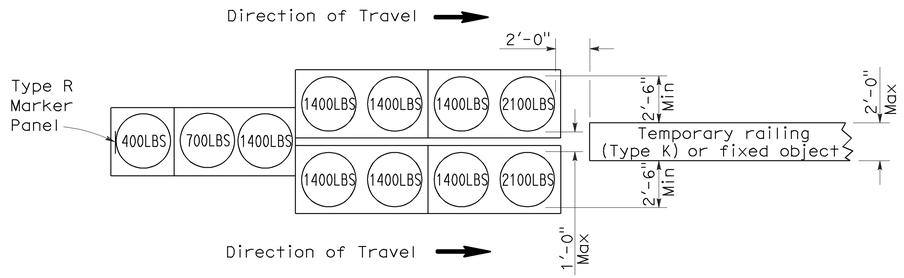

ARRAY 'TU11'

Approach speed less than 45 mph

ARRAY 'TU21'

Approach speed 45 mph or more

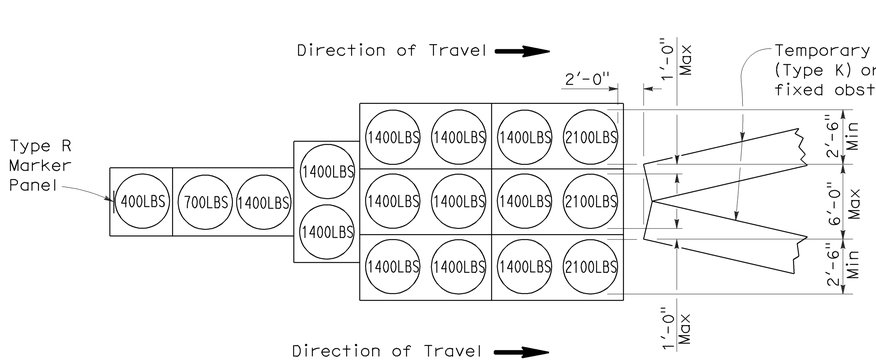

ARRAY 'TU17'

Approach speed less than 45 mph

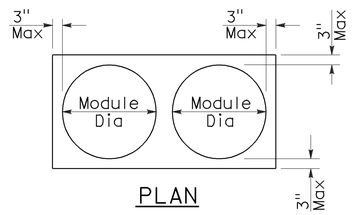

PLAN

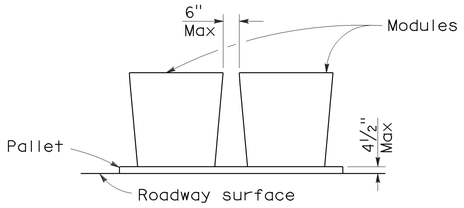

ELEVATION

CRASH CUSHION PALLET DETAIL

See Note 7

NOTES:

1. (XXX) Indicates sand filled module location and weight of sand in pounds for each module. Module spacing is based on the greater diameter of the module.
2. All sand weights are nominal.
3. Temporary crash cushion arrays shall not encroach on the traveled way.
4. Place the top of Type R marker panel 1" below the module lid.
5. Refer to Standard Plan A73B for marker details.
6. Approach speeds indicated conform to NCHRP 350 Report criteria.
7. Use of pallets is optional.

STATE OF CALIFORNIA
DEPARTMENT OF TRANSPORTATION

TEMPORARY CRASH CUSHION, SAND FILLED (UNIDIRECTIONAL)

NO SCALE

RSP T1A DATED JUNE 6, 2008 SUPERSEDES STANDARD PLAN T1A
DATED MAY 1, 2006 - PAGE 211 OF THE STANDARD PLANS BOOK DATED MAY 2006.

REVISED STANDARD PLAN RSP T1A

2006 REVISED STANDARD PLAN RSP T1A

5-15-08

DIST	COUNTY	ROUTE	POST MILES TOTAL PROJECT	SHEET NO.	TOTAL SHEETS
07	LA	405	1.2, 2.3	18	20

Randell D. Hiatt
REGISTERED CIVIL ENGINEER

June 6, 2008
PLANS APPROVAL DATE

REGISTERED PROFESSIONAL ENGINEER
Randell D. Hiatt
No. C50200
Exp. 6-30-09
CIVIL
STATE OF CALIFORNIA

The State of California or its officers or agents shall not be responsible for the accuracy or completeness of electronic copies of this plan sheet.

To accompany plans dated 02-22-11

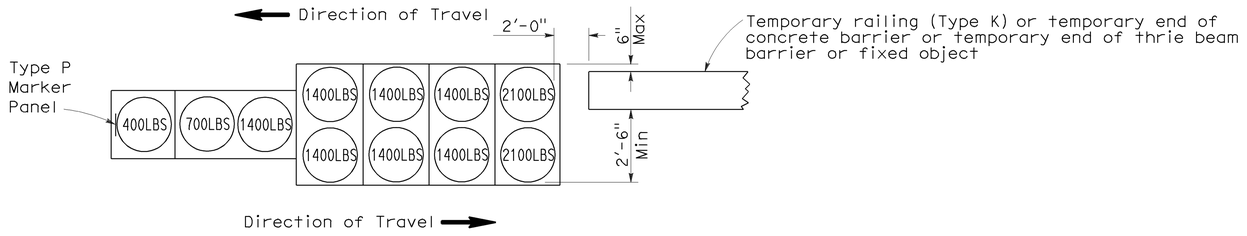

ARRAY 'TB11'

Approach speed less than 45 mph

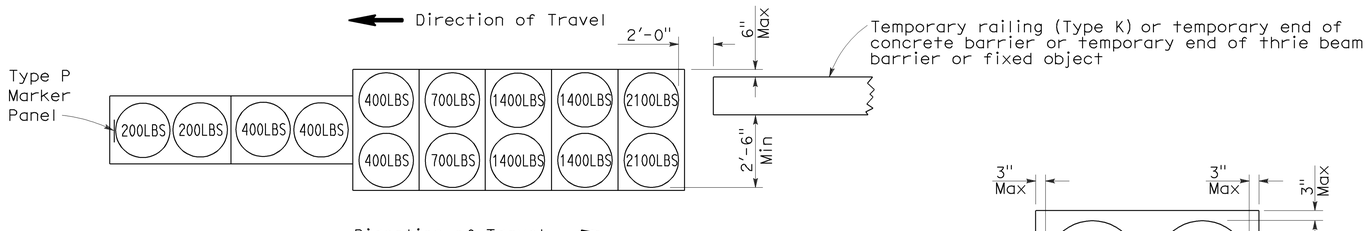

ARRAY 'TB14'

Approach speed 45 mph or more

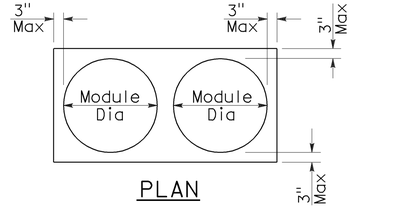

PLAN

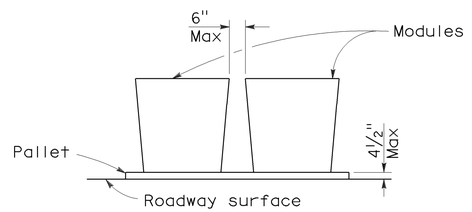

ELEVATION

CRASH CUSHION PALLET DETAIL

See Note 7

NOTES:

1. (XXX) Indicates sand filled module location and weight of sand in pounds for each module. Module spacing is based on the greater diameter of the module.
2. All sand weights are nominal.
3. Temporary crash cushion arrays shall not encroach on the traveled way.
4. Place the Type P marker panel so that the bottom of the panel rests upon the pallet.
5. Refer to Standard Plan A73B for marker details.
6. Approach speeds indicated conform to NCHRP 350 Report criteria.
7. Use of pallets is optional.

STATE OF CALIFORNIA
DEPARTMENT OF TRANSPORTATION

TEMPORARY CRASH CUSHION, SAND FILLED (BIDIRECTIONAL)

NO SCALE

RSP T1B DATED JUNE 6, 2008 SUPERSEDES STANDARD PLAN T1B
DATED MAY 1, 2006 - PAGE 212 OF THE STANDARD PLANS BOOK DATED MAY 2006.

REVISED STANDARD PLAN RSP T1B

2006 REVISED STANDARD PLAN RSP T1B

5-15-08

DIST	COUNTY	ROUTE	POST MILES TOTAL PROJECT	SHEET NO.	TOTAL SHEETS
07	LA	405	1.2, 2.3	19	20

Randell D. Hiatt
REGISTERED CIVIL ENGINEER

June 6, 2008
PLANS APPROVAL DATE

REGISTERED PROFESSIONAL ENGINEER
Randell D. Hiatt
No. C50200
Exp. 6-30-09
CIVIL
STATE OF CALIFORNIA

The State of California or its officers or agents shall not be responsible for the accuracy or completeness of electronic copies of this plan sheet.

To accompany plans dated 02-22-11

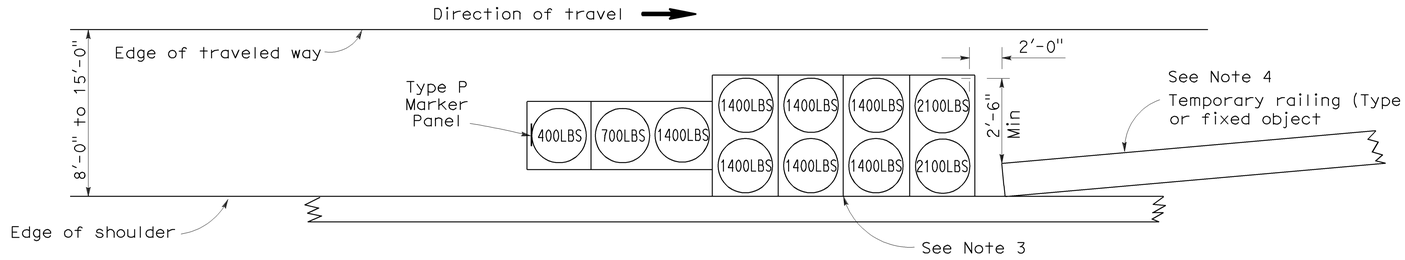

ARRAY 'TS11'

Approach speed less than 45 mph
See Note 9

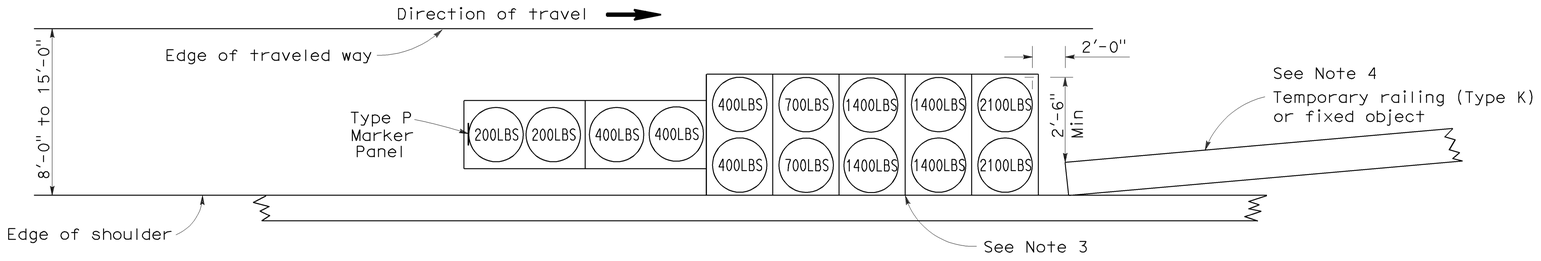

ARRAY 'TS14'

Approach speed 45 mph or more
See Note 9

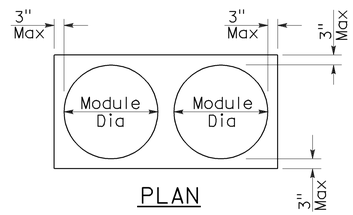

PLAN

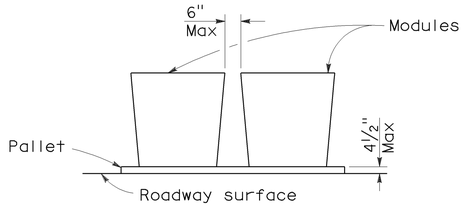

ELEVATION

CRASH CUSHION PALLET DETAIL

See Note 11

NOTES:

1. (XXX) Indicates sand filled module location and weight of sand in pounds for each module. Module spacing is based on the greater diameter of the module.
2. All sand weights are nominal.
3. The temporary crash cushion arrays shown on this plan shall be used only in locations where there will be traffic on one side of the temporary crash cushion array.
4. If the fixed object or approach end of the temporary railing is less than 15'-0" from the edge of traveled way, a temporary crash cushion is required in a construction or work zone.
5. Temporary crash cushion arrays shall not encroach on the traveled way.
6. Arrays for median shoulders shall conform to details shown on this plan for outside shoulders.
7. Place the Type P marker panel so that the bottom of the panel rests upon the pallet and faces traffic.
8. Refer to Standard Plan A73B for marker details.
9. For shoulder widths less than 8'-0", appropriate approved crash cushion protection, other than sand filled modules, shall be provided at fixed objects and at approach ends of temporary railing. The specific type of crash cushion shall be as shown on the project plans or as specified in the Special Provisions, or if not shown on the project plans or specified in the Special Provisions, shall be as approved by the Engineer.
10. Approach speeds indicated conform to NCHRP 350 Report criteria.
11. Use of pallets is optional.

STATE OF CALIFORNIA
DEPARTMENT OF TRANSPORTATION

TEMPORARY CRASH CUSHION, SAND FILLED (SHOULDER INSTALLATIONS)

NO SCALE

RSP T2 DATED JUNE 6, 2008 SUPERSEDES STANDARD PLAN T2
DATED MAY 1, 2006 - PAGE 213 OF THE STANDARD PLANS BOOK DATED MAY 2006.

REVISED STANDARD PLAN RSP T2

2006 REVISED STANDARD PLAN RSP T2

5-15-08

DIST	COUNTY	ROUTE	POST MILES TOTAL PROJECT	SHEET NO.	TOTAL SHEETS
07	LA	405	1.2, 2.3	20	20

Robert B Schott
LICENSED LANDSCAPE ARCHITECT

April 3, 2009
PLANS APPROVAL DATE

LICENSED LANDSCAPE ARCHITECT
Robert B. Schott 3695
Signature
11-30-10
Renewal Date
2-25-09
Date
STATE OF CALIFORNIA

The State of California or its officers or agents shall not be responsible for the accuracy or completeness of electronic copies of this plan sheet.

To accompany plans dated 02-22-11

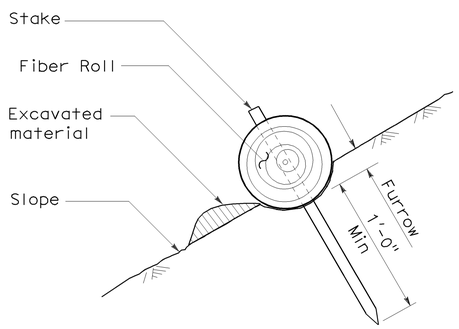

SECTION

TEMPORARY FIBER ROLL (TYPE 1)

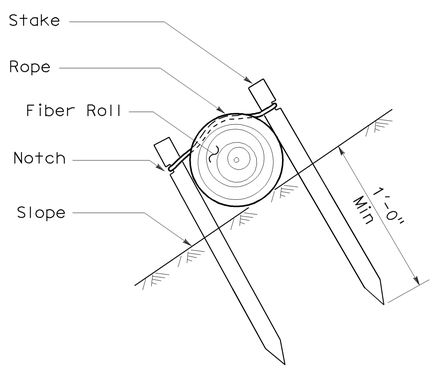

SECTION

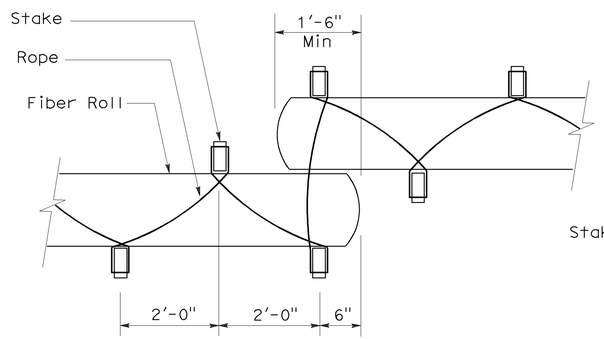

PLAN

TEMPORARY FIBER ROLL (TYPE 2)

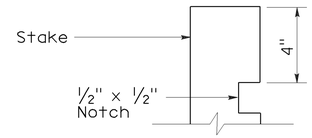

ELEVATION

STAKE NOTCH DETAIL

NOTES:

1. Temporary fiber roll spacing varies depending upon slope inclination.
2. Installations shown in the perspectives are for slope inclination of 10:1 and steeper.

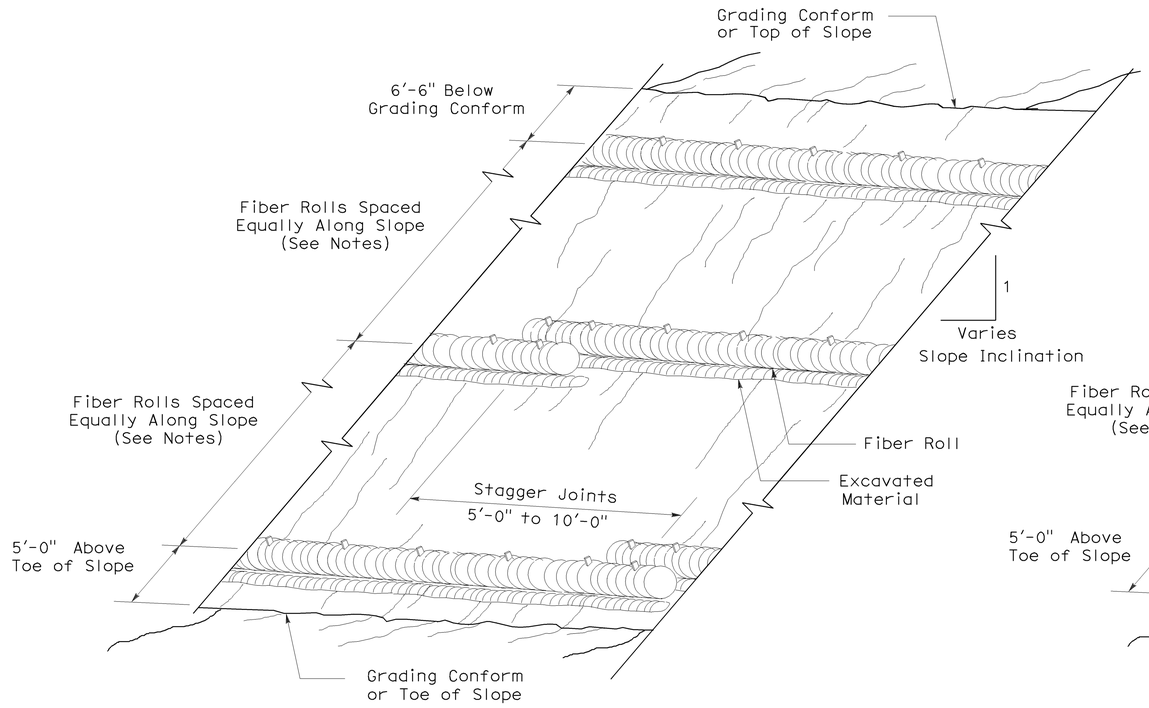

PERSPECTIVE

TEMPORARY FIBER ROLL (TYPE 1)

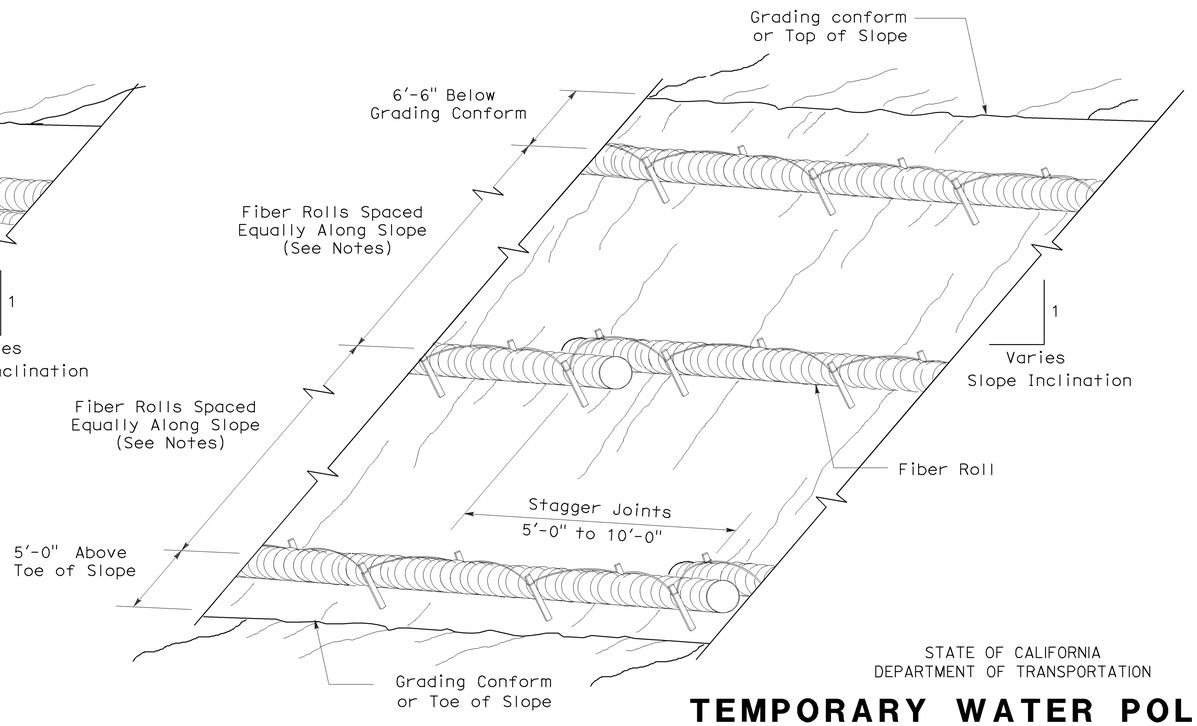

PERSPECTIVE

TEMPORARY FIBER ROLL (TYPE 2)

STATE OF CALIFORNIA
DEPARTMENT OF TRANSPORTATION

TEMPORARY WATER POLLUTION CONTROL DETAILS (TEMPORARY FIBER ROLL)

NO SCALE

RSP T56 DATED APRIL 3, 2009 SUPERSEDES STANDARD PLAN T56 DATED MAY 1, 2006 - PAGE 232 OF THE STANDARD PLANS BOOK DATED MAY 2006.

REVISED STANDARD PLAN RSP T56

2006 REVISED STANDARD PLAN RSP T56

2-23-09