INDEX OF PLANS

SHEET No.	DESCRIPTION
1	TITLE AND LOCATION MAP
2	CONSTRUCTION AREA SIGNS
3-9	TRAFFIC HANDLING DETAILS
10	PAVEMENT DELINEATION DETAILS
11	PAVEMENT DELINEATION QUANTITIES
12-15	REVISED STANDARD PLANS
STRUCTURE PLANS	
16-19	DOLORES YARD OVERHEAD

THE STANDARD PLANS LIST APPLICABLE TO THIS CONTRACT IS INCLUDED IN THE NOTICE TO BIDDERS AND SPECIAL PROVISIONS BOOK.

STATE OF CALIFORNIA

DEPARTMENT OF TRANSPORTATION

PROJECT PLANS FOR CONSTRUCTION ON

STATE HIGHWAY

IN LOS ANGELES COUNTY

IN LOS ANGELES

AT DOLORES YARD OVERHEAD

TO BE SUPPLEMENTED BY STANDARD PLANS DATED MAY 2006

Dist	COUNTY	ROUTE	POST MILES TOTAL PROJECT	SHEET No.	TOTAL SHEETS
07	LA	405	8.8	1	19

LOCATION MAP

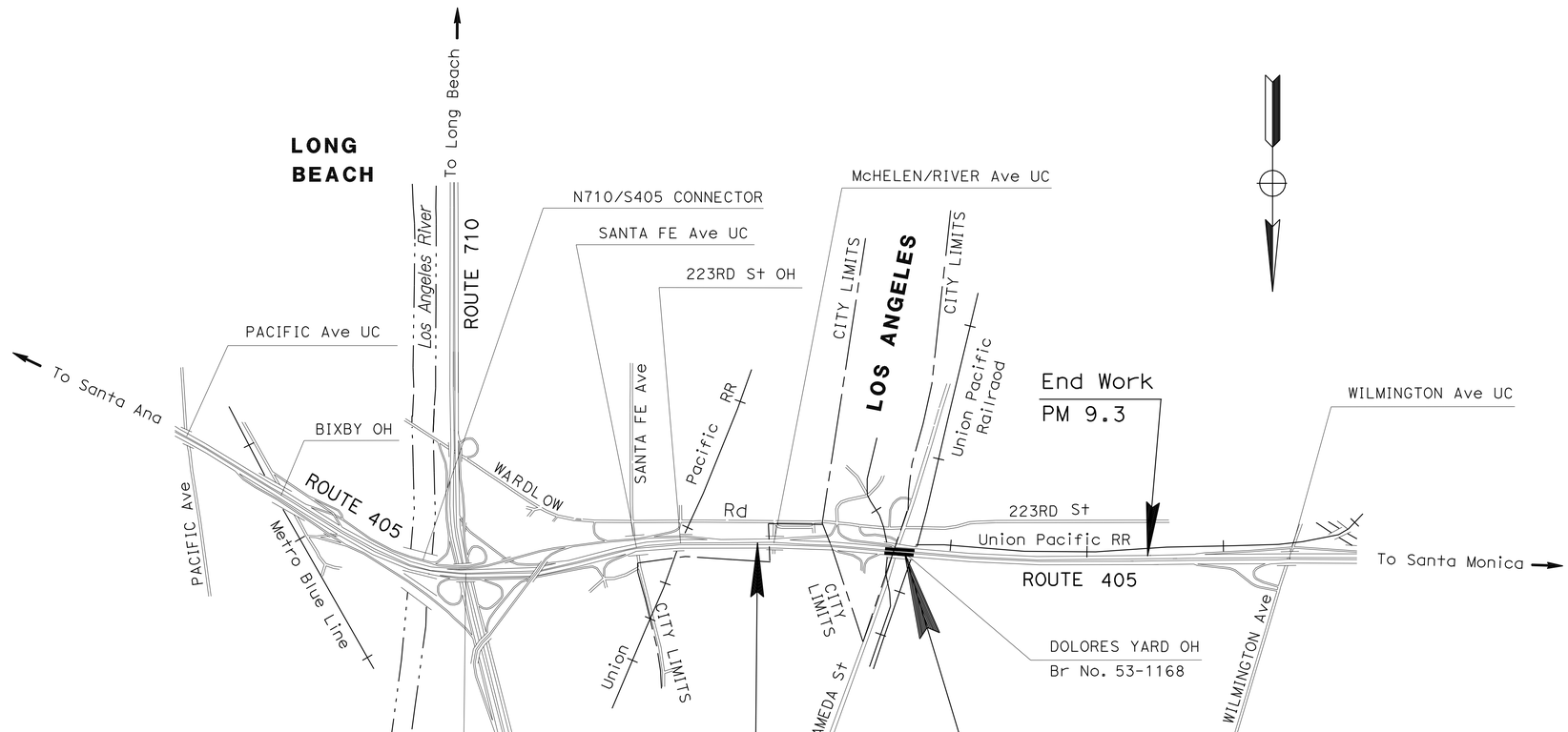

NO SCALE

LOCATION OF CONSTRUCTION

DOLORES YARD OVERHEAD
ROUTE 405, PM 8.8

THE CONTRACTOR SHALL POSSESS THE CLASS (OR CLASSES) OF LICENSE AS SPECIFIED IN THE "NOTICE TO BIDDERS."

PROJECT MANAGER: CHRISTIAN SAM
DESIGN ENGINEER: HAMID SAADATNEJADI

1-7-11
PROJECT ENGINEER REGISTERED CIVIL ENGINEER — DATE

CAM CHAU
No. 70305
Exp. 9-30-12
CIVIL
REGISTERED PROFESSIONAL ENGINEER
STATE OF CALIFORNIA

January 18, 2011
PLANS APPROVAL DATE

THE STATE OF CALIFORNIA OR ITS OFFICERS OR AGENTS SHALL NOT BE RESPONSIBLE FOR THE ACCURACY OR COMPLETENESS OF SCANNED COPIES OF THIS PLAN SHEET.

CONTRACT No.	07-4Y6804
PROJECT ID	0700001108

DATE PLOTTED => 18-JAN-2011
TIME PLOTTED => 11:58
LAST REVISION 01-18-11

Dist	COUNTY	ROUTE	POST MILES TOTAL PROJECT	SHEET No.	TOTAL SHEETS
07	LA	405	8.8	2	19

REGISTERED CIVIL ENGINEER — 1-7-11 DATE

01-18-11
PLANS APPROVAL DATE

CAM CHAU No. 70305 Exp. 9-30-12 CIVIL — REGISTERED PROFESSIONAL ENGINEER — STATE OF CALIFORNIA

THE STATE OF CALIFORNIA OR ITS OFFICERS OR AGENTS SHALL NOT BE RESPONSIBLE FOR THE ACCURACY OR COMPLETENESS OF SCANNED COPIES OF THIS PLAN SHEET.

NOTES:

1. LOCATIONS OF CONSTRUCTION AREA SIGNS AS SHOWN ARE APPROXIMATE. EXACT LOCATIONS WILL BE DETERMINED BY THE ENGINEER.
2. EXISTING UTILITY FACILITIES HAVE NOT BEEN PLOTTED ON THIS PLAN.

ABBREVIATION

CA - CALIFORNIA CODE

STATIONARY MOUNTED CONSTRUCTION AREA SIGNS

SIGN NUMBER	SIGN CODE	PANEL SIZE (inch x inch)	SIGN MESSAGE	NUMBER OF POSTS AND SIZE	NUMBER OF SIGNS
(1)	C40(CA)	144 x 60	TRAFFIC FINES DOUBLED IN CONSTRUCTION ZONES	2-6" x 8"	2
(2)	W20-1	48 x 48	ROAD WORK AHEAD	2-4" x 6"	2
(3)	W20-1	30 x 30	ROAD WORK AHEAD	1-4" x 6"	1
(4)	G20-2	48 x 24	END ROAD WORK	1-4" x 6"	3

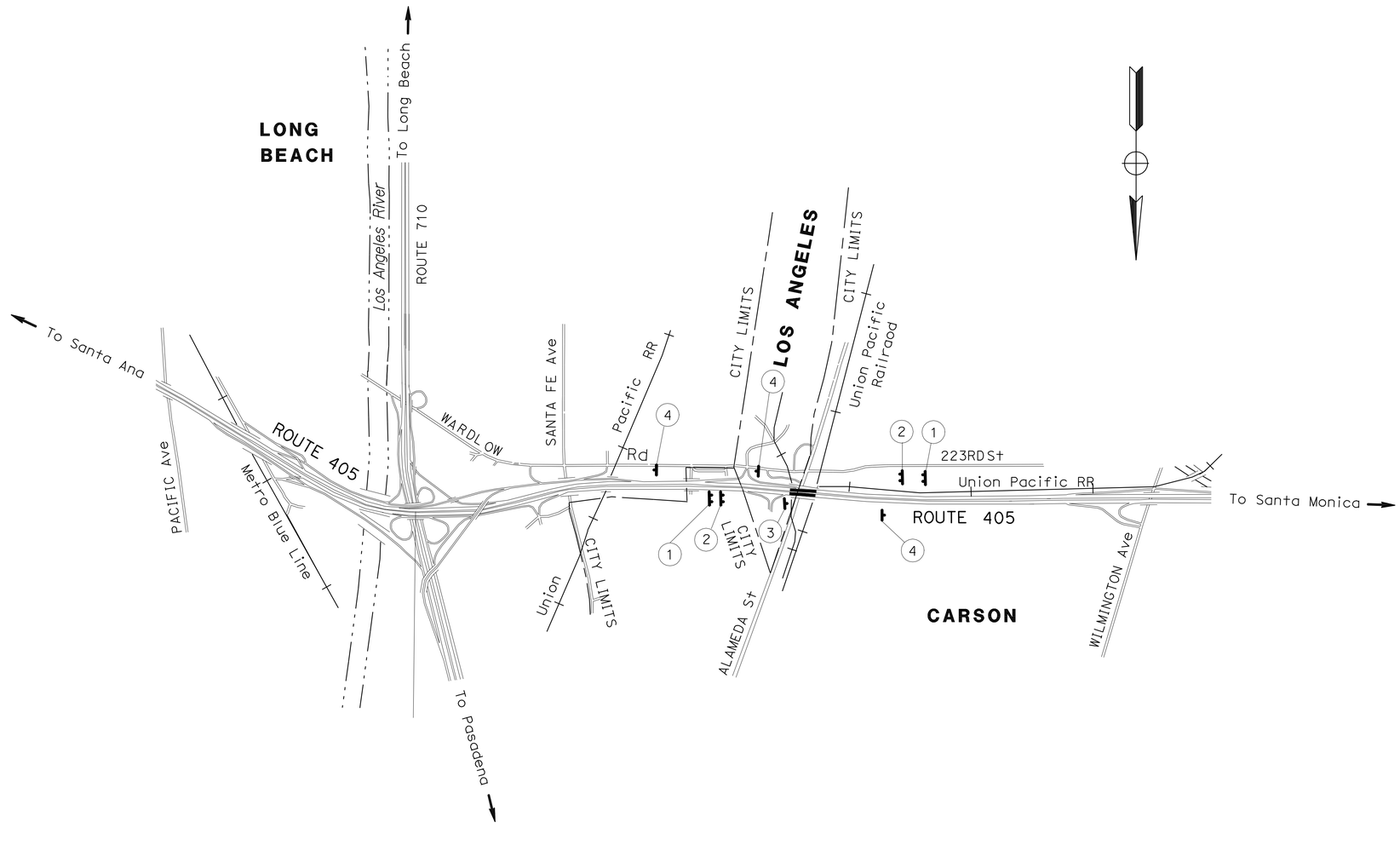

CONSTRUCTION AREA SIGNS

NO SCALE

CS-1

THIS PLAN ACCURATE FOR CONSTRUCTION AREA SIGN WORK ONLY.

CALCULATED-DESIGNED BY: CAM CHAU
CHECKED BY: HAMID SAADATNEJADI
FUNCTIONAL SUPERVISOR: HAMID SAADATNEJADI
REVISED BY / DATE REVISED

STATE OF CALIFORNIA - DEPARTMENT OF TRANSPORTATION
Caltrans® MAINTENANCE ENGINEERING

LAST REVISION: DATE PLOTTED => 13-JAN-2011 TIME PLOTTED => 12:03
01-18-11

BORDER LAST REVISED 7/2/2010 | USERNAME => s122436 | DGN FILE => 07000011081a001.dgn | RELATIVE BORDER SCALE IS IN INCHES 0 1 2 3 | UNIT 1959 | PROJECT NUMBER & PHASE 07000011081

Dist	COUNTY	ROUTE	POST MILES TOTAL PROJECT	SHEET No.	TOTAL SHEETS
07	LA	405	8.8	3	19

Denis Katayama 09-22-10
REGISTERED CIVIL ENGINEER DATE

01-18-11
PLANS APPROVAL DATE

REGISTERED PROFESSIONAL ENGINEER — D.S. KATAYAMA — No. C50648 — Exp. 9-30-11 — CIVIL — STATE OF CALIFORNIA

THE STATE OF CALIFORNIA OR ITS OFFICERS OR AGENTS SHALL NOT BE RESPONSIBLE FOR THE ACCURACY OR COMPLETENESS OF SCANNED COPIES OF THIS PLAN SHEET.

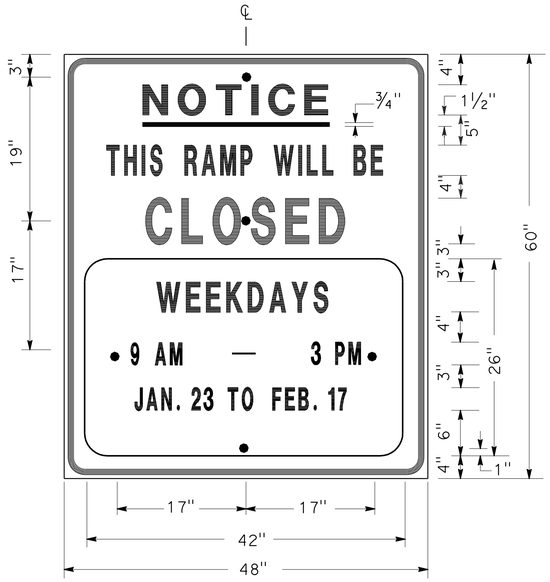

SIGN SP-1

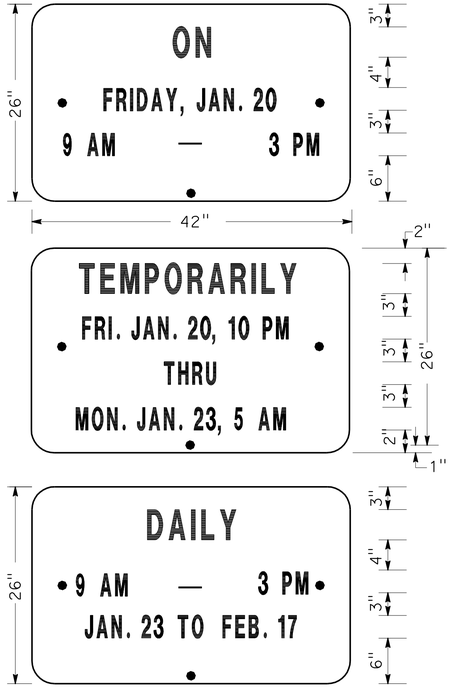

ALTERNATE OVERLAY PANELS (TYPICAL)

SPECIAL ADVANCE NOTICE PUBLICITY SIGN

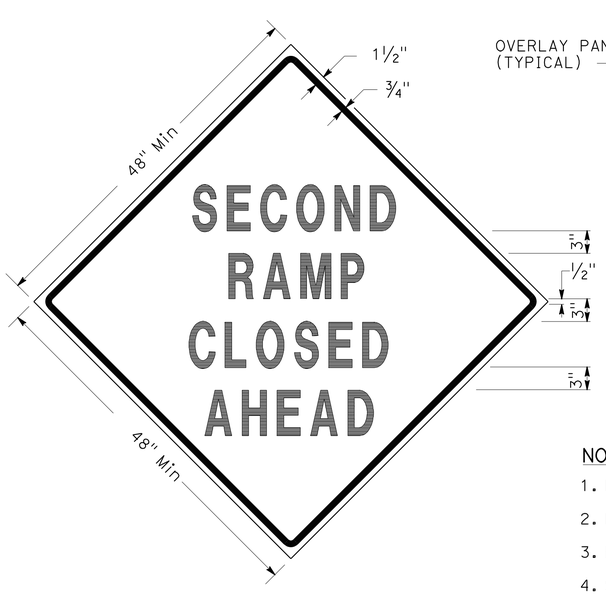

SIGN SP-3

SIGN SP-5

NOTES: (SIGNS SP-3 & SP-5)

1. LETTERS - 6" SERIES D.
2. LETTERS AND BORDERS - BLACK ON RETROREFLECTORIZED ORANGE BACKGROUND.
3. BASE MATERIAL SHALL BE ALUMINUM (MINIMUM 0.06").
4. SIGNS SHALL BE MOUNTED WITH BOTTOMS OF SIGNS A MINIMUM OF 6′ ABOVE GROUND.

SPECIAL SIGN FOR EXIT RAMP CLOSURES

NOTES: (SIGN SP-1)

1. SIGNS SHALL HAVE ORANGE RETROREFLECTORIZED BACKGROUND WITH BLACK BORDER AND LETTERS.
2. BOLT HOLES SHALL BE ⅜" DIAMETER.
3. BASE MATERIAL SHALL BE ALUMINUM (MINIMUM 0.06").
4. SIGNS SHALL BE MOUNTED WITH BOTTOMS OF SIGNS A MINIMUM OF 6′ ABOVE GROUND.

SIZE	BORDER WIDTH	MARGIN WIDTH	LETTER SIZE					CORNER RADIUS
			LINE 1	LINE 2*	LINE 3	LINE 4	LINE 5,6 & 7*	
48"x60"	1¼"	¾"	4E	4D	6E	4D		3"
42"x26"	OVERLAY						3D	1½"
* CONDENSED SPACING IF NECESSARY								

SIGN SP-4

NOTES: (SIGN SP-4)

1. LETTERS - 6" SERIES C.
2. LETTERS AND BORDERS - BLACK ON RETROREFLECTORIZED WHITE BACKGROUND.
3. BASE MATERIAL SHALL BE ALUMINUM (MINIMUM 0.06").
4. SIGNS SHALL BE PLACED AT RAMP ENTRANCES IN ADDITION TO SIGNS POSTED IN ACCORDANCE WITH STANDARD PLAN T14.

SPECIAL SIGN FOR ENTRANCE RAMP CLOSURES

TRAFFIC HANDLING DETAILS
TRAFFIC CONTROL SYSTEM FOR RAMP CLOSURES, DETOUR SIGNS AND MISCELLANEOUS DETAILS

SHEET 1 OF 2
NO SCALE

THD-1

LAST REVISION 01-18-11 | DATE PLOTTED => 13-JAN-2011 | TIME PLOTTED => 12:03

STATE OF CALIFORNIA - DEPARTMENT OF TRANSPORTATION
Caltrans®
DTM

FUNCTIONAL SUPERVISOR: JOHN YANG

CALCULATED-DESIGNED BY: ALBERT K YU
CHECKED BY: JOCELYN C CHIANG

REVISED BY	DATE REVISED
JC	7/10

BORDER LAST REVISED 7/2/2010

USERNAME => s122436
DGN FILE => 0700001108me001.dgn

RELATIVE BORDER SCALE IS IN INCHES 0 1 2 3

UNIT 1882 | PROJECT NUMBER & PHASE | 07000011081

Dist	COUNTY	ROUTE	POST MILES TOTAL PROJECT	SHEET No.	TOTAL SHEETS
07	LA	405	8.8	4	19

Denis Katayama 09-22-10
REGISTERED CIVIL ENGINEER DATE

01-18-11
PLANS APPROVAL DATE

REGISTERED PROFESSIONAL ENGINEER — D.S. KATAYAMA — No. C50648 — Exp. 9-30-11 — CIVIL — STATE OF CALIFORNIA

THE STATE OF CALIFORNIA OR ITS OFFICERS OR AGENTS SHALL NOT BE RESPONSIBLE FOR THE ACCURACY OR COMPLETENESS OF SCANNED COPIES OF THIS PLAN SHEET.

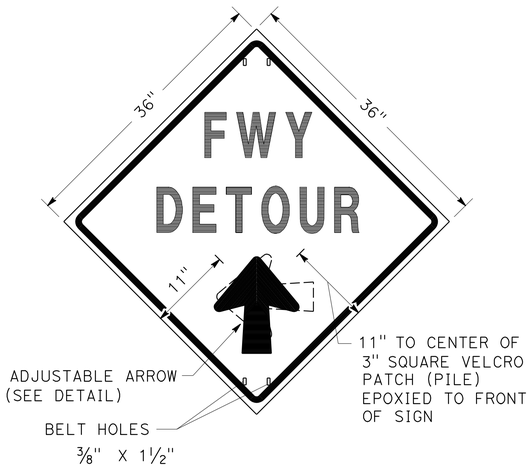

SIGN SP-2

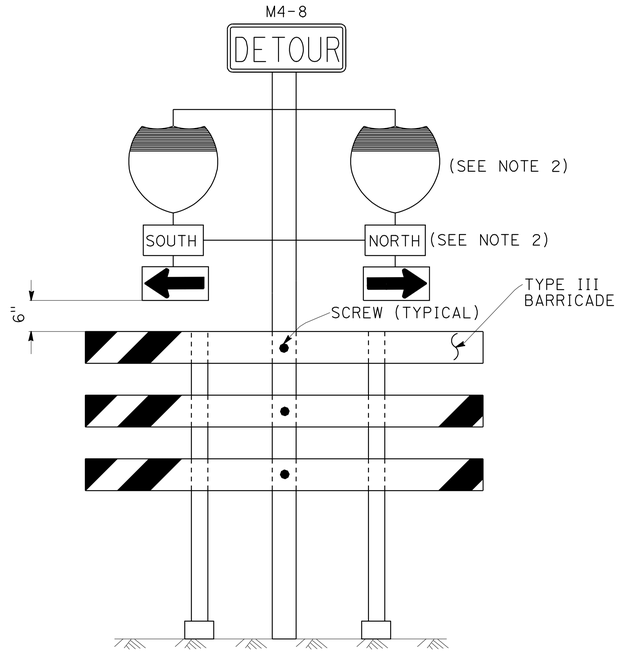

SIGN SP-6 (SEE NOTE 1)

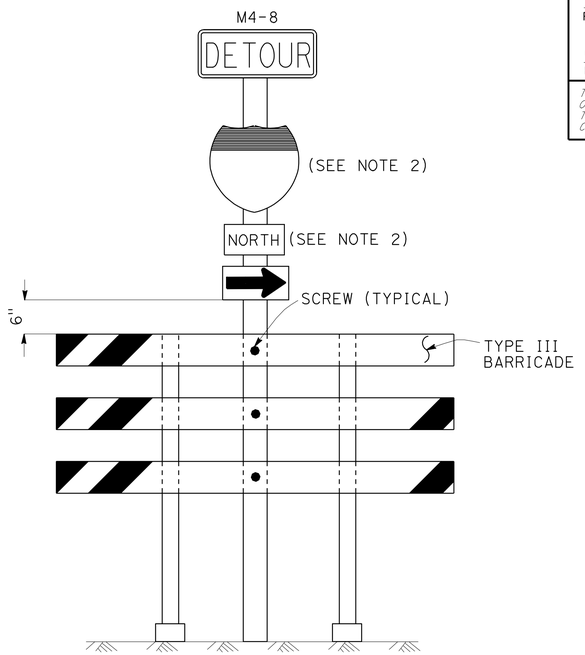

SIGN SP-7 (SEE NOTE 1)

NOTES: (SIGN SP-2)

1. LETTERS -6" SERIES E.
2. LETTERS, BORDER AND ARROW - BLACK ON RETROREFLECTORIZED ORANGE BACKGROUND.
3. BASE MATERIAL FOR SIGNS AND ARROWS SHALL BE ALUMINUM (MINIMUM 0.06").
4. BELTS (LUGGAGE STRAPS) SHALL BE 1" WIDE BY 48" LONG, MADE OF COTTON OR POLYPROPYLENE WEB MATERIAL.
5. SIGNS SHALL BE MOUNTED WITH BOTTOMS OF SIGNS A MINIMUM OF 6' ABOVE GROUND EXCEPT AS OTHERWISE SHOWN ON OTHER TRAFFIC HANDLING DETAILS PLANS.

ABBREVIATION

(CA) CALIFORNIA CODE

NOTES: (SIGNS SP-6 & SP-7)

1. IN LIEU OF PLACING SIGNS ON TYPE III BARRICADES, SIGNS, INCLUDING POSTS, MAY BE PLACED INTO THE GROUND OR FASTENED ONTO ELECTROLIERS.
2. USE APPROPRIATE ROUTE SHIELD [G26-2(CA), G27-2(CA), G28-2(CA)] AND CARDINAL DIRECTION [NORTH (M3-1), SOUTH (M3-3), EAST (M3-2), WEST (M3-4)]

SPECIAL PORTABLE FREEWAY DETOUR SIGNS

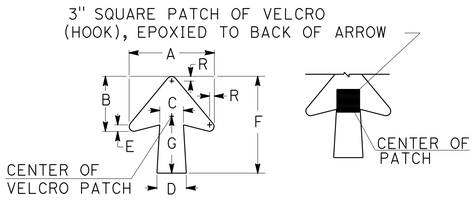

DIMENSIONS							
A	B	C	D	E	F	G	R
11 1/4"	7 1/4"	3 1/8"	4"	7/8"	13"	7 1/2"	5/8"

SPECIAL PORTABLE FREEWAY DETOUR SIGN

ADJUSTABLE ARROW DETAIL

TRAFFIC HANDLING DETAILS

TRAFFIC CONTROL SYSTEM FOR RAMP CLOSURES, DETOUR SIGNS AND MISCELLANEOUS DETAILS

SHEET 2 OF 2

NO SCALE

THD-2

CALCULATED-DESIGNED BY	CHECKED BY	REVISED BY	DATE REVISED
ALBERT K YU	JOCELYN C CHIANG	JC	7/10

FUNCTIONAL SUPERVISOR: JOHN YANG

STATE OF CALIFORNIA - DEPARTMENT OF TRANSPORTATION — DTM — Caltrans

LAST REVISION DATE PLOTTED => 13-JAN-2011
TIME PLOTTED => 12:04

BORDER LAST REVISED 7/2/2010 | USERNAME => s122436 | DGN FILE => 0700001108me002.dgn | RELATIVE BORDER SCALE IS IN INCHES 0 1 2 3 | UNIT 1882 | PROJECT NUMBER & PHASE 07000011081

Dist	COUNTY	ROUTE	POST MILES TOTAL PROJECT	SHEET No.	TOTAL SHEETS
07	LA	405	8.8	5	19

Denis Katayama 09-22-10
REGISTERED CIVIL ENGINEER DATE

01-18-11
PLANS APPROVAL DATE

REGISTERED PROFESSIONAL ENGINEER
D.S. KATAYAMA
No. C50648
Exp. 9-30-11
CIVIL
STATE OF CALIFORNIA

THE STATE OF CALIFORNIA OR ITS OFFICERS OR AGENTS SHALL NOT BE RESPONSIBLE FOR THE ACCURACY OR COMPLETENESS OF SCANNED COPIES OF THIS PLAN SHEET.

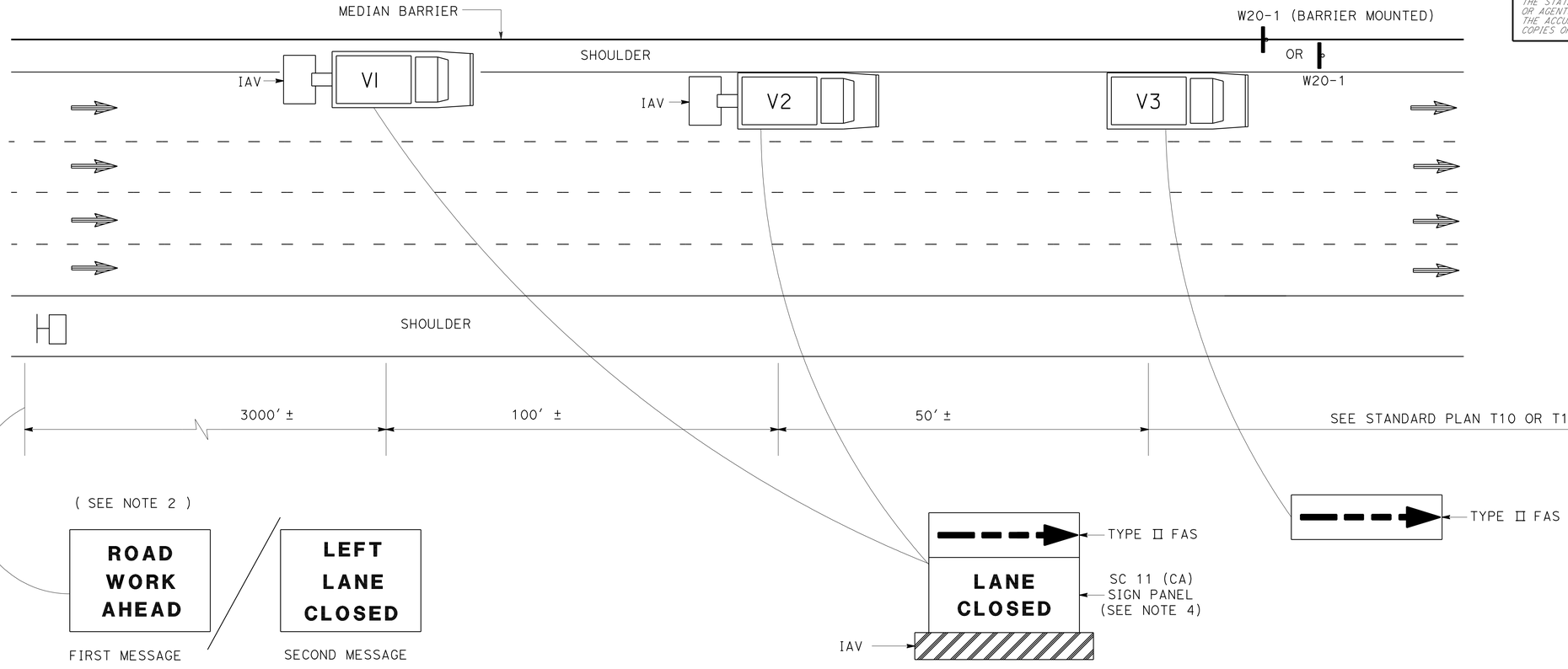

NOTES:

1. LANE CLOSURES SHALL NOT BE PLACED ON CREST VERTICAL CURVES OR ON HORIZONTAL CURVES.
2. PCMS SHALL BE ACTIVATED PRIOR TO TRAFFIC CONTROL ACTIVITIES ON THE LANE.
3. A MINIMUM SIGHT DISTANCE OF 1500′ SHALL BE PROVIDED IN ADVANCE OF PCMS.
4. VEHICLE-MOUNTED SIGN PANELS SHALL BE TYPE III OR IV RETROREFLECTORIZED SHEETING, BLACK ON WHITE OR BLACK ON ORANGE WITH 8" MINIMUM SERIES D LETTERS PER CALTRANS SIGN SPECIFICATIONS.

LEGEND

V1, V2	SHADOW VEHICLE
V3	WORK/APPLICATION VEHICLE
	PORTABLE CHANGEABLE MESSAGE SIGN (PCMS)
	DIRECTION OF TRAVEL
	CONSTRUCTION AREA SIGN

ABBREVIATIONS

FAS	FLASHING ARROW SIGN
IAV	IMPACT ATTENUATOR VEHICLE
CMS	CHANGEABLE MESSAGE SIGN
PCMS	PORTABLE CHANGEABLE MESSAGE SIGN
(CA)	CALIFORNIA CODE

TRAFFIC HANDLING DETAILS
TRAFFIC CONTROL SYSTEM
FOR MEDIAN SHOULDERS LESS THAN 8 FEET

NO SCALE

THD-3

STATE OF CALIFORNIA - DEPARTMENT OF TRANSPORTATION
DTM
Caltrans
FUNCTIONAL SUPERVISOR: JOHN YANG
CALCULATED-DESIGNED BY: JOCELYN C CHIANG
CHECKED BY: ALBERT K YU
REVISED BY: JC
DATE REVISED: 7/10

LAST REVISION DATE PLOTTED => 13-JAN-2011
TIME PLOTTED => 12:04

Dist	COUNTY	ROUTE	POST MILES TOTAL PROJECT	SHEET No.	TOTAL SHEETS
07	LA	405	8.8	6	19

Denis Katayama 09-22-10
REGISTERED CIVIL ENGINEER DATE

01-18-11
PLANS APPROVAL DATE

REGISTERED PROFESSIONAL ENGINEER — D.S. KATAYAMA — No. C50648 — Exp. 9-30-11 — CIVIL — STATE OF CALIFORNIA

THE STATE OF CALIFORNIA OR ITS OFFICERS OR AGENTS SHALL NOT BE RESPONSIBLE FOR THE ACCURACY OR COMPLETENESS OF SCANNED COPIES OF THIS PLAN SHEET.

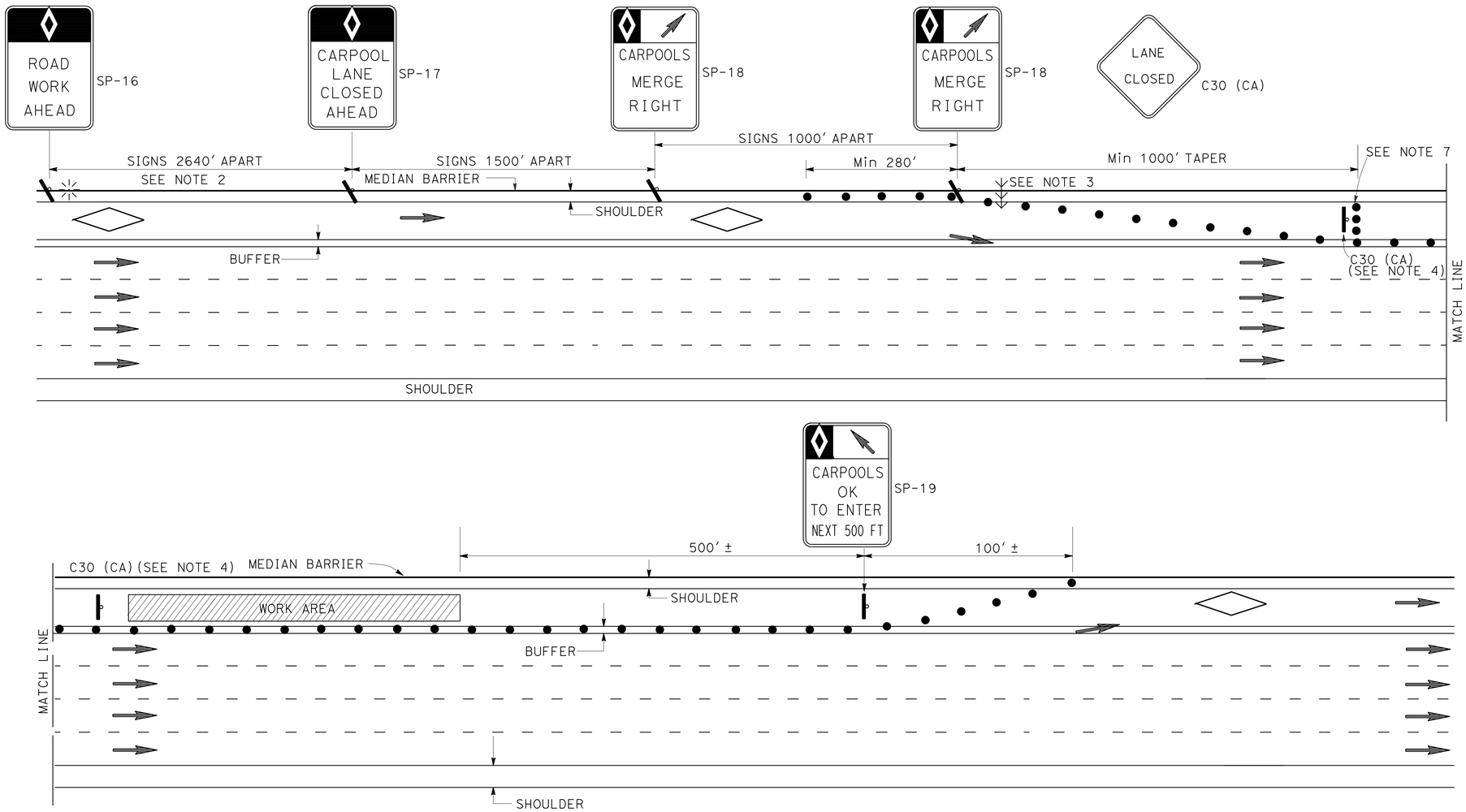

ABBREVIATIONS

(CA) CALIFORNIA CODE

HOV HIGH OCCUPANCY VEHICLE

NOTES: FOR CASE I AND CASE II

1. AT LEAST ONE PERSON SHALL BE ASSIGNED TO FULL TIME MAINTENANCE OF TRAFFIC CONTROL DEVICES ON NIGHT LANE CLOSURES OR DAY-TIME CLOSURES EXCEEDING 1 MILE LENGTH, INCLUDING TAPERS.
2. ADVANCE WARNING SIGN INSTALLATIONS SHALL BE EQUIPPED WITH FLAGS FOR DAYTIME CLOSURES. TYPE B HIGH INTENSITY FLASHING WARNING LIGHTS SHALL BE USED ON SP-16 SIGNS DURING NIGHT LANE CLOSURES. FLAGS AND WARNING LIGHTS SHALL BE ATTACHED TO SIGNS AS APPROVED BY THE ENGINEER.
3. THE FLASHING ARROW SIGN SHALL BE TYPE I.
4. PLACE C30 (CA) SIGNS EVERY 2000' THROUGHOUT THE LENGTH OF LANE CLOSURE.
5. A MINIMUM 1500' OF SIGHT DISTANCE SHALL BE PROVIDED WHERE POSSIBLE FOR VEHICLES APPROACHING THE FLASHING ARROW SIGN. LANE CLOSURES SHALL NOT BE PLACED ON CREST VERTICAL CURVES OR ON HORIZONTAL CURVES.
6. PORTABLE DELINEATORS PLACED AT ONE-HALF THE SPACING INDICATED FOR TRAFFIC CONES MAY BE USED INSTEAD OF CONES FOR DAYTIME CLOSURES.
7. A MINIMUM OF 3 CONES SHALL BE PLACED TRANSVERSELY ACROSS CLOSED LANES WHERE TAPERS END AND EVERY 2000'. TWO TYPE II BARRICADES MAY BE USED INSTEAD OF 3 CONES. THE ALIGNMENT OF CONES OR BARRICADES MAY BE SHIFTED FROM THE TRANSVERSE ALIGNMENT TO PROVIDE ACCESS TO WORK.
8. IF AN INGRESS/EGRESS AREA IS WITHIN 5250' UPSTREAM OR DOWNSTREAM OF THE WORK AREA, LANE CLOSURES SHALL BE EXTENDED TO THAT AREA AS SHOWN IN CASE II.
9. SIGNS SP-16, 17, 18, AND 19 MAY BE OVERLAID ON EXISTING CARPOOL SIGNS IN MEDIANS AS APPROVED BY THE ENGINEER.
10. SIGNS SP-16, 17, 18, AND C30 (CA) SHALL BE BLACK ON ORANGE BACKGROUND. SIGN SP-19 SHALL BE BLACK ON WHITE BACKGROUND. DIAMONDS ON SIGNS SHALL BE WHITE.
11. FOR CLOSURE OF LANE(S) ADJACENT TO HOV LANES, SEE CASE II.
12. THE MAXIMUM SPACING BETWEEN CONES SHALL BE APPROXIMATELY 50' IN TAPERS AND 100' ON TANGENTS.

LEGEND

- CONE
- FLASHING BEACON
- HOV LANE
- FLASHING ARROW SIGN
- PORTABLE SIGN
- DIRECTION OF TRAVEL

SIGN PANEL

SIZE (MIN)

SP-16 36" X 54"
SP-17 36" X 54"
SP-18 36" X 48"
SP-19 36" X 60"
C30 (CA) 30" X 30"
G20-2 48" X 24"

TRAFFIC HANDLING DETAILS
TRAFFIC CONTROL SYSTEM FOR HIGH OCCUPANCY VEHICLE LANES AT NON-INGRESS/EGRESS AREAS
CASE I
NO SCALE

THD-4

CALCULATED-DESIGNED BY	CHECKED BY	REVISED BY	DATE REVISED
ALBERT K YU	JOCELYN C CHIANG	JC	7/10

FUNCTIONAL SUPERVISOR: JOHN YANG

STATE OF CALIFORNIA - DEPARTMENT OF TRANSPORTATION — DTM — Caltrans®

LAST REVISION: DATE PLOTTED => 13-JAN-2011 TIME PLOTTED => 12:04
01-18-11

Dist	COUNTY	ROUTE	POST MILES TOTAL PROJECT	SHEET No.	TOTAL SHEETS
07	LA	405	8.8	7	19

Denis Katayama 09-22-10
REGISTERED CIVIL ENGINEER DATE

01-18-11
PLANS APPROVAL DATE

D.S. KATAYAMA No. C50648 Exp. 9-30-11 CIVIL — REGISTERED PROFESSIONAL ENGINEER — STATE OF CALIFORNIA

THE STATE OF CALIFORNIA OR ITS OFFICERS OR AGENTS SHALL NOT BE RESPONSIBLE FOR THE ACCURACY OR COMPLETENESS OF SCANNED COPIES OF THIS PLAN SHEET.

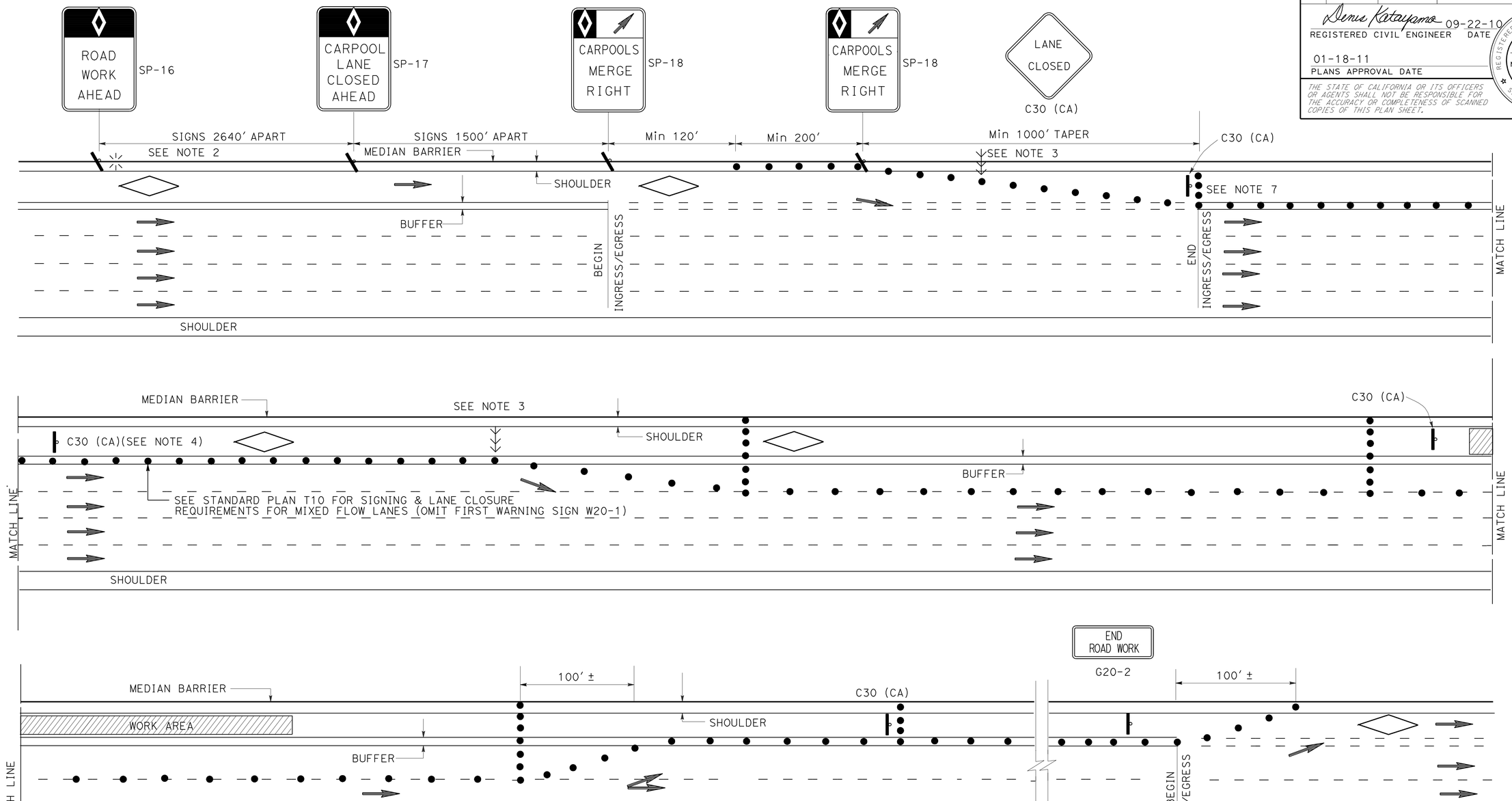

NOTES:

1. SEE CASE I FOR NOTES, LEGENDS AND ABBREVIATIONS FOR THIS SHEET.
2. CLOSURES OF ONE MIXED FLOW TRAFFIC LANE ADJACENT TO HOV LANE SHOWN. MULTIPLE MIXED FLOW LANE CLOSURES ARE SIMILAR.

TRAFFIC HANDLING DETAILS
TRAFFIC CONTROL SYSTEM FOR HIGH OCCUPANCY VEHICLE LANES AND ADJACENT FREEWAY LANES BETWEEN INGRESS/EGRESS AREAS
CASE II

NO SCALE

THD-5

REVISED BY	DATE REVISED	CALCULATED-DESIGNED BY	CHECKED BY	FUNCTIONAL SUPERVISOR
JC	7/10	ALBERT K YU	JOCELYN C CHIANG	JOHN YANG

STATE OF CALIFORNIA - DEPARTMENT OF TRANSPORTATION DTM

LAST REVISION DATE PLOTTED => 13-JAN-2011 TIME PLOTTED => 12:04 01-18-11

BORDER LAST REVISED 7/2/2010 | USERNAME => s122436 DGN FILE => 0700001108me005.dgn | RELATIVE BORDER SCALE IS IN INCHES 0 1 2 3 | UNIT 1882 | PROJECT NUMBER & PHASE 07000011081

Dist	COUNTY	ROUTE	POST MILES TOTAL PROJECT	SHEET No.	TOTAL SHEETS
07	LA	405	8.8	8	19

Denis Katayama 09-22-10
REGISTERED CIVIL ENGINEER DATE

01-18-11
PLANS APPROVAL DATE

REGISTERED PROFESSIONAL ENGINEER
D.S. KAYAYAMA
No. C50648
Exp. 9-30-11
CIVIL
STATE OF CALIFORNIA

THE STATE OF CALIFORNIA OR ITS OFFICERS OR AGENTS SHALL NOT BE RESPONSIBLE FOR THE ACCURACY OR COMPLETENESS OF SCANNED COPIES OF THIS PLAN SHEET.

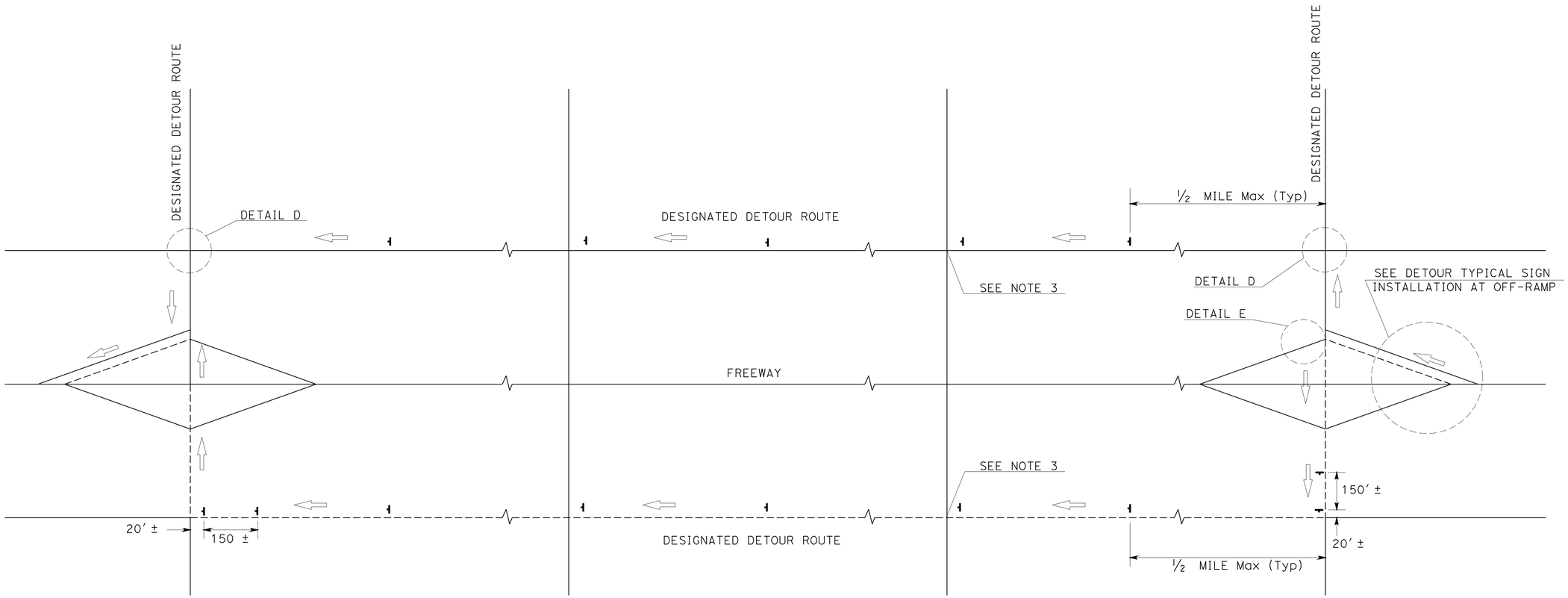

TYPICAL DETOUR SIGN INSTALLATION ALONG DESIGNATED DETOUR ROUTE

LEGEND

⊣	TEMPORARY SIGN (SP-2)
AND/OR	DESIGNATED DETOUR ROUTE
⇨	DIRECTION OF TRAVEL

NOTES:

1. SP-2 SIGNS SHALL NOT BE INSTALLED ON BARRICADES EXCEPT AS OTHERWISE SHOWN.
2. SIGN LOCATIONS ARE APPROXIMATE. EXACT LOCATIONS WILL BE DETERMINED BY THE ENGINEER.
3. SP-2 SIGNS SHALL BE POSTED AT SIGNALIZED INTERSECTIONS ALONG THE DESIGNATED DETOUR ROUTE OR ½ MILE MAXIMUM APART.

TRAFFIC HANDLING DETAILS

TRAFFIC CONTROL SYSTEM FOR DETOUR SIGN INSTALLATION ALONG DESIGNATED DETOUR ROUTE

SHEET 1 OF 2

NO SCALE

THD-6

STATE OF CALIFORNIA - DEPARTMENT OF TRANSPORTATION
DTM
Caltrans

FUNCTIONAL SUPERVISOR: JOHN YANG
CALCULATED-DESIGNED BY: ALBERT K YU
CHECKED BY: JOCELYN C CHIANG
REVISED BY: JC
DATE REVISED: 7/10

LAST REVISION DATE PLOTTED => 13-JAN-2011
01-18-11 TIME PLOTTED => 12:04

Dist	COUNTY	ROUTE	POST MILES TOTAL PROJECT	SHEET No.	TOTAL SHEETS
07	LA	405	8.8	9	19

Denis Katayama 09-22-10
REGISTERED CIVIL ENGINEER DATE

01-18-11
PLANS APPROVAL DATE

REGISTERED PROFESSIONAL ENGINEER D.S. KATAYAMA No. C50648 Exp. 9-30-11 CIVIL STATE OF CALIFORNIA

THE STATE OF CALIFORNIA OR ITS OFFICERS OR AGENTS SHALL NOT BE RESPONSIBLE FOR THE ACCURACY OR COMPLETENESS OF SCANNED COPIES OF THIS PLAN SHEET.

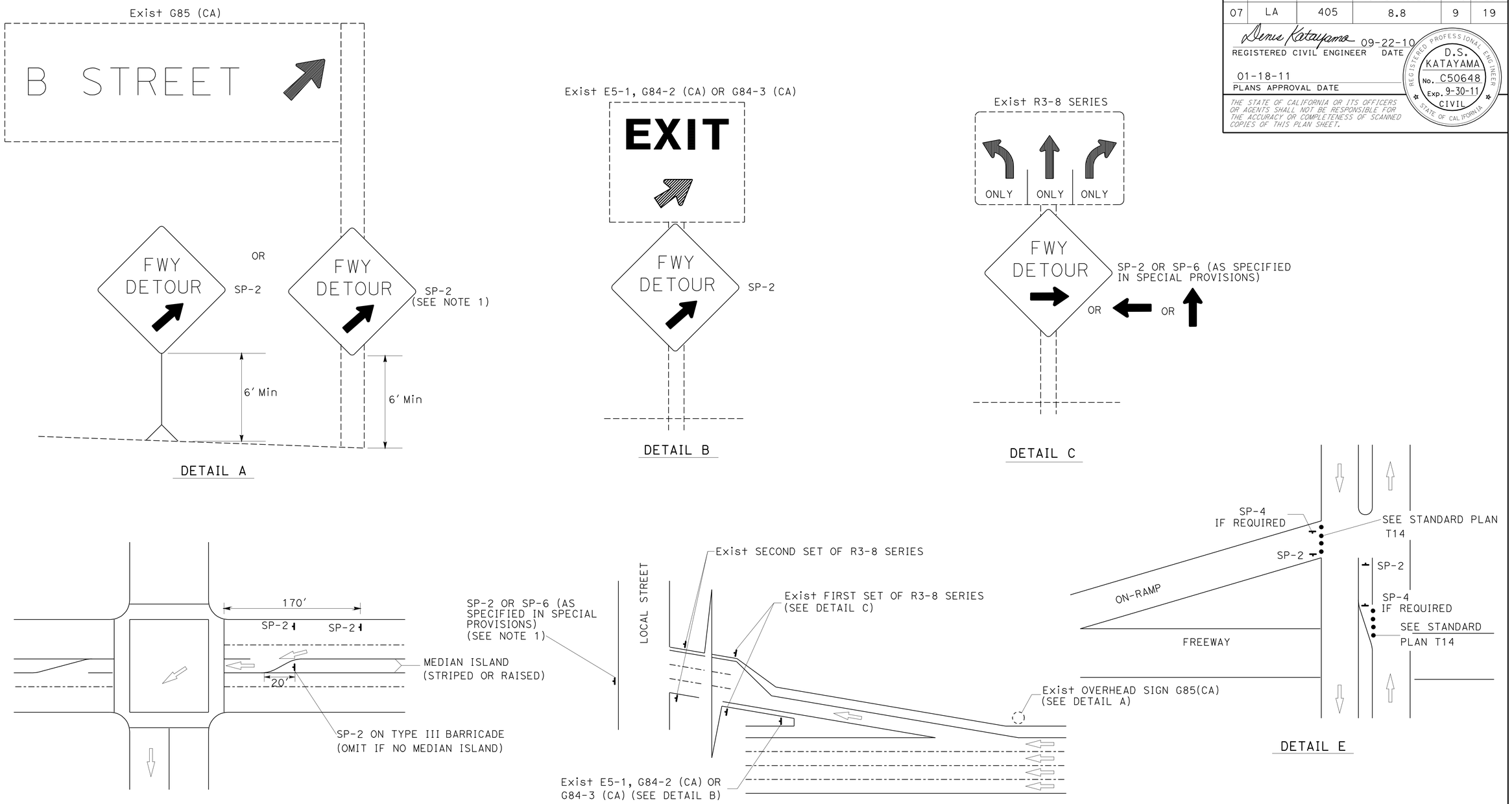

TYPICAL DETOUR SIGN INSTALLATION AT OFF-RAMP

NOTES:

1. TEMPORARY SIGNS MAY BE STRAPPED ON EXISTING ELECTROLIER, SIGNAL POSTS, OR SIGN POSTS.
2. OMIT DETAIL A AND DETAIL B FOR FULL FREEWAY CLOSURES.
3. SEE TRAFFIC HANDLING DETAILS PLAN-TRAFFIC CONTROL SYSTEM FOR RAMP CLOSURES, DETOUR SIGNS AND MISCELLANEOUS DETAILS SHEET 2 OF 2 FOR SP-6.

ABBREVIATIONS

(CA) CALIFORNIA CODE

LEGENDS

- TRAFFIC CONE
- TEMPORARY SIGN
- DIRECTION OF TRAVEL
- EXISTING OVERHEAD SIGN

TRAFFIC HANDLING DETAILS
TRAFFIC CONTROL SYSTEM FOR DETOUR SIGN INSTALLATION ALONG DESIGNATED DETOUR ROUTE
SHEET 2 OF 2

NO SCALE

THD-7

STATE OF CALIFORNIA - DEPARTMENT OF TRANSPORTATION
Caltrans DTM

FUNCTIONAL SUPERVISOR: JOHN YANG
CALCULATED-DESIGNED BY: ALBERT K YU
CHECKED BY: JOCELYN C CHIANG
REVISED BY: JC
DATE REVISED: 8/10

LAST REVISION 01-18-11
DATE PLOTTED => 13-JAN-2011
TIME PLOTTED => 12:04

Dist	COUNTY	ROUTE	POST MILES TOTAL PROJECT	SHEET No.	TOTAL SHEETS
07	LA	405	8.8	10	19

REGISTERED CIVIL ENGINEER — 1-7-11 DATE

CAM CHAU No. 70305 Exp. 9-30-12 CIVIL — REGISTERED PROFESSIONAL ENGINEER — STATE OF CALIFORNIA

01-18-11
PLANS APPROVAL DATE

THE STATE OF CALIFORNIA OR ITS OFFICERS OR AGENTS SHALL NOT BE RESPONSIBLE FOR THE ACCURACY OR COMPLETENESS OF SCANNED COPIES OF THIS PLAN SHEET.

NOTES:

1. DETAIL 13/14 (Mod) CONSISTS OF DETAIL 13 WITH THE ADDITION OF A 4" WIDE THERMOPLASTIC STRIPE 12' LONG ON TOP OF TYPE A NON-REFLECTIVE PAVEMENT MARKERS.

LEGEND:

- 4" WHITE THERMOPLASTIC TRAFFIC STRIPE
- 4" YELLOW THERMOPLASTIC TRAFFIC STRIPE
- TYPE A MARKER
- TYPE G MARKER
- TYPE H MARKER
- DIRECTION OF TRAVEL

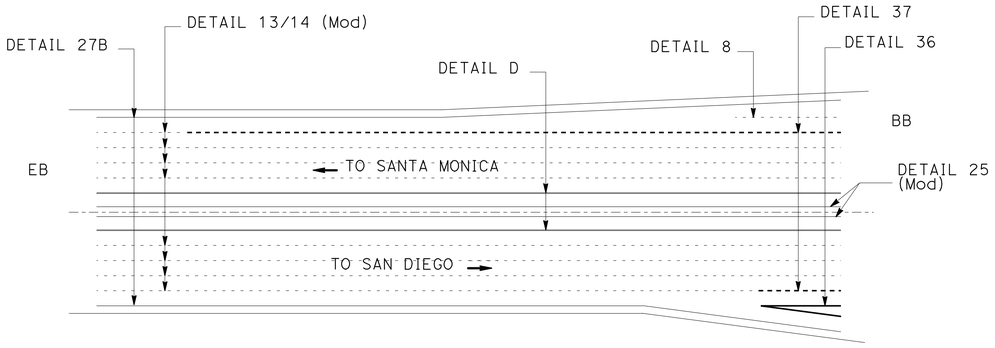

DOLORES YARD OH

Br No. 53-1168, PM 8.76

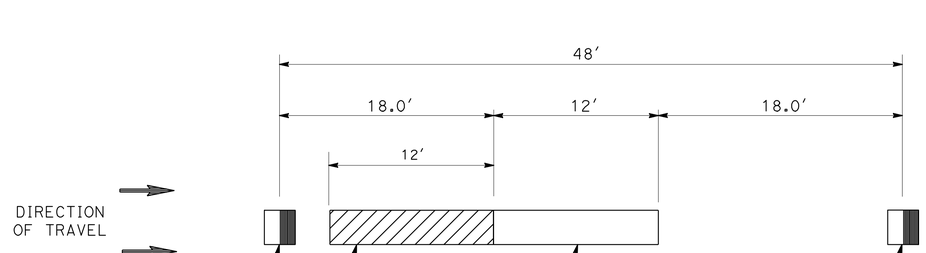

TEMPORARY LANE LINE PAVEMENT DELINEATION

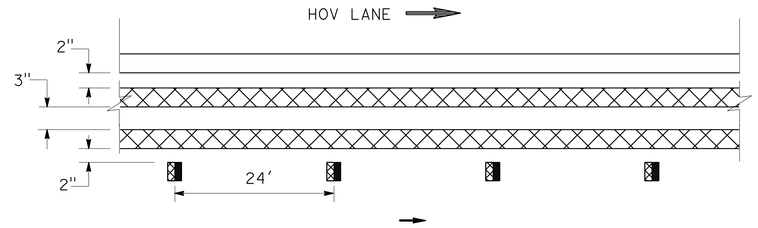

DETAIL D

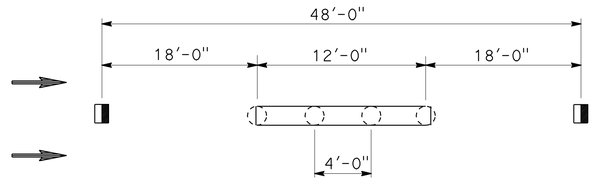

DETAIL 13/14 (Mod)

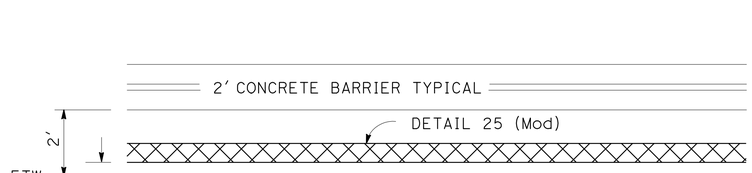

DETAIL 25 (Mod)

PAVEMENT DELINEATION DETAILS

NO SCALE

PDD-1

STATE OF CALIFORNIA - DEPARTMENT OF TRANSPORTATION
Caltrans MAINTENANCE ENGINEERING

FUNCTIONAL SUPERVISOR: HAMID SAADATNEJADI

CALCULATED-DESIGNED BY: CAM CHAU
CHECKED BY: HAMID SAADATNEJADI

REVISED BY | DATE REVISED

LAST REVISION | DATE PLOTTED => 13-JAN-2011
01-18-11 | TIME PLOTTED => 12:04

BORDER LAST REVISED 7/2/2010

USERNAME => s122436
DGN FILE => 0700001108nb001.dgn

RELATIVE BORDER SCALE IS IN INCHES 0 1 2 3

UNIT 1959

PROJECT NUMBER & PHASE 07000011081

Dist	COUNTY	ROUTE	POST MILES TOTAL PROJECT	SHEET No.	TOTAL SHEETS
07	LA	405	8.8	11	19

1-7-11
REGISTERED CIVIL ENGINEER DATE

CAM CHAU
No. 70305
Exp. 9-30-12
CIVIL
REGISTERED PROFESSIONAL ENGINEER
STATE OF CALIFORNIA

01-18-11
PLANS APPROVAL DATE

THE STATE OF CALIFORNIA OR ITS OFFICERS OR AGENTS SHALL NOT BE RESPONSIBLE FOR THE ACCURACY OR COMPLETENESS OF SCANNED COPIES OF THIS PLAN SHEET.

PAVEMENT DELINEATION QUANTITIES

				THERMOPLASTIC TRAFFIC STRIPE										PAVEMENT MARKER						
														NON-RELECTIVE	RETROREFLECTIVE					
				REMOVE YELLOW THERMOPLASTIC TRAFFIC STRIPE (HAZARDOUS WASTE)	REMOVE TRAFFIC STRIPE	REMOVE PAVEMENT MARKER	4" PAINT TRAFFIC STRIPE (BLACK) (N)	4" WHITE (BROKEN 17-7) DETAIL 8	4" WHITE (BROKEN 36-12) DETAIL 13/14 (Mod)	4" YELLOW DETAIL 25 (Mod)	4" DOUBLE YELLOW DETAIL D	4" WHITE DETAIL 27B	4" WHITE DETAIL 27B	8" WHITE DETAIL 36	8" WHITE (BROKEN 12-3) DETAIL 37	(NON-REFLECTIVE) TYPE A DETAIL 13/14 (Mod)	(RETROREFLECTIVE) TYPE C DETAIL 13/14 (Mod)	(RETROREFLECTIVE) TYPE G DETAIL 13/14 (Mod)	(RETROREFLECTIVE) TYPE H DETAIL D	(RETROREFLECTIVE) TYPE H DETAIL 25 (Mod)	(RETROREFLECTIVE) TYPE G DETAIL 36	(RETROREFLECTIVE) TYPE G DETAIL 37
Rte	PM	BRIDGE NAME	Br No.	LF	LF	EA	LF	LF	LF	LF	LF	LF	LF	LF	LF	EA	EA	EA	EA	EA	EA	EA
405	8.76	DOLORES YARD OH	53-1168	8196	5477	775	1636	270	5778	1636	3280	1636	1636	260	810	482	16	105	69	35	12	56
			TOTAL	8196	5477	775	1636	270	5778	8188				260	810	482	293					

N = NOT A SEPARATE PAY ITEM

PAVEMENT DELINEATION QUANTITIES

PDQ-1

REVISED BY | DATE REVISED
CALCULATED-DESIGNED BY: CAM CHAU
CHECKED BY: HAMID SAADATNEJADI
FUNCTIONAL SUPERVISOR: HAMID SAADATNEJADI
STATE OF CALIFORNIA - DEPARTMENT OF TRANSPORTATION
Caltrans MAINTENANCE ENGINEERING

LAST REVISION 01-18-11
DATE PLOTTED => 18-JAN-2011
TIME PLOTTED => 11:58

DIST	COUNTY	ROUTE	POST MILES TOTAL PROJECT	SHEET NO.	TOTAL SHEETS
07	LA	405	8.8	12	19

Randell D. Hiatt
REGISTERED CIVIL ENGINEER

June 6, 2008
PLANS APPROVAL DATE

REGISTERED PROFESSIONAL ENGINEER
Randell D. Hiatt
No. C50200
Exp. 6-30-09
CIVIL
STATE OF CALIFORNIA

The State of California or its officers or agents shall not be responsible for the accuracy or completeness of electronic copies of this plan sheet.

To accompany plans dated 01-18-11

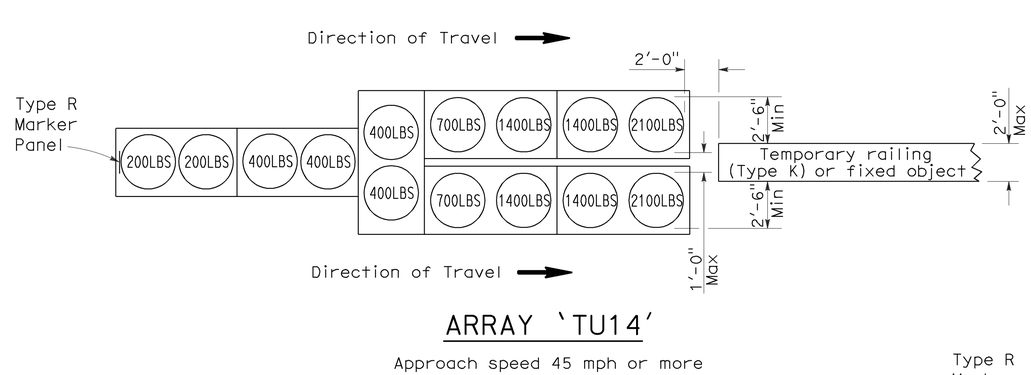

ARRAY 'TU14'

Approach speed 45 mph or more

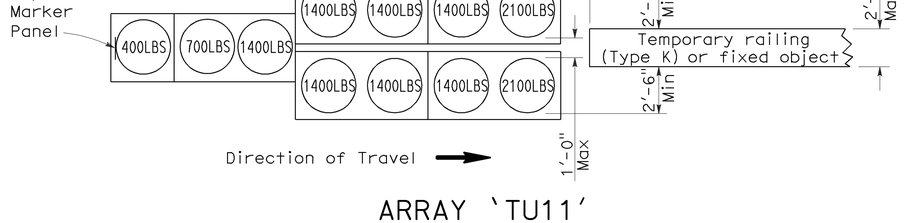

ARRAY 'TU11'

Approach speed less than 45 mph

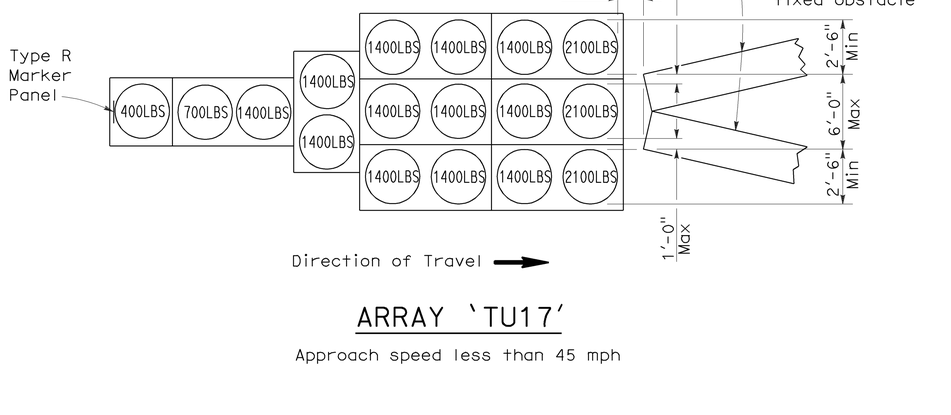

ARRAY 'TU17'

Approach speed less than 45 mph

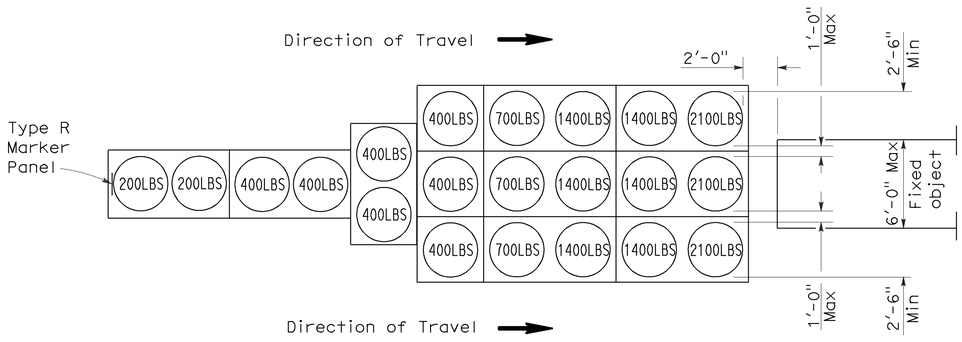

ARRAY 'TU21'

Approach speed 45 mph or more

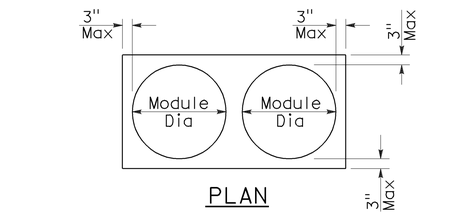

PLAN

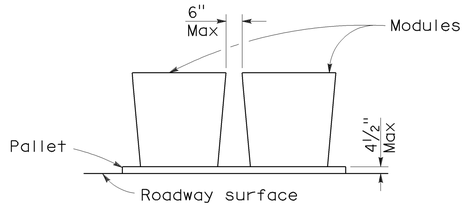

ELEVATION

CRASH CUSHION PALLET DETAIL

See Note 7

NOTES:

1. (XXX) Indicates sand filled module location and weight of sand in pounds for each module. Module spacing is based on the greater diameter of the module.
2. All sand weights are nominal.
3. Temporary crash cushion arrays shall not encroach on the traveled way.
4. Place the top of Type R marker panel 1" below the module lid.
5. Refer to Standard Plan A73B for marker details.
6. Approach speeds indicated conform to NCHRP 350 Report criteria.
7. Use of pallets is optional.

STATE OF CALIFORNIA
DEPARTMENT OF TRANSPORTATION

TEMPORARY CRASH CUSHION, SAND FILLED (UNIDIRECTIONAL)

NO SCALE

RSP T1A DATED JUNE 6, 2008 SUPERSEDES STANDARD PLAN T1A
DATED MAY 1, 2006 - PAGE 211 OF THE STANDARD PLANS BOOK DATED MAY 2006.

REVISED STANDARD PLAN RSP T1A

2006 REVISED STANDARD PLAN RSP T1A

5-15-08

DIST	COUNTY	ROUTE	POST MILES TOTAL PROJECT	SHEET NO.	TOTAL SHEETS
07	LA	405	8.8	13	19

Randell D. Hiatt
REGISTERED CIVIL ENGINEER

June 6, 2008
PLANS APPROVAL DATE

REGISTERED PROFESSIONAL ENGINEER
Randell D. Hiatt
No. C50200
Exp. 6-30-09
CIVIL
STATE OF CALIFORNIA

The State of California or its officers or agents shall not be responsible for the accuracy or completeness of electronic copies of this plan sheet.

To accompany plans dated 01-18-11

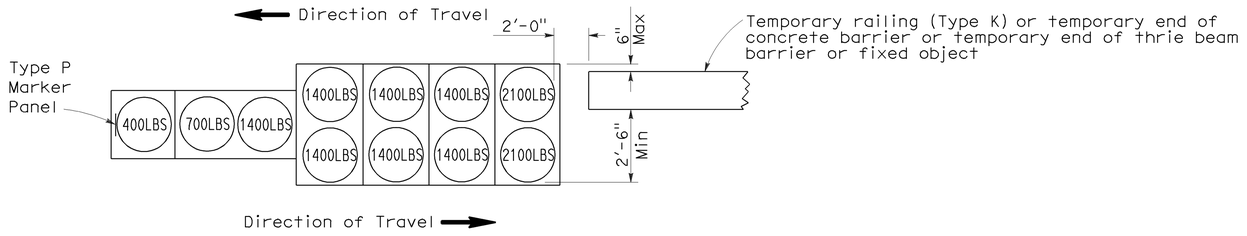

ARRAY 'TB11'

Approach speed less than 45 mph

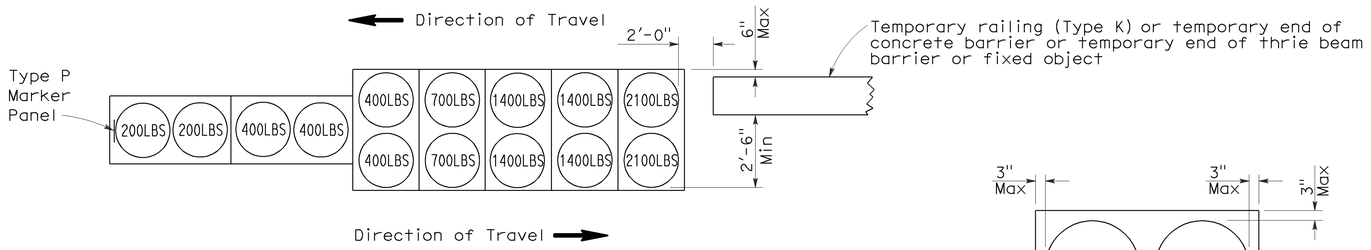

ARRAY 'TB14'

Approach speed 45 mph or more

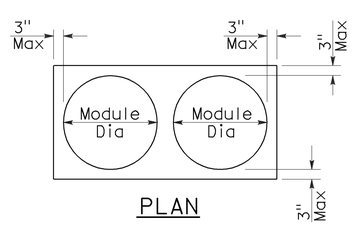

PLAN

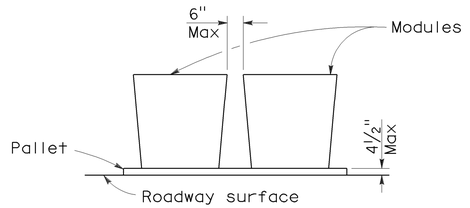

ELEVATION

CRASH CUSHION PALLET DETAIL

See Note 7

NOTES:

1. (XXX) Indicates sand filled module location and weight of sand in pounds for each module. Module spacing is based on the greater diameter of the module.
2. All sand weights are nominal.
3. Temporary crash cushion arrays shall not encroach on the traveled way.
4. Place the Type P marker panel so that the bottom of the panel rests upon the pallet.
5. Refer to Standard Plan A73B for marker details.
6. Approach speeds indicated conform to NCHRP 350 Report criteria.
7. Use of pallets is optional.

STATE OF CALIFORNIA
DEPARTMENT OF TRANSPORTATION

TEMPORARY CRASH CUSHION, SAND FILLED (BIDIRECTIONAL)

NO SCALE

RSP T1B DATED JUNE 6, 2008 SUPERSEDES STANDARD PLAN T1B
DATED MAY 1, 2006 - PAGE 212 OF THE STANDARD PLANS BOOK DATED MAY 2006.

REVISED STANDARD PLAN RSP T1B

2006 REVISED STANDARD PLAN RSP T1B

5-15-08

DIST	COUNTY	ROUTE	POST MILES TOTAL PROJECT	SHEET NO.	TOTAL SHEETS
07	LA	405	8.8	14	19

Randell D. Hiatt
REGISTERED CIVIL ENGINEER

June 6, 2008
PLANS APPROVAL DATE

REGISTERED PROFESSIONAL ENGINEER
Randell D. Hiatt
No. C50200
Exp. 6-30-09
CIVIL
STATE OF CALIFORNIA

The State of California or its officers or agents shall not be responsible for the accuracy or completeness of electronic copies of this plan sheet.

To accompany plans dated 01-18-11

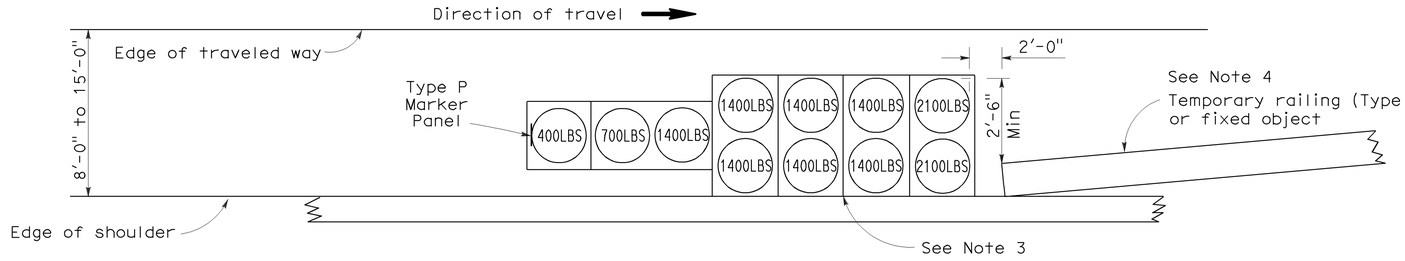

ARRAY 'TS11'

Approach speed less than 45 mph
See Note 9

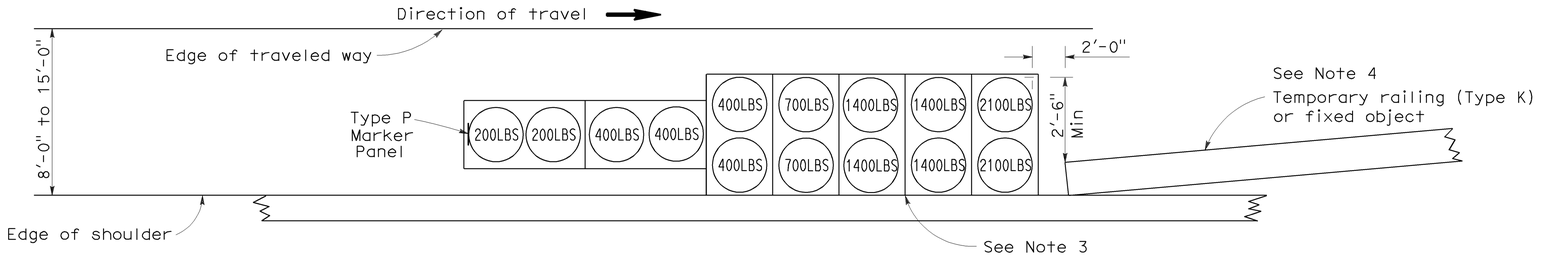

ARRAY 'TS14'

Approach speed 45 mph or more
See Note 9

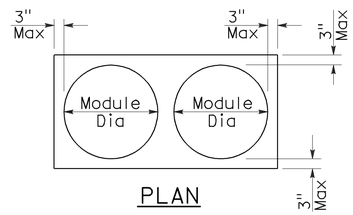

PLAN

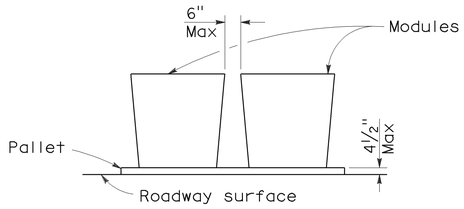

ELEVATION

CRASH CUSHION PALLET DETAIL

See Note 11

NOTES:

1. (XXX) Indicates sand filled module location and weight of sand in pounds for each module. Module spacing is based on the greater diameter of the module.
2. All sand weights are nominal.
3. The temporary crash cushion arrays shown on this plan shall be used only in locations where there will be traffic on one side of the temporary crash cushion array.
4. If the fixed object or approach end of the temporary railing is less than 15'-0" from the edge of traveled way, a temporary crash cushion is required in a construction or work zone.
5. Temporary crash cushion arrays shall not encroach on the traveled way.
6. Arrays for median shoulders shall conform to details shown on this plan for outside shoulders.
7. Place the Type P marker panel so that the bottom of the panel rests upon the pallet and faces traffic.
8. Refer to Standard Plan A73B for marker details.
9. For shoulder widths less than 8'-0", appropriate approved crash cushion protection, other than sand filled modules, shall be provided at fixed objects and at approach ends of temporary railing. The specific type of crash cushion shall be as shown on the project plans or as specified in the Special Provisions, or if not shown on the project plans or specified in the Special Provisions, shall be as approved by the Engineer.
10. Approach speeds indicated conform to NCHRP 350 Report criteria.
11. Use of pallets is optional.

STATE OF CALIFORNIA
DEPARTMENT OF TRANSPORTATION

TEMPORARY CRASH CUSHION, SAND FILLED (SHOULDER INSTALLATIONS)

NO SCALE

RSP T2 DATED JUNE 6, 2008 SUPERSEDES STANDARD PLAN T2
DATED MAY 1, 2006 - PAGE 213 OF THE STANDARD PLANS BOOK DATED MAY 2006.

REVISED STANDARD PLAN RSP T2

2006 REVISED STANDARD PLAN RSP T2

5-15-08

DIST	COUNTY	ROUTE	POST MILES TOTAL PROJECT	SHEET NO.	TOTAL SHEETS
07	LA	405	8.8	15	19

REGISTERED CIVIL ENGINEER

Efthymios Delis
No. C51434
Exp. 6-30-08
CIVIL
REGISTERED PROFESSIONAL ENGINEER
STATE OF CALIFORNIA

October 5, 2007
PLANS APPROVAL DATE

The State of California or its officers or agents shall not be responsible for the accuracy or completeness of electronic copies of this plan sheet.

To accompany plans dated 01-18-11

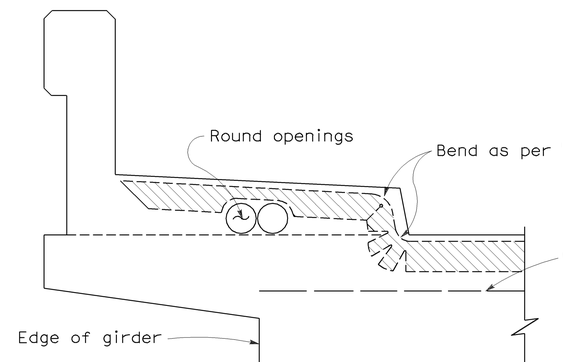

NOTE:

Type "B" seal shown. Type "A" seals to comform to the general path of seal shown, cuts for bending not required. Bend Type "A" seals 3" up into curb or barrier rail on only the low end of the seal.

CONCRETE BARRIER AND SIDEWALK

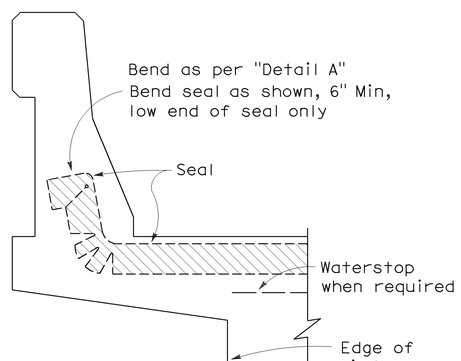

CONCRETE BARRIER

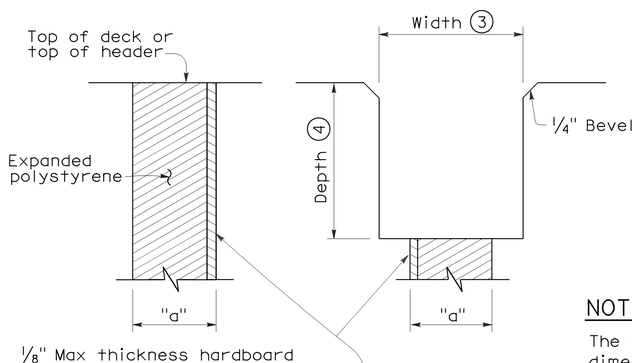

FORMING DETAIL SAWCUT DETAIL

NOTE:

The Contractor shall verify all controlling field dimensions before ordering or fabricatiing any material.

JOINT SEALS DETAILS

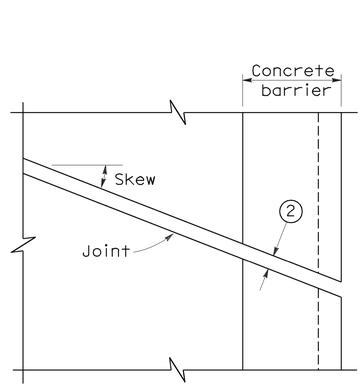

PLAN OF JOINT (SKEW ≤ 20°)

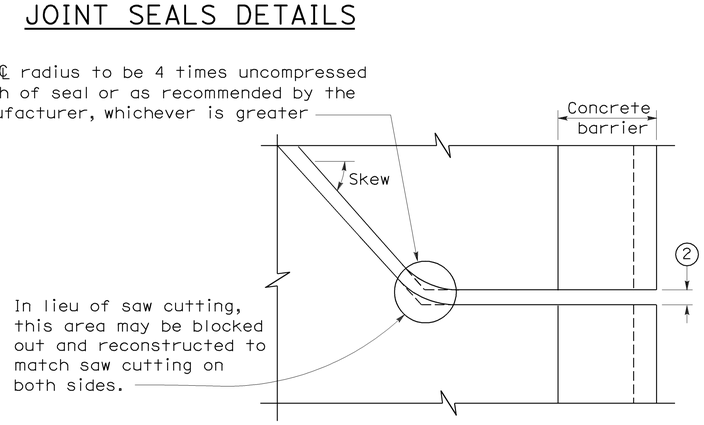

PLAN OF JOINT (SKEW > 20°)

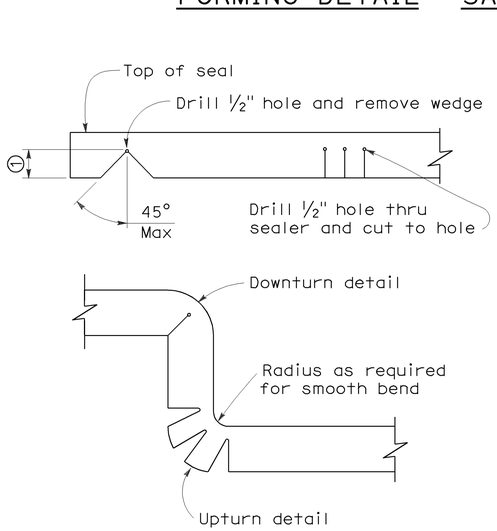

DETAIL A

NOTES:

1. Make smooth cuts from the bottom of seal to 1½" clear of top leaving at least one complete cell between the top of the cut and top of the seal. When necessary cut back of seal to clear conduit and round openings.
2. Opening in barrier to match width of sawn deck joint.
3. Sawcut groove widths shall be as ordered by the Engineer.
4. Depth of sawcut: Type A - Depth to be 2" minimum.
   Type B - Depth to be equal to or greater than the depth of seal measured along the contact surface, when compressed to minimum width position (W_2) plus dimensions shown.
5. MR (movement rating) as shown on other plan sheets.
6. Other depths must be approved by the Engineer.

DIMENSIONS "a" OF JOINT REQUIRED

Movement Rating (MR) (5)	Bridge Type	"a" Dimension, Deck Concrete Placed		
		Winter	Fall-Spring	Summer
2"	All except CIP/PS	1½"	1¼"	¾"
	CIP/PS	1¼"	1"	½"
1½"	All except CIP/PS	1¼"	1"	½"
	CIP/PS	1"	¾"	½"
1"	All except CIP/PS	1"	¾"	½"
	CIP/PS	¾"	½"	½"
½"	All except CIP/PS	¾"	¾"	½"
	CIP/PS	½"	½"	½"

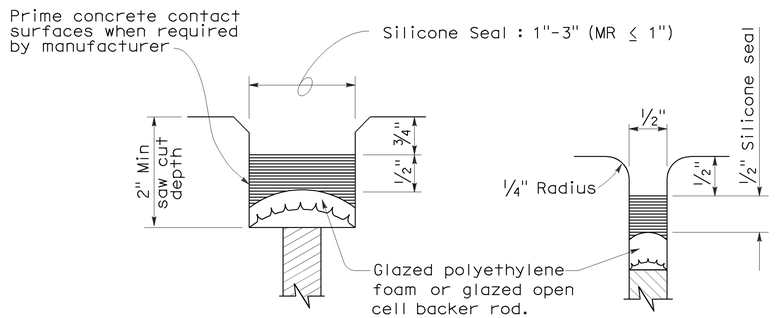

TYPE A SEAL

Movement rating : Silicone = 1" Max

TYPE AL SEAL

Longitudinal joints only

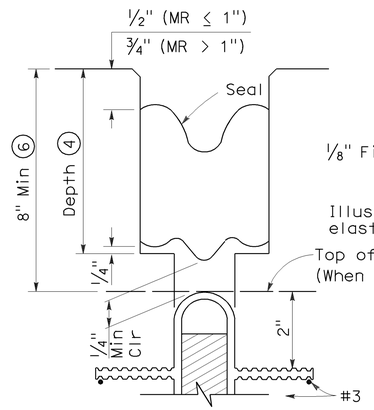

TYPE B JOINT SEAL
IN MINIMUM WIDTH POSITION (W_2)

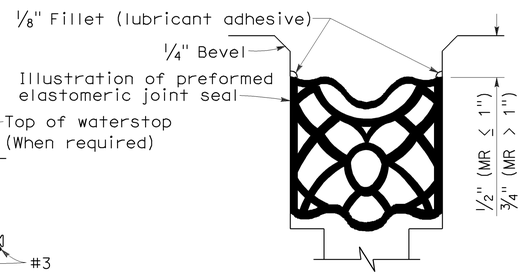

TYPE B SEAL

Movement Rating ≤ 2"

STATE OF CALIFORNIA
DEPARTMENT OF TRANSPORTATION

JOINT SEALS (MAXIMUM MOVEMENT RATING = 2")

NO SCALE

RSP B6-21 DATED OCTOBER 5, 2007 SUPERSEDES STANDARD PLAN B6-21 DATED MAY 1, 2006 - PAGE 258 OF THE STANDARD PLANS BOOK DATED MAY 2006.

REVISED STANDARD PLAN RSP B6-21

2006 REVISED STANDARD PLAN RSP B6-21

5-8-07

DIST	COUNTY	ROUTE	POST MILES TOTAL PROJECT	SHEET No	TOTAL SHEETS
07	LA	405	8.8	16	19

Heidi Kuntz 9-29-10
REGISTERED CIVIL ENGINEER DATE

1-18-11
PLANS APPROVAL DATE

REGISTERED PROFESSIONAL ENGINEER — Heidi Kuntz, No. C62489, Exp. 9-30-11, CIVIL, STATE OF CALIFORNIA

The State of California or its officers or agents shall not be responsible for the accuracy or completeness of electronic copies of this plan sheet.

NOTE: (APPLY TO ALL SHEETS)
····-····- Indicates existing.

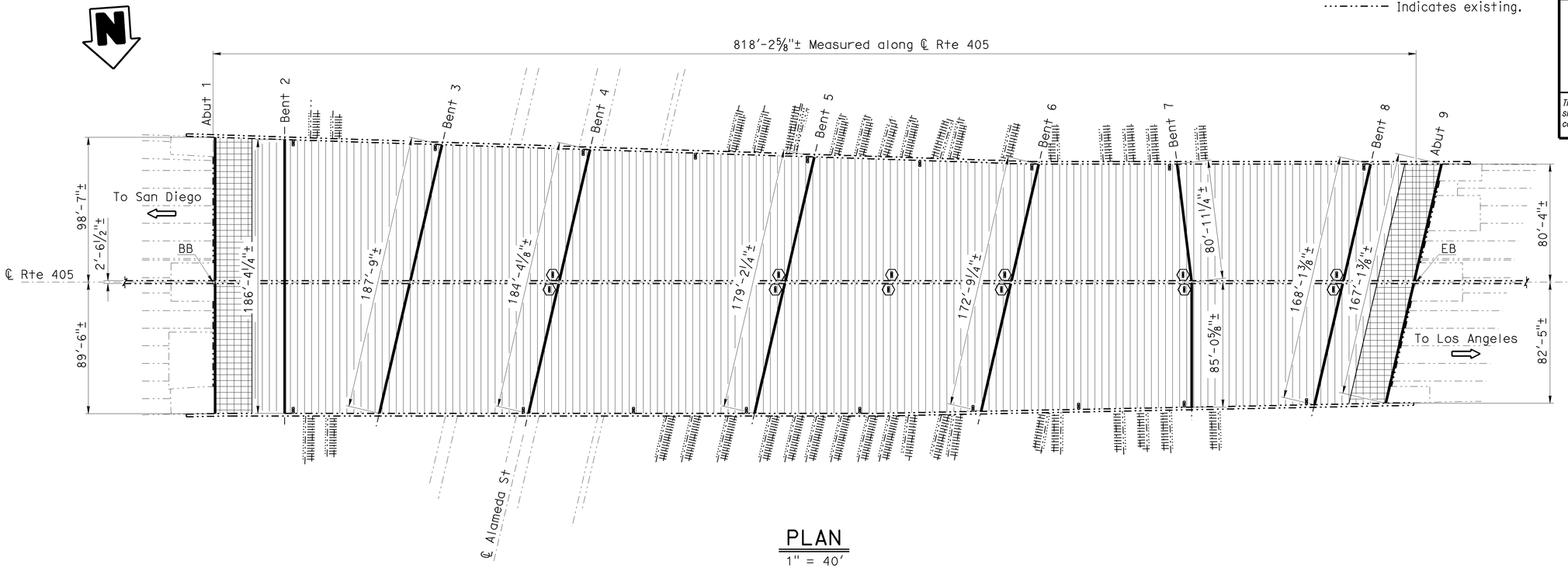

PLAN
1" = 40'

QUANTITIES

PUBLIC SAFETY PLAN	LUMP	SUM
REMOVE CONCRETE DECK SURFACE	8,850	SQFT
REMOVE UNSOUND CONCRETE	1,580	CF
PREPARE CONCRETE BRIDGE DECK SURFACE	142,000	SQFT
CLEAN EXPANSION JOINT	1,600	LF
RAPID SETTING CONCRETE (PATCH)	1,580	CF
FURNISH POLYESTER CONCRETE OVERLAY	10,650	CF
PLACE POLYESTER CONCRETE OVERLAY	142,000	SQFT
JOINT SEAL (MR 1/2")	523	LF
JOINT SEAL (MR 1")	713	LF
JOINT SEAL (MR 1 1/2")	364	LF
MISCELLANEOUS METAL (BRIDGE)	1,615	LB

NOTES: (APPLY TO THIS SHEET ONLY)

Indicates limits of prepare concrete bridge deck surface, furnish and place new ¾" minimum depth polyester concrete overlay. Prior to placing new polyester concrete overlay, remove unsound concrete and patch with rapid setting concrete as shown on "Deck Repair Detail - Overlay" on "JOINT SEAL DETAILS" sheet.

Indicates limits of remove concrete deck surface. For details, see "Polyester Concrete Taper Detail" on "MISCELLANEOUS DETAILS NO. 2" sheet.

Indicates location of existing joint seal removal and placement of new joint seal.

Indicates existing deck drain to be modified (Tot 12). For details, see "MISCELLANEOUS DETAILS NO. 1" sheet.

Indicates existing deck drain (Tot 18). For details, see "MISCELLANEOUS DETAILS NO. 2" sheet.

INDEX TO PLANS

SHEET NO.	TITLE
1	GENERAL PLAN
2	MISCELLANEOUS DETAILS NO. 1
3	MISCELLANEOUS DETAILS NO. 2
4	JOINT SEAL DETAILS

STANDARD PLANS DATED MAY 2006

SHEET NO.	TITLE
A10A	ACRONYMS AND ABBREVIATIONS (SHEET 1 OF 2)
A10B	ACRONYMS AND ABBREVIATIONS (SHEET 2 OF 2)
RSP B6-21	JOINT SEALS (MAXIMUM MOVEMENT RATING = 2")

STANDARD PLAN SHEET NO.
DETAIL NO.

NOTE:
THE CONTRACTOR SHALL VERIFY ALL CONTROLLING FIELD DIMENSIONS BEFORE ORDERING OR FABRICATING ANY MATERIAL.

Matthew W. Lee 9-29-10
DESIGN ENGINEER

DESIGN	BY Heidi Kuntz	CHECKED Matt Lee	LAYOUT	BY Dale Kubochi	CHECKED Heidi Kuntz
DETAILS	BY Dale Kubochi	CHECKED Matt Lee	SPECIFICATIONS	BY Erwin Ruffino	PLANS AND SPECS COMPARED Erwin Ruffino
QUANTITIES	BY Heidi Kuntz	CHECKED Matt Lee			

STATE OF CALIFORNIA
DEPARTMENT OF TRANSPORTATION

DIVISION OF MAINTENANCE
STRUCTURE MAINTENANCE DESIGN

CU 07
EA 4Y6801

BRIDGE NO. 53-1168
POST MILE 8.8

DOLORES YARD OVERHEAD
GENERAL PLAN

STRUCTURES MAINTENANCE GENERAL PLAN SHEET (ENGLISH) (REV. 10/25/05)

ORIGINAL SCALE IN INCHES FOR REDUCED PLANS 0 1 2 3

DISREGARD PRINTS BEARING EARLIER REVISION DATES →

REVISION DATES										SHEET	OF
2-11-10	2-25-10	9-9-10	9-21-10							1	4

FILE => 07-4y6801-a-gp.dgn

USERNAME => s124428 DATE PLOTTED => 12-JAN-2011 TIME PLOTTED => 09:15

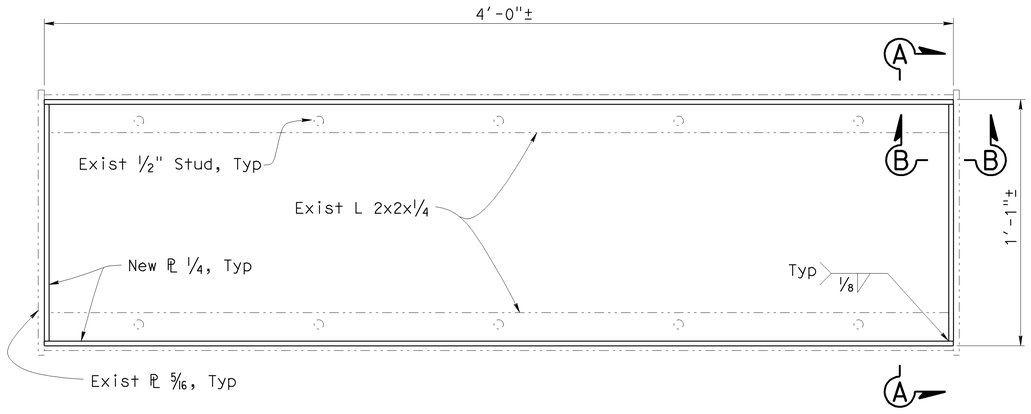

Note: Grate not shown for clarity

PLAN (Existing Frame)

3" = 1'-0"

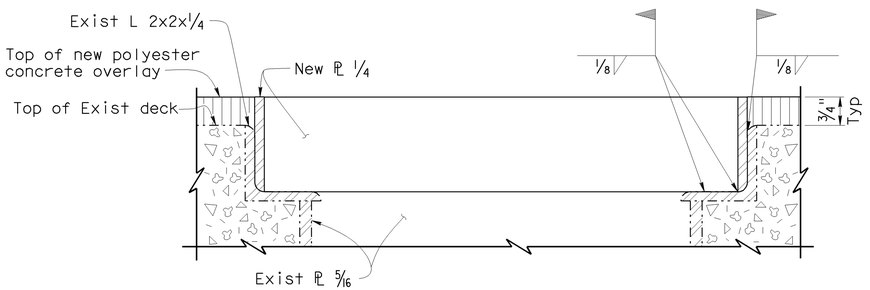

SECTION A-A

6" = 1'-0"

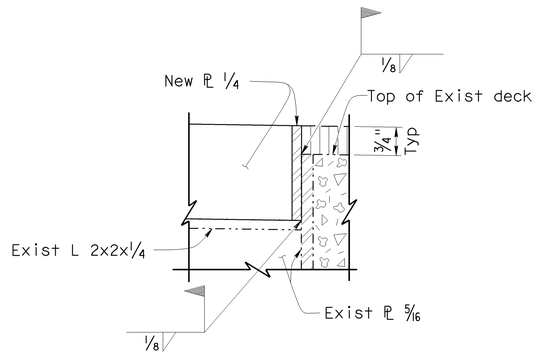

SECTION B-B

6" = 1'-0"

NOTE:
THE CONTRACTOR SHALL VERIFY ALL CONTROLLING FIELD DIMENSIONS BEFORE ORDERING OR FABRICATING ANY MATERIAL.

NOTES: (APPLY TO THIS SHEET ONLY)

1. Details shown are for drains located in the median of structure.
2. New grate to be galvanized after fabrication.
3. Existing grate to be removed and replaced with new grate.

DIST	COUNTY	ROUTE	POST MILES TOTAL PROJECT	SHEET No	TOTAL SHEETS
07	LA	405	8.8	17	19

Heidi Kuntz 9-29-10
REGISTERED CIVIL ENGINEER DATE

1-18-11
PLANS APPROVAL DATE

REGISTERED PROFESSIONAL ENGINEER — Heidi Kuntz, No. C62489, Exp. 9-30-11, CIVIL, STATE OF CALIFORNIA

The State of California or its officers or agents shall not be responsible for the accuracy or completeness of electronic copies of this plan sheet.

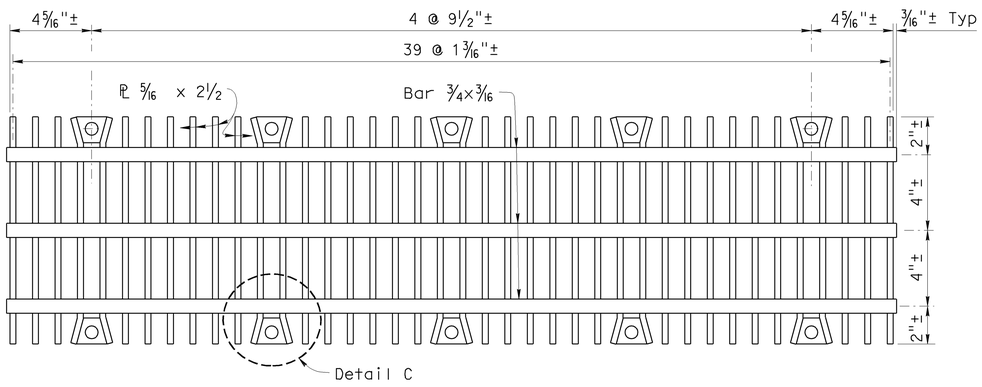

PLAN (New Grate)

3" = 1'-0"

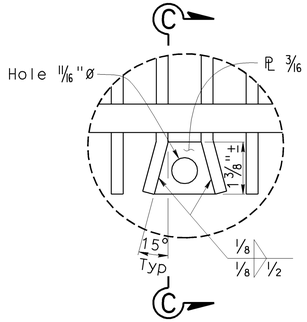

DETAIL C

6" = 1'-0"

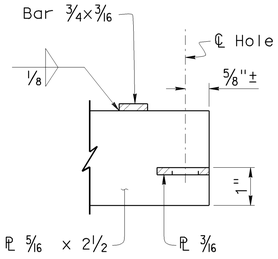

SECTION C-C

6" = 1'-0"

	DESIGN	BY Heidi Kuntz	CHECKED Matt Lee	STATE OF CALIFORNIA DEPARTMENT OF TRANSPORTATION	DIVISION OF MAINTENANCE STRUCTURE MAINTENANCE DESIGN
	DETAILS	BY Dale Kubochi	CHECKED Matt Lee		
	QUANTITIES	BY Heidi Kuntz	CHECKED Matt Lee		

BRIDGE NO. 53-1168
POST MILE 8.8

DOLORES YARD OVERHEAD
MISCELLANEOUS DETAILS NO. 1

STRUCTURES MAINTENANCE GENERAL PLAN & DETAIL SHEET (ENGLISH) (REV. 5/17/06)

ORIGINAL SCALE IN INCHES FOR REDUCED PLANS 0 1 2 3

CU 07
EA 4Y6801

DISREGARD PRINTS BEARING EARLIER REVISION DATES → REVISION DATES: 3-1-10, 7-7-10, 9-8-10

SHEET 2 OF 4

FILE => 07-4y6801-i-misc-det01.dgn

USERNAME => s1224428 DATE PLOTTED => 12-JAN-2011 TIME PLOTTED => 09:15

DIST	COUNTY	ROUTE	POST MILES TOTAL PROJECT	SHEET No	TOTAL SHEETS
07	LA	405	8.8	18	19

Heidi Kuntz 9-29-10
REGISTERED CIVIL ENGINEER DATE

1-18-11
PLANS APPROVAL DATE

REGISTERED PROFESSIONAL ENGINEER
Heidi Kuntz
No. C62489
Exp. 9-30-11
CIVIL
STATE OF CALIFORNIA

The State of California or its officers or agents shall not be responsible for the accuracy or completeness of electronic copies of this plan sheet.

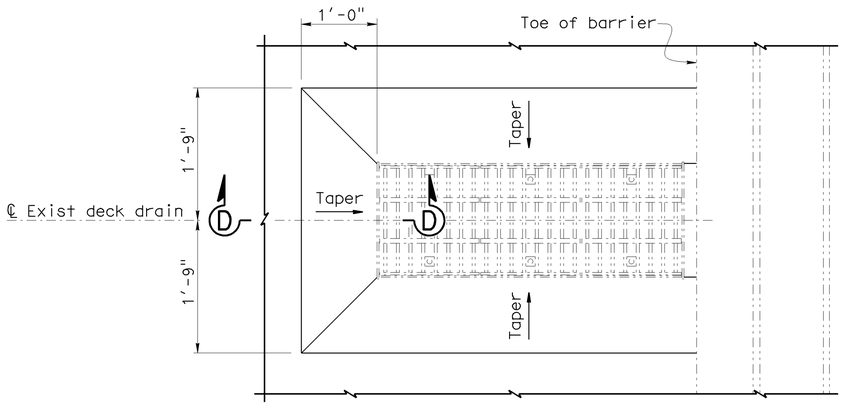

PLAN (Existing Deck Drain)

1" = 1'-0"

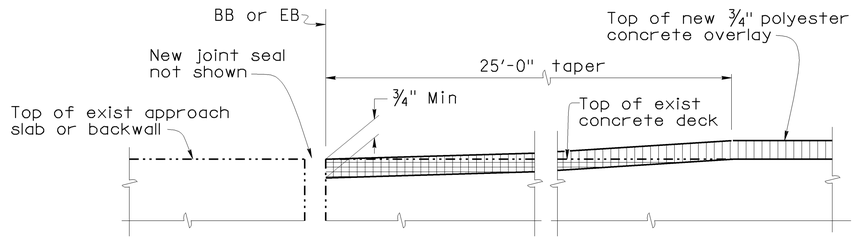

POLYESTER CONCRETE TAPER DETAIL

NO SCALE

Indicates limits of remove concrete deck surface.

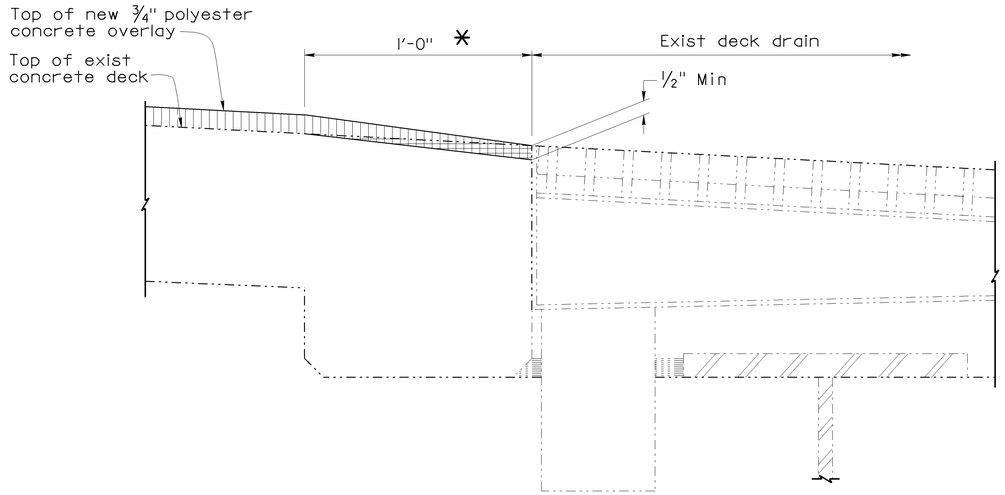

SECTION D-D

No Scale

Notes:

1. Details shown are for drains located in the exterior shoulders of structure.

* - Remove concrete deck surface around existing deck drain, Typ

NOTE:
THE CONTRACTOR SHALL VERIFY ALL CONTROLLING FIELD DIMENSIONS BEFORE ORDERING OR FABRICATING ANY MATERIAL.

DESIGN	BY Heidi Kuntz	CHECKED Matt Lee	STATE OF CALIFORNIA DEPARTMENT OF TRANSPORTATION	DIVISION OF MAINTENANCE STRUCTURE MAINTENANCE DESIGN	BRIDGE NO. 53-1168
DETAILS	BY Dale Kubochi	CHECKED Matt Lee			POST MILE 8.8
QUANTITIES	BY Heidi Kuntz	CHECKED Matt Lee			

DOLORES YARD OVERHEAD
MISCELLANEOUS DETAILS NO. 2

STRUCTURES MAINTENANCE GENERAL PLAN & DETAIL SHEET (ENGLISH) (REV. 5/17/06)

ORIGINAL SCALE IN INCHES FOR REDUCED PLANS 0 1 2 3

CU 07
EA 4Y6801

DISREGARD PRINTS BEARING EARLIER REVISION DATES →

REVISION DATES: 7-17-10 | 7-7-10 | 9-8-10

SHEET 3 OF 4

FILE => 07-4y6801-i-misc-det02.dgn

USERNAME => s124228 DATE PLOTTED => 12-JAN-2011 TIME PLOTTED => 09:15

DIST	COUNTY	ROUTE	POST MILES TOTAL PROJECT	SHEET No	TOTAL SHEETS
07	LA	405	8.8	19	19

Heidi Kuntz 9-29-10
REGISTERED CIVIL ENGINEER DATE

1-18-11
PLANS APPROVAL DATE

REGISTERED PROFESSIONAL ENGINEER — Heidi Kuntz — No. C62489 — Exp. 9-30-11 — CIVIL — STATE OF CALIFORNIA

The State of California or its officers or agents shall not be responsible for the accuracy or completeness of electronic copies of this plan sheet.

JOINT SEAL TABLE

BRIDGE NAME	BRIDGE NUMBER	LOCATION		MINIMUM "MR" (INCHES)	APPROXIMATE LENGTH (FEET)	EXISTING WATERSTOP	APPROX DEPTH TO CLEAN EXP JOINT (INCHES)
DOLORES YARD OVERHEAD	53-1168	Abut 1	BW	½	188.08	NO	9
		Bent 2	EJ	1	186.42	YES	4
		Bent 3	EJ	1	187.75	YES	4
		Bent 4	EJ	1½ ✳	184.42	YES	4
		Bent 5	EJ	1½ ✳	179.17	YES	13
		Bent 6	EJ	1 ✳	172.08	YES	4
		Bent 7	EJ	1 ✳	166.00	YES	4
		Bent 8	EJ	½	168.17	YES	4
		Abut 9	BW	½	167.17	NO	9

LEGEND:
BW - Abutment backwall joint
EJ - Expansion Joint
✳ Compression joint seal

The following notes apply to JOINT SEAL TYPE B:

1) Seal must satisfy both minimum Movement Rating (MR) and minimum W1 requirements.
2) Minimum W1 is the calculated maximum width of the joint based on field measurements. After the joints have been cleaned, minimum W1 is to be calculated by the Engineer.
3) W1 shall be the smaller of the values determined as follows:
   A) 0.85 times the manufacturer's designed minimum uncompressed width of the seal.
   B) The width of the seal on the third successive test cycle of the pressure deflection test, when compressed to an average pressure of 3 psi.
4) Bend Type B joint seal 6" up into curb or rail on the low side of the deck where deck joint matches curb or rail joint.
5) For details not shown, see RSP B6-21

DECK REPAIR TABLE
REMOVE UNSOUND CONCRETE AND RAPID SETTING CONCRETE (PATCH)

BRIDGE NAME	BRIDGE NUMBER	APPROXIMATE AREA DAMAGED (PERCENT)	APPROXIMATE DEPTH (INCHES)
DOLORES YARD OVERHEAD	53-1168	1	3

Locations to be determined by the Engineer. For details see "DECK REPAIR DETAIL".

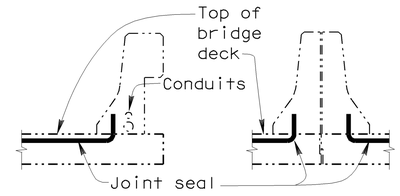

BARRIER RAIL

JOINT SEAL AT LOW SIDE OF DECK

Notes: Details shown for illustration purposes only. For use only where deck joint matches the sidewalk, curb or barrier rail joint.

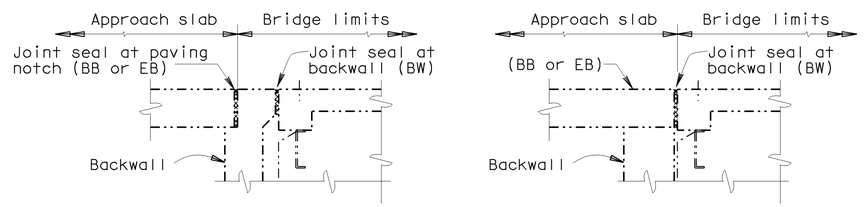

ABUTMENT WITH BACKWALL

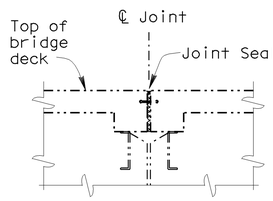

BENT

JOINT SEAL LOCATION

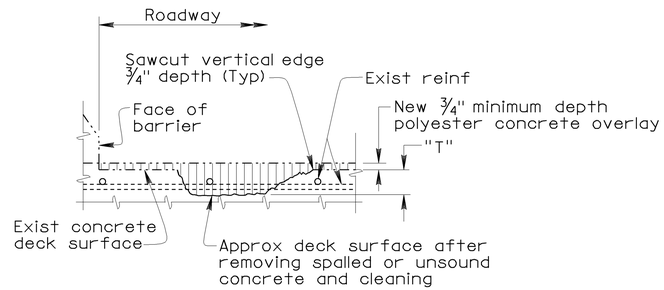

DECK REPAIR DETAIL - OVERLAY

Notes:
-Reinforcement may be encountered during deck concrete removal.
-For "T" > 3" use rapid setting concrete patch.

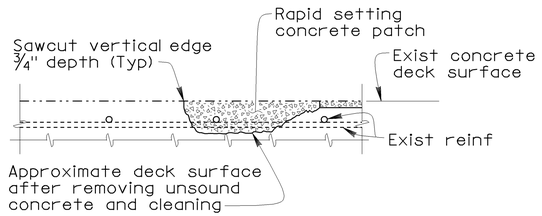

DECK REPAIR DETAIL

Note: Locations to be determined by the Engineer. Reinforcement may be encountered during deck concrete removal.

NO SCALE

NOTE:
THE CONTRACTOR SHALL VERIFY ALL CONTROLLING FIELD DIMENSIONS BEFORE ORDERING OR FABRICATING ANY MATERIAL.

DESIGN	BY Heidi Kuntz	CHECKED Matt Lee	STATE OF CALIFORNIA DEPARTMENT OF TRANSPORTATION	DIVISION OF MAINTENANCE STRUCTURE MAINTENANCE DESIGN	BRIDGE NO. 53-1168
DETAILS	BY Dale Kubochi	CHECKED Matt Lee			POST MILE 8.8
QUANTITIES	BY Heidi Kuntz	CHECKED Matt Lee		CU 07 EA 4Y6801	DISREGARD PRINTS BEARING EARLIER REVISION DATES →

DOLORES YARD OVERHEAD
JOINT SEAL DETAILS

STRUCTURES MAINTENANCE GENERAL PLAN & DETAIL SHEET (ENGLISH) (REV. 5/17/06)

ORIGINAL SCALE IN INCHES FOR REDUCED PLANS 0 1 2 3

REVISION DATES: 3-17-10 | 5-5-10 | 7-15-10 | 9-8-10

SHEET 4 OF 4

FILE => 07-4y6801-j-jtseal-det.dgn

USERNAME = s1124428 DATE PLOTTED => 12-JAN-2011 TIME PLOTTED => 09:15