FOR CONTRACT NO.: 07-4T5804

INFORMATION HANDOUT

PERMITS

City of Pasadena
DEPARTMENT OF PUBLIC WORKS

PERMIT NO. 50619

MATERIALS INFORMATION

BBS Power Connection Diagram

ROUTE: 07-LA-210-R24.2

COPY

Department of Public Works -- City of Pasadena

CITY OF PASADENA

NO 50619

LB

Draft permit for bidding purposes. Final permit pending approved plans and selection of contractor.

Fees for processing and insection to be determined.

Public Improvement Permit

Hale Building
175 N. Garfield Ave.
(626) 744-4195

Date December 11, 2012

THIS CERTIFIES, that Caltrans (Cecilio Burciaga)

Address 100 S. Main Street, Suite 100, MS-15 Phone 213-897-7242

City Los Angeles State CA Zip 90012

is hereby granted permission to install conduit and conductors in the city sidewalk and remove and install traffic signal pole at City Yard signalized intersection. Work includes the installation of detector loops in roadway. Improvements pending approved plans. Construction is scheduled to start 1- 9-14 thru 7-18-14

at Mountain St and City Yard signalized intersection at 235 W. Mountain St.

per Chapter 12.24 of the Pasadena Municipal Code, as amended, and in accordance with the "Standard Specifications For Public Works Construction", latest edition, and any special provisions of the Department of Public Works.

Permit Expires on:

July 18, 2014

Inspection MUST BE requested ONE DAY in advance.

Daniel A. Rix, City Engineer

By: RY

VOID UNLESS VALIDATED BY CASHIER

FEES		
Processing	$	0.00
Inspection	$	0.00
Rent	$	0.00
Other	$	0.00
Penalty	$	0.00
Total Fees	$	0.00
DEPOSITS		
Paving	$	0.00
Street Tree	$	0.00
Other	$	0.00
Total Deposits	$	0.00
PAY CASHIER	$	0.00

A VALIDATED COPY OF THIS PERMIT MUST BE KEPT AT THE JOB SITE AT ALL TIMES.

Dist	COUNTY	LOCATION CODE	POST MILES TOTAL PROJECT	SHEET No.	TOTAL SHEETS

REGISTERED CIVIL ENGINEER 12-20-07 DATE

PLANS APPROVAL DATE

THE STATE OF CALIFORNIA OR ITS OFFICERS OR AGENTS SHALL NOT BE RESPONSIBLE FOR THE ACCURACY OR COMPLETENESS OF SCANNED COPIES OF THIS PLAN SHEET.

REGISTERED PROFESSIONAL ENGINEER Theresa A. Gabriel No. E15129 Exp 6-30-10 ELECT STATE OF CALIFORNIA

ABBREVIATIONS: (THIS SHEET ONLY)

PTS = POWER TRANSFER SWITCH
UPS = UNINTERRUPTIBLE POWER SUPPLY
UPSC = UNINTERRUPTIBLE POWER SUPPLY CONTROLLER
UPSM = UPS MODE
BP = BYPASS
MBPS = MANUAL BYPASS SWITCH
AC+ = UNGROUNDED CONDUCTOR
AC- = GROUNDED CONDUCTOR
C = COMMON
Grn = GREEN
Blk = BLACK
Wht = WHITE
SF = STATE-FURNISHED
Batt = BATTERY
Temp = TEMPERATURE
TB = TERMINAL BOARD
Cntl = CONTROL
Gnd = GROUND

NOTES: (THIS SHEET ONLY)

1. TYPE B REFERS TO THE BBS EQUIPMENT FROM MANUFACTURER B.
2. CASE-1 REFERS TO THE SITUATION WHEN THE ENTIRE BBS EQUIPMENT INCLUDING THE BATTERIES ARE INSTALLED IN THE BBS CABINET.
3. THE LOCATION OF THE 2"C NIPPLE WILL BE DETERMINED BY THE ENGINEER IN THE FIELD.
4. THE CONTRACTOR SHALL FURNISH AND INSTALL A NEMA-1 ENCLOSURE WITH 30 A, 1P, 120/240 VOLTS RATED CIRCUIT BREAKER MANUFACTURED PER UL STANDARD 489.
5. A TEMPERATURE PROBE SHALL BE ATTACHED TO THE BATTERY BY TAPE OR ATTACHED TO THE NEGATIVE TERMINAL OF THE BATTERY.
6. THE ELECTRICAL POWER FOR THE COOLING FAN FOR THE BBS CABINET SHALL BE TAPPED FROM THE BOTTOM OF THE TB IN THE CONTROLLER CABINET.
7. THE CONTRACTOR SHALL PROVIDE A 9-WIRE WIRING HARNESS OR BUNDLED 9 MULTICOLOR CONDUCTORS, #18 AWG WIRES FROM THE RELAY ON THE INVERTER/CHARGER UNIT TO THE CONTROLLER. THE ENDS OF THE CONDUCTORS SHALL BE INSULATED WITH TAPE AND A SIX-FOOT COIL ON EACH END.

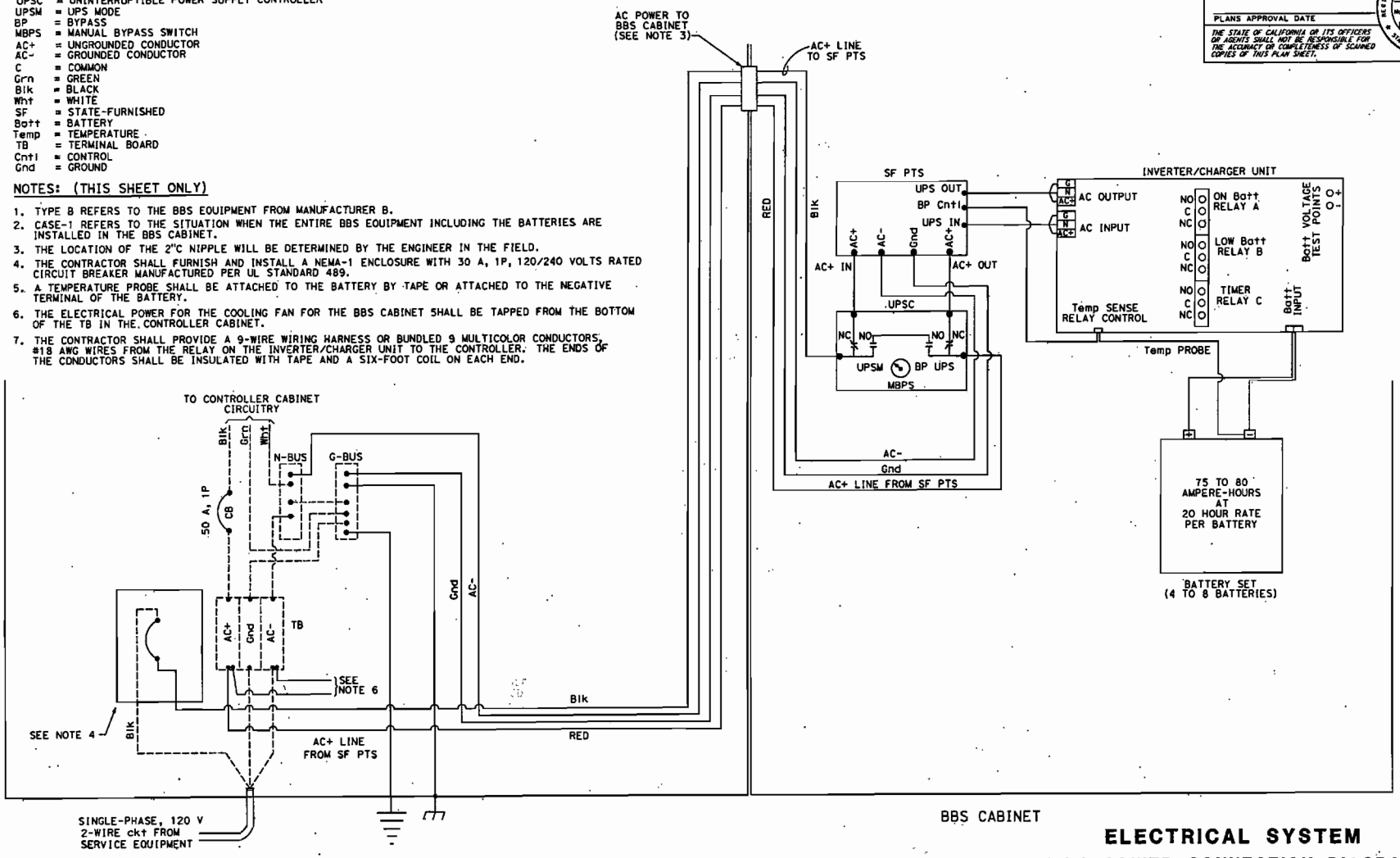

ELECTRICAL SYSTEM

(BBS POWER CONNECTION DIAGRAM, TYPE B, CASE-1)

REVISED BY | DATE REVISED | CALCULATED-DESIGNED BY | CHECKED BY | FUNCTIONAL SUPERVISOR

STATE OF CALIFORNIA - DEPARTMENT OF TRANSPORTATION

Caltrans

LAST REVISION 3-11-09 | DATE PLOTTED => 24-JAN-2013 | TIME PLOTTED => 09:32

BORDER LAST REVISED 4/11/2008 | RELATIVE BORDER SCALE IS IN INCHES 0 1 2 3 | USERNAME => s121093 | DGN FILE => BBS'DUIFSM.dgn | CU 00000 | EA 000000

Dist	COUNTY	LOCATION CODE	POST MILES TOTAL PROJECT	SHEET No.	TOTAL SHEETS

REGISTERED CIVIL ENGINEER — DATE 12-20-07

PLANS APPROVAL DATE

Theresa A. Gabriel No. E15129 Exp. 6-30-10 ELECT. STATE OF CALIFORNIA — REGISTERED PROFESSIONAL ENGINEER

THE STATE OF CALIFORNIA OR ITS OFFICERS OR AGENTS SHALL NOT BE RESPONSIBLE FOR THE ACCURACY OR COMPLETENESS OF SCANNED COPIES OF THIS PLAN SHEET.

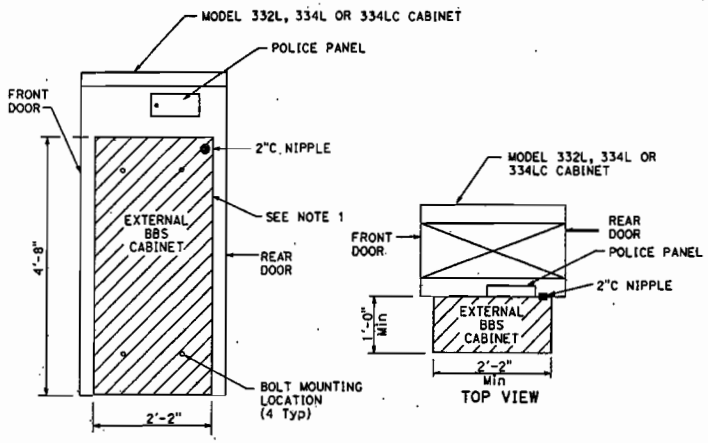

EXTERNAL BBS CABINET MOUNTED TO THE MODEL 332L, 334L OR 334LC CABINET

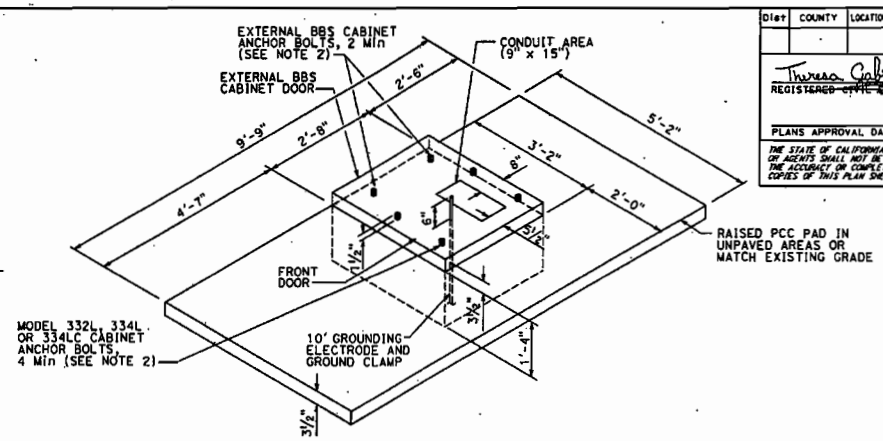

LEFT-HAND INSTALLATION DETAIL A

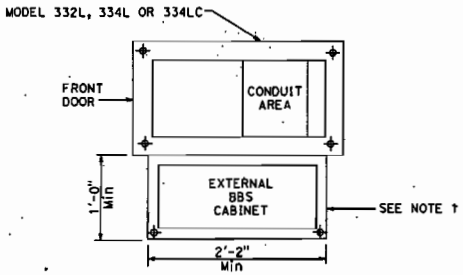

BASE PLAN FOR BBS MOUNTED TO THE MODEL 332L, 334L OR 334LC CABINET

(FOR DIMENSIONS AND DETAILS NOT SHOWN, SEE SHEET A6-1 TO A6-4, CABINET HOUSING DETAILS OF THE TRANSPORTATION ELECTRICAL EQUIPMENT SPECIFICATION (TEES))

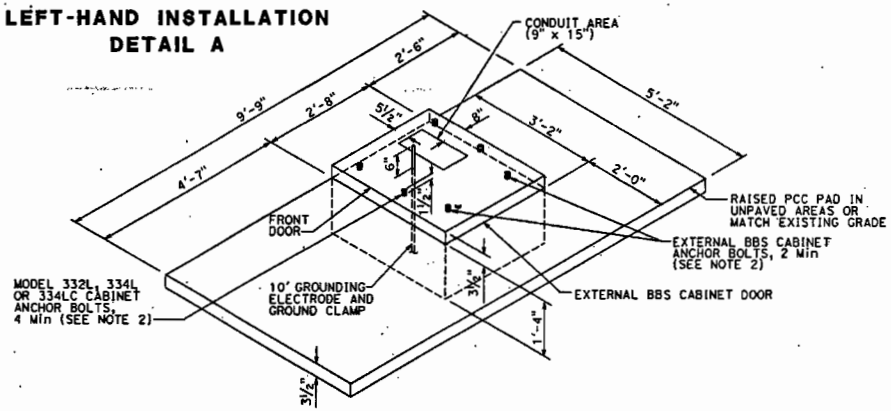

RIGHT-HAND INSTALLATION DETAIL B

MODIFIED MODEL 332L, 334L OR 334LC CABINET FOUNDATION DETAIL FOR BATTERY BACKUP SYSTEM (BBS)

(FOR ADDITIONAL NOTES, SEE SHEET ES-3C OF THE STANDARD PLANS FOR MODEL 332L, 334L OR 334LC CABINETS)

NOTES: (THIS SHEET ONLY)

1. THE EXTERNAL BBS CABINET SHALL BE MOUNTED TO THE MODEL 332L, 334L OR 334LC CABINET WITH FOUR 18-8 STAINLESS STEEL Hex HEAD, FULLY-THREADED, ⅜"-16 x 1" BOLTS; TWO WASHERS PER BOLT, DESIGNED FOR ⅜" BOLTS AND ARE 18-8 STAINLESS STEEL, 1" OUTSIDE DIAMETER, ROUND, AND FLAT; AND ONE K-LOCK NUT PER BOLT THAT IS 18-8 STAINLESS STEEL AND A Hex-NUT. THE ENGINEER WILL HAVE TO APPROVE THE BOLT MOUNTING LOCATION PRIOR TO INSTALLATION.
2. THE ANCHOR BOLTS SHALL BE ¾" Dia x 15" WITH A 2"-90° BEND. THE CABINET MANUFACTURER'S SPECIFICATION SHALL DETERMINE THE LOCATION OF THE ANCHOR BOLTS IN THE FOUNDATION. THE ENGINEER WILL HAVE TO APPROVE THE ANCHOR BOLTS AND ITS LOCATION IN THE FOUNDATION PRIOR TO CONSTRUCTION.
3. THE CONTRACTOR SHALL VERIFY THE DIMENSIONS OF THE BBS CABINET PRIOR TO CONSTRUCTING THE FOUNDATION OF THE Std MODEL 332L, 334L OR 334LC CABINET FOUNDATION. THE ENGINEER WILL HAVE TO APPROVE ANY NECESSARY DEVIATIONS PRIOR TO CONSTRUCTION.
4. ALL DIMENSIONS ARE NOMINAL.

ELECTRICAL SYSTEMS
(BATTERY BACKUP SYSTEM FOUNDATION DETAILS)

NO SCALE

STATE OF CALIFORNIA - DEPARTMENT OF TRANSPORTATION — Caltrans

FUNCTIONAL SUPERVISOR | CALCULATED-DESIGNED BY | CHECKED BY | REVISED BY | DATE REVISED

LAST REVISION 2-2-09 | DATE PLOTTED => 24-JAN-2013 | TIME PLOTTED => 09:31