Dist	COUNTY	ROUTE	POST MILES TOTAL PROJECT	SHEET No.	TOTAL SHEETS
07	LA	105	R0.5	1	45

HSNHPI-1053(003)E

STATE OF CALIFORNIA
DEPARTMENT OF TRANSPORTATION

PROJECT PLANS FOR CONSTRUCTION ON
STATE HIGHWAY

IN LOS ANGELES COUNTY IN LOS ANGELES AT S1/E105 CONNECTOR SEPARATION

TO BE SUPPLEMENTED BY STANDARD PLANS DATED 2010

INDEX OF PLANS

SHEET No.	DESCRIPTION
1	TITLE AND LOCATION MAP
2-3	TYPICAL CROSS SECTIONS
4	LAYOUT
5	SUPERELEVATION AND PROFILE DIAGRAM
6-9	CONSTRUCTION DETAILS
10	UTILITY PLAN
11	CONSTRUCTION AREA SIGNS
12-17	TRAFFIC HANDLING PLANS, DETAILS & QUANTITIES
18-21	SIGN PLANS
22	SUMMARY OF QUANTITIES
23-29	HIGHWAY PLANTING
30-33	ELECTRICAL PLANS
34-42	REVISED STANDARD PLANS

STRUCTURE PLANS

43-45	S1/E105 CONNECTOR - DRAINAGE SYSTEM

THE STANDARD PLANS LIST APPLICABLE TO THIS CONTRACT IS INCLUDED IN THE NOTICE TO BIDDERS AND SPECIAL PROVISIONS BOOK.

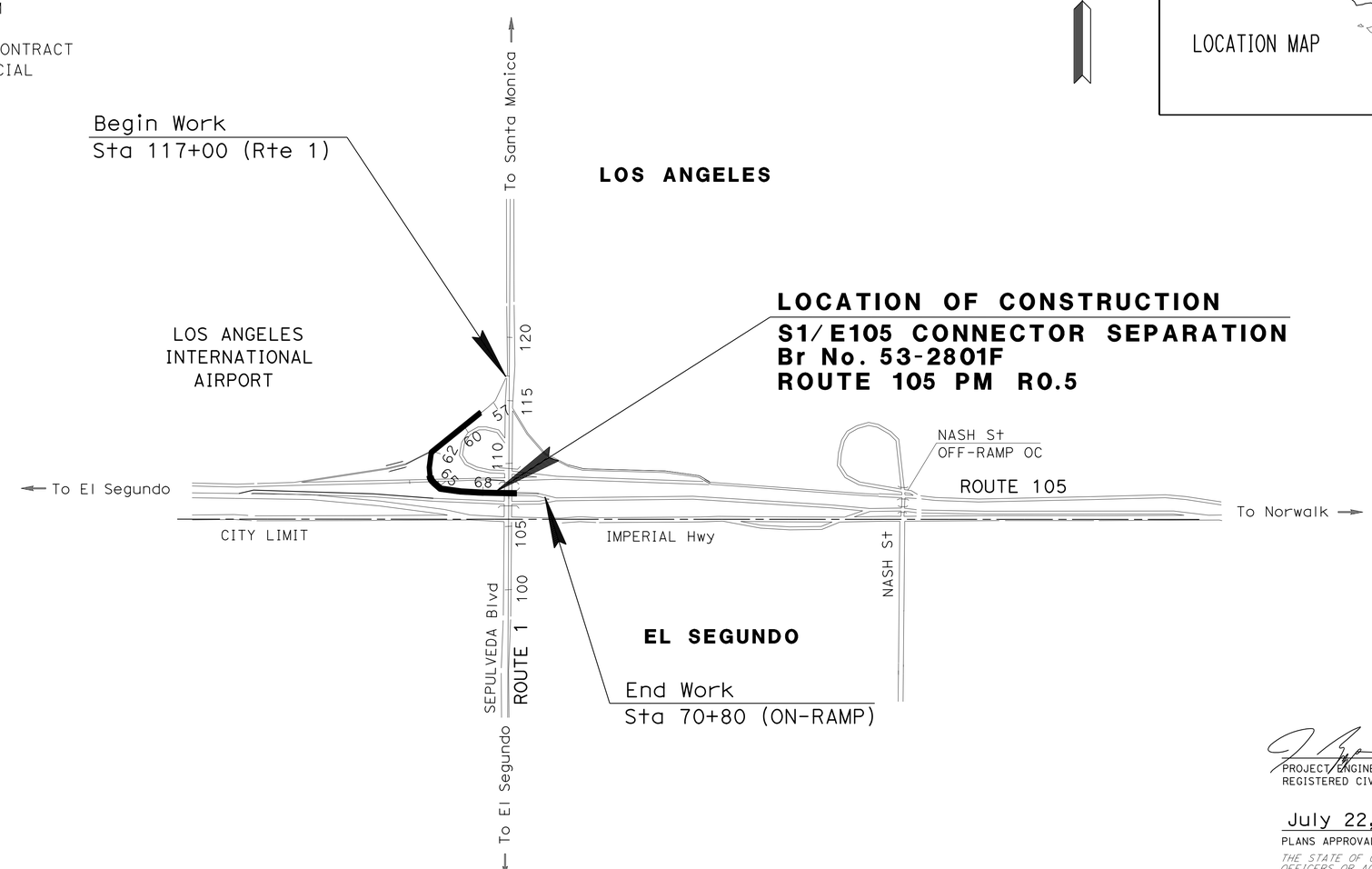

NO SCALE

THE CONTRACTOR SHALL POSSESS THE CLASS (OR CLASSES) OF LICENSE AS SPECIFIED IN THE "NOTICE TO BIDDERS."

PROJECT MANAGER: OJAS SHETH

DESIGN ENGINEER: JOSEPH REYNOZA

6-18-13
PROJECT ENGINEER REGISTERED CIVIL ENGINEER — DATE

REGISTERED PROFESSIONAL ENGINEER — JOSEPH E. REYNOZA — No. C79648 — Exp. 9/30/14 — CIVIL — STATE OF CALIFORNIA

July 22, 2013
PLANS APPROVAL DATE

THE STATE OF CALIFORNIA OR ITS OFFICERS OR AGENTS SHALL NOT BE RESPONSIBLE FOR THE ACCURACY OR COMPLETENESS OF SCANNED COPIES OF THIS PLAN SHEET.

CONTRACT No.	07-4T5704
PROJECT ID	0712000121

LAST REVISION 00-00-00 — DATE PLOTTED => 25-JUL-2013 — TIME PLOTTED => 07:27

Dist	COUNTY	ROUTE	POST MILES TOTAL PROJECT	SHEET No.	TOTAL SHEETS
07	LA	105	R0.5	2	45

REGISTERED CIVIL ENGINEER 6-18-13 DATE

7-22-13
PLANS APPROVAL DATE

REGISTERED PROFESSIONAL ENGINEER JOSEPH E. REYNOZA No. C79648 Exp 9/30/14 CIVIL STATE OF CALIFORNIA

THE STATE OF CALIFORNIA OR ITS OFFICERS OR AGENTS SHALL NOT BE RESPONSIBLE FOR THE ACCURACY OR COMPLETENESS OF SCANNED COPIES OF THIS PLAN SHEET.

NOTES:

1. DIMENSION OF THE STRUCTURAL SECTIONS ARE SUBJECT TO TOLERANCE SPECIFIED IN THE STANDARD SPECIFICATIONS.
2. SUPERELEVATION AS SHOWN OR AS DIRECTED BY THE ENGINEER.
3. AFTER COLD PLANE, SEAL CRACKS GREATER THAN 0.2 INCH WITH HOT APPLIED CRACKS SEALANT. DIG OUT AND REPAIR LOCALIZED FAILED AREAS AFTER COLD PLANE WITH MINIMUM 0.15′ HMA (TYPE A).
4. SEE LAYOUT FOR CUT SIDE SLOPE DETAILS.
5. SEE LANDSCAPE PLANS FOR MINOR CONCRETE DETAILS.

ABBREVIATIONS:

TS = TOE OF SLOPE

TYPICAL STRUCTURAL SECTIONS

1
- HIGH FRICTION SURFACE TREATMENT
- 0.20′ TO 1.60′ HMA (TYPE A)
- 0.20′ COLD PLANE AC PAVEMENT

2
- HIGH FRICTION SURFACE TREATMENT

EXISTING STRUCTURAL SECTIONS

A
- HIGH FRICTION SURFACE TREATMENT
- 0.20′ RUBBERIZED AC (TYPE G)
- 0.25′ ASPHALT CONCRETE (TYPE B)
- 0.75′ LEAN CONCRETE BASE
- 0.35′ CLASS 3 AGGREGATE BASE
- 0.75′ CLASS 4 AGGREGATE SUBBASE

B
- HIGH FRICTION SURFACE TREATMENT
- 0.20′ RUBBERIZED AC (TYPE G)
- 0.40′ AC (TYPE B)
- 0.60′ LEAN CONCRETE BASE
- 1.15′ CLASS 3 AGGREGATE BASE

C
- 0.45′ ASPHALT CONCRETE (TYPE B)
- 0.75′ LEAN CONCRETE BASE
- 0.35′ CLASS 3 AGGREGATE BASE
- 0.75′ CLASS 4 AGGREGATE SUBBASE

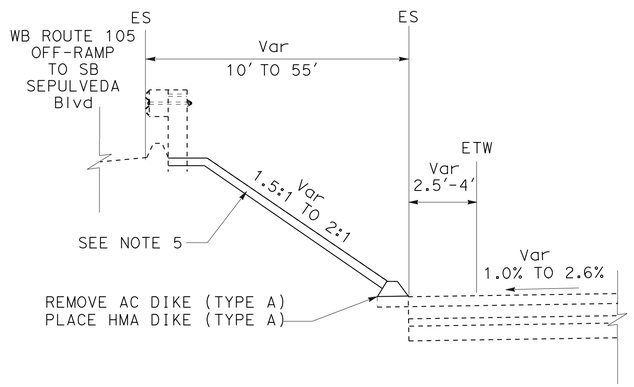

EB ON-RAMP FROM SB SEPULVEDA BOULEVARD
Sta 60+05 TO Sta 61+00

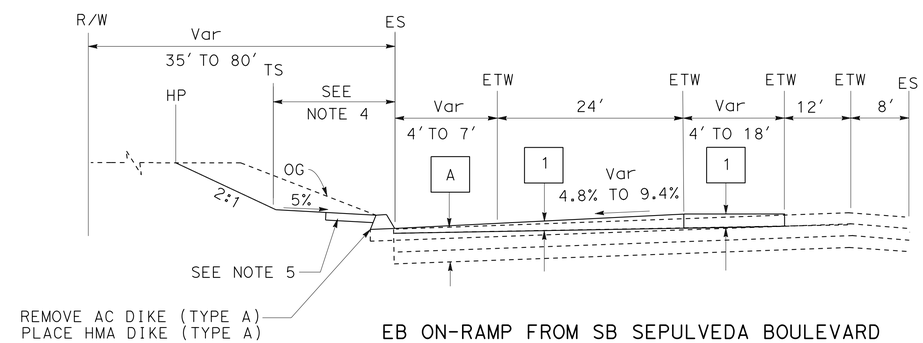

EB ON-RAMP FROM SB SEPULVEDA BOULEVARD
Sta 61+40 TO Sta 62+80

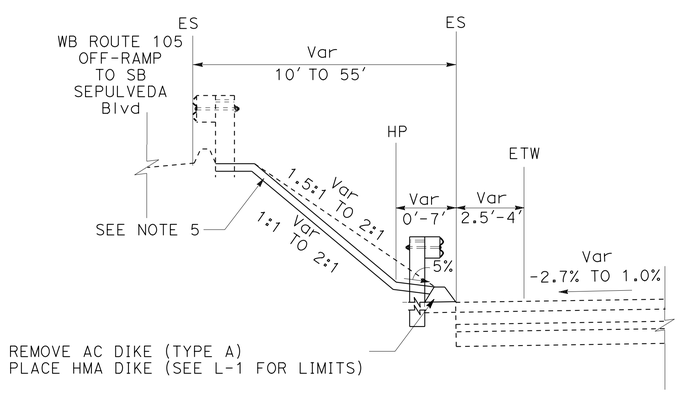

EB ON-RAMP FROM SB SEPULVEDA BOULEVARD
Sta 58+87.5 TO Sta 60+05

SLOPE ROUNDING DETAIL
(TYPICAL)

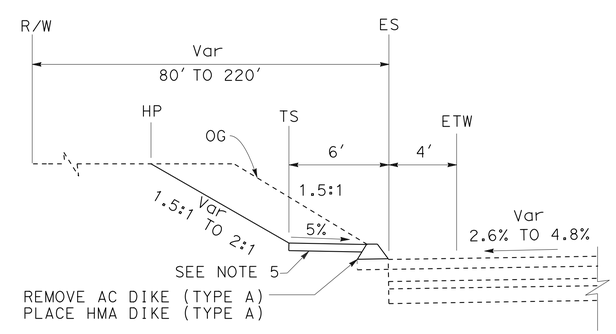

EB ON-RAMP FROM SB SEPULVEDA BOULEVARD
Sta 61+00 TO Sta 61+40

TYPICAL CROSS SECTIONS

NO SCALE

X-1

STATE OF CALIFORNIA - DEPARTMENT OF TRANSPORTATION
Caltrans® OFFICE OF DESIGN A

FUNCTIONAL SUPERVISOR: MARIO GUTIERREZ
CALCULATED-DESIGNED BY: JOSEPH REYNOZA
CHECKED BY: WILFRIDO MORALES
REVISED BY / DATE REVISED

LAST REVISION 00-00-00 | DATE PLOTTED => 25-JUL-2013 | TIME PLOTTED => 07:27

Dist	COUNTY	ROUTE	POST MILES TOTAL PROJECT	SHEET No.	TOTAL SHEETS
07	LA	105	R0.5	3	45

REGISTERED CIVIL ENGINEER 6-18-13 DATE

7-22-13
PLANS APPROVAL DATE

REGISTERED PROFESSIONAL ENGINEER JOSEPH E. REYNOZA No. C79648 Exp 9/30/14 CIVIL STATE OF CALIFORNIA

THE STATE OF CALIFORNIA OR ITS OFFICERS OR AGENTS SHALL NOT BE RESPONSIBLE FOR THE ACCURACY OR COMPLETENESS OF SCANNED COPIES OF THIS PLAN SHEET.

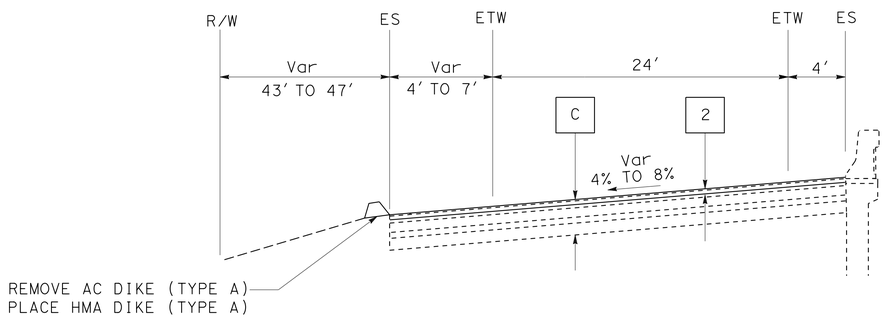

EB ON-RAMP FROM SB SEPULVEDA BOULEVARD
Sta 64+80 TO Sta 66+75

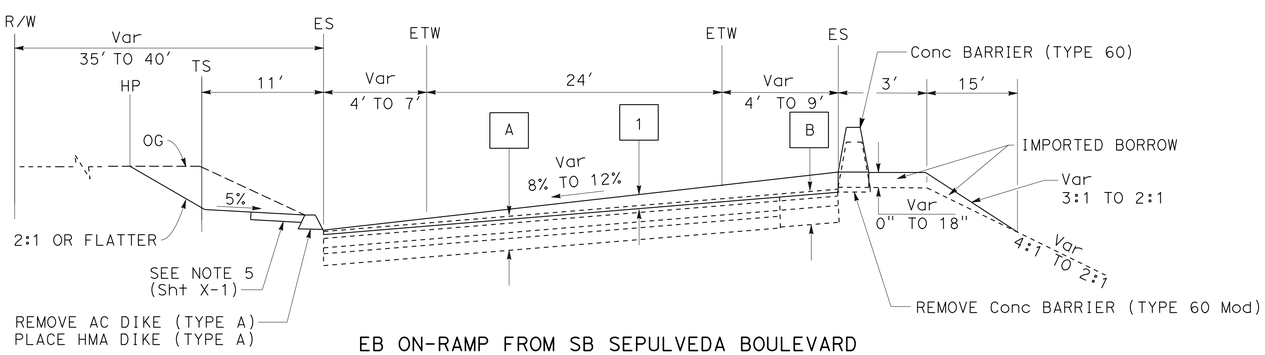

EB ON-RAMP FROM SB SEPULVEDA BOULEVARD
Sta 62+80 TO Sta 64+80

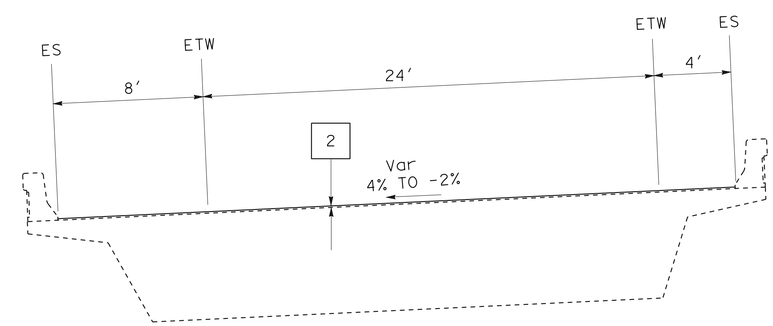

EB ON-RAMP FROM SB SEPULVEDA BOULEVARD
Sta 66+75 TO Sta 67+80

TYPICAL CROSS SECTIONS

NO SCALE

X-2

STATE OF CALIFORNIA - DEPARTMENT OF TRANSPORTATION
Caltrans® OFFICE OF DESIGN A

FUNCTIONAL SUPERVISOR: MARIO GUTIERREZ
CALCULATED-DESIGNED BY: JOSEPH REYNOZA
CHECKED BY: WILFRIDO MORALES
REVISED BY / DATE REVISED

LAST REVISION 00-00-00
DATE PLOTTED => 25-JUL-2013
TIME PLOTTED => 07:27

Dist	COUNTY	ROUTE	POST MILES TOTAL PROJECT	SHEET No.	TOTAL SHEETS
07	LA	105	R0.5	4	45

REGISTERED CIVIL ENGINEER 6-18-13 DATE

7-22-13
PLANS APPROVAL DATE

REGISTERED PROFESSIONAL ENGINEER JOSEPH E. REYNOZA No. C79648 Exp 9/30/14 CIVIL STATE OF CALIFORNIA

THE STATE OF CALIFORNIA OR ITS OFFICERS OR AGENTS SHALL NOT BE RESPONSIBLE FOR THE ACCURACY OR COMPLETENESS OF SCANNED COPIES OF THIS PLAN SHEET.

NOTE:

1. FOR ACCURATE RIGHT OF WAY DATA, CONTACT RIGHT OF WAY ENGINEERING AT THE DISTRICT OFFICE.

LEGEND:

- MINOR CONCRETE (STAMPED CONCRETE) (SEE LD-2 FOR DETAILS)
- VEGETATION CONTROL MINOR CONCRETE (SEE LD-2 FOR DETAILS)

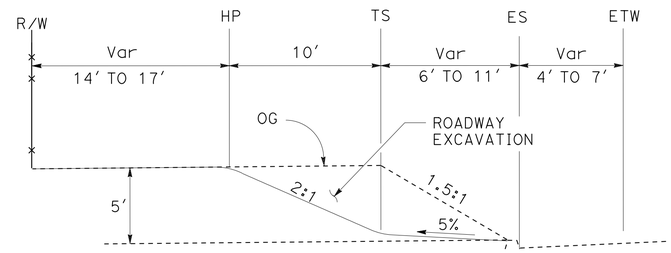

RAMP 3
Sta 62+52 TO Sta 62+72

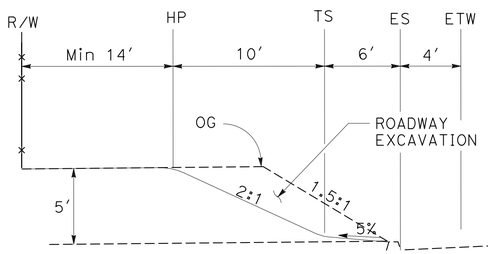

RAMP 3
Sta 61+00 TO Sta 62+52

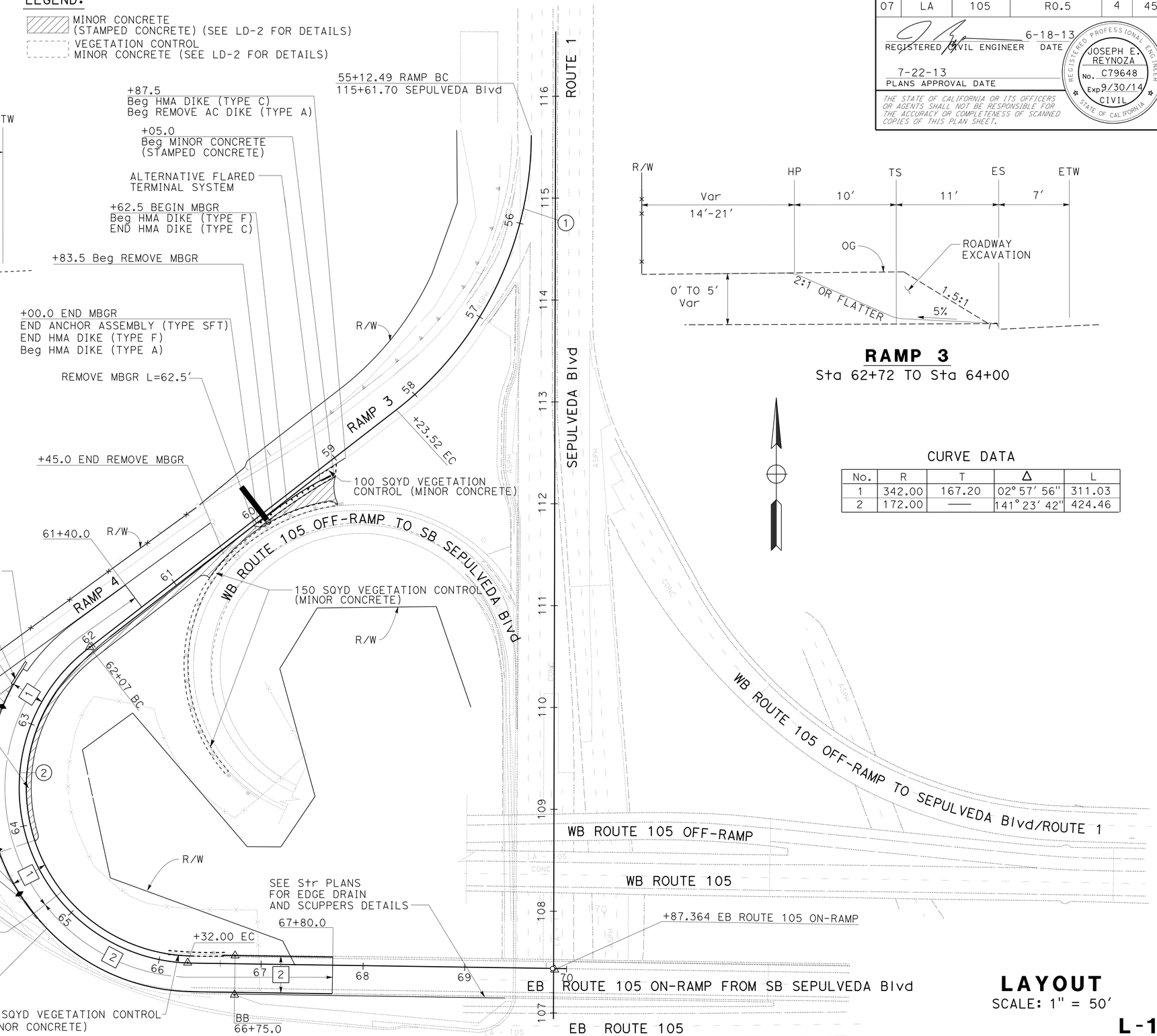

RAMP 3
Sta 62+72 TO Sta 64+00

CURVE DATA

No.	R	T	Δ	L
1	342.00	167.20	02° 57' 56"	311.03
2	172.00	——	141° 23' 42"	424.46

LAYOUT
SCALE: 1" = 50'

L-1

STATE OF CALIFORNIA - DEPARTMENT OF TRANSPORTATION
Caltrans® OFFICE OF DESIGN A

FUNCTIONAL SUPERVISOR: MARIO GUTIERREZ
CALCULATED-DESIGNED BY: JOSEPH REYNOZA
CHECKED BY: WILFRIDO MORALES
REVISED BY
DATE REVISED

LAST REVISION 00-00-00
DATE PLOTTED => 25-JUL-2013
TIME PLOTTED => 07:27

Dist	COUNTY	ROUTE	POST MILES TOTAL PROJECT	SHEET No.	TOTAL SHEETS
07	LA	105	R0.5	5	45

REGISTERED CIVIL ENGINEER 6-18-13 DATE

7-22-13
PLANS APPROVAL DATE

REGISTERED PROFESSIONAL ENGINEER JOSEPH E. REYNOZA No. C79648 Exp 9/30/14 CIVIL STATE OF CALIFORNIA

THE STATE OF CALIFORNIA OR ITS OFFICERS OR AGENTS SHALL NOT BE RESPONSIBLE FOR THE ACCURACY OR COMPLETENESS OF SCANNED COPIES OF THIS PLAN SHEET.

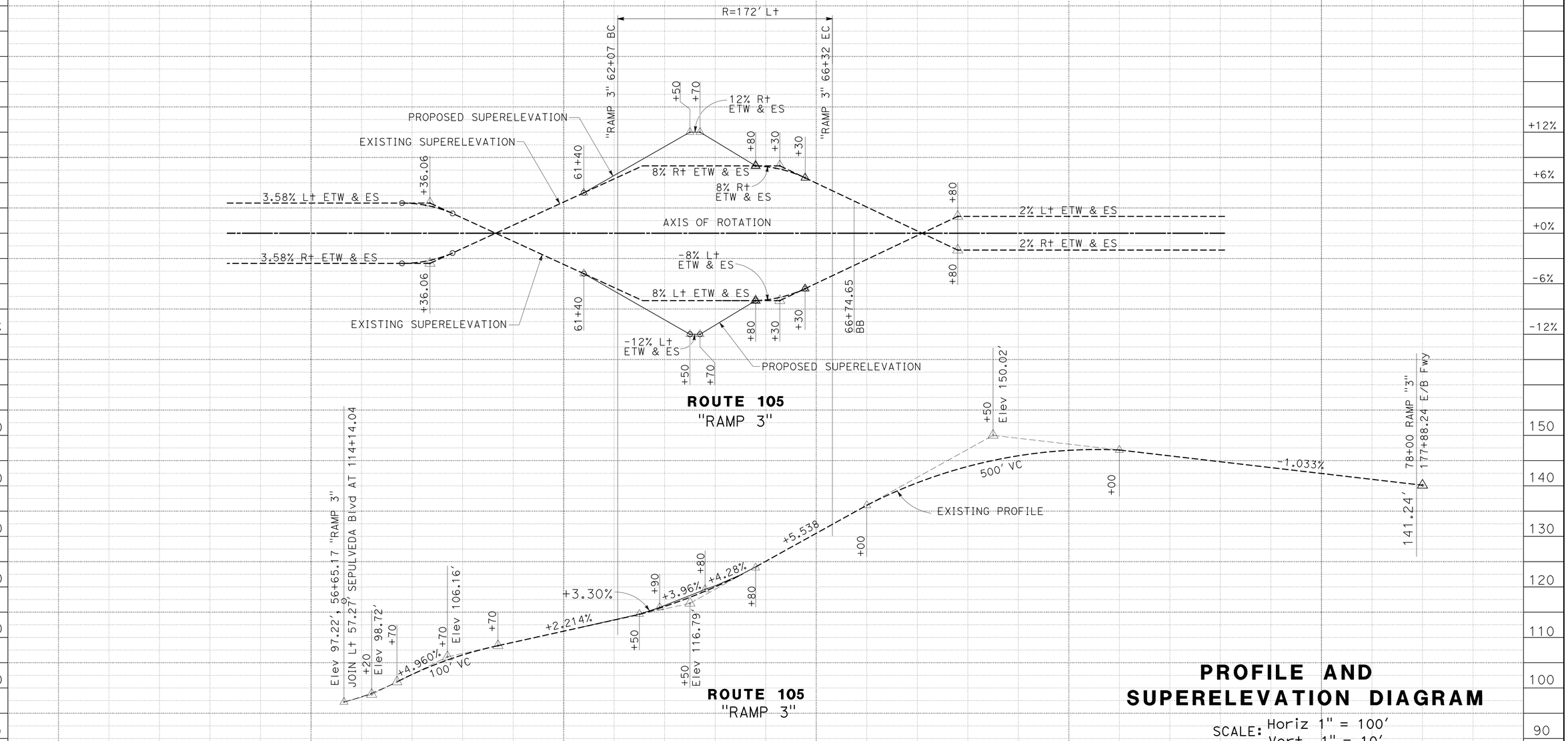

PROFILE AND SUPERELEVATION DIAGRAM

SCALE: Horiz 1" = 100'
Vert 1" = 10'

PS-1

STATE OF CALIFORNIA - DEPARTMENT OF TRANSPORTATION
Caltrans® OFFICE OF DESIGN A

FUNCTIONAL SUPERVISOR: MARIO A. GUTIERREZ
CALCULATED-DESIGNED BY: JOSEPH REYNOZA
CHECKED BY: WILFRIDO MORALES
REVISED BY
DATE REVISED

LAST REVISION 00-00-00
DATE PLOTTED => 25-JUL-2013
TIME PLOTTED => 07:27

Dist	COUNTY	ROUTE	POST MILES TOTAL PROJECT	SHEET No.	TOTAL SHEETS
07	LA	105	R0.5	6	45

REGISTERED CIVIL ENGINEER 6-18-13 DATE

7-22-13
PLANS APPROVAL DATE

REGISTERED PROFESSIONAL ENGINEER JOSEPH E. REYNOZA No. C79648 Exp 9/30/14 CIVIL STATE OF CALIFORNIA

THE STATE OF CALIFORNIA OR ITS OFFICERS OR AGENTS SHALL NOT BE RESPONSIBLE FOR THE ACCURACY OR COMPLETENESS OF SCANNED COPIES OF THIS PLAN SHEET.

NOTE:

1. SEE STRUCTURE PLANS FOR EDGE DRAIN OUTLET DETAILS

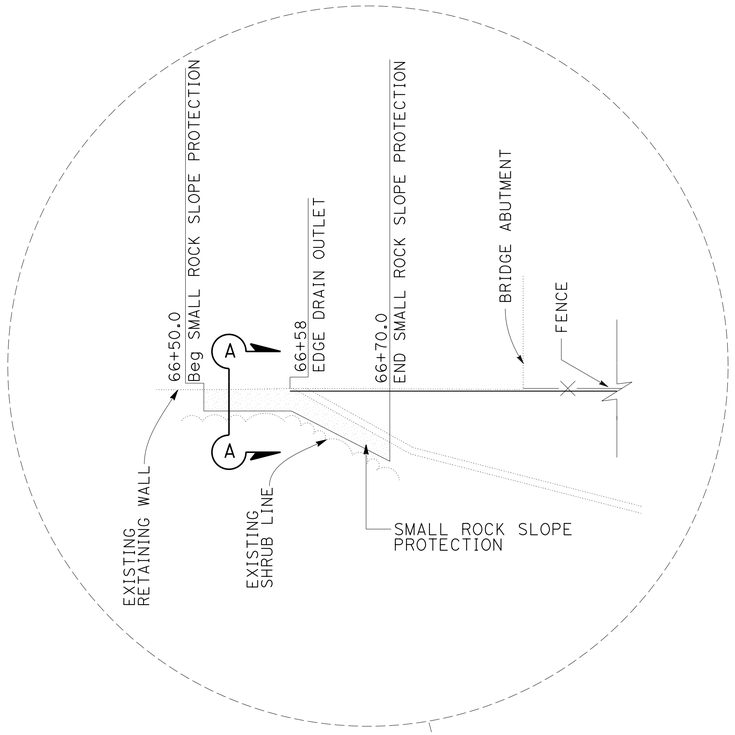

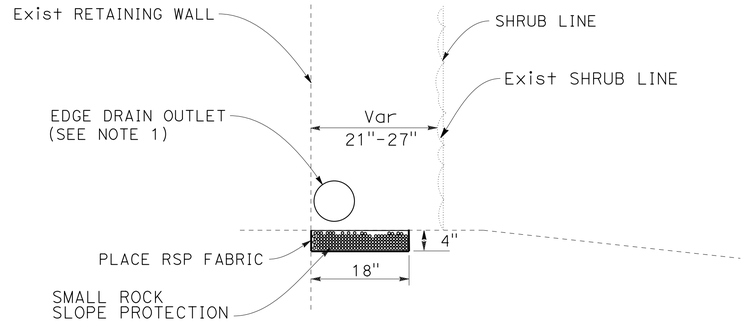

SECTION A-A
Sta 66+50 TO Sta 66+70

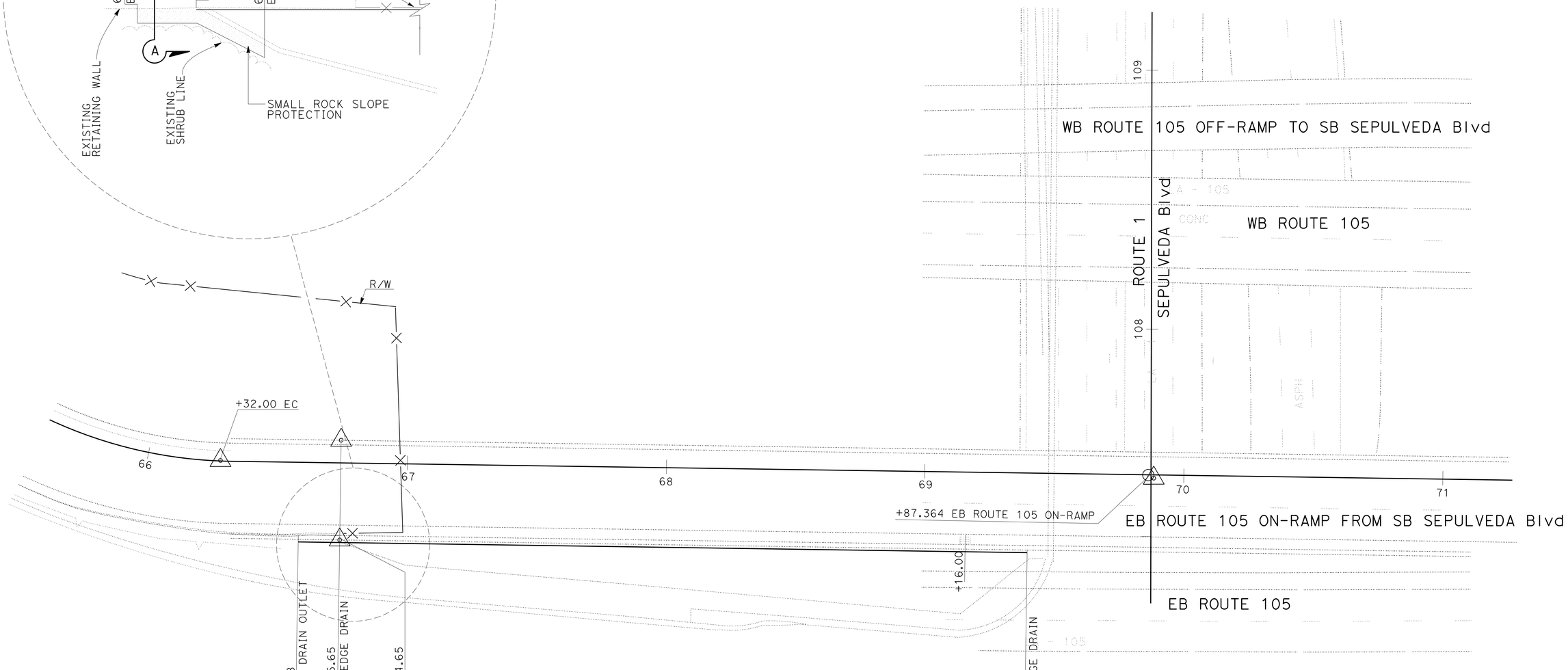

CONSTRUCTION DETAILS

SCALE: 1" = 20'

C-1

STATE OF CALIFORNIA - DEPARTMENT OF TRANSPORTATION
Caltrans® OFFICE OF DESIGN A

FUNCTIONAL SUPERVISOR: MARIO A. GUTIERREZ
CALCULATED-DESIGNED BY: JOSEPH E. REYNOZA
CHECKED BY: WILFRIDO MORALES
REVISED BY
DATE REVISED

LAST REVISION 00-00-00
DATE PLOTTED => 25-JUL-2013
TIME PLOTTED => 07:27

Dist	COUNTY	ROUTE	POST MILES TOTAL PROJECT	SHEET No.	TOTAL SHEETS
07	LA	105	R0.5	7	45

REGISTERED CIVIL ENGINEER 6-18-13 DATE

7-22-13
PLANS APPROVAL DATE

REGISTERED PROFESSIONAL ENGINEER JOSEPH E. REYNOZA No. C79648 Exp 9/30/14 CIVIL STATE OF CALIFORNIA

THE STATE OF CALIFORNIA OR ITS OFFICERS OR AGENTS SHALL NOT BE RESPONSIBLE FOR THE ACCURACY OR COMPLETENESS OF SCANNED COPIES OF THIS PLAN SHEET.

TABLE A

POST OFFSET DIMENSIONS		
Post No.	3'-0" System End Offset	3'-6" System End Offset
1	36"	42"
2	22¼"	27¾"
3	11¾"	16¼"
4	6¾"	10⅝"
5	3"	6"
6	¾"	2¾"
7	0"	¾"
8	0"	0"

See Note 12

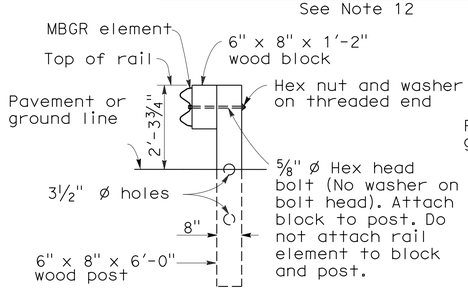

SECTION A-A

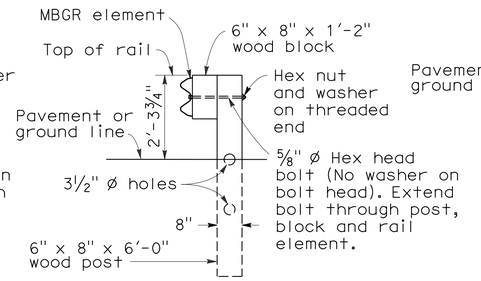

SECTION B-B

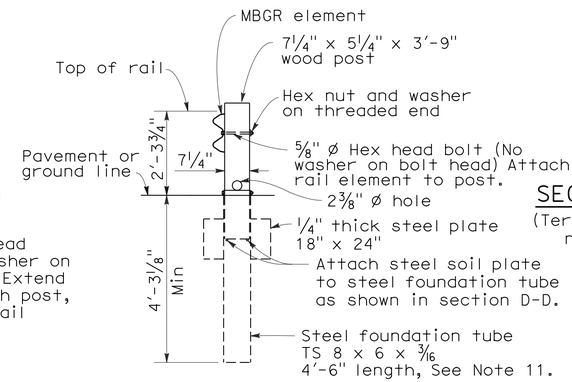

SECTION C-C

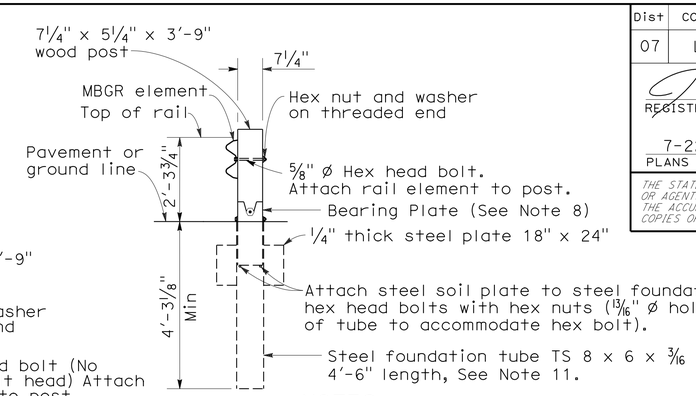

SECTION D-D
(Terminal Section not shown)

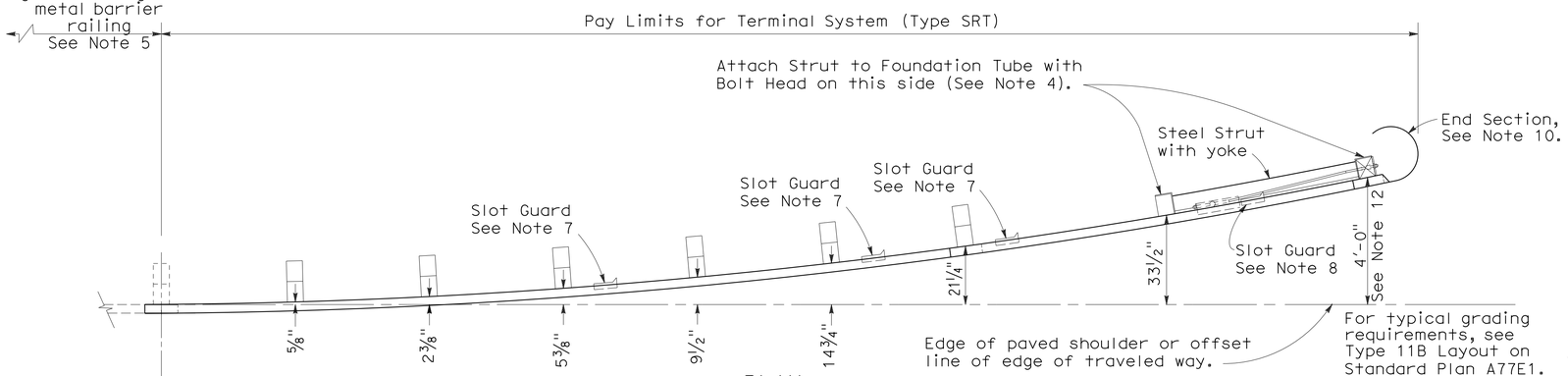

PLAN

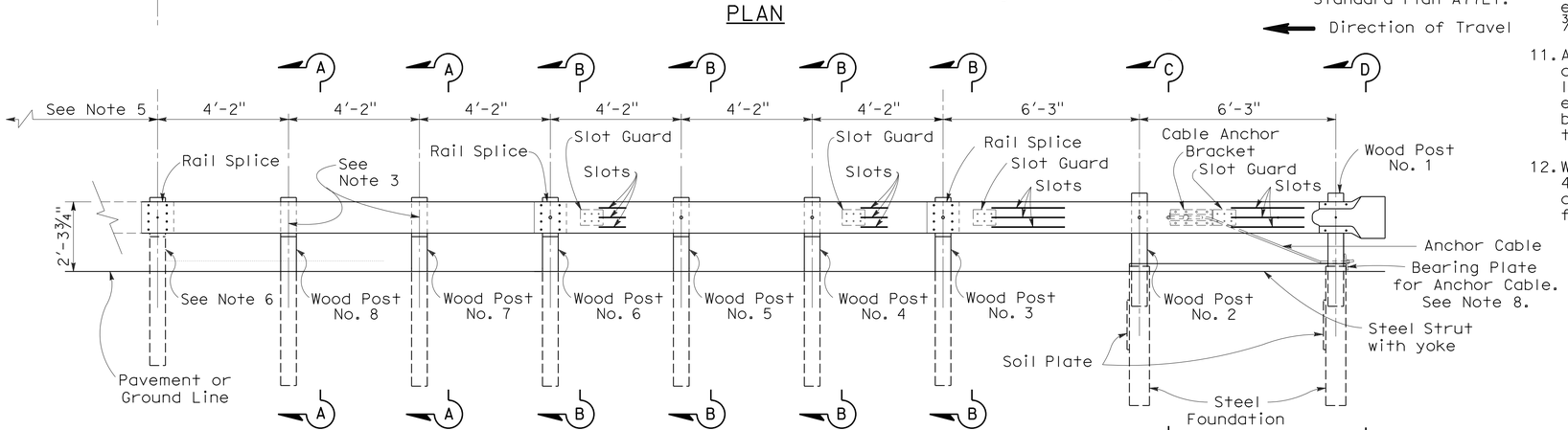

ELEVATION

TERMINAL SYSTEM (TYPE SRT)
(8 Post System)
See Note 9

NOTES:

1. For additional details of Terminal System (Type SRT), refer to the manufacturer's installation instructions.
2. The post offset dimensions are given to the center of the traffic face of the block, except at the first two posts, where the dimension is to the center of the traffic face of the post. Offset points are to be located by chord measurements at the back of the rail equal to the nominal post spacing's shown. Posts are to be set approximately radial to the railing at each post locations.
3. Do not attach rail elements to posts 7 and 8.
4. Attach strut to Post Nos. 1 and 2 foundation tubes with ⅝" Ø hex head bolts, washers and hex nuts. Bolts extend through the strut, steel foundation tube, and wood posts.
5. For the length and type of metal beam guard railing or metal barrier railing the terminal system is attached to, see the Project Plans.
6. Attach rail element to this post and block. Payment for this post, block and hardware is included in payment for the type of railing or barrier the terminal system is attached to, not part of payment for Terminal System (Type SRT).
7. The deflector angle of the slot guard is to be positioned immediately downstream of the slots.
8. For bearing plate orientation, refer to the manufacturer's installation instructions.
9. For typical use of this terminal system with guard railing, see the A77E, A77F and A77G Series of Standard Plans. See Standard Plan A78E for typical use of this terminal system with single thrie beam barrier.
10. A complete wrap around end section may continued to be used in existing installations. New installations shall be constructed with the ¾ wrap end section shown.
11. A 6'-0" length steel foundation tube, TS 8 x 6 x 3/16 without a soil plate, may be furnished and installed in place of the 4'-6" length steel foundation tube and soil plate shown. Minimum embedment of the 6'-0" length tube shall be 5'-9". A ⅝" Ø hex head bolt and nut shall be installed in the hole in 6'-0" length tube to keep the wood post from dropping into the tube.
12. Where site conditions will not accommodate use of the standard 4'-0" system end offset, 3'-6" or 3'-0" system end offsets, as applicable, may be used. See Table A for post offset dimensions for 3'-6" and 3'-0" system end offsets.

METAL BEAM RAILING TERMINAL SYSTEM (TYPE SRT)

CONSTRUCTION DETAILS

NO SCALE

C-2

STATE OF CALIFORNIA - DEPARTMENT OF TRANSPORTATION
Caltrans® OFFICE OF DESIGN A
FUNCTIONAL SUPERVISOR: MARIO A. GUTIERREZ
CALCULATED-DESIGNED BY: WILFRIDO MORALES
CHECKED BY: JOSEPH E. REYNOZA
REVISED BY
DATE REVISED

LAST REVISION 00-00-00 | DATE PLOTTED => | TIME PLOTTED =>

Dist	COUNTY	ROUTE	POST MILES TOTAL PROJECT	SHEET No.	TOTAL SHEETS
07	LA	105	R0.5	8	45

REGISTERED CIVIL ENGINEER 6-18-13 DATE

7-22-13
PLANS APPROVAL DATE

REGISTERED PROFESSIONAL ENGINEER JOSEPH E. REYNOZA No. C79648 Exp 9/30/14 CIVIL STATE OF CALIFORNIA

THE STATE OF CALIFORNIA OR ITS OFFICERS OR AGENTS SHALL NOT BE RESPONSIBLE FOR THE ACCURACY OR COMPLETENESS OF SCANNED COPIES OF THIS PLAN SHEET.

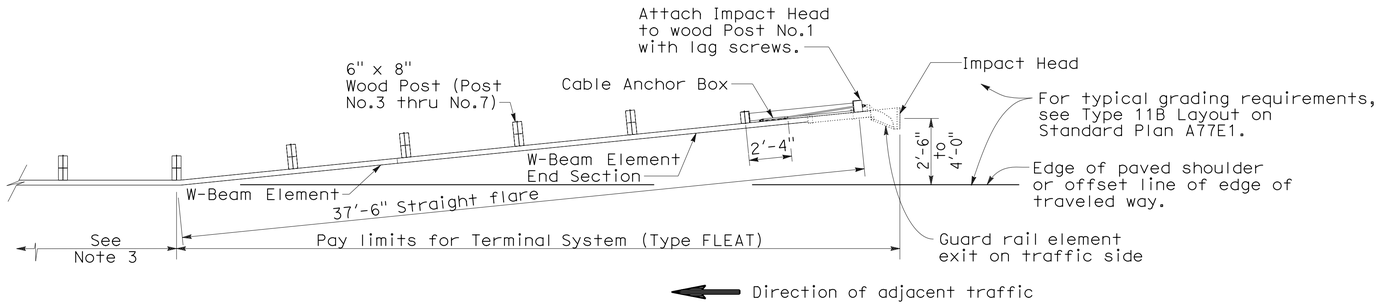

PLAN

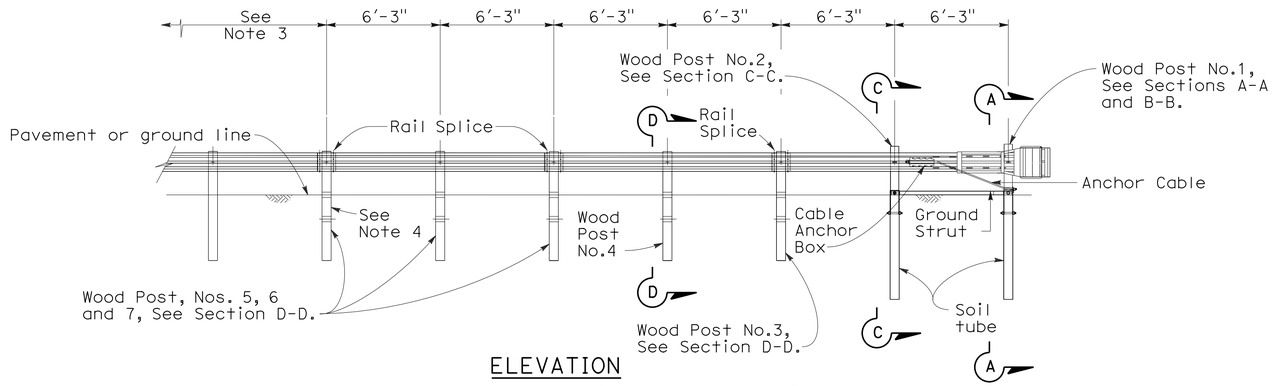

ELEVATION

TERMINAL SYSTEM (TYPE FLEAT)

NOTES:

1. For additional details of Terminal System (Type FLEAT), refer to the manufacturer's installation instructions.
2. Terminal System (Type FLEAT) not to be used where extrusion of the rail on the front side of the installation would be in the path of pedestrian traffic.
3. For the length and type of metal beam guard railing or metal barrier railing the terminal system is attached to, see Project Plans. For typical use of this terminal system with guard railing, see the A77E, A77F and A77G Series of the Standard Plans.
4. Attach rail element to this post and block. Payment for this post, block and attaching hardware is included in payment for Terminal System (Type FLEAT).

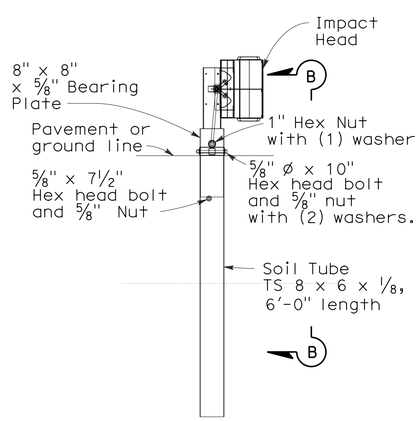

SECTION A-A

Post No.1

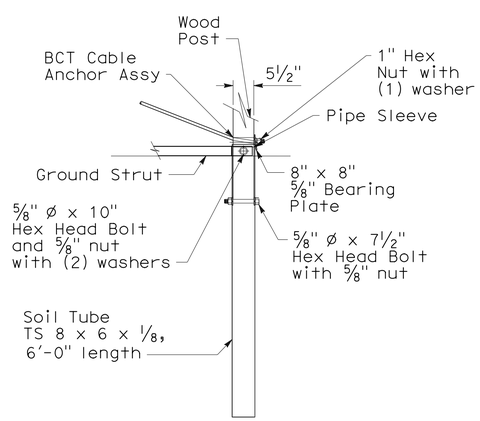

SECTION B-B

Partial view Post No.1

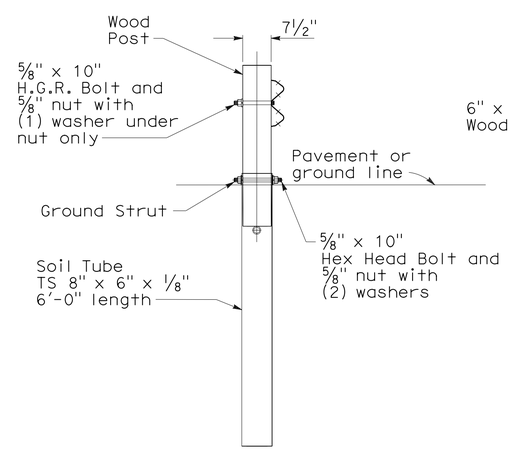

SECTION C-C

at Post No.2

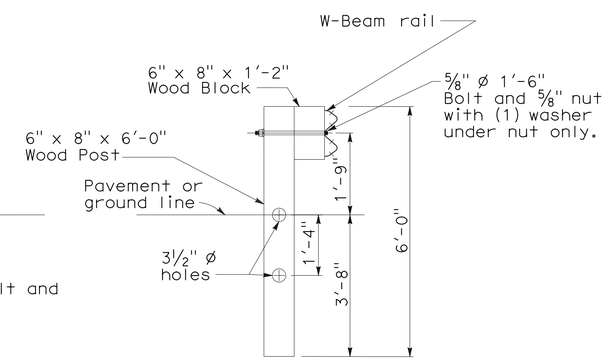

SECTION D-D

Post No.3 through No.7.

METAL BEAM RAILING TERMINAL SYSTEM (TYPE FLEAT)

CONSTRUCTION DETAILS

NO SCALE

C-3

STATE OF CALIFORNIA - DEPARTMENT OF TRANSPORTATION
Caltrans® OFFICE OF DESIGN A

FUNCTIONAL SUPERVISOR: MARIO A. GUTIERREZ

CALCULATED-DESIGNED BY: JOSEPH E. REYNOZA
CHECKED BY: WILFRIDO MORALES

REVISED BY
DATE REVISED

LAST REVISION 00-00-00
DATE PLOTTED =>
TIME PLOTTED =>

Dist	COUNTY	ROUTE	POST MILES TOTAL PROJECT	SHEET No.	TOTAL SHEETS
07	LA	105	R0.5	9	45

REGISTERED CIVIL ENGINEER 6-18-13 DATE

7-22-13
PLANS APPROVAL DATE

REGISTERED PROFESSIONAL ENGINEER JOSEPH E. REYNOZA No. C79648 Exp 9/30/14 CIVIL STATE OF CALIFORNIA

THE STATE OF CALIFORNIA OR ITS OFFICERS OR AGENTS SHALL NOT BE RESPONSIBLE FOR THE ACCURACY OR COMPLETENESS OF SCANNED COPIES OF THIS PLAN SHEET.

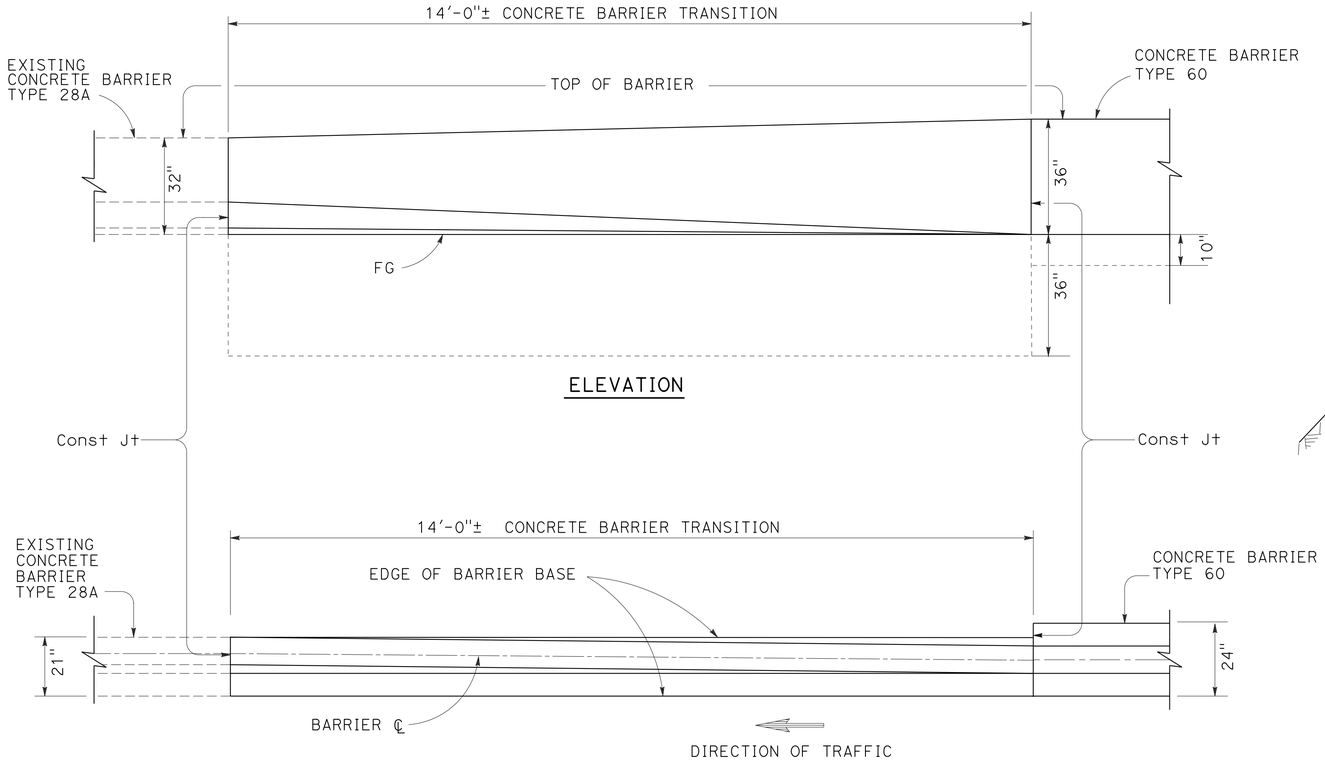

TRANSITION CONCRETE BARRIER TYPE 60 TO CONCRETE BARRIER TYPE 28A

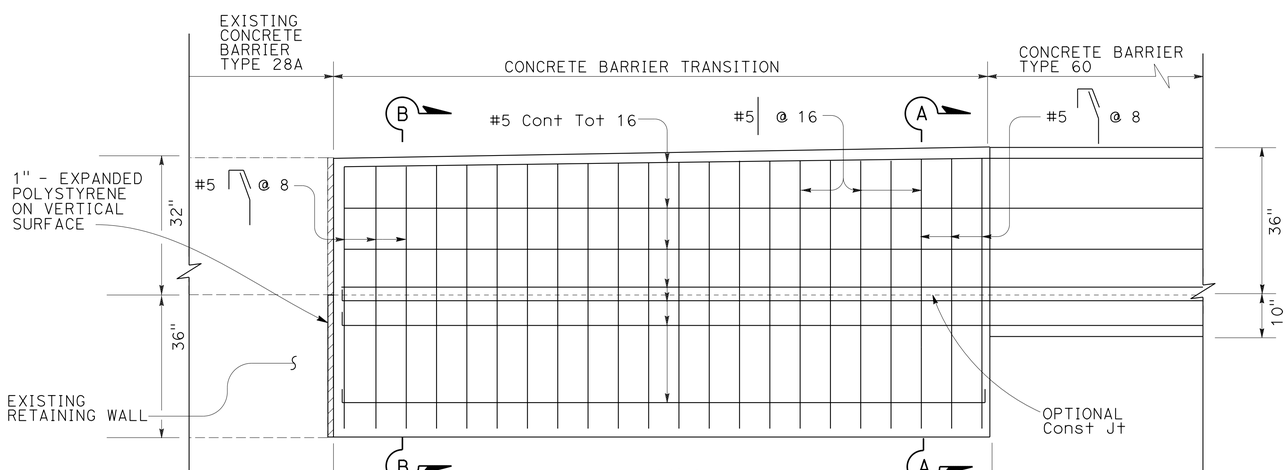

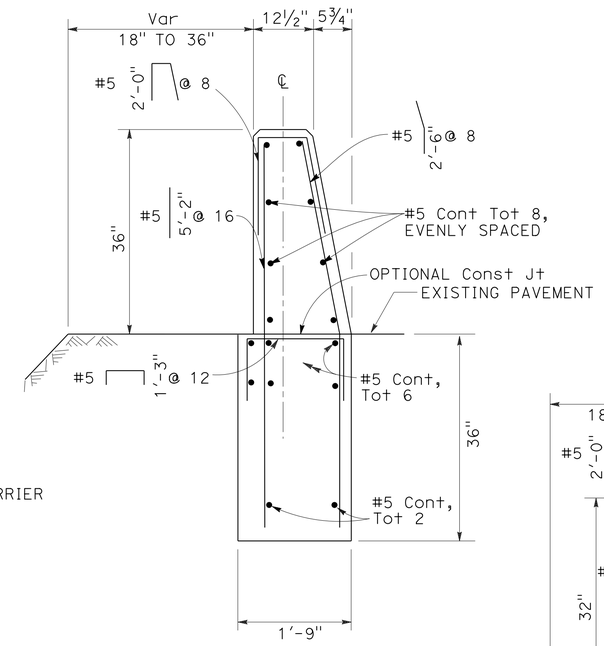

SECTION A-A

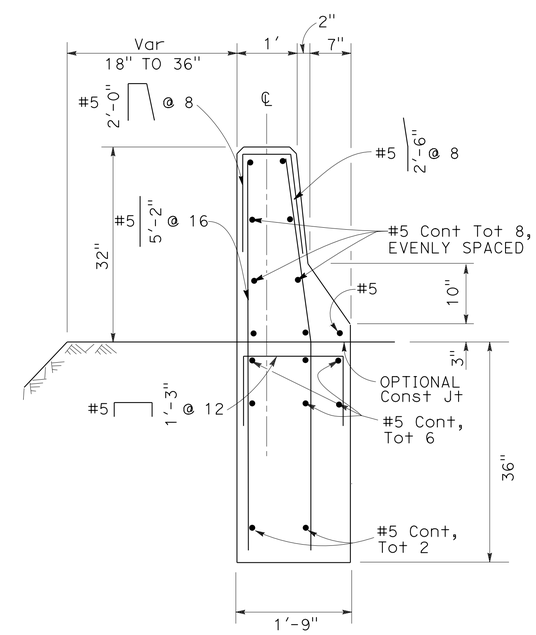

SECTION B-B

NOTE:

1. See Standard Plan A76B for Concrete Barrier Type 60

CONSTRUCTION DETAILS

SCALE: 1" = 20'

C-4

STATE OF CALIFORNIA - DEPARTMENT OF TRANSPORTATION
Caltrans® OFFICE OF DESIGN A

FUNCTIONAL SUPERVISOR: MARIO A. GUTIERREZ
CALCULATED-DESIGNED BY: JOSEPH E. REYNOZA
CHECKED BY: WILFRIDO MORALES
REVISED BY
DATE REVISED

LAST REVISION 00-00-00
DATE PLOTTED =>
TIME PLOTTED =>

Dist	COUNTY	ROUTE	POST MILES TOTAL PROJECT	SHEET No.	TOTAL SHEETS
07	LA	105	R0.5	10	45

N. Celina Aviles 6-18-13
REGISTERED CIVIL ENGINEER DATE

7-22-13
PLANS APPROVAL DATE

REGISTERED PROFESSIONAL ENGINEER N.CELINA AVILES No. 57106 Exp.12/31/13 CIVIL STATE OF CALIFORNIA

THE STATE OF CALIFORNIA OR ITS OFFICERS OR AGENTS SHALL NOT BE RESPONSIBLE FOR THE ACCURACY OR COMPLETENESS OF SCANNED COPIES OF THIS PLAN SHEET.

NOTES:

1. FOR ACCURATE RIGHT OF WAY DATA, CONTACT RIGHT OF WAY ENGINEERING AT THE DISTRICT OFFICE.
2. UTILITY OWNERSHIP:

ELECTRIC : LOS ANGELES DEPARTMENT OF WATER & POWER
SOUTHERN CALIFORNIA EDISON

GAS : SOUTHERN CALIFORNIA GAS COMPANY

OIL : EXXON MOBIL PIPELINE
SHELL PIPELINE COMPANY LP
PHILLIPS 66 PIPELINE, LLC
CHEVRON

WATER : METROPOLITAN WATER DISTRICT OF SOUTHERN CALIFORNIA WATER SERVICE COMPANY

TELEPHONE : AT&T LOCAL SERVICES (TCG)
VERIZON

POSITIVE LOCATION INFORMATION

No. ⬠	LOCATION	ELEVATION	DEPTH	METHOD
1	9.3′ Lt "E1" 62+42.8	110.5′	6.4′	POTHOLING
2	10.0′ Lt "E1" 62+48.1	108.8′	8.3′	POTHOLING
3	17.1′ Lt "E1" 62+44.8	110.4′	9.9′	POTHOLING
4	16.4′ Lt "E1" 62+50.2	108.1′	12.0′	POTHOLING
5	37.7′ Lt "E1" 62+50.9	117.2′	4.3′	POTHOLING
6	37.3′ Lt "E1" 62+55.1	115.3′	6.3′	POTHOLING

ABBREVIATIONS:

AT & T	AMERICAN TELEPHONE & TELEGRAPH
LADWP	LOS ANGELES DEPARTMENT OF WATER & POWER
GC	GALVANIZED CONDUIT
Bu Ca	BURIED CABLE
Chev	CHEVRON
Csg	CASING
GIP	GALVANIZED IRON PIPE
Kv	KILO-VOLT
MWD	METROPOLITAN WATER DISTRICT
Nat	NATURAL
P	POWER
SCE	SOUTHERN CALIFORNIA EDISON

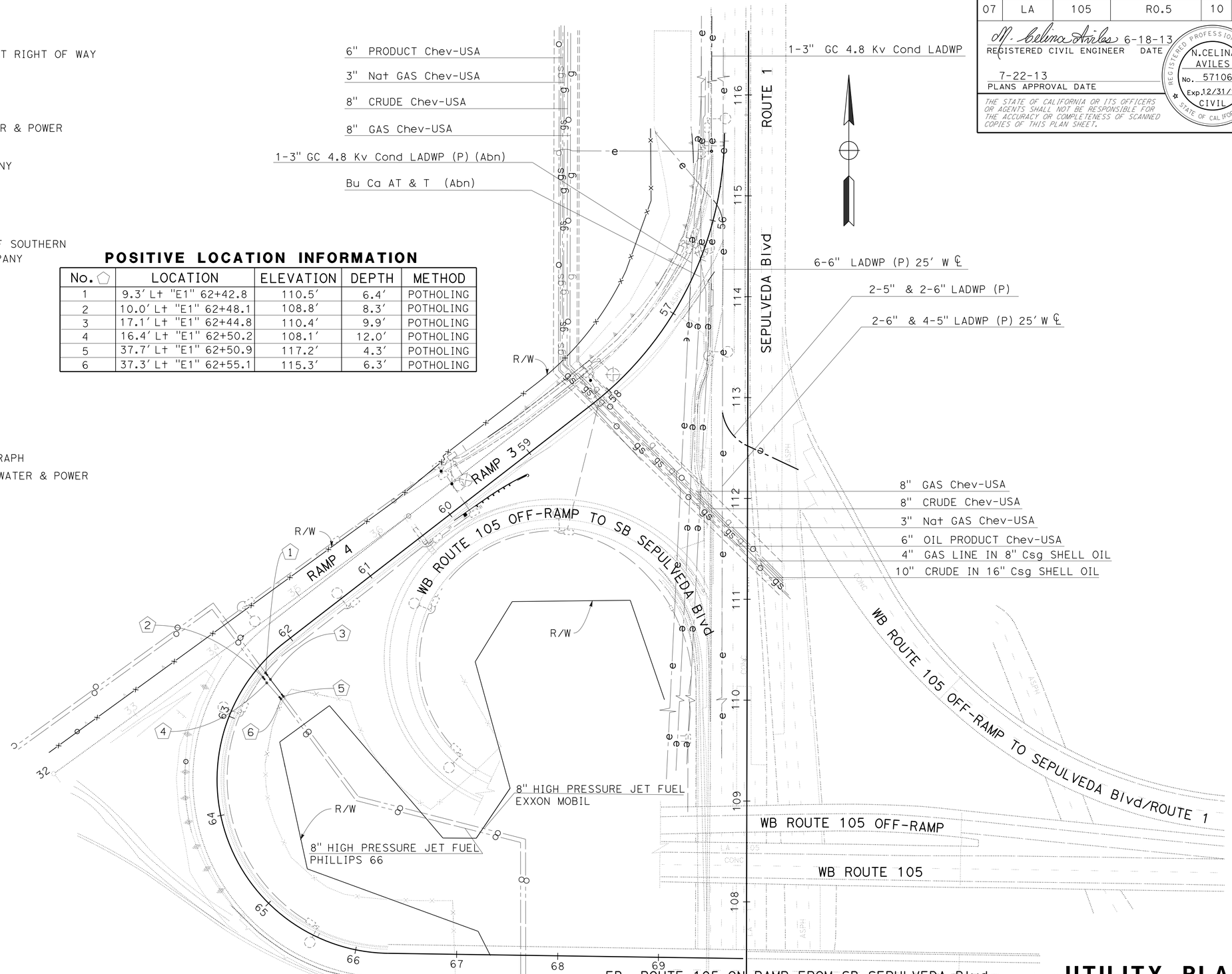

APPROVED FOR UTILITY INFORMATION ONLY

UTILITY PLAN

SCALE: 1" = 50′

U-1

STATE OF CALIFORNIA - DEPARTMENT OF TRANSPORTATION
Caltrans® OFFICE OF DESIGN A

FUNCTIONAL SUPERVISOR: JERREL B. KAM
CALCULATED-DESIGNED BY: JOSEPH REYNOZA
CHECKED BY: N. CELINA AVILES
REVISED BY
DATE REVISED

LAST REVISION 00-00-00
DATE PLOTTED => 25-JUL-2013
TIME PLOTTED => 07:27

Dist	COUNTY	ROUTE	POST MILES TOTAL PROJECT	SHEET No.	TOTAL SHEETS
07	LA	105	R0.5	11	45

REGISTERED CIVIL ENGINEER 6-18-13 DATE

7-22-13
PLANS APPROVAL DATE

REGISTERED PROFESSIONAL ENGINEER JOSEPH E. REYNOZA No. C79648 Exp 9/30/14 CIVIL STATE OF CALIFORNIA

THE STATE OF CALIFORNIA OR ITS OFFICERS OR AGENTS SHALL NOT BE RESPONSIBLE FOR THE ACCURACY OR COMPLETENESS OF SCANNED COPIES OF THIS PLAN SHEET.

STATIONARY MOUNTED CONSTRUCTION AREA SIGNS

SIGN No. (X)	SIGN CODE FEDERAL	SIGN CODE CALIFORNIA	SIGN MESSAGE	PANEL SIZE	No. OF POSTS AND SIZE	No. OF SIGNS
1		C40	TRAFFIC FINES DOUBLED IN CONSTRUCTION ZONES	144" x 60"	2- 6" x 8"	1
2	W20-1		ROAD WORK AHEAD	48" x 48"	1- 6" x 6"	1
3	G20-2		END ROAD WORK	48" x 24"	1- 4" x 6"	1
4	W21-5		SHOULDER WORK	48" x 48"	1- 6" x 6"	1
5	W21-5		LEFT SHOULDER CLOSE AHEAD	48" x 48"	1- 6" x 6"	1
6		C30A	SHOULDER CLOSED	48" x 48"	1- 6" x 6"	1
7	W21-5		RIGHT SHOULDER CLOSE AHEAD	48" x 48"	1- 6" x 6"	1

NOTE:

1. EXACT LOCATIONS AND POSITION OF SIGNS WILL BE DETERMINED BY THE ENGINEER.

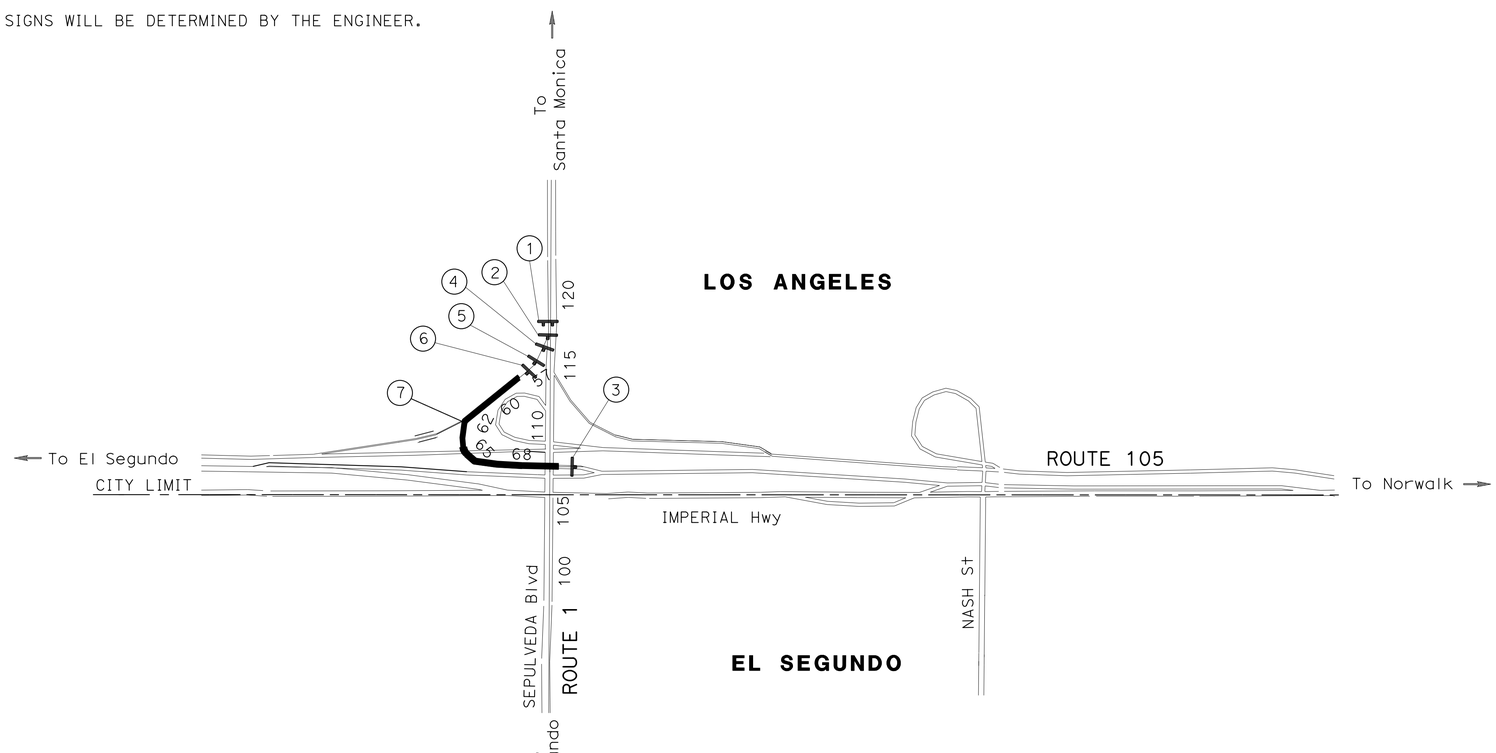

APPROVED FOR CONSTRUCTION AREA SIGN WORK ONLY

CONSTRUCTION AREA SIGNS

NO SCALE

CS-1

STATE OF CALIFORNIA - DEPARTMENT OF TRANSPORTATION
Caltrans® OFFICE OF DESIGN A

FUNCTIONAL SUPERVISOR: MARIO GUTIERREZ
CALCULATED-DESIGNED BY: JOSEPH REYNOZA
CHECKED BY: WILFRIDO MORALES
REVISED BY
DATE REVISED

LAST REVISION 00-00-00
DATE PLOTTED => 25-JUL-2013
TIME PLOTTED => 07:27

Dist	COUNTY	ROUTE	POST MILES TOTAL PROJECT	SHEET No.	TOTAL SHEETS
07	LA	105	R0.5	12	45

REGISTERED CIVIL ENGINEER 6-18-13 DATE

7-22-13
PLANS APPROVAL DATE

REGISTERED PROFESSIONAL ENGINEER JOSEPH E. REYNOZA No. C79648 Exp. 9/30/14 CIVIL STATE OF CALIFORNIA

THE STATE OF CALIFORNIA OR ITS OFFICERS OR AGENTS SHALL NOT BE RESPONSIBLE FOR THE ACCURACY OR COMPLETENESS OF SCANNED COPIES OF THIS PLAN SHEET.

NOTE:

REMOVE CONFLICTING STRIPING.

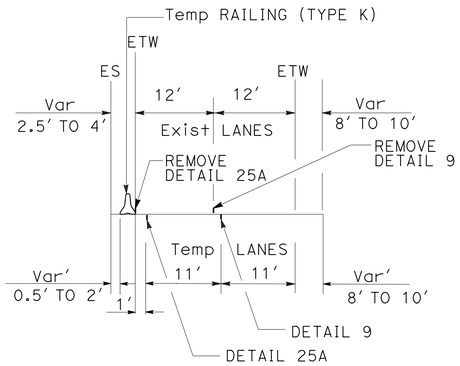

TYPICAL SECTION A-A

Sta 56+60 TO Sta 61+80

TYPICAL SECTION B-B

Sta 62+40 TO Sta 65+00

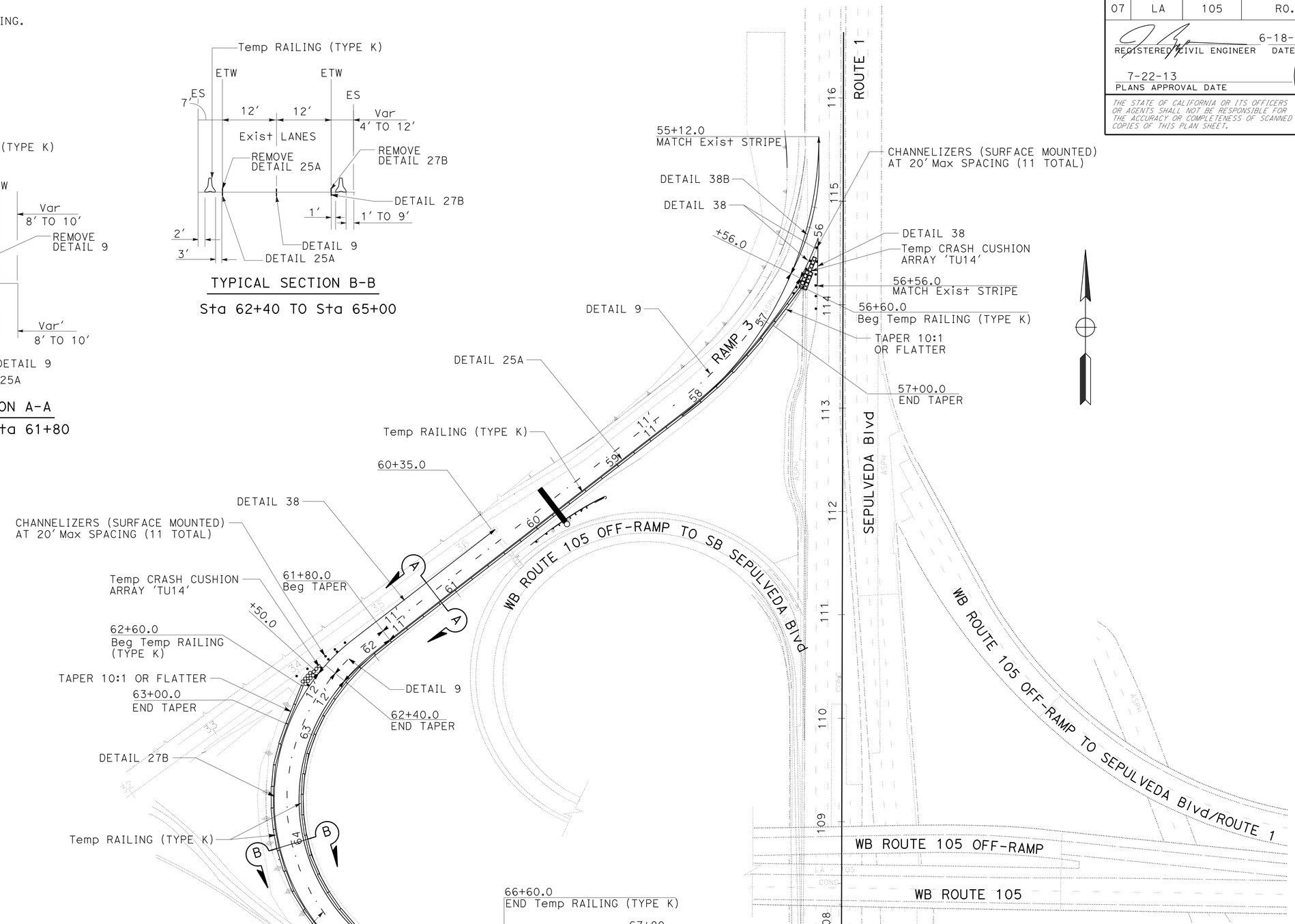

APPROVED FOR TRAFFIC HANDLING WORK ONLY

TRAFFIC HANDLING PLAN

SCALE: 1" = 50'

TH-1

STATE OF CALIFORNIA - DEPARTMENT OF TRANSPORTATION
Caltrans® OFFICE OF DESIGN A

FUNCTIONAL SUPERVISOR: MARIO A. GUTIERREZ

CALCULATED-DESIGNED BY: JOSEPH REYNOZA
CHECKED BY: WILFRIDO MORALES

REVISED BY
DATE REVISED

LAST REVISION 00-00-00
DATE PLOTTED => 25-JUL-2013
TIME PLOTTED => 07:27

Dist	COUNTY	ROUTE	POST MILES TOTAL PROJECT	SHEET No.	TOTAL SHEETS
07	LA	105	R0.5	13	45

REGISTERED CIVIL ENGINEER 8-9-12 DATE

7-22-13
PLANS APPROVAL DATE

REGISTERED PROFESSIONAL ENGINEER ALBERT K. YU No. 43220 Exp. 3/31/14 CIVIL STATE OF CALIFORNIA

THE STATE OF CALIFORNIA OR ITS OFFICERS OR AGENTS SHALL NOT BE RESPONSIBLE FOR THE ACCURACY OR COMPLETENESS OF SCANNED COPIES OF THIS PLAN SHEET.

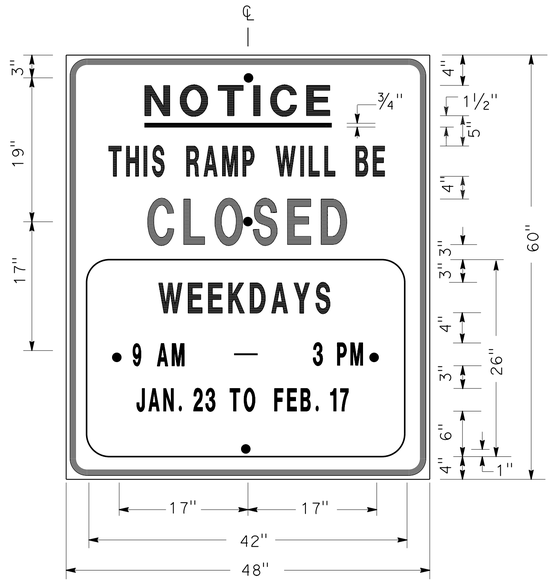

SIGN SP-1

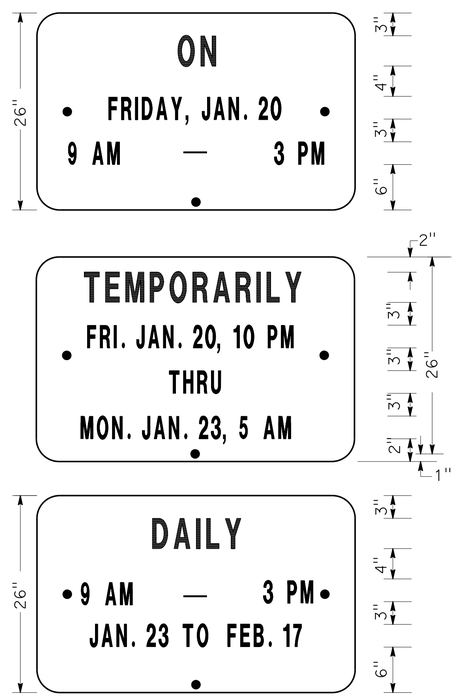

ALTERNATE OVERLAY PANELS (TYPICAL)

SPECIAL ADVANCE NOTICE PUBLICITY SIGN

NOTES: (SIGN SP-1)

1. LETTERS AND BORDER SHALL BE BLACK ON REFLECTORIZED ORANGE BACKGROUND.
2. BOLT HOLES SHALL BE 3/8" DIAMETER.
3. BASE MATERIAL SHALL BE ALUMINUM (MINIMUM 0.06").
4. SIGNS SHALL BE MOUNTED WITH BOTTOMS OF SIGNS A MINIMUM OF 7' ABOVE GROUND.

SIZE	BORDER WIDTH	MARGIN WIDTH	LETTER SIZE					CORNER RADIUS
			LINE 1	LINE 2*	LINE 3	LINE 4	LINE 5, 6, & 7*	
48"x60"	1 1/4"	3/4"	4E	4D	6E	4D		3"
42"x26"	OVERLAY						3D	1 1/2"
* CONDENSED SPACING IF NECESSARY								

SIGN SP-4

NOTES: (SIGN SP-4)

1. LETTERS - 6" SERIES C.
2. LETTERS AND BORDER SHALL BE BLACK ON REFLECTORIZED WHITE BACKGROUND.
3. BOLT HOLES SHALL BE 3/8" DIAMETER.
4. BASE MATERIAL SHALL BE ALUMINUM (MINIMUM 0.06").
5. SIGNS SHALL BE PLACED AT RAMP ENTRANCES IN ADDITION TO SIGNS POSTED IN ACCORDANCE WITH REVISED STANDARD PLAN T14.

SPECIAL SIGN FOR ENTRANCE RAMP CLOSURES

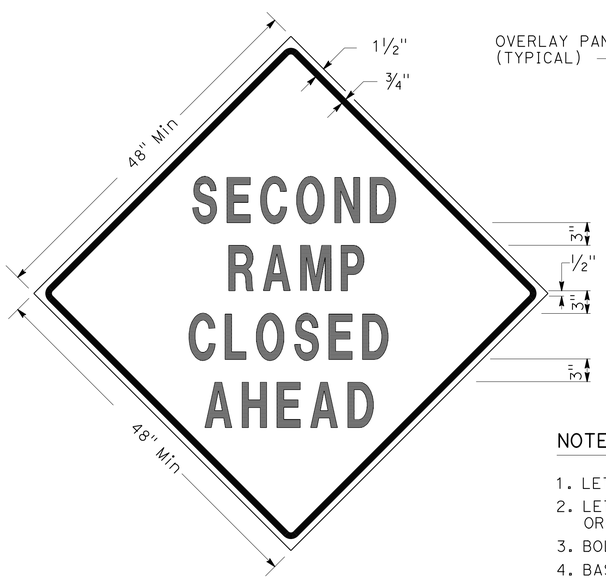

SIGN SP-3

SIGN SP-5

NOTES: (SIGNS SP-3 & SP-5)

1. LETTERS - 6" SERIES D.
2. LETTERS AND BORDER SHALL BE BLACK ON REFLECTORIZED ORANGE BACKGROUND.
3. BOLT HOLES SHALL BE 3/8" DIAMETER.
4. BASE MATERIAL SHALL BE ALUMINUM (MINIMUM 0.06").
5. SIGNS SHALL BE MOUNTED WITH BOTTOMS OF SIGNS A MINIMUM OF 7' ABOVE GROUND.
6. SIGN SP-5 SHALL BE USED IF THE OFF-RAMP TO BE CLOSED FOLLOWS A FREEWAY OFF-CONNECTOR.

SPECIAL SIGNS FOR EXIT RAMP CLOSURES

TRAFFIC HANDLING DETAILS
TRAFFIC CONTROL SYSTEM FOR RAMP CLOSURES, DETOUR SIGNS, AND MISCELLANEOUS DETAILS
SHEET 1 OF 2

NO SCALE

THD-1

REVISED BY	DATE REVISED
JC	3/12

CALCULATED-DESIGNED BY: ALBERT K YU
CHECKED BY: JOCELYN C CHIANG
FUNCTIONAL SUPERVISOR: JOHN YANG

STATE OF CALIFORNIA - DEPARTMENT OF TRANSPORTATION
Caltrans® DTM

LAST REVISION 00-00-00 DATE PLOTTED => 25-JUL-2013 TIME PLOTTED => 07:27

Dist	COUNTY	ROUTE	POST MILES TOTAL PROJECT	SHEET No.	TOTAL SHEETS
07	LA	105	R0.5	14	45

REGISTERED CIVIL ENGINEER 8-9-12 DATE

7-22-13
PLANS APPROVAL DATE

REGISTERED PROFESSIONAL ENGINEER ALBERT K. YU No. 43220 Exp. 3/31/14 CIVIL STATE OF CALIFORNIA

THE STATE OF CALIFORNIA OR ITS OFFICERS OR AGENTS SHALL NOT BE RESPONSIBLE FOR THE ACCURACY OR COMPLETENESS OF SCANNED COPIES OF THIS PLAN SHEET.

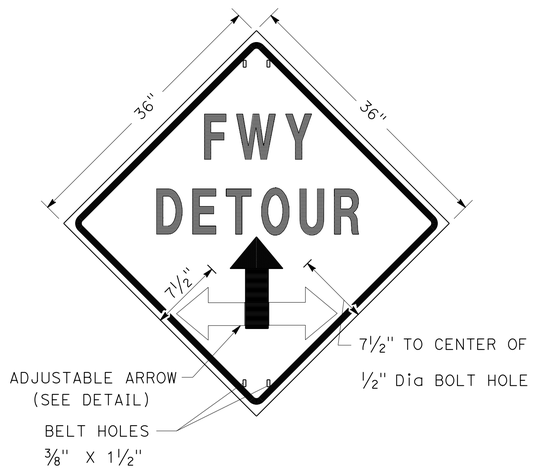

SIGN SP-2

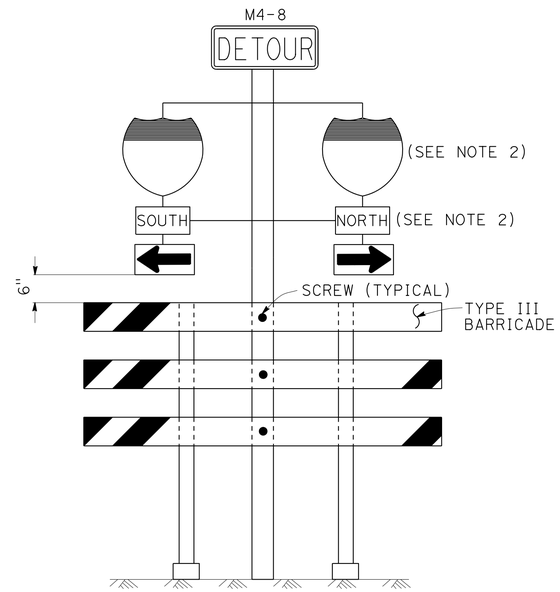

SIGN SP-6 (SEE NOTE 1)

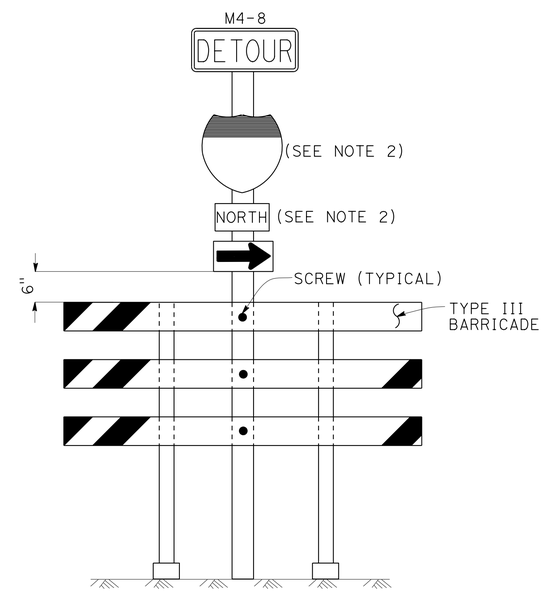

SIGN SP-7 (SEE NOTE 1)

NOTES: SIGN SP-2

1. LETTERS - 6" SERIES E.
2. LETTERS, BORDER AND ARROW - BLACK ON RETROREFLECTORIZED ORANGE BACKGROUND.
3. BASE MATERIAL FOR SIGNS AND ARROWS SHALL BE ALUMINUM (MINIMUM 0.06").
4. BELTS (LUGGAGE STRAPS) SHALL BE 1" WIDE BY 48" LONG, MADE OF COTTON OR POLYPROPYLENE WEB MATERIAL.
5. SIGNS SHALL BE MOUNTED WITH BOTTOMS OF SIGNS A MINIMUM OF 7' ABOVE GROUND EXCEPT AS OTHERWISE SHOWN ON OTHER TRAFFIC HANDLING DETAILS PLANS.

NOTES: (SIGNS SP-6 & SP-7)

1. IN LIEU OF PLACING SIGNS ON TYPE III BARRICADES, SIGNS, INCLUDING POSTS, MAY BE PLACED INTO THE GROUND OR FASTENED ONTO ELECTROLIERS.
2. USE APPROPRIATE ROUTE MARKER [G26-2(CA), G27-2(CA), G28-2(CA)] AND CARDINAL DIRECTION [NORTH (M3-1), SOUTH (M3-3), EAST (M3-2), WEST (M3-4)].

SPECIAL PORTABLE FREEWAY DETOUR SIGNS

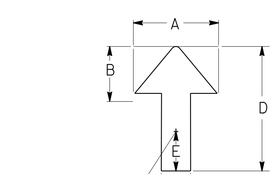

DIMENSIONS				
A	B	C	D	E
6"	3"	2"	8"	1"

ADJUSTABLE ARROW DETAIL

ABBREVIATION

(CA) CALIFORNIA CODE

TRAFFIC HANDLING DETAILS

TRAFFIC CONTROL SYSTEM FOR RAMP CLOSURES, DETOUR SIGNS, AND MISCELLANEOUS DETAILS

SHEET 2 OF 2

NO SCALE

THD-2

STATE OF CALIFORNIA - DEPARTMENT OF TRANSPORTATION
Caltrans DTM

FUNCTIONAL SUPERVISOR: JOHN YANG
CALCULATED-DESIGNED BY: ALBERT K YU
CHECKED BY: JOCELYN C CHIANG
REVISED BY: JC
DATE REVISED: 3/12

LAST REVISION 00-00-00 | DATE PLOTTED => 25-JUL-2013 | TIME PLOTTED => 07:27

Dist	COUNTY	ROUTE	POST MILES TOTAL PROJECT	SHEET No.	TOTAL SHEETS
07	LA	105	R0.5	15	45

REGISTERED CIVIL ENGINEER 8-9-12 DATE

7-22-13
PLANS APPROVAL DATE

REGISTERED PROFESSIONAL ENGINEER ALBERT K. YU No. 43220 Exp. 3/31/14 CIVIL STATE OF CALIFORNIA

THE STATE OF CALIFORNIA OR ITS OFFICERS OR AGENTS SHALL NOT BE RESPONSIBLE FOR THE ACCURACY OR COMPLETENESS OF SCANNED COPIES OF THIS PLAN SHEET.

LEGEND

- SIGN SP-2
- AND/OR — DESIGNATED DETOUR ROUTE
- DETOUR DIRECTION
- CONTROLLED INTERSECTION

NOTES:

1. SP-2 SIGNS MAY BE STRAPPED ON EXISTING ELECTROLIER, SIGNAL POST OR SIGN POST.
2. SP-2 SIGNS SHALL NOT BE INSTALLED ON BARRICADES EXCEPT AS OTHERWISE SHOWN.
3. SIGN LOCATIONS ARE APPROXIMATE. EXACT LOCATIONS WILL BE DETERMINED BY THE ENGINEER.
4. SP-2 SIGNS SHALL BE POSTED AT EACH CONTROLLED INTERSECTION (EXCEPT AT COMMERCIAL PROPERTY, RESIDENTIAL COMPLEX OR T-INTERSECTION FROM ONE-WAY STREET) ALONG THE DESIGNATED DETOUR ROUTE.
5. UNLESS OTHERWISE SHOWN ON OTHER THD PLANS, WHEN CONTROLLED INTERSECTIONS ALONG THE DESIGNATED DETOUR ROUTE ARE CLOSELY SPACED, PLACE SP-2 SIGNS AT CONTROLLED INTERSECTIONS AT A DISTANCE NOT TO EXCEED 1/4 MILE FROM THE PRECEDING DETOUR SIGN.
6. EXCEPT AS OTHERWISE SHOWN ON OTHER PLANS OR SPECIFIED IN THE SPECIAL PROVISIONS, SP-2 SIGNS SHALL BE PLACED AS SHOWN ON THIS PLAN.

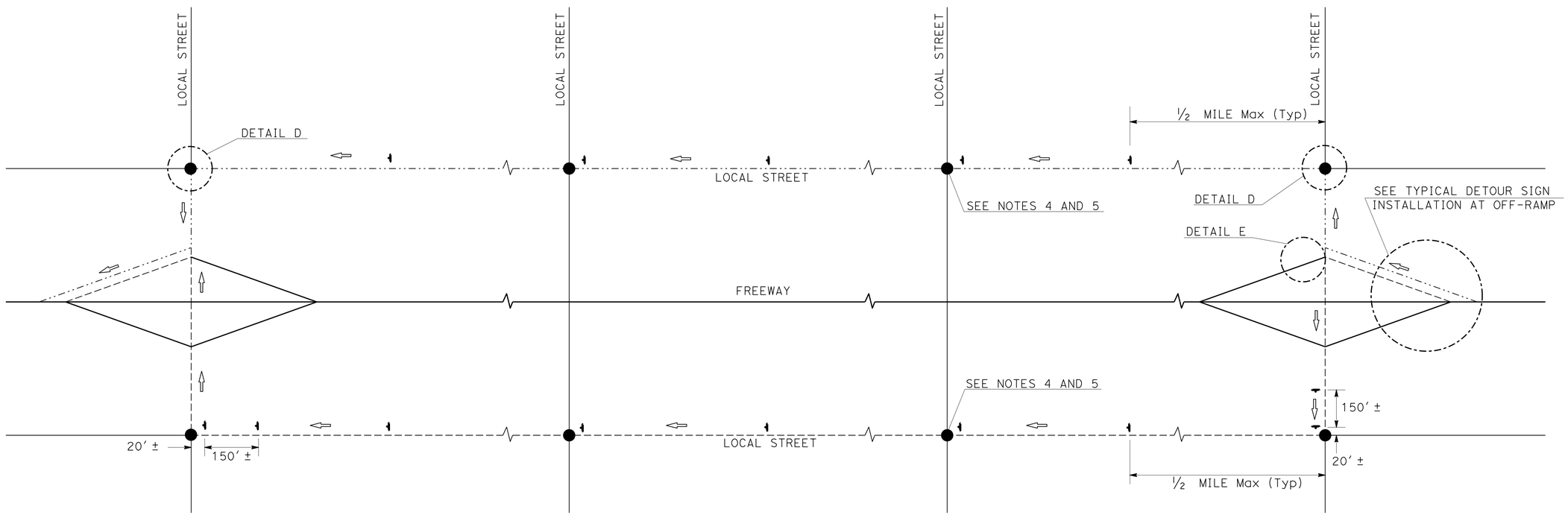

TYPICAL DETOUR SIGN INSTALLATION ALONG DESIGNATED DETOUR ROUTE

TRAFFIC HANDLING DETAILS

TRAFFIC CONTROL SYSTEM FOR DETOUR SIGN INSTALLATION ALONG DESIGNATED DETOUR ROUTE

SHEET 1 OF 3

NO SCALE

THD-3

STATE OF CALIFORNIA - DEPARTMENT OF TRANSPORTATION
Caltrans® DTM

FUNCTIONAL SUPERVISOR: JOHN YANG
CALCULATED-DESIGNED BY: ALBERT K YU
CHECKED BY: JOCELYN C CHIANG
REVISED BY: JC
DATE REVISED: 3/12

LAST REVISION 00-00-00
DATE PLOTTED => 25-JUL-2013
TIME PLOTTED => 07:27

Dist	COUNTY	ROUTE	POST MILES TOTAL PROJECT	SHEET No.	TOTAL SHEETS
07	LA	105	R0.5	16	45

REGISTERED CIVIL ENGINEER 8-9-12 DATE

7-22-13
PLANS APPROVAL DATE

REGISTERED PROFESSIONAL ENGINEER ALBERT K. YU No. 43220 Exp. 3/31/14 CIVIL STATE OF CALIFORNIA

THE STATE OF CALIFORNIA OR ITS OFFICERS OR AGENTS SHALL NOT BE RESPONSIBLE FOR THE ACCURACY OR COMPLETENESS OF SCANNED COPIES OF THIS PLAN SHEET.

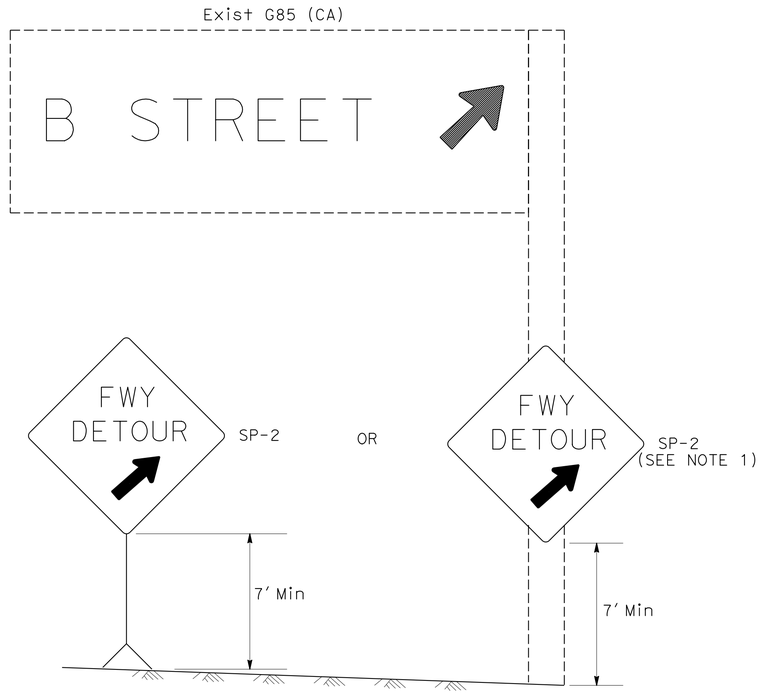

DETAIL A (SEE NOTE 3)

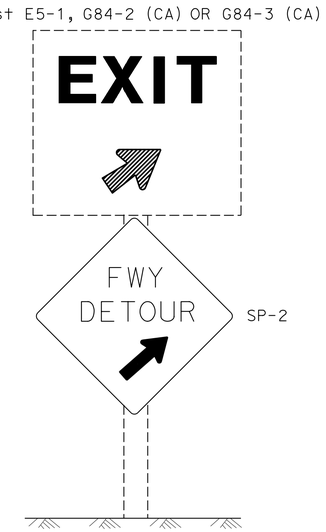

DETAIL B (SEE NOTE 3)

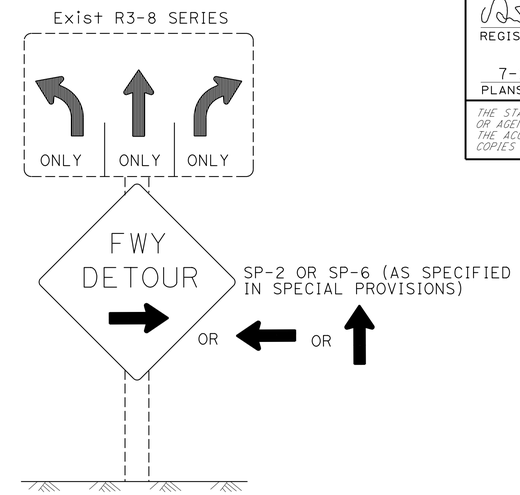

DETAIL C (SEE NOTES 4, 5, AND 6)

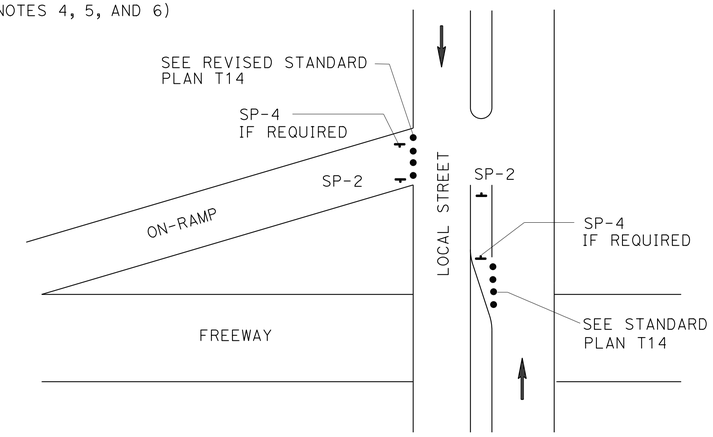

DETAIL E

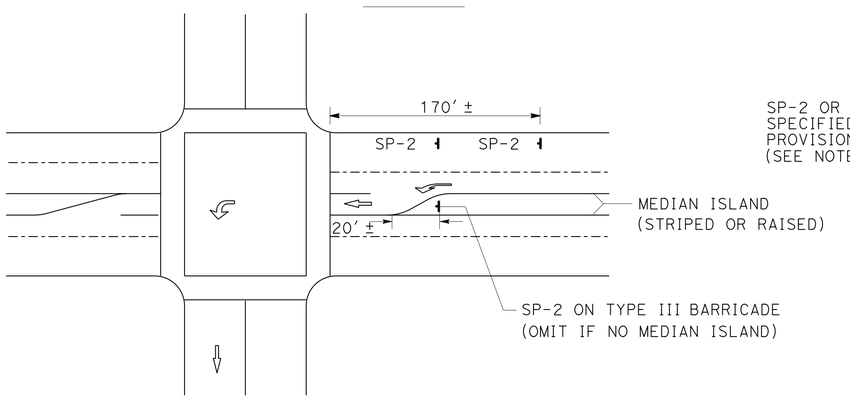

DETAIL D

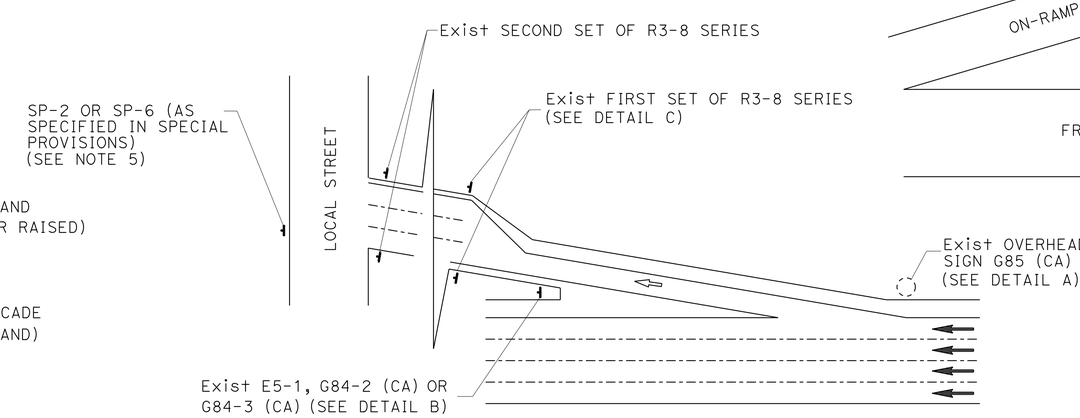

TYPICAL DETOUR SIGN INSTALLATION AT OFF-RAMP

LEGEND

- CONE
- PORTABLE SIGN
- DIRECTION OF TRAVEL
- DETOUR DIRECTION
- EXISTING OVERHEAD SIGN

NOTES: SIGN SP-2

1. SP-2 SIGNS MAY BE STRAPPED ON EXISTING ELECTROLIER, SIGNAL POST OR SIGN POST.
2. SP-2 SIGNS SHALL NOT BE INSTALLED ON BARRICADES EXCEPT AS OTHERWISE SHOWN.
3. OMIT DETAILS A AND B FOR FULL FREEWAY CLOSURES.
4. SEE TRAFFIC HANDLING DETAILS-TRAFFIC CONTROL SYSTEM FOR RAMP CLOSURES, DETOUR SIGNS, AND MISCELLANEOUS DETAILS PLAN SHEET 2 OF 2 FOR SP-6 SIGN DETAILS.
5. IF R3-8 SERIES SIGNS ARE NOT PRESENT AT THE OFF-RAMP, SP-2 OR SP-6 SIGNS SHALL BE FASTENED ONTO EXISTING ELECTROLIER, SIGNAL POST OR SIGN POST.
6. EXCEPT FOR DETAILS A & B, OMIT SP-2 SIGNS IF RAMP HAS MANDATORY SINGLE MOVE.

SIGN CODE LEGEND

XXYY-Y: FEDERAL SIGN CODE PER MANUAL ON UNIFORM TRAFFIC CONTROL DEVICES (MUTCD)

XXYY-Y (CA): CALIFORNIA SIGN CODE PER CALIFORNIA MUTCD

TRAFFIC HANDLING DETAILS
TRAFFIC CONTROL SYSTEM FOR DETOUR SIGN INSTALLATION ALONG DESIGNATED DETOUR ROUTE
SHEET 2 OF 3

NO SCALE

THD-4

STATE OF CALIFORNIA - DEPARTMENT OF TRANSPORTATION
Caltrans DTM

FUNCTIONAL SUPERVISOR: JOHN YANG
CALCULATED-DESIGNED BY: ALBERT K YU
CHECKED BY: JOCELYN C CHIANG
REVISED BY: JC
DATE REVISED: 3/12

LAST REVISION: 00-00-00
DATE PLOTTED => 25-JUL-2013
TIME PLOTTED => 07:27

Dist	COUNTY	ROUTE	POST MILES TOTAL PROJECT	SHEET No.	TOTAL SHEETS
07	LA	105	R0.5	17	45

REGISTERED CIVIL ENGINEER 6-18-13 DATE

7-22-13
PLANS APPROVAL DATE

REGISTERED PROFESSIONAL ENGINEER JOSEPH E. REYNOZA No. C79648 Exp. 9/30/14 CIVIL STATE OF CALIFORNIA

THE STATE OF CALIFORNIA OR ITS OFFICERS OR AGENTS SHALL NOT BE RESPONSIBLE FOR THE ACCURACY OR COMPLETENESS OF SCANNED COPIES OF THIS PLAN SHEET.

NOTE:

FOR ADDITIONAL QUANTITIES, SEE Q-1.

REMOVE PAVEMENT DELINEATION

SHEET No.	REMOVE THERMOPLASTIC TRAFFIC STRIPE					REMOVE PAVEMENT MARKER		REMOVE THERMOPLASTIC PAVEMENT MARKING
	DETAIL 25A (Mod)	DETAIL 27B (Mod)	DETAIL 9	DETAIL 38	DETAIL 38B	RETROREFLECTIVE		
	4" SOLID YELLOW	4" SOLID WHITE	4" BROKEN WHITE	8" SOLID WHITE	8" SOLID WHITE	TYPE G CLEAR ONE WAY	TYPE H YELLOW ONE WAY	
	LF					EA		
TH-1	1124	530	329	510	288	323	563	SQFT
TOTAL	2781					886		60

TRAFFIC HANDLING QUANTITIES

SHEET No.	PAINT TRAFFIC STRIPE (1-COAT)					PAVEMENT MARKER	
	DETAIL 25A	DETAIL 27B	DETAIL 9	DETAIL 38	DETAIL 38B	(RETROREFLECTIVE)	
	4" SOLID YELLOW	4" SOLID WHITE	4" BROKEN WHITE	8" SOLID WHITE	8" SOLID WHITE	TYPE G CLEAR ONE WAY	TYPE H YELLOW ONE WAY
	LF					EA	
TH-1	1659	1065	1302	405	144	128	73
TOTAL	4575					201	

TEMPORARY RAILING (TYPE K)

SHEET No.	LENGTH (LF)
TH-1	1260

MISCELLANEOUS TRAFFIC ITEMS

SHEET No.	CHANNELIZER (SURFACE MOUNTED)	TEMPORARY CRASH CUSHION MODULE
	EA	EA
TH-1	22	28

TRAFFIC HANDLING QUANTITIES

THQ-1

REVISED BY | DATE REVISED

JOSEPH REYNOZA | WILFRIDO MORALES

CALCULATED-DESIGNED BY | CHECKED BY

FUNCTIONAL SUPERVISOR: MARIO A. GUTIERREZ

STATE OF CALIFORNIA - DEPARTMENT OF TRANSPORTATION
Caltrans® OFFICE OF DESIGN A

LAST REVISION 00-00-00 | DATE PLOTTED => 25-JUL-2013 | TIME PLOTTED => 07:27

Dist	COUNTY	ROUTE	POST MILES TOTAL PROJECT	SHEET No.	TOTAL SHEETS
07	LA	105	R0.5	18	45

REGISTERED CIVIL ENGINEER 6-18-13 DATE

7-22-13
PLANS APPROVAL DATE

REGISTERED PROFESSIONAL ENGINEER ESTHER M. KIM No. 48363 Exp. 6/30/14 CIVIL STATE OF CALIFORNIA

THE STATE OF CALIFORNIA OR ITS OFFICERS OR AGENTS SHALL NOT BE RESPONSIBLE FOR THE ACCURACY OR COMPLETENESS OF SCANNED COPIES OF THIS PLAN SHEET.

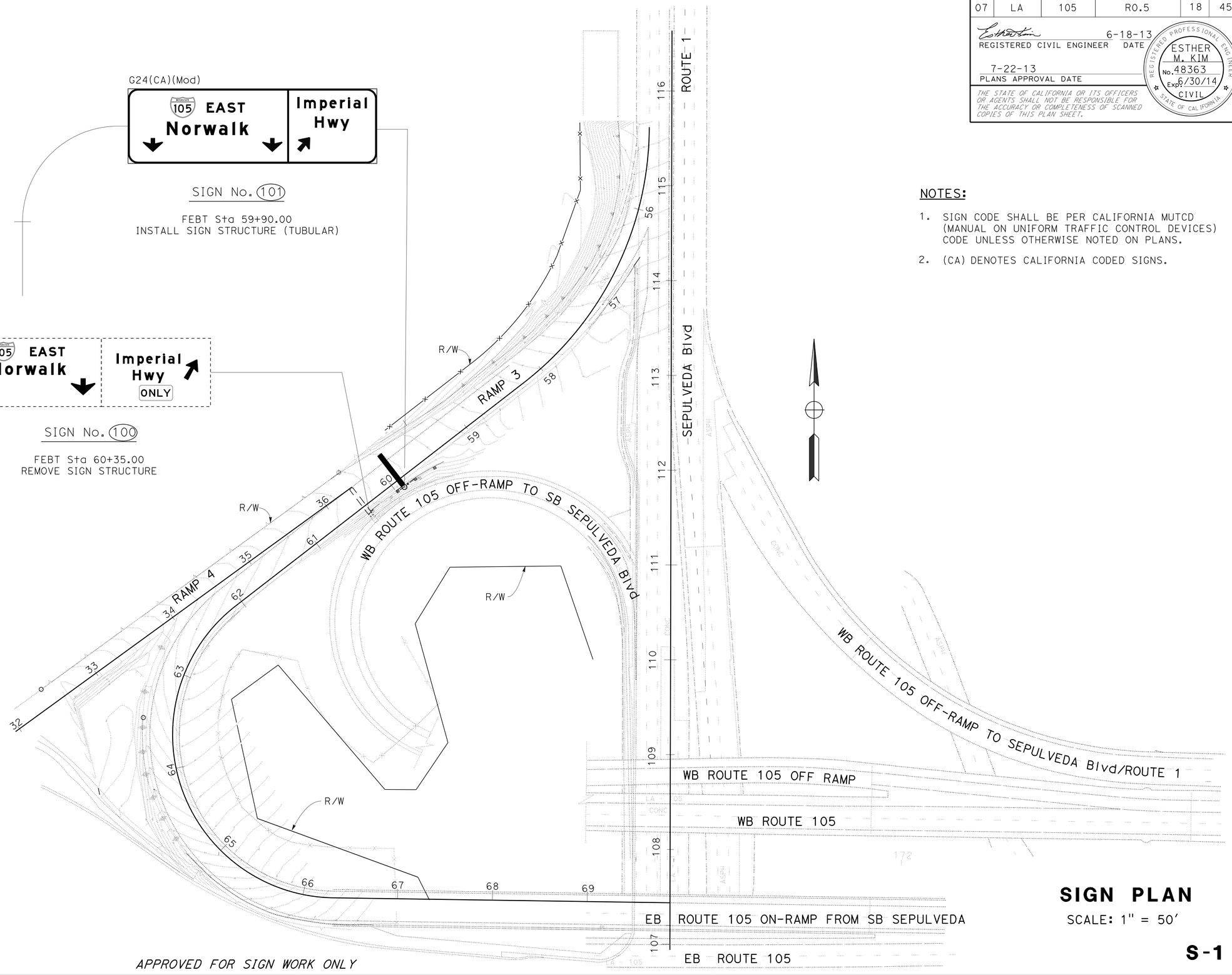

NOTES:

1. SIGN CODE SHALL BE PER CALIFORNIA MUTCD (MANUAL ON UNIFORM TRAFFIC CONTROL DEVICES) CODE UNLESS OTHERWISE NOTED ON PLANS.
2. (CA) DENOTES CALIFORNIA CODED SIGNS.

SIGN PLAN

SCALE: 1" = 50'

S-1

APPROVED FOR SIGN WORK ONLY

REVISED BY	DATE REVISED

CALCULATED-DESIGNED BY	CHECKED BY
RICHARD KHAW	ESTHER M. KIM

FUNCTIONAL SUPERVISOR: MOHAMMED CHOWDHURY

STATE OF CALIFORNIA - DEPARTMENT OF TRANSPORTATION

Caltrans® TRAFFIC DESIGN

S:\projects\4t5701\07-4t5701\74t570oa001.dgn

LAST REVISION 00-00-00 | DATE PLOTTED => 25-JUL-2013 | TIME PLOTTED => 07:27

Dist	COUNTY	ROUTE	POST MILES TOTAL PROJECT	SHEET No.	TOTAL SHEETS
07	LA	105	R0.5	19	45

REGISTERED CIVIL ENGINEER 6-18-13 DATE

7-22-13
PLANS APPROVAL DATE

REGISTERED PROFESSIONAL ENGINEER ESTHER M. KIM No. 48363 Exp. 6/30/14 CIVIL STATE OF CALIFORNIA

THE STATE OF CALIFORNIA OR ITS OFFICERS OR AGENTS SHALL NOT BE RESPONSIBLE FOR THE ACCURACY OR COMPLETENESS OF SCANNED COPIES OF THIS PLAN SHEET.

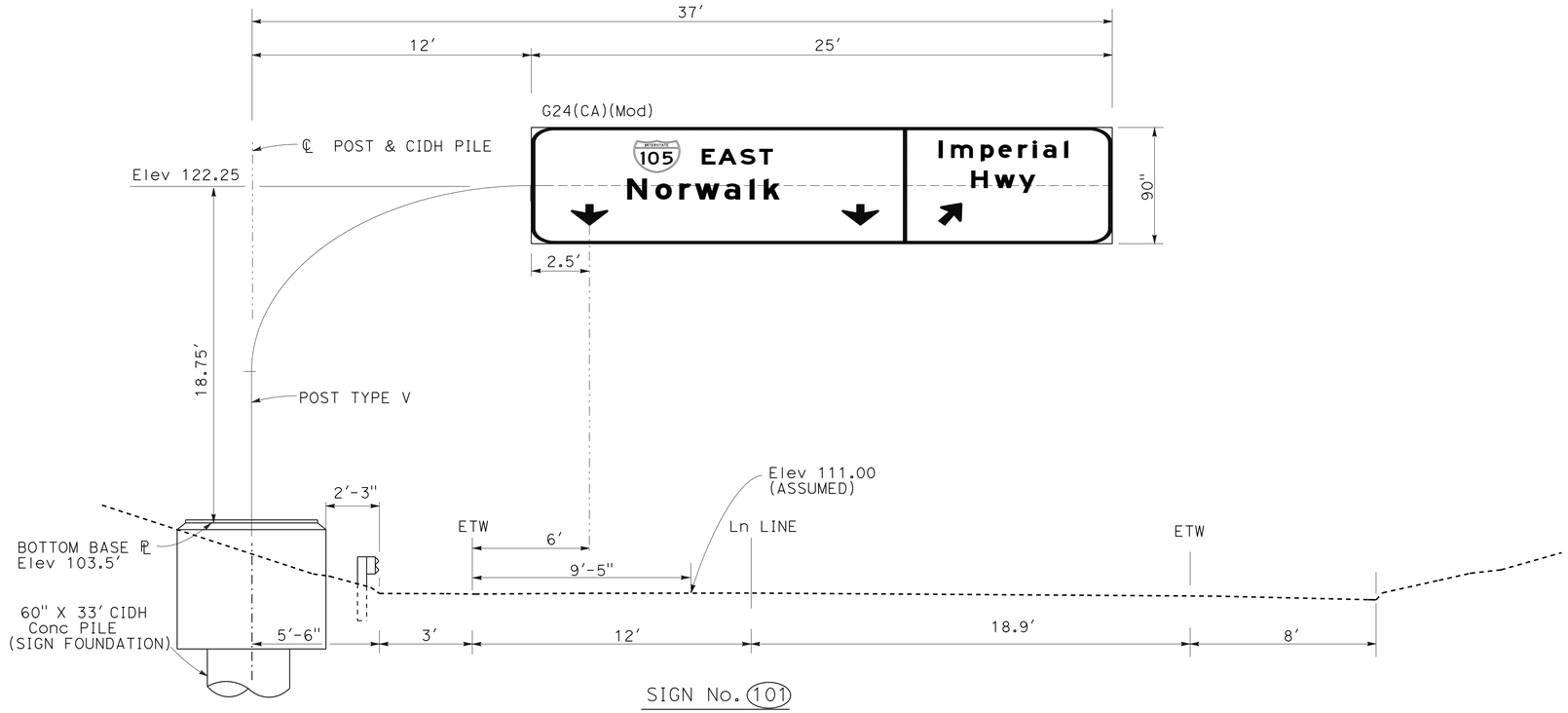

SIGN No. 101

FEBT Sta 59+90.00

1. FURNISH AND INSTALL SIGN STRUCTURE (TUBULAR)
2. INSTALL LAMINATED SIGN PANEL (TYPE A).
3. ILLUMINATION AND WALKWAY ARE REQUIRED.

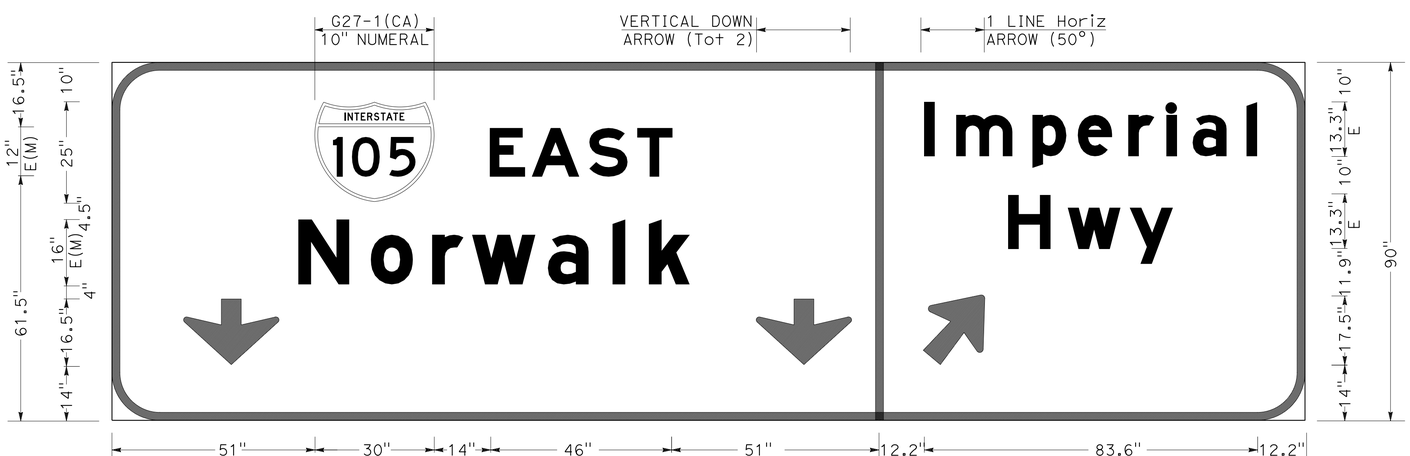

G24(CA)(Mod)
2.0" BORDER WITH 12" RADIUS
WHITE LEGEND, ARROWS & BORDERS ON GREEN BACKGROUND

NOTES:

1. BASE PLATE ELEVATIONS MUST BE DETERMINED IN THE FIELD TO PROVIDE A VERTICAL CLEARANCE OF 18'-5" MINIMUM FROM BOTTOM OF WALKWAY BEAM OR LIGHTING FIXTURE TO THE ROADBED.
2. VERIFY CONTROLLING DIMENSIONS BEFORE ORDERING OR FABRICATING MATERIALS.
3. FOR SIGN ILLUMINATION SEE ELECTRICAL PLANS.

SIGN DETAILS

NO SCALE

SD-1

REVISED BY | DATE REVISED
RICHARD KHAW | ESTHER M. KIM
CALCULATED-DESIGNED BY | CHECKED BY
FUNCTIONAL SUPERVISOR
MOHAMMED CHOWDHURY

STATE OF CALIFORNIA - DEPARTMENT OF TRANSPORTATION
Caltrans® TRAFFIC DESIGN

S:\projects\4t5701\07-4t5701\74t570ob001.dgn

LAST REVISION 00-00-00 | DATE PLOTTED => 25-JUL-2013 | TIME PLOTTED => 07:27

DIST	COUNTY	ROUTE	POST MILES TOTAL PROJECT	SHEET No.	TOTAL SHEETS
07	LA	105	R0.5	20	45

REGISTERED CIVIL ENGINEER 1-14-13 DATE

7-22-13
PLANS APPROVAL DATE

REGISTERED PROFESSIONAL ENGINEER
Chungkeun Lee
No. C69450
Exp. 6-30-14
CIVIL
STATE OF CALIFORNIA

The State of California or its officers or agents shall not be responsible for the accuracy or completeness of electronic copies of this plan sheet.

This LOTB sheet was prepared in accordance with the Caltrans Soil & Rock Logging, Classification, & Presentation Manual (2010 Edition).

See 2010 Standard Plans A10F and A10G for Soil Legend, and A10H for Rock Legend.

BENCH MARK

CP 101: PK nail in back of AC gore between SB Sepulveda Blvd and On-Ramp to EB 105 (Elev 102.16′)
NAVD 88

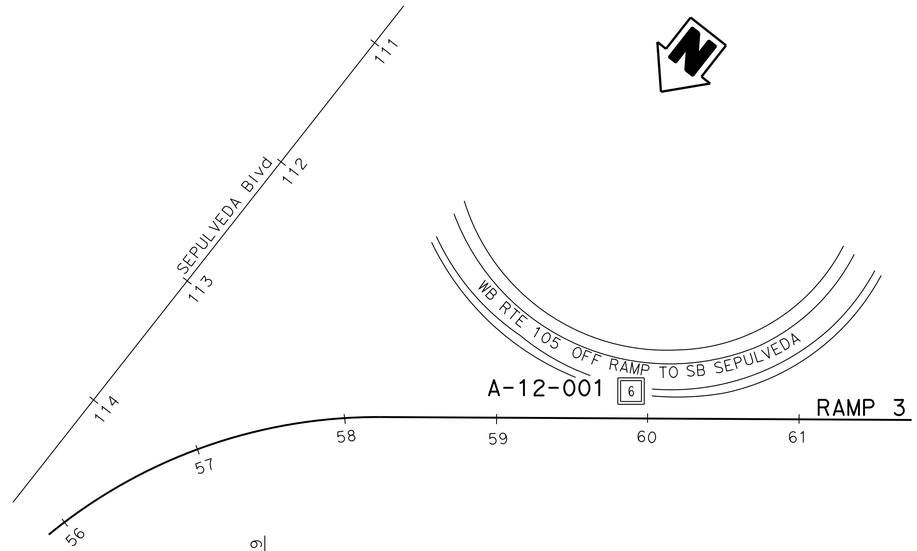

PLAN

1" = 50′

Note: No ground water encountered during field investigation.

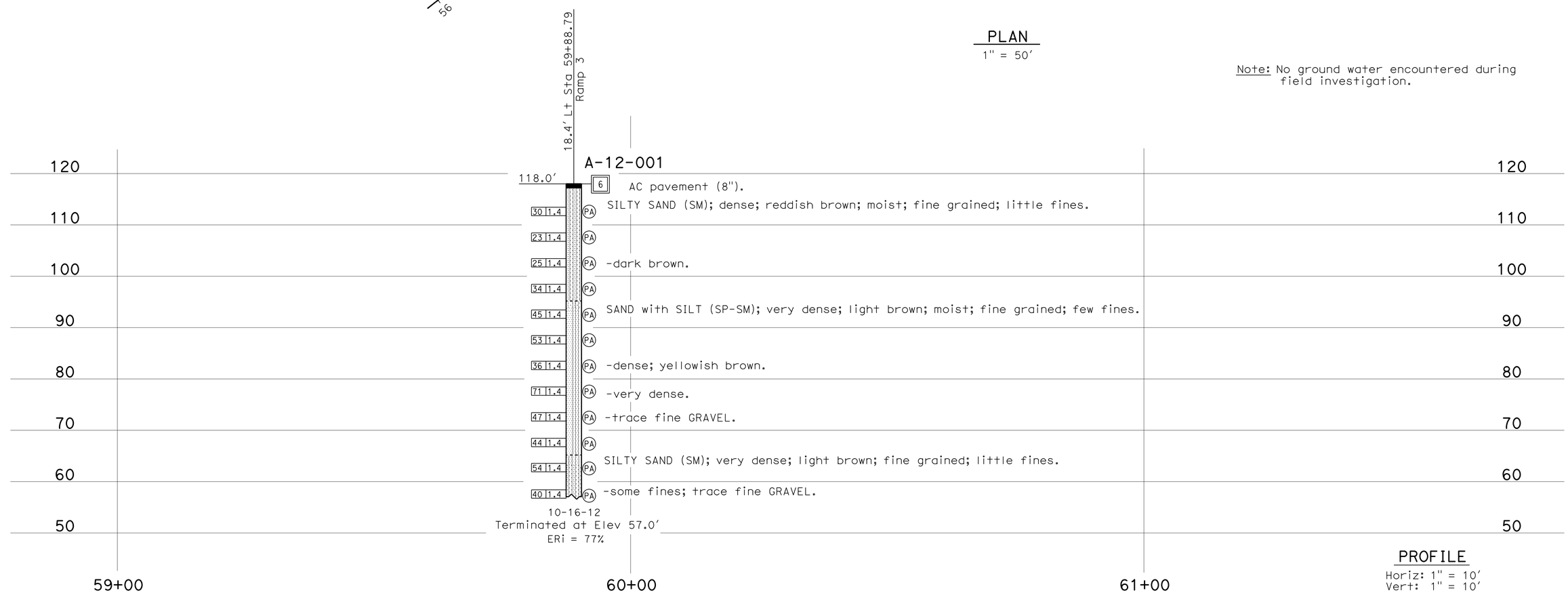

PROFILE

Horiz: 1" = 10′
Vert: 1" = 10′

ENGINEERING SERVICES	MATERIALS AND GEOTECHNICAL SERVICES	STATE OF CALIFORNIA DEPARTMENT OF TRANSPORTATION	DIVISION OF ENGINEERING SERVICES STRUCTURE DESIGN	BRIDGE NO.	OVERHEAD SIGN REPLACEMENT
FUNCTIONAL SUPERVISOR	DRAWN BY: W. Tang 01/13	FIELD INVESTIGATION BY:	DESIGN BRANCH X	POST MILE 0.5	LOG OF TEST BORINGS
NAME: C. Liu	CHECKED BY: C. Harris	M. Islam			

OGS CIVIL LOG OF TEST BORINGS SHEET

ORIGINAL SCALE IN INCHES FOR REDUCED PLANS 0 1 2 3

UNIT: 3643
PROJECT NUMBER & PHASE: 07120001211
CONTRACT NO.: 07-4T5701

DISREGARD PRINTS BEARING EARLIER REVISION DATES

REVISION DATES: 01-08-13 01-09-13

SHEET X OF X

FILE => 74t570ob002.dgn

USERNAME => s119140 DATE PLOTTED => 25-JUL-2013 TIME PLOTTED => 07:27

Dist	COUNTY	ROUTE	POST MILES TOTAL PROJECT	SHEET No.	TOTAL SHEETS
07	LA	105	R0.5	21	45

REGISTERED CIVIL ENGINEER 6-18-13 DATE

7-22-13
PLANS APPROVAL DATE

REGISTERED PROFESSIONAL ENGINEER ESTHER M. KIM No. 48363 Exp 6/30/14 CIVIL STATE OF CALIFORNIA

THE STATE OF CALIFORNIA OR ITS OFFICERS OR AGENTS SHALL NOT BE RESPONSIBLE FOR THE ACCURACY OR COMPLETENESS OF SCANNED COPIES OF THIS PLAN SHEET.

NOTE:

1. FOR NOTES SEE S-1 SHEET.

LEGEND

L : LENGTH OF SIGN
D : DEPTH OF SIGN

OVERHEAD SIGN QUANTITIES

SHEET No.	SIGN No. ◯	DIRECTION	60" CAST-IN-DRILLED HOLE CONCRETE PILE (SIGN FOUNDATION)	SIGN STRUCTURE (TUBULAR)		REMOVE SIGN STRUCTURE
				FURNISH	INSTALL	
			LF	LB	LB	EA
S-1	100	FEBT				1
S-1	101	FEBT	33	14,600	14,600	
TOTAL			33	14,600	14,600	1

CONTRACTOR FURNISHED SIGN QUANTITIES

MATERIAL SUMMARY											FURNISH LAMINATED PANEL SIGN (1"- TYPE A)
						SIGN FACING MATERIAL					
						BACKGROUND		LEGEND			
SHEET No.	SIGN CODE	SIGN No. ◯	SIGN SIZE L X D	SIGN AREA	SINGLE FACED	SHEETING COLOR	RETRO-REFLECTIVE ASTM TYPE	SHEETING COLOR	RETRO-REFLECTIVE ASTM TYPE	PREMIUM GRAFFITI FILM	
				SQFT							SQFT
SD-1	G24(CA)(Mod)	101	25' X 7.5'	187.5	•	GREEN	IV	WHITE	IV	•	187.5
						TOTAL					187.5

SIGN QUANTITIES

SQ-1

REVISED BY | DATE REVISED
RICHARD KHAW | ESTHER M. KIM
CALCULATED-DESIGNED BY | CHECKED BY
FUNCTIONAL SUPERVISOR
MOHAMMED CHOWDHURY

STATE OF CALIFORNIA - DEPARTMENT OF TRANSPORTATION
Caltrans TRAFFIC DESIGN

LAST REVISION 00-00-00 | DATE PLOTTED => 25-JUL-2013 | TIME PLOTTED => 07:27

Dist	COUNTY	ROUTE	POST MILES TOTAL PROJECT	SHEET No.	TOTAL SHEETS
07	LA	105	R0.5	22	45

REGISTERED CIVIL ENGINEER 6-18-13 DATE

7-22-13
PLANS APPROVAL DATE

REGISTERED PROFESSIONAL ENGINEER JOSEPH E. REYNOZA No. C79648 Exp 9/30/14 CIVIL STATE OF CALIFORNIA

THE STATE OF CALIFORNIA OR ITS OFFICERS OR AGENTS SHALL NOT BE RESPONSIBLE FOR THE ACCURACY OR COMPLETENESS OF SCANNED COPIES OF THIS PLAN SHEET.

ROADWAY QUANTITIES

REFERENCE SHEET No.	REMOVE METAL BEAM GUARD RAILING	REMOVE ASPHALT CONCRETE DIKE	COLD PLANE ASPHALT CONCRETE	REMOVE CONCRETE BARRIER	REMOVE CRASH CUSHION	CRASH CUSHION TYPE SCI SMART 70 GM	ROADWAY EXCAVATION	IMPORTED BORROW	GRAVEL MULCH	HOT MIX ASPHALT (TYPE A)	HIGH FRICTION SURFACE TREATMENT	MINOR HOT MIX ASPHALT	PLACE HMA DIKE (TYPE A)	PLACE HMA DIKE (TYPE C)	PLACE HMA DIKE (TYPE F)	MINOR CONCRETE (STAMPED CONCRETE)	METAL BEAM GUARD RAILING (WOOD POST)	VEGETATION CONTROL (MINOR CONCRETE)	END ANCHOR ASSEMBLY (TYPE SFT)	ALTERNATIVE FLARED TERMINAL SYSTEM	CONCRETE BARRIER (TYPE 60)
	LF	LF	SQYD	LF	EA	EA	CY	CY	SQFT	TON	SQYD	TON	LF	LF	LF	SQFT	LF	SQYD	EA	EA	LF
L-1	63	593	1500	214	1	1	300	125	30	550	2300	14	480	75	38	5500	37.5	273	1	1	214
TOTAL	63	593	1500	214	1	1	300	125	30	550	2300	14	480	75	38	5500	37.5	273	1	1	214

TEMPORARY WATER POLLUTION CONTROL QUANTITIES

TEMPORARY DRAINAGE INLET PROTECTION	TEMPORARY FIBER ROLL	TEMPORARY SILT FENCE	TEMPORARY CONSTRUCTION ENTRANCE
EA	LF	LF	EA
7	2000	200	1
7	2000	200	1

PAVEMENT DELINEATION

	4" THERMOPLASTIC TRAFFIC STRIPE		4" THERMOPLASTIC TRAFFIC STRIPE (BROKEN 17-7)	8" THERMOPLASTIC TRAFFIC STRIPE		PAVEMENT MARKER (RETROREFLECTIVE)		THERMOPLASTIC PAVEMENT MARKING
	YELLOW	WHITE	WHITE	WHITE				
	DETAIL 25A(Mod)	DETAIL 27B(Mod)	DETAIL 9	DETAIL 38	DETAIL 38B	TYPE G	TYPE H	
	LF	LF	LF	LF	LF	EA		SQFT
SUBTOTAL	1124	530	1124	295	144	325	563	60
TOTAL	1654		1124	439		888		60

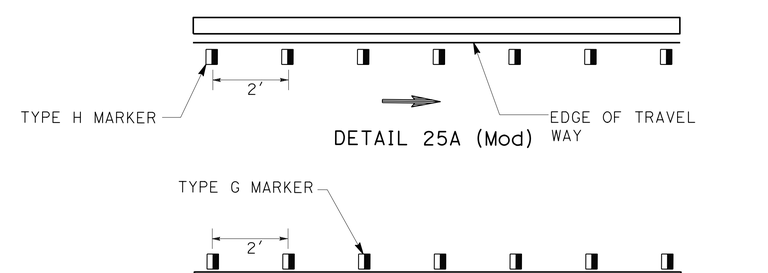

SUMMARY OF QUANTITIES

Q-1

STATE OF CALIFORNIA - DEPARTMENT OF TRANSPORTATION
Caltrans® OFFICE OF DESIGN A

FUNCTIONAL SUPERVISOR: MARIO GUTIERREZ
CALCULATED-DESIGNED BY: JOSEPH REYNOZA
CHECKED BY: WILFRIDO MORALES
REVISED BY
DATE REVISED

LAST REVISION 00-00-00
DATE PLOTTED => 25-JUL-2013
TIME PLOTTED => 07:27

Dist	COUNTY	ROUTE	POST MILES TOTAL PROJECT	SHEET No.	TOTAL SHEETS
07	LA	105	R0.5	23	45

LICENSED LANDSCAPE ARCHITECT

7-22-13
PLANS APPROVAL DATE

LICENSED LANDSCAPE ARCHITECT
GENE KIMMEL
No. 5104
Signature
10-31-14
Renewal date
06-20-13
Date
STATE OF CALIFORNIA

THE STATE OF CALIFORNIA OR ITS OFFICERS OR AGENTS SHALL NOT BE RESPONSIBLE FOR THE ACCURACY OR COMPLETENESS OF SCANNED COPIES OF THIS PLAN SHEET.

NOTE:

1. FOR ACCURATE RIGHT OF WAY DATA, CONTACT RIGHT OF WAY ENGINEERING AT THE DISTRICT OFFICE.

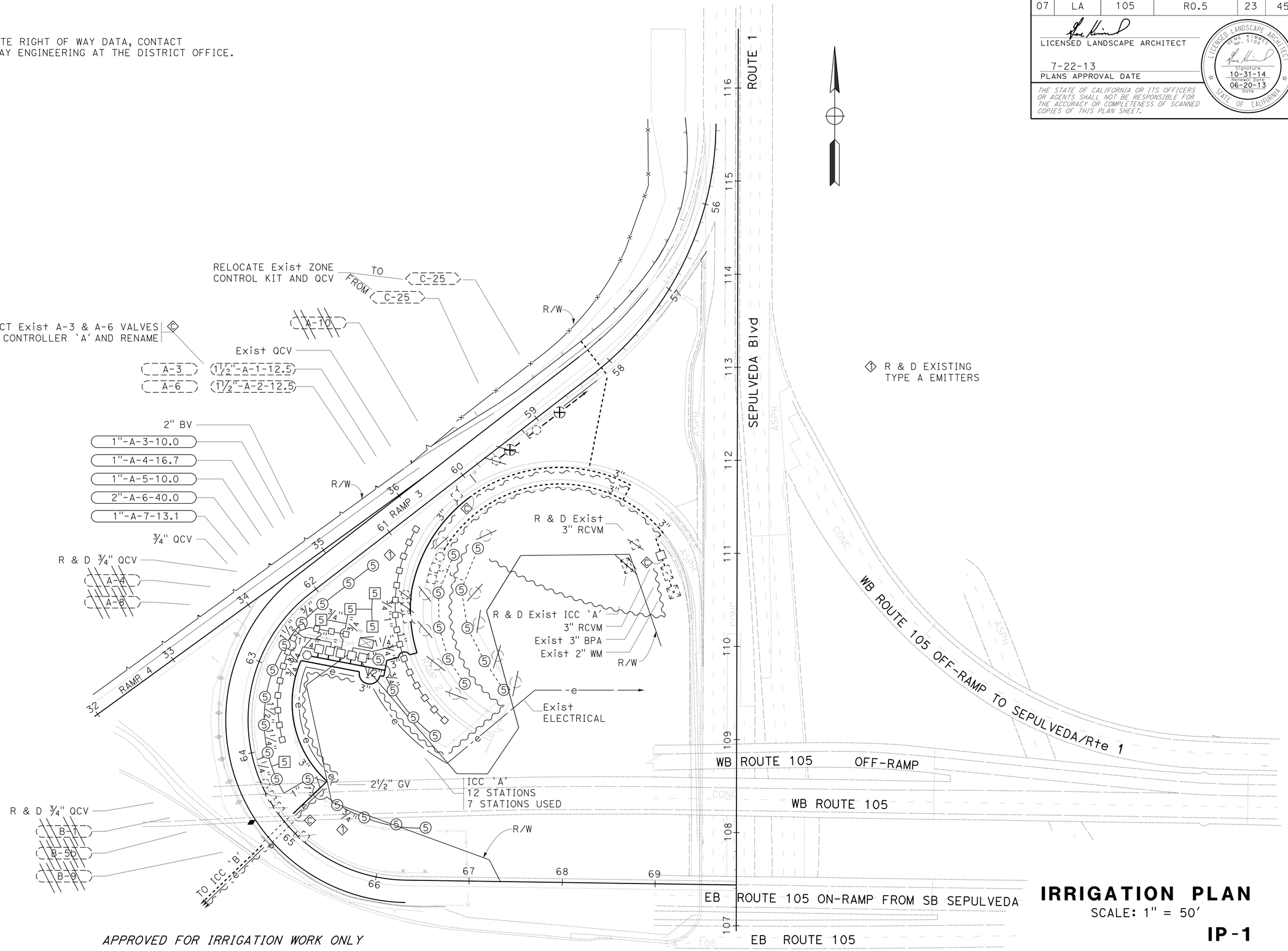

APPROVED FOR IRRIGATION WORK ONLY

IRRIGATION PLAN

SCALE: 1" = 50'

IP-1

STATE OF CALIFORNIA - DEPARTMENT OF TRANSPORTATION
Caltrans® LANDSCAPE ARCHITECTURE

SENIOR LANDSCAPE ARCHITECT: JENNIFER TAIRA

CALCULATED-DESIGNED BY: GENE KIMMEL
CHECKED BY: JENNIFER TAIRA

REVISED BY
DATE REVISED

LAST REVISION 00-00-00
DATE PLOTTED => 25-JUL-2013
TIME PLOTTED => 07:27

Dist	COUNTY	ROUTE	POST MILES TOTAL PROJECT	SHEET No.	TOTAL SHEETS
07	LA	105	R0.5	24	45

LICENSED LANDSCAPE ARCHITECT

7-22-13
PLANS APPROVAL DATE

LICENSED LANDSCAPE ARCHITECT
GENE KIMMEL
No. 5104
Signature
10-31-14
Renewal date
06-20-13
Date
STATE OF CALIFORNIA

THE STATE OF CALIFORNIA OR ITS OFFICERS OR AGENTS SHALL NOT BE RESPONSIBLE FOR THE ACCURACY OR COMPLETENESS OF SCANNED COPIES OF THIS PLAN SHEET.

SUBTOTALS PER VALVE ON LATERAL SUPPLY SIDE OF CONTROL VALVE

DESCRIPTION			UNIT	VALVE OR ASSEMBLY NUMBER A1	A2	A3	A4	A5	A6	A7	SUBTOTALS	UNIT	DESCRIPTION		
PLASTIC PIPE SUPPLY LINE	SCH 40	¾"	LF	-	-	125	200	100	215	180	820	LF	¾"	SCH 40	PLASTIC PIPE SUPPLY LINE
		1"	LF	-	-	25	35	25	100	100	285	LF	1"		
		1¼"	LF	-	-	-	50	-	60	-	110	LF	1¼"		
		1½"	LF	-	-	-	-	-	110	-	110	LF	1½"		
		2"	LF	-	-	-	-	-	50	-	50	LF	2"		
	PR 315													PR 315	
GSP															GSP
DIP															DIP
SPRINKLER TYPE		A-5	EA	5	5	4	-	4	16	-	34	EA	A-5		SPRINKLER TYPE
		B-3	EA	-	-	-	15	-	-	12	27	EA	B-3		

IRRIGATION QUANTITIES

IQ-1

STATE OF CALIFORNIA - DEPARTMENT OF TRANSPORTATION
Caltrans LANDSCAPE ARCHITECTURE

SENIOR LANDSCAPE ARCHITECT: JENNIFER TAIRA
CALCULATED-DESIGNED BY: GENE KIMMEL
CHECKED BY: GEORGE OLGUIN
REVISED BY
DATE REVISED

LAST REVISION 00-00-00
DATE PLOTTED => 25-JUL-2013
TIME PLOTTED => 07:27

Dist	COUNTY	ROUTE	POST MILES TOTAL PROJECT	SHEET No.	TOTAL SHEETS
07	LA	105	R0.5	25	45

LICENSED LANDSCAPE ARCHITECT

7-22-13
PLANS APPROVAL DATE

LICENSED LANDSCAPE ARCHITECT — GENE KIMMEL No. 5104 — Signature — Renewal date 10-31-14 — Date 06-20-13 — STATE OF CALIFORNIA

THE STATE OF CALIFORNIA OR ITS OFFICERS OR AGENTS SHALL NOT BE RESPONSIBLE FOR THE ACCURACY OR COMPLETENESS OF SCANNED COPIES OF THIS PLAN SHEET.

SUBTOTALS PER PLAN SHEET ON MAIN SUPPLY SIDE OF CONTROL VALVE

DESCRIPTION			UNIT	SHEET NUMBER IP-1	SUBTOTALS
BPA		ENCLOSURE			
BOOSTER PUMP					
IRRIGATION CONTROLLER		12 STATION	EA	1	1
		STATION			
		STATION			
	CEC	SINGLE	EA	1	1
		DOUBLE			
VALVES AND ASSEMBLIES	RCV	1"	EA	4	4
		2"	EA	1	1
		3"	EA	1	1
	GV	2½"	EA	1	1
	QCV	¾"	EA	1	1
	BV	2"	EA	1	1
	FAU				
CONDUIT	CSP				
	WSP				
PLASTIC PIPE SUPPLY LINE	SCH 40	2"	LF	60	60
		3"	LF	540	540
	PR 315				
	GSP				
	DIP				

TOTAL QUANTITIES

TOTALS	UNIT	DESCRIPTION		
BPA		ENCLOSURE		
		BOOSTER PUMP		
1	EA	12 STATION		IRRIGATION CONTROLLER
		STATION		
		STATION		
1	EA	SINGLE	CEC	
		DOUBLE		
4	EA	1"	RCV	VALVES AND ASSEMBLIES
1	EA	2"		
1	EA	3"		
1	EA	2½"	GV	
1	EA	¾"	QCV	
1	EA	2"	BV	
			FAU	
			CSP	CONDUIT
			WSP	
820	LF	¾"	SCH 40	PLASTIC PIPE SUPPLY LINE
285	LF	1"		
110	LF	1¼"		
110	LF	1½"		
110	LF	2"		
540	LF	3"		
			PR 315	
			GSP	
			DIP	
34	EA	A-5	SPRINKLER TYPE	
27	EA	B-3		

IRRIGATION QUANTITIES

IQ-2

STATE OF CALIFORNIA - DEPARTMENT OF TRANSPORTATION
Caltrans® LANDSCAPE ARCHITECTURE

SENIOR LANDSCAPE ARCHITECT: JENNIFER TAIRA
CALCULATED-DESIGNED BY: GEORGE OLGUIN
CHECKED BY
REVISED BY: GENE KIMMEL
DATE REVISED

LAST REVISION 00-00-00
DATE PLOTTED => 25-JUL-2013
TIME PLOTTED => 07:27

Dist	COUNTY	ROUTE	POST MILES TOTAL PROJECT	SHEET No.	TOTAL SHEETS
07	LA	105	R0.5	26	45

LICENSED LANDSCAPE ARCHITECT

7-22-13
PLANS APPROVAL DATE

LICENSED LANDSCAPE ARCHITECT
GENE KIMMEL
No. 5104
Signature
10-31-14
Renewal date
06-20-13
Date
STATE OF CALIFORNIA

THE STATE OF CALIFORNIA OR ITS OFFICERS OR AGENTS SHALL NOT BE RESPONSIBLE FOR THE ACCURACY OR COMPLETENESS OF SCANNED COPIES OF THIS PLAN SHEET.

LEGEND

WEED GERMINTATION, MAINTAIN Exist PLANTED AREA AND PRUNE Exist PLANTS

Exist MULCH

MULCH

NOTE:
UNDERLINED PORTIONS OF BOTANICAL NAME INDICATE ABBREVIATIONS USED ON PLANTING PLANS.

PLANT LIST AND PLANTING SPECIFICATIONS

PLANT GROUP	PLANT No.	SYMBOL	BOTANICAL NAME	COMMON NAME	SIZE	QUANTITY EACH	HOLE SIZE (INCH) Dia	HOLE SIZE (INCH) DEPTH	BASIN TYPE	IRON SULFATE ①	SOIL AMEND ①	COMMERCIAL FERTILIZER ① PLANTING	COMMERCIAL FERTILIZER ① PLT ESTB	BASIN MULCH (CF) ①	STAKING	PLANTING LIMITS MINIMUM DISTANCE (ft) FROM ETW	Pvmt	FENCE	WALL	PAVED DITCH	EARTH DITCH	ON CENTER (ft)	REMARKS
A	1		RHAPHIOLEPIS INDICA 'SPRINGTIME'	INDIAN HAWTHORNE	No. 1	28	③	③	II	—	—	¼ LB	¼ LB	3	—	—	10	6	6	10	12	8	SHRUB
B	2		STRELITZIA REGINA	BIRD OF PARADISE	No. 5	22	③	③	II	—	—	½ LB	½ LB	4	—	—	8	6	6	6	8	8	SHRUB
H	3		CARPOBROTUS EDULIS	HOTTENTOT FIG	⑥ CUTTING	5500	⑥	⑥	—	—	—	10 LB/ 1000 SQFT	10 LB/ 1000 SQFT	—	—	—	6	6	6	6	8	1.5	GROUNG COVER
U	4		CHAMAEROPS HUMILIS	MEDITERRANEAN FAN PALM	No. 15	3	③	③	II	—	—	1 LB	1 LB	6	—	30	—	20	20	8	8	⑦	MULTI TRUNK PALM TREE
	5		METROSIDEROS EXCELSA	NEW ZEALAND CHRISTMAS TREE	No. 15	5	③	③	II	—	—	1 LB	1 LB	6	⑨	30	—	15	15	15	17	⑦	TREE
Z	6		BRAHEA EDULIS	GUADALUPE PALM	④⑧ No. 15	6	③	③	II	—	—	1 LB	1 LB	6	⑨	30	—	6	6	6	8	⑦	PALM TREE

MAINTAIN Exist PLANTED AREAS

SYMBOL	BOTANICAL NAME	COMMON NAME	REMARKS
	ERYTHRINA CORALLOIDES	NAKED CORAL TREE	TREE
	METROSIDEROS EXCELSA	NEW ZEALAND CHRISTMAS TREE	TREE
	WASHINGTONIA ROBUSTA	MEXICAN FAN PALM	PALM TREE

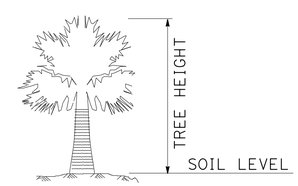

ELEVATION

PALM TREE HEIGHT

APPLICABLE WHEN CIRCLED:

1 - QUANTITIES SHOWN ARE "PER PLANT" UNLESS SHOWN AS SQFT OR SQYD APPLICATION RATES
2 - BASIN MULCH IS INCLUDED WITH MULCH QUANTITIES SHOWN ON PLANTING PLAN
3 - SUFFICIENT TO RECEIVE ROOT BALL
4 - SEE DETAIL
5 - SEE SPECIAL PROVISIONS
6 - SEE STANDARD SPECIFICATIONS
7 - AS SHOWN ON PLANS
8 - PALM TREE HEIGHT SHALL BE 3.5' Min
9 - REQUIRED
10 - ROOT PROTECTOR REQUIRED
11 - ROOT BARRIER REQUIRED
12 - STATE-FURNISHED

PLANT LIST

PL-1

REVISED BY | DATE REVISED
GENE KIMMEL | JENNIFER TAIRA
CALCULATED-DESIGNED BY | CHECKED BY
SENIOR LANDSCAPE ARCHITECT | JENNIFER TAIRA
STATE OF CALIFORNIA - DEPARTMENT OF TRANSPORTATION
Caltrans LANDSCAPE ARCHITECTURE

LAST REVISION 00-00-00 | DATE PLOTTED => 25-JUL-2013 | TIME PLOTTED => 07:27

Dist	COUNTY	ROUTE	POST MILES TOTAL PROJECT	SHEET No.	TOTAL SHEETS
07	LA	105	R0.5	27	45

LICENSED LANDSCAPE ARCHITECT

7-22-13
PLANS APPROVAL DATE

LICENSED LANDSCAPE ARCHITECT
GENE KIMMEL No. 5104
Signature
10-31-14
Renewal date
06-20-13
Date
STATE OF CALIFORNIA

THE STATE OF CALIFORNIA OR ITS OFFICERS OR AGENTS SHALL NOT BE RESPONSIBLE FOR THE ACCURACY OR COMPLETENESS OF SCANNED COPIES OF THIS PLAN SHEET.

NOTE:

1. FOR ACCURATE RIGHT OF WAY DATA, CONTACT RIGHT OF WAY ENGINEERING AT THE DISTRICT OFFICE.

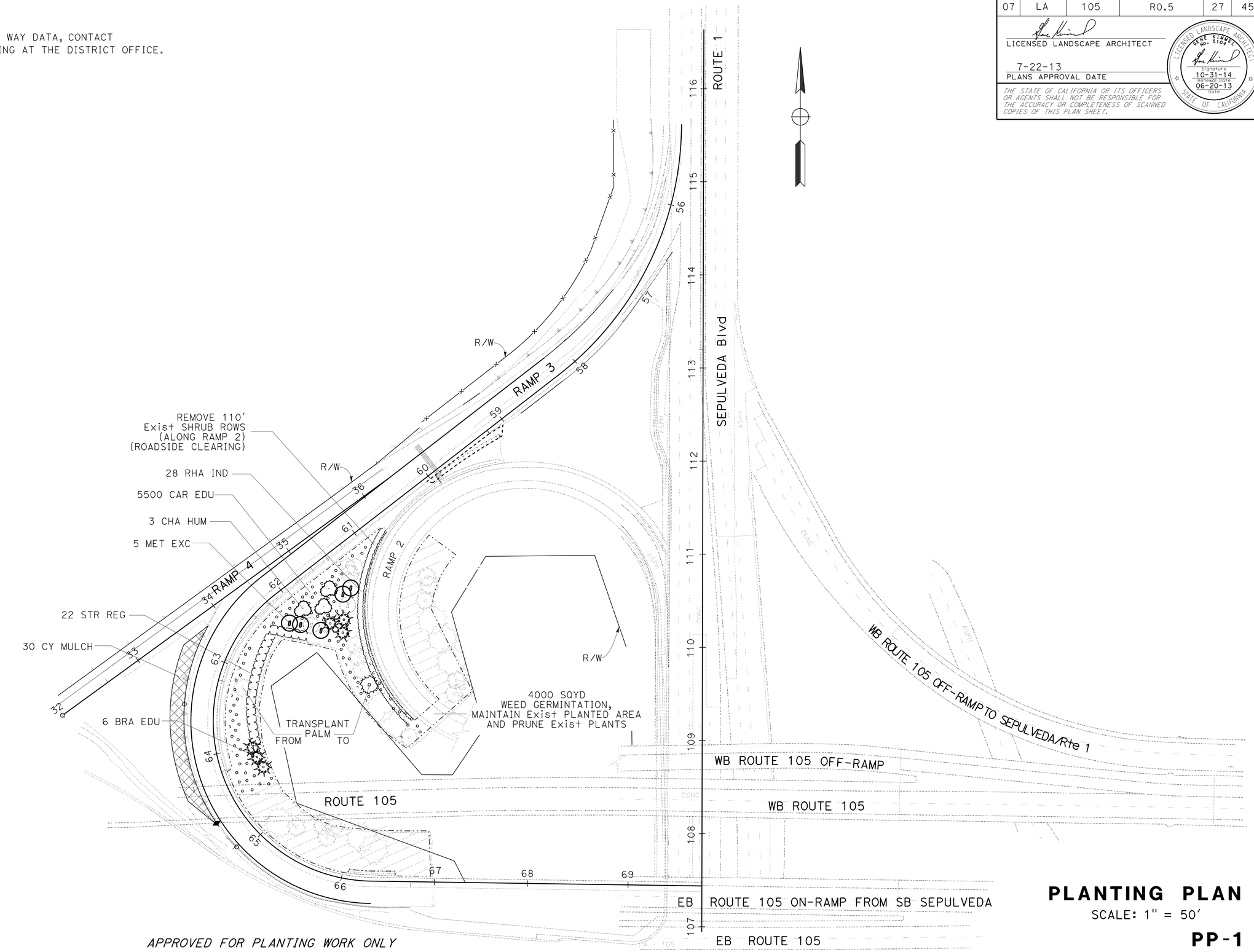

APPROVED FOR PLANTING WORK ONLY

PLANTING PLAN

SCALE: 1" = 50′

PP-1

STATE OF CALIFORNIA - DEPARTMENT OF TRANSPORTATION
Caltrans LANDSCAPE ARCHITECTURE

SENIOR LANDSCAPE ARCHITECT: JENNIFER TAIRA

CALCULATED-DESIGNED BY: GENE KIMMEL
CHECKED BY: JENNIFER TAIRA

REVISED BY
DATE REVISED

LAST REVISION 00-00-00
DATE PLOTTED => 25-JUL-2013
TIME PLOTTED => 07:27

Dist	COUNTY	ROUTE	POST MILES TOTAL PROJECT	SHEET No.	TOTAL SHEETS
07	LA	105	R0.5	28	45

LICENSED LANDSCAPE ARCHITECT

7-22-13
PLANS APPROVAL DATE

LICENSED LANDSCAPE ARCHITECT — GENE KIMMEL No. 5104 — Signature — 10-31-14 Renewal date — 06-20-13 Date — STATE OF CALIFORNIA

THE STATE OF CALIFORNIA OR ITS OFFICERS OR AGENTS SHALL NOT BE RESPONSIBLE FOR THE ACCURACY OR COMPLETENESS OF SCANNED COPIES OF THIS PLAN SHEET.

SPRINKLER SCHEDULE

SYMBOL	TYPE	DESCRIPTION	SPRAY PATTERN	OPERATING PRESSURE (psi)	PRESSURE COMPENSATING	PLUS/MINUS 5% ② DISCHARGE: GALLONS PER MINUTE (GPM)	GALLONS PER HOUR (GPH)	RADIUS (ft)	WIDTH x LENGTH (ft)	MATERIAL	INLET CONNECTION (NPT INCH)	POSITIVE-LOCKING Adj ARC STOP	BACKSPLASH PREVENTER	DIFFUSER PIN	DISTANCE CONTROL FLAP	Adj DISCHARGE	RISER: TYPE	RISER MATERIAL: PLASTIC	GALVANIZED	RISER: SIZE (IPS INCH)	HEIGHT (INCH)	FLOW SHUTOFF DEVICE	⑤ SWING JOINT (TYPE)	RISER SUPPORT	SPRINKLER PROTECTOR (TYPE)	REMARKS
⑤ [5]	A-5	GEAR DRIVEN	P/F	30	—	2.5	—	30		PL	½	—	—	—	—	④	I	—	X	½	18	X	III	—	—	
□	B-3	STRIP SPRAY	SST/EST	30	—	1.21 / 0.49	—	—	4X30 / 4X15	PL	—	—	—	—	—	—	I	—	X	½	12	X	—	—	—	

X IN BOX DENOTES REQUIREMENT

APPLICABLE WHEN CIRCLED BELOW:

1 - SEE SPECIAL PROVISIONS.
2 - IF A PRESSURE COMPENSATING DEVICE IS SPECIFIED, THE DISCHARGE AND RADII SHOWN REFLECT ITS USE.
3 - ARC STOP SHALL BE FITTED WITH A NUT AND BOLT.
④ - WITH NOZZLE SET
⑤ - SWING JOINTS REQUIRED ADJACENT TO SHOULDERS, CURBS, SIDEWALKS, AND DIKES.
6 - UNLESS OTHERWISE SHOWN ON PLANS.

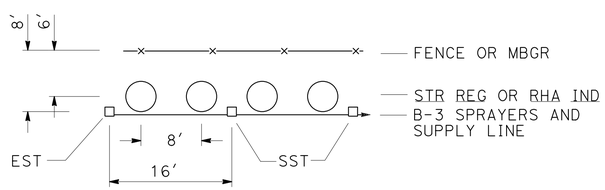

PLAN

SHRUB ROW PLANTING AND IRRIGATION

LEGEND

IRRIGATION CONTROLLER
CONTROLLER STATION

A-6 (Exist CODE)
1½"-A-2-12.5 (NEW CODE)

Exist ZONE CONTROL KIT
Exist ZONE CONTROL KIT CALLOUT — C-25

LANDSCAPE DETAILS

NO SCALE

LD-1

STATE OF CALIFORNIA - DEPARTMENT OF TRANSPORTATION
Caltrans® LANDSCAPE ARCHITECTURE
SENIOR LANDSCAPE ARCHITECT: JENNIFER TAIRA
CALCULATED-DESIGNED BY: GEORGE OLGUIN
CHECKED BY
REVISED BY: GENE KIMMEL
DATE REVISED

LAST REVISION 00-00-00
DATE PLOTTED => 25-JUL-2013
TIME PLOTTED => 07:27

Dist	COUNTY	ROUTE	POST MILES TOTAL PROJECT	SHEET No.	TOTAL SHEETS
07	LA	105	R0.5	29	45

LICENSED LANDSCAPE ARCHITECT

7-22-13
PLANS APPROVAL DATE

LICENSED LANDSCAPE ARCHITECT — GENE KIMMEL No. 5104 — Signature — 10-31-14 Renewal date — 06-20-13 Date — STATE OF CALIFORNIA

THE STATE OF CALIFORNIA OR ITS OFFICERS OR AGENTS SHALL NOT BE RESPONSIBLE FOR THE ACCURACY OR COMPLETENESS OF SCANNED COPIES OF THIS PLAN SHEET.

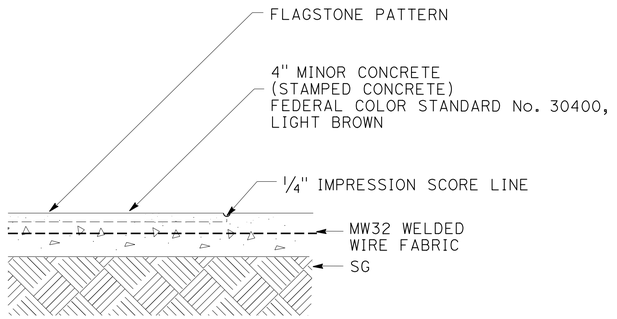

SECTION

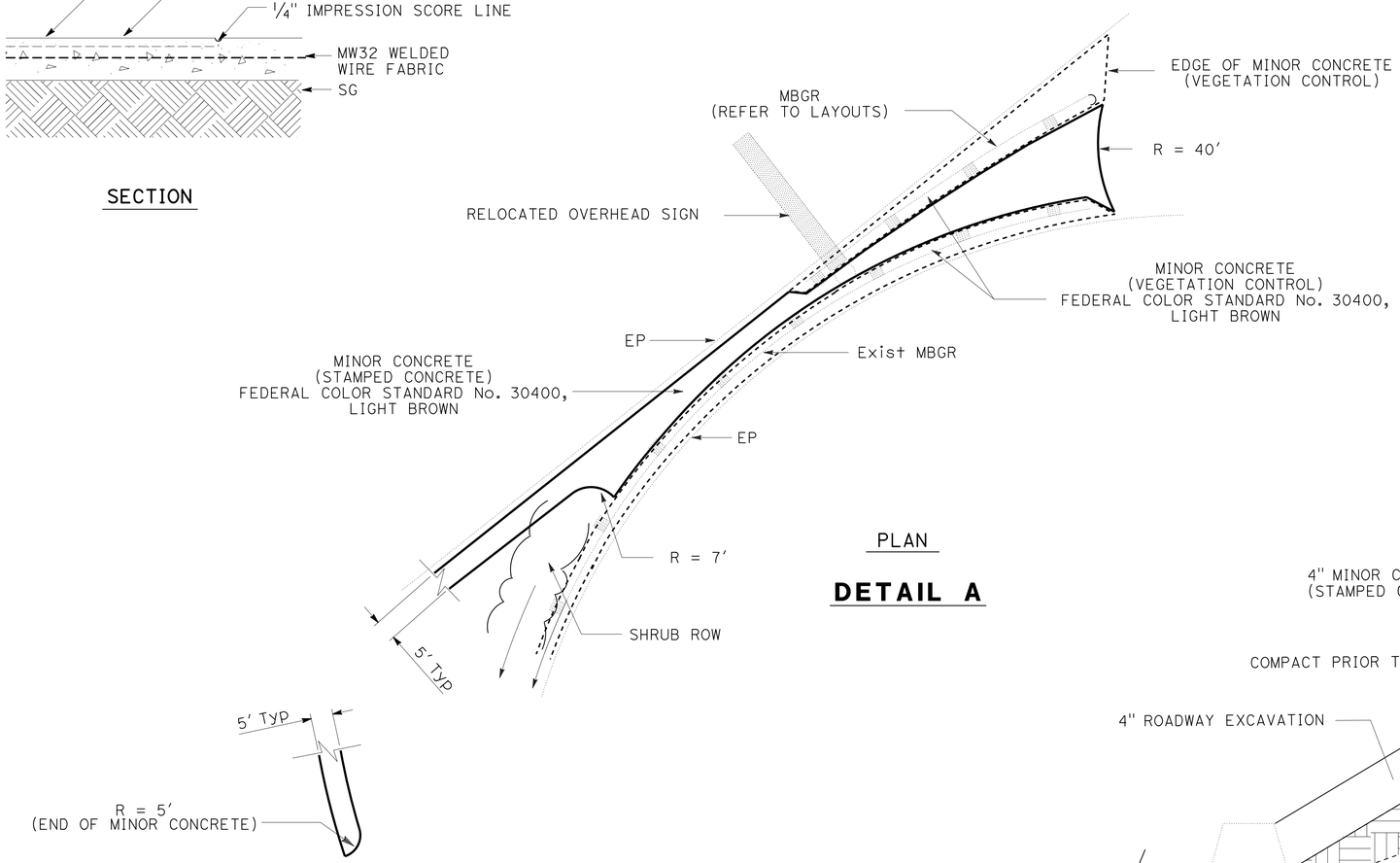

PLAN

DETAIL A

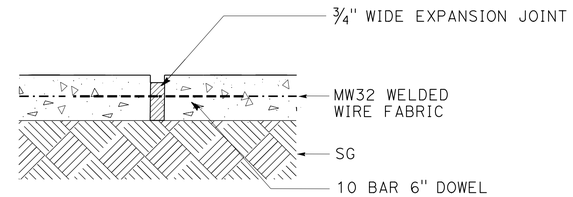

EXPANSION JOINT DETAIL

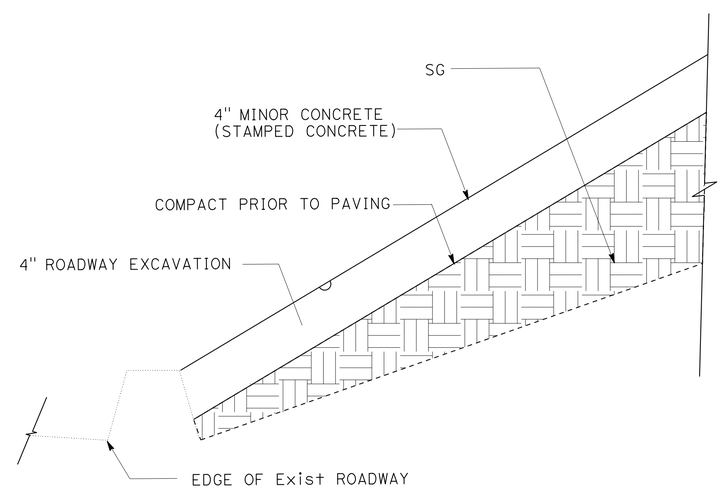

GRADING

MINOR CONCRETE (STAMPED CONCRETE) DETAILS

LANDSCAPE DETAILS
NO SCALE
LD-2

STATE OF CALIFORNIA - DEPARTMENT OF TRANSPORTATION
Caltrans® LANDSCAPE ARCHITECTURE
SENIOR LANDSCAPE ARCHITECT: JENNIFER TAIRA
CALCULATED-DESIGNED BY: GENE KIMMEL
CHECKED BY: GEORGE OLGUIN
REVISED BY
DATE REVISED

LAST REVISION 00-00-00
DATE PLOTTED => 25-JUL-2013
TIME PLOTTED => 07:27

Dist	COUNTY	ROUTE	POST MILES TOTAL PROJECT	SHEET No.	TOTAL SHEETS
07	LA	105	R0.5	30	45

REGISTERED ELECTRICAL ENGINEER 3/18/13 DATE

7-22-13
PLANS APPROVAL DATE

REGISTERED PROFESSIONAL ENGINEER CESAR HERNANDEZ No. 15805 Exp. 12/31/14 ELECTRICAL STATE OF CALIFORNIA

THE STATE OF CALIFORNIA OR ITS OFFICERS OR AGENTS SHALL NOT BE RESPONSIBLE FOR THE ACCURACY OR COMPLETENESS OF SCANNED COPIES OF THIS PLAN SHEET.

NOTE:

FOR ACCURATE RIGHT OF WAY DATA, CONTACT RIGHT OF WAY ENGINEERING AT THE DISTRICT OFFICE.

LEGEND (THIS SHEET ONLY):

1. Exist 2"C, 4#6 (Ltg), 2#12 (Irr), 1#8 (G).
2. Exist 2"C, RC CONDUCTORS, INSTALL 2#6, 1#8 (G).
3. RL TYPE 15-SB Std. RC LIGHT FIXTURE. INSTALL 165 W LED TYPE FIXTURE.
4. 2"C, 2#6, 1#8 (G).
5. RL TYPE 30 Std. RC LIGHT FIXTURE. INSTALL 235 W LED TYPE FIXTURE.
6. RC LIGHT FIXTURE, INSTALL 165 W LED TYPE FIXTURE.
7. RC LIGHT FIXTURE, INSTALL 235 W LED TYPE FIXTURE.
8. INSTALL TYPE 15-SB WITH 8' LMA, AND 165 W LED TYPE FIXTURE.

ABBREVIATION:

DWP - LOS ANGELES DEPARTMENT OF WATER AND POWER

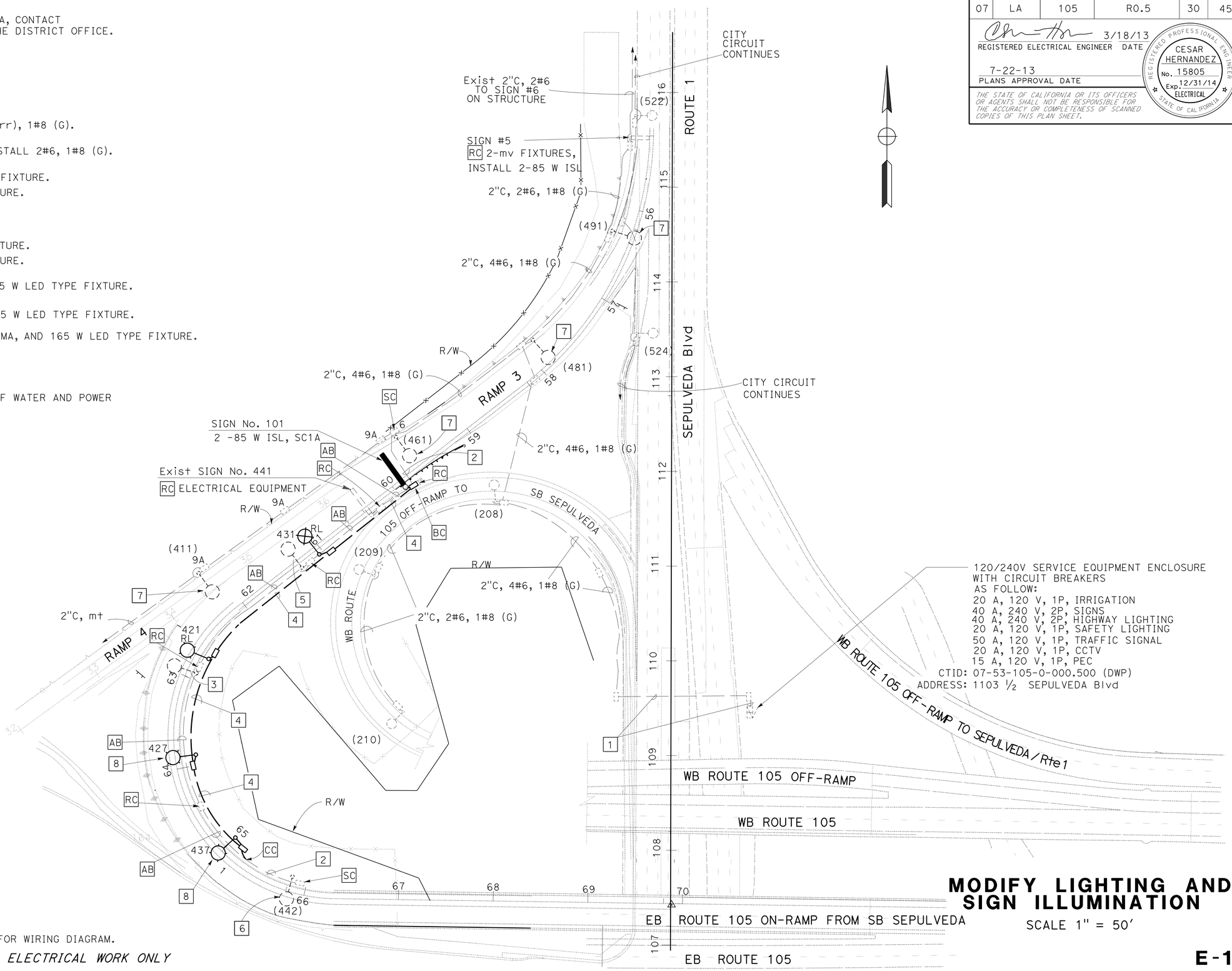

SEE SHEET E-2 FOR WIRING DIAGRAM.

APPROVED FOR ELECTRICAL WORK ONLY

MODIFY LIGHTING AND SIGN ILLUMINATION

SCALE 1" = 50'

E-1

STATE OF CALIFORNIA - DEPARTMENT OF TRANSPORTATION
Caltrans
TRAFFIC DESIGN

FUNCTIONAL SUPERVISOR: HASSAN MANNAA
CALCULATED-DESIGNED BY: CESAR HERNANDEZ
CHECKED BY: HASSAN MANNAA
REVISED BY
DATE REVISED

LAST REVISION 00-00-00
DATE PLOTTED => 25-JUL-2013
TIME PLOTTED => 07:28

Dist	COUNTY	ROUTE	POST MILES TOTAL PROJECT	SHEET No.	TOTAL SHEETS
07	LA	105	R0.5	31	45

REGISTERED ELECTRICAL ENGINEER 3/18/13 DATE

7-22-13
PLANS APPROVAL DATE

REGISTERED PROFESSIONAL ENGINEER
CESAR HERNANDEZ
No. 15805
Exp. 12/31/14
ELECTRICAL
STATE OF CALIFORNIA

THE STATE OF CALIFORNIA OR ITS OFFICERS OR AGENTS SHALL NOT BE RESPONSIBLE FOR THE ACCURACY OR COMPLETENESS OF SCANNED COPIES OF THIS PLAN SHEET.

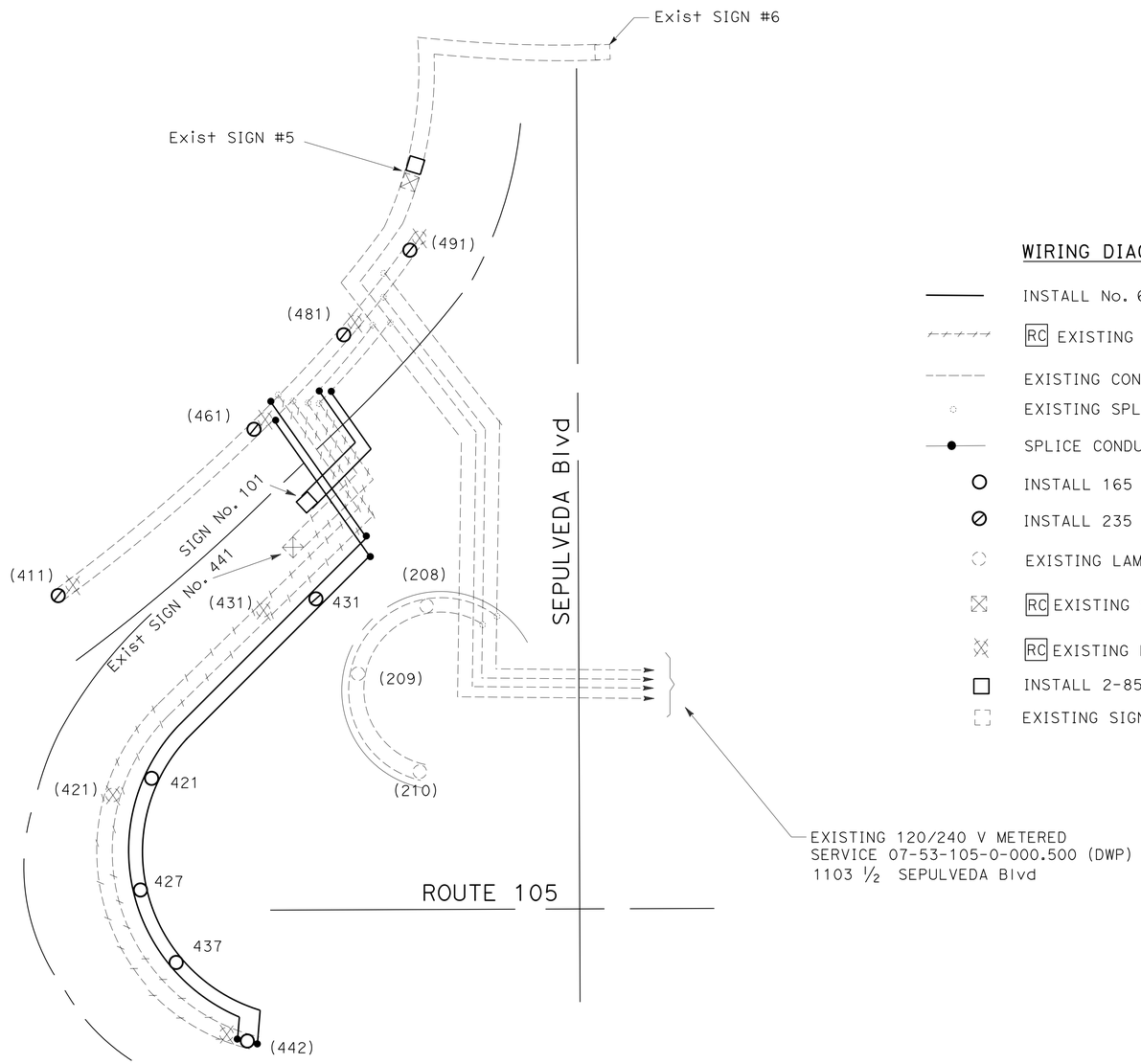

WIRING DIAGRAM

WIRING DIAGRAM LEGEND (THIS SHEET ONLY)

- INSTALL No. 6 CONDUCTOR.
- RC EXISTING CONDUCTOR.
- EXISTING CONDUCTOR TO REMAIN.
- EXISTING SPLICE CONDUCTOR.
- SPLICE CONDUCTOR.
- INSTALL 165 W LED LAMP.
- INSTALL 235 W LED LAMP.
- EXISTING LAMP AND BALLAST.
- RC EXISTING SIGN LAMP AND BALLAST.
- RC EXISTING HPS LAMP AND BALLAST.
- INSTALL 2-85 W ISL LAMPS.
- EXISTING SIGN LAMP AND BALLAST.

MODIFY LIGHTING AND SIGN ILLUMINATION

NO SCALE

E-2

STATE OF CALIFORNIA - DEPARTMENT OF TRANSPORTATION
Caltrans
TRAFFIC DESIGN

FUNCTIONAL SUPERVISOR: HASSAN MANNAA
CALCULATED-DESIGNED BY: CESAR HERNANDEZ
CHECKED BY: HASSAN MANNAA
REVISED BY
DATE REVISED

LAST REVISION 00-00-00
DATE PLOTTED => 25-JUL-2013
TIME PLOTTED => 07:28

Dist	COUNTY	ROUTE	POST MILES TOTAL PROJECT	SHEET No.	TOTAL SHEETS
07	LA	105	R0.5	32	45

REGISTERED ELECTRICAL ENGINEER 3/18/13 DATE

7-22-13
PLANS APPROVAL DATE

REGISTERED PROFESSIONAL ENGINEER CESAR HERNANDEZ No. 15805 Exp. 12/31/14 ELECTRICAL STATE OF CALIFORNIA

THE STATE OF CALIFORNIA OR ITS OFFICERS OR AGENTS SHALL NOT BE RESPONSIBLE FOR THE ACCURACY OR COMPLETENESS OF SCANNED COPIES OF THIS PLAN SHEET.

NOTE:

FOR ACCURATE RIGHT OF WAY DATA, CONTACT RIGHT OF WAY ENGINEERING AT THE DISTRICT OFFICE.

LEGEND (THIS SHEET ONLY):

1. 2"C, 2#12 (FLASHING BEACON), 1#8 (G).
2. 1½"C, 4#12 (FLASHING BEACON, Irr), 1#8 (G).
3. 1½"C, 2#12 (FLASHING BEACON), 1#8 (G).
4. INSTALL TYPE 15-FBS FLASHING BEACON SYSTEM WITHOUT SIGN PANEL AND SIGN LIGHTING FIXTURE.
5. Exist 2" C, 4#6 (Itg), 2#12 (Irr), ADD 2#12 (FLASHING BEACON), 1#8 (G)
6. 1½"C, 2#12 (IRRIGATION), 1#8 (G).
7. 2"C, 4#12 (FLASHING BEACON, Irr), 1#8 (G).
8. Exist 1½"C, 2#12 (Irr).

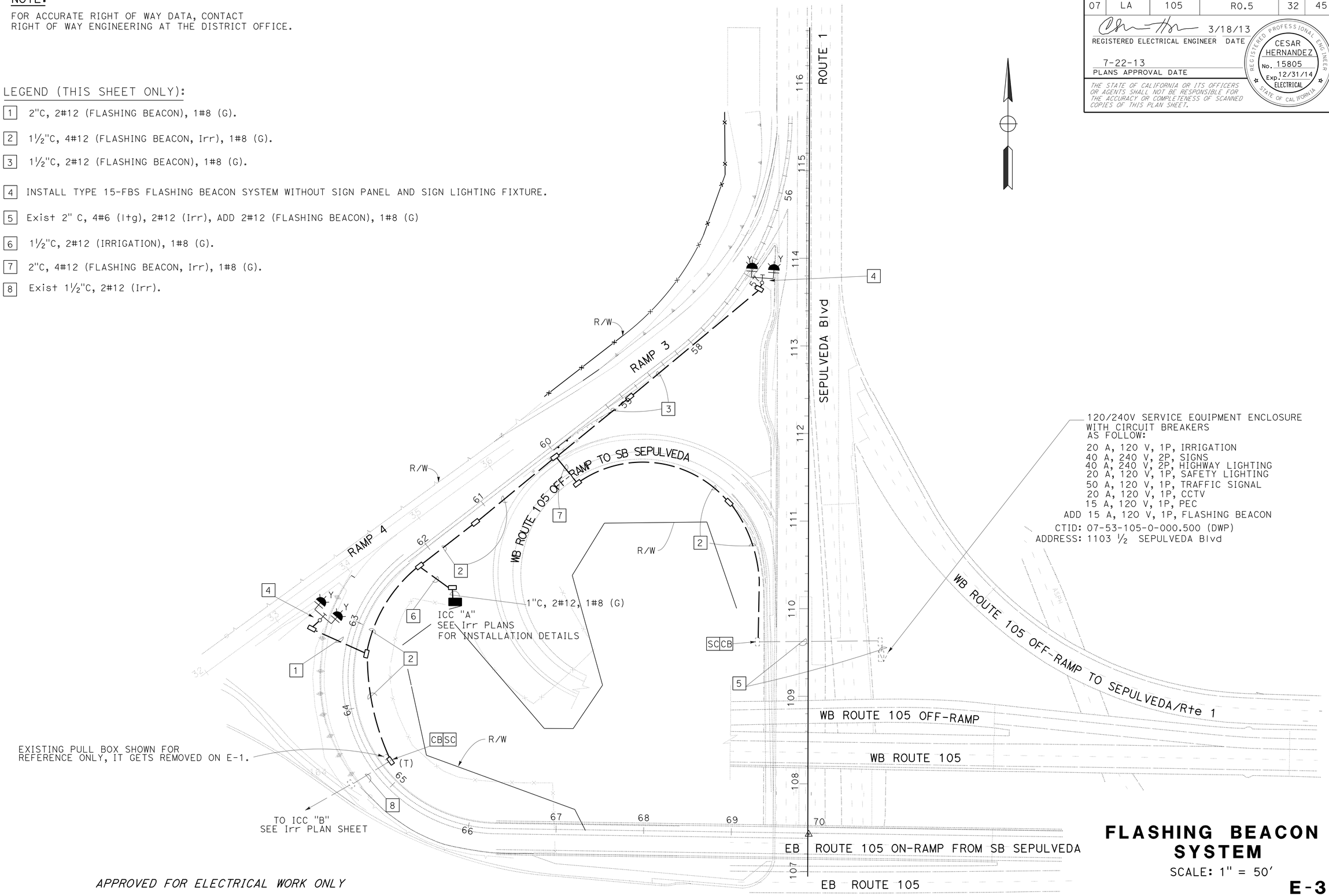

APPROVED FOR ELECTRICAL WORK ONLY

FLASHING BEACON SYSTEM

SCALE: 1" = 50'

E-3

STATE OF CALIFORNIA - DEPARTMENT OF TRANSPORTATION
Caltrans
TRAFFIC DESIGN

FUNCTIONAL SUPERVISOR: HASSAN MANNAA
CALCULATED-DESIGNED BY: CESAR HERNANDEZ
CHECKED BY: HASSAN MANNAA
REVISED BY
DATE REVISED

LAST REVISION 00-00-00
DATE PLOTTED => 25-JUL-2013
TIME PLOTTED => 07:28

Dist	COUNTY	ROUTE	POST MILES TOTAL PROJECT	SHEET No.	TOTAL SHEETS
07	LA	105	R0.5	33	45

REGISTERED ELECTRICAL ENGINEER 3/18/13 DATE

7-22-13
PLANS APPROVAL DATE

REGISTERED PROFESSIONAL ENGINEER CESAR HERNANDEZ No. 15805 Exp. 12/31/14 ELECTRICAL STATE OF CALIFORNIA

THE STATE OF CALIFORNIA OR ITS OFFICERS OR AGENTS SHALL NOT BE RESPONSIBLE FOR THE ACCURACY OR COMPLETENESS OF SCANNED COPIES OF THIS PLAN SHEET.

MODIFY LIGHTING AND SIGN ILLUMINATION

SHEET No.	(N) #5 PULL BOX	(N) 2" CONDUIT	(N) RC SIGN FIXTURE	(N) ISL	(N) SC1A	(N) TYPE 15 Std	(N) RELOCATE TYPE 15 OR 30 Std	(N) RC HPS FIXTURE	(N) LED LUMINAIRE	(N) #8 (G) CONDUCTOR	(N) #6 CONDUCTOR
	EA	LF	EA	EA	EA	EA	EA	EA	EA	LF	LF
E-1	5	525	4	4	1	2	2	7	9	725	1600
TOTAL	5	525	4	4	1	2	2	7	9	725	1600

(N) - NOT A SEPARATE PAY ITEM, FOR INFORMATION ONLY

FLASHING BEACON SYSTEM

SHEET No.	(N) #5 PULL BOX	(N) #5 (T) PULL BOX	(N) 2" CONDUIT	(N) 1½" CONDUIT	(N) 1" CONDUIT	(N) #8 (G) CONDUCTOR	(N) #12 CONDUCTOR	(N) LED FLASHING BEACON	(N) LED FLASHING BEACON CONTROL ASSEMBLY	(N) 15 A CB
	EA	EA	LF	LF	LF	LF	LF	EA	EA	EA
E-3	10	1	110	1050	10	1200	3850	4	2	1
TOTAL	10	1	110	1050	10	1200	3850	4	2	1

(N) - NOT A SEPARATE PAY ITEM, FOR INFORMATION ONLY

ELECTRICAL QUANTITIES

E-4

REVISED BY | DATE REVISED
CESAR HERNANDEZ | HASSAN MANNAA
CALCULATED-DESIGNED BY | CHECKED BY
FUNCTIONAL SUPERVISOR
HASSAN MANNAA

STATE OF CALIFORNIA - DEPARTMENT OF TRANSPORTATION
Caltrans® TRAFFIC DESIGN

LAST REVISION 00-00-00 | DATE PLOTTED => 25-JUL-2013 | TIME PLOTTED => 07:28

Dist	COUNTY	ROUTE	POST MILES TOTAL PROJECT	SHEET No.	TOTAL SHEETS
07	LA	105	R0.5	34	45

REGISTERED CIVIL ENGINEER

April 20, 2012
PLANS APPROVAL DATE

REGISTERED PROFESSIONAL ENGINEER
Roberta L. McLaughlin
No. C40375
Exp. 3-31-13
CIVIL
STATE OF CALIFORNIA

THE STATE OF CALIFORNIA OR ITS OFFICERS OR AGENTS SHALL NOT BE RESPONSIBLE FOR THE ACCURACY OR COMPLETENESS OF SCANNED COPIES OF THIS PLAN SHEET.

TO ACCOMPANY PLANS DATED 7-22-13

2010 REVISED STANDARD PLAN RSP A24A

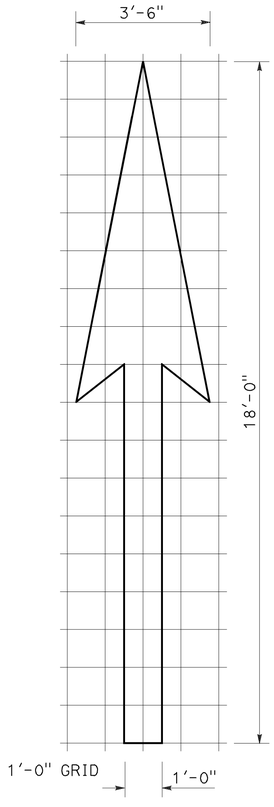

A=25 ft^2

TYPE I 18'-0" ARROW

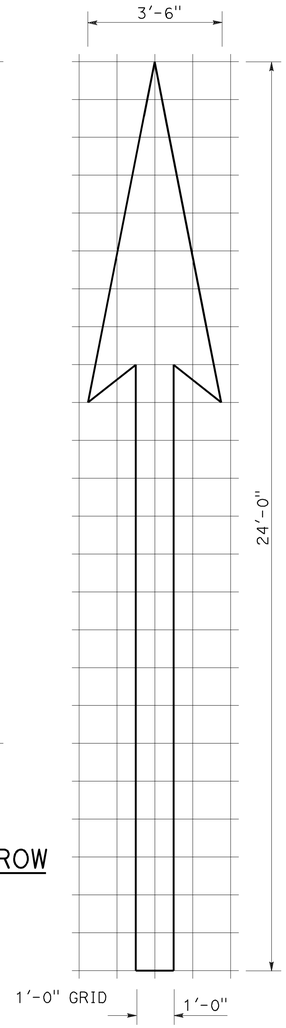

A=31 ft^2

TYPE I 24'-0" ARROW

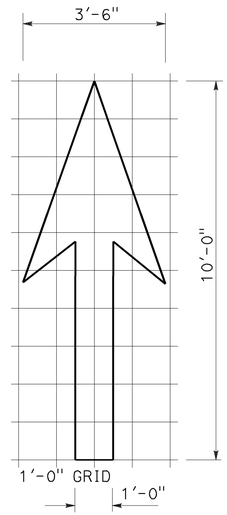

A=14 ft^2

TYPE I 10'-0" ARROW

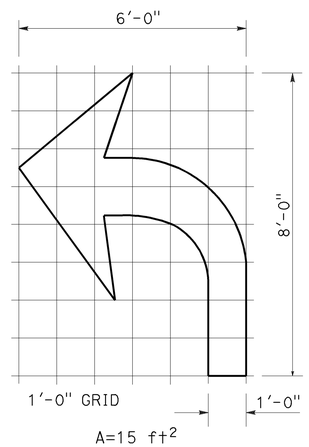

A=15 ft^2

TYPE IV (L) ARROW

(For Type IV (R) arrow, use mirror image)

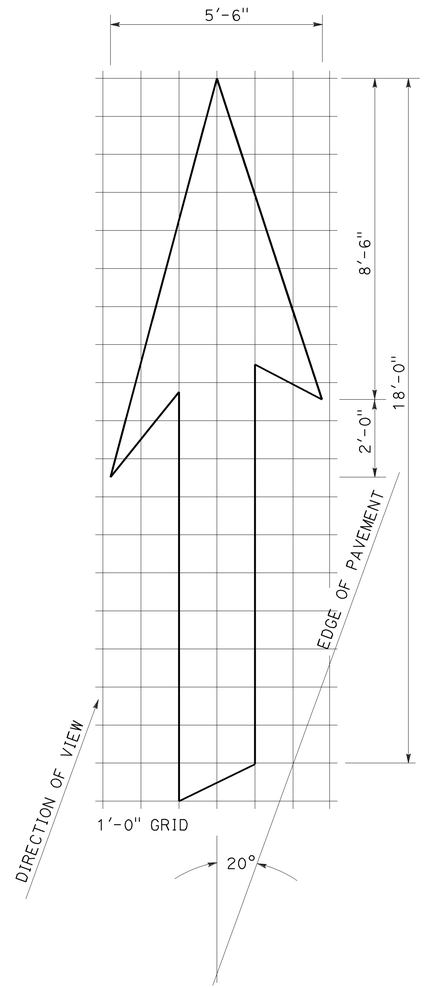

A=42 ft^2

TYPE VI ARROW

Right lane drop arrow
(For left lane, use mirror image)

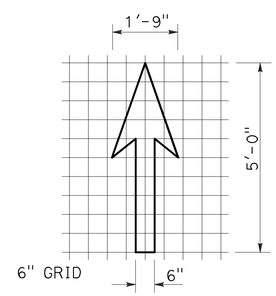

A=3.5 ft^2

BIKE LANE ARROW

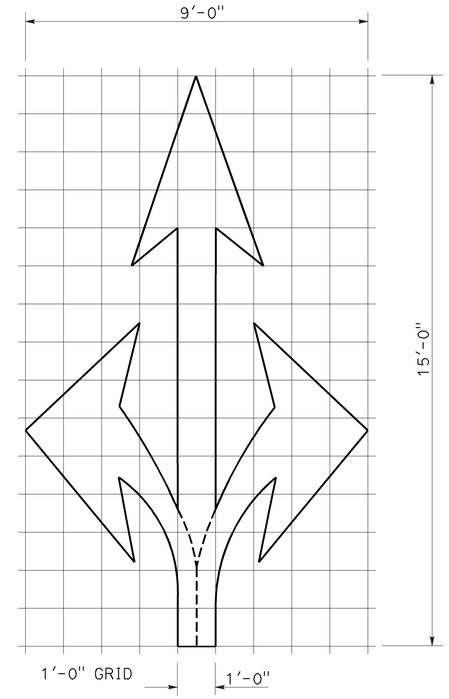

A=36 ft^2

TYPE VIII ARROW

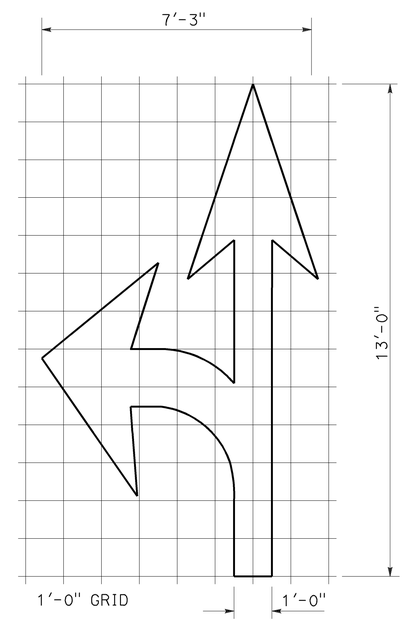

A=27 ft^2

TYPE VII (L) ARROW

(For Type VII (R) arrow, use mirror image)

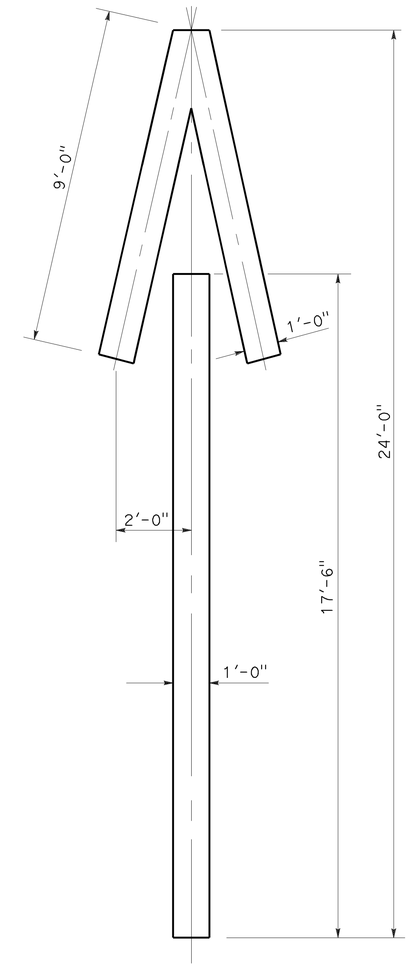

A=33 ft^2

TYPE V ARROW

NOTE:
Minor variations in dimensions may be accepted by the Engineer.

STATE OF CALIFORNIA
DEPARTMENT OF TRANSPORTATION

PAVEMENT MARKINGS ARROWS

NO SCALE

RSP A24A DATED APRIL 20, 2012 SUPERSEDES STANDARD PLAN A24A DATED MAY 20, 2011 - PAGE 13 OF THE STANDARD PLANS BOOK DATED 2010.

REVISED STANDARD PLAN RSP A24A

3-14-12

Dist	COUNTY	ROUTE	POST MILES TOTAL PROJECT	SHEET No.	TOTAL SHEETS
07	LA	105	R0.5	35	45

Randell D. Hiatt
REGISTERED CIVIL ENGINEER

October 19, 2012
PLANS APPROVAL DATE

REGISTERED PROFESSIONAL ENGINEER
Randell D. Hiatt
No. C50200
Exp. 6-30-13
CIVIL
STATE OF CALIFORNIA

THE STATE OF CALIFORNIA OR ITS OFFICERS OR AGENTS SHALL NOT BE RESPONSIBLE FOR THE ACCURACY OR COMPLETENESS OF SCANNED COPIES OF THIS PLAN SHEET.

TO ACCOMPANY PLANS DATED 7-22-13

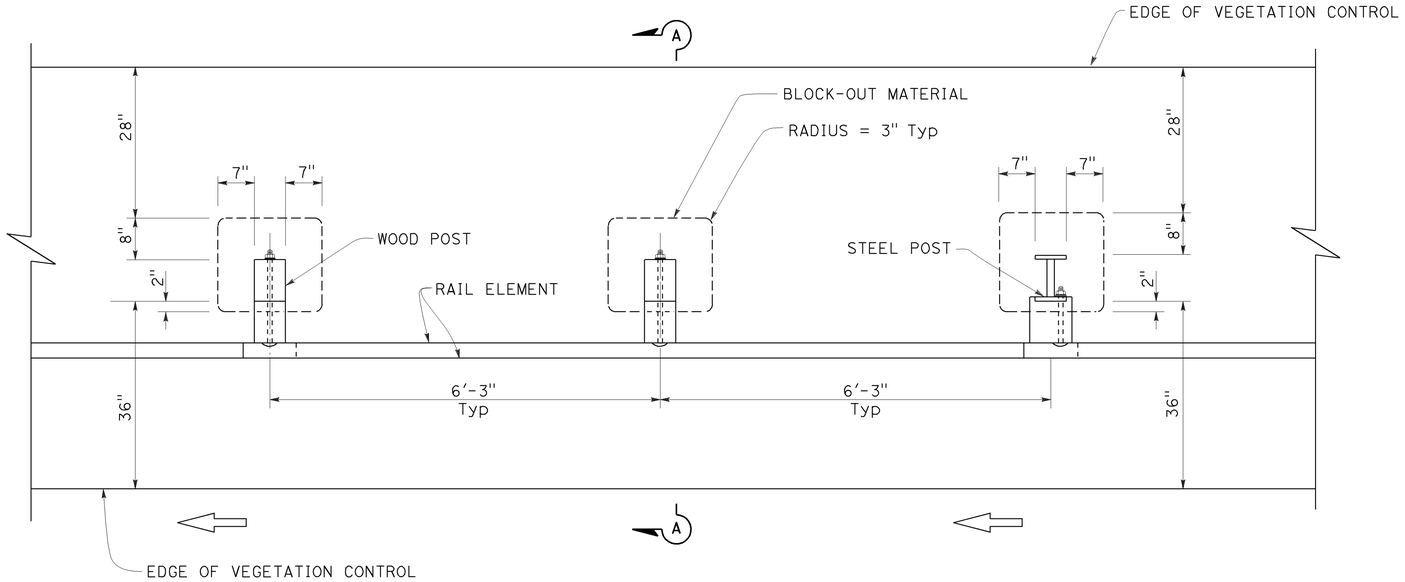

PLAN

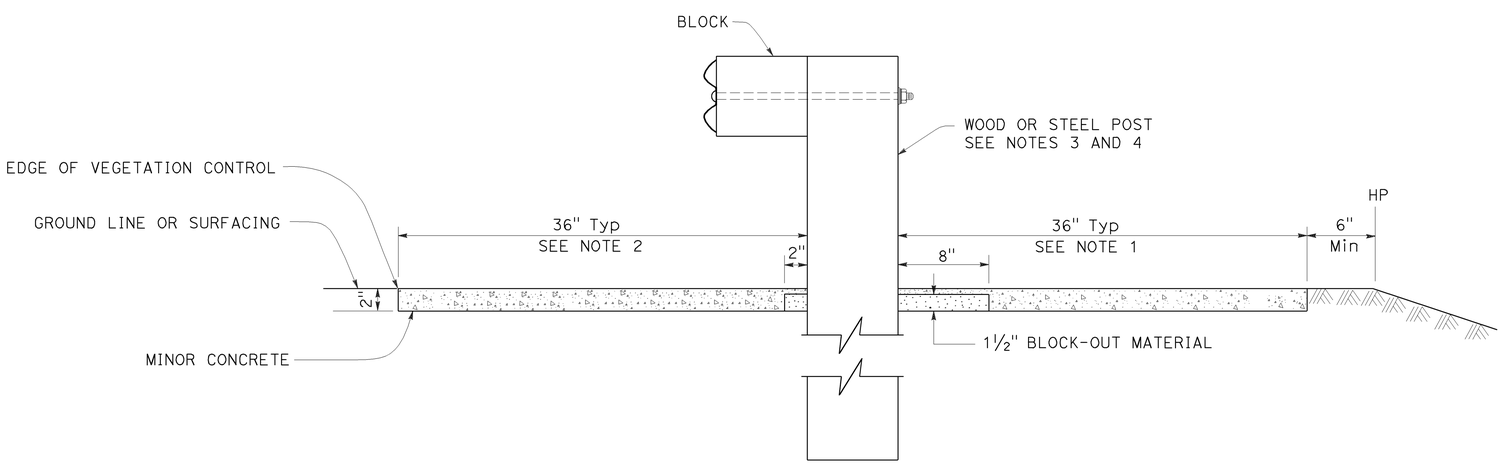

SECTION A-A

NOTES:

1. Where the distance between back of post and hinge point is less than 42", construct vegetation control to 6" from hinge point while maintaining the 8" block-out at back of post. If the 8" block-out at back of post can not be maintained, construct vegetation control flush with the back edge of post.
2. Where dike is constructed under railing, construct vegetation control to back edge of dike. Where paved shoulder is constructed within 36" in front of the post, construct vegetation control to the edge of paved shoulder.
3. For wood post sizes, see Standard Plan A77C1.
4. For steel post sizes, see Standard Plan A77C2.
5. For details not shown, see Standard Plans A77A1 and A77A2.

STATE OF CALIFORNIA
DEPARTMENT OF TRANSPORTATION

METAL BEAM GUARD RAILING TYPICAL VEGETATION CONTROL STANDARD RAILING SECTION

NO SCALE

RSP A77C5 DATED OCTOBER 19, 2012 SUPERSEDES STANDARD PLAN A77C5 DATED MAY 20, 2011 - PAGE 53 OF THE STANDARD PLANS BOOK DATED 2010.

REVISED STANDARD PLAN RSP A77C5

2010 REVISED STANDARD PLAN RSP A77C5

9-26-12

Dist	COUNTY	ROUTE	POST MILES TOTAL PROJECT	SHEET No.	TOTAL SHEETS
07	LA	105	R0.5	36	45

Randell D. Hiatt
REGISTERED CIVIL ENGINEER

October 19, 2012
PLANS APPROVAL DATE

REGISTERED PROFESSIONAL ENGINEER
Randell D. Hiatt
No. C50200
Exp. 6-30-13
CIVIL
STATE OF CALIFORNIA

THE STATE OF CALIFORNIA OR ITS OFFICERS OR AGENTS SHALL NOT BE RESPONSIBLE FOR THE ACCURACY OR COMPLETENESS OF SCANNED COPIES OF THIS PLAN SHEET.

TO ACCOMPANY PLANS DATED 7-22-13

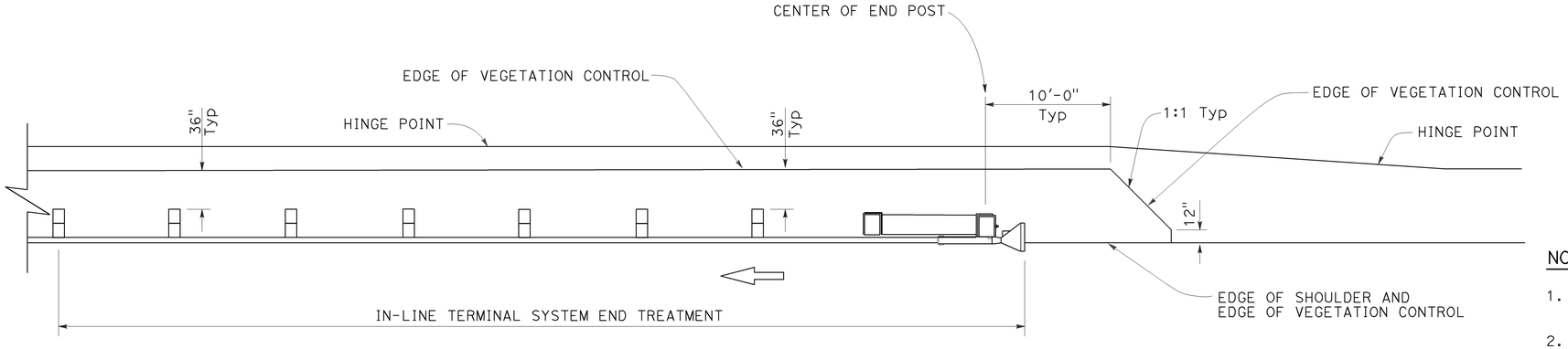

PLAN

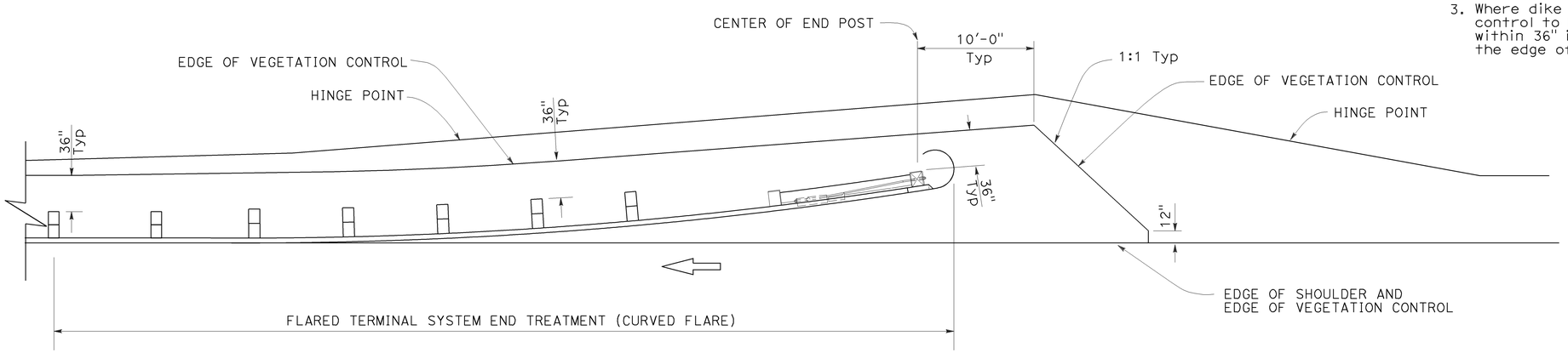

PLAN

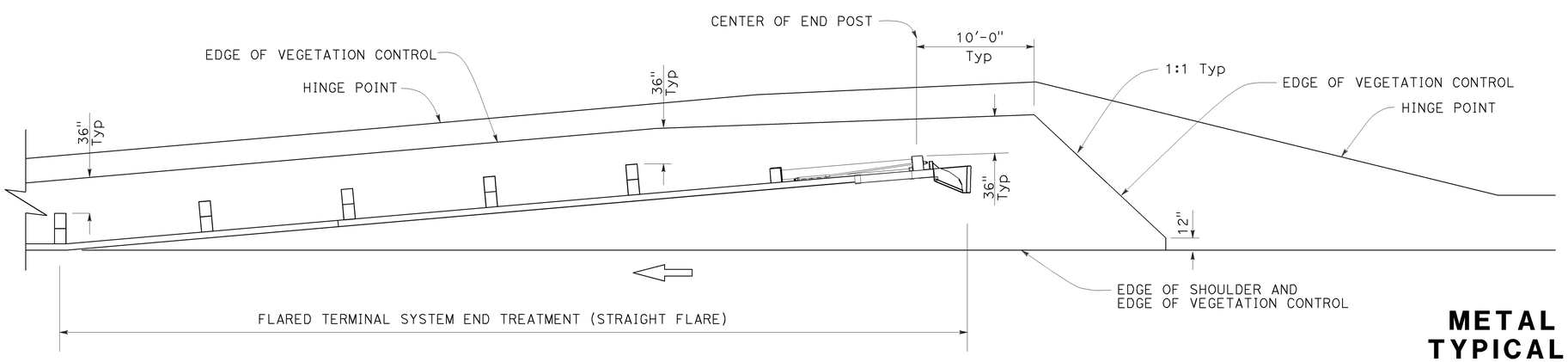

PLAN

NOTES:

1. See Revised Standard Plan RSP A77C5 for additional vegetation control details.
2. Where the distance between back of post and hinge point is less than 42", construct vegetation control to 6" from hinge point while maintaining the 8" block-out at back of post. If the 8" block-out at back of post can not be maintained, construct vegetation control flush with the back edge of post.
3. Where dike is constructed under railing, construct vegetation control to back edge of dike. Where paved shoulder is constructed within 36" in front of the post, construct vegetation control to the edge of paved shoulder.

STATE OF CALIFORNIA
DEPARTMENT OF TRANSPORTATION

METAL BEAM GUARD RAILING TYPICAL VEGETATION CONTROL FOR TERMINAL SYSTEM END TREATMENTS

NO SCALE

RSP A77C6 DATED OCTOBER 19, 2012 SUPERSEDES STANDARD PLAN A77C6 DATED MAY 20, 2011 - PAGE 54 OF THE STANDARD PLANS BOOK DATED 2010.

REVISED STANDARD PLAN RSP A77C6

2010 REVISED STANDARD PLAN RSP A77C6

Dist	COUNTY	ROUTE	POST MILES TOTAL PROJECT	SHEET No.	TOTAL SHEETS
07	LA	105	R0.5	37	45

Randell D. Hiatt
REGISTERED CIVIL ENGINEER

October 19, 2012
PLANS APPROVAL DATE

REGISTERED PROFESSIONAL ENGINEER
Randell D. Hiatt
No. C50200
Exp. 6-30-13
CIVIL
STATE OF CALIFORNIA

THE STATE OF CALIFORNIA OR ITS OFFICERS OR AGENTS SHALL NOT BE RESPONSIBLE FOR THE ACCURACY OR COMPLETENESS OF SCANNED COPIES OF THIS PLAN SHEET.

TO ACCOMPANY PLANS DATED 7-22-13

NOTES:

1. See Revised Standard Plan RSP A77C5 for additional vegetation control details.
2. Where the distance between back of post and hinge point is less than 42", construct vegetation control to 6" from hinge point while maintaining the 8" block-out at back of post. If the 8" block-out at back of post can not be maintained, construct vegetation control flush with the back edge of post.
3. Where dike is constructed under railing, construct vegetation control to back edge of dike. Where paved shoulder is constructed within 36" in front of the post, construct vegetation control to the edge of paved shoulder.

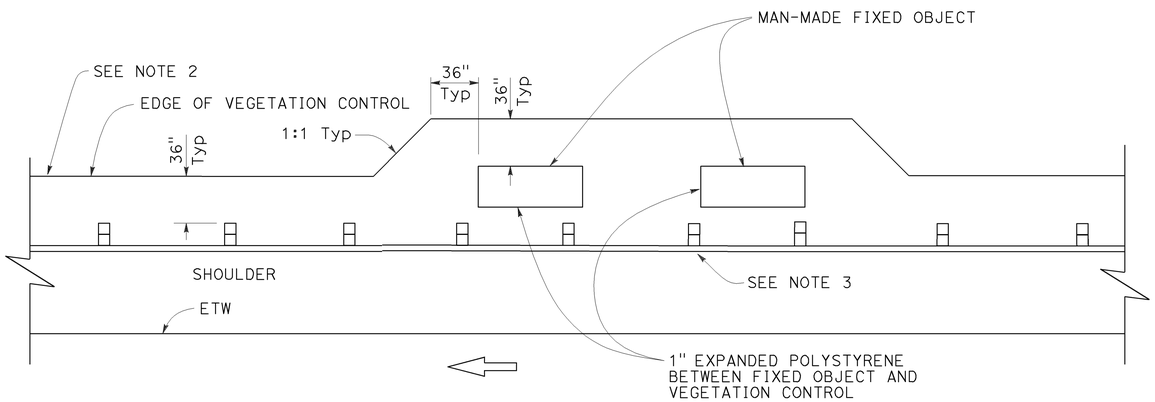

PLAN

Fixed object(s) on shoulder

STATE OF CALIFORNIA
DEPARTMENT OF TRANSPORTATION

METAL BEAM GUARD RAILING TYPICAL VEGETATION CONTROL AT FIXED OBJECT

NO SCALE

RSP A77C8 DATED OCTOBER 19, 2012 SUPERSEDES STANDARD PLAN A77C8 DATED MAY 20, 2011 - PAGE 56 OF THE STANDARD PLANS BOOK DATED 2010.

REVISED STANDARD PLAN RSP A77C8

2010 REVISED STANDARD PLAN RSP A77C8

Dist	COUNTY	ROUTE	POST MILES TOTAL PROJECT	SHEET No.	TOTAL SHEETS
07	LA	105	R0.5	38	45

Randell D. Hiatt
REGISTERED CIVIL ENGINEER

October 19, 2012
PLANS APPROVAL DATE

REGISTERED PROFESSIONAL ENGINEER
Randell D. Hiatt
No. C50200
Exp. 6-30-13
CIVIL
STATE OF CALIFORNIA

THE STATE OF CALIFORNIA OR ITS OFFICERS OR AGENTS SHALL NOT BE RESPONSIBLE FOR THE ACCURACY OR COMPLETENESS OF SCANNED COPIES OF THIS PLAN SHEET.

TO ACCOMPANY PLANS DATED 7-22-13

2010 REVISED STANDARD PLAN RSP A77C9

NOTES:

1. See Revised Standard Plan RSP A77C5 for additional vegetation control details.
2. Where dike is constructed under railing, construct vegetation control to back edge of dike. Where paved shoulder is constructed within 36" in front of the post, construct vegetation control to the edge of paved shoulder.

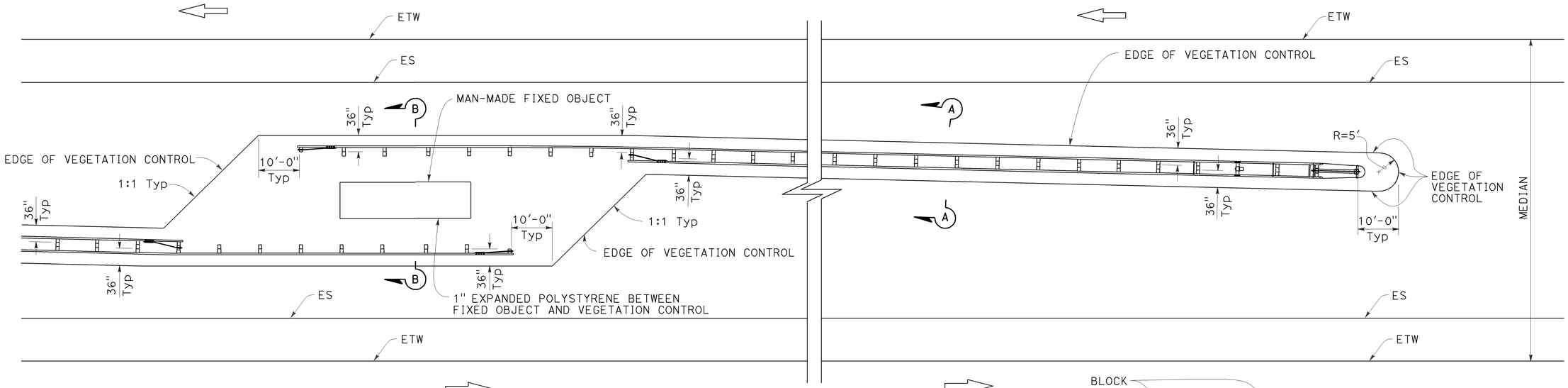

PLAN

Fixed object(s) in median

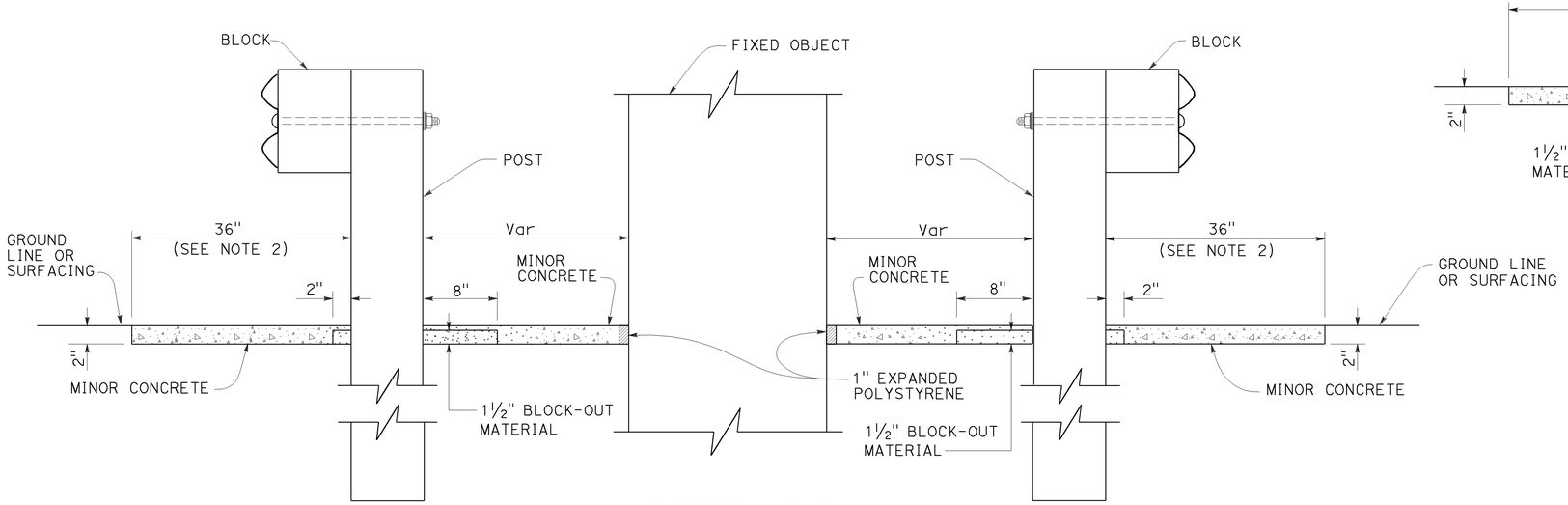

SECTION B-B

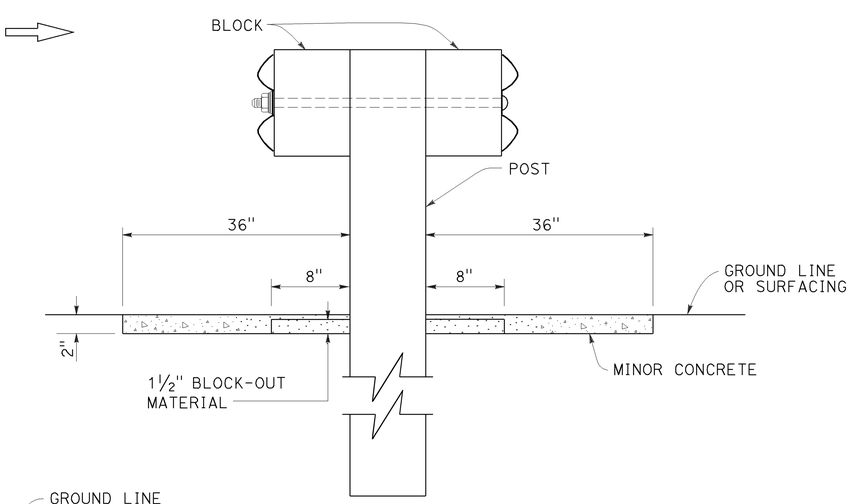

SECTION A-A

STATE OF CALIFORNIA
DEPARTMENT OF TRANSPORTATION

METAL BEAM GUARD RAILING TYPICAL VEGETATION CONTROL AT FIXED OBJECT

NO SCALE

RSP A77C9 DATED OCTOBER 19, 2012 SUPERSEDES STANDARD PLAN A77C9 DATED MAY 20, 2011 - PAGE 57 OF THE STANDARD PLANS BOOK DATED 2010.

REVISED STANDARD PLAN RSP A77C9

9-26-12

Dist	COUNTY	ROUTE	POST MILES TOTAL PROJECT	SHEET No.	TOTAL SHEETS
07	LA	105	R0.5	39	45

REGISTERED CIVIL ENGINEER

April 19, 2013
PLANS APPROVAL DATE

REGISTERED PROFESSIONAL ENGINEER Gurinderpal Bhullar No. C48815 Exp. 9-30-14 CIVIL STATE OF CALIFORNIA

THE STATE OF CALIFORNIA OR ITS OFFICERS OR AGENTS SHALL NOT BE RESPONSIBLE FOR THE ACCURACY OR COMPLETENESS OF SCANNED COPIES OF THIS PLAN SHEET.

TO ACCOMPANY PLANS DATED 7-22-13

TYPICAL RAMP CLOSURES

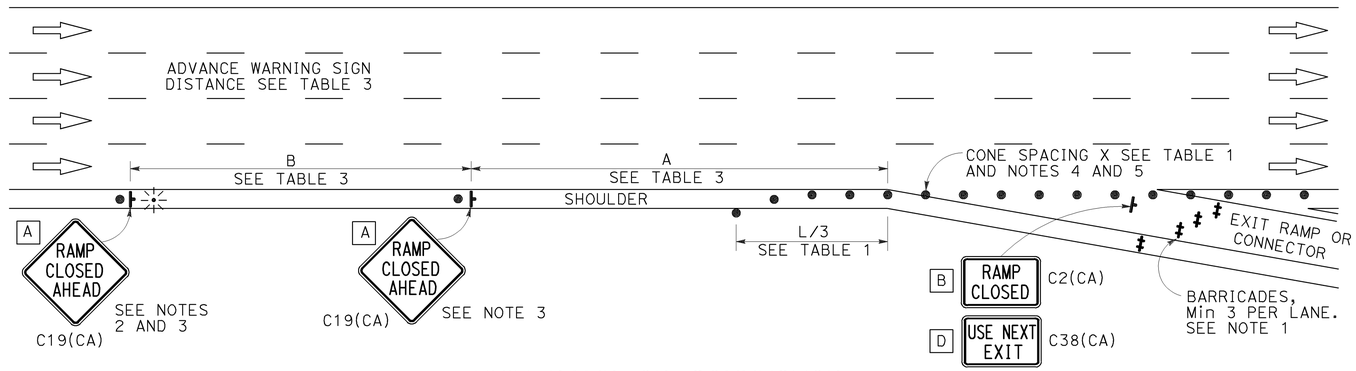

EXIT RAMP OR CONNECTOR

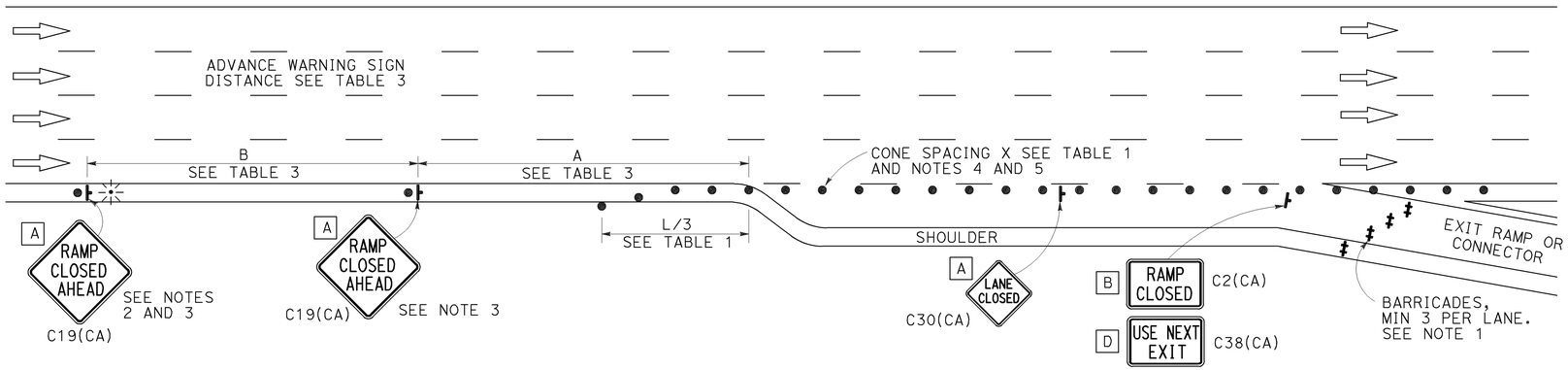

EXIT RAMP OR CONNECTOR WITH ADDITIONAL LANE

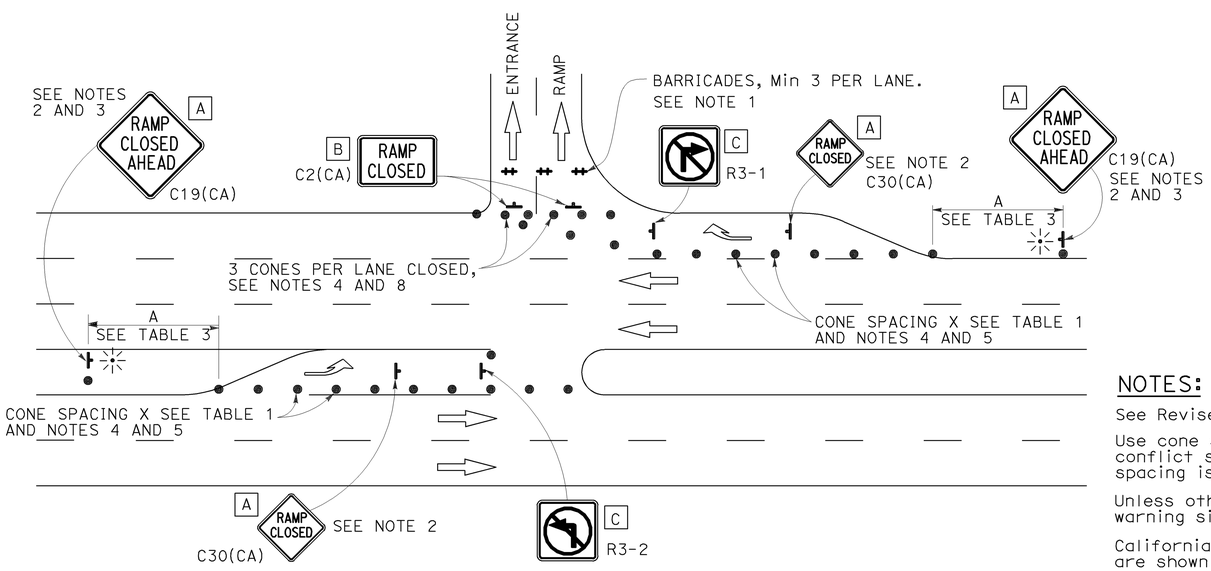

ENTRANCE RAMP WITH TURNING POCKETS

SIGN PANEL SIZE (Min)

- A 48" × 48"
- B 48" × 30"
- C 36" × 36"
- D 48" × 36"

LEGEND

- TRAFFIC CONE
- TEMPORARY TRAFFIC CONTROL SIGN
- BARRICADES
- PORTABLE FLASHING BEACON

NOTES:

1. Barricades shall be Type I, II, or III for closures lasting one week or less and Type III for closures lasting longer than one week.
2. In addition to placing the C19(CA) "RAMP CLOSED AHEAD" and C30(CA) "RAMP CLOSED" signs, black on orange overlay plates with the word "CLOSED" may be mounted, as directed by the Engineer, on all guide signs that refer to the closed ramp. The letter size on the overlay shall be the same as the guide sign.
3. Each advance C19(CA) "RAMP CLOSED AHEAD" sign shall be equipped with at least two flags for daytime closure. Each flag shall be at least 16" × 16" in size and shall be orange or fluorescent red-orange in color. A flashing beacon shall be placed on top of the first C19(CA) sign during hours of darkness.
4. All cones used for ramp closures during the hours of darkness shall be fitted with retroreflective bands (or sleeves) as specified in the specifications.
5. Portable delineators, placed at one-half the spacing indicated for traffic cones, may be used instead of cones for daytime ramp closures only.
6. At least one person shall be assigned to provide full time maintenance of traffic control devices, unless otherwise directed by the Engineer.
7. The existing "EXIT" signs shall be covered during ramp closures.
8. A minimum of 3 cones shall be placed transversely across each closed lane and shoulder.

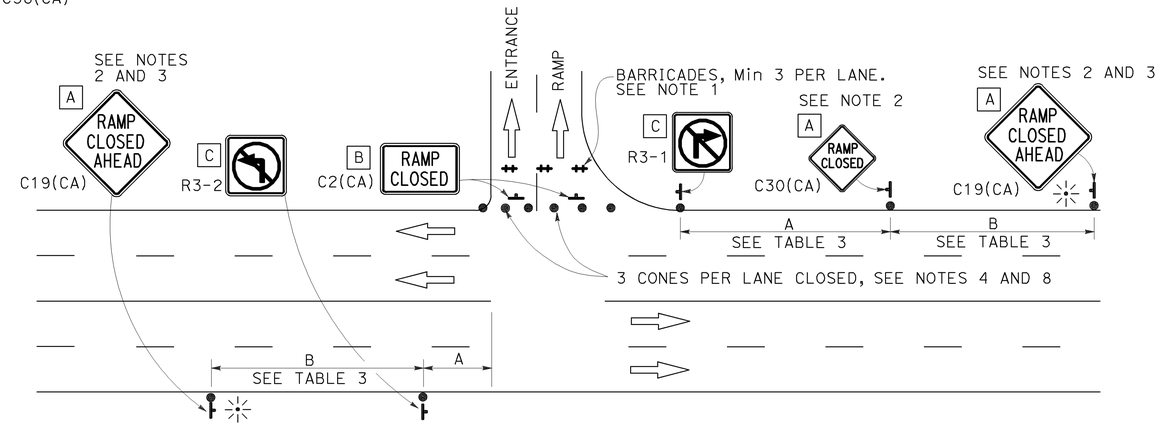

ENTRANCE RAMP WITHOUT TURNING POCKETS

NOTES:

See Revised Standard Plan RSP T9 for tables.

Use cone spacing X for taper segment, Y for tangent segment or Z for conflict situations, as approriate, per Table 1, unless X, Y, or Z cone spacing is shown on this sheet.

Unless otherwise specified in the special provisions, all temporary warning signs shall have black legend on fluorescent orange background.

California codes are designated by (CA). Otherwise, Federal (MUTCD) codes are shown.

STATE OF CALIFORNIA
DEPARTMENT OF TRANSPORTATION

TRAFFIC CONTROL SYSTEM FOR RAMP CLOSURE

NO SCALE

RSP T14 DATED APRIL 19, 2013 SUPERSEDES STANDARD PLAN T14
DATED MAY 20, 2011 - PAGE 242 OF THE STANDARD PLANS BOOK DATED 2010.

REVISED STANDARD PLAN RSP T14

2010 REVISED STANDARD PLAN RSP T14

12-18-12

DIST	COUNTY	ROUTE	POST MILES TOTAL PROJECT	SHEET NO.	TOTAL SHEETS
07	LA	105	R0.5	40	45

REGISTERED ELECTRICAL ENGINEER

January 20, 2012
PLANS APPROVAL DATE

REGISTERED PROFESSIONAL ENGINEER Jeffery G. McRae No. E14512 Exp. 6-30-12 ELECTRICAL STATE OF CALIFORNIA

THE STATE OF CALIFORNIA OR ITS OFFICERS OR AGENTS SHALL NOT BE RESPONSIBLE FOR THE ACCURACY OR COMPLETENESS OF SCANNED COPIES OF THIS PLAN SHEET.

TO ACCOMPANY PLANS DATED 7-22-13

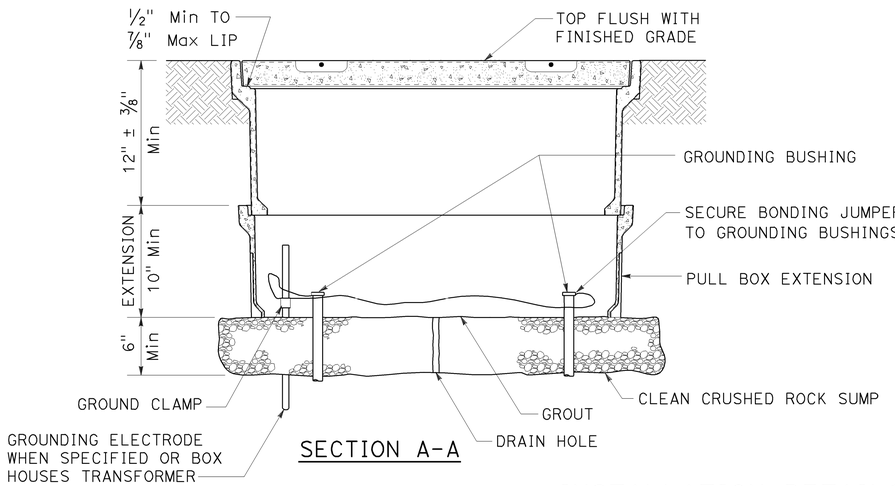

SECTION A-A

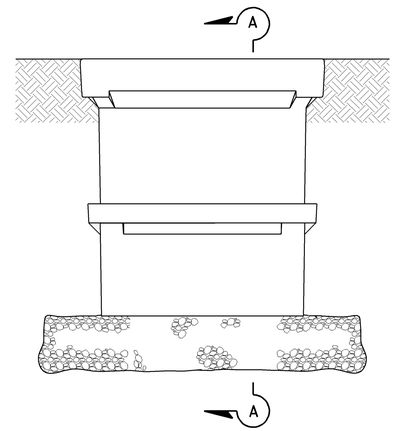

SIDE VIEW

INSTALLATION DETAILS

DETAIL A

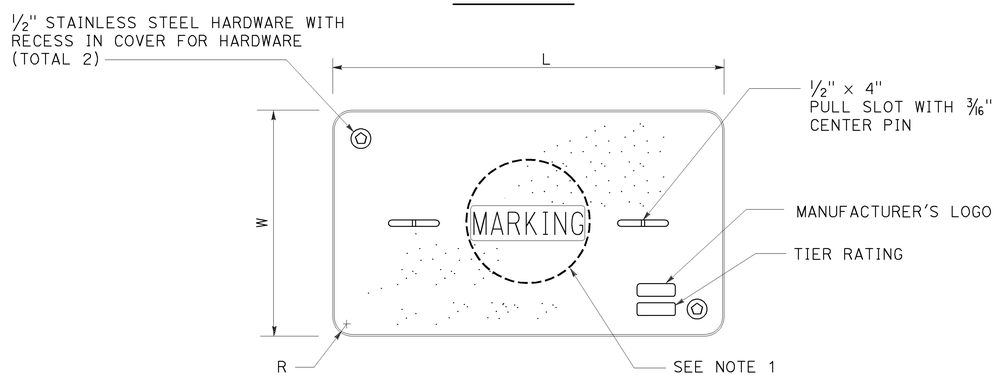

COVER TOP VIEW

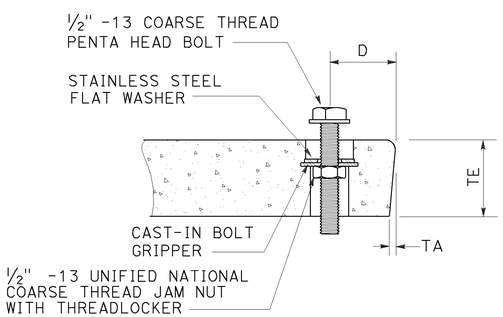

TYPICAL COVER CAPTIVE BOLT

OR SIMILAR

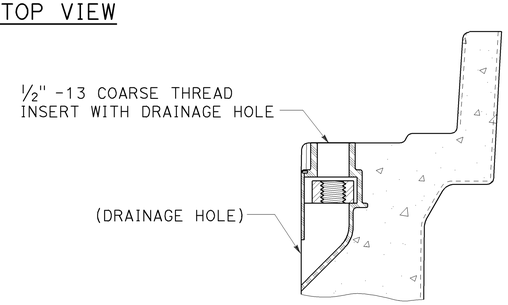

TYPICAL THREADED INSERT

OR SIMILAR

DIMENSION TABLE

PULL BOX	PULL BOX			COVER						
	MINIMUM DEPTH BOX	MINIMUM DEPTH EXTENSION	MAXIMUM WEIGHT	L	W	R	TE	TA	D	MAXIMUM WEIGHT
No. 3½	12"	N/A	40 lb	1′ - 3⅜"	10⅛"	1⅜"	2"	⅛"	1¾"	30 lb
No. 5	12"	10"	55 lb	1′ - 11¼"	1′ - 1¾"	1⅜"	2"	⅛"	1¾"	60 lb
No. 6	12"	10"	70 lb	2′ - 6½"	1′ - 5½"	1⅜"	2"	⅛"	2"	85 lb

NOTES ON PULL BOXES:

1. Pull box covers must be marked as follows: "SERVICE" Service circuits between service point and service disconnect; "SPRINKLER-CONTROL" sprinkler control circuits, 50 V or less; "CALTRANS" on all pull boxes, except pull boxes marked "SPRINKLER-CONTROL"; and "TELEPHONE" Telephone service;

   A) No. 3½ pull box.
      1) "SIGNAL" - Traffic signal circuits with or without street or sign lighting circuits.
      2) "ST LIGHTING" - Street or sign lighting circuits where voltage is under 600 V.

   B) No. 5, 6, 9 or 9A pull box.
      1) "TRAFFIC SIGNAL" - Traffic signal circuits with or without street or sign lighting circuits.
      2) "STREET LIGHTING" - Street or sign lighting circuits where voltage is under 600 V.
      3) "STREET LIGHTING-HIGH VOLTAGE" - Street or sign lighting circuits where voltage is above 600 V.
      4) "IRRIGATION" - Circuits to irrigation controller 120 V or more.
      5) "RAMP METER" - Ramp meter circuits.
      6) "COUNT STATION" - Count or speed monitor circuits.
      7) "COMMUNICATIONS" - Communication circuits.
      8) "TOS COMMUNICATIONS" - TOS communication line.
      9) "TOS POWER" - TOS power.
      10) "TDC POWER" - Telephone demarcation cabinet power.
      11) "CCTV" - Closed circuit television circuits.
      12) "TMS" - Traffic monitoring station circuits.
      13) "CMS" - Changeable message sign circuits.
      14) "HAR" - Highway advisory radio circuits.

2. The nominal dimensions of the opening in which the cover sets must be the same as the cover dimensions (L and W) plus ⅛" or greater.
3. Covers and boxes must be interchangeable with California Standard. When interchanged with a standard, the top surfaces must be flush within ⅛". Top outside radius of covers and pull boxes must have a ⅛" radius.
4. Pull box extension may be another pull box as long as the bottom edge of the pull box can fit into the cover opening.

STATE OF CALIFORNIA
DEPARTMENT OF TRANSPORTATION

ELECTRICAL SYSTEMS (PULL BOX)

NO SCALE

RSP ES-8A DATED JANUARY 20, 2012 SUPPLEMENTS THE STANDARD PLANS BOOK DATED 2010.

REVISED STANDARD PLAN RSP ES-8A

2010 REVISED STANDARD PLAN RSP ES-8A

01-09-12

DIST	COUNTY	ROUTE	POST MILES TOTAL PROJECT	SHEET NO.	TOTAL SHEETS
07	LA	105	R0.5	41	45

REGISTERED ELECTRICAL ENGINEER

January 20, 2012
PLANS APPROVAL DATE

REGISTERED PROFESSIONAL ENGINEER
Jeffery G. McRae
No. E14512
Exp. 6-30-12
ELECTRICAL
STATE OF CALIFORNIA

THE STATE OF CALIFORNIA OR ITS OFFICERS OR AGENTS SHALL NOT BE RESPONSIBLE FOR THE ACCURACY OR COMPLETENESS OF SCANNED COPIES OF THIS PLAN SHEET.

TO ACCOMPANY PLANS DATED 7-22-13

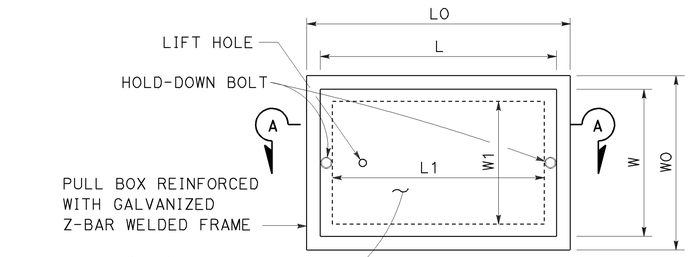

TOP VIEW

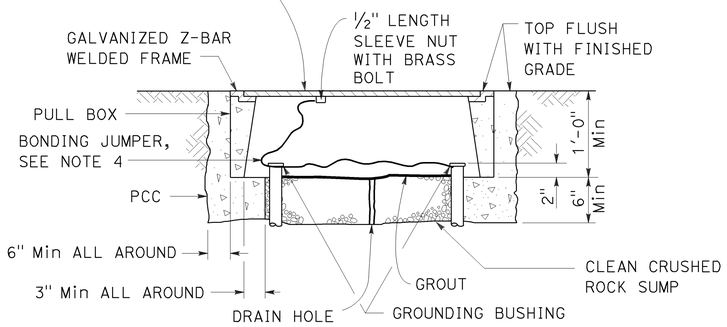

SECTION A-A

No. 3½(T), No. 5(T) AND No. 6(T) TRAFFIC PULL BOX

NOTES ON PULL BOXES:

1. Traffic pull box shall be provided with steel cover and special concrete footing. Steel cover shall have embossed non-skid pattern.
2. Steel reinforcing shall be as regularly used in the standard products of the respective manufacturer.
3. Pull box covers must be marked as follows: "SERVICE" Service circuits between service point and service disconnect; "SPRINKLER-CONTROL" Sprinkler control circuits, 50 V or less; "CALTRANS" On all pull boxes, except pull boxes marked "SPRINKLER-CONTROL"; and "TELEPHONE" Telephone service.
   A) No. 3½(T) pull box.
      1) "SIGNAL" - Traffic signal circuits with or without street or sign lighting circuits.
      2) "ST LIGHTING" - Street or sign lighting circuits where voltage is under 600 V.
   B) No. 5(T) or 6(T) pull box.
      1) "TRAFFIC SIGNAL" - Traffic signal circuits with or without street or sign lighting circuits.
      2) "STREET LIGHTING" - Street or sign lighting circuits where voltage is under 600 V.
      3) "STREET LIGHTING-HIGH VOLTAGE" - Street or sign lighting circuits where voltage is above 600 V.
      4) "IRRIGATION" - Circuits to irrigation controller 120 V or more.
      5) "RAMP METER" - Ramp meter circuits.
      6) "COUNT STATION" - Count or speed monitor circuits.
      7) "COMMUNICATION" - Communication circuits.
      8) "TOS COMMUNICATIONS" - TOS communications line.
      9) "TOS POWER" - TOS power.
      10) "TDC POWER" - Telephone demarcation cabinet power.
      11) "CCTV" - Closed circuit television circuits.
      12) "TMS" - Traffic monitoring station circuits.
      13) "CMS" - Changeable message sign circuits.
      14) "HAR" - Highway advisory radio circuits.
4. Bonding jumper for metal covers shall be 3' long, minimum.
5. The nominal dimensions of the opening in which the cover sets must be the same as the cover dimensions except the length and width dimensions shall be ⅛" greater.
6. Covers and boxes must be interchangeable with California standard male and female gages. When interchanged with a standard male or female gage, the top surfaces must be flush within ⅛".

DIMENSION TABLE

PULL BOX	BOX						COVER				
	MINIMUM * THICKNESS	MINIMUM DEPTH BOX AND EXTENSION	WO	LO	L1	W1	L **	W **	R	EDGE THICKNESS	EDGE TAPER
No. 3½(T)	1½"	1'-0"	1'-5"± 1"	1'-8⅞"±	1'-2½"±	10⅝"± 1"	1'-8"±	1'-1¾"±	0"	½"	NONE
No. 5(T)	1¾"	1'-0"	1'-11½"± 1"	2'-5½"±	1'-7"±	1'-1"± 1"	2'-3"±	1'-4"±	0"	½"	NONE
No. 6(T)	2"	1'-0"	2'-6"± 1"	2'-11½"±	1'-11½"±	1'-5"± 1"	2'-9"±	1'-8"±	0"	½"	NONE

* EXCLUDING CONDUIT WEB ** TOP DIMENSION

STATE OF CALIFORNIA
DEPARTMENT OF TRANSPORTATION

ELECTRICAL SYSTEMS (TRAFFIC RATED PULL BOX)

NO SCALE

RSP ES-8B DATED JANUARY 20, 2012 SUPPLEMENTS THE STANDARD PLANS BOOK DATED 2010.

REVISED STANDARD PLAN RSP ES-8B

2010 REVISED STANDARD PLAN RSP ES-8B

Dist	COUNTY	ROUTE	POST MILES TOTAL PROJECT	SHEET No.	TOTAL SHEETS
07	LA	105	R0.5	42	45

REGISTERED ELECTRICAL ENGINEER

July 20, 2012
PLANS APPROVAL DATE

REGISTERED PROFESSIONAL ENGINEER
Jeffery G. McRae
No. E14512
Exp. 6-30-14
ELECTRICAL
STATE OF CALIFORNIA

THE STATE OF CALIFORNIA OR ITS OFFICERS OR AGENTS SHALL NOT BE RESPONSIBLE FOR THE ACCURACY OR COMPLETENESS OF SCANNED COPIES OF THIS PLAN SHEET.

TO ACCOMPANY PLANS DATED 7-22-13

ISOFOOTCANDLE CURVE - MINIMUM

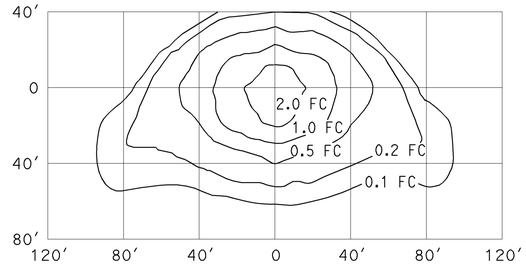

TYPE III MEDIUM CUTOFF

Cutoff Luminaire
34′ Mounting Height
Lamp operated at 22,000 lm
200-W high pressure sodium lamp
ANSI Designation S66

ISOFOOTCANDLE CURVE - MINIMUM

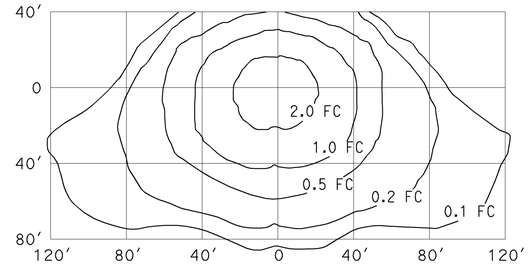

TYPE III MEDIUM CUTOFF

Cutoff Luminaire
40′ Mounting Height
Lamp operated at 37,000 lm
310-W high pressure sodium lamp
ANSI Designation S67

ISOFOOTCANDLE CURVE - MINIMUM

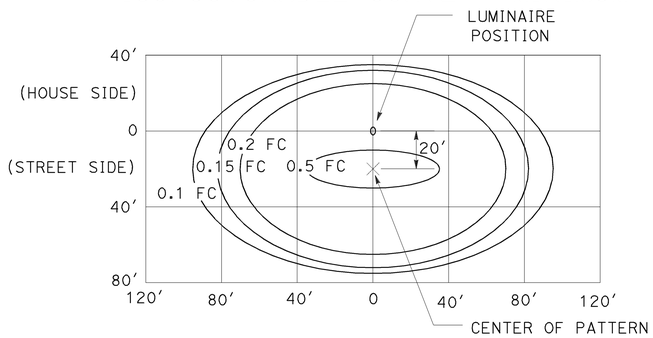

LED LUMINAIRE ROADWAY 1

200-W HPS Equivalent at 34′ Mounting Height

ISOFOOTCANDLE CURVE - MINIMUM

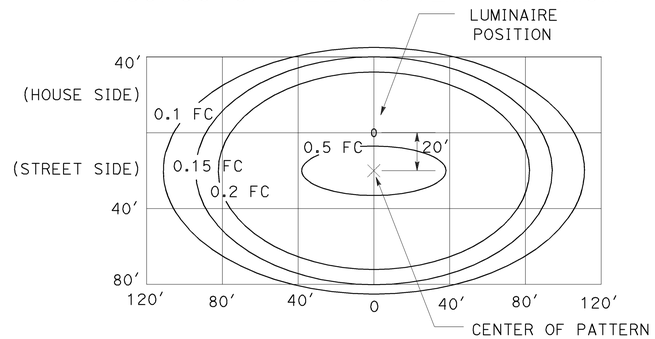

LED LUMINAIRE ROADWAY 2

310-W HPS Equivalent at 40′ Mounting Height

ISOFOOTCANDLE CURVE - MINIMUM

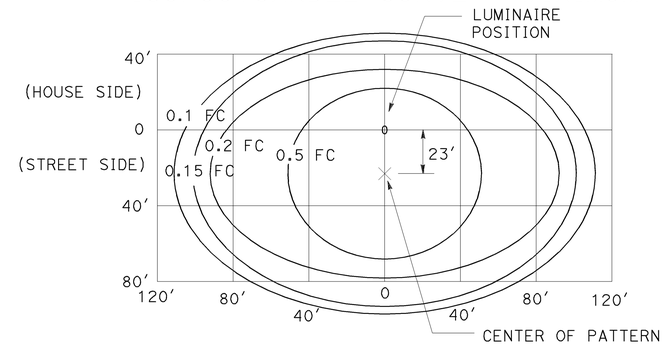

LED LUMINAIRE ROADWAY 4

400-W HPS Equivalent at 40′ Mounting Height

ISOFOOTCANDLE CURVE - MINIMUM

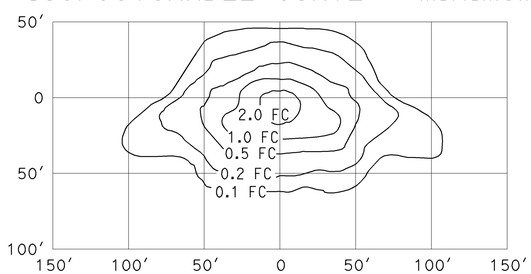

TYPE III MEDIUM CUTOFF

Cutoff Luminaire
30′ Mounting Height
Lamp operated at 16,000 lm
150-W high pressure sodium lamp
ANSI Designation S55

ISOFOOTCANDLE CURVE - MINIMUM

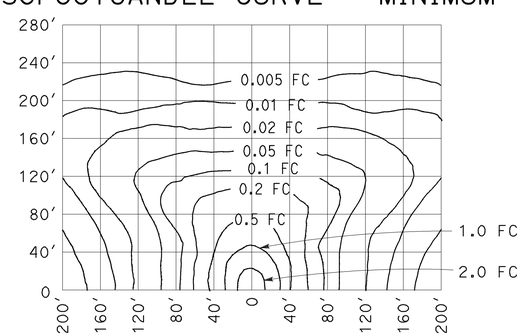

LOW PRESSURE SODIUM LUMINAIRE

40′ Mounting Height
Lamp operated at 33,000 lm
180-W low pressure sodium lamp

STATE OF CALIFORNIA
DEPARTMENT OF TRANSPORTATION

ELECTRICAL SYSTEMS (ISOFOOTCANDLE DIAGRAMS)

NO SCALE

RSP ES-10A DATED JULY 20, 2012 SUPPLEMENTS THE STANDARD PLANS BOOK DATED 2010.

REVISED STANDARD PLAN RSP ES-10A

2010 REVISED STANDARD PLAN RSP ES-10A

DIST	COUNTY	ROUTE	POST MILES TOTAL PROJECT	SHEET No.	TOTAL SHEETS
07	LA	105	R0.5	43	45

REGISTERED CIVIL ENGINEER — DATE 1/8/13

7-22-13
PLANS APPROVAL DATE

REGISTERED PROFESSIONAL ENGINEER — JORGE I. ESTRADA No. C51473 Exp. 06/30/14 CIVIL — STATE OF CALIFORNIA

The State of California or its officers or agents shall not be responsible for the accuracy or completeness of scanned copies of this plan sheet.

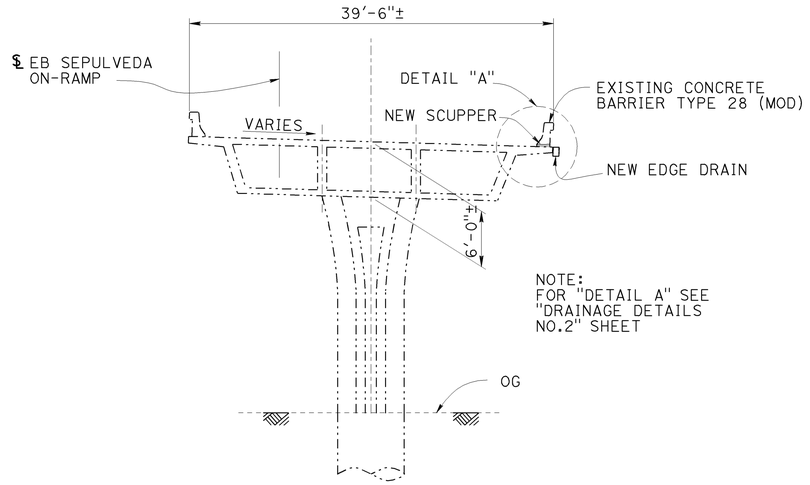

SECTION A-A

1/8" = 1'

INDEX TO PLANS

1. GENERAL PLAN
2. DRAINAGE DETAILS NO.1
3. DRAINAGE DETAILS NO.2

STANDARD PLANS DATED 2010

SHEET NO.	TITLE
A10A - A10B	ABBREVIATIONS (SHEETS 1 AND 2 OF 2)
A10C - A10E	LINES AND SYMBOLS (SHEETS 1,2 AND 3 OF 3)

LEGEND

Existing Structure

New Scupper

NOTES:

1. Paint "Bridge No. 53-2801F"
2. Paint Bent Number
3. Existing Approach Slab

Existing high friction surface treatment (HFST) on bridge deck (Sta 66+74.65± to Sta 67+80±) to be overlaid with one layer of new HFST (Sta 66+74.65 to Sta 67+80). See "ROADWAY PLANS" for details

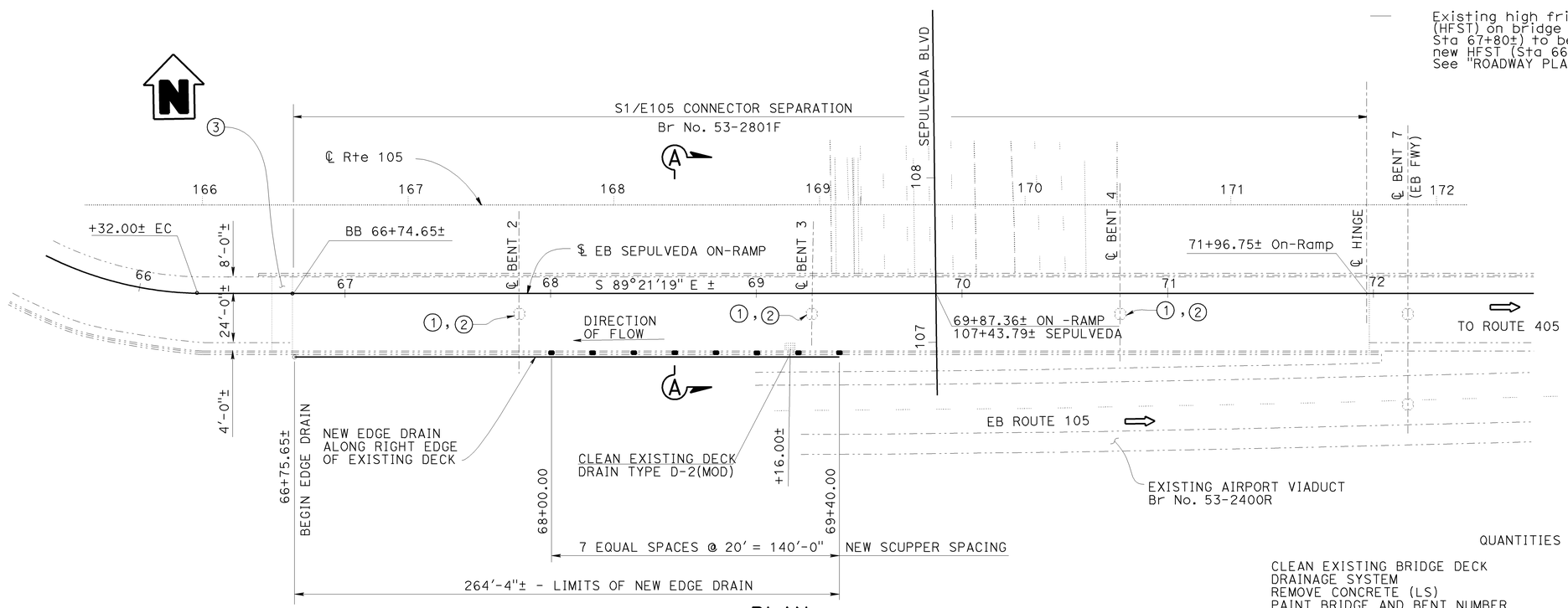

PLAN

1" = 30'

QUANTITIES

CLEAN EXISTING BRIDGE DECK	61	LF
DRAINAGE SYSTEM		
REMOVE CONCRETE (LS)	LUMP	SUM
PAINT BRIDGE AND BENT NUMBER	3	EA
BRIDGE DECK DRAINAGE SYSTEM	2,800	LB

NOTE:
THE CONTRACTOR SHALL VERIFY ALL CONTROLLING FIELD DIMENSIONS BEFORE ORDERING OR FABRICATING ANY MATERIAL.

MIKE POPE
DESIGN ENGINEER

	BY	CHECKED		BY	CHECKED
DESIGN	JORGE ESTRADA	MIKE POPE	LOAD & RESISTANCE FACTOR DESIGN		
DETAILS	FARIDEH RASHEDI	JORGE ESTRADA	LAYOUT	FARIDEH RASHEDI	JORGE ESTRADA
QUANTITIES	JORGE ESTRADA	MIKE POPE	SPECIFICATIONS	KEVIN ELLINGSON	PLANS AND SPECS COMPARED KEVIN ELLINGSON

ORIGINAL SCALE IN INCHES FOR REDUCED PLANS 0 1 2 3

STATE OF CALIFORNIA
DEPARTMENT OF TRANSPORTATION

DIVISION OF ENGINEERING SERVICES
STRUCTURE DESIGN
DESIGN BRANCH 18

BRIDGE NO. 53-2801F
POST MILE R0.50

S1/E105 CONNECTOR SEPARATION (DRAINAGE)
GENERAL PLAN

UNIT: 3603
PROJECT NUMBER & PHASE: 07120001211
CONTRACT NO.: 07-4T5704

DISREGARD PRINTS BEARING EARLIER REVISION DATES

REVISION DATES: 10-12-12 12-28-12 5-23-13 — SHEET 1 OF 3

USERNAME => s129900 DATE PLOTTED => 18-JUN-2013 TIME PLOTTED => 15:17

STRUCTURES DESIGN GENERAL PLAN SHEET (ENGLISH) (REV.09-01-10)

FILE => 07-4t5700-a-gp.dgn

DIST	COUNTY	ROUTE	POST MILES TOTAL PROJECT	SHEET No.	TOTAL SHEETS
07	LA	105	R0.5	44	45

REGISTERED CIVIL ENGINEER — DATE 1/8/13

7-22-13
PLANS APPROVAL DATE

REGISTERED PROFESSIONAL ENGINEER — JORGE I. ESTRADA — No. C51473 — Exp. 06-30-14 — CIVIL — STATE OF CALIFORNIA

The State of California or its officers or agents shall not be responsible for the accuracy or completeness of electronic copies of this plan sheet.

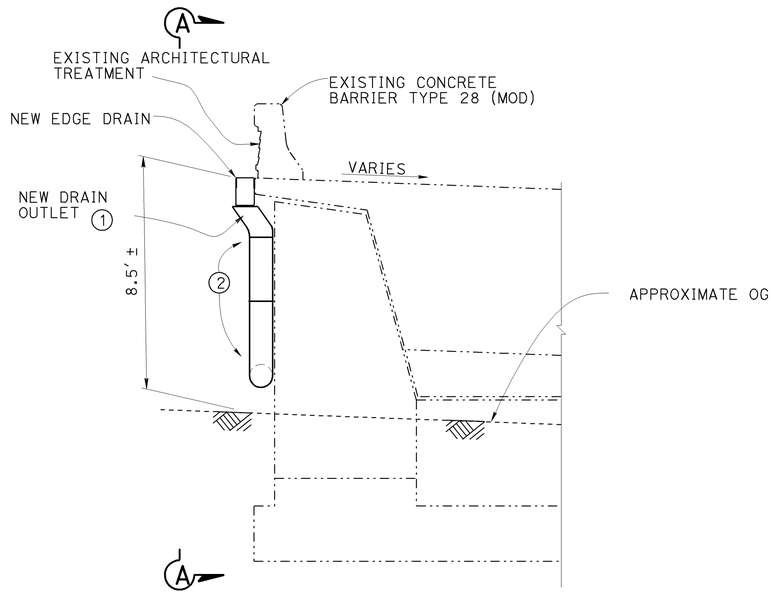

DRAIN OUTLET AT ABUTMENT 1

(LOOKING BACK ON STATION)

3/8" = 1'

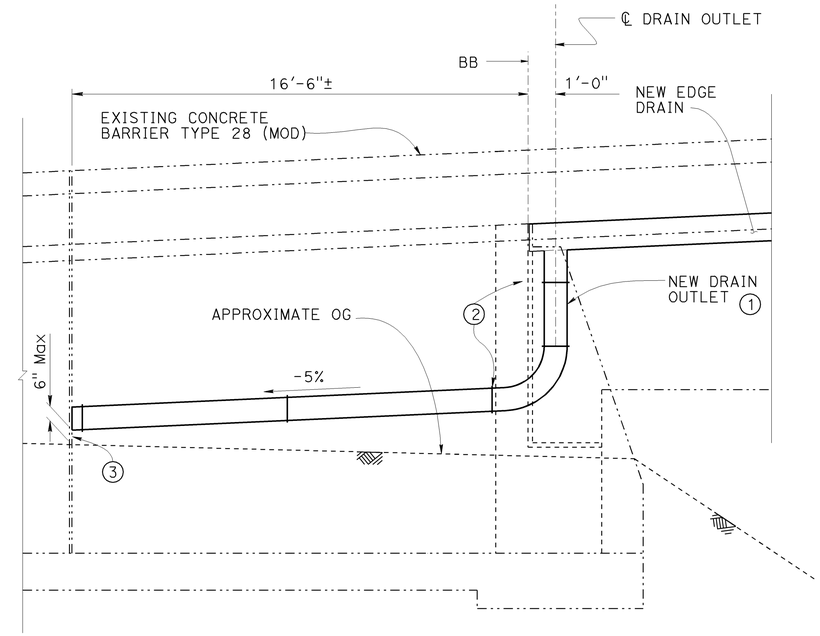

ELEVATION A-A

3/8" = 1'-0"

LEGEND

EXISTING STRUCTURE

NEW BRIDGE DECK DRAINAGE SYSTEM

DRAIN OUTLET NOTES:

1. All steel pipe to be 10" internal diameter X 1/8" wall thickness and will be galvanized. Fittings and bends will have a minimum wall thickness of 1/8". All joints or connections to be connected by a steel pipe sleeve (See "DRAIN OUTLET SLEEVE CONNECTION" on this sheet) and to be smooth throughout inside of pipe except as noted. All bends to be 24" radius measured along centerline of pipe. All bends to be smooth.

2. Attach drain outlet to outside face of abutment with 1/8" X 1 1/2" straps with 2 - 5/8" ø metal expansion anchors at 10' maximum centers and no more than 8" on each side of joints.

3. See roadway plans for drainage details not shown.

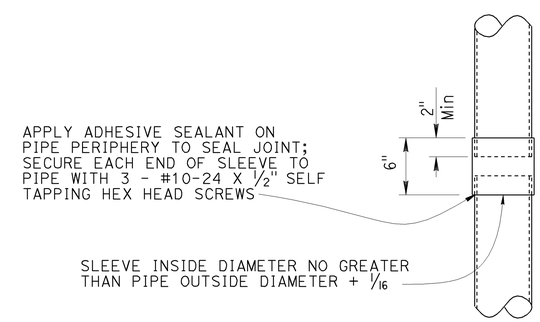

DRAIN OUTLET SLEEVE CONNECTION

NO SCALE

NOTE:
THE CONTRACTOR SHALL VERIFY ALL CONTROLLING FIELD DIMENSIONS BEFORE ORDERING OR FABRICATING ANY MATERIAL.

	BY	CHECKED
DESIGN	JORGE ESTRADA	MIKE POPE
DETAILS	FARIDEH RASHEDI	JORGE ESTRADA
QUANTITIES	JORGE ESTRADA	MIKE POPE

STATE OF CALIFORNIA
DEPARTMENT OF TRANSPORTATION

DIVISION OF ENGINEERING SERVICES
STRUCTURE DESIGN
DESIGN BRANCH 18

BRIDGE NO. 53-2801F
POST MILE R0.50

S1/E105 CONNECTOR SEPARATION (DRAINAGE)
DRAINAGE DETAILS NO.1

STRUCTURES DESIGN DETAIL SHEET (ENGLISH) (REV. 09-01-10)
ALL DIMENSIONS ARE IN FEET UNLESS OTHERWISE SHOWN

ORIGINAL SCALE IN INCHES FOR REDUCED PLANS 0 1 2 3

UNIT: 3603
PROJECT NUMBER & PHASE: 07120001211
CONTRACT NO.: 07-4T5704

DISREGARD PRINTS BEARING EARLIER REVISION DATES → REVISION DATES 10-08-12 10-30-12 10-31-12

SHEET 2 OF 3

FILE => 07-4t5700-d-draindet1.dgn

USERNAME => s129900 DATE PLOTTED => 18-JUN-2013 TIME PLOTTED => 14:12

DIST	COUNTY	ROUTE	POST MILES TOTAL PROJECT	SHEET No.	TOTAL SHEETS
07	LA	105	R0.5	45	45

JEstrada. 1/8/13
REGISTERED CIVIL ENGINEER DATE

7-22-13
PLANS APPROVAL DATE

REGISTERED PROFESSIONAL ENGINEER JORGE I. ESTRADA No. C51473 Exp. 06-30-14 CIVIL STATE OF CALIFORNIA

The State of California or its officers or agents shall not be responsible for the accuracy or completeness of electronic copies of this plan sheet.

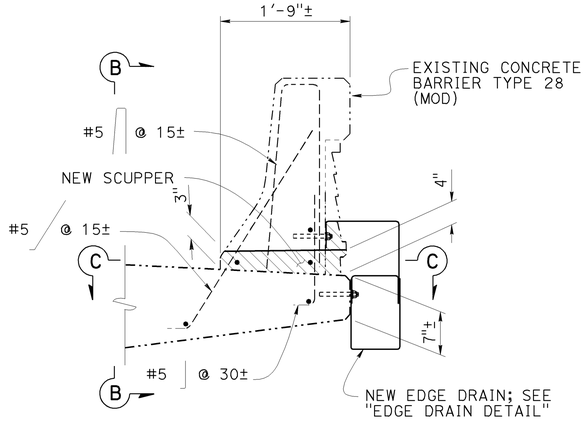

DETAIL A

1" = 1'

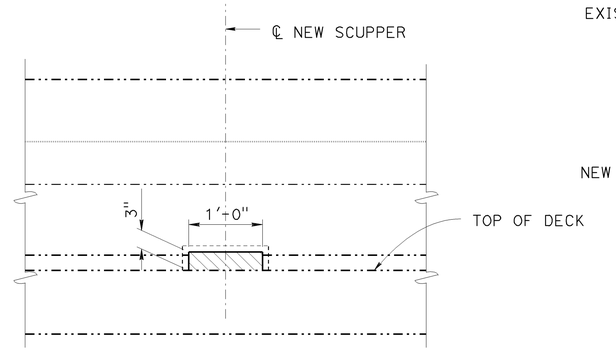

ELEVATION B-B

1" = 1'

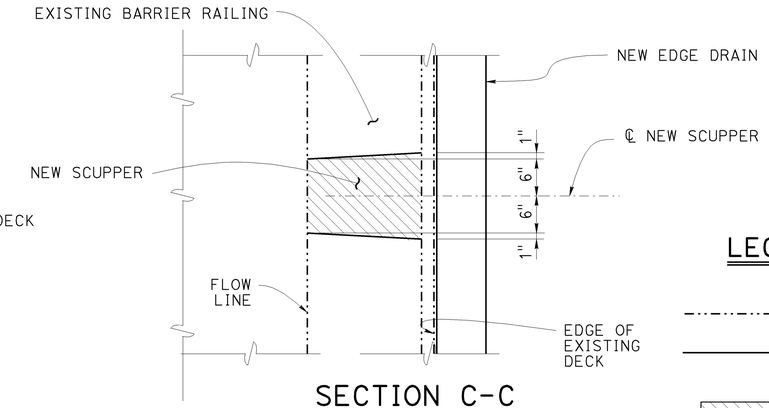

SECTION C-C

1" = 1'

LEGEND

INDICATES EXISTING STRUCTURE

INDICATES NEW BRIDGE DECK DRAINAGE SYSTEM

INDICATES LIMITS OF CONCRETE REMOVAL

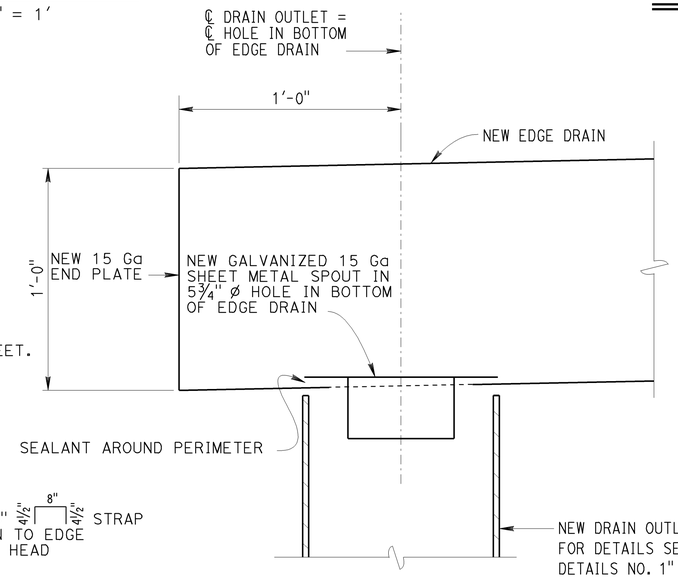

EDGE DRAIN AT DRAIN OUTLET

3" = 1'

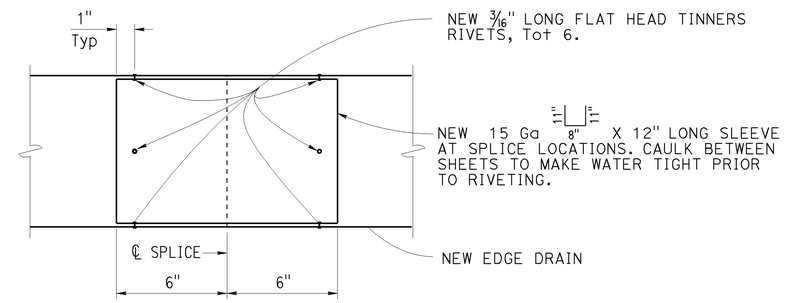

EDGE DRAIN SPLICE - PLAN

EDGE DRAIN SPLICES AT 20' OC MAXIMUM
3" = 1'

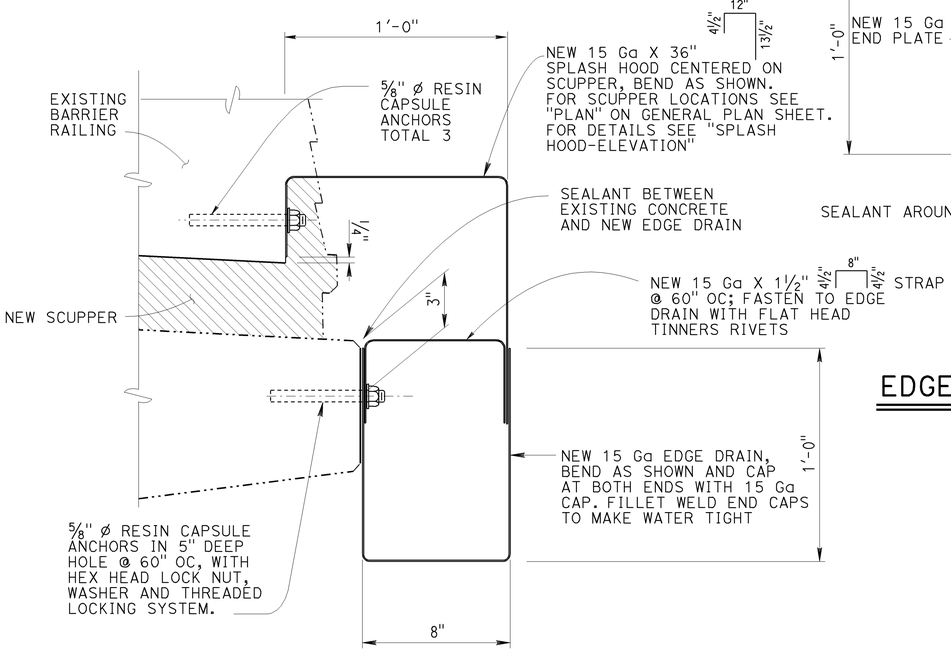

EDGE DRAIN DETAIL

3" = 1'

NOTE:
THE CONTRACTOR SHALL VERIFY ALL CONTROLLING FIELD DIMENSIONS BEFORE ORDERING OR FABRICATING ANY MATERIAL.

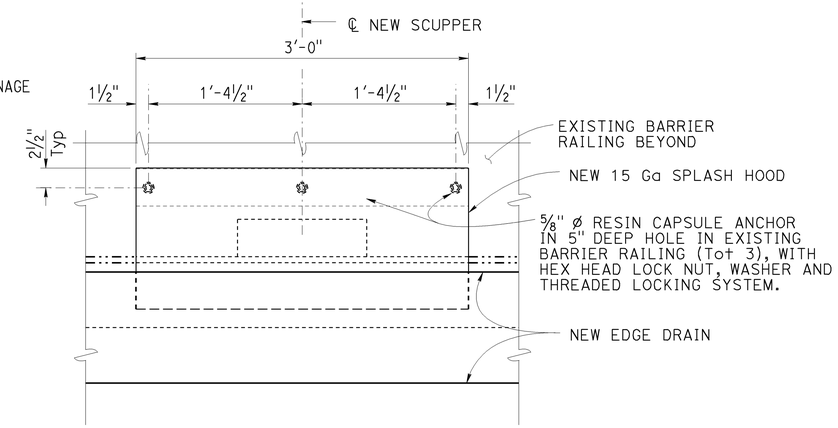

SPLASH HOOD - ELEVATION

1½" = 1'

	BY	CHECKED
DESIGN	JORGE ESTRADA	MIKE POPE
DETAILS	FARIDEH RASHEDI	JORGE ESTRADA
QUANTITIES	JORGE ESTRADA	MIKE POPE

STATE OF CALIFORNIA
DEPARTMENT OF TRANSPORTATION

DIVISION OF ENGINEERING SERVICES
STRUCTURE DESIGN
DESIGN BRANCH 18

BRIDGE NO. 53-2801F
POST MILE R0.50

S1/E105 CONNECTOR SEPARATION (DRAINAGE)
DRAINAGE DETAILS NO.2

STRUCTURES DESIGN DETAIL SHEET (ENGLISH) (REV. 09-01-10)
ALL DIMENSIONS ARE IN FEET UNLESS OTHERWISE SHOWN

ORIGINAL SCALE IN INCHES FOR REDUCED PLANS 0 1 2 3

UNIT: 3603
PROJECT NUMBER & PHASE: 07120001211
CONTRACT NO.: 07-4T5704

DISREGARD PRINTS BEARING EARLIER REVISION DATES
REVISION DATES: 10-08-12 10-30-12 10-31-12
SHEET 3 OF 3

FILE => 07-4t5700-d-drainde+2.dgn

USERNAME => s129900 DATE PLOTTED => 18-JUN-2013 TIME PLOTTED => 14:16