Dist	COUNTY	ROUTE	KILOMETER POST TOTAL PROJECT	SHEET No.	TOTAL SHEETS
07	LA	1	82.8/83.3	1	46

STATE OF CALIFORNIA

DEPARTMENT OF TRANSPORTATION

ACSTP-4141(004)E

PROJECT PLANS FOR CONSTRUCTION ON

STATE HIGHWAY

IN LOS ANGELES COUNTY
IN MALIBU
FROM 0.3 KM NORTH OF SEA VISTA DRIVE
TO VIA ESCONDIDO DRIVE

TO BE SUPPLEMENTED BY STANDARD PLANS DATED JULY 2004

INDEX OF SHEETS

SHEET No.	DESCRIPTION
1	TITLE AND LOCATION MAP
2-3	TYPICAL CROSS SECTIONS
4-5	LAYOUTS
6-10	TEMPORARY WATER POLLUTION CONTROL PLAN, DETAILS AND QUANTITIES
11-12	UTILITY PLANS
13	CONSTRUCTION AREA SIGNS
14-18	STAGE CONSTRUCTION PLANS
19-21	PAVEMENT DELINEATION PLANS, DETAILS AND QUANTITIES
22	SUMMARY OF QUANTITIES
23-30	REVISED STANDARD PLANS
STRUCTURE PLANS	
31-46	ESCONDIDO BEACH LANDSLIDE

THE STANDARD PLANS LIST APPLICABLE TO THIS CONTRACT IS INCLUDED IN THE NOTICE TO BIDDERS AND SPECIAL PROVISIONS BOOK.

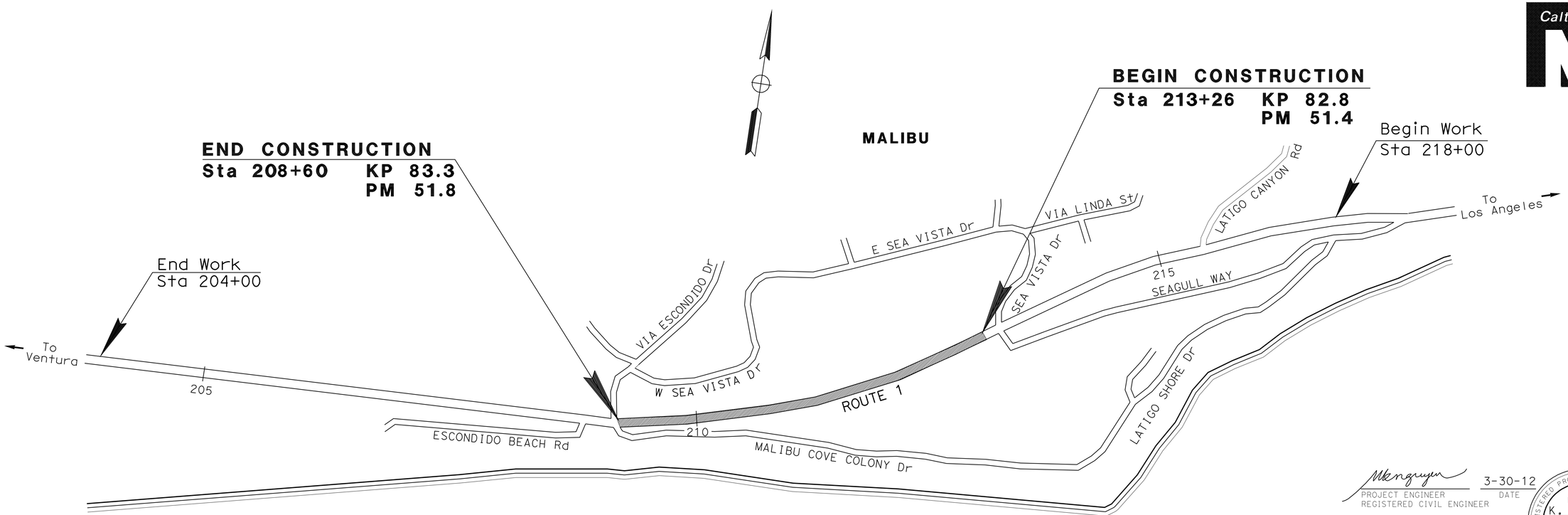

NO SCALE

THE CONTRACTOR SHALL POSSESS THE CLASS (OR CLASSES) OF LICENSE AS SPECIFIED IN THE ''NOTICE TO BIDDERS.''

PROJECT MANAGER: SYED HUQ

DESIGN ENGINEER: MIKE K. NGUYEN

PROJECT ENGINEER
REGISTERED CIVIL ENGINEER

3-30-12
DATE

June 4, 2012
PLANS APPROVAL DATE

REGISTERED PROFESSIONAL ENGINEER
MIKE K. NGUYEN
No. 67756
Exp. 6/30/13
CIVIL
STATE OF CALIFORNIA

THE STATE OF CALIFORNIA OR ITS OFFICERS OR AGENTS SHALL NOT BE RESPONSIBLE FOR THE ACCURACY OR COMPLETENESS OF ELECTRONIC COPIES OF THIS PLAN SHEET.

CONTRACT No.	07-4L2214
PROJECT ID	0712000204

LAST REVISION 12-22-11

DATE PLOTTED => 10-JUL-2012
TIME PLOTTED => 1611

Dist	COUNTY	ROUTE	KILOMETER POST TOTAL PROJECT	SHEET No.	TOTAL SHEETS
07	LA	1	82.8/83.3	2	46

REGISTERED CIVIL ENGINEER 3-30-12 DATE

6-4-12
PLANS APPROVAL DATE

REGISTERED PROFESSIONAL ENGINEER MIKE K. NGUYEN No. 67756 Exp. 6-30-13 CIVIL STATE OF CALIFORNIA

THE STATE OF CALIFORNIA OR ITS OFFICERS OR AGENTS SHALL NOT BE RESPONSIBLE FOR THE ACCURACY OR COMPLETENESS OF SCANNED COPIES OF THIS PLAN SHEET.

Caltrans Metric

NOTES:

1. SEE UTILITY PLANS FOR DETAILS NOT SHOWN.
2. DIMENSIONS OF THE STRUCTURAL SECTIONS ARE SUBJECT TO TOLERANCES SPECIFIED IN THE STANDARD SPECIFICATIONS.
3. SUPERELEVATION AS SHOWN OR AS DIRECTED BY THE ENGINEER.

EXISTING STRUCTURAL SECTIONS

(1) 100 mm AC TYPE B
230 mm CLASS 4 AS

(2) 100 mm AC
200 mm PCC
100 mm CEMENT SG TREATMENT
400 mm SM

LEGEND:

Str LOL: STRUCTURE LAYOUT LINE

PROPOSED STRUCTURAL SECTIONS

(3) 60 mm RUBBERIZED HOT MIX ASPHALT (GAP GRADED)
105 mm HOT MIX ASPHALT (TYPE B)
165 mm LEAN CONCRETE BASE
315 mm CLASS 3 AGGREGATE BASE

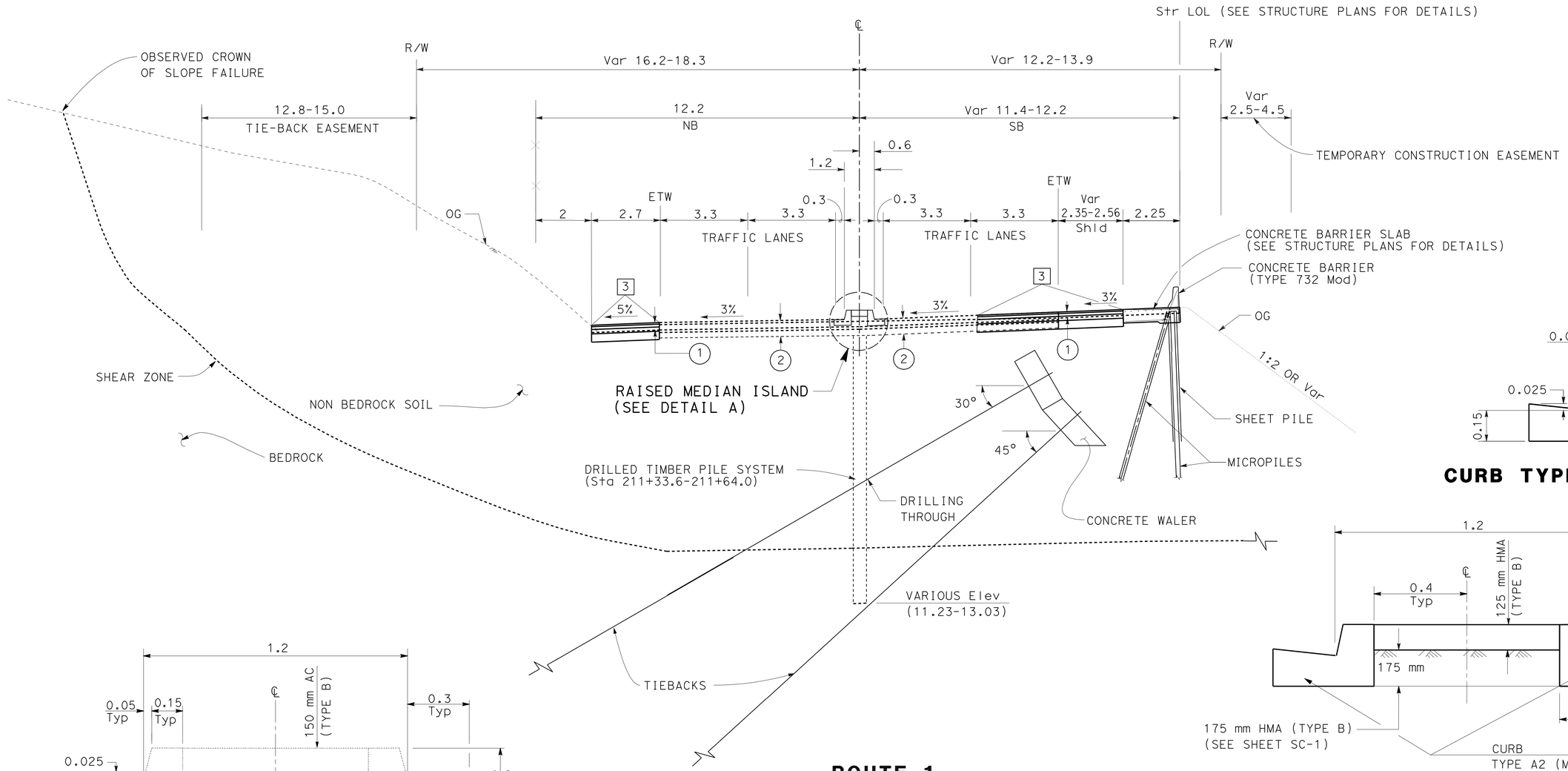

ROUTE 1
Sta 209+30.85 TO Sta 212+27.22

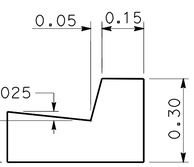

CURB TYPE A2 (Mod)

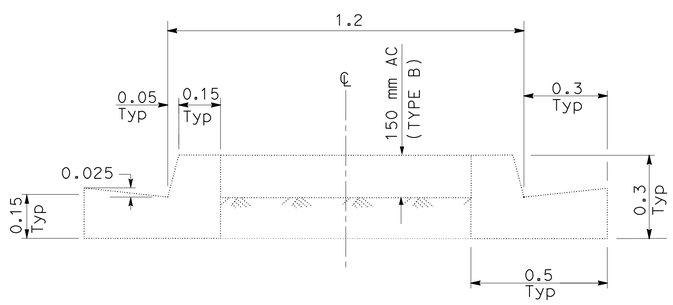

Exist RAISED MEDIAN

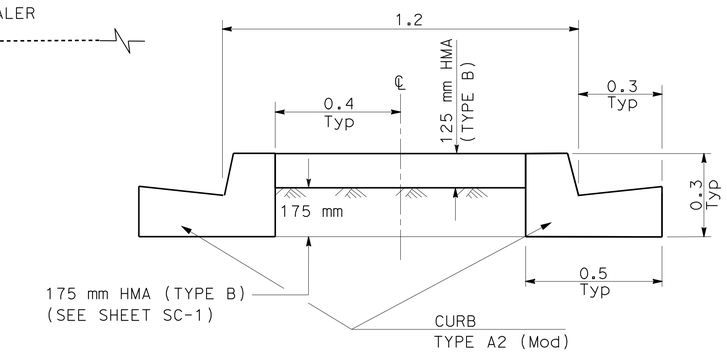

DETAIL A

ALL DIMENSIONS ARE IN METERS UNLESS OTHERWISE SHOWN

TYPICAL CROSS SECTION

NO SCALE

X-1

STATE OF CALIFORNIA - DEPARTMENT OF TRANSPORTATION
Caltrans **DESIGN**

FUNCTIONAL SUPERVISOR: ORLANCE LEE
CALCULATED-DESIGNED BY: MIKE NGUYEN
CHECKED BY: PAUL HSU
REVISED BY
DATE REVISED

LAST REVISION 00-00-00
DATE PLOTTED => 04-JUN-2012
TIME PLOTTED => 13:37

Dist	COUNTY	ROUTE	KILOMETER POST TOTAL PROJECT	SHEET No.	TOTAL SHEETS
07	LA	1	82.8/83.3	3	46

Caltrans Metric

REGISTERED CIVIL ENGINEER 3-30-12 DATE

6-4-12
PLANS APPROVAL DATE

REGISTERED PROFESSIONAL ENGINEER
MIKE K. NGUYEN
No. 67756
Exp. 6-30-13
CIVIL
STATE OF CALIFORNIA

THE STATE OF CALIFORNIA OR ITS OFFICERS OR AGENTS SHALL NOT BE RESPONSIBLE FOR THE ACCURACY OR COMPLETENESS OF SCANNED COPIES OF THIS PLAN SHEET.

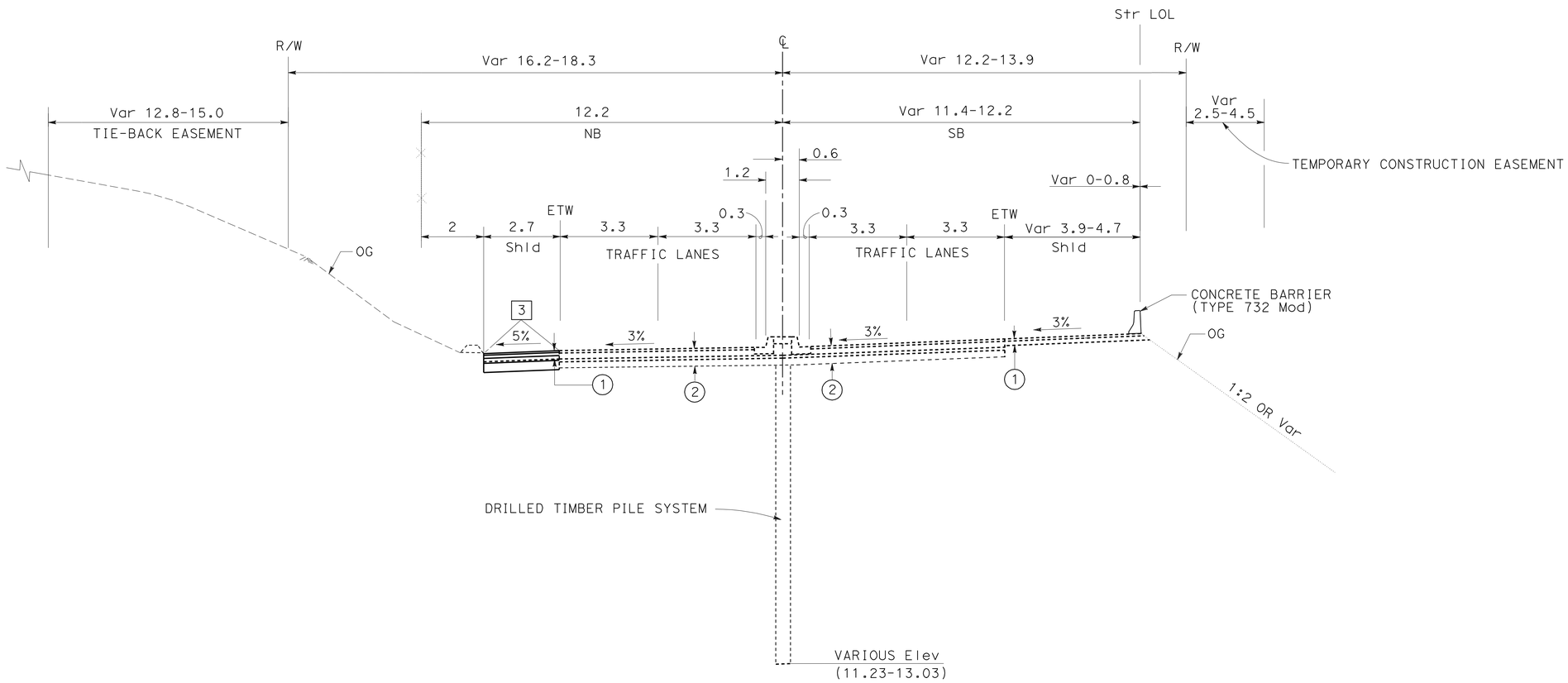

ROUTE 1

Sta 212+27.22 TO Sta 213+25.96
Sta 208+69.83 TO Sta 209+29.85

ALL DIMENSIONS ARE IN METERS
UNLESS OTHERWISE SHOWN

TYPICAL CROSS SECTION

NO SCALE

X-2

STATE OF CALIFORNIA - DEPARTMENT OF TRANSPORTATION
Caltrans DESIGN

FUNCTIONAL SUPERVISOR: ORLANCE LEE
CALCULATED-DESIGNED BY: MIKE NGUYEN
CHECKED BY: PAUL HSU
REVISED BY
DATE REVISED

LAST REVISION 00-00-00
DATE PLOTTED => 04-JUN-2012
TIME PLOTTED => 13:51

Dist	COUNTY	ROUTE	KILOMETER POST TOTAL PROJECT	SHEET No.	TOTAL SHEETS
07	LA	1	82.8/83.3	4	46

REGISTERED CIVIL ENGINEER 3-30-12 DATE

6-4-12
PLANS APPROVAL DATE

REGISTERED PROFESSIONAL ENGINEER MIKE K. NGUYEN No. 67756 Exp. 6-30-13 CIVIL STATE OF CALIFORNIA

THE STATE OF CALIFORNIA OR ITS OFFICERS OR AGENTS SHALL NOT BE RESPONSIBLE FOR THE ACCURACY OR COMPLETENESS OF SCANNED COPIES OF THIS PLAN SHEET.

Caltrans Metric

NOTE:

FOR ACCURATE RIGHT OF WAY DATA, CONTACT RIGHT OF WAY ENGINEERING AT THE DISTRICT OFFICE.

CURVE DATA

No. Ⓡ	R	Δ	T	L
1	1310.643	32°27'21"	381.468	742.426
2	1322.052	13°00'00"	150.629	300.000

LEGEND:

⇨ = DIRECTION OF TRAFFIC
Str LOL = STRUCTURE LAYOUT LINE

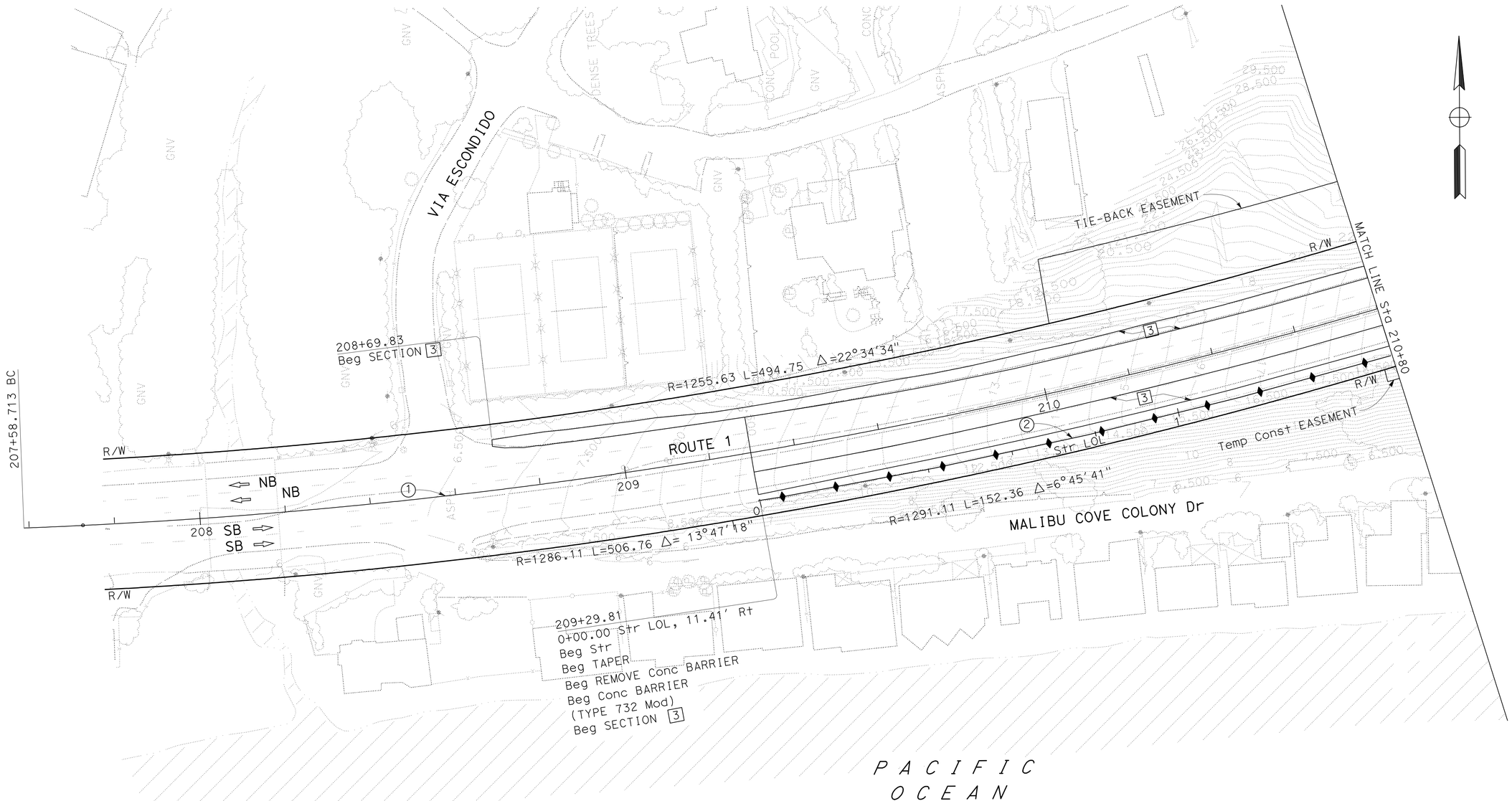

ALL DIMENSIONS ARE IN METERS
UNLESS OTHERWISE SHOWN

LAYOUT
SCALE 1:500

L-1

STATE OF CALIFORNIA - DEPARTMENT OF TRANSPORTATION
Caltrans
DESIGN

FUNCTIONAL SUPERVISOR: ORLANCE LEE
CALCULATED-DESIGNED BY: MIKE NGUYEN
CHECKED BY: PAUL HSU
REVISED BY
DATE REVISED

LAST REVISION 00-00-00 | DATE PLOTTED => 04-JUN-2012 | TIME PLOTTED => 13:38

Dist	COUNTY	ROUTE	KILOMETER POST TOTAL PROJECT	SHEET No.	TOTAL SHEETS
07	LA	1	82.8/83.3	5	46

REGISTERED CIVIL ENGINEER 3-30-12 DATE

6-4-12
PLANS APPROVAL DATE

REGISTERED PROFESSIONAL ENGINEER MIKE K. NGUYEN No. 67756 Exp. 6-30-13 CIVIL STATE OF CALIFORNIA

THE STATE OF CALIFORNIA OR ITS OFFICERS OR AGENTS SHALL NOT BE RESPONSIBLE FOR THE ACCURACY OR COMPLETENESS OF SCANNED COPIES OF THIS PLAN SHEET.

Caltrans Metric

NOTE:

FOR ACCURATE RIGHT OF WAY DATA, CONTACT RIGHT OF WAY ENGINEERING AT THE DISTRICT OFFICE.

CURVE DATA

No. ⊕	R	Δ	T	L
1	1310.643	32°27'21"	381.468	742.426
2	1322.052	13°00'00"	150.629	300.000

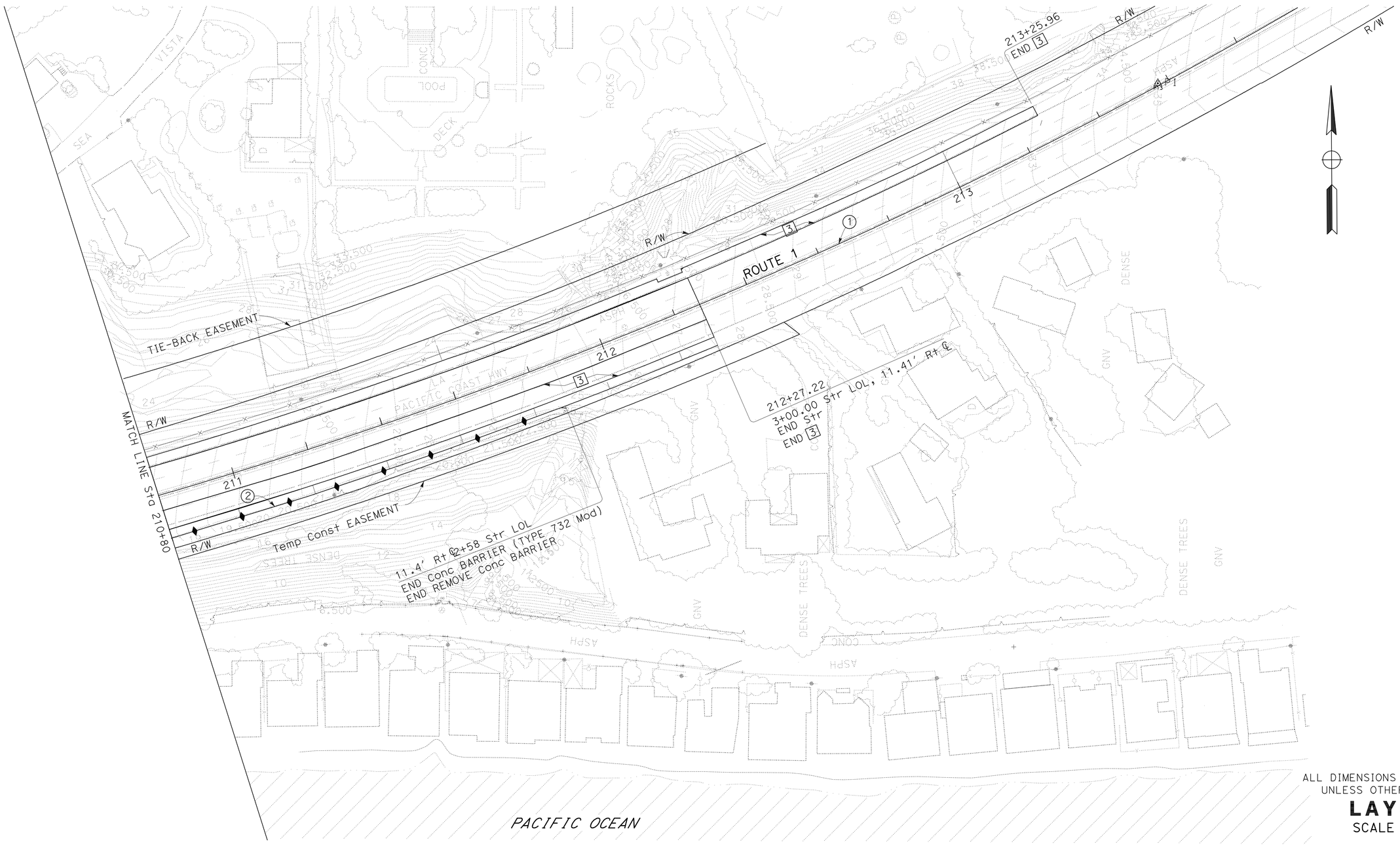

ALL DIMENSIONS ARE IN METERS UNLESS OTHERWISE SHOWN

LAYOUT

SCALE 1:500

L-2

STATE OF CALIFORNIA - DEPARTMENT OF TRANSPORTATION

Caltrans **DESIGN**

FUNCTIONAL SUPERVISOR: ORLANCE LEE

CALCULATED-DESIGNED BY: MIKE NGUYEN

CHECKED BY: PAUL HSU

REVISED BY

DATE REVISED

LAST REVISION 00-00-00 | DATE PLOTTED => 04-JUN-2012 | TIME PLOTTED => 13:34

Dist	COUNTY	ROUTE	KILOMETER POST TOTAL PROJECT	SHEET No.	TOTAL SHEETS
07	LA	1	82.8/83.3	6	46

REGISTERED CIVIL ENGINEER 3-30-12 DATE

6-4-12
PLANS APPROVAL DATE

REGISTERED PROFESSIONAL ENGINEER MIKE K. NGUYEN No. 67756 Exp. 6-30-13 CIVIL STATE OF CALIFORNIA

THE STATE OF CALIFORNIA OR ITS OFFICERS OR AGENTS SHALL NOT BE RESPONSIBLE FOR THE ACCURACY OR COMPLETENESS OF SCANNED COPIES OF THIS PLAN SHEET.

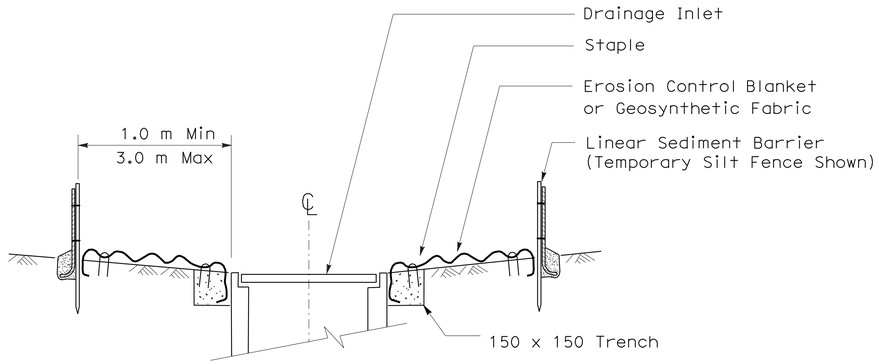

SECTION A-A

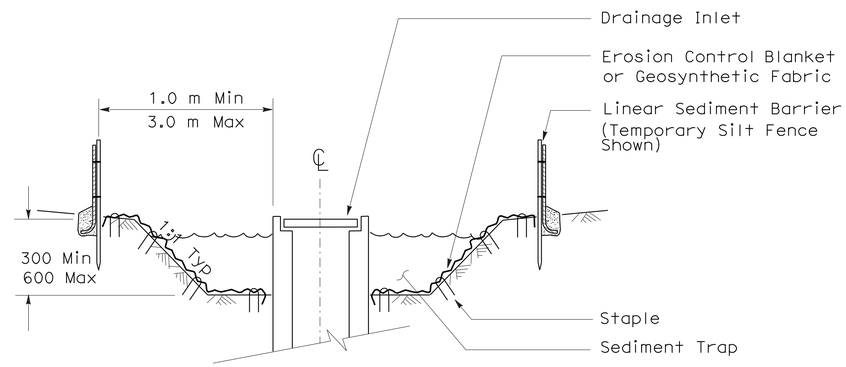

SECTION B-B

NOTES

1. See Standard Plan T51 for Temporary Silt Fence.
2. Dimensions may vary to fit field conditions.

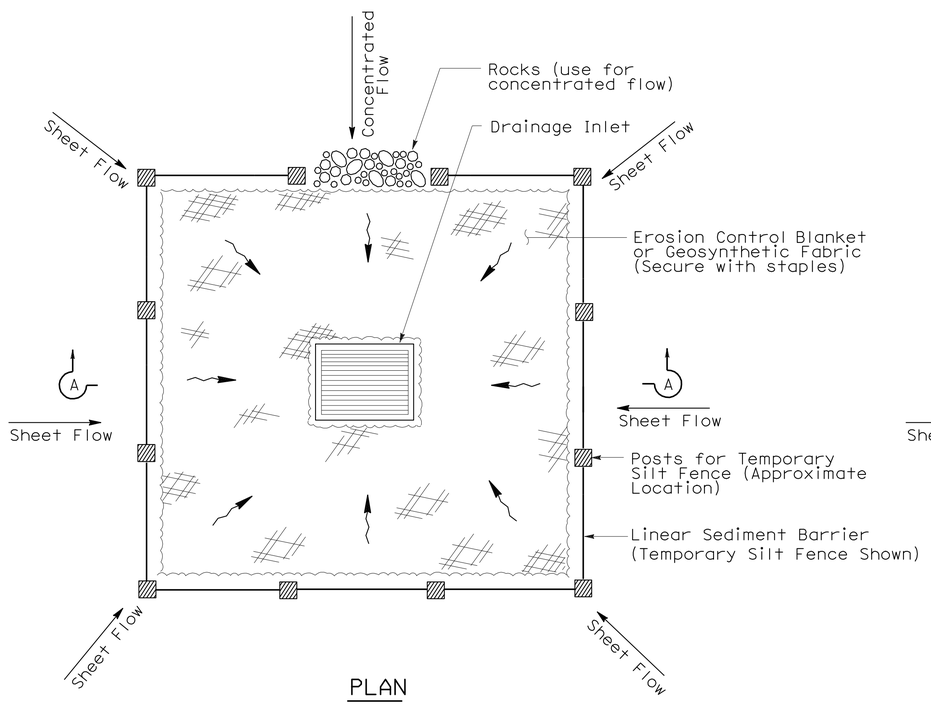

PLAN

TEMPORARY DRAINAGE INLET PROTECTION (TYPE 1)

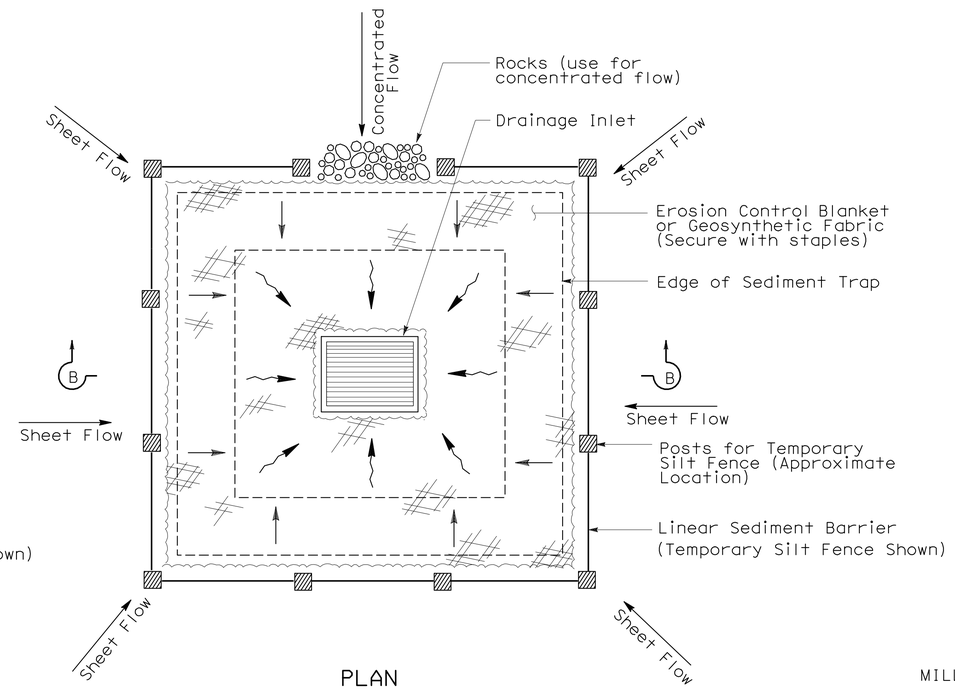

PLAN

TEMPORARY DRAINAGE INLET PROTECTION (TYPE 2) (EXCAVATED SEDIMENT TRAP)

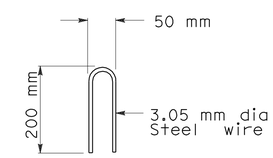

STAPLE DETAIL

ALL DIMENSIONS ARE IN MILLIMETERS UNLESS OTHERWISE SHOWN

TEMPORARY WATER POLLUTION CONTROL DETAILS (TEMPORARY DRAINAGE INLET PROTECTION)

NO SCALE

WPCD-1

STATE OF CALIFORNIA - DEPARTMENT OF TRANSPORTATION
Caltrans DESIGN

FUNCTIONAL SUPERVISOR: ORLANCE LEE
CALCULATED-DESIGNED BY: MIKE NGUYEN
CHECKED BY: PAUL HSU
REVISED BY
DATE REVISED

LAST REVISION 00-00-00
DATE PLOTTED => 04-JUN-2012
TIME PLOTTED => 13:34

Dist	COUNTY	ROUTE	KILOMETER POST TOTAL PROJECT	SHEET No.	TOTAL SHEETS
07	LA	1	82.8/83.3	7	46

REGISTERED CIVIL ENGINEER 3-30-12 DATE

6-4-12
PLANS APPROVAL DATE

REGISTERED PROFESSIONAL ENGINEER MIKE K. NGUYEN No. 67756 Exp. 6-30-13 CIVIL STATE OF CALIFORNIA

THE STATE OF CALIFORNIA OR ITS OFFICERS OR AGENTS SHALL NOT BE RESPONSIBLE FOR THE ACCURACY OR COMPLETENESS OF SCANNED COPIES OF THIS PLAN SHEET.

Caltrans Metric

GRAVEL BAG BARRIER (TYPE 3A) SPACING TABLE

SLOPE OF ROADWAY (PERCENT)	1 to 3.9	4 to 5.9	6 to 7.9	8 to 10	10+
INTERVAL BETWEEN BARRIERS (m)	30.0	22.5	15.0	7.5	4.0

For slope of less than 1%, install barriers only if erosion/sediment is prevalent

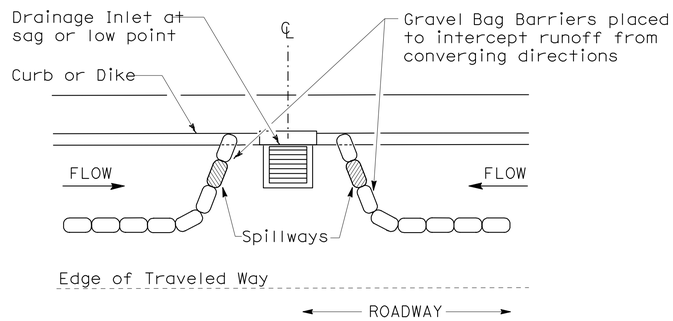

PLAN

CONFIGURATION FOR SAG POINT INLET (GRAVEL BAG BERM)

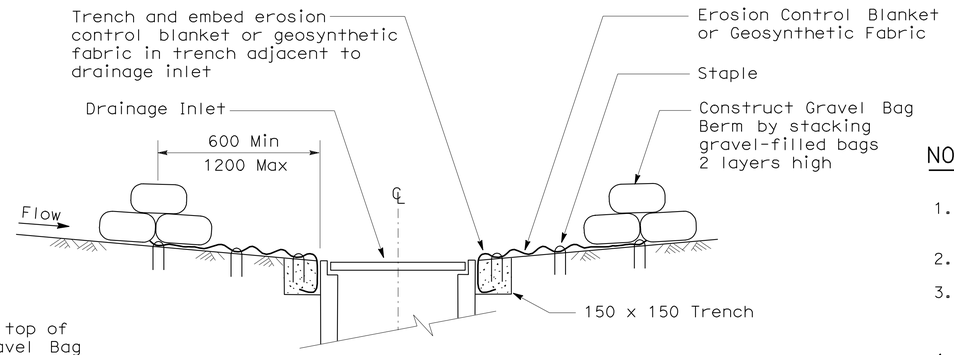

SECTION A-A

NOTES:

1. Place safety cones adjacent to drainage inlet protection.
2. Dimensions may vary to fit field conditions.
3. Install a minimum of 3 gravel bag barriers upstream of each drainage inlet to be protected.
4. Position erosion control blanket or geosynthetic fabric at edge of concrete apron and secure in trench.
5. Erosion control blanket/geosynthetic fabric is not required if the area adjacent to the drainage inlet is vegetated or paved.

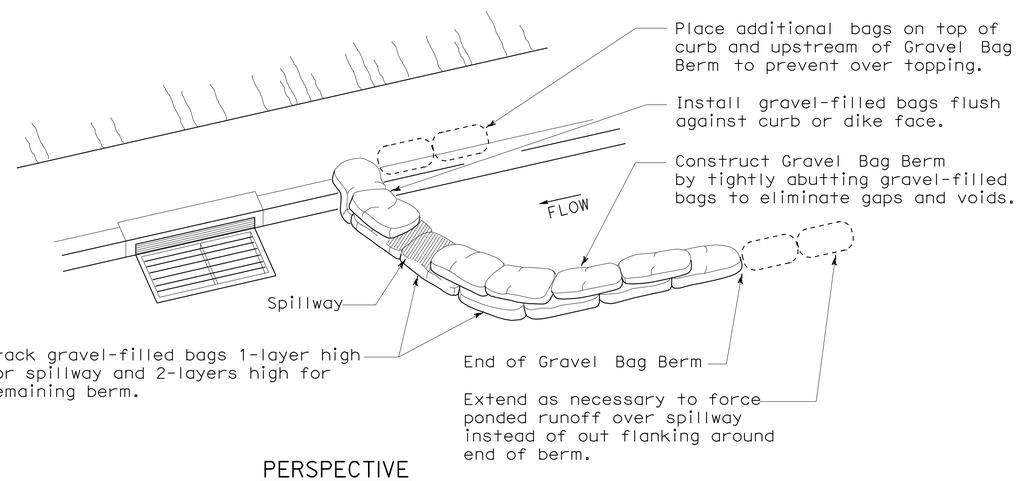

PERSPECTIVE

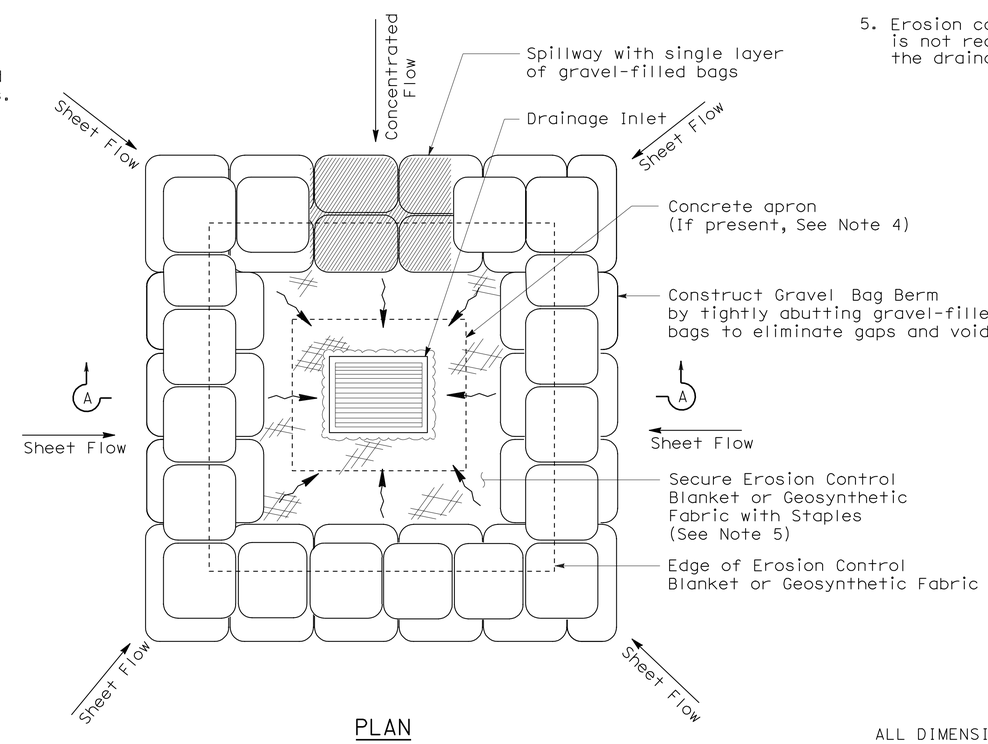

PLAN

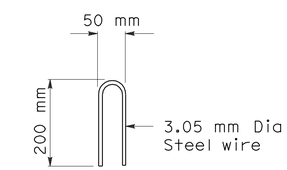

STAPLE DETAIL

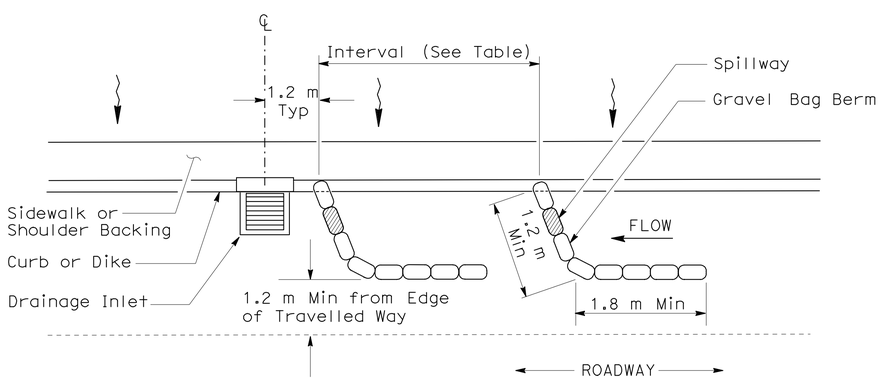

PLAN

TEMPORARY DRAINAGE INLET PROTECTION (TYPE 3A) (GRAVEL BAG BERM)

TEMPORARY DRAINAGE INLET PROTECTION (TYPE 3B)

ALL DIMENSIONS ARE IN MILLIMETERS UNLESS OTHERWISE SHOWN

TEMPORARY WATER POLLUTION CONTROL DETAILS (TEMPORARY DRAINAGE INLET PROTECTION)

NO SCALE

WPCD-2

REVISED BY | DATE REVISED
MIKE NGUYEN | PAUL HSU
CALCULATED-DESIGNED BY | CHECKED BY
FUNCTIONAL SUPERVISOR: ORLANCE LEE

STATE OF CALIFORNIA - DEPARTMENT OF TRANSPORTATION
Caltrans DESIGN

LAST REVISION 00-00-00 | DATE PLOTTED => 04-JUN-2012 | TIME PLOTTED => 13:34

Dist	COUNTY	ROUTE	KILOMETER POST TOTAL PROJECT	SHEET No.	TOTAL SHEETS
07	LA	1	82.8/83.3	8	46

REGISTERED CIVIL ENGINEER 3-30-12 DATE

6-4-12
PLANS APPROVAL DATE

REGISTERED PROFESSIONAL ENGINEER MIKE K. NGUYEN No. 67756 Exp. 6-30-13 CIVIL STATE OF CALIFORNIA

THE STATE OF CALIFORNIA OR ITS OFFICERS OR AGENTS SHALL NOT BE RESPONSIBLE FOR THE ACCURACY OR COMPLETENESS OF SCANNED COPIES OF THIS PLAN SHEET.

Caltrans Metric

FLEXIBLE SEDIMENT BARRIER SPACING TABLE

SLOPE OF ROADWAY (PERCENT)	0 to 0.9	1 to 1.9	2 to 2.9	3 to 4	5 +
INTERVAL BETWEEN BARRIERS (m)	15.24	10.67	9.14	7.62	6.10
ANGLE FROM FACE OF CURB (DEGREES)	70	70	70	45	45
SUGGESTED BARRIER LENGTH (m)	1.82	1.82	1.82	1.82	1.82

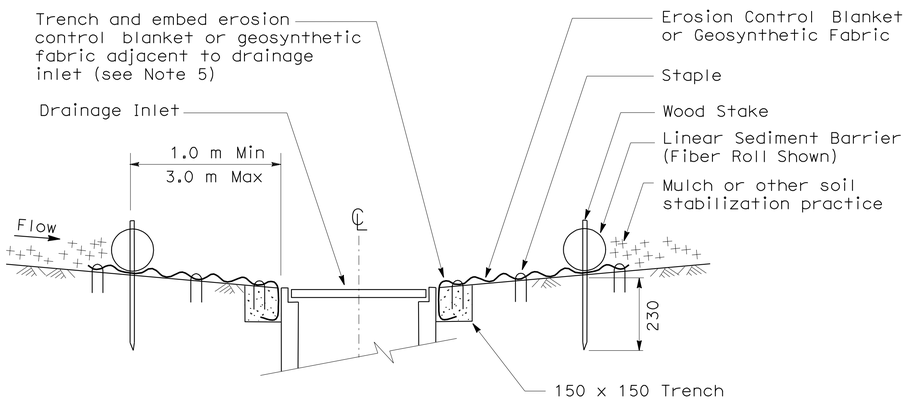

SECTION A-A

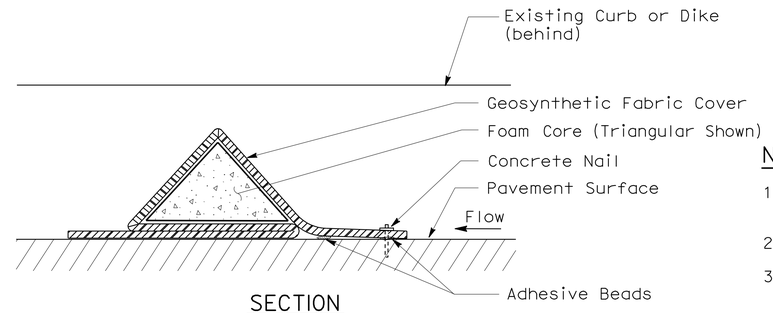

SECTION

FLEXIBLE SEDIMENT BARRIER DETAIL
FOAM BARRIER SHOWN

NOTES:

1. See Standard Plan T51 for Temporary Silt Fence.
2. Dimensions may vary to fit field conditions.
3. Install a minimum of 3 flexible sediment barriers upstream of each drainage inlet to be protected.
4. Position erosion control blanket or geosynthetic fabric at edge of concrete apron and secure in trench.
5. Erosion control blanket/geosynthetic fabric is not required if the area adjacent to the drainage inlet is vegetated.

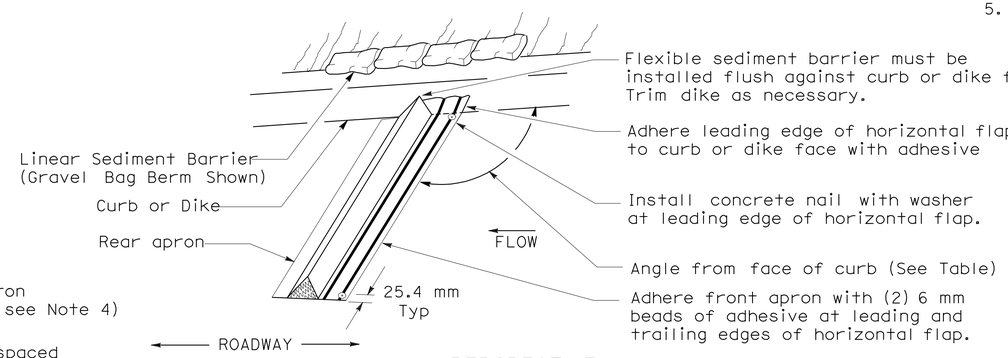

PERSPECTIVE

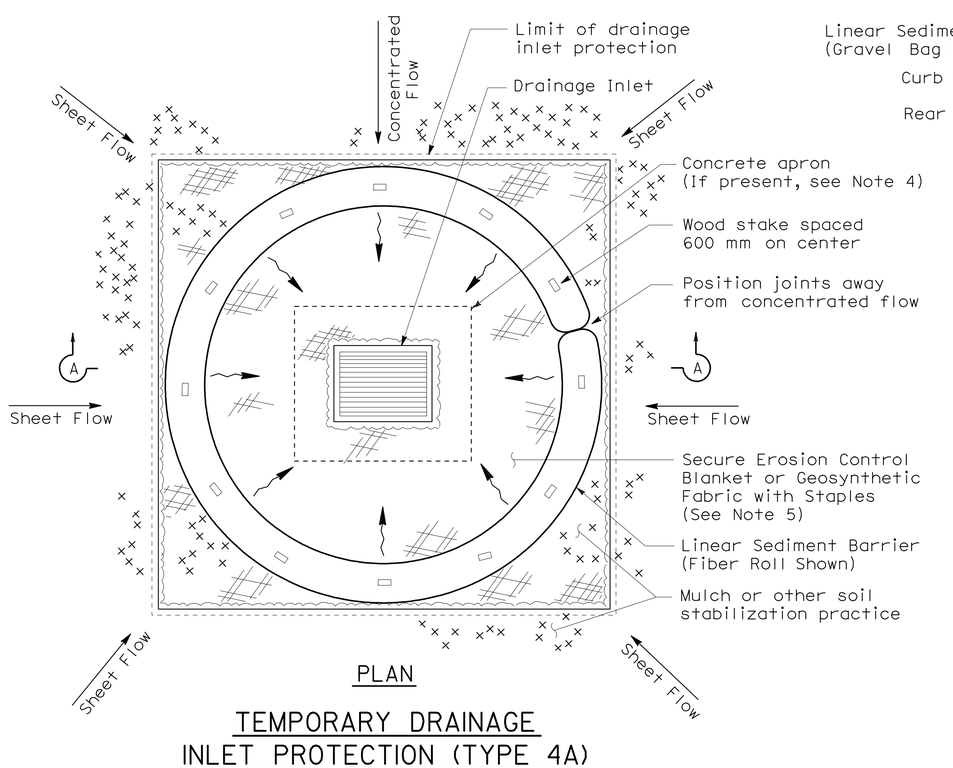

PLAN

TEMPORARY DRAINAGE
INLET PROTECTION (TYPE 4A)
(FIBER ROLLS)

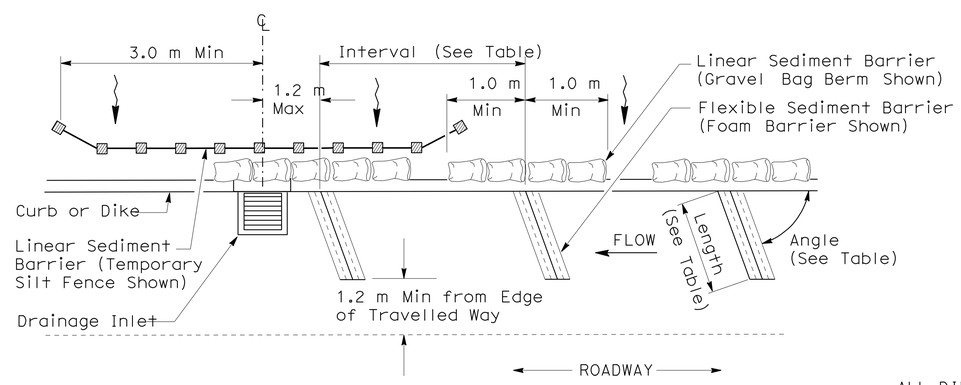

PLAN

TEMPORARY DRAINAGE
INLET PROTECTION (TYPE 4B)
FLEXIBLE SEDIMENT BARRIER

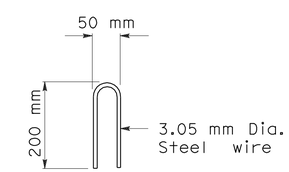

STAPLE DETAIL

ALL DIMENSIONS ARE IN MILLIMETERS UNLESS OTHERWISE SHOWN

TEMPORARY WATER POLLUTION CONTROL DETAILS (TEMPORARY DRAINAGE INLET PROTECTION)

NO SCALE

WPCD-3

REVISED BY | DATE REVISED
MIKE NGUYEN | PAUL HSU
CALCULATED-DESIGNED BY | CHECKED BY
FUNCTIONAL SUPERVISOR: ORLANCE LEE

STATE OF CALIFORNIA - DEPARTMENT OF TRANSPORTATION
Caltrans DESIGN

LAST REVISION 00-00-00 | DATE PLOTTED => 04-JUN-2012 | TIME PLOTTED => 13:34

Dist	COUNTY	ROUTE	KILOMETER POST TOTAL PROJECT	SHEET No.	TOTAL SHEETS
07	LA	1	82.8/83.3	9	46

REGISTERED CIVIL ENGINEER 3-30-12 DATE

6-4-12
PLANS APPROVAL DATE

REGISTERED PROFESSIONAL ENGINEER MIKE K. NGUYEN No. 67756 Exp. 6-30-13 CIVIL STATE OF CALIFORNIA

THE STATE OF CALIFORNIA OR ITS OFFICERS OR AGENTS SHALL NOT BE RESPONSIBLE FOR THE ACCURACY OR COMPLETENESS OF SCANNED COPIES OF THIS PLAN SHEET.

Caltrans Metric

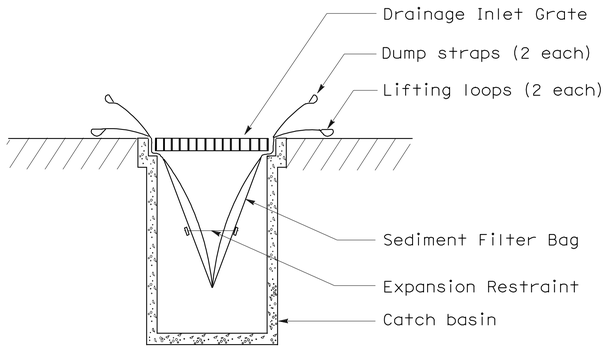

SECTION B-B

SEDIMENT FILTER BAG DETAIL

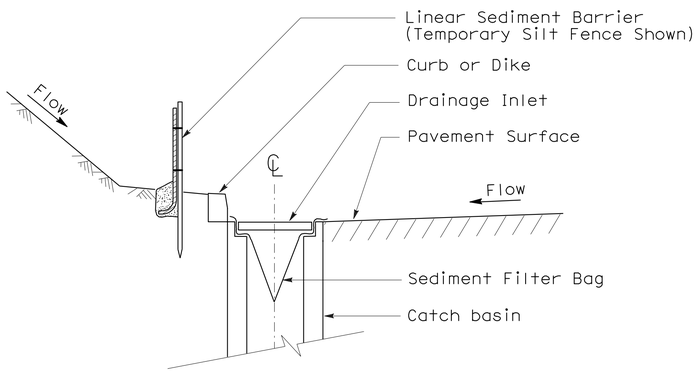

SECTION A-A

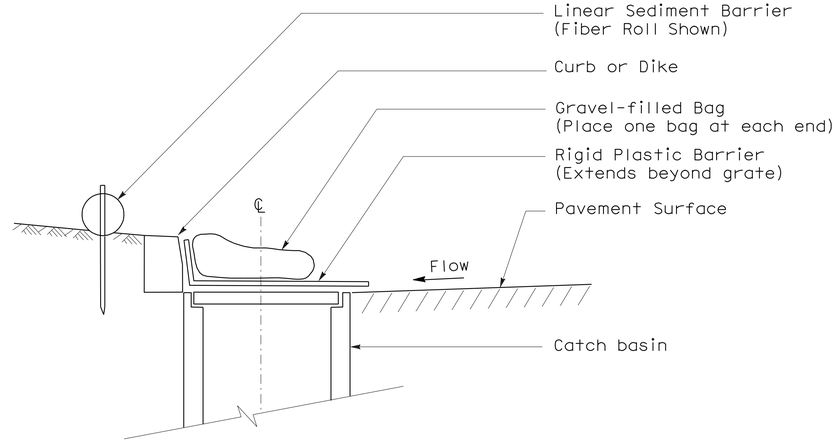

SECTION

TEMPORARY DRAINAGE INLET PROTECTION (TYPE 6A) (CATCH BASIN WITH GRATE)

NOTES:

1. See Std Plan T51 for Temporary Silt Fence.
2. Dimensions may vary to fit field conditions.

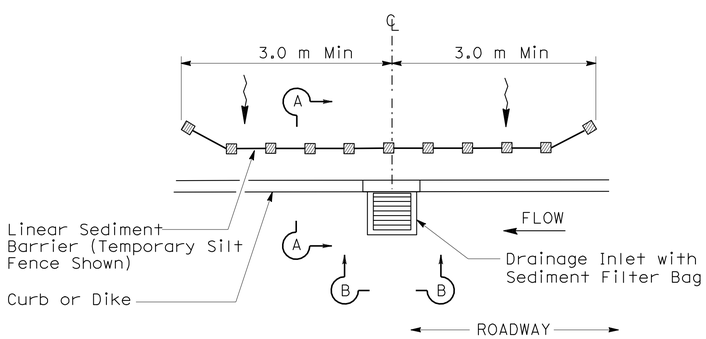

PLAN

TEMPORARY DRAINAGE INLET PROTECTION (TYPE 5) (SEDIMENT FILTER BAG)

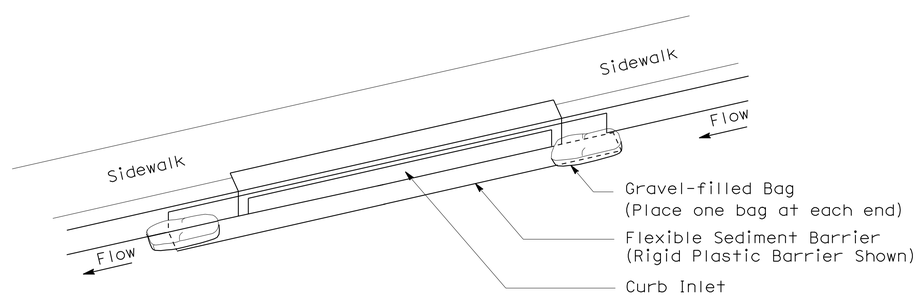

PERSPECTIVE

TEMPORARY DRAINAGE INLET PROTECTION (TYPE 6B) (CURB INLET WITHOUT GRATE)

ALL DIMENSIONS ARE IN MILLIMETERS UNLESS OTHERWISE SHOWN

TEMPORARY WATER POLLUTION CONTROL DETAILS (TEMPORARY DRAINAGE INLET PROTECTION)

NO SCALE

WPCD-4

STATE OF CALIFORNIA - DEPARTMENT OF TRANSPORTATION
Caltrans DESIGN

FUNCTIONAL SUPERVISOR: ORLANCE LEE
CALCULATED-DESIGNED BY: MIKE NGUYEN
CHECKED BY: PAUL HSU
REVISED BY
DATE REVISED

LAST REVISION 00-00-00
DATE PLOTTED => 04-JUN-2012
TIME PLOTTED => 13:34

Dist	COUNTY	ROUTE	KILOMETER POST TOTAL PROJECT	SHEET No.	TOTAL SHEETS
07	LA	1	82.8/83.3	10	46

Caltrans Metric

MKnguyen 3-30-12
REGISTERED CIVIL ENGINEER DATE

6-4-12
PLANS APPROVAL DATE

REGISTERED PROFESSIONAL ENGINEER
MIKE K. NGUYEN
No. 67756
Exp. 6-30-13
CIVIL
STATE OF CALIFORNIA

THE STATE OF CALIFORNIA OR ITS OFFICERS OR AGENTS SHALL NOT BE RESPONSIBLE FOR THE ACCURACY OR COMPLETENESS OF SCANNED COPIES OF THIS PLAN SHEET.

WATER POLLUTION CONTROL QUANTITIES

DESCRIPTION LOCATION	TEMPORARY COVER	TEMPORARY DRAIN INLET PROTECTION	TEMPORARY CONSTRUCTION ENTRANCE	TEMPORARY GRAVEL BAG BERM	TEMPORARY SILT FENCE
	m^2	EA	EA	m	m
L-1 & L-2	2600	5	1	300	400

TEMPORARY WATER POLLUTION CONTROL QUANTITIES

WPCQ-1

STATE OF CALIFORNIA - DEPARTMENT OF TRANSPORTATION
Caltrans DESIGN

FUNCTIONAL SUPERVISOR: ORLANCE LEE
CALCULATED-DESIGNED BY: MIKE NGUYEN
CHECKED BY: PAUL HSU
REVISED BY
DATE REVISED

LAST REVISION 00-00-00
DATE PLOTTED => 04-JUN-2012
TIME PLOTTED => 13:34

Dist	COUNTY	ROUTE	KILOMETER POST TOTAL PROJECT	SHEET No.	TOTAL SHEETS
07	LA	1	82.8/83.3	11	46

N. Celina Aviles 3-30-12
REGISTERED CIVIL ENGINEER DATE

6-4-12
PLANS APPROVAL DATE

REGISTERED PROFESSIONAL ENGINEER N. CELINA AVILES No. C53797 Exp. 12/31/13 CIVIL STATE OF CALIFORNIA

THE STATE OF CALIFORNIA OR ITS OFFICERS OR AGENTS SHALL NOT BE RESPONSIBLE FOR THE ACCURACY OR COMPLETENESS OF SCANNED COPIES OF THIS PLAN SHEET.

Caltrans Metric

POSITIVE LOCATION INFORMATION

POTHOLE No.	NORTHING/ EASTING	UTILITY COMPANY	SURFACE/GROUND ELEVATION (m)	DEPTH (m)
1	558504.814 1929443.341	SOUTHERN CALIFORNIA GAS COMPANY	12.731	0.969
2	558627.703 1929539.667	SOUTHERN CALIFORNIA GAS COMPANY	18.807	1.231
3	558689.839 1929658.528	SOUTHERN CALIFORNIA GAS COMPANY	20.387	1.956
4001	1929502.178 558636.344	LOS ANGELES COUNTY WATERWORKS DISTRICTS	16.246	1.549
4002	1929488.815 558633.153	LOS ANGELES COUNTY WATERWORKS DISTRICTS	15.377	1.270
4003	1929372.321 558610.961	LOS ANGELES COUNTY WATERWORKS DISTRICTS	8.243	1.524
4004	1929567.863 558654.843	LOS ANGELES COUNTY WATERWORKS DISTRICTS	20.406	1.524

NOTES:

1. FOR ACCURATE RIGHT OF WAY DATA, CONTACT RIGHT OF WAY ENGINEERING AT THE DISTRICT OFFICE.
2. LOCATION OF UTILITY FACILITIES SHOWN ON THE THESE PLANS ARE APPROXIMATE AND SHALL BE VERIFIED BY THE CONTRACTOR PRIOR TO CONSTRUCTION.
3. FOR UTILITIES RELOCATION PLANS, SEE SHEET U-2.
4. UTILITY OWNERSHIP ON THIS PROJECT:
   ELECTRIC - SOUTHERN CALIFORNIA EDISON (SCE)
   GAS - SOUTHERN CALIFORNIA GAS COMPANY (SCG)
   TELEPHONE - VERIZON (Vzn)
   WATER - LOS ANGELES COUNTY WATERWORKS DISTRICTS (LA Co)

ABBREVIATIONS:

St\l - STEEL
MP - MEDIUM PRESSURE
EW - EAST OF WEST

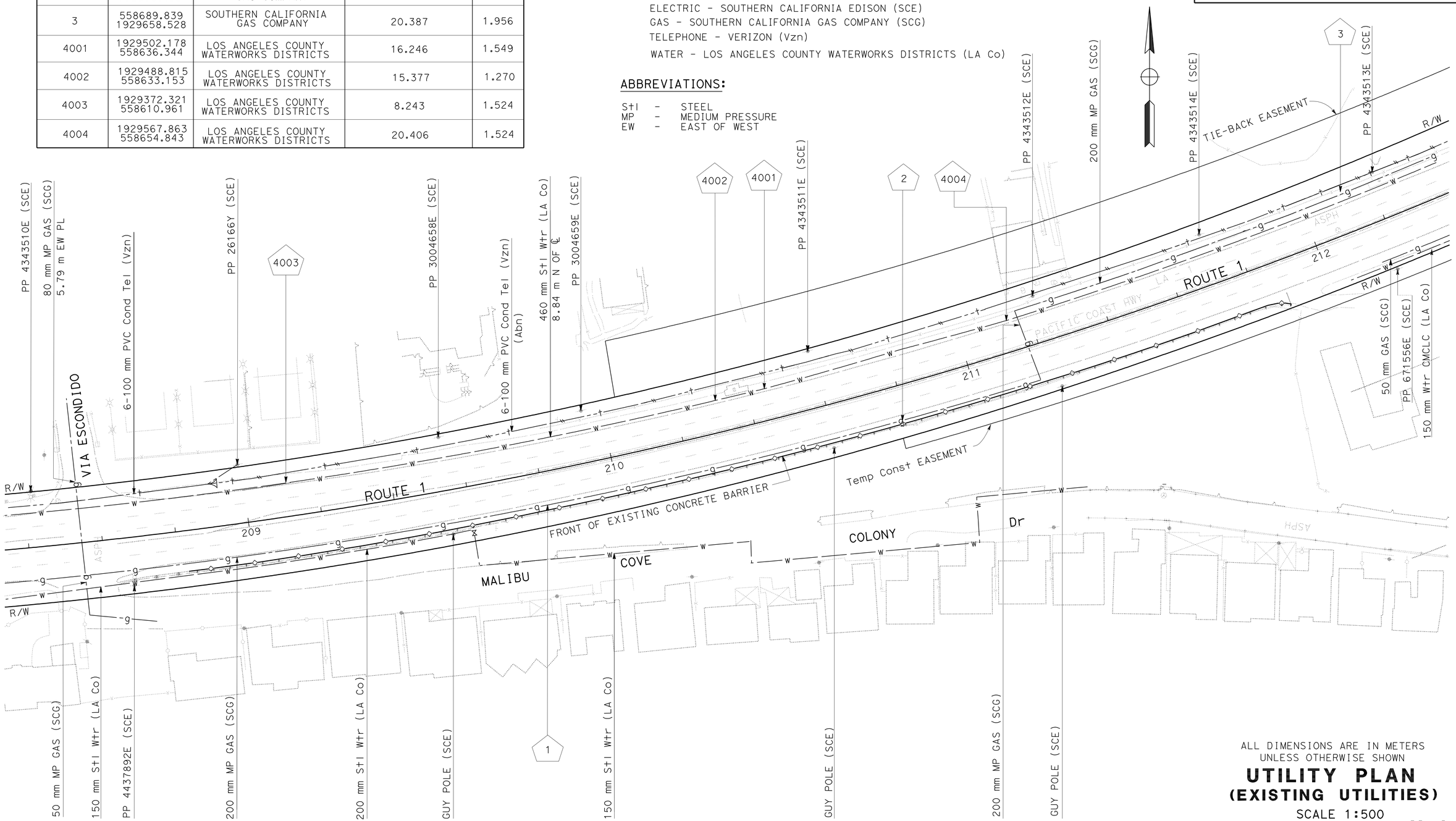

ALL DIMENSIONS ARE IN METERS UNLESS OTHERWISE SHOWN

UTILITY PLAN
(EXISTING UTILITIES)

SCALE 1:500

U-1

APPROVED FOR UTILITY WORK ONLY

STATE OF CALIFORNIA - DEPARTMENT OF TRANSPORTATION
Caltrans DESIGN

FUNCTIONAL SUPERVISOR: JERREL B KAM
CALCULATED-DESIGNED BY: SUZIE KEARNS
CHECKED BY: MIKE NGUYEN
REVISED BY: SK
DATE REVISED: 3/12

LAST REVISION 00-00-00
DATE PLOTTED => 04-JUN-2012
TIME PLOTTED => 13:35

Dist	COUNTY	ROUTE	KILOMETER POST TOTAL PROJECT	SHEET No.	TOTAL SHEETS
07	LA	1	82.8/83.3	12	46

N. Celina Aviles 3-30-12
REGISTERED CIVIL ENGINEER DATE

6-4-12
PLANS APPROVAL DATE

REGISTERED PROFESSIONAL ENGINEER N. CELINA AVILES No. C53797 Exp. 12/31/13 CIVIL STATE OF CALIFORNIA

THE STATE OF CALIFORNIA OR ITS OFFICERS OR AGENTS SHALL NOT BE RESPONSIBLE FOR THE ACCURACY OR COMPLETENESS OF SCANNED COPIES OF THIS PLAN SHEET.

Caltrans Metric

NOTES:

1. FOR ACCURATE RIGHT OF WAY DATA, CONTACT RIGHT OF WAY ENGINEERING AT THE DISTRICT OFFICE.
2. LOCATION OF UTILITY FACILITIES SHOWN ON THE THESE PLANS ARE APPROXIMATE AND SHALL BE VERIFIED BY THE CONTRACTOR PRIOR TO CONSTRUCTION.
3. FOR EXISTING UTILITIES SEE SHEET U-1.

(X) : TO BE INSTALLED TEMPORARILY BY OTHERS PRIOR TO CONSTRUCTION.
(XX) : TO BE RELOCATED TEMPORARILY BY OTHERS PRIOR TO CONSTRUCTION.
(**) : UTILITY FACILITY TO BE ABANDONED IN PLACE BY OTHERS PRIOR TO CONSTRUCTION.
(***) : UTILITY FACILITY TO BE INSTALLED BY OTHERS PRIOR TO CONSTUCTION.
(E) : EXISTING UTILITY FACILITY TO REMAIN.

EXISTING UTILITY TO BE ABANDONED
(E) EXISTING UTILITY TO REMAIN — (Abn) — (E) EXISTING UTILITY TO REMAIN

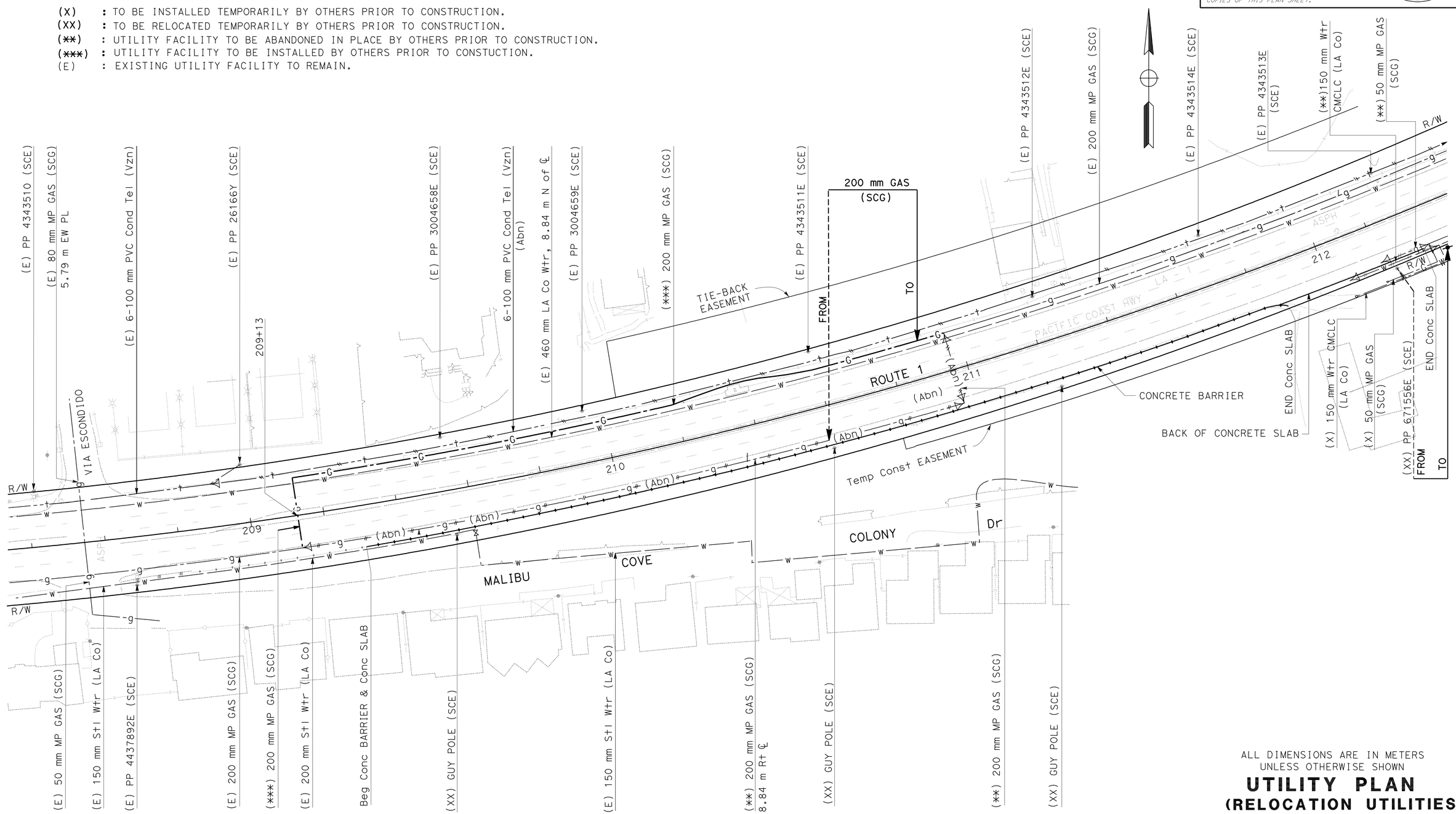

ALL DIMENSIONS ARE IN METERS UNLESS OTHERWISE SHOWN

UTILITY PLAN
(RELOCATION UTILITIES)

SCALE 1:500

U-2

APPROVED FOR UTILITY WORK ONLY

STATE OF CALIFORNIA - DEPARTMENT OF TRANSPORTATION
Caltrans DESIGN

FUNCTIONAL SUPERVISOR: JERREL B KAM
CALCULATED-DESIGNED BY: SUZIE KEARNS
CHECKED BY: MIKE NGUYEN
REVISED BY: SK
DATE REVISED: 3/12

LAST REVISION 00-00-00
DATE PLOTTED => 04-JUN-2012
TIME PLOTTED => 13:35

Dist	COUNTY	ROUTE	KILOMETER POST TOTAL PROJECT	SHEET No.	TOTAL SHEETS
07	LA	1	82.8/83.3	13	46

REGISTERED CIVIL ENGINEER 3-30-12 DATE

6-4-12
PLANS APPROVAL DATE

REGISTERED PROFESSIONAL ENGINEER MIKE K. NGUYEN No. 67756 Exp. 6-30-13 CIVIL STATE OF CALIFORNIA

THE STATE OF CALIFORNIA OR ITS OFFICERS OR AGENTS SHALL NOT BE RESPONSIBLE FOR THE ACCURACY OR COMPLETENESS OF SCANNED COPIES OF THIS PLAN SHEET.

Caltrans Metric

NOTES:

1. SIGN LOCATIONS SHOWN ARE APPROXIMATE. EXACT LOCATION WILL BE DETERMINED BY THE ENGINEER.

2. WHERE APPROPRIATE, SIGNS MAY BE MOUNTED ON EXISTING POWER POLES AND ELECTROLIERS BY STRAP AND SADDLE BRACKET METHOD.

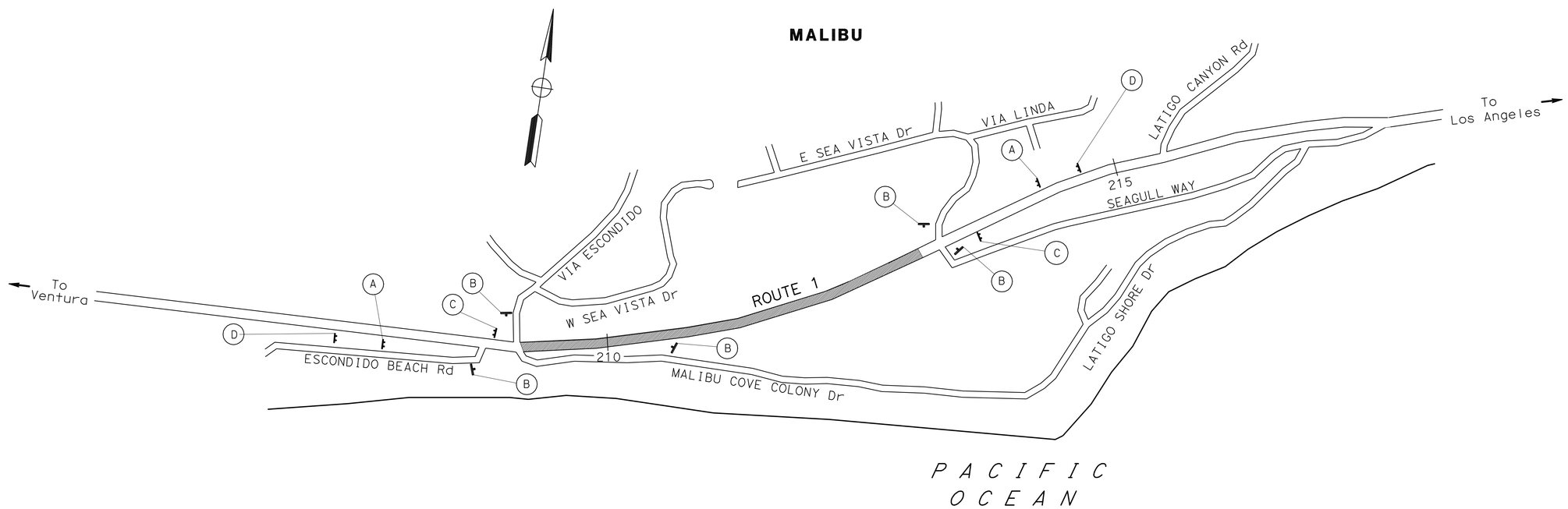

STATIONARY MOUNTED CONSTRUCTION AREA SIGNS

SIGN No. (X)	SIGN CODE		PANEL SIZE (mm)	SIGN MESSAGE	No. OF POSTS AND SIZE	No. OF SIGNS
	FEDERAL	CALIFORNIA				
A	W20-1		1830 x 1830	ROAD WORK AHEAD	2-140 mm x 140 mm	2
B	W20-1		900 x 900	ROAD WORK AHEAD	1-89 mm x 140 mm	5
C	G20-2		1500 x 0600	END ROAD WORK	2-89 mm x 89 mm	2
D		C-40	3505 x 1525	TRAFFIC FINES DOUBLED IN CONSTRUCTION ZONES	2-140 mm x 184 mm	2

CONSTRUCTION AREA SIGNS

NO SCALE

CS-1

APPROVED FOR CONSTRUCTION AREA SIGN WORK ONLY

STATE OF CALIFORNIA - DEPARTMENT OF TRANSPORTATION
Caltrans DESIGN

FUNCTIONAL SUPERVISOR: ORLANCE LEE
CALCULATED-DESIGNED BY: MIKE NGUYEN
CHECKED BY: PAUL HSU
REVISED BY
DATE REVISED

LAST REVISION 00-00-00
DATE PLOTTED => 04-JUN-2012
TIME PLOTTED => 13:35

Dist	COUNTY	ROUTE	KILOMETER POST TOTAL PROJECT	SHEET No.	TOTAL SHEETS
07	LA	1	82.8/83.3	14	46

REGISTERED CIVIL ENGINEER 3-30-12 DATE

6-4-12
PLANS APPROVAL DATE

REGISTERED PROFESSIONAL ENGINEER MIKE K. NGUYEN No. 67756 Exp. 6-30-13 CIVIL STATE OF CALIFORNIA

THE STATE OF CALIFORNIA OR ITS OFFICERS OR AGENTS SHALL NOT BE RESPONSIBLE FOR THE ACCURACY OR COMPLETENESS OF SCANNED COPIES OF THIS PLAN SHEET.

Caltrans Metric

LEGEND:

- BT (XX) BEGIN TEMPORARY TRAFFIC STRIPE DETAIL PER CALTRANS STANDARD PLAN
- ET (XX) END TEMPORARY TRAFFIC STRIPE DETAIL PER CALTRANS STANDARD PLAN
- BR (XX) BEGIN REMOVAL EXIST STRIPE
- ER (XX) END REMOVAL EXIST STRIPE
- CONSTRUCTION AREA
- (XX) PAVEMENT DELINEATION DETAIL NUMBER PER STANDARD PLANS
- CHANNELIZER (SURFACE MOUNTED)
- TEMPORARY RAILING (TYPE K)
- DIRECTION OF TRAFFIC
- POINT OF CHANGE IN PAVEMENT DELINEATION

NOTES:

1. REMOVE EXISTING PAVEMENT DELINEATION THAT ARE IN CONFLICT WITH TEMPORARY PAVEMENT DELINEATION.
2. TEMPORARY RAILING (TYPE K) HAS SCUPPERS.
3. TEMPORARY PAVEMENT DELINEATION ARE PAINT UNLESS OTHERWISE NOTED.
4. TEMPORARY PAVEMENT DELINEATION AND TEMPORARY K-RAIL SHALL BE REMOVED AFTER EACH STAGE OF CONSTRUCTION, UNLESS NOTED OTHERWISE.
5. EXISTING ROADSIDE SIGNS SHALL REMAIN IN PLACE UNLESS DIRECTED BY THE ENGINEER.
6. FOR ACCURATE RIGHT OF WAY DATA, CONTACT RIGHT OF WAY ENGINEERING AT THE DISTRICT OFFICE.

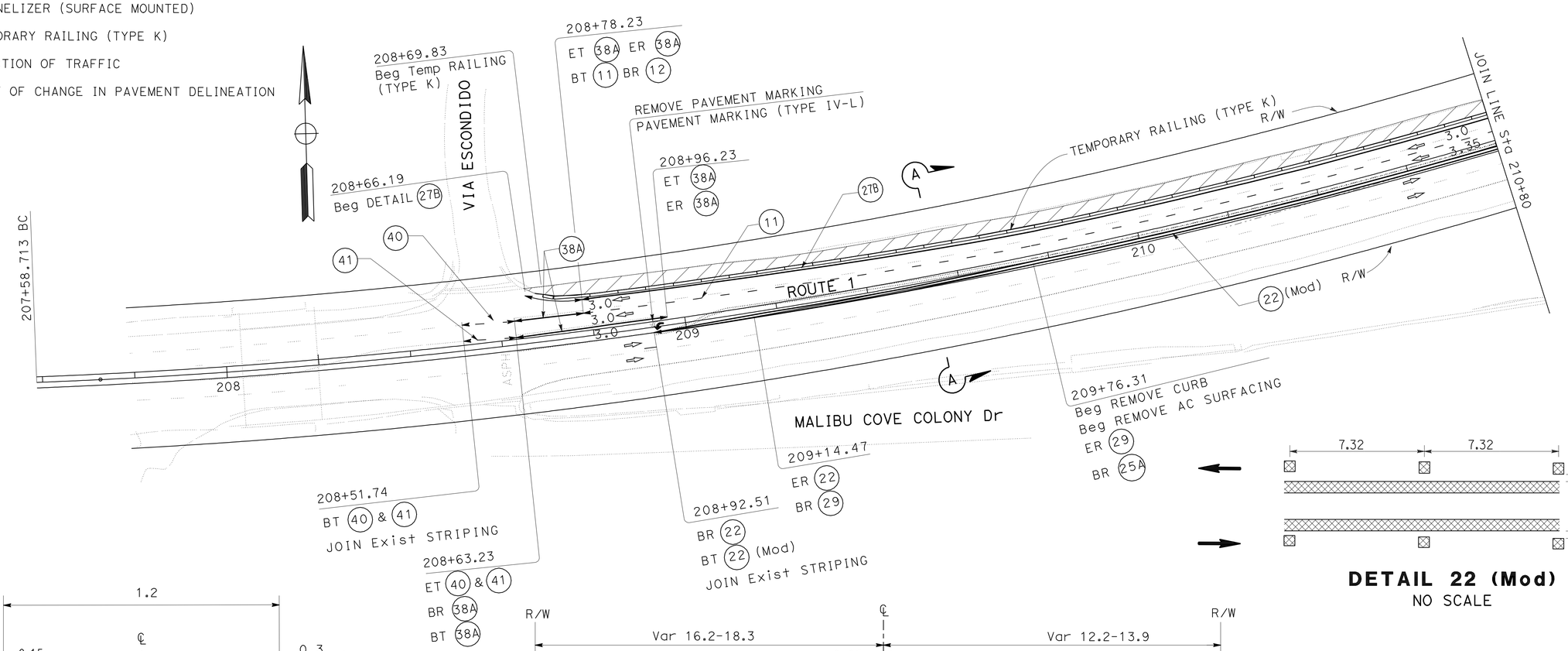

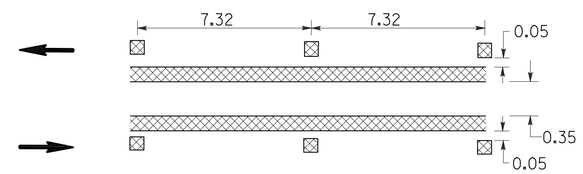

DETAIL 22 (Mod)
NO SCALE

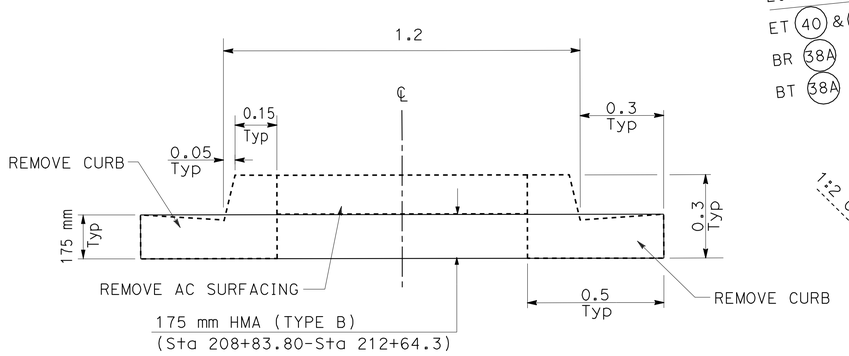

DETAIL A
NO SCALE

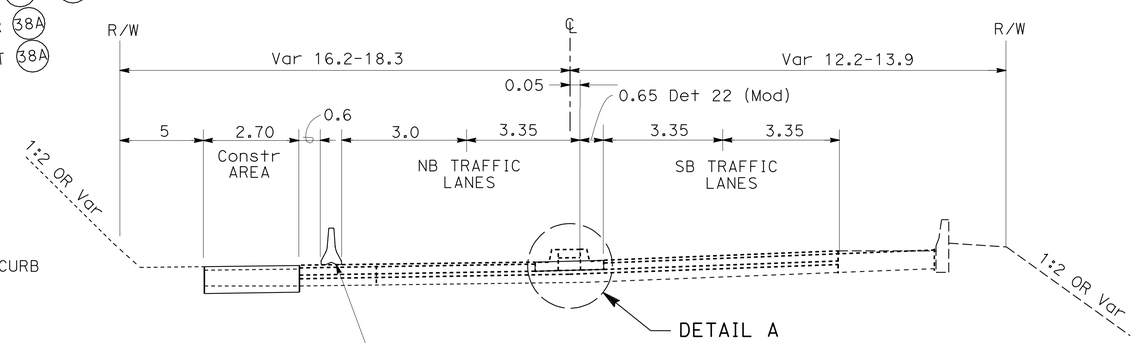

SECTION A-A
RECONSTRUCT SHOULDER ON NB
NO SCALE

ALL DIMENSIONS ARE IN METERS UNLESS OTHERWISE SHOWN

STAGE CONSTRUCTION
STAGE 1
SCALE 1:500

SC-1

APPROVED FOR STAGE CONSTRUCTION WORK ONLY

REVISED BY	DATE REVISED

CALCULATED-DESIGNED BY	CHECKED BY
MIKE NGUYEN	PAUL HSU

FUNCTIONAL SUPERVISOR: ORLANCE LEE

STATE OF CALIFORNIA - DEPARTMENT OF TRANSPORTATION
Caltrans
DESIGN

LAST REVISION 00-00-00
DATE PLOTTED => 04-JUN-2012
TIME PLOTTED => 13:41

Dist	COUNTY	ROUTE	KILOMETER POST TOTAL PROJECT	SHEET No.	TOTAL SHEETS
07	LA	1	82.8/83.3	15	46

REGISTERED CIVIL ENGINEER 3-30-12 DATE

6-4-12
PLANS APPROVAL DATE

REGISTERED PROFESSIONAL ENGINEER
MIKE K. NGUYEN
No. 67756
Exp. 6-30-13
CIVIL
STATE OF CALIFORNIA

THE STATE OF CALIFORNIA OR ITS OFFICERS OR AGENTS SHALL NOT BE RESPONSIBLE FOR THE ACCURACY OR COMPLETENESS OF SCANNED COPIES OF THIS PLAN SHEET.

Caltrans Metric

NOTE:

FOR ACCURATE RIGHT OF WAY DATA, CONTACT
RIGHT OF WAY ENGINEERING AT THE DISTRICT OFFICE.

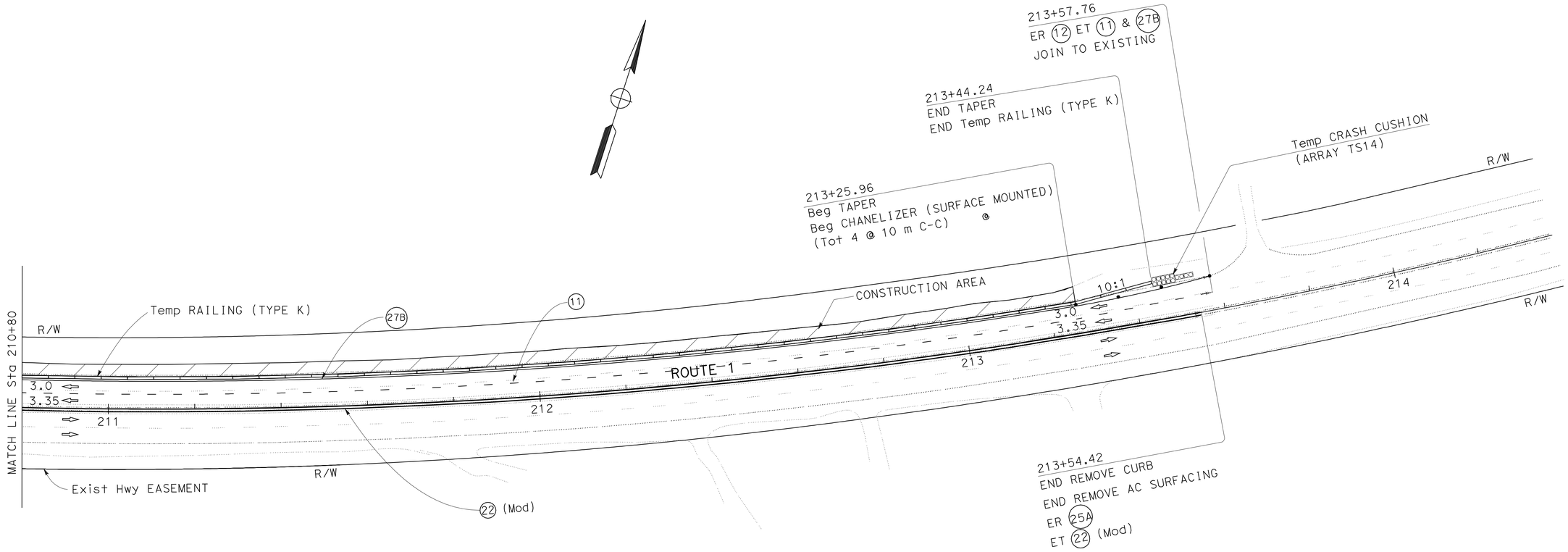

ALL DIMENSIONS ARE IN METERS
UNLESS OTHERWISE SHOWN

STAGE CONSTRUCTION
STAGE 1

SCALE 1:500

SC-2

APPROVED FOR STAGE CONSTRUCTION WORK ONLY

STATE OF CALIFORNIA - DEPARTMENT OF TRANSPORTATION
Caltrans
DESIGN

FUNCTIONAL SUPERVISOR: ORLANCE LEE
CALCULATED-DESIGNED BY: MIKE NGUYEN
CHECKED BY: PAUL HSU
REVISED BY
DATE REVISED

LAST REVISION 00-00-00
DATE PLOTTED => 04-JUN-2012
TIME PLOTTED => 15:55

Dist	COUNTY	ROUTE	KILOMETER POST TOTAL PROJECT	SHEET No.	TOTAL SHEETS
07	LA	1	82.8/83.3	16	46

REGISTERED CIVIL ENGINEER 3-30-12 DATE

6-4-12
PLANS APPROVAL DATE

REGISTERED PROFESSIONAL ENGINEER MIKE K. NGUYEN No. 67756 Exp. 6-30-13 CIVIL STATE OF CALIFORNIA

THE STATE OF CALIFORNIA OR ITS OFFICERS OR AGENTS SHALL NOT BE RESPONSIBLE FOR THE ACCURACY OR COMPLETENESS OF SCANNED COPIES OF THIS PLAN SHEET.

Caltrans Metric

NOTE:

FOR ACCURATE RIGHT OF WAY DATA, CONTACT RIGHT OF WAY ENGINEERING AT THE DISTRICT OFFICE.

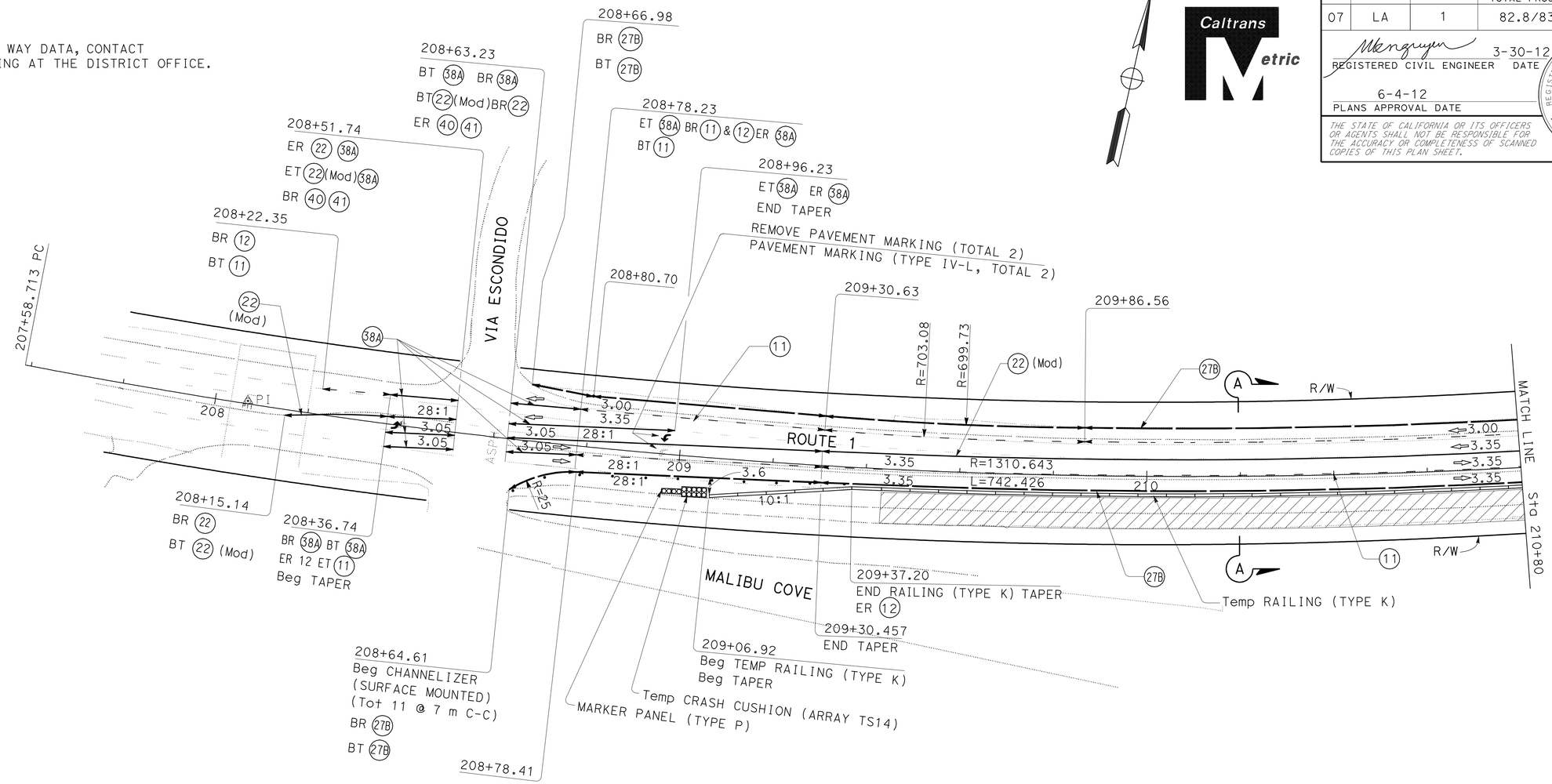

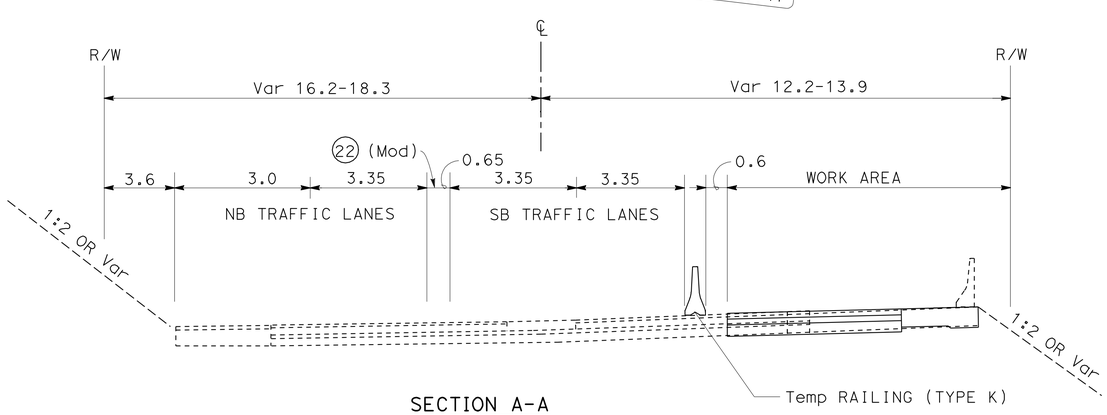

SECTION A-A

CONSTRUCT TIE-BACK & MICROPILE WALL ON SB

NO SCALE

ALL DIMENSIONS ARE IN METERS
UNLESS OTHERWISE SHOWN

STAGE CONSTRUCTION

STAGE 2

SCALE 1:500

SC-3

APPROVED FOR STAGE CONSTRUCTION WORK ONLY

STATE OF CALIFORNIA - DEPARTMENT OF TRANSPORTATION

Caltrans DESIGN

FUNCTIONAL SUPERVISOR: ORLANCE LEE

CALCULATED-DESIGNED BY: MIKE NGUYEN

CHECKED BY: PAUL HSU

REVISED BY

DATE REVISED

LAST REVISION 00-00-00

DATE PLOTTED => 04-JUN-2012

TIME PLOTTED => 15:55

Dist	COUNTY	ROUTE	KILOMETER POST TOTAL PROJECT	SHEET No.	TOTAL SHEETS
07	LA	1	82.8/83.3	17	46

REGISTERED CIVIL ENGINEER 3-30-12 DATE

6-4-12
PLANS APPROVAL DATE

REGISTERED PROFESSIONAL ENGINEER MIKE K. NGUYEN No. 67756 Exp. 6-30-13 CIVIL STATE OF CALIFORNIA

THE STATE OF CALIFORNIA OR ITS OFFICERS OR AGENTS SHALL NOT BE RESPONSIBLE FOR THE ACCURACY OR COMPLETENESS OF SCANNED COPIES OF THIS PLAN SHEET.

Caltrans Metric

NOTE:

FOR ACCURATE RIGHT OF WAY DATA, CONTACT
RIGHT OF WAY ENGINEERING AT THE DISTRICT OFFICE.

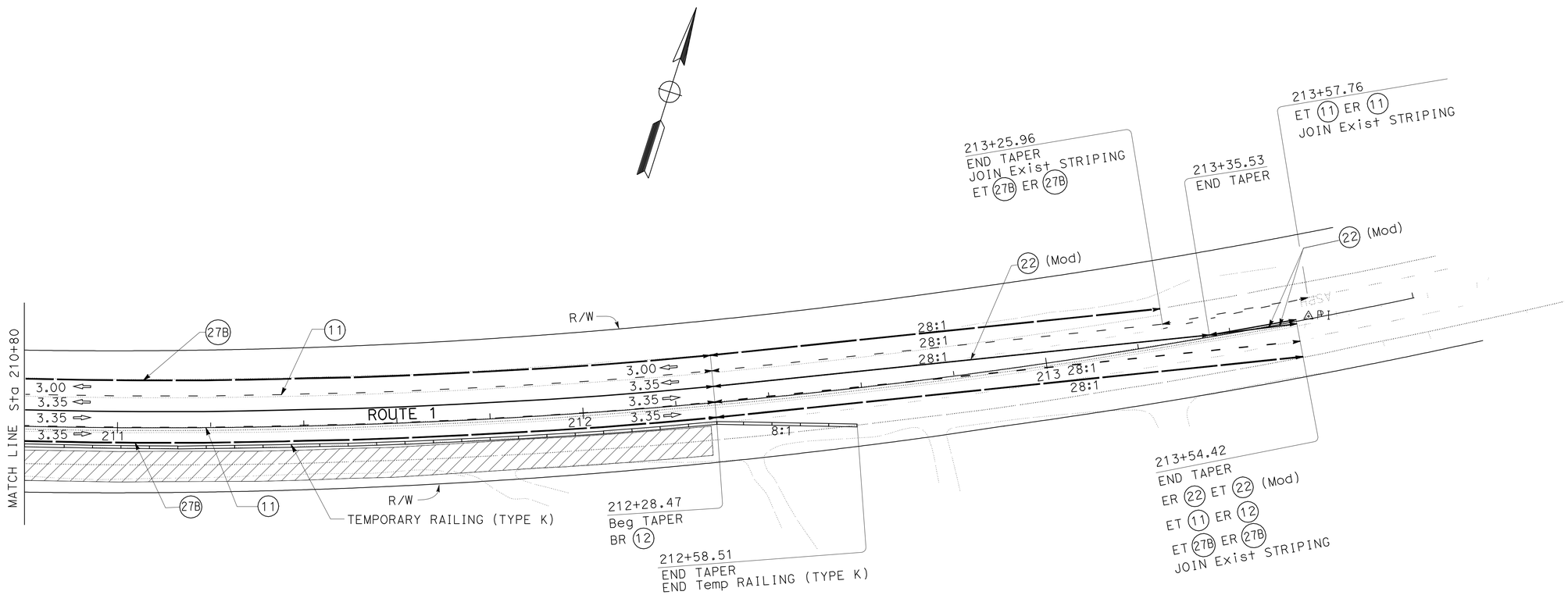

ALL DIMENSIONS ARE IN METERS
UNLESS OTHERWISE SHOWN

STAGE CONSTRUCTION
STAGE 2
SCALE 1:500

SC-4

APPROVED FOR STAGE CONSTRUCTION WORK ONLY

STATE OF CALIFORNIA - DEPARTMENT OF TRANSPORTATION
Caltrans
DESIGN

FUNCTIONAL SUPERVISOR: ORLANCE LEE
CALCULATED-DESIGNED BY: MIKE NGUYEN
CHECKED BY: PAUL HSU
REVISED BY
DATE REVISED

LAST REVISION 00-00-00
DATE PLOTTED => 04-JUN-2012
TIME PLOTTED => 15:55

Dist	COUNTY	ROUTE	KILOMETER POST TOTAL PROJECT	SHEET No.	TOTAL SHEETS
07	LA	1	82.8/83.3	18	46

REGISTERED CIVIL ENGINEER 3-30-12 DATE

6-4-12
PLANS APPROVAL DATE

REGISTERED PROFESSIONAL ENGINEER MIKE K. NGUYEN No. 67756 Exp. 6-30-13 CIVIL STATE OF CALIFORNIA

THE STATE OF CALIFORNIA OR ITS OFFICERS OR AGENTS SHALL NOT BE RESPONSIBLE FOR THE ACCURACY OR COMPLETENESS OF SCANNED COPIES OF THIS PLAN SHEET.

Caltrans Metric

STAGE CONSTRUCTION QUANTITIES

SHEET NO.	STATION	DETAIL No. / PAVEMENT MARKING	TEMPORARY PAVEMENT MARKER RETROREFLECTIVE TYPE D	PAINTED TRAFFIC STRIPE (1-COAT) 100 mm	PAINTED TRAFFIC STRIPE (1-COAT) 200 mm	PAINT PAVEMENT MARKING (1-COAT)	REMOVE PAVEMENT MARKER TYPE AY	REMOVE PAVEMENT MARKER TYPE D	REMOVE PAVEMENT MARKER TYPE G	REMOVE PAVEMENT MARKER TYPE H	REMOVE PAINTED TRAFFIC STRIPE WHITE	REMOVE PAINTED TRAFFIC STRIPE YELLOW	REMOVE THERMOPLASTIC TRAFFIC STRIPE WHITE	REMOVE THERMOPLASTIC TRAFFIC STRIPE YELLOW	REMOVE THERMOPLASTIC PAVEMENT MARKING	TEMPORARY RAILING (TYPE K)	TEMPORARY CRASH CUSHION MODULE	CHANNELIZER (SURFACE MOUNTED)	REMARKS
			EA	m	m	m^2	EA	EA	EA	EA	m	m	m	m	m^2	m	EA	EA	
SC-1	208+66.19 TO 210+80	27B		214		1.4									1.4	211			STAGE 1
	208+78.23 TO 210+80	11		202															
	208+76.31 TO 210+80	12							15				51						
	209+77.975 TO 210+80	25A								58				208					
	208+63.23 TO 208+96.23	38A			96								96						
	208+51.74 TO 208+63.23	40		12															
	208+51.74 TO 208+63.23	41		12															
	209+66.19 TO 210+80	22	54	375			30	7						147					
	208+92.51 TO 209+76.31	29						20						248					
SC-2	210+80 TO 213+57.76	11		278														4	
	210+80 TO 213+57.76	12							20				70			265			
	210+80 TO 213+54.42	25A								76				549			14		
	210+80 TO 213+57.76	27B		278															
	210+80 TO 213+54.42	22	76	549															
SC-3	208+22.348 TO 210+80	11		418		1.4					51				2.8		14		STAGE 2
	208+22.35 TO 20937.20	12							6				19						
	208+15.14 TO 210+80	22	76	516			90	70				516							
	208+64.61 TO 210+80	27B		429									429			174		11	
	208+36.74 TO 208+96.23	38A			216								216						
	208+51.74 TO 208+63.23	40									2								
	208+51.74 TO 208+63.23	41										2							
SC-4	210+80 TO 213+54.42	11		553							70								
	210+80 TO 213+54.42	12							9				32						
	210+80 TO 213+54.42	22	78	549				78				549							
	210+80 TO 213+54.42	27B		521									521			179			
SUB-TOTAL			284	4906	312	2.8	120	175	50	134	123	1067	1434	1152	4.2	829	28	15	
TOTAL			284	5218		2.8	479				1190		2586		4.2	829	28	15	

STAGE CONSTRUCTION QUANTITIES

SCQ-1

STATE OF CALIFORNIA - DEPARTMENT OF TRANSPORTATION
Caltrans DESIGN

FUNCTIONAL SUPERVISOR: ORLANCE LEE
CALCULATED-DESIGNED BY: MIKE NGUYEN
CHECKED BY: PAUL HSU
REVISED BY
DATE REVISED

LAST REVISION 00-00-00
DATE PLOTTED => 04-JUN-2012
TIME PLOTTED => 13:37

Dist	COUNTY	ROUTE	KILOMETER POST TOTAL PROJECT	SHEET No.	TOTAL SHEETS
07	LA	1	82.8/83.3	19	46

REGISTERED CIVIL ENGINEER 3-30-12 DATE

6-4-12
PLANS APPROVAL DATE

REGISTERED PROFESSIONAL ENGINEER MIKE K. NGUYEN No. 67756 Exp. 6-30-13 CIVIL STATE OF CALIFORNIA

THE STATE OF CALIFORNIA OR ITS OFFICERS OR AGENTS SHALL NOT BE RESPONSIBLE FOR THE ACCURACY OR COMPLETENESS OF SCANNED COPIES OF THIS PLAN SHEET.

Caltrans Metric

NOTES:

1. DELINEATION SHALL BE RESTRIPED ON THE SAME ALIGNMENT UNLESS OTHERWISE SHOWN ON PAVEMENT DELINEATION PLANS.
2. TEMPORARY PAVEMENT DELINEATION SHALL BE REMOVED, UNLESS NOTED OTHERWISE.
3. FOR ACCURATE RIGHT OF WAY DATA, CONTACT RIGHT OF WAY ENGINEERING AT THE DISTRICT OFFICE.

LEGEND:

- DIRECTION OF TRAVEL
- (XX) STRIPING DETAIL PER STANDARD PLAN
- YELLOW NON-REFLECTIVE (TYPE AY)
- TWO-WAY YELLOW RETROREFLECTIVE (TYPE D)
- 100 mm YELLOW
- 100 mm WHITE

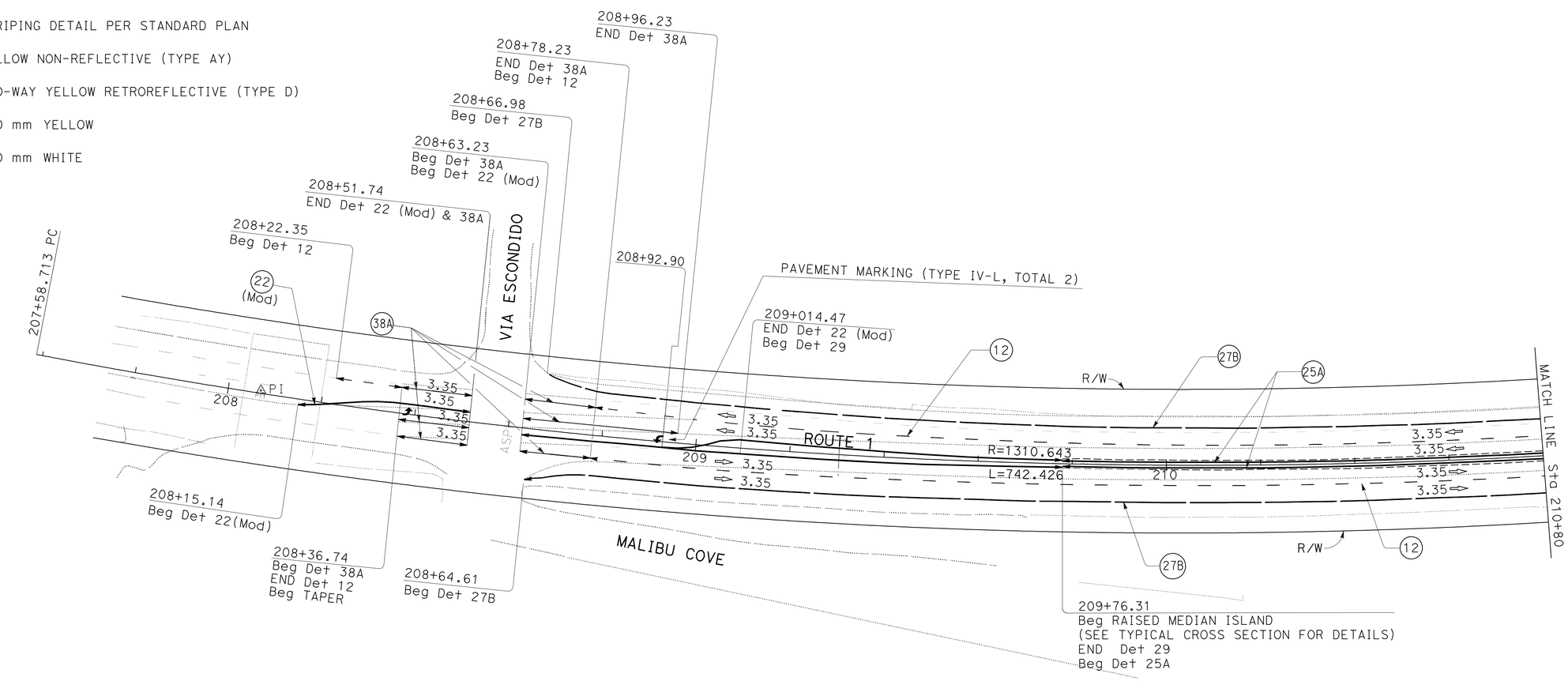

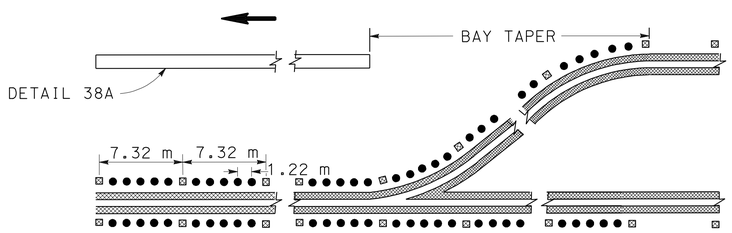

DETAIL 22 (Mod) (FOR LEFT TURN)

NO SCALE

APPROVED FOR PAVEMENT DELINEATION WORK ONLY

ALL DIMENSIONS ARE IN METERS
UNLESS OTHERWISE SHOWN

PAVEMENT DELINEATION PLAN

SCALE 1:500

PD-1

STATE OF CALIFORNIA - DEPARTMENT OF TRANSPORTATION
Caltrans
DESIGN

FUNCTIONAL SUPERVISOR: ORLANCE LEE
CALCULATED-DESIGNED BY: MIKE NGUYEN
CHECKED BY: PAUL HSU
REVISED BY
DATE REVISED

LAST REVISION 00-00-00
DATE PLOTTED => 04-JUN-2012
TIME PLOTTED => 15:55

Dist	COUNTY	ROUTE	KILOMETER POST TOTAL PROJECT	SHEET No.	TOTAL SHEETS
07	LA	1	82.8/83.3	20	46

REGISTERED CIVIL ENGINEER 3-30-12 DATE

6-4-12
PLANS APPROVAL DATE

REGISTERED PROFESSIONAL ENGINEER
MIKE K. NGUYEN
No. 67756
Exp. 6-30-13
CIVIL
STATE OF CALIFORNIA

THE STATE OF CALIFORNIA OR ITS OFFICERS OR AGENTS SHALL NOT BE RESPONSIBLE FOR THE ACCURACY OR COMPLETENESS OF SCANNED COPIES OF THIS PLAN SHEET.

Caltrans Metric

NOTE:

FOR ACCURATE RIGHT OF WAY DATA, CONTACT
RIGHT OF WAY ENGINEERING AT THE DISTRICT OFFICE.

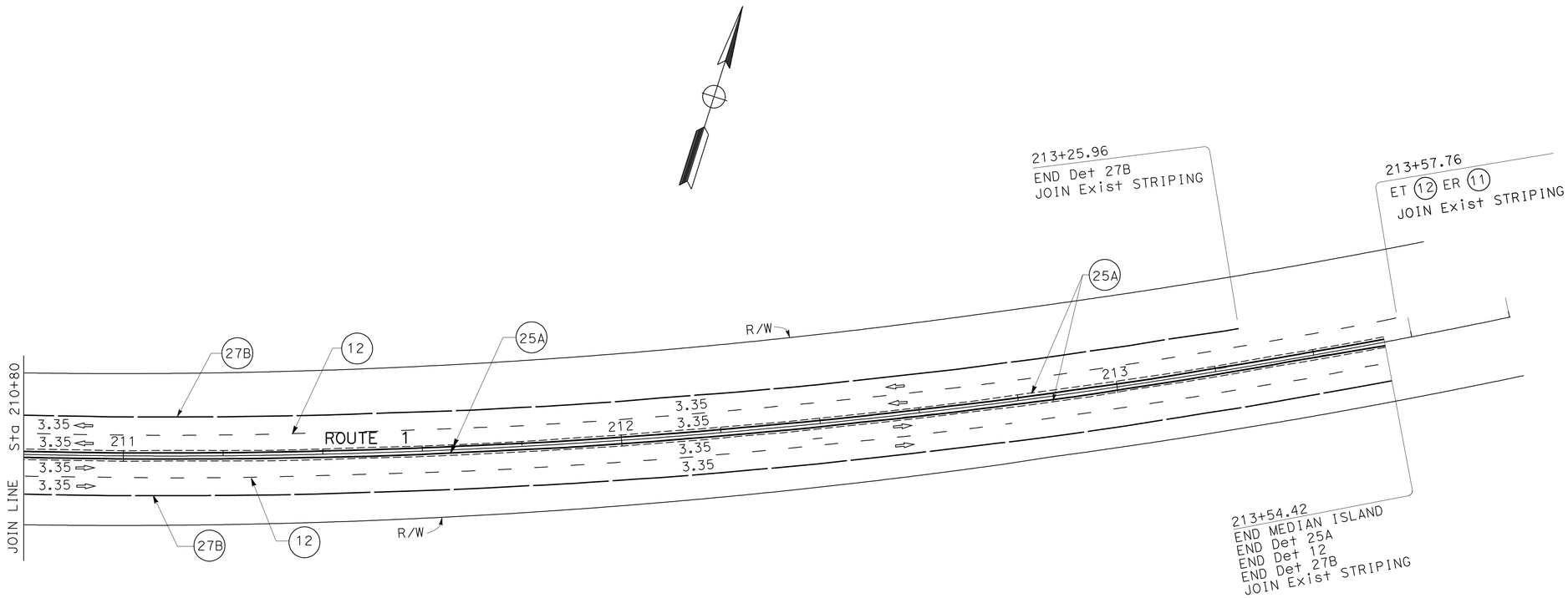

ALL DIMENSIONS ARE IN METERS
UNLESS OTHERWISE SHOWN

PAVEMENT DELINEATION PLAN

SCALE 1:500

PD-2

APPROVED FOR PAVEMENT DELINEATION WORK ONLY

STATE OF CALIFORNIA - DEPARTMENT OF TRANSPORTATION
Caltrans® **DESIGN**

FUNCTIONAL SUPERVISOR: ORLANCE LEE
CALCULATED-DESIGNED BY: MIKE NGUYEN
CHECKED BY: PAUL HSU
REVISED BY
DATE REVISED

LAST REVISION 00-00-00
DATE PLOTTED => 04-JUN-2012
TIME PLOTTED => 15:55

Dist	COUNTY	ROUTE	KILOMETER POST TOTAL PROJECT	SHEET No.	TOTAL SHEETS
07	LA	1	82.8/83.3	21	46

REGISTERED CIVIL ENGINEER 3-30-12 DATE

6-4-12
PLANS APPROVAL DATE

REGISTERED PROFESSIONAL ENGINEER MIKE K. NGUYEN No. 67756 Exp. 6-30-13 CIVIL STATE OF CALIFORNIA

THE STATE OF CALIFORNIA OR ITS OFFICERS OR AGENTS SHALL NOT BE RESPONSIBLE FOR THE ACCURACY OR COMPLETENESS OF SCANNED COPIES OF THIS PLAN SHEET.

Caltrans Metric

PAVEMENT DELINEATION QUANTITIES

SHEET No.	STATION	DETAIL No. / PAVEMENT MARKING	PAVEMENT MARKER (RETROREFLECTIVE) TYPE AY	TYPE D	TYPE G	TYPE H	100 mm THERMOPLASTIC TRAFFIC STRIPE (BROKEN 10.98 m-3.66 m)	100 mm THERMOPLASTIC TRAFFIC STRIPE WHITE	100 mm THERMOPLASTIC TRAFFIC STRIPE YELLOW	200 mm THERMOPLASTIC TRAFFIC STRIPE	THERMOPLASTIC PAVEMENT MARKING	REMARKS
			EA	EA	EA	EA	m	m	m	m	m^2	
PD-1	208+64.61 TO 210+80	27B						429			1.4	
	208+22.35 TO 210+80	12			36		418					
	208+10.95 TO 210+80	22 (Mod)	120	28					220			
	209+77.98 TO 210+80	25A				30			208			
	209+14.47 TO 209+76.31	29		16					248			
	208+36.74 TO 208+98.53	38A								108	2.8	
PD-2	210+80 TO 213+54.42	12			38		521					
	210+80 TO 213+54.42	25A				78			549			
	210+80 TO 213+54.42	27B						521				
SUB-TOTAL			120	44	74	108	939	950	1225	108	4.2	
TOTAL			346				939	2175		108	4.2	

PAVEMENT DELINEATION QUANTITIES

PDQ-1

STATE OF CALIFORNIA - DEPARTMENT OF TRANSPORTATION
Caltrans DESIGN

FUNCTIONAL SUPERVISOR: ORLANCE LEE
CALCULATED-DESIGNED BY: MIKE NGUYEN
CHECKED BY: PAUL HSU
REVISED BY
DATE REVISED

LAST REVISION 00-00-00
DATE PLOTTED => 04-JUN-2012
TIME PLOTTED => 15:55

Dist	COUNTY	ROUTE	KILOMETER POST TOTAL PROJECT	SHEET No.	TOTAL SHEETS
07	LA	1	82.8/83.3	22	46

REGISTERED CIVIL ENGINEER 3-30-12 DATE

6-4-12
PLANS APPROVAL DATE

REGISTERED PROFESSIONAL ENGINEER MIKE K. NGUYEN No. 67756 Exp. 6-30-13 CIVIL STATE OF CALIFORNIA

THE STATE OF CALIFORNIA OR ITS OFFICERS OR AGENTS SHALL NOT BE RESPONSIBLE FOR THE ACCURACY OR COMPLETENESS OF SCANNED COPIES OF THIS PLAN SHEET.

Caltrans Metric

ROADWAY QUANTITIES

SHEET No.	STATION	(N) REMOVE ASPHALT CONCRETE SURFACING	REMOVE CURB	REMOVE CONCRETE BARRIER	RUBERIZED HOT MIX ASPHALT (GAP GRADED)	HOT MIX ASPHALT (TYPE B)	ROADWAY EXCAVATION	CLASS 3 AGGREGATE BASE	MINOR CONCRETE	LEAN CONCRETE BASE	TACK COAT
		m^3	m	m	TONNE	TONNE	m^3	TONNE	m^3	m^3	TONNE
L-1	209+30-210+80.20	13.91	115.90	149.35	205.14	359.00	784.44	451.19	23.47	236.34	0.3
L-2	210+80.20-213+54.42	32.90	274.22	108.65	216.56	379.98	826.30	476.28	55.53	249.48	0.3
TOTAL		46.81	390.12	258.00	421.70	738.98	1610.74	927.47	79.00	485.82	0.6

(N) NOT A SEPARATE PAY ITEM, FOR INFORMATION ONLY.

SUMMARY OF QUANTITIES

Q-1

STATE OF CALIFORNIA - DEPARTMENT OF TRANSPORTATION
Caltrans DESIGN

FUNCTIONAL SUPERVISOR: ORLANCE LEE
CALCULATED-DESIGNED BY: MIKE NGUYEN
CHECKED BY: PAUL HSU
REVISED BY
DATE REVISED

LAST REVISION 00-00-00
DATE PLOTTED => 04-JUN-2012
TIME PLOTTED => 13:37

DIST	COUNTY	ROUTE	KILOMETER POST TOTAL PROJECT	SHEET NO.	TOTAL SHEETS
07	LA	1	82.8/83.3	23	46

Caltrans Metric

REGISTERED CIVIL ENGINEER

November 17, 2006
PLANS APPROVAL DATE

REGISTERED PROFESSIONAL ENGINEER Michael Janzen No. 44788 Exp. 03-31-08 CIVIL STATE OF CALIFORNIA

The State of California or its officers or agents shall not be responsible for the accuracy or completeness of electronic copies of this plan sheet.

To get to the Caltrans web site, go to: http://www.dot.ca.gov

To accompany plans dated 6-4-12

2004 REVISED Std PLAN RSP A87A

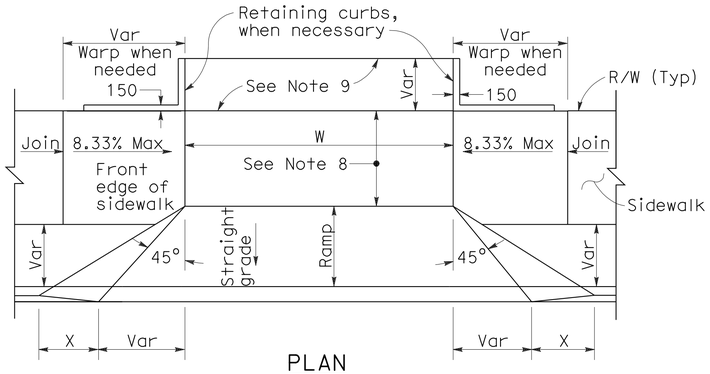

PLAN

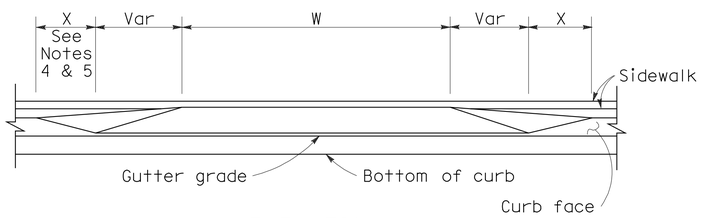

ELEVATION

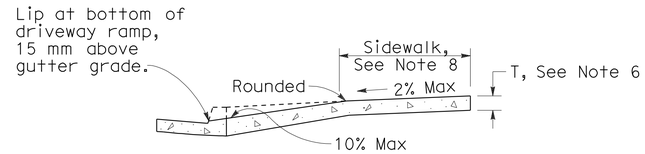

CASE A

Typical driveway, sidewalk not depressed

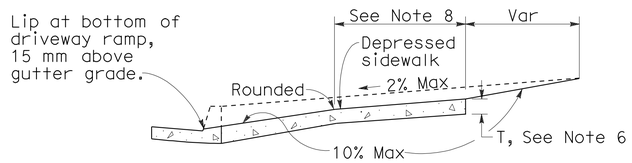

CASE B

Driveway with depressed sidewalk

SECTIONS

DRIVEWAYS

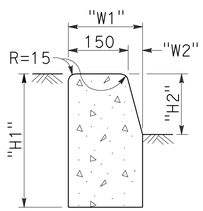

TYPE A1 CURBS

See Table A

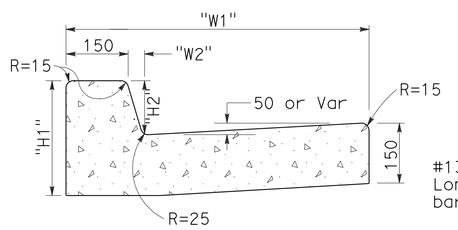

TYPE A2 CURBS

See Table A

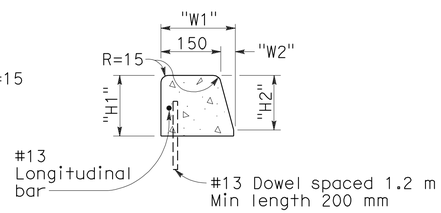

TYPE A3 CURBS

Superimposed on existing pavement
See Table A

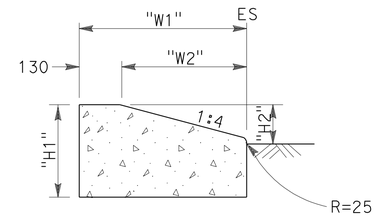

TYPE D CURBS

See Table A

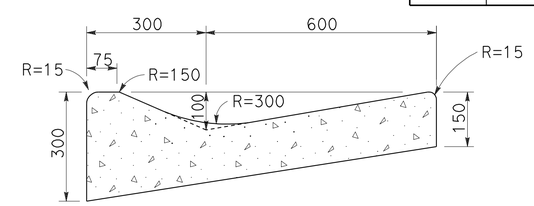

TYPE E CURB

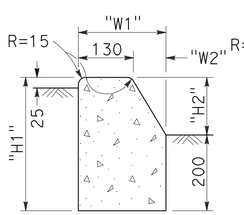

TYPE B1 CURBS

See Table A

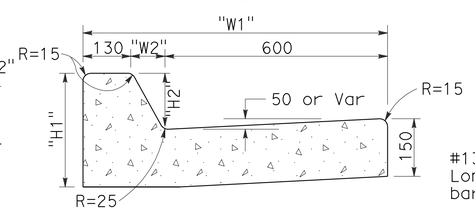

TYPE B2 CURBS

See Table A

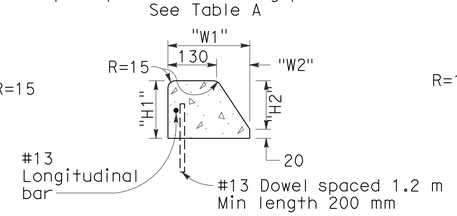

TYPE B3 CURBS

Superimposed on existing pavement
See Table A

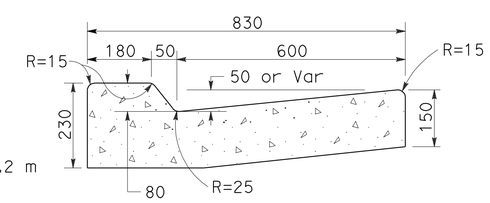

TYPE B4 CURBS

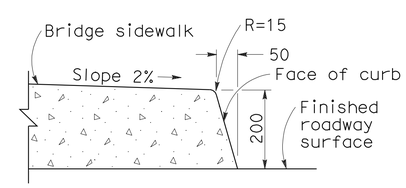

TYPE H CURB

On Bridges

CURBS

CURB QUANTITIES

TYPE	CUBIC METERS PER METER
A1-150	0.064
A1-200	0.075
A2-150	0.144
A2-200	0.155
A3-150	0.025
A3-200	0.035
B1-100	0.056
B1-150	0.073
B2-100	0.137
B2-150	0.152
B3-100	0.017
B3-150	0.027
B4	0.142
D-100	0.100
D-150	0.162
E	0.161

TABLE A

CURB TYPE	DIMENSIONS "H1"	"H2"	"W1"	"W2"
A1-150	350	150	190	40
A1-200	400	200	200	50
A2-150	300	150	790	40
A2-200	350	200	800	50
A3-150	150	130	185	35
A3-200	200	180	198	48
B1-100	300	100	200	70
B1-150	350	150	230	100
B2-100	250	100	800	70
B2-150	300	150	830	100
B3-100	100	80	185	55
B3-150	150	130	217	87
D-100	250	100	452	322
D-150	300	150	652	522

NOTES

1. Case A driveway section typically applies.
2. Use Case B driveway section when ramp slopes would exceed 10% in Case A.
3. Use Case B driveway section when sidewalk cross slope would exceed 2% in Case A.
4. X=900 mm except for curb heights over 250 mm where 1:4 slopes shall be used on curb slope.
5. X is a variable when sidewalk is located where wheelchairs may traverse the surface. Slopes shall not exceed 8.33%.
6. Sidewalk and ramp thickness ``T'' at driveway shall be 100 mm for residental and 150 mm for commercial.
7. Difference in slope of the driveway ramp and the slope of a line between the gutter and a point on the roadway 1.5 meters from gutter line shall not exceed 15%. Reduce driveway ramp slope, not gutter slope, where required.
8. Minimum width of clear passageway for sidewalk shall be 1.22 meters.
9. Retaining curbs and acquisition of construction easement may be necessary for narrow sidewalks or curb heights in excess of 150 mm.
10. Across the pedestrian route at curb ramp locations, the gutter pan slope shall not exceed 25 mm of depth for each 600 mm of width.

STATE OF CALIFORNIA
DEPARTMENT OF TRANSPORTATION

CURBS AND DRIVEWAYS

NO SCALE

ALL DIMENSIONS ARE IN MILLIMETERS UNLESS OTHERWISE SHOWN

RSP A87A DATED NOVEMBER 17, 2006 SUPERSEDES STANDARD PLAN A87A DATED JULY 1, 2004-PAGE 115 OF THE STANDARD PLANS BOOK DATED JULY 2004.

REVISED STANDARD PLAN RSP A87A

10-25-06

DIST	COUNTY	ROUTE	KILOMETER POST TOTAL PROJECT	SHEET NO.	TOTAL SHEETS
07	LA	1	82.8/83.3	24	46

Caltrans Metric

REGISTERED CIVIL ENGINEER

January 18, 2008
PLANS APPROVAL DATE

REGISTERED PROFESSIONAL ENGINEER Raymond Don Tsztoo No. C37332 Exp. 6-30-08 CIVIL STATE OF CALIFORNIA

The State of California or its officers or agents shall not be responsible for the accuracy or completeness of electronic copies of this plan sheet.

To get to the Caltrans web site, go to: http://www.dot.ca.gov

To accompany plans dated 6-4-12

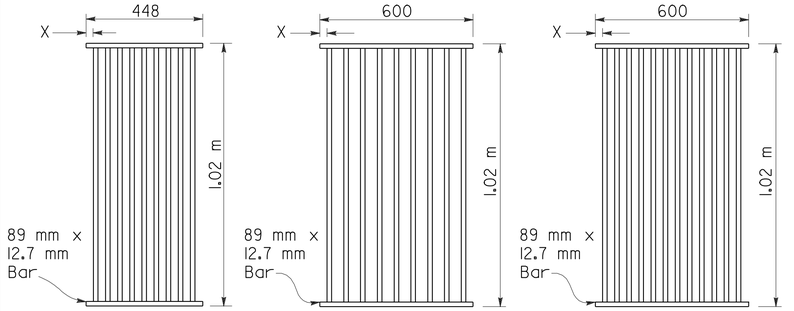

TYPE 450-9

35 mm Clear spacing. Use within the roadbed on highways where bicycles and pedestrians are excluded.

TYPE 600-9

51 mm Clear spacing. Use in locations off the roadbed on all types of highways.

TYPE 600-12

35 mm Clear spacing. Use within the roadbed on highways where bicycles and pedestrians are excluded.

RECTANGULAR GRATE DETAILS

(See table below)

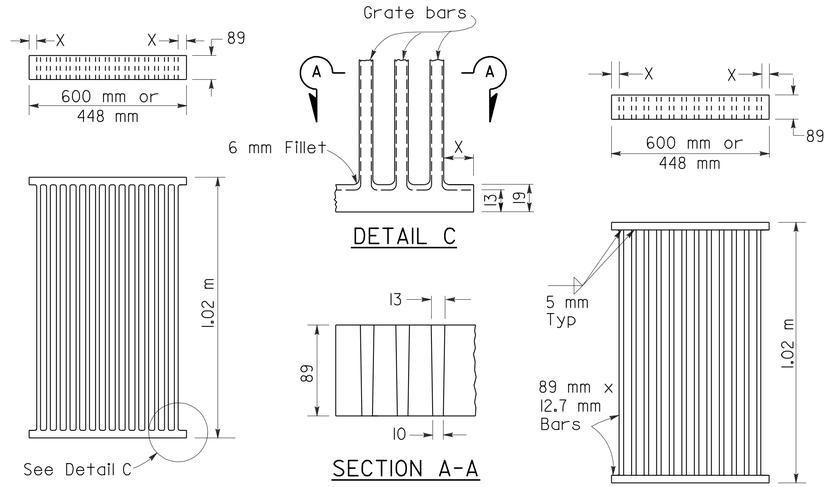

ALTERNATIVE CAST NODULAR IRON GRATE OR CAST STEEL GRATE

ALTERNATIVE WELDED GRATE

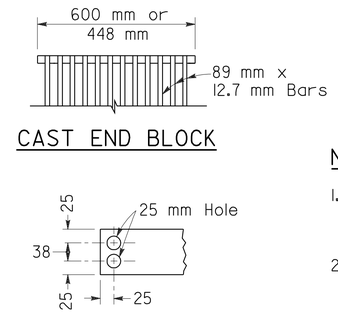

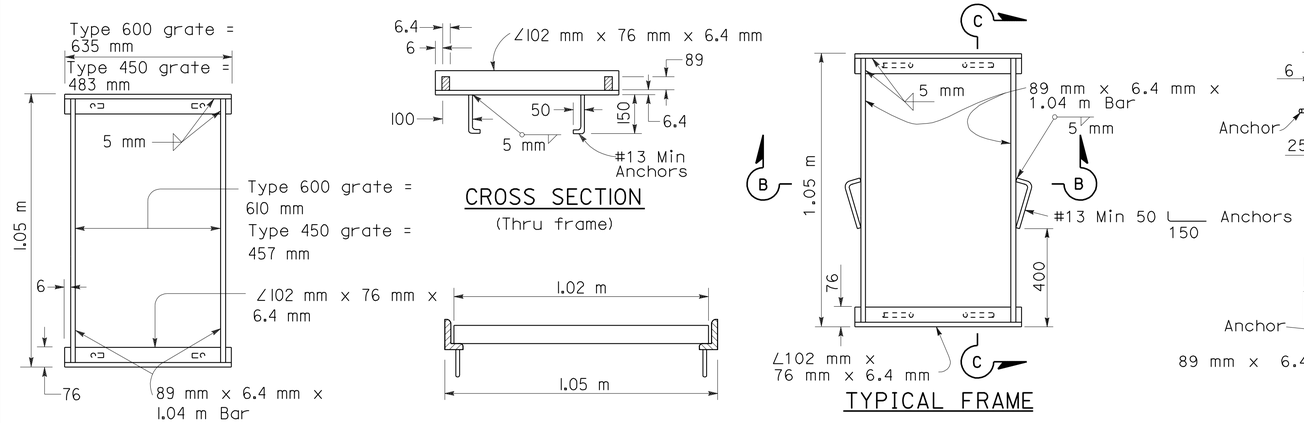

RECTANGULAR FRAME DETAILS

(For all rectangular grates)

ALTERNATIVE ANCHOR FOR RECTANGULAR FRAME

(For details not shown, See Rectangular Frame Details)

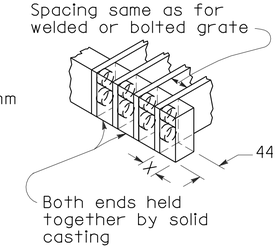

ALTERNATIVE CAST NODULAR IRON OR CAST STEEL END BLOCK GRATE

NOTES

1. Grate type numbers refer to approximate width of grate in millimeters and number of bars, respectively.
2. Contractor has the option of using cast nodular iron, cast steel, welded, bolted, or cast end block grate.
3. See Special Provisions for requirements pertaining to galvanizing or asphalt dipping of grates and frames.
4. Rounded top of bars optional on all grates.
5. Pipe inlets with a grate shall be placed so that bars parallel direction of principle surface flow.
6. Full penetration butt welds may be substituted for the fillet welds on all anchors.
7. Standard square, hexagon, round or equivalent headed anchors may be substituted for the right angle hooks on the anchors shown on this plan.
8. Grate and frame weights are based on welded grates (weights of face angles, steps, protection bars, etc. are not included).

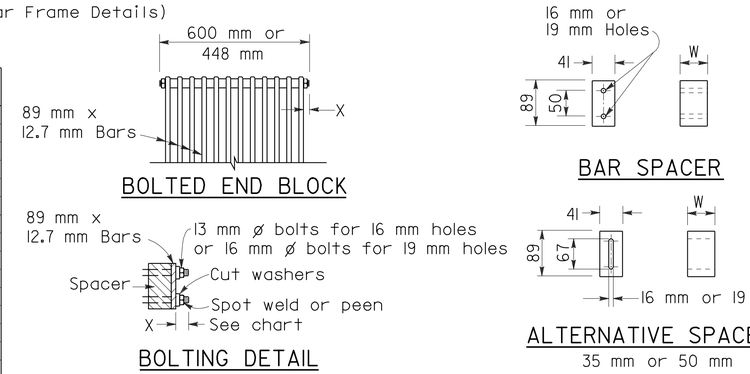

ALTERNATIVE BOLTED GRATE

GRATE BAR SPACING TABLE

TYPE	No. OF BARS	CLEAR BAR SPACING (mm)	X (mm)
450-9	9	35	27
600-9	9	51	40
600-12	12	35	32

INLET TYPE	COVER TYPE	MASS (kg)
OS	PLATE	79
OL-2.1	PLATE	77
OL-3.0	PLATE	77
OL-4.3	PLATE	77
OL-6.4	PLATE	77
OCP	PLATE	51
OCPI	PLATE	51
OCPI	REDWOOD	19
OMP	PLATE	80
OMPI	PLATE	80

INLET TYPE	GRATE TYPE	No. OF GRATES	MASS (kg)
GDO	600-12	2	288
GOL-2.1	600-12	1	148
GOL-3.0	600-12	1	148
GO,G1,G2,G3,G4(TYPE 600)	600-9	1	119
	600-12	1	148
G4(TYPE 450),G5,G6	450-9	1	113
GT-1	450-9	2	226
GT-2	450-9	2	226
GT-3	600-12	2	296
GT-4	600-12	2	296
TRASH RACK			10

BASIS FOR MISC IRON & STEEL FINAL PAY MASSES FOR DRAINAGE INLETS

(See General Notes, No. 8)

STATE OF CALIFORNIA
DEPARTMENT OF TRANSPORTATION

GRATE DETAILS

NO SCALE

ALL DIMENSIONS ARE IN MILLIMETERS UNLESS OTHERWISE SHOWN

RSP D77A DATED JANUARY 18, 2008 SUPERSEDES STANDARD PLAN D77A DATED JULY 1, 2004 - PAGE 155 OF THE STANDARD PLANS BOOK DATED JULY 2004.

REVISED STANDARD PLAN RSP D77A

2004 REVISED Std PLAN RSP D77A

DIST	COUNTY	ROUTE	KILOMETER POST TOTAL PROJECT	SHEET NO.	TOTAL SHEETS
07	LA	1	82.8/83.3	25	46

Caltrans Metric

Randell D. Hiatt
REGISTERED CIVIL ENGINEER

June 6, 2008
PLANS APPROVAL DATE

REGISTERED PROFESSIONAL ENGINEER
Randell D. Hiatt
No. C50200
Exp. 6-30-09
CIVIL
STATE OF CALIFORNIA

The State of California or its officers or agents shall not be responsible for the accuracy or completeness of electronic copies of this plan sheet.

To get to the Caltrans web site, go to: http://www.dot.ca.gov

To accompany plans dated 6-4-12

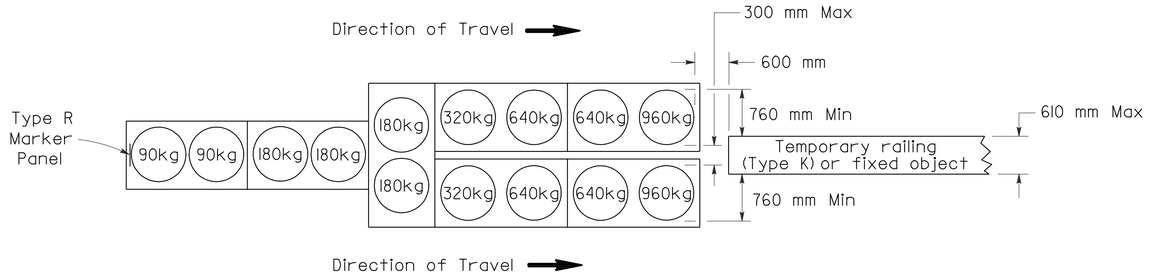

ARRAY 'TU14'

Approach speed 70 km/h or more

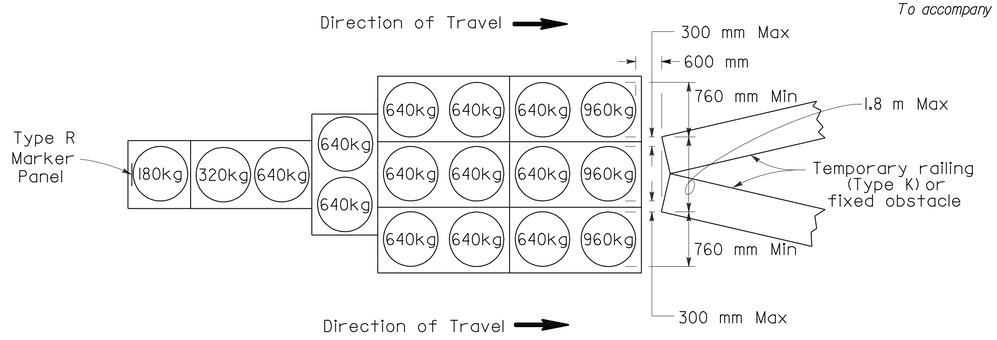

ARRAY 'TU17'

Approach speed less than 70 km/h

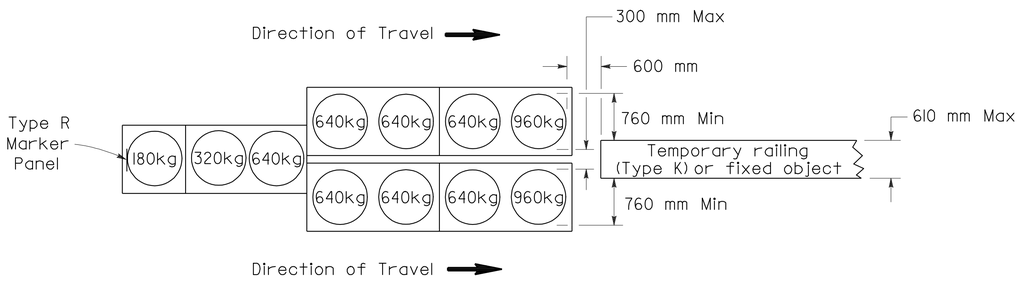

ARRAY 'TU11'

Approach speed less than 70 km/h

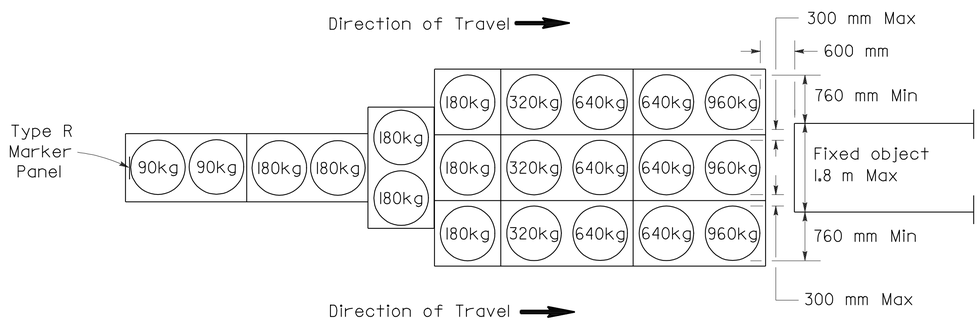

ARRAY 'TU21'

Approach speed 70 km/h or more

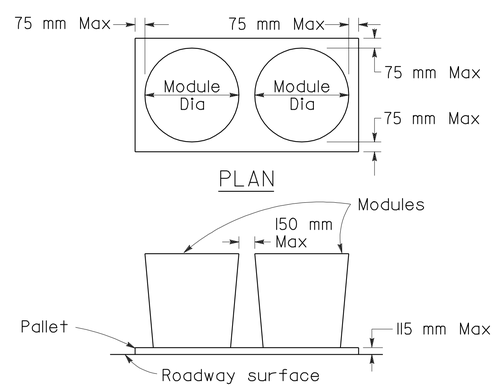

CRASH CUSHION PALLET DETAIL

See Note 7

NOTES

1. (XXX) Indicates sand filled module location and mass of sand in kilograms for each module. Module spacing is based on the greater diameter of the module.
2. All sand masses are nominal.
3. Temporary crash cushion arrays shall not encroach on the traveled way.
4. Place the top of Type R marker panel 25 mm below the module lid.
5. Refer to Standard Plan A73B for marker details.
6. Approach speeds indicated conform to NCHRP 350 Report criteria.
7. Use of Pallets is optional.

STATE OF CALIFORNIA
DEPARTMENT OF TRANSPORTATION

TEMPORARY CRASH CUSHION, SAND FILLED (UNIDIRECTIONAL)

NO SCALE

ALL DIMENSIONS ARE IN MILLIMETERS UNLESS OTHERWISE SHOWN

RSP T1A DATED JUNE 6, 2008 SUPERSEDES STANDARD PLAN T1A
DATED July 1, 2004 - PAGE 211 OF THE STANDARD PLANS BOOK DATED July 2004.

REVISED STANDARD PLAN RSP T1A

2004 REVISED Std PLAN RSP T1A

5-16-08

DIST	COUNTY	ROUTE	KILOMETER POST TOTAL PROJECT	SHEET NO.	TOTAL SHEETS
07	LA	1	82.8/83.3	26	46

Randell D. Hiatt
REGISTERED CIVIL ENGINEER

June 6, 2008
PLANS APPROVAL DATE

REGISTERED PROFESSIONAL ENGINEER
Randell D. Hiatt
No. C50200
Exp. 6-30-09
CIVIL
STATE OF CALIFORNIA

The State of California or its officers or agents shall not be responsible for the accuracy or completeness of electronic copies of this plan sheet.

To get to the Caltrans web site, go to: http://www.dot.ca.gov

To accompany plans dated 6-4-12

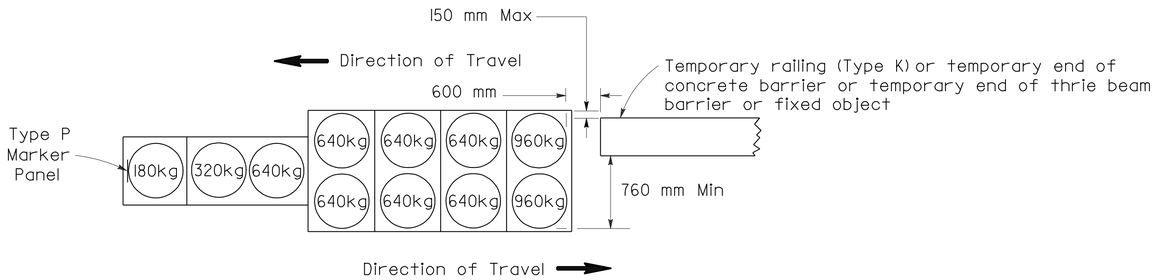

ARRAY 'TBI1'

Approach speed less than 70 km/h

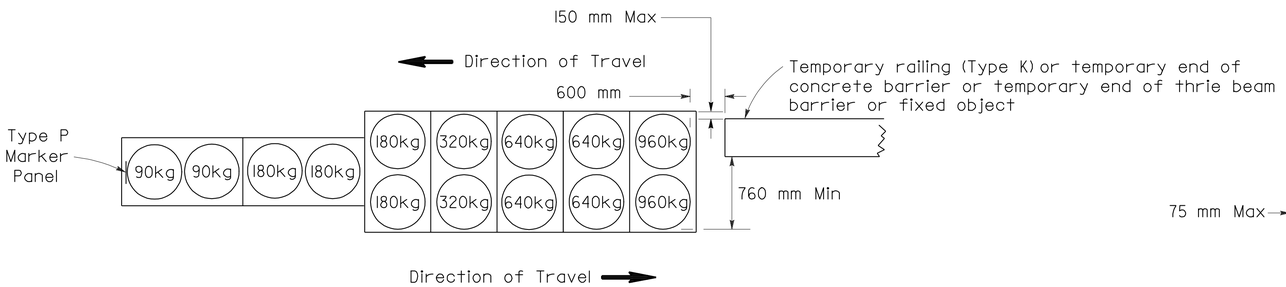

ARRAY 'TBI4'

Approach speed 70 km/h or more

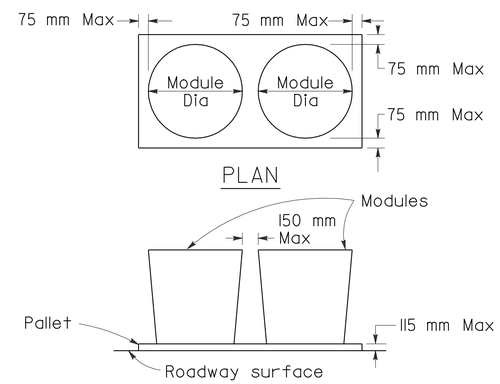

CRASH CUSHION PALLET DETAIL

See Note 7

NOTES

1. (XXX) Indicates sand filled module location and mass of sand in kilograms for each module. Module spacing is based on the greater diameter of the module.
2. All sand masses are nominal.
3. Temporary crash cushion arrays shall not encroach on the traveled way.
4. Place the Type P marker panel so that the bottom of the panel rests upon the pallet.
5. Refer to Standard Plan A73B for marker details.
6. Approach speeds indicated conform to NCHRP 350 Report criteria.
7. Use of Pallets is optional.

STATE OF CALIFORNIA
DEPARTMENT OF TRANSPORTATION

TEMPORARY CRASH CUSHION, SAND FILLED (BIDIRECTIONAL)

NO SCALE

ALL DIMENSIONS ARE IN MILLIMETERS UNLESS OTHERWISE SHOWN

RSP T1B DATED JUNE 6, 2008 SUPERSEDES STANDARD PLAN T1B DATED July 1, 2004 - PAGE 212 OF THE STANDARD PLANS BOOK DATED July 2004.

REVISED STANDARD PLAN RSP T1B

2004 REVISED Std PLAN RSP T1B

5-16-08

DIST	COUNTY	ROUTE	KILOMETER POST TOTAL PROJECT	SHEET NO.	TOTAL SHEETS
07	LA	1	82.8/83.3	27	46

Randell D. Hiatt
REGISTERED CIVIL ENGINEER

June 6, 2008
PLANS APPROVAL DATE

REGISTERED PROFESSIONAL ENGINEER
Randell D. Hiatt
No. C50200
Exp. 6-30-09
CIVIL
STATE OF CALIFORNIA

The State of California or its officers or agents shall not be responsible for the accuracy or completeness of electronic copies of this plan sheet.

To get to the Caltrans web site, go to: http://www.dot.ca.gov

To accompany plans dated 6-4-12

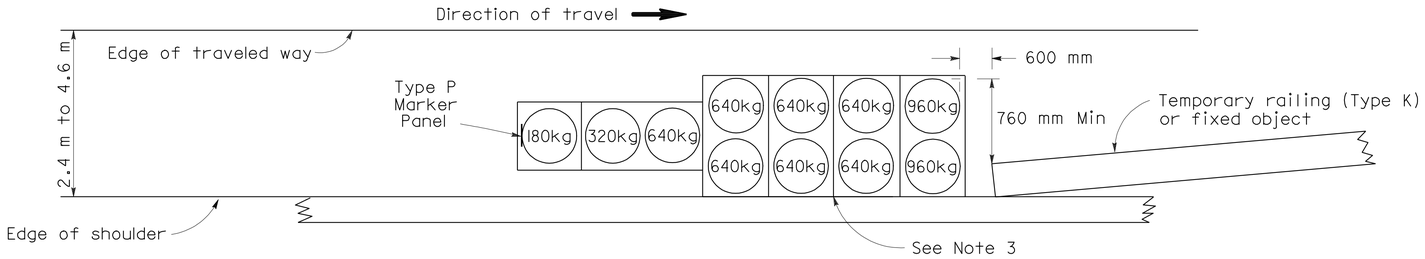

ARRAY 'TSI1'

Approach speed less than 70 km/h
See Note 9

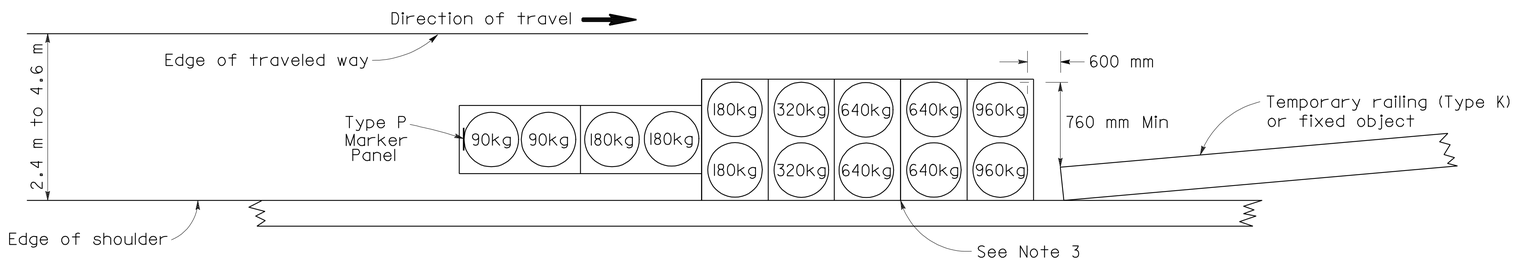

ARRAY 'TSI4'

Approach speed 70 km/h or more
See Note 9

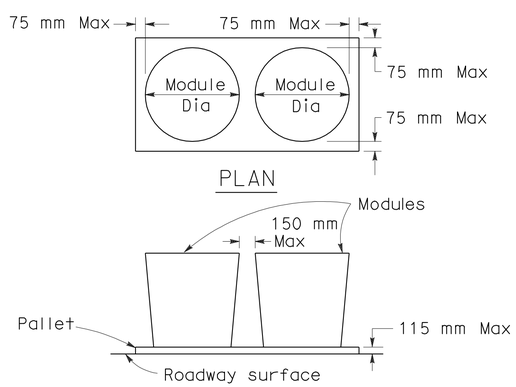

CRASH CUSHION PALLET DETAIL

See Note 11

NOTES

1. (XXX) Indicates sand filled module location and mass of sand in kilograms for each module. Module spacing is based on the greater diameter of the module.
2. All sand masses are nominal.
3. The temporary crash cushion arrays shown on this plan shall be used only in locations where there will be traffic on one side of the temporary crash cushion array.
4. If the fixed object or approach end of the temporary railing is less than 4.60 meters from the edge of traveled way, a temporary crash cushion is required.
5. Temporary crash cushion arrays shall not encroach on the traveled way.
6. Arrays for median shoulders shall conform to details shown on this plan for outside shoulders.
7. Place the Type P marker panel so that the bottom of the panel rest upon the pallet and faces traffic.
8. Refer to Standard Plan A73B for marker details.
9. For shoulder widths less than 2.4 m, appropriate approved crash cushion protection, other than sand filled modules, shall be provided at fixed objects and at approach ends of temporary railing. The specific type of crash cushion shall be as shown on the project plans or as specified in the Special Provisions, or if not shown on the project plans or specified in the Special Provisions, shall be as approved by the Engineer.
10. Approach speeds indicated conform to NCHRP 350 Report criteria.
11. Use of Pallets is optional.

STATE OF CALIFORNIA
DEPARTMENT OF TRANSPORTATION

TEMPORARY CRASH CUSHION, SAND FILLED (SHOULDER INSTALLATIONS)

NO SCALE

ALL DIMENSIONS ARE IN MILLIMETERS UNLESS OTHERWISE SHOWN

RSP T2 DATED JUNE 6, 2008 SUPERSEDES STANDARD PLAN T2
DATED July 1, 2004 - PAGE 213 OF THE STANDARD PLANS BOOK DATED July 2004.

REVISED STANDARD PLAN RSP T2

2004 REVISED Std PLAN RSP T2

5-16-08

To accompany plans dated 6-4-12

Caltrans Metric

DIST	COUNTY	ROUTE	KILOMETER POST TOTAL PROJECT	SHEET NO.	TOTAL SHEETS
07	LA	1	82.8/83.3	28	46

REGISTERED CIVIL ENGINEER

November 17, 2006
PLANS APPROVAL DATE

REGISTERED PROFESSIONAL ENGINEER Greg W. Edwards No. C36386 Exp. 6-30-08 CIVIL STATE OF CALIFORNIA

The State of California or its officers or agents shall not be responsible for the accuracy or completeness of electronic copies of this plan sheet.

To get to the Caltrans web site, go to: http://www.dot.ca.gov

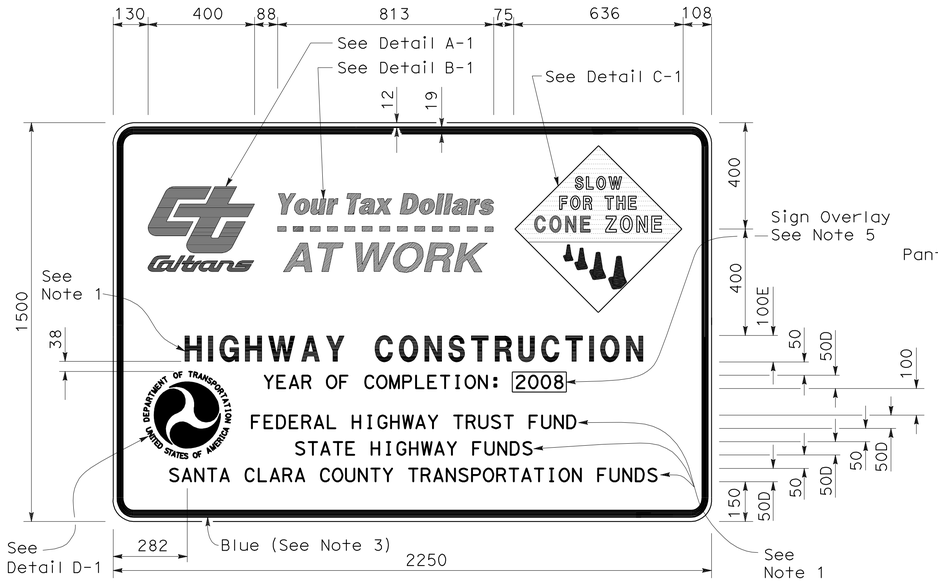

TYPE 1

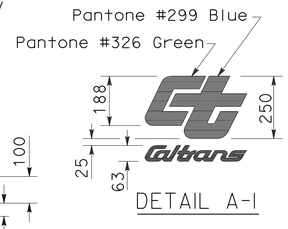

DETAIL A-1

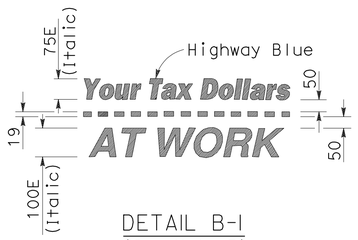

DETAIL B-1
(See Note 3)

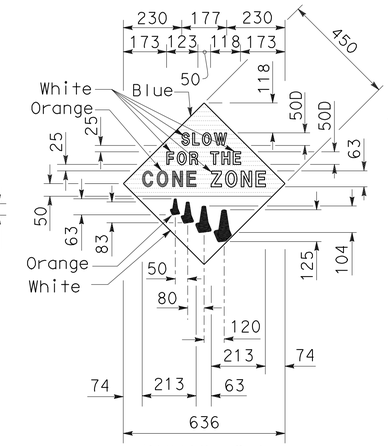

DETAIL C-1
(See Note 4)

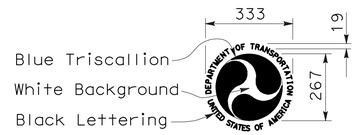

DETAIL D-1
(See Note 6)

NOTES:

1. The sign messages shown for type of project and fund types are examples only. See the Special Provisions for the applicable type of project and fund type messages to be used.
2. Except as otherwise shown, the legend of sign shall be black on a white background (non-reflective).
3. The border of the signs and details "B-1" and "B-2" shall be blue (non-reflective).
4. The diamond in details "C-1" and "C-2" shall be blue for the background of message, " SLOW FOR THE CONE ZONE", and white background for the orange cones. The color and type of font for the "SLOW FOR THE CONE ZONE" message shall be: "SLOW" white D; "FOR THE" white D; "CONE" orange Arial font; "ZONE" white Arial font.
5. Year of completion of project construction shown on the overlay is an example only. See the Special Provisions.
6. Use when the Project involves Federal Highway Trust Fund.

TYPE 2

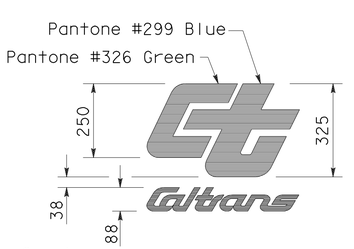

DETAIL A-2

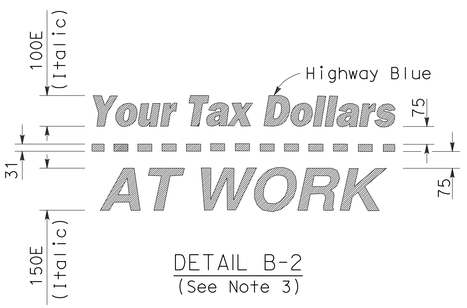

DETAIL B-2
(See Note 3)

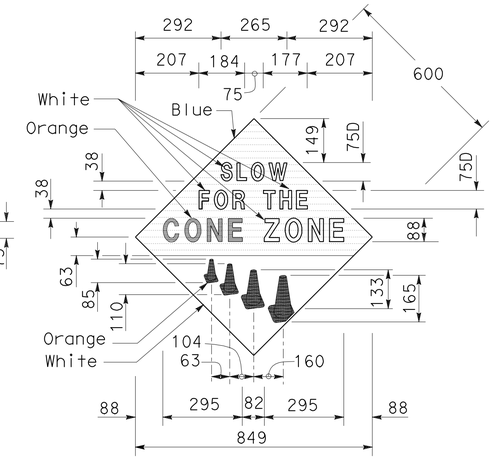

DETAIL C-2
(See Note 4)

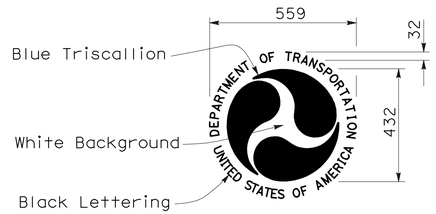

DETAIL D-2
(See Note 6)

STATE OF CALIFORNIA
DEPARTMENT OF TRANSPORTATION

CONSTRUCTION PROJECT FUNDING IDENTIFICATION SIGNS

NO SCALE

ALL DIMENSIONS ARE IN MILLIMETERS UNLESS OTHERWISE SHOWN

RSP T7 DATED NOVEMBER 17, 2006 SUPERSEDES RSP T7 DATED APRIL 28, 2005 AND STANDARD PLAN T7 DATED JULY 1, 2004-PAGE 217 OF THE STANDARD PLANS BOOK DATED JULY 2004.

REVISED STANDARD PLAN RSP T7

2004 REVISED Std PLAN RSP T7

9-7-06

DIST	COUNTY	ROUTE	KILOMETER POST TOTAL PROJECT	SHEET NO.	TOTAL SHEETS
07	LA	1	82.8/83.3	29	46

Caltrans Metric

Greg W. Edwards
REGISTERED CIVIL ENGINEER

April 28, 2005
PLANS APPROVAL DATE

REGISTERED PROFESSIONAL ENGINEER Greg W. Edwards No. C36386 Exp. 6-30-06 CIVIL STATE OF CALIFORNIA

The State of California or its officers or agents shall not be responsible for the accuracy or completeness of electronic copies of this plan sheet.

To get to the Caltrans web site, go to: http://www.dot.ca.gov

To accompany plans dated 6-4-12

TYPICAL LANE CLOSURE

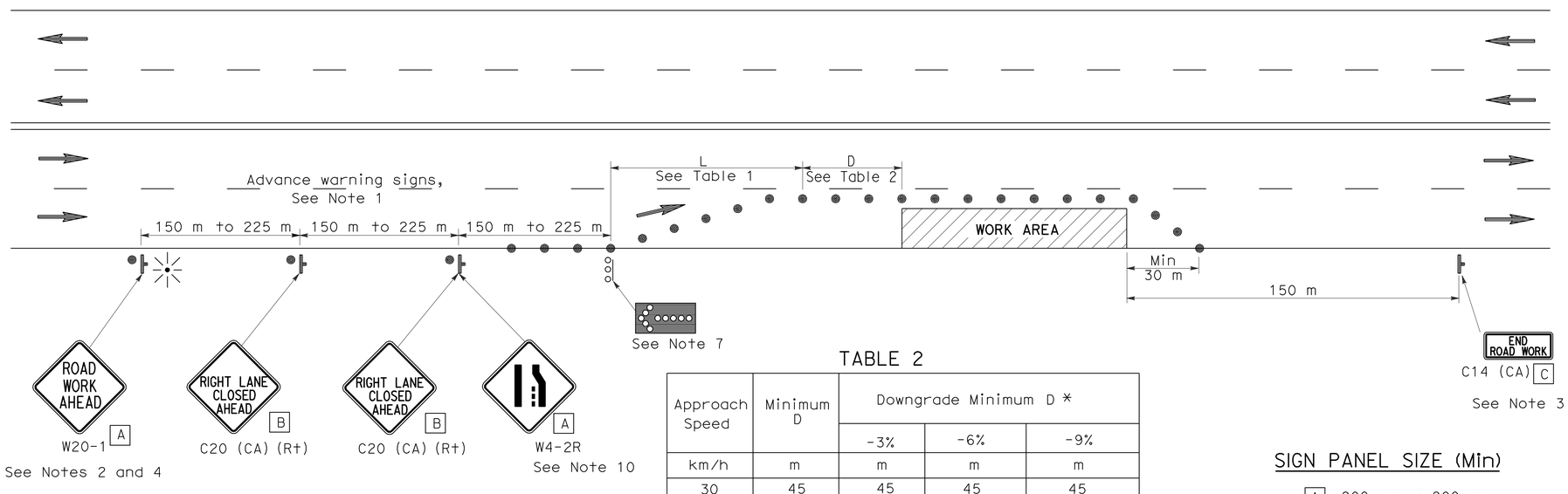

TABLE 2

Approach Speed	Minimum D	Downgrade Minimum D *		
		-3%	-6%	-9%
km/h	m	m	m	m
30	45	45	45	45
40	45	50	50	53
50	45	66	70	74
60	45	87	92	97
70	65	1 10	1 16	124
80	85	136	144	154

* Use on sustained downgrade steeper than or equal to grades shown and longer than 1.6 km.

SIGN PANEL SIZE (Min)

- A 900 mm x 900 mm
- B 914 mm x 914 mm
- C 914 mm x 457 mm

LEGEND

- Traffic Cone
- Temporary Sign
- Direction of Travel
- Flashing Arrow Sign (FAS)
- FAS Support or Trailer
- Portable Flashing Beacon

NOTES

Unless otherwise specified in the special provisions, all temporary warning signs shall have black legend on orange background.

California code are designated by (CA). Otherwise, Federal codes are shown.

NOTES

1. Where approach speeds are low, advance warning signs may be placed at 90 m spacing and placed closer in urban areas.
2. Each advance warning sign shall be equipped with at least two flags for daytime closure. Each flag shall be at least 400 mm x 400 mm in size and shall be orange or fluorescent red-orange in color. Flashing beacons shall be placed at the locations indicated for lane closure during hours of darkness.
3. A C14 (CA) "END ROAD WORK" sign, as appropriate, shall be placed at the end of the lane closure unless the end of work area is obvious, or ends within a larger project's limits.
4. If the W20-1 sign would follow within 600 m of a stationary W20-1 or C11 (CA) "ROAD WORK NEXT _____ MILES", use a C20 (CA) sign for the first advance warning sign.
5. All cones used for lane closures during the hours of darkness shall be fitted with retroreflective bands (or sleeves) as specified in the specifications.
6. Portable delineators, placed at one-half the spacing indicated for traffic cones, may be used instead of cones for daytime closures only.
7. Flashing arrow sign shall be either Type I or Type II.
8. The maximum spacing between cones along a tangent shall be 15 m and along a taper shall be approximately as shown in Table 1.
9. For approach speeds over 80 km/h, use the "Traffic Control System for Lane Closure On Freeways And Expressways" plan for lane closure details and requirements.
10. When specified in the special provisions, a W4-2 "LANE ENDS" symbol sign is to be used in place of the C20 (CA) "RIGHT LANE CLOSED AHEAD" sign.

TABLE I

Approach Speed	* Minimum L	** Max spacing of cones along taper
km/h	m	m
30	38	6
40	38	8
50	98	10
60	98	12
70	183	14
80	183	15
Over 80	See Note 9	

* Use L for lane widths less than or equal to 3.6 m.

** See Note 8

STATE OF CALIFORNIA
DEPARTMENT OF TRANSPORTATION

TRAFFIC CONTROL SYSTEM FOR LANE CLOSURE ON MULTILANE CONVENTIONAL HIGHWAYS

NO SCALE

ALL DIMENSIONS ARE IN MILLIMETERS UNLESS OTHERWISE SHOWN

RSP T11 DATED APRIL 28, 2005 SUPERSEDES STANDARD PLAN T11 DATED JULY 1, 2004-PAGE 220 OF THE STANDARD PLANS BOOK DATED JULY 2004.

REVISED STANDARD PLAN RSP T11

2004 REVISED Std PLAN RSP T11

DIST	COUNTY	ROUTE	KILOMETER POST TOTAL PROJECT	SHEET NO.	TOTAL SHEETS
07	LA	1	82.8/83.3	30	46

REGISTERED CIVIL ENGINEER

April 28, 2005
PLANS APPROVAL DATE

Greg W. Edwards No. C36386 Exp. 6-30-06 CIVIL — REGISTERED PROFESSIONAL ENGINEER — STATE OF CALIFORNIA

The State of California or its officers or agents shall not be responsible for the accuracy or completeness of electronic copies of this plan sheet.

To get to the Caltrans web site, go to: http://www.dot.ca.gov

Caltrans Metric

To accompany plans dated 6-4-12

LEGEND

- Traffic Cone
- Temporary Sign
- Direction of Travel
- Flashing Arrow Sign (FAS)
- FAS Support or Trailer
- Portable Flashing Beacon

TABLE 1

Approach Speed	*Minimum L	** Max spacing of cones along taper
km/h	m	m
30	38	6
40	38	8
50	98	10
60	98	12
70	183	14
80	183	15
Over 80	See Note 11	

* Use L for lane widths less than or equal to 3.6 m.

** See Note 10

TABLE 2

Approach Speed	Minimum D	Downgrade Minimum D *		
		-3%	-6%	-9%
km/h	m	m	m	m
30	45	45	45	45
40	45	50	50	53
50	45	66	70	74
60	45	87	92	97
70	65	110	116	124
80	85	136	144	154

* Use on sustained downgrade steeper than or equal to grades shown and longer than 1.6 km.

TYPICAL CLOSING OF HALF ROADWAY

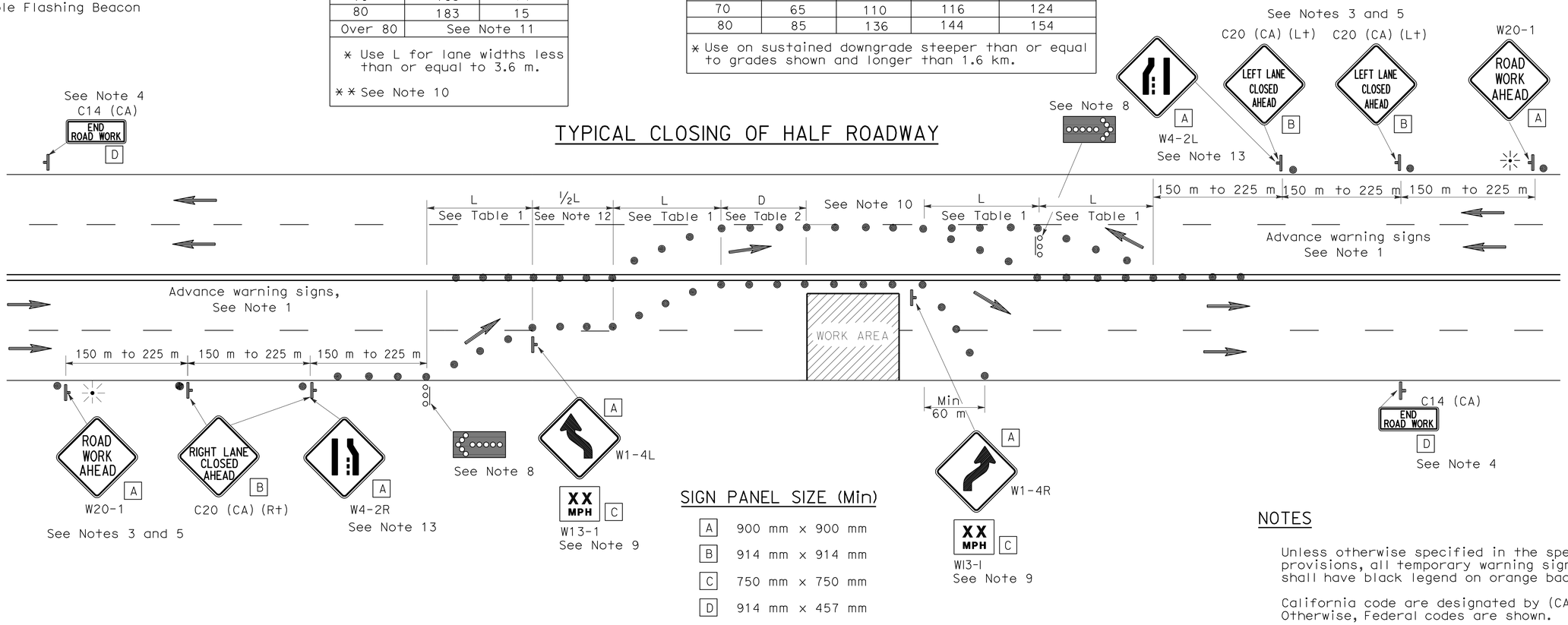

SIGN PANEL SIZE (Min)

A	900 mm x 900 mm
B	914 mm x 914 mm
C	750 mm x 750 mm
D	914 mm x 457 mm

NOTES

Unless otherwise specified in the special provisions, all temporary warning signs shall have black legend on orange background.

California code are designated by (CA). Otherwise, Federal codes are shown.

NOTES

1. Where Approach speeds are low, advance warning signs may be placed at 90 m spacing and placed closer in urban areas.
2. At least one person shall be assigned to provide full time maintenance of traffic control devices for lane closure unless, otherwise directed by the Engineer.
3. Each advance warning sign in each direction of travel shall be equipped with at least two flags for daytime closure. Each flag shall be at least 400 mm x 400 mm in size and shall be orange or fluorescent red-orange in color. Flashing beacons shall be placed at the locations indicated for lane closure during hours of darkness.
4. A C14 (CA) "END ROAD WORK" sign, as appropriate, shall be placed at the end of the lane closure unless the end of work area is obvious, or ends within a larger project's limits.
5. If the W20-1 sign would follow within 600 m of a stationary W20-1 or C11 (CA) "ROAD WORK NEXT _____ MILES", use a C20 (CA) sign for the first advance warning sign.
6. All cones used for lane closures during the hours of darkness shall be fitted with retroreflective bands (or sleeves) as specified in the specifications.
7. Portable delineators, placed at one-half the spacing indicated for traffic cones, may be used instead of cones for daytime closures only.
8. Flashing arrow signs shall be either Type I or Type II.
9. Advisory speed will be determined by the Engineer. The W13-1 Sign will not be required when advisory speed is more than the posted or maximum speed limit.
10. The maximum spacing between cones along a tangent shall be 15 m and along a taper shall be approximately as shown in Table 1.
11. For approach speeds over 80 km/h, use the "Traffic Control System For Lane Closure On Freeways And Expressways" plan for lane closure details and requirements.
12. Unless otherwise specified in the special provisions, the (½ L) shown between the two (L) lane closure tapers shall be used.
13. When specified in the special provisions, a W4-2 "Lane Ends" symbol sign is to be used in place of the C20 (CA) "RIGHT (LEFT) LANE CLOSED AHEAD" sign.

STATE OF CALIFORNIA
DEPARTMENT OF TRANSPORTATION

TRAFFIC CONTROL SYSTEM FOR LANE CLOSURE ON MULTILANE CONVENTIONAL HIGHWAYS

NO SCALE

ALL DIMENSIONS ARE IN MILLIMETERS UNLESS OTHERWISE SHOWN

RSP T12 DATED APRIL 28, 2005 SUPERSEDES STANDARD PLAN T12 DATED JULY 1, 2004-PAGE 221 OF THE STANDARD PLANS BOOK DATED JULY 2004.

REVISED STANDARD PLAN RSP T12

2004 REVISED Std PLAN RSP T12

DIST	COUNTY	ROUTE	KILOMETER POST TOTAL PROJECT	SHEET No	TOTAL SHEETS
07	LA	1	82.8/83.3	31	46

REGISTERED CIVIL ENGINEER 5-21-12 DATE

6-4-12
PLANS APPROVAL DATE

REGISTERED PROFESSIONAL ENGINEER K. K. Lin No. C60567 Exp. 12-31-12 CIVIL STATE OF CALIFORNIA

The State of California or its officers or agents shall not be responsible for the accuracy or completeness of electronic copies of this plan sheet.

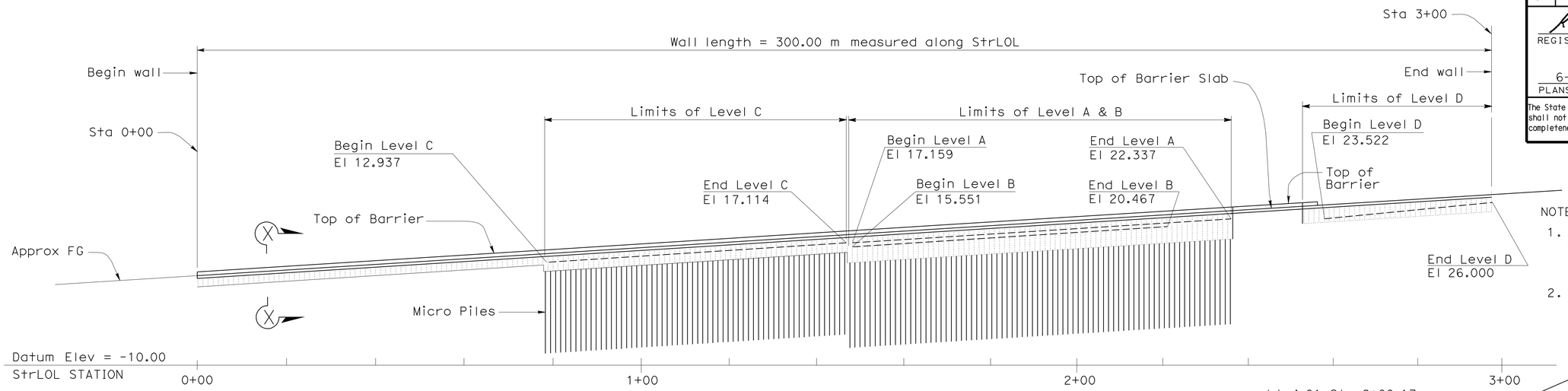

DEVELOPED ELEVATION

1:500

NOTES:

1. THE CONTRACTOR SHALL VERIFY ALL CONTROLLING FIELD DIMENSIONS BEFORE ORDERING OR FABRICATING ANY MATERIAL.
2. CONCRETE BARRIER TO BE (TYPE 732 MOD) 1999 REVISED STD. PLAN (B11-55)

INDEX TO PLANS

SHEET No.	TITLE
1	GENERAL PLAN
2	ELEVATION 1 OF 5
3	ELEVATION 2 OF 5
4	ELEVATION 3 OF 5
5	ELEVATION 4 OF 5
6	ELEVATION 5 OF 5
7	TYPICAL SECTION NO. 1
8	TYPICAL SECTION NO. 2
9	TYPICAL SECTION NO. 3
10	TYPICAL SECTION NO. 4
11	CONCRETE WALER DETAILS NO. 1
12	CONCRETE WALER DETAILS NO. 2
13	TIEBACK TENDON DETAILS
14	STRUCTURE DETAILS NO. 1
15	PAY LIMITS-STRUCTURE EXCAVATION & BACKFILL
16	LOG OF TEST BORINGS

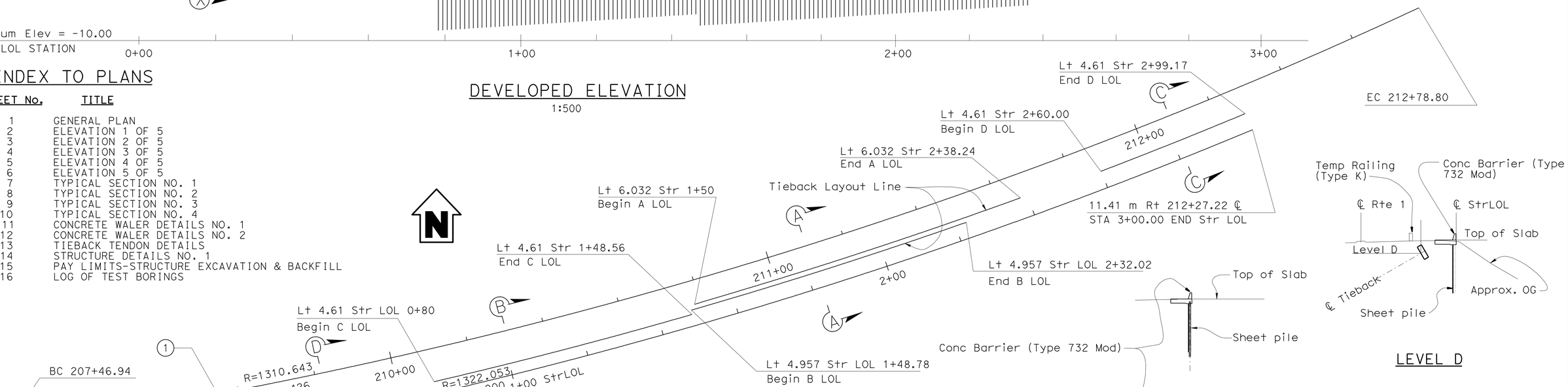

PLAN

1:500

CURVE DATA				
No.	R	Δ	T	L
1	1310.643 m	32°27′21"	381.468 m	742.426 m
2	1322.053 m	13°00′00"	150.629 m	300.000 m

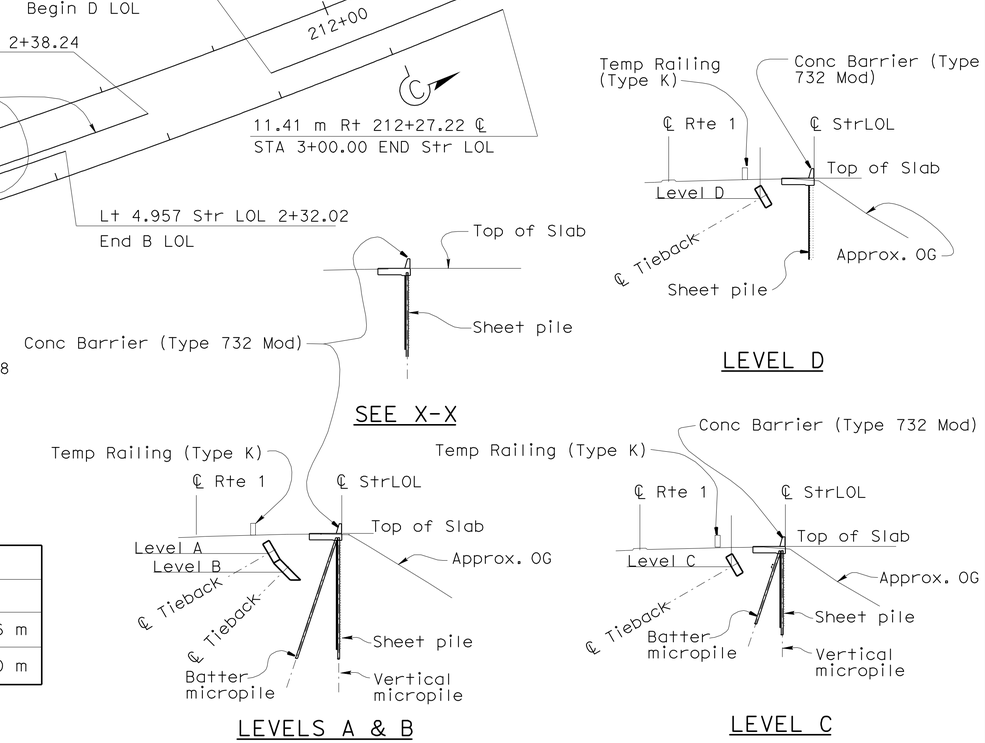

TYPICAL SECTIONS

1:250

NOTES:

1. For General notes, see "TYPICAL SECTION No. 4" sheet.
2. For SECTION A-A, see "TYPICAL SECTION No. 1" sheet. SECTION B-B, C-C, D-D, see respective sheets.
3. For Existing slope inclinometers, see "LOG OF TEST BORINGS".
4. Gas line to be relocated by others.
5. The Contractor shall take precautionary measures to protect any existing utilities located at the work site. It is The Contractor's responsibility to contact the owners of utilities prior to excavation for the verification of utility locations.

Caltrans Metric

JAMES SAGAR
DESIGN ENGINEER

	BY	CHECKED
DESIGN	KOU-KWANG LIN	S BAROT
DETAILS	P C WELLS	KOU-KWANG LIN
QUANTITIES	S. BAROT	N. KANEPATHIPILLAI

LOAD FACTOR DESIGN — LIVE LOADING: HS20-44 AND ALTERNATIVE AND PERMIT DESIGN LOAD
LAYOUT — BY — CHECKED
SPECIFICATIONS — BY — PLANS AND SPECS COMPARED

ALL DIMENSIONS ARE IN METERS UNLESS OTHERWISE SHOWN

ORIGINAL SCALE IN MILLIMETERS FOR REDUCED PLANS 0 10 20 30 40 50 60 70 80 90 100

STATE OF CALIFORNIA
DEPARTMENT OF TRANSPORTATION

DIVISION OF ENGINEERING SERVICES
STRUCTURE DESIGN
SPECIAL DESIGNS BRANCH

CU 07
EA 4L2211

BRIDGE NO. 53-RW1
KILOMETER POST

ESCONDIDO BEACH LANDSLIDE
GENERAL PLAN

DISREGARD PRINTS BEARING EARLIER REVISION DATES
REVISION DATES 5-21-12
SHEET 1 OF 16

FILE => agp01a.dgn

STRUCTURES DESIGN GENERAL PLAN SHEET (METRIC) (REV.03-17-04)

USERNAME => s114937 DATE PLOTTED => 04-JUN-2012 TIME PLOTTED => 13:10

DIST	COUNTY	ROUTE	KILOMETER POST TOTAL PROJECT	SHEET No	TOTAL SHEETS
07	LA	1	82.8/83.3	32	46

REGISTERED CIVIL ENGINEER 5-21-12 DATE

6-4-12
PLANS APPROVAL DATE

REGISTERED PROFESSIONAL ENGINEER K. K. Lin No. C60567 Exp. 12-31-12 CIVIL STATE OF CALIFORNIA

The State of California or its officers or agents shall not be responsible for the accuracy or completeness of electronic copies of this plan sheet.

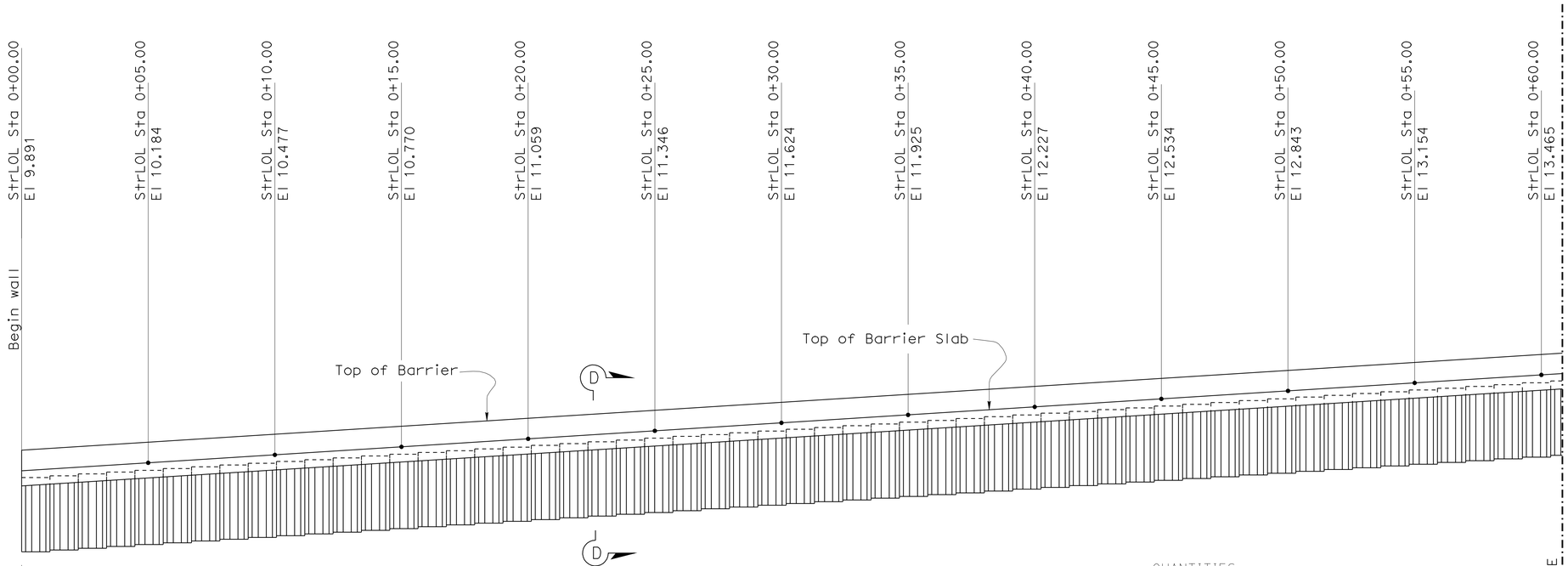

QUANTITIES

STRUCTURE EXCAVATION (TIEBACK WALL)	2980	m^3
STRUCTURE BACKFILL (TIEBACK WALL)	2100	m^3
MICROPILES (NPS 6-XS)	142	EA
STEEL SHEET PILING	1734	m^2
TIEBACK ANCHOR	120	EA
STRUCTURAL CONCRETE	340	m^3
STRUCTURAL CONCRETE, BARRIER SLAB	380	m^3
BAR REINFORCING STEEL (EPOXY COATED)	72 780	kg
CONCRETE BARRIER (TYPE 732mod)	258	m

NOTES:

1. THE CONTRACTOR SHALL VERIFY ALL CONTROLLING FIELD DIMENSIONS BEFORE ORDERING OR FABRICATING ANY MATERIAL.
2. For details see sheet 14,10.

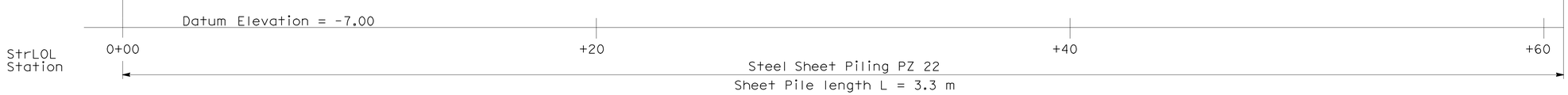

ELEVATION

(Front face shown)
1:100

Caltrans Metric

	BY	CHECKED
DESIGN	KOU-KWANG LIN	S BAROT
DETAILS	P C WELLS	KOU-KWANG LIN
QUANTITIES	S BAROT	N. KANEPATHIPILLAI

STATE OF CALIFORNIA
DEPARTMENT OF TRANSPORTATION

DIVISION OF ENGINEERING SERVICES
STRUCTURE DESIGN
SPECIAL DESIGNS BRANCH

BRIDGE NO. 53-RW1
KILOMETER POST

ESCONDIDO LANDSLIDE RTE 1

ELEVATION 1 OF 5

ALL DIMENSIONS ARE IN METERS UNLESS OTHERWISE SHOWN

ORIGINAL SCALE IN MILLIMETERS FOR REDUCED PLANS 0 10 20 30 40 50 60 70 80 90 100

CU 07
EA 4L2211

DISREGARD PRINTS BEARING EARLIER REVISION DATES

REVISION DATES: 12-29-11 5-21-12

SHEET 2 OF 16

FILE => drtwdet01a.dgn

STRUCTURES DESIGN DETAIL SHEET (METRIC) (REV.03-17-04)

USERNAME => s114937 DATE PLOTTED => 04-JUN-2012 TIME PLOTTED => 13:10

DIST	COUNTY	ROUTE	KILOMETER POST TOTAL PROJECT	SHEET No	TOTAL SHEETS
07	LA	1	82.8/83.3	33	46

REGISTERED CIVIL ENGINEER DATE

6-4-12
PLANS APPROVAL DATE

REGISTERED PROFESSIONAL ENGINEER K. K. Lin No. C60567 Exp. 12-31-12 CIVIL STATE OF CALIFORNIA

The State of California or its officers or agents shall not be responsible for the accuracy or completeness of electronic copies of this plan sheet.

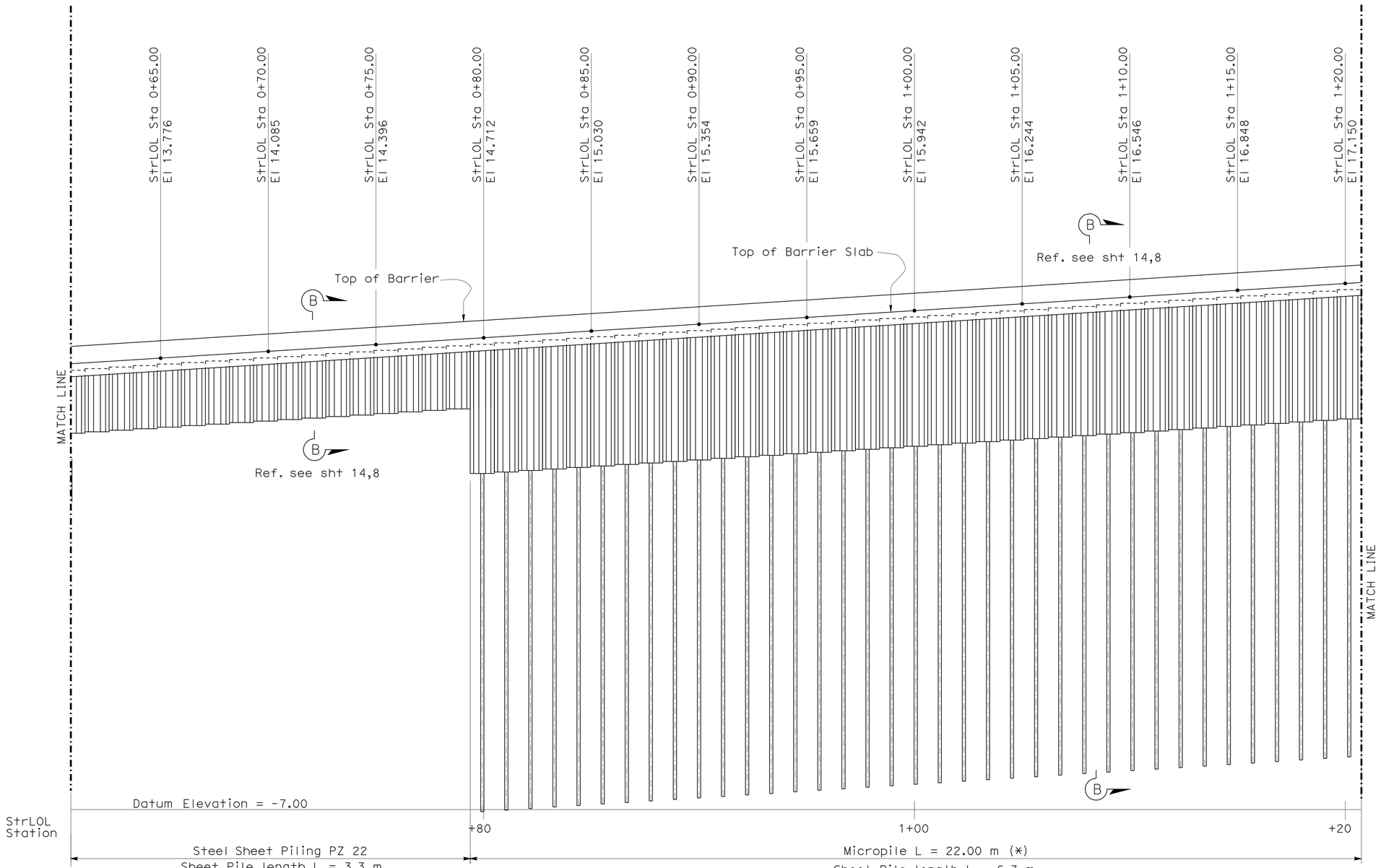

(*) For vertical and battered, alternating at 1m apart, typical for limits of level C and limits of level A & B

ELEVATION
(Front face shown)
1:100

NOTES:

1. THE CONTRACTOR SHALL VERIFY ALL CONTROLLING FIELD DIMENSIONS BEFORE ORDERING OR FABRICATING ANY MATERIAL.
2. For details see sheet 14,8.

Caltrans Metric

ALL DIMENSIONS ARE IN METERS UNLESS OTHERWISE SHOWN

ORIGINAL SCALE IN MILLIMETERS FOR REDUCED PLANS 0 10 20 30 40 50 60 70 80 90 100

	BY	CHECKED
DESIGN	KOU-KWANG LIN	S BAROT
DETAILS	P C WELLS	KOU-KWANG LIN
QUANTITIES	S BAROT	N. KANEPATHIPILLAI

STATE OF CALIFORNIA
DEPARTMENT OF TRANSPORTATION

DIVISION OF ENGINEERING SERVICES
STRUCTURE DESIGN
SPECIAL DESIGNS BRANCH

CU 07
EA 4L2211

BRIDGE NO. 53-RW1
KILOMETER POST

ESCONDIDO LANDSLIDE RTE 1
ELEVATION 2 OF 5

DISREGARD PRINTS BEARING EARLIER REVISION DATES 12-19-05 12-29-11

REVISION DATES

SHEET 3 OF 16

FILE => drtwdet02a.dgn

STRUCTURES DESIGN DETAIL SHEET (METRIC) (REV.03-17-04)

USERNAME => s114937 DATE PLOTTED => 04-JUN-2012 TIME PLOTTED => 13:14

DIST	COUNTY	ROUTE	KILOMETER POST TOTAL PROJECT	SHEET No	TOTAL SHEETS
07	LA	1	82.8/83.3	34	46

REGISTERED CIVIL ENGINEER DATE

6-4-12
PLANS APPROVAL DATE

REGISTERED PROFESSIONAL ENGINEER K. K. LIN No. C60567 Exp. 12-31-12 CIVIL STATE OF CALIFORNIA

The State of California or its officers or agents shall not be responsible for the accuracy or completeness of electronic copies of this plan sheet.

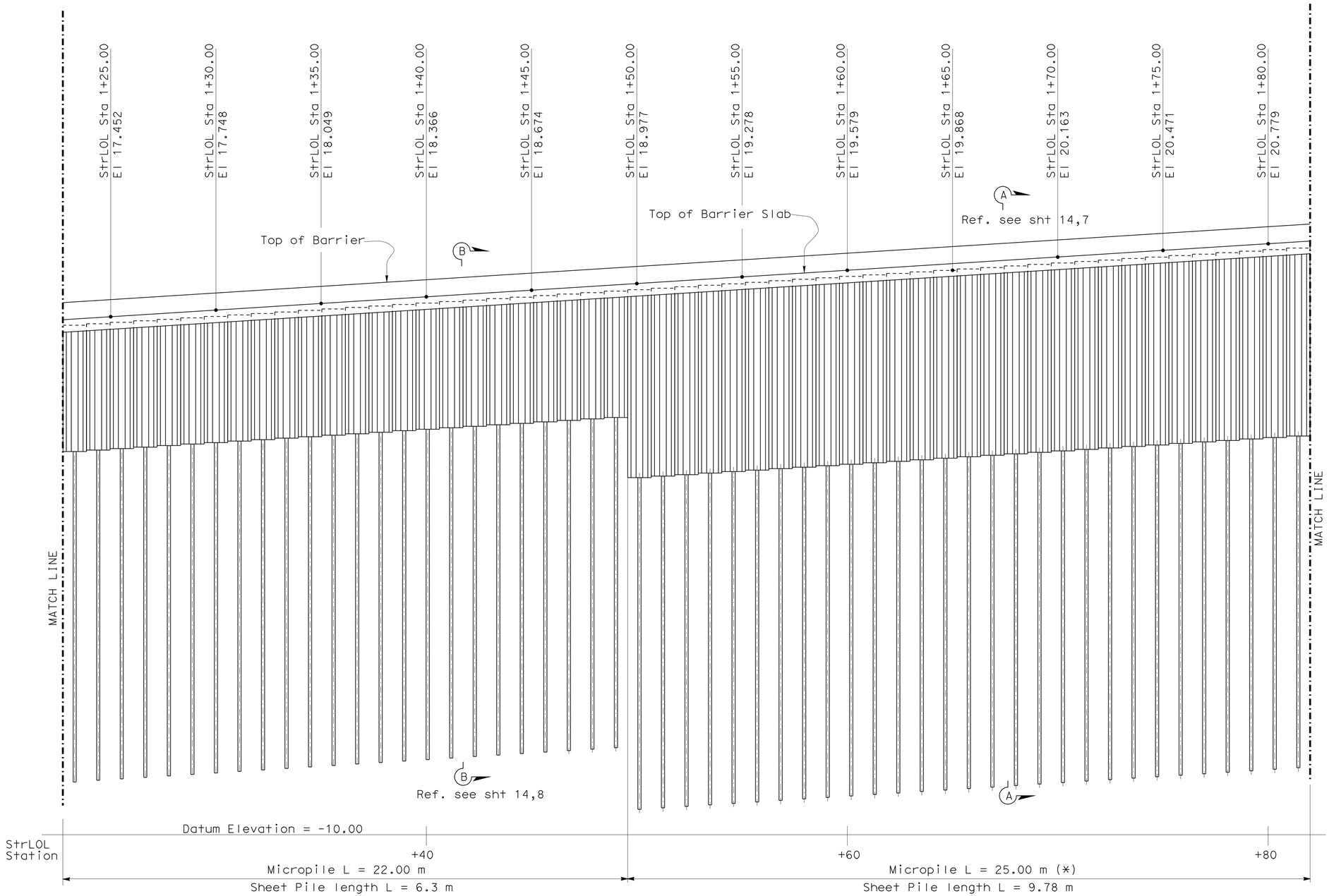

ELEVATION
(Front face shown)
1:100

(*) For vertical and battered, alternating at 1m apart, typical for limits of level C and limits of level A & B

NOTES:

1. THE CONTRACTOR SHALL VERIFY ALL CONTROLLING FIELD DIMENSIONS BEFORE ORDERING OR FABRICATING ANY MATERIAL.
2. For details see sheets 14,8,7.

Caltrans Metric

	BY	CHECKED
DESIGN	KOU-KWANG LIN	S BAROT
DETAILS	P C WELLS	KOU-KWANG LIN
QUANTITIES	S BAROT	N. KANEPATHIPILLAI

STATE OF CALIFORNIA
DEPARTMENT OF TRANSPORTATION

DIVISION OF ENGINEERING SERVICES
STRUCTURE DESIGN
SPECIAL DESIGNS BRANCH

BRIDGE NO. 53-RW1
KILOMETER POST

ESCONDIDO LANDSLIDE RTE 1

ELEVATION 3 OF 5

ALL DIMENSIONS ARE IN METERS UNLESS OTHERWISE SHOWN

ORIGINAL SCALE IN MILLIMETERS FOR REDUCED PLANS 0 10 20 30 40 50 60 70 80 90 100

CU 07
EA 4L2211

DISREGARD PRINTS BEARING EARLIER REVISION DATES 12-29-11

REVISION DATES

SHEET 4 OF 16

FILE => drtwdet03a.dgn

STRUCTURES DESIGN DETAIL SHEET (METRIC) (REV.03-17-04)

USERNAME => s114937 DATE PLOTTED => 04-JUN-2012 TIME PLOTTED => 13:11

DIST	COUNTY	ROUTE	KILOMETER POST TOTAL PROJECT	SHEET No	TOTAL SHEETS
07	LA	1	82.8/83.3	35	46

REGISTERED CIVIL ENGINEER 5-21-12 DATE

6-4-12
PLANS APPROVAL DATE

REGISTERED PROFESSIONAL ENGINEER K. K. Lin No. C60567 Exp. 12-31-12 CIVIL STATE OF CALIFORNIA

The State of California or its officers or agents shall not be responsible for the accuracy or completeness of electronic copies of this plan sheet.

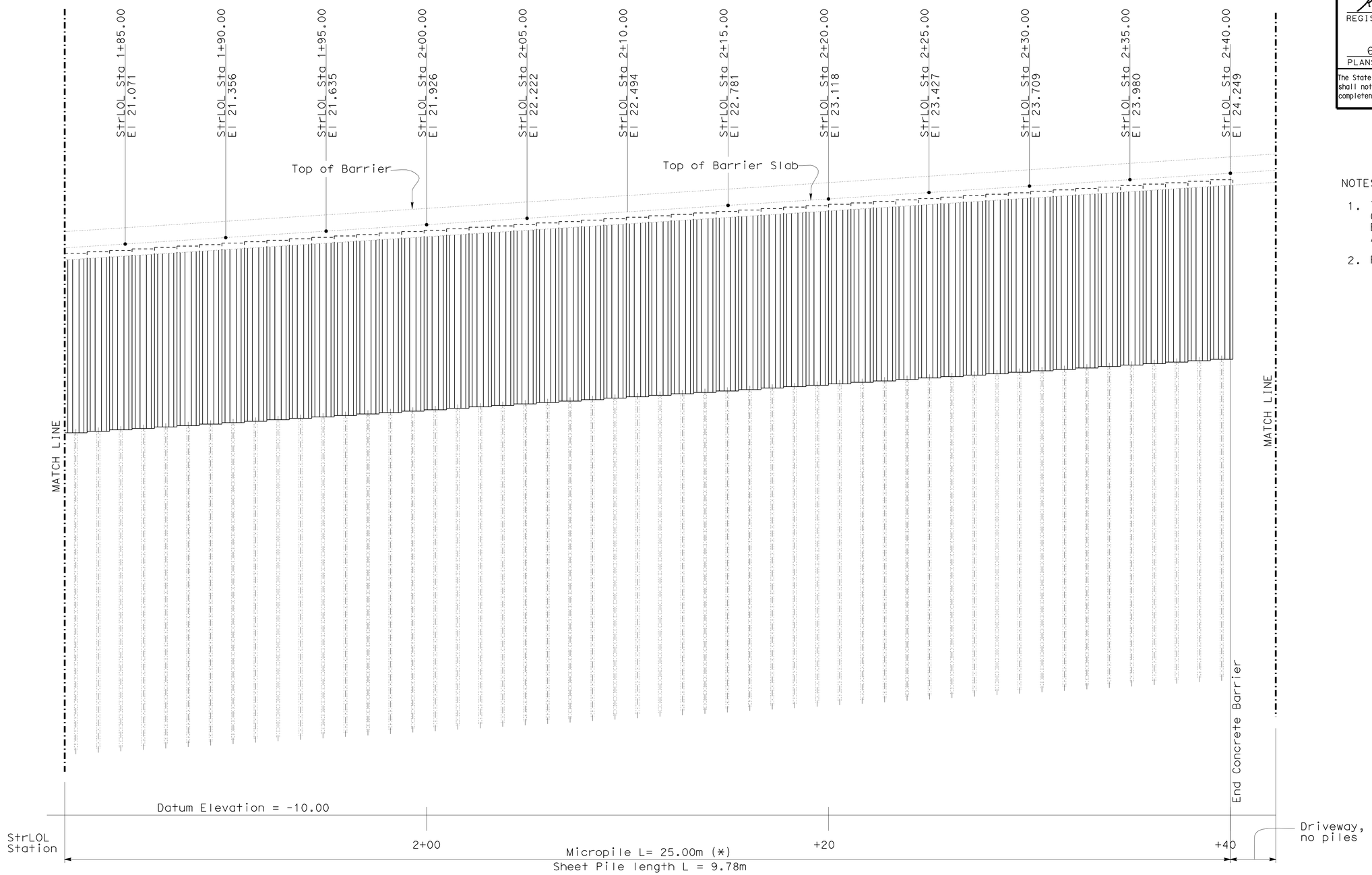

ELEVATION
(Front face shown)
1:100

(*) For vertical and battered, alternating at 1m apart, typical for limits of level C and limits of level A & B

NOTES:

1. THE CONTRACTOR SHALL VERIFY ALL CONTROLLING FIELD DIMENSIONS BEFORE ORDERING OR FABRICATING ANY MATERIAL.
2. For details see sheet 14,1.

Caltrans Metric

	BY	CHECKED
DESIGN	KOU-KWANG LIN	S BAROT
DETAILS	P C WELLS	KOU-KWANG LIN
QUANTITIES	S BAROT	N. KANEPATHIPILLAI

STATE OF CALIFORNIA
DEPARTMENT OF TRANSPORTATION

DIVISION OF ENGINEERING SERVICES
STRUCTURE DESIGN
SPECIAL DESIGNS BRANCH

BRIDGE NO. 53-RW1
KILOMETER POST

ESCONDIDO LANDSLIDE RTE 1
ELEVATION 4 OF 5

ALL DIMENSIONS ARE IN METERS UNLESS OTHERWISE SHOWN

ORIGINAL SCALE IN MILLIMETERS FOR REDUCED PLANS 0 10 20 30 40 50 60 70 80 90 100

CU 07
EA 4L2211

DISREGARD PRINTS BEARING EARLIER REVISION DATES

REVISION DATES: 12-29-11 5-21-12

SHEET 5 OF 16

FILE => drtwdet04a.dgn

STRUCTURES DESIGN DETAIL SHEET (METRIC) (REV.03-17-04)

USERNAME => s114937 DATE PLOTTED => 04-JUN-2012 TIME PLOTTED => 13:11

DIST	COUNTY	ROUTE	KILOMETER POST TOTAL PROJECT	SHEET No	TOTAL SHEETS
07	LA	1	82.8/83.3	36	46

REGISTERED CIVIL ENGINEER 5-21-12 DATE

6-4-12
PLANS APPROVAL DATE

REGISTERED PROFESSIONAL ENGINEER K. K. Lin No. C60567 Exp. 12-31-12 CIVIL STATE OF CALIFORNIA

The State of California or its officers or agents shall not be responsible for the accuracy or completeness of electronic copies of this plan sheet.

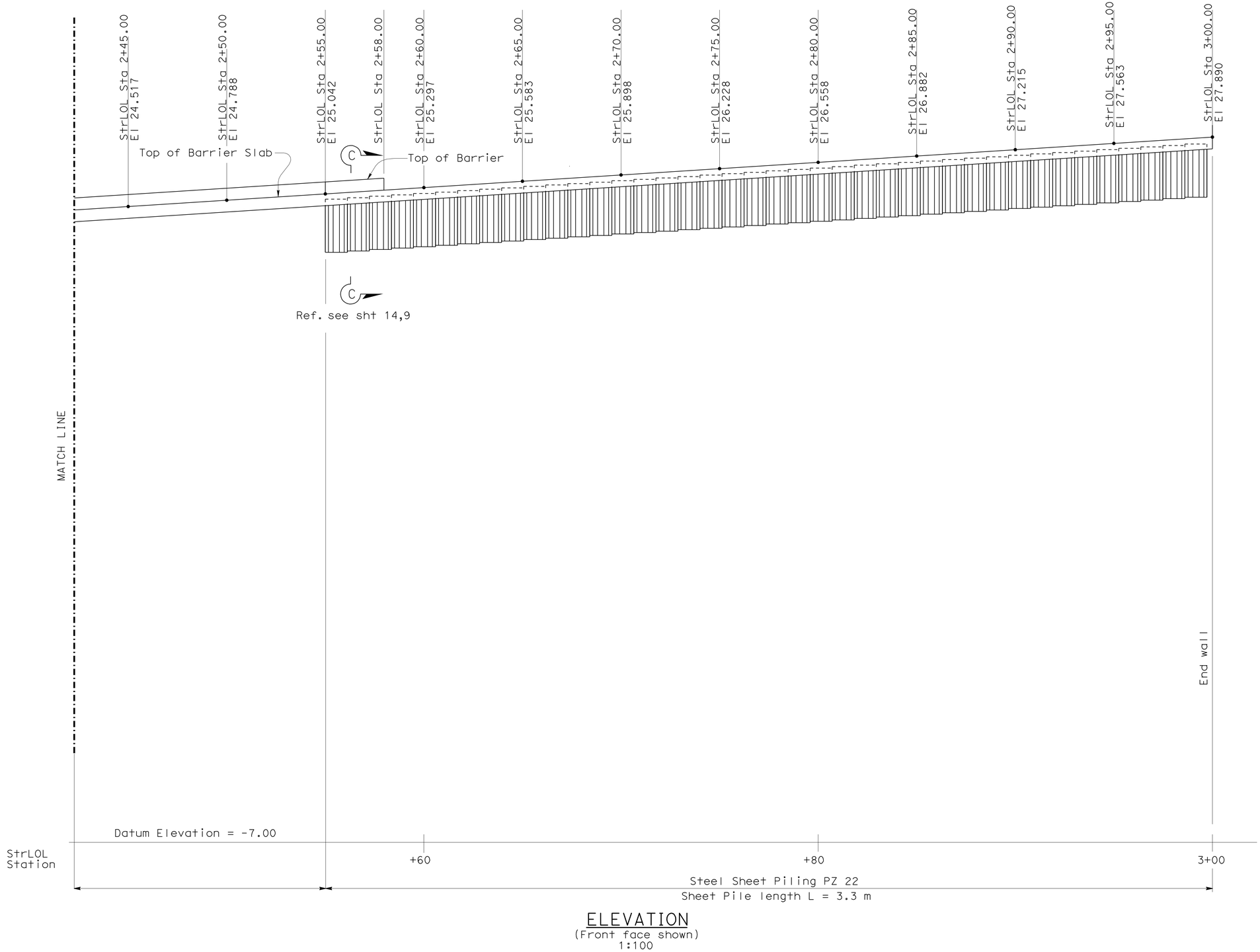

ELEVATION
(Front face shown)
1:100

NOTES:

1. THE CONTRACTOR SHALL VERIFY ALL CONTROLLING FIELD DIMENSIONS BEFORE ORDERING OR FABRICATING ANY MATERIAL.
2. For details see sheet 14,9.

Caltrans Metric

	BY	CHECKED
DESIGN	KOU-KWANG LIN	S BAROT
DETAILS	P C WELLS	KOU-KWANG LIN
QUANTITIES	S BAROT	N. KANEPATHIPILLAI

STATE OF CALIFORNIA
DEPARTMENT OF TRANSPORTATION

DIVISION OF ENGINEERING SERVICES
STRUCTURE DESIGN
SPECIAL DESIGNS BRANCH

BRIDGE NO. 53-RW1
KILOMETER POST

ESCONDIDO LANDSLIDE RTE 1
RETAINING WALL ELEVATION 5 OF 5

ALL DIMENSIONS ARE IN METERS UNLESS OTHERWISE SHOWN

ORIGINAL SCALE IN MILLIMETERS FOR REDUCED PLANS 0 10 20 30 40 50 60 70 80 90 100

CU 07
EA 4L2211

DISREGARD PRINTS BEARING EARLIER REVISION DATES

REVISION DATES: 12-29-11 5-21-12

SHEET 6 OF 16

FILE => drtwdet05a.dgn

STRUCTURES DESIGN DETAIL SHEET (METRIC) (REV.03-17-04)

USERNAME => s114937 DATE PLOTTED => 04-JUN-2012 TIME PLOTTED => 13:11

DIST	COUNTY	ROUTE	KILOMETER POST TOTAL PROJECT	SHEET No	TOTAL SHEETS
07	LA	1	82.8/83.3	37	46

REGISTERED CIVIL ENGINEER DATE

6-4-12
PLANS APPROVAL DATE

REGISTERED PROFESSIONAL ENGINEER K. K. Lin No. C60567 Exp. 12-31-12 CIVIL STATE OF CALIFORNIA

The State of California or its officers or agents shall not be responsible for the accuracy or completeness of electronic copies of this plan sheet.

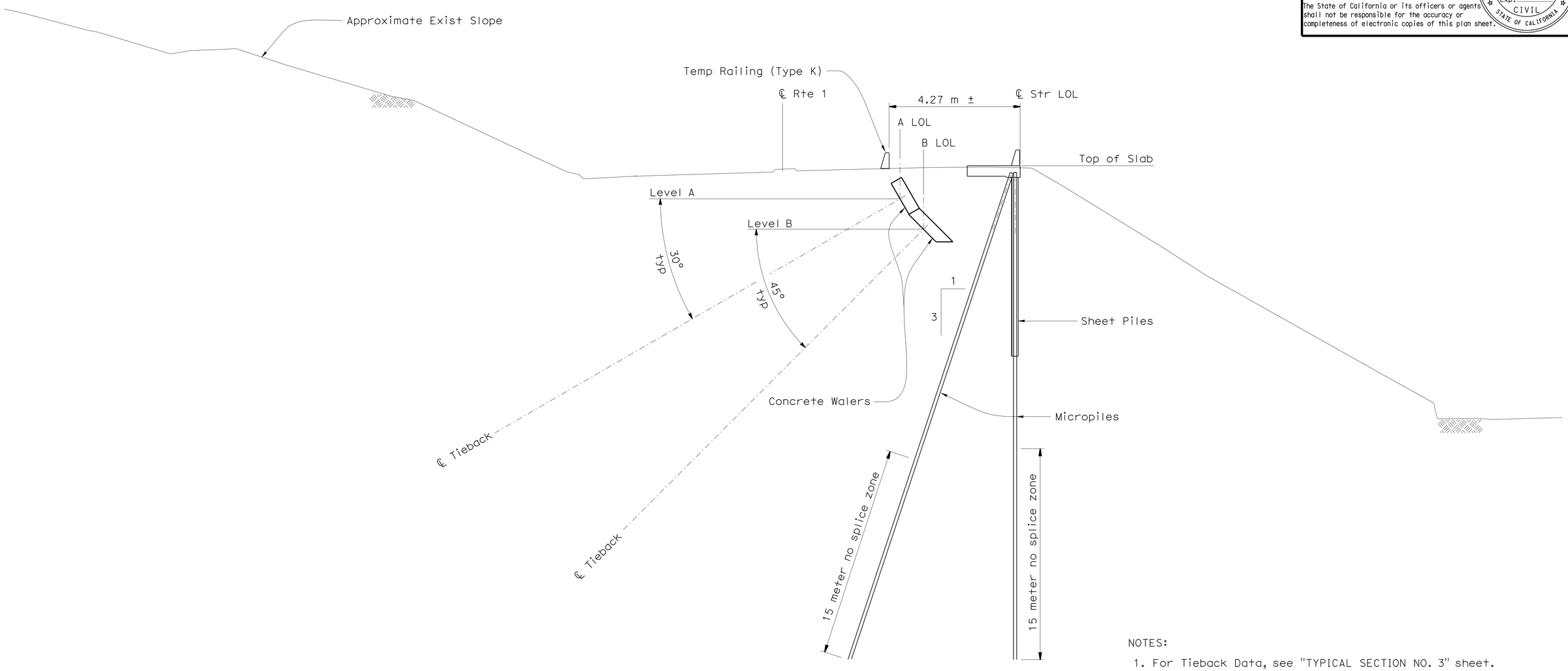

SECTION A-A
1:100

NOTES:

1. For Tieback Data, see "TYPICAL SECTION NO. 3" sheet.
2. For Concrete Waler Details, see "CONCRETE WALER DETAILS No. 1" sheet.
3. For Sheet Pile Wall Details, see Structural DETAILS No. 1.
4. For Tieback Anchors, see "TIEBACK TENDON DETAILS" sheet.
5. The Contractor shall verify all controlling field dimensions before ordering or fabricating any material.

Caltrans Metric

	BY	CHECKED
DESIGN	KOU-KWANG LIN	S BAROT
DETAILS	P C WELLS	KOU-KWANG LIN
QUANTITIES	S BAROT	N. KANEPATHIPILLAI

STATE OF CALIFORNIA
DEPARTMENT OF TRANSPORTATION

DIVISION OF ENGINEERING SERVICES
STRUCTURE DESIGN
SPECIAL DESIGNS BRANCH

BRIDGE NO. 53-RW1
KILOMETER POST

ESCONDIDO BEACH LANDSLIDE
TYPICAL SECTION NO. 1

ALL DIMENSIONS ARE IN METERS UNLESS OTHERWISE SHOWN

ORIGINAL SCALE IN MILLIMETERS FOR REDUCED PLANS 0 10 20 30 40 50 60 70 80 90 100

CU 07
EA 4L2211

DISREGARD PRINTS BEARING EARLIER REVISION DATES 12-19-05 12-29-11

REVISION DATES

SHEET 7 OF 16

FILE => ftyp01.dgn

STRUCTURES DESIGN DETAIL SHEET (METRIC) (REV.03-17-04)

USERNAME => s123631 DATE PLOTTED => 04-JUN-2012 TIME PLOTTED => 13:14

DIST	COUNTY	ROUTE	KILOMETER POST TOTAL PROJECT	SHEET No	TOTAL SHEETS
07	LA	1	82.8/83.3	38	46

REGISTERED CIVIL ENGINEER DATE

6-4-12
PLANS APPROVAL DATE

REGISTERED PROFESSIONAL ENGINEER K. K. Lin No. C60567 Exp. 12-31-08 CIVIL STATE OF CALIFORNIA

The State of California or its officers or agents shall not be responsible for the accuracy or completeness of electronic copies of this plan sheet.

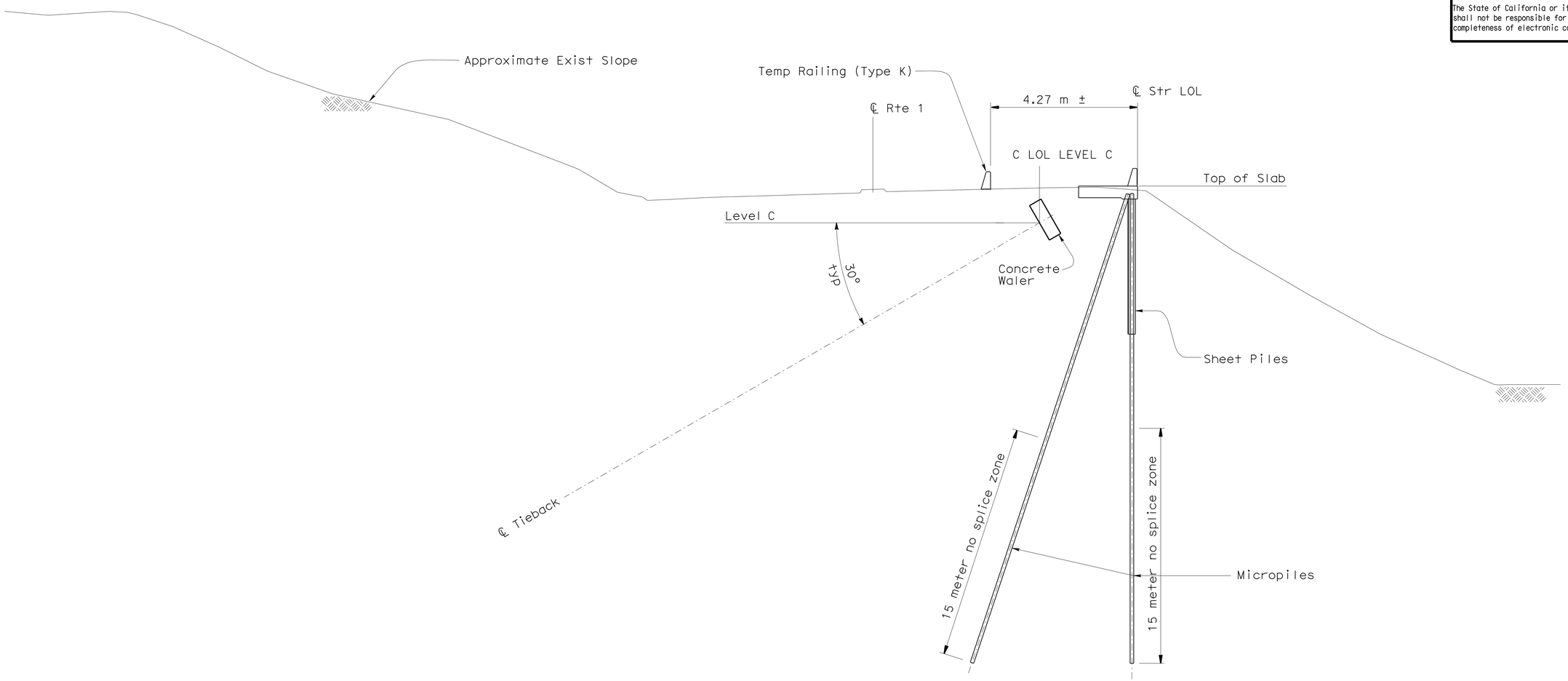

SECTION B-B
1:100

NOTES:

1. For Tieback Data, see "TYPICAL SECTION NO. 3" sheet.
2. For Concrete Waler Details, see "CONCRETE WALER DETAILS No. 2" sheet.
3. For Sheet Pile Wall Details, see SRUCTURE DETAILS No. 1.
4. For Tieback Anchors, see "TIEBACK TENDON DETAILS" sheet.
5. The Contractor shall verify all controlling field dimensions before ordering or fabricating any material.

Caltrans Metric

	BY	CHECKED
DESIGN	KOU-KWANG LIN	S BAROT
DETAILS	P C WELLS	KOU-KWANG LIN
QUANTITIES	S BAROT	N. KANEPATHIPILLAI

STATE OF CALIFORNIA
DEPARTMENT OF TRANSPORTATION

DIVISION OF ENGINEERING SERVICES
STRUCTURE DESIGN
SPECIAL DESIGNS BRANCH

BRIDGE NO. 53-RW1
KILOMETER POST

ESCONDIDO BEACH LANDSLIDE
TYPICAL SECTION NO. 2

ALL DIMENSIONS ARE IN METERS UNLESS OTHERWISE SHOWN

ORIGINAL SCALE IN MILLIMETERS FOR REDUCED PLANS 0 10 20 30 40 50 60 70 80 90 100

CU 07
EA 4L2211

DISREGARD PRINTS BEARING EARLIER REVISION DATES 12-19-05

REVISION DATES

SHEET 8 OF 16

FILE => ftyp02.dgn

STRUCTURES DESIGN DETAIL SHEET (METRIC) (REV.03-17-04)

USERNAME => s123631 DATE PLOTTED => 04-JUN-2012 TIME PLOTTED => 13:14

DIST	COUNTY	ROUTE	KILOMETER POST TOTAL PROJECT	SHEET No	TOTAL SHEETS
07	LA	1	82.8/83.3	39	46

REGISTERED CIVIL ENGINEER DATE

6-4-12
PLANS APPROVAL DATE

REGISTERED PROFESSIONAL ENGINEER K. K. Lin No. C60567 Exp. 12-31-12 CIVIL STATE OF CALIFORNIA

The State of California or its officers or agents shall not be responsible for the accuracy or completeness of electronic copies of this plan sheet.

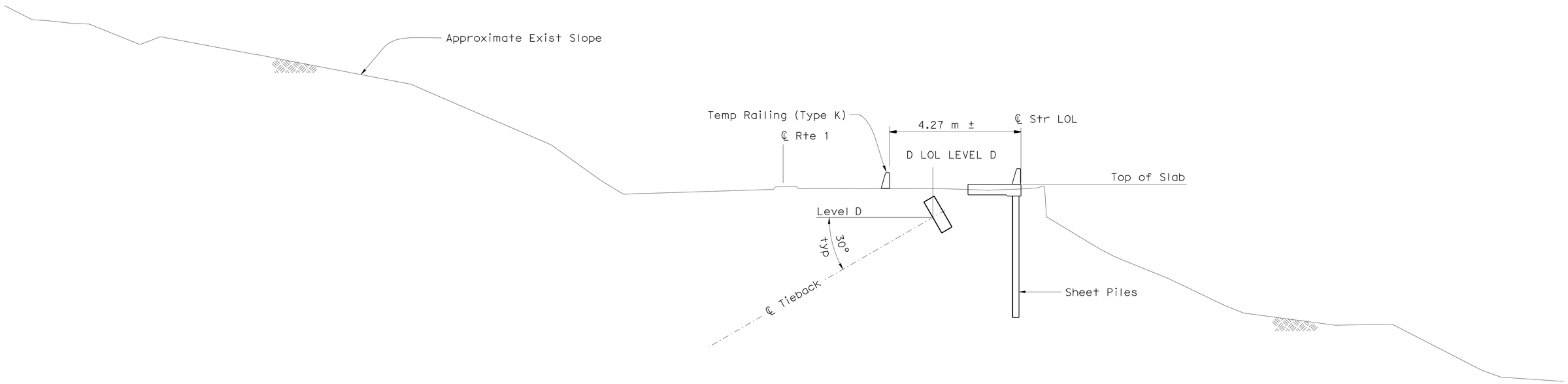

SECTION C-C

1:100

NOTES:

1. For Concrete Waler Details, see "CONCRETE WALER DETAILS No. 2" sheet.
2. For Sheet Pile Wall Details, see STRUCTURE DETAILS No. 1.
3. For Tieback Anchors, see "TIEBACK TENDON DETAILS" sheet.
4. The Contractor shall verify all controlling field dimensions before ordering or fabricating any material.

TIEBACK DATA

LEVEL	T (kN)	UNBONDED LENGTH (m)	INCLINATION	NUMBER OF TIEBACKS
A	1350	25	30°	37
B	1350	25	45°	37
C	1350	25	30°	29
D	1350	25	30°	17

Caltrans Metric

ALL DIMENSIONS ARE IN METERS UNLESS OTHERWISE SHOWN

ORIGINAL SCALE IN MILLIMETERS FOR REDUCED PLANS 0 10 20 30 40 50 60 70 80 90 100

	BY	CHECKED
DESIGN	KOU-KWANG LIN	S BAROT
DETAILS	P C WELLS	KOU-KWANG LIN
QUANTITIES	S BAROT	N. KANEPATHIPILLAI

STATE OF CALIFORNIA DEPARTMENT OF TRANSPORTATION

DIVISION OF ENGINEERING SERVICES STRUCTURE DESIGN
SPECIAL DESIGNS BRANCH

CU 07
EA 4L2211

BRIDGE NO. 53-RW1
KILOMETER POST

ESCONDIDO BEACH LANDSLIDE
TYPICAL SECTION NO. 3

DISREGARD PRINTS BEARING EARLIER REVISION DATES

REVISION DATES: 12-19-05 12-29-11

SHEET 9 OF 16

FILE => ftyp03.dgn

STRUCTURES DESIGN DETAIL SHEET (METRIC) (REV.03-17-04)

USERNAME => s123631 DATE PLOTTED => 04-JUN-2012 TIME PLOTTED => 13:14

DIST	COUNTY	ROUTE	KILOMETER POST TOTAL PROJECT	SHEET No	TOTAL SHEETS
07	LA	1	82.8/83.3	40	46

REGISTERED CIVIL ENGINEER 5/31/12 DATE

6-4-12
PLANS APPROVAL DATE

REGISTERED PROFESSIONAL ENGINEER K. K. Lin No. C60567 Exp. 12-31-12 CIVIL STATE OF CALIFORNIA

The State of California or its officers or agents shall not be responsible for the accuracy or completeness of electronic copies of this plan sheet.

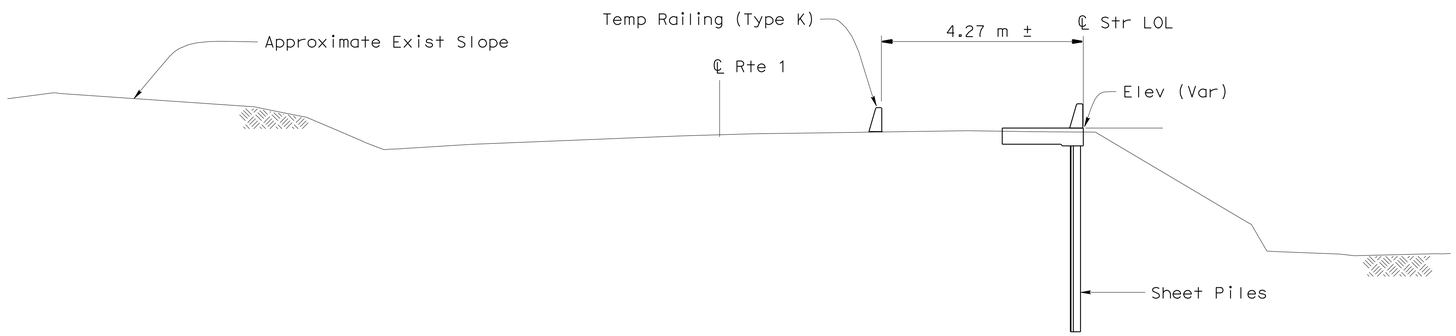

SECTION D-D
1:100

GENERAL NOTES

DESIGN: Caltrans Bridge Design Specifications LFD version April 2000.

SOIL PARAMETERS: $\phi = 29°$, $g = 19.0\ kN/m^3$ $C = 28.8\ kPa$
(For determination of slope stability)

STRUCTURAL STEEL: Steel Sheet Piling- ASTM Designation: A572/A572M, Grade 50 (345 MPa)

Micropiling - ASTM Designation: A252, Grade 3

REINFORCED CONCRETE: f_y = 420 MPa (Yield strength of reinforcement)

f'_c = 28.0 MPa (Concrete compressive strength at 28 days)

n = 8

PRESTRESSING STEEL: Strand tendon - ASTM Designation: A416
T = Design force per stressing anchor, see "TIEBACK DATA" on "TYPICAL SECTION No. 3" sheet 9.

fpu = Minimum tensile strength of prestressing steel, (kiloNewtons per square millimeter)

$A_{S(min)}$= Minimum cross sectional area of prestressing steel in tieback tendon.(square millimeters)

$$A_{S(min)} = \frac{1.5\ T}{0.75\ fpu}$$

For details see "RETAINING WALL DETAILS No. 1" sheet

Caltrans Metric

	BY	CHECKED
DESIGN	KOU-KWANG LIN	S BAROT
DETAILS	P C WELLS	KOU-KWANG LIN
QUANTITIES	S BAROT	N. KANEPATHIPILLAI

STATE OF CALIFORNIA
DEPARTMENT OF TRANSPORTATION

DIVISION OF ENGINEERING SERVICES
STRUCTURE DESIGN
SPECIAL DESIGNS BRANCH

BRIDGE NO. 53-RW1
KILOMETER POST

ESCONDIDO BEACH LANDSLIDE
TYPICAL SECTION NO. 4

ALL DIMENSIONS ARE IN METERS UNLESS OTHERWISE SHOWN

ORIGINAL SCALE IN MILLIMETERS FOR REDUCED PLANS 0 10 20 30 40 50 60 70 80 90 100

CU 07
EA 4L2211

DISREGARD PRINTS BEARING EARLIER REVISION DATES 12-19-05 12-29-11 5/31/12

REVISION DATES

SHEET 10 OF 16

FILE => ftyp04.dgn

STRUCTURES DESIGN DETAIL SHEET (METRIC) (REV.03-17-04)

USERNAME => s123631 DATE PLOTTED => 04-JUN-2012 TIME PLOTTED => 13:14

DIST	COUNTY	ROUTE	KILOMETER POST TOTAL PROJECT	SHEET No	TOTAL SHEETS
07	LA	1	82.8/83.3	41	46

REGISTERED CIVIL ENGINEER DATE

6-4-12
PLANS APPROVAL DATE

REGISTERED PROFESSIONAL ENGINEER K. K. Lin No. C60567 Exp. 12-31-12 CIVIL STATE OF CALIFORNIA

The State of California or its officers or agents shall not be responsible for the accuracy or completeness of electronic copies of this plan sheet.

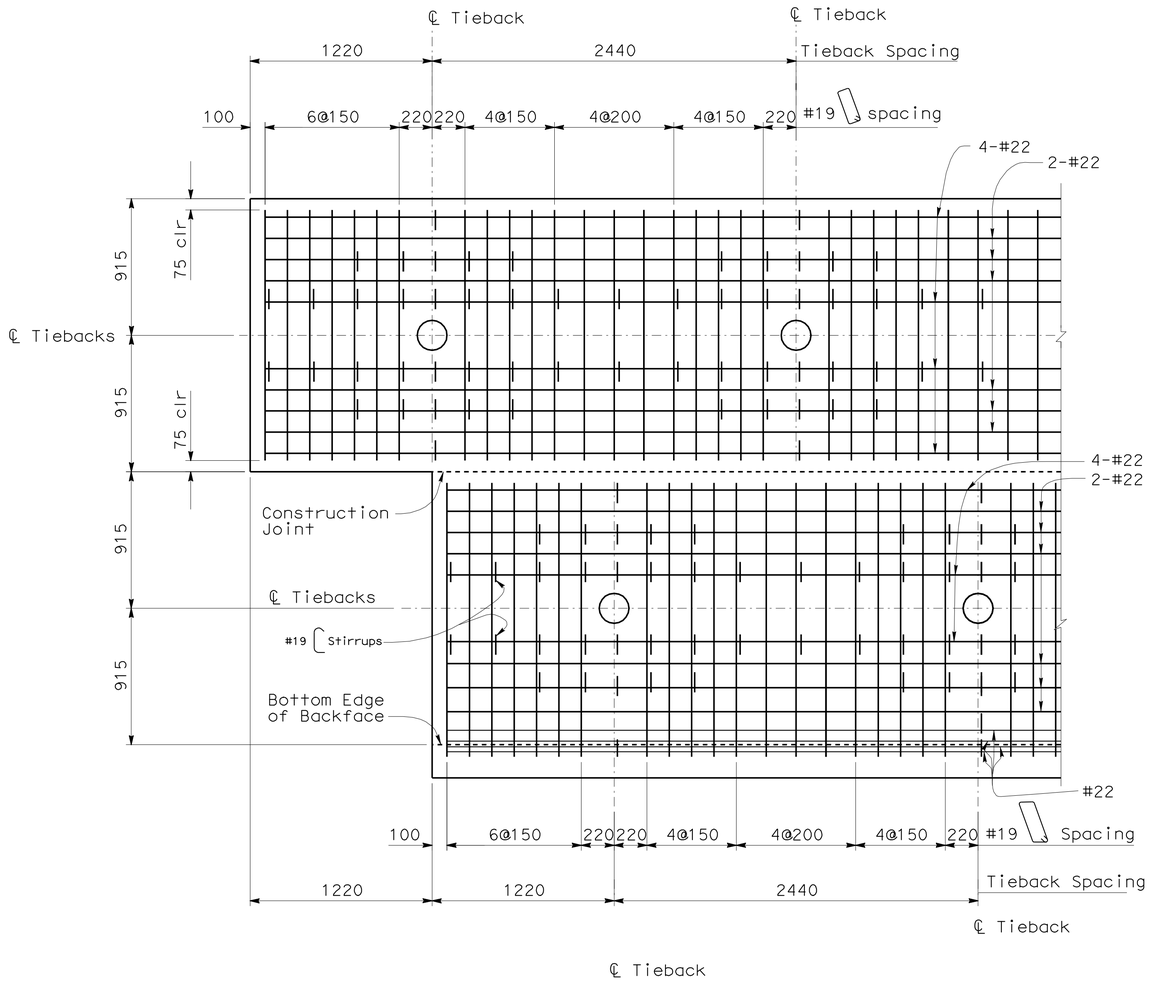

SECTION E-E
1:20

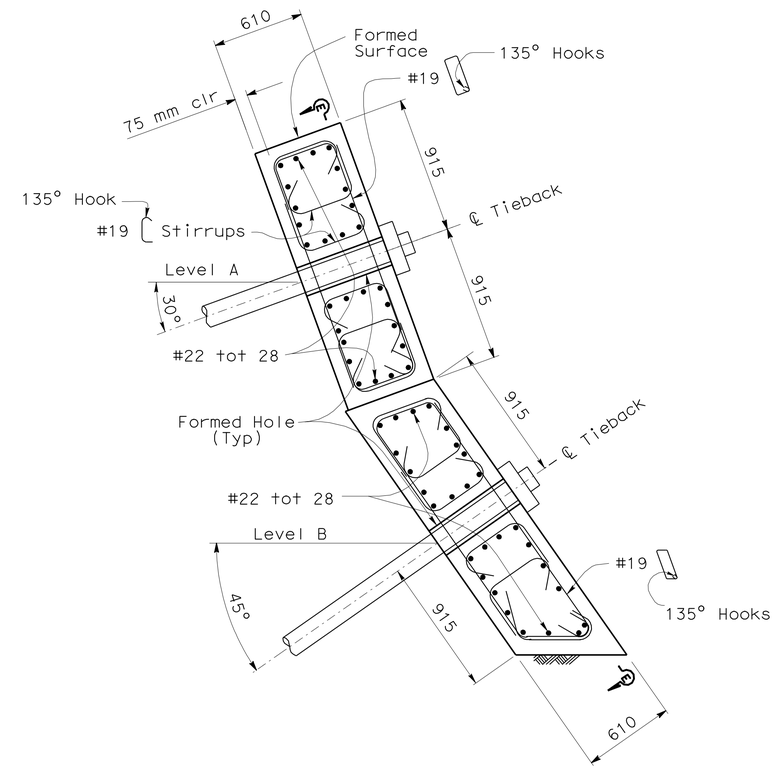

WALER AT LEVEL A & B
1:20

NOTES:

1. All reinforcement bars are Epoxy Coated.
2. Adjust the reinf spacings at the PI locations to fit the changing of the finished grades behind the wall along the concrete walers.
3. For level A & leved B elevation see "General Plan sheet".

NOTE:
THE CONTRACTOR SHALL VERIFY ALL CONTROLLING FIELD DIMENSIONS BEFORE ORDERING OR FABRICATING ANY MATERIAL.

Caltrans Metric

	BY	CHECKED
DESIGN	KOU-KWANG LIN	S BAROT
DETAILS	P C WELLS	KOU-KWANG LIN
QUANTITIES	S BAROT	N KANEPATHIPILLAI

STATE OF CALIFORNIA
DEPARTMENT OF TRANSPORTATION

DIVISION OF ENGINEERING SERVICES
STRUCTURE DESIGN
SPECIAL DESIGNS BRANCH

BRIDGE NO. 53-RW1
KILOMETER POST

ESCONDIDO BEACH LANDSLIDE
CONCRETE WALER DETAILS NO. 1

ALL DIMENSIONS ARE IN MILLIMETERS UNLESS OTHERWISE SHOWN

ORIGINAL SCALE IN MILLIMETERS FOR REDUCED PLANS 0 10 20 30 40 50 60 70 80 90 100

CU 07
EA 4L2211

DISREGARD PRINTS BEARING EARLIER REVISION DATES 12-19-05 12-30-11

REVISION DATES

SHEET 11 OF 16

FILE => kers01.dgn

STRUCTURES DESIGN DETAIL SHEET (METRIC) (REV.03-17-04)

USERNAME => s123631 DATE PLOTTED => 04-JUN-2012 TIME PLOTTED => 13:15

DIST	COUNTY	ROUTE	KILOMETER POST TOTAL PROJECT	SHEET No	TOTAL SHEETS
07	LA	1	82.8/83.3	42	46

REGISTERED CIVIL ENGINEER DATE

6-4-12
PLANS APPROVAL DATE

REGISTERED PROFESSIONAL ENGINEER K. K. Lin No. C60567 Exp. 12-31-12 CIVIL STATE OF CALIFORNIA

The State of California or its officers or agents shall not be responsible for the accuracy or completeness of electronic copies of this plan sheet.

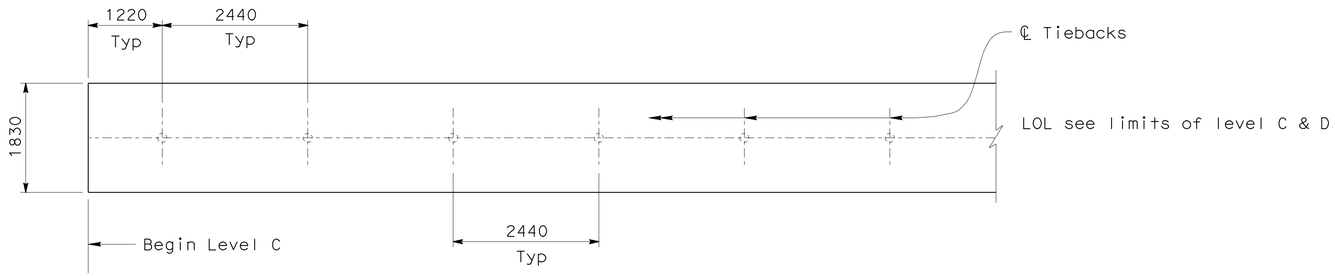

NOTE:
THE CONTRACTOR SHALL VERIFY ALL CONTROLLING FIELD DIMENSIONS BEFORE ORDERING OR FABRICATING ANY MATERIAL.

TIEBACK LAYOUT LEVELS A-D

1:50

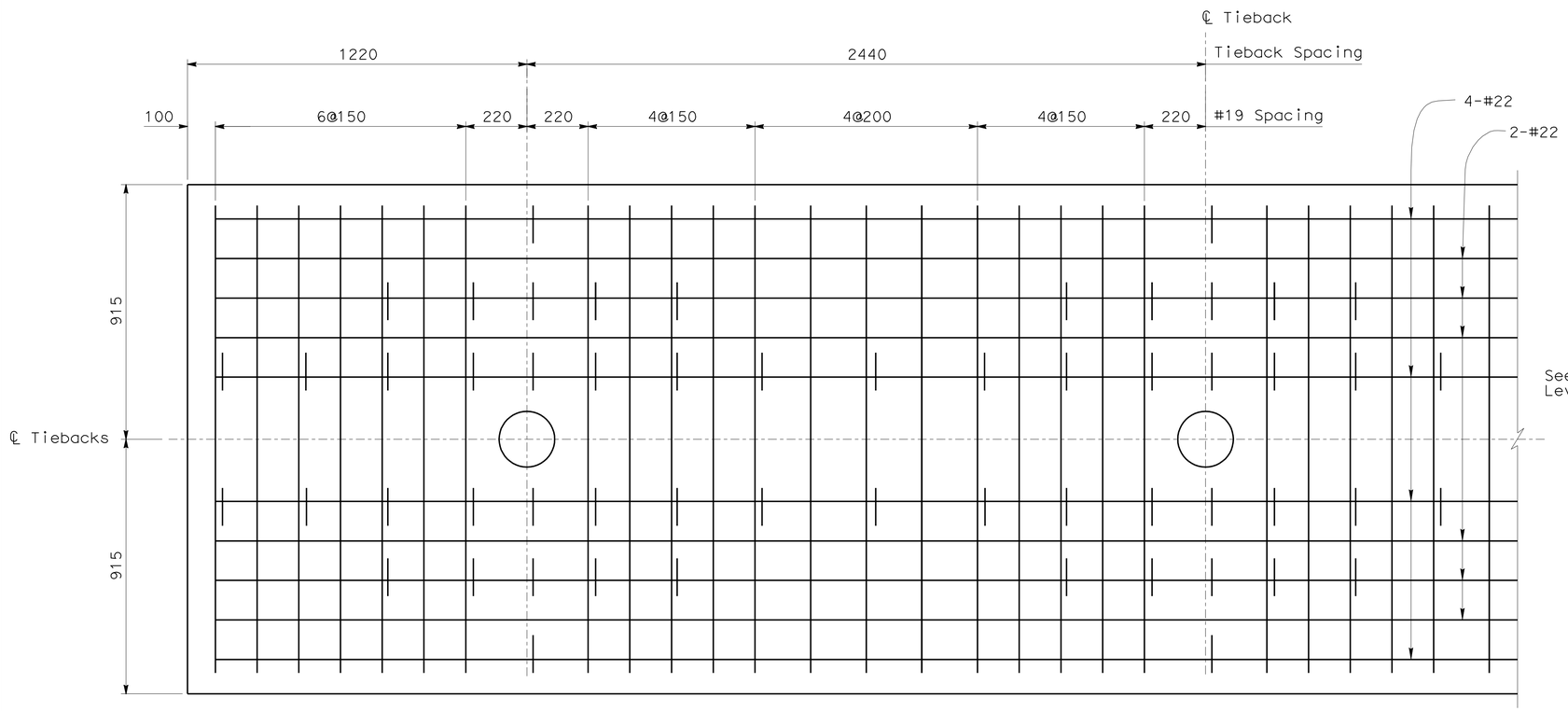

SECTIONS B-B & C-C

1:10

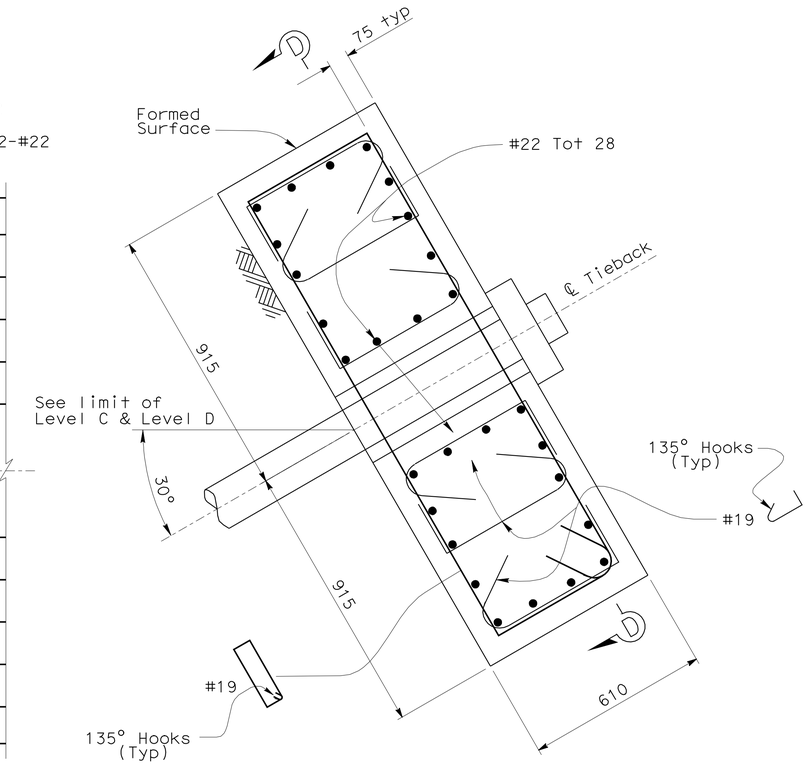

WALER AT LEVEL C & D

1:10

NOTES:

1. All reinforcement bars are Epoxy Coated.
2. For level C & D elevations, see General Plan sheet.

Caltrans Metric

	BY	CHECKED
DESIGN	KOU-KWANG LIN	S BAROT
DETAILS	P C WELLS	KOU-KWANG LIN
QUANTITIES	S BAROT	N KANEPATHIPILLAI

STATE OF CALIFORNIA DEPARTMENT OF TRANSPORTATION

DIVISION OF ENGINEERING SERVICES STRUCTURE DESIGN
SPECIAL DESIGNS BRANCH

BRIDGE NO. 53-RW1
KILOMETER POST

ESCONDIDO BEACH LANDSLIDE
CONCRETE WALER DETAILS NO. 2

ALL DIMENSIONS ARE IN MILLIMETERS UNLESS OTHERWISE SHOWN

ORIGINAL SCALE IN MILLIMETERS FOR REDUCED PLANS 0 10 20 30 40 50 60 70 80 90 100

CU 07
EA 4L2211

DISREGARD PRINTS BEARING EARLIER REVISION DATES

REVISION DATES: 12-19-05, 12-30-11

SHEET 12 OF 16

FILE => kers02.dgn

STRUCTURES DESIGN DETAIL SHEET (METRIC) (REV.03-17-04)

USERNAME => s123631 DATE PLOTTED => 04-JUN-2012 TIME PLOTTED => 13:15

DIST	COUNTY	ROUTE	KILOMETER POST TOTAL PROJECT	SHEET No	TOTAL SHEETS
07	LA	1	82.8/83.3	43	46

REGISTERED CIVIL ENGINEER DATE

6-4-12
PLANS APPROVAL DATE

REGISTERED PROFESSIONAL ENGINEER K. K. Lin No. C60567 Exp. 12-31-12 CIVIL STATE OF CALIFORNIA

The State of California or its officers or agents shall not be responsible for the accuracy or completeness of electronic copies of this plan sheet.

Caltrans Metric

NOTE:
THE CONTRACTOR SHALL VERIFY ALL CONTROLLING FIELD DIMENSIONS BEFORE ORDERING OR FABRICATING ANY MATERIAL.

LEGEND:

1. Level of initial grouting
2. Level of secondary grouting
3. Level of initial grout inside corrugated sheathing

NOTES:

A. Steel tube welded to bearing plate (min length = 1000 mm, min thickness = 5 mm) Galvanize assembly after fabrication.

B. For unbonded length, see "TIEBACK DATA" on "TYPICAL SECTION NO. 3" sheet.

C. Bonded length shall be determined by the Contractor.

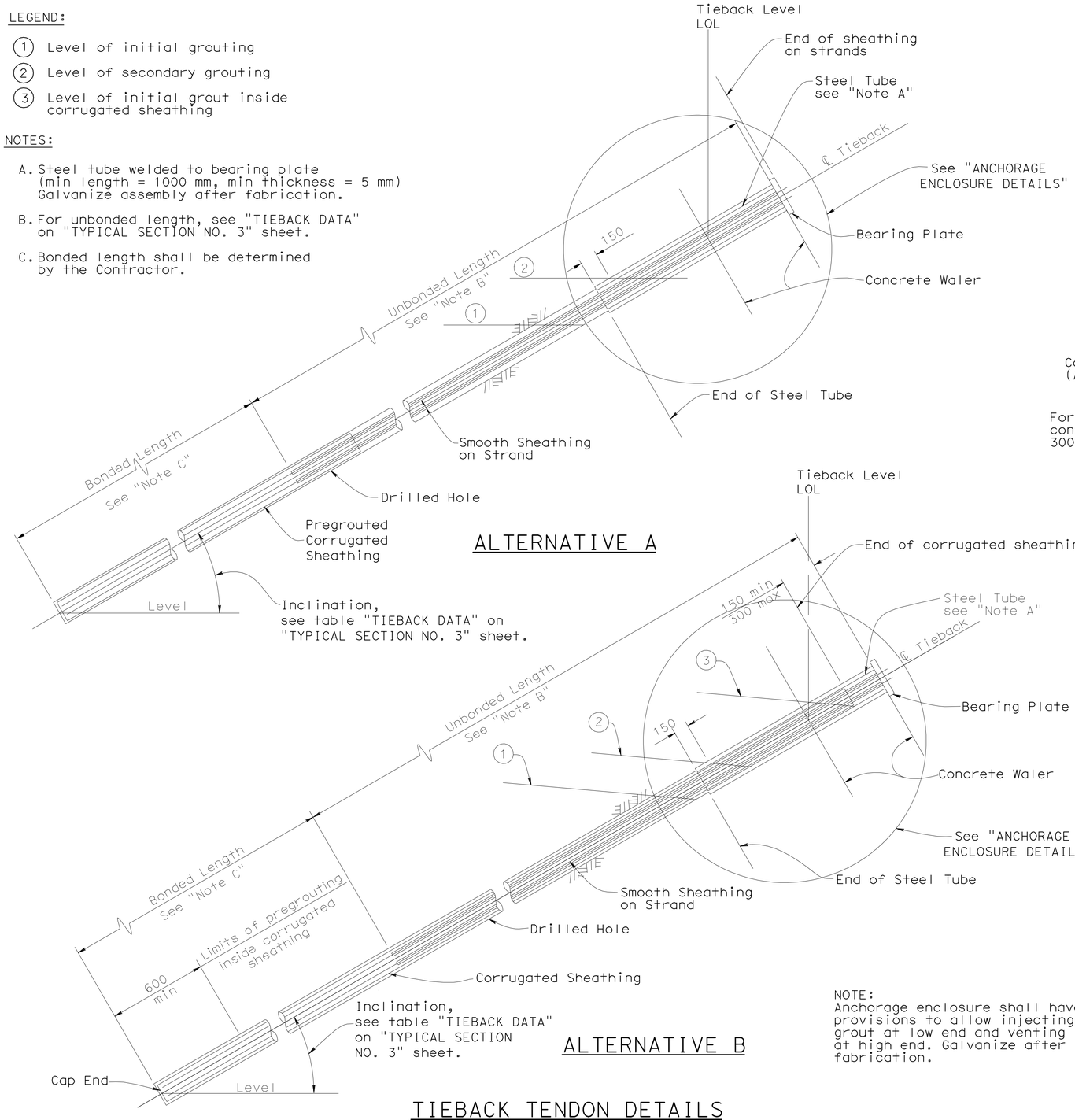

NOTE:
Anchorage enclosure shall have provisions to allow injecting grout at low end and venting at high end. Galvanize after fabrication.

TIEBACK TENDON DETAILS

No Scale

ALL DIMENSIONS ARE IN MILLIMETERS UNLESS OTHERWISE SHOWN

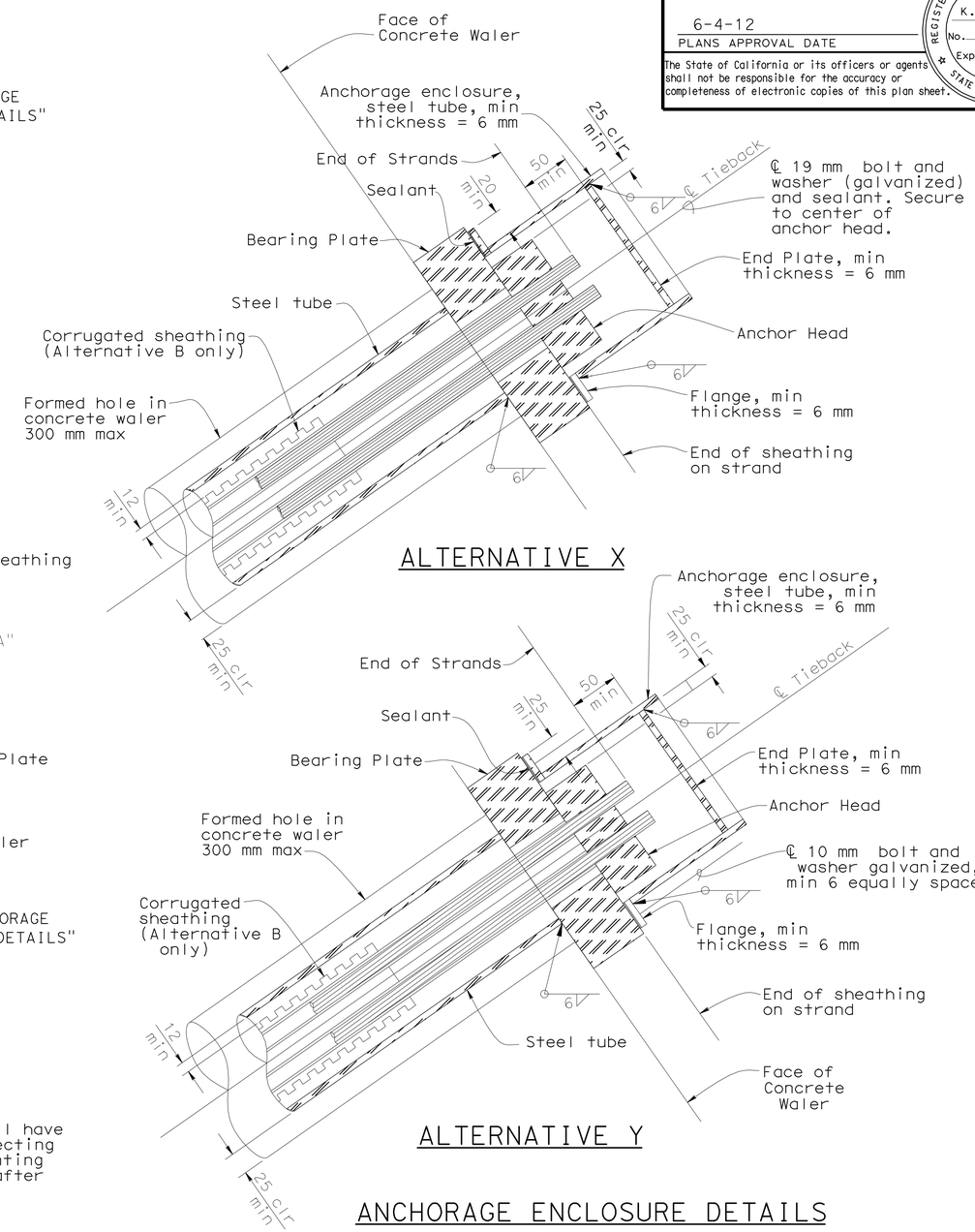

ANCHORAGE ENCLOSURE DETAILS

No Scale

ALL DIMENSIONS ARE IN MILLIMETERS UNLESS OTHERWISE SHOWN

DESIGN	BY KOU-KWANG LIN	CHECKED S BAROT	
DETAILS	BY P C WELLS	CHECKED KOU-KWANG LIN	
QUANTITIES	BY S BAROT	CHECKED N KANEPATHIPILLAI	

STATE OF CALIFORNIA
DEPARTMENT OF TRANSPORTATION

DIVISION OF ENGINEERING SERVICES
STRUCTURE DESIGN
SPECIAL DESIGNS BRANCH

BRIDGE NO. 53-RW1
KILOMETER POST

BUTTRESS AT TIEBACK TENDON DETAILS

Caltrans Metric

ALL DIMENSIONS ARE IN MILLIMETERS UNLESS OTHERWISE SHOWN

ORIGINAL SCALE IN MILLIMETERS FOR REDUCED PLANS 0 10 20 30 40 50 60 70 80 90 100

CU 07
EA 4L2211

DISREGARD PRINTS BEARING EARLIER REVISION DATES 12-19-05 12-30-11

REVISION DATES

SHEET 13 OF 16

FILE => kers03.dgn

STRUCTURES DESIGN DETAIL SHEET (METRIC) (REV.03-17-04)

USERNAME => s123631 DATE PLOTTED => 04-JUN-2012 TIME PLOTTED => 13:15

DIST	COUNTY	ROUTE	KILOMETER POST TOTAL PROJECT	SHEET No	TOTAL SHEETS
07	LA	1	82.8/83.3	44	46

REGISTERED CIVIL ENGINEER DATE

6-4-12
PLANS APPROVAL DATE

REGISTERED PROFESSIONAL ENGINEER K. K. LIN No. C60567 Exp. 12-31-12 CIVIL STATE OF CALIFORNIA

The State of California or its officers or agents shall not be responsible for the accuracy or completeness of electronic copies of this plan sheet.

NOTE:
Barrier rail not shown for clarity

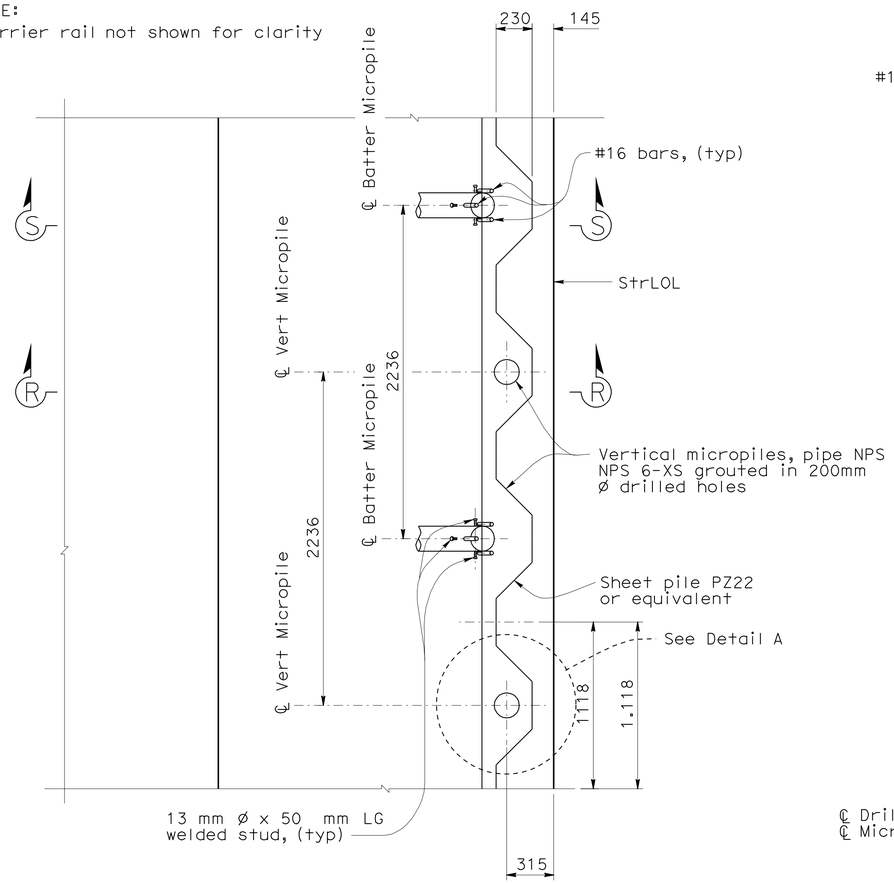

PLAN
1:20

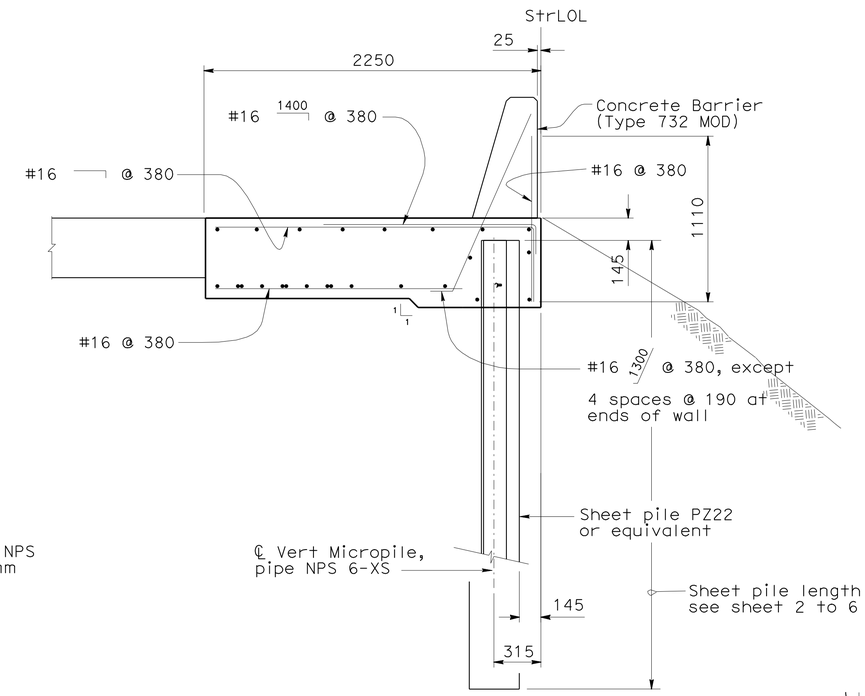

SECTION R-R
(for rebar not shown
see SECTION S-S)
1:20

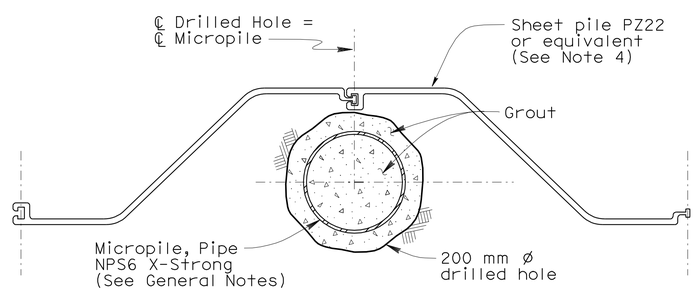

DETAIL A
1:5

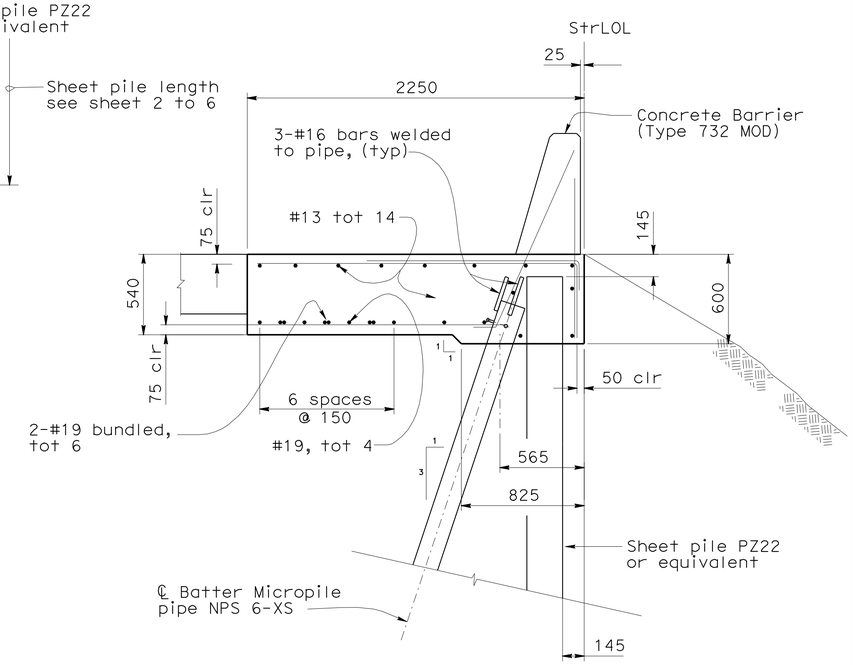

SECTION S-S
1:20

NOTES:

1. For Concrete Barrier (Type 732 MOD) reinforcements, see 1999 Revised Std. Plan (B11-55)
2. Clearance to reinforcing steel in Concrete Barrier Slab to be 25 mm.
3. No expansion joint in Barrier or Barrier Slab within limits of wall.
4. Minimum section modulus for sheet Pile = 973 cm^3/m.
5. Steel pipe pile (A 252, Gr 3)
   fy = 310 MPa, min yield
   fu = 455 MPa, min tensile

Caltrans Metric

	BY	CHECKED
DESIGN	KOU-KWANG LIN	S BAROT
DETAILS	P C WELLS	KOU-KWANG LIN
QUANTITIES	S BAROT	N KANEPATHIPILLAI

STATE OF CALIFORNIA
DEPARTMENT OF TRANSPORTATION

DIVISION OF ENGINEERING SERVICES
STRUCTURE DESIGN
SPECIAL DESIGNS BRANCH

BRIDGE NO. 53-RW1
KILOMETER POST

ESCONDIDO BEACH LANDSLIDE
STRUCTURE DETAILS NO. 1

ALL DIMENSIONS ARE IN MILLIMETERS UNLESS OTHERWISE SHOWN

ORIGINAL SCALE IN MILLIMETERS FOR REDUCED PLANS 0 10 20 30 40 50 60 70 80 90 100

CU 07
EA 4L2211

DISREGARD PRINTS BEARING EARLIER REVISION DATES 12-30-11 1-12-12

REVISION DATES

SHEET 14 OF 16

FILE => kers04.dgn

STRUCTURES DESIGN DETAIL SHEET (METRIC) (REV.03-17-04)

USERNAME => s123631 DATE PLOTTED => 04-JUN-2012 TIME PLOTTED => 13:15

DIST	COUNTY	ROUTE	KILOMETER POST TOTAL PROJECT	SHEET No	TOTAL SHEETS
07	LA	1	82.8/83.3	45	46

REGISTERED CIVIL ENGINEER DATE

6-4-12
PLANS APPROVAL DATE

REGISTERED PROFESSIONAL ENGINEER K. K. Lin No. C60567 Exp. 12-31-12 CIVIL STATE OF CALIFORNIA

The State of California or its officers or agents shall not be responsible for the accuracy or completeness of electronic copies of this plan sheet.

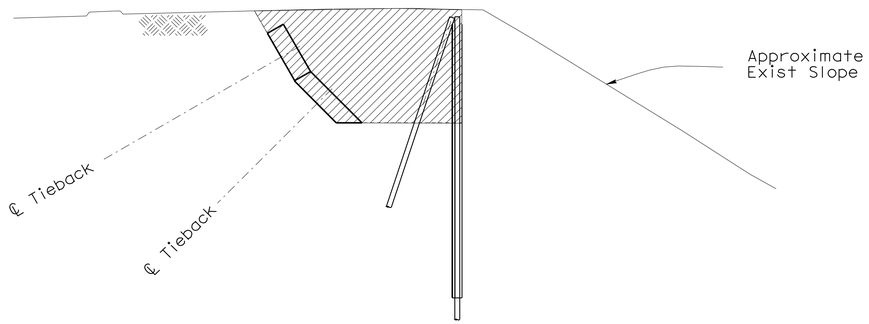

(EXCAVATION) SECTION A-A
1:100

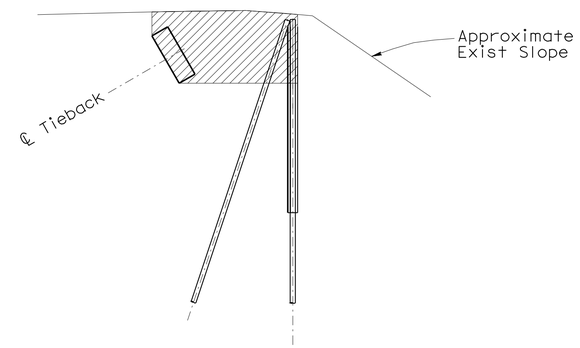

(EXCAVATION) SECTION B-B
1:100

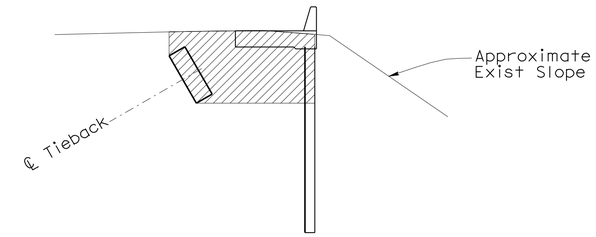

(EXCAVATION) SECTION C-C
1:100

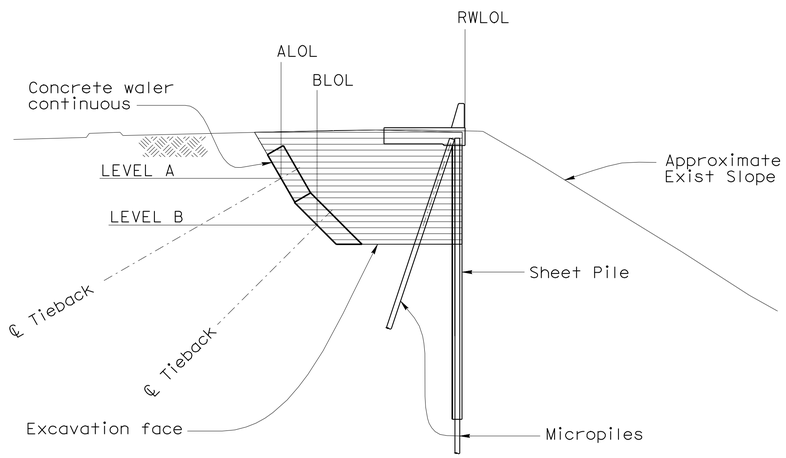

(BACKFILL) SECTION A-A
(SEE LIMIT OF LEVEL A&B)
1:100

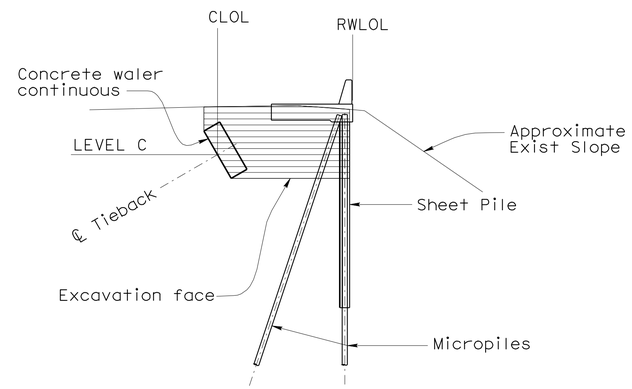

(BACKFILL) SECTION B-B
(SEE LIMIT OF LEVEL C)
1:100

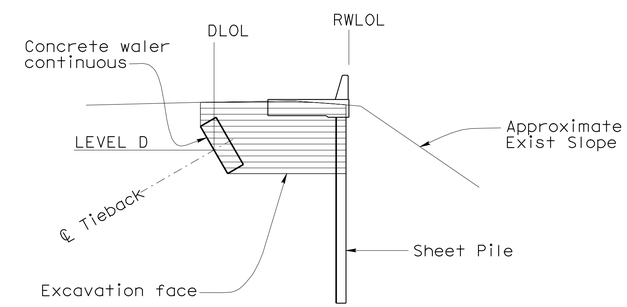

(BACKFILL) SECTION C-C
(SEE LIMIT OF LEVEL D)
1:100

PAY LIMITS - STRUCTURE EXCAVATION AND BACKFILL

NOTE:

1. For section locations, see "GENERAL PLAN".

LEGENDS:

Structure Excavation (TieBack wall)

Structure Backfill (TieBack wall 95% compaction)

DESIGN	BY KOU-KWANG LIN	CHECKED S BAROT	
DETAILS	BY P C WELLS	CHECKED KOU-KWANG LIN	
QUANTITIES	BY S BAROT	CHECKED N KANEPATHIPILLAI	

STATE OF CALIFORNIA
DEPARTMENT OF TRANSPORTATION

DIVISION OF ENGINEERING SERVICES
STRUCTURE DESIGN
SPECIAL DESIGNS BRANCH

BRIDGE NO. 53-RW1
KILOMETER POST

ESCONDIDO BEACH LANDSLIDE

PAY LIMITS - STRUCTURE EXCAVATION & BACKFILL

ALL DIMENSIONS ARE IN METERS UNLESS OTHERWISE SHOWN

ORIGINAL SCALE IN MILLIMETERS FOR REDUCED PLANS 0 10 20 30 40 50 60 70 80 90 100

CU 07
EA 4L2211

DISREGARD PRINTS BEARING EARLIER REVISION DATES 12-19-05 12-30-11

REVISION DATES

SHEET 15 OF 16

FILE => rgd01.dgn

STRUCTURES DESIGN DETAIL SHEET (METRIC) (REV.03-17-04)

USERNAME => s123631 DATE PLOTTED => 04-JUN-2012 TIME PLOTTED => 13:15

DIST	COUNTY	ROUTE	KILOMETER POST TOTAL PROJECT	SHEET No	TOTAL SHEETS
07	LA	1	82.8/83.3	46	46

REGISTERED CIVIL ENGINEER 6-30-05

6-4-12
PLANS APPROVAL DATE

REGISTERED PROFESSIONAL ENGINEER — Bhaskar Joshi — No. C66350 — Exp. 6-30-06 — CIVIL — STATE OF CALIFORNIA

The State of California or its officers or agents shall not be responsible for the accuracy or completeness of electronic copies of this plan sheet.

Caltrans Metric

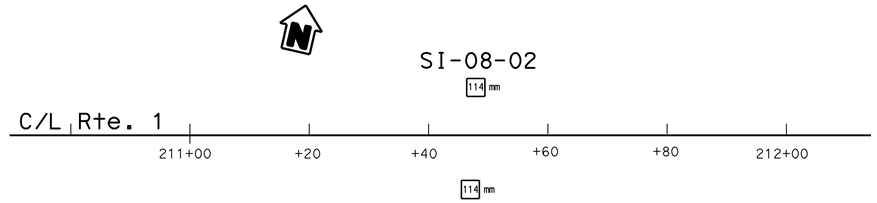

BENCH MARK

BM Elev. 31.581 m

N 558,728.309 m
E 1,929,518.560 m

PLAN

1:500

Note:
Classification and description of soils presented on this sheets are generally in accordance with ASTM D2488, and D2487 where laboratory test results of gradation and Atterberg Limits are available.

PROFILE

HOR. 1:100
VER. 1:100
ALL DIMENSIONS ARE IN METERS UNLESS OTHERWISE SHOWN

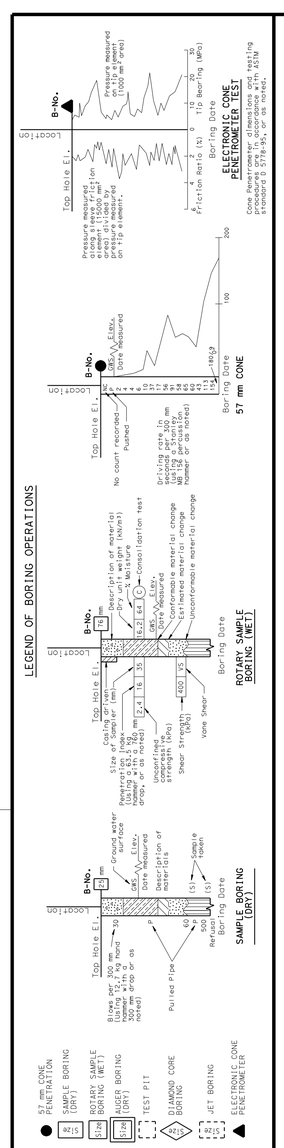

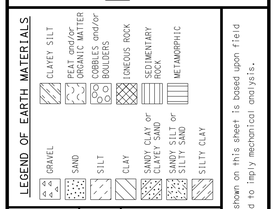

CONSISTENCY CLASSIFICATION FOR SOILS

According to the Standard Penetration Test

SPT N-Value (Blows/0.3m)	Granular	SPT N-Value (Blows/0.3m)	Cohesive
0-4	Very Loose	<2	Very Soft
5-10	Loose	2-4	Soft
11-30	Medium Dense	5-8	Firm
31-50	Dense	9-15	Stiff
>50	Very Dense	16-30	Very stiff
		>30	Hard

NOTE: Classification of earth material as shown on this sheet is based upon field inspection and is not to be construed to imply mechanical analysis.

ENGINEERING SERVICES	GEOTECHNICAL SERVICES
DRAWN BY	W. Tang 09/02
CHECKED BY	B. Joshi

FIELD INVESTIGATION BY: B. Joshi

STATE OF CALIFORNIA DEPARTMENT OF TRANSPORTATION

DIVISION OF STRUCTURES
STRUCTURE DESIGN

BRIDGE NO.
KILOMETER POST 83.04

ESCONDIDO BEACH LANDSLIDE
LOG OF TEST BORINGS

CU 07
EA 0P1401

ORIGINAL SCALE IN MILLIMETERS FOR REDUCED PLANS 0 10 20 30 40 50 60 70 80 90 100

DISREGARD PRINTS BEARING EARLIER REVISION DATES

REVISION DATES (PRELIMINARY STAGE ONLY): 12-26-02 3-28-05 4-12-05 5-2-05 6-30-05

SHEET 16 OF 16

OGS CIVIL LOG OF TEST BORINGS SHEET (METRIC) (REV. 4/04)

FILE => LogTestBoring.dgn

USERNAME => s123631 DATE PLOTTED => 04-JUN-2012 TIME PLOTTED => 13:15