INDEX OF PLANS

SHEET No.	DESCRIPTION
1	TITLE AND LOCATION MAP
2	TYPICAL CROSS SECTION
3	LAYOUT
4-5	CONSTRUCTION DETAILS
6	UTILITY PLAN
7	CONSTRUCTION AREA SIGNS
8-9	STAGE CONSTRUCTION
10	SUMMARY OF QUANTITIES
11-14	REVISED STANDARD PLANS
15-50	STRUCTURE PLANS

THE STANDARD PLANS LIST APPLICABLE TO THIS CONTRACT IS INCLUDED IN THE NOTICE TO BIDDERS AND SPECIAL PROVISIONS BOOK.

STATE OF CALIFORNIA

DEPARTMENT OF TRANSPORTATION

ER-17E1(004)E

Dist	COUNTY	ROUTE	POST MILES TOTAL PROJECT	SHEET No.	TOTAL SHEETS
07	LA	1	8.7	1	50

PROJECT PLANS FOR CONSTRUCTION ON

STATE HIGHWAY

IN LOS ANGELES COUNTY
IN LOS ANGELES
0.1 MILE WEST OF DOMINGUEZ CHANNEL

TO BE SUPPLEMENTED BY STANDARD PLANS DATED 2010

LOCATION OF CONSTRUCTION
STA 520+00 PM 8.7

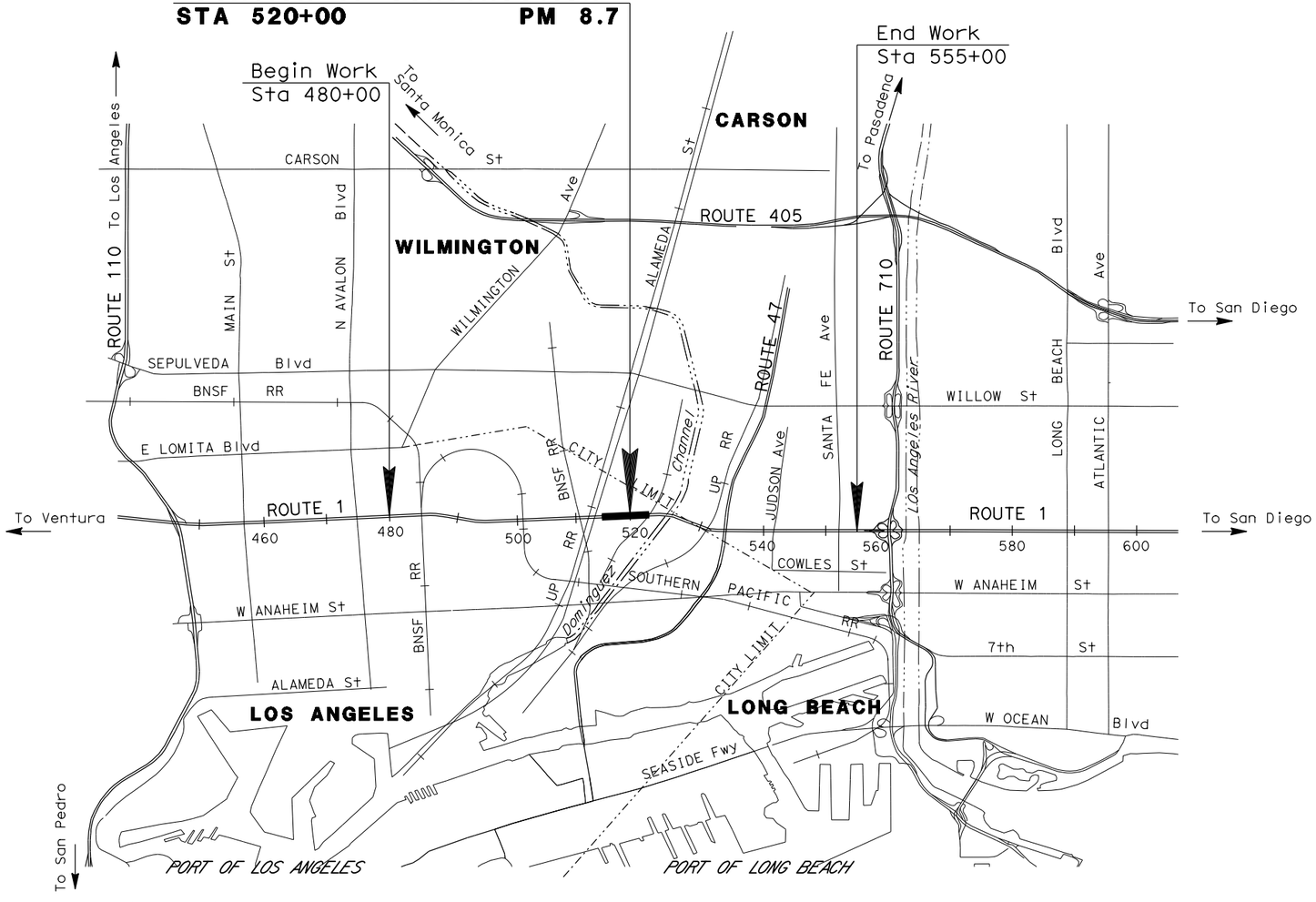

PROJECT ENGINEER
REGISTERED CIVIL ENGINEER

7-1-13
DATE

July 8, 2013
PLANS APPROVAL DATE

REGISTERED PROFESSIONAL ENGINEER
M. OJI KALU
No. 55712
Exp. 12/31/14
CIVIL
STATE OF CALIFORNIA

THE STATE OF CALIFORNIA OR ITS OFFICERS OR AGENTS SHALL NOT BE RESPONSIBLE FOR THE ACCURACY OR COMPLETENESS OF SCANNED COPIES OF THIS PLAN SHEET.

THE CONTRACTOR SHALL POSSESS THE CLASS (OR CLASSES) OF LICENSE AS SPECIFIED IN THE "NOTICE TO BIDDERS."

NO SCALE

PROJECT MANAGER DAVID Y. YAN

DESIGN ENGINEER VINCENT VALIDO Jr

CONTRACT No.	07-3X3904
PROJECT ID	0712000064

LAST REVISION 00-00-00

DATE PLOTTED => 09-AUG-2013
TIME PLOTTED => 10:56

Dist	COUNTY	ROUTE	POST MILES TOTAL PROJECT	SHEET No.	TOTAL SHEETS
07	LA	1	8.7	2	50

REGISTERED CIVIL ENGINEER 7-1-13 DATE

7-08-13
PLANS APPROVAL DATE

REGISTERED PROFESSIONAL ENGINEER M. OJI KALU No. 55712 Exp. 12/31/14 CIVIL STATE OF CALIFORNIA

THE STATE OF CALIFORNIA OR ITS OFFICERS OR AGENTS SHALL NOT BE RESPONSIBLE FOR THE ACCURACY OR COMPLETENESS OF SCANNED COPIES OF THIS PLAN SHEET.

NOTE:

1. FOR THE SCUPPER, 20' C-C SPACING, SEE Std PLAN B7-8 FOR DETAILS.

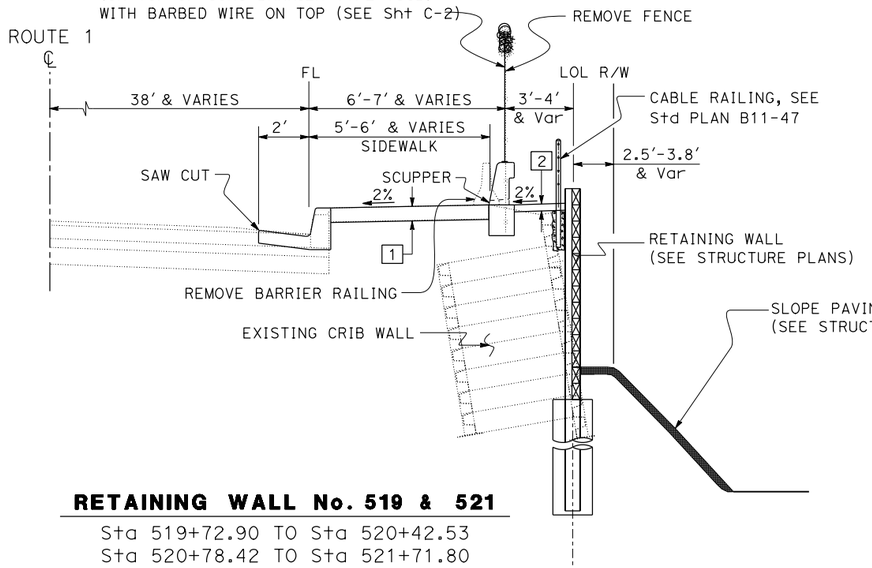

RETAINING WALL No. 519 & 521

Sta 519+72.90 TO Sta 520+42.53
Sta 520+78.42 TO Sta 521+71.80

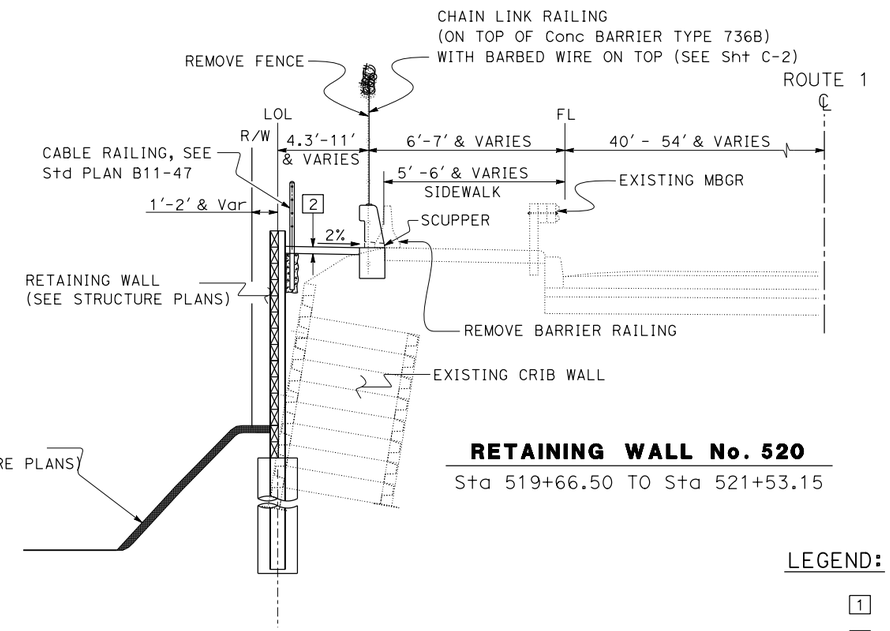

RETAINING WALL No. 520

Sta 519+66.50 TO Sta 521+53.15

LEGEND:

1 4" MINOR CONCRETE (SIDEWALK)

2 2" MINOR CONCRETE (Misc CONSTRUCTION)

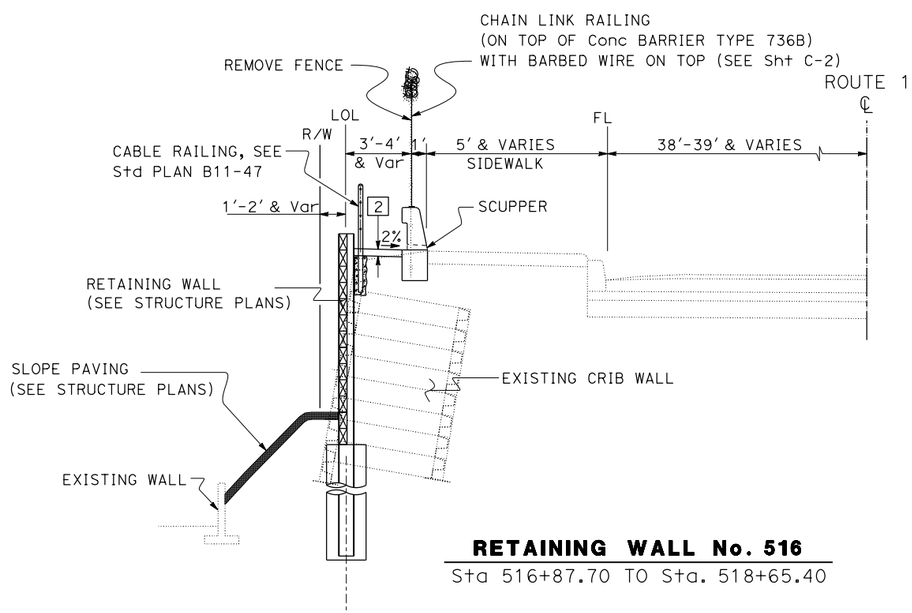

RETAINING WALL No. 516

Sta 516+87.70 TO Sta. 518+65.40

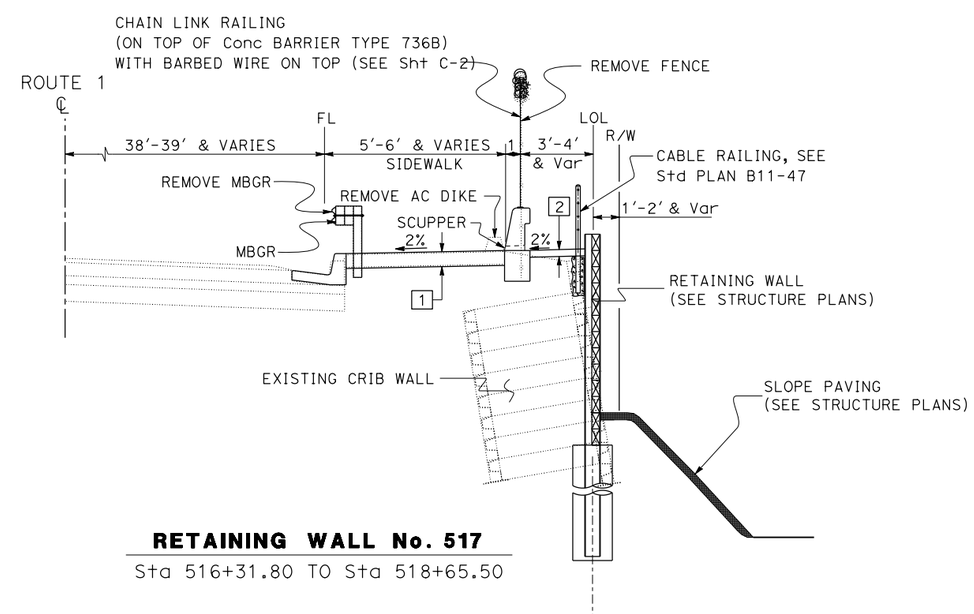

RETAINING WALL No. 517

Sta 516+31.80 TO Sta 518+65.50

TYPICAL CROSS SECTIONS

NO SCALE

X-1

STATE OF CALIFORNIA - DEPARTMENT OF TRANSPORTATION
Caltrans® OFFICE OF DESIGN B

FUNCTIONAL SUPERVISOR: ALINE ANTARAMIAN
CALCULATED-DESIGNED BY: VINCENT VALIDO JR.
CHECKED BY: M. OJI KALU
REVISED BY
DATE REVISED

LAST REVISION 00-00-00
DATE PLOTTED => 09-AUG-2013
TIME PLOTTED => 10:36

Dist	COUNTY	ROUTE	POST MILES TOTAL PROJECT	SHEET No.	TOTAL SHEETS
07	LA	1	8.7	3	50

REGISTERED CIVIL ENGINEER 7-1-13 DATE

7-08-13
PLANS APPROVAL DATE

REGISTERED PROFESSIONAL ENGINEER M. OJI KALU No. 55712 Exp. 12/31/14 CIVIL STATE OF CALIFORNIA

THE STATE OF CALIFORNIA OR ITS OFFICERS OR AGENTS SHALL NOT BE RESPONSIBLE FOR THE ACCURACY OR COMPLETENESS OF SCANNED COPIES OF THIS PLAN SHEET.

NOTE:

FOR COMPLETE R/W AND ACCURATE ACCESS DATA, SEE R/W RECORD MAPS AT THE DISTRICT OFFICE.

CURVE DATA				
No.	R	Δ	T	L
1	1800.00	36°03′45″	585.94	1132.94

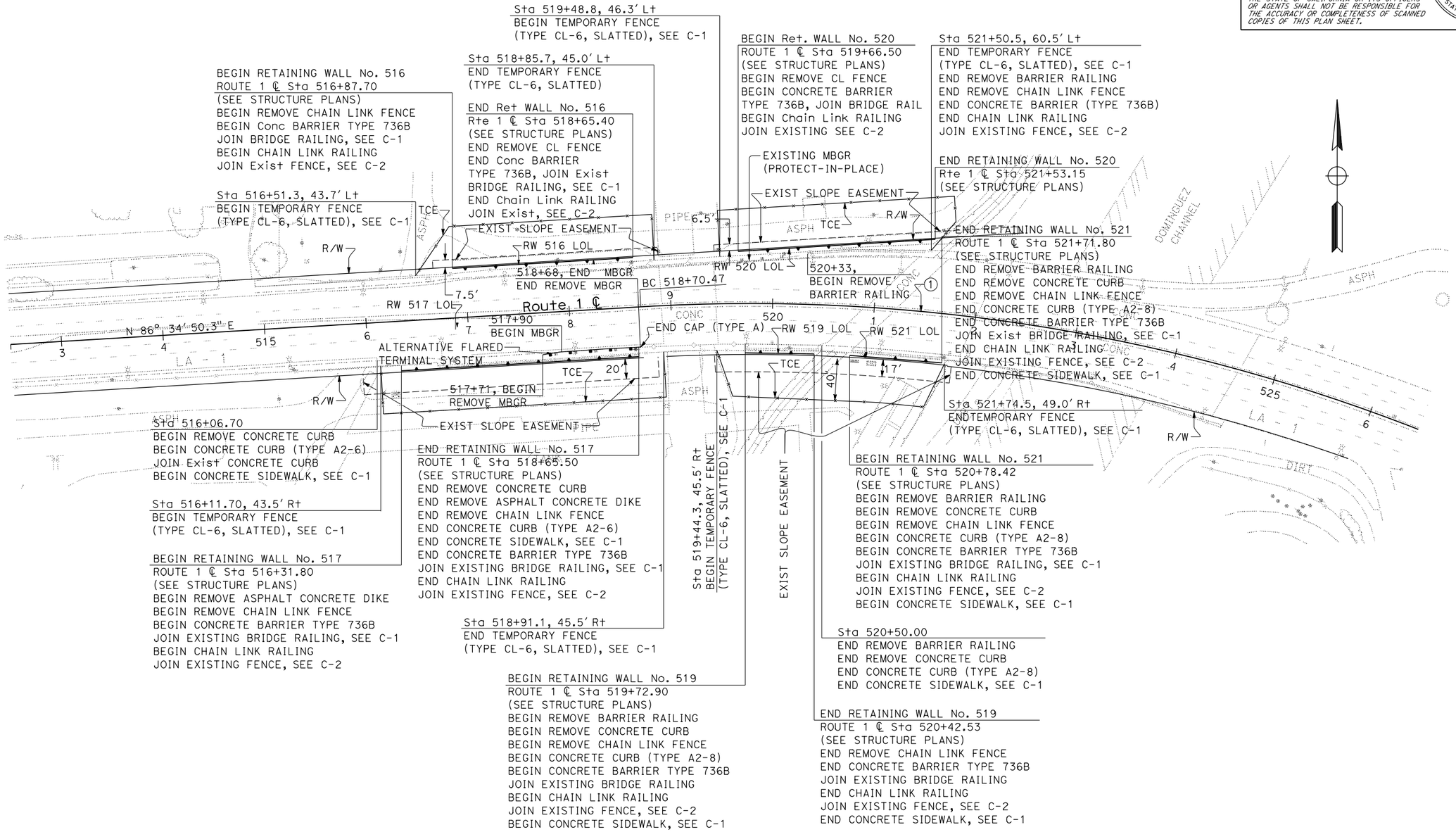

LAYOUT

SCALE 1" = 50′

L-1

REVISED BY	DATE REVISED

CALCULATED-DESIGNED BY	CHECKED BY
VINCENT VALIDO JR.	M. OJI KALU

FUNCTIONAL SUPERVISOR: M. OJI KALU

STATE OF CALIFORNIA - DEPARTMENT OF TRANSPORTATION
Caltrans® OFFICE OF DESIGN B

LAST REVISION 00-00-00 | DATE PLOTTED => 09-AUG-2013 | TIME PLOTTED => 10:36

Dist	COUNTY	ROUTE	POST MILES TOTAL PROJECT	SHEET No.	TOTAL SHEETS
07	LA	1	8.7	4	50

REGISTERED CIVIL ENGINEER 7-1-13 DATE

7-08-13
PLANS APPROVAL DATE

REGISTERED PROFESSIONAL ENGINEER M. OJI KALU No. 55712 Exp. 12/31/14 CIVIL STATE OF CALIFORNIA

THE STATE OF CALIFORNIA OR ITS OFFICERS OR AGENTS SHALL NOT BE RESPONSIBLE FOR THE ACCURACY OR COMPLETENESS OF SCANNED COPIES OF THIS PLAN SHEET.

LEGEND:

- ROADWAY EXCAVATION
- ROADWAY EXCAVATION (TYPE Z-2) (AERIALLY DEPOSITED LEAD)
- CONCRETE SIDEWALK
- ROADWAY BACKFILL

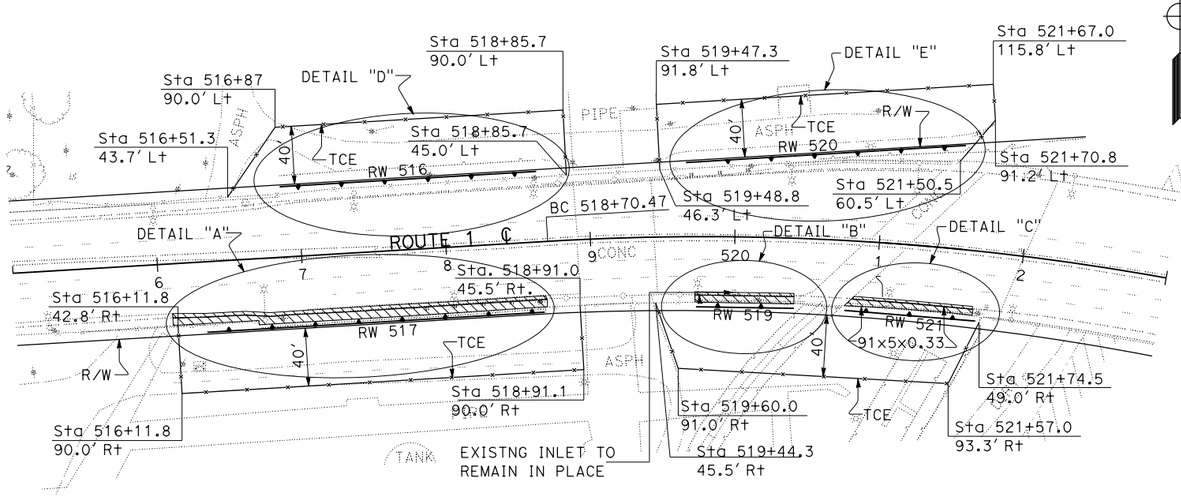

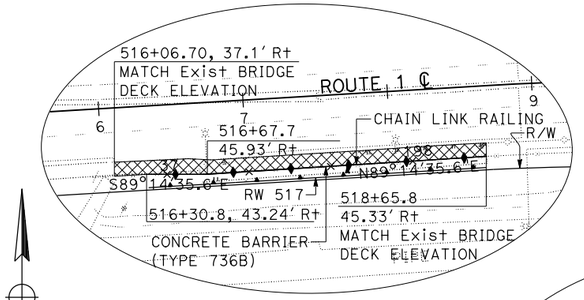

DETAIL "A"

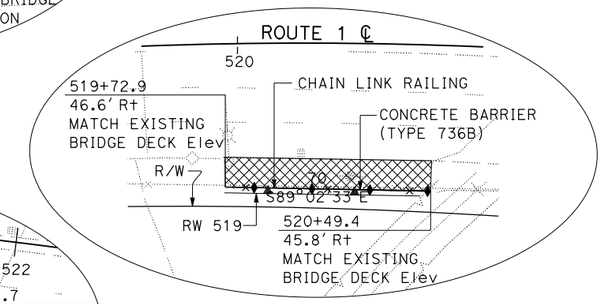

DETAIL "B"

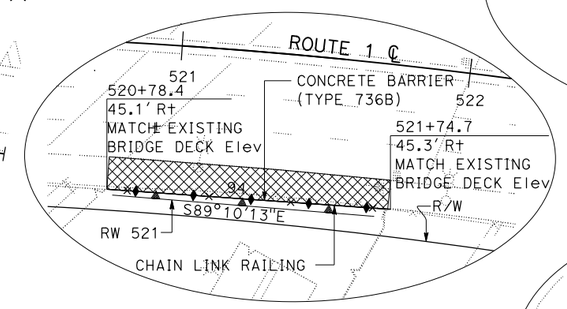

DETAIL "C"

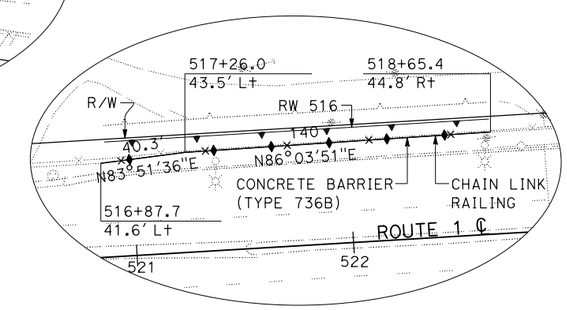

DETAIL "D"

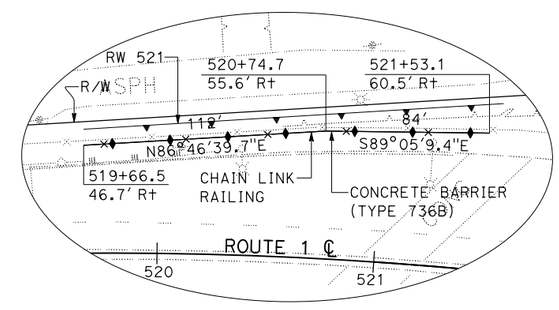

DETAIL "E"

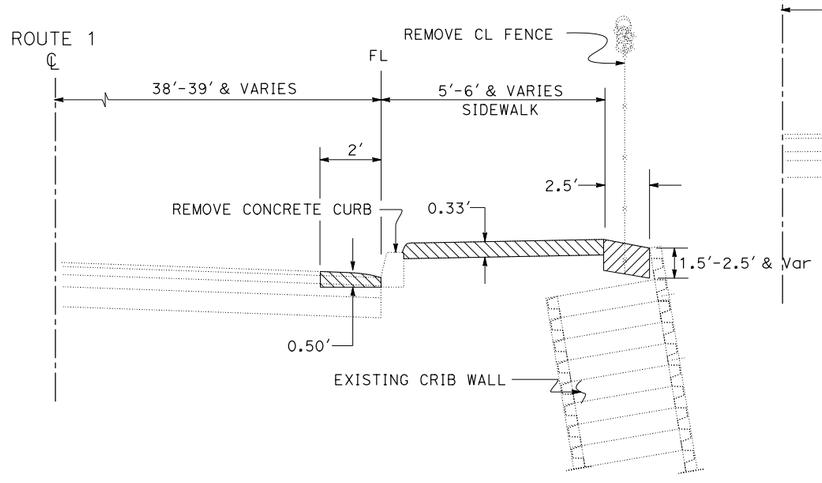

ROADWAY EXCAVATION
TYPICAL

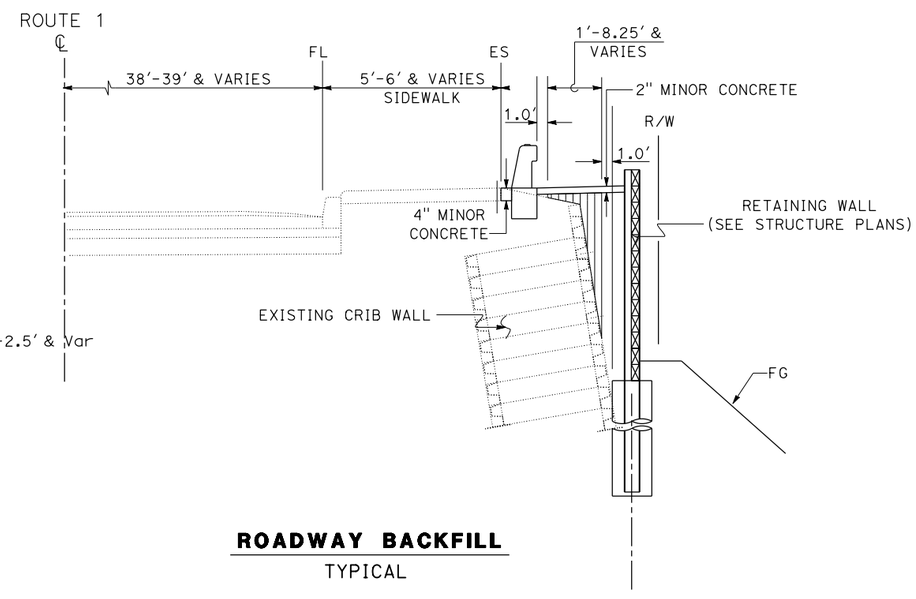

ROADWAY BACKFILL
TYPICAL

CONSTRUCTION DETAILS

NO SCALE

C-1

STATE OF CALIFORNIA - DEPARTMENT OF TRANSPORTATION
Caltrans® OFFICE OF DESIGN B

FUNCTIONAL SUPERVISOR: ALINE ANTARAMIAN
CALCULATED-DESIGNED BY: VINCENT VALIDO JR.
CHECKED BY: M. OJI KALU
REVISED BY
DATE REVISED

LAST REVISION 00-00-00
DATE PLOTTED => 09-AUG-2013
TIME PLOTTED => 10:36

DIST	COUNTY	ROUTE	POST MILES TOTAL PROJECT	SHEET No.	TOTAL SHEETS
07	LA	01	8.7	5	50

REGISTERED CIVIL ENGINEER 03-15-13 DATE

07-08-13
PLANS APPROVAL DATE

REGISTERED PROFESSIONAL ENGINEER Hogni Setberg No. C70338 Exp. 9-30-14 CIVIL STATE OF CALIFORNIA

The State of California or its officers or agents shall not be responsible for the accuracy or completeness of scanned copies of this plan sheet.

Notes:

1. Place Chain Link Railing Fabric on traffic side.
2. Place Barbed Wire facing away from traffic side.
3. Posts shall be vertical.
4. Railing shall conform to horizontal and vertical alignment.
5. Alternative details may be submitted by the contrator for engineer approval.
6. Provide thimbles at all cable loops.
7. Railing assembly except chain link fabric to be galvanized after fabrication.
8. Place fabric parallel to slope.

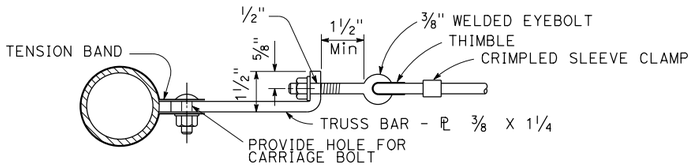

TOP CABLE ANCHORAGE DETAIL

NO SCALE

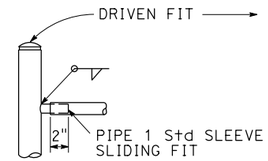

TYPICAL DETAILS

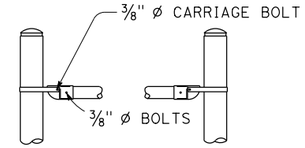

ALTERNATIVE DETAILS

END BRACE DETAILS

NO SCALE

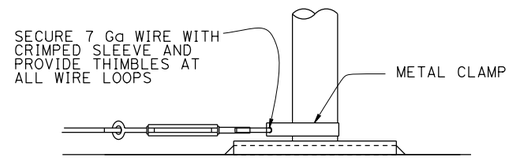

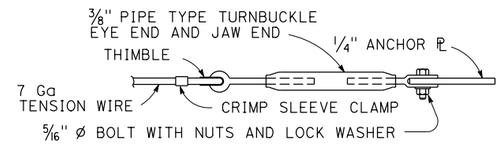

BOTTOM ANCHORAGE DETAIL

NO SCALE

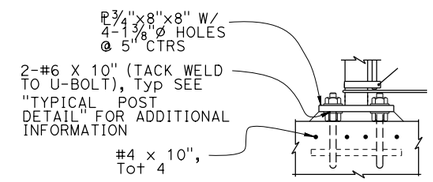

DETAIL A

NO SCALE

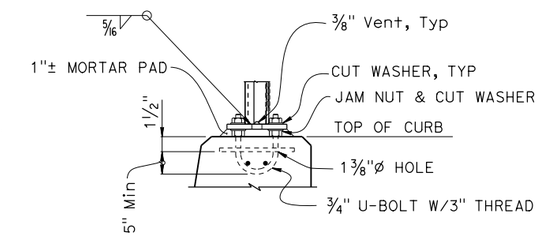

DETAIL B

NO SCALE

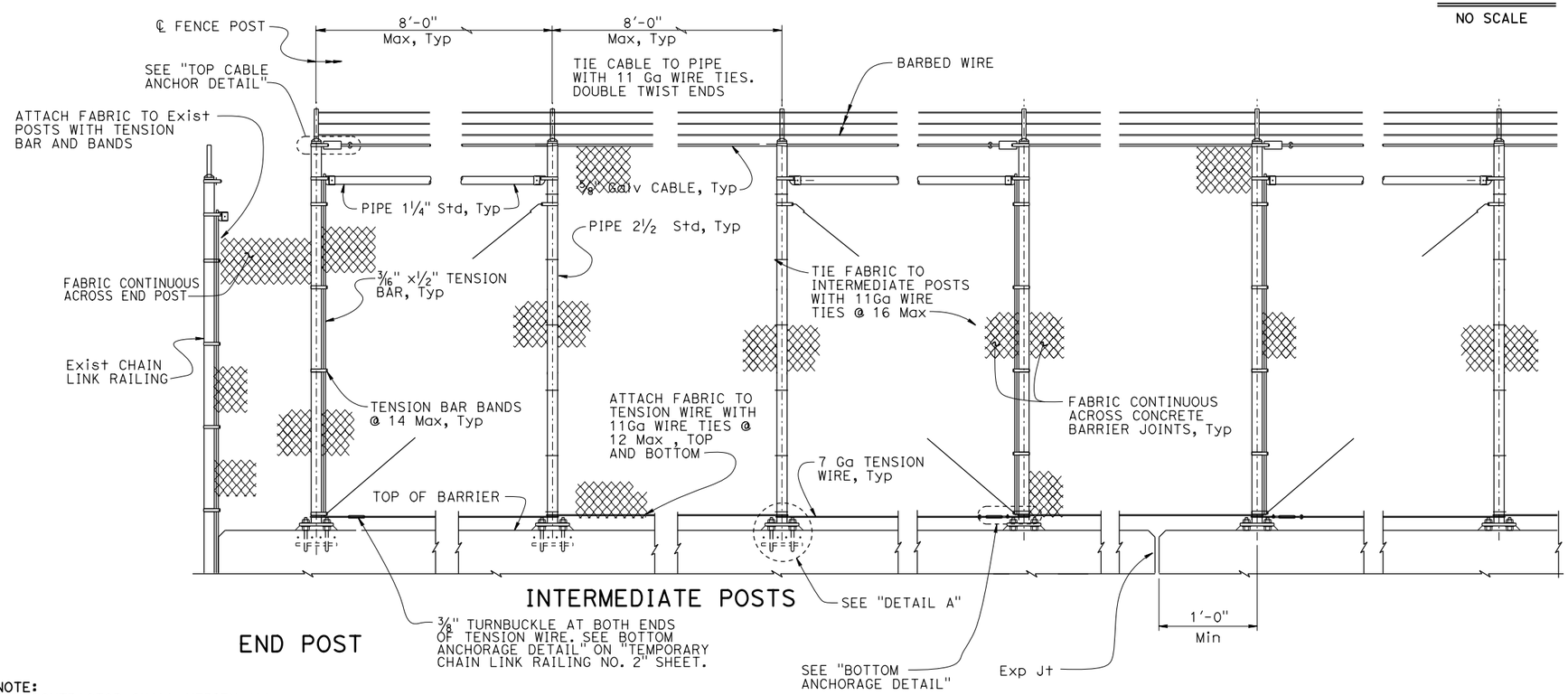

ELEVATION

3/4" = 1'-0"

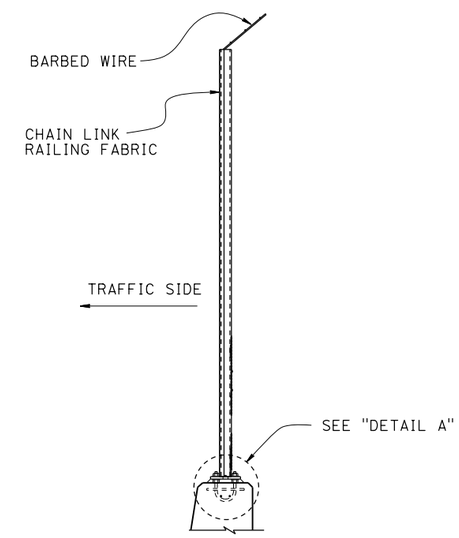

TYPICAL POST DETAILS

3/4" = 1'-0"

NOTE:
THE CONTRACTOR SHALL VERIFY ALL CONTROLLING FIELD DIMENSIONS BEFORE ORDERING OR FABRICATING ANY MATERIAL.

CHAIN LINK RAILING DETAILS

	BY	CHECKED
DESIGN	H. Setberg	J. Higareda
DETAILS	S. Cholda	J. Higareda
QUANTITIES	X	X

STATE OF CALIFORNIA
DEPARTMENT OF TRANSPORTATION

DIVISION OF ENGINEERING SERVICES
STRUCTURE DESIGN
DESIGN BRANCH 15

BRIDGE NO. VARIES
POST MILE 8.67-8.77

CONSTRUCTION DETAILS

C-2

STRUCTURES DESIGN DETAIL SHEET (ENGLISH) (REV. 09-01-10)

ORIGINAL SCALE IN INCHES FOR REDUCED PLANS 0 1 2 3

UNIT: 3604
PROJECT NUMBER & PHASE: 07120000641
CONTRACT NO.: 07-3X3904

DISREGARD PRINTS BEARING EARLIER REVISION DATES

REVISION DATES: 03-27-13 03-22-13 04-23-13

SHEET X OF X

FILE => 73x390ga002.dgn

USERNAME => s112049 DATE PLOTTED => 09-AUG-2013 TIME PLOTTED => 10:36

Dist	COUNTY	ROUTE	POST MILES TOTAL PROJECT	SHEET No.	TOTAL SHEETS
07	LA	1	8.7	6	50

REGISTERED CIVIL ENGINEER 7-1-13 DATE

7-08-13
PLANS APPROVAL DATE

REGISTERED PROFESSIONAL ENGINEER PARVIZ YEGANEH No. C53797 Exp. 6-30-15 CIVIL STATE OF CALIFORNIA

THE STATE OF CALIFORNIA OR ITS OFFICERS OR AGENTS SHALL NOT BE RESPONSIBLE FOR THE ACCURACY OR COMPLETENESS OF SCANNED COPIES OF THIS PLAN SHEET.

NOTES:

1. FOR ACCURATE RIGHT OF WAY DATA, CONTACT RIGHT OF WAY ENGINEERING AT THE DISTRICT OFFICE.

UTILITY OWNERSHIP ON THIS PROJECT

ELECTRICAL - LOS ANGELES DEPARTMENT OF WATER AND POWER
GAS - SOUTHERN CALIFORNIA GAS (SCG)
WATER - LOS ANGELES DEPARTMENT OF WATER AND POWER

ABBREVIATIONS:

Wtr - WATER
CAL - CALIFORNIA
DWP - DEPARTMENT OF WATER & POWER

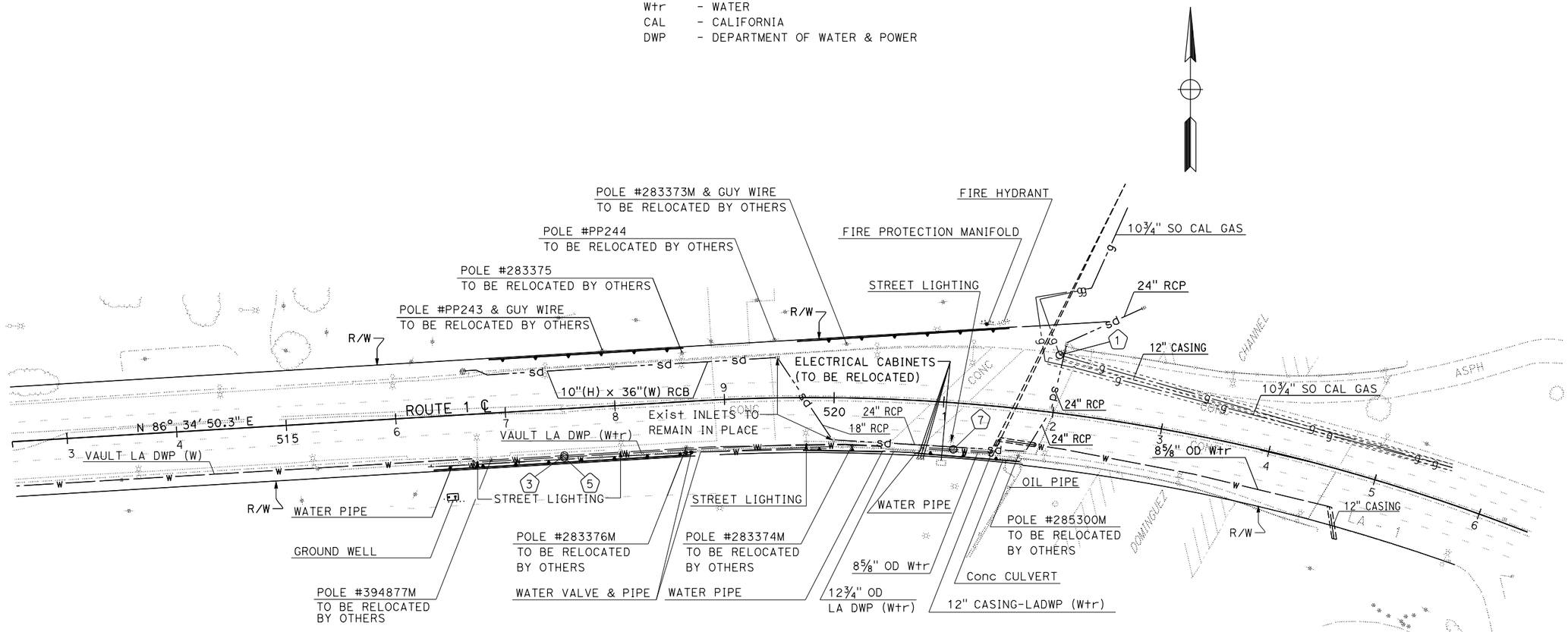

POTHOLE LOCATION TABLE

X	UTILITY	NORTHING	EASTING	UTILITY Elev	DEPTH
1	GAS	1746713.387	6491436.949	28.831	3.46′
3	WATER	1746622.580	6490985.581	28.213	3.83′
5	WATER	1746620.768	6490985.541	28.143	2.20′
7	WATER	1746628.117	6491339.946	26.019	1.35′

APPROVED FOR UTILITY INFORMATION ONLY

UTILITY PLAN

NO SCALE

U-1

STATE OF CALIFORNIA - DEPARTMENT OF TRANSPORTATION
Caltrans UTILITY ENGINEERING

FUNCTIONAL SUPERVISOR: CELINA AVILES
CALCULATED-DESIGNED BY: PARVIZ YEGANEH
CHECKED BY: CELINA AVILES
REVISED BY
DATE REVISED

LAST REVISION 00-00-00
DATE PLOTTED => 09-AUG-2013
TIME PLOTTED => 10:36

BORDER LAST REVISED 7/2/2010
USERNAME => s112049
DGN FILE => 73x390ka001.dgn
RELATIVE BORDER SCALE IS IN INCHES 0 1 2 3
UNIT 1806
PROJECT NUMBER & PHASE 07120000641

Dist	COUNTY	ROUTE	POST MILES TOTAL PROJECT	SHEET No.	TOTAL SHEETS
07	LA	1	8.7	7	50

REGISTERED CIVIL ENGINEER 7-1-13 DATE

7-08-13
PLANS APPROVAL DATE

REGISTERED PROFESSIONAL ENGINEER M. OJI KALU No. 55712 Exp 12/31/14 CIVIL STATE OF CALIFORNIA

THE STATE OF CALIFORNIA OR ITS OFFICERS OR AGENTS SHALL NOT BE RESPONSIBLE FOR THE ACCURACY OR COMPLETENESS OF SCANNED COPIES OF THIS PLAN SHEET.

NOTE:

LOCATIONS OF CONSTRUCTION AREA SIGNS SHOWN ARE APPROXIMATE. EXACT LOCATION WILL BE DETERMINED BY THE RESIDENT ENGINEER.

STATIONARY MOUNTED CONSTRUCTION AREA SIGNS

SIGN NUMBER (X)	SIGN CODE	PANEL SIZE	SIGN MESSAGE	NUMBER OF POSTS AND SIZE	NUMBER OF SIGNS (SHEET CS-1)
1	C40 (CA)	108" x 42"	TRAFFIC FINES DOUBLED IN CONSTRUCTION ZONES	2-6" x 6"	2
2	W20-1	36" x 36"	ROAD WORK AHEAD	1-4" x 4"	2
3	G20-2	36" x 18"	END ROAD WORK	1-4" x 4"	2
4	R9-10	24" x 12"	SIDEWALK CLOSED, USE OTHER SIDE	1-2" x 4"	4
5	R9-11	24" x 12"	SIDEWALK CLOSED AHEAD, CROSS HERE	1-2" x 4"	4

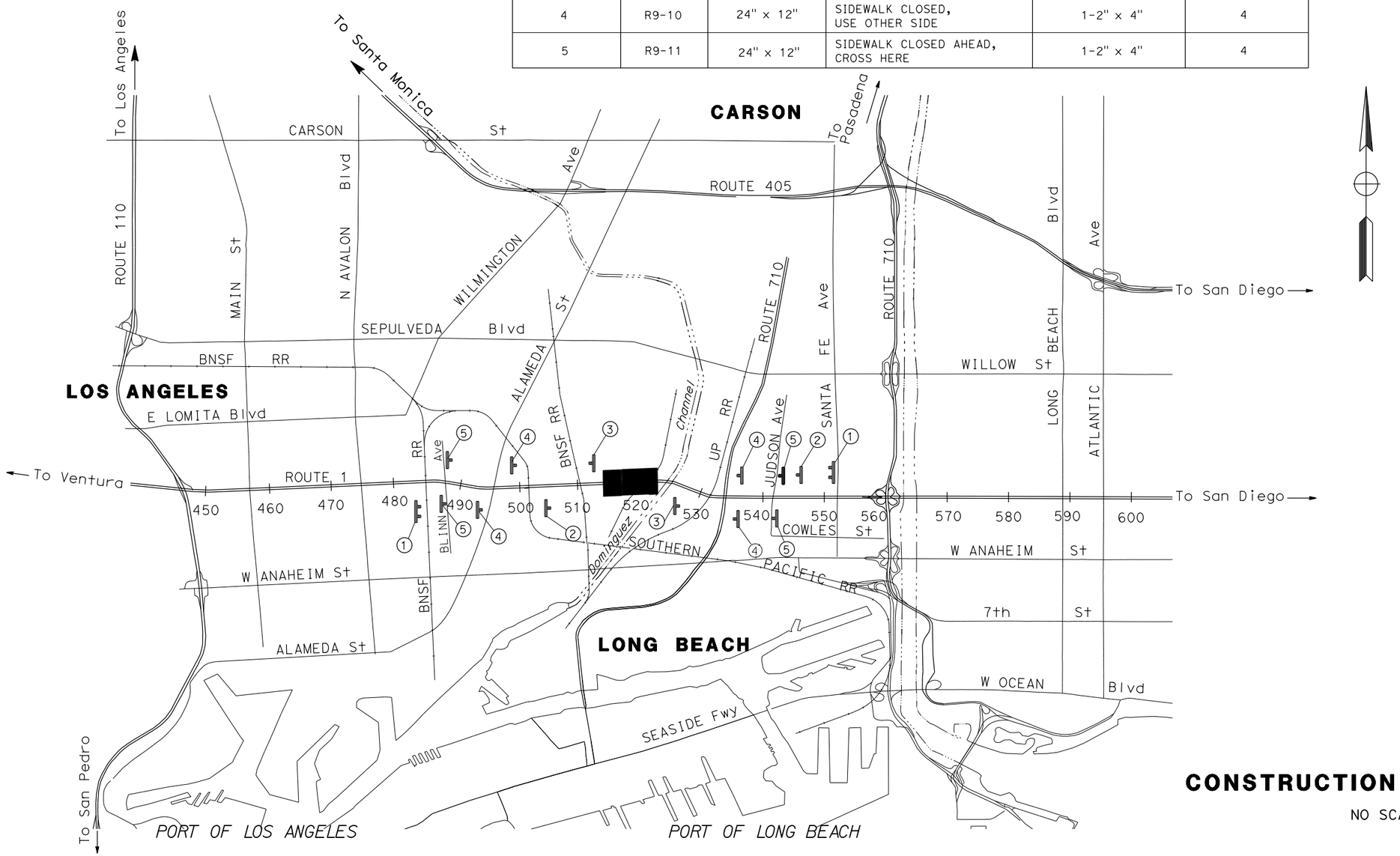

CONSTRUCTION AREA SIGNS

NO SCALE

CS-1

APPROVED FOR CONSTRUCTION AREA SIGN WORK ONLY

STATE OF CALIFORNIA - DEPARTMENT OF TRANSPORTATION
Caltrans OFFICE OF DESIGN B

FUNCTIONAL SUPERVISOR: ALINE ANTARAMIAN
CALCULATED-DESIGNED BY: VINCENT M VALIDO JR
CHECKED BY: M OJI KALU
REVISED BY
DATE REVISED

LAST REVISION 00-00-00
DATE PLOTTED => 09-AUG-2013
TIME PLOTTED => 10:36

Dist	COUNTY	ROUTE	POST MILES TOTAL PROJECT	SHEET No.	TOTAL SHEETS
07	LA	1	8.7	8	50

REGISTERED CIVIL ENGINEER 7-1-13 DATE

7-08-13
PLANS APPROVAL DATE

REGISTERED PROFESSIONAL ENGINEER M. OJI KALU No. 55712 Exp 12/31/14 CIVIL STATE OF CALIFORNIA

THE STATE OF CALIFORNIA OR ITS OFFICERS OR AGENTS SHALL NOT BE RESPONSIBLE FOR THE ACCURACY OR COMPLETENESS OF SCANNED COPIES OF THIS PLAN SHEET.

LEGEND:

WORK AREA

CURVE DATA				
No. (x)	R	Δ	T	L
1	1800.00	36°03′45″	585.94	1132.94

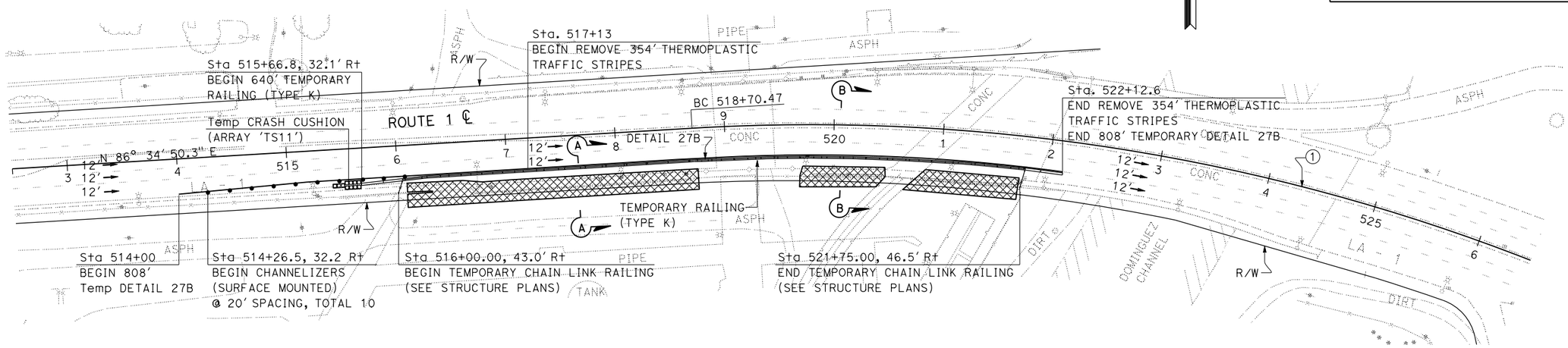

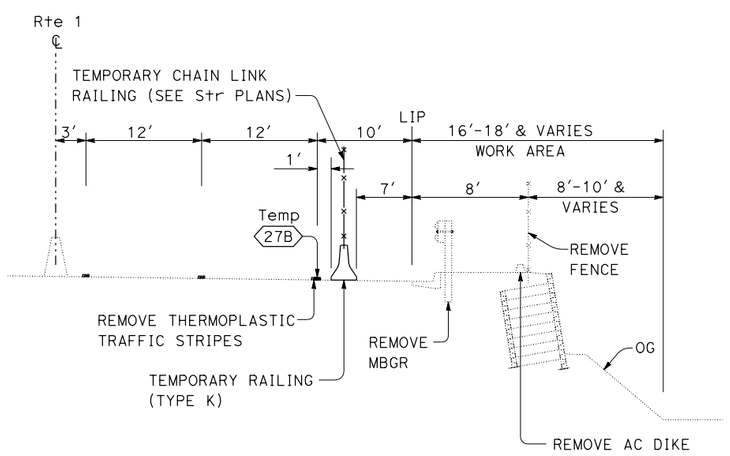

SECTION A-A
NO SCALE

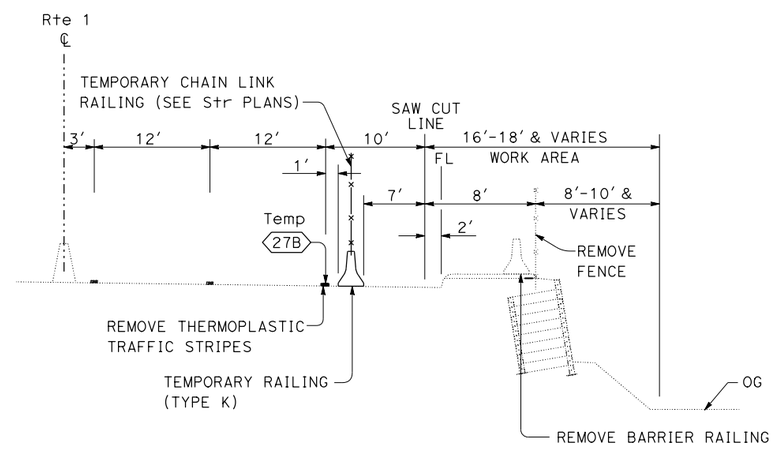

SECTION B-B
NO SCALE

STAGE 1
STAGE CONSTRUCTION

SCALE: 1" = 50′

APPROVED FOR STAGE CONSTRUCTION WORK ONLY

SC-1

STATE OF CALIFORNIA - DEPARTMENT OF TRANSPORTATION
Caltrans® OFFICE OF DESIGN B

FUNCTIONAL SUPERVISOR: ALINE ANTARAMIAN
CALCULATED-DESIGNED BY: M. OJI KALU
CHECKED BY:
REVISED BY:
DATE REVISED:

LAST REVISION 00-00-00
DATE PLOTTED => 09-AUG-2013
TIME PLOTTED => 10:36

Dist	COUNTY	ROUTE	POST MILES TOTAL PROJECT	SHEET No.	TOTAL SHEETS
07	LA	1	8.7	9	50

REGISTERED CIVIL ENGINEER 7-1-13 DATE

7-08-13
PLANS APPROVAL DATE

REGISTERED PROFESSIONAL ENGINEER M. OJI KALU No. 55712 Exp. 12/31/14 CIVIL STATE OF CALIFORNIA

THE STATE OF CALIFORNIA OR ITS OFFICERS OR AGENTS SHALL NOT BE RESPONSIBLE FOR THE ACCURACY OR COMPLETENESS OF SCANNED COPIES OF THIS PLAN SHEET.

CURVE DATA				
No. (#)	R	Δ	T	L
1	1800.00	36°03′45″	585.94	1132.94

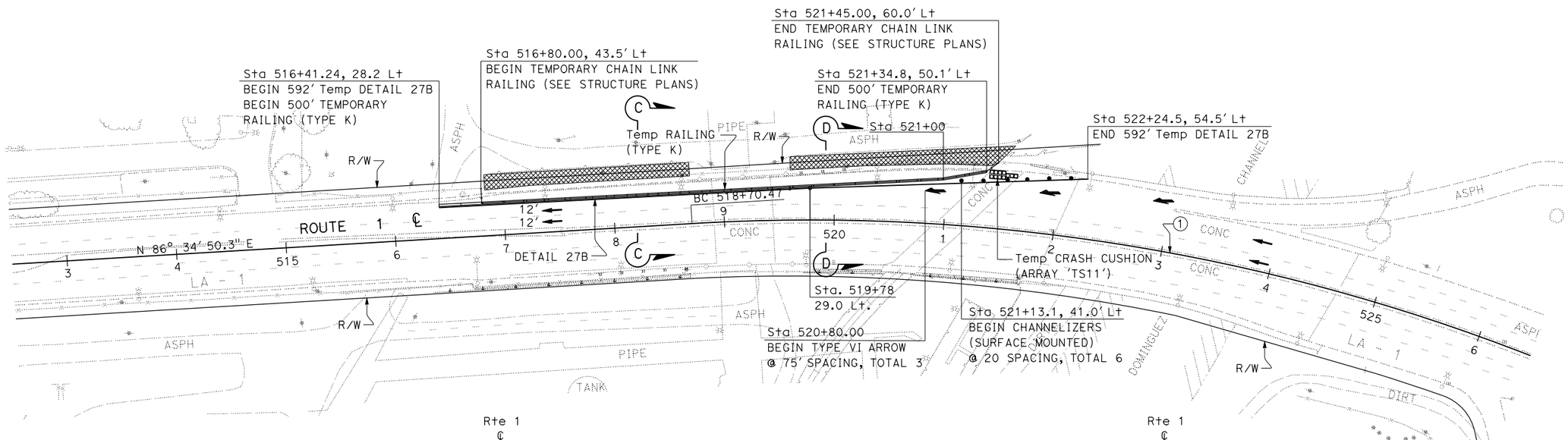

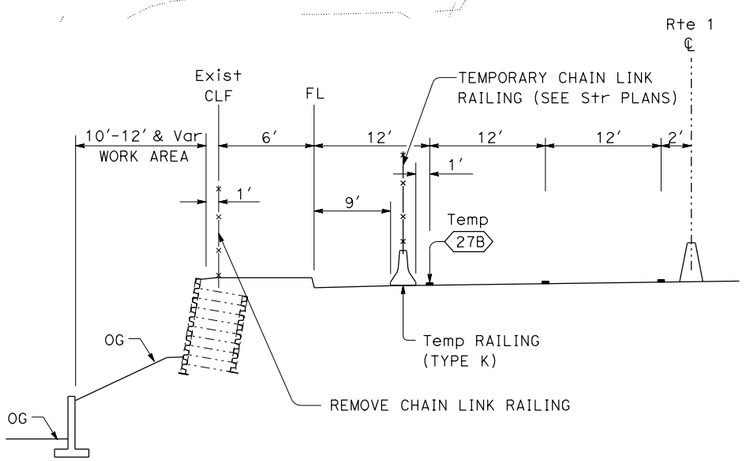

SECTION C-C
NO SCALE

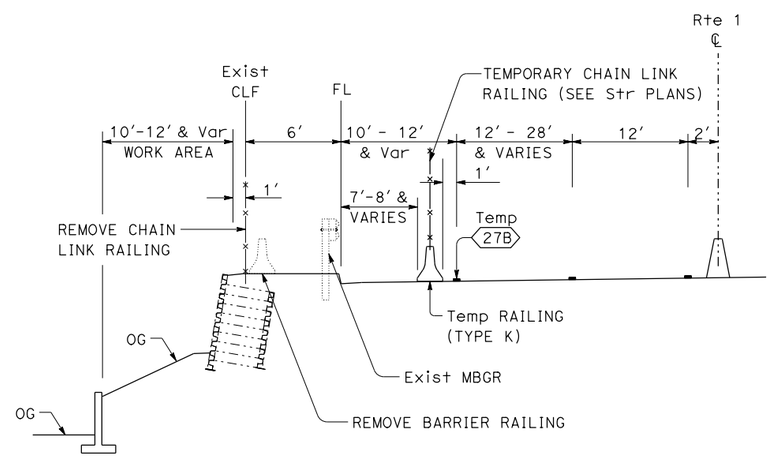

SECTION D-D
NO SCALE

STAGE 2
STAGE CONSTRUCTION

SCALE: 1" = 50′

SC-2

APPROVED FOR STAGE CONSTRUCTION WORK ONLY

REVISED BY	DATE REVISED
VINCENT VALIDO JR.	M. OJI KALU
CALCULATED-DESIGNED BY	CHECKED BY
FUNCTIONAL SUPERVISOR	ALINE ANTARAMIAN

STATE OF CALIFORNIA - DEPARTMENT OF TRANSPORTATION
Caltrans® OFFICE OF DESIGN B

LAST REVISION 00-00-00 | DATE PLOTTED => 09-AUG-2013 TIME PLOTTED => 10:36

Dist	COUNTY	ROUTE	POST MILES TOTAL PROJECT	SHEET No.	TOTAL SHEETS
07	LA	1	8.7	10	50

REGISTERED CIVIL ENGINEER 7-1-13 DATE

7-08-13
PLANS APPROVAL DATE

REGISTERED PROFESSIONAL ENGINEER M. OJI KALU No. 55712 Exp. 12/31/14 CIVIL STATE OF CALIFORNIA

THE STATE OF CALIFORNIA OR ITS OFFICERS OR AGENTS SHALL NOT BE RESPONSIBLE FOR THE ACCURACY OR COMPLETENESS OF SCANNED COPIES OF THIS PLAN SHEET.

ROADWAY QUANTITY SUMMARY

SHEET NUMBER	TEMPORARY FENCE (TYPE CL-6, SLATTED)	TEMPORARY RAILING (TYPE K)	CHANNELIZER (SURFACE MOUNTED)	TEMPORARY CRASH CUSHION MODULE	TEMPORARY TRAFFIC STRIPE (PAINT)	THERMOPLASTIC PAVEMENT MARKING	METAL BEAM GUARD RAILING (WOOD POST)	CHAIN LINK RAILING	CABLE RAILING	CONCRETE BARRIER (TYPE 736B)	END CAP (TYPE A)	ALTERNATIVE FLARED TERMINAL SYSTEM	MINOR CONCRETE (CURB AND GUTTER)	MINOR CONCRETE (SIDEWALK)	MINOR CONCRETE (Misc CONSTRUCTION)	ROADWAY EXCAVATION	ROADWAY EXCAVATION (TYPE Z-2) (AERIALLY DEPOSITED LEAD)	IMPORTED BORROW
	LF	LF	EA	EA	LF	SQFT	LF	LF	LF	LF	EA	EA	CY	CY	CY	CY	CY	CY
L-1	1,298						75	771	800	771	1	1	26	24		40	300	
SC-1		640	10	11	808													
SC-2		500	6	11	592	126												
C-1															23			160
TOTAL	1,298	1,140	16	22	1,400	126	80	771	800	771	1	1	26	24	23	40	300	160

TEMPORARY CONSTRUCTION BEST MANAGEMENT PRACTICES

SHEET NUMBER	TEMPORARY COVER	TEMPORARY FIBER ROLL	TEMPORARY GRAVEL BAG BERM	TEMPORARY SILT FENCE	TEMPORARY DRAINAGE INLET PROTECTION
	SQYD	LF	LF	LF	EA
L-1	3,820	2,030	2,100	2,100	8
TOTAL	3,820	2,030	2,100	2,100	8

REMOVE QUANTITIES

SHEET NUMBER	THERMOPLASTIC TRAFFIC STRIPE	CHAIN LINK FENCE	REMOVE MBGR	ASPHALT CONCRETE DIKE	CONCRETE CURB	BARRIER RAILING	TREATED WOOD WASTE
	LF	LF	LF	LF	LF	LF	LB
L-1		771	97	240	421	271	2000
SC-1	354						
SC-2							
TOTAL	354	771	97	240	421	271	2000

SUMMARY OF QUANTITIES

Q-1

STATE OF CALIFORNIA - DEPARTMENT OF TRANSPORTATION
Caltrans® OFFICE OF DESIGN B

FUNCTIONAL SUPERVISOR: ALINE ANTARAMIAN
CALCULATED-DESIGNED BY: VINCENT VALIDO JR.
CHECKED BY: M. OJI KALU
REVISED BY
DATE REVISED

LAST REVISION 00-00-00
DATE PLOTTED => 09-AUG-2013
TIME PLOTTED => 10:36

Dist	COUNTY	ROUTE	POST MILES TOTAL PROJECT	SHEET No.	TOTAL SHEETS
07	LA	1	8.7	11	50

REGISTERED CIVIL ENGINEER

April 20, 2012
PLANS APPROVAL DATE

REGISTERED PROFESSIONAL ENGINEER
Roberta L. McLaughlin
No. C40375
Exp. 3-31-13
CIVIL
STATE OF CALIFORNIA

THE STATE OF CALIFORNIA OR ITS OFFICERS OR AGENTS SHALL NOT BE RESPONSIBLE FOR THE ACCURACY OR COMPLETENESS OF SCANNED COPIES OF THIS PLAN SHEET.

TO ACCOMPANY PLANS DATED 7-08-13

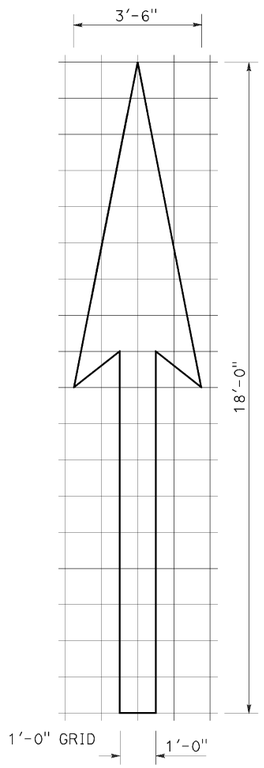

A=25 ft^2

TYPE I 18'-0" ARROW

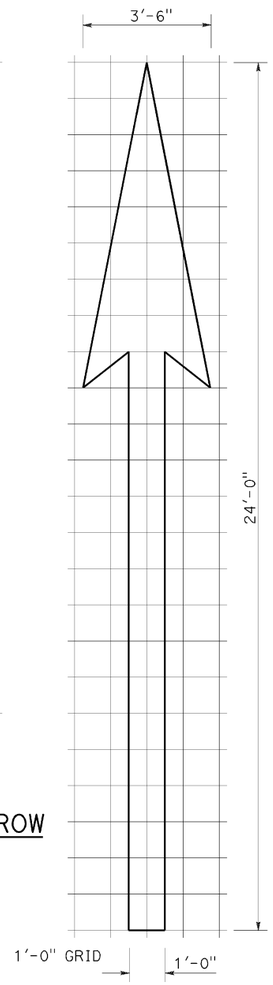

A=31 ft^2

TYPE I 24'-0" ARROW

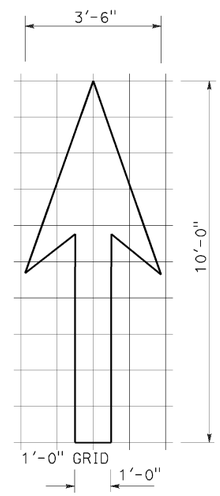

A=14 ft^2

TYPE I 10'-0" ARROW

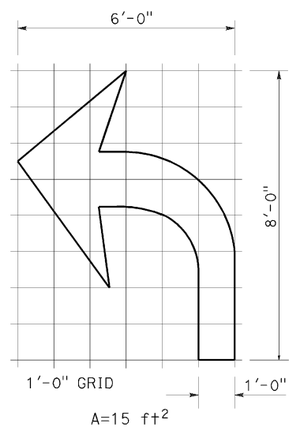

A=15 ft^2

TYPE IV (L) ARROW

(For Type IV (R) arrow, use mirror image)

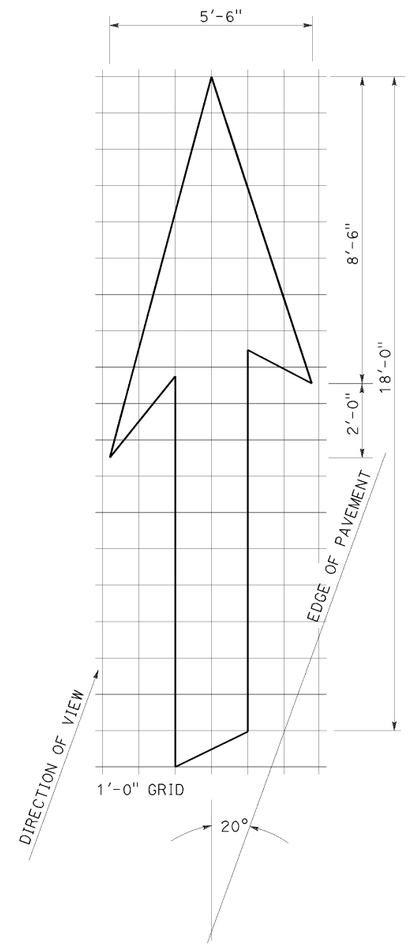

A=42 ft^2

TYPE VI ARROW

Right lane drop arrow
(For left lane, use mirror image)

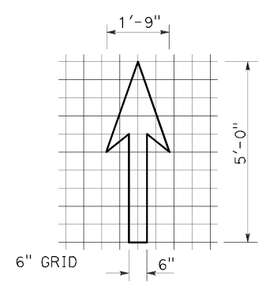

A=3.5 ft^2

BIKE LANE ARROW

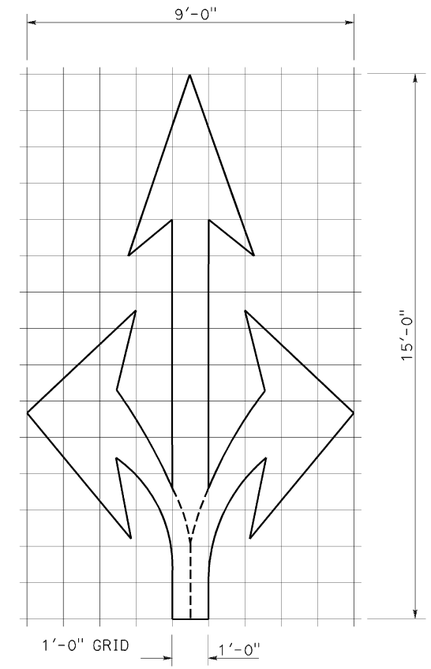

A=36 ft^2

TYPE VIII ARROW

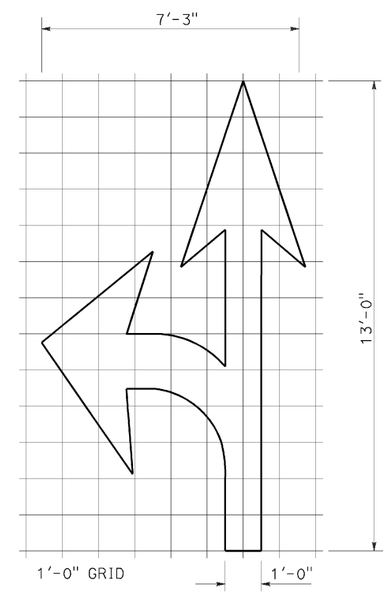

A=27 ft^2

TYPE VII (L) ARROW

(For Type VII (R) arrow, use mirror image)

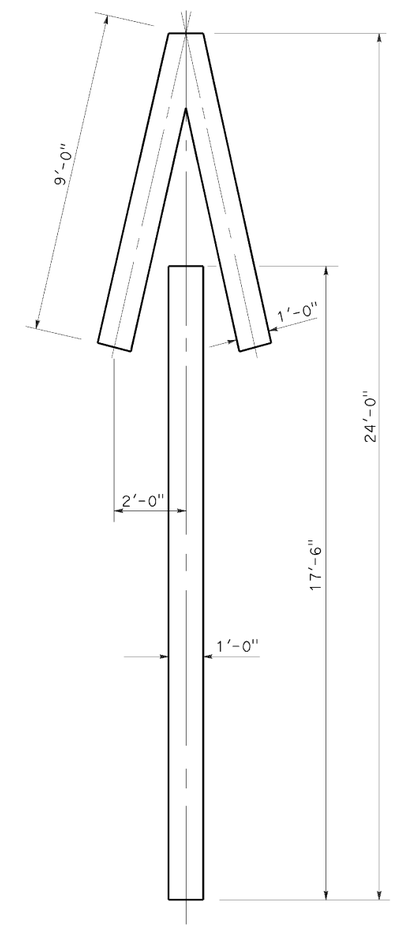

A=33 ft^2

TYPE V ARROW

NOTE:
Minor variations in dimensions may be accepted by the Engineer.

STATE OF CALIFORNIA
DEPARTMENT OF TRANSPORTATION

PAVEMENT MARKINGS ARROWS

NO SCALE

RSP A24A DATED APRIL 20, 2012 SUPERSEDES STANDARD PLAN A24A DATED MAY 20, 2011 - PAGE 13 OF THE STANDARD PLANS BOOK DATED 2010.

REVISED STANDARD PLAN RSP A24A

2010 REVISED STANDARD PLAN RSP A24A

3-14-12

Dist	COUNTY	ROUTE	POST MILES TOTAL PROJECT	SHEET No.	TOTAL SHEETS
07	LA	1	8.7	12	50

REGISTERED CIVIL ENGINEER

October 19, 2012
PLANS APPROVAL DATE

REGISTERED PROFESSIONAL ENGINEER Glenn DeCou No. C34547 Exp. 9-30-13 CIVIL STATE OF CALIFORNIA

THE STATE OF CALIFORNIA OR ITS OFFICERS OR AGENTS SHALL NOT BE RESPONSIBLE FOR THE ACCURACY OR COMPLETENESS OF SCANNED COPIES OF THIS PLAN SHEET.

TO ACCOMPANY PLANS DATED 7-08-13

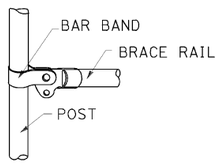

BRACE RAIL

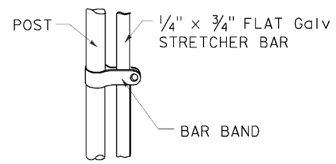

STRETCHER BAR

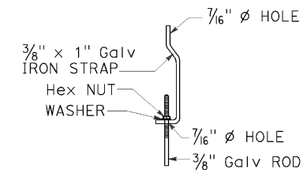

TRUSS TIGHTENER

NOTES:

1. All material for abutment connection to be galvanized.
2. The chain link fabric shall be replaced by barbed wire strands at 12" maximum centers between the double posts.
3. When the width of the culvert makes it necessary to anchor a post to the top of the culvert, a cast iron shoe or other device approved by the Engineer shall be used.
4. Fencing over stream and around headwall may also use Barbed Wire or Wire Mesh fencing with either wood post or steel post installation.
5. See Standard Plan A85 for Chain Link fence dimensions. See Standard Plan A86 for Barbed Wire and Wire Mesh fence dimensions and for wood post and steel post installation.

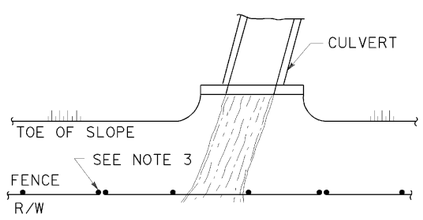

PLAN

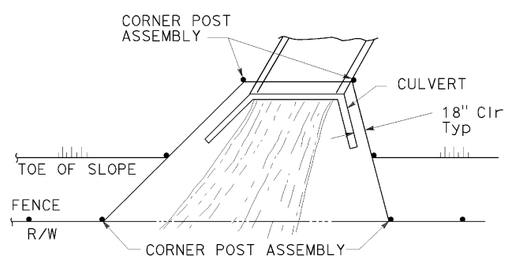

PLAN

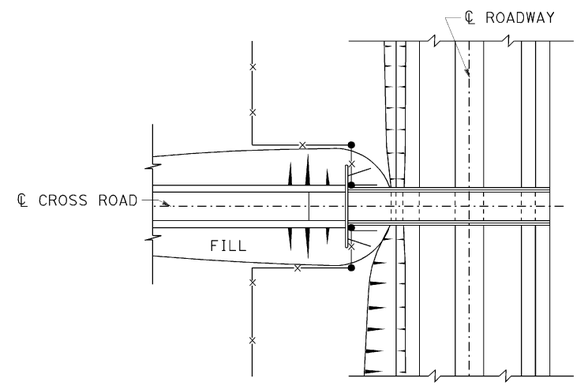

PLAN OF ROADWAY - OVERCROSSING

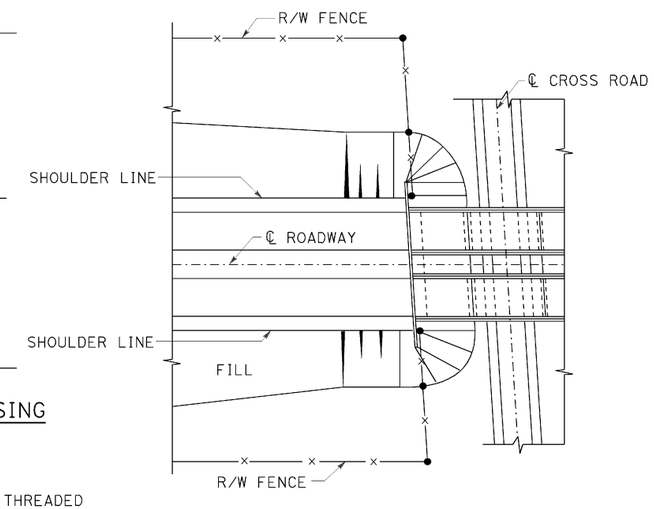

PLAN OF ROADWAY - UNDERCROSSING

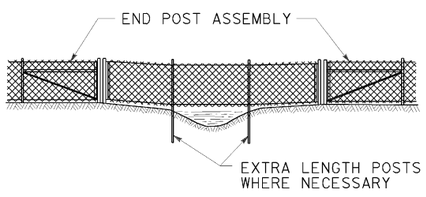

ELEVATION

INSTALLATION OVER STREAM

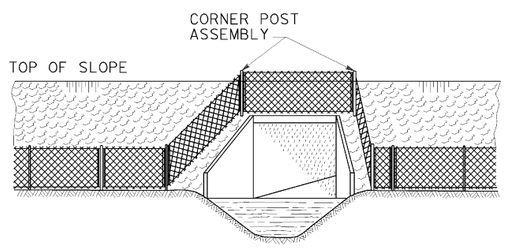

ELEVATION

INSTALLATION AROUND HEADWALL

See Note 4

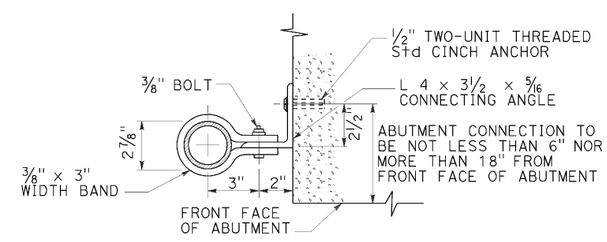

ABUTMENT CONNECTION

TYPICAL INSTALLATION AT BRIDGES

STATE OF CALIFORNIA
DEPARTMENT OF TRANSPORTATION

CHAIN LINK FENCE DETAILS

NO SCALE

RSP A85B DATED OCTOBER 19, 2012 SUPERSEDES STANDARD PLAN A85B DATED MAY 20, 2011 - PAGE 114 OF THE STANDARD PLANS BOOK DATED 2010.

REVISED STANDARD PLAN RSP A85B

2010 REVISED STANDARD PLAN RSP A85B

7-19-12

Dist	COUNTY	ROUTE	POST MILES TOTAL PROJECT	SHEET No.	TOTAL SHEETS
07	LA	1	8.7	13	50

REGISTERED CIVIL ENGINEER

April 19, 2013
PLANS APPROVAL DATE

REGISTERED PROFESSIONAL ENGINEER
Gurinderpal Bhullar
No. C48815
Exp. 9-30-14
CIVIL
STATE OF CALIFORNIA

THE STATE OF CALIFORNIA OR ITS OFFICERS OR AGENTS SHALL NOT BE RESPONSIBLE FOR THE ACCURACY OR COMPLETENESS OF SCANNED COPIES OF THIS PLAN SHEET.

TO ACCOMPANY PLANS DATED 7-08-13

TABLE 1

TAPER LENGTH CRITERIA AND CHANNELIZING DEVICE SPACING

SPEED (S)	MINIMUM TAPER LENGTH * FOR WIDTH OF OFFSET 12 FEET (W)				MAXIMUM CHANNELIZING DEVICE SPACING		
					X	Y	Z **
	TANGENT 2L	MERGING L	SHIFTING L/2	SHOULDER L/3	TAPER	TANGENT	CONFLICT
mph	ft	ft	ft	ft	ft	ft	ft
20	160	80	40	27	20	40	10
25	250	125	63	42	25	50	12
30	360	180	90	60	30	60	15
35	490	245	123	82	35	70	17
40	640	320	160	107	40	80	20
45	1080	540	270	180	45	90	22
50	1200	600	300	200	50	100	25
55	1320	660	330	220	55	110	27
60	1440	720	360	240	60	120	30
65	1560	780	390	260	65	130	32
70	1680	840	420	280	70	140	35

* - For other offsets, use the following merging taper length formula for L:
For speed of 40 mph or less, $L = WS^2/60$
For speed of 45 mph or more, $L = WS$

Where: L = Taper length in feet
W = Width of offset in feet
S = Posted speed limit, off-peak 85th-percentile speed prior to work starting, or the anticipated operating speed in mph

** - Use for taper and tangent sections where there are no pavement markings or where there is a conflict between existing pavement markings and channelizers (CA).

TABLE 2

LONGITUDINAL BUFFER SPACE AND FLAGGER STATION SPACING

SPEED *	Min D **	DOWNGRADE Min D ***		
		-3%	-6%	-9%
mph	ft	ft	ft	ft
20	115	116	120	126
25	155	158	165	173
30	200	205	215	227
35	250	257	271	287
40	305	315	333	354
45	360	378	400	427
50	425	446	474	507
55	495	520	553	593
60	570	598	638	686
65	645	682	728	785
70	730	771	825	891

* - Speed is posted speed limit, off-peak 85th-percentile speed prior to work starting, or the anticipated operating speed in mph

** - Longitudinal buffer space or flagger station spacing

*** - Use on sustained downgrade steeper than -3 percent and longer than 1 mile.

TABLE 3

ADVANCE WARNING SIGN SPACING

ROAD TYPE	DISTANCE BETWEEN SIGNS *		
	A	B	C
	ft	ft	ft
URBAN - 25 mph OR LESS	100	100	100
URBAN - MORE THAN 25 mph TO 40 mph	250	250	250
URBAN - MORE THAN 40 mph	350	350	350
RURAL	500	500	500
EXPRESSWAY / FREEWAY	1000	1500	2640

* - The distances are approximate, are intended for guidance purposes only, and should be applied with engineering judgment. These distances should be adjusted by the Engineer for field conditions, if necessary, by increasing or decreasing the recommmended distances.

STATE OF CALIFORNIA
DEPARTMENT OF TRANSPORTATION

TRAFFIC CONTROL SYSTEM FOR LANE CLOSURE ON FREEWAYS AND EXPRESSWAYS

NO SCALE

RSP T9 DATED APRIL 19, 2013 SUPPLEMENTS THE STANDARD PLANS BOOK DATED 2010.

REVISED STANDARD PLAN RSP T9

2010 REVISED STANDARD PLAN RSP T9

1-23-13

Dist	COUNTY	ROUTE	POST MILES TOTAL PROJECT	SHEET No.	TOTAL SHEETS
07	LA	1	8.7	14	50

REGISTERED CIVIL ENGINEER

April 19, 2013
PLANS APPROVAL DATE

REGISTERED PROFESSIONAL ENGINEER Gurinderpal Bhullar No. C48815 Exp. 9-30-14 CIVIL STATE OF CALIFORNIA

THE STATE OF CALIFORNIA OR ITS OFFICERS OR AGENTS SHALL NOT BE RESPONSIBLE FOR THE ACCURACY OR COMPLETENESS OF SCANNED COPIES OF THIS PLAN SHEET.

TO ACCOMPANY PLANS DATED 7-08-13

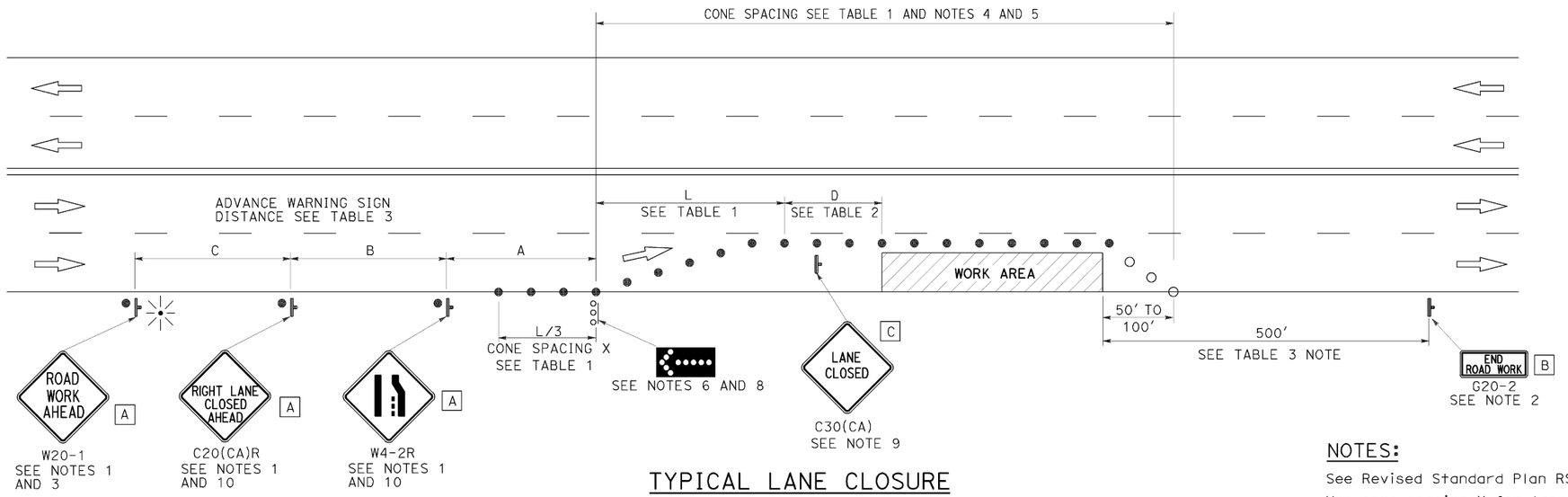

TYPICAL LANE CLOSURE

NOTES:

See Revised Standard Plan RSP T9 for tables.

Use cone spacing X for taper segment, Y for tangent segment or Z for conflict situations, as approriate, per Table 1, unless X, Y, or Z cone spacing is shown on this sheet.

Unless otherwise specified in the special provisions, all temporary warning signs shall have black legend on fluorescent orange background.

California codes are designated by (CA). Otherwise, Federal (MUTCD) codes are shown.

LEGEND

- TRAFFIC CONE
- TRAFFIC CONE (OPTIONAL TAPER)
- TEMPORARY TRAFFIC CONTROL SIGN
- FLASHING ARROW SIGN (FAS)
- FAS SUPPORT OR TRAILER
- PORTABLE FLASHING BEACON

SIGN PANEL SIZE (Min)

A	48" x 48"
B	36" x 18"
C	30" x 30"

NOTES:

1. Each advance warning sign shall be equipped with at least two flags for daytime closure. Each flag shall be at least 16" x 16" in size and shall be orange or fluorescent red-orange in color. Flashing beacons shall be placed at the locations indicated for lane closure during hours of darkness.
2. A G20-2 "END ROAD WORK" sign, as appropriate, shall be placed at the end of the lane closure unless the end of work area is obvious, or ends within a larger project's limits.
3. If the W20-1 sign would follow within 2000' of a stationary W20-1 or G20-1 "ROAD WORK NEXT _____ MILES", use a C20(CA) sign for the first advance warning sign.
4. All cones used for lane closures during the hours of darkness shall be fitted with retroreflective bands (or sleeves) as specified in the specifications.
5. Portable delineators, placed at one-half the spacing indicated for traffic cones, may be used instead of cones for daytime closures only.
6. Flashing arrow sign shall be either Type I or Type II.
7. For approach speeds over 50 mph, use the "Traffic Control System for Lane Closure On Freeways And Expressways" plan for lane closure details and requirements.
8. A minimum 1500' of sight distance shall be provided where possible for vehicles approaching the first flashing arrow sign. Lane closures shall not begin at the top of crest vertical curve or on a horizontal curve.
9. Place a C30(CA) sign every 2000' throughout length of lane closure.
10. Median lane closures shall conform to the details as shown except that C20(CA)L and W4-2L signs shall be used.
11. At least one person shall be assigned to provide full time maintenance of traffic control devices for lane closure unless, otherwise directed by the Engineer.

STATE OF CALIFORNIA
DEPARTMENT OF TRANSPORTATION

TRAFFIC CONTROL SYSTEM FOR LANE CLOSURE ON MULTILANE CONVENTIONAL HIGHWAYS

NO SCALE

RSP T11 DATED APRIL 19, 2013 SUPERSEDES STANDARD PLAN T11
DATED MAY 20, 2011 - PAGE 239 OF THE STANDARD PLANS BOOK DATED 2010.

REVISED STANDARD PLAN RSP T11

2010 REVISED STANDARD PLAN RSP T11

4-2-13

DIST	COUNTY	ROUTE	POST MILES TOTAL PROJECT	SHEET No.	TOTAL SHEETS
07	LA	01	8.7	15	50

REGISTERED CIVIL ENGINEER 03-15-13 DATE

7-08-13
PLANS APPROVAL DATE

REGISTERED PROFESSIONAL ENGINEER Hogni Setberg No. C70338 Exp. 9-30-14 CIVIL STATE OF CALIFORNIA

The State of California or its officers or agents shall not be responsible for the accuracy or completeness of scanned copies of this plan sheet.

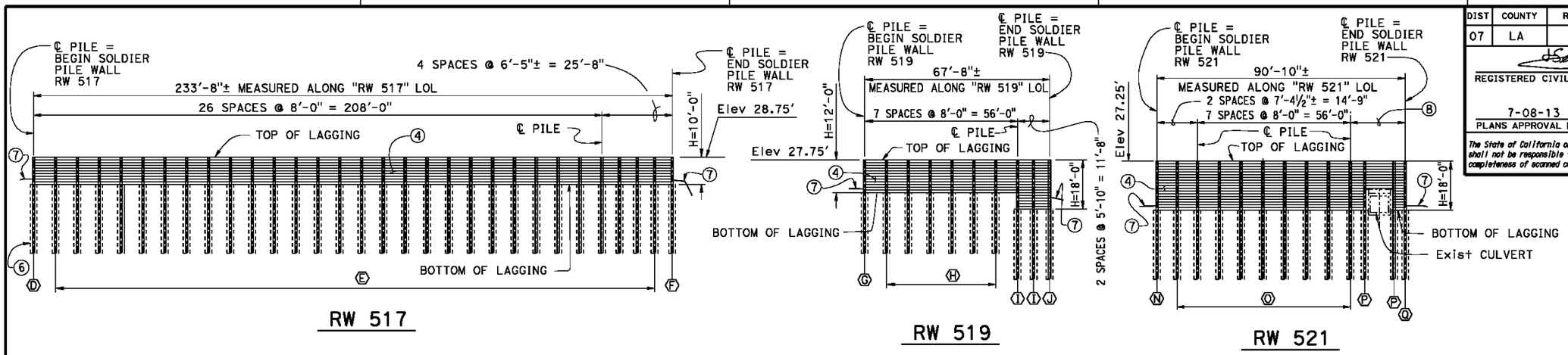

DATUM Elev -50.00'

517+00 518+00 519+00 520+00 521+00 522+00

Legend:

- ⊗ - Indicates pile designation, see "PILE DATA TABLE" on "INDEX TO PLANS" sheet
- Indicates Exist Steel Sheet Pile Removal, see Note 3
- Indicates Exist Metal Crib Wall Removal, see Note 2
- Indicates Exist Concrete Retaining Wall Removal see Note 4
- Indicates Exist Structure

DEVELOPED ELEVATION

1" = 20'-0"

SOLDIER PILE WALLS RW 517, RW 519, AND RW 521

Notes:

1. For information not shown, see "GENERAL PLAN No. 2" and "GENERAL PLAN No. 3" sheets.
2. Not all removal shown for clarity. For details see "CRIB WALL REMOVAL" sheet.
3. For details, see "SOLDIER PILE WALLS DETAILS NO. 9" sheet.
4. Not all removal shown for clarity. For details , see "SOLDIER PILE WALLS DETAILS NO. 15" sheet.
5. For utilities not shown, see "FOUNDATION PLAN" sheet and "Road Plans".
6. For staged construction, see "Road Plans".

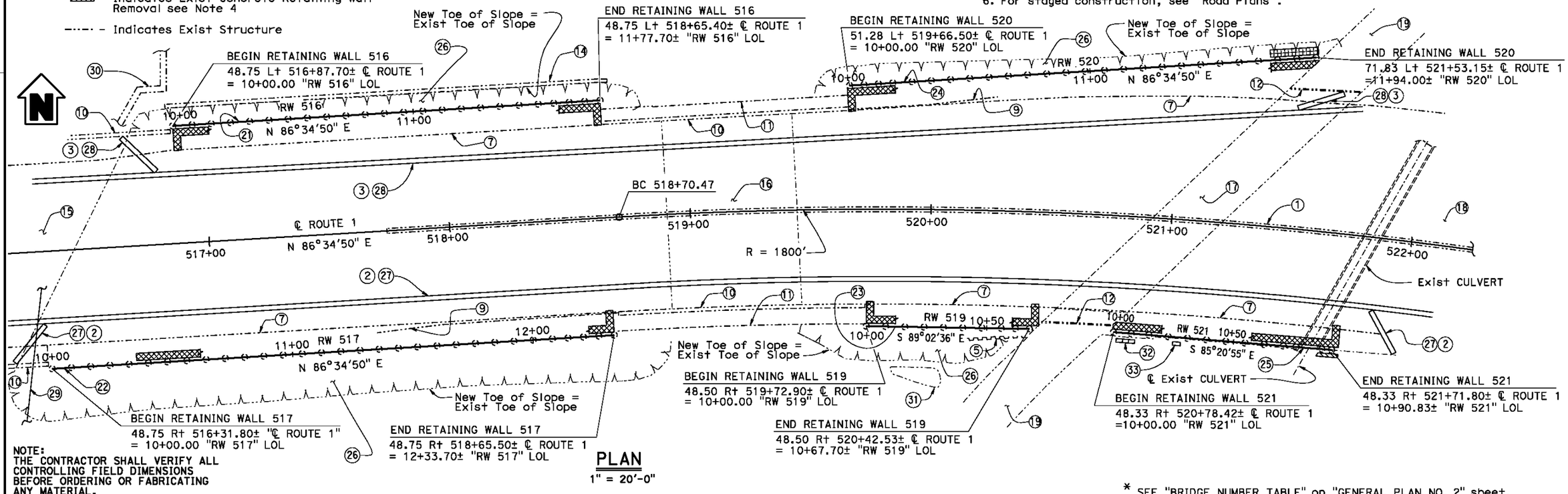

PLAN

1" = 20'-0"

NOTE:
THE CONTRACTOR SHALL VERIFY ALL CONTROLLING FIELD DIMENSIONS BEFORE ORDERING OR FABRICATING ANY MATERIAL.

* SEE "BRIDGE NUMBER TABLE" on "GENERAL PLAN NO. 2" sheet.

DESIGN	BY H. Setberg	CHECKED J. Higareda	LOAD & RESISTANCE FACTOR DESIGN	LIVE LOADING: HL93 W/"LOW-BOY" PERMIT DESIGN VEHICLE	
DETAILS	BY S. Cholda	CHECKED J. Higareda	LAYOUT	BY H. Setberg	CHECKED J. Higareda
QUANTITIES	BY C. Chang/T. Menard	CHECKED S. Moradi/T. Logus/H. Setberg	SPECIFICATIONS	BY K. Doll	PLANS AND SPECS COMPIMPED K. Doll

Traci Holden
DESIGN ENGINEER

ORIGINAL SCALE IN INCHES FOR REDUCED PLANS 0 1 2 3

STATE OF CALIFORNIA
DEPARTMENT OF TRANSPORTATION

DIVISION OF ENGINEERING SERVICES STRUCTURE DESIGN
DESIGN BRANCH 15

BRIDGE NO. *VARIES
POST MILE 8.67-8.77

REFINERY SOLDIER PILE WALLS
GENERAL PLAN NO. 1

UNIT: 3604
PROJECT NUMBER & PHASE: 07120000641
CONTRACT NO.: 07-3x3904

DISREGARD PRINTS BEARING EARLIER REVISION DATES

REVISION DATES 03-08-13 03-14-13 03-19-13 04-23-13

SHEET 1 OF 36

STRUCTURES DESIGN GENERAL PLAN SHEET (ENGLISH) (REV.09-01-10)

FILE => 53e0516_17_19_20_21-a-gp01.dgn

USERNAME => s119982 DATE PLOTTED => 26-JUN-2013 TIME PLOTTED => 14:28

DIST	COUNTY	ROUTE	POST MILES TOTAL PROJECT	SHEET No.	TOTAL SHEETS
07	LA	01	8.7	16	50

REGISTERED CIVIL ENGINEER 03-15-13 DATE

7-08-13
PLANS APPROVAL DATE

REGISTERED PROFESSIONAL ENGINEER Hogni Setberg No. C70338 Exp. 9-30-14 CIVIL STATE OF CALIFORNIA

The State of California or its officers or agents shall not be responsible for the accuracy or completeness of scanned copies of this plan sheet.

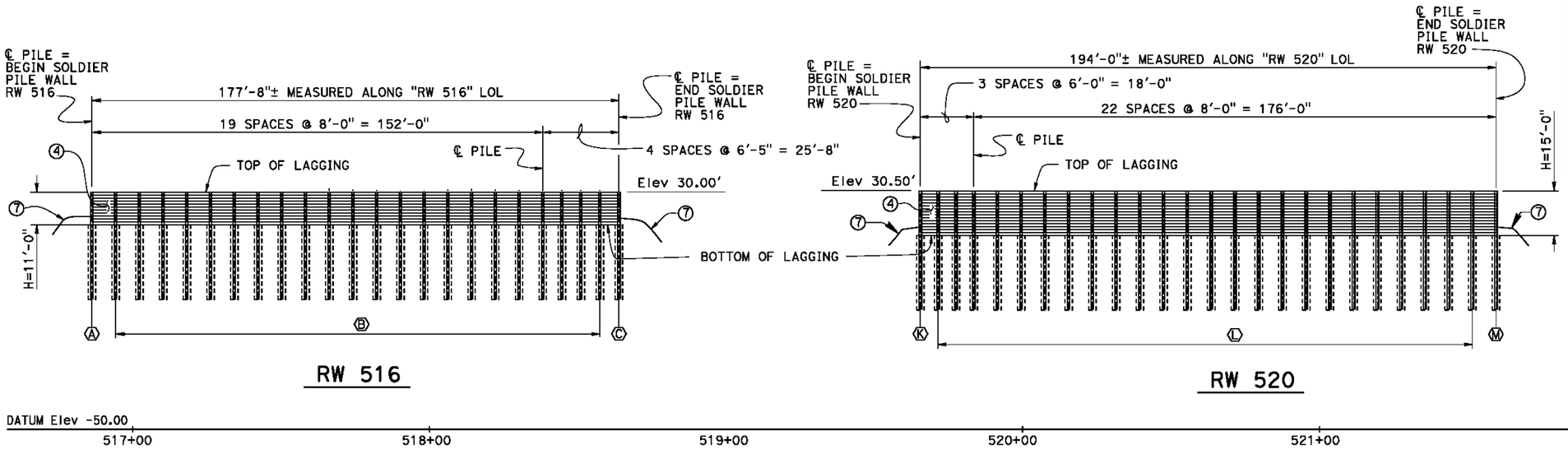

Legend:

Ⓧ - Indicates pile designation see "PILE DETA TABLE" on "INDEX TO PLANS" sheet

DEVELOPED ELEVATION (MIRRORED)

1" = 20'-0"

SOLDIER PILE WALLS RW 516 AND RW 520

NOTES:

1. Exist Concrete Barrier, see "Road Plans"
2. Temporary Railing Type K Stage 1 Construction, see "Road Plans"
3. Temporary Railing Type K, Stage 2 Construction, see "Road Plans""
4. Precast Concrete Lagging, see "LAGGING PANEL DETAILS" sheets.
5. Exist Temporary Sheet Pile Shoring to remain.
6. First steel pile at Begin RW 517 to be spliced to maintain clearance to overhead power utility. For splice details see "MISCELLANEOUS DETAILS"sheet.
7. Sidewalk, see "Road Plans".
8. For pile spacing, see "SOLDIER PILE WALLS DETAILS NO. 13" sheet.
9. Existing MBGR, see "Road Plans".
10. Existing Concrete Barrier on sidewalk, see "Road Plans".
11. Existing Metal Railing.
12. Existing Barrier.
13. Existing 8"± ø Water Pipe inside existing Metal Crib Wall on South side only, protect in place, see "Road Plans". (In some locations the Water Pipe has a 12"± ø casing).
14. Existing concrete wall to remain.
15. Refinery Road UC, Br. No. 53-0356.
16. Pipe Line UC, Br. No. 53-0355.
17. Texaco OH Br. No. 53-2152.
18. Dominguez Channel, Br. No. 53-0719.
19. Depressed rail way.
20. Existing Chain Link Railing, see "Road Plans".
21. Paint "RW 516" and "Br. No. 53E0245".
22. Paint "RW 517" and "Br. No. 53E0246".
23. Paint "RW 519" and "Br. No. 53E0247".
24. Paint "RW 520" and "Br. No. 53E0248".
25. Paint "RW 521" and "Br. No. 53E0249".
26. Exist AC Slope Paving Removal from OG. Place slope paving with Vegetation Control (Asphalt Composite) on FS, for limits, see "SLOPE PAVING DETAILS" sheet.
27. Temporary Chain Link Railing on K-Rail, Stage 1 Construction, see "Road Plans" and "TEMPORARY CHAIN LINK RAILING DETAILS" sheet.
28. Temporary Chain Link Railing on K-Rail, Stage 2 Construction, see "Road Plans" and "TEMPORARY CHAIN LINK RAILING DETAILS" sheet.
29. Overhead power utility to remain. Maintain 12' Min clearance.
30. Above ground oil pipes, protect in place.
31. Well and utilities, protect in place, see "Road Plans".
32. Utility cabinets to be relocated, see "Road Plans".
33. Utility cabinets , protect in place, see "Road Plans".

BRIDGE NUMBER TABLE

BRIDGE NAME	BRIDGE NUMBER
RW 516	53E0245
RW 517	53E0246
RW 519	53E0247
RW 520	53E0248
RW 521	53E0249

NOTE:
THE CONTRACTOR SHALL VERIFY ALL CONTROLLING FIELD DIMENSIONS BEFORE ORDERING OR FABRICATING ANY MATERIAL.

Traci Holden
DESIGN ENGINEER

	BY	CHECKED
DESIGN	H. Setberg	J. Higareda
DETAILS	S. Cholda	J. Higareda
QUANTITIES	C. Chan/T. Menard	S. Moradi/T. Logus/H. Setberg

LOAD & RESISTANCE FACTOR DESIGN — LIVE LOADING: HL93 W/"LOW-BOY"; PERMIT DESIGN VEHICLE

	BY	CHECKED
LAYOUT	H. Setberg	J. Higareda
SPECIFICATIONS	K. Doll	PLANS AND SPECS COMPARED K. Doll

STATE OF CALIFORNIA
DEPARTMENT OF TRANSPORTATION

DIVISION OF ENGINEERING SERVICES
STRUCTURE DESIGN
DESIGN BRANCH 15

BRIDGE NO. VARIES
POST MILE 8.67-8.77

REFINERY SOLDIER PILE WALLS
GENERAL PLAN NO. 2

ORIGINAL SCALE IN INCHES FOR REDUCED PLANS 0 1 2 3

UNIT: 3604
PROJECT NUMBER & PHASE: 07120000641
CONTRACT NO.: 07-3x3904

DISREGARD PRINTS BEARING EARLIER REVISION DATES

REVISION DATES 10-02-12 04-22-13 05-01-13 03-15-13

SHEET 2 OF 36

STRUCTURES DESIGN GENERAL PLAN SHEET (ENGLISH) (REV.09-01-10)

FILE => 53e0516_17_19_20_21-a-gp02.dgn

USERNAME => s119982 DATE PLOTTED => 26-JUN-2013 TIME PLOTTED => 14:28

DIST	COUNTY	ROUTE	POST MILES TOTAL PROJECT	SHEET No.	TOTAL SHEETS
07	LA	01	8.7	17	50

REGISTERED CIVIL ENGINEER 03-15-13 DATE

7-08-13
PLANS APPROVAL DATE

REGISTERED PROFESSIONAL ENGINEER Hogni Setberg No. C70338 Exp. 9-30-14 CIVIL STATE OF CALIFORNIA

The State of California or its officers or agents shall not be responsible for the accuracy or completeness of scanned copies of this plan sheet.

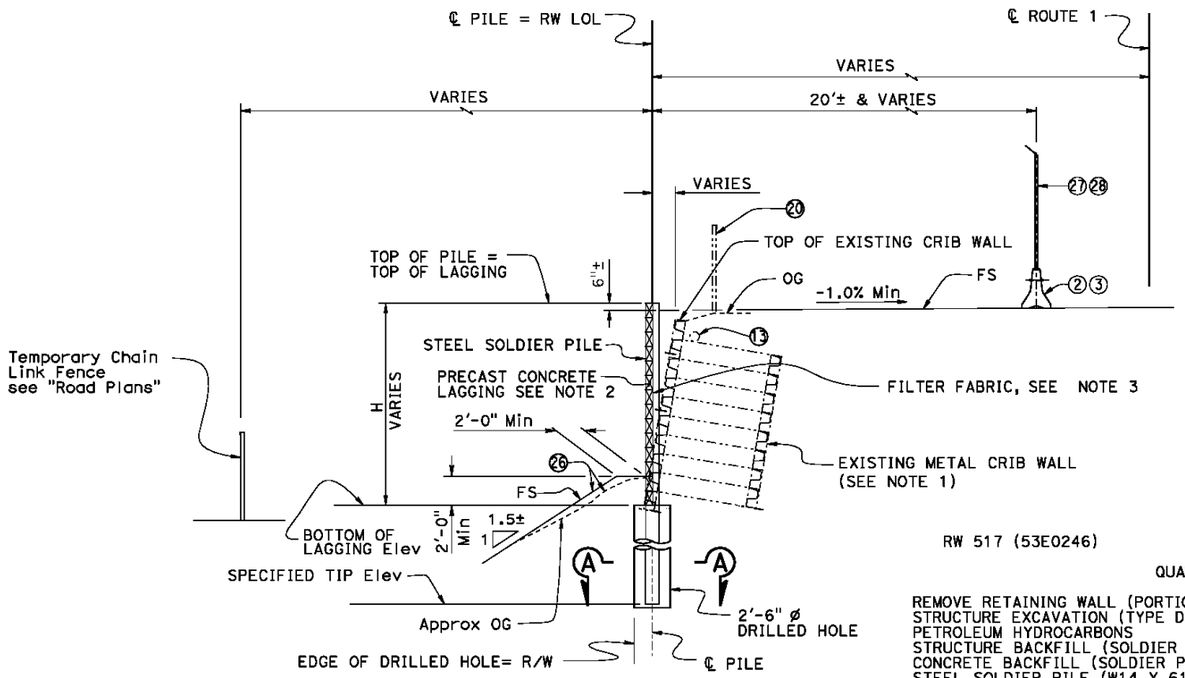

TYPICAL SECTION

1" = 5'-0"

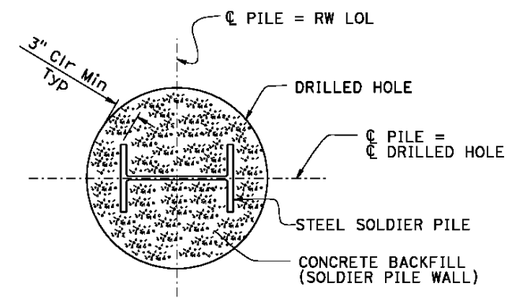

SECTION A-A

NO SCALE

NOTES:

1. Portion of existing Metal Crib Wall to be removed to accommodate Soldier Pile Wall, see "CRIB WALL REMOVAL" sheet.
2. For Precast Concrete Lagging details, see "LAGGING PANEL DETAILS" sheets.
3. Place Filter Fabric behind lagging, between steel piles, full height of wall, see "LAGGING PANEL DETAILS NO. 1" sheet.
4. Typical Section on left side shown looking up station; right side similar.

RW 517 (53E0246)

QUANTITIES

REMOVE RETAINING WALL (PORTION), LOCATION B	LUMP	SUM
STRUCTURE EXCAVATION (TYPE DC) WITH PETROLEUM HYDROCARBONS	235	CY
STRUCTURE BACKFILL (SOLDIER PILE WALL)	250	CY
CONCRETE BACKFILL (SOLDIER PILE WALL)	140	CY
STEEL SOLDIER PILE (W14 X 61)	1,015	LF
STEEL SOLDIER PILE (W18 X 86)	70	LF
30" DRILLED HOLE	780	LF
STRUCTURAL CONCRETE, RETURN WALL	5	CY
PRECAST CONCRETE LAGGING	2,340	SQFT
BAR REINFORCING STEEL (RETURN WALL)	565	LB
CLEAN AND PAINT STEEL SOLDIER PILING	LUMP	SUM
VEGETATION CONTROL (ASPHALT COMPOSITE)	550	SQYD
TEMPORARY CHAIN LINK RAILING	360	LF

RW 520 (53E0248)

QUANTITIES

REMOVE RETAINING WALL (PORTION), LOCATION D	LUMP	SUM
STRUCTURE EXCAVATION (TYPE DC) WITH PETROLEUM HYDROCARBONS	160	CY
STRUCTURE BACKFILL (SOLDIER PILE WALL)	300	CY
CONCRETE BACKFILL (SOLDIER PILE WALL)	120	CY
STEEL SOLDIER PILE (W18 X 106)	960	LF
STEEL SOLDIER PILE (W18 X 158)	80	LF
30" DRILLED HOLE	660	LF
STRUCTURAL CONCRETE, RETURN WALL	7	CY
DRILL AND BOND DOWEL	15	LF
PRECAST CONCRETE LAGGING	2,910	SQFT
BAR REINFORCING STEEL (RETURN WALL)	590	LB
CLEAN AND PAINT STEEL SOLDIER PILING	LUMP	SUM
VEGETATION CONTROL (ASPHALT COMPOSITE)	160	SQYD
TEMPORARY CHAIN LINK RAILING	280	LF

RW 516 (53E0245)

QUANTITIES

REMOVE RETAINING WALL (PORTION), LOCATION A	LUMP	SUM
STRUCTURE EXCAVATION (TYPE DC) WITH PETROLEUM HYDROCARBONS	80	CY
STRUCTURE EXCAVATION (TYPE Z-2), (AERIALLY DEPOSITED LEAD)	60	CY
STRUCTURE BACKFILL (SOLDIER PILE WALL)	210	CY
CONCRETE BACKFILL (SOLDIER PILE WALL)	110	CY
STEEL SOLDIER PILE (W16 X 67)	790	LF
STEEL SOLDIER PILE (W18 X 119)	70	LF
30" DRILLED HOLE	610	LF
STRUCTURAL CONCRETE, RETURN WALL	5	CY
PRECAST CONCRETE LAGGING	1,955	SQFT
BAR REINFORCING STEEL (RETURN WALL)	570	LB
CLEAN AND PAINT STEEL SOLDIER PILING	LUMP	SUM
VEGETATION CONTROL (ASPHALT COMPOSITE)	300	SQYD
TEMPORARY CHAIN LINK RAILING	260	LF

RW 519 (53E0247)

QUANTITIES

REMOVE RETAINING WALL (PORTION), LOCATION C	LUMP	SUM
STRUCTURE EXCAVATION (TYPE DC) WITH PETROLEUM HYDROCARBONS	80	CY
STRUCTURE BACKFILL (SOLDIER PILE WALL)	100	CY
CONCRETE BACKFILL (SOLDIER PILE WALL)	40	CY
STEEL SOLDIER PILE (W18 X 76)	205	LF
STEEL SOLDIER PILE (W18 X 158)	120	LF
STEEL SOLDIER PILE (W18 X 175)	45	LF
30" DRILLED HOLE	230	LF
STRUCTURAL CONCRETE, RETURN WALL	9	CY
DRILL AND BOND DOWEL	5	LF
PRECAST CONCRETE LAGGING	880	SQFT
BAR REINFORCING STEEL (RETURN WALL)	775	LB
CLEAN AND PAINT STEEL SOLDIER PILING	LUMP	SUM
VEGETATION CONTROL (ASPHALT COMPOSITE)	105	SQYD
TEMPORARY CHAIN LINK RAILING	100	LF

RW 521 (53E0249)

QUANTITIES

REMOVE RETAINING WALL (PORTION), LOCATION E	LUMP	SUM
STRUCTURE EXCAVATION (TYPE DC) WITH PETROLEUM HYDROCARBONS	110	CY
STRUCTURE EXCAVATION (TYPE Z-2), (AERIALLY DEPOSITED LEAD)	100	CY
STRUCTURE BACKFILL (SOLDIER PILE WALL)	170	CY
CONCRETE BACKFILL (SOLDIER PILE WALL)	60	CY
STEEL SOLDIER PILE (W18 X 158)	470	LF
STEEL SOLDIER PILE (W18 X 175)	90	LF
30" DRILLED HOLE	330	LF
STRUCTURAL CONCRETE, RETURN WALL	8	CY
DRILL AND BOND DOWEL	3	LF
PRECAST CONCRETE LAGGING	1,635	SQFT
BAR REINFORCING STEEL (RETURN WALL)	665	LB
CLEAN AND PAINT STEEL SOLDIER PILING	LUMP	SUM
TEMPORARY CHAIN LINK RAILING	140	LF

NOTE:
THE CONTRACTOR SHALL VERIFY ALL CONTROLLING FIELD DIMENSIONS BEFORE ORDERING OR FABRICATING ANY MATERIAL.

Traci Holden
DESIGN ENGINEER

	BY	CHECKED
DESIGN	H. Setberg	J. Higareda
DETAILS	S. Cholda	J. Higareda
QUANTITIES	C. Chan/T. Menard	S. Moradi/T. Logus

LOAD & RESISTANCE FACTOR DESIGN — LIVE LOADING: HL93 W/"LOW-BOY", PERMIT DESIGN VEHICLE

LAYOUT — BY H. Setberg — CHECKED J. Higareda

SPECIFICATIONS — BY K. Doll — PLANS AND SPECS COMPARED K. Doll

ORIGINAL SCALE IN INCHES FOR REDUCED PLANS 0 1 2 3

STATE OF CALIFORNIA
DEPARTMENT OF TRANSPORTATION

DIVISION OF ENGINEERING SERVICES
STRUCTURE DESIGN
DESIGN BRANCH 15

BRIDGE NO. VARIES
POST MILE 8.67-8.77

REFINERY SOLDIER PILE WALLS
GENERAL PLAN NO. 3

UNIT: 3604
PROJECT NUMBER & PHASE: 07120000641
CONTRACT NO.: 07-3X3904

DISREGARD PRINTS BEARING EARLIER REVISION DATES 12-27-12 01-22-13 05-01-13 06-26-13

SHEET 3 OF 36

STRUCTURES DESIGN GENERAL PLAN SHEET (ENGLISH) (REV.09-01-10)

FILE => 53e0516_17_19_20_21-a-gp03.dgn

USERNAME => s119982 DATE PLOTTED => 26-JUN-2013 TIME PLOTTED => 14:28

DIST	COUNTY	ROUTE	POST MILES TOTAL PROJECT	SHEET No.	TOTAL SHEETS
07	LA	01	8.7	18	50

REGISTERED CIVIL ENGINEER 03-15-13 DATE

7-08-13
PLANS APPROVAL DATE

REGISTERED PROFESSIONAL ENGINEER Hagni Setberg No. C70338 Exp. 9-30-14 CIVIL STATE OF CALIFORNIA

The State of California or its officers or agents shall not be responsible for the accuracy or completeness of scanned copies of this plan sheet.

INDEX TO PLANS

SHEET NO.	TITLE
1.	GENERAL PLAN NO. 1
2.	GENERAL PLAN NO. 2
3.	GENERAL PLAN NO. 3
4.	INDEX TO PLANS
5.	FOUNDATION PLAN
6.	CRIB WALL REMOVAL
7.	SOLDIER PILE WALLS DETAILS NO.1
8.	SOLDIER PILE WALLS DETAILS NO.2
9.	SOLDIER PILE WALLS DETAILS NO.3
10.	SOLDIER PILE WALLS DETAILS NO.4
11.	SOLDIER PILE WALLS DETAILS NO.5
12.	SOLDIER PILE WALLS DETAILS NO.6
13.	SOLDIER PILE WALLS DETAILS NO.7
14.	SOLDIER PILE WALLS DETAILS NO.8
15.	SOLDIER PILE WALLS DETAILS NO.9
16.	SOLDIER PILE WALLS DETAILS NO.10
17.	SOLDIER PILE WALLS DETAILS NO.11
18.	SOLDIER PILE WALLS DETAILS NO.12
19.	SOLDIER PILE WALLS DETAILS NO.13
20.	SOLDIER PILE WALLS DETAILS NO.14
21.	SOLDIER PILE WALLS DETAILS NO.15
22.	LAGGING PANEL DETAILS NO.1
23.	LAGGING PANEL DETAILS NO.2
24.	MISCELLANEOUS DETAILS
25.	SLOPE PAVING DETAILS
26.	TEMPORARY CHAIN LINK RAILING NO. 1
27.	TEMPORARY CHAIN LINK RAILING NO. 2
28.	EXCAVATION AND BACKFILL RW 516
29.	EXCAVATION AND BACKFILL RW 517
30.	EXCAVATION AND BACKFILL RW 519
31.	EXCAVATION AND BACKFILL RW 520
32.	EXCAVATION AND BACKFILL RW 521
33.	LOG OF TEST BORINGS 1 OF 4
34.	LOG OF TEST BORINGS 2 OF 4
35.	LOG OF TEST BORINGS 3 OF 4
36.	LOG OF TEST BORINGS 4 OF 4

STANDARD PLANS DATED 2010

A10A	ABBREVIATIONS (SHEET 1 OF 2)
A10B	ABBREVIATIONS (SHEET 2 OF 2)
A10F	LEGEND-SOIL (SHEET 1 OF 2)
A10G	LEGEND-SOIL (SHEET 2 OF 2)
A10H	LEGEND-ROCK
T3A	TEMPORARY RAILING (TYPE K)
T3B	TEMPORARY RAILING (TYPE K)

STANDARD PLAN SHEET No.

DETAIL No.

GENERAL NOTES
LOAD AND RESISTANCE FACTOR DESIGN

DESIGN: AASHTO LRFD BRIDGE DESIGN SPECIFICATIONS, 4th Edition and California Amendments, dated December 2008

LIVE LOADING: 240 psf Surcharge

SEISMIC LOADING: $k_h = .02$, $k_v = 0.0$

REINFORCED CONCRETE: $f_y = 60$ ksi
$f'_c = 3.6$ ksi

PRECAST CONCRETE: $f_y = 60$ ksi
$f'_c = 4$ ksi

STRUCTURAL STEEL: $f_y = 50$ ksi
(ASTM A572 Grade 50)

SOIL PARAMETERS: See "Soil Parameters Table"

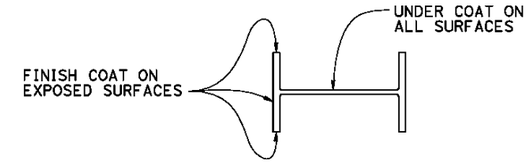

SECTION A-A
NO SCALE

SOIL PARAMETERS TABLE			
RW No.	Soil	γ (pcf)	ø (degrees)
516	(Fill)	120	31
	(Native)		29
517	(Fill)	125	30
	(Native)	120	
519		120	31
520		120	30
521		125	32

PILE DATA TABLE				
Location	Pile Designation	Steel Pile Type	Drilled Hole Diameter	Specified Tip Elevation
RW 516	A	W18X119	2.5 ft	-6.00 ft
	B	W16X67	2.5 ft	-6.00 ft
	C	W18X119	2.5 ft	-6.00 ft
RW 517	D	W18X86	2.5 ft	-6.25 ft
	E	W14X61	2.5 ft	-6.25 ft
	F	W18X86	2.5 ft	-6.25 ft
RW 519	G	W18X158	2.5 ft	-6.25 ft
	H	W18X76	2.5 ft	-6.25 ft
	I	W18X158	2.5 ft	-15.75 ft
	J	W18X175	2.5 ft	-15.75 ft
RW 520	K	W18X158	2.5 ft	-9.50 ft
	L	W18X106	2.5 ft	-9.50 ft
	M	W18X158	2.5 ft	-9.50 ft
RW 521	N	W18X175	2.5 ft	-15.75 ft
	O	W18X158	2.5 ft	-15.75 ft
	P	W18X158	2.5 ft	-15.75 ft
	Q	W18X175	2.5 ft	-15.75 ft

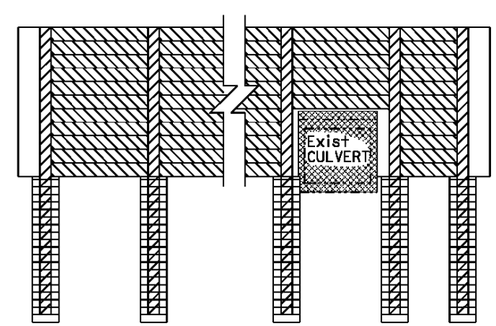

LEGEND:

- Structural Concrete, Return Wall
- Precast Concrete, Lagging, 4 ksi @ 28 Days
- Concrete Backfill, Soldier Pile Wall
- Structural Steel

CONCRETE STRENGTH AND TYPE LIMITS
NO SCALE

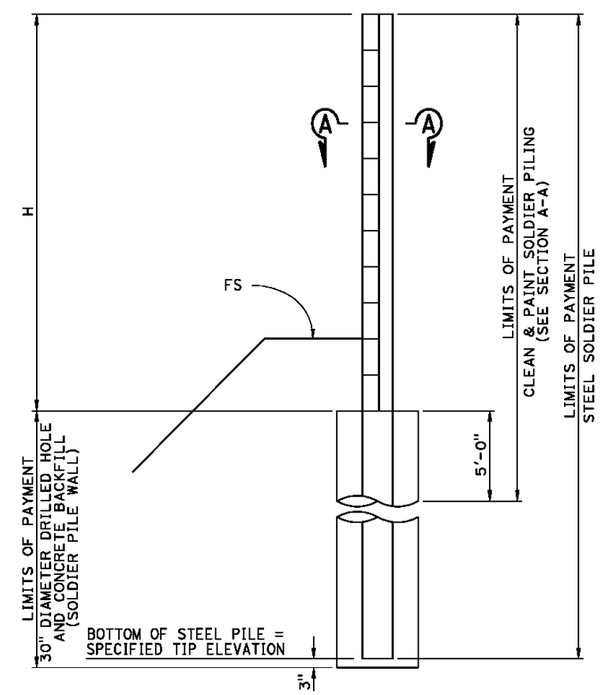

LIMITS OF PAYMENT SOLDIER PILE
NO SCALE

NOTE:
THE CONTRACTOR SHALL VERIFY ALL CONTROLLING FIELD DIMENSIONS BEFORE ORDERING OR FABRICATING ANY MATERIAL.

	BY	CHECKED
DESIGN	H. Setberg	J. Higareda
DETAILS	H. Mauroschadt/S. Cholda	J. Higareda
QUANTITIES	C. Chan	S. Moradi

STATE OF CALIFORNIA
DEPARTMENT OF TRANSPORTATION

DIVISION OF ENGINEERING SERVICES
STRUCTURE DESIGN
DESIGN BRANCH 15

BRIDGE NO. VARIES
POST MILE 8.67-8.77

REFINERY SOLDIER PILE WALLS
INDEX TO PLANS

STRUCTURES DESIGN DETAIL SHEET (ENGLISH) (REV. 09-01-10)

ORIGINAL SCALE IN INCHES FOR REDUCED PLANS 0 1 2 3

UNIT: 3604
PROJECT NUMBER & PHASE: 07120000641
CONTRACT NO.: 07-3X3904

DISREGARD PRINTS BEARING EARLIER REVISION DATES

REVISION DATES 11-28-12 03-14-13 04-23-13 05-06-13

SHEET 4 OF 36

FILE => 53e0516_17_19_20_21-a-ltp.dgn

USERNAME => s119882 DATE PLOTTED => 26-JUN-2013 TIME PLOTTED => 14:28

DIST	COUNTY	ROUTE	POST MILES TOTAL PROJECT	SHEET No.	TOTAL SHEETS
07	LA	01	8.7	19	50

REGISTERED CIVIL ENGINEER 03-15-13 DATE

7-08-13
PLANS APPROVAL DATE

REGISTERED PROFESSIONAL ENGINEER Hognl Setberg No. C70338 Exp. 9-30-14 CIVIL STATE OF CALIFORNIA

The State of California or its officers or agents shall not be responsible for the accuracy or completeness of electronic copies of this plan sheet.

CURVE DATA				
No.	R	Δ	T	L
(A)	1800.00'	36°03'45"	585.94'	1132.94'

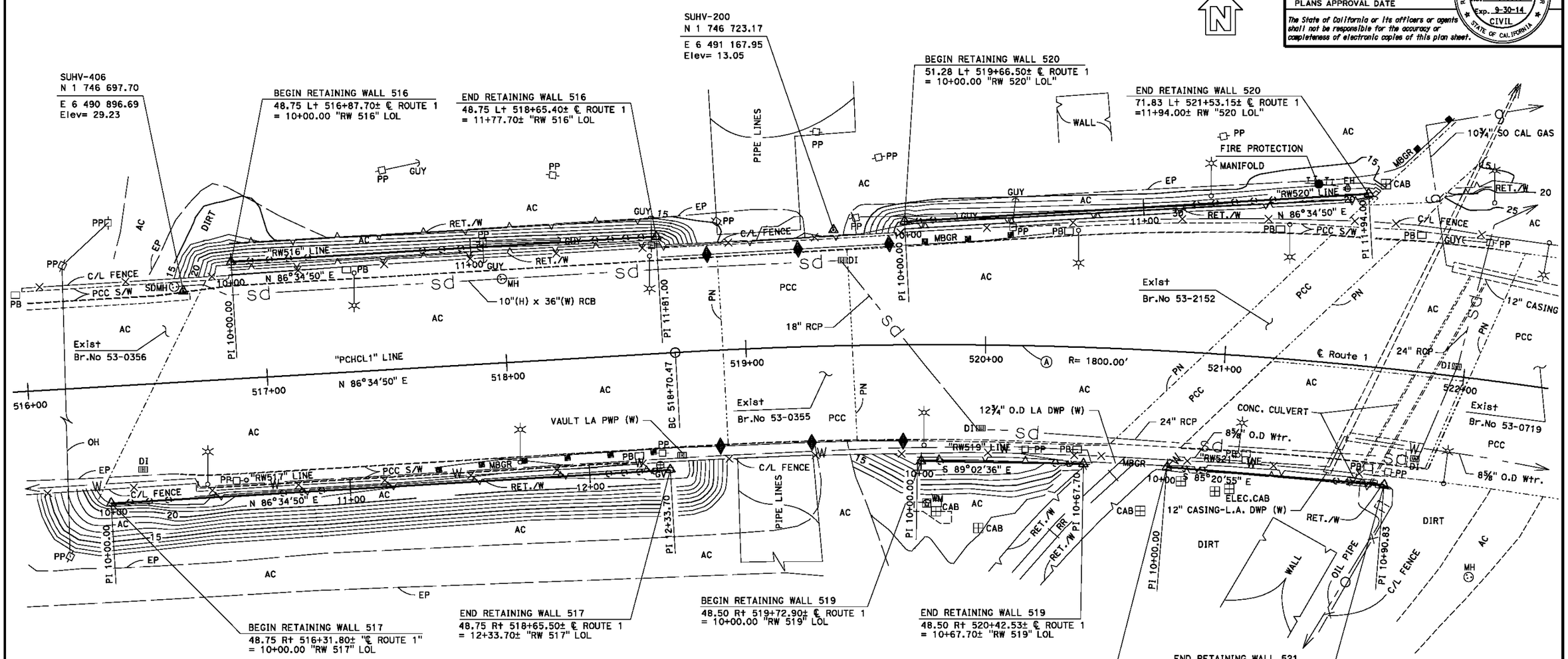

SURVEY CONTROL

SUHV-406
FND: Nail and Tin
37.85 Ft Lt "PCHCL1" Line
Sta 516+67.10
N 1 746 697.70
E 6 490 896.69
Elev= 29.23

SUHV-200
FND: Set PK/AC
48.34 Ft Lt "PCHCL1" Line
Sta 519+37.64
N 1 746 723.17
E 6 491 167.95
Elev= 13.05

NOTE:
THE CONTRACTOR SHALL VERIFY ALL CONTROLLING FIELD DIMENSIONS BEFORE ORDERING OR FABRICATING ANY MATERIAL.

NOTES:
1. UNDERGROUND UTILITIES AS SHOWN ARE APPROXIMATE.
2. NOT ALL SOLDIER PILES SHOWN FOR CLARITY.

PRELIMINARY INVESTIGATION SECTION

SCALE 1"=20'	VERT.DATUM NAVD88	PHOTOGRAMMETRY AS OF: X		
HORZ.DATUM NAD83 (1991.35)	SURVEYED	BY DIST.07	CHECKED	BY T.PHUNG 06/2012
ALIGNMENT TIES Dist. Traverse Sheet	DRAFTED	BY V.PHAM 07/2012	CHECKED	BY S.ALIVIO 07/2012

DESIGN	BY H. Setberg	CHECKED J. Higareda
DETAILS	BY S. Cholda	CHECKED J. Higareda
QUANTITIES	BY C. Chan/T. Menard	CHECKED H. Setberg/A. Logus

STATE OF CALIFORNIA
DEPARTMENT OF TRANSPORTATION

DIVISION OF ENGINEERING SERVICES
STRUCTURE DESIGN
DESIGN BRANCH 15

BRIDGE NO. VARIES
POST MILE 8.67-8.77

REFINERY SOLDIER PILE WALLS
FOUNDATION PLAN

STRUCTURES FOUNDATION PLAN SHEET (ENGLISH) (REV. 09-01-10)

ORIGINAL SCALE IN INCHES FOR REDUCED PLANS 0 1 2 3

UNIT: 3604
PROJECT NUMBER & PHASE: 071200000641
CONTRACT NO.: 007-3X3904

DISREGARD PRINTS BEARING EARLIER REVISION DATES

REVISION DATES 07/20/12 04/25/13 05-01-13 02-15-13

SHEET 5 OF 36

FILE => 53e0516_17_19_20_21-e-fp.dgn

DIST	COUNTY	ROUTE	POST MILES TOTAL PROJECT	SHEET No.	TOTAL SHEETS
07	LA	01	8.7	20	50

REGISTERED CIVIL ENGINEER 03-15-13 DATE

7-08-13
PLANS APPROVAL DATE

REGISTERED PROFESSIONAL ENGINEER Hogni Setberg No. C70338 Exp. 9-30-14 CIVIL STATE OF CALIFORNIA

The State of California or its officers or agents shall not be responsible for the accuracy or completeness of scanned copies of this plan sheet.

Notes:

1. Double layer of front Stringer Panels.
2. Entire front face Stringer Panels may not need to be removed at all locatios. Remove enough to accomodate new Soldier Pile Wall or as directed by the Engineer.
3. Entire End Spacer Panel may not need to be removed at all locations. Removed enough to accomodate new Return Wall or as directed by the Engineer.

LEGEND:

- Indicates Exist Metal Crib Wall Removal

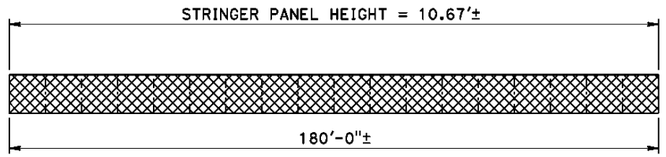

MIRRORED ELEVATION @ RW 516

1" = 20'-0"

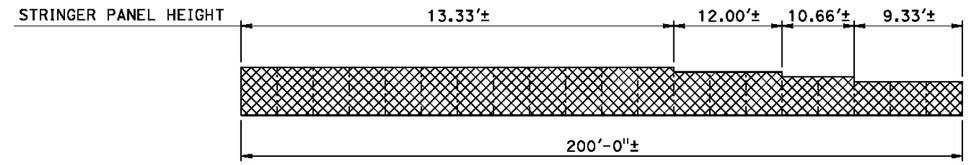

MIRRORED ELEVATION @ RW 520

1" = 20'-0"

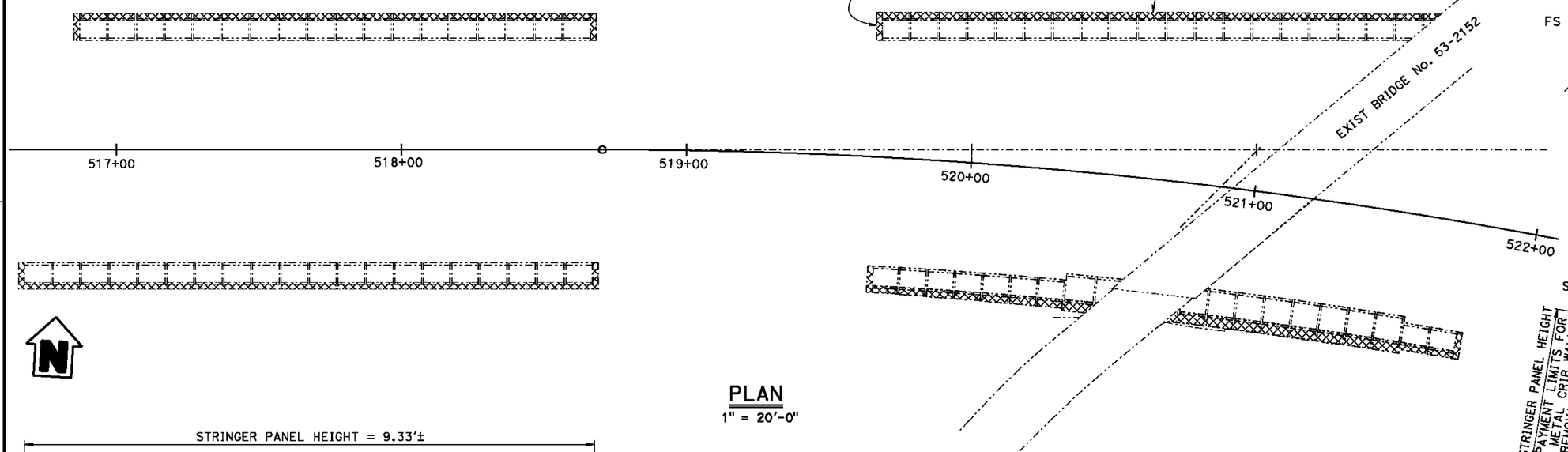

PLAN

1" = 20'-0"

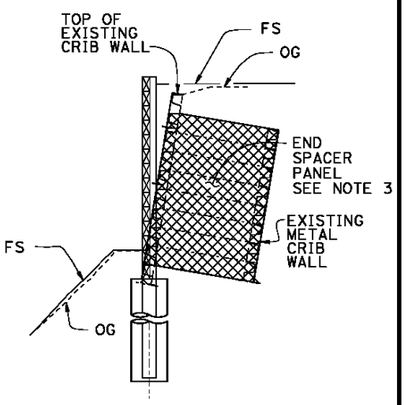

REMOVAL TYPICAL END OF WALL SECTION

NO SCALE

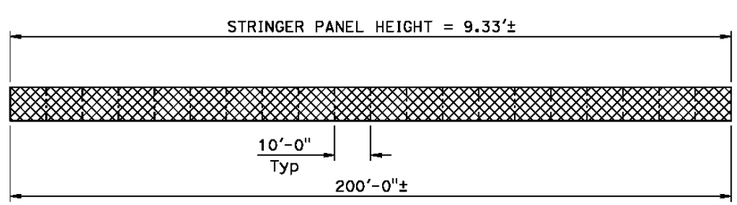

ELEVATION @ RW 517

1" = 20'-0"

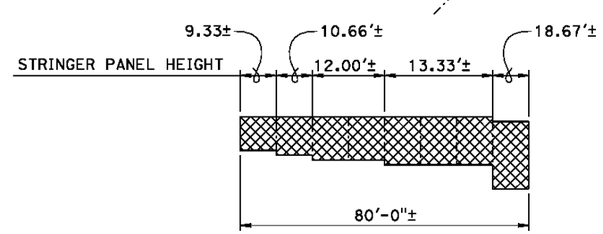

ELEVATION @ RW 519

1" = 20'-0"

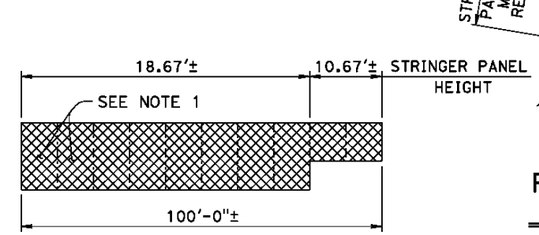

ELEVATION @ RW 521

1" = 20'-0"

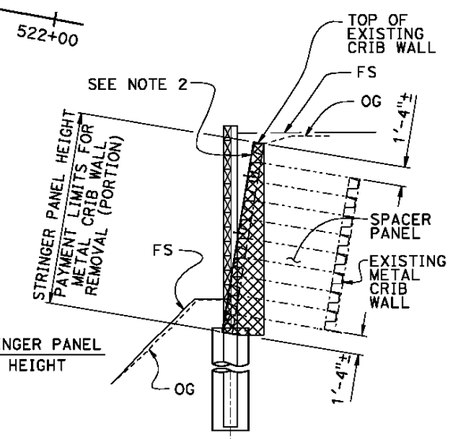

REMOVAL TYPICAL WALL SECTION

NO SCALE

NOTE:
THE CONTRACTOR SHALL VERIFY ALL CONTROLLING FIELD DIMENSIONS BEFORE ORDERING OR FABRICATING ANY MATERIAL.

	BY	CHECKED
DESIGN	H. Setberg	J. Higareda
DETAILS	H. Mauroschadt	J. Higareda
QUANTITIES	T. Menard	A. Logus

STATE OF CALIFORNIA
DEPARTMENT OF TRANSPORTATION

DIVISION OF ENGINEERING SERVICES
STRUCTURE DESIGN
DESIGN BRANCH 15

BRIDGE NO. VARIES
POST MILE 8.67-8.77

REFINERY SOLDIER PILE WALLS
CRIB WALL REMOVAL

STRUCTURES DESIGN DETAIL SHEET (ENGLISH) (REV. 09-01-10)

ORIGINAL SCALE IN INCHES FOR REDUCED PLANS 0 1 2 3

UNIT: 3604
PROJECT NUMBER & PHASE: 07120000641
CONTRACT NO.: 07-3x3904

DISREGARD PRINTS BEARING EARLIER REVISION DATES

REVISION DATES 11-16-12 05-01-13 02-21-13 03-15-13

SHEET 6 OF 36

FILE => 53e0516_17_19_20_21-f-rem.dgn

USERNAME => a119882 DATE PLOTTED => 26-JUN-2013 TIME PLOTTED => 14:28

DIST	COUNTY	ROUTE	POST MILES TOTAL PROJECT	SHEET No.	TOTAL SHEETS
07	LA	01	8.7	21	50

REGISTERED CIVIL ENGINEER 03-15-13 DATE

7-08-13
PLANS APPROVAL DATE

REGISTERED PROFESSIONAL ENGINEER Hogni Setberg No. C70338 Exp. 9-30-14 CIVIL STATE OF CALIFORNIA

The State of California or its officers or agents shall not be responsible for the accuracy or completeness of scanned copies of this plan sheet.

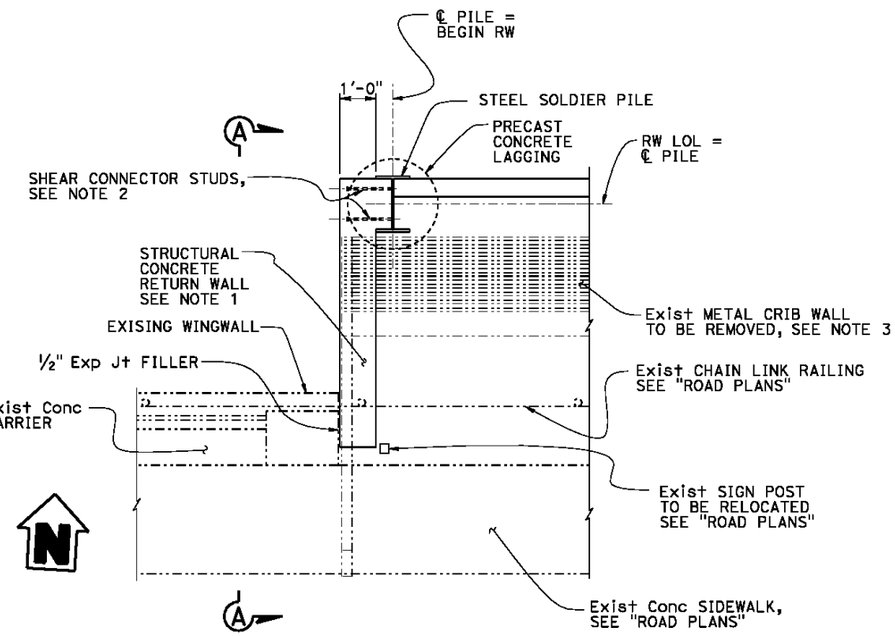

PLAN
½" = 1'-0"

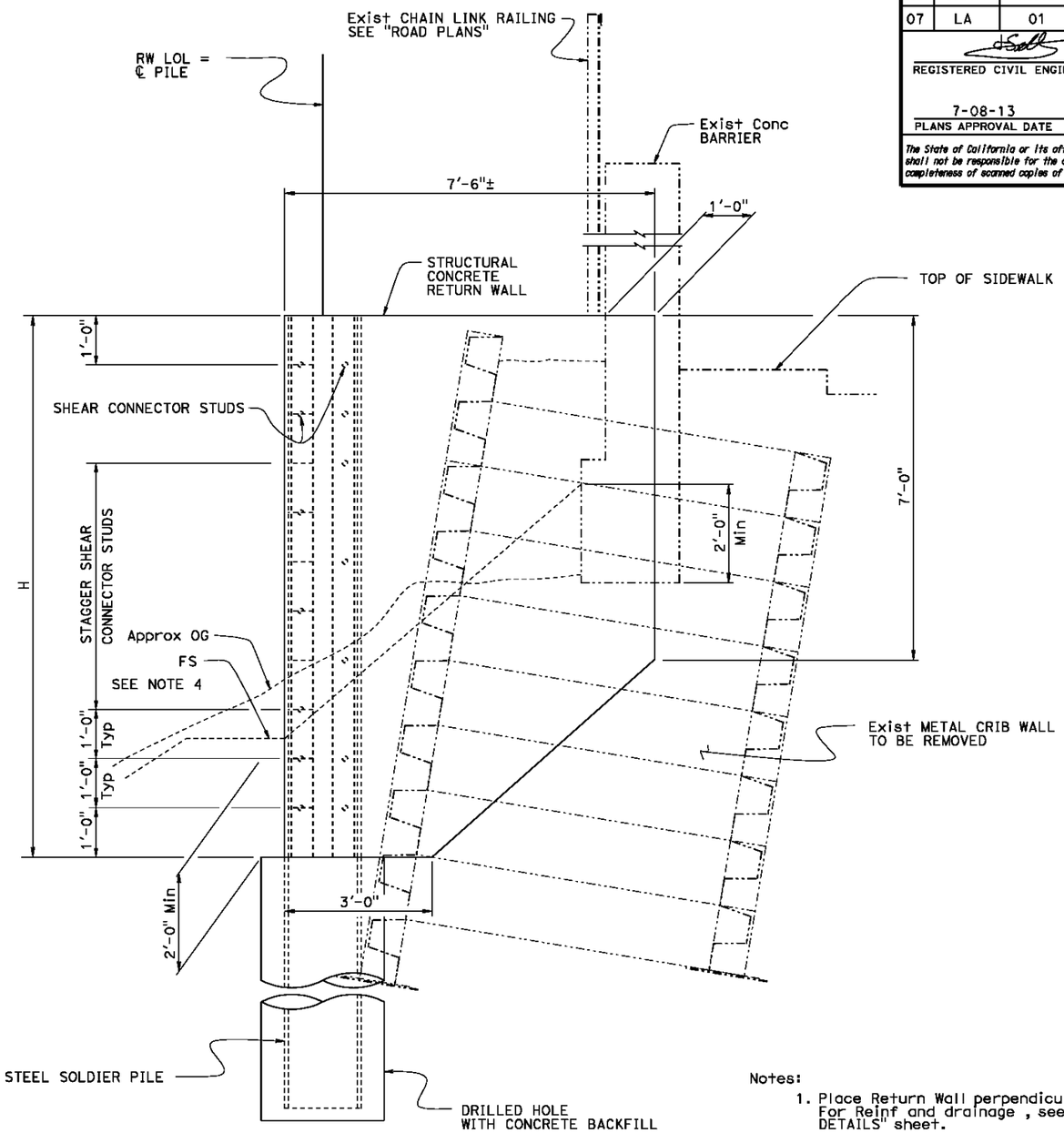

VIEW A-A
¾" = 1'-0"

Notes:

1. Place Return Wall perpendicular to RW LOL. For Reinf and drainage , see"MISCELLANEOUS DETAILS" sheet.
2. For Shear Connector Stud details, see"SHEAR CONNECTOR STUDS" detail on "MISCELLANEOUS DETAILS" sheet.
3. For details, see "CRIB WALL REMOVAL" sheet.
4. Place FS at Return Wall as shown or as directed by the Engineer.

NOTE:
THE CONTRACTOR SHALL VERIFY ALL CONTROLLING FIELD DIMENSIONS BEFORE ORDERING OR FABRICATING ANY MATERIAL.

RETURN WALL DETAILS
BEGIN RW 516

	BY	CHECKED
DESIGN	H. Setberg	J. Higareda
DETAILS	S. Cholda	J. Higareda
QUANTITIES	C. Chan	H. Setberg

STATE OF CALIFORNIA
DEPARTMENT OF TRANSPORTATION

DIVISION OF ENGINEERING SERVICES
STRUCTURE DESIGN
DESIGN BRANCH 15

BRIDGE NO. 53E0245
POST MILE 8.76

REFINERY SOLDIER PILE WALLS
SOLDIER PILE WALLS DETAILS NO. 1

STRUCTURES DESIGN DETAIL SHEET (ENGLISH) (REV. 09-01-10)

ORIGINAL SCALE IN INCHES FOR REDUCED PLANS 0 1 2 3

UNIT: 3604
PROJECT NUMBER & PHASE: 07120000641
CONTRACT NO.: 07-3X3904

DISREGARD PRINTS BEARING EARLIER REVISION DATES

REVISION DATES 11-18-12 04-23-13 02-18-13 03-15-13

SHEET 7 OF 36

FILE => 53e0516_17_19_20_21-g-rwdt01.dgn

USERNAME => s119982 DATE PLOTTED => 26-JUN-2013 TIME PLOTTED => 14:28

DIST	COUNTY	ROUTE	POST MILES TOTAL PROJECT	SHEET No.	TOTAL SHEETS
07	LA	01	8.7	22	50

REGISTERED CIVIL ENGINEER 03-15-13 DATE

7-08-13
PLANS APPROVAL DATE

REGISTERED PROFESSIONAL ENGINEER Hogni Setberg No. C70338 Exp. 9-30-14 CIVIL STATE OF CALIFORNIA

The State of California or its officers or agents shall not be responsible for the accuracy or completeness of scanned copies of this plan sheet.

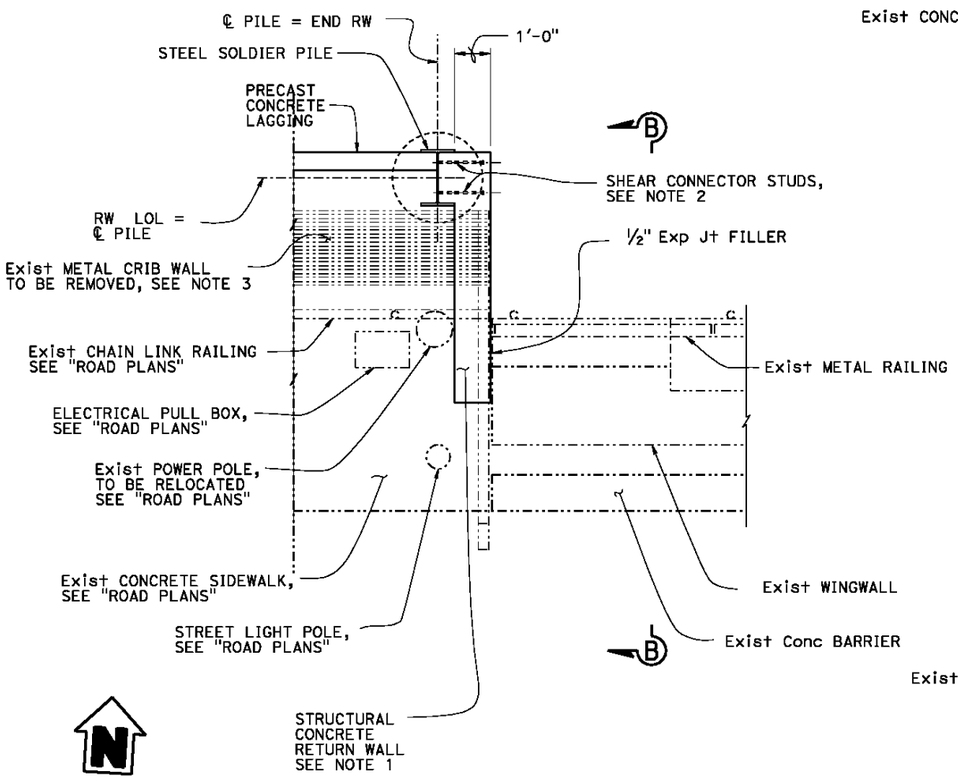

PLAN
½" = 1'-0"

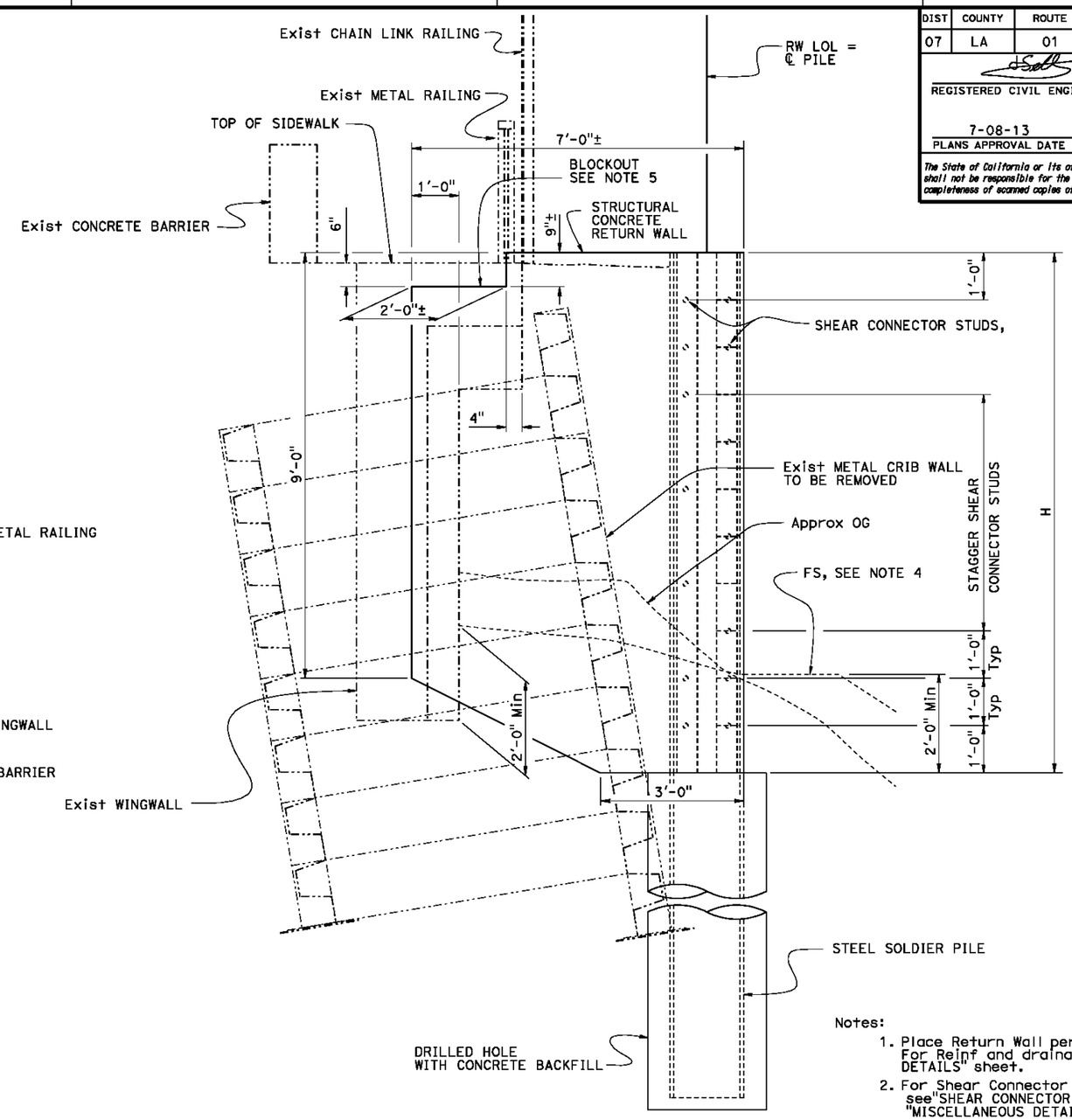

VIEW B-B
¾" = 1'-0"

Notes:

1. Place Return Wall perpendicular to RW LOL. For Reinf and drainage , see"MISCELLANEOUS DETAILS" sheet.
2. For Shear Connector Stud details, see"SHEAR CONNECTOR STUDS" detail on "MISCELLANEOUS DETAILS" sheet.
3. For details, see "CRIB WALL REMOVAL" sheet.
4. Place FS at Return Wall as shown or as directed by the Engineer.
5. For Blockout Reinf see "MISCELLANEOUS DETAIL" sheet.

NOTE:
THE CONTRACTOR SHALL VERIFY ALL CONTROLLING FIELD DIMENSIONS BEFORE ORDERING OR FABRICATING ANY MATERIAL.

RETURN WALL DETAILS
END RW 516

	BY	CHECKED
DESIGN	H. Setberg	J. Higareda
DETAILS	S. Cholda	J. Higareda
QUANTITIES	C. Chan	H. Setberg

STATE OF CALIFORNIA
DEPARTMENT OF TRANSPORTATION

DIVISION OF ENGINEERING SERVICES
STRUCTURE DESIGN
DESIGN BRANCH 15

BRIDGE NO. 53E0245
POST MILE 8.76

REFINERY SOLDIER PILE WALLS
SOLDIER PILE WALLS DETAILS NO. 2

STRUCTURES DESIGN DETAIL SHEET (ENGLISH) (REV. 09-01-10)

ORIGINAL SCALE IN INCHES FOR REDUCED PLANS 0 1 2 3

UNIT: 3604
PROJECT NUMBER & PHASE: 07120000641
CONTRACT NO.: 07-3X3904

DISREGARD PRINTS BEARING EARLIER REVISION DATES

REVISION DATES: 10-31-12 02-21-13 03-13-13 04-23-13

SHEET 8 OF 36

FILE => 53e0516_17_19_20_21-g-rwd02.dgn

USERNAME => a119882 DATE PLOTTED => 26-JUN-2013 TIME PLOTTED => 14:28

DIST	COUNTY	ROUTE	POST MILES TOTAL PROJECT	SHEET No.	TOTAL SHEETS
07	LA	01	8.7	23	50

REGISTERED CIVIL ENGINEER 03-15-13 DATE

7-08-13
PLANS APPROVAL DATE

REGISTERED PROFESSIONAL ENGINEER Hogni Setberg No. C70338 Exp. 9-30-14 CIVIL STATE OF CALIFORNIA

The State of California or its officers or agents shall not be responsible for the accuracy or completeness of scanned copies of this plan sheet.

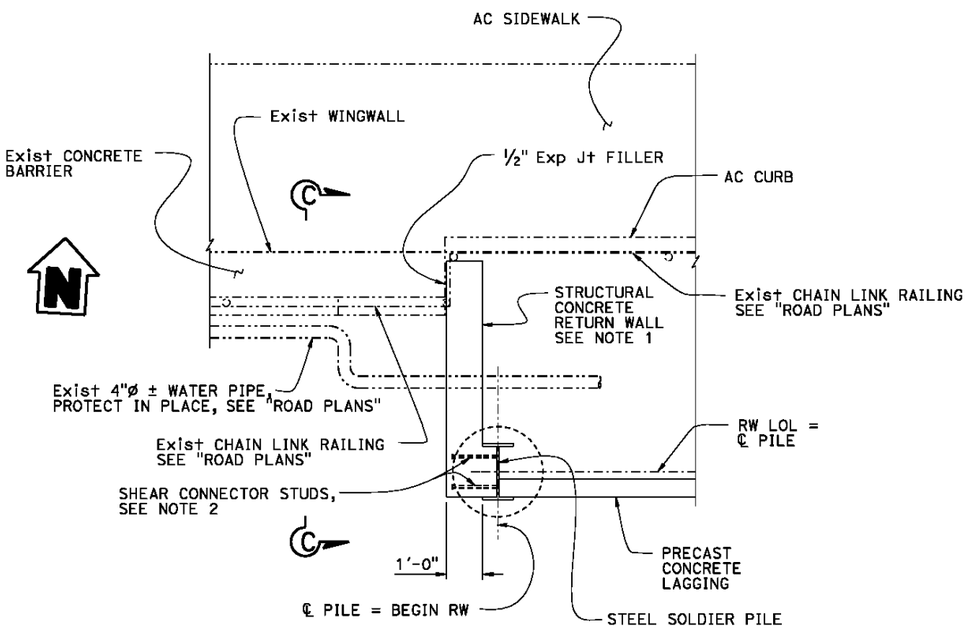

PLAN
½" = 1'-0"

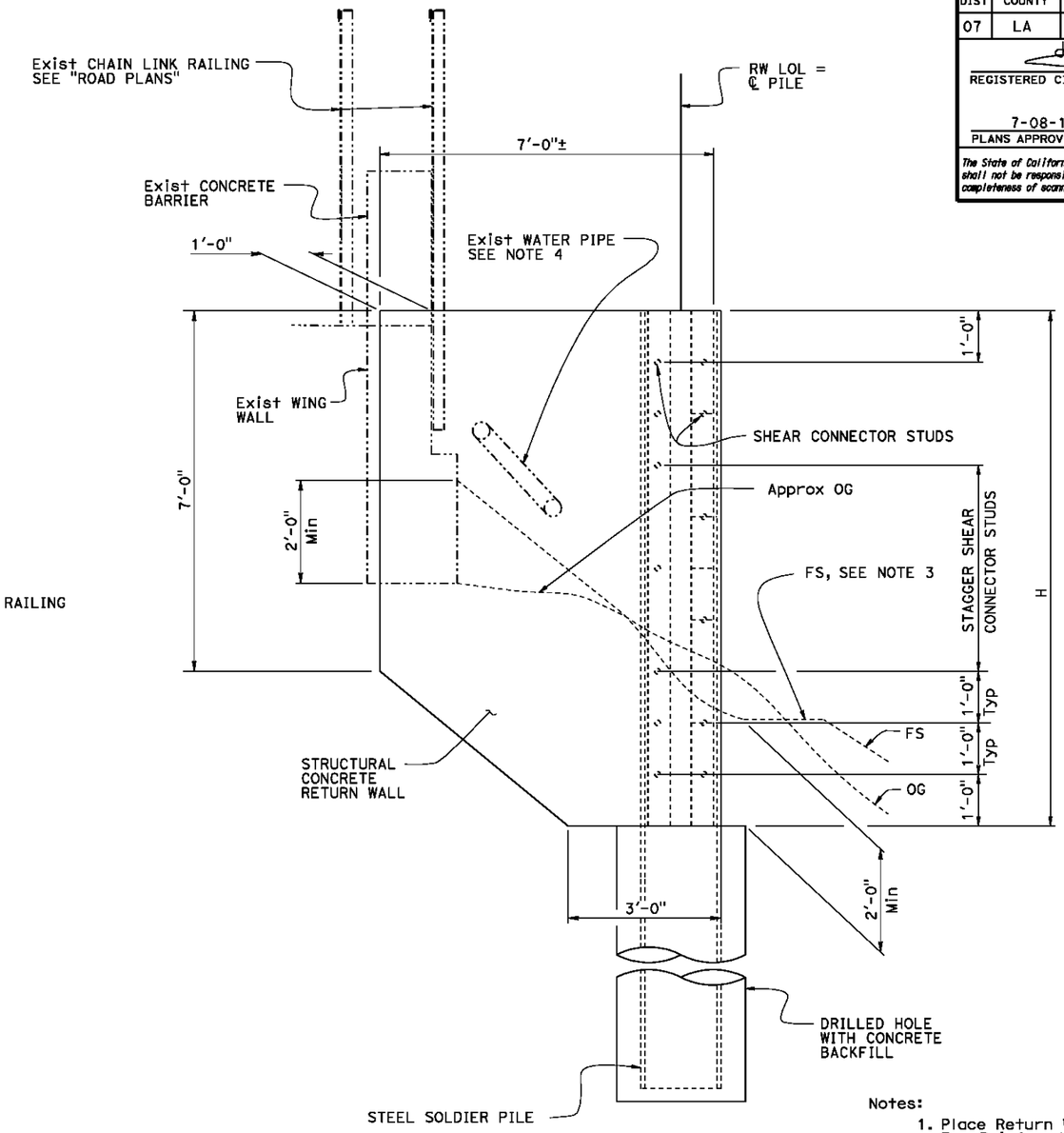

VIEW C-C
¾" = 1'-0"

Notes:

1. Place Return Wall perpendicular to RW LOL. For Reinf and drainage , see"MISCELLANEOUS DETAILS" sheet.
2. For Shear Connector Stud details, see"SHEAR CONNECTOR STUDS" detail on "MISCELLANEOUS DETAILS" sheet.
3. Place FS at Return Wall as shown or as directed by the Engineer.
4. For utility opening Reinf, see "MISCELLANEOUS DETAILS" sheet.

NOTE:
THE CONTRACTOR SHALL VERIFY ALL CONTROLLING FIELD DIMENSIONS BEFORE ORDERING OR FABRICATING ANY MATERIAL.

RETURN WALL DETAILS
BEGIN RW 517

	BY	CHECKED
DESIGN	H. Setberg	J. Higareda
DETAILS	S. Cholda	J. Higareda
QUANTITIES	C. Chan	H. Setberg

STATE OF CALIFORNIA
DEPARTMENT OF TRANSPORTATION

DIVISION OF ENGINEERING SERVICES
STRUCTURE DESIGN
DESIGN BRANCH 15

BRIDGE NO. 53E0246
POST MILE 8.77

REFINERY SOLDIER PILE WALLS
SOLDIER PILE WALLS DETAILS NO. 3

STRUCTURES DESIGN DETAIL SHEET (ENGLISH) (REV. 09-01-10)

ORIGINAL SCALE IN INCHES FOR REDUCED PLANS 0 1 2 3

UNIT: 3604
PROJECT NUMBER & PHASE: 07120000641
CONTRACT NO.: 07-3X3904

DISREGARD PRINTS BEARING EARLIER REVISION DATES

REVISION DATES: 11-08-12 02-21-13 03-13-13 04-23-13

SHEET 9 OF 36

FILE => 53e0516_17_19_20_21-g-rwdt03.dgn

USERNAME => a119882 DATE PLOTTED => 26-JUN-2013 TIME PLOTTED => 14:28

DIST	COUNTY	ROUTE	POST MILES TOTAL PROJECT	SHEET No.	TOTAL SHEETS
07	LA	01	8.7	24	50

REGISTERED CIVIL ENGINEER 03-15-13 DATE

7-08-13
PLANS APPROVAL DATE

REGISTERED PROFESSIONAL ENGINEER Hogni Setberg No. C70338 Exp. 9-30-14 CIVIL STATE OF CALIFORNIA

The State of California or its officers or agents shall not be responsible for the accuracy or completeness of scanned copies of this plan sheet.

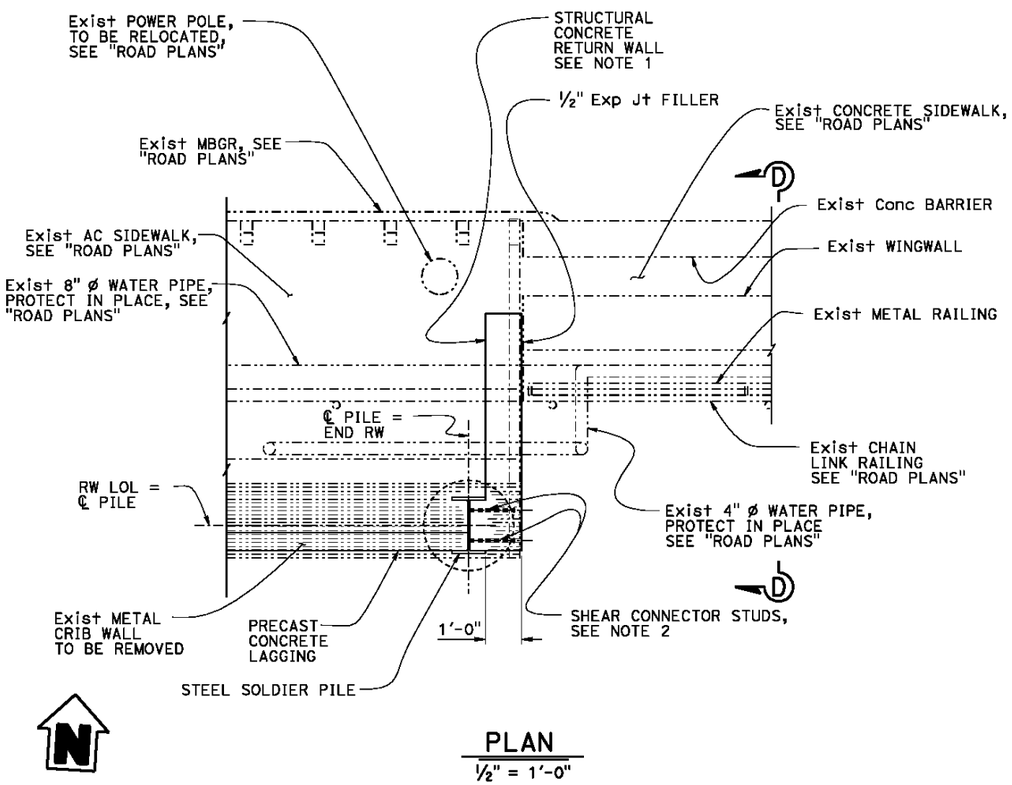

PLAN

½" = 1'-0"

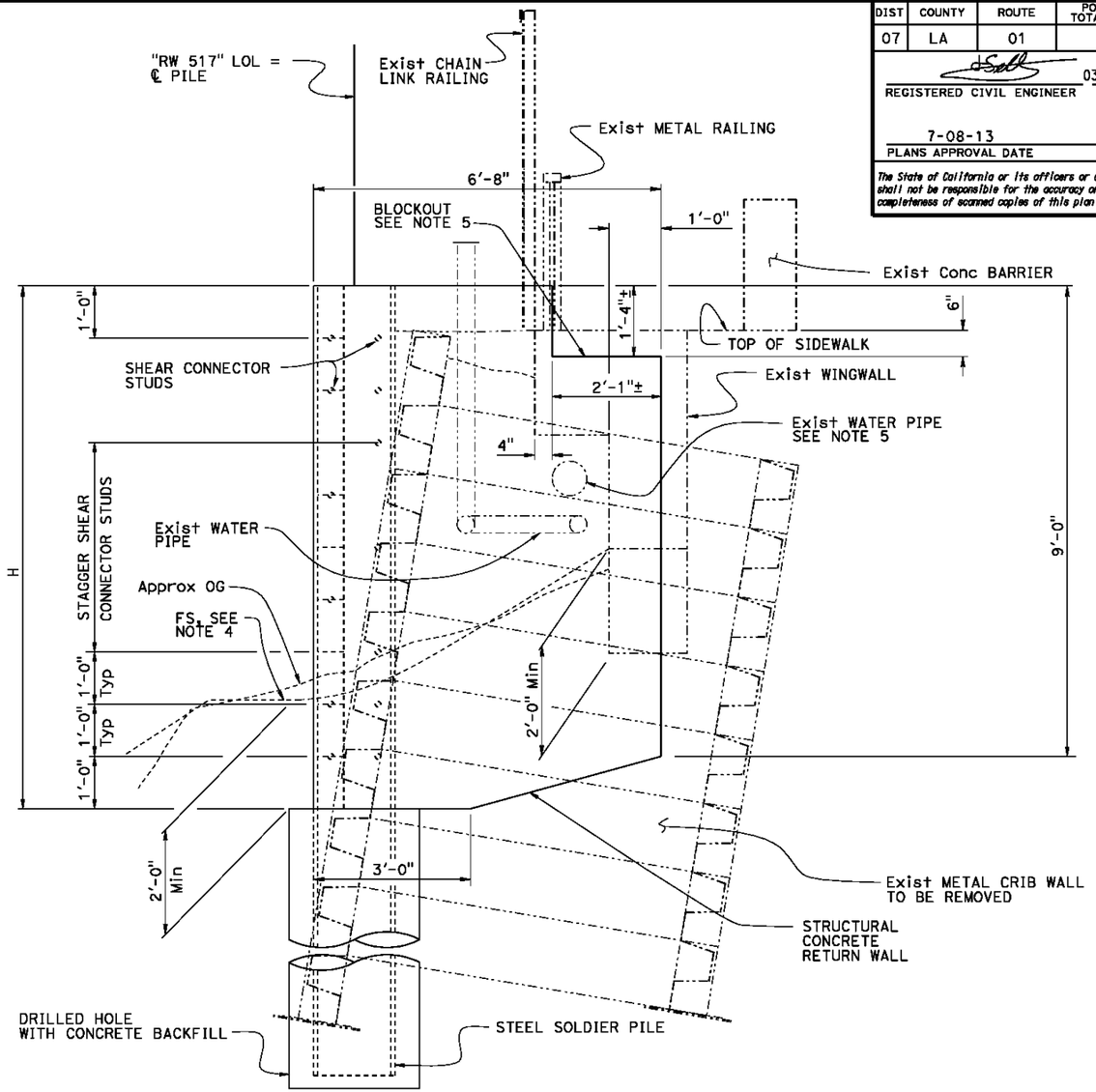

VIEW D-D

¾" = 1'-0"

Notes:

1. Place Return Wall perpendicular to RW LOL. For Reinf and drainage , see"MISCELLANEOUS DETAILS" sheet.
2. For Shear Connector Stud details, see"SHEAR CONNECTOR STUDS" detail on "MISCELLANEOUS DETAILS" sheet.
3. For details, see "CRIB WALL REMOVAL" sheet.
4. Place FS at Return Wall as shown or as directed by the Engineer.
5. For Blockout and utility opening Reinf see "MISCELLANEOUS DETAILS" sheet.

NOTE:
THE CONTRACTOR SHALL VERIFY ALL CONTROLLING FIELD DIMENSIONS BEFORE ORDERING OR FABRICATING ANY MATERIAL.

RETURN WALL DETAILS
END RW 517

	BY	CHECKED
DESIGN	H. Setberg	J. Higareda
DETAILS	S. Choida	J. Higareda
QUANTITIES	C. Chan	H. Setberg

STATE OF CALIFORNIA
DEPARTMENT OF TRANSPORTATION

DIVISION OF ENGINEERING SERVICES
STRUCTURE DESIGN
DESIGN BRANCH 15

BRIDGE NO. 53E0246
POST MILE 8.77

REFINARY SOLDIER PILE WALLS
SOLDIER PILE WALLS DETAILS NO. 4

STRUCTURES DESIGN DETAIL SHEET (ENGLISH) (REV. 09-01-10)

ORIGINAL SCALE IN INCHES FOR REDUCED PLANS 0 1 2 3

UNIT: 3604
PROJECT NUMBER & PHASE: 07120000641
CONTRACT NO.: 07-3X3904

DISREGARD PRINTS BEARING EARLIER REVISION DATES

REVISION DATES: 11-14-12 02-21-13 03-15-13 04-23-13

SHEET 10 OF 36

FILE => 53e0516_17_19_20_21-g-rwdt04.dgn

USERNAME => a119982 DATE PLOTTED => 26-JUN-2013 TIME PLOTTED => 14:28

DIST	COUNTY	ROUTE	POST MILES TOTAL PROJECT	SHEET No.	TOTAL SHEETS
07	LA	01	8.7	25	50

REGISTERED CIVIL ENGINEER 03-15-13 DATE

7-08-13
PLANS APPROVAL DATE

REGISTERED PROFESSIONAL ENGINEER Hogni Setberg No. C70338 Exp. 9-30-14 CIVIL STATE OF CALIFORNIA

The State of California or its officers or agents shall not be responsible for the accuracy or completeness of scanned copies of this plan sheet.

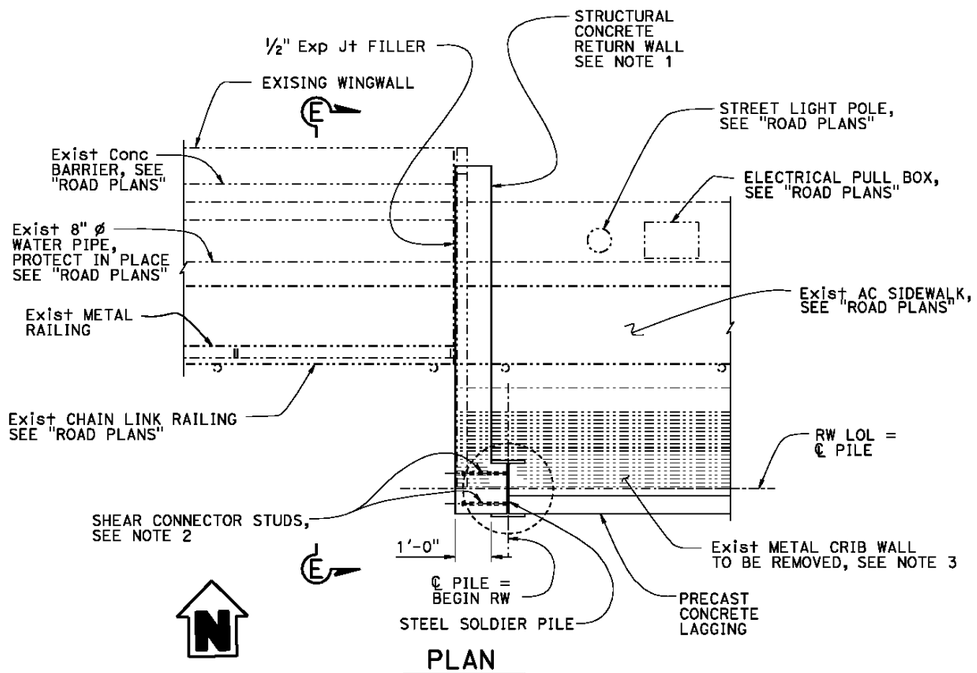

PLAN
½" = 1'-0"

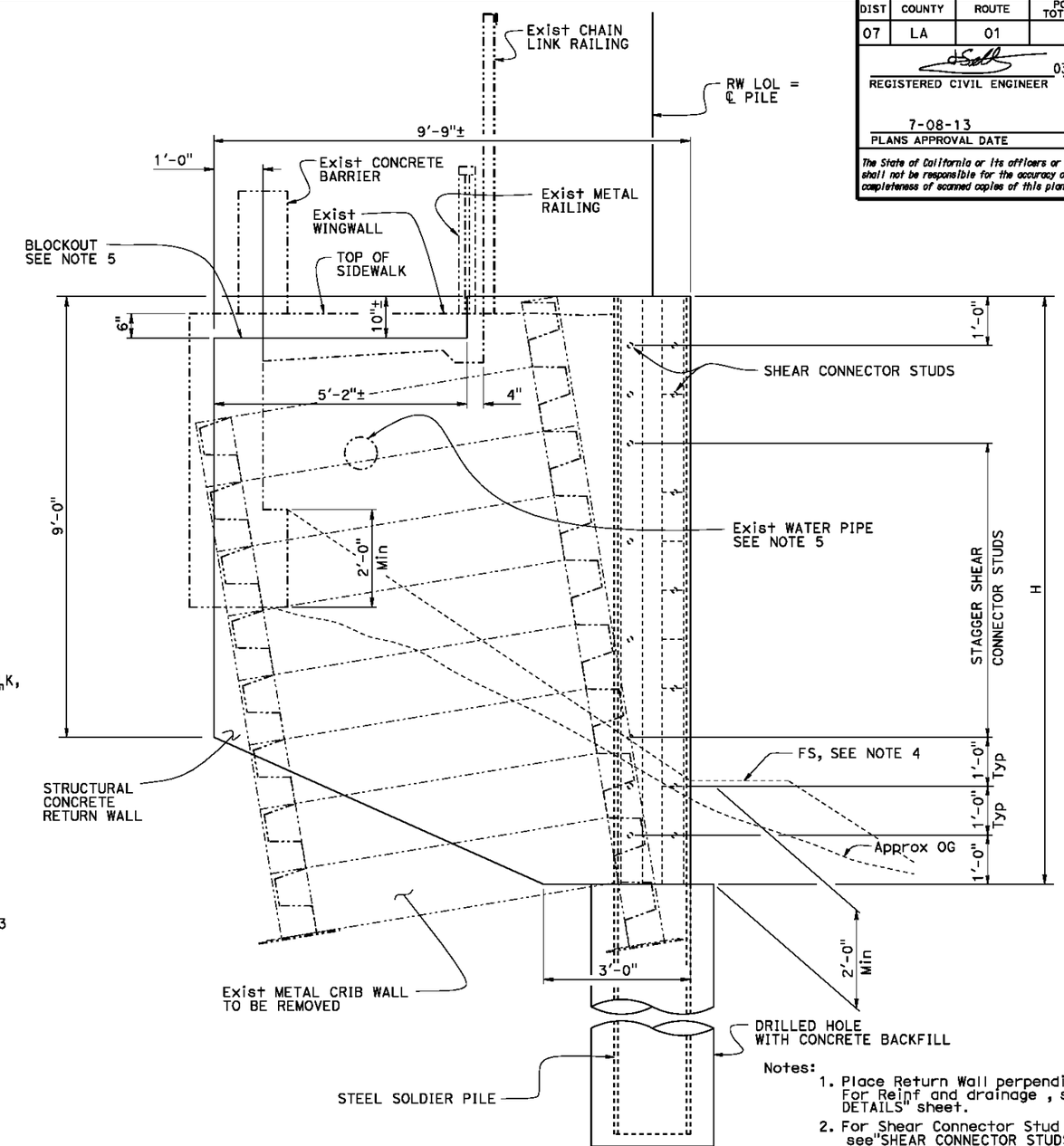

VIEW E-E
¾" = 1'-0"

Notes:

1. Place Return Wall perpendicular to RW LOL. For Reinf and drainage , see"MISCELLANEOUS DETAILS" sheet.
2. For Shear Connector Stud details, see"SHEAR CONNECTOR STUDS" detail on "MISCELLANEOUS DETAILS" sheet.
3. For details, see "CRIB WALL REMOVAL" sheet.
4. Place FS at Return Wall as shown or as directed by the Engineer.
5. For Blockout and utility opening Reinf see "MISCELLANEOUS DETAILS" sheet.

NOTE:
THE CONTRACTOR SHALL VERIFY ALL CONTROLLING FIELD DIMENSIONS BEFORE ORDERING OR FABRICATING ANY MATERIAL.

RETURN WALL DETAILS
BEGIN RW 519

	BY	CHECKED
DESIGN	H. Setberg	J. Higareda
DETAILS	S. Choida	J. Higareda
QUANTITIES	C. Chan	H. Setberg

STATE OF CALIFORNIA
DEPARTMENT OF TRANSPORTATION

DIVISION OF ENGINEERING SERVICES
STRUCTURE DESIGN
DESIGN BRANCH 15

BRIDGE NO. 53E0247
POST MILE 8.71

REFINERY SOLDIER PILE WALLS
SOLDIER PILE WALLS DETAILS NO. 5

STRUCTURES DESIGN DETAIL SHEET (ENGLISH) (REV. 09-01-10)

ORIGINAL SCALE IN INCHES FOR REDUCED PLANS 0 1 2 3

UNIT: 3604
PROJECT NUMBER & PHASE: 0712000064
CONTRACT NO.: 07-3X3901

DISREGARD PRINTS BEARING EARLIER REVISION DATES

REVISION DATES 11-09-12 03-12-13 04-23-13 02-21-13

SHEET 11 OF 36

FILE => 53e0516_17_19_20_21-g-rwdt05.dgn

USERNAME => a119982 DATE PLOTTED => 26-JUN-2013 TIME PLOTTED => 14:28

DIST	COUNTY	ROUTE	POST MILES TOTAL PROJECT	SHEET No.	TOTAL SHEETS
07	LA	01	8.7	26	50

REGISTERED CIVIL ENGINEER 03-15-13 DATE

7-08-13
PLANS APPROVAL DATE

REGISTERED PROFESSIONAL ENGINEER Hogni Setberg No. C70338 Exp. 9-30-14 CIVIL STATE OF CALIFORNIA

The State of California or its officers or agents shall not be responsible for the accuracy or completeness of scanned copies of this plan sheet.

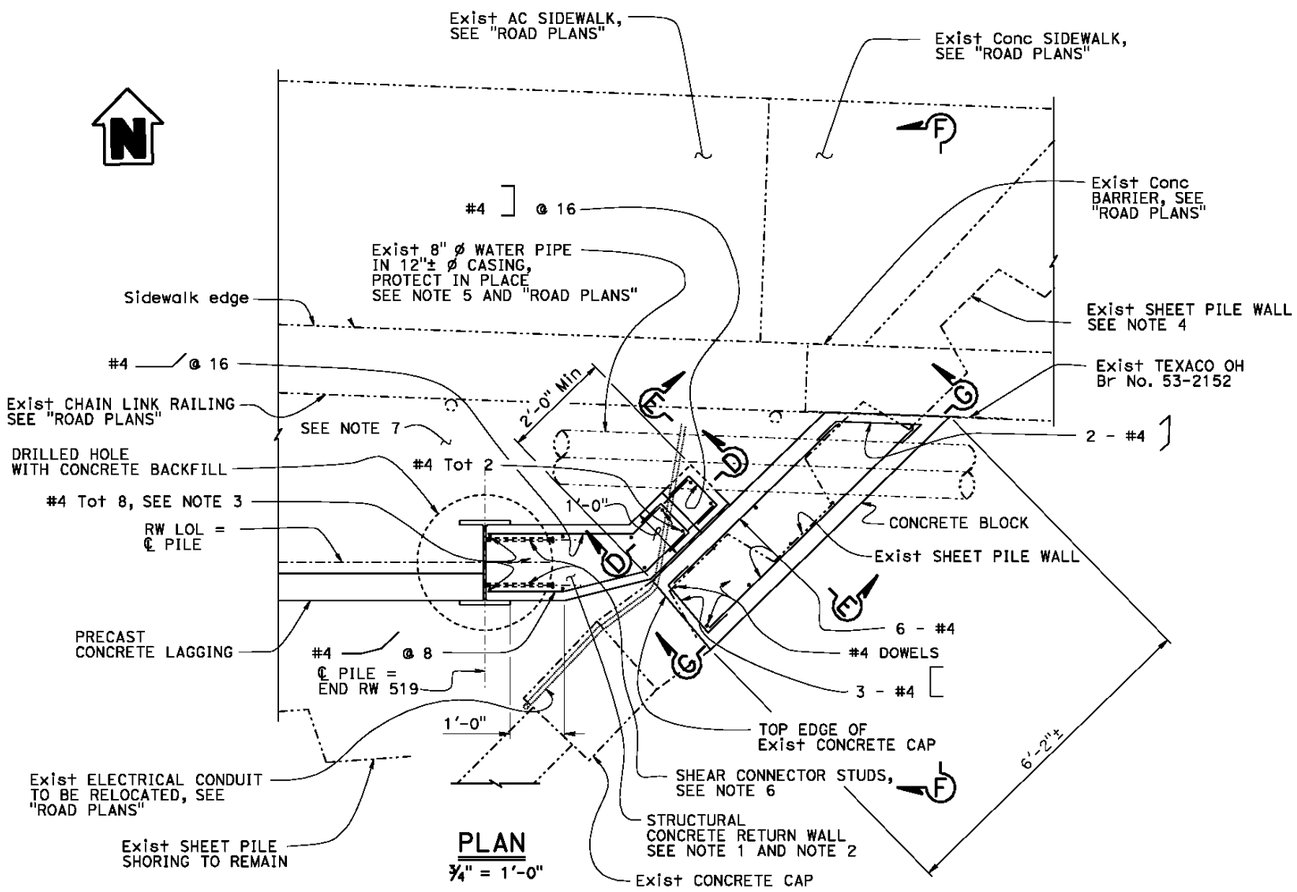

PLAN

¾" = 1'-0"

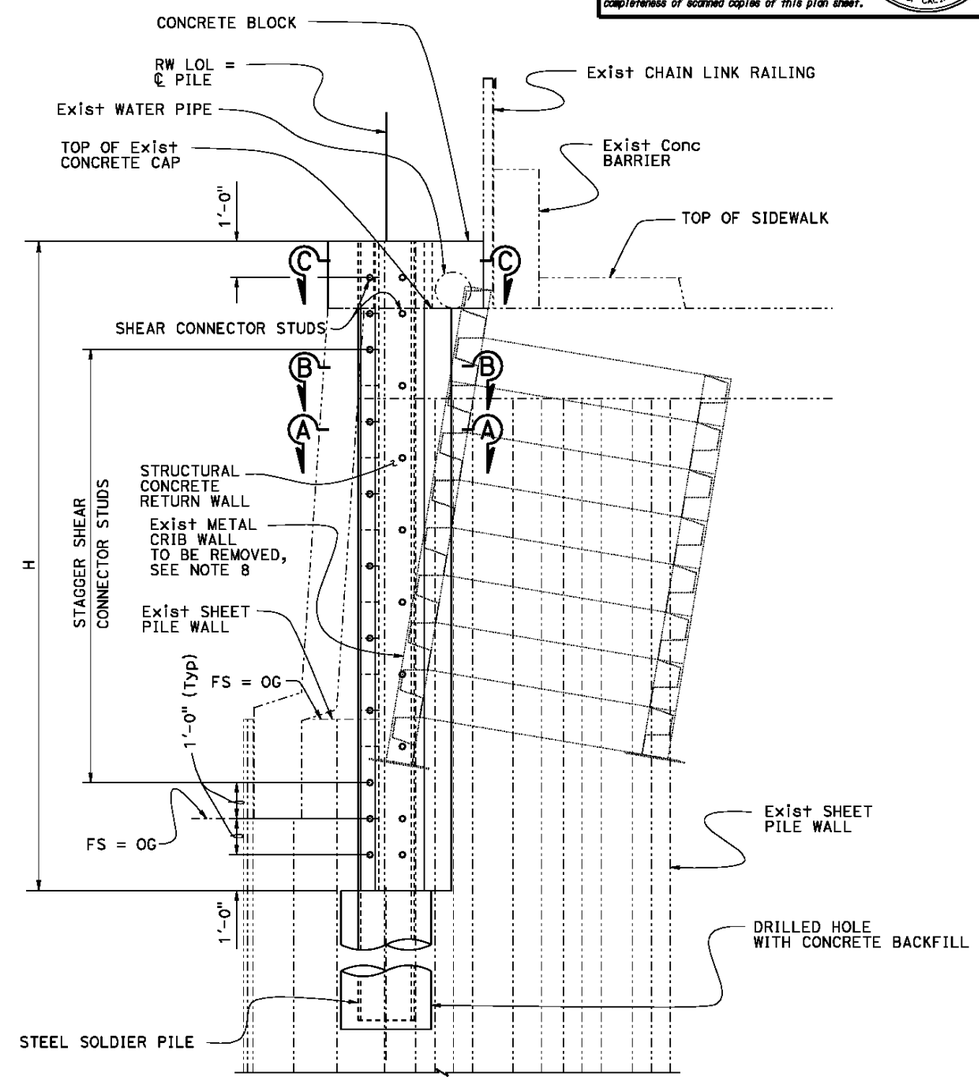

VIEW F-F

½" = 1'-0"

Notes:

1. Place Return Wall parallel to existing concrete cap on Sheet Pile Wall.
2. Return Wall shape may be changed, depending upon existing sheet pile layout and approval by the Engineer.
3. Number of vertical bars shown is approximate. Place bars in every corner and at every intersection. Bar spacing along faces shall not exceed 8".
4. Exist Sheet Pile layout shown, is approximate.
5. Cast Concrete Block aroud Exist Water Pipe casing as shown or as directed by the engineer. Place 1" Exp Jt filler around pipe casing.
6. For Shear Connector Stud details, see"SHEAR CONNECTOR STUDS" detail on "MISCELLANEOUS DETAILS" sheet.
7. Exist Metal Crib Wall not shown for clarity.
8. For details, see "CRIB WALL REMOVAL" sheet.
9. For "SECTION A-A", "SECTION B-B", "SECTION C-C", "SECTION D-D", SECTION E-E", and "SECTION G-G", see " SOLDIER PILE WALL DETAILS NO. 7" sheet.

NOTE:
THE CONTRACTOR SHALL VERIFY ALL CONTROLLING FIELD DIMENSIONS BEFORE ORDERING OR FABRICATING ANY MATERIAL.

RETURN WALL DETAILS
END RW 519

	BY	CHECKED
DESIGN	H.Setberg	J. Higareda
DETAILS	S. Cholda	J. Higareda
QUANTITIES	C. Chan	H. Setberg

STATE OF CALIFORNIA
DEPARTMENT OF TRANSPORTATION

DIVISION OF ENGINEERING SERVICES
STRUCTURE DESIGN
DESIGN BRANCH 15

BRIDGE NO. 53E0247
POST MILE 8.71

REFINERY SOLDIER PILE WALLS
SOLDIER PILE WALLS DETAILS NO. 6

STRUCTURES DESIGN DETAIL SHEET (ENGLISH) (REV. 09-01-10)

ORIGINAL SCALE IN INCHES FOR REDUCED PLANS 0 1 2 3

UNIT: 3604
PROJECT NUMBER & PHASE: 07120000641
CONTRACT NO.: 07-3X3904

DISREGARD PRINTS BEARING EARLIER REVISION DATES

REVISION DATES 11-28-12 04-25-13 05-01-13 03-15-13

SHEET 12 OF 36

FILE => 53e0516_17_19_20_21-g-rwdt06.dgn

USERNAME => s119982 DATE PLOTTED => 26-JUN-2013 TIME PLOTTED => 14:28

DIST	COUNTY	ROUTE	POST MILES TOTAL PROJECT	SHEET No.	TOTAL SHEETS
07	LA	01	8.7	27	50

REGISTERED CIVIL ENGINEER 03-15-13 DATE

7-08-13
PLANS APPROVAL DATE

REGISTERED PROFESSIONAL ENGINEER Hogni Setberg No. C70338 Exp. 9-30-14 CIVIL STATE OF CALIFORNIA

The State of California or its officers or agents shall not be responsible for the accuracy or completeness of scanned copies of this plan sheet.

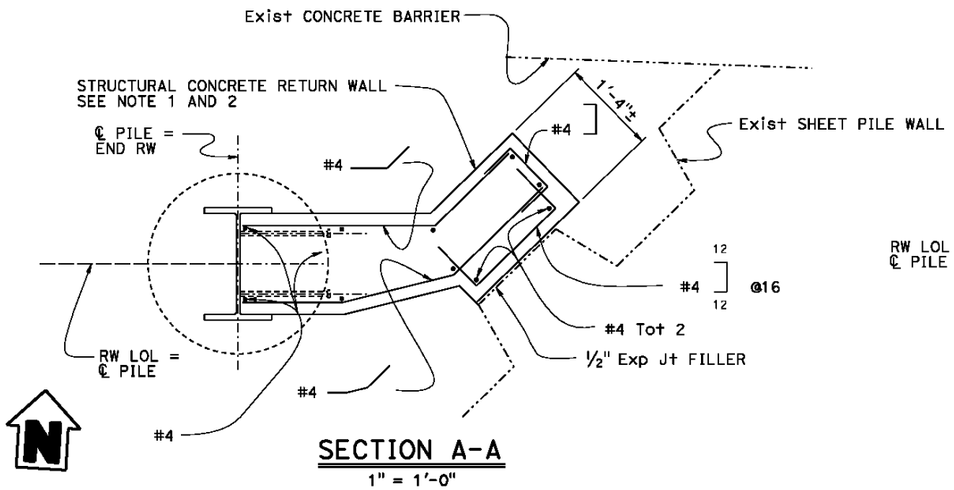

SECTION A-A
1" = 1'-0"

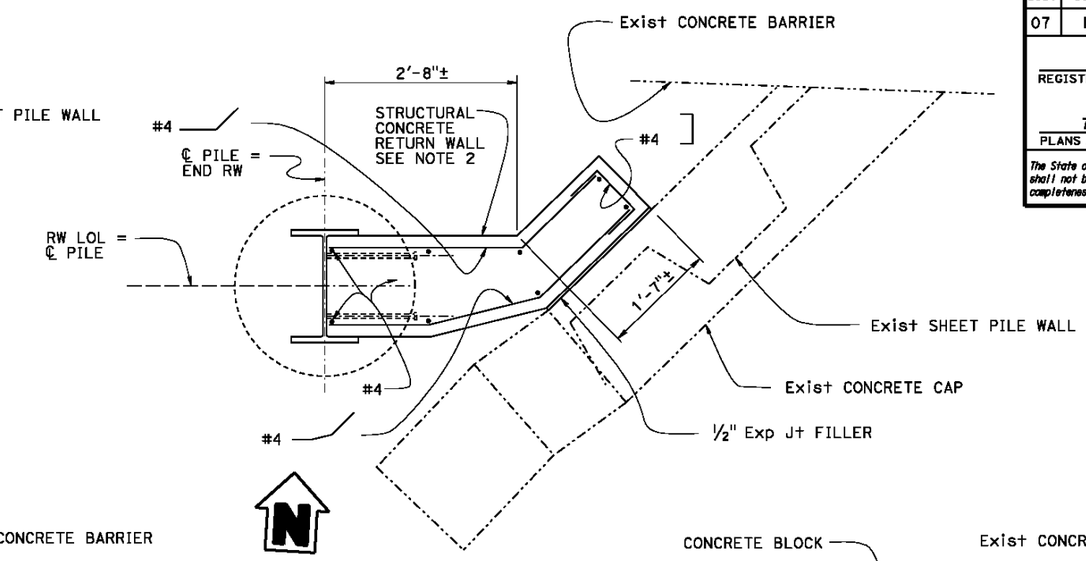

SECTION B-B
1" = 1'-0"

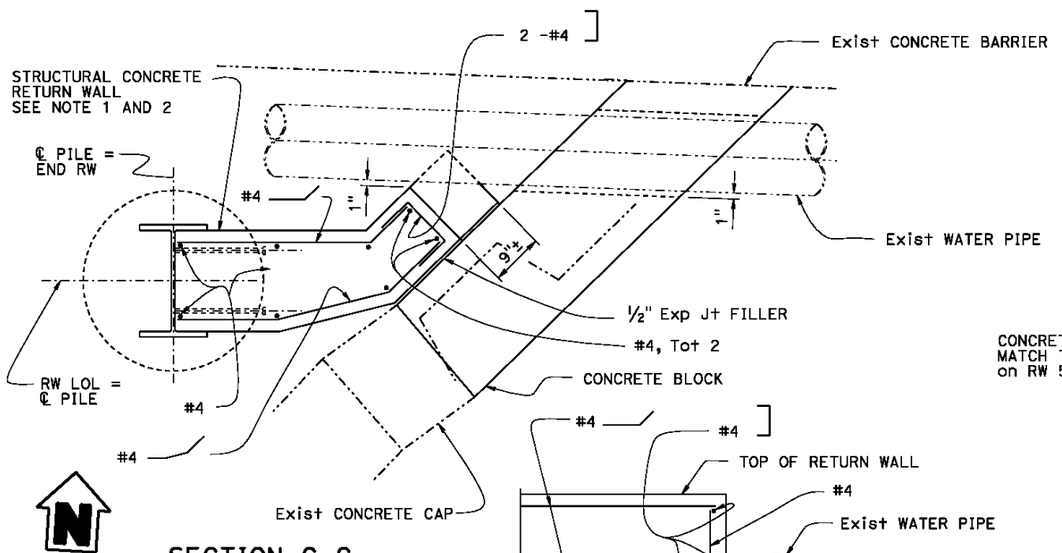

SECTION C-C
1" = 1'-0"

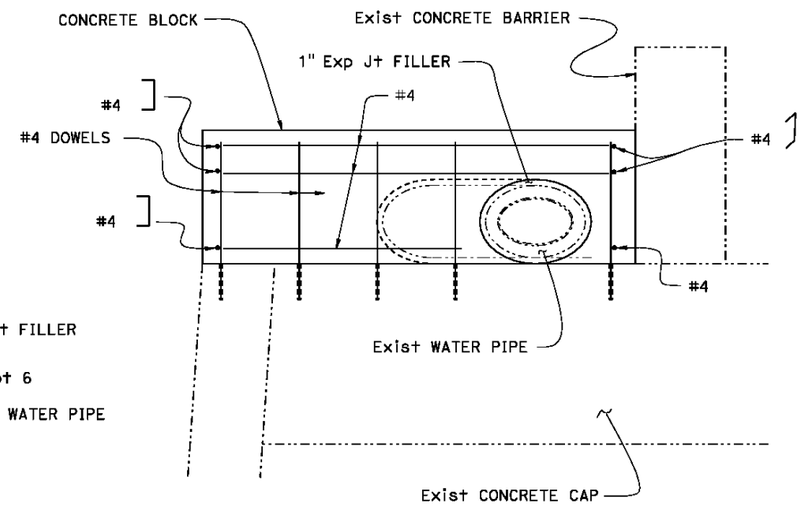

SECTION G-G
1" = 1'-0"

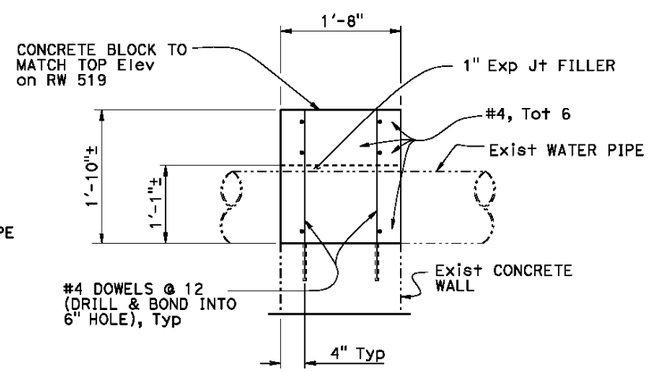

SECTION E-E
1" = 1'-0"

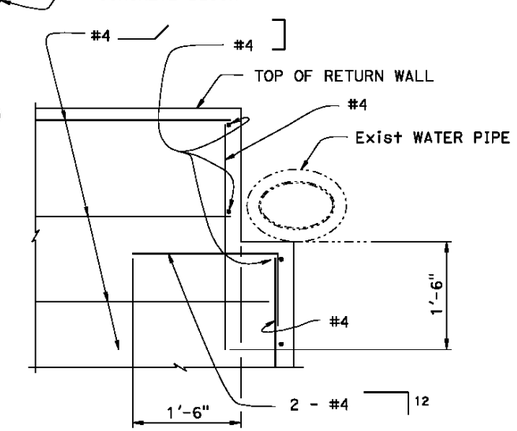

SECTION D-D
1" = 1'-0"

Notes:
1. For details not shown see "SECTION B-B".
2. Secction is rotated 90° counter clockwise for clarity.

NOTE:
THE CONTRACTOR SHALL VERIFY ALL CONTROLLING FIELD DIMENSIONS BEFORE ORDERING OR FABRICATING ANY MATERIAL.

RETURN WALL DETAILS
END RW 519

	BY	CHECKED
DESIGN	H.Setberg	J. Higareda
DETAILS	S. Choida	J. Higareda
QUANTITIES	C. Chan	H. Setberg

STATE OF CALIFORNIA
DEPARTMENT OF TRANSPORTATION

DIVISION OF ENGINEERING SERVICES
STRUCTURE DESIGN
DESIGN BRANCH 15

BRIDGE NO. 53E0247
POST MILE 8.71

REFINERY SOLDIER PILE WALLS
SOLDIER PILE WALLS DETAILS NO. 7

STRUCTURES DESIGN DETAIL SHEET (ENGLISH) (REV. 09-01-10)

ORIGINAL SCALE IN INCHES FOR REDUCED PLANS 0 1 2 3

UNIT: 3604
PROJECT NUMBER & PHASE: 07120000641
CONTRACT NO.: 07-3X3904

DISREGARD PRINTS BEARING EARLIER REVISION DATES

REVISION DATES: 11-28-12 02-21-13 03-13-13 04-23-13

SHEET 13 OF 36

FILE => 53e0516_17_19_20_21-g-rwdt07.dgn

USERNAME => a119992 DATE PLOTTED => 26-JUN-2013 TIME PLOTTED => 14:28

DIST	COUNTY	ROUTE	POST MILES TOTAL PROJECT	SHEET No.	TOTAL SHEETS
07	LA	01	8.7	28	50

REGISTERED CIVIL ENGINEER 03-15-13 DATE

7-08-13
PLANS APPROVAL DATE

REGISTERED PROFESSIONAL ENGINEER Hogni Setberg No. C70338 Exp. 9-30-14 CIVIL STATE OF CALIFORNIA

The State of California or its officers or agents shall not be responsible for the accuracy or completeness of scanned copies of this plan sheet.

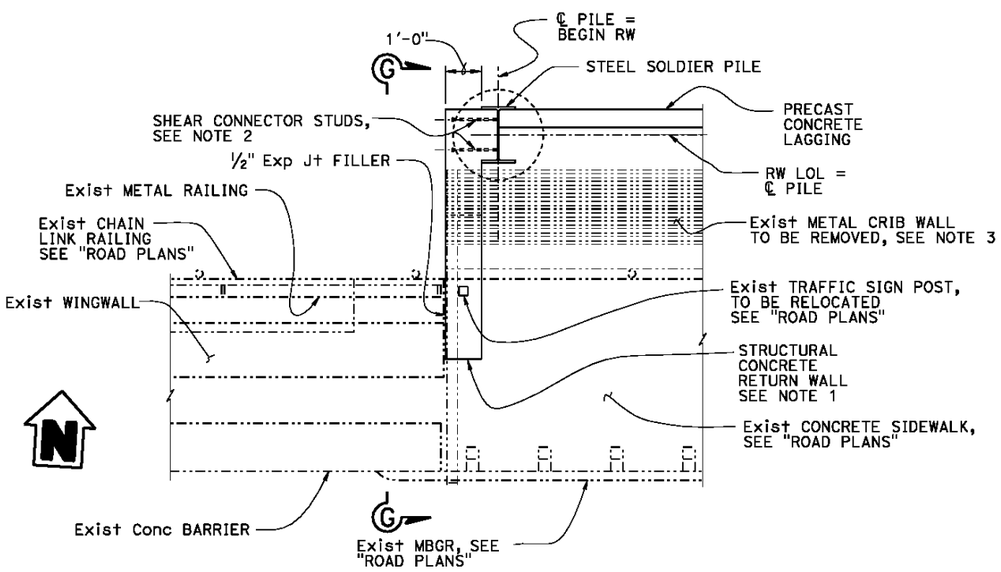

PLAN
½" = 1'-0"

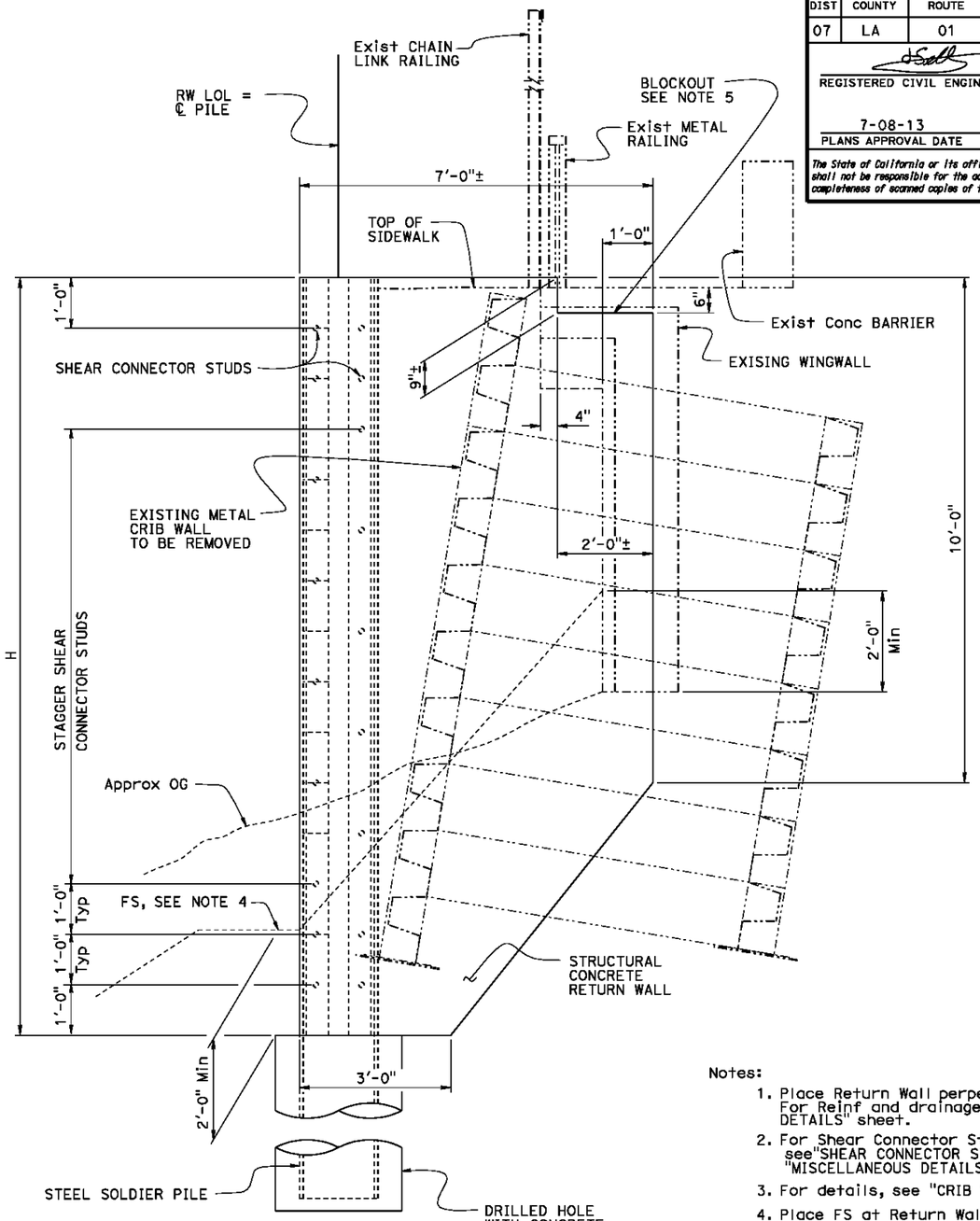

VIEW G-G
¾" = 1'-0"

Notes:

1. Place Return Wall perpendicular to RW LOL. For Reinf and drainage , see"MISCELLANEOUS DETAILS" sheet.
2. For Shear Connector Stud details, see"SHEAR CONNECTOR STUDS" detail on "MISCELLANEOUS DETAILS" sheet.
3. For details, see "CRIB WALL REMOVAL" sheet.
4. Place FS at Return Wall as shown or as directed by the Engineer.
5. For Blockout Reinf see "MISCELLANEOUS DETAIL" sheet.

NOTE:
THE CONTRACTOR SHALL VERIFY ALL CONTROLLING FIELD DIMENSIONS BEFORE ORDERING OR FABRICATING ANY MATERIAL.

RETURN WALL DETAILS
BEGIN RW 520

	BY	CHECKED
DESIGN	H. Setberg	J. Higareda
DETAILS	S. Cholda	J. Higareda
QUANTITIES	C. Chan	H. Setberg

STATE OF CALIFORNIA
DEPARTMENT OF TRANSPORTATION

DIVISION OF ENGINEERING SERVICES
STRUCTURE DESIGN
DESIGN BRANCH 15

BRIDGE NO. 53E0248
POST MILE 8.71

REFINERY SOLDIER PILE WALLS
SOLDIER PILE WALLS DETAILS NO. 8

STRUCTURES DESIGN DETAIL SHEET (ENGLISH) (REV. 09-01-10)

ORIGINAL SCALE IN INCHES FOR REDUCED PLANS 0 1 2 3

UNIT: 3604
PROJECT NUMBER & PHASE: 07120000641
CONTRACT NO.: 07-3X3904

DISREGARD PRINTS BEARING EARLIER REVISION DATES

REVISION DATES 11-09-12 02-21-13 03-12-13 04-23-13

SHEET 14 OF 36

FILE => 53e0516_17_19_20_21-g-rwct08.dgn

USERNAME => s119982 DATE PLOTTED => 26-JUN-2013 TIME PLOTTED => 14:28

DIST	COUNTY	ROUTE	POST MILES TOTAL PROJECT	SHEET No.	TOTAL SHEETS
07	LA	01	8.7	29	50

REGISTERED CIVIL ENGINEER 03-15-13 DATE

7-08-13
PLANS APPROVAL DATE

REGISTERED PROFESSIONAL ENGINEER Hogni Setberg No. C70338 Exp. 9-30-14 CIVIL STATE OF CALIFORNIA

The State of California or its officers or agents shall not be responsible for the accuracy or completeness of scanned copies of this plan sheet.

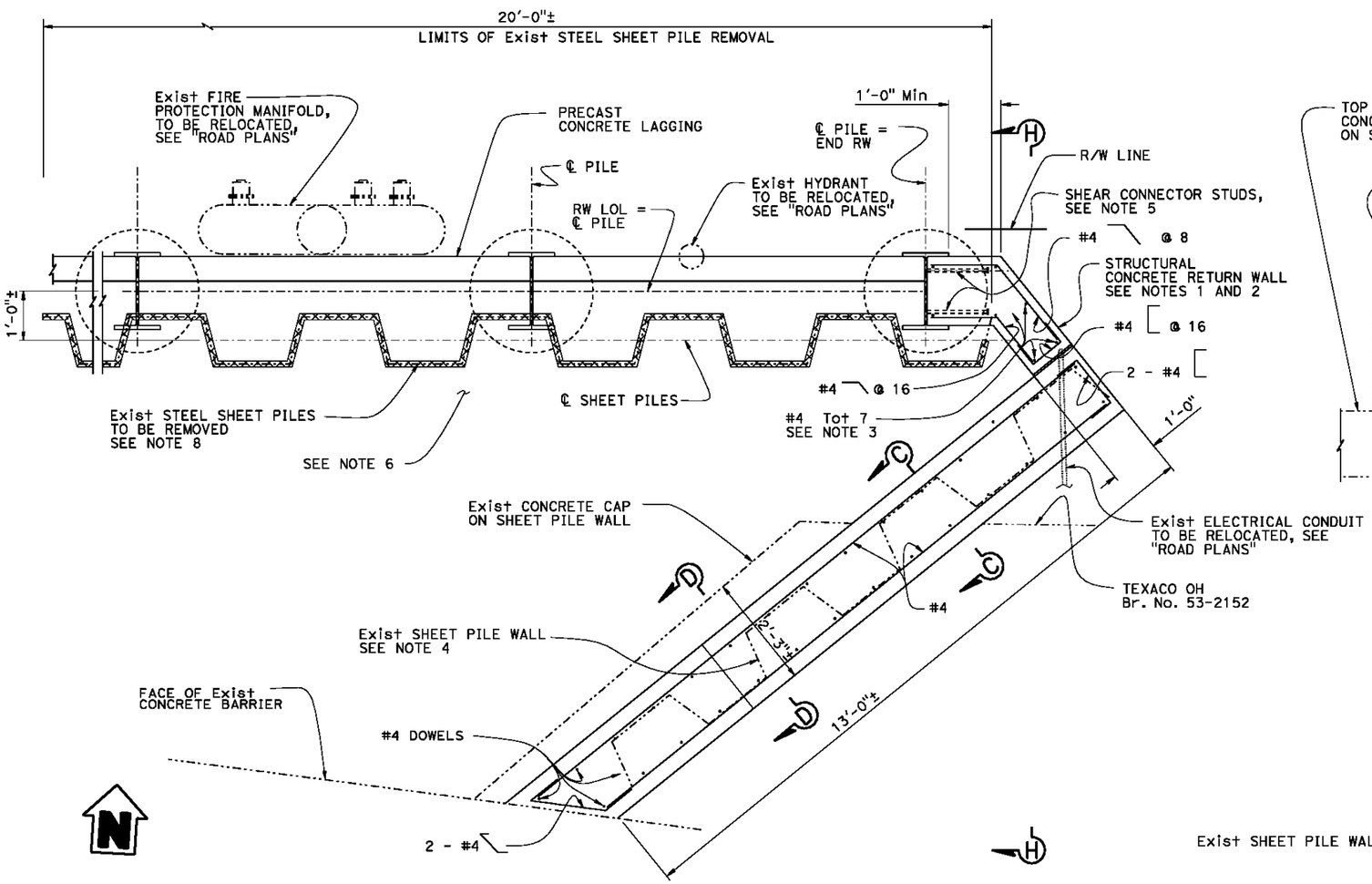

PLAN
3/4" = 1'-0"

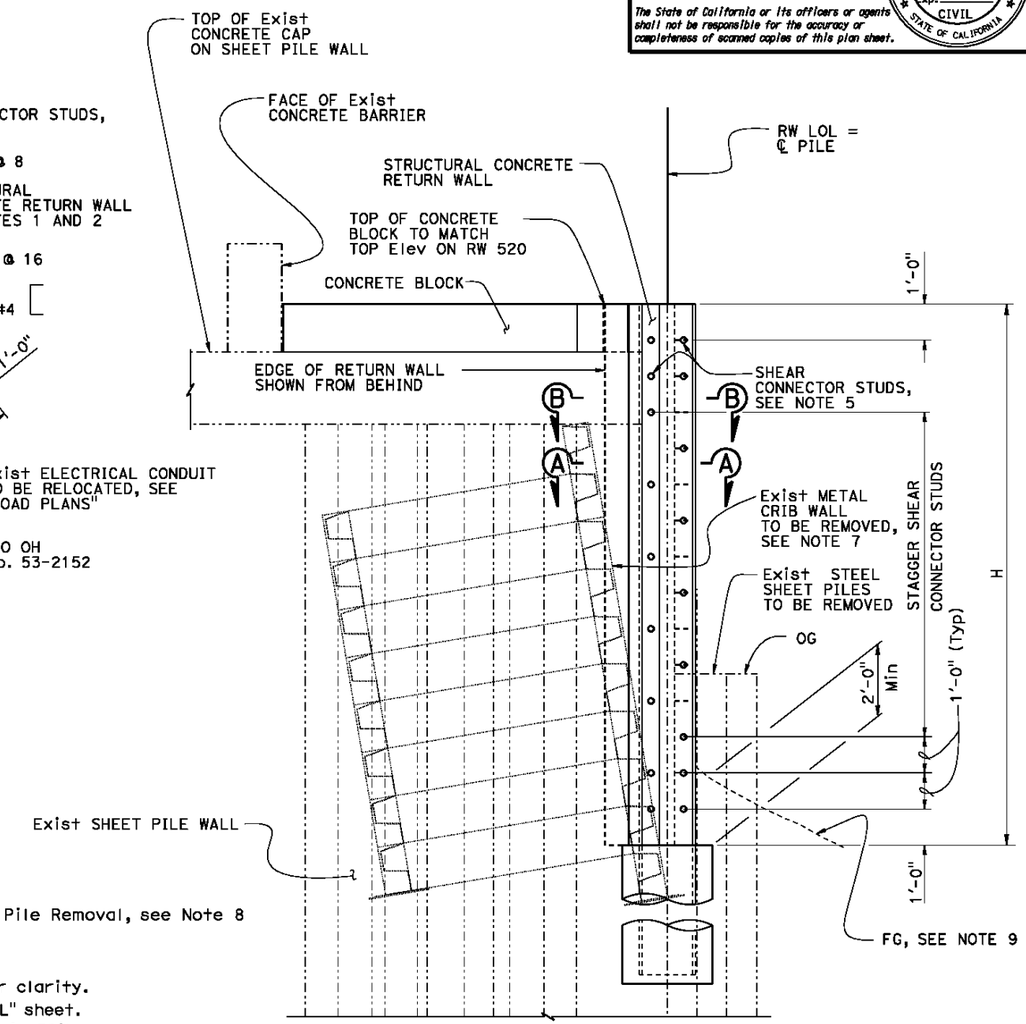

VIEW H-H
1/2" = 1'-0"

Legend:

▨ - Indicates Exist Steel Sheet Pile Removal, see Note 8

Notes:

1. Place Return Wall perpendicular to existing concrete cap on Sheet Pile Wall.
2. Return Wall shape may be changed, depending upon existing sheet pile layout and approval by the Engineer.
3. Number of vertical bars shown is approximate. Place bars in every corner and at every intersection. Bar spacing along faces shall not exceed 8".
4. Exist Sheet Pile layout shown is approximate.
5. For Shear Connector Stud details, see"SHEAR CONNECTOR STUDS" detail on "MISCELLANEOUS DETAILS" sheet.
6. Exist Metal Crib Wall not shown for clarity.
7. For details, see "CRIB WALL REMOVAL" sheet.
8. Length of Exist steel sheet piles is 30'±.
9. Place FG at Return Wall as shown or as directed by the Engineer.
10. For SECTION A-A, SECTION B-B, SECTION C-C, and SECTION D-D, see "SOLDIER PILE WALLS DETAILS NO.10" sheet.

NOTE:
THE CONTRACTOR SHALL VERIFY ALL CONTROLLING FIELD DIMENSIONS BEFORE ORDERING OR FABRICATING ANY MATERIAL.

RETURN WALL DETAILS
END RW 520

	BY	CHECKED
DESIGN	H. Setberg	J. Higareda
DETAILS	S. Cholda	J. Higareda
QUANTITIES	C. Chan/T. Menard	H. Setberg/S. Moradi

STATE OF CALIFORNIA
DEPARTMENT OF TRANSPORTATION

DIVISION OF ENGINEERING SERVICES
STRUCTURE DESIGN
DESIGN BRANCH 15

BRIDGE NO. 53E0248
POST MILE 8.71

REFINARY SOLDIER PILE WALLS
SOLDIER PILE WALLS DETAILS NO. 9

STRUCTURES DESIGN DETAIL SHEET (ENGLISH) (REV. 09-01-10)

ORIGINAL SCALE IN INCHES FOR REDUCED PLANS 0 1 2 3

UNIT: 3604
PROJECT NUMBER & PHASE: 07120000641
CONTRACT NO.: 07-3X3904

DISREGARD PRINTS BEARING EARLIER REVISION DATES

REVISION DATES 12-07-12 05-01-13 03-15-13 04-26-13

SHEET 15 OF 36

FILE => 53e0516_17_19_20_21-g-rwdt09.dgn

USERNAME => s119982 DATE PLOTTED => 26-JUN-2013 TIME PLOTTED => 14:28

DIST	COUNTY	ROUTE	POST MILES TOTAL PROJECT	SHEET No.	TOTAL SHEETS
07	LA	01	8.7	30	50

REGISTERED CIVIL ENGINEER 03-15-13 DATE

7-08-13
PLANS APPROVAL DATE

REGISTERED PROFESSIONAL ENGINEER Hogni Setberg No. C70338 Exp. 9-30-14 CIVIL STATE OF CALIFORNIA

The State of California or its officers or agents shall not be responsible for the accuracy or completeness of scanned copies of this plan sheet.

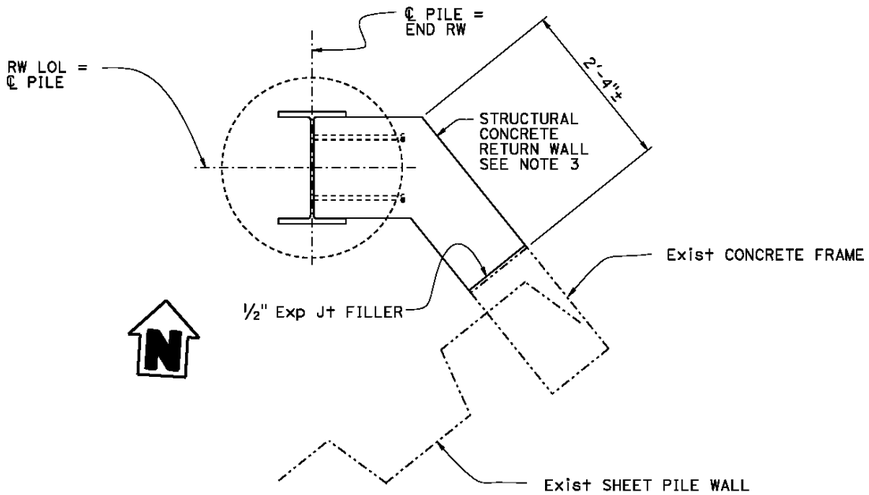

SECTION A-A
1" = 1'-0"

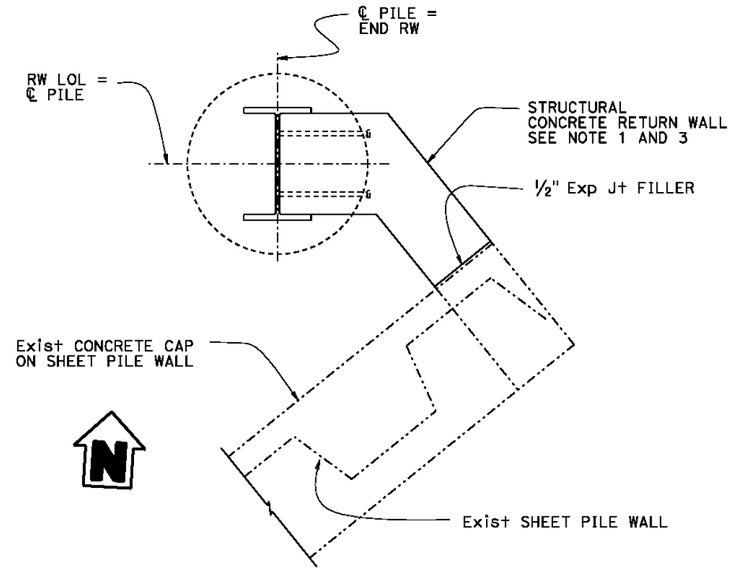

SECTION B-B
1" = 1'-0"

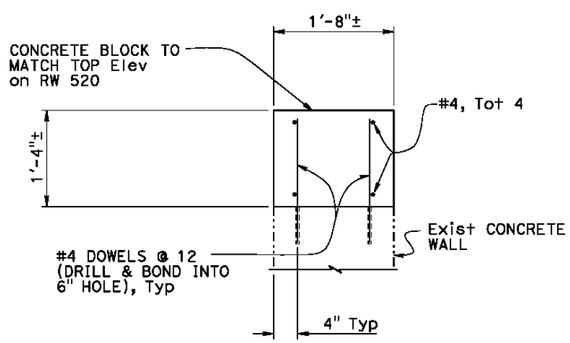

SECTION C-C
1" = 1'-0"

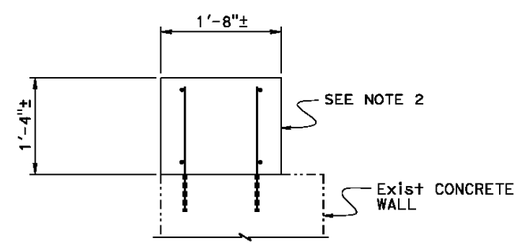

SECTION D-D
1" = 1'-0"

Note:
1. For details not shown see "SECTION A-A".
2. For details not shown see "SECTION C-C".
3. Section is rotated 90° counter clockwise for clarity.

NOTE:
THE CONTRACTOR SHALL VERIFY ALL CONTROLLING FIELD DIMENSIONS BEFORE ORDERING OR FABRICATING ANY MATERIAL.

RETURN WALL DETAILS
END RW 520

	BY	CHECKED
DESIGN	H. Setberg	J. Higareda
DETAILS	S. Cholda	J. Higareda
QUANTITIES	C. Chan	H. Setberg

STATE OF CALIFORNIA
DEPARTMENT OF TRANSPORTATION

DIVISION OF ENGINEERING SERVICES
STRUCTURE DESIGN
DESIGN BRANCH 15

BRIDGE NO. 53E0248
POST MILE 8.71

REFINARY SOLDIER PILE WALLS
SOLDIER PILE WALLS DETAILS NO. 10

STRUCTURES DESIGN DETAIL SHEET (ENGLISH) (REV. 09-01-10)

ORIGINAL SCALE IN INCHES FOR REDUCED PLANS 0 1 2 3

UNIT: 3604
PROJECT NUMBER & PHASE: 07120000641
CONTRACT NO.: 07-3X3904

DISREGARD PRINTS BEARING EARLIER REVISION DATES

REVISION DATES: 01-16-13 04-23-13 02-21-13 03-15-13

SHEET 16 OF 36

FILE => 53e0516_17_19_20_21-g-rwdt10.dgn

USERNAME => a119882 DATE PLOTTED => 26-JUN-2013 TIME PLOTTED => 14:28

DIST	COUNTY	ROUTE	POST MILES TOTAL PROJECT	SHEET No.	TOTAL SHEETS
07	LA	01	8.7	31	50

REGISTERED CIVIL ENGINEER 03-15-13 DATE

7-08-13
PLANS APPROVAL DATE

REGISTERED PROFESSIONAL ENGINEER Hogni Setberg No. C70338 Exp. 9-30-14 CIVIL STATE OF CALIFORNIA

The State of California or its officers or agents shall not be responsible for the accuracy or completeness of scanned copies of this plan sheet.

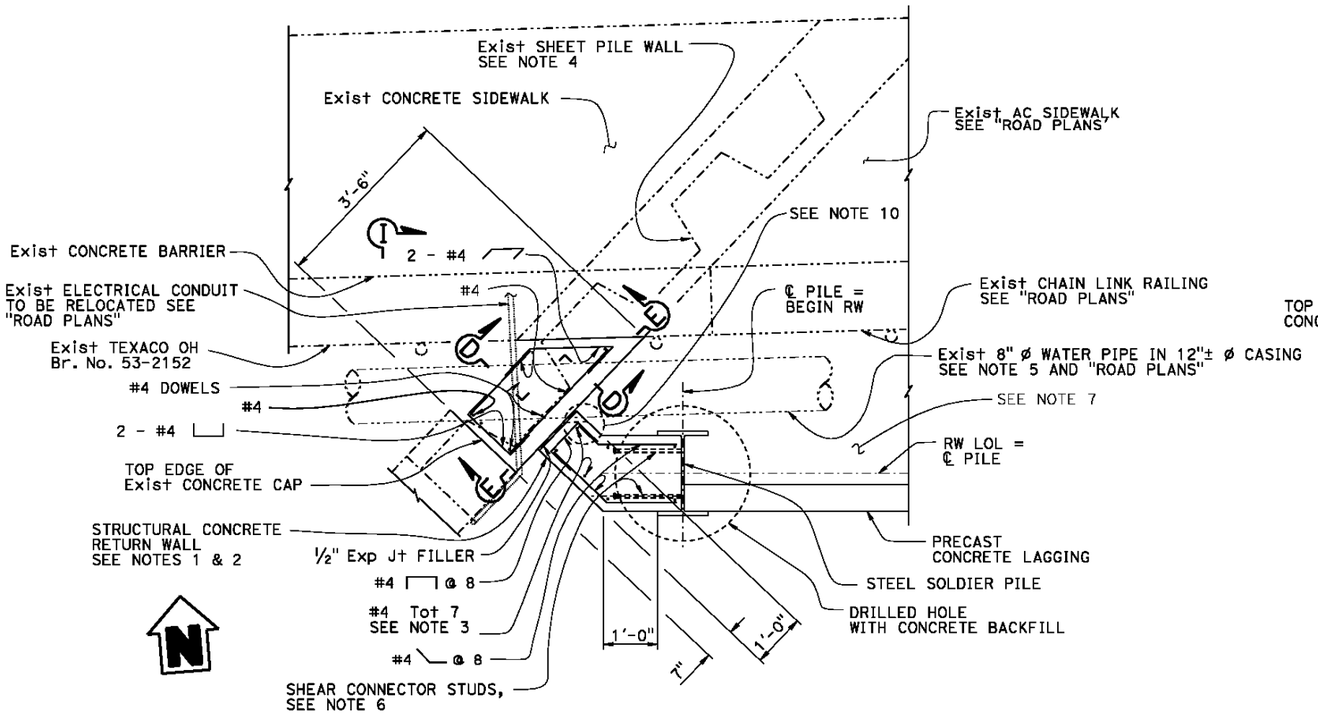

PLAN

¾" = 1'-0"

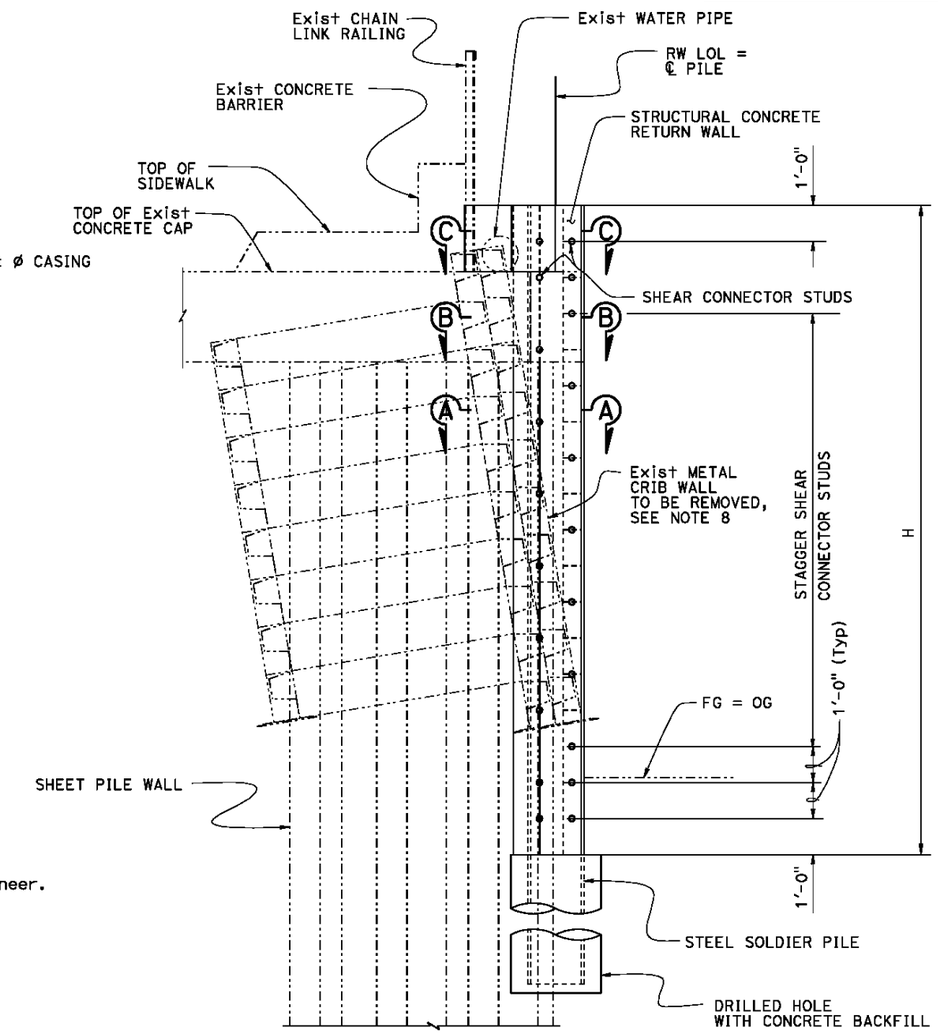

VIEW I-I

½" = 1'-0"

Notes:

1. Place Return Wall perpendicular to existing concrete cap on Sheet Pile Wall.
2. Return Wall shape may be changed, depending upon existing sheet pile layout and approval by the Engineer.
3. Number of vertical bars shown is approximate. Place bars in every corner and at every intersection. Bar spacing along faces shall not exceed 8".
4. Exist Sheet Pile layout shown, is approximate.
5. Cast Concrete Block around Exist Water Pipe casing as shown or as directed by the engineer. Place 1" Exp Jt filler around pipe casing.
6. For Shear Connector Stud details, see"SHEAR CONNECTOR STUDS" detail on "MISCELLANEOUS DETAILS" sheet.
7. Exist Metal Crib Wall not shown for clarity.
8. For details, see "CRIB WALL REMOVAL" sheet.
9. For SECTION A-A, SECTION B-B, SECTION C-C, "SECTION D-D" and "SECTION E-E" see "SOLDIER PILE WALLS DETAILS NO.12" sheet.
10. Typical Reinf shown, for Reinf at pipe, see "SECTION C-C" on "SOLDIER PILE WALLS DETAILS NO.12" sheet.

NOTE:
THE CONTRACTOR SHALL VERIFY ALL CONTROLLING FIELD DIMENSIONS BEFORE ORDERING OR FABRICATING ANY MATERIAL.

RETURN WALL DETAILS
BEGIN RW 521

	BY	CHECKED
DESIGN	H. Setberg	J. Higareda
DETAILS	S. Cholda	J. Higareda
QUANTITIES	C. Chan	H. Setberg

STATE OF CALIFORNIA
DEPARTMENT OF TRANSPORTATION

DIVISION OF ENGINEERING SERVICES
STRUCTURE DESIGN
DESIGN BRANCH 15

BRIDGE NO. 53E0249
POST MILE 8.69

REFINERY SOLDIER PILE WALLS
SOLDIER PILE WALLS DETAILS NO.11

STRUCTURES DESIGN DETAIL SHEET (ENGLISH) (REV. 09-01-10)

ORIGINAL SCALE IN INCHES FOR REDUCED PLANS 0 1 2 3

UNIT: 3604
PROJECT NUMBER & PHASE: 07120000641
CONTRACT NO.: 07-3X3904

DISREGARD PRINTS BEARING EARLIER REVISION DATES

REVISION DATES: 11-28-12 05-01-13 03-15-13 04-26-13

SHEET 17 OF 36

FILE => 53e0516_17_19_20_21-g-rwd11.dgn

USERNAME => a119982 DATE PLOTTED => 26-JUN-2013 TIME PLOTTED => 14:28

DIST	COUNTY	ROUTE	POST MILES TOTAL PROJECT	SHEET No.	TOTAL SHEETS
07	LA	01	8.7	32	50

REGISTERED CIVIL ENGINEER 03-15-13 DATE

7-08-13
PLANS APPROVAL DATE

REGISTERED PROFESSIONAL ENGINEER Hogni Setberg No. C70338 Exp. 9-30-14 CIVIL STATE OF CALIFORNIA

The State of California or its officers or agents shall not be responsible for the accuracy or completeness of scanned copies of this plan sheet.

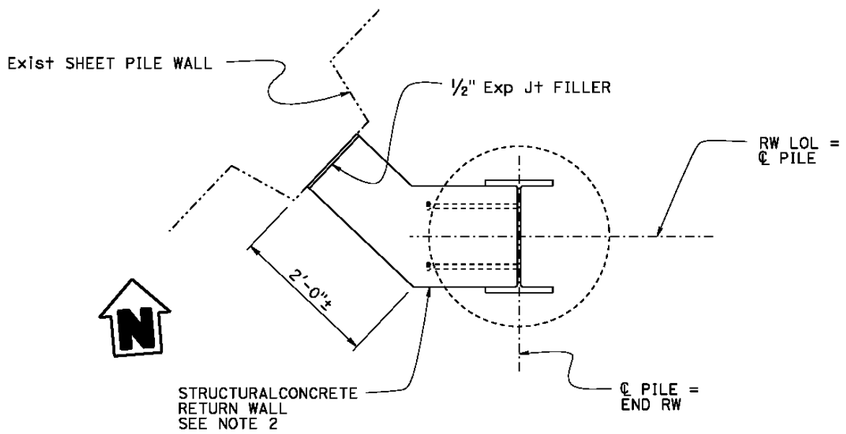

SECTION A-A
1" = 1'-0"

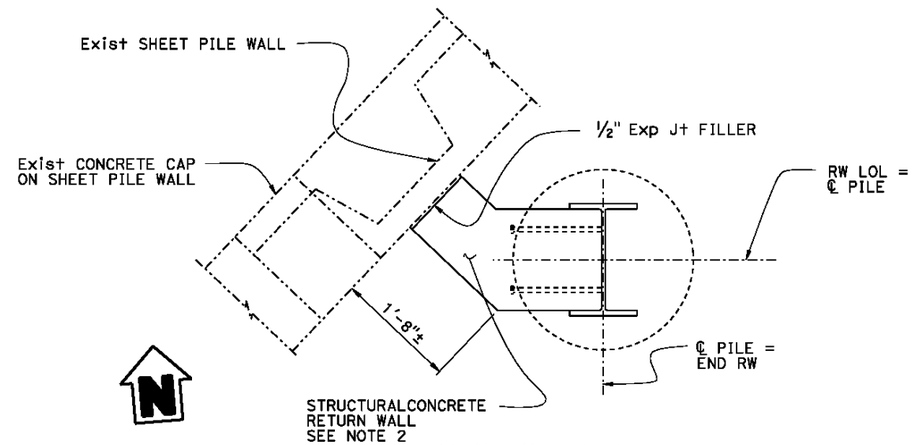

SECTION B-B
1" = 1'-0"

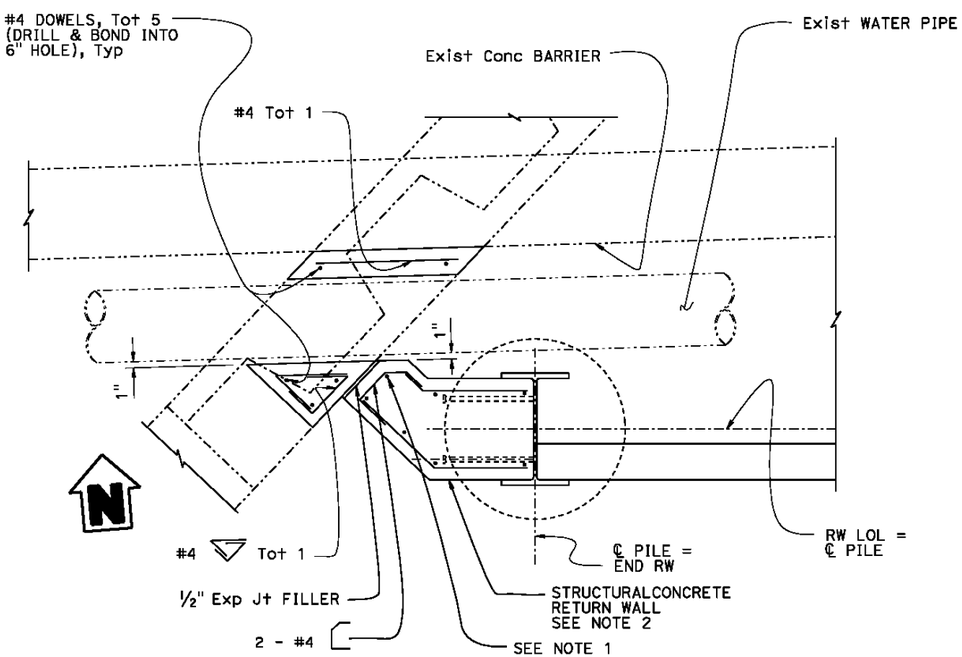

SECTION C-C
1" = 1'-0"

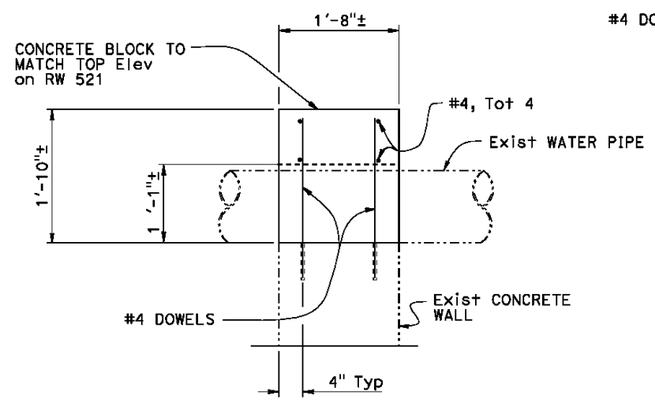

SECTION D-D
1" = 1'-0"

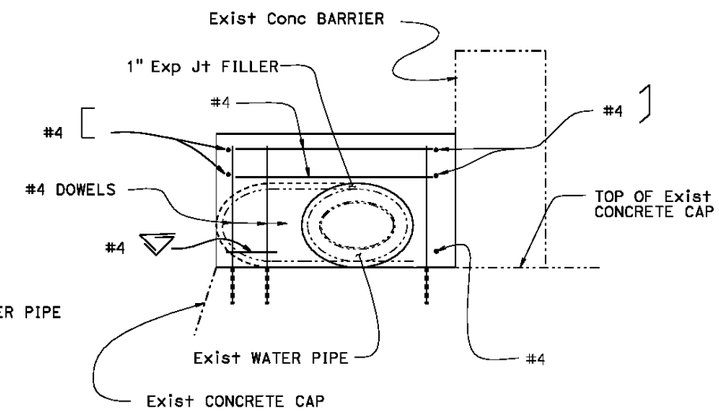

SECTION E-E
1" = 1'-0"

Note:
1. Bend vertical bar, as necessary, to accomodate notch.
2. Secction is rotated 90° clockwise for clarity.

NOTE:
THE CONTRACTOR SHALL VERIFY ALL CONTROLLING FIELD DIMENSIONS BEFORE ORDERING OR FABRICATING ANY MATERIAL.

RETURN WALL DETAILS
BEGIN RW 521

	BY	CHECKED
DESIGN	H. Setberg	J. Higareda
DETAILS	S. Cholda	J. Higareda
QUANTITIES	C. Chan	H. Setberg

STATE OF CALIFORNIA
DEPARTMENT OF TRANSPORTATION

DIVISION OF ENGINEERING SERVICES
STRUCTURE DESIGN
DESIGN BRANCH 15

BRIDGE NO. 53E0249
POST MILE 8.69

REFINERY SOLDIER PILE WALLS
SOLDIER PILE WALLS DETAILS NO.12

STRUCTURES DESIGN DETAIL SHEET (ENGLISH) (REV. 09-01-10)

ORIGINAL SCALE IN INCHES FOR REDUCED PLANS 0 1 2 3

UNIT: 3604
PROJECT NUMBER & PHASE: 07120000641
CONTRACT NO.: 07-3X38904

DISREGARD PRINTS BEARING EARLIER REVISION DATES

REVISION DATES 11-29-12 03-15-13 04-24-13 05-14-13

SHEET 18 OF 36

FILE => 53e0516_17_19_20_21-g-rwdt12.dgn

USERNAME => s119982 DATE PLOTTED => 26-JUN-2013 TIME PLOTTED => 14:28

DIST	COUNTY	ROUTE	POST MILES TOTAL PROJECT	SHEET No.	TOTAL SHEETS
07	LA	01	8.7	33	50

REGISTERED CIVIL ENGINEER 03-15-13 DATE

7-08-13
PLANS APPROVAL DATE

REGISTERED PROFESSIONAL ENGINEER Hogni Setberg No. C70338 Exp. 9-30-14 CIVIL STATE OF CALIFORNIA

The State of California or its officers or agents shall not be responsible for the accuracy or completeness of scanned copies of this plan sheet.

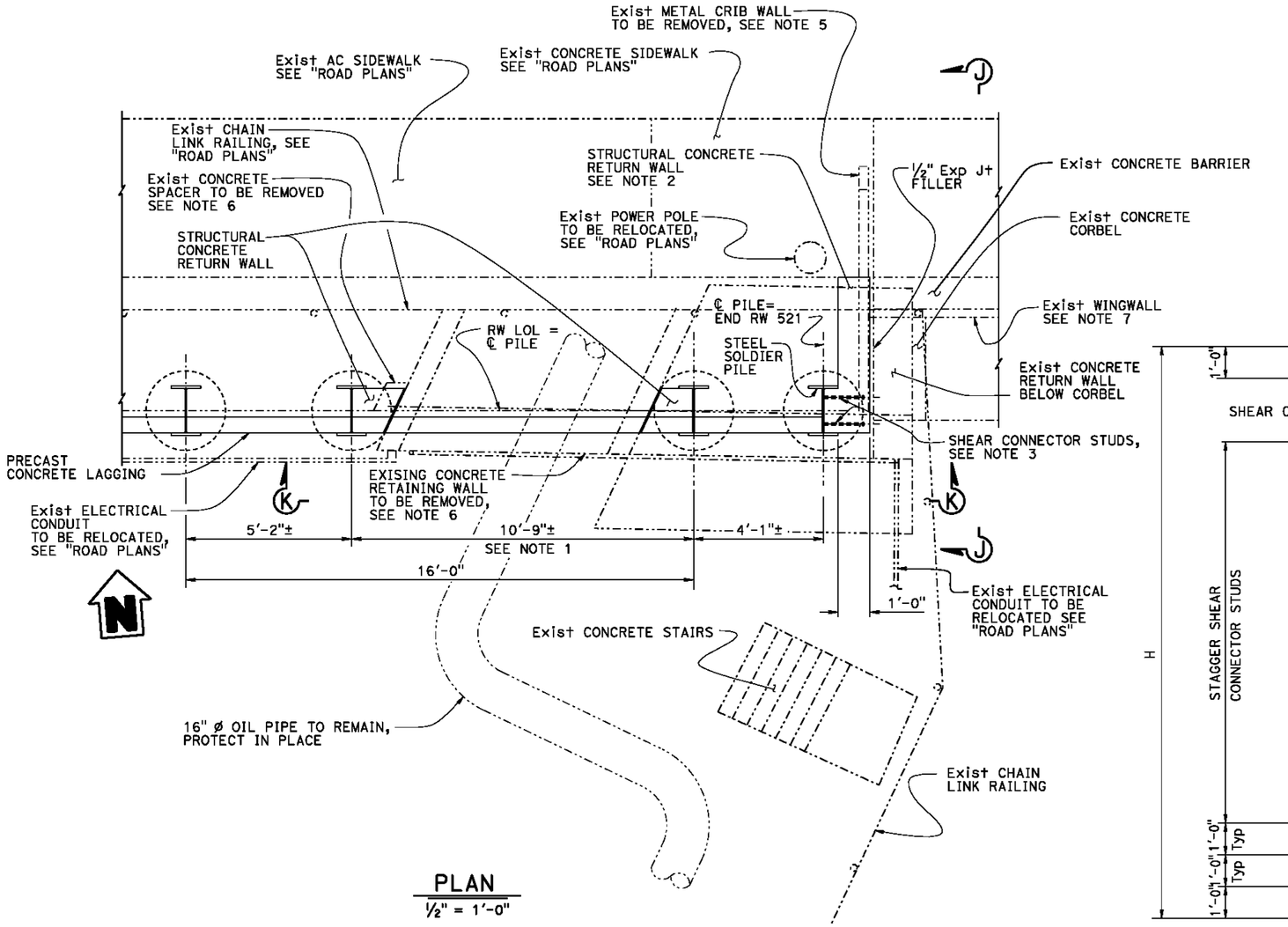

PLAN
1/2" = 1'-0"

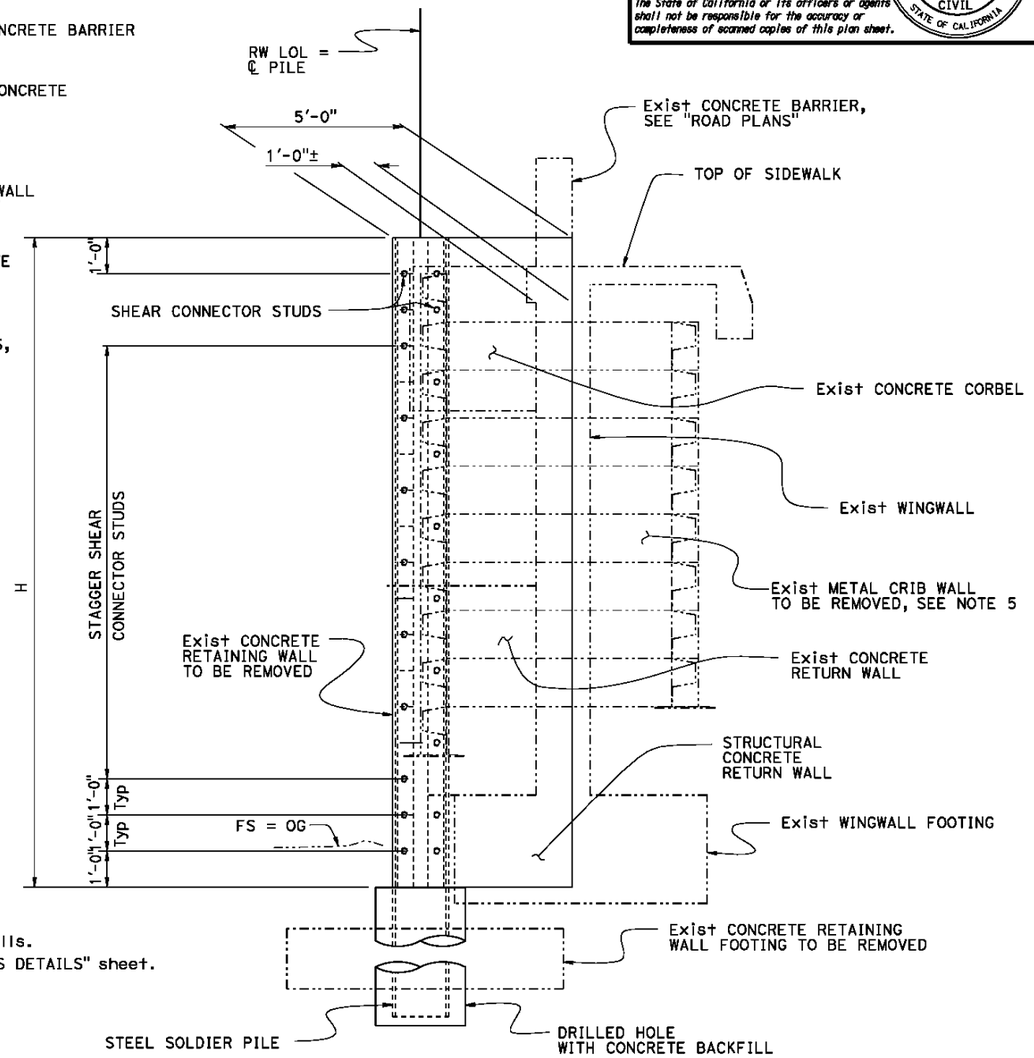

VIEW J-J
1/2" = 1'-0"

Notes:

1. Drilled hole for Soldier Piles to be placed as close as possible to Exist culvert walls.
2. Place Return Wall perpendicular to RW LOL. For Reinf and drainage see "MISCELLANEOUS DETAILS" sheet.
3. For Shear Connector Stud details, see"SHEAR CONNECTOR STUDS" detail on "MISCELLANEOUS DETAILS" sheet.
4. Exist Metal Crib Wall not shown for clarity.
5. For details, see "CRIB WALL REMOVAL" sheet.
6. For details, see "SOLDIER PILE WALL DETAILS NO. 15" sheet.
7. Exist Wingwall footing not shown for clarity.
8. For "VIEW K-K" see "SOLDIER PILE WALL DETAILS NO. 14" sheet.

NOTE:
THE CONTRACTOR SHALL VERIFY ALL CONTROLLING FIELD DIMENSIONS BEFORE ORDERING OR FABRICATING ANY MATERIAL.

RETURN WALL DETAILS
END RW 521

	BY	CHECKED
DESIGN	H. Setberg	J. Higareda
DETAILS	S. Cholda	J. Higareda
QUANTITIES	C. Chan	H. Setberg

STATE OF CALIFORNIA
DEPARTMENT OF TRANSPORTATION

DIVISION OF ENGINEERING SERVICES
STRUCTURE DESIGN
DESIGN BRANCH 15

BRIDGE NO. 53E0249
POST MILE 8.69

REFINERY SOLDIER PILE WALLS
SOLDIER PILE WALLS DETAILS NO. 13

STRUCTURES DESIGN DETAIL SHEET (ENGLISH) (REV. 09-01-10)

ORIGINAL SCALE IN INCHES FOR REDUCED PLANS 0 1 2 3

UNIT: 3604
PROJECT NUMBER & PHASE: 07120000641
CONTRACT NO.: 07-3X3904

DISREGARD PRINTS BEARING EARLIER REVISION DATES

REVISION DATES 11-16-12 04-24-13 05-01-13 03-15-13

SHEET 19 OF 36

FILE => 53e0516_17_19_20_21-g-rwdt13.dgn

USERNAME => s119982 DATE PLOTTED => 26-JUN-2013 TIME PLOTTED => 14:29

DIST	COUNTY	ROUTE	POST MILES TOTAL PROJECT	SHEET No.	TOTAL SHEETS
07	LA	01	8.7	34	50

REGISTERED CIVIL ENGINEER 03-15-13 DATE

7-08-13
PLANS APPROVAL DATE

REGISTERED PROFESSIONAL ENGINEER Hogni Setberg No. C70338 Exp. 9-30-14 CIVIL STATE OF CALIFORNIA

The State of California or its officers or agents shall not be responsible for the accuracy or completeness of scanned copies of this plan sheet.

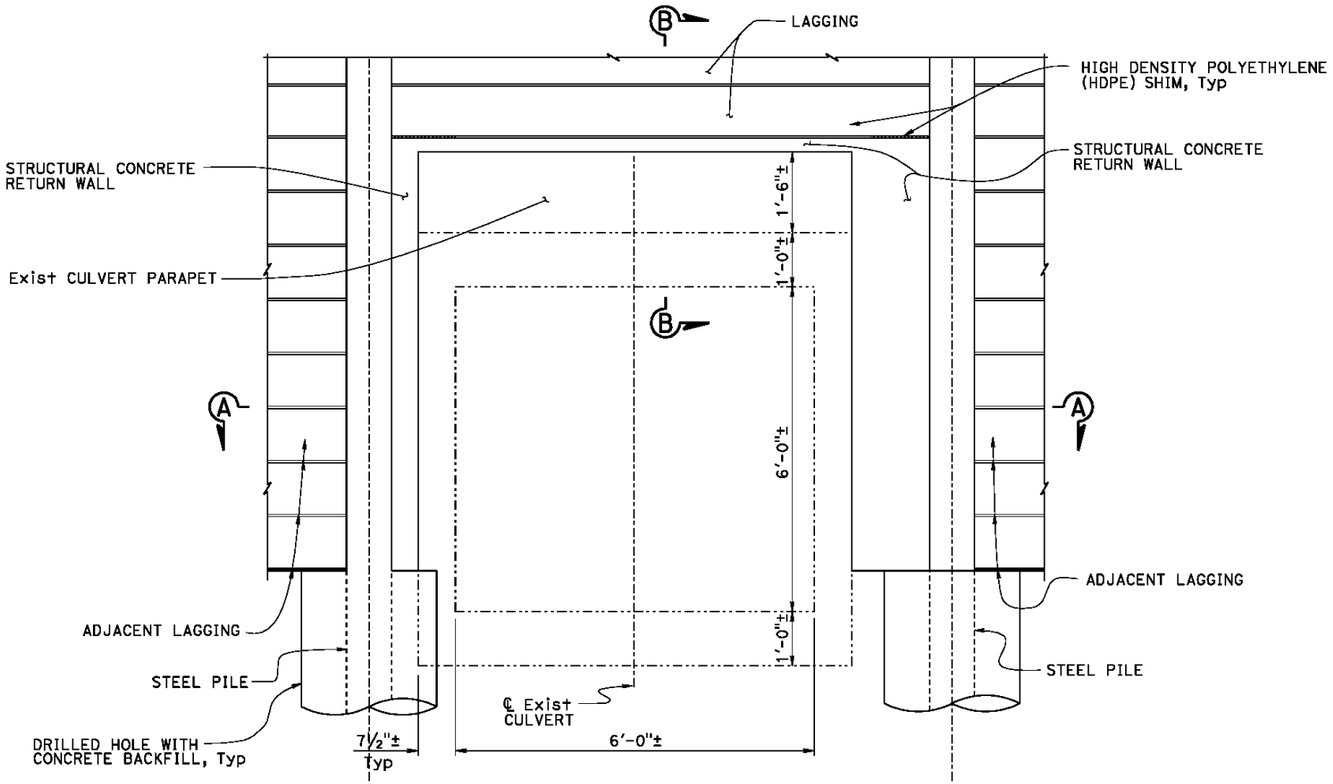

VIEW K-K

¾" = 1'-0"

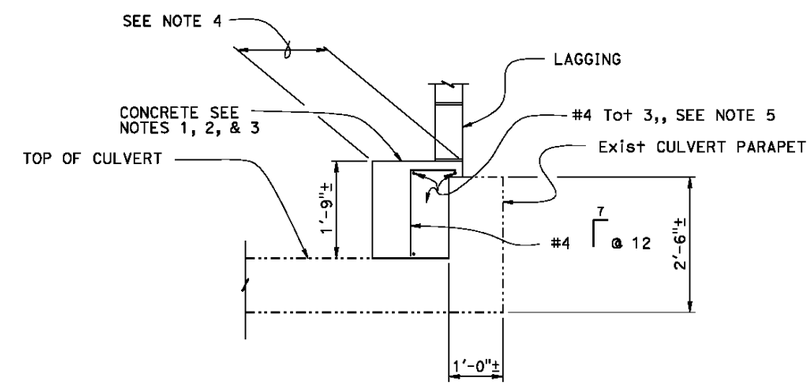

SECTION B-B

¾" = 1'-0"

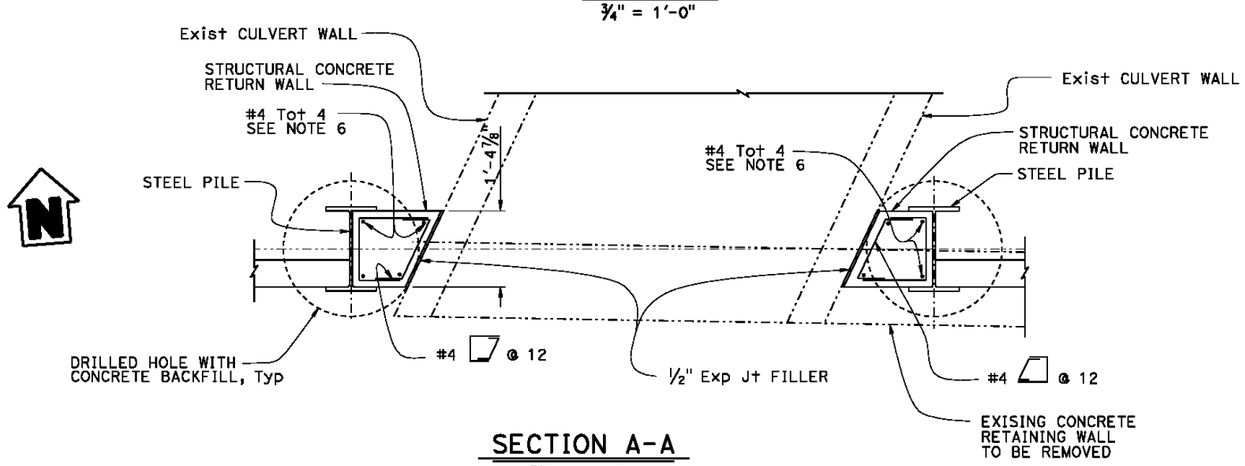

SECTION A-A

¾" = 1'-0"

Notes:

1. Place concrete to raise lagging so that it is level with adjacent lagging panels.
2. If lagging lines up behind existing parapet, the concrete does not need to extend up and over the parapet.
3. Shape and location of concrete is approximate. Shape and location may be changed to accomodate actual field conditions with the approval of the Engineer.
4. Dimension equals distance between flanges of adjacent W-sections.
5. Extend bars into vertical concrete.
6. Extend bars into horizontal concrete.

NOTE:
THE CONTRACTOR SHALL VERIFY ALL CONTROLLING FIELD DIMENSIONS BEFORE ORDERING OR FABRICATING ANY MATERIAL.

RETURN WALL DETAILS BY Exist CULVERT

END RW 521

	BY	CHECKED
DESIGN	H. Setberg	J. Higareda
DETAILS	S. Cholda	J. Higareda
QUANTITIES	C. Chan	H. Setberg

STATE OF CALIFORNIA
DEPARTMENT OF TRANSPORTATION

DIVISION OF ENGINEERING SERVICES
STRUCTURE DESIGN
DESIGN BRANCH 15

BRIDGE NO. 53E0249
POST MILE 8.69

REFINERY SOLDIER PILE WALLS
SOLDIER PILE WALLS DETAILS NO. 14

STRUCTURES DESIGN DETAIL SHEET (ENGLISH) (REV. 09-01-10)

ORIGINAL SCALE IN INCHES FOR REDUCED PLANS 0 1 2 3

UNIT: 3604
PROJECT NUMBER & PHASE: 07120000641
CONTRACT NO.: 07-3X3804

DISREGARD PRINTS BEARING EARLIER REVISION DATES

REVISION DATES 12-18-12 03-14-12 03-18-13 04-24-13

SHEET 20 OF 36

FILE => 53e0516_17_19_20_21-g-rwdt14.dgn

USERNAME => s119882 DATE PLOTTED => 26-JUN-2013 TIME PLOTTED => 14:29

DIST	COUNTY	ROUTE	POST MILES TOTAL PROJECT	SHEET No.	TOTAL SHEETS
07	LA	01	8.7	35	50

REGISTERED CIVIL ENGINEER 03-15-13 DATE

7-08-13
PLANS APPROVAL DATE

REGISTERED PROFESSIONAL ENGINEER Hogni Setberg No. C70338 Exp. 9-30-14 CIVIL STATE OF CALIFORNIA

The State of California or its officers or agents shall not be responsible for the accuracy or completeness of scanned copies of this plan sheet.

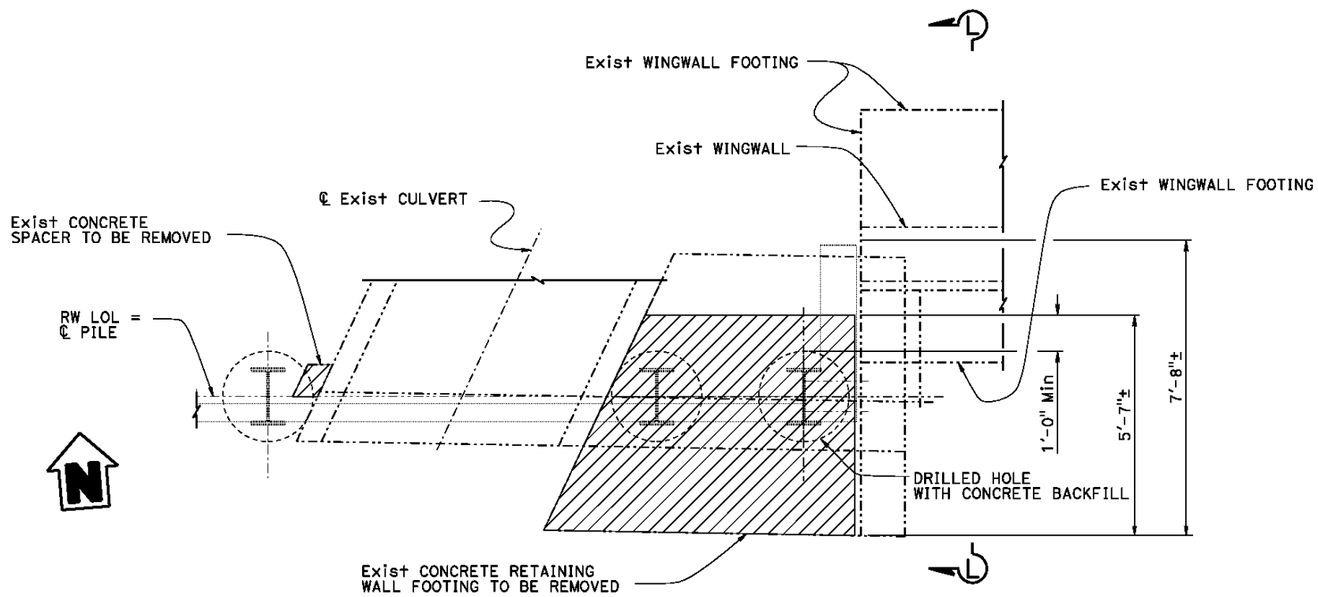

PLAN
½" = 1'-0"

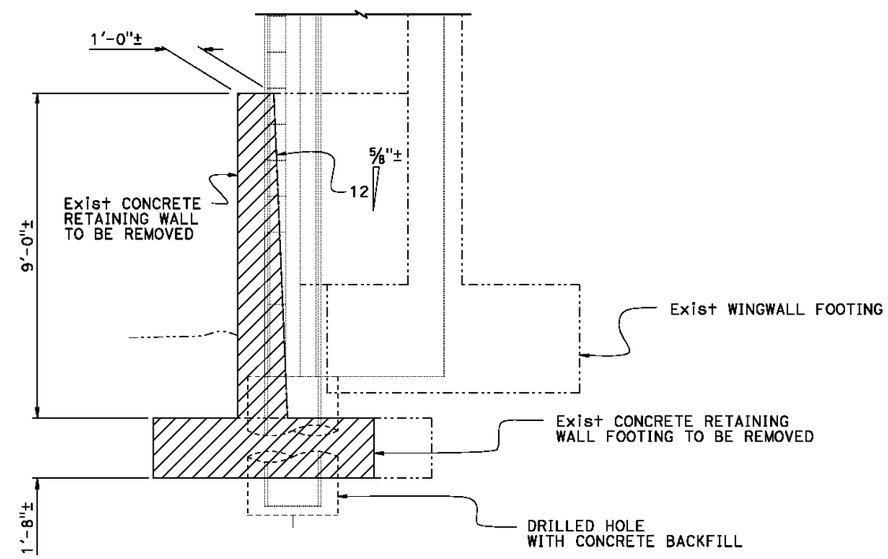

VIEW L-L
½" = 1'-0"

Legend:

Indicates Exist Concrete Retaining Wall Removal

NOTE:
THE CONTRACTOR SHALL VERIFY ALL CONTROLLING FIELD DIMENSIONS BEFORE ORDERING OR FABRICATING ANY MATERIAL.

CONCRETE RETAINING WALL REMOVAL DETAILS
END RW 521

	BY	CHECKED
DESIGN	H. Setberg	J. Higareda
DETAILS	S. Cholda	J. Higareda
QUANTITIES	C. Chan	H. Setberg

STATE OF CALIFORNIA
DEPARTMENT OF TRANSPORTATION

DIVISION OF ENGINEERING SERVICES
STRUCTURE DESIGN
DESIGN BRANCH 15

BRIDGE NO. 53E0249
POST MILE 8.69

REFINERY SOLDIER PILE WALLS
SOLDIER PILE WALLS DETAILS NO. 15

STRUCTURES DESIGN DETAIL SHEET (ENGLISH) (REV. 09-01-10)

ORIGINAL SCALE IN INCHES FOR REDUCED PLANS 0 1 2 3

UNIT: 3604
PROJECT NUMBER & PHASE: 07120000641
CONTRACT NO.: 07-3X3904

DISREGARD PRINTS BEARING EARLIER REVISION DATES

REVISION DATES 11-16-12 03-15-13 05-01-13 06-26-13

SHEET 21 OF 36

FILE => 53e0516_17_19_20_21-g-rwdt15.dgn

USERNAME => a119982 DATE PLOTTED => 26-JUN-2013 TIME PLOTTED => 14:29

DIST	COUNTY	ROUTE	POST MILES TOTAL PROJECT	SHEET No.	TOTAL SHEETS
07	LA	01	8.7	36	50

REGISTERED CIVIL ENGINEER 03-15-13 DATE

7-08-13
PLANS APPROVAL DATE

REGISTERED PROFESSIONAL ENGINEER Hogni Setberg No. C70338 Exp. 9-30-14 CIVIL STATE OF CALIFORNIA

The State of California or its officers or agents shall not be responsible for the accuracy or completeness of scanned copies of this plan sheet.

Notes:
1. Cast the letter "B" on back face of panel. Place inprint such, that it does not decrease clearances to the rebar.
2. Glue Filter Fabric to back face of panels.
3. Glue shims to one of the lagging panels.
4. Each lifting insert must have the capacity of 1.5 times the weight of the lagging panel.
4. All Reinf in lagging panels to be Epoxy Coated Prefabricated Reinforcement.

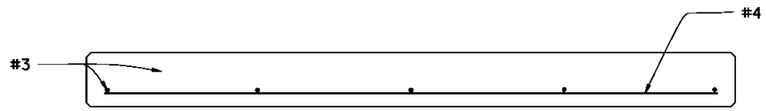

SECTION A-A
1½" = 1'-0"

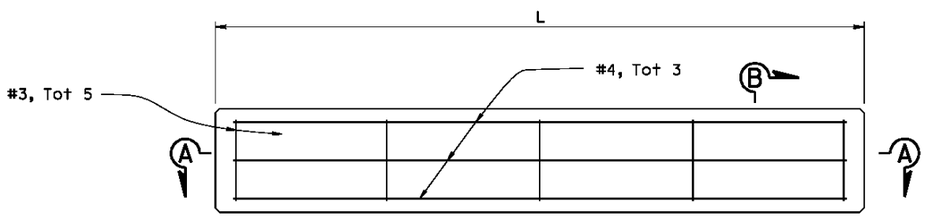

ELEVATION
1½" = 1'-0"

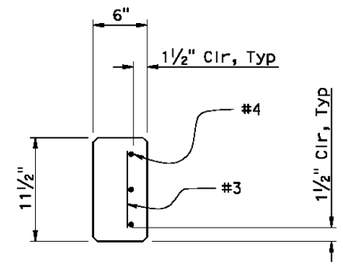

SECTION B-B
1½" = 1'-0"

PRECAST CONCRETE LAGGING DETAIL (L < 6')

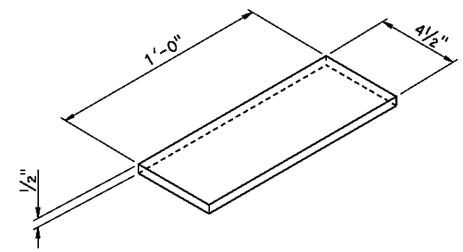

HDPE SHIM DETAILS
NO SCALE

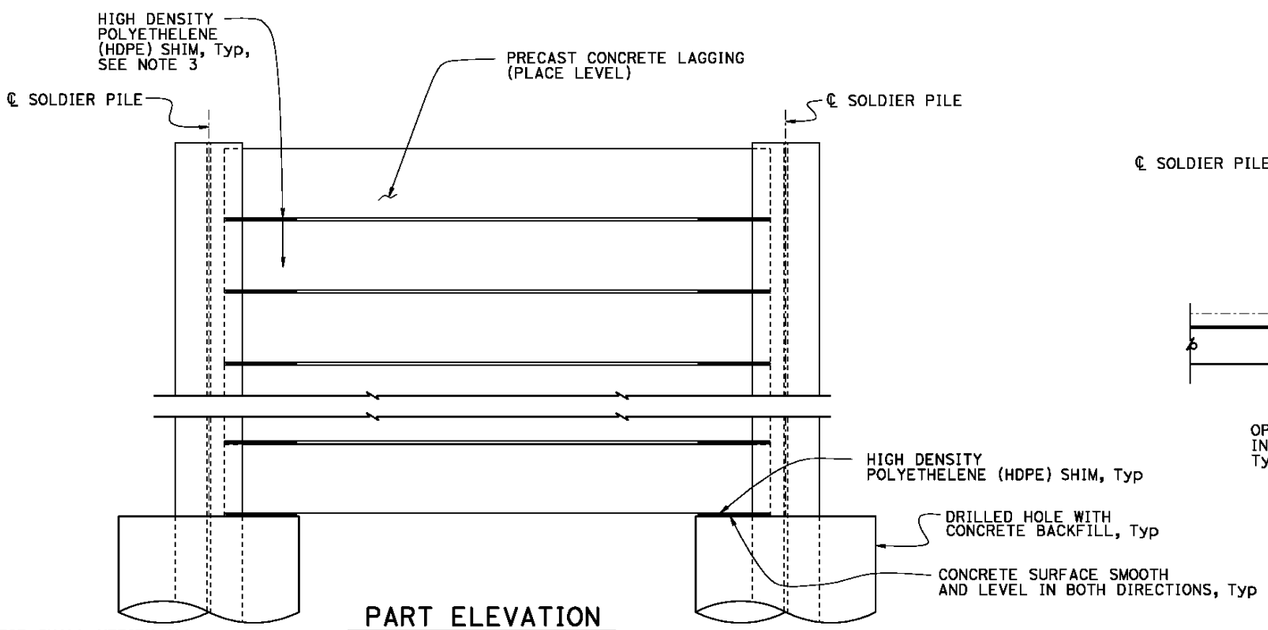

PART ELEVATION
1" = 1'-0"

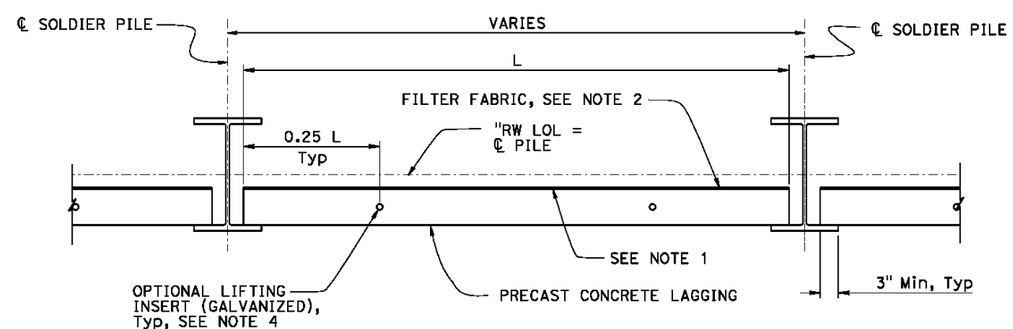

PART PLAN
1" = 1'-0"

NOTE:
THE CONTRACTOR SHALL VERIFY ALL CONTROLLING FIELD DIMENSIONS BEFORE ORDERING OR FABRICATING ANY MATERIAL.

	BY	CHECKED
DESIGN	H. Setberg	J. Higareda
DETAILS	S. Cholda	J. Higareda
QUANTITIES	C. Chan	S. Moradi

STATE OF CALIFORNIA
DEPARTMENT OF TRANSPORTATION

DIVISION OF ENGINEERING SERVICES
STRUCTURE DESIGN
DESIGN BRANCH 15

BRIDGE NO. VARIES
POST MILE 8.67-8.77

REFINERY SOLDIER PILE WALLS
LAGGING PANEL DETAILS NO. 1

STRUCTURES DESIGN DETAIL SHEET (ENGLISH) (REV. 09-01-10)

ORIGINAL SCALE IN INCHES FOR REDUCED PLANS 0 1 2 3

UNIT: 3604
PROJECT NUMBER & PHASE: 07120000641
CONTRACT NO.: 07-3X3904

DISREGARD PRINTS BEARING EARLIER REVISION DATES

REVISION DATES 11-08-12 03-14-13 04-24-13 03-15-13

SHEET 22 OF 36

FILE => 53e0516_17_19_20_21-g-rwdt16.dgn

USERNAME => a119882 DATE PLOTTED => 26-JUN-2013 TIME PLOTTED => 14:29

DIST	COUNTY	ROUTE	POST MILES TOTAL PROJECT	SHEET No.	TOTAL SHEETS
07	LA	01	8.7	37	50

REGISTERED CIVIL ENGINEER 03-15-13 DATE

7-08-13
PLANS APPROVAL DATE

REGISTERED PROFESSIONAL ENGINEER Hogni Setberg No. C70338 Exp. 9-30-14 CIVIL STATE OF CALIFORNIA

The State of California or its officers or agents shall not be responsible for the accuracy or completeness of scanned copies of this plan sheet.

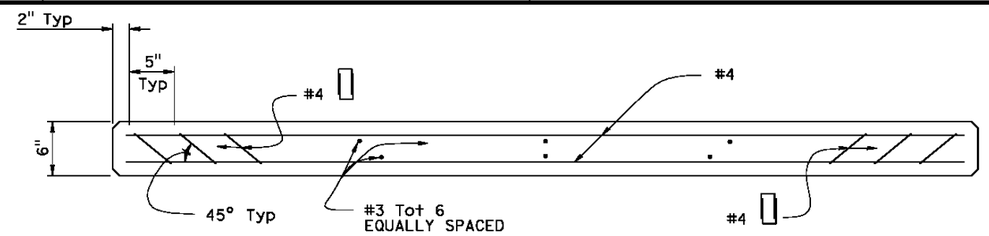

SECTION C-C
1½" = 1'-0"

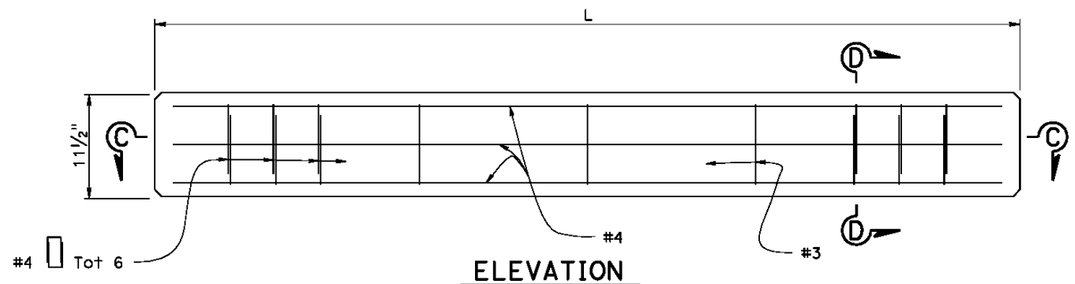

ELEVATION
1½" = 1'-0"

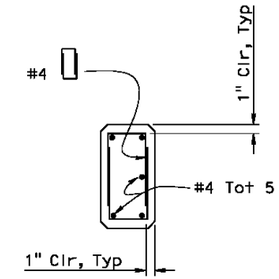

SECTION D-D
1½" = 1'-0"

PRECAST CONCRETE LAGGING DETAIL (6' < L < 8')

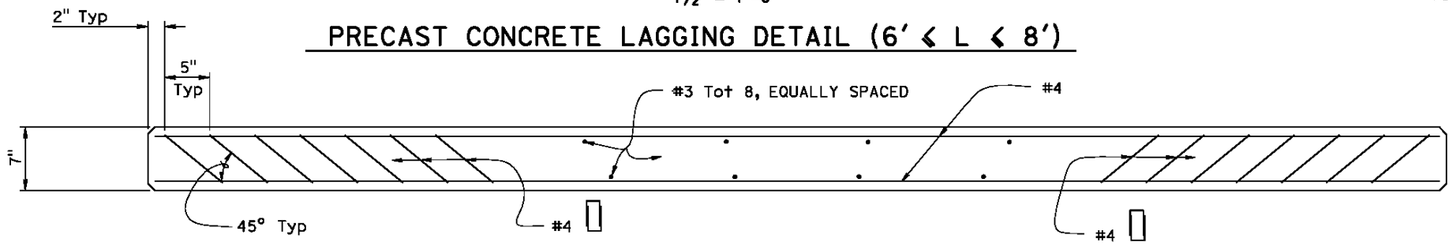

SECTION E-E
1½" = 1'-0"

Note:
1. All Reinf in lagging panels to be Epoxy Coated Prefabricated Reinforcement

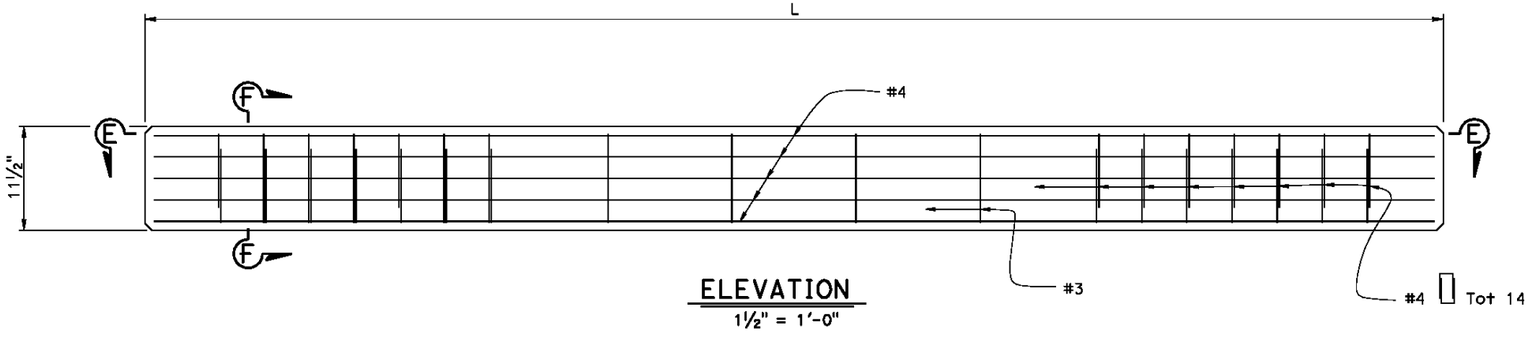

ELEVATION
1½" = 1'-0"

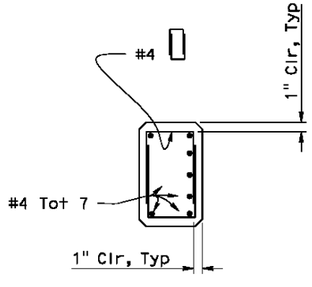

SECTION F-F
1½" = 1'-0"

NOTE:
THE CONTRACTOR SHALL VERIFY ALL CONTROLLING FIELD DIMENSIONS BEFORE ORDERING OR FABRICATING ANY MATERIAL.

PRECAST CONCRETE LAGGING DETAIL (8' < L ≤ 12')

	BY	CHECKED
DESIGN	H. Setberg	J. Higareda
DETAILS	S. Cholda	J. Higareda
QUANTITIES	C. Chan	S. Moradi

STATE OF CALIFORNIA
DEPARTMENT OF TRANSPORTATION

DIVISION OF ENGINEERING SERVICES
STRUCTURE DESIGN
DESIGN BRANCH 15

BRIDGE NO. VARIES
POST MILE 8.67-8.77

REFINERY SOLDIER PILE WALLS
LAGGING PANEL DETAILS NO. 2

STRUCTURES DESIGN DETAIL SHEET (ENGLISH) (REV. 09-01-10)

ORIGINAL SCALE IN INCHES FOR REDUCED PLANS 0 1 2 3

UNIT: 3604
PROJECT NUMBER & PHASE: 07120000641
CONTRACT NO.: 07-3X3904

DISREGARD PRINTS BEARING EARLIER REVISION DATES

REVISION DATES 12-08-12 03-15-13 03-18-13 03-14-13

SHEET 23 OF 36

FILE => 53e0516_17_19_20_21-g-rwd117.dgn

USERNAME => s119982 DATE PLOTTED => 26-JUN-2013 TIME PLOTTED => 14:29

DIST	COUNTY	ROUTE	POST MILES TOTAL PROJECT	SHEET No.	TOTAL SHEETS
07	LA	01	8.7	38	50

REGISTERED CIVIL ENGINEER 03-15-13 DATE

7-08-13
PLANS APPROVAL DATE

REGISTERED PROFESSIONAL ENGINEER Hogni Setberg No. C70338 Exp. 9-30-14 CIVIL STATE OF CALIFORNIA

The State of California or its officers or agents shall not be responsible for the accuracy or completeness of scanned copies of this plan sheet.

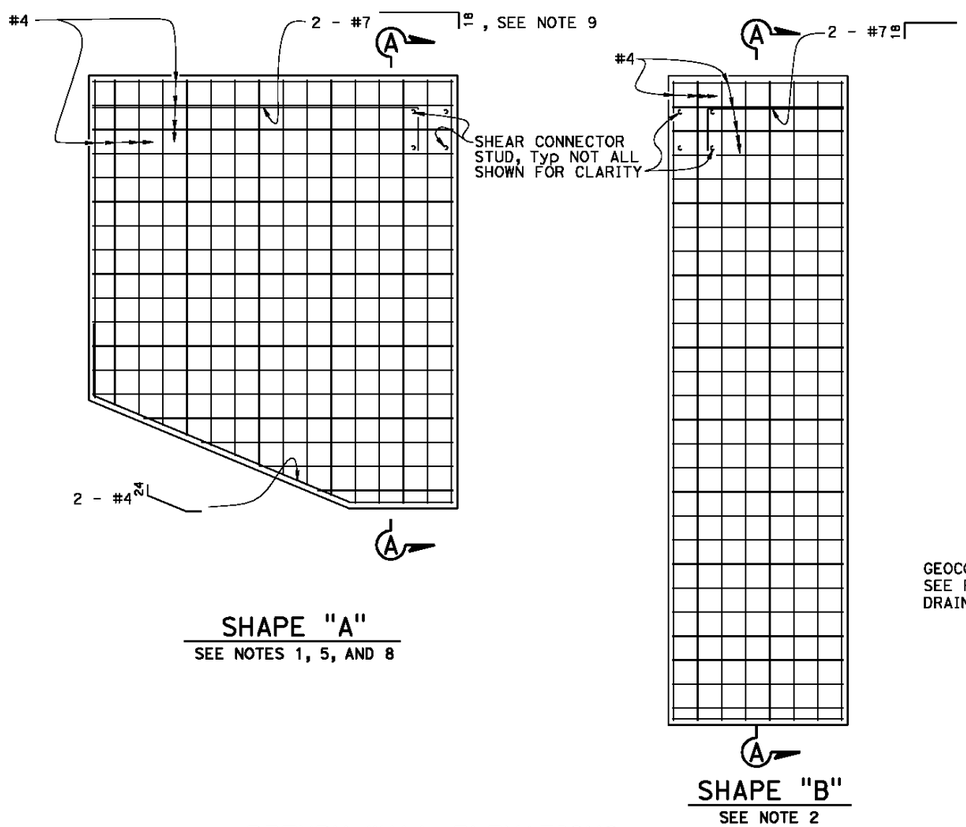

RETURN WALL ELEVATIONS
½" = 1'-0"

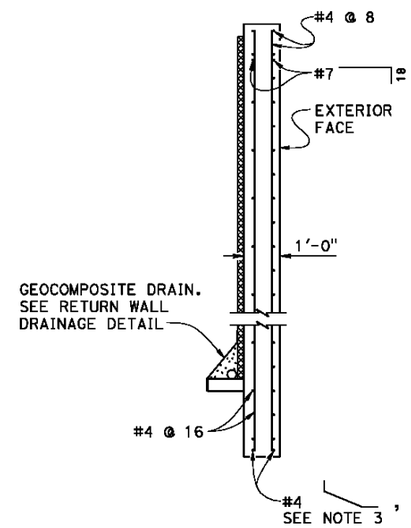

SECTION A-A
½" = 1'-0"

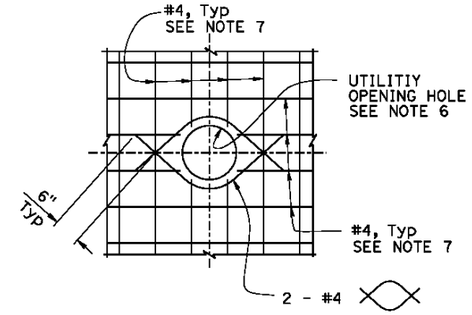

UTILITY OPENING DETAIL
½" = 1'-0"

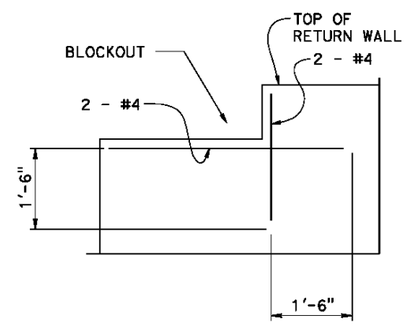

BLOCKOUT DETAIL
½" = 1'-0"

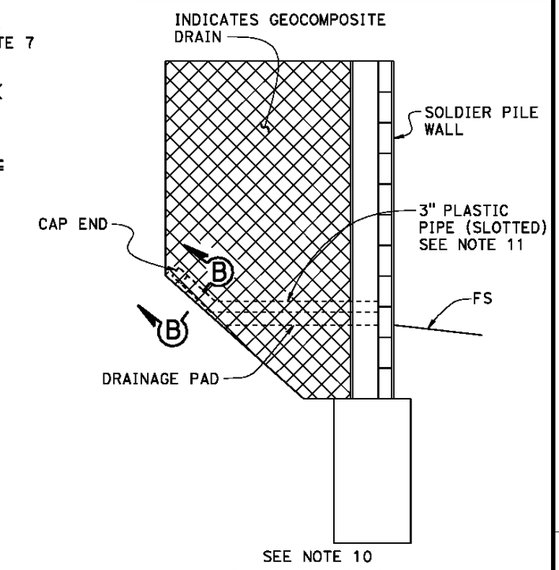

RETURN WALL DRAINAGE DETAIL
NO SCALE

NOTES:

1. Return Wall at Begin RW 519 shown, Return Walls at Begin and End RW 516, Begin and End RW 517, and Begin RW 520 similar.
2. Return Wall at End RW 521.
3. For Return Wall at End RW 521 use straight bar.
4. For Return Walls at End RW 519, End RW 520, and Begin RW 521, see "SOLDIER PILE WALLS DETAILS" sheets.
5. For utilities opening, see "UTILITY OPENING DETAIL".
6. Opening diameter to be 2" greater than Utility diameter. Place 1" Exp Jt Filler around utility.
7. Space bars at 8" on both faces.
8. For blockuots, see "BLOCKOUT DETAIL".
9. Move bars lower to next shear connector stud to clear Blockout as neccessary.
10. Return wall at Begin RW 516 shown, Return walls at End RW 516, Begin and End RW 517, Begin RW 519, and Begin RW 520, similar.
11. Line up ℄ pipe with ℄ lagging gap. Place pipe flush with back of lagging. Pipe to penetrate filter fabric on back of lagging.
12. Grind exposed flange surface flush and flange welds where lagging is in bearing. For splice embedded in concrete apply zinc primer. For splice above concrete, coat as shown on "INDEX TO PLANS" sheet.

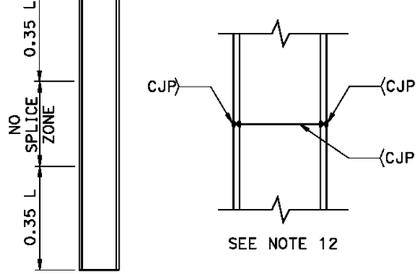

STEEL SOLDIER PILE SPLICE DETAIL
NO SCALE

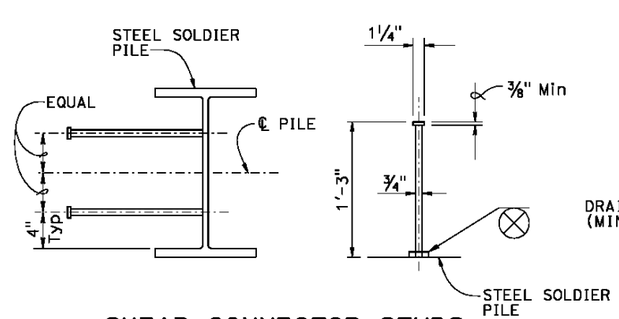

SHEAR CONNECTOR STUDS
1½" = 1'-0"

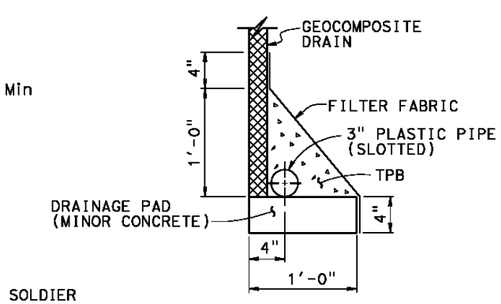

SECTION B-B
½" = 1'-0"

NOTE:
THE CONTRACTOR SHALL VERIFY ALL CONTROLLING FIELD DIMENSIONS BEFORE ORDERING OR FABRICATING ANY MATERIAL.

	BY	CHECKED
DESIGN	H. Setberg	J. Higareda
DETAILS	S. Cholda	J. Higareda
QUANTITIES	C. Chan	H. Setberg

STATE OF CALIFORNIA
DEPARTMENT OF TRANSPORTATION

DIVISION OF ENGINEERING SERVICES
STRUCTURE DESIGN
DESIGN BRANCH 15

BRIDGE NO. VARIES
POST MILE 8.67-8.77

REFINERY SOLDIER PILE WALLS
MISCELLANEOUS DETAILS

STRUCTURES DESIGN DETAIL SHEET (ENGLISH) (REV. 09-01-10)

ORIGINAL SCALE IN INCHES FOR REDUCED PLANS 0 1 2 3

UNIT: 3604
PROJECT NUMBER & PHASE: 07120000641
CONTRACT NO.: 07-3X3904

DISREGARD PRINTS BEARING EARLIER REVISION DATES

REVISION DATES 11-29-12 04-24-13 05-07-13 05-15-13

SHEET 24 OF 36

FILE => 53e0516_17_19_20_21-g-rwdt18.dgn

USERNAME => s119982 DATE PLOTTED => 26-JUN-2013 TIME PLOTTED => 14:29

DIST	COUNTY	ROUTE	POST MILES TOTAL PROJECT	SHEET No.	TOTAL SHEETS
07	LA	01	8.7	39	50

REGISTERED CIVIL ENGINEER 03-15-13 DATE

7-08-13
PLANS APPROVAL DATE

REGISTERED PROFESSIONAL ENGINEER Hognl Setberg No. C70338 Exp. 9-30-14 CIVIL STATE OF CALIFORNIA

The State of California or its officers or agents shall not be responsible for the accuracy or completeness of scanned copies of this plan sheet.

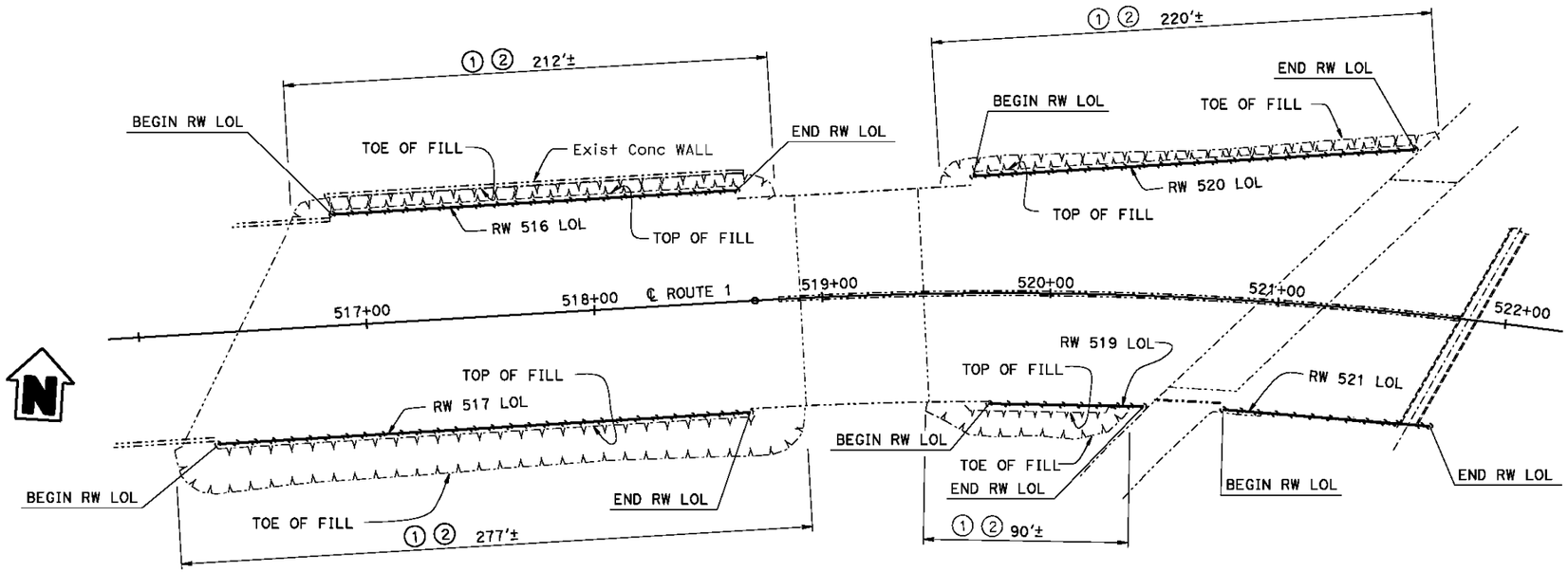

PLAN
1" = 30'-0"

Legend:

① Limits of AC Slope Paving Removal

② Limits of slope paving with Vegetation Control (Asphalt Composite)

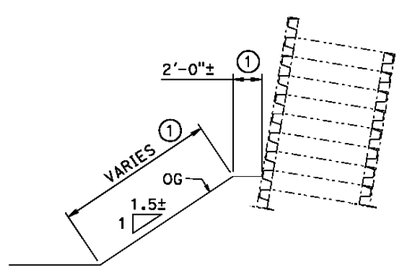

TYPICAL SECTION (REMOVAL)
1" = 5'-0"

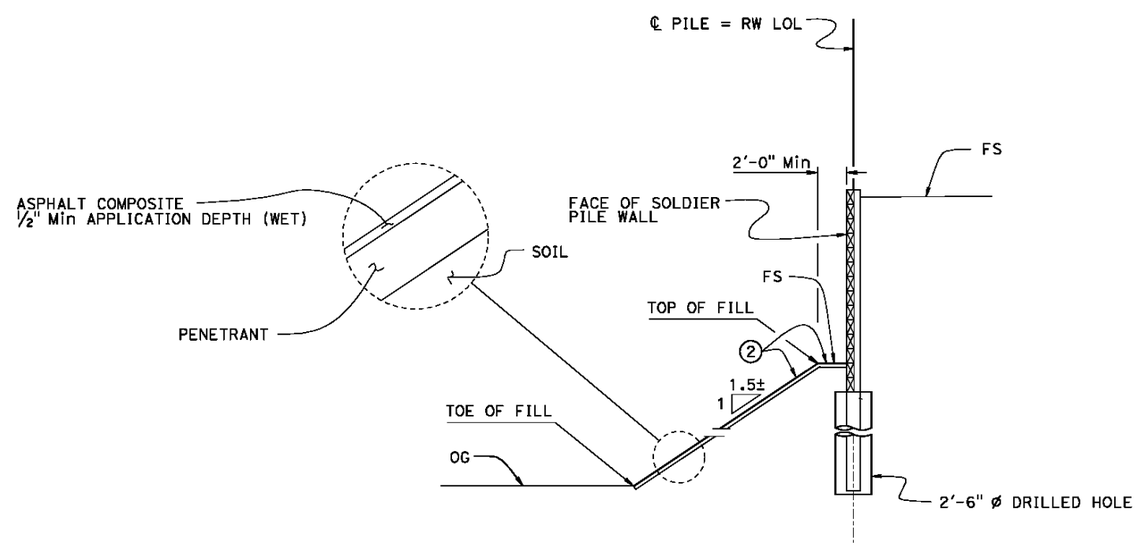

TYPICAL SECTION
1" = 5'-0"

NOTE:
THE CONTRACTOR SHALL VERIFY ALL CONTROLLING FIELD DIMENSIONS BEFORE ORDERING OR FABRICATING ANY MATERIAL.

	BY	CHECKED
DESIGN	H. Setberg	J. Higareda
DETAILS	S. Cholda	J. Higareda
QUANTITIES	T. Menard	S. Moradi

STATE OF CALIFORNIA
DEPARTMENT OF TRANSPORTATION

DIVISION OF ENGINEERING SERVICES
STRUCTURE DESIGN
DESIGN BRANCH 15

BRIDGE NO. VARIES
POST MILE 8.67 - 8.77

REFINERY SOLDIER PILE WALLS
SLOPE PAVING DETAILS

STRUCTURES DESIGN DETAIL SHEET (ENGLISH) (REV. 09-01-10)

ORIGINAL SCALE IN INCHES FOR REDUCED PLANS 0 1 2 3

UNIT: 3604
PROJECT NUMBER & PHASE: 07120000641
CONTRACT NO.: 07-3X3904

DISREGARD PRINTS BEARING EARLIER REVISION DATES

REVISION DATES: 02-08-13 04-26-13 05-01-13 05-01-13

SHEET 25 OF 36

FILE => 53e0516_17_19_20_21-w-sp.dgn

USERNAME => a119882 DATE PLOTTED => 26-JUN-2013 TIME PLOTTED => 14:29

DIST	COUNTY	ROUTE	POST MILES TOTAL PROJECT	SHEET No.	TOTAL SHEETS
07	LA	01	8.7	40	50

REGISTERED CIVIL ENGINEER 03-15-13 DATE

7-08-13
PLANS APPROVAL DATE

REGISTERED PROFESSIONAL ENGINEER Hognl Setberg No. C70338 Exp. 9-30-14 CIVIL STATE OF CALIFORNIA

The State of California or its officers or agents shall not be responsible for the accuracy or completeness of scanned copies of this plan sheet.

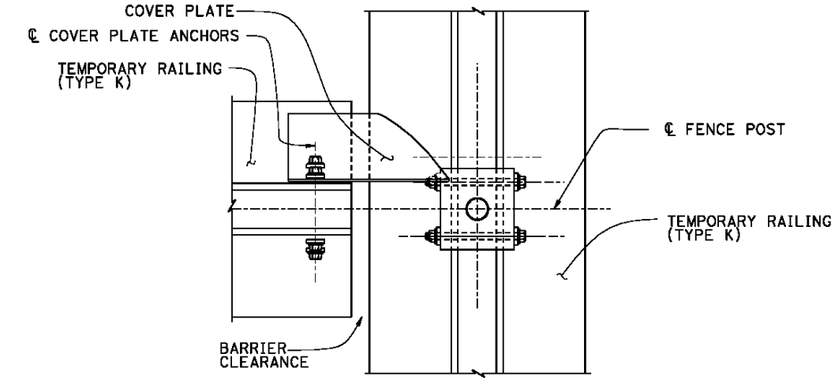

SECTION A-A
1½" = 1'-0"

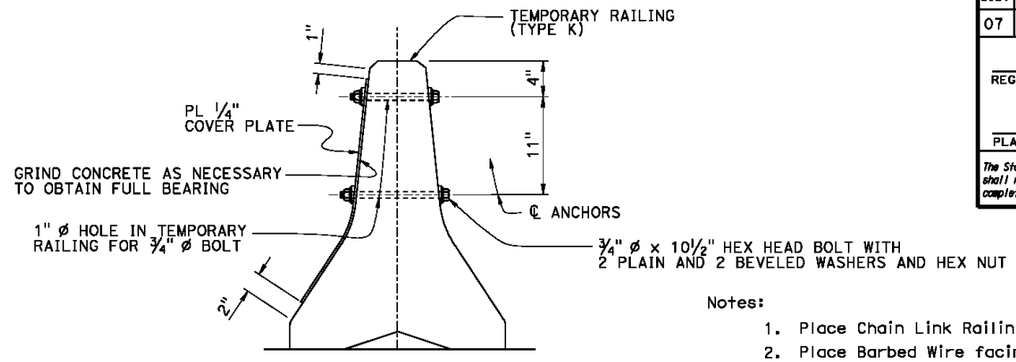

SECTION B-B
1½" = 1'-0"

Notes:

1. Place Chain Link Railing Fabric on traffic side.
2. Place Barbed Wire facing away from traffic side.
3. For "DETAIL A" and "BRACKET DETAIL", see "TEMPORARY CHAIN LINK RAILING NO. 2" sheet.
4. Posts shall be vertical.
5. Railing shall conform to horizontal and vertical alignment.
6. Alternative details may be submitted by the contrator for engineer approval.
7. Provide thimbles at all cable loops.

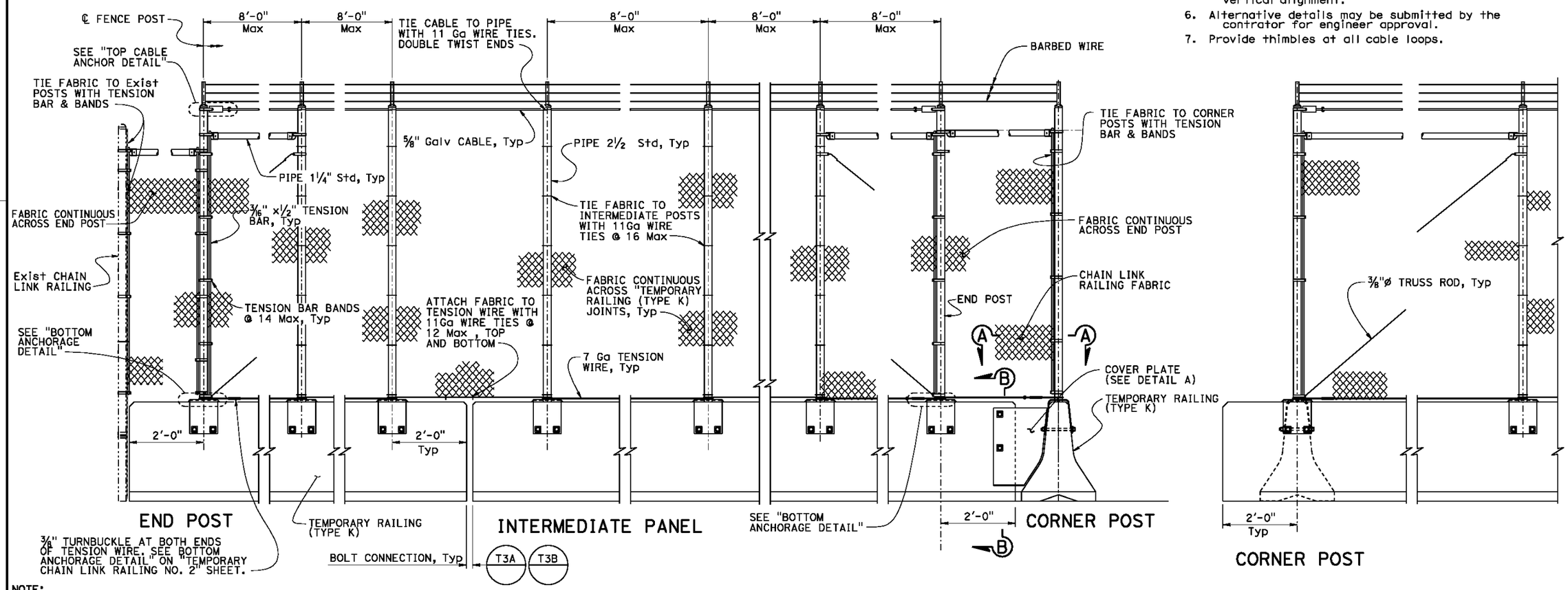

PART ELEVATION
¾" = 1'-0"

NOTE:
THE CONTRACTOR SHALL VERIFY ALL CONTROLLING FIELD DIMENSIONS BEFORE ORDERING OR FABRICATING ANY MATERIAL.

	BY	CHECKED
DESIGN	H. Setberg	J. Higareda
DETAILS	S. Cholda	J. Higareda
QUANTITIES	C. Chan	H. Setberg

STATE OF CALIFORNIA
DEPARTMENT OF TRANSPORTATION

DIVISION OF ENGINEERING SERVICES
STRUCTURE DESIGN
DESIGN BRANCH 15

BRIDGE NO. VARIES
POST MILE 8.67-8.77

REFINARY SOLDIER PILE WALLS
TEMPORARY CHAIN LINK RAILING NO. 1

STRUCTURES DESIGN DETAIL SHEET (ENGLISH) (REV. 09-01-10)

ORIGINAL SCALE IN INCHES FOR REDUCED PLANS 0 1 2 3

UNIT: 3604
PROJECT NUMBER & PHASE: 07120000641
CONTRACT NO.: 07-3X3904

DISREGARD PRINTS BEARING EARLIER REVISION DATES

REVISION DATES: 02-28-13 05-01-13 03-08-13 04-26-13

SHEET 26 OF 36

FILE => 53e0516_17_19_20_21-x-clr01.dgn

USERNAME => s119892 DATE PLOTTED => 26-JUN-2013 TIME PLOTTED => 14:29

DIST	COUNTY	ROUTE	POST MILES TOTAL PROJECT	SHEET No.	TOTAL SHEETS
07	LA	01	8.7	41	50

REGISTERED CIVIL ENGINEER 03-15-13 DATE

7-08-13
PLANS APPROVAL DATE

REGISTERED PROFESSIONAL ENGINEER Hogni Setberg No. C70338 Exp. 9-30-14 CIVIL STATE OF CALIFORNIA

The State of California or its officers or agents shall not be responsible for the accuracy or completeness of scanned copies of this plan sheet.

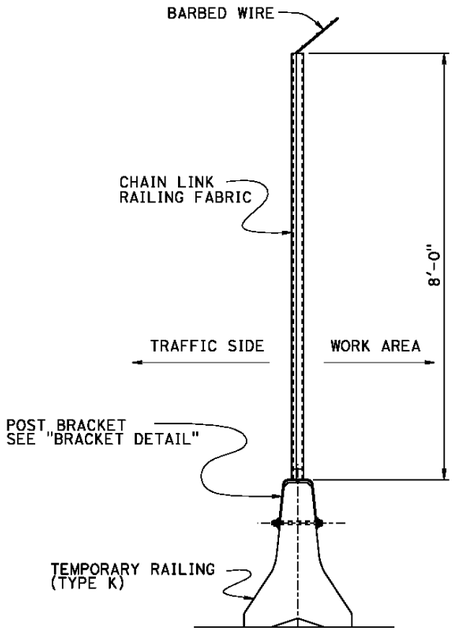

TYPICAL SECTION

3/4" = 1'-0"

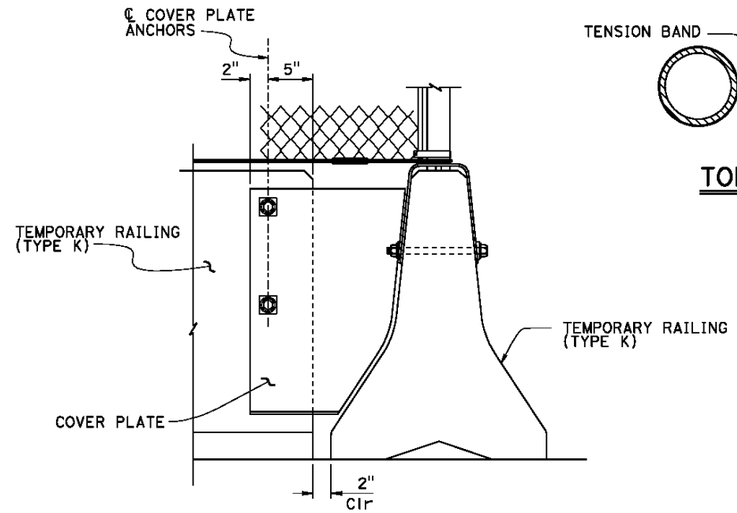

DETAIL A

1 1/2" = 1'-0"

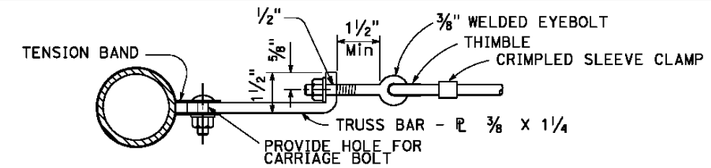

TOP CABLE ANCHORAGE DETAIL

NO SCALE

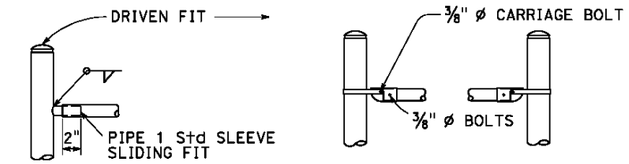

TYPICAL DETAILS ALTERNATIVE DETAILS

END BRACE DETAILS

NO SCALE

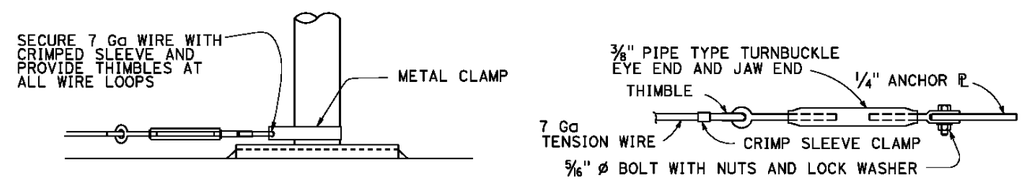

BOTTOM ANCHORAGE DETAIL

NO SCALE

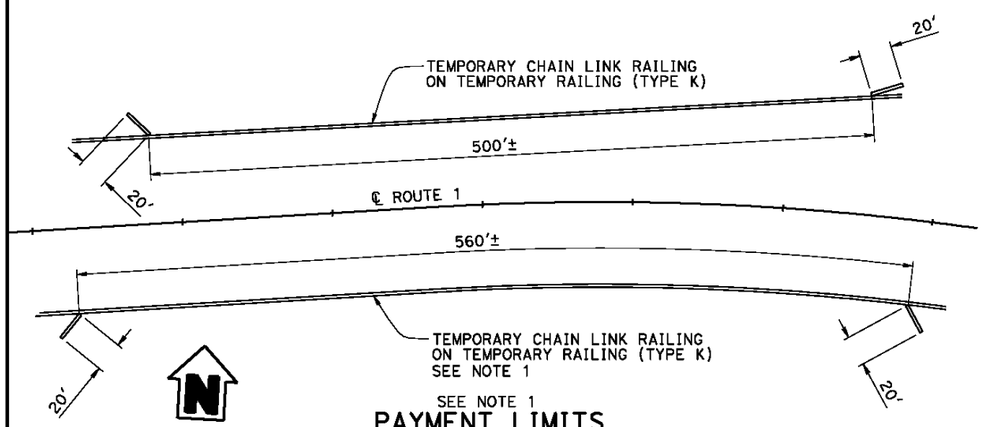

SEE NOTE 1

PAYMENT LIMITS

NO SCALE

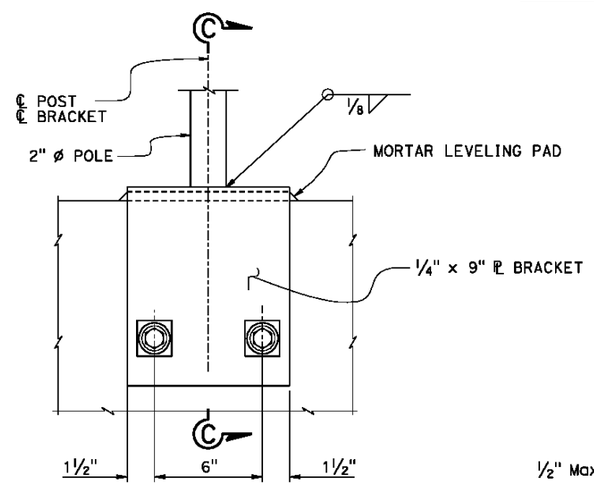

ELEVATION

3" = 1'-0"

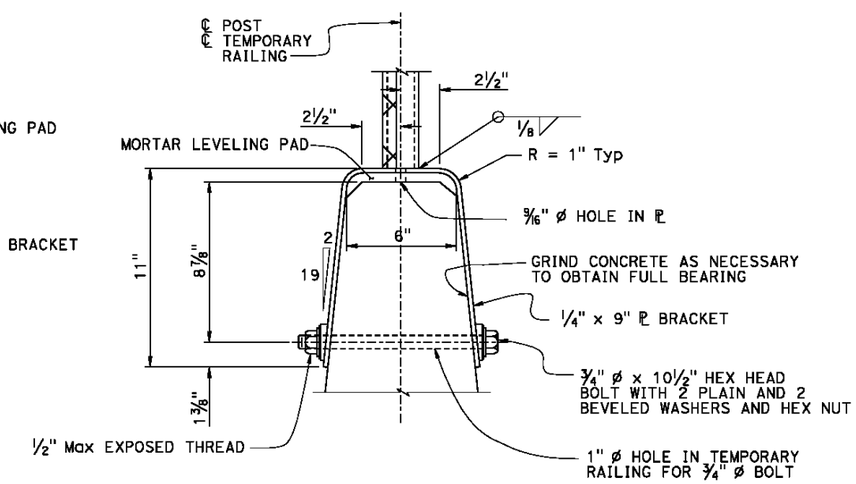

SECTION C-C

3" = 1'-0"

BRACKET DETAIL

NOTE:
THE CONTRACTOR SHALL VERIFY ALL CONTROLLING FIELD DIMENSIONS BEFORE ORDERING OR FABRICATING ANY MATERIAL.

NOTES:
1. Payment Limits for Temporary Chain Link Railing. For Payment Limits for Temporary Railing (Type K) See "Road Plans".

	BY	CHECKED
DESIGN	H. Setberg	J. Higareda
DETAILS	S. Cholda	J. Higareda
QUANTITIES	C. Chan	H. Setberg

STATE OF CALIFORNIA DEPARTMENT OF TRANSPORTATION

DIVISION OF ENGINEERING SERVICES STRUCTURE DESIGN DESIGN BRANCH 15

BRIDGE NO. VARIES
POST MILE 8.67-8.77

REFINARY SOLDIER PILE WALLS
TEMPORARY CHAIN LINK RAILING NO. 2

STRUCTURES DESIGN DETAIL SHEET (ENGLISH) (REV. 09-01-10)

ORIGINAL SCALE IN INCHES FOR REDUCED PLANS 0 1 2 3

UNIT: 3604
PROJECT NUMBER & PHASE: 07120000641
CONTRACT NO.: 3X3904

DISREGARD PRINTS BEARING EARLIER REVISION DATES

REVISION DATES 03-01-13 03-15-13 04-26-13 03-15-13

SHEET 27 OF 36

FILE => 53e0516_17_19_20_21-x-clr02.dgn

USERNAME => a119882 DATE PLOTTED => 26-JUN-2013 TIME PLOTTED => 14:29

DIST	COUNTY	ROUTE	POST MILES TOTAL PROJECT	SHEET No.	TOTAL SHEETS
07	LA	01	8.7	42	50

REGISTERED CIVIL ENGINEER 03-15-13 DATE

7-08-13
PLANS APPROVAL DATE

REGISTERED PROFESSIONAL ENGINEER Hogni Setberg No. C70338 Exp. 9-30-14 CIVIL STATE OF CALIFORNIA

The State of California or its officers or agents shall not be responsible for the accuracy or completeness of scanned copies of this plan sheet.

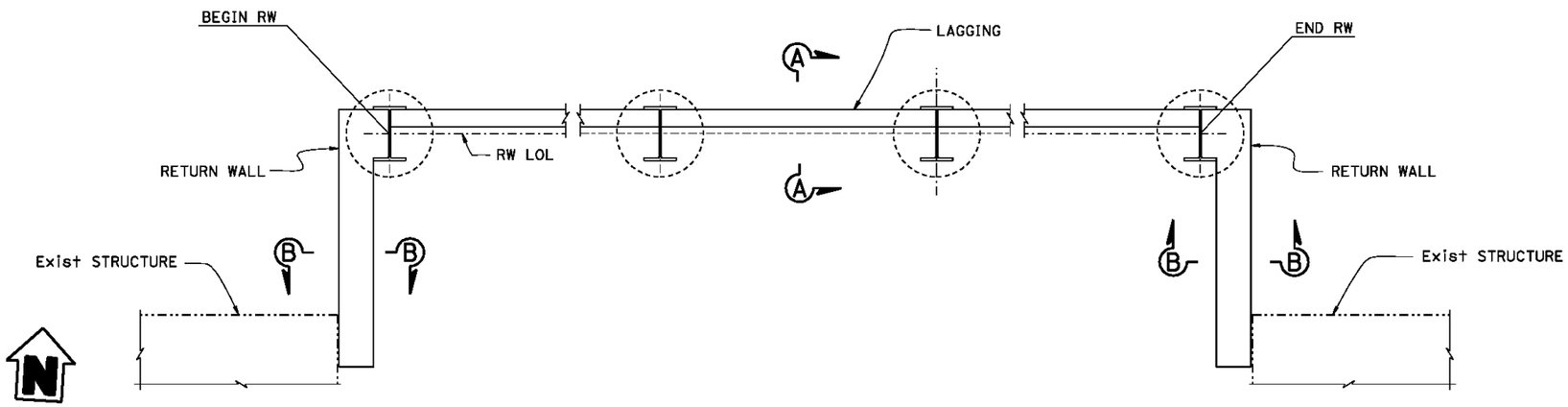

Note:

1. Exist Metal Crib Wall not shown for clarity.

PLAN

NO SCALE
(SEE NOTE 1)

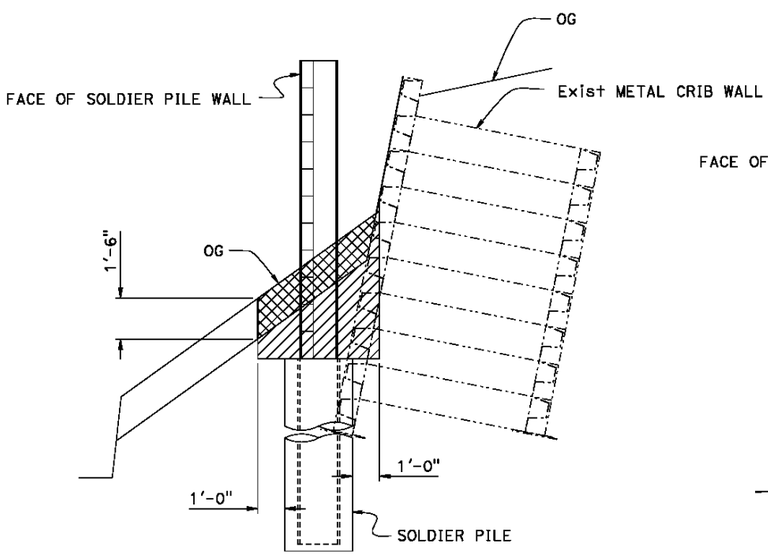

EXCAVATION

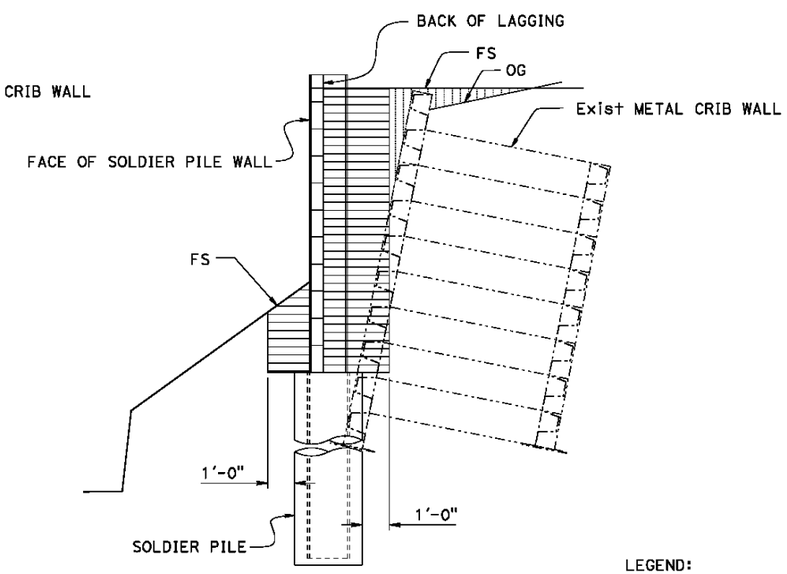

BACKFILL

SECTION A-A

NO SCALE

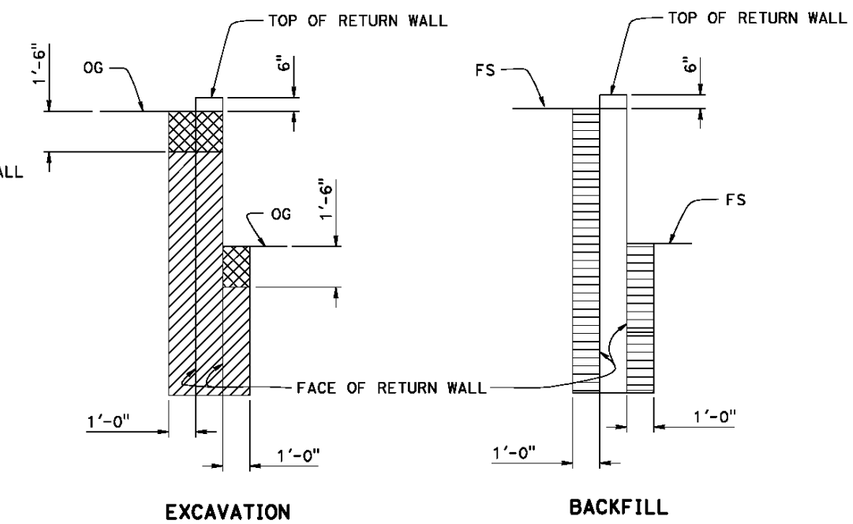

EXCAVATION

BACKFILL

SECTION B-B

NO SCALE

LEGEND:

- Indicates Structure Excavation (Type Z-2), (ADL)
- Indicates Structure Excavation (Type DC), with Petroleum Hydrocarbons
- Indicates Structure Backfill (Soldier Pile Wall)
- Indicates Roadway Embankment, see "Road Plans"

NOTE:
THE CONTRACTOR SHALL VERIFY ALL CONTROLLING FIELD DIMENSIONS BEFORE ORDERING OR FABRICATING ANY MATERIAL.

	BY	CHECKED
DESIGN	H. Setberg	J. Higareda
DETAILS	S. Cholda	J. Higareda
QUANTITIES	C. Chan	A. Logus

STATE OF CALIFORNIA
DEPARTMENT OF TRANSPORTATION

DIVISION OF ENGINEERING SERVICES
STRUCTURE DESIGN
DESIGN BRANCH 15

BRIDGE NO. 53E0245
POST MILE 8.76

REFINERY SOLDIER PILE WALLS
EXCAVATION & BACKFILL RW 516

STRUCTURES DESIGN DETAIL SHEET (ENGLISH) (REV. 09-01-10)

ORIGINAL SCALE IN INCHES FOR REDUCED PLANS 0 1 2 3

UNIT: 3604
PROJECT NUMBER & PHASE: 07120000641
CONTRACT NO.: 07-3X3904

DISREGARD PRINTS BEARING EARLIER REVISION DATES

REVISION DATES 12-18-12 06-26-13 03-18-13 04-25-13

SHEET 28 OF 36

FILE => 53e0516_17_19_20_21-y-exc-bck01.dgn

USERNAME => a119982 DATE PLOTTED => 26-JUN-2013 TIME PLOTTED => 14:29

DIST	COUNTY	ROUTE	POST MILES TOTAL PROJECT	SHEET No.	TOTAL SHEETS
07	LA	01	8.7	43	50

REGISTERED CIVIL ENGINEER — DATE 03-15-13

PLANS APPROVAL DATE 7-08-13

REGISTERED PROFESSIONAL ENGINEER — Hogni Setberg — No. C70338 — Exp. 9-30-14 — CIVIL — STATE OF CALIFORNIA

The State of California or its officers or agents shall not be responsible for the accuracy or completeness of scanned copies of this plan sheet.

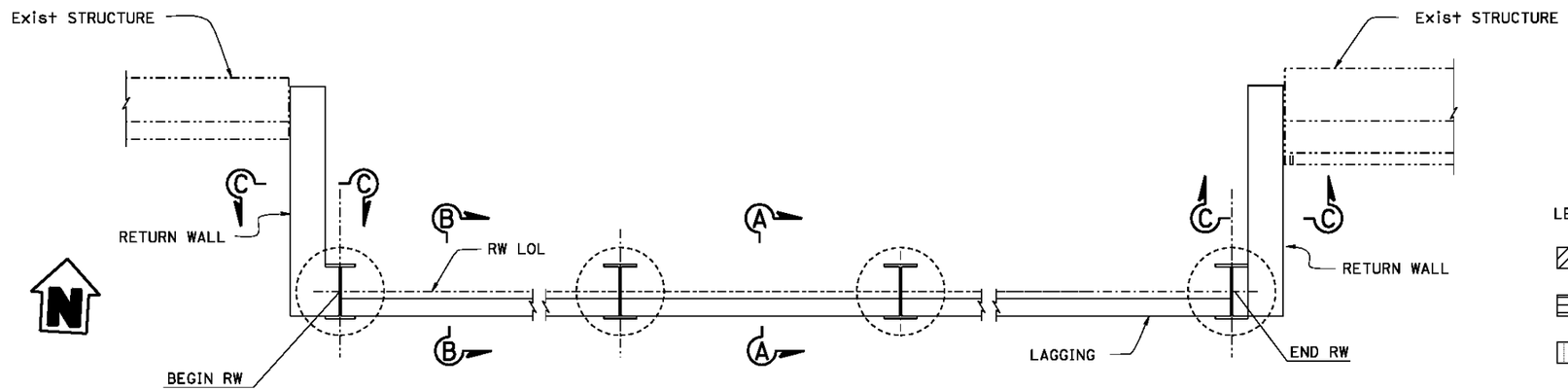

PLAN

NO SCALE
(SEE NOTE 1)

LEGEND:

- Indicates Structure Excavation (Type DC), with Petroleum Hydrocarbons
- Indicates Structure Backfill (Soldier Pile Wall)
- Indicates Roadway Embankment, see "Road Plans"

Note:

1. Exist Metal Crib Wall not shown for clarity.

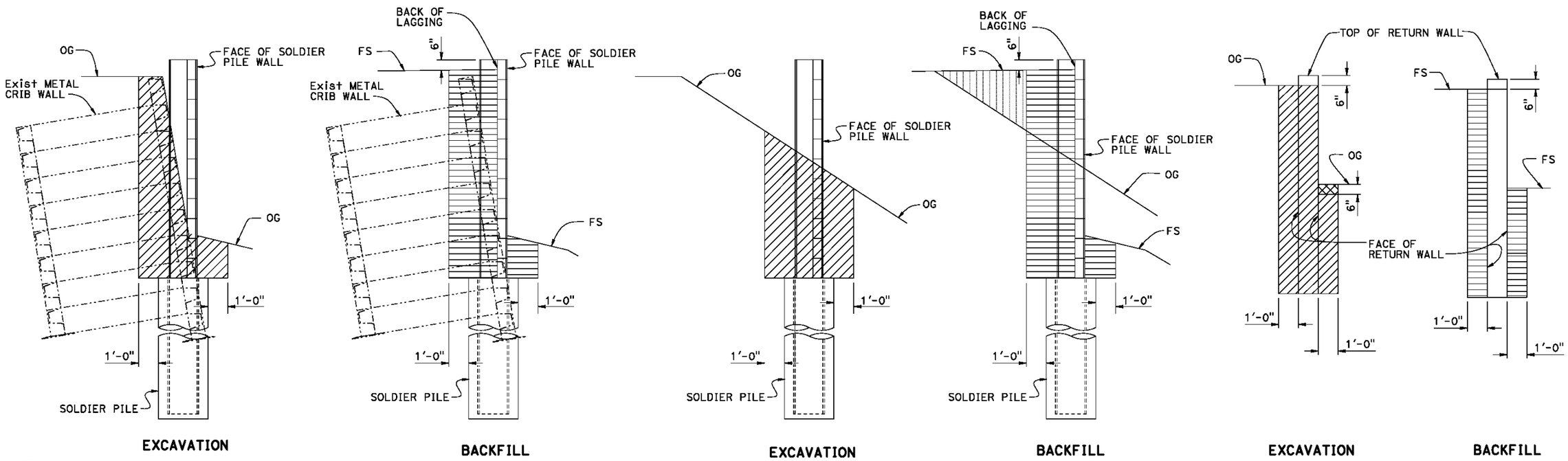

NOTE:
THE CONTRACTOR SHALL VERIFY ALL CONTROLLING FIELD DIMENSIONS BEFORE ORDERING OR FABRICATING ANY MATERIAL.

SECTION A-A

NO SCALE

SECTION B-B

NO SCALE

SECTION C-C

NO SCALE

	BY	CHECKED
DESIGN	H. Setberg	J. Higareda
DETAILS	S. Cholda	J. Higareda
QUANTITIES	C. Chan	A. Logus

STATE OF CALIFORNIA
DEPARTMENT OF TRANSPORTATION

DIVISION OF ENGINEERING SERVICES
STRUCTURE DESIGN
DESIGN BRANCH 15

BRIDGE NO. 53E0246
POST MILE 8.77

REFINERY SOLDIER PILE WALLS
EXCAVATION & BACKFILL RW 517

STRUCTURES DESIGN DETAIL SHEET (ENGLISH) (REV. 09-01-10)

ORIGINAL SCALE IN INCHES FOR REDUCED PLANS 0 1 2 3

UNIT: 3604
PROJECT NUMBER & PHASE: 07120000641
CONTRACT NO.: 07-3X3904

DISREGARD PRINTS BEARING EARLIER REVISION DATES

REVISION DATES: 01-02-13 03-15-13 04-23-13 06-26-13

SHEET 29 OF 36

FILE => 53e0516_17_19_20_21-y-exc-bck02.dgn

USERNAME => a119982 DATE PLOTTED => 26-JUN-2013 TIME PLOTTED => 14:28

DIST	COUNTY	ROUTE	POST MILES TOTAL PROJECT	SHEET No.	TOTAL SHEETS
07	LA	01	8.7	44	50

REGISTERED CIVIL ENGINEER 03-15-13 DATE

7-08-13
PLANS APPROVAL DATE

REGISTERED PROFESSIONAL ENGINEER Hogni Setberg No. C70338 Exp. 9-30-14 CIVIL STATE OF CALIFORNIA

The State of California or its officers or agents shall not be responsible for the accuracy or completeness of scanned copies of this plan sheet.

Note:
1. Exist Metal Crib Wall not shown for clarity.

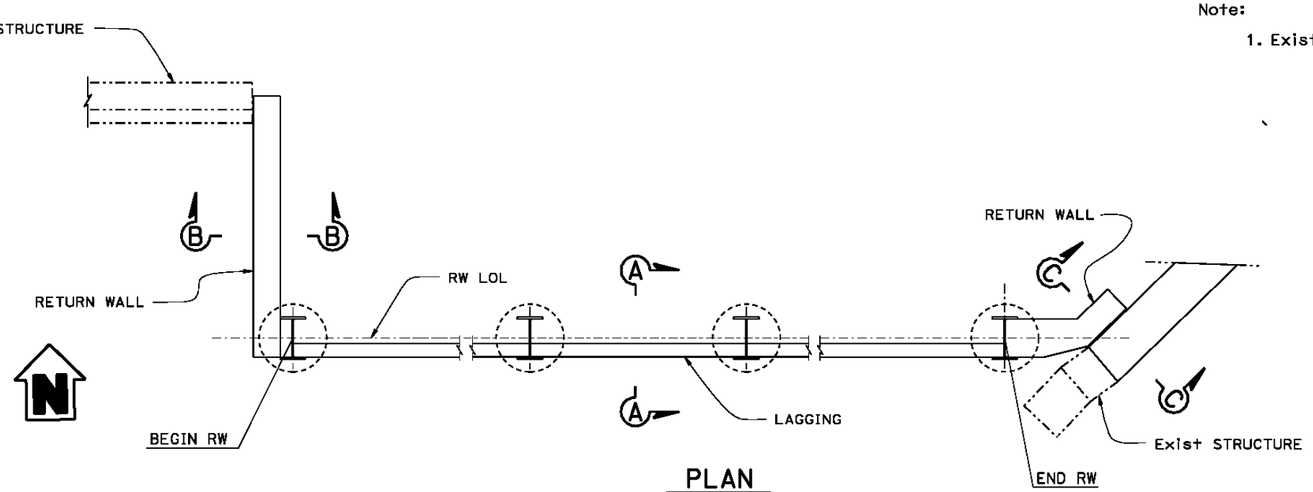

PLAN
NO SCALE
(SEE NOTE 1)

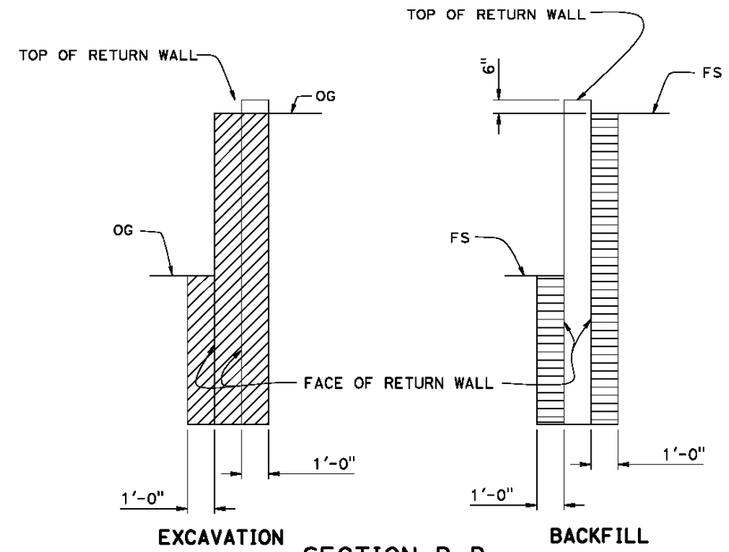

SECTION B-B
NO SCALE

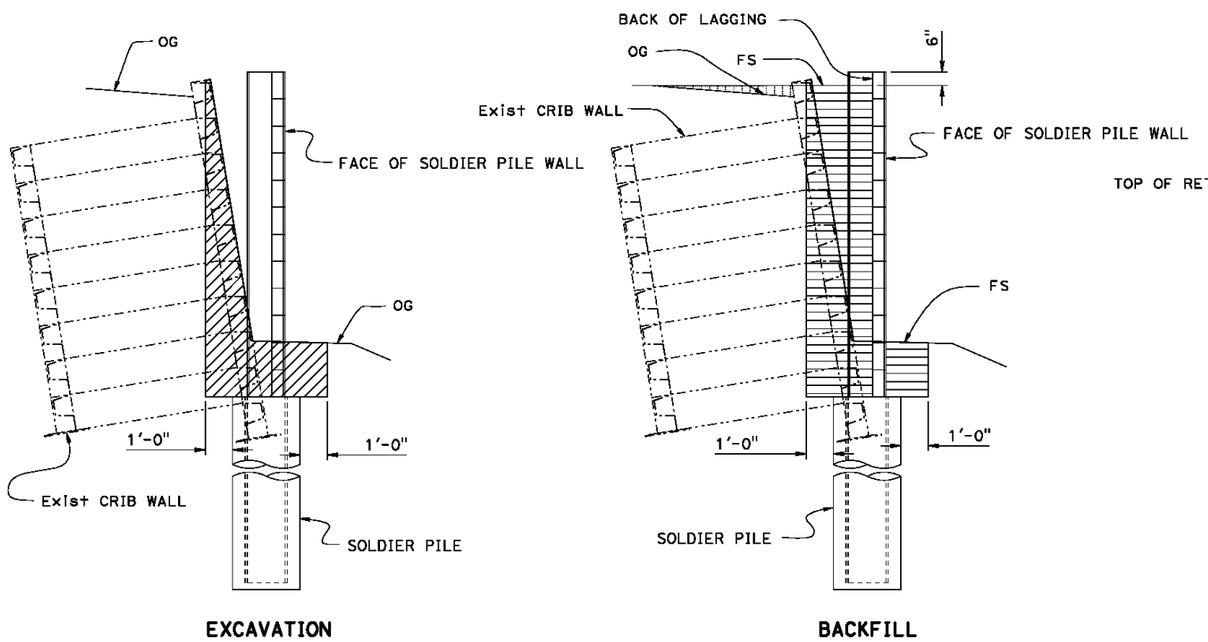

SECTION A-A
NO SCALE

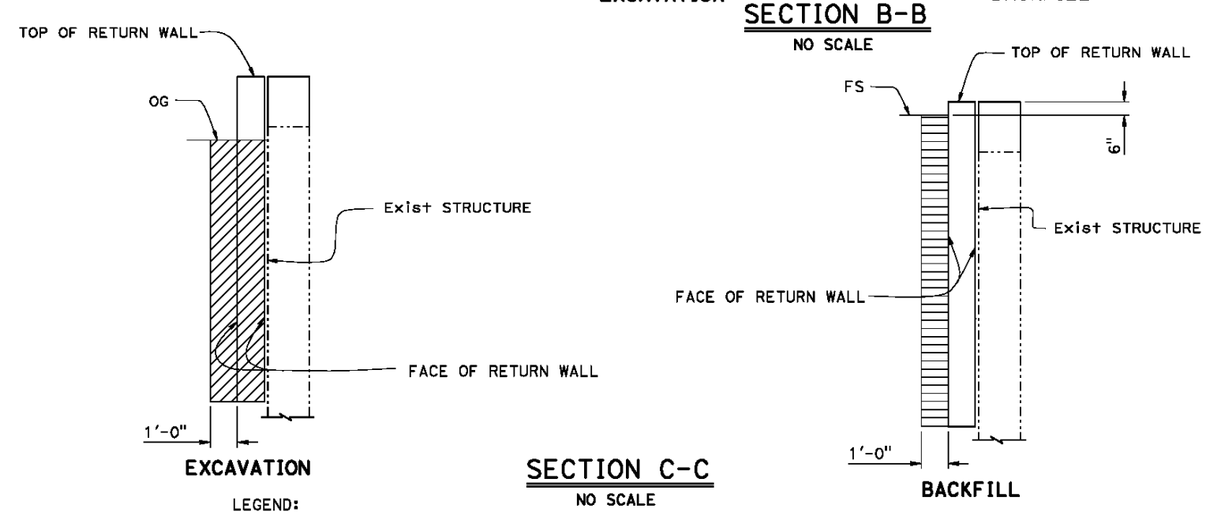

SECTION C-C
NO SCALE

NOTE:
THE CONTRACTOR SHALL VERIFY ALL CONTROLLING FIELD DIMENSIONS BEFORE ORDERING OR FABRICATING ANY MATERIAL.

LEGEND:

- Indicates Structure Excavation (Type DC), with Petroleum Hydrocarbons
- Indicates Structure Backfill (Soldier Pile Wall)
- Indicates Roadway Embankment, see "Road Plans"

	BY	CHECKED
DESIGN	H. Setberg	J. Higareda
DETAILS	S. Cholda	J. Higareda
QUANTITIES	C. Chan	A. Logus

STATE OF CALIFORNIA
DEPARTMENT OF TRANSPORTATION

DIVISION OF ENGINEERING SERVICES
STRUCTURE DESIGN
DESIGN BRANCH 15

BRIDGE NO. 53E0247
POST MILE 8.71

REFINERY SOLDIER PILE WALLS
EXCAVATION & BACKFILL RW 519

STRUCTURES DESIGN DETAIL SHEET (ENGLISH) (REV. 09-01-10)

ORIGINAL SCALE IN INCHES FOR REDUCED PLANS 0 1 2 3

UNIT: 3604
PROJECT NUMBER & PHASE: 07120000641
CONTRACT NO.: 07-3X3904

DISREGARD PRINTS BEARING EARLIER REVISION DATES

REVISION DATES 01-01-13 06-26-13 04-23-13 05-01-13

SHEET 30 OF 36

FILE => 53e0516_17_19_20_21-y-exc-bck03.dgn

USERNAME => a119982 DATE PLOTTED => 26-JUN-2013 TIME PLOTTED => 14:29

DIST	COUNTY	ROUTE	POST MILES TOTAL PROJECT	SHEET No.	TOTAL SHEETS
07	LA	01	8.7	45	50

REGISTERED CIVIL ENGINEER 03-15-13 DATE

7-08-13
PLANS APPROVAL DATE

REGISTERED PROFESSIONAL ENGINEER Hogni Setberg No. C70338 Exp. 9-30-14 CIVIL STATE OF CALIFORNIA

The State of California or its officers or agents shall not be responsible for the accuracy or completeness of scanned copies of this plan sheet.

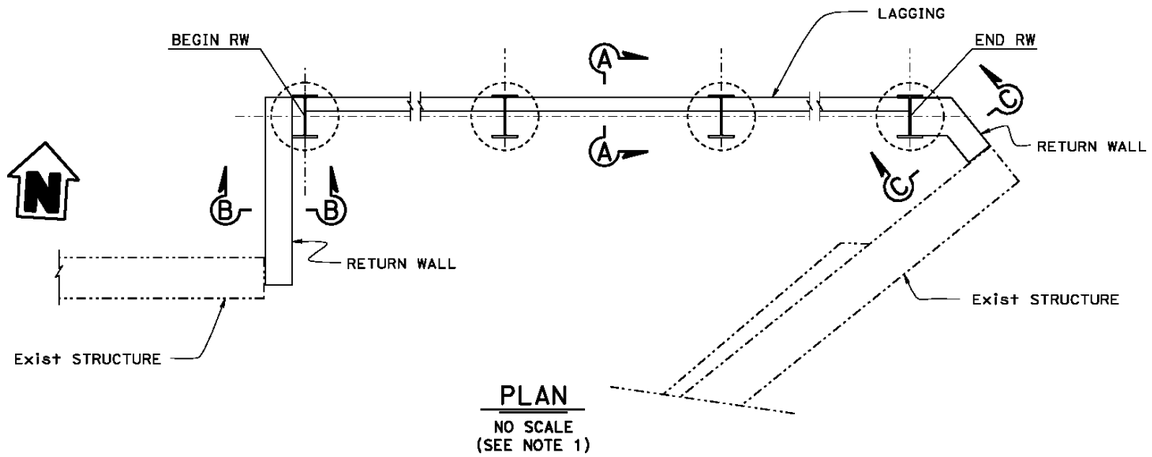

PLAN
NO SCALE
(SEE NOTE 1)

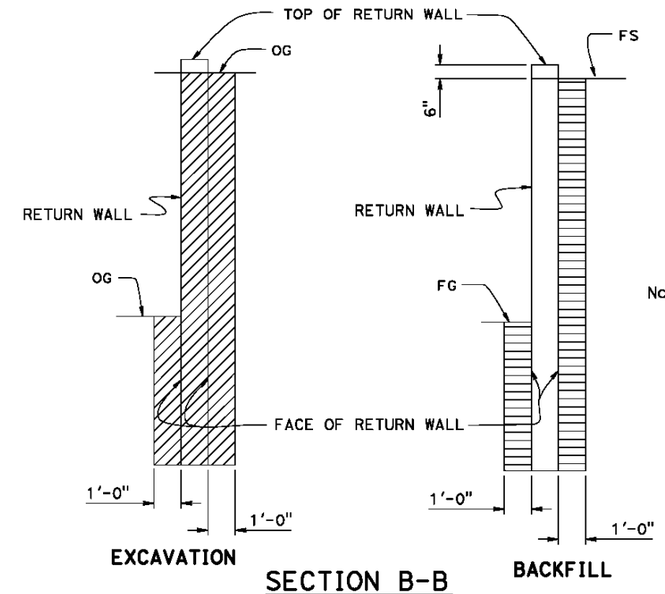

SECTION B-B
NO SCALE

Note:

1. Exist Metal Crib Wall not shown for clarity.

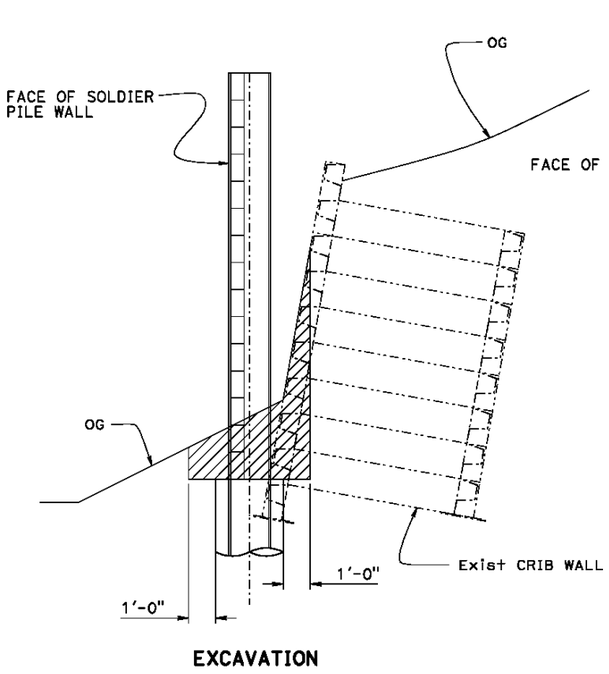

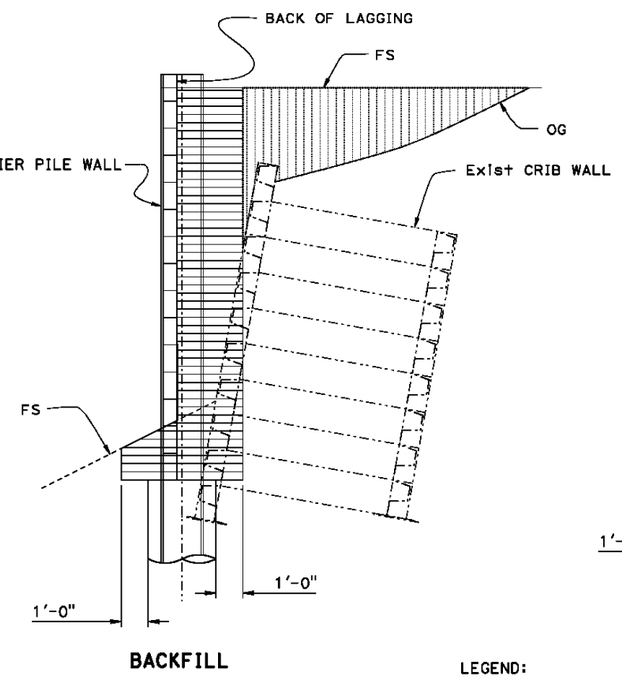

SECTION A-A
NO SCALE

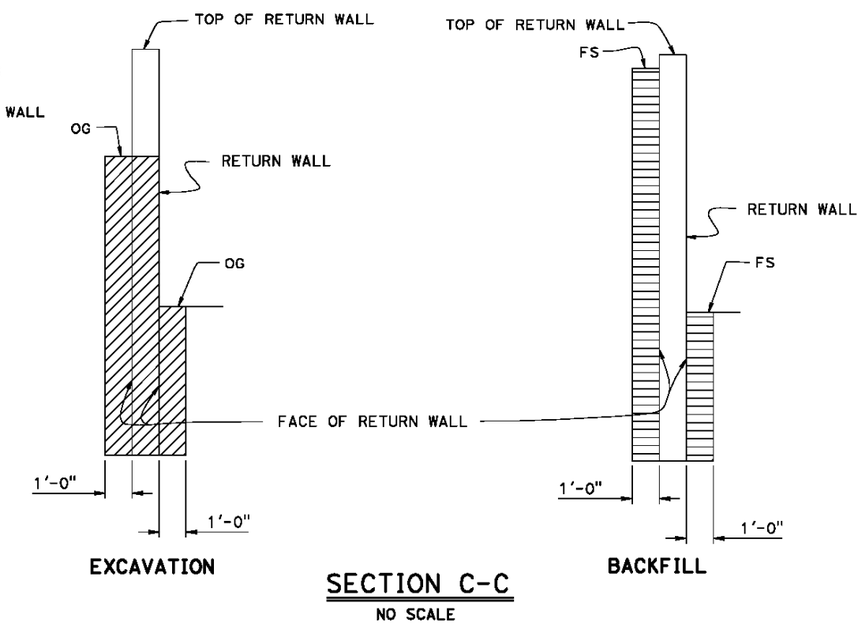

SECTION C-C
NO SCALE

NOTE:
THE CONTRACTOR SHALL VERIFY ALL CONTROLLING FIELD DIMENSIONS BEFORE ORDERING OR FABRICATING ANY MATERIAL.

LEGEND:

- Indicates Structure Excavation (Type DC), with Petroleum Hydrocarbons
- Indicates Structure Backfill (Soldier Pile Wall)
- Indicates Roadway Embankment, see "Road Plans"

	BY	CHECKED
DESIGN	H. Setberg	J. Higareda
DETAILS	S. Choida	J. Higareda
QUANTITIES	C. Chan	A. Logus

STATE OF CALIFORNIA
DEPARTMENT OF TRANSPORTATION

DIVISION OF ENGINEERING SERVICES
STRUCTURE DESIGN
DESIGN BRANCH 15

BRIDGE NO. 53E0248
POST MILE 8.71

REFINERY SOLDIER PILE WALLS
EXCAVATION & BACKFILL RW 520

STRUCTURES DESIGN DETAIL SHEET (ENGLISH) (REV. 09-01-10)

ORIGINAL SCALE IN INCHES FOR REDUCED PLANS 0 1 2 3

UNIT: 3604
PROJECT NUMBER & PHASE: 07120000641
CONTRACT NO.: 07-3X3904

DISREGARD PRINTS BEARING EARLIER REVISION DATES

REVISION DATES 01-16-13 05-01-13 06-26-13 04-22-13

SHEET 31 OF 36

FILE => 53e0516_17_19_20_21-y-exc-bck04.dgn

USERNAME => a119982 DATE PLOTTED => 26-JUN-2013 TIME PLOTTED => 14:28

DIST	COUNTY	ROUTE	POST MILES TOTAL PROJECT	SHEET No.	TOTAL SHEETS
07	LA	01	8.7	46	50

REGISTERED CIVIL ENGINEER 03-15-13 DATE

7-08-13
PLANS APPROVAL DATE

REGISTERED PROFESSIONAL ENGINEER Hognl Setberg No. C70338 Exp. 9-30-14 CIVIL STATE OF CALIFORNIA

The State of California or its officers or agents shall not be responsible for the accuracy or completeness of scanned copies of this plan sheet.

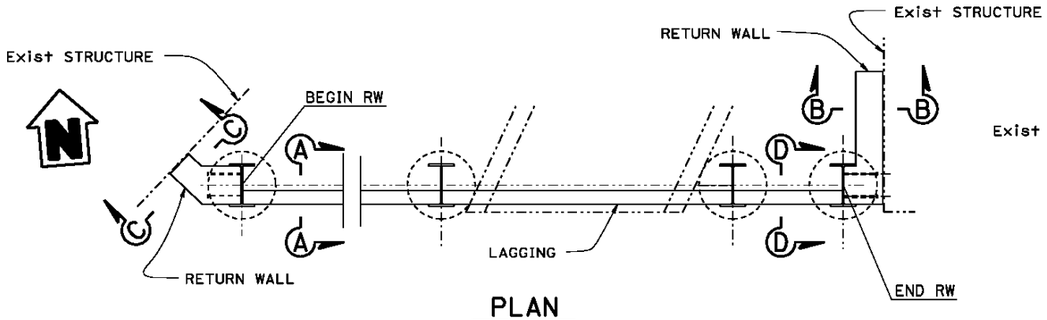

PLAN
NO SCALE
(SEE NOTE 1)

LEGEND:

- Indicates Structure Excavation (Type Z-2), (ADL)
- Indicates Structure Excavation (Type DC, with Petroleum Hydrocarbons
- Indicates Structure Backfill (Soldier Pile Wall)
- Indicates Roadway Embankment, see "Road Plans"

Note:
1. Exist Metal Crib Wall not shown for clarity.
2. Limits of Type Z-2 soil with Petroleum Hydrocarbons.
3. For Backfill, see "SECTION A-A".

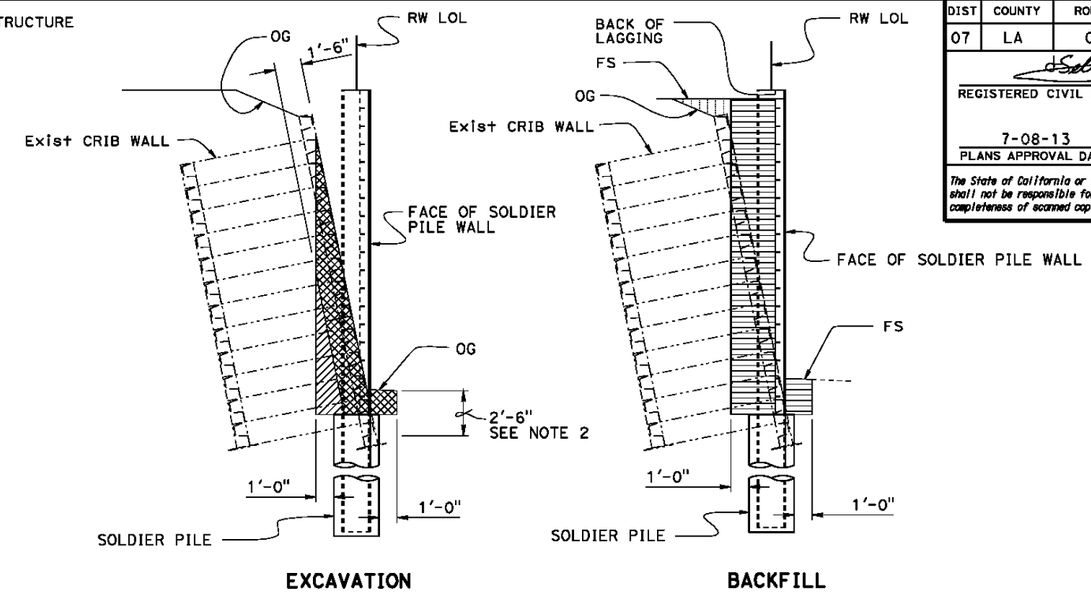

EXCAVATION BACKFILL

SECTION A-A
NO SCALE

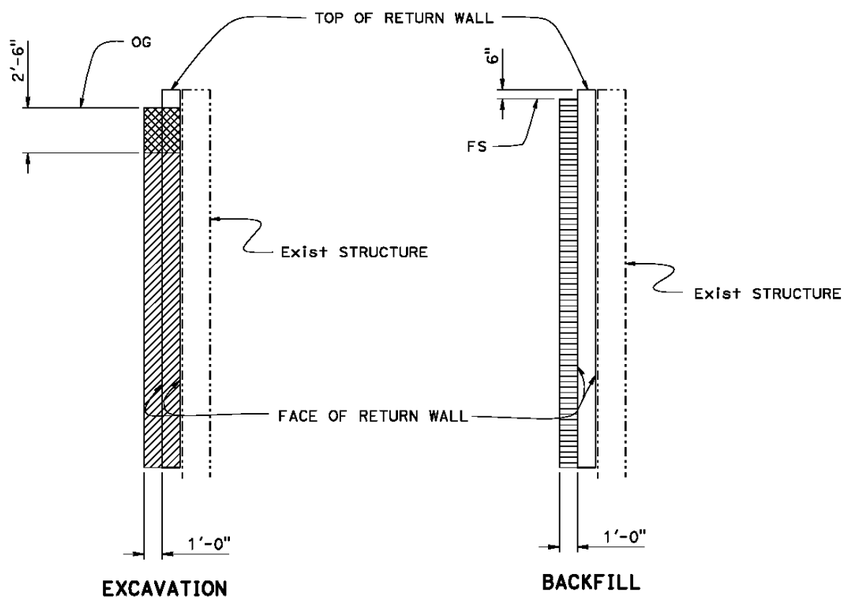

EXCAVATION BACKFILL

SECTION B-B
NO SCALE

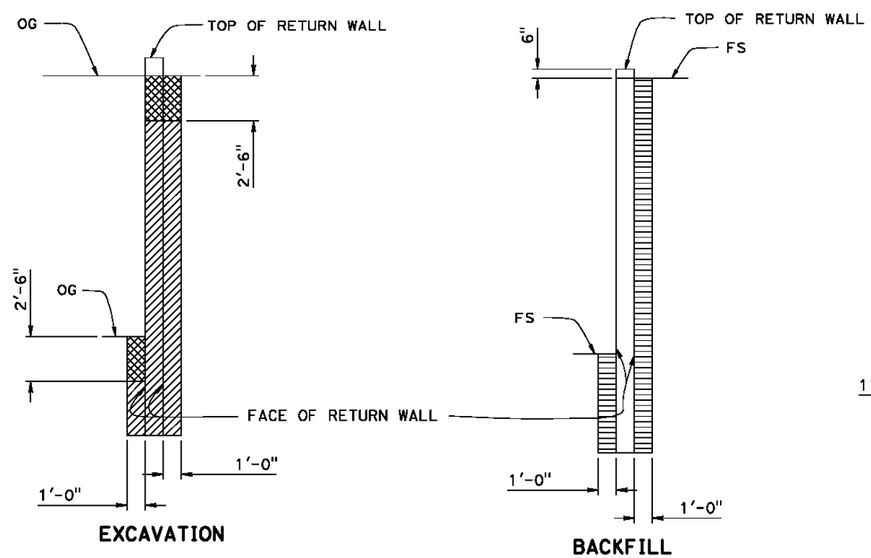

EXCAVATION BACKFILL

SECTION C-C
NO SCALE

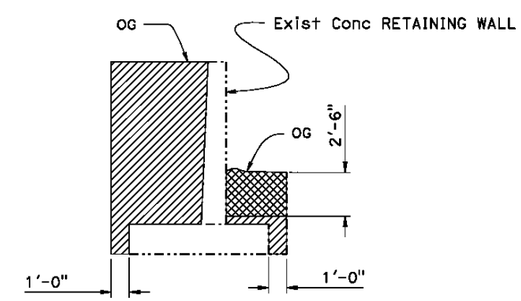

EXCAVATION
(SEE NOTE 3)

SECTION D-D
NO SCALE

NOTE:
THE CONTRACTOR SHALL VERIFY ALL CONTROLLING FIELD DIMENSIONS BEFORE ORDERING OR FABRICATING ANY MATERIAL.

	BY	CHECKED
DESIGN	H. Setberg	J. Higareda
DETAILS	S. Choida	J. Higareda
QUANTITIES	C. Chan	A. Logus

STATE OF CALIFORNIA
DEPARTMENT OF TRANSPORTATION

DIVISION OF ENGINEERING SERVICES
STRUCTURE DESIGN
DESIGN BRANCH 15

BRIDGE NO. 53E0249
POST MILE 8.69

REFINERY SOLDIER PILE WALLS
EXCAVATION AND BACKFILL RW 521

STRUCTURES DESIGN DETAIL SHEET (ENGLISH) (REV. 09-01-10)

ORIGINAL SCALE IN INCHES FOR REDUCED PLANS 0 1 2 3

UNIT: 3604
PROJECT NUMBER & PHASE: 07120000641
CONTRACT NO.: 3X3904

DISREGARD PRINTS BEARING EARLIER REVISION DATES

REVISION DATES 01-28-13 06-26-13 04-23-13 05-01-13

SHEET 32 OF 36

FILE => 53e0516_17_19_20_21-y-exc-bck05.dgn

USERNAME => a119982 DATE PLOTTED => 26-JUN-2013 TIME PLOTTED => 14:28

DIST	COUNTY	ROUTE	POST MILES TOTAL PROJECT	SHEET No.	TOTAL SHEETS
07	LA	1	8.7	47	50

GEOTECHNICAL PROFESSIONAL — DATE 09/2012

7-08-13
PLANS APPROVAL DATE

REGISTERED PROFESSIONAL ENGINEER — MICHAEL G. SMITH No. 2229 Exp. 3-31-2014 GEOTECHNICAL — STATE OF CALIFORNIA

The State of California or its officers or agents shall not be responsible for the accuracy or completeness of electronic copies of this plan sheet.

This LOTB sheet was prepared in accordance with the Caltrans Soil & Rock Logging, Classification, & Presentation Manual (2010 Edition).

BENCH MARK

BMCP100 EL.29.20
SET PK NAIL IN CENTER OF PCH, ABOUT 600' WEST OF DOMINGUEZ CHANNEL
N 1746656.68 E 6490847.05

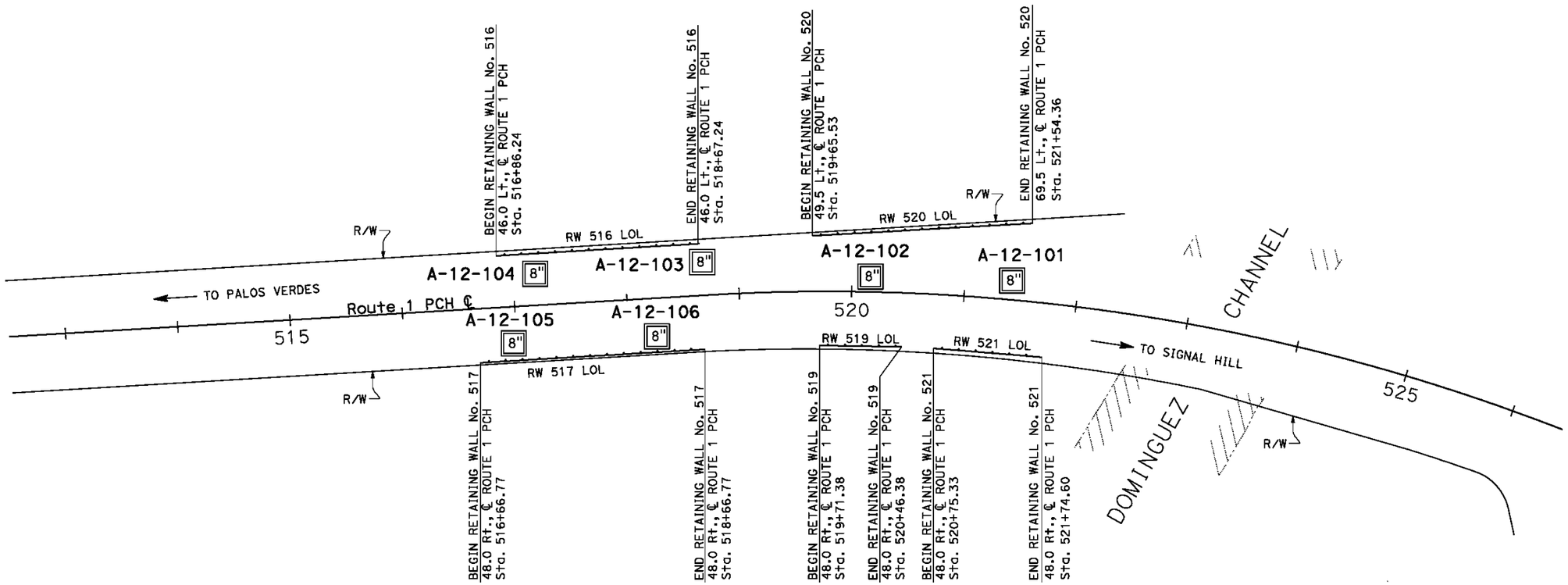

PLAN
SCALE 1"=50'

ENGINEERING SERVICES	MATERIALS AND GEOTECHNICAL SERVICES	STATE OF CALIFORNIA DEPARTMENT OF TRANSPORTATION	DIVISION OF ENGINEERING SERVICES STRUCTURE DESIGN DESIGN BRANCH 15	BRIDGE NO. VARIES / POST MILE 8.7-8.88	REFINERY SOLDIER PILE WALLS
FUNCTIONAL SUPERVISOR	DRAWN BY: P.QUACH	FIELD INVESTIGATION BY:			LOG OF TEST BORINGS SHEET 1 OF 4
NAME: M. SMITH	CHECKED BY: P.YERRA	T.PANAH			

OGS CIVIL LOG OF TEST BORINGS SHEET

ORIGINAL SCALE IN INCHES FOR REDUCED PLANS 0 1 2 3

UNIT: 3604
PROJECT NUMBER & PHASE: 07120000641 EA NO.: 07-3x3904

DISREGARD PRINTS BEARING EARLIER REVISION DATES → 03-08-13 05-01-13

REVISION DATES | SHEET 33 OF 36

FILE => 53e0516_17_19_20_21-z-lltb01.dgn

USERNAME => s119982 DATE PLOTTED => 26-JUN-2013 TIME PLOTTED => 14:29

Notes:

1. Borings A-12-105 and A-12-106 encountered contaminated soils with a maximum PID reading of 800 ppm.
2. Groundwater elevations may fluctuate over time, however the amount of fluctuation cannot be determined by our office. The groundwater elevations given in these Log of Test Boring sheets is the actual elevation encountered at the location and date of soil boring.

DIST	COUNTY	ROUTE	POST MILES TOTAL PROJECT	SHEET No.	TOTAL SHEETS
07	LA	1	8.7	48	50

GEOTECHNICAL PROFESSIONAL — DATE 09/2012

7-08-13
PLANS APPROVAL DATE

REGISTERED PROFESSIONAL ENGINEER — MICHAEL G. SMITH — No. 2229 — Exp. 3-31-2014 — GEOTECHNICAL — STATE OF CALIFORNIA

The State of California or its officers or agents shall not be responsible for the accuracy or completeness of electronic copies of this plan sheet.

This LOTB sheet was prepared in accordance with the Caltrans Soil & Rock Logging, Classification, & Presentation Manual (2010 Edition).

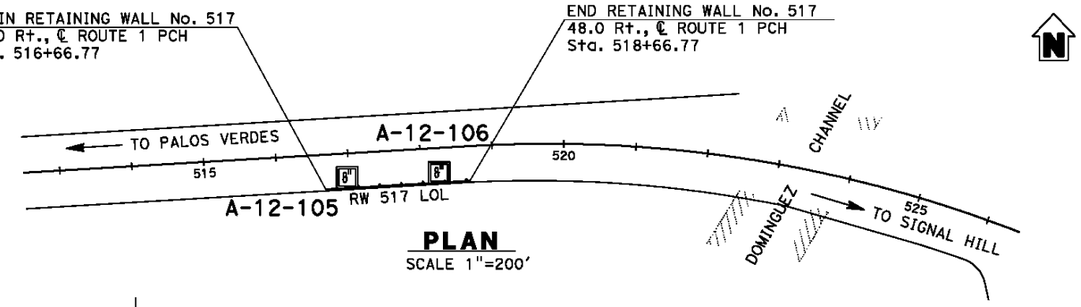

PLAN
SCALE 1"=200'

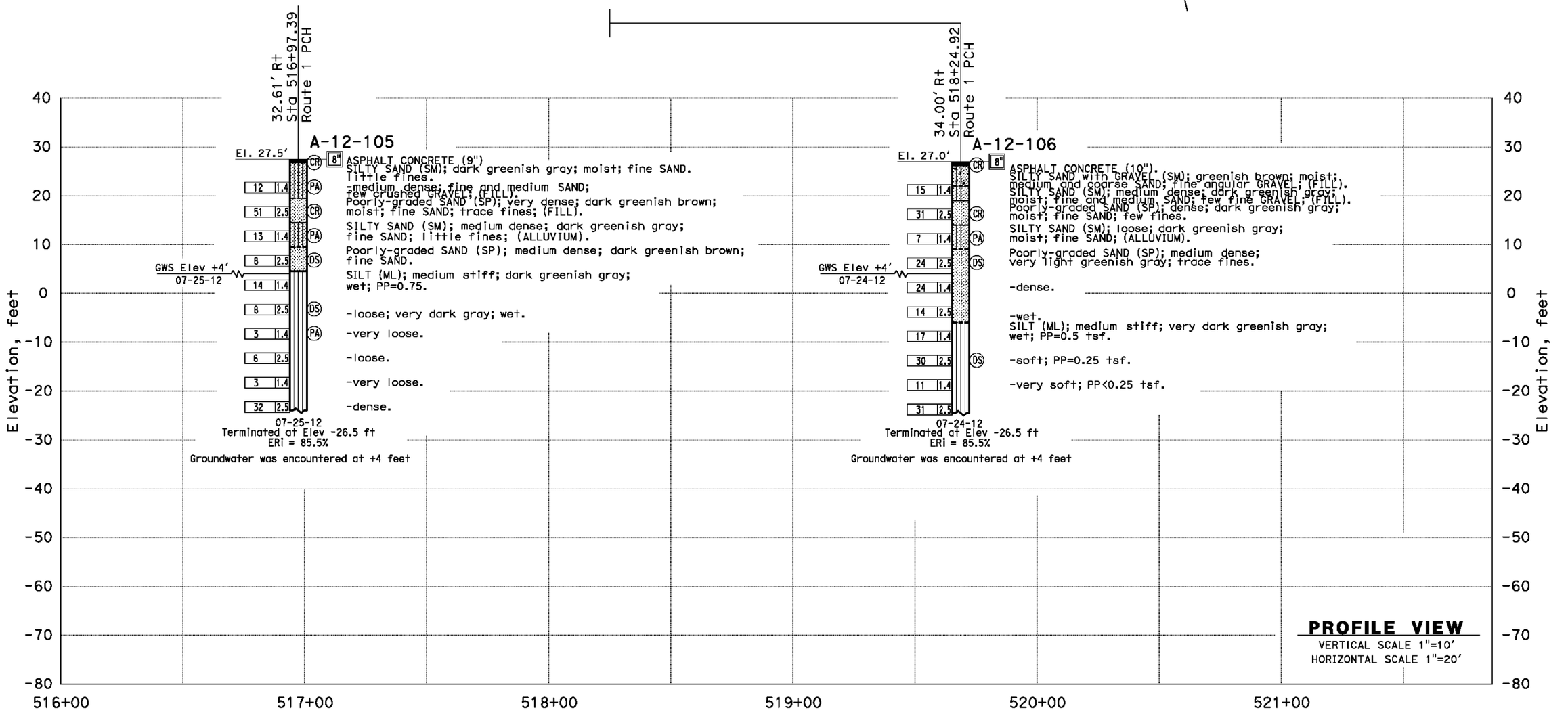

PROFILE VIEW
VERTICAL SCALE 1"=10'
HORIZONTAL SCALE 1"=20'

ENGINEERING SERVICES	MATERIALS AND GEOTECHNICAL SERVICES	STATE OF CALIFORNIA DEPARTMENT OF TRANSPORTATION	DIVISION OF ENGINEERING SERVICES STRUCTURE DESIGN DESIGN BRANCH 15	BRIDGE NO. 53E0246 / POST MILE 8.7-8.88	REFINERY SOLDIER PILE WALLS
FUNCTIONAL SUPERVISOR	DRAWN BY: P.QUACH	FIELD INVESTIGATION BY:			LOG OF TEST BORINGS SHEET 2 OF 4
NAME: M. SMITH	CHECKED BY: P.YERRA	T.PANAH			

OGS CIVIL LOG OF TEST BORINGS SHEET — ORIGINAL SCALE IN INCHES FOR REDUCED PLANS 0 1 2 3

UNIT: 3604
PROJECT NUMBER & PHASE: 07120000641 — EA NO.: 07-3x3904

DISREGARD PRINTS BEARING EARLIER REVISION DATES — REVISION DATES 03-05-13 06-01-13 — SHEET 34 OF 36

FILE => 53e0516_17_19_20_21-z-lltb02.dgn

USERNAME => s119982 DATE PLOTTED => 26-JUN-2013 TIME PLOTTED => 14:29

DIST	COUNTY	ROUTE	POST MILES TOTAL PROJECT	SHEET No.	TOTAL SHEETS
07	LA	1	8.7	49	50

GEOTECHNICAL PROFESSIONAL — DATE 09/2012

7-08-13
PLANS APPROVAL DATE

REGISTERED PROFESSIONAL ENGINEER — MICHAEL G. SMITH — No. 2229 — Exp. 3-31-2014 — GEOTECHNICAL — STATE OF CALIFORNIA

The State of California or its officers or agents shall not be responsible for the accuracy or completeness of electronic copies of this plan sheet.

This LOTB sheet was prepared in accordance with the Caltrans Soil & Rock Logging, Classification, & Presentation Manual (2010 Edition).

Notes:

1. Borings A-12-103 and A-12-104 encountered contaminated soils with a maximum PID reading of 4500 ppm.
2. Groundwater elevations may fluctuate over time, however the amount of fluctuation cannot be determined by our office. The groundwater elevations given in these Log of Test Boring sheets is the actual elevation encountered at the location and date of soil boring.

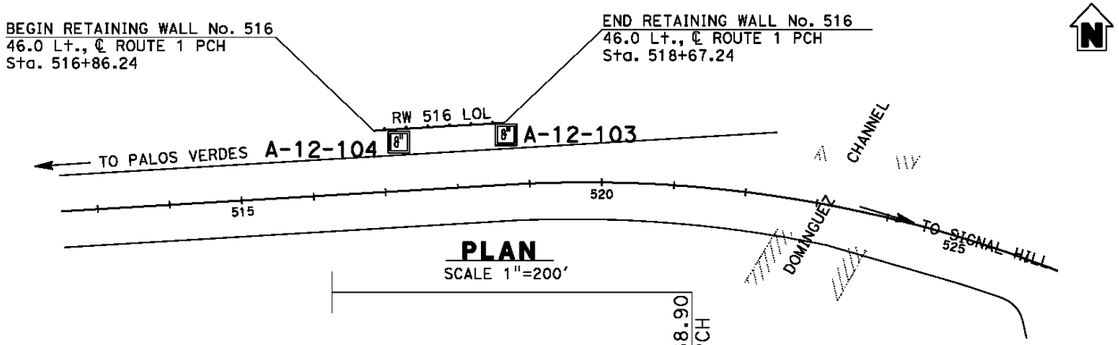

PLAN
SCALE 1"=200'

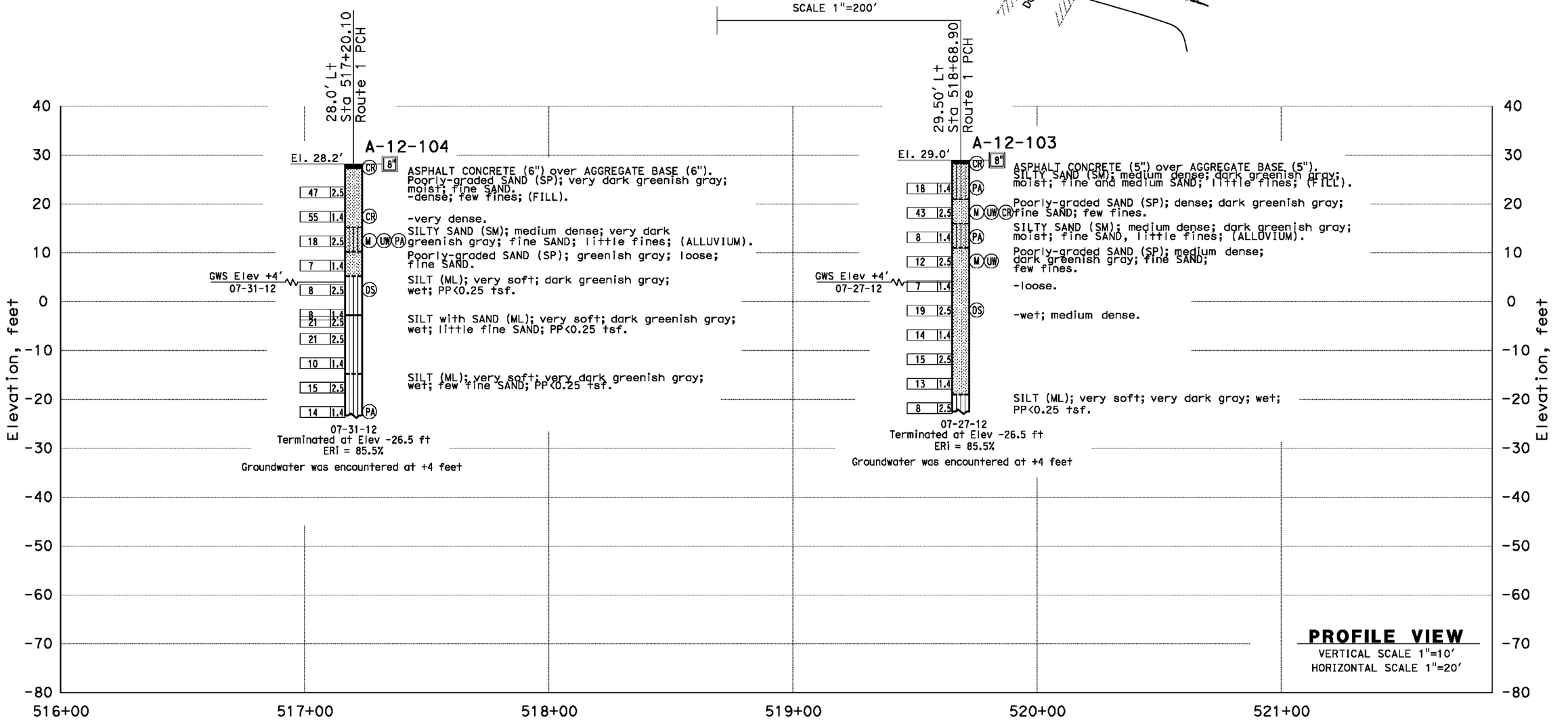

ENGINEERING SERVICES	MATERIALS AND GEOTECHNICAL SERVICES	STATE OF CALIFORNIA DEPARTMENT OF TRANSPORTATION	DIVISION OF ENGINEERING SERVICES STRUCTURE DESIGN DESIGN BRANCH 15	BRIDGE NO. 53E0245 / POST MILE 8.7-8.88	REFINERY SOLDIER PILE WALLS
FUNCTIONAL SUPERVISOR NAME: M. SMITH	DRAWN BY: P.QUACH / CHECKED BY: P.YERRA	FIELD INVESTIGATION BY: T.PANAH			LOG OF TEST BORINGS SHEET 3 OF 4

OGS CIVIL LOG OF TEST BORINGS SHEET

ORIGINAL SCALE IN INCHES FOR REDUCED PLANS 0 1 2 3

UNIT: 3604
PROJECT NUMBER & PHASE: 07120000641
EA NO.: 07-3x3904

DISREGARD PRINTS BEARING EARLIER REVISION DATES → 03-08-13 05-01-13

SHEET 35 OF 36

FILE => 53e0516_17_19_20_21-z-lltb03.dgn

USERNAME => s119982 DATE PLOTTED => 26-JUN-2013 TIME PLOTTED => 14:29

DIST	COUNTY	ROUTE	POST MILES TOTAL PROJECT	SHEET No.	TOTAL SHEETS
07	LA	1	8.7	50	50

GEOTECHNICAL PROFESSIONAL — DATE 09/2012

7-08-13
PLANS APPROVAL DATE

REGISTERED PROFESSIONAL ENGINEER — MICHAEL G. SMITH No. 2229 Exp. 3-31-2014 GEOTECHNICAL — STATE OF CALIFORNIA

The State of California or its officers or agents shall not be responsible for the accuracy or completeness of electronic copies of this plan sheet.

This LOTB sheet was prepared in accordance with the Caltrans Soil & Rock Logging, Classification, & Presentation Manual (2010 Edition).

Notes:

1. Borings A-12-101 and A-12-102 encountered contaminated soils with a maximum PID reading of 3000 ppm.
2. Groundwater elevations may fluctuate over time, however the amount of fluctuation cannot be determined by our office. The groundwater elevations given in these Log of Test Boring sheets is the actual elevation encountered at the location and date of soil boring.

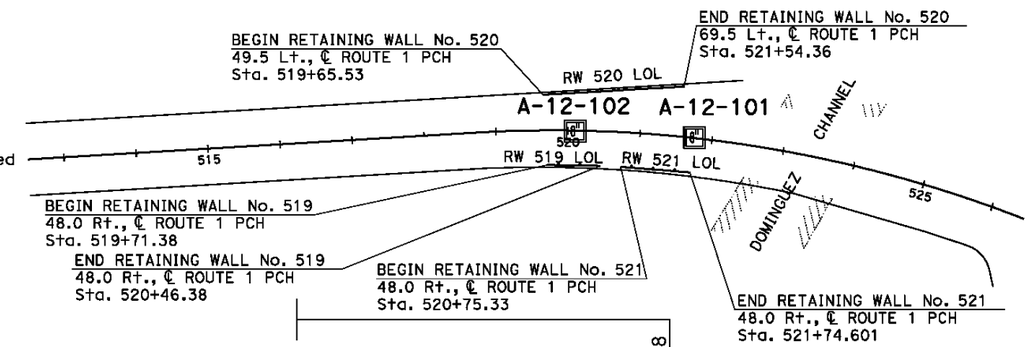

PLAN
SCALE 1"=200'

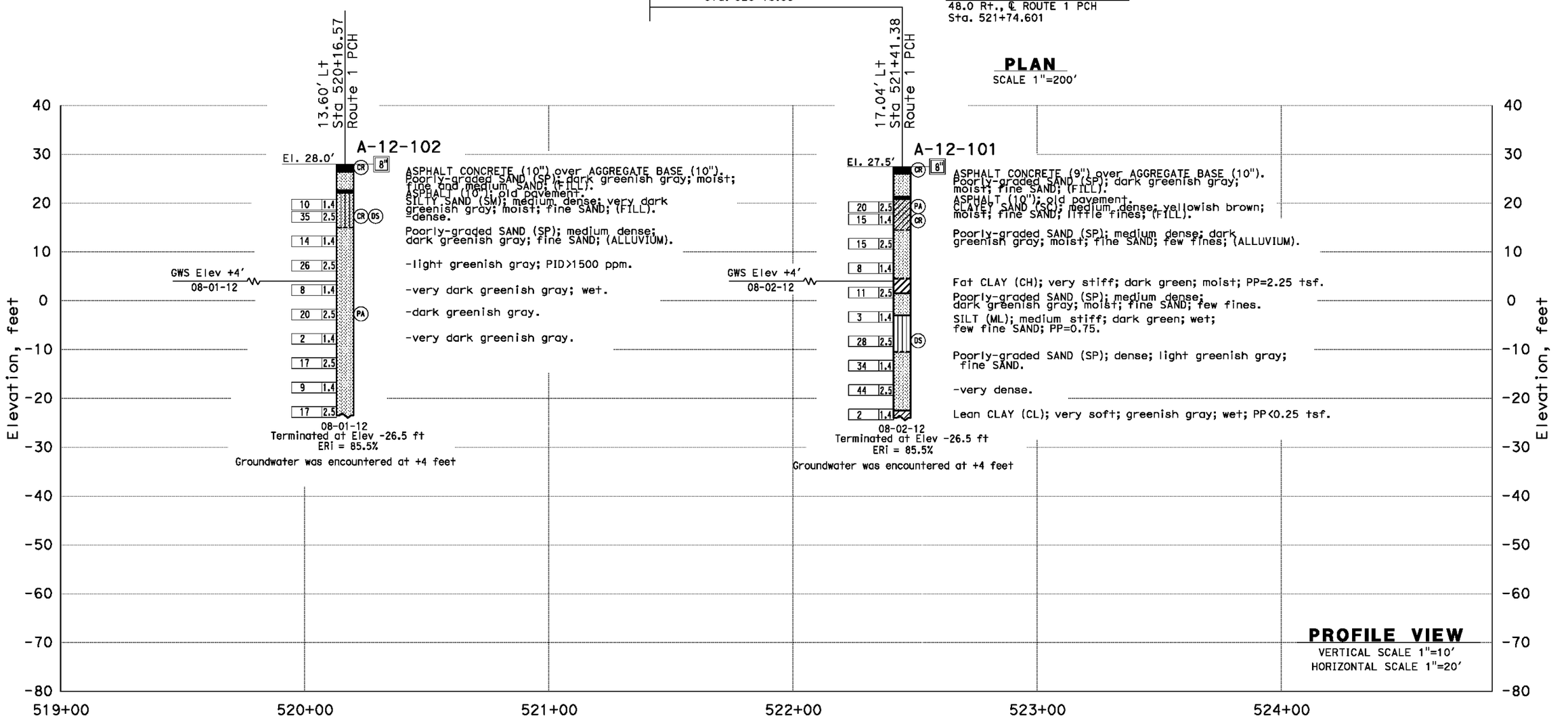

PROFILE VIEW
VERTICAL SCALE 1"=10'
HORIZONTAL SCALE 1"=20'

ENGINEERING SERVICES	MATERIALS AND GEOTECHNICAL SERVICES	STATE OF CALIFORNIA DEPARTMENT OF TRANSPORTATION	DIVISION OF ENGINEERING SERVICES STRUCTURE DESIGN DESIGN BRANCH 15	BRIDGE NO. VARIES / POST MILE 8.7-8.88	REFINERY SOLDIER PILE WALLS
FUNCTIONAL SUPERVISOR	DRAWN BY: P.QUACH	FIELD INVESTIGATION BY:			LOG OF TEST BORINGS SHEET 4 OF 4
NAME: M. SMITH	CHECKED BY: P.YERRA	T.PANAH			

OGS CIVIL LOG OF TEST BORINGS SHEET

ORIGINAL SCALE IN INCHES FOR REDUCED PLANS 0 1 2 3

UNIT: 3604
PROJECT NUMBER & PHASE: 07120000641 EA NO.: 07-3x3904

DISREGARD PRINTS BEARING EARLIER REVISION DATES

REVISION DATES: 03-08-13 05-01-13 — SHEET 36 OF 36

FILE => 53e0516_17_19_20_21-z-lltb04.dgn

USERNAME => s119982 DATE PLOTTED => 26-JUN-2013 TIME PLOTTED => 14:29