Dist	COUNTY	ROUTE	POST MILES TOTAL PROJECT	SHEET No.	TOTAL SHEETS
07	LA	1,105, 110, 405	Var	1	50

INDEX OF PLANS

SHEET No.	DESCRIPTION
1	TITLE AND LOCATION MAP
2	LOCATIONS OF CONSTRUCTION
3-4	CONSTRUCTION AREA SIGNS
5-13	TRAFFIC HANDLING DETAILS
14-16	PAVEMENT DELINEATION QUANTITIES
17-28	REVISED STANDARD PLANS

STRUCTURE PLANS

29-50	ROUTES 1, 105, 110, 405 BRIDGES

THE STANDARD PLANS LIST APPLICABLE TO THIS CONTRACT IS INCLUDED IN THE NOTICE TO BIDDERS AND SPECIAL PROVISIONS BOOK.

STATE OF CALIFORNIA

DEPARTMENT OF TRANSPORTATION

PROJECT PLANS FOR CONSTRUCTION ON

STATE HIGHWAY

IN LOS ANGELES COUNTY AT VARIOUS LOCATIONS

TO BE SUPPLEMENTED BY STANDARD PLANS DATED 2010

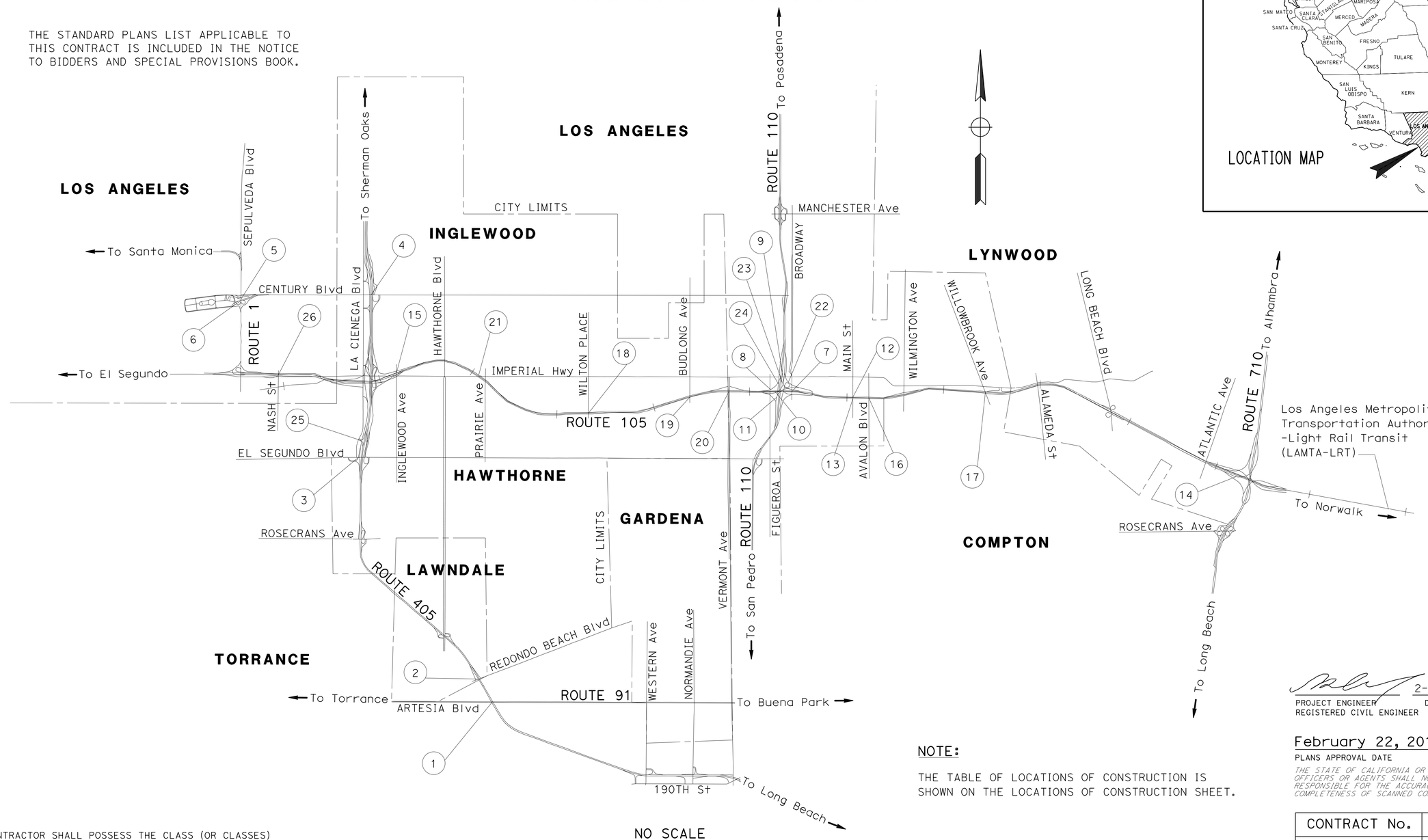

NO SCALE

LOCATION MAP

NOTE:

THE TABLE OF LOCATIONS OF CONSTRUCTION IS SHOWN ON THE LOCATIONS OF CONSTRUCTION SHEET.

THE CONTRACTOR SHALL POSSESS THE CLASS (OR CLASSES) OF LICENSE AS SPECIFIED IN THE "NOTICE TO BIDDERS."

PROJECT ENGINEER REGISTERED CIVIL ENGINEER — DATE 2-2-16

REGISTERED PROFESSIONAL ENGINEER SHAHIN ENGILY No. 50125 Exp. 6-30-17 CIVIL STATE OF CALIFORNIA

February 22, 2016
PLANS APPROVAL DATE

THE STATE OF CALIFORNIA OR ITS OFFICERS OR AGENTS SHALL NOT BE RESPONSIBLE FOR THE ACCURACY OR COMPLETENESS OF SCANNED COPIES OF THIS PLAN SHEET.

CONTRACT No.	07-3W1004
PROJECT ID	0715000043

PROJECT MANAGER: CHRISTIAN SAM
DESIGN ENGINEER: PAUL CRISPI

LAST REVISION 02-22-16 | DATE PLOTTED => 16-FEB-2016 | TIME PLOTTED => 02:21

Dist	COUNTY	ROUTE	POST MILES TOTAL PROJECT	SHEET No.	TOTAL SHEETS
07	LA	1,105, 110,405	Var	2	50

REGISTERED CIVIL ENGINEER 2-2-16 DATE

2-22-16
PLANS APPROVAL DATE

REGISTERED PROFESSIONAL ENGINEER SHAHIN ENGILY No. 50125 Exp. 6-30-17 CIVIL STATE OF CALIFORNIA

THE STATE OF CALIFORNIA OR ITS OFFICERS OR AGENTS SHALL NOT BE RESPONSIBLE FOR THE ACCURACY OR COMPLETENESS OF SCANNED COPIES OF THIS PLAN SHEET.

LOCATIONS OF CONSTRUCTION

Loc No. (#)	BRIDGE NAME	BRIDGE No.	Rte	PM
1	ROUTE 405 / 91 Sep	53-1227	405	16.56
2	REDONDO BEACH Blvd UC	53-1229	405	16.88
3	EL SEGUNDO Blvd OC (E&W 105 - S405 Conn OC)	53-1239H	105	R2.05
4	CENTURY Blvd UC	53-1243	405	22.22
5	CENTURY Blvd OC	53-1834L	1	26.91
6	CENTURY Blvd OC	53-1834R	1	26.90
7	BROADWAY UC	53-2401R	105	R7.56
8	FIGUEROA St OC (S110 - W105)	53-2402	110	13.85
9	E105 - N110 Conn OC	53-2404G	105	R7.02
10	ROUTE 105 / 110 Sep	53-2405R	105	R7.26
11	W105 - S110 Conn OC	53-2407F	105	R7.43
12	MAIN St UC	53-2410L	105	R7.79
13	MAIN St UC	53-2410R	105	R7.79
14	E105 - N710 Conn OC	53-2418G	105	R13.14
15	INGLEWOOD Ave UC	53-2435	105	R2.53
16	AVALON Blvd UC	53-2477	105	R8.29
17	WILLOWBROOK Ave OH	53-2487L	105	R9.78
18	WILTON PLACE OC	53-2522	105	R5.48
19	BUDLONG Ave OC	53-2526	105	R6.52
20	VERMONT Ave OC	53-2527	105	R6.74
21	IMPERIAL Hwy ON-RAMP (SPUR)	53-2653K	105	R3.50
22	W105 - N110 Conn OC	53-2676F	105	R7.61
23	W105 - N110 HOV Conn OC	53-2680F	105	R7.80
24	IMPERIAL Hwy ON-RAMP OC	53-2683K	105	13.89
25	E&W 105 - S405 Conn OC (RAMPS UNDERCROSSING OC)	53-2686H	105	R2.03
26	NASH St OFF-RAMP OC	53-2803K	105	R0.98

LOCATIONS OF CONSTRUCTION

LC-1

REVISED BY | DATE REVISED
MARLON SARMIENTO | SHAWN ENGILY
CALCULATED-DESIGNED BY | CHECKED BY
FUNCTIONAL SUPERVISOR
PAUL CRISPI

STATE OF CALIFORNIA - DEPARTMENT OF TRANSPORTATION
Caltrans MAINTENANCE ENGINEERING

LAST REVISION 02-22-16 | DATE PLOTTED => 16-FEB-2016 TIME PLOTTED => 02:21

Dist	COUNTY	ROUTE	POST MILES TOTAL PROJECT	SHEET No.	TOTAL SHEETS
07	LA	1,105, 110,405	Var	3	50

REGISTERED CIVIL ENGINEER 2-2-16 DATE

2-22-16
PLANS APPROVAL DATE

REGISTERED PROFESSIONAL ENGINEER SHAHIN ENGILY No. 50125 Exp. 6-30-17 CIVIL STATE OF CALIFORNIA

THE STATE OF CALIFORNIA OR ITS OFFICERS OR AGENTS SHALL NOT BE RESPONSIBLE FOR THE ACCURACY OR COMPLETENESS OF SCANNED COPIES OF THIS PLAN SHEET.

NOTES:

1. C40 SIGNS MUST BE PLACED APPROXIMATELY 500' IN ADVANCE OF W20-1 SIGNS OR AS THE ENGINEER DETERMINES.
2. LOCATIONS OF CONSTRUCTION AREA SIGNS SHOWN ARE APPROXIMATE. LOCATIONS WILL BE DETERMINED BY THE ENGINEER.
3. FOR OTHER CONSTRUCTION AREA SIGNS, SEE CS-2.

LEGEND:

(#) - LOCATIONS OF CONSTRUCTION

STATIONARY MOUNTED CONSTRUCTION AREA SIGNS

SIGN	SIGN CODE FEDERAL	SIGN CODE CALIFORNIA	PANEL SIZE	SIGN MESSAGE	NUMBER OF POSTS AND SIZE	NUMBER OF SIGNS
A		C40 (CA)	144" x 60"	TRAFFIC FINES DOUBLED IN CONSTRUCTION ZONES	2 - 6" x 6"	17
B	W20-1		48" x 48"	ROAD WORK AHEAD	2 - 4" x 6"	30
C	G20-2		48" x 24"	END ROAD WORK	1 - 4" x 6"	26

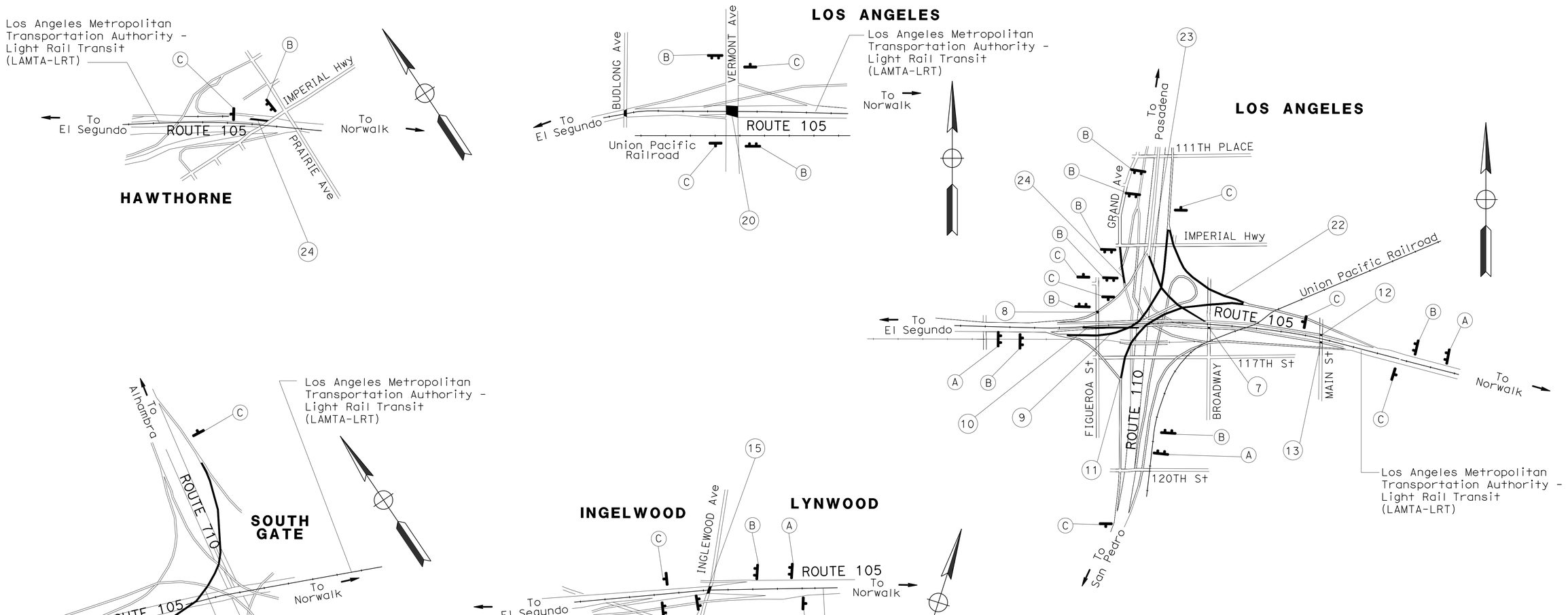

CONSTRUCTION AREA SIGNS

NO SCALE

CS-1

APPROVED FOR CONSTRUCTION AREA SIGN WORK ONLY

STATE OF CALIFORNIA - DEPARTMENT OF TRANSPORTATION
Caltrans MAINTENANCE ENGINEERING

FUNCTIONAL SUPERVISOR: PAUL CRISPI
CALCULATED-DESIGNED BY: SHAWN ENGILY
CHECKED BY: MARLON SARMIENTO
REVISED BY
DATE REVISED

LAST REVISION 02-22-16
DATE PLOTTED => 16-FEB-2016
TIME PLOTTED => 02:21

Dist	COUNTY	ROUTE	POST MILES TOTAL PROJECT	SHEET No.	TOTAL SHEETS
07	LA	1,105, 110,405	Var	4	50

REGISTERED CIVIL ENGINEER 2-2-16 DATE

2-22-16
PLANS APPROVAL DATE

REGISTERED PROFESSIONAL ENGINEER SHAHIN ENGILY No. 50125 Exp. 6-30-17 CIVIL STATE OF CALIFORNIA

THE STATE OF CALIFORNIA OR ITS OFFICERS OR AGENTS SHALL NOT BE RESPONSIBLE FOR THE ACCURACY OR COMPLETENESS OF SCANNED COPIES OF THIS PLAN SHEET.

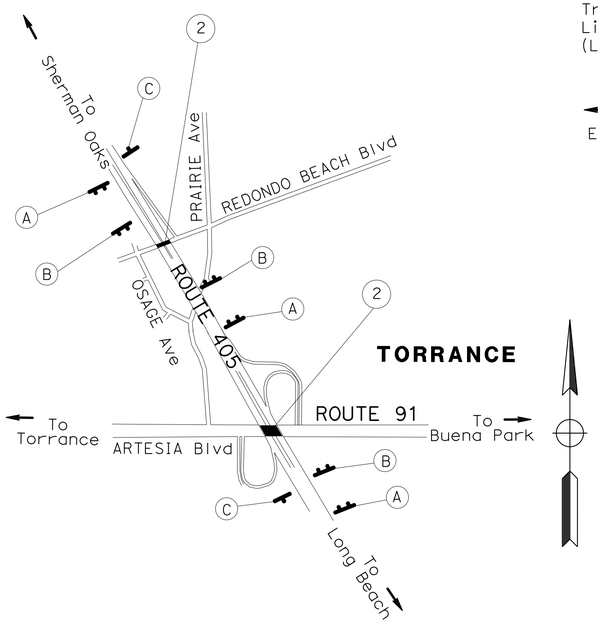

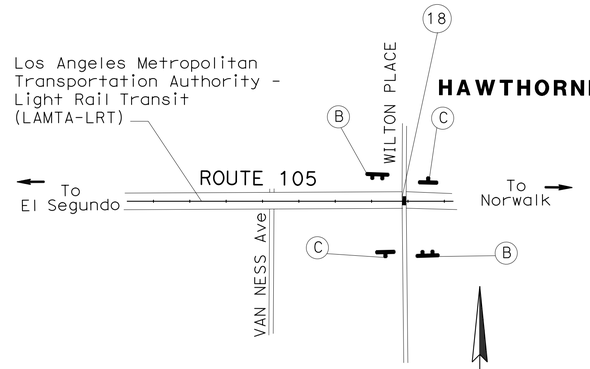

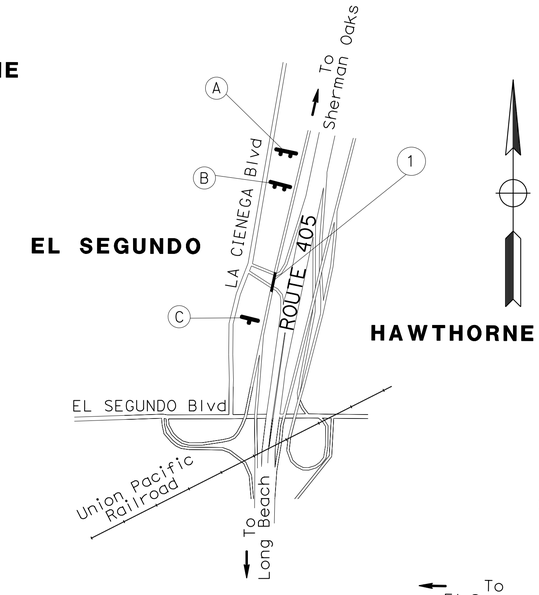

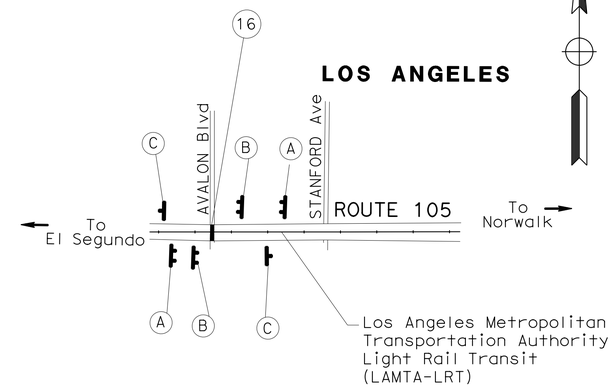

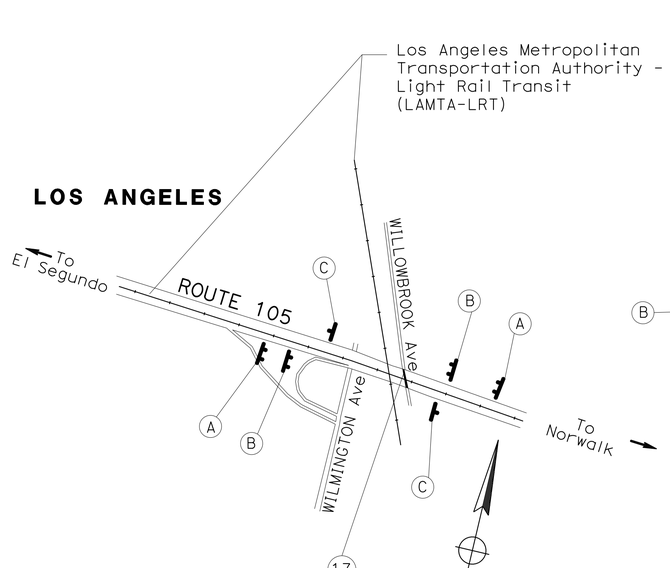

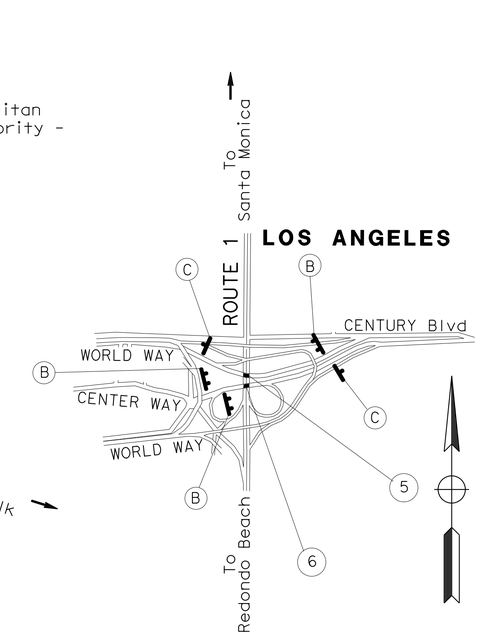

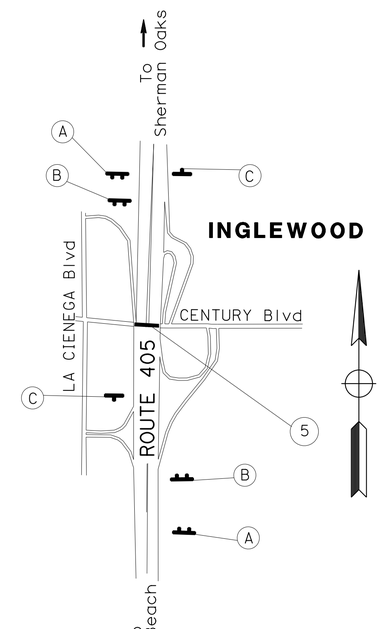

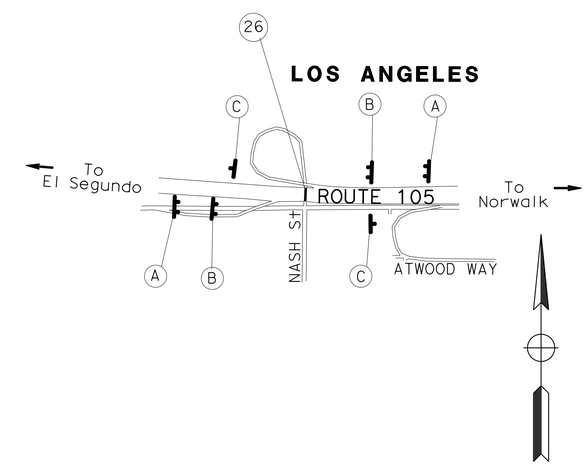

CONSTRUCTION AREA SIGNS

NO SCALE

APPROVED FOR CONSTRUCTION AREA SIGN WORK ONLY

CS-2

STATE OF CALIFORNIA - DEPARTMENT OF TRANSPORTATION
Caltrans MAINTENANCE ENGINEERING

FUNCTIONAL SUPERVISOR: PAUL CRISPI
CALCULATED-DESIGNED BY: MARLON SARMIENTO
CHECKED BY: SHAWN ENGILY
REVISED BY
DATE REVISED

LAST REVISION 02-22-16
DATE PLOTTED => 16-FEB-2016
TIME PLOTTED => 02:21

Dist	COUNTY	ROUTE	POST MILES TOTAL PROJECT	SHEET No.	TOTAL SHEETS
07	LA	1, 105, 110, 405	Var	5	50

REGISTERED CIVIL ENGINEER 11-19-15 DATE

2-22-16
PLANS APPROVAL DATE

REGISTERED PROFESSIONAL ENGINEER JOCELYN C CHIANG No. 62742 Exp 6-30-16 CIVIL STATE OF CALIFORNIA

THE STATE OF CALIFORNIA OR ITS OFFICERS OR AGENTS SHALL NOT BE RESPONSIBLE FOR THE ACCURACY OR COMPLETENESS OF SCANNED COPIES OF THIS PLAN SHEET.

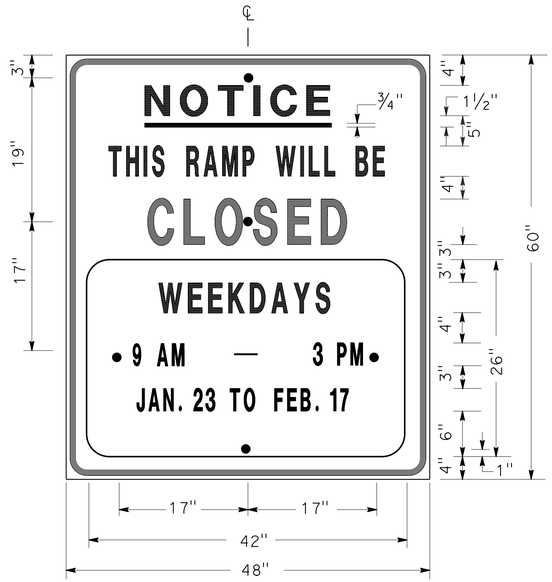

SIGN SP-1

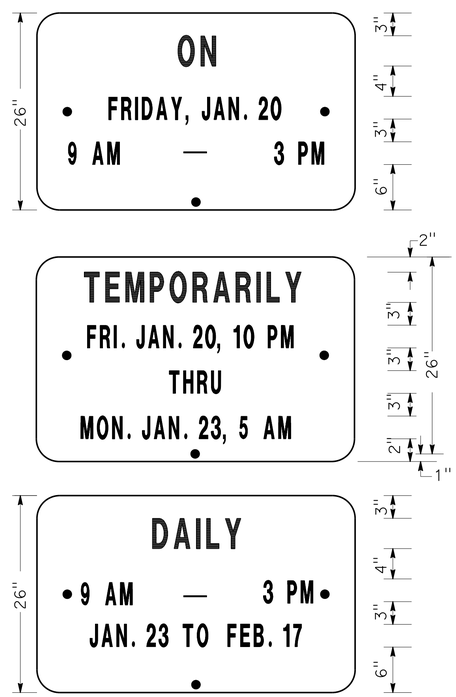

ALTERNATE OVERLAY PANELS (TYPICAL)

SPECIAL ADVANCE NOTICE PUBLICITY SIGN

NOTES: SIGN SP-1

1. LETTERS AND BORDER MUST BE BLACK ON REFLECTORIZED ORANGE BACKGROUND.
2. BOLT HOLES MUST BE 3/8" DIAMETER.
3. BASE MATERIAL MUST BE ALUMINUM (MINIMUM 0.06").
4. SIGNS MUST BE MOUNTED WITH BOTTOMS OF SIGNS A MINIMUM OF 7' ABOVE GROUND.

SIZE	BORDER WIDTH	MARGIN WIDTH	LETTER SIZE					CORNER RADIUS
			LINE 1	LINE 2*	LINE 3	LINE 4	LINE 5, 6, & 7*	
48"x60"	1 1/4"	3/4"	4E	4D	6E	4D		3"
42"x26"	OVERLAY						3D	1 1/2"
* CONDENSED SPACING IF NECESSARY								

SIGN SP-4

NOTES: SIGN SP-4

1. LETTERS - 6" SERIES C.
2. LETTERS AND BORDER MUST BE BLACK ON REFLECTORIZED WHITE BACKGROUND.
3. BOLT HOLES MUST BE 3/8" DIAMETER.
4. BASE MATERIAL MUST BE ALUMINUM (MINIMUM 0.06").
5. SIGNS MUST BE PLACED AT RAMP ENTRANCES IN ADDITION TO SIGNS POSTED IN ACCORDANCE WITH REVISED STANDARD PLAN RSP T14.

SPECIAL SIGN FOR ENTRANCE RAMP CLOSURES

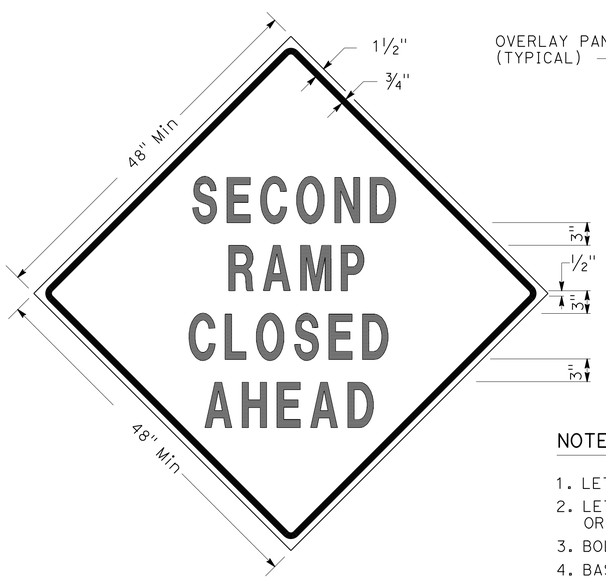

SIGN SP-3

SIGN SP-5

NOTES: SIGNS SP-3 & SP-5

1. LETTERS - 6" SERIES D.
2. LETTERS AND BORDER MUST BE BLACK ON REFLECTORIZED ORANGE BACKGROUND.
3. BOLT HOLES MUST BE 3/8" DIAMETER.
4. BASE MATERIAL MUST BE ALUMINUM (MINIMUM 0.06").
5. SIGNS MUST BE MOUNTED WITH BOTTOMS OF SIGNS A MINIMUM OF 7' ABOVE GROUND.
6. SIGN SP-5 MUST BE USED IF THE OFF-RAMP TO BE CLOSED FOLLOWS A FREEWAY OFF-CONNECTOR.

SPECIAL SIGNS FOR EXIT RAMP CLOSURES

TRAFFIC HANDLING DETAILS
TRAFFIC CONTROL SYSTEM FOR RAMP CLOSURES, DETOUR SIGNS, AND MISCELLANEOUS DETAILS
SHEET 1 OF 2

NO SCALE

THD-1

STATE OF CALIFORNIA - DEPARTMENT OF TRANSPORTATION
Caltrans DTM

FUNCTIONAL SUPERVISOR: SAM ESQUENAZI
CALCULATED-DESIGNED BY: ALBERT K YU
CHECKED BY: JOCELYN C CHIANG
REVISED BY: JC
DATE REVISED: 2/14

LAST REVISION 02-22-16 | DATE PLOTTED => 16-FEB-2016 | TIME PLOTTED => 02:21

Dist	COUNTY	ROUTE	POST MILES TOTAL PROJECT	SHEET No.	TOTAL SHEETS
07	LA	1, 105, 110, 405	Var	6	50

REGISTERED CIVIL ENGINEER DATE 11-19-15

2-22-16
PLANS APPROVAL DATE

REGISTERED PROFESSIONAL ENGINEER JOCELYN C CHIANG No. 62742 Exp. 6-30-16 CIVIL STATE OF CALIFORNIA

THE STATE OF CALIFORNIA OR ITS OFFICERS OR AGENTS SHALL NOT BE RESPONSIBLE FOR THE ACCURACY OR COMPLETENESS OF SCANNED COPIES OF THIS PLAN SHEET.

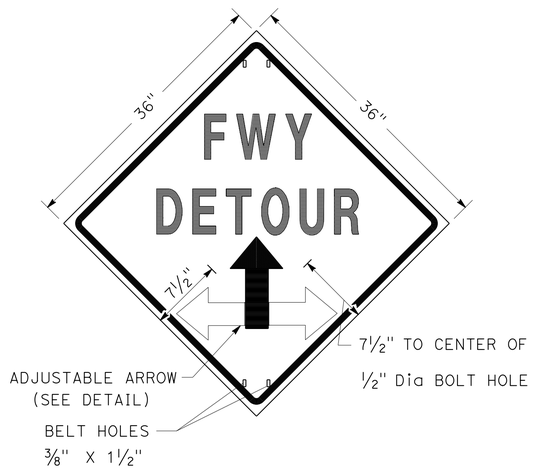

SIGN SP-2

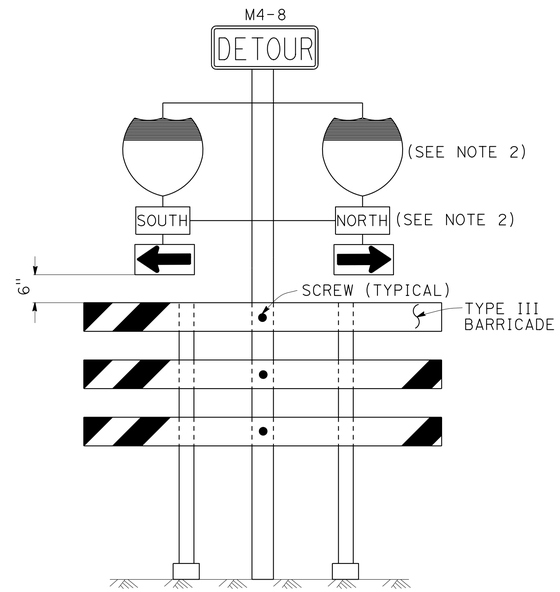

SIGN SP-6 (SEE NOTE 1)

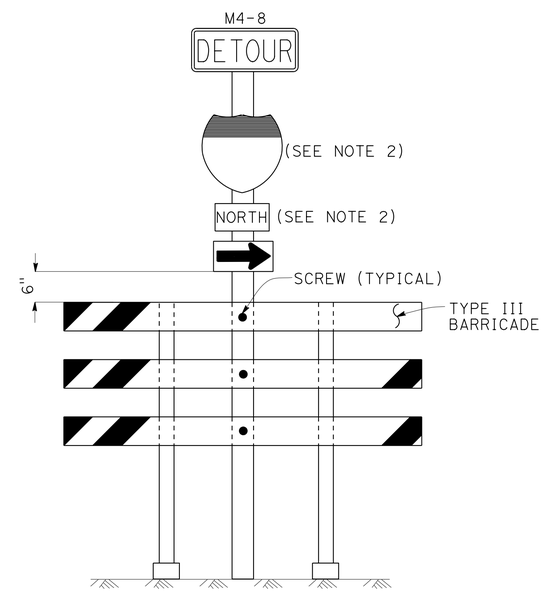

SIGN SP-7 (SEE NOTE 1)

NOTES: SIGN SP-2

1. LETTERS - 6" SERIES E.
2. LETTERS, BORDER AND ARROW - BLACK ON RETROREFLECTORIZED ORANGE BACKGROUND.
3. BASE MATERIAL FOR SIGNS AND ARROWS MUST BE ALUMINUM (MINIMUM 0.06").
4. BELTS (LUGGAGE STRAPS) MUST BE 1" WIDE BY 48" LONG, MADE OF COTTON OR POLYPROPYLENE WEB MATERIAL.
5. SIGNS MUST BE MOUNTED WITH BOTTOMS OF SIGNS A MINIMUM OF 7' ABOVE GROUND EXCEPT AS OTHERWISE SHOWN ON OTHER TRAFFIC HANDLING DETAILS PLANS.

NOTES: SIGNS SP-6 & SP-7

1. IN LIEU OF PLACING SIGNS ON TYPE III BARRICADES, SIGNS, INCLUDING POSTS, MAY BE PLACED INTO THE GROUND OR FASTENED ONTO ELECTROLIERS.
2. USE APPROPRIATE ROUTE MARKER [G26-2(CA), G27-2(CA), G28-2(CA)] AND CARDINAL DIRECTION [NORTH (M3-1), SOUTH (M3-3), EAST (M3-2), WEST (M3-4)].

SPECIAL PORTABLE FREEWAY DETOUR SIGNS

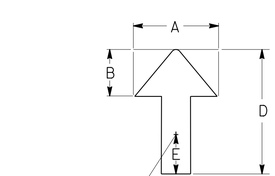

DIMENSIONS				
A	B	C	D	E
6"	3"	2"	8"	1"

ADJUSTABLE ARROW DETAIL

ABBREVIATION

(CA) CALIFORNIA CODE

TRAFFIC HANDLING DETAILS

TRAFFIC CONTROL SYSTEM FOR RAMP CLOSURES, DETOUR SIGNS, AND MISCELLANEOUS DETAILS

SHEET 2 OF 2

NO SCALE

THD-2

STATE OF CALIFORNIA - DEPARTMENT OF TRANSPORTATION
Caltrans® DTM

FUNCTIONAL SUPERVISOR: SAM ESQUENAZI
CALCULATED-DESIGNED BY: ALBERT K YU
CHECKED BY: JOCELYN C CHIANG
REVISED BY: JC
DATE REVISED: 2/14

LAST REVISION 02-22-16 | DATE PLOTTED => 16-FEB-2016 | TIME PLOTTED => 02:21

Dist	COUNTY	ROUTE	POST MILES TOTAL PROJECT	SHEET No.	TOTAL SHEETS
07	LA	1, 105, 110, 405	Var	7	50

REGISTERED CIVIL ENGINEER 11-19-15 DATE

2-22-16
PLANS APPROVAL DATE

REGISTERED PROFESSIONAL ENGINEER JOCELYN C CHIANG No. 62742 Exp 6-30-16 CIVIL STATE OF CALIFORNIA

THE STATE OF CALIFORNIA OR ITS OFFICERS OR AGENTS SHALL NOT BE RESPONSIBLE FOR THE ACCURACY OR COMPLETENESS OF SCANNED COPIES OF THIS PLAN SHEET.

LEGEND

- SIGN SP-2
- AND/OR — DESIGNATED DETOUR ROUTE
- DETOUR DIRECTION
- CONTROLLED INTERSECTION

NOTES:

1. SP-2 SIGNS MAY BE STRAPPED ON EXISTING ELECTROLIER, SIGNAL POST OR SIGN POST.
2. SP-2 SIGNS MUST NOT BE INSTALLED ON BARRICADES EXCEPT AS OTHERWISE SHOWN.
3. SIGN LOCATIONS ARE APPROXIMATE. EXACT LOCATIONS WILL BE DETERMINED BY THE ENGINEER.
4. SP-2 SIGNS MUST BE POSTED AT EACH CONTROLLED INTERSECTION (EXCEPT AT COMMERCIAL PROPERTY, RESIDENTIAL COMPLEX OR T-INTERSECTION FROM ONE-WAY STREET) ALONG THE DESIGNATED DETOUR ROUTE.
5. UNLESS OTHERWISE SHOWN ON OTHER THD PLANS, WHEN CONTROLLED INTERSECTIONS ALONG THE DESIGNATED DETOUR ROUTE ARE CLOSELY SPACED, PLACE SP-2 SIGNS AT CONTROLLED INTERSECTIONS AT A DISTANCE NOT TO EXCEED 1/4 MILE FROM THE PRECEDING DETOUR SIGN.
6. EXCEPT AS OTHERWISE SHOWN ON OTHER PLANS OR SPECIFIED IN THE SPECIAL PROVISIONS, SP-2 SIGNS MUST BE PLACED AS SHOWN ON THIS PLAN.

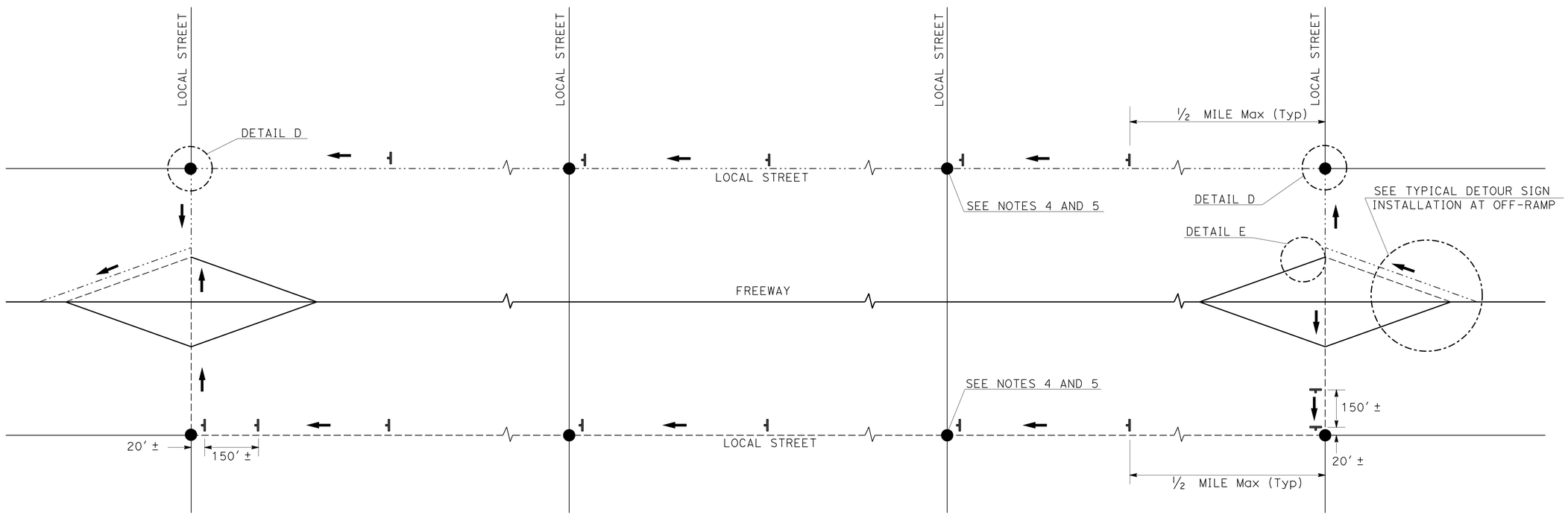

TYPICAL DETOUR SIGN INSTALLATION ALONG DESIGNATED DETOUR ROUTE

TRAFFIC HANDLING DETAILS

TRAFFIC CONTROL SYSTEM FOR DETOUR SIGN INSTALLATION ALONG DESIGNATED DETOUR ROUTE

SHEET 1 OF 2

NO SCALE

THD-3

STATE OF CALIFORNIA - DEPARTMENT OF TRANSPORTATION

Caltrans

DTM

FUNCTIONAL SUPERVISOR: SAM ESQUENAZI

CALCULATED-DESIGNED BY: ALBERT K YU

CHECKED BY: JOCELYN C CHIANG

REVISED BY: JC

DATE REVISED: 2/14

LAST REVISION: 02-22-16

DATE PLOTTED => 16-FEB-2016

TIME PLOTTED => 02:21

Dist	COUNTY	ROUTE	POST MILES TOTAL PROJECT	SHEET No.	TOTAL SHEETS
07	LA	1, 105, 110, 405	Var	8	50

REGISTERED CIVIL ENGINEER 11-19-15 DATE

2-22-16
PLANS APPROVAL DATE

REGISTERED PROFESSIONAL ENGINEER JOCELYN C CHIANG No. 62742 Exp 6-30-16 CIVIL STATE OF CALIFORNIA

THE STATE OF CALIFORNIA OR ITS OFFICERS OR AGENTS SHALL NOT BE RESPONSIBLE FOR THE ACCURACY OR COMPLETENESS OF SCANNED COPIES OF THIS PLAN SHEET.

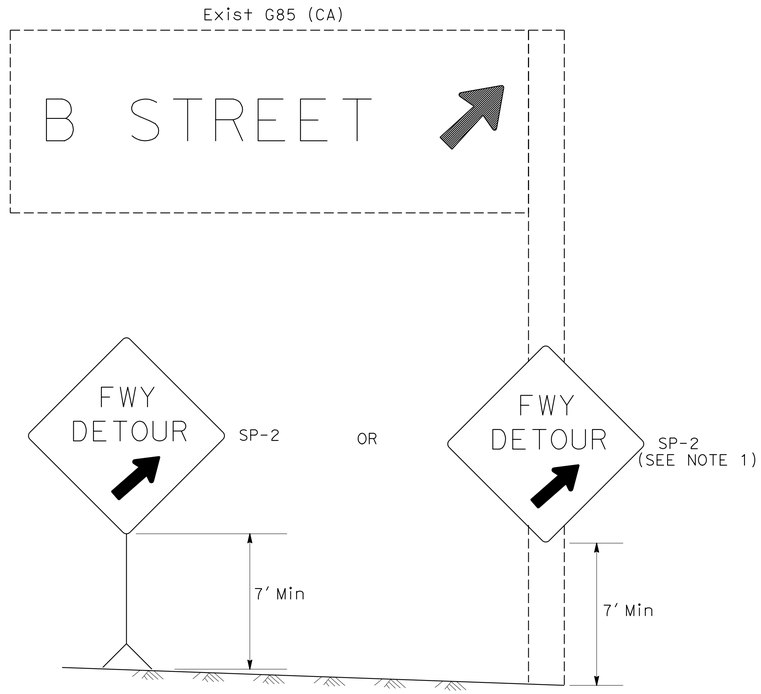

DETAIL A (SEE NOTE 3)

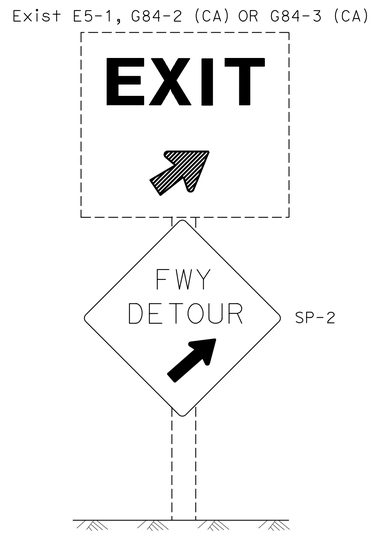

DETAIL B (SEE NOTE 3)

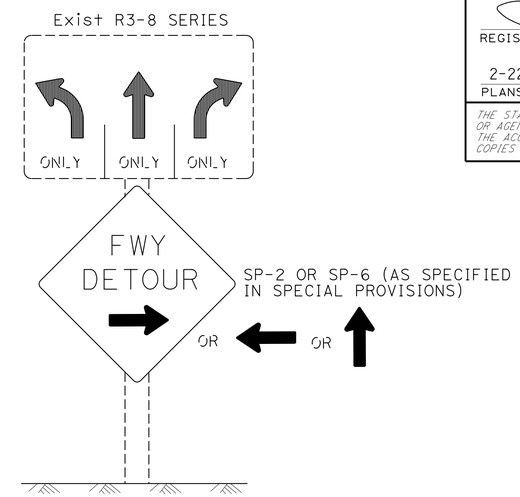

DETAIL C (SEE NOTES 4, 5, AND 6)

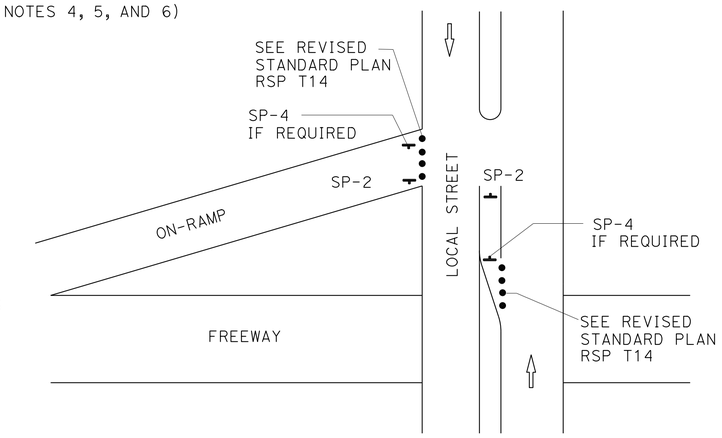

DETAIL E

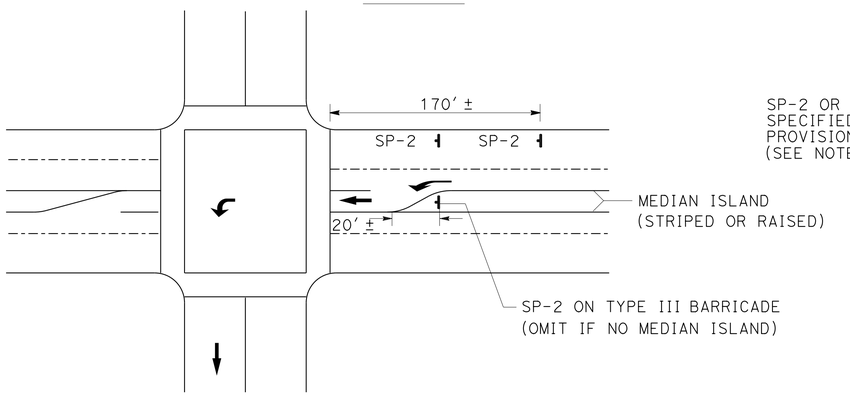

DETAIL D

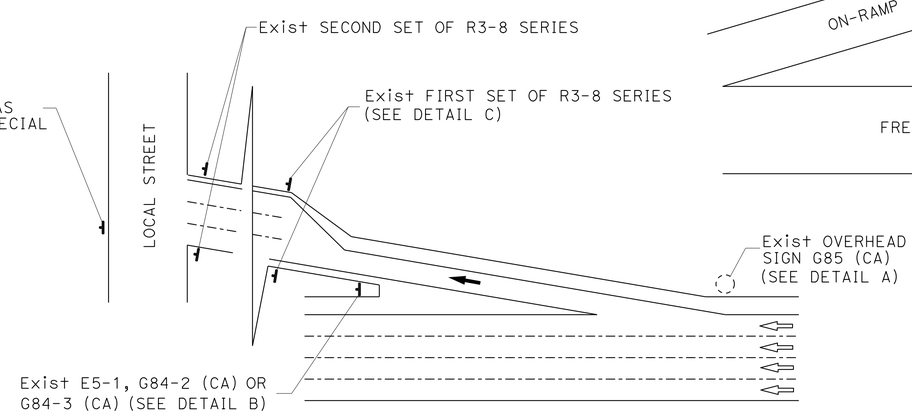

TYPICAL DETOUR SIGN INSTALLATION AT OFF-RAMP

LEGEND

- • TRAFFIC CONE
- TEMPORARY TRAFFIC CONTROL SIGN
- → DETOUR DIRECTION
- ◌ EXISTING OVERHEAD SIGN

NOTES: SIGN SP-2

1. SP-2 SIGNS MAY BE STRAPPED ON EXISTING ELECTROLIER, SIGNAL POST OR SIGN POST.
2. SP-2 SIGNS MUST NOT BE INSTALLED ON BARRICADES EXCEPT AS OTHERWISE SHOWN.
3. OMIT DETAILS A AND B FOR FULL FREEWAY CLOSURES.
4. SEE TRAFFIC HANDLING DETAILS-TRAFFIC CONTROL SYSTEM FOR RAMP CLOSURES, DETOUR SIGNS, AND MISCELLANEOUS DETAILS PLAN SHEET 2 OF 2 FOR SP-6 SIGN DETAILS.
5. IF R3-8 SERIES SIGNS ARE NOT PRESENT AT THE OFF-RAMP, SP-2 OR SP-6 SIGNS MUST BE FASTENED ONTO EXISTING ELECTROLIER, SIGNAL POST OR SIGN POST.
6. EXCEPT FOR DETAILS A & B, OMIT SP-2 SIGNS IF RAMP HAS MANDATORY SINGLE MOVE.

SIGN CODE LEGEND

XXYY-Y: FEDERAL SIGN CODE PER MANUAL ON UNIFORM TRAFFIC CONTROL DEVICES (MUTCD)

XXYY-Y (CA): CALIFORNIA SIGN CODE PER CALIFORNIA MUTCD

TRAFFIC HANDLING DETAILS
TRAFFIC CONTROL SYSTEM FOR DETOUR SIGN INSTALLATION ALONG DESIGNATED DETOUR ROUTE
SHEET 2 OF 2

NO SCALE **THD-4**

STATE OF CALIFORNIA - DEPARTMENT OF TRANSPORTATION
Caltrans DTM

FUNCTIONAL SUPERVISOR: SAM ESQUENAZI
REVISED BY: JC — DATE REVISED: 2/14
CALCULATED-DESIGNED BY: ALBERT K YU — CHECKED BY: JOCELYN C CHIANG

LAST REVISION 02-22-16 — DATE PLOTTED => 16-FEB-2016 — TIME PLOTTED => 02:21

Dist	COUNTY	ROUTE	POST MILES TOTAL PROJECT	SHEET No.	TOTAL SHEETS
07	LA	1, 105, 110, 405	Var	9	50

REGISTERED CIVIL ENGINEER DATE 11-19-15

2-22-16
PLANS APPROVAL DATE

REGISTERED PROFESSIONAL ENGINEER JOCELYN C CHIANG No. 62742 Exp 6-30-16 CIVIL STATE OF CALIFORNIA

THE STATE OF CALIFORNIA OR ITS OFFICERS OR AGENTS SHALL NOT BE RESPONSIBLE FOR THE ACCURACY OR COMPLETENESS OF SCANNED COPIES OF THIS PLAN SHEET.

NOTES:

1. LANE CLOSURES MUST NOT BE PLACED ON CREST VERTICAL CURVES OR ON HORIZONTAL CURVES.
2. PCMS MUST BE ACTIVATED PRIOR TO TRAFFIC CONTROL ACTIVITIES ON THE HOV LANE.
3. A MINIMUM SIGHT DISTANCE OF 1500′ MUST BE PROVIDED IN ADVANCE OF PCMS.
4. VEHICLE-MOUNTED SIGN PANELS MUST BE TYPE III OR IV RETROREFLECTORIZED SHEETING, BLACK ON WHITE OR BLACK ON ORANGE WITH 8" MINIMUM SERIES D LETTERS PER CALTRANS SIGN SPECIFICATIONS.
5. PLACE PCMS ON THE MEDIAN SHOULDER WHERE SUFFICIENT ROOM (SUCH AS CHP ENFORCEMENT AREAS) EXISTS.
6. ADVANCE WARNING SIGN INSTALLATIONS MUST BE EQUIPPED WITH FLAGS FOR DAYTIME CLOSURES. TYPE B HIGH INTENSITY FLASHING WARNING LIGHTS MUST BE USED ON SP-16 SIGN DURING NIGHT LANE CLOSURES. FLAGS AND WARNING LIGHTS MUST BE ATTACHED TO SIGNS AS APPROVED BY THE ENGINEER.

LEGEND

V1, V2	SHADOW VEHICLES
V3	WORK/APPLICATION VEHICLE
	PCMS
	PORTABLE FLASHING BEACON
	TEMPORARY TRAFFIC CONTROL SIGN
	FLASHING ARROW SIGN (FAS)

ABBREVIATIONS

IAV	IMPACT ATTENUATOR VEHICLE
(CA)	CALIFORNIA CODE
CHP	CALIFORNIA HIGHWAY PATROL

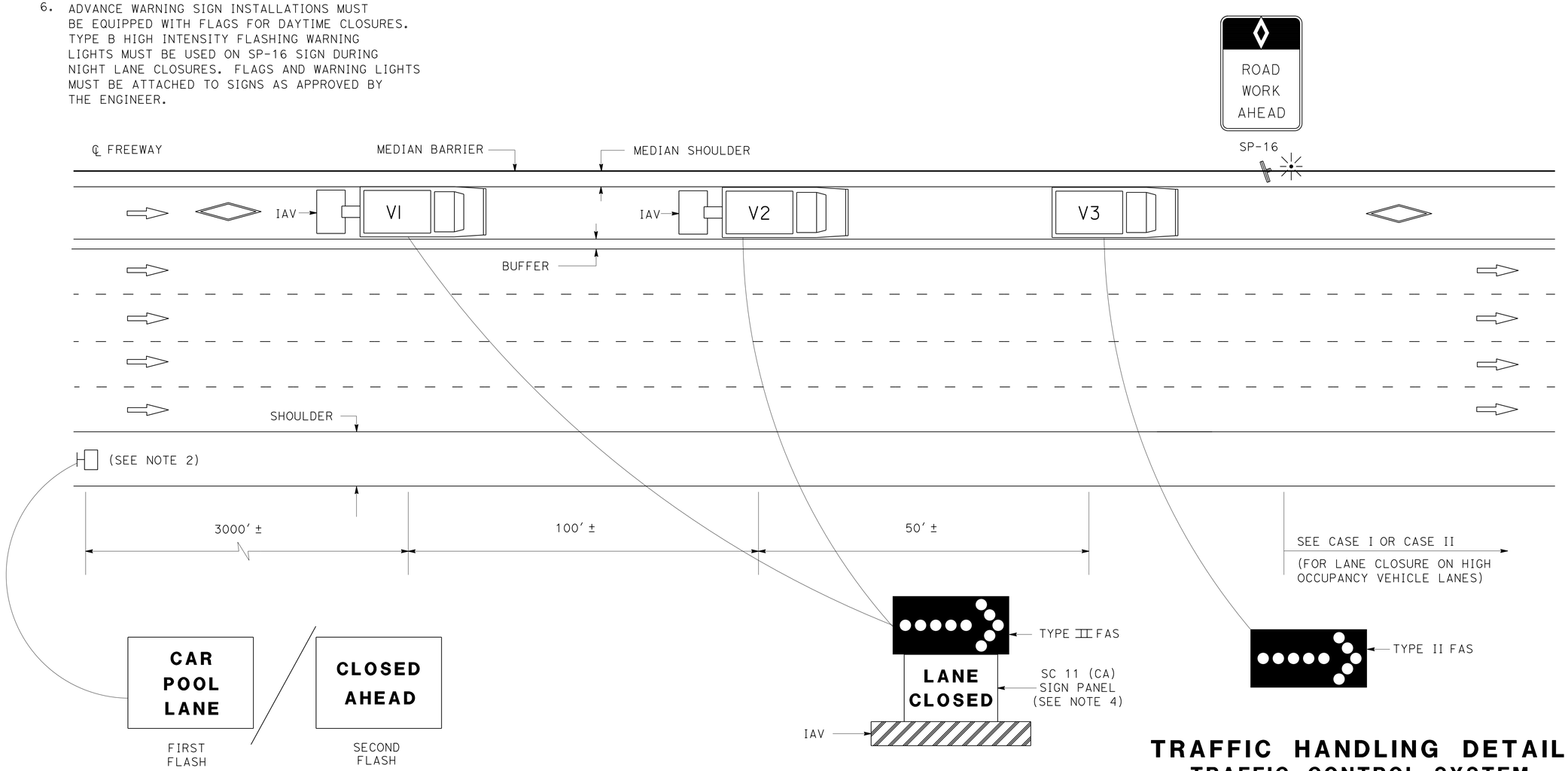

PCMS OR TRUCK MOUNTED CMS MESSAGE

(SEE NOTE 5)

TRAFFIC HANDLING DETAILS
TRAFFIC CONTROL SYSTEM FOR HIGH OCCUPANCY VEHICLE LANES WITH MEDIAN SHOULDERS LESS THAN 8 FEET

NO SCALE

THD-5

STATE OF CALIFORNIA - DEPARTMENT OF TRANSPORTATION
Caltrans® DTM

FUNCTIONAL SUPERVISOR: SAM ESQUENAZI
CALCULATED-DESIGNED BY: ALBERT K YU
CHECKED BY: JOCELYN C CHIANG
REVISED BY: JC
DATE REVISED: 2/14

LAST REVISION 02-22-16 | DATE PLOTTED => 16-FEB-2016 | TIME PLOTTED => 02:21

Dist	COUNTY	ROUTE	POST MILES TOTAL PROJECT	SHEET No.	TOTAL SHEETS
07	LA	1, 105, 110, 405	Var	10	50

REGISTERED CIVIL ENGINEER 11-19-15 DATE

2-22-16
PLANS APPROVAL DATE

REGISTERED PROFESSIONAL ENGINEER JOCELYN C CHIANG No. 62742 Exp 6-30-16 CIVIL STATE OF CALIFORNIA

THE STATE OF CALIFORNIA OR ITS OFFICERS OR AGENTS SHALL NOT BE RESPONSIBLE FOR THE ACCURACY OR COMPLETENESS OF SCANNED COPIES OF THIS PLAN SHEET.

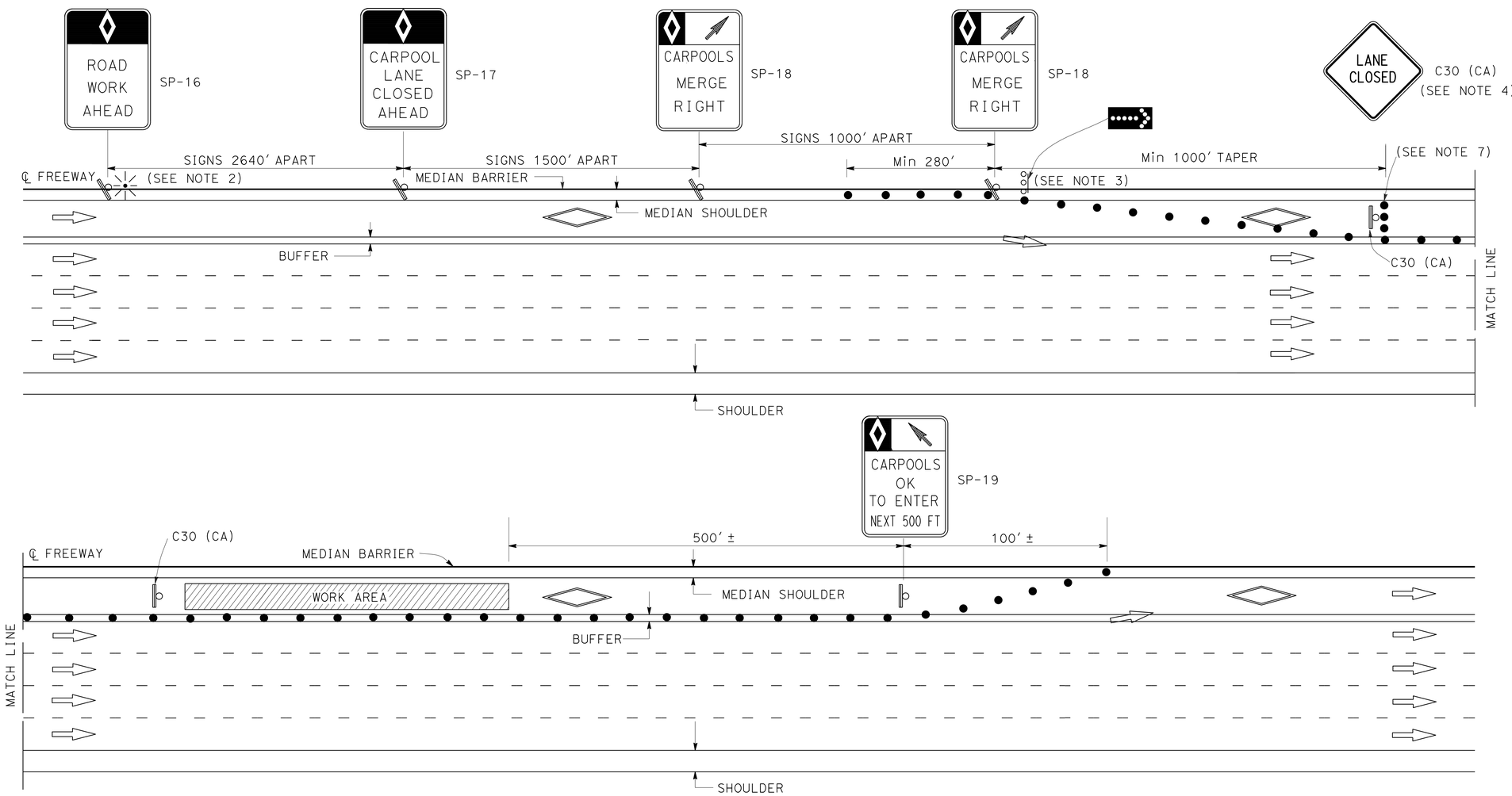

LEGEND

- TRAFFIC CONE
- PORTABLE FLASHING BEACON
- TEMPORARY TRAFFIC CONTROL SIGN
- FLASHING ARROW SIGN (FAS)
- FAS SUPPORT OR TRAILER

ABBREVIATIONS

(CA) CALIFORNIA CODE

SIGN PANEL

	SIZE (MIN)
SP-16	36" X 54"
SP-17	36" X 54"
SP-18	36" X 48"
SP-19	36" X 60"
C30 (CA)	30" X 30"
G20-2	48" X 24"

NOTES: FOR CASE I AND CASE II

1. AT LEAST ONE PERSON MUST BE ASSIGNED TO FULL TIME MAINTENANCE OF TRAFFIC CONTROL DEVICES ON NIGHT LANE CLOSURES OR DAY-TIME CLOSURES EXCEEDING 1 MILE LENGTH, INCLUDING TAPERS.
2. ADVANCE WARNING SIGN INSTALLATIONS MUST BE EQUIPPED WITH FLAGS FOR DAYTIME CLOSURES. TYPE B HIGH INTENSITY FLASHING WARNING LIGHTS MUST BE USED ON SP-16 SIGN DURING NIGHT LANE CLOSURES. FLAGS AND WARNING LIGHTS MUST BE ATTACHED TO SIGNS AS APPROVED BY THE ENGINEER.
3. THE FLASHING ARROW SIGN MUST BE TYPE I.
4. PLACE C30 (CA) SIGNS EVERY 2000' THROUGHOUT THE LENGTH OF LANE CLOSURE.
5. A MINIMUM 1500' OF SIGHT DISTANCE MUST BE PROVIDED WHERE POSSIBLE FOR VEHICLES APPROACHING THE FLASHING ARROW SIGN. LANE CLOSURES MUST NOT BE PLACED ON CREST VERTICAL CURVES OR ON HORIZONTAL CURVES.
6. PORTABLE DELINEATORS PLACED AT ONE-HALF THE SPACING INDICATED FOR TRAFFIC CONES MAY BE USED INSTEAD OF CONES FOR DAYTIME CLOSURES.
7. A MINIMUM OF 3 CONES MUST BE PLACED TRANSVERSELY ACROSS CLOSED LANES WHERE TAPERS END AND EVERY 2000'. TWO TYPE II BARRICADES MAY BE USED INSTEAD OF 3 CONES. THE ALIGNMENT OF CONES OR BARRICADES MAY BE SHIFTED FROM THE TRANSVERSE ALIGNMENT TO PROVIDE ACCESS TO WORK.
8. IF AN INGRESS/EGRESS AREA IS WITHIN 5250' UPSTREAM OR DOWNSTREAM OF THE WORK AREA, LANE CLOSURES MUST BE EXTENDED TO THAT AREA AS SHOWN IN CASE II.
9. SIGNS SP-16, 17, 18, AND 19 MAY BE OVERLAID ON EXISTING CARPOOL SIGNS IN MEDIANS AS APPROVED BY THE ENGINEER.
10. SIGNS SP-16, 17, 18, AND C30 (CA) MUST BE BLACK ON ORANGE BACKGROUND. SIGN SP-19 MUST BE BLACK ON WHITE BACKGROUND. DIAMONDS ON SIGNS MUST BE WHITE.
11. FOR CLOSURE OF LANE(S) ADJACENT TO HOV LANES, SEE CASE II.
12. THE MAXIMUM SPACING BETWEEN CONES MUST BE APPROXIMATELY 50' IN TAPERS AND 100' ON TANGENTS.

TRAFFIC HANDLING DETAILS
TRAFFIC CONTROL SYSTEM FOR HIGH OCCUPANCY VEHICLE LANES AT NON-INGRESS/EGRESS AREAS CASE I

NO SCALE

THD-6

CALCULATED-DESIGNED BY	JC
CHECKED BY	2/14
REVISED BY	DATE REVISED
ALBERT K YU	JOCELYN C CHIANG
FUNCTIONAL SUPERVISOR	SAM ESQUENAZI

STATE OF CALIFORNIA - DEPARTMENT OF TRANSPORTATION
Caltrans® DTM

LAST REVISION 02-22-16 | DATE PLOTTED => 16-FEB-2016 | TIME PLOTTED => 02:21

Dist	COUNTY	ROUTE	POST MILES TOTAL PROJECT	SHEET No.	TOTAL SHEETS
07	LA	1, 105, 110, 405	Var	11	50

REGISTERED CIVIL ENGINEER DATE 11-19-15

2-22-16
PLANS APPROVAL DATE

REGISTERED PROFESSIONAL ENGINEER JOCELYN C CHIANG No. 62742 Exp 6-30-16 CIVIL STATE OF CALIFORNIA

THE STATE OF CALIFORNIA OR ITS OFFICERS OR AGENTS SHALL NOT BE RESPONSIBLE FOR THE ACCURACY OR COMPLETENESS OF SCANNED COPIES OF THIS PLAN SHEET.

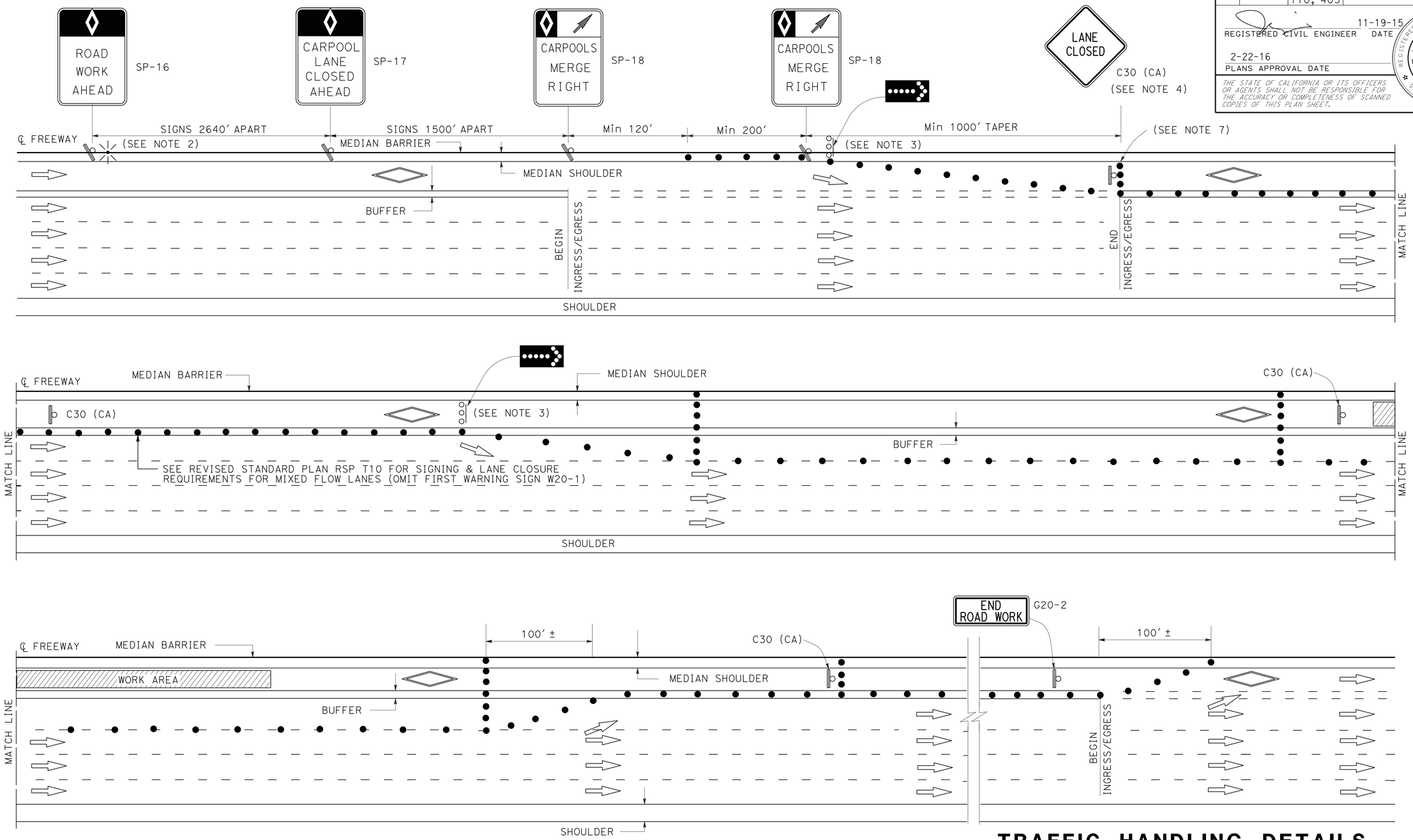

NOTES:

1. SEE CASE I FOR NOTES, LEGEND, SIGN PANEL, AND ABBREVIATIONS FOR THIS SHEET.
2. CLOSURES OF ONE MIXED FLOW TRAFFIC LANE ADJACENT TO HOV LANE SHOWN ON THIS SHEET. MULTIPLE MIXED FLOW LANE CLOSURES ARE SIMILAR.

TRAFFIC HANDLING DETAILS
TRAFFIC CONTROL SYSTEM FOR HIGH OCCUPANCY VEHICLE LANES AND ADJACENT FREEWAY LANES BETWEEN INGRESS/EGRESS AREAS
CASE II

NO SCALE

THD-7

REVISED BY	DATE REVISED
JC	2/14

ALBERT K YU — JOCELYN C CHIANG — CALCULATED-DESIGNED BY — CHECKED BY

FUNCTIONAL SUPERVISOR: SAM ESQUENAZI

STATE OF CALIFORNIA - DEPARTMENT OF TRANSPORTATION — Caltrans — DTM

LAST REVISION 02-22-16 | DATE PLOTTED => 16-FEB-2016 | TIME PLOTTED => 02:21

Dist	COUNTY	ROUTE	POST MILES TOTAL PROJECT	SHEET No.	TOTAL SHEETS
07	LA	1, 105, 110, 405	Var	12	50

REGISTERED CIVIL ENGINEER 11-19-15 DATE

2-22-16
PLANS APPROVAL DATE

REGISTERED PROFESSIONAL ENGINEER DYARI AHMED No. 66868 Exp. 9/30/16 CIVIL STATE OF CALIFORNIA

THE STATE OF CALIFORNIA OR ITS OFFICERS OR AGENTS SHALL NOT BE RESPONSIBLE FOR THE ACCURACY OR COMPLETENESS OF SCANNED COPIES OF THIS PLAN SHEET.

LEGEND

- TRAFFIC CONE
- TRAFFIC PLASTIC DRUM
- TEMPORARY TRAFFIC CONTROL SIGN
- BARRICADES
- PCMS
- FLASHING ARROW SIGN (FAS)
- FAS SUPPORT OR TRAILER

ABBREVIATIONS

(CA) CALIFORNIA CODE

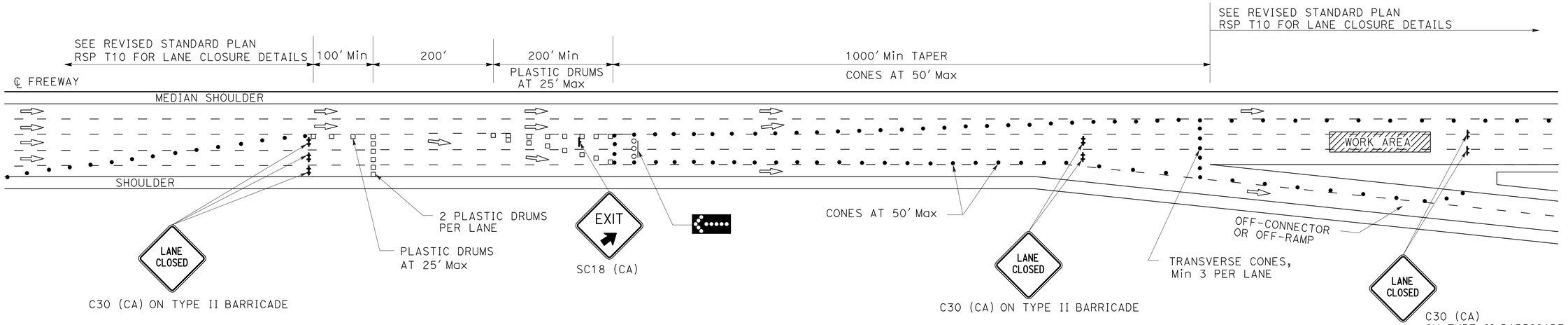

OPTION 1

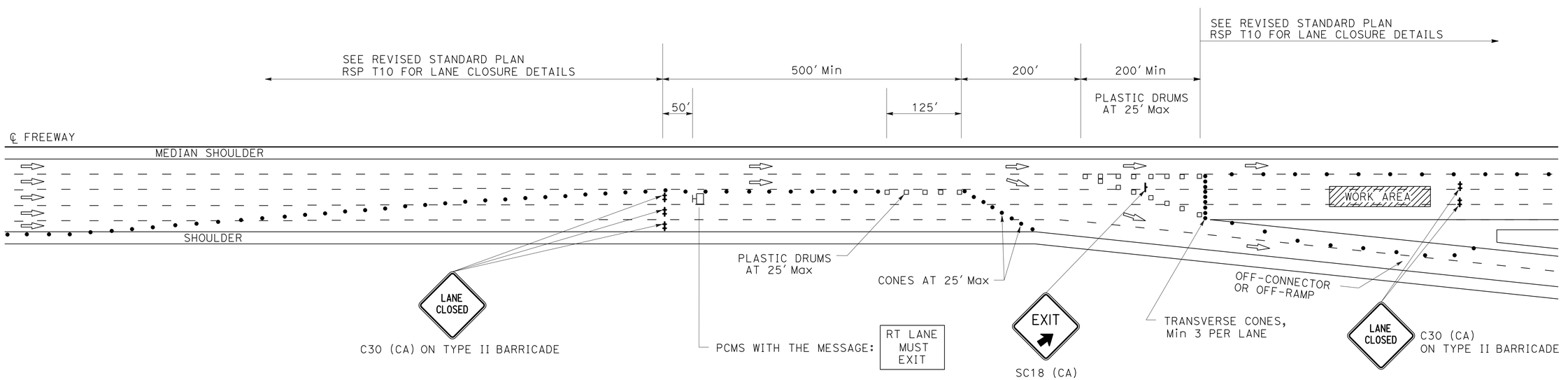

OPTION 2

TRAFFIC HANDLING DETAILS

TRAFFIC CONTROL SYSTEM FOR SLIP-RAMP AT OFF-CONNECTOR OR OFF-RAMP

NO SCALE

THD-8

REVISED BY	DATE REVISED
JC	2/14

ALBERT K YU — JOCELYN C CHIANG

CALCULATED-DESIGNED BY — CHECKED BY

FUNCTIONAL SUPERVISOR: SAM ESQUENAZI

STATE OF CALIFORNIA - DEPARTMENT OF TRANSPORTATION — DTM — Caltrans

LAST REVISION 02-22-16 — DATE PLOTTED => 16-FEB-2016 — TIME PLOTTED => 02:21

Dist	COUNTY	ROUTE	POST MILES TOTAL PROJECT	SHEET No.	TOTAL SHEETS
07	LA	1, 105, 110, 405	Var	13	50

REGISTERED CIVIL ENGINEER 11-19-15 DATE

2-22-16
PLANS APPROVAL DATE

REGISTERED PROFESSIONAL ENGINEER DYARI AHMED No. 66868 Exp. 9/30/16 CIVIL STATE OF CALIFORNIA

THE STATE OF CALIFORNIA OR ITS OFFICERS OR AGENTS SHALL NOT BE RESPONSIBLE FOR THE ACCURACY OR COMPLETENESS OF SCANNED COPIES OF THIS PLAN SHEET.

NOTES:

1. EXACT LOCATION OF PCMS WILL BE DETERMINED BY THE ENGINEER TO PROVIDE ADEQUATE VISIBILITY.
2. PCMS MESSAGE DISPLAYED WILL BE APPROVED BY THE ENGINEER.
3. PCMS MESSAGE MUST BE CHANGED AT THE BEGINNING OF CURE PERIOD TO REFLECT NUMBER OF CLOSED LANES.

ABBREVIATIONS

(CA) CALIFORNIA CODE

LEGEND

- • TRAFFIC CONE
- TEMPORARY TRAFFIC CONTROL SIGN
- PCMS

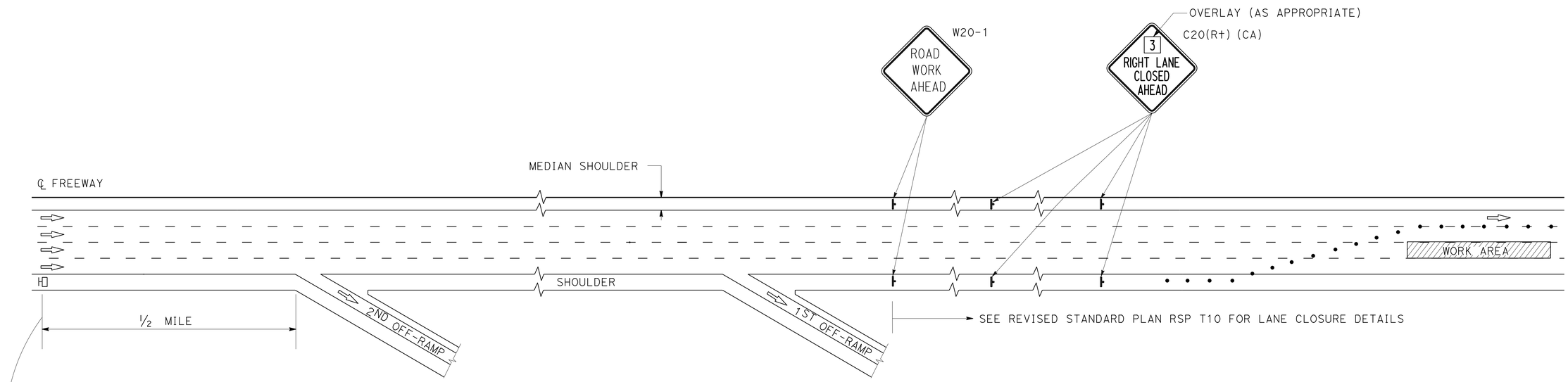

FIRST FLASH	X (NO OF LANES)RIGHT/LEFT	1ST LINE (TYPICAL)
	LANES	2ND LINE (TYPICAL)
	CLOSED	3RD LINE (TYPICAL)
SECOND FLASH	A ST	LIMIT OF CLOSURE (TYPICAL)
	TO	
	B DR	LIMIT OF CLOSURE (TYPICAL)

WORDING FORMAT FOR PCMS MESSAGE

TRAFFIC HANDLING DETAILS
TRAFFIC CONTROL SYSTEM FOR CONCRETE PAVEMENT AND APPROACH SLAB REPLACEMENT

NO SCALE

THD-9

REVISED BY	DATE REVISED
JC	2/14

ALBERT K YU
JOCELYN C CHIANG
CALCULATED-DESIGNED BY
CHECKED BY
FUNCTIONAL SUPERVISOR
SAM ESQUENAZI

STATE OF CALIFORNIA - DEPARTMENT OF TRANSPORTATION
Caltrans
DTM

LAST REVISION 02-22-16
DATE PLOTTED => 16-FEB-2016
TIME PLOTTED => 02:21

Dist	COUNTY	ROUTE	POST MILES TOTAL PROJECT	SHEET No.	TOTAL SHEETS
07	LA	1,105, 110,405	Var	14	50

REGISTERED CIVIL ENGINEER 2-2-16 DATE

2-22-16
PLANS APPROVAL DATE

REGISTERED PROFESSIONAL ENGINEER SHAHIN ENGILY No. 50125 Exp. 6-30-17 CIVIL STATE OF CALIFORNIA

THE STATE OF CALIFORNIA OR ITS OFFICERS OR AGENTS SHALL NOT BE RESPONSIBLE FOR THE ACCURACY OR COMPLETENESS OF SCANNED COPIES OF THIS PLAN SHEET.

THERMOPLASTIC TRAFFIC STRIPE

LOCATION No. (X)	DESCRIPTION	DETAIL No. 8	13 (Mod)	25	27B	M	29 (Mod)	24	28	21	4" TRAFFIC STRIPE TAPE (WARRANTY) YELLOW	WHITE	36	36A/B	38	38A	37
		4" YELLOW THERMOPLASTIC TRAFFIC STRIPE (BROKEN 17-7)	4" THERMOPLASTIC TRAFFIC STRIPE (BROKEN 36-12)	4" THERMOPLASTIC TRAFFIC STRIPE			4" YELLOW THERMOPLASTIC TRAFFIC STRIPE						8" THERMOPLASTIC TRAFFIC STRIPE				8" THERMOPLASTIC TRAFFIC STRIPE (BROKEN 12-3)
		LF	LF	LF	LF	LF	LF	LF	LF	LF	LF	LF	LF	LF	LF	LF	LF
3	EL SEGUNDO Blvd OC (E&W 105 - S405 Conn OC)		185	185	185												
4	CENTURY Blvd UC		1,800	400	1,400		800							200	200		600
5	CENTURY Blvd OC		410	205	205												
6	CENTURY Blvd OC		410	205	205												
8	FIGUEROA St OC (S110 - W105)	245			50				280	210						55	
9	E105 - N110 Conn OC		4,840	4,840	4,980								400				
10	ROUTE 105 / 110 Sep		2,040	1,020	2,040		8,160										
11	W105 - S110 Conn OC		1,970	1,970	1,970												
12	MAIN St UC		585	195	390		780						390				
13	MAIN St UC		585	195	585		780							195			
16	AVALON Blvd UC		1,075	430	860		1,720										430
19	BUDLONG Ave OC									720							
20	VERMONT Ave OC	1,290			465	200		460	3,940								
21	IMPERIAL Hwy ON-RAMP (SPUR)		1,275	1,275	1,275												
22	W105 - N110 Conn OC										2,795	2,795					
23	W105 - N110 HOV Conn OC			315	335										315		
24	IMPERIAL Hwy ON-RAMP OC		485	485	485												
25	E&W 105 - S405 Conn OC (RAMPS UNDERCROSSING OC)		910	910	910												
	SUB-TOTAL	1,535	16,570	12,630	16,340	200	12,240	460	4,220	930	2,795	2,795	790	395	515	55	1,030
	SHEET TOTAL	1,535	16,570	47,020							5,590		1,755				1,030

PAVEMENT DELINEATION QUANTITIES

PDQ-1

STATE OF CALIFORNIA - DEPARTMENT OF TRANSPORTATION
Caltrans MAINTENANCE ENGINEERING

FUNCTIONAL SUPERVISOR: PAUL CRISPI
CALCULATED-DESIGNED BY: MARLON SARMIENTO
CHECKED BY: SHAWN ENGILY
REVISED BY
DATE REVISED

LAST REVISION 02-22-16
DATE PLOTTED => 16-FEB-2016
TIME PLOTTED => 02:21

Dist	COUNTY	ROUTE	POST MILES TOTAL PROJECT	SHEET No.	TOTAL SHEETS
07	LA	1,105, 110,405	Var	15	50

REGISTERED CIVIL ENGINEER 2-2-16 DATE

2-22-16
PLANS APPROVAL DATE

REGISTERED PROFESSIONAL ENGINEER SHAHIN ENGILY No. 50125 Exp. 6-30-17 CIVIL STATE OF CALIFORNIA

THE STATE OF CALIFORNIA OR ITS OFFICERS OR AGENTS SHALL NOT BE RESPONSIBLE FOR THE ACCURACY OR COMPLETENESS OF SCANNED COPIES OF THIS PLAN SHEET.

LOCATION No. (X)	DESCRIPTION	PAVEMENT MARKERS											PAVEMENT MARKINGS								
		DETAIL No.										4" TRAFFIC STRIPE TAPE (WARRANTY)	ARROWS		SYMBOLS, WORDS AND CROSSWALKS						
		13 (Mod)	36	36 A/B	38	M	37		29 (Mod)	25	YELLOW										
		TYPE A (NON-REFLECTIVE)	TYPE G (RETROREFLECTIVE)						TYPE C (RETROREFLECTIVE)	TYPE H (RETROREFLECTIVE)			TYPE I (24' ARROW)	TYPE V (24' ARROW)	DIAMOND	DIAGONALS	LANE	ONLY	CAR	POOL	CROSSWALK & LIMIT LINE
		EA	EA	EA	EA	EA	EA	EA	EA	EA	EA	EA	SQFT	SQFT	SQFT	SQFT	SQFT	SQFT	SQFT	SQFT	SQFT
3	EL SEGUNDO Blvd OC (E&W 105 - S405 Conn OC)	16	5								5										
4	CENTURY Blvd UC	151	39		9	9		10	54	34	9					50					
5	CENTURY Blvd OC	35	10								5					100					
6	CENTURY Blvd OC	35	10								5					40					
8	FIGUEROA St OC (S110 - W105)													33							
9	E105 - N110 Conn OC	404	102	18							102										
10	ROUTE 105 / 110 Sep	171	44							171	22										
11	W105 - S110 Conn OC	165	42								42										
12	MAIN St UC	50	13	17						34	5										
13	MAIN St UC	50	13		9					34	5										
16	AVALON Blvd UC	91	23					7	38	37	10								17	23	
20	VERMONT Ave OC						4									625					125
21	IMPERIAL Hwy ON-RAMP (SPUR)	107	28								28										
22	W105 - N110 Conn OC										59	35									
23	W105 - N110 HOV Conn OC					14					8				11			22	17	23	
24	IMPERIAL Hwy ON-RAMP OC	41	11								11										
25	E&W 105 - S405 Conn OC (RAMPS UNDERCROSSING OC)	77	20								20										
	SUB-TOTAL	1,393	360	35	18	23	4	17	92	310	336	35		33	11	815		22	34	46	125
	SHEET TOTAL	1,393	1,230										1,086								

PAVEMENT DELINEATION QUANTITIES

PDQ-2

STATE OF CALIFORNIA - DEPARTMENT OF TRANSPORTATION
Caltrans MAINTENANCE ENGINEERING

FUNCTIONAL SUPERVISOR: PAUL CRISPI
CALCULATED-DESIGNED BY: MARLON SARMIENTO
CHECKED BY: SHAWN ENGILY
REVISED BY
DATE REVISED

LAST REVISION 02-22-16
DATE PLOTTED => 16-FEB-2016
TIME PLOTTED => 02:21

Dist	COUNTY	ROUTE	POST MILES TOTAL PROJECT	SHEET No.	TOTAL SHEETS
07	LA	1,105, 110,405	Var	16	50

REGISTERED CIVIL ENGINEER 2-2-16 DATE

2-22-16
PLANS APPROVAL DATE

REGISTERED PROFESSIONAL ENGINEER SHAHIN ENGILY No. 50125 Exp. 6-30-17 CIVIL STATE OF CALIFORNIA

THE STATE OF CALIFORNIA OR ITS OFFICERS OR AGENTS SHALL NOT BE RESPONSIBLE FOR THE ACCURACY OR COMPLETENESS OF SCANNED COPIES OF THIS PLAN SHEET.

LEGEND:

- TYPE G ONE-WAY CLEAR RETROREFLECTIVE PAVEMENT MARKER
- TYPE H ONE-WAY YELLOW RETROREFLECTIVE PAVEMENT MARKER
- DIRECTION OF TRAVEL

NOTE:
PLACE 4" WIDE THERMOPLASTIC STRIPE 12.0' LONG ON TOP OF TYPE A NON REFLECTIVE MARKERS.

LOCATION No. (X)	DESCRIPTION	REMOVAL QUANTITIES: REMOVE YELLOW THERMOPLASTIC TRAFFIC STRIPE (HAZARDOUS WASTE)	REMOVE THERMOPLASTIC TRAFFIC STRIPE	REMOVE THERMOPLASTIC PAVEMENT MARKING	REMOVE PAVEMENT MARKER
		LF	LF	SQFT	EA
3	EL SEGUNDO Blvd OC (E&W 105 - S405 Conn OC)	185	231		26
4	CENTURY Blvd UC	400	3,170	50	315
5	CENTURY Blvd OC	205	308	100	50
6	CENTURY Blvd OC	205	308	40	50
8	FIGUEROA St OC (S110 - W105)		666	33	
9	E105 - N110 Conn OC	4,840	6,590		626
10	ROUTE 105 / 110 Sep	1,020	10,710		408
11	W105 - S110 Conn OC	1,970	2,463		249
12	MAIN St UC	195	1,706		119
13	MAIN St UC	195	1,706		111
16	AVALON Blvd UC	430	2,935	40	206
19	BUDLONG Ave OC		720		
20	VERMONT Ave OC		5,441	750	4
21	IMPERIAL Hwy ON-RAMP (SPUR)	1,275	1,594		162
22	W105 - N110 Conn OC	2,795	6,056		94
23	W105 - N110 HOV Conn OC	315	650	62	22
24	IMPERIAL Hwy ON-RAMP OC	485	606		64
25	E&W 105 - S405 Conn OC (RAMPS UNDERCROSSING OC)	910	1,138		117
	SHEET TOTAL	15,425	46,998	1,075	2,623

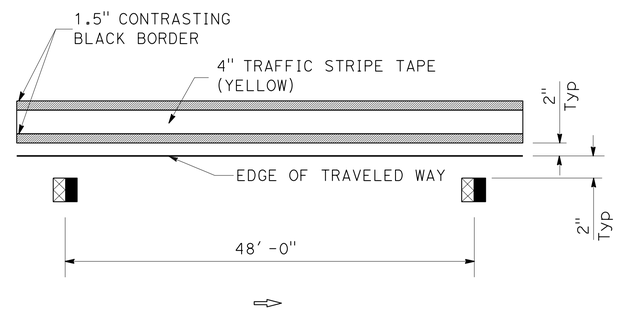

4" TRAFFIC STRIPE TAPE (YELLOW)

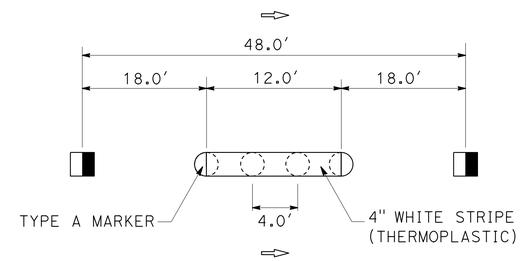

DETAIL 13 (Mod)

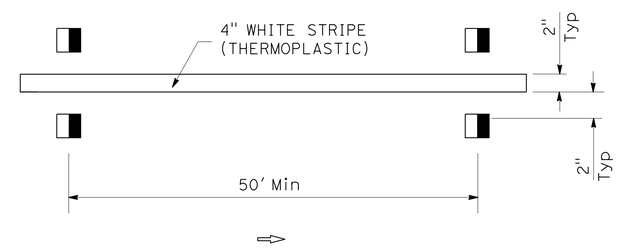

DETAIL M

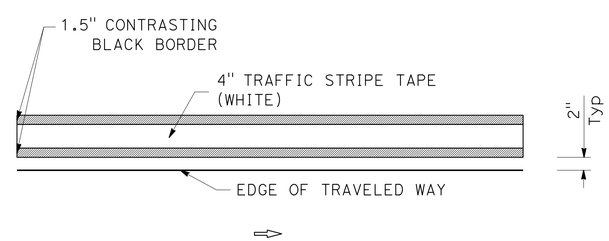

4" TRAFFIC STRIPE TAPE (WHITE)

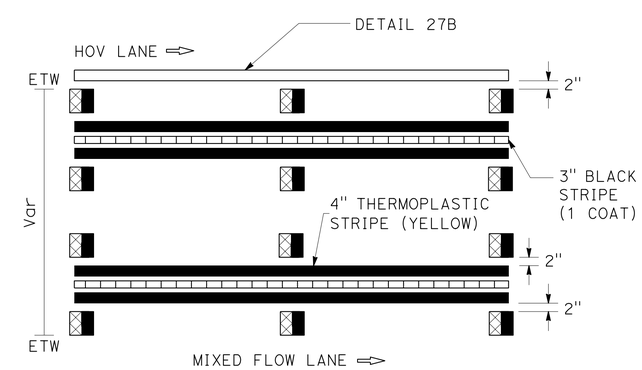

DETAIL 29 (Mod)

PAVEMENT DELINEATION QUANTITIES

NO SCALE

PDQ-3

STATE OF CALIFORNIA - DEPARTMENT OF TRANSPORTATION
Caltrans MAINTENANCE ENGINEERING

FUNCTIONAL SUPERVISOR: PAUL CRISPI
CALCULATED-DESIGNED BY: MARLON SARMIENTO
CHECKED BY: SHAWN ENGILY
REVISED BY
DATE REVISED

LAST REVISION 02-22-16 | DATE PLOTTED => 16-FEB-2016 | TIME PLOTTED => 02:21

M

Maint	MAINTENANCE
Max	MAXIMUM
MB	METAL BEAM
MBB	METAL BEAM BARRIER
MBGR	METAL BEAM GUARD RAILING
Med	MEDIAN
MGS	MIDWEST GUARDRAIL SYSTEM
MH	MANHOLE
Min	MINIMUM
Misc	MISCELLANEOUS
Misc I & S	MISCELLANEOUS IRON AND STEEL
Mkr	MARKER
Mod	MODIFIED,
	MODIFY
Mon	MONUMENT
MP	METAL PLATE
MPGR	METAL PLATE GUARD RAILING
MR	MOVEMENT RATING
MSE	MECHANICALLY STABILIZED EMBANKMENT
Mt	MOUNTAIN, MOUNT
Mtl	MATERIAL
MVP	MAINTENANCE VEHICLE PULLOUT

N

N	NORTH
NB	NORTHBOUND
No.	NUMBER (MUST HAVE PERIOD)
Nos.	NUMBERS (MUST HAVE PERIOD)
NPS	NOMINAL PIPE SIZE
NS	NEAR SIDE
NSP	NEW STANDARD PLAN
NTS	NOT TO SCALE

O

Oblr	OBLITERATE
OC	OVERCROSSING
OD	OUTSIDE DIAMETER
OF	OUTSIDE FACE
OG	ORIGINAL GROUND
OGAC	OPEN GRADED ASPHALT CONCRETE
OGFC	OPEN GRADED FRICTION COURSE
OH	OVERHEAD
OHWM	ORDINARY HIGH WATER MARK
O-O	OUT TO OUT
Opp	OPPOSITE
OSD	OVERSIDE DRAIN

P

P	PAGE
PAP	PERFORATED ALUMINUM PIPE
PB	PULL BOX
PC	POINT OF CURVATURE,
	PRECAST
PCC	POINT OF COMPOUND CURVE,
	PORTLAND CEMENT CONCRETE
PCMS	PORTABLE CHANGEABLE MESSAGE SIGN
PCP	PERFORATED CONCRETE PIPE,
	PRESTRESSED CONCRETE PIPE
PCVC	POINT OF COMPOUND VERTICAL CURVE
PEC	PERMIT TO ENTER AND CONSTRUCT
Ped	PEDESTRIAN
Ped OC	PEDESTRIAN OVERCROSSING
Ped UC	PEDESTRIAN UNDERCROSSING
Perm Mtl	PERMEABLE MATERIAL

P continued

PG	PROFILE GRADE
PI	POINT OF INTERSECTION
PJP	PARTIAL JOINT PENETRATION
Pkwy	PARKWAY
ℙ,PL	PLATE
P/L	PROPERTY LINE
PM	POST MILE,
	TIME FROM NOON TO MIDNIGHT
PN	PAVING NOTCH
POC	POINT OF HORIZONTAL CURVE
POT	POINT OF TANGENT
POVC	POINT OF VERTICAL CURVE
PP	PIPE PILE,
	PLASTIC PIPE,
	POWER POLE
PPL	PREFORMED PERMEABLE LINER
PPP	PERFORATED PLASTIC PIPE
PRC	POINT OF REVERSE CURVE
PRF	PAVEMENT REINFORCING FABRIC
PRVC	POINT OF REVERSE VERTICAL CURVE
PS&E	PLANS, SPECIFICATIONS AND ESTIMATES
PS, P/S	PRESTRESSED
PSP	PERFORATED STEEL PIPE
PT	POINT OF TANGENCY
PVC	POLYVINYL CHLORIDE
Pvmt	PAVEMENT

Q

Qty	QUANTITY

R

R	RADIUS
R & D	REMOVE AND DISPOSE
R & S	REMOVE AND SALVAGE
R/C	RATE OF CHANGE
RCA	REINFORCED CONCRETE ARCH
RCB	REINFORCED CONCRETE BOX
RCP	REINFORCED CONCRETE PIPE
RCPA	REINFORCED CONCRETE PIPE ARCH
Rd	ROAD
Reinf	REINFORCED,
	REINFORCEMENT,
	REINFORCING
Rel	RELOCATE
Repl	REPLACEMENT
Ret	RETAINING
Rev	REVISED, REVISION
Rdwy	ROADWAY
RHMA	RUBBERIZED HOT MIX ASPHALT
Riv	RIVER
RM	ROAD-MIXED
RP	RADIUS POINT,
	REFERENCE POINT
RR	RAILROAD
RSP	ROCK SLOPE PROTECTION,
	REVISED STANDARD PLAN
Rt	RIGHT
Rte	ROUTE
RW	REDWOOD,
	RETAINING WALL
R/W	RIGHT OF WAY
Rwy	RAILWAY

S

S	SOUTH,
	SUPPLEMENT
SAE	STRUCTURE APPROACH EMBANKMENT
Salv	SALVAGE
SAPP	STRUCTURAL ALUMINUM PLATE PIPE
SB	SOUTHBOUND
SC	SAND CUSHION
SCSP	SLOTTED CORRUGATED STEEL PIPE
SD	STORM DRAIN
Sec	SECOND,
	SECTION
Sep	SEPARATION
SG	SUBGRADE
Shld	SHOULDER
Sht	SHEET
Sim	SIMILAR
℄	STATION LINE
SM	SELECTED MATERIAL
Spec	SPECIAL,
	SPECIFICATIONS
SPP	SLOTTED PLASTIC PIPE
SS	SLOPE STAKE
SSBM	STRAP AND SADDLE BRACKET METHOD
SSD	STRUCTURAL SECTION DRAIN
SSPA	STRUCTURAL STEEL PLATE ARCH
SSPP	STRUCTURAL STEEL PLATE PIPE
SSPPA	STRUCTURAL STEEL PLATE PIPE ARCH
SSRP	STEEL SPIRAL RIB PIPE
St	STREET
Sta	STATION
STBB	SINGLE THRIE BEAM BARRIER
Std	STANDARD
Str	STRUCTURE
Surf	SURFACING
SW	SIDEWALK,
	SOUND WALL
Swr	SEWER
Sym	SYMMETRICAL
S4S	SURFACE 4 SIDES

T

T	SEMI-TANGENT
Tan	TANGENT
TBB	THRIE BEAM BARRIER
Tbr	TIMBER
TC	TOP OF CURB
TCB	TRAFFIC CONTROL BOX
TCE	TEMPORARY CONSTRUCTION EASEMENT
Tel	TELEPHONE
Temp	TEMPORARY
TG	TOP OF GRADE
Tot	TOTAL
TP	TELEPHONE POLE
TPB	TREATED PERMEABLE BASE
TPM	TREATED PERMEABLE MATERIAL
Trans	TRANSITION

T continued

TS	TRANSVERSE,
	TRAFFIC SIGNAL,
	TUBULAR STEEL
Typ	TYPICAL

U

UC	UNDERCROSSING
UD	UNDERDRAIN
UG	UNDERGROUND
UON	UNLESS OTHERWISE NOTED
UP	UNDERPASS

V

V	VALVE,
	DESIGN SPEED
Var	VARIABLE,
	VARIES
VC	VERTICAL CURVE
VCP	VITRIFIED CLAY PIPE
Vert	VERTICAL
Via	VIADUCT
Vol	VOLUME

W

W	WEST,
	WIDTH
WB	WESTBOUND
WH	WEEP HOLE
WM	WIRE MESH
WS	WATER SURFACE
WSP	WELDED STEEL PIPE
Wt	WEIGHT
WV	WATER VALVE
WW	WINGWALL
WWLOL	WINGWALL LAYOUT LINE

X

X Sec	CROSS SECTION
Xing	CROSSING

Y

Yr	YEAR
Yrs	YEARS

Dist	COUNTY	ROUTE	POST MILES TOTAL PROJECT	SHEET No.	TOTAL SHEETS
07		1, 105, 110, 405	Var	17	50

Grace M. Tsushima
REGISTERED CIVIL ENGINEER

July 19, 2013
PLANS APPROVAL DATE

REGISTERED PROFESSIONAL ENGINEER Grace M. Tsushima No. C49814 Exp. 9-30-14 CIVIL STATE OF CALIFORNIA

THE STATE OF CALIFORNIA OR ITS OFFICERS OR AGENTS SHALL NOT BE RESPONSIBLE FOR THE ACCURACY OR COMPLETENESS OF SCANNED COPIES OF THIS PLAN SHEET.

TO ACCOMPANY PLANS DATED 2-22-16

2010 REVISED STANDARD PLAN RSP A10B

UNIT OF MEASUREMENT SYMBOLS:

Some of the symbols used in the project plan quantity tables and in the Bid Item List are:

TABLE A

SYMBOL USED	DEFINITIONS
ACRE	ACRE
CF	CUBIC FOOT
CY	CUBIC YARD
EA	EACH
GAL	GALLON
LB	POUND
LF	LINEAR FOOT
SQFT	SQUARE FOOT
SQYD	SQUARE YARD
STA	100 FEET
TAB	TABLET
TON	2,000 POUNDS

Some of the symbols used in the plans other than in the project plan quantity tables are:

TABLE B

SYMBOL USED	DEFINITIONS
ksi	KIPS PER SQUARE INCH
ksf	KIPS PER SQUARE FOOT
psi	POUNDS PER SQUARE INCH
psf	POUNDS PER SQUARE FOOT
lb/ft^3, pcf	POUNDS PER CUBIC FOOT
tsf	TONS PER SQUARE FOOT
mph, MPH *	MILES PER HOUR
ø	NOMINAL DIAMETER
oz	OUNCE
lb	POUND
kip	1,000 POUNDS
cal	CALORIE
ft	FOOT OR FEET
gal	GALLON

* For use on a sign panel only

STATE OF CALIFORNIA
DEPARTMENT OF TRANSPORTATION

ABBREVIATIONS (SHEET 2 OF 2)

NO SCALE

RSP A10B DATED JULY 19, 2013 SUPERSEDES STANDARD PLAN A10B DATED MAY 20, 2011 - PAGE 2 OF THE STANDARD PLANS BOOK DATED 2010.

REVISED STANDARD PLAN RSP A10B

6-7-13

Dist	COUNTY	ROUTE	POST MILES TOTAL PROJECT	SHEET No.	TOTAL SHEETS
		1, 105, 110, 405	Var	18	50

REGISTERED CIVIL ENGINEER

July 19, 2013
PLANS APPROVAL DATE

Roberta L. McLaughlin No. C40375 Exp. 3-31-15 CIVIL
REGISTERED PROFESSIONAL ENGINEER
STATE OF CALIFORNIA

THE STATE OF CALIFORNIA OR ITS OFFICERS OR AGENTS SHALL NOT BE RESPONSIBLE FOR THE ACCURACY OR COMPLETENESS OF SCANNED COPIES OF THIS PLAN SHEET.

TO ACCOMPANY PLANS DATED 2-22-16

EXIT RAMP NEUTRAL AREA (GORE) TREATMENT

DETAIL 36

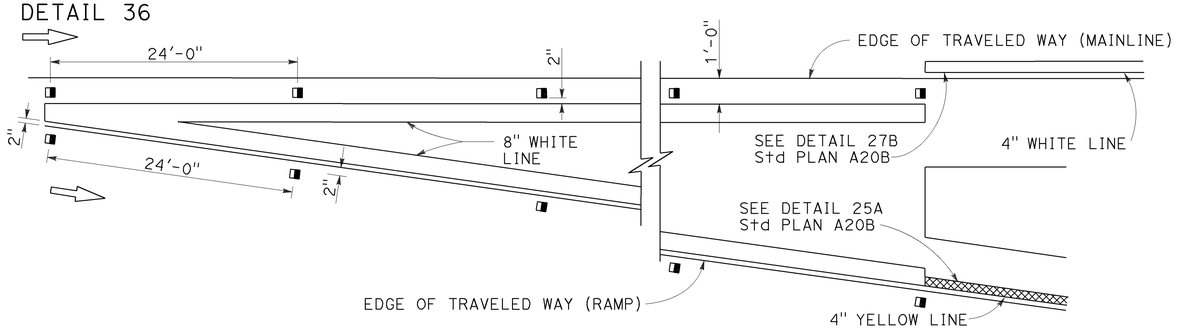

ENTRANCE RAMP NEUTRAL AREA (MERGE) TREATMENT

DETAIL 36A

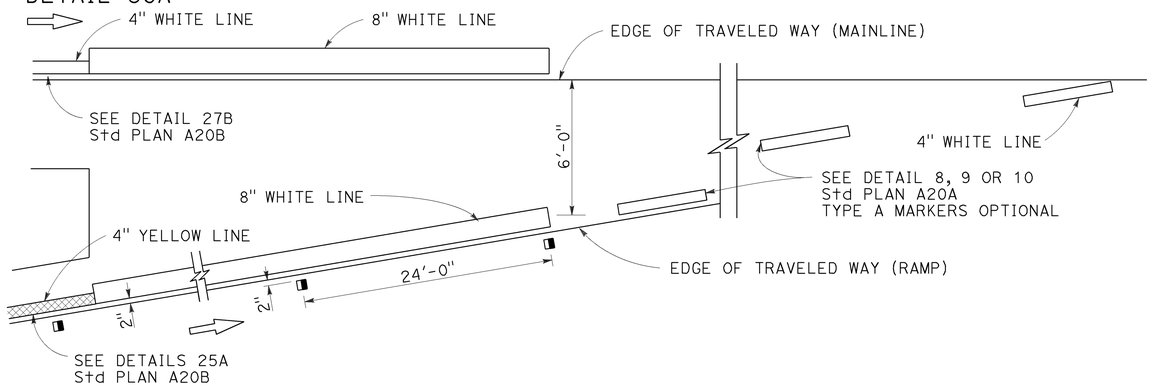

ENTRANCE RAMP NEUTRAL AREA (ACCELERATION LANE) TREATMENT

DETAIL 36B

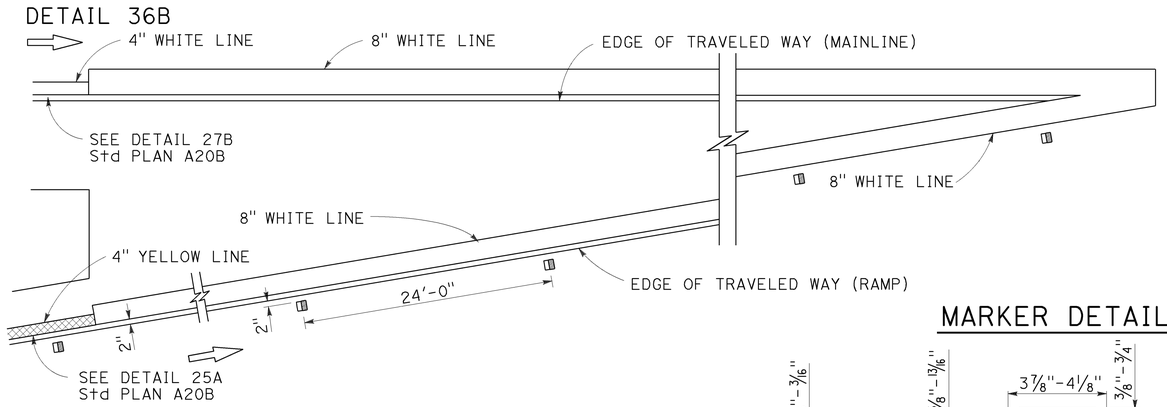

MARKER DETAILS

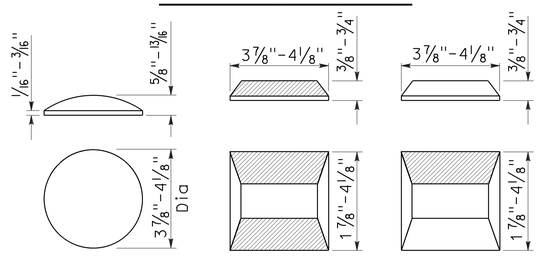

RETROREFLECTIVE FACE

LEGEND:

MARKERS

- TYPE A WHITE NON-REFLECTIVE
- TYPE C RED-CLEAR RETROREFLECTIVE
- TYPE G ONE-WAY CLEAR RETROREFLECTIVE

LANE DROP AT EXIT RAMPS

DETAIL 37

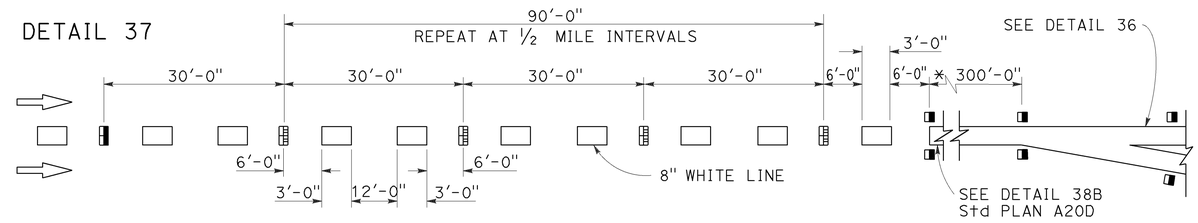

DETAIL 37A

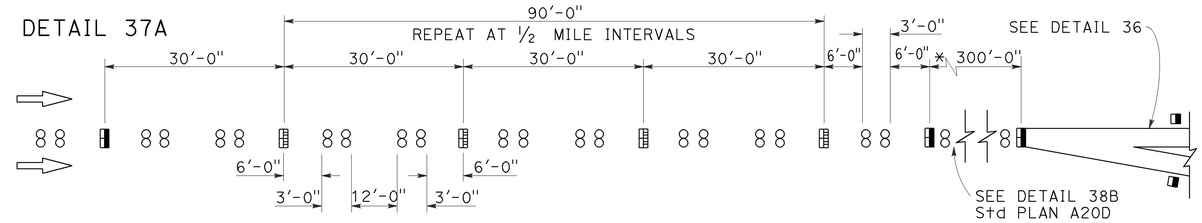

* The solid channelizing line shown may be omitted on short auxiliary lanes where weaving length is critical.

LANE DROP AT INTERSECTIONS

DETAIL 37B

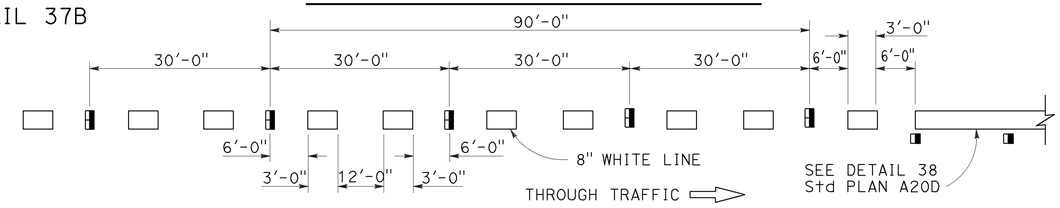

DETAIL 37C

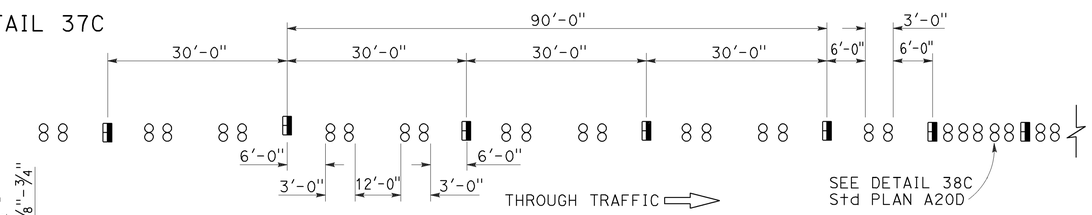

STATE OF CALIFORNIA
DEPARTMENT OF TRANSPORTATION

PAVEMENT MARKERS AND TRAFFIC LINE TYPICAL DETAILS

NO SCALE

RSP A20C DATED JULY 19, 2013 SUPERSEDES STANDARD PLAN A20C DATED MAY 20, 2011 - PAGE 11 OF THE STANDARD PLANS BOOK DATED 2010.

REVISED STANDARD PLAN RSP A20C

2010 REVISED STANDARD PLAN RSP A20C

4-29-13

Dist	COUNTY	ROUTE	POST MILES TOTAL PROJECT	SHEET No.	TOTAL SHEETS
07	LA	1, 105, 110, 405	Var	19	50

REGISTERED CIVIL ENGINEER

April 20, 2012
PLANS APPROVAL DATE

REGISTERED PROFESSIONAL ENGINEER
Roberta L. McLaughlin
No. C40375
Exp. 3-31-13
CIVIL
STATE OF CALIFORNIA

THE STATE OF CALIFORNIA OR ITS OFFICERS OR AGENTS SHALL NOT BE RESPONSIBLE FOR THE ACCURACY OR COMPLETENESS OF SCANNED COPIES OF THIS PLAN SHEET.

TO ACCOMPANY PLANS DATED 2-22-16

2010 REVISED STANDARD PLAN RSP A24A

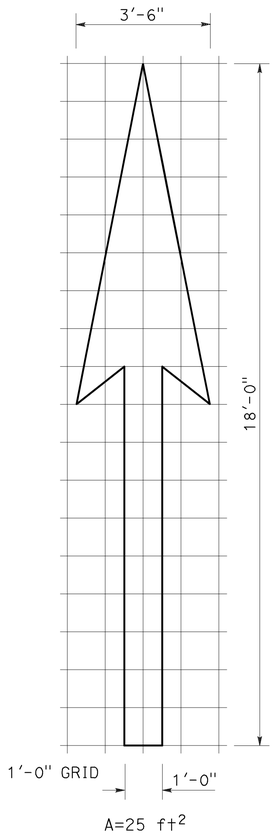

A=25 ft^2

TYPE I 18'-0" ARROW

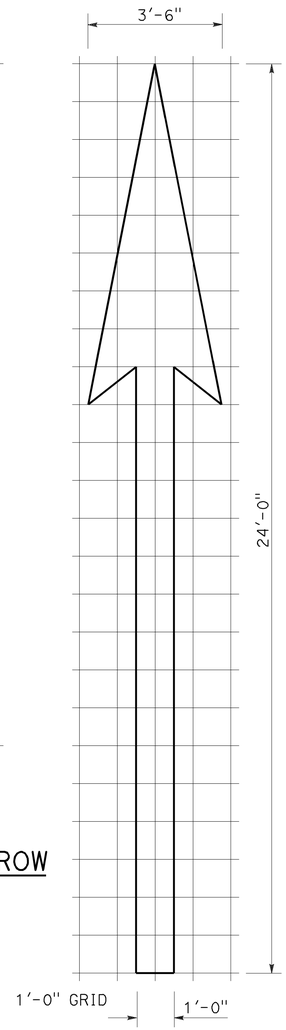

A=31 ft^2

TYPE I 24'-0" ARROW

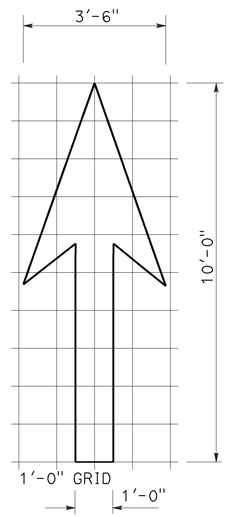

A=14 ft^2

TYPE I 10'-0" ARROW

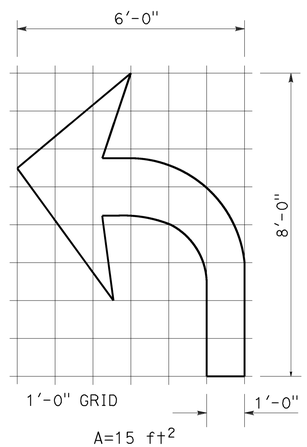

A=15 ft^2

TYPE IV (L) ARROW

(For Type IV (R) arrow, use mirror image)

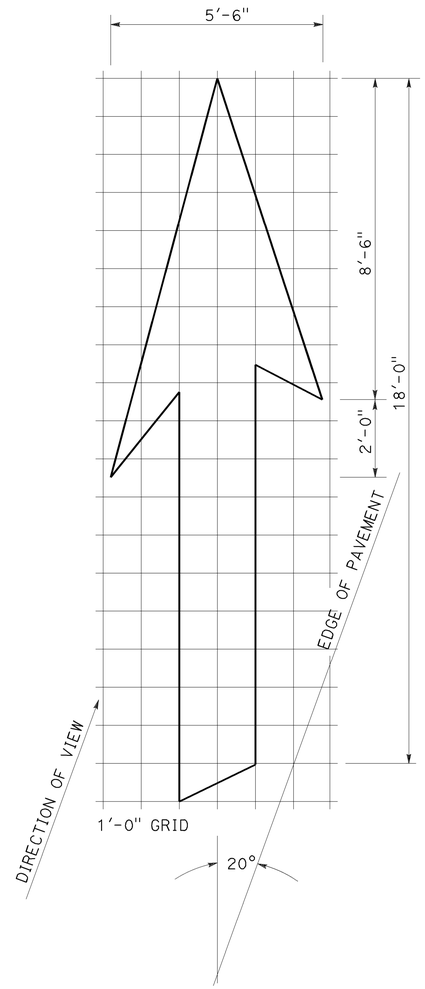

A=42 ft^2

TYPE VI ARROW

Right lane drop arrow
(For left lane, use mirror image)

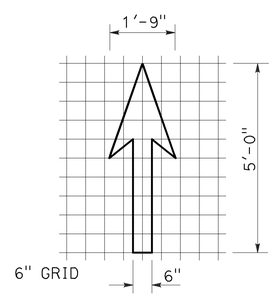

A=3.5 ft^2

BIKE LANE ARROW

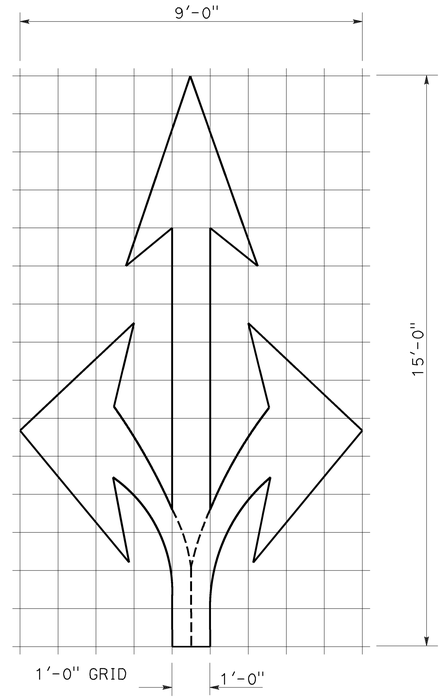

A=36 ft^2

TYPE VIII ARROW

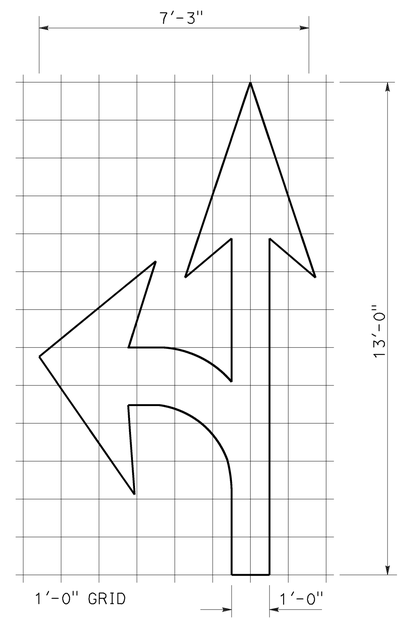

A=27 ft^2

TYPE VII (L) ARROW

(For Type VII (R) arrow, use mirror image)

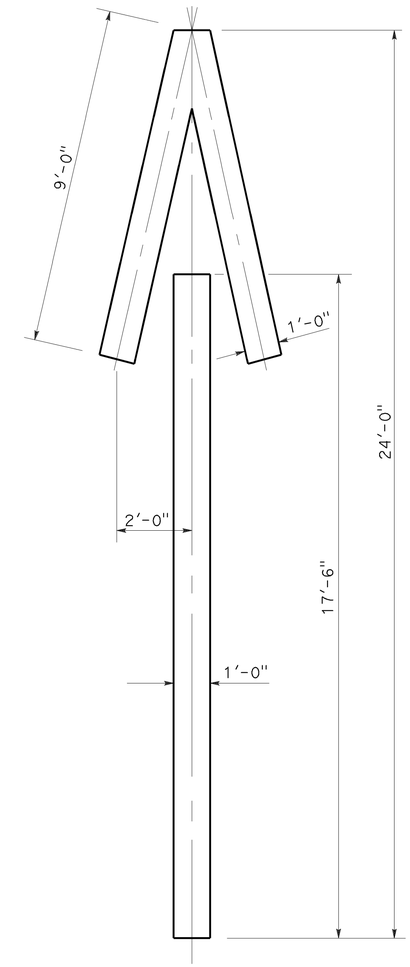

A=33 ft^2

TYPE V ARROW

NOTE:
Minor variations in dimensions may be accepted by the Engineer.

STATE OF CALIFORNIA
DEPARTMENT OF TRANSPORTATION

PAVEMENT MARKINGS ARROWS

NO SCALE

RSP A24A DATED APRIL 20, 2012 SUPERSEDES STANDARD PLAN A24A DATED MAY 20, 2011 - PAGE 13 OF THE STANDARD PLANS BOOK DATED 2010.

REVISED STANDARD PLAN RSP A24A

3-14-12

Dist	COUNTY	ROUTE	POST MILES TOTAL PROJECT	SHEET No.	TOTAL SHEETS
07	LA	1, 105, 110, 405	Var	20	50

REGISTERED CIVIL ENGINEER

October 19, 2012
PLANS APPROVAL DATE

REGISTERED PROFESSIONAL ENGINEER Roberta L. McLaughlin No. C40375 Exp. 3-31-13 CIVIL STATE OF CALIFORNIA

THE STATE OF CALIFORNIA OR ITS OFFICERS OR AGENTS SHALL NOT BE RESPONSIBLE FOR THE ACCURACY OR COMPLETENESS OF SCANNED COPIES OF THIS PLAN SHEET.

NOTE: TO ACCOMPANY PLANS DATED 2-22-16

Minor variations in dimensions may be accepted by the Engineer.

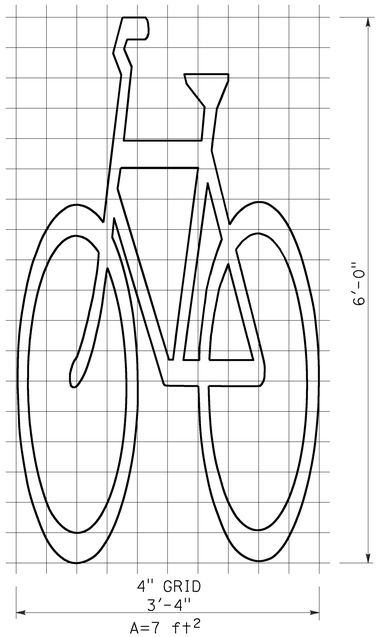

BIKE LANE SYMBOL WITHOUT PERSON

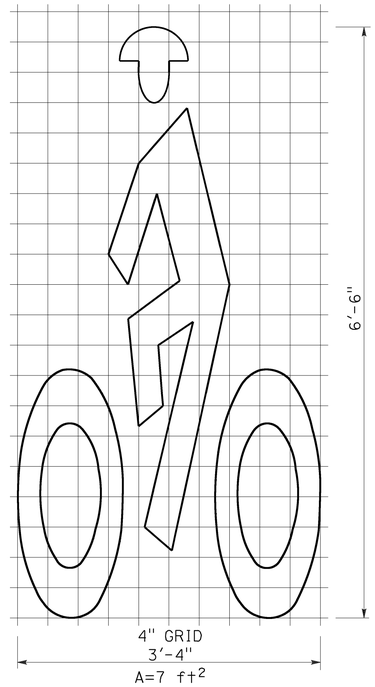

BIKE LANE SYMBOL WITH PERSON

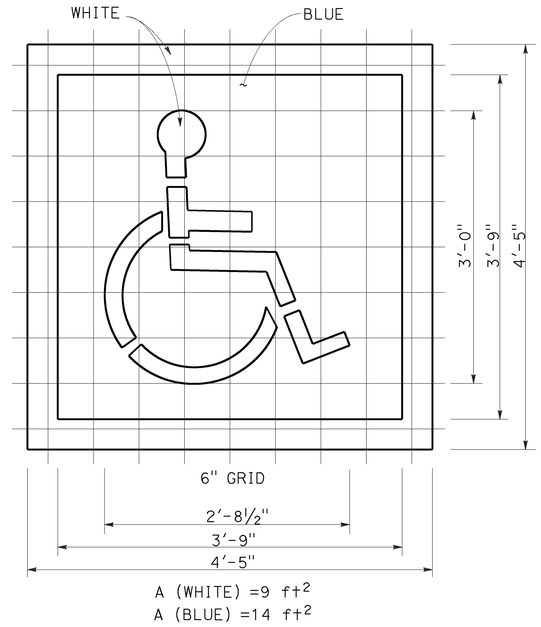

INTERNATIONAL SYMBOL OF ACCESSIBILITY (ISA) MARKING

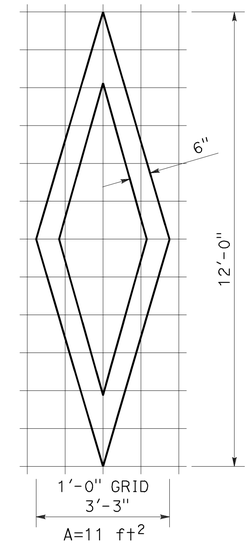

DIAMOND SYMBOL

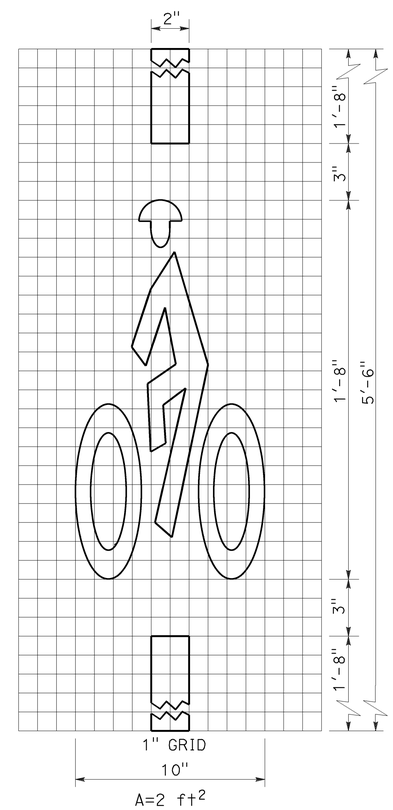

BICYCLE LOOP DETECTOR SYMBOL

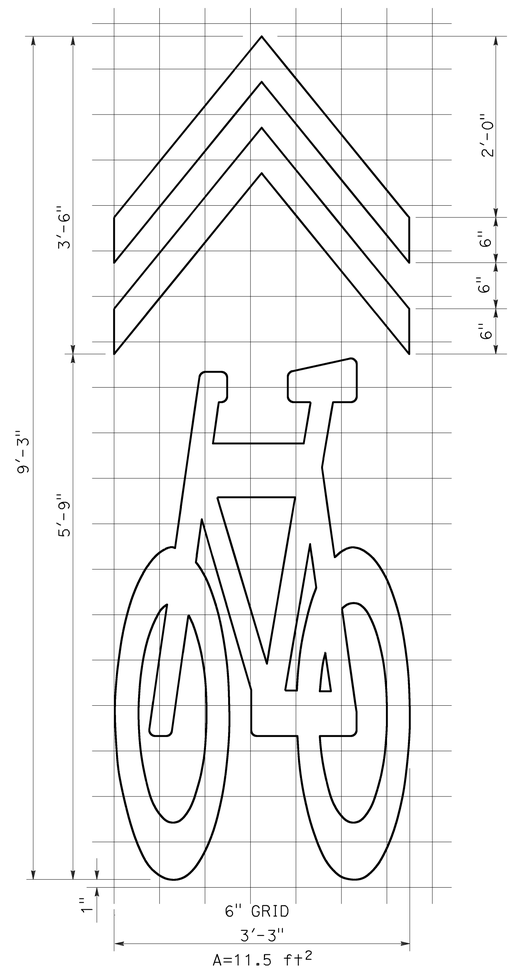

SHARED ROADWAY BICYCLE MARKING

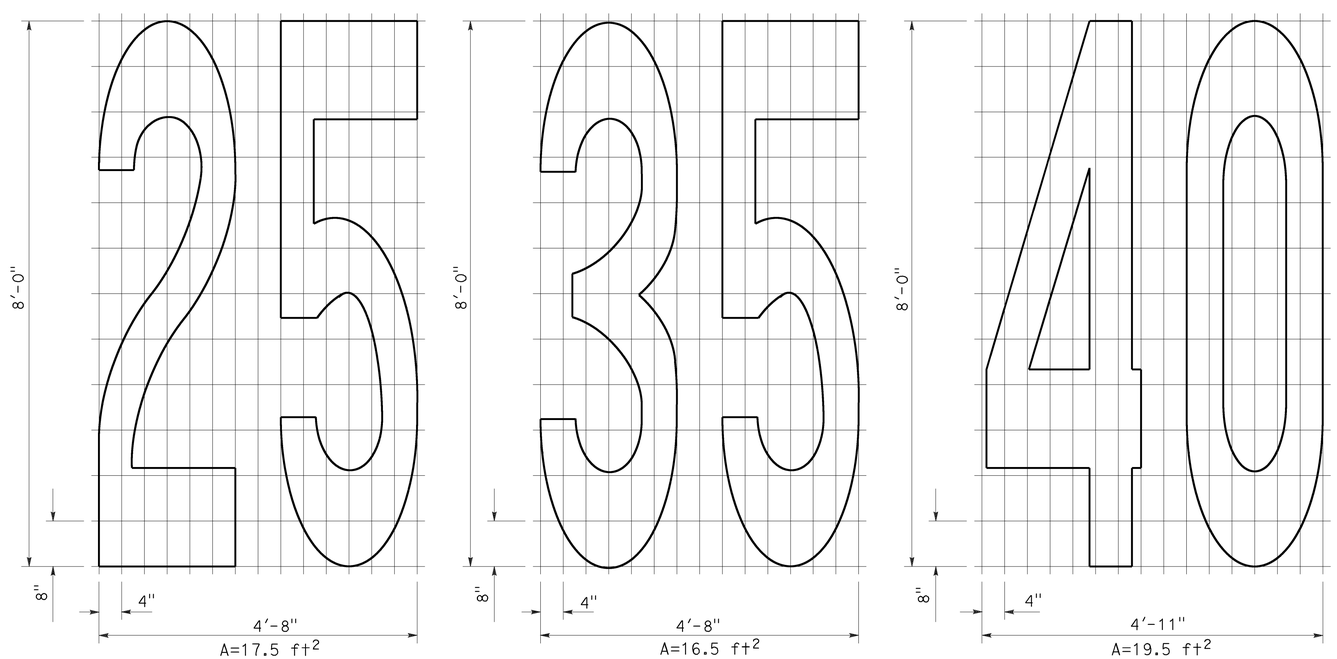

NUMERALS

STATE OF CALIFORNIA
DEPARTMENT OF TRANSPORTATION

PAVEMENT MARKINGS SYMBOLS AND NUMERALS

NO SCALE

RSP A24C DATED OCTOBER 19, 2012 SUPERSEDES STANDARD PLAN A24C DATED MAY 20, 2011 - PAGE 15 OF THE STANDARD PLANS BOOK DATED 2010.

REVISED STANDARD PLAN RSP A24C

2010 REVISED STANDARD PLAN RSP A24C

6-28-12

Dist	COUNTY	ROUTE	POST MILES TOTAL PROJECT	SHEET No.	TOTAL SHEETS
07	LA	1, 105, 110, 405	Var	21	50

REGISTERED CIVIL ENGINEER

July 20, 2012
PLANS APPROVAL DATE

REGISTERED PROFESSIONAL ENGINEER
Roberta L. McLaughlin
No. C40375
Exp. 3-31-13
CIVIL
STATE OF CALIFORNIA

THE STATE OF CALIFORNIA OR ITS OFFICERS OR AGENTS SHALL NOT BE RESPONSIBLE FOR THE ACCURACY OR COMPLETENESS OF SCANNED COPIES OF THIS PLAN SHEET.

TO ACCOMPANY PLANS DATED 2-22-16

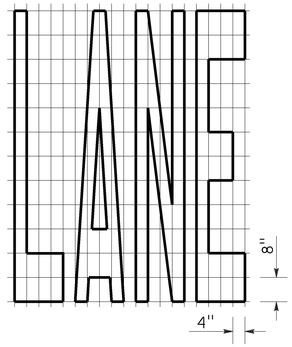

A=24 ft^2

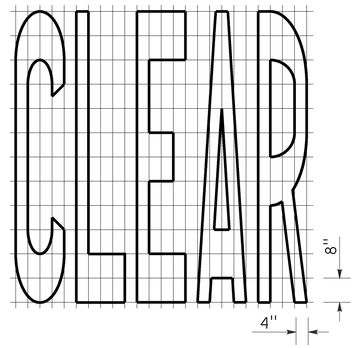

A=27 ft^2

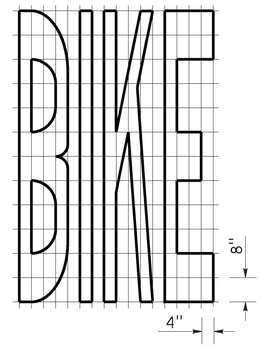

A=21 ft^2

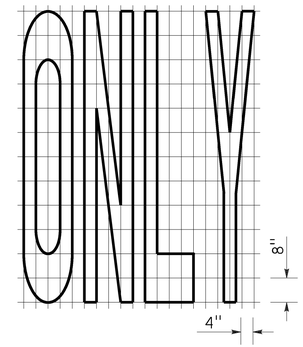

A=22 ft^2

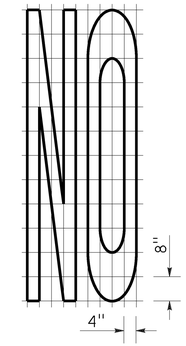

A=14 ft^2

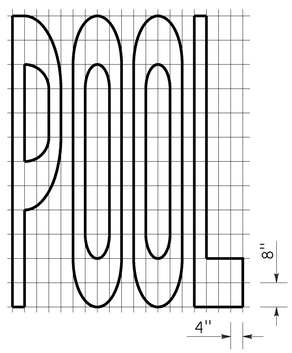

A=23 ft^2

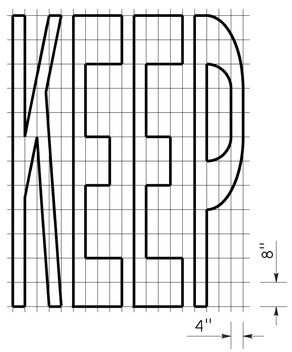

A=24 ft^2

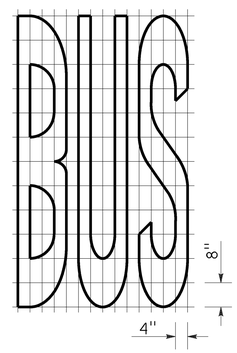

A=20 ft^2

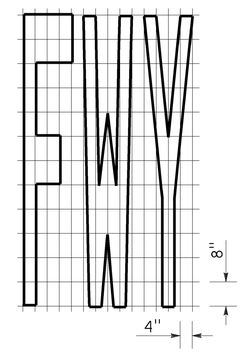

A=16 ft^2

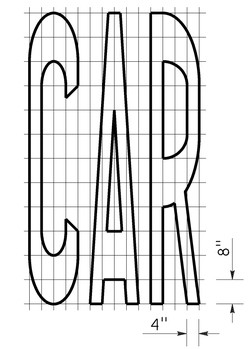

A=17 ft^2

WORD MARKINGS			
ITEM	ft^2	ITEM	ft^2
LANE	24	NO	14
POOL	23	BIKE	21
CAR	17	BUS	20
CLEAR	27	ONLY	22
KEEP	24	FWY	16

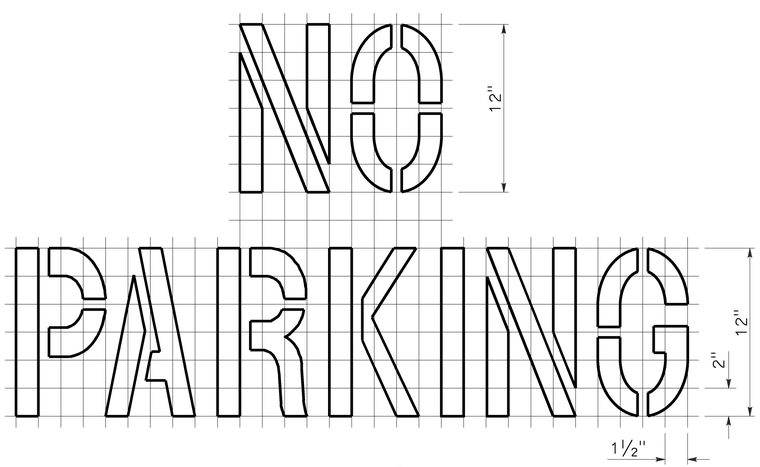

A=2 ft^2
See Notes 6 and 7

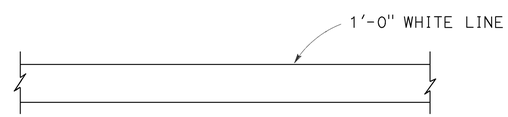

LIMIT LINE (STOP LINE)

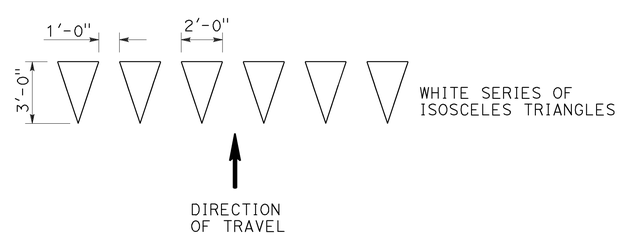

YIELD LINE

NOTES:

1. If a message consists of more than one word, it should read "UP", i.e., the first word should be nearest the driver.
2. The space between words should be at least four times the height of the characters for low speed roads, but not more than ten times the height of the characters. The space may be reduced appropriately where there is limited space because of local conditions.
3. Minor variations in dimensions may be accepted by the Engineer.
4. Portions of a letter, number or symbol may be separated by connecting segments not to exceed 2" in width.
5. The words "NO PARKING" pavement marking is to be used for parking facilities. For typical locations of markings, see Standard Plans A90A and A90B.
6. The words "NO PARKING", shall be painted in white letters no less than 1'-0" high on a contrasting background and located so that it is visible to traffic enforcement officials.

STATE OF CALIFORNIA
DEPARTMENT OF TRANSPORTATION

PAVEMENT MARKINGS WORDS, LIMIT AND YIELD LINES

NO SCALE

RSP A24E DATED JULY 20, 2012 SUPERSEDES STANDARD PLAN A24E
DATED MAY 20, 2011 - PAGE 17 OF THE STANDARD PLANS BOOK DATED 2010.

REVISED STANDARD PLAN RSP A24E

2010 REVISED STANDARD PLAN RSP A24E

6-12-12

Dist	COUNTY	ROUTE	POST MILES TOTAL PROJECT	SHEET No.	TOTAL SHEETS
07	LA	1, 105, 110, 405	Var	22	50

REGISTERED CIVIL ENGINEER

July 20, 2012
PLANS APPROVAL DATE

REGISTERED PROFESSIONAL ENGINEER
Roberta L. McLaughlin
No. C40375
Exp. 3-31-13
CIVIL
STATE OF CALIFORNIA

THE STATE OF CALIFORNIA OR ITS OFFICERS OR AGENTS SHALL NOT BE RESPONSIBLE FOR THE ACCURACY OR COMPLETENESS OF SCANNED COPIES OF THIS PLAN SHEET.

TO ACCOMPANY PLANS DATED 2-22-16

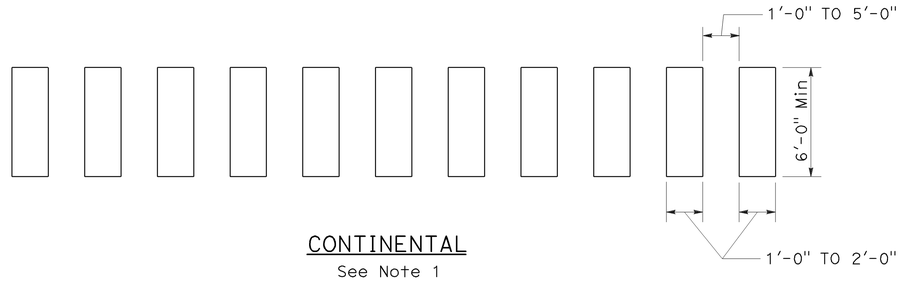

CONTINENTAL
See Note 1

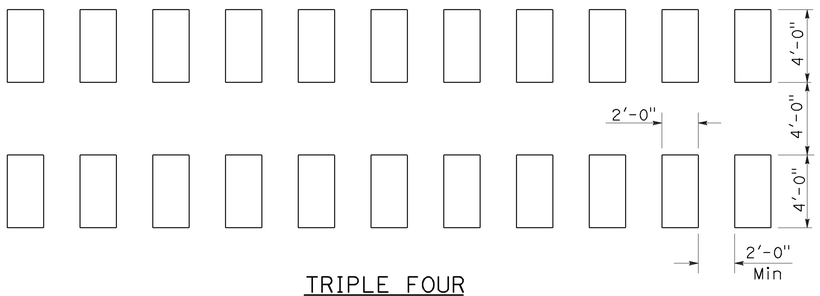

TRIPLE FOUR
See Note 1

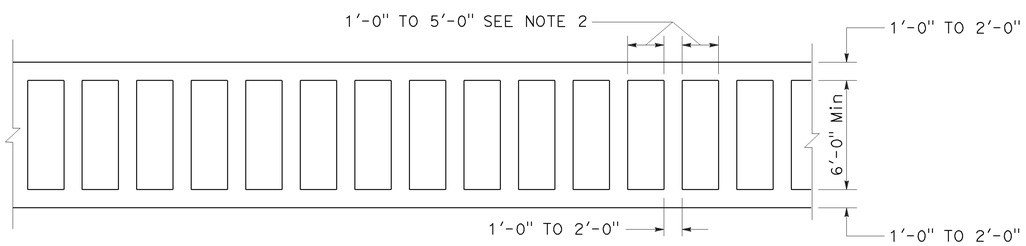

LADDER

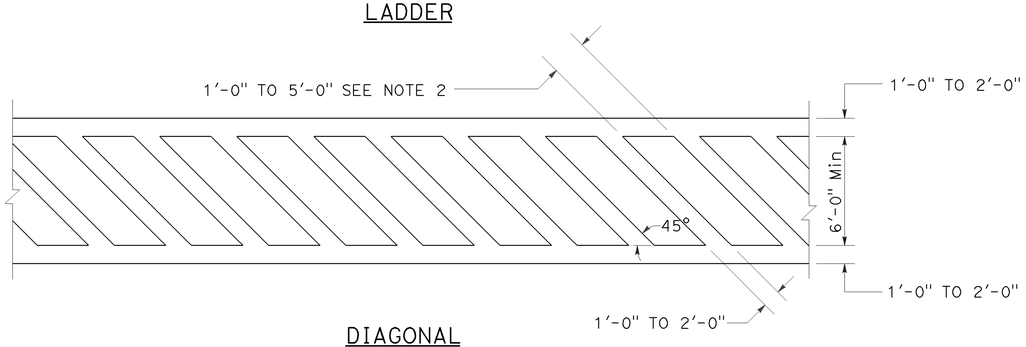

DIAGONAL

HIGHER VISIBILITY CROSSWALKS

NOTES:

1. Spaces between markings should be placed in wheel tracks of each lane.
2. Spacings not to exceed 2.5 times width of longitudinal line.
3. All crosswalk markings must be white except for those near schools must be yellow.

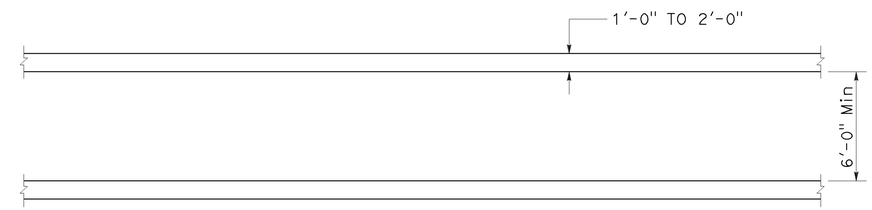

BASIC

STATE OF CALIFORNIA
DEPARTMENT OF TRANSPORTATION

PAVEMENT MARKINGS CROSSWALKS

NO SCALE

RSP A24F DATED JULY 20, 2012 SUPPLEMENTS THE STANDARD PLANS BOOK DATED 2010.

REVISED STANDARD PLAN RSP A24F

2010 REVISED STANDARD PLAN RSP A24F

6-28-12

Dist	COUNTY	ROUTE	POST MILES TOTAL PROJECT	SHEET No.	TOTAL SHEETS
07	LA	1, 105, 110, 405	Var	23	50

REGISTERED CIVIL ENGINEER

October 30, 2015
PLANS APPROVAL DATE

REGISTERED PROFESSIONAL ENGINEER Efthymios Delis No. C51434 Exp. 6-30-17 CIVIL STATE OF CALIFORNIA

THE STATE OF CALIFORNIA OR ITS OFFICERS OR AGENTS SHALL NOT BE RESPONSIBLE FOR THE ACCURACY OR COMPLETENESS OF SCANNED COPIES OF THIS PLAN SHEET.

TO ACCOMPANY PLANS DATED 2-22-16

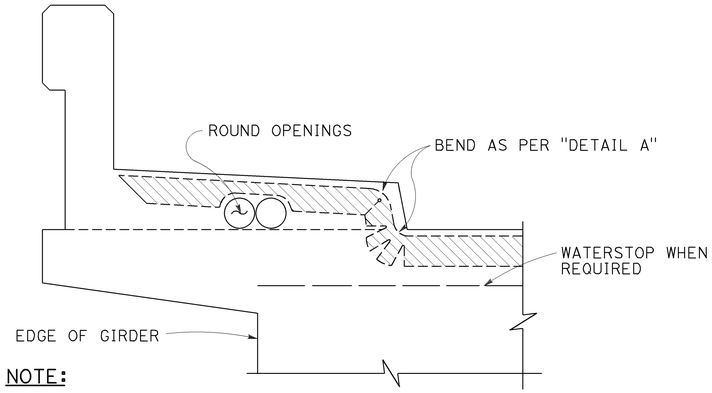

NOTE:
Type "B" seal shown. Type "A" seals to comform to the general path of seal shown, cuts for bending not required. Bend type "A" seals 3" up into curb or barrier rail on only the low end of the seal.

CONCRETE BARRIER AND SIDEWALK

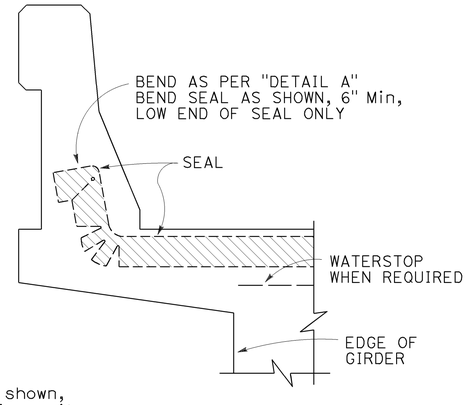

CONCRETE BARRIER

JOINT SEALS DETAILS

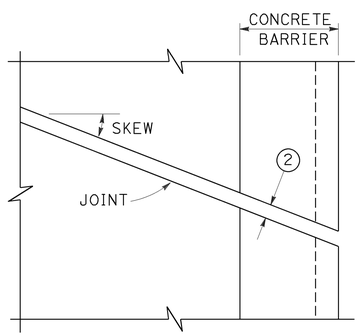

PLAN OF JOINT (SKEW ≤ 20°)

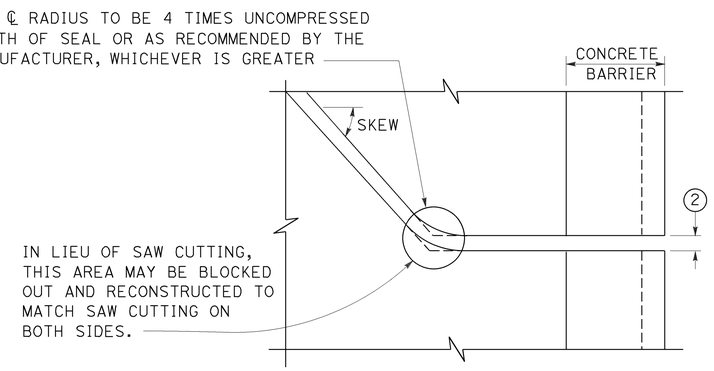

PLAN OF JOINT (SKEW > 20°)

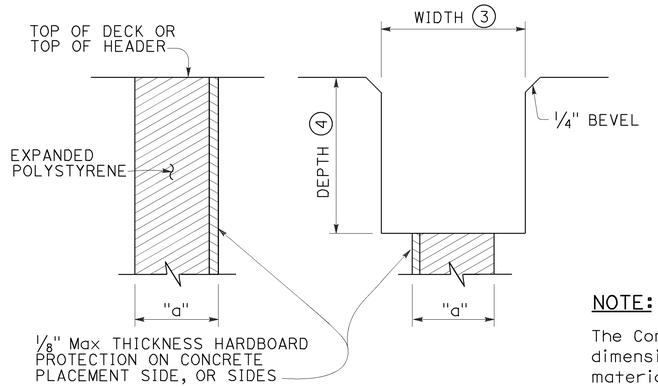

FORMING DETAIL SAWCUT DETAIL

NOTE:
The Contractor shall verify all controlling field dimensions before ordering or fabricatiing any material.

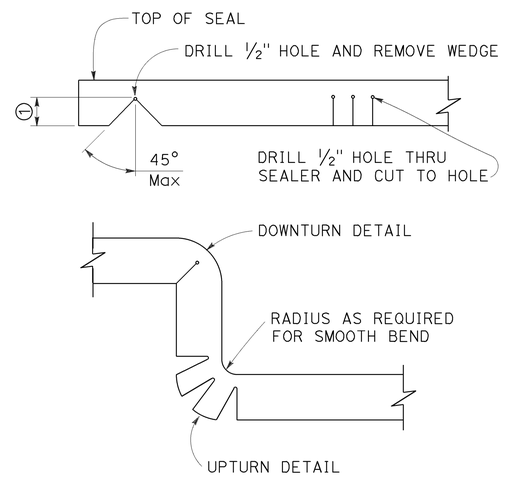

DETAIL A

NOTES:

1. Make smooth cuts from the bottom of seal to 1½" clear of top leaving at least one complete cell between the top of the cut and top of the seal. When necessary cut back of seal to clear conduit and round openings.
2. Opening in barrier to match width of sawn deck joint.
3. Sawcut groove widths shall be as ordered by the Engineer.
4. Depth of sawcut: Type A - Depth to be 2" minimum.
   Type B - Depth to be equal to or greater than the depth of seal measured along the contact surface, when compressed to minimum width position (W_2) plus dimensions shown.
5. MR (movement rating) as shown on other plan sheets.
6. Other depths must be approved by the Engineer.
7. A sidewalk joint shall be covered by an expansion joint armor.

DIMENSIONS "a" OF JOINT REQUIRED

MOVEMENT RATING (MR) 5	BRIDGE TYPE	"a" DIMENSION DECK CONCRETE PLACED		
		WINTER	FALL-SPRING	SUMMER
2"	ALL EXCEPT CIP/PS	1½"	1¼"	¾"
	CIP/PS	1¼"	1"	½"
1½"	ALL EXCEPT CIP/PS	1¼"	1"	½"
	CIP/PS	1"	¾"	½"
1"	ALL EXCEPT CIP/PS	1"	¾"	½"
	CIP/PS	¾"	½"	½"
½"	ALL EXCEPT CIP/PS	¾"	¾"	½"
	CIP/PS	½"	½"	½"

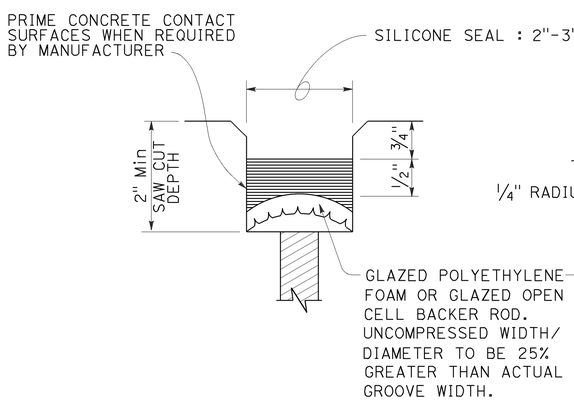

TYPE A SEAL
Movement rating : Silicone = 1" Max

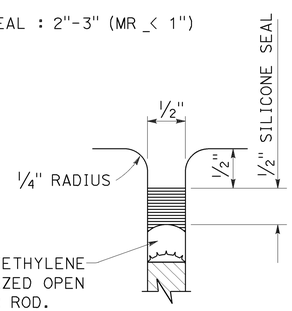

TYPE AL SEAL
Longitudinal joints only

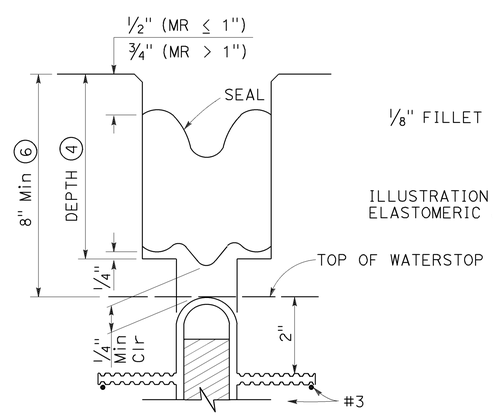

TYPE B JOINT SEAL
IN MINIMUM WIDTH POSITION (W_2)

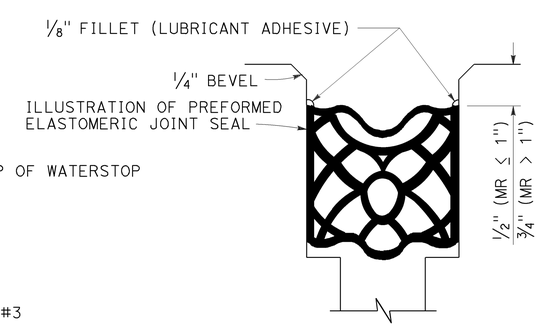

TYPE B SEAL
Movement Rating ≤ 2"

STATE OF CALIFORNIA
DEPARTMENT OF TRANSPORTATION

JOINT SEALS (MAXIMUM MOVEMENT RATING = 2")

NO SCALE

RSP B6-21 DATED OCTOBER 30, 2015 SUPERSEDES STANDARD PLAN B6-21 DATED MAY 20, 2011 - PAGE 283 OF THE STANDARD PLANS BOOK DATED 2010.

REVISED STANDARD PLAN RSP B6-21

2010 REVISED STANDARD PLAN RSP B6-21

8-18-15

Dist	COUNTY	ROUTE	POST MILES TOTAL PROJECT	SHEET No.	TOTAL SHEETS
07	LA	1, 105, 110, 405	Var	24	50

REGISTERED CIVIL ENGINEER

July 19, 2013
PLANS APPROVAL DATE

REGISTERED PROFESSIONAL ENGINEER
Gurinderpal Bhullar
No. C48815
Exp. 9-30-14
CIVIL
STATE OF CALIFORNIA

THE STATE OF CALIFORNIA OR ITS OFFICERS OR AGENTS SHALL NOT BE RESPONSIBLE FOR THE ACCURACY OR COMPLETENESS OF SCANNED COPIES OF THIS PLAN SHEET.

TO ACCOMPANY PLANS DATED 2-22-16

2010 REVISED STANDARD PLAN RSP T9

TABLE 1

TAPER LENGTH CRITERIA AND CHANNELIZING DEVICE SPACING

SPEED (S)	MINIMUM TAPER LENGTH * FOR WIDTH OF OFFSET 12 FEET (W)				MAXIMUM CHANNELIZING DEVICE SPACING		
					X	Y	Z **
	TANGENT 2L	MERGING L	SHIFTING L/2	SHOULDER L/3	TAPER	TANGENT	CONFLICT
mph	ft	ft	ft	ft	ft	ft	ft
20	160	80	40	27	20	40	10
25	250	125	63	42	25	50	12
30	360	180	90	60	30	60	15
35	490	245	123	82	35	70	17
40	640	320	160	107	40	80	20
45	1080	540	270	180	45	90	22
50	1200	600	300	200	50	100	25
55	1320	660	330	220	55	110	27
60	1440	720	360	240	60	120	30
65	1560	780	390	260	65	130	32
70	1680	840	420	280	70	140	35

* - For other offsets, use the following merging taper length formula for L:
For speed of 40 mph or less, $L = WS^2/60$
For speed of 45 mph or more, $L = WS$

Where: L = Taper length in feet
W = Width of offset in feet
S = Posted speed limit, off-peak 85th-percentile speed prior to work starting, or the anticipated operating speed in mph

** - Use for taper and tangent sections where there are no pavement markings or where there is a conflict between existing pavement markings and channelizers (CA).

TABLE 2

LONGITUDINAL BUFFER SPACE AND FLAGGER STATION SPACING

SPEED *	Min D **	DOWNGRADE Min D ***		
		-3%	-6%	-9%
mph	ft	ft	ft	ft
20	115	116	120	126
25	155	158	165	173
30	200	205	215	227
35	250	257	271	287
40	305	315	333	354
45	360	378	400	427
50	425	446	474	507
55	495	520	553	593
60	570	598	638	686
65	645	682	728	785
70	730	771	825	891

* - Speed is posted speed limit, off-peak 85th-percentile speed prior to work starting, or the anticipated operating speed in mph

** - Longitudinal buffer space or flagger station spacing

*** - Use on sustained downgrade steeper than -3 percent and longer than 1 mile.

TABLE 3

ADVANCE WARNING SIGN SPACING

ROAD TYPE	DISTANCE BETWEEN SIGNS *		
	A	B	C
	ft	ft	ft
URBAN - 25 mph OR LESS	100	100	100
URBAN - MORE THAN 25 mph TO 40 mph	250	250	250
URBAN - MORE THAN 40 mph	350	350	350
RURAL	500	500	500
EXPRESSWAY / FREEWAY	1000	1500	2640

* - The distances are approximate, are intended for guidance purposes only, and should be applied with engineering judgment. These distances should be adjusted by the Engineer for field conditions, if necessary, by increasing or decreasing the recommmended distances.

STATE OF CALIFORNIA
DEPARTMENT OF TRANSPORTATION

TRAFFIC CONTROL SYSTEM TABLES FOR LANE AND RAMP CLOSURES

NO SCALE

RSP T9 DATED JULY 19, 2013 SUPERSEDES RSP T9 DATED APRIL 19, 2013 THAT SUPPLEMENTS THE STANDARD PLANS BOOK DATED 2010.

REVISED STANDARD PLAN RSP T9

TO ACCOMPANY PLANS DATED 2-22-16

Dist	COUNTY	ROUTE	POST MILES TOTAL PROJECT	SHEET No.	TOTAL SHEETS
07	LA	1, 105, 110, 405	Var	25	50

REGISTERED CIVIL ENGINEER

April 19, 2013
PLANS APPROVAL DATE

REGISTERED PROFESSIONAL ENGINEER Gurinderpal Bhullar No. C48815 Exp. 9-30-14 CIVIL STATE OF CALIFORNIA

THE STATE OF CALIFORNIA OR ITS OFFICERS OR AGENTS SHALL NOT BE RESPONSIBLE FOR THE ACCURACY OR COMPLETENESS OF SCANNED COPIES OF THIS PLAN SHEET.

NOTES:

See Revised Standard Plan RSP T9 for tables.

Use cone spacing X for taper segment, Y for tangent segment or Z for conflict situations, as approriate, per Table 1, unless X, Y, or Z cone spacing is shown on this sheet.

Unless otherwise specified in the special provisions, all temporary warning signs shall have black legend on fluorescent orange background.

California codes are designated by (CA). Otherwise, Federal (MUTCD) codes are shown.

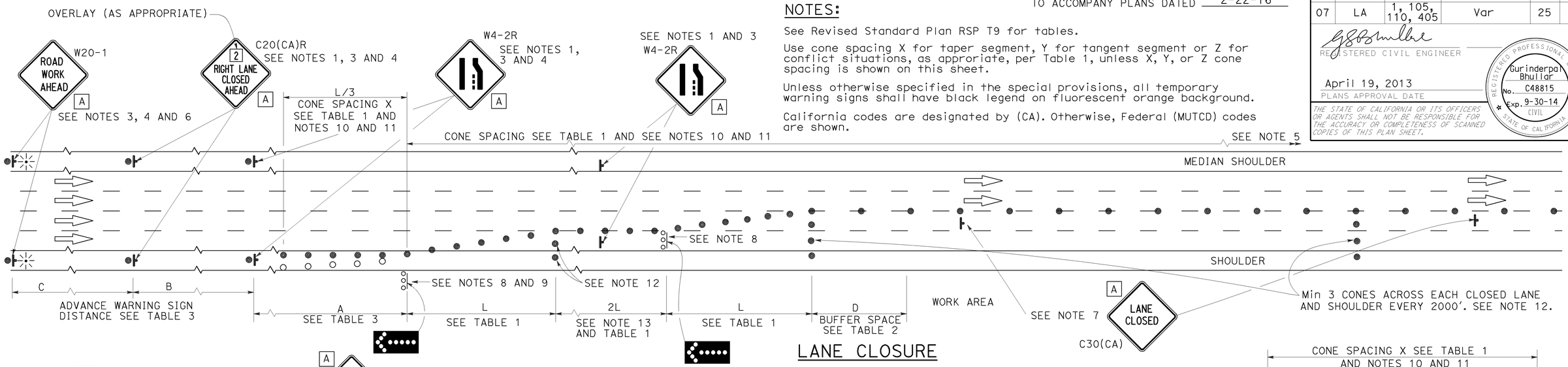

LANE CLOSURE

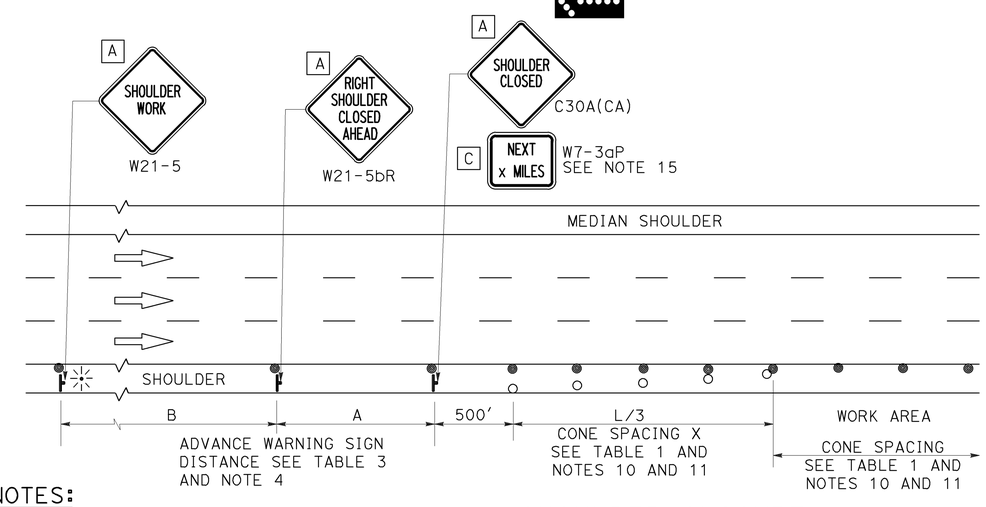

SHOULDER CLOSURE

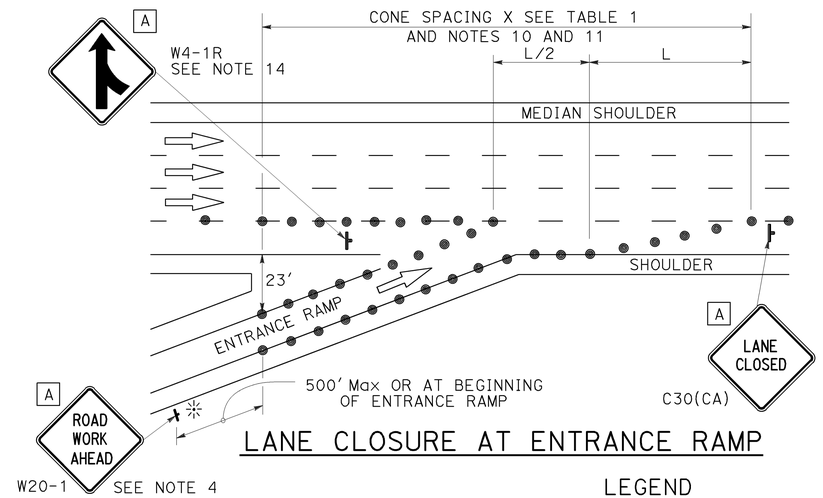

LANE CLOSURE AT ENTRANCE RAMP

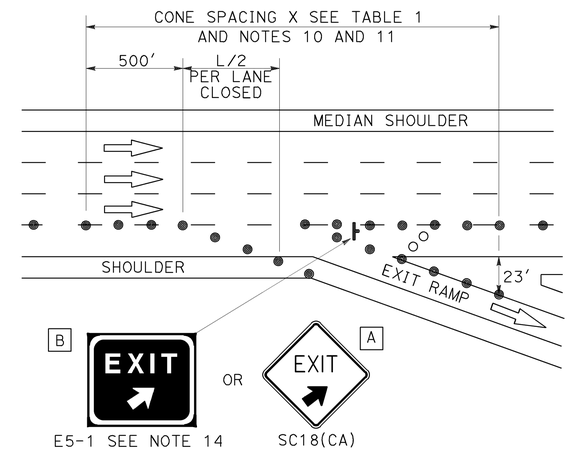

LANE CLOSURE AT EXIT RAMP

NOTES:

1. Median lane closures shall conform to the details as shown except that C20(CA)L and W4-2L signs shall be used.
2. At least one person shall be assigned to provide full time maintenance of traffic control devices for lane closures.
3. Duplicate sign installations are not required:
   a) On opposite shoulder if at least one-half of the available lanes remain open to traffic.
   b) In the median if the width of the median shoulder is less than 8' and the outside lanes are to be closed.
4. Each advance warning sign on each side of the roadway shall be equipped with at least two flags for daytime closure. Each flag shall be at least 16" x 16" in size and shall be orange or fluorescent red-orange in color. Flashing beacons shall be placed at the locations indicated for lane closure during hours of darkness.
5. A G20-2 "END ROAD WORK" sign, with minimum size of 48" x 24" as appropriate, shall be placed at the end of the lane closure unless the end of work area is obvious or ends within a larger project's limits.
6. If the W20-1 sign would follow within 2000' of a stationary W20-1 or G20-1 "ROAD WORK NEXT _____ MILES", use a C20(CA) sign for the first advance warning sign.
7. Place a C30(CA) sign every 2000' throughout length of lane closure.
8. One flashing arrow sign for each lane closed. The flashing arrow signs shall be Type I.
9. A minimum 1500' of sight distance shall be provided where possible for vehicles approaching the first flashing arrow sign. Lane closures shall not begin at top of crest vertical curve or on a horizontal curve.
10. All cones used for lane closures during the hours of darkness shall be fitted with retroreflective bands (or sleeves) as specified in the specifications.
11. Portable delineators, placed at one-half the spacing indicated for traffic cones may be used instead of cones for daytime closures only.
12. Unless otherwise specified in the special provisions, a minimum of 3 cones shall be placed transversely across each closed lane and shoulder at each location where a taper across a traffic lane ends and every 2000' as shown on the "Lane Closure" detail. Two Type II barricades may be used instead of the 3 cones. The transverse alignment of the cones or barricades on the closed shoulder may be shifted from the transverse alignment to provide access to the work.
13. Unless otherwise specified in the special provisions, the 2L tangent shown along lane lines shall be used between the L tapers required for each closed traffic lane.
14. Unless otherwise specified in the special provisions, the E5-1 or SC18(CA) and W4-1 signs shall be used as shown.
15. A W7-3aP "NEXT____ MILES" plaque must be used if theshoulder closure extends beyond the distance that can be perceived by road users.

LEGEND

- TRAFFIC CONE
- TRAFFIC CONE (OPTIONAL TAPER)
- TEMPORARY TRAFFIC CONTROL SIGN
- FLASHING ARROW SIGN (FAS)
- FAS SUPPORT OR TRAILER
- PORTABLE FLASHING BEACON

SIGN PANEL SIZE (Min)

A	48" x 48"
B	72" x 60"
C	36" x 30"

STATE OF CALIFORNIA
DEPARTMENT OF TRANSPORTATION

TRAFFIC CONTROL SYSTEM FOR LANE CLOSURE ON FREEWAYS AND EXPRESSWAYS

NO SCALE

RSP T10 DATED APRIL 19, 2013 SUPERSEDES STANDARD PLAN T10 DATED MAY 20, 2011 - PAGE 237 OF THE STANDARD PLANS BOOK DATED 2010.

REVISED STANDARD PLAN RSP T10

2010 REVISED STANDARD PLAN RSP T10

12-18-12

TO ACCOMPANY PLANS DATED 2-22-16

Dist	COUNTY	ROUTE	POST MILES TOTAL PROJECT	SHEET No.	TOTAL SHEETS
07	LA	1, 105, 110, 405	Var	26	50

REGISTERED CIVIL ENGINEER

April 19, 2013
PLANS APPROVAL DATE

REGISTERED PROFESSIONAL ENGINEER Gurinderpal Bhullar No. C48815 Exp. 9-30-14 CIVIL STATE OF CALIFORNIA

THE STATE OF CALIFORNIA OR ITS OFFICERS OR AGENTS SHALL NOT BE RESPONSIBLE FOR THE ACCURACY OR COMPLETENESS OF SCANNED COPIES OF THIS PLAN SHEET.

NOTES: See Revised Standard Plan RSP T9 for tables.

Use cone spacing X for taper segment, Y for tangent segment or Z for conflict situations, as approriate, per Table 1, unless X, Y, or Z cone spacing is shown on this sheet.

Unless otherwise specified in the special provisions, all temporary warning signs shall have black legend on fluorescent orange background.

California codes are designated by (CA). Otherwise, Federal (MUTCD) codes are shown.

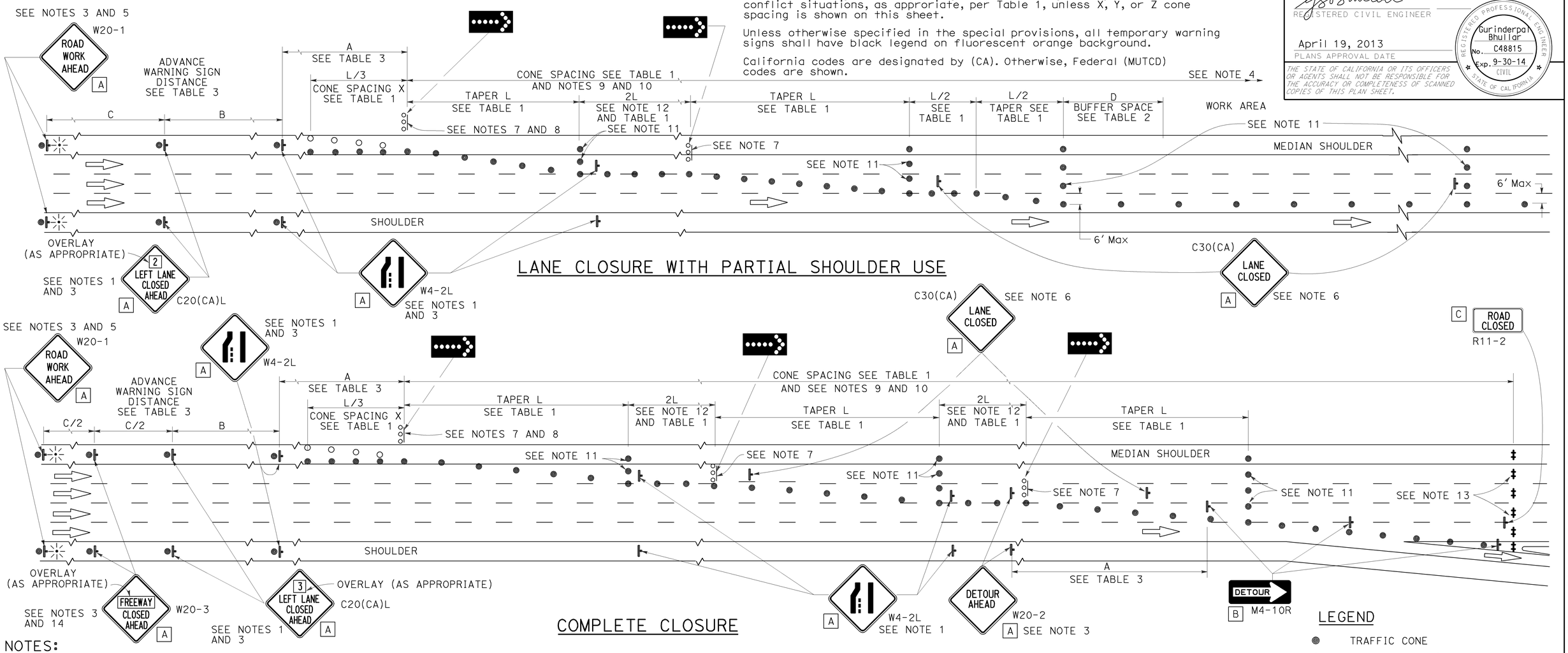

LANE CLOSURE WITH PARTIAL SHOULDER USE

COMPLETE CLOSURE

NOTES:

1. Lane closures on the right side using partial median shoulder as a traffic lane shall conform to the details as shown except that C20(CA)R and W4-2R signs shall be used.
2. At least one person shall be assigned to provide full time maintenance of traffic control devices for lane closures.
3. Each advance warning sign on each side of the roadway shall be equipped with at least two flags for daytime closure. Each flag shall be at least 16" X 16" in size and shall be orange or fluorescent red-orange in color. Flashing beacons shall be placed at the locations indicated for lane closure during hours of darkness.
4. A G20-2 "END ROAD WORK" sign, with minimum size of 48" x 24" as appropriate, shall be placed at the end of the lane closure unless the end of work area is obvious or ends within a larger project's limits.
5. If the W20-1 sign would follow within 2000' of a stationary W20-1 or G20-1 "ROAD WORK NEXT ___ MILES", use a C20(CA) sign for the first advance warning sign.
6. Place a C30(CA) sign every 2000' throughout length of lane closure.
7. One flashing arrow sign for each lane closed. The flashing arrow signs shall be Type I.
8. A minimum 1500' of sight distance shall be provided where possible for vehicles approaching the first flashing arrow sign. Lane closures shall not begin at the top of crest vertical curve or on a horizontal curve.
9. All cones used for lane closures during the hours of darkness shall be fitted with retroreflective bands (or sleeves) as specified in the specifications.
10. Portable delineators, placed at one-half the spacing indicated for traffic cones, may be used instead of cones for daytime closures only.
11. Unless otherwise specified in the special provisions, a minimum of 3 cones shall be placed transversely across each closed lane and shoulder at each location where a taper across a traffic lane ends and every 2000' as shown on the "Lane Closure With Partial Shoulder Use" detail. Two Type II barricades may be used instead of the 3 cones. The transverse alignment of the cones or barricades on the closed shoulder may be shifted from the transverse alignment to provide access to the work.
12. Unless otherwise specified in the special provisions, the 2L tangent shown along lane lines shall be used between the L tapers required for each closed traffic lane.
13. A minimum of Two Type II or III barricades shall be placed across each closed lane and shoulder at the location shown and every 2000' within the complete closure area. Within the complete closure area, the transverse alignment of the barricades on the closed shoulder may be shifted from the transverse alignment to provide access to the work.
14. When specified in the special provisions, a W20-2 "DETOUR AHEAD" sign is to be used in place of the W20-3 "FREEWAY CLOSED AHEAD" sign.

SIGN PANEL SIZE (Min)

A	48" x 48"
B	48" x 18"
C	48" x 30"

LEGEND

- TRAFFIC CONE
- TRAFFIC CONE (OPTIONAL TAPER)
- TEMPORARY TRAFFIC CONTROL SIGN
- FLASHING ARROW SIGN (FAS)
- FAS SUPPORT OR TRAILER
- PORTABLE FLASHING BEACON

STATE OF CALIFORNIA
DEPARTMENT OF TRANSPORTATION

TRAFFIC CONTROL SYSTEM FOR LANE CLOSURES ON FREEWAYS AND EXPRESSWAYS

NO SCALE

RSP T10A DATED APRIL 19, 2013 SUPERSEDES STANDARD PLAN T10A DATED MAY 20, 2011 - PAGE 238 OF THE STANDARD PLANS BOOK DATED 2010.

REVISED STANDARD PLAN RSP T10A

2010 REVISED STANDARD PLAN RSP T10A

12-18-13

Dist	COUNTY	ROUTE	POST MILES TOTAL PROJECT	SHEET No.	TOTAL SHEETS
07	LA	1, 105, 110, 405	Var	27	50

Devinder Singh
REGISTERED CIVIL ENGINEER

October 30, 2015
PLANS APPROVAL DATE

REGISTERED PROFESSIONAL ENGINEER
Devinder Singh
No. C50470
Exp. 6-30-17
CIVIL
STATE OF CALIFORNIA

THE STATE OF CALIFORNIA OR ITS OFFICERS OR AGENTS SHALL NOT BE RESPONSIBLE FOR THE ACCURACY OR COMPLETENESS OF SCANNED COPIES OF THIS PLAN SHEET.

TO ACCOMPANY PLANS DATED 2-22-16

2010 REVISED STANDARD PLAN RSP T13

NOTES:

See Revised Standard Plan RSP T9 for tables.

Use cone spacing X for taper segment, Y for tangent segment or Z for conflict situations, as approriate, per Table 1, unless X, Y, or Z cone spacing is shown on this sheet.

Unless otherwise specified in the special provisions, all temporary warning signs shall have black legend on fluorescent orange background.

California codes are designated by (CA). Otherwise, Federal (MUTCD) codes are shown.

TYPICAL LANE CLOSURE WITH REVERSIBLE CONTROL

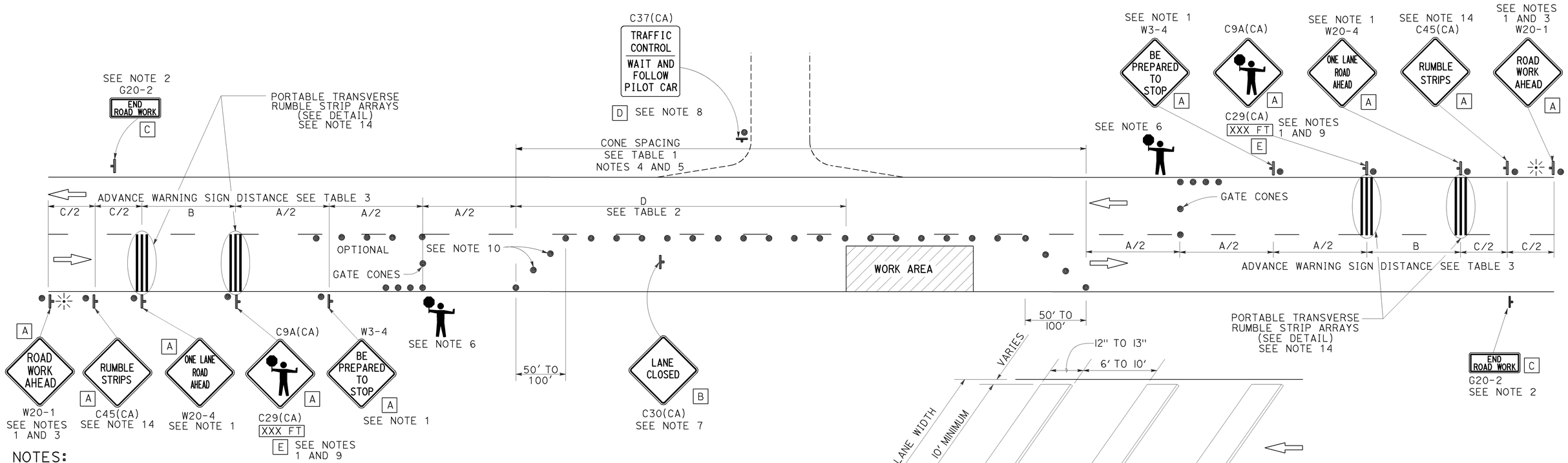

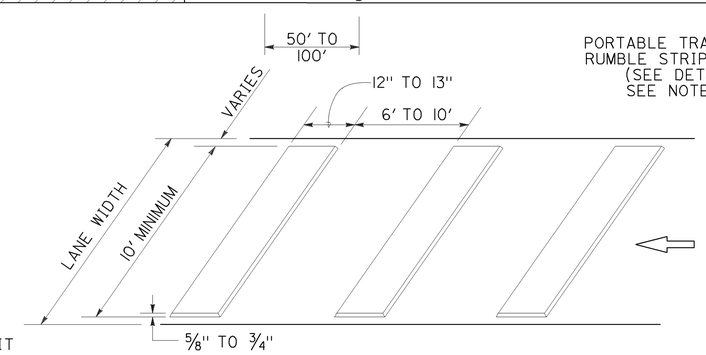

PORTABLE TRANSVERSE RUMBLE STRIP ARRAY DETAIL

NOTES:

1. Each advance warning sign in each direction of travel shall be equipped with at least two flags for daytime closure. Each flag shall be at least 16" x 16" in size and shall be orange or fluorescent red-orange in color. Flashing beacons shall be placed at the locations indicated for lane closure during hours of darkness.
2. A G20-2 "END ROAD WORK" sign, as appropriate, shall be placed at the end of the lane control unless the end of work area is obvious, or ends within a larger project's limits.
3. If the W20-1 sign would follow within 2000' of a stationary W20-1 or G20-1 "ROAD WORK NEXT _____ MILES", use a W20-4 sign for the first advance warning sign.
4. All cones used for lane closures during the hours of darkness shall be fitted with retroreflective bands (or sleeves) as specified in the specifications.
5. Portable delineators, placed at one-half the spacing indicated for traffic cones, may be used instead of cones for daytime closures only.
6. Additional advance flaggers may be required. Flagger should stand in a conspicuous place, be visible to approaching traffic as well as approaching vehicles after the first vehicle has stopped. During the hours of darkness, the flagging-station and flagger shall be illuminated and clearly visible to approaching traffic. The illumination footprint of the lighting on the ground shall be at least 20' in diameter. Place a minimum of four cones at 50' intervals in advance of flagger station as shown.
7. Place C30(CA) "LANE CLOSED" sign at 500' to 1000' intervals throughout extended work areas. They are optional if the work area is visible from the flagger station.
8. When a pilot car is used, place a C37(CA) "TRAFFIC CONTROL-WAIT AND FOLLOW PILOT CAR" sign with black legend on white background at all intersections, driveways and alleys without a flagger within traffic control area. Signs shall be clean and visible at all times. Where traffic can not be effectively self-regulated, at least one flagger shall be used at each intersection within traffic control area.
9. An optional C29(CA) sign may be placed below the C9A(CA) sign.
10. Either traffic cones or barricades shall be placed on the taper. Barricades shall be Type I, II, or III.
11. The color of the portable transverse rumble strips shall be black or orange. Use 2 arrays, each array shall consist of 3 rumble strips.
12. Portable transverse rumble strips shall not be placed on sharp horizontal or vertical curves nor shall they be placed through pedestrian crossings.
13. If the portable transverse rumble strips become out of alignment (skewed) by more than 6 inches, measured from one end to the other, they shall be readjusted to bring the placement back to the original location.
14. Portable transverse rumble strips are not required if any one of the following conditions is satisfied:
    A. Work duration occupies a location for four hours or less
    B. Posted speed limit is below 45 MPH
    C. Work is of emergency nature
    D. Work zone is in snow or icy weather conditions

LEGEND

- TRAFFIC CONE
- TEMPORARY TRAFFIC CONTROL SIGN
- PORTABLE FLASHING BEACON
- FLAGGER

SIGN PANEL SIZE (Min)

A	48" x 48"
B	30" x 30"
C	36" x 18"
D	36" x 42"
E	20" x 7"

STATE OF CALIFORNIA
DEPARTMENT OF TRANSPORTATION

TRAFFIC CONTROL SYSTEM FOR LANE CLOSURE ON TWO LANE CONVENTIONAL HIGHWAYS

NO SCALE

RSP T13 DATED OCTOBER 30, 2015 SUPERSEDES RSP T13 DATED OCTOBER 17, 2014, RSP T13 DATED JULY 18, 2014 AND RSP T13 DATED APRIL 19, 2013 AND STANDARD PLAN T13 DATED MAY 20, 2011 - PAGE 241 OF THE STANDARD PLANS BOOK DATED 2010.

REVISED STANDARD PLAN RSP T13

10-13-15

Dist	COUNTY	ROUTE	POST MILES TOTAL PROJECT	SHEET No.	TOTAL SHEETS
07	LA	1, 105, 110, 405	Var	28	50

REGISTERED CIVIL ENGINEER

April 19, 2013
PLANS APPROVAL DATE

REGISTERED PROFESSIONAL ENGINEER Gurinderpal Bhullar No. C48815 Exp. 9-30-14 CIVIL STATE OF CALIFORNIA

THE STATE OF CALIFORNIA OR ITS OFFICERS OR AGENTS SHALL NOT BE RESPONSIBLE FOR THE ACCURACY OR COMPLETENESS OF SCANNED COPIES OF THIS PLAN SHEET.

TO ACCOMPANY PLANS DATED 2-22-16

TYPICAL RAMP CLOSURES

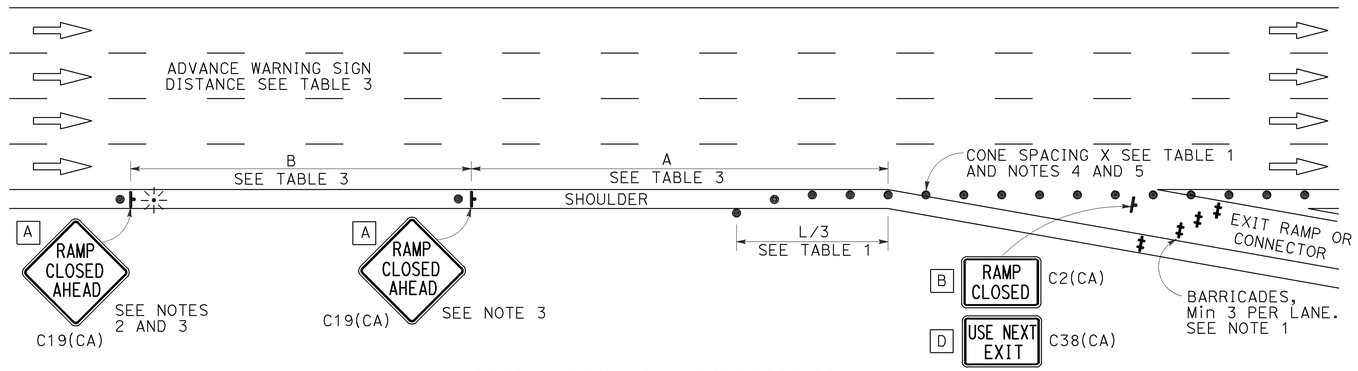

EXIT RAMP OR CONNECTOR

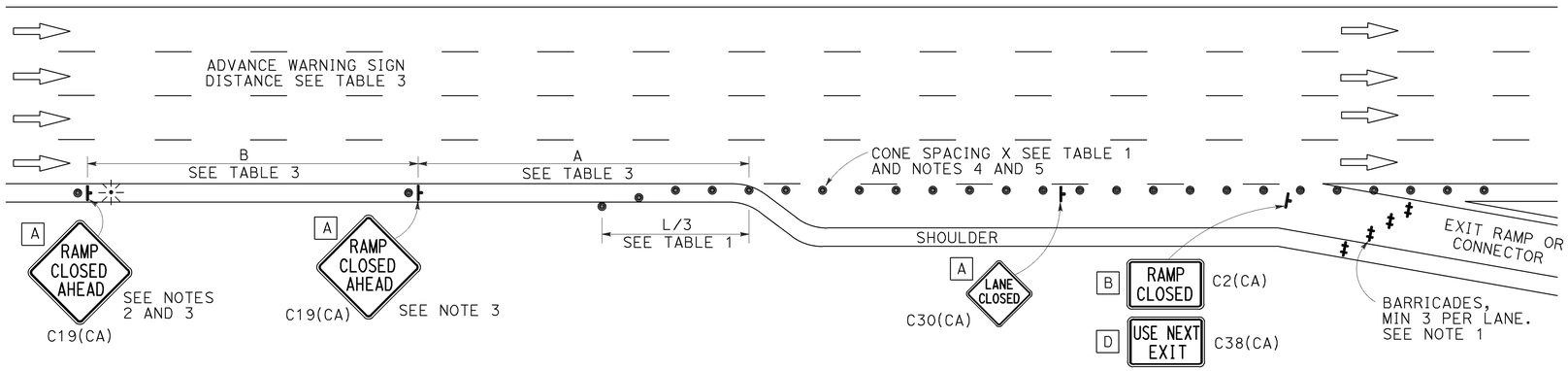

EXIT RAMP OR CONNECTOR WITH ADDITIONAL LANE

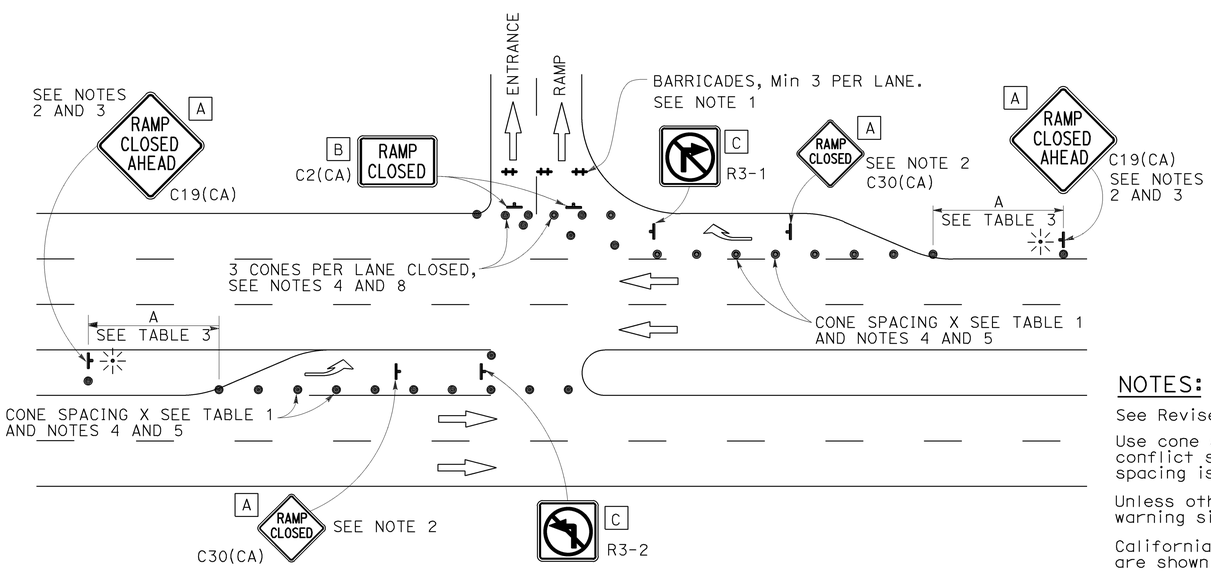

ENTRANCE RAMP WITH TURNING POCKETS

SIGN PANEL SIZE (Min)

- A 48" × 48"
- B 48" × 30"
- C 36" × 36"
- D 48" × 36"

LEGEND

- TRAFFIC CONE
- TEMPORARY TRAFFIC CONTROL SIGN
- BARRICADES
- PORTABLE FLASHING BEACON

NOTES:

1. Barricades shall be Type I, II, or III for closures lasting one week or less and Type III for closures lasting longer than one week.
2. In addition to placing the C19(CA) "RAMP CLOSED AHEAD" and C30(CA) "RAMP CLOSED" signs, black on orange overlay plates with the word "CLOSED" may be mounted, as directed by the Engineer, on all guide signs that refer to the closed ramp. The letter size on the overlay shall be the same as the guide sign.
3. Each advance C19(CA) "RAMP CLOSED AHEAD" sign shall be equipped with at least two flags for daytime closure. Each flag shall be at least 16" × 16" in size and shall be orange or fluorescent red-orange in color. A flashing beacon shall be placed on top of the first C19(CA) sign during hours of darkness.
4. All cones used for ramp closures during the hours of darkness shall be fitted with retroreflective bands (or sleeves) as specified in the specifications.
5. Portable delineators, placed at one-half the spacing indicated for traffic cones, may be used instead of cones for daytime ramp closures only.
6. At least one person shall be assigned to provide full time maintenance of traffic control devices, unless otherwise directed by the Engineer.
7. The existing "EXIT" signs shall be covered during ramp closures.
8. A minimum of 3 cones shall be placed transversely across each closed lane and shoulder.

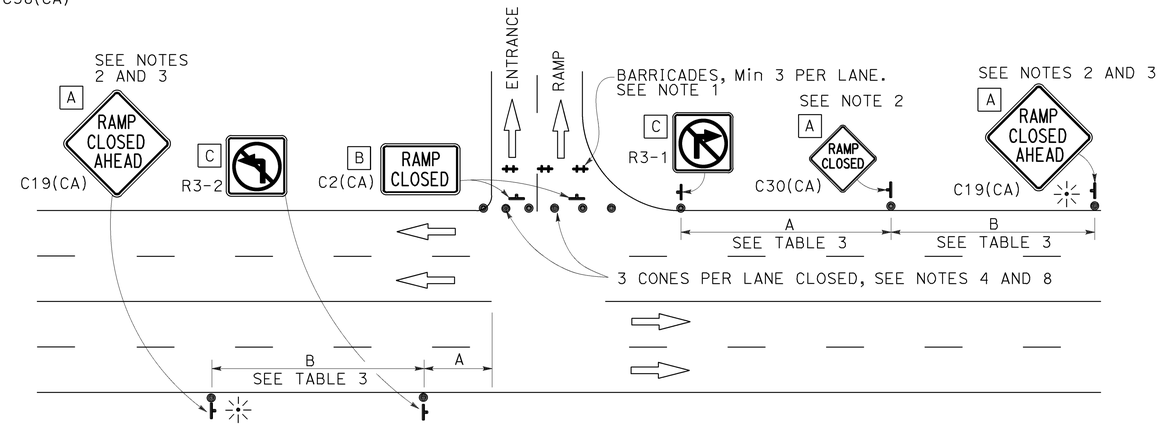

ENTRANCE RAMP WITHOUT TURNING POCKETS

NOTES:

See Revised Standard Plan RSP T9 for tables.

Use cone spacing X for taper segment, Y for tangent segment or Z for conflict situations, as approriate, per Table 1, unless X, Y, or Z cone spacing is shown on this sheet.

Unless otherwise specified in the special provisions, all temporary warning signs shall have black legend on fluorescent orange background.

California codes are designated by (CA). Otherwise, Federal (MUTCD) codes are shown.

STATE OF CALIFORNIA
DEPARTMENT OF TRANSPORTATION

TRAFFIC CONTROL SYSTEM FOR RAMP CLOSURE

NO SCALE

RSP T14 DATED APRIL 19, 2013 SUPERSEDES STANDARD PLAN T14 DATED MAY 20, 2011 - PAGE 242 OF THE STANDARD PLANS BOOK DATED 2010.

REVISED STANDARD PLAN RSP T14

2010 REVISED STANDARD PLAN RSP T14

12-18-12

DIST	COUNTY	ROUTE	POST MILES TOTAL PROJECT	SHEET No.	TOTAL SHEETS
07	LA	1,105, 110,405	Var	29	50

REGISTERED CIVIL ENGINEER 8-25-15 DATE

2-22-16
PLANS APPROVAL DATE

REGISTERED PROFESSIONAL ENGINEER GERALD D. JOO No. C65380 Exp. 09/30/17 CIVIL STATE OF CALIFORNIA

The State of California or its officers or agents shall not be responsible for the accuracy or completeness of scanned copies of this plan sheet.

CENTURY BOULEVARD OC BR NO 53-1834L/R

QUANTITIES

PUBLIC SAFETY PLAN	LUMP	SUM
PREPARE CONCRETE BRIDGE DECK SURFACE	24,000	SQFT
TREAT BRIDGE DECK	24,000	SQFT
FURNISH BRIDGE DECK TREATMENT MATERIAL	300	GAL

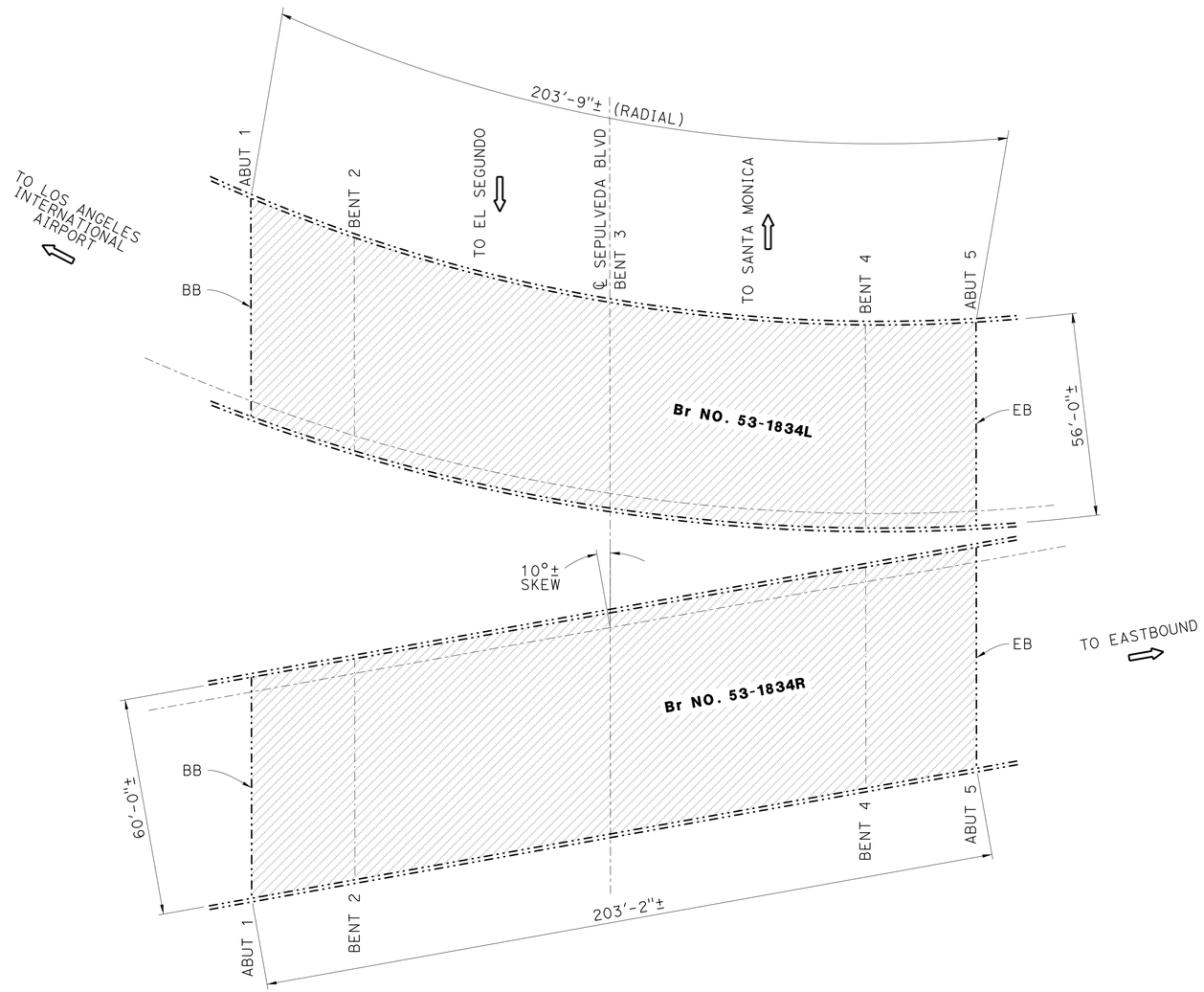

CENTURY BLVD OC

Br No. 53-1834L/R, Rte 1, PM 26.91
1" = 20'

INDEX TO PLANS

SHEET NO.	TITLE
1	GENERAL PLAN NO. 1
2	GENERAL PLAN NO. 2
3	GENERAL PLAN NO. 3
4	GENERAL PLAN NO. 4
5	GENERAL PLAN NO. 5
6	GENERAL PLAN NO. 6
7	GENERAL PLAN NO. 7
8	GENERAL PLAN NO. 8
9	GENERAL PLAN NO. 9
10	GENERAL PLAN NO. 10
11	GENERAL PLAN NO. 11
12	GENERAL PLAN NO. 12
13	GENERAL PLAN NO. 13
14	GENERAL PLAN NO. 14
15	GENERAL PLAN NO. 15
16	GENERAL PLAN NO. 16
17	MISCELLANEOUS DETAILS NO. 1
18	MISCELLANEOUS DETAILS NO. 2
19	STRUCTURE APPROACH TYPE R (30S)
20	SOFFIT ACCESS DOOR DETAILS

STANDARD PLANS DATED 2010

SHEET NO.	TITLE
A10A	ABBREVIATIONS (SHEET 1 OF 2)
RSP A10B	ABBREVIATIONS (SHEET 2 OF 2)
A10C	LINES AND SYMBOLS (SHEET 1 OF 3)
A10D	LINES AND SYMBOLS (SHEET 2 OF 3)
A10E	LINES AND SYMBOLS (SHEET 3 OF 3)
B6-21	JOINT SEALS (MAXIMUM MOVEMENT RATING = 2")

STANDARD PLAN SHEET NO.

DETAIL NO.

LEGEND:

Indicates existing.

Indicates direction of traffic.

Indicates limits of prepare concrete bridge deck surface and treat existing bridge deck with high molecular weight methacrylate.

NOTE:
THE CONTRACTOR SHALL VERIFY ALL CONTROLLING FIELD DIMENSIONS BEFORE ORDERING OR FABRICATING ANY MATERIAL. EXEMPT PROJECT PER UTILITY POLICY, UTILITIES ARE NOT SHOWN.

TONY BRAKE
DESIGN ENGINEER

	BY	CHECKED
DESIGN	G. JOO	T. BRAKE
DETAILS	T. DANG	G. JOO
QUANTITIES	G. JOO	R. PATEL

LOAD FACTOR DESIGN — LIVE LOADING: HS20-44 AND ALTERNATIVE AND PERMIT DESIGN LOAD

	BY	CHECKED
LAYOUT	T. DANG	G. JOO
SPECIFICATIONS	T. NEDWICK	PLANS AND SPECS COMPARED T. NEDWICK

STATE OF CALIFORNIA
DEPARTMENT OF TRANSPORTATION

DIVISION OF MAINTENANCE
STRUCTURE MAINTENANCE DESIGN

BRIDGE NO. Various
POST MILE Varies

ROUTE 1,105,110,405 BRIDGES
GENERAL PLAN NO. 1

STRUCTURES MAINTENANCE GENERAL PLAN SHEET (ENGLISH) (REV. 09-01-10)

ORIGINAL SCALE IN INCHES FOR REDUCED PLANS 0 1 2 3

UNIT: 3489
PROJECT NUMBER & PHASE: 0715000043-1 CONTRACT NO.: 07-3W1004

DISREGARD PRINTS BEARING EARLIER REVISION DATES

REVISION DATES 3-04-15 9-17-15

SHEET 01 OF 22

FILE => 07-3W1001-a-gp01-.dgn

USERNAME => s122436 DATE PLOTTED => 16-FEB-2016 TIME PLOTTED => 02:22

DIST	COUNTY	ROUTE	POST MILES TOTAL PROJECT	SHEET No.	TOTAL SHEETS
07	LA	1,105, 110,405	Var	30	50

REGISTERED CIVIL ENGINEER 8-25-15 DATE

2-22-16
PLANS APPROVAL DATE

REGISTERED PROFESSIONAL ENGINEER GERALD D. JOO No. C65380 Exp. 09/30/17 CIVIL STATE OF CALIFORNIA

The State of California or its officers or agents shall not be responsible for the accuracy or completeness of scanned copies of this plan sheet.

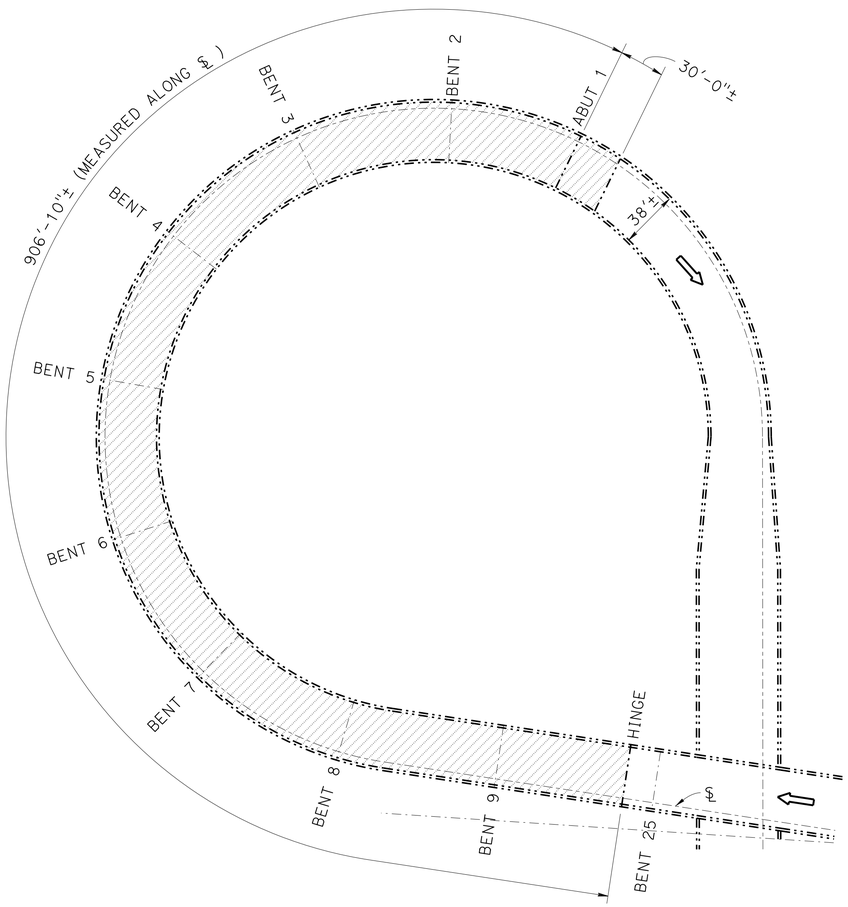

NASH STREET OFF-RAMP OC

Br No. 53-2803K, Rte 105, PM R0.98
1" = 50'

LEGEND:

Indicates existing.

Indicates direction of traffic.

Indicates limits of prepare concrete bridge deck surface and treat existing bridge deck with high molecular weight methacrylate.

NASH STREET OFF-RAMP OC BR NO 53-2803K
QUANTITIES

PUBLIC SAFETY PLAN	LUMP	SUM
PREPARE CONCRETE BRIDGE DECK SURFACE	36,000	SQFT
TREAT BRIDGE DECK	36,000	SQFT
FURNISH BRIDGE DECK TREATMENT MATERIAL	450	GAL

E&W105-S405 CONNECTOR OC BR NO 53-2686H
QUANTITIES

PUBLIC SAFETY PLAN	LUMP	SUM
PREPARE CONCRETE BRIDGE DECK SURFACE	17,000	SQFT
TREAT BRIDGE DECK	17,000	SQFT
FURNISH BRIDGE DECK TREATMENT MATERIAL	215	GAL

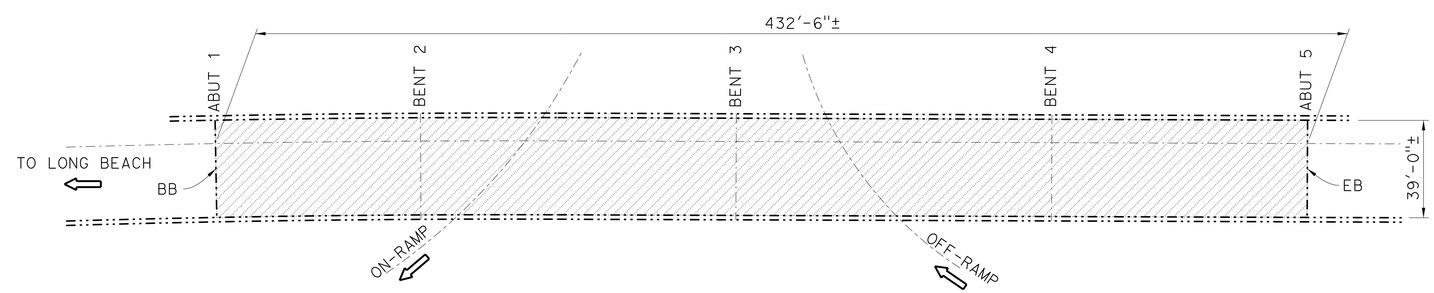

E&W105-S405 CONNECTOR OC (RAMPS UNDERCROSSING OC)

Br No. 53-2686H, Rte 105, PM R2.03
1" = 30'

NOTE:
THE CONTRACTOR SHALL VERIFY ALL CONTROLLING FIELD DIMENSIONS BEFORE ORDERING OR FABRICATING ANY MATERIAL. EXEMPT PROJECT PER UTILITY POLICY, UTILITIES ARE NOT SHOWN.

TONY BRAKE
DESIGN ENGINEER

	BY	CHECKED
DESIGN	G. JOO	T. BRAKE
DETAILS	T. DANG	G. JOO
QUANTITIES	G. JOO	R. PATEL

LOAD FACTOR DESIGN — LIVE LOADING: HS20-44 AND ALTERNATIVE AND PERMIT DESIGN LOAD

	BY	CHECKED
LAYOUT	T. DANG	G. JOO
SPECIFICATIONS	T. NEDWICK	T. NEDWICK (PLANS AND SPECS COMPARED)

STATE OF CALIFORNIA
DEPARTMENT OF TRANSPORTATION

DIVISION OF MAINTENANCE
STRUCTURE MAINTENANCE DESIGN

BRIDGE NO. Various
POST MILE Varies

ROUTE 1,105,110,405 BRIDGES
GENERAL PLAN NO. 2

STRUCTURES MAINTENANCE GENERAL PLAN SHEET (ENGLISH) (REV. 09-01-10)

ORIGINAL SCALE IN INCHES FOR REDUCED PLANS 0 1 2 3

UNIT: 3489
PROJECT NUMBER & PHASE: 0715000043-1 CONTRACT NO.: 07-3W1004

DISREGARD PRINTS BEARING EARLIER REVISION DATES

REVISION DATES: 3-04-15 9-17-15

SHEET 02 OF 22

FILE => 07-3W1001-a-gp02-.dgn

USERNAME => s122436 DATE PLOTTED => 16-FEB-2016 TIME PLOTTED => 02:22

DIST	COUNTY	ROUTE	POST MILES TOTAL PROJECT	SHEET No.	TOTAL SHEETS
07	LA	1,105, 110,405	Var	31	50

REGISTERED CIVIL ENGINEER 8-25-15 DATE

2-22-16
PLANS APPROVAL DATE

REGISTERED PROFESSIONAL ENGINEER GERALD D. JOO No. C65380 Exp. 09/30/17 CIVIL STATE OF CALIFORNIA

The State of California or its officers or agents shall not be responsible for the accuracy or completeness of scanned copies of this plan sheet.

LEGEND:

Indicates existing.

Indicates direction of traffic.

Indicates limits of prepare concrete bridge deck surface and treat existing bridge deck with high molecular weight methacrylate.

Indicates location of clean expansion joint and placement of new joint seal.

Los Angeles Metropolitan Transportation Authority

EL SEGUNDO BOULEVARD OC BR NO 53-1239H
QUANTITIES

PUBLIC SAFETY PLAN	LUMP	SUM
PREPARE CONCRETE BRIDGE DECK SURFACE	7,050	SQFT
TREAT BRIDGE DECK	7,050	SQFT
FURNISH BRIDGE DECK TREATMENT MATERIAL	90	GAL

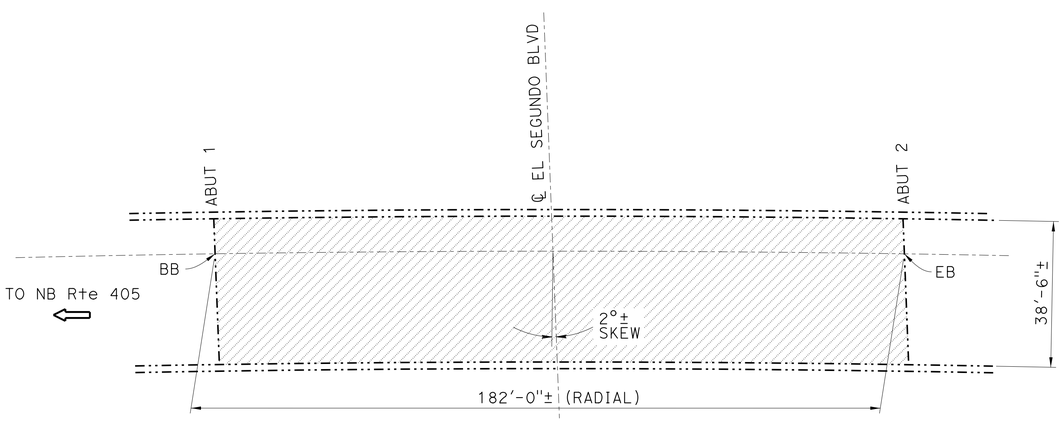

EL SEGUNDO BLVD OC (E& W105-S405 CONNECTOR OC)

Br No. 53-1239H, Rte 105, PM R2.05
1" = 20'

INGLEWOOD AVENUE UC BR NO 53-2435
QUANTITIES

CLEAN EXPANSION JOINT	250	LF
JOINT SEAL (MR 1/2")	250	LF

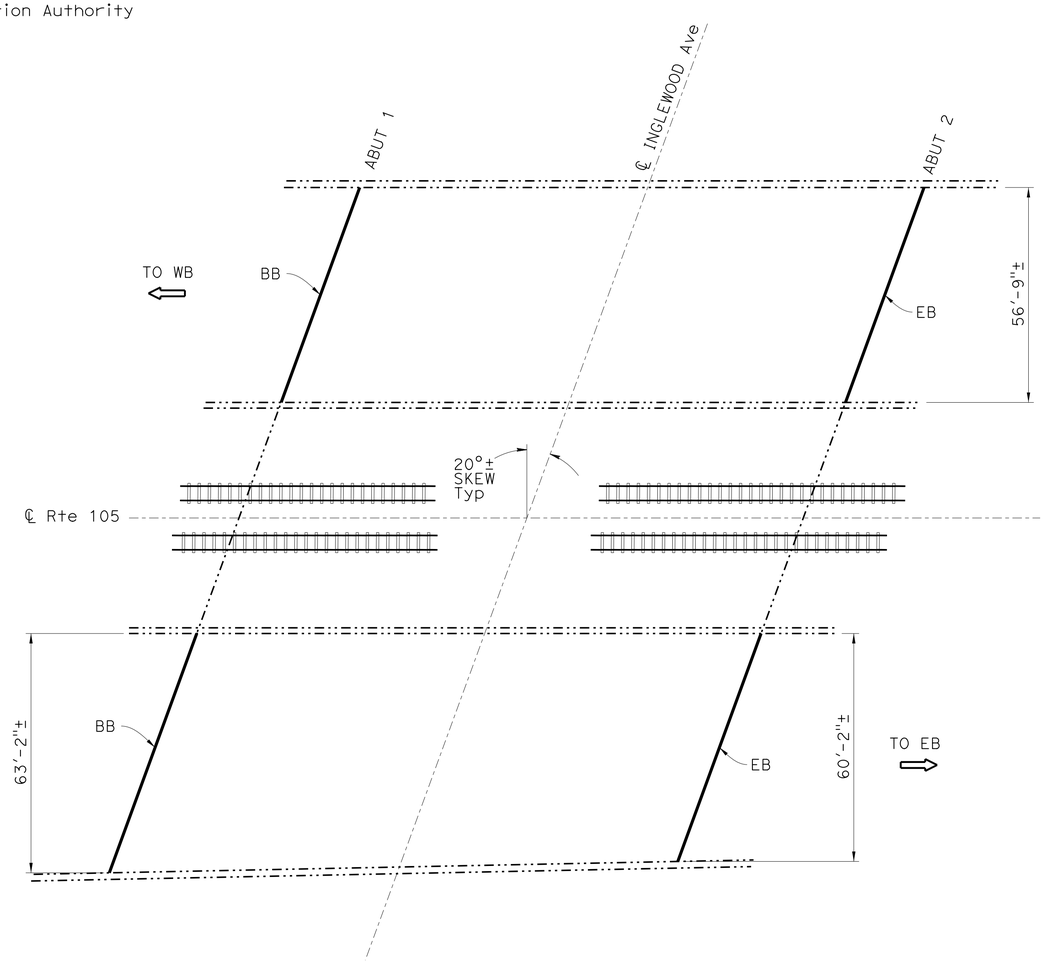

INGLEWOOD AVENUE UC

Br No. 53-2435, Rte 105, PM R2.53
1" = 20'

NOTE:
THE CONTRACTOR SHALL VERIFY ALL CONTROLLING FIELD DIMENSIONS BEFORE ORDERING OR FABRICATING ANY MATERIAL. EXEMPT PROJECT PER UTILITY POLICY, UTILITIES ARE NOT SHOWN UTILITY.

DESIGN	BY G. JOO	CHECKED T. BRAKE	LOAD FACTOR DESIGN	LIVE LOADING: HS20-44 AND ALTERNATIVE AND PERMIT DESIGN LOAD	
DETAILS	BY T. DANG	CHECKED G. JOO	LAYOUT	BY T. DANG	CHECKED G. JOO
QUANTITIES	BY G. JOO	CHECKED R. PATEL	SPECIFICATIONS	BY T. NEDWICK	PLANS AND SPECS COMPARED T. NEDWICK

TONY BRAKE
DESIGN ENGINEER

STATE OF CALIFORNIA
DEPARTMENT OF TRANSPORTATION

DIVISION OF MAINTENANCE
STRUCTURE MAINTENANCE DESIGN

BRIDGE NO. Various
POST MILE Varies

ROUTE 1,105,110,405 BRIDGES
GENERAL PLAN NO. 3

STRUCTURES MAINTENANCE GENERAL PLAN SHEET (ENGLISH) (REV. 09-01-10)

ORIGINAL SCALE IN INCHES FOR REDUCED PLANS 0 1 2 3

UNIT: 3489
PROJECT NUMBER & PHASE: 0715000043-1 CONTRACT NO.: 07-3W1004

DISREGARD PRINTS BEARING EARLIER REVISION DATES

REVISION DATES: 3-01-15 9-17-15

SHEET 03 OF 22

FILE => 07-3W1001-a-gp03-.dgn

USERNAME => s122436 DATE PLOTTED => 16-FEB-2016 TIME PLOTTED => 02:22

DIST	COUNTY	ROUTE	POST MILES TOTAL PROJECT	SHEET No.	TOTAL SHEETS
07	LA	1,105, 110,405	Var	32	50

REGISTERED CIVIL ENGINEER 8-25-15 DATE

2-22-16
PLANS APPROVAL DATE

The State of California or its officers or agents shall not be responsible for the accuracy or completeness of scanned copies of this plan sheet.

REGISTERED PROFESSIONAL ENGINEER GERALD D. JOO No. C65380 Exp. 09/30/17 CIVIL STATE OF CALIFORNIA

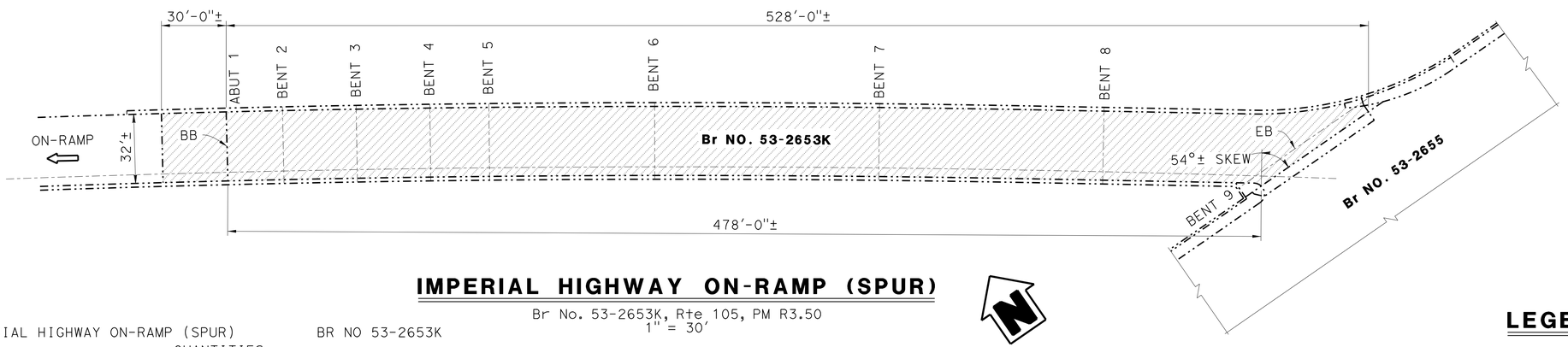

IMPERIAL HIGHWAY ON-RAMP (SPUR)

Br No. 53-2653K, Rte 105, PM R3.50
1" = 30'

IMPERIAL HIGHWAY ON-RAMP (SPUR) BR NO 53-2653K
QUANTITIES

PUBLIC SAFETY PLAN	LUMP	SUM
PREPARE CONCRETE BRIDGE DECK SURFACE	17,000	SQFT
TREAT BRIDGE DECK	17,000	SQFT
FURNISH BRIDGE DECK TREATMENT MATERIAL	210	GAL

LEGEND:

Indicates existing.

Indicates direction of traffic.

Indicates limits of prepare concrete bridge deck surface and treat existing bridge deck with high molecular weight methacrylate.

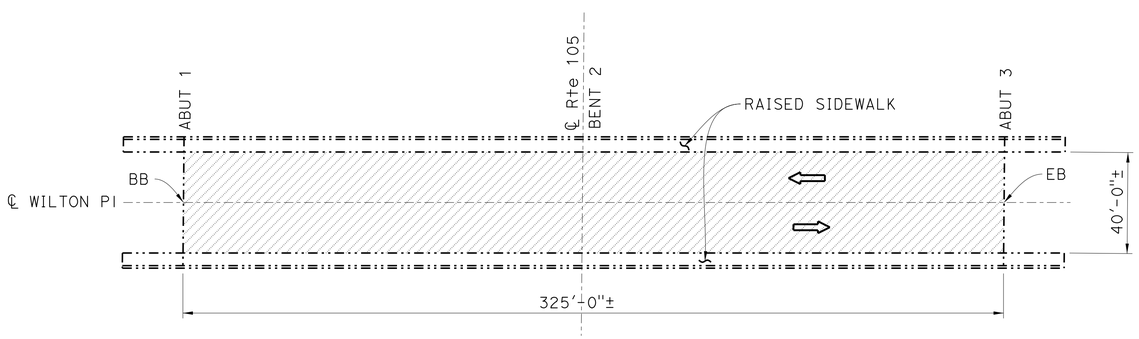

WILTON PLACE OC

Br No. 53-2522, Rte 105, PM R5.48
1" = 30'

WILTON PLACE OC BR NO 53-2522
QUANTITIES

PUBLIC SAFETY PLAN	LUMP	SUM
PREPARE CONCRETE BRIDGE DECK SURFACE	13,000	SQFT
TREAT BRIDGE DECK	13,000	SQFT
FURNISH BRIDGE DECK TREATMENT MATERIAL	165	GAL

NOTE:
THE CONTRACTOR SHALL VERIFY ALL CONTROLLING FIELD DIMENSIONS BEFORE ORDERING OR FABRICATING ANY MATERIAL. EXEMPT PROJECT PER UTILITY POLICY, UTILITIES ARE NOT SHOWN UTILITY.

TONY BRAKE
DESIGN ENGINEER

	BY	CHECKED			
DESIGN	G. JOO	T. BRAKE	LOAD FACTOR DESIGN	LIVE LOADING: HS20-44 AND ALTERNATIVE AND PERMIT DESIGN LOAD	
DETAILS	T. DANG	G. JOO	LAYOUT	T. DANG	G. JOO
QUANTITIES	G. JOO	R. PATEL	SPECIFICATIONS	T. NEDWICK	PLANS AND SPECS COMPARED T. NEDWICK

STATE OF CALIFORNIA
DEPARTMENT OF TRANSPORTATION

DIVISION OF MAINTENANCE
STRUCTURE MAINTENANCE DESIGN

BRIDGE NO. Various
POST MILE Varies

ROUTE 1,105,110,405 BRIDGES
GENERAL PLAN NO. 4

STRUCTURES MAINTENANCE GENERAL PLAN SHEET (ENGLISH) (REV. 09-01-10)

ORIGINAL SCALE IN INCHES FOR REDUCED PLANS 0 1 2 3

UNIT: 3489
PROJECT NUMBER & PHASE: 0715000043-1 CONTRACT NO.: 07-3W1004

DISREGARD PRINTS BEARING EARLIER REVISION DATES

REVISION DATES 3-01-15 9-17-15

SHEET 04 OF 22

FILE => 07-3W1001-a-gp04-.dgn

USERNAME => s122436 DATE PLOTTED => 16-FEB-2016 TIME PLOTTED => 02:22

DIST	COUNTY	ROUTE	POST MILES TOTAL PROJECT	SHEET No.	TOTAL SHEETS
07	LA	1,105, 110,405	Var	33	50

REGISTERED CIVIL ENGINEER 8-25-15 DATE

2-22-16
PLANS APPROVAL DATE

REGISTERED PROFESSIONAL ENGINEER GERALD D. JOO No. C65380 Exp. 09/30/17 CIVIL STATE OF CALIFORNIA

The State of California or its officers or agents shall not be responsible for the accuracy or completeness of scanned copies of this plan sheet.

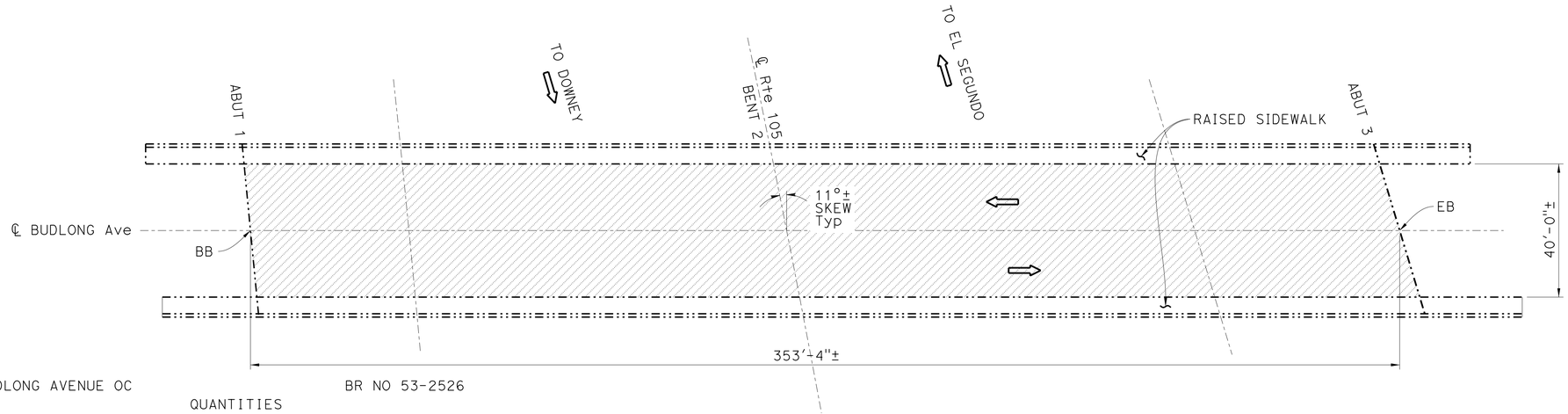

BUDLONG AVENUE OC BR NO 53-2526

QUANTITIES

PUBLIC SAFETY PLAN	LUMP	SUM
PREPARE CONCRETE BRIDGE DECK SURFACE	14,500	SQFT
TREAT BRIDGE DECK	14,500	SQFT
FURNISH BRIDGE DECK TREATMENT MATERIAL	185	GAL

BUDLONG AVENUE OC

Br No. 53-2526, Rte 105, PM R6.52
1" = 20'

LEGEND:

Indicates existing.

Indicates direction of traffic.

Indicates limits of prepare concrete bridge deck surface and treat existing bridge deck with high molecular weight methacrylate.

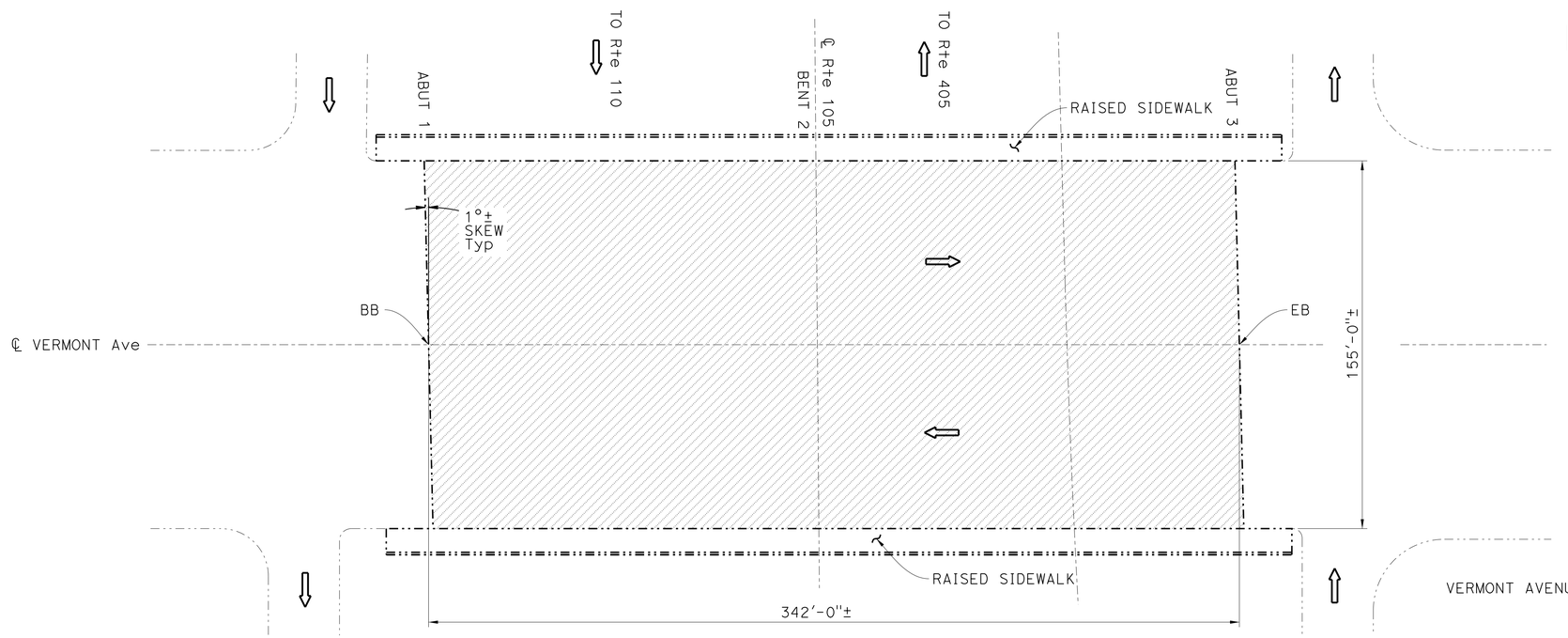

VERMONT AVENUE OC BR NO 53-2527

QUANTITIES

PUBLIC SAFETY PLAN	LUMP	SUM
PREPARE CONCRETE BRIDGE DECK SURFACE	53,100	SQFT
TREAT BRIDGE DECK	53,100	SQFT
FURNISH BRIDGE DECK TREATMENT MATERIAL	665	GAL

VERMONT AVENUE OC

Br No. 53-2527, Rte 105, PM R6.74
1" = 30'

NOTE:
THE CONTRACTOR SHALL VERIFY ALL CONTROLLING FIELD DIMENSIONS BEFORE ORDERING OR FABRICATING ANY MATERIAL. EXEMPT PROJECT PER POLICY, UTILITIES ARE NOT SHOWN UTILITY.

TONY BRAKE
DESIGN ENGINEER

	BY	CHECKED
DESIGN	G. JOO	T. BRAKE
DETAILS	T. DANG	G. JOO
QUANTITIES	G. JOO	R. PATEL

LOAD FACTOR DESIGN	LIVE LOADING: HS20-44 AND ALTERNATIVE AND PERMIT DESIGN LOAD		
LAYOUT	BY T. DANG	CHECKED G. JOO	
SPECIFICATIONS	BY T. NEDWICK	PLANS AND SPECS COMPARED T. NEDWICK	

STATE OF CALIFORNIA
DEPARTMENT OF TRANSPORTATION

DIVISION OF MAINTENANCE
STRUCTURE MAINTENANCE DESIGN

BRIDGE NO. Various
POST MILE Varies

ROUTE 1,105,110,405 BRIDGES
GENERAL PLAN NO. 5

STRUCTURES MAINTENANCE GENERAL PLAN SHEET (ENGLISH) (REV. 09-01-10)

ORIGINAL SCALE IN INCHES FOR REDUCED PLANS 0 1 2 3

UNIT: 3489
PROJECT NUMBER & PHASE: 0715000043-1 CONTRACT NO.: 07-3W1004

DISREGARD PRINTS BEARING EARLIER REVISION DATES

REVISION DATES: 3-01-15 9-17-15

SHEET 05 OF 22

FILE => 07-3W1001-a-gp05-.dgn

USERNAME => s122436 DATE PLOTTED => 16-FEB-2016 TIME PLOTTED => 02:22

DIST	COUNTY	ROUTE	POST MILES TOTAL PROJECT	SHEET No.	TOTAL SHEETS
07	LA	1,105, 110,405	Var	34	50

REGISTERED CIVIL ENGINEER 8-25-15 DATE

2-22-16
PLANS APPROVAL DATE

REGISTERED PROFESSIONAL ENGINEER GERALD D. JOO No. C65380 Exp. 09/30/17 CIVIL STATE OF CALIFORNIA

The State of California or its officers or agents shall not be responsible for the accuracy or completeness of scanned copies of this plan sheet.

E105-N110 CONNECTOR OC BR NO 53-2404G

QUANTITIES

PUBLIC SAFETY PLAN	LUMP	SUM
REPAIR SPALLED SURFACE AREA	1	SQFT
PREPARE CONCRETE BRIDGE DECK SURFACE	234,500	SQFT
TREAT BRIDGE DECK	234,500	SQFT
FURNISH BRIDGE DECK TREATMENT MATERIAL	2,950	GAL
REPLACE NEOPRENE GLAND (MR 4")	80	LF
CLEAN EXPANSION JOINT	80	LF

JOINT SEAL ASSEMBLY DIMENSIONS

LOCATION	MINIMUM "MR" (INCHES)	SKEW	"a" Dimension		
			Winter	Spring/Fall	Summer
HINGE 6	4	0	2¼"	1¼"	1¾"

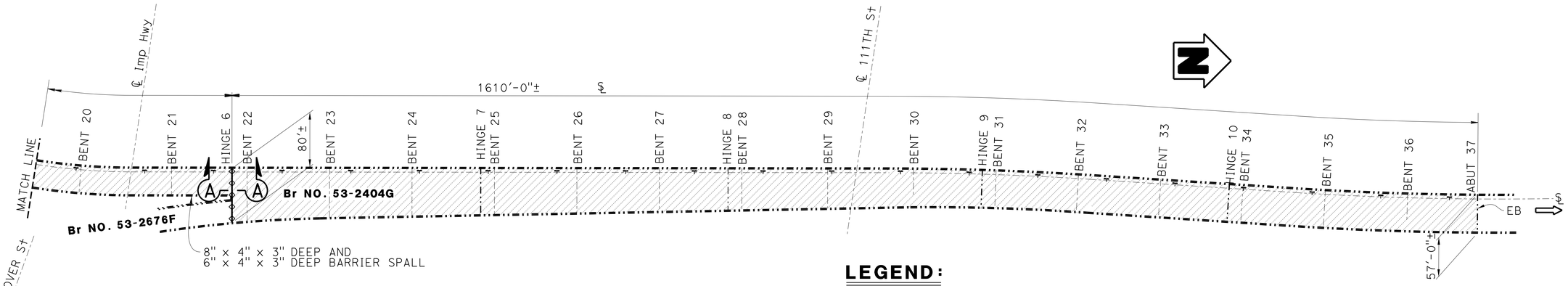

LEGEND:

- Indicates existing.
- Indicates direction of traffic.
- Indicates limits of prepare concrete bridge deck surface and treat existing bridge deck with high molecular weight methacrylate.
- Indicates location of removal, clean expansion joint and placement of neoprene gland in existing joint seal assembly. Remove and replace existing A325 bolts that anchor the existing top plate, ⅝" ø long bolts spaced at 6 inches center to center.
- Union Pacific Railroad Track.

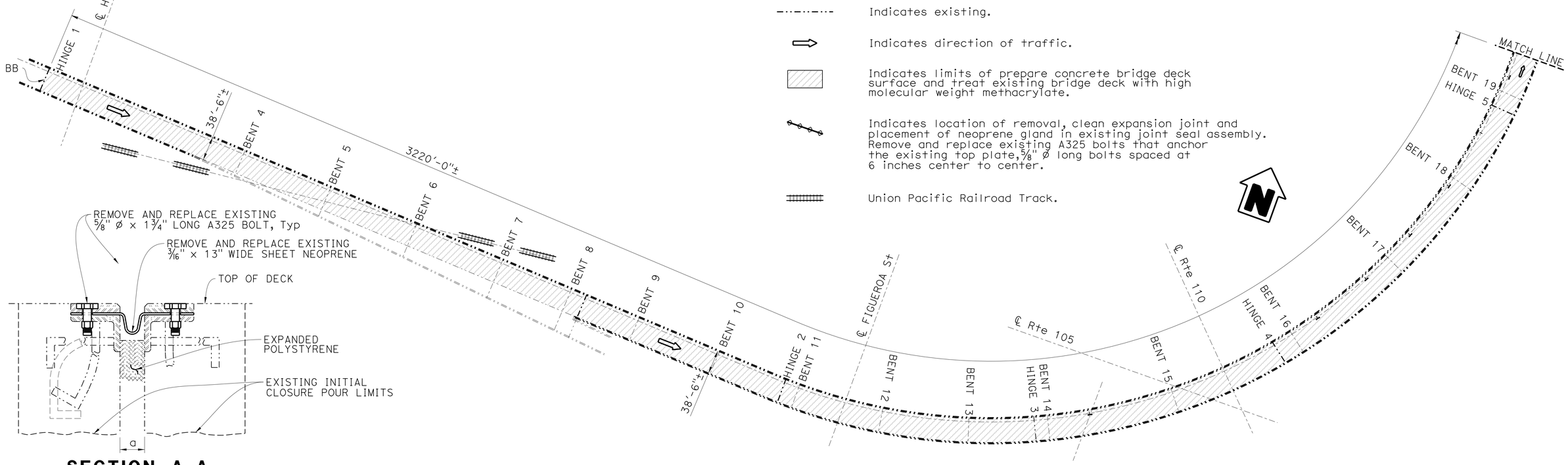

SECTION A-A

NO SCALE

NOTE:
THE CONTRACTOR SHALL VERIFY ALL CONTROLLING FIELD DIMENSIONS BEFORE ORDERING OR FABRICATING ANY MATERIAL. EXEMPT PROJECT PER UTILITY POLICY, UTILITIES ARE NOT SHOWN UTILITY.

E105-N110 CONNECTOR OC

Br No. 53-2404G, Rte 105, PM R7.02
1" = 80'

TONY BRAKE DESIGN ENGINEER	DESIGN	BY G. JOO	CHECKED T. BRAKE	LOAD FACTOR DESIGN	LIVE LOADING: HS20-44 AND ALTERNATIVE AND PERMIT DESIGN LOAD	
	DETAILS	BY T. DANG	CHECKED G. JOO	LAYOUT	BY T. DANG	CHECKED G. JOO
	QUANTITIES	BY G. JOO	CHECKED R. PATEL	SPECIFICATIONS	BY T. NEDWICK	PLANS AND SPECS COMPARED T. NEDWICK

STATE OF CALIFORNIA DEPARTMENT OF TRANSPORTATION

DIVISION OF MAINTENANCE STRUCTURE MAINTENANCE DESIGN

BRIDGE NO. Various
POST MILE Varies

ROUTE 1,105,110,405 BRIDGES
GENERAL PLAN NO. 6

STRUCTURES MAINTENANCE GENERAL PLAN SHEET (ENGLISH) (REV. 09-01-10)

ORIGINAL SCALE IN INCHES FOR REDUCED PLANS 0 1 2 3

UNIT: 3489
PROJECT NUMBER & PHASE: 0715000043-1 CONTRACT NO.: 07-3W1004

DISREGARD PRINTS BEARING EARLIER REVISION DATES

REVISION DATES 3-01-15 9-17-15

SHEET 06 OF 22

FILE => 07-3W1001-a-gp06-.dgn

USERNAME => s122436 DATE PLOTTED => 16-FEB-2016 TIME PLOTTED => 02:22

DIST	COUNTY	ROUTE	POST MILES TOTAL PROJECT	SHEET No.	TOTAL SHEETS
07	LA	1,105, 110,405	Var	35	50

REGISTERED CIVIL ENGINEER 8-25-15 DATE

2-22-16
PLANS APPROVAL DATE

REGISTERED PROFESSIONAL ENGINEER GERALD D. JOO No. C65380 Exp. 09/30/17 CIVIL STATE OF CALIFORNIA

The State of California or its officers or agents shall not be responsible for the accuracy or completeness of scanned copies of this plan sheet.

LEGEND:

- Indicates existing.
- Indicates direction of traffic.
- Indicates limits of prepare concrete bridge deck surface and treat existing bridge deck with high molecular weight methacrylate.
- Los Angeles Metropolitan Transportation Authority
- Indicates removal of unsound concrete and place rapid setting concrete patch. See CONCRETE SURFACE REPAIR DETAIL on "MISCELLANEOUS DETAILS NO. 2" sheet.
- Indicates limits of remove existing PCC and AC approach and place new Structure Approach Type R(30S). For details, see "STRUCTURE APPROACH TYPE R(30S)" sheet.
- Indicates location of removal, clean expansion joint and placement of neoprene gland in existing joint seal assembly. Remove and replace existing A325 bolts that anchor the existing top plate, 5/8" Ø long bolts spaced at 6 inches center to center.
- Indicates location of placement of new joint seal.

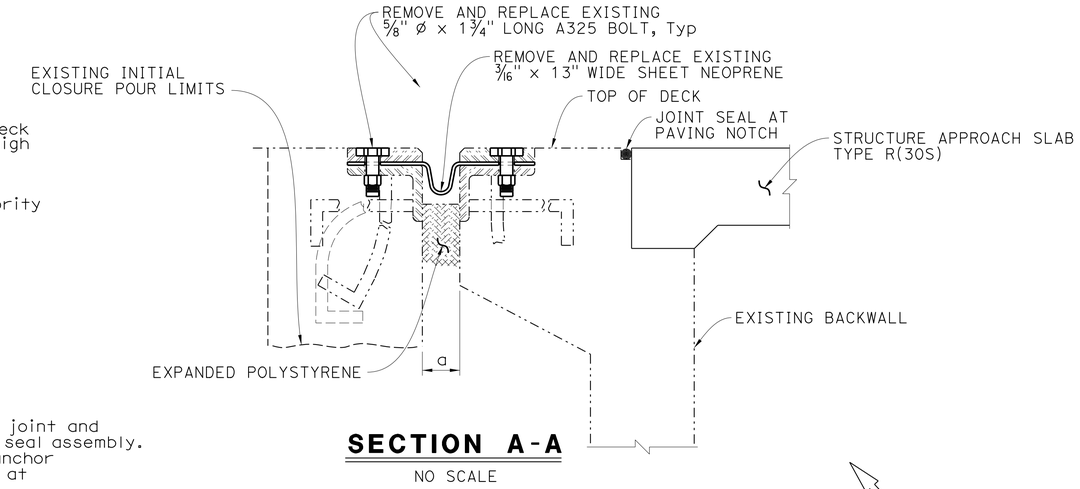

SECTION A-A

NO SCALE

ROUTE 105/110 SEPARATION — BR NO 53-2405R

QUANTITIES

PUBLIC SAFETY PLAN	LUMP	SUM
RAPID SETTING CONCRETE (PATCH)	1	CF
REMOVE UNSOUND CONCRETE	1	CF
PREPARE CONCRETE BRIDGE DECK SURFACE	91,500	SQFT
TREAT BRIDGE DECK	91,500	SQFT
FURNISH BRIDGE DECK TREATMENT MATERIAL	1,150	GAL
STRUCTURAL CONCRETE, APPROACH SLAB (TYPE R)	130	CY
REPLACE NEOPRENE GLAND (MR 4")	75	LF
JOINT SEAL (MR 1/2")	75	LF
CLEAN EXPANSION JOINT	75	LF

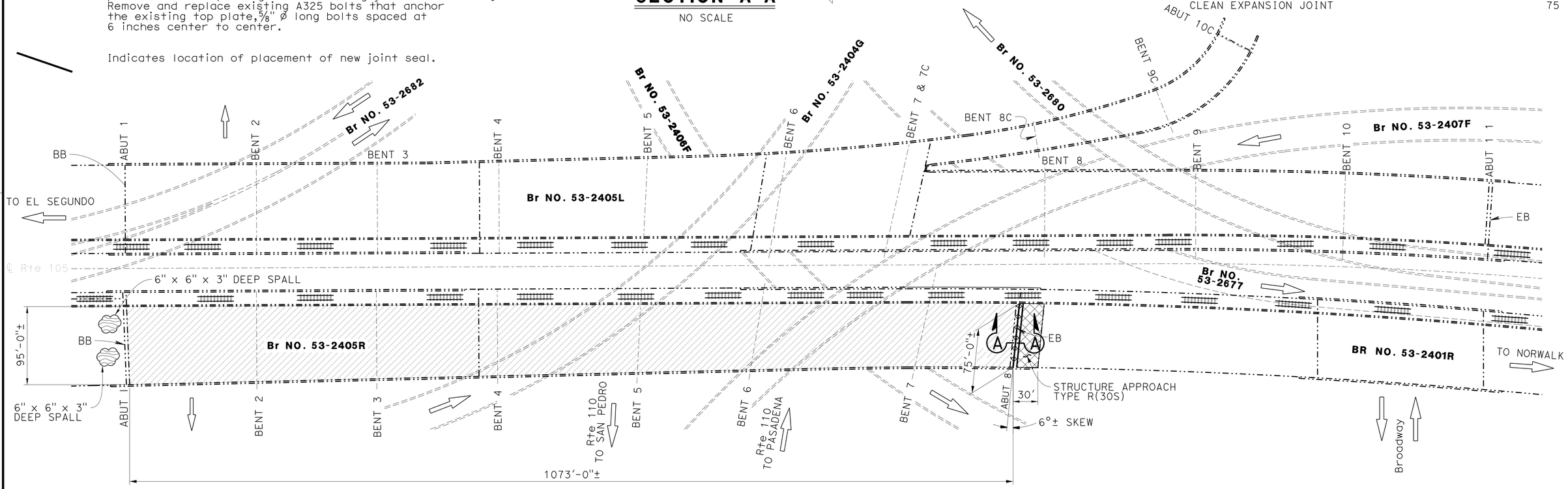

ROUTE 105/110 SEPARATION

Br No. 53-2405R, Rte 105, PM R7.26
NO SCALE

JOINT SEAL ASSEMBLY DIMENSIONS

LOCATION	MINIMUM "MR" (INCHES)	SKEW	"a" Dimension		
			Winter	Spring/Fall	Summer
ABUT 8	4	6°±	2 1/8"	1 1/8"	1 5/8"

NOTE:
THE CONTRACTOR SHALL VERIFY ALL CONTROLLING FIELD DIMENSIONS BEFORE ORDERING OR FABRICATING ANY MATERIAL. EXEMPT PROJECT PER UTILITY POLICY, UTILITIES ARE NOT SHOWN UTILITY.

DESIGN	BY G. JOO	CHECKED T. BRAKE	LOAD FACTOR DESIGN	LIVE LOADING: HS20-44 AND ALTERNATIVE AND PERMIT DESIGN LOAD	
DETAILS	BY T. DANG	CHECKED C. JOO	LAYOUT	BY T. DANG	CHECKED C. JOO
QUANTITIES	BY G. JOO	CHECKED R. PATEL	SPECIFICATIONS	BY T. NEDWICK	PLANS AND SPECS COMPARED T. NEDWICK

TONY BRAKE
DESIGN ENGINEER

STATE OF CALIFORNIA
DEPARTMENT OF TRANSPORTATION

DIVISION OF MAINTENANCE
STRUCTURE MAINTENANCE DESIGN

BRIDGE NO. Various
POST MILE Varies

ROUTE 1,105,110,405 BRIDGES
GENERAL PLAN NO. 7

STRUCTURES MAINTENANCE GENERAL PLAN SHEET (ENGLISH) (REV. 09-01-10)

ORIGINAL SCALE IN INCHES FOR REDUCED PLANS 0 1 2 3

UNIT: 3489
PROJECT NUMBER & PHASE: 0715000043-1
CONTRACT NO.: 07-3W1004

DISREGARD PRINTS BEARING EARLIER REVISION DATES

REVISION DATES: 3-04-15 9-17-15

SHEET 07 OF 22

FILE => 07-3W1001-a-gp07-.dgn

USERNAME => s122436 DATE PLOTTED => 16-FEB-2016 TIME PLOTTED => 02:22

DIST	COUNTY	ROUTE	POST MILES TOTAL PROJECT	SHEET No.	TOTAL SHEETS
07	LA	1,105, 110,405	Var	36	50

REGISTERED CIVIL ENGINEER 8-25-15 DATE

2-22-16
PLANS APPROVAL DATE

REGISTERED PROFESSIONAL ENGINEER GERALD D. JOO No. C65380 Exp. 09/30/17 CIVIL STATE OF CALIFORNIA

The State of California or its officers or agents shall not be responsible for the accuracy or completeness of scanned copies of this plan sheet.

LEGEND:

Indicates existing.

Indicates direction of traffic.

Indicates limits of prepare concrete bridge deck surface and treat existing bridge deck with high molecular weight methacrylate.

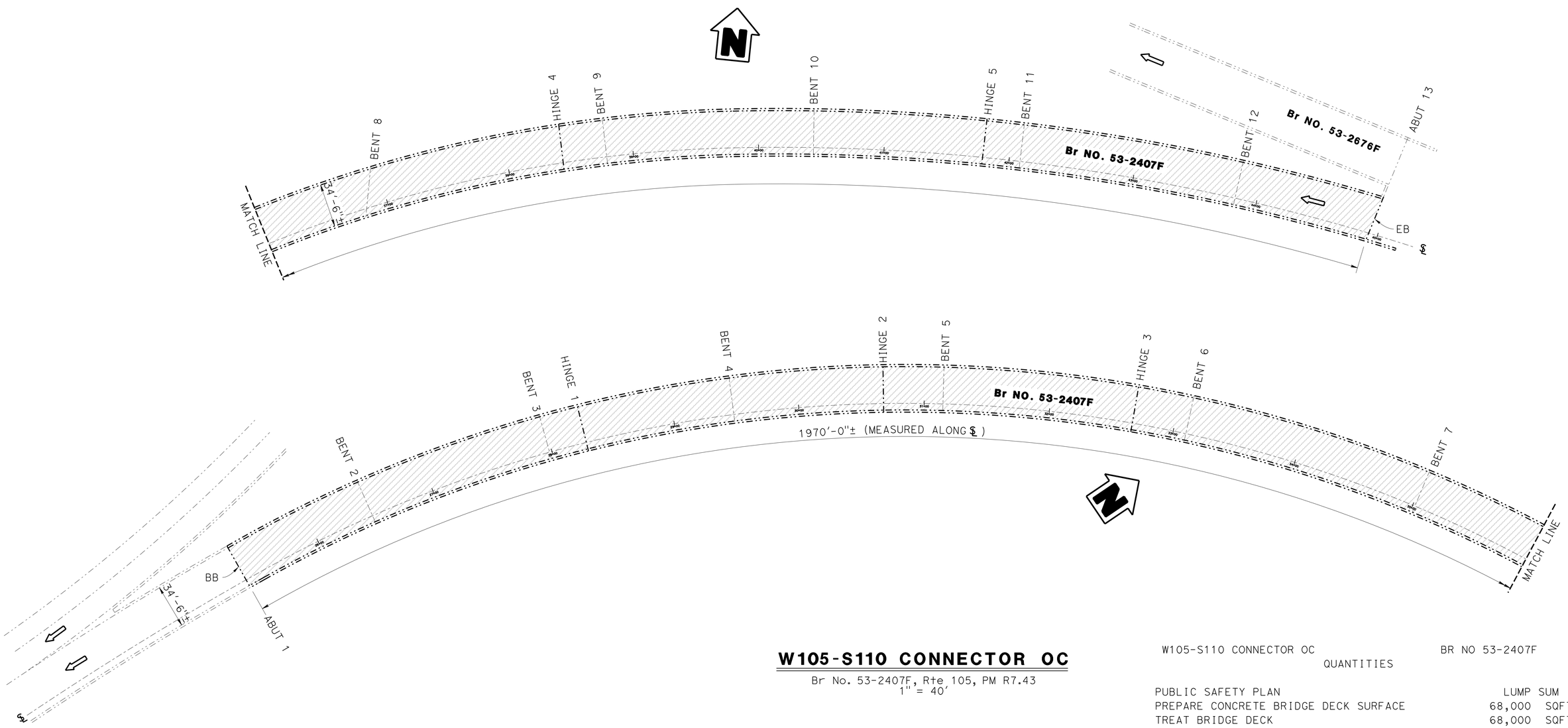

NOTE:
THE CONTRACTOR SHALL VERIFY ALL CONTROLLING FIELD DIMENSIONS BEFORE ORDERING OR FABRICATING ANY MATERIAL. EXEMPT PROJECT PER UTILITY POLICY, UTILITIES ARE NOT SHOWN UTILITY.

W105-S110 CONNECTOR OC

Br No. 53-2407F, Rte 105, PM R7.43
1" = 40'

W105-S110 CONNECTOR OC BR NO 53-2407F

QUANTITIES

PUBLIC SAFETY PLAN	LUMP	SUM
PREPARE CONCRETE BRIDGE DECK SURFACE	68,000	SQFT
TREAT BRIDGE DECK	68,000	SQFT
FURNISH BRIDGE DECK TREATMENT MATERIAL	850	GAL

TONY BRAKE DESIGN ENGINEER	DESIGN	BY G. JOO	CHECKED T. BRAKE	LOAD FACTOR DESIGN	LIVE LOADING: HS20-44 AND ALTERNATIVE AND PERMIT DESIGN LOAD	
	DETAILS	BY T. DANG	CHECKED G. JOO	LAYOUT	BY T. DANG	CHECKED G. JOO
	QUANTITIES	BY G. JOO	CHECKED R. PATEL	SPECIFICATIONS	BY T. NEDWICK	PLANS AND SPECS COMPARED T. NEDWICK

STATE OF CALIFORNIA
DEPARTMENT OF TRANSPORTATION

DIVISION OF MAINTENANCE
STRUCTURE MAINTENANCE DESIGN

BRIDGE NO. Various
POST MILE Varies

ROUTE 1,105,110,405 BRIDGES
GENERAL PLAN NO. 8

STRUCTURES MAINTENANCE GENERAL PLAN SHEET (ENGLISH) (REV. 09-01-10)

ORIGINAL SCALE IN INCHES FOR REDUCED PLANS 0 1 2 3

UNIT: 3489
PROJECT NUMBER & PHASE: 0715000043-1
CONTRACT NO.: 07-3W1004

DISREGARD PRINTS BEARING EARLIER REVISION DATES

REVISION DATES 3-04-15 9-17-15

SHEET 08 OF 22

FILE => 07-3W1001-a-gp08-.dgn

USERNAME => s122436 DATE PLOTTED => 16-FEB-2016 TIME PLOTTED => 02:22

DIST	COUNTY	ROUTE	POST MILES TOTAL PROJECT	SHEET No.	TOTAL SHEETS
07	LA	1,105, 110,405	Var	37	50

REGISTERED CIVIL ENGINEER 8-25-15 DATE

2-22-16
PLANS APPROVAL DATE

REGISTERED PROFESSIONAL ENGINEER GERALD D. JOO No. C65380 Exp. 09/30/17 CIVIL STATE OF CALIFORNIA

The State of California or its officers or agents shall not be responsible for the accuracy or completeness of scanned copies of this plan sheet.

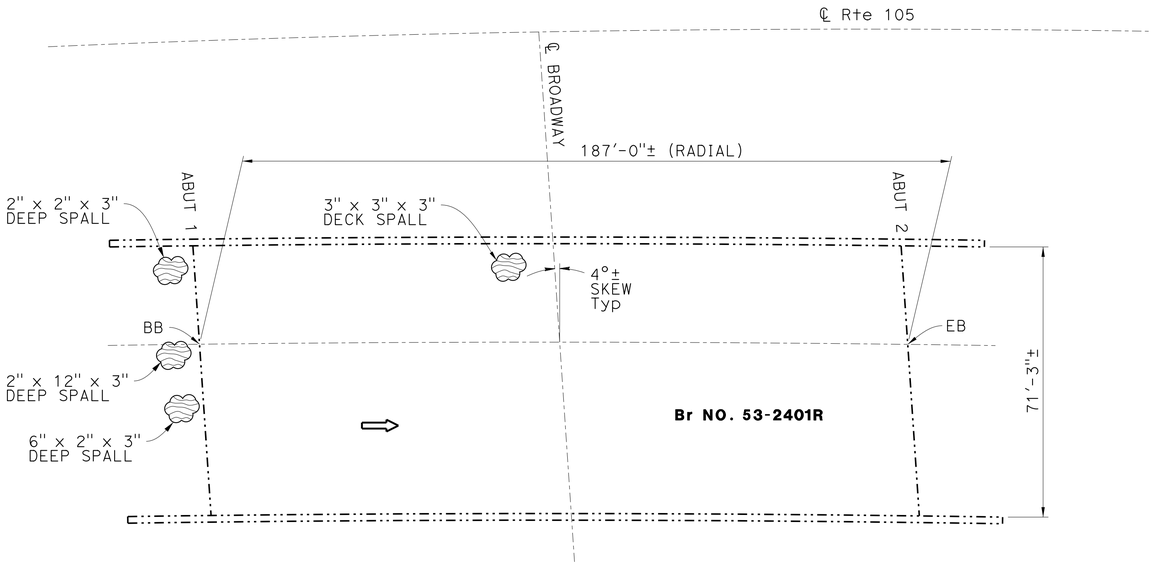

BROADWAY UC

Br No. 53-2401R, Rte 105, PM R7.56
1" = 20'

BROADWAY UC BR NO 53-2401R

QUANTITIES

RAPID SETTING CONCRETE (PATCH)	1	CF
REMOVE UNSOUND CONCRETE	1	CF

LEGEND:

Indicates existing.

Indicates direction of traffic.

Indicates limits of prepare concrete bridge deck surface and treat existing bridge deck with high molecular weight methacrylate.

Indicates location of removal, clean expansion joint and placement of neoprene gland in existing joint seal assembly. Remove and replace existing A325 bolts that anchor the existing top plate, 5/8" Ø long bolts spaced at 6 inches center to center.

Indicates removal of unsound concrete and place rapid setting concrete patch. See CONCRETE SURFACE REPAIR DETAIL on "MISCELLANEOUS DETAILS NO. 2" sheet.

JOINT SEAL ASSEMBLY DIMENSIONS

LOCATION	MINIMUM "MR" (INCHES)	SKEW	"a" Dimension		
			Winter	Spring/Fall	Summer
HINGE 8	3 1/2	0	2 1/4"	1 1/4"	1 3/4"

SECTION A-A

NO SCALE

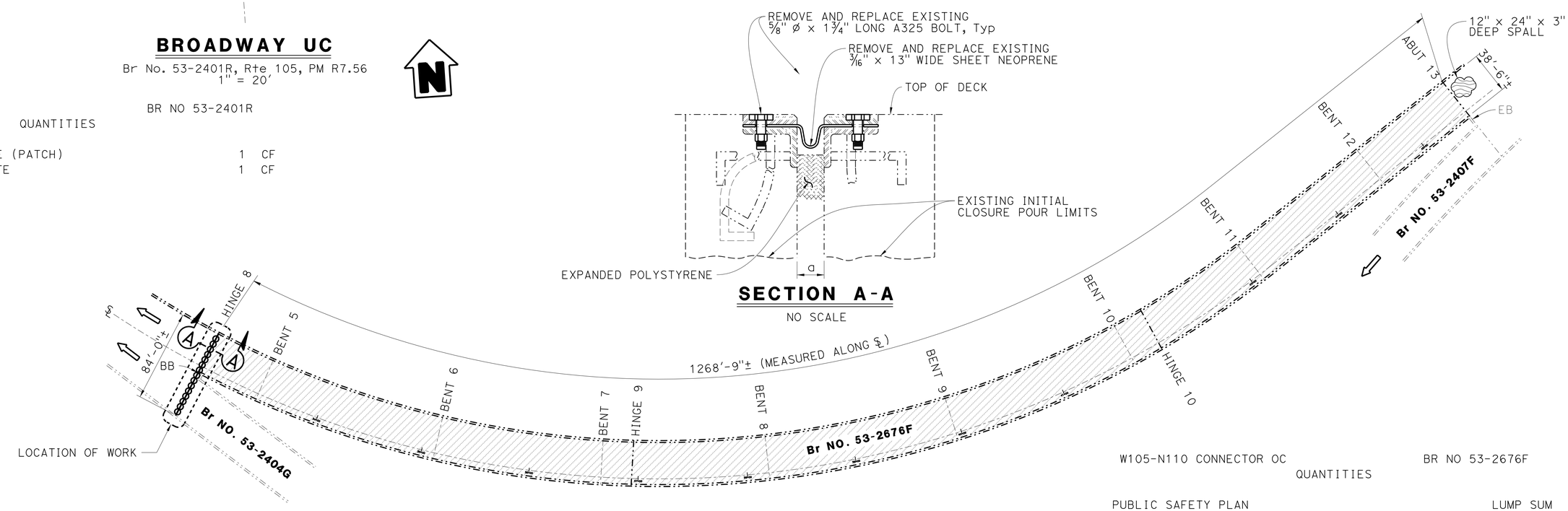

W105-N110 CONNECTOR OC

Br No. 53-2676F, Rte 105, PM R7.61
1" = 50'

W105-N110 CONNECTOR OC BR NO 53-2676F

QUANTITIES

PUBLIC SAFETY PLAN	LUMP	SUM
RAPID SETTING CONCRETE (PATCH)	1	CF
REMOVE UNSOUND CONCRETE	1	CF
PREPARE CONCRETE BRIDGE DECK SURFACE	49,000	SQFT
TREAT BRIDGE DECK	49,000	SQFT
FURNISH BRIDGE DECK TREATMENT MATERIAL	615	GAL
REPLACE NEOPRENE GLAND (MR 3 1/2")	84	LF
CLEAN EXPANSION JOINT	84	LF

NOTE:
THE CONTRACTOR SHALL VERIFY ALL CONTROLLING FIELD DIMENSIONS BEFORE ORDERING OR FABRICATING ANY MATERIAL. EXEMPT PROJECT PER UTILITY POLICY, UTILITIES ARE NOT SHOWN UTILITY.

TONY BRAKE
DESIGN ENGINEER

	BY	CHECKED			
DESIGN	G. JOO	T. BRAKE	LOAD FACTOR DESIGN	LIVE LOADING: HS20-44 AND ALTERNATIVE AND PERMIT DESIGN LOAD	
DETAILS	T. DANG	G. JOO	LAYOUT	T. DANG	G. JOO
QUANTITIES	G. JOO	R. PATEL	SPECIFICATIONS	T. NEDWICK	PLANS AND SPECS COMPARED T. NEDWICK

STATE OF CALIFORNIA
DEPARTMENT OF TRANSPORTATION

DIVISION OF MAINTENANCE
STRUCTURE MAINTENANCE DESIGN

BRIDGE NO. Various
POST MILE Varies

ROUTE 1,105,110,405 BRIDGES
GENERAL PLAN NO. 9

STRUCTURES MAINTENANCE GENERAL PLAN SHEET (ENGLISH) (REV. 09-01-10)

ORIGINAL SCALE IN INCHES FOR REDUCED PLANS 0 1 2 3

UNIT: 3489
PROJECT NUMBER & PHASE: 0715000043-1 CONTRACT NO.: 07-3W1004

DISREGARD PRINTS BEARING EARLIER REVISION DATES

REVISION DATES 3-01-15 9-17-15

SHEET 09 OF 22

FILE => 07-3W1001-a-gp09-.dgn

USERNAME => s122436 DATE PLOTTED => 16-FEB-2016 TIME PLOTTED => 02:22

DIST	COUNTY	ROUTE	POST MILES TOTAL PROJECT	SHEET No.	TOTAL SHEETS
07	LA	1,105, 110,405	Var	38	50

REGISTERED CIVIL ENGINEER 8-25-15 DATE

2-22-16
PLANS APPROVAL DATE

REGISTERED PROFESSIONAL ENGINEER GERALD D. JOO No. C65380 Exp. 09/30/17 CIVIL STATE OF CALIFORNIA

The State of California or its officers or agents shall not be responsible for the accuracy or completeness of scanned copies of this plan sheet.

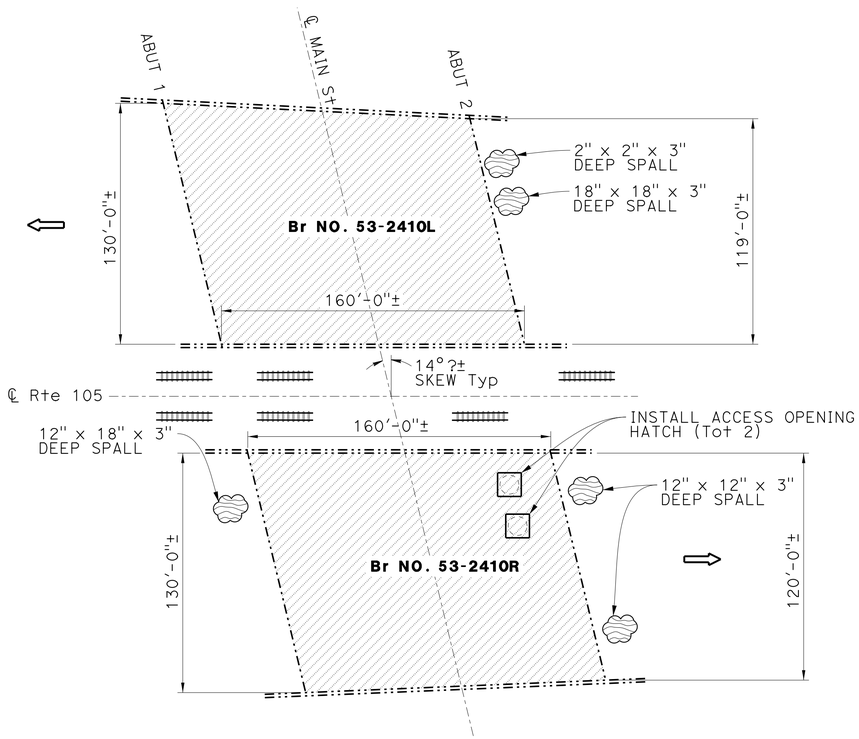

MAIN STREET UC

Br No. 53-2410L/R, Rte 105, PM R7.79
1" = 40'

LEGEND:

- Indicates existing.
- Indicates direction of traffic.
- Indicates limits of prepare concrete bridge deck surface and treat existing bridge deck with high molecular weight methacrylate.
- Indicates removal of unsound concrete and place rapid setting concrete patch. See CONCRETE SURFACE REPAIR DETAIL on "MISCELLANEOUS DETAILS NO. 2" sheet.
- Indicates location of install access opening hatch at existing 2'-0"± diameter soffit opening. See "ACCESS OPENING HATCH", SOFFIT DETAILS" sheet.
- Los Angeles Metropolitan Transportation Authority

MAIN STREET UC — BR NO 53-2410L/R

QUANTITIES

PUBLIC SAFETY PLAN	LUMP	SUM
RAPID SETTING CONCRETE (PATCH)	3	CF
REMOVE UNSOUND CONCRETE	3	CF
PREPARE CONCRETE BRIDGE DECK SURFACE	40,000	SQFT
TREAT BRIDGE DECK	40,000	SQFT
FURNISH BRIDGE DECK TREATMENT MATERIAL	500	GAL
SOFFIT ACCESS DOOR	2	EA

NOTE:
THE CONTRACTOR SHALL VERIFY ALL CONTROLLING FIELD DIMENSIONS BEFORE ORDERING OR FABRICATING ANY MATERIAL. EXEMPT PROJECT PER UTILITY POLICY, UTILITIES ARE NOT SHOWN UTILITY.

TONY BRAKE
DESIGN ENGINEER

	BY	CHECKED
DESIGN	G. JOO	T. BRAKE
DETAILS	T. DANG	G. JOO
QUANTITIES	G. JOO	R. PATEL

LOAD FACTOR DESIGN	LIVE LOADING: HS20-44 AND ALTERNATIVE AND PERMIT DESIGN LOAD		
LAYOUT	BY T. DANG	CHECKED G. JOO	
SPECIFICATIONS	BY T. NEDWICK	PLANS AND SPECS COMPARED T. NEDWICK	

STATE OF CALIFORNIA
DEPARTMENT OF TRANSPORTATION

DIVISION OF MAINTENANCE
STRUCTURE MAINTENANCE DESIGN

BRIDGE NO. Various
POST MILE Varies

ROUTE 1,105,110,405 BRIDGES
GENERAL PLAN NO. 10

STRUCTURES MAINTENANCE GENERAL PLAN SHEET (ENGLISH) (REV. 09-01-10)

ORIGINAL SCALE IN INCHES FOR REDUCED PLANS 0 1 2 3

UNIT: 3489
PROJECT NUMBER & PHASE: 0715000043-1
CONTRACT NO.: 07-3W1004

DISREGARD PRINTS BEARING EARLIER REVISION DATES

REVISION DATES: 3-01-15 9-17-15

SHEET 10 OF 22

FILE => 07-3W1001-a-gp10-.dgn

USERNAME => s122436 DATE PLOTTED => 16-FEB-2016 TIME PLOTTED => 02:22

DIST	COUNTY	ROUTE	POST MILES TOTAL PROJECT	SHEET No.	TOTAL SHEETS
07	LA	1,105, 110,405	Var	39	50

REGISTERED CIVIL ENGINEER 8-25-15 DATE

2-22-16
PLANS APPROVAL DATE

REGISTERED PROFESSIONAL ENGINEER GERALD D. JOO No. C65380 Exp. 09/30/17 CIVIL STATE OF CALIFORNIA

The State of California or its officers or agents shall not be responsible for the accuracy or completeness of scanned copies of this plan sheet.

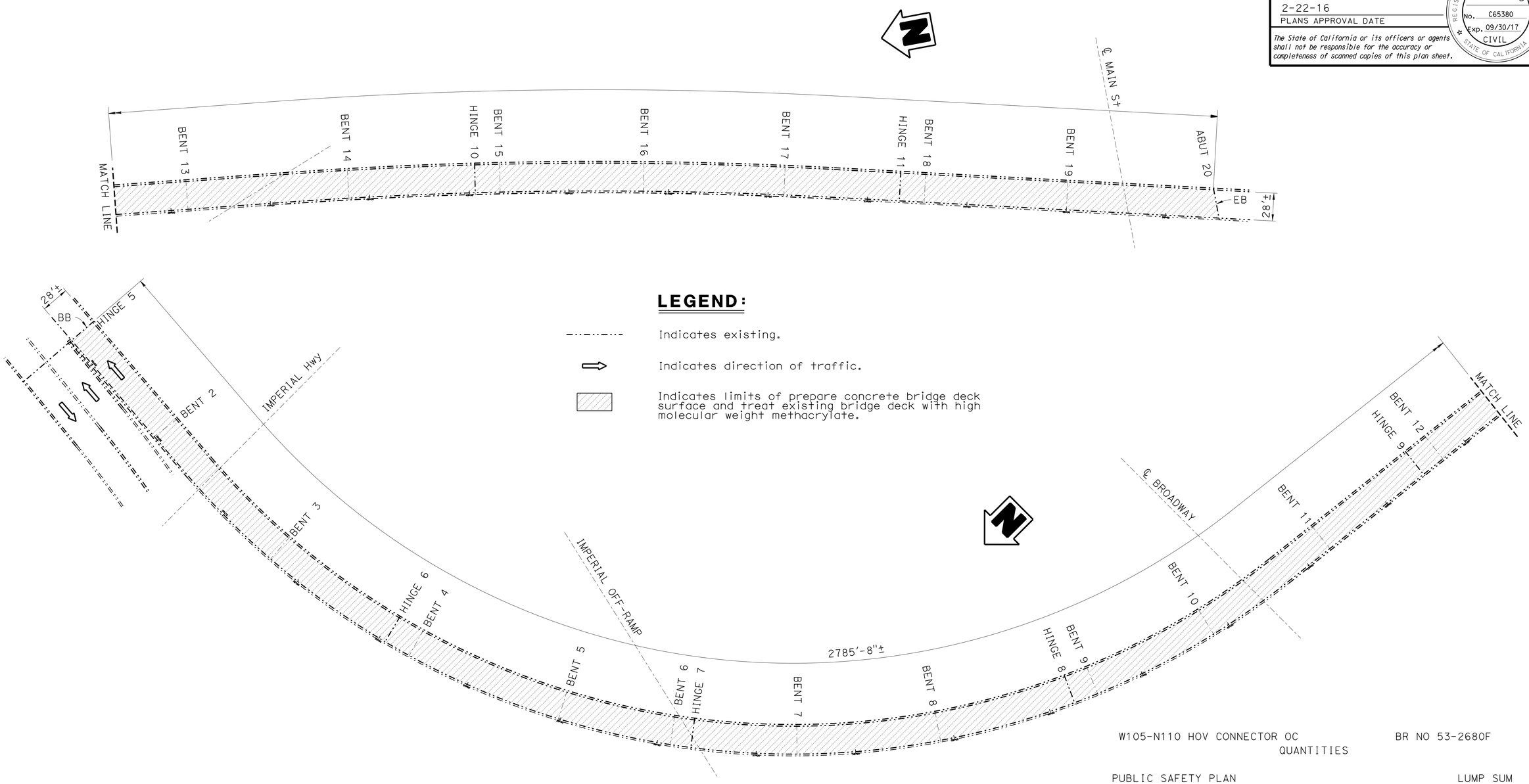

LEGEND:

Indicates existing.

Indicates direction of traffic.

Indicates limits of prepare concrete bridge deck surface and treat existing bridge deck with high molecular weight methacrylate.

W105-N110 HOV CONNECTOR OC

Br No. 53-2680F, Rte 105, PM R7.80
1" = 50'

W105-N110 HOV CONNECTOR OC BR NO 53-2680F
QUANTITIES

PUBLIC SAFETY PLAN	LUMP	SUM
PREPARE CONCRETE BRIDGE DECK SURFACE	78,000	SQFT
TREAT BRIDGE DECK	78,000	SQFT
FURNISH BRIDGE DECK TREATMENT MATERIAL	980	GAL

NOTE:
THE CONTRACTOR SHALL VERIFY ALL CONTROLLING FIELD DIMENSIONS BEFORE ORDERING OR FABRICATING ANY MATERIAL. EXEMPT PROJECT PER UTILITY POLICY, UTILITIES ARE NOT SHOWN UTILITY.

TONY BRAKE
DESIGN ENGINEER

	BY	CHECKED
DESIGN	G. JOO	T. BRAKE
DETAILS	T. DANG	G. JOO
QUANTITIES	G. JOO	R. PATEL

LOAD FACTOR DESIGN — LIVE LOADING: HS20-44 AND ALTERNATIVE AND PERMIT DESIGN LOAD

	BY	CHECKED
LAYOUT	T. DANG	G. JOO
SPECIFICATIONS	T. NEDWICK	T. NEDWICK (PLANS AND SPECS COMPARED)

STATE OF CALIFORNIA
DEPARTMENT OF TRANSPORTATION

DIVISION OF MAINTENANCE
STRUCTURE MAINTENANCE DESIGN

BRIDGE NO. Various
POST MILE Varies

ROUTE 1,105,110,405 BRIDGES
GENERAL PLAN NO. 11

STRUCTURES MAINTENANCE GENERAL PLAN SHEET (ENGLISH) (REV. 09-01-10)

ORIGINAL SCALE IN INCHES FOR REDUCED PLANS 0 1 2 3

UNIT: 3489
PROJECT NUMBER & PHASE: 0715000043-1 CONTRACT NO.: 07-3W1004

DISREGARD PRINTS BEARING EARLIER REVISION DATES

REVISION DATES: 3-01-15 9-17-15

SHEET 11 OF 22

FILE => 07-3W1001-a-gp11-.dgn

USERNAME => s122436 DATE PLOTTED => 16-FEB-2016 TIME PLOTTED => 02:22

DIST	COUNTY	ROUTE	POST MILES TOTAL PROJECT	SHEET No.	TOTAL SHEETS
07	LA	1,105, 110,405	Var	40	50

REGISTERED CIVIL ENGINEER 8-25-15 DATE

2-22-16
PLANS APPROVAL DATE

REGISTERED PROFESSIONAL ENGINEER GERALD D. JOO No. C65380 Exp. 09/30/17 CIVIL STATE OF CALIFORNIA

The State of California or its officers or agents shall not be responsible for the accuracy or completeness of scanned copies of this plan sheet.

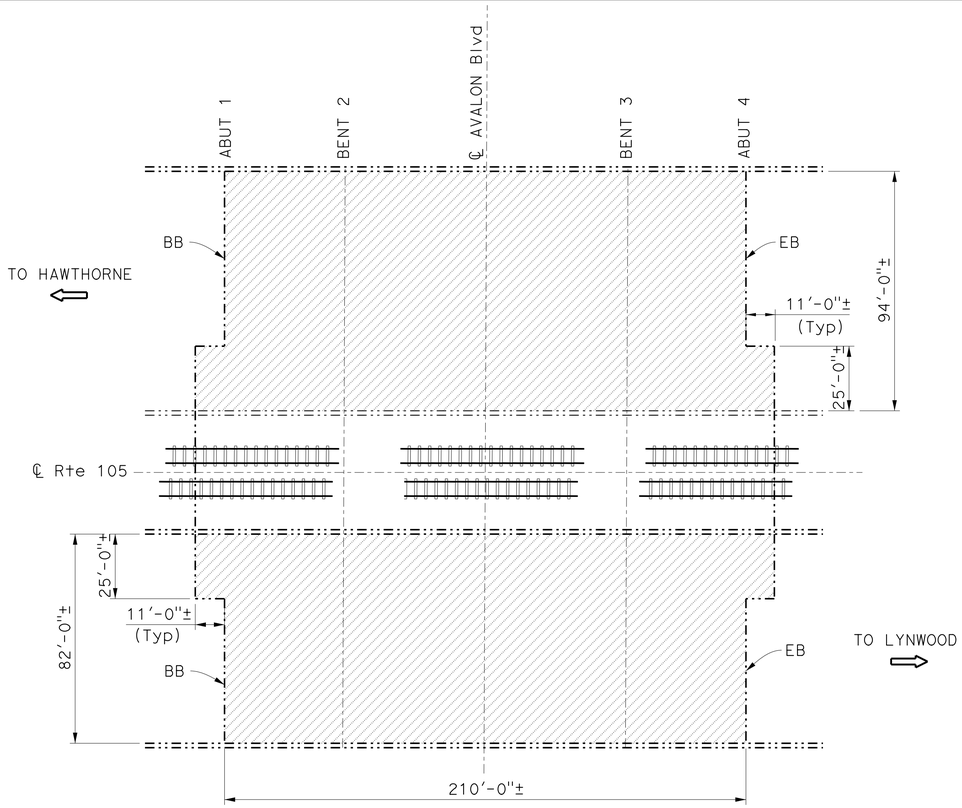

AVALON BLVD UC

Br No. 53-2477, Rte 105, PM R8.29
1" = 30'

AVALON BOULEVARD UC BR NO 53-2477

QUANTITIES

PUBLIC SAFETY PLAN	LUMP	SUM
PREPARE CONCRETE BRIDGE DECK SURFACE	38,100	SQFT
TREAT BRIDGE DECK	38,100	SQFT
FURNISH BRIDGE DECK TREATMENT MATERIAL	480	GAL

LEGEND:

Indicates existing.

Indicates direction of traffic.

Indicates limits of prepare concrete bridge deck surface and treat existing bridge deck with high molecular weight methacrylate.

Los Angeles Metropolitan Transportation Authority

Indicates removal of unsound concrete and place rapid setting concrete patch. See CONCRETE SURFACE REPAIR DETAIL on "MISCELLANEOUS DETAILS NO. 2" sheet.

WILLOWBROOK OH BR NO 53-2487

QUANTITIES

RAPID SETTING CONCRETE (PATCH)	1	CF
REMOVE UNSOUND CONCRETE	1	CF

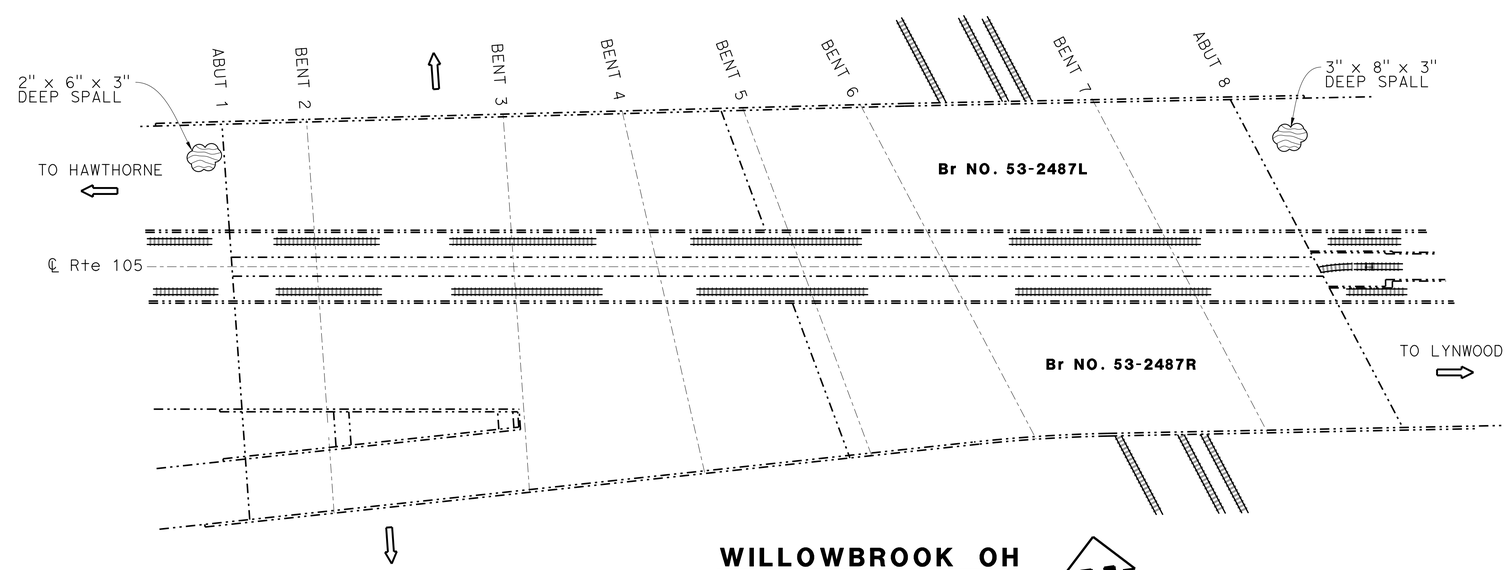

WILLOWBROOK OH

Br No. 53-2487, Rte 105, PM R9.78
1" = 50'

NOTE:
THE CONTRACTOR SHALL VERIFY ALL CONTROLLING FIELD DIMENSIONS BEFORE ORDERING OR FABRICATING ANY MATERIAL. EXEMPT PROJECT PER UTILITY POLICY, UTILITIES ARE NOT SHOWN UTILITY.

TONY BRAKE
DESIGN ENGINEER

	BY	CHECKED			
DESIGN	G. JOO	T. BRAKE	LOAD FACTOR DESIGN	LIVE LOADING: HS20-44 AND ALTERNATIVE AND PERMIT DESIGN LOAD	
DETAILS	T. DANG	G. JOO	LAYOUT	T. DANG	G. JOO
QUANTITIES	G. JOO	R. PATEL	SPECIFICATIONS	T. NEDWICK	PLANS AND SPECS COMPARED T. NEDWICK

STATE OF CALIFORNIA
DEPARTMENT OF TRANSPORTATION

DIVISION OF MAINTENANCE
STRUCTURE MAINTENANCE DESIGN

BRIDGE NO. Various
POST MILE Varies

ROUTE 1,105,110,405 BRIDGES
GENERAL PLAN NO. 12

STRUCTURES MAINTENANCE GENERAL PLAN SHEET (ENGLISH) (REV. 09-01-10)

ORIGINAL SCALE IN INCHES FOR REDUCED PLANS 0 1 2 3

UNIT: 3489
PROJECT NUMBER & PHASE: 0715000043-1 CONTRACT NO.: 07-3W1004

DISREGARD PRINTS BEARING EARLIER REVISION DATES

REVISION DATES: 3-01-15 9-17-15

SHEET 12 OF 22

FILE => 07-3W1001-a-gp12-.dgn

USERNAME => s122436 DATE PLOTTED => 16-FEB-2016 TIME PLOTTED => 02:22

DIST	COUNTY	ROUTE	POST MILES TOTAL PROJECT	SHEET No.	TOTAL SHEETS
07	LA	1,105, 110,405	Var	41	50

REGISTERED CIVIL ENGINEER 8-25-15 DATE

2-22-16
PLANS APPROVAL DATE

REGISTERED PROFESSIONAL ENGINEER GERALD D. JOO No. C65380 Exp. 09/30/17 CIVIL STATE OF CALIFORNIA

The State of California or its officers or agents shall not be responsible for the accuracy or completeness of scanned copies of this plan sheet.

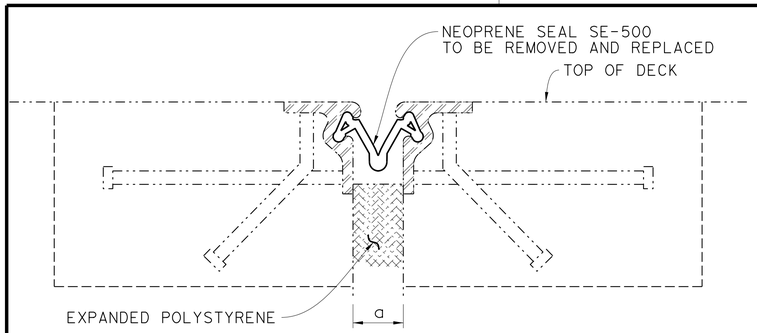

SECTION A-A

NO SCALE

LEGEND:

Indicates existing.

Indicates direction of traffic.

Indicates location of removal, clean expansion joint and placement of neoprene gland in existing Watson-Bowman ACME strip seal model SE-500.

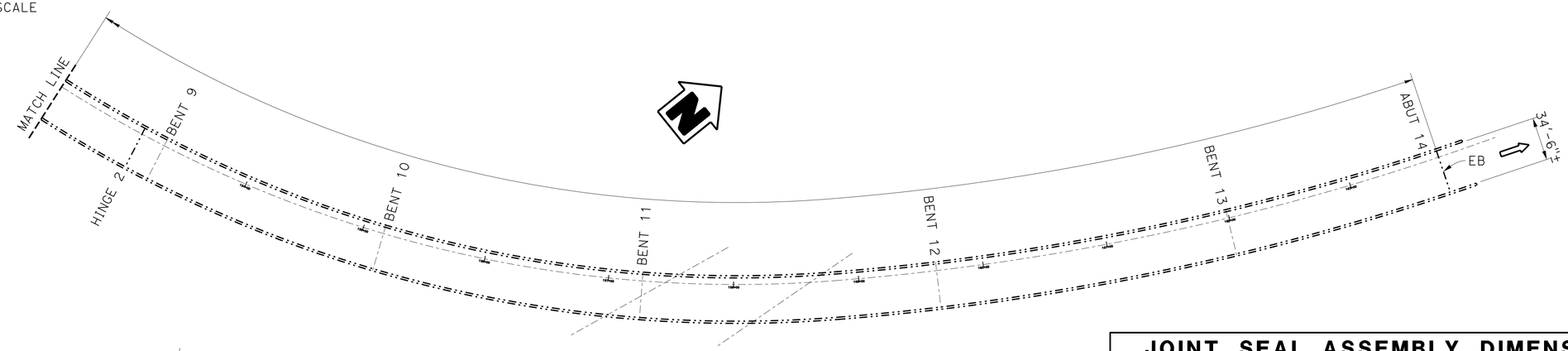

JOINT SEAL ASSEMBLY DIMENSIONS					
LOCATION	MINIMUM "MR" (INCHES)	SKEW	"a" Dimension		
			Winter	Spring/Fall	Summer
HINGE 1	3	0	**	**	**

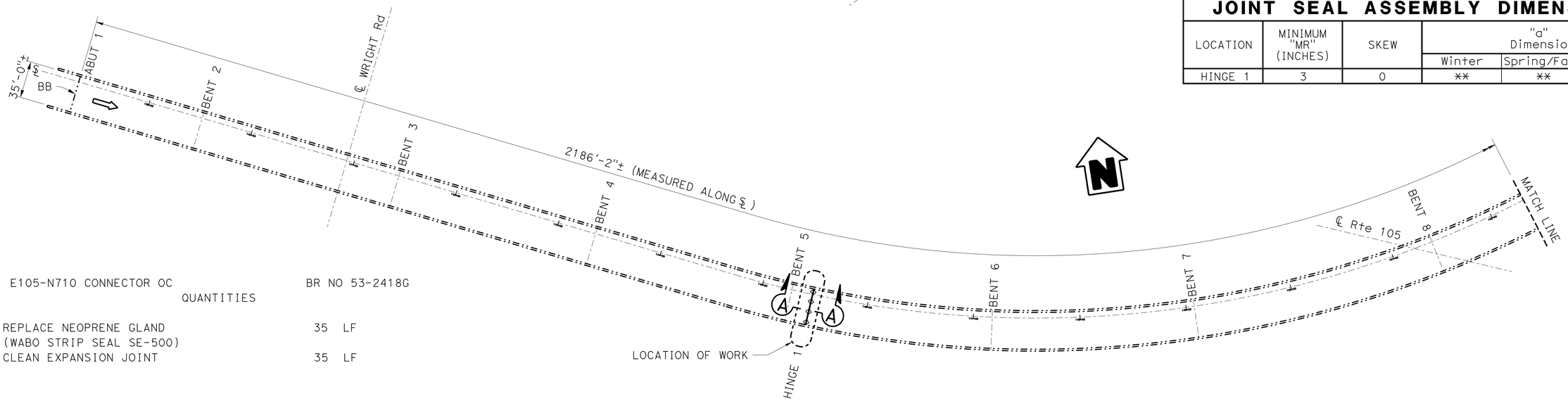

E105-N710 CONNECTOR OC BR NO 53-2418G

QUANTITIES

REPLACE NEOPRENE GLAND (WABO STRIP SEAL SE-500)	35	LF
CLEAN EXPANSION JOINT	35	LF

NOTE:
THE CONTRACTOR SHALL VERIFY ALL CONTROLLING FIELD DIMENSIONS BEFORE ORDERING OR FABRICATING ANY MATERIAL. EXEMPT PROJECT PER UTILITY POLICY, UTILITIES ARE NOT SHOWN UTILITY.

E105-N710 CONNECTOR OC

Br No. 53-2418G, Rte 105, PM R13.14
1" = 50'

DESIGN	BY G. JOO	CHECKED T. BRAKE	LOAD FACTOR DESIGN	LIVE LOADING: HS20-44 AND ALTERNATIVE AND PERMIT DESIGN LOAD	
DETAILS	BY T. DANG	CHECKED G. JOO	LAYOUT	BY T. DANG	CHECKED G. JOO
QUANTITIES	BY G. JOO	CHECKED R. PATEL	SPECIFICATIONS	BY T. NEDWICK	PLANS AND SPECS COMPARED T. NEDWICK

TONY BRAKE
DESIGN ENGINEER

STATE OF CALIFORNIA
DEPARTMENT OF TRANSPORTATION

DIVISION OF MAINTENANCE
STRUCTURE MAINTENANCE DESIGN

BRIDGE NO. Various
POST MILE Varies

ROUTE 1,105,110,405 BRIDGES
GENERAL PLAN NO. 13

STRUCTURES MAINTENANCE GENERAL PLAN SHEET (ENGLISH) (REV. 09-01-10)

ORIGINAL SCALE IN INCHES FOR REDUCED PLANS 0 1 2 3

UNIT: 3489
PROJECT NUMBER & PHASE: 0715000043-1 CONTRACT NO.: 07-3W1004

DISREGARD PRINTS BEARING EARLIER REVISION DATES → REVISION DATES 3-04-15 9-17-15

SHEET 13 OF 22

FILE => 07-3W1001-a-gp13-.dgn

USERNAME => s122436 DATE PLOTTED => 16-FEB-2016 TIME PLOTTED => 02:22

DIST	COUNTY	ROUTE	POST MILES TOTAL PROJECT	SHEET No.	TOTAL SHEETS
07	LA	1,105, 110,405	Var	42	50

REGISTERED CIVIL ENGINEER 8-25-15 DATE

2-22-16
PLANS APPROVAL DATE

REGISTERED PROFESSIONAL ENGINEER GERALD D. JOO No. C65380 Exp. 09/30/17 CIVIL STATE OF CALIFORNIA

The State of California or its officers or agents shall not be responsible for the accuracy or completeness of scanned copies of this plan sheet.

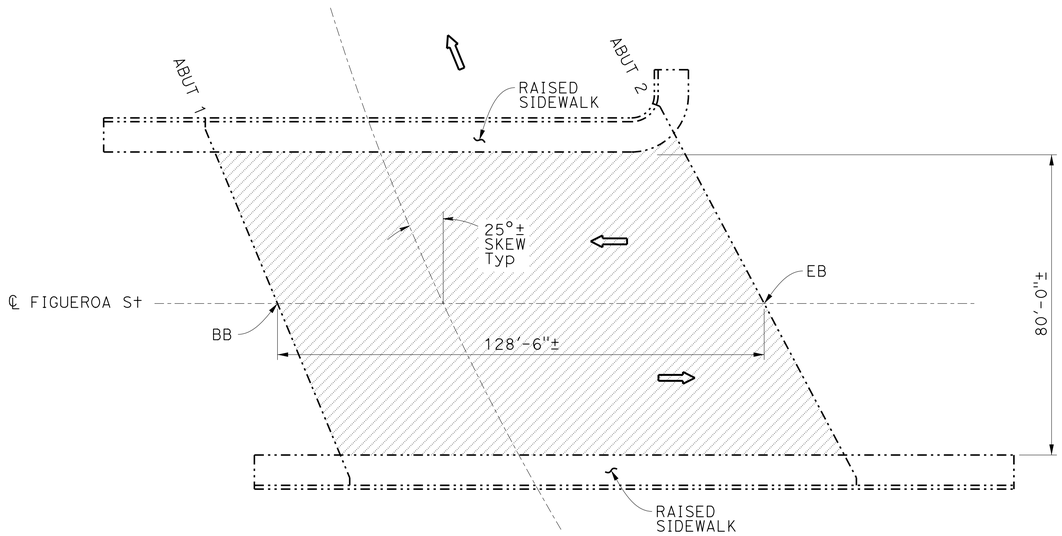

FIGUEROA OC (S110-W105)

Br No. 53-2402, Rte 110, PM 13.85
1" = 20'

LEGEND:

Indicates existing.

Indicates direction of traffic.

Indicates limits of prepare concrete bridge deck surface and treat existing bridge deck with high molecular weight methacrylate.

FIGUEROA OC (S110-W105) BR NO 53-2402

QUANTITIES

PUBLIC SAFETY PLAN	LUMP	SUM
PREPARE CONCRETE BRIDGE DECK SURFACE	10,500	SQFT
TREAT BRIDGE DECK	10,500	SQFT
FURNISH BRIDGE DECK TREATMENT MATERIAL	135	GAL

NOTE:
THE CONTRACTOR SHALL VERIFY ALL CONTROLLING FIELD DIMENSIONS BEFORE ORDERING OR FABRICATING ANY MATERIAL. EXEMPT PROJECT PER UTILITY POLICY, UTILITIES ARE NOT SHOWN UTILITY.

TONY BRAKE
DESIGN ENGINEER

	BY	CHECKED			
DESIGN	G. JOO	T. BRAKE	LOAD FACTOR DESIGN	LIVE LOADING: HS20-44 AND ALTERNATIVE AND PERMIT DESIGN LOAD	
DETAILS	T. DANG	G. JOO	LAYOUT	T. DANG	G. JOO
QUANTITIES	G. JOO	R. PATEL	SPECIFICATIONS	T. NEDWICK	PLANS AND SPECS COMPARED T. NEDWICK

STATE OF CALIFORNIA
DEPARTMENT OF TRANSPORTATION

DIVISION OF MAINTENANCE
STRUCTURE MAINTENANCE DESIGN

BRIDGE NO. Various
POST MILE Varies

ROUTE 1,105,110,405 BRIDGES
GENERAL PLAN NO. 14

STRUCTURES MAINTENANCE GENERAL PLAN SHEET (ENGLISH) (REV. 09-01-10)

ORIGINAL SCALE IN INCHES FOR REDUCED PLANS 0 1 2 3

UNIT: 3489
PROJECT NUMBER & PHASE: 0715000043-1 CONTRACT NO.: 07-3W1004

DISREGARD PRINTS BEARING EARLIER REVISION DATES → REVISION DATES 3-01-15 9-17-15

SHEET 14 OF 22

FILE => 07-3W1001-a-gp14-.dgn

USERNAME => s122436 DATE PLOTTED => 16-FEB-2016 TIME PLOTTED => 02:22

DIST	COUNTY	ROUTE	POST MILES TOTAL PROJECT	SHEET No.	TOTAL SHEETS
07	LA	1,105, 110,405	Var	43	50

REGISTERED CIVIL ENGINEER 8-25-15 DATE

2-22-16
PLANS APPROVAL DATE

REGISTERED PROFESSIONAL ENGINEER GERALD D. JOO No. C65380 Exp. 09/30/17 CIVIL STATE OF CALIFORNIA

The State of California or its officers or agents shall not be responsible for the accuracy or completeness of scanned copies of this plan sheet.

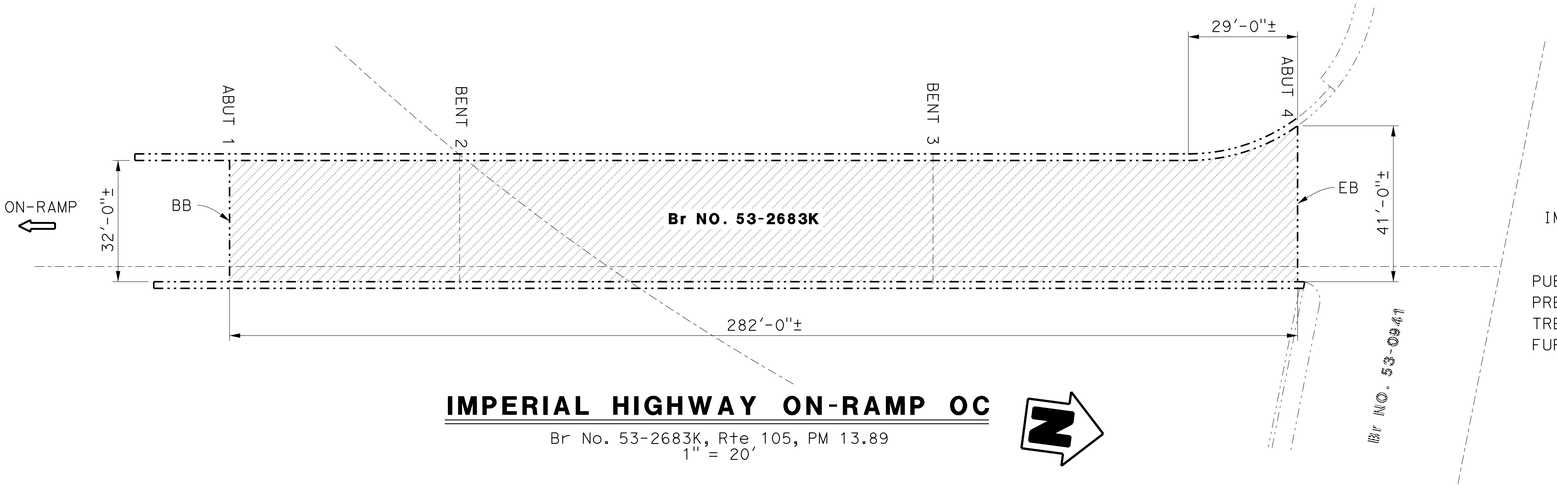

IMPERIAL HIGHWAY ON-RAMP OC

Br No. 53-2683K, Rte 105, PM 13.89
1" = 20'

IMPERIAL HIGHWAY ON-RAMP OC — BR NO 53-2683K
QUANTITIES

PUBLIC SAFETY PLAN	LUMP	SUM
PREPARE CONCRETE BRIDGE DECK SURFACE	9,500	SQFT
TREAT BRIDGE DECK	9,500	SQFT
FURNISH BRIDGE DECK TREATMENT MATERIAL	120	GAL

LEGEND:

Indicates existing.

Indicates direction of traffic.

Indicates limits of prepare concrete bridge deck surface and treat existing bridge deck with high molecular weight methacrylate.

Indicates location of clean expansion joint and placement of new joint seal.

Indicates removal of unsound concrete and place rapid setting concrete patch. See CONCRETE SURFACE REPAIR DETAIL on "MISCELLANEOUS DETAILS NO. 2" sheet.

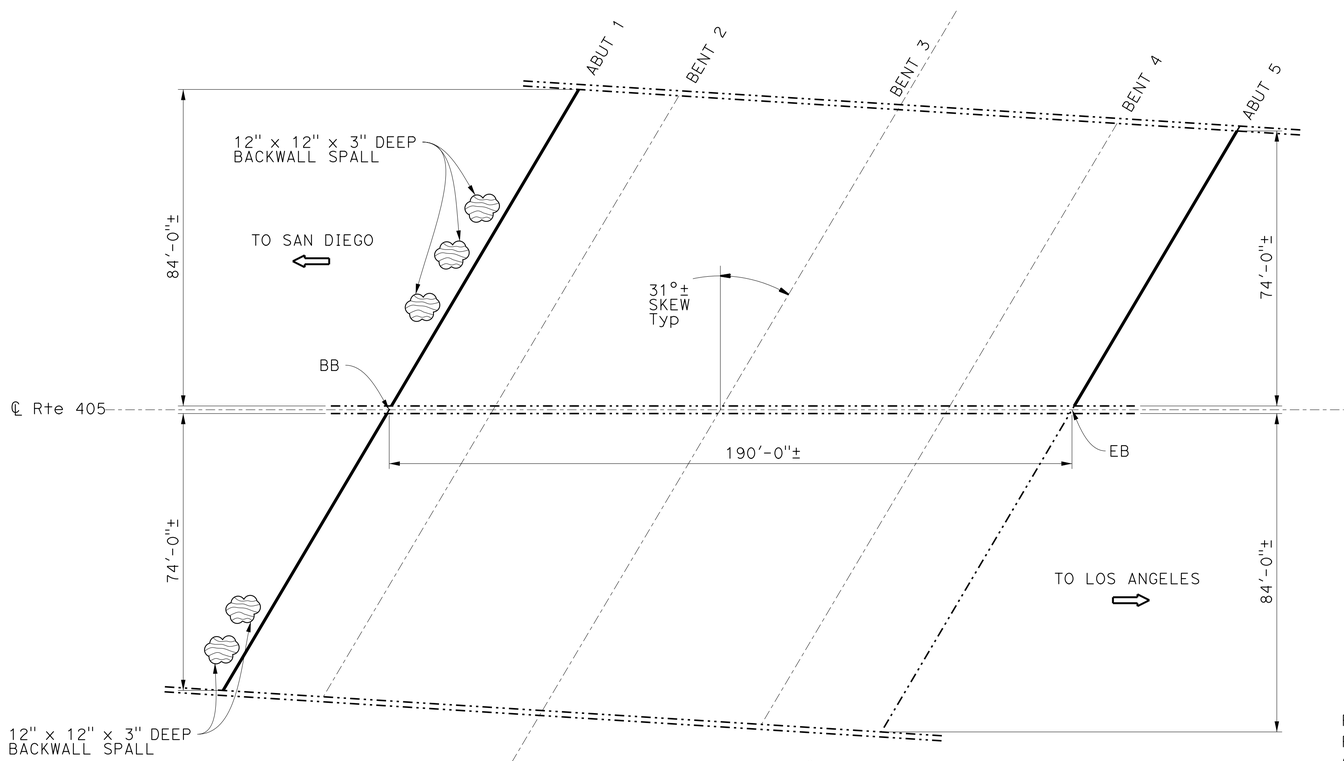

ROUTE 405/91 SEPARATION

Br No. 53-1227, Rte 405, PM 16.56
1" = 20'

ROUTE 405/91 SEPARATION — BR NO 53-1227
QUANTITIES

RAPID SETTING CONCRETE (PATCH)	2	CF
REMOVE UNSOUND CONCRETE	2	CF
CLEAN EXPANSION JOINT	272	LF
JOINT SEAL (MR ½")	272	LF

NOTE:
THE CONTRACTOR SHALL VERIFY ALL CONTROLLING FIELD DIMENSIONS BEFORE ORDERING OR FABRICATING ANY MATERIAL. EXEMPT PROJECT PER UTILITY POLICY, UTILITIES ARE NOT SHOWN UTILITY.

TONY BRAKE
DESIGN ENGINEER

	BY	CHECKED			
DESIGN	G. JOO	T. BRAKE	LOAD FACTOR DESIGN	LIVE LOADING: HS20-44 AND ALTERNATIVE AND PERMIT DESIGN LOAD	
DETAILS	T. DANG	G. JOO	LAYOUT	T. DANG	G. JOO
QUANTITIES	G. JOO	R. PATEL	SPECIFICATIONS	T. NEDWICK	T. NEDWICK (PLANS AND SPECS COMPARED)

STATE OF CALIFORNIA
DEPARTMENT OF TRANSPORTATION

DIVISION OF MAINTENANCE
STRUCTURE MAINTENANCE DESIGN

BRIDGE NO. Various
POST MILE Varies

ROUTE 1,105,110,405 BRIDGES
GENERAL PLAN NO. 15

STRUCTURES MAINTENANCE GENERAL PLAN SHEET (ENGLISH) (REV. 09-01-10)

ORIGINAL SCALE IN INCHES FOR REDUCED PLANS 0 1 2 3

UNIT: 3489
PROJECT NUMBER & PHASE: 0715000043-1
CONTRACT NO.: 07-3W1004

DISREGARD PRINTS BEARING EARLIER REVISION DATES

REVISION DATES: ~~3-04-15~~ 9-17-15

SHEET 15 OF 22

FILE => 07-3W1001-a-gp15-.dgn

USERNAME => s122736 DATE PLOTTED => 16-FEB-2016 TIME PLOTTED => 02:22

DIST	COUNTY	ROUTE	POST MILES TOTAL PROJECT	SHEET No.	TOTAL SHEETS
07	LA	1,105, 110,405	Var	44	50

REGISTERED CIVIL ENGINEER 8-25-15 DATE

2-22-16
PLANS APPROVAL DATE

REGISTERED PROFESSIONAL ENGINEER GERALD D. JOO No. C65380 Exp. 09/30/17 CIVIL STATE OF CALIFORNIA

The State of California or its officers or agents shall not be responsible for the accuracy or completeness of scanned copies of this plan sheet.

BARRIER RAIL REPAIR

BRIDGE NAME	BRIDGE NUMBER	BARRIER AREA (SQ-FT)	APPROX AREA DAMAGED
REDONDO BEACH BLVD UC	53-1229	650	5%

LEGEND:

Indicates existing.

Indicates direction of traffic.

Indicates limits of prepare concrete bridge deck surface and treat existing bridge deck with high molecular weight methacrylate.

Indicates location of clean expansion joint and placement of new joint seal.

Indicates repair spalled surface area.

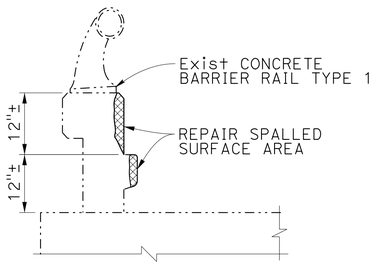

BARRIER RAIL REPAIR

NO SCALE

REDONDO BEACH BOULEVARD UC BR NO 53-1229

QUANTITIES

REPAIR SPALLED SURFACE AREA	35	SQFT
CLEAN EXPANSION JOINT	294	LF
JOINT SEAL (MR 1/2")	294	LF

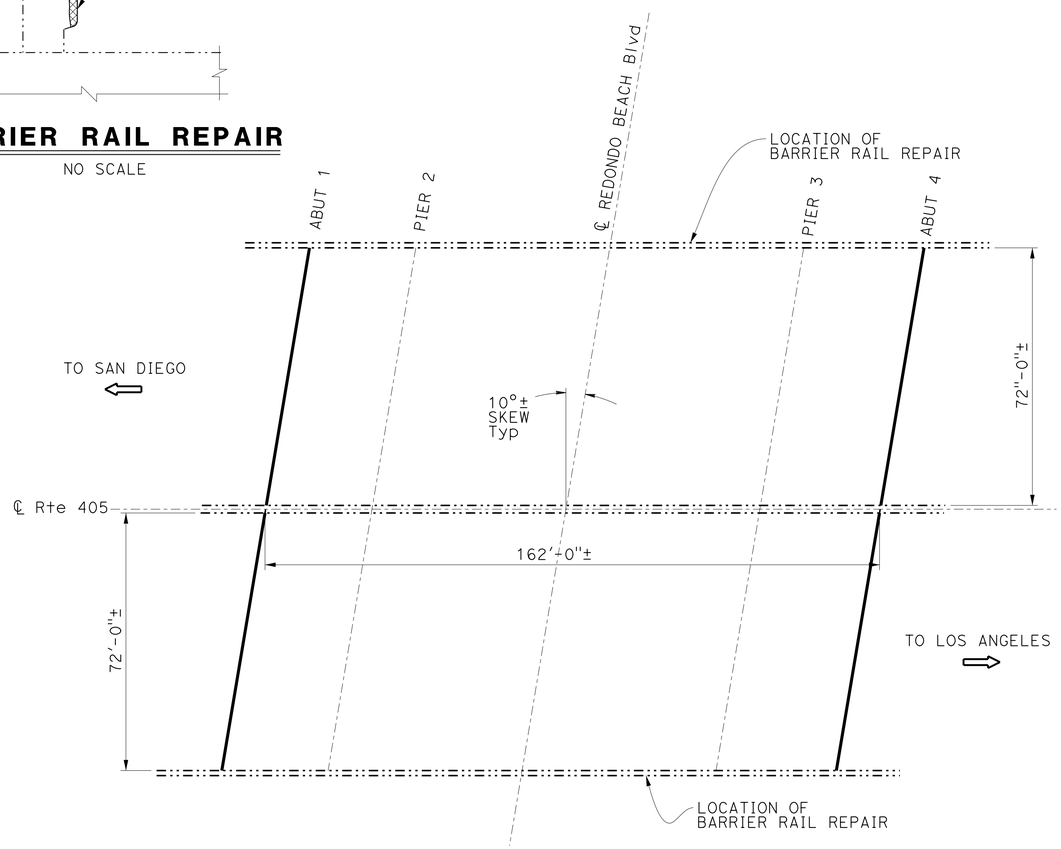

REDONDO BEACH BLVD UC

Br No. 53-1229, Rte 405, PM 16.88
1" = 20'

CENTURY BOULEVARD UC BR NO 53-1243

QUANTITIES

PUBLIC SAFETY PLAN	LUMP	SUM
PREPARE CONCRETE BRIDGE DECK SURFACE	60,500	SQFT
TREAT BRIDGE DECK	60,500	SQFT
FURNISH BRIDGE DECK TREATMENT MATERIAL	760	GAL

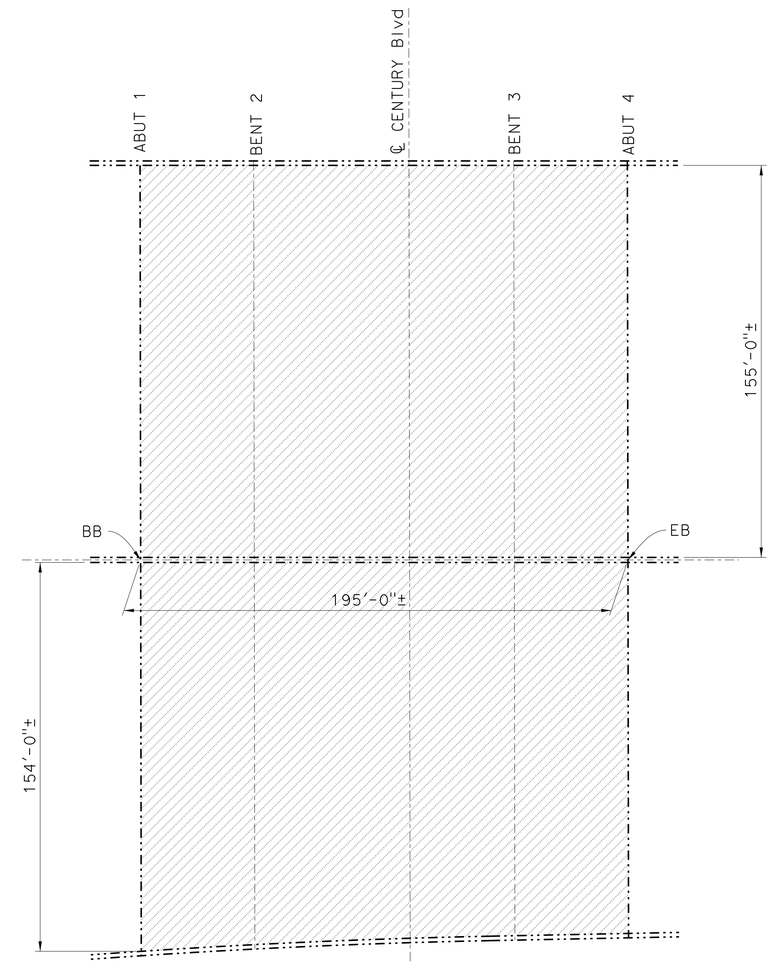

CENTURY BLVD UC

Br No. 53-1243, Rte 405, PM 22.22
1" = 20'

NOTE:
THE CONTRACTOR SHALL VERIFY ALL CONTROLLING FIELD DIMENSIONS BEFORE ORDERING OR FABRICATING ANY MATERIAL. EXEMPT PROJECT PER UTILITY POLICY, UTILITIES ARE NOT SHOWN UTILITY.

TONY BRAKE
DESIGN ENGINEER

	BY	CHECKED			
DESIGN	G. JOO	T. BRAKE	LOAD FACTOR DESIGN	LIVE LOADING: HS20-44 AND ALTERNATIVE AND PERMIT DESIGN LOAD	
DETAILS	T. DANG	G. JOO	LAYOUT	T. DANG	G. JOO
QUANTITIES	G. JOO	R. PATEL	SPECIFICATIONS	T. NEDWICK	PLANS AND SPECS COMPARED T. NEDWICK

STATE OF CALIFORNIA
DEPARTMENT OF TRANSPORTATION

DIVISION OF MAINTENANCE
STRUCTURE MAINTENANCE DESIGN

BRIDGE NO. Various
POST MILE Varies

ROUTE 1,105,110,405 BRIDGES
GENERAL PLAN NO. 16

STRUCTURES MAINTENANCE GENERAL PLAN SHEET (ENGLISH) (REV. 09-01-10)

ORIGINAL SCALE IN INCHES FOR REDUCED PLANS 0 1 2 3

UNIT: 3489
PROJECT NUMBER & PHASE: 0715000043-1 CONTRACT NO.: 07-3W1004

DISREGARD PRINTS BEARING EARLIER REVISION DATES

REVISION DATES 3-01-15 9-17-15

SHEET 16 OF 22

FILE => 07-3W1001-a-gp16-.dgn

USERNAME => s122436 DATE PLOTTED => 16-FEB-2016 TIME PLOTTED => 02:22

DIST	COUNTY	ROUTE	POST MILES TOTAL PROJECT	SHEET No.	TOTAL SHEETS
07	LA	1,105, 110,405	Var	45	50

REGISTERED CIVIL ENGINEER 8-25-15 DATE

2-22-16
PLANS APPROVAL DATE

REGISTERED PROFESSIONAL ENGINEER GERALD D. JOO No. C65380 Exp. 09/30/17 CIVIL STATE OF CALIFORNIA

The State of California or its officers or agents shall not be responsible for the accuracy or completeness of scanned copies of this plan sheet.

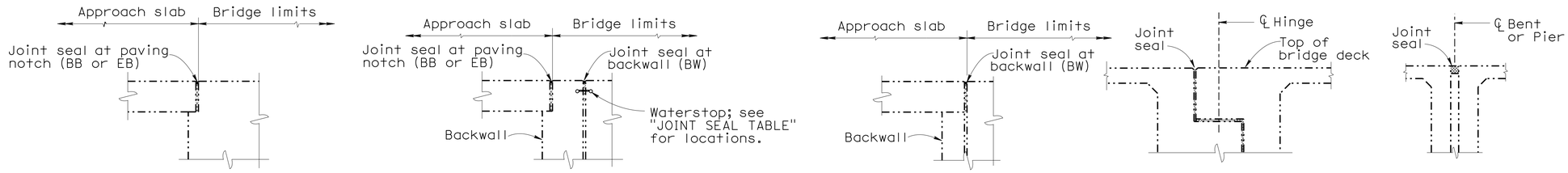

DIAPHRAGM ABUTMENT | ABUTMENT WITH BACKWALL AND PAVING NOTCH | ABUTMENT WITH BACKWALL | HINGE | BENT OR PIER

JOINT SEAL LOCATION

NO SCALE

JOINT SEAL TABLE

BRIDGE NAME	BRIDGE NUMBER	LOCATION		MINIMUM "MR" (INCHES)	APPROX JOINT LENGTH (LF)	EXISTING WATERSTOP	APPROX DEPTH TO CLEAN EXP JOINT (INCHES)	LENGTH TO CLEAN EXP JOINT (LF)
ROUTE 405/91 SEPARATION	53-1227	ABUT 1	PN	1/2	185	NO	12	183
		ABUT 5	PN	1/2	87	NO	12	87
REDONDO BEACH BLVD UC	53-1229	ABUT 1	PN	1/2	147	NO	12	147
		ABUT 4	PN	1/2	147	NO	12	147
INGLEWOOD AVENUE UC	53-2435	ABUT 1	PN	1/2	125	NO	12	125
		ABUT 2	PN	1/2	125	NO	12	125
E105-N110 CONNECTOR OC	53-2404G	HINGE 6	--	4*	80	NO	12	80
ROUTE 105/110 SEPARATION	53-2405R	ABUT 8	BW	4*	75	YES	12	75
		ABUT 8	PN	1/2	75	NO	--	--
E105-N710 CONNECTOR OC	53-2418G	HINGE 1	--	3*	35	NO	12	35
W105-N110 CONNECTOR OC	53-2676F	HINGE 8	--	3 1/2*	84	NO	12	84

* = REMOVE AND REPLACE NEOPRENE GLAND IN EXISTING JOINT SEAL ASSEMBLY.

NOTES:

The following notes apply to JOINT SEAL TYPE A:

Install Joint Seal (MR = 1/2") or Silicone Joint Seal 3" up into curb or barrier rail on the low side of the deck where deck joint aligns with curb or barrier rail joint.

For details not shown see Standard Plan B6-21 sheet.

The following notes apply to JOINT SEAL TYPE B:

1) Seal must satisfy both minimum Movement Rating (MR) and minimum W1 requirements.

2) Minimum W1 is the calculated maximum width of the joint based on field measurements. After the joints have been cleaned, minimum W1 is to be recalculated by the Engineer.

3) W1 shall be the smaller of the values determined as follows:
   A) 0.85 times the manufacturer's designed minimum uncompressed width of the seal.
   B) The width of the seal on the third successive test cycle of the pressure deflection test, when compressed to an average pressure of 3.0 PSI.

4) Bend Type B joint seal 6 inches up into curb or rail on the low side of the deck where deck joint matches curb or rail joint.

For details not shown see Standard Plan B6-21 sheet.

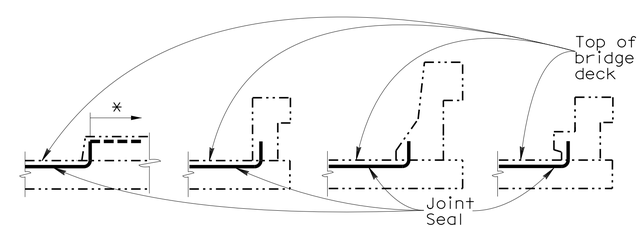

BARRIER RAIL

JOINT SEAL AT LOW SIDE OF DECK

Note: Details shown for illustration purposes only.

For use only where deck joint matches the sidewalk, curb or barrier rail joint.
* Extension of Joint will be determined by the Engineer if nessary.

NOTE:
THE CONTRACTOR SHALL VERIFY ALL CONTROLLING FIELD DIMENSIONS BEFORE ORDERING OR FABRICATING ANY MATERIAL. EXEMPT PROJECT PER UTILITY POLICY, UTILITIES ARE NOT SHOWN UTILITY.

	BY	CHECKED
DESIGN	G. JOO	T. BRAKE
DETAILS	T. DANG	G. JOO
QUANTITIES	G. JOO	R. PATEL

STATE OF CALIFORNIA
DEPARTMENT OF TRANSPORTATION

DIVISION OF MAINTENANCE
STRUCTURE MAINTENANCE DESIGN

BRIDGE NO. Various
POST MILE Varies

ROUTE 1,105,110,405 BRIDGES
MISCELLANEOUS DETAILS NO. 1

STRUCTURES MAINTENANCE DETAIL SHEET (ENGLISH) (REV. 09-01-10)

ORIGINAL SCALE IN INCHES FOR REDUCED PLANS 0 1 2 3

UNIT: 3489
PROJECT NUMBER & PHASE: 0715000043-1
CONTRACT NO.: 07-3W1004

DISREGARD PRINTS BEARING EARLIER REVISION DATES

REVISION DATES: 3-01-15 9-17-15

SHEET 17 OF 22

FILE => 07-3W1001-b-miscdt101-.dgn

USERNAME => s122436 DATE PLOTTED => 16-FEB-2016 TIME PLOTTED => 02:22

DIST	COUNTY	ROUTE	POST MILES TOTAL PROJECT	SHEET No.	TOTAL SHEETS
07	LA	1,105, 110,405	Var	46	50

REGISTERED CIVIL ENGINEER 8-25-15 DATE

2-22-16
PLANS APPROVAL DATE

REGISTERED PROFESSIONAL ENGINEER GERALD D. JOO No. C65380 Exp. 09/30/17 CIVIL STATE OF CALIFORNIA

The State of California or its officers or agents shall not be responsible for the accuracy or completeness of scanned copies of this plan sheet.

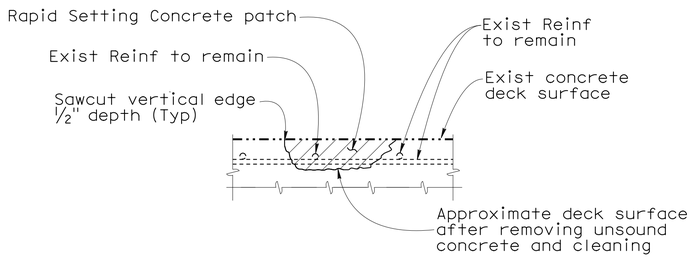

CONCRETE SURFACE REPAIR DETAIL

Location will be determined by the Engineer. Reinforcement may be encountered during deck concrete removal and is to remain undamaged.

NOTES:

1. Existing reinforcement shall be protected in place during unsound concrete removal and patching operations.
2. It is responsibility of the Contractor to repair any reinforcement that is accidentally cut by saw cutting operations.
3. When existing transverse reinforcement is exposed in the deck surface, saw cutting may be waived with the approval of the Engineer.
4. The saw cut depth shall not exceed ¾ inch or the concrete cover over the top steel reinforcing bars, whichever is less.
5. Remove unsound Portland Cement concrete and unsound concrete patches to expose sound, hard concrete substrate. Replace original deck surface with rapid setting concrete patch.

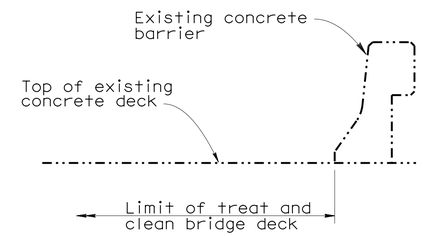

EOD BARRIER

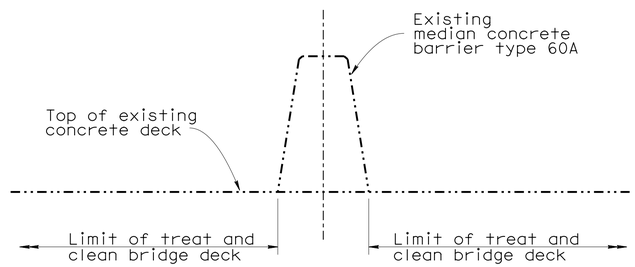

MEDIAN BARRIER

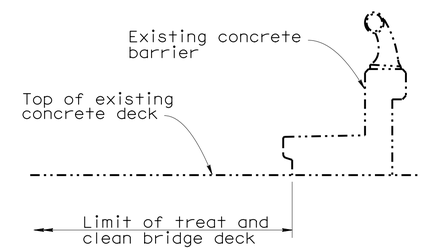

SIDEWALK BARRIER TYPE 2

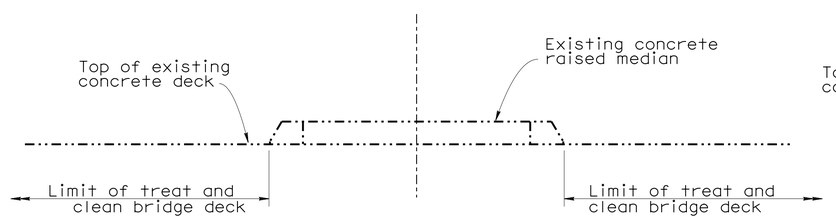

RAISED MEDIAN

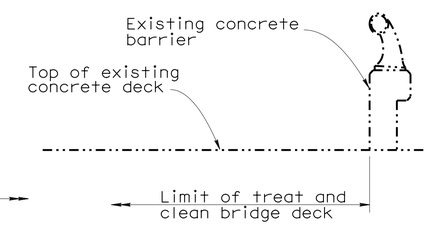

SIDEWALK BARRIER TYPE 1

TYPICAL LIMITS OF DECK WORK

NO SCALE

NOTE:
THE CONTRACTOR SHALL VERIFY ALL CONTROLLING FIELD DIMENSIONS BEFORE ORDERING OR FABRICATING ANY MATERIAL. EXEMPT PROJECT PER UTILITY POLICY, UTILITIES ARE NOT SHOWN UTILITY.

	BY	CHECKED
DESIGN	G. JOO	T. BRAKE
DETAILS	T. DANG	G. JOO
QUANTITIES	G. JOO	R. PATEL

STATE OF CALIFORNIA
DEPARTMENT OF TRANSPORTATION

DIVISION OF MAINTENANCE
STRUCTURE MAINTENANCE DESIGN

BRIDGE NO. Various
POST MILE Varies

ROUTE 1,105,110,405 BRIDGES
MISCELLANOUS DETAILS NO. 2

STRUCTURES MAINTENANCE DETAIL SHEET (ENGLISH) (REV. 09-01-10)

ORIGINAL SCALE IN INCHES FOR REDUCED PLANS 0 1 2 3

UNIT: 3489
PROJECT NUMBER & PHASE: 0715000043-1
CONTRACT NO.: 07-3W1004

DISREGARD PRINTS BEARING EARLIER REVISION DATES

REVISION DATES: ~~3-04-15~~ 9-17-15

SHEET 18 OF 22

FILE => 07-3W1001-b-miscdt102-.dgn

USERNAME => s122236 DATE PLOTTED => 16-FEB-2016 TIME PLOTTED => 02:22

DIST	COUNTY	ROUTE	POST MILES TOTAL PROJECT	SHEET No.	TOTAL SHEETS
07	LA	1,105, 110,405	Var	47	50

REGISTERED CIVIL ENGINEER 8-25-15 DATE

2-22-16
PLANS APPROVAL DATE

REGISTERED PROFESSIONAL ENGINEER GERALD D. JOO No. C65380 Exp. 09/30/17 CIVIL STATE OF CALIFORNIA

The State of California or its officers or agents shall not be responsible for the accuracy or completeness of electronic copies of this plan sheet.

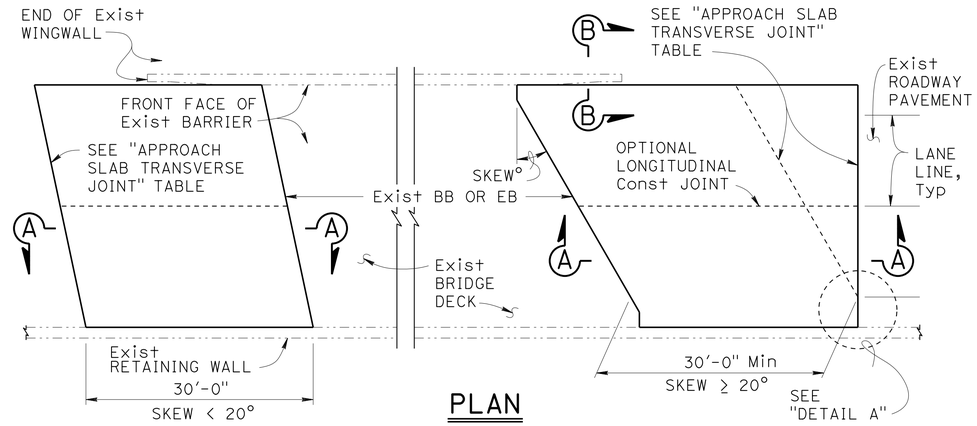

PLAN

1" = 10'

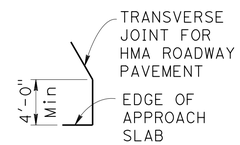

DETAIL A

No Scale

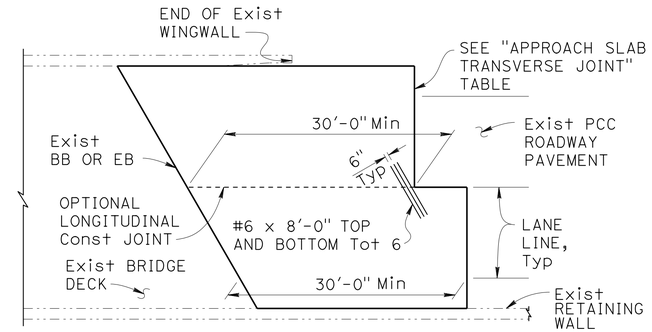

END STAGGER DETAIL

1" = 10'

APPROACH SLAB TRANSVERSE JOINT		
APPROACH SKEW	WITH HMA ROADWAY PAVEMENT	WITH PCC ROADWAY PAVEMENT
< 20°	PARALLEL TO BB OR EB	PARALLEL TO BB OR EB
20° - 45°	PARALLEL TO BB OR EB USE "DETAIL A"	STAGGER AT LANE LINES 24' TO 36' APART, SEE "END STAGGER DETAIL"
> 45°	PARALLEL TO BB OR EB USE "DETAIL A"	STAGGER AT EACH LANE LINE, SEE "END STAGGER DETAIL"

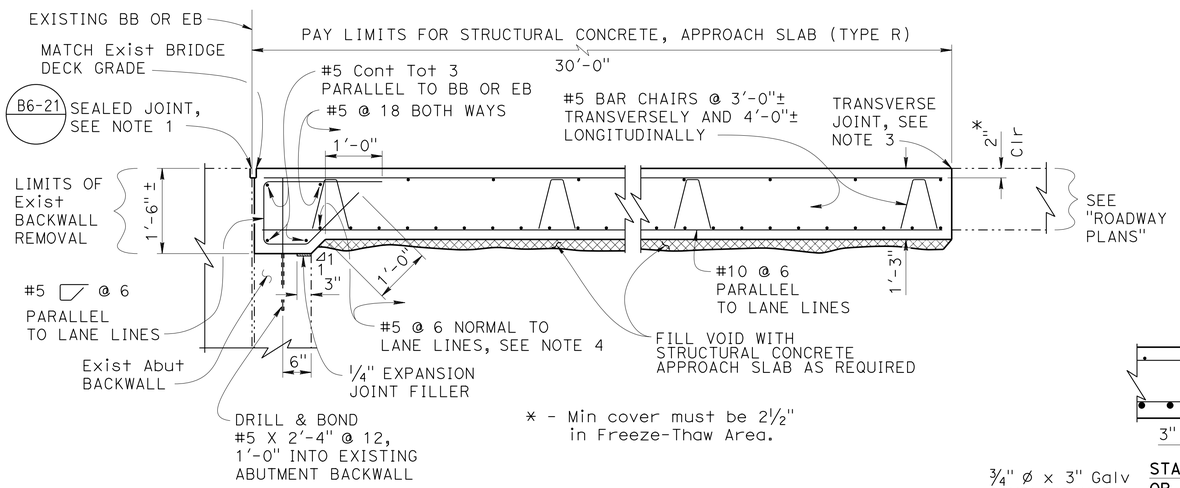

* - Min cover must be 2½" in Freeze-Thaw Area.

SECTION A-A (1)

¾" = 1'-0"

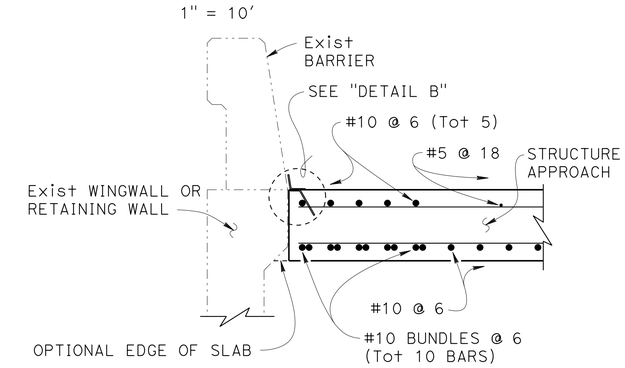

SECTION B-B

¾" = 1'-0"

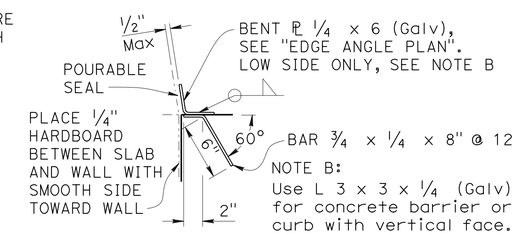

DETAIL B

1½" = 1'-0"

DESIGN NOTES

DESIGN: AASHTO LRFD Bridge Design Specifications, 2012 Edition with Caltrans Amendments, preface dated January 2014

LIMIT STATES: Service I, Strength I & II, Extreme II and Fatigue I (γ_{FAT} = 1.0)

DEAD LOAD: Includes 35 psf for future wearing surface

LIVE LOAD: HL93 and permit design load
Equivalent strip width method: W_1 = 12 ft
Slab span: L_1 = 24.5 ft

REINFORCED CONCRETE:
f_y = 60 ksi
f'_c = 3.6 ksi
n = 8

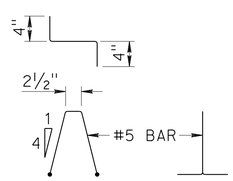

BAR CHAIR DETAIL

1" = 1'-0"

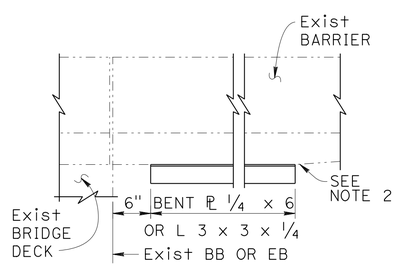

EDGE ANGLE PLAN

1" = 1'-0"

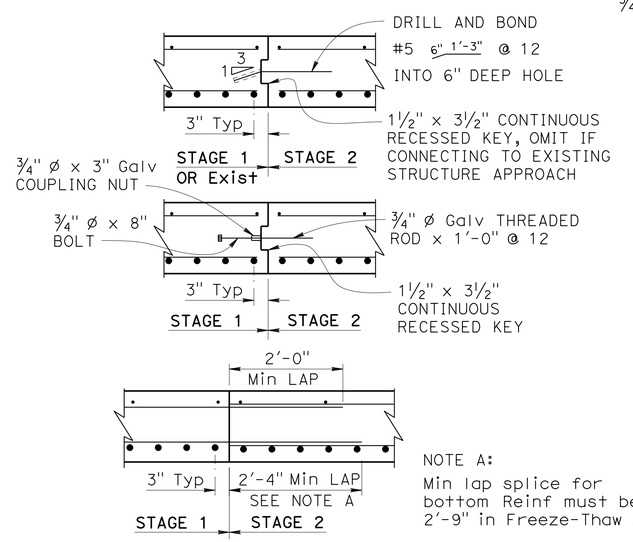

NOTE A:
Min lap splice for bottom Reinf must be 2'-9" in Freeze-Thaw Area.

LONGITUDINAL CONSTRUCTION JOINT ALTERNATIVES

¾" = 1'-0"

NOTES:

1. For joint protection details and other details not shown, see other plan sheets. Adjust reinforcement to clear sawcut for sealed joint.
2. End the plate or edge angle at beginning of barrier transition, end of wingwall, or end of structure approach as applicable.
3. Transverse Joint must be a minimum of 5'-0" from an existing or constructed weakened plane joint in approach PCC roadway pavement. Refer to Standard Plans P10 and P14.
4. At the Contractor's option, approach slab transverse reinforcement may be placed parallel to BB or EB. Spacing of transverse reinforcement is measured along ℄ roadway.

—··— Indicates Existing Structure

NOTE:
THE CONTRACTOR SHALL VERIFY ALL CONTROLLING FIELD DIMENSIONS BEFORE ORDERING OR FABRICATING ANY MATERIAL. EXEMPT PROJECT PER UTILITY POLICY, UTILITIES ARE NOT SHOWN UTILITY.

REVISED STANDARD DRAWING

FILE NO. xs3-130

APPROVAL DATE January 2015

(1) REVISED

STATE OF CALIFORNIA DEPARTMENT OF TRANSPORTATION

DIVISION OF ENGINEERING SERVICES

BRIDGE NO. Various

POST MILE Varies

ROUTE 1,105,110,405 BRIDGES

STRUCTURE APPROACH TYPE R (30S)

DS OSD 2147A (ENGLISH STANDARD DRAWING "XS" BORDER REV. (10-01-14)

ORIGINAL SCALE IN INCHES FOR REDUCED PLANS 0 1 2 3

UNIT: 3489
PROJECT NUMBER & PHASE: 0715000043-1
CONTRACT NO.: 07-3W1004

DISREGARD PRINTS BEARING EARLIER REVISION DATES

REVISION DATES: 3-04-15 9-17-15

SHEET 19 OF 22

FILE => 07-3W1001-c-strappR30S-.dgn

USERNAME => s122436 DATE PLOTTED => 16-FEB-2016 TIME PLOTTED => 02:22

DIST	COUNTY	ROUTE	POST MILES TOTAL PROJECT	SHEET No.	TOTAL SHEETS
07	LA	1,105, 110,405	Var	48	50

REGISTERED CIVIL ENGINEER 8-25-15 DATE

2-22-16
PLANS APPROVAL DATE

REGISTERED PROFESSIONAL ENGINEER GERALD D. JOO No. C65380 Exp. 09/30/17 CIVIL STATE OF CALIFORNIA

The State of California or its officers or agents shall not be responsible for the accuracy or completeness of electronic copies of this plan sheet.

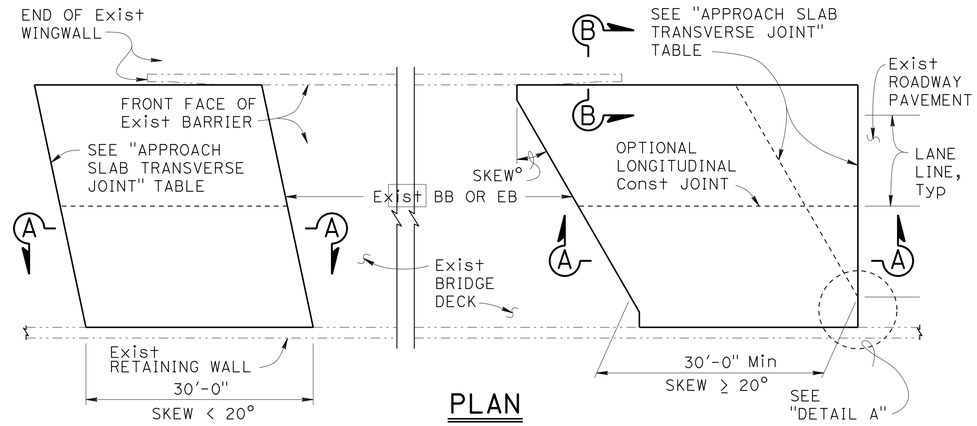

PLAN

1" = 10'

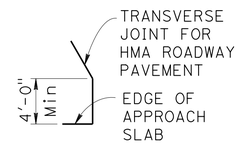

DETAIL A

No Scale

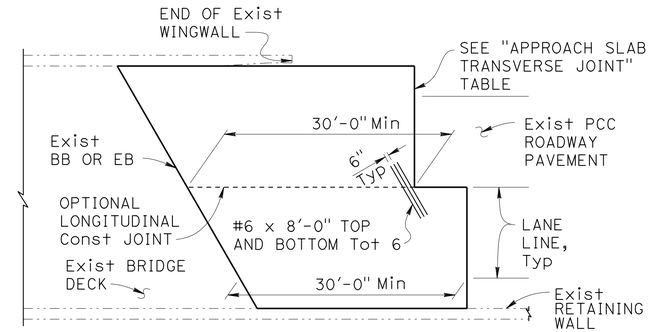

END STAGGER DETAIL

1" = 10'

APPROACH SLAB TRANSVERSE JOINT		
APPROACH SKEW	WITH HMA ROADWAY PAVEMENT	WITH PCC ROADWAY PAVEMENT
< 20°	PARALLEL TO BB OR EB	PARALLEL TO BB OR EB
20° - 45°	PARALLEL TO BB OR EB USE "DETAIL A"	STAGGER AT LANE LINES 24' TO 36' APART, SEE "END STAGGER DETAIL"
> 45°	PARALLEL TO BB OR EB USE "DETAIL A"	STAGGER AT EACH LANE LINE, SEE "END STAGGER DETAIL"

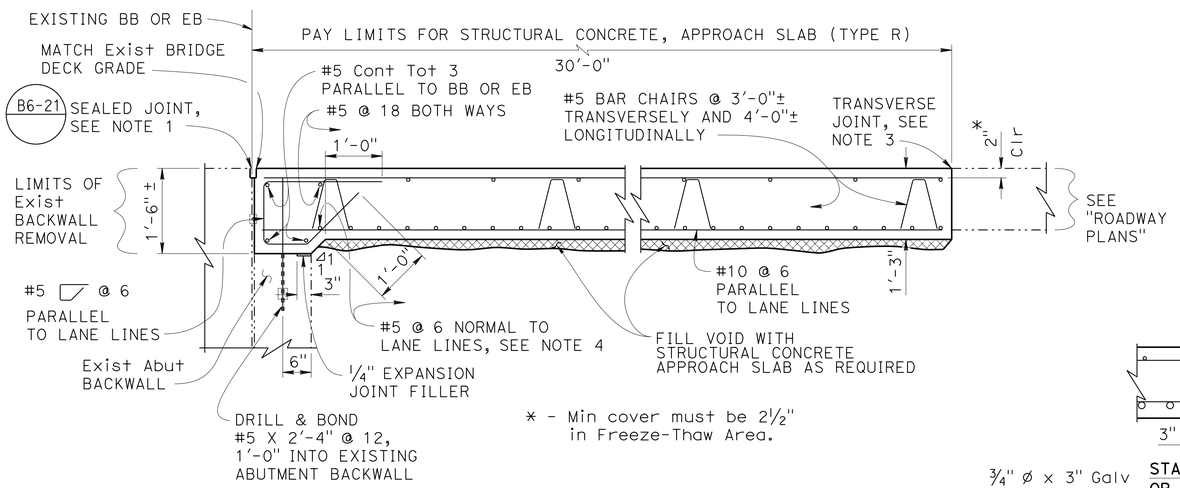

* - Min cover must be 2½" in Freeze-Thaw Area.

SECTION A-A

3/4" = 1'-0"

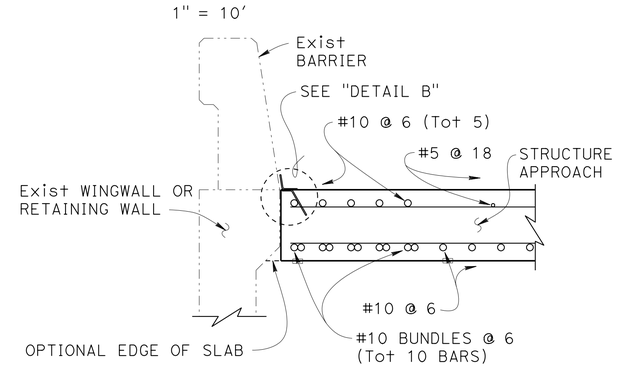

SECTION B-B

3/4" = 1'-0"

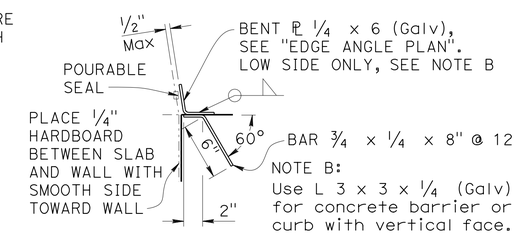

DETAIL B

1½" = 1'-0"

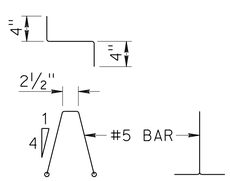

BAR CHAIR DETAIL

1" = 1'-0"

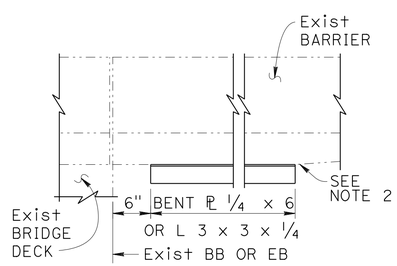

EDGE ANGLE PLAN

1" = 1'-0"

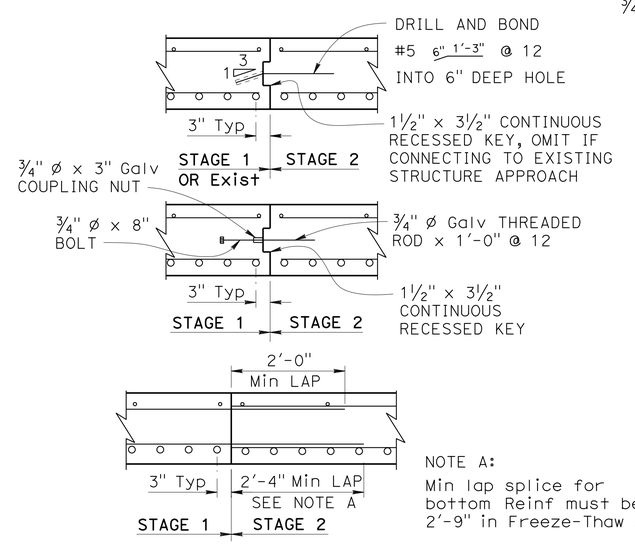

NOTE A:
Min lap splice for bottom Reinf must be 2'-9" in Freeze-Thaw Area.

LONGITUDINAL CONSTRUCTION JOINT ALTERNATIVES

3/4" = 1'-0"

DESIGN NOTES

DESIGN: AASHTO LRFD Bridge Design Specifications, 2012 Edition with Caltrans Amendments, preface dated January 2014

LIMIT STATES: Service I, Strength I & II, Extreme II and Fatigue I (γ_{FAT} = 1.0)

DEAD LOAD: Includes 35 psf for future wearing surface

LIVE LOAD: HL93 and permit design load
Equivalent strip width method: W_1 = 12 ft
Slab span: L_1 = 24.5 ft

REINFORCED CONCRETE:
f_y = 60 ksi
f'_c = 3.6 ksi
n = 8

NOTES:

1. For joint protection details and other details not shown, see other plan sheets. Adjust reinforcement to clear sawcut for sealed joint.
2. End the plate or edge angle at beginning of barrier transition, end of wingwall, or end of structure approach as applicable.
3. Transverse Joint must be a minimum of 5'-0" from an existing or constructed weakened plane joint in approach PCC roadway pavement. Refer to Standard Plans P10 and P14.
4. At the Contractor's option, approach slab transverse reinforcement may be placed parallel to BB or EB. Spacing of transverse reinforcement is measured along ℄ roadway.

—··— Indicates Existing Structure

NOTE:
THE CONTRACTOR SHALL VERIFY ALL CONTROLLING FIELD DIMENSIONS BEFORE ORDERING OR FABRICATING ANY MATERIAL. EXEMPT PROJECT PER UTILITY POLICY, UTILITIES ARE NOT SHOWN UTILITY.

REVISED STANDARD DRAWING

FILE NO. xs3-130

APPROVAL DATE January 2015

1 REVISED

STATE OF CALIFORNIA DEPARTMENT OF TRANSPORTATION

DIVISION OF ENGINEERING SERVICES

BRIDGE NO. Various

POST MILE Varies

ROUTE 1,105,110,405 BRIDGES

STRUCTURE APPROACH TYPE R (30S)

DS OSD 2147A (ENGLISH STANDARD DRAWING "XS" BORDER REV. (10-01-14)

ORIGINAL SCALE IN INCHES FOR REDUCED PLANS 0 1 2 3

UNIT: 3489
PROJECT NUMBER & PHASE: 0715000043-1
CONTRACT NO.: 07-3W1004

DISREGARD PRINTS BEARING EARLIER REVISION DATES

REVISION DATES: 3-04-15 9-17-15

SHEET 20 OF 22

FILE => 07-3W1001-c-strapptyper30s-.dgn

USERNAME => s122436 DATE PLOTTED => 16-FEB-2016 TIME PLOTTED => 02:22

DIST	COUNTY	ROUTE	POST MILES TOTAL PROJECT	SHEET No.	TOTAL SHEETS
07	LA	1,105, 110,405	Var	49	50

REGISTERED CIVIL ENGINEER 8-25-15 DATE

2-22-16
PLANS APPROVAL DATE

REGISTERED PROFESSIONAL ENGINEER GERALD D. JOO No. C65380 Exp. 09/30/17 CIVIL STATE OF CALIFORNIA

The State of California or its officers or agents shall not be responsible for the accuracy or completeness of scanned copies of this plan sheet.

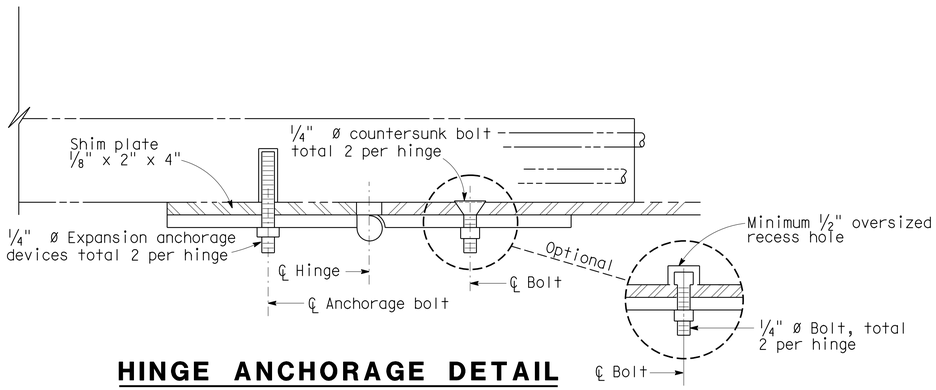

HINGE ANCHORAGE DETAIL

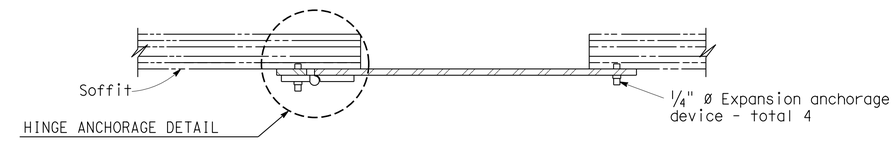

SECTION A-A

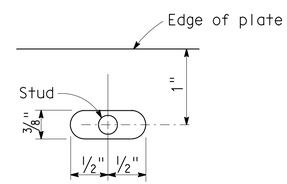

DETAIL A

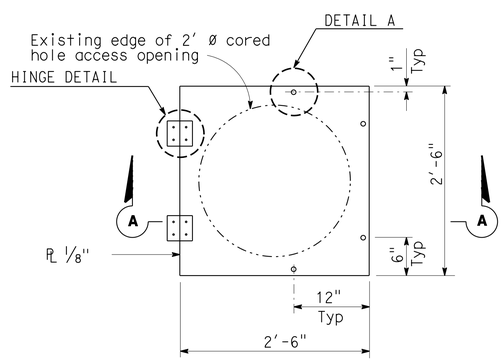

PLAN

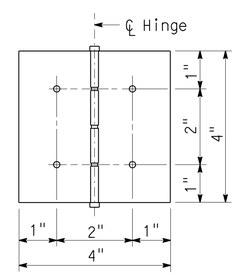

HINGE DETAIL

NOTES:

1. Non-removable pin in hinge.
2. Hinge assembly to be galvanized, brass or stainless steel.
3. Use thread locking system for all hinge nuts.
4. Hinge assembly to be minimum 1/8" thick.

ACCESS OPENING HATCH DETAIL

Note: Soffit access hatch opening direction to be determined by the Engineer

NOTE:
THE CONTRACTOR SHALL VERIFY ALL CONTROLLING FIELD DIMENSIONS BEFORE ORDERING OR FABRICATING ANY MATERIAL. EXEMPT PROJECT PER UTILITY POLICY, UTILITIES ARE NOT SHOWN UTILITY.

	BY	CHECKED
DESIGN	G. JOO	T. BRAKE
DETAILS	T. DANG	G. JOO
QUANTITIES	G. JOO	R. PATEL

STATE OF CALIFORNIA
DEPARTMENT OF TRANSPORTATION

DIVISION OF MAINTENANCE
STRUCTURE MAINTENANCE DESIGN

BRIDGE NO. Various
POST MILE Varies

ROUTE 1,105,110,405 BRIDGES
SOFFIT ACCESS DOOR DETAILS

STRUCTURES MAINTENANCE DETAIL SHEET (ENGLISH) (REV. 09-01-10)

ORIGINAL SCALE IN INCHES FOR REDUCED PLANS 0 1 2 3

UNIT: 3489
PROJECT NUMBER & PHASE: 0715000043-1
CONTRACT NO.: 07-3W1004

DISREGARD PRINTS BEARING EARLIER REVISION DATES

REVISION DATES: 3-04-15 9-17-15

SHEET 21 OF 22

FILE => 07-3W1001-d-saccardtl-.dgn

USERNAME => s122436 DATE PLOTTED => 16-FEB-2016 TIME PLOTTED => 02:22

DIST	COUNTY	ROUTE	POST MILES TOTAL PROJECT	SHEET No.	TOTAL SHEETS
07	LA	1,105, 110,405	Var	50	50

REGISTERED CIVIL ENGINEER 8-25-15 DATE

2-22-16
PLANS APPROVAL DATE

REGISTERED PROFESSIONAL ENGINEER GERALD D. JOO No. C65380 Exp. 09/30/17 CIVIL STATE OF CALIFORNIA

The State of California or its officers or agents shall not be responsible for the accuracy or completeness of scanned copies of this plan sheet.

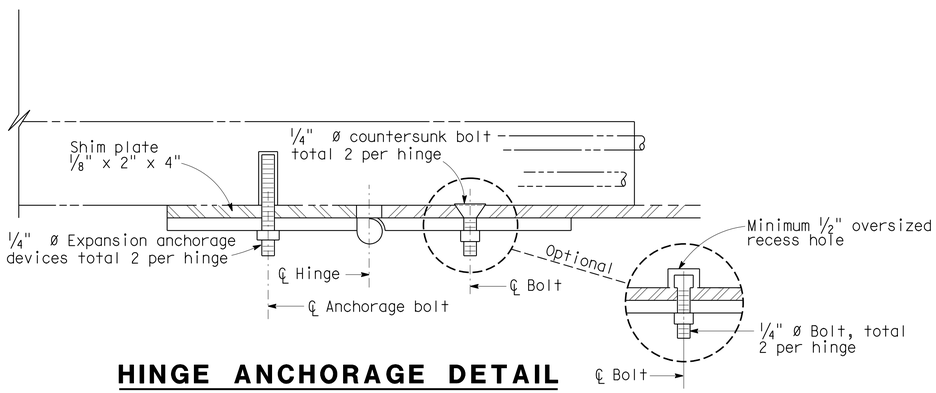

HINGE ANCHORAGE DETAIL

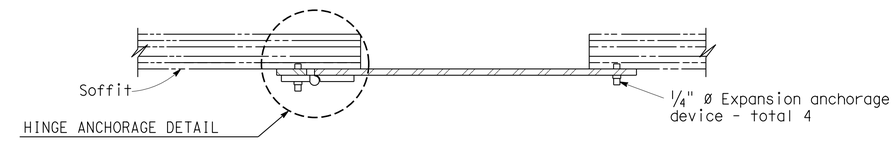

SECTION A-A

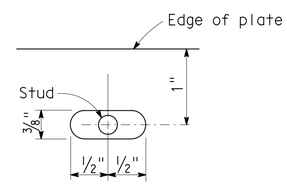

DETAIL A

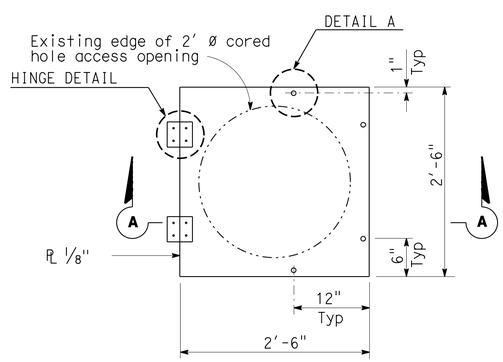

PLAN

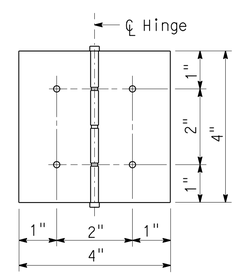

HINGE DETAIL

NOTES:

1. Non-removable pin in hinge.
2. Hinge assembly to be galvanized, brass or stainless steel.
3. Use thread locking system for all hinge nuts.
4. Hinge assembly to be minimum 1/8" thick.

ACCESS OPENING HATCH DETAIL

Note: Soffit access hatch opening direction to be determined by the Engineer

NOTE:
THE CONTRACTOR SHALL VERIFY ALL CONTROLLING FIELD DIMENSIONS BEFORE ORDERING OR FABRICATING ANY MATERIAL. EXEMPT PROJECTS PER UTILITY POLICY, UTILITIES ARE NOT SHOWN UTILITY.

	BY	CHECKED
DESIGN	G. JOO	T. BRAKE
DETAILS	T. DANG	G. JOO
QUANTITIES	G. JOO	R. PATEL

STATE OF CALIFORNIA
DEPARTMENT OF TRANSPORTATION

DIVISION OF MAINTENANCE
STRUCTURE MAINTENANCE DESIGN

BRIDGE NO. Various
POST MILE Varies

ROUTE 1,105,110,405 BRIDGES
SOFFIT ACCESS DOOR DETAILS

STRUCTURES MAINTENANCE DETAIL SHEET (ENGLISH) (REV. 09-01-10)

ORIGINAL SCALE IN INCHES FOR REDUCED PLANS 0 1 2 3

UNIT: 3489
PROJECT NUMBER & PHASE: 0715000043-1 CONTRACT NO.: 07-3W1004

DISREGARD PRINTS BEARING EARLIER REVISION DATES

REVISION DATES: 3-01-15 9-17-15

SHEET 22 OF 22

FILE => 07-3W1001-d-soffitaccessdoordtls-.dgn

USERNAME => s122436 DATE PLOTTED => 16-FEB-2016 TIME PLOTTED => 02:22