Dist	COUNTY	ROUTE	POST MILES TOTAL PROJECT	SHEET No.	TOTAL SHEETS
07	LA	210	R24.7/R44.9	201	274

REGISTERED ELECTRICAL ENGINEER 6/26/15 DATE

7-27-15
PLANS APPROVAL DATE

REGISTERED PROFESSIONAL ENGINEER JESSE RUELAS No. E015604 Exp. 12/31/15 ELECTRICAL STATE OF CALIFORNIA

THE STATE OF CALIFORNIA OR ITS OFFICERS OR AGENTS SHALL NOT BE RESPONSIBLE FOR THE ACCURACY OR COMPLETENESS OF SCANNED COPIES OF THIS PLAN SHEET.

INDUCTIVE LOOP DETECTORS

FOR TYPICAL LOCATION OF LOOP DETECTORS SEE DETAIL A AND B SHEET E-163

No.	PM	LOCATION	56	57	58	59	60	61	62	63	64	65	66	67	68	69	70	71	72	73	74	75	76	77	78	79	80	81	82	83	84	85	86	87	88	89	90	No. OF STUBOUT (REPLACE)
1	25.29	WB ROUTE 210 OFF TO FAIR OAKS Ave / MAPLE St				X	X		X	X	X	X																										6
2	25.30	EB ROUTE 210 OFF TO FAIR OAKS Ave / CORSON St																																				6
3	25.55	WB ROUTE 210 OFF TO MARENGO Ave / MAPLE St				X	X	X	X	X	X	X																										6
4	25.56	EB ROUTE 210 OFF TO MARENGO Ave / CORSON St																												X	X	X	X					6
5	26.33	WB ROUTE 210 OFF TO LAKE Ave / MAPLE St			X	X	X	X	X	X	X	X																										6
6	26.34	EB ROUTE 210 OFF TO LAKE Ave / CORSON St																														X	X	X	X	X	X	6
7	26.94	WB ROUTE 210 OFF TO HILL Ave / MAPLE St				X	X	X		X	X	X																		X	X	X	X		X			9
8	26.95	EB ROUTE 210 OFF TO HILL Ave / CORSON St																												X	X	X	X					9
9	27.41	WB ROUTE 210 OFF TO ALLEN Ave / MAPLE St			X	X	X			X	X	X																		X	X	X	X					9
10	27.42	EB ROUTE 210 OFF TO ALLEN Ave / CORSON St																														X	X	X	X			9
11	28.25	WB ROUTE 210 OFF TO ALTADENA Dr / MAPLE St					X	X			X	X																		X	X	X	X	X	X			9
12	28.26	EB ROUTE 210 OFF TO ALTADENA Dr / CORSON St																														X	X	X	X			9
13	** 28.49	WB ROUTE 210 OFF TO SIERRA MADRE Blvd / SAN GABRIEL Blvd	X	X	X																																	13
14	28.51	EB ROUTE 210 OFF TO SIERRA MADRE Blvd / CORSON St																												X	X	X	X	X	X			10
15	28.70	EB ROUTE 210 OFF TO SAN GABRIEL Blvd / LA TIERRA St																												X		X	X	X	X			8
16	29.29	WB ROUTE 210 OFF TO SIERRA MADRE VILLA Ave					X	X																						X	X	X	X		X			7
17	29.30	EB ROUTE 210 OFF TO SIERRA MADRE VILLA Ave / WALNUT St																																				8
18	29.65	EB ROUTE 210 OFF TO COLORADO Blvd / MERLON St				X	X						X			Y	X	X	Y	X	X	Y	X	X	X							X		X				7
19	30.06	WB ROUTE 210 OFF TO FOOTHILL Blvd / SEARS Dr																				Y	X	X	X					X		X		X				6
20	31.04	WB ROUTE 210 OFF TO BALDWIN Ave / FOOTHILL Blvd			X	X	X																															8

X: AB EXISTING INDUCTIVE LOOP DETECTORS, INSTALL TYPE E INDUCTIVE LOOP DETECTORS AT THE SAME LOCATION.
Y: AB EXISTING INDUCTIVE LOOP DETECTORS, INSTALL TYPE D INDUCTIVE LOOP DETECTORS AT THE SAME LOCATION.
**: SEE DETAIL B SHEET E-163.

FOR CONTINUATION SEE E-159

APPROVED FOR ELECTRICAL WORK ONLY

INDUCTIVE LOOP DETECTOR

E-160

REVISED BY | DATE REVISED
KARINE PARTAMIAN | JESSE RUELAS
CALCULATED-DESIGNED BY | CHECKED BY
FUNCTIONAL SUPERVISOR: YI TSAU

STATE OF CALIFORNIA - DEPARTMENT OF TRANSPORTATION
Caltrans
TRAFFIC DESIGN

LAST REVISION 00-00-00 | DATE PLOTTED => 16-SEP-2015 | TIME PLOTTED => 13:26

Dist	COUNTY	ROUTE	POST MILES TOTAL PROJECT	SHEET No.	TOTAL SHEETS
07	LA	210	R24.7/R44.9	202	274

REGISTERED ELECTRICAL ENGINEER 6/26/15 DATE

7-27-15
PLANS APPROVAL DATE

REGISTERED PROFESSIONAL ENGINEER JESSE RUELAS No. E015604 Exp. 12/31/15 ELECTRICAL STATE OF CALIFORNIA

THE STATE OF CALIFORNIA OR ITS OFFICERS OR AGENTS SHALL NOT BE RESPONSIBLE FOR THE ACCURACY OR COMPLETENESS OF SCANNED COPIES OF THIS PLAN SHEET.

INDUCTIVE LOOP DETECTOR

FOR TYPICAL LOCATION OF LOOP DETECTORS
SEE DETAIL A AND B SHEET E-163

No.	PM	LOCATION	1	2	3	4	5	6	7	8	9	10	11	12	13	14	15	16	17	18	19	20	21	22	23	24	25	26	27	28	29	30	31	32	33	34	35	36	37	38	39	40	41	42	43	44	45	46	47	48	49	50	51	52	53	54	55	56	57	58	59
21	31.15	EB ROUTE 210 OFF TO BALDWIN Ave		X	X														X	X	Y																																							
22	31.91	WB ROUTE 210 OFF TO SANTA ANITA Ave		X	X														X	X	Y	Y	Y				X	X				X	X				X	X																					
23	32.09	EB ROUTE 210 OFF TO SANTA ANITA Ave		X	X								X	X	Y	X	X	Y	X	X	Y																										Y	Y	Y		X	X	X		X	X	X		X	X
24	32.74	WB ROUTE 210 OFF TO HUNTINGTON Dr		X	X																																																							
25	32.88	EB ROUTE 210 OFF TO HUNTINGTON Dr																																																										
26	33.75	WB ROUTE 210 OFF TO MYRTLE Ave AND CENTRAL Ave		X	X					X	X	Y	X	X	Y																																Y	Y	Y		X	X	X		X	X	X			
27	33.76	EB ROUTE 210 OFF TO MYRTLE Ave / EVERGREEN Ave	X	X					X	X	X	Y										Y	Y	Y			X	X	X			X	X	X																										
28	34.24	WB ROUTE 210 OFF TO CALIFORNIA / AND CENTRAL Ave																																																										
29	34.25	EB ROUTE 210 OFF TO CALIFORNIA Ave / EVERGREEN Ave																																																										
30	35.16	WB ROUTE 210 OFF TO MOUNTAIN Ave / CENTRAL Ave		X	X																																										Y	Y	Y		X	X	X		X	X	X			
31	35.20	EB ROUTE 210 OFF TO MOUNTAIN Ave / EVERGREEN Ave	X	X					X	X	X	Y										Y	Y	Y			X	X	X			X	X	X					X	X	X																			
32	37.81	WB ROUTE 210 OFF TO IRWINDALE Ave	X	X	X					X	X	Y	X	X	Y	X	X	Y				Y	Y				X	X				X	X																												
33	37.82	EB ROUTE 210 OFF TO IRWINDALE Ave		X	X					X	X	Y	X	X	Y	X	X	Y				Y	Y				X	X				X	X																												
34	39.61	EB ROUTE 210 OFF TO AZUSA Ave																				Y	Y	Y			X	X	X			X	X	X																											
35	39.70	WB ROUTE 210 OFF TO ALAMEDA Ave AND FIRST St								X	X	Y	X	X	Y	X	X	Y	X	X	Y	Y	Y				X	X				X	X															Y	Y	Y		X	X	X		X	X	X			
36	40.59	EB ROUTE 210 OFF TO CITRUS Ave	X	X																		Y	Y				X	X				X	X						X	X																				
37	40.90	WB ROUTE 210 OFF TO CITRUS Ave AND BASELINE Rd		X	X																	Y	Y				X	X				X	X						X	X																				
38	41.63	EB ROUTE 210 OFF TO GRAND Ave		X	X				X	X	X	Y	X	X	Y	X	X	Y	X	X	Y	Y	Y	Y			X	X	X			X	X	X														Y	Y	Y	Y	X	X	X	X	X	X	X	X		
39	41.73	WB ROUTE 210 OFF TO BASELINE Rd		X	X				X	X	X	Y	X	X	Y	X	X	Y	X	X	Y	Y	Y	Y	Y		X	X	X	X		X	X	X	X				X	X																					
40	44.00	EB ROUTE 210 OFF TO LONEHILL Ave	X	X	X																	Y	Y				X	X				X	X															Y	Y			X	X			X	X				
41	44.01	WB ROUTE 210 OFF TO LONEHILL Ave		X	X				X	X	X	Y										Y	Y				X	X				X	X															Y	Y												

X: AB EXISTING INDUCTIVE LOOP DETECTORS, INSTALL TYPE E INDUCTIVE LOOP DETECTORS AT THE SAME LOCATION.
Y: AB EXISTING INDUCTIVE LOOP DETECTORS, INSTALL TYPE D INDUCTIVE LOOP DETECTORS AT THE SAME LOCATION.
**: SEE DETAIL B SHEET E-163.

FOR CONTINUATION SEE E-164

REVISED BY | DATE REVISED
KARINE PARTAMIAN | JESSE RUELAS
CALCULATED-DESIGNED BY | CHECKED BY
FUNCTIONAL SUPERVISOR | YI TSAU

STATE OF CALIFORNIA - DEPARTMENT OF TRANSPORTATION
Caltrans
TRAFFIC DESIGN

INDUCTIVE LOOP DETECTOR

E-161

LAST REVISION 00-00-00 | DATE PLOTTED => 16-SEP-2015 | TIME PLOTTED => 13:26

Dist	COUNTY	ROUTE	POST MILES TOTAL PROJECT	SHEET No.	TOTAL SHEETS
07	LA	210	R24.7/R44.9	203	274

REGISTERED ELECTRICAL ENGINEER 6/26/15 DATE

7-27-15
PLANS APPROVAL DATE

REGISTERED PROFESSIONAL ENGINEER JESSE RUELAS No. E015604 Exp. 12/31/15 ELECTRICAL STATE OF CALIFORNIA

THE STATE OF CALIFORNIA OR ITS OFFICERS OR AGENTS SHALL NOT BE RESPONSIBLE FOR THE ACCURACY OR COMPLETENESS OF SCANNED COPIES OF THIS PLAN SHEET.

INDUCTIVE LOOP DETECTOR

FOR TYPICAL LOCATION OF LOOP DETECTORS SEE DETAIL A AND B SHEET E-163

No.	PM	LOCATION	56	57	58	59	60	61	62	63	64	65	66	67	68	69	70	71	72	73	74	75	76	77	78	79	80	81	82	83	84	85	86	87	88	89	90	No. OF STUBOUT (REPLACE)
21	31.15	EB ROUTE 210 OFF TO BALDWIN Ave																				Y	X	X	X					X		X						5
22	31.91	WB ROUTE 210 OFF TO SANTA ANITA Ave																														X		X				4
23	32.09	EB ROUTE 210 OFF TO SANTA ANITA Ave																				Y	X	X	X							X		X				6
24	32.74	WB ROUTE 210 OFF TO HUNTINGTON Dr																												X		X						4
25	32.88	EB ROUTE 210 OFF TO HUNTINGTON Dr																																				5
26	33.75	WB ROUTE 210 OFF TO MYRTLE Ave AND CENTRAL Ave																				Y	X	X	X					X		X						5
27	33.76	EB ROUTE 210 OFF TO MYRTLE Ave / EVERGREEN Ave																	Y	X	X	Y	X	X						X		X						5
28	34.24	WB ROUTE 210 OFF TO CALIFORNIA / AND CENTRAL Ave																																				
29	34.25	EB ROUTE 210 OFF TO CALIFORNIA Ave / EVERGREEN Ave																																				
30	35.16	WB ROUTE 210 OFF TO MOUNTAIN Ave / CENTRAL Ave			X	X	X															Y	X	X	X					X		X						5
31	35.20	EB ROUTE 210 OFF TO MOUNTAIN Ave / EVERGREEN Ave																												X		X						5
32	37.81	WB ROUTE 210 OFF TO IRWINDALE Ave														Y	X	X	Y	X	X	Y	X	X						X		X		X				5
33	37.82	EB ROUTE 210 OFF TO IRWINDALE Ave																												X		X						5
34	39.61	EB ROUTE 210 OFF TO AZUSA Ave																												X		X						3
35	39.70	WB ROUTE 210 OFF TO ALAMEDA Ave AND FIRST St											Y	X	X	Y	X	X	Y	X	X	Y	X	X														4
36	40.59	EB ROUTE 210 OFF TO CITRUS Ave																												X		X						4
37	40.90	WB ROUTE 210 OFF TO CITRUS Ave AND BASELINE Rd																												X		X						4
38	41.63	EB ROUTE 210 OFF TO GRAND Ave				X	X						Y	X	X	Y	X	X	Y	X	X	Y	X	X		Y	X	X	X									5
39	41.73	WB ROUTE 210 OFF TO BASELINE Rd														Y	X	X	Y	X	X	Y	X	X	X					X		X						5
40	44.00	EB ROUTE 210 OFF TO LONEHILL Ave																				Y	X	X	X					X	X	X	X	X	X	X	X	4
41	44.01	WB ROUTE 210 OFF TO LONEHILL Ave																												X		X						5

FOR CONTINUATION SEE E-162

X: AB EXISTING INDUCTIVE LOOP DETECTORS, INSTALL TYPE E INDUCTIVE LOOP DETECTORS AT THE SAME LOCATION.

Y: AB EXISTING INDUCTIVE LOOP DETECTORS, INSTALL TYPE D INDUCTIVE LOOP DETECTORS AT THE SAME LOCATION.

**: SEE DETAIL B SHEET E-163.

STATE OF CALIFORNIA - DEPARTMENT OF TRANSPORTATION
Caltrans
TRAFFIC DESIGN

FUNCTIONAL SUPERVISOR: YI TSAU
CALCULATED-DESIGNED BY: KARINE PARTAMIAN
CHECKED BY: JESSE RUELAS
REVISED BY
DATE REVISED

INDUCTIVE LOOP DETECTOR

E-162

LAST REVISION 00-00-00
DATE PLOTTED => 16-SEP-2015
TIME PLOTTED => 13:26

Dist	COUNTY	ROUTE	POST MILES TOTAL PROJECT	SHEET No.	TOTAL SHEETS
07	LA	210	R24.7/R44.9	204	274

REGISTERED ELECTRICAL ENGINEER 6/26/15 DATE

7-27-15
PLANS APPROVAL DATE

REGISTERED PROFESSIONAL ENGINEER JESSE RUELAS No. E015604 Exp. 12/31/15 ELECTRICAL STATE OF CALIFORNIA

THE STATE OF CALIFORNIA OR ITS OFFICERS OR AGENTS SHALL NOT BE RESPONSIBLE FOR THE ACCURACY OR COMPLETENESS OF SCANNED COPIES OF THIS PLAN SHEET.

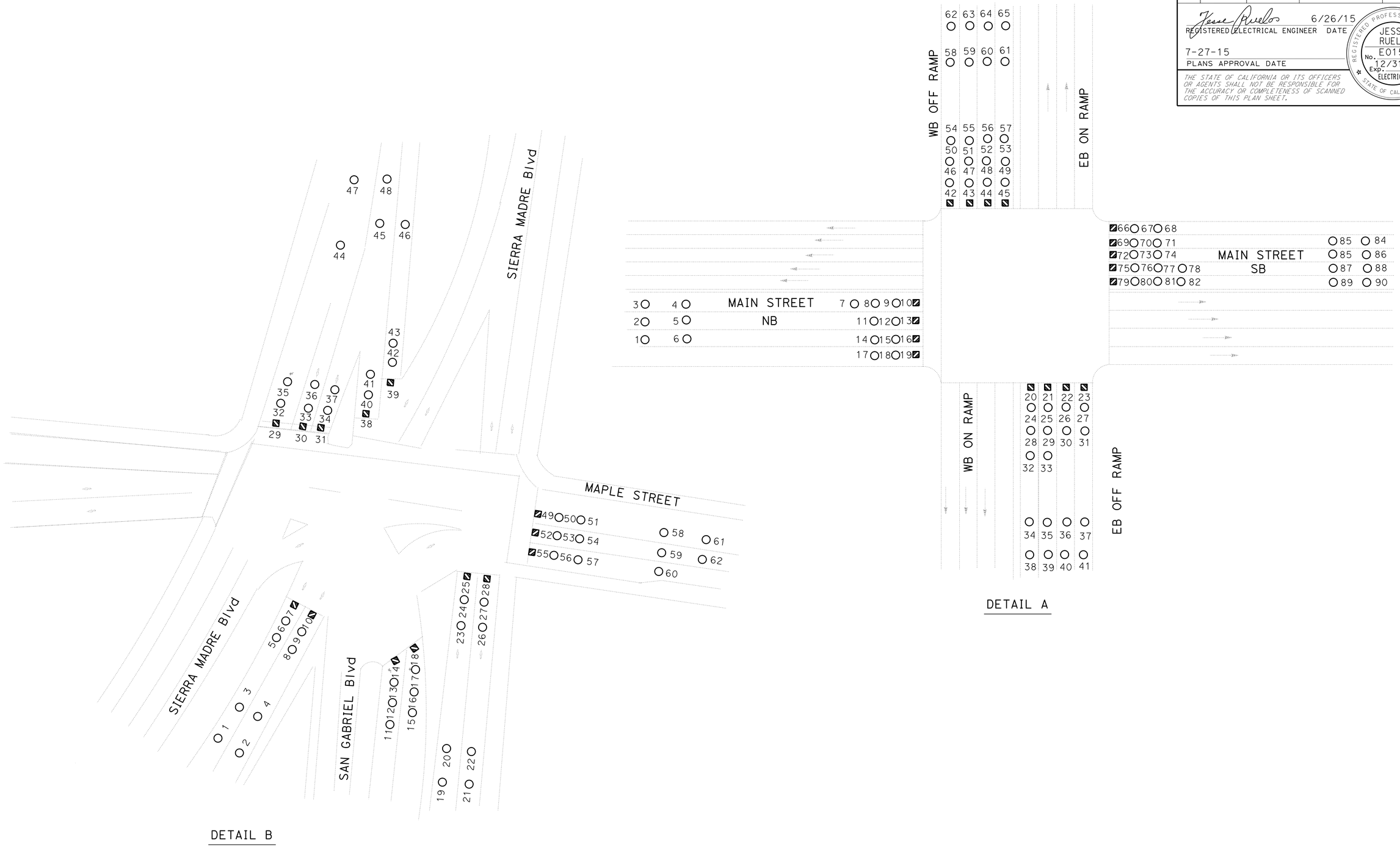

INDUCTIVE LOOP DETECTOR

NO SCALE

E-163

STATE OF CALIFORNIA - DEPARTMENT OF TRANSPORTATION
Caltrans® **TRAFFIC DESIGN**

FUNCTIONAL SUPERVISOR: YI TSAU
CALCULATED-DESIGNED BY: KARINE PARTAMIAN
CHECKED BY: JESSE RUELAS
REVISED BY
DATE REVISED

LAST REVISION 00-00-00
DATE PLOTTED => 16-SEP-2015
TIME PLOTTED => 13:26

Dist	COUNTY	ROUTE	POST MILES TOTAL PROJECT	SHEET No.	TOTAL SHEETS
07	LA	210	R24.7/R44.9	205	274

REGISTERED ELECTRICAL ENGINEER 6/26/15 DATE

7-27-15
PLANS APPROVAL DATE

REGISTERED PROFESSIONAL ENGINEER JESSE RUELAS No. E015604 Exp. 12/31/15 ELECTRICAL STATE OF CALIFORNIA

THE STATE OF CALIFORNIA OR ITS OFFICERS OR AGENTS SHALL NOT BE RESPONSIBLE FOR THE ACCURACY OR COMPLETENESS OF SCANNED COPIES OF THIS PLAN SHEET.

NOTE: ITEMS SHOWN IN TABLES ARE NOT SEPARATE PAY ITEM, FOR INFORMATION ONLY.

MODIFY RAMP METERING SYSTEM

SHEET No.	DLC LF	LOOP DETECTOR (EACH)	STUB OUT (EACH)	CONDUCTORS LF	CONDUCTORS LF	CONDUCTORS LF	CONDUIT LF	CONDUIT LF	9CSC LF	5CSC LF	FOUNDATION CONTROLLER, FB (EACH)	PULL BOX (EACH)	FB (EACH)
		TYPE E		#8	#6	#4	3"	2"					
E-128	5260	6	1	801	438		579	34	1262	54	1-FB 1-RM CONTROLLER	1-No. 6 1-No. 5	1
E-129	5645	2	2	966	538		445	20	810	244	1-FB 1-RM CONTROLLER	1-No. 6(T)	1
E-130	6670	2	2	733	372		477	106	964	126	1-FB 1-RM CONTROLLER	1-No. 6 2-No. 5	1
E-131	6431	2	2	1061	108		154	54	524	208	1-FB 1-RM CONTROLLER	1-No. 6 1-No. 5	1
E-132	9529	8	3	1363	526		210	336	1822	352	2-FB 1-RM CONTROLLER	1-No. 6	3
E-133	10068	8	2	1659	140		20	96	690	876	2-FB 1-RM CONTROLLER		2
E-134	9272	7	3	2155	1166		1000		1910	410	3-FB 1-RM CONTROLLER	3-No. 6 2-No. 5	3
E-135	1367	1	1	1164			100		466		1-RM CONTROLLER	2-No. 6	
E-136	1437	2	2	885	1188				53	415	2-FB 1-RM CONTROLLER	1-No. 6	2
E-137	6850	9	5	3996	654		130		232	984	2-FB 1-RM CONTROLLER	1-No. 6	2
E-138	1370	2	2	415	808				80	144	1-FB		1
E-139	9821	7	2	1926	136		60		1558	876	2-FB 1-RM CONTROLLER	1-No. 6 6-No. 5(T)	2
E-141	4886	2	2	1768			60		314	9068	3-FB 1-RM CONTROLLER	2-No. 6	3
E-142	8436	4	4	1410		1896	300		1246	48	1-FB 2-RM CONTROLLER	2-No. 6	1
E-143	2284	8	3	1676	2188		80		150	2285	2-FB 1-RM CONTROLLER	1-No. 6	2
E-144	1632	6	2	899	1792				88	3299	1-FB		1
E-145	2084	2	2	740	470		110		240	320	3-FB 1-RM CONTROLLER	1-No. 6	3
E-146		2	2						201	717			
E-147	8648	2	2	1154		368	640		1106	348	2-FB 1-RM CONTROLLER	1-No. 6	2
E-148	9569	2	2	1638					315	293	1-FB 1-RM CONTROLLER		1
E-149	2522	7	3	1165		1056	280		180	818	1-FB 1-RM CONTROLLER	1-No. 6 1-No. 5	1
E-150	4060	7	3	1447			430	141	949	153	1-FB 1-RM CONTROLLER	1- No. 6	1
E-151	2217	2	2	1933					188	143	2-FB		2
E-152	3219	2	2	1769			40		525	183	1-FB 1-RM CONTROLLER	2- No. 6	2
E-153	3246	2	3	1268			88		512	365	1-FB 1-RM CONTROLLER	1- No. 6	1
E-154	6427	7	3	1531		1706	121		538	1326	2-FB 1-RM CONTROLLER	1- No. 6	2
E-155	4599	2	3	1021	2042		90		812	530	2-FB 1-RM CONTROLLER	1- No. 6	2
E-157	4367	7	3	1678		2194	138		256	2050	2-FB 1-RM CONTROLLER	1- No. 6	2

INDUCTIVE LOOP DETECTOR

SHEET No.	LOOP DETECTOR (EACH)	STUB OUT (EACH)
	QUANTITY-TYPE	
E-159	150-TYPE E 9-TYPE D	———
E-160	116-TYPE E 4-TYPE D	157
E-161	210-TYPE E 80-TYPE D	———
E-162	95-TYPE E 22-TYPE D	88

MODIFY TRAFFIC MONITORING STATION

SHEET No.	DLC LF	LOOP DETECTOR (EACH)	STUB OUT (EACH)	CONDUCTORS LF	334 CONTROLLER ASSEMBLY (EACH)	
		TYPE E		#8		
E-140		6	1			
E-156	870			208		

ELECTRICAL QUATITIES

E-164

STATE OF CALIFORNIA - DEPARTMENT OF TRANSPORTATION
Caltrans TRAFFIC DESIGN

FUNCTIONAL SUPERVISOR: YI TSAU
CALCULATED-DESIGNED BY: KARINE PARTAMIAN
CHECKED BY: JESSE RUELAS
REVISED BY
DATE REVISED

LAST REVISION 00-00-00
DATE PLOTTED => 16-SEP-2015
TIME PLOTTED => 13:26

Dist	COUNTY	ROUTE	POST MILES TOTAL PROJECT	SHEET No.	TOTAL SHEETS
07	LA	210	R24.7/R44.9	206	274

REGISTERED ELECTRICAL ENGINEER 6/26/15 DATE

7-27-15
PLANS APPROVAL DATE

REGISTERED PROFESSIONAL ENGINEER JACQUELINE C. TAN No. E015611 Exp. 12/31/15 ELECTRICAL STATE OF CALIFORNIA

THE STATE OF CALIFORNIA OR ITS OFFICERS OR AGENTS SHALL NOT BE RESPONSIBLE FOR THE ACCURACY OR COMPLETENESS OF SCANNED COPIES OF THIS PLAN SHEET.

NOTE: (THIS SHEET ONLY)

REFER TO SHEETS E-2 THROUGH E-4
FOR PHYSICAL LOCATIONS

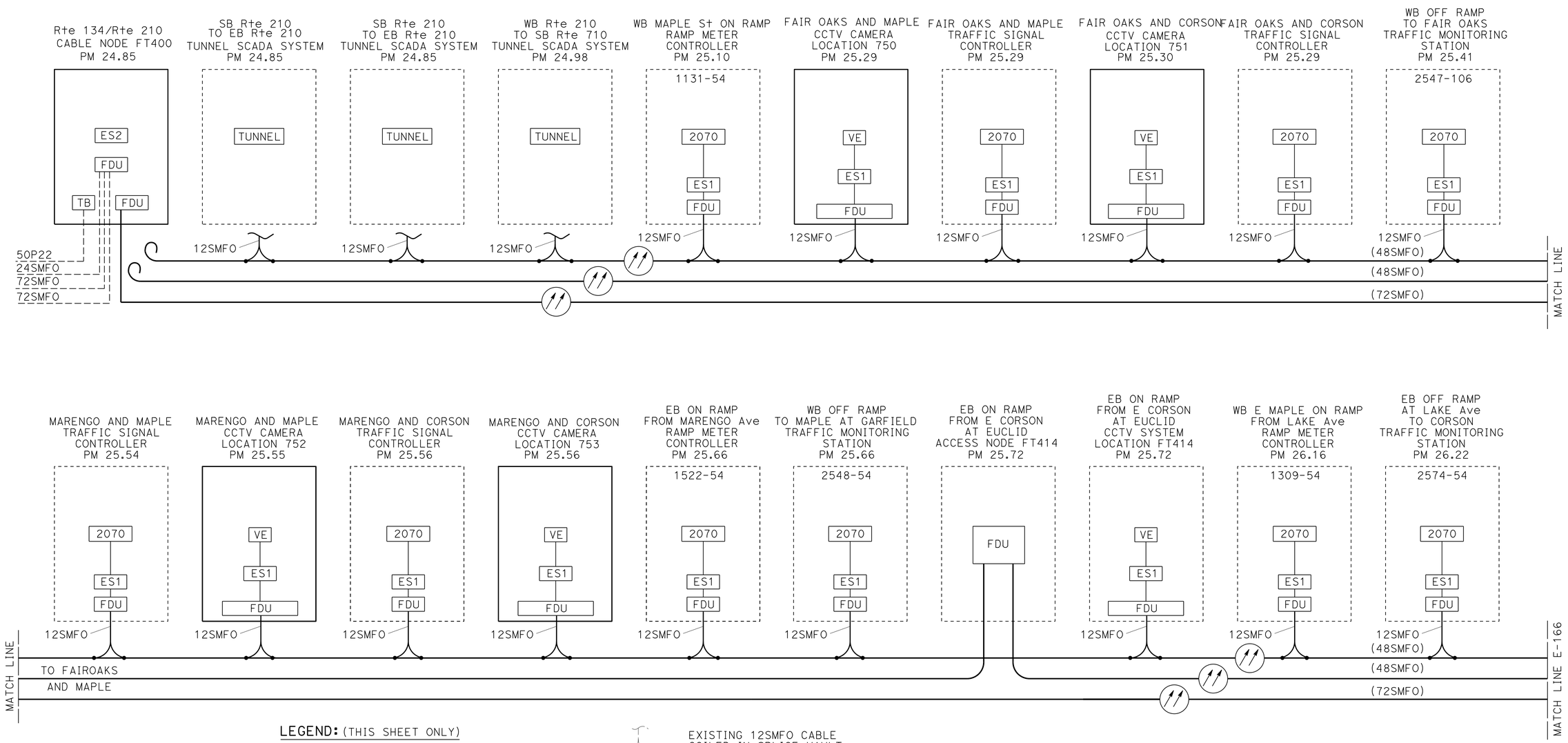

LEGEND: (THIS SHEET ONLY)

170 - CONTROLLER MODEL 170
2070 - CONTROLLER MODEL 2070
ES1 - ETHERNET SWITCH TYPE 1
ES2 - ETHERNET SWITCH TYPE 2
VE - VIDEO ENCODER
B/O - BREAK OUT

EXISTING 12SMFO CABLE COILED IN SPLICE VAULT

SPLICE NEW AND EXISTING CABLES

EXISTING CONDUCTOR OR FIBER OPTIC CABLE

PROPOSED CONDUIT CONDUIT AND CABLE

APPROVED FOR ELECTRICAL WORK ONLY

MODIFY COMMUNICATION SYSTEM

SCHEMATIC No. 1

NO SCALE

E-165

STATE OF CALIFORNIA - DEPARTMENT OF TRANSPORTATION
Caltrans® OFFICE OF ITS

FUNCTIONAL SUPERVISOR: JACQUELINE C. TAN
CALCULATED-DESIGNED BY: BOB TIEU
CHECKED BY: JACQUELINE C. TAN
REVISED BY
DATE REVISED

LAST REVISION 00-00-00
DATE PLOTTED => 16-SEP-2015
TIME PLOTTED => 13:26

Dist	COUNTY	ROUTE	POST MILES TOTAL PROJECT	SHEET No.	TOTAL SHEETS
07	LA	210	R24.7/R44.9	207	274

REGISTERED ELECTRICAL ENGINEER — DATE: 6/26/15

PLANS APPROVAL DATE: 7-27-15

REGISTERED PROFESSIONAL ENGINEER — JACQUELINE C. TAN — No. E015611 — Exp. 12/31/15 — ELECTRICAL — STATE OF CALIFORNIA

THE STATE OF CALIFORNIA OR ITS OFFICERS OR AGENTS SHALL NOT BE RESPONSIBLE FOR THE ACCURACY OR COMPLETENESS OF SCANNED COPIES OF THIS PLAN SHEET.

NOTE: (THIS SHEET ONLY)

REFER TO SHEETS E-4 THROUGH E-6 FOR PHYSICAL LOCATIONS

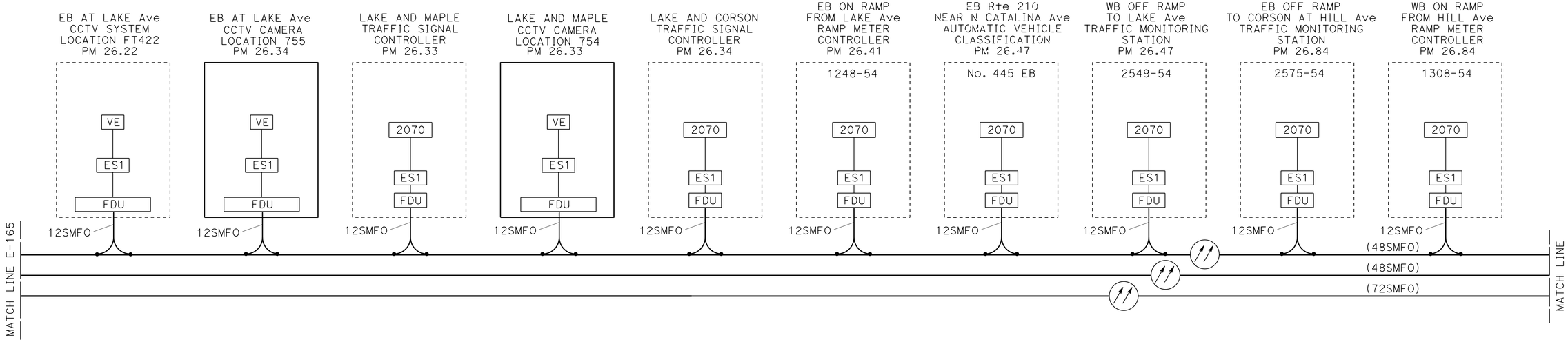

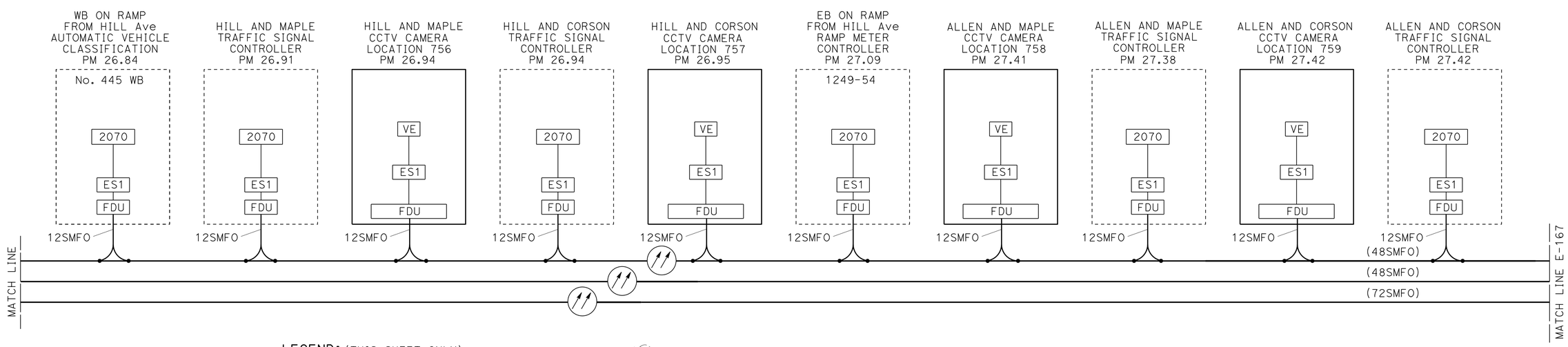

LEGEND: (THIS SHEET ONLY)

170 - CONTROLLER MODEL 170
2070 - CONTROLLER MODEL 2070
ES1 - ETHERNET SWITCH TYPE 1
ES2 - ETHERNET SWITCH TYPE 2
VE - VIDEO ENCODER
B/O - BREAK OUT

EXISTING 12SMFO CABLE COILED IN SPLICE VAULT

SPLICE NEW AND EXISTING CABLES

EXISTING CONDUCTOR OR FIBER OPTIC CABLE

PROPOSED CONDUIT CONDUIT AND CABLE

MODIFY COMMUNICATION SYSTEM
SCHEMATIC No. 2
NO SCALE

APPROVED FOR ELECTRICAL WORK ONLY

E-166

STATE OF CALIFORNIA - DEPARTMENT OF TRANSPORTATION
Caltrans®
OFFICE OF ITS
FUNCTIONAL SUPERVISOR: JACQUELINE C. TAN
CALCULATED-DESIGNED BY: BOB TIEU
CHECKED BY: JACQUELINE C. TAN
REVISED BY
DATE REVISED

LAST REVISION 00-00-00
DATE PLOTTED => 16-SEP-2015
TIME PLOTTED => 13:26

Dist	COUNTY	ROUTE	POST MILES TOTAL PROJECT	SHEET No.	TOTAL SHEETS
07	LA	210	R24.7/R44.9	208	274

Jacqueline C Tan 6/26/15
REGISTERED ELECTRICAL ENGINEER DATE

7-27-15
PLANS APPROVAL DATE

REGISTERED PROFESSIONAL ENGINEER JACQUELINE C. TAN No. E015611 Exp. 12/31/15 ELECTRICAL STATE OF CALIFORNIA

THE STATE OF CALIFORNIA OR ITS OFFICERS OR AGENTS SHALL NOT BE RESPONSIBLE FOR THE ACCURACY OR COMPLETENESS OF SCANNED COPIES OF THIS PLAN SHEET.

NOTE: (THIS SHEET ONLY)

REFER TO SHEETS E-6 THROUGH E-8
FOR PHYSICAL LOCATIONS

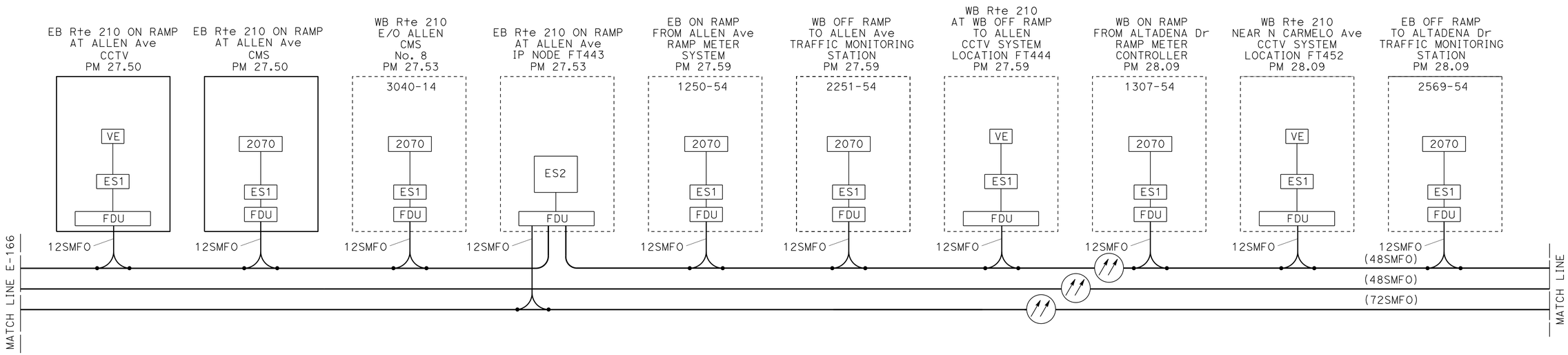

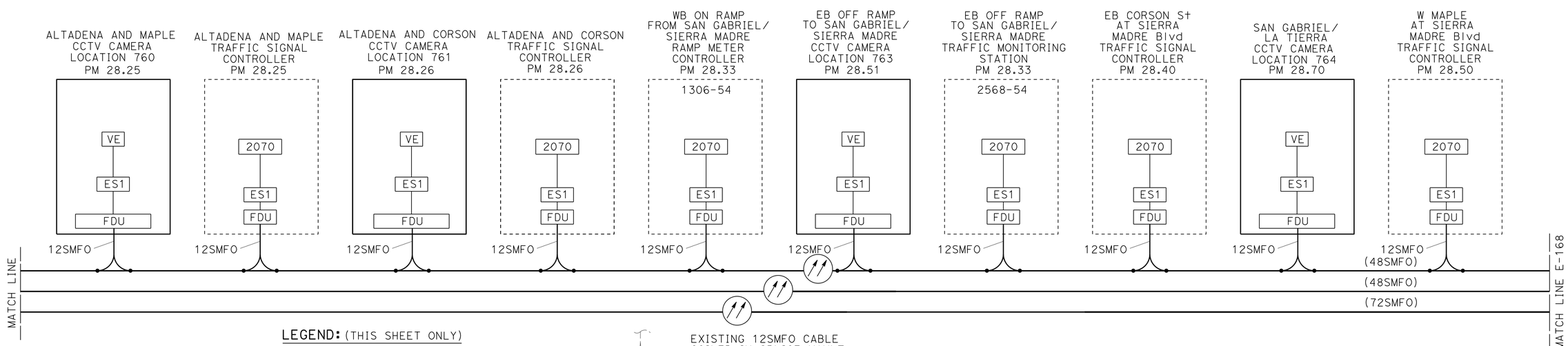

LEGEND: (THIS SHEET ONLY)

170 - CONTROLLER MODEL 170
2070 - CONTROLLER MODEL 2070
ES1 - ETHERNET SWITCH TYPE 1
ES2 - ETHERNET SWITCH TYPE 2
VE - VIDEO ENCODER
B/O - BREAK OUT

EXISTING 12SMFO CABLE COILED IN SPLICE VAULT

SPLICE NEW AND EXISTING CABLES

EXISTING CONDUCTOR OR FIBER OPTIC CABLE

PROPOSED CONDUIT CONDUIT AND CABLE

MODIFY COMMUNICATION SYSTEM
SCHEMATIC No. 3
NO SCALE

APPROVED FOR ELECTRICAL WORK ONLY

E-167

STATE OF CALIFORNIA - DEPARTMENT OF TRANSPORTATION
Caltrans
OFFICE OF ITS
FUNCTIONAL SUPERVISOR: JACQUELINE C. TAN
CALCULATED-DESIGNED BY: BOB TIEU
CHECKED BY: JACQUELINE C. TAN
REVISED BY
DATE REVISED

LAST REVISION 00-00-00
DATE PLOTTED => 16-SEP-2015
TIME PLOTTED => 13:26

Dist	COUNTY	ROUTE	POST MILES TOTAL PROJECT	SHEET No.	TOTAL SHEETS
07	LA	210	R24.7/R44.9	209	274

REGISTERED ELECTRICAL ENGINEER 6/26/15 DATE

7-27-15
PLANS APPROVAL DATE

REGISTERED PROFESSIONAL ENGINEER JACQUELINE C. TAN No. E015611 Exp. 12/31/15 ELECTRICAL STATE OF CALIFORNIA

THE STATE OF CALIFORNIA OR ITS OFFICERS OR AGENTS SHALL NOT BE RESPONSIBLE FOR THE ACCURACY OR COMPLETENESS OF SCANNED COPIES OF THIS PLAN SHEET.

NOTE: (THIS SHEET ONLY)

REFER TO SHEETS E-8 THROUGH E-11
FOR PHYSICAL LOCATIONS

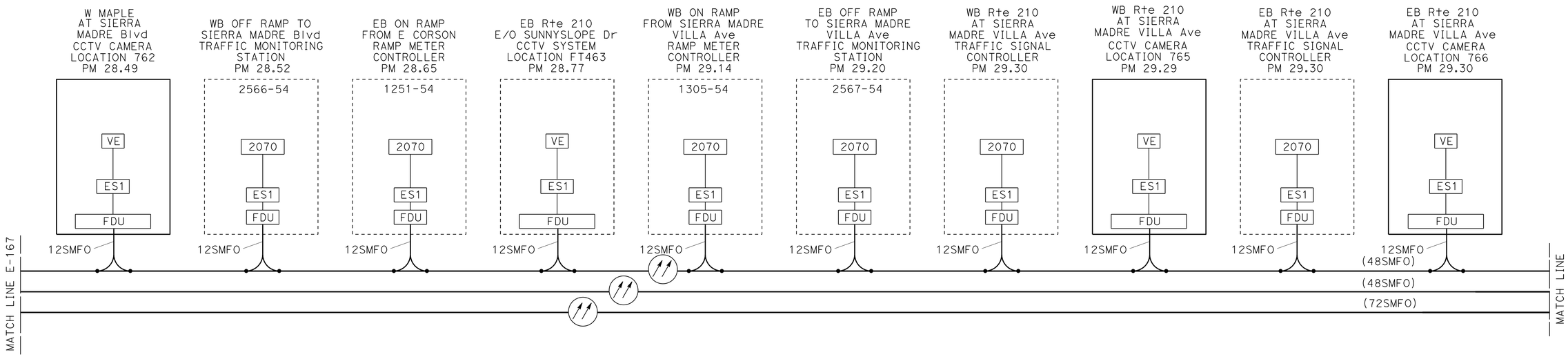

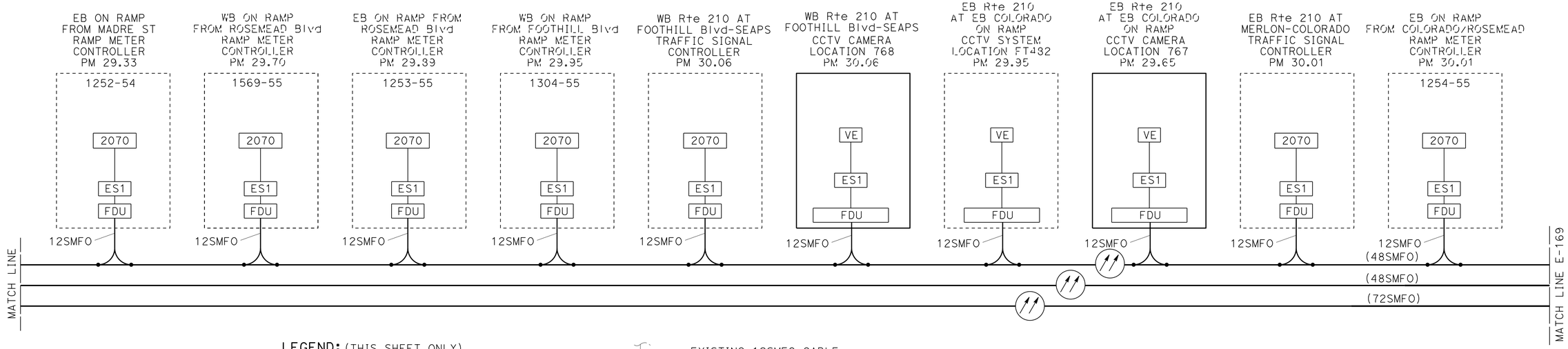

LEGEND: (THIS SHEET ONLY)

170 - CONTROLLER MODEL 170
2070 - CONTROLLER MODEL 2070
ES1 - ETHERNET SWITCH TYPE 1
ES2 - ETHERNET SWITCH TYPE 2
VE - VIDEO ENCODER
B/O - BREAK OUT

EXISTING 12SMFO CABLE COILED IN SPLICE VAULT
SPLICE NEW AND EXISTING CABLES
EXISTING CONDUCTOR OR FIBER OPTIC CABLE
PROPOSED CONDUIT CONDUIT AND CABLE

MODIFY COMMUNICATION SYSTEM
SCHEMATIC No. 4
NO SCALE

APPROVED FOR ELECTRICAL WORK ONLY

E-168

STATE OF CALIFORNIA - DEPARTMENT OF TRANSPORTATION
Caltrans
OFFICE OF ITS
FUNCTIONAL SUPERVISOR: JACQUELINE C. TAN
CALCULATED-DESIGNED BY: BOB TIEU
CHECKED BY: JACQUELINE C. TAN
REVISED BY
DATE REVISED

LAST REVISION 00-00-00
DATE PLOTTED => 16-SEP-2015
TIME PLOTTED => 13:26

Dist	COUNTY	ROUTE	POST MILES TOTAL PROJECT	SHEET No.	TOTAL SHEETS
07	LA	210	R24.7/R44.9	210	274

REGISTERED ELECTRICAL ENGINEER — DATE: 6/26/15

PLANS APPROVAL DATE: 7-27-15

REGISTERED PROFESSIONAL ENGINEER — JACQUELINE C. TAN — No. E015611 — Exp. 12/31/15 — ELECTRICAL — STATE OF CALIFORNIA

THE STATE OF CALIFORNIA OR ITS OFFICERS OR AGENTS SHALL NOT BE RESPONSIBLE FOR THE ACCURACY OR COMPLETENESS OF SCANNED COPIES OF THIS PLAN SHEET.

NOTE: (THIS SHEET ONLY)

REFER TO SHEETS E-11 THROUGH E-15 FOR PHYSICAL LOCATIONS

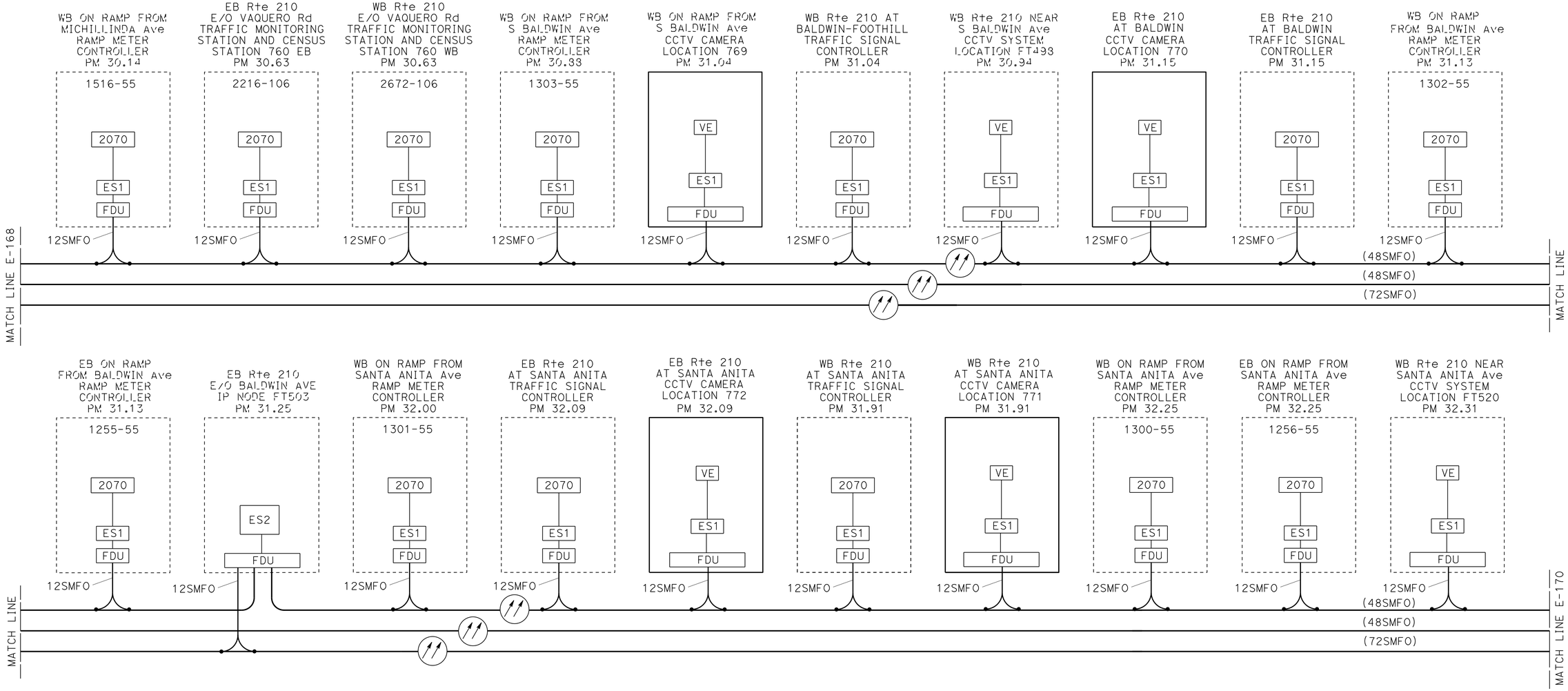

LEGEND: (THIS SHEET ONLY)

170 - CONTROLLER MODEL 170
2070 - CONTROLLER MODEL 2070
ES1 - ETHERNET SWITCH TYPE 1
ES2 - ETHERNET SWITCH TYPE 2
VE - VIDEO ENCODER
B/O - BREAK OUT

EXISTING 12SMFO CABLE COILED IN SPLICE VAULT
SPLICE NEW AND EXISTING CABLES
EXISTING CONDUCTOR OR FIBER OPTIC CABLE
PROPOSED CONDUIT CONDUIT AND CABLE

APPROVED FOR ELECTRICAL WORK ONLY

MODIFY COMMUNICATION SYSTEM
SCHEMATIC No. 5
NO SCALE

E-169

STATE OF CALIFORNIA - DEPARTMENT OF TRANSPORTATION
Caltrans
OFFICE OF ITS

FUNCTIONAL SUPERVISOR: JACQUELINE C. TAN
CALCULATED-DESIGNED BY: BOB TIEU
CHECKED BY: JACQUELINE C. TAN
REVISED BY
DATE REVISED

LAST REVISION 00-00-00 | DATE PLOTTED => 16-SEP-2015 | TIME PLOTTED => 13:26

Dist	COUNTY	ROUTE	POST MILES TOTAL PROJECT	SHEET No.	TOTAL SHEETS
07	LA	210	R24.7/R44.9	211	274

REGISTERED ELECTRICAL ENGINEER — DATE: 6/26/15

PLANS APPROVAL DATE: 7-27-15

REGISTERED PROFESSIONAL ENGINEER — JACQUELINE C. TAN No. E015611 Exp. 12/31/15 ELECTRICAL — STATE OF CALIFORNIA

THE STATE OF CALIFORNIA OR ITS OFFICERS OR AGENTS SHALL NOT BE RESPONSIBLE FOR THE ACCURACY OR COMPLETENESS OF SCANNED COPIES OF THIS PLAN SHEET.

NOTE: (THIS SHEET ONLY)

REFER TO SHEETS E-16 THROUGH E-19 FOR PHYSICAL LOCATIONS

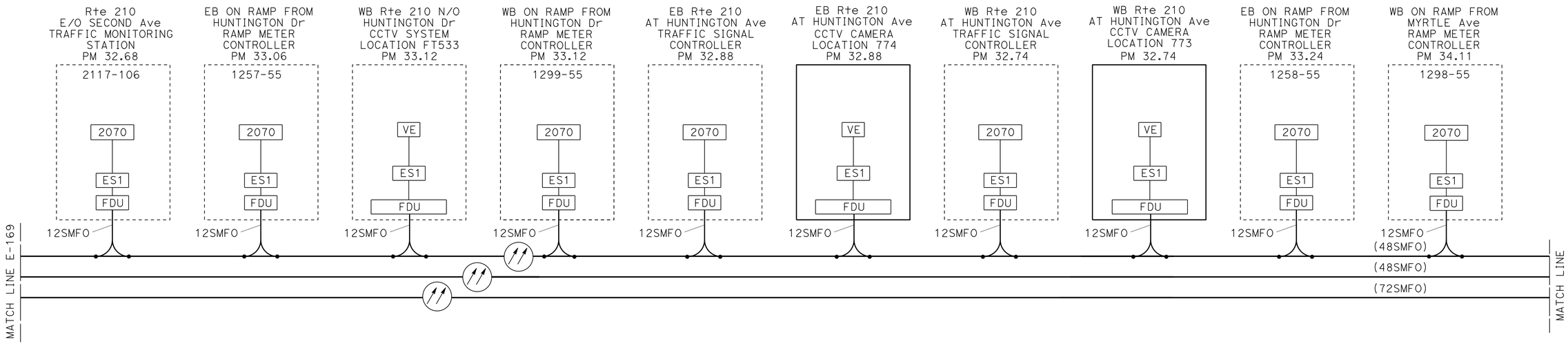

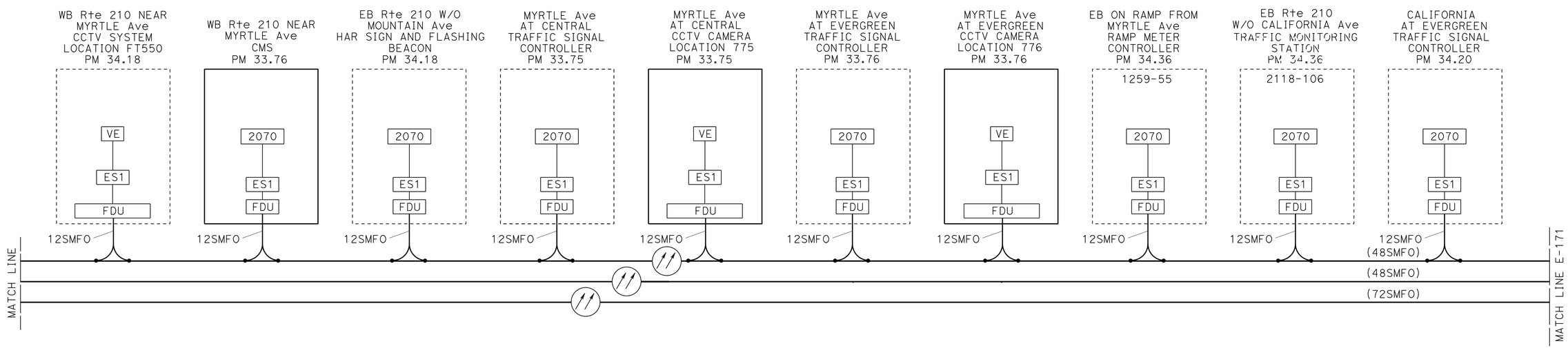

LEGEND: (THIS SHEET ONLY)

170 - CONTROLLER MODEL 170
2070 - CONTROLLER MODEL 2070
ES1 - ETHERNET SWITCH TYPE 1
ES2 - ETHERNET SWITCH TYPE 2
VE - VIDEO ENCODER
B/O - BREAK OUT

EXISTING 12SMFO CABLE COILED IN SPLICE VAULT
SPLICE NEW AND EXISTING CABLES
EXISTING CONDUCTOR OR FIBER OPTIC CABLE
PROPOSED CONDUIT CONDUIT AND CABLE

MODIFY COMMUNICATION SYSTEM
SCHEMATIC No. 6
NO SCALE

APPROVED FOR ELECTRICAL WORK ONLY

E-170

STATE OF CALIFORNIA - DEPARTMENT OF TRANSPORTATION
Caltrans
OFFICE OF ITS
FUNCTIONAL SUPERVISOR: JACQUELINE C. TAN
CALCULATED-DESIGNED BY: BOB TIEU
CHECKED BY: JACQUELINE C. TAN
REVISED BY
DATE REVISED

LAST REVISION 00-00-00 | DATE PLOTTED => 16-SEP-2015 | TIME PLOTTED => 13:26

Dist	COUNTY	ROUTE	POST MILES TOTAL PROJECT	SHEET No.	TOTAL SHEETS
07	LA	210	R24.7/R44.9	212	274

REGISTERED ELECTRICAL ENGINEER — DATE: 6/26/15

PLANS APPROVAL DATE: 7-27-15

REGISTERED PROFESSIONAL ENGINEER — JACQUELINE C. TAN — No. E015611 — Exp. 12/31/15 — ELECTRICAL — STATE OF CALIFORNIA

THE STATE OF CALIFORNIA OR ITS OFFICERS OR AGENTS SHALL NOT BE RESPONSIBLE FOR THE ACCURACY OR COMPLETENESS OF SCANNED COPIES OF THIS PLAN SHEET.

NOTE: (THIS SHEET ONLY)

REFER TO SHEETS E-19 THROUGH E-23 FOR PHYSICAL LOCATIONS

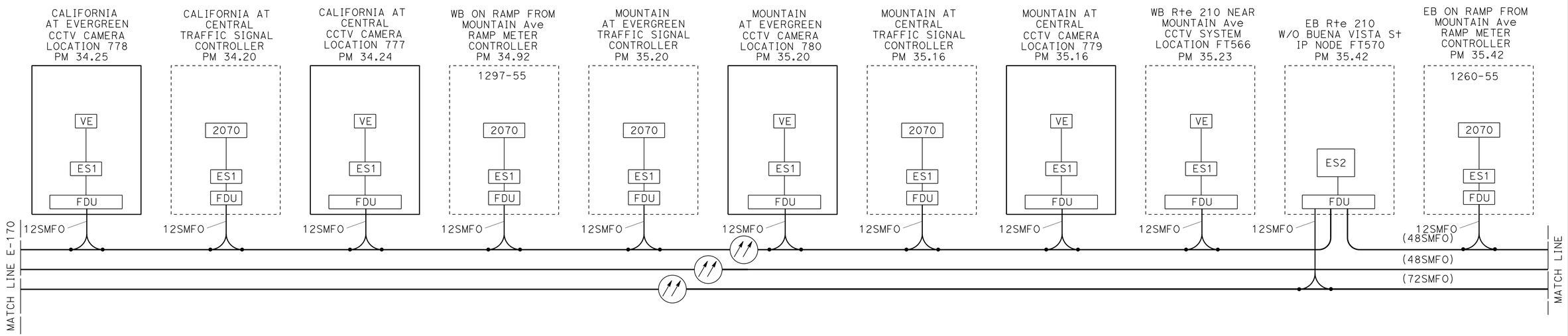

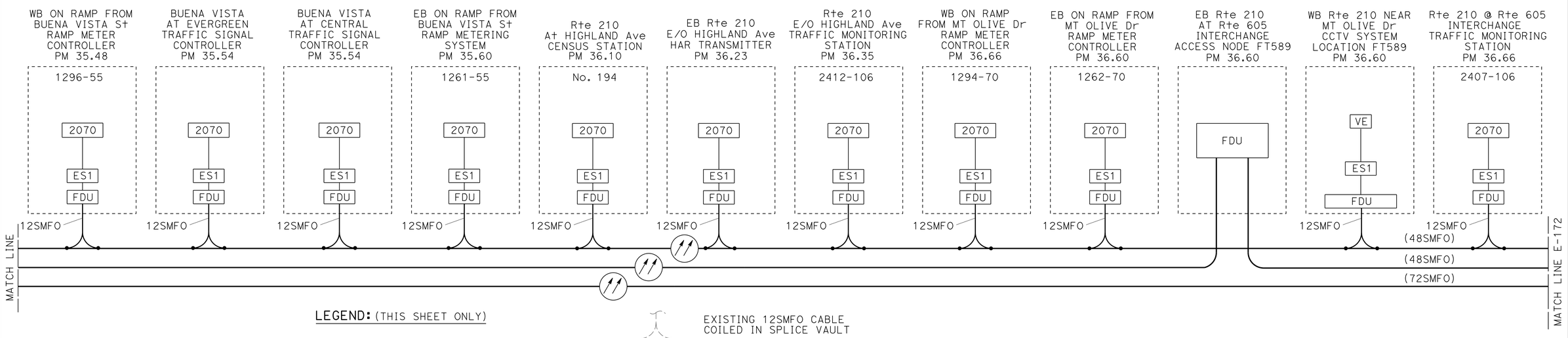

LEGEND: (THIS SHEET ONLY)

170 - CONTROLLER MODEL 170
2070 - CONTROLLER MODEL 2070
ES1 - ETHERNET SWITCH TYPE 1
ES2 - ETHERNET SWITCH TYPE 2
VE - VIDEO ENCODER
B/O - BREAK OUT

EXISTING 12SMFO CABLE COILED IN SPLICE VAULT

SPLICE NEW AND EXISTING CABLES

EXISTING CONDUCTOR OR FIBER OPTIC CABLE

PROPOSED CONDUIT CONDUIT AND CABLE

MODIFY COMMUNICATION SYSTEM
SCHEMATIC No. 7
NO SCALE

APPROVED FOR ELECTRICAL WORK ONLY

E-171

STATE OF CALIFORNIA - DEPARTMENT OF TRANSPORTATION
Caltrans®
OFFICE OF ITS

FUNCTIONAL SUPERVISOR: JACQUELINE C. TAN

CALCULATED-DESIGNED BY: BOB TIEU — JACQUELINE C. TAN

CHECKED BY

REVISED BY — DATE REVISED

LAST REVISION 00-00-00 — DATE PLOTTED => 16-SEP-2015 — TIME PLOTTED => 13:27

Dist	COUNTY	ROUTE	POST MILES TOTAL PROJECT	SHEET No.	TOTAL SHEETS
07	LA	210	R24.7/R44.9	213	274

REGISTERED ELECTRICAL ENGINEER — DATE 6/26/15

7-27-15
PLANS APPROVAL DATE

REGISTERED PROFESSIONAL ENGINEER — JACQUELINE C. TAN — No. E015611 — Exp. 12/31/15 — ELECTRICAL — STATE OF CALIFORNIA

THE STATE OF CALIFORNIA OR ITS OFFICERS OR AGENTS SHALL NOT BE RESPONSIBLE FOR THE ACCURACY OR COMPLETENESS OF SCANNED COPIES OF THIS PLAN SHEET.

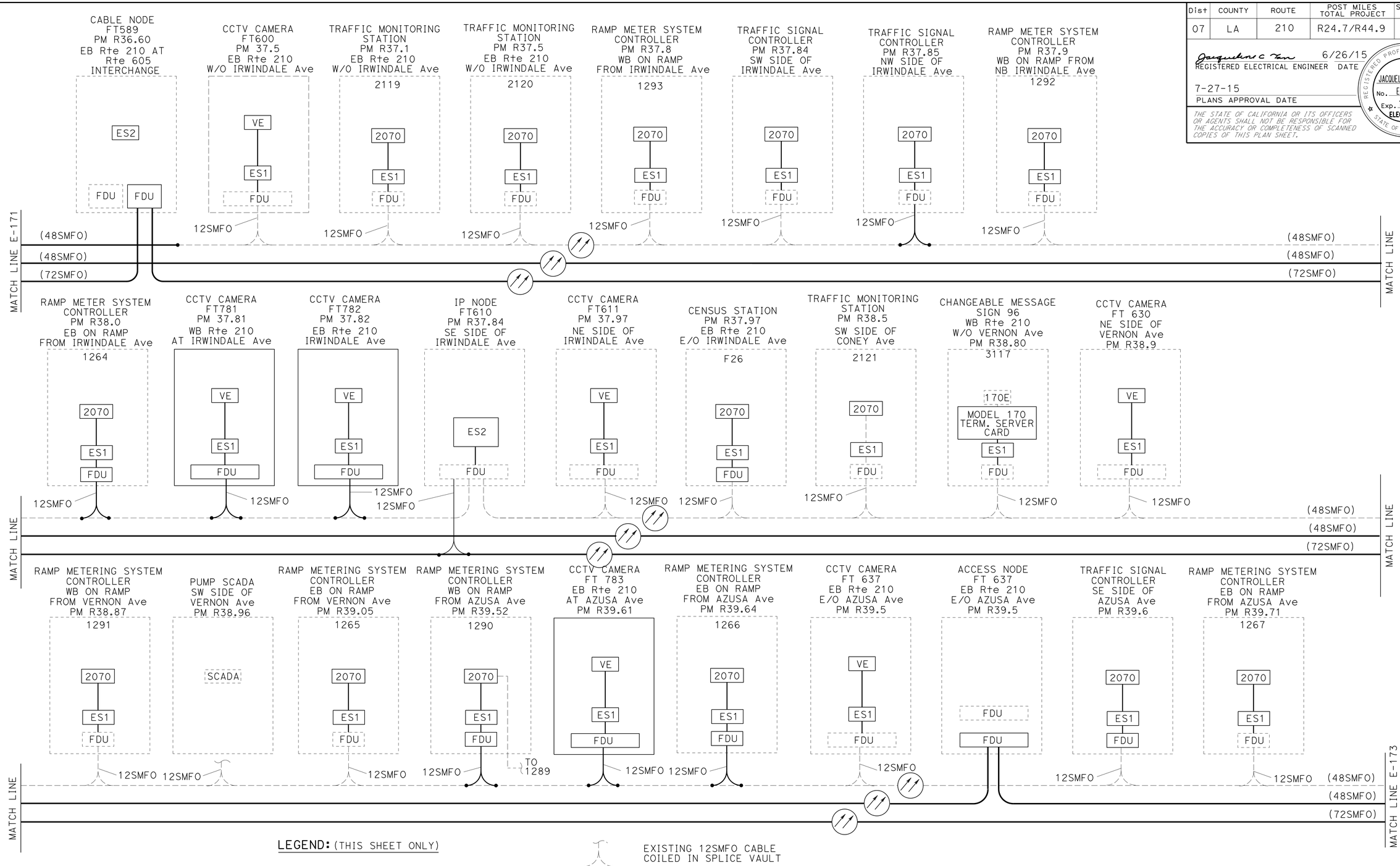

LEGEND: (THIS SHEET ONLY)

170 - CONTROLLER MODEL 170
2070 - CONTROLLER MODEL 2070
ES1 - ETHERNET SWITCH TYPE 1
ES2 - ETHERNET SWITCH TYPE 2
VE - VIDEO ENCODER
B/O - BREAK OUT

EXISTING 12SMFO CABLE COILED IN SPLICE VAULT

SPLICE NEW AND EXISTING CABLES

EXISTING CONDUCTOR OR FIBER OPTIC CABLE

PROPOSED CONDUIT CONDUIT AND CABLE

NOTE: (THIS SHEET ONLY)

REFER TO SHEETS E-23 THROUGH E-29 FOR PHYSICAL LOCATIONS

MODIFY COMMUNICATION SYSTEM
SCHEMATIC No. 8
NO SCALE

APPROVED FOR ELECTRICAL WORK ONLY

E-172

STATE OF CALIFORNIA - DEPARTMENT OF TRANSPORTATION
OFFICE OF ITS
FUNCTIONAL SUPERVISOR: JACQUELINE C. TAN
CALCULATED-DESIGNED BY: CONWAY CHU
CHECKED BY: JACQUELINE C. TAN
REVISED BY
DATE REVISED

LAST REVISION 09-23-14
DATE PLOTTED => 16-SEP-2015
TIME PLOTTED => 13:27

Dist	COUNTY	ROUTE	POST MILES TOTAL PROJECT	SHEET No.	TOTAL SHEETS
07	LA	210	R24.7/R44.9	214	274

Jacqueline C Tan 6/26/15
REGISTERED ELECTRICAL ENGINEER DATE

7-27-15
PLANS APPROVAL DATE

REGISTERED PROFESSIONAL ENGINEER
JACQUELINE C. TAN
No. E015611
Exp. 12/31/15
ELECTRICAL
STATE OF CALIFORNIA

THE STATE OF CALIFORNIA OR ITS OFFICERS OR AGENTS SHALL NOT BE RESPONSIBLE FOR THE ACCURACY OR COMPLETENESS OF SCANNED COPIES OF THIS PLAN SHEET.

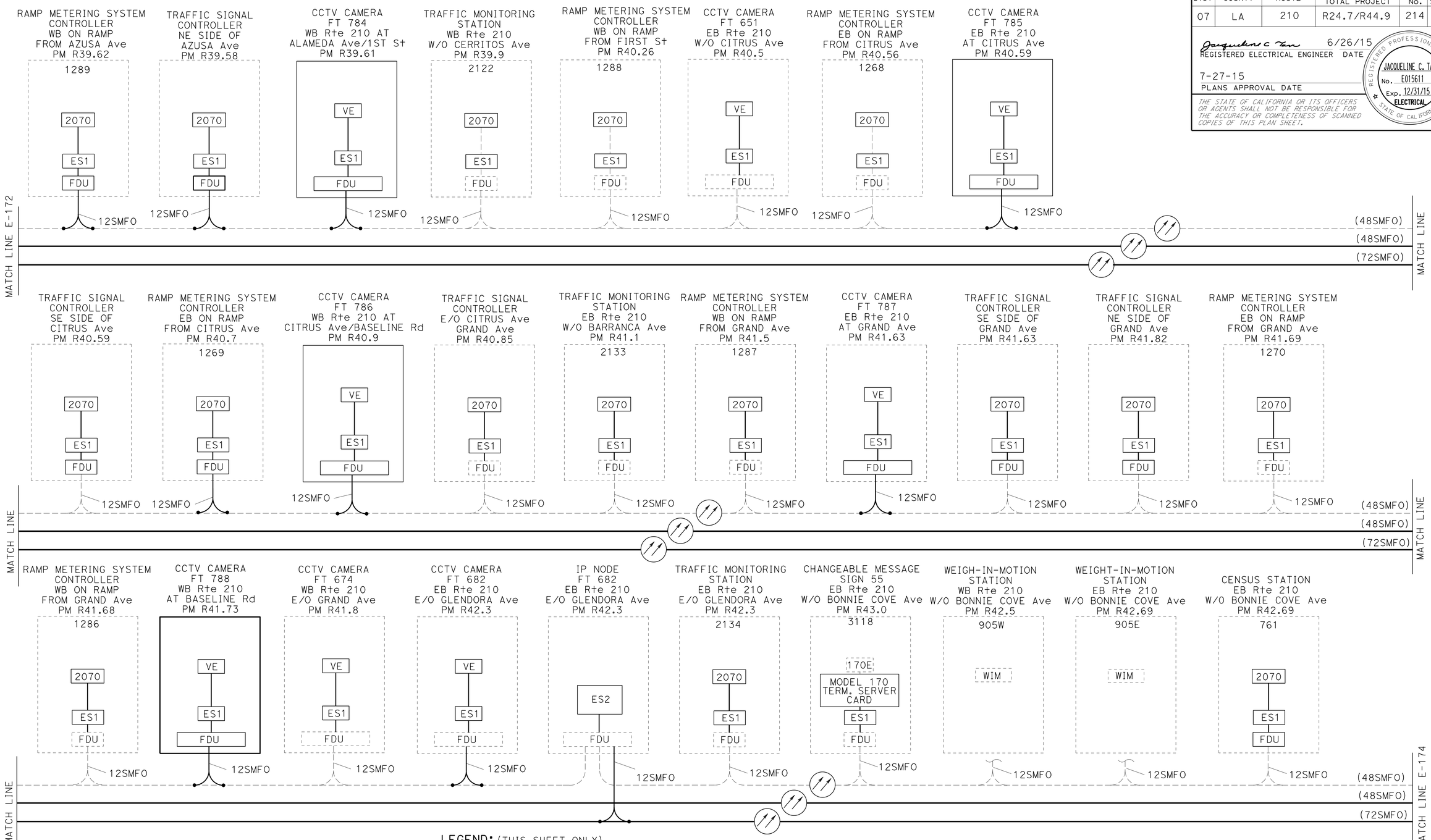

LEGEND: (THIS SHEET ONLY)

170 - CONTROLLER MODEL 170

2070 - CONTROLLER MODEL 2070

EXISTING 12SMFO CABLE COILED IN SPLICE VAULT

B/O - BREAK OUT

EXISTING CONDUIT AND CABLE

PROPOSED CONDUIT AND CABLE

ES1 - ETHERNET SWITCH TYPE 1

ES2 - ETHERNET SWITCH TYPE 2

VE - VIDEO ENCODER

NOTE: (THIS SHEET ONLY)

REFER TO SHEETS E-29 THROUGH E-35 FOR PHYSICAL LOCATIONS

MODIFY COMMUNICATION SYSTEM

SCHEMATIC No. 9

NO SCALE

APPROVED FOR ELECTRICAL WORK ONLY

E-173

STATE OF CALIFORNIA - DEPARTMENT OF TRANSPORTATION
Caltrans
OFFICE OF ITS

FUNCTIONAL SUPERVISOR: JACQUELINE C. TAN
CALCULATED-DESIGNED BY: CONWAY CHU
CHECKED BY: JACQUELINE C. TAN
REVISED BY
DATE REVISED

LAST REVISION 09-23-14
DATE PLOTTED => 16-SEP-2015
TIME PLOTTED => 13:27

Dist	COUNTY	ROUTE	POST MILES TOTAL PROJECT	SHEET No.	TOTAL SHEETS
07	LA	210	R24.7/R44.9	215	274

REGISTERED ELECTRICAL ENGINEER — 6/26/15 DATE

7-27-15
PLANS APPROVAL DATE

REGISTERED PROFESSIONAL ENGINEER — JACQUELINE C. TAN No. E015611 Exp. 12/31/15 ELECTRICAL — STATE OF CALIFORNIA

THE STATE OF CALIFORNIA OR ITS OFFICERS OR AGENTS SHALL NOT BE RESPONSIBLE FOR THE ACCURACY OR COMPLETENESS OF SCANNED COPIES OF THIS PLAN SHEET.

NOTE: (THIS SHEET ONLY)
REFER TO SHEETS E-35 THROUGH E-38
FOR PHYSICAL LOCATIONS

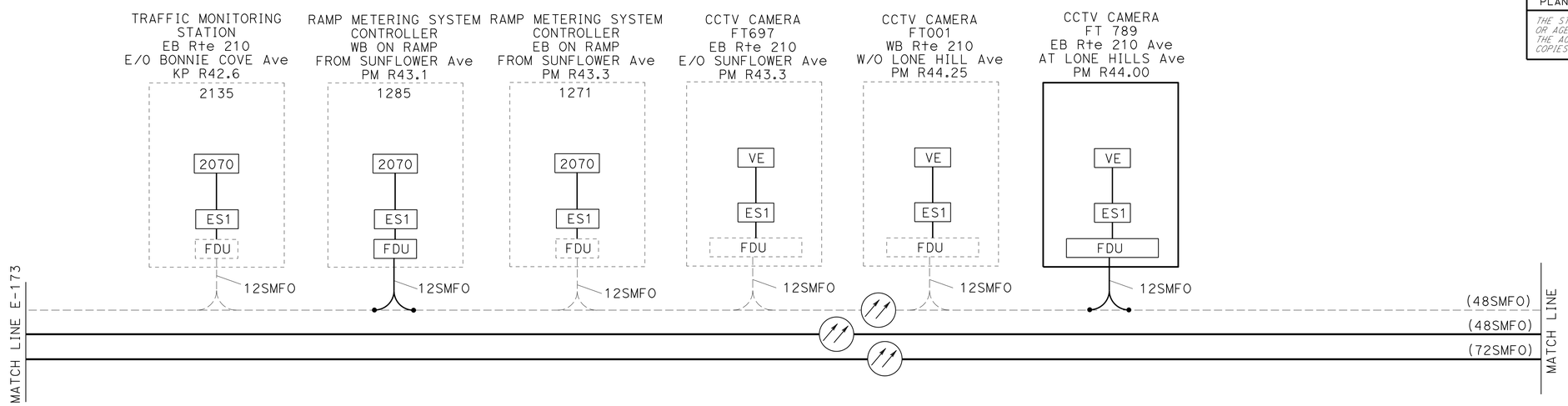

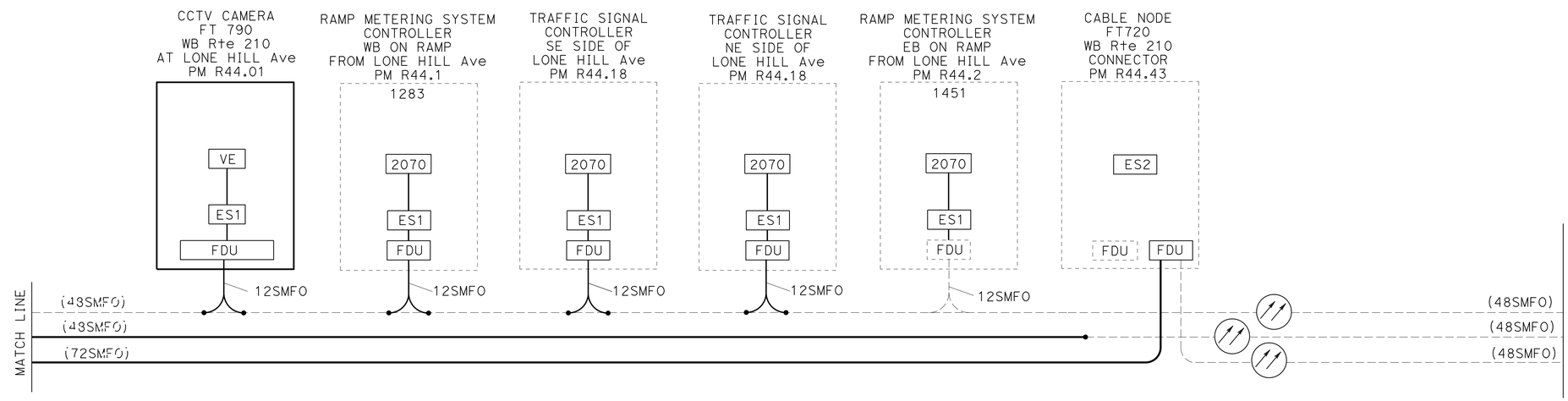

LEGEND: (THIS SHEET ONLY)

2070 - CONTROLLER MODEL 2070

XXXX — LOCATION NUMBER

EXISTING 12SMFO CABLE COILED IN SPLICE VAULT

SPLICE NEW AND EXISTING CABLES

EXISTING CONDUIT AND CABLE

PROPOSED CONDUIT AND CABLE

MODIFY COMMUNICATION SYSTEM
SCHEMATIC No. 10
NO SCALE

APPROVED FOR ELECTRICAL WORK ONLY

E-174

REVISED BY | DATE REVISED
CONWAY CHU | JACQUELINE C. TAN
CALCULATED-DESIGNED BY | CHECKED BY
FUNCTIONAL SUPERVISOR | JACQUELINE C. TAN
STATE OF CALIFORNIA - DEPARTMENT OF TRANSPORTATION
Caltrans
OFFICE OF ITS

LAST REVISION 09-23-14 | DATE PLOTTED => 16-SEP-2015 | TIME PLOTTED => 13:27

Dist	COUNTY	ROUTE	POST MILES TOTAL PROJECT	SHEET No.	TOTAL SHEETS
07	LA	210	R24.7/R44.9	216	274

REGISTERED ELECTRICAL ENGINEER 6/26/15 DATE

7-27-15
PLANS APPROVAL DATE

REGISTERED PROFESSIONAL ENGINEER JACQUELINE C. TAN No. E015611 Exp. 12/31/15 ELECTRICAL STATE OF CALIFORNIA

THE STATE OF CALIFORNIA OR ITS OFFICERS OR AGENTS SHALL NOT BE RESPONSIBLE FOR THE ACCURACY OR COMPLETENESS OF SCANNED COPIES OF THIS PLAN SHEET.

LEGEND AND ABBREVIATION: (THIS SHEET ONLY)

- X - TERMINATED ACTIVE (NEW)
- O - TERMINATED SPARE
- Tx - TRANSMITTER
- Rx - RECEIVER
- CS - CENSUS STATION
- TS - TRAFFIC SIGNAL

FIBER OPTIC CABLE (48SMFO) ASSIGNMENT TABLE (PM 24.85 to PM 27.40)

FIBER	USE	Rte 134/Rte 210 CABLE NODE FT400	SB Rte 210 TO EB Rte 210 TUNNEL SCADA SYSTEM	SB Rte 210 TO EB Rte 210 TUNNEL SCADA SYSTEM	WB Rte 210 TO SB Rte 710 TUNNEL SCADA SYSTEM	WB MAPLE St ON RAMP RAMP METER CONTROLLER 1311-54	FAIR OAKS AND MAPLE CCTV CAMERA LOCATION 750	FAIR OAKS AND MAPLE TRAFFIC SIGNAL CONTROLLER	FAIR OAKS AND CORSON CCTV CAMERA LOCATION 751	FAIR OAKS AND CORSON TRAFFIC SIGNAL CONTROLLER	WB OFF RAMP TO FAIR OAKS TRAFFIC MONITORING STATION 2547-106	MARENGO AND MAPLE TRAFFIC SIGNAL CONTROLLER	MARENGO AND MAPLE CCTV CAMERA LOCATION 752	MARENGO AND CORSON TRAFFIC SIGNAL CONTROLLER	MARENGO AND CORSON CCTV CAMERA LOCATION 753	EB ON RAMP FROM MARENGO Ave RAMP METER CONTROLLER 1522-54	WB OFF RAMP TO MAPLE AT GRAFIELD TRAFFIC MONITORING STATION 2548-54	EB ON RAMP FROM E CORSON AT EUCLID CCTV SYSTEM LOCATION FT414	WB E MAPLE ON RAMP FROM LAKE Ave RAMP METER CONTROLLER 1309-54	EB OFF RAMP AT LAKE Ave TO CORSON TRAFFIC MONITORING STATION 2574-54	SWQ AT LAKE Ave CCTV CAMERA LOCATION FT422	SWQ AT LAKE Ave CCTV CAMERA LOCATION 755	LAKE AND MAPLE TRAFFIC SIGNAL CONTROLLER	LAKE AND MAPLE CCTV CAMERA LOCATION 754	EB ON RAMP FROM LAKE Ave RAMP METER CONTROLLER 1248-54	EB Rte 210 NEAR N CATALINA Ave AUTOMATIC VEHICLE CLASSIFICATION	WB OFF RAMP TO LAKE Ave TRAFFIC MONITORING STATION 2549-54	EB OFF RAMP TO CORSON AT HILL Ave TRAFFIC MONITORING STATION 2575-54	WB ON RAMP FROM Hill Ave RAMP METER CONTROLLER 1308-54	WB ON RAMP FROM HILL Ave AUTOMATIC VEHICLE CLASSIFICATION	HILL AND MAPLE TRAFFIC SIGNAL CONTROLLER	HILL AND MAPLE CCTV CAMERA LOCATION 756	HILL AND CORSON TRAFFIC SIGNAL CONTROLLER	HILL AND CORSON CCTV CAMERA LOCATION 757	EB ON RAMP FROM HILL Ave RAMP METER CONTROLLER 1249-54	ALLEN AND MAPLE CCTV CAMERA LOCATION 758	ALLEN AND MAPLE TRAFFIC SIGNAL CONTROLLER	ALLEN AND CORSON CCTV CAMERA LOCATION 759	ALLEN AND CORSON TRAFFIC SIGNAL CONTROLLER	FIBER
	PM R	24.85	24.85	24.85	24.98	25.10	25.23	25.23	25.29	25.29	25.41	25.54	25.54	25.54	25.54	25.66	25.66	25.72	26.16	26.22	26.22	26.22	26.28	26.28	26.41	26.47	26.47	26.84	26.84	26.84	26.91	26.91	26.91	26.91	27.09	27.40	27.40	27.40	27.40	
1	RMS - Tx															X									X										X					1
2	RMS - Rx															X									X										X					2
3	RMS - Tx					X													X										X											3
4	RMS - Rx					X													X										X											4
5	TMS - Tx										X									X								X												5
6	TMS - Rx										X									X								X												6
7	TMS - Tx																X										X													7
8	TMS - Rx																X										X													8
9																																								9
10																																								10
11	CS - Tx																																							11
12	CS - Rx																																							12
13	CMS - Tx																																							13
14	CMS - Rx																																							14
15																																								15
16																																								16
17																																								17
18																																								18
19																																								19
20																																								20
21	CCTV CAMERA-Tx								X						X						X			X									X				X		21
22	CCTV CAMERA-Rx								X						X						X			X									X				X		22
23	CCTV CAMERA-Tx						X						X					X				X									X					X			23
24	CCTV CAMERA-Rx						X						X					X				X									X					X			24
25	TS - Tx									X																						X						X		25
26	TS - Rx									X																						X						X		26
27																																								27
28																																								28
29																																								29
30																																								30
31	**TS - Tx**							X				X											X										X					X	31
32	**TS - Rx**							X				X											X										X					X	32
33	HAR - Tx																																							33
34	HAR - Rx																																							34
35	AVC - Tx																									O				O										35
36	AVC - Rx																									O				O										36
37	TUNNEL - Tx		O	O	O																																			37
38	TUNNEL - Rx		O	O	O																																			38
.																																								.
.																																								.
48																																								48

MODIFY COMMUNICATION SYSTEM
(FIBER OPTIC ASSIGNMENT TABLE No. 1)
(DISTRIBUTION)

APPROVED FOR ELECTRICAL WORK ONLY

E-175

REVISED BY | DATE REVISED
BOB TIEU | JACQUELINE C. TAN
CALCULATED-DESIGNED BY | CHECKED BY
FUNCTIONAL SUPERVISOR: JACQUELINE C. TAN

STATE OF CALIFORNIA - DEPARTMENT OF TRANSPORTATION
Caltrans® OFFICE OF ITS

LAST REVISION 09-23-14 | DATE PLOTTED => 16-SEP-2015 | TIME PLOTTED => 13:27

Dist	COUNTY	ROUTE	POST MILES TOTAL PROJECT	SHEET No.	TOTAL SHEETS
07	LA	210	R24.7/R44.9	217	274

REGISTERED ELECTRICAL ENGINEER DATE 6/26/15

7-27-15
PLANS APPROVAL DATE

REGISTERED PROFESSIONAL ENGINEER JACQUELINE C. TAN No. E015611 Exp. 12/31/15 ELECTRICAL STATE OF CALIFORNIA

THE STATE OF CALIFORNIA OR ITS OFFICERS OR AGENTS SHALL NOT BE RESPONSIBLE FOR THE ACCURACY OR COMPLETENESS OF SCANNED COPIES OF THIS PLAN SHEET.

FIBER OPTIC CABLE (48SMFO) ASSIGNMENT TABLE (PM 27.50 to PM 30.01)

FIBER	USE	EB Rte 210 ON RAMP AT ALLEN Ave CCTV CAMERA LOCATION	EB Rte 210 ON RAMP AT ALLEN Ave CHANGEABLE MESSAGE SIGN	WB Rte 210 E/O ALLEN Ave CHANGEABLE MESSAGE SIGN No. 81	EB Rte 210 ON RAMP AT ALLEN Ave IP NODE 1 (DATA NODE) LOCATION FT443	WB OFF RAMP TO ALLEN Ave TRAFFIC MONITORING STATION 2551-54	WB Rte 210 at WB OFF RAMP TO ALLEN Ave CCTV SYTEM LOCATION FT444	WB ON RAMP FROM ALTADENA Dr RAMP METER CONTROLLER	WB Rte 210 NEAR CARMELO Ave CCTV SYSTEM LOCATION FT452	EB OFF RAMP TO ALTADENA Dr TRAFFIC MONITORING STATION 2569-54	ALTADENA AND MAPLE CCTV CAMERA LOCATION 760	ALTADENA AND MAPLE TRAFFIC SIGNAL CONTROLLER	ALTADENA AND CORSON CCTV CAMERA LOCATION 761	ALTADENA AND CORSON TRAFFIC SIGNAL CONTROLLER	WB ON RAMP FROM SAN GABRIEL/ SIERRA MADRE RAMP METER CONTROLLER 1306-54	EB OFF RAMP TO SAN GABRIEL/ SIERRA MADRE CCTV CAMERA LOCATION 763	EB OFF RAMP TO SAN GABRIEL/ SIERRA MADRE TRAFFIC MONITORING STATION 2568-54	EB CORSON St AT SIERRA MADRE Blvd TRAFFIC SIGNAL CONTROLLER	SAN GABRIEL/LA TIERRA CCTV CAMERA LOCATION 764	W MAPLE AT SIERRA MADRE Blvd TRAFFIC SIGNAL CONTROLLER	W MAPLE AT SIERRA MADRE Blvd CCTV CAMERA LOCATION 762	WB OFF RAMP TO SIERRA MADRE Blvd TRAFFIC MONITORING STATION 2566-54	EB ON RAMP FROM E CORSON RAMP METER CONTROLLER 1251-54	EB Rte 210 E/O SUNNYSLOPE Dr CCTV SYSTEM LOCATION FT463	WB ON RAMP FROM SIERRA MADRE VILLA Ave RAMP METER CONTROLLER 1305-54	EB OFF RAMP TO SIERRA MADRE VILLA Ave TRAFFIC MONITORING STATION 2567-54	WB Rte 210 AT SIERRA MADRE VILLA Ave TRAFFIC SIGNAL CONTROLLER	WB Rte 210 AT SIERRA MADRE VILLA Ave CCTV CAMERA LOCATION 765	EB Rte 210 AT SIERRA MADRE VILLA Ave TRAFFIC SIGNAL CONTROLLER	EB Rte 210 AT SIERRA MADRE VILLA Ave CCTV CAMERA LOCATION 766	EB ON RAMP FROM MADRE St RAMP METER CONTROLLER 1252-54	WB ON RAMP FROM ROSEMEAD Blvd RAMP METER CONTROLLER 1569-55	EB ON RAMP FROM ROSEMEAD Blvd RAMP METER CONTROLLER 1253-55	WB ON RAMP FROM FOOTHILL Blvd RAMP METER CONTROLLER 1304-55	WB Rte 210 AT FOOTHILL Blvd-SEARS TRAFFIC SIGNAL CONTROLLER	WB Rte 210 AT FOOTHILL BLVD-SEARS CCTV CAMERA LOCATION 768	EB Rte 210 AT EB COLORADO ON RAMP CCTV CAMERA LOCATION FT482	EB Rte 210 AT EB COLORADO ON RAMP CCTV CAMERA LOCATION 767	EB Rte 210 AT MERLON-COLORADO TRAFFIC SIGNAL CONTROLLER	EB ON RAMP FROM COLORADO/ROSEMEAD RAMP METER CONTROLLER 1254-55	FIBER
	PM R	27.50	27.50	27.53	27.59	27.59	27.59	28.09	28.09	28.09	28.21	28.21	28.21	28.21	28.33	28.33	28.33	28.40	28.52	28.46	28.46	28.52	28.65	28.77	29.14	29.20	29.27	29.27	29.27	29.27	29.33	29.70	29.89	29.95	29.95	29.95	29.95	29.95	30.01	30.01	
1	RMS - Tx				X										X										X							X		X							1
2	RMS - Rx				X										X										X							X		X							2
3	RMS - Tx				X			X															X								X		X							X	3
4	RMS - Rx				X			X															X								X		X							X	4
5	TMS - Tx				X					X												X																			5
6	TMS - Rx				X					X												X																			6
7	TMS - Tx				X	X											X									X															7
8	TMS - Rx				X	X											X									X															8
9					X																																				9
10					X																																				10
11	CS - Tx				X																																				11
12	CS - Rx				X																																				12
13	CMS - Tx			X	X																																				13
14	CMS - Rx			X	X																																				14
15	CMS - Tx		X		X																																				15
16	CMS - Rx		X		X																																				16
17					X																																				17
18					X																																				18
19					X																																				19
20					X																																				20
21	CCTV CAMERA-Tx				X				X				X						X					X					X							X					21
22	CCTV CAMERA-Rx				X				X				X						X					X					X							X					22
23	CCTV CAMERA-Tx	X			X		X				X					X					X							X									X		X		23
24	CCTV CAMERA-Rx	X			X		X				X					X					X							X									X		X		24
25	TS - Tx				X							X						X									X								X						25
26	TS - Rx				X							X						X									X								X						26
27					X																																				27
28					X																																				28
29					X																																				29
30					X																																				30
31	**TS - Tx**				X									X						X								X										X		31
32	**TS - Rx**				X									X						X								X										X		32
.					.																																			.
.					.																																			.
48		X			X																																			48

LEGEND AND ABBREVIATION: (THIS SHEET ONLY)

X - TERMINATED ACTIVE (NEW)
O - TERMINATED SPARE
Tx - TRANSMITTER
Rx - RECEIVER
CS - CENSUS STATION
TS - TRAFFIC SIGNAL

MODIFY COMMUNICATION SYSTEM
(FIBER OPTIC ASSIGNMENT TABLE No. 2)
(DISTRIBUTION)

APPROVED FOR ELECTRICAL WORK ONLY

E-176

BOB TIEU | REVISED BY
JACQUELINE C. TAN | DATE REVISED
CALCULATED-DESIGNED BY
CHECKED BY
FUNCTIONAL SUPERVISOR
JACQUELINE C. TAN

STATE OF CALIFORNIA - DEPARTMENT OF TRANSPORTATION
OFFICE OF ITS
Caltrans

LAST REVISION 09-23-14 | DATE PLOTTED => 16-SEP-2015 | TIME PLOTTED => 13:27

Dist	COUNTY	ROUTE	POST MILES TOTAL PROJECT	SHEET No.	TOTAL SHEETS
07	LA	210	R24.7/R44.9	218	274

REGISTERED ELECTRICAL ENGINEER 6/26/15 DATE

7-27-15
PLANS APPROVAL DATE

REGISTERED PROFESSIONAL ENGINEER
JACQUELINE C. TAN
No. E015611
Exp. 12/31/15
ELECTRICAL
STATE OF CALIFORNIA

THE STATE OF CALIFORNIA OR ITS OFFICERS OR AGENTS SHALL NOT BE RESPONSIBLE FOR THE ACCURACY OR COMPLETENESS OF SCANNED COPIES OF THIS PLAN SHEET.

FIBER OPTIC CABLE (48SMFO) ASSIGNMENT TABLE (PM 30.14 to PM 34.36)

FIBER	USE	WB ON RAMP FROM MICHILLINDA Ave RAMP METER CONTROLLER 1516-55	EB R+e 210 E/O VAQUERO Rd TRAFFIC MONITORING STATION & CENSUS STATION 2116-106	WB R+e 210 E/O VAQUERO Rd TRAFFIC MONITORING STATION & CENSUS STATION 2672-106	WB ON RAMP FROM S BALDWIN Ave RAMP METER CONTROLLER 1303-55	**WB ON RAMP FROM S BALDWIN Ave CCTV CAMERA LOCATION 769**	WB R+e 210 AT BALDWIN-FOOTHILL TRAFFIC SIGNAL CONTROLLER	WB R+e 210 NEAR S BALDWIN Ave CCTV SYSTEM LOCATION FT498	**EB R+e 210 AT BALDWIN Ave CCTV SYSTEM LOCATION 770**	EB R+e 210 AT BALDWIN Ave TRAFFIC SIGNAL CONTROLLER	WB ON RAMP FROM BALDWIN Ave RAMP METER CONTROLLER 1302-55	EB ON RAMP FROM BALDWIN Ave RAMP METER CONTROLLER 1255-55	EB R+e 210 E/O BALDWIN Ave IP NODE 2 (DATA NODE) LOCATION FT503	WB ON RAMP FROM SANTA ANITA Ave RAMP METER CONTROLLER 1301-55	EB R+e 210 AT SANTA ANITA Ave TRAFFIC SIGNAL CONTROLLER	**EB R+e 210 AT SANTA ANITA Ave CCTV CAMERA LOCATION 772**	WB R+e 210 AT SANTA ANITA Ave TRAFFIC SIGNAL CONTROLLER	**WB R+e 210 AT SANTA ANITA Ave CCTV CAMERA LOCATION 771**	WB ON RAMP FROM SANTA ANITA Ave RAMP METER CONTROLLER 1300-55	EB ON RAMP FROM SANTA ANITA Ave RAMP METER CONTROLLER 1256-55	WB R+e 210 NEAR SANTA ANITA Ave CCTV CAMERA LOCATION FT520	R+e 210 E/O SECOND Ave TRAFFIC MONITORING STATION 2117-106	EB ON RAMP FROM HUNTINGTON Dr RAMP METER CONTROLLER 1257-55	WB R+e 210 N/O HUNTINGTON Dr CCTV SYSTEM LOCATION FT533	WB ON RAMP FROM HUNTINGTON Dr RAMP METER CONTROLLER 1299-55	EB R+e 210 AT HUNTINGTON Dr TRAFFIC SIGNAL CONTROLLER	**EB R+e 210 AT HUNTINGTON Dr CCTV CAMERA LOCATION 774**	WB R+e 210 AT HUNTINGTON Dr TRAFFIC SIGNAL CONTROLLER	**WB R+e 210 AT HUNTINGTON Dr CCTV CAMERA LOCATION 773**	EB ON RAMP FROM HUNTINGTON Dr RAMP METER CONTROLLER 1258-55	WB ON RAMP FROM MYRTLE Ave RAMP METER CONTROLLER 1298-54	WB R+e 210 NEAR MYRTLE Ave CCTV CAMERA LOCATION FT550	**WB R+e 210 NEAR MYRTLE Ave CHANGEABLE MESSAGE SIGN**	EB R+e 210 W/O MOUNTAIN Ave HAR SIGN & FLASHING BEACON	MYRTLE Ave AT CENTRAL TRAFFIC SIGNAL CONTROLLER	**MYRTLE Ave AT CENTRAL CCTV CAMERA LOCATION 775**	MYRTLE Ave AT EVERGREEN TRAFFIC SIGNAL CONTROLLER	**MYRTLE Ave AT EVERGREEN CCTV CAMERA LOCATION 776**	EB ON RAMP FROM MYRTLE Ave RAMP METER CONTROLLER 1259-55	EB R+e 210 W/O CALIFORNIA Ave TRAFFIC MONITORING STATION 2118-106	FIBER
	PM R	30.14	30.63	30.63	30.88	30.88	30.88	30.94	31.13	31.13	31.13	31.13	31.25	32.00	32.19	32.19	32.19	32.19	32.25	32.25	32.31	32.68	33.06	33.12	33.12	33.12	33.12	33.18	33.18	33.24	34.11	34.18	34.18	34.18	34.18	34.18	34.18	34.18	34.36	34.36	
1	RMS - Tx	X									X		X	X						X					X						X										1
2	RMS - Rx	X									X		X	X						X					X						X										2
3	RMS - Tx				X							X	X						X				X							X									X		3
4	RMS - Rx				X							X	X						X				X							X									X		4
5	TMS - Tx												X									X																			5
6	TMS - Rx												X									X																			6
7	TMS - Tx												X																											X	7
8	TMS - Rx												X																											X	8
9													X																												9
10													X																												10
11	CS - Tx		X	X									X																												11
12	CS - Rx		X	X									X																												12
13	CMS - Tx												X																				X								13
14	CMS - Rx												X																				X								14
15	CMS - Tx												X																												15
16	CMS - Rx												X																												16
17													X																												17
18													X																												18
19													X																												19
20													X																												20
21	CCTV CAMERA-Tx					X			X				X					X						X					X						X						21
22	CCTV CAMERA-Rx					X			X				X					X						X					X						X						22
23	CCTV CAMERA-Tx							X					X			X					X						X				X						X					23
24	CCTV CAMERA-Rx							X					X			X					X						X				X						X					24
25	TS - Tx						X						X		X											X								X				X			25
26	TS - Rx						X						X		X											X								X				X			26
27													X																												27
28													X																												28
29													X																												29
30													X																												30
31	**TS - Tx**									X			X				X											X									X				31
32	**TS - Rx**									X			X				X											X									X				32
.													.																												.
.													.																												.
48													X																												48

LEGEND AND ABBREVIATION: (THIS SHEET ONLY)

X - TERMINATED ACTIVE (NEW)
O - TERMINATED SPARE
TBD - TO BE DETERMINED

Tx - TRANSMITTER
Rx - RECEIVER
CS - CENSUS STATION
TS - TRAFFIC SIGNAL

APPROVED FOR ELECTRICAL WORK ONLY

MODIFY COMMUNICATION SYSTEM
(FIBER OPTIC ASSIGNMENT TABLE No. 3)
(DISTRIBUTION)

E-177

REVISED BY	DATE REVISED
BOB TIEU	

CALCULATED-DESIGNED BY: JACQUELINE C. TAN
CHECKED BY:
FUNCTIONAL SUPERVISOR: JACQUELINE C. TAN

STATE OF CALIFORNIA - DEPARTMENT OF TRANSPORTATION
Caltrans
OFFICE OF ITS

LAST REVISION 09-23-14 | DATE PLOTTED => 16-SEP-2015 | TIME PLOTTED => 13:27

Dist	COUNTY	ROUTE	POST MILES TOTAL PROJECT	SHEET No.	TOTAL SHEETS
07	LA	210	R24.7/R44.9	219	274

Jacqueline C Tan 6/26/15
REGISTERED ELECTRICAL ENGINEER DATE

7-27-15
PLANS APPROVAL DATE

REGISTERED PROFESSIONAL ENGINEER
JACQUELINE C. TAN
No. E015611
Exp. 12/31/15
ELECTRICAL
STATE OF CALIFORNIA

THE STATE OF CALIFORNIA OR ITS OFFICERS OR AGENTS SHALL NOT BE RESPONSIBLE FOR THE ACCURACY OR COMPLETENESS OF SCANNED COPIES OF THIS PLAN SHEET.

FIBER OPTIC CABLE (48SMFO) ASSIGNMENT TABLE (PM 34.55 to PM 37.84)

FIBER	USE	CALIFORNIA AT EVERGREEN TRAFFIC SIGNAL CONTROLLER	**CALIFORNIA AT EVERGREEN CCTV CAMERA LOCATION 778**	CALIFORNIA AT CENTRAL TRAFFIC SIGNAL CONTROLLER	**CALIFORNIA AT CENTRAL CCTV CAMERA LOCATION 777**	WB ON RAMP FROM MOUNTAIN Ave RAMP METER CONTROLLER 1297-55	MOUNTAIN AT EVERGREEN TRAFFIC SIGNAL CONTROLLER	**MOUNTAIN AT EVERGREEN CCTV CAMERA LOCATION 780**	MOUNTAIN AT CENTRAL TRAFFIC SIGNAL CONTROLLER	**MOUNTAIN AT CENTRAL CCTV CAMERA LOCATION 779**	WB R†e 210 NEAR MOUNTAIN Ave CCTV SYSTEM LOCATION FT567	EB R†e 210 W/O BUENA VISTA S† IP NODE (DATA NODE) FT570	EB ON RAMP FROM MOUNTAIN Ave RAMP METER CONTROLLER 1260-55	WB ON RAMP FROM BUENA VISTA S† RAMP METER CONTROLLER 1296-55	BUENA VISTA AT EVERGREEN TRAFFIC SIGNAL CONTROLLER	BUENA VISTA AT CENTRAL TRAFFIC SIGNAL CONTROLLER	EB ON RAMP FROM BUENA VISTA S† RAMP METER CONTROLLER 1261-55	R†e 210 AT HIGHLAND Ave CENSUS STATION No 194	EB R†e 210 E/O HIGHLAND Ave HAR TRANSMITTER	R†e 210 W/O HIGHLAND Ave TRAFFIC MONITORING STATION 2412-106	WB ON RAMP FROM MT OLIVE Dr RAMP METER CONTROLLER 1294-70	EB ON RAMP FROM MT OLIVE Dr RAMP METER CONTROLLER 1262-70	WB R†e 210 NEAR MT OLIVE Dr CCTV SYSTEM LOCATION FT589	R†e 210 AT R†e 605 INTERCHANGE TRAFFIC MONITORING STATION 2407-106	R†e 210/R†e 605 CABLE NODE FT589	EB R†e 210 W/O IRWINDALE Ave CCTV CAMERA FT600	EB R†e 210 W/O IRWINDALE Ave TMS 2119	EB R†e 210 W/O IRWINDALE Ave TMS 2120	WB ON-RAMP FROM IRWINDALE Ave RAMP METER 1293	SW SIDE OF IRWINDALE Ave TRAFFIC SIGNAL	**NW SIDE OF IRWINDALE Ave TRAFFIC SIGNAL**	WB ON-RAMP FROM NB IRWINDALE Ave RAMP METER 1292	EB ON-RAMP FROM NB IRWINDALE Ave RAMP METER 1264	**WB R†e 210 AT IRWINDALE Ave CCTV CAMERA 781**	**EB R†e 210 AT IRWINDALE Ave CCTV CAMERA 782**	SE SIDE OF IRWINDALE Ave IP NODE (DATA NODE) FT610	FIBER
	PM R	34.55	34.55	34.24	34.24	34.92	35.05	35.05	35.15	35.15	35.23	35.42	35.42	35.48	35.54	35.54	35.85	36.10	36.60	36.35	36.66	36.60	36.60	36.66	36.60	37.50	37.10	37.50	37.78	37.84	37.85	37.90	37.80	37.81	37.82	37.84	
1	RMS - Tx					X						X		X							X				S				X				X			X	1
2	RMS - Rx					X						X		X							X				S				X				X			X	2
3	RMS - Tx											X	X				X					X			S							X				X	3
4	RMS - Rx											X	X				X					X			S							X				X	4
5	TMS - Tx											X								X					S		X									X	5
6	TMS - Rx											X								X					S		X									X	6
7	TMS - Tx											X												X	S			X								X	7
8	TMS - Rx											X												X	S			X								X	8
9												X													S											X	9
10												X													S											X	10
11	CS - Tx											X						X							S											X	11
12	CS - Rx											X						X							S											X	12
13	CMS - Tx											X													S											X	13
14	CMS - Rx											X													S											X	14
15												X													S											X	15
16												X													S											X	16
17												X													S											X	17
18												X													S											X	18
19												X													S											X	19
20												X													S											X	20
21	CCTV CAMERA-Tx		X					X			X	X													S	X									X	X	21
22	CCTV CAMERA-Rx		X					X			X	X													S	X									X	X	22
23	CCTV CAMERA-Tx				X					X		X											X		S									X		X	23
24	CCTV CAMERA-Rx				X					X		X											X		S									X		X	24
25	TS - Tx	X					X					X			X										S					X						X	25
26	TS - Rx	X					X					X			X										S					X						X	26
27												X													S											X	27
28												X													S											X	28
29												X													S											X	29
30												X													S											X	30
31	**TS - Tx**			X					X			X				X									S						X					X	31
32	**TS - Rx**			X					X			X				X									S						X					X	32
33												X							X						S											X	33
34												X							X						S											X	34
.												.													.											.	.
.												.													.											.	.
48												X													S											X	48

LEGEND AND ABBREVIATION: (THIS SHEET ONLY)

- **X** - TERMINATED ACTIVE (NEW)
- X - TERMINATED ACTIVE (EXISTING)
- O - TERMINATED SPARE
- Tx - TRANSMITTER
- Rx - RECEIVER
- CS - CENSUS STATION
- TS - TRAFFIC SIGNAL
- **S - SPLICE AT SPLICE VAULT**

APPROVED FOR ELECTRICAL WORK ONLY

MODIFY COMMUNICATION SYSTEM
(FIBER OPTIC ASSIGNMENT TABLE No. 4)
(DISTRIBUTION)

E-178

BOB TIEU	REVISED BY
JACQUELINE C. TAN	DATE REVISED
CALCULATED-DESIGNED BY	
CHECKED BY	
FUNCTIONAL SUPERVISOR	
JACQUELINE C. TAN	

STATE OF CALIFORNIA - DEPARTMENT OF TRANSPORTATION
Caltrans
OFFICE OF ITS

LAST REVISION 09-23-14 | DATE PLOTTED => 16-SEP-2015 | TIME PLOTTED => 13:27

Dist	COUNTY	ROUTE	POST MILES TOTAL PROJECT	SHEET No.	TOTAL SHEETS
07	LA	210	R24.7/R44.9	220	274

Jacqueline C Tan 6/26/15
REGISTERED ELECTRICAL ENGINEER DATE

7-27-15
PLANS APPROVAL DATE

REGISTERED PROFESSIONAL ENGINEER
JACQUELINE C. TAN
No. E015611
Exp. 12/31/15
ELECTRICAL
STATE OF CALIFORNIA

THE STATE OF CALIFORNIA OR ITS OFFICERS OR AGENTS SHALL NOT BE RESPONSIBLE FOR THE ACCURACY OR COMPLETENESS OF SCANNED COPIES OF THIS PLAN SHEET.

FIBER OPTIC CABLE (48SMFO) ASSIGNMENT TABLE (PM 37.84 to PM 42.30)

FIBER	USE	SE SIDE OF IRWINDALE Ave IP NODE (DATA NODE) FT610	NE SIDE OF IRWINDALE Ave CCTV CAMERA FT611	EB Rte 210 E/O IRWINDALE Ave CENSUS STATION F26	EB Rte 210 E/O IRWINDALE Ave HAR BEACON AND SIGN	SW SIDE OF CONEY Ave TRAFFIC MONITORING STATION 2121	WB Rte 210 W/O VERNON Ave CHANGEABLE MESSAGE SIGN No. 96	NE SIDE OF VERNON Ave CCTV CAMERA FT630	WB ON RAMP FROM VERNON Ave RAMP METER 1291	SW SIDE OF VERNON Ave PUMP STATION	EB ON RAMP FROM VERNON Ave RAMP METER 1265	**WB ON RAMP FROM AZUSA Ave RAMP METER 1290**	**EB Rte 210 AT AZUSA Ave CCTV CAMERA 783**	**EB ON RAMP FROM AZUSA Ave RAMP METER 1266**	EB Rte 210 E/O AZUSA Ave CCTV CAMERA FT637	SE SIDE OF AZUSA Ave TRAFFIC SIGNAL	EB ON RAMP FROM AZUSA Ave RAMP METER 1267	**WB ON RAMP FROM AZUSA Ave RAMP METER 1289**	**SE SIDE OF AZUSA Ave TRAFFIC SIGNAL**	**WB Rte 210 AT ALAMEDA Ave/1st St CCTV CAMERA FT784**	WB Rte 210 W/O CERRITOS Ave TRAFFIC MONITORING STATION 2122	WB ON RAMP FROM FIRST St RAMP METER 1288	EB Rte 210 W/O CITRUS Ave CCTV CAMERA FT651	EB ON RAMP FROM CITRUS Ave RAMP METER 1268	**EB Rte 210 AT CITRUS Ave CCTV CAMERA 785**	SE SIDE OF CITRUS Ave TRAFFIC SIGNAL	**EB ON RAMP FROM CITRUS Ave RAMP METER 1269**	**WB Rte 210 AT CITRUS Ave/BASELINE Rd CCTV CAMERA 786**	**NE SIDE OF CITRUS Ave TRAFFIC SIGNAL**	EB Rte 210 W/O BARRANCA Ave TRAFFIC MONITORING STATION 2133	WB ON RAMP FROM GRAND Ave RAMP METER 1287	**EB Rte 210 AT GRAND Ave CCTV CAMERA 787**	**SE SIDE OF GRAND Ave TRAFFIC SIGNAL**	NE SIDE OF GRAND Ave TRAFFIC SIGNAL	EB ON RAMP FROM GRAND Ave RAMP METER 1270	WB ON RAMP FROM GRAND Ave RAMP METER 1286	**WB Rte 210 AT BASELINE Rd CCTV CAMERA 788**	WB Rte 210 E/O GRAND Ave CCTV CAMERA FT674	EB Rte 210 E/O GLENDORA Ave CCTV CAMERA FT682	EB Rte 210 E/O GLENDORA Ave IP NODE (DATA NODE) FT682	FIBER
KP R		37.84	37.90	37.97	38.03	38.50	38.80	38.90	38.87	38.96	39.05	39.52	38.61	39.64	39.50	39.60	39.71	39.62	39.58	39.70	39.90	40.26	40.50	40.56	40.59	40.59	40.70	40.90	40.85	41.10	41.50	41.63	41.63	41.82	41.69	41.68	41.73	41.80	42.30	42.30	
1	RMS - Tx	X									X			**X**				**X**				X									X					X					X	1
2	RMS - Rx	X									X			**X**				**X**				X									X					X					X	2
3	RMS - Tx	X							X			**X**					X							X			**X**								X						X	3
4	RMS - Rx	X							X			**X**					X							X			**X**								X						X	4
5	TMS - Tx	X				X																								X											X	5
6	TMS - Rx	X				X																								X											X	6
7	TMS - Tx	X																			X																				X	7
8	TMS - Rx	X																			X																				X	8
9		X																																							X	9
10		X																																							X	10
11	CS - Tx	X		**X**																																					X	11
12	CS - Rx	X		**X**																																					X	12
13	CMS 96 - Tx	X					X																																		X	13
14	CMS 96 - Rx	X					X																																		X	14
15		X																																							X	15
16		X																																							X	16
17		X																																							X	17
18		X																																							X	18
19		X																																							X	19
20		X																																							X	20
21	CCTV CAMERA-Tx	X						X					**X**										X					**X**										**X**		X	X	21
22	CCTV CAMERA-Rx	X						X					**X**										X					**X**										**X**		X	X	22
23	CCTV CAMERA-Tx	X	X												X					**X**					**X**							**X**							X		X	23
24	CCTV CAMERA-Rx	X	X												X					**X**					**X**							**X**							X		X	24
25	TS - Tx	X														**X**										**X**								**X**							X	25
26	TS - Rx	X														**X**										**X**								**X**							X	26
27		X																																							X	27
28		X																																							X	28
29	PUMP STATION	X								O																															X	29
30	PUMP STATION	X								O																															X	30
31	**TS - Tx**	X																	**X**										**X**				**X**								X	31
32	**TS - Rx**	X																	**X**										**X**				**X**								X	32
.		.																																							.	.
.		.																																							.	.
48		X																																							X	48

LEGEND AND ABBREVIATION:(THIS SHEET ONLY)

- **X** - TERMINATED ACTIVE (NEW)
- X - TERMINATED ACTIVE (EXISTING)
- O - TERMINATED SPARE

- Tx - TRANSMITTER
- Rx - RECEIVER
- CS - CENSUS STATION
- TS - TRAFFIC SIGNAL

MODIFY COMMUNICATION SYSTEM
(FIBER OPTIC ASSIGNMENT TABLE No. 5)
(DISTRIBUTION)

APPROVED FOR ELECTRICAL WORK ONLY

E-179

REVISED BY | DATE REVISED
CONWAY CHU | JACQUELINE C. TAN
CALCULATED-DESIGNED BY | CHECKED BY
FUNCTIONAL SUPERVISOR: JACQUELINE C. TAN
STATE OF CALIFORNIA - DEPARTMENT OF TRANSPORTATION
Caltrans
OFFICE OF ITS

LAST REVISION 06-09-15 | DATE PLOTTED => 16-SEP-2015 | TIME PLOTTED => 13:27

Dist	COUNTY	ROUTE	POST MILES TOTAL PROJECT	SHEET No.	TOTAL SHEETS
07	LA	210	R24.7/R44.9	221	274

Jacqueline C Tan 6/26/15
REGISTERED ELECTRICAL ENGINEER DATE

7-27-15
PLANS APPROVAL DATE

REGISTERED PROFESSIONAL ENGINEER
JACQUELINE C. TAN
No. E015611
Exp. 12/31/15
ELECTRICAL
STATE OF CALIFORNIA

THE STATE OF CALIFORNIA OR ITS OFFICERS OR AGENTS SHALL NOT BE RESPONSIBLE FOR THE ACCURACY OR COMPLETENESS OF SCANNED COPIES OF THIS PLAN SHEET.

FIBER OPTIC CABLE (48SMFO) ASSIGNMENT TABLE (PM 42.30 to PM 44.43)

FIBER	USE	EB Rte 210 E/O GLENDORA Ave IP NODE (DATA NODE) FT682	EB Rte 210 E/O GLENDORA Ave TRAFFIC MONITORING STATION 2134	EB Rte 210 W/O BONNIE COVE Ave CHANGEABLE MESSAGE SIGN No. 55	WB Rte 210 W/O BONNIE COVE Ave WEIGH-IN-MOTIN STATION 905W	EB Rte 210 W/O BONNIE COVE Ave WEIGH-IN-MOTION STATION 905E	EB Rte 210 W/O BONNIE COVE Ave CENSUS STATION 761	EB Rte 210 E/O BONNIE COVE Ave TRAFFIC MONITORING STATION 2135	**WB ON RAMP FROM SUNFLOWER Ave RAMP METER 1285**	EB ON RAMP FROM SUNFLOWER Ave RAMP METER 1271	EB Rte 210 E/O SUNFLOWER Ave CCTV CAMERA FT697	WB Rte 210 W/O LONE HILL Ave CCTV CAMERA FT001	**EB Rte 210 AT LONE HILL Ave CCTV CAMERA 789**	**WB Rte 210 AT LONE HILL Ave CCTV CAMERA 790**	**WB ON RAMP FROM LONE HILL Ave RAMP METER 1283**	SE SIDE OF LONE HILL Ave TRAFFIC SIGNAL	**NE SIDE OF LONE HILL Ave TRAFFIC SIGNAL**	EB ON RAMP FROM LONE HILL Ave RAMP METER 1451	EB Rte 210 E/O LONE HILL Ave CABLE NODE FT720	FIBER
PM R		42.30	42.30	43.00	42.50	42.69	42.69	42.60	43.10	43.30	43.30	44.25	44.00	44.01	44.10	44.18	44.18	44.20	44.43	
1	RMS - Tx	X							**X**									X	X	1
2	RMS - Rx	X							**X**									X	X	2
3	RMS - Tx	X								X					**X**				X	3
4	RMS - Rx	X								X					**X**				X	4
5	TMS - Tx	X						X											X	5
6	TMS - Rx	X						X											X	6
7	TMS - Tx	X	X																X	7
8	TMS - Rx	X	X																X	8
9		X																	X	9
10		X																	X	10
11	CS - Tx	X					**X**												X	11
12	CS - Rx	X					**X**												X	12
13		X																	X	13
14		X																	X	14
15	CMS 55	X		X															X	15
16	CMS 55	X		X															X	16
17		X																	X	17
18		X																	X	18
19		X																	X	19
20		X																	X	20
21	CCTV CAMERA-Tx	X										X		**X**					X	21
22	CCTV CAMERA-Rx	X										X		**X**					X	22
23	CCTV CAMERA-Tx	X									X		**X**		X				X	23
24	CCTV CAMERA-Rx	X									X		**X**		X				X	24
25	TS - Tx	X														**X**			X	25
26	TS - Rx	X														**X**			X	26
27	WIM	X			O	O													X	27
28	WIM	X			O	O													X	28
29		X																	X	29
30		X																	X	30
31	**TS - Tx**	X															**X**		X	31
32	**TS - Rx**	X															**X**		X	32
33		X																	X	33
34		X																	X	34
35		X																	X	35
36		X																	X	36
37		X																	X	37
38		X																	X	38
39		X																	X	39
40		X																	X	40
41		X																	X	41
42		X																	X	42
43		X																	X	43
44		X																	X	44
45		X																	X	45
46		X																	X	46
47		X																	X	47
48		X																	X	48

LEGEND AND ABBRIVIATION: (THIS SHEET ONLY)

X - TERMINATED ACTIVE (NEW)
X - TERMINATED ACTIVE (EXISTING)
O - TERMINATED SPARE

Tx - TRANSMITTER
Rx - RECEIVER
WIM - WEIGHT IN MOTION
IP - INTERNET PROTOCOL
CS - CENSUS STATION
TS - TRAFFIC SIGNAL

MODIFY COMMUNICATION SYSTEM
(FIBER OPTIC ASSIGNMENT TABLE No. 6)
(DISTRIBUTION)

E-180

APPROVED FOR ELECTRICAL WORK ONLY

STATE OF CALIFORNIA - DEPARTMENT OF TRANSPORTATION
Caltrans
OFFICE OF ITS

FUNCTIONAL SUPERVISOR: JACQUELINE C. TAN
CALCULATED-DESIGNED BY: CONWAY CHU
CHECKED BY: JACQUELINE C. TAN
REVISED BY
DATE REVISED

LAST REVISION 09-23-14
DATE PLOTTED => 16-SEP-2015
TIME PLOTTED => 13:27

Dist	COUNTY	ROUTE	POST MILES TOTAL PROJECT	SHEET No.	TOTAL SHEETS
07	LA	210	R24.7/R44.9	222	274

Jacqueline C Tan 6/26/15
REGISTERED ELECTRICAL ENGINEER DATE

7-27-15
PLANS APPROVAL DATE

REGISTERED PROFESSIONAL ENGINEER
JACQUELINE C. TAN
No. E015611
Exp. 12/31/15
ELECTRICAL
STATE OF CALIFORNIA

THE STATE OF CALIFORNIA OR ITS OFFICERS OR AGENTS SHALL NOT BE RESPONSIBLE FOR THE ACCURACY OR COMPLETENESS OF SCANNED COPIES OF THIS PLAN SHEET.

TRUNK FIBER OPTIC CABLE
(72SMFO) ASSIGNMENT TABLE (PM 24.86 to PM 44.43)

FIBER	USE	Rte 134 / Rte 210 CABLE NODE FT400	EB Rte 210 ONRAMP AT ALLEN Ave IP NODE (DATA NODE) FT443	EB Rte 210 E/O BALDWIN Ave IP NODE (DATA NODE) FT503	EB Rte 210 W/O BUENA VISTA St IP NODE (DATA NODE) FT570	Rte 210 / Rte 605 CABLE NODE FT589	EB Rte SE SIDE OF IRWINDALE Ave IP NODE (DATA NODE) FT610	EB Rte 210 E/O GLENDORA Ave IP NODE (DATA NODE) FT682	Rte 57 / Rte 210 CABLE NODE FT720	NOTE
	PM R	24.86	27.53	31.26	35.42	36.60	37.84	42.30	44.43	
1	TRUNK IN 1	X	X			X	X		X	
2	TRUNK OUT 1	X	X			X	X		X	
3	TRUNK IN 2	X		X		X		X	X	
4	TRUNK OUT 2	X		X		X		X	X	
5	TRUNK IN 3	X			X	X			X	
6	TRUNK OUT 3	X			X	X			X	
7		X				X			X	
8		X				X			X	
9		X				X			X	
10		X				X			X	
.		.				.			.	
.		.				.			.	
.		.				.			.	
72		X				X			X	

SPARE FIBER OPTIC CABLE
(48SMFO) ASSIGNMENT TABLE (PM 24.86 to PM 44.43)

FIBER	USE	Rte 134 / Rte 210 CABLE NODE FT400	EB ONRAMP FROM E CORSON AT EUCLID Ave ACCESS NODE (VIDEO NODE) FT414	EB Rte 210 AT Rte 605 INTERCHANGE ACCESS NODE (VIDEO NODE) FT589	EB Rte 210 E/O AZUSA Ave ACCESS NODE (VIDEO NODE) FT637	Rte 57 / Rte 210 CABLE NODE FT720	NOTE
	PM R	24.86	25.72	36.60	39.50	44.43	
1	SPARE	C	X	X	X	C	
2	SPARE	C	X	X	X	C	
3	SPARE	C	X	X	X	C	
4	SPARE	C	X	X	X	C	
5	SPARE	C	X	X	X	C	
6	SPARE	C	X	X	X	C	
7	SPARE	C	X	X	X	C	
8	SPARE	C	X	X	X	C	
9	SPARE	C	X	X	X	C	
10	SPARE	C	X	X	X	C	
.	.	.	.	.	.	.	
.	.	.	.	.	.	.	
.	.	.	.	.	.	.	
48	SPARE	C	X	X	X	C	

LEGEND AND ABBRIVIATION:(THIS SHEET ONLY)

X - TERMINATED ACTIVE

C - COIL 30 FEET OF 48SMFO IN SPLICE VAULT

MODIFY COMMUNICATION SYSTEM
(FIBER OPTIC ASSIGNMENT TABLE No. 7)

APPROVED FOR ELECTRICAL WORK ONLY

E-181

STATE OF CALIFORNIA - DEPARTMENT OF TRANSPORTATION
Caltrans®
OFFICE OF ITS

FUNCTIONAL SUPERVISOR: JACQUELINE C. TAN
CALCULATED-DESIGNED BY: CONWAY CHU
CHECKED BY: JACQUELINE C. TAN
REVISED BY
DATE REVISED

LAST REVISION 09-23-14
DATE PLOTTED => 16-SEP-2015
TIME PLOTTED => 13:27

Dist	COUNTY	ROUTE	POST MILES TOTAL PROJECT	SHEET No.	TOTAL SHEETS
07	LA	210	R24.7/R44.9	223	274

Jacqueline C Tan 6/26/15
REGISTERED ELECTRICAL ENGINEER DATE

7-27-15
PLANS APPROVAL DATE

REGISTERED PROFESSIONAL ENGINEER JACQUELINE C. TAN No. E015611 Exp. 12/31/15 ELECTRICAL STATE OF CALIFORNIA

THE STATE OF CALIFORNIA OR ITS OFFICERS OR AGENTS SHALL NOT BE RESPONSIBLE FOR THE ACCURACY OR COMPLETENESS OF SCANNED COPIES OF THIS PLAN SHEET.

LEGEND: (THIS SHEET ONLY)

1 #8 COPPER WIRE ATTACHED TO GROUNDING PROVISION ON COMMUNICATION PULL BOX WITH TERMINAL LUG

NOTES: (THIS SHEET ONLY)

1. FOR DETAILS NOT SHOWN SEE Std PLAN RSP ES-8B.
2. CONDUITS SHOWN ARE FOR EXAMPLE ONLY. ADDITIONAL CONDUITS MAY BE REQUIRED AS SHOWN ON THE PLAN SHEETS.

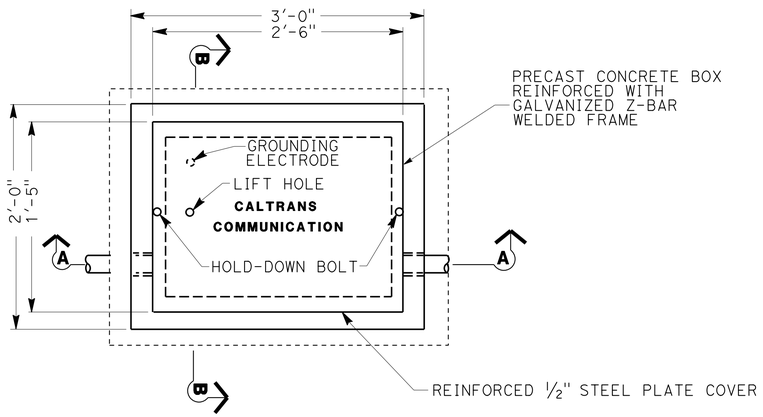

TOP VIEW

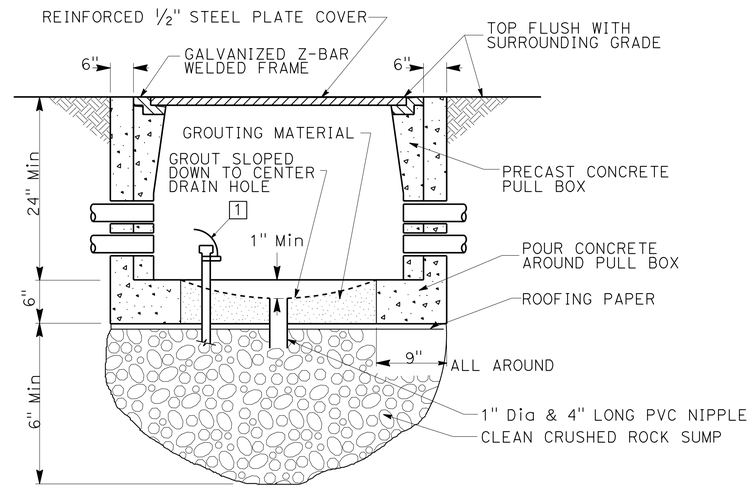

SECTION A-A

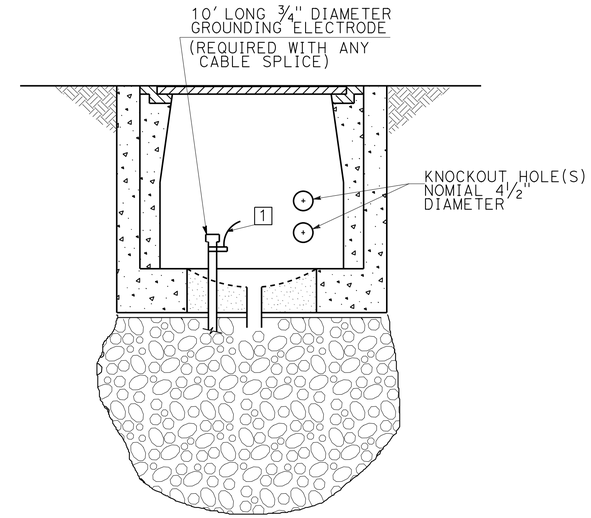

SECTION B-B

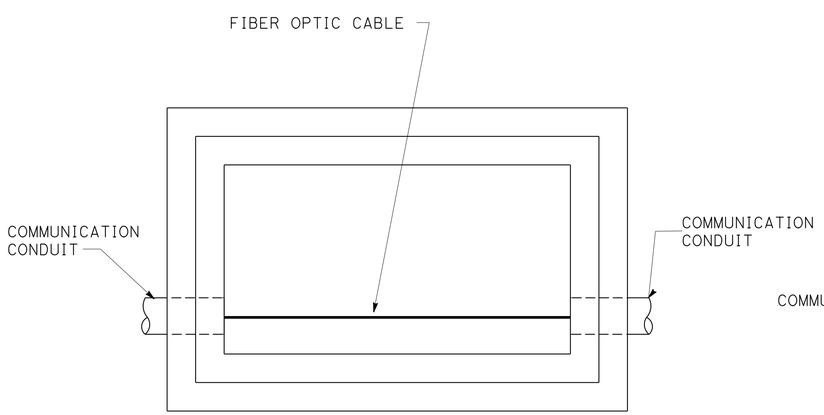

DETAIL A

COMMUNICATION PULL BOX WITH FIBER OPTIC CABLE - NO SPLICE

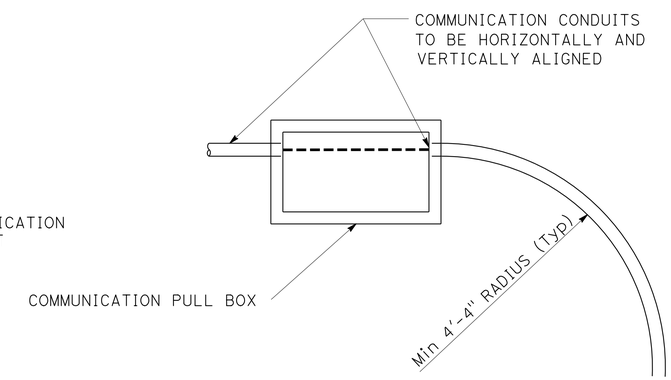

DETAIL B

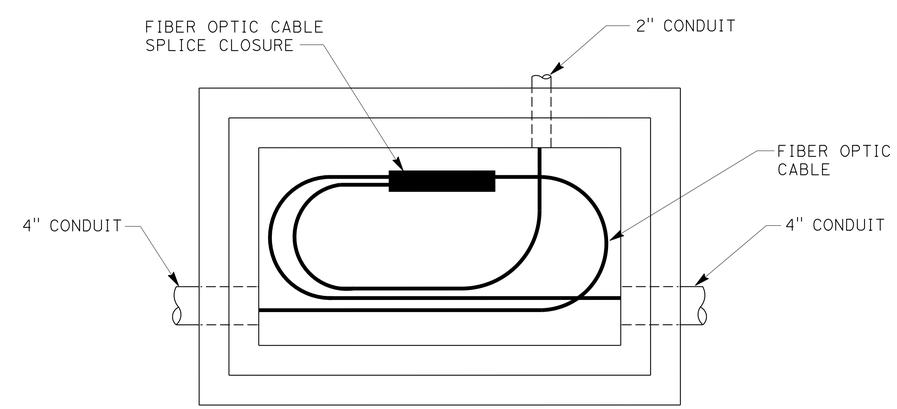

DETAIL C

COMMUNICATION PULL BOX WITH FIBER OPTIC CABLE - WITH SPLICE

(COMMUNICATION PULL BOX DETAILS)

FOR ABBREVIATIONS AND NOTES SEE SHEET E-1

ELECTRICAL DETAILS

NO SCALE

E-182

STATE OF CALIFORNIA - DEPARTMENT OF TRANSPORTATION
Caltrans
OFFICE OF ITS

FUNCTIONAL SUPERVISOR: JACQUELINE C. TAN
CALCULATED-DESIGNED BY: JACQUELINE C. TAN
CHECKED BY: TUYEN NGO
REVISED BY / DATE REVISED

LAST REVISION 00-00-00 | DATE PLOTTED => 16-SEP-2015 | TIME PLOTTED => 13:27

Dist	COUNTY	ROUTE	POST MILES TOTAL PROJECT	SHEET No.	TOTAL SHEETS
07	LA	210	R24.7/R44.9	224	274

Jacqueline C Tan 6/26/15
REGISTERED ELECTRICAL ENGINEER DATE

7-27-15
PLANS APPROVAL DATE

REGISTERED PROFESSIONAL ENGINEER JACQUELINE C. TAN No. E015611 Exp. 12/31/15 ELECTRICAL STATE OF CALIFORNIA

THE STATE OF CALIFORNIA OR ITS OFFICERS OR AGENTS SHALL NOT BE RESPONSIBLE FOR THE ACCURACY OR COMPLETENESS OF SCANNED COPIES OF THIS PLAN SHEET.

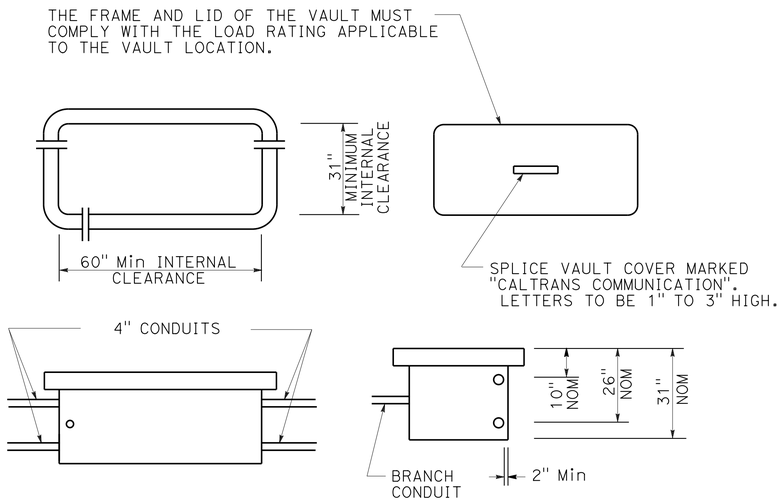

SPLICE VAULT DIMENSIONS

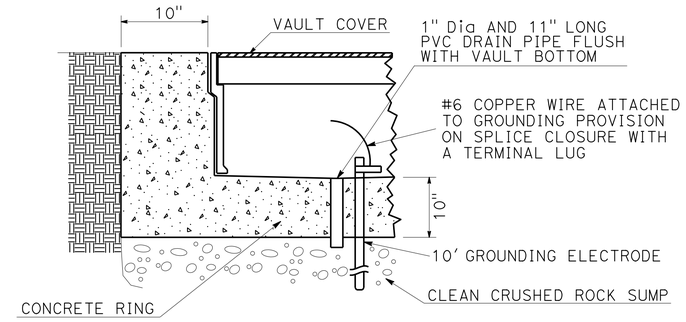

SPLICE VAULT INSTALLATION

INSTALLATION IN ASPHALT PAVEMENT OR COMPACTED EARTH

INSTALLATION NOTES:

1. CONCRETE ENCASEMENT AROUND SPLICE VAULT MUST BE MINOR CONCRETE.
2. LONGER SIDE OF THE SPLICE VAULT MUST BE PARALLEL TO THE DIRECTION OF TRAVEL.

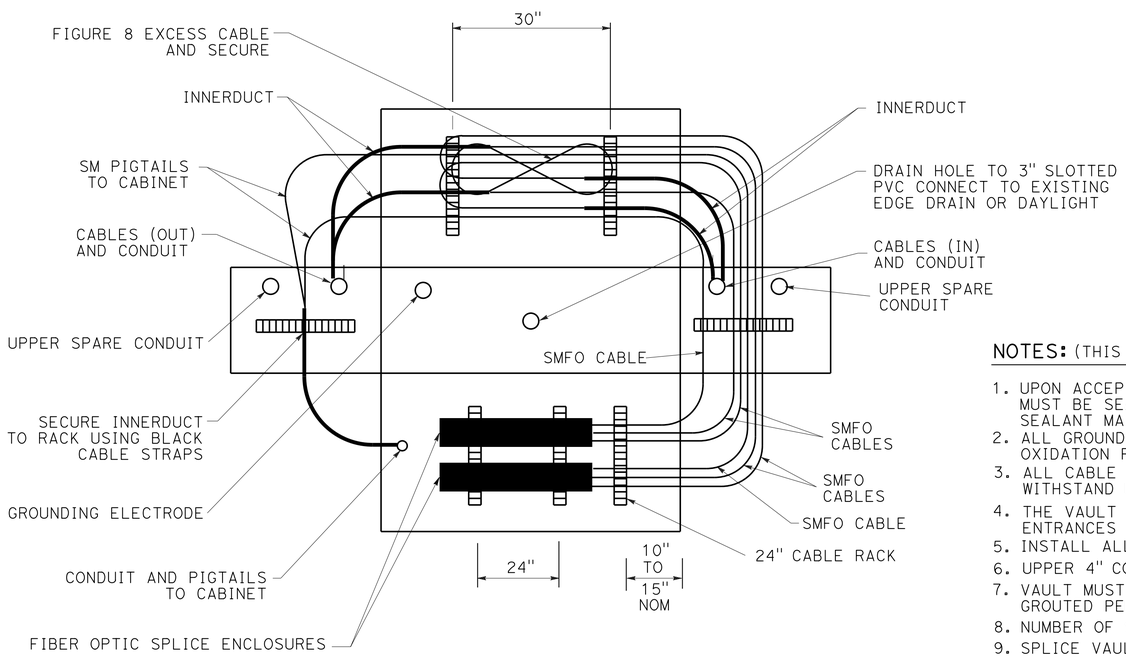

CABLE INSTALLATION

TOP VIEW - WALLS FOLDED DOWN FOR CLARITY

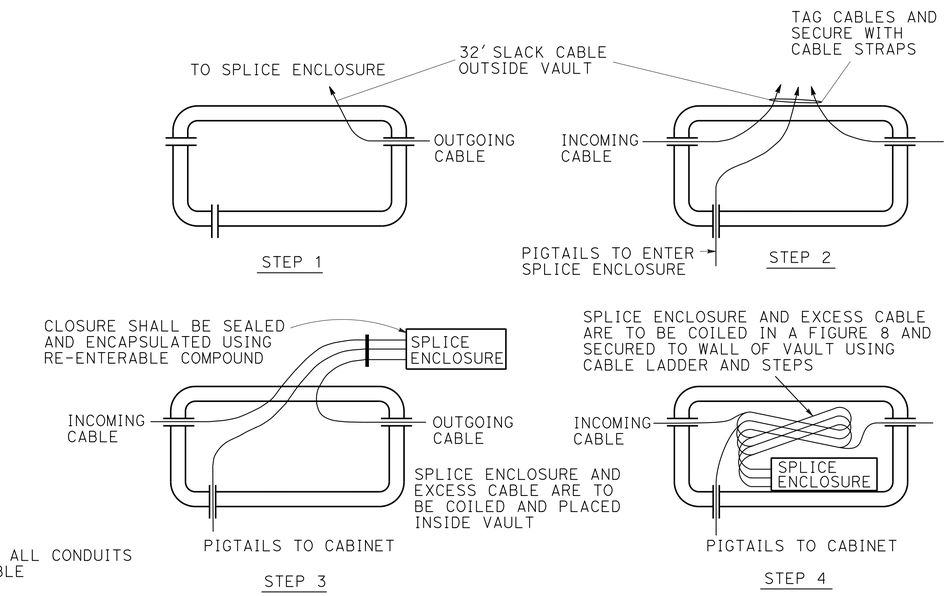

SPLICE PROCEDURE

NOTES: (THIS SHEET ONLY)

1. UPON ACCEPTANCE OF THE WORK ALL CONDUITS MUST BE SEALED WITH COMPATIBLE SEALANT MATERIAL
2. ALL GROUND CONNECTIONS MUST BE COATED WITH OXIDATION PROHIBITING COMPOUND.
3. ALL CABLE STRAPS MUST BE DESIGNED TO WITHSTAND ULTRA-VIOLET EXPOSURE.
4. THE VAULT MUST BE CAULKED AFTER ALL KNOWN ENTRANCES HAVE BEEN MADE.
5. INSTALL ALL CABLES IN LOWER 4" CONDUIT.
6. UPPER 4" CONDUIT IS SPARE ONLY.
7. VAULT MUST HAVE INTEGRAL BASE OR MUST BE GROUTED PER STANDARD SPECIFICATION OF PULL BOXES.
8. NUMBER OF SPLICE ENCLOSURES MAY VARY.
9. SPLICE VAULTS MUST BE STEEL PLATED.
10. ADDITIONAL KNOCKOUTS ARE NEEDED ON THE LONGER SIDE OF THE SPLICE VAULT.
11. COIL 30' OF FIBER OPTIC CABLES IN SPLICE VAULT.

ELECTRICAL DETAILS

NO SCALE

(SPLICE VAULT DETAILS)

FOR LEGEND, ABBREVIATIONS AND NOTES SEE SHEET E-1.

E-183

STATE OF CALIFORNIA - DEPARTMENT OF TRANSPORTATION
OFFICE OF ITS
Caltrans
FUNCTIONAL SUPERVISOR: JACQUELINE TAN
CALCULATED-DESIGNED BY: TUYEN NGO
CHECKED BY: JACQUELINE TAN
REVISED BY
DATE REVISED

LAST REVISION
DATE PLOTTED => 16-SEP-2015
TIME PLOTTED => 13:27

Dist	COUNTY	ROUTE	POST MILES TOTAL PROJECT	SHEET No.	TOTAL SHEETS
07	LA	210	R24.7/R44.9	225	274

Jacqueline C Tan 6/26/15
REGISTERED ELECTRICAL ENGINEER DATE

7-27-15
PLANS APPROVAL DATE

REGISTERED PROFESSIONAL ENGINEER
JACQUELINE C. TAN
No. E015611
Exp. 12/31/15
ELECTRICAL
STATE OF CALIFORNIA

THE STATE OF CALIFORNIA OR ITS OFFICERS OR AGENTS SHALL NOT BE RESPONSIBLE FOR THE ACCURACY OR COMPLETENESS OF SCANNED COPIES OF THIS PLAN SHEET.

NOTES: (THIS SHEET ONLY)

1. JACKED COMMUNICATION CONDUITS SHALL BE 30" MINIMUM BELOW FINISHED GRADE.
2. PLACE PULL BOXES OR SPLICE VAULTS AS SHOWN.
3. BENDS MUST BE FACTORY BENDS.

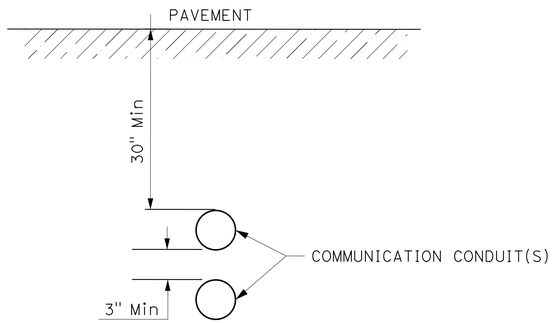

SECTION A-A

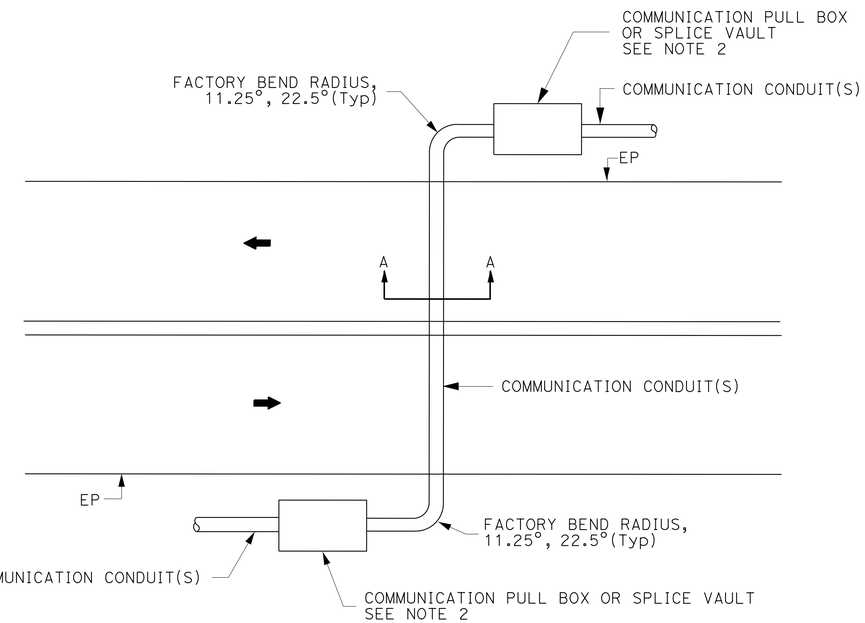

TYPICAL MAINLINE CROSSING (4 OR MORE LANES)

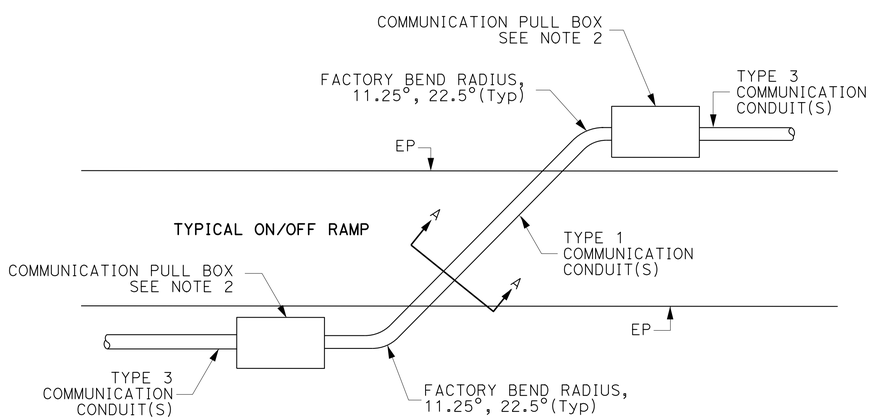

TYPICAL ON/OFF RAMP CROSSING

(JACKED CONDUIT DETAILS)

FOR ABBREVIATIONS AND NOTES SEE SHEET E-1

ELECTRICAL DETAILS

NO SCALE

E-184

STATE OF CALIFORNIA - DEPARTMENT OF TRANSPORTATION
Caltrans®
OFFICE OF ITS

FUNCTIONAL SUPERVISOR: JACQUELINE C. TAN
CALCULATED-DESIGNED BY: TUYEN NGO
CHECKED BY: JACQUELINE C. TAN
REVISED BY
DATE REVISED

LAST REVISION 00-00-00
DATE PLOTTED => 16-SEP-2015
TIME PLOTTED => 13:27

Dist	COUNTY	ROUTE	POST MILES TOTAL PROJECT	SHEET No.	TOTAL SHEETS
07	LA	210	R24.7/R44.9	226	274

REGISTERED ELECTRICAL ENGINEER — DATE: 6/26/15

7-27-15
PLANS APPROVAL DATE

REGISTERED PROFESSIONAL ENGINEER — JACQUELINE C. TAN — No. E015611 — Exp. 12/31/15 — ELECTRICAL — STATE OF CALIFORNIA

THE STATE OF CALIFORNIA OR ITS OFFICERS OR AGENTS SHALL NOT BE RESPONSIBLE FOR THE ACCURACY OR COMPLETENESS OF SCANNED COPIES OF THIS PLAN SHEET.

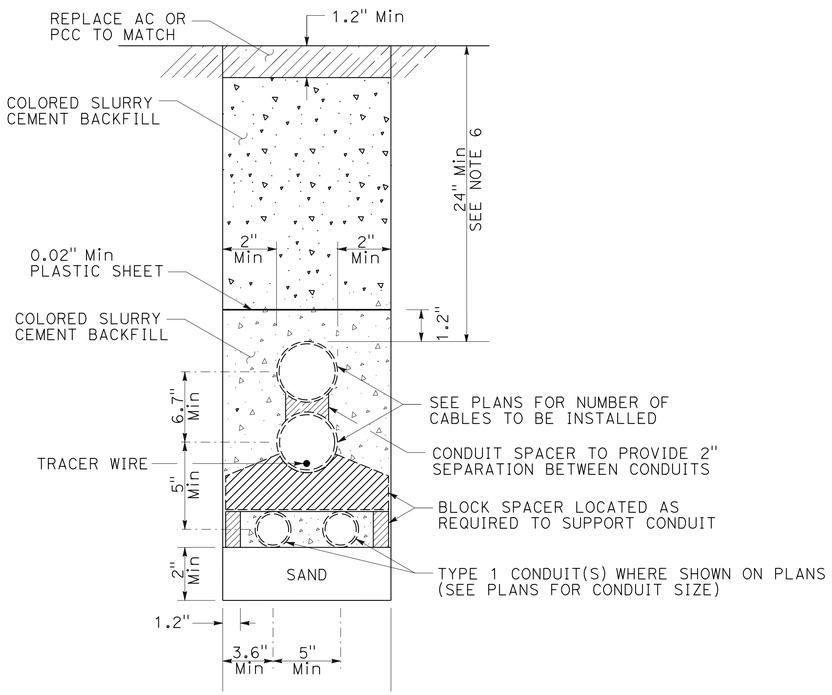

PAVEMENT (CONCRETE OR ASPHALT)
WITH Exist TYPE 3 COMMUNICATION CONDUIT(S)
AND TYPE 1 CONDUIT(S)

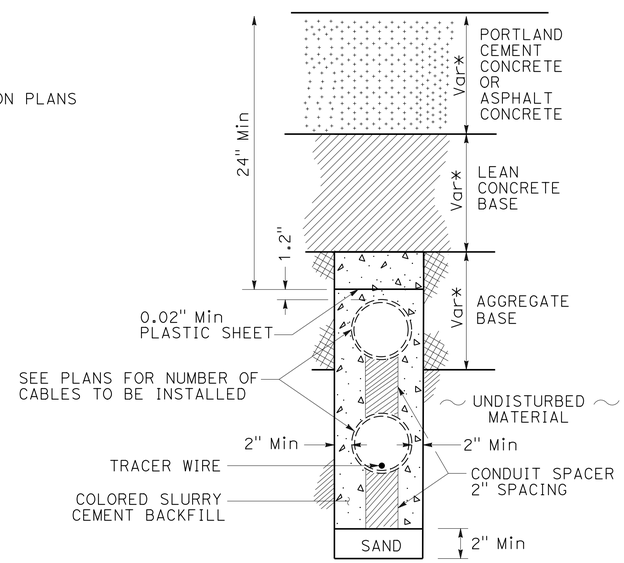

PAVEMENT (PCC or ASPHALT)
WITH Exist TYPE 3 COMMUNICATION CONDUIT(S)

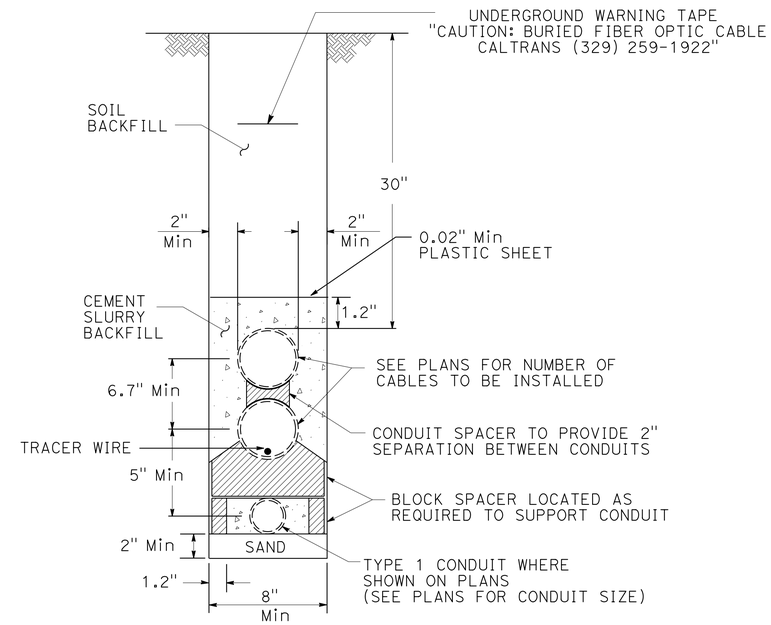

EXISTING TYPE 3 CONDUITS AND
TYPE 1 CONDUIT IN SOIL.

(TYPICAL Exist COMMUNICATION CONDUIT INSTALLATION DETAILS)

ELECTRICAL DETAILS

NO SCALE

E-185

REVISED BY	DATE REVISED

CALCULATED-DESIGNED BY: TUYEN NGO
CHECKED BY: JACQUELINE C. TAN
FUNCTIONAL SUPERVISOR: JACQUELINE C. TAN

STATE OF CALIFORNIA - DEPARTMENT OF TRANSPORTATION
Caltrans
OFFICE OF ITS

LAST REVISION 06-10-15 | DATE PLOTTED => 16-SEP-2015 | TIME PLOTTED => 13:27

Dist	COUNTY	ROUTE	POST MILES TOTAL PROJECT	SHEET No.	TOTAL SHEETS
07	LA	210	R24.7/R44.9	227	274

Jacqueline C Tan 6/26/15
REGISTERED ELECTRICAL ENGINEER DATE

7-27-15
PLANS APPROVAL DATE

REGISTERED PROFESSIONAL ENGINEER JACQUELINE C. TAN No. E015611 Exp. 12/31/15 ELECTRICAL STATE OF CALIFORNIA

THE STATE OF CALIFORNIA OR ITS OFFICERS OR AGENTS SHALL NOT BE RESPONSIBLE FOR THE ACCURACY OR COMPLETENESS OF SCANNED COPIES OF THIS PLAN SHEET.

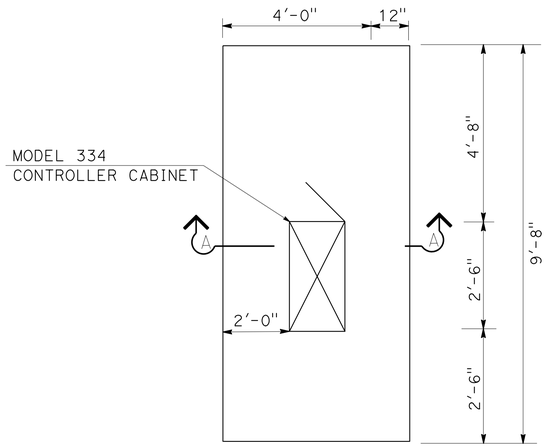

DETAIL A
PLAN VIEW

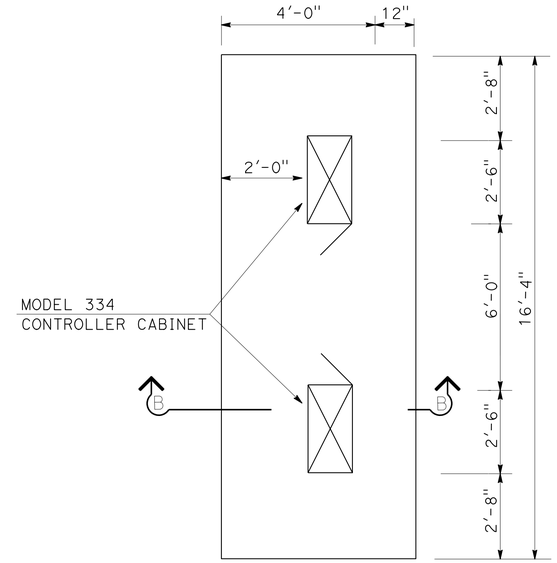

DETAIL B
PLAN VIEW

NOTES: (THIS SHEET ONLY)

1. CABINETS MUST BE INSTALLED 30 FEET FROM ETW OR 6 FEET FROM MBGR FOR TYPICAL FIXED OBJECT INSTALLATION DETAILS.
2. CONSTRUCT PAD AND GRADE TO DRAIN AROUND AND AWAY FOR CABINET IN KEEPING WITH EXISTING DRAINAGE PATTERN.
3. CABINET DOOR MUST BE LOCATED AS SHOWN AND HINGED TO AWAY FROM TRAVEL WAY.
4. FOR INFORMATION NOT SHOWN, SEE STANDARD PLAN SHEET ES-3C.

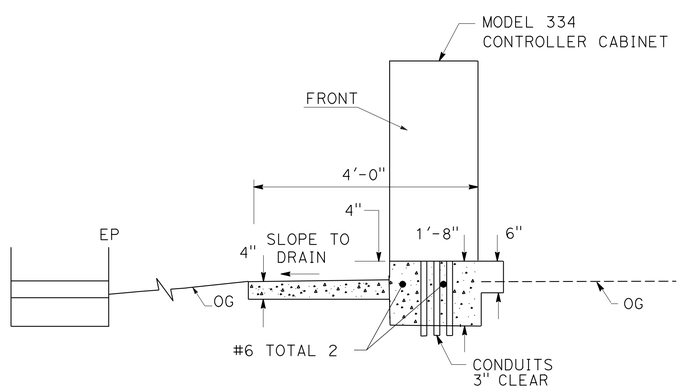

SECTION A-A
ELEVATION VIEW FOR DETAIL A

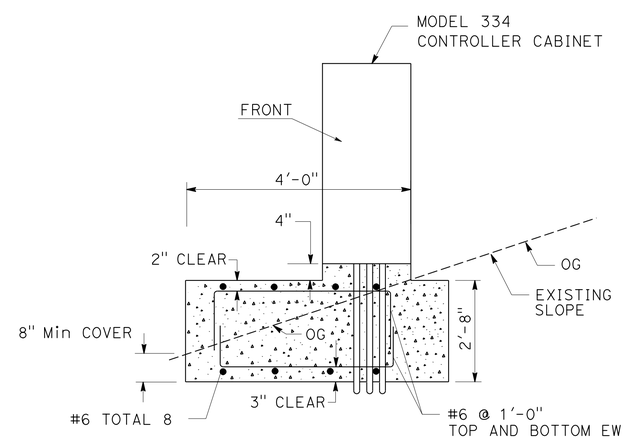

SECTION B-B
ELEVATION VIEW FOR DETAIL B

ELECTRICAL DETAILS

NO SCALE

E-186

(CONTROLLER CABINET FOUNDATION DETAILS)

REVISED BY	DATE REVISED

CALCULATED-DESIGNED BY	CHECKED BY
TUYEN NGO	JACQUELINE C. TAN

FUNCTIONAL SUPERVISOR: JACQUELINE C. TAN

STATE OF CALIFORNIA - DEPARTMENT OF TRANSPORTATION
Caltrans
OFFICE OF ITS

LAST REVISION 00-00-00 | DATE PLOTTED => 16-SEP-2015 | TIME PLOTTED => 13:27

Dist	COUNTY	ROUTE	POST MILES TOTAL PROJECT	SHEET No.	TOTAL SHEETS
07	LA	210	R24.7/R44.9	228	274

Jacqueline C Tan 6/26/15
REGISTERED ELECTRICAL ENGINEER DATE

7-27-15
PLANS APPROVAL DATE

REGISTERED PROFESSIONAL ENGINEER
JACQUELINE C. TAN
No. E015611
Exp. 12/31/15
ELECTRICAL
STATE OF CALIFORNIA

THE STATE OF CALIFORNIA OR ITS OFFICERS OR AGENTS SHALL NOT BE RESPONSIBLE FOR THE ACCURACY OR COMPLETENESS OF SCANNED COPIES OF THIS PLAN SHEET.

LEGEND: (THIS SHEET ONLY)

1 CONNECTORIZING DONE AT THE MODEL 334-TV CONTROLLER CABINET.

NOTE: (SHEETS E-187 TO E-188)

1. ALL COMPONENTS AND CONNECTORS MUST MEET NEMA TS 2 REQUIREMENTS.
2. SERIAL CABLE MUST BE A NULL CABLE.

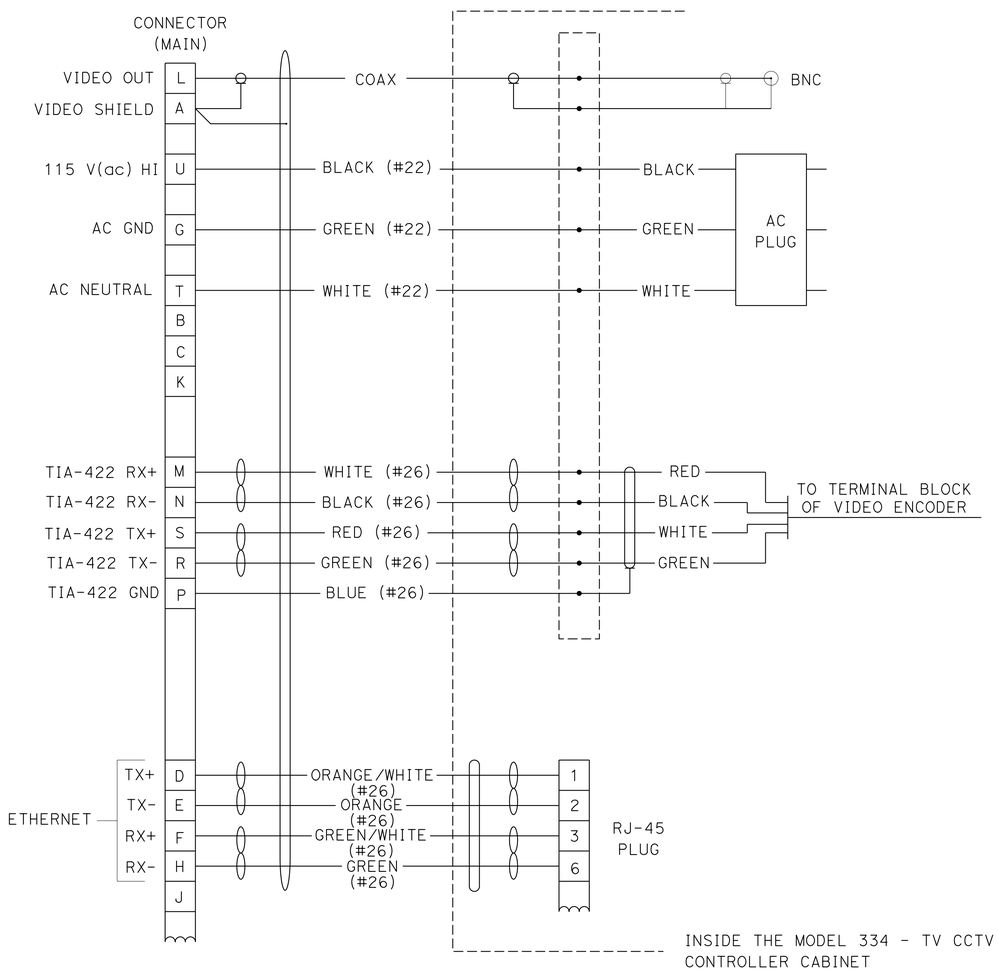

CABLE SCHEMATIC

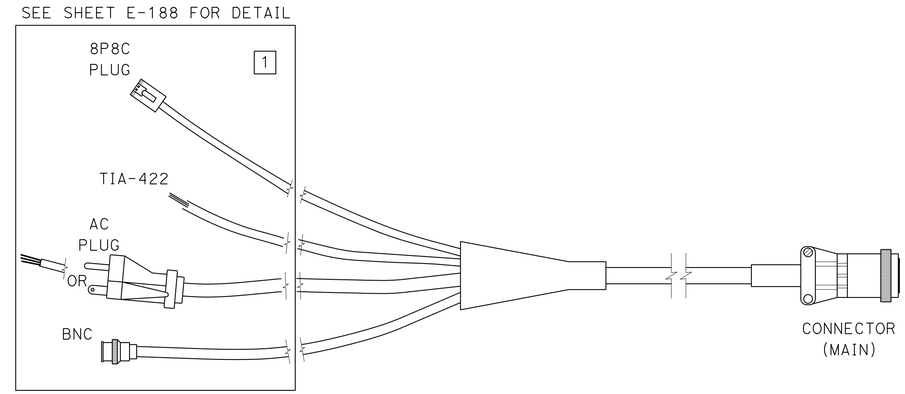

COMPOSITE VIDEO CABLE

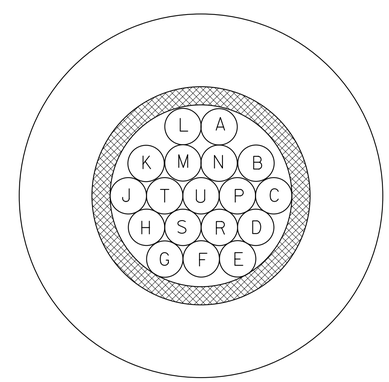

COMPOSITE VIDEO CABLE CROSS SECTION

(COMPOSITE VIDEO CABLE)

ELECTRICAL DETAILS

NO SCALE

E-187

STATE OF CALIFORNIA - DEPARTMENT OF TRANSPORTATION
Caltrans
OFFICE OF ITS

FUNCTIONAL SUPERVISOR: JACQUELINE C. TAN
CALCULATED-DESIGNED BY: TUYEN NGO
CHECKED BY: JACQUELINE C. TAN
REVISED BY
DATE REVISED

LAST REVISION 00-00-00
DATE PLOTTED => 16-SEP-2015
TIME PLOTTED => 13:27

Dist	COUNTY	ROUTE	POST MILES TOTAL PROJECT	SHEET No.	TOTAL SHEETS
07	LA	210	R24.7/R44.9	229	274

Jacqueline C Tan 6/26/15
REGISTERED ELECTRICAL ENGINEER DATE

7-27-15
PLANS APPROVAL DATE

REGISTERED PROFESSIONAL ENGINEER
JACQUELINE C. TAN
No. E015611
Exp. 12/31/15
ELECTRICAL
STATE OF CALIFORNIA

THE STATE OF CALIFORNIA OR ITS OFFICERS OR AGENTS SHALL NOT BE RESPONSIBLE FOR THE ACCURACY OR COMPLETENESS OF SCANNED COPIES OF THIS PLAN SHEET.

NOTES: (WIRING DIAGRAM)

1. USE MANUFACTURER SUPPLIED COMPOSITE VIDEO CABLE.
2. ALL CABLES MUST BE ALUMINUM SHIELDED TO PREVENT CROSS TALK.
3. CONNECT ALL DRAIN WIRES OF SHIELDED-CONDUCTORS TO CABINET GROUND.
4. WATERPROOF ALL CONNECTORS AND CABLES USING WATER-TIGHT GROMETS, SEALING COMPOUNDS, AND TAPE.
5. INSTALL ADAPTER MOUNTING PLATES TO MOUNT CCTV CAMERA ON EXISTING POLE OR TRUSS MOUNT AS SHOWN.

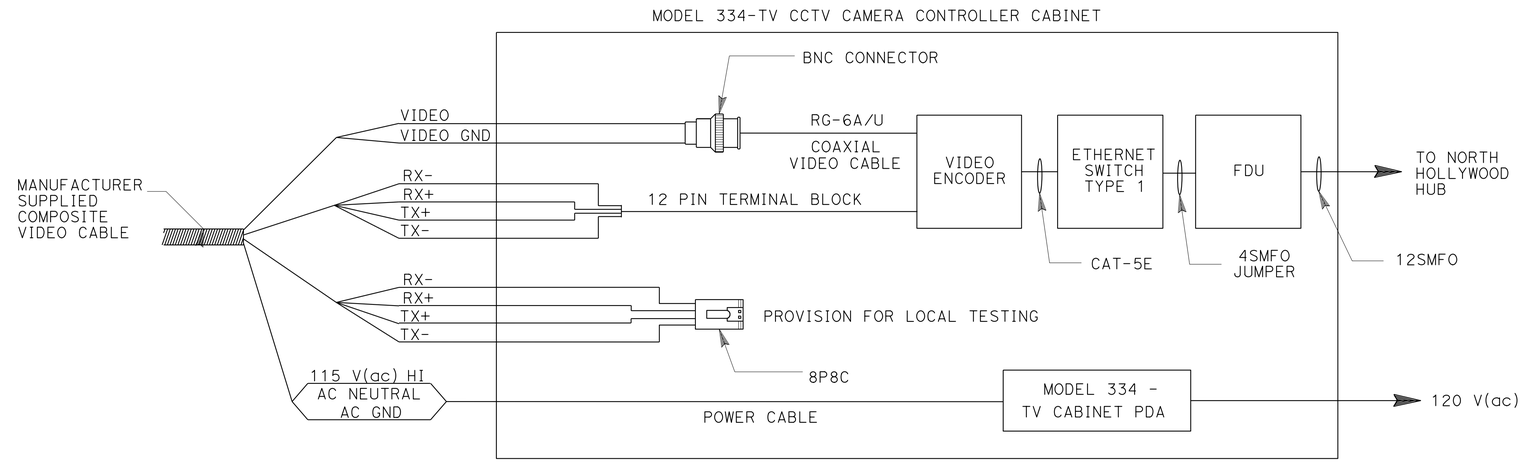

TYPICAL WIRING DIAGRAM

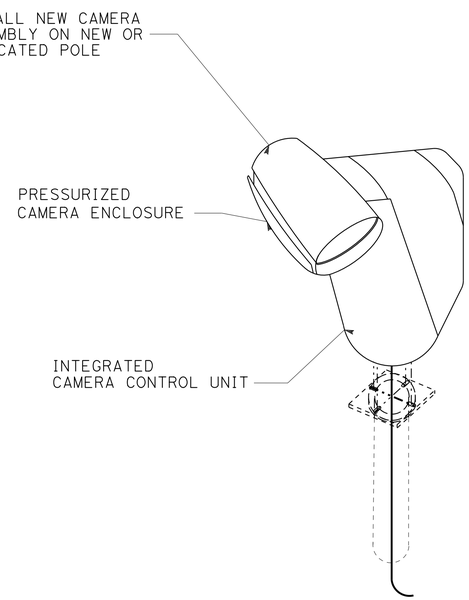

PROPOSED TYPICAL CAMERA WITH PAN/TILT UNIT

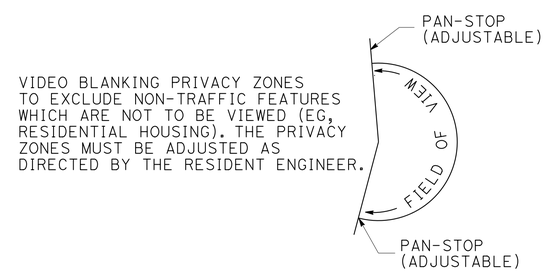

(CLOSED CIRCUIT TELEVISION CAMERA WIRING DIAGRAM WITH PAN/TILT UNIT)

ELECTRICAL DETAILS

NO SCALE

E-188

STATE OF CALIFORNIA - DEPARTMENT OF TRANSPORTATION
Caltrans®
OFFICE OF ITS

FUNCTIONAL SUPERVISOR: JACQUELINE C. TAN
CALCULATED-DESIGNED BY: NGO TUYEN
CHECKED BY: JACQUELINE C. TAN
REVISED BY
DATE REVISED

LAST REVISION 06-10-15
DATE PLOTTED => 16-SEP-2015
TIME PLOTTED => 13:27

Dist	COUNTY	ROUTE	POST MILES TOTAL PROJECT	SHEET No.	TOTAL SHEETS
07	LA	210	R24.7/R44.9	230	274

Jacqueline C Tan 6/26/15
REGISTERED ELECTRICAL ENGINEER DATE

7-27-15
PLANS APPROVAL DATE

REGISTERED PROFESSIONAL ENGINEER JACQUELINE C. TAN No. E015611 Exp. 12/31/15 ELECTRICAL STATE OF CALIFORNIA

THE STATE OF CALIFORNIA OR ITS OFFICERS OR AGENTS SHALL NOT BE RESPONSIBLE FOR THE ACCURACY OR COMPLETENESS OF SCANNED COPIES OF THIS PLAN SHEET.

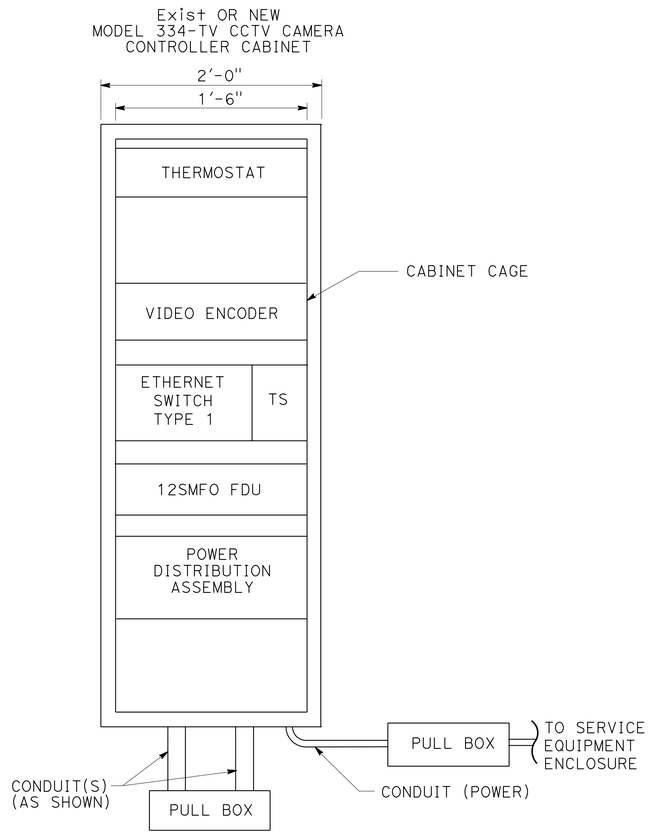

Exist OR NEW
MODEL 334-TV CONTROLLER CABINET EQUIPMENT LAYOUT

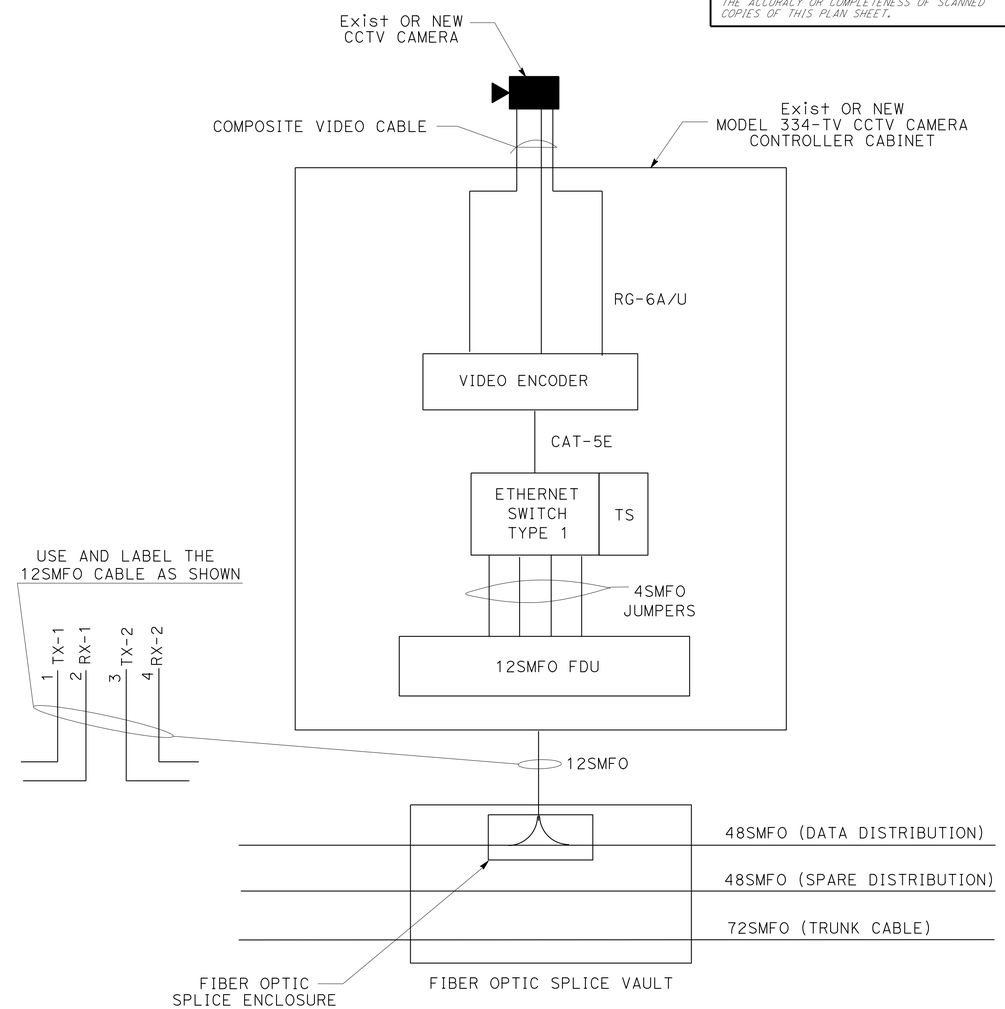

Exist OR NEW
MODEL 334-TV CONTROLLER CABINET WIRING DETAIL

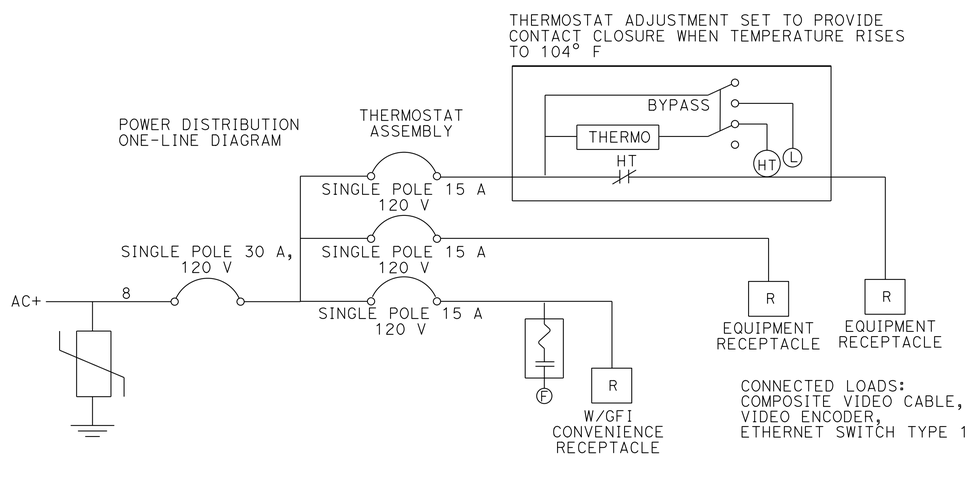

Exist OR NEW
POWER DISTRIBUTION ASSEMBLY

(MODEL 334-TV CONTROLLER CABINET DETAILS FOR CCTV)

FOR LEGEND, ABBREVIATIONS AND NOTES SEE SHEET E-1.

ELECTRICAL DETAILS
NO SCALE

E-189

STATE OF CALIFORNIA - DEPARTMENT OF TRANSPORTATION
Caltrans® **OFFICE OF ITS**

FUNCTIONAL SUPERVISOR: JACQUELINE TAN
CALCULATED-DESIGNED BY: TUYEN NGO
CHECKED BY: JACQUELINE TAN
REVISED BY
DATE REVISED

LAST REVISION 00-00-00
DATE PLOTTED => 16-SEP-2015
TIME PLOTTED => 13:27

Dist	COUNTY	ROUTE	POST MILES TOTAL PROJECT	SHEET No.	TOTAL SHEETS
07	LA	210	R24.7/R44.9	231	274

Jacqueline C Tan 6/26/15
REGISTERED ELECTRICAL ENGINEER DATE

7-27-15
PLANS APPROVAL DATE

REGISTERED PROFESSIONAL ENGINEER JACQUELINE C. TAN No. E015611 Exp. 12/31/15 ELECTRICAL STATE OF CALIFORNIA

THE STATE OF CALIFORNIA OR ITS OFFICERS OR AGENTS SHALL NOT BE RESPONSIBLE FOR THE ACCURACY OR COMPLETENESS OF SCANNED COPIES OF THIS PLAN SHEET.

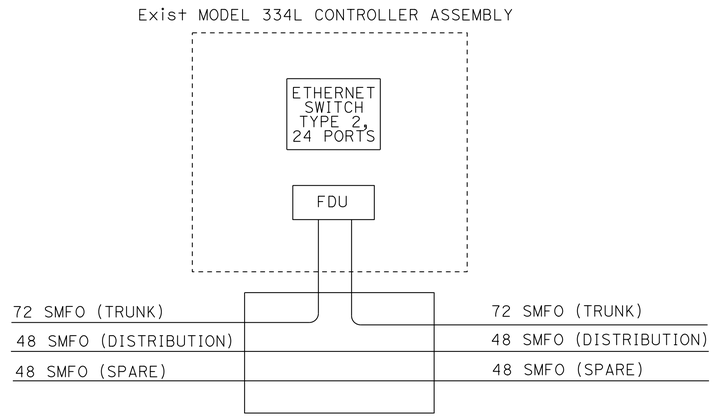

Exist MODEL 334L - CONTROLLER ASSEMBLY WIRING DETAIL FOR CABLE NODE

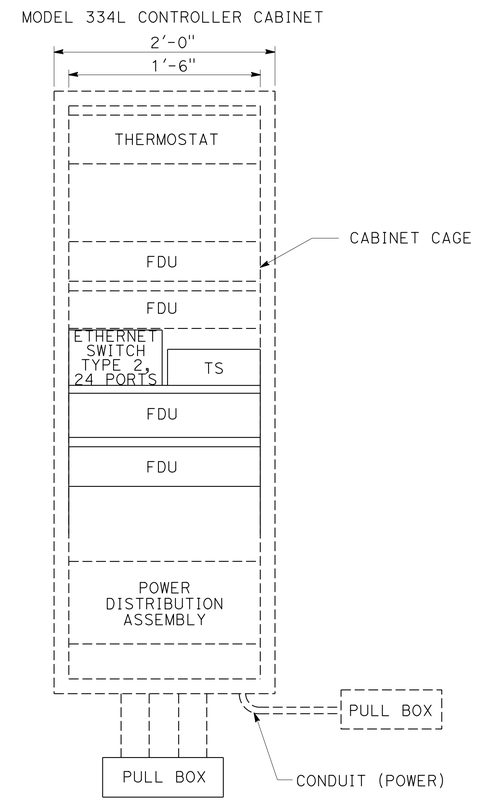

Exist MODEL 334L CONTROLLER
(TYPICAL CABLE NODE)
CABINET EQUIPMENT LAYOUT

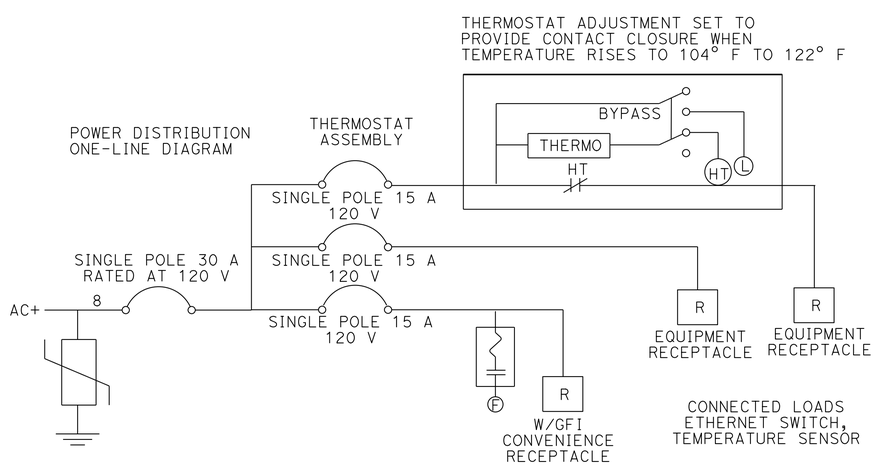

NEW OR Exist POWER DISTRIBUTION ASSEMBLY

(MODEL 334L CONTROLLER CABINET DETAILS FOR CABLE NODE)

FOR ABBREVIATIONS AND NOTES SEE SHEET E-1

ELECTRICAL DETAILS
NO SCALE

E-190

STATE OF CALIFORNIA - DEPARTMENT OF TRANSPORTATION
Caltrans® OFFICE OF ITS
FUNCTIONAL SUPERVISOR JACQUELINE C. TAN
CALCULATED-DESIGNED BY TUYEN NGO
CHECKED BY JACQUELINE C. TAN
REVISED BY
DATE REVISED

LAST REVISION 00-00-00
DATE PLOTTED => 16-SEP-2015
TIME PLOTTED => 13:27

Dist	COUNTY	ROUTE	POST MILES TOTAL PROJECT	SHEET No.	TOTAL SHEETS
07	LA	210	R24.7/R44.9	232	274

Jacqueline C Tan 6/26/15
REGISTERED ELECTRICAL ENGINEER DATE

7-27-15
PLANS APPROVAL DATE

REGISTERED PROFESSIONAL ENGINEER JACQUELINE C. TAN No. E015611 Exp. 06/30/15 ELECTRICAL STATE OF CALIFORNIA

THE STATE OF CALIFORNIA OR ITS OFFICERS OR AGENTS SHALL NOT BE RESPONSIBLE FOR THE ACCURACY OR COMPLETENESS OF SCANNED COPIES OF THIS PLAN SHEET.

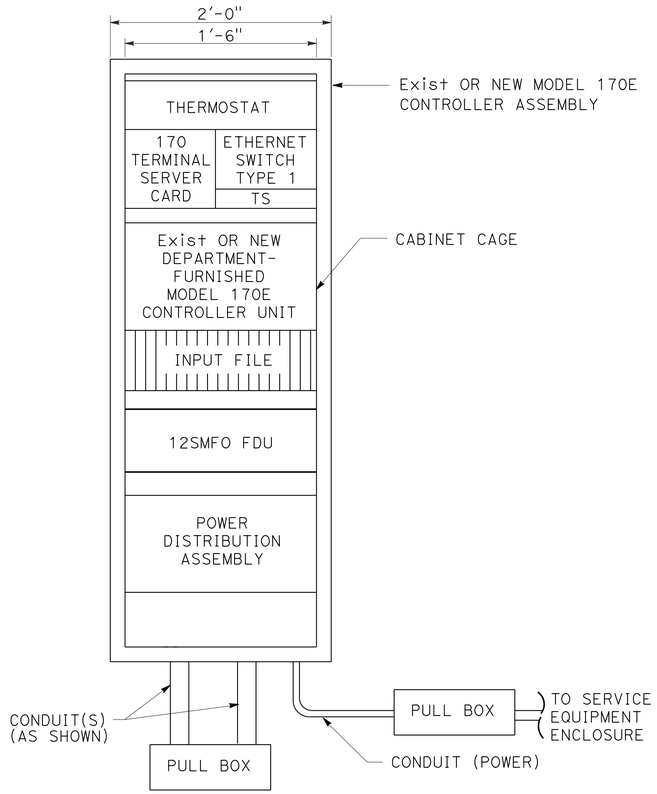

Exist OR NEW
MODEL 170E CONTROLLER ASSEMBLY
EQUIPMENT LAYOUT FOR CMS

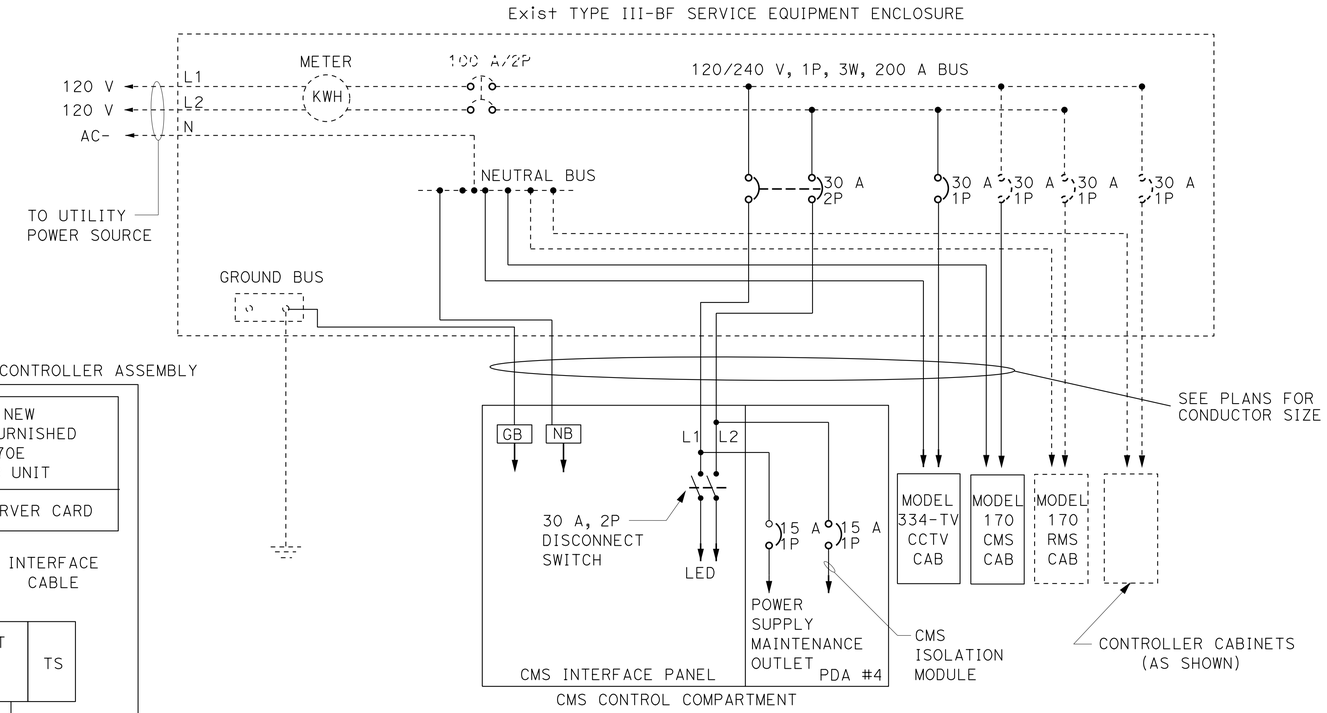

TYPICAL MODEL 500 LED CMS SYSTEM WIRING
AND CIRCUIT BREAKERS

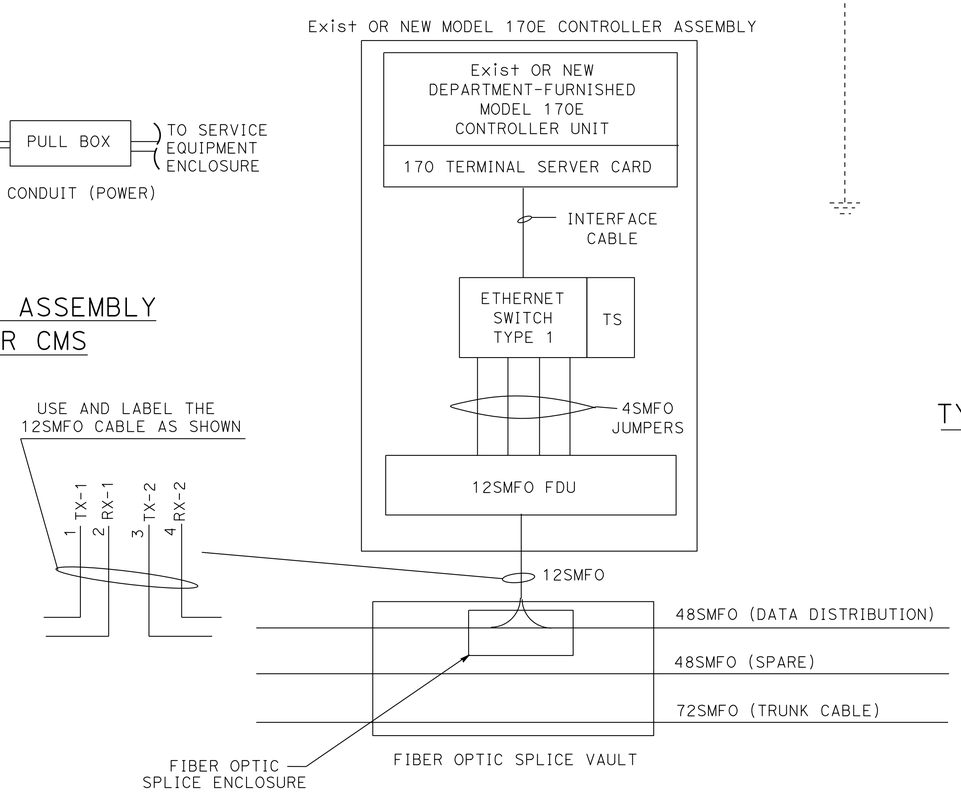

Exist OR NEW MODEL 170E CONTROLLER ASSEMBLY DETAILS FOR CMS

(MODEL 170E CONTROLLER CABINET DETAILS FOR CMS)

FOR LEGEND, ABBREVIATIONS AND NOTES SEE SHEET E-1.

ELECTRICAL DETAILS
NO SCALE

E-191

REVISED BY	DATE REVISED
TUYEN NGO	JACQUELINE TAN

CALCULATED-DESIGNED BY	CHECKED BY

FUNCTIONAL SUPERVISOR: JACQUELINE TAN

STATE OF CALIFORNIA - DEPARTMENT OF TRANSPORTATION
Caltrans
OFFICE OF ITS

LAST REVISION 00-00-00 | DATE PLOTTED => 16-SEP-2015 | TIME PLOTTED => 13:27

Dist	COUNTY	ROUTE	POST MILES TOTAL PROJECT	SHEET No.	TOTAL SHEETS
07	LA	210	R24.7/R44.9	233	274

Jacqueline C Tan 6/26/15
REGISTERED ELECT. ENGINEER DATE

7-27-15
PLANS APPROVAL DATE

REGISTERED PROFESSIONAL ENGINEER
JACQUELINE C. TAN
No. E015611
Exp. 12/31/15
ELECTRICAL
STATE OF CALIFORNIA

THE STATE OF CALIFORNIA OR ITS OFFICERS OR AGENTS SHALL NOT BE RESPONSIBLE FOR THE ACCURACY OR COMPLETENESS OF SCANNED COPIES OF THIS PLAN SHEET.

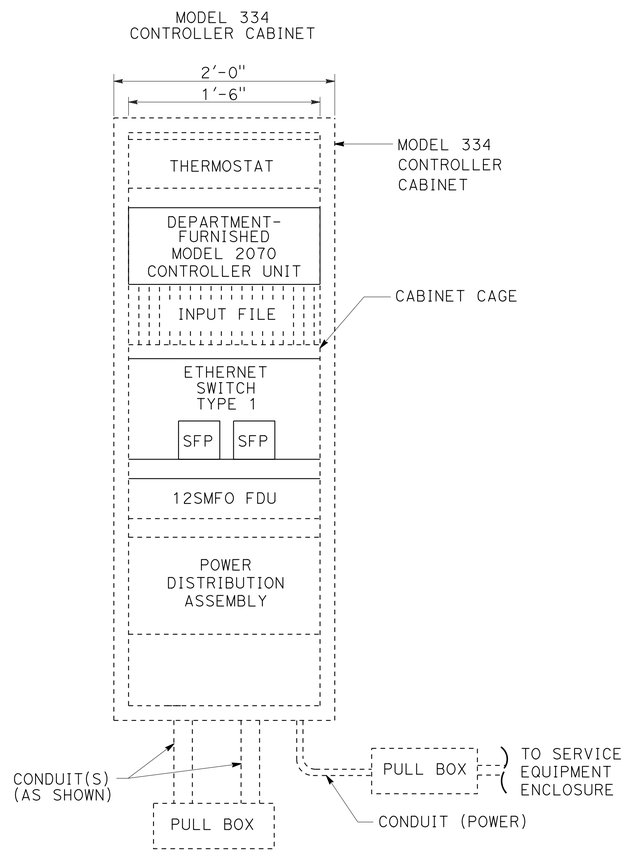

TYPICAL MODEL 334 CONTROLLER CABINET EQUIPMENT LAYOUT FOR RMS/TMS/CS/AVC

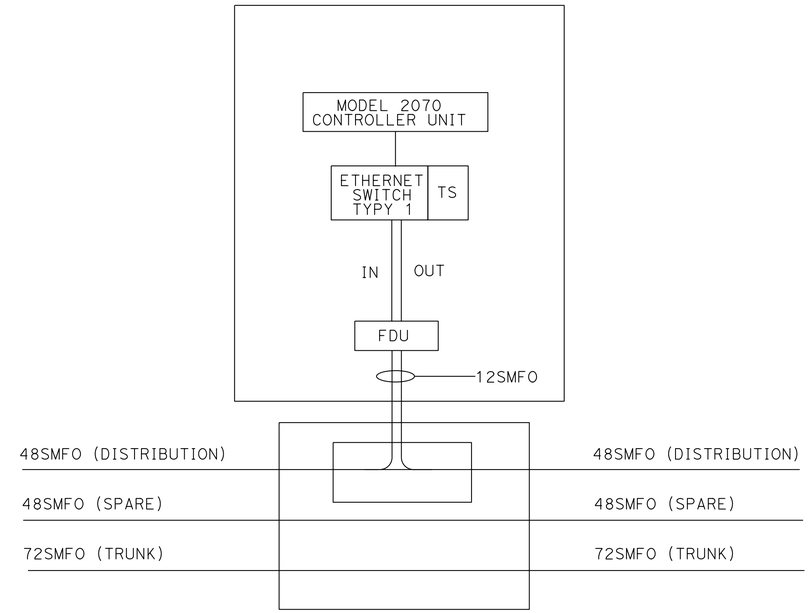

NEW OR Exist MODEL 334 CONTROLLER ASSEMBLY WIRING DETAIL FOR RMS/TMS/CS/AVC

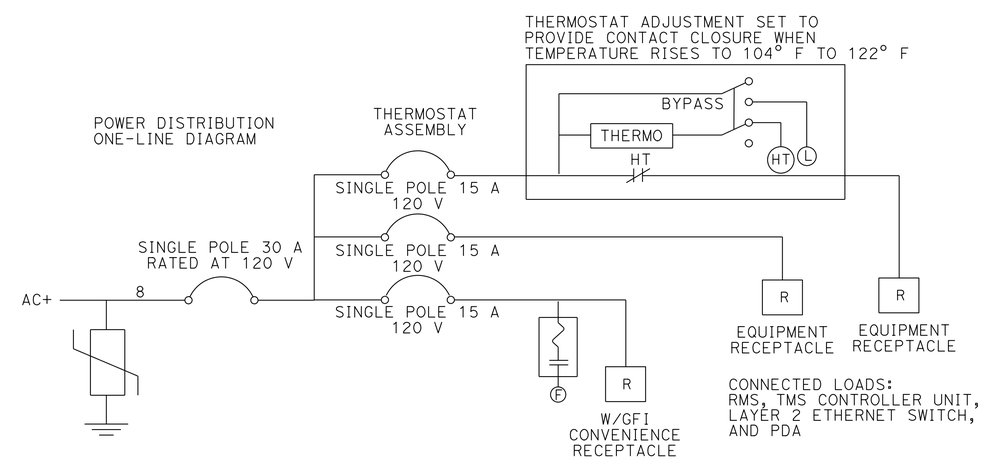

TYPICAL POWER DISTRIBUTION ASSEMBLY

ELECTRICAL DETAILS

NO SCALE

(MODEL 334 CONTROLLER CABINET DETAILS FOR RMS/TMS/CS/AVC)

FOR LEGEND, ABBREVIATIONS AND NOTES SEE SHEET E-1

E-192

STATE OF CALIFORNIA - DEPARTMENT OF TRANSPORTATION
Caltrans
OFFICE OF ITS
FUNCTIONAL SUPERVISOR: JACQUELINE C. TAN
CALCULATED-DESIGNED BY: TUYEN NGO
CHECKED BY: JACQUELINE C. TAN
REVISED BY
DATE REVISED

LAST REVISION
DATE PLOTTED => 16-SEP-2015
TIME PLOTTED => 13:27

Dist	COUNTY	ROUTE	POST MILES TOTAL PROJECT	SHEET No.	TOTAL SHEETS
07	LA	210	R24.7/R44.9	234	274

Jacqueline C Tan 6/26/15
REGISTERED ELECTRICAL ENGINEER DATE

7-27-15
PLANS APPROVAL DATE

REGISTERED PROFESSIONAL ENGINEER
JACQUELINE C. TAN
No. E015611
Exp. 12/31/15
ELECTRICAL
STATE OF CALIFORNIA

THE STATE OF CALIFORNIA OR ITS OFFICERS OR AGENTS SHALL NOT BE RESPONSIBLE FOR THE ACCURACY OR COMPLETENESS OF SCANNED COPIES OF THIS PLAN SHEET.

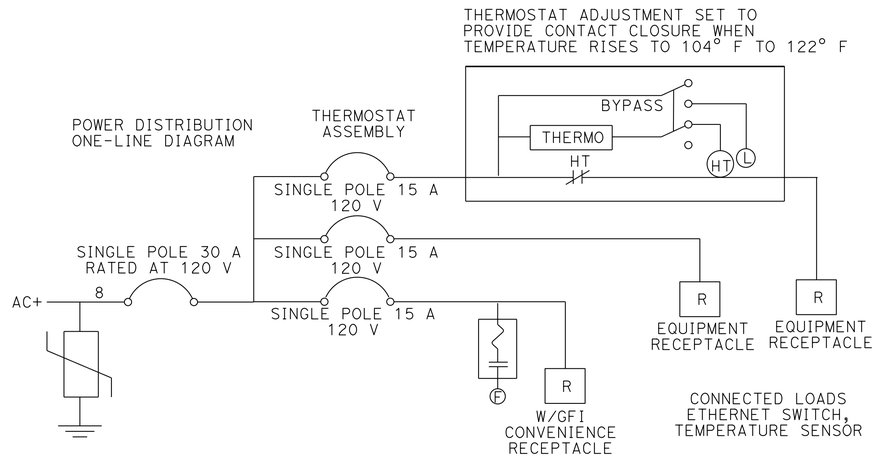

Exist POWER DISTRIBUTION ASSEMBLY

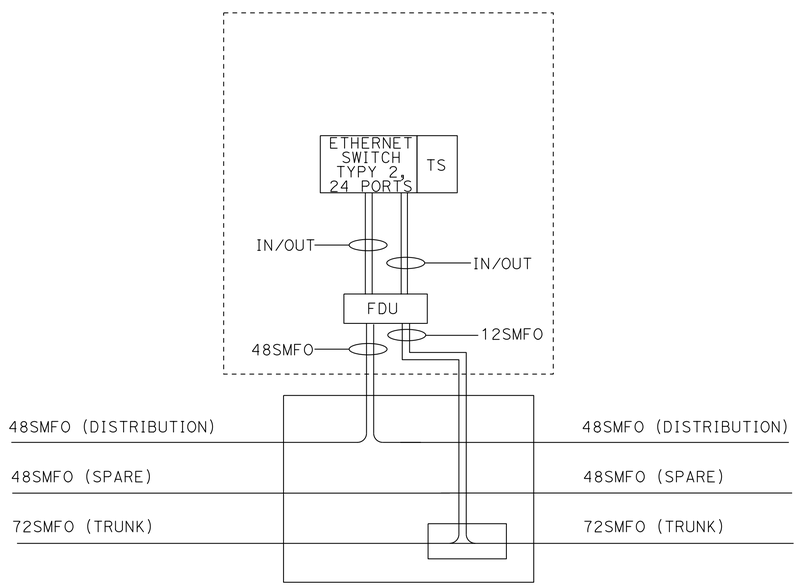

MODEL 334 CONTROLLER ASSEMBLY WIRING DETAIL FOR IP NODE

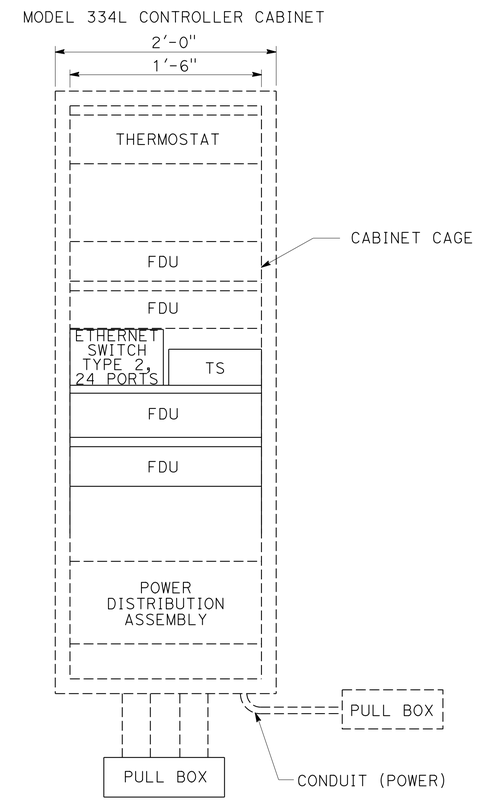

Exist MODEL 334L CONTROLLER
(TYPICAL IP NODE)
CABINET EQUIPMENT LAYOUT

(MODEL 334L CONTROLLER CABINET DETAILS FOR IP NODE)

FOR ABBREVIATIONS AND NOTES SEE SHEET E-1

ELECTRICAL DETAILS

NO SCALE

E-193

STATE OF CALIFORNIA - DEPARTMENT OF TRANSPORTATION
Caltrans®
OFFICE OF ITS

FUNCTIONAL SUPERVISOR: JACQUELINE C. TAN
CALCULATED-DESIGNED BY: TUYEN NGO
CHECKED BY: JACQUELINE C. TAN
REVISED BY
DATE REVISED

LAST REVISION 00-00-00
DATE PLOTTED => 16-SEP-2015
TIME PLOTTED => 13:27

Dist	COUNTY	ROUTE	POST MILES TOTAL PROJECT	SHEET No.	TOTAL SHEETS
07	LA	210	R24.7/R44.9	235	274

Jacqueline C Tan 6/26/15
REGISTERED ELECTRICAL ENGINEER DATE

7-27-15
PLANS APPROVAL DATE

REGISTERED PROFESSIONAL ENGINEER
JACQUELINE C. TAN
No. E015611
Exp. 12/31/15
ELECTRICAL
STATE OF CALIFORNIA

THE STATE OF CALIFORNIA OR ITS OFFICERS OR AGENTS SHALL NOT BE RESPONSIBLE FOR THE ACCURACY OR COMPLETENESS OF SCANNED COPIES OF THIS PLAN SHEET.

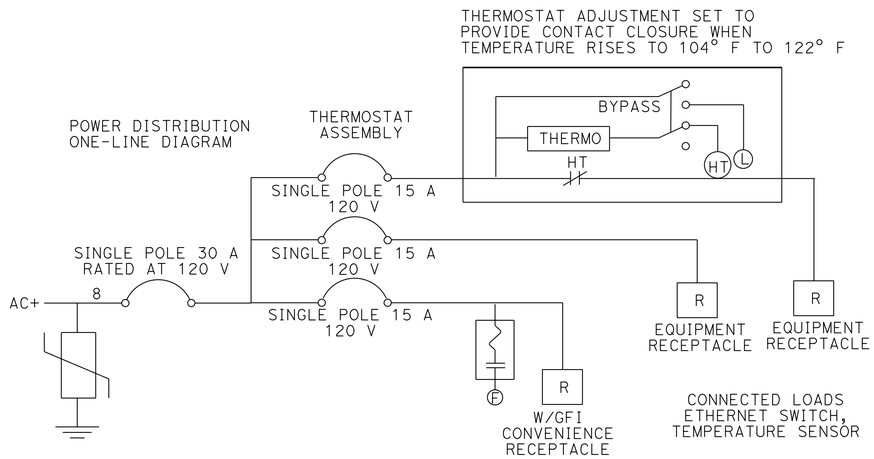

Exist POWER DISTRIBUTION ASSEMBLY

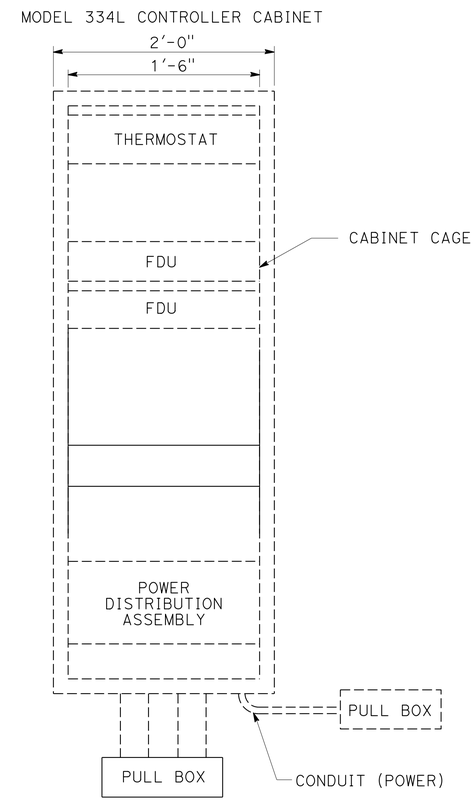

Exist MODEL 334L CONTROLLER
(TYPICAL ACCESS NODE)
CABINET EQUIPMENT LAYOUT

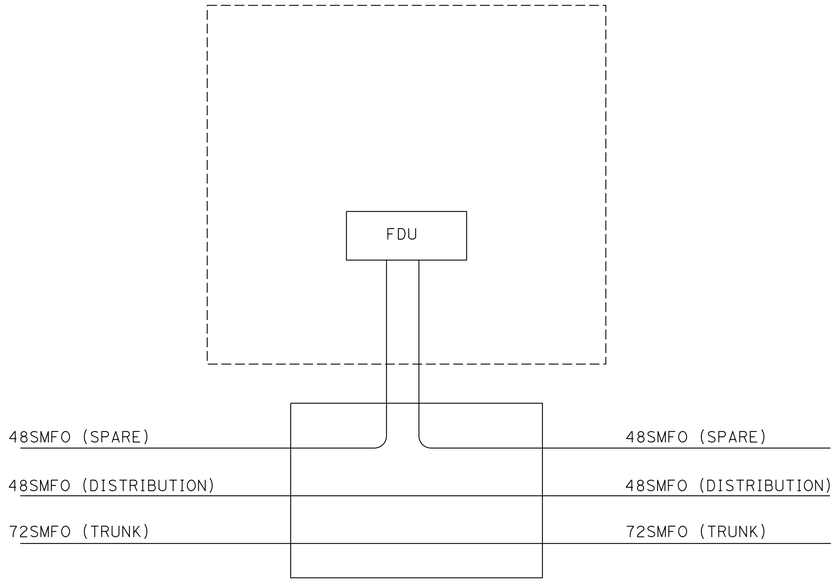

ELECTRICAL DETAILS

NO SCALE

(MODEL 334L CONTROLLER CABINET DETAILS FOR ACCESS NODE)

FOR ABBREVIATIONS AND NOTES SEE SHEET E-1

E-194

STATE OF CALIFORNIA - DEPARTMENT OF TRANSPORTATION
Caltrans
OFFICE OF ITS

FUNCTIONAL SUPERVISOR: JACQUELINE C. TAN
CALCULATED-DESIGNED BY: TUYEN NGO
CHECKED BY: JACQUELINE C. TAN
REVISED BY
DATE REVISED

LAST REVISION 00-00-00
DATE PLOTTED => 16-SEP-2015
TIME PLOTTED => 13:27

Dist	COUNTY	ROUTE	POST MILES TOTAL PROJECT	SHEET No.	TOTAL SHEETS
07	LA	210	R24.7/R44.9	236	274

REGISTERED ELECTRICAL ENGINEER 6/26/15 DATE

7-27-15
PLANS APPROVAL DATE

REGISTERED PROFESSIONAL ENGINEER JACQUELINE C. TAN No. E015611 Exp. 12/31/15 ELECTRICAL STATE OF CALIFORNIA

THE STATE OF CALIFORNIA OR ITS OFFICERS OR AGENTS SHALL NOT BE RESPONSIBLE FOR THE ACCURACY OR COMPLETENESS OF SCANNED COPIES OF THIS PLAN SHEET.

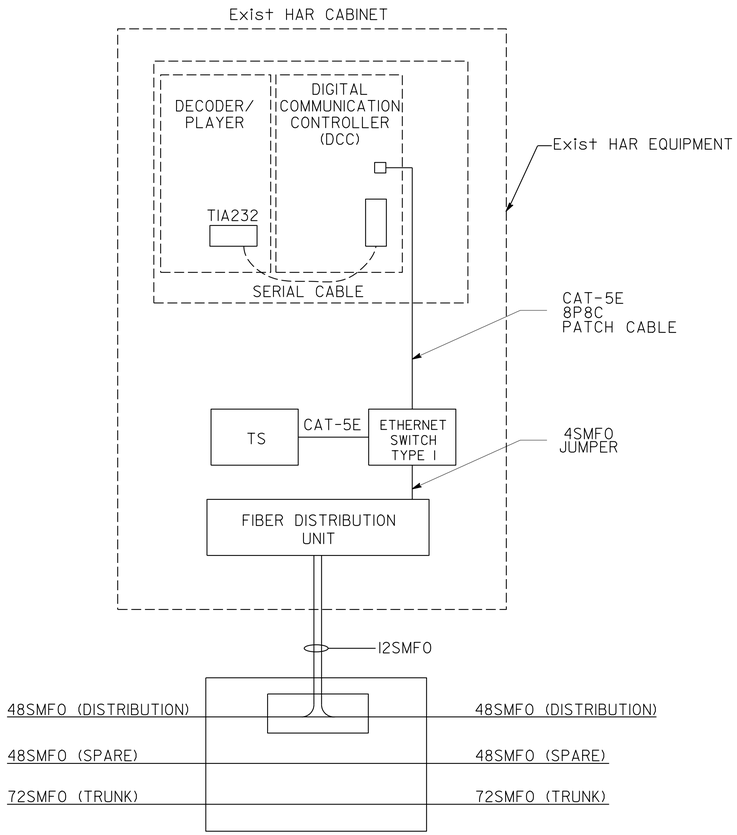

(MODEL 334 CONTROLLER ASSEMBLY WIRING FOR HAR)

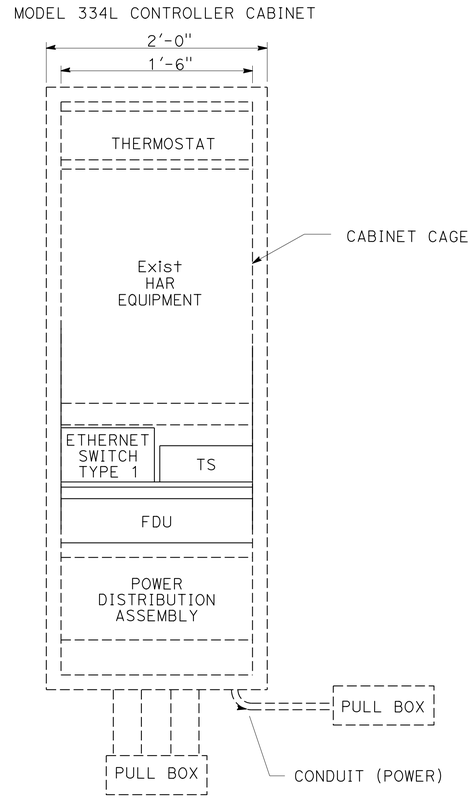

Exist MODEL 334L CONTROLLER
(TYPICAL HAR)
CABINET EQUIPMENT LAYOUT

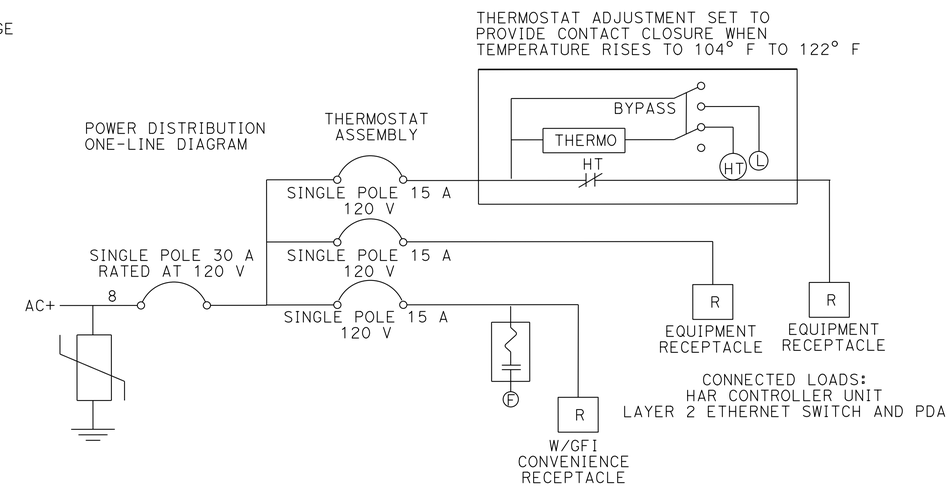

Exist POWER DISTRIBUTION ASSEMBLY

(MODEL 334L CONTROLLER CABINET DETAILS FOR HAR)

FOR ABBREVIATIONS AND NOTES SEE SHEET E-1

ELECTRICAL DETAILS

NO SCALE

E-195

STATE OF CALIFORNIA - DEPARTMENT OF TRANSPORTATION
Caltrans
OFFICE OF ITS

FUNCTIONAL SUPERVISOR: JACQUELINE C. TAN
CALCULATED-DESIGNED BY: TUYEN NGO
CHECKED BY: JACQUELINE C. TAN
REVISED BY
DATE REVISED

LAST REVISION 00-00-00
DATE PLOTTED => 16-SEP-2015
TIME PLOTTED => 13:27

Dist	COUNTY	ROUTE	POST MILES TOTAL PROJECT	SHEET No.	TOTAL SHEETS
07	LA	210	R24.7/R44.9	237	274

Jacqueline C Tan 6/26/15
REGISTERED ELECTRICAL ENGINEER DATE

7-27-15
PLANS APPROVAL DATE

REGISTERED PROFESSIONAL ENGINEER
JACQUELINE C. TAN
No. E015611
Exp. 12/31/15
ELECTRICAL
STATE OF CALIFORNIA

THE STATE OF CALIFORNIA OR ITS OFFICERS OR AGENTS SHALL NOT BE RESPONSIBLE FOR THE ACCURACY OR COMPLETENESS OF SCANNED COPIES OF THIS PLAN SHEET.

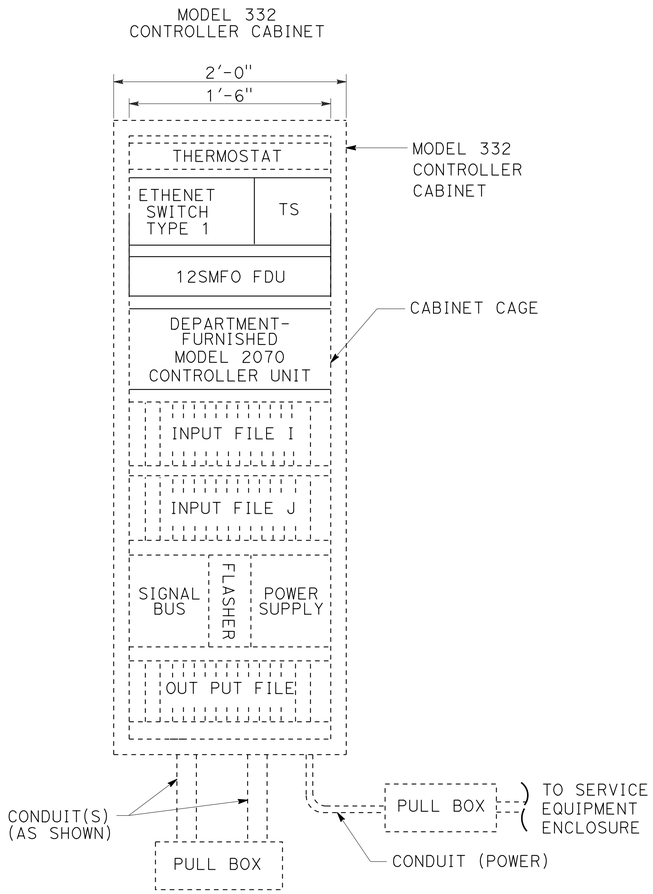

TYPICAL MODEL 332 CONTROLLER
CABINET EQUIPMENT LAYOUT FOR TRAFFIC SIGNAL

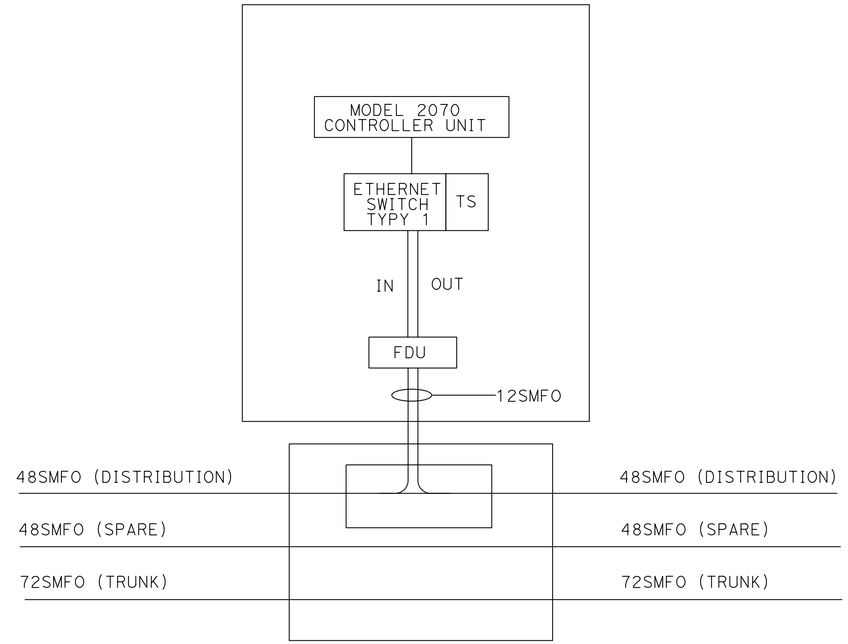

TYPICAL MODEL 332 CONTROLLER ASSEMBLY
WIRING DETAIL FOR TRAFFIC SIGNAL

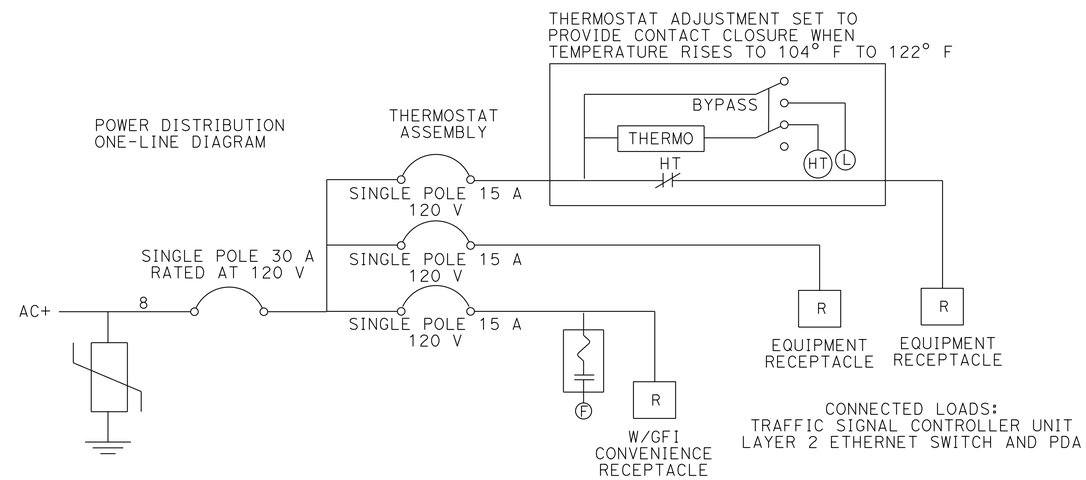

Exist POWER DISTRIBUTION ASSEMBLY

ELECTRICAL DETAILS

NO SCALE

(MODEL 332 CONTROLLER CABINET DETAILS FOR TRAFFIC SIGNAL)

FOR LEGEND, ABBREVIATIONS AND NOTES SEE SHEET E-1

E-196

STATE OF CALIFORNIA - DEPARTMENT OF TRANSPORTATION
Caltrans® OFFICE OF ITS

FUNCTIONAL SUPERVISOR: JACQUELINE C. TAN
CALCULATED-DESIGNED BY: JACQUELINE C. TAN
CHECKED BY
REVISED BY: TUYEN NGO
DATE REVISED

LAST REVISION 00-00-00
DATE PLOTTED => 16-SEP-2015
TIME PLOTTED => 13:27

Dist	COUNTY	ROUTE	POST MILES TOTAL PROJECT	SHEET No.	TOTAL SHEETS
07	LA	210	R24.7/R44.9	238	274

Jacqueline C Tan 6/26/15
REGISTERED ELECTRICAL ENGINEER DATE

7-27-15
PLANS APPROVAL DATE

REGISTERED PROFESSIONAL ENGINEER
JACQUELINE C. TAN
No. E015611
Exp. 12/31/15
ELECTRICAL
STATE OF CALIFORNIA

THE STATE OF CALIFORNIA OR ITS OFFICERS OR AGENTS SHALL NOT BE RESPONSIBLE FOR THE ACCURACY OR COMPLETENESS OF SCANNED COPIES OF THIS PLAN SHEET.

LEGEND: (THIS SHEET ONLY)

[1] INSTALL 4 ZX SPF MODULES IN EXISTING LAYER 3 SWITCH COMPATIBLE WITH FIELD SFP MODULES.

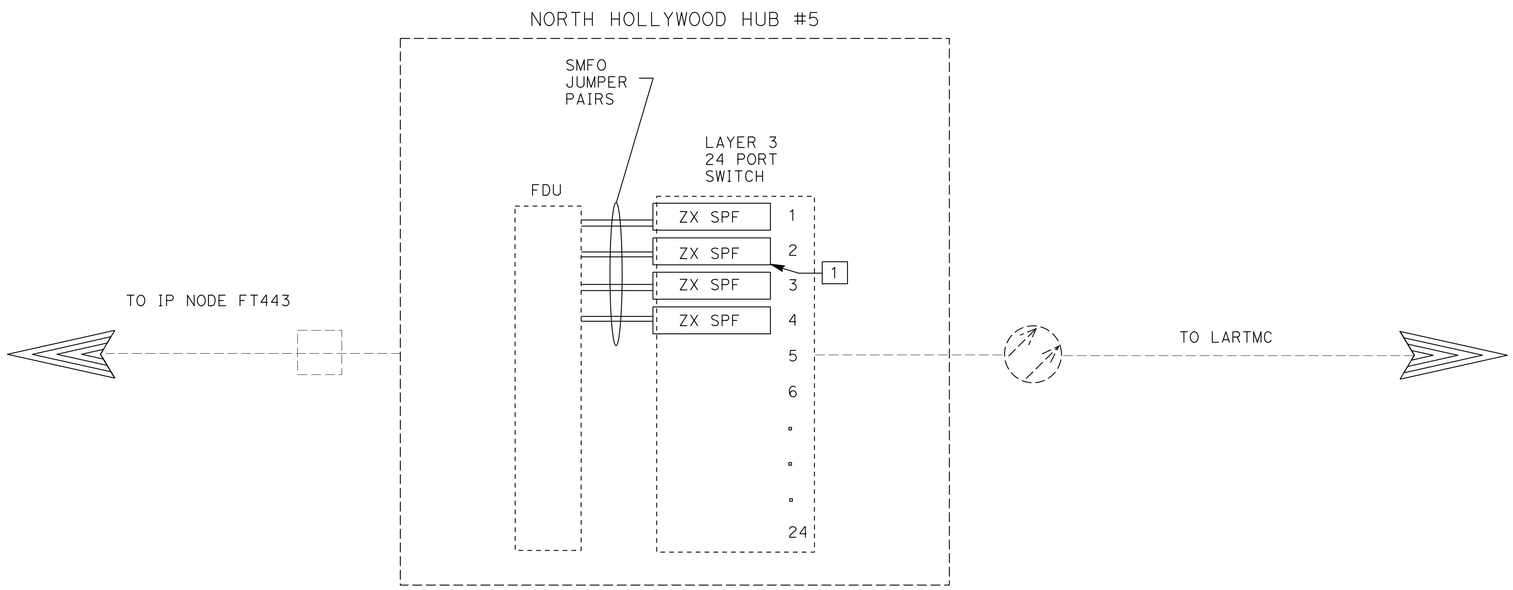

WORK AT HUB BUILDINGS

(EQUIPMENT AT NORTH HOLLYWOOD HUB BUILDING)

E-197

REVISED BY | DATE REVISED
TUYEN NGO | JACQUELINE C. TAN
CALCULATED-DESIGNED BY | CHECKED BY
FUNCTIONAL SUPERVISOR | JACQUELINE C. TAN
STATE OF CALIFORNIA - DEPARTMENT OF TRANSPORTATION
Caltrans
OFFICE OF ITS

LAST REVISION 06-10-15 | DATE PLOTTED => 16-SEP-2015 | TIME PLOTTED => 13:27

Dist	COUNTY	ROUTE	POST MILES TOTAL PROJECT	SHEET No.	TOTAL SHEETS
07	LA	210	R24.7/R44.9	239	274

Jacqueline C Tan 6/26/15
REGISTERED ELECTRICAL ENGINEER DATE

7-27-15
PLANS APPROVAL DATE

REGISTERED PROFESSIONAL ENGINEER
JACQUELINE C. TAN
No. E015611
Exp. 12/31/15
ELECTRICAL
STATE OF CALIFORNIA

THE STATE OF CALIFORNIA OR ITS OFFICERS OR AGENTS SHALL NOT BE RESPONSIBLE FOR THE ACCURACY OR COMPLETENESS OF SCANNED COPIES OF THIS PLAN SHEET.

LEGEND: (THIS SHEET ONLY)

1 INSTALL 4 ZX SPF MODULES IN EXISTING LAYER 3 SWITCH COMPATIBLE WITH FIELD SFP MODULES.

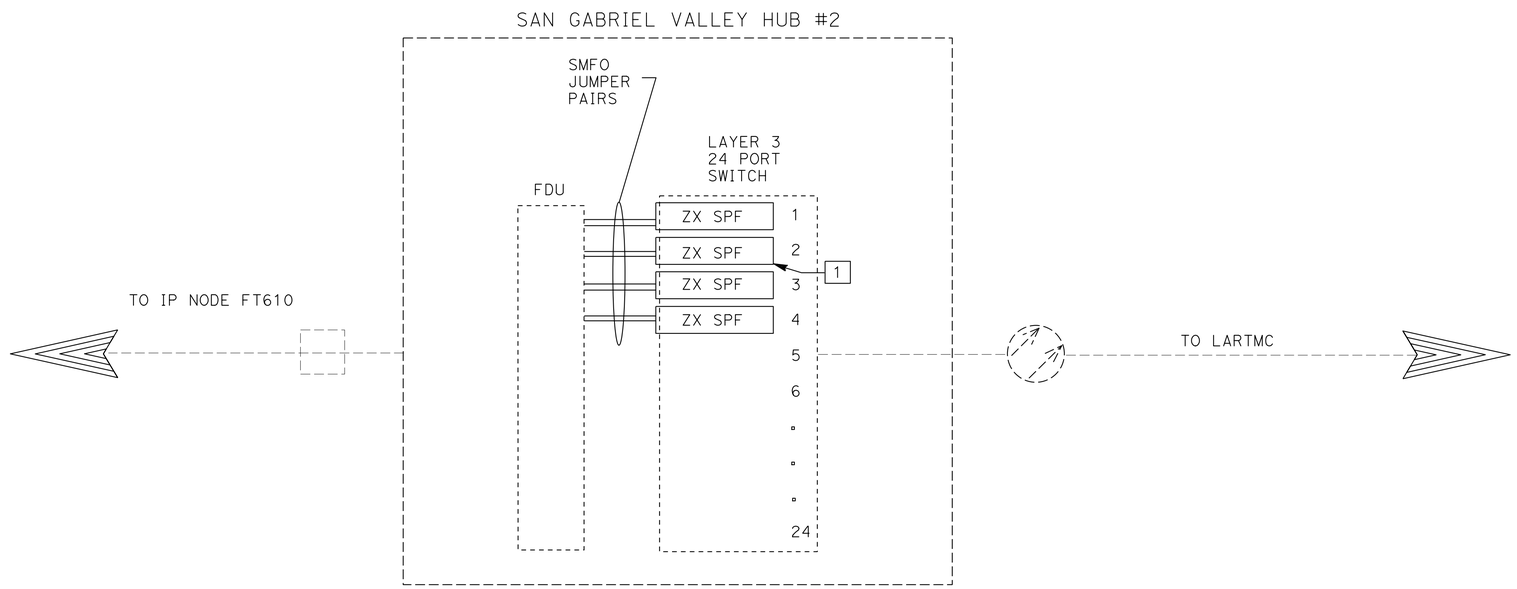

WORK AT HUB BUILDINGS

(EQUIPMENT AT SAN GABRIEL VALLEY HUB BUILDING)

E-198

STATE OF CALIFORNIA - DEPARTMENT OF TRANSPORTATION
Caltrans
OFFICE OF ITS

FUNCTIONAL SUPERVISOR: JACQUELINE C. TAN
CALCULATED-DESIGNED BY: TUYEN NGO
CHECKED BY: JACQUELINE C. TAN
REVISED BY
DATE REVISED

LAST REVISION 06-10-15
DATE PLOTTED => 16-SEP-2015
TIME PLOTTED => 13:27

Dist	COUNTY	ROUTE	POST MILES TOTAL PROJECT	SHEET No.	TOTAL SHEETS
07	LA	210	R24.7/R44.9	240	274

Jacqueline C Tan 6/26/15
REGISTERED ELECTRICAL ENGINEER DATE

7-27-15
PLANS APPROVAL DATE

REGISTERED PROFESSIONAL ENGINEER
JACQUELINE C. TAN
No. E015611
Exp. 12/31/15
ELECTRICAL
STATE OF CALIFORNIA

THE STATE OF CALIFORNIA OR ITS OFFICERS OR AGENTS SHALL NOT BE RESPONSIBLE FOR THE ACCURACY OR COMPLETENESS OF SCANNED COPIES OF THIS PLAN SHEET.

LEGEND: (THIS SHEET ONLY)

1 INSTALL 3 ZX SPF MODULES IN EXISTING LAYER 3 SWITCH COMPATIBLE WITH FIELD SFP MODULES.

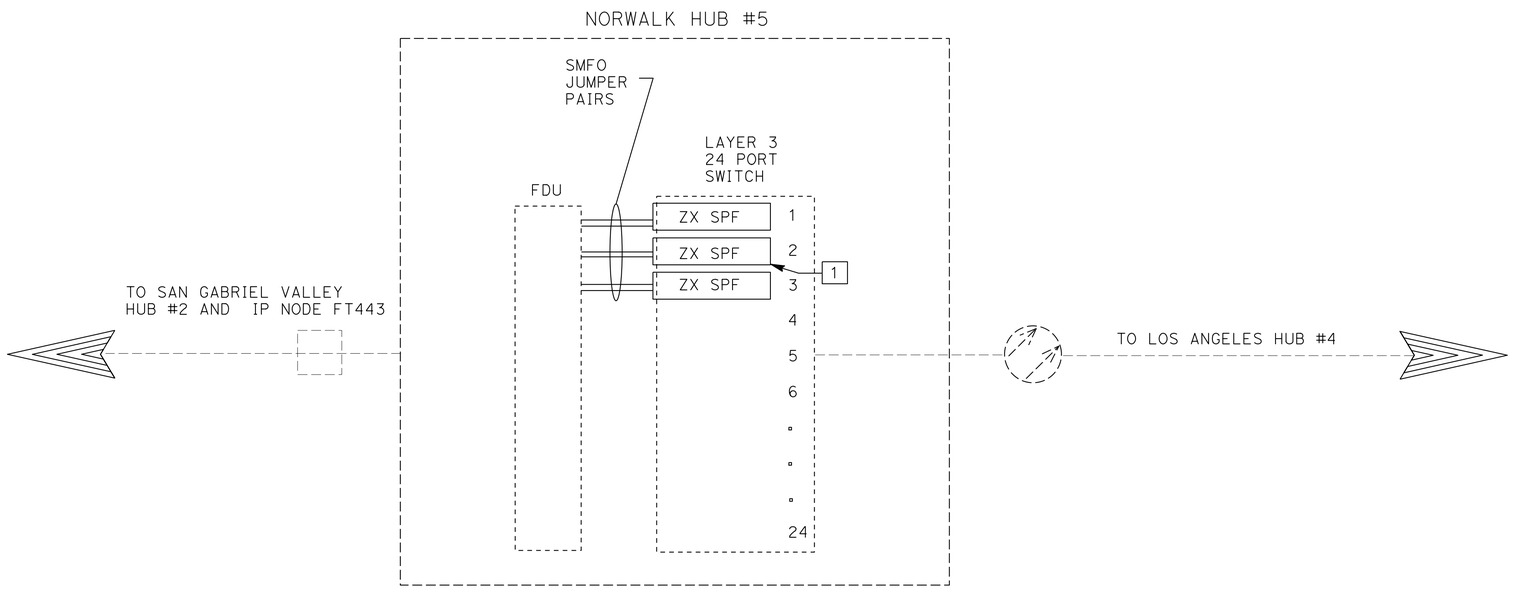

WORK AT HUB BUILDINGS

(EQUIPMENT AT NORWALK HUB BUILDING)

E-199

REVISED BY | DATE REVISED
TUYEN NGO | JACQUELINE C. TAN
CALCULATED-DESIGNED BY | CHECKED BY
FUNCTIONAL SUPERVISOR
JACQUELINE C. TAN

STATE OF CALIFORNIA - DEPARTMENT OF TRANSPORTATION
Caltrans
OFFICE OF ITS

LAST REVISION 06-10-15 | DATE PLOTTED => 16-SEP-2015 | TIME PLOTTED => 13:27

Dist	COUNTY	ROUTE	POST MILES TOTAL PROJECT	SHEET No.	TOTAL SHEETS
07	LA	210	R24.7/R44.9	241	274

Jacqueline C Tan 6/26/15
REGISTERED ELECTRICAL ENGINEER DATE

7-27-15
PLANS APPROVAL DATE

REGISTERED PROFESSIONAL ENGINEER
JACQUELINE C. TAN
No. E015611
Exp. 12/31/15
ELECTRICAL
STATE OF CALIFORNIA

THE STATE OF CALIFORNIA OR ITS OFFICERS OR AGENTS SHALL NOT BE RESPONSIBLE FOR THE ACCURACY OR COMPLETENESS OF SCANNED COPIES OF THIS PLAN SHEET.

LEGEND: (THIS SHEET ONLY)

1 INSTALL 6 DECODER MODULES IN EXISTING VIDEO RACK TO BE USED TO DECODE INCOMING VIDEO.

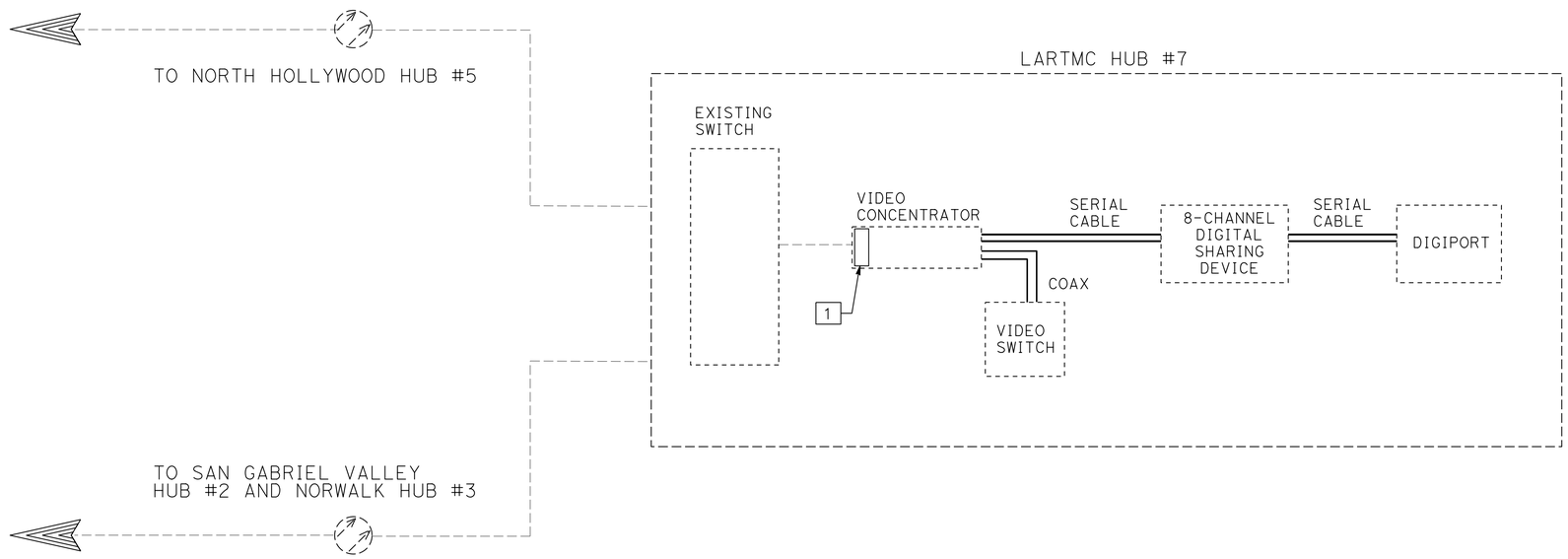

(EQUIPMENT AT LOS ANGELES REGIONAL TRANSPORTATION MANAGEMENT CENTER)

WORK AT LOS ANGELES REGIONAL TRANSPORTATION MANAGEMENT CENTER

E-200

STATE OF CALIFORNIA - DEPARTMENT OF TRANSPORTATION
Caltrans
OFFICE OF ITS

FUNCTIONAL SUPERVISOR: JACQUELINE C. TAN
CALCULATED-DESIGNED BY: TUYEN NGO
CHECKED BY: JACQUELINE C. TAN
REVISED BY
DATE REVISED

LAST REVISION 04-28-14
DATE PLOTTED => 16-SEP-2015
TIME PLOTTED => 13:27

Dist	COUNTY	ROUTE	POST MILES TOTAL PROJECT	SHEET No.	TOTAL SHEETS
07	LA	210	R24.7/R44.9	242	274

Jacqueline C Tan 6/26/15
REGISTERED ELECTRICAL ENGINEER DATE

7-27-15
PLANS APPROVAL DATE

REGISTERED PROFESSIONAL ENGINEER
JACQUELINE C. TAN
No. E015611
Exp. 12/31/15
ELECTRICAL
CALIFORNIA

THE STATE OF CALIFORNIA OR ITS OFFICERS OR AGENTS SHALL NOT BE RESPONSIBLE FOR THE ACCURACY OR COMPLETENESS OF SCANNED COPIES OF THIS PLAN SHEET.

NOTES:

1. FOR LEGEND, SEE SHEET E-1.
2. ITEMS SHOWN IN TABLE ARE NOT SEPARATE PAY ITEMS, FOR INFORMATION ONLY.

WORK AT HUB BUILDINGS

SHEET No.	TYPE ZX SFP MODULE AND CABLE
	EA
E-197	4
E-198	4
E-199	3

WORK AT LARTMC

SHEET No.	VIDEO DECODER AND CABLE
	EA
E-200	6

ELECTRICAL QUANTITIES

E-201

REVISED BY | DATE REVISED
CONWAY CHU | JACQUELINE C. TAN
CALCULATED-DESIGNED BY | CHECKED BY
FUNCTIONAL SUPERVISOR
JACQUELINE C. TAN

STATE OF CALIFORNIA - DEPARTMENT OF TRANSPORTATION
Caltrans®
OFFICE OF ITS

LAST REVISION 06-25-15
DATE PLOTTED => 16-SEP-2015
TIME PLOTTED => 13:27

M

Maint	MAINTENANCE
Max	MAXIMUM
MB	METAL BEAM
MBB	METAL BEAM BARRIER
MBGR	METAL BEAM GUARD RAILING
Med	MEDIAN
MGS	MIDWEST GUARDRAIL SYSTEM
MH	MANHOLE
Min	MINIMUM
Misc	MISCELLANEOUS
Misc I & S	MISCELLANEOUS IRON AND STEEL
Mkr	MARKER
Mod	MODIFIED,
	MODIFY
Mon	MONUMENT
MP	METAL PLATE
MPGR	METAL PLATE GUARD RAILING
MR	MOVEMENT RATING
MSE	MECHANICALLY STABILIZED EMBANKMENT
Mt	MOUNTAIN, MOUNT
Mtl	MATERIAL
MVP	MAINTENANCE VEHICLE PULLOUT

N

N	NORTH
NB	NORTHBOUND
No.	NUMBER (MUST HAVE PERIOD)
Nos.	NUMBERS (MUST HAVE PERIOD)
NPS	NOMINAL PIPE SIZE
NS	NEAR SIDE
NSP	NEW STANDARD PLAN
NTS	NOT TO SCALE

O

Oblr	OBLITERATE
OC	OVERCROSSING
OD	OUTSIDE DIAMETER
OF	OUTSIDE FACE
OG	ORIGINAL GROUND
OGAC	OPEN GRADED ASPHALT CONCRETE
OGFC	OPEN GRADED FRICTION COURSE
OH	OVERHEAD
OHWM	ORDINARY HIGH WATER MARK
O-O	OUT TO OUT
Opp	OPPOSITE
OSD	OVERSIDE DRAIN

P

P	PAGE
PAP	PERFORATED ALUMINUM PIPE
PB	PULL BOX
PC	POINT OF CURVATURE,
	PRECAST
PCC	POINT OF COMPOUND CURVE,
	PORTLAND CEMENT CONCRETE
PCMS	PORTABLE CHANGEABLE MESSAGE SIGN
PCP	PERFORATED CONCRETE PIPE,
	PRESTRESSED CONCRETE PIPE
PCVC	POINT OF COMPOUND VERTICAL CURVE
PEC	PERMIT TO ENTER AND CONSTRUCT
Ped	PEDESTRIAN
Ped OC	PEDESTRIAN OVERCROSSING
Ped UC	PEDESTRIAN UNDERCROSSING
Perm Mtl	PERMEABLE MATERIAL

P continued

PG	PROFILE GRADE
PI	POINT OF INTERSECTION
PJP	PARTIAL JOINT PENETRATION
Pkwy	PARKWAY
ℙ,PL	PLATE
P/L	PROPERTY LINE
PM	POST MILE,
	TIME FROM NOON TO MIDNIGHT
PN	PAVING NOTCH
POC	POINT OF HORIZONTAL CURVE
POT	POINT OF TANGENT
POVC	POINT OF VERTICAL CURVE
PP	PIPE PILE,
	PLASTIC PIPE,
	POWER POLE
PPL	PREFORMED PERMEABLE LINER
PPP	PERFORATED PLASTIC PIPE
PRC	POINT OF REVERSE CURVE
PRF	PAVEMENT REINFORCING FABRIC
PRVC	POINT OF REVERSE VERTICAL CURVE
PS&E	PLANS, SPECIFICATIONS AND ESTIMATES
PS, P/S	PRESTRESSED
PSP	PERFORATED STEEL PIPE
PT	POINT OF TANGENCY
PVC	POLYVINYL CHLORIDE
Pvmt	PAVEMENT

Q

Qty	QUANTITY

R

R	RADIUS
R & D	REMOVE AND DISPOSE
R & S	REMOVE AND SALVAGE
R/C	RATE OF CHANGE
RCA	REINFORCED CONCRETE ARCH
RCB	REINFORCED CONCRETE BOX
RCP	REINFORCED CONCRETE PIPE
RCPA	REINFORCED CONCRETE PIPE ARCH
Rd	ROAD
Reinf	REINFORCED,
	REINFORCEMENT,
	REINFORCING
Rel	RELOCATE
Repl	REPLACEMENT
Ret	RETAINING
Rev	REVISED, REVISION
Rdwy	ROADWAY
RHMA	RUBBERIZED HOT MIX ASPHALT
Riv	RIVER
RM	ROAD-MIXED
RP	RADIUS POINT,
	REFERENCE POINT
RR	RAILROAD
RSP	ROCK SLOPE PROTECTION,
	REVISED STANDARD PLAN
Rt	RIGHT
Rte	ROUTE
RW	REDWOOD,
	RETAINING WALL
R/W	RIGHT OF WAY
Rwy	RAILWAY

S

S	SOUTH,
	SUPPLEMENT
SAE	STRUCTURE APPROACH EMBANKMENT
Salv	SALVAGE
SAPP	STRUCTURAL ALUMINUM PLATE PIPE
SB	SOUTHBOUND
SC	SAND CUSHION
SCSP	SLOTTED CORRUGATED STEEL PIPE
SD	STORM DRAIN
Sec	SECOND,
	SECTION
Sep	SEPARATION
SG	SUBGRADE
Shld	SHOULDER
Sht	SHEET
Sim	SIMILAR
℄	STATION LINE
SM	SELECTED MATERIAL
Spec	SPECIAL,
	SPECIFICATIONS
SPP	SLOTTED PLASTIC PIPE
SS	SLOPE STAKE
SSBM	STRAP AND SADDLE BRACKET METHOD
SSD	STRUCTURAL SECTION DRAIN
SSPA	STRUCTURAL STEEL PLATE ARCH
SSPP	STRUCTURAL STEEL PLATE PIPE
SSPPA	STRUCTURAL STEEL PLATE PIPE ARCH
SSRP	STEEL SPIRAL RIB PIPE
St	STREET
Sta	STATION
STBB	SINGLE THRIE BEAM BARRIER
Std	STANDARD
Str	STRUCTURE
Surf	SURFACING
SW	SIDEWALK,
	SOUND WALL
Swr	SEWER
Sym	SYMMETRICAL
S4S	SURFACE 4 SIDES

T

T	SEMI-TANGENT
Tan	TANGENT
TBB	THRIE BEAM BARRIER
Tbr	TIMBER
TC	TOP OF CURB
TCB	TRAFFIC CONTROL BOX
TCE	TEMPORARY CONSTRUCTION EASEMENT
Tel	TELEPHONE
Temp	TEMPORARY
TG	TOP OF GRADE
Tot	TOTAL
TP	TELEPHONE POLE
TPB	TREATED PERMEABLE BASE
TPM	TREATED PERMEABLE MATERIAL
Trans	TRANSITION

T continued

TS	TRANSVERSE,
	TRAFFIC SIGNAL,
	TUBULAR STEEL
Typ	TYPICAL

U

UC	UNDERCROSSING
UD	UNDERDRAIN
UG	UNDERGROUND
UON	UNLESS OTHERWISE NOTED
UP	UNDERPASS

V

V	VALVE,
	DESIGN SPEED
Var	VARIABLE,
	VARIES
VC	VERTICAL CURVE
VCP	VITRIFIED CLAY PIPE
Vert	VERTICAL
Via	VIADUCT
Vol	VOLUME

W

W	WEST,
	WIDTH
WB	WESTBOUND
WH	WEEP HOLE
WM	WIRE MESH
WS	WATER SURFACE
WSP	WELDED STEEL PIPE
Wt	WEIGHT
WV	WATER VALVE
WW	WINGWALL
WWLOL	WINGWALL LAYOUT LINE

X

X Sec	CROSS SECTION
Xing	CROSSING

Y

Yr	YEAR
Yrs	YEARS

Dist	COUNTY	ROUTE	POST MILES TOTAL PROJECT	SHEET No.	TOTAL SHEETS
07	LA	210	R24.7/R44.9	243	274

Grace M. Tsushima
REGISTERED CIVIL ENGINEER

July 19, 2013
PLANS APPROVAL DATE

REGISTERED PROFESSIONAL ENGINEER Grace M. Tsushima No. C49814 Exp. 9-30-14 CIVIL STATE OF CALIFORNIA

THE STATE OF CALIFORNIA OR ITS OFFICERS OR AGENTS SHALL NOT BE RESPONSIBLE FOR THE ACCURACY OR COMPLETENESS OF SCANNED COPIES OF THIS PLAN SHEET.

TO ACCOMPANY PLANS DATED 7-27-15

UNIT OF MEASUREMENT SYMBOLS:

Some of the symbols used in the project plan quantity tables and in the Bid Item List are:

TABLE A

SYMBOL USED	DEFINITIONS
ACRE	ACRE
CF	CUBIC FOOT
CY	CUBIC YARD
EA	EACH
GAL	GALLON
LB	POUND
LF	LINEAR FOOT
SQFT	SQUARE FOOT
SQYD	SQUARE YARD
STA	100 FEET
TAB	TABLET
TON	2,000 POUNDS

Some of the symbols used in the plans other than in the project plan quantity tables are:

TABLE B

SYMBOL USED	DEFINITIONS
ksi	KIPS PER SQUARE INCH
ksf	KIPS PER SQUARE FOOT
psi	POUNDS PER SQUARE INCH
psf	POUNDS PER SQUARE FOOT
lb/ft^3, pcf	POUNDS PER CUBIC FOOT
tsf	TONS PER SQUARE FOOT
mph, MPH *	MILES PER HOUR
ø	NOMINAL DIAMETER
oz	OUNCE
lb	POUND
kip	1,000 POUNDS
cal	CALORIE
ft	FOOT OR FEET
gal	GALLON

* For use on a sign panel only

STATE OF CALIFORNIA
DEPARTMENT OF TRANSPORTATION

ABBREVIATIONS (SHEET 2 OF 2)

NO SCALE

RSP A10B DATED JULY 19, 2013 SUPERSEDES STANDARD PLAN A10B DATED MAY 20, 2011 - PAGE 2 OF THE STANDARD PLANS BOOK DATED 2010.

REVISED STANDARD PLAN RSP A10B

2010 REVISED STANDARD PLAN RSP A10B

6-7-13

Dist	COUNTY	ROUTE	POST MILES TOTAL PROJECT	SHEET No.	TOTAL SHEETS
07	LA	210	R24.7/R44.9	244	274

Randell D. Hiatt
REGISTERED CIVIL ENGINEER

July 19, 2013
PLANS APPROVAL DATE

REGISTERED PROFESSIONAL ENGINEER
Randell D. Hiatt
No. C50200
Exp. 6-30-15
CIVIL
STATE OF CALIFORNIA

THE STATE OF CALIFORNIA OR ITS OFFICERS OR AGENTS SHALL NOT BE RESPONSIBLE FOR THE ACCURACY OR COMPLETENESS OF SCANNED COPIES OF THIS PLAN SHEET.

TO ACCOMPANY PLANS DATED 7-27-15

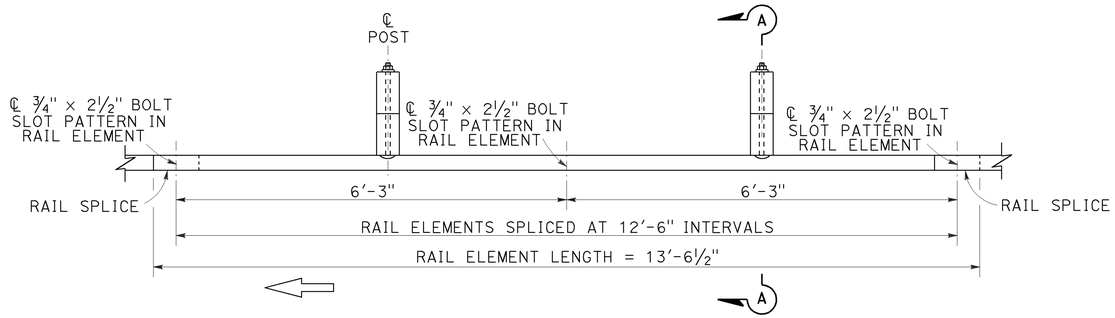

PLAN

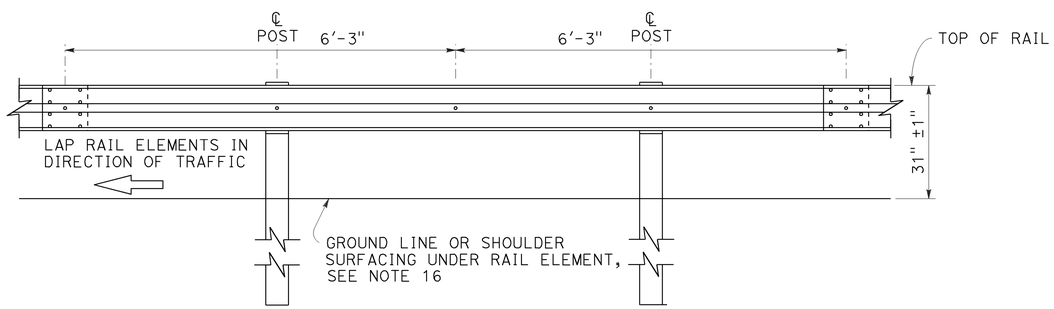

ELEVATION

MIDWEST GUARDRAIL SYSTEM WITH WOOD POST AND BLOCKS

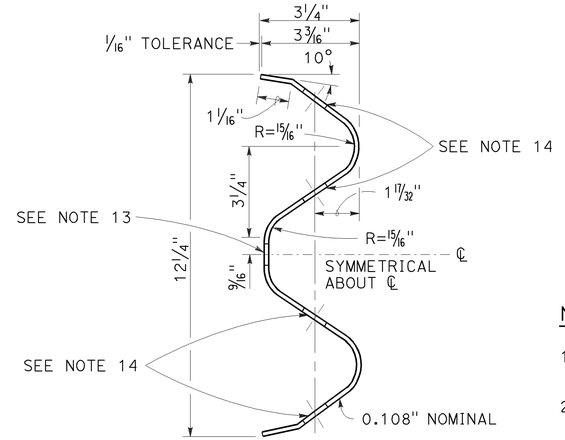

SECTION THRU RAIL ELEMENT

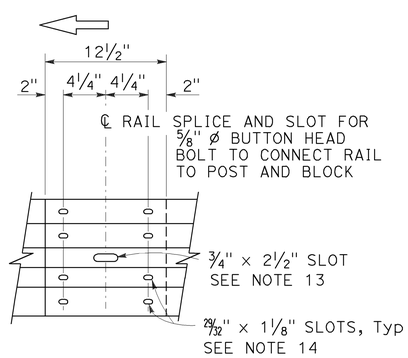

ELEVATION

RAIL ELEMENT SPLICE DETAIL

a) Connect the over lapped end of the rail elements with ⅝" ø × 1⅜" button head oval shoulder splice bolts inserted into the 29⁄32" × 1⅛" slots and bolted together with ⅝" ø recessed hex nuts. Recess of hex nut points toward rail element. A total of 8 bolts and nuts are to be used at each rail splice connection.

b) The ends of the rail elements are to be overlapped in the direction of traffic (see details).

c) Where end cap is to be attached to the end of a rail element, a total of 4 of the above described splice bolts and nuts are to be used.

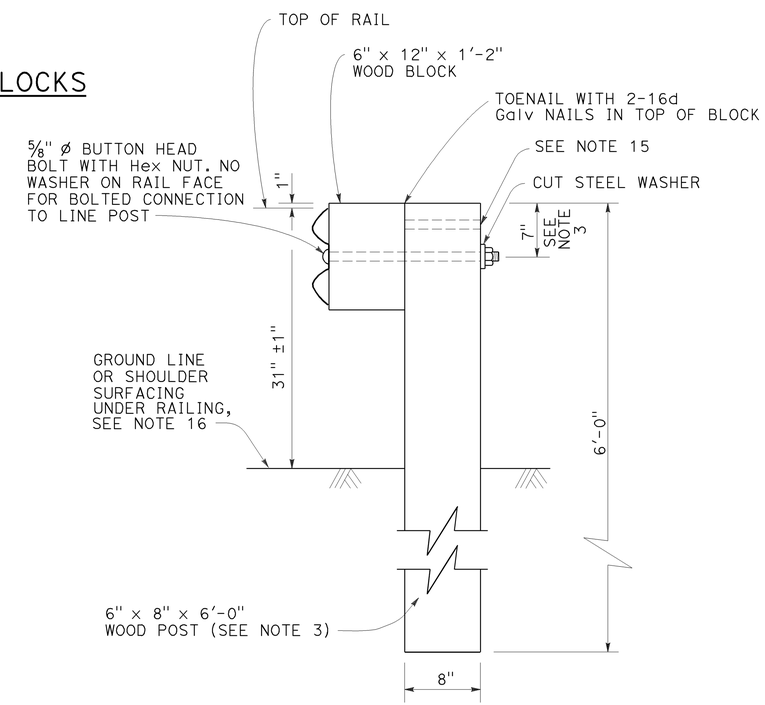

SECTION A-A

TYPICAL WOOD LINE POST INSTALLATION

See Note 4

NOTES:

1. For details of steel post installations, see Revised Standard Plan RSP A77L2.
2. For details of standard hardware used to construct MGS, see Revised Standard Plan RSP A77M1.
3. For details of wood posts and wood blocks used to construct MGS, see Revised Standard Plan RSP A77N1.
4. For additional installation details, see Revised Standard Plan RSP A77N3.
5. MGS post spacing to be 6'-3" center to center, except as otherwise noted.
6. For MGS typical layouts, see the A77P, A77Q and A77R Series of Standard Plans.
7. If railing is connected to terminal system end treatment, use 31" height terminal system end treatment.
8. For MGS end anchor details, see Revised Standard Plans RSP A77S1 and RSP A77T2.
9. For details of MGS transition to bridge railing, see Revised Standard Plan RSP A77U4.
10. For additional details of MSG connection to bridge railing, see Revised Standard Plans RSP A77U1, RSP A77U2 and RSP A77V1.
11. For MGS connection details to abutments and walls, see Revised Standard Plan RSP A77U3.
12. For typical MGS delineation and dike positioning details, see Revised Standard Plan RSP A77N4.
13. Slotted hole for bolted connection of rail element to block and post. See "Section Thru Rail Element".
14. Slotted holes for splice bolts to overlap ends of rail element. See "Section Thru Rail Element".
15. Additional hole in uppermost portion of line post is for potential future adjustments of railing height. See Revised Standard Plan RSP A77N1.
16. Install posts in soil.

STATE OF CALIFORNIA
DEPARTMENT OF TRANSPORTATION

MIDWEST GUARDRAIL SYSTEM STANDARD RAILING SECTION (WOOD POST WITH WOOD BLOCK)

NO SCALE

RSP A77L1 DATED JULY 19, 2013 SUPPLEMENTS STANDARD PLANS BOOK DATED 2010.

REVISED STANDARD PLAN RSP A77L1

2010 REVISED STANDARD PLAN RSP A77L1

7-3-13

Dist	COUNTY	ROUTE	POST MILES TOTAL PROJECT	SHEET No.	TOTAL SHEETS
07	LA	210	R24.7/R44.9	245	274

Randell D. Hiatt
REGISTERED CIVIL ENGINEER

July 19, 2013
PLANS APPROVAL DATE

REGISTERED PROFESSIONAL ENGINEER
Randell D. Hiatt
No. C50200
Exp. 6-30-15
CIVIL
STATE OF CALIFORNIA

THE STATE OF CALIFORNIA OR ITS OFFICERS OR AGENTS SHALL NOT BE RESPONSIBLE FOR THE ACCURACY OR COMPLETENESS OF SCANNED COPIES OF THIS PLAN SHEET.

TO ACCOMPANY PLANS DATED 7-27-15

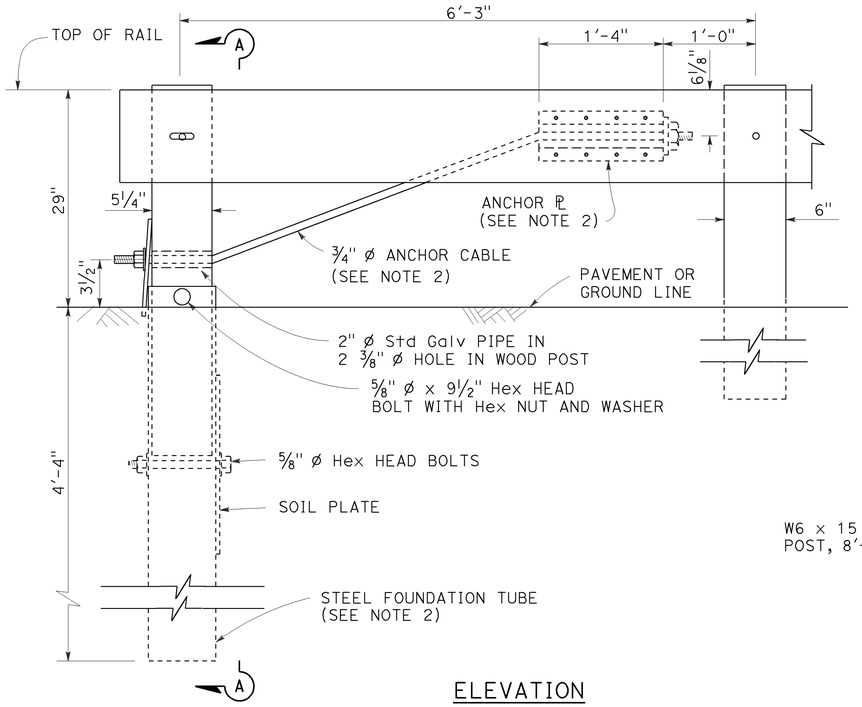

ELEVATION
END ANCHOR
ASSEMBLY (TYPE SFT)

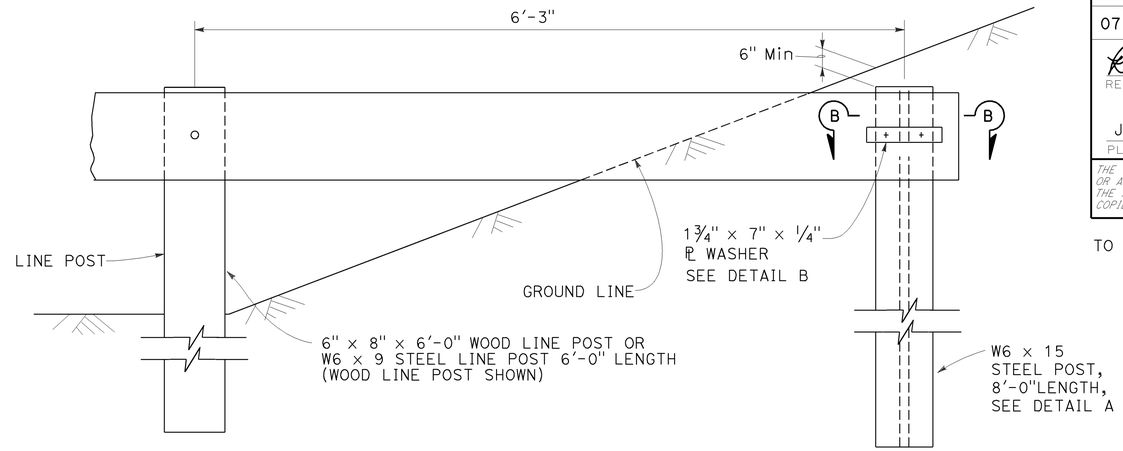

BURIED POST END ANCHOR

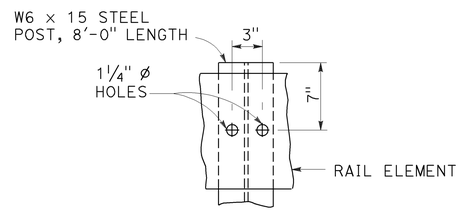

DETAIL A

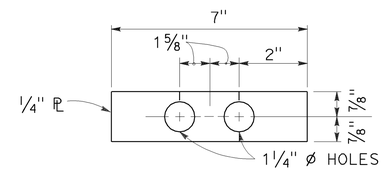

DETAIL B

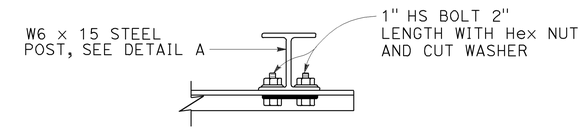

SECTION B-B

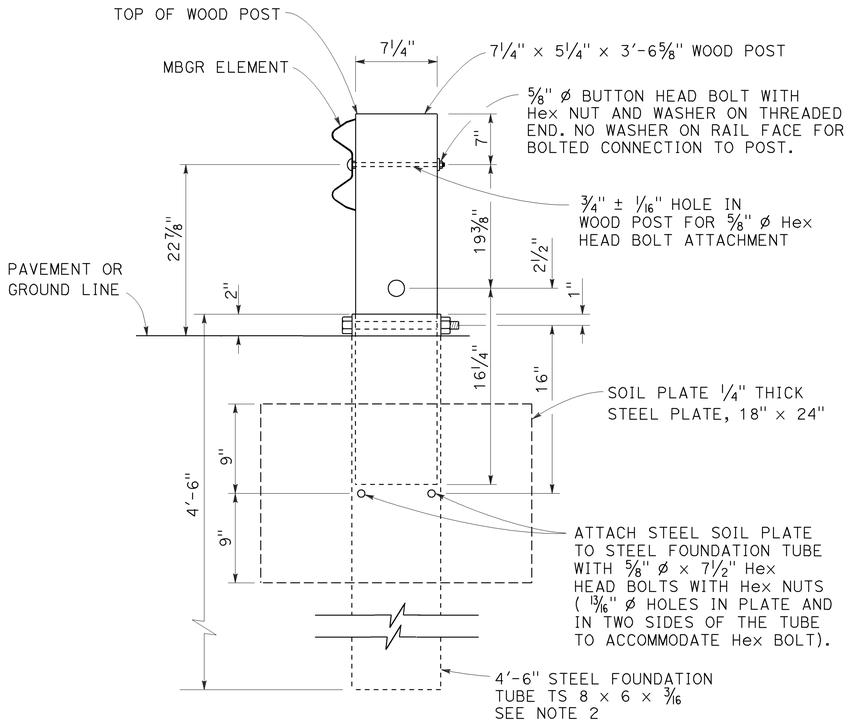

SECTION A-A

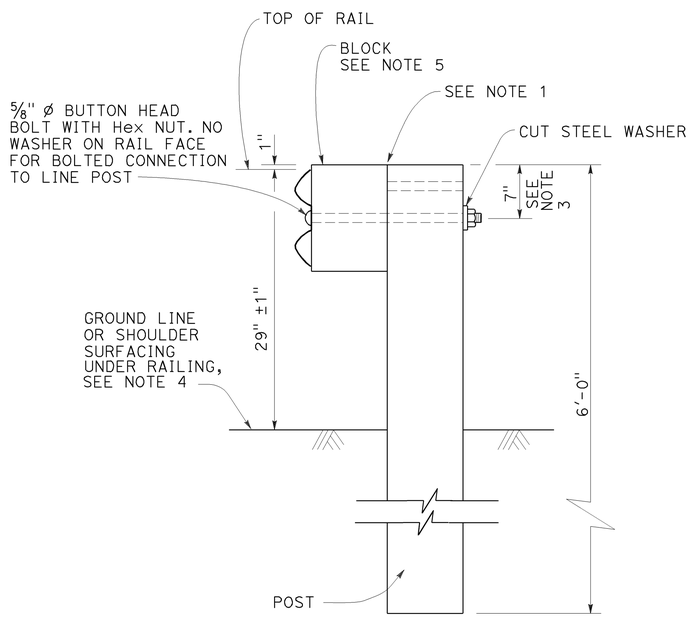

TYPICAL LINE
POST INSTALLATION

NOTES:

1. For wood post and wood block, toenail with 2-16d Galv nails in top of block. For steel post and notched wood or plastic block, notched face of block faces steel post.
2. A 6'-0" Length steel foundation tube, TS 8 x 6 x 3/16, without a soil plate, may be furnished and installed in place of the 4'-6" length steel foundation tube and soil plate shown, Minimum embadment of the 6'-0" length tube shall be 5'-9". A 5/8" ø Hex head bolt and nut shall be installed in the hole in the 6'-0" length tube to keep the wood post from dropping into the tube.
3. To connect railing to 27" terminal system end treatment, transition the top of railing height at a ratio of 120:1 to terminal system end treatment height plus one 12'-6" standard railing section at the transitioned height for a horizontal connection to the end treatment.
4. Install posts in soil.
5. See Revised Standard Plans RSP A77N1 and RSP A77N2 for details.
6. Holes excavation in the slope to construct the buried post end anchor shall be backfilled with selected earth, placed in layers approximately 1'-0" thick. Each layer shall be moistened and thoroughly compacted.

STATE OF CALIFORNIA
DEPARTMENT OF TRANSPORTATION

METAL BEAM GUARD RAILING RECONSTRUCT INSTALLATION

NO SCALE

RSP A77L3 DATED JULY 19, 2013 SUPPLEMENTS THE STANDARD PLANS BOOK DATED 2010.

REVISED STANDARD PLAN RSP A77L3

2010 REVISED STANDARD PLAN RSP A77L3

7-16-13

Dist	COUNTY	ROUTE	POST MILES TOTAL PROJECT	SHEET No.	TOTAL SHEETS
07	LA	210	R24.7/R44.9	246	274

Randell D. Hiatt
REGISTERED CIVIL ENGINEER

July 19, 2013
PLANS APPROVAL DATE

REGISTERED PROFESSIONAL ENGINEER
Randell D. Hiatt
No. C50200
Exp. 6-30-15
CIVIL
STATE OF CALIFORNIA

THE STATE OF CALIFORNIA OR ITS OFFICERS OR AGENTS SHALL NOT BE RESPONSIBLE FOR THE ACCURACY OR COMPLETENESS OF SCANNED COPIES OF THIS PLAN SHEET.

TO ACCOMPANY PLANS DATED 7-27-15

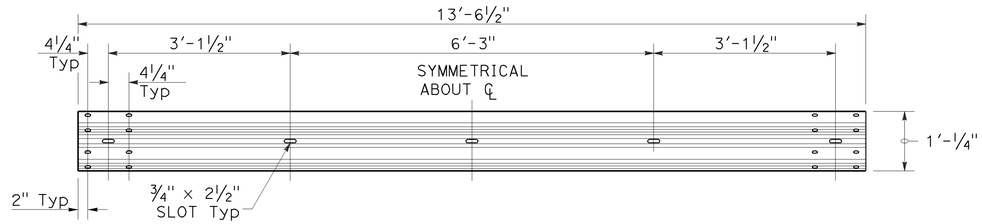

TYPICAL RAIL ELEMENT

NOTE:

1. Slotted holes for splice bolts to overlap ends of rail element.

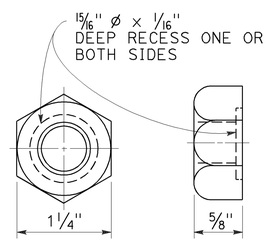

⅝" ø RECESS NUT

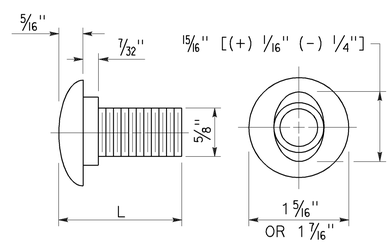

⅝" ø BUTTON HEAD BOLT

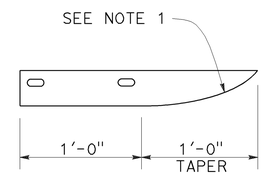

PLAN

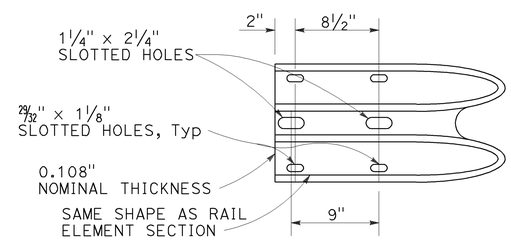

ELEVATION

END CAP
(TYPE A)

BUTTON HEAD BOLT

L	THREAD LENGTH
1⅜"	FULL THREAD LENGTH
2"	FULL THREAD LENGTH
10"	4" Min THREAD LENGTH
18"	4" Min THREAD LENGTH
20"	4" Min THREAD LENGTH
22"	4" Min THREAD LENGTH
26"	4" Min THREAD LENGTH
36"	4" Min THREAD LENGTH
** 2¾"	2" Min THREAD LENGTH
** 19"	4" Min THREAD LENGTH

** For nested rail applications.

STATE OF CALIFORNIA
DEPARTMENT OF TRANSPORTATION

MIDWEST GUARDRAIL SYSTEM STANDARD HARDWARE

NO SCALE

RSP A77M1 DATED JULY 19, 2013 SUPPLEMENTS THE STANDARD PLANS BOOK DATED 2010.

REVISED STANDARD PLAN RSP A77M1

2010 REVISED STANDARD PLAN RSP A77M1

7-3-13

Dist	COUNTY	ROUTE	POST MILES TOTAL PROJECT	SHEET No.	TOTAL SHEETS
07	LA	210	R24.7/R44.9	247	274

Randell D. Hiatt
REGISTERED CIVIL ENGINEER

July 19, 2013
PLANS APPROVAL DATE

REGISTERED PROFESSIONAL ENGINEER
Randell D. Hiatt
No. C50200
Exp. 6-30-15
CIVIL
STATE OF CALIFORNIA

THE STATE OF CALIFORNIA OR ITS OFFICERS OR AGENTS SHALL NOT BE RESPONSIBLE FOR THE ACCURACY OR COMPLETENESS OF SCANNED COPIES OF THIS PLAN SHEET.

TO ACCOMPANY PLANS DATED 7-27-15

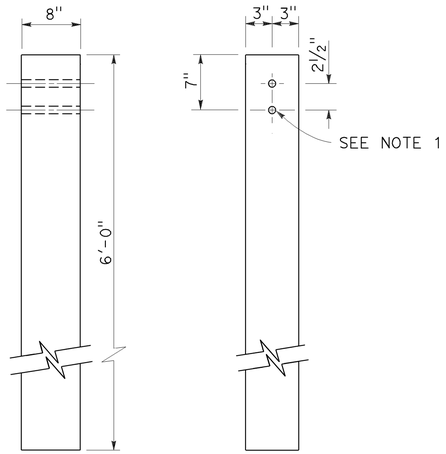

SIDE FRONT

6" x 8" WOOD POST
See Note 3

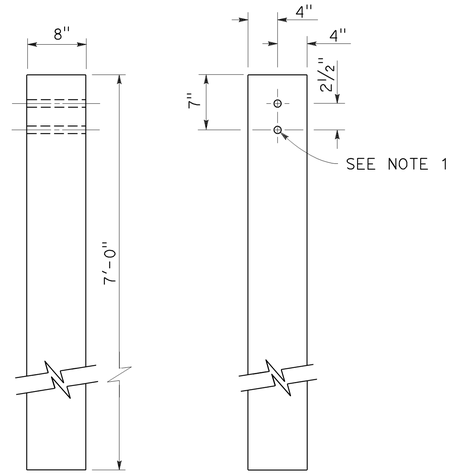

SIDE FRONT

8" x 8" WOOD POST
See Note 4

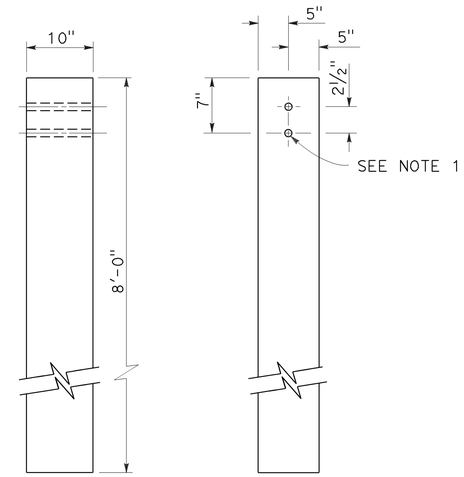

SIDE FRONT

10" x 10" WOOD POST
See Note 5

NOTES:

1. All holes in wood posts and blocks shall be 3/4" Dia ± 1/16".
2. Dimensions shown for wood post are nominal.
3. This post and block combination used for standard line post sections of MGS.
4. This post and 8" x 12" block combination used for line post sections of MGS on narrow roadways.
5. This post and 8" x 12" block combination is typically used where strengthened line post sections of MGS are warranted to shield fixed objects.
6. See Revised Standard Plan RSP A77L3 for use of 6" x 8" and 8" x 8" wood blocks.

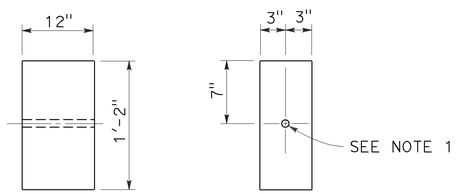

SIDE FRONT

6" x 12" WOOD BLOCK
See Note 3

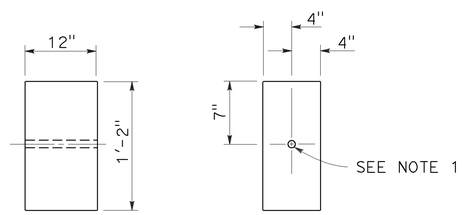

SIDE FRONT

8" x 12" WOOD BLOCK

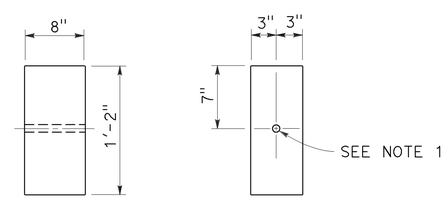

SIDE FRONT

6" x 8" WOOD BLOCK
Only for use with metal beam guard rail see Note 6

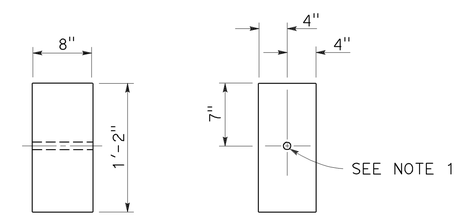

SIDE FRONT

8" x 8" WOOD BLOCK
Only for use with metal beam guard rail see Note 6

STATE OF CALIFORNIA
DEPARTMENT OF TRANSPORTATION

MIDWEST GUARDRAIL SYSTEM WOOD POST AND WOOD BLOCK DETAILS

NO SCALE

RSP A77N1 DATED JULY 19, 2013 SUPPLEMENTS THE STANDARD PLANS BOOK DATED 2010.

REVISED STANDARD PLAN RSP A77N1

2010 REVISED STANDARD PLAN RSP A77N1

7-3-13

Dist	COUNTY	ROUTE	POST MILES TOTAL PROJECT	SHEET No.	TOTAL SHEETS
07	LA	210	R24.7/R44.9	248	274

Randell D. Hiatt
REGISTERED CIVIL ENGINEER

November 15, 2013
PLANS APPROVAL DATE

REGISTERED PROFESSIONAL ENGINEER
Randell D. Hiatt
No. C50200
Exp. 6-30-15
CIVIL
STATE OF CALIFORNIA

THE STATE OF CALIFORNIA OR ITS OFFICERS OR AGENTS SHALL NOT BE RESPONSIBLE FOR THE ACCURACY OR COMPLETENESS OF SCANNED COPIES OF THIS PLAN SHEET.

TO ACCOMPANY PLANS DATED 7-27-15

2010 REVISED STANDARD PLAN RSP A77N3

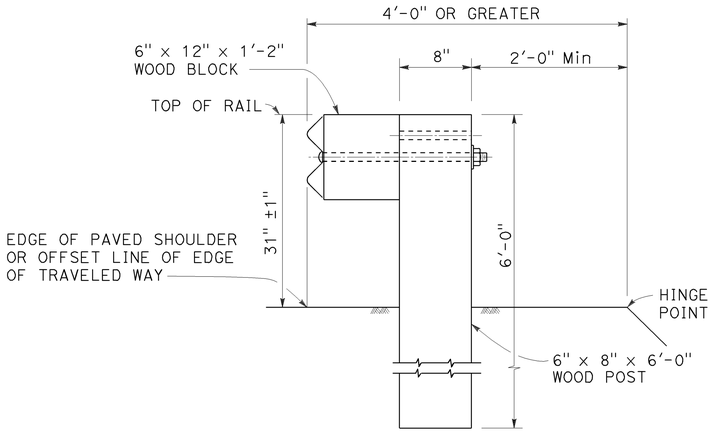

DETAIL A

TYPICAL ROADWAY INSTALLATION

See Note 1

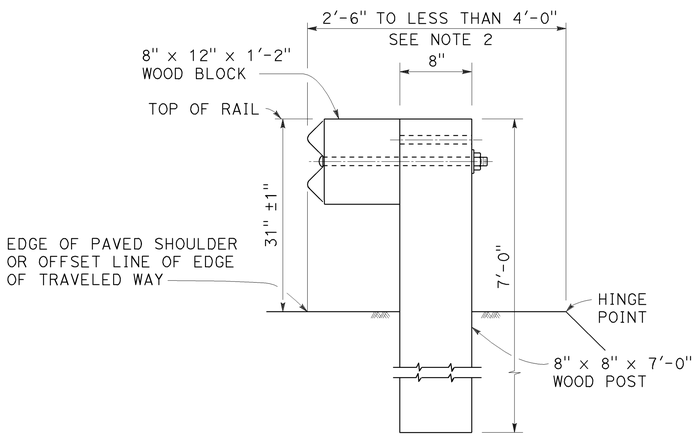

DETAIL B

NARROW ROADWAY INSTALLATION

See Note 1

POST EMBEDMENT

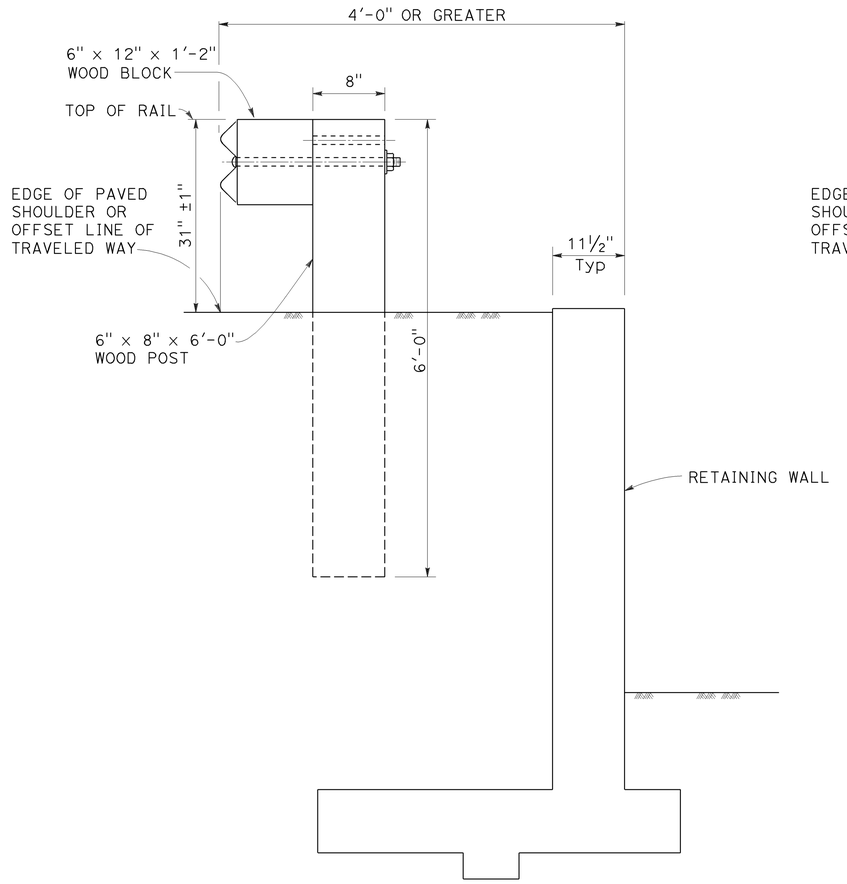

DETAIL C

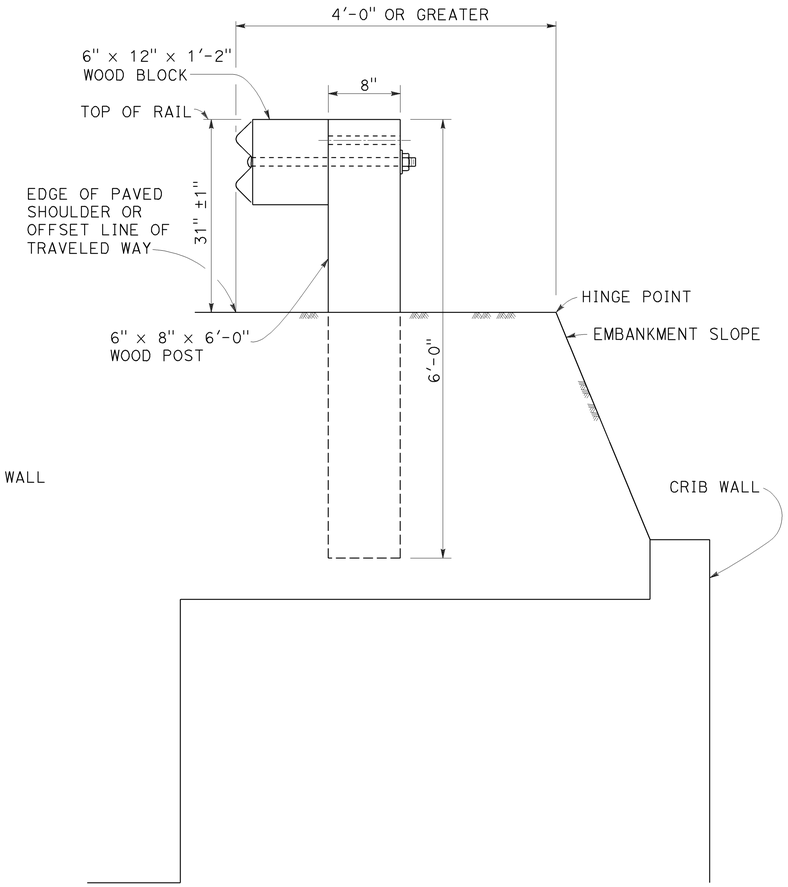

DETAIL D

INSTALLATION AT EARTH RETAINING WALLS

NOTES:

1. These installation details also applicable to steel line post installations. For Detail A, C, and D, where steel line post installations are constructed, W6 x 8.5 or W6 x 9 steel post, 6'-0" in length, with 6" x 12" x 1'-2" notched wood blocks or notched recycled plastic blocks are to be used in place of the size of wood post and wood block shown. For Detail B, where steel line post installations are constructed, W6 x 15 steel post, 8'-0" in length, with 8" x 12" x 1'-2" notched wood blocks or notched recycled plastic blocks are to be used in place of the size of wood post and wood block shown. For additional installation details, see Revised Standard Plan RSP A77L1 and RSP A77L2.
2. Where the distance between the face of the rail and the hinge point is less than 2'-6", see the Project Plans for special details.
3. For dike positioning with MGS installations, see Revised Standard Plan RSP A77N4.

STATE OF CALIFORNIA
DEPARTMENT OF TRANSPORTATION

MIDWEST GUARDRAIL SYSTEM TYPICAL LINE POST EMBEDMENT AND HINGE POINT OFFSET DETAILS

NO SCALE

RSP A77N3 DATED NOVEMBER 15, 2013 SUPERSEDES RSP A77N3
DATED JULY 19, 2013 THAT SUPPLEMENTS THE STANDARD PLANS BOOK DATED 2010.

REVISED STANDARD PLAN RSP A77N3

10-29-13

Dist	COUNTY	ROUTE	POST MILES TOTAL PROJECT	SHEET No.	TOTAL SHEETS
07	LA	210	R24.7/R44.9	249	274

Randell D. Hiatt
REGISTERED CIVIL ENGINEER

July 19, 2013
PLANS APPROVAL DATE

REGISTERED PROFESSIONAL ENGINEER
Randell D. Hiatt
No. C50200
Exp. 6-30-15
CIVIL
STATE OF CALIFORNIA

THE STATE OF CALIFORNIA OR ITS OFFICERS OR AGENTS SHALL NOT BE RESPONSIBLE FOR THE ACCURACY OR COMPLETENESS OF SCANNED COPIES OF THIS PLAN SHEET.

TO ACCOMPANY PLANS DATED 7-27-15

NOTES:

1. When necessary to place dike more than 7" in front of face of MGS, only Type C dike may be used. For dike details, see Revised Standard Plan RSP A87B.
2. For standard railing post embedment, see Revised Standard Plan RSP A77N3.
3. MGS delineation to be used where shown on the Project Plans.
4. When dike or curb is placed under MGS, the maximum height of the dike or curb shall be 6". Mountable dike should not be used. For dike and curb details, see Revised Standard Plans RSP A87A and RSP A87B.
5. For details of typical distance between the face of rail and hinge point, see Revised Standard Plan RSP A77N3.
6. For steel line posts, use 1/4 - 20 self-tapping screws in 0.22" diameter holes or 1/4" bolts in 9/32" diameter holes.

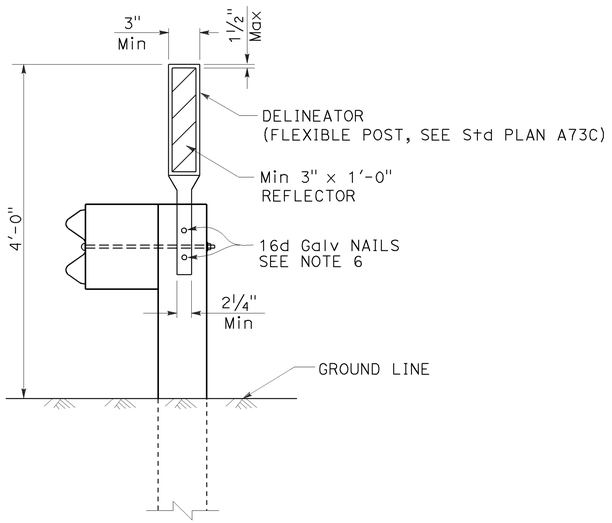

MGS DELINEATION

See Note 3

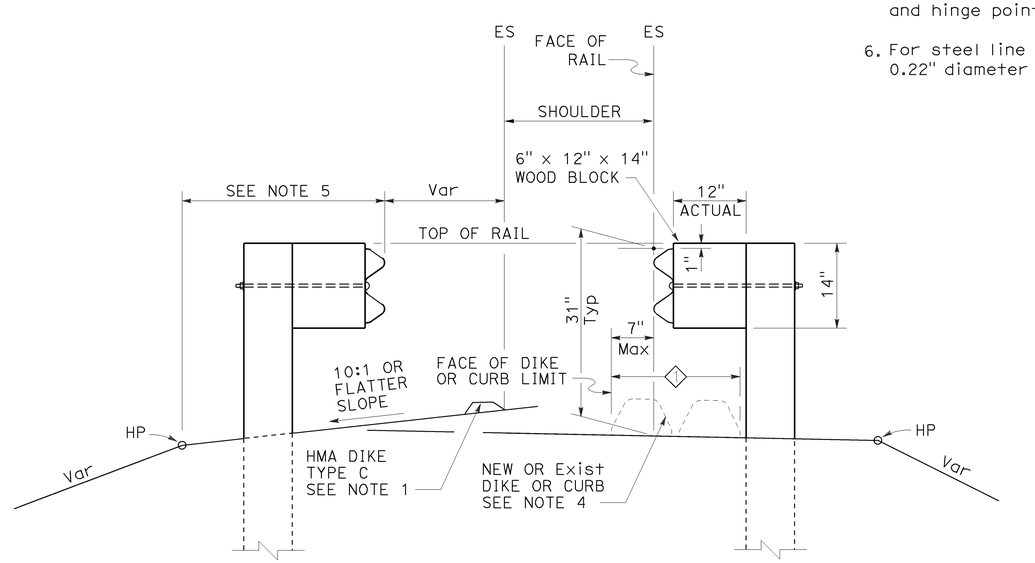

DIKE POSITIONING

See Note 1

1 PERMISSIBLE DIKE OR CURB PLACEMENT AREA

STATE OF CALIFORNIA
DEPARTMENT OF TRANSPORTATION

MIDWEST GUARDRAIL SYSTEM TYPICAL RAILING DELINEATION AND DIKE POSITIONING DETAILS

NO SCALE

RSP A77N4 DATED JULY 19, 2013 SUPPLEMENTS THE STANDARD PLANS BOOK DATED 2010.

REVISED STANDARD PLAN RSP A77N4

2010 REVISED STANDARD PLAN RSP A77N4

7-10-13

Dist	COUNTY	ROUTE	POST MILES TOTAL PROJECT	SHEET No.	TOTAL SHEETS
07	LA	210	R24.7/R44.9	250	274

Randell D. Hiatt
REGISTERED CIVIL ENGINEER

July 19, 2013
PLANS APPROVAL DATE

REGISTERED PROFESSIONAL ENGINEER
Randell D. Hiatt
No. C50200
Exp. 6-30-15
CIVIL
STATE OF CALIFORNIA

THE STATE OF CALIFORNIA OR ITS OFFICERS OR AGENTS SHALL NOT BE RESPONSIBLE FOR THE ACCURACY OR COMPLETENESS OF SCANNED COPIES OF THIS PLAN SHEET.

TO ACCOMPANY PLANS DATED 7-27-15

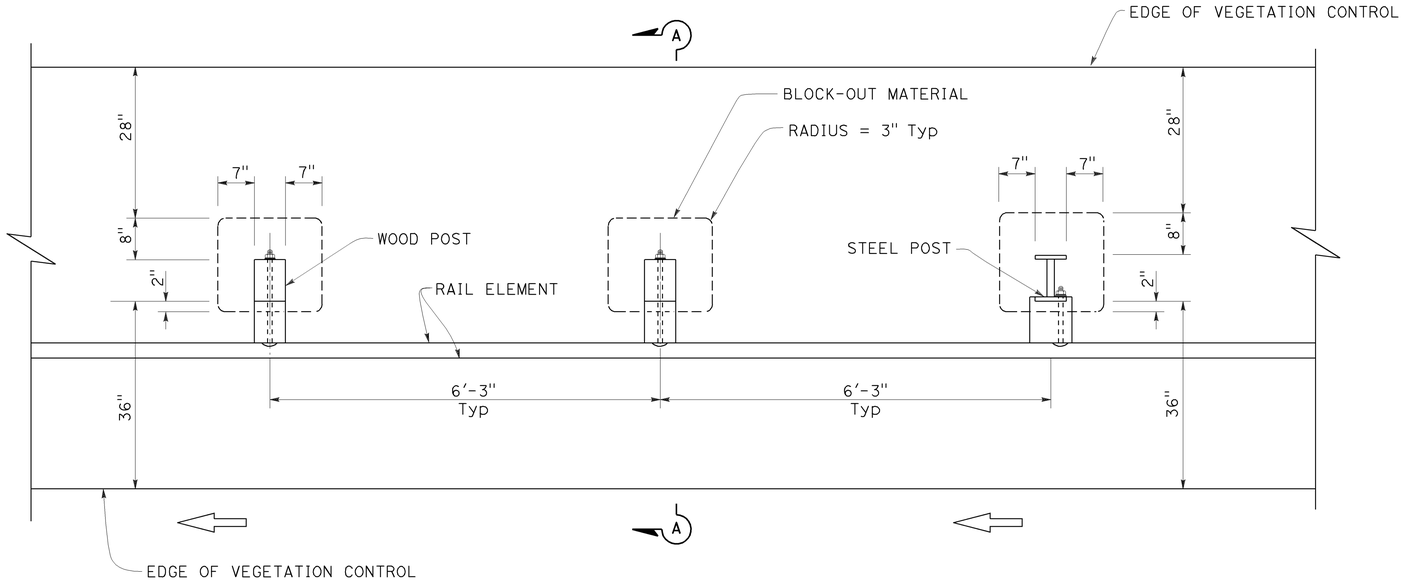

PLAN

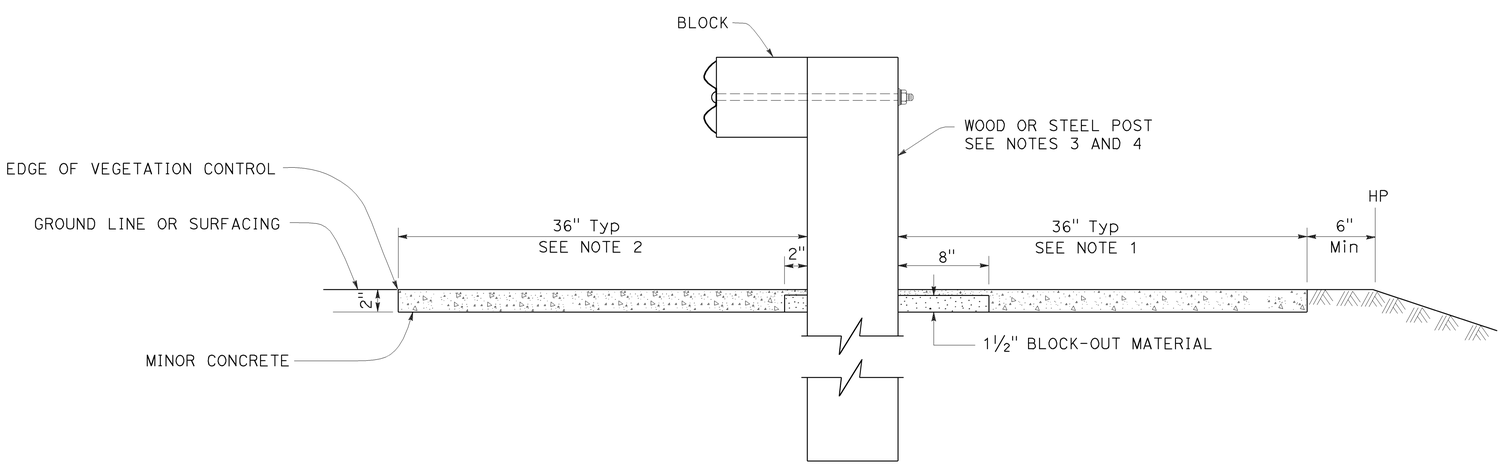

SECTION A-A

NOTES:

1. Where the distance between back of post and hinge point is less than 42", construct vegetation control to 6" from hinge point while maintaining the 8" block-out at back of post. If the 8" block-out at back of post can not be maintained, construct vegetation control flush with the back edge of post.
2. Where dike is constructed under railing, construct vegetation control to back edge of dike. Where paved shoulder is constructed within 36" in front of the post, construct vegetation control to the edge of paved shoulder.
3. For wood post sizes, see Revised Standard Plan RSP A77N1.
4. For steel post sizes, see Revised Standard Plan RSP A77N2.
5. For details not shown, see Revised Standard Plans RSP A77L1 and RSP A77L2.

STATE OF CALIFORNIA
DEPARTMENT OF TRANSPORTATION

MIDWEST GUARDRAIL SYSTEM TYPICAL VEGETATION CONTROL STANDARD RAILING SECTION

NO SCALE

RSP A77N5 DATED JULY 19, 2013 SUPPLEMENTS THE STANDARD PLANS BOOK DATED 2010.

REVISED STANDARD PLAN RSP A77N5

2010 REVISED STANDARD PLAN RSP A77N5

7-3-13

Dist	COUNTY	ROUTE	POST MILES TOTAL PROJECT	SHEET No.	TOTAL SHEETS
07	LA	210	R24.7/R44.9	251	274

Randell D. Hiatt
REGISTERED CIVIL ENGINEER

July 19, 2013
PLANS APPROVAL DATE

REGISTERED PROFESSIONAL ENGINEER
Randell D. Hiatt
No. C50200
Exp. 6-30-15
CIVIL
STATE OF CALIFORNIA

THE STATE OF CALIFORNIA OR ITS OFFICERS OR AGENTS SHALL NOT BE RESPONSIBLE FOR THE ACCURACY OR COMPLETENESS OF SCANNED COPIES OF THIS PLAN SHEET.

TO ACCOMPANY PLANS DATED 7-27-15

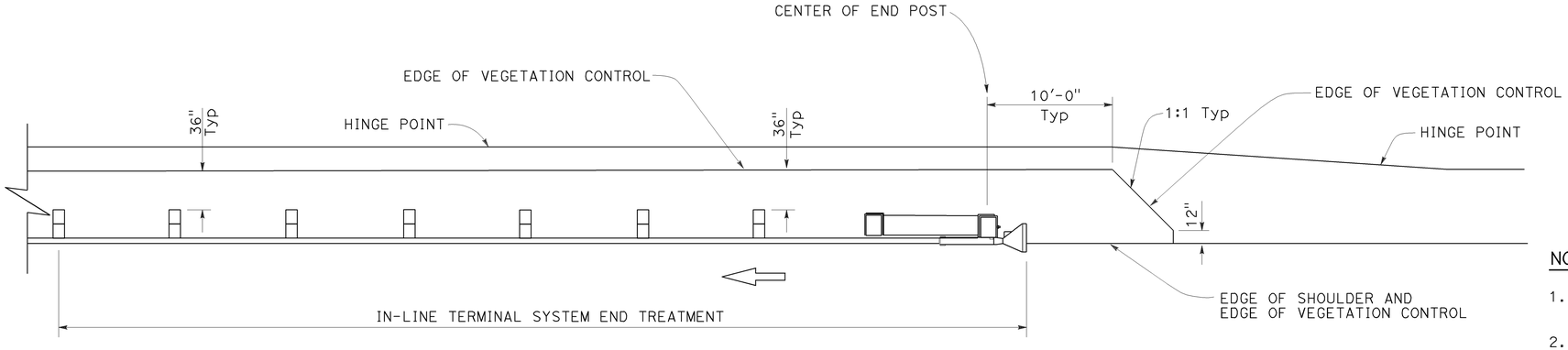

PLAN

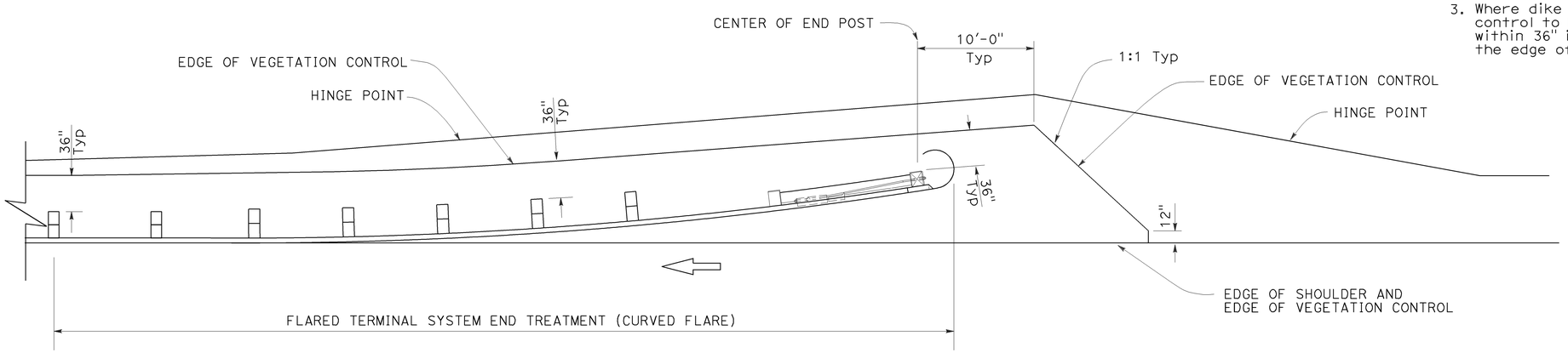

PLAN

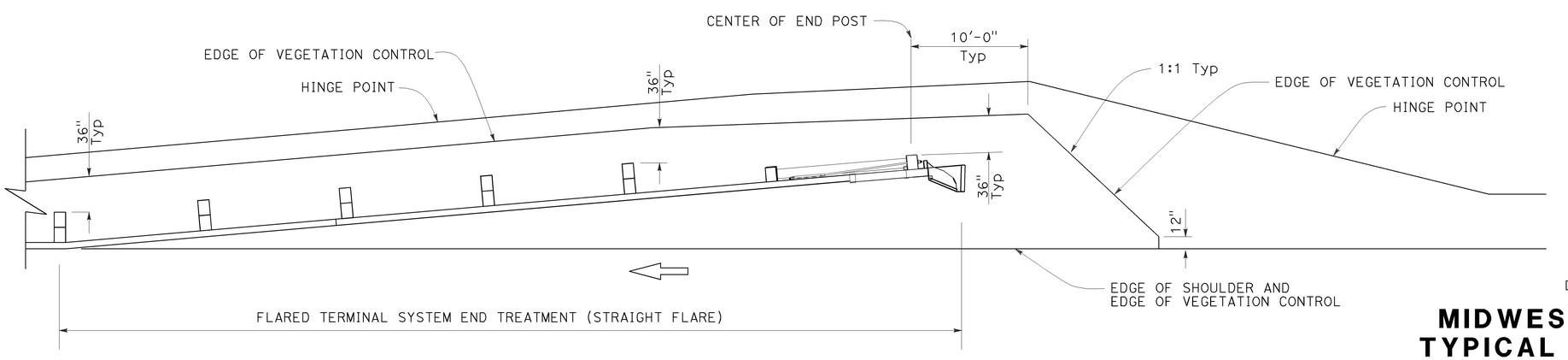

PLAN

NOTES:

1. See Revised Standard Plan RSP A77N5 for additional vegetation control details.
2. Where the distance between back of post and hinge point is less than 42", construct vegetation control to 6" from hinge point while maintaining the 8" block-out at back of post. If the 8" block-out at back of post can not be maintained, construct vegetation control flush with the back edge of post.
3. Where dike is constructed under railing, construct vegetation control to back edge of dike. Where paved shoulder is constructed within 36" in front of the post, construct vegetation control to the edge of paved shoulder.

STATE OF CALIFORNIA
DEPARTMENT OF TRANSPORTATION

MIDWEST GUARDRAIL SYSTEM TYPICAL VEGETATION CONTROL FOR TERMINAL SYSTEM END TREATMENTS

NO SCALE

RSP A77N6 DATED JULY 19, 2013 SUPPLEMENTS THE STANDARD PLANS BOOK DATED 2010.

REVISED STANDARD PLAN RSP A77N6

2010 REVISED STANDARD PLAN RSP A77N6

6-12-13

Dist	COUNTY	ROUTE	POST MILES TOTAL PROJECT	SHEET No.	TOTAL SHEETS
07	LA	210	R24.7/R44.9	252	274

Randell D. Hiatt
REGISTERED CIVIL ENGINEER

November 15, 2013
PLANS APPROVAL DATE

REGISTERED PROFESSIONAL ENGINEER
Randell D. Hiatt
No. C50200
Exp. 6-30-15
CIVIL
STATE OF CALIFORNIA

THE STATE OF CALIFORNIA OR ITS OFFICERS OR AGENTS SHALL NOT BE RESPONSIBLE FOR THE ACCURACY OR COMPLETENESS OF SCANNED COPIES OF THIS PLAN SHEET.

TO ACCOMPANY PLANS DATED 7-27-15

2010 REVISED STANDARD PLAN RSP A77P1

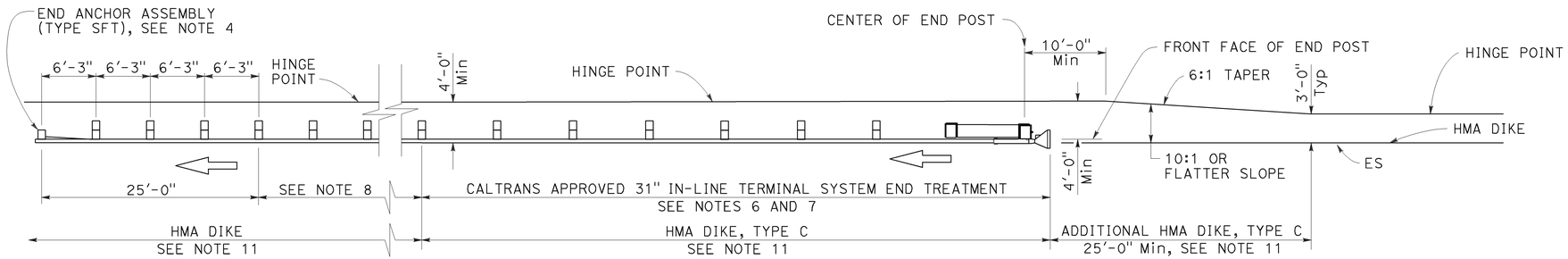

TYPE 11A LAYOUT

(Embankment MGS installation with 31" in-line end treatment at traffic approach end of railing) see Note 5

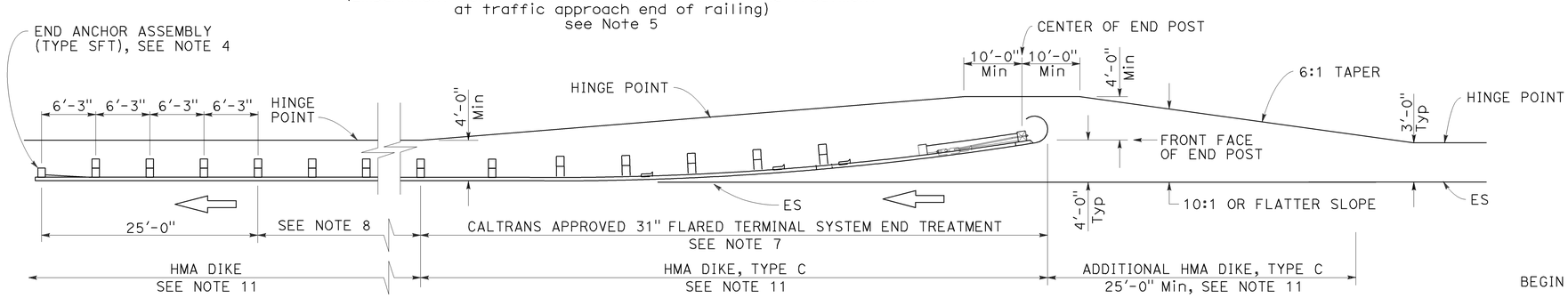

TYPE 11B LAYOUT

(Embankment MGS installation with 31" flared end treatment at traffic approach end of railing) see Note 5

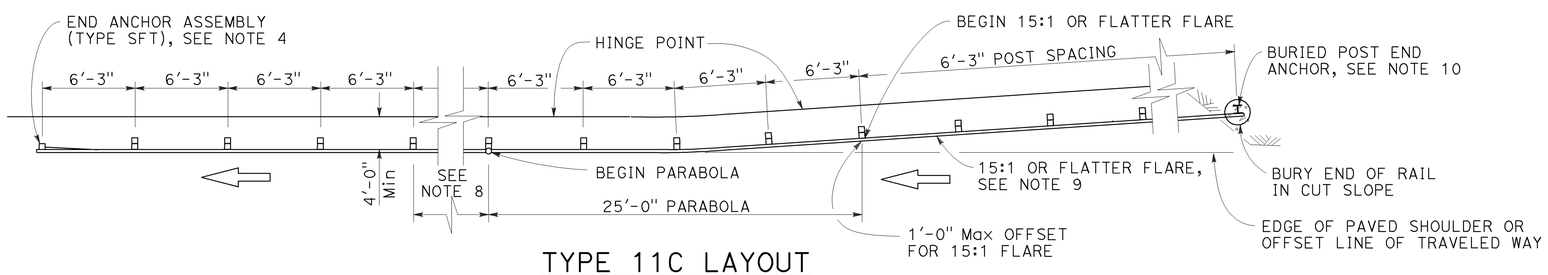

TYPE 11C LAYOUT

(Embankment MGS installation with buried end anchor treatment at traffic approach end of railing) see Notes 5 and 11

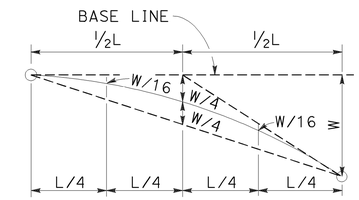

TYPICAL PARABOLIC LAYOUT

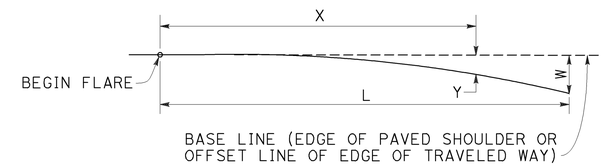

$$Y = \frac{WX^2}{L^2}$$

Y = OFFSET FROM BASE LINE
W = MAXIMUM OFFSET
X = DISTANCE ALONG BASE LINE
L = LENGTH OF FLARE

PARABOLIC FLARE OFFSETS

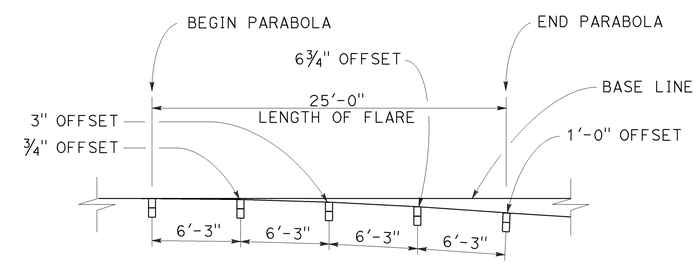

TYPICAL FLARE OFFSETS FOR 1 FOOT Max END OFFSET

NOTES:

1. Line post, blocks and hardware to be used are shown on Revised Standard Plans RSP A77L1, RSP A77L2, RSP A77M1, RSP A77N1 and RSP A77N2.
2. MGS post spacing to be 6'-3" center to center, except as otherwise noted.
3. Except as noted, line posts are 6" x 8" x 6'-0" wood with 6" x 12" x 1'-2" wood blocks. W6 x 8.5 or W6 x 9 steel posts, 6'-0" in length, with 6" x 12" x 1'-2" notched wood blocks or recycled plastic blocks may be used for 6" x 8" x 6'-0" wood post with 6" x 12" x 1'-2" wood blocks where applicable and when specified.
4. For End Anchor Assembly (Type SFT) details, see Revised Standard Plan RSP A77S1.
5. Layout Types 11A, 11B or 11C are typically used where MGS is recommended to shield embankment slopes and a crashworthy end treatment is required for only one direction of traffic.
6. 31" in-line terminal system end treatments are used where site conditions will not accommodate a flared end treatment.
7. The type of 31" terminal system end treatment to be used will be shown on the Project Plans.
8. Dependent on site conditions (embankment height and side slope), construction of additional MGS (length equal to multiples of 12'-6" with 6'-3" post spacing) may be advisable.
9. The 15:1 or flatter flare used with buried end anchors is based on the edge of the paved shoulder or offset line of edge of the traveled way. The length of MGS within the 15:1 or flatter flare is based on site conditions and should be a length equal to multiples of 12'-6".
10. For details of the buried post end anchor used with Type 11C Layout, see Revised Standard Plan RSP A77T2.
11. Where placement of dike is required with MGS installations, see Revised Standard Plan RSP A77N4 for dike positioning details.

STATE OF CALIFORNIA
DEPARTMENT OF TRANSPORTATION

MIDWEST GUARDRAIL SYSTEM TYPICAL LAYOUTS FOR EMBANKMENTS

NO SCALE

RSP A77P1 DATED NOVEMBER 15, 2013 SUPERSEDES RSP A77P1 DATED JULY 19, 2013 THAT SUPPLEMENTS THE STANDARD PLANS BOOK DATED 2010.

REVISED STANDARD PLAN RSP A77P1

10-4-13

Dist	COUNTY	ROUTE	POST MILES TOTAL PROJECT	SHEET No.	TOTAL SHEETS
07	LA	210	R24.7/R44.9	253	274

Randell D. Hiatt
REGISTERED CIVIL ENGINEER

July 19, 2013
PLANS APPROVAL DATE

REGISTERED PROFESSIONAL ENGINEER
Randell D. Hiatt
No. C50200
Exp. 6-30-15
CIVIL
STATE OF CALIFORNIA

THE STATE OF CALIFORNIA OR ITS OFFICERS OR AGENTS SHALL NOT BE RESPONSIBLE FOR THE ACCURACY OR COMPLETENESS OF SCANNED COPIES OF THIS PLAN SHEET.

TO ACCOMPANY PLANS DATED 7-27-15

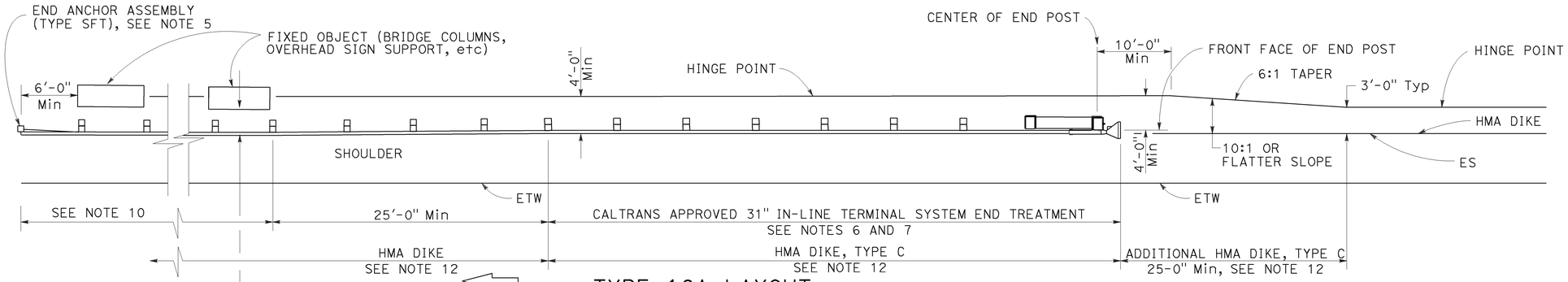

TYPE 16A LAYOUT

(MGS installation at roadside fixed object or objects with 31" in-line end treatment at traffic approach end of railing)
See Notes 11 and 12

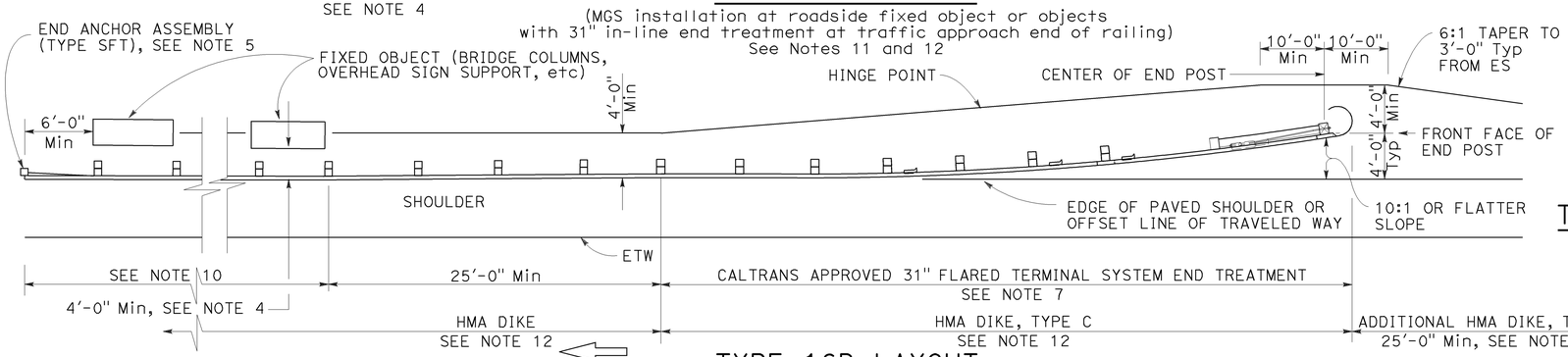

TYPE 16B LAYOUT

(MGS installation at roadside fixed object or objects with 31' flared end treatment at traffic approach end of railing)
See Notes 11 and 12

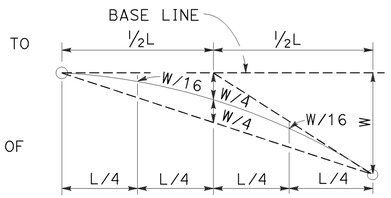

TYPIC AL PARABOLIC LAYOUT

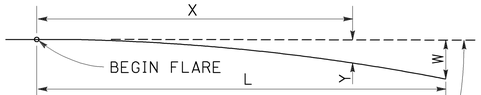

BASE LINE (EDGE OF PAVED SHOULDER OR OFFSET LINE OF EDGE OF TRAVELED WAY)

$$Y = \frac{WX^2}{L^2}$$

Y = OFFSET FROM BASE LINE
W = MAXIMUM OFFSET
X = DISTANCE ALONG BASE LINE
L = LENGTH OF FLARE

PARABOLIC FLARE OFFSETS

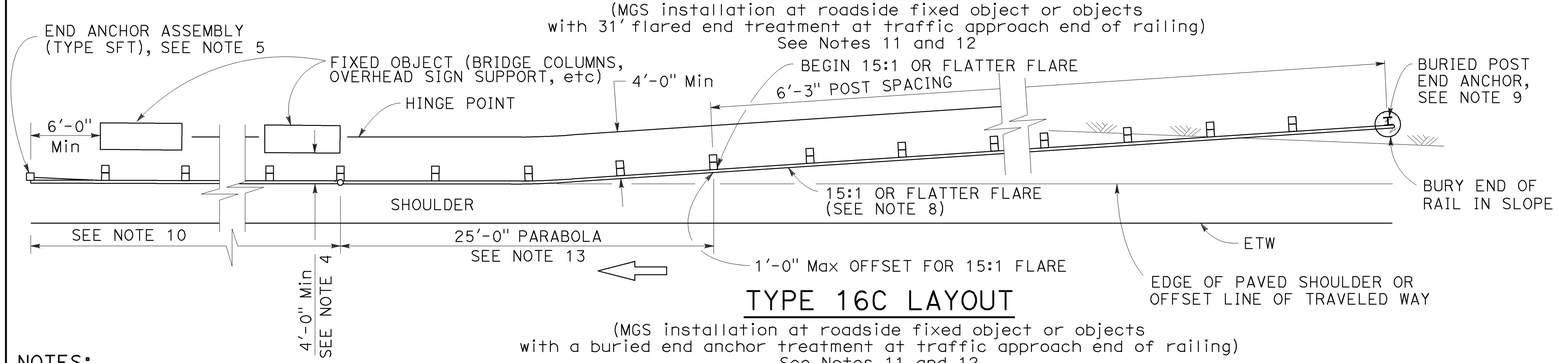

TYPE 16C LAYOUT

(MGS installation at roadside fixed object or objects with a buried end anchor treatment at traffic approach end of railing)
See Notes 11 and 12

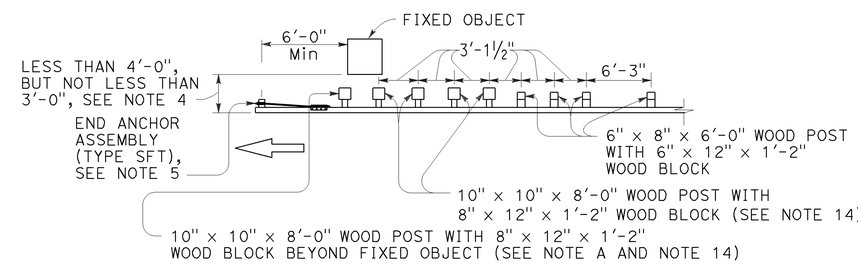

NOTE A: For a series of fixed objects (bridge columns, overhead sign supports, etc.) additional 10" x 10" x 8'-0" wood post with 8" x 12" x 1'-2" wood blocks at 3'-1½" center to center spacing are to be used between fixed objects.

STRENGTHENED MIDWEST GUARDRAIL SYSTEM SECTIONS FOR FIXED OBJECT

Use strengthened MGS sections with Types 16A, 16B or 16C layouts where minimum clearance between the face of the railing and fixed object(s) is less than 4'-0", but not less than 3'-0". See Note 4

NOTES:

1. Line post, blocks and hardware to be used are shown on Revised Standard Plans RSP A77L1, RSP A77L2, RSP A77M1, RSP A77N1 and RSP A77N2.
2. MGS post spacing to be 6'-3" center to center, except as otherwise noted.
3. Except as noted, line posts are 6" x 8" x 6'-0" wood with 6" x 12" x 1'-2" wood blocks. W6 x 8.5 or W6 x 9 steel posts, 6'-0" in length, with 6" x 12" x 1'-2" notched wood blocks or notched recycled plastic blocks may be used for 6" x 8" x 6'-0" wood line posts with 6" x 12" x 1'-2" wood blocks where applicable and when specified.
4. A 4'-0" minimum clearance is required between the face of the railing and the face of a fixed object located directly behind MGS sections with post spacing of 6'-3". Construct MGS as shown in the detail "Strengthened Midwest Guardrail System Sections for Fixed Object" on this plan, where the clearance between the face of the railing and the face of a fixed object is less than 4'-0", but not less than 3'-0". Where the clearance is less than 3'-0", a concrete wall or barrier should be constructed to shield the fixed object(s).
5. For End Anchor Assembly (Type SFT) details, see Revised Standard Plan RSP A77S1.
6. 31" in-line terminal system end treatments are used where site conditions will not accommodate a 31" flared end treatment.
7. The type of 31" terminal system to be used will be shown on the Project Plans.
8. The 15:1 or flatter flare used with Type 16C Layout is based on the edge of the paved shoulder or offset line of edge of the traveled way. The length of MGS within the 15:1 or flatter flare is based on site conditions and should be a length equal to multiples of 12'-6".
9. For details of the Buried Post End Anchor used with Type 16C Layout, see Revised Standard Plan RSP A77T2.
10. As site conditions dictate, construct additional MGS to shield fixed object(s). Additional MGS length equal to multiples of 12'-6". Post spacing at 6'-3" except as specified in Note 4.
11. Layout Types 16A, 16B or 16C are typically used where MGS is recommended to shield roadside fixed object(s) and a crashworthy 31" end treatment is required for only one direction of traffic.
12. Where placement of dike is required with MGS, see Revised Standard Plan RSP A77N4 for dike positioning details.
13. For typical flare offsets for 25'-0" length parabola with maximum offset of 1'-0", see Revised Standard Plan RSP A77P1.
14. W6 x 15 steel post, 8'-0" in length, with 8" x 12" x 1'-2" notched wood block or notched recycled plastic blocks may be used in place of the 10" x 10" x 8'-0" wood post with 8" x 12" x 1'-2" wood block shown in the detail "Strengthened Midwest Guardrail System Sections for Fixed Object".

STATE OF CALIFORNIA
DEPARTMENT OF TRANSPORTATION

MIDWEST GUARDRAIL SYSTEM TYPICAL LAYOUTS FOR ROADSIDE FIXED OBJECTS

NO SCALE

RSP A77R3 DATED JULY 19, 2013 SUPPLEMENTS THE STANDARD PLANS BOOK DATED 2010.

REVISED STANDARD PLAN RSP A77R3

2010 REVISED STANDARD PLAN RSP A77R3

6-20-13

Dist	COUNTY	ROUTE	POST MILES TOTAL PROJECT	SHEET No.	TOTAL SHEETS
07	LA	210	R24.7/R44.9	254	274

Randell D. Hiatt
REGISTERED CIVIL ENGINEER

November 15, 2013
PLANS APPROVAL DATE

REGISTERED PROFESSIONAL ENGINEER
Randell D. Hiatt
No. C50200
Exp. 6-30-15
CIVIL
STATE OF CALIFORNIA

THE STATE OF CALIFORNIA OR ITS OFFICERS OR AGENTS SHALL NOT BE RESPONSIBLE FOR THE ACCURACY OR COMPLETENESS OF SCANNED COPIES OF THIS PLAN SHEET.

TO ACCOMPANY PLANS DATED 7-27-15

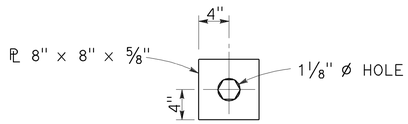

DETAIL "A"
CABLE CONNECTION
END PLATE

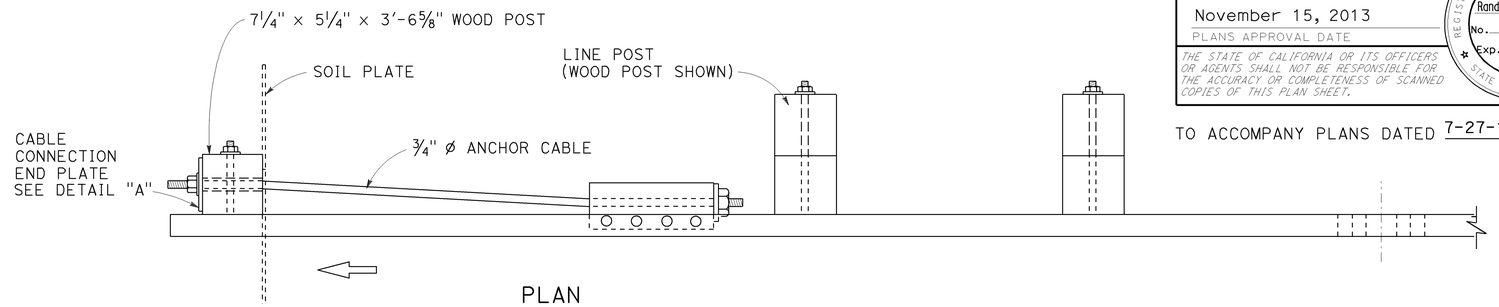

PLAN

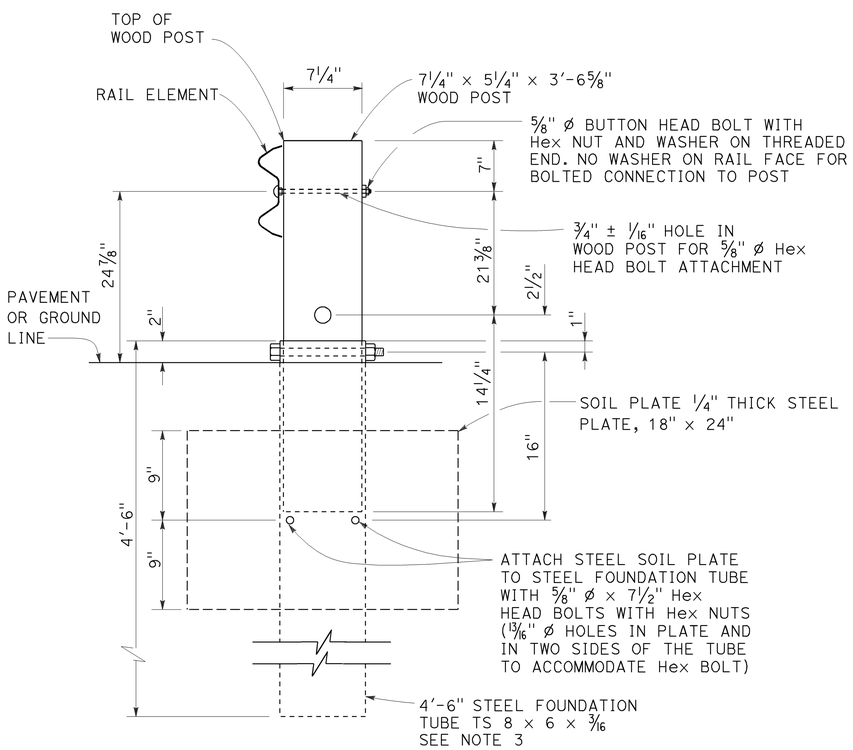

SECTION A-A

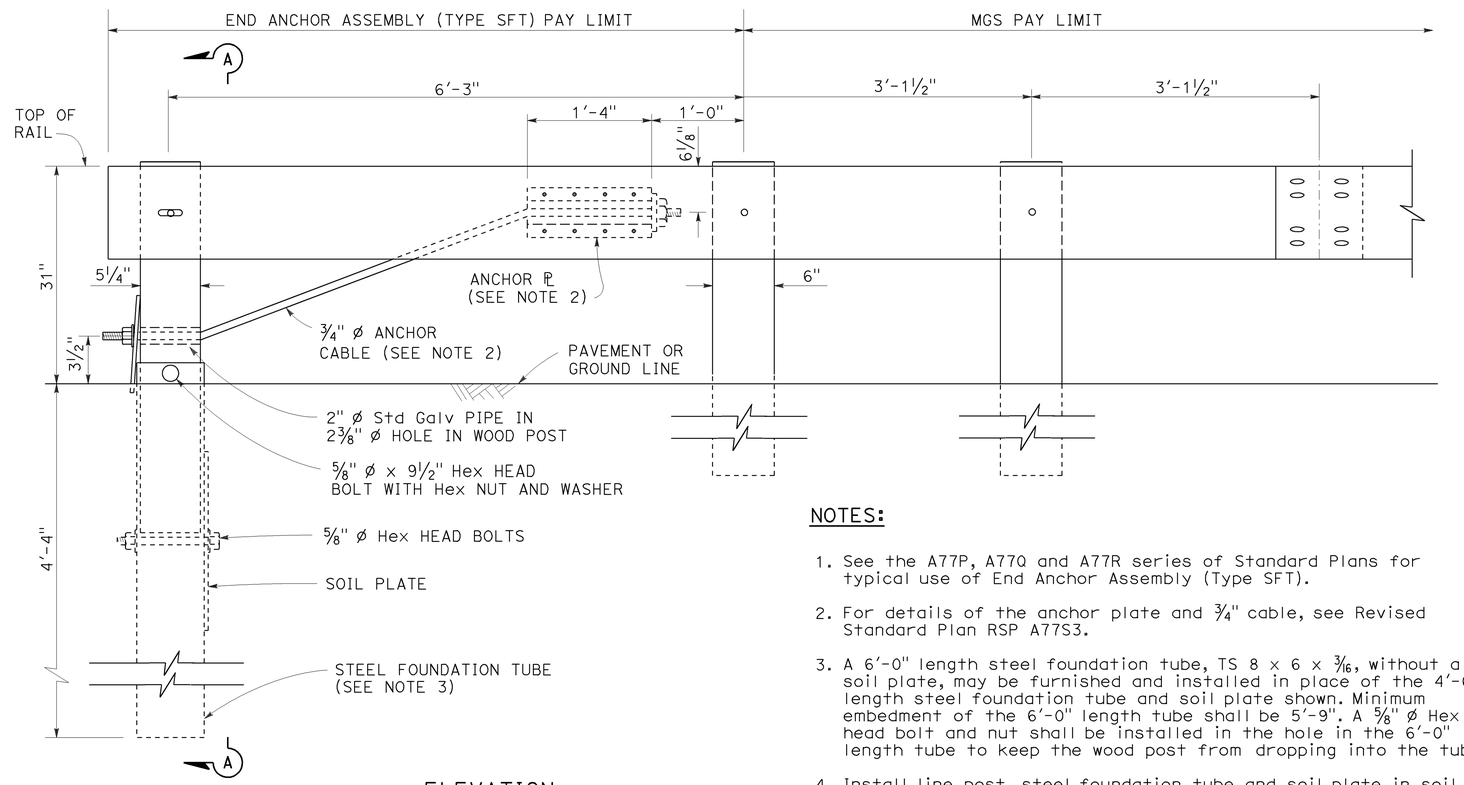

ELEVATION

END ANCHOR
ASSEMBLY (TYPE SFT)
See Note 1

NOTES:

1. See the A77P, A77Q and A77R series of Standard Plans for typical use of End Anchor Assembly (Type SFT).
2. For details of the anchor plate and 3/4" cable, see Revised Standard Plan RSP A77S3.
3. A 6'-0" length steel foundation tube, TS 8 x 6 x 3/16, without a soil plate, may be furnished and installed in place of the 4'-6" length steel foundation tube and soil plate shown. Minimum embedment of the 6'-0" length tube shall be 5'-9". A 5/8" ø Hex head bolt and nut shall be installed in the hole in the 6'-0" length tube to keep the wood post from dropping into the tube.
4. Install line post, steel foundation tube and soil plate in soil.

STATE OF CALIFORNIA
DEPARTMENT OF TRANSPORTATION

MIDWEST GUARDRAIL SYSTEM END ANCHOR ASSEMBLY (TYPE SFT)

NO SCALE

RSP A77S1 DATED NOVEMBER 15, 2013 SUPERSEDES RSP A77S1
DATED JULY 19, 2013 THAT SUPPLEMENTS THE STANDARD PLANS BOOK DATED 2010.

REVISED STANDARD PLAN RSP A77S1

2010 REVISED STANDARD PLAN RSP A77S1

10-4-13

Dist	COUNTY	ROUTE	POST MILES TOTAL PROJECT	SHEET No.	TOTAL SHEETS
07	LA	210	R24.7/R44.9	255	274

Randell D. Hiatt
REGISTERED CIVIL ENGINEER

July 19, 2013
PLANS APPROVAL DATE

REGISTERED PROFESSIONAL ENGINEER
Randell D. Hiatt
No. C50200
Exp. 6-30-15
CIVIL
STATE OF CALIFORNIA

THE STATE OF CALIFORNIA OR ITS OFFICERS OR AGENTS SHALL NOT BE RESPONSIBLE FOR THE ACCURACY OR COMPLETENESS OF SCANNED COPIES OF THIS PLAN SHEET.

TO ACCOMPANY PLANS DATED 7-27-15

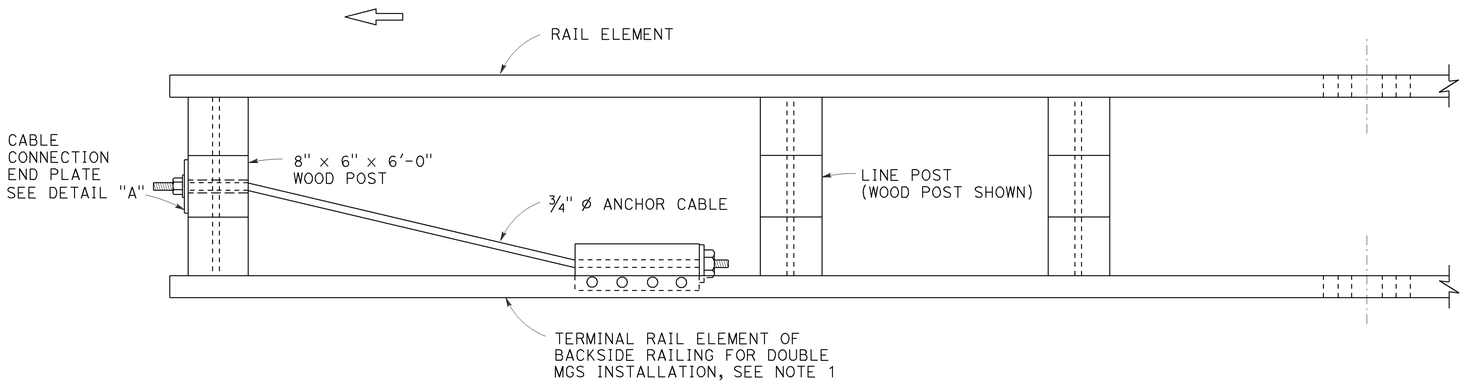

PLAN

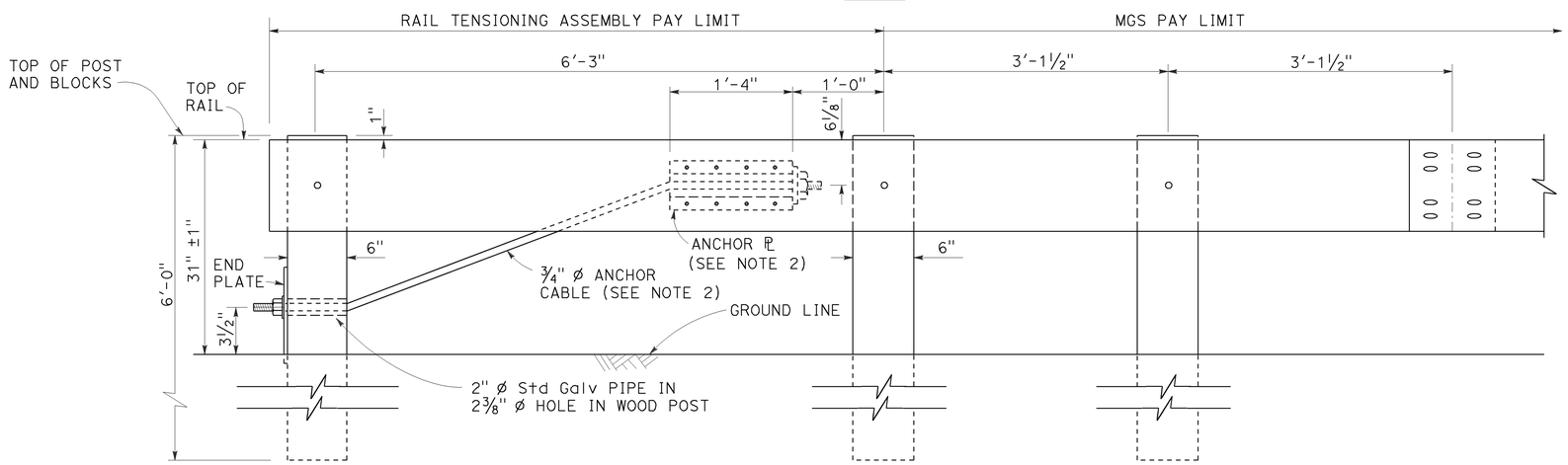

ELEVATION
RAIL TENSIONING ASSEMBLY
See Note 1

NOTES:

1. See Revised Standard Plans RSP A77Q3 and RSP A77R1 for typical use of rail tensioning assembly.
2. For details of the anchor plate and ¾" cable, see Revised Standard Plan RSP A77S3.

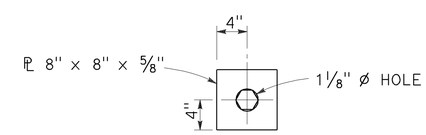

DETAIL "A"
CABLE CONNECTION END PLATE

STATE OF CALIFORNIA
DEPARTMENT OF TRANSPORTATION

MIDWEST GUARDRAIL SYSTEM RAIL TENSIONING ASSEMBLY

NO SCALE

RSP A77S2 DATED JULY 19, 2013 SUPPLEMENTS THE STANDARD PLANS BOOK DATED 2010.

REVISED STANDARD PLAN RSP A77S2

2010 REVISED STANDARD PLAN RSP A77S2

7-3-13

Dist	COUNTY	ROUTE	POST MILES TOTAL PROJECT	SHEET No.	TOTAL SHEETS
07	LA	210	R24.7/R44.9	256	274

Randell D. Hiatt
REGISTERED CIVIL ENGINEER

November 15, 2013
PLANS APPROVAL DATE

REGISTERED PROFESSIONAL ENGINEER
Randell D. Hiatt
No. C50200
Exp. 6-30-15
CIVIL
STATE OF CALIFORNIA

THE STATE OF CALIFORNIA OR ITS OFFICERS OR AGENTS SHALL NOT BE RESPONSIBLE FOR THE ACCURACY OR COMPLETENESS OF SCANNED COPIES OF THIS PLAN SHEET.

TO ACCOMPANY PLANS DATED 7-27-15

2010 REVISED STANDARD PLAN RSP A77S3

NOTE:

See Revised Standard Plans RSP A77S1, RSP A77S2 and RSP A77T1 for typical use of anchor cable and anchor plate.

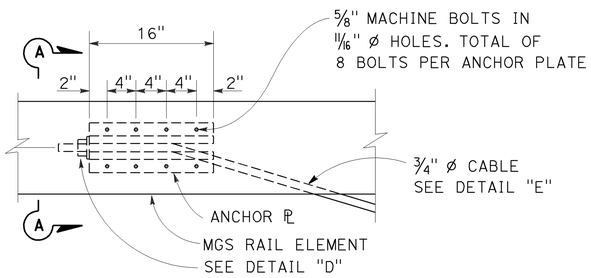

ANCHOR PLATE DETAIL
(MGS shown, TBB similar)

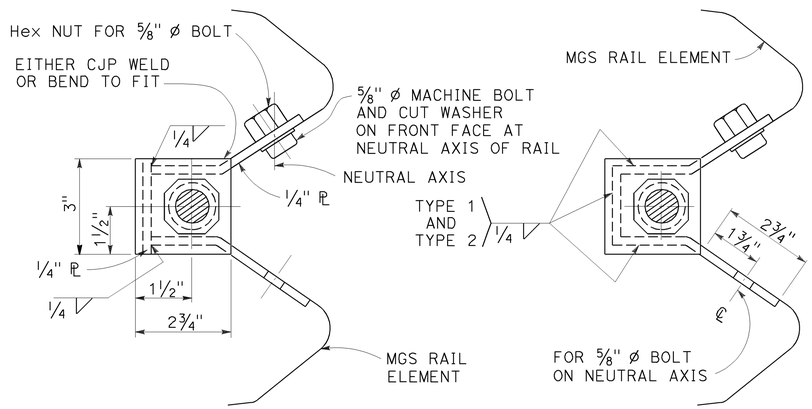

NOTE:
Dimensioning applies to both types.

SECTION A-A
(ALTERNATIVE TYPE 1)

SECTION A-A
(ALTERNATIVE TYPE 2)

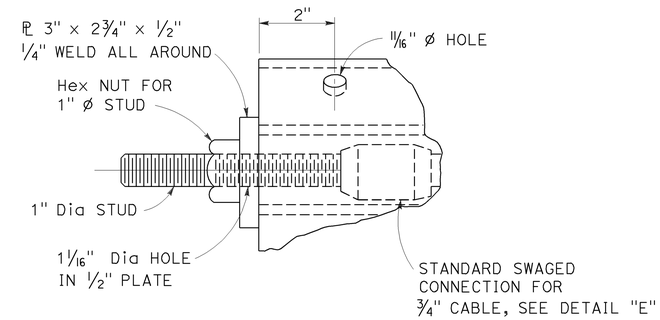

DETAIL "D"

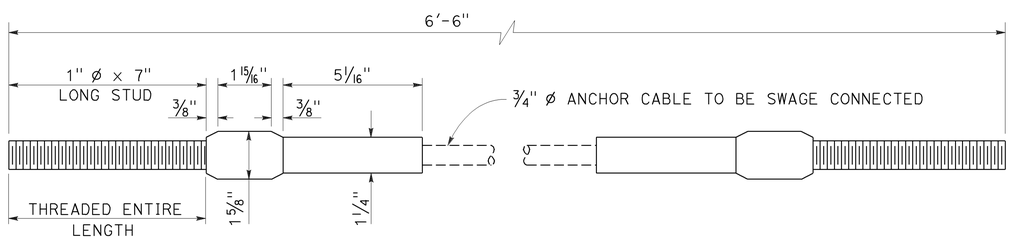

ANCHOR CABLE WITH
SWAGED FITTING AND STUD
DETAIL "E"

STATE OF CALIFORNIA
DEPARTMENT OF TRANSPORTATION

METAL RAILING ANCHOR CABLE AND ANCHOR PLATE DETAILS

NO SCALE

RSP A77S3 DATED NOVEMBER 15, 2013 SUPERSEDES RSP A77S3
DATED JULY 19, 2013 THAT SUPPLEMENTS THE STANDARD PLANS BOOK DATED 2010.

REVISED STANDARD PLAN RSP A77S3

10-4-13

Dist	COUNTY	ROUTE	POST MILES TOTAL PROJECT	SHEET No.	TOTAL SHEETS
07	LA	210	R24.7/R44.9	257	274

Randell D. Hiatt
REGISTERED CIVIL ENGINEER

July 19, 2013
PLANS APPROVAL DATE

REGISTERED PROFESSIONAL ENGINEER
Randell D. Hiatt
No. C50200
Exp. 6-30-15
CIVIL
STATE OF CALIFORNIA

THE STATE OF CALIFORNIA OR ITS OFFICERS OR AGENTS SHALL NOT BE RESPONSIBLE FOR THE ACCURACY OR COMPLETENESS OF SCANNED COPIES OF THIS PLAN SHEET.

TO ACCOMPANY PLANS DATED 7-27-15

NOTES:

1. Refer to Revised Standard Plans RSP A77L1 and RSP A77L2 for component details for MGS not shown on this plan.
2. All posts for any standard barrier run shall be of the same type: Wood or Steel.
3. Install posts in soil.

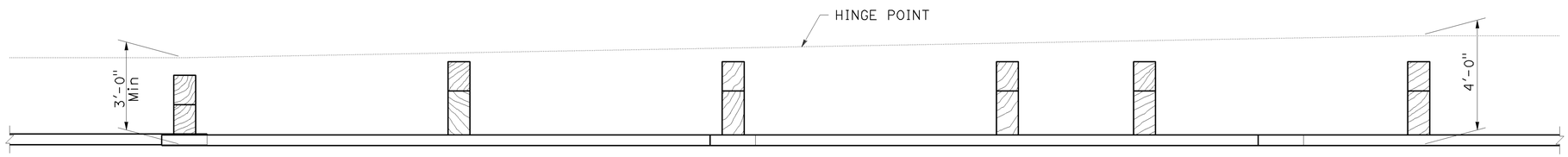

PLAN

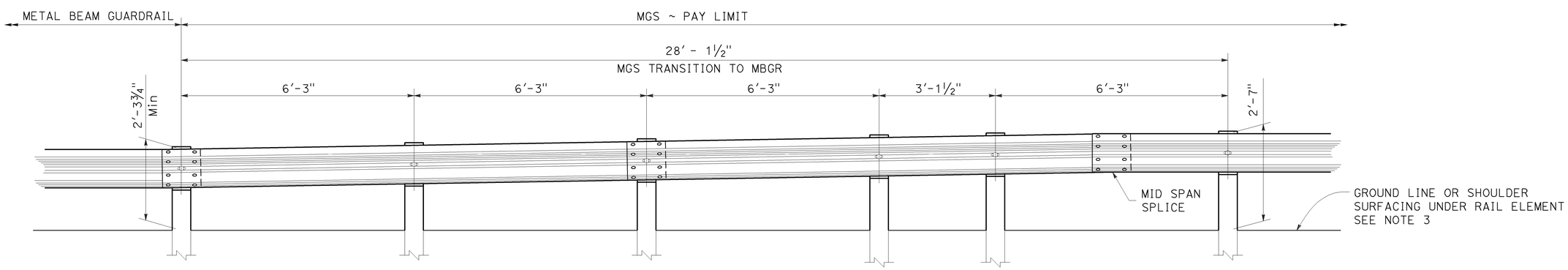

ELEVATION

STATE OF CALIFORNIA
DEPARTMENT OF TRANSPORTATION

MIDWEST GUARDRAIL SYSTEM TRANSITION TO METAL BEAM GUARDRAIL

NO SCALE

RSP A77U5 DATED JULY 19, 2013 SUPPLEMENTS THE STANDARD PLANS BOOK DATED 2010.

REVISED STANDARD PLAN RSP A77U5

2010 REVISED STANDARD PLAN RSP A77U5

6-20-13

Dist	COUNTY	ROUTE	POST MILES TOTAL PROJECT	SHEET No.	TOTAL SHEETS
07	LA	210	R24.7/R44.9	258	274

Gregory A. Balzer
LICENSED LANDSCAPE ARCHITECT

July 19, 2013
PLANS APPROVAL DATE

THE STATE OF CALIFORNIA OR ITS OFFICERS OR AGENTS SHALL NOT BE RESPONSIBLE FOR THE ACCURACY OR COMPLETENESS OF SCANNED COPIES OF THIS PLAN SHEET.

LICENSED LANDSCAPE ARCHITECT
Gregory A. Balzer 2576
10-31-14
2-28-15
Renewal Date
7-19-13
Date
STATE OF CALIFORNIA

TO ACCOMPANY PLANS DATED 7-27-15

A

AB	AGGREGATE BASE
ABS	ACRYLONITRILE-BUTADIENE-STYRENE
AC	ASPHALT CONCRETE
ACC	ARMOR-CLAD CONDUCTORS
Adj	ADJACENT/ADJUSTABLE
AIC	AUXILIARY IRRIGATION CONTROLLER
Alt	ALTERNATIVE
AMEND	AMENDMENT
ARV	AIR RELEASE VALVE
AUTO	AUTOMATIC
AUX	AUXILIARY
AVB	ATMOSPHERIC VACUUM BREAKER

B

B&B	BALLED AND BURLAPPED
B/B	BRASS/BRONZE
B/B/PL	BRASS/BRONZE/PLASTIC
B/PL	BRASS/PLASTIC
BFM	BONDED FIBER MATRIX
Bit Ctd	BITUMINOUS COATED
BP	BOOSTER PUMP
BPA	BACKFLOW PREVENTER ASSEMBLY
BPE	BACKFLOW PREVENTER ENCLOSURE
BV	BALL VALVE

C

C	CONDUIT
CAP	CORRUGATED ALUMINUM PIPE
CARV	COMBINATION AIR RELEASE VALVE
CB	COUPLING BAND
CCA	CAM COUPLER ASSEMBLY
CEC	CONTROLLER ENCLOSURE CABINET
CHDPE	CORRUGATED HIGH DENSITY POLYETHYLENE
CL	CHAIN LINK
CNC	CONTROL AND NEUTRAL CONDUCTORS
Conc	CONCRETE
CP	COPPER PIPE
CS	COMPOST SOCK
CSP	CORRUGATED STEEL PIPE
CST	CENTER STRIP
CV	CHECK VALVE

D

Dia	DIAMETER
DIP	DUCTILE IRON PIPE
DIT	DRIP IRRIGATION TUBING
DG	DECOMPOSED GRANITE
DN	DIAMETER NOMINAL
DVA	DRIP VALVE ASSEMBLY

E

EC	EROSION CONTROL
ECTC	EROSION CONTROL TECHNOLOGY COUNCIL
Elect	ELECTRIC/ELECTRICAL
Elev	ELEVATION
ELL	ELBOW
ENCL	ENCLOSURE
EP	EDGE OF PAVEMENT
ES	EDGE OF SHOULDER
EST	END STRIP
ESTB	ESTABLISHMENT
ETW	EDGE OF TRAVELED WAY

F

F	FULL CIRCLE
F/P	FULL/PART CIRCLE
FCV	FLOW CONTROL VALVE
FERT	FERTILIZER
FG	FINISHED GRADE
FH	FLEXIBLE HOSE
FIPT	FEMALE IRON PIPE THREAD
FIS	FERTILIZER INJECTOR SYSTEM
FL	FLOW LINE
FR	FIBER ROLL
FS	FLOW SENSOR
FSC	FLOW SENSOR CABLE
FV	FLUSH VALVE

G

Galv	GALVANIZED
GARV	GARDEN VALVE
GARVA	GARDEN VALVE ASSEMBLY
GM	GRAVEL MULCH
GPH	GALLONS PER HOUR
GPM	GALLONS PER MINUTE
GSP	GALVANIZED STEEL PIPE
GV	GATE VALVE

H

H	HALF CIRCLE
HDPE	HIGH DENSITY POLYETHYLENE
HP	HORSEPOWER/HINGE POINT
HPL	HIGH PRESSURE LINE
Hwy	HIGHWAY

I

IC	IRRIGATION CONTROLLER
ICC	IRRIGATION CONTROLLER(S) IN CONTROLLER ENCLOSURE CABINET
ID	INSIDE DIAMETER
IFS	IRRIGATION FILTRATION SYSTEM
IPS	IRON PIPE SIZE
IPT	IRON PIPE THREAD
Irr	IRRIGATION

L

L	LENGTH

M

Max	MAXIMUM
MBGR	METAL BEAM GUARD RAILING
MCV	MANUAL CONTROL VALVE
MIC	MASTER IRRIGATION CONTROLLER
Min	MINIMUM
MIPT	MALE IRON PIPE THREAD
Misc	MISCELLANEOUS
Mtl	MATERIAL
MVP	MAINTENANCE VEHICLE PULLOUT

N

NCN	NO COMMON NAME
NL	NOZZLE LINE
No.	NUMBER
NPT	NATIONAL PIPE THREAD

O

O/C	ON CENTER
OD	OUTSIDE DIAMETER
OL	OVERLAP

P

P	PART CIRCLE
PB	PULL BOX
PCC	PORTLAND CEMENT CONCRETE
PE	POLYETHYLENE
Pkt	PACKET
PL	PLASTIC
PLS	PURE LIVE SEED
PLT	PLANT/PLANTING
PLT ESTB	PLANT ESTABLISHMENT
PM	POST MILE
PR	PRESSURE RATED
PRLV	PRESSURE RELIEF VALVE
PRV	PRESSURE REGULATING VALVE
PVC	POLYVINYL CHLORIDE
Pvmt	PAVEMENT

Q

Q	QUARTER CIRCLE
QCV	QUICK COUPLING VALVE

R

R	RADIUS
RCP	REINFORCED CONCRETE PIPE
RCV	REMOTE CONTROL VALVE
RCVM	REMOTE CONTROL VALVE (MASTER)
RCVMF	REMOTE CONTROL VALVE (MASTER) W/FLOW SENSOR
RCVP	REMOTE CONTROL VALVE W/PRESSURE REGULATOR
RCW	RECYCLED WATER
RECP	ROLLED EROSION CONTROL PRODUCT
REQ	REQUIRED
RICS	REMOTE IRRIGATION CONTROL SYSTEM
R/W	RIGHT OF WAY

S

S	SLIP
SCH	SCHEDULE
SF	STATE-FURNISHED
Shld	SHOULDER
Sq	SQUARE
SST	SIDE STRIP
Sta	STATION
Std	STANDARD
SW	SIDEWALK/SOUND WALL

T

T	THIRD CIRCLE/THREAD
TLS	TRUCK LOADING STANDPIPE
TQ	THREE QUARTER CIRCLE
TRM	TURF REINFORCEMENT MAT
TT	TWO-THIRDS CIRCLE
TWSA	TREE WELL SPRINKLER ASSEMBLY
Typ	TYPICAL

U

UG	UNDERGROUND

W

W	WIDTH
W/	WITH
WM	WATER METER
WS	WYE STRAINER
WSA	WYE STRAINER ASSEMBLY
WSP	WELDED STEEL PIPE
WWM	WELDED WIRE MESH

NOTE:

For additional abbreviations, see Standard Plans A10A and A10B.

STATE OF CALIFORNIA
DEPARTMENT OF TRANSPORTATION

LANDSCAPE AND EROSION CONTROL ABBREVIATIONS

NO SCALE

RSP H1 DATED JULY 19, 2013 SUPERSEDES STANDARD PLAN H1 DATED MAY 20, 2011 - PAGE 218 OF THE STANDARD PLANS BOOK DATED 2010.

REVISED STANDARD PLAN RSP H1

2010 REVISED STANDARD PLAN RSP H1

6-28-13

Dist	COUNTY	ROUTE	POST MILES TOTAL PROJECT	SHEET No.	TOTAL SHEETS
07	LA	210	R24.7/R44.9	259	274

LICENSED LANDSCAPE ARCHITECT

November 15, 2013
PLANS APPROVAL DATE

LICENSED LANDSCAPE ARCHITECT — Gregory A. Balzer — 2516 — 02-28-15 Renewal Date — 11-15-13 Date — STATE OF CALIFORNIA

THE STATE OF CALIFORNIA OR ITS OFFICERS OR AGENTS SHALL NOT BE RESPONSIBLE FOR THE ACCURACY OR COMPLETENESS OF SCANNED COPIES OF THIS PLAN SHEET.

TO ACCOMPANY PLANS DATED 7-27-15

EXISTING	NEW	ITEM DESCRIPTION
		WATER METER (WM)
		BACKFLOW PREVENTER ASSEMBLY (BPA)
		BACKFLOW PREVENTER ENCLOSURE (BPE)
		BOOSTER PUMP (BP)
		TRUCK LOADING STANDPIPE (TLS)
	FS	FLOW SENSOR (FS)
		MASTER IRRIGATION CONTROLLER (MIC)
		AUXILIARY IRRIGATION CONTROLLER (AIC)
		IRRIGATION CONTROLLER (IC) IRRIGATION CONTROLLER (IC) (BATTERY) IRRIGATION CONTROLLER (IC) (SOLAR) IRRIGATION CONTROLLER (IC) (TWO WIRE) IRRIGATION CONTROLLER(S) IN CONTROLLER ENCLOSURE CABINET (ICC)
acc	ACC	ARMOR-CLAD CONDUCTORS (ACC)
cnc	CNC	CONTROL AND NEUTRAL CONDUCTORS (CNC)
		IRRIGATION CONDUIT
		EXTEND IRRIGATION CONDUIT
dip	DIP	DUCTILE IRON PIPE (SUPPLY LINE) (MAIN) (DIP)
		GALVANIZED STEEL PIPE (SUPPLY LINE) (MAIN) (GSP)
		GALVANIZED STEEL PIPE (SUPPLY LINE) (LATERAL) (GSP)
		PLASTIC PIPE (SUPPLY LINE) (MAIN)
		PLASTIC PIPE (SUPPLY LINE) (LATERAL)
cp	CP	COPPER PIPE (SUPPLY LINE)
dit	DIT	DRIP IRRIGATION TUBING
		REMOTE CONTROL VALVE (RCV) REMOTE CONTROL VALVE (MASTER) (RCVM) REMOTE CONTROL VALVE (MASTER) W/FLOW METER (RCVMF)
P	P	REMOTE CONTROL VALVE W/PRESSURE REGULATOR (RCVP)
		EXISTING MANUAL CONTROL VALVE (MCV)
	V	DRIP VALVE ASSEMBLY (DVA)
	Y	WYE STRAINER ASSEMBLY (WSA)

EXISTING	NEW	ITEM DESCRIPTION
		GATE VALVE (GV)
		BALL VALVE (BV)
		QUICK COUPLING VALVE (QCV)
		CAM COUPLER ASSEMBLY (CCA)
		GARDEN VALVE ASSEMBLY (GARVA)
		PRESSURE REGULATING VALVE (PRV)
		PRESSURE RELIEF VALVE (PRLV)
		FLOW CONTROL VALVE (FCV)
		COMBINATION AIR RELEASE VALVE (CARV)
		CHECK VALVE (CV)
		FLUSH VALVE (FV)
		EXISTING NOZZLE LINE W/TURNING UNION
		EXISTING IRRIGATION SYSTEM
		EXISTING IRRIGATION SYSTEM TO BE REMOVED
		CHAIN LINK GATE
		QUICK COUPLING VALVE W/SPRINKLER PROTECTOR
3	3	SPRINKLER W/SPRINKLER PROTECTOR
	C	CONNECT TO EXISTING SYSTEM
		CAP
		CAP EXISTING
	\\\FR\\\	FIBER ROLL
	\\\CS\\\	COMPOST SOCK

- RCV SIZE
- IRRIGATION CONTROLLER
- CONTROLLER STATION
- VALVE IN PARALLEL (IF APPLICABLE)
- GPM
- QUANTITY OF SPRINKLERS (WHEN SHOWN)

* 2½"-A-2b-40-60

VALVE CODE

* VALVE CODES FOR EXISTING VALVES ARE SHOWN IN A DASHED ENCLOSURE.

STATE OF CALIFORNIA
DEPARTMENT OF TRANSPORTATION

LANDSCAPE AND EROSION CONTROL SYMBOLS

NO SCALE

RSP H2 DATED NOVEMBER 15, 2013 SUPERSEDES RSP H2 DATED JULY 19, 2013 AND STANDARD PLAN H2 DATED MAY 20, 2011 - PAGE 219 OF THE STANDARD PLANS BOOK DATED 2010.

REVISED STANDARD PLAN RSP H2

2010 REVISED STANDARD PLAN RSP H2

10-9-13

Dist	COUNTY	ROUTE	POST MILES TOTAL PROJECT	SHEET No.	TOTAL SHEETS
07	LA	210	R24.7/R44.9	260	274

REGISTERED CIVIL ENGINEER

July 19, 2013
PLANS APPROVAL DATE

REGISTERED PROFESSIONAL ENGINEER Gurinderpal Bhullar No. C48815 Exp. 9-30-14 CIVIL STATE OF CALIFORNIA

THE STATE OF CALIFORNIA OR ITS OFFICERS OR AGENTS SHALL NOT BE RESPONSIBLE FOR THE ACCURACY OR COMPLETENESS OF SCANNED COPIES OF THIS PLAN SHEET.

TO ACCOMPANY PLANS DATED 7-27-15

TABLE 1

TAPER LENGTH CRITERIA AND CHANNELIZING DEVICE SPACING

SPEED (S)	MINIMUM TAPER LENGTH * FOR WIDTH OF OFFSET 12 FEET (W)				MAXIMUM CHANNELIZING DEVICE SPACING		
					X	Y	Z **
	TANGENT 2L	MERGING L	SHIFTING L/2	SHOULDER L/3	TAPER	TANGENT	CONFLICT
mph	ft	ft	ft	ft	ft	ft	ft
20	160	80	40	27	20	40	10
25	250	125	63	42	25	50	12
30	360	180	90	60	30	60	15
35	490	245	123	82	35	70	17
40	640	320	160	107	40	80	20
45	1080	540	270	180	45	90	22
50	1200	600	300	200	50	100	25
55	1320	660	330	220	55	110	27
60	1440	720	360	240	60	120	30
65	1560	780	390	260	65	130	32
70	1680	840	420	280	70	140	35

* - For other offsets, use the following merging taper length formula for L:
For speed of 40 mph or less, $L = WS^2/60$
For speed of 45 mph or more, $L = WS$

Where: L = Taper length in feet
W = Width of offset in feet
S = Posted speed limit, off-peak 85th-percentile speed prior to work starting, or the anticipated operating speed in mph

** - Use for taper and tangent sections where there are no pavement markings or where there is a conflict between existing pavement markings and channelizers (CA).

TABLE 2

LONGITUDINAL BUFFER SPACE AND FLAGGER STATION SPACING

SPEED *	Min D **	DOWNGRADE Min D ***		
		-3%	-6%	-9%
mph	ft	ft	ft	ft
20	115	116	120	126
25	155	158	165	173
30	200	205	215	227
35	250	257	271	287
40	305	315	333	354
45	360	378	400	427
50	425	446	474	507
55	495	520	553	593
60	570	598	638	686
65	645	682	728	785
70	730	771	825	891

* - Speed is posted speed limit, off-peak 85th-percentile speed prior to work starting, or the anticipated operating speed in mph

** - Longitudinal buffer space or flagger station spacing

*** - Use on sustained downgrade steeper than -3 percent and longer than 1 mile.

TABLE 3

ADVANCE WARNING SIGN SPACING

ROAD TYPE	DISTANCE BETWEEN SIGNS *		
	A	B	C
	ft	ft	ft
URBAN - 25 mph OR LESS	100	100	100
URBAN - MORE THAN 25 mph TO 40 mph	250	250	250
URBAN - MORE THAN 40 mph	350	350	350
RURAL	500	500	500
EXPRESSWAY / FREEWAY	1000	1500	2640

* - The distances are approximate, are intended for guidance purposes only, and should be applied with engineering judgment. These distances should be adjusted by the Engineer for field conditions, if necessary, by increasing or decreasing the recommmended distances.

STATE OF CALIFORNIA
DEPARTMENT OF TRANSPORTATION

TRAFFIC CONTROL SYSTEM TABLES FOR LANE AND RAMP CLOSURES

NO SCALE

RSP T9 DATED JULY 19, 2013 SUPERSEDES RSP T9 DATED APRIL 19, 2013 THAT SUPPLEMENTS THE STANDARD PLANS BOOK DATED 2010.

REVISED STANDARD PLAN RSP T9

2010 REVISED STANDARD PLAN RSP T9

4-30-13

Dist	COUNTY	ROUTE	POST MILES TOTAL PROJECT	SHEET No.	TOTAL SHEETS
07	LA	210	R24.7/R44.9	261	274

REGISTERED CIVIL ENGINEER

April 19, 2013
PLANS APPROVAL DATE

REGISTERED PROFESSIONAL ENGINEER Gurinderpal Bhullar No. C48815 Exp. 9-30-14 CIVIL STATE OF CALIFORNIA

THE STATE OF CALIFORNIA OR ITS OFFICERS OR AGENTS SHALL NOT BE RESPONSIBLE FOR THE ACCURACY OR COMPLETENESS OF SCANNED COPIES OF THIS PLAN SHEET.

TO ACCOMPANY PLANS DATED 7-27-15

NOTES:

See Revised Standard Plan RSP T9 for tables.

Use cone spacing X for taper segment, Y for tangent segment or Z for conflict situations, as approriate, per Table 1, unless X, Y, or Z cone spacing is shown on this sheet.

Unless otherwise specified in the special provisions, all temporary warning signs shall have black legend on fluorescent orange background.

California codes are designated by (CA). Otherwise, Federal (MUTCD) codes are shown.

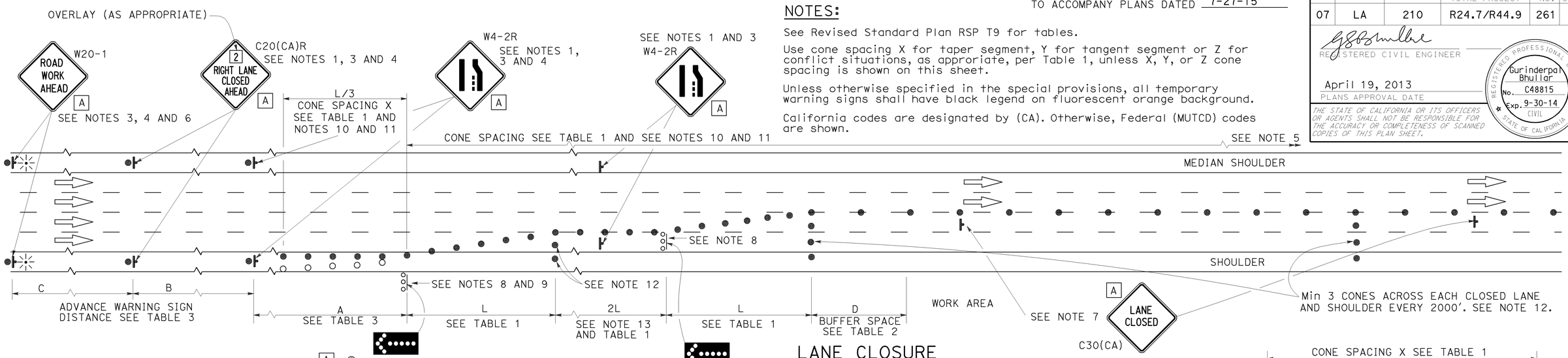

LANE CLOSURE

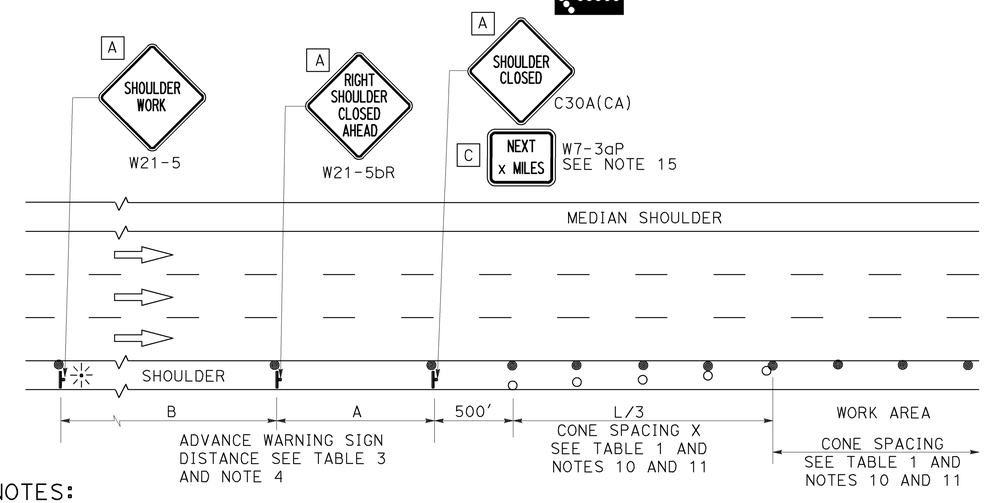

SHOULDER CLOSURE

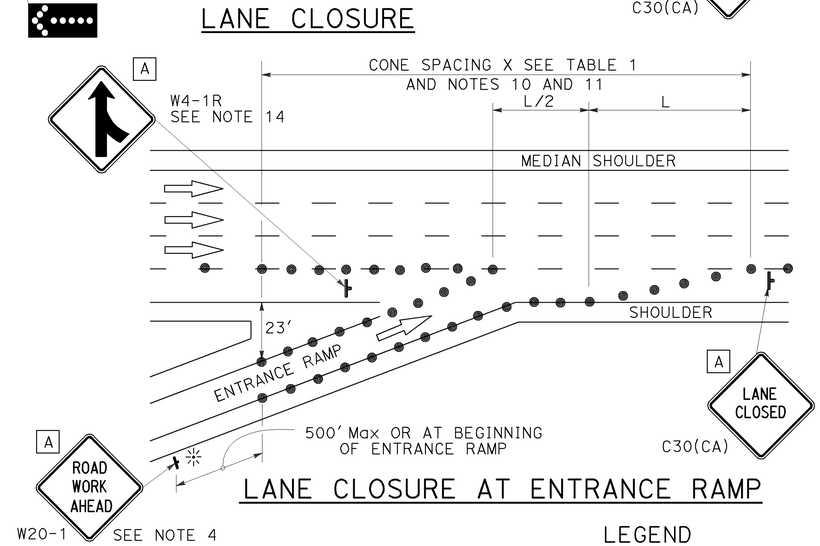

LANE CLOSURE AT ENTRANCE RAMP

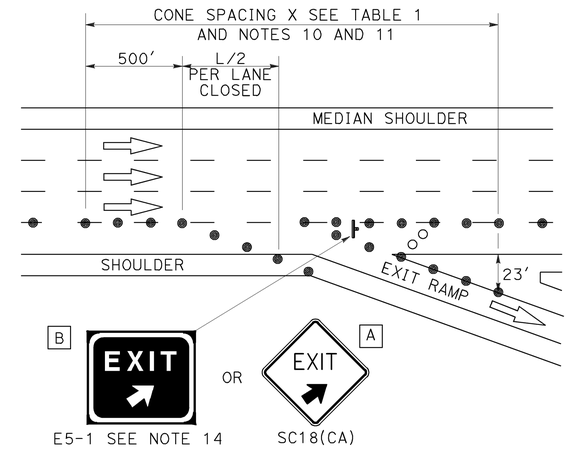

LANE CLOSURE AT EXIT RAMP

NOTES:

1. Median lane closures shall conform to the details as shown except that C20(CA)L and W4-2L signs shall be used.
2. At least one person shall be assigned to provide full time maintenance of traffic control devices for lane closures.
3. Duplicate sign installations are not required:
   a) On opposite shoulder if at least one-half of the available lanes remain open to traffic.
   b) In the median if the width of the median shoulder is less than 8' and the outside lanes are to be closed.
4. Each advance warning sign on each side of the roadway shall be equipped with at least two flags for daytime closure. Each flag shall be at least 16" x 16" in size and shall be orange or fluorescent red-orange in color. Flashing beacons shall be placed at the locations indicated for lane closure during hours of darkness.
5. A G20-2 "END ROAD WORK" sign, with minimum size of 48" x 24" as appropriate, shall be placed at the end of the lane closure unless the end of work area is obvious or ends within a larger project's limits.
6. If the W20-1 sign would follow within 2000' of a stationary W20-1 or G20-1 "ROAD WORK NEXT _____ MILES", use a C20(CA) sign for the first advance warning sign.
7. Place a C30(CA) sign every 2000' throughout length of lane closure.
8. One flashing arrow sign for each lane closed. The flashing arrow signs shall be Type I.
9. A minimum 1500' of sight distance shall be provided where possible for vehicles approaching the first flashing arrow sign. Lane closures shall not begin at top of crest vertical curve or on a horizontal curve.
10. All cones used for lane closures during the hours of darkness shall be fitted with retroreflective bands (or sleeves) as specified in the specifications.
11. Portable delineators, placed at one-half the spacing indicated for traffic cones may be used instead of cones for daytime closures only.
12. Unless otherwise specified in the special provisions, a minimum of 3 cones shall be placed transversely across each closed lane and shoulder at each location where a taper across a traffic lane ends and every 2000' as shown on the "Lane Closure" detail. Two Type II barricades may be used instead of the 3 cones. The transverse alignment of the cones or barricades on the closed shoulder may be shifted from the transverse alignment to provide access to the work.
13. Unless otherwise specified in the special provisions, the 2L tangent shown along lane lines shall be used between the L tapers required for each closed traffic lane.
14. Unless otherwise specified in the special provisions, the E5-1 or SC18(CA) and W4-1 signs shall be used as shown.
15. A W7-3aP "NEXT____ MILES" plaque must be used if theshoulder closure extends beyond the distance that can be perceived by road users.

LEGEND

- TRAFFIC CONE
- TRAFFIC CONE (OPTIONAL TAPER)
- TEMPORARY TRAFFIC CONTROL SIGN
- FLASHING ARROW SIGN (FAS)
- FAS SUPPORT OR TRAILER
- PORTABLE FLASHING BEACON

SIGN PANEL SIZE (Min)

A	48" x 48"
B	72" x 60"
C	36" x 30"

STATE OF CALIFORNIA
DEPARTMENT OF TRANSPORTATION

TRAFFIC CONTROL SYSTEM FOR LANE CLOSURE ON FREEWAYS AND EXPRESSWAYS

NO SCALE

RSP T10 DATED APRIL 19, 2013 SUPERSEDES STANDARD PLAN T10 DATED MAY 20, 2011 - PAGE 237 OF THE STANDARD PLANS BOOK DATED 2010.

REVISED STANDARD PLAN RSP T10

2010 REVISED STANDARD PLAN RSP T10

12-18-12

Dist	COUNTY	ROUTE	POST MILES TOTAL PROJECT	SHEET No.	TOTAL SHEETS
07	LA	210	R24.7/R44.9	262	274

REGISTERED CIVIL ENGINEER

April 19, 2013
PLANS APPROVAL DATE

REGISTERED PROFESSIONAL ENGINEER Gurinderpal Bhullar No. C48815 Exp. 9-30-14 CIVIL STATE OF CALIFORNIA

THE STATE OF CALIFORNIA OR ITS OFFICERS OR AGENTS SHALL NOT BE RESPONSIBLE FOR THE ACCURACY OR COMPLETENESS OF SCANNED COPIES OF THIS PLAN SHEET.

TO ACCOMPANY PLANS DATED 7-27-15

TYPICAL RAMP CLOSURES

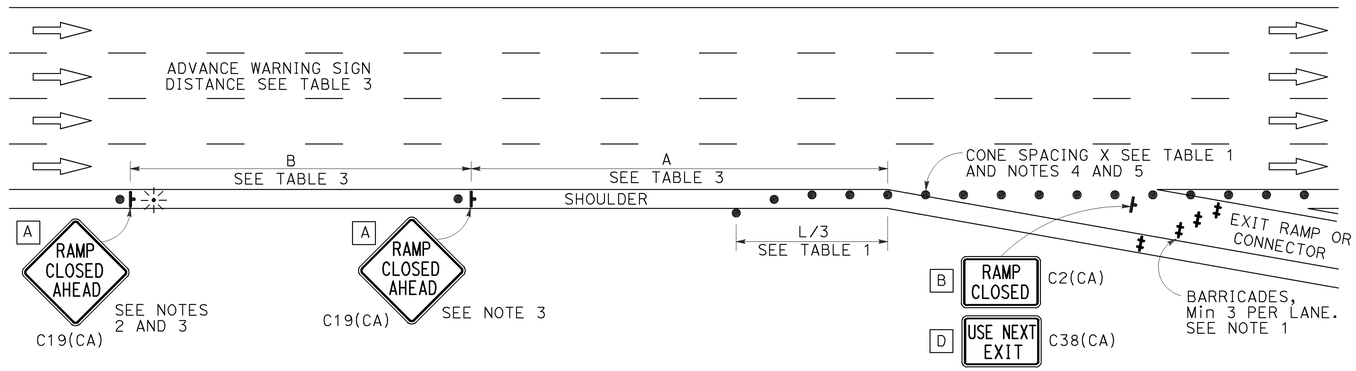

EXIT RAMP OR CONNECTOR

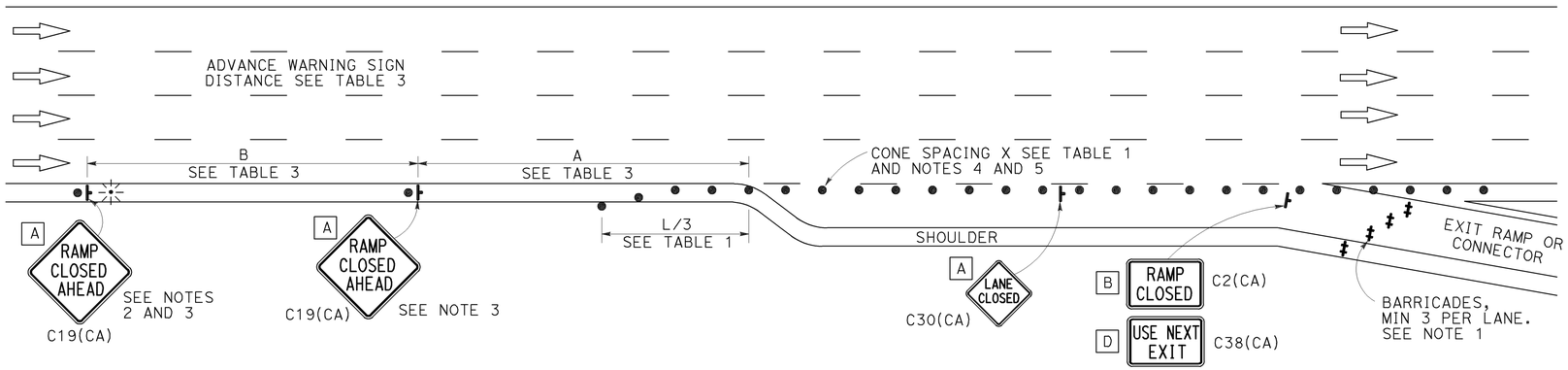

EXIT RAMP OR CONNECTOR WITH ADDITIONAL LANE

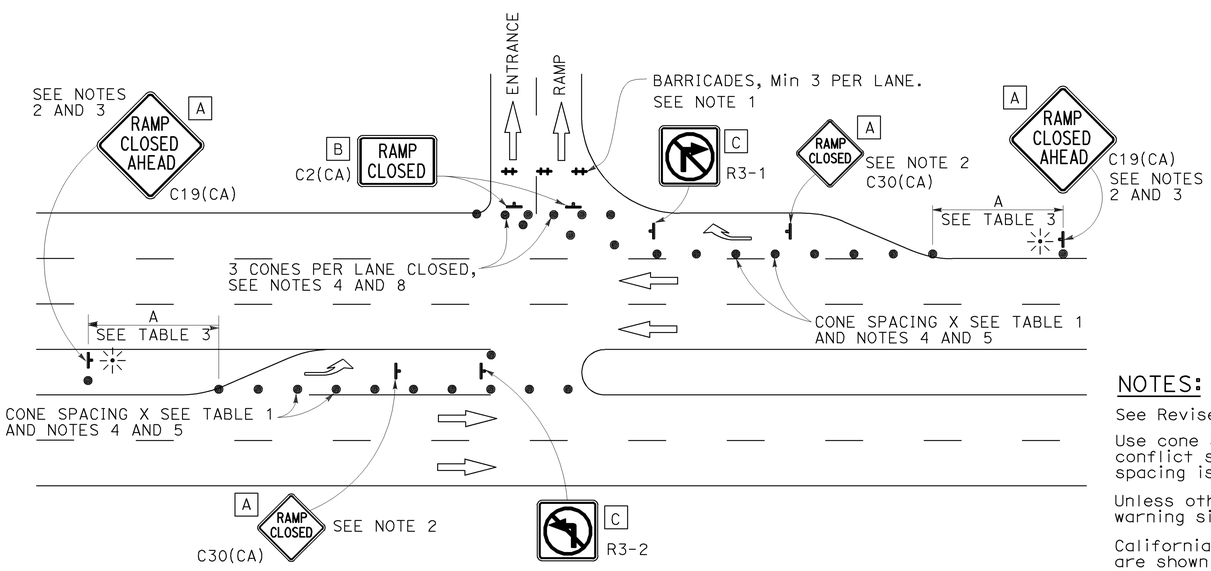

ENTRANCE RAMP WITH TURNING POCKETS

SIGN PANEL SIZE (Min)

- A 48" × 48"
- B 48" × 30"
- C 36" × 36"
- D 48" × 36"

LEGEND

- TRAFFIC CONE
- TEMPORARY TRAFFIC CONTROL SIGN
- BARRICADES
- PORTABLE FLASHING BEACON

NOTES:

1. Barricades shall be Type I, II, or III for closures lasting one week or less and Type III for closures lasting longer than one week.
2. In addition to placing the C19(CA) "RAMP CLOSED AHEAD" and C30(CA) "RAMP CLOSED" signs, black on orange overlay plates with the word "CLOSED" may be mounted, as directed by the Engineer, on all guide signs that refer to the closed ramp. The letter size on the overlay shall be the same as the guide sign.
3. Each advance C19(CA) "RAMP CLOSED AHEAD" sign shall be equipped with at least two flags for daytime closure. Each flag shall be at least 16" × 16" in size and shall be orange or fluorescent red-orange in color. A flashing beacon shall be placed on top of the first C19(CA) sign during hours of darkness.
4. All cones used for ramp closures during the hours of darkness shall be fitted with retroreflective bands (or sleeves) as specified in the specifications.
5. Portable delineators, placed at one-half the spacing indicated for traffic cones, may be used instead of cones for daytime ramp closures only.
6. At least one person shall be assigned to provide full time maintenance of traffic control devices, unless otherwise directed by the Engineer.
7. The existing "EXIT" signs shall be covered during ramp closures.
8. A minimum of 3 cones shall be placed transversely across each closed lane and shoulder.

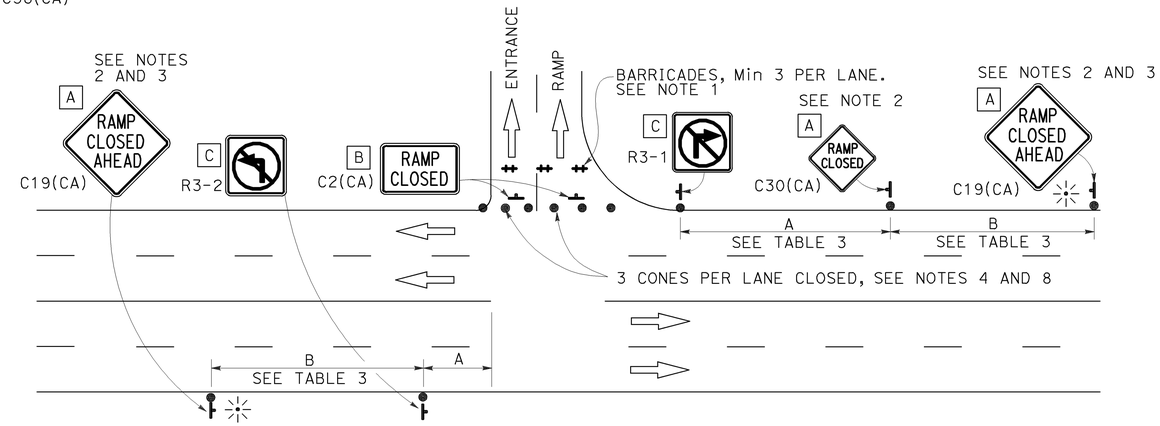

ENTRANCE RAMP WITHOUT TURNING POCKETS

NOTES:

See Revised Standard Plan RSP T9 for tables.

Use cone spacing X for taper segment, Y for tangent segment or Z for conflict situations, as approriate, per Table 1, unless X, Y, or Z cone spacing is shown on this sheet.

Unless otherwise specified in the special provisions, all temporary warning signs shall have black legend on fluorescent orange background.

California codes are designated by (CA). Otherwise, Federal (MUTCD) codes are shown.

STATE OF CALIFORNIA
DEPARTMENT OF TRANSPORTATION

TRAFFIC CONTROL SYSTEM FOR RAMP CLOSURE

NO SCALE

RSP T14 DATED APRIL 19, 2013 SUPERSEDES STANDARD PLAN T14
DATED MAY 20, 2011 - PAGE 242 OF THE STANDARD PLANS BOOK DATED 2010.

REVISED STANDARD PLAN RSP T14

2010 REVISED STANDARD PLAN RSP T14

12-18-12

Dist	COUNTY	ROUTE	POST MILES TOTAL PROJECT	SHEET No.	TOTAL SHEETS
07	LA	210	R24.7/R44.9	263	274

REGISTERED CIVIL ENGINEER

July 19, 2013
PLANS APPROVAL DATE

REGISTERED PROFESSIONAL ENGINEER Stanley P. Johnson No. C57793 Exp. 3-31-14 CIVIL STATE OF CALIFORNIA

THE STATE OF CALIFORNIA OR ITS OFFICERS OR AGENTS SHALL NOT BE RESPONSIBLE FOR THE ACCURACY OR COMPLETENESS OF SCANNED COPIES OF THIS PLAN SHEET.

TO ACCOMPANY PLANS DATED 7-27-15

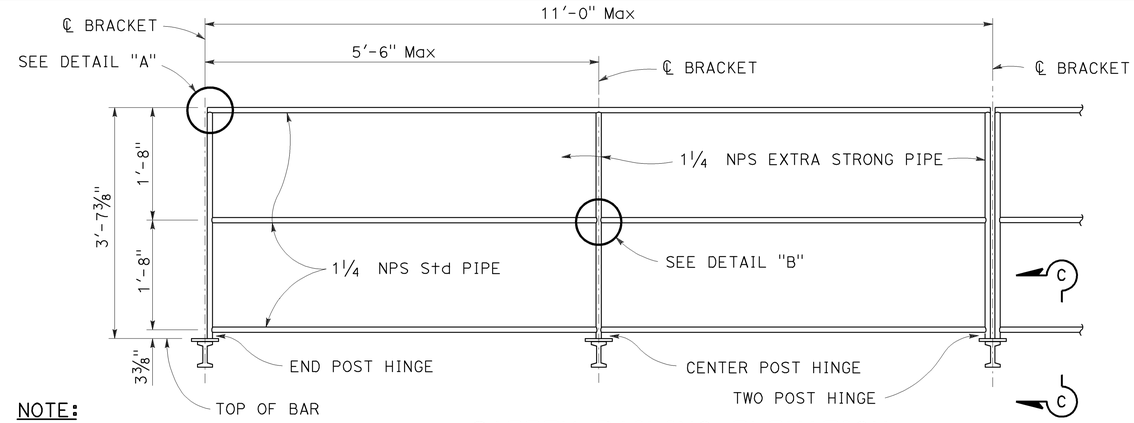

NOTE:
Chain assembly behind (see detail this page)

SAFETY RAILING ELEVATION

NOTE:
See Standard Plans S101 and S105 and S109 for walkway bracket spacing.

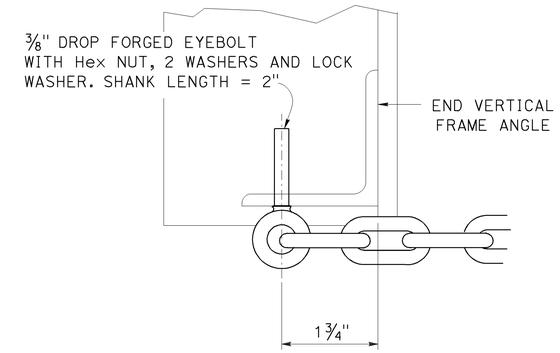

SECTION D-D

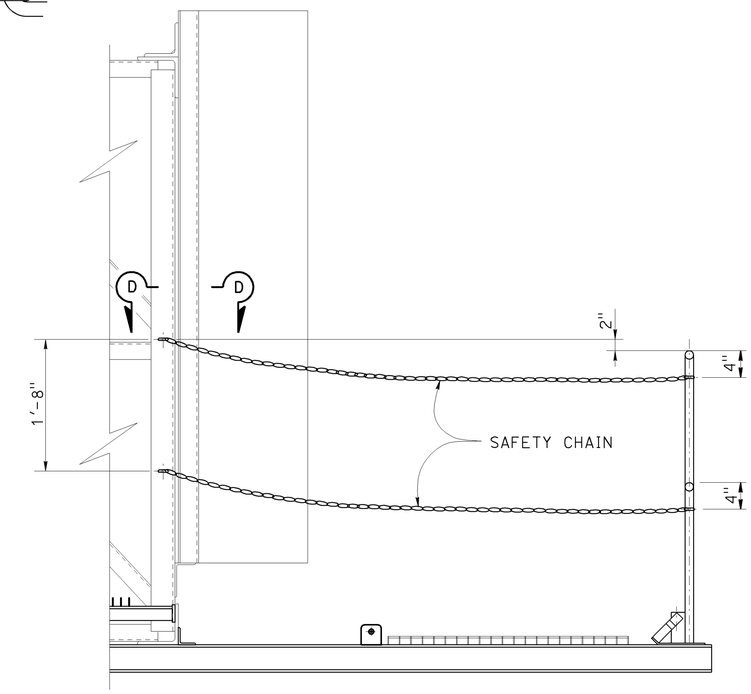

CHAIN ASSEMBLY

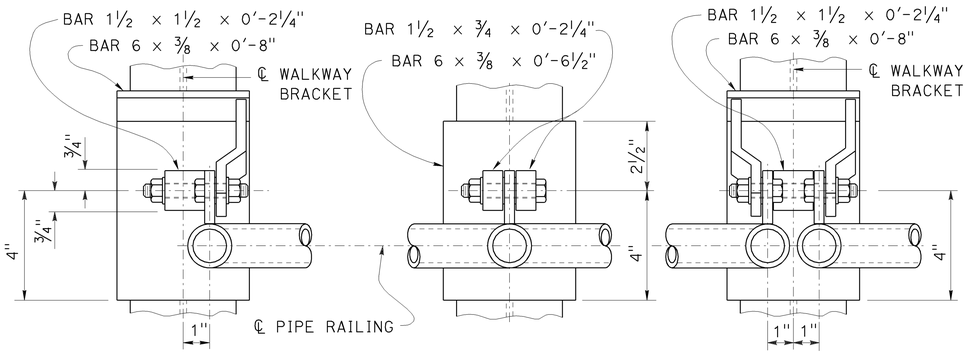

END POST — CENTER POST — TWO POST

WELDED HINGE - PLAN

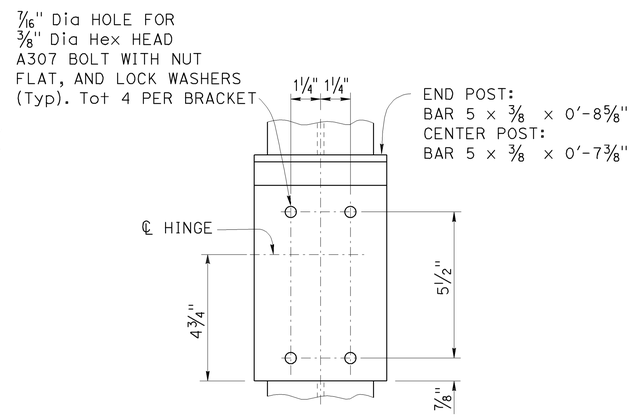

TYPICAL BOLTED (ALTERNATIVE)

HINGED CONNECTION

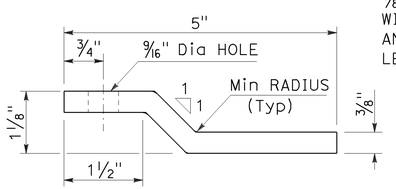

PLAN - KICKER BAR

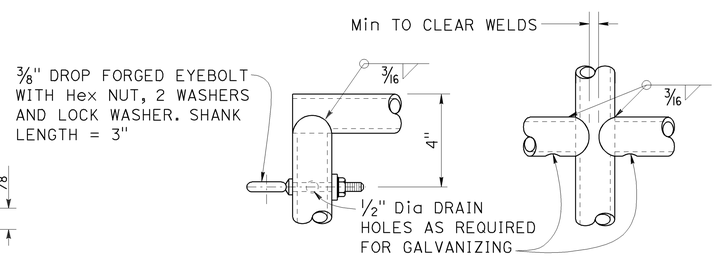

DETAIL "A" — DETAIL "B"

NOTE:
Alternative venting methods may be used if approved by the Engineer.

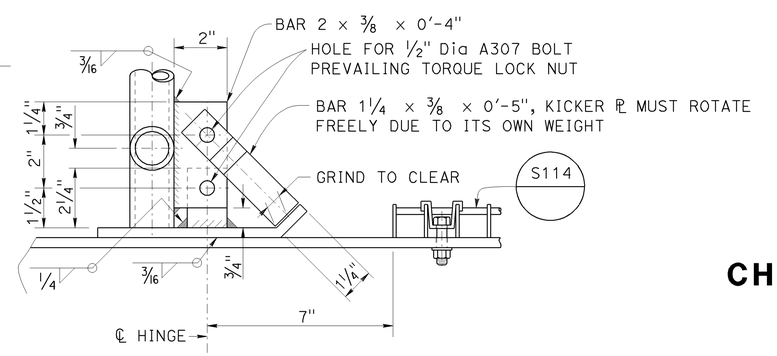

SECTION C-C
ELEVATION VIEW

STATE OF CALIFORNIA
DEPARTMENT OF TRANSPORTATION

OVERHEAD SIGN-TRUSS SINGLE POST TYPE WALKWAY SAFETY RAILING DETAILS CHANGEABLE MESSAGE SIGNS MODEL 500 AND 510

NO SCALE

RSP S140 DATED JULY 19, 2013 SUPERSEDES STANDARD PLAN S140 DATED MAY 20, 2011 - PAGE 422 OF THE STANDARD PLANS BOOK DATED 2010.

REVISED STANDARD PLAN RSP S140

2010 REVISED STANDARD PLAN RSP S140

7-11-13

Dist	COUNTY	ROUTE	POST MILES TOTAL PROJECT	SHEET No.	TOTAL SHEETS
07	LA	210	R24.7/R44.9	264	274

REGISTERED CIVIL ENGINEER

July 19, 2013
PLANS APPROVAL DATE

REGISTERED PROFESSIONAL ENGINEER
Stanley P. Johnson
No. C57793
Exp. 3-31-14
CIVIL
STATE OF CALIFORNIA

THE STATE OF CALIFORNIA OR ITS OFFICERS OR AGENTS SHALL NOT BE RESPONSIBLE FOR THE ACCURACY OR COMPLETENESS OF SCANNED COPIES OF THIS PLAN SHEET.

TO ACCOMPANY PLANS DATED 7-27-15

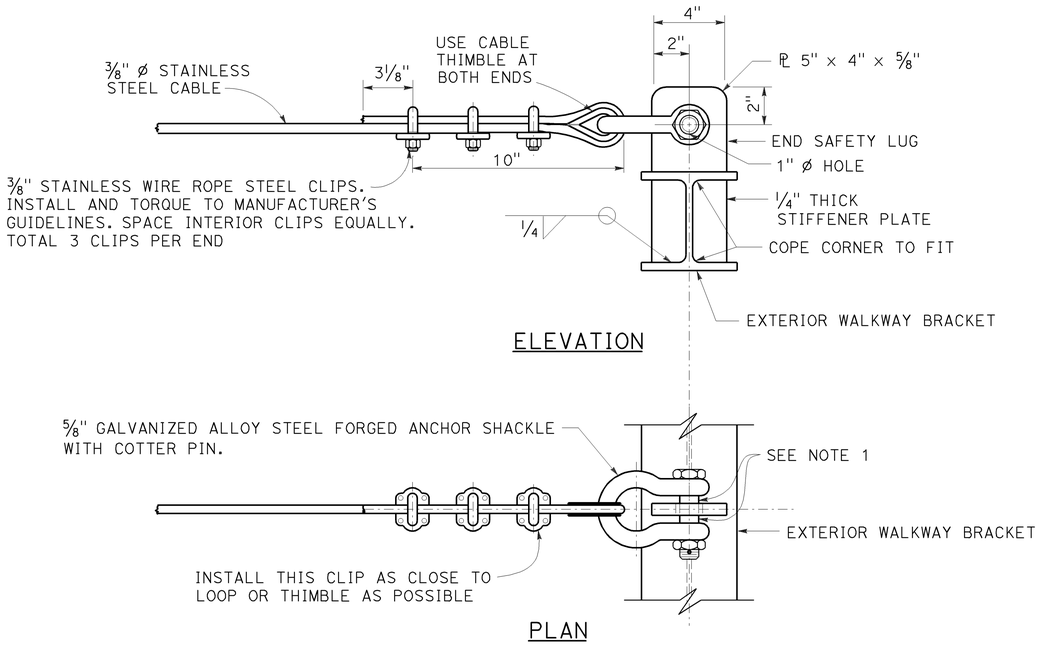

END SAFETY CABLE DETAIL

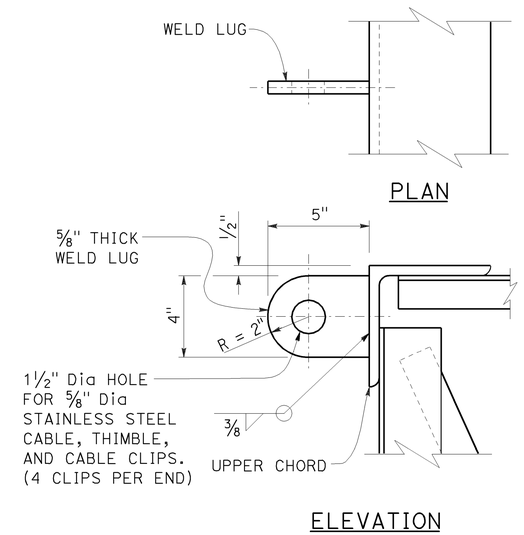

BACKSIDE WELD LUG DETAIL

NOTE: Backside weld lug shall be installed only for projects requiring backside walkways.

NOTES:

1. Place an equal amount of washers on each side to align cable with end lug without restricting shakle bolt rotation or contacting cable.
2. For walkway grating details, see Standard Plan S114.

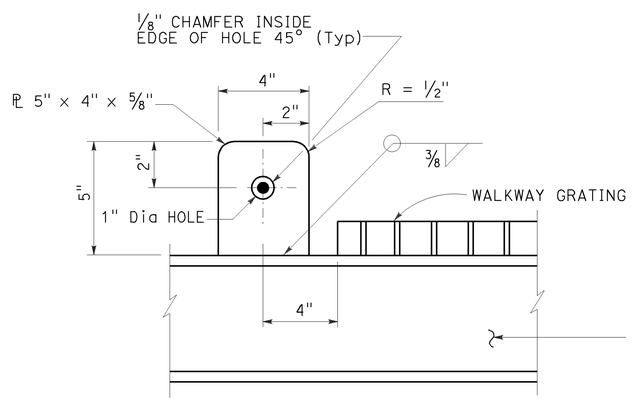

INTERIOR SAFETY LUG DETAIL

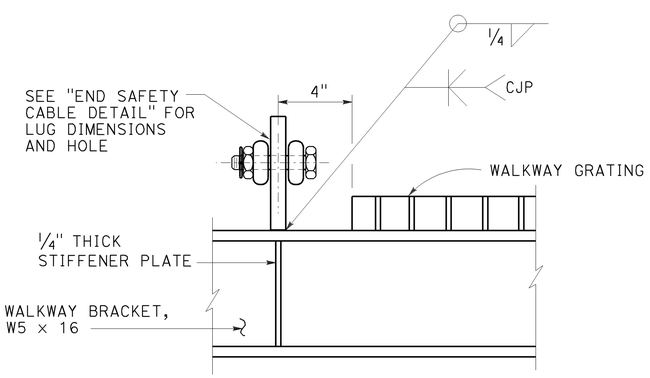

END SAFETY LUG DETAIL

STATE OF CALIFORNIA
DEPARTMENT OF TRANSPORTATION

OVERHEAD SIGN-TRUSS SINGLE POST TYPE SAFETY CABLE ANCHORAGE DETAILS CHANGEABLE MESSAGE SIGNS MODEL 500 AND 510

NO SCALE

RSP S141 DATED JULY 19, 2013 SUPERSEDES STANDARD PLAN S141
DATED MAY 20, 2011 - PAGE 423 OF THE STANDARD PLANS BOOK DATED 2010.

REVISED STANDARD PLAN RSP S141

2010 REVISED STANDARD PLAN RSP S141

7-11-13

Dist	COUNTY	ROUTE	POST MILES TOTAL PROJECT	SHEET No.	TOTAL SHEETS
07	LA	210	R24.7/R44.9	265	274

Theresa Gabriel
REGISTERED ELECTRICAL ENGINEER

July 19, 2013
PLANS APPROVAL DATE

REGISTERED PROFESSIONAL ENGINEER Theresa Aziz Gabriel No. E15129 Exp. 6-30-14 ELECTRICAL STATE OF CALIFORNIA

THE STATE OF CALIFORNIA OR ITS OFFICERS OR AGENTS SHALL NOT BE RESPONSIBLE FOR THE ACCURACY OR COMPLETENESS OF SCANNED COPIES OF THIS PLAN SHEET.

TO ACCOMPANY PLANS DATED 7-27-15

LEGEND:

AB	ABANDON. IF APPLIED TO CONDUIT, REMOVE CONDUCTORS
BC	INSTALL PULL BOX IN EXISTING CONDUIT RUN
BP	PEDESTRIAN BARRICADE, TYPE AS INDICATED ON PLAN
CB	INSTALL CONDUIT INTO EXISTING PULL BOX
CC	CONNECT NEW AND EXISTING CONDUIT. REMOVE EXISTING CONDUCTORS AND INSTALL CONDUCTORS AS INDICATED
CF	CONDUIT TO REMAIN FOR FUTURE USE. REMOVE CONDUCTORS. INSTALL PULL TAPE
DH	DETECTOR HANDHOLE
FA	FOUNDATION TO BE ABANDONED
IS	INSTALL SIGN ON SIGNAL MAST ARM
NS	NO SLIP BASE ON STANDARD
PEC	PHOTOELECTRIC CONTROL
PEU	PHOTOELECTRIC UNIT
RC	EQUIPMENT OR MATERIAL TO BE REMOVED AND BECOME THE PROPERTY OF THE CONTRACTOR
RE	REMOVE ELECTROLIER, FUSES AND BALLAST. TAPE ENDS OF CONDUCTORS
RL	RELOCATE EQUIPMENT
RR	REMOVE AND REUSE EQUIPMENT
RS	REMOVE AND SALVAGE EQUIPMENT
SC	SPLICE NEW TO EXISTING CONDUCTORS
SD	SERVICE DISCONNECT
TSP	TELEPHONE SERVICE POINT

ABBREVIATIONS

APS	ACCESSIBLE PEDESTRIAN SIGNAL
BBS	BATTERY BACKUP SYSTEM
BC	BOLT CIRCLE
BPB	BICYCLE PUSH BUTTON
C	CONDUIT
CB	CIRCUIT BREAKER
CCTV	CLOSED CIRCUIT TELEVISION
Ckt	CIRCUIT
CMS	CHANGEABLE MESSAGE SIGN
Ctid	CALTRANS IDENTIFICATION
Comm	COMMUNICATION
DLC	LOOP DETECTOR LEAD-IN CABLE
EMS	EXTINGUISHABLE MESSAGE SIGN
EVUC	EMERGENCY VEHICLE UNIT CABLE
EVUD	EMERGENCY VEHICLE UNIT DETECTOR
FB	FLASHING BEACON
FBCA	FLASHING BEACON CONTROL ASSEMBLY
FBS	FLASHING BEACON WITH SLIP BASE
FO	FIBER OPTIC
G	EQUIPMENT GROUNDING CONDUCTOR
GB	GROUND BUS
GFCI	GROUND FAULT CIRCUIT INTERRUPTER
HAR	HIGHWAY ADVISORY RADIO
Hex	HEXAGONAL
HPS	HIGH PRESSURE SODIUM
IISNS	INTERNALLY ILLUMINATED STREET NAME SIGN
ISL	INDUCTION SIGN LIGHTING
LED	LIGHT EMITTING DIODE
LMA	LUMINAIRE MAST ARM
LPS	LOW PRESSURE SODIUM
Ltg	LIGHTING
Lum	LUMINAIRE
M	METERED
MAT	MAST ARM MOUNTING TOP ATTACHMENT
MAS	MAST ARM MOUNTING SIDE ATTACHMENT
M/M	MULTIPLE TO MULTIPLE TRANSFORMER
Mtg	MOUNTING
MV	MERCURY VAPOR LIGHTING FIXTURE
MVDS	MICROWAVE VEHICLE DETECTION SYSTEM
N	NEUTRAL (GROUNDED CONDUCTOR)
NB	NEUTRAL BUS
NC	NORMALLY CLOSE
NO	NORMALLY OPEN
P	CIRCUIT BREAKER'S POLE
PB	PULL BOX
PBA	PUSH BUTTON ASSEMBLY
PEC	PHOTOELECTRIC CONTROL
Ped	PEDESTRIAN
PEU	PHOTOELECTRIC UNIT
PT	CONDUIT WITH PULL TAPE
RE	RELOCATED EQUIPMENT
RM	RAMP METERING
RWIS	ROADSIDE WEATHER INFORMATION SYSTEM
SB	SLIP BASE
SIC	SIGNAL INTERCONNECT CABLE
Sig	SIGNAL
SMA	SIGNAL MAST ARM
SNS	STREET NAME SIGN
SP	SERVICE POINT
TDC	TELEPHONE DEMARCATION CABINET
TMS	TRAFFIC MONITORING STATION
TOS	TRAFFIC OPERATIONS SYSTEM
Veh	VEHICLE
VIVDS	VIDEO IMAGE VEHICLE DETECTION SYSTEM
WIM	WEIGH-IN-MOTION
Xfmr	TRANSFORMER

SOFFIT AND WALL MOUNTED LUMINAIRES

PENDANT, 70 W HPS UNLESS OTHERWISE SPECIFIED

FLUSH, 70 W HPS UNLESS OTHERWISE SPECIFIED

WALL SURFACE, 70 W HPS UNLESS OTHERWISE SPECIFIED

EXISTING SOFFIT OR WALL LUMINAIRE TO REMAIN UNMODIFIED

EXISTING SOFFIT OR WALL LUMINAIRE TO BE MODIFIED AS SPECIFIED

NOTE:

Arrow indicates "street side" of luminaire.

COMMONLY USED SYMBOLS FOR UNITED STATES CUSTOMARY UNITS OF MEASUREMENT:

SYMBOL USED	DEFINITIONS
Ω	OHMS
min	MINUTE
s	SECOND
bps	BITS PER SECOND
Bps	BYTES PER SECOND
A	AMPERE
V	VOLT
V(dc)	VOLT (DIRECT CURRENT)
V(ac)	VOLT (ALTERNATING CURRENT)
FC	FOOT - CANDLE
W	WATTS
VA	VOLT-AMPERE
M	MEGA
k	KILO
m	MILLI
μ	MICRO
P	PICO
Hz	HERTZ

MISCELLANEOUS ELECTROLIERS

NEW	EXISTING	
		LUMINAIRE ON WOOD POLE
		NON-STANDARD ELECTROLIER (SEE PROJECT NOTES OR PROJECT PLANS)
		CITY ELECTROLIER
		ELECTROLIER FOUNDATION (FUTURE INSTALLATION)

NOTES:

1. HPS luminaires shall be 310 W HPS when installed on Type 21, 21D, 30, 31 and 32 Standards, unless otherwise specified. HPS luminaires shall be 200 W when installed on other type standards or poles, unless otherwise specified.
2. LED luminaires shall be 235 W when installed on Type 21, 21D, 30, 31 and 32 Standards, unless otherwise specified. LED luminaires shall be 165 W when installed on other type standards or poles, unless otherwise specified.
3. Luminaires shall be the cutoff type, ANSI Type III medium cutoff lighting distribution, unless otherwise specified.

STANDARD ELECTROLIER

NEW	EXISTING	STANDARD TYPE
		15
		15D
		15 STRUCTURE
		15D STRUCTURE
		21
		21D
		21 STRUCTURE
		21D STRUCTURE
		30
		31
		32

STATE OF CALIFORNIA
DEPARTMENT OF TRANSPORTATION

ELECTRICAL SYSTEMS (LEGEND AND ABBREVIATIONS)

NO SCALE

RSP ES-1A DATED JULY 19, 2013 SUPERSEDES STANDARD PLAN ES-1A DATED MAY 20, 2011 - PAGE 425 OF THE STANDARD PLANS BOOK DATED 2010.

REVISED STANDARD PLAN RSP ES-1A

2010 REVISED STANDARD PLAN RSP ES-1A

Dist	COUNTY	ROUTE	POST MILES TOTAL PROJECT	SHEET No.	TOTAL SHEETS
07	LA	210	R24.7/R44.9	266	274

Theresa Gabriel
REGISTERED ELECTRICAL ENGINEER

July 19, 2013
PLANS APPROVAL DATE

REGISTERED PROFESSIONAL ENGINEER
Theresa Aziz Gabriel
No. E15129
Exp. 6-30-14
ELECTRICAL
STATE OF CALIFORNIA

THE STATE OF CALIFORNIA OR ITS OFFICERS OR AGENTS SHALL NOT BE RESPONSIBLE FOR THE ACCURACY OR COMPLETENESS OF SCANNED COPIES OF THIS PLAN SHEET.

TO ACCOMPANY PLANS DATED 7-27-15

CONDUIT

NEW	EXISTING	
		LIGHTING CONDUIT, UNLESS OTHERWISE INDICATED OR NOTED
		TRAFFIC SIGNAL CONDUIT
C	c	COMMUNICATION CONDUIT
T	t	TELEPHONE CONDUIT
F	f	FIRE ALARM CONDUIT
FO	fo	FIBER OPTIC CONDUIT
		CONDUIT TERMINATION
R	r	CONDUIT RISER ATTACHED TO THE STRUCTURE OR SERVICE POLE

SERVICE EQUIPMENT

NEW	EXISTING	
OH	oh	OVERHEAD LINES
U	U	WOOD POLE, "U" INDICATES UTILITY OWNED
		POLE GUY WITH ANCHOR
		UTILITY TRANSFORMER - GROUND MOUNTED
III	III	SERVICE EQUIPMENT ENCLOSURE TYPE. DOOR INDICATES FRONT OF ENCLOSURE
T	t	TELEPHONE DEMARCATION CABINET

POLE-MOUNTED SERVICE DESIGNATION

TYPE H SERVICE, 28'-10" — TYPE OF INSTALLATION AND POLE HEIGHT ABOVE GRADE

FLASHING BEACON

NEW	EXISTING	
R	R	FLASHING BEACON (ONE VEHICLE SIGNAL HEAD WITH BACKPLATE AND VISOR) "R" INDICATES RED INDICATION, "Y" INDICATES YELLOW INDICATION
Y Y	Y Y	FLASHING BEACON WITH TYPE 15-FBS STANDARD AND A SIGN.
R R	R R	FLASHING BEACON WITH TYPES 9, 9A OR 9B SIGN UNLESS OTHERWISE SPECIFIED OR INDICATED

SIGNAL EQUIPMENT

NEW	EXISTING	
C	C	PEDESTRIAN SIGNAL HEAD "C" INDICATES COUNTDOWN PEDESTRIAN HEAD
		PUSH BUTTON ASSEMBLY POST
		PEDESTRIAN BARRICADE
		VEHICLE SIGNAL HEAD (WITH BACKPLATE AND 3-SECTIONS: RED, YELLOW AND GREEN)
		VEHICLE SIGNAL HEAD WITH ANGLE VISOR
PV	PV	MODIFICATIONS OF BASIC SYMBOL: "L" INDICATES ALL NON-ARROW SECTIONS LOUVERED "LG" INDICATES LOUVERED GREEN SECTION ONLY "PV" INDICATES ALL 12" SECTIONS PROGRAMMED VISIBILITY "8" INDICATES ALL 8" SECTIONS (ONLY WHEN SPECIFIED)
		VEHICLE SIGNAL HEAD CONSISTING OF RED, YELLOW AND GREEN LEFT ARROW SECTIONS
		VEHICLE SIGNAL HEAD CONSISTING OF RED AND YELLOW SECTIONS WITH AN UP GREEN ARROW SECTION
		VEHICLE SIGNAL HEAD (5 SECTION) CONSISTING OF RED, YELLOW AND GREEN SECTIONS WITH YELLOW AND GREEN RIGHT ARROW SECTIONS
		TYPE 15TS STANDARD WITH VEHICLE SIGNAL HEAD AND LUMINAIRE
		TYPE 21TS STANDARD WITH VEHICLE SIGNAL HEAD AND LUMINAIRE
		STANDARD WITH LUMINAIRE AND SIGNAL MAST ARMS AND ATTACHED VEHICLE SIGNAL HEADS
		TYPE 1 STANDARD WITH ATTACHED VEHICLE SIGNAL HEADS
		STANDARD WITH A SIGNAL MAST ARM, ATTACHED VEHICLE SIGNAL HEADS AND INTERNALLY ILLUMINATED STREET NAME SIGN
		CONTROLLER ASSEMBLY. DOOR INDICATES FRONT OF CABINET

SIGNAL EQUIPMENT Cont

NEW	EXISTING	
		GUARD POST
		TYPE 1 STANDARD WITH RAMP METERING SIGN
		OPTICAL DETECTOR FOR THE EMERGENCY VEHICLE DETECTION SYSTEM

NOTES:

1. All signal sections shall be 12" unless shown otherwise.
2. Signal heads shall be provided with backplates unless shown otherwise.

ILLUMINATED OVERHEAD SIGN

NEW	EXISTING	
		SINGLE POST, SINGLE ILLUMINATED SIGN, BALANCED BUTTERFLY
		SINGLE POST, DOUBLE ILLUMINATED SIGN, BALANCED BUTTERFLY
		SINGLE POST, SINGLE ILLUMINATED SIGN, FULL CANTILEVER
		DOUBLE POST, SINGLE ILLUMINATED SIGN
		SINGLE ILLUMINATED SIGN MOUNTED ON STRUCTURE
		DOUBLE POST, SINGLE ILLUMINATED SIGN WITH ELECTROLIER

STATE OF CALIFORNIA
DEPARTMENT OF TRANSPORTATION

ELECTRICAL SYSTEMS (LEGEND AND ABBREVIATIONS)

NO SCALE

RSP ES-1B DATED JULY 19, 2013 SUPERSEDES STANDARD PLAN ES-1B DATED MAY 20, 2011 - PAGE 426 OF THE STANDARD PLANS BOOK DATED 2010.

REVISED STANDARD PLAN RSP ES-1B

2010 REVISED STANDARD PLAN RSP ES-1B

7-15-13

Dist	COUNTY	ROUTE	POST MILES TOTAL PROJECT	SHEET No.	TOTAL SHEETS
07	LA	210	R24.7/R44.9	267	274

Theresa Gabriel
REGISTERED ELECTRICAL ENGINEER

July 19, 2013
PLANS APPROVAL DATE

REGISTERED PROFESSIONAL ENGINEER
Theresa Aziz Gabriel
No. E15129
Exp. 6-30-14
ELECTRICAL
STATE OF CALIFORNIA

THE STATE OF CALIFORNIA OR ITS OFFICERS OR AGENTS SHALL NOT BE RESPONSIBLE FOR THE ACCURACY OR COMPLETENESS OF SCANNED COPIES OF THIS PLAN SHEET.

TO ACCOMPANY PLANS DATED 7-27-15

EQUIPMENT IDENTIFICATION

ILLUMINATED SIGN IDENTIFICATION NUMBER:

SIGN No. 12345
10 ISL SCI 1.0

- SIGN NUMBER - PLACE ON POST OR STRUCTURE
- TRANSFORMER RATING (kVA)
- LIGHTING CONTROL TYPE
- NUMBER AND TYPE OF FIXTURES

DO NOT PLACE ON STANDARD OR STRUCTURE

ELECTROLIER OR EQUIPMENT IDENTIFICATION NUMBER:

12345 - 15'-0"

- MAST ARM LENGTH, IF SHOWN. DO NOT PLACE ON STANDARD OR STRUCTURE
- EQUIPMENT NUMBER - PLACE ON STANDARD OR STRUCTURE. EXISTING EQUIPMENT NUMBERS ARE SHOWN IN PARENTHESIS

CONDUIT AND CONDUCTOR IDENTIFICATION:

1½"C, 2#10, 15#14, 2 DLC, 12P#18

- PAIR
- NUMBER AND SIZE OF CONDUCTORS AND CABLES
- SIZE OF CONDUIT IN INCHES

ø1, ø2, ø2P, etc.	TRAFFIC PHASE IDENTIFICATION FOR SIGNAL FACES, DETECTORS AND PHASE DIAGRAMS
1 2 3	LEGEND NUMBERS
A B C	EQUIPMENT, SIGNAL POLES, INSTALLATION OR ITEMS
1 2 3	CONDUIT RUN NUMBERS

SIGNAL AND LIGHTING STANDARD (TYPICAL DESIGNATION):

19A - 3 - 100

- WIND VELOCITY = 100 mph
- CASE 3 ARM LOADING
- STANDARD TYPE
- STANDARD PLAN SHEET NUMBER
- DETAIL, NUMBER, SECTION, TYPE OR ELEVATION

MISCELLANEOUS EQUIPMENT

NEW	EXISTING	
CMS	cms	CHANGEABLE MESSAGE SIGN
		CLOSED CIRCUIT TELEVISION CAMERA
		HIGHWAY ADVISORY RADIO POLE AND ANTENNA
EMS	ems	EXTINGUISHABLE MESSAGE SIGN
M V	m v	DETECTION DEVICE M = MICROWAVE SENSOR V = VIDEO IMAGE SENSOR

WIRING DIAGRAM LEGEND

----	EXTERNAL CONDUCTOR
——	CONDUCTOR OR BUS
	TIE POINT
	CONTACTOR COIL
	CONTACTOR, NO CONTACT
	TERMINAL BLOCKS
	CONTACTOR, NC CONTACT
	ENCLOSURE BOND
	GROUNDING ELECTRODE
	CIRCUIT BREAKER
	RECEPTACLE

PULL BOXES

NEW	EXISTING	
		PULL BOX, No. 5 UNLESS OTHERWISE INDICATED OR NOTED
3	9A(21)	PULL BOX, ADDITIONAL DESIGNATIONS OR DESCRIPTIONS

3 No. 3½ PULL BOX
5 No. 5 PULL BOX
6 No. 6 PULL BOX
7 No. 7 (CEILING PULL BOX)
8 No. 8 (PENDANT SOFFIT PULL BOX)
9 No. 9 PULL BOX
9A No. 9A PULL BOX

(C) COMMUNICATIONS PULL BOX
(E) PULL BOX WITH EXTENSION
(S) SPRINKLER CONTROL PULL BOX
(21) ANCHOR BOLTS AND CONDUIT FOR FUTURE INSTALLATION OF TYPE 21 STANDARD
(T) TRAFFIC PULL BOX

VEHICLE DETECTORS

5 J 9 U

- VEHICLE DETECTOR DESIGNATION
- U = UPPER
  L = LOWER
- SLOT NUMBER IN INPUT FILE
- INPUT FILE (I OR J)
- PHASE

NEW	EXISTING	
		TYPE A DETECTOR LOOP. OUTLINE OF SAWCUT SHOWN
		TYPE B DETECTOR LOOP. OUTLINE OF SAWCUT SHOWN
		TYPE C DETECTOR LOOP. OUTLINE OF SAWCUT SHOWN
		TYPE D DETECTOR LOOP. OUTLINE OF SAWCUT SHOWN
		TYPE E DETECTOR LOOP. OUTLINE OF SAWCUT SHOWN
		TYPE Q DETECTOR LOOP. OUTLINE OF SAWCUT SHOWN
		MAGNETIC DETECTOR
DH	dh	DETECTOR HANDHOLE
		MICROWAVE OR VIDEO DETECTION ZONE

STATE OF CALIFORNIA
DEPARTMENT OF TRANSPORTATION

ELECTRICAL SYSTEMS (LEGEND AND ABBREVIATIONS)

NO SCALE

RSP ES-1C DATED JULY 19, 2013 SUPERSEDES STANDARD PLAN ES-1C DATED MAY 20, 2011 - PAGE 427 OF THE STANDARD PLANS BOOK DATED 2010.

REVISED STANDARD PLAN RSP ES-1C

2010 REVISED STANDARD PLAN RSP ES-1C

Dist	COUNTY	ROUTE	POST MILES TOTAL PROJECT	SHEET No.	TOTAL SHEETS
07	LA	210	R24.7/R44.9	268	274

Theresa Gabriel
REGISTERED ELECTRICAL ENGINEER

July 19, 2013
PLANS APPROVAL DATE

REGISTERED PROFESSIONAL ENGINEER
Theresa Aziz Gabriel
No. E15129
Exp. 6-30-14
ELECTRICAL
STATE OF CALIFORNIA

THE STATE OF CALIFORNIA OR ITS OFFICERS OR AGENTS SHALL NOT BE RESPONSIBLE FOR THE ACCURACY OR COMPLETENESS OF SCANNED COPIES OF THIS PLAN SHEET.

TO ACCOMPANY PLANS DATED 7-27-15

2010 REVISED STANDARD PLAN RSP ES-5B

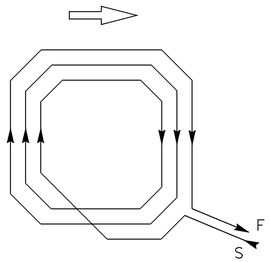

WINDING DETAIL

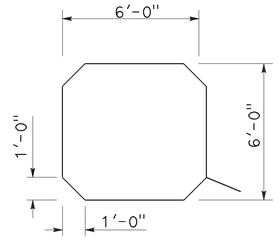

SAWCUT DETAIL

TYPE A LOOP DETECTOR CONFIGURATION

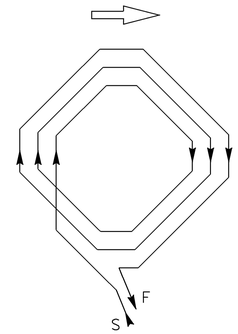

WINDING DETAIL

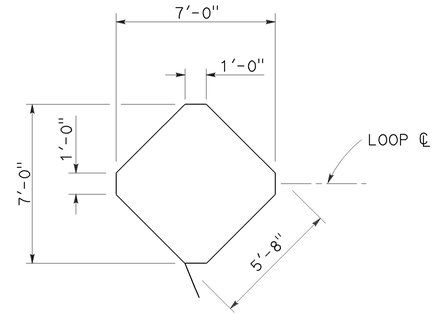

SAWCUT DETAIL

TYPE B LOOP DETECTOR CONFIGURATION

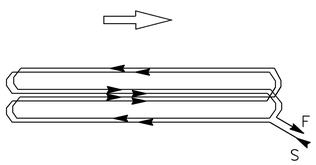

WINDING DETAIL

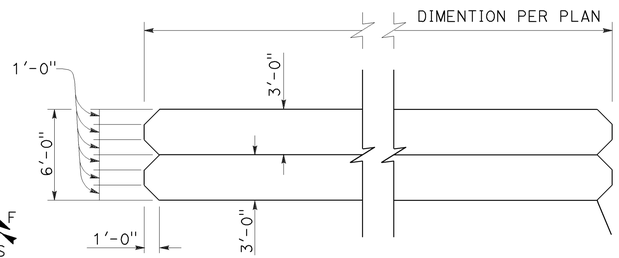

SAWCUT DETAIL

TYPE C LOOP DETECTOR CONFIGURATION

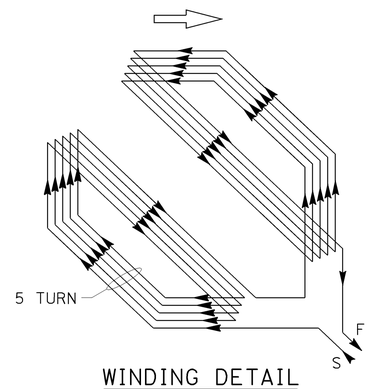

WINDING DETAIL

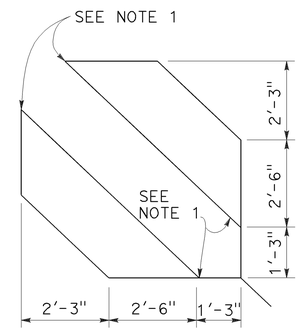

SAWCUT DETAIL

TYPE D LOOP DETECTOR CONFIGURATION

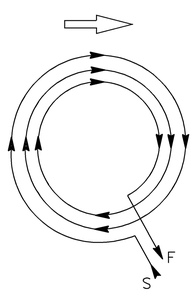

WINDING DETAIL

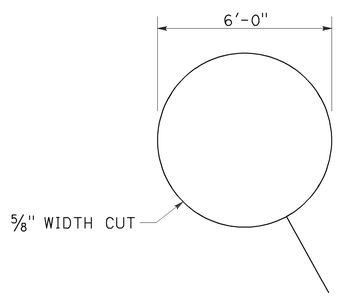

SAWCUT DETAIL

TYPE E LOOP DETECTOR CONFIGURATION

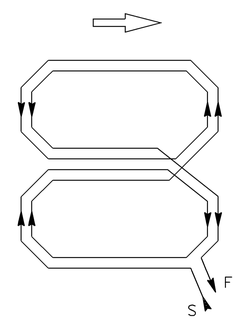

WINDING DETAIL

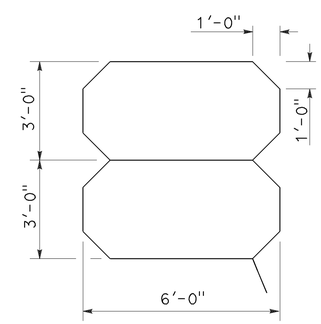

SAWCUT DETAIL

TYPE Q LOOP DETECTOR CONFIGURATION

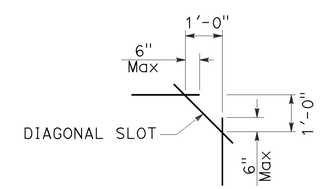

PLAN VIEW OF DIAGONAL SLOT AT CORNERS

NOTES:

1. Round corners of acute angle sawcuts to prevent damage to conductors.
2. Typical distance separating loops from edge to edge is 10' for Type A, B, D and E installation in single lane.

STATE OF CALIFORNIA
DEPARTMENT OF TRANSPORTATION

ELECTRICAL SYSTEMS (DETECTORS)

NO SCALE

RSP ES-5B DATED JULY 19, 2013 SUPERSEDES STANDARD PLAN ES-5B DATED MAY 20, 2011 - PAGE 449 OF THE STANDARD PLANS BOOK DATED 2010.

REVISED STANDARD PLAN RSP ES-5B

Dist	COUNTY	ROUTE	POST MILES TOTAL PROJECT	SHEET No.	TOTAL SHEETS
07	LA	210	R24.7/R44.9	269	274

Theresa Gabriel
REGISTERED ELECTRICAL ENGINEER

July 19, 2013
PLANS APPROVAL DATE

REGISTERED PROFESSIONAL ENGINEER Theresa Aziz Gabriel No. E15129 Exp. 6-30-14 ELECTRICAL STATE OF CALIFORNIA

THE STATE OF CALIFORNIA OR ITS OFFICERS OR AGENTS SHALL NOT BE RESPONSIBLE FOR THE ACCURACY OR COMPLETENESS OF SCANNED COPIES OF THIS PLAN SHEET.

TO ACCOMPANY PLANS DATED 7-27-15

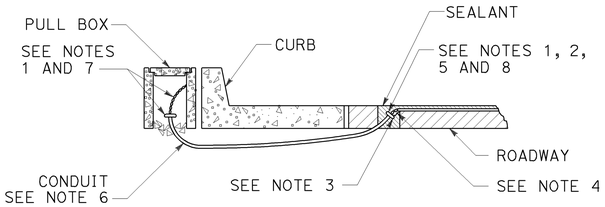

TYPE A
CURB TERMINATION DETAIL

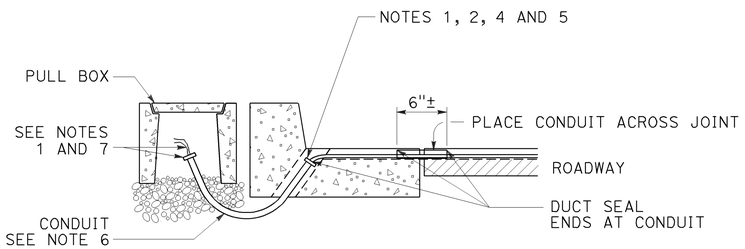

CROSS SECTION

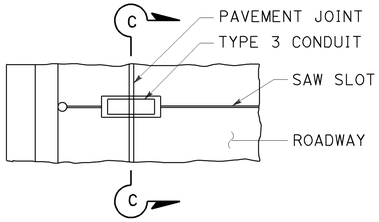

PLAN VIEW

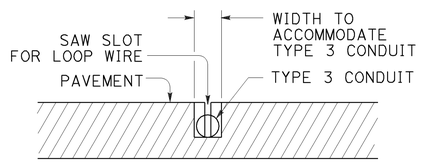

SECTION C-C

TYPE B
CURB TERMINATION DETAIL

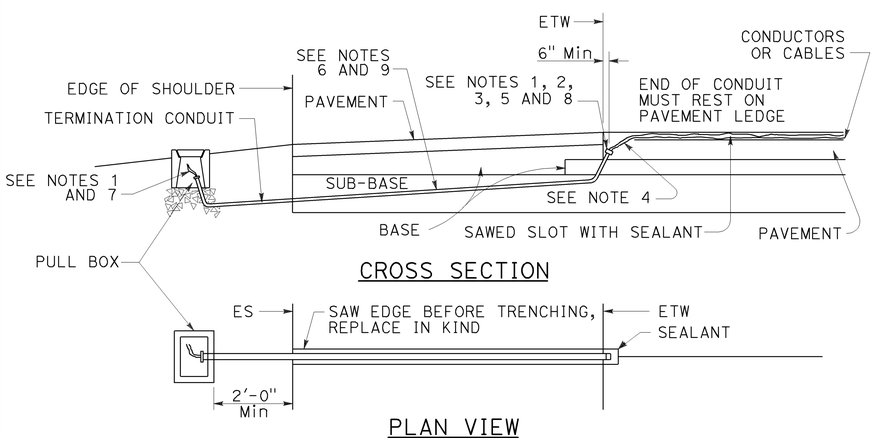

CROSS SECTION

PLAN VIEW

SHOULDER TERMINATION DETAILS

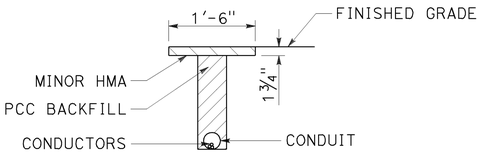

"T" TRENCH
DETAIL T

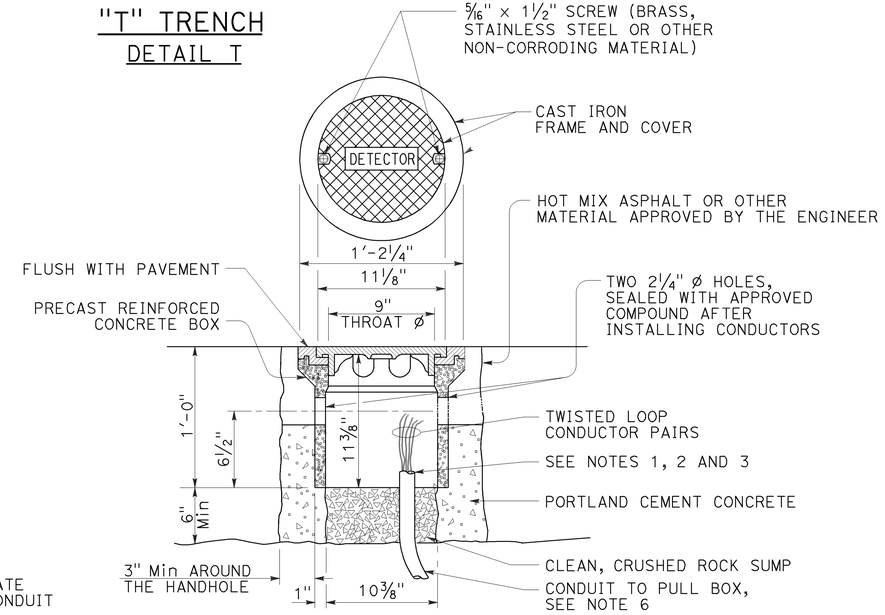

DETECTOR HANDHOLE DETAIL

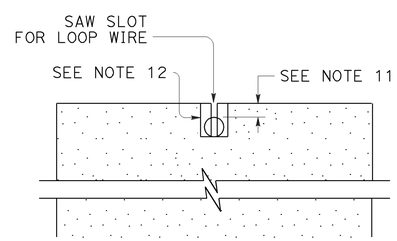

SECTION A-A

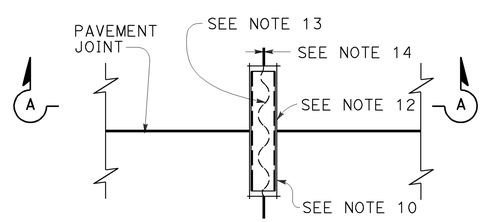

PLAN VIEW

TYPICAL LOOP LEAD-IN DETAIL
AT PAVEMENT JOINT

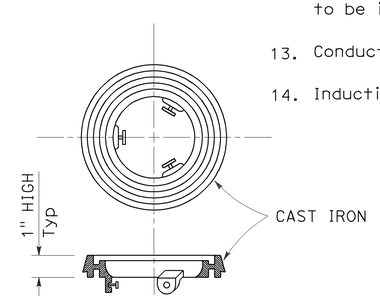

LOCKING GRADE RING

NOTES:

1. Bushing shall be used at end of conduit.
2. Tape detector conductors or cables 3" each side of bushings.
3. Install duct seal compound to each end of termination conduit before installing sealant.
4. Round all sharp edges where detector conductors or cables have to pass.
5. End of conduit shall be 3⅛" below roadway surface.
6.

Conduit size	Loop conductors
1"C minimum	1 to 2 pairs
1½"C minimum	3 to 4 pairs
2"C minimum	5 or more pairs

7. Splice detector conductors or cables to detector lead-in-cable.
8. Location of detector handhole when shown on plans.
9. When the shoulder and traveled way are paved with the same material and there is no joint between them, the conduit shall extend only 2'-0" into the shoulder pavement.
10. ¾"C, Type 3 conduit 6" long minimum, plug both ends with duct compound to keep out sealant.
11. ½" Minimum between top of conduit and pavement surface.
12. Sawcut shall not exceed 1" in width and ⅛" longer than conduit to be installed.
13. Conductors with ½" minimum slack inside conduit.
14. Inductive loop detector saw slot.

STATE OF CALIFORNIA
DEPARTMENT OF TRANSPORTATION

ELECTRICAL SYSTEMS (CURB TERMINATION AND HANDHOLE)

NO SCALE

RSP ES-5D DATED JULY 19, 2013 SUPERSEDES STANDARD PLAN ES-5D DATED MAY 20, 2011 - PAGE 451 OF THE STANDARD PLANS BOOK DATED 2010.

REVISED STANDARD PLAN RSP ES-5D

2010 REVISED STANDARD PLAN RSP ES-5D

7-9-13

Dist	COUNTY	ROUTE	POST MILES TOTAL PROJECT	SHEET No.	TOTAL SHEETS
07	LA	210	R24.7/R44.9	270	274

REGISTERED CIVIL ENGINEER

July 19, 2013
PLANS APPROVAL DATE

REGISTERED PROFESSIONAL ENGINEER Stanley P. Johnson No. C57793 Exp. 3-31-14 CIVIL STATE OF CALIFORNIA

THE STATE OF CALIFORNIA OR ITS OFFICERS OR AGENTS SHALL NOT BE RESPONSIBLE FOR THE ACCURACY OR COMPLETENESS OF SCANNED COPIES OF THIS PLAN SHEET.

TO ACCOMPANY PLANS DATED 7-27-15

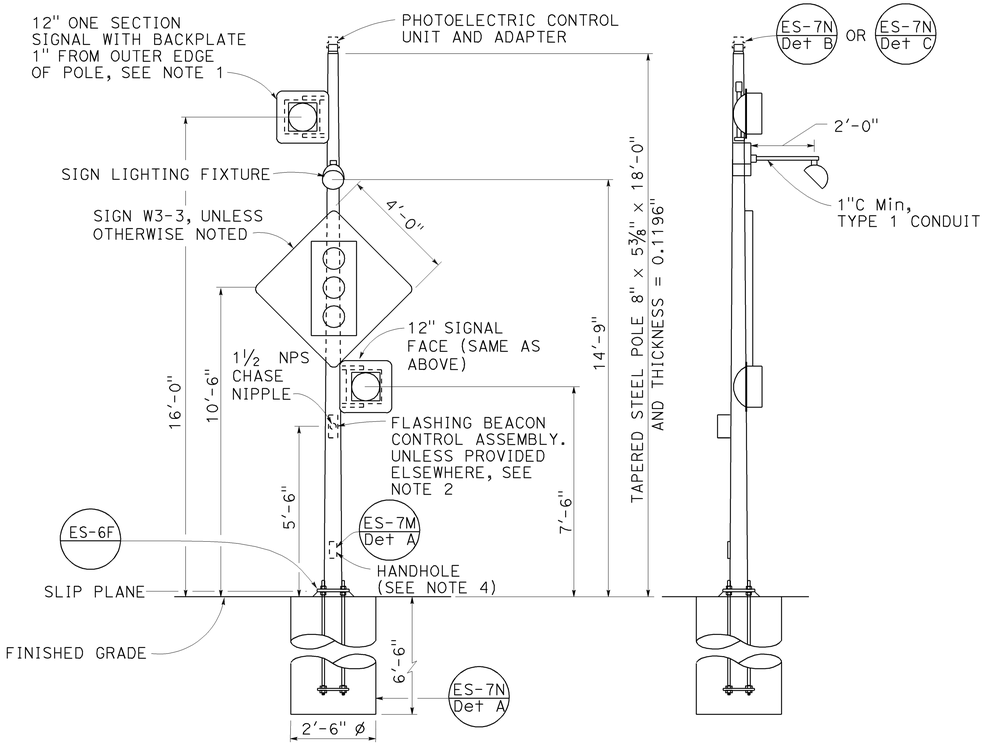

FRONT VIEW

SIDE VIEW

TYPE 15-FBS

ADVANCE FLASHING BEACON WITH SLIP BASE INSTALLATION

DETAIL A

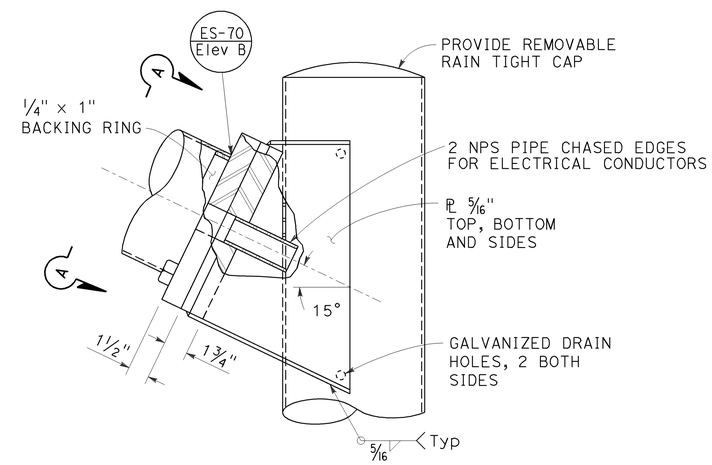

ELEVATION B

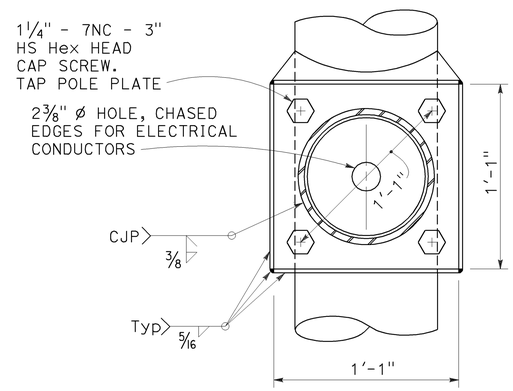

VIEW A-A

FLASHING BEACON MAST ARM CONNECTION DETAIL

DETAIL B

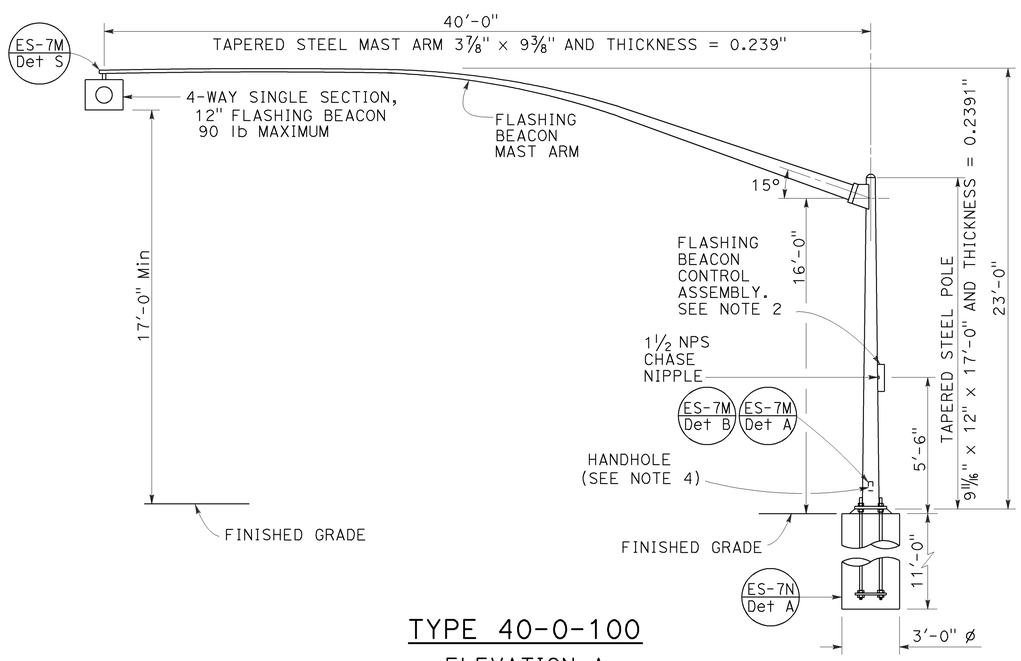

TYPE 40-0-100

ELEVATION A

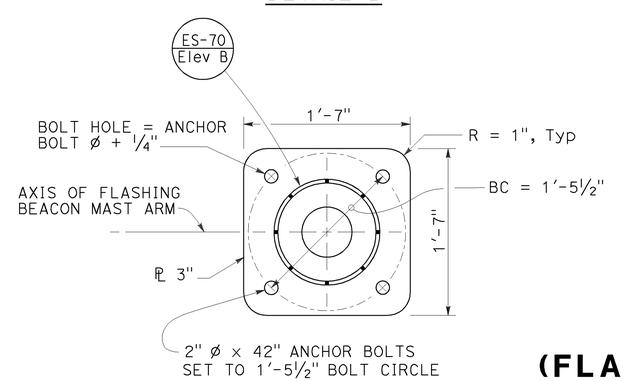

BASE PLATE

DETAIL C

NOTES:

1. See Revised Standard Plan RSP ES-4A and Standard Plan ES-4D for attachment fitting details.
2. For wiring diagram, see Standard Plan ES-14B.
3. For additional notes and details, see Standard Plans ES-7M and ES-7N.
4. Handhole shall be located on the downstream side of traffic.
5. See project plans for type of standard to be installed.

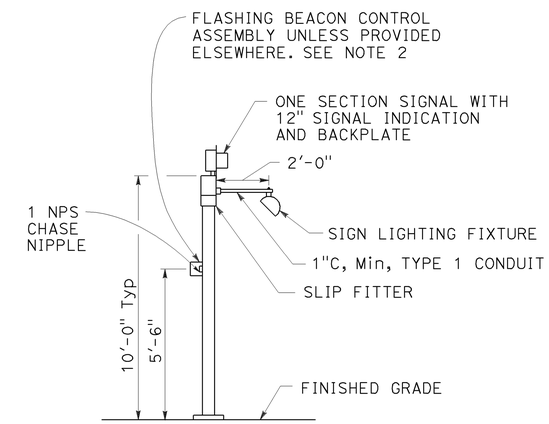

TYPE 1-A, 1-B, 1-C AND 1-D

ADVANCE FLASHING BEACON INSTALLATION

DETAIL D

See Note 5

STATE OF CALIFORNIA
DEPARTMENT OF TRANSPORTATION

ELECTRICAL SYSTEMS (FLASHING BEACON ON A TYPE 1, TYPE 15-FBS AND TYPE 40 STANDARD)

NO SCALE

RSP ES-7J DATED JULY 19, 2013 SUPERSEDES STANDARD PLAN ES-7J DATED MAY 20, 2011 - PAGE 471 OF THE STANDARD PLANS BOOK DATED 2010.

REVISED STANDARD PLAN RSP ES-7J

2010 REVISED STANDARD PLAN RSP ES-7J

6-26-13

DIST	COUNTY	ROUTE	POST MILES TOTAL PROJECT	SHEET NO.	TOTAL SHEETS
07	LA	210	R24.7/R44.9	271	274

Theresa Gabriel
REGISTERED ELECTRICAL ENGINEER

July 19, 2013
PLANS APPROVAL DATE

REGISTERED PROFESSIONAL ENGINEER Theresa Aziz Gabriel No. E15129 Exp. 6-30-14 ELECTRICAL STATE OF CALIFORNIA

THE STATE OF CALIFORNIA OR ITS OFFICERS OR AGENTS SHALL NOT BE RESPONSIBLE FOR THE ACCURACY OR COMPLETENESS OF SCANNED COPIES OF THIS PLAN SHEET.

TO ACCOMPANY PLANS DATED 7-27-15

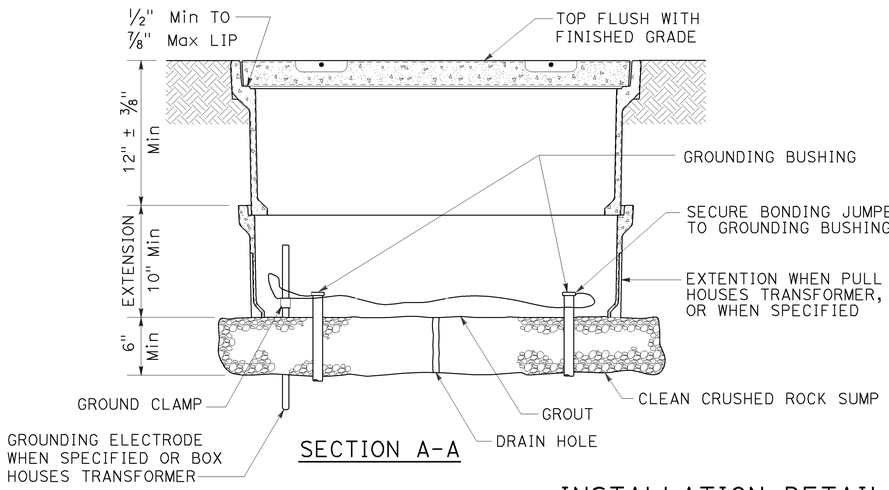

SECTION A-A

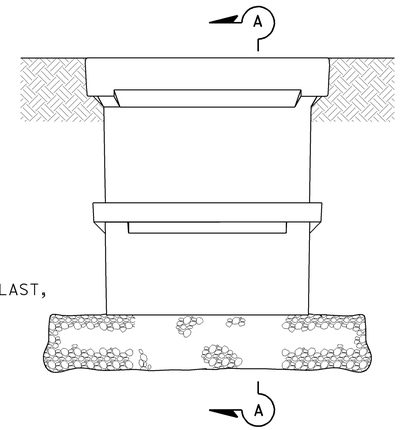

SIDE VIEW

INSTALLATION DETAILS

DETAIL A

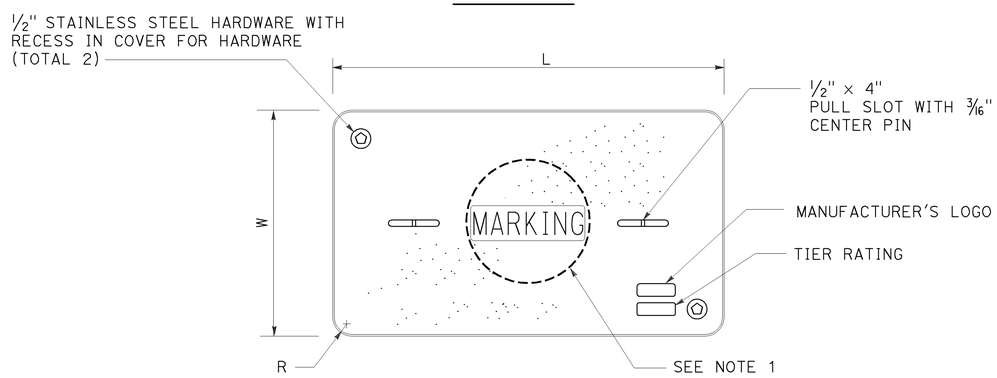

COVER TOP VIEW

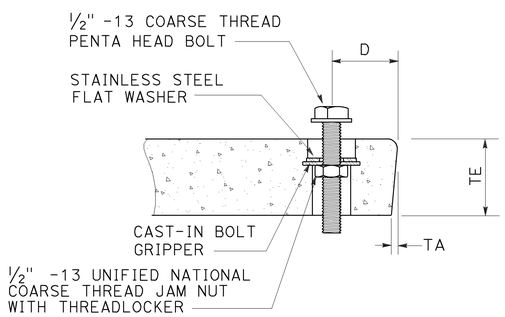

TYPICAL COVER CAPTIVE BOLT

OR SIMILAR

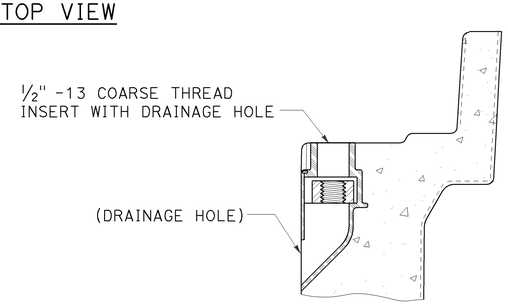

TYPICAL THREADED INSERT

OR SIMILAR

DIMENSION TABLE

PULL BOX	PULL BOX			COVER						
	MINIMUM DEPTH BOX	MINIMUM DEPTH EXTENSION	MAXIMUM WEIGHT	L	W	R	TE	TA	D	MAXIMUM WEIGHT
No. 3½	12"	N/A	40 lb	1′ - 3⅜"	10⅛"	1⅜"	2"	⅛"	1¾"	30 lb
No. 5	12"	10"	55 lb	1′ - 11¼"	1′ - 1¾"	1⅜"	2"	⅛"	1¾"	60 lb
No. 6	12"	10"	70 lb	2′ - 6½"	1′ - 5½"	1⅜"	2"	⅛"	2"	85 lb

NOTES:

1. Pull box covers shall be marked as follows: "SERVICE" Service circuits between service point and service disconnect; "SPRINKLER-CONTROL" sprinkler control circuits, 50 V or less; "CALTRANS" on all pull boxes, except pull boxes marked "SPRINKLER-CONTROL"; and "TELEPHONE" Telephone service;
   - A) No. 3½ pull box.
     - 1) "SIGNAL" - Traffic signal circuits with or without lighting or sign lighting circuits.
     - 2) "LIGHTING" - Lighting or sign lighting circuits where voltage is under 600 V.
   - B) No. 5, 6, 9 or 9A pull box.
     - 1) "TRAFFIC SIGNAL" - Traffic signal circuits with or without lighting or sign lighting circuits.
     - 2) "LIGHTING" - Lighting or sign lighting circuits where voltage is under 600 V.
     - 3) "LIGHTING-HIGH VOLTAGE" - Lighting or sign lighting circuits where voltage is above 600 V.
     - 4) "IRRIGATION" - Circuits to irrigation controller 120 V or more.
     - 5) "RAMP METER" - Ramp meter circuits.
     - 6) "COUNT STATION" - Count or speed monitor circuits.
     - 7) "COMMUNICATIONS" - Communication circuits.
     - 8) "TOS COMMUNICATIONS" - TOS communication line.
     - 9) "TOS POWER" - TOS power.
     - 10) "TDC POWER" - Telephone demarcation cabinet power.
     - 11) "CCTV" - Closed circuit television circuits.
     - 12) "TMS" - Traffic monitoring station circuits.
     - 13) "CMS" - Changeable message sign circuits.
     - 14) "HAR" - Highway advisory radio circuits.
     - 15) "BOOSTER PUMP" - Booster pump circuit.
2. The nominal dimensions of the opening in which the cover sets shall be the same as the cover dimensions except the length and width dimensions shall be ⅛" greater.
3. Covers and boxes shall be interchangeable with California standard male and female gages. When interchanged with a standard male or female gage, the top surfaces shall be flush within ⅛". Top outside radius of covers and pull boxes shall have a ⅛" radius.
4. Pull box extension may be another pull box as long as the bottom edge of the pull box can fit into the cover opening.
5. All dimensions for the cover for non-traffic pull box are nominal values.

STATE OF CALIFORNIA
DEPARTMENT OF TRANSPORTATION

ELECTRICAL SYSTEMS (NON-TRAFFIC PULL BOX)

NO SCALE

RSP ES-8A DATED JULY 19, 2013 SUPERSEDES RSP ES-8A DATED JANUARY 20, 2012 THAT SUPPLEMENTS THE STANDARD PLANS BOOK DATED 2010.

REVISED STANDARD PLAN RSP ES-8A

2010 REVISED STANDARD PLAN RSP ES-8A

7-15-13

DIST	COUNTY	ROUTE	POST MILES TOTAL PROJECT	SHEET NO.	TOTAL SHEETS
07	LA	210	R24.7/R44.9	272	274

Theresa Gabriel
REGISTERED ELECTRICAL ENGINEER

July 19, 2013
PLANS APPROVAL DATE

REGISTERED PROFESSIONAL ENGINEER
Theresa Aziz Gabriel
No. E15129
Exp. 6-30-14
ELECTRICAL
STATE OF CALIFORNIA

THE STATE OF CALIFORNIA OR ITS OFFICERS OR AGENTS SHALL NOT BE RESPONSIBLE FOR THE ACCURACY OR COMPLETENESS OF SCANNED COPIES OF THIS PLAN SHEET.

TO ACCOMPANY PLANS DATED 7-27-15

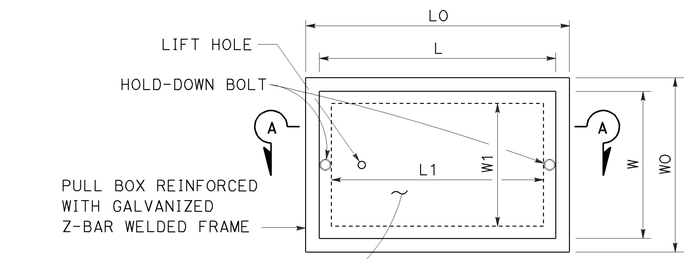

TOP VIEW

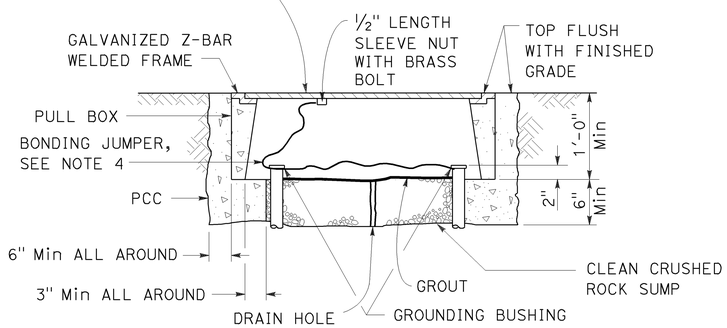

SECTION A-A

No. 3½(T), No. 5(T) AND No. 6(T) TRAFFIC PULL BOX

NOTES:

1. Traffic pull box shall be provided with steel cover and special concrete footing. Steel cover shall have embossed non-skid pattern.
2. Steel reinforcing shall be as regularly used in the standard products of the respective manufacturer.
3. Pull box covers shall be marked as follows: "SERVICE" Service circuits between service point and service disconnect; "SPRINKLER-CONTROL" Sprinkler control circuits, 50 V or less; "CALTRANS" On all pull boxes, except pull boxes marked "SPRINKLER-CONTROL"; and "TELEPHONE" Telephone service.
   - A) No. 3½(T) pull box.
     - 1) "SIGNAL" - Traffic signal circuits with or without lighting or sign lighting circuits.
     - 2) "LIGHTING" - Lighting or sign lighting circuits where voltage is under 600 V.
   - B) No. 5(T) or 6(T) pull box.
     - 1) "TRAFFIC SIGNAL" - Traffic signal circuits with or without lighting or sign lighting circuits.
     - 2) "LIGHTING" - Lighting or sign lighting circuits where voltage is under 600 V.
     - 3) "LIGHTING-HIGH VOLTAGE" - Lighting or sign lighting circuits where voltage is above 600 V.
     - 4) "IRRIGATION" - Circuits to irrigation controller 120 V or more.
     - 5) "RAMP METER" - Ramp meter circuits.
     - 6) "COUNT STATION" - Count or speed monitor circuits.
     - 7) "COMMUNICATION" - Communication circuits.
     - 8) "TOS COMMUNICATIONS" - TOS communications line.
     - 9) "TOS POWER" - TOS power.
     - 10) "TDC POWER" - Telephone demarcation cabinet power.
     - 11) "CCTV" - Closed circuit television circuits.
     - 12) "TMS" - Traffic monitoring station circuits.
     - 13) "CMS" - Changeable message sign circuits.
     - 14) "HAR" - Highway advisory radio circuits.
     - 15) "BOOSTER PUMP" - Booster pump circuit.
4. Bonding jumper for metal covers shall be 3' long, minimum.
5. The nominal dimensions of the opening in which the cover sets shall be the same as the cover dimensions except the length and width dimensions shall be ⅛" greater.
6. Covers and boxes shall be interchangeable with California standard male and female gages. When interchanged with a standard male or female gage, the top surfaces shall be flush within ⅛".

DIMENSION TABLE

PULL BOX	PULL BOX						COVER				
	MINIMUM * THICKNESS	MINIMUM DEPTH BOX AND EXTENSION	WO	LO	L1	W1	L **	W **	R	EDGE THICKNESS	EDGE TAPER
No. 3½(T)	1½"	1'-0"	1'-5"± 1"	1'-8⅞"±	1'-2½"±	10⅝"± 1"	1'-8"±	1'-1¾"±	0"	½"	NONE
No. 5(T)	1¾"	1'-0"	1'-11½"± 1"	2'-5½"±	1'-7"±	1'-1"± 1"	2'-3"±	1'-4"±	0"	½"	NONE
No. 6(T)	2"	1'-0"	2'-6"± 1"	2'-11½"±	1'-11½"±	1'-5"± 1"	2'-9"±	1'-8"±	0"	½"	NONE

* EXCLUDING CONDUIT WEB ** TOP DIMENSION

STATE OF CALIFORNIA
DEPARTMENT OF TRANSPORTATION

ELECTRICAL SYSTEMS (TRAFFIC PULL BOX)

NO SCALE

RSP ES-8B DATED JULY 19, 2013 SUPERSEDES RSP ES-8B DATED JANUARY 20, 2012 THAT SUPPLEMENTS THE STANDARD PLANS BOOK DATED 2010.

REVISED STANDARD PLAN RSP ES-8B

2010 REVISED STANDARD PLAN RSP ES-8B

7-15-13

Dist	COUNTY	ROUTE	POST MILES TOTAL PROJECT	SHEET No.	TOTAL SHEETS
07	LA	210	R24.7/R44.9	273	274

REGISTERED CIVIL ENGINEER

July 19, 2013
PLANS APPROVAL DATE

REGISTERED PROFESSIONAL ENGINEER
Stanley P. Johnson
No. C57793
Exp. 3-31-14
CIVIL
STATE OF CALIFORNIA

THE STATE OF CALIFORNIA OR ITS OFFICERS OR AGENTS SHALL NOT BE RESPONSIBLE FOR THE ACCURACY OR COMPLETENESS OF SCANNED COPIES OF THIS PLAN SHEET.

TO ACCOMPANY PLANS DATED 7-27-15

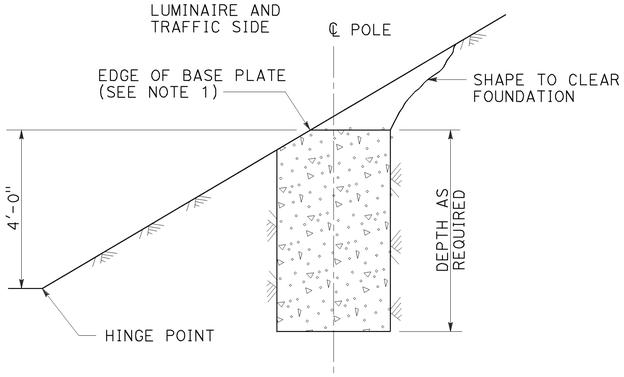

CUT SLOPES
STEEPER THAN 4:1,
LESS THAN 2:1
DETAIL A-1
See Note 2 and 3

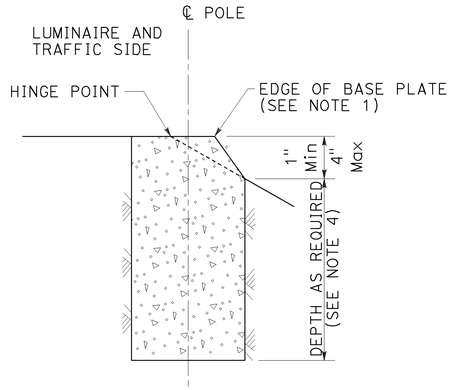

FILL SLOPES
STEEPER THAN 4:1,
LESS THAN 2:1
DETAIL A-2
See Note 2 and 3

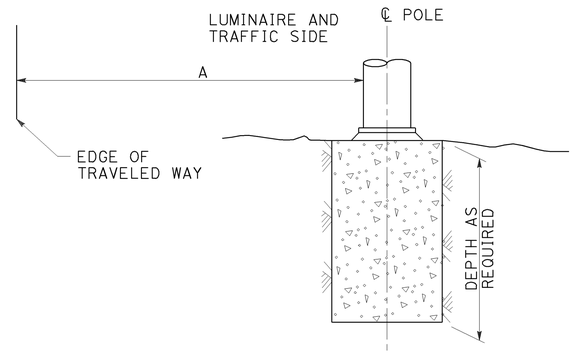

FLAT SECTIONS, CUT OR FILL SLOPES
4:1 OR FLATTER
DETAIL A-3
See Note 2

STANDARD TYPE	SETBACK (DIMENSION A)
32	30'-0" (Min)
31	20'-0" (Min)
15, 15D, 15-SB, 21, 21D, 30	ARM LENGTH (Min)

FOUNDATIONS ADJACENT TO ALL ROADWAYS EXCEPT
IN SIDEWALK, MEDIAN AND ISLAND AREAS
DETAIL A

NOTES:

1. Where a portion of the foundation is above grade, the top edges shall have a 1" chamfer.
2. Slopes shall be horizontal to vertical ratio (Horizontal : Vertical).
3. Horizontal setbacks on cut and fill slopes steeper than 4:1 shall not exceed the distance shown for flat sections.
4. CIDH embedment depth shall be increased beyond standard depths by the diameter of the CIDH.

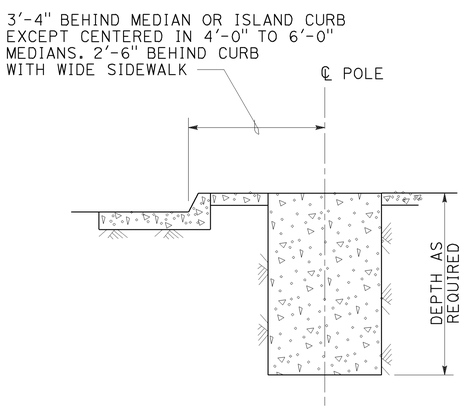

MEDIAN, ISLAND
OR WIDE SIDEWALK
DETAIL B-1
7' Wide and wider

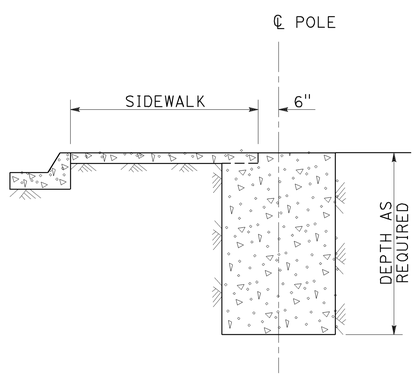

NARROW SIDEWALK
DETAIL B-2
Less than 7' wide

FOUNDATIONS IN SIDEWALK, MEDIAN AND ISLAND AREAS
DETAIL B

STATE OF CALIFORNIA
DEPARTMENT OF TRANSPORTATION

ELECTRICAL SYSTEMS (FOUNDATION INSTALLATIONS)

NO SCALE

RSP ES-11 DATED JULY 19, 2013 SUPERSEDES STANDARD PLAN ES-11
DATED MAY 20, 2011 - PAGE 488 OF THE STANDARD PLANS BOOK DATED 2010.

REVISED STANDARD PLAN RSP ES-11

2010 REVISED STANDARD PLAN RSP ES-11

7-9-13

Dist	COUNTY	ROUTE	POST MILES TOTAL PROJECT	SHEET No.	TOTAL SHEETS
07	LA	210	R24.7/R44.9	274	274

REGISTERED CIVIL ENGINEER

November 15, 2013
PLANS APPROVAL DATE

REGISTERED PROFESSIONAL ENGINEER
Stanley P. Johnson
No. C57793
Exp. 3-31-14
CIVIL
STATE OF CALIFORNIA

THE STATE OF CALIFORNIA OR ITS OFFICERS OR AGENTS SHALL NOT BE RESPONSIBLE FOR THE ACCURACY OR COMPLETENESS OF SCANNED COPIES OF THIS PLAN SHEET.

TO ACCOMPANY PLANS DATED 7-27-15

POLE TYPE	POLE DATA				BASE PLATE DATA				CIDH	
	HEIGHT "h"	Min OD		THICKNESS	"C"	THICKNESS	ANCHOR BOLT SIZE	BC = BOLT CIRCLE	Dia	"d"
		BASE	TOP							
CCTV 25	25′	7⅜"	3¾"	0.1793"	1′-1"	1"	1½" ø x 36"	11½"	2′-6"	7′-0"
CCTV 30	30′	8"			1′-1½"			1′-0"		7′-6"
CCTV 35	35′	8⅝"			1′-2"			1′-1"		8′-0"
CCTV 40	40′	9⅜"			1′-3"			1′-1½"		8′-6"
CCTV 45	45′	10"						1′-2"		

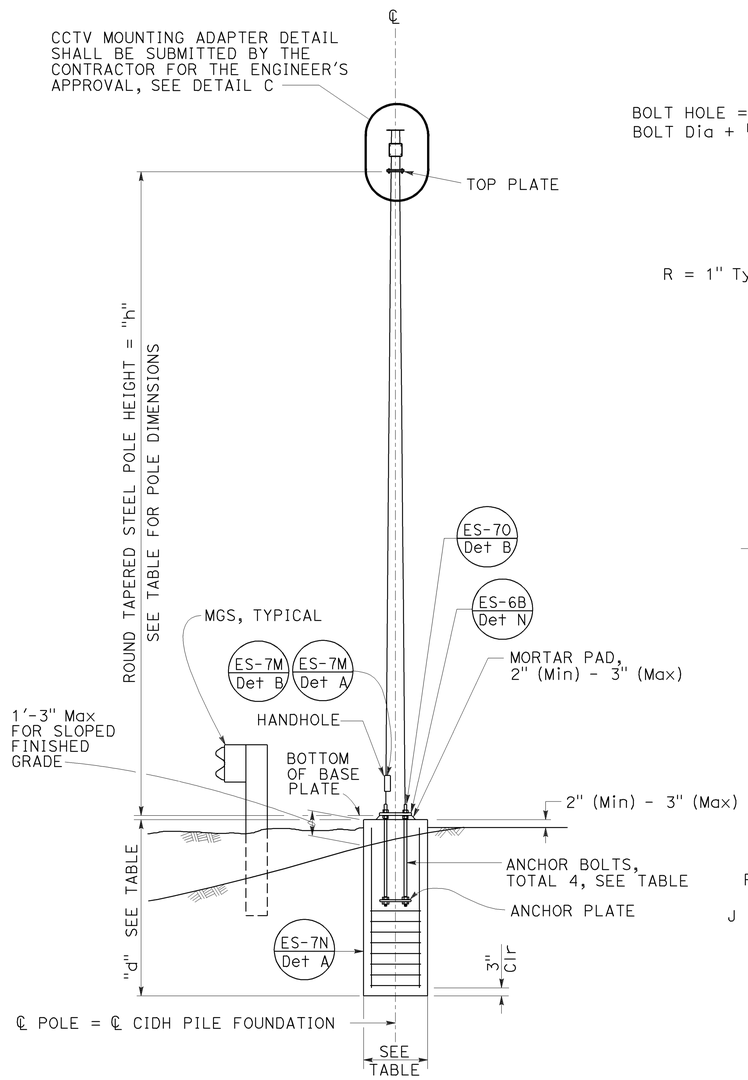

ELEVATION A

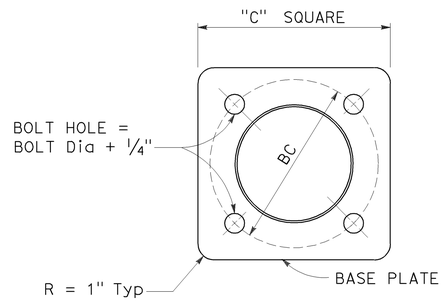

BASE PLATE

DETAIL A

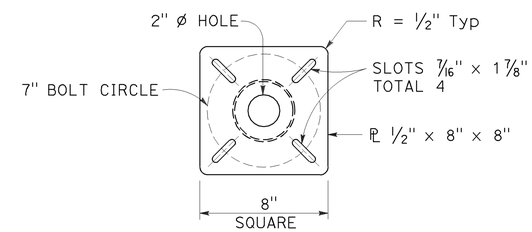

TOP PLATE

DETAIL B

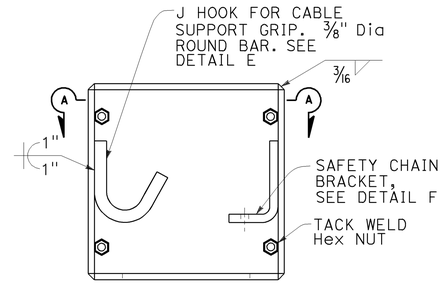

BOX ENCLOSURE

DETAIL D

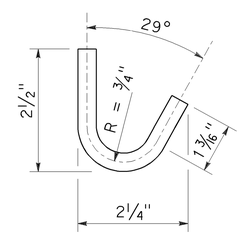

J HOOK

DETAIL E

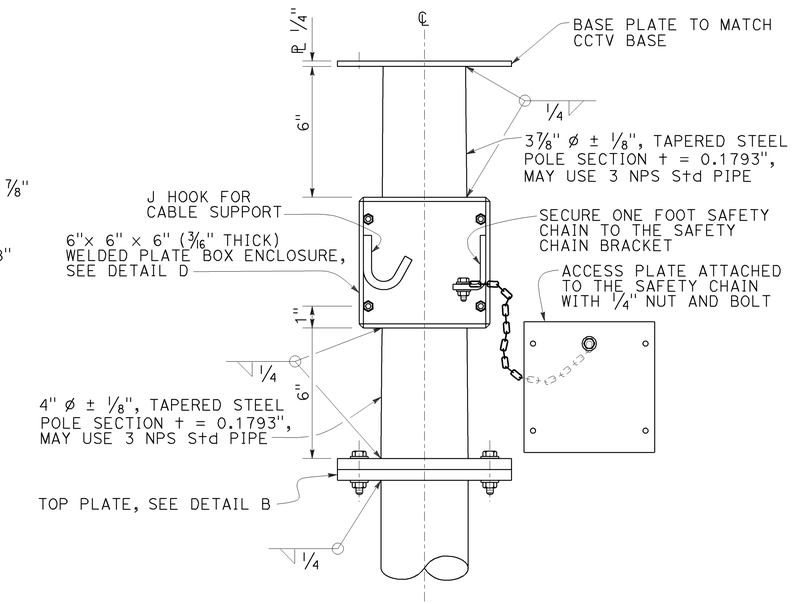

CLOSED CIRCUIT TELEVISION MOUNTING ADAPTER

DETAIL C

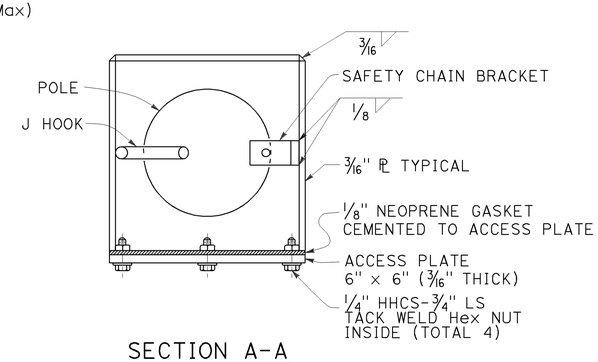

SECTION A-A

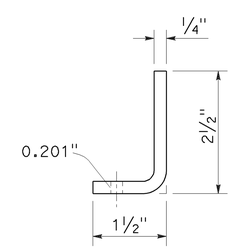

SAFETY CHAIN BRACKET

DETAIL F

NOTES:

1. The Contractor shall verify controlling field dimensions before ordering or fabricating any material.
2. During pole installation, the post shall be raked as necessary with the use of leveling nuts to provide a plumb pole axis.
3. Wind Loadings (3-second gust): 100 mph
4. Unit Stresses (Structural Steel):
   a. fy = 55,000 psi (tapered steel tube and anchor bolts)
   b. fy = 50,000 psi (unless otherwise noted)
5. Unit Stresses (Reinforced Concrete):
   a. f′c = 3,625 psi
   b. fy = 60,000 psi

STATE OF CALIFORNIA
DEPARTMENT OF TRANSPORTATION

ELECTRICAL SYSTEMS (CLOSED CIRCUIT TELEVISION, 25' TO 45' POLE)

NO SCALE

RSP ES-16B DATED NOVEMBER 15, 2013 SUPERSEDES STANDARD PLAN ES-16B DATED MAY 20, 2011 - PAGE 501 OF THE STANDARD PLANS BOOK DATED 2010.

REVISED STANDARD PLAN RSP ES-16B

2010 REVISED STANDARD PLAN RSP ES-16B

10-4-13