Dist	COUNTY	ROUTE	POST MILES TOTAL PROJECT	SHEET No.	TOTAL SHEETS
07	Ven	33	15.7	1	108

STATE OF CALIFORNIA

DEPARTMENT OF TRANSPORTATION

ACST-47C8(004)E

PROJECT PLANS FOR CONSTRUCTION ON

STATE HIGHWAY

IN VENTURA COUNTY
NEAR OJAI AT 0.1 MILE SOUTH OF
NORTH FORK MATILIJA CREEK BRIDGE

TO BE SUPPLEMENTED BY STANDARD PLANS DATED 2010

INDEX OF PLANS

SHEET No.	DESCRIPTION
1	TITLE AND LOCATION MAP
2	TYPICAL CROSS SECTIONS
3	LAYOUTS
4	PROFILES
5-27	CONSTRUCTION DETAILS
28-29	DRAINAGE PLANS, PROFILES AND QUANTITIES
30	CONSTRUCTION AREA SIGNS
31	TRAFFIC HANDLING PLANS
32	PAVEMENT DELINEATION PLANS AND QUANTITIES
33-35	SUMMARY OF QUANTITIES
36-39	LANDSCAPE PLANS
40-46	ELECTRICAL PLANS
47-97	REVISED STANDARD PLANS

STRUCTURE PLANS

98-108	STATE ROUTE 33 SOIL NAIL WALL

THE STANDARD PLANS LIST APPLICABLE TO THIS CONTRACT IS INCLUDED IN THE NOTICE TO BIDDERS AND SPECIAL PROVISIONS BOOK.

LOCATION MAP

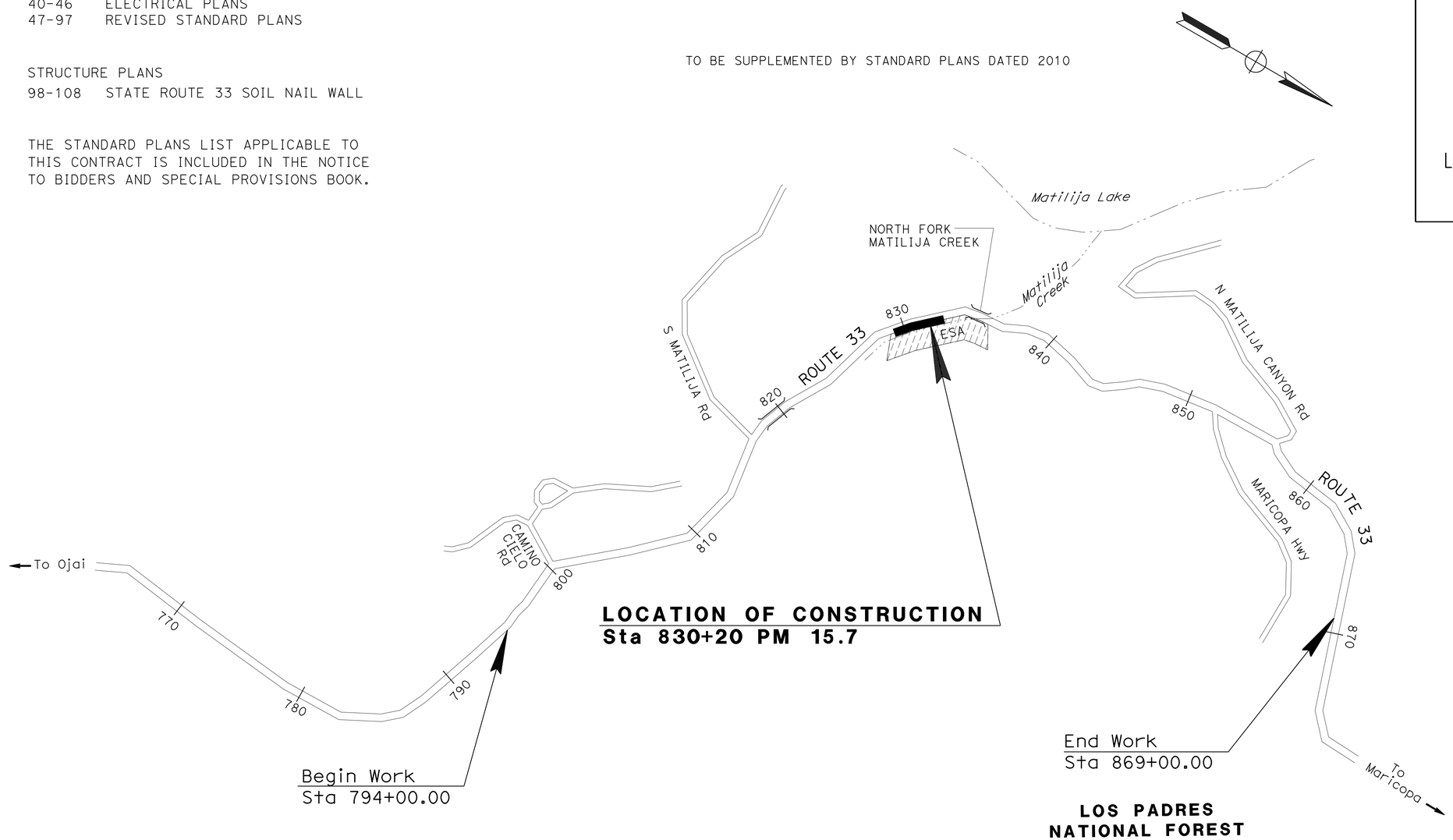

NO SCALE

THE CONTRACTOR SHALL POSSESS THE CLASS (OR CLASSES) OF LICENSE AS SPECIFIED IN THE "NOTICE TO BIDDERS."

PROJECT MANAGER: SHAHRIAR YADEGARI

DESIGN MANAGER: MANSOOR A. KHAN

Steve Pham 6-21-16
PROJECT ENGINEER DATE
REGISTERED CIVIL ENGINEER

June 24, 2016
PLANS APPROVAL DATE

REGISTERED PROFESSIONAL ENGINEER STEVE PHAM No. 67183 Exp. 9/30/16 CIVIL STATE OF CALIFORNIA

THE STATE OF CALIFORNIA OR ITS OFFICERS OR AGENTS SHALL NOT BE RESPONSIBLE FOR THE ACCURACY OR COMPLETENESS OF SCANNED COPIES OF THIS PLAN SHEET.

CONTRACT No.	07-305204
PROJECT ID	0714000092

LAST REVISION 00-00-00 DATE PLOTTED => 12-AUG-2016 TIME PLOTTED => 07:28

Dist	COUNTY	ROUTE	POST MILES TOTAL PROJECT	SHEET No.	TOTAL SHEETS
07	Ven	33	15.7	2	108

Steve Pham 6-21-16
REGISTERED CIVIL ENGINEER DATE

6-24-16
PLANS APPROVAL DATE

REGISTERED PROFESSIONAL ENGINEER STEVE PHAM No. 67183 Exp. 9/30/16 CIVIL STATE OF CALIFORNIA

THE STATE OF CALIFORNIA OR ITS OFFICERS OR AGENTS SHALL NOT BE RESPONSIBLE FOR THE ACCURACY OR COMPLETENESS OF SCANNED COPIES OF THIS PLAN SHEET.

NOTE:

1. DIMENSIONS OF THE PAVEMENT STRUCTURES (STRUCTURAL SECTIONS) ARE SUBJECT TO TOLERANCES SPECIFIED IN THE STANDARD SPECIFICATIONS.

TYPICAL PAVEMENT STRUCTURAL SECTIONS

EXISTING

A
- 0.35' AC (TYPE B)
- 0.65' CLASS 2 AB

PROPOSED

1
- 0.15' HMA (TYPE A)
- ---- GPI (PAVING FABRIC)
- ASPHALT BINDER (GEOSYNTHETIC PAVEMENT INTERLAYER)
- 0.20' HMA (TYPE A)

2
- 0.35' COLD PLANE AC Pvmt

LEGEND:

SEE STRUCTURE PLANS

ABBREVIATIONS:

GPI GEOSYNTHETIC PAVEMENT INTERLAYER

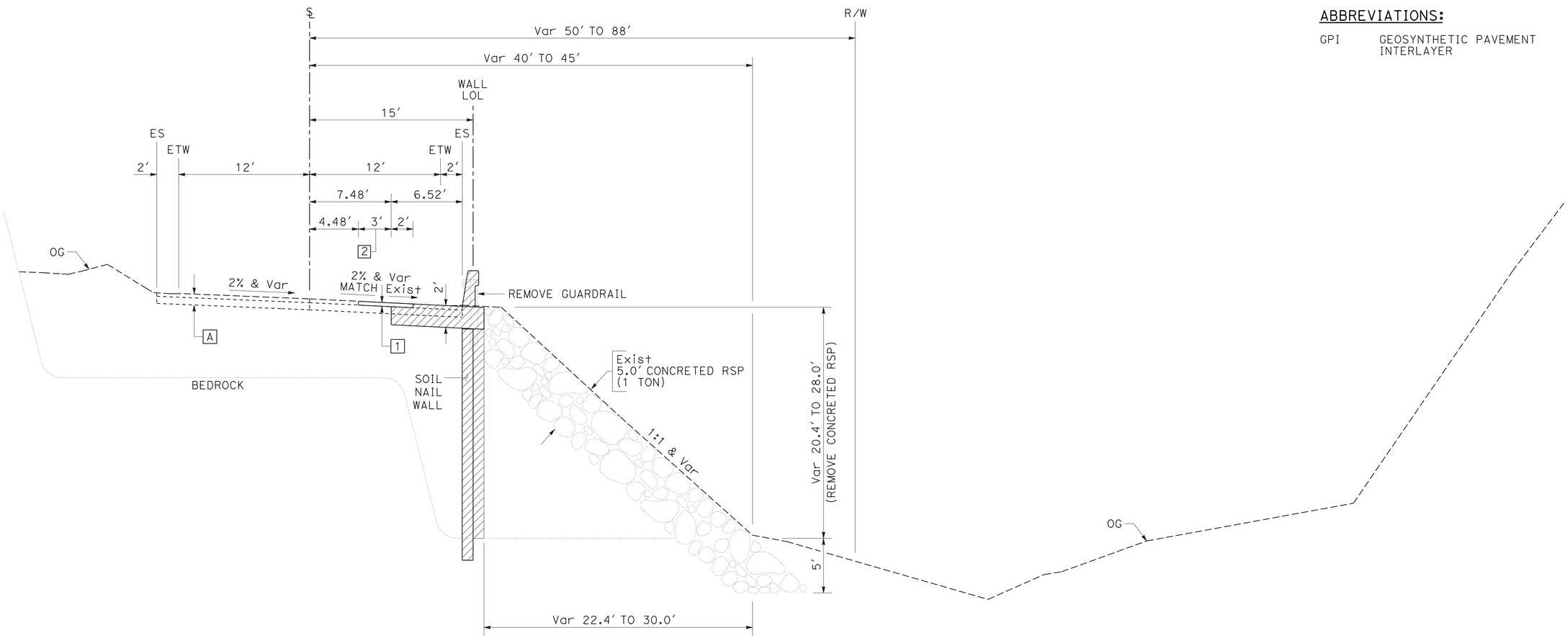

ROUTE 33
Sta 829+70.00 TO Sta 834+70.00

TYPICAL CROSS SECTIONS

NO SCALE

X-1

STATE OF CALIFORNIA - DEPARTMENT OF TRANSPORTATION
Caltrans
DESIGN

FUNCTIONAL SUPERVISOR: MANSOOR A. KHAN
CALCULATED-DESIGNED BY: STEVE PHAM
CHECKED BY: SHAO-CHIANG LIU
REVISED BY
DATE REVISED

LAST REVISION 00-00-00
DATE PLOTTED => 04-AUG-2016
TIME PLOTTED => 14:47

Dist	COUNTY	ROUTE	POST MILES TOTAL PROJECT	SHEET No.	TOTAL SHEETS
07	Ven	33	15.7	3	108

Steve Pham 6-21-16
REGISTERED CIVIL ENGINEER DATE

6-24-16
PLANS APPROVAL DATE

REGISTERED PROFESSIONAL ENGINEER STEVE PHAM No. 67183 Exp. 9/30/16 CIVIL STATE OF CALIFORNIA

THE STATE OF CALIFORNIA OR ITS OFFICERS OR AGENTS SHALL NOT BE RESPONSIBLE FOR THE ACCURACY OR COMPLETENESS OF SCANNED COPIES OF THIS PLAN SHEET.

NOTES:

1. FOR ACCURATE RIGHT OF WAY DATA, CONTACT RIGHT OF WAY ENGINEERING AT THE DISTRICT OFFICE.
2. STATION LINE IS NOT THE CENTERLINE OF RIGHT OF WAY.
3. EXISTING UTILITY FACILITIES ARE NOT SHOWN ON THESE PLANS.
4. FOR ROCK WEIR SYSTEM, FISH HABITAT STRUCTURES, CONCRETED RSP, VEGETATION CONTROL, TEMPORARY CREEK DIVERSION SYSTEM, AND ESA FENCING, SEE CONSTRUCTION DETAILS.

CURVE DATA

No. ⊗	R	Δ	T	L
1	588.00′	17°58′28″	93.00′	184.46′
2	442.00′	17°23′53″	67.63′	134.22′
3	788.00′	21°38′35″	150.63′	297.66′
4	412.00′	25°9′02″	91.91′	180.85′
5	295.00′	16°31′59″	42.86′	85.12′
6	554.00′	17°41′04″	86.18′	170.99′

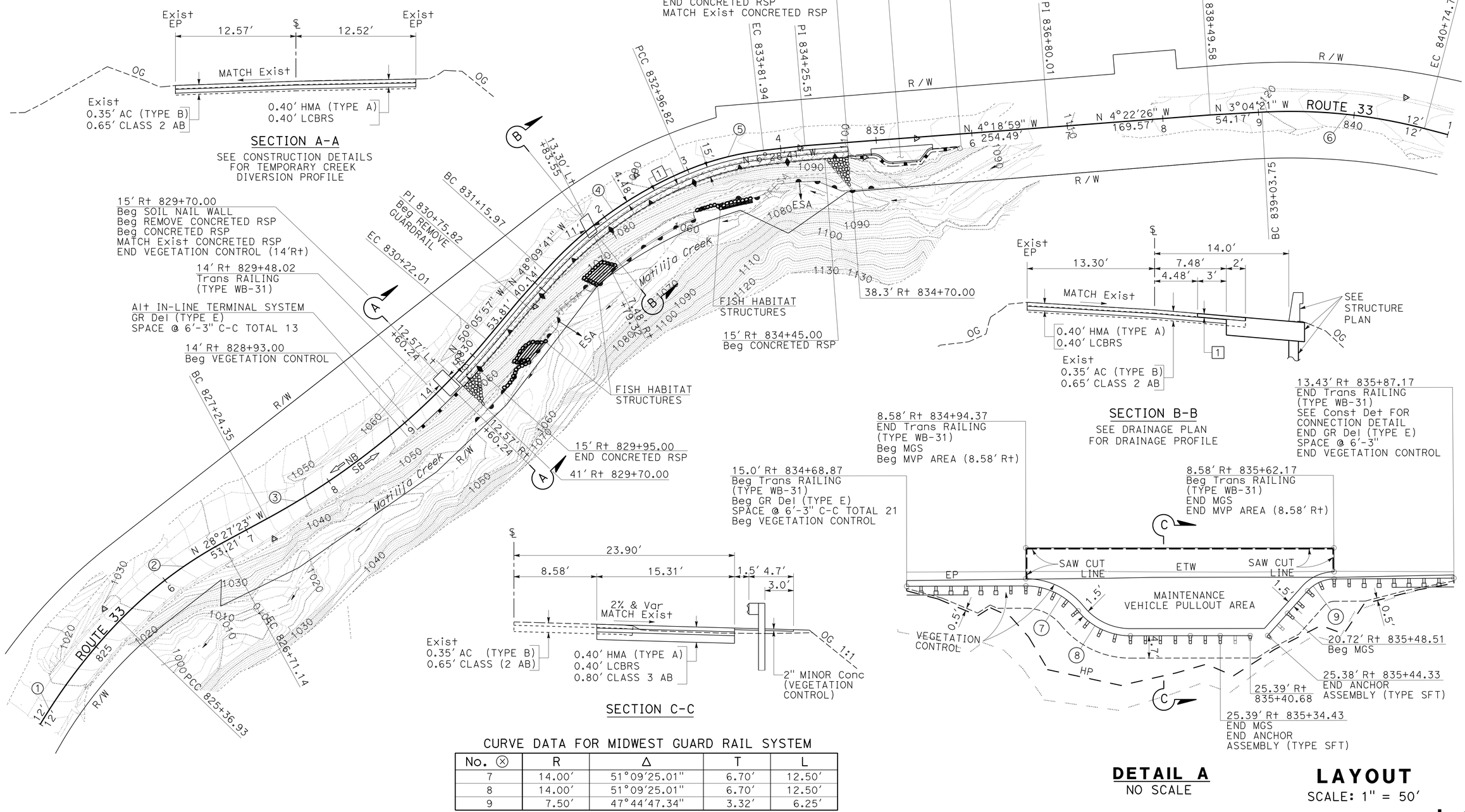

CURVE DATA FOR MIDWEST GUARD RAIL SYSTEM

No. ⊗	R	Δ	T	L
7	14.00′	51°09′25.01″	6.70′	12.50′
8	14.00′	51°09′25.01″	6.70′	12.50′
9	7.50′	47°44′47.34″	3.32′	6.25′

L-1

STATE OF CALIFORNIA - DEPARTMENT OF TRANSPORTATION
Caltrans DESIGN
FUNCTIONAL SUPERVISOR: MANSOOR A. KHAN
CALCULATED-DESIGNED BY: STEVE PHAM
CHECKED BY: SHAO-CHIANG LIU
REVISED BY / DATE REVISED

LAST REVISION 00-00-00 | DATE PLOTTED => 04-AUG-2016 | TIME PLOTTED => 14:47

Dist	COUNTY	ROUTE	POST MILES TOTAL PROJECT	SHEET No.	TOTAL SHEETS
07	Ven	33	15.7	4	108

REGISTERED CIVIL ENGINEER 6-21-16 DATE

6-24-16
PLANS APPROVAL DATE

REGISTERED PROFESSIONAL ENGINEER BEN WILLARDSON No. C64937 Exp. 6/30/17 CIVIL STATE OF CALIFORNIA

THE STATE OF CALIFORNIA OR ITS OFFICERS OR AGENTS SHALL NOT BE RESPONSIBLE FOR THE ACCURACY OR COMPLETENESS OF SCANNED COPIES OF THIS PLAN SHEET.

HDR
3230 EL CAMINO REAL
SUITE 200
IRVINE, CA 92602

CWE
1561 E. ORANGETHORPE
SUITE 240
FULLERTON, CA 92831

ABBREVIATIONS:

D/S DOWN STREAM
EG EXISTING GRADE
GB GRADE BREAK

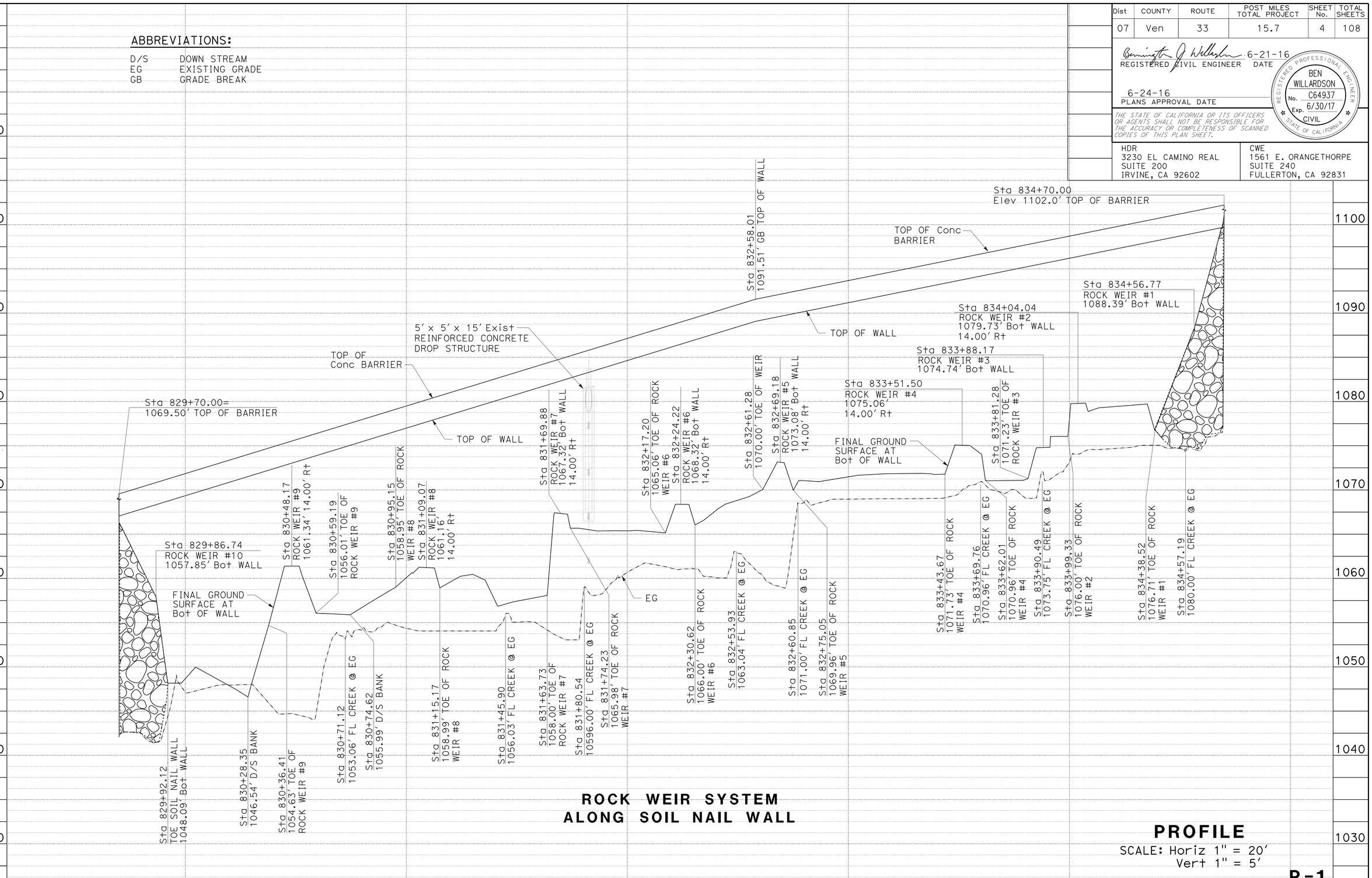

ROCK WEIR SYSTEM
ALONG SOIL NAIL WALL

PROFILE

SCALE: Horiz 1" = 20'
Vert 1" = 5'

P-1

BEN WILLARDSON | REVISED BY
VIK BAPNA | DATE REVISED
CALCULATED-DESIGNED BY
CHECKED BY
CAMILO ROCHA | CONSULTANT FUNCTIONAL SUPERVISOR

STATE OF CALIFORNIA - DEPARTMENT OF TRANSPORTATION
Caltrans

DATE PLOTTED - 04-AUG-2016
TIME PLOTTED - 14:47
LAST REVISION 00-00-00

Dist	COUNTY	ROUTE	POST MILES TOTAL PROJECT	SHEET No.	TOTAL SHEETS
07	Ven	33	15.7	5	108

REGISTERED CIVIL ENGINEER 6-21-16 DATE

6-24-16
PLANS APPROVAL DATE

REGISTERED PROFESSIONAL ENGINEER BEN WILLARDSON No. C64937 Exp. 6/30/17 CIVIL STATE OF CALIFORNIA

THE STATE OF CALIFORNIA OR ITS OFFICERS OR AGENTS SHALL NOT BE RESPONSIBLE FOR THE ACCURACY OR COMPLETENESS OF SCANNED COPIES OF THIS PLAN SHEET.

HDR
3230 EL CAMINO REAL
SUITE 200
IRVINE, CA 92602

CWE
1561 E. ORANGETHORPE
SUITE 240
FULLERTON, CA 92831

NOTE:

FOR ACCURATE RIGHT OF WAY DATA, CONTACT
RIGHT OF WAY ENGINEERING AT THE DISTRICT OFFICE.

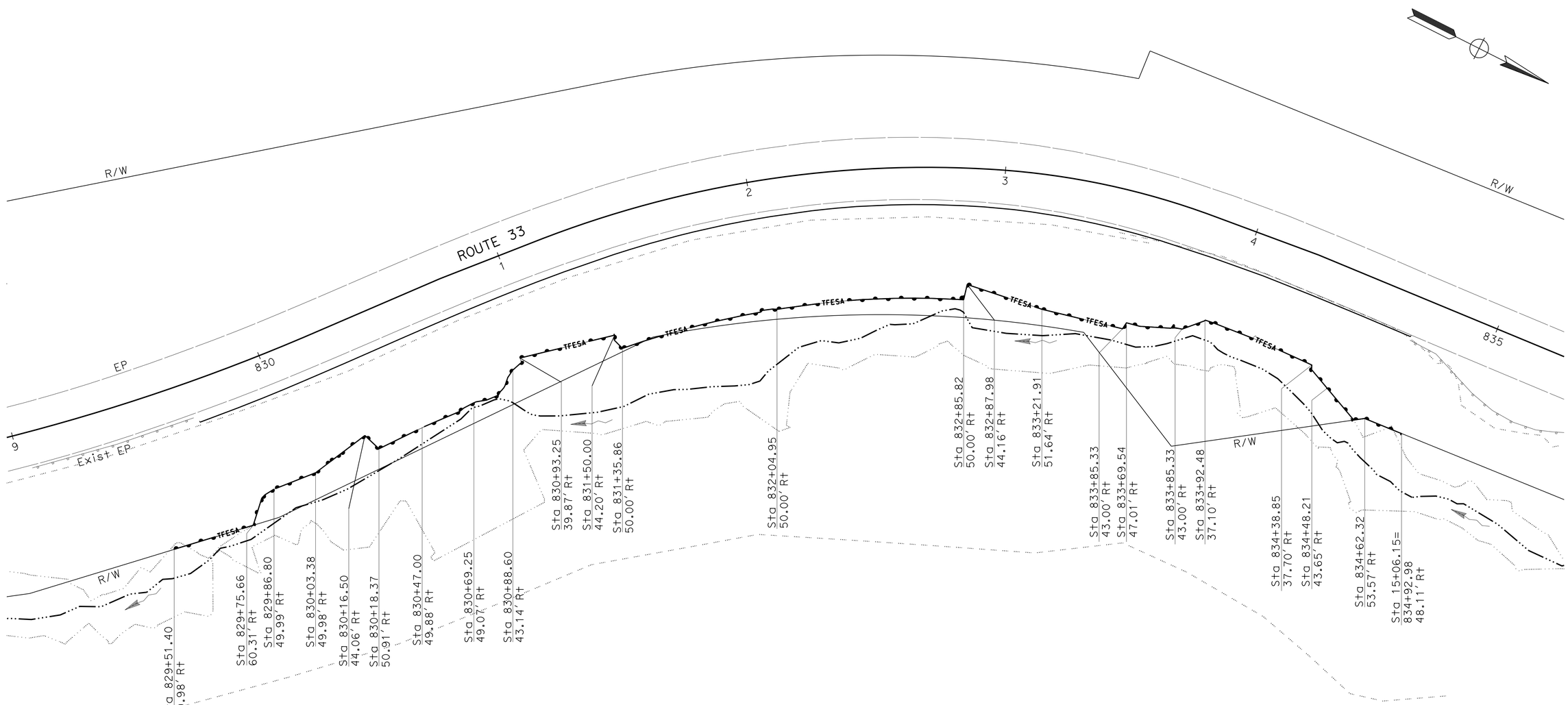

CONSTRUCTION DETAILS

ESA FENCE CONTROL

SCALE: 1" = 20'

C-1

STATE OF CALIFORNIA - DEPARTMENT OF TRANSPORTATION

Caltrans

CONSULTANT FUNCTIONAL SUPERVISOR: CAMILO ROCHA

CALCULATED-DESIGNED BY: BEN WILLARDSON

CHECKED BY: VIK BAPNA

REVISED BY

DATE REVISED

LAST REVISION 00-00-00

DATE PLOTTED = 04-AUG-2016
TIME PLOTTED = 14:47

Dist	COUNTY	ROUTE	POST MILES TOTAL PROJECT	SHEET No.	TOTAL SHEETS
07	Ven	33	15.7	6	108

Steve Pham 6-21-16
REGISTERED CIVIL ENGINEER DATE

6-24-16
PLANS APPROVAL DATE

REGISTERED PROFESSIONAL ENGINEER
STEVE PHAM
No. 67183
Exp. 9/30/16
CIVIL
STATE OF CALIFORNIA

THE STATE OF CALIFORNIA OR ITS OFFICERS OR AGENTS SHALL NOT BE RESPONSIBLE FOR THE ACCURACY OR COMPLETENESS OF SCANNED COPIES OF THIS PLAN SHEET.

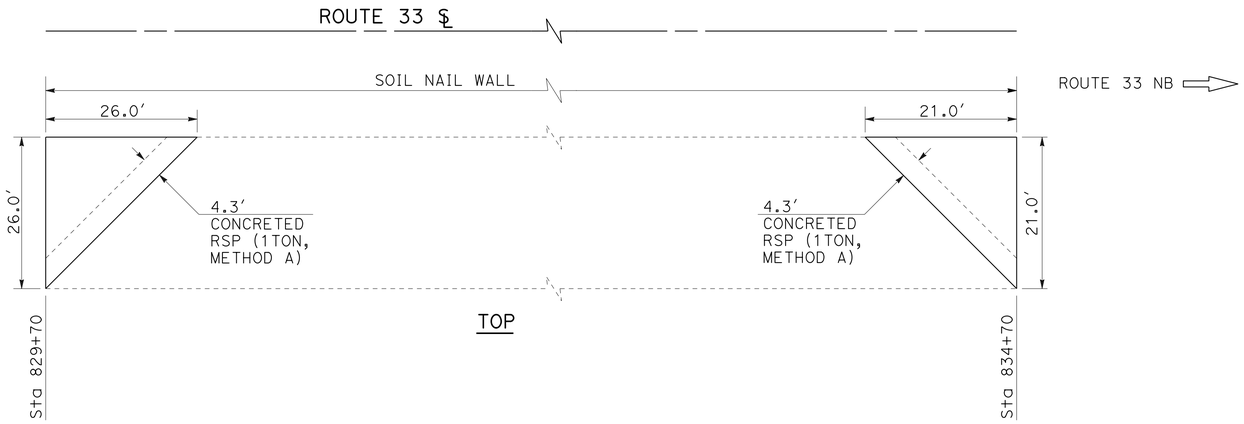

TOP

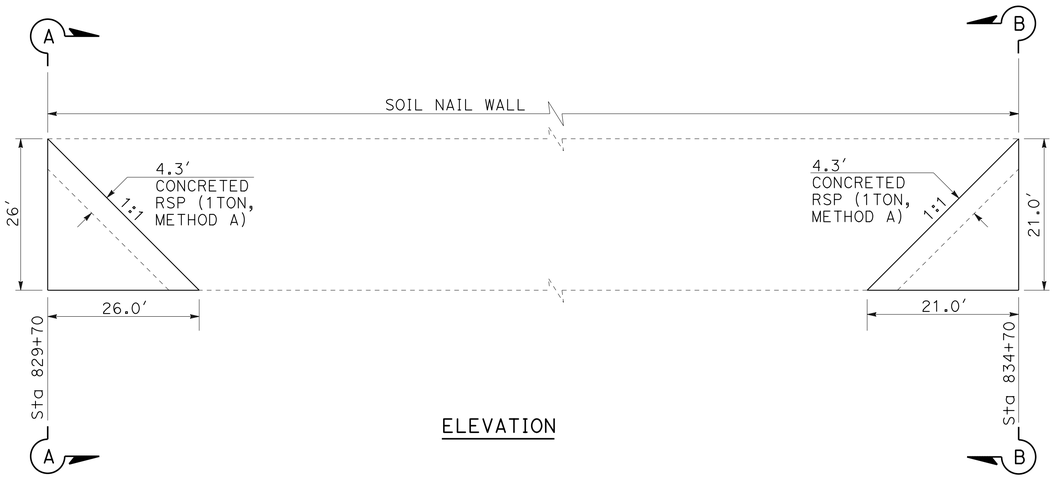

ELEVATION

LEGEND:

ROCK SLOPE PROTECTION FABRIC (CLASS 10)

ROCK SLOPE PROTECTION FABRIC (CLASS 10)

STRUCTURE EXCAVATION (ROCK SLOPE PROTECTION)

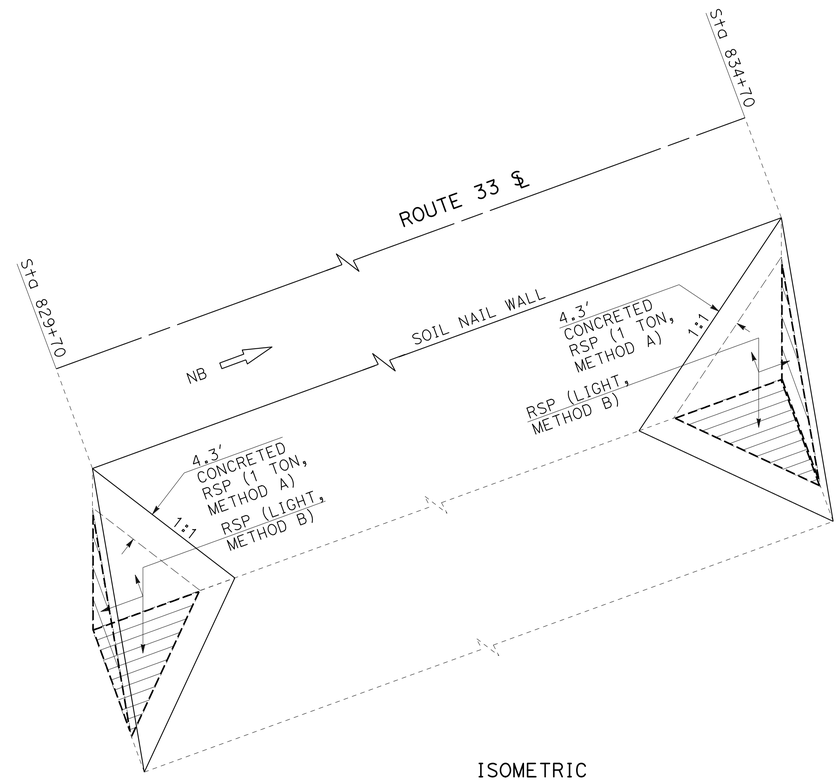

ISOMETRIC

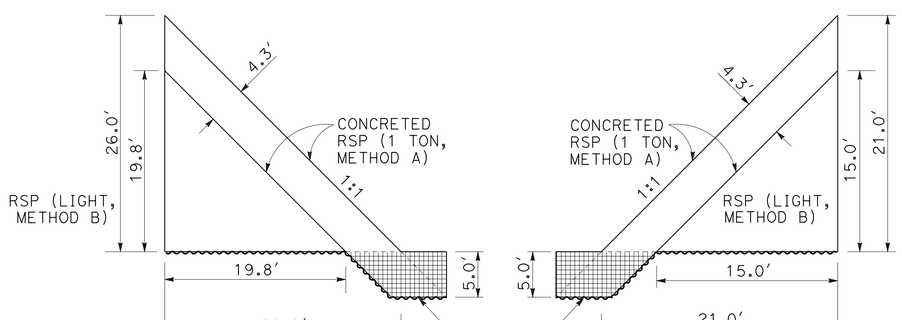

SECTION A-A

SECTION B-B

CONSTRUCTION DETAILS
CONCRETED ROCK SLOPE PROTECTION

NO SCALE

C-2

STATE OF CALIFORNIA - DEPARTMENT OF TRANSPORTATION
Caltrans
DESIGN

FUNCTIONAL SUPERVISOR: MANSOOR A. KHAN
CALCULATED-DESIGNED BY: STEVE PHAM
CHECKED BY: SHAO-CHIANG LIU
REVISED BY
DATE REVISED

LAST REVISION 00-00-00
DATE PLOTTED => 04-AUG-2016
TIME PLOTTED => 14:47

Dist	COUNTY	ROUTE	POST MILES TOTAL PROJECT	SHEET No.	TOTAL SHEETS
07	Ven	33	15.7	7	108

Steve Pham 6-21-16
REGISTERED CIVIL ENGINEER DATE

6-24-16
PLANS APPROVAL DATE

REGISTERED PROFESSIONAL ENGINEER
STEVE PHAM
No. 67183
Exp. 9/30/16
CIVIL
STATE OF CALIFORNIA

THE STATE OF CALIFORNIA OR ITS OFFICERS OR AGENTS SHALL NOT BE RESPONSIBLE FOR THE ACCURACY OR COMPLETENESS OF SCANNED COPIES OF THIS PLAN SHEET.

NOTE:

FOR DETAILS NOT SHOWN SEE RSP A77N5, A77N6 AND A77N7.

LEGEND:

VEGETATION CONTROL (MINOR CONCRETE)

DIRECTION OF TRAFFIC

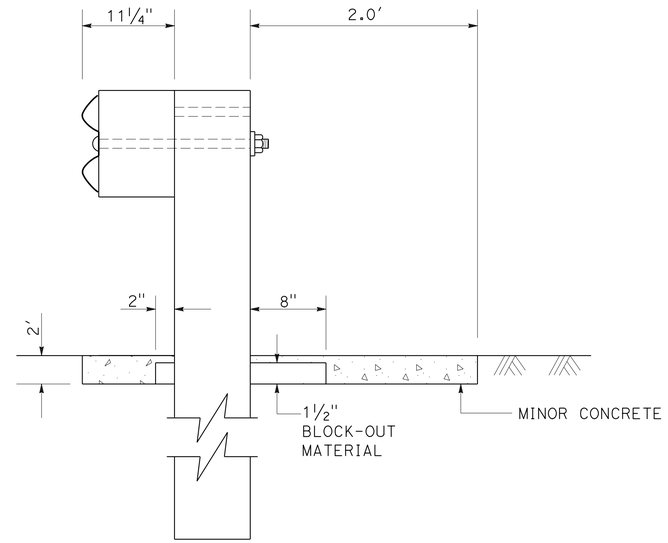

SECTION A-A

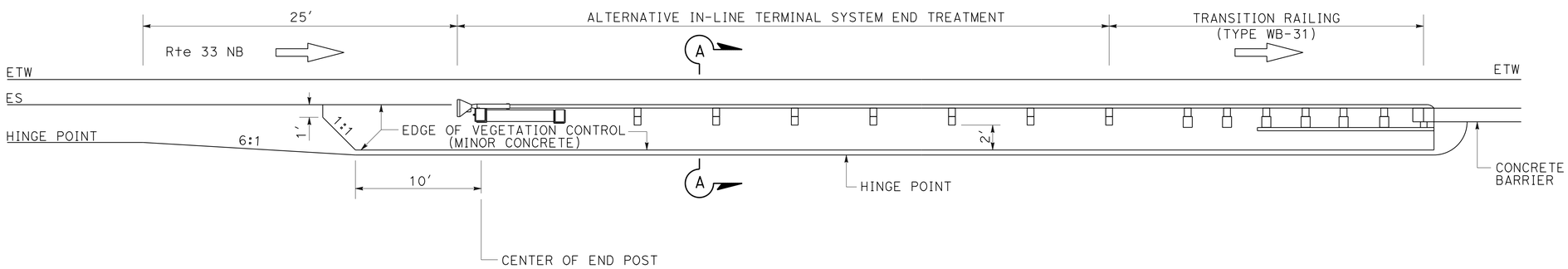

TOP VIEW

MIDWEST GUARDRAILING SYSTEM VEGETATION CONTROL

CONSTRUCTION DETAILS

NO SCALE

C-3

STATE OF CALIFORNIA - DEPARTMENT OF TRANSPORTATION
Caltrans
DESIGN

FUNCTIONAL SUPERVISOR: MANSOOR A. KHAN
CALCULATED-DESIGNED BY: STEVE PHAM
CHECKED BY: SHAO-CHIANG LIU
REVISED BY
DATE REVISED

LAST REVISION 00-00-00
DATE PLOTTED => 04-AUG-2016
TIME PLOTTED => 14:47

Dist	COUNTY	ROUTE	POST MILES TOTAL PROJECT	SHEET No.	TOTAL SHEETS
07	Ven	33	15.7	8	108

Bennington J. Willardson 6-21-16
REGISTERED CIVIL ENGINEER DATE

6-24-16
PLANS APPROVAL DATE

REGISTERED PROFESSIONAL ENGINEER
BEN WILLARDSON
No. C64937
Exp. 6/30/17
CIVIL
STATE OF CALIFORNIA

THE STATE OF CALIFORNIA OR ITS OFFICERS OR AGENTS SHALL NOT BE RESPONSIBLE FOR THE ACCURACY OR COMPLETENESS OF SCANNED COPIES OF THIS PLAN SHEET.

HDR
3230 EL CAMINO REAL
SUITE 200
IRVINE, CA 92602

CWE
1561 E. ORANGETHORPE
SUITE 240
FULLERTON, CA 92831

NOTE:

FOR ACCURATE RIGHT OF WAY DATA, CONTACT RIGHT OF WAY ENGINEERING AT THE DISTRICT OFFICE.

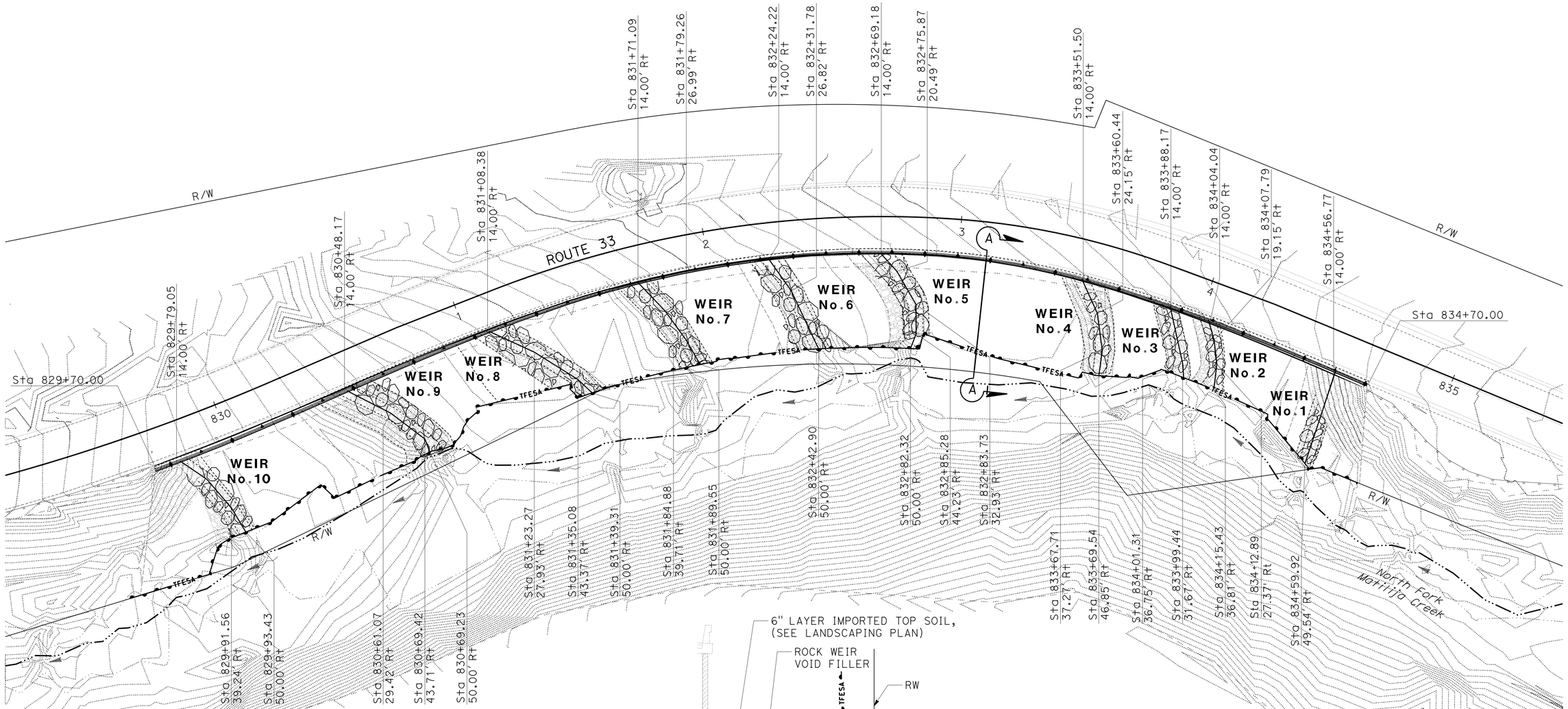

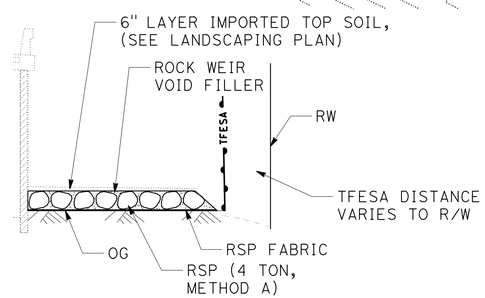

SECTION A-A
NO SCALE

CONSTRUCTION DETAILS
ROCK WEIR PLAN
(SHEET 1 OF 10)
SCALE: 1" = 20'

C-4

STATE OF CALIFORNIA - DEPARTMENT OF TRANSPORTATION
Caltrans

CONSULTANT FUNCTIONAL SUPERVISOR: CAMILO ROCHA
CALCULATED-DESIGNED BY: BEN WILLARDSON
CHECKED BY: VIK BAPNA
REVISED BY
DATE REVISED

LAST REVISION 00-00-00
DATE PLOTTED - 04-AUG-2016
TIME PLOTTED - 14:47

Dist	COUNTY	ROUTE	POST MILES TOTAL PROJECT	SHEET No.	TOTAL SHEETS
07	Ven	33	15.7	9	108

REGISTERED CIVIL ENGINEER 6-21-16 DATE

6-24-16
PLANS APPROVAL DATE

REGISTERED PROFESSIONAL ENGINEER BEN WILLARDSON No. C64937 Exp. 6/30/17 CIVIL STATE OF CALIFORNIA

THE STATE OF CALIFORNIA OR ITS OFFICERS OR AGENTS SHALL NOT BE RESPONSIBLE FOR THE ACCURACY OR COMPLETENESS OF SCANNED COPIES OF THIS PLAN SHEET.

HDR
3230 EL CAMINO REAL
SUITE 200
IRVINE, CA 92602

CWE
1561 E. ORANGETHORPE
SUITE 240
FULLERTON, CA 92831

ABBREVIATIONS:

D/S DOWN STREAM
EG EXISTING GRADE

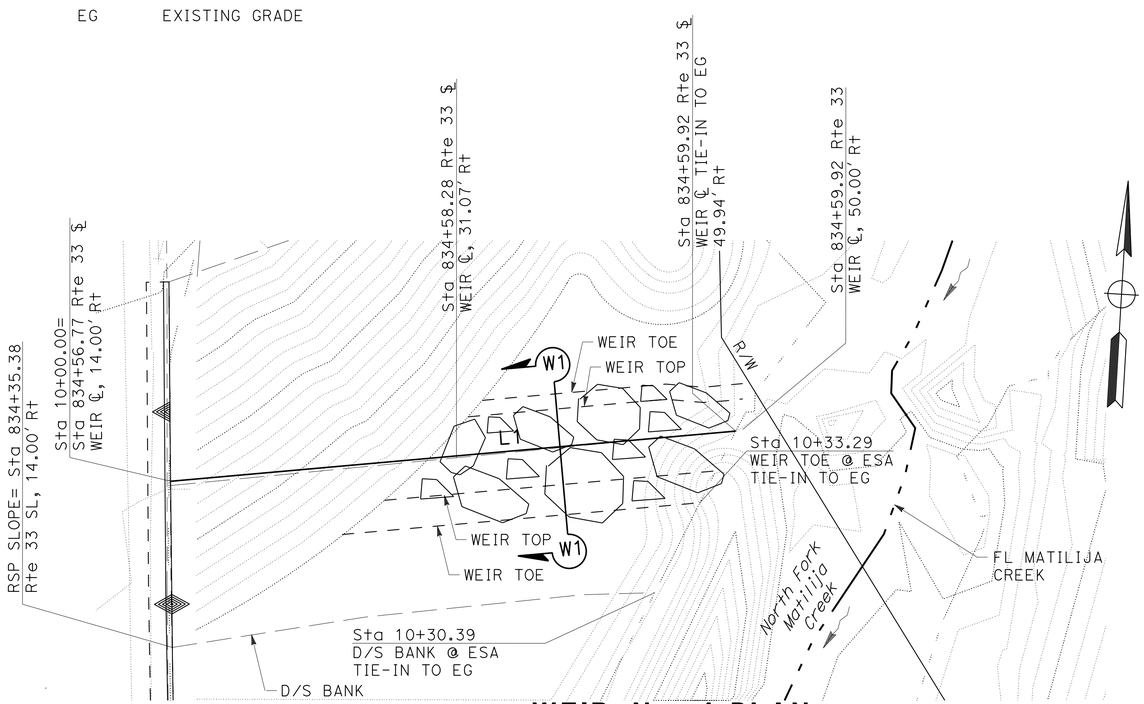

WEIR No. 1 PLAN

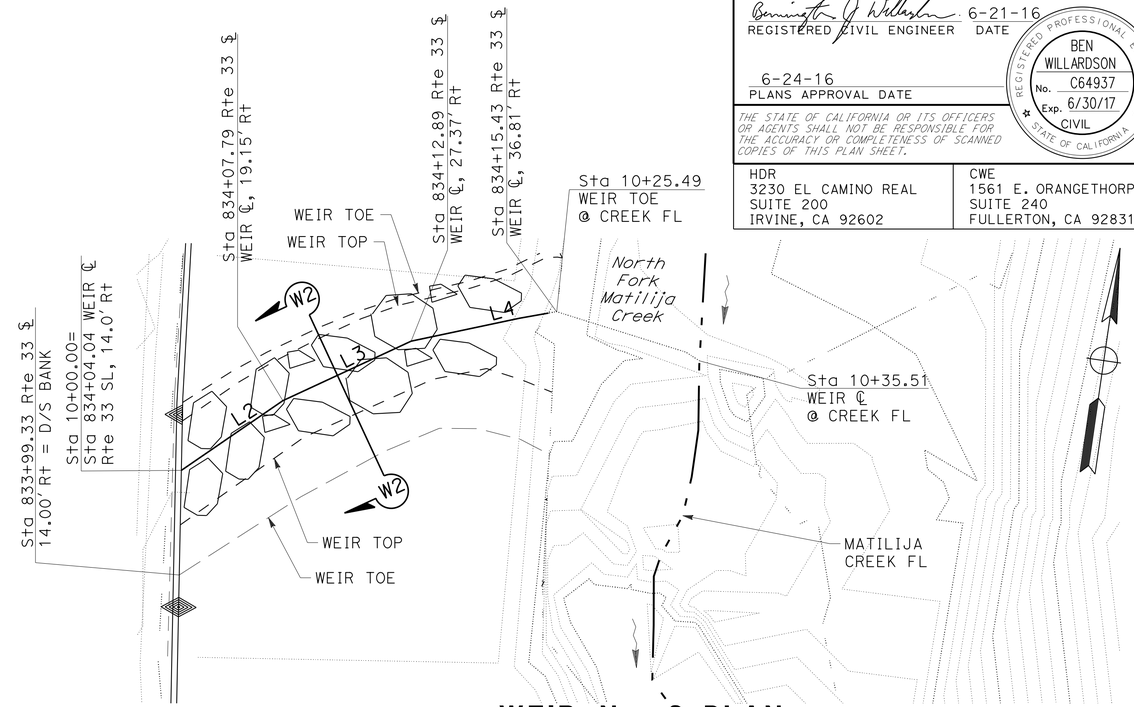

WEIR No. 2 PLAN

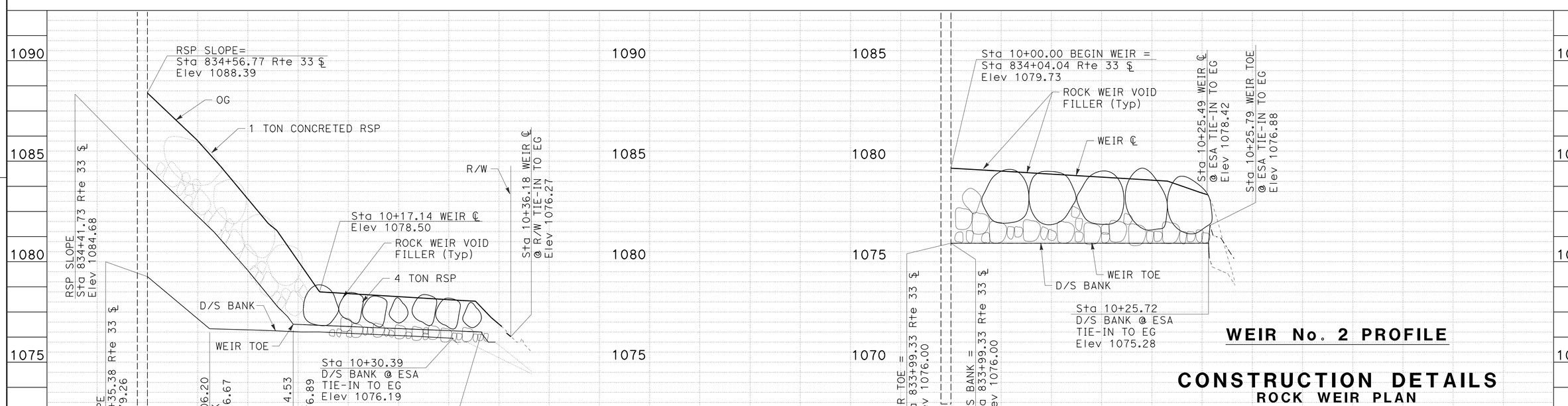

WEIR No. 1 PROFILE

WEIR No. 2 PROFILE

CONSTRUCTION DETAILS
ROCK WEIR PLAN
(SHEET 2 OF 10)

SCALE: Horiz 1" = 5'
Vert 1" = 2.5'

C-5

STATE OF CALIFORNIA - DEPARTMENT OF TRANSPORTATION
Caltrans

CONSULTANT FUNCTIONAL SUPERVISOR: CAMILO ROCHA
CALCULATED-DESIGNED BY: BEN WILLARDSON
CHECKED BY: VIK BAPNA
REVISED BY
DATE REVISED

LAST REVISION 00-00-00
DATE PLOTTED - 04-AUG-2016
TIME PLOTTED - 14:47

Dist	COUNTY	ROUTE	POST MILES TOTAL PROJECT	SHEET No.	TOTAL SHEETS
07	Ven	33	15.7	10	108

REGISTERED CIVIL ENGINEER 6-21-16 DATE

6-24-16
PLANS APPROVAL DATE

REGISTERED PROFESSIONAL ENGINEER BEN WILLARDSON No. C64937 Exp. 6/30/17 CIVIL STATE OF CALIFORNIA

THE STATE OF CALIFORNIA OR ITS OFFICERS OR AGENTS SHALL NOT BE RESPONSIBLE FOR THE ACCURACY OR COMPLETENESS OF SCANNED COPIES OF THIS PLAN SHEET.

HDR
3230 EL CAMINO REAL
SUITE 200
IRVINE, CA 92602

CWE
1561 E. ORANGETHORPE
SUITE 240
FULLERTON, CA 92831

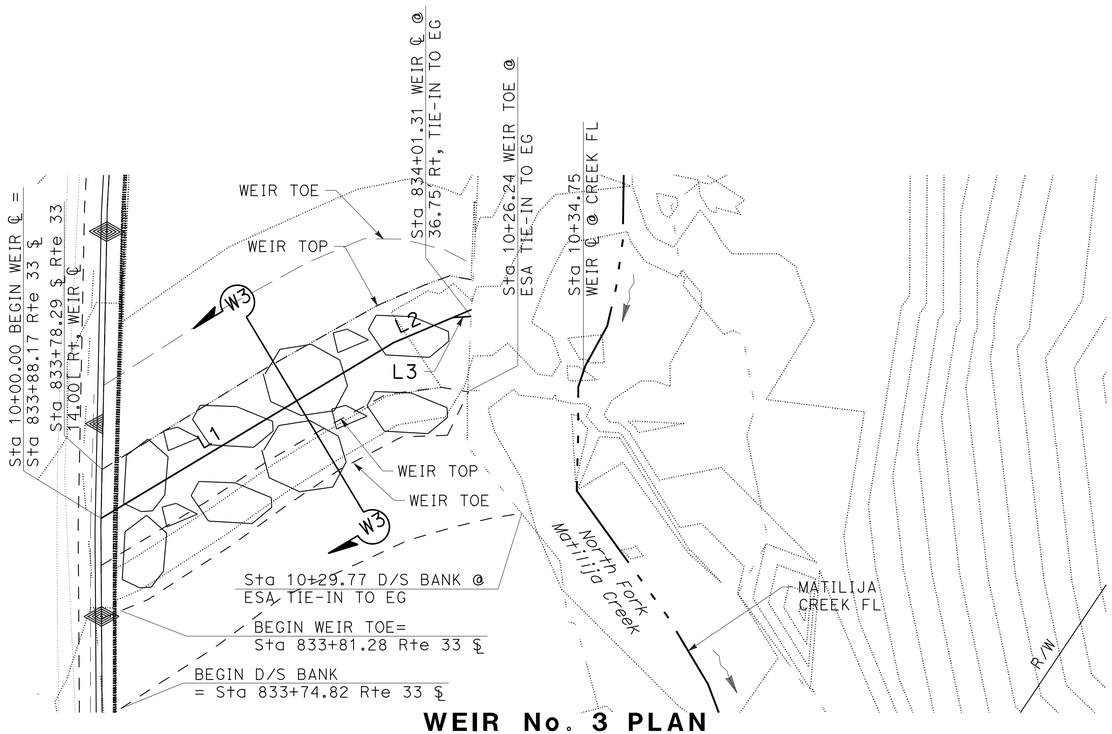

WEIR No. 3 PLAN

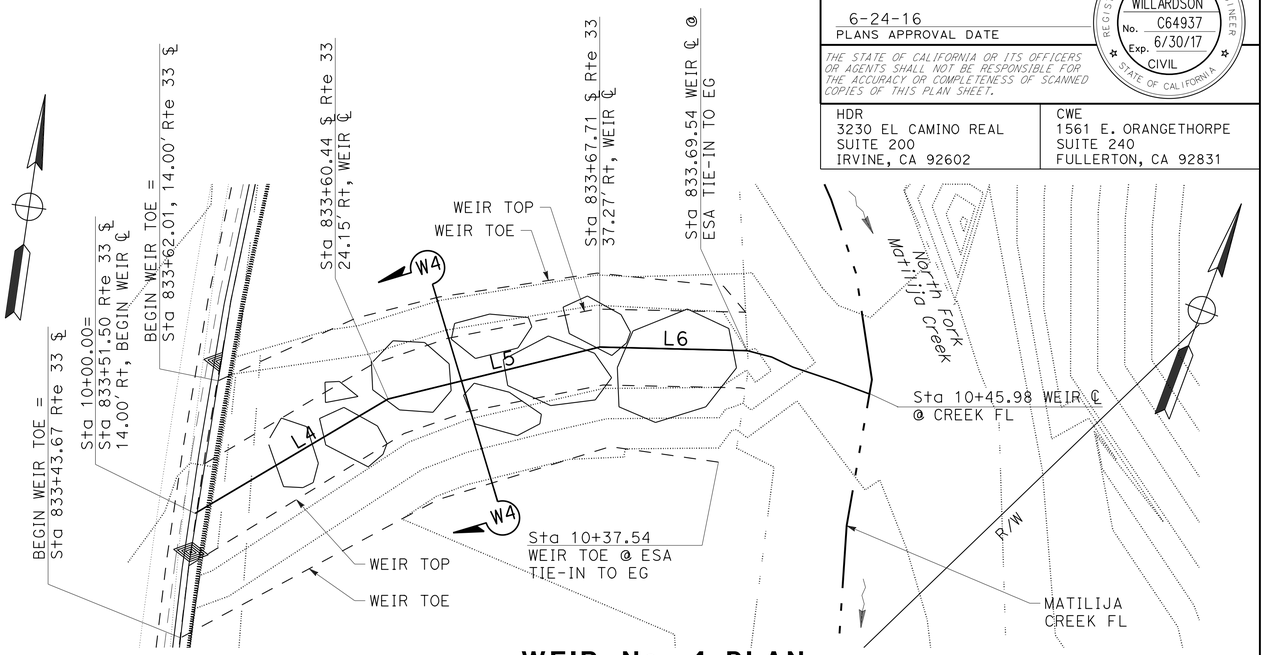

WEIR No. 4 PLAN

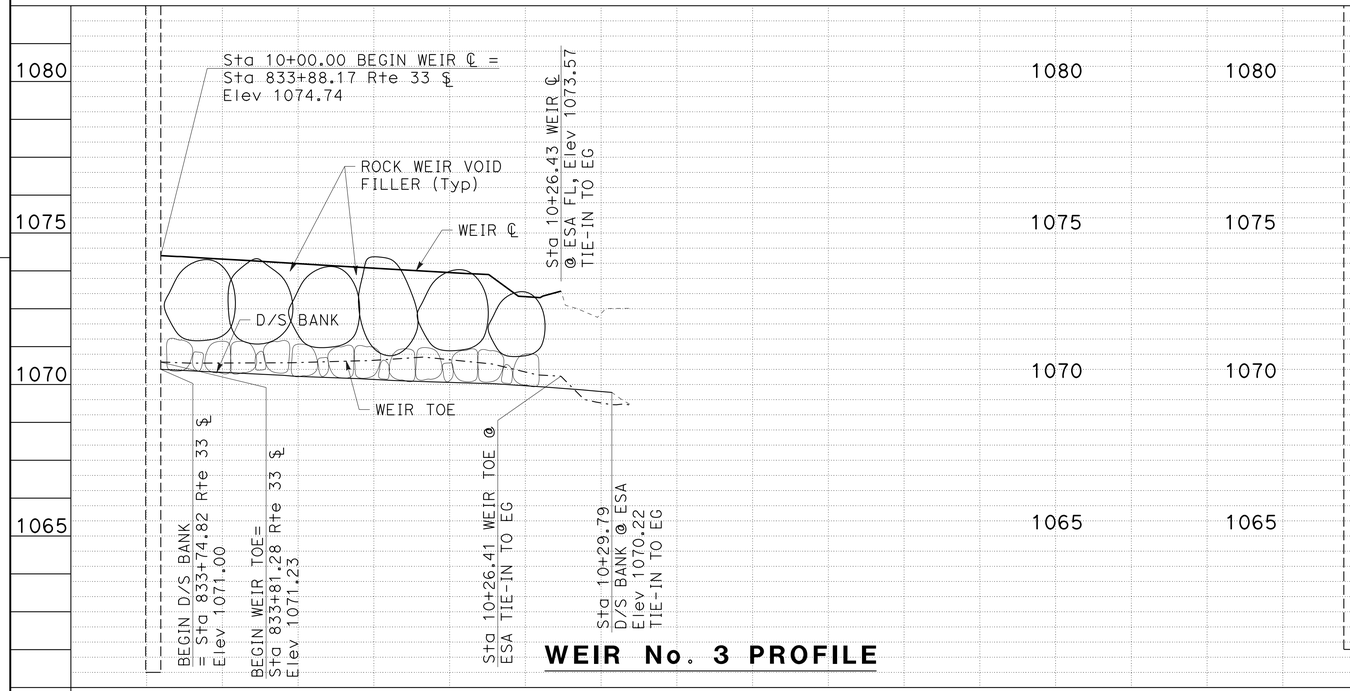

WEIR No. 3 PROFILE

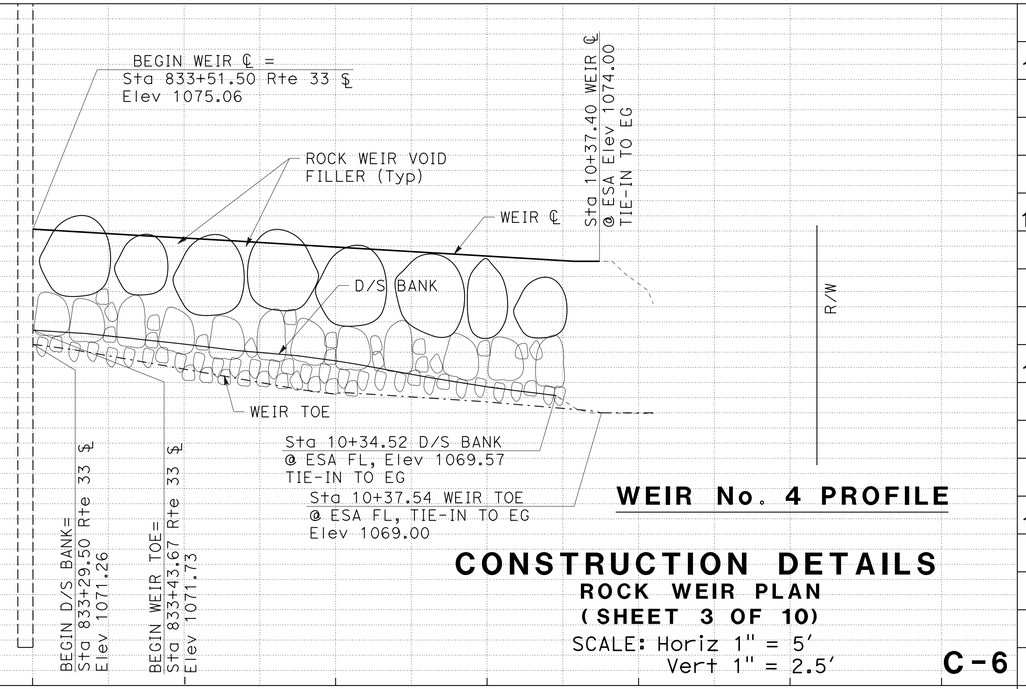

WEIR No. 4 PROFILE

CONSTRUCTION DETAILS

ROCK WEIR PLAN

(SHEET 3 OF 10)

SCALE: Horiz 1" = 5'
Vert 1" = 2.5'

C-6

STATE OF CALIFORNIA - DEPARTMENT OF TRANSPORTATION
Caltrans

CONSULTANT FUNCTIONAL SUPERVISOR: CAMILO ROCHA

CALCULATED-DESIGNED BY: BEN WILLARDSON
CHECKED BY: VIK BAPNA
REVISED BY
DATE REVISED

DATE PLOTTED - 04-AUG-2016
TIME PLOTTED - 14:47
LAST REVISION 00-00-00

Dist	COUNTY	ROUTE	POST MILES TOTAL PROJECT	SHEET No.	TOTAL SHEETS
07	Ven	33	15.7	11	108

REGISTERED CIVIL ENGINEER 6-21-16 DATE

6-24-16
PLANS APPROVAL DATE

REGISTERED PROFESSIONAL ENGINEER BEN WILLARDSON No. C64937 Exp. 6/30/17 CIVIL STATE OF CALIFORNIA

THE STATE OF CALIFORNIA OR ITS OFFICERS OR AGENTS SHALL NOT BE RESPONSIBLE FOR THE ACCURACY OR COMPLETENESS OF SCANNED COPIES OF THIS PLAN SHEET.

HDR
3230 EL CAMINO REAL
SUITE 200
IRVINE, CA 92602

CWE
1561 E. ORANGETHORPE
SUITE 240
FULLERTON, CA 92831

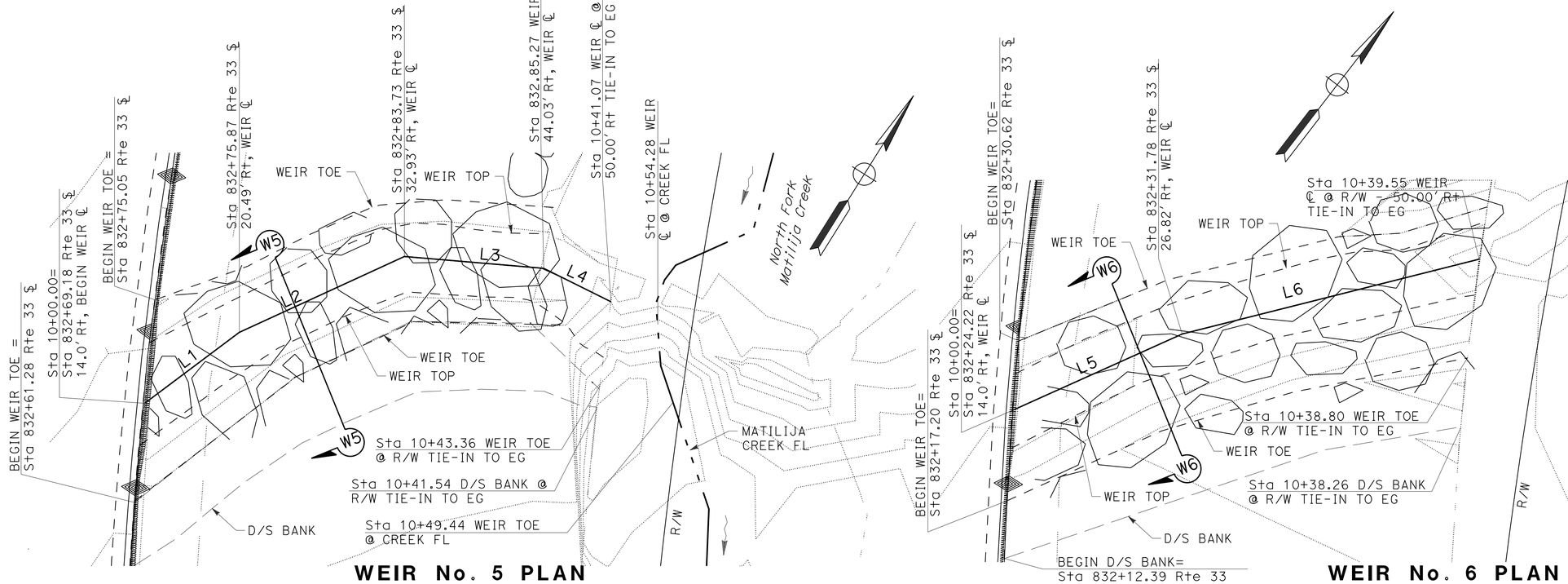

WEIR No. 5 PLAN

WEIR No. 6 PLAN

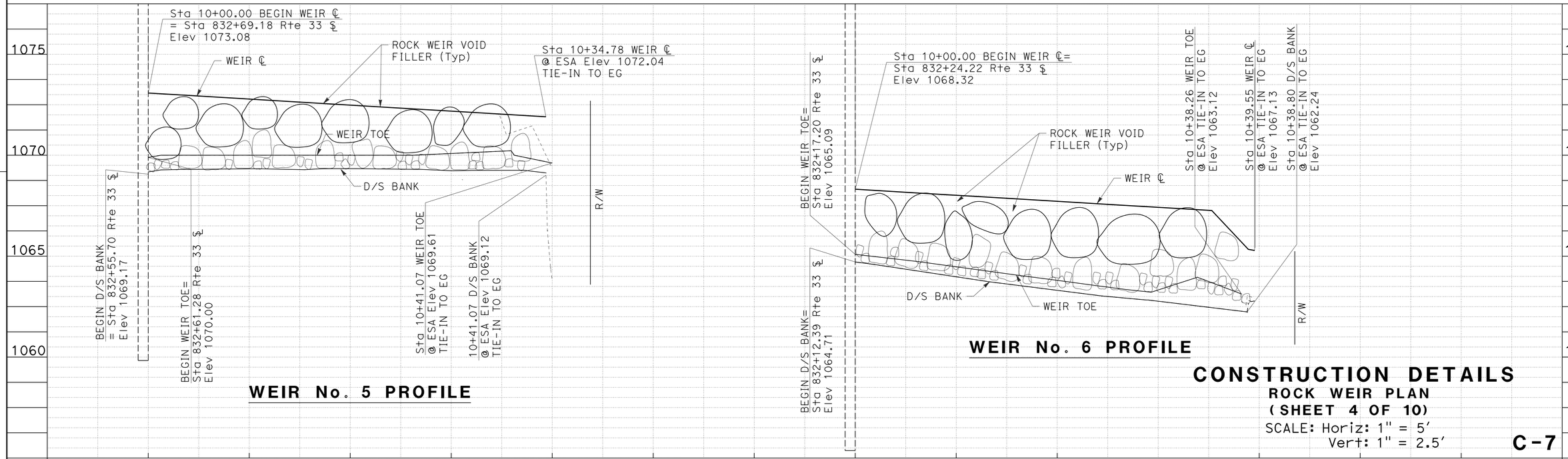

WEIR No. 5 PROFILE

WEIR No. 6 PROFILE

CONSTRUCTION DETAILS

ROCK WEIR PLAN

(SHEET 4 OF 10)

SCALE: Horiz: 1" = 5'
Vert: 1" = 2.5'

C-7

REVISED BY	DATE REVISED
BEN WILLARDSON	VIK BAPNA
CALCULATED-DESIGNED BY	CHECKED BY
CAMILO ROCHA	

CONSULTANT FUNCTIONAL SUPERVISOR

STATE OF CALIFORNIA - DEPARTMENT OF TRANSPORTATION

Caltrans

DATE PLOTTED - 04-AUG-2016
TIME PLOTTED - 14:47

LAST REVISION 00-00-00

Dist	COUNTY	ROUTE	POST MILES TOTAL PROJECT	SHEET No.	TOTAL SHEETS
07	Ven	33	15.7	12	108

REGISTERED CIVIL ENGINEER 6-21-16 DATE

6-24-16
PLANS APPROVAL DATE

REGISTERED PROFESSIONAL ENGINEER BEN WILLARDSON No. C64937 Exp. 6/30/17 CIVIL STATE OF CALIFORNIA

THE STATE OF CALIFORNIA OR ITS OFFICERS OR AGENTS SHALL NOT BE RESPONSIBLE FOR THE ACCURACY OR COMPLETENESS OF SCANNED COPIES OF THIS PLAN SHEET.

HDR
3230 EL CAMINO REAL
SUITE 200
IRVINE, CA 92602

CWE
1561 E. ORANGETHORPE
SUITE 240
FULLERTON, CA 92831

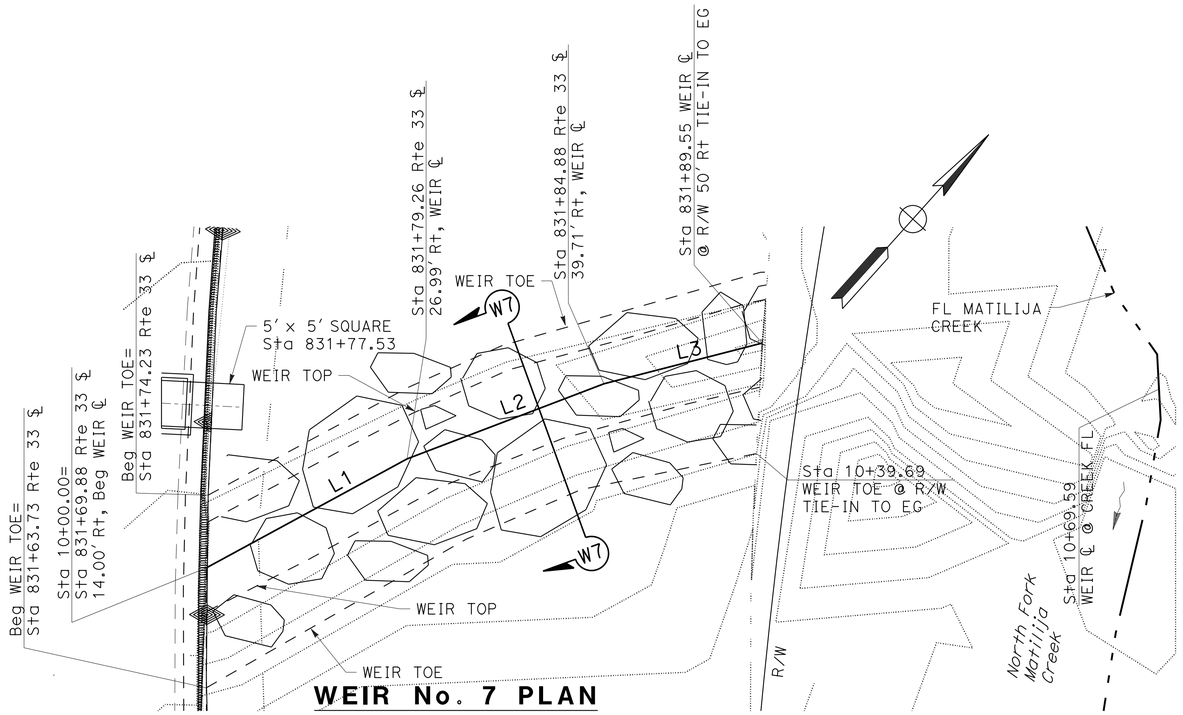

WEIR No. 7 PLAN

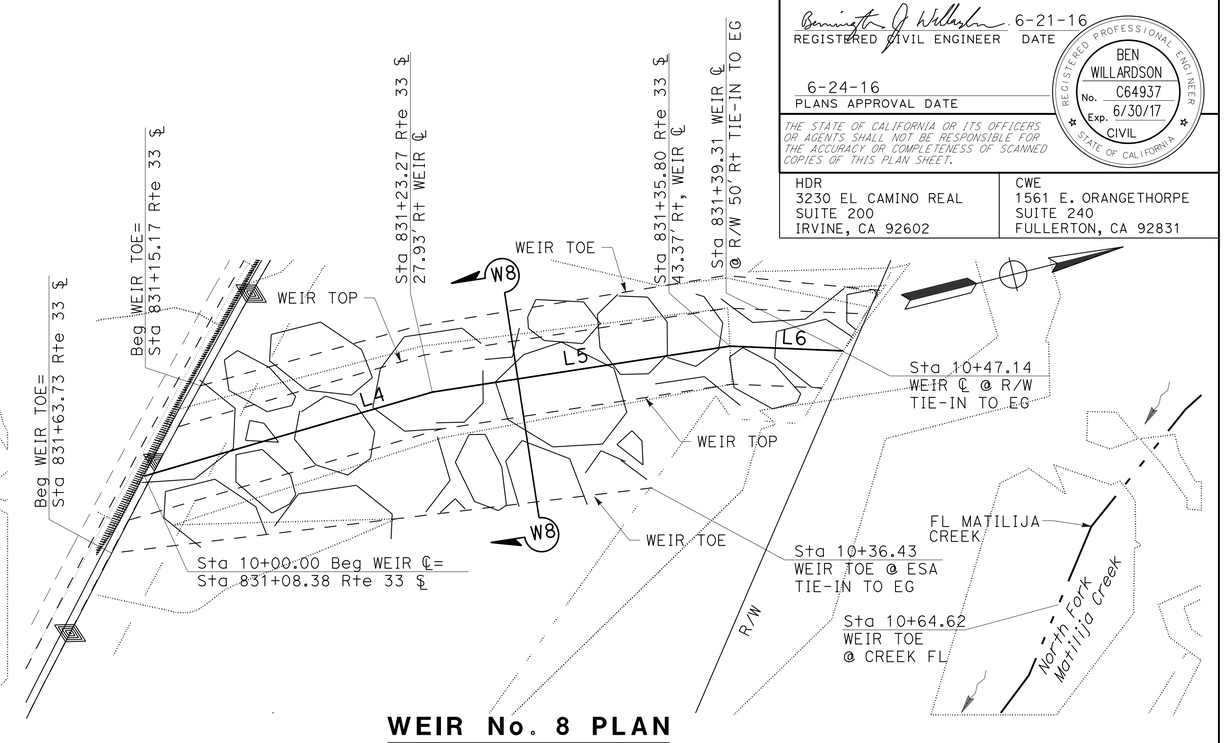

WEIR No. 8 PLAN

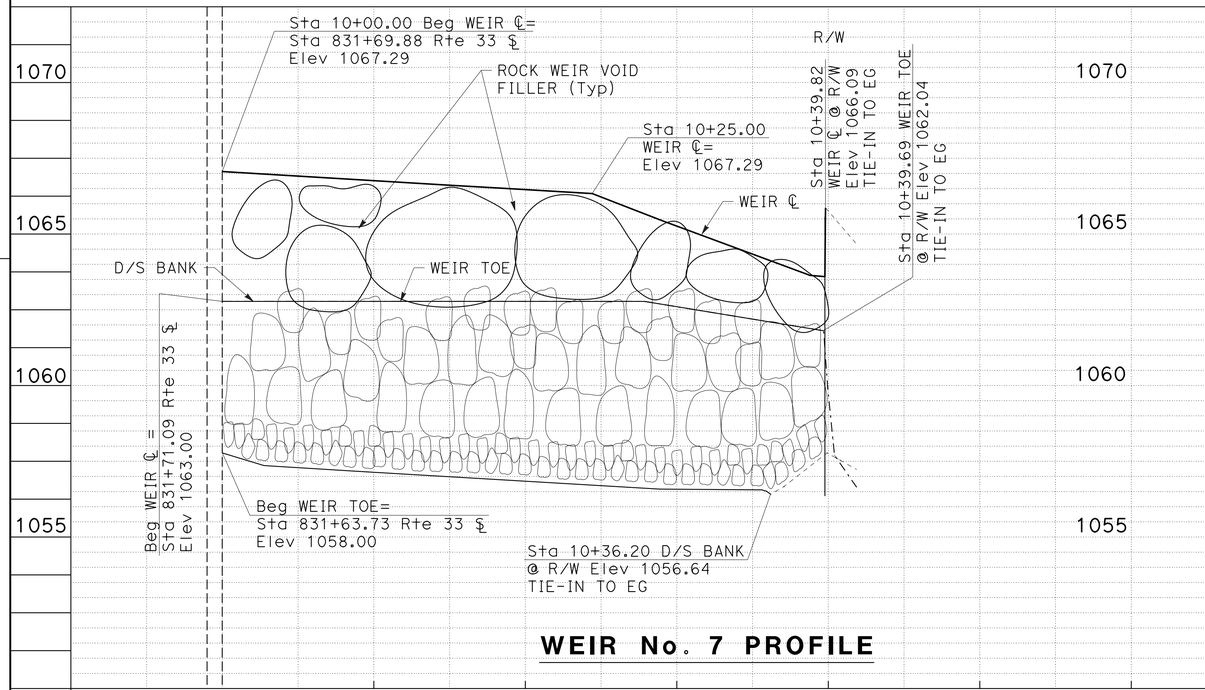

WEIR No. 7 PROFILE

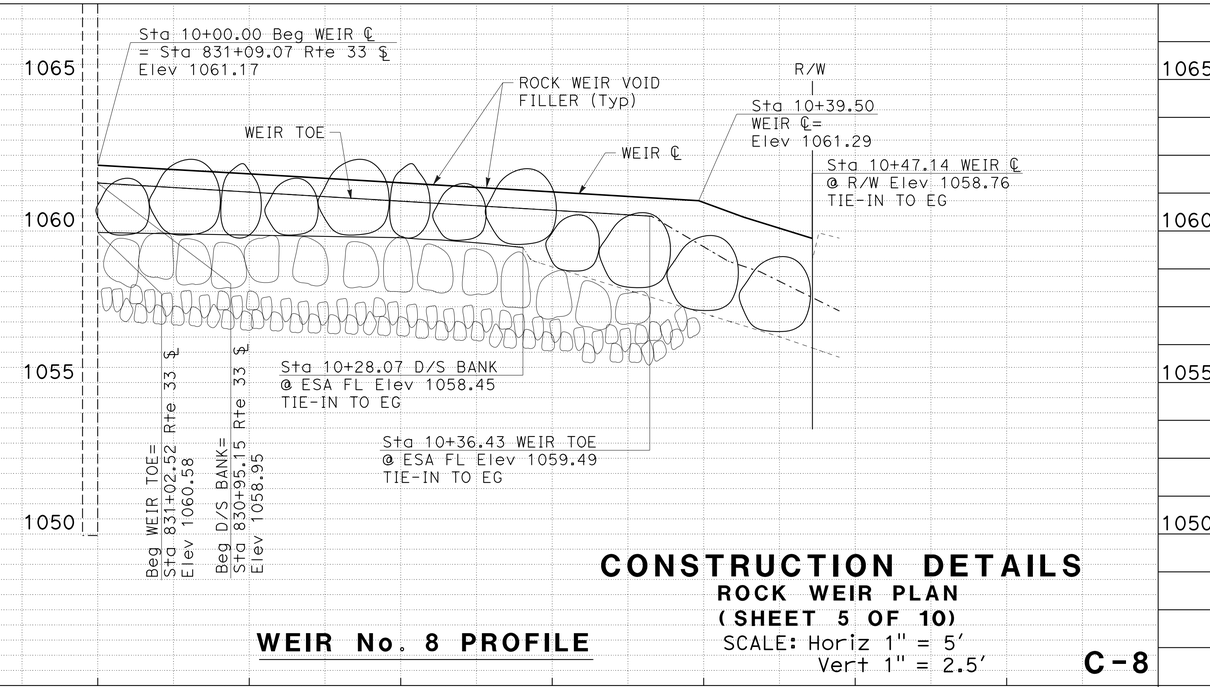

WEIR No. 8 PROFILE

CONSTRUCTION DETAILS

ROCK WEIR PLAN

(SHEET 5 OF 10)

SCALE: Horiz 1" = 5'
Vert 1" = 2.5'

C-8

BEN WILLARDSON | REVISED BY | DATE REVISED
VIK BAPNA | CALCULATED-DESIGNED BY | CHECKED BY
CAMILO ROCHA | CONSULTANT FUNCTIONAL SUPERVISOR
STATE OF CALIFORNIA - DEPARTMENT OF TRANSPORTATION
Caltrans

DATE PLOTTED - 04-AUG-2016
TIME PLOTTED - 14:47
LAST REVISION 00-00-00

Dist	COUNTY	ROUTE	POST MILES TOTAL PROJECT	SHEET No.	TOTAL SHEETS
07	Ven	33	15.7	13	108

REGISTERED CIVIL ENGINEER 6-21-16 DATE

6-24-16
PLANS APPROVAL DATE

REGISTERED PROFESSIONAL ENGINEER BEN WILLARDSON No. C64937 Exp. 6/30/17 CIVIL STATE OF CALIFORNIA

THE STATE OF CALIFORNIA OR ITS OFFICERS OR AGENTS SHALL NOT BE RESPONSIBLE FOR THE ACCURACY OR COMPLETENESS OF SCANNED COPIES OF THIS PLAN SHEET.

HDR
3230 EL CAMINO REAL
SUITE 200
IRVINE, CA 92602

CWE
1561 E. ORANGETHORPE
SUITE 240
FULLERTON, CA 92831

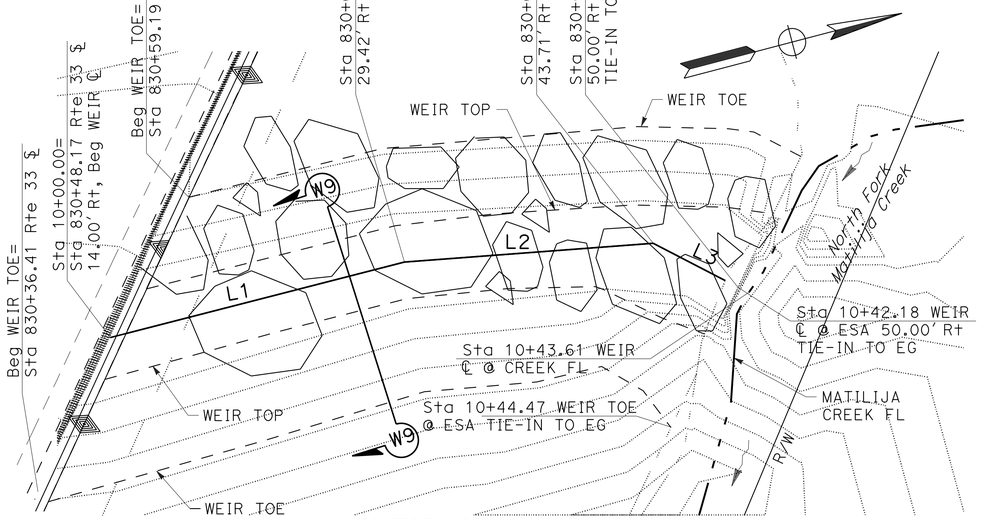

WEIR No. 9 PLAN

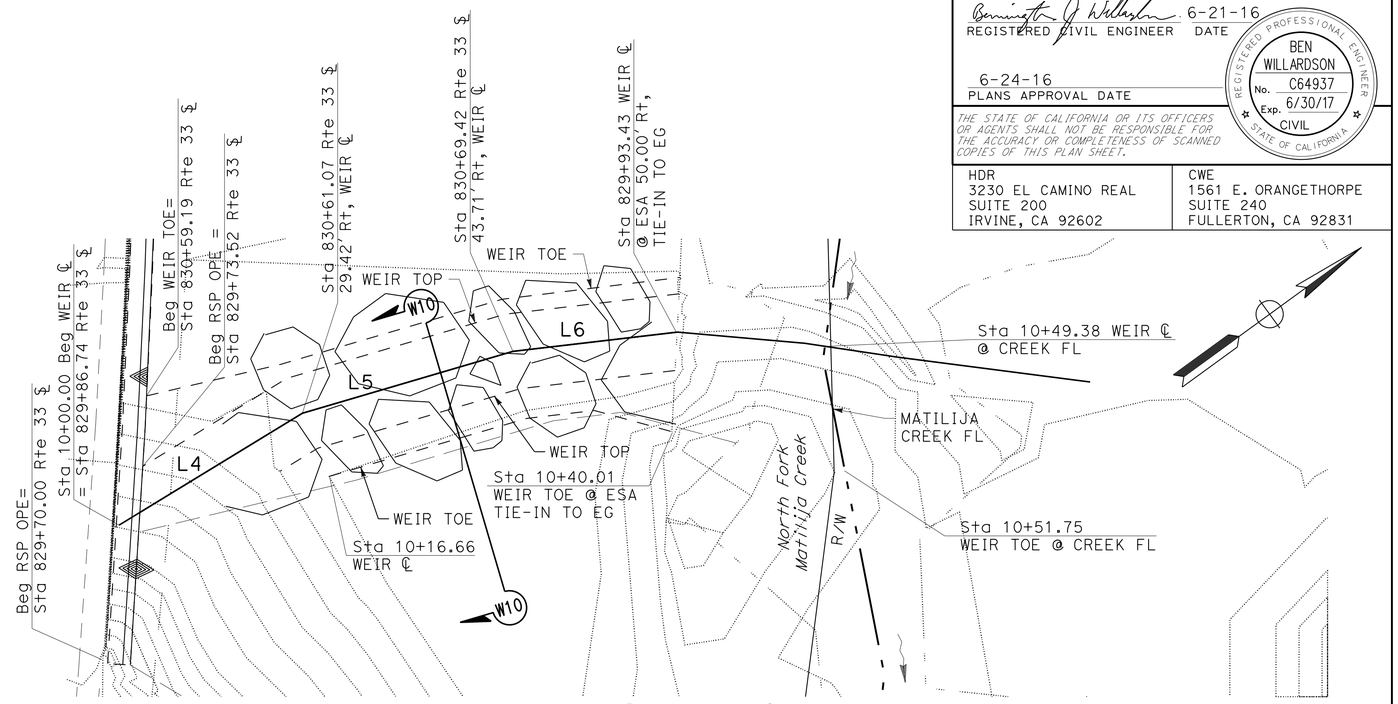

WEIR No. 10 PLAN

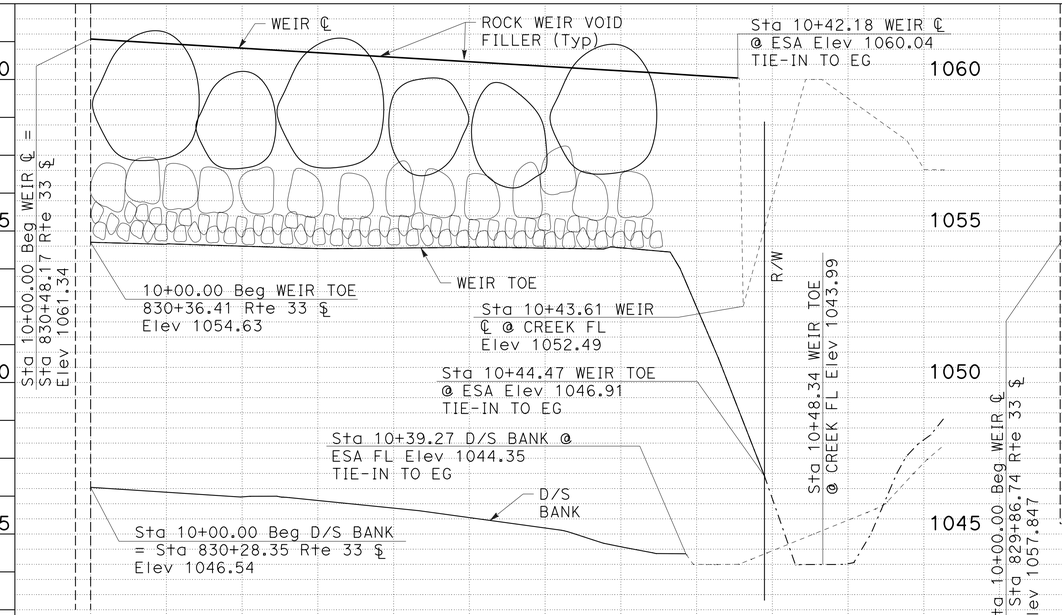

WEIR No. 9 PROFILE

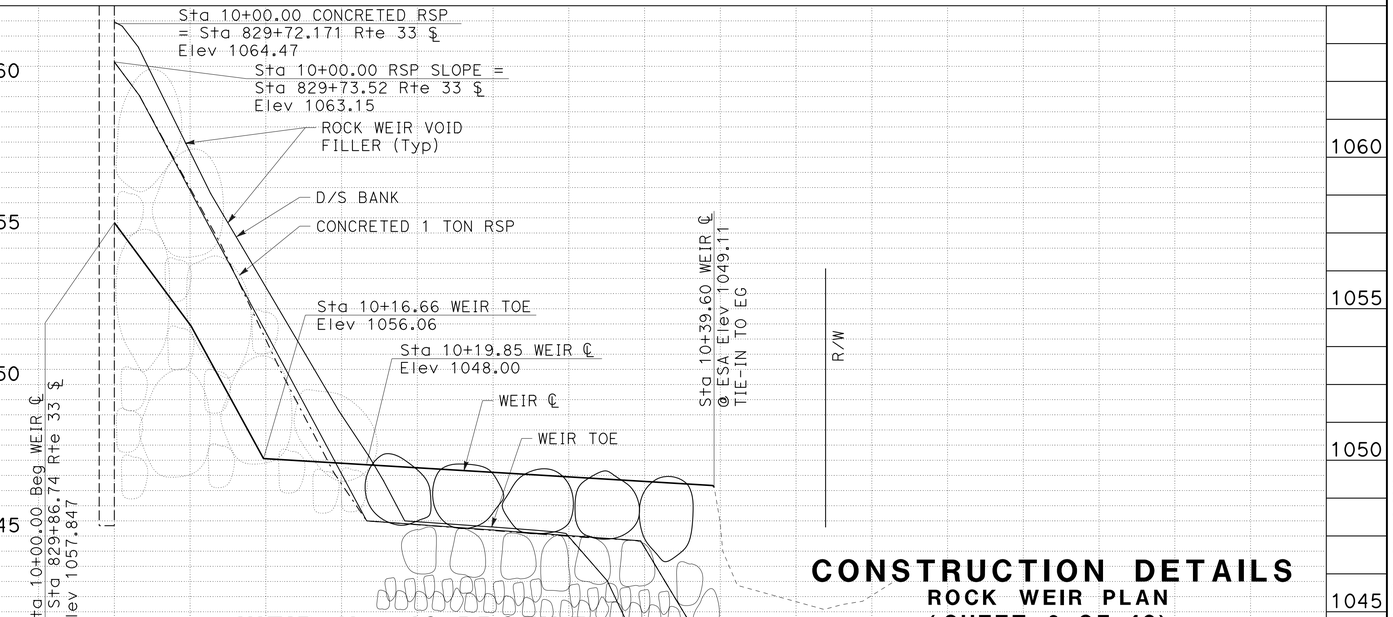

WEIR No. 10 PROFILE

CONSTRUCTION DETAILS

ROCK WEIR PLAN

(SHEET 6 OF 10)

SCALE: Horiz: 1" = 5'
Vert: 1" = 2.5'

C-9

REVISED BY | DATE REVISED
BEN WILLARDSON | VIK BAPNA
CALCULATED-DESIGNED BY | CHECKED BY
CONSULTANT FUNCTIONAL SUPERVISOR: CAMILO ROCHA

STATE OF CALIFORNIA - DEPARTMENT OF TRANSPORTATION
Caltrans

LAST REVISION 00-00-00 | DATE PLOTTED - 04-AUG-2016 | TIME PLOTTED - 14:47

Dist	COUNTY	ROUTE	POST MILES TOTAL PROJECT	SHEET No.	TOTAL SHEETS
07	Ven	33	15.7	14	108

REGISTERED CIVIL ENGINEER 6-21-16 DATE

6-24-16
PLANS APPROVAL DATE

REGISTERED PROFESSIONAL ENGINEER BEN WILLARDSON No. C64937 Exp. 6/30/17 CIVIL STATE OF CALIFORNIA

THE STATE OF CALIFORNIA OR ITS OFFICERS OR AGENTS SHALL NOT BE RESPONSIBLE FOR THE ACCURACY OR COMPLETENESS OF SCANNED COPIES OF THIS PLAN SHEET.

HDR
3230 EL CAMINO REAL
SUITE 200
IRVINE, CA 92602

CWE
1561 E. ORANGETHORPE
SUITE 240
FULLERTON, CA 92831

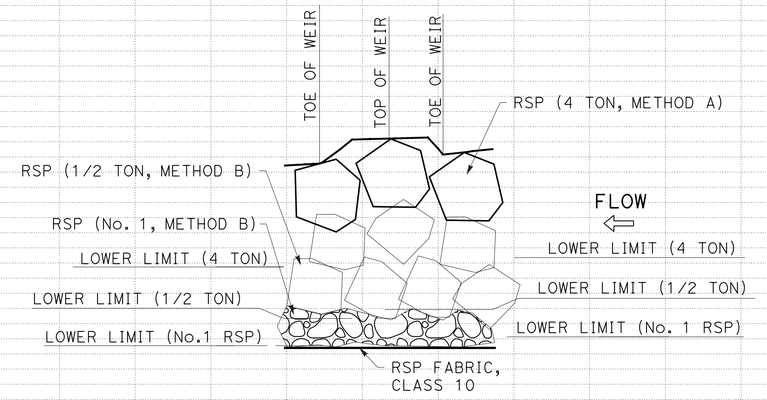

W1 - W1 CROSS SECTION

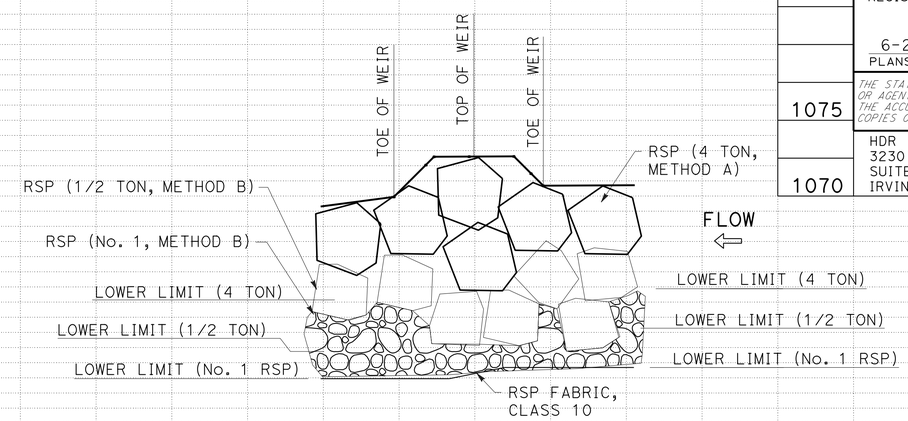

W5 - W5 CROSS SECTION

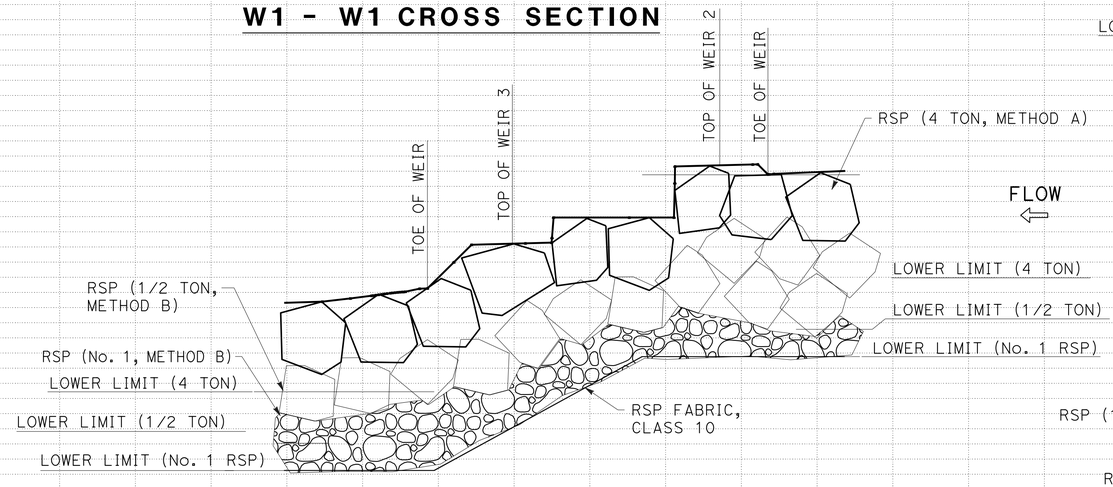

W2 - W2 AND W3 - W3 CROSS SECTIONS

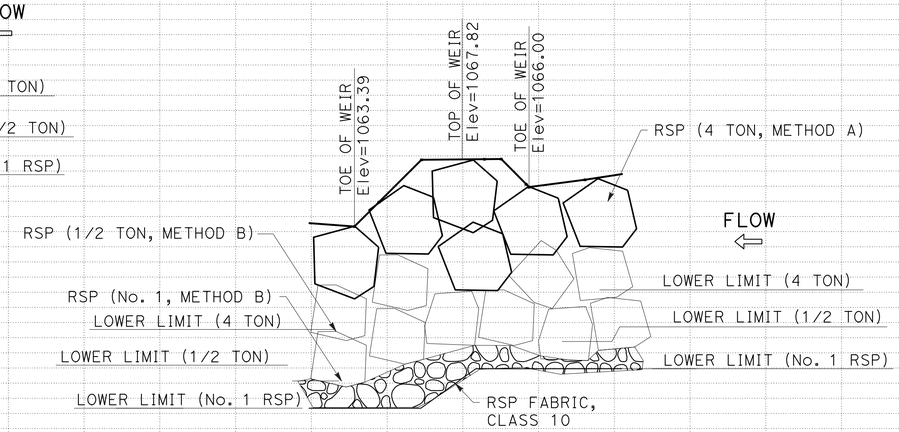

W6 - W6 CROSS SECTION

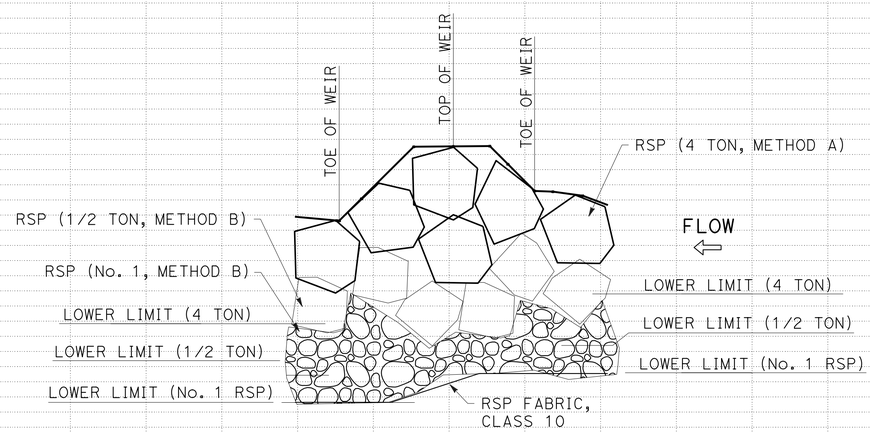

W4 - W4 CROSS SECTION

NOTE:

1. TYPICAL DEPTH OF LAYERS:
   (4 TON) = 6.8 FT
   (1/2 TON) = 3.4 FT
   No. 1 = 1.8 FT

CONSTRUCTION DETAILS

ROCK WEIR PLAN

(SHEET 7 OF 10)

SCALE: Horiz 1" = 10'
Vert 1" = 5'

C-10

0+95 1+00 1+10 1+20 1+30 1+50 0+95 1+00 1+10 1+20 1+25

REVISED BY | DATE REVISED
BEN WILLARDSON | VIK BAPNA
CALCULATED-DESIGNED BY | CHECKED BY
CONSULTANT FUNCTIONAL SUPERVISOR: CAMILO ROCHA
STATE OF CALIFORNIA - DEPARTMENT OF TRANSPORTATION
Caltrans

LAST REVISION 00-00-00 | DATE PLOTTED - 04-AUG-2016 | TIME PLOTTED - 14:47

Dist	COUNTY	ROUTE	POST MILES TOTAL PROJECT	SHEET No.	TOTAL SHEETS
07	Ven	33	15.7	15	108

REGISTERED CIVIL ENGINEER 6-21-16 DATE

6-24-16
PLANS APPROVAL DATE

REGISTERED PROFESSIONAL ENGINEER BEN WILLARDSON No. C64937 Exp. 6/30/17 CIVIL STATE OF CALIFORNIA

THE STATE OF CALIFORNIA OR ITS OFFICERS OR AGENTS SHALL NOT BE RESPONSIBLE FOR THE ACCURACY OR COMPLETENESS OF SCANNED COPIES OF THIS PLAN SHEET.

HDR
3230 EL CAMINO REAL
SUITE 200
IRVINE, CA 92602

CWE
1561 E. ORANGETHORPE
SUITE 240
FULLERTON, CA 92831

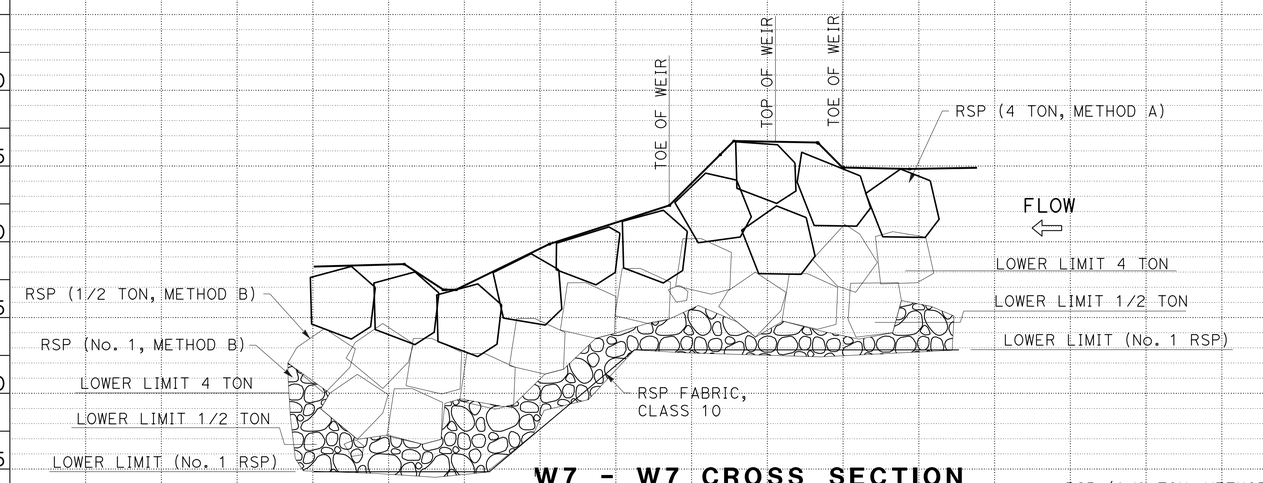

W7 - W7 CROSS SECTION

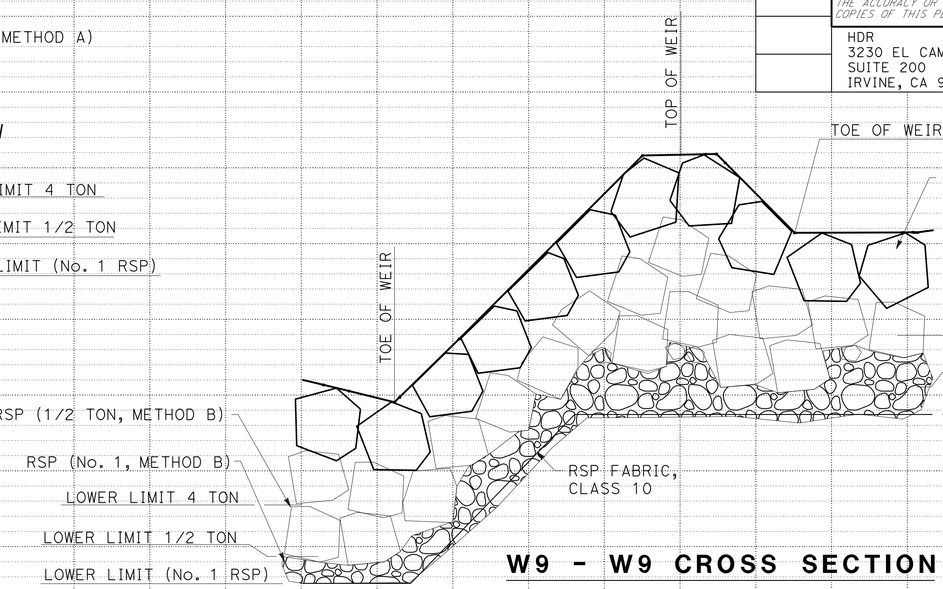

W9 - W9 CROSS SECTION

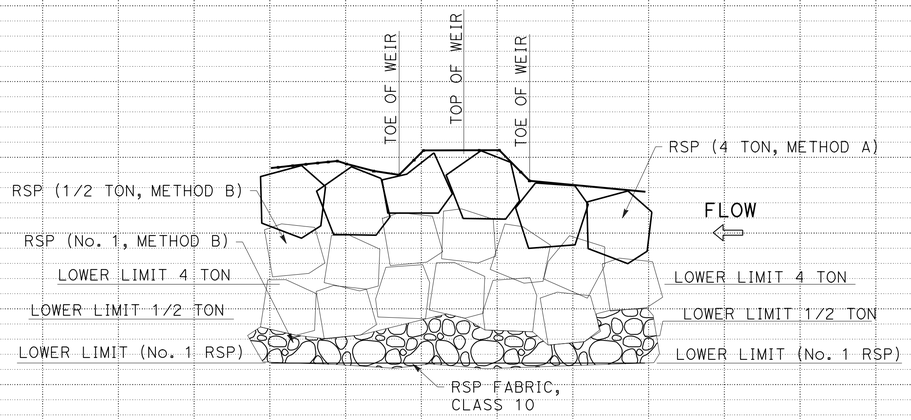

W8 - W8 CROSS SECTION

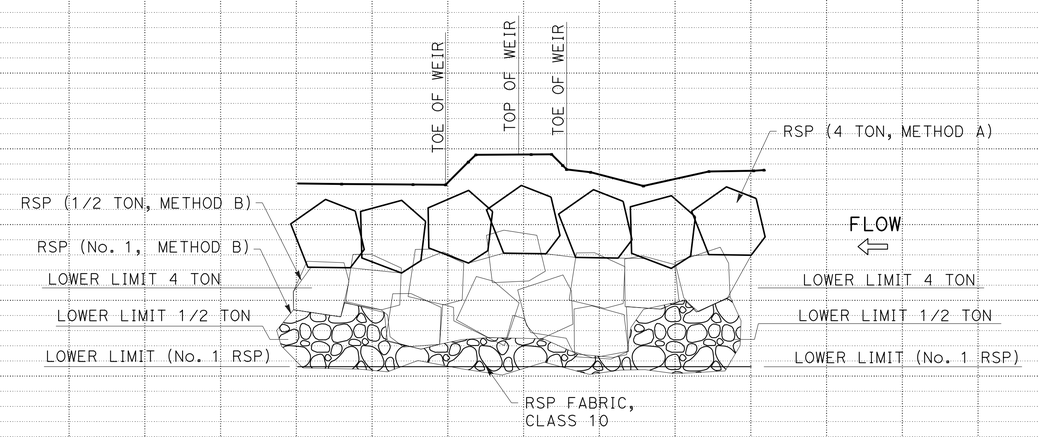

W10 - W10 CROSS SECTION

NOTE:

1. TYPICAL DEPTH OF LAYERS:
   (4 TON) = 6.8 FT
   (1/2 TON) = 3.4 FT
   No. 1 = 1.8 FT

CONSTRUCTION DETAILS
ROCK WEIR PLAN
(SHEET 8 OF 10)

SCALE: Horiz 1" = 10'
Vert 1" = 5'

C-11

0+95 1+00 1+10 1+20 1+30 1+40 0+95 1+00 1+10 1+20 1+25

STATE OF CALIFORNIA - DEPARTMENT OF TRANSPORTATION
Caltrans

CONSULTANT FUNCTIONAL SUPERVISOR: CAMILO ROCHA
CALCULATED-DESIGNED BY: BEN WILLARDSON
CHECKED BY: VIK BAPNA
REVISED BY
DATE REVISED

DATE PLOTTED - 04-AUG-2016
TIME PLOTTED - 14:47
LAST REVISION 00-00-00

Dist	COUNTY	ROUTE	POST MILES TOTAL PROJECT	SHEET No.	TOTAL SHEETS
07	Ven	33	15.7	16	108

REGISTERED CIVIL ENGINEER 6-21-16 DATE

6-24-16
PLANS APPROVAL DATE

REGISTERED PROFESSIONAL ENGINEER BEN WILLARDSON No. C64937 Exp. 6/30/17 CIVIL STATE OF CALIFORNIA

THE STATE OF CALIFORNIA OR ITS OFFICERS OR AGENTS SHALL NOT BE RESPONSIBLE FOR THE ACCURACY OR COMPLETENESS OF SCANNED COPIES OF THIS PLAN SHEET.

HDR
3230 EL CAMINO REAL
SUITE 200
IRVINE, CA 92602

CWE
1561 E. ORANGETHORPE
SUITE 240
FULLERTON, CA 92831

NOTES:

1. USING CHAIN PATTERN SHOWN IN "ROCK WEIR PLAN", FRONT ROW ROCKS MUST BE CHAINED TO BACK ROW ROCKS IN GROUPS OF 2 OR 3.
2. REMOVE ROCK DUST AND LOOSE MATERIAL FROM DRILLED HOLES.
3. PLACE CHAIN IN DRILLED HOLES WITH NO MORE THAN 1" OF SAG IN EACH CHAIN.
4. ONCE CHAIN IS IN PLACE, FILL HOLES WITH HIGH-STRENGTH EPOXY.

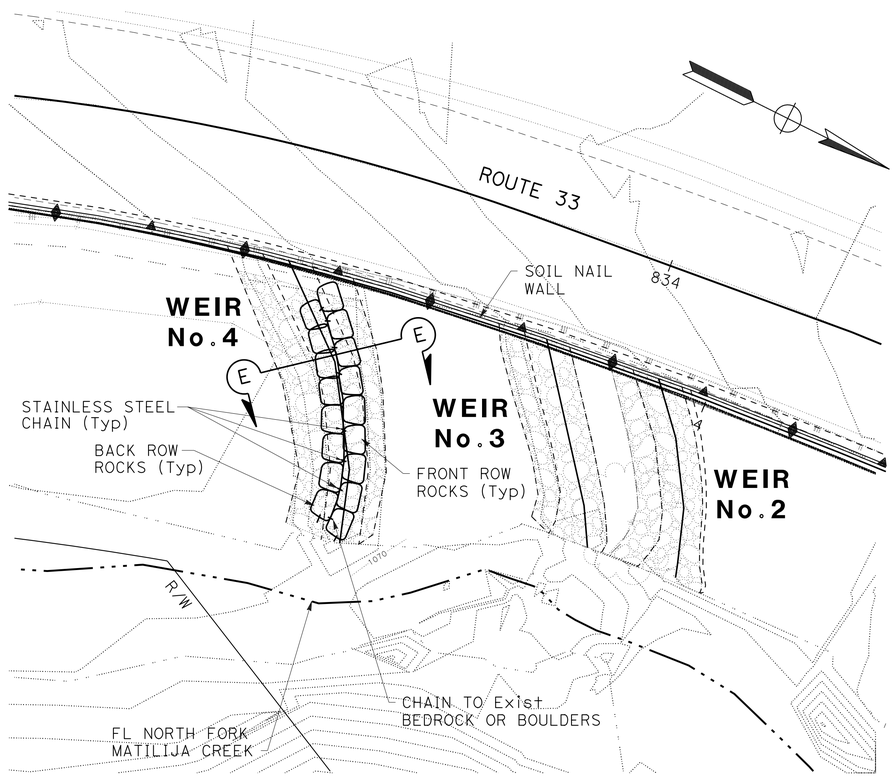

ROCK WEIR PLAN
SCALE: 1" = 10'

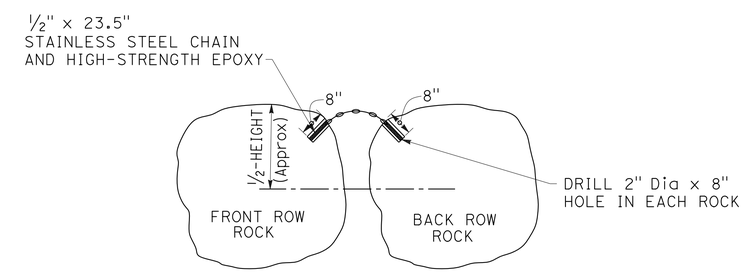

TYPICAL SECTION E-E
NO SCALE

ROCK WEIR CHAINING

ROCK WEIR No. 1 THROUGH No.10

CONSTRUCTION DETAILS

ROCK WEIR PLAN
(SHEET 9 OF 10)
SCALE AS SHOWN

C-12

STATE OF CALIFORNIA - DEPARTMENT OF TRANSPORTATION
Caltrans
CONSULTANT FUNCTIONAL SUPERVISOR: CAMILO ROCHA
CALCULATED-DESIGNED BY: BEN WILLARDSON
CHECKED BY: VIK BAPNA
REVISED BY
DATE REVISED

LAST REVISION 00-00-00
DATE PLOTTED - 04-AUG-2016
TIME PLOTTED - 14:47

Dist	COUNTY	ROUTE	POST MILES TOTAL PROJECT	SHEET No.	TOTAL SHEETS
07	Ven	33	15.7	17	108

REGISTERED CIVIL ENGINEER 6-21-16 DATE

6-24-16
PLANS APPROVAL DATE

REGISTERED PROFESSIONAL ENGINEER BEN WILLARDSON No. C64937 Exp. 6/30/17 CIVIL STATE OF CALIFORNIA

THE STATE OF CALIFORNIA OR ITS OFFICERS OR AGENTS SHALL NOT BE RESPONSIBLE FOR THE ACCURACY OR COMPLETENESS OF SCANNED COPIES OF THIS PLAN SHEET.

HDR
3230 EL CAMINO REAL
SUITE 200
IRVINE, CA 92602

CWE
1561 E. ORANGETHORPE
SUITE 240
FULLERTON, CA 92831

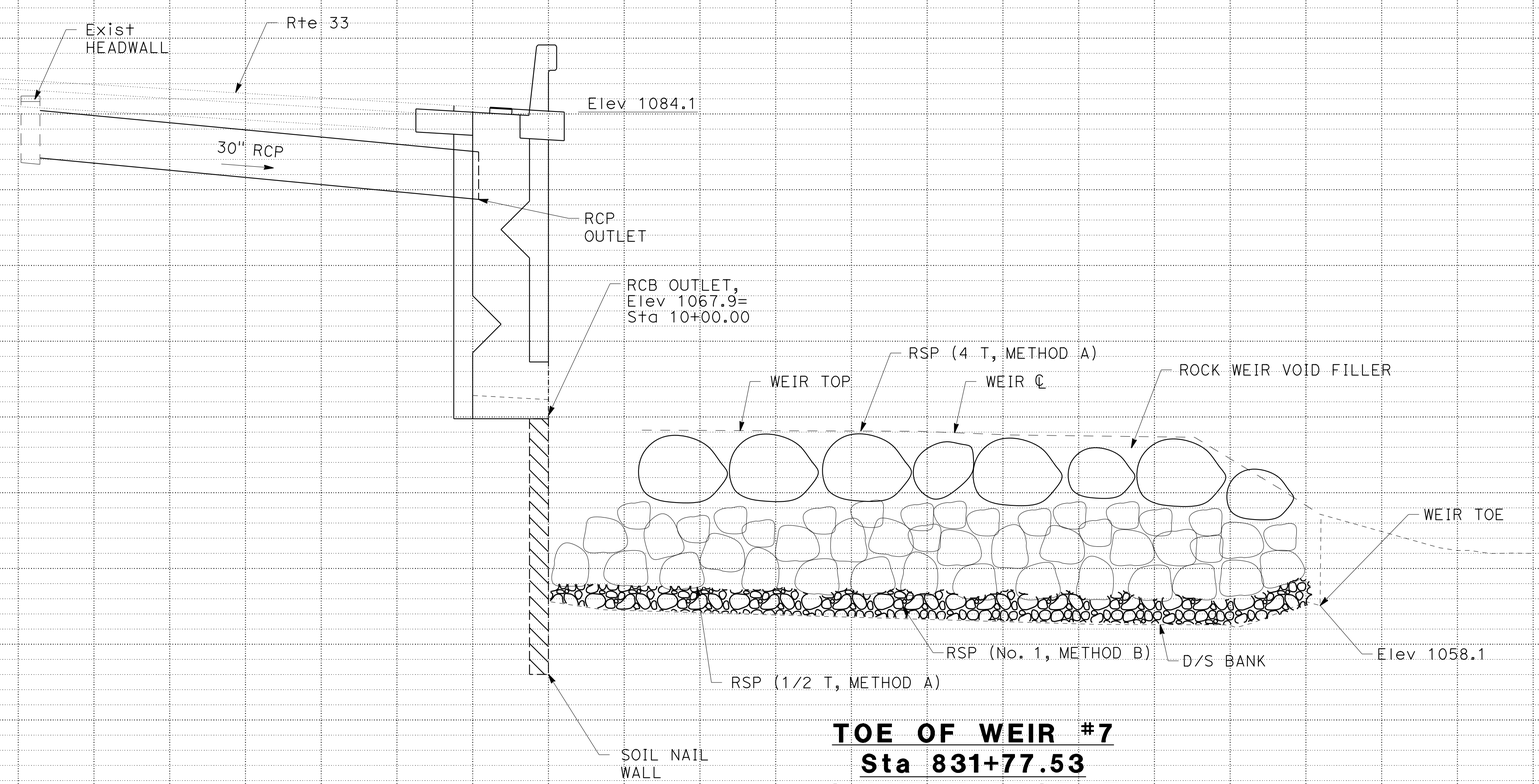

TOE OF WEIR #7
Sta 831+77.53
CULVERT PROFILE

CONSTRUCTION DETAILS
ROCK WEIR PLAN
(SHEET 10 OF 10)
SCALE: Horiz 1" = 4'
Vert 1" = 4'

C-13

REVISED BY | DATE REVISED
BEN WILLARDSON | VIK BAPNA
CALCULATED-DESIGNED BY | CHECKED BY
CONSULTANT FUNCTIONAL SUPERVISOR | CAMILO ROCHA
STATE OF CALIFORNIA - DEPARTMENT OF TRANSPORTATION
Caltrans

LAST REVISION 00-00-00 | DATE PLOTTED - 04-AUG-2016 | TIME PLOTTED - 14:47

Dist	COUNTY	ROUTE	POST MILES TOTAL PROJECT	SHEET No.	TOTAL SHEETS
07	Ven	33	15.7	18	108

REGISTERED CIVIL ENGINEER 6-21-16 DATE

6-24-16
PLANS APPROVAL DATE

REGISTERED PROFESSIONAL ENGINEER BEN WILLARDSON No. C64937 Exp. 6/30/17 CIVIL STATE OF CALIFORNIA

THE STATE OF CALIFORNIA OR ITS OFFICERS OR AGENTS SHALL NOT BE RESPONSIBLE FOR THE ACCURACY OR COMPLETENESS OF SCANNED COPIES OF THIS PLAN SHEET.

HDR
3230 EL CAMINO REAL
SUITE 200
IRVINE, CA 92602

CWE
1561 E. ORANGETHORPE
SUITE 240
FULLERTON, CA 92831

NOTE:

FOR ACCURATE RIGHT OF WAY DATA, CONTACT
RIGHT OF WAY ENGINEERING AT THE DISTRICT OFFICE.

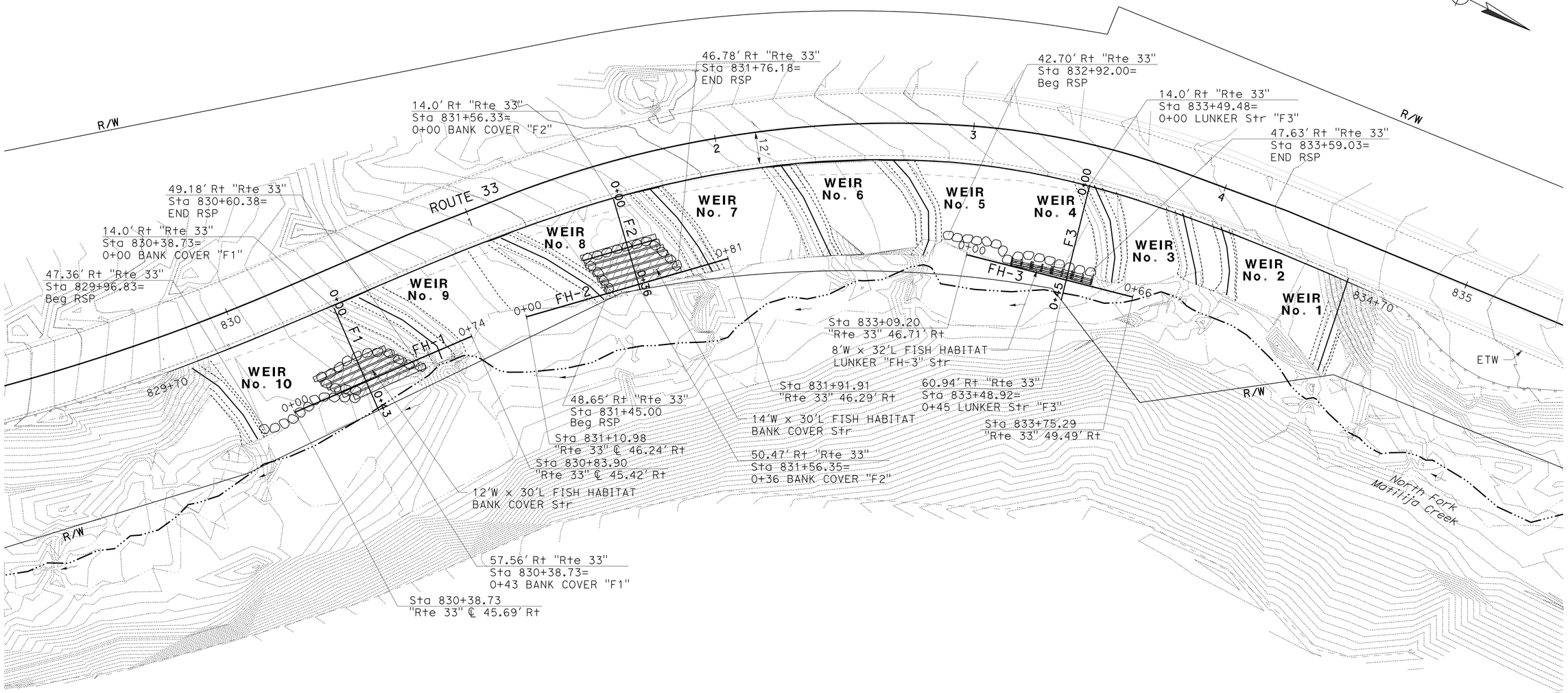

CONSTRUCTION DETAILS
FISH HABITAT STRUCTURES
(SHEET 1 OF 4)

SCALE: 1" = 20'

C-14

STATE OF CALIFORNIA - DEPARTMENT OF TRANSPORTATION
Caltrans

CONSULTANT FUNCTIONAL SUPERVISOR: CAMILO ROCHA

CALCULATED-DESIGNED BY: BEN WILLARDSON
CHECKED BY: VIK BAPNA

REVISED BY
DATE REVISED

LAST REVISION 00-00-00
DATE PLOTTED = 04-AUG-2016
TIME PLOTTED = 14:47

Dist	COUNTY	ROUTE	POST MILES TOTAL PROJECT	SHEET No.	TOTAL SHEETS
07	Ven	33	15.7	19	108

REGISTERED CIVIL ENGINEER 6-21-16 DATE

6-24-16
PLANS APPROVAL DATE

REGISTERED PROFESSIONAL ENGINEER BEN WILLARDSON No. C64937 Exp. 6/30/17 CIVIL STATE OF CALIFORNIA

THE STATE OF CALIFORNIA OR ITS OFFICERS OR AGENTS SHALL NOT BE RESPONSIBLE FOR THE ACCURACY OR COMPLETENESS OF SCANNED COPIES OF THIS PLAN SHEET.

HDR
3230 EL CAMINO REAL
SUITE 200
IRVINE, CA 92602

CWE
1561 E. ORANGETHORPE
SUITE 240
FULLERTON, CA 92831

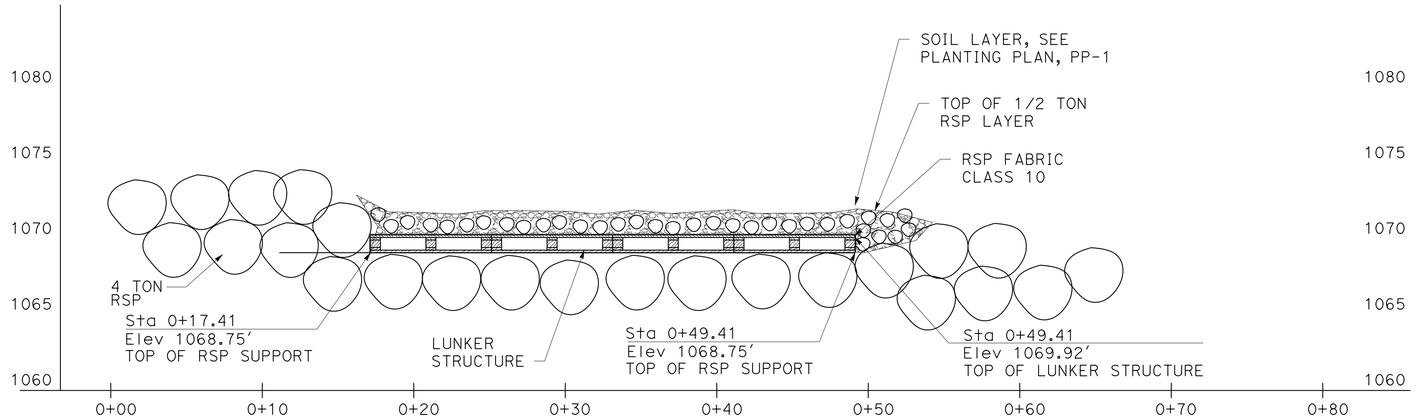

LUNKER STRUCTURE FH-3 PROFILE

SCALE: Horiz 1" = 5'
Vert 1" = 5'

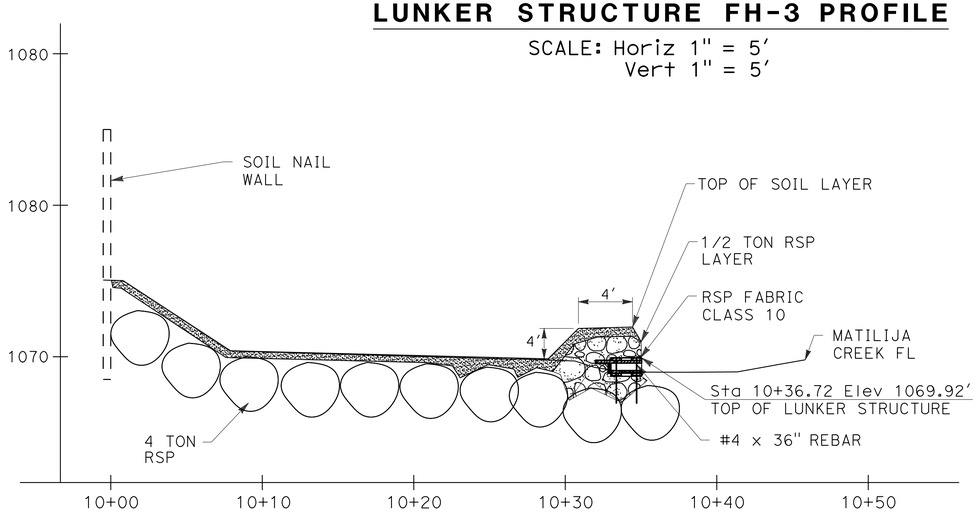

LUNKER STRUCTURE F3 CROSS SECTION

SCALE: Horiz: 1" = 5'
Vert: 1" = 5'

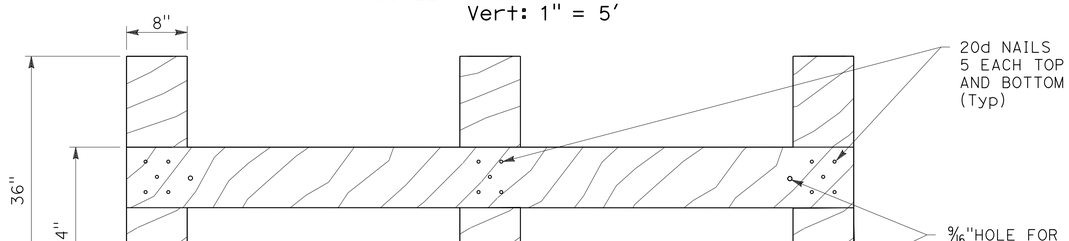

LUNKER PLAN
NO SCALE

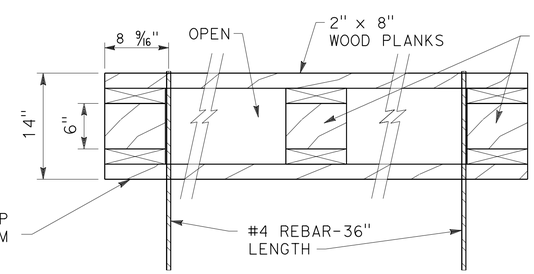

LUNKER ELEVATION
NO SCALE

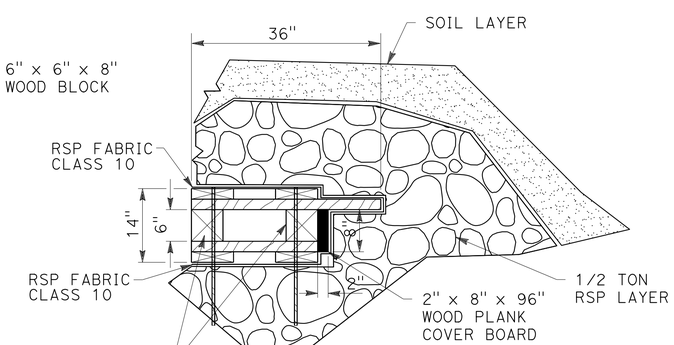

LUNKER SECTION
NO SCALE

LUNKER STRUCTURE FH-3 DETAILS

GENERAL NOTES:

1. TYPICAL DEPTH OF LAYERS:
   (4 TON) = 6.8 FT
   (1/2 TON) = 3.4 FT
   No. 1 = 1.8 FT

CONSTRUCTION DETAILS
FISH HABITAT STRUCTURES
(SHEET 2 OF 4)
SCALE AS SHOWN

C-15

STATE OF CALIFORNIA - DEPARTMENT OF TRANSPORTATION
Caltrans®

CONSULTANT FUNCTIONAL SUPERVISOR: CAMILO ROCHA
CALCULATED-DESIGNED BY: BEN WILLARDSON
CHECKED BY: VIK BAPNA
REVISED BY
DATE REVISED

LAST REVISION 00-00-00
DATE PLOTTED - 04-AUG-2016
TIME PLOTTED - 14:47

Dist	COUNTY	ROUTE	POST MILES TOTAL PROJECT	SHEET No.	TOTAL SHEETS
07	Ven	33	15.7	20	108

REGISTERED CIVIL ENGINEER 6-21-16 DATE

6-24-16
PLANS APPROVAL DATE

REGISTERED PROFESSIONAL ENGINEER BEN WILLARDSON No. C64937 Exp. 6/30/17 CIVIL STATE OF CALIFORNIA

THE STATE OF CALIFORNIA OR ITS OFFICERS OR AGENTS SHALL NOT BE RESPONSIBLE FOR THE ACCURACY OR COMPLETENESS OF SCANNED COPIES OF THIS PLAN SHEET.

HDR
3230 EL CAMINO REAL
SUITE 200
IRVINE, CA 92602

CWE
1561 E. ORANGETHORPE
SUITE 240
FULLERTON, CA 92831

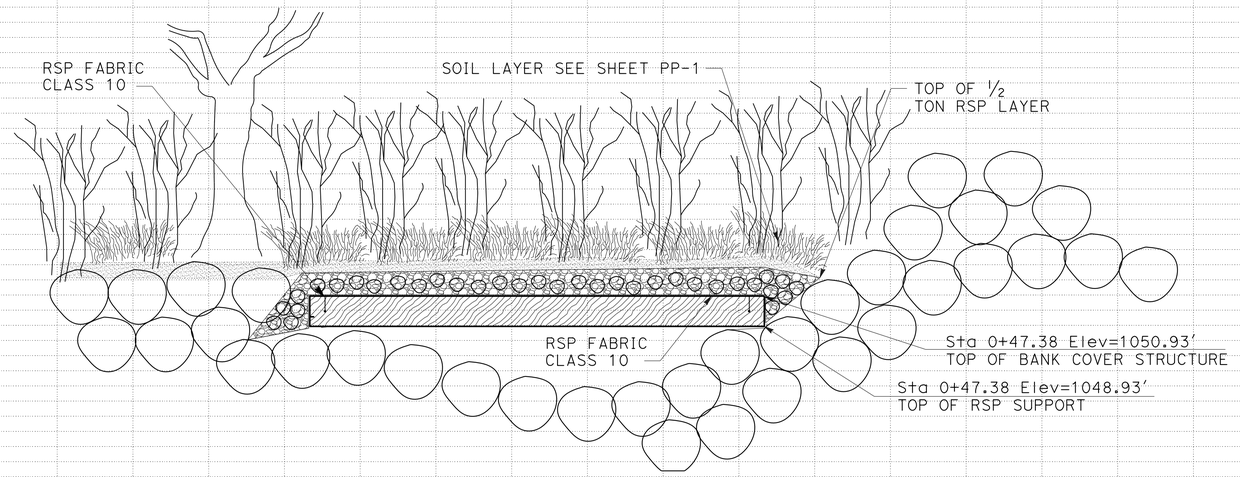

BANK COVER FH-1 PROFILE
(WEIR No. 9 Loc)

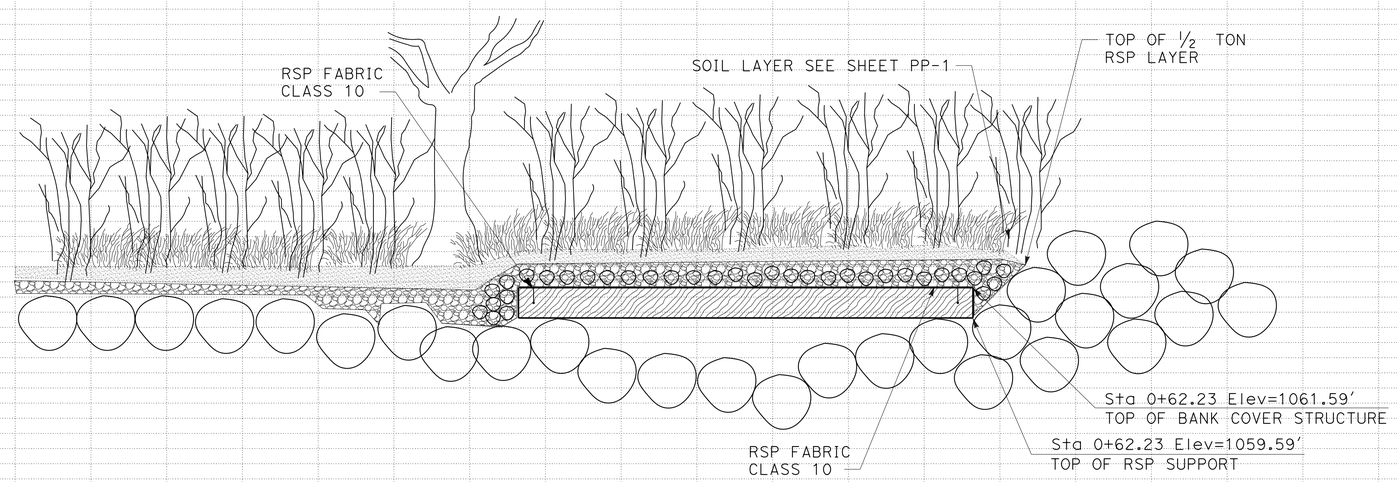

BANK COVER FH-2 PROFILE
(WEIR No. 7 Loc)

CONSTRUCTION DETAILS
FISH HABITAT STRUCTURES
PROFILES (SHEET 3 OF 4)

SCALE: Horiz 1" = 5'
Vert 1" = 5'

C-16

STATE OF CALIFORNIA - DEPARTMENT OF TRANSPORTATION
Caltrans®

CONSULTANT FUNCTIONAL SUPERVISOR: CAMILO ROCHA
CALCULATED-DESIGNED BY: BEN WILLARDSON
CHECKED BY: VIK BAPNA
REVISED BY
DATE REVISED

LAST REVISION 00-00-00
DATE PLOTTED - 04-AUG-2016
TIME PLOTTED - 14:47

Dist	COUNTY	ROUTE	POST MILES TOTAL PROJECT	SHEET No.	TOTAL SHEETS
07	Ven	33	15.7	21	108

REGISTERED CIVIL ENGINEER 6-21-16 DATE

6-24-16
PLANS APPROVAL DATE

REGISTERED PROFESSIONAL ENGINEER BEN WILLARDSON No. C64937 Exp. 6/30/17 CIVIL STATE OF CALIFORNIA

THE STATE OF CALIFORNIA OR ITS OFFICERS OR AGENTS SHALL NOT BE RESPONSIBLE FOR THE ACCURACY OR COMPLETENESS OF SCANNED COPIES OF THIS PLAN SHEET.

HDR
3230 EL CAMINO REAL
SUITE 200
IRVINE, CA 92602

CWE
1561 E. ORANGETHORPE
SUITE 240
FULLERTON, CA 92831

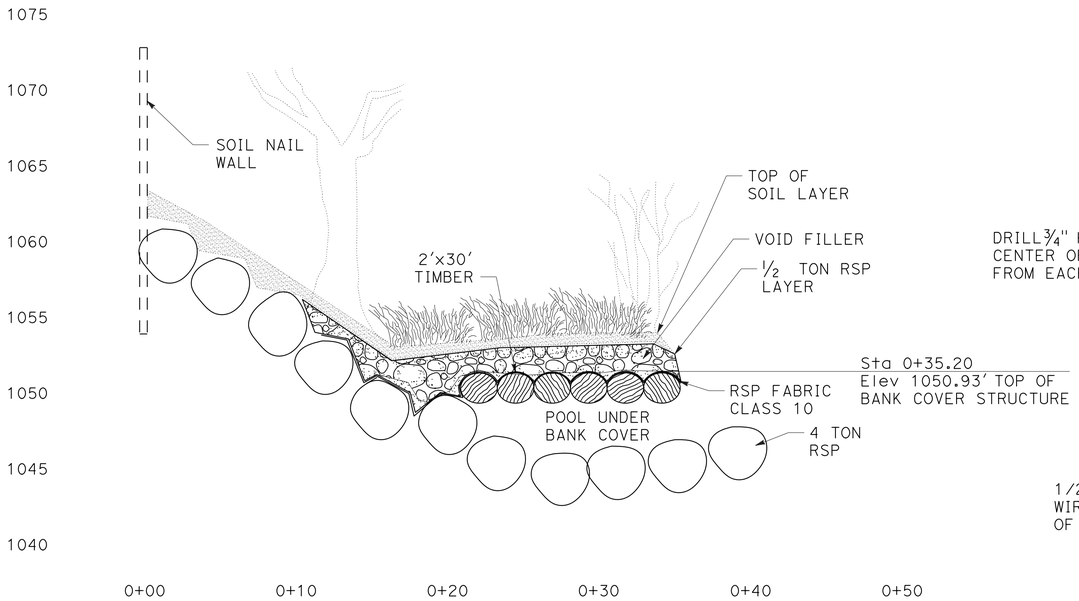

BANK COVER F1 STRUCTURE
(WEIR No. 9 Loc) 12'W x 30'L

SCALE: Horiz 1" = 5'
Vert 1" = 5'

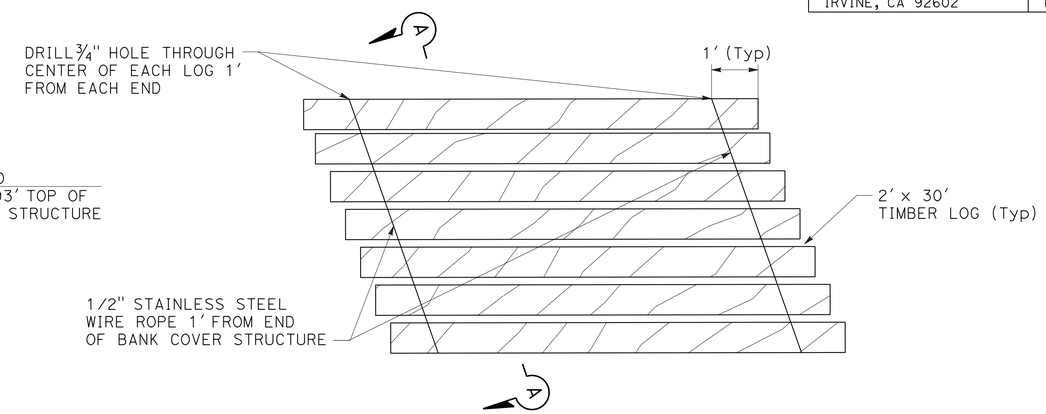

TYPICAL BANK COVER STRUCTURE PLAN

NO SCALE

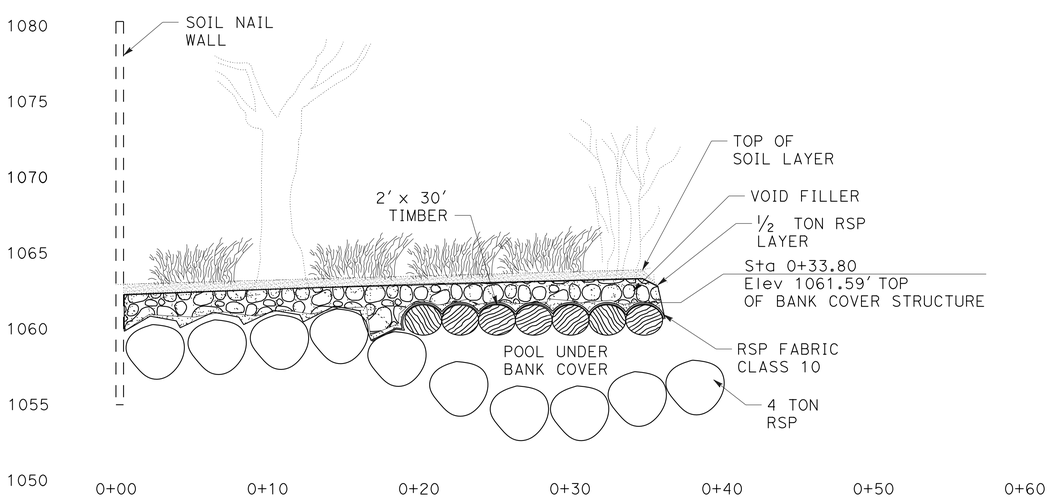

BANK COVER F2 STRUCTURE
(WEIR No. 7 Loc) 14'W x 30'L

SCALE: Horiz 1" = 5'
Vert 1" = 5'

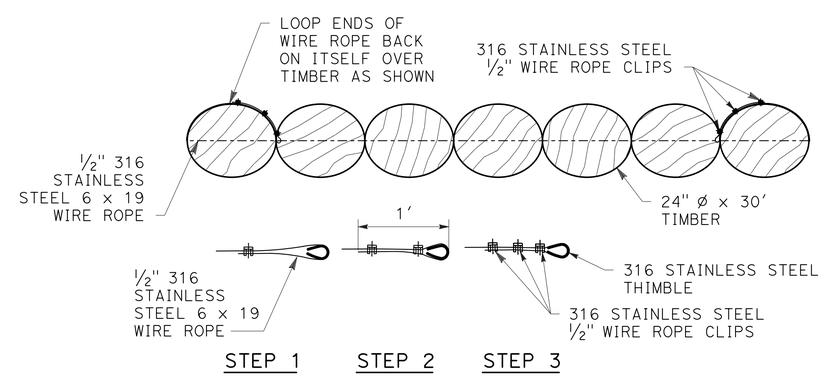

SECTION A-A
TIMBER STRUCTURE ELEMENT OF THE BANK COVER STRUCTURE

NO SCALE

CONSTRUCTION DETAILS
FISH HABITAT STRUCTURES
(SHEET 4 OF 4)

SCALE AS SHOWN

C-17

STATE OF CALIFORNIA - DEPARTMENT OF TRANSPORTATION

Caltrans

CONSULTANT FUNCTIONAL SUPERVISOR: CAMILO ROCHA

CALCULATED-DESIGNED BY: BEN WILLARDSON

CHECKED BY: VIK BAPNA

REVISED BY

DATE REVISED

LAST REVISION 00-00-00

DATE PLOTTED = 04-AUG-2016
TIME PLOTTED = 14:47

Dist	COUNTY	ROUTE	POST MILES TOTAL PROJECT	SHEET No.	TOTAL SHEETS
07	Ven	33	15.7	22	108

REGISTERED CIVIL ENGINEER 6-21-16 DATE

6-24-16
PLANS APPROVAL DATE

REGISTERED PROFESSIONAL ENGINEER BEN WILLARDSON No. C64937 Exp. 6/30/17 CIVIL STATE OF CALIFORNIA

THE STATE OF CALIFORNIA OR ITS OFFICERS OR AGENTS SHALL NOT BE RESPONSIBLE FOR THE ACCURACY OR COMPLETENESS OF SCANNED COPIES OF THIS PLAN SHEET.

HDR
3230 EL CAMINO REAL
SUITE 200
IRVINE, CA 92602

CWE
1561 E. ORANGETHORPE
SUITE 240
FULLERTON, CA 92831

NOTE:

FOR ACCURATE RIGHT OF WAY DATA, CONTACT RIGHT OF WAY ENGINEERING AT THE DISTRICT OFFICE.

LEGEND:

TEMPORARY RSP (4T, METHOD A)

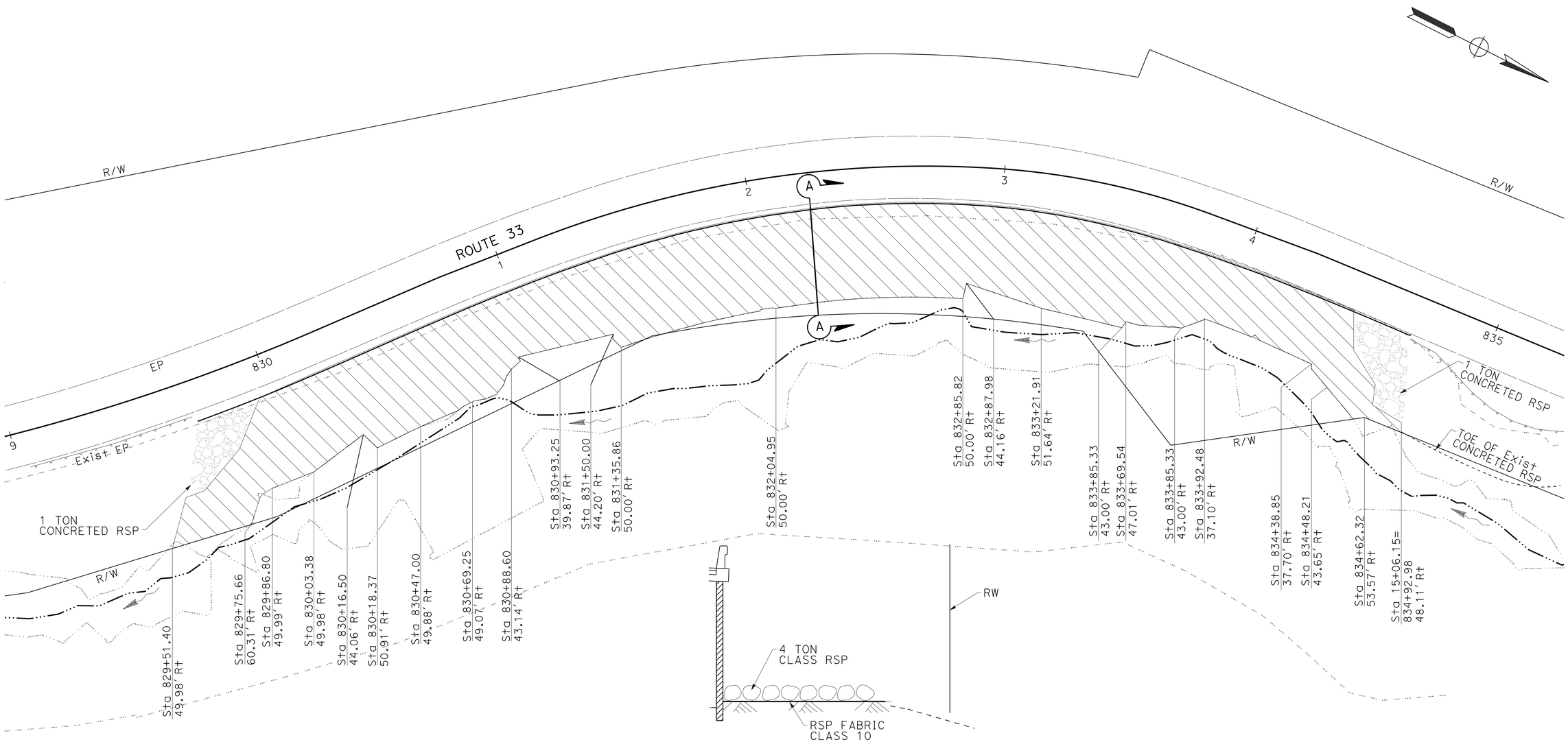

SECTION A-A
NO SCALE

CONSTRUCTION DETAILS
TEMPORARY ROCK SLOPE PROTECTION
SCALE: 1" = 20'

C-18

STATE OF CALIFORNIA - DEPARTMENT OF TRANSPORTATION
Caltrans

CONSULTANT FUNCTIONAL SUPERVISOR: CAMILO ROCHA
CALCULATED-DESIGNED BY: BEN WILLARDSON
CHECKED BY: VIK BAPNA
REVISED BY
DATE REVISED

LAST REVISION 00-00-00
DATE PLOTTED - 04-AUG-2016
TIME PLOTTED - 14:47

Dist	COUNTY	ROUTE	POST MILES TOTAL PROJECT	SHEET No.	TOTAL SHEETS
07	Ven	33	15.7	23	108

REGISTERED CIVIL ENGINEER 6-21-16 DATE

6-24-16
PLANS APPROVAL DATE

REGISTERED PROFESSIONAL ENGINEER BEN WILLARDSON No. C64937 Exp. 6/30/17 CIVIL STATE OF CALIFORNIA

THE STATE OF CALIFORNIA OR ITS OFFICERS OR AGENTS SHALL NOT BE RESPONSIBLE FOR THE ACCURACY OR COMPLETENESS OF SCANNED COPIES OF THIS PLAN SHEET.

HDR
3230 EL CAMINO REAL
SUITE 200
IRVINE, CA 92602

CWE
1561 E. ORANGETHORPE
SUITE 240
FULLERTON, CA 92831

NOTE:

FOR ACCURATE RIGHT OF WAY DATA, CONTACT RIGHT OF WAY ENGINEERING AT THE DISTRICT OFFICE.

LEGEND:

NYLON FISH BARRIER NET (3/8-INCH MESH SIZE AND 1#16" TWINE DIAMETER)

PVC FLOATS

CURVE DATA

No. ⊛	R	Δ	T	L
8	11.25′	92°22′44"	11.73′	18.14′
9	392.00′	38°43′10"	137.74′	264.91′

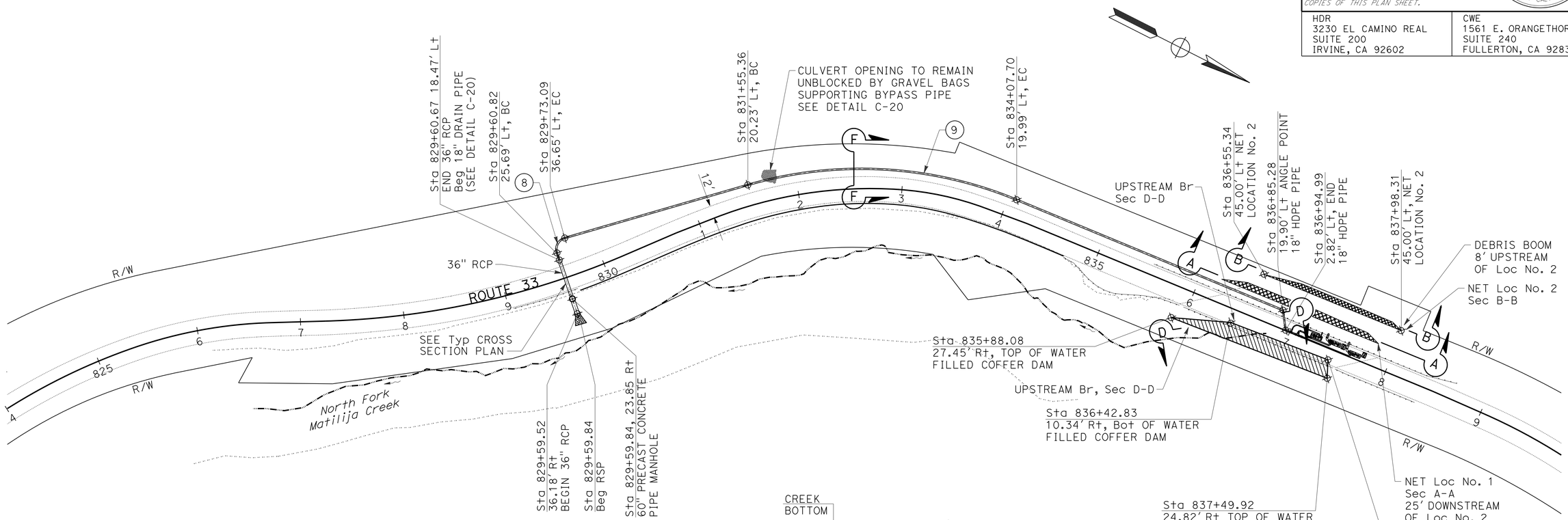

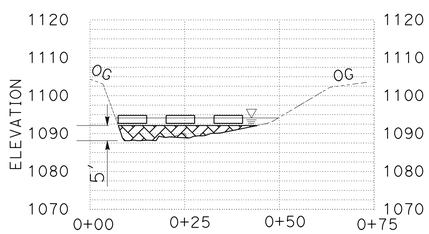

SECTION A-A
NET LOCATION No. 1
SCALE: 1" = 20′

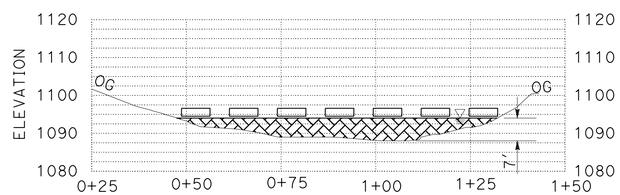

SECTION B-B
NET LOCATION No. 2
SCALE: 1" = 20′

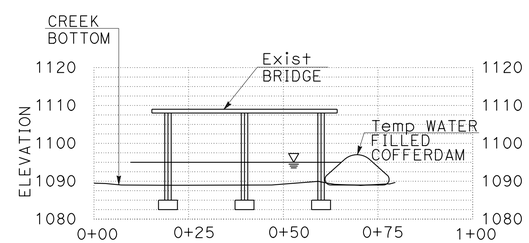

SECTION D-D
PROFILE AT SOUTH ABUTEMENT
SCALE: 1" = 20′

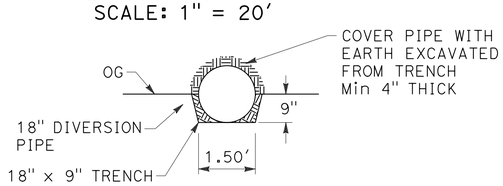

SECTION F-F
DITCH EXCAVATION
NO SCALE

CONSTRUCTION DETAILS

TEMPORARY CREEK DIVERSION SYSTEM
PROJECT CONTROL (SHEET 1 OF 4)

SCALE: 1" = 50′

C-19

STATE OF CALIFORNIA - DEPARTMENT OF TRANSPORTATION
Caltrans

CONSULTANT FUNCTIONAL SUPERVISOR: CAMILO ROCHA
CALCULATED-DESIGNED BY: BEN WILLARDSON
CHECKED BY: VIK BAPNA
REVISED BY
DATE REVISED

LAST REVISION 00-00-00
DATE PLOTTED - 04-AUG-2016
TIME PLOTTED - 14:47

Dist	COUNTY	ROUTE	POST MILES TOTAL PROJECT	SHEET No.	TOTAL SHEETS
07	Ven	33	15.7	24	108

REGISTERED CIVIL ENGINEER 6-21-16 DATE

6-24-16
PLANS APPROVAL DATE

REGISTERED PROFESSIONAL ENGINEER BEN WILLARDSON No. C64937 Exp. 6/30/17 CIVIL STATE OF CALIFORNIA

THE STATE OF CALIFORNIA OR ITS OFFICERS OR AGENTS SHALL NOT BE RESPONSIBLE FOR THE ACCURACY OR COMPLETENESS OF SCANNED COPIES OF THIS PLAN SHEET.

HDR
3230 EL CAMINO REAL
SUITE 200
IRVINE, CA 92602

CWE
1561 E. ORANGETHORPE
SUITE 240
FULLERTON, CA 92831

CONSTRUCTION LEGEND:

1. Sta 829+59.52, 36.18′ Rt, Beg 36" RCP TO Sta 929+59.77, 24.14′ Rt, END 36" RCP
2. Sta 829+59.84, 21.39′ Rt, 60" Ø PRECAST CONCRETE PIPE MANHOLE STRUCTURE, 6" WALL, 8" BASE, 10′ HEIGHT
3. Sta 829+59.84, 21.39′ Rt, PRECAST REINFORCED CONCRETE FLAT MANHOLE STRUCTURE TOP WITH 30" ECCENTRIC OPENING, 11.5" THICK
4. Sta 829+59.84, 21.39′ Rt, 30" Ø MANHOLE RIM AND COVER
5. Sta 829+59.92, 18.64′ Rt, Beg 36" RCP Sta 829+60.67, 18.47′ Lt, END 36" RCP
6. Sta 829+60.67, 18.47′ Lt, PIPE CULVERT HEADWALL (SEE Std PLAN D89)
7. Sta 829+60.69, 19.47′ Lt, GRAVEL BAG REVETMENT TO SEAL 18" HDPE DRAIN PIPE IN 36" RCP
8. Sta 829+60.57 13.47′ Lt, Beg 18" HDPE DRAIN PIPE Sta 836+94.99, 2.82′ Lt, END 18" HDPE DRAIN PIPE
9. Sta 831+72.03 TO Sta 831+87.47, 20.18′ Lt GRAVEL BAG SUPPORT FOR 18" HDPE DRAIN PIPE

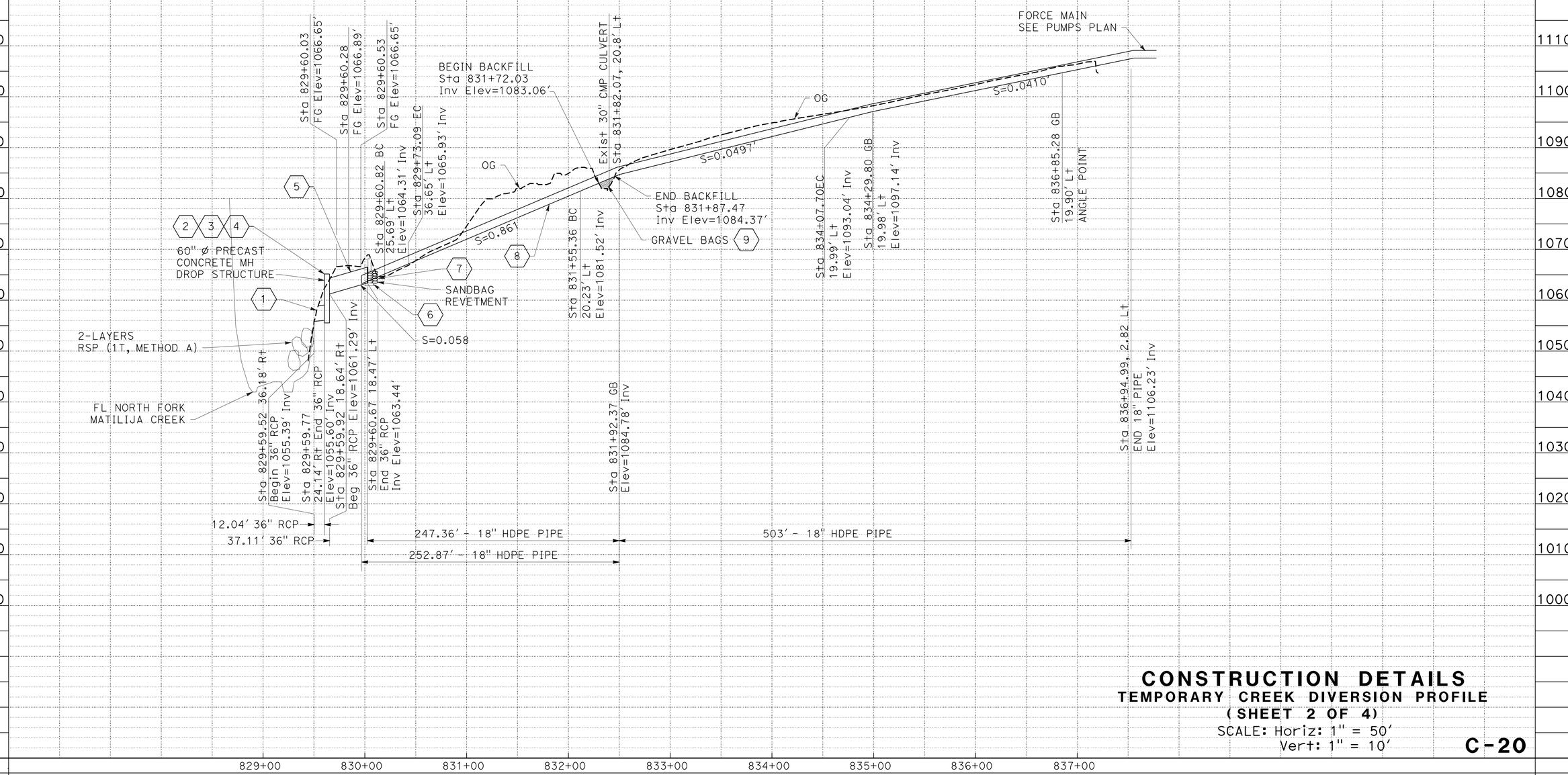

CONSTRUCTION DETAILS
TEMPORARY CREEK DIVERSION PROFILE
(SHEET 2 OF 4)

SCALE: Horiz: 1" = 50′
Vert: 1" = 10′

C-20

STATE OF CALIFORNIA - DEPARTMENT OF TRANSPORTATION
Caltrans

CONSULTANT FUNCTIONAL SUPERVISOR: CAMILO ROCHA
CALCULATED-DESIGNED BY: BEN WILLARDSON
CHECKED BY: VIK BAPNA
REVISED BY
DATE REVISED

LAST REVISION 00-00-00
DATE PLOTTED - 04-AUG-2016
TIME PLOTTED - 14:47

Dist	COUNTY	ROUTE	POST MILES TOTAL PROJECT	SHEET No.	TOTAL SHEETS
07	Ven	33	15.7	25	108

REGISTERED CIVIL ENGINEER 6-21-16 DATE

6-24-16
PLANS APPROVAL DATE

REGISTERED PROFESSIONAL ENGINEER BEN WILLARDSON No. C64937 Exp. 6/30/17 CIVIL STATE OF CALIFORNIA

THE STATE OF CALIFORNIA OR ITS OFFICERS OR AGENTS SHALL NOT BE RESPONSIBLE FOR THE ACCURACY OR COMPLETENESS OF SCANNED COPIES OF THIS PLAN SHEET.

HDR
3230 EL CAMINO REAL
SUITE 200
IRVINE, CA 92602

CWE
1561 E. ORANGETHORPE
SUITE 240
FULLERTON, CA 92831

ABBREVIATIONS:

GPM GALLONS PER MINUTE
TDH TOTAL DYNAMIC HEAD

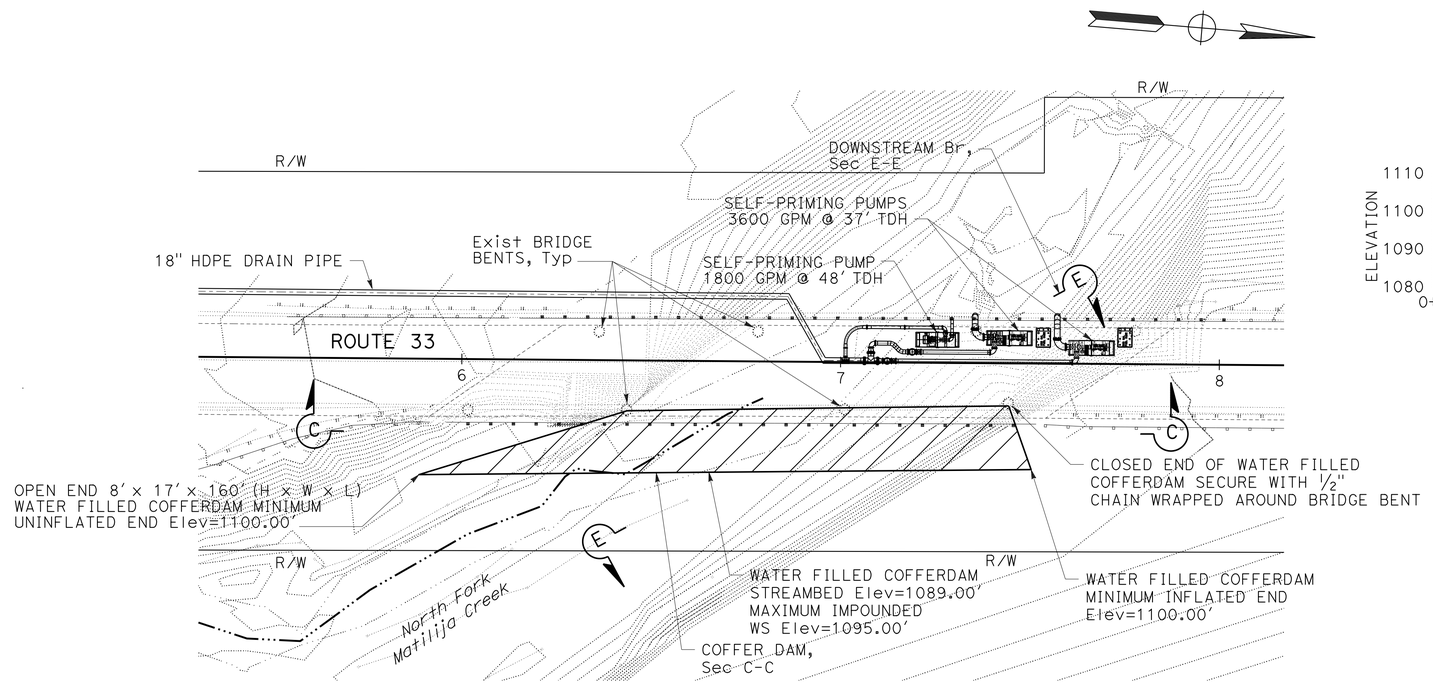

COFFER DAM PLAN
SCALE: 1" = 20'

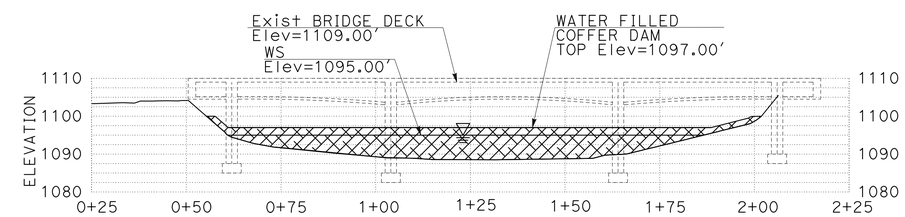

SECTION C-C
SCALE: 1" = 20'

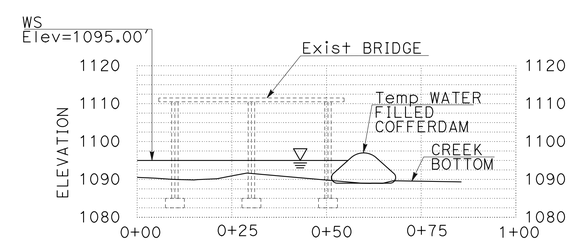

SECTION E-E
SCALE: 1" = 20'

CONSTRUCTION DETAILS
TEMPORARY CREEK DIVERSION SYSTEM
(SHEET 3 OF 4)
SCALE: 1" = 20'

C-21

REVISED BY | DATE REVISED
BEN WILLARDSON | VIK BAPNA
CALCULATED-DESIGNED BY | CHECKED BY
CONSULTANT FUNCTIONAL SUPERVISOR | CAMILO ROCHA
STATE OF CALIFORNIA - DEPARTMENT OF TRANSPORTATION
Caltrans

LAST REVISION 00-00-00 | DATE PLOTTED - 04-AUG-2016 | TIME PLOTTED - 14:47

Dist	COUNTY	ROUTE	POST MILES TOTAL PROJECT	SHEET No.	TOTAL SHEETS
07	Ven	33	15.7	26	108

REGISTERED CIVIL ENGINEER 6-21-16 DATE

6-24-16
PLANS APPROVAL DATE

REGISTERED PROFESSIONAL ENGINEER BEN WILLARDSON No. C64937 Exp. 6/30/17 CIVIL STATE OF CALIFORNIA

THE STATE OF CALIFORNIA OR ITS OFFICERS OR AGENTS SHALL NOT BE RESPONSIBLE FOR THE ACCURACY OR COMPLETENESS OF SCANNED COPIES OF THIS PLAN SHEET.

HDR
3230 EL CAMINO REAL
SUITE 200
IRVINE, CA 92602

CWE
1561 E. ORANGETHORPE
SUITE 240
FULLERTON, CA 92831

PUMP TABLE

PUMP	CAPACITY (GPM)	WS Elev ON	WS Elev OFF
A	3600	1093.00′	1091.50′
B	3600	1092.50′	1091.00′
C	1800	1092.00′	1090.00′

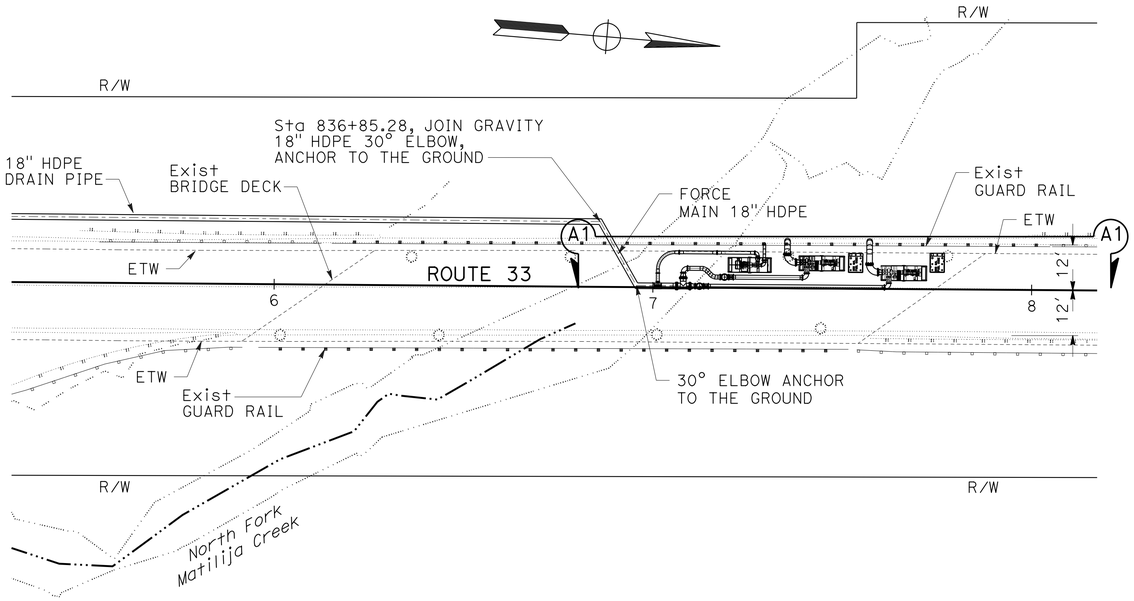

PUMP LAYOUT

SCALE: 1" = 20′

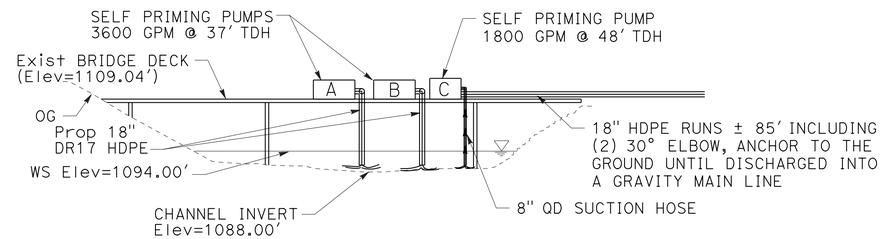

SECTION A1-A1

PROFILE AT SOUTH ABUTEMENT
SCALE: 1" = 20′

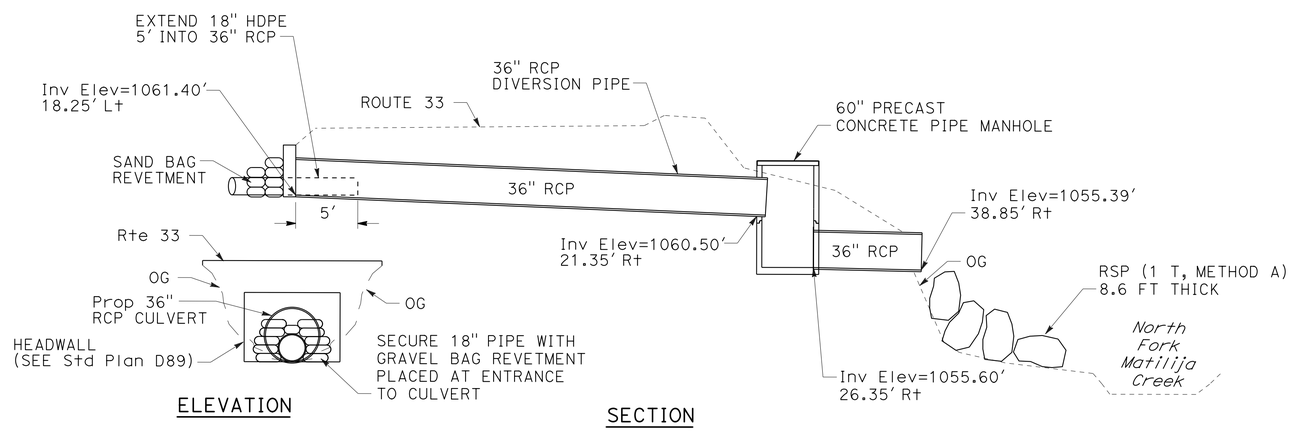

UNDERCROSSING DIVERSION PIPE CONNECTION PROFILE AT Sta 829+60 ROUTE 33

SCALE: 1" = 10′

ABBREVIATIONS:

QD	QUICK DISCONNECT
WS	WATER SURFACE
DR	DIMENSION RATIO

CONSTRUCTION DETAILS

TEMPORARY CREEK DIVERSION SYSTEM

(SHEET 4 OF 4)

SCALE AS SHOWN

C-22

STATE OF CALIFORNIA - DEPARTMENT OF TRANSPORTATION

Caltrans

CONSULTANT FUNCTIONAL SUPERVISOR: CAMILO ROCHA

CALCULATED-DESIGNED BY: BEN WILLARDSON

CHECKED BY: VIK BAPNA

REVISED BY | DATE REVISED

LAST REVISION 00-00-00 | DATE PLOTTED - 04-AUG-2016 | TIME PLOTTED - 14:47

DIST	COUNTY	ROUTE	POST MILES TOTAL PROJECT	SHEET No.	TOTAL SHEETS
07	Ven	33	15.7	27	108

REGISTERED CIVIL ENGINEER 6/9/16 DATE

6-24-16
PLANS APPROVAL DATE

REGISTERED PROFESSIONAL ENGINEER YU SONG No. C71687 Exp. 12/31/17 CIVIL STATE OF CALIFORNIA

The State of California or its officers or agents shall not be responsible for the accuracy or completeness of scanned copies of this plan sheet.

LOCATION TABLE

BRIDGE No.	BRIDGE NAME	ROUTE	POST MILE	DIRECTION	APPROACH END	DEPARTURE END	LENGTH	TOTAL LENGTH
52-0044	NORTH FORK MATILIJA CREEK	33	15.85	WB RIGHT	1		6'-0"	6'-0"

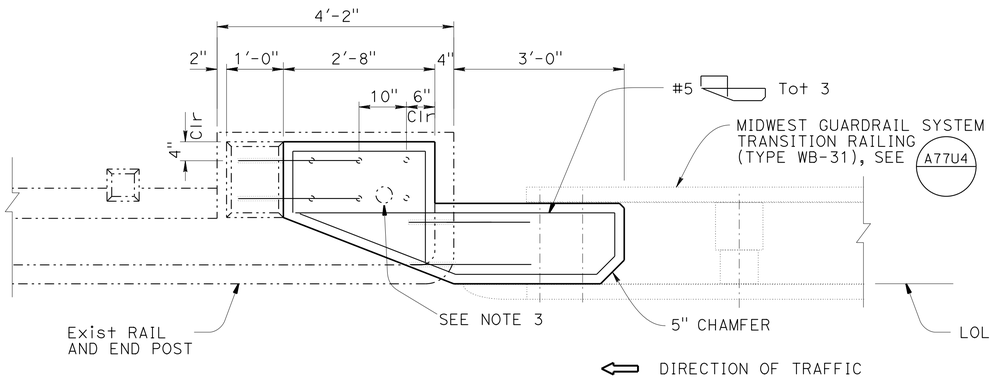

PLAN
3/4" = 1'-0"

LEGEND:

Indicates existing structure

Indicates new structure

NOTES:

1. See "ROADWAY PLANS" for work location.
2. Holes used for fastening existing MBGR must be mortar filled, unless holes were cast using pipe sleeves.
3. Relocate survey monument.
4. The alignment of the barrier transition and transitional railing shall follow that of the existing MBGR.

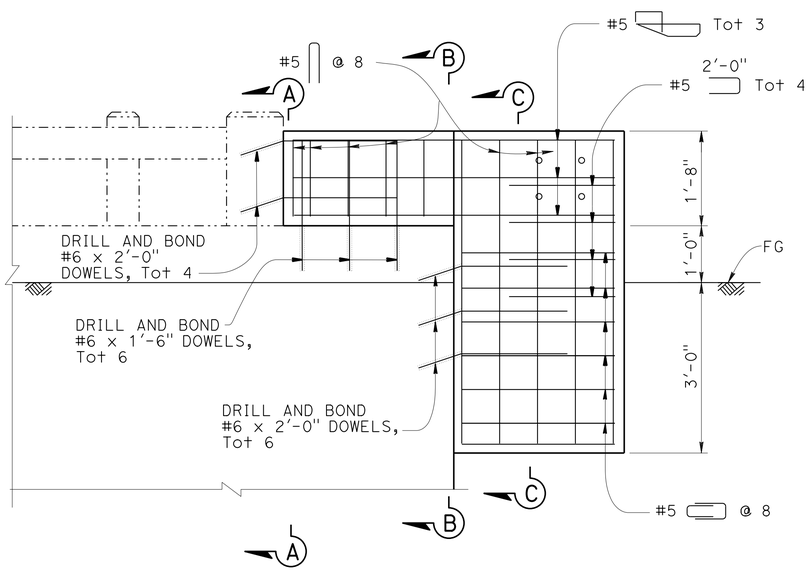

ELEVATION
3/4" = 1'-0"

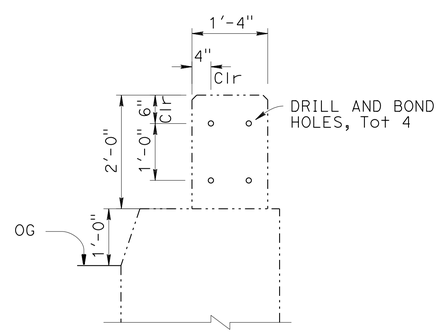

SECTION A-A
3/4" = 1'-0"

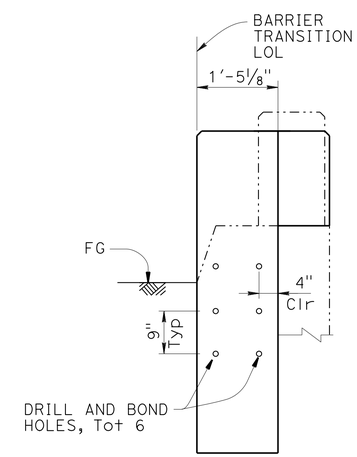

SECTION B-B
3/4" = 1'-0"

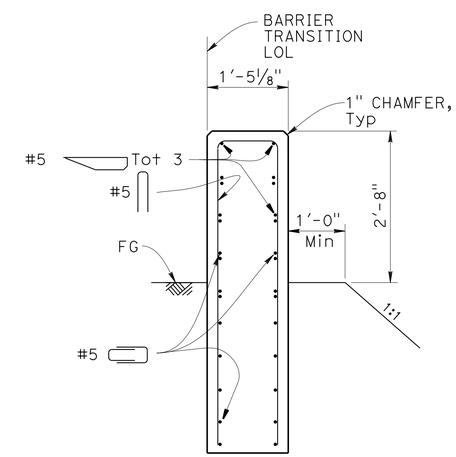

SECTION C-C
3/4" = 1'-0"

THE CONTRACTOR MUST VERIFY ALL CONTROLLING FIELD DIMENSIONS BEFORE ORDERING OR FABRICATING ANY MATERIAL.

CONSTRUCTION DETAILS C-23

DESIGN	BY YU SONG	CHECKED VICTOR LOPEZ	
DETAILS	BY HUNG NGUYEN	CHECKED YU SONG	
QUANTITIES	BY	CHECKED	

BRANCH CHIEF DAVID NEUMANN

STATE OF **CALIFORNIA** DEPARTMENT OF TRANSPORTATION

DIVISION OF ENGINEERING SERVICES DESIGN AND TECHNICAL SERVICES SPECIAL DESIGNS BRANCH **B**

BRIDGE NO. 52-0044
POST MILE 15.85

CONCRETE BARRIER TRANSITIONS
BRIDGE END CONNECTION

STRUCTURES DESIGN DETAIL SHEET (ENGLISH) (REV. 09-01-10)

ORIGINAL SCALE IN INCHES FOR REDUCED PLANS 0 1 2 3

UNIT: X
PROJECT NUMBER & PHASE: 0714000092-1
CONTRACT NO.: 07-305204

DISREGARD PRINTS BEARING EARLIER REVISION DATES

REVISION DATES 6/6/16 SHEET 1 OF 1

FILE => 730520ga023.dgn

USERNAME => s125624 DATE PLOTTED => 04-AUG-2016 TIME PLOTTED => 14:47

Dist	COUNTY	ROUTE	POST MILES TOTAL PROJECT	SHEET No.	TOTAL SHEETS
07	Ven	33	15.7	28	108

REGISTERED CIVIL ENGINEER 6-21-16 DATE

6-24-16
PLANS APPROVAL DATE

REGISTERED PROFESSIONAL ENGINEER
ARA JITECHIAN
No. 54893
Exp. 6/30/18
CIVIL
STATE OF CALIFORNIA

THE STATE OF CALIFORNIA OR ITS OFFICERS OR AGENTS SHALL NOT BE RESPONSIBLE FOR THE ACCURACY OR COMPLETENESS OF SCANNED COPIES OF THIS PLAN SHEET.

NOTES:

1. FOR ACCURATE RIGHT OF WAY DATA, CONTACT RIGHT OF WAY ENGINEERING AT THE DISTRICT OFFICE.
2. CONTRACTOR SHALL VERIFY FIELD DIMENSIONS PRIOR TO COMMENCEMENT OF WORK.

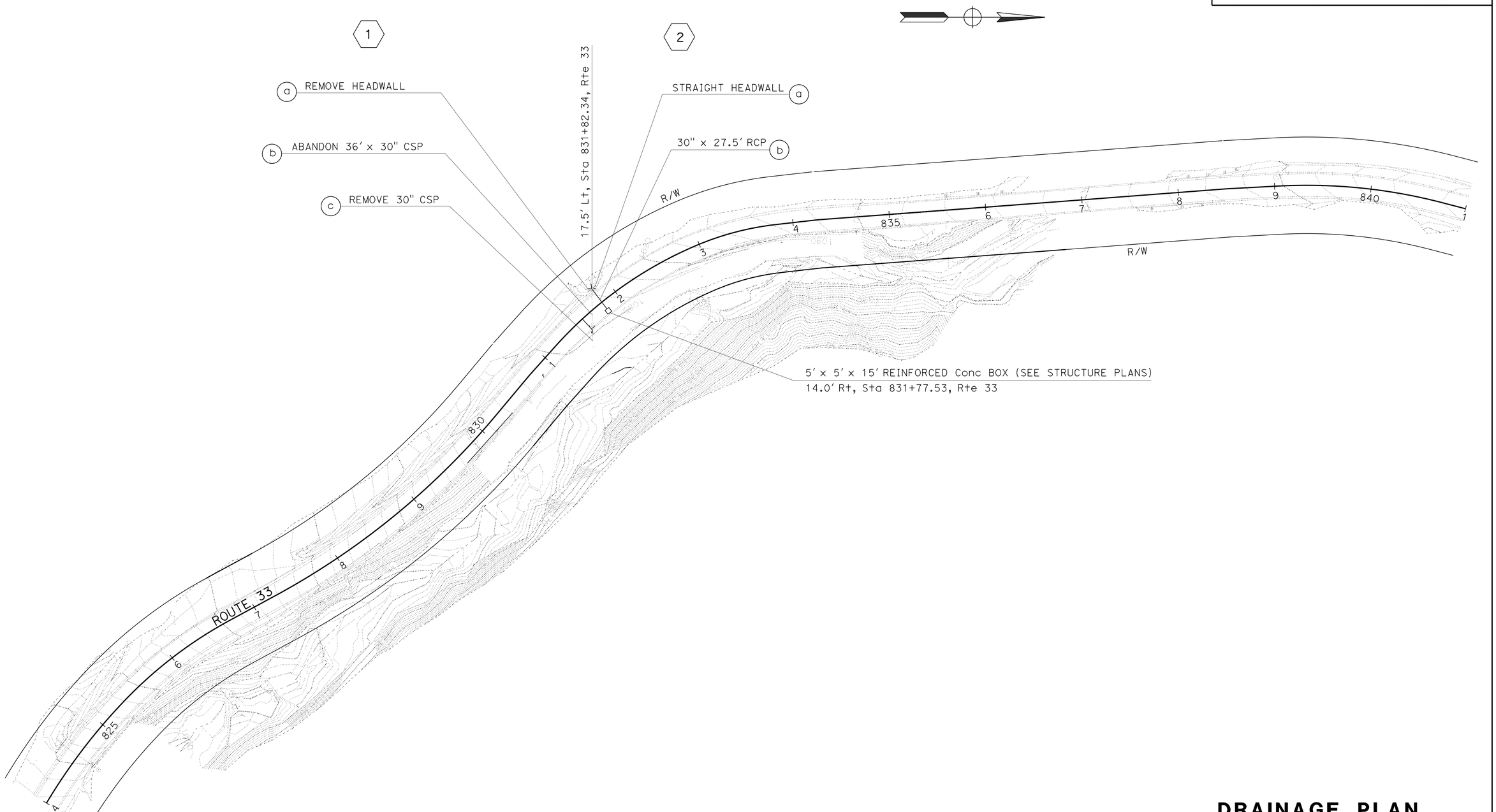

APPROVED FOR DRAINAGE WORK ONLY

DRAINAGE PLAN

SCALE: 1" = 50'

D-1

STATE OF CALIFORNIA - DEPARTMENT OF TRANSPORTATION
Caltrans
HYDRAULICS

FUNCTIONAL SUPERVISOR: DAVE BHALLA
CALCULATED-DESIGNED BY: ARA JITECHIAN
CHECKED BY: DAVE BHALLA
REVISED BY
DATE REVISED

LAST REVISION 00-00-00
DATE PLOTTED => 04-AUG-2016
TIME PLOTTED => 14:47

Dist	COUNTY	ROUTE	POST MILES TOTAL PROJECT	SHEET No.	TOTAL SHEETS
07	Ven	33	15.7	29	108

REGISTERED CIVIL ENGINEER 6-21-16 DATE

6-24-16
PLANS APPROVAL DATE

REGISTERED PROFESSIONAL ENGINEER ARA JITECHIAN No. 54893 Exp. 6/30/18 CIVIL STATE OF CALIFORNIA

THE STATE OF CALIFORNIA OR ITS OFFICERS OR AGENTS SHALL NOT BE RESPONSIBLE FOR THE ACCURACY OR COMPLETENESS OF SCANNED COPIES OF THIS PLAN SHEET.

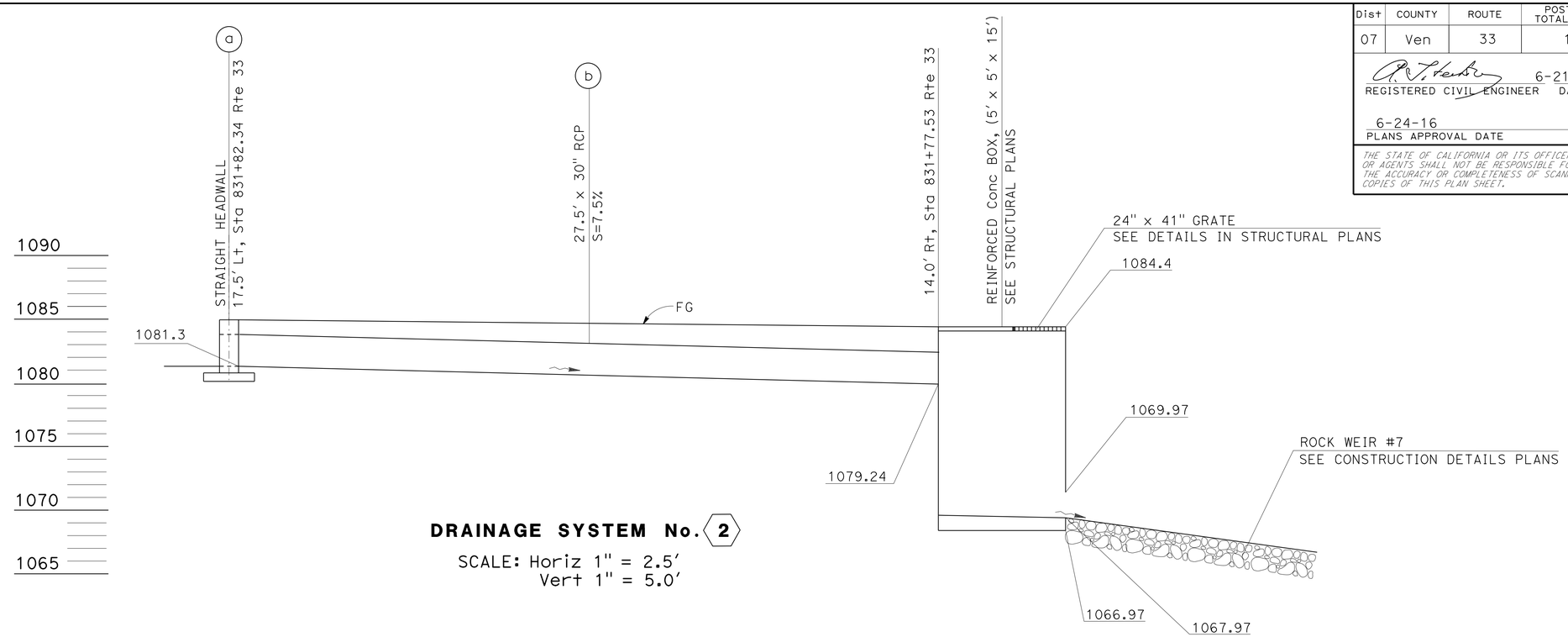

DRAINAGE SYSTEM No. 2

SCALE: Horiz 1" = 2.5'
Vert 1" = 5.0'

DRAINAGE QUANTITIES

DRAINAGE SHEET No.	DRAINAGE SYSTEM No. ⬡	DRAINAGE UNIT No. ○	REMOVE PIPE LF	REMOVE CONCRETE CY	ABANDON PIPELINE EA	SAND BACKFILL CY	30" RCP LF	MINOR Conc (MINOR STRUCTURE) CY	DESCRIPTION	STATION
D-1	1	a		1.52					REMOVE HEADWALL	17.5' Lt, Sta 831+82.34, Rte 33
D-1	1	b			1	5.1			ABANDON 30" CSP, L=22'	17.5' Lt, Sta 831+82.34, Rte 33
D-1	1	c	8						REMOVE 30" CSP	
D-1	2	a						1.52	HEADWALL	17.5' Lt, Sta 831+82.34, Rte 33
D-1	2	b					27.5		30" RCP	
TOTAL			8	1.52	1	5.1	27.5	1.52		

DRAINAGE PROFILES AND QUANTITIES

DP-1

STATE OF CALIFORNIA - DEPARTMENT OF TRANSPORTATION
Caltrans HYDRAULICS

FUNCTIONAL SUPERVISOR: DAVE BHALLA
CALCULATED-DESIGNED BY: ARA JITECHIAN
CHECKED BY: DAVE BHALLA
REVISED BY
DATE REVISED

LAST REVISION 00-00-00
DATE PLOTTED => 04-AUG-2016
TIME PLOTTED => 14:47

Dist	COUNTY	ROUTE	POST MILES TOTAL PROJECT	SHEET No.	TOTAL SHEETS
07	Ven	33	15.7	30	108

Steve Pham 6-21-16
REGISTERED CIVIL ENGINEER DATE

6-24-16
PLANS APPROVAL DATE

REGISTERED PROFESSIONAL ENGINEER STEVE PHAM No. 67183 Exp. 9/30/16 CIVIL STATE OF CALIFORNIA

THE STATE OF CALIFORNIA OR ITS OFFICERS OR AGENTS SHALL NOT BE RESPONSIBLE FOR THE ACCURACY OR COMPLETENESS OF SCANNED COPIES OF THIS PLAN SHEET.

STATIONARY MOUNTED CONSTRUCTION AREA SIGNS

SIGN No. (X)	SIGN CODE FEDERAL	SIGN CODE CALIFORNIA	PANEL SIZE	SIGN MESSAGE	NUMBER OF POSTS AND SIZE	No. OF SIGNS
1			90" x 60"	CONSTRUCTION PROJECT FUNDING IDENTIFICATION SIGN	2 - 6" x 6"	2
2		C40(CA)	108" x 42"	TRAFFIC FINES DOUBLED IN CONSTRUCTION ZONES	2 - 6" x 6"	2
3	W20-1		36" x 36"	ROAD WORK AHEAD	1 - 4" x 6"	5
4	W20-4		36" x 36"	ONE LANE ROAD AHEAD	1 - 4" x 6"	2
5	W3-3		30" x 30"	TRAFFIC SIGNAL SIGN	1 - 4" x 6"	2
6	W5-1		36" x 36"	ROAD NARROWS	1 - 4" x 6"	2
* 7	R10-6		24" x 36"	STOP HERE ON RED	1 - 4" x 6"	2
8	G20-2		36" x 18"	END ROAD WORK	1 - 4" x 6"	2
* 9	W1-4R		30" x 30"	REVERSE CURVE SIGN (RIGHT)	1 - 4" x 6"	2
* 10	W1-4L		30" x 30"	REVERSE CURVE SIGN (LEFT)	1 - 4" x 6"	2
11	W20-1		36" x 36"	ROAD WORK AHEAD	1 - 4" x 6"	2
	W13-1		24" x 24"	25 MPH		
12	PCMS			1st FLASH: ROADWORK/AHEAD/7AM-5PM 2nd: Beg Const DATE TO END Const DAY 3rd: EXPECT/DELAY		2

NOTES:

1. LOCATIONS OF CONSTRUCTION AREA SIGNS SHOWN ARE APPROXIMATE. EXACT LOCATIONS WILL BE DETERMINED BY THE ENGINEER.
2. "TRAFFIC FINES DOUBLED IN CONSTRUCTION ZONES" SIGN MUST BE PLACED APPROXIMATELY 500 FEET IN ADVANCE OF "ROAD WORK AHEAD" SIGN OR AS DIRECTED BY THE ENGINEER.
3. "*" SIGNS SHOWN ON TRAFFIC HANDLING PLAN.

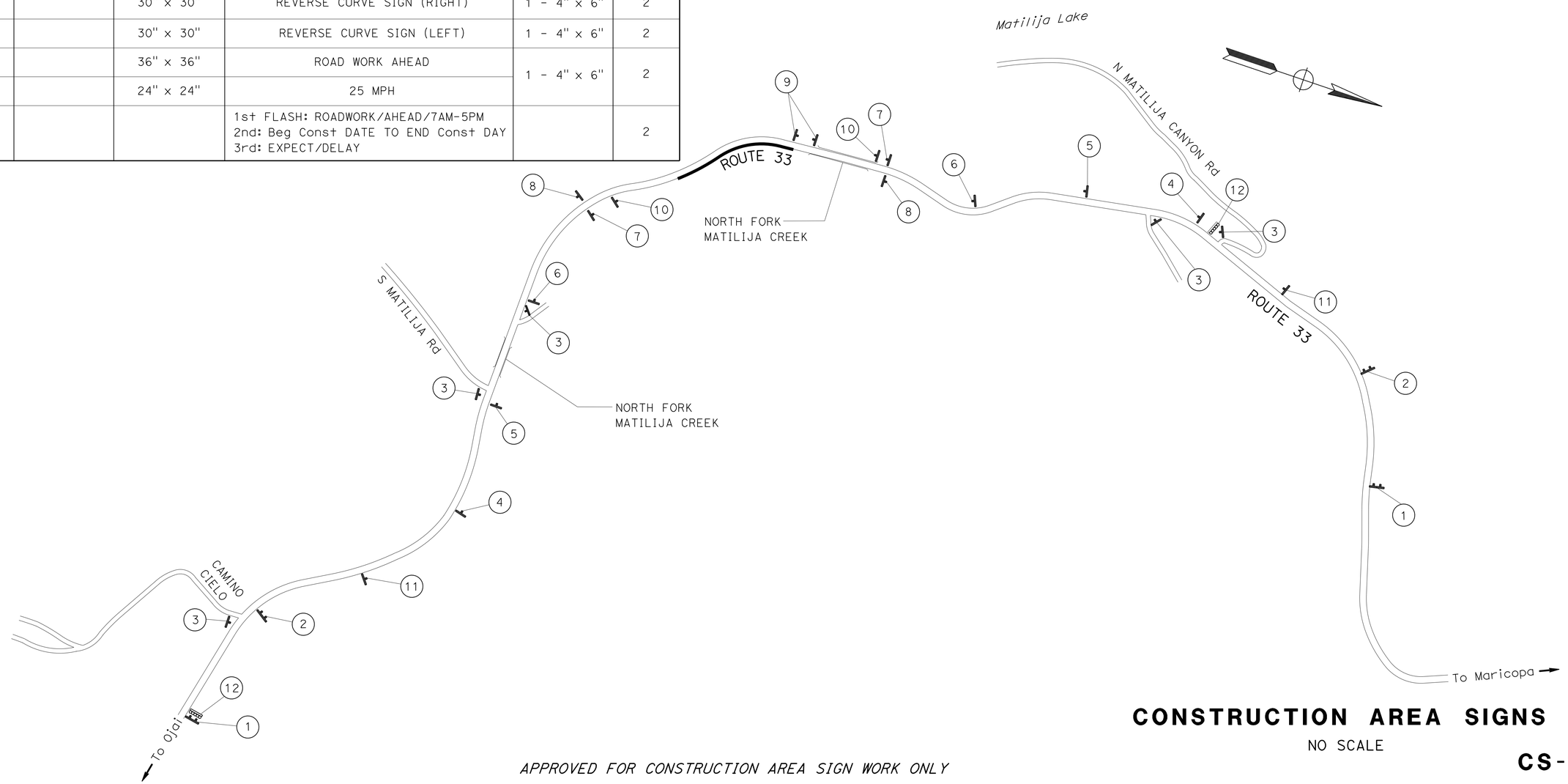

APPROVED FOR CONSTRUCTION AREA SIGN WORK ONLY

CONSTRUCTION AREA SIGNS

NO SCALE

CS-1

STATE OF CALIFORNIA - DEPARTMENT OF TRANSPORTATION
Caltrans
DESIGN

FUNCTIONAL SUPERVISOR: MANSOOR A. KHAN
CALCULATED-DESIGNED BY: STEVE PHAM
CHECKED BY: SHAO-CHIANG LIU
REVISED BY
DATE REVISED

LAST REVISION 00-00-00
DATE PLOTTED => 04-AUG-2016
TIME PLOTTED => 14:47

Dist	COUNTY	ROUTE	POST MILES TOTAL PROJECT	SHEET No.	TOTAL SHEETS
07	Ven	33	15.7	31	108

Steve Pham 6-21-16
REGISTERED CIVIL ENGINEER DATE

6-24-16
PLANS APPROVAL DATE

REGISTERED PROFESSIONAL ENGINEER
STEVE PHAM
No. 67183
Exp. 9/30/16
CIVIL
STATE OF CALIFORNIA

THE STATE OF CALIFORNIA OR ITS OFFICERS OR AGENTS SHALL NOT BE RESPONSIBLE FOR THE ACCURACY OR COMPLETENESS OF SCANNED COPIES OF THIS PLAN SHEET.

LEGEND:

TEMPORARY CRASH CUSHION MODULE (ARRAY "TS11")

NOTE:

FOR ADDITIONAL CONSTRUCTION AREA SIGNS, SEE CONSTRUCTION AREA SIGNS PLAN.

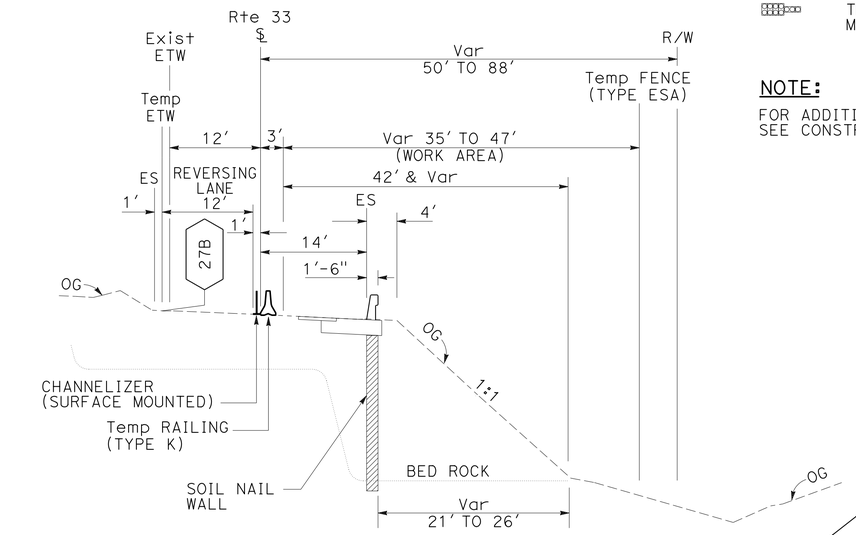

SECTION A-A
NO SCALE

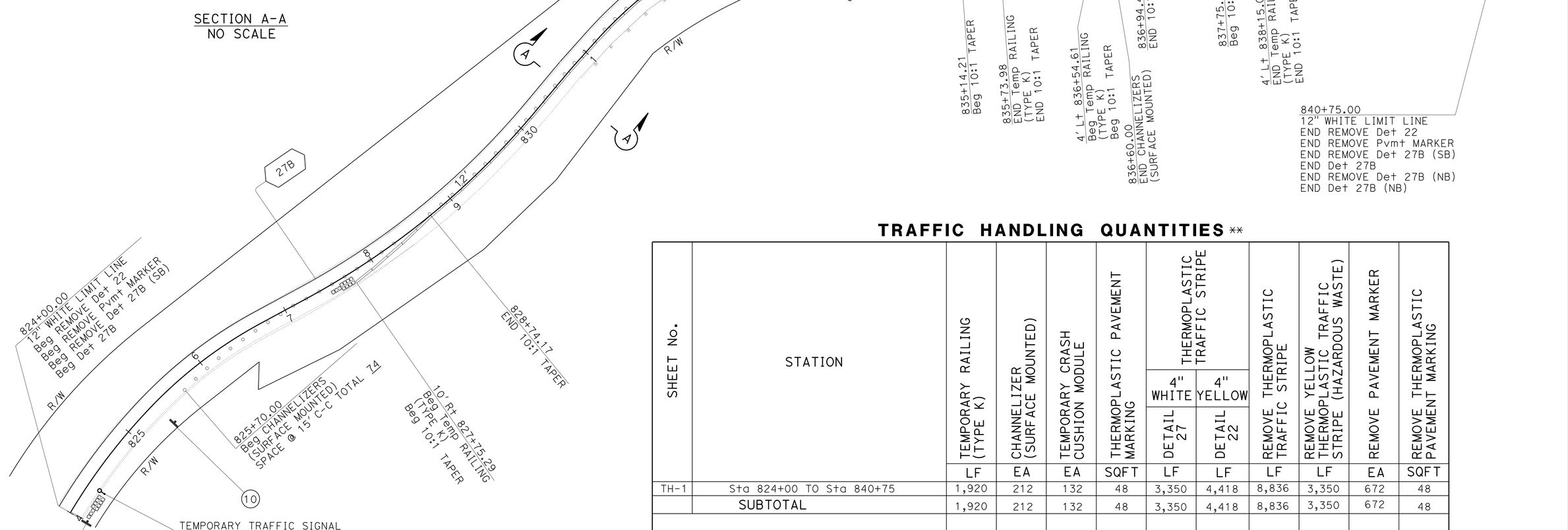

TRAFFIC HANDLING QUANTITIES **

SHEET No.	STATION	TEMPORARY RAILING (TYPE K)	CHANNELIZER (SURFACE MOUNTED)	TEMPORARY CRASH CUSHION MODULE	THERMOPLASTIC PAVEMENT MARKING	THERMOPLASTIC TRAFFIC STRIPE 4" WHITE DETAIL 27	THERMOPLASTIC TRAFFIC STRIPE 4" YELLOW DETAIL 22	REMOVE THERMOPLASTIC TRAFFIC STRIPE	REMOVE YELLOW THERMOPLASTIC TRAFFIC STRIPE (HAZARDOUS WASTE)	REMOVE PAVEMENT MARKER	REMOVE THERMOPLASTIC PAVEMENT MARKING
		LF	EA	EA	SQFT	LF	LF	LF	LF	EA	SQFT
TH-1	Sta 824+00 TO Sta 840+75	1,920	212	132	48	3,350	4,418	8,836	3,350	672	48
	SUBTOTAL	1,920	212	132	48	3,350	4,418	8,836	3,350	672	48
	TOTAL	1,920	212	132	48	7,768*		8,836	3,350	672	48

** QUANTITIES CALCULATED FOR TWO SEASONS.
* SEE PAVEMENT DELINEATION PLAN FOR ADDITIONAL QUANTITIES.

APPROVED FOR TRAFFIC HANDLING WORK ONLY

TRAFFIC HANDLING PLAN

SCALE: 1" = 50'

TH-1

STATE OF CALIFORNIA - DEPARTMENT OF TRANSPORTATION
Caltrans
DESIGN
FUNCTIONAL SUPERVISOR: MANSOOR A. KHAN
CALCULATED-DESIGNED BY: STEVE PHAM
CHECKED BY: SHAO-CHIANG LIU
REVISED BY
DATE REVISED

LAST REVISION 00-00-00
DATE PLOTTED => 04-AUG-2016
TIME PLOTTED => 14:47

Dist	COUNTY	ROUTE	POST MILES TOTAL PROJECT	SHEET No.	TOTAL SHEETS
07	Ven	33	15.7	32	108

Steve Pham 6-21-16
REGISTERED CIVIL ENGINEER DATE

6-24-16
PLANS APPROVAL DATE

REGISTERED PROFESSIONAL ENGINEER
STEVE PHAM
No. 67183
Exp. 9/30/16
CIVIL
STATE OF CALIFORNIA

THE STATE OF CALIFORNIA OR ITS OFFICERS OR AGENTS SHALL NOT BE RESPONSIBLE FOR THE ACCURACY OR COMPLETENESS OF SCANNED COPIES OF THIS PLAN SHEET.

LEGEND:

⟨No.⟩ TRAFFIC STRIPE DETAIL NUMBER

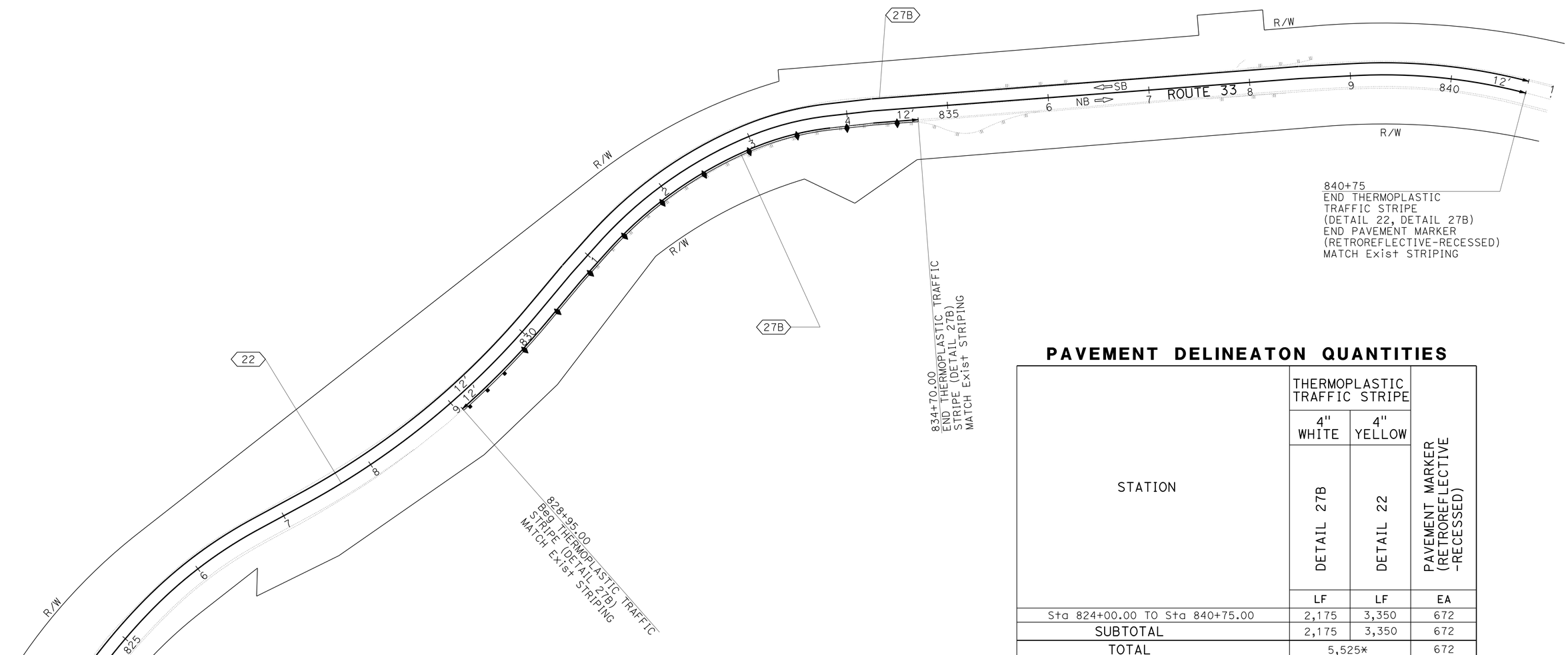

PAVEMENT DELINEATON QUANTITIES

STATION	THERMOPLASTIC TRAFFIC STRIPE 4" WHITE DETAIL 27B	THERMOPLASTIC TRAFFIC STRIPE 4" YELLOW DETAIL 22	PAVEMENT MARKER (RETROREFLECTIVE -RECESSED)
	LF	LF	EA
Sta 824+00.00 TO Sta 840+75.00	2,175	3,350	672
SUBTOTAL	2,175	3,350	672
TOTAL	5,525*		672

* SEE TRAFFIC HANDLING PLAN FOR ADDITIONAL QUANTITY

APPROVED FOR PAVEMENT DELINEATION WORK ONLY

PAVEMENT DELINEATION PLAN AND QUANTITES

SCALE: 1" = 50'

PD-1

STATE OF CALIFORNIA - DEPARTMENT OF TRANSPORTATION
Caltrans
DESIGN
FUNCTIONAL SUPERVISOR: MANSOOR A. KHAN
CALCULATED-DESIGNED BY: STEVE PHAM
CHECKED BY: SHAO-CHIANG LIU
REVISED BY
DATE REVISED

LAST REVISION 00-00-00
DATE PLOTTED => 04-AUG-2016
TIME PLOTTED => 14:47

Dist	COUNTY	ROUTE	POST MILES TOTAL PROJECT	SHEET No.	TOTAL SHEETS
07	Ven	33	15.7	33	108

REGISTERED CIVIL ENGINEER 6-21-16 DATE

6-24-16
PLANS APPROVAL DATE

REGISTERED PROFESSIONAL ENGINEER BEN WILLARDSON No. C64937 Exp. 6/30/17 CIVIL STATE OF CALIFORNIA

THE STATE OF CALIFORNIA OR ITS OFFICERS OR AGENTS SHALL NOT BE RESPONSIBLE FOR THE ACCURACY OR COMPLETENESS OF SCANNED COPIES OF THIS PLAN SHEET.

HDR
3230 EL CAMINO REAL
SUITE 200
IRVINE, CA 92602

CWE
1561 E. ORANGETHORPE
SUITE 240
FULLERTON, CA 92831

ROCK WEIR QUANTITIES

ROCK WEIR No.	SHEET No.	STATION	ROCK SLOPE PROTECTION (No. 1, METHOD B)	ROCK SLOPE PROTECTION (1/2T, METHOD A)	ROCK SLOPE PROTECTION (4T, METHOD A)	ROCK SLOPE PROTECTION FABRIC (CLASS 10)	ROCK WEIR VOID FILLER
			CY	CY	CY	SQYD	CY
1	C-4 C-5 C-10	834+56.77 TO 834+59.93	12.89	24.35	48.70	41.47	36.83
2	C-4 C-5 C-10	834+04.04 TO 834+15.42	14.71	27.78	55.56	82.31	42.02
3	C-4 C-6 C-10	833+88.17 TO 834+01.31	14.71	27.78	55.57	82.32	42.03
4	C-4 C-6 C-10	833+51.50 TO 833+69.54	39.30	74.24	148.47	125.35	112.29
5	C-4 C-7 C-10	832+69.18 TO 832+82.32	40.62	76.23	153.46	136.39	116.06
6	C-4 C-7 C-10	832+24.22 TO 832+42.90	27.15	51.28	102.57	136.24	77.57
7	C-4 C-8 C-11	831+71.09 TO 831+89.55	55.45	104.74	209.48	289.79	158.43
8	C-4 C-8 C-11	831+08.38 TO 831+39.31	65.13	123.02	246.05	205.65	186.09
9	C-4 C-9 C-11	830+48.17 TO 830+69.23	70.70	133.55	267.10	317.27	202.01
10	C-4 C-9 C-11	829+93.40 TO 829+78.94	23.27	43.96	87.92	142.56	66.49
BETWEEN WEIRS	C-4	829+93.40 TO 834+59.93			1,815.00	1,210.00	780.00
		TOTAL	363.93	686.93**	3,189.88**	2,769.35*	1,819.82**

* - SEE FISH HABITAT STRUCTURES TABLE AND SHEET Q-2 FOR ADDITIONAL QUANTITIES

** - SEE FISH HABITAT STRUCTURES TABLE FOR ADDITIONAL QUANTITIES

FISH HABITAT STRUCTURES QUANTITIES

SHEET No.	STATION	BANK COVER STRUCTURE (N)	LUNKER STRUCTURE (N)	2' DIAMETER x 30' LONG UN-MILLED TIMBER LOGS (N)	1/2" STAINLESS STEEL WIRE ROPE (N)	1/2" WIRE ROPE CLIPS (N)	STAINLESS STEEL THIMBLES (N)	2"x8" ROUGH SAWN LUMBER PLANKS (8-FT LENGTH) (N)	6"x6" ROUGH SAWN LUMBER BLOCKS (N)	#4x36" LONG REINFORCING STEEL BAR (DEFORMED) (N)	ROCK SLOPE PROTECTION (CLASS 10)	ROCK SLOPE PROTECTION (4T, METHOD A)	ROCK SLOPE PROTECTION (1/2T, METHOD A)	ROCK WEIR VOID FILLER
				EA	LF	EA	EA	EA	EA	EA	SQYD	CY	CY	CY
C-14	830+35.97	1		6	45	12	4				155	67	45	48
	831+53.96	1		7	45	12	4				120	41	53	40
	833+41.14		1					36	24	16	30	40	16	24
	TOTAL										305 *	148**	114**	112**

(N) - NOT A SEPARATE PAY ITEM, FOR INFORMATION ONLY

* - SEE ROCK WEIR QUANTITY TABLE AND SHEET Q-2 FOR ADDITIONAL QUANTITIES

** - SEE ROCK WEIR QUANTITY TABLE FOR ADDITIONAL QUANTITIES

SUMMARY OF QUANTITIES

Q-1

STATE OF CALIFORNIA - DEPARTMENT OF TRANSPORTATION
Caltrans®

CONSULTANT FUNCTIONAL SUPERVISOR: CAMILO ROCHA
CALCULATED-DESIGNED BY: BEN WILLARDSON
CHECKED BY: VIK BAPNA
REVISED BY
DATE REVISED

LAST REVISION 00-00-00
DATE PLOTTED - 04-AUG-2016
TIME PLOTTED - 14:47

Dist	COUNTY	ROUTE	POST MILES TOTAL PROJECT	SHEET No.	TOTAL SHEETS
07	Ven	33	15.7	34	108

Steve Pham 6-21-16
REGISTERED CIVIL ENGINEER DATE

6-24-16
PLANS APPROVAL DATE

REGISTERED PROFESSIONAL ENGINEER
STEVE PHAM
No. 67183
Exp. 9/30/16
CIVIL
STATE OF CALIFORNIA

THE STATE OF CALIFORNIA OR ITS OFFICERS OR AGENTS SHALL NOT BE RESPONSIBLE FOR THE ACCURACY OR COMPLETENESS OF SCANNED COPIES OF THIS PLAN SHEET.

TEMPORARY WATER POLLUTION CONTROL QUANTITIES

STATION	TEMPORARY GRAVEL BAG BERM	TEMPORARY SILT FENCE	TEMPORARY CONSTRUCTION ENTRANCE	TEMPORARY FIBER ROLL	TEMPORARY COVER	TEMPORARY DRAINAGE INLET PROTECTION
	LF	LF	EA	LF	SQYD	EA
Sta 824+00.00 TO Sta 840+75.00 (SEASON 1)	600	600	2	600	2,000	3
Sta 824+00.00 TO Sta 840+75.00 (SEASON 2)	600	600	2	600	2,000	3
TOTAL	1,200	1,200	4	1,200	4,000	6

ROADWAY QUANTITIES

SHEET No.	STATION	ROADWAY EXCAVATION		REMOVE GUARDRAIL	TREATED WOOD WASTE	MIDWEST GUARDRAIL SYSTEM (WOOD POST)	GUARD RAILING DELINEATOR	TRANSITION RAILING (TYPE WB-31)	ALTERNATIVE IN-LINE TERMINAL SYSTEM	END ANCHOR ASSEMBLY (TYPE SFT)	VEGETATION CONTROL (MINOR CONCRETE)	TACK COAT	GEOSYNTHETIC PAVEMENT INTERLAYER (PAVING FABRIC)	ASPHALT BINDER (GEOSYNTHETIC PAVEMENT INTERLAYER)	COLD PLANE ASPHALT CONCRETE PAVEMENT	HOT MIX ASPHALT (TYPE A)	LEAN CONCRETE BASE RAPID SETTING	CLASS 3 AGGREGATE BASE	(N) EMBANKMENT	ROCK SLOPE PROTECTION FABRIC (CLASS 10)	ROCK SLOPE PROTECTION (LIGHT, METHOD B)	CONCRETED-ROCK SLOPE PROTECTION (1T, METHOD A)	STRUCTURE EXCAVATION (ROCK SLOPE ROTECTION)	TEMPORARY FENCE (TYPE ESA)
		CY	CY	LF	LB	LF	EA	EA	EA	EA	SQYD	TON	SQYD	TON	SQYD	TON	CY	CY	CY	SQYD	CY	CY	CY	LF
L-1	Sta 824+00.00 TO Sta 840+75.00	6,050*	296	420	640	120	34	3	1	2	175	0.35	280	0.35	167	108	22	26	14	105	69	188	91	1,220
SUBTOTAL		6,050	296	420	640	120	34	3	1	2	175	0.35	280	0.35	167	108	22	26		105	69	188	91	1,220
GRAND TOTAL		6,346		420	640	120	34	3	1	2	175	0.35	280	0.35	167	108	22	26		105**	69	188	91	1,220

(N) - NOT A SEPARATE PAY ITEM, FOR INFORMATION ONLY.
* FOR CONCRETED RSP REMOVAL
** SEE Q-1 FOR ADDITIONAL QUANTITIES

SUMMARY OF QUANTITIES

Q-2

STATE OF CALIFORNIA - DEPARTMENT OF TRANSPORTATION
DESIGN
FUNCTIONAL SUPERVISOR: MANSOOR A. KHAN
CALCULATED-DESIGNED BY: STEVE PHAM
CHECKED BY: SHAO-CHIANG LIU
REVISED BY
DATE REVISED

LAST REVISION 00-00-00
DATE PLOTTED => 04-AUG-2016
TIME PLOTTED => 14:47

Dist	COUNTY	ROUTE	POST MILES TOTAL PROJECT	SHEET No.	TOTAL SHEETS
07	Ven	33	15.7	35	108

REGISTERED CIVIL ENGINEER 6-21-16 DATE

6-24-16
PLANS APPROVAL DATE

REGISTERED PROFESSIONAL ENGINEER BEN WILLARDSON No. C64937 Exp. 6/30/17 CIVIL STATE OF CALIFORNIA

THE STATE OF CALIFORNIA OR ITS OFFICERS OR AGENTS SHALL NOT BE RESPONSIBLE FOR THE ACCURACY OR COMPLETENESS OF SCANNED COPIES OF THIS PLAN SHEET.

HDR
3230 EL CAMINO REAL
SUITE 200
IRVINE, CA 92602

CWE
1561 E. ORANGETHORPE
SUITE 240
FULLERTON, CA 92831

TEMPORARY CREEK DIVERSION SYSTEM QUANTITIES

SHEET No.	STATION	8'x17'x 160' (H x W x L) WATER FILLED COFFER DAM	FISH BARRIER NETS WITH FLOAT LINE	DEBRIS BOOM	SELF-PRIMING, END-SUCTION PUMPS	8" HDPE TEE	18" HDPE TEE	18" HDPE DRAIN PIPE	36" REINFORCED CONCRETE PIPE	60" ø PRECAST CONCRETE PIPE MANHOLE	30" MANHOLE RING AND COVER	ROCK SLOPE PROTECTION (1T, METHOD A)	ROCK SLOPE PROTECTION FABRIC (CLASS 10)	MINOR CONCRETE, HEADWALL
		(N)	(N)	(N)	(N)	(N)	(N)	(N)	(N)	(N)	(N)	(N)	(N)	(N)
		LF	EA	SQFT	EA	EA	EA	LF	LF	EA	EA	CY	SQYD	CY
C-19	829+59.89 TO 836+51.10	160						750						
C-21	836+78.88 TO 837+57.64		2	100	3	1	2							
C-19	829+59.89								49	1	1	104	11	1

(N) - NOT A SEPARATE PAY ITEM, FOR INFORMATION ONLY

TEMPORARY ROCK SLOPE PROTECTION QUANTITIES

SHEET No.	STATION	TEMPORARY ROCK SLOPE PROTECTION (4T, METHOD A)	ROCK SLOPE PROTECTION FABRIC (CLASS 10)
		(N)	(N)
		CY	SQYD
C-18	829+53.46 TO 834+92.98	2,630	1,753

(N) - NOT A SEPARATE PAY ITEM, FOR INFORMATION ONLY

SUMMARY OF QUANTITIES

Q-3

STATE OF CALIFORNIA - DEPARTMENT OF TRANSPORTATION
Caltrans

CONSULTANT FUNCTIONAL SUPERVISOR: CAMILO ROCHA
CALCULATED-DESIGNED BY: BEN WILLARDSON
CHECKED BY: VIK BAPNA
REVISED BY
DATE REVISED

LAST REVISION 00-00-00
DATE PLOTTED - 04-AUG-2016
TIME PLOTTED - 14:47

Dist	COUNTY	ROUTE	POST MILES TOTAL PROJECT	SHEET No.	TOTAL SHEETS
07	Ven	33	15.7	36	108

Kathleen M. McKernin
LICENSED LANDSCAPE ARCHITECT

6-24-16
PLANS APPROVAL DATE

LICENSED LANDSCAPE ARCHITECT
KATHLEEN M. MCKERNIN
No. 5630
Signature
10/31/17
Renewal Date
11/12/15
Date
STATE OF CALIFORNIA

THE STATE OF CALIFORNIA OR ITS OFFICERS OR AGENTS SHALL NOT BE RESPONSIBLE FOR THE ACCURACY OR COMPLETENESS OF SCANNED COPIES OF THIS PLAN SHEET.

HDR
3230 EL CAMINO REAL
SUITE 200
IRVINE, CA 92602

CWE
1561 E. ORANGETHORPE
SUITE 240
FULLERTON, CA 92831

PLANTING LEGEND

PLANT GROUP	PLANT No.	SYMBOL	BOTANICAL NAME	COMMON NAME	SIZE	QUANTITY EACH	HOLE SIZE (INCH) Dia	HOLE SIZE (INCH) DEPTH	BASIN TYPE	SOIL AMENDMENT ① TYPE	SOIL AMENDMENT ① RATE	IRON SULFATE ① RATE	COMMERCIAL FERTILIZER ① PLANTING	COMMERCIAL FERTILIZER ① PLT ESTB	BASIN MULCH TYPE	BASIN MULCH CY	STAKING	PLANTING LIMITS MINIMUM DISTANCE (ft) FROM ETW	Pvmt	FENCE	WALL	PAVED DITCH	EARTH DITCH	ON CENTER (ft)	REMARKS
B	1	⬡	ALNUS RHOMBIFOLIA	WHITE ALDER	No.5	20	④	④	④	⑤	.15 CY	-		-	-	0.1	-	-	-	-	-	-	-	10′	TREE
	2	■	PLATANUS RACEMOSA	CALIFORNIA SYCAMORE	No.5	13	④	④	④	⑤	.15 CY	-		-	-	0.1	-	-	-	-	-	-	-	20′	TREE
	3	△	SALIX LASIOPEPSIS	ARROYO WILLOW	No.5	20	④	④	④	⑤	.15 CY	-		-	-	0.1	-	-	-	-	-	-	-	10′	TREE
H	4	⬢	ALNUS RHOMBIFOLIA	WHITE ALDER	CUTTING	52	④	④	-	-	-	-	1 Pkt	-	-	-	-	-	-	-	-	-	-	2′	SHRUB ⑪ RANDOM SPACING
	5	(dotted)	BACCHARIS SALICIFOLIA	MULEFAT	CUTTING	7,150	④	④	-	-	-	-	1 Pkt	-	-	-	-	-	-	-	-	-	-		SHRUB (LIVE JOINT)
	6	▲	SALIX LASIOPEPSIS	ARROYO WILLOW	CUTTING	52	④	④	-	-	-	-	1 Pkt	-	-	-	-	-	-	-	-	-	-	2′	SHRUB ⑫ RANDOM SPACING
K	7	⧅	PLATANUS RACEMOSA	CALIFORNIA SYCAMORE	24" BOX	27	④	④	④ ⑨	⑤	.75 CY	-		-	-	0.4	⑥	-	-	-	-	-	-	20′	TREE
	8	⧆	PLATANUS RACEMOSA	CALIFORNIA SYCAMORE	48" BOX	6	④	④	④ ⑩	⑤	4.0 CY	-		-	-	1.5	⑥	-	-	-	-	-	-	20′	TREE

NOTE:
UNDERLINED PORTIONS OF BOTANICAL NAME INDICATE ABBREVIATIONS USED ON PLANTING PLANS.

APPLICABLE WHEN CIRCLED:

① - QUANTITIES SHOWN ARE "PER PLANT" UNLESS SHOWN AS SQFT OR SQYD APPLICATION RATES
2 - BASIN MULCH IS INCLUDED WITH MULCH QUANTITIES SHOWN ON PLANTING PLAN
3 - NOT USED
④ - SEE DETAIL
⑤ - SEE SPECIAL PROVISIONS
⑥ - SEE STANDARD DETAILS
7 - AS SHOWN ON PLANS
8 - UNLESS OTHERWISE SHOWN ON PLANS
⑨ - BASIN AREA EQUAL TO: 48" IN DIAMETER
⑩ - BASIN AREA EQUAL TO: 96" IN DIAMETER
⑪ - INSTALL SHRUBS IN DRY SOIL LOCATIONS (FURTHER FROM EDGE OF STEP POOL)
⑫ - INSTALL SHRUBS IN WET SOIL LOCATIONS (CLOSER TO EDGE OF STEP POOL)

LEGEND:

MULEFAT (BACCHARIS SALICIFOLIA)

ALDER AND WILLOW CUTTINGS PLANTING AREA

REVISED BY | DATE REVISED
BEN WILLARDSON | VIK BAPNA
CALCULATED-DESIGNED BY | CHECKED BY
CONSULTANT SENIOR LANDSCAPE ARCHITECT | CAMILO ROCHA
STATE OF CALIFORNIA - DEPARTMENT OF TRANSPORTATION
Caltrans

PLANT LEGEND
PL-1

LAST REVISION 00-00-00 | DATE PLOTTED => 04-AUG-2016 | TIME PLOTTED => 14:47

Dist	COUNTY	ROUTE	POST MILES TOTAL PROJECT	SHEET No.	TOTAL SHEETS
07	Ven	33	15.7	37	108

Kathleen M. McKernin
LICENSED LANDSCAPE ARCHITECT

6-24-16
PLANS APPROVAL DATE

LICENSED LANDSCAPE ARCHITECT
KATHLEEN M. MCKERNIN
No. 5630
Signature
10/31/17
Renewal Date
11/12/15
Date
STATE OF CALIFORNIA

THE STATE OF CALIFORNIA OR ITS OFFICERS OR AGENTS SHALL NOT BE RESPONSIBLE FOR THE ACCURACY OR COMPLETENESS OF SCANNED COPIES OF THIS PLAN SHEET.

HDR
3230 EL CAMINO REAL
SUITE 200
IRVINE, CA 92602

CWE
1561 E. ORANGETHORPE
SUITE 240
FULLERTON, CA 92831

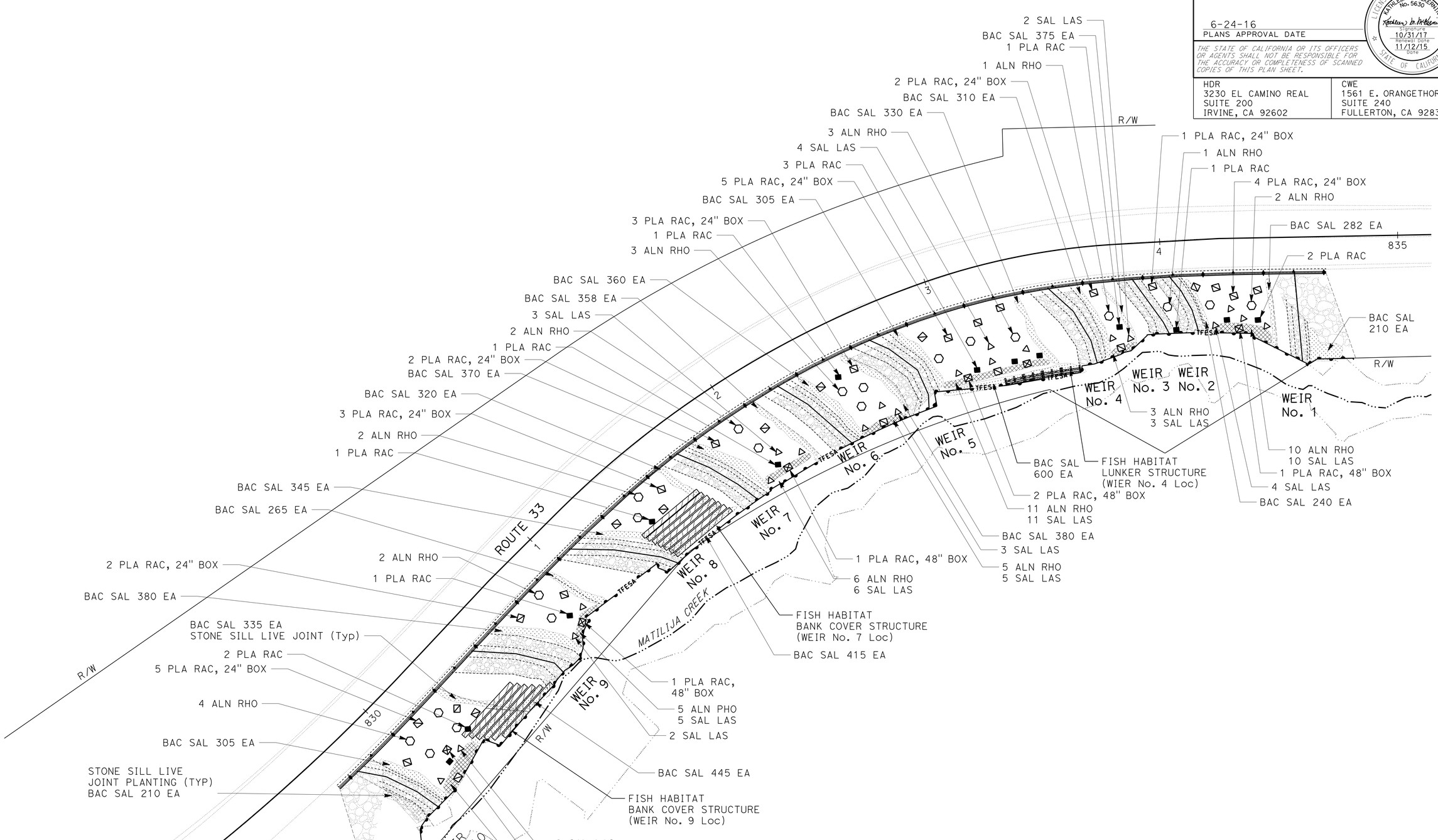

PLANTING PLAN

SCALE: 1" = 20'

PP-1

APPROVED FOR PLANTING WORK ONLY

STATE OF CALIFORNIA - DEPARTMENT OF TRANSPORTATION
Caltrans

CONSULTANT SENIOR LANDSCAPE ARCHITECT: CAMILO ROCHA

CALCULATED-DESIGNED BY: BEN WILLARDSON
CHECKED BY: VIK BAPNA

REVISED BY
DATE REVISED

LAST REVISION 00-00-00
DATE PLOTTED => 04-AUG-2016
TIME PLOTTED => 14:47

Dist	COUNTY	ROUTE	POST MILES TOTAL PROJECT	SHEET No.	TOTAL SHEETS
07	Ven	33	15.7	38	108

Kathleen M. McKernin
LICENSED LANDSCAPE ARCHITECT

6-24-16
PLANS APPROVAL DATE

LICENSED LANDSCAPE ARCHITECT
KATHLEEN M. MCKERNIN
No. 5630
Signature
10/31/17
Renewal Date
11/12/15
Date
STATE OF CALIFORNIA

THE STATE OF CALIFORNIA OR ITS OFFICERS OR AGENTS SHALL NOT BE RESPONSIBLE FOR THE ACCURACY OR COMPLETENESS OF SCANNED COPIES OF THIS PLAN SHEET.

HDR
3230 EL CAMINO REAL
SUITE 200
IRVINE, CA 92602

CWE
1561 E. ORANGETHORPE
SUITE 240
FULLERTON, CA 92831

NOTES:

1. BOX TREES AND CONTAINER SHRUBS TO BE INSTALLED AFTER RSP (4T, METHOD A) AND ROCK WEIR VOID FILLER HAS BEEN PLACED
2. REMOVE OR PLACE INDIVIDUAL 4T ROCKS AS NECESSARY TO PROVIDE CLEARANCE FOR ROOT BALL AS SHOWN
3. FILL IN NATIVE SOIL AND SOIL AMENDMENTS, THOROUGHLY MIX TO REDUCE COMPACTION.
4. PLACE AND CUT TO FIT RECP OVER RSP LAYER AND AROUND PLANTED TREES
5. PLACE TOPSOIL AND CONSTRUCT BERMS AS SHOWN

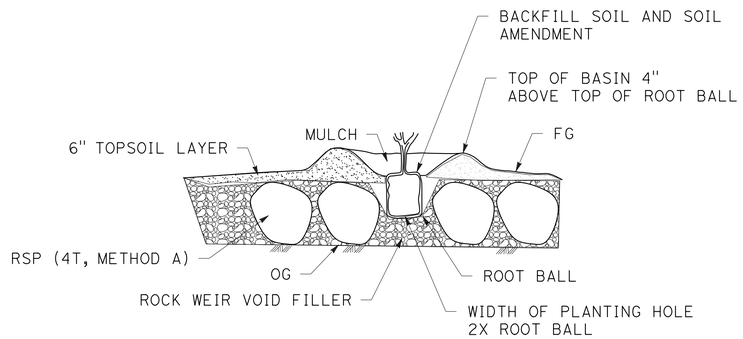

CONTAINER PLANT BASIN DETAIL

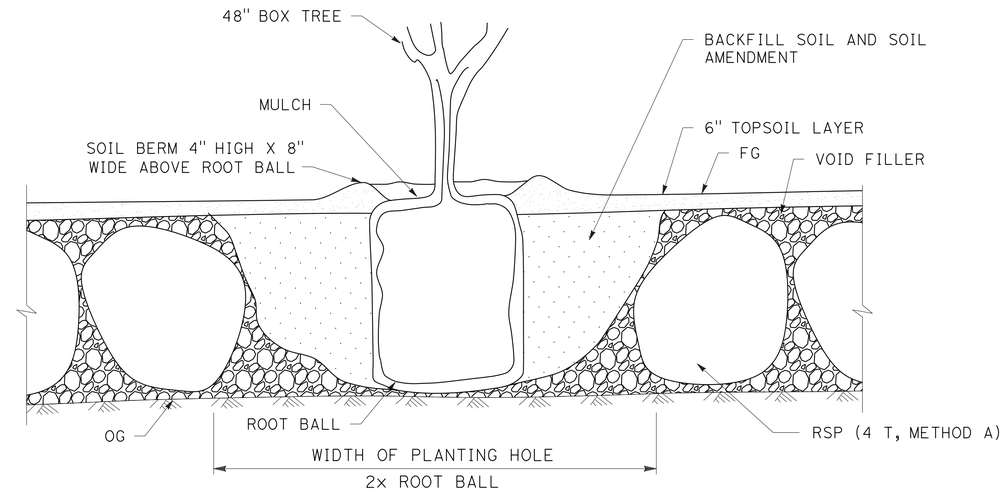

BOX TREE PLANTING DETAIL

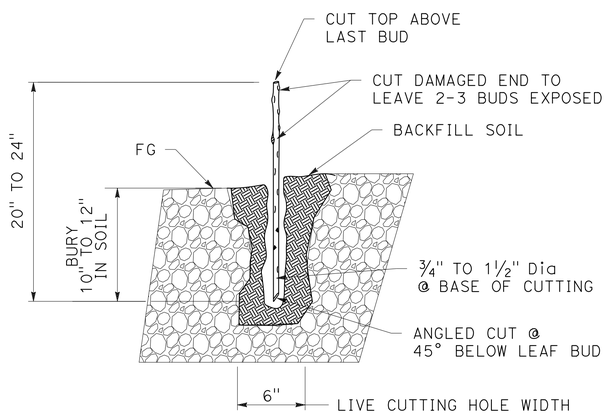

WILLOW AND ALDER CUTTING PLANTING DETAIL - TYPICAL

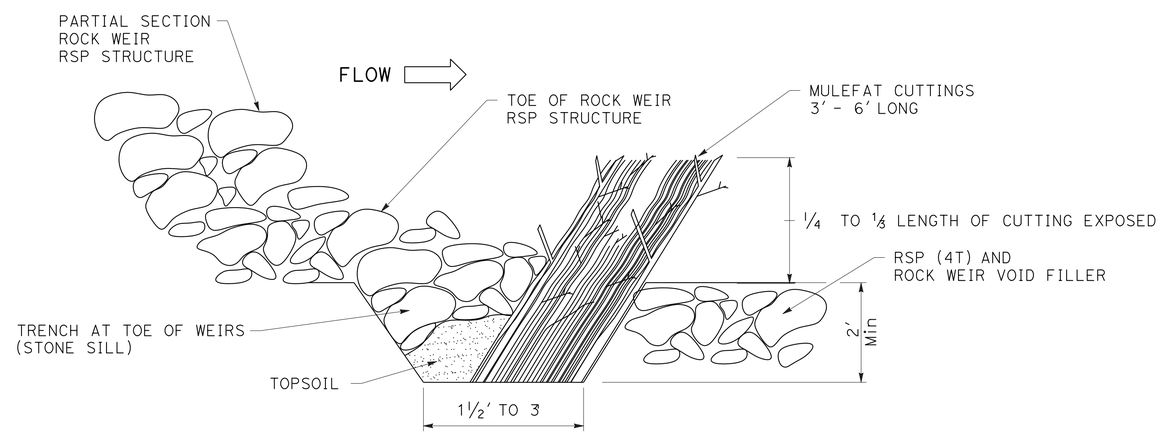

STONE SILL WITH LIVE JOINT PLANTINGS DETAIL

LANDSCAPE DETAILS

NO SCALE

LD-1

STATE OF CALIFORNIA - DEPARTMENT OF TRANSPORTATION
Caltrans®

CONSULTANT SENIOR LANDSCAPE ARCHITECT: CAMILO ROCHA

CALCULATED-DESIGNED BY: BEN WILLARDSON
CHECKED BY: VIK BAPNA

REVISED BY | DATE REVISED

LAST REVISION 00-00-00 | DATE PLOTTED => 04-AUG-2016 | TIME PLOTTED => 14:47

Dist	COUNTY	ROUTE	POST MILES TOTAL PROJECT	SHEET No.	TOTAL SHEETS
07	Ven	33	15.7	39	108

LICENSED LANDSCAPE ARCHITECT

6-24-16
PLANS APPROVAL DATE

LICENSED LANDSCAPE ARCHITECT
KATHLEEN M. MCKERNIN
No. 5630
Signature
10/31/17
Renewal Date
11/12/15
Date
STATE OF CALIFORNIA

THE STATE OF CALIFORNIA OR ITS OFFICERS OR AGENTS SHALL NOT BE RESPONSIBLE FOR THE ACCURACY OR COMPLETENESS OF SCANNED COPIES OF THIS PLAN SHEET.

HDR
3230 EL CAMINO REAL
SUITE 200
IRVINE, CA 92602

CWE
1561 E. ORANGETHORPE
SUITE 240
FULLERTON, CA 92831

SEED MIX 1

SEED	BOTANICAL NAME (COMMON NAME)	PERCENT GERMINATION (MINIMUM)	POUNDS PURE LIVE SEED PER ACRE
MIXED MONTANE PIONEERS	BROMUS CARINATUS (MOUNTAIN BROME)	60	6.00
	ELYMUS GLAUCUS BERKELEY (BLUE WILDRYE)	60	4.00
	LASTHENIA CALIFORNIA (CALIFORNIA GOLDFIELDS)	35	0.50
	LUPINUS BICOLOR (BICOLOR LUPINE)	60	3.00
	NASSELLA CERNUA (NODDING NEEDLE GRASS)	50	4.00
	NEMOPHILA MENZIESII (BABY BLUE EYES)	60	2.00
	TRIFOLIUM WILDENOVII (TOM CAT CLOVER)	50	2.00
	VULPIA MICROSTACHYS (SMALL FESCUE)	50	6.00

EROSION CONTROL TYPE 1

SEQUENCE	ITEM	MATERIAL DESCRIPTION	MATERIAL TYPE	APPLICATION RATE
STEP 1	TOPSOIL	TOPSOIL		6"
STEP 2	COMPOST	COMPOST	MEDIUM	130 CY/ACRE
STEP 3	ROLL EROSION CONTROL PRODUCT	NETTING	TYPE A	
STEP 4	HYDROSEED	SEED	MIX 1	27.5 LB/ACRE
		FIBER	WOOD	500 LB/ACRE
STEP 5	HYDROMULCH	FIBER	WOOD	1500 LB/ACRE
		TACKIFIER	GUAR	125 LB/ACRE

LEGEND:

EC TYPE 1

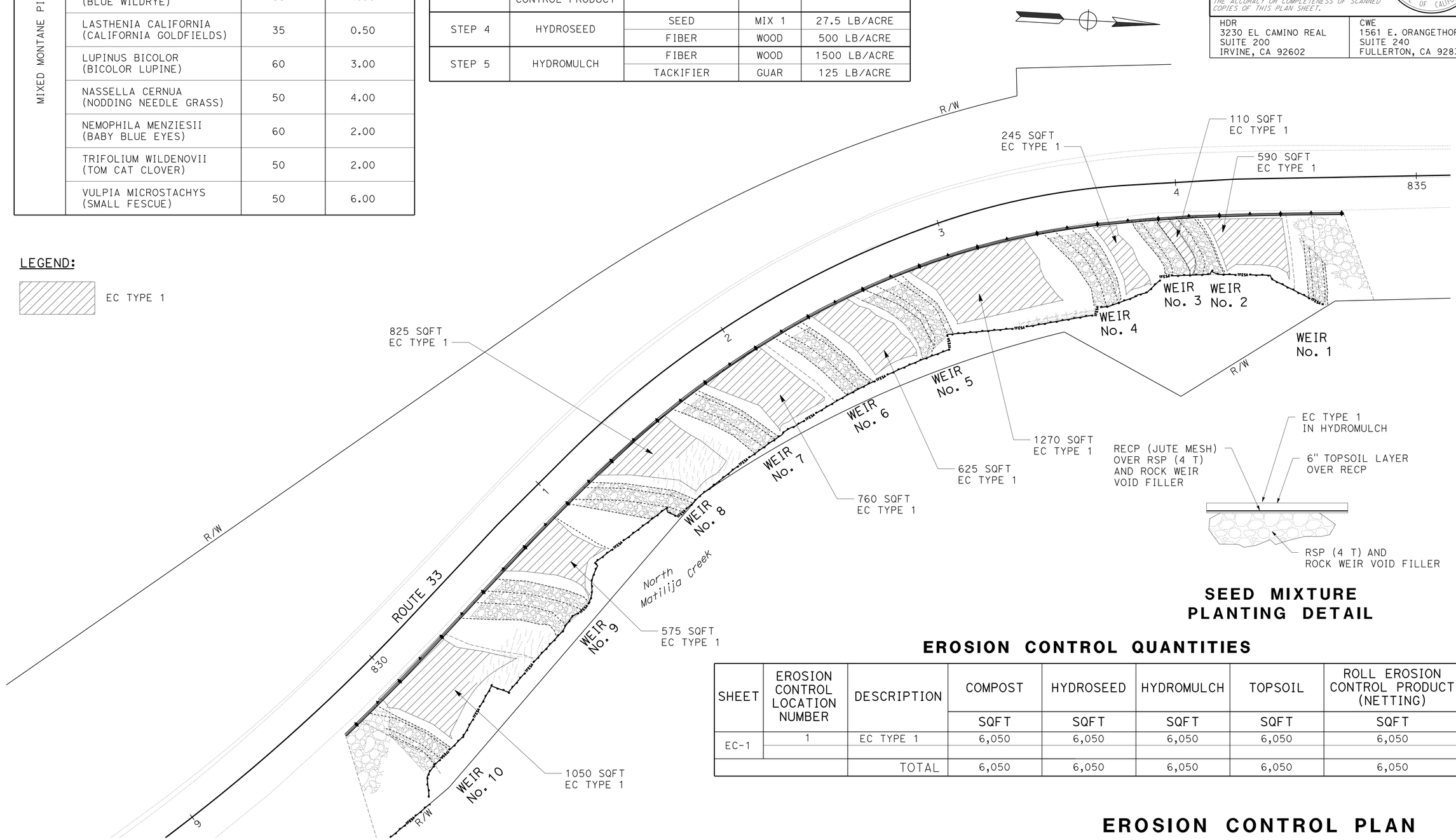

SEED MIXTURE PLANTING DETAIL

EROSION CONTROL QUANTITIES

SHEET	EROSION CONTROL LOCATION NUMBER	DESCRIPTION	COMPOST	HYDROSEED	HYDROMULCH	TOPSOIL	ROLL EROSION CONTROL PRODUCT (NETTING)
			SQFT	SQFT	SQFT	SQFT	SQFT
EC-1	1	EC TYPE 1	6,050	6,050	6,050	6,050	6,050
		TOTAL	6,050	6,050	6,050	6,050	6,050

APPROVED FOR EROSION CONTROL WORK ONLY

EROSION CONTROL PLAN

SCALE: 1" = 20'

EC-1

STATE OF CALIFORNIA - DEPARTMENT OF TRANSPORTATION
Caltrans

CONSULTANT SENIOR LANDSCAPE ARCHITECT: CAMILO ROCHA
CALCULATED-DESIGNED BY: BEN WILLARDSON
CHECKED BY: VIK BAPNA
REVISED BY
DATE REVISED

LAST REVISION 00-00-00
DATE PLOTTED => 04-AUG-2016
TIME PLOTTED => 14:47

Dist	COUNTY	ROUTE	POST MILES TOTAL PROJECT	SHEET No.	TOTAL SHEETS
07	Ven	33	15.7	40	108

REGISTERED ELECTRICAL ENGINEER 6-21-16 DATE

6-24-16
PLANS APPROVAL DATE

REGISTERED PROFESSIONAL ENGINEER CESAR HERNANDEZ No. E15805 Exp. 12/31/16 ELECTRICAL STATE OF CALIFORNIA

THE STATE OF CALIFORNIA OR ITS OFFICERS OR AGENTS SHALL NOT BE RESPONSIBLE FOR THE ACCURACY OR COMPLETENESS OF SCANNED COPIES OF THIS PLAN SHEET.

PHASE DIAGRAM

Ø1	Ø2	Ø3	Ø4
← CLEARANCE	←	→ CLEARANCE	→

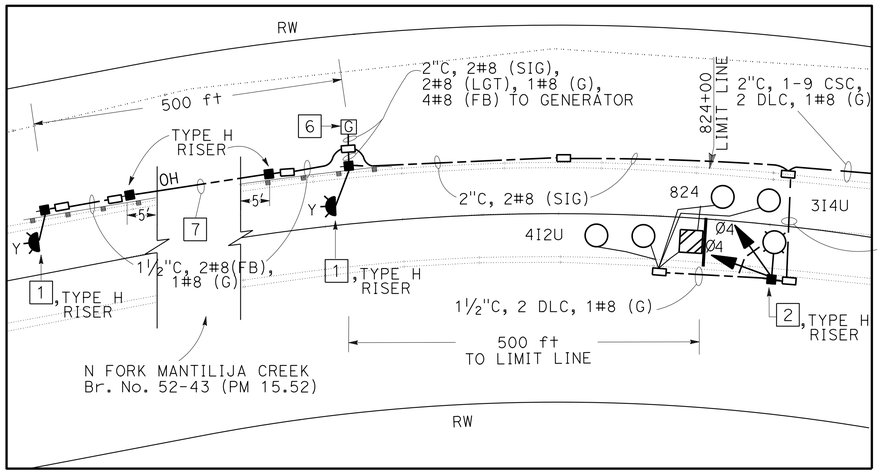

DETAIL A

NO SCALE

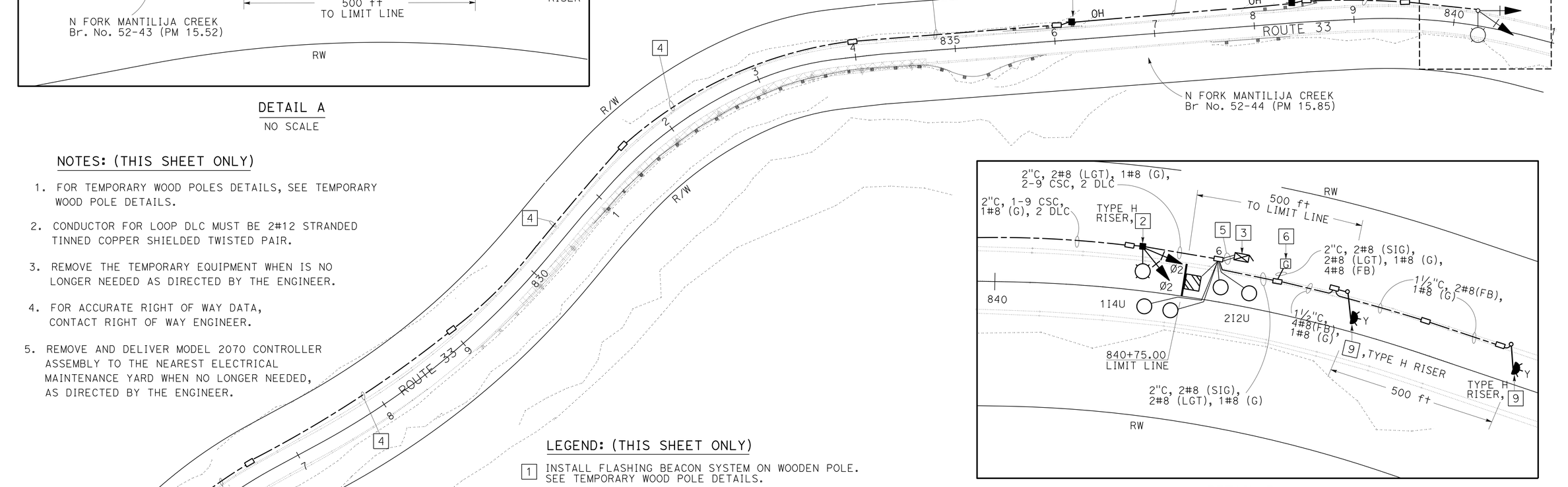

NOTES: (THIS SHEET ONLY)

1. FOR TEMPORARY WOOD POLES DETAILS, SEE TEMPORARY WOOD POLE DETAILS.
2. CONDUCTOR FOR LOOP DLC MUST BE 2#12 STRANDED TINNED COPPER SHIELDED TWISTED PAIR.
3. REMOVE THE TEMPORARY EQUIPMENT WHEN IS NO LONGER NEEDED AS DIRECTED BY THE ENGINEER.
4. FOR ACCURATE RIGHT OF WAY DATA, CONTACT RIGHT OF WAY ENGINEER.
5. REMOVE AND DELIVER MODEL 2070 CONTROLLER ASSEMBLY TO THE NEAREST ELECTRICAL MAINTENANCE YARD WHEN NO LONGER NEEDED, AS DIRECTED BY THE ENGINEER.

DETAIL B

NO SCALE

LEGEND: (THIS SHEET ONLY)

1. INSTALL FLASHING BEACON SYSTEM ON WOODEN POLE. SEE TEMPORARY WOOD POLE DETAILS.
2. SEE TEMPORARY WOOD POLE DETAILS.
3. INSTALL LONG LEAD -IN CABLE LOOP DETECTOR SENSOR UNIT. INSTALL STATE-FURNISHED MODEL 2070 CONTROLLER ASSEMBLY.
4. INSTALL 2"C, 1-9 CSC, 2 DLC, 1#8 (G).
5. INSTALL 2-2"C, 2#8 (SIG), 1#8 (G), 2-9 CSC, 4 DLC.
6. INSTALL PORTABLE GENERATOR. THE CAPACITY SHALL BE SIZED TO PROVIDE POWER TO TEMPORARY SIGNAL SYSTEM AND TEMPORARY FLASHING BEACON SYSTEM.
7. INSTALL MESSENGER WIRE WITH 2#8 (FLASHING BEACON), 1#8 (G).
8. INSTALL MESSENGER WIRE WITH 1-9 CSC, 2 DLC, 1#8 (G).
9. INSTALL TYPE 15-FBS FLASHING BEACON PER RSP ES-7J EXCEPT NO PHOTOELECTRIC CONTROL UNIT AND ADAPTER.

G GENERATOR

APPROVED FOR TRAFFIC HANDLING WORK ONLY

TRAFFIC HANDLING PLAN TEMPORARY SIGNAL SYSTEM

SCALE: 1" = 50'

E-1

STATE OF CALIFORNIA - DEPARTMENT OF TRANSPORTATION
Caltrans® TRAFFIC DESIGN

FUNCTIONAL SUPERVISOR: FATEMEH ANSARI
CALCULATED-DESIGNED BY: XOCHILT NARANJO
CHECKED BY: CESAR HERNANDEZ
REVISED BY / DATE REVISED

LAST REVISION 00-00-00 | DATE PLOTTED => 04-AUG-2016 | TIME PLOTTED => 14:47

Dist	COUNTY	ROUTE	POST MILES TOTAL PROJECT	SHEET No.	TOTAL SHEETS
07	Ven	33	15.7	41	108

REGISTERED ELECTRICAL ENGINEER 6-21-16 DATE

6-24-16
PLANS APPROVAL DATE

REGISTERED PROFESSIONAL ENGINEER CESAR HERNANDEZ No. E15805 Exp. 12/31/16 ELECTRICAL STATE OF CALIFORNIA

THE STATE OF CALIFORNIA OR ITS OFFICERS OR AGENTS SHALL NOT BE RESPONSIBLE FOR THE ACCURACY OR COMPLETENESS OF SCANNED COPIES OF THIS PLAN SHEET.

NOTE: (THIS SHEET ONLY)

1. ITEMS SHOWN ON TABLE ARE NOT A SEPARATE PAY ITEM, FOR INFORMATION ONLY

TEMPORARY SIGNAL SYSTEM

SHEET No.	(N) ELECTROLIER STANDARD [T15S]	(N) LOOP DETECTOR	(N) FLASHING BEACON	(N) (WIRE) CONDUCTOR 2#10	(N) CONDUCTOR 2#8	(N) (WIRE GROUND) CONDUCTOR [1#8 (G)]	(N) PULL BOX #5	(N) MODEL 2070 CONTROLLER ASSEMBLY	(N) SIZE 1½" CONDUIT	(N) SIZE 2" CONDUIT	(N) WOOD POLE	(N) GENERATOR	(N) PULL BOX #6	(N) (WIRE) MESSENGER
	EA	EA	EA	LF	LF	LF	EA	EA	LF	LF	EA	EA	EA	LF
TH-2	2	10	4	1707	6900	3450	20	1	1120	2430	8	4	1	740
TOTAL	2	10	4	1707	6900	3450	20	1	1120	2430	8	4	1	740

SUMMARY OF QUANTITIES

E-2

STATE OF CALIFORNIA - DEPARTMENT OF TRANSPORTATION
Caltrans® TRAFFIC DESIGN

FUNCTIONAL SUPERVISOR: FATEMEH ANSARI
CALCULATED-DESIGNED BY: XOCHILT NARANJO
CHECKED BY: CESAR HERNANDEZ
REVISED BY
DATE REVISED

LAST REVISION 00-00-00 | DATE PLOTTED => 04-AUG-2016 | TIME PLOTTED => 14:47

DIST	COUNTY	ROUTE	POST MILES TOTAL PROJECT	SHEET No.	TOTAL SHEETS
07	Ven	33	15.7	42	108

REGISTERED CIVIL ENGINEER 6-21-16 DATE

6-24-16
PLANS APPROVAL DATE

REGISTERED PROFESSIONAL ENGINEER RICHARD LANCE NARGENT No. C78431 Exp. 9/30/17 CIVIL STATE OF CALIFORNIA

The State of California or its officers or agents shall not be responsible for the accuracy or completeness of electronic copies of this plan sheet.

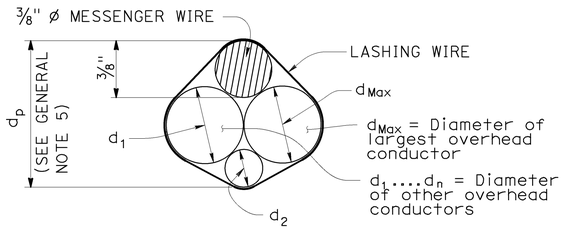

$d_p = 3/8'' + d_{Max} + 0.30 * (d_1 + d_2 + \ldots d_n)$

PROJECTED DEPTH OF OVERHEAD BUNDLE, (d_p)

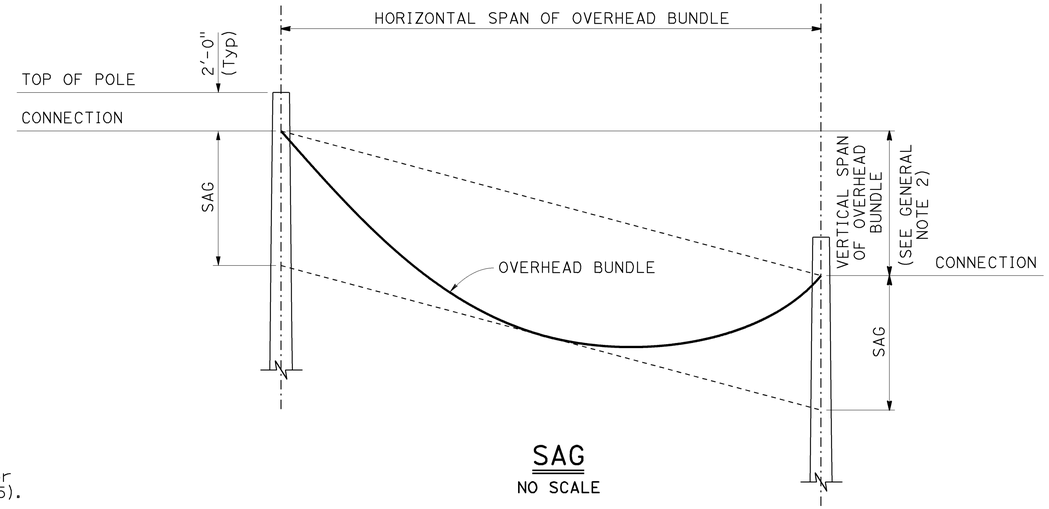

SAG

NO SCALE

Design: AASHTO Standard Specifications for Structural Supports for Highway Signs, Luminaires and Traffic Signals, Fifth Edition (LTS-5).

GROUP LOAD COMBINATIONS:

I Dead Load
II Dead Load + Wind Load
III Dead Load + 0.5 (Wind Load) + Ice Load
IV Fatigue: Not used

LOADING:

Wind Loading: 100 mph (3-second gust)
Wind Recurrence Interval: 10 years
Combined height, exposure, and elevated terrain factor = 1.05 (Exposure C, structure is not located on or over the top half of a ridge, hill, or escarpment)

Ice Loading: 3.0 psf on surfaces, 0.60 in radial thickness of ice at a unit weight of 60 pcf on overhead bundles

BASIC DESIGN VALUES:

Timber Poles: Fb = 1850 psi
Fv = 110 psi
Fcp = 230 psi
Fc = 950 psi
E = 1500 x 10^3 psi

DESIGN WIRE BREAKING STRENGTHS:

ASTM A475, Utilities Grade, 7 strand modified by termination efficiency factor of 0.8

FOUNDATION DESIGN NOTES:

1. Pole embedment depth design is based on Broms' approximate procedure as described in Article 13.6 of AASHTO LTS-5.

2. Embedment depth is calculated based on following soil parameters,
Cohesive Soil:
Shear strength of soil c = 1500 psf.
Cohesionless Soil:
Ø = 30 deg, γ = 120 pcf.
Soil assumed to be unsaturated.

3. An overload factor of 2.0 and an undercapacity factor of 0.7 were used for safety factor of 2.86.

4. Allowable vertical bearing pressure at the end bearing of poles is 3000 psf at 6 feet or more embedment.

5. Guy wire anchor minimum allowable tension capacity, "Qa" = 8,900 lbs.

NOTE:
THE CONTRACTOR MUST VERIFY ALL CONTROLLING FIELD DIMENSIONS BEFORE ORDERING OR FABRICATING ANY MATERIAL.

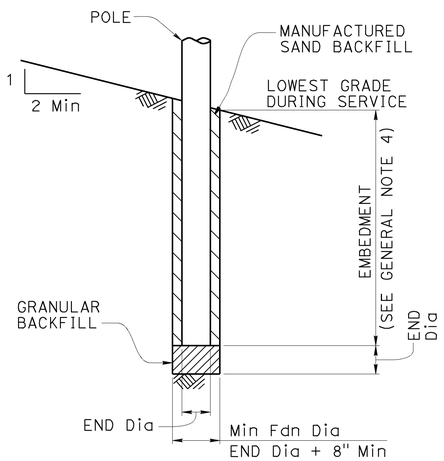

POLE FOUNDATION

GENERAL NOTES:

1. The messenger wire and any combination of overhead conductors must not exceed either a self weight of 3.0 lb/ft or the maximum d in the pole selection tables.

2. The maximum vertical span is 10% of the horizontal span.

3. For poles with adjacent unbalanced horizontal spans, the shortest horizontal span must be at least 50% of the largest horizontal span.

4. Add 2'-0" for slopes above 1V:4H.

5. For a pole supporting multiple spans, calculate d_p for each span and use the largest value.

6. Do not exceed the attachments shown.

DIAMETERS AND SELF WEIGHT OF OVERHEAD CONDUCTORS

CONDUCTOR OR CABLE TYPE	DIAMETER d (in)	WEIGHT w (plf)
3 CONDUCTOR SIGNAL CABLE (3CSC)	0.400	0.0980
5 CONDUCTOR SIGNAL CABLE (5CSC)	0.500	0.1560
9 CONDUCTOR SIGNAL CABLE (9CSC)	0.650	0.2760
12 CONDUCTOR SIGNAL CABLE (12CSC)	0.800	0.3970
28 CONDUCTOR SIGNAL CABLE (28CSC)	0.900	0.6490
1-#14	0.166	0.0235
1-#12	0.185	0.0330
1-#10	0.210	0.0476
1-#8	0.271	0.0774
1-#6	0.310	0.1130
1-#4	0.359	0.1690
1-#3	0.388	0.2080
1-#2	0.420	0.2560
1-#1	0.498	0.3340
6-CONDUCTOR SIGNAL INTERCONNECT CABLE (SIC)	0.350	0.0860
12-CONDUCTOR SIGNAL INTERCONNECT CABLE (SIC)	0.500	0.1440
DETECTOR LEAD-IN CABLE (DLC)	0.310	0.0440
12 to 48-STRAND FIBER OPTIC CABLE (48FOC)	0.424	0.0600
72-STRAND FIBER OPTIC CABLE (72FOC)	0.484	0.0770
96-STRAND FIBER OPTIC CABLE (96FOC)	0.535	0.1050
144-STRAND FIBER OPTIC CABLE (144FOC)	0.670	0.1890
3/8" Ø MESSENGER WIRE	0.375	0.2730

NO SCALE

BRANCH CHIEF DAVID NEUMANN

	BY	CHECKED
DESIGN	L WARREN	V LOPEZ
DETAILS	H NGUYEN	V LOPEZ
QUANTITIES		

STATE OF CALIFORNIA
DEPARTMENT OF TRANSPORTATION

DIVISION OF ENGINEERING SERVICES
DESIGN AND TECHNICAL SERVICES
SPECIAL DESIGNS BRANCH B

BRIDGE NO. N/A
POST MILE 15.7/15.8

TEMPORARY WOOD POLES
GENERAL NOTES

SES-1

STRUCTURES DESIGN SPECIAL DESIGN SHEET (ENGLISH) (REV. 09-01-10)

ORIGINAL SCALE IN INCHES FOR REDUCED PLANS 0 1 2 3

UNIT:
PROJECT NUMBER & PHASE: 0714000092

CONTRACT NO.: 07-305201

DISREGARD PRINTS BEARING EARLIER REVISION DATES

REVISION DATES 8/18/15

SHEET 1 OF 5

FILE => 07-305201-ses-1.dgn

USERNAME => s132428 DATE PLOTTED => 14 JUL 2016 TIME PLOTTED => 08:55

DIST	COUNTY	ROUTE	POST MILES TOTAL PROJECT	SHEET No.	TOTAL SHEETS
07	Ven	33	15.7	43	108

REGISTERED CIVIL ENGINEER 6-21-16 DATE

6-24-16
PLANS APPROVAL DATE

The State of California or its officers or agents shall not be responsible for the accuracy or completeness of electronic copies of this plan sheet.

REGISTERED PROFESSIONAL ENGINEER RICHARD LANCE WARREN No. C78431 Exp. 9/30/17 CIVIL STATE OF CALIFORNIA

LEGEND

- Wood Pole No Attachments
- A — Wood Pole with Attachments
- —OH— Overhead Bundle

POLE SELECTION TABLE

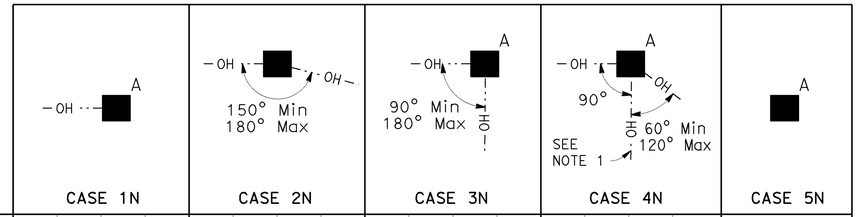

		CASE 1N				CASE 2N				CASE 3N				CASE 4N				CASE 5N
	MAXIMUM d_p	1"	1.5"	2.0"	2.5"	1"	1.5"	2.0"	2.5"	1.0"	1.5"	2.0"	2.5"	1"	1.5"	2.0"	2.5"	N/A
OVERHEAD BUNDLE HORIZONTAL SPAN (Max) 50′	MINIMUM POLE CLASS	H-1	H-2	H-2	H-2	4	3	2	1	H-2	H-2	H-3	H-3	H-4	H-4	H-4	H-5	CLASS 1 E = 10′
	POLE EMBEDMENT (E)	11′				10′				11′				12′				
100′	MINIMUM POLE CLASS	H-2	H-3	H-4	H-5	1	H-1	H-2	H-3	H-4	H-5	H-5	H-6	H-5	H-5	H-6		
	POLE EMBEDMENT (E)	12′				11′				12′				12′				
150′	MINIMUM POLE CLASS	H-4	H-5	H-6		H-1	H-2	H-3	H-5	H-6				H-6				
	POLE EMBEDMENT (E)	12′				12′				12′				12′				
200′	MINIMUM POLE CLASS	H-5	H-6			H-2	H-3	H-5										
	POLE EMBEDMENT (E)	12′				12′												

1. CCTV camera assembly or vehicle detection system
2. Overhead bundle consisting of a 3/8" ø messenger wire, overhead conductors, and lashing wire
3. Luminaire with mast arm
4. Pedestrian push button assembly or accessible push button assembly
5. Signal face with 3 indications or single sheet sign panel (10 SQFT Max)
6. Riser with weather head as required
7. Pull box as required
8. Grounding as required
9. Single flashing beacon or single sheet sign panel (4 SQFT Max)
10. Single sheet sign panel (4′ x 4′ Max) or signal face with 3 indications
11. Flashing beacon control assembly
12. NEMA 3R enclosure, 26"(W) x 56"(H) x 12"(D) Max dimensions. Max weight including batteries, 450 lbs
13. 25′ SQFT Max total photovoltaic panels mounted as shown as required
14. 2-12" flashing beacons

NOTES:

1. In addition to other restrictions on maximum horizontal span, this horizontal span must not exceed 100′.
2. Cases 1N, 3N and 4N may substitute the attachments shown in Case 5N if the photovoltaic panel is not included.
3. For Case 1N without an overhead bundle (item 2) use minimum pole class H-1 with E=11′.

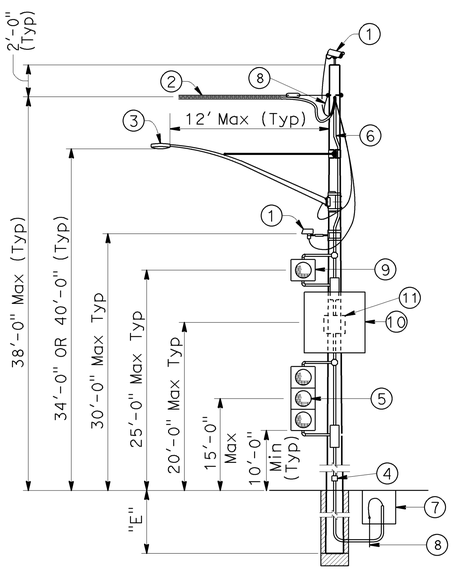

CASE 1N
POLE AT DEAD END WITH ATTACHMENTS
SEE NOTE 2

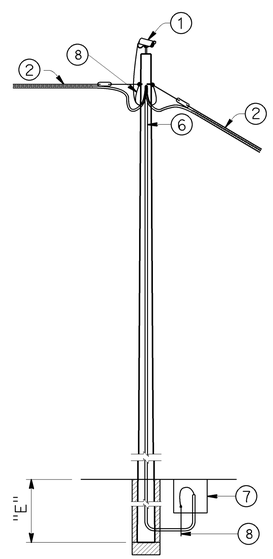

CASE 2N
POLE AT TANGENT WITHOUT ATTACHMENTS

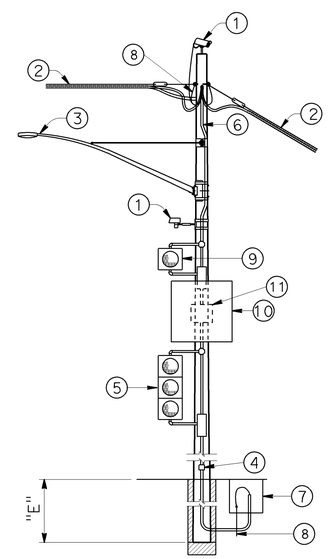

CASE 3N
POLE AT TANGENT OR CORNER WITH ATTACHMENTS
SEE NOTE 2

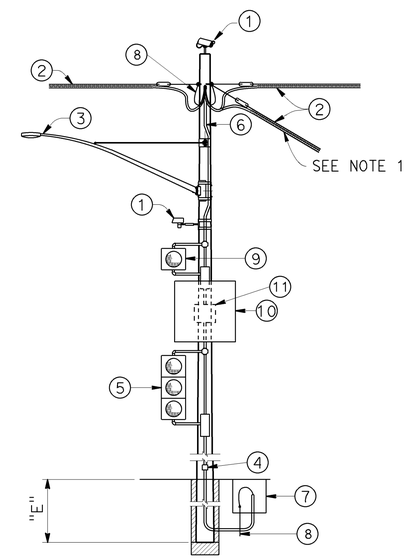

CASE 4N
POLE AT JUNCTION WITH ATTACHMENTS
SEE NOTE 2

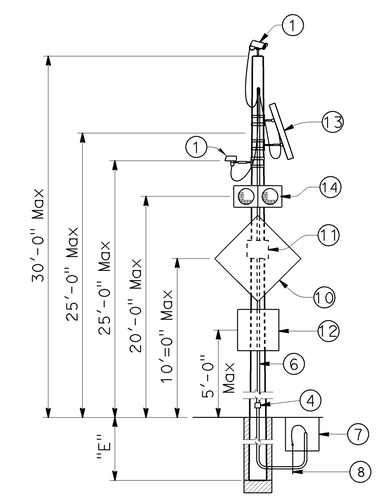

CASE 5N
POLE WITHOUT OVERHEAD BUNDLE WITH ATTACHMENTS

NOTE:
THE CONTRACTOR MUST VERIFY ALL CONTROLLING FIELD DIMENSIONS BEFORE ORDERING OR FABRICATING ANY MATERIAL.

NO SCALE

BRANCH CHIEF DAVID NEUMANN	DESIGN	BY L WARREN	CHECKED V LOPEZ
	DETAILS	BY H NGUYEN	CHECKED V LOPEZ
	QUANTITIES	BY	CHECKED

STATE OF CALIFORNIA
DEPARTMENT OF TRANSPORTATION

DIVISION OF ENGINEERING SERVICES
DESIGN AND TECHNICAL SERVICES
SPECIAL DESIGNS BRANCH B

BRIDGE NO. N/A
POST MILE 15.7/15.8

TEMPORARY WOOD POLES
NON GUYED - NO SIGNAL ON SPANS

SES-2

STRUCTURES DESIGN SPECIAL DESIGN SHEET (ENGLISH) (REV. 09-01-10)

ORIGINAL SCALE IN INCHES FOR REDUCED PLANS 0 1 2 3

UNIT:
PROJECT NUMBER & PHASE: 0714000092 CONTRACT NO.: 07-305201

DISREGARD PRINTS BEARING EARLIER REVISION DATES

REVISION DATES 8/18/15

SHEET 2 OF 5

FILE => 07-305201-ses-2.dgn

USERNAME => s132428 DATE PLOTTED => 14-JUL-2016 TIME PLOTTED => 08:55

DIST	COUNTY	ROUTE	POST MILES TOTAL PROJECT	SHEET No.	TOTAL SHEETS
07	Ven	33	15.7	44	108

REGISTERED CIVIL ENGINEER 6-21-16 DATE

6-24-16
PLANS APPROVAL DATE

The State of California or its officers or agents shall not be responsible for the accuracy or completeness of electronic copies of this plan sheet.

REGISTERED PROFESSIONAL ENGINEER RICHARD LANCE NAUGEN No. C78431 Exp. 9/30/17 CIVIL STATE OF CALIFORNIA

LEGEND

A — Wood Pole with Attachments

—OH··— Overhead Bundle

——→ Guy Anchor

POLE SELECTION TABLE

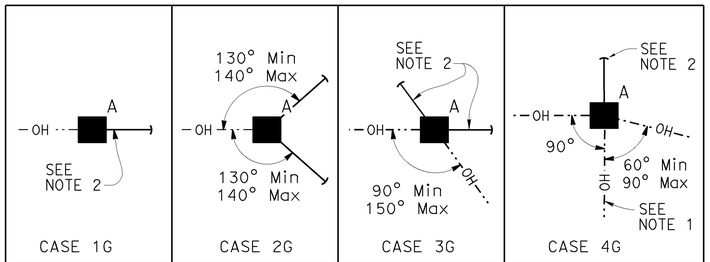

		MAXIMUM d_p	1"	1.5"	2.0"	2.5"	1"	1.5"	2.0"	2.5"	1"	1.5"	2.0"	2.5"	1"	1.5"	2.0"	2.5"
OVERHEAD BUNDLE HORIZONTAL SPAN (Max)	50′	MINIMUM POLE CLASS	H-1	H-1	H-2	H-2	1	1	1	1	1	1	1	H-1	H-2	H-2	H-3	H-3
		POLE EMBEDMENT (E)	10′				9′				9′				11′			
	100′	MINIMUM POLE CLASS	H-2	H-2	H-3	H-4	1	H-1	H-1	H-1	1	H-1	H-2	H-2	H-3	H-3	H-4	H-4
		POLE EMBEDMENT (E)	11′				9′				9′				12′			
	150′	MINIMUM POLE CLASS	H-3	H-3	H-4	H-5	H-1	H-1	H-2	H-2	H-2	H-3	H-3	H-3	H-4	H-5	H-5	H-6
		POLE EMBEDMENT (E)	11′				9′				9′				12′			
	200′	MINIMUM POLE CLASS	H-4	H-4	H-5	H-6	H-1	H-2	H-3	H-3	H-3	H-3	H-4	H-4	H-5	H-6		
		POLE EMBEDMENT (E)	11′				9′				9′				12′			

1. CCTV camera assembly or vehicle detection system
2. Overhead bundle consisting of a ⅜" ø messenger wire, overhead conductors, and lashing wire
3. Luminaire with mast arm
4. Pedestrian push button assembly or accessible push button assembly
5. Signal face with 3 indications or single sheet sign panel (10 SQFT Max)
6. Riser with weather head as required
7. Pull box as required
8. Grounding as required
9. Single flashing beacon or single sheet sign panel (4 SQFT Max)
10. Single sheet sign panel (4′ x 4′ Max) or signal face with 3 indications
11. Flashing beacon control assembly
12. ½" ø guy wire with white guy marker and strain insulator (for anchorage see "TEMPORARY WOOD POLES-DETAILS No. 2" sheet)

NOTES:

1. In addition to other restrictions on maximum horizontal span, this horizontal span must not exceed 100′.
2. Guy wire in line with opposing span ± 5°.

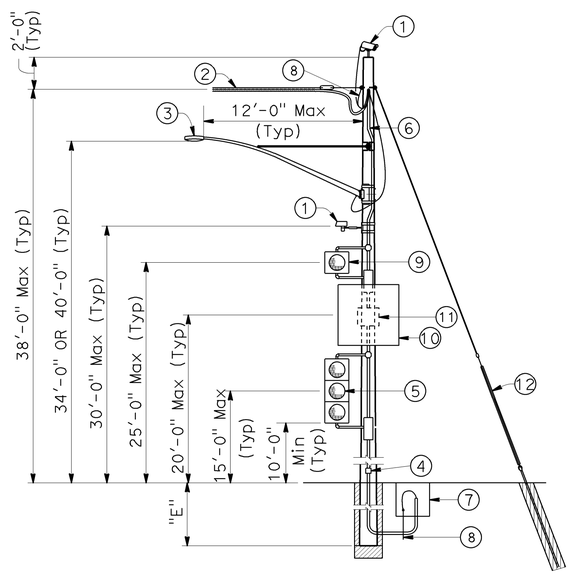

CASE 1G
POLE AT DEAD END
WITH ATTACHMENTS

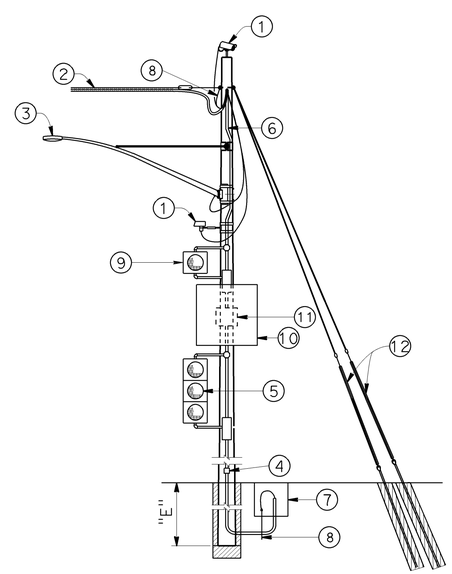

CASE 2G
POLE AT DEAD END
WITH ATTACHMENTS

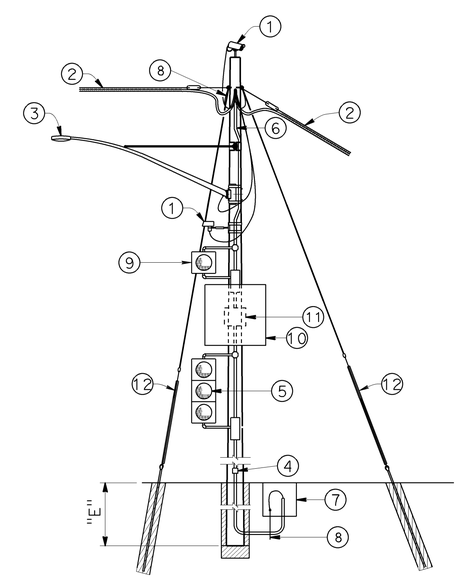

CASE 3G
POLE AT CORNER
WITH ATTACHMENTS

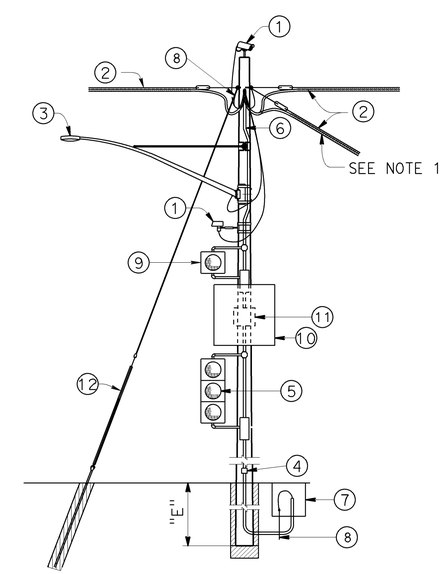

CASE 4G
POLE AT JUNCTION
WITH ATTACHMENTS

NOTE:
THE CONTRACTOR MUST VERIFY ALL CONTROLLING FIELD DIMENSIONS BEFORE ORDERING OR FABRICATING ANY MATERIAL.

NO SCALE

BRANCH CHIEF DAVID NEUMANN

	BY	CHECKED
DESIGN	L WARREN	V LOPEZ
DETAILS	H NGUYEN	V LOPEZ
QUANTITIES		

STATE OF CALIFORNIA
DEPARTMENT OF TRANSPORTATION

DIVISION OF ENGINEERING SERVICES
DESIGN AND TECHNICAL SERVICES
SPECIAL DESIGNS BRANCH
B

BRIDGE NO. N/A
POST MILE 15.7/15.8

TEMPORARY WOOD POLES
GUYED - NO SIGNAL ON SPANS

SES-3

STRUCTURES DESIGN SPECIAL DESIGN SHEET (ENGLISH) (REV. 09-01-10)

ORIGINAL SCALE IN INCHES FOR REDUCED PLANS 0 1 2 3

UNIT:
PROJECT NUMBER & PHASE: 0714000092
CONTRACT NO.: 07-305201

DISREGARD PRINTS BEARING EARLIER REVISION DATES

REVISION DATES 8/18/15 | SHEET 3 | OF 5

FILE => 07-305201-ses-3.dgn

USERNAME => s132428 DATE PLOTTED => 14-JUL-2016 TIME PLOTTED => 08:55

DIST	COUNTY	ROUTE	POST MILES TOTAL PROJECT	SHEET No.	TOTAL SHEETS
07	Ven	33	15.7	45	108

REGISTERED CIVIL ENGINEER 6-21-16 DATE

6-24-16
PLANS APPROVAL DATE

REGISTERED PROFESSIONAL ENGINEER RICHARD LANCE WARREN No. C78431 Exp. 9/30/17 CIVIL STATE OF CALIFORNIA

The State of California or its officers or agents shall not be responsible for the accuracy or completeness of electronic copies of this plan sheet.

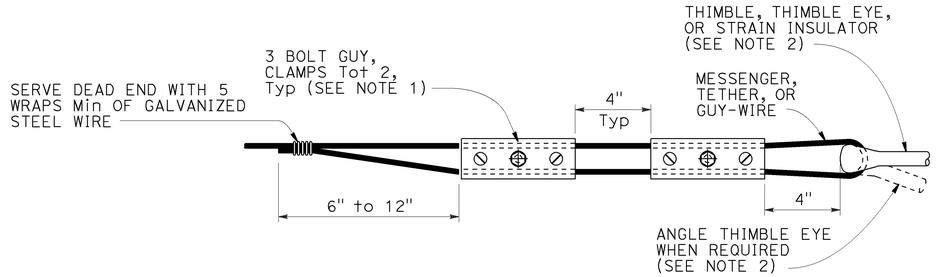

ALTERNATIVE TERMINATION OF MESSENGER WIRES USING GUY CLAMPS

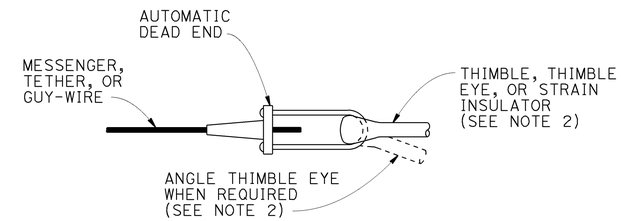

TERMINATION OF WIRES USING AUTOMATIC DEAD END

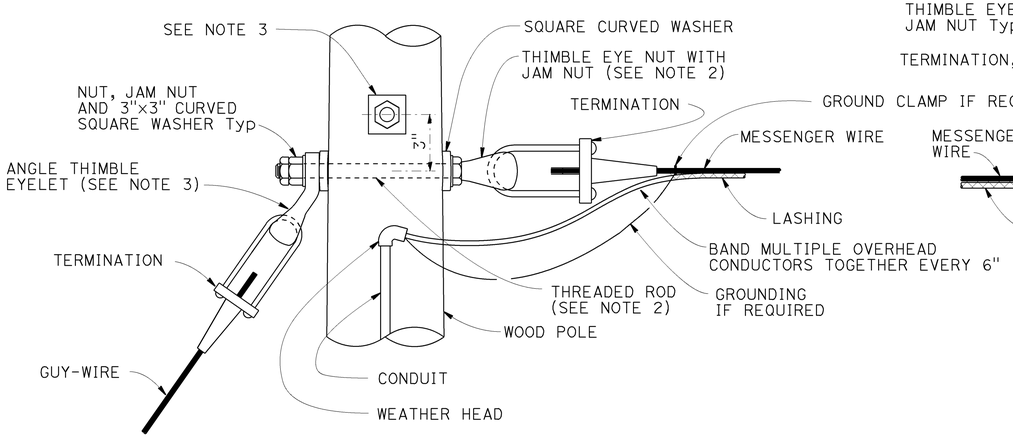

POLE AT DEAD END WITH GUY-WIRE CONNECTION

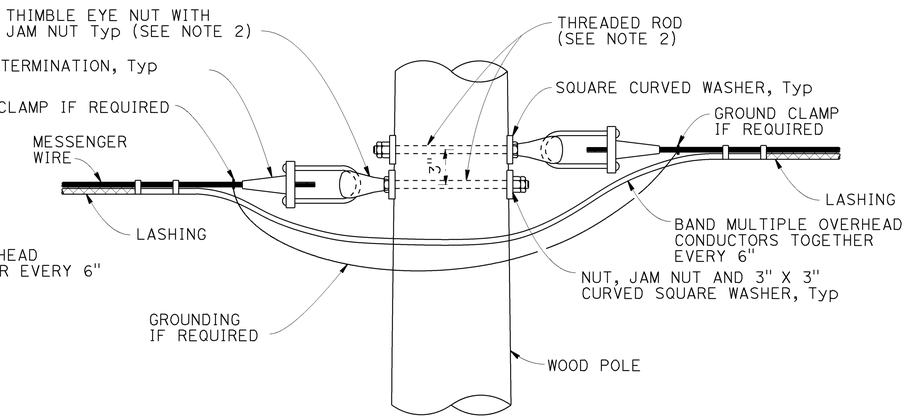

POLE AT TANGENT OR CORNER CONNECTION

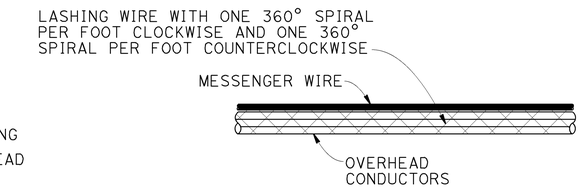

DOUBLE LASHING DETAIL

USE IF d_p IS GREATER THAN $1\frac{1}{2}$"

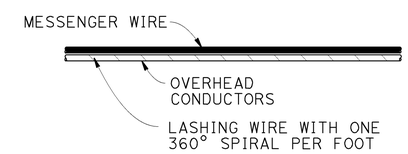

TYPICAL LASHING DETAIL

USE IF d_p IS $1\frac{1}{2}$" OR LESS

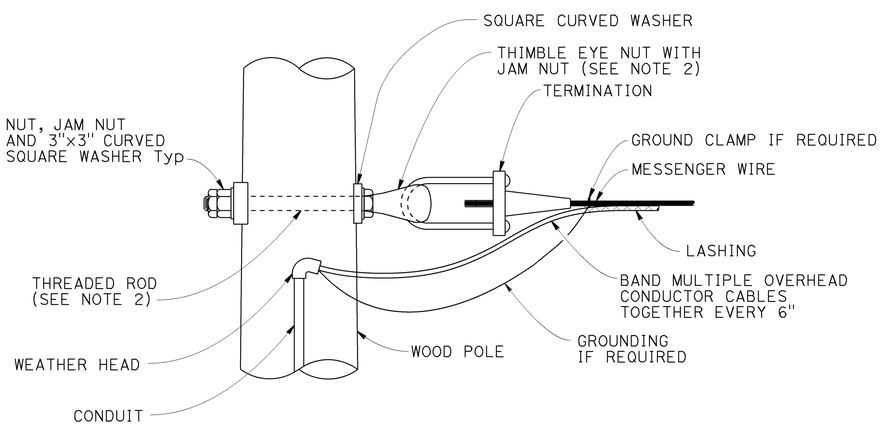

POLE AT DEAD END CONNECTION

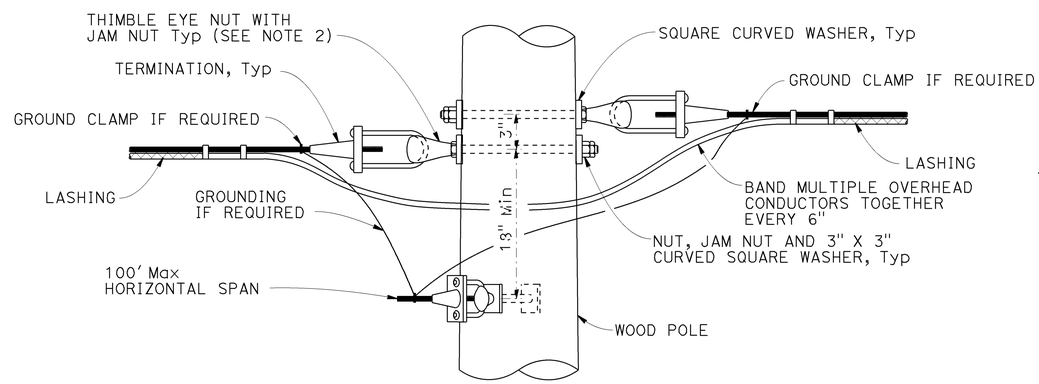

POLE AT JUNCTION CONNECTION

NOTES:

1. For guy wires use 3 clamps.
2. Use $\frac{5}{8}$" ø except $\frac{3}{4}$" ø at guyed wires
3. Install additional angle thimble eyelet at poles with two guy wires.

NOTE:
THE CONTRACTOR MUST VERIFY ALL CONTROLLING FIELD DIMENSIONS BEFORE ORDERING OR FABRICATING ANY MATERIAL.

NO SCALE

BRANCH CHIEF DAVID NEUMANN	DESIGN	BY L WARREN	CHECKED V LOPEZ
	DETAILS	BY H NGUYEN	CHECKED V LOPEZ
	QUANTITIES	BY	CHECKED

STATE OF CALIFORNIA
DEPARTMENT OF TRANSPORTATION

DIVISION OF ENGINEERING SERVICES
DESIGN AND TECHNICAL SERVICES
SPECIAL DESIGNS BRANCH
B

BRIDGE NO. N/A
POST MILE 15.7/15.8

TEMPORARY WOOD POLES
DETAILS No.1

SES-4

STRUCTURES DESIGN SPECIAL DESIGN SHEET (ENGLISH) (REV. 09-01-10)

ORIGINAL SCALE IN INCHES FOR REDUCED PLANS 0 1 2 3

UNIT:
PROJECT NUMBER & PHASE: 0714000092
CONTRACT NO.: 07-305201

DISREGARD PRINTS BEARING EARLIER REVISION DATES → 8/18/15

REVISION DATES | SHEET 4 | OF 5

FILE => 07-305201-ses-4.dgn

USERNAME => s132428 DATE PLOTTED => 14-JUL-2016 TIME PLOTTED => 08:55

DIST	COUNTY	ROUTE	POST MILES TOTAL PROJECT	SHEET No.	TOTAL SHEETS
07	Ven	33	15.7	46	108

REGISTERED CIVIL ENGINEER 6-21-16 DATE

6-24-16
PLANS APPROVAL DATE

REGISTERED PROFESSIONAL ENGINEER RICHARD LANCE WARREN No. C78431 Exp. 9/30/17 CIVIL STATE OF CALIFORNIA

The State of California or its officers or agents shall not be responsible for the accuracy or completeness of electronic copies of this plan sheet.

NOTE:

1. For minimum allowable tension capacity of anchors see "Temporary Wood Poles - General Notes" sheet.

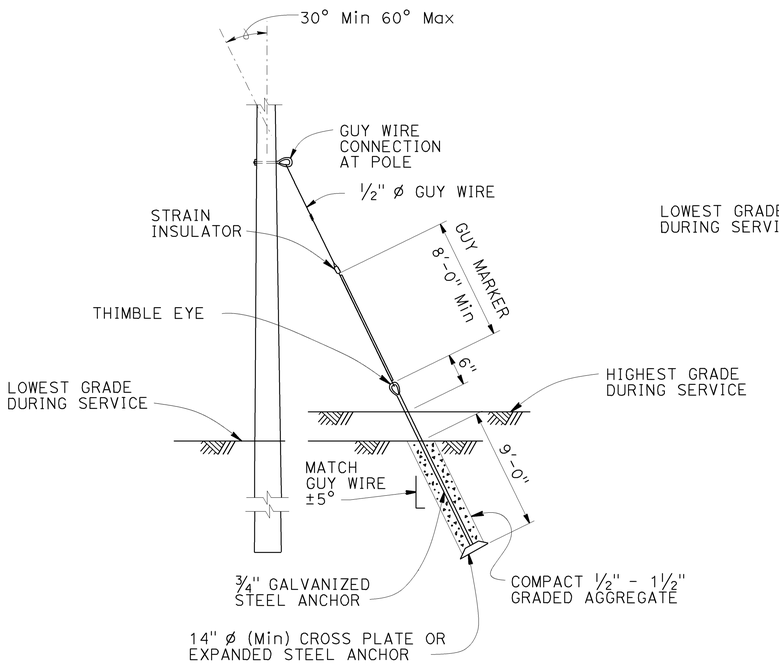

NOTE:

Helical anchor detail may be used in place of expanded steel anchors.

EXPANDED STEEL ANCHOR DETAIL

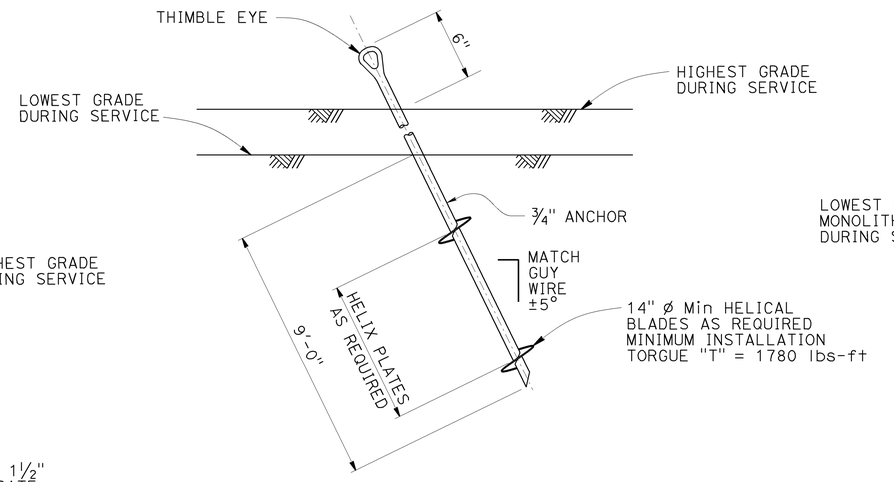

HELICAL ANCHOR DETAIL

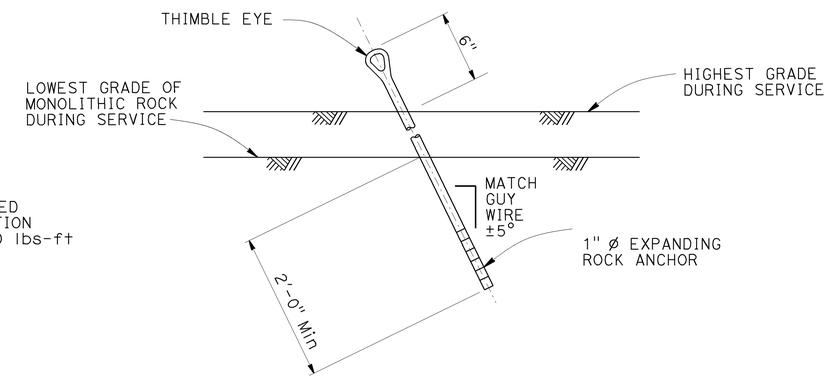

EXPANDING ROCK ANCHOR DETAIL

NOTE:
THE CONTRACTOR MUST VERIFY ALL CONTROLLING FIELD DIMENSIONS BEFORE ORDERING OR FABRICATING ANY MATERIAL.

NO SCALE

BRANCH CHIEF DAVID NEUMANN	DESIGN	BY L WARREN	CHECKED V LOPEZ
	DETAILS	BY H NGUYEN	CHECKED V LOPEZ
	QUANTITIES	BY	CHECKED

STATE OF CALIFORNIA
DEPARTMENT OF TRANSPORTATION

DIVISION OF ENGINEERING SERVICES
DESIGN AND TECHNICAL SERVICES
SPECIAL DESIGNS BRANCH
B

BRIDGE NO. N/A
POST MILE 15.7/15.8

TEMPORARY WOOD POLES
DETAILS No. 2

SES-5

STRUCTURES DESIGN SPECIAL DESIGN SHEET (ENGLISH) (REV. 09-01-10)

ORIGINAL SCALE IN INCHES FOR REDUCED PLANS 0 1 2 3

UNIT:
PROJECT NUMBER & PHASE: 0714000092
CONTRACT NO.: 07-305201

DISREGARD PRINTS BEARING EARLIER REVISION DATES

REVISION DATES 8/18/15

SHEET 5 OF 5

FILE => 07-305201-ses-5.dgn

USERNAME => s132428 DATE PLOTTED => 14-JUL-2016 TIME PLOTTED => 08:55

M

Maint	MAINTENANCE
Max	MAXIMUM
MB	METAL BEAM
MBB	METAL BEAM BARRIER
MBGR	METAL BEAM GUARD RAILING
Med	MEDIAN
MGS	MIDWEST GUARDRAIL SYSTEM
MH	MANHOLE
Min	MINIMUM
Misc	MISCELLANEOUS
Misc I & S	MISCELLANEOUS IRON AND STEEL
Mkr	MARKER
Mod	MODIFIED,
	MODIFY
Mon	MONUMENT
MP	METAL PLATE
MPGR	METAL PLATE GUARD RAILING
MR	MOVEMENT RATING
MSE	MECHANICALLY STABILIZED EMBANKMENT
Mt	MOUNTAIN, MOUNT
Mtl	MATERIAL
MVP	MAINTENANCE VEHICLE PULLOUT

N

N	NORTH
NB	NORTHBOUND
No.	NUMBER (MUST HAVE PERIOD)
Nos.	NUMBERS (MUST HAVE PERIOD)
NPS	NOMINAL PIPE SIZE
NS	NEAR SIDE
NSP	NEW STANDARD PLAN
NTS	NOT TO SCALE

O

Oblr	OBLITERATE
OC	OVERCROSSING
OD	OUTSIDE DIAMETER
OF	OUTSIDE FACE
OG	ORIGINAL GROUND
OGAC	OPEN GRADED ASPHALT CONCRETE
OGFC	OPEN GRADED FRICTION COURSE
OH	OVERHEAD
OHWM	ORDINARY HIGH WATER MARK
O-O	OUT TO OUT
Opp	OPPOSITE
OSD	OVERSIDE DRAIN

P

P	PAGE
PAP	PERFORATED ALUMINUM PIPE
PB	PULL BOX
PC	POINT OF CURVATURE,
	PRECAST
PCC	POINT OF COMPOUND CURVE,
	PORTLAND CEMENT CONCRETE
PCMS	PORTABLE CHANGEABLE MESSAGE SIGN
PCP	PERFORATED CONCRETE PIPE,
	PRESTRESSED CONCRETE PIPE
PCVC	POINT OF COMPOUND VERTICAL CURVE
PEC	PERMIT TO ENTER AND CONSTRUCT
Ped	PEDESTRIAN
Ped OC	PEDESTRIAN OVERCROSSING
Ped UC	PEDESTRIAN UNDERCROSSING
Perm Mtl	PERMEABLE MATERIAL

P continued

PG	PROFILE GRADE
PI	POINT OF INTERSECTION
PJP	PARTIAL JOINT PENETRATION
Pkwy	PARKWAY
ℙ,PL	PLATE
P/L	PROPERTY LINE
PM	POST MILE,
	TIME FROM NOON TO MIDNIGHT
PN	PAVING NOTCH
POC	POINT OF HORIZONTAL CURVE
POT	POINT OF TANGENT
POVC	POINT OF VERTICAL CURVE
PP	PIPE PILE,
	PLASTIC PIPE,
	POWER POLE
PPL	PREFORMED PERMEABLE LINER
PPP	PERFORATED PLASTIC PIPE
PRC	POINT OF REVERSE CURVE
PRF	PAVEMENT REINFORCING FABRIC
PRVC	POINT OF REVERSE VERTICAL CURVE
PS&E	PLANS, SPECIFICATIONS AND ESTIMATES
PS, P/S	PRESTRESSED
PSP	PERFORATED STEEL PIPE
PT	POINT OF TANGENCY
PVC	POLYVINYL CHLORIDE
Pvmt	PAVEMENT

Q

Qty	QUANTITY

R

R	RADIUS
R & D	REMOVE AND DISPOSE
R & S	REMOVE AND SALVAGE
R/C	RATE OF CHANGE
RCA	REINFORCED CONCRETE ARCH
RCB	REINFORCED CONCRETE BOX
RCP	REINFORCED CONCRETE PIPE
RCPA	REINFORCED CONCRETE PIPE ARCH
Rd	ROAD
Reinf	REINFORCED,
	REINFORCEMENT,
	REINFORCING
Rel	RELOCATE
Repl	REPLACEMENT
Ret	RETAINING
Rev	REVISED, REVISION
Rdwy	ROADWAY
RHMA	RUBBERIZED HOT MIX ASPHALT
Riv	RIVER
RM	ROAD-MIXED
RP	RADIUS POINT,
	REFERENCE POINT
RR	RAILROAD
RSP	ROCK SLOPE PROTECTION,
	REVISED STANDARD PLAN
Rt	RIGHT
Rte	ROUTE
RW	REDWOOD,
	RETAINING WALL
R/W	RIGHT OF WAY
Rwy	RAILWAY

S

S	SOUTH,
	SUPPLEMENT
SAE	STRUCTURE APPROACH EMBANKMENT
Salv	SALVAGE
SAPP	STRUCTURAL ALUMINUM PLATE PIPE
SB	SOUTHBOUND
SC	SAND CUSHION
SCSP	SLOTTED CORRUGATED STEEL PIPE
SD	STORM DRAIN
Sec	SECOND,
	SECTION
Sep	SEPARATION
SG	SUBGRADE
Shld	SHOULDER
Sht	SHEET
Sim	SIMILAR
℄	STATION LINE
SM	SELECTED MATERIAL
Spec	SPECIAL,
	SPECIFICATIONS
SPP	SLOTTED PLASTIC PIPE
SS	SLOPE STAKE
SSBM	STRAP AND SADDLE BRACKET METHOD
SSD	STRUCTURAL SECTION DRAIN
SSPA	STRUCTURAL STEEL PLATE ARCH
SSPP	STRUCTURAL STEEL PLATE PIPE
SSPPA	STRUCTURAL STEEL PLATE PIPE ARCH
SSRP	STEEL SPIRAL RIB PIPE
St	STREET
Sta	STATION
STBB	SINGLE THRIE BEAM BARRIER
Std	STANDARD
Str	STRUCTURE
Surf	SURFACING
SW	SIDEWALK,
	SOUND WALL
Swr	SEWER
Sym	SYMMETRICAL
S4S	SURFACE 4 SIDES

T

T	SEMI-TANGENT
Tan	TANGENT
TBB	THRIE BEAM BARRIER
Tbr	TIMBER
TC	TOP OF CURB
TCB	TRAFFIC CONTROL BOX
TCE	TEMPORARY CONSTRUCTION EASEMENT
Tel	TELEPHONE
Temp	TEMPORARY
TG	TOP OF GRADE
Tot	TOTAL
TP	TELEPHONE POLE
TPB	TREATED PERMEABLE BASE
TPM	TREATED PERMEABLE MATERIAL
Trans	TRANSITION

T continued

TS	TRANSVERSE,
	TRAFFIC SIGNAL,
	TUBULAR STEEL
Typ	TYPICAL

U

UC	UNDERCROSSING
UD	UNDERDRAIN
UG	UNDERGROUND
UON	UNLESS OTHERWISE NOTED
UP	UNDERPASS

V

V	VALVE,
	DESIGN SPEED
Var	VARIABLE,
	VARIES
VC	VERTICAL CURVE
VCP	VITRIFIED CLAY PIPE
Vert	VERTICAL
Via	VIADUCT
Vol	VOLUME

W

W	WEST,
	WIDTH
WB	WESTBOUND
WH	WEEP HOLE
WM	WIRE MESH
WS	WATER SURFACE
WSP	WELDED STEEL PIPE
Wt	WEIGHT
WV	WATER VALVE
WW	WINGWALL
WWLOL	WINGWALL LAYOUT LINE

X

X Sec	CROSS SECTION
Xing	CROSSING

Y

Yr	YEAR
Yrs	YEARS

Dist	COUNTY	ROUTE	POST MILES TOTAL PROJECT	SHEET No.	TOTAL SHEETS
07	Ven	33	15.7	47	108

Grace M. Tsushima
REGISTERED CIVIL ENGINEER

July 19, 2013
PLANS APPROVAL DATE

REGISTERED PROFESSIONAL ENGINEER
Grace M. Tsushima
No. C49814
Exp. 9-30-14
CIVIL
STATE OF CALIFORNIA

THE STATE OF CALIFORNIA OR ITS OFFICERS OR AGENTS SHALL NOT BE RESPONSIBLE FOR THE ACCURACY OR COMPLETENESS OF SCANNED COPIES OF THIS PLAN SHEET.

TO ACCOMPANY PLANS DATED 6-24-16

UNIT OF MEASUREMENT SYMBOLS:

Some of the symbols used in the project plan quantity tables and in the Bid Item List are:

TABLE A

SYMBOL USED	DEFINITIONS
ACRE	ACRE
CF	CUBIC FOOT
CY	CUBIC YARD
EA	EACH
GAL	GALLON
LB	POUND
LF	LINEAR FOOT
SQFT	SQUARE FOOT
SQYD	SQUARE YARD
STA	100 FEET
TAB	TABLET
TON	2,000 POUNDS

Some of the symbols used in the plans other than in the project plan quantity tables are:

TABLE B

SYMBOL USED	DEFINITIONS
ksi	KIPS PER SQUARE INCH
ksf	KIPS PER SQUARE FOOT
psi	POUNDS PER SQUARE INCH
psf	POUNDS PER SQUARE FOOT
lb/ft^3, pcf	POUNDS PER CUBIC FOOT
tsf	TONS PER SQUARE FOOT
mph, MPH *	MILES PER HOUR
ø	NOMINAL DIAMETER
oz	OUNCE
lb	POUND
kip	1,000 POUNDS
cal	CALORIE
ft	FOOT OR FEET
gal	GALLON

* For use on a sign panel only

STATE OF CALIFORNIA
DEPARTMENT OF TRANSPORTATION

ABBREVIATIONS (SHEET 2 OF 2)

NO SCALE

RSP A10B DATED JULY 19, 2013 SUPERSEDES STANDARD PLAN A10B DATED MAY 20, 2011 - PAGE 2 OF THE STANDARD PLANS BOOK DATED 2010.

REVISED STANDARD PLAN RSP A10B

2010 REVISED STANDARD PLAN RSP A10B

6-7-13

REFERENCE: CALTRANS SOIL & ROCK LOGGING, CLASSIFICATION, AND PRESENTATION MANUAL (2010)

Dist	COUNTY	ROUTE	POST MILES TOTAL PROJECT	SHEET No.	TOTAL SHEETS
07	Ven	33	15.7	48	108

CERTIFIED ENGINEERING GEOLOGIST

October 30, 2015
PLANS APPROVAL DATE

REGISTERED GEOLOGIST
CHRIS A. RISDEN
CERTIFIED ENGINEERING GEOLOGIST
No. 2541
Exp. 9-30-17
STATE OF CALIFORNIA

THE STATE OF CALIFORNIA OR ITS OFFICERS OR AGENTS SHALL NOT BE RESPONSIBLE FOR THE ACCURACY OR COMPLETENESS OF SCANNED COPIES OF THIS PLAN SHEET.

TO ACCOMPANY PLANS DATED 6-24-16

ABBREVIATION:

GWS = Ground Water Surface

CEMENTATION

DESCRIPTION	CRITERIA
WEAK	CRUMBLES OR BREAKS WITH HANDLING OR LITTLE FINGER PRESSURE.
MODERATE	CRUMBLES OR BREAKS WITH CONSIDERABLE FINGER PRESSURE.
STRONG	WILL NOT CRUMBLE OR BREAK WITH FINGER PRESSURE.

BOREHOLE IDENTIFICATION

SYMBOL	HOLE TYPE	DESCRIPTION
Size	A	AUGER BORING (HOLLOW OR SOLID STEM BUCKET)
Size	R	ROTARY DRILLED BORING (CONVENTIONAL)
	RW	ROTARY DRILLED WITH SELF-CASING WIRE-LINE
	RC	ROTARY CORE WITH CONTINUOUSLY-SAMPLED, SELF-CASING WIRE-LINE
	P	ROTARY PERCUSSION BORING (AIR)
Size	R	ROTARY DRILLED DIAMOND CORE
	RC	ROTARY DRILLED DIAMOND CORE, CONTINUOUSLY SAMPLED
Size	HD	HAND DRIVEN (1-INCH SOIL TUBE)
	HA	HAND AUGER
●	D	DYNAMIC CONE PENETRATION BORING
▲	CPT	CONE PENETRATION TEST (ASTM D 5778)
⬚	O	OTHER (NOTE ON LOTB)

Note: Size in inches.

CONSISTENCY OF COHESIVE SOILS

DESCRIPTION	SHEAR STRENGTH (tsf)	POCKET PENETROMETER MEASUREMENT, PP, (tsf)	TORVANE MEASUREMENT, TV, (tsf)	VANE SHEAR MEASUREMENT, VS, (tsf)
VERY SOFT	LESS THAN 0.12	LESS THAN 0.25	LESS THAN 0.12	LESS THAN 0.12
SOFT	0.12 - 0.25	0.25 - 0.5	0.12 - 0.25	0.12 - 0.25
MEDIUM STIFF	0.25 - 0.5	0.5 - 1	0.25 - 0.5	0.25 - 0.5
STIFF	0.5 - 1	1 - 2	0.5 - 1	0.5 - 1
VERY STIFF	1 - 2	2 - 4	1 - 2	1 - 2
HARD	GREATER THAN 2	GREATER THAN 4	GREATER THAN 2	GREATER THAN 2

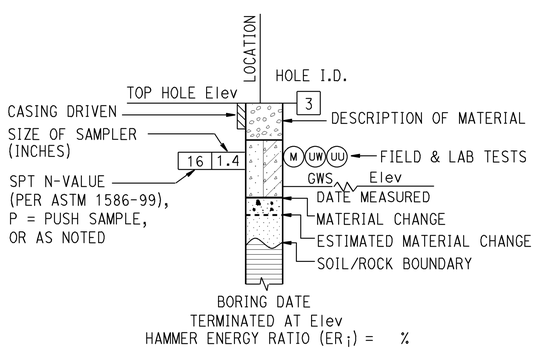

ROTARY BORING

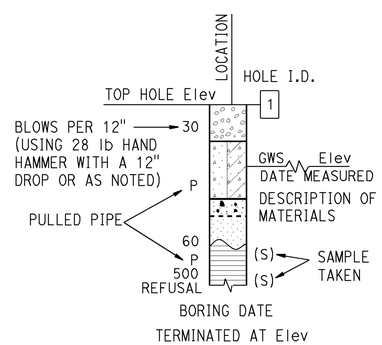

HAND BORING

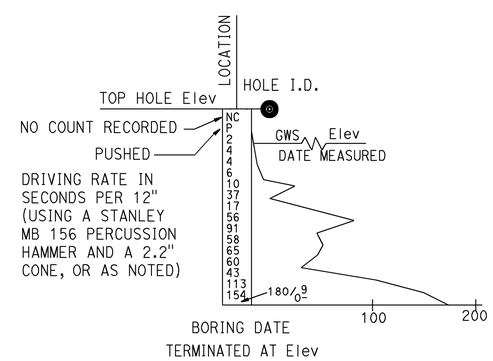

DYNAMIC CONE PENETRATION BORING

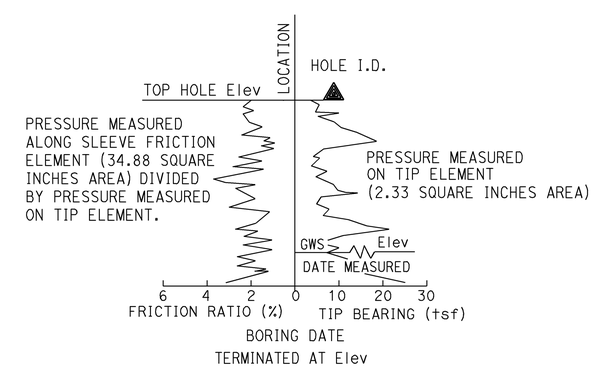

CONE PENETRATION TEST (CPT) BORING

STATE OF CALIFORNIA
DEPARTMENT OF TRANSPORTATION

LEGEND - SOIL (SHEET 1 OF 2)

NO SCALE

RSP A10F DATED OCTOBER 30, 2015 SUPERSEDES STANDARD PLAN A10F DATED MAY 20, 2011 - PAGE 6 OF THE STANDARD PLANS BOOK DATED 2010.

REVISED STANDARD PLAN RSP A10F

2010 REVISED STANDARD PLAN RSP A10F

8-18-15

REFERENCE: CALTRANS SOIL & ROCK LOGGING, CLASSIFICATION, AND PRESENTATION MANUAL (2010)

Dist	COUNTY	ROUTE	POST MILES TOTAL PROJECT	SHEET No.	TOTAL SHEETS
07	Ven	33	15.7	49	108

CERTIFIED ENGINEERING GEOLOGIST

October 30, 2015
PLANS APPROVAL DATE

REGISTERED GEOLOGIST
CHRIS A. RISDEN
CERTIFIED ENGINEERING GEOLOGIST
No. 2541
Exp. 9-30-17
STATE OF CALIFORNIA

THE STATE OF CALIFORNIA OR ITS OFFICERS OR AGENTS SHALL NOT BE RESPONSIBLE FOR THE ACCURACY OR COMPLETENESS OF SCANNED COPIES OF THIS PLAN SHEET.

TO ACCOMPANY PLANS DATED 6-24-16

GROUP SYMBOLS AND NAMES

GRAPHIC/SYMBOL	GROUP NAMES	GRAPHIC/SYMBOL	GROUP NAMES
GW	WELL-GRADED GRAVEL WELL-GRADED GRAVEL WITH SAND	CL	LEAN CLAY LEAN CLAY WITH SAND LEAN CLAY WITH GRAVEL SANDY LEAN CLAY SANDY LEAN CLAY WITH GRAVEL GRAVELLY LEAN CLAY GRAVELLY LEAN CLAY WITH SAND
GP	POORLY-GRADED GRAVEL POORLY-GRADED GRAVEL WITH SAND		
GW-GM	WELL-GRADED GRAVEL WITH SILT WELL-GRADED GRAVEL WITH SILT AND SAND	CL-ML	SILTY CLAY SILTY CLAY WITH SAND SILTY CLAY WITH GRAVEL SANDY SILTY CLAY SANDY SILTY CLAY WITH GRAVEL GRAVELLY SILTY CLAY GRAVELLY SILTY CLAY WITH SAND
GW-GC	WELL-GRADED GRAVEL WITH CLAY (OR SILTY CLAY) WELL-GRADED GRAVEL WITH CLAY AND SAND (OR SILTY CLAY AND SAND)		
GP-GM	POORLY-GRADED GRAVEL WITH SILT POORLY-GRADED GRAVEL WITH SILT AND SAND	ML	SILT SILT WITH SAND SILT WITH GRAVEL SANDY SILT SANDY SILT WITH GRAVEL GRAVELLY SILT GRAVELLY SILT WITH SAND
GP-GC	POORLY-GRADED GRAVEL WITH CLAY (OR SILTY CLAY) POORLY-GRADED GRAVEL WITH CLAY AND SAND (OR SILTY CLAY AND SAND)		
GM	SILTY GRAVEL SILTY GRAVEL WITH SAND	OL	ORGANIC LEAN CLAY ORGANIC LEAN CLAY WITH SAND ORGANIC LEAN CLAY WITH GRAVEL SANDY ORGANIC LEAN CLAY SANDY ORGANIC LEAN CLAY WITH GRAVEL GRAVELLY ORGANIC LEAN CLAY GRAVELLY ORGANIC LEAN CLAY WITH SAND
GC	CLAYEY GRAVEL CLAYEY GRAVEL WITH SAND		
GC-GM	SILTY, CLAYEY GRAVEL SILTY, CLAYEY GRAVEL WITH SAND	OL	ORGANIC SILT ORGANIC SILT WITH SAND ORGANIC SILT WITH GRAVEL SANDY ORGANIC SILT SANDY ORGANIC SILT WITH GRAVEL GRAVELLY ORGANIC SILT GRAVELLY ORGANIC SILT WITH SAND
SW	WELL-GRADED SAND WELL-GRADED SAND WITH GRAVEL		
SP	POORLY-GRADED SAND POORLY-GRADED SAND WITH GRAVEL	CH	FAT CLAY FAT CLAY WITH SAND FAT CLAY WITH GRAVEL SANDY FAT CLAY SANDY FAT CLAY WITH GRAVEL GRAVELLY FAT CLAY GRAVELLY FAT CLAY WITH SAND
SW-SM	WELL-GRADED SAND WITH SILT WELL-GRADED SAND WITH SILT AND GRAVEL		
SW-SC	WELL-GRADED SAND WITH CLAY (OR SILTY CLAY) WELL-GRADED SAND WITH CLAY AND GRAVEL (OR SILTY CLAY AND GRAVEL)	MH	ELASTIC SILT ELASTIC SILT WITH SAND ELASTIC SILT WITH GRAVEL SANDY ELASTIC SILT SANDY ELASTIC SILT WITH GRAVEL GRAVELLY ELASTIC SILT GRAVELLY ELASTIC SILT WITH SAND
SP-SM	POORLY-GRADED SAND WITH SILT POORLY-GRADED SAND WITH SILT AND GRAVEL		
SP-SC	POORLY-GRADED SAND WITH CLAY (OR SILTY CLAY) POORLY-GRADED SAND WITH CLAY AND GRAVEL (OR SILTY CLAY AND GRAVEL)	OH	ORGANIC FAT CLAY ORGANIC FAT CLAY WITH SAND ORGANIC FAT CLAY WITH GRAVEL SANDY ORGANIC FAT CLAY SANDY ORGANIC FAT CLAY WITH GRAVEL GRAVELLY ORGANIC FAT CLAY GRAVELLY ORGANIC FAT CLAY WITH SAND
SM	SILTY SAND SILTY SAND WITH GRAVEL		
SC	CLAYEY SAND CLAYEY SAND WITH GRAVEL	OH	ORGANIC ELASTIC SILT ORGANIC ELASTIC SILT WITH SAND ORGANIC ELASTIC SILT WITH GRAVEL SANDY ORGANIC ELASTIC SILT SANDY ORGANIC ELASTIC SILT WITH GRAVEL GRAVELLY ORGANIC ELASTIC SILT GRAVELLY ORGANIC ELASTIC SILT WITH SAND
SC-SM	SILTY, CLAYEY SAND SILTY, CLAYEY SAND WITH GRAVEL		
PT	PEAT	OL/OH	ORGANIC SOIL ORGANIC SOIL WITH SAND ORGANIC SOIL WITH GRAVEL SANDY ORGANIC SOIL SANDY ORGANIC SOIL WITH GRAVEL GRAVELLY ORGANIC SOIL GRAVELLY ORGANIC SOIL WITH SAND
	COBBLES COBBLES AND BOULDERS BOULDERS		

FIELD AND LABORATORY TESTING

- (C) CONSOLIDATION (ASTM D2435)
- (CL) COLLAPSE POTENTIAL (ASTM D4546)
- (CP) COMPACTION CURVE (CTM 216)
- (CR) CORROSIVITY TESTING (CTM 643, CTM 422, CTM 417)
- (CU) CONSOLIDATED UNDRAINED TRIAXIAL (ASTM D4767)
- (DS) DIRECT SHEAR (ASTM D3080)
- (EI) EXPANSION INDEX (ASTM D4829)
- (M) MOISTURE CONTENT (ASTM D2216)
- (OC) ORGANIC CONTENT-% (ASTM D2974)
- (P) PERMEABILITY (CTM 220)
- (PA) PARTICLE SIZE ANALYSIS (ASTM D422)
- (PI) PLASTICITY INDEX (AASHTO T 90) LIQUID LIMIT (AASHTO T 89)
- (PL) POINT LOAD INDEX (ASTM D5731)
- (PM) PRESSURE METER
- (R) R-VALUE (CTM 301)
- (SE) SAND EQUIVALENT (CTM 217)
- (SG) SPECIFIC GRAVITY (AASHTO T 100)
- (SL) SHRINKAGE LIMIT (ASTM D4943)
- (SW) SWELL POTENTIAL (ASTM D4546)
- (UC) UNCONFINED COMPRESSION-SOIL (ASTM D2166) UNCONFINED COMPRESSION-ROCK (ASTM D7012 - METHOD C)
- (UU) UNCONSOLIDATED UNDRAINED TRIAXIAL (ASTM D2850)
- (UW) UNIT WEIGHT (ASTM D7263 - METHOD B)

APPARENT DENSITY OF COHESIONLESS SOILS

DESCRIPTION	SPT N_{60} (BLOWS / 12 INCHES)
VERY LOOSE	0 - 5
LOOSE	5 - 10
MEDIUM DENSE	10 - 30
DENSE	30 - 50
VERY DENSE	GREATER THAN 50

MOISTURE

DESCRIPTION	CRITERIA
DRY	NO DISCERNABLE MOISTURE
MOIST	MOISTURE PRESENT, BUT NO FREE WATER
WET	VISIBLE FREE WATER

PERCENT OR PROPORTION OF SOILS

DESCRIPTION	CRITERIA
TRACE	PARTICLES ARE PRESENT BUT ESTIMATED TO BE LESS THAN 5%
FEW	5% - 10%
LITTLE	15% - 25%
SOME	30% - 45%
MOSTLY	50% - 100%

PARTICLE SIZE

DESCRIPTION		SIZE
BOULDER		GREATER THAN 12"
COBBLE		3" - 12"
GRAVEL	COARSE	3/4" - 3"
	FINE	1/5" - 3/4"
SAND	COARSE	1/16" - 1/5"
	MEDIUM	1/64" - 1/16"
	FINE	1/300" - 1/64"
SILT AND CLAY		LESS THAN 1/300"

STATE OF CALIFORNIA
DEPARTMENT OF TRANSPORTATION

LEGEND - SOIL (SHEET 2 OF 2)

NO SCALE

RSP A10G DATED OCTOBER 30, 2015 SUPERSEDES STANDARD PLAN A10G DATED MAY 20, 2011 - PAGE 7 OF THE STANDARD PLANS BOOK DATED 2010.

REVISED STANDARD PLAN RSP A10G

2010 REVISED STANDARD PLAN RSP A10G

9-22-16

Dist	COUNTY	ROUTE	POST MILES TOTAL PROJECT	SHEET No.	TOTAL SHEETS
07	Ven	33	15.7	50	108

REGISTERED CIVIL ENGINEER

July 20, 2012
PLANS APPROVAL DATE

REGISTERED PROFESSIONAL ENGINEER
Roberta L. McLaughlin
No. C40375
Exp. 3-31-13
CIVIL
STATE OF CALIFORNIA

THE STATE OF CALIFORNIA OR ITS OFFICERS OR AGENTS SHALL NOT BE RESPONSIBLE FOR THE ACCURACY OR COMPLETENESS OF SCANNED COPIES OF THIS PLAN SHEET.

TO ACCOMPANY PLANS DATED 6-24-16

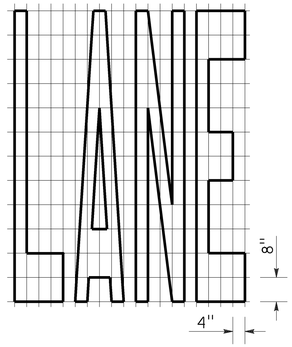

A=24 ft^2

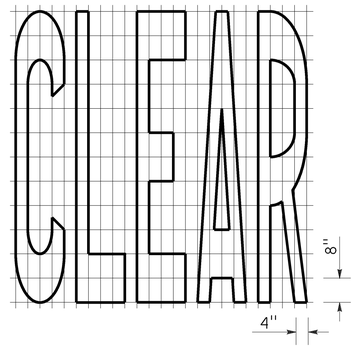

A=27 ft^2

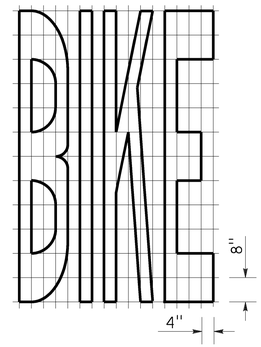

A=21 ft^2

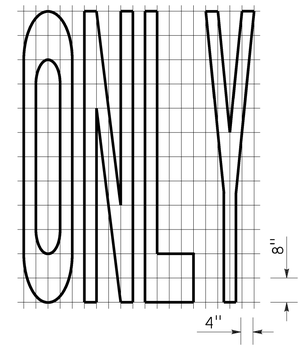

A=22 ft^2

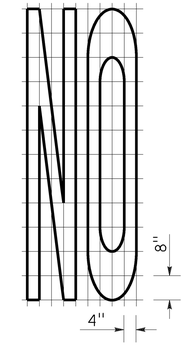

A=14 ft^2

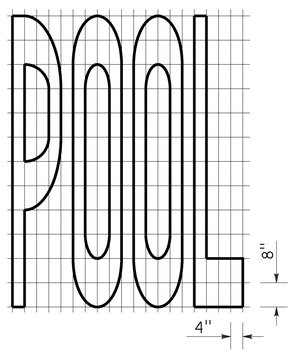

A=23 ft^2

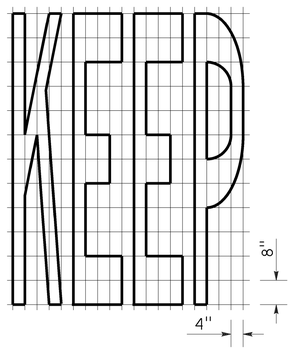

A=24 ft^2

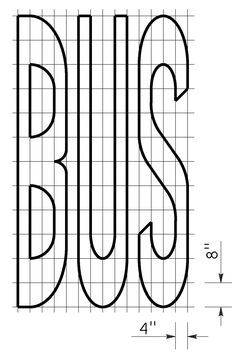

A=20 ft^2

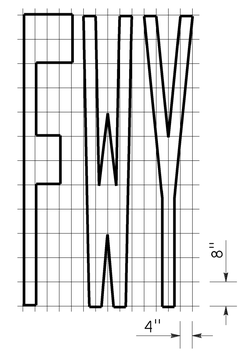

A=16 ft^2

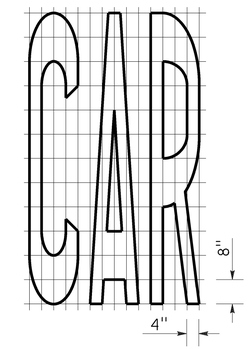

A=17 ft^2

WORD MARKINGS			
ITEM	ft^2	ITEM	ft^2
LANE	24	NO	14
POOL	23	BIKE	21
CAR	17	BUS	20
CLEAR	27	ONLY	22
KEEP	24	FWY	16

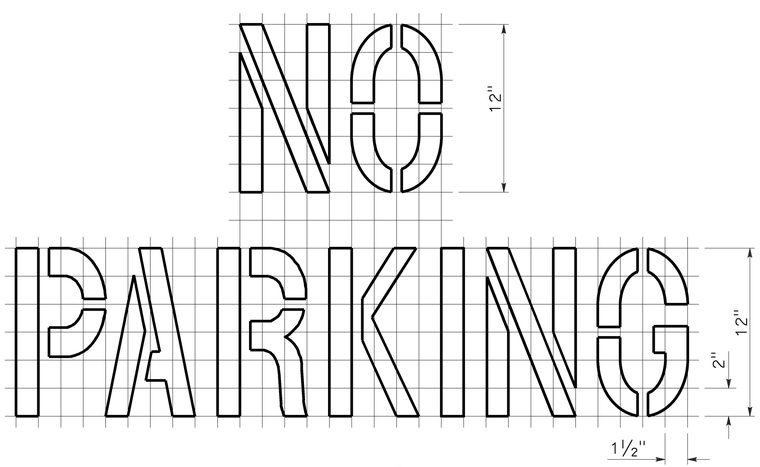

A=2 ft^2
See Notes 6 and 7

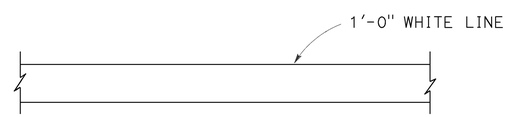

LIMIT LINE (STOP LINE)

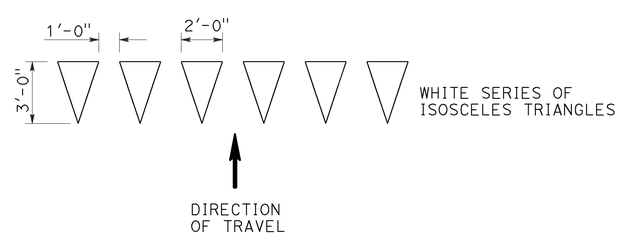

YIELD LINE

NOTES:

1. If a message consists of more than one word, it should read "UP", i.e., the first word should be nearest the driver.
2. The space between words should be at least four times the height of the characters for low speed roads, but not more than ten times the height of the characters. The space may be reduced appropriately where there is limited space because of local conditions.
3. Minor variations in dimensions may be accepted by the Engineer.
4. Portions of a letter, number or symbol may be separated by connecting segments not to exceed 2" in width.
5. The words "NO PARKING" pavement marking is to be used for parking facilities. For typical locations of markings, see Standard Plans A90A and A90B.
6. The words "NO PARKING", shall be painted in white letters no less than 1'-0" high on a contrasting background and located so that it is visible to traffic enforcement officials.

STATE OF CALIFORNIA
DEPARTMENT OF TRANSPORTATION

PAVEMENT MARKINGS WORDS, LIMIT AND YIELD LINES

NO SCALE

RSP A24E DATED JULY 20, 2012 SUPERSEDES STANDARD PLAN A24E
DATED MAY 20, 2011 - PAGE 17 OF THE STANDARD PLANS BOOK DATED 2010.

REVISED STANDARD PLAN RSP A24E

2010 REVISED STANDARD PLAN RSP A24E

6-12-12

Dist	COUNTY	ROUTE	POST MILES TOTAL PROJECT	SHEET No.	TOTAL SHEETS
07	Ven	33	15.7	51	108

Randell D. Hiatt
REGISTERED CIVIL ENGINEER

July 19, 2013
PLANS APPROVAL DATE

REGISTERED PROFESSIONAL ENGINEER Randell D. Hiatt No. C50200 Exp. 6-30-15 CIVIL STATE OF CALIFORNIA

THE STATE OF CALIFORNIA OR ITS OFFICERS OR AGENTS SHALL NOT BE RESPONSIBLE FOR THE ACCURACY OR COMPLETENESS OF SCANNED COPIES OF THIS PLAN SHEET.

TO ACCOMPANY PLANS DATED 6-24-16

2010 REVISED STANDARD PLAN RSP A77L1

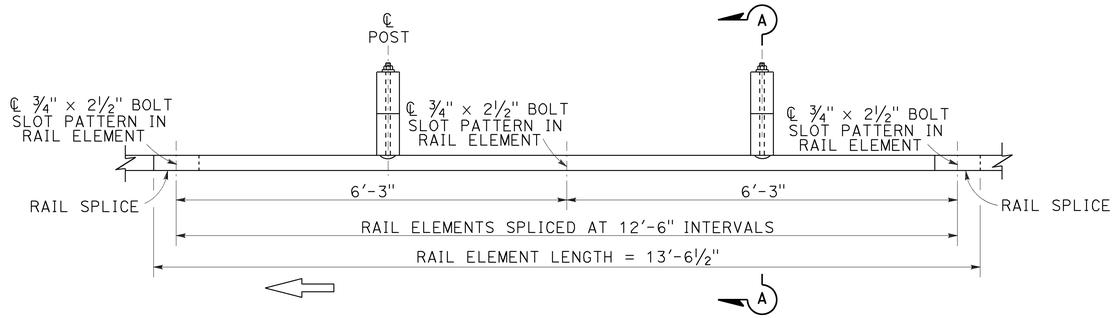

PLAN

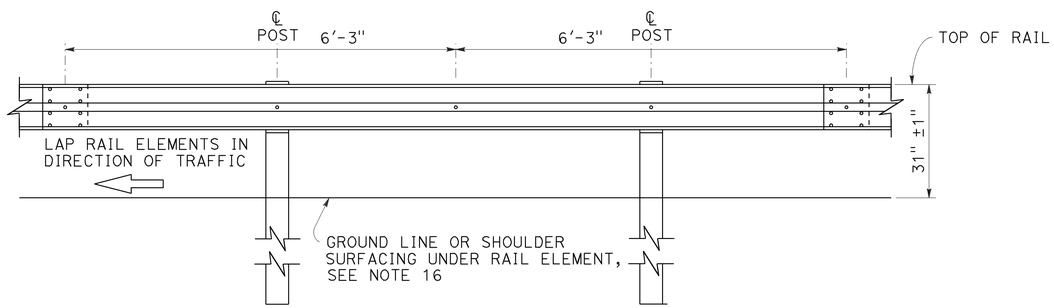

ELEVATION

MIDWEST GUARDRAIL SYSTEM WITH WOOD POST AND BLOCKS

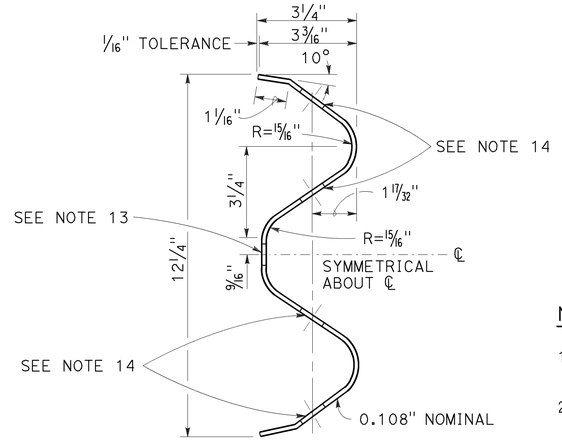

SECTION THRU RAIL ELEMENT

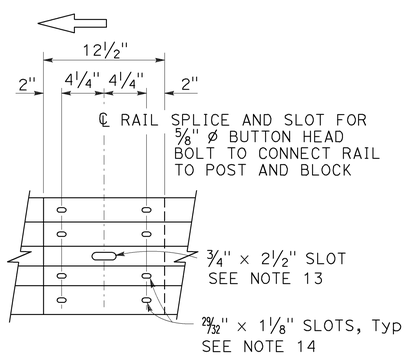

ELEVATION

RAIL ELEMENT SPLICE DETAIL

a) Connect the over lapped end of the rail elements with ⅝" ø × 1⅜" button head oval shoulder splice bolts inserted into the 29/32" × 1⅛" slots and bolted together with ⅝" ø recessed hex nuts. Recess of hex nut points toward rail element. A total of 8 bolts and nuts are to be used at each rail splice connection.

b) The ends of the rail elements are to be overlapped in the direction of traffic (see details).

c) Where end cap is to be attached to the end of a rail element, a total of 4 of the above described splice bolts and nuts are to be used.

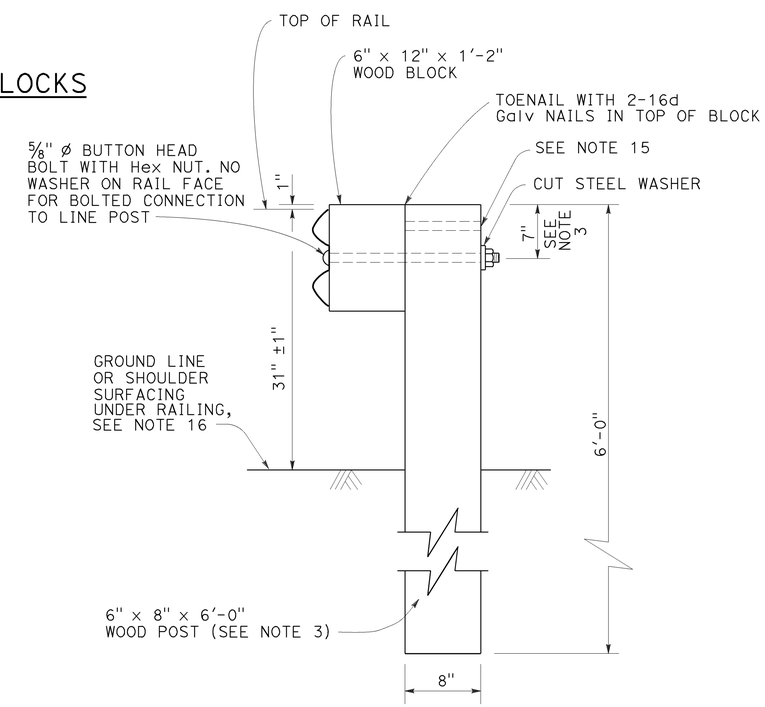

SECTION A-A

TYPICAL WOOD LINE POST INSTALLATION

See Note 4

NOTES:

1. For details of steel post installations, see Revised Standard Plan RSP A77L2.
2. For details of standard hardware used to construct MGS, see Revised Standard Plan RSP A77M1.
3. For details of wood posts and wood blocks used to construct MGS, see Revised Standard Plan RSP A77N1.
4. For additional installation details, see Revised Standard Plan RSP A77N3.
5. MGS post spacing to be 6'-3" center to center, except as otherwise noted.
6. For MGS typical layouts, see the A77P, A77Q and A77R Series of Standard Plans.
7. If railing is connected to terminal system end treatment, use 31" height terminal system end treatment.
8. For MGS end anchor details, see Revised Standard Plans RSP A77S1 and RSP A77T2.
9. For details of MGS transition to bridge railing, see Revised Standard Plan RSP A77U4.
10. For additional details of MSG connection to bridge railing, see Revised Standard Plans RSP A77U1, RSP A77U2 and RSP A77V1.
11. For MGS connection details to abutments and walls, see Revised Standard Plan RSP A77U3.
12. For typical MGS delineation and dike positioning details, see Revised Standard Plan RSP A77N4.
13. Slotted hole for bolted connection of rail element to block and post. See "Section Thru Rail Element".
14. Slotted holes for splice bolts to overlap ends of rail element. See "Section Thru Rail Element".
15. Additional hole in uppermost portion of line post is for potential future adjustments of railing height. See Revised Standard Plan RSP A77N1.
16. Install posts in soil.

STATE OF CALIFORNIA
DEPARTMENT OF TRANSPORTATION

MIDWEST GUARDRAIL SYSTEM STANDARD RAILING SECTION (WOOD POST WITH WOOD BLOCK)

NO SCALE

RSP A77L1 DATED JULY 19, 2013 SUPPLEMENTS STANDARD PLANS BOOK DATED 2010.

REVISED STANDARD PLAN RSP A77L1

Dist	COUNTY	ROUTE	POST MILES TOTAL PROJECT	SHEET No.	TOTAL SHEETS
07	Ven	33	15.7	52	108

Randell D. Hiatt
REGISTERED CIVIL ENGINEER

July 19, 2013
PLANS APPROVAL DATE

REGISTERED PROFESSIONAL ENGINEER
Randell D. Hiatt
No. C50200
Exp. 6-30-15
CIVIL
STATE OF CALIFORNIA

THE STATE OF CALIFORNIA OR ITS OFFICERS OR AGENTS SHALL NOT BE RESPONSIBLE FOR THE ACCURACY OR COMPLETENESS OF SCANNED COPIES OF THIS PLAN SHEET.

TO ACCOMPANY PLANS DATED 6-24-16

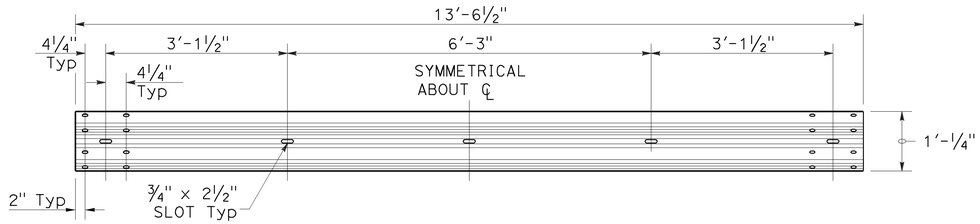

TYPICAL RAIL ELEMENT

NOTE:

1. Slotted holes for splice bolts to overlap ends of rail element.

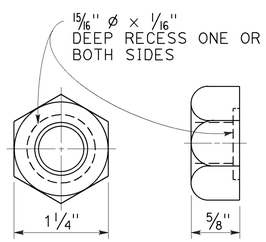

⅝" ø RECESS NUT

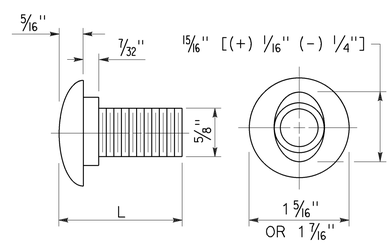

⅝" ø BUTTON HEAD BOLT

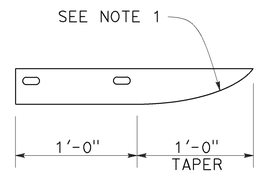

PLAN

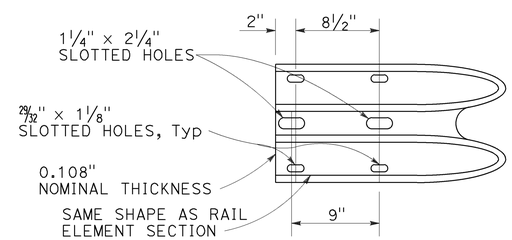

ELEVATION

END CAP
(TYPE A)

BUTTON HEAD BOLT

L	THREAD LENGTH
1⅜"	FULL THREAD LENGTH
2"	FULL THREAD LENGTH
10"	4" Min THREAD LENGTH
18"	4" Min THREAD LENGTH
20"	4" Min THREAD LENGTH
22"	4" Min THREAD LENGTH
26"	4" Min THREAD LENGTH
36"	4" Min THREAD LENGTH
** 2¾"	2" Min THREAD LENGTH
** 19"	4" Min THREAD LENGTH

** For nested rail applications.

STATE OF CALIFORNIA
DEPARTMENT OF TRANSPORTATION

MIDWEST GUARDRAIL SYSTEM STANDARD HARDWARE

NO SCALE

RSP A77M1 DATED JULY 19, 2013 SUPPLEMENTS THE STANDARD PLANS BOOK DATED 2010.

REVISED STANDARD PLAN RSP A77M1

2010 REVISED STANDARD PLAN RSP A77M1

7-3-13

Dist	COUNTY	ROUTE	POST MILES TOTAL PROJECT	SHEET No.	TOTAL SHEETS
07	Ven	33	15.7	53	108

Randell D. Hiatt
REGISTERED CIVIL ENGINEER

July 19, 2013
PLANS APPROVAL DATE

REGISTERED PROFESSIONAL ENGINEER
Randell D. Hiatt
No. C50200
Exp. 6-30-15
CIVIL
STATE OF CALIFORNIA

THE STATE OF CALIFORNIA OR ITS OFFICERS OR AGENTS SHALL NOT BE RESPONSIBLE FOR THE ACCURACY OR COMPLETENESS OF SCANNED COPIES OF THIS PLAN SHEET.

TO ACCOMPANY PLANS DATED 6-24-16

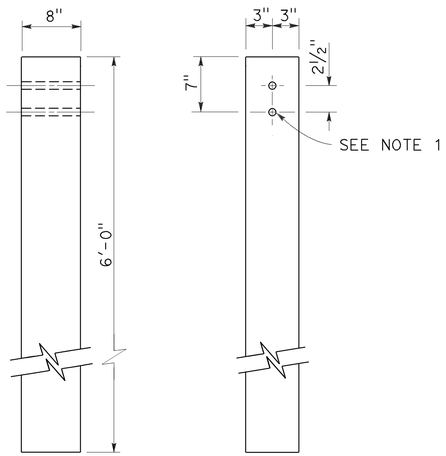

SIDE FRONT

6" x 8" WOOD POST
See Note 3

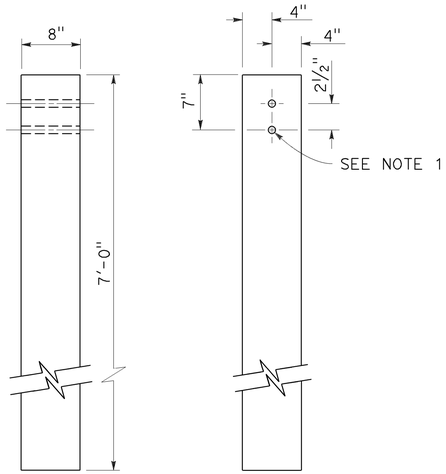

SIDE FRONT

8" x 8" WOOD POST
See Note 4

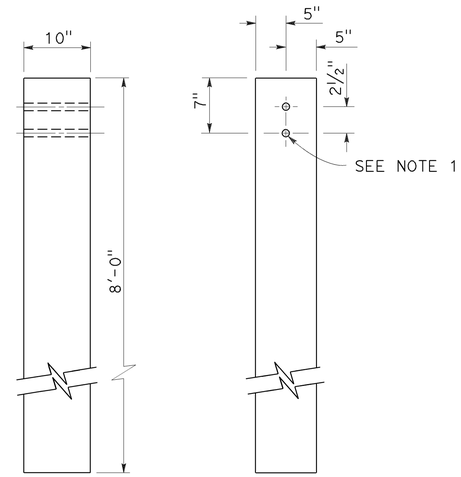

SIDE FRONT

10" x 10" WOOD POST
See Note 5

NOTES:

1. All holes in wood posts and blocks shall be ¾" Dia ± 1/16".
2. Dimensions shown for wood post are nominal.
3. This post and block combination used for standard line post sections of MGS.
4. This post and 8" x 12" block combination used for line post sections of MGS on narrow roadways.
5. This post and 8" x 12" block combination is typically used where strengthened line post sections of MGS are warranted to shield fixed objects.
6. See Revised Standard Plan RSP A77L3 for use of 6" x 8" and 8" x 8" wood blocks.

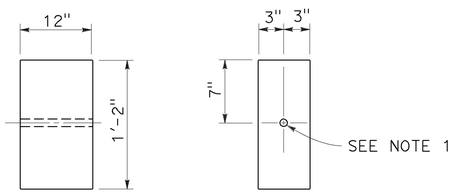

SIDE FRONT

6" x 12" WOOD BLOCK
See Note 3

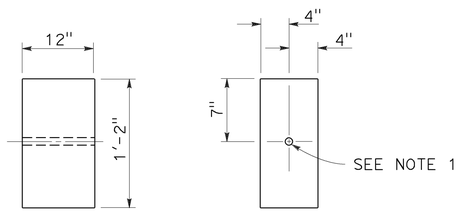

SIDE FRONT

8" x 12" WOOD BLOCK

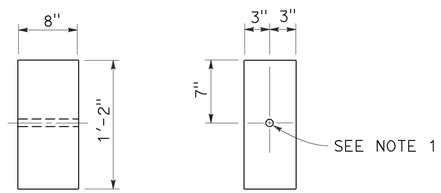

SIDE FRONT

6" x 8" WOOD BLOCK
Only for use with metal beam guard rail see Note 6

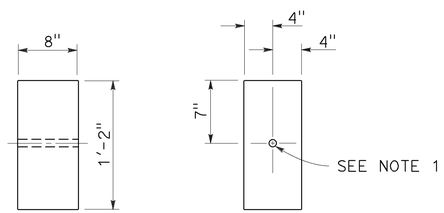

SIDE FRONT

8" x 8" WOOD BLOCK
Only for use with metal beam guard rail see Note 6

STATE OF CALIFORNIA
DEPARTMENT OF TRANSPORTATION

MIDWEST GUARDRAIL SYSTEM WOOD POST AND WOOD BLOCK DETAILS

NO SCALE

RSP A77N1 DATED JULY 19, 2013 SUPPLEMENTS THE STANDARD PLANS BOOK DATED 2010.

REVISED STANDARD PLAN RSP A77N1

2010 REVISED STANDARD PLAN RSP A77N1

7-3-13

Dist	COUNTY	ROUTE	POST MILES TOTAL PROJECT	SHEET No.	TOTAL SHEETS
07	Ven	33	15.7	54	108

Randell D. Hiatt
REGISTERED CIVIL ENGINEER

November 15, 2013
PLANS APPROVAL DATE

REGISTERED PROFESSIONAL ENGINEER
Randell D. Hiatt
No. C50200
Exp. 6-30-15
CIVIL
STATE OF CALIFORNIA

THE STATE OF CALIFORNIA OR ITS OFFICERS OR AGENTS SHALL NOT BE RESPONSIBLE FOR THE ACCURACY OR COMPLETENESS OF SCANNED COPIES OF THIS PLAN SHEET.

TO ACCOMPANY PLANS DATED 6-24-16

2010 REVISED STANDARD PLAN RSP A77N3

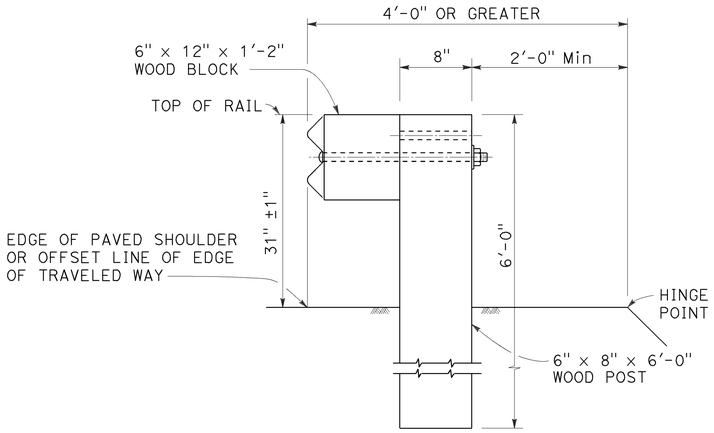

DETAIL A

TYPICAL ROADWAY INSTALLATION

See Note 1

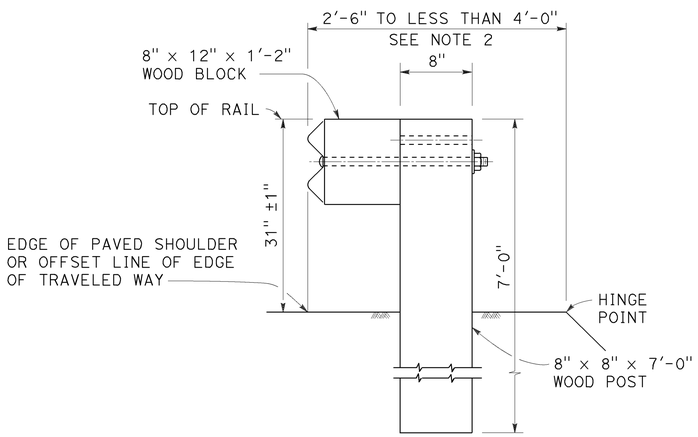

DETAIL B

NARROW ROADWAY INSTALLATION

See Note 1

POST EMBEDMENT

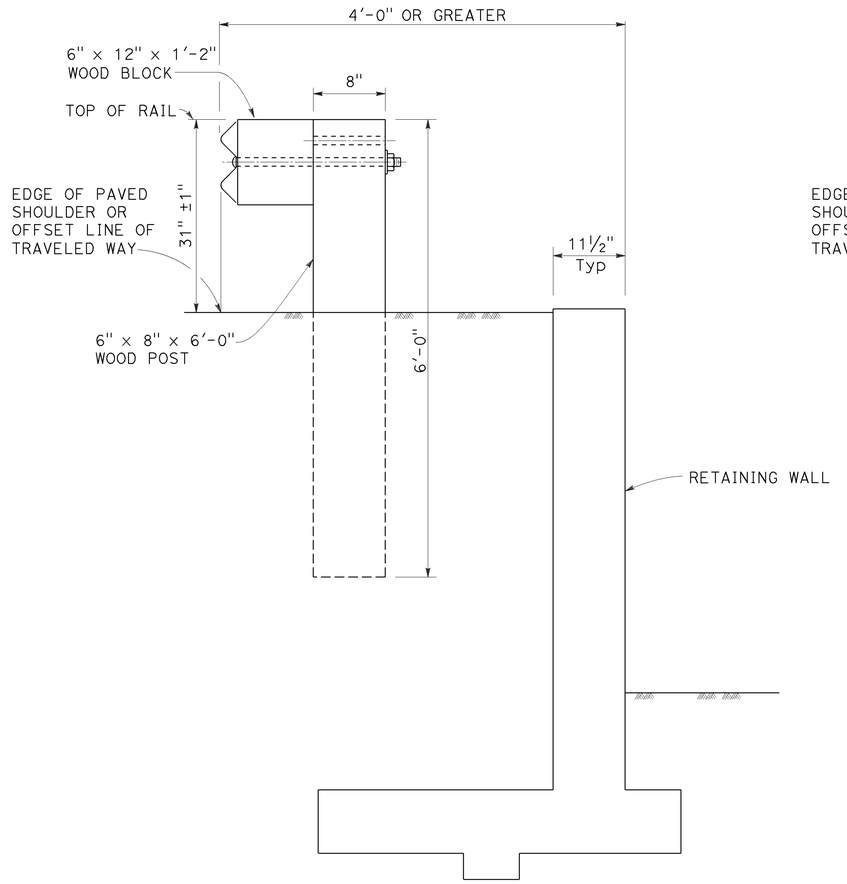

DETAIL C

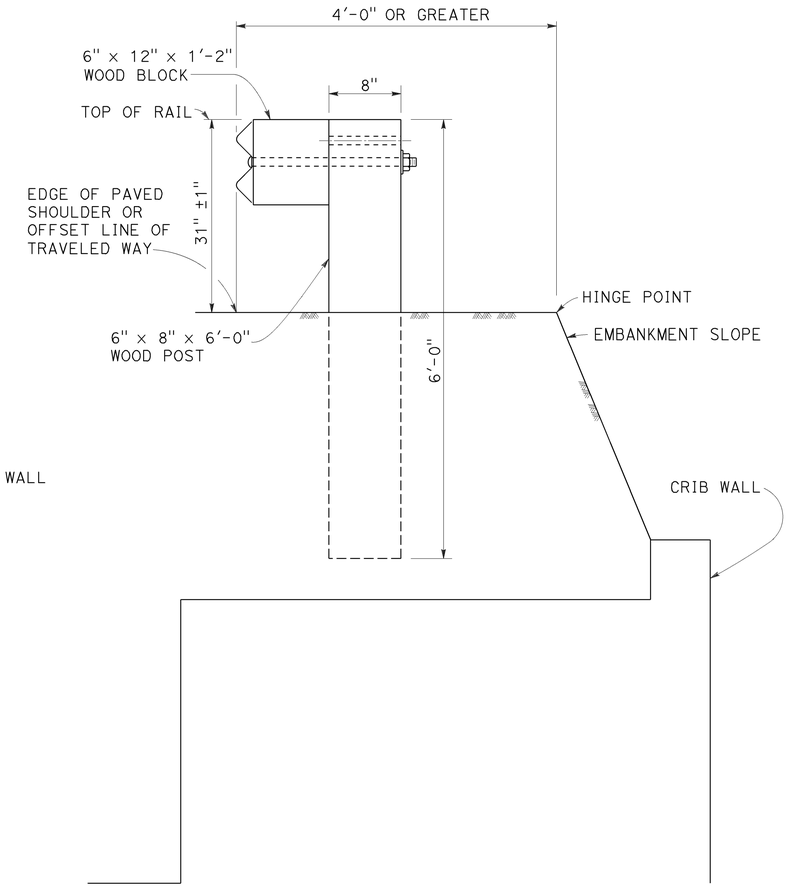

DETAIL D

INSTALLATION AT EARTH RETAINING WALLS

NOTES:

1. These installation details also applicable to steel line post installations. For Detail A, C, and D, where steel line post installations are constructed, W6 x 8.5 or W6 x 9 steel post, 6'-0" in length, with 6" x 12" x 1'-2" notched wood blocks or notched recycled plastic blocks are to be used in place of the size of wood post and wood block shown. For Detail B, where steel line post installations are constructed, W6 x 15 steel post, 8'-0" in length, with 8" x 12" x 1'-2" notched wood blocks or notched recycled plastic blocks are to be used in place of the size of wood post and wood block shown. For additional installation details, see Revised Standard Plan RSP A77L1 and RSP A77L2.
2. Where the distance between the face of the rail and the hinge point is less than 2'-6", see the Project Plans for special details.
3. For dike positioning with MGS installations, see Revised Standard Plan RSP A77N4.

STATE OF CALIFORNIA
DEPARTMENT OF TRANSPORTATION

MIDWEST GUARDRAIL SYSTEM TYPICAL LINE POST EMBEDMENT AND HINGE POINT OFFSET DETAILS

NO SCALE

RSP A77N3 DATED NOVEMBER 15, 2013 SUPERSEDES RSP A77N3
DATED JULY 19, 2013 THAT SUPPLEMENTS THE STANDARD PLANS BOOK DATED 2010.

REVISED STANDARD PLAN RSP A77N3

10-29-13

Dist	COUNTY	ROUTE	POST MILES TOTAL PROJECT	SHEET No.	TOTAL SHEETS
07	Ven	33	15.7	55	108

Randell D. Hiatt
REGISTERED CIVIL ENGINEER

July 19, 2013
PLANS APPROVAL DATE

REGISTERED PROFESSIONAL ENGINEER
Randell D. Hiatt
No. C50200
Exp. 6-30-15
CIVIL
STATE OF CALIFORNIA

THE STATE OF CALIFORNIA OR ITS OFFICERS OR AGENTS SHALL NOT BE RESPONSIBLE FOR THE ACCURACY OR COMPLETENESS OF SCANNED COPIES OF THIS PLAN SHEET.

TO ACCOMPANY PLANS DATED 6-24-16

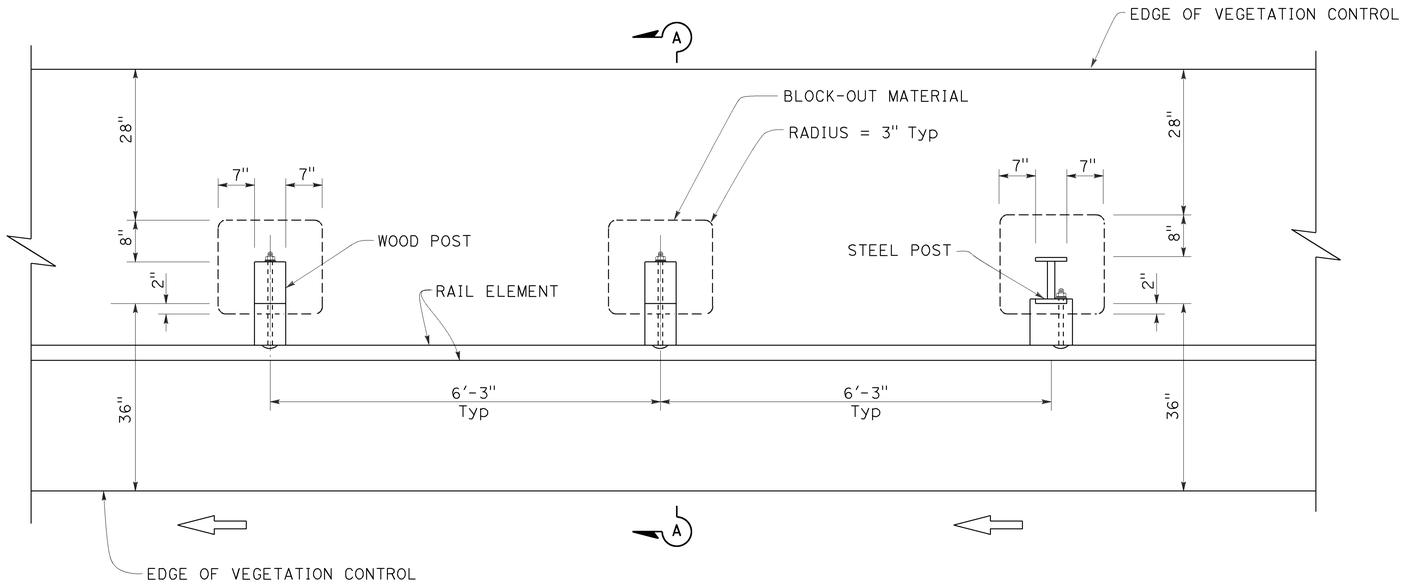

PLAN

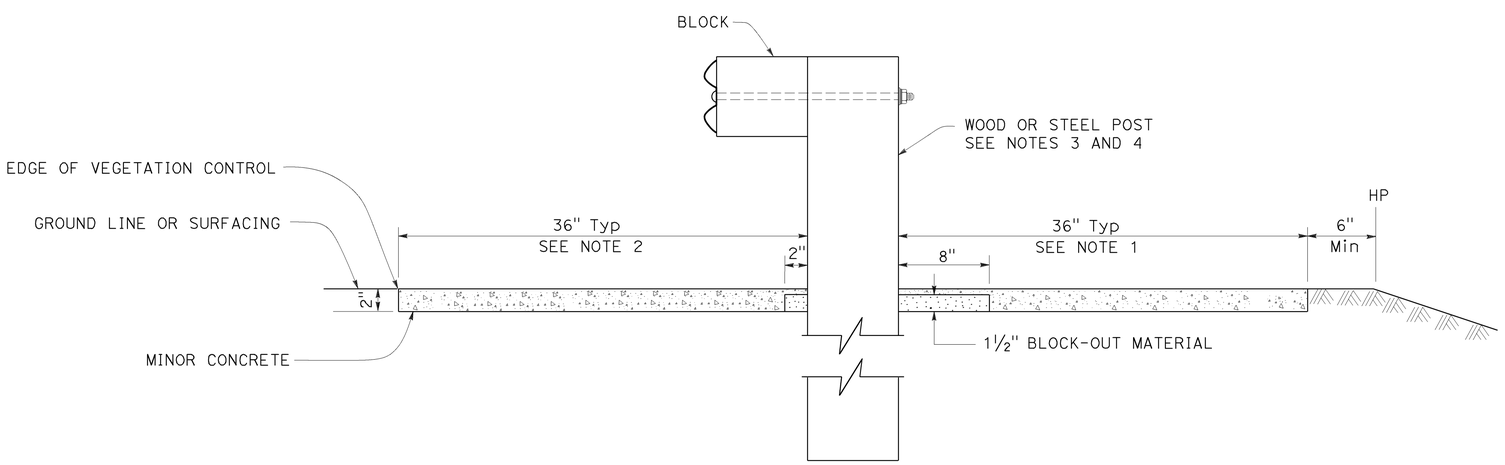

SECTION A-A

NOTES:

1. Where the distance between back of post and hinge point is less than 42", construct vegetation control to 6" from hinge point while maintaining the 8" block-out at back of post. If the 8" block-out at back of post can not be maintained, construct vegetation control flush with the back edge of post.
2. Where dike is constructed under railing, construct vegetation control to back edge of dike. Where paved shoulder is constructed within 36" in front of the post, construct vegetation control to the edge of paved shoulder.
3. For wood post sizes, see Revised Standard Plan RSP A77N1.
4. For steel post sizes, see Revised Standard Plan RSP A77N2.
5. For details not shown, see Revised Standard Plans RSP A77L1 and RSP A77L2.

STATE OF CALIFORNIA
DEPARTMENT OF TRANSPORTATION

MIDWEST GUARDRAIL SYSTEM TYPICAL VEGETATION CONTROL STANDARD RAILING SECTION

NO SCALE

RSP A77N5 DATED JULY 19, 2013 SUPPLEMENTS THE STANDARD PLANS BOOK DATED 2010.

REVISED STANDARD PLAN RSP A77N5

2010 REVISED STANDARD PLAN RSP A77N5

7-3-13

Dist	COUNTY	ROUTE	POST MILES TOTAL PROJECT	SHEET No.	TOTAL SHEETS
07	Ven	33	15.7	56	108

Randell D. Hiatt
REGISTERED CIVIL ENGINEER

July 19, 2013
PLANS APPROVAL DATE

REGISTERED PROFESSIONAL ENGINEER
Randell D. Hiatt
No. C50200
Exp. 6-30-15
CIVIL
STATE OF CALIFORNIA

THE STATE OF CALIFORNIA OR ITS OFFICERS OR AGENTS SHALL NOT BE RESPONSIBLE FOR THE ACCURACY OR COMPLETENESS OF SCANNED COPIES OF THIS PLAN SHEET.

TO ACCOMPANY PLANS DATED 6-24-16

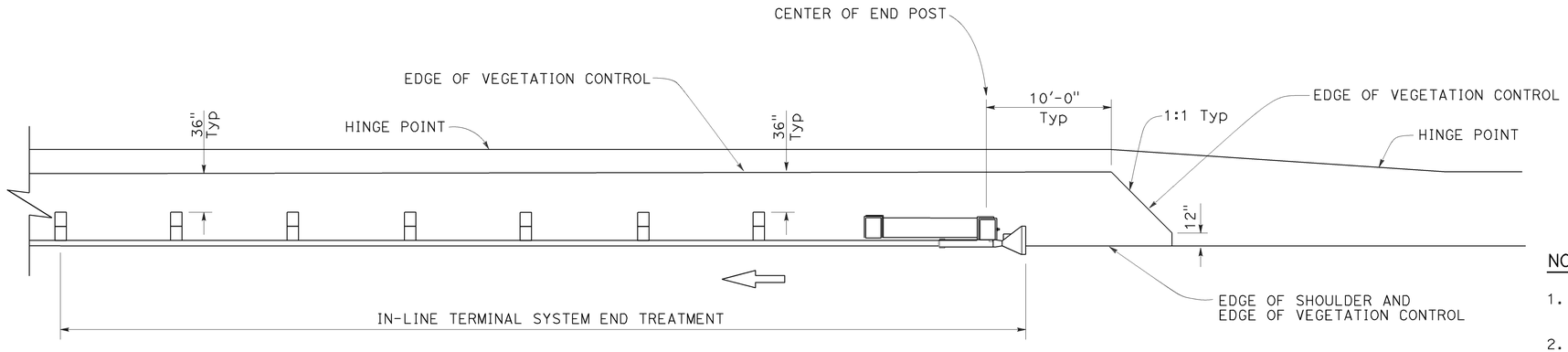

PLAN

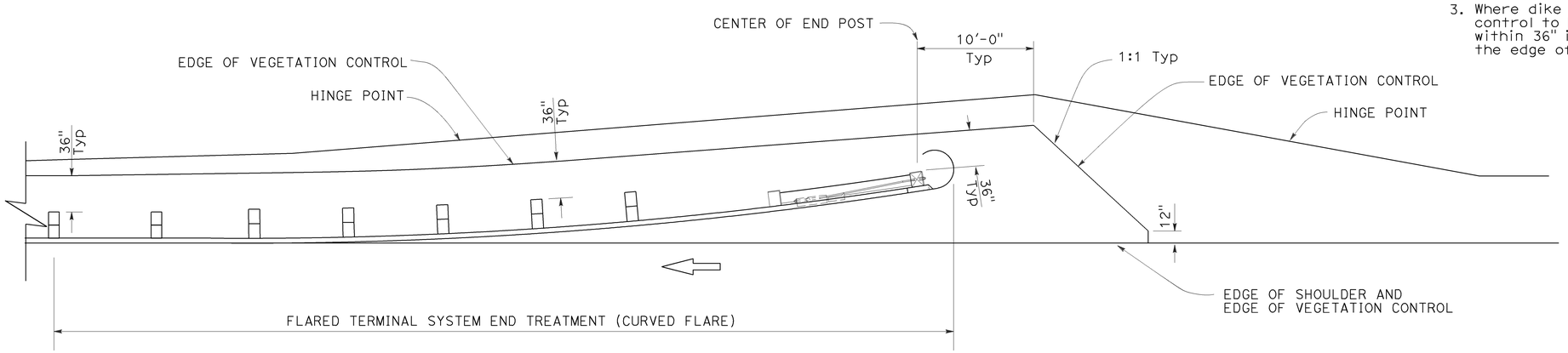

PLAN

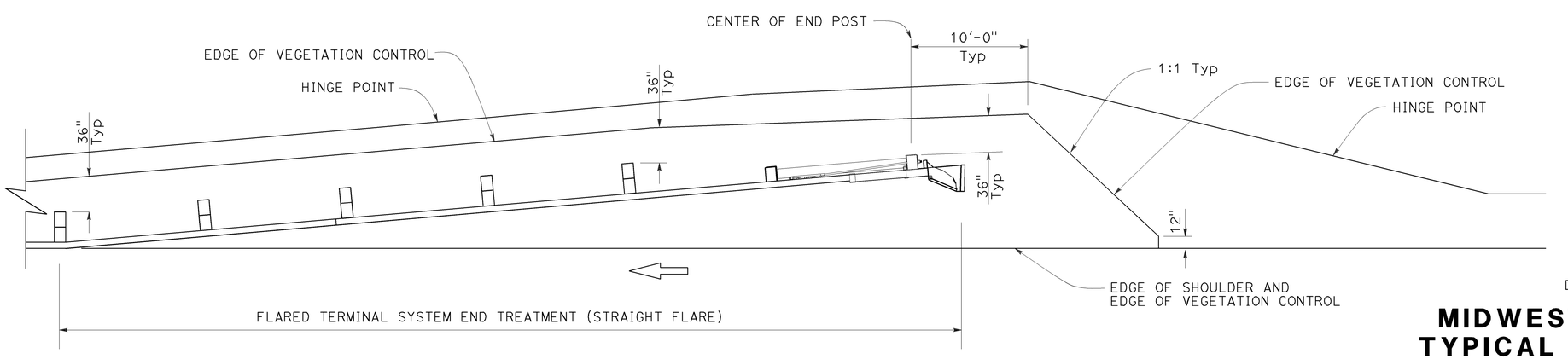

PLAN

NOTES:

1. See Revised Standard Plan RSP A77N5 for additional vegetation control details.
2. Where the distance between back of post and hinge point is less than 42", construct vegetation control to 6" from hinge point while maintaining the 8" block-out at back of post. If the 8" block-out at back of post can not be maintained, construct vegetation control flush with the back edge of post.
3. Where dike is constructed under railing, construct vegetation control to back edge of dike. Where paved shoulder is constructed within 36" in front of the post, construct vegetation control to the edge of paved shoulder.

STATE OF CALIFORNIA
DEPARTMENT OF TRANSPORTATION

MIDWEST GUARDRAIL SYSTEM TYPICAL VEGETATION CONTROL FOR TERMINAL SYSTEM END TREATMENTS

NO SCALE

RSP A77N6 DATED JULY 19, 2013 SUPPLEMENTS THE STANDARD PLANS BOOK DATED 2010.

REVISED STANDARD PLAN RSP A77N6

2010 REVISED STANDARD PLAN RSP A77N6

6-12-13

Dist	COUNTY	ROUTE	POST MILES TOTAL PROJECT	SHEET No.	TOTAL SHEETS
07	Ven	33	15.7	57	108

Randell D. Hiatt
REGISTERED CIVIL ENGINEER

July 19, 2013
PLANS APPROVAL DATE

REGISTERED PROFESSIONAL ENGINEER
Randell D. Hiatt
No. C50200
Exp. 6-30-15
CIVIL
STATE OF CALIFORNIA

THE STATE OF CALIFORNIA OR ITS OFFICERS OR AGENTS SHALL NOT BE RESPONSIBLE FOR THE ACCURACY OR COMPLETENESS OF SCANNED COPIES OF THIS PLAN SHEET.

TO ACCOMPANY PLANS DATED 6-24-16

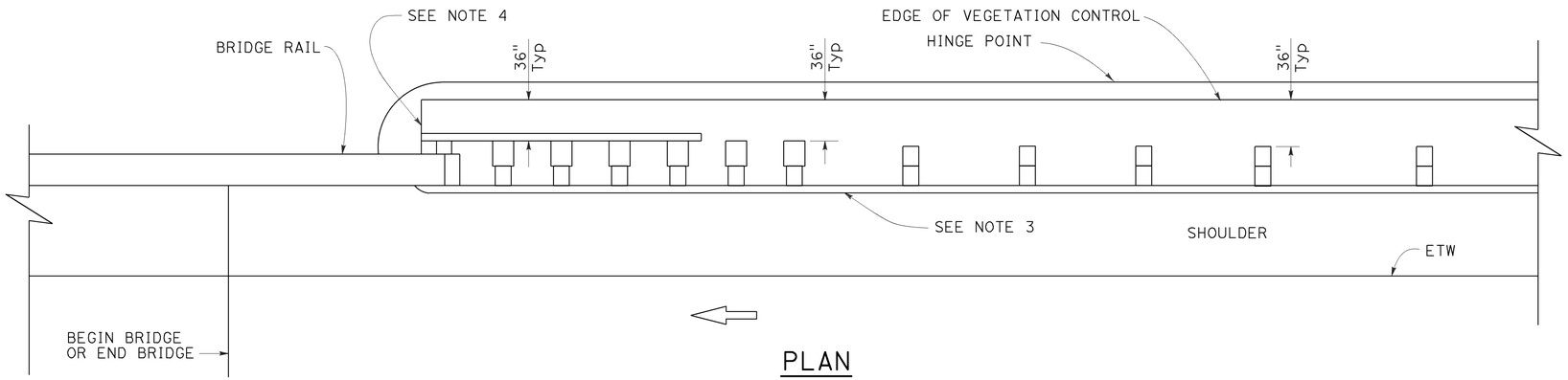

PLAN

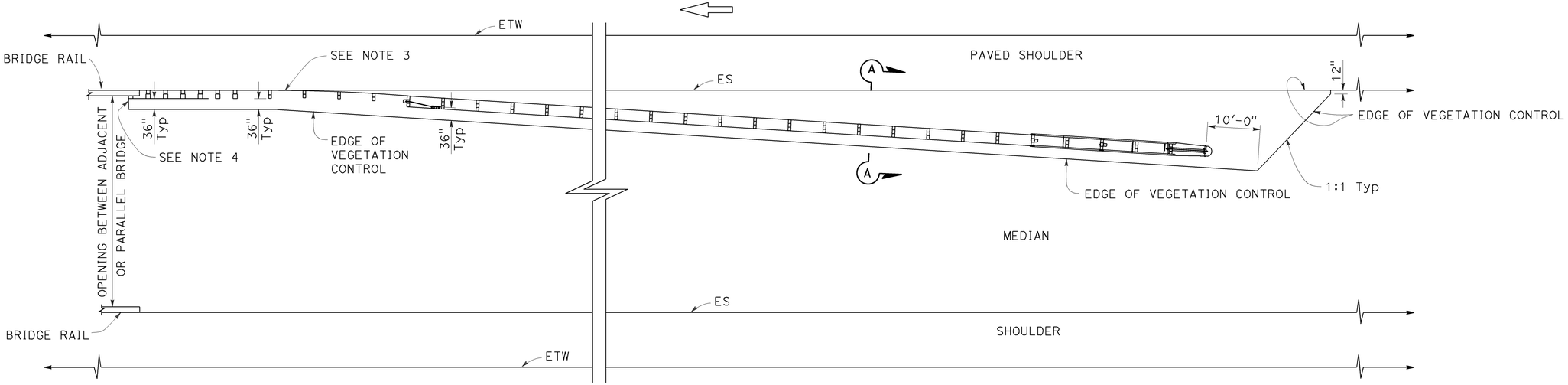

PLAN

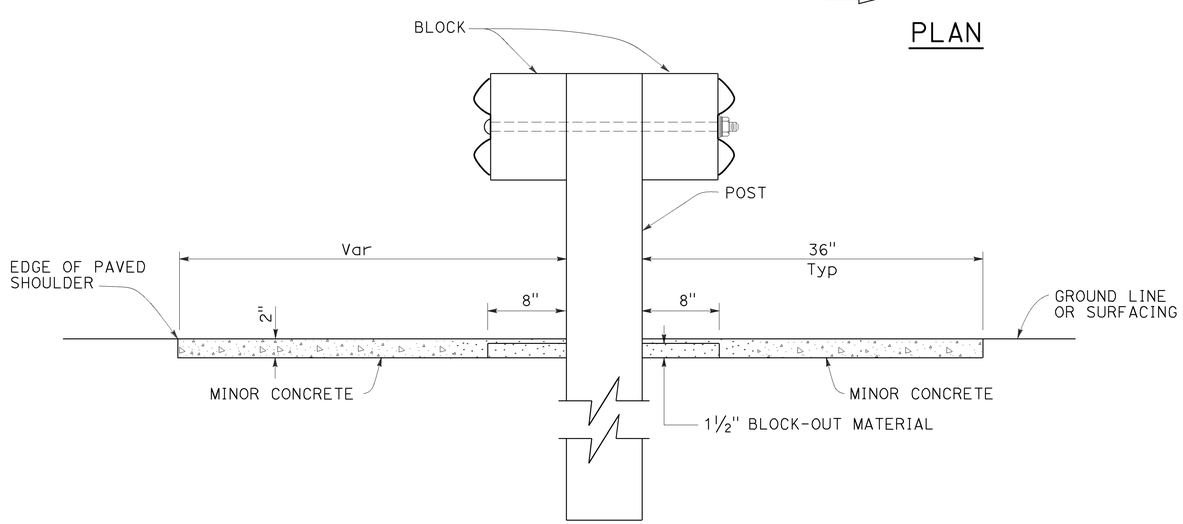

SECTION A-A

NOTES:

1. See Revised Standard Plan RSP A77N5 for additional vegetation control details.
2. Where the distance between back of post and hinge point is less than 42", construct vegetation control to 6" from hinge point while maintaining the 8" block-out at back of post. If the 8" block-out at back of post can not be maintained, construct vegetation control flush with the back edge of post.
3. Where dike is constructed under railing, construct vegetation control to back edge of dike. Where paved shoulder is constructed within 36" in front of the post, construct vegetation control to the edge of paved shoulder.
4. End vegetation control at end of backside rail element.

STATE OF CALIFORNIA
DEPARTMENT OF TRANSPORTATION

MIDWEST GUARDRAIL SYSTEM TYPICAL VEGETATION CONTROL AT STRUCTURE APPROACH

NO SCALE

RSP A77N7 DATED JULY 19, 2013 SUPPLEMENTS THE STANDARD PLANS BOOK DATED 2010.

REVISED STANDARD PLAN RSP A77N7

2010 REVISED STANDARD PLAN RSP A77N7

6-12-13

Dist	COUNTY	ROUTE	POST MILES TOTAL PROJECT	SHEET No.	TOTAL SHEETS
07	Ven	33	15.7	58	108

Randell D. Hiatt
REGISTERED CIVIL ENGINEER

August 14, 2015
PLANS APPROVAL DATE

REGISTERED PROFESSIONAL ENGINEER
Randell D. Hiatt
No. C50200
Exp. 6-30-17
CIVIL
STATE OF CALIFORNIA

THE STATE OF CALIFORNIA OR ITS OFFICERS OR AGENTS SHALL NOT BE RESPONSIBLE FOR THE ACCURACY OR COMPLETENESS OF SCANNED COPIES OF THIS PLAN SHEET.

TO ACCOMPANY PLANS DATED 6-24-16

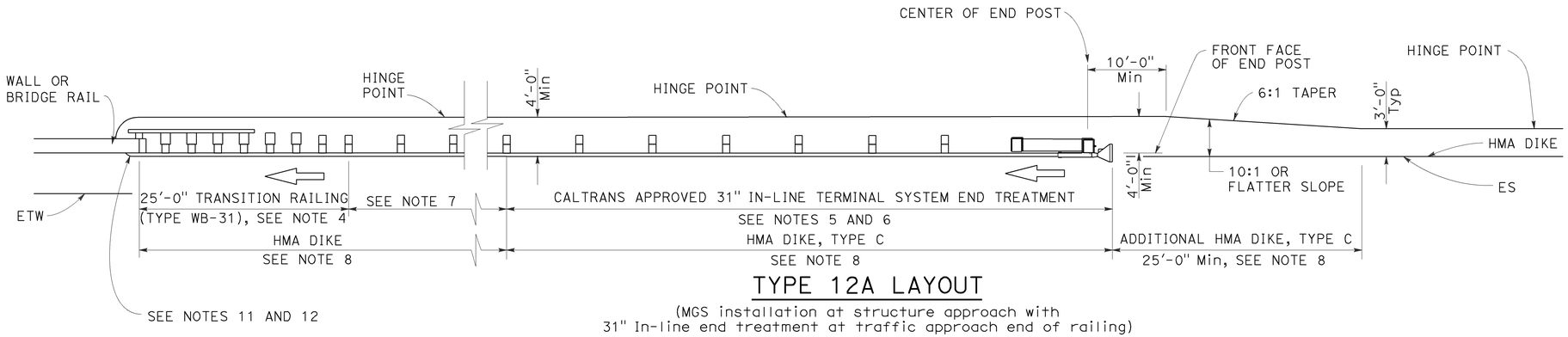

TYPE 12A LAYOUT

(MGS installation at structure approach with
31" In-line end treatment at traffic approach end of railing)
See Note 9

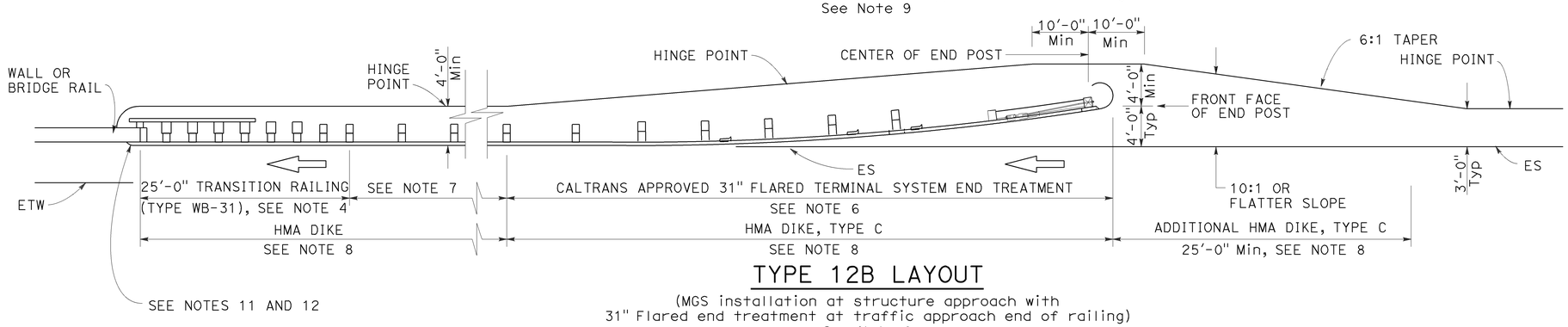

TYPE 12B LAYOUT

(MGS installation at structure approach with
31" Flared end treatment at traffic approach end of railing)
See Note 9

NOTES:

1. Line post, blocks and hardware to be used are shown on Revised Standard Plans RSP A77L1, RSP A77L2, RSP A77M1, RSP A77N1 and RSP A77N2.
2. MGS post spacing to be 6'-3" center to center, except as otherwise noted.
3. Except as noted, line posts are 6" x 8" x 6'-0" wood with 6" x 12" x 1'-2" wood blocks. W6 x 8.5 or W6 x 9 steel posts, 6'-0" in length, with 6" x 12" x 1'-2" notched wood blocks or plastic blocks may be used for 6" x 8" x 6'-0" wood posts with 6" x 12" x 1'-2" wood blocks where applicable and when specified.
4. For Transition Railing (Type WB-31) details for Types 12A and 12B Layouts, see Revised Standard Plan RSP A77U4.
5. 31" in-line terminal system end treatments are used where site conditions will not accommodate a 31" flared end treatment.
6. The type of 31" terminal system end treatment to be used will be shown on the Project Plans.
7. Dependent on site conditions (embankment height, side slopes, or other fixed objects), it may be advisable to construct additional guard railing (a length equal to multiples of 12'-6" with 6'-3" post spacing) between the transition railing and end treatment. A 12.5 degree angle of departure can be drawn on the Project Plans from the edge of traveled way through the outer most point of the fixed object to determine the additional length of railing needed.
8. Where placement of dike is required with guard railing installations, see Revised Standard Plan RSP A77N4 for dike positioning details.
9. Type 12A or Type 12B Layouts are typically used:
   a. To the right of approaching traffic, at the end of a structure, on two-lane conventional highway where the roadbed width across the structure is less than 40 feet.
   b. To the left of approaching traffic, at the end of a structure, on two-lane conventional highway where the roadbed width across the structure is less than 40 feet.
   c. To the right of approaching traffic at the end of each structure on multilane freeways or expressways with separate adjacent or parallel bridges.
   d. To the right of approaching traffic at the end of the structure on multilane freeways or expressways with decked median on the bridge.
10. See Revised Standard Plan RSP A77Q3 for typical layout used left of approaching traffic at the ends of each structure on multilane freeways or expressways with separate adjacent or parallel bridges.
11. For additional details of typical connections to bridge rail, see Connection Detail AA on Revised Standard Plans RSP A77U1 and RSP A77U2 and Connection Detail FF on Revised Standard Plans RSP A77V1 and RSP A77V2.
12. For additional details of a typical connection to walls or abutments, see Revised Standard Plan RSP A77U3.

STATE OF CALIFORNIA
DEPARTMENT OF TRANSPORTATION

MIDWEST GUARDRAIL SYSTEM TYPICAL LAYOUTS FOR STRUCTURE APPROACH

NO SCALE

RSP A77Q1 DATED AUGUST 14, 2015 SUPERSEDES RSP A77Q1 DATED JULY 19, 2013 THAT SUPPLEMENTS THE STANDARD PLANS BOOK DATED 2010.

REVISED STANDARD PLAN RSP A77Q1

2010 REVISED STANDARD PLAN RSP A77Q1

8-12-15

Dist	COUNTY	ROUTE	POST MILES TOTAL PROJECT	SHEET No.	TOTAL SHEETS
07	Ven	33	15.7	59	108

Randell D. Hiatt
REGISTERED CIVIL ENGINEER

August 14, 2015
PLANS APPROVAL DATE

REGISTERED PROFESSIONAL ENGINEER
Randell D. Hiatt
No. C50200
Exp. 6-30-17
CIVIL
STATE OF CALIFORNIA

THE STATE OF CALIFORNIA OR ITS OFFICERS OR AGENTS SHALL NOT BE RESPONSIBLE FOR THE ACCURACY OR COMPLETENESS OF SCANNED COPIES OF THIS PLAN SHEET.

TO ACCOMPANY PLANS DATED 6-24-16

2010 REVISED STANDARD PLAN RSP A77Q2

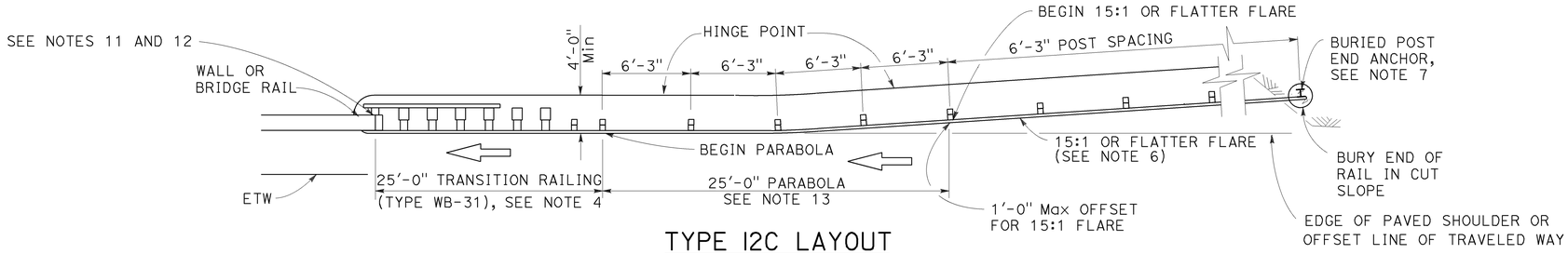

TYPE 12C LAYOUT

(MGS installation at structure approach with a
Buried end anchor treatment at traffic approach end of railing)
See Notes 8 and 9

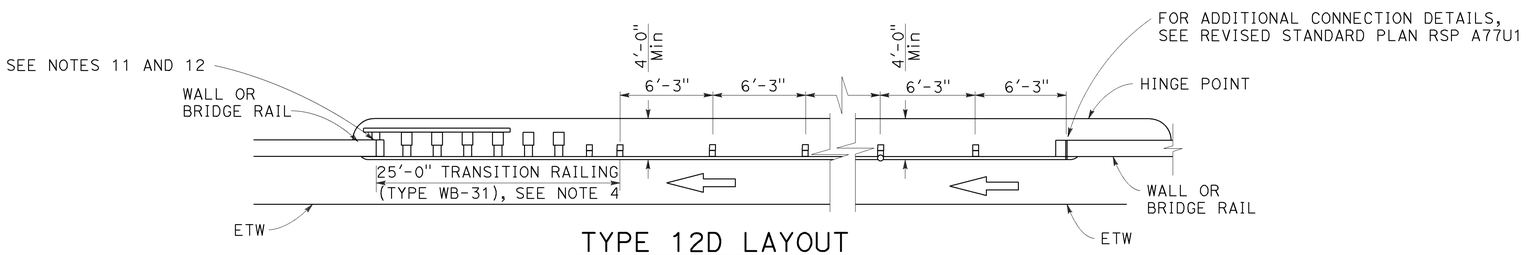

TYPE 12D LAYOUT

(Continuous MGS installation between structures)
See Notes 5 and 9

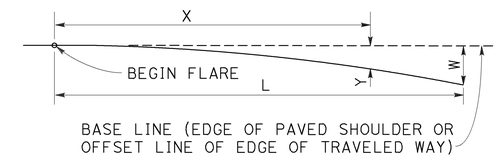

$$Y = \frac{WX^2}{L^2}$$

Y = OFFSET FROM BASE LINE
W = MAXIMUM OFFSET
X = DISTANCE ALONG BASE LINE
L = LENGTH OF FLARE

PARABOLIC FLARE OFFSETS

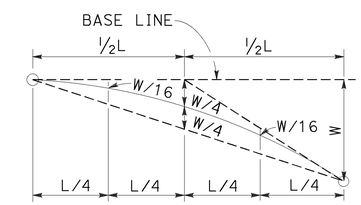

TYPICAL PARABOLIC LAYOUT

NOTES:

1. Line post, blocks and hardware to be used are shown on Revised Standard Plans RSP A77L1, RSP A77L2, RSP A77M1, RSP A77N1 and RSP A77N2.
2. MGS post spacing to be 6'-3" center to center, except as otherwise noted.
3. Except as noted, line posts are 6" x 8" x 6'-0" m wood with 6" x 12" x 1'-2" wood blocks. W6 x 8.5 or W6 x 9 steel posts, 6'-0" in length, with 6" x 12" x 1'-2" notched wood blocks or plastic blocks may be used for 6" x 8" x 6'-0" wood posts with 6" x 12" x 1'-2" wood blocks where applicable and when specified.
4. For Transition Railing (Type WB-31) details for Types 12C and 12D Layouts, see Revised Standard Plan RSP A77U4.
5. Type 12D layout is typically used where continous MGS is recommended between structures.
6. The 15:1 or flatter flare for Type 12C Layout is based on the edge of the paved shoulder or offset line of edge of the traveled way. The length of MGS with the 15:1 or flatter flare is based on site conditions and should be a length equal to multiples of 12'-6".
7. For details of the buried post end anchor used with Type 12C Layout, see Revised Standard Plan RSP A77T2.
8. Where placement of dike is required with MGS installations, see Revised Standard Plan RSP A77N4 for dike positioning details.
9. Type 12C Layout is typically used:
   a. To the right of approaching traffic, at the end of the structure, on two-lane conventional highway where the roadbed width across the structure is less than 40 feet.
   b. To the left of approaching traffic, at each of a structure, on two-lane conventional highway where the roadbed width across the structure is less than 40 feet.
   c. To the right of approaching traffic at the end of each structure on multilane freeways or expressways with separate adjacent or parallel bridges.
   d. To the right of approaching traffic at the end of the structure on multilane freeways or expressways with decked median on the bridge.
10. See Revised Standard Plan RSP A77Q3 for typical layout used left of approaching traffic at the ends of each structure on multilane freeways or expressways with separate adjacent or parallel bridges.
11. For additional details of typical connections to bridge rail, see Connection Detail AA on Revised Standard Plans RSP A77U1 and RSP A77U2 and Connection Detail FF on Revised Standard Plans RSP A77V1 and RSP A77V2.
12. For additional details of a typical connection to walls or abutments, see Revised Standard Plan RSP A77U3.
13. For typical flare offsets for 25'-0" length parabola with maximum offset of 1'-0", see Revised Standard Plan RSP A77P1.

STATE OF CALIFORNIA
DEPARTMENT OF TRANSPORTATION

MIDWEST GUARDRAIL SYSTEM TYPICAL LAYOUTS FOR STRUCTURE APPROACH AND BETWEEN STRUCTURES

NO SCALE

RSP A77Q2 DATED AUGUST 14, 2015 SUPERSEDES RSP A77Q2 DATED JULY 19, 2013 THAT SUPPLEMENTS THE STANDARD PLANS BOOK DATED 2010.

REVISED STANDARD PLAN RSP A77Q2

8-12-15

Dist	COUNTY	ROUTE	POST MILES TOTAL PROJECT	SHEET No.	TOTAL SHEETS
07	Ven	33	15.7	60	108

Randell D. Hiatt
REGISTERED CIVIL ENGINEER

November 15, 2013
PLANS APPROVAL DATE

REGISTERED PROFESSIONAL ENGINEER
Randell D. Hiatt
No. C50200
Exp. 6-30-15
CIVIL
STATE OF CALIFORNIA

THE STATE OF CALIFORNIA OR ITS OFFICERS OR AGENTS SHALL NOT BE RESPONSIBLE FOR THE ACCURACY OR COMPLETENESS OF SCANNED COPIES OF THIS PLAN SHEET.

TO ACCOMPANY PLANS DATED 6-24-16

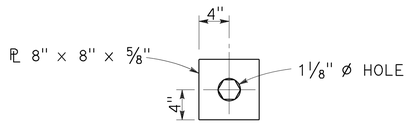

DETAIL "A"
CABLE CONNECTION
END PLATE

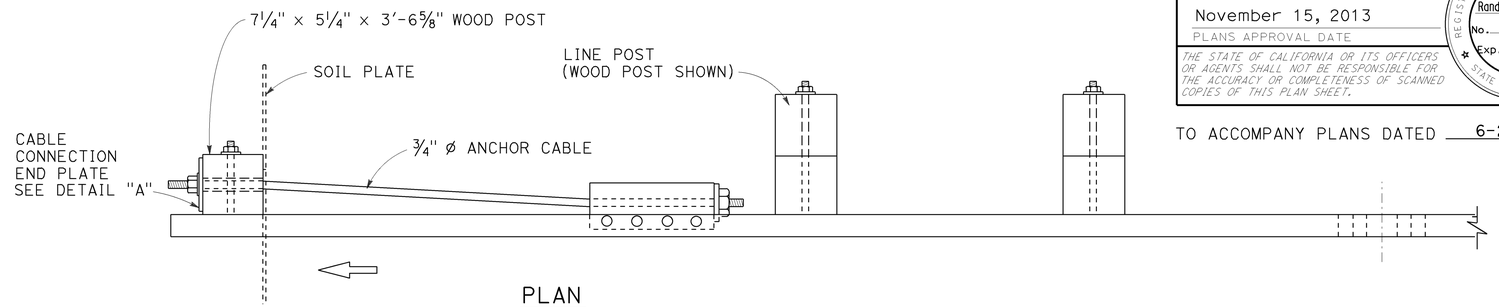

PLAN

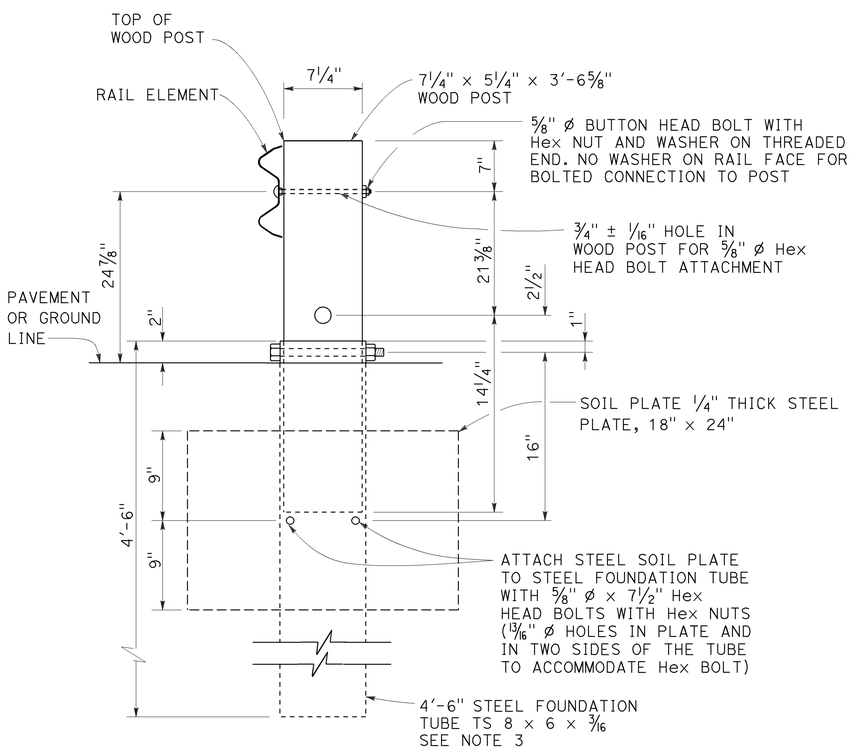

SECTION A-A

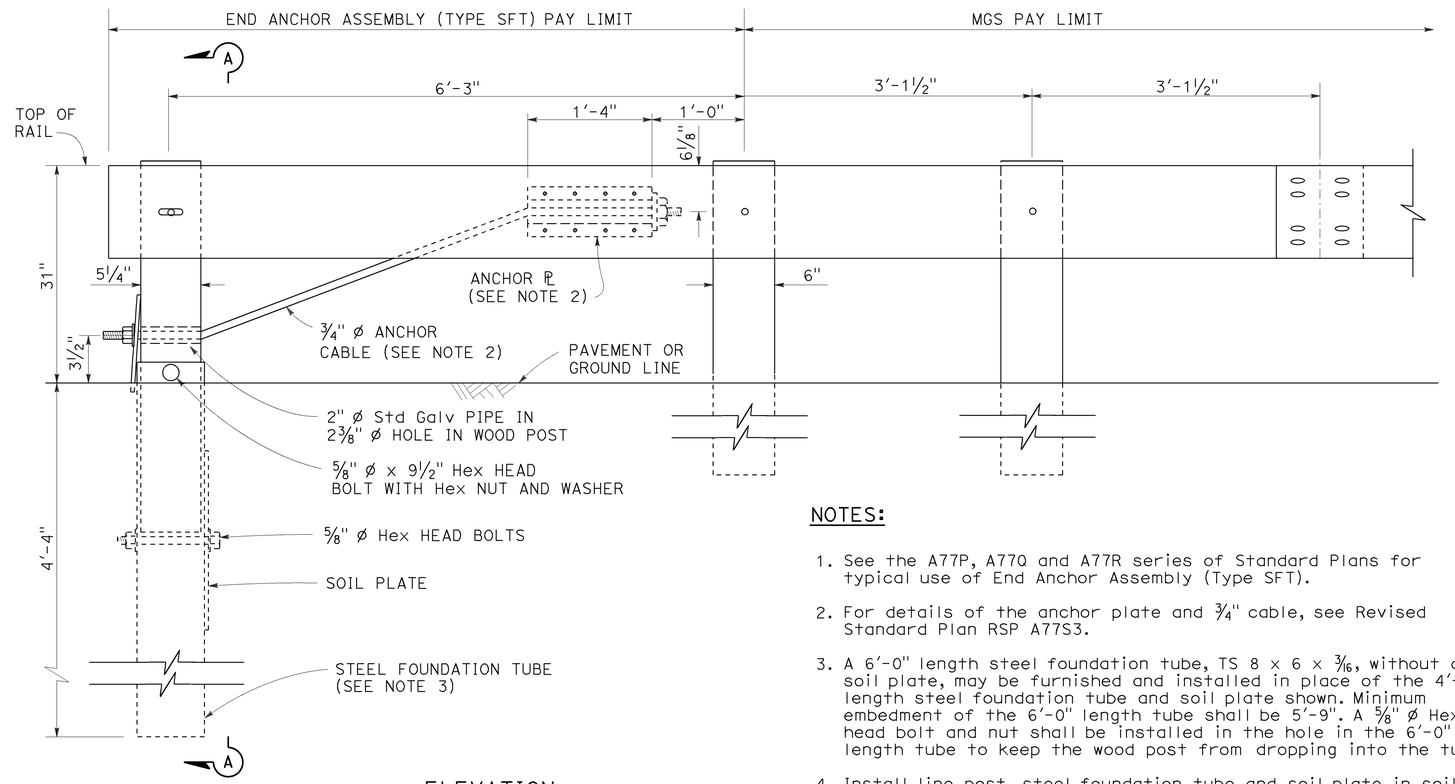

ELEVATION

END ANCHOR
ASSEMBLY (TYPE SFT)
See Note 1

NOTES:

1. See the A77P, A77Q and A77R series of Standard Plans for typical use of End Anchor Assembly (Type SFT).
2. For details of the anchor plate and 3/4" cable, see Revised Standard Plan RSP A77S3.
3. A 6'-0" length steel foundation tube, TS 8 × 6 × 3/16, without a soil plate, may be furnished and installed in place of the 4'-6" length steel foundation tube and soil plate shown. Minimum embedment of the 6'-0" length tube shall be 5'-9". A 5/8" ø Hex head bolt and nut shall be installed in the hole in the 6'-0" length tube to keep the wood post from dropping into the tube.
4. Install line post, steel foundation tube and soil plate in soil.

STATE OF CALIFORNIA
DEPARTMENT OF TRANSPORTATION

MIDWEST GUARDRAIL SYSTEM END ANCHOR ASSEMBLY (TYPE SFT)

NO SCALE

RSP A77S1 DATED NOVEMBER 15, 2013 SUPERSEDES RSP A77S1 DATED JULY 19, 2013 THAT SUPPLEMENTS THE STANDARD PLANS BOOK DATED 2010.

REVISED STANDARD PLAN RSP A77S1

2010 REVISED STANDARD PLAN RSP A77S1

10-4-13

Dist	COUNTY	ROUTE	POST MILES TOTAL PROJECT	SHEET No.	TOTAL SHEETS
07	Ven	33	15.7	61	108

Randell D. Hiatt
REGISTERED CIVIL ENGINEER

November 15, 2013
PLANS APPROVAL DATE

REGISTERED PROFESSIONAL ENGINEER
Randell D. Hiatt
No. C50200
Exp. 6-30-15
CIVIL
STATE OF CALIFORNIA

THE STATE OF CALIFORNIA OR ITS OFFICERS OR AGENTS SHALL NOT BE RESPONSIBLE FOR THE ACCURACY OR COMPLETENESS OF SCANNED COPIES OF THIS PLAN SHEET.

TO ACCOMPANY PLANS DATED 6-24-16

2010 REVISED STANDARD PLAN RSP A77S3

NOTE:

See Revised Standard Plans RSP A77S1, RSP A77S2 and RSP A77T1 for typical use of anchor cable and anchor plate.

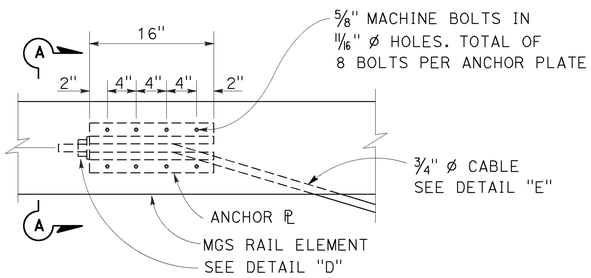

ANCHOR PLATE DETAIL
(MGS shown, TBB similar)

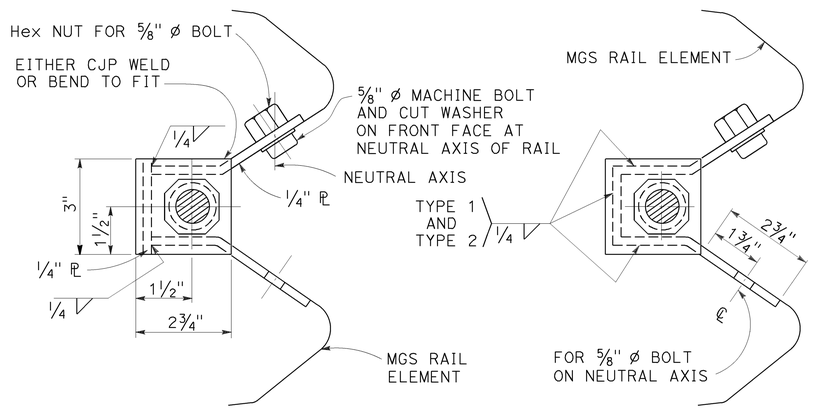

NOTE:
Dimensioning applies to both types.

SECTION A-A
(ALTERNATIVE TYPE 1)

SECTION A-A
(ALTERNATIVE TYPE 2)

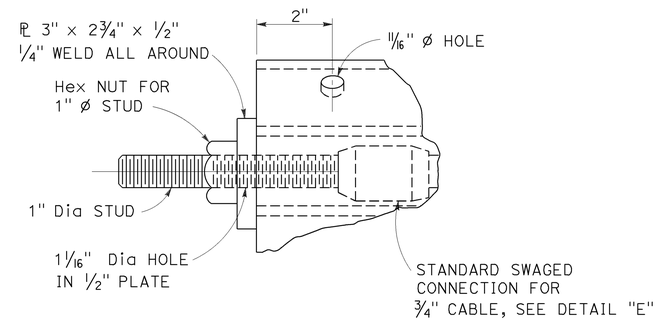

DETAIL "D"

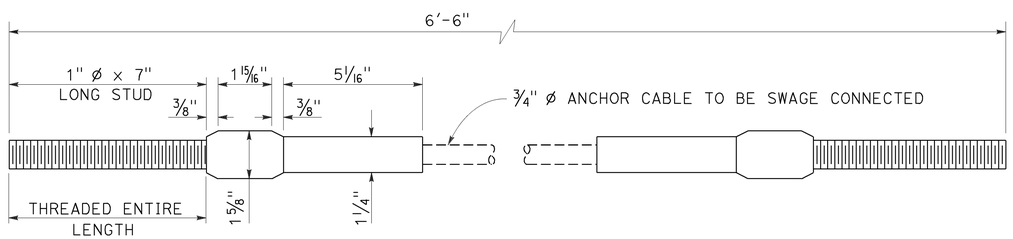

ANCHOR CABLE WITH
SWAGED FITTING AND STUD
DETAIL "E"

STATE OF CALIFORNIA
DEPARTMENT OF TRANSPORTATION

METAL RAILING ANCHOR CABLE AND ANCHOR PLATE DETAILS

NO SCALE

RSP A77S3 DATED NOVEMBER 15, 2013 SUPERSEDES RSP A77S3
DATED JULY 19, 2013 THAT SUPPLEMENTS THE STANDARD PLANS BOOK DATED 2010.

REVISED STANDARD PLAN RSP A77S3

10-4-13

Dist	COUNTY	ROUTE	POST MILES TOTAL PROJECT	SHEET No.	TOTAL SHEETS
07	Ven	33	15.7	62	108

Randell D. Hiatt
REGISTERED CIVIL ENGINEER

July 19, 2013
PLANS APPROVAL DATE

REGISTERED PROFESSIONAL ENGINEER
Randell D. Hiatt
No. C50200
Exp. 6-30-15
CIVIL
STATE OF CALIFORNIA

THE STATE OF CALIFORNIA OR ITS OFFICERS OR AGENTS SHALL NOT BE RESPONSIBLE FOR THE ACCURACY OR COMPLETENESS OF SCANNED COPIES OF THIS PLAN SHEET.

TO ACCOMPANY PLANS DATED 6-24-16

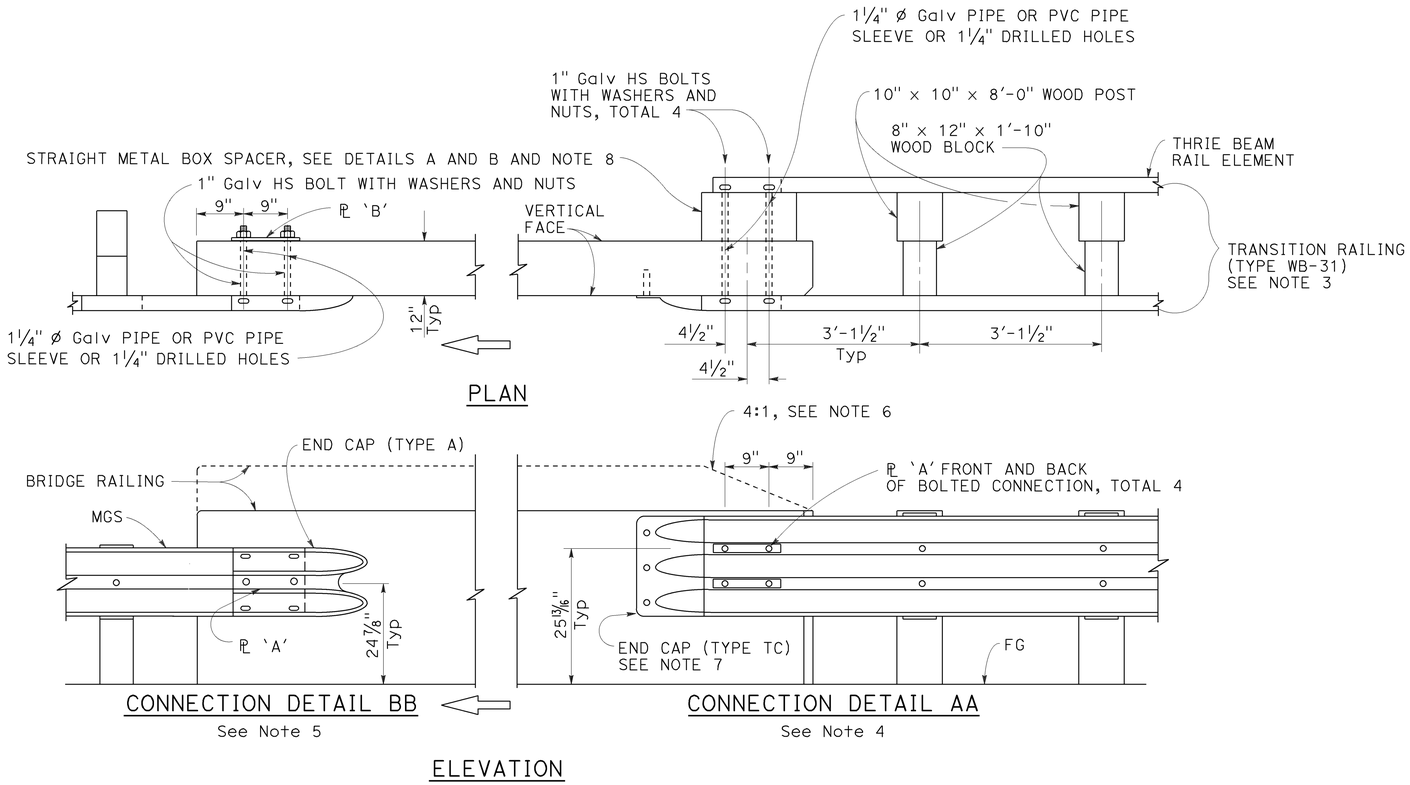

MIDWEST GUARDRAIL SYSTEM CONNECTION TO BRIDGE RAILING WITHOUT SIDEWALK

NOTES:

1. See Revised Standard Plan RSP A77U2 for additional connection details to bridges without sidewalks.
2. Additional details of posts, blocks and hardware are shown on Revised Standard Plans RSP A77M1, RSP A77N1 and RSP A77N2.
3. For additional details of Transition Railing (Type WB-31), see Revised Standard Plan RSP A77U4. Transition Railing (Type WB-31) transitions the 12 gauge MGS railing section to a heavier gage nested thrie beam railing section which is connected to the concrete bridge railing.
4. For typical use of Connection Detail AA, see Layout Types 12A and 12B on Revised Standard Plan RSP A77Q1, Layout Types 12C and 12D on Revised Standard Plan RSP A77Q2, and Layout Type 12E on Revised Standard Plan RSP A77Q3.
5. For typical use of Connection Detail BB, see Layout Type 12D (structure departure railing connection) on Revised Standard Plan RSP A77Q2 and Layout Type 12DD on Revised Standard Plan RSP A77Q5.
6. Where the height of the bridge railing exceeds the height of the thrie beam railing by more than 1" at Connection Detail AA, taper the top of the end of the bridge railing at 4:1 to match the top elevation of the thrie beam rail.
7. For details of End Cap (Type TC), see Revised Standard Plan RSP A77U4.
8. See Revised Standard Plan RSP A77U4 for additional details regarding depth dimension for straight metal box spacer.

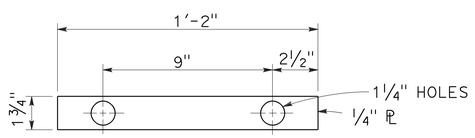

PLATE 'A'

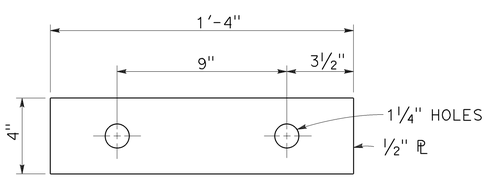

PLATE 'B'
(For backside of connection BB)

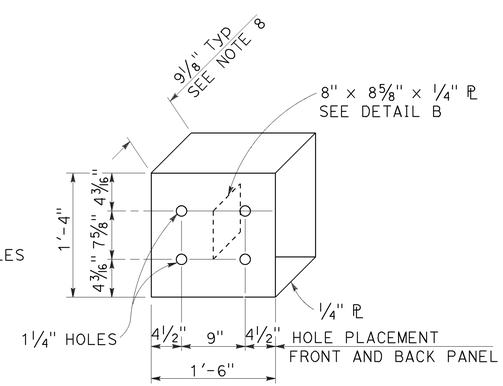

DETAIL A

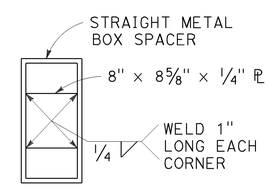

DETAIL B

STRAIGHT METAL BOX SPACER

STATE OF CALIFORNIA
DEPARTMENT OF TRANSPORTATION

MIDWEST GUARDRAIL SYSTEM CONNECTIONS TO BRIDGE RAILINGS WITHOUT SIDEWALKS DETAILS No. 1

NO SCALE

RSP A77U1 DATED JULY 19, 2013 SUPPLEMENTS THE STANDARD PLANS BOOK DATED 2010.

REVISED STANDARD PLAN RSP A77U1

2010 REVISED STANDARD PLAN RSP A77U1

7-8-13

Dist	COUNTY	ROUTE	POST MILES TOTAL PROJECT	SHEET No.	TOTAL SHEETS
07	Ven	33	15.7	63	108

Randell D. Hiatt
REGISTERED CIVIL ENGINEER

July 19, 2013
PLANS APPROVAL DATE

REGISTERED PROFESSIONAL ENGINEER
Randell D. Hiatt
No. C50200
Exp. 6-30-15
CIVIL
STATE OF CALIFORNIA

THE STATE OF CALIFORNIA OR ITS OFFICERS OR AGENTS SHALL NOT BE RESPONSIBLE FOR THE ACCURACY OR COMPLETENESS OF SCANNED COPIES OF THIS PLAN SHEET.

TO ACCOMPANY PLANS DATED 6-24-16

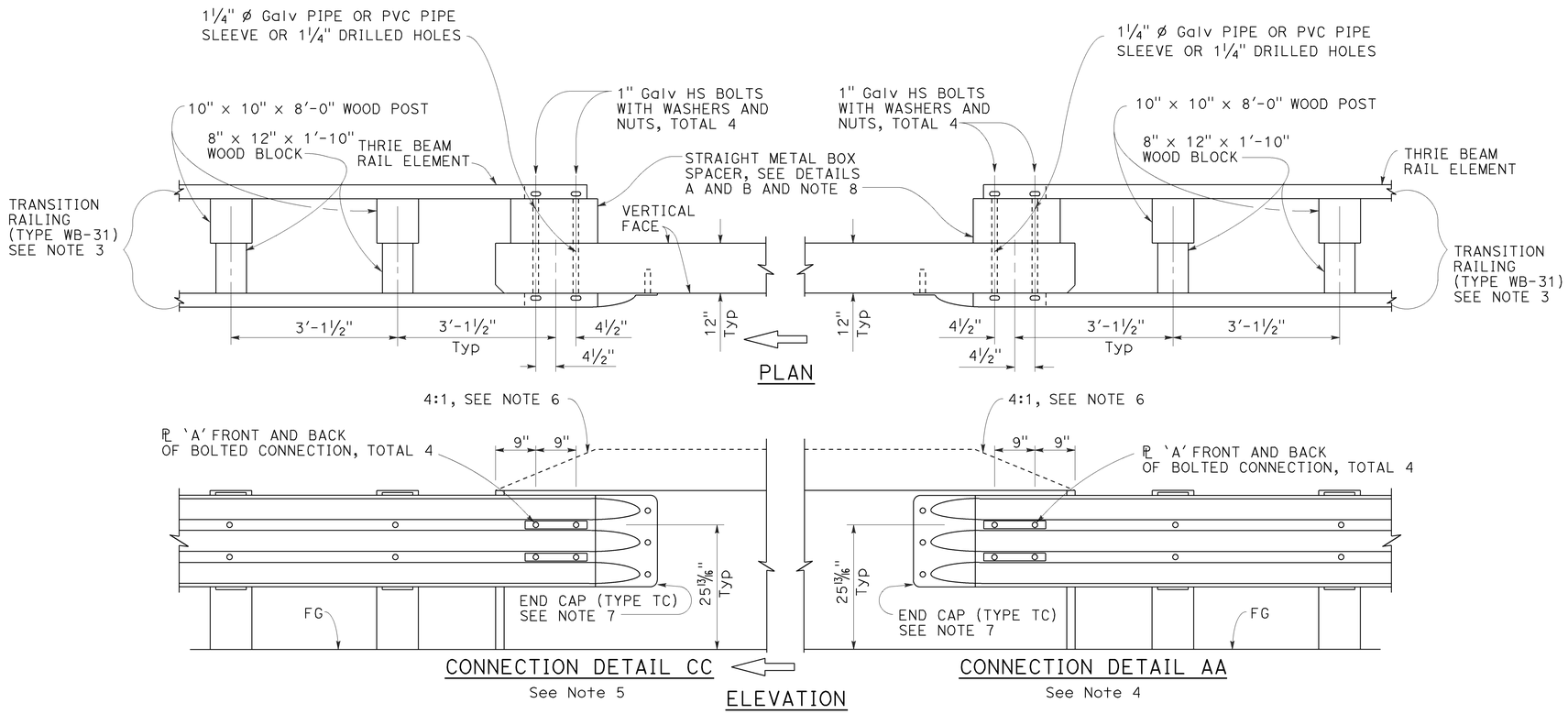

MIDWEST GUARDRAIL SYSTEM CONNECTION TO BRIDGE RAILING WITHOUT SIDEWALK

NOTES:

1. See Revised Standard Plan RSP A77U1 for additional connection details to bridges without sidewalks.
2. Additional details of posts, blocks and hardware are shown on Revised Standard Plans RSP A77M1, RSP A77N1 and RSP A77N2.
3. For additional details of Transition Railing (Type WB-31), see Revised Standard Plan RSP A77U4. Transition Railing (Type WB-31) transitions the 12 gauge MGS railing section to a heavier gage nested thrie beam railing section which is connected to the concrete bridge railing.
4. For typical use of Connection Detail AA, see Layout Types 12A and 12B on Revised Standard Plan RSP A77Q1, Layout Types 12C and 12D on Revised Standard Plan RSP A77Q2, and Layout Type 12E on Revised Standard Plan RSP A77Q3.
5. For typical use of Connection Detail CC, see Layout Types 12AA and 12BB on Revised Standard Plan RSP A77Q4 and Layout Type 12CC on Revised Standard Plan RSP A77Q5.
6. Where the height of the bridge railing exceeds the height of the thrie beam railing by more than 1" at Connection Detail AA and connection Detail CC, taper the top of the end of the bridge railing at 4:1 to match the top elevation of the thrie beam railing.
7. For details of End Cap (Type TC), see Revised Standard Plan RSP A77U4.
8. See Revised Standard Plan RSP A77U4 for additional details regarding depth dimension for straight metal box spacer.

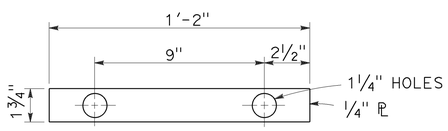

PLATE 'A'

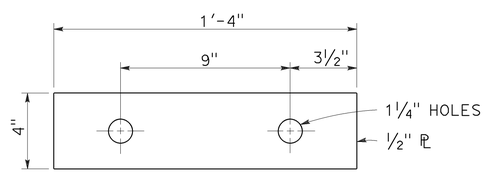

PLATE 'B'
(For backside of connection BB)

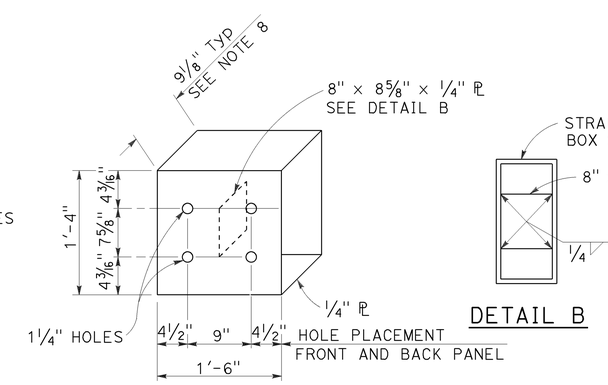

DETAIL A

STRAIGHT METAL BOX SPACER

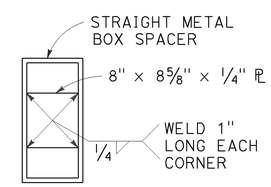

DETAIL B

STATE OF CALIFORNIA
DEPARTMENT OF TRANSPORTATION

MIDWEST GUARDRAIL SYSTEM CONNECTIONS TO BRIDGE RAILINGS WITHOUT SIDEWALKS DETAILS No. 2

NO SCALE

RSP A77U2 DATED JULY 19, 2013 SUPPLEMENTS THE STANDARD PLANS BOOK DATED 2010.

REVISED STANDARD PLAN RSP A77U2

2010 REVISED STANDARD PLAN RSP A77U2

6-20-13

Dist	COUNTY	ROUTE	POST MILES TOTAL PROJECT	SHEET No.	TOTAL SHEETS
07	Ven	33	15.7	64	108

Randell D. Hiatt
REGISTERED CIVIL ENGINEER

July 19, 2013
PLANS APPROVAL DATE

REGISTERED PROFESSIONAL ENGINEER
Randell D. Hiatt
No. C50200
Exp. 6-30-15
CIVIL
STATE OF CALIFORNIA

THE STATE OF CALIFORNIA OR ITS OFFICERS OR AGENTS SHALL NOT BE RESPONSIBLE FOR THE ACCURACY OR COMPLETENESS OF SCANNED COPIES OF THIS PLAN SHEET.

TO ACCOMPANY PLANS DATED 6-24-16

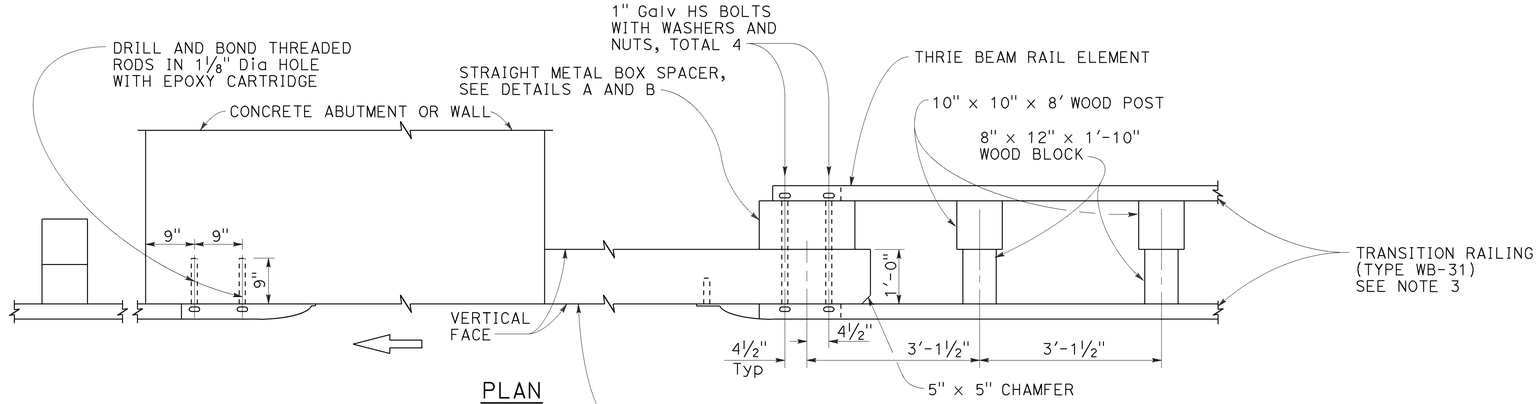

PLAN

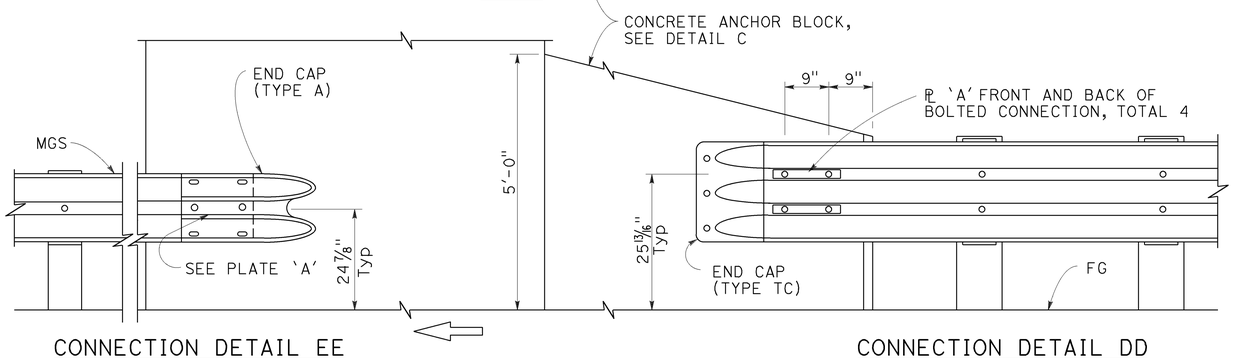

CONNECTION DETAIL EE
See Note 5

CONNECTION DETAIL DD
See Note 4

ELEVATION

MIDWEST GUARDRAIL SYSTEM CONNECTION TO ABUTMENT OR WALL

NOTES:

1. These connection details apply to abutments and walls.
2. Additional details of posts, blocks and hardware are shown on Revised Standard Plans RSP A77M1, RSP A77N1 and RSP A77N2.
3. For additional details of Transition Railing (Type WB-31), see Revised Standard Plan RSP A77U4. Transition Railing (Type WB-31) transitions the 12 gauge MGS railing section to a heavier gage nested thrie beam railingsection which is connected to the concrete anchor block.
4. For typical use of Connection Details DD, see Layout Types 12A and 12B on Revised Standard Plan RSP A77Q1 and Layout Types 12C and 12D on Revised Standard Plan RSP A77Q2.
5. For typical use of Connection Detail EE, see Layout Type 12D on Revised Standard Plan RSP A77Q2 and Layout Type 12DD on Revised Standard Plan RSP A77Q5.

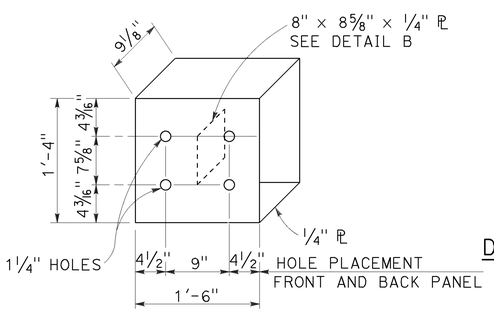

DETAIL A

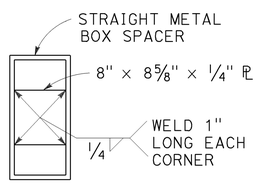

DETAIL B

STRAIGHT METAL BOX SPACER

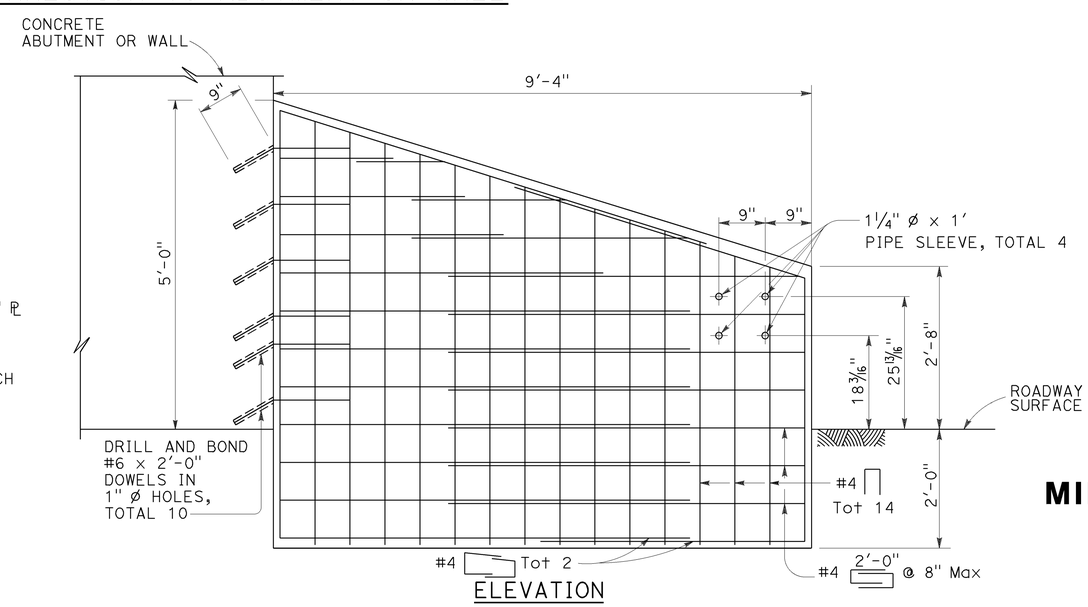

ELEVATION

ANCHOR BLOCK FOR TRANSITION RAILING CONNECTION

DETAIL C

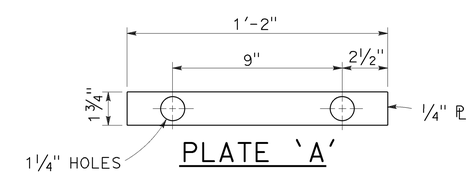

PLATE 'A'

STATE OF CALIFORNIA
DEPARTMENT OF TRANSPORTATION

MIDWEST GUARDRAIL SYSTEM CONNECTIONS TO ABUTMENTS AND WALLS

NO SCALE

RSP A77U3 DATED JULY 19, 2013 SUPPLEMENTS THE STANDARD PLANS BOOK DATED 2010.

REVISED STANDARD PLAN RSP A77U3

2010 REVISED STANDARD PLAN RSP A77U3

7-8-13

Dist	COUNTY	ROUTE	POST MILES TOTAL PROJECT	SHEET No.	TOTAL SHEETS
07	Ven	33	15.7	65	108

Randell D. Hiatt
REGISTERED CIVIL ENGINEER

January 23, 2015
PLANS APPROVAL DATE

REGISTERED PROFESSIONAL ENGINEER
Randell D. Hiatt
No. C50200
Exp. 6-30-15
CIVIL
STATE OF CALIFORNIA

THE STATE OF CALIFORNIA OR ITS OFFICERS OR AGENTS SHALL NOT BE RESPONSIBLE FOR THE ACCURACY OR COMPLETENESS OF SCANNED COPIES OF THIS PLAN SHEET.

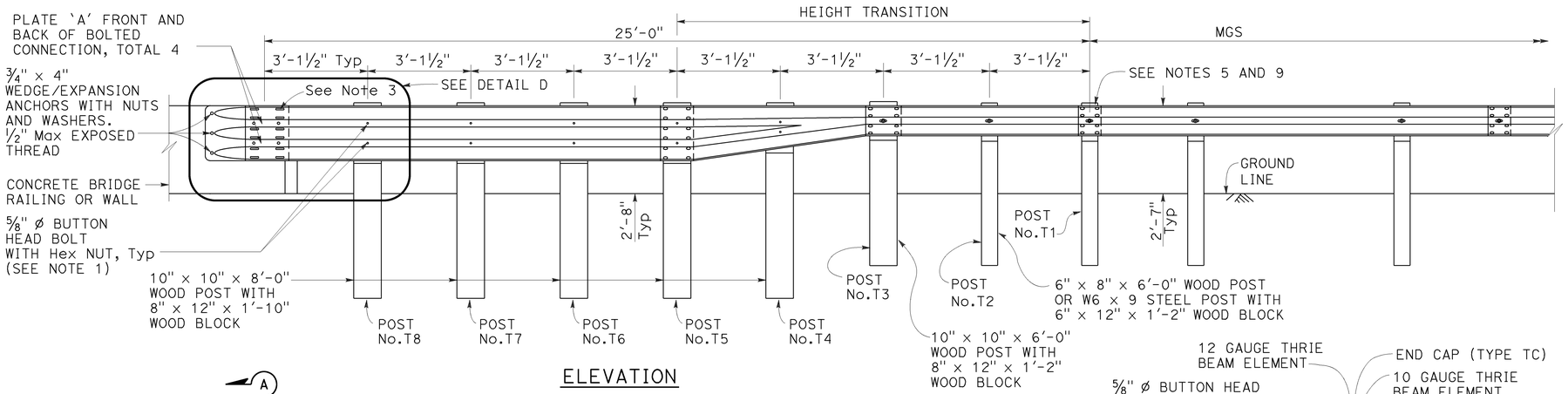

ELEVATION

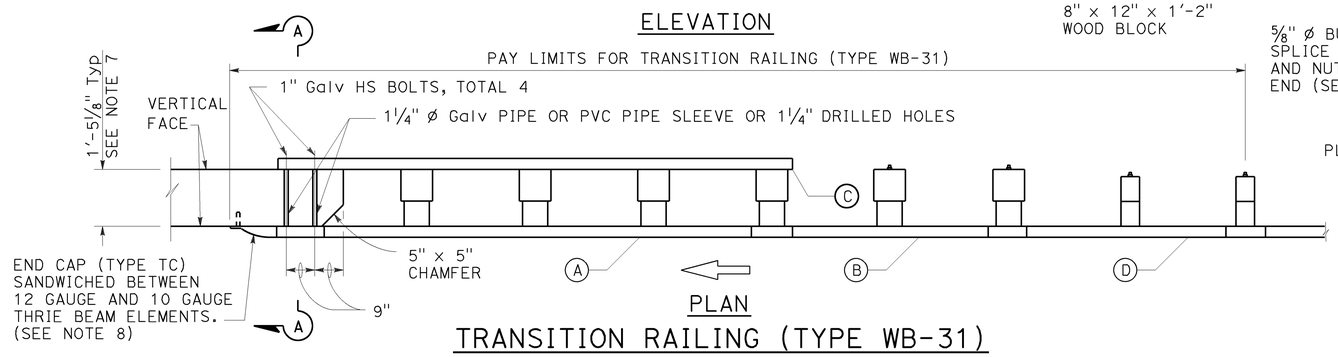

PLAN

TRANSITION RAILING (TYPE WB-31)

(No Blockout Attachment)

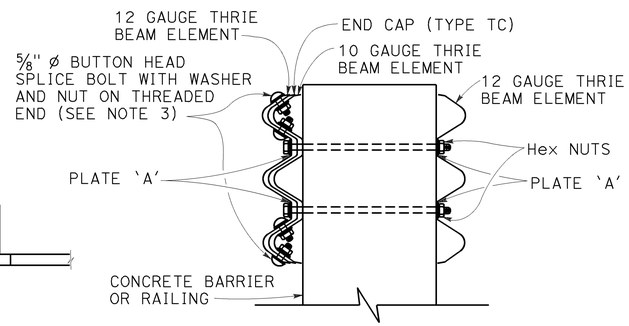

SECTION A-A

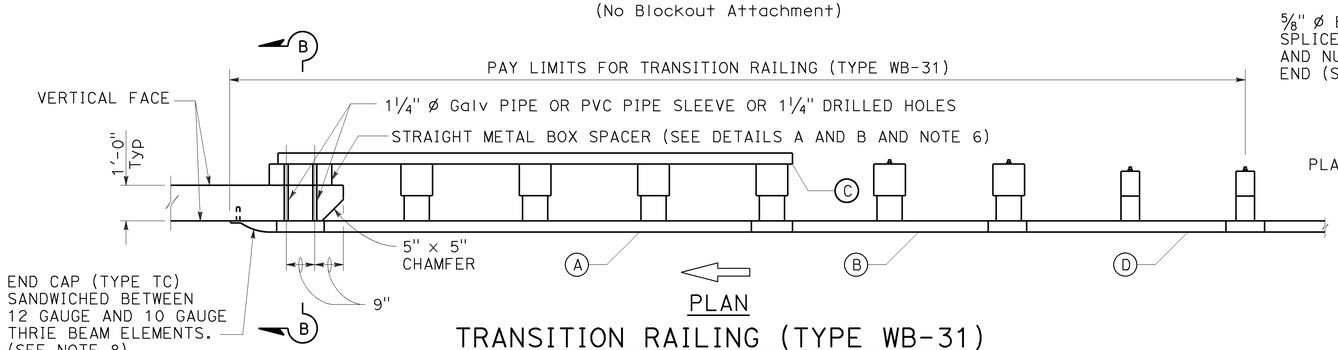

PLAN

TRANSITION RAILING (TYPE WB-31)

(Blockout Attachment)

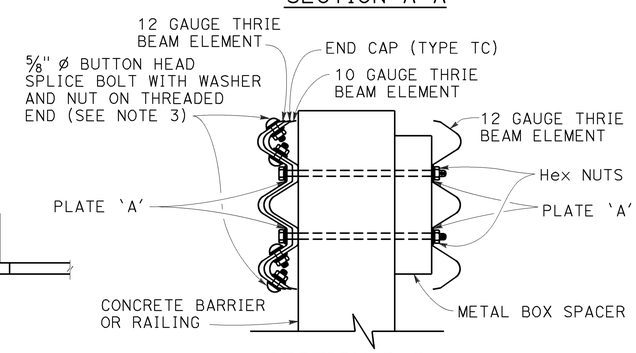

SECTION B-B

LEGEND:

- (A) NESTED THRIE BEAM ELEMENTS (ONE 12 GAUGE ELEMENT NESTED OVER ONE 10 GAUGE ELEMENT).
- (B) ONE ASYMMETRICAL 10 GAUGE "W" BEAM TO THRIE BEAM ELEMENT.
- (C) ONE 12 GAUGE THRIE BEAM ELEMENT.
- (D) ONE 10 GAUGE "W" BEAM RAIL ELEMENT (7'-3 1/2"LENGTH)

10 GAUGE = 0.138" THICK
12 GAUGE = 0.108" THICK

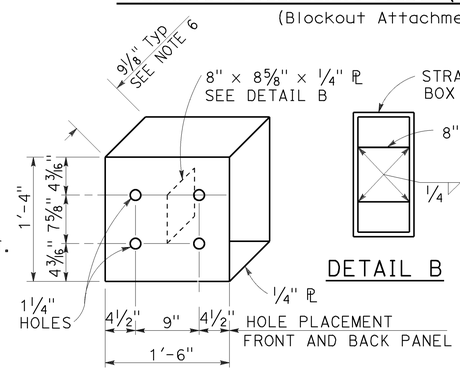

DETAIL A

STRAIGHT METAL BOX SPACER

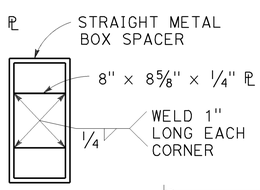

DETAIL B

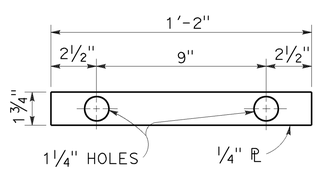

DETAIL C

PLATE 'A'

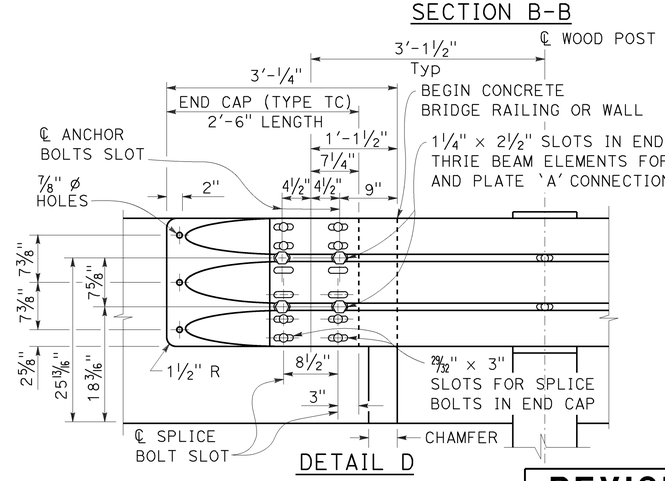

DETAIL D

NOTES:

TO ACCOMPANY PLANS DATED 6-24-16

1. Use 5/8" ø Button head bolts and hex nuts for connections to posts. No washer on rail face for bolted connections to post.
2. The nested rail elements, end cap, and 'W' beam to thrie beam element may be spliced together prior to bolting the elements to the wood post and concrete barrier or railing.
3. Exterior splice bolt holes for rail element splices at Post No. T5 and the connection to the concrete barrier or railing shall be the standard 29/32" x 1 1/8" slot size. Interior splice bolt holes at these locations may be increased up to 1 1/4" ø. Only the top 4 and the bottom 4 splice bolts with washers and nuts are required for rail splices at Post No. T5 and the connection to the concrete barrier or railing.
4. The top elevation of Posts No. T2 through No. T7 shall not project more than 1" above the top elevation of the rail element.
5. Typically, the railing connected to Transition Railing (Type WB-31) will be either standard railing section of MGS with height transition ratio of 150:1 or a Caltrans approved 31" end treatment attached to Post No. T1.
6. The depth of the metal box spacer varies from the 9 1/8" to 1 1/2" and is dependent on the width of the concrete railing or wall. The combined dimension for the depth of the metal box spacer plus the width of railing or wall is typically 21 1/8". Where the space between the backside of the concrete railing or wall and the rear thrie beam element is less than 1 1/2", metal plates similar to Plate 'A' are to be used as spacers.
7. Where the width of the concrete railing or wall is greater than 17 1/8", wood blocks are to be used to fill the space created between the backside of Posts No. T5 through No. T8 and the rear thrie beam element. These wood blocks shall be 8" in width and 1'-2" in length. The dimension between the front thrie beam element and the rear thrie beam element is to match the width of the concrete railing or wall.
8. End cap may be installed over 12 gauge and 10 gauge thrie beam elements where transition railing is installed on the departure end of bridge railing.
9. Conform standard railing section height to 31" at Post No. T1 using height transition ratio of 150:1.

STATE OF CALIFORNIA
DEPARTMENT OF TRANSPORTATION

MIDWEST GUARDRAIL SYSTEM TRANSITION RAILING (TYPE WB-31)

NO SCALE

RSP A77U4 DATED JANUARY 23, 2015 SUPERSEDES RSP A77U4 DATED NOVEMBER 15, 2013 AND RSP A77U4 DATED JULY 19, 2013 THAT SUPPLEMENTS THE STANDARD PLANS BOOK DATED 2010.

REVISED STANDARD PLAN RSP A77U4

2010 REVISED STANDARD PLAN RSP A77U4

1-8-15

Dist	COUNTY	ROUTE	POST MILES TOTAL PROJECT	SHEET No.	TOTAL SHEETS
07	Ven	33	15.7	66	108

Raymond Don Tsztoo
REGISTERED CIVIL ENGINEER

April 19, 2013
PLANS APPROVAL DATE

REGISTERED PROFESSIONAL ENGINEER Raymond Don Tsztoo No. C37332 Exp. 6-30-14 CIVIL STATE OF CALIFORNIA

THE STATE OF CALIFORNIA OR ITS OFFICERS OR AGENTS SHALL NOT BE RESPONSIBLE FOR THE ACCURACY OR COMPLETENESS OF SCANNED COPIES OF THIS PLAN SHEET.

TO ACCOMPANY PLANS DATED 6-24-16

2010 REVISED STANDARD PLAN RSP D77B

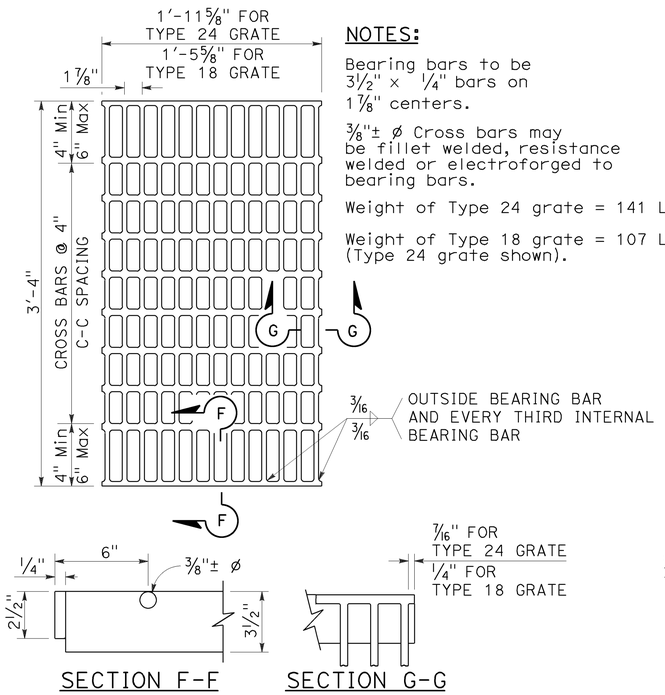

SECTION F-F SECTION G-G

TYPE 18-10 AND 24-13 GRATE

(Welded Steel)

NOTES:

Bearing bars to be 3½" × ¼" bars on 1⅞" centers.

⅜"± ø Cross bars may be fillet welded, resistance welded or electroforged to bearing bars.

Weight of Type 24 grate = 141 LBS.

Weight of Type 18 grate = 107 LBS. (Type 24 grate shown).

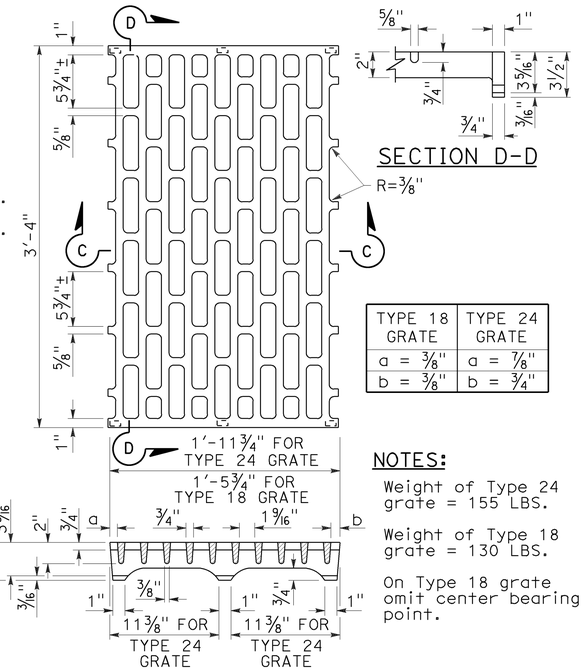

SECTION D-D

TYPE 18 GRATE	TYPE 24 GRATE
a = ⅜"	a = ⅞"
b = ⅜"	b = ¾"

NOTES:

Weight of Type 24 grate = 155 LBS.

Weight of Type 18 grate = 130 LBS.

On Type 18 grate omit center bearing point.

SECTION C-C

TYPE 18-8C AND 24-10C GRATE

(Cast ductile iron)

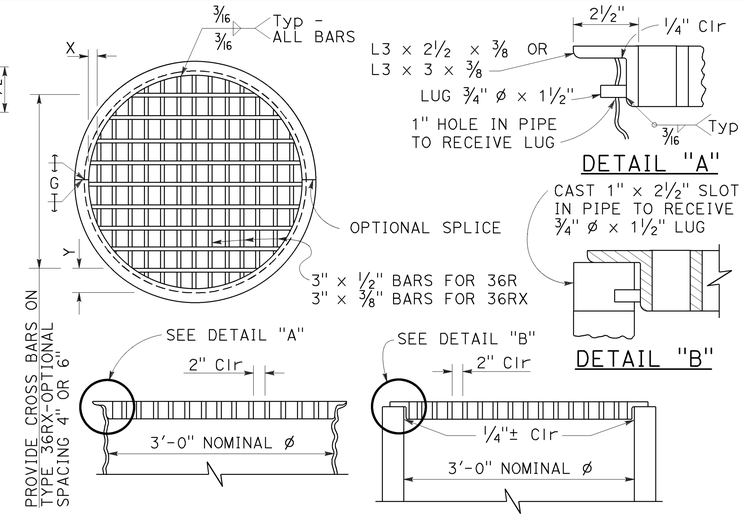

DETAIL "A"

DETAIL "B"

TYPE 36R AND 36RX GRATE DETAILS

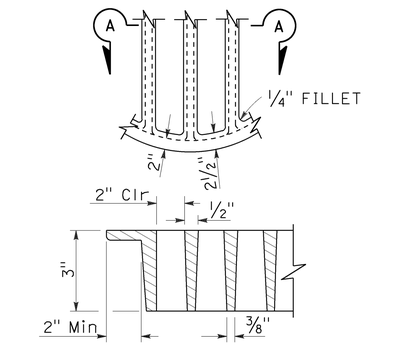

SECTION A-A

ALTERNATIVE CAST DUCTILE IRON GRATE OR CAST CARBON STEEL GRATE TYPE 36R AND 36RX

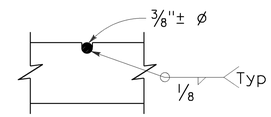

⅜"± ø Cross bars may be fillet welded, resistance welded or electroforged to bearing bars.

CROSS BAR DETAIL TYPE 36RX GRATE (WELDED STEEL)

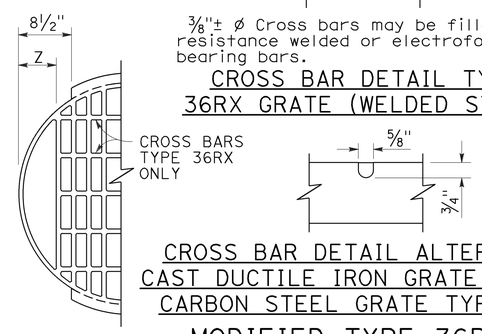

CROSS BAR DETAIL ALTERNATIVE CAST DUCTILE IRON GRATE OR CAST CARBON STEEL GRATE TYPE 36RX

MODIFIED TYPE 36R AND 36RX GRATE FOR ODI INLET

BASIS FOR Misc IRON AND STEEL FINAL PAY WEIGHTS FOR DRAINAGE INLETS

INLET TYPE	GRATE TYPE	No. OF GRATES	WEIGHT LB
GDO (SEE NOTE 4)	24-10C	2	391
	24-10S	2	456
	24-12X	2	473
	24-13	2	374
GO,GOL,G1,G2, G3,G4 (TYPE 24)	24-10C	1	202
	24-10S	1	229
	24-12X	1	239
	24-13	1	188
G4 (TYPE 18) G5,G6	18-8S	1	187
	18-9X	1	187
	18-10	1	149
GT1,GT2	18-8S	2	374
	18-9X	2	374
	18-10	2	298
GT3,GT4	24-10C	2	404
	24-10S	2	458
	24-12X	2	478
	24-13	2	376
ODI	36RX (Mod)	1	196
GMP,GCP,GCPI	36RX	1	215
ODI	36R (Mod)	1	220
GMP,GCP,GCPI	36R	1	236
TRASH RACK			22
GRATE CHAIN			3

NOTES:

1. When alternative grates are allowed - Final pay based on alternative with the lesser weight.
2. Use frame shown on Standard Plan D74A, D74B or RSP D77A as appropriate.
3. When Type 24-10S, 24-12X or 24-13 grates are used with GDO Inlets, a ¼" × 3½" × 3'-4⅞" steel bar shall be welded across the center of inlet frame to separate the individual grates.
4. See Revised Standard Plan RSP D77A for connecting chain to welded grate and frame. When chain is required, do not use cast ductile iron grate.

GRATE BAR SPACING TABLE

TYPE	No. OF BARS	CLEAR BAR SPACING	X	Y 4" SPACING	Y 6" SPACING	Z
36R	13	2"	2⅛"	-	-	-
36RX (STEEL)	15	2"	9/16"	3¾"	5¾"	-
36RX (CAST)	13	2"	2⅛"	3¾"	5¾"	-
36R Mod	12	2"	2⅛"	-	-	5"
36RX Mod (STEEL)	13	2"	9/16"	3¾"	5¾"	5 11/16"
36RX Mod (CAST)	12	2"	2⅛"	3¾"	5¾"	5"

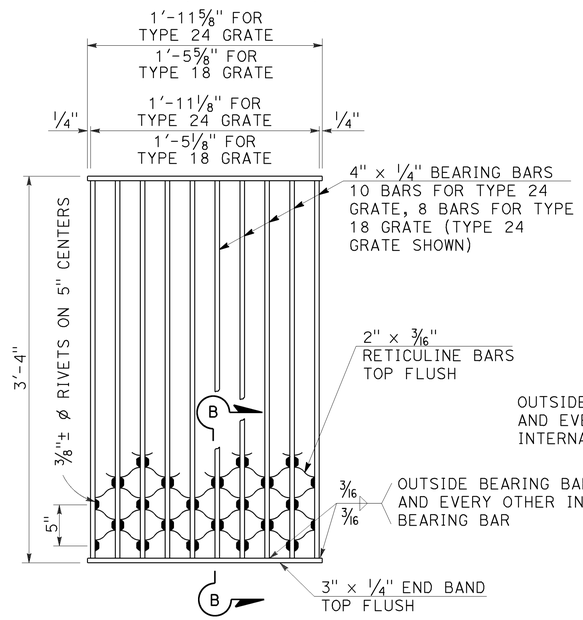

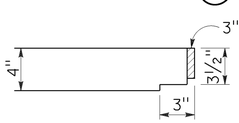

SECTION B-B

NOTES:

Weight of Type 24 grate = 182 LBS.
Weight of Type 18 grate = 145 LBS.

TYPE 18-8S AND 24-10S GRATE

(Welded Steel) Reticuline type

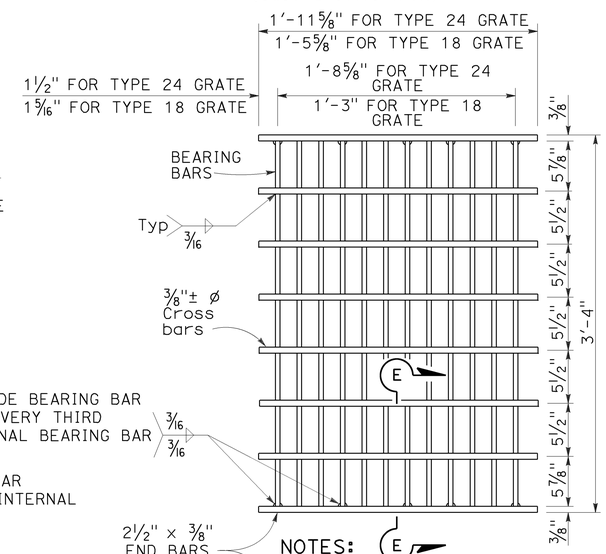

SECTION E-E

NOTES:

Bearing bars to be 3½" × ⅜" bars on 1⅞" centers.

12 Bars for Type 24 grate - 9 bars for Type 18 grates. (Type 24 grate shown).

Weight of Type 24 grate = 192 LBS.

Weight of Type 18 grate = 145 LBS.

⅜"± ø Cross bars may be fillet welded, resistance welded or electroforged to bearing bars.

TYPE 18-9X AND 24-12X GRATE

(Welded Steel)

STATE OF CALIFORNIA
DEPARTMENT OF TRANSPORTATION

GRATE DETAILS No. 2

NO SCALE

RSP D77B DATED APRIL 19, 2013 SUPERSEDES RSP D77B DATED JULY 20, 2012 AND STANDARD PLAN D77B DATED MAY 20, 2011 - PAGE 165 OF THE STANDARD PLANS BOOK DATED 2010.

REVISED STANDARD PLAN RSP D77B

4-4-13

Dist	COUNTY	ROUTE	POST MILES TOTAL PROJECT	SHEET No.	TOTAL SHEETS
07	Ven	33	15.7	67	108

REGISTERED CIVIL ENGINEER

July 15, 2016
PLANS APPROVAL DATE

REGISTERED PROFESSIONAL ENGINEER Carl M. Duan No. C59976 Exp. 6-30-18 CIVIL STATE OF CALIFORNIA

THE STATE OF CALIFORNIA OR ITS OFFICERS OR AGENTS SHALL NOT BE RESPONSIBLE FOR THE ACCURACY OR COMPLETENESS OF SCANNED COPIES OF THIS PLAN SHEET.

TO ACCOMPANY PLANS DATED 6-24-16

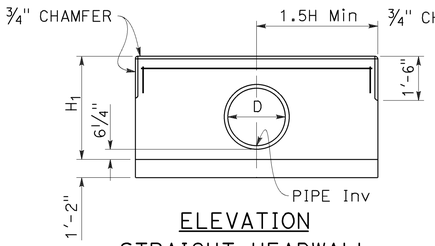

ELEVATION
STRAIGHT HEADWALL
SINGLE CIRCULAR PIPE

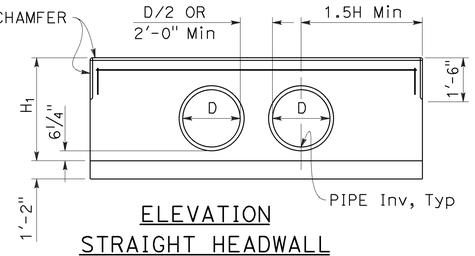

ELEVATION
STRAIGHT HEADWALL
DOUBLE CIRCULAR PIPE

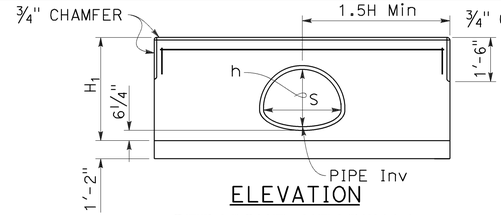

ELEVATION
STRAIGHT HEADWALL
SINGLE CMP

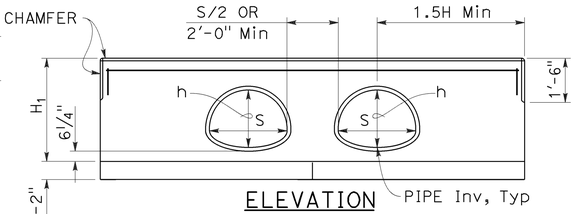

ELEVATION
STRAIGHT HEADWALL
DOUBLE CMP

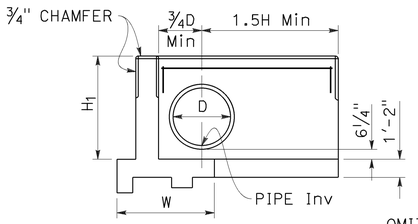

ELEVATION
"L" HEADWALL

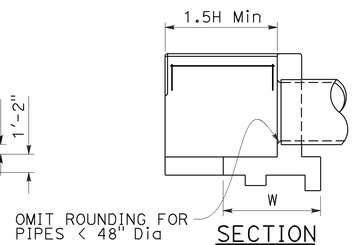

SECTION
"L" HEADWALL

CIRCULAR PIPE CULVERT HEADWALLS

See Note 2

H	CIRCULAR PIPE SIZE D	CMP ARCH SIZE S x h
2'-8"	12"	-
2'-11"	15"	21" x 15"
3'-2"	18"	24" x 18"
3'-5"	21"	28" x 20"
3'-8"	24"	35" x 24"
3'-11"	27"	-
4'-2"	30"	42" x 29"
4'-5"	33"	49" x 33"
4'-8"	36"	-
4'-11"	39"	57" x 38"
5'-2"	42"	64" x 43"
5'-5"	45"	-
5'-8"	48"	71" x 47"
5'-11"	51"	-
6'-2"	54"	-

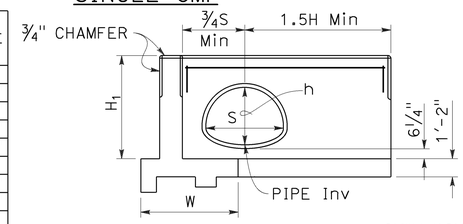

ELEVATION
"L" HEADWALL

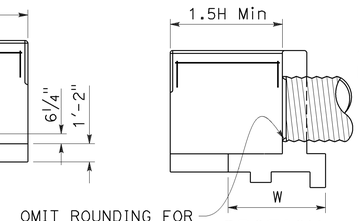

SECTION
"L" HEADWALL

CMP ARCH CULVERT HEADWALLS

See Note 2

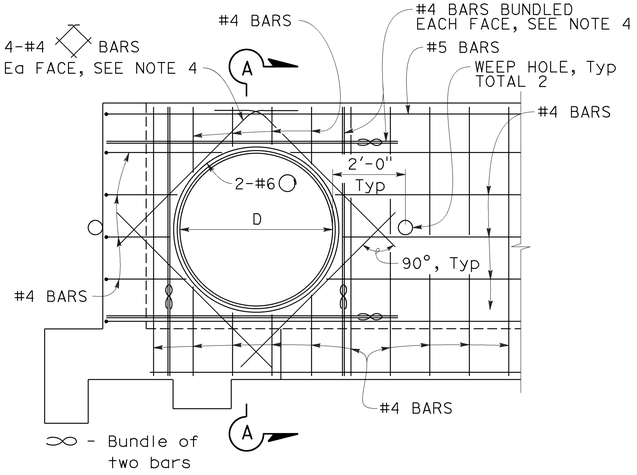

REINFORCEMENT MODIFICATION

"L" headwall shown. Straight headwall similar.
Circular pipe shown. CMP arch similar.

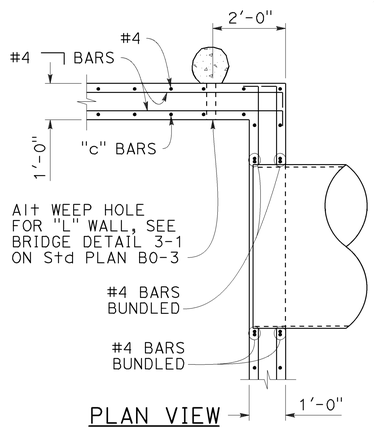

PLAN VIEW
STEM WALL

"L" headwall shown.
Straight headwall similar.

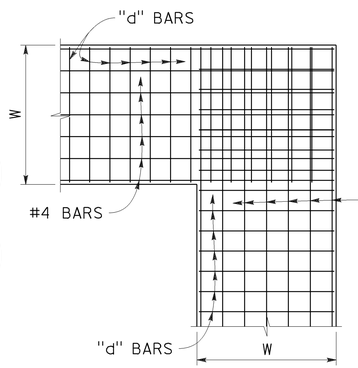

PLAN VIEW
FOOTING

"L" headwall shown.
Straight headwall similar.

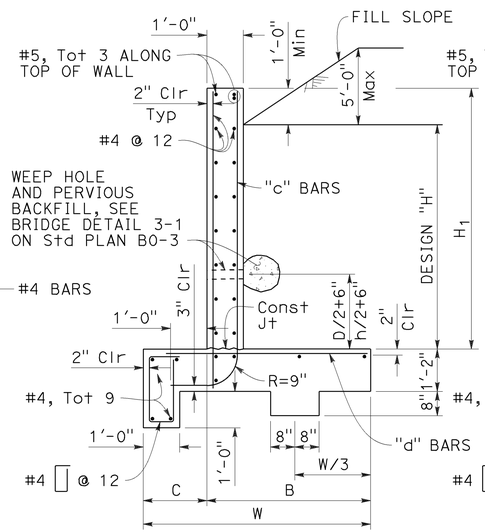

TYPICAL SECTION

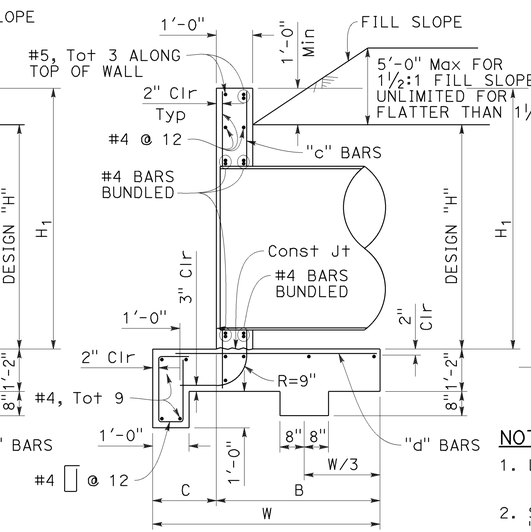

SECTION A-A

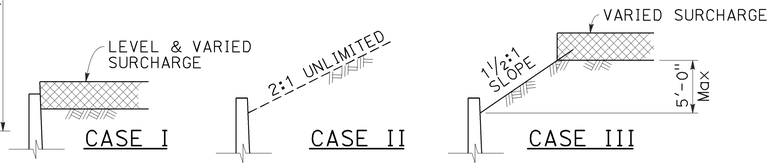

DETAIL OF DESIGN LOADING CASES

H		2'-8"	2'-11"	3'-2"	3'-5"	3'-8"	3'-11"	4'-2"	4'-5"	4'-8"	4'-11"	5'-2"	5'-5"	5'-8"	5'-11"	6'-2"
W		4'-7"	4'-9"	4'-10"	5'-0"	5'-1"	5'-2"	5'-3"	5'-5"	5'-6"	5'-7"	5'-8"	5'-9"	5'-11"	6'-0"	6'-3"
C		1'-2"	1'-2"	1'-2"	1'-3"	1'-3"	1'-3"	1'-3"	1'-4"	1'-4"	1'-4"	1'-5"	1'-5"	1'-6"	1'-6"	1'-9"
B		3'-5"	3'-7"	3'-8"	3'-9"	3'-10"	3'-11"	4'-0"	4'-1"	4'-2"	4'-3"	4'-3"	4'-4"	4'-5"	4'-6"	4'-6"
"c" BARS		#4 @ 12	#4 @ 12	#4 @ 12	#4 @ 12	#4 @ 12	#4 @ 12	#4 @ 12	#4 @ 12	#4 @ 12	#4 @ 12	#4 @ 12	#4 @ 12	#4 @ 12	#4 @ 12	#5 @ 12
"d" BARS		#4 @ 12	#4 @ 8	#4 @ 8	#4 @ 8	#4 @ 8	#5 @ 12	#5 @ 12	#5 @ 12	#5 @ 12	#5 @ 8	#5 @ 8	#5 @ 8	#5 @ 8	#6 @ 8	#6 @ 8
* Conc CY/LF		0.404	0.412	0.415	0.423	0.426	0.430	0.433	0.440	0.444	0.448	0.451	0.455	0.462	0.466	0.477
* Reinf LB/LF		23	24	24	25	25	26	27	27	28	28	29	29	30	31	32
**CASE I	Ser (q'o, B')	0.79, 4.66	0.83, 4.57	0.88, 4.58	0.89, 4.73	0.93, 4.74	0.93, 4.75	1.02, 4.75	1.02, 4.92	1.07, 4.93	1.11, 4.94	1.12, 4.98	1.16, 4.99	1.17, 5.16	1.21, 5.18	1.15, 5.53
	Str (q'o, B')	1.48, 1.75	1.53, 1.80	1.65, 1.76	1.64, 1.88	1.76, 1.85	1.89, 1.83	2.02, 1.80	1.97, 1.95	2.08, 1.94	2.20, 1.93	2.28, 1.92	2.39, 1.92	2.31, 2.08	2.41, 2.09	2.17, 2.41
	Extr (q'o, B')	0.65, 4.16	0.68, 4.27	0.72, 4.29	0.74, 4.44	0.78, 4.46	0.82, 4.47	0.86, 4.47	0.87, 4.63	0.92, 4.63	0.96, 4.64	0.98, 4.69	1.03, 4.69	1.04, 4.84	1.09, 4.84	1.05, 5.18
**CASE II	Ser (q'o, B')	0.41, 4.52	0.44, 4.67	0.48, 4.73	0.51, 4.90	0.55, 4.95	0.59, 5.00	0.63, 5.04	0.65, 5.21	0.70, 5.26	0.74, 5.30	0.77, 5.37	0.81, 5.40	0.83, 5.58	0.88, 5.61	0.86, 5.96
	Str (q'o, B')	1.05, 4.49	1.10, 4.64	1.15, 4.69	1.19, 4.86	1.24, 4.90	1.30, 4.94	1.36, 4.98	1.39, 5.15	1.46, 5.18	1.52, 5.22	1.56, 5.28	1.62, 5.31	1.62, 5.48	1.72, 5.51	1.69, 5.85
	Extr (q'o, B')	0.98, 3.90	1.03, 4.00	1.10, 4.01	1.13, 4.15	1.19, 4.15	1.26, 4.15	1.33, 4.14	1.37, 4.28	1.44, 4.27	1.52, 4.26	1.57, 4.29	1.65, 4.28	1.68, 4.41	1.77, 4.40	1.72, 4.71
**CASE III	Ser (q'o, B')	0.61, 4.53	0.64, 4.73	0.68, 4.76	0.70, 4.91	0.74, 4.91	0.79, 4.94	0.83, 4.93	0.85, 5.08	1.17, 4.03	1.23, 4.03	1.27, 4.06	1.34, 4.02	1.36, 4.15	1.43, 4.11	1.36, 4.45
	Str (q'o, B')	0.99, 4.28	1.04, 4.67	1.10, 4.69	1.13, 4.83	1.19, 4.82	1.25, 4.83	1.32, 4.82	1.35, 4.95	2.02, 2.66	2.16, 2.62	2.25, 2.59	2.44, 2.48	2.49, 2.54	2.70, 2.44	2.50, 2.72
	Extr (q'o, B')	0.90, 3.88	0.95, 3.93	1.01, 3.91	1.04, 4.02	1.11, 3.97	1.18, 3.92	1.25, 3.90	1.28, 4.00	1.35, 3.94	1.43, 3.92	1.11, 5.14	1.55, 3.87	1.58, 3.97	1.67, 3.91	1.60, 4.22

* Quantities include 1'-0" extension above the design "H" limit.
** q'o = net bearing stress (ksf), B' = effective footing width (ft)
Ser - service limit
Str - strength limit
Extr - extreme event

REINFORCED CONCRETE HEADWALL

Quantities do not include added diagonals and do not consider pipe occupancy.

NOTE: Reinforced Concrete: fy = 60,000 psi
f'c = 3,600 psi

Earth Density: 120 pcf
Equivalent Fluid Pressure: 36 pcf

NOTES:

1. Length of wall from ℄ pipe to end of wall is 1.5H Min, unless a greater length is shown on project plans.
2. Single circular pipe or single CMP shown for "L" headwall. For double pipe in "L" headwall, see "ELEVATION STRAIGHT HEADWALL DOUBLE CIRCULAR PIPE" or "ELEVATION STRAIGHT HEADWALL DOUBLE CMP" detail for additional information.
3. Cable railing to be installed on top of headwall when shown on Project Plans. See Revised Standard Plan RSP B11-47 for cable railing details.
4. Adjacent to each side of the opening, place additional reinforcement equivalent to half the interupted main reinforcement. For pipes 42" diameter and greater, add 4 diagonals, 1 bar each side. Extend bars one development length past the intersection with the adjacent diagonal bar, or where bars intersect mid thickness of adjacent wall, bottom slab or at top of wall, bend ends as required into same plane.
5. Quantities are approximate and for design purposes only. No deduction is made for pipe or arch occupancy.

STATE OF CALIFORNIA
DEPARTMENT OF TRANSPORTATION

PIPE CULVERT HEADWALLS STRAIGHT AND "L"

NO SCALE

RSP D89 DATED JULY 15, 2016 SUPERSEDES STANDARD PLAN D89
DATED MAY 20, 2011 - PAGE 188 OF THE STANDARD PLANS BOOK DATED 2010.

REVISED STANDARD PLAN RSP D89

2010 REVISED STANDARD PLAN RSP D89

6-20-16

Dist	COUNTY	ROUTE	POST MILES TOTAL PROJECT	SHEET No.	TOTAL SHEETS
07	Ven	33	15.7	68	108

Gregory A. Balzer
LICENSED LANDSCAPE ARCHITECT

July 19, 2013
PLANS APPROVAL DATE

THE STATE OF CALIFORNIA OR ITS OFFICERS OR AGENTS SHALL NOT BE RESPONSIBLE FOR THE ACCURACY OR COMPLETENESS OF SCANNED COPIES OF THIS PLAN SHEET.

LICENSED LANDSCAPE ARCHITECT — Gregory A. Balzer 2576 — Expiration Date 2-28-15 — Renewal Date 7-19-13 — Date — STATE OF CALIFORNIA

TO ACCOMPANY PLANS DATED 6-24-16

A

AB	AGGREGATE BASE
ABS	ACRYLONITRILE-BUTADIENE-STYRENE
AC	ASPHALT CONCRETE
ACC	ARMOR-CLAD CONDUCTORS
Adj	ADJACENT/ADJUSTABLE
AIC	AUXILIARY IRRIGATION CONTROLLER
Alt	ALTERNATIVE
AMEND	AMENDMENT
ARV	AIR RELEASE VALVE
AUTO	AUTOMATIC
AUX	AUXILIARY
AVB	ATMOSPHERIC VACUUM BREAKER

B

B&B	BALLED AND BURLAPPED
B/B	BRASS/BRONZE
B/B/PL	BRASS/BRONZE/PLASTIC
B/PL	BRASS/PLASTIC
BFM	BONDED FIBER MATRIX
Bit Ctd	BITUMINOUS COATED
BP	BOOSTER PUMP
BPA	BACKFLOW PREVENTER ASSEMBLY
BPE	BACKFLOW PREVENTER ENCLOSURE
BV	BALL VALVE

C

C	CONDUIT
CAP	CORRUGATED ALUMINUM PIPE
CARV	COMBINATION AIR RELEASE VALVE
CB	COUPLING BAND
CCA	CAM COUPLER ASSEMBLY
CEC	CONTROLLER ENCLOSURE CABINET
CHDPE	CORRUGATED HIGH DENSITY POLYETHYLENE
CL	CHAIN LINK
CNC	CONTROL AND NEUTRAL CONDUCTORS
Conc	CONCRETE
CP	COPPER PIPE
CS	COMPOST SOCK
CSP	CORRUGATED STEEL PIPE
CST	CENTER STRIP
CV	CHECK VALVE

D

Dia	DIAMETER
DIP	DUCTILE IRON PIPE
DIT	DRIP IRRIGATION TUBING
DG	DECOMPOSED GRANITE
DN	DIAMETER NOMINAL
DVA	DRIP VALVE ASSEMBLY

E

EC	EROSION CONTROL
ECTC	EROSION CONTROL TECHNOLOGY COUNCIL
Elect	ELECTRIC/ELECTRICAL
Elev	ELEVATION
ELL	ELBOW
ENCL	ENCLOSURE
EP	EDGE OF PAVEMENT
ES	EDGE OF SHOULDER
EST	END STRIP
ESTB	ESTABLISHMENT
ETW	EDGE OF TRAVELED WAY

F

F	FULL CIRCLE
F/P	FULL/PART CIRCLE
FCV	FLOW CONTROL VALVE
FERT	FERTILIZER
FG	FINISHED GRADE
FH	FLEXIBLE HOSE
FIPT	FEMALE IRON PIPE THREAD
FIS	FERTILIZER INJECTOR SYSTEM
FL	FLOW LINE
FR	FIBER ROLL
FS	FLOW SENSOR
FSC	FLOW SENSOR CABLE
FV	FLUSH VALVE

G

Galv	GALVANIZED
GARV	GARDEN VALVE
GARVA	GARDEN VALVE ASSEMBLY
GM	GRAVEL MULCH
GPH	GALLONS PER HOUR
GPM	GALLONS PER MINUTE
GSP	GALVANIZED STEEL PIPE
GV	GATE VALVE

H

H	HALF CIRCLE
HDPE	HIGH DENSITY POLYETHYLENE
HP	HORSEPOWER/HINGE POINT
HPL	HIGH PRESSURE LINE
Hwy	HIGHWAY

I

IC	IRRIGATION CONTROLLER
ICC	IRRIGATION CONTROLLER(S) IN CONTROLLER ENCLOSURE CABINET
ID	INSIDE DIAMETER
IFS	IRRIGATION FILTRATION SYSTEM
IPS	IRON PIPE SIZE
IPT	IRON PIPE THREAD
Irr	IRRIGATION

L

L	LENGTH

M

Max	MAXIMUM
MBGR	METAL BEAM GUARD RAILING
MCV	MANUAL CONTROL VALVE
MIC	MASTER IRRIGATION CONTROLLER
Min	MINIMUM
MIPT	MALE IRON PIPE THREAD
Misc	MISCELLANEOUS
Mtl	MATERIAL
MVP	MAINTENANCE VEHICLE PULLOUT

N

NCN	NO COMMON NAME
NL	NOZZLE LINE
No.	NUMBER
NPT	NATIONAL PIPE THREAD

O

O/C	ON CENTER
OD	OUTSIDE DIAMETER
OL	OVERLAP

P

P	PART CIRCLE
PB	PULL BOX
PCC	PORTLAND CEMENT CONCRETE
PE	POLYETHYLENE
Pkt	PACKET
PL	PLASTIC
PLS	PURE LIVE SEED
PLT	PLANT/PLANTING
PLT ESTB	PLANT ESTABLISHMENT
PM	POST MILE
PR	PRESSURE RATED
PRLV	PRESSURE RELIEF VALVE
PRV	PRESSURE REGULATING VALVE
PVC	POLYVINYL CHLORIDE
Pvmt	PAVEMENT

Q

Q	QUARTER CIRCLE
QCV	QUICK COUPLING VALVE

R

R	RADIUS
RCP	REINFORCED CONCRETE PIPE
RCV	REMOTE CONTROL VALVE
RCVM	REMOTE CONTROL VALVE (MASTER)
RCVMF	REMOTE CONTROL VALVE (MASTER) W/FLOW SENSOR
RCVP	REMOTE CONTROL VALVE W/PRESSURE REGULATOR
RCW	RECYCLED WATER
RECP	ROLLED EROSION CONTROL PRODUCT
REQ	REQUIRED
RICS	REMOTE IRRIGATION CONTROL SYSTEM
R/W	RIGHT OF WAY

S

S	SLIP
SCH	SCHEDULE
SF	STATE-FURNISHED
Shld	SHOULDER
Sq	SQUARE
SST	SIDE STRIP
Sta	STATION
Std	STANDARD
SW	SIDEWALK/SOUND WALL

T

T	THIRD CIRCLE/THREAD
TLS	TRUCK LOADING STANDPIPE
TQ	THREE QUARTER CIRCLE
TRM	TURF REINFORCEMENT MAT
TT	TWO-THIRDS CIRCLE
TWSA	TREE WELL SPRINKLER ASSEMBLY
Typ	TYPICAL

U

UG	UNDERGROUND

W

W	WIDTH
W/	WITH
WM	WATER METER
WS	WYE STRAINER
WSA	WYE STRAINER ASSEMBLY
WSP	WELDED STEEL PIPE
WWM	WELDED WIRE MESH

NOTE:

For additional abbreviations, see Standard Plans A10A and A10B.

STATE OF CALIFORNIA
DEPARTMENT OF TRANSPORTATION

LANDSCAPE AND EROSION CONTROL ABBREVIATIONS

NO SCALE

RSP H1 DATED JULY 19, 2013 SUPERSEDES STANDARD PLAN H1 DATED MAY 20, 2011 - PAGE 218 OF THE STANDARD PLANS BOOK DATED 2010.

REVISED STANDARD PLAN RSP H1

2010 REVISED STANDARD PLAN RSP H1

6-28-13

Dist	COUNTY	ROUTE	POST MILES TOTAL PROJECT	SHEET No.	TOTAL SHEETS
07	Ven	33	15.7	69	108

LICENSED LANDSCAPE ARCHITECT

July 15, 2016
PLANS APPROVAL DATE

LICENSED LANDSCAPE ARCHITECT
Michael V. Ferrara 3899
9-30-17
Renewal Date
Date
STATE OF CALIFORNIA

THE STATE OF CALIFORNIA OR ITS OFFICERS OR AGENTS SHALL NOT BE RESPONSIBLE FOR THE ACCURACY OR COMPLETENESS OF SCANNED COPIES OF THIS PLAN SHEET.

TO ACCOMPANY PLANS DATED 6-24-16

EXISTING	NEW	ITEM DESCRIPTION
		WATER METER (WM)
		BACKFLOW PREVENTER ASSEMBLY (BPA)
		BACKFLOW PREVENTER ENCLOSURE (BPE)
		BOOSTER PUMP (BP)
		TRUCK LOADING STANDPIPE (TLS)
	FS	FLOW SENSOR (FS)
X	X	MASTER IRRIGATION CONTROLLER (MIC)
		AUXILIARY IRRIGATION CONTROLLER (AIC)
		IRRIGATION CONTROLLER (IC) IRRIGATION CONTROLLER (IC) (BATTERY) IRRIGATION CONTROLLER (IC) (SOLAR) IRRIGATION CONTROLLER (IC) (TWO WIRE)
		IRRIGATION CONTROLLER(S) IN CONTROLLER ENCLOSURE CABINET (ICC)
acc	ACC	ARMOR-CLAD CONDUCTORS (ACC)
		CONTROL AND NEUTRAL CONDUCTORS (CNC)
		IRRIGATION CONDUIT
		IRRIGATION SLEEVE
dip	DIP	DUCTILE IRON PIPE (SUPPLY LINE) (MAIN) (DIP)
		GALVANIZED STEEL PIPE (SUPPLY LINE) (MAIN) (GSP)
		GALVANIZED STEEL PIPE (SUPPLY LINE) (LATERAL) (GSP)
		PLASTIC PIPE (SUPPLY LINE) (MAIN)
		PLASTIC PIPE (SUPPLY LINE) (LATERAL)
cp	CP	COPPER PIPE (SUPPLY LINE)
dit	DIT	DRIP IRRIGATION TUBING
		REMOTE CONTROL VALVE (RCV) REMOTE CONTROL VALVE (MASTER) (RCVM) REMOTE CONTROL VALVE (MASTER) W/FLOW METER (RCVMF)
P	P	REMOTE CONTROL VALVE W/PRESSURE REGULATOR (RCVP)
		EXISTING MANUAL CONTROL VALVE (MCV)
V	V	DRIP VALVE ASSEMBLY (DVA)
Y	Y	WYE STRAINER ASSEMBLY (WSA)

EXISTING	NEW	ITEM DESCRIPTION
		GATE VALVE (GV)
		BALL VALVE (BV)
		QUICK COUPLING VALVE (QCV)
		CAM COUPLER ASSEMBLY (CCA)
		GARDEN VALVE ASSEMBLY (GARVA)
		PRESSURE REGULATING VALVE (PRV)
		PRESSURE RELIEF VALVE (PRLV)
		FLOW CONTROL VALVE (FCV)
		COMBINATION AIR RELEASE VALVE (CARV)
		CHECK VALVE (CV)
		FLUSH VALVE (FV)
		EXISTING NOZZLE LINE W/TURNING UNION
		EXISTING IRRIGATION SYSTEM
		EXISTING IRRIGATION SYSTEM TO BE REMOVED
		CHAIN LINK GATE
		QUICK COUPLING VALVE W/SPRINKLER PROTECTOR
3	3	SPRINKLER W/SPRINKLER PROTECTOR
	C	CONNECT TO EXISTING SYSTEM
		CAP
		CAP EXISTING
	\\\FR\\\	FIBER ROLL
	\\\CS\\\	COMPOST SOCK

RCV SIZE
IRRIGATION CONTROLLER
CONTROLLER STATION
VALVE IN PARALLEL (IF APPLICABLE)
GPM
QUANTITY OF SPRINKLERS (WHEN SHOWN)

* 2½"-A-2b-40-60

VALVE CODE

* VALVE CODES FOR EXISTING VALVES ARE SHOWN IN A DASHED ENCLOSURE.

STATE OF CALIFORNIA
DEPARTMENT OF TRANSPORTATION

LANDSCAPE AND EROSION CONTROL SYMBOLS

NO SCALE

RSP H2 DATED JULY 15, 2016 SUPERSEDES RSP H2 DATED NOVEMBER 15, 2013 AND RSP H2 DATED JULY 19, 2013 AND STANDARD PLAN H2 DATED MAY 20, 2011 - PAGE 219 OF THE STANDARD PLANS BOOK DATED 2010.

REVISED STANDARD PLAN RSP H2

2010 REVISED STANDARD PLAN RSP H2

5-24-16

Dist	COUNTY	ROUTE	POST MILES TOTAL PROJECT	SHEET No.	TOTAL SHEETS
07	Ven	33	15.7	70	108

Gregory A. Balzer
LICENSED LANDSCAPE ARCHITECT

July 19, 2013
PLANS APPROVAL DATE

LICENSED LANDSCAPE ARCHITECT
Gregory A. Balzer 2576
Registered Landscape Architect
2-28-15
Renewal Date
7-19-13
Date
STATE OF CALIFORNIA

THE STATE OF CALIFORNIA OR ITS OFFICERS OR AGENTS SHALL NOT BE RESPONSIBLE FOR THE ACCURACY OR COMPLETENESS OF SCANNED COPIES OF THIS PLAN SHEET.

TO ACCOMPANY PLANS DATED 6-24-16

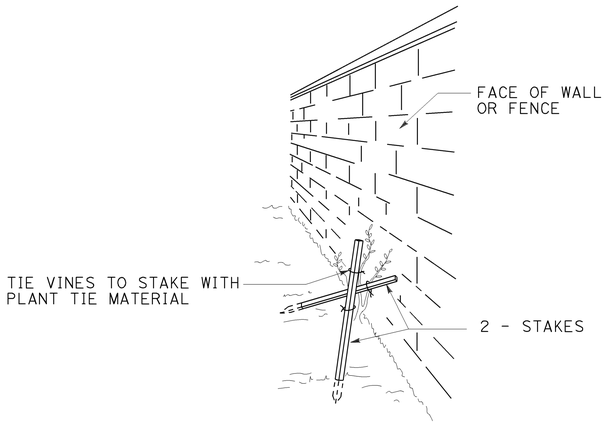

PERSPECTIVE
VINE STAKING

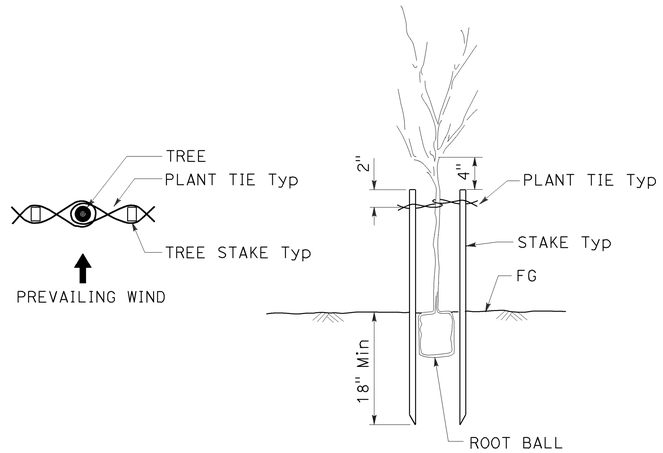

TREE STAKING

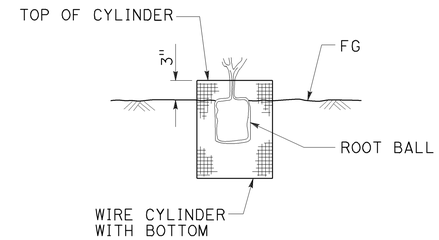

SECTION
ROOT PROTECTOR

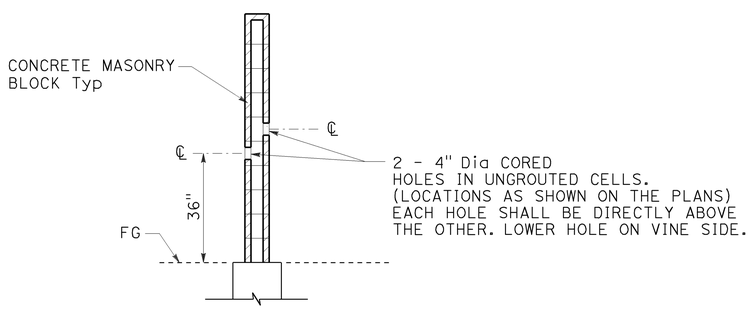

SECTION
CORE HOLE (VINE)

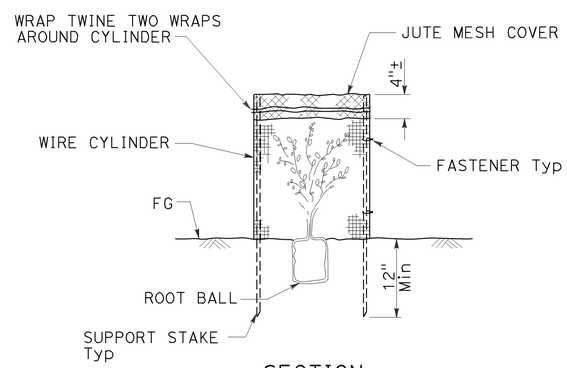

SECTION
FOLIAGE PROTECTOR

STATE OF CALIFORNIA
DEPARTMENT OF TRANSPORTATION

LANDSCAPE DETAILS

NO SCALE

RSP H4 DATED JULY 19, 2013 SUPERSEDES STANDARD PLAN H4
DATED MAY 20, 2011 - PAGE 221 OF THE STANDARD PLANS BOOK DATED 2010.

REVISED STANDARD PLAN RSP H4

2010 REVISED STANDARD PLAN RSP H4

6-28-13

Dist	COUNTY	ROUTE	POST MILES TOTAL PROJECT	SHEET No.	TOTAL SHEETS
07	Ven	33	15.7	71	108

Gregory A. Balzer
LICENSED LANDSCAPE ARCHITECT

July 19, 2013
PLANS APPROVAL DATE

LICENSED LANDSCAPE ARCHITECT Gregory A. Balzer 2576 STATE OF CALIFORNIA
Gregory A. Balzer
Registration Date 2-28-15
Renewal Date 7-19-13
Date

THE STATE OF CALIFORNIA OR ITS OFFICERS OR AGENTS SHALL NOT BE RESPONSIBLE FOR THE ACCURACY OR COMPLETENESS OF SCANNED COPIES OF THIS PLAN SHEET.

TO ACCOMPANY PLANS DATED 6-24-16

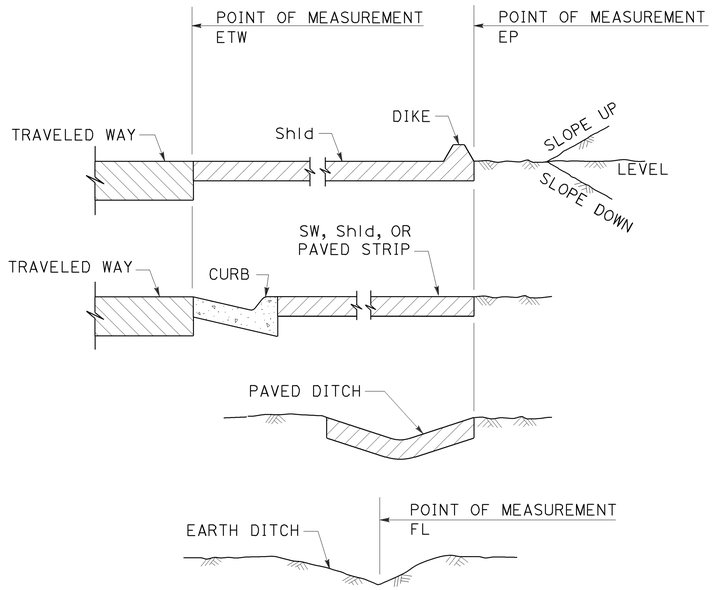

SECTION
POINTS OF MEASUREMENT

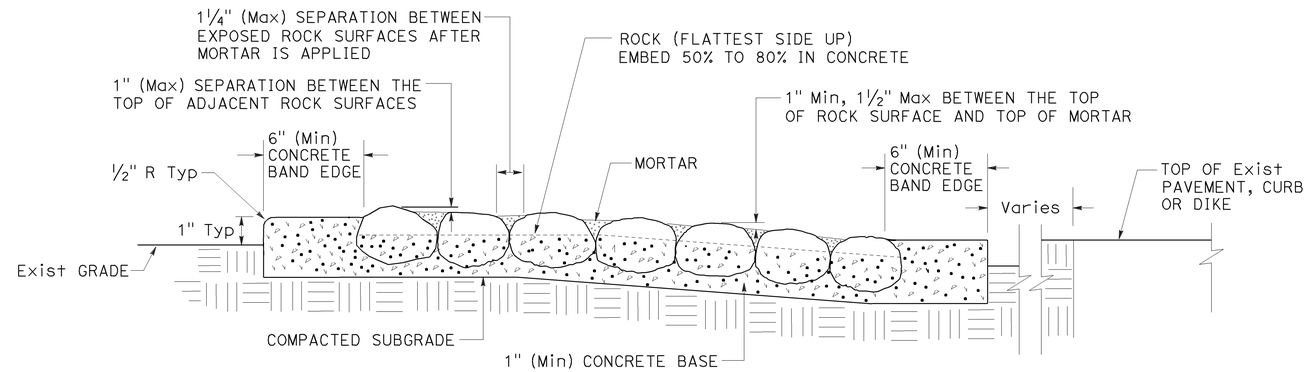

SECTION
ROCK BLANKET

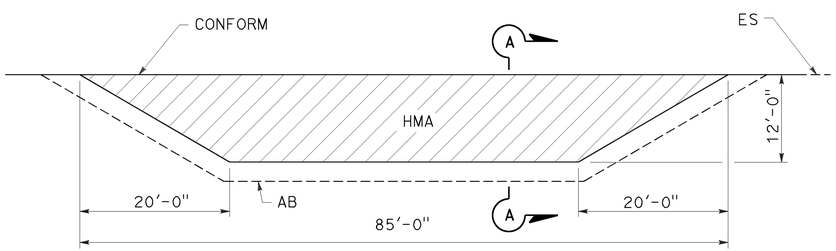

PLAN

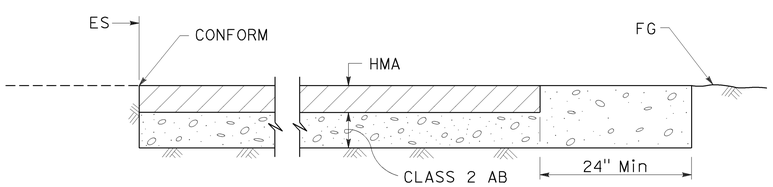

SECTION A-A
MAINTENANCE VEHICLE PULLOUT

STATE OF CALIFORNIA
DEPARTMENT OF TRANSPORTATION

LANDSCAPE DETAILS

NO SCALE

RSP H9A DATED JULY 19, 2013 SUPPLEMENTS THE STANDARD PLANS BOOK DATED 2010.

REVISED STANDARD PLAN RSP H9A

2010 REVISED STANDARD PLAN RSP H9A

6-21-13

Dist	COUNTY	ROUTE	POST MILES TOTAL PROJECT	SHEET No.	TOTAL SHEETS
07	Ven	33	15.7	72	108

REGISTERED CIVIL ENGINEER

July 19, 2013
PLANS APPROVAL DATE

REGISTERED PROFESSIONAL ENGINEER
Gurinderpal Bhullar
No. C48815
Exp. 9-30-14
CIVIL
STATE OF CALIFORNIA

THE STATE OF CALIFORNIA OR ITS OFFICERS OR AGENTS SHALL NOT BE RESPONSIBLE FOR THE ACCURACY OR COMPLETENESS OF SCANNED COPIES OF THIS PLAN SHEET.

TO ACCOMPANY PLANS DATED 6-24-16

2010 REVISED STANDARD PLAN RSP T9

TABLE 1

TAPER LENGTH CRITERIA AND CHANNELIZING DEVICE SPACING

SPEED (S)	MINIMUM TAPER LENGTH * FOR WIDTH OF OFFSET 12 FEET (W)				MAXIMUM CHANNELIZING DEVICE SPACING		
					X	Y	Z **
	TANGENT 2L	MERGING L	SHIFTING L/2	SHOULDER L/3	TAPER	TANGENT	CONFLICT
mph	ft	ft	ft	ft	ft	ft	ft
20	160	80	40	27	20	40	10
25	250	125	63	42	25	50	12
30	360	180	90	60	30	60	15
35	490	245	123	82	35	70	17
40	640	320	160	107	40	80	20
45	1080	540	270	180	45	90	22
50	1200	600	300	200	50	100	25
55	1320	660	330	220	55	110	27
60	1440	720	360	240	60	120	30
65	1560	780	390	260	65	130	32
70	1680	840	420	280	70	140	35

* - For other offsets, use the following merging taper length formula for L:
For speed of 40 mph or less, $L = WS^2/60$
For speed of 45 mph or more, $L = WS$

Where: L = Taper length in feet
W = Width of offset in feet
S = Posted speed limit, off-peak 85th-percentile speed prior to work starting, or the anticipated operating speed in mph

** - Use for taper and tangent sections where there are no pavement markings or where there is a conflict between existing pavement markings and channelizers (CA).

TABLE 2

LONGITUDINAL BUFFER SPACE AND FLAGGER STATION SPACING

SPEED *	Min D **	DOWNGRADE Min D ***		
		-3%	-6%	-9%
mph	ft	ft	ft	ft
20	115	116	120	126
25	155	158	165	173
30	200	205	215	227
35	250	257	271	287
40	305	315	333	354
45	360	378	400	427
50	425	446	474	507
55	495	520	553	593
60	570	598	638	686
65	645	682	728	785
70	730	771	825	891

* - Speed is posted speed limit, off-peak 85th-percentile speed prior to work starting, or the anticipated operating speed in mph

** - Longitudinal buffer space or flagger station spacing

*** - Use on sustained downgrade steeper than -3 percent and longer than 1 mile.

TABLE 3

ADVANCE WARNING SIGN SPACING

ROAD TYPE	DISTANCE BETWEEN SIGNS *		
	A	B	C
	ft	ft	ft
URBAN - 25 mph OR LESS	100	100	100
URBAN - MORE THAN 25 mph TO 40 mph	250	250	250
URBAN - MORE THAN 40 mph	350	350	350
RURAL	500	500	500
EXPRESSWAY / FREEWAY	1000	1500	2640

* - The distances are approximate, are intended for guidance purposes only, and should be applied with engineering judgment. These distances should be adjusted by the Engineer for field conditions, if necessary, by increasing or decreasing the recommmended distances.

STATE OF CALIFORNIA
DEPARTMENT OF TRANSPORTATION

TRAFFIC CONTROL SYSTEM TABLES FOR LANE AND RAMP CLOSURES

NO SCALE

RSP T9 DATED JULY 19, 2013 SUPERSEDES RSP T9 DATED APRIL 19, 2013 THAT SUPPLEMENTS THE STANDARD PLANS BOOK DATED 2010.

REVISED STANDARD PLAN RSP T9

Dist	COUNTY	ROUTE	POST MILES TOTAL PROJECT	SHEET No.	TOTAL SHEETS
07	Ven	33	15.7	73	108

Devinder Singh
REGISTERED CIVIL ENGINEER

October 30, 2015
PLANS APPROVAL DATE

REGISTERED PROFESSIONAL ENGINEER
Devinder Singh
No. C50470
Exp. 6-30-17
CIVIL
STATE OF CALIFORNIA

THE STATE OF CALIFORNIA OR ITS OFFICERS OR AGENTS SHALL NOT BE RESPONSIBLE FOR THE ACCURACY OR COMPLETENESS OF SCANNED COPIES OF THIS PLAN SHEET.

TO ACCOMPANY PLANS DATED 6-24-16

2010 REVISED STANDARD PLAN RSP T13

NOTES:

See Revised Standard Plan RSP T9 for tables.

Use cone spacing X for taper segment, Y for tangent segment or Z for conflict situations, as approriate, per Table 1, unless X, Y, or Z cone spacing is shown on this sheet.

Unless otherwise specified in the special provisions, all temporary warning signs shall have black legend on fluorescent orange background.

California codes are designated by (CA). Otherwise, Federal (MUTCD) codes are shown.

TYPICAL LANE CLOSURE WITH REVERSIBLE CONTROL

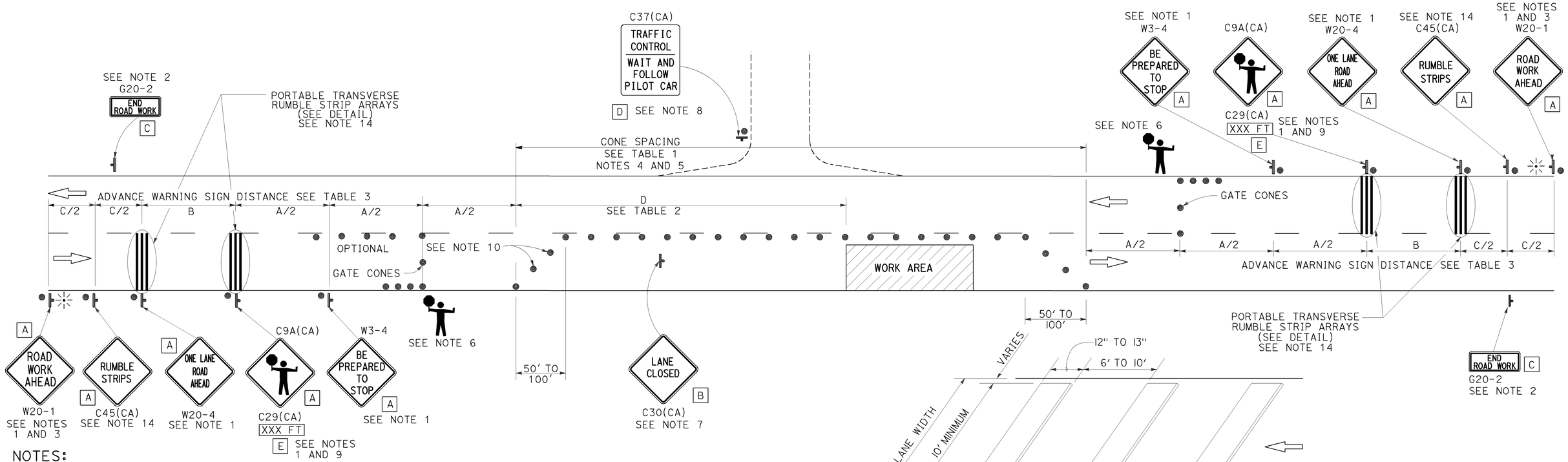

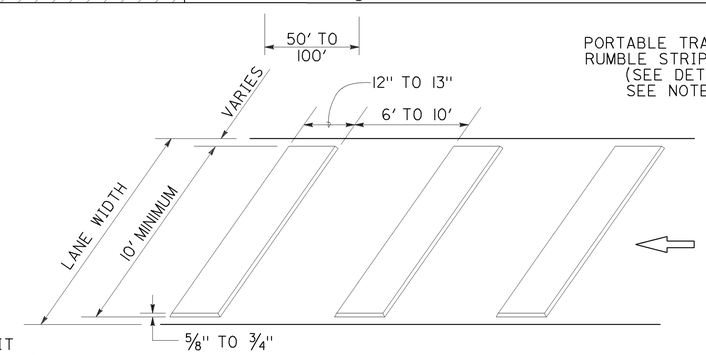

PORTABLE TRANSVERSE RUMBLE STRIP ARRAY DETAIL

NOTES:

1. Each advance warning sign in each direction of travel shall be equipped with at least two flags for daytime closure. Each flag shall be at least 16" x 16" in size and shall be orange or fluorescent red-orange in color. Flashing beacons shall be placed at the locations indicated for lane closure during hours of darkness.
2. A G20-2 "END ROAD WORK" sign, as appropriate, shall be placed at the end of the lane control unless the end of work area is obvious, or ends within a larger project's limits.
3. If the W20-1 sign would follow within 2000' of a stationary W20-1 or G20-1 "ROAD WORK NEXT _____ MILES", use a W20-4 sign for the first advance warning sign.
4. All cones used for lane closures during the hours of darkness shall be fitted with retroreflective bands (or sleeves) as specified in the specifications.
5. Portable delineators, placed at one-half the spacing indicated for traffic cones, may be used instead of cones for daytime closures only.
6. Additional advance flaggers may be required. Flagger should stand in a conspicuous place, be visible to approaching traffic as well as approaching vehicles after the first vehicle has stopped. During the hours of darkness, the flagging-station and flagger shall be illuminated and clearly visible to approaching traffic. The illumination footprint of the lighting on the ground shall be at least 20' in diameter. Place a minimum of four cones at 50' intervals in advance of flagger station as shown.
7. Place C30(CA) "LANE CLOSED" sign at 500' to 1000' intervals throughout extended work areas. They are optional if the work area is visible from the flagger station.
8. When a pilot car is used, place a C37(CA) "TRAFFIC CONTROL-WAIT AND FOLLOW PILOT CAR" sign with black legend on white background at all intersections, driveways and alleys without a flagger within traffic control area. Signs shall be clean and visible at all times. Where traffic can not be effectively self-regulated, at least one flagger shall be used at each intersection within traffic control area.
9. An optional C29(CA) sign may be placed below the C9A(CA) sign.
10. Either traffic cones or barricades shall be placed on the taper. Barricades shall be Type I, II, or III.
11. The color of the portable transverse rumble strips shall be black or orange. Use 2 arrays, each array shall consist of 3 rumble strips.
12. Portable transverse rumble strips shall not be placed on sharp horizontal or vertical curves nor shall they be placed through pedestrian crossings.
13. If the portable transverse rumble strips become out of alignment (skewed) by more than 6 inches, measured from one end to the other, they shall be readjusted to bring the placement back to the original location.
14. Portable transverse rumble strips are not required if any one of the following conditions is satisfied:
    A. Work duration occupies a location for four hours or less
    B. Posted speed limit is below 45 MPH
    C. Work is of emergency nature
    D. Work zone is in snow or icy weather conditions

LEGEND

- TRAFFIC CONE
- TEMPORARY TRAFFIC CONTROL SIGN
- PORTABLE FLASHING BEACON
- FLAGGER

SIGN PANEL SIZE (Min)

A	48" x 48"
B	30" x 30"
C	36" x 18"
D	36" x 42"
E	20" x 7"

STATE OF CALIFORNIA
DEPARTMENT OF TRANSPORTATION

TRAFFIC CONTROL SYSTEM FOR LANE CLOSURE ON TWO LANE CONVENTIONAL HIGHWAYS

NO SCALE

RSP T13 DATED OCTOBER 30, 2015 SUPERSEDES RSP T13 DATED OCTOBER 17, 2014, RSP T13 DATED JULY 18, 2014 AND RSP T13 DATED APRIL 19, 2013 AND STANDARD PLAN T13 DATED MAY 20, 2011 - PAGE 241 OF THE STANDARD PLANS BOOK DATED 2010.

REVISED STANDARD PLAN RSP T13

10-13-15

Dist	COUNTY	ROUTE	POST MILES TOTAL PROJECT	SHEET No.	TOTAL SHEETS
07	Ven	33	15.7	74	108

REGISTERED CIVIL ENGINEER

July 15, 2016
PLANS APPROVAL DATE

REGISTERED PROFESSIONAL ENGINEER Tillat Satter No. C42892 Exp. 3-31-18 CIVIL STATE OF CALIFORNIA

THE STATE OF CALIFORNIA OR ITS OFFICERS OR AGENTS SHALL NOT BE RESPONSIBLE FOR THE ACCURACY OR COMPLETENESS OF SCANNED COPIES OF THIS PLAN SHEET.

TO ACCOMPANY PLANS DATED 6-24-16

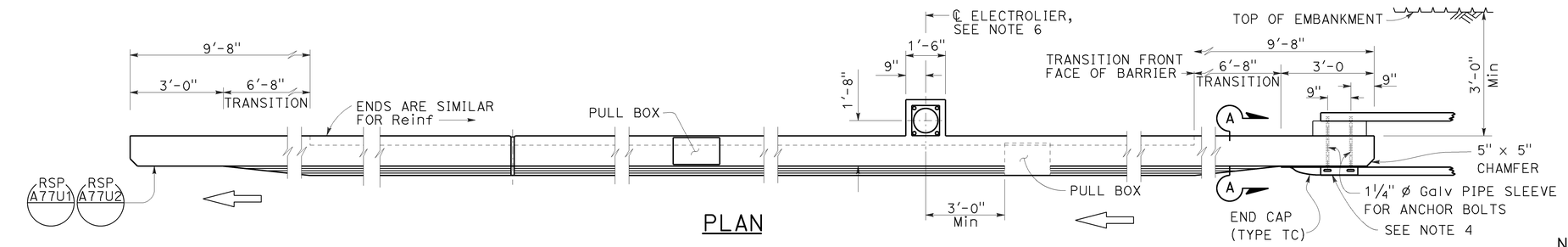

PLAN

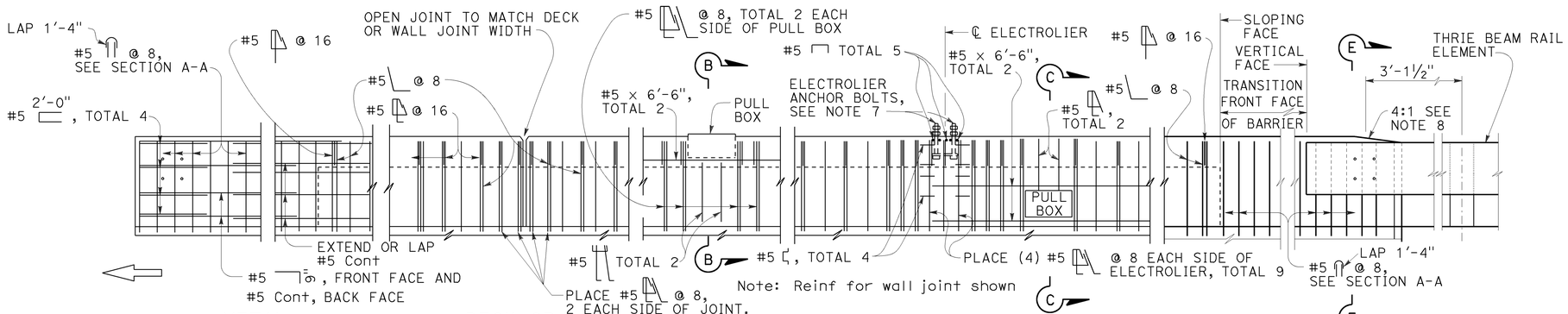

METAL RAILING CONNECTION

DECK OR WALL JOINT

ELEVATION

ELECTROLIER
See Note F

TYPE 736A

NOTES:

1. Walls are to be backfilled before barrier is placed.
2. Clearance to reinforcing steel in barrier to be 1", except as noted. Longitudinal reinforcement to stop at all expansion joints.
3. Dimensions may vary with roadway cross slope and with certain thickness of surfacing. See Project Plans.
4. For typical metal railing connection details not shown, see Revised Standard Plans RSP A77U1 and RSP A77U2.
5. See Revised Standard Plans RSP ES-9A, RSP ES-9B, RSP ES-9C, RSP ES-9D and RSP ES-9E for electrical details. The maximum number of conduits in the barrier is limited to two 2" conduits along with one 3" conduit. When a 3" conduit is used, it is restricted to the base of the barrier.
6. For electrolier mounting details, See Revised Standard Plans RSP ES-6A and RSP ES-6B.
7. Minimum concrete edge distance, to the reinforcing shown, shall be maintained. Edge distance may be adjusted to accommodate increase in concrete cover for architectual treatment.
8. Taper the top of the end of the bridge railing at 4:1 to match the top elevation of the thrie beam rail element.

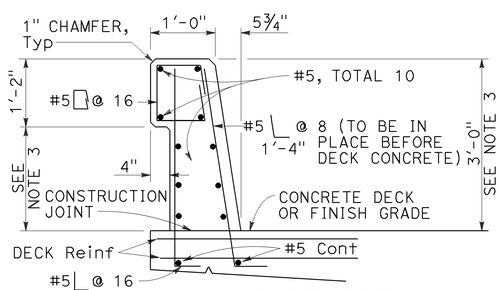

TYPE 736

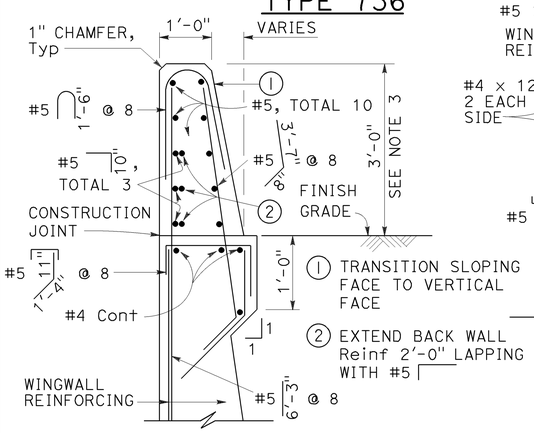

SECTION A-A

Details shown for barrier anchorage to Type 736A. Anchorgae for barrier Types 736 and 736B are similar to their respective details.

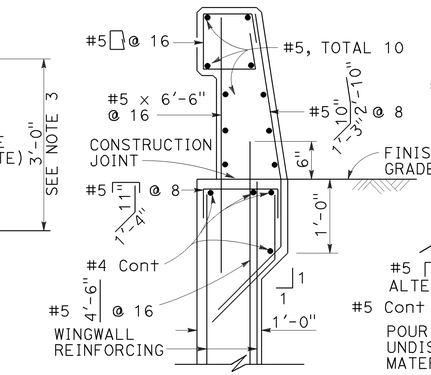

TYPE 736A

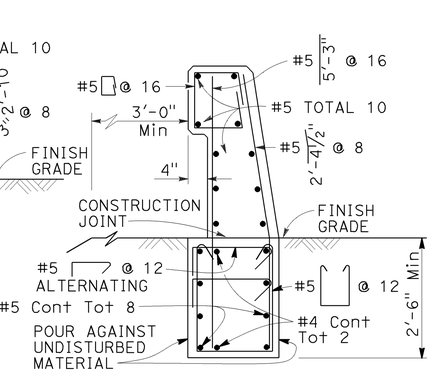

TYPE 736B

Note: Types 736A & 736B are similar to Type 736 except as noted

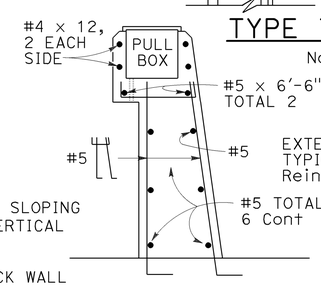

SECTION B-B

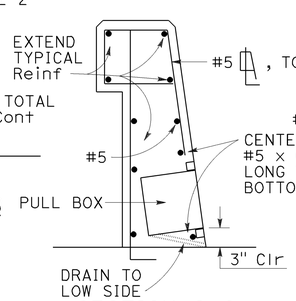

SECTION C-C
See Notes

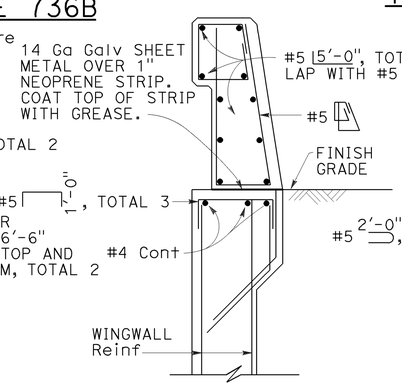

SECTION D-D

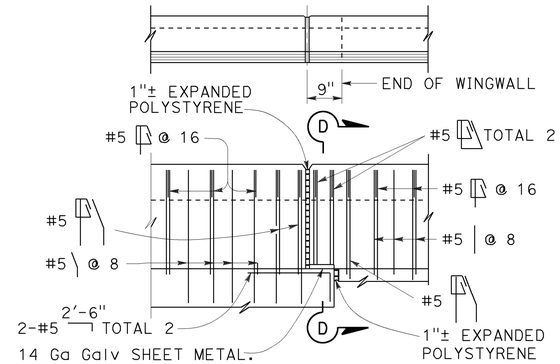

TYPE 736A TYPE 736B

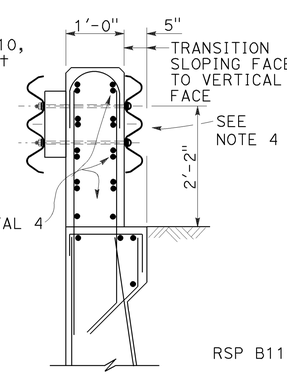

SECTION E-E
See Notes

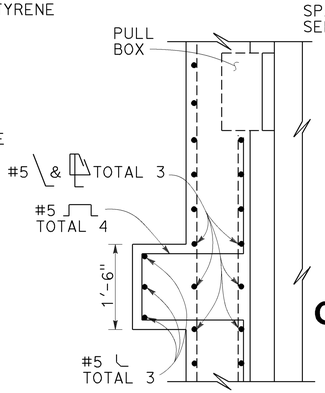

SECTION F-F

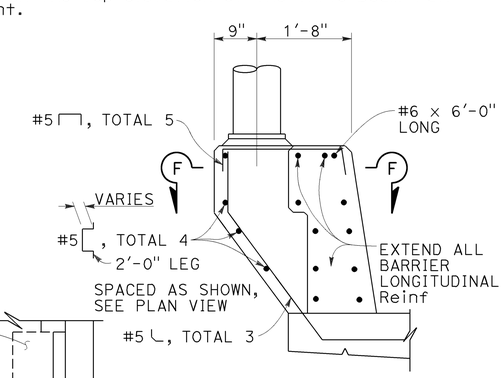

PEDESTAL ELEVATION

STATE OF CALIFORNIA
DEPARTMENT OF TRANSPORTATION

CONCRETE BARRIER TYPE 736

NO SCALE

RSP B11-55 DATED JULY 15, 2016 SUPERSEDES RSP B11-56 DATED NOVEMBER 15, 2013 AND RSP B11-56 DATED JULY 19, 2013 AND STANDARD PLAN B11-56 DATED MAY 20, 2011 - PAGE 298 OF THE STANDARD PLANS BOOK DATED 2010.

REVISED STANDARD PLAN RSP B11-56

2010 REVISED STANDARD PLAN RSP B11-56

6-29-16

Dist	COUNTY	ROUTE	POST MILES TOTAL PROJECT	SHEET No.	TOTAL SHEETS
07	Ven	33	15.7	75	108

Theresa Gabriel
REGISTERED ELECTRICAL ENGINEER

October 30, 2015
PLANS APPROVAL DATE

REGISTERED PROFESSIONAL ENGINEER Theresa Aziz Gabriel No. E15129 Exp. 6-30-16 ELECTRICAL STATE OF CALIFORNIA

THE STATE OF CALIFORNIA OR ITS OFFICERS OR AGENTS SHALL NOT BE RESPONSIBLE FOR THE ACCURACY OR COMPLETENESS OF SCANNED COPIES OF THIS PLAN SHEET.

TO ACCOMPANY PLANS DATED 6-24-16

LEGEND:

- AB — ABANDON. IF APPLIED TO CONDUIT, REMOVE CONDUCTORS
- BC — INSTALL PULL BOX IN EXISTING CONDUIT RUN
- BP — PEDESTRIAN BARRICADE, TYPE AS INDICATED ON PLAN
- CB — INSTALL CONDUIT INTO EXISTING PULL BOX
- CC — CONNECT NEW AND EXISTING CONDUIT. REMOVE EXISTING CONDUCTORS AND INSTALL CONDUCTORS AS INDICATED
- CF — CONDUIT TO REMAIN FOR FUTURE USE. REMOVE CONDUCTORS. INSTALL PULL TAPE
- DH — DETECTOR HANDHOLE
- FA — FOUNDATION TO BE ABANDONED
- IS — INSTALL SIGN ON SIGNAL MAST ARM
- NS — NO SLIP BASE ON STANDARD
- PEC — PHOTOELECTRIC CONTROL
- PEU — PHOTOELECTRIC UNIT
- RC — EQUIPMENT OR MATERIAL TO BE REMOVED AND BECOME THE PROPERTY OF THE CONTRACTOR
- RE — REMOVE ELECTROLIER, FUSES AND BALLAST. TAPE ENDS OF CONDUCTORS
- RL — RELOCATE EQUIPMENT
- RR — REMOVE AND REUSE EQUIPMENT
- RS — REMOVE AND SALVAGE EQUIPMENT
- SC — SPLICE NEW TO EXISTING CONDUCTORS
- SD — SERVICE DISCONNECT
- TSP — TELEPHONE SERVICE POINT

ABBREVIATIONS

AC+	UNDERGROUNDED CONDUCTOR
APS	ACCESSIBLE PEDESTRIAN SIGNAL
Batt	BATTERY
BBS	BATTERY BACKUP SYSTEM
BC	BOLT CIRCLE
Blk	BLACK
BP	BYPASS
BPB	BICYCLE PUSH BUTTON
C	CONDUIT
CB	CIRCUIT BREAKER
CCTV	CLOSED CIRCUIT TELEVISION
Ckt	CIRCUIT
CMS	CHANGEABLE MESSAGE SIGN
Ctid	CALTRANS IDENTIFICATION
Comm	COMMUNICATION
Cntl	CONTROL
DF	DEPARTMENT-FURNISHED
DLC	LOOP DETECTOR LEAD-IN CABLE
EMS	EXTINGUISHABLE MESSAGE SIGN
EVUC	EMERGENCY VEHICLE UNIT CABLE
EVUD	EMERGENCY VEHICLE UNIT DETECTOR
FB	FLASHING BEACON
FBCA	FLASHING BEACON CONTROL ASSEMBLY
FBS	FLASHING BEACON WITH SLIP BASE
FO	FIBER OPTIC
G	EQUIPMENT GROUNDING CONDUCTOR
GB	GROUND BUS
GFCI	GROUND FAULT CIRCUIT INTERRUPTER
Grn	GREEN
HAR	HIGHWAY ADVISORY RADIO
Hex	HEXAGONAL
HPS	HIGH PRESSURE SODIUM
IISNS	INTERNALLY ILLUMINATED STREET NAME SIGN
ISL	INDUCTION SIGN LIGHTING
LED	LIGHT EMITTING DIODE
LMA	LUMINAIRE MAST ARM
LPS	LOW PRESSURE SODIUM
Ltg	LIGHTING
Lum	LUMINAIRE
M	METERED
MAT	MAST ARM MOUNTING TOP ATTACHMENT
MAS	MAST ARM MOUNTING SIDE ATTACHMENT
MBPS	MANUAL BYPASS SWITCH
M/M	MULTIPLE TO MULTIPLE TRANSFORMER
Mtg	MOUNTING
MV	MERCURY VAPOR LIGHTING FIXTURE
MVDS	MICROWAVE VEHICLE DETECTION SYSTEM
N	NEUTRAL (GROUNDED CONDUCTOR)
NB	NEUTRAL BUS
NC	NORMALLY CLOSE
NO	NORMALLY OPEN
P	CIRCUIT BREAKER'S POLE
PB	PULL BOX
PBA	PUSH BUTTON ASSEMBLY
PEC	PHOTOELECTRIC CONTROL
Ped	PEDESTRIAN
PEU	PHOTOELECTRIC UNIT
PT	CONDUIT WITH PULL TAPE
PTR	POWER TRANSFER RELAY
RE	RELOCATED EQUIPMENT
RM	RAMP METERING
RWIS	ROADSIDE WEATHER INFORMATION SYSTEM
SB	SLIP BASE
SIC	SIGNAL INTERCONNECT CABLE
Sig	SIGNAL
SMA	SIGNAL MAST ARM
SNS	STREET NAME SIGN
SP	SERVICE POINT
TB	TERMINAL BOARD
TDC	TELEPHONE DEMARCATION CABINET
Temp	TEMPERATURE
TMS	TRAFFIC MONITORING STATION
TOS	TRAFFIC OPERATIONS SYSTEM
UPS	UNINTERRUPTABLE POWER SUPPLY
UPSC	UNINTERRUPTABLE POWER SUPPLY CONTROLLER
Veh	VEHICLE
VIVDS	VIDEO IMAGE VEHICLE DETECTION SYSTEM
Wht	WHITE
WIM	WEIGH-IN-MOTION
Xfmr	TRANSFORMER

SOFFIT AND WALL-MOUNTED LUMINAIRES

- PENDANT SOFFIT LUMINAIRE, 70 W HPS UNLESS OTHERWISE SPECIFIED
- FLUSH-MOUNTED SOFFIT LUMINAIRE, 70 W HPS UNLESS OTHERWISE SPECIFIED
- WALL-MOUNTED LUMINAIRE, 70 W HPS UNLESS OTHERWISE SPECIFIED
- EXISTING SOFFIT OR WALL-MOUNTED LUMINAIRE TO REMAIN UNMODIFIED
- (M) EXISTING SOFFIT OR WALL-MOUNTED LUMINAIRE TO BE MODIFIED AS SPECIFIED

NOTE:
Arrow indicates "street side" of luminaire.

COMMONLY USED SYMBOLS FOR UNITED STATES CUSTOMARY UNITS OF MEASUREMENT:

SYMBOL	DEFINITIONS
Ω	OHMS
min	MINUTE
s	SECOND
bps	BITS PER SECOND
Bps	BYTES PER SECOND
A	AMPERE
V	VOLT
V(dc)	VOLT (DIRECT CURRENT)
V(ac)	VOLT (ALTERNATING CURRENT)
FC	FOOT - CANDLE
W	WATTS
VA	VOLT-AMPERE
M	MEGA
k	KILO
m	MILLI
μ	MICRO
P	PICO
Hz	HERTZ

MISCELLANEOUS ELECTROLIERS

NEW	EXISTING	
		LUMINAIRE ON WOOD POLE
		NON-STANDARD ELECTROLIER (SEE PROJECT LEGEND)
		CITY ELECTROLIER
		ELECTROLIER FOUNDATION (FUTURE INSTALLATION)

NOTES:

1. LED luminaires shall be 235 W when installed on Type 21, 21D, 30, 31 and 32 Standards, unless otherwise specified. LED luminaires shall be 165 W when installed on other type standards or poles, unless otherwise specified.
2. Luminaires shall be the cutoff type, ANSI Type III medium cutoff lighting distribution, unless otherwise specified.

STANDARD ELECTROLIER

NEW	EXISTING	STANDARD TYPE
		15
		15D
		15 STRUCTURE
		15D STRUCTURE
		21
		21D
		21 STRUCTURE
		21D STRUCTURE
		30
		31
		32

STATE OF CALIFORNIA
DEPARTMENT OF TRANSPORTATION

ELECTRICAL SYSTEMS (LEGEND AND ABBREVIATIONS)

NO SCALE

RSP ES-1A DATED OCTOBER 30, 2015 SUPERSEDES RSP ES-1A DATED JULY 19, 2013 AND STANDARD PLAN ES-1A DATED MAY 20, 2011 - PAGE 425 OF THE STANDARD PLANS BOOK DATED 2010.

REVISED STANDARD PLAN RSP ES-1A

2010 REVISED STANDARD PLAN RSP ES-1A

9-29-15

Dist	COUNTY	ROUTE	POST MILES TOTAL PROJECT	SHEET No.	TOTAL SHEETS
07	Ven	33	15.7	76	108

Theresa Gabriel
REGISTERED ELECTRICAL ENGINEER

October 30, 2015
PLANS APPROVAL DATE

REGISTERED PROFESSIONAL ENGINEER Theresa Aziz Gabriel No. E15129 Exp. 6-30-16 ELECTRICAL STATE OF CALIFORNIA

THE STATE OF CALIFORNIA OR ITS OFFICERS OR AGENTS SHALL NOT BE RESPONSIBLE FOR THE ACCURACY OR COMPLETENESS OF SCANNED COPIES OF THIS PLAN SHEET.

TO ACCOMPANY PLANS DATED 6-24-16

CONDUIT

NEW	EXISTING	
		LIGHTING CONDUIT, UNLESS OTHERWISE INDICATED OR NOTED
		TRAFFIC SIGNAL CONDUIT
C	c	COMMUNICATION CONDUIT
T	t	TELEPHONE CONDUIT
F	f	FIRE ALARM CONDUIT
FO	fo	FIBER OPTIC CONDUIT
		CONDUIT TERMINATION
R	r	CONDUIT RISER ATTACHED TO THE STRUCTURE OR SERVICE POLE

SERVICE EQUIPMENT

NEW	EXISTING	
OH	oh	OVERHEAD LINES
U	U	WOOD POLE, "U" INDICATES UTILITY OWNED
		POLE GUY WITH ANCHOR
		UTILITY TRANSFORMER - GROUND MOUNTED
III	III	SERVICE EQUIPMENT ENCLOSURE TYPE. DOOR INDICATES FRONT OF ENCLOSURE
T	t	TELEPHONE DEMARCATION CABINET

POLE-MOUNTED SERVICE DESIGNATION

TYPE H SERVICE, 28'-10" — TYPE OF INSTALLATION AND POLE HEIGHT ABOVE GRADE

FLASHING BEACON

NEW	EXISTING	
R	R	FLASHING BEACON (ONE VEHICLE SIGNAL HEAD WITH BACKPLATE AND VISOR) "R" INDICATES RED INDICATION, "Y" INDICATES YELLOW INDICATION
Y Y	Y Y	FLASHING BEACON WITH TYPE 15-FBS STANDARD AND A SIGN.
R R	R R	FLASHING BEACON WITH TYPES 9, 9A OR 9B SIGN UNLESS OTHERWISE SPECIFIED OR INDICATED

SIGNAL EQUIPMENT

NEW	EXISTING	
		PEDESTRIAN SIGNAL HEAD
		PUSH BUTTON ASSEMBLY POST
		PEDESTRIAN BARRICADE
		VEHICLE SIGNAL HEAD (WITH BACKPLATE AND 3-SECTIONS: RED, YELLOW AND GREEN)
		VEHICLE SIGNAL HEAD WITH ANGLE VISOR
PV	PV	MODIFICATIONS OF BASIC SYMBOL: "L" INDICATES ALL NON-ARROW SECTIONS LOUVERED "LG" INDICATES LOUVERED GREEN SECTION ONLY "PV" INDICATES ALL 12" SECTIONS PROGRAMMED VISIBILITY "8" INDICATES ALL 8" SECTIONS (ONLY WHEN SPECIFIED)
		VEHICLE SIGNAL HEAD CONSISTING OF RED, YELLOW AND GREEN LEFT ARROW SECTIONS
		VEHICLE SIGNAL HEAD CONSISTING OF RED AND YELLOW SECTIONS WITH AN UP GREEN ARROW SECTION
		VEHICLE SIGNAL HEAD (5 SECTION) CONSISTING OF RED, YELLOW AND GREEN SECTIONS WITH YELLOW AND GREEN RIGHT ARROW SECTIONS
		TYPE 15TS STANDARD WITH VEHICLE SIGNAL HEAD AND LUMINAIRE
		TYPE 21TS STANDARD WITH VEHICLE SIGNAL HEAD AND LUMINAIRE
		STANDARD WITH LUMINAIRE AND SIGNAL MAST ARMS AND ATTACHED VEHICLE SIGNAL HEADS
		TYPE 1 STANDARD WITH ATTACHED VEHICLE SIGNAL HEADS
		STANDARD WITH A SIGNAL MAST ARM, ATTACHED VEHICLE SIGNAL HEADS AND INTERNALLY ILLUMINATED STREET NAME SIGN
		CONTROLLER ASSEMBLY. DOOR INDICATES FRONT OF CABINET

SIGNAL EQUIPMENT Cont

NEW	EXISTING	
		GUARD POST
		TYPE 1 STANDARD WITH RAMP METERING SIGN
		OPTICAL DETECTOR FOR THE EMERGENCY VEHICLE DETECTION

NOTES:

1. All signal sections shall be 12" unless shown otherwise.
2. Signal heads shall be provided with backplates unless shown otherwise.

ILLUMINATED OVERHEAD SIGN

NEW	EXISTING	
		SINGLE POST, SINGLE ILLUMINATED SIGN, BALANCED BUTTERFLY
		SINGLE POST, DOUBLE ILLUMINATED SIGN, BALANCED BUTTERFLY
		SINGLE POST, SINGLE ILLUMINATED SIGN, FULL CANTILEVER
		DOUBLE POST, SINGLE ILLUMINATED SIGN
		SINGLE ILLUMINATED SIGN MOUNTED ON STRUCTURE
		DOUBLE POST, SINGLE ILLUMINATED SIGN WITH ELECTROLIER

STATE OF CALIFORNIA
DEPARTMENT OF TRANSPORTATION

ELECTRICAL SYSTEMS (LEGEND AND ABBREVIATIONS)

NO SCALE

RSP ES-1B DATED OCTOBER 30, 2015 SUPERSEDES RSP ES-1B DATED JULY 19, 2013 AND STANDARD PLAN ES-1B DATED MAY 20, 2011 - PAGE 426 OF THE STANDARD PLANS BOOK DATED 2010.

REVISED STANDARD PLAN RSP ES-1B

2010 REVISED STANDARD PLAN RSP ES-1B

8-19-15

Dist	COUNTY	ROUTE	POST MILES TOTAL PROJECT	SHEET No.	TOTAL SHEETS
07	Ven	33	15.7	77	108

Theresa Gabriel
REGISTERED ELECTRICAL ENGINEER

April 15, 2016
PLANS APPROVAL DATE

REGISTERED PROFESSIONAL ENGINEER
Theresa Aziz Gabriel
No. E15129
Exp. 6-30-16
ELECTRICAL
STATE OF CALIFORNIA

THE STATE OF CALIFORNIA OR ITS OFFICERS OR AGENTS SHALL NOT BE RESPONSIBLE FOR THE ACCURACY OR COMPLETENESS OF SCANNED COPIES OF THIS PLAN SHEET.

TO ACCOMPANY PLANS DATED 6-24-16

2010 REVISED STANDARD PLAN RSP ES-1C

EQUIPMENT IDENTIFICATION

ILLUMINATED SIGN IDENTIFICATION:

SIGN No. 12345
10 ISL SCI 1.0

- SIGN EQUIPMENT IDENTIFICATION CHARACTERS - PLACE ON POST OR STRUCTURE
- TRANSFORMER RATING (kVA)
- LIGHTING CONTROL TYPE
- NUMBER AND TYPE OF FIXTURES

} DO NOT PLACE ON STANDARD OR STRUCTURE

ELECTROLIER OR EQUIPMENT IDENTIFICATION:

L2745 - 15'-0"

- MAST ARM LENGTH, IF SHOWN. DO NOT PLACE ON STANDARD OR STRUCTURE
- EQUIPMENT IDENTIFICATION CHARACTERS - PLACE ON STANDARD OR STRUCTURE. EXISTING EQUIPMENT IDENTIFICATION CHARACTERS ARE SHOWN IN PARENTHESIS

CONDUIT AND CONDUCTOR IDENTIFICATION:

1½"C, 2#10, 15#14, 2 DLC, 12P#18 (PAIR)

- NUMBER AND SIZE OF CONDUCTORS AND CABLES
- SIZE OF CONDUIT IN INCHES

ø1, ø2, ø2P, etc.	TRAFFIC PHASE IDENTIFICATION FOR SIGNALS, DETECTORS AND PHASE DIAGRAMS
1 2 3	LEGEND NUMBERS
A B C	EQUIPMENT, SIGNAL POLES, INSTALLATION OR ITEMS
1 2 3	CONDUIT RUN NUMBERS

SIGNAL AND LIGHTING STANDARD (TYPICAL DESIGNATION):

19A - 3 - 100

- WIND VELOCITY = 100 mph
- CASE 3 ARM LOADING
- STANDARD TYPE
- STANDARD PLAN SHEET NUMBER
- DETAIL, NUMBER, SECTION, TYPE OR ELEVATION

MISCELLANEOUS EQUIPMENT

NEW	EXISTING	
CMS	cms	CHANGEABLE MESSAGE SIGN
		CLOSED CIRCUIT TELEVISION CAMERA
		HIGHWAY ADVISORY RADIO POLE AND ANTENNA
EMS	ems	LED EXTINGUISHABLE MESSAGE SIGN
M V	m v	DETECTION DEVICE M = MICROWAVE SENSOR V = VIDEO IMAGE SENSOR

WIRING DIAGRAM LEGEND

- EXTERNAL CONDUCTOR
- CONDUCTOR OR BUS
- TIE POINT
- CONTACTOR COIL
- CONTACTOR, NO CONTACT
- TERMINAL BLOCKS
- CONTACTOR, NC CONTACT
- ENCLOSURE BOND
- GROUNDING ELECTRODE
- CIRCUIT BREAKER
- RECEPTACLE

PULL BOXES

NEW	EXISTING	
		PULL BOX, No. 5 UNLESS OTHERWISE INDICATED OR NOTED
3	9A(21)	PULL BOX, ADDITIONAL DESIGNATIONS OR DESCRIPTIONS

3 No. 3½ PULL BOX
5 No. 5 PULL BOX
6 No. 6 PULL BOX
7 No. 7 PULL BOX (CEILING)
8 No. 8 PULL BOX
9 No. 9 PULL BOX (STRUCTURE)
9A No. 9A PULL BOX (STRUCTURE)

(C) COMMUNICATIONS PULL BOX
(E) PULL BOX WITH EXTENSION
(S) SPRINKLER CONTROL PULL BOX
(21) ANCHOR BOLTS AND CONDUIT FOR FUTURE INSTALLATION OF TYPE 21 STANDARD
(T) TRAFFIC PULL BOX

VEHICLE DETECTORS

5 J 9 U

- VEHICLE DETECTOR DESIGNATION
- U = UPPER
  L = LOWER
- SLOT NUMBER IN INPUT FILE
- INPUT FILE (I OR J)
- PHASE

NEW	EXISTING	
		TYPE A LOOP DETECTOR. OUTLINE OF SAW CUT SHOWN
		TYPE B LOOP DETECTOR. OUTLINE OF SAW CUT SHOWN
		TYPE C LOOP DETECTOR. OUTLINE OF SAW CUT SHOWN
		TYPE D LOOP DETECTOR. OUTLINE OF SAW CUT SHOWN
		TYPE E LOOP DETECTOR. OUTLINE OF SAW CUT SHOWN
		TYPE Q LOOP DETECTOR. OUTLINE OF SAW CUT SHOWN
DH	dh	DETECTOR HANDHOLE
		MICROWAVE OR VIDEO DETECTION ZONE

STATE OF CALIFORNIA
DEPARTMENT OF TRANSPORTATION

ELECTRICAL SYSTEMS (LEGEND AND ABBREVIATIONS)

NO SCALE

RSP ES-1C DATED APRIL 15, 2016 SUPERSEDES RSP ES-1C DATED OCTOBER 30, 2015 AND RSP ES-1C DATED JULY 19, 2013 AND STANDARD PLAN ES-1C DATED MAY 20, 2011 - PAGE 427 OF THE STANDARD PLANS BOOK DATED 2010.

REVISED STANDARD PLAN RSP ES-1C

1-22-16

Dist	COUNTY	ROUTE	POST MILES TOTAL PROJECT	SHEET No.	TOTAL SHEETS
07	Ven	33	15.7	78	108

Theresa Gabriel
REGISTERED ELECTRICAL ENGINEER

October 30, 2015
PLANS APPROVAL DATE

REGISTERED PROFESSIONAL ENGINEER Theresa Aziz Gabriel No. E15129 Exp. 6-30-16 ELECTRICAL STATE OF CALIFORNIA

THE STATE OF CALIFORNIA OR ITS OFFICERS OR AGENTS SHALL NOT BE RESPONSIBLE FOR THE ACCURACY OR COMPLETENESS OF SCANNED COPIES OF THIS PLAN SHEET.

TO ACCOMPANY PLANS DATED 6-24-16

2010 REVISED STANDARD PLAN RSP ES-2A

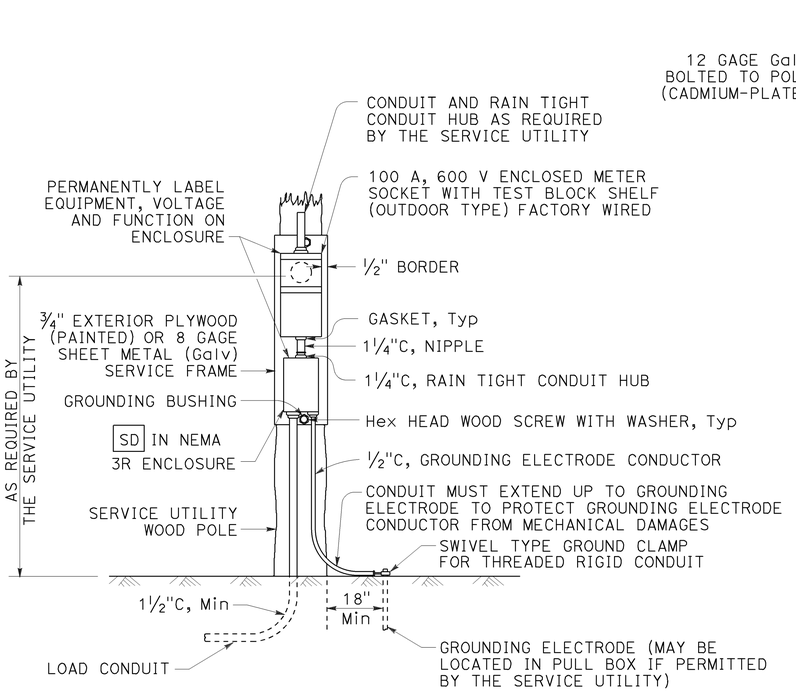

TYPE SCE-1
DETAIL A

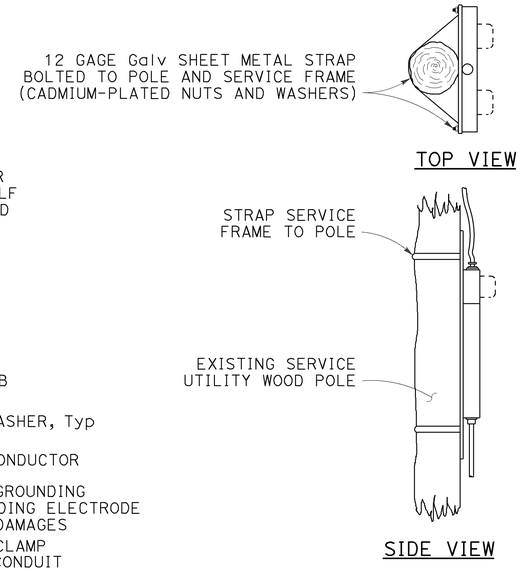

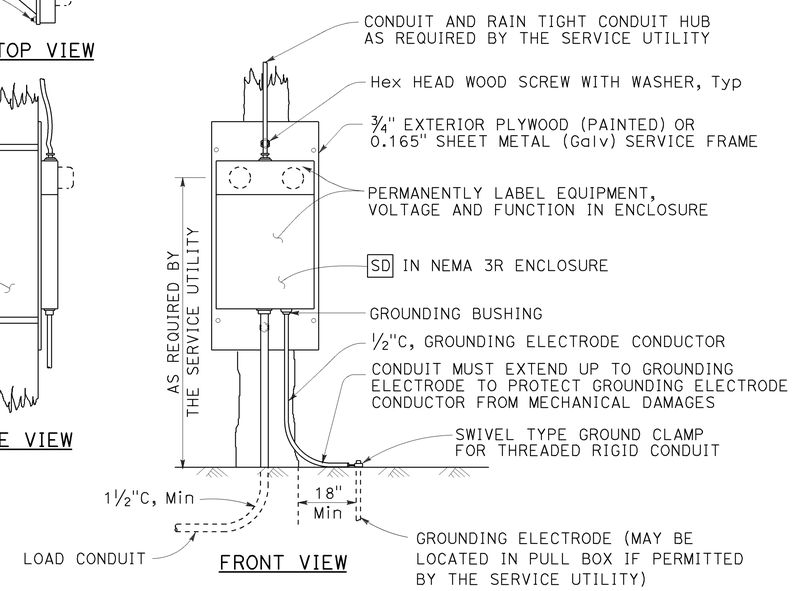

TYPE SCE-2
DETAIL B

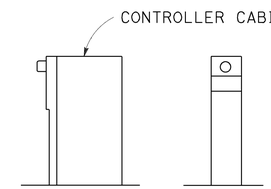

TYPE OF SERVICE (TYPICAL)
DETAIL C

See Notes 1 and 2

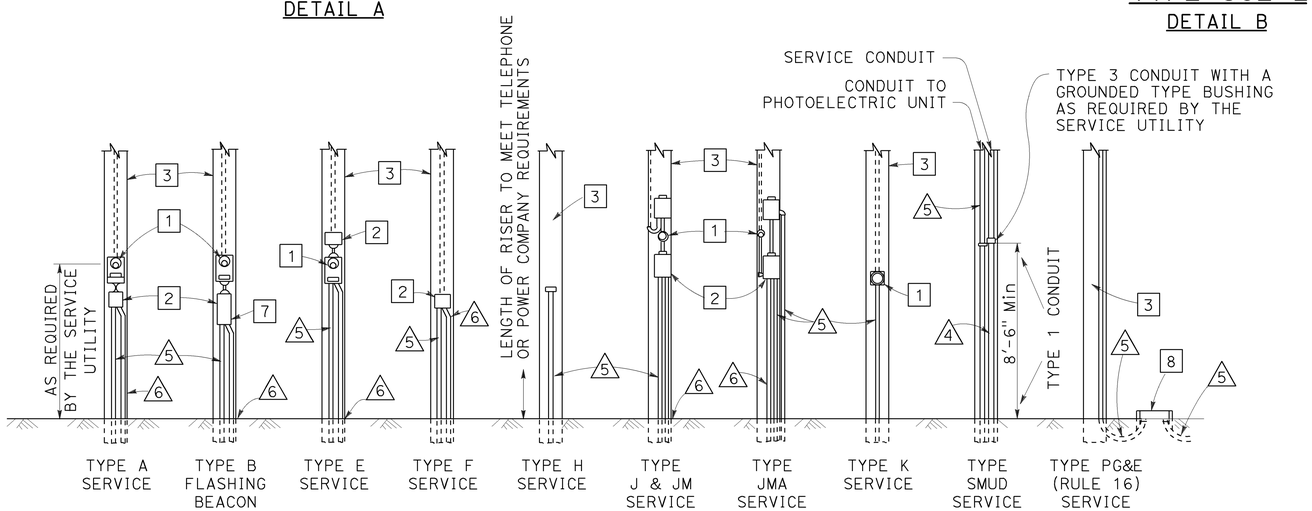

POLE MOUNTED SERVICE INSTALLATIONS
DETAIL D

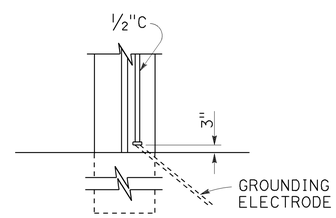

TYPE A
See Note 3

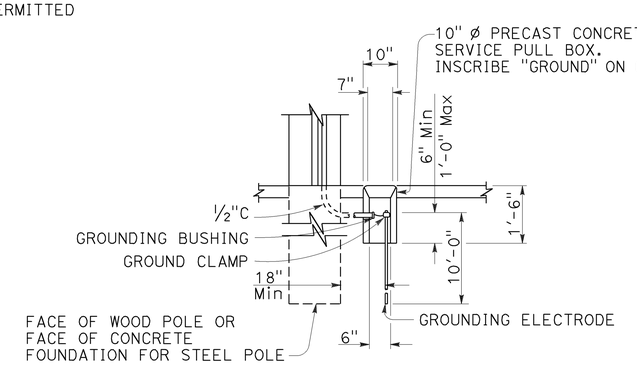

TYPE B
See Note 4

SERVICE GROUNDING
DETAIL E

LEGEND:

1. METER SOCKET.
2. SERVICE ENCLOSURE WITH A MINIMUM 60 A RATED MAIN CIRCUIT BREAKER, UNLESS OTHERWISE SHOWN.
3. A. UTILITY OWNED POLE. THE SERVICE UTILITY WILL FURNISH AND INSTALL REQUIRED SERVICE RISER, PEU WITH CONDUCTORS AND OTHER EQUIPMENT AS NEEDED.
   B. STATE OWNED POLE. THE CONTRACTOR SHALL FURNISH AND INSTALL REQUIRED SERVICE RISER AND EQUIPMENT.
4. 2"C, SERVICE CONDUIT MUST HAVE A GROUNDED TYPE BUSHING INSTALLED AT UPPER END OF THE METALLIC POLE RISER CONDUIT. A GROUNDING CONDUCTOR MUST BE ATTACHED TO THE BUSHING, CARRIED THROUGH THE CONDUIT RUN AND ATTACHED TO THE SERVICE EQUIPMENT ENCLOSURE'S GROUNDING ELECTRODE.
5. CONDUIT, LENGTH AND SIZE AS REQUIRED.
6. ½"C, 1#6. SEE DETAIL E.
7. FLASHING BEACON CONTROL ASSEMBLY.
8. SERVICE PULL BOX, No. 5 UNLESS OTHERWISE NOTED, FURNISHED AND INSTALLED BY THE CONTRACTOR. SERVICE UTILITY SHALL DETERMINE THE EXACT LOCATION.

NOTES:

1. Type II service equipment enclosure mounted on the side of a controller cabinet.
2. Type III complete free-standing service equipment enclosure.
3. Ground clamp and required fittings must be accessible. Conduit must extend to protect grounding electrode conductor from mechanical damage.
4. Use where service utility requires 18" clearance between grounding electrode and the pole or service equipment enclosure. Installation shown is for sidewalk or paved areas. In unpaved areas, omit special service pull box and locate ground clamp above ground or locate ground clamp in nearest pull box.

STATE OF CALIFORNIA
DEPARTMENT OF TRANSPORTATION

ELECTRICAL SYSTEMS (SERVICE EQUIPMENT)

NO SCALE

RSP ES-2A DATED OCTOBER 30, 2015 SUPERSEDES STANDARD PLAN ES-2A DATED MAY 20, 2011 - PAGE 428 OF THE STANDARD PLANS BOOK DATED 2010.

REVISED STANDARD PLAN RSP ES-2A

8-20-15

Dist	COUNTY	ROUTE	POST MILES TOTAL PROJECT	SHEET No.	TOTAL SHEETS
07	Ven	33	15.7	79	108

Theresa Gabriel
REGISTERED ELECTRICAL ENGINEER

April 15, 2016
PLANS APPROVAL DATE

REGISTERED PROFESSIONAL ENGINEER Theresa Aziz Gabriel No. E15129 Exp. 6-30-16 ELECTRICAL STATE OF CALIFORNIA

THE STATE OF CALIFORNIA OR ITS OFFICERS OR AGENTS SHALL NOT BE RESPONSIBLE FOR THE ACCURACY OR COMPLETENESS OF SCANNED COPIES OF THIS PLAN SHEET.

TO ACCOMPANY PLANS DATED 6-24-16

2010 REVISED STANDARD PLAN RSP ES-3B

NOTES:

1. Type G, M, P, R, S and Model 336L cabinets shall be installed with the back toward the nearest lane of traffic.
2. In unpaved areas, a raised portland cement concrete pad shall be constructed in front of each controller cabinet. The pad shall be 3'-0" x 3'-0" x 4" for a Type G cabinet and shall be 3'-0" x 4" thick x width of foundation for Type M, P, R, S and Model 336L cabinets.
3. The steel pedestal, base plate and bolt circle for Type G cabinet shall be the same as that shown for a Type 1-C Standard (see RSP ES-7B). Pedestal shall be 2'-1" to 2'-6" in length. Anchor bolts shall be ¾" ø x 1'-6" with a 2" - 90° bend. Four bolts required per cabinet.
4. Type G cabinet shall be provided with a slipfitter to permit mounting an 4½" outside diameter pedestal. Slipfitter shall be bolted to bottom of the cabinet.
5. A 1" drain shall be provided through the foundation of a Type M or Model 336L cabinet. Drain pipe shall be screened.
6. Cabinet shelves shall be adjustable for vertical spacing and shall be removable. Type M, P, R and S cabinets shall be provided with a minimum of two shelves.
7. Controller units, plug-mounted equipment, shelf-mounted equipment and wall-mounted equipment shall be located to permit safe and easy removal or replacement without removing any other piece of equipment.
8. Where telephone interconnect is required, a minimum of 5" clear vertical space shall be provided inside the cabinet for the equipment.
9. Telephone interconnect conductors shall be enclosed in a ¾"C or larger conduit through the foundation. Type 4 conduit shall be used to separate telephone and power conductors in cabinets or pedestals.
10. Anchor bolts for Type M, P, R, S and Model 336L cabinets shall be ¾" ø x 1'-6" with a 2" - 90° bend.

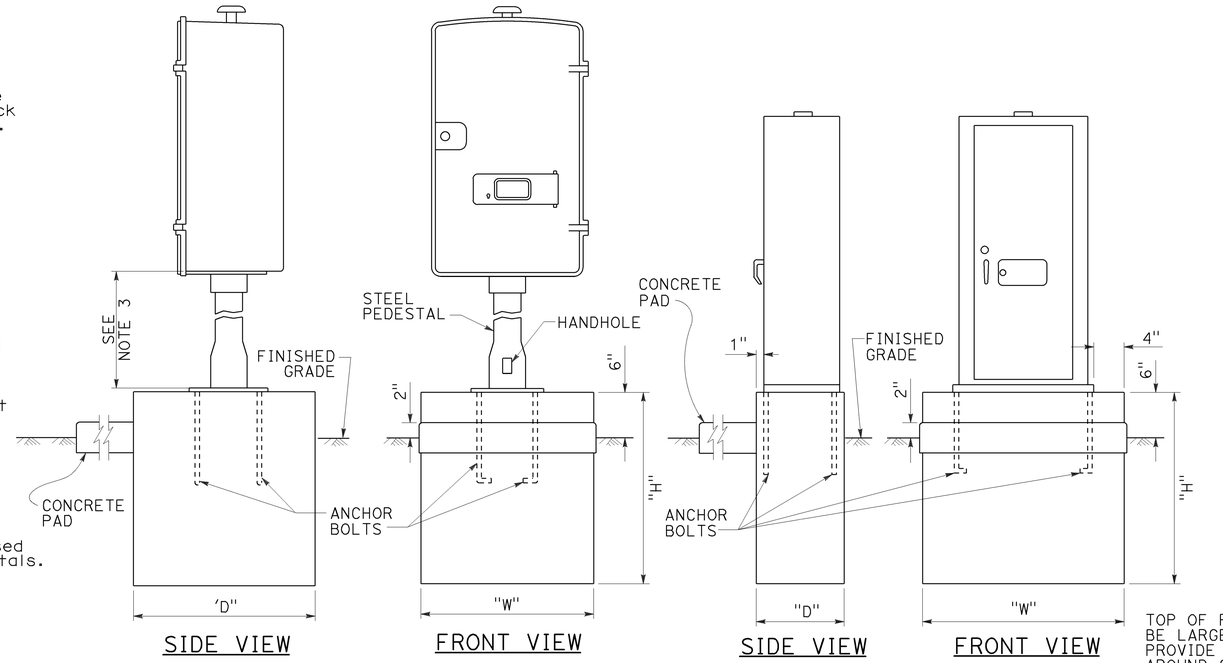

FOUNDATION FOR TYPE G CABINET
DETAIL A

FOUNDATION FOR TYPE P, R AND S CABINETS
DETAIL B

CABINET TYPE	FOUNDATION		
	"W"	"H"	"D"
G	2'-0"	3'-6"	2'-0"
M	3'-2"	2'-6"	1'-6"
P	4'-4½"	1'-6"	2'-4"
R	4'-2"	1'-6"	2'-4"
S	5'-11½"	1'-6"	2'-4"

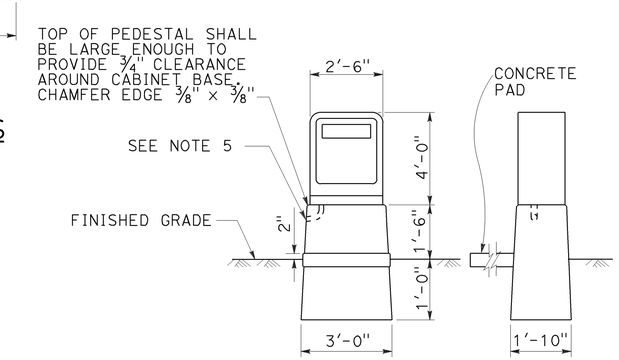

PEDESTAL FOUNDATION FOR TYPE M OR MODEL 336L CABINET
DETAIL C

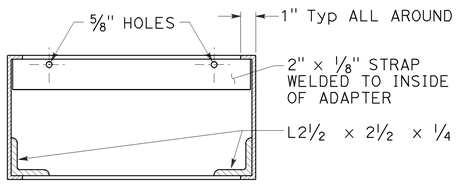

SECTION A-A

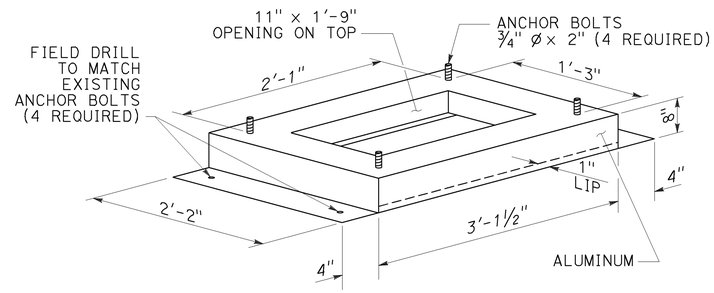

TYPE PR CABINET ADAPTER
See Notes A and B

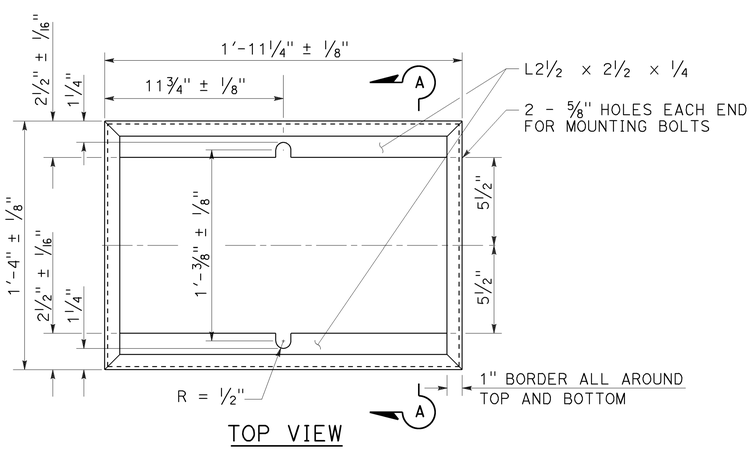

TOP VIEW

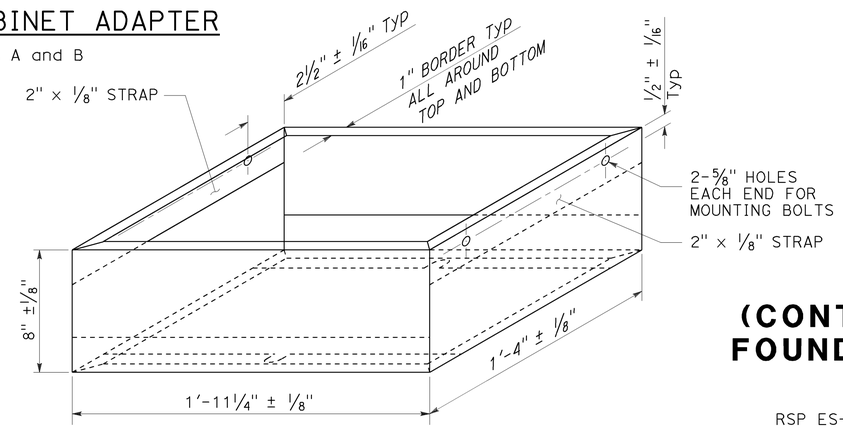

TYPE M CABINET ADAPTER
See Notes A, C, and D

NOTES:

A. Material: 0.188" thickness aluminum plate.
B. Adapter for Type P or Type R cabinet foundation.
C. Adapter for Type M cabinet foundation.
D. Mounting bolts shall be ⅜" ø minimum size.

STATE OF CALIFORNIA
DEPARTMENT OF TRANSPORTATION

ELECTRICAL SYSTEMS (CONTROLLER CABINET ADAPTER, FOUNDATIONS, AND PAD DETAILS)

NO SCALE

RSP ES-3B DATED APRIL 15, 2016 SUPERSEDES RSP ES-3B DATED OCTOBER 30, 2015 AND STANDARD PLAN ES-3B DATED MAY 20, 2011 - PAGE 436 OF THE STANDARD PLANS BOOK DATED 2010.

REVISED STANDARD PLAN RSP ES-3B

1-12-16

Dist	COUNTY	ROUTE	POST MILES TOTAL PROJECT	SHEET No.	TOTAL SHEETS
07	Ven	33	15.7	80	108

Theresa Gabriel
REGISTERED ELECTRICAL ENGINEER

April 15, 2016
PLANS APPROVAL DATE

REGISTERED PROFESSIONAL ENGINEER
Theresa Aziz Gabriel
No. E15129
Exp. 6-30-16
ELECTRICAL
STATE OF CALIFORNIA

THE STATE OF CALIFORNIA OR ITS OFFICERS OR AGENTS SHALL NOT BE RESPONSIBLE FOR THE ACCURACY OR COMPLETENESS OF SCANNED COPIES OF THIS PLAN SHEET.

TO ACCOMPANY PLANS DATED 6-24-16

2010 REVISED STANDARD PLAN RSP ES-3C

NOTES:

1. Controller units, plug-mounted equipment, shelf-mounted equipment and wall-mounted equipment shall be located to permit safe and easy removal or replacement without removing any other piece of equipment.
2. Cabinet fan may be installed at an alternate location near the top of the cabinet when approved by the Engineer.
3. Where telephone interconnect is required, a minimum of 5" clear vertical space shall be provided inside the cabinet for the equipment.
4. Telephone interconnect conductors shall be enclosed in a ¾"C or larger conduit through the foundation. Type 4 conduit shall be used to separate telephone and power conductors in cabinets.

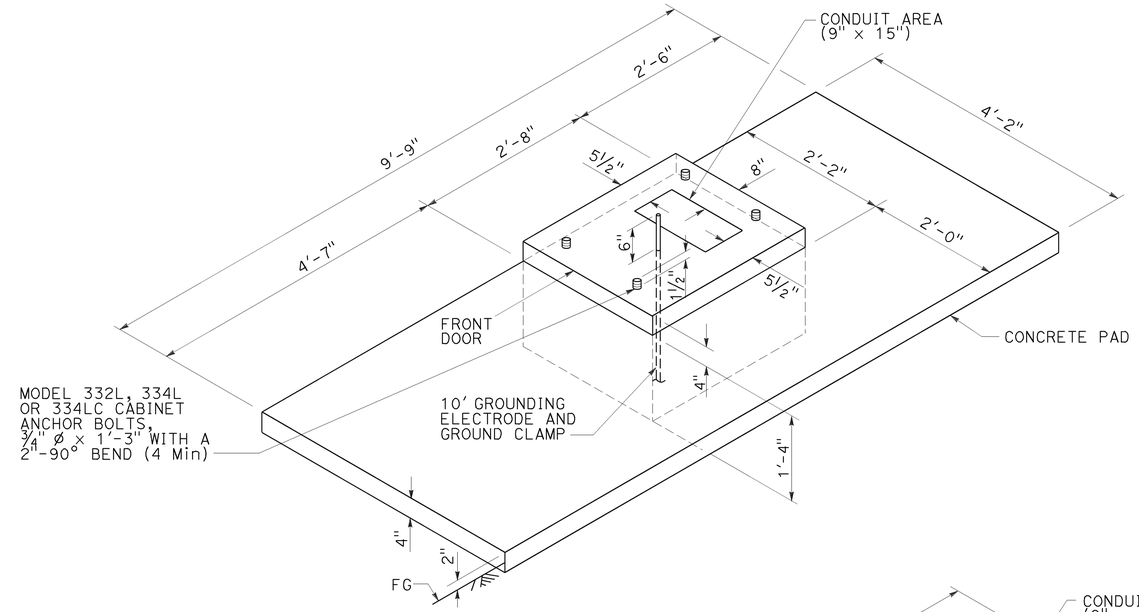

FOUNDATION AND PAD DETAIL

Model 332L, 334L and 334LC

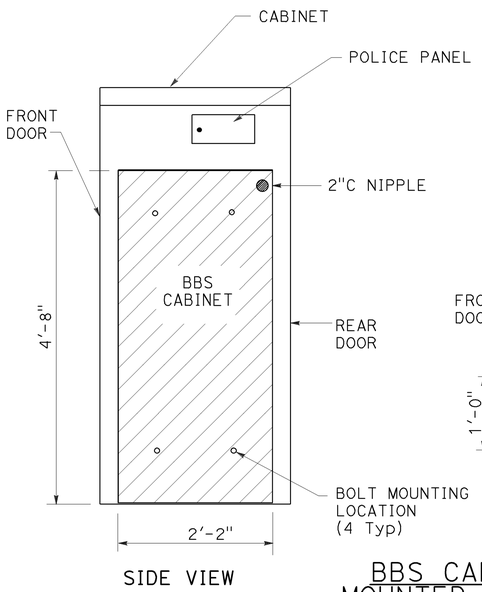

SIDE VIEW

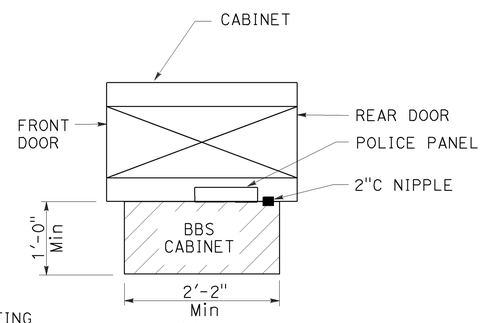

TOP VIEW

BBS CABINET MOUNTED TO THE MODEL 332L CABINET

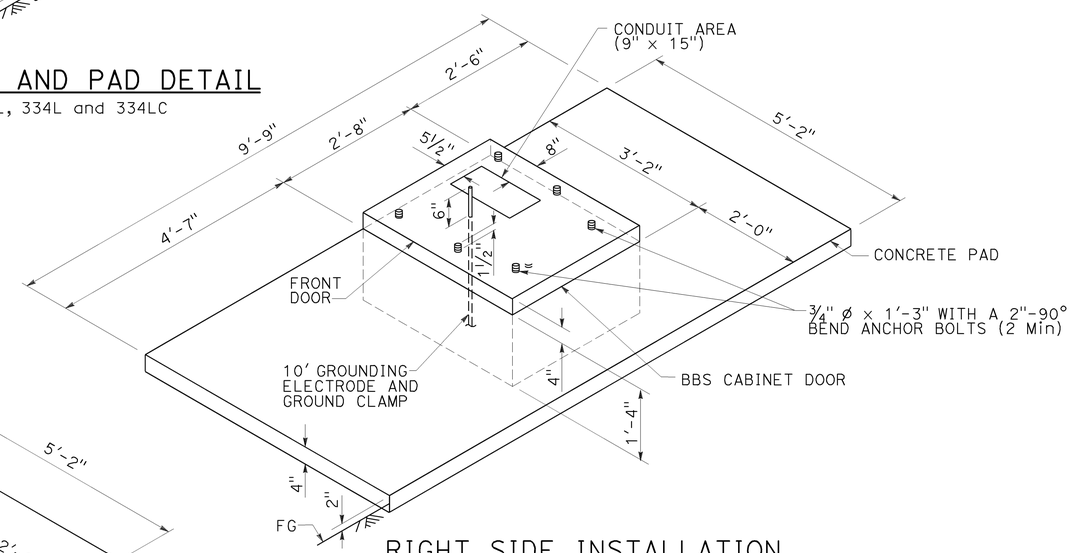

RIGHT SIDE INSTALLATION

DETAIL B

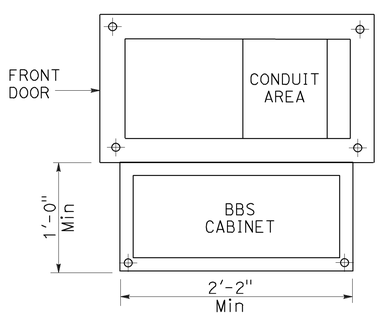

BASE PLAN FOR BBS MOUNTED TO THE MODEL 332L CABINET

(FOR DIMENSIONS AND DETAILS NOT SHOWN, SEE CABINET HOUSING DETAILS OF THE TRANSPORTATION ELECTRICAL EQUIPMENT SPECIFICATION (TEES))

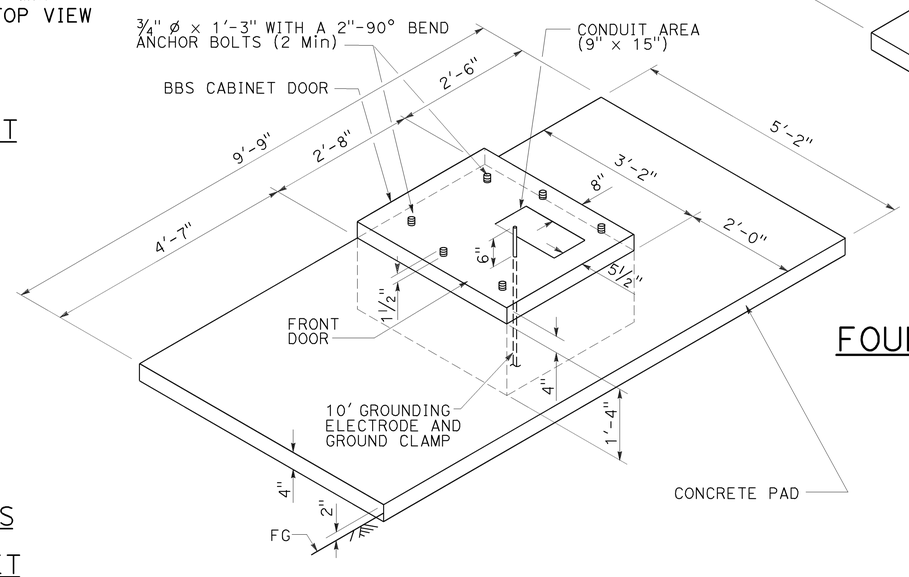

LEFT SIDE INSTALLATION

DETAIL A

MODIFIED MODEL 332L CABINET FOUNDATION DETAIL FOR BATTERY BACKUP SYSTEM

STATE OF CALIFORNIA
DEPARTMENT OF TRANSPORTATION

ELECTRICAL SYSTEMS (CONTROLLER CABINET FOUNDATION AND PAD DETAILS)

NO SCALE

RSP ES-3C DATED APRIL 15, 2016 SUPERSEDES RSP ES-3C DATED OCTOBER 30, 2015 AND STANDARD PLAN ES-3C DATED MAY 20, 2011 - PAGE 437 OF THE STANDARD PLANS BOOK DATED 2010.

REVISED STANDARD PLAN RSP ES-3C

1-12-16

Dist	COUNTY	ROUTE	POST MILES TOTAL PROJECT	SHEET No.	TOTAL SHEETS
07	Ven	33	15.7	81	108

Theresa Gabriel
REGISTERED ELECTRICAL ENGINEER

October 30, 2015
PLANS APPROVAL DATE

REGISTERED PROFESSIONAL ENGINEER
Theresa Aziz Gabriel
No. E15129
Exp. 6-30-16
ELECTRICAL
STATE OF CALIFORNIA

THE STATE OF CALIFORNIA OR ITS OFFICERS OR AGENTS SHALL NOT BE RESPONSIBLE FOR THE ACCURACY OR COMPLETENESS OF SCANNED COPIES OF THIS PLAN SHEET.

TO ACCOMPANY PLANS DATED 6-24-16

2010 REVISED STANDARD PLAN RSP ES-4A

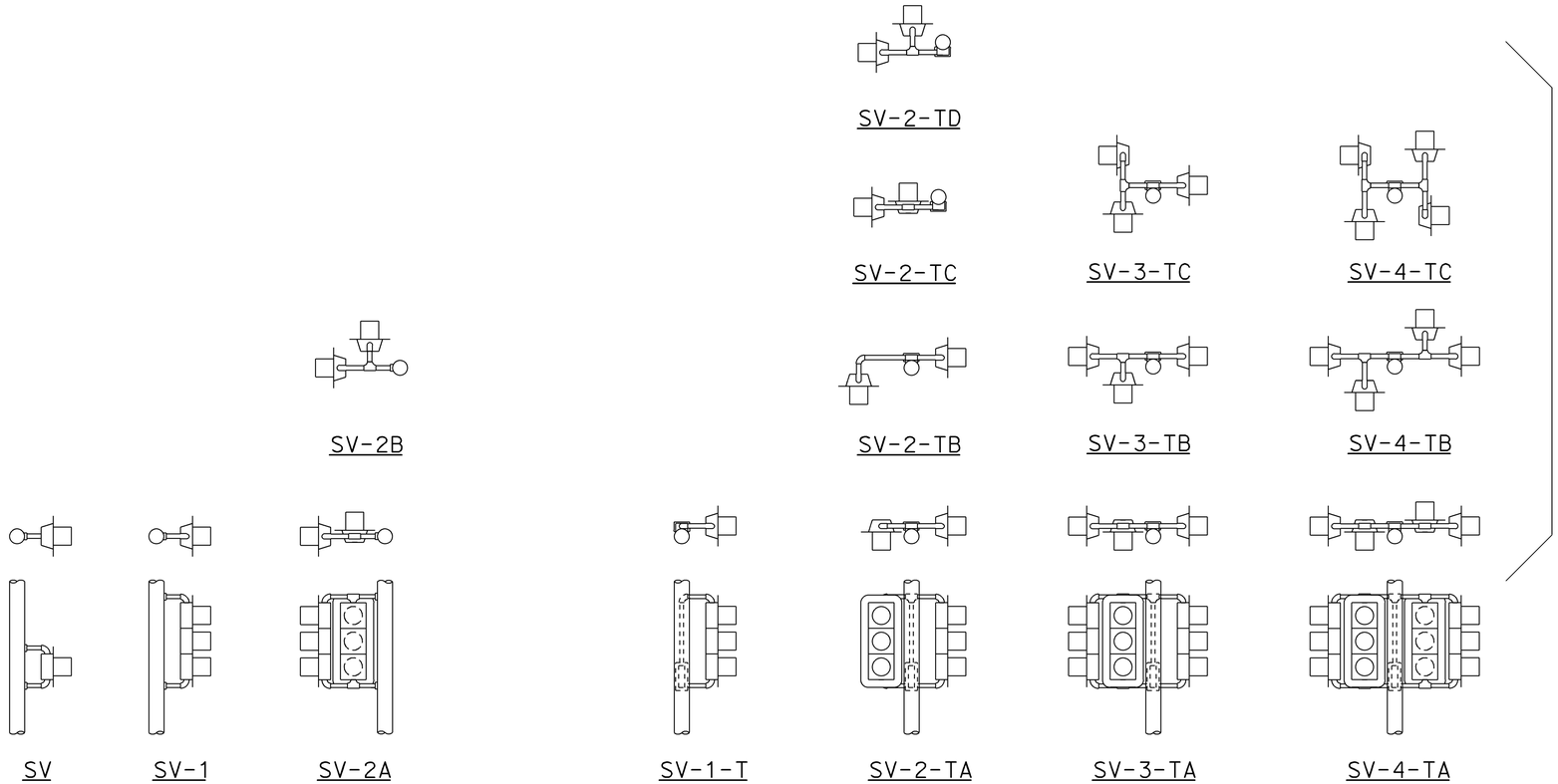

SIDE MOUNTINGS

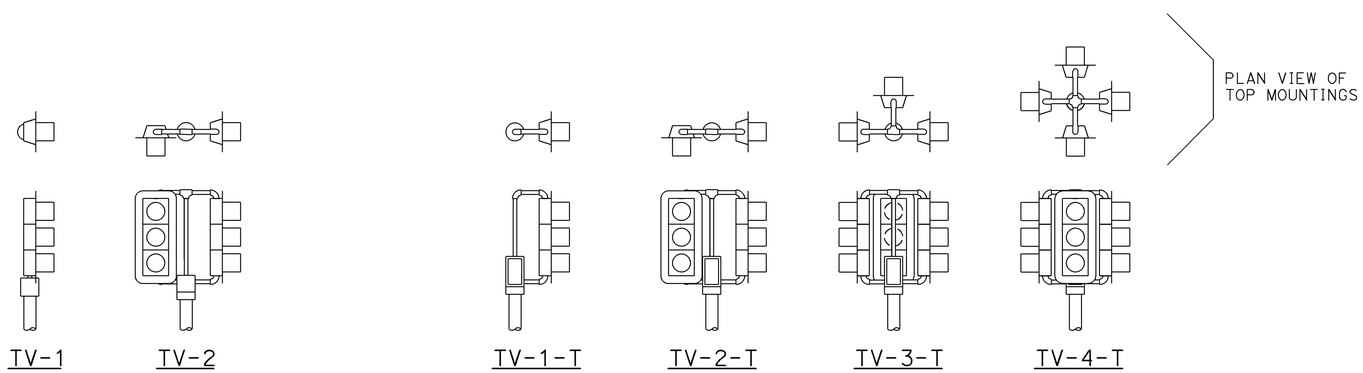

TOP MOUNTINGS

ABBREVIATIONS:

SV	SIDE MOUNTED SIGNAL HEADS
T	TERMINAL COMPARTMENT
TV	TOP MOUNTED SIGNAL HEADS
1, 2, 3, 4	NUMBER OF SIGNAL FACES (3 - SECTION, UNLESS OTHERWISE INDICATED)
A, B, C, D	CONFIGURATION OF SIGNALS

NOTES:

1. Mountings shall be oriented to provide maximum horizontal clearance to adjacent roadway.
2. Bracket arms shall be long enough to permit proper alignment of signals and backplate installation.
3. See Revised Standard Plans RSP ES-4D and RSP ES-4E for attachment fitting details.

STATE OF CALIFORNIA
DEPARTMENT OF TRANSPORTATION

ELECTRICAL SYSTEMS (SIGNAL HEADS AND MOUNTINGS)

NO SCALE

RSP ES-4A DATED OCTOBER 30, 2015 SUPERSEDES RSP ES-4A DATED JULY 19, 2013 AND STANDARD PLAN ES-4A DATED MAY 20, 2011 - PAGE 443 OF THE STANDARD PLANS BOOK DATED 2010.

REVISED STANDARD PLAN RSP ES-4A

9-28-15

Dist	COUNTY	ROUTE	POST MILES TOTAL PROJECT	SHEET No.	TOTAL SHEETS
07	Ven	33	15.7	82	108

Theresa Gabriel
REGISTERED ELECTRICAL ENGINEER

October 30, 2015
PLANS APPROVAL DATE

REGISTERED PROFESSIONAL ENGINEER
Theresa Aziz Gabriel
No. E15129
Exp. 6-30-16
ELECTRICAL
STATE OF CALIFORNIA

THE STATE OF CALIFORNIA OR ITS OFFICERS OR AGENTS SHALL NOT BE RESPONSIBLE FOR THE ACCURACY OR COMPLETENESS OF SCANNED COPIES OF THIS PLAN SHEET.

TO ACCOMPANY PLANS DATED 6-24-16

2010 REVISED STANDARD PLAN RSP ES-4C

VISORS

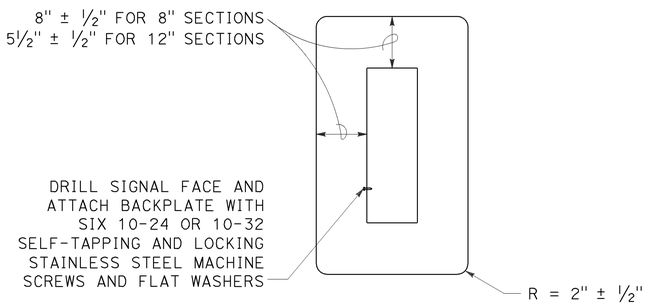

8" AND 12" SECTIONS

BACKPLATE

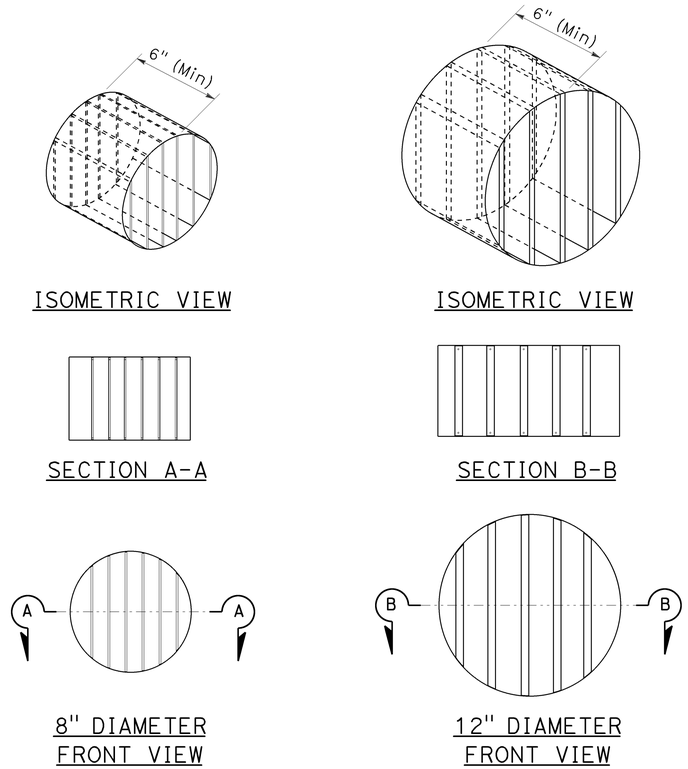

DIRECTIONAL LOUVER

Directional louvers shall be oriented and secured in place with one plated brass machine screw and nut.

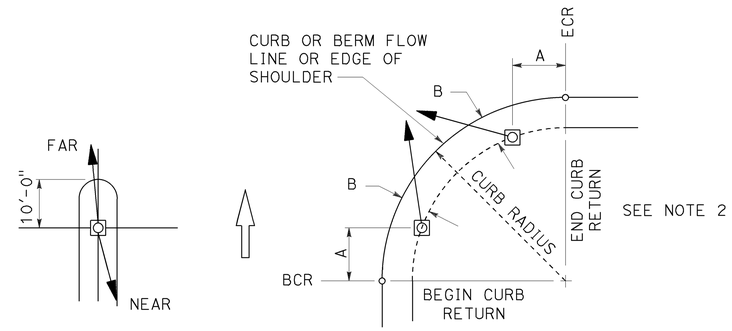

NOTES:

1. Typical signal pole placement unless dimensioned on plans.
2. For A and B dimensions, see Pole Schedule.

SIGNAL STANDARD PLACEMENT DIMENSIONS AND EQUIPMENT LOCATIONS

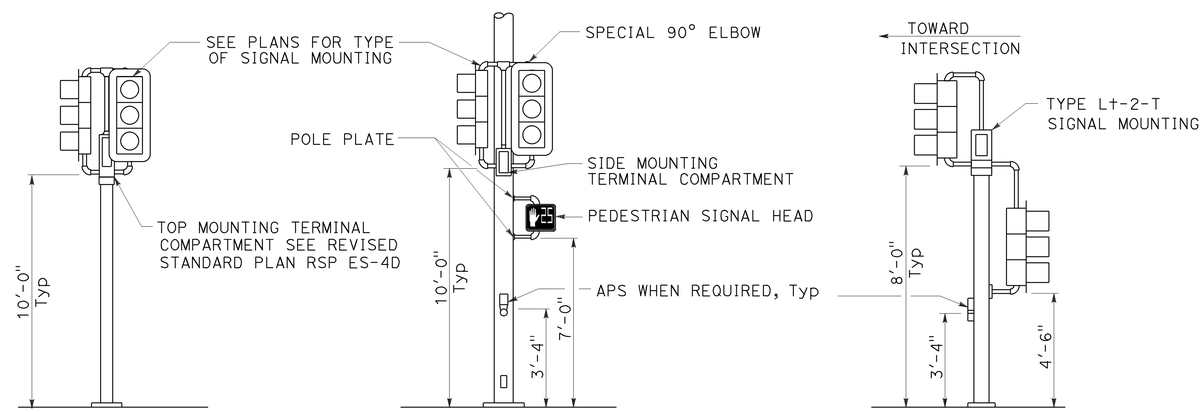

TOP MOUNTED SIGNALS (TV)
Type 1-A, 1-B, 1-C and 1-D standard as indicated on the plans

SIDE MOUNTED SIGNALS (SV AND SP)
Normally used on standards with luminaire or signal mast arm

LEFT TURN LANE SIGNAL
Type 1-A, 1-B, 1-C and 1-D standard as indicated on plans

TYPICAL SIGNAL HEAD INSTALLATIONS

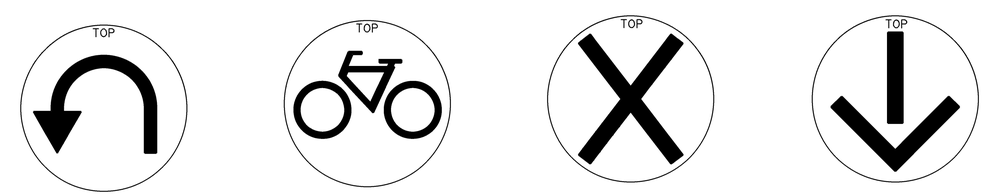

U-TURN | BICYCLE | LANE CONTROL | LANE CONTROL

SIGNAL FACES

STATE OF CALIFORNIA
DEPARTMENT OF TRANSPORTATION

ELECTRICAL SYSTEMS (SIGNAL HEADS AND MOUNTINGS)

NO SCALE

RSP ES-4C DATED OCTOBER 30, 2015 SUPERSEDES RSP ES-4C DATED JULY 19, 2013 AND STANDARD PLAN ES-4C DATED MAY 20, 2011 - PAGE 445 OF THE STANDARD PLANS BOOK DATED 2010.

REVISED STANDARD PLAN RSP ES-4C

Dist	COUNTY	ROUTE	POST MILES TOTAL PROJECT	SHEET No.	TOTAL SHEETS
07	Ven	33	15.7	83	108

Theresa Gabriel
REGISTERED ELECTRICAL ENGINEER

October 30, 2015
PLANS APPROVAL DATE

REGISTERED PROFESSIONAL ENGINEER Theresa Aziz Gabriel No. E15129 Exp. 6-30-16 ELECTRICAL STATE OF CALIFORNIA

THE STATE OF CALIFORNIA OR ITS OFFICERS OR AGENTS SHALL NOT BE RESPONSIBLE FOR THE ACCURACY OR COMPLETENESS OF SCANNED COPIES OF THIS PLAN SHEET.

TO ACCOMPANY PLANS DATED 6-24-16

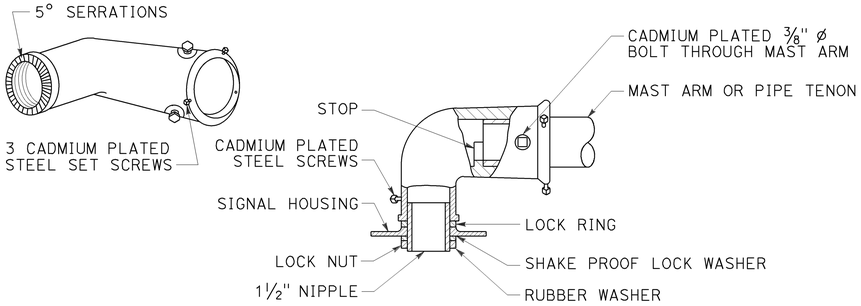

TYPE MAT
MAST ARM MOUNTING
For 2 NPS pipe, see Note 1.

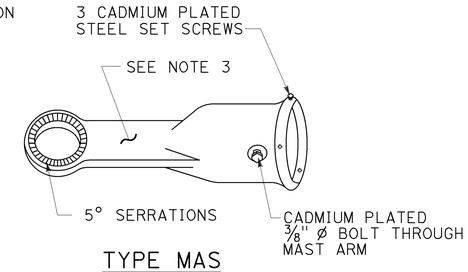

TYPE MAS
MAST ARM MOUNTING
For 2 NPS pipe, see Note 1.

SIGNAL SLIP FITTERS

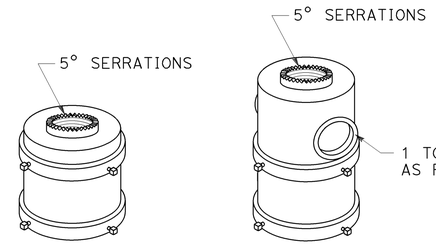

FOR ONE MOUNTING FOR MULTIPLE MOUNTINGS

TOP MOUNTINGS
For 4 NPS pipe, see Note 2.

NOTES:

1. After mast arm signal has been plumbed and secured, drill 7/16" hole through mast arm tenon in line with slip fitter hole. Place a cadmium plated ⅜" ø galvanized bolt with washer under bolt head through hole and secure with washer, nut, and locknut. Seal openings between mast arm mountings and mast arm with mastic.
2. (A) Threaded top mounted slip fitter openings shall be 1½ NPS.
   (B) Serrations in fittings shall match those on bottom of signal heads or in lock ring.
   (C) Top opening shall be offset when backplate is used.
3. Wireway shall have a cross section area of 0.95 square inch minimum. Minimum width of ½".

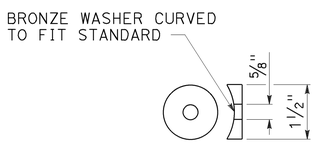

DETAIL C

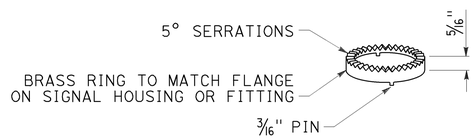

LOCK RING
Use where locking ring is not integral With signal housing or fitting.

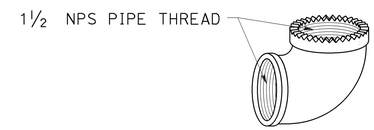

SPECIAL 90° ELBOW
One for each signal head, except those With special slip fitter mounting

MISCELLANEOUS MOUNTING HARDWARE

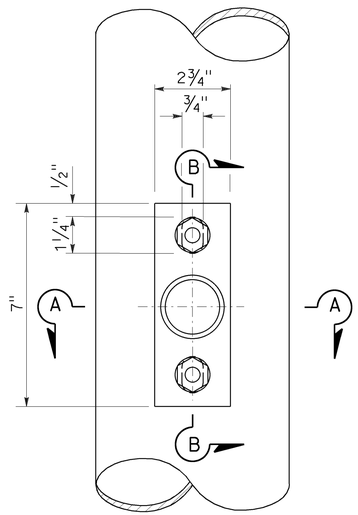

TOP VIEW

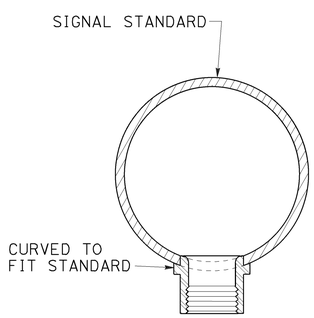

SECTION A-A

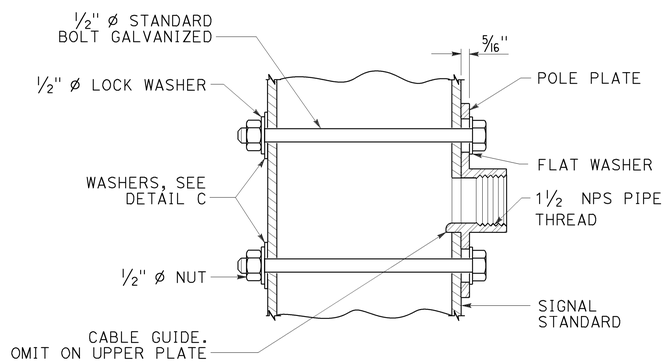

SECTION B-B

POLE PLATE FOR SIDE MOUNTED SIGNAL HEAD
WITHOUT TERMINAL COMPARTMENT

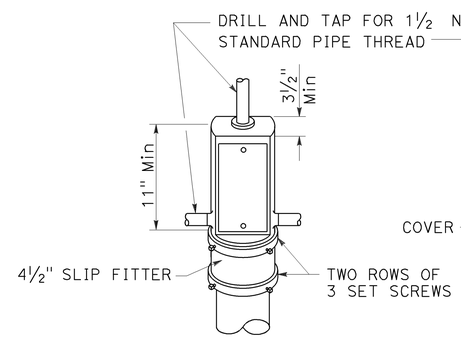

TOP MOUNTING

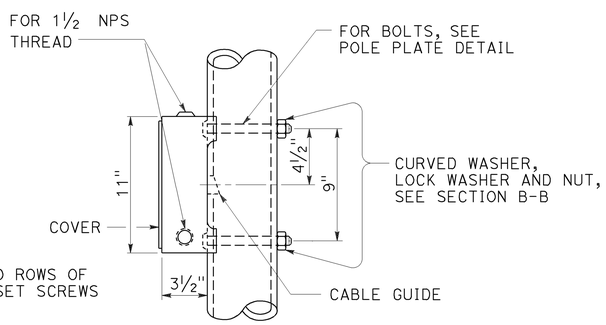

SIDE MOUNTING

TERMINAL COMPARTMENT

STATE OF CALIFORNIA
DEPARTMENT OF TRANSPORTATION

ELECTRICAL SYSTEMS (SIGNAL HEAD MOUNTING)

NO SCALE

RSP ES-4D DATED OCTOBER 30, 2015 SUPERSEDES STANDARD PLAN ES-4D DATED MAY 20, 2011 - PAGE 446 OF THE STANDARD PLANS BOOK DATED 2010.

REVISED STANDARD PLAN RSP ES-4D

2010 REVISED STANDARD PLAN RSP ES-4D

8-20-15

Dist	COUNTY	ROUTE	POST MILES TOTAL PROJECT	SHEET No.	TOTAL SHEETS
07	Ven	33	15.7	84	108

Theresa Gabriel
REGISTERED ELECTRICAL ENGINEER

October 30, 2015
PLANS APPROVAL DATE

REGISTERED PROFESSIONAL ENGINEER
Theresa Aziz Gabriel
No. E15129
Exp. 6-30-16
ELECTRICAL
STATE OF CALIFORNIA

THE STATE OF CALIFORNIA OR ITS OFFICERS OR AGENTS SHALL NOT BE RESPONSIBLE FOR THE ACCURACY OR COMPLETENESS OF SCANNED COPIES OF THIS PLAN SHEET.

TO ACCOMPANY PLANS DATED 6-24-16

2010 REVISED STANDARD PLAN RSP ES-4E

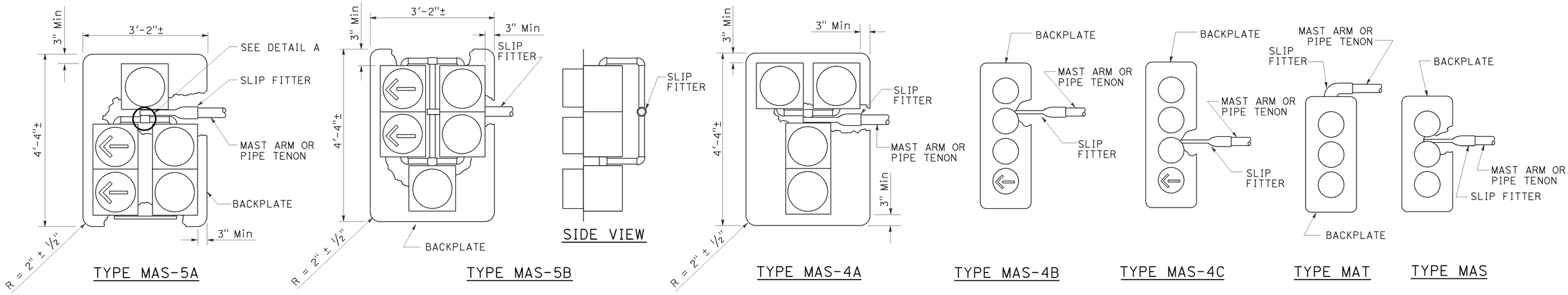

MAST ARM MOUNTINGS

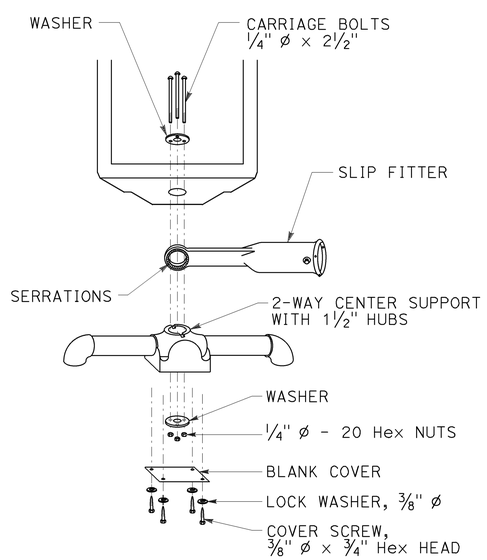

DETAIL A

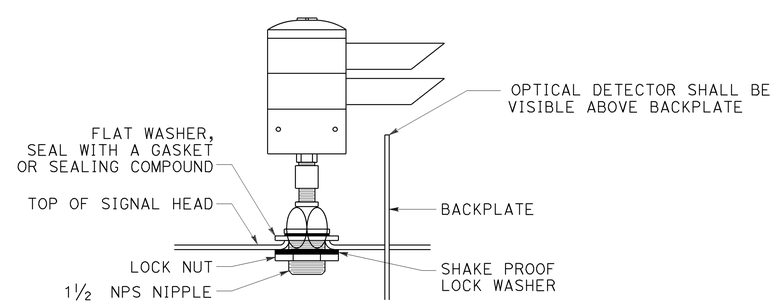

OPTICAL DETECTOR MOUNTING FOR EMERGENCY VEHICLE DETECTION

DETAIL B

STATE OF CALIFORNIA
DEPARTMENT OF TRANSPORTATION

ELECTRICAL SYSTEMS (SIGNAL HEADS AND OPTICAL DETECTOR MOUNTING)

NO SCALE

RSP ES-4E DATED OCTOBER 30, 2015 SUPERSEDES RSP ES-4E DATED JULY 19, 2013 AND STANDARD PLAN ES-4E DATED MAY 20, 2011 - PAGE 447 OF THE STANDARD PLANS BOOK DATED 2010.

REVISED STANDARD PLAN RSP ES-4E

8-19-15

Dist	COUNTY	ROUTE	POST MILES TOTAL PROJECT	SHEET No.	TOTAL SHEETS
07	Ven	33	15.7	85	108

Theresa Gabriel
REGISTERED ELECTRICAL ENGINEER

April 15, 2016
PLANS APPROVAL DATE

REGISTERED PROFESSIONAL ENGINEER
Theresa Aziz Gabriel
No. E15129
Exp. 6-30-16
ELECTRICAL
STATE OF CALIFORNIA

THE STATE OF CALIFORNIA OR ITS OFFICERS OR AGENTS SHALL NOT BE RESPONSIBLE FOR THE ACCURACY OR COMPLETENESS OF SCANNED COPIES OF THIS PLAN SHEET.

TO ACCOMPANY PLANS DATED 6-24-16

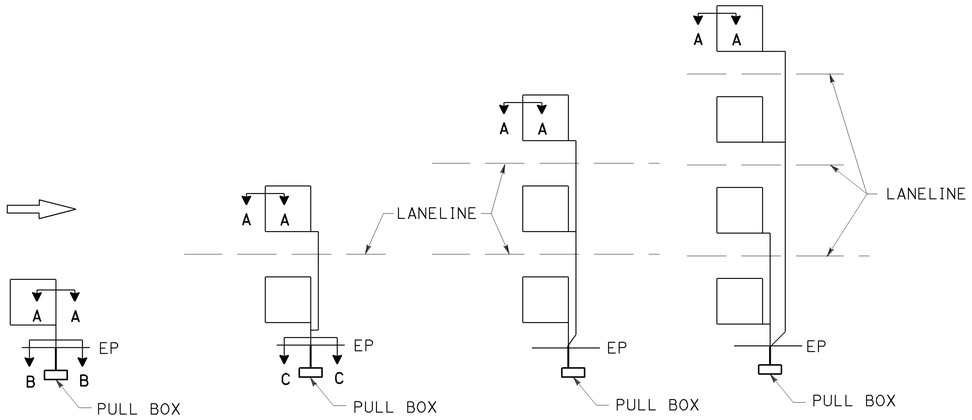

SAW CUT DETAILS

Type A loop detector configurations illustrated

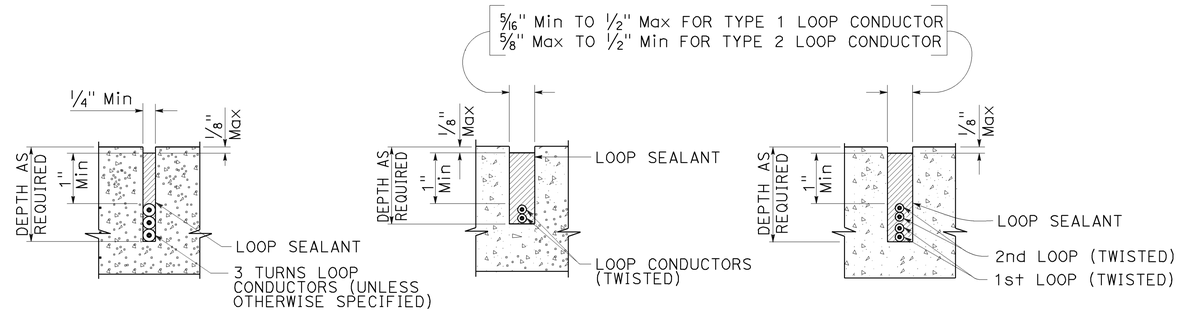

SECTION A-A SECTION B-B SECTION C-C

SLOT DETAILS - TYPE 1 AND TYPE 2 LOOP CONDUCTOR

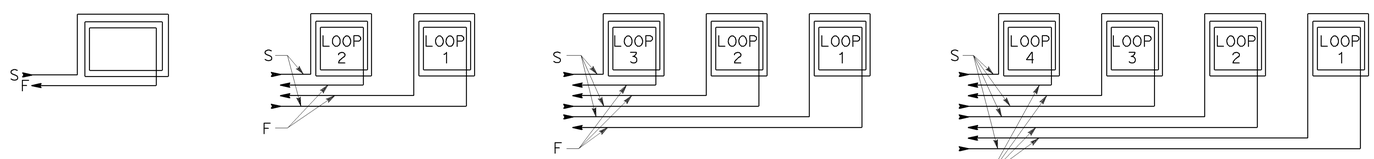

WINDING DETAILS

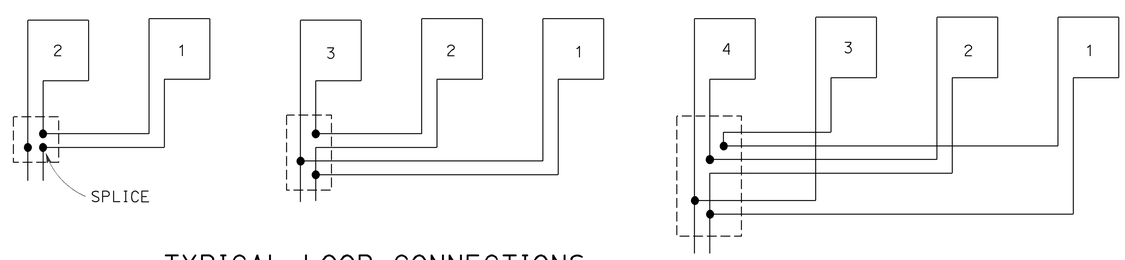

TYPICAL LOOP CONNECTIONS

Dashed lines represent the pull box

ABBREVIATIONS:

S - START
F - FINISH

STATE OF CALIFORNIA
DEPARTMENT OF TRANSPORTATION

ELECTRICAL SYSTEMS (LOOP DETECTORS)

NO SCALE

RSP ES-5A DATED APRIL 15, 2016 SUPERSEDES RSP ES-5A DATED OCTOBER 30, 2015 AND STANDARD PLAN ES-5A DATED MAY 20, 2011 - PAGE 448 OF THE STANDARD PLANS BOOK DATED 2010.

REVISED STANDARD PLAN RSP ES-5A

2010 REVISED STANDARD PLAN RSP ES-5A

1-12-16

Dist	COUNTY	ROUTE	POST MILES TOTAL PROJECT	SHEET No.	TOTAL SHEETS
07	Ven	33	15.7	86	108

Theresa Gabriel
REGISTERED ELECTRICAL ENGINEER

April 15, 2016
PLANS APPROVAL DATE

REGISTERED PROFESSIONAL ENGINEER
Theresa Aziz Gabriel
No. E15129
Exp. 6-30-16
ELECTRICAL
STATE OF CALIFORNIA

THE STATE OF CALIFORNIA OR ITS OFFICERS OR AGENTS SHALL NOT BE RESPONSIBLE FOR THE ACCURACY OR COMPLETENESS OF SCANNED COPIES OF THIS PLAN SHEET.

TO ACCOMPANY PLANS DATED 6-24-16

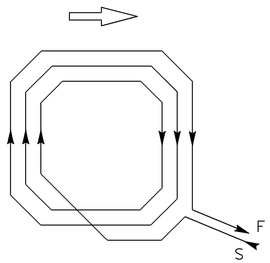

WINDING DETAIL

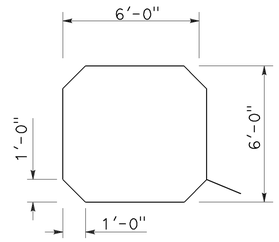

SAW CUT DETAIL

TYPE A LOOP DETECTOR CONFIGURATION

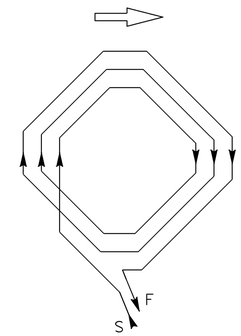

WINDING DETAIL

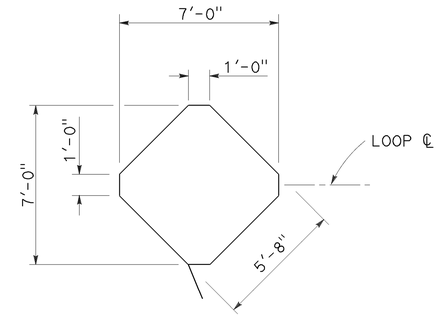

SAW CUT DETAIL

TYPE B LOOP DETECTOR CONFIGURATION

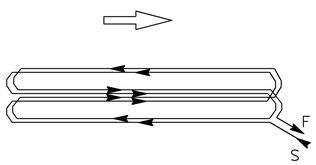

WINDING DETAIL

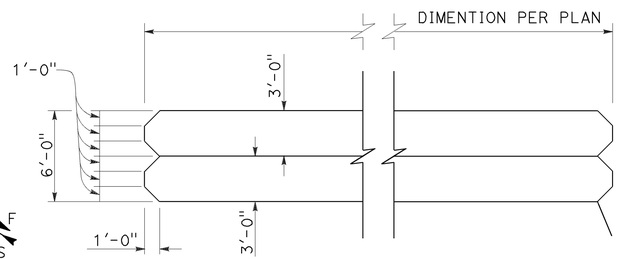

SAW CUT DETAIL

TYPE C LOOP DETECTOR CONFIGURATION

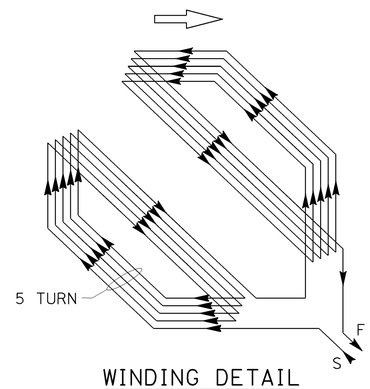

WINDING DETAIL

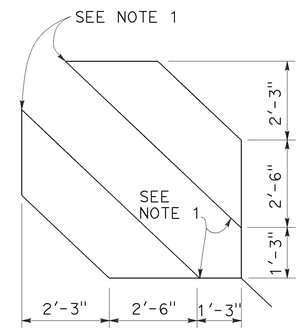

SAW CUT DETAIL

TYPE D LOOP DETECTOR CONFIGURATION

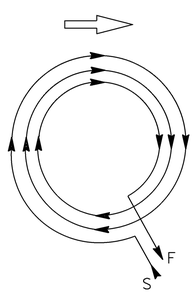

WINDING DETAIL

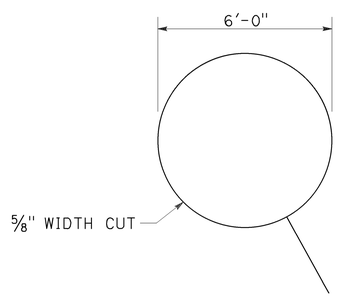

SAW CUT DETAIL

TYPE E LOOP DETECTOR CONFIGURATION

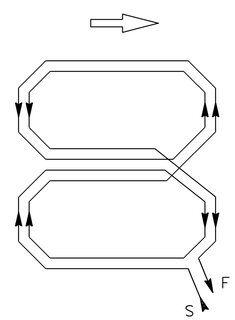

WINDING DETAIL

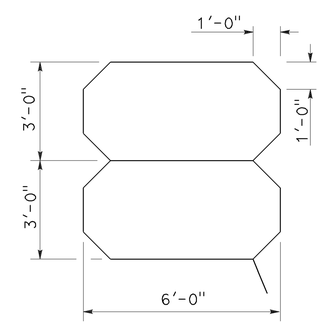

SAW CUT DETAIL

TYPE Q LOOP DETECTOR CONFIGURATION

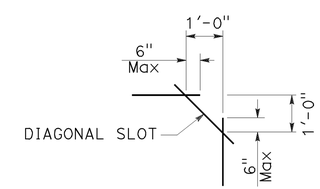

PLAN VIEW OF DIAGONAL SLOT AT CORNERS

NOTES:

1. Round corners of acute angle saw cuts to prevent damage to conductors.
2. Typical distance separating loops from edge to edge is 10' for Type A, B, D and E installation in single lane.
3. Use Type D loops for limit line detection and bicycle lanes.

STATE OF CALIFORNIA
DEPARTMENT OF TRANSPORTATION

ELECTRICAL SYSTEMS (DETECTORS)

NO SCALE

RSP ES-5B DATED APRIL 15, 2016 SUPERSEDES RSP ES-5B DATED OCTOBER 30, 2015 AND RSP ES-5B DATED JULY 19, 2013 AND STANDARD PLAN ES-5B DATED MAY 20, 2011 - PAGE 449 OF THE STANDARD PLANS BOOK DATED 2010.

REVISED STANDARD PLAN RSP ES-5B

2010 REVISED STANDARD PLAN RSP ES-5B

1-22-16

Dist	COUNTY	ROUTE	POST MILES TOTAL PROJECT	SHEET No.	TOTAL SHEETS
07	Ven	33	15.7	87	108

Theresa Gabriel
REGISTERED ELECTRICAL ENGINEER

October 30, 2015
PLANS APPROVAL DATE

REGISTERED PROFESSIONAL ENGINEER Theresa Aziz Gabriel No. E15129 Exp. 6-30-16 ELECTRICAL STATE OF CALIFORNIA

THE STATE OF CALIFORNIA OR ITS OFFICERS OR AGENTS SHALL NOT BE RESPONSIBLE FOR THE ACCURACY OR COMPLETENESS OF SCANNED COPIES OF THIS PLAN SHEET.

TO ACCOMPANY PLANS DATED 6-24-16

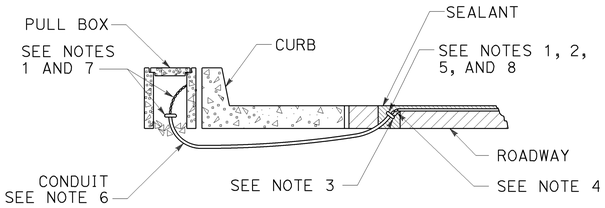

TYPE A
CURB TERMINATION DETAIL

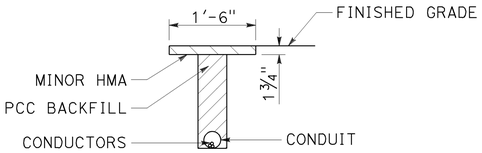

"T" TRENCH
DETAIL T

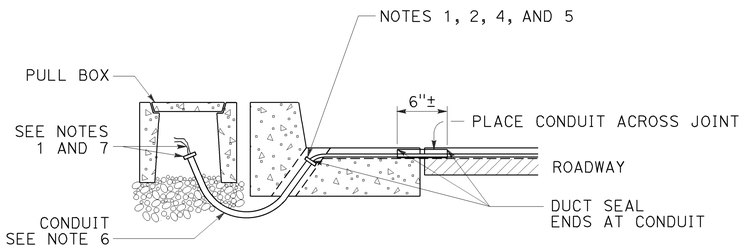

CROSS SECTION

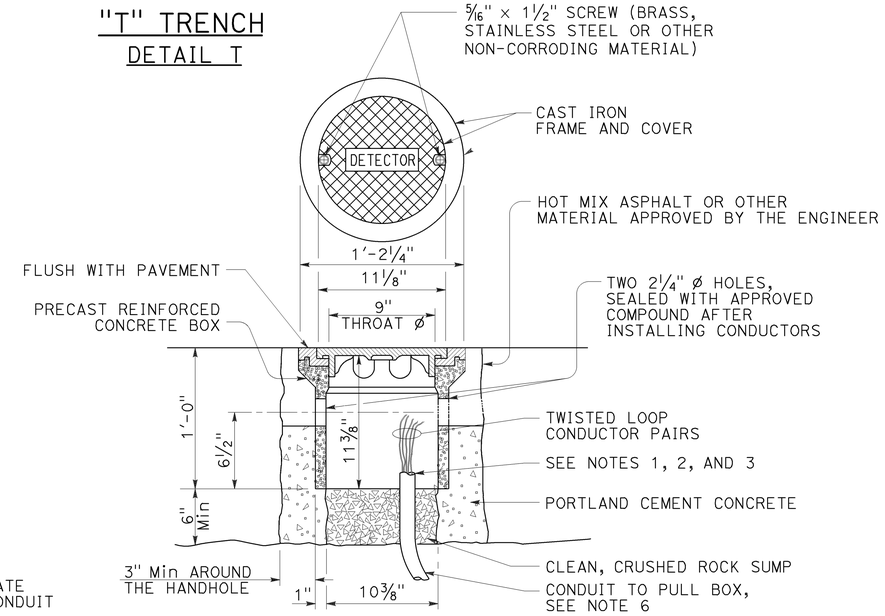

DETECTOR HANDHOLE DETAIL

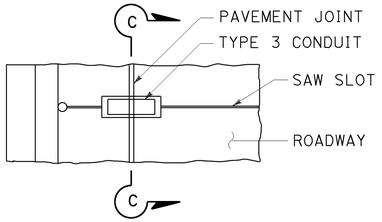

PLAN VIEW

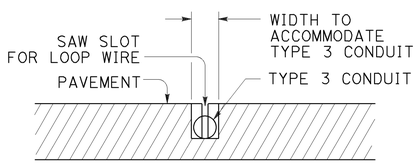

SECTION C-C

TYPE B
CURB TERMINATION DETAIL

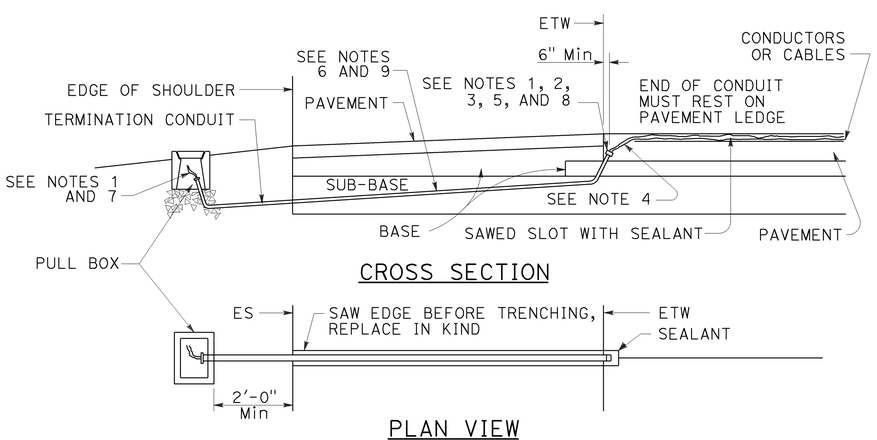

CROSS SECTION

PLAN VIEW

SHOULDER TERMINATION DETAILS

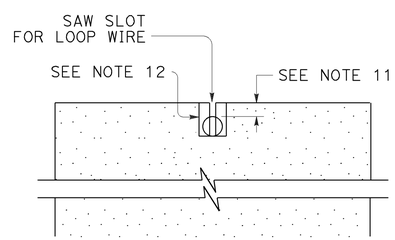

SECTION A-A

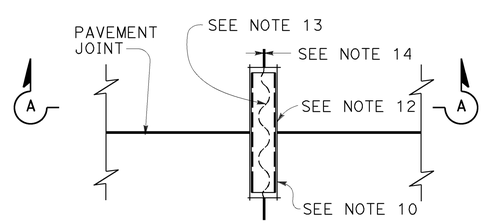

PLAN VIEW

TYPICAL LOOP LEAD-IN DETAIL AT PAVEMENT JOINT

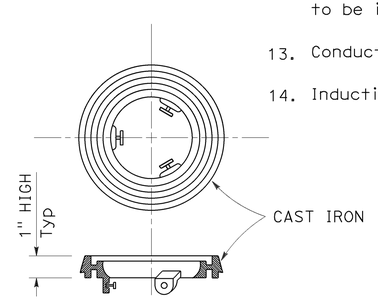

LOCKING GRADE RING

NOTES:

1. Bushing shall be used at end of conduit.
2. Tape detector conductors or cables 3" each side of bushings.
3. Install duct seal compound to each end of termination conduit before installing sealant.
4. Round all sharp edges where detector conductors or cables have to pass.
5. End of conduit shall be 3⅛" below roadway surface.
6.

Conduit size	Loop conductors
1"C minimum	1 to 2 pairs
1½"C minimum	3 to 4 pairs
2"C minimum	5 or more pairs

7. Splice detector conductors or cables to detector lead-in-cable.
8. Location of detector handhole when shown on plans.
9. When the shoulder and traveled way are paved with the same material and there is no joint between them, the conduit shall extend only 2'-0" into the shoulder pavement.
10. ¾"C, Type 3 conduit 6" long minimum, plug both ends with duct compound to keep out sealant.
11. ½" Minimum between top of conduit and pavement surface.
12. Sawcut shall not exceed 1" in width and ⅛" longer than conduit to be installed.
13. Conductors with ½" minimum slack inside conduit.
14. Inductive loop detector saw slot.

STATE OF CALIFORNIA
DEPARTMENT OF TRANSPORTATION

ELECTRICAL SYSTEMS (CURB AND SHOULDER TERMINATION, TRENCH, AND HANDHOLE DETAILS)

NO SCALE

RSP ES-5D DATED OCTOBER 30, 2015 SUPERSEDES RSP ES-5D DATED JULY 19, 2013 AND STANDARD PLAN ES-5D DATED MAY 20, 2011 - PAGE 451 OF THE STANDARD PLANS BOOK DATED 2010.

REVISED STANDARD PLAN RSP ES-5D

2010 REVISED STANDARD PLAN RSP ES-5D

8-19-15

Dist	COUNTY	ROUTE	POST MILES TOTAL PROJECT	SHEET No.	TOTAL SHEETS
07	Ven	33	15.7	88	108

REGISTERED CIVIL ENGINEER

July 15, 2016

PLANS APPROVAL DATE

REGISTERED PROFESSIONAL ENGINEER Stanley P. Johnson No. C57793 Exp. 3-31-18 CIVIL STATE OF CALIFORNIA

THE STATE OF CALIFORNIA OR ITS OFFICERS OR AGENTS SHALL NOT BE RESPONSIBLE FOR THE ACCURACY OR COMPLETENESS OF SCANNED COPIES OF THIS PLAN SHEET.

TO ACCOMPANY PLANS DATED 6-24-16

NOTES:

1. [ ] Indicates mast arm length to be used unless otherwise noted on the plans.
2. For additional notes and details, see Rvised Standard Plans RSP ES-7M and RSP ES-7N.
3. See Concrete Barrier Details Type 60E and 60SE.
4. For locations with one arm, plug unused cap screw holes and chased outlet with galvanized cap screws and knockout plug.
5. Handhole shall be located perpendicular to the luminaire mast arm and as directed by the Engineer.

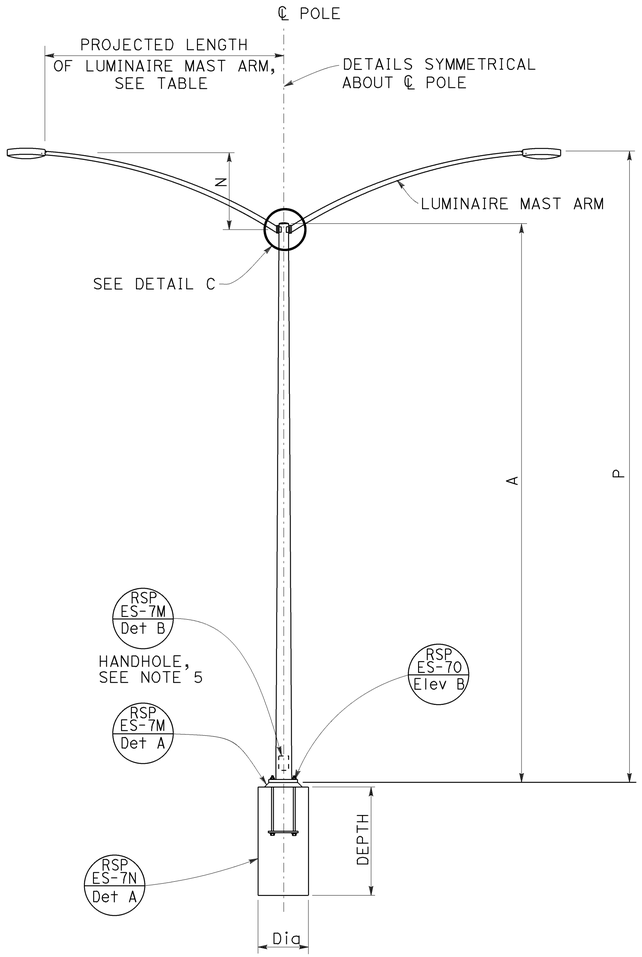

TYPE 15D AND TYPE 21D

ELEVATION A

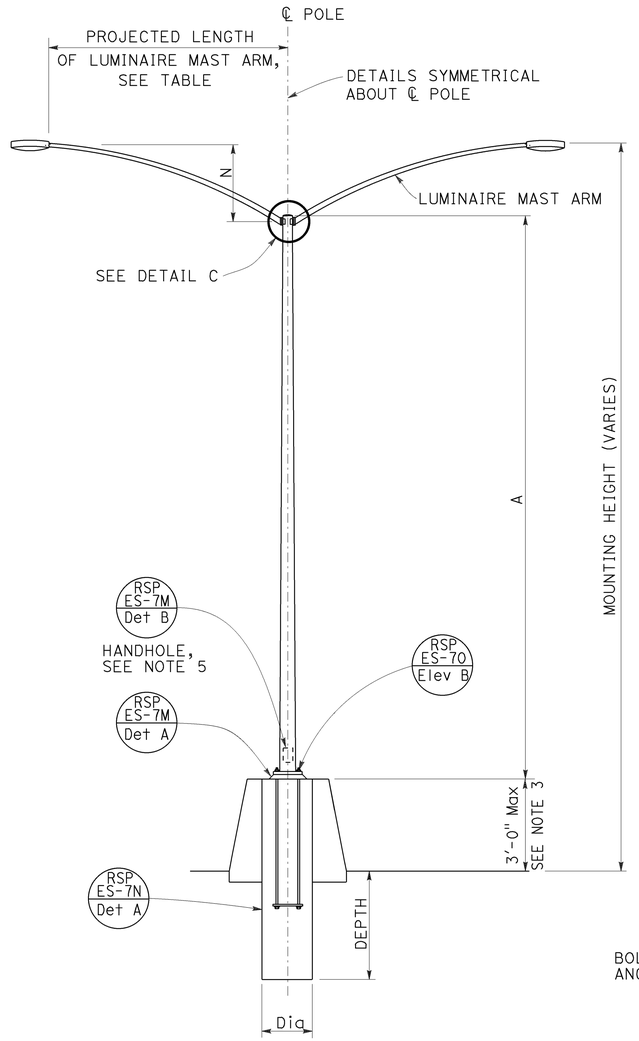

TYPE 15D AND TYPE 21D

MEDIAN BARRIER MOUNTED

ELEVATION B

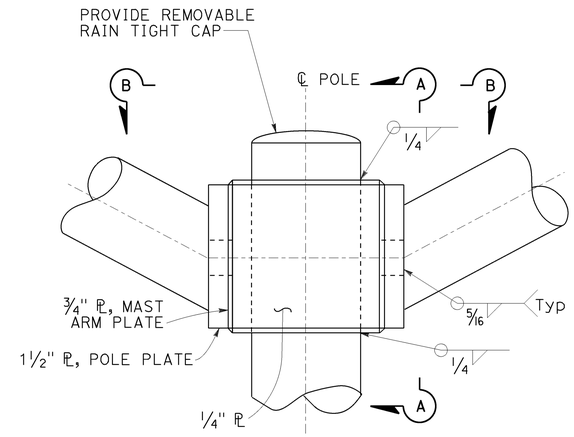

DETAIL C

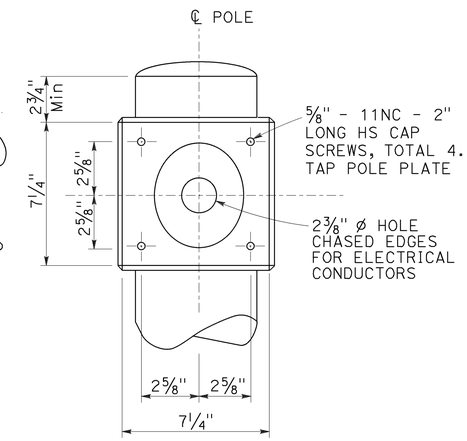

SECTION A-A

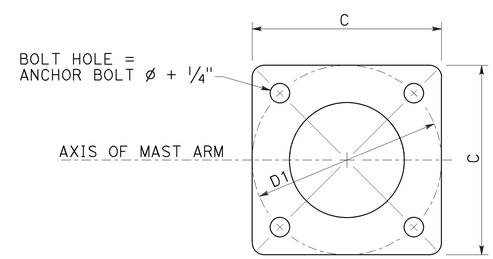

BASE PLATE

DETAIL B

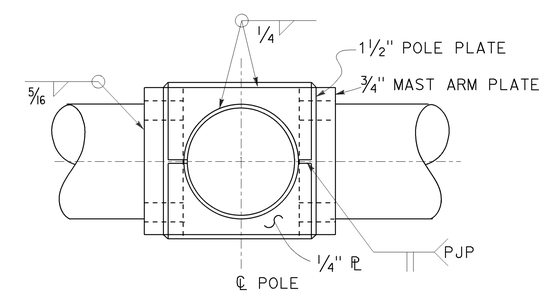

SECTION B-B

POLE TYPE	POLE DATA				BASE PLATE DATA				CIDH PILE FOUNDATION	
	A HEIGHT	Min OD BASE	Min OD TOP	Min THICKNESS	C	BC = BOLT CIRCLE	THICKNESS	ANCHOR BOLT SIZE	Dia	DEPTH
15D	30'-0"	8"	3 11/16"	0.1793"	1'-0"	1'-0"	1 1/2"	1 1/4" ø x 42"	2'-6"	7'-0"
21D	35'-0"	8 5/8"								

LUMINAIRE MAST ARM DATA					
PROJECTED LENGTH	N RISE	Min OD AT POLE	NOMINAL THICKNESS	P TYPE 15D	P TYPE 21D
6'-0"	2'-0"±	3 1/4"	0.1196"	31'-6"±	36'-6"±
8'-0"	2'-6"±	3 1/2"		32'-0"±	37'-0"±
10'-0"	3'-3"±	3 7/8"		32'-9"±	37'-9"±
[12'-0"]	4'-3"±			33'-9"±	38'-9"±

STATE OF CALIFORNIA
DEPARTMENT OF TRANSPORTATION

ELECTRICAL SYSTEMS (LIGHTING STANDARD, TYPES 15D AND 21D, DOUBLE LUMINAIRE MAST ARM)

NO SCALE

RSP ES-6D DATED JULY 15, 2016 SUPERSEDES RSP ES-6D DATED OCTOBER 30, 2015 AND STANDARD PLAN ES-6D DATED MAY 20, 2011 - PAGE 455 OF THE STANDARD PLANS BOOK DATED 2010.

REVISED STANDARD PLAN RSP ES-6D

2015 REVISED STANDARD PLAN RSP ES-6D

6-20-16

Dist	COUNTY	ROUTE	POST MILES TOTAL PROJECT	SHEET No.	TOTAL SHEETS
07	Ven	33	15.7	89	108

REGISTERED CIVIL ENGINEER

July 15, 2016
PLANS APPROVAL DATE

REGISTERED PROFESSIONAL ENGINEER
Stanley P. Johnson
No. C57793
Exp. 3-31-18
CIVIL
STATE OF CALIFORNIA

THE STATE OF CALIFORNIA OR ITS OFFICERS OR AGENTS SHALL NOT BE RESPONSIBLE FOR THE ACCURACY OR COMPLETENESS OF SCANNED COPIES OF THIS PLAN SHEET.

TO ACCOMPANY PLANS DATED 6-24-16

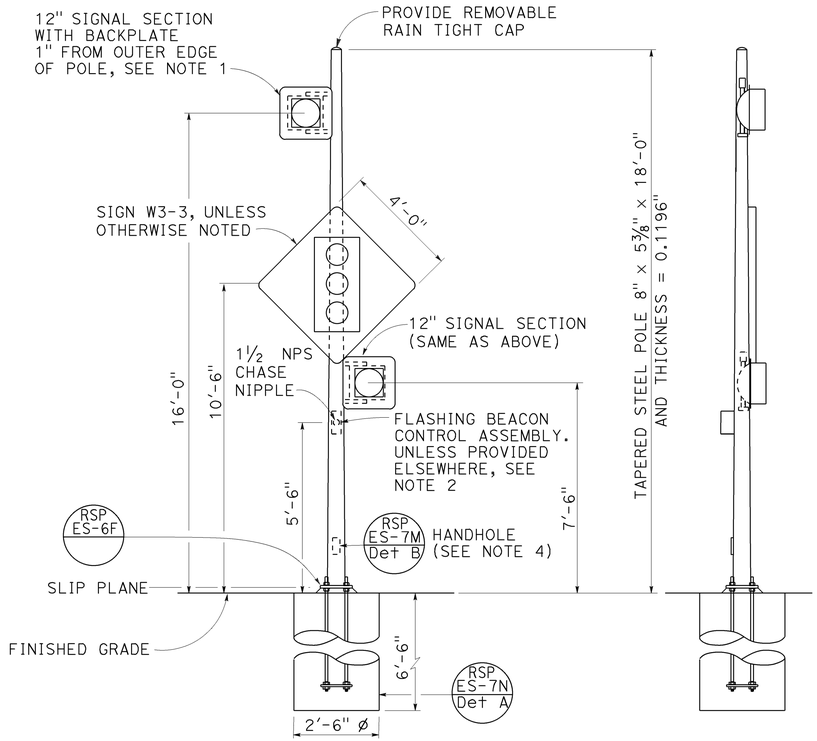

FRONT VIEW

SIDE VIEW

TYPE 15-FBS
FLASHING BEACON WITH SLIP BASE INSTALLATION
DETAIL A

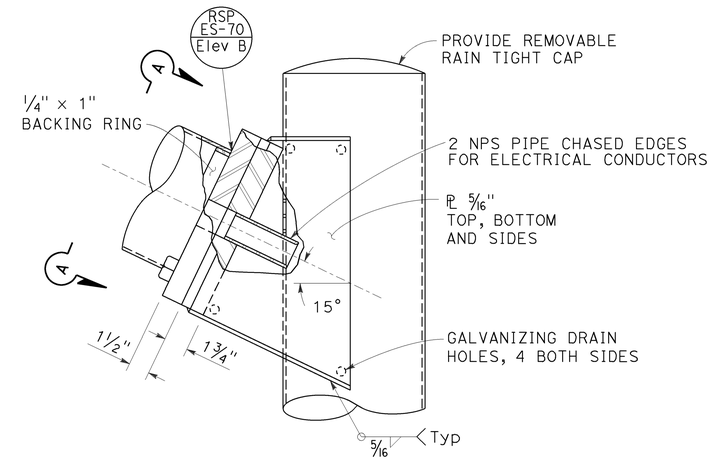

ELEVATION B

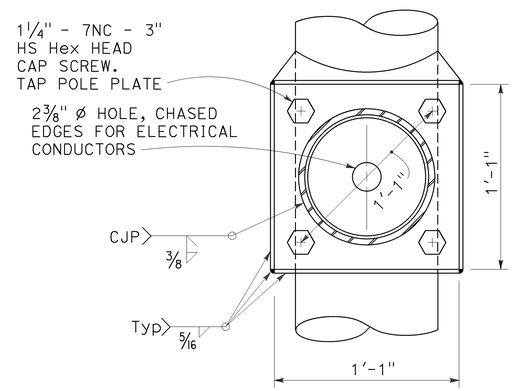

VIEW A-A

FLASHING BEACON MAST ARM CONNECTION DETAIL
DETAIL B

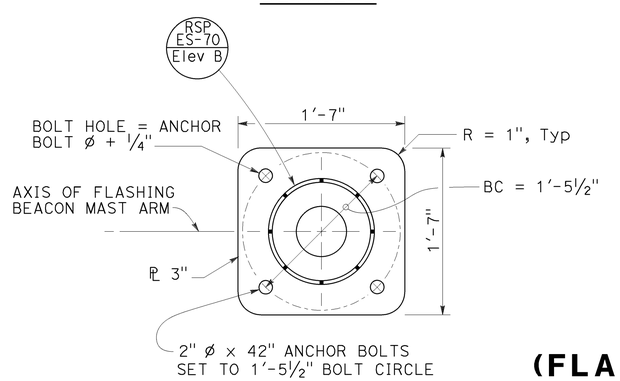

BASE PLATE

DETAIL C

NOTES:

1. See Revised Standard Plans RSP ES-4A and RSP ES-4D for attachment fitting details.
2. For wiring diagram, see Revised Standard Plan RSP ES-14B.
3. For additional notes and details, see Revised Standard Plans RSP ES-7M and RSP ES-7N.
4. Handhole shall be located on the downstream side of traffic.
5. See project plans for type of standard to be installed.

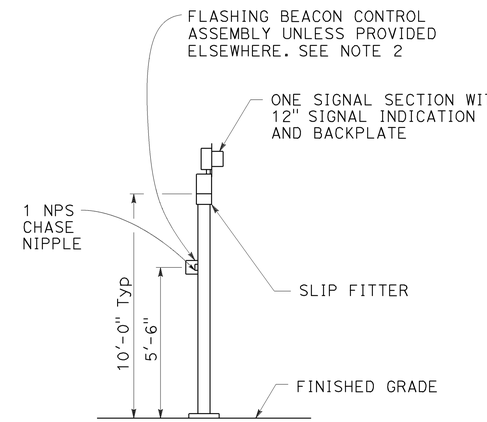

TYPE 1-A, 1-B, 1-C, AND 1-D
FLASHING BEACON INSTALLATION
DETAIL D
See Note 5

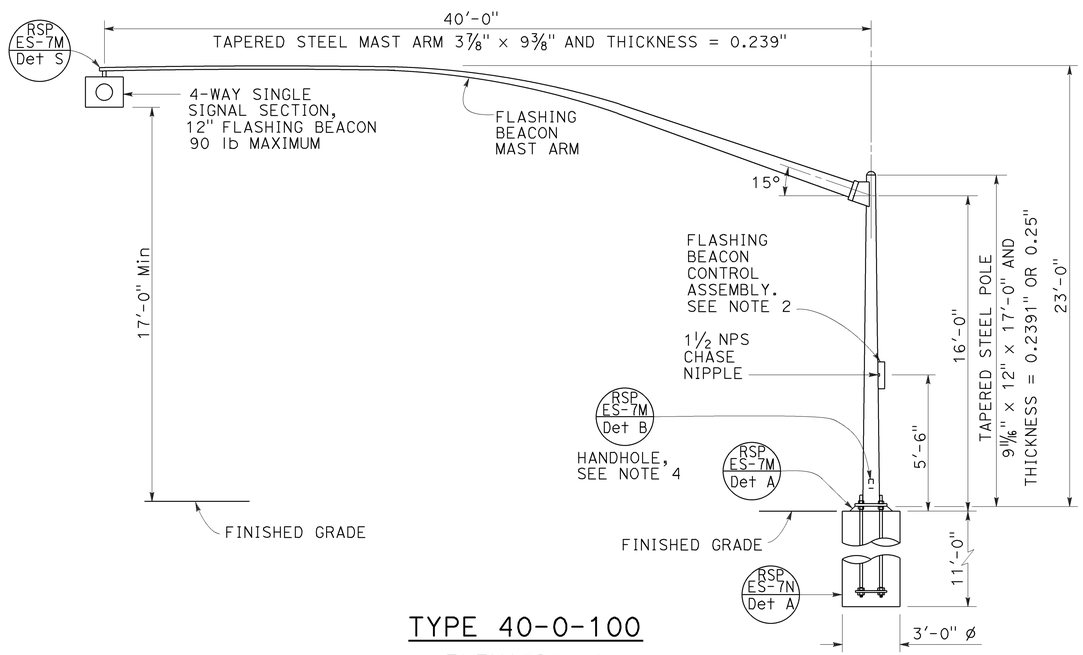

TYPE 40-0-100
ELEVATION A

STATE OF CALIFORNIA
DEPARTMENT OF TRANSPORTATION

ELECTRICAL SYSTEMS (FLASHING BEACON ON A TYPE 1, TYPE 15-FBS, AND TYPE 40 STANDARD)

NO SCALE

RSP ES-7J DATED JULY 15, 2016 SUPERSEDES RSP ES-7J DATED APRIL 15, 2016 AND RSP ES-7J DATED OCTOBER 30, 2015 AND RSP ES-7J DATED JULY 19, 2013 AND STANDARD PLAN ES-7J DATED MAY 20, 2011 - PAGE 471 OF THE STANDARD PLANS BOOK DATED 2010.

REVISED STANDARD PLAN RSP ES-7J

2010 REVISED STANDARD PLAN RSP ES-7J

6-20-16

Dist	COUNTY	ROUTE	POST MILES TOTAL PROJECT	SHEET No.	TOTAL SHEETS
07	Ven	33	15.7	90	108

REGISTERED CIVIL ENGINEER

July 15, 2016
PLANS APPROVAL DATE

REGISTERED PROFESSIONAL ENGINEER
Stanley P. Johnson
No. C57793
Exp. 3-31-18
CIVIL
STATE OF CALIFORNIA

THE STATE OF CALIFORNIA OR ITS OFFICERS OR AGENTS SHALL NOT BE RESPONSIBLE FOR THE ACCURACY OR COMPLETENESS OF SCANNED COPIES OF THIS PLAN SHEET.

TO ACCOMPANY PLANS DATED 6-24-16

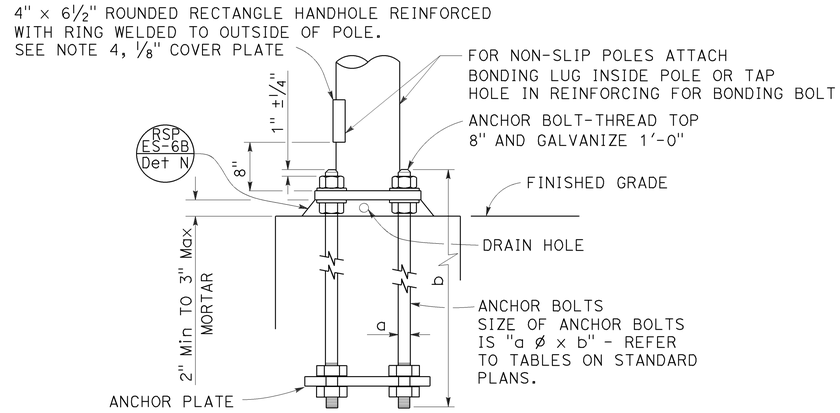

HANDHOLE AND ANCHORAGE
DETAIL A

IDENTIFICATION NUMBER

1. Attach a stamped metal tag with pole's identification number above the handhole. ¼" high number, minimum.
2. Attach a stamped metal tag with mast arm's identification number to the bottom of the signal mast arm near the pole plate. ¼" high number, minimum.

Type — Load case (Use SL for special load case) — Design wind velocity (mph) — Signal mast arm length (ft) {Near handhole: Maximum signal mast arm length for pole type; Near pole plate: Installed signal mast arm length} — Standard plan year — Only for poles or mast arms using Detail F — Only for poles or mast arms using RSP ES-7O

26A - 3 - 100 - 45 - 10 - F or FB

SAMPLE IDENTIFICATION NUMBER

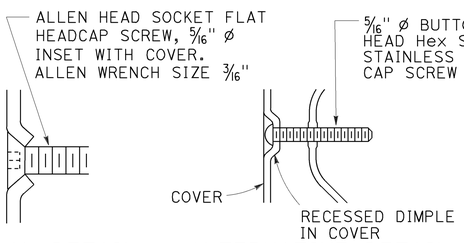

TYPICAL DETAIL
DETAIL B-1

ALTERNATIVE DETAIL
DETAIL B-2

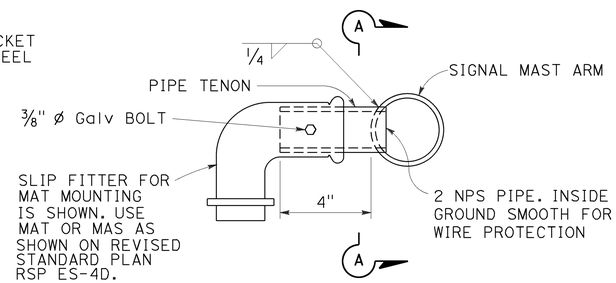

SIDE TENON
DETAIL S-1

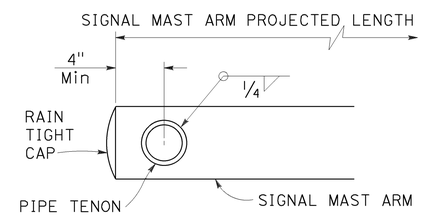

SECTION A-A

PIPE TENONS
DETAIL S

NOTES:

1. Provide a Hex nut, leveling nut and 2 washers for each bolt.
2. Luminaire mast arms shall be round, tapered steel tubes, taper of 0.1375" to 0.143-inch per foot with an end section 2⅜" OD for mounting hardware. Extensions of 2 NPS Standard pipe and 7" long may be used at the option of the manufacturer. When low pressure sodium luminaires are required, the extension shall be 1'-3".
3. Signal mast arms shall be round, tapered steel tubes, maximum taper 0.143-inch per foot.
4. Handhole reinforcement ring shall be ¼" x 2" for 0.1196" to 0.2391" thick poles, ⅜" x 2" for 0.3125" to 0.375" thick poles.
5. Handholes shall be located on the downstream side of traffic.
6. Detail F, fatigue resistant weld, is required at socket welded signal mast arm plate and pole base plate.
7. Cap screws shall be tightened by the turn-of-nut method ⅓ turn from a snug tight condition. No washer will be required.
8. Outside diameter, wall thickness, and corresponding section properties of poles and mast arms as shown in the Standard Plans are minimums. Unless otherwise specified, alternative sections shall require approval by the Engineer.
9. Design: AASHTO Standard Specifications for Structural Support for Highway Signs, Luminaires, and Traffic Signals, 6th Edition. Basic Wind Speed = 100 mph (3 seconds gust). Yearly Mean Wind Velocity = 15.6 mph.
10. Materials (Structural steel):
    fy = 55,000 psi (tapered steel tube and anchor bolts)
    fy = 50,000 psi (unless otherwise noted)
11. Materials (Reinforced concrete):
    f'c = 3,625 psi
    fy = 60,000 psi

WELD SIZE	WALL THICKNESS
3/16"	0.1196"
¼"	0.1793"
5/16"	0.2391"
⅜"	0.3125"
7/16"	0.375"

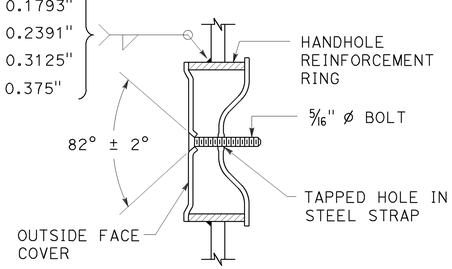

TAMPER RESISTANT HANDHOLE COVER
DETAIL B

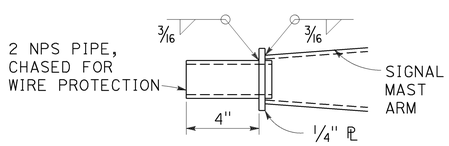

TIP TENON
DETAIL TL

This detail supersedes Detail S when so designated

WELD SIZE	WALL THICKNESS
⅛"	0.1196"
3/16"	0.1793"
¼"	0.2391"

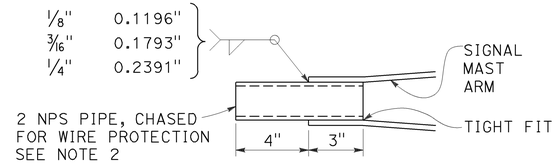

TIP TENON
DETAIL TS

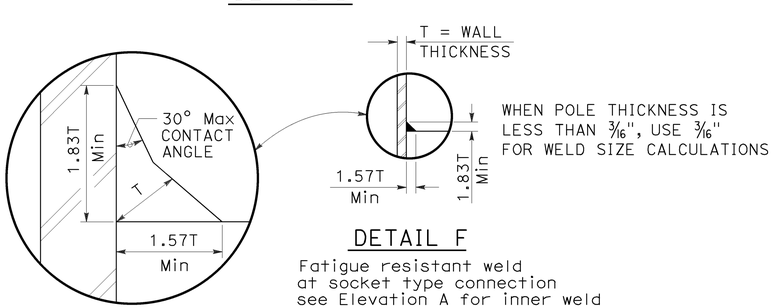

DETAIL F

Fatigue resistant weld at socket type connection see Elevation A for inner weld

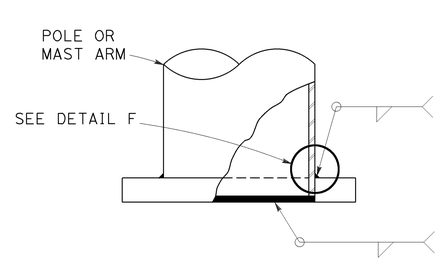

WELD SIZE	WALL THICKNESS
¼"	0.1196"
5/16"	0.1793"
⅜"	0.2391"
7/16"	0.3125"

⅛"	0.1196"
3/16"	0.1793"
¼"	0.2391"
5/16"	0.3125"

ELEVATION A

STATE OF CALIFORNIA
DEPARTMENT OF TRANSPORTATION

ELECTRICAL SYSTEMS (SIGNAL AND LIGHTING STANDARD, DETAIL No. 1)

NO SCALE

RSP ES-7M DATED JULY 15, 2016 SUPERSEDES RSP ES-7M DATED OCTOBER 30, 2015 AND STANDARD PLAN ES-7M DATED MAY 20, 2011 - PAGE 474 OF THE STANDARD PLANS BOOK DATED 2010.

REVISED STANDARD PLAN RSP ES-7M

2010 REVISED STANDARD PLAN RSP ES-7M

6-20-16

Dist	COUNTY	ROUTE	POST MILES TOTAL PROJECT	SHEET No.	TOTAL SHEETS
07	Ven	33	15.7	91	108

REGISTERED CIVIL ENGINEER

July 15, 2016
PLANS APPROVAL DATE

REGISTERED PROFESSIONAL ENGINEER
Stanley P. Johnson
No. C57793
Exp. 3-31-18
CIVIL
STATE OF CALIFORNIA

THE STATE OF CALIFORNIA OR ITS OFFICERS OR AGENTS SHALL NOT BE RESPONSIBLE FOR THE ACCURACY OR COMPLETENESS OF SCANNED COPIES OF THIS PLAN SHEET.

TO ACCOMPANY PLANS DATED 6-24-16

2010 REVISED STANDARD PLAN RSP ES-7N

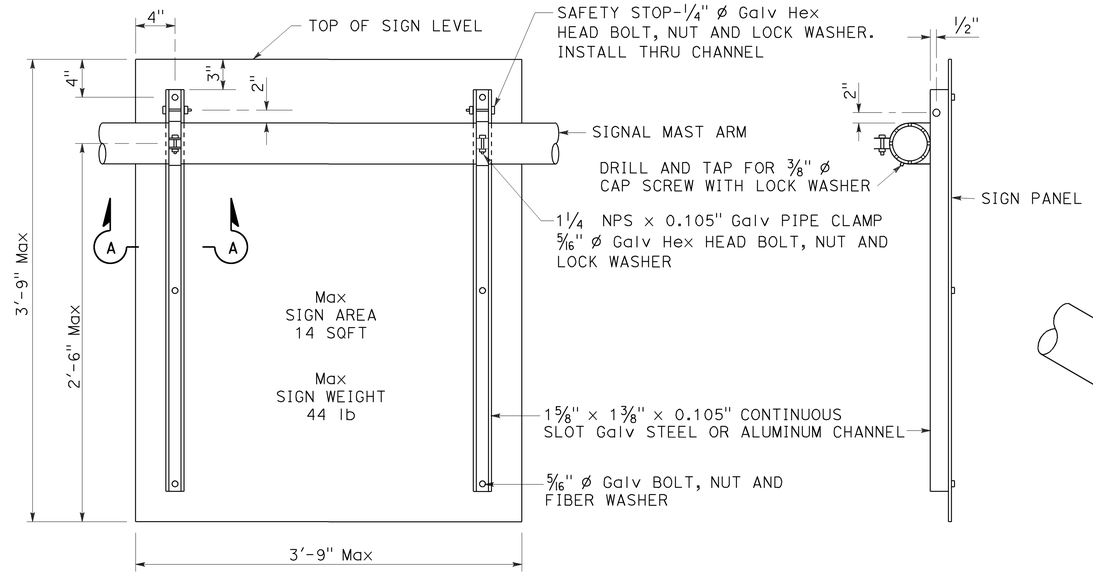

REAR VIEW

SIDE VIEW

SIGN MOUNTING DETAILS
DETAIL U

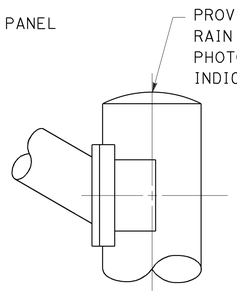

STANDARD TOP
DETAIL B-1

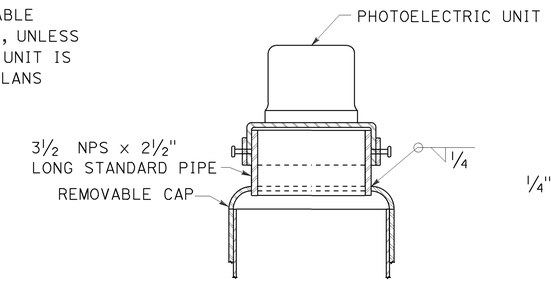

MOUNTING ADAPTER FOR
PHOTOELECTRIC UNIT
DETAIL B-2

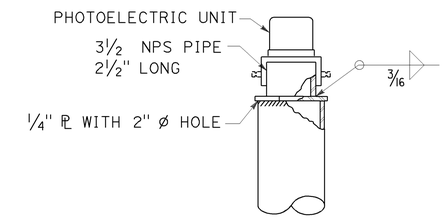

ALTERNATIVE
MOUNTING ADAPTER
DETAIL B-3

POLE TOP DETAILS
DETAIL B

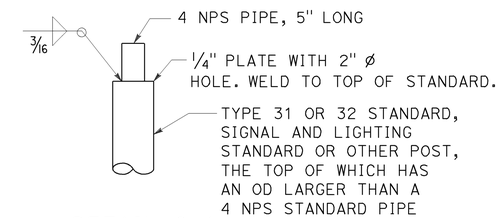

DETAIL C-1

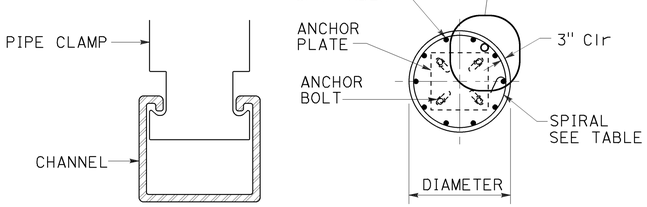

SECTION A-A

SECTION B-B

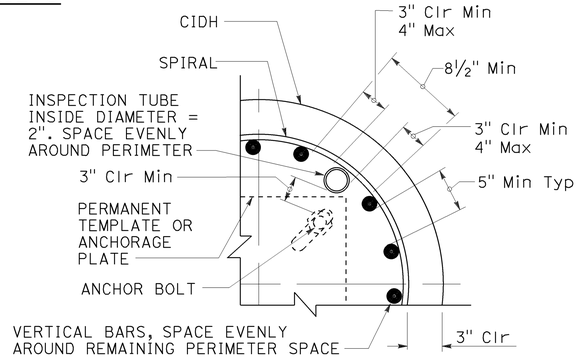

INSPECTION TUBE PLACEMENT
DETAIL I

CIDH REINFORCING AND INSPECTION TUBE SCHEDULE			
CIDH DIAMETER	VERTICAL BARS	SPIRAL	INSPECTION TUBE
2 ft	8-#5	#4 AT 6	2
2.5 ft	10-#6		4*
3 ft	12-#7	#5 AT 6	
3.5 ft	14-#8		4
4 ft	18-#9	2-#4 AT 7	5
4.5 ft	18-#9	2-#5 AT 7	5
5 ft	22-#10	2-#5 AT 7	6
6 ft	26-#11	2-#6 AT 7	7

* FOR SLIP BASE VERSIONS WITH 3 ANCHOR BOLTS USE 3 INSPECTION TUBES.

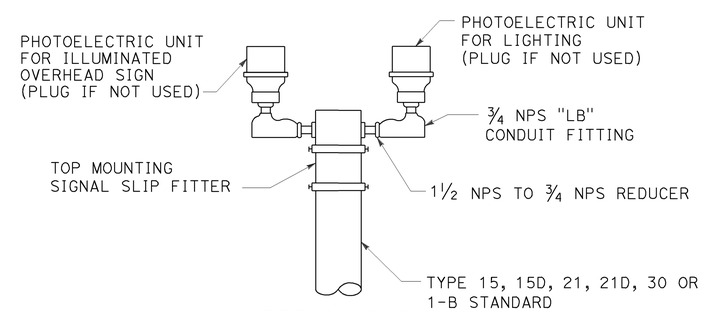

DETAIL C-2

DUAL PHOTOELECTRIC UNIT MOUNTING DETAIL
DETAIL C

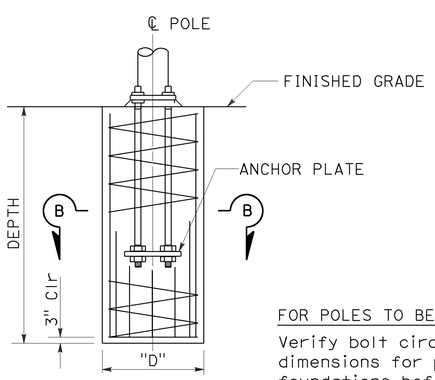

ELEVATION

FOR POLES TO BE INSTALLED ON EXISTING FOUNDATION:

Verify bolt circles, anchor bolt sizes and dependent dimensions for poles to be installed on existing foundations before fabricating the poles.

CAST-IN-DRILLED-HOLE PILE FOUNDATION, REINFORCED PILE
DETAIL A

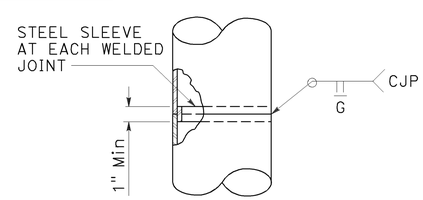

FOR UNIFORM TUBE THICKNESS
DETAIL T-1

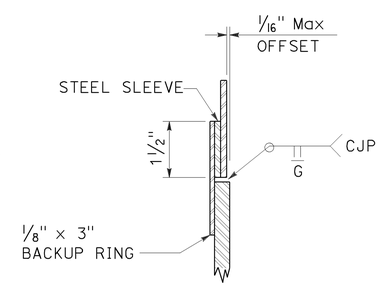

AT TUBE THICKNESS CHANGE
DETAIL T-2

POLE SPLICES
DETAIL T

STATE OF CALIFORNIA
DEPARTMENT OF TRANSPORTATION

ELECTRICAL SYSTEMS (SIGNAL AND LIGHTING STANDARD, DETAIL No. 2)

NO SCALE

RSP ES-7N DATED JULY 15, 2016 SUPERSEDES RSP ES-7N DATED OCTOBER 30, 2015 AND STANDARD PLAN ES-7N DATED MAY 20, 2011 - PAGE 475 OF THE STANDARD PLANS BOOK DATED 2010.

REVISED STANDARD PLAN RSP ES-7N

6-20-16

DIST	COUNTY	ROUTE	POST MILES TOTAL PROJECT	SHEET NO.	TOTAL SHEETS
07	Ven	33	15.7	92	108

Theresa Gabriel
REGISTERED ELECTRICAL ENGINEER

April 15, 2016
PLANS APPROVAL DATE

REGISTERED PROFESSIONAL ENGINEER Theresa Aziz Gabriel No. E15129 Exp. 6-30-16 ELECTRICAL STATE OF CALIFORNIA

THE STATE OF CALIFORNIA OR ITS OFFICERS OR AGENTS SHALL NOT BE RESPONSIBLE FOR THE ACCURACY OR COMPLETENESS OF SCANNED COPIES OF THIS PLAN SHEET.

TO ACCOMPANY PLANS DATED 6-24-16

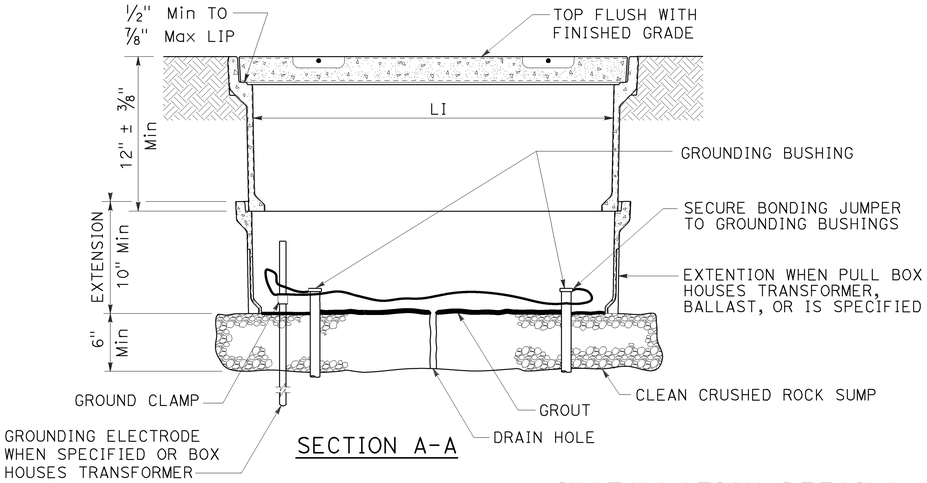

SECTION A-A

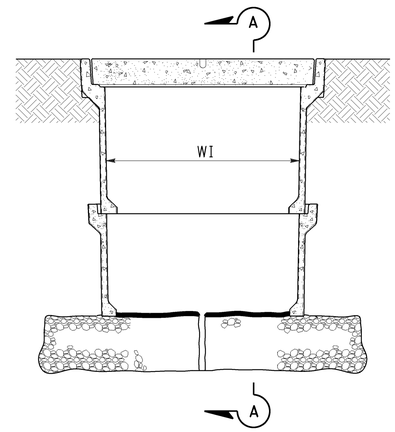

SIDE VIEW

INSTALLATION DETAILS

DETAIL A

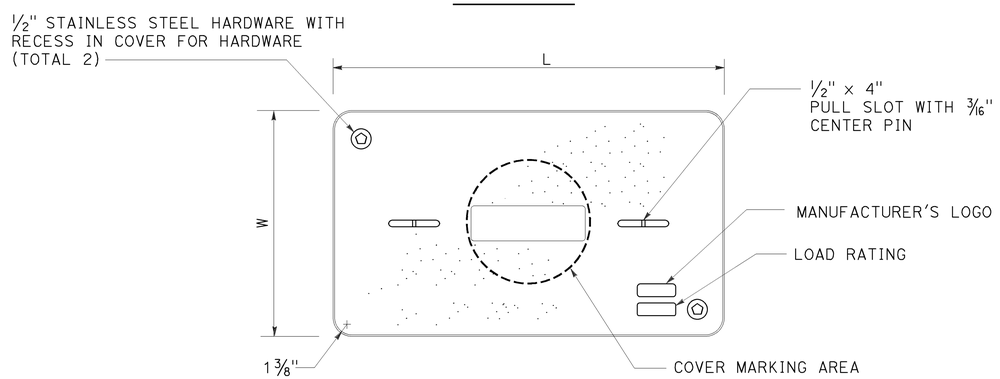

COVER TOP VIEW

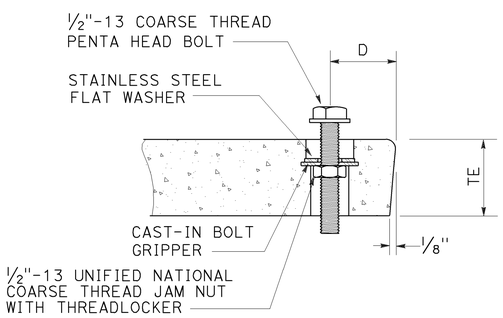

TYPICAL COVER CAPTIVE BOLT

OR SIMILAR

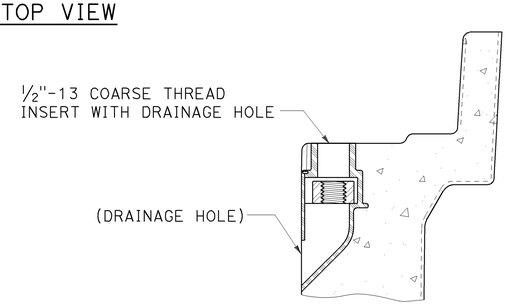

TYPICAL THREADED INSERT

OR SIMILAR

NOTES:

1. The nominal dimensions of the opening in which the cover sets shall be the same as the cover dimensions except the length and width dimensions shall be 1/8" greater.
2. Covers and boxes shall be interchangeable with California standard male and female gages. When interchanged with a standard male or female gage, the top surfaces shall be flush within 1/8". Top outside radius of covers and pull boxes shall have a 1/8" radius.
3. Dimensions for the cover for non-traffic pull box are nominal values.

DIMENSION TABLE

PULL BOX	PULL BOX					COVER				
	MINIMUM DEPTH BOX	MINIMUM DEPTH EXTENSION	MINIMUM WEIGHT	LI Min	WI Min	TE	D	L	W	MINIMUM WEIGHT
No. 3 1/2	12"	N/A	40 lb	1' - 3"	9"	1 3/4"	1 3/4"	1'-3 1/4" - 1'-3 3/8"	10" - 10 1/8"	30 lb
No. 5	12"	10"	55 lb	1' - 8"	11"	2"	1 3/4"	1'-11 1/4"	1'-1 3/4"	60 lb
No. 6	12"	10"	70 lb	2' - 4 1/4"	1' - 3 1/4"	2"	2"	2'-6 1/2"	1'-5 1/2"	85 lb

STATE OF CALIFORNIA
DEPARTMENT OF TRANSPORTATION

ELECTRICAL SYSTEMS (NON-TRAFFIC PULL BOX)

NO SCALE

RSP ES-8A DATED APRIL 15, 2016 SUPERSEDES RSP ES-8A DATED OCTOBER 30, 2015 AND RSP ES-8A DATED JULY 19, 2013 AND RSP ES-8A DATED JANUARY 20, 2012 THAT SUPPLEMENTS THE STANDARD PLANS BOOK DATED 2010.

REVISED STANDARD PLAN RSP ES-8A

2010 REVISED STANDARD PLAN RSP ES-8A

1-22-16

Dist	COUNTY	ROUTE	POST MILES TOTAL PROJECT	SHEET No.	TOTAL SHEETS
07	Ven	33	15.7	93	108

Theresa Gabriel
REGISTERED ELECTRICAL ENGINEER

October 30, 2015
PLANS APPROVAL DATE

REGISTERED PROFESSIONAL ENGINEER
Theresa Aziz Gabriel
No. E15129
Exp. 6-30-16
ELECTRICAL
STATE OF CALIFORNIA

THE STATE OF CALIFORNIA OR ITS OFFICERS OR AGENTS SHALL NOT BE RESPONSIBLE FOR THE ACCURACY OR COMPLETENESS OF SCANNED COPIES OF THIS PLAN SHEET.

TO ACCOMPANY PLANS DATED 6-24-16

NOTE:
Curves represent the minimum footcandle (FC).

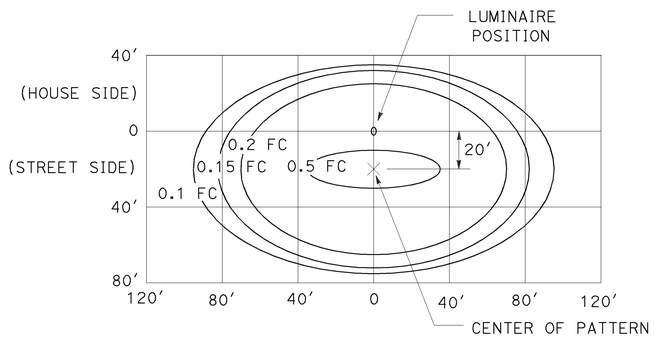

LED LUMINAIRE 165 W
34′ Mounting Height

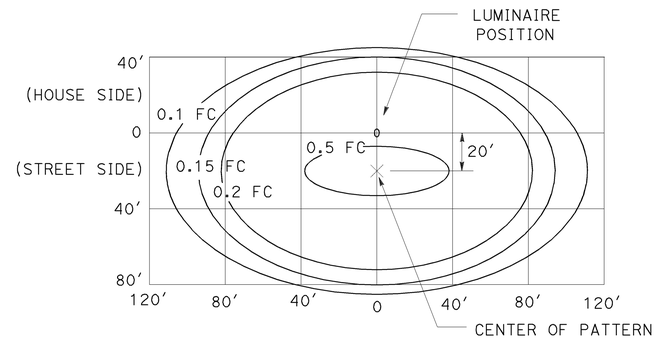

LED LUMINAIRE 235 W
40′ Mounting Height

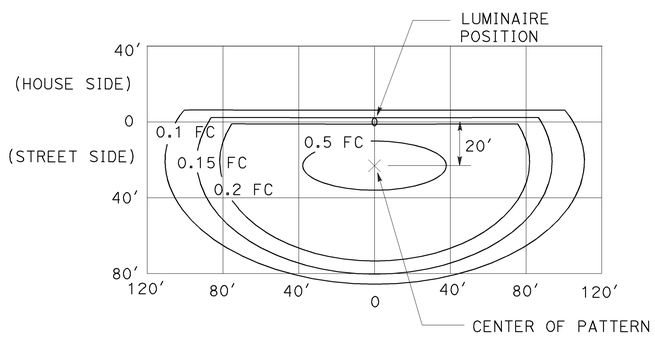

LED LUMINAIRE 235 W
40′ Mounting Height
with back side control

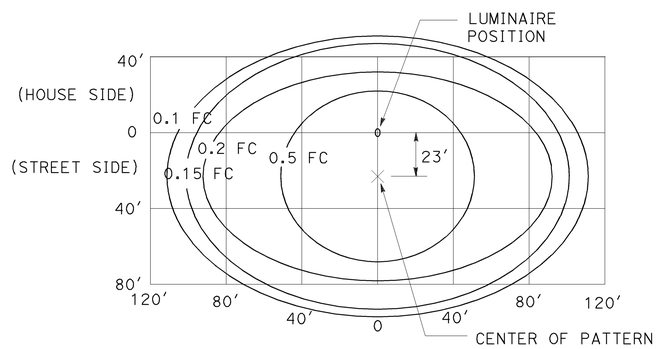

LED LUMINAIRE 300 W
40′ Mounting Height

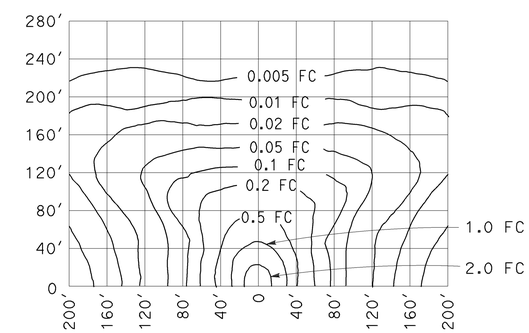

LOW-PRESSURE SODIUM LUMINAIRE 180 W
40′ Mounting Height
Lamp operated at 33,000 lm

STATE OF CALIFORNIA
DEPARTMENT OF TRANSPORTATION

ELECTRICAL SYSTEMS (ISOFOOTCANDLE CURVES)

NO SCALE

RSP ES-10A DATED OCTOBER 30, 2015 SUPERSEDES RSP ES-10A DATED JULY 19, 2013 THAT SUPPLEMENTS THE STANDARD PLANS BOOK DATED 2010.

REVISED STANDARD PLAN RSP ES-10A

2010 REVISED STANDARD PLAN RSP ES-10A

9-29-15

Dist	COUNTY	ROUTE	POST MILES TOTAL PROJECT	SHEET No.	TOTAL SHEETS
07	Ven	33	15.7	94	108

Theresa Gabriel
REGISTERED ELECTRICAL ENGINEER

October 30, 2015
PLANS APPROVAL DATE

REGISTERED PROFESSIONAL ENGINEER
Theresa Aziz Gabriel
No. E15129
Exp. 6-30-16
ELECTRICAL
STATE OF CALIFORNIA

THE STATE OF CALIFORNIA OR ITS OFFICERS OR AGENTS SHALL NOT BE RESPONSIBLE FOR THE ACCURACY OR COMPLETENESS OF SCANNED COPIES OF THIS PLAN SHEET.

TO ACCOMPANY PLANS DATED 6-24-16

NOTE:

Curves represent the minimum footcandle (FC).

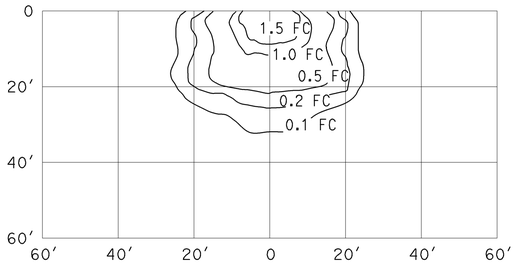

HIGH-PRESSURE SODIUM
WALL-MOUNTED LUMINAIRE 70 W

15′ Mounting Height
ANSI Designation S62
Lamp operated at 5,800 lm

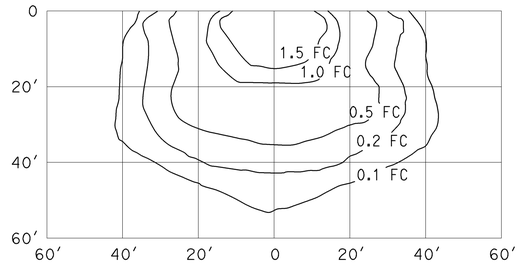

HIGH-PRESSURE SODIUM
WALL-MOUNTED LUMINAIRE 100 W

15′ Mounting Height
ANSI Designation S54
Lamp operated at 9,500 lm

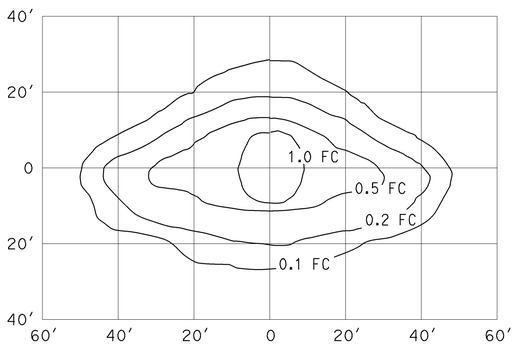

HIGH-PRESSURE SODIUM
PENDANT SOFFIT LUMINAIRE 70 W
TYPE III SHORT

17′ Mounting Height
ANSI Designation S62
Lamp operated at 5,800 lm

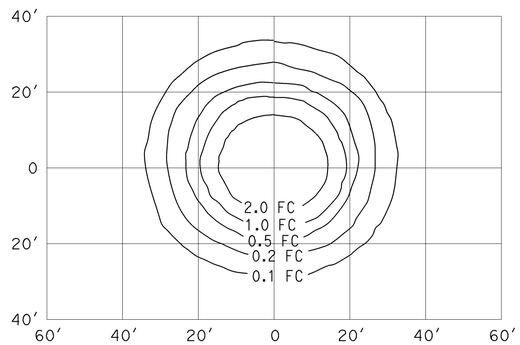

HIGH-PRESSURE SODIUM
PENDANT SOFFIT LUMINAIRE 70 W

17′ Mounting Height
ANSI Designation S62
Lamp operated at 5,800 lm

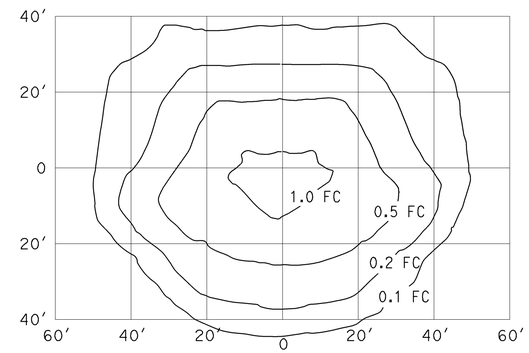

HIGH-PRESSURE SODIUM
FLUSH-MOUNTED SOFFIT LUMINAIRE 70 W

17′ Mounting Height
ANSI Designation S62
Lamp operated at 5,800 lm

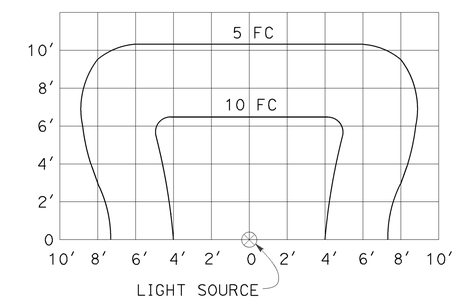

INDUCTION SIGN
LIGHTING FIXTURE 85 W

STATE OF CALIFORNIA
DEPARTMENT OF TRANSPORTATION

ELECTRICAL SYSTEMS (ISOFOOTCANDLE CURVES)

NO SCALE

RSP ES-10B DATED OCTOBER 30, 2015 SUPERSEDES RSP ES-10B DATED JULY 20, 2012 THAT SUPPLEMENTS THE STANDARD PLANS BOOK DATED 2010.

REVISED STANDARD PLAN RSP ES-10B

2010 REVISED STANDARD PLAN RSP ES-10B

Dist	COUNTY	ROUTE	POST MILES TOTAL PROJECT	SHEET No.	TOTAL SHEETS
07	Ven	33	15.7	95	108

REGISTERED CIVIL ENGINEER

July 15, 2016
PLANS APPROVAL DATE

REGISTERED PROFESSIONAL ENGINEER
Stanley P. Johnson
No. C57793
Exp. 3-31-18
CIVIL
STATE OF CALIFORNIA

THE STATE OF CALIFORNIA OR ITS OFFICERS OR AGENTS SHALL NOT BE RESPONSIBLE FOR THE ACCURACY OR COMPLETENESS OF SCANNED COPIES OF THIS PLAN SHEET.

TO ACCOMPANY PLANS DATED 6-24-16

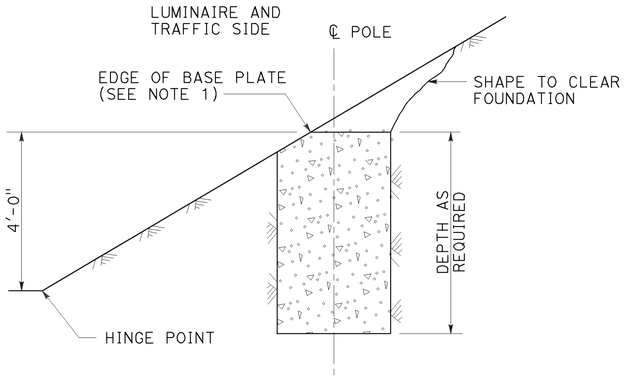

CUT SLOPES
STEEPER THAN 4:1,
LESS THAN 2:1
DETAIL A-1
See Note 2 and 3

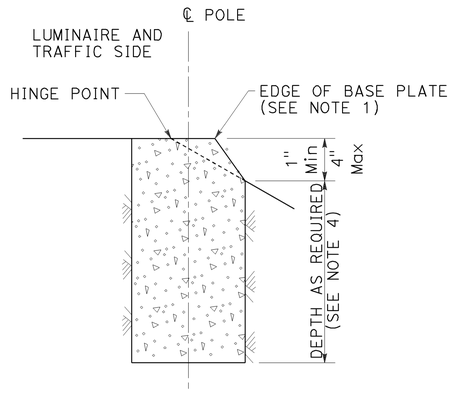

FILL SLOPES
STEEPER THAN 4:1,
LESS THAN 2:1
DETAIL A-2
See Note 2 and 3

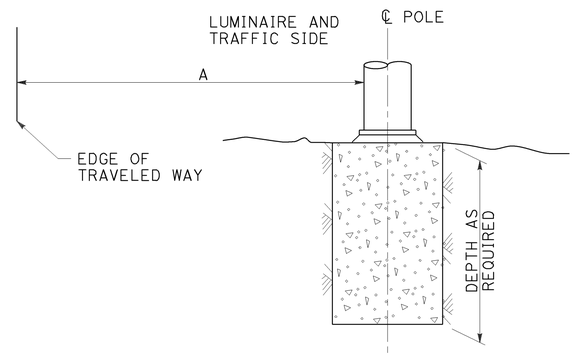

FLAT SECTIONS, CUT OR FILL SLOPES
4:1 OR FLATTER
DETAIL A-3
See Note 2

STANDARD TYPE	SETBACK (DIMENSION A)
32	30'-0" (Min)
31	20'-0" (Min)
15, 15D, 15-SB, 21, 21D, 30	ARM LENGTH (Min)

FOUNDATIONS ADJACENT TO ALL ROADWAYS EXCEPT
IN SIDEWALK, MEDIAN AND ISLAND AREAS
DETAIL A

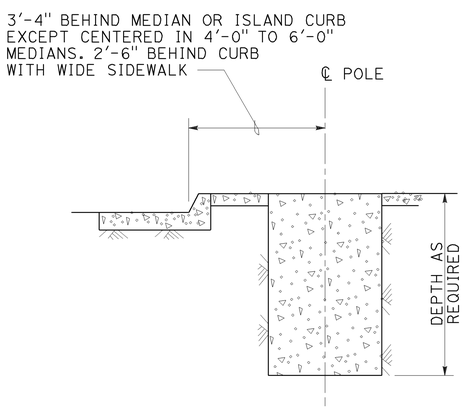

MEDIAN, ISLAND
OR WIDE SIDEWALK
DETAIL B-1
7' Wide and wider

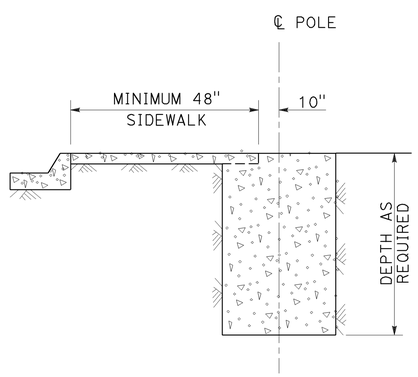

NARROW SIDEWALK
DETAIL B-2
Less than 7' wide

FOUNDATIONS IN SIDEWALK, MEDIAN AND ISLAND AREAS
DETAIL B

NOTES:

1. Where a portion of the foundation is above grade, the top edges shall have a 1" chamfer.
2. Slopes shall be horizontal to vertical ratio (Horizontal : Vertical).
3. Horizontal setbacks on cut and fill slopes steeper than 4:1 shall not exceed the distance shown for flat sections.
4. CIDH embedment depth shall be increased beyond standard depths by the diameter of the CIDH.

STATE OF CALIFORNIA
DEPARTMENT OF TRANSPORTATION

ELECTRICAL SYSTEMS (FOUNDATION INSTALLATIONS)

NO SCALE

RSP ES-11 DATED JULY 15, 2016 SUPERSEDES RSP ES-11 DATED JULY 19, 2013 AND STANDARD PLAN ES-11 DATED MAY 20, 2011 - PAGE 488 OF THE STANDARD PLANS BOOK DATED 2010.

REVISED STANDARD PLAN RSP ES-11

2010 REVISED STANDARD PLAN RSP ES-11

6-20-16

Dist	COUNTY	ROUTE	POST MILES TOTAL PROJECT	SHEET No.	TOTAL SHEETS
07	Ven	33	15.7	96	108

Theresa Gabriel
REGISTERED ELECTRICAL ENGINEER

April 15, 2016
PLANS APPROVAL DATE

REGISTERED PROFESSIONAL ENGINEER
Theresa Aziz Gabriel
No. E15129
Exp. 6-30-16
ELECTRICAL
STATE OF CALIFORNIA

THE STATE OF CALIFORNIA OR ITS OFFICERS OR AGENTS SHALL NOT BE RESPONSIBLE FOR THE ACCURACY OR COMPLETENESS OF SCANNED COPIES OF THIS PLAN SHEET.

TO ACCOMPANY PLANS DATED 6-24-16

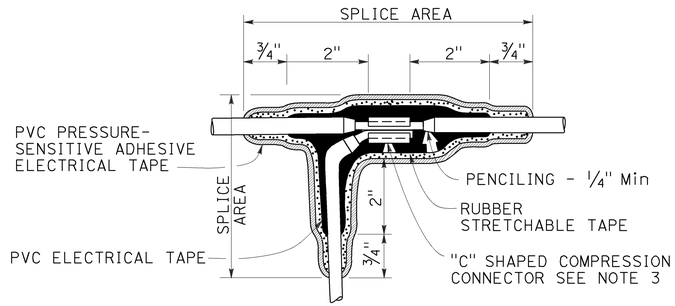

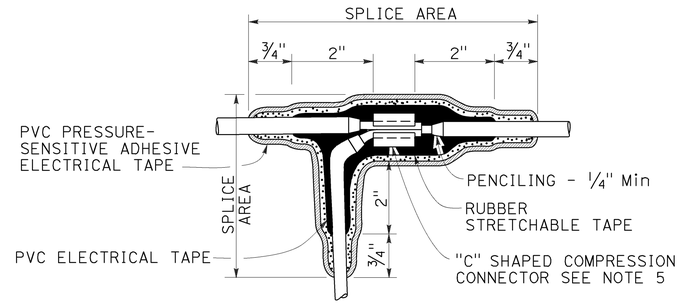

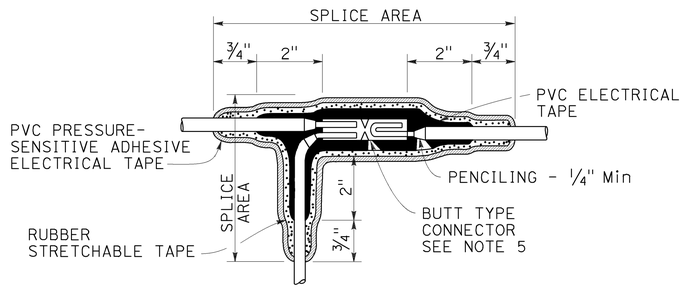

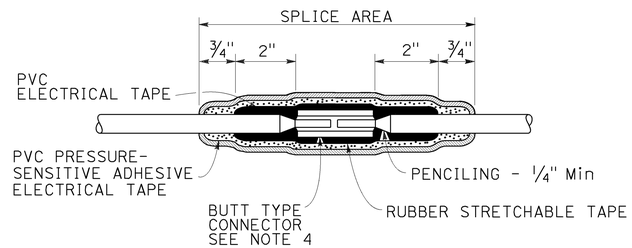

NOTES:

1. Dimensions are minimum.
2. Rubber tapes shall be rolled after application.
3. Between 1 free-end and 1 through conductor.
4. Between 2 free-end conductors.
5. Between 3 free-end conductors.

TYPICAL SPLICE INSULATION METHOD B

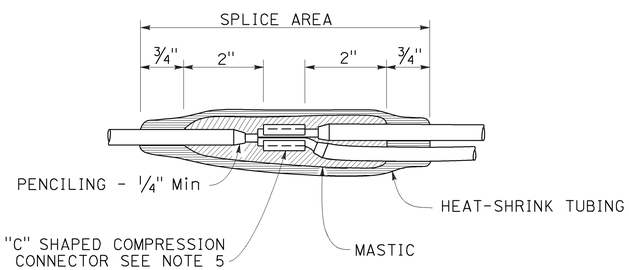

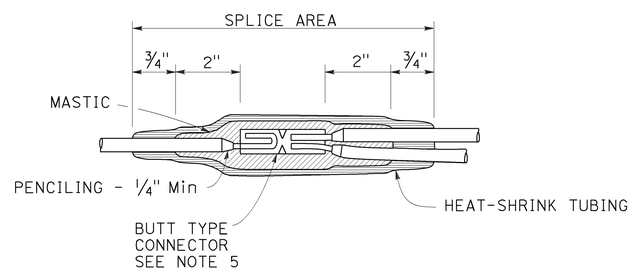

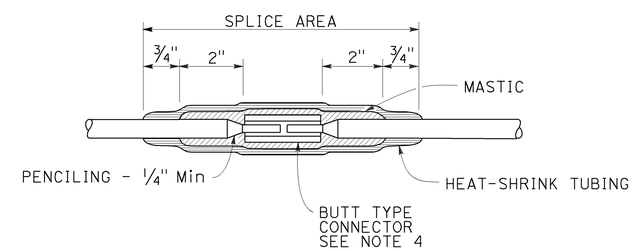

TYPICAL SPLICE INSULATION HEAT-SHRINK TUBING

STATE OF CALIFORNIA
DEPARTMENT OF TRANSPORTATION

ELECTRICAL SYSTEMS (SPLICE INSULATION METHODS DETAILS)

NO SCALE

RSP ES-13A DATED APRIL 15, 2016 SUPERSEDES RSP ES-13A DATED OCTOBER 30, 2015 AND STANDARD PLAN ES-13A DATED MAY 20, 2011 - PAGE 491 OF THE STANDARD PLANS BOOK DATED 2010.

REVISED STANDARD PLAN RSP ES-13A

2010 REVISED STANDARD PLAN RSP ES-13A

1-22-16

Dist	COUNTY	ROUTE	POST MILES TOTAL PROJECT	SHEET No.	TOTAL SHEETS
07	Ven	33	15.7	97	108

Theresa Gabriel
REGISTERED ELECTRICAL ENGINEER

April 15, 2016
PLANS APPROVAL DATE

REGISTERED PROFESSIONAL ENGINEER
Theresa Aziz Gabriel
No. E15129
Exp. 6-30-16
ELECTRICAL
STATE OF CALIFORNIA

THE STATE OF CALIFORNIA OR ITS OFFICERS OR AGENTS SHALL NOT BE RESPONSIBLE FOR THE ACCURACY OR COMPLETENESS OF SCANNED COPIES OF THIS PLAN SHEET.

TO ACCOMPANY PLANS DATED 6-24-16

CIRCUIT VOLTAGE	FUSE VOLTAGE RATING	FUSE CURRENT RATING						
		HPS LAMP BALLAST		LOW PRESSURE SODIUM BALLAST	INDUCTION SIGN LIGHTING	SINGLE PHASE (TWO WIRE) TRANSFORMERS (PRIMARY SIDE)		
		70 W	100 W	180 W	85 W	1 kVA	2 kVA	3 kVA
120 V	250 V	5 A	5 A	5 A	5 A	10 A	20 A	30 A
240 V	250 V	5 A	5 A	5 A	5 A	6 A	10 A	20 A
480 V	500-600 V	5 A	5 A	3 A	1 A (SEE NOTE 2)	3 A	6 A	10 A

NOTES:

1. Primary lines of multiple ballasts shall be provided with fused connectors. Fuse ratings shall be as noted above.
2. See Revised Standard Plan RSP ES-15D, Type SC3 control.

FUSE RATINGS FOR FUSED CONNECTORS

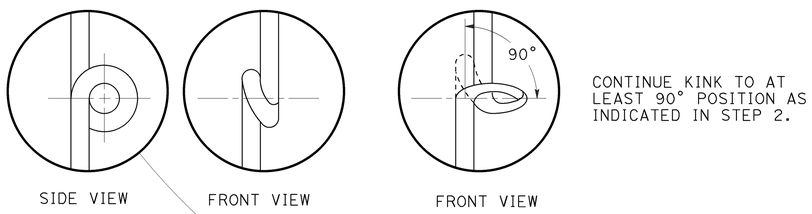

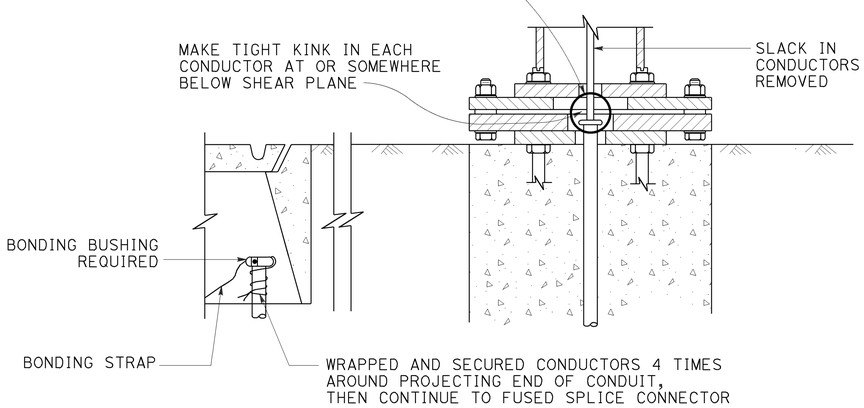

KINKING DETAIL FOR SLIP BASE STANDARDS

DETAIL A

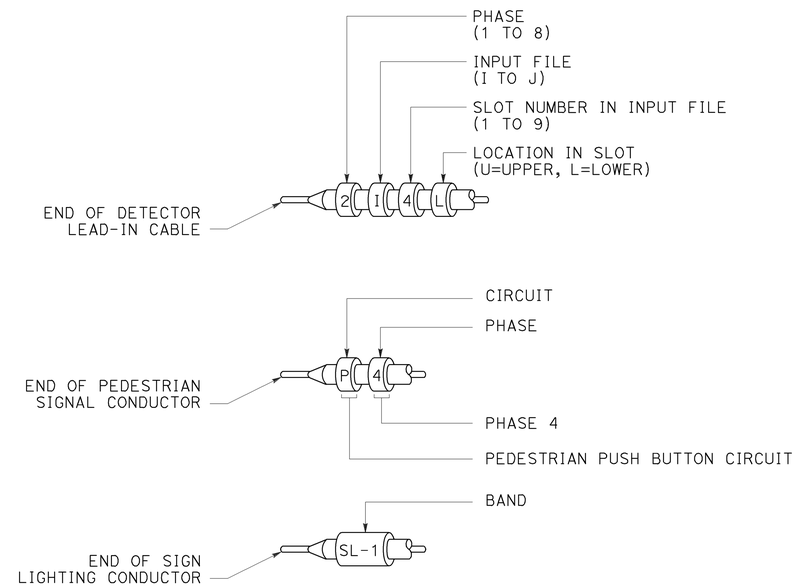

TYPICAL BANDING DETAILS

DETAIL B

STATE OF CALIFORNIA
DEPARTMENT OF TRANSPORTATION

ELECTRICAL SYSTEMS (FUSE RATING, KINKING AND BANDING DETAIL)

NO SCALE

RSP ES-13B DATED APRIL 15, 2016 SUPERSEDES STANDARD PLAN ES-13B DATED MAY 20, 2011 - PAGE 492 OF THE STANDARD PLANS BOOK DATED 2010.

REVISED STANDARD PLAN RSP ES-13B

2010 REVISED STANDARD PLAN RSP ES-13B

1-12-16

DIST	COUNTY	ROUTE	POST MILES TOTAL PROJECT	SHEET No.	TOTAL SHEETS
07	Ven	33	15.7	98	108

REGISTERED CIVIL ENGINEER 6-16-16 DATE

6-24-16
PLANS APPROVAL DATE

REGISTERED PROFESSIONAL ENGINEER JOHN LANE No. C55042 Exp. 06-30-18 CIVIL STATE OF CALIFORNIA

The State of California or its officers or agents shall not be responsible for the accuracy or completeness of electronic copies of this plan sheet.

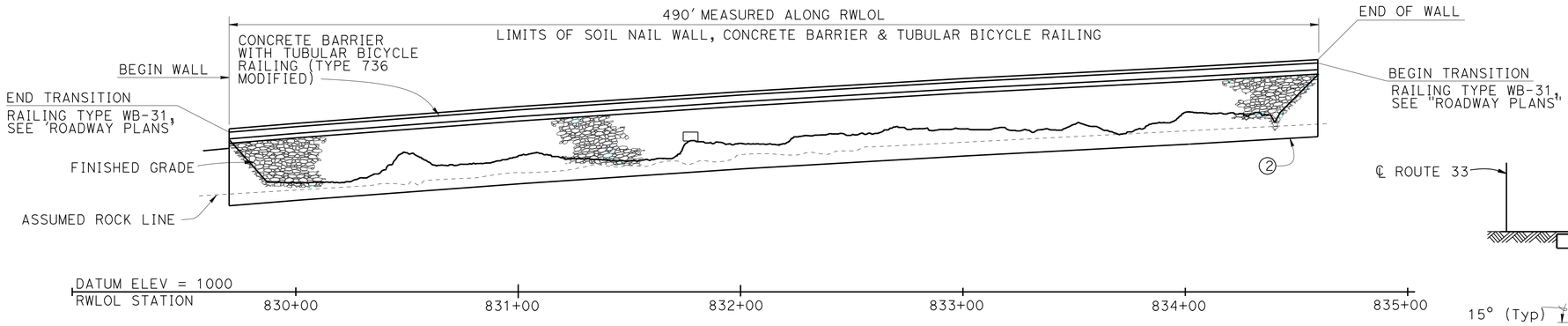

DEVELOPED RETAINING WALL ELEVATION

1" = 30'-0"

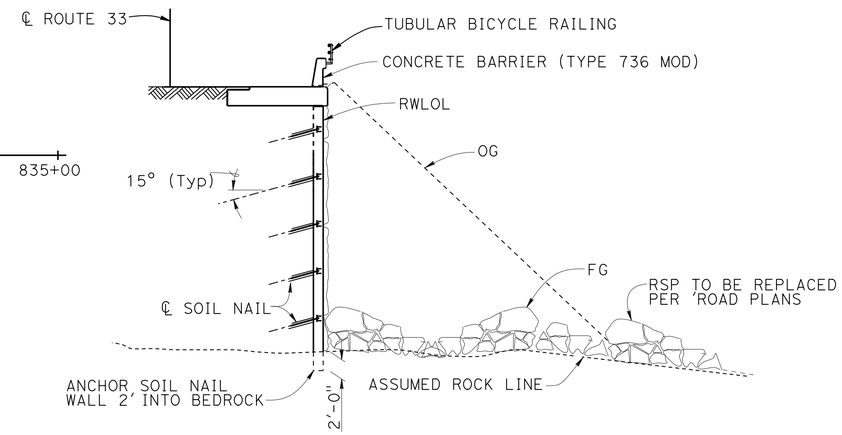

TYPICAL SECTION

1/8" = 1'-0"

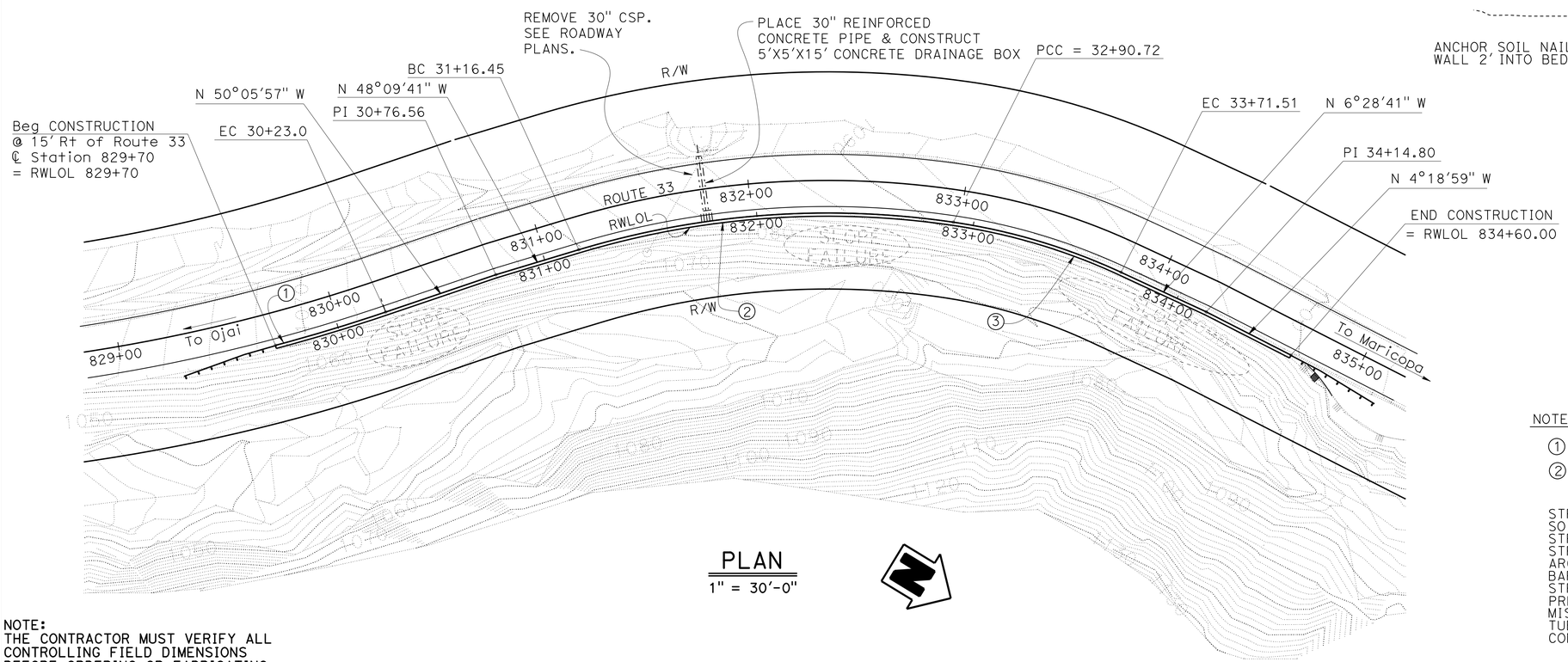

PLAN

1" = 30'-0"

RW LOL CURVE DATA

Curve No.	R	Δ	T	L
1	803'	3°46'55.567"	26.5	53.0'
2	397'	25°09'02"	88.6	174.27'
3	280'	16°31'59"	40.6	80.79'

NOTES:

1. For Roadway Drainage and Earthwork, see "Roadway Plans"
2. Wall shall be anchored 2' into bedrock

STRUCTURE EXCAVATION (SOIL NAIL WALL)	980	CY
SOIL NAIL	10,795	LF
STRUCTURAL CONCRETE (SOIL NAIL WALL)	340	CY
STRUCTURAL CONCRETE, BARRIER SLAB	295	CY
ARCHITECTURAL TEXTURE (RANDOM STONE)	9,270	SQFT
BAR REINFORCING STEEL (SOIL NAIL WALL)	76,650	LB
STRUCTURAL SHOTCRETE	170	CY
PREPARE AND STAIN CONCRETE	9,270	SQFT
MISCELLANEOUS METAL	280	LB
TUBULAR BICYCLE RAILING	490	LF
CONCRETE BARRIER (TYPE 736 MODIFIED)	490	LF

NOTE:
THE CONTRACTOR MUST VERIFY ALL CONTROLLING FIELD DIMENSIONS BEFORE ORDERING OR FABRICATING ANY MATERIAL.

x Douglas W. Dunrud
DESIGN ENGINEER

	BY	CHECKED
DESIGN	J. Lane	D. Dunrud
DETAILS	L. Xiong / Y. Tang / K. Kubo	J. Lane
QUANTITIES	J. Lane	D. Dunrud

LOAD & RESISTANCE FACTOR DESIGN — LIVE LOADING: HL93 W/"LOW-BOY"; PERMIT DESIGN VEHICLE

	BY	CHECKED
LAYOUT	J. Lane	D. Dunrud
SPECIFICATIONS	K. Doll	PLANS AND SPECS COMPARED J. Lane

ORIGINAL SCALE IN INCHES FOR REDUCED PLANS 0 1 2 3

STATE OF CALIFORNIA
DEPARTMENT OF TRANSPORTATION

DIVISION OF ENGINEERING SERVICES
STRUCTURE DESIGN
DESIGN BRANCH 14

BRIDGE NO. NA
POST MILE 15.7

STATE ROUTE 33 SOIL NAIL WALL
GENERAL PLAN

UNIT: 3613
PROJECT NUMBER & PHASE: 0714000092
CONTRACT NO.: 07-305201

DISREGARD PRINTS BEARING EARLIER REVISION DATES → 03-14-16 04-06-16 6-16-16 6-17-16

SHEET 1 OF 11

STRUCTURES DESIGN GENERAL PLAN SHEET (ENGLISH) (REV.09-01-10)

FILE => 305201-a-gp_gp-sheet.dgn

USERNAME => s125624 DATE PLOTTED => 04-AUG-2016 TIME PLOTTED => 14:49

DIST	COUNTY	ROUTE	POST MILES TOTAL PROJECT	SHEET No.	TOTAL SHEETS
07	Ven	33	15.7	99	108

REGISTERED CIVIL ENGINEER 6-16-16 DATE

6-24-16
PLANS APPROVAL DATE

REGISTERED PROFESSIONAL ENGINEER JOHN LANE No. C55042 Exp. 06-30-18 CIVIL STATE OF CALIFORNIA

The State of California or its officers or agents shall not be responsible for the accuracy or completeness of electronic copies of this plan sheet.

INDEX TO PLANS

SHEET	TITLE
1.	GENERAL PLAN
2.	INDEX TO PLANS
3.	SOIL NAIL WALL DETAILS NO. 1
4.	SOIL NAIL WALL DETAILS NO. 2
5.	SOIL NAIL WALL DETAILS NO. 3
6.	CONCRETE BARRIER SLAB DETAILS
7.	SCUPPER DETAILS
8.	NAIL LAYOUT
9.	TUBULAR BICYCLE RAILING
10.	ARCHITECTURAL DETAILS
11.	LOG OF TEST BORINGS

STANDARD PLANS DATED 2010

A10A	ABBREVIATIONS (SHEET 1 OF 2)
RSP A10B	ABBREVIATIONS (SHEET 2 OF 2)
A10C	LINES AND SYMBOLS (SHEET 1 OF 3)
A10D	LINES AND SYMBOLS (SHEET 2 OF 3)
A10E	LINES AND SYMBOLS (SHEET 3 OF 3)
RSP A10F	LEGEND-SOIL (SHEET 1 OF 2)
RSP A10G	LEGEND-SOIL (SHEET 2 OF 2)
A10H	LEGEND-ROCK
RSP A77U4	MIDWEST GUARDRAIL SYSTEM TRANSITION RAILING (TYPE WB-31)
RSP D77B	GRATE DETAILS No. 2
RSP B11-56	CONCRETE BARRIER TYPE 736

ACCELERATION RESPONSE SPECTRUM (ARS)

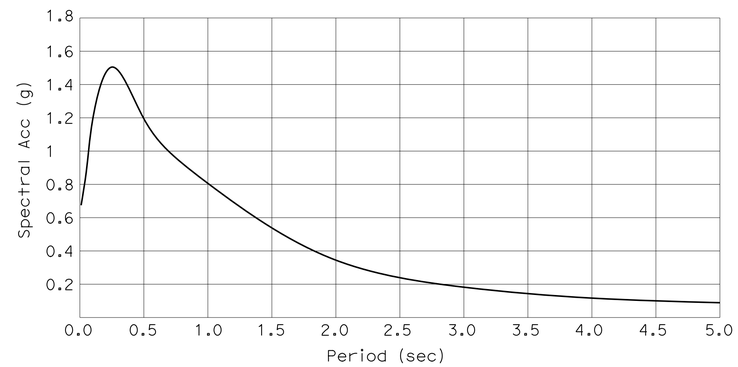

Soil Nail Resistance Information

Station Along RWLOL	Design Pullout Resistance (pound per feet)	Tensile Force of Nail (kips)	Facing Tensile Force (kips)
829+70 to 834+59.6	2800	32	28

GENERAL NOTES - SOIL NAIL WALL

DESIGN:
Federal Highway Administration Publication Geotechnical Engineering Circular No. 7
Soil Nail Walls, Publication No. FHWA-IF-03-017

LIVE LOADING:
No Live Loading

REINFORCED CONCRETE:
fy = 60 ksi (Yield Strength of Reinforcement)
f'c = 3.6 ksi (Compressive Strength at 28 days)
n = 8

STRUCTURAL SHOTCRETE:
f'c = 3.6 ksi
fy = 65 ksi (plain welded wire reinforcement)
fy = 60 ksi (whaler bar reinforcement)

STRUCTURAL STEEL (BEARING PLATES):
fy = 50 ksi

STUDS:
fy = 55 ksi

SOIL NAIL:
fy = 75 ksi

SOIL PARAMETERS:
γ = 120 pcf
ϕ = 34°
c = 150 lb/ft^2

GROUT:
f'c = 3000 psi at 28 Days

SEISMIC LOADING::
Soil Profile: Soil Shearwave velocity V_{30}= 560 ft/sec
Average shear velocity in top 100 ftof soil)
Moment Magnitude: MMax = 7.0+0.25
Peak Ground Acceleration 0.679
kh = 0.2

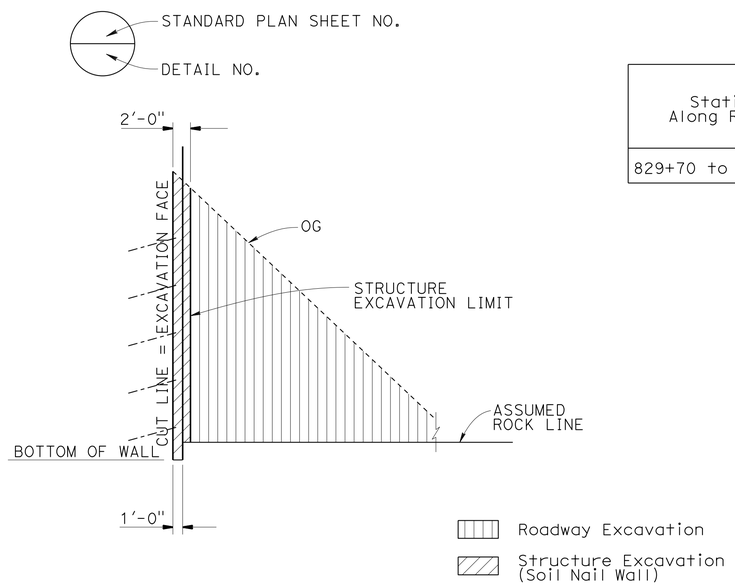

PAY LIMITS OF EXCAVATION AND BACKFILL

No Scale

DESIGN	BY J. Lane	CHECKED D. Dunrud	
DETAILS	BY L. Xiong / Y. Tang / K. Kubo	CHECKED J. Lane	
QUANTITIES	BY J. Lane	CHECKED D. Dunrud	

STATE OF CALIFORNIA DEPARTMENT OF TRANSPORTATION

DIVISION OF ENGINEERING SERVICES STRUCTURE DESIGN DESIGN BRANCH 14

BRIDGE NO. NA
POST MILE 15.7

STATE ROUTE 33 SOIL NAIL WALL
INDEX TO PLANS

STRUCTURES DESIGN DETAIL SHEET (ENGLISH) (REV. 09-01-10)

ORIGINAL SCALE IN INCHES FOR REDUCED PLANS 0 1 2 3

UNIT: 3613
PROJECT NUMBER & PHASE: 0714000092
CONTRACT NO.: 07-305201

DISREGARD PRINTS BEARING EARLIER REVISION DATES

REVISION DATES 03-08-16 03-09-16 03-14-16 04-06-16

SHEET 2 OF 11

FILE => 305201-a-itp_detail.dgn

USERNAME => s125624 DATE PLOTTED => 04-AUG-2016 TIME PLOTTED => 14:49

DIST	COUNTY	ROUTE	POST MILES TOTAL PROJECT	SHEET No.	TOTAL SHEETS
07	Ven	33	15.7	100	108

REGISTERED CIVIL ENGINEER 6-16-16 DATE

6-24-16
PLANS APPROVAL DATE

REGISTERED PROFESSIONAL ENGINEER JOHN LANE No. C55042 Exp. 06-30-18 CIVIL STATE OF CALIFORNIA

The State of California or its officers or agents shall not be responsible for the accuracy or completeness of electronic copies of this plan sheet.

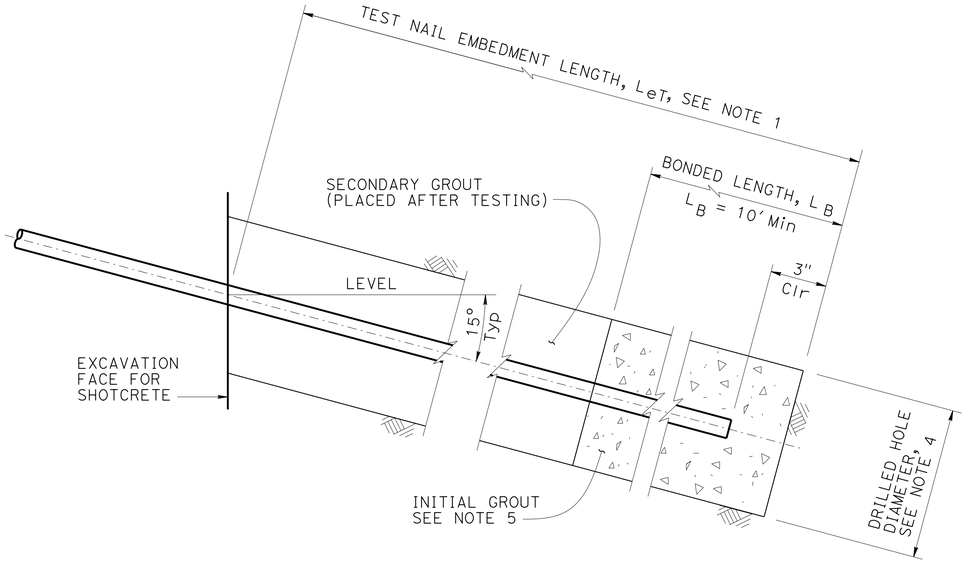

TEST SOIL NAIL ASSEMBLY DETAIL

NO SCALE

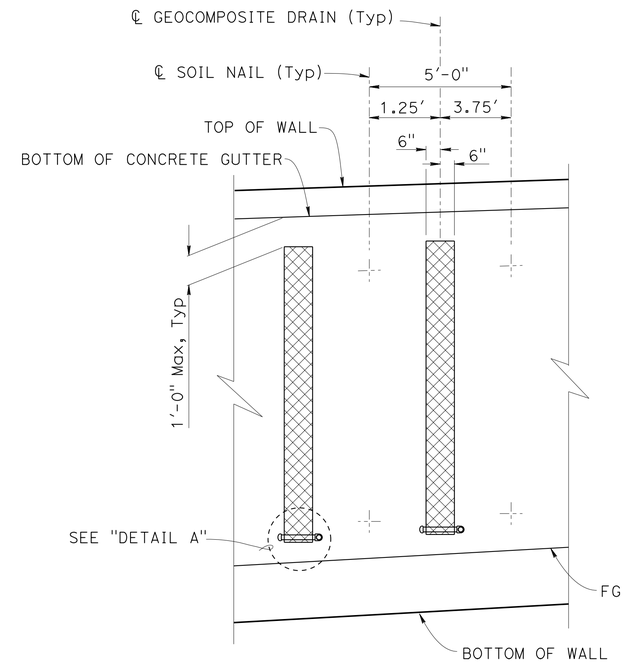

PART ELEVATION GEOCOMPOSITE DRAIN

3/8" = 1'-0"

NOTES:

1. End Treatment and splicing for Geocomposite Drain per manufacturer recommendations.
2. Geocomposite Drain not required for wall height less than 6'-0".
3. Geocomposite Drain shall be adjusted when conflicting with Test Soil Nails.
4. Weep Hole at every Geocomposite Drain.

TEST NAIL NOTES:

1. The test nail embedment length LeT, shall be equal to 2/3 of the embedment length, Le of adjacent production soil nail assemblies, but not less than 12'-0".
2. The total length of the test nail assembly equals the embedment length plus the length required for jacking equipment.
3. For location of proof test nail see, "NAIL LAYOUT" sheets. Additional proof test nails will be installed and tested per special provisions.
4. Contractor to determine drilled hole diameter.
5. Finished grout surface to be normal to the bar.

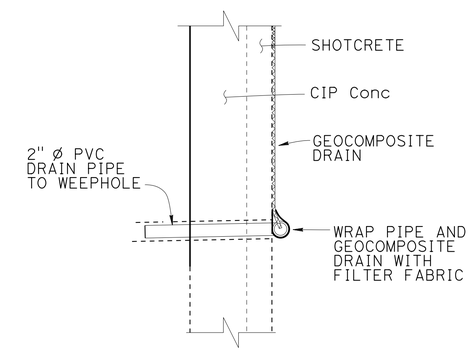

SECTION B-B

NO SCALE

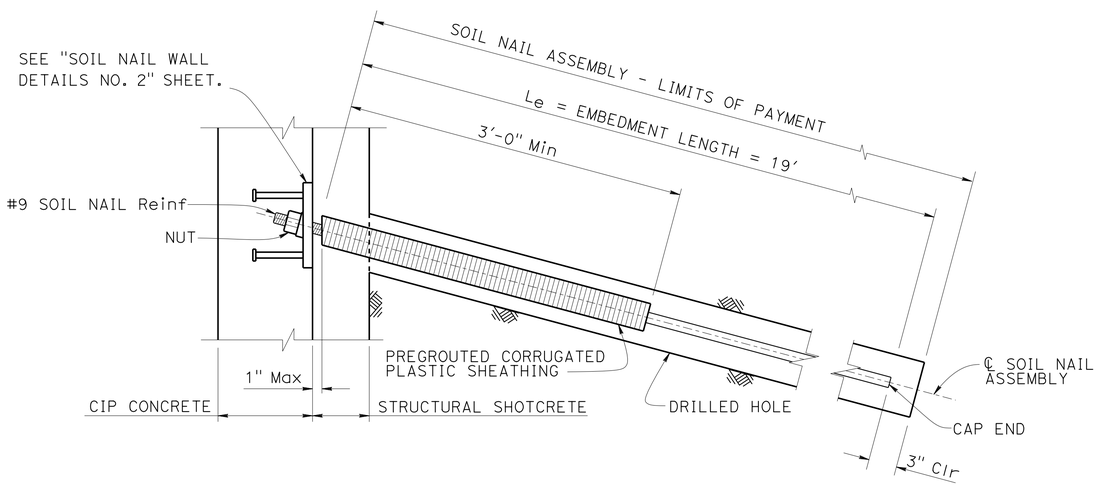

SOIL NAIL ASSEMBLY DETAIL

NO SCALE

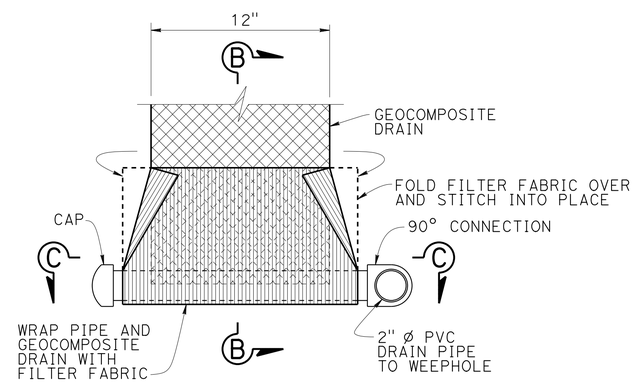

DETAIL A

NO SCALE

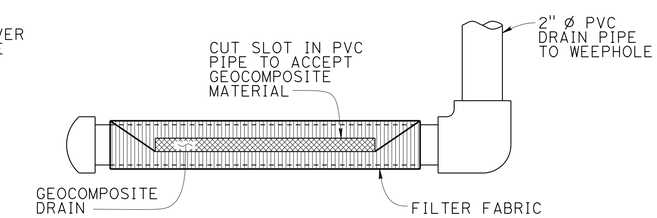

SECTION C-C

NO SCALE

	BY	CHECKED
DESIGN	J. Lane	D. Dunrud
DETAILS	L. Xiong / K. Kubo	J. Lane
QUANTITIES	J. Lane	D. Dunrud

STATE OF CALIFORNIA DEPARTMENT OF TRANSPORTATION

DIVISION OF ENGINEERING SERVICES STRUCTURE DESIGN DESIGN BRANCH 14

BRIDGE NO. NA

POST MILE 15.7

STATE ROUTE 33 SOIL NAIL WALL

SOIL NAIL WALL DETAILS NO. 1

STRUCTURES DESIGN DETAIL SHEET (ENGLISH) (REV. 09-01-10)

ORIGINAL SCALE IN INCHES FOR REDUCED PLANS 0 1 2 3

UNIT: 3613
PROJECT NUMBER & PHASE: 0714000092

CONTRACT NO.: 07-305201

DISREGARD PRINTS BEARING EARLIER REVISION DATES

REVISION DATES 02-12-16 02-25-16 03-14-16 02-02-16

SHEET 3 OF 11

FILE => 305201-d-snwdet1_detail-sheet.dgn

USERNAME => s125624 DATE PLOTTED => 04-AUG-2016 TIME PLOTTED => 14:49