INDEX OF PLANS

SHEET No.	DESCRIPTION
1	TITLE AND LOCATION MAP
2	LOCATIONS OF CONSTRUCTION
3-4	CONSTRUCTION AREA SIGNS
5-11	TRAFFIC HANDLING PLANS
12	PAVEMENT DELINEATION DETAILS
13	SUMMARY OF QUANTITIES
14-18	REVISED STANDARD PLANS

STRUCTURE PLANS

19-33	ROUTE 605 BRIDGES

THE STANDARD PLANS LIST APPLICABLE TO THIS CONTRACT IS INCLUDED IN THE NOTICE TO BIDDERS AND SPECIAL PROVISIONS BOOK.

STATE OF CALIFORNIA

DEPARTMENT OF TRANSPORTATION

PROJECT PLANS FOR CONSTRUCTION ON

STATE HIGHWAY

IN LOS ANGELES COUNTY

AT VARIOUS LOCATIONS

FROM ARTESIA BOULEVARD UNDERCROSSING

TO WALNUT CREEK

TO BE SUPPLEMENTED BY STANDARD PLANS DATED MAY 2006

Dist	COUNTY	ROUTE	POST MILES TOTAL PROJECT	SHEET No.	TOTAL SHEETS
07	LA	605	R4.8/R19.9	1	33

LOCATION MAP

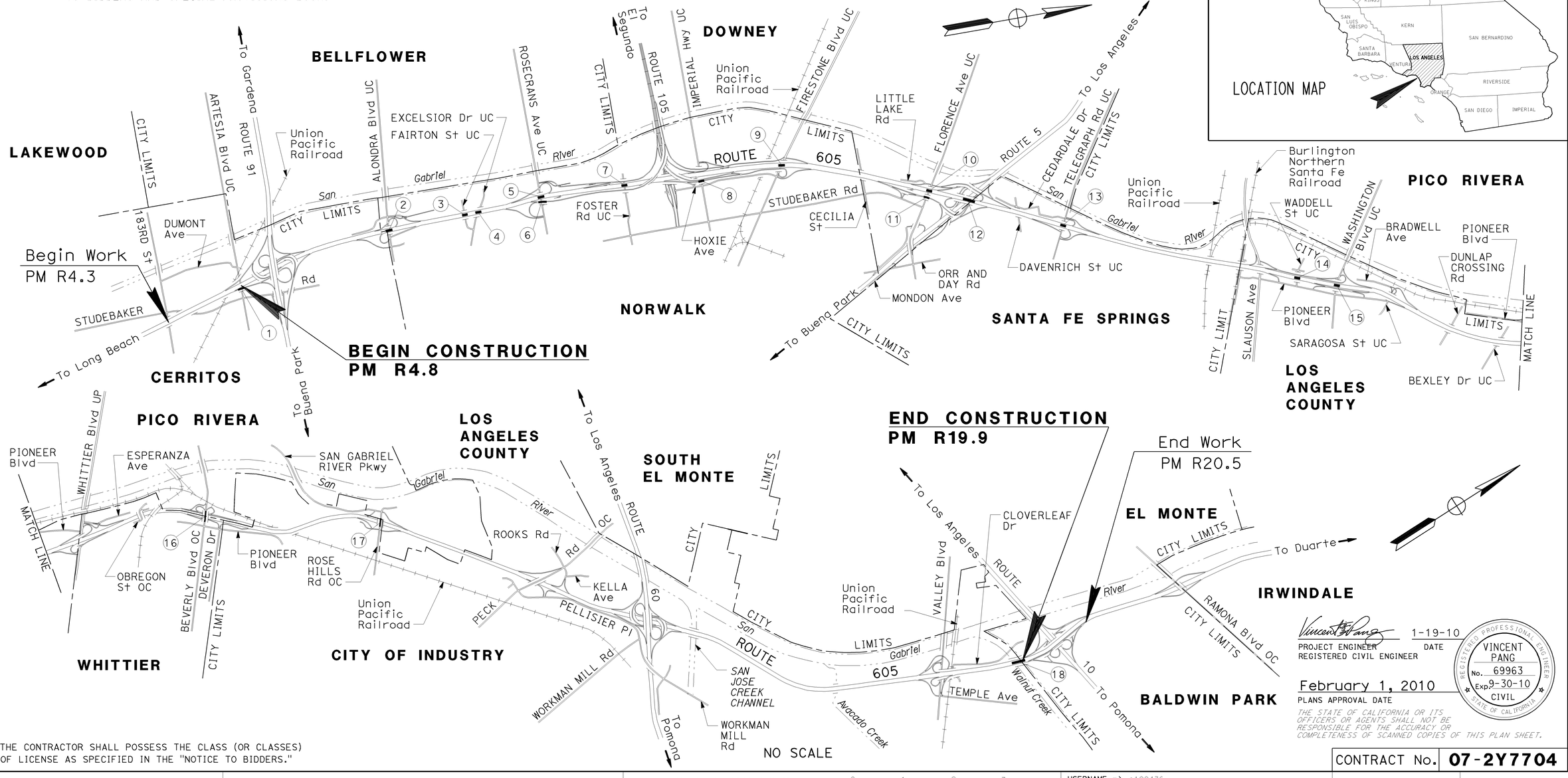

NO SCALE

THE CONTRACTOR SHALL POSSESS THE CLASS (OR CLASSES) OF LICENSE AS SPECIFIED IN THE "NOTICE TO BIDDERS."

PROJECT MANAGER: JIWANJIT PALAHA

DESIGN ENGINEER: LARRY WIERING

1-19-10
PROJECT ENGINEER — DATE
REGISTERED CIVIL ENGINEER

REGISTERED PROFESSIONAL ENGINEER — VINCENT PANG — No. 69963 — Exp. 9-30-10 — CIVIL — STATE OF CALIFORNIA

February 1, 2010
PLANS APPROVAL DATE

THE STATE OF CALIFORNIA OR ITS OFFICERS OR AGENTS SHALL NOT BE RESPONSIBLE FOR THE ACCURACY OR COMPLETENESS OF SCANNED COPIES OF THIS PLAN SHEET.

LAST REVISION: DATE PLOTTED => 08-FEB-2010; TIME PLOTTED => 23:24; 02-01-10

CONTRACT No. 07-2Y7704

BORDER LAST REVISED 8/1/2008 | CALTRANS WEB SITE IS: HTTP//WWW.DOT.CA.GOV/ | RELATIVE BORDER SCALE IS IN INCHES 0 1 2 3 | USERNAME => s122436 DGN FILE => 72y770ab001.dgn | CU 07606 | EA 2Y7701

Dist	COUNTY	ROUTE	POST MILES TOTAL PROJECT	SHEET No.	TOTAL SHEETS
07	LA	605	R4.8/R19.9	2	33

Vincent Pang 1-19-10
REGISTERED CIVIL ENGINEER DATE

2-1-10
PLANS APPROVAL DATE

REGISTERED PROFESSIONAL ENGINEER
VINCENT PANG
No. 69663
Exp. 9-30-10
CIVIL
STATE OF CALIFORNIA

THE STATE OF CALIFORNIA OR ITS OFFICERS OR AGENTS SHALL NOT BE RESPONSIBLE FOR THE ACCURACY OR COMPLETENESS OF SCANNED COPIES OF THIS PLAN SHEET.

LOCATIONS OF CONSTRUCTION

No.	BRIDGE NAME	BRIDGE No.	PM
1	N605-E91 CONNECTOR OC	53-1735G	R4.78
2	ALONDRA BOULEVARD UC	53-1645	R5.81
3	FAIRTON STREET UC	53-1646	R6.32
4	EXCELSIOR DRIVE UC	53-1647	R6.40
5	ROSECRANS AVENUE UC	53-1648	R6.81
6	N605-W105 CONNECTOR OC	53-2699G	R6.81
7	FOSTER ROAD UC	53-1650	R7.34
8	N605-FIRESTONE/IMPERIAL	53-1651T	R7.84
9	FIRESTONE BOULEVARD UC	53-1653	R8.38
10	FLORENCE AVENUE UC	53-1656	R9.35
11	N605-S5 CONNECTOR OC	53-1656G	R9.35
12	ROUTE 605/5 SEPARATION	53-1660	R9.55
13	TELEGRAPH ROAD UC	53-1662	R10.25
14	WADDELL STREET UC	53-1666	R11.80
15	WASHINGTON BOULEVARD UC	53-1667	R12.05
16	BEVERLY BOULEVARD OC	53-1531	R14.41
17	ROSE HILLS ROAD OC	53-1533	R15.57
18	WALNUT CREEK	53-1343	R19.85

REVISED BY | DATE REVISED
VINCENT PANG | LARRY WIERING
CALCULATED-DESIGNED BY | CHECKED BY
FUNCTIONAL SUPERVISOR: LARRY WIERING
STATE OF CALIFORNIA - DEPARTMENT OF TRANSPORTATION
Caltrans® MAINTENANCE ENGINEERING

LOCATIONS OF CONSTRUCTION

LC-1

LAST REVISION | DATE PLOTTED => 08-FEB-2010
02-01-10 | TIME PLOTTED => 23:26

BORDER LAST REVISED 4/11/2008 | RELATIVE BORDER SCALE IS IN INCHES 0 1 2 3 | USERNAME => s122436 DGN FILE => 72y770ba001.dgn | CU 07606 | EA 2Y7701

Dist	COUNTY	ROUTE	POST MILES TOTAL PROJECT	SHEET No.	TOTAL SHEETS
07	LA	605	R4.8/R19.9	3	33

Vincent Pang 1-19-10
REGISTERED CIVIL ENGINEER DATE

2-1-10
PLANS APPROVAL DATE

REGISTERED PROFESSIONAL ENGINEER
VINCENT PANG
No. 69663
Exp. 9-30-10
CIVIL
STATE OF CALIFORNIA

THE STATE OF CALIFORNIA OR ITS OFFICERS OR AGENTS SHALL NOT BE RESPONSIBLE FOR THE ACCURACY OR COMPLETENESS OF SCANNED COPIES OF THIS PLAN SHEET.

NOTES:

1. LOCATIONS OF CONSTRUCTION AREA SIGNS SHOWN ARE APPROXIMATE. EXACT LOCATIONS WILL BE DETERMINED BY THE ENGINEER.
2. EXISTING UTILITY FACILITIES HAVE NOT BEEN PLOTTED ON THESE PLANS

STATIONARY MOUNTED CONSTRUCTION AREA SIGNS

SIGN NUMBER	SIGN CODE	PANEL SIZE	SIGN MESSAGE	NUMBER OF POSTS AND SIZE	No. OF SIGNS CS-1	No. OF SIGNS CS-2	TOTAL No. OF SIGNS
(A)	G20-2	48" x 24"	END ROAD WORK	1 - 4" x 6"	16	2	18
(B)	W20-1	48" x 48"	ROAD WORK AHEAD	1 - 6" x 6"	21	5	26
(C)	G20-2	36" x 18"	END ROAD WORK	1 - 4" x 4"	0	4	4
(D)	W20-1	36" x 36"	ROAD WORK AHEAD	1 - 4" x 6"	0	4	4
(E)	C40 (CA)	144" x 60"	TRAFFIC FINES DOUBLED IN CONSTRUCTION ZONES	2 - 6" x 8"	8	5	13

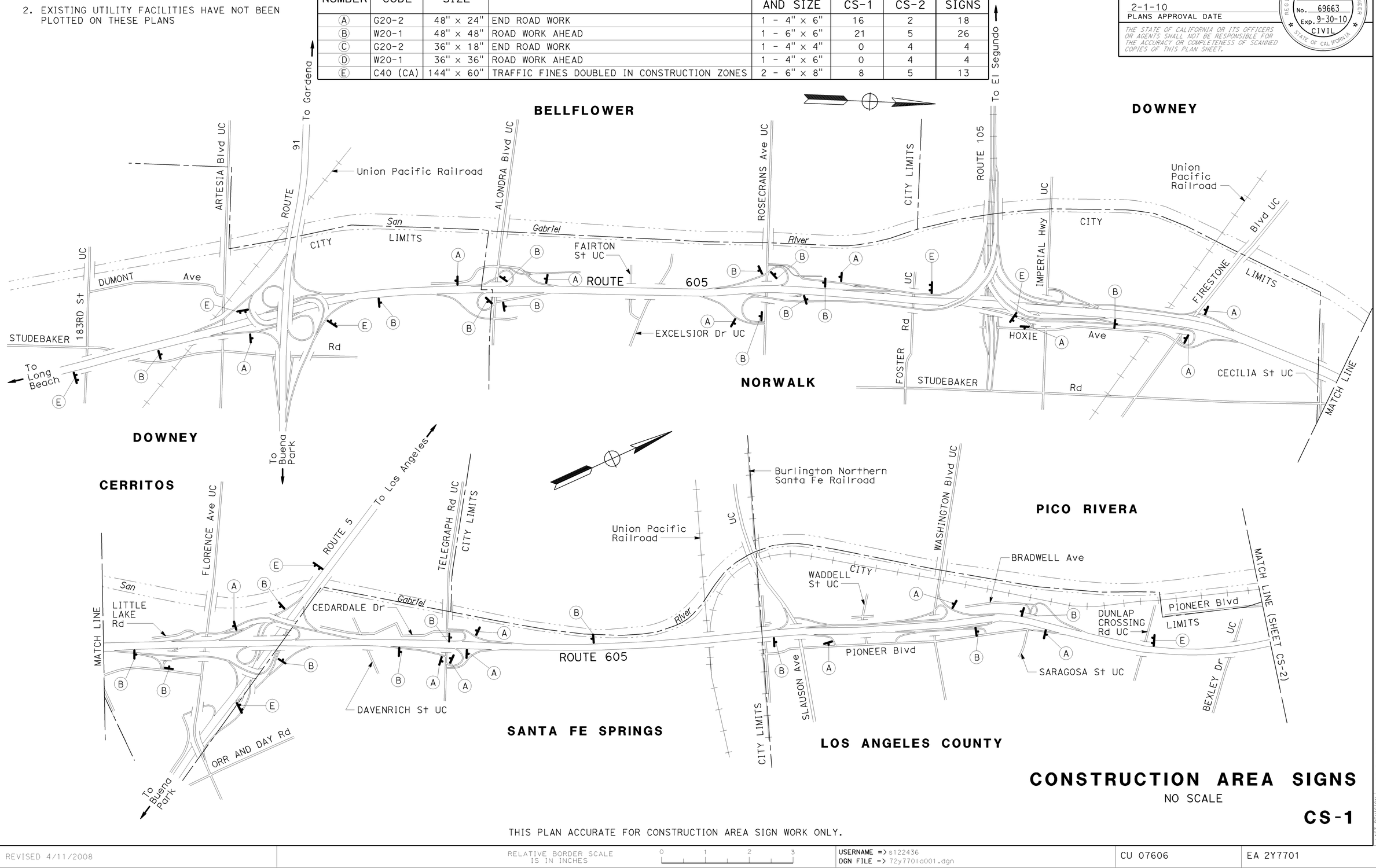

CONSTRUCTION AREA SIGNS

NO SCALE

CS-1

THIS PLAN ACCURATE FOR CONSTRUCTION AREA SIGN WORK ONLY.

STATE OF CALIFORNIA - DEPARTMENT OF TRANSPORTATION
Caltrans® MAINTENANCE ENGINEERING

FUNCTIONAL SUPERVISOR: LARRY WIERING
CALCULATED-DESIGNED BY: VINCENT PANG
CHECKED BY: LARRY WIERING
REVISED BY
DATE REVISED

LAST REVISION DATE PLOTTED => 08-FEB-2010
02-01-10 TIME PLOTTED => 23:26

BORDER LAST REVISED 4/11/2008
RELATIVE BORDER SCALE IS IN INCHES 0 1 2 3
USERNAME => s122436
DGN FILE => 72y7701a001.dgn
CU 07606
EA 2Y7701

Dist	COUNTY	ROUTE	POST MILES TOTAL PROJECT	SHEET No.	TOTAL SHEETS
07	LA	605	R4.8/R19.9	4	33

Vincent Pang 1-19-10
REGISTERED CIVIL ENGINEER DATE

2-1-10
PLANS APPROVAL DATE

REGISTERED PROFESSIONAL ENGINEER
VINCENT PANG
No. 69663
Exp. 9-30-10
CIVIL
STATE OF CALIFORNIA

THE STATE OF CALIFORNIA OR ITS OFFICERS OR AGENTS SHALL NOT BE RESPONSIBLE FOR THE ACCURACY OR COMPLETENESS OF SCANNED COPIES OF THIS PLAN SHEET.

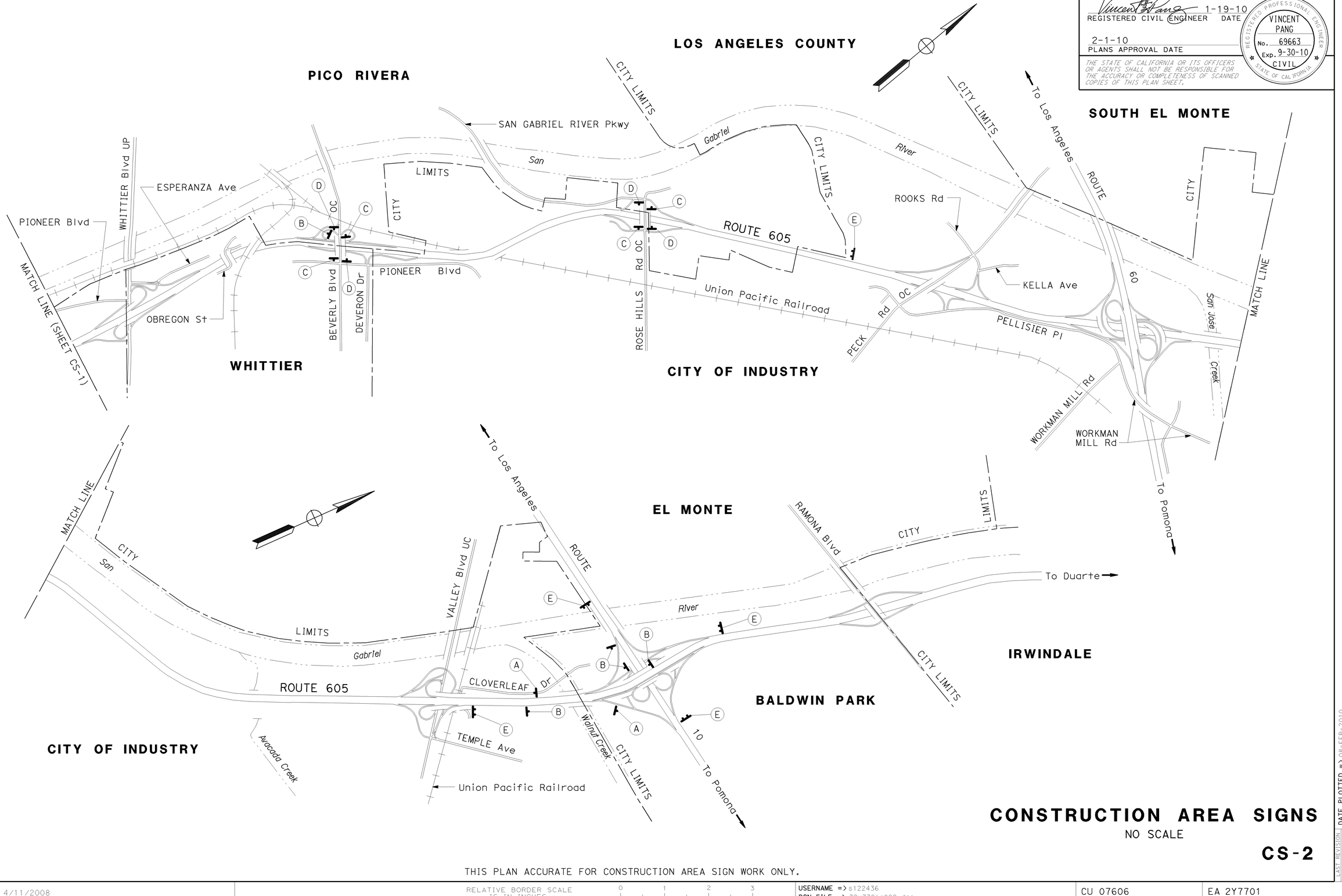

CONSTRUCTION AREA SIGNS

NO SCALE

CS-2

THIS PLAN ACCURATE FOR CONSTRUCTION AREA SIGN WORK ONLY.

STATE OF CALIFORNIA - DEPARTMENT OF TRANSPORTATION
Caltrans MAINTENANCE ENGINEERING

FUNCTIONAL SUPERVISOR: LARRY WIERING
CALCULATED-DESIGNED BY: VINCENT PANG
CHECKED BY: LARRY WIERING
REVISED BY
DATE REVISED

LAST REVISION DATE PLOTTED => 08-FEB-2010
TIME PLOTTED => 23:27
02-01-10

BORDER LAST REVISED 4/11/2008

RELATIVE BORDER SCALE IS IN INCHES 0 1 2 3

USERNAME => s122436
DGN FILE => 72y7701a002.dgn

CU 07606

EA 2Y7701

Dist	COUNTY	ROUTE	POST MILES TOTAL PROJECT	SHEET No.	TOTAL SHEETS
07	LA	605	R4.8/R19.9	5	33

Denis Katayama 6-18-09
REGISTERED CIVIL ENGINEER DATE

2-1-10
PLANS APPROVAL DATE

REGISTERED PROFESSIONAL ENGINEER D.S. KATAYAMA No. C50648 Exp. 9-30-11 CIVIL STATE OF CALIFORNIA

THE STATE OF CALIFORNIA OR ITS OFFICERS OR AGENTS SHALL NOT BE RESPONSIBLE FOR THE ACCURACY OR COMPLETENESS OF SCANNED COPIES OF THIS PLAN SHEET.

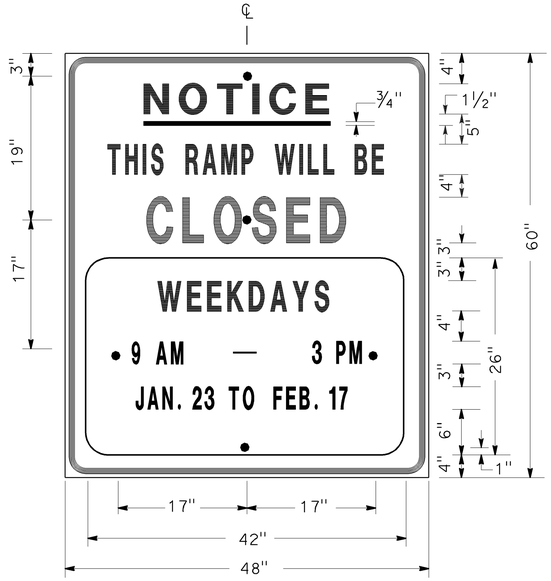

SIGN SP-1

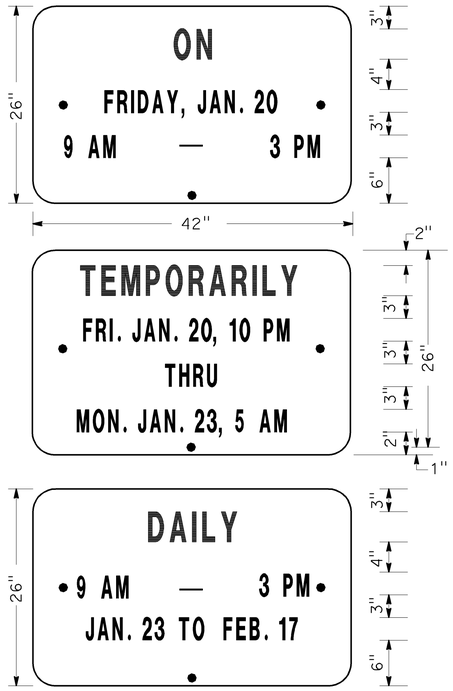

ALTERNATE OVERLAY PANELS (TYPICAL)

NOTES: (SIGN SP-1)

1. SIGNS SHALL HAVE ORANGE RETROREFLECTORIZED BACKGROUND WITH BLACK BORDER AND LETTERS.
2. BOLT HOLES SHALL BE ⅜" DIAMETER.
3. BASE MATERIAL SHALL BE ALUMINUM (MINIMUM 0.06").
4. SIGNS SHALL BE MOUNTED WITH BOTTOMS OF SIGNS A MINIMUM OF 6' ABOVE GROUND.

SIZE	BORDER WIDTH	MARGIN WIDTH	LETTER SIZE LINE 1	LINE 2*	LINE 3	LINE 4	LINE 5,6 & 7*	CORNER RADIUS
48"×60"	1¼"	¾"	4E	4D	6E	4D		3"
42"×26"	OVERLAY						3D	1½"
* CONDENSED SPACING IF NECESSARY								

SPECIAL ADVANCE NOTICE PUBLICITY SIGN

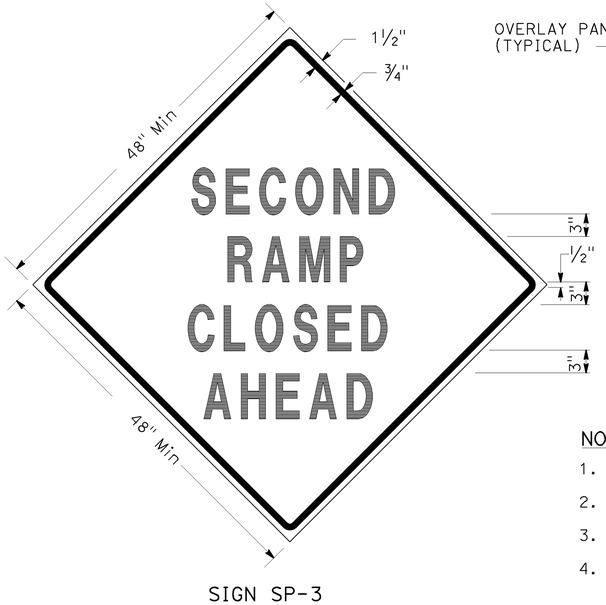

SIGN SP-3

SIGN SP-5

NOTES: (SIGNS SP-3 & SP-5)

1. LETTERS - 6" SERIES D.
2. LETTERS AND BORDERS - BLACK ON RETROREFLECTORIZED ORANGE BACKGROUND.
3. BASE MATERIAL SHALL BE ALUMINUM (MINIMUM 0.06").
4. SIGNS SHALL BE MOUNTED WITH BOTTOMS OF SIGNS A MINIMUM OF 6' ABOVE GROUND.

SPECIAL SIGN FOR EXIT RAMP CLOSURES

SIGN SP-4

NOTES: (SIGN SP-4)

1. LETTERS - 6" SERIES C.
2. LETTERS AND BORDERS - BLACK ON RETROREFLECTORIZED WHITE BACKGROUND.
3. BASE MATERIAL SHALL BE ALUMINUM (MINIMUM 0.06").
4. SIGNS SHALL BE PLACED AT RAMP ENTRANCES IN ADDITION TO SIGNS POSTED IN ACCORDANCE WITH STANDARD PLAN T14.

SPECIAL SIGN FOR ENTRANCE RAMP CLOSURES

TRAFFIC HANDLING DETAILS
TRAFFIC CONTROL SYSTEM FOR RAMP CLOSURES, DETOUR SIGNS AND MISCELLANEOUS DETAILS
SHEET 1 OF 2

NO SCALE

THD-1

STATE OF CALIFORNIA - DEPARTMENT OF TRANSPORTATION
Caltrans DTM

FUNCTIONAL SUPERVISOR	CALCULATED-DESIGNED BY	CHECKED BY	REVISED BY	DATE REVISED
JOHN YANG	ALBERT K YU	JOCELYN C CHIANG	JC	7/08
			JC	8/08
			JC	9/08

LAST REVISION 02-01-10 DATE PLOTTED => 08-FEB-2010 TIME PLOTTED => 23:28

Dist	COUNTY	ROUTE	POST MILES TOTAL PROJECT	SHEET No.	TOTAL SHEETS
07	LA	605	R4.8/R19.9	6	33

Dena Katayama 6-18-09
REGISTERED CIVIL ENGINEER DATE

2-1-10
PLANS APPROVAL DATE

REGISTERED PROFESSIONAL ENGINEER — D.S. KATAYAMA — No. C50648 — Exp. 9-30-11 — CIVIL — STATE OF CALIFORNIA

THE STATE OF CALIFORNIA OR ITS OFFICERS OR AGENTS SHALL NOT BE RESPONSIBLE FOR THE ACCURACY OR COMPLETENESS OF SCANNED COPIES OF THIS PLAN SHEET.

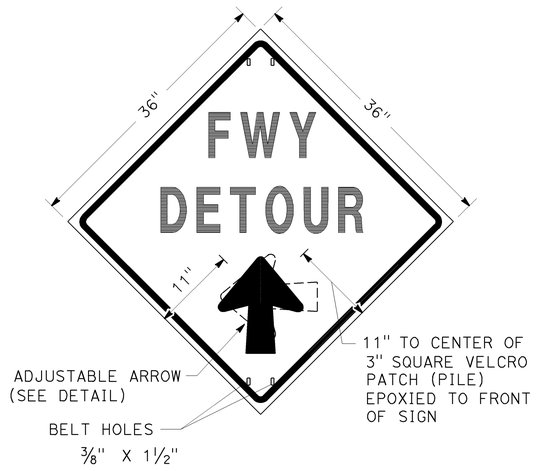

SIGN SP-2

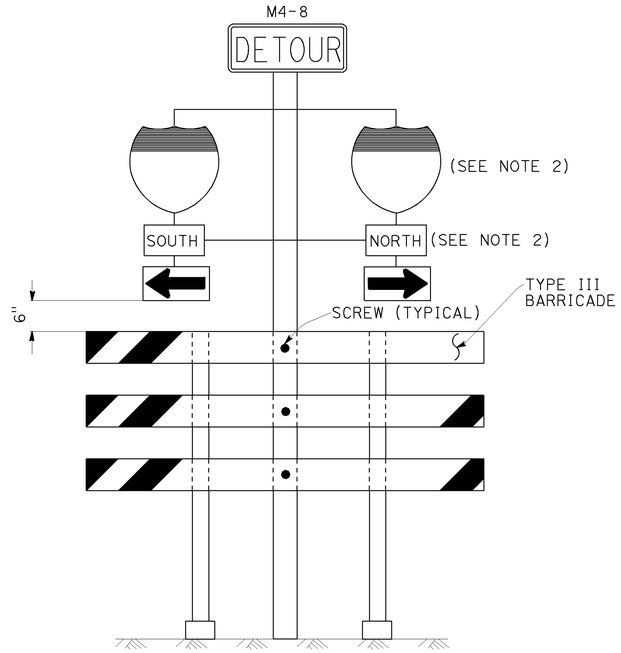

SIGN SP-6 (SEE NOTE 1)

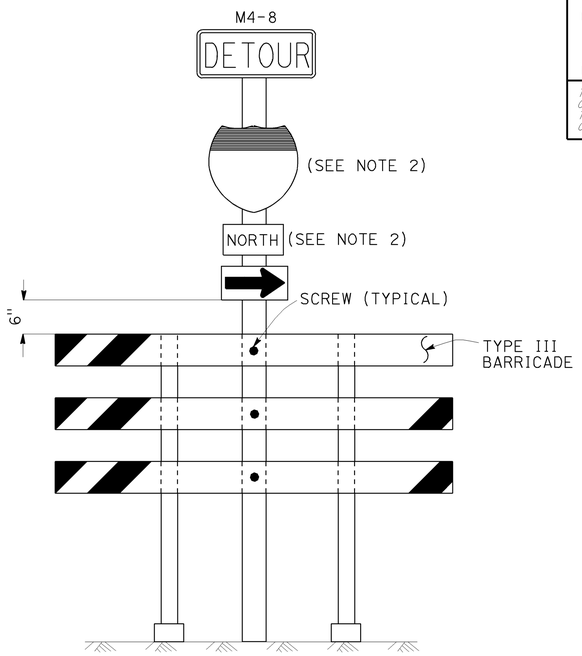

SIGN SP-7 (SEE NOTE 1)

NOTES: (SIGN SP-2)

1. LETTERS -6" SERIES E.
2. LETTERS, BORDER AND ARROW - BLACK ON RETROREFLECTORIZED ORANGE BACKGROUND.
3. BASE MATERIAL FOR SIGNS AND ARROWS SHALL BE ALUMINUM (MINIMUM 0.06").
4. BELTS (LUGGAGE STRAPS) SHALL BE 1" WIDE BY 48" LONG, MADE OF COTTON OR POLYPROPYLENE WEB MATERIAL.
5. SIGNS SHALL BE MOUNTED WITH BOTTOMS OF SIGNS A MINIMUM OF 6' ABOVE GROUND EXCEPT AS OTHERWISE SHOWN ON OTHER TRAFFIC HANDLING DETAILS PLANS.

ABBREVIATION

(CA) CALIFORNIA CODE

NOTES: (SIGNS SP-6 & SP-7)

1. IN LIEU OF PLACING SIGNS ON TYPE III BARRICADES, SIGNS, INCLUDING POSTS, MAY BE PLACED INTO THE GROUND OR FASTENED ONTO ELECTROLIERS.
2. USE APPROPRIATE ROUTE SHIELD [G26-2(CA), G27-2(CA), G28-2(CA)] AND CARDINAL DIRECTION [NORTH (M3-1), SOUTH (M3-3), EAST (M3-2), WEST (M3-4)]

SPECIAL PORTABLE FREEWAY DETOUR SIGNS

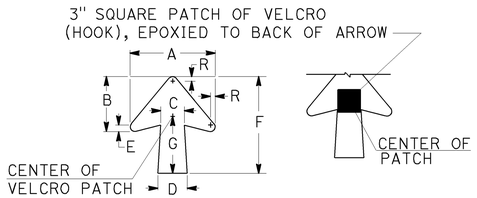

DIMENSIONS							
A	B	C	D	E	F	G	R
11 1/4"	7 1/4"	3 1/8"	4"	7/8"	13"	7 1/2"	5/8"

SPECIAL PORTABLE FREEWAY DETOUR SIGN

ADJUSTABLE ARROW DETAIL

TRAFFIC HANDLING DETAILS

TRAFFIC CONTROL SYSTEM FOR RAMP CLOSURES, DETOUR SIGNS AND MISCELLANEOUS DETAILS

SHEET 2 OF 2

NO SCALE

THD-2

REVISED BY	DATE REVISED
JC	9/08
JC	7/08

ALBERT K YU
JOCELYN C CHIANG
CALCULATED-DESIGNED BY
CHECKED BY
FUNCTIONAL SUPERVISOR: JOHN YANG

STATE OF CALIFORNIA - DEPARTMENT OF TRANSPORTATION
DTM
Caltrans

LAST REVISION DATE PLOTTED => 08-FEB-2010
TIME PLOTTED => 23:30
02-01-10

BORDER LAST REVISED 4/11/2008
RELATIVE BORDER SCALE IS IN INCHES 0 1 2 3
USERNAME => s122436
DGN FILE => 72y770me002.dgn
CU 07385
EA 2Y7701

Dist	COUNTY	ROUTE	POST MILES TOTAL PROJECT	SHEET No.	TOTAL SHEETS
07	LA	605	R4.8/R19.9	7	33

Denis Katayama 6-18-09
REGISTERED CIVIL ENGINEER DATE

2-1-10
PLANS APPROVAL DATE

REGISTERED PROFESSIONAL ENGINEER
D.S. KATAYAMA
No. C50648
Exp. 9-30-11
CIVIL
STATE OF CALIFORNIA

THE STATE OF CALIFORNIA OR ITS OFFICERS OR AGENTS SHALL NOT BE RESPONSIBLE FOR THE ACCURACY OR COMPLETENESS OF SCANNED COPIES OF THIS PLAN SHEET.

NOTES:

1. LANE CLOSURES SHALL NOT BE PLACED ON CREST VERTICAL CURVES OR ON HORIZONTAL CURVES.
2. PCMS SHALL BE ACTIVATED PRIOR TO TRAFFIC CONTROL ACTIVITIES ON THE HOV LANE.
3. A MINIMUM SIGHT DISTANCE OF 1500' SHALL BE PROVIDED IN ADVANCE OF PCMS.
4. VEHICLE-MOUNTED SIGN PANELS SHALL BE TYPE III OR IV RETROREFLECTORIZED SHEETING, BLACK ON WHITE OR BLACK ON ORANGE WITH 8" MINIMUM SERIES D LETTERS PER CALTRANS SIGN SPECIFICATIONS.
5. PLACE PCMS ON THE MEDIAN SHOULDER WHERE SUFFICIENT ROOM (SUCH AS CHP ENFORCEMENT AREAS) EXISTS.

LEGEND

V1, V2	SHADOW VEHICLE
V3	WORK/APPLICATION VEHICLE
	PORTABLE CHANGEABLE MESSAGE SIGN (PCMS)
	DIRECTION OF TRAVEL
	HOV LANE

ABBREVIATIONS

FAS	FLASHING ARROW SIGN
IAV	IMPACT ATTENUATOR VEHICLE
CMS	CHANGEABLE MESSAGE SIGN
(CA)	CALIFORNIA CODE
PCMS	PORTABLE CHANGEABLE MESSAGE SIGN
HOV	HIGH OCCUPANCY VEHICLE

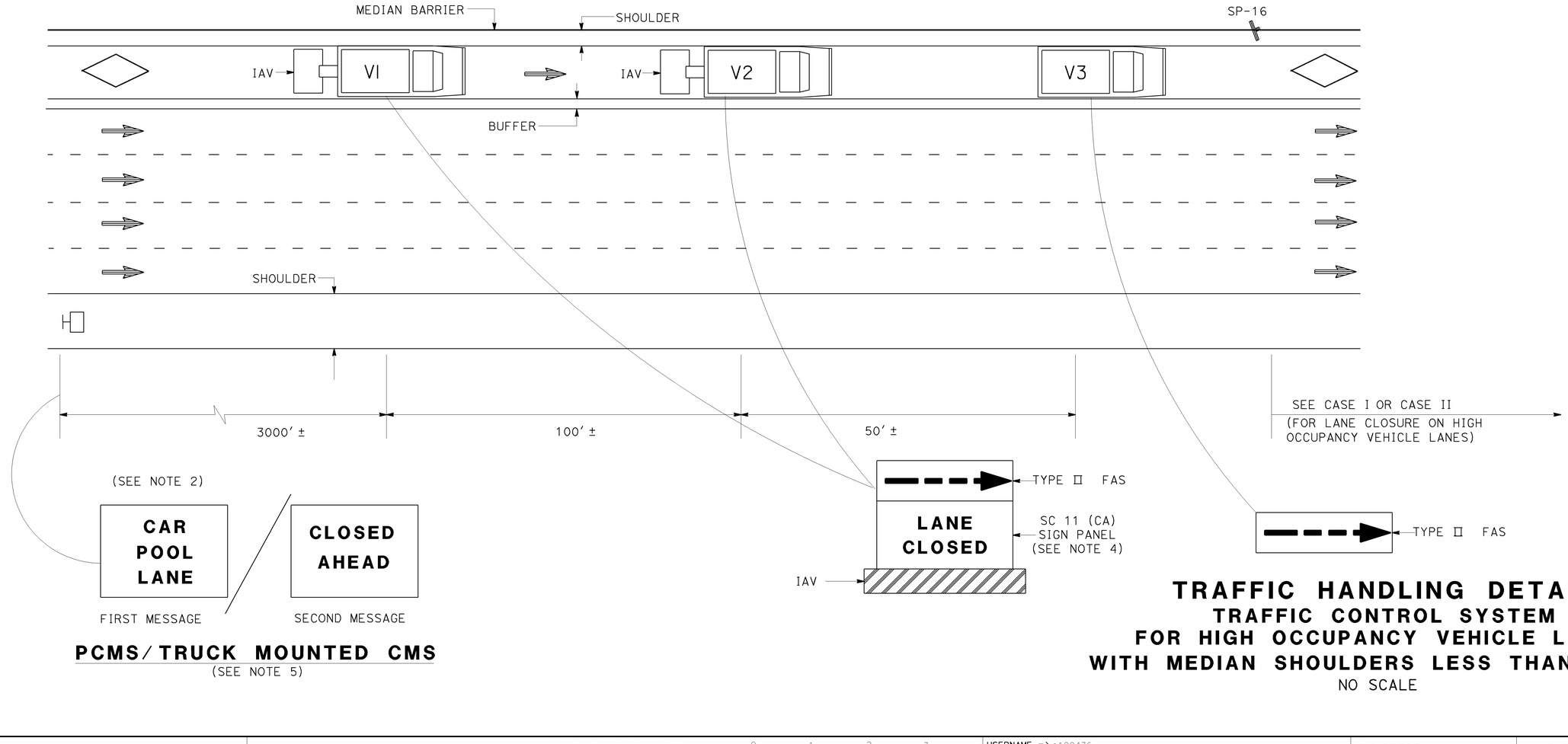

TRAFFIC HANDLING DETAILS
TRAFFIC CONTROL SYSTEM FOR HIGH OCCUPANCY VEHICLE LANES WITH MEDIAN SHOULDERS LESS THAN 8 FEET

NO SCALE

THD-3

CALCULATED-DESIGNED BY: ALBERT K YU
CHECKED BY: JOCELYN C CHIANG
FUNCTIONAL SUPERVISOR: JOHN YANG
STATE OF CALIFORNIA - DEPARTMENT OF TRANSPORTATION
DTM
Caltrans

REVISED BY	DATE REVISED
JC	9/08
JC	7/08

LAST REVISION | DATE PLOTTED => 08-FEB-2010
02-01-10 | TIME PLOTTED => 23:31

BORDER LAST REVISED 4/11/2008
RELATIVE BORDER SCALE IS IN INCHES 0 1 2 3
USERNAME => s122436
DGN FILE => 72y770me003.dgn
CU 07385
EA 2Y7701

Dist	COUNTY	ROUTE	POST MILES TOTAL PROJECT	SHEET No.	TOTAL SHEETS
07	LA	605	R4.8/R19.9	8	33

Denis Katayama 6-18-09
REGISTERED CIVIL ENGINEER DATE

2-1-10
PLANS APPROVAL DATE

REGISTERED PROFESSIONAL ENGINEER
D.S. KATAYAMA
No. C50648
Exp. 9-30-11
CIVIL
STATE OF CALIFORNIA

THE STATE OF CALIFORNIA OR ITS OFFICERS OR AGENTS SHALL NOT BE RESPONSIBLE FOR THE ACCURACY OR COMPLETENESS OF SCANNED COPIES OF THIS PLAN SHEET.

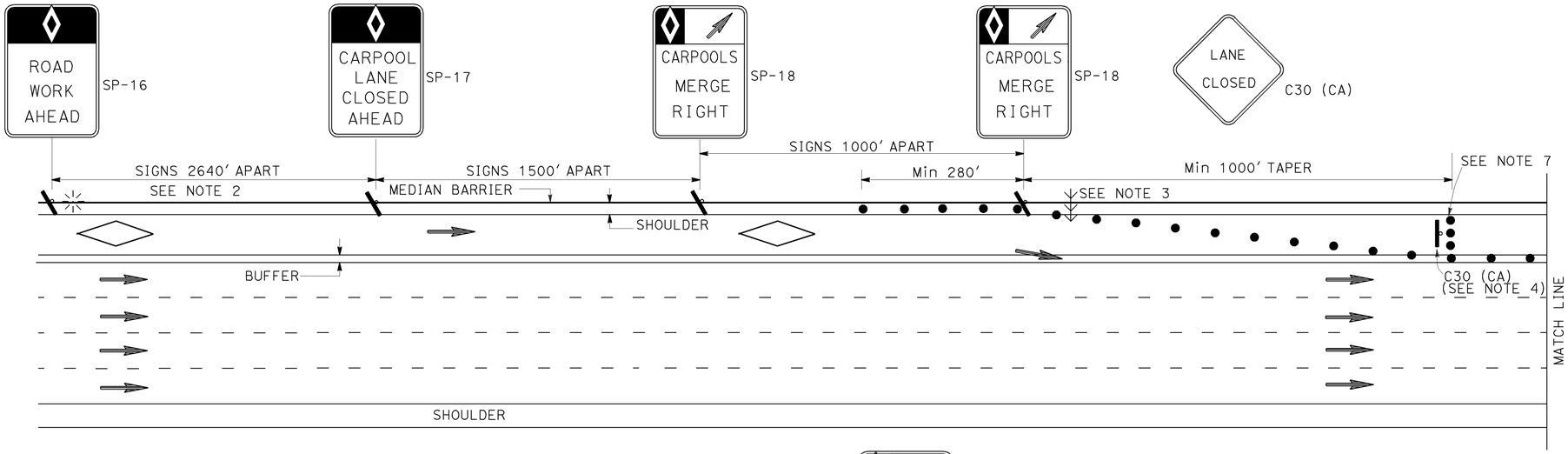

ABBREVIATIONS

(CA) CALIFORNIA CODE

HOV HIGH OCCUPANCY VEHICLE

NOTES: FOR CASE I AND CASE II

1. AT LEAST ONE PERSON SHALL BE ASSIGNED TO FULL TIME MAINTENANCE OF TRAFFIC CONTROL DEVICES ON NIGHT LANE CLOSURES OR DAY-TIME CLOSURES EXCEEDING 1 MILE LENGTH, INCLUDING TAPERS.
2. ADVANCE WARNING SIGN INSTALLATIONS SHALL BE EQUIPPED WITH FLAGS FOR DAYTIME CLOSURES. TYPE B HIGH INTENSITY FLASHING WARNING LIGHTS SHALL BE USED ON SP-16 SIGNS DURING NIGHT LANE CLOSURES. FLAGS AND WARNING LIGHTS SHALL BE ATTACHED TO SIGNS AS APPROVED BY THE ENGINEER.
3. THE FLASHING ARROW SIGN SHALL BE TYPE I.
4. PLACE C30 (CA) SIGNS EVERY 2000' THROUGHOUT THE LENGTH OF LANE CLOSURE.
5. A MINIMUM 1500' OF SIGHT DISTANCE SHALL BE PROVIDED WHERE POSSIBLE FOR VEHICLES APPROACHING THE FLASHING ARROW SIGN. LANE CLOSURES SHALL NOT BE PLACED ON CREST VERTICAL CURVES OR ON HORIZONTAL CURVES.
6. PORTABLE DELINEATORS PLACED AT ONE-HALF THE SPACING INDICATED FOR TRAFFIC CONES MAY BE USED INSTEAD OF CONES FOR DAYTIME CLOSURES.
7. A MINIMUM OF 3 CONES SHALL BE PLACED TRANSVERSELY ACROSS CLOSED LANES WHERE TAPERS END AND EVERY 2000'. TWO TYPE II BARRICADES MAY BE USED INSTEAD OF 3 CONES. THE ALIGNMENT OF CONES OR BARRICADES MAY BE SHIFTED FROM THE TRANSVERSE ALIGNMENT TO PROVIDE ACCESS TO WORK.
8. IF AN INGRESS/EGRESS AREA IS WITHIN 5250' UPSTREAM OR DOWNSTREAM OF THE WORK AREA, LANE CLOSURES SHALL BE EXTENDED TO THAT AREA AS SHOWN IN CASE II.
9. SIGNS SP-16, 17, 18, AND 19 MAY BE OVERLAID ON EXISTING CARPOOL SIGNS IN MEDIANS AS APPROVED BY THE ENGINEER.
10. SIGNS SP-16, 17, 18, AND C30 (CA) SHALL BE BLACK ON ORANGE BACKGROUND. SIGN SP-19 SHALL BE BLACK ON WHITE BACKGROUND. DIAMONDS ON SIGNS SHALL BE WHITE.
11. FOR CLOSURE OF LANE(S) ADJACENT TO HOV LANES, SEE CASE II.
12. THE MAXIMUM SPACING BETWEEN CONES SHALL BE APPROXIMATELY 50' IN TAPERS AND 100' ON TANGENTS.

LEGEND

- CONE
- FLASHING BEACON
- HOV LANE
- FLASHING ARROW SIGN
- PORTABLE SIGN
- DIRECTION OF TRAVEL

SIGN PANEL SIZE (MIN)

SP-16	36" X 54"
SP-17	36" X 54"
SP-18	36" X 48"
SP-19	36" X 60"
C30 (CA)	30" X 30"
G20-2	48" X 24"

TRAFFIC HANDLING DETAILS
TRAFFIC CONTROL SYSTEM FOR HIGH OCCUPANCY VEHICLE LANES AT NON-INGRESS/EGRESS AREAS
CASE I
NO SCALE

THD-4

JC	9/08	ALBERT K YU	CALCULATED-DESIGNED BY
JC	7/08	JOCELYN C CHIANG	CHECKED BY
REVISED BY	DATE REVISED	JOHN YANG	FUNCTIONAL SUPERVISOR

STATE OF CALIFORNIA - DEPARTMENT OF TRANSPORTATION DTM Caltrans®

LAST REVISION DATE PLOTTED => 08-FEB-2010
TIME PLOTTED => 23:31
02-01-10

BORDER LAST REVISED 4/11/2008 | RELATIVE BORDER SCALE IS IN INCHES 0 1 2 3 | USERNAME => s122436 DGN FILE => 72y770me004.dgn | CU 07385 | EA 2Y7701

Dist	COUNTY	ROUTE	POST MILES TOTAL PROJECT	SHEET No.	TOTAL SHEETS
07	LA	605	R4.8/R19.9	9	33

Denis Katayama 6-18-09
REGISTERED CIVIL ENGINEER DATE

2-1-10
PLANS APPROVAL DATE

REGISTERED PROFESSIONAL ENGINEER
D.S. KATAYAMA
No. C50648
Exp. 9-30-11
CIVIL
STATE OF CALIFORNIA

THE STATE OF CALIFORNIA OR ITS OFFICERS OR AGENTS SHALL NOT BE RESPONSIBLE FOR THE ACCURACY OR COMPLETENESS OF SCANNED COPIES OF THIS PLAN SHEET.

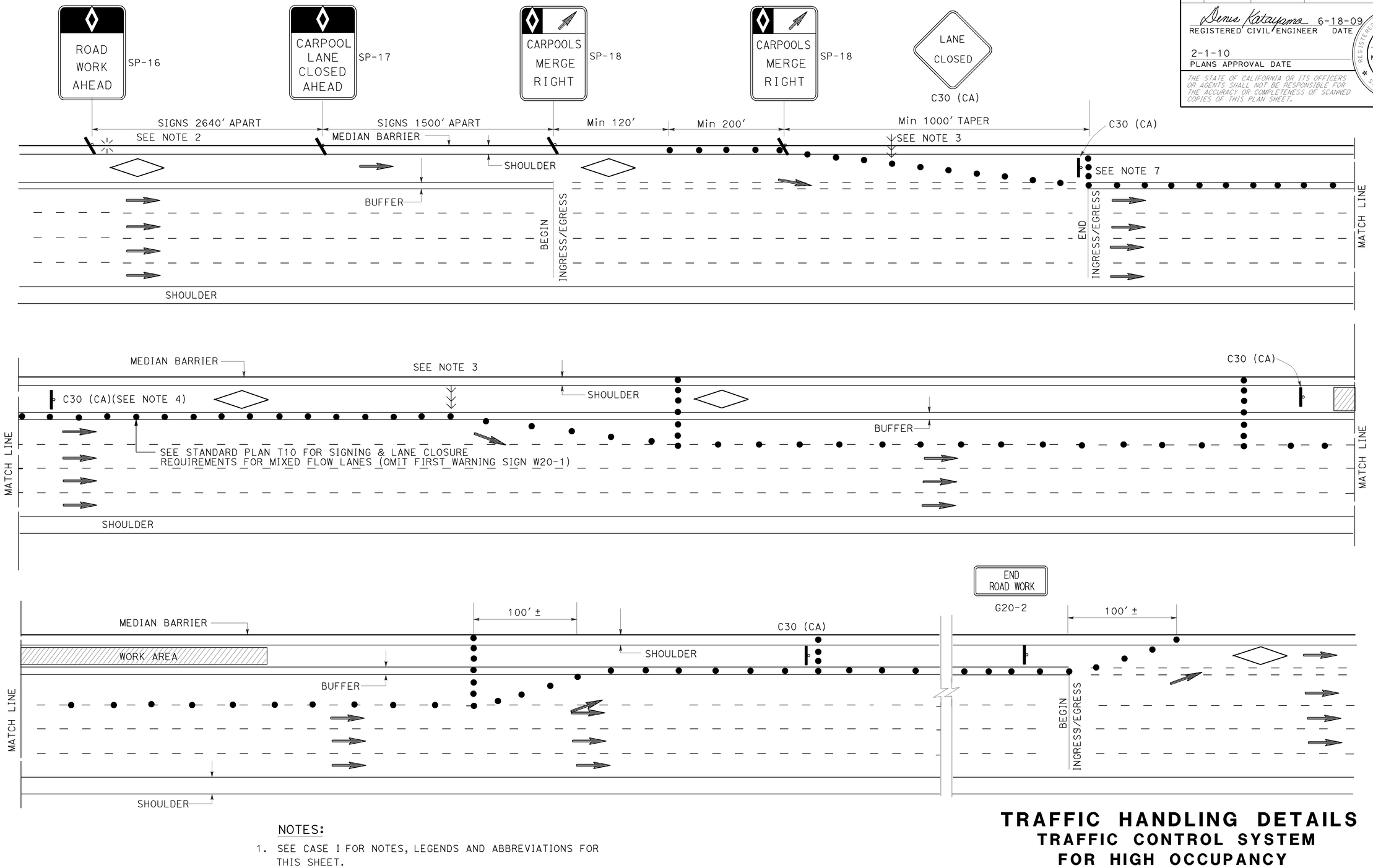

NOTES:

1. SEE CASE I FOR NOTES, LEGENDS AND ABBREVIATIONS FOR THIS SHEET.
2. CLOSURES OF ONE MIXED FLOW TRAFFIC LANE ADJACENT TO HOV LANE SHOWN. MULTIPLE MIXED FLOW LANE CLOSURES ARE SIMILAR.

TRAFFIC HANDLING DETAILS
TRAFFIC CONTROL SYSTEM FOR HIGH OCCUPANCY VEHICLE LANES AND ADJACENT FREEWAY LANES BETWEEN INGRESS/EGRESS AREAS
CASE II

NO SCALE

THD-5

JC	9/08	
JC	7/08	
REVISED BY	DATE REVISED	
ALBERT K YU	JOCELYN C CHIANG	
CALCULATED-DESIGNED BY	CHECKED BY	
FUNCTIONAL SUPERVISOR	JOHN YANG	

STATE OF CALIFORNIA - DEPARTMENT OF TRANSPORTATION
DTM
Caltrans

LAST REVISION | DATE PLOTTED => 08-FEB-2010 | TIME PLOTTED => 23:32
02-01-10

Dist	COUNTY	ROUTE	POST MILES TOTAL PROJECT	SHEET No.	TOTAL SHEETS
07	LA	605	R4.8/R19.9	10	33

Denis Katayama 6-18-09
REGISTERED CIVIL ENGINEER DATE

2-1-10
PLANS APPROVAL DATE

REGISTERED PROFESSIONAL ENGINEER
D.S. KATAYAMA
No. C50648
Exp. 9-30-11
CIVIL
STATE OF CALIFORNIA

THE STATE OF CALIFORNIA OR ITS OFFICERS OR AGENTS SHALL NOT BE RESPONSIBLE FOR THE ACCURACY OR COMPLETENESS OF SCANNED COPIES OF THIS PLAN SHEET.

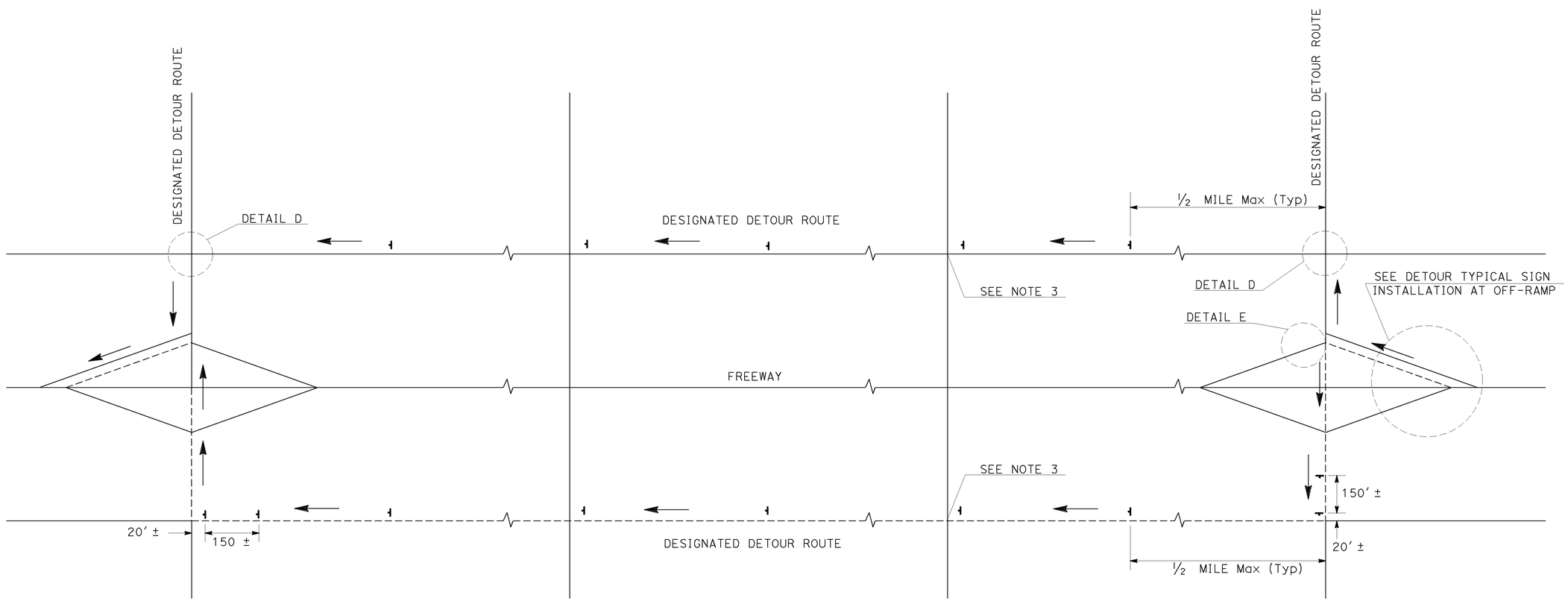

TYPICAL DETOUR SIGN INSTALLATION ALONG DESIGNATED DETOUR ROUTE

LEGEND

⊣	SIGN SP-2
AND/OR	DESIGNATED DETOUR ROUTE
→	DIRECTION OF TRAVEL

NOTES:

1. SP-2 SIGNS SHALL NOT BE INSTALLED ON BARRICADES EXCEPT AS OTHERWISE SHOWN.
2. SIGN LOCATIONS ARE APPROXIMATE. EXACT LOCATIONS WILL BE DETERMINED BY THE ENGINEER.
3. SP-2 SIGNS SHALL BE POSTED AT SIGNALIZED INTERSECTIONS ALONG THE DESIGNATED DETOUR ROUTE OR ½ MILE MAXIMUM APART.

TRAFFIC HANDLING DETAILS
TRAFFIC CONTROL SYSTEM FOR DETOUR SIGN INSTALLATION ALONG DESIGNATED DETOUR ROUTE
SHEET 1 OF 2
NO SCALE

THD-6

	REVISED BY	CALCULATED-DESIGNED BY	CHECKED BY	FUNCTIONAL SUPERVISOR
DATE REVISED	ALBERT K YU	JOCELYN C CHIANG		JOHN YANG
7/08	JC			
9/08	JC			

STATE OF CALIFORNIA - DEPARTMENT OF TRANSPORTATION
Caltrans®
DTM

LAST REVISION | DATE PLOTTED => 08-FEB-2010
02-01-10 | TIME PLOTTED => 23:33

BORDER LAST REVISED 4/11/2008

RELATIVE BORDER SCALE IS IN INCHES 0 1 2 3

USERNAME => s122436
DGN FILE => 72y770me006.dgn

CU 07385

EA 2Y7701

Dist	COUNTY	ROUTE	POST MILES TOTAL PROJECT	SHEET No.	TOTAL SHEETS
07	LA	605	R4.8/R19.9	11	33

Denis Katayama 6-18-09
REGISTERED CIVIL ENGINEER DATE

2-1-10
PLANS APPROVAL DATE

REGISTERED PROFESSIONAL ENGINEER D.S. KATAYAMA No. C50648 Exp. 9-30-11 CIVIL STATE OF CALIFORNIA

THE STATE OF CALIFORNIA OR ITS OFFICERS OR AGENTS SHALL NOT BE RESPONSIBLE FOR THE ACCURACY OR COMPLETENESS OF SCANNED COPIES OF THIS PLAN SHEET.

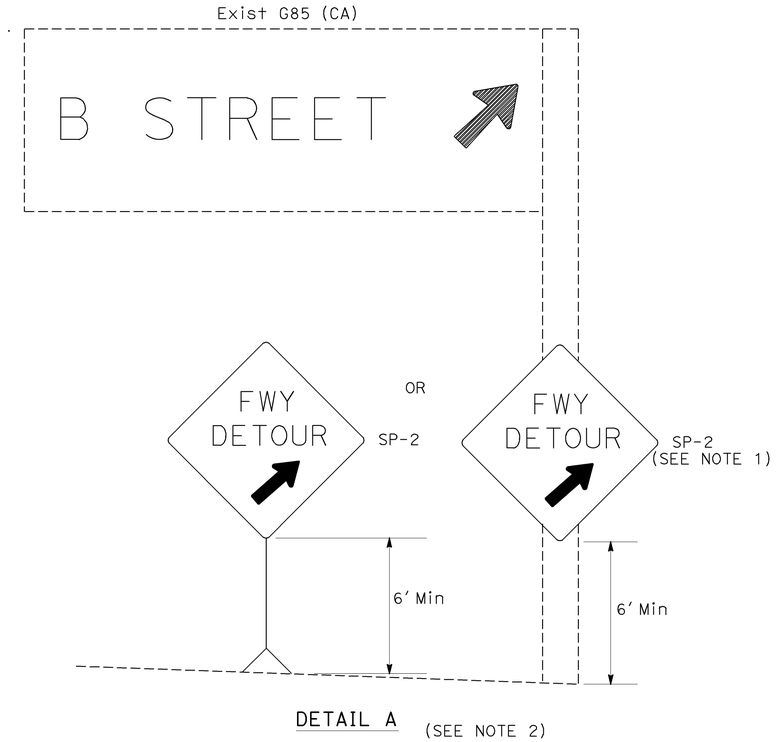

DETAIL A (SEE NOTE 2)

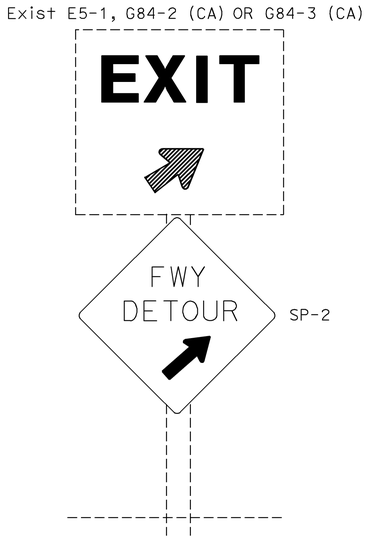

DETAIL B (SEE NOTE 2)

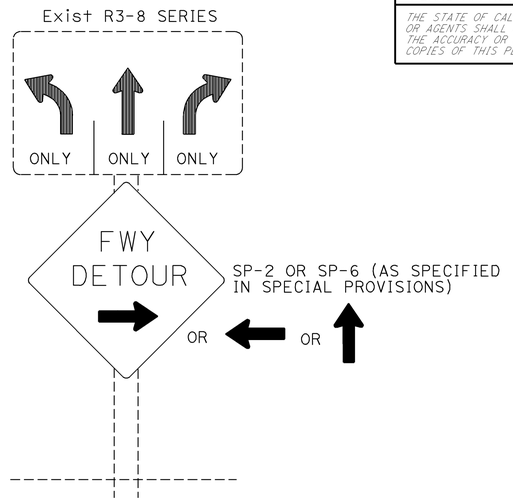

DETAIL C (SEE NOTE 3)

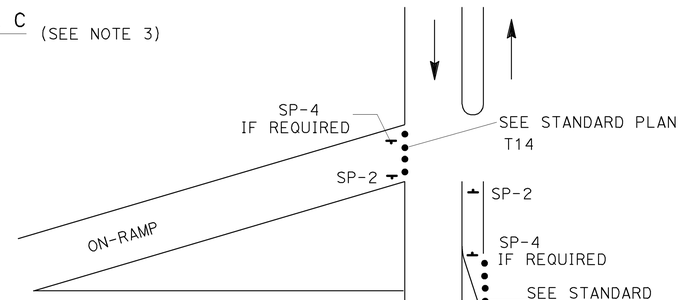

DETAIL E

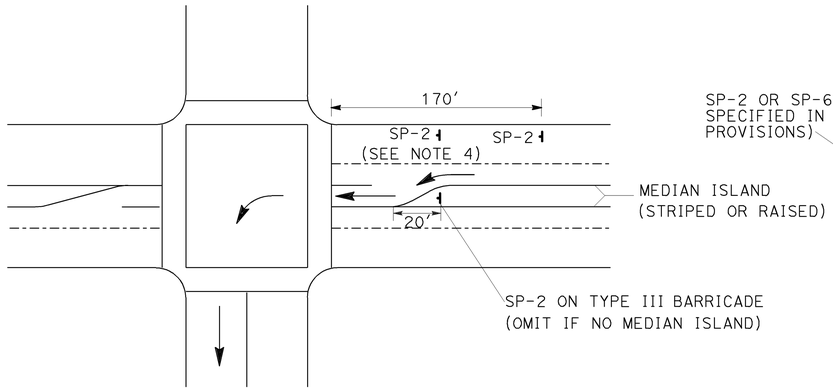

DETAIL D

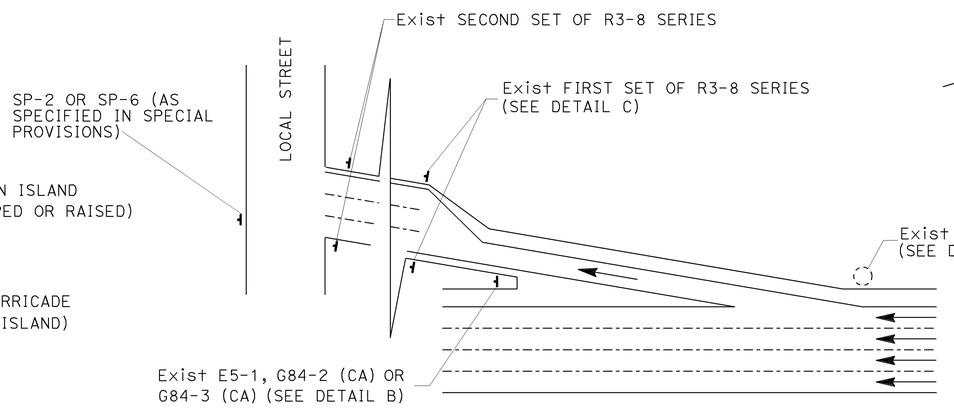

TYPICAL DETOUR SIGN INSTALLATION AT OFF-RAMP

NOTES:

1. SP-2 MAY BE STRAPPED ON EXISTING ELECTROLIER SIGNAL POSTS OR SIGN POSTS.
2. OMIT DETAIL A AND DETAIL B FOR FULL FREEWAY CLOSURES.
3. SEE TRAFFIC HANDLING DETAILS PLAN-TRAFFIC CONTROL SYSTEM FOR RAMP CLOSURES, DETOUR SIGNS AND MISCELLANEOUS DETAILS SHEET 2 OF 2 FOR SP-6.
4. OMIT IF MEDIAN ISLAND EXIST.

ABBREVIATIONS

(CA) CALIFORNIA CODE

LEGENDS

- CONE
- PORTABLE SIGN
- DIRECTION OF TRAVEL
- EXISTING OVERHEAD SIGN

TRAFFIC HANDLING DETAILS
TRAFFIC CONTROL SYSTEM FOR DETOUR SIGN INSTALLATION ALONG DESIGNATED DETOUR ROUTE
SHEET 2 OF 2
NO SCALE

THD-7

CALCULATED-DESIGNED BY	CHECKED BY	REVISED BY	DATE REVISED
ALBERT K YU	JOCELYN C CHIANG	JC	7/08
		JC	9/08

FUNCTIONAL SUPERVISOR: JOHN YANG

STATE OF CALIFORNIA - DEPARTMENT OF TRANSPORTATION
DTM
Caltrans

LAST REVISION 02-01-10 | DATE PLOTTED => 08-FEB-2010 | TIME PLOTTED => 23:34

BORDER LAST REVISED 4/11/2008 | RELATIVE BORDER SCALE IS IN INCHES 0 1 2 3 | USERNAME => s122436 | DGN FILE => 72y770me007.dgn | CU 07385 | EA 2Y7701

Dist	COUNTY	ROUTE	POST MILES TOTAL PROJECT	SHEET No.	TOTAL SHEETS
07	LA	605	R4.8/R19.9	12	33

REGISTERED CIVIL ENGINEER — 1-19-10 DATE

2-1-10
PLANS APPROVAL DATE

REGISTERED PROFESSIONAL ENGINEER — VINCENT PANG — No. 69663 — Exp. 9-30-10 — CIVIL — STATE OF CALIFORNIA

THE STATE OF CALIFORNIA OR ITS OFFICERS OR AGENTS SHALL NOT BE RESPONSIBLE FOR THE ACCURACY OR COMPLETENESS OF SCANNED COPIES OF THIS PLAN SHEET.

NOTES:

1. SEE PAVEMENT DELINEATION QUANTITIES FOR LOCATION AND TYPES OF TRAFFIC STRIPES AND PAVEMENT MARKINGS TO BE PLACED.
2. FOR RIGHT-OF-WAY AND ACCESS DATA, CONTACT RIGHT OF WAY ENGINEERING AT THE DISTRICT OFFICE.

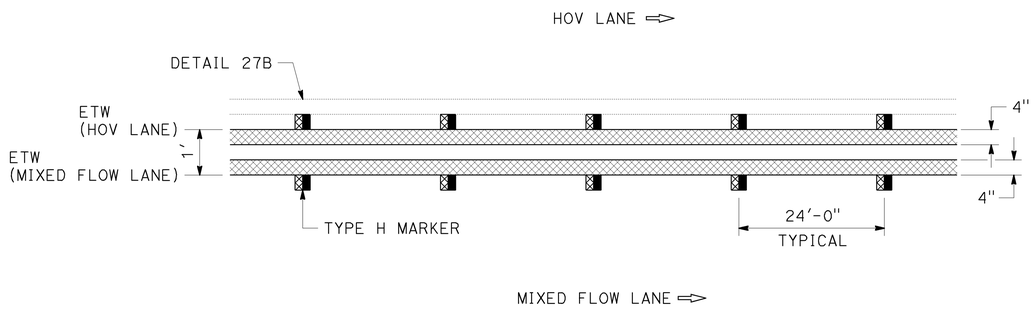

BUFFER STRIPING DETAIL M-9

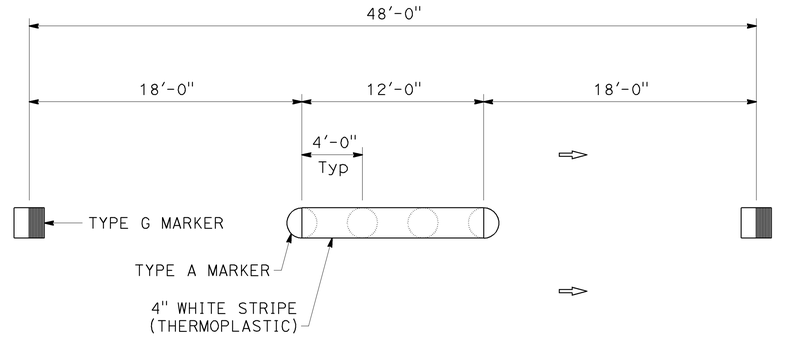

NOTE:

1. THE ADDITION OF A 4" WIDE THERMOPLASTIC STRIPE 12' LONG ON TOP OF TYPE A, WHITE NON-REFLECTIVE MARKERS.

DETAIL 13 (MODIFIED)

PAVEMENT DELINEATION DETAILS

NO SCALE

PDD-1

VINCENT PANG — CALCULATED-DESIGNED BY
LARRY WIERING — CHECKED BY
REVISED BY
DATE REVISED
LARRY WIERING — FUNCTIONAL SUPERVISOR
STATE OF CALIFORNIA - DEPARTMENT OF TRANSPORTATION
Caltrans® MAINTENANCE ENGINEERING

LAST REVISION | DATE PLOTTED => 08-FEB-2010 | TIME PLOTTED => 23:35 | 02-01-10

Dist	COUNTY	ROUTE	POST MILES TOTAL PROJECT	SHEET No.	TOTAL SHEETS
07	LA	605	R4.8/R19.9	13	33

1-19-10
REGISTERED CIVIL ENGINEER DATE

2-1-10
PLANS APPROVAL DATE

REGISTERED PROFESSIONAL ENGINEER
VINCENT PANG
No. 69663
Exp. 9-30-10
CIVIL
STATE OF CALIFORNIA

THE STATE OF CALIFORNIA OR ITS OFFICERS OR AGENTS SHALL NOT BE RESPONSIBLE FOR THE ACCURACY OR COMPLETENESS OF SCANNED COPIES OF THIS PLAN SHEET.

PAVEMENT DELINEATION QUANTITIES

DIRECTION	LOCATION	REMOVE TRAFFIC STRIPE	REMOVE PAVEMENT MARKER	REMOVE PAVEMENT MARKING	REMOVE YELLOW THERMOPLASTIC TRAFFIC STRIPE (HAZARDOUS WASTE)	4" THERMOPLASTIC TRAFFIC STRIPE (BROKEN 17-7) WHITE DETAIL 9	4" THERMOPLASTIC TRAFFIC STRIPE (BROKEN 36-12) WHITE DETAIL 13 (MODIFIED)	4" THERMOPLASTIC TRAFFIC STRIPE DOUBLE YELLOW DETAIL M-9	4" THERMOPLASTIC TRAFFIC STRIPE YELLOW DETAIL 25	4" THERMOPLASTIC TRAFFIC STRIPE WHITE DETAIL 27B	8" THERMOPLASTIC TRAFFIC STRIPE WHITE DETAIL 36A	8" THERMOPLASTIC TRAFFIC STRIPE WHITE DETAIL 38B	8" THERMOPLASTIC TRAFFIC STRIPE (BROKEN 12-3) WHITE DETAIL 37	THERMOPLASTIC PAVEMENT MARKING					PAVEMENT MARKERS			
														CAR	POOL	ONLY	◊	TYPE VI ARROW	(NON-REFLECTIVE) TYPE A	(RETROREFLECTIVE) TYPE C	(RETROREFLECTIVE) TYPE G	(RETROREFLECTIVE) TYPE H
		LF	EA	SQFT	LF	LF	LF	LF	LF	LF	LF	LF	LF	SQFT	SQFT	SQFT	SQFT	SQFT	EA	EA	EA	EA
	FOSTER ROAD UC	1050	129		684		684	456	228	456		207	21						60	4	37	28
	FIRESTONE BOULEVARD UC	984	168	82	760		1140	380	380	570				17	23			42	96	14	30	28
	FLORENCE AVENUE UC	473	79		516		516	344	172	344									44		14	21
NB	N605-S5 CONNECTOR OC	284	40	11	172		172		172	172			172				11		16	14	5	5
	ROUTE 605/5 SEPARATION	1832	255		1704	162	1704	1,136	568	1,215	72								144		48	63
	WADDELL STREET UC	314	58		342		342	228	114	228									32		10	16
	EXCELSIOR DRIVE UC	602	116		531		708	354	177	354			177						60	14	19	23
	FOSTER ROAD UC	904	127	45	684		684	456	228	456		116	112		23	22			60	10	29	28
	FIRESTONE BOULEVARD UC	646	123	11	570		760	380	190	380			190				11		64	16	20	23
	FLORENCE AVENUE UC	827	90		516	69	516	344	172	344	167								44		25	21
SB	ROUTE 605/5 SEPARATION	1428	185		1704		1136	1,136	568	1,144									96		26	63
	WADDELL STREET UC	473	71		456		342	228	228	342			114						32	10	10	19
SUBTOTAL		9817	1441	149	8639	231	8704	5,442	3,197	6,005	239	323	786						748	82	273	338
TOTAL		9817	1441	149	8639	231	8704	14,644			562		786	149					748	693		

SUMMARY OF QUANTITIES

Q-1

CALCULATED-DESIGNED BY: VINCENT PANG
CHECKED BY: LARRY WIERING
REVISED BY
DATE REVISED
FUNCTIONAL SUPERVISOR: LARRY WIERING
STATE OF CALIFORNIA - DEPARTMENT OF TRANSPORTATION
Caltrans® MAINTENANCE ENGINEERING

LAST REVISION 02-01-10 | DATE PLOTTED => 08-FEB-2010 | TIME PLOTTED => 23:35

BORDER LAST REVISED 4/11/2008
RELATIVE BORDER SCALE IS IN INCHES 0 1 2 3
USERNAME => s122436
DGN FILE => 72y770pa001.dgn
CU 07606
EA 2Y7701

DIST	COUNTY	ROUTE	POST MILES TOTAL PROJECT	SHEET NO.	TOTAL SHEETS
07	LA	605	R4.8/R19.9	14	33

Donald E. Howe
REGISTERED CIVIL ENGINEER

Donald E. Howe
No. C46402
Exp. 3-31-09
CIVIL
REGISTERED PROFESSIONAL ENGINEER
STATE OF CALIFORNIA

June 6, 2008
PLANS APPROVAL DATE

The State of California or its officers or agents shall not be responsible for the accuracy or completeness of electronic copies of this plan sheet.

To accompany plans dated 2-1-10

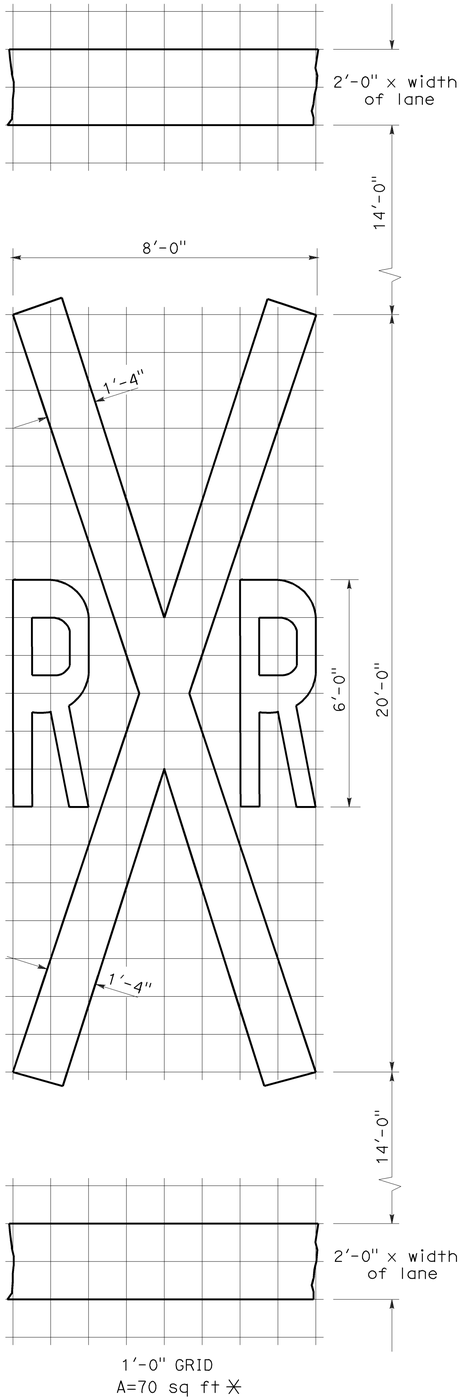

RAILROAD CROSSING SYMBOL

✳70 sq ft DOES NOT INCLUDE THE 2'-0" x VARIABLE WIDTH TRANSVERSE LINES.

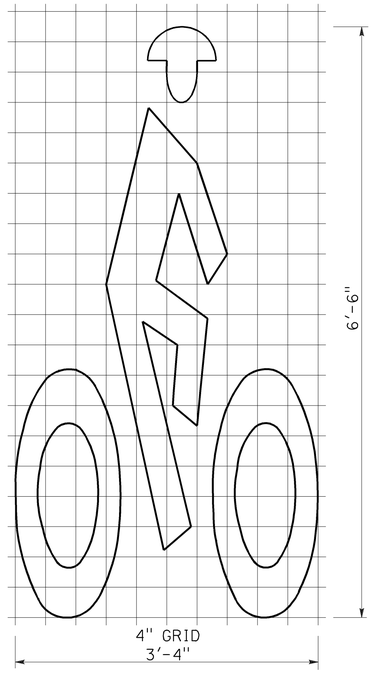

A=7 sq ft

BIKE LANE SYMBOL

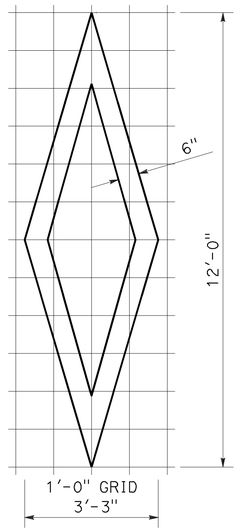

A=11 sq ft

DIAMOND SYMBOL

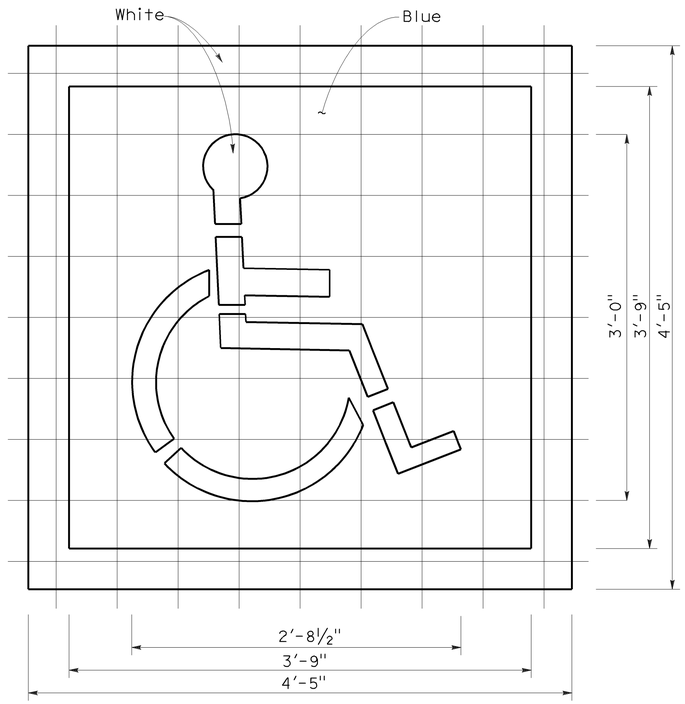

6" GRID
A (White) =9 sq ft
A (Blue) =14 sq ft

INTERNATIONAL SYMBOL OF ACCESSIBILITY MARKING

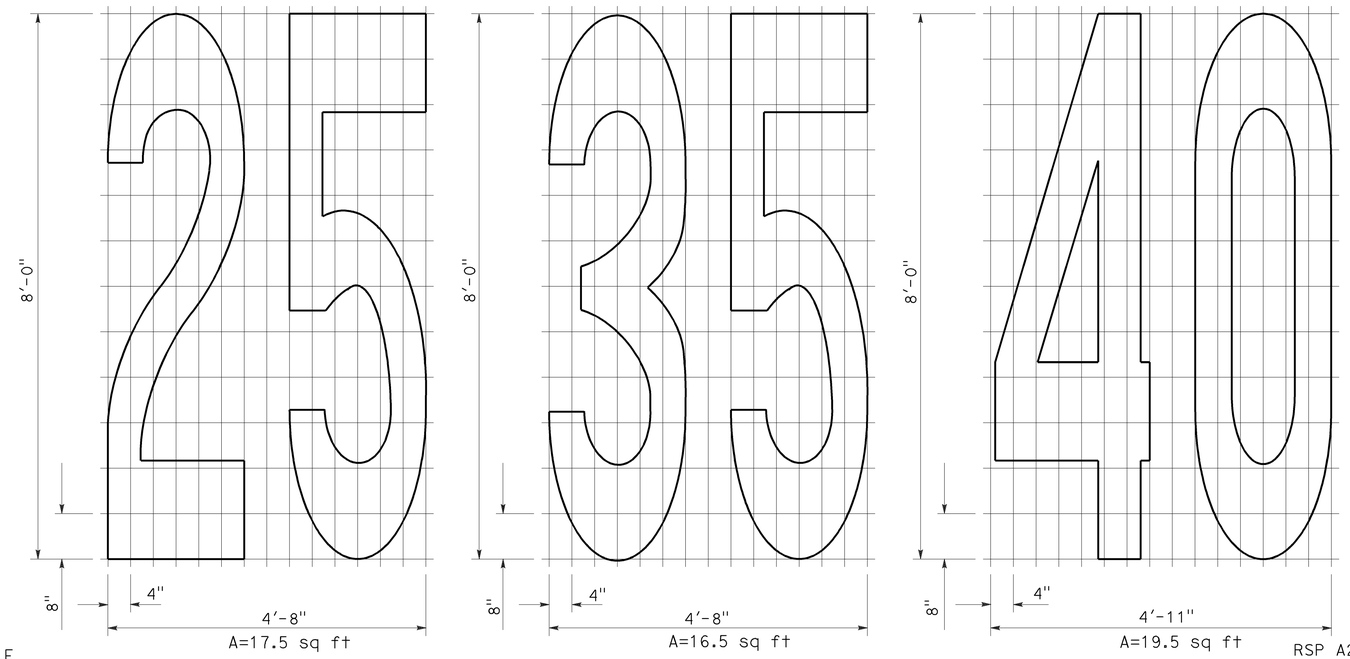

NUMERALS

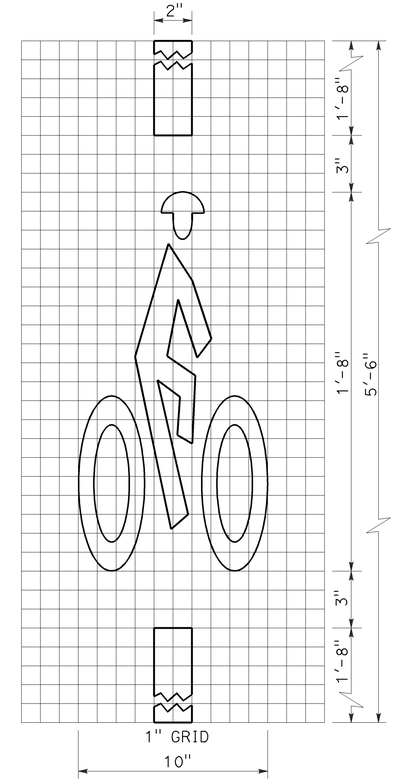

A=2 sq ft

BICYCLE LOOP DETECTOR SYMBOL

NOTE:

1. Minor variations in dimensions may be accepted by the Engineer.

STATE OF CALIFORNIA
DEPARTMENT OF TRANSPORTATION

PAVEMENT MARKINGS SYMBOLS AND NUMERALS

NO SCALE

RSP A24C DATED JUNE 6, 2008 SUPERSEDES STANDARD PLAN A24C DATED MAY 1, 2006 - PAGE 11 OF THE STANDARD PLANS BOOK DATED MAY 2006.

REVISED STANDARD PLAN RSP A24C

2006 REVISED STANDARD PLAN RSP A24C

5-27-08

DIST	COUNTY	ROUTE	POST MILES TOTAL PROJECT	SHEET NO.	TOTAL SHEETS
07	LA	605	R4.8/R19.9	15	33

Randell D. Hiatt
REGISTERED CIVIL ENGINEER

June 6, 2008
PLANS APPROVAL DATE

Randell D. Hiatt
No. C50200
Exp. 6-30-09
CIVIL
REGISTERED PROFESSIONAL ENGINEER
STATE OF CALIFORNIA

The State of California or its officers or agents shall not be responsible for the accuracy or completeness of electronic copies of this plan sheet.

To accompany plans dated 2-1-10

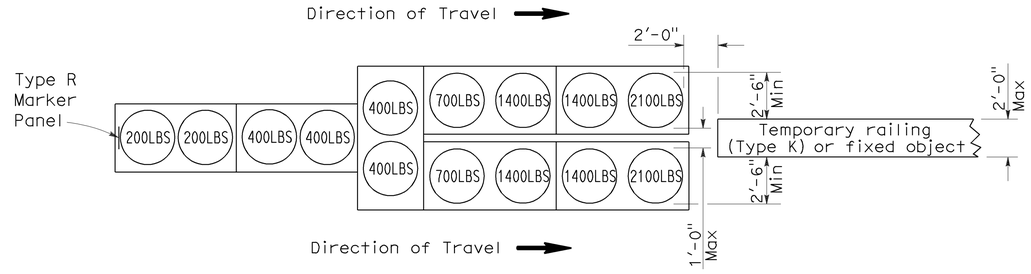

ARRAY 'TU14'

Approach speed 45 mph or more

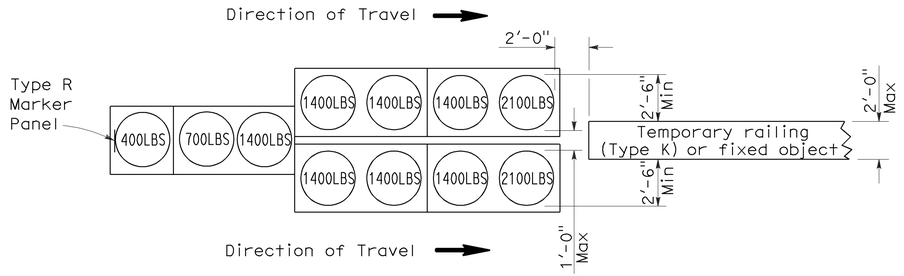

ARRAY 'TU11'

Approach speed less than 45 mph

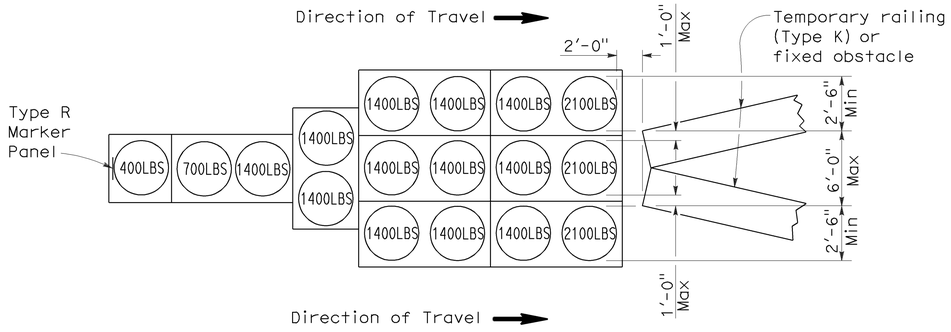

ARRAY 'TU17'

Approach speed less than 45 mph

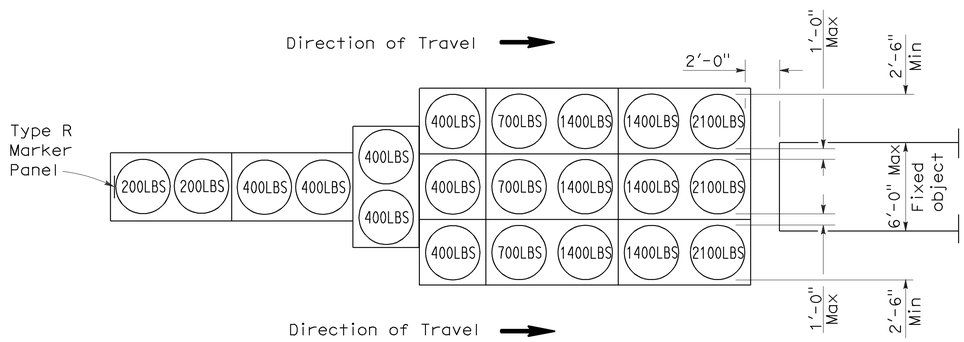

ARRAY 'TU21'

Approach speed 45 mph or more

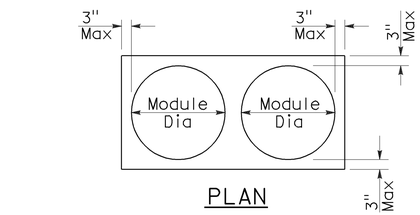

PLAN

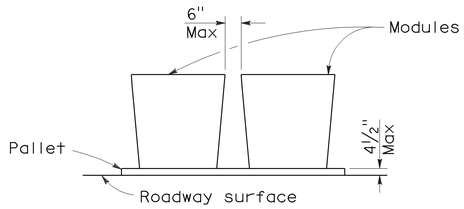

ELEVATION

CRASH CUSHION PALLET DETAIL

See Note 7

NOTES:

1. (XXX) Indicates sand filled module location and weight of sand in pounds for each module. Module spacing is based on the greater diameter of the module.
2. All sand weights are nominal.
3. Temporary crash cushion arrays shall not encroach on the traveled way.
4. Place the top of Type R marker panel 1" below the module lid.
5. Refer to Standard Plan A73B for marker details.
6. Approach speeds indicated conform to NCHRP 350 Report criteria.
7. Use of pallets is optional.

STATE OF CALIFORNIA
DEPARTMENT OF TRANSPORTATION

TEMPORARY CRASH CUSHION, SAND FILLED (UNIDIRECTIONAL)

NO SCALE

RSP T1A DATED JUNE 6, 2008 SUPERSEDES STANDARD PLAN T1A
DATED MAY 1, 2006 - PAGE 211 OF THE STANDARD PLANS BOOK DATED MAY 2006.

REVISED STANDARD PLAN RSP T1A

2006 REVISED STANDARD PLAN RSP T1A

5-15-08

DIST	COUNTY	ROUTE	POST MILES TOTAL PROJECT	SHEET NO.	TOTAL SHEETS
07	LA	605	R4.8/R19.9	16	33

Randell D. Hiatt
REGISTERED CIVIL ENGINEER

June 6, 2008
PLANS APPROVAL DATE

REGISTERED PROFESSIONAL ENGINEER
Randell D. Hiatt
No. C50200
Exp. 6-30-09
CIVIL
STATE OF CALIFORNIA

The State of California or its officers or agents shall not be responsible for the accuracy or completeness of electronic copies of this plan sheet.

To accompany plans dated 2-1-10

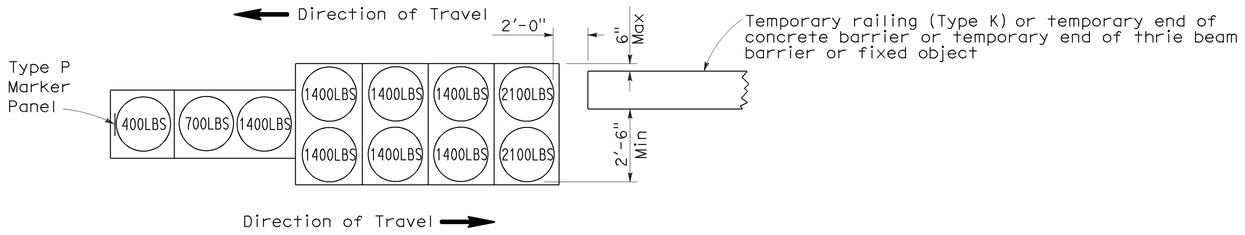

ARRAY 'TB11'

Approach speed less than 45 mph

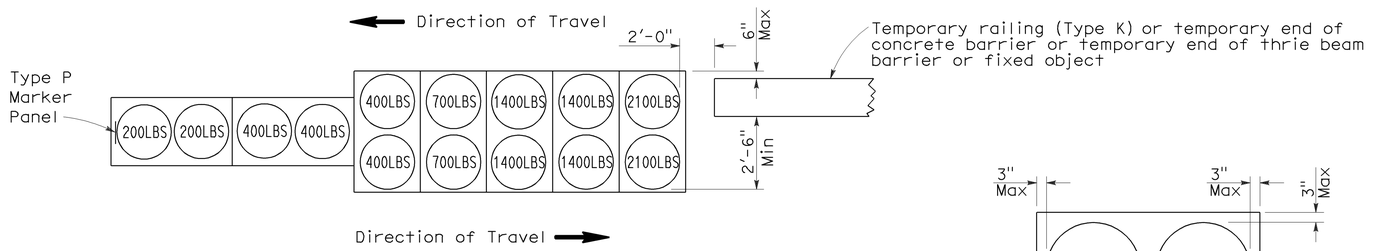

ARRAY 'TB14'

Approach speed 45 mph or more

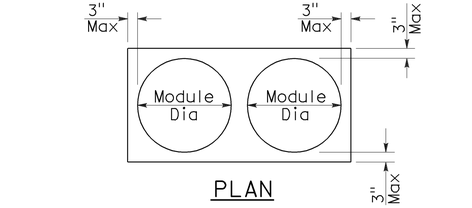

PLAN

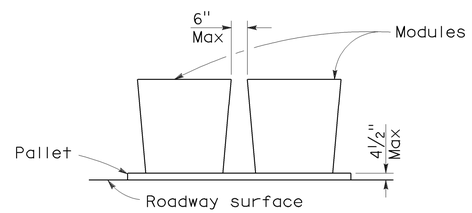

ELEVATION

CRASH CUSHION PALLET DETAIL

See Note 7

NOTES:

1. (XXX) Indicates sand filled module location and weight of sand in pounds for each module. Module spacing is based on the greater diameter of the module.
2. All sand weights are nominal.
3. Temporary crash cushion arrays shall not encroach on the traveled way.
4. Place the Type P marker panel so that the bottom of the panel rests upon the pallet.
5. Refer to Standard Plan A73B for marker details.
6. Approach speeds indicated conform to NCHRP 350 Report criteria.
7. Use of pallets is optional.

STATE OF CALIFORNIA
DEPARTMENT OF TRANSPORTATION

TEMPORARY CRASH CUSHION, SAND FILLED (BIDIRECTIONAL)

NO SCALE

RSP T1B DATED JUNE 6, 2008 SUPERSEDES STANDARD PLAN T1B
DATED MAY 1, 2006 - PAGE 212 OF THE STANDARD PLANS BOOK DATED MAY 2006.

REVISED STANDARD PLAN RSP T1B

2006 REVISED STANDARD PLAN RSP T1B

5-15-08

DIST	COUNTY	ROUTE	POST MILES TOTAL PROJECT	SHEET NO.	TOTAL SHEETS
07	LA	605	R4.8/R19.9	17	33

Randell D. Hiatt
REGISTERED CIVIL ENGINEER

June 6, 2008
PLANS APPROVAL DATE

REGISTERED PROFESSIONAL ENGINEER
Randell D. Hiatt
No. C50200
Exp. 6-30-09
CIVIL
STATE OF CALIFORNIA

The State of California or its officers or agents shall not be responsible for the accuracy or completeness of electronic copies of this plan sheet.

To accompany plans dated 2-1-10

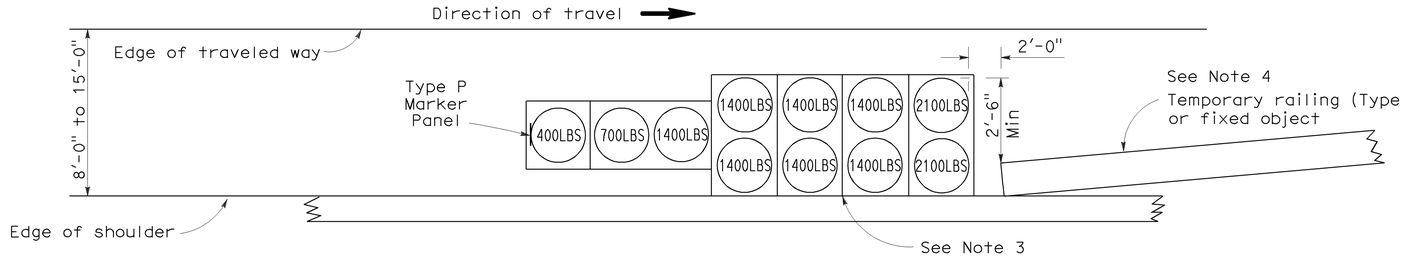

ARRAY 'TS11'

Approach speed less than 45 mph
See Note 9

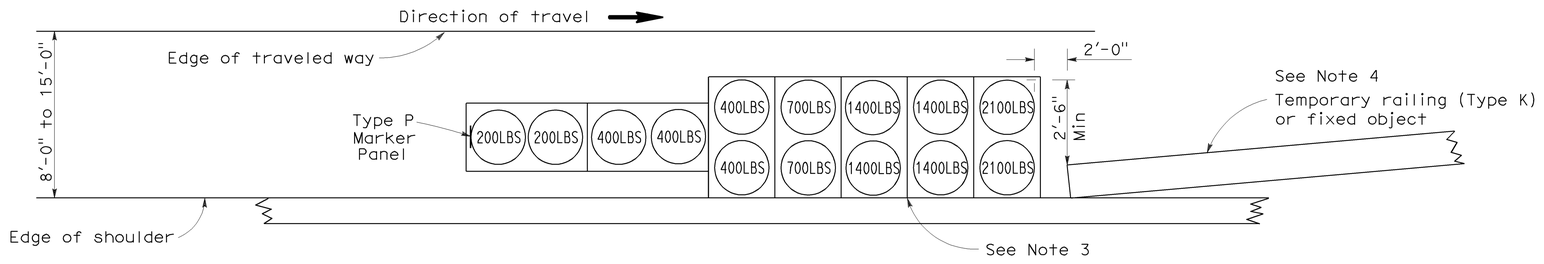

ARRAY 'TS14'

Approach speed 45 mph or more
See Note 9

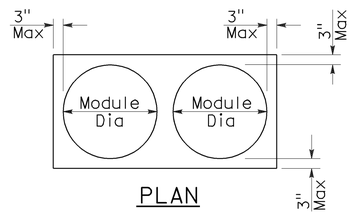

PLAN

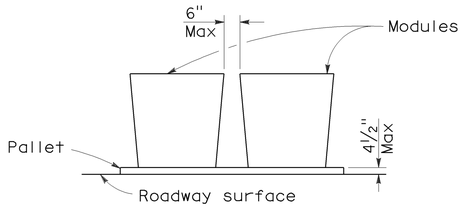

ELEVATION

CRASH CUSHION PALLET DETAIL

See Note 11

NOTES:

1. (XXX) Indicates sand filled module location and weight of sand in pounds for each module. Module spacing is based on the greater diameter of the module.
2. All sand weights are nominal.
3. The temporary crash cushion arrays shown on this plan shall be used only in locations where there will be traffic on one side of the temporary crash cushion array.
4. If the fixed object or approach end of the temporary railing is less than 15'-0" from the edge of traveled way, a temporary crash cushion is required in a construction or work zone.
5. Temporary crash cushion arrays shall not encroach on the traveled way.
6. Arrays for median shoulders shall conform to details shown on this plan for outside shoulders.
7. Place the Type P marker panel so that the bottom of the panel rests upon the pallet and faces traffic.
8. Refer to Standard Plan A73B for marker details.
9. For shoulder widths less than 8'-0", appropriate approved crash cushion protection, other than sand filled modules, shall be provided at fixed objects and at approach ends of temporary railing. The specific type of crash cushion shall be as shown on the project plans or as specified in the Special Provisions, or if not shown on the project plans or specified in the Special Provisions, shall be as approved by the Engineer.
10. Approach speeds indicated conform to NCHRP 350 Report criteria.
11. Use of pallets is optional.

STATE OF CALIFORNIA
DEPARTMENT OF TRANSPORTATION

TEMPORARY CRASH CUSHION, SAND FILLED (SHOULDER INSTALLATIONS)

NO SCALE

RSP T2 DATED JUNE 6, 2008 SUPERSEDES STANDARD PLAN T2
DATED MAY 1, 2006 - PAGE 213 OF THE STANDARD PLANS BOOK DATED MAY 2006.

REVISED STANDARD PLAN RSP T2

2006 REVISED STANDARD PLAN RSP T2

5-15-08

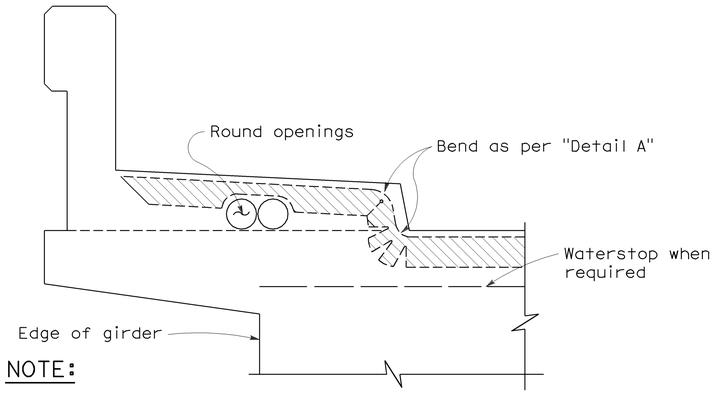

NOTE:

Type "B" seal shown. Type "A" seals to comform to the general path of seal shown, cuts for bending not required. Bend Type "A" seals 3" up into curb or barrier rail on only the low end of the seal.

CONCRETE BARRIER AND SIDEWALK

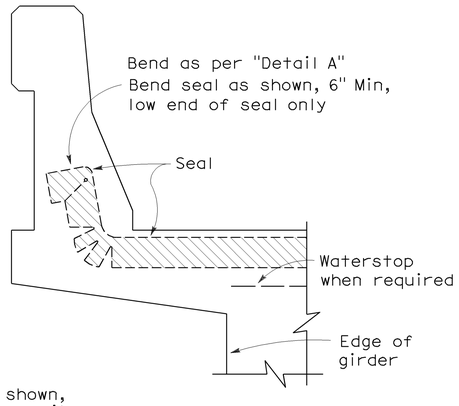

CONCRETE BARRIER

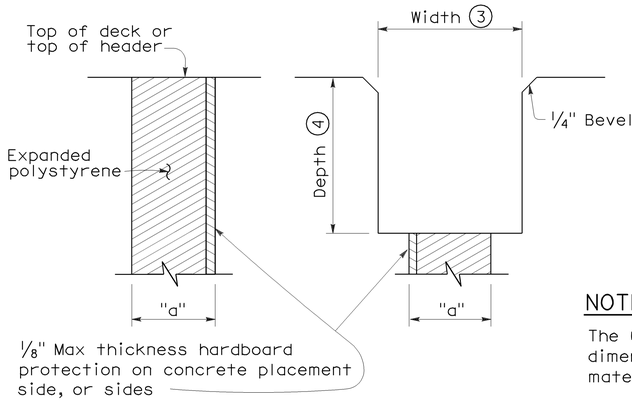

FORMING DETAIL SAWCUT DETAIL

DIST	COUNTY	ROUTE	POST MILES TOTAL PROJECT	SHEET NO.	TOTAL SHEETS
07	LA	605	R4.8/R19.9	18	33

REGISTERED CIVIL ENGINEER

Efthymios Delis
No. C51434
Exp. 6-30-08
CIVIL
REGISTERED PROFESSIONAL ENGINEER
STATE OF CALIFORNIA

October 5, 2007
PLANS APPROVAL DATE

The State of California or its officers or agents shall not be responsible for the accuracy or completeness of electronic copies of this plan sheet.

To accompany plans dated 2-1-10

NOTE:

The Contractor shall verify all controlling field dimensions before ordering or fabricatiing any material.

JOINT SEALS DETAILS

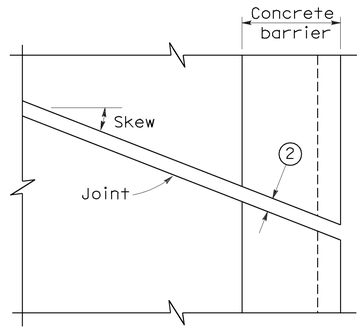

PLAN OF JOINT (SKEW ≤ 20°)

Min ℄ radius to be 4 times uncompressed width of seal or as recommended by the manufacturer, whichever is greater

In lieu of saw cutting, this area may be blocked out and reconstructed to match saw cutting on both sides.

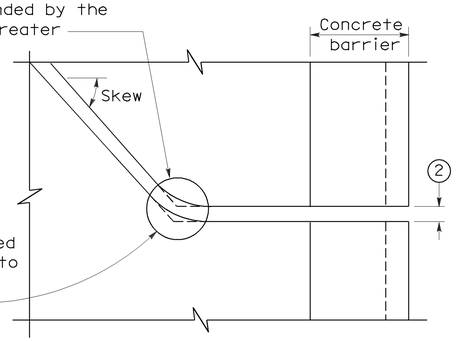

PLAN OF JOINT (SKEW > 20°)

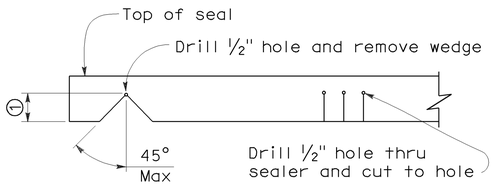

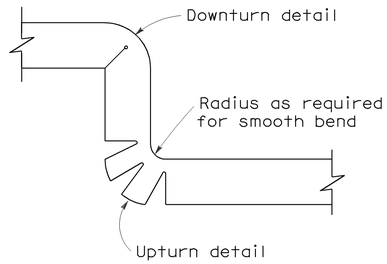

DETAIL A

NOTES:

(1) Make smooth cuts from the bottom of seal to 1½" clear of top leaving at least one complete cell between the top of the cut and top of the seal. When necessary cut back of seal to clear conduit and round openings.

(2) Opening in barrier to match width of sawn deck joint.

(3) Sawcut groove widths shall be as ordered by the Engineer.

(4) Depth of sawcut: Type A - Depth to be 2" minimum.
Type B - Depth to be equal to or greater than the depth of seal measured along the contact surface, when compressed to minimum width position (W_2) plus dimensions shown.

(5) MR (movement rating) as shown on other plan sheets.

(6) Other depths must be approved by the Engineer.

DIMENSIONS "a" OF JOINT REQUIRED

Movement Rating (MR) (5)	Bridge Type	"a" Dimension Deck Concrete Placed		
		Winter	Fall-Spring	Summer
2"	All except CIP/PS	1½"	1¼"	¾"
	CIP/PS	1¼"	1"	½"
1½"	All except CIP/PS	1¼"	1"	½"
	CIP/PS	1"	¾"	½"
1"	All except CIP/PS	1"	¾"	½"
	CIP/PS	¾"	½"	½"
½"	All except CIP/PS	¾"	¾"	½"
	CIP/PS	½"	½"	½"

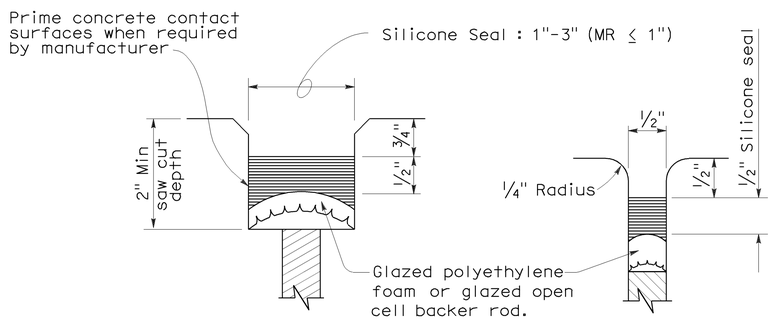

TYPE A SEAL

Movement rating : Silicone = 1" Max

TYPE AL SEAL

Longitudinal joints only

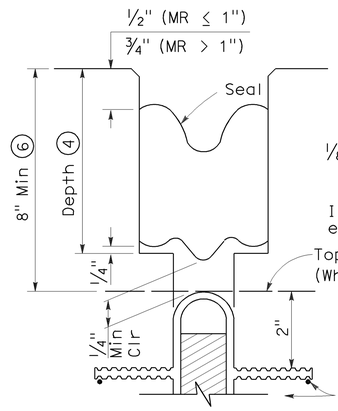

TYPE B JOINT SEAL
IN MINIMUM WIDTH POSITION (W_2)

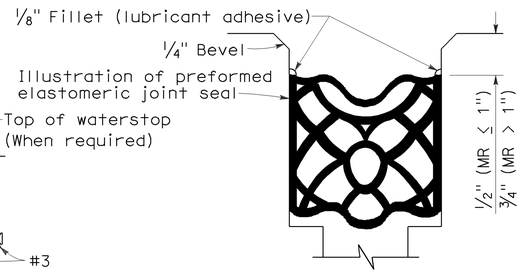

TYPE B SEAL

Movement Rating ≤ 2"

STATE OF CALIFORNIA
DEPARTMENT OF TRANSPORTATION

JOINT SEALS (MAXIMUM MOVEMENT RATING = 2")

NO SCALE

RSP B6-21 DATED OCTOBER 5, 2007 SUPERSEDES STANDARD PLAN B6-21 DATED MAY 1, 2006 - PAGE 258 OF THE STANDARD PLANS BOOK DATED MAY 2006.

REVISED STANDARD PLAN RSP B6-21

2006 REVISED STANDARD PLAN RSP B6-21

5-8-07

DIST	COUNTY	ROUTE	POST MILES TOTAL PROJECT	SHEET No	TOTAL SHEETS
07	LA	605	R4.8/R19.9	19	33

11-19-09
REGISTERED CIVIL ENGINEER DATE

2-1-10
PLANS APPROVAL DATE

REGISTERED PROFESSIONAL ENGINEER — MAZIN S. IBRAHIM — No. C69896 — Exp. 09/30/10 — CIVIL — STATE OF CALIFORNIA

The State of California or its officers or agents shall not be responsible for the accuracy or completeness of electronic copies of this plan sheet.

Caltrans now has a web site! To get to the web site, go to: http://www.dot.ca.gov

LEGEND:

Indicates existing.

Indicates direction of traffic.

Indicates limits of existing joint seal removal and placement of new joint seal. Prior to placement of new joint seal, repair joint spalls.

STANDARD PLANS DATED MAY 2006

SHEET NO.	TITLE
A10A	ACRONYMS AND ABBREVIATIONS (SHEET 1 OF 2)
A10B	ACRONYMS AND ABBREVIATIONS (SHEET 2 OF 2)
A10C	SYMBOLS (SHEET 1 OF 2)
A10D	SYMBOLS (SHEET 2 OF 2)
RSP B6-21	JOINT SEALS (MAXIMUM MOVEMENT RATING = 2")

STANDARD PLAN SHEET No.

DETAIL No.

INDEX TO PLANS

SHEET NO.	TITLE
1	GENERAL PLAN No. 1
2	GENERAL PLAN No. 2
3	GENERAL PLAN No. 3
4	GENERAL PLAN No. 4
5	GENERAL PLAN No. 5
6	GENERAL PLAN No. 6
7	GENERAL PLAN No. 7
8	GENERAL PLAN No. 8
9	GENERAL PLAN No. 9
10	GENERAL PLAN No.10
11	MISCELLANEOUS DETAILS No. 1
12	MISCELLANEOUS DETAILS No. 2
13	MISCELLANEOUS DETAILS No. 3
14	MISCELLANEOUS DETAILS No. 4
15	JOINT SEAL ASSEMBLY MAXIMUM MR=4"

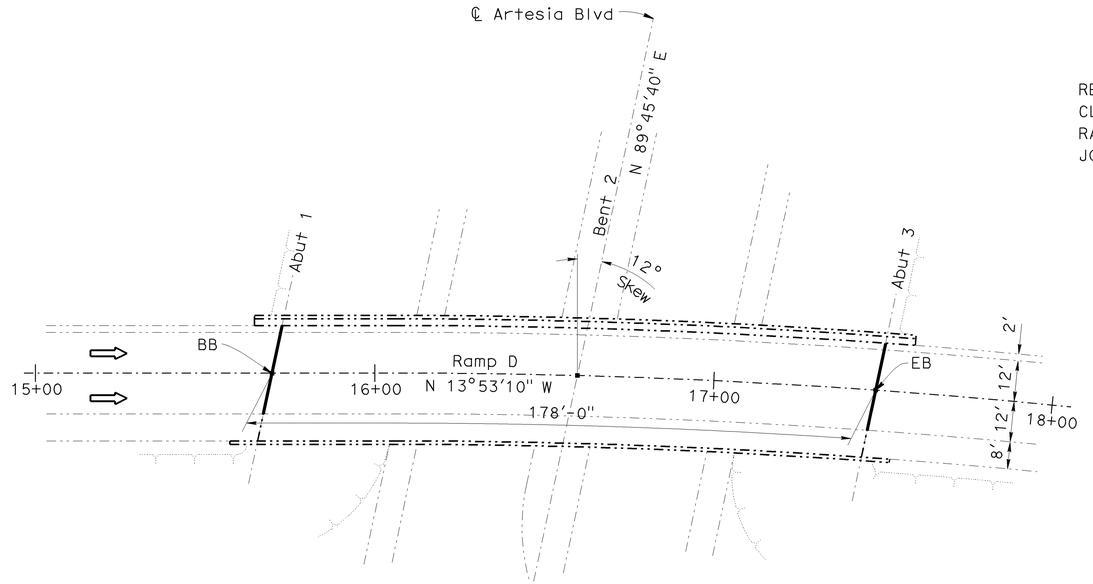

N605-E91 CONNECTOR OC

Br No. 53-1735G, Rte 605, PM R4.78
No Scale

N605-E91 CONNECTOR OC #53-1735G

QUANTITIES

REMOVE UNSOUND CONCRETE	2 CF
CLEAN EXPANSION JOINT	52 LF
RAPID SETTING CONCRETE (PATCH)	2 CF
JOINT SEAL (MR 1")	52 LF

ALONDRA Blvd UC #53-1645

QUANTITIES

REMOVE UNSOUND CONCRETE	3 CF
CLEAN EXPANSION JOINT	286 LF
RAPID SETTING CONCRETE (PATCH)	3 CF
JOINT SEAL (MR 1")	286 LF

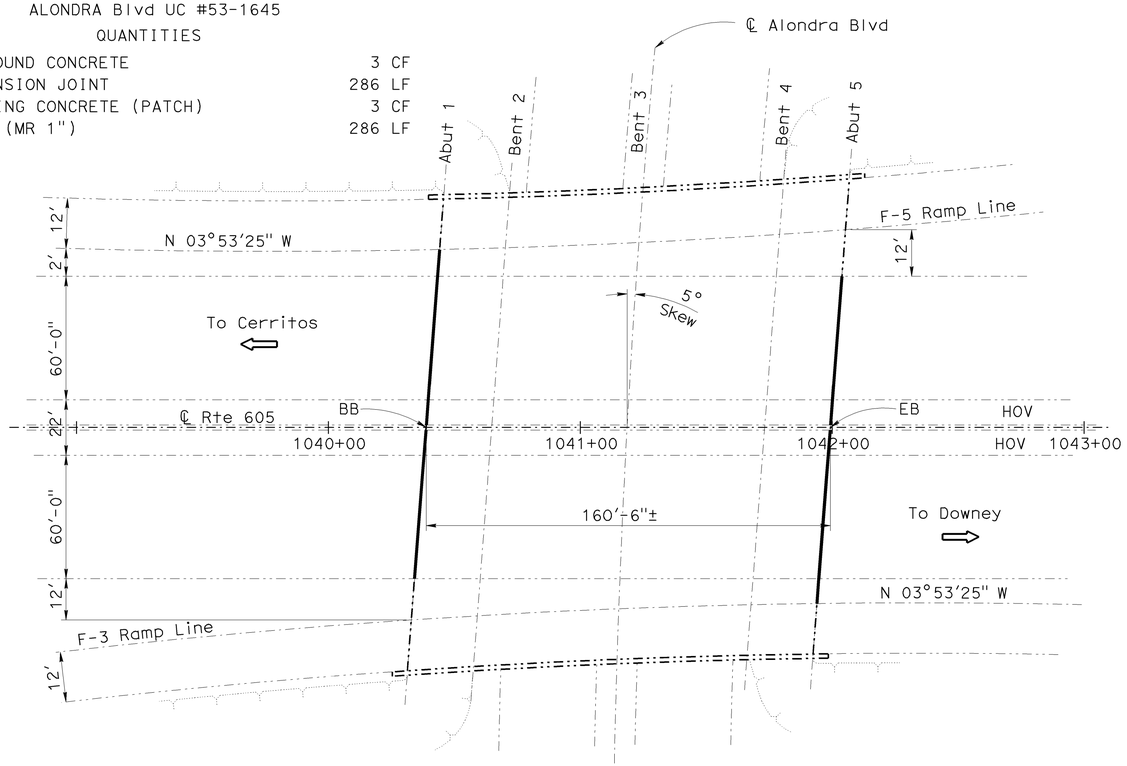

ALONDRA BOULEVARD UC

Br No. 53-1645, Rte 605, PM R5.81
No Scale

NOTE:
THE CONTRACTOR SHALL VERIFY ALL CONTROLLING FIELD DIMENSIONS BEFORE ORDERING OR FABRICATING ANY MATERIAL.

TONY D. BRAKE
DESIGN ENGINEER

DESIGN	BY Mazin Ibrahim	CHECKED Hong Tien Tran	LOAD FACTOR DESIGN	LIVE LOADING: HS20-44 AND ALTERNATIVE AND PERMIT DESIGN LOAD	
DETAILS	BY Clayton Tom	CHECKED Mazin Ibrahim	LAYOUT	BY Clayton Tom	CHECKED Mazin Ibrahim
QUANTITIES	BY Mazin Ibrahim	CHECKED Hong Tien Tran	SPECIFICATIONS	BY Kevin Ellingson	PLANS AND SPECS COMPARED Kevin Ellingson

STRUCTURES MAINTENANCE GENERAL PLAN SHEET (ENGLISH) (REV. 2/4/05)

ORIGINAL SCALE IN INCHES FOR REDUCED PLANS 0 1 2 3

STATE OF CALIFORNIA
DEPARTMENT OF TRANSPORTATION

DIVISION OF MAINTENANCE
STRUCTURE MAINTENANCE DESIGN

CU 07
EA 2Y7701

FILE => 07-2Y7701-a-gp01.dgn

BRIDGE NO. Various
POST MILE Varies

ROUTE 605 BRIDGES
GENERAL PLAN NO. 1

DISREGARD PRINTS BEARING EARLIER REVISION DATES →

REVISION DATES: 03-06-09 | 04-28-09 | 05-08-09 | 06-03-09 | 06-11-09 | 07-23-09 | 11-06-09 | 11-18-09

SHEET 1 OF 15

USERNAME => s1172283 DATE PLOTTED => 26-JAN-2010 TIME PLOTTED => 07:27

DIST	COUNTY	ROUTE	POST MILES TOTAL PROJECT	SHEET No	TOTAL SHEETS
07	LA	605	R4.8/R19.9	20	33

11-19-09
REGISTERED CIVIL ENGINEER DATE

2-1-10
PLANS APPROVAL DATE

REGISTERED PROFESSIONAL ENGINEER — MAZIN S. IBRAHIM — No. C69896 — Exp. 09/30/10 — CIVIL — STATE OF CALIFORNIA

The State of California or its officers or agents shall not be responsible for the accuracy or completeness of electronic copies of this plan sheet.

Caltrans now has a web site! To get to the web site, go to: http://www.dot.ca.gov

LEGEND:

- Indicates existing.
- Indicates direction of traffic.
- Indicates limits of clean and treat bridge deck with high molecular weight methacrylate. Prior to bridge deck treatment, remove unsound concrete and patch with rapid setting concrete.
- Indicates limits of existing joint seal removal and placement of new joint seal. Prior to placement of new joint seal, repair joint spalls.

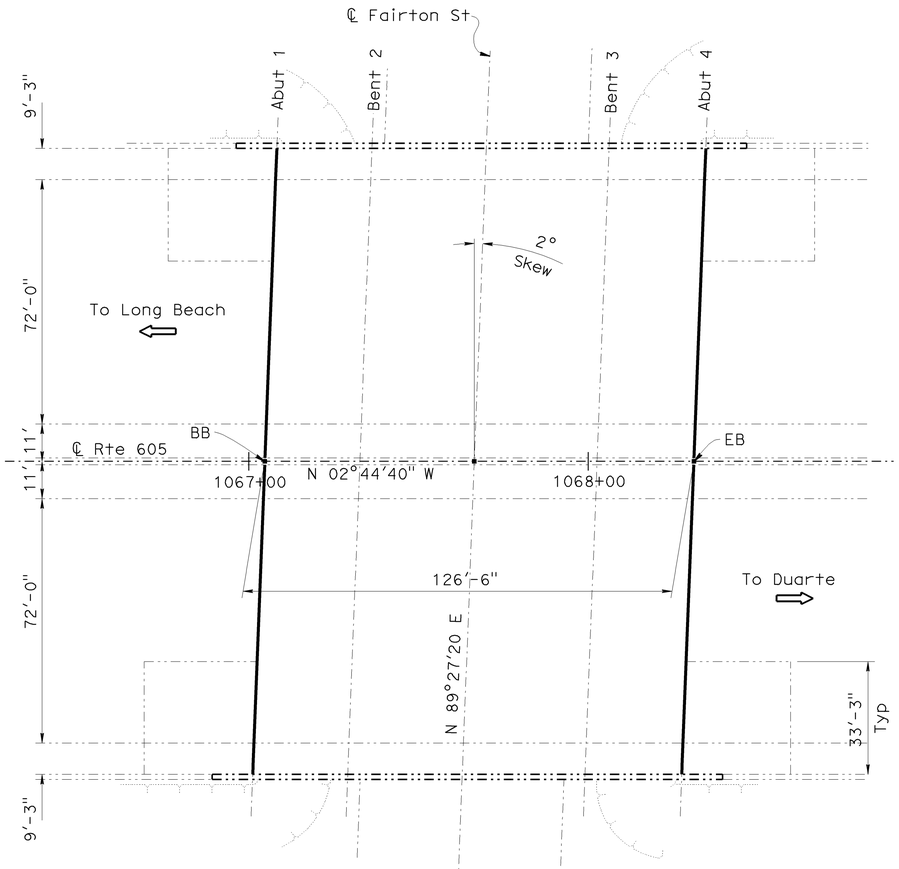

FAIRTON STREET UC

Br No. 53-1646, Rte 605, PM R6.32
Scale: 1"=20'

FAIRTON STREET UC #53-1646
QUANTITIES

REMOVE UNSOUND CONCRETE	3 CF
CLEAN EXPANSION JOINT	372 LF
RAPID SETTING CONCRETE (PATCH)	3 CF
JOINT SEAL (MR 1½")	372 LF

EXCELSIOR DRIVE UC #53-1647
QUANTITIES

REMOVE UNSOUND CONCRETE	41 CF
CLEAN BRIDGE DECK	16,420 SQFT
RAPID SETTING CONCRETE (PATCH)	41 CF
PUBLIC SAFETY PLAN	LUMP SUM
TREAT BRIDGE DECK	16,420 SQFT
FURNISH BRIDGE DECK TREATMENT MATERIAL	205 GAL

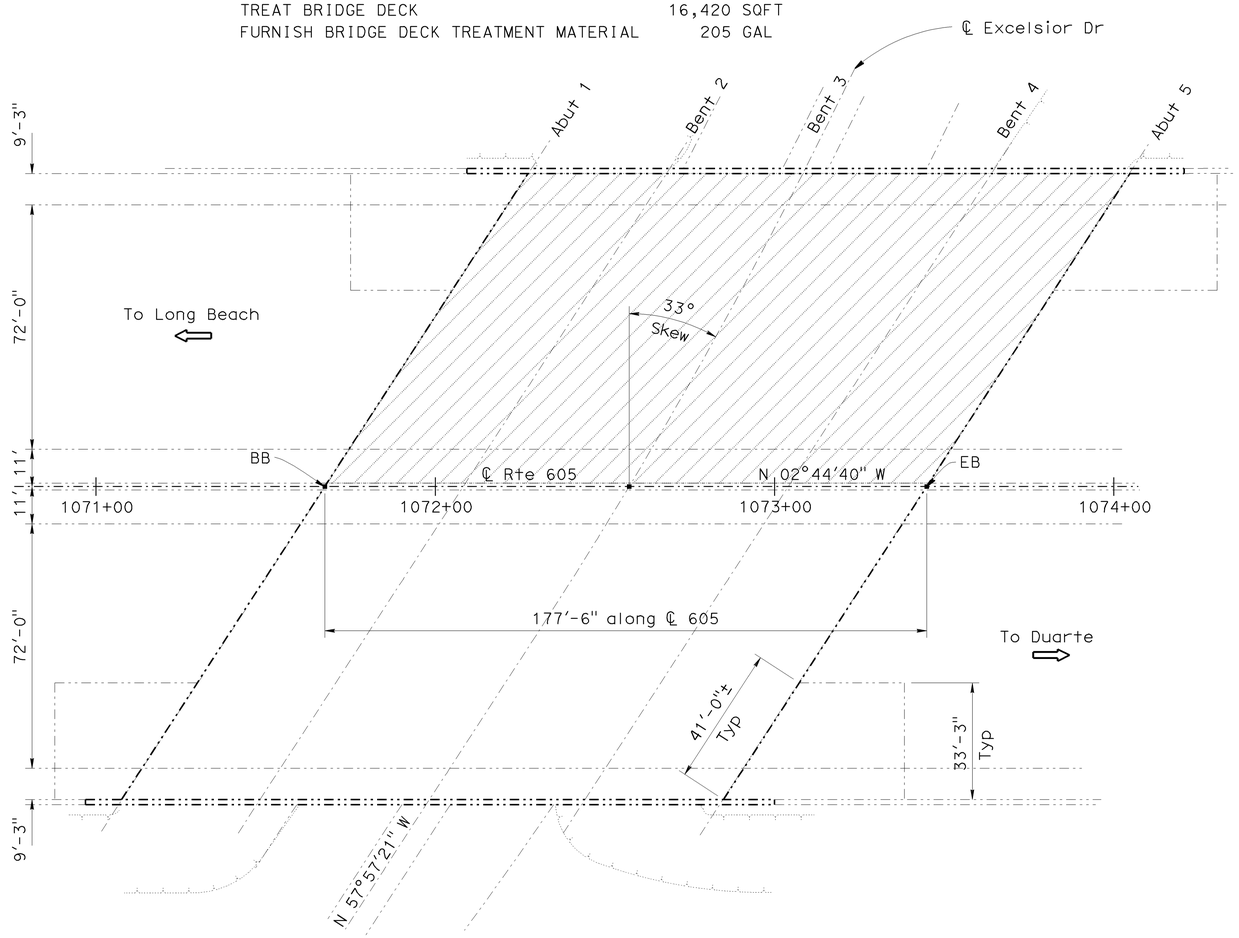

EXCELSIOR DRIVE UC

Br No. 53-1647, Rte 605, PM R6.4
Scale: 1"=20'

NOTE:
THE CONTRACTOR SHALL VERIFY ALL CONTROLLING FIELD DIMENSIONS BEFORE ORDERING OR FABRICATING ANY MATERIAL.

TONY D. BRAKE
DESIGN ENGINEER

DESIGN	BY Mazin Ibrahim	CHECKED Hong Tien Tran	LOAD FACTOR DESIGN	LIVE LOADING: HS20-44 AND ALTERNATIVE AND PERMIT DESIGN LOAD		
DETAILS	BY Clayton Tom	CHECKED Mazin Ibrahim	LAYOUT	BY Clayton Tom	CHECKED Mazin Ibrahim	
QUANTITIES	BY Mazin Ibrahim	CHECKED Hong Tien Tran	SPECIFICATIONS	BY Kevin Ellingson	PLANS AND SPECS COMPARED Kevin Ellingson	

STATE OF CALIFORNIA
DEPARTMENT OF TRANSPORTATION

DIVISION OF MAINTENANCE
STRUCTURE MAINTENANCE DESIGN

CU 07
EA 2Y7701

BRIDGE NO. Various
POST MILE Varies

ROUTE 605 BRIDGES
GENERAL PLAN NO. 2

STRUCTURES MAINTENANCE GENERAL PLAN SHEET (ENGLISH) (REV. 2/4/05)

ORIGINAL SCALE IN INCHES FOR REDUCED PLANS 0 1 2 3

DISREGARD PRINTS BEARING EARLIER REVISION DATES →

REVISION DATES: 01-05-09 | 04-28-09 | 05-06-09 | 06-03-09 | 06-11-09 | 07-23-09 | 11-06-09 | 11-18-09

SHEET 2 OF 15

FILE => 07-2Y7701-a-gp02.dgn

USERNAME => s117283 DATE PLOTTED => 26-JAN-2010 TIME PLOTTED => 07:28

DIST	COUNTY	ROUTE	POST MILES TOTAL PROJECT	SHEET No	TOTAL SHEETS
07	LA	605	R4.8/R19.9	21	33

11-19-09
REGISTERED CIVIL ENGINEER DATE

2-1-10
PLANS APPROVAL DATE

MAZIN S. IBRAHIM
REGISTERED PROFESSIONAL ENGINEER
No. C69896
Exp. 09/30/10
CIVIL
STATE OF CALIFORNIA

The State of California or its officers or agents shall not be responsible for the accuracy or completeness of electronic copies of this plan sheet.

Caltrans now has a web site! To get to the web site, go to: http://www.dot.ca.gov

LEGEND:

Indicates existing.

Indicates direction of traffic.

Indicates limits of existing joint seal removal and placement of new joint seal. Prior to placement of new joint seal, repair joint spalls.

Indicates location of existing modular joint seal assembly removal and placement with new joint seal.

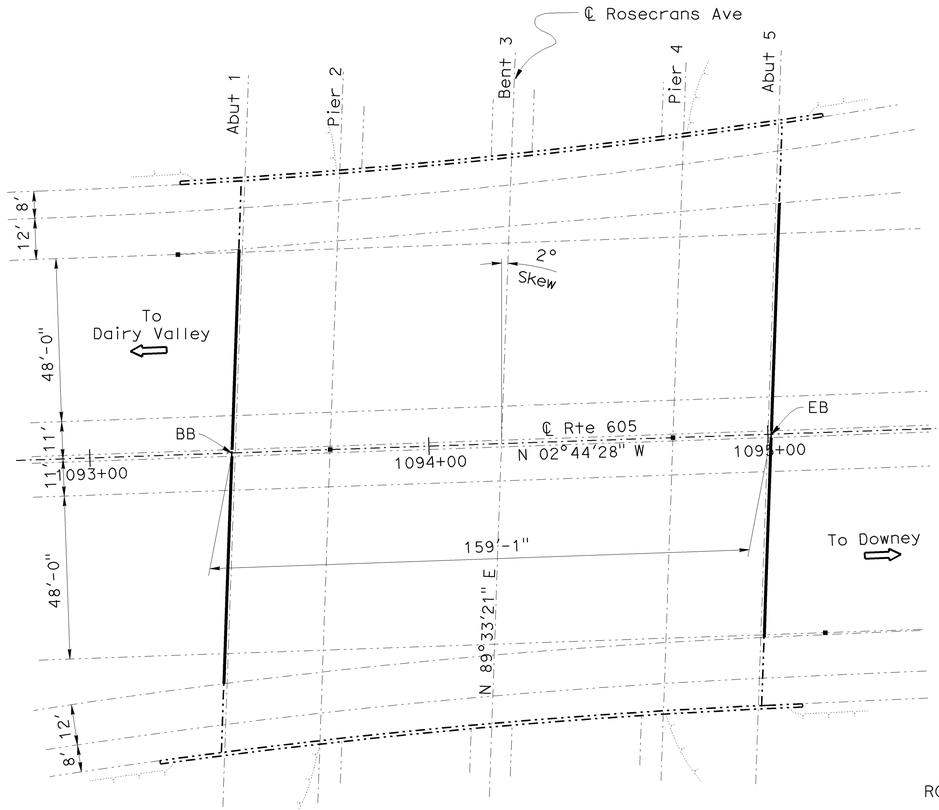

ROSECRANS AVENUE UC

Br No. 53-1648, Rte 605, PM R6.81
No Scale

ROSECRANS AVENUE UC #53-1648
QUANTITIES

REMOVE UNSOUND CONCRETE	3 CF
CLEAN EXPANSION JOINT	260 LF
RAPID SETTING CONCRETE (PATCH)	3 CF
JOINT SEAL (MR 2")	260 LF

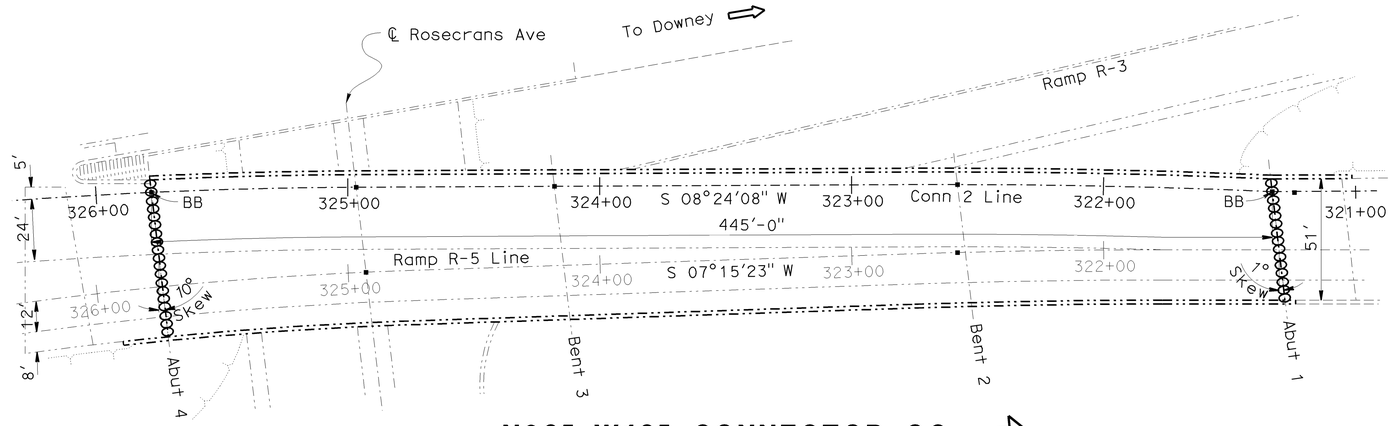

N605-W105 CONNECTOR OC

Br No. 53-2699G, Rte 605, PM R6.81
No Scale

N605-W105 CONNECTOR OC #53-2699G
QUANTITIES

REMOVE UNSOUND CONCRETE	2 CF
BRIDGE REMOVAL (PORTION), LOCATION A	LUMP SUM
STRUCTURAL CONCRETE, BRIDGE	10 CY
CLEAN EXPANSION JOINT	100 LF
RAPID SETTING CONCRETE (PATCH)	2 CF
JOINT SEAL ASSEMBLY (MR 3½")	100 LF
BAR REINFORCING STEEL (BRIDGE)	1,800 LB

NOTE:
THE CONTRACTOR SHALL VERIFY ALL CONTROLLING FIELD DIMENSIONS BEFORE ORDERING OR FABRICATING ANY MATERIAL.

TONY D. BRAKE
DESIGN ENGINEER

	BY	CHECKED	LOAD FACTOR DESIGN	LIVE LOADING: HS20-44 AND ALTERNATIVE AND PERMIT DESIGN LOAD	
DESIGN	Mazin Ibrahim	Hong Tien Tran			
DETAILS	Clayton Tom	Mazin Ibrahim	LAYOUT	Clayton Tom	Mazin Ibrahim
QUANTITIES	Mazin Ibrahim	Hong Tien Tran	SPECIFICATIONS	Kevin Ellingson	PLANS AND SPECS COMPARED Kevin Ellingson

STATE OF CALIFORNIA
DEPARTMENT OF TRANSPORTATION

DIVISION OF MAINTENANCE
STRUCTURE MAINTENANCE DESIGN

CU 07
EA 2Y7701

BRIDGE NO. Various
POST MILE Varies

ROUTE 605 BRIDGES
GENERAL PLAN NO. 3

STRUCTURES MAINTENANCE GENERAL PLAN SHEET (ENGLISH) (REV. 2/4/05)

ORIGINAL SCALE IN INCHES FOR REDUCED PLANS 0 1 2 3

DISREGARD PRINTS BEARING EARLIER REVISION DATES →

REVISION DATES										SHEET	OF
03-05-09	04-28-09	05-05-09	06-05-09	06-11-09	07-23-09	11-06-09	11-18-09			3	15

FILE => 07-2Y7701-a-gp03.dgn

USERNAME => s1172B3 DATE PLOTTED => 26-JAN-2010 TIME PLOTTED => 07:29

DIST	COUNTY	ROUTE	POST MILES TOTAL PROJECT	SHEET No	TOTAL SHEETS
07	LA	605	R4.8/R19.9	22	33

11-19-09
REGISTERED CIVIL ENGINEER DATE

2-1-10
PLANS APPROVAL DATE

REGISTERED PROFESSIONAL ENGINEER
MAZIN S. IBRAHIM
No. C69896
Exp. 09/30/10
CIVIL
STATE OF CALIFORNIA

The State of California or its officers or agents shall not be responsible for the accuracy or completeness of electronic copies of this plan sheet.

Caltrans now has a web site! To get to the web site, go to: http://www.dot.ca.gov

LEGEND:

- Indicates existing.
- Indicates direction of traffic.
- Indicates limits of existing joint seal removal and placement of new joint seal. Prior to placement of new joint seal, repair joint spalls.
- Indicates limits of clean and treat bridge deck with high molecular weight methacrylate. Prior to bridge deck treatment, remove unsound concrete and patch with rapid setting concrete.

FOSTER ROAD UC #53-1650
QUANTITIES

REMOVE UNSOUND CONCRETE	95 CF
CLEAN BRIDGE DECK	36,710 SQFT
CLEAN EXPANSION JOINT	324 LF
RAPID SETTING CONCRETE (PATCH)	95 CF
JOINT SEAL (MR 1½")	324 LF
PUBLIC SAFETY PLAN	LUMP SUM
TREAT BRIDGE DECK	36,710 SQFT
FURNISH BRIDGE DECK TREATMENT MATERIAL	460 GAL

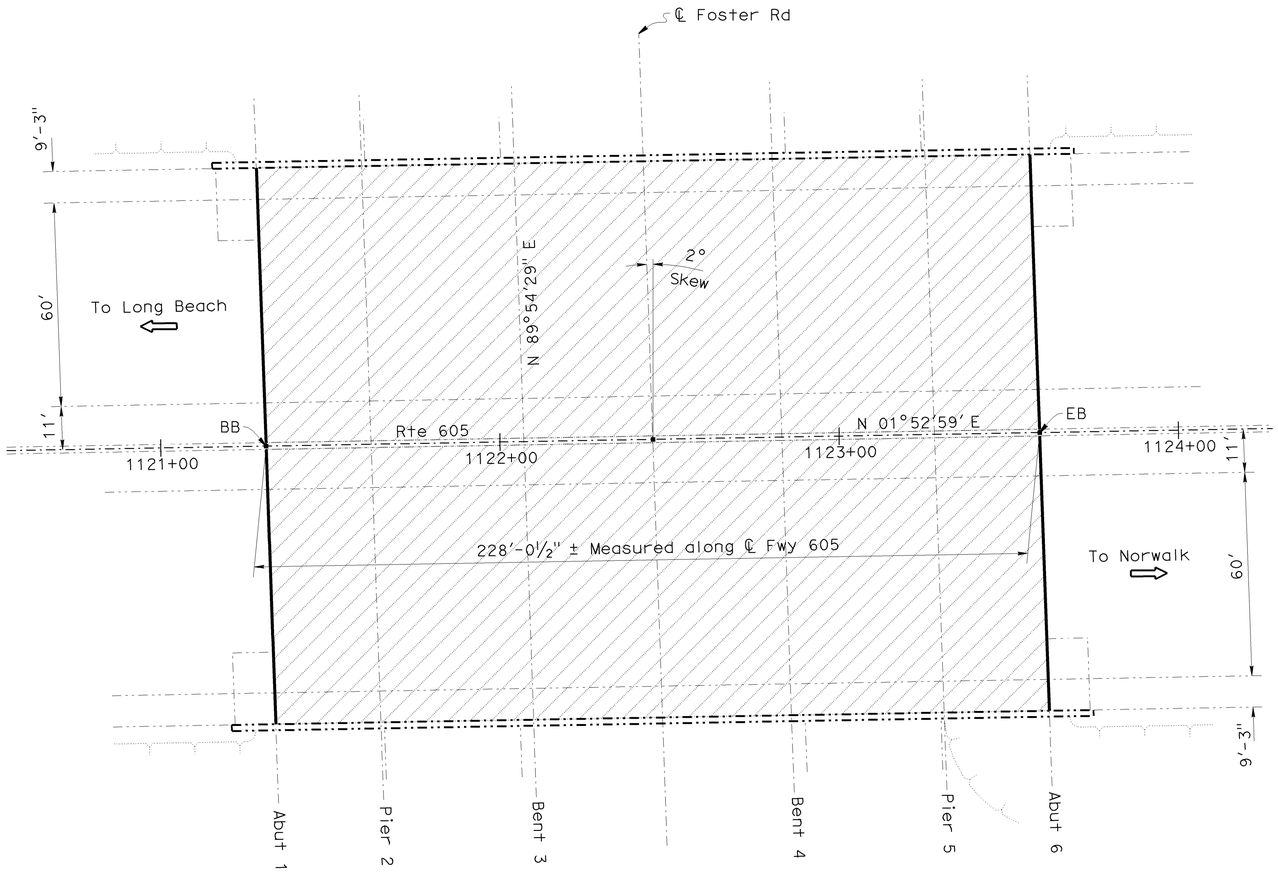

FOSTER ROAD UC

Br No. 53-1650, Rte 605, PM R7.34
Scale: 1"=20'

NOTE:
THE CONTRACTOR SHALL VERIFY ALL CONTROLLING FIELD DIMENSIONS BEFORE ORDERING OR FABRICATING ANY MATERIAL.

TONY D. BRAKE DESIGN ENGINEER	DESIGN	BY Mazin Ibrahim	CHECKED Hong Tien Tran	LOAD FACTOR DESIGN	LIVE LOADING: HS20-44 AND ALTERNATIVE AND PERMIT DESIGN LOAD		STATE OF CALIFORNIA DEPARTMENT OF TRANSPORTATION	DIVISION OF MAINTENANCE STRUCTURE MAINTENANCE DESIGN	BRIDGE NO. Various POST MILE Varies
	DETAILS	BY Clayton Tom	CHECKED Mazin Ibrahim	LAYOUT	BY Clayton Tom	CHECKED Mazin Ibrahim			
	QUANTITIES	BY Mazin Ibrahim	CHECKED Hong Tien Tran	SPECIFICATIONS	BY Kevin Ellingson	PLANS AND SPECS COMPARED Kevin Ellingson			

ROUTE 605 BRIDGES
GENERAL PLAN NO. 4

STRUCTURES MAINTENANCE GENERAL PLAN SHEET (ENGLISH) (REV. 2/4/05)

ORIGINAL SCALE IN INCHES FOR REDUCED PLANS 0 1 2 3

CU 07
EA 2Y7701

DISREGARD PRINTS BEARING EARLIER REVISION DATES →

REVISION DATES: 03-05-09 | 04-28-09 | 05-06-09 | 06-05-09 | 06-11-09 | 07-23-09 | 11-06-09 | 11-18-09

SHEET 4 OF 15

FILE => 07-2Y7701-a-gp04.dgn

USERNAME => s117283 DATE PLOTTED => 26-JAN-2010 TIME PLOTTED => 07:30

DIST	COUNTY	ROUTE	POST MILES TOTAL PROJECT	SHEET No	TOTAL SHEETS
07	LA	605	R4.8/R19.9	23	33

11-19-09
REGISTERED CIVIL ENGINEER DATE

2-1-10
PLANS APPROVAL DATE

REGISTERED PROFESSIONAL ENGINEER
MAZIN S. IBRAHIM
No. C69896
Exp. 09/30/10
CIVIL
STATE OF CALIFORNIA

The State of California or its officers or agents shall not be responsible for the accuracy or completeness of electronic copies of this plan sheet.

Caltrans now has a web site! To get to the web site, go to: http://www.dot.ca.gov

LEGEND:

Indicates existing.

Indicates direction of traffic.

Indicates limits of existing joint seal removal and placement of new joint seal. Prior to placement of new joint seal, repair joint spalls.

Indicates location of existing modular joint seal assembly removal and placement with new joint seal.

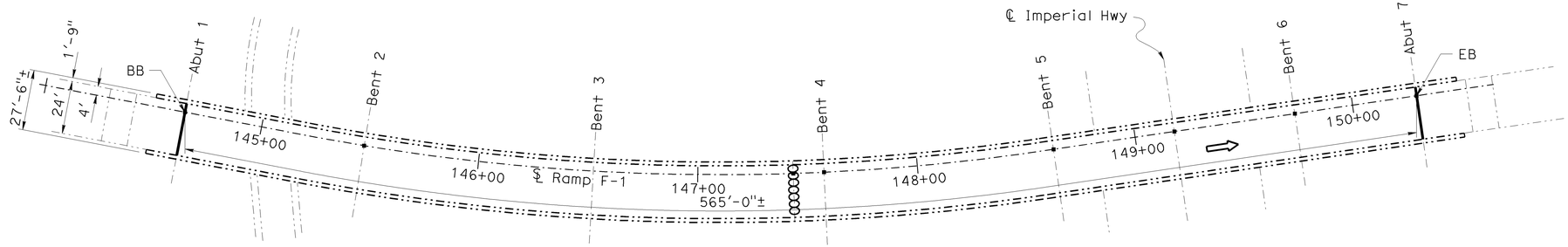

N605-FIRESTONE/IMPERIAL

Br No. 53-1651T, Rte 605, PM R7.84
Scale: 1"=30'

N605-FIRESTONE/IMPERIAL #53-1651T

QUANTITIES

REMOVE UNSOUND CONCRETE	2 CF
BRIDGE REMOVAL (PORTION), LOCATION B	LUMP SUM
STRUCTURAL CONCRETE, BRIDGE	2 CY
CLEAN EXPANSION JOINT	76 LF
RAPID SETTING CONCRETE (PATCH)	2 CF
JOINT SEAL (MR 1")	48 LF
JOINT SEAL ASSEMBLY (MR 3½")	28 LF
BAR REINFORCING STEEL (BRIDGE)	445 LB

NOTE:
THE CONTRACTOR SHALL VERIFY ALL CONTROLLING FIELD DIMENSIONS BEFORE ORDERING OR FABRICATING ANY MATERIAL.

TONY D. BRAKE
DESIGN ENGINEER

	BY	CHECKED	LOAD FACTOR DESIGN	LIVE LOADING: HS20-44 AND ALTERNATIVE AND PERMIT DESIGN LOAD	
DESIGN	Mazin Ibrahim	Hong Tien Tran			
DETAILS	Clayton Tom	Mazin Ibrahim	LAYOUT	Clayton Tom	Mazin Ibrahim
QUANTITIES	Mazin Ibrahim	Hong Tien Tran	SPECIFICATIONS	Kevin Ellingson	PLANS AND SPECS COMPARED Kevin Ellingson

STATE OF CALIFORNIA
DEPARTMENT OF TRANSPORTATION

DIVISION OF MAINTENANCE
STRUCTURE MAINTENANCE DESIGN

CU 07
EA 2Y7701

BRIDGE NO. Various
POST MILE Varies

ROUTE 605 BRIDGES
GENERAL PLAN NO. 5

STRUCTURES MAINTENANCE GENERAL PLAN SHEET (ENGLISH) (REV. 2/4/05)

ORIGINAL SCALE IN INCHES FOR REDUCED PLANS 0 1 2 3

DISREGARD PRINTS BEARING EARLIER REVISION DATES →

REVISION DATES: 03-05-09 | 04-28-09 | 05-08-09 | 06-03-09 | 06-11-09 | 07-23-09 | 11-06-09 | 11-18-09

SHEET 5 OF 15

FILE => 07-2Y7701-a-gp05.dgn

USERNAME => s117283 DATE PLOTTED => 26-JAN-2010 TIME PLOTTED => 07:30

DIST	COUNTY	ROUTE	POST MILES TOTAL PROJECT	SHEET No	TOTAL SHEETS
07	LA	605	R4.8/R19.9	24	33

11-19-09
REGISTERED CIVIL ENGINEER DATE

2-1-10
PLANS APPROVAL DATE

REGISTERED PROFESSIONAL ENGINEER MAZIN S. IBRAHIM No. C69896 Exp. 09/30/10 CIVIL STATE OF CALIFORNIA

The State of California or its officers or agents shall not be responsible for the accuracy or completeness of electronic copies of this plan sheet.

Caltrans now has a web site! To get to the web site, go to: http://www.dot.ca.gov

LEGEND:

- Indicates existing.
- Indicates direction of traffic.
- Indicates limits of existing joint seal removal and placement of new joint seal. Prior to placement of new joint seal, repair joint spalls.
- Indicates limits of clean and treat bridge deck with high molecular weight methacrylate. Prior to bridge deck treatment, remove unsound concrete and patch with rapid setting concrete.

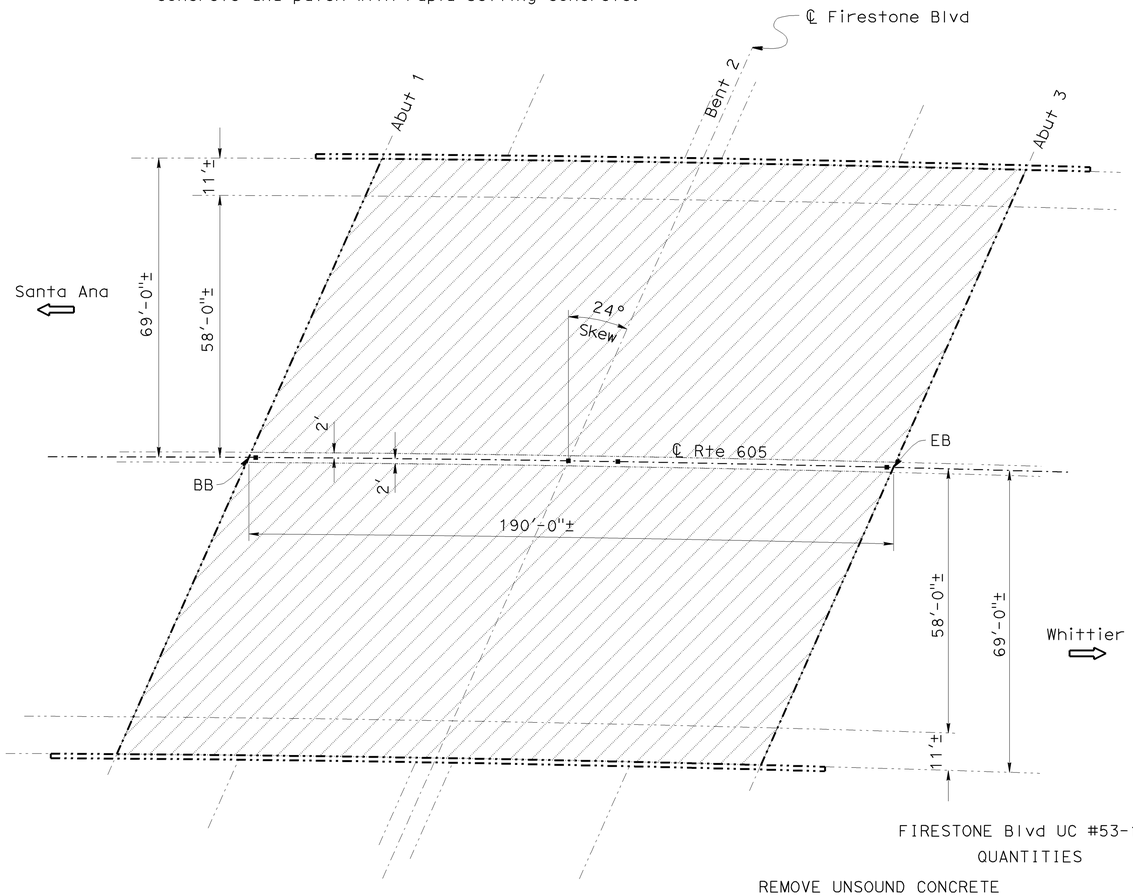

FIRESTONE Blvd UC #53-1653
QUANTITIES

REMOVE UNSOUND CONCRETE	65 CF
CLEAN BRIDGE DECK	25,840 SQFT
RAPID SETTING CONCRETE (PATCH)	65 CF
PUBLIC SAFETY PLAN	LUMP SUM
TREAT BRIDGE DECK	25,840 SQFT
FURNISH BRIDGE DECK TREATMENT MATERIAL	323 GAL

FIRESTONE BOULEVARD UC

Br No. 53-1653, Rte 605, PM R8.38
Scale: 1"=20′

FLORENCE AVENUE UC #53-1656
QUANTITIES

REMOVE UNSOUND CONCRETE	73 CF
CLEAN BRIDGE DECK	26,360 SQFT
CLEAN EXPANSION JOINT	783 LF
RAPID SETTING CONCRETE (PATCH)	73 CF
JOINT SEAL (MR 1½")	453 LF
JOINT SEAL (MR 2 ")	330 LF
PUBLIC SAFETY PLAN	LUMP SUM
TREAT BRIDGE DECK	26,360 SQFT
FURNISH BRIDGE DECK TREATMENT MATERIAL	328 GAL

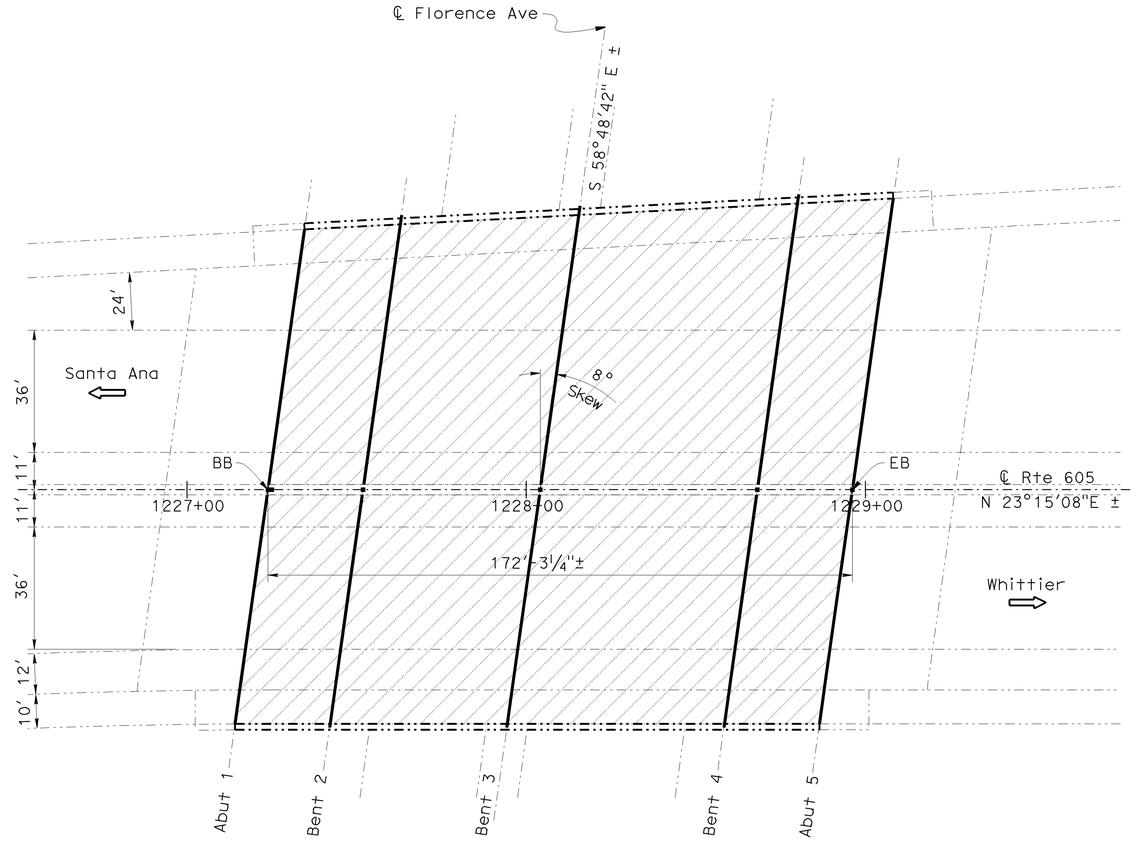

FLORENCE AVENUE UC

Br No. 53-1656, Rte 605, PM R9.35
Scale: 1"=20′

NOTE:
THE CONTRACTOR SHALL VERIFY ALL CONTROLLING FIELD DIMENSIONS BEFORE ORDERING OR FABRICATING ANY MATERIAL.

TONY D. BRAKE
DESIGN ENGINEER

DESIGN	BY Mazin Ibrahim	CHECKED Hong Tien Tran	LOAD FACTOR DESIGN	LIVE LOADING: HS20-44 AND ALTERNATIVE AND PERMIT DESIGN LOAD	
DETAILS	BY Clayton Tom	CHECKED Mazin Ibrahim	LAYOUT	BY Clayton Tom	CHECKED Mazin Ibrahim
QUANTITIES	BY Mazin Ibrahim	CHECKED Hong Tien Tran	SPECIFICATIONS	BY Kevin Ellingson	PLANS AND SPECS COMPARED Kevin Ellingson

STATE OF CALIFORNIA
DEPARTMENT OF TRANSPORTATION

DIVISION OF MAINTENANCE
STRUCTURE MAINTENANCE DESIGN

CU 07
EA 2Y7701

BRIDGE NO. Various
POST MILE Varies

ROUTE 605 BRIDGES
GENERAL PLAN NO. 6

STRUCTURES MAINTENANCE GENERAL PLAN SHEET (ENGLISH) (REV. 2/4/05)

ORIGINAL SCALE IN INCHES FOR REDUCED PLANS 0 1 2 3

DISREGARD PRINTS BEARING EARLIER REVISION DATES →

REVISION DATES: 03-05-09 | 04-28-09 | 05-08-09 | 06-03-09 | 06-11-09 | 07-23-09 | 11-06-09 | 11-18-09

SHEET 6 OF 15

FILE => 07-2Y7701-a-gp06.dgn

USERNAME = s117283 DATE PLOTTED => 26-JAN-2010 TIME PLOTTED => 07:30

DIST	COUNTY	ROUTE	POST MILES TOTAL PROJECT	SHEET No	TOTAL SHEETS
07	LA	605	R4.8/R19.9	25	33

11-19-09
REGISTERED CIVIL ENGINEER DATE

2-1-10
PLANS APPROVAL DATE

REGISTERED PROFESSIONAL ENGINEER — MAZIN S. IBRAHIM — No. C69896 — Exp. 09/30/10 — CIVIL — STATE OF CALIFORNIA

The State of California or its officers or agents shall not be responsible for the accuracy or completeness of electronic copies of this plan sheet.

Caltrans now has a web site! To get to the web site, go to: http://www.dot.ca.gov

LEGEND:

Indicates existing.

Indicates direction of traffic.

Indicates limits of clean and treat bridge deck with high molecular weight methacrylate. Prior to bridge deck treatment, remove unsound concrete and patch with rapid setting concrete.

Indicates limits of existing joint seal removal and placement of new joint seal. Prior to placement of new joint seal, repair joint spalls.

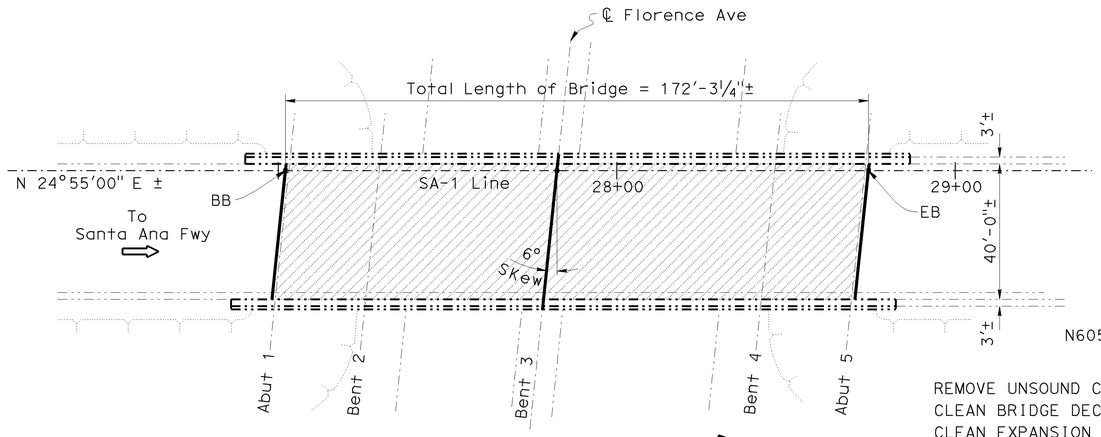

N605-S5 CONNECTOR OC

Br No. 53-1656G, Rte 605, PM R9.35
No Scale

N605-S5 CONNECTOR OC #53-1656G
QUANTITIES

REMOVE UNSOUND CONCRETE	20 CF
CLEAN BRIDGE DECK	6,890 SQFT
CLEAN EXPANSION JOINT	125 LF
RAPID SETTING CONCRETE (PATCH)	20 CF
JOINT SEAL (MR 1")	86 LF
JOINT SEAL (MR 1½")	39 LF
PUBLIC SAFETY PLAN	LUMP SUM
TREAT BRIDGE DECK	6,890 SQFT
FURNISH BRIDGE DECK TREATMENT MATERIAL	86 GAL

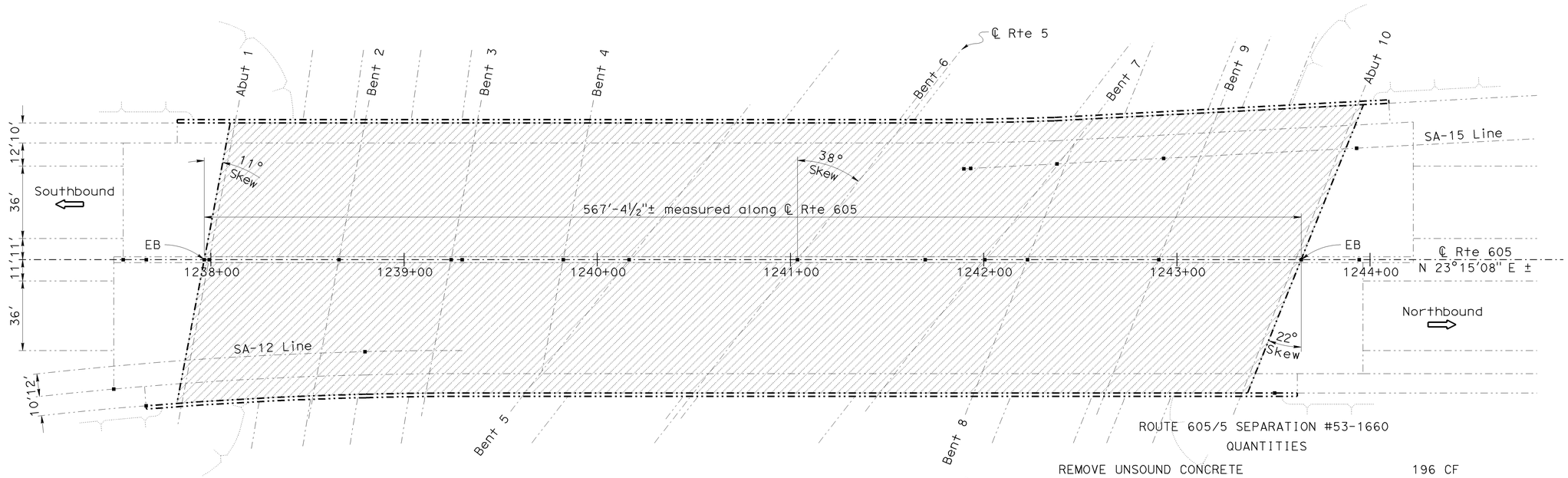

ROUTE 605/5 SEPARATION

Br No. 53-1660, Rte 605, PM R9.55
No Scale

ROUTE 605/5 SEPARATION #53-1660
QUANTITIES

REMOVE UNSOUND CONCRETE	196 CF
CLEAN BRIDGE DECK	78,292 SQFT
RAPID SETTING CONCRETE (PATCH)	196 CF
PUBLIC SAFETY PLAN	LUMP SUM
TREAT BRIDGE DECK	78,292 SQFT
FURNISH BRIDGE DECK TREATMENT MATERIAL	979 GAL

NOTE:
THE CONTRACTOR SHALL VERIFY ALL CONTROLLING FIELD DIMENSIONS BEFORE ORDERING OR FABRICATING ANY MATERIAL.

TONY D. BRAKE
DESIGN ENGINEER

	BY	CHECKED	LOAD FACTOR DESIGN	LIVE LOADING: HS20-44 AND ALTERNATIVE AND PERMIT DESIGN LOAD	
DESIGN	Mazin Ibrahim	Hong Tien Tran			
DETAILS	Clayton Tom	Mazin Ibrahim	LAYOUT	Clayton Tom	Mazin Ibrahim
QUANTITIES	Mazin Ibrahim	Hong Tien Tran	SPECIFICATIONS	Kevin Ellingson	PLANS AND SPECS COMPARED Kevin Ellingson

STATE OF CALIFORNIA
DEPARTMENT OF TRANSPORTATION

DIVISION OF MAINTENANCE
STRUCTURE MAINTENANCE DESIGN

CU 07
EA 2Y7701

BRIDGE NO. Various
POST MILE Varies

ROUTES 605 BRIDGES
GENERAL PLAN NO. 7

DISREGARD PRINTS BEARING EARLIER REVISION DATES →

REVISION DATES: 03-05-09 | 04-28-09 | 05-08-09 | 06-03-09 | 06-11-09 | 07-23-09 | 11-06-09 | 11-18-09

SHEET 7 OF 15

STRUCTURES MAINTENANCE GENERAL PLAN SHEET (ENGLISH) (REV. 2/4/05)

ORIGINAL SCALE IN INCHES FOR REDUCED PLANS 0 1 2 3

FILE => 07-2Y7701-a-gp07.dgn

USERNAME => s1172B3 DATE PLOTTED => 26-JAN-2010 TIME PLOTTED => 07:31

DIST	COUNTY	ROUTE	POST MILES TOTAL PROJECT	SHEET No	TOTAL SHEETS
07	LA	605	R4.8/R19.9	26	33

11-19-09
REGISTERED CIVIL ENGINEER DATE

2-1-10
PLANS APPROVAL DATE

REGISTERED PROFESSIONAL ENGINEER — MAZIN S. IBRAHIM — No. C69896 — Exp. 09/30/10 — CIVIL — STATE OF CALIFORNIA

The State of California or its officers or agents shall not be responsible for the accuracy or completeness of electronic copies of this plan sheet.

Caltrans now has a web site! To get to the web site, go to: http://www.dot.ca.gov

LEGEND:

Indicates existing.

Indicates direction of traffic.

Indicates limits of existing joint seal removal and placement of new joint seal. Prior to placement of new joint seal, repair joint spalls.

Indicates limits of clean and treat bridge deck with high molecular weight methacrylate. Prior to bridge deck treatment, remove unsound concrete and patch with rapid setting concrete.

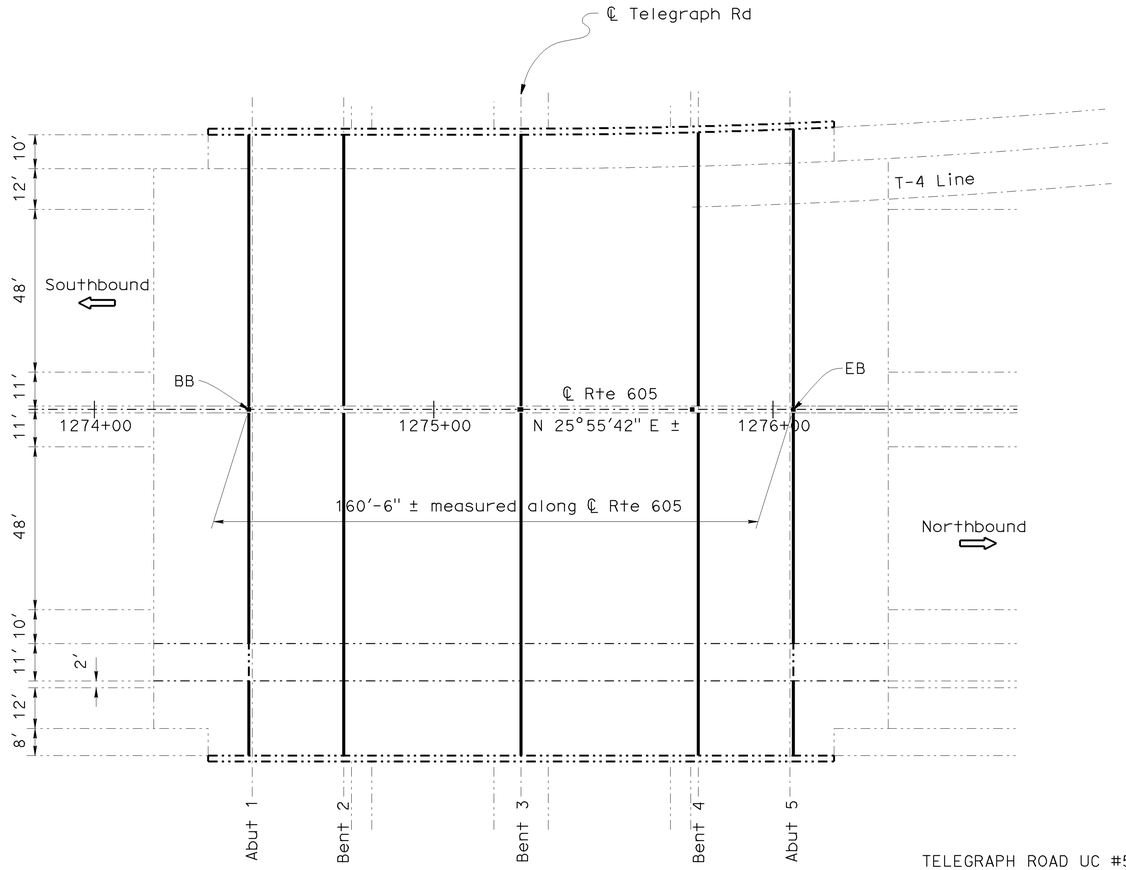

TELEGRAPH ROAD UC

Br No. 53-1662, Rte 605, PM R10.25
Scale: 1"=20′

TELEGRAPH ROAD UC #53-1662
QUANTITIES

REMOVE UNSOUND CONCRETE	7 CF
CLEAN EXPANSION JOINT	921 LF
RAPID SETTING CONCRETE (PATCH)	7 CF
JOINT SEAL (MR 1½")	921 LF

WADDELL STREET UC #53-1666
QUANTITIES

REMOVE UNSOUND CONCRETE	56 CF
CLEAN BRIDGE DECK	20,862 SQFT
CLEAN EXPANSION JOINT	372 LF
RAPID SETTING CONCRETE (PATCH)	56 CF
JOINT SEAL (MR 2")	372 LF
PUBLIC SAFETY PLAN	LUMP SUM
TREAT BRIDGE DECK	20,862 SQFT
FURNISH BRIDGE DECK TREATMENT MATERIAL	261 GAL

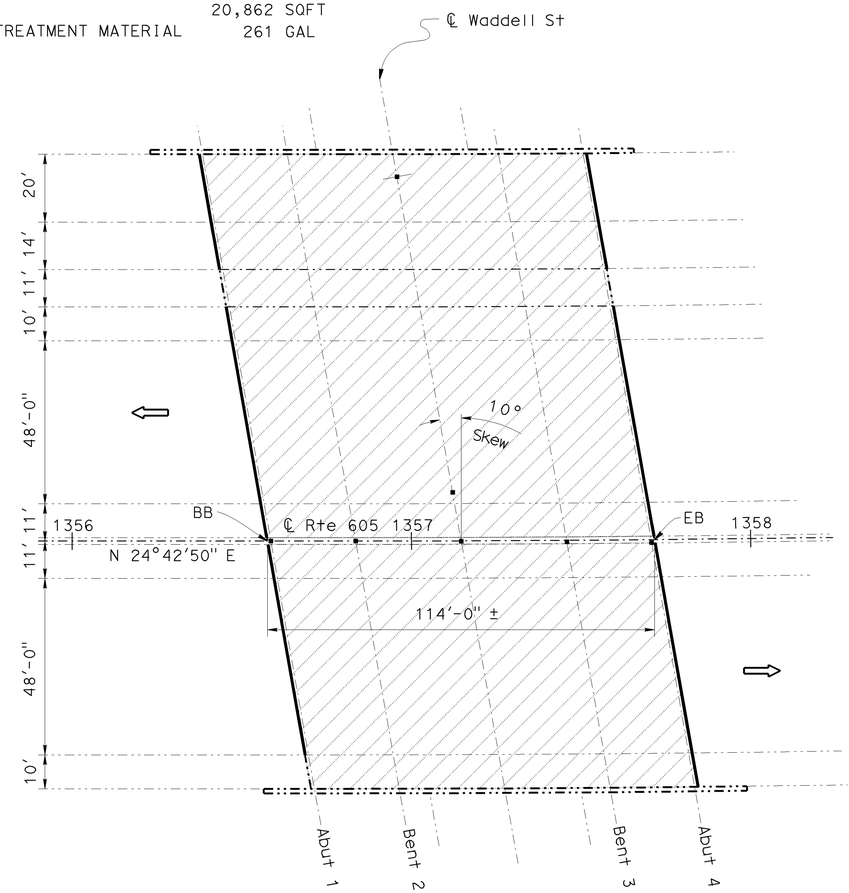

WADDELL STREET UC

Br No. 53-1666, Rte 605, PM R11.8
Scale: 1"=20′

NOTE:
THE CONTRACTOR SHALL VERIFY ALL CONTROLLING FIELD DIMENSIONS BEFORE ORDERING OR FABRICATING ANY MATERIAL.

TONY D. BRAKE
DESIGN ENGINEER

DESIGN	BY Mazin Ibrahim	CHECKED Hong Tien Tran	LOAD FACTOR DESIGN	LIVE LOADING: HS20-44 AND ALTERNATIVE AND PERMIT DESIGN LOAD	
DETAILS	BY Clayton Tom	CHECKED Mazin Ibrahim	LAYOUT	BY Clayton Tom	CHECKED Mazin Ibrahim
QUANTITIES	BY Mazin Ibrahim	CHECKED Hong Tien Tran	SPECIFICATIONS	BY Kevin Ellingson	PLANS AND SPECS COMPARED Kevin Ellingson

STATE OF CALIFORNIA
DEPARTMENT OF TRANSPORTATION

DIVISION OF MAINTENANCE
STRUCTURE MAINTENANCE DESIGN

CU 07
EA 2Y7701

BRIDGE NO. Various
POST MILE Varies

ROUTE 605 BRIDGES
GENERAL PLAN NO. 8

STRUCTURES MAINTENANCE GENERAL PLAN SHEET (ENGLISH) (REV. 2/4/05)

ORIGINAL SCALE IN INCHES FOR REDUCED PLANS 0 1 2 3

DISREGARD PRINTS BEARING EARLIER REVISION DATES →

REVISION DATES: 03-05-09 | 04-28-09 | 05-08-09 | 06-05-09 | 06-11-09 | 07-23-09 | 11-06-09 | 11-18-09

SHEET 8 OF 15

FILE => 07-2Y7701-a-gp08.dgn

USERNAME = s117283 DATE PLOTTED => 26-JAN-2010 TIME PLOTTED => 07:31

DIST	COUNTY	ROUTE	POST MILES TOTAL PROJECT	SHEET No	TOTAL SHEETS
07	LA	605	R4.8/R19.9	27	33

11-19-09
REGISTERED CIVIL ENGINEER DATE

2-1-10
PLANS APPROVAL DATE

REGISTERED PROFESSIONAL ENGINEER
MAZIN S. IBRAHIM
No. C69896
Exp. 09/30/10
CIVIL
STATE OF CALIFORNIA

The State of California or its officers or agents shall not be responsible for the accuracy or completeness of electronic copies of this plan sheet.

Caltrans now has a web site! To get to the web site, go to: http://www.dot.ca.gov

LEGEND:

Indicates existing.

Indicates direction of traffic.

Indicates limits of existing joint seal removal and placement of new joint seal. Prior to placement of new joint seal, repair joint spalls.

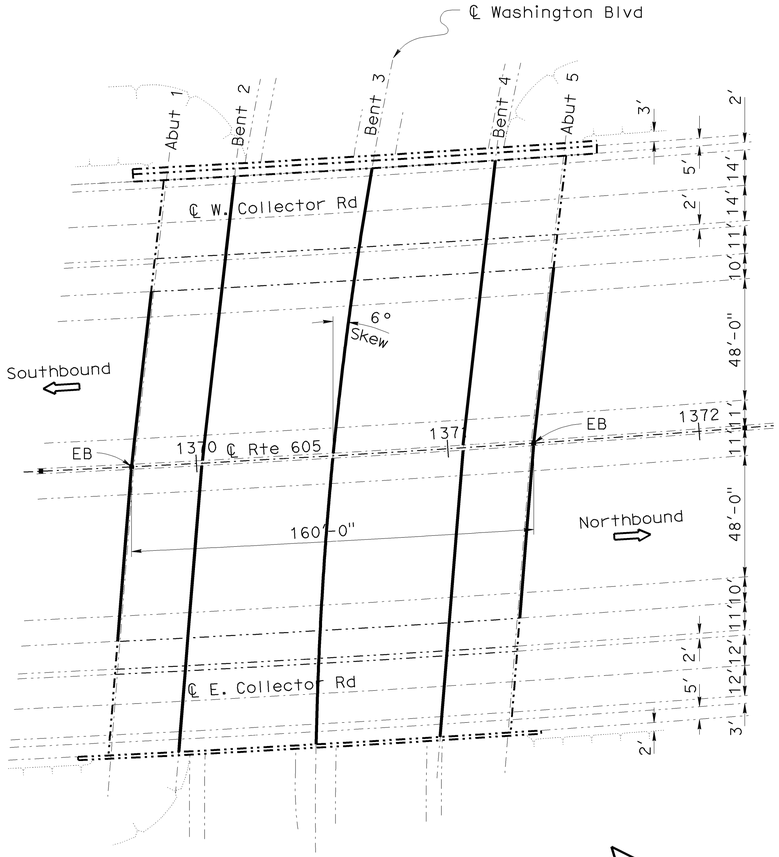

WASHINGTON BOULEVARD UC

Br No. 53-1667, Rte 605, PM R12.05
No Scale

WASHINGTON Blvd UC #53-1667

QUANTITIES

REMOVE UNSOUND CONCRETE	7 CF
CLEAN EXPANSION JOINT	875 LF
RAPID SETTING CONCRETE (PATCH)	7 CF
JOINT SEAL (MR 1½")	597 LF
JOINT SEAL (MR 2")	278 LF

NOTE:
THE CONTRACTOR SHALL VERIFY ALL CONTROLLING FIELD DIMENSIONS BEFORE ORDERING OR FABRICATING ANY MATERIAL.

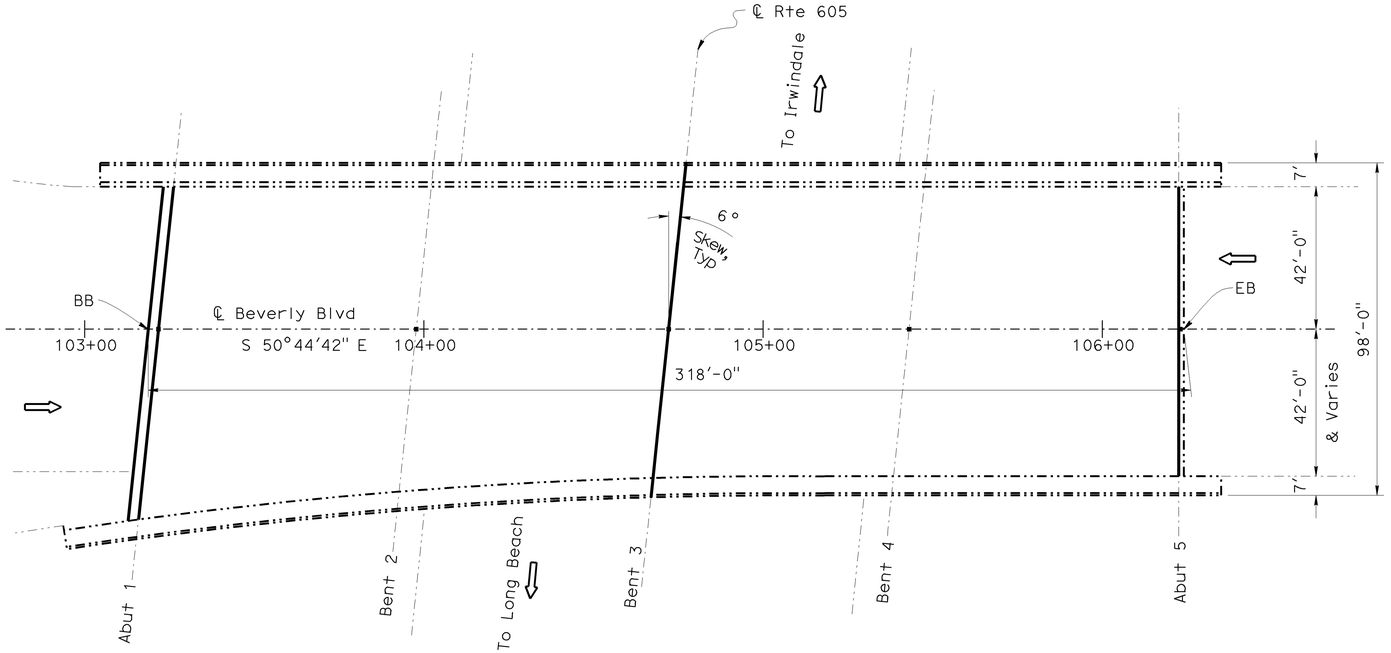

BEVERLY BOULEVARD OC

Br No. 53-1531, Rte 605, PM R14.41
No Scale

BEVERLY Blvd OC #53-1531

QUANTITIES

REMOVE UNSOUND CONCRETE	3 CF
CLEAN EXPANSION JOINT	377 LF
RAPID SETTING CONCRETE (PATCH)	3 CF
JOINT SEAL (MR 1")	97 LF
JOINT SEAL (MR 1½")	97 LF
JOINT SEAL (MR 2")	183 LF

TONY D. BRAKE
DESIGN ENGINEER

DESIGN	BY Mazin Ibrahim	CHECKED Hong Tien Tran	LOAD FACTOR DESIGN	LIVE LOADING: HS20-44 AND ALTERNATIVE AND PERMIT DESIGN LOAD	
DETAILS	BY Clayton Tom	CHECKED Mazin Ibrahim	LAYOUT	BY Clayton Tom	CHECKED Mazin Ibrahim
QUANTITIES	BY Mazin Ibrahim	CHECKED Hong Tien Tran	SPECIFICATIONS	BY Kevin Ellingson	PLANS AND SPECS COMPARED Kevin Ellingson

STATE OF CALIFORNIA
DEPARTMENT OF TRANSPORTATION

DIVISION OF MAINTENANCE
STRUCTURE MAINTENANCE DESIGN

CU 07
EA 2Y7701

BRIDGE NO. Various
POST MILE Varies

ROUTE 605 BRIDGES
GENERAL PLAN NO. 9

STRUCTURES MAINTENANCE GENERAL PLAN SHEET (ENGLISH) (REV. 2/4/05)

ORIGINAL SCALE IN INCHES FOR REDUCED PLANS 0 1 2 3

DISREGARD PRINTS BEARING EARLIER REVISION DATES →

REVISION DATES: 03-05-09 | 04-28-09 | 05-08-09 | 06-03-09 | 06-11-09 | 07-23-09 | 11-06-09 | 11-18-09

SHEET 9 OF 15

FILE => 07-2Y7701-a-gp09.dgn

USERNAME => s117283 DATE PLOTTED => 26-JAN-2010 TIME PLOTTED => 07:31

DIST	COUNTY	ROUTE	POST MILES TOTAL PROJECT	SHEET No	TOTAL SHEETS
07	LA	605	R4.8/R19.9	28	33

11-19-09
REGISTERED CIVIL ENGINEER DATE

2-1-10
PLANS APPROVAL DATE

REGISTERED PROFESSIONAL ENGINEER — MAZIN S. IBRAHIM — No. C69896 — Exp. 09/30/10 — CIVIL — STATE OF CALIFORNIA

The State of California or its officers or agents shall not be responsible for the accuracy or completeness of electronic copies of this plan sheet.

Caltrans now has a web site! To get to the web site, go to: http://www.dot.ca.gov

LEGEND:

Indicates existing.

Indicates direction of traffic.

Indicates limits of existing joint seal removal and placement of new joint seal. Prior to placement of new joint seal, repair joint spalls.

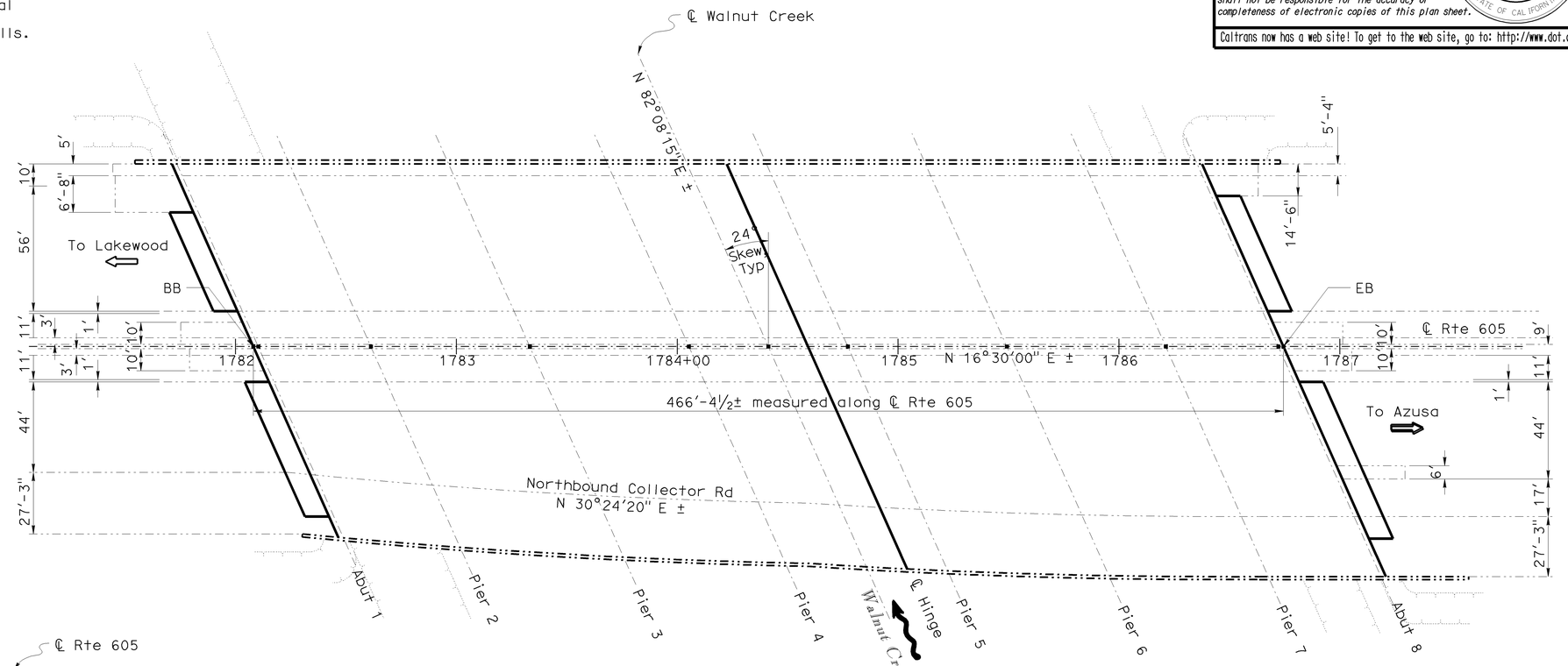

WALNUT CREEK BRIDGE

Br No. 53-1343, Rte 605, PM R19.85
Scale: 1"=30'

WALNUT CREEK BRIDGE #53-1343
QUANTITIES

REMOVE UNSOUND CONCRETE	7 CF
CLEAN EXPANSION JOINT	783 LF
RAPID SETTING CONCRETE (PATCH)	7 CF
JOINT SEAL (MR 1")	236 LF
JOINT SEAL (MR 2")	547 LF

ROSE HILLS ROAD OC #53-1533
QUANTITIES

REMOVE UNSOUND CONCRETE	2 CF
CLEAN EXPANSION JOINT	120 LF
RAPID SETTING CONCRETE (PATCH)	2 CF
JOINT SEAL (MR 2")	120 LF

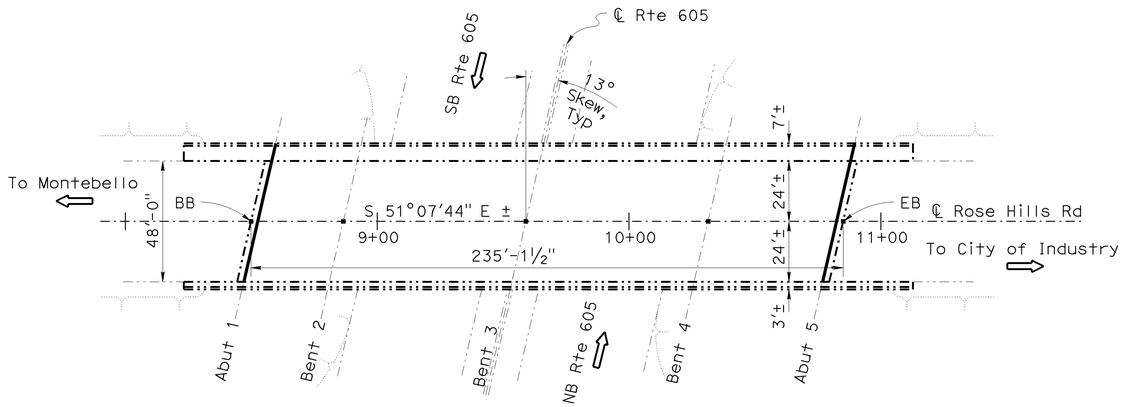

ROSE HILLS ROAD OC

Br No. 53-1533, Rte 605, PM R15.57
Scale: 1"=30'

NOTE:
THE CONTRACTOR SHALL VERIFY ALL CONTROLLING FIELD DIMENSIONS BEFORE ORDERING OR FABRICATING ANY MATERIAL.

TONY D. BRAKE, DESIGN ENGINEER	DESIGN	BY Mazin Ibrahim	CHECKED Hong Tien Tran	LOAD FACTOR DESIGN	LIVE LOADING: HS20-44 AND ALTERNATIVE AND PERMIT DESIGN LOAD		
	DETAILS	BY Clayton Tom	CHECKED Mazin Ibrahim	LAYOUT	BY Clayton Tom	CHECKED Mazin Ibrahim	
	QUANTITIES	BY Mazin Ibrahim	CHECKED Hong Tien Tran	SPECIFICATIONS	BY Kevin Ellingson	PLANS AND SPECS COMPARED Kevin Ellingson	

STATE OF CALIFORNIA
DEPARTMENT OF TRANSPORTATION

DIVISION OF MAINTENANCE
STRUCTURE MAINTENANCE DESIGN

CU 07
EA 2Y7701

BRIDGE NO. Various
POST MILE Varies

ROUTE 605 BRIDGES
GENERAL PLAN NO. 10

STRUCTURES MAINTENANCE GENERAL PLAN SHEET (ENGLISH) (REV. 2/4/05)

ORIGINAL SCALE IN INCHES FOR REDUCED PLANS 0 1 2 3

DISREGARD PRINTS BEARING EARLIER REVISION DATES →

REVISION DATES										SHEET	OF
01-05-09	04-28-09	05-06-09	06-04-09	06-11-09	07-23-09	11-06-09	11-18-09			10	15

FILE => 07-2Y7701-a-gp10.dgn

USERNAME => s117283 DATE PLOTTED => 26-JAN-2010 TIME PLOTTED => 07:32

DIST	COUNTY	ROUTE	POST MILES TOTAL PROJECT	SHEET No	TOTAL SHEETS
07	LA	605	R4.8/R19.9	29	33

11-19-09
REGISTERED CIVIL ENGINEER DATE

2-1-10
PLANS APPROVAL DATE

REGISTERED PROFESSIONAL ENGINEER
MAZIN S. IBRAHIM
No. C69896
Exp. 09/30/10
CIVIL
STATE OF CALIFORNIA

The State of California or its officers or agents shall not be responsible for the accuracy or completeness of electronic copies of this plan sheet.

Caltrans now has a web site! To get to the web site, go to: http://www.dot.ca.gov

JOINT SEAL TABLE

BRIDGE NAME	BRIDGE NUMBER	JOINT SEAL LOCATION	MINIMUM "MR" (INCHES)	APPROXIMATE LENGTH (FEET)	EXISTING WATERSTOP	APPROX DEPTH TO CLEAN EXP JOINT (INCHES)	APPROX DEPTH OF JOINT SPALLS (INCHES)	APPROX WIDTH OF JOINT SPALLS (INCHES)	APPROX LENGTH OF JOINT SPALLS (FEET)
N605-E91 Conn OC	53-1735G	Abut 1	1"	26	NO	6	3	6	5
		Abut 3	1"	26	NO	6	3	6	5
Alondra Blvd UC	53-1645	Abut 1	1"	143	NO	6	3	6	5
		Abut 5	1"	143	NO	6	3	6	5
Fairton Street UC	53-1646	Abut 1	1½"	186	NO	6	3	6	5
		Abut 4	1½"	186	NO	6	3	6	5
Rosecrans Ave UC	53-1648	Abut 1	2"	130	NO	6	3	6	5
		Abut 5	2"	130	NO	6	3	6	5
N605-W105 Conn OC	53-2699G	Abut 1*	3½"	51	YES	12	3	6	5
		Abut 4*	3½"	49	YES	12	3	6	5
Foster Road UC	53-1650	Abut 1	1½"	162	NO	6	3	6	5
		Abut 6	1½"	162	NO	6	3	6	5
N605-Firestone/Imperial	53-1651T	Abut 1	1"	24	NO	6	3	6	5
		Hinge 3*	3½"	28	YES	12	3	6	5
		Abut 7	1"	24	NO	6	3	6	5
Florence Ave UC	53-1656	Abut 1	2"	180	NO	6	3	6	5
		Bent 2	1½"	151	NO	6	3	6	5
		Bent 3	1½"	151	NO	6	3	6	5
		Bent 4	1½"	151	NO	6	3	6	5
		Abut 5	2"	150	NO	6	3	6	5
N605-S5 Conn OC	53-1656G	Abut 1	1"	39	NO	6	3	6	5
		Bent 3	1"	47	NO	6	3	6	5
		Abut 5	1½"	39	NO	6	3	6	5
Telegraph Road UC	53-1662	Abut 1	1½"	183	NO	6	3	6	5
		Bent 2	1½"	185	NO	6	3	6	5
		Bent 3	1½"	185	NO	6	3	6	5
		Bent 4	1½"	185	NO	6	3	6	5
		Abut 5	1½"	183	NO	6	3	6	5
Waddell Street UC	53-1666	Abut 1	2"	186	NO	6	3	6	5
		Abut 4	2"	186	NO	6	3	6	5
Washington Blvd UC	53-1667	Abut 1	2"	139	NO	6	3	6	5
		Bent 2	1½"	199	NO	6	3	6	5
		Bent 3	1½"	199	NO	6	3	6	5
		Bent 4	1½"	199	NO	6	3	6	5
		Abut 5	2"	139	NO	6	3	6	5
Beverly Blvd OC	53-1531	Abut 1, PN	1"	97	NO	6	3	6	5
		Abut 1, BW	1½"	97	NO	6	3	6	5
		Bent 3	2"	99	NO	6	3	6	5
		Abut 5	2"	84	NO	6	3	6	5
Rose Hills Road OC	53-1533	Abut 1	2"	60	NO	6	3	6	5
		Abut 5	2"	60	NO	6	3	6	5
Walnut Creek Bridge	53-1343	Abut 1, PN	1"	118	NO	6	3	6	5
		Abut 1, BW	2"	181	NO	6	3	6	5
		Hinge	2"	185	YES	12	3	6	5
		Abut 8, BW	2"	181	NO	6	3	6	5
		Abut 8, PN	1"	118	NO	6	3	6	5

* See "Miscellaneous Details No. 4" sheet.

NOTE:
THE CONTRACTOR SHALL VERIFY ALL CONTROLLING FIELD DIMENSIONS BEFORE ORDERING OR FABRICATING ANY MATERIAL.

DESIGN	BY Mazin Ibrahim	CHECKED Hong Tien Tran	STATE OF CALIFORNIA DEPARTMENT OF TRANSPORTATION
DETAILS	BY Clayton Tom	CHECKED Mazin Ibrahim	DIVISION OF MAINTENANCE STRUCTURE MAINTENANCE DESIGN
QUANTITIES	BY Mazin Ibrahim	CHECKED Hong Tien Tran	CU 07 EA 2Y7701

BRIDGE NO. Various
POST MILE Varies

ROUTE 605 BRIDGES
MISCELLANEOUS DETAILS NO. 1

STRUCTURES MAINTENANCE DETAIL SHEET (ENGLISH) (REV. 2/4/05)

ORIGINAL SCALE IN INCHES FOR REDUCED PLANS 0 1 2 3

DISREGARD PRINTS BEARING EARLIER REVISION DATES →

REVISION DATES: 05-08-09 | 06-03-09 | 06-19-09 | 07-29-09 | 07-30-09 | 09-14-09 | 11-06-09 | 11-18-09

SHEET 11 OF 15

FILE => 07-2Y7701-u-miscdt01.dgn

USERNAME => s1172B3 DATE PLOTTED => 26-JAN-2010 TIME PLOTTED => 07:32

DIST	COUNTY	ROUTE	POST MILES TOTAL PROJECT	SHEET No	TOTAL SHEETS
07	LA	605	R4.8/R19.9	30	33

11-19-09
REGISTERED CIVIL ENGINEER DATE

2-1-10
PLANS APPROVAL DATE

REGISTERED PROFESSIONAL ENGINEER
MAZIN S. IBRAHIM
No. C69896
Exp. 09/30/10
CIVIL
STATE OF CALIFORNIA

The State of California or its officers or agents shall not be responsible for the accuracy or completeness of electronic copies of this plan sheet.

Caltrans now has a web site! To get to the web site, go to: http://www.dot.ca.gov

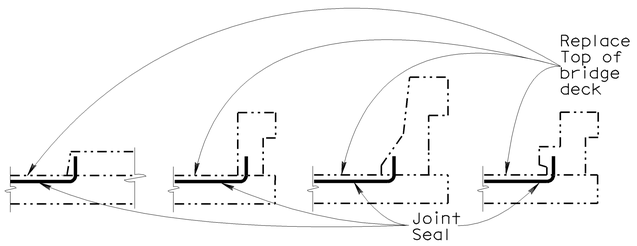

BARRIER RAIL

JOINT SEAL AT LOW SIDE OF DECK

Note: Details shown for illustration purposes only.

For use only where deck joint matches the sidewalk, curb or barrier rail joint.

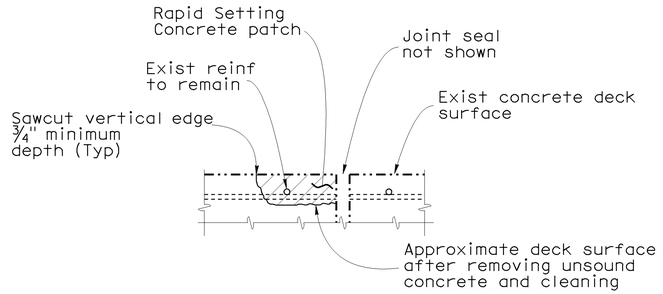

JOINT SPALL REPAIR DETAIL

Note: Reinforcement may be encountered during deck concrete removal and is to remain undamaged.

NOTES:

The following notes apply to JOINT SEAL TYPE A:

Install Joint Seal (MR = ½") or Silicone Joint Seal 3" up into curb or barrier rail on the low side of the deck where deck joint aligns with curb or barrier rail joint.

For details not shown see RSP B6-21.

The following notes apply to JOINT SEAL TYPE B:

1) Seal must satisfy both minimum Movement Rating (MR) and minimum W1 requirements.

2) Minimum W1 is the calculated maximum width of the joint based on field measurements. After the joints have been cleaned, minimum W1 is to be recalculated by the Engineer.

3) W1 shall be the smaller of the values determined as follows:
   A) 0.85 times the manufacturer's designed minimum uncompressed width of the seal.
   B) The width of the seal on the third successive test cycle of the pressure deflection test, when compressed to an average pressure of 3.0 PSI.

4) Bend Type B joint seal 6 inches up into curb or rail on the low side of the deck where deck joint matches curb or rail joint.

For details not shown see RSP B6-21.

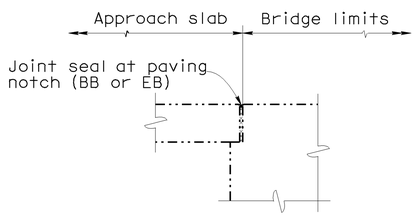

DIAPHRAGM ABUTMENT

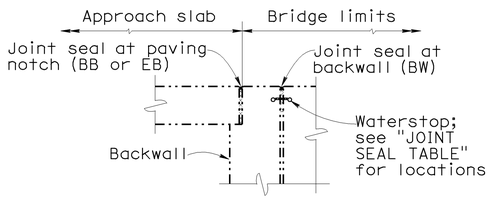

ABUTMENT WITH BACKWALL AND PAVING NOTCH

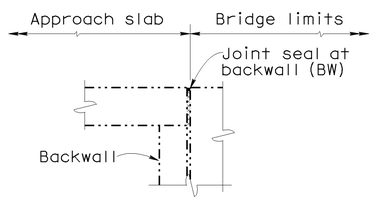

ABUTMENT WITH BACKWALL

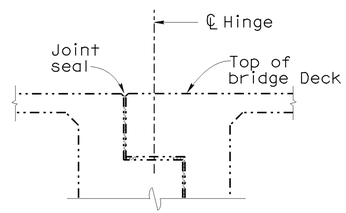

HINGE

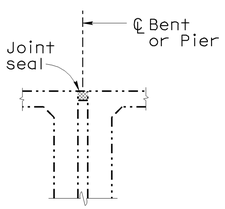

BENT OR PIER

JOINT SEAL LOCATION

NO SCALE

NOTE:
THE CONTRACTOR SHALL VERIFY ALL CONTROLLING FIELD DIMENSIONS BEFORE ORDERING OR FABRICATING ANY MATERIAL.

	BY	CHECKED
DESIGN	Mazin Ibrahim	Hong Tien Tran
DETAILS	Clayton Tom	Mazin Ibrahim
QUANTITIES	Mazin Ibrahim	Hong Tien Tran

STATE OF CALIFORNIA
DEPARTMENT OF TRANSPORTATION

DIVISION OF MAINTENANCE
STRUCTURE MAINTENANCE DESIGN

BRIDGE NO. Various
POST MILE Varies

ROUTE 605 BRIDGES
MISCELLANEOUS DETAILS NO. 2

STRUCTURES MAINTENANCE DETAIL SHEET (ENGLISH) (REV. 2/4/05)

ORIGINAL SCALE IN INCHES FOR REDUCED PLANS 0 1 2 3

CU 07
EA 2Y7701

DISREGARD PRINTS BEARING EARLIER REVISION DATES →

REVISION DATES: 05-05-09 | 05-08-09 | 06-03-09 | 06-11-09 | 07-23-09 | 11-06-09 | 11-18-09

SHEET 12 OF 15

FILE => 07-2Y7701-u-miscdt02.dgn

USERNAME => s1117283 DATE PLOTTED => 26-JAN-2010 TIME PLOTTED => 07:32

DIST	COUNTY	ROUTE	POST MILES TOTAL PROJECT	SHEET No	TOTAL SHEETS
07	LA	605	R4.8/R19.9	31	33

REGISTERED CIVIL ENGINEER — 11-19-09 DATE

2-1-10
PLANS APPROVAL DATE

MAZIN S. IBRAHIM — No. C69896 — Exp. 09/30/10 — CIVIL — REGISTERED PROFESSIONAL ENGINEER — STATE OF CALIFORNIA

The State of California or its officers or agents shall not be responsible for the accuracy or completeness of electronic copies of this plan sheet.

Caltrans now has a web site! To get to the web site, go to: http://www.dot.ca.gov

DECK REPAIR TABLE
REMOVE UNSOUND CONCRETE AND RAPID SETTING CONCRETE (PATCH)

BRIDGE NAME	BRIDGE NUMBER	APPROXIMATE AREA DAMAGED (%)	APPROXIMATE DEPTH (INCHES)
Excelsior Drive UC	53-1647	1	3
Foster Road UC	53-1650	1	3
Firestone Blvd UC	53-1653	1	3
Florence Ave UC	53-1656	1	3
Route 605/5 Separation	53-1660	1	3
Waddell Street UC	53-1666	1	3

DECK REPAIR NOTES:

1. Existing reinforcement shall be protected in place during unsound concrete removal and patching operations.
2. It is responsibility of the Contractor to repair any reinforcement that is accidently cut by saw cutting operations.
3. When existing transverse reinforcement is exposed in the deck surface, saw cutting shall be waived with the approval of the Engineer.
4. The saw cut depth shall not exceed ¾ inch or the concrete cover over the top steel reinforcing bars, whichever is less.
5. Remove unsound Portland Cement concrete and unsound concrete patches to expose sound, hard concrete substrate. Replace original deck surface with rapid setting concrete patch.

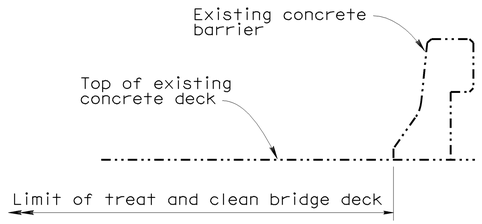

EOD BARRIER

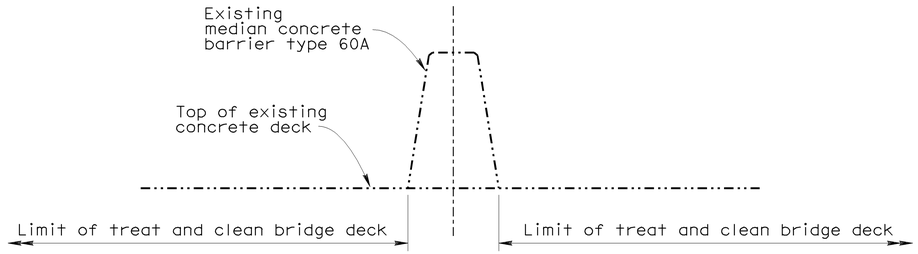

MEDIAN BARRIER

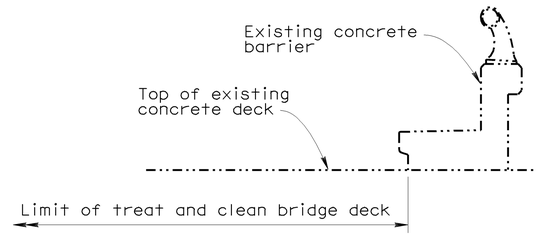

SIDEWALK BARRIER TYPE 2

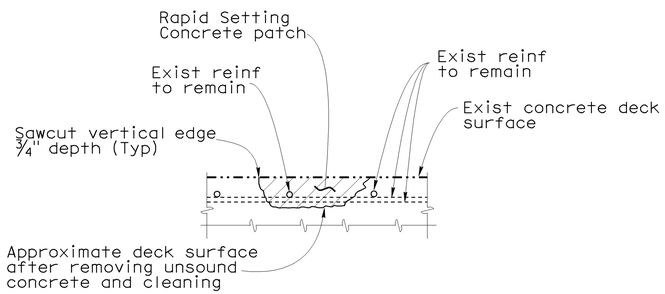

DECK DAMAGE REPAIR DETAIL

Location will be determined by the Engineer. Reinforcement may be encountered during deck concrete removal and is to remain undamaged.

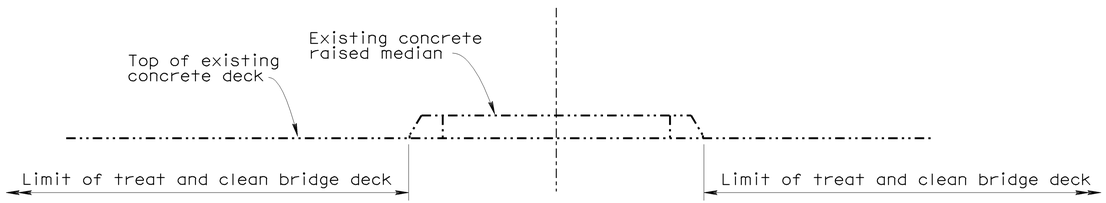

RAISED MEDIAN

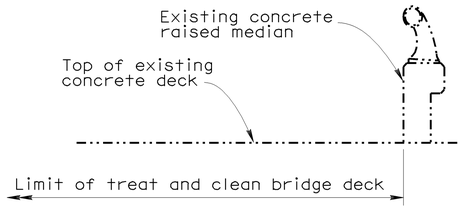

SIDEWALK BARRIER TYPE 1

NOTE:
THE CONTRACTOR SHALL VERIFY ALL CONTROLLING FIELD DIMENSIONS BEFORE ORDERING OR FABRICATING ANY MATERIAL.

TYPICAL LIMITS OF DECK WORK

NO SCALE

DESIGN	BY Mazin Ibrahim	CHECKED Hong Tien Tran	STATE OF CALIFORNIA DEPARTMENT OF TRANSPORTATION	DIVISION OF MAINTENANCE STRUCTURE MAINTENANCE DESIGN	BRIDGE NO. Various	ROUTE 605 BRIDGES	
DETAILS	BY Clayton Tom	CHECKED Mazin Ibrahim			POST MILE Varies	MISCELLANEOUS DETAILS NO. 3	
QUANTITIES	BY Mazin Ibrahim	CHECKED Hong Tien Tran		CU 07 EA 2Y7701	DISREGARD PRINTS BEARING EARLIER REVISION DATES →	REVISION DATES: 05-05-09, 05-08-09, 06-03-09, 06-11-09, 07-23-09, 11-06-09, 11-18-09	SHEET 13 OF 15

STRUCTURES MAINTENANCE DETAIL SHEET (ENGLISH) (REV. 2/4/05)

ORIGINAL SCALE IN INCHES FOR REDUCED PLANS 0 1 2 3

FILE => 07-2Y7701-u-miscdt03.dgn

USERNAME => s117283 DATE PLOTTED => 26-JAN-2010 TIME PLOTTED => 07:33

DIST	COUNTY	ROUTE	POST MILES TOTAL PROJECT	SHEET No	TOTAL SHEETS
07	LA	605	R4.8/R19.9	32	33

11-19-09
REGISTERED CIVIL ENGINEER DATE

2-1-10
PLANS APPROVAL DATE

REGISTERED PROFESSIONAL ENGINEER
MAZIN S. IBRAHIM
No. C69896
Exp. 09/30/10
CIVIL
STATE OF CALIFORNIA

The State of California or its officers or agents shall not be responsible for the accuracy or completeness of electronic copies of this plan sheet.

Caltrans now has a web site! To get to the web site, go to: http://www.dot.ca.gov

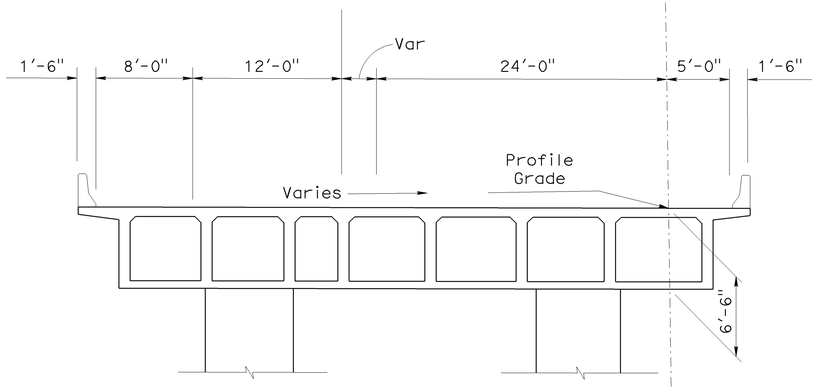

Br No. 53-2699G Abut, #1&4

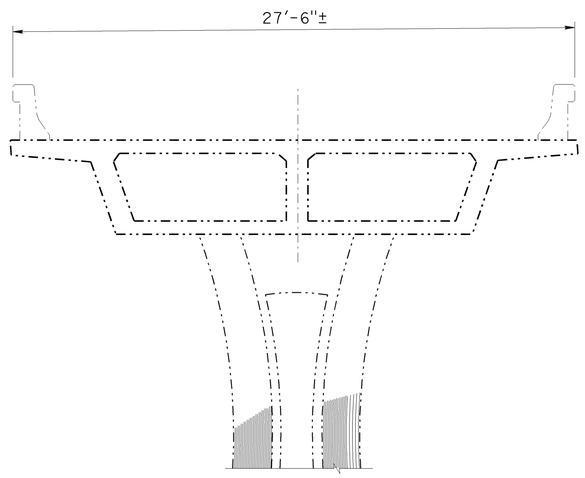

Br No. 53-1651T, Hinge 4

TYPICAL SECTION

NO SCALE

TEMPORARY DECKING DESIGN LOADING

1. Movement demand per foot = 3800 lbs-ft/ft
2. For steel plate systems:
   a. anchor bolt shear per foot = 2700 lbs/ft
   b. anchor bolt tension = 4225 lbs
   c. maximum anchor bolt spacing = 1.0 ft

LEGEND:

- Indicates existing.
- Indicates new structure.
- Indicates concrete removal limits. Preserve existing reinf.
- Indicates new PCC

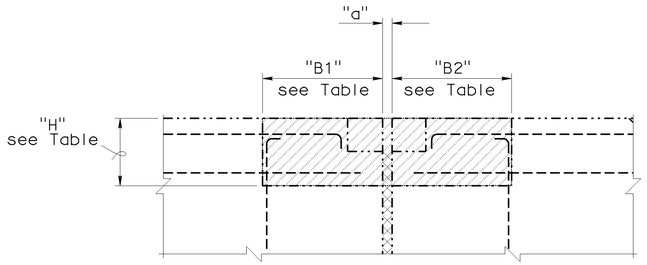

EXISTING

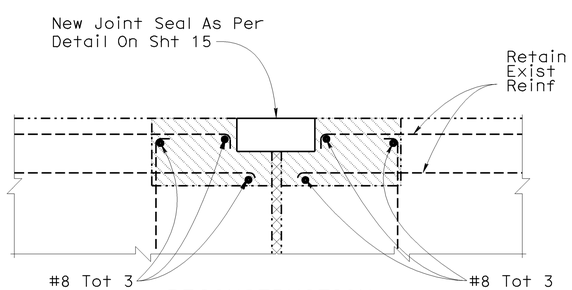

RECONSTRUCTION

JOINT SEAL ASSEMBLY REPLACEMENT CROSS SECTION

NO SCALE

JOINT SEAL ASSEMBLY DIMENSIONS

BRIDGE NUMBER	JOINT SEAL LOCATION	"B1"	"B2"	"H"
53-2699G	Abut 1 Abut 4	14"	14"	12"
53-1651T	Hinge 4	9"	22"	8"

For "a" dimensions, see "JOINT SEAL ASSEMBLY" sheet.

NOTE:
THE CONTRACTOR SHALL VERIFY ALL CONTROLLING FIELD DIMENSIONS BEFORE ORDERING OR FABRICATING ANY MATERIAL.

	BY	CHECKED
DESIGN	Mazin Ibrahim	Hong Tien Tran
DETAILS	Clayton Tom	Mazin Ibrahim
QUANTITIES	Mazin Ibrahim	Hong Tien Tran

STATE OF CALIFORNIA
DEPARTMENT OF TRANSPORTATION

DIVISION OF MAINTENANCE
STRUCTURE MAINTENANCE DESIGN

BRIDGE NO.	ROUTES 605 BRIDGES
Various	
POST MILE	MISCELLANEOUS DETAILS NO. 4
Varies	

STRUCTURES MAINTENANCE DETAIL SHEET (ENGLISH) (REV. 2/4/05)

ORIGINAL SCALE IN INCHES FOR REDUCED PLANS 0 1 2 3

CU 07
EA 2Y7701

DISREGARD PRINTS BEARING EARLIER REVISION DATES →

REVISION DATES: 05-12-09 | 06-11-09 | 07-23-09 | 11-06-09 | 11-18-09

SHEET 14 OF 15

FILE => 07-2Y7701-u-miscdt04.dgn

USERNAME => s1117283 DATE PLOTTED => 26-JAN-2010 TIME PLOTTED => 07:34

DIST	COUNTY	ROUTE	POST MILES TOTAL PROJECT	SHEET No	TOTAL SHEETS
07	LA	605	R4.8/R19.9	33	33

11-19-09
REGISTERED CIVIL ENGINEER DATE

2-1-10
PLANS APPROVAL DATE

REGISTERED PROFESSIONAL ENGINEER — MAZIN S. IBRAHIM — No. C69896 — Exp. 09/30/10 — CIVIL — STATE OF CALIFORNIA

The State of California or its officers or agents shall not be responsible for the accuracy or completeness of electronic copies of this plan sheet.

Caltrans now has a web site! To get to the web site, go to: http://www.dot.ca.gov

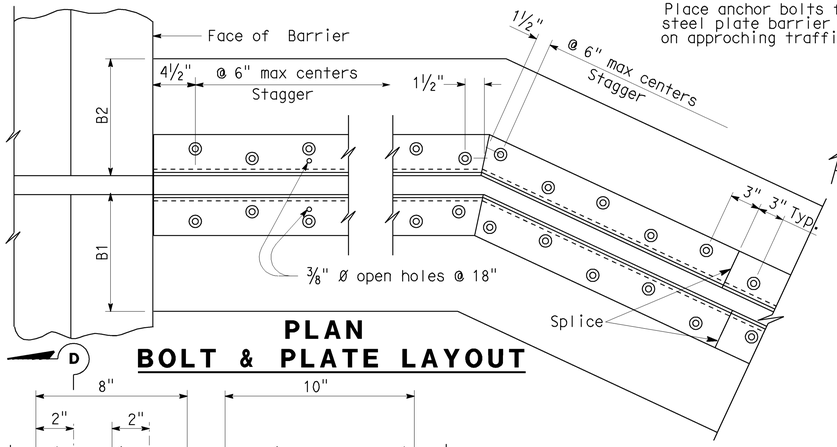

PLAN BOLT & PLATE LAYOUT

SKEW ≤ 20°

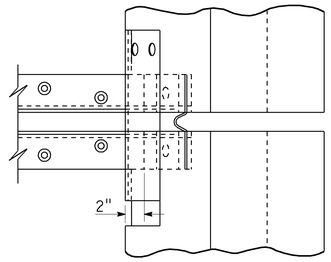

SKEW > 20°

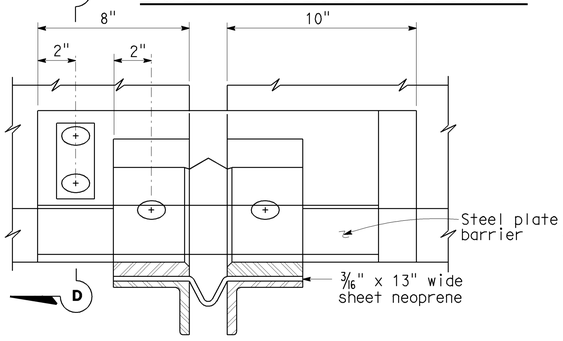

VIEW B-B

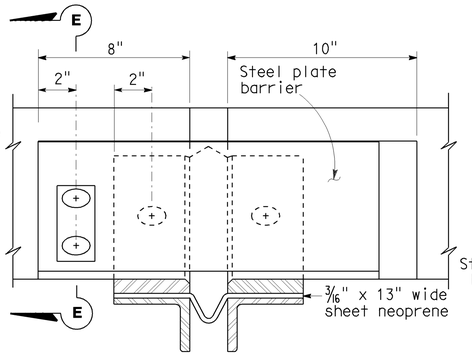

VIEW C-C

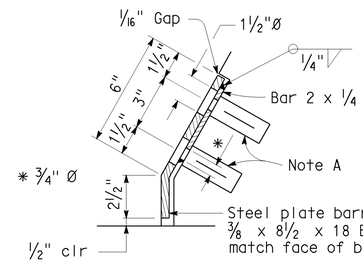

SECTION D-D

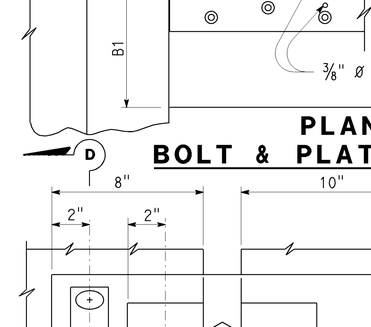

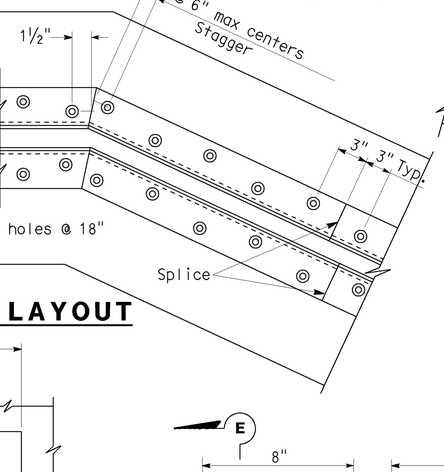

LOW SIDE BARRIER DETAIL
(See Note B)

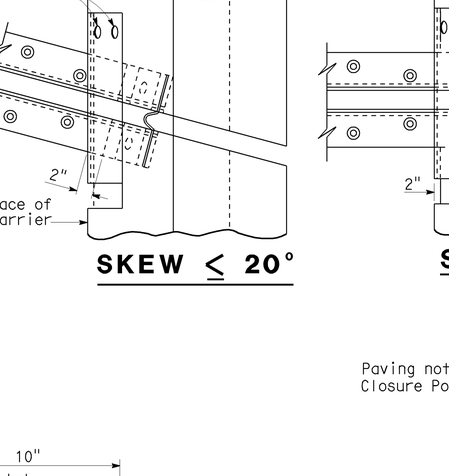

SIDEWALK DETAIL
(See Note B)

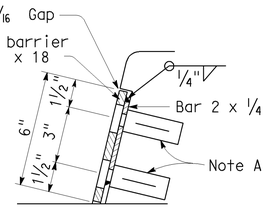

SECTION E-E

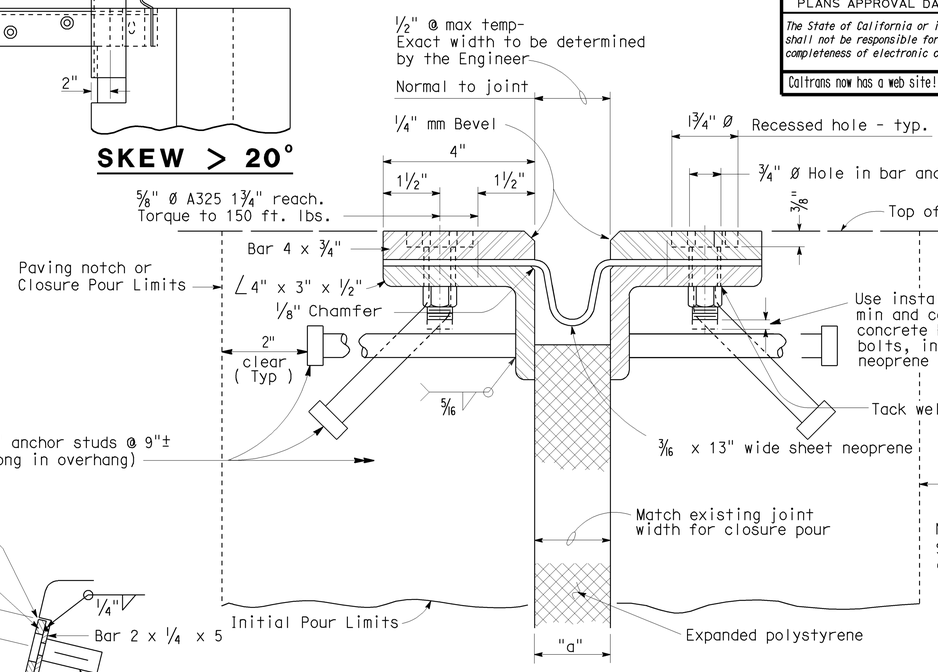

SECTION A-A

Note :
Stagger anchor studs @ 4½"± on centers thus :

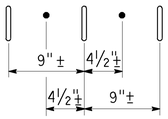

Joint Information				"a" Dimensions		
Bridge No.	Location	Movement Rating (MR)	Skew	Winter	Spring & Fall	Summer
53-1651T	Hinge 4	3½	0	2¾	2	1½
53-2699G	Abut 1	3½	1°	2¾	2	1½
	Abut 4	3½	10°	2¾	2	1½

NOTES:

Full penetration butt welds may be substituted for fillet welds on all anchor studs.

Alternate types of anchor studs may be permitted subject to the approval by the Engineer.

Joint seal assembly to be used in conjunction with closure pour. (See other sheets for limits). Closure pour shall not be placed until final deck surface is within the tolerances specified.

Use joint at crown of roadway, at any change in traverse slope in deck and at changes in horizontal direction. Place other joints at or near lanes. All metal parts to be painted or galvanized after fabrication.

Sheet neoprene shall be fabricated in one continuous piece or joints shall be vulcanized. Neoprene shall be fabricated to bend around corners. 1" holes in neoprene sheets shall be drilled or punched so that the neoprene is not distorted at the time of installation.

NOTE A

Insert assembly or expansion anchorage for ⅝" x 1¾" A325 bolt.

NOTE B

Use the sidewalk Detail at all sidewalk joints. Use the Barrier Detail at both sides if the roadway is crowned or if the difference in elevation between the ends of the seal is 0.5′ or less.

NO SCALE

NOTE:
THE CONTRACTOR SHALL VERIFY ALL CONTROLLING FIELD DIMENSIONS BEFORE ORDERING OR FABRICATING ANY MATERIAL.

	BY	CHECKED
DESIGN	Mazin Ibrahim	Hong Tien Tran
DETAILS	Clayton Tom	Mazin Ibrahim
QUANTITIES	Mazin Ibrahim	Hong Tien Tran

STATE OF CALIFORNIA
DEPARTMENT OF TRANSPORTATION

DIVISION OF MAINTENANCE
STRUCTURE MAINTENANCE DESIGN

CU 07
EA 2Y7701

BRIDGE NO. Various
POST MILE Varies

ROUTE 605 BRIDGES
JOINT SEAL ASSEMBLY (MAXIMUM MOVEMENT RATING = 4")

STRUCTURES MAINTENANCE DETAIL SHEET (ENGLISH) (REV. 2/4/05)

ORIGINAL SCALE IN INCHES FOR REDUCED PLANS 0 1 2 3

DISREGARD PRINTS BEARING EARLIER REVISION DATES →

REVISION DATES: 05-08-09 | 06-11-09 | 07-23-09 | 11-06-09 | 11-18-09

SHEET 15 OF 15

FILE => 07-2Y7701-w-jsadt.dgn

USERNAME => s117283 DATE PLOTTED => 26-JAN-2010 TIME PLOTTED => 07:34