Dist	COUNTY	ROUTE	POST MILES TOTAL PROJECT	SHEET No.	TOTAL SHEETS
07	LA	101	11.8/35.3	101	192

Nooshin Ansari 1-15-14
REGISTERED ELECTRICAL ENGINEER DATE

2-18-14
PLANS APPROVAL DATE

REGISTERED PROFESSIONAL ENGINEER NOOSHIN ANSARI No. E71010 Exp. 9/30/2015 ELECTRICAL STATE OF CALIFORNIA

THE STATE OF CALIFORNIA OR ITS OFFICERS OR AGENTS SHALL NOT BE RESPONSIBLE FOR THE ACCURACY OR COMPLETENESS OF SCANNED COPIES OF THIS PLAN SHEET.

SUMMARY OF INDUCTIVE LOOPS

PM	LOCATIONS	QUANTITY			LOOP LOCATIONS (SEE DETAILS SHEET E-5)																						
		STUB-OUTS	PULL BOX	LOOPS	SYSTEM LOOPS (CITY)							INDUCTIVE LOOP															
19.8	NB Rte 101 AT LOUISE Ave	1	1	5								47	48	49	50	51											
19.8	SB Rte 101 AT LOUISE Ave	1	1	5								52	53	54	55	56											
20.0	NB Rte 101 AT ENCINO Ave POC	1	1	5								47	48	49	50	51											
20.0	SB Rte 101 AT ENCINO Ave POC	1	1	5								52	53	54	55	56											
20.1	NB Rte 101 OFF RAMP TO WHITE OAK Ave	2	2	4	73	74	75					18															
20.2	SB Rte 101 AT WHITE OAK Ave	1	1	5								52	53	54	55	56											
20.4	NB Rte 101 AT WHITE OAK Ave	1	1	5								47	48	49	50	51											
20.9	SB Rte 101 ON RAMP FROM BURBANK Blvd	2	2	9								4	5	7	8	10	11	13	14	16							
21.0	NB Rte 101 AT BURBANK Blvd	1	1	5								47	48	49	50	51											
21.0	SB Rte 101 AT BURBANK Blvd	1	1	5								52	53	54	55	56											
21.1	NB Rte 101 OFF RAMP TO RESEDA BlvD	2	2	4	73	74	75					18															
21.4	NB Rte 101 AT RESEDA Blvd	1	1	10								47	48	49	50	51	59	60	61	62	63						
21.4	SB Rte 101 AT RESEDA Blvd	1	1	5								52	53	54	55	53											
21.4	SB Rte 101 OFF RAMP TO RESEDA Blvd	2	2	4	73	74	75					18															
22.1	NB Rte 101 AT VANALDEN Ave	1	1	5								47	48	49	50	51											
22.1	SB Rte 101 AT VANALDEN Ave	1	1	5								52	53	54	55	56											
22.1	NB Rte 101 OFF RAMP TO TAMPA Ave	2	2	4	73	74	75					18															
22.4	NB Rte 101 AT TAMPA Ave	1	1	5								47	48	49	50	51											
22.4	SB Rte 101 OFF RAMP TO TAMPA Ave	2	2	2	73*							18															
22.6	NB Rte 101 AT MELVIN Ave	1	1	5								47	48	49	50	51											
22.7	SB Rte 101 AT MELVIN Ave	1	1	5								52	53	54	55	56											
23.1	NB Rte 101 OFF RAMP TO WINNETKA Ave	2	2	4	73	74	75					18															
23.2	SB Rte 101 AT WINNETKA Ave	1	1	5								52	53	54	55	53											
23.4	SB Rte 101 OFF RAMP TO WINNETKA Ave	2	2	3	73	74						18															
23.4	NB Rte 101 AT WINNETKA Ave	1	1	5								47	48	49	50	51											
23.7	NB Rte 101	1	1	5								47	48	49	50	51											
23.7	SB Rte 101	1	1	5								53	54	55	56	57											
24.1	NB Rte 101 OFF RAMP TO DE SOTO Ave	2	2	4	73	74	75					18															
24.2	SB Rte 101 AT DE SOTO Ave	1	1	5								52	53	54	55	56											
24.5	NB Rte 101 AT DE SOTO Ave	1	1	5								47	48	49	50	51	59	60	61	62	63						
24.5	SB Rte 101 OFF RAMP TO DE SOTO Ave	2	2	4	73	74	75					18															
24.7	NB Rte 101 OFF RAMP TO CANOGA Ave	2	2	3	73	74						18															
24.7	SB Rte 101 ON RAMP FROM CANOGA Ave	4	4	13	70	71						1	2	4	5	7	8	10	11	13	14	16					
24.8	NB Rte 101 AT CANOGA Ave	1	1	5								47	48	49	50	51											
24.8	SB Rte 101 AT CANOGA Ave	1	1	5								52	53	54	55	56											
25.2	NB Rte 101 OFF RAMP TO NB Rte 27/ TOPANGA CANYON Blvd	1	1	1								18															
25.2	SB Rte 101 ON RAMP FROM NB Rte 27/ TOPANGA CANYON Blvd	2	2	6								1	4	7	10	13	16										
25.3	NB Rte 101 AT Rte 27/ TOPANGA CANYON Blvd	1	1	5								47	48	49	50	51											
25.3	SB Rte 101 AT Rte 27/ TOPANGA CANYON Blvd	1	1	4								52	53	54	55												
25.4	NB Rte 101 OFF RAMP TO SB Rte 27/ TOPANGA CANYON Blvd	1	1	1								18															
25.4	SB Rte 101 ON RAMP FROM SB Rte 27/ TOPANGA CANYON Blvd	2	2	6								1	4	7	10	13	16										
25.4	SB Rte 101 AT Rte 27/ TOPANGA CANYON Blvd	1	1	4								52	53	54	55												
25.5	NB Rte 101 AT Rte 27/ TOPANGA CANYON Blvd	1	1	4								48	49	50	51												
25.6	SB Rte 101 ON RAMP FROM VENTURA Blvd/ SHOUP Ave	4	4	13								1	2	3	77	4	5	7	8	10	11	13	14	16			
25.7	NB Rte 101 OFF RAMP TO VENTURA Blvd/ SHOUP Ave	1	1	1								18															
25.7	SB Rte 101 AT VENTURA Blvd/ SHOUP Ave	1	1	4								52	53	54	55												
25.9	SB Rte 101 OFF RAMP TO VENTURA Blvd/ SHOUP Ave	1	1	1								18															
26.6	SB Rte 101 OFF RAMP TO FALLBROOK Ave	1	1	1								18															
26.6	NB Rte 101 AT DEL VALLE ST PED OC	1	1	4								48	49	50	51												
26.6	SB Rte 101 AT DEL VALLE ST PED OC	1	1	4								52	53	54	55												

* SYSTEM LOOP MUST BE CUT 6'x8'

INDUCTIVE LOOP DETECTOR
(REPLACEMENT)

E-7

STATE OF CALIFORNIA - DEPARTMENT OF TRANSPORTATION
Caltrans
TRAFFIC DESIGN

FUNCTIONAL SUPERVISOR: OSWALD ELIZONDO
CALCULATED-DESIGNED BY: NOOSHIN ANSARI
CHECKED BY: OSWALD ELIZONDO
REVISED BY
DATE REVISED

LAST REVISION 00-00-00
DATE PLOTTED => 26-MAR-2014
TIME PLOTTED => 10:28

Dist	COUNTY	ROUTE	POST MILES TOTAL PROJECT	SHEET No.	TOTAL SHEETS
07	LA	101	11.8/35.3	102	192

Nooshin Ansari 1-15-14
REGISTERED ELECTRICAL ENGINEER DATE

2-18-14
PLANS APPROVAL DATE

REGISTERED PROFESSIONAL ENGINEER NOOSHIN ANSARI No. E71010 Exp. 9/30/2015 ELECTRICAL STATE OF CALIFORNIA

THE STATE OF CALIFORNIA OR ITS OFFICERS OR AGENTS SHALL NOT BE RESPONSIBLE FOR THE ACCURACY OR COMPLETENESS OF SCANNED COPIES OF THIS PLAN SHEET.

SUMMARY OF INDUCTIVE LOOPS

PM	LOCATIONS	QUANTITY			LOOP LOCATIONS (SEE DETAILS SHEET E-5)																							
		STUB-OUTS	PULL BOX	LOOPS	SYSTEM LOOPS (CITY)							INDUCTIVE LOOP																
26.8	NB Rte 101 OFF RAMP TO WOODLAKE Ave	1	1	1								18																
26.9	NB Rte 101 AT WOODLAKE Ave	1	1	4								48	49	50	51													
27.2	NB Rte 101 OFF RAMP TO VALLEY CIRCLE Blvd	1	1	2								18	19															
27.2	SB Rte 101 AT VALLEY CIRCLE Blvd	1	1	4								52	53	54	55													
27.2	SB Rte 101 ON RAMP FROM MULHOLAAND Dr	1	1	1								16																
27.4	SB Rte 101 ON RAMP FROM VALLEY CIRCLE Blvd	3	3	11								1	2	4	5	7	8	10	11	13	14	16						
27.4	SB Rte 101 AT CALABASAS Rd	1	1	4								52	53	54	55													
27.5	SB Rte 101 OFF RAMP TO CALABASAS Rd	1	1	2								18	19															
27.5	NB Rte 101 AT LONG VALLEY Rd	1	1	4								48	49	50	51													
27.5	NB Rte 101 ON RAMP FROM VALLEY CIRCLE Blvd	3	3	11								1	2	4	5	7	8	10	11	13	14	16						
27.5	NB Rte 101 AT LONG VALLEY Rd	1	1	4								48	49	50	51													
28.0	SB Rte 101	1	1	4								52	53	54	55													
28.0	NB Rte 101	1	1	4								48	49	50	51													
28.0	SB Rte 101 ON RAMP FROM NB Pkwy CALABASAS	3	3	11								1	2	4	5	7	8	10	11	13	14	16						
28.1	NB Rte 101 OFF RAMP TO Pkwy CALABASAS	1	1	2								18	19															
28.2	SB Rte 101 AT Pkwy CALABASAS	1	1	4								52	53	54	55													
28.3	NB Rte 101 ON RAMP FROM NB Pkwy CALABASAS	3	3	12								1	2	3	4	5	7	8	10	11	13	14	16					
28.3	NB Rte 101 AT Pkwy CALABASAS	1	1	4								48	49	50	51													
28.4	SB Rte 101 ON RAMP FROM CALABASAS Rd	1	1	1								16																
28.5	SB Rte 101 AT CALABASAS Rd	1	1	4								52	53	54	55													
28.6	SB Rte 101 AT CALABASAS Rd	1	1	4								52	53	54	55													
28.6	NB Rte 101	1	1	4								48	49	50	51													
28.8	SB Rte 101 OFF RAMP TO CALABASAS Rd	2	2	4								18	19	26	27													
28.9	SB RTE 101	1	1	4								52	53	54	55													
29.5	SB Rte 101	1	1	4								52	53	54	55													
30.4	SB Rte 101	1	1	4								52	53	54	55													
30.5	SB Rte 101	1	1	4								52	53	54	55													
30.9	NB Rte 101 OFF RAMP TO LAS VIRGENES Rd	2	2	4								18	26	27	28													
31.0	SB Rte 101 ON RAMP FROM NB LAS VIRGENES Rd	3	3	6								1	4	7	10	13	16											
31.0	SB Rte 101 AT LAS VIRGINES Rd	1	1	8								52	53	54	55	64	65	66	67									
31.0	SB Rte 101 AT LAS VIRGINES Rd	1	1	4								52	53	54	55													
31.1	NB Rte 101 AT LAS VIRGINES Rd	1	1	4								48	49	50	51													
39.1	SB Rte 405	1	1	12								52	53	54	55	56	57	64	65	66	67	68	69					
39.5	NB Rte 405	1	1	10								47	48	49	50	51	59	60	61	62	63							

INDUCTIVE LOOP DETECTOR
(REPLACEMENT)

E-8

REVISED BY | DATE REVISED
NOOSHIN ANSARI | OSWALD ELIZONDO
CALCULATED-DESIGNED BY | CHECKED BY
FUNCTIONAL SUPERVISOR: OSWALD ELIZONDO
STATE OF CALIFORNIA - DEPARTMENT OF TRANSPORTATION
Caltrans TRAFFIC DESIGN

LAST REVISION 00-00-00 | DATE PLOTTED => 26-MAR-2014 | TIME PLOTTED => 10:28

Dist	COUNTY	ROUTE	POST MILES TOTAL PROJECT	SHEET No.	TOTAL SHEETS
07	LA	101	11.8/35.3	103	192

REGISTERED ELECTRICAL ENGINEER — DATE: 1-15-14

2-18-14
PLANS APPROVAL DATE

REGISTERED PROFESSIONAL ENGINEER — NOOSHIN ANSARI — No. E17010 — Exp. 9-30-2015 — ELECTRICAL — STATE OF CALIFORNIA

THE STATE OF CALIFORNIA OR ITS OFFICERS OR AGENTS SHALL NOT BE RESPONSIBLE FOR THE ACCURACY OR COMPLETENESS OF SCANNED COPIES OF THIS PLAN SHEET.

NOTE:
FOR ACCURATE RIGHT OF WAY DATA, CONTACT
RIGHT OF WAY ENGINERRING AT THE DISTRICT OFFICE.

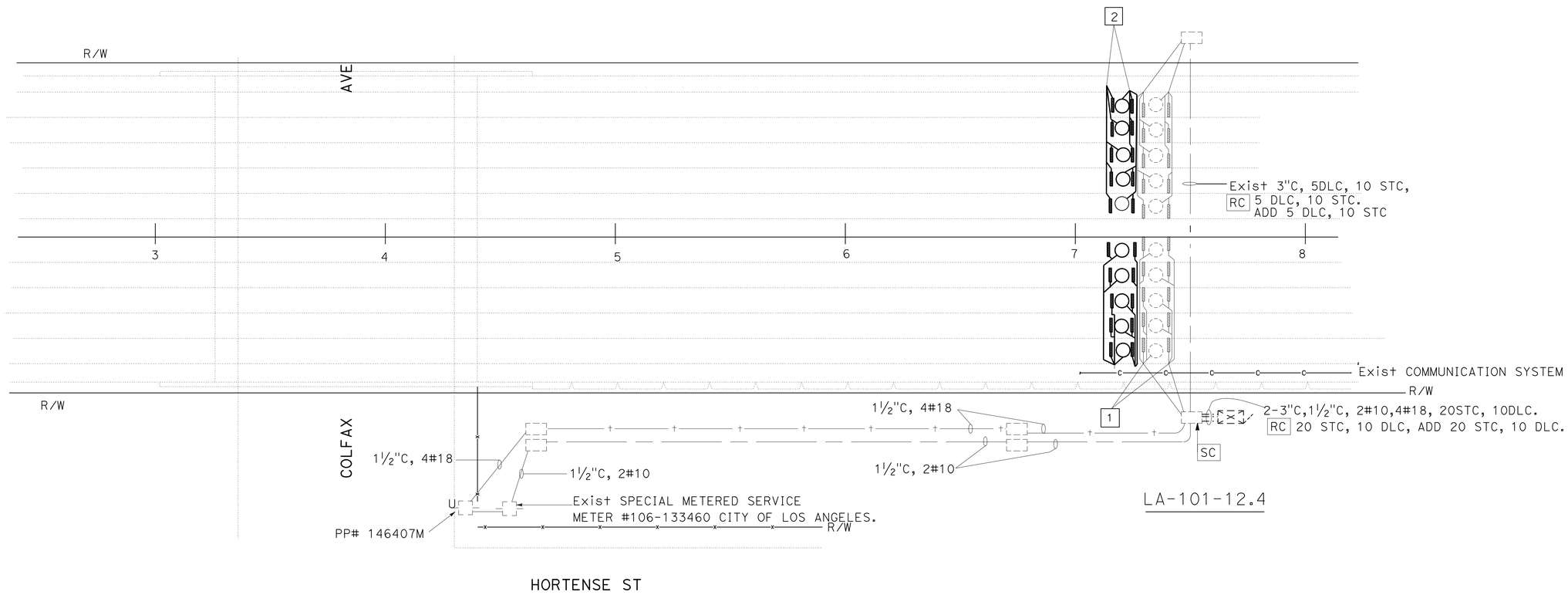

NOTES: (THIS SHEET)

1 AB PIEZO-ELECTRIC AXLE SENSOR AND INDUCTIVE LOOP DETECTORS.

2 INSTALL AXLE SENSOR AND INDUCTIVE LOOP DETECTORS NEXT TO OLD LOCATION. REUSE STUB-OUT FOR NEW INSTALLATION.

LEGEND: (THIS SHEET)

PIEZO-ELECTRIC AXLE SENSOR

STC SCREENED TRANSMISSION CABLE

SEE SHEET E-10 FOR PIEZO-ELECTRIC AXLE SENSOR INSTALLATION DETAILS.

APPROVED FOR ELECTRICAL WORK ONLY

MODIFY AUTOMATIC VEHICLE CLASSIFICATION STATION

NO SCALE

E-9

STATE OF CALIFORNIA - DEPARTMENT OF TRANSPORTATION
Caltrans® TRAFFIC DESIGN

FUNCTIONAL SUPERVISOR: OSWALD ELIZONDO

CALCULATED-DESIGNED BY: NOOSHIN ANSARI
CHECKED BY: STEVEN MALKSON

REVISED BY
DATE REVISED

LAST REVISION 00-00-00 | DATE PLOTTED => 26-MAR-2014 | TIME PLOTTED => 10:28

Dist	COUNTY	ROUTE	POST MILES TOTAL PROJECT	SHEET No.	TOTAL SHEETS
07	LA	101	11.8/35.3	104	192

Nooshin Ansari 1-15-14
REGISTERED ELECTRICAL ENGINEER DATE

2-18-14
PLANS APPROVAL DATE

REGISTERED PROFESSIONAL ENGINEER NOOSHIN ANSARI No. E17010 Exp. 9-30-15 ELECTRICAL STATE OF CALIFORNIA

THE STATE OF CALIFORNIA OR ITS OFFICERS OR AGENTS SHALL NOT BE RESPONSIBLE FOR THE ACCURACY OR COMPLETENESS OF SCANNED COPIES OF THIS PLAN SHEET.

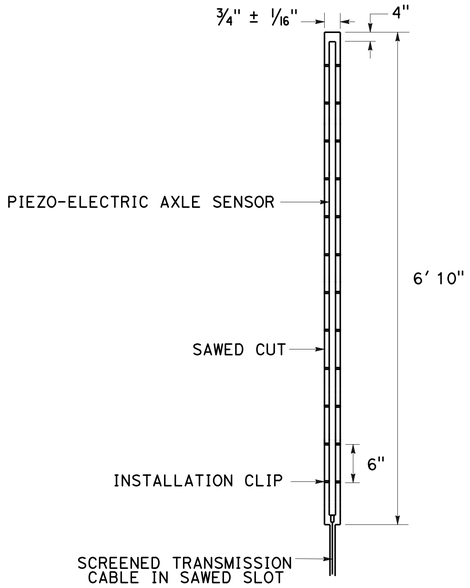

DETAIL "A"

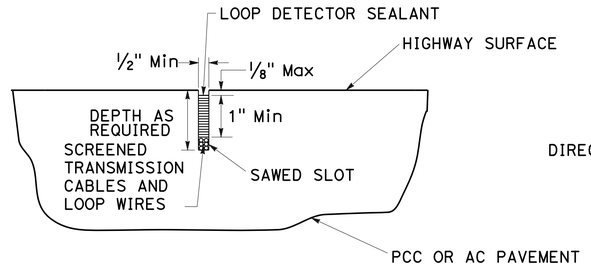

SECTION A-A

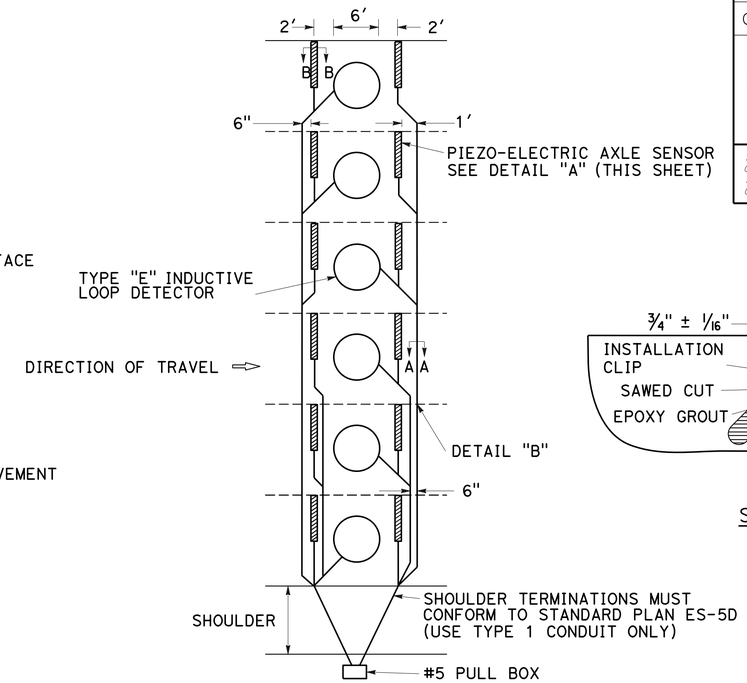

TYPICAL AXLE SENSOR INSTALLATION

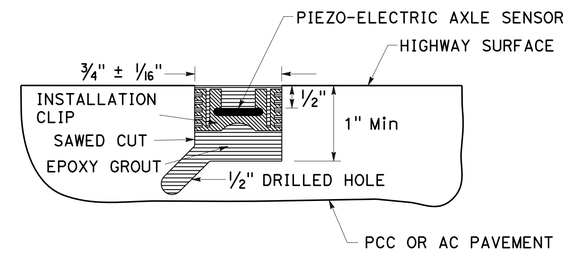

SECTION B-B

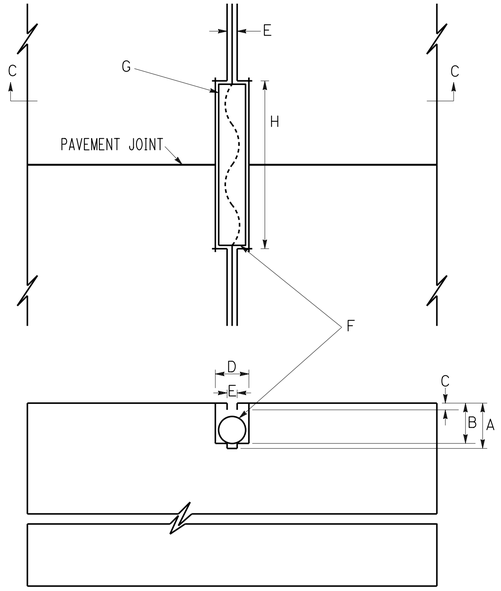

SECTION C-C

A. SAW CUT DEPTH TO ACCOMODATE SPECIFIED NUMBER OF CONDUCTORS WITH A MINIMUM OF 1" FROM TOP OF WIRE TO PAVEMENT SURFACE (3-1/4" MAX).

B. SLOT SAW-CUT DEPTH TO ACCOMODATE 1" TYPE 3 CONDUIT WITH 1/2" MINIMUM FROM TOP OF CONDUIT TO PAVEMENT SURFACE.

C. 1/2" MINIMUM BETWEEN TOP OF CONDUIT AND PAVEMENT SURFACE.

D. SAW-CUT WIDTH TO ACCOMODATE 1" TYPE 3 CONDUIT WITH 1/8" CLEARANCE.

E. SAW-CUT 1/2" WIDE.

F. 1" TYPE 3 CONDUIT, 6" LONG. PLUG BOTH ENDS WITH CAULKING COMPOUND TO KEEP OUT EPOXY.

G. CONDUCTORS WITH 1/2" MINIMUM SLACK INSIDE CONDUIT.

H. SAW-CUT LENGTH OF SLOT 1/8" LONGER THAN CONDUIT.

DETAIL "B" (TYPICAL LEAD-IN AT PAVEMENT JOINT)

AXLE SENSOR INSTALLATION PROCEDURE

1. MARK THE POSITION OF THE AXLE SENSORS AS DIRECTED BY THE ENGINEER. AXLE SENSOR CHANNELS MUST BE PERPENDICULAR TO TRAFFIC.
2. MARK THE POSITION OF THE LOOP DETECTORS. THE DETECTORS MUST BE CENTERED IN THE LANE AND BETWEEN THE AXLE SENSORS.
3. MARK THE HOME RUN CUTS AS SHOWN IN THE AXLE SENSOR INSTALLATION DETAIL.
4. USING A CONCRETE SAW CUT THE AXLE SENSOR CHANNELS 3/4" WIDE BY 1" DEEP IN A SINGLE PASS. CUTS MUST BE STRAIGHT AND TRUE.
5. CUT THE LOOP DETECTORS AND HOME RUNS.
6. DRILL 1/2" HOLES, 1" DEEP, AT A 45 DEGREE ANGLE AT THE BOTTOM CORNERS OF EACH AXLE SENSOR CHANNEL. HOLES MUST BE 1' APART AND ON ALTERNATING SIDES OF THE CHANNEL.
7. WASH OUT THE CHANNELS AND ALL SAW CUTS THOROUGHLY WITH HIGH PRESSURE WATER. DRY COMPLETELY WITH AN AIR COMPRESSOR. IN PCC PAVEMENT ONLY, WIPE OUT THE CHANNELS WITH LACQUER THINNER AND CLEAN COTTON RAGS.
8. PLACE 4" DUCT TAPE STRIPS ON THE PAVEMENT AROUND THE CHANNELS.
9. ENSURE THAT EACH SENSOR IS STRAIGHT AND FLAT. BEND EACH END DOWN SLIGHTLY AND PLACE THE INSTALLATION CLIPS ON THE SENSOR.
10. BLOCK OFF THE CABLE END OF THE CHANNEL WITH DUCT SEAL TO PREVENT THE GROUT FLOWING OUT OF THE CHANNEL.
11. INSERT SENSOR EPOXY CARTRIDGE INTO CAULKING GUN. ATTACH STATIC MIXING TUBE ONTO CARTRIDGE.
12. WHILE WEARING PROTECTIVE GLOVES, HALF FILL THE CHANNEL WITH SENSOR EPOXY. ENSURE THAT THE BOTTOM OF THE CHANNEL IS COMPLETELY COVERED, AND THAT THE HOLES DRILLED IN STEP 6 ARE FILLED.
13. PLACE THE SENSOR IN THE CHANNEL WITH THE BRASS ELEMENT 1/2" BELOW THE ROAD SURFACE, WITH NO VOIDS BENEATH THE SENSOR.
14. COMPLETELY FILL THE CHANNEL WITH SENSOR EPOXY. SMOOTH OUT THE EPOXY ON TOP OF THE SENSOR TO ROAD LEVEL, WITH NO TROUGH ON TOP.
15. WHEN SENSOR EPOXY HAS BEGUN TO SET, REMOVE THE DUCT TAPE FROM THE PAVEMENT. REMOVE THE DUCT SEAL FROM THE END OF THE CHANNEL.
16. INSTALL THE LOOP DETECTORS.
17. INSTALL ALL LEAD-IN CABLES IN THE HOME RUN SLOTS, INSTALLING TYPE 3 CONDUIT AT THE EXPANSION JOINT CROSSINGS. PULL CABLES THROUGH STUB-OUT CONDUIT AND COIL IN PULL BOX.
18. SEAL ALL SAW CUTS. ELASTOMERIC SEALANT ONLY MUST BE USED IN ALL CUTS CONTAINING SCREENED TRANSMISSION CABLE.
19. REMOVE ANY HIGH SPOTS IN THE SENSOR EPOXY WITH A HAND GRINDER.
20. CLEAN UP THE SITE. WHEN ALL SEALANTS ARE COMPLETELY CURED, LANES MAY BE OPENED TO TRAFFIC.

ELECTRICAL DETAILS

NO SCALE

E-10

REVISED BY | DATE REVISED
NOOSHIN ANSARI | STEVEN MALKSON
CALCULATED-DESIGNED BY | CHECKED BY
FUNCTIONAL SUPERVISOR | OSWALD ELIZONDO

STATE OF CALIFORNIA - DEPARTMENT OF TRANSPORTATION
Caltrans® TRAFFIC DESIGN

LAST REVISION 00-00-00 | DATE PLOTTED => 26-MAR-2014 | TIME PLOTTED => 10:28

Dist	COUNTY	ROUTE	POST MILES TOTAL PROJECT	SHEET No.	TOTAL SHEETS
07	LA	101	11.8/35.3	105	192

Nooshin Ansari 1-15-14
REGISTERED ELECTRICAL ENGINEER DATE

2-18-14
PLANS APPROVAL DATE

REGISTERED PROFESSIONAL ENGINEER
NOOSHIN ANSARI
No. E71010
Exp. 9/30/2015
ELECTRICAL
STATE OF CALIFORNIA

THE STATE OF CALIFORNIA OR ITS OFFICERS OR AGENTS SHALL NOT BE RESPONSIBLE FOR THE ACCURACY OR COMPLETENESS OF SCANNED COPIES OF THIS PLAN SHEET.

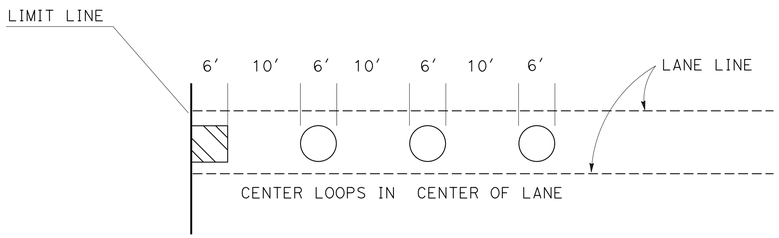

TYPICAL LOOP DETAIL

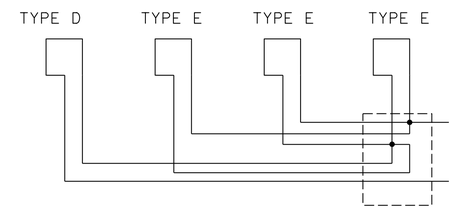

LOOP CONNECTION

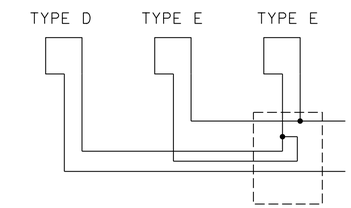

LOOP CONNECTION

INDUCTIVE LOOP DETECTOR
(REPLACEMENT)
(ELECTRICAL DETAIL)
(BICYCLE LOOP DETECTOR DETAILS)

NO SCALE

E-11

STATE OF CALIFORNIA - DEPARTMENT OF TRANSPORTATION
Caltrans® TRAFFIC DESIGN

FUNCTIONAL SUPERVISOR: OSWALD ELIZONDO
CALCULATED-DESIGNED BY: NOOSHIN ANSARI
CHECKED BY: OSWALD ELIZONDO
REVISED BY
DATE REVISED

LAST REVISION 00-00-00
DATE PLOTTED => 26-MAR-2014
TIME PLOTTED => 10:28

Dist	COUNTY	ROUTE	POST MILES TOTAL PROJECT	SHEET No.	TOTAL SHEETS
07	LA	101	11.8/35.3	106	192

Nooshin Ansari 1/15/14
REGISTERED ELECTRICAL ENGINEER DATE

2-18-14
PLANS APPROVAL DATE

REGISTERED PROFESSIONAL ENGINEER NOOSHIN ANSARI No. E17010 Exp. 9/30/2015 ELECTRICAL STATE OF CALIFORNIA

THE STATE OF CALIFORNIA OR ITS OFFICERS OR AGENTS SHALL NOT BE RESPONSIBLE FOR THE ACCURACY OR COMPLETENESS OF SCANNED COPIES OF THIS PLAN SHEET.

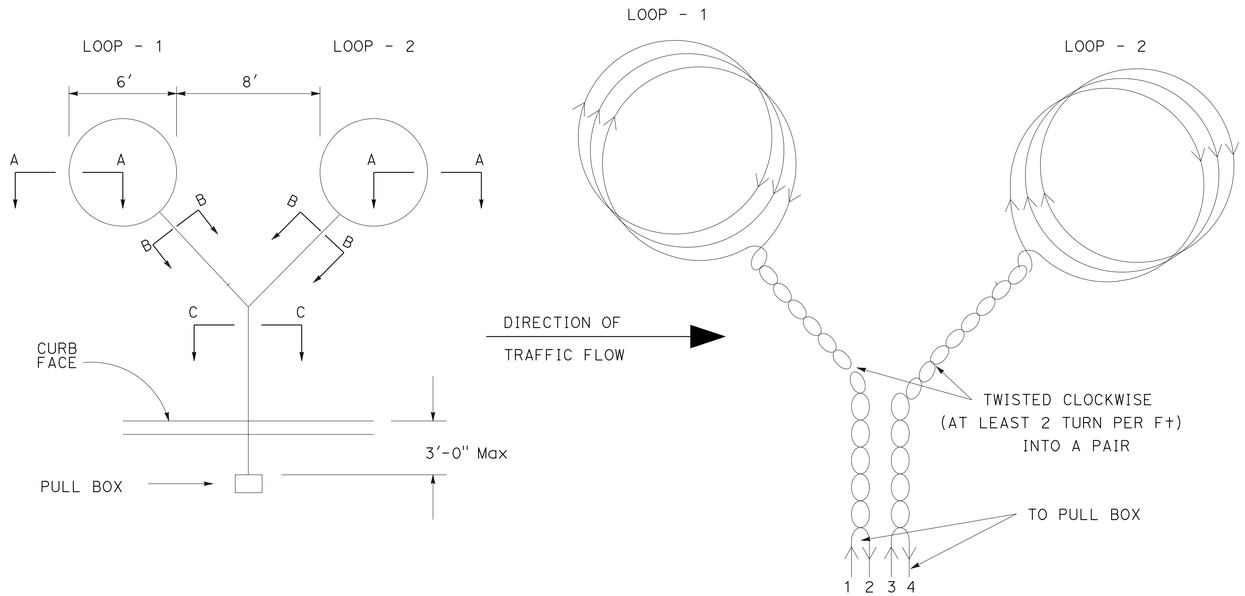

WINDING DETAILS
Not to Scale

NOTES:

1. INSTALL 3 CLOCKWISE TURNS OF LOOP WIRE FOR EACH DETECTOR, UNLESS OTHERWISE SHOWN ON SIGNAL PLAN.

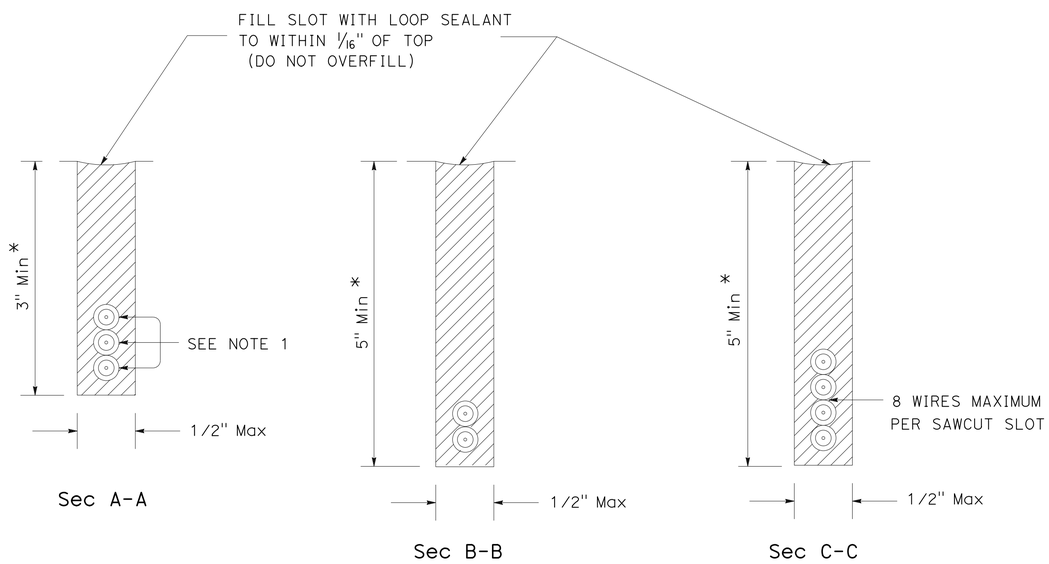

* DEPTH OF SLOT NOT TO EXCEED DEPTH OF PAVEMENT, FOR PCC (CONCRETE) SURFACES, THE MINIMUM COVER ABOVE LOOP WIRE SHALL BE 2.5" MINIMUM.

INDUCTIVE LOOP DETECTOR
(REPLACEMENT)
(CITY)
(ELECTRICAL DETAIL)

NO SCALE

E-12

STATE OF CALIFORNIA - DEPARTMENT OF TRANSPORTATION
Caltrans
TRAFFIC DESIGN

FUNCTIONAL SUPERVISOR: OSWALD ELIZONDO
CALCULATED-DESIGNED BY: NOOSHIN ANSARI
CHECKED BY: OSWALD ELIZONDO
REVISED BY
DATE REVISED

LAST REVISION 00-00-00
DATE PLOTTED => 26-MAR-2014
TIME PLOTTED => 10:28

Dist	COUNTY	ROUTE	POST MILES TOTAL PROJECT	SHEET No.	TOTAL SHEETS
07	LA	101	11.8/35.3	107	192

Nooshin Ansari 1-15-14
REGISTERED ELECTRICAL ENGINEER DATE

2-18-14
PLANS APPROVAL DATE

REGISTERED PROFESSIONAL ENGINEER NOOSHIN ANSARI No. E17010 Exp. 9-30-2015 ELECTRICAL STATE OF CALIFORNIA

THE STATE OF CALIFORNIA OR ITS OFFICERS OR AGENTS SHALL NOT BE RESPONSIBLE FOR THE ACCURACY OR COMPLETENESS OF SCANNED COPIES OF THIS PLAN SHEET.

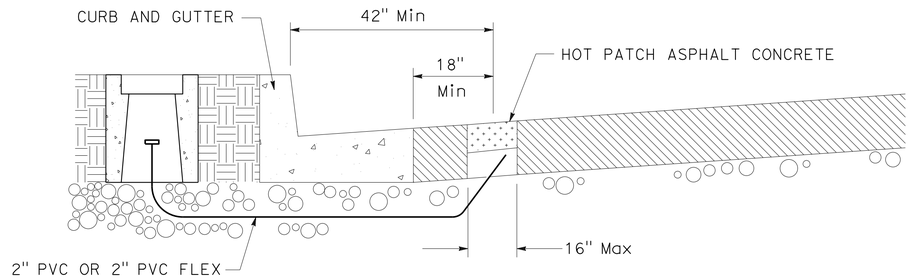

SECTION D-D
NOT TO SCALE

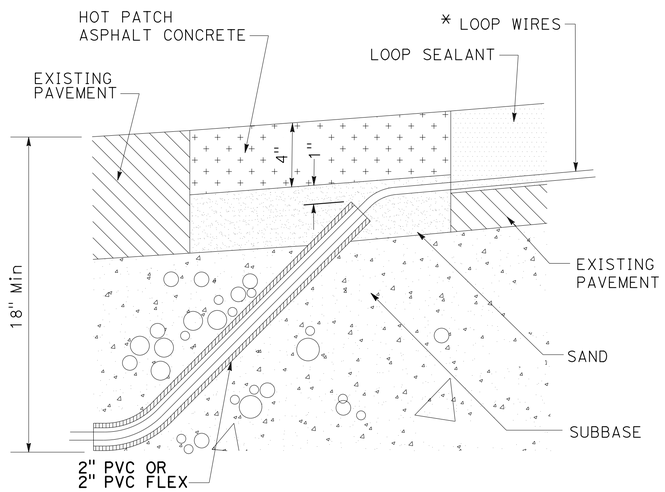

CONDUIT DETAIL
NOT TO SCALE

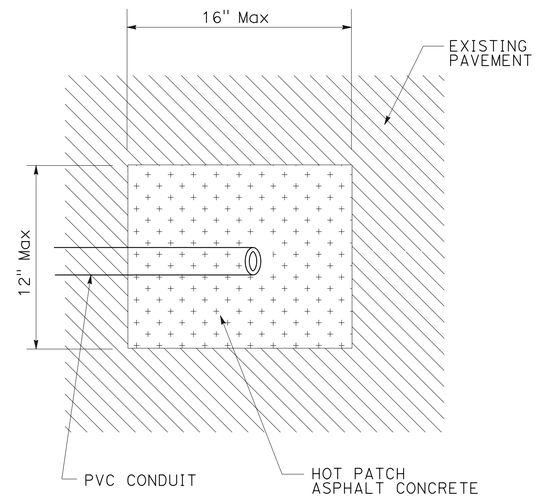

STUB-OUT DETAIL
(Top View)
NOT TO SCALE

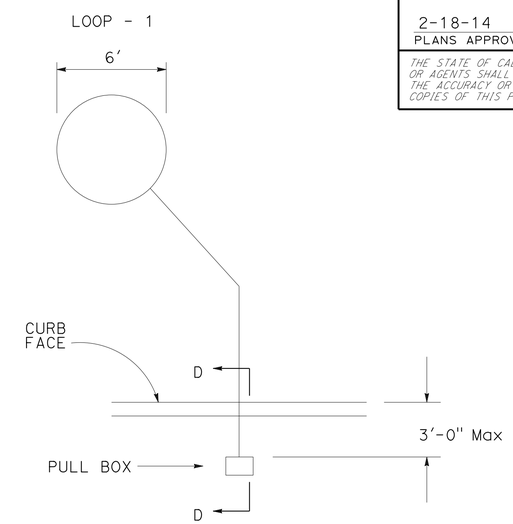

NOTES:

PERFORM LOOP INSTALLATION IN THE FOLLOWING ORDER:

1. OPEN THE PAVEMENT AT LEAST 42" FROM CURB FACE AND AT LEAST 18" FROM EDGE OF GUTTER USING A STAR DRILL OR A JACK HAMMER (ASPHALT CONCRETE ONLY). OPEN NO MORE THAN A 12" X16" AREA. IN CASES WHERE THERE IS A CONCRETE BUS PAD ADJACENT TO THE GUTTER, INSTALL THE STUBOUT BEYOND THE EDGE OF THE BUS PAD.
2. INSTALL 2" PVC (SCHEDULE 80) OR PVC FLEX (SCHEDULE 40) FROM THE PULL BOX PIT WITH A 45° ELBOW AT THE STUB-OUT AS SHOWN. DEPTH OF THE CONDUIT SHALL BE AT LEAST 18" BELOW THE STREET GRADE.
3. PATCH STREET USING HOT PATCH ASPHALT CONCRETE AND SAND AS SHOWN.
4. INSTALL DUCT SEAL WHERE WIRES ENTER 2" PVC OR 2" PVC FLEX.
5. FILL SAWCUT SLOT WITH HOT-MELT RUBBERIZED ASPHALT SEALANT.

* NO MORE THAN 8 LOOPS OR 16 WIRES PER STUB-OUT.

INDUCTIVE LOOP DETECTOR
(REPLACEMENT)
(CITY)
(ELECTRICAL DETAIL)

NO SCALE

E-13

STATE OF CALIFORNIA - DEPARTMENT OF TRANSPORTATION
Caltrans® TRAFFIC DESIGN

FUNCTIONAL SUPERVISOR: OSWALD ELIZONDO
CALCULATED-DESIGNED BY: NOOSHIN ANSARI
CHECKED BY: OSWALD ELIZONDO
REVISED BY
DATE REVISED

LAST REVISION 00-00-00
DATE PLOTTED => 26-MAR-2014
TIME PLOTTED => 10:28

Dist	COUNTY	ROUTE	POST MILES TOTAL PROJECT	SHEET No.	TOTAL SHEETS
07	LA	101	11.8/35.3	108	192

Nooshin Ansari 1-15-14
REGISTERED ELECTRICAL ENGINEER DATE

2-18-14
PLANS APPROVAL DATE

REGISTERED PROFESSIONAL ENGINEER
NOOSHIN ANSARI
No. E17010
Exp. 9-30-2015
ELECTRICAL
STATE OF CALIFORNIA

THE STATE OF CALIFORNIA OR ITS OFFICERS OR AGENTS SHALL NOT BE RESPONSIBLE FOR THE ACCURACY OR COMPLETENESS OF SCANNED COPIES OF THIS PLAN SHEET.

NOTES:

1. THIS SHEET DESCRIBES A TWO, THREE OR FOUR PAIR LOOP DETECTOR LEAD-IN CABLE, INDIVIDUALLY SHIELDED AND JACKETED AND SUITABLE FOR INSTALLATION IN A PAVEMENT SAWCUT, CONDUIT, OR DIRECT BURIAL.
2. THE DETECTOR LEAD-IN CABLE CAN BE WIRED IN EITHER A SINGLE, DOUBLE, TRIPLE OR QUADRUPLE CHANNEL CONFIGURATION.
3. ELECTRICAL CONNECTIONS SHALL BE CAREFULLY SOLDERED AND WATERPROOFED.
4. LOOP NUMBERS SHOWN ARE TYPICAL.
5. SYSTEM LOOPS USE A SINGLE PAIR FOR EACH LOOP.

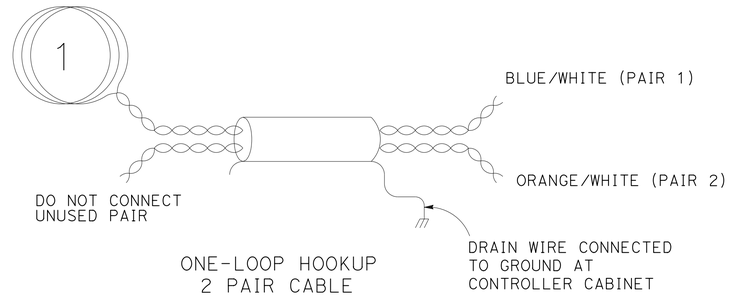

ONE-LOOP HOOKUP
2 PAIR CABLE

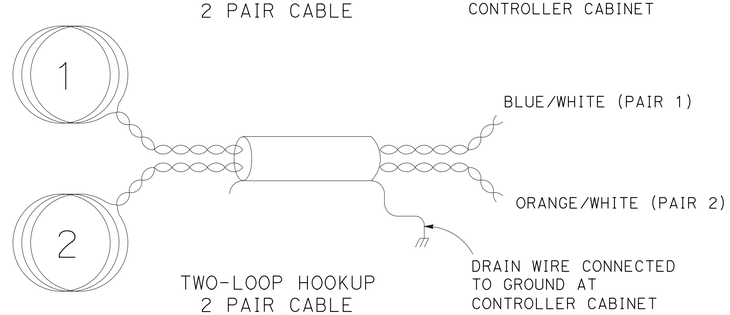

TWO-LOOP HOOKUP
2 PAIR CABLE

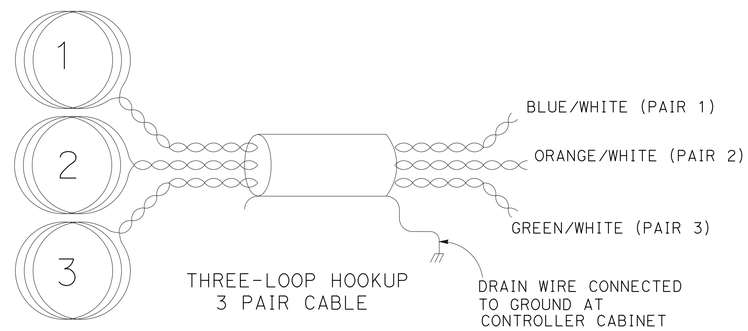

THREE-LOOP HOOKUP
3 PAIR CABLE

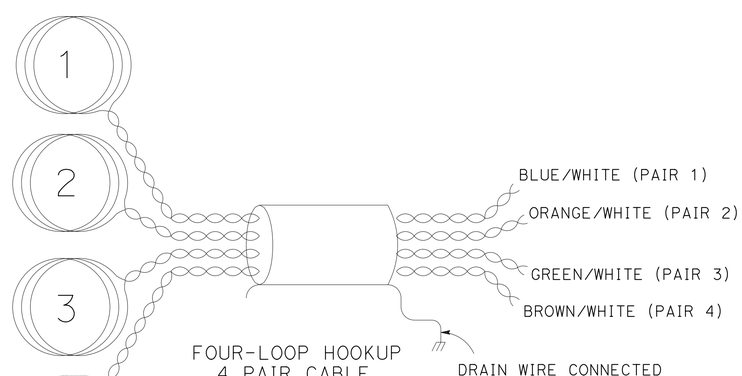

FOUR-LOOP HOOKUP
4 PAIR CABLE

INDUCTIVE LOOP DETECTOR
(REPLACEMENT)
(CITY)
(ELECTRICAL DETAIL)
NO SCALE

E-14

STATE OF CALIFORNIA - DEPARTMENT OF TRANSPORTATION
Caltrans
TRAFFIC DESIGN

FUNCTIONAL SUPERVISOR: OSWALD ELIZONDO
CALCULATED-DESIGNED BY: NOOSHIN ANSARI
CHECKED BY: OSWALD ELIZONDO
REVISED BY
DATE REVISED

LAST REVISION 00-00-00
DATE PLOTTED => 26-MAR-2014
TIME PLOTTED => 10:28

Dist	COUNTY	ROUTE	POST MILES TOTAL PROJECT	SHEET No.	TOTAL SHEETS
07	LA	101	11.8/35.3	109	192

Nooshin Ansari 1-15-14
REGISTERED ELECTRICAL ENGINEER DATE

2-18-14
PLANS APPROVAL DATE

REGISTERED PROFESSIONAL ENGINEER
NOOSHIN ANSARI
No. E17010
Exp. 9/30/2015
ELECTRICAL
STATE OF CALIFORNIA

THE STATE OF CALIFORNIA OR ITS OFFICERS OR AGENTS SHALL NOT BE RESPONSIBLE FOR THE ACCURACY OR COMPLETENESS OF SCANNED COPIES OF THIS PLAN SHEET.

NOTES:

1. CONNECT TWO TO FOUR LOOPS IN SERIES TO EACH PAIR, DO NOT USE PARALLEL CONNECTIONS.
2. DO NOT CONNECT ANY UNUSED CABLE PAIRS.
3. TYPICAL INSTALLATION SHOWN. TWO OR THREE PAIR CABLE MAY BE USED WHEN SHOWN ON SIGNAL PLAN.

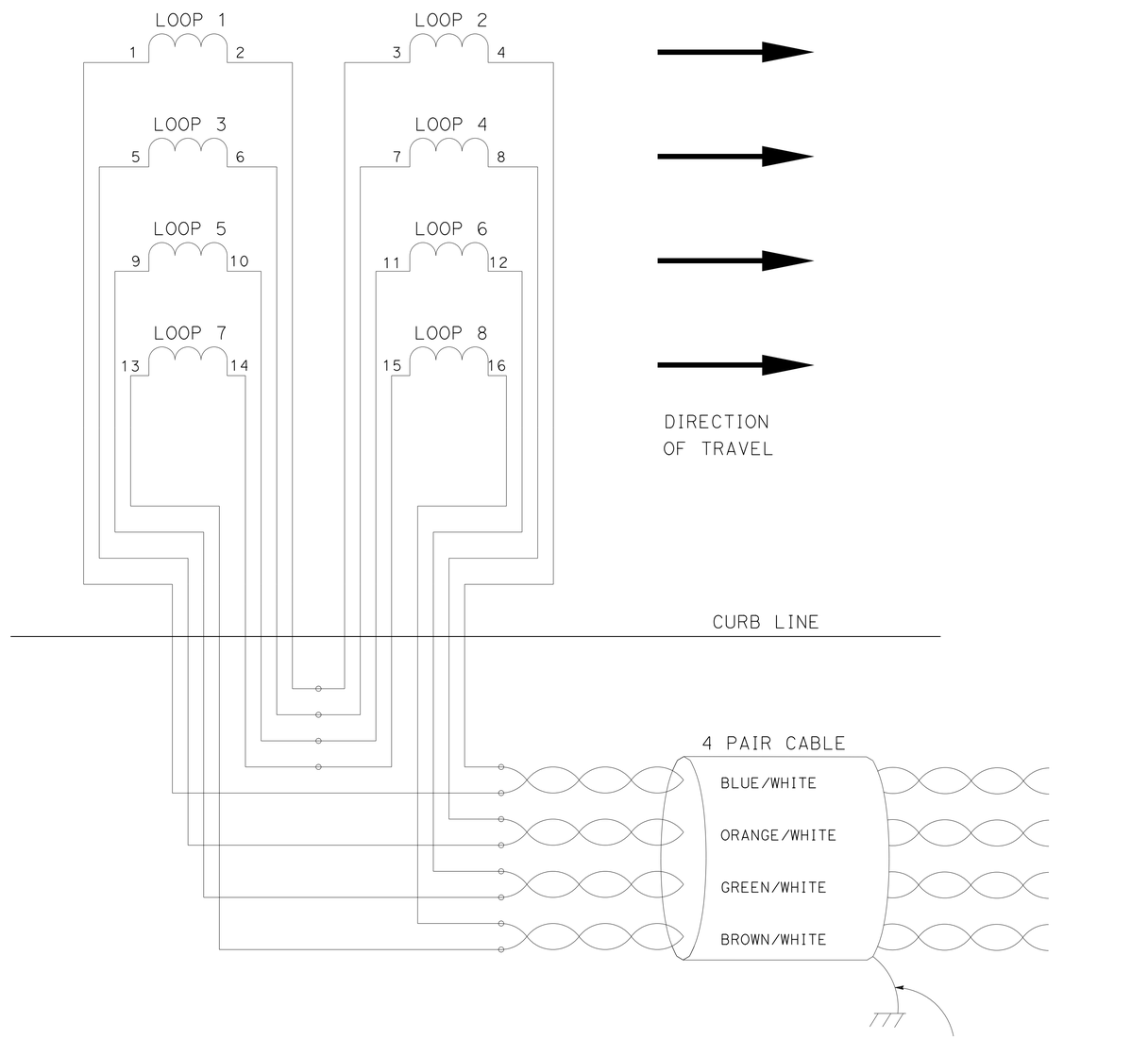

ACTUATION / PHASE LOOPS

INDUCTIVE LOOP DETECTOR
(REPLACEMENT)
(CITY)
(ELECTRICAL DETAIL)
NO SCALE

E-15

STATE OF CALIFORNIA - DEPARTMENT OF TRANSPORTATION
Caltrans
TRAFFIC DESIGN

FUNCTIONAL SUPERVISOR: OSWALD ELIZONDO
CALCULATED-DESIGNED BY: NOOSHIN ANSARI
CHECKED BY: OSWALD ELIZONDO
REVISED BY
DATE REVISED

LAST REVISION 00-00-00
DATE PLOTTED => 26-MAR-2014
TIME PLOTTED => 10:28

Dist	COUNTY	ROUTE	POST MILES TOTAL PROJECT	SHEET No.	TOTAL SHEETS
07	LA	101	11.8/35.3	110	192

Nooshin Ansari 1-15-14
REGISTERED ELECTRICAL ENGINEER DATE

2-18-14
PLANS APPROVAL DATE

REGISTERED PROFESSIONAL ENGINEER
NOOSHIN ANSARI
No. E17010
Exp. 9/30/2015
ELECTRICAL
STATE OF CALIFORNIA

THE STATE OF CALIFORNIA OR ITS OFFICERS OR AGENTS SHALL NOT BE RESPONSIBLE FOR THE ACCURACY OR COMPLETENESS OF SCANNED COPIES OF THIS PLAN SHEET.

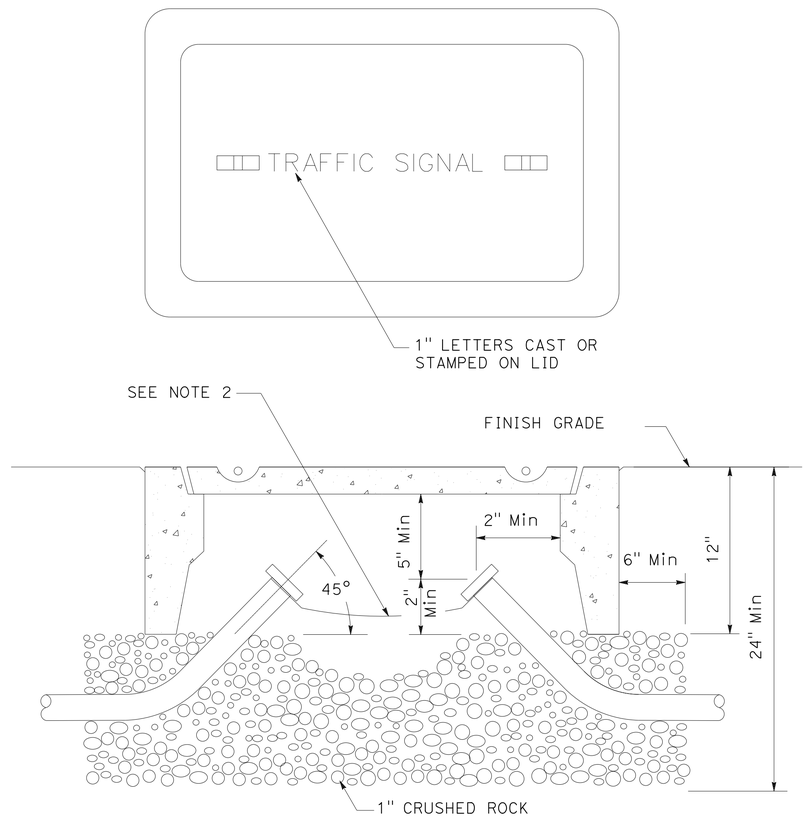

NOTES:

1. OUTSIDE DIMENSION: TYPE PB 2 - 15" X 25", TYPE PB3 - 22" X 34".
2. GALVANIZED CONDUITS MUST BE BONDED WITH COPPER GROUND STRAP AROUND THE NECK OF EACH CONDUIT. PVC CONDUITS MUST HAVE THEIR #8 GROUND WIRES SPLICED TOGETHER.

INDUCTIVE LOOP DETECTOR
(REPLACEMENT)
(CITY)
(ELECTRICAL DETAILS)

NO SCALE

E-16

REVISED BY	NOOSHIN ANSARI
DATE REVISED	
CALCULATED-DESIGNED BY	OSWALD ELIZONDO
CHECKED BY	
FUNCTIONAL SUPERVISOR	OSWALD ELIZONDO

STATE OF CALIFORNIA - DEPARTMENT OF TRANSPORTATION
Caltrans
TRAFFIC DESIGN

LAST REVISION 00-00-00 | DATE PLOTTED => 26-MAR-2014 | TIME PLOTTED => 10:28

Dist	COUNTY	ROUTE	POST MILES TOTAL PROJECT	SHEET No.	TOTAL SHEETS
07	LA	101	11.8/53.3	111	192

REGISTERED ELECTRICAL ENGINEER 1-15-14 DATE

2-18-14
PLANS APPROVAL DATE

REGISTERED PROFESSIONAL ENGINEER PATRICK P. LUI No. E17534 Exp. 06/30/15 ELECTRICAL STATE OF CALIFORNIA

THE STATE OF CALIFORNIA OR ITS OFFICERS OR AGENTS SHALL NOT BE RESPONSIBLE FOR THE ACCURACY OR COMPLETENESS OF SCANNED COPIES OF THIS PLAN SHEET.

MODIFY CHANGEABLE MESSAGE SIGN

	CHANGEABLE MESSAGE SIGN PANEL (N)	CMS CONTROL CABLES (N)	30A, 2P CIRCUIT BREAKER (N)	1#8(G) (N)
SHEET No.	EA	LF	EA	LF
E-2	1	490	1	80
E-3	1	60	1	20
TOTAL	2	550	2	100

(N) - NOT A SEPARATE PAY ITEM, FOR INFORMATION ONLY

INDUCTIVE LOOP DETECTOR (REPLACEMENT)

SHEET No.	STUB-OUTS (N)	PULL BOX (N)	LOOPS (N)
	EA	EA	EA
E-6	63	63	246
E-7	69	69	237
E-8	46	46	170
TOTAL	178	178	653

(N) - NOT A SEPARATE PAY ITEM. FOR INFORMATION ONLY

MODIFY AUTOMATIC VEHICHLE CLASSIFICATION STATION

SHEET No.	SCREENED TRANSMITION CABLE (N)	LEAD IN CABLE (DLC) (N)	LOOPS (N)	PIEZO-ELECTRIC AXLE SENSOR (N)
	LF	LF	EA	EA
E-9	300	300	10	20
TOTAL	300	300	10	20

(N) - NOT A SEPARATE PAY ITEM. FOR INFORMATION ONLY

ELECTRICAL QUANTITIES

E-17

REVISED BY | DATE REVISED
PATRICK P. LUI | JACQUELINE C. TAN
CALCULATED-DESIGNED BY | CHECKED BY
FUNCTIONAL SUPERVISOR: JACQUELINE C. TAN
STATE OF CALIFORNIA - DEPARTMENT OF TRANSPORTATION
Caltrans OFFICE OF ITS

LAST REVISION 00-00-00 | DATE PLOTTED => 26-MAR-2014 TIME PLOTTED => 10:28

M

Maint	MAINTENANCE
Max	MAXIMUM
MB	METAL BEAM
MBB	METAL BEAM BARRIER
MBGR	METAL BEAM GUARD RAILING
Med	MEDIAN
MGS	MIDWEST GUARDRAIL SYSTEM
MH	MANHOLE
Min	MINIMUM
Misc	MISCELLANEOUS
Misc I & S	MISCELLANEOUS IRON AND STEEL
Mkr	MARKER
Mod	MODIFIED,
	MODIFY
Mon	MONUMENT
MP	METAL PLATE
MPGR	METAL PLATE GUARD RAILING
MR	MOVEMENT RATING
MSE	MECHANICALLY STABILIZED EMBANKMENT
Mt	MOUNTAIN, MOUNT
Mtl	MATERIAL
MVP	MAINTENANCE VEHICLE PULLOUT

N

N	NORTH
NB	NORTHBOUND
No.	NUMBER (MUST HAVE PERIOD)
Nos.	NUMBERS (MUST HAVE PERIOD)
NPS	NOMINAL PIPE SIZE
NS	NEAR SIDE
NSP	NEW STANDARD PLAN
NTS	NOT TO SCALE

O

Oblr	OBLITERATE
OC	OVERCROSSING
OD	OUTSIDE DIAMETER
OF	OUTSIDE FACE
OG	ORIGINAL GROUND
OGAC	OPEN GRADED ASPHALT CONCRETE
OGFC	OPEN GRADED FRICTION COURSE
OH	OVERHEAD
OHWM	ORDINARY HIGH WATER MARK
O-O	OUT TO OUT
Opp	OPPOSITE
OSD	OVERSIDE DRAIN

P

P	PAGE
PAP	PERFORATED ALUMINUM PIPE
PB	PULL BOX
PC	POINT OF CURVATURE,
	PRECAST
PCC	POINT OF COMPOUND CURVE,
	PORTLAND CEMENT CONCRETE
PCMS	PORTABLE CHANGEABLE MESSAGE SIGN
PCP	PERFORATED CONCRETE PIPE,
	PRESTRESSED CONCRETE PIPE
PCVC	POINT OF COMPOUND VERTICAL CURVE
PEC	PERMIT TO ENTER AND CONSTRUCT
Ped	PEDESTRIAN
Ped OC	PEDESTRIAN OVERCROSSING
Ped UC	PEDESTRIAN UNDERCROSSING
Perm Mtl	PERMEABLE MATERIAL

P continued

PG	PROFILE GRADE
PI	POINT OF INTERSECTION
PJP	PARTIAL JOINT PENETRATION
Pkwy	PARKWAY
ℙ,PL	PLATE
P/L	PROPERTY LINE
PM	POST MILE,
	TIME FROM NOON TO MIDNIGHT
PN	PAVING NOTCH
POC	POINT OF HORIZONTAL CURVE
POT	POINT OF TANGENT
POVC	POINT OF VERTICAL CURVE
PP	PIPE PILE,
	PLASTIC PIPE,
	POWER POLE
PPL	PREFORMED PERMEABLE LINER
PPP	PERFORATED PLASTIC PIPE
PRC	POINT OF REVERSE CURVE
PRF	PAVEMENT REINFORCING FABRIC
PRVC	POINT OF REVERSE VERTICAL CURVE
PS&E	PLANS, SPECIFICATIONS AND ESTIMATES
PS, P/S	PRESTRESSED
PSP	PERFORATED STEEL PIPE
PT	POINT OF TANGENCY
PVC	POLYVINYL CHLORIDE
Pvmt	PAVEMENT

Q

Qty	QUANTITY

R

R	RADIUS
R & D	REMOVE AND DISPOSE
R & S	REMOVE AND SALVAGE
R/C	RATE OF CHANGE
RCA	REINFORCED CONCRETE ARCH
RCB	REINFORCED CONCRETE BOX
RCP	REINFORCED CONCRETE PIPE
RCPA	REINFORCED CONCRETE PIPE ARCH
Rd	ROAD
Reinf	REINFORCED,
	REINFORCEMENT,
	REINFORCING
Rel	RELOCATE
Repl	REPLACEMENT
Ret	RETAINING
Rev	REVISED, REVISION
Rdwy	ROADWAY
RHMA	RUBBERIZED HOT MIX ASPHALT
Riv	RIVER
RM	ROAD-MIXED
RP	RADIUS POINT,
	REFERENCE POINT
RR	RAILROAD
RSP	ROCK SLOPE PROTECTION,
	REVISED STANDARD PLAN
Rt	RIGHT
Rte	ROUTE
RW	REDWOOD,
	RETAINING WALL
R/W	RIGHT OF WAY
Rwy	RAILWAY

S

S	SOUTH,
	SUPPLEMENT
SAE	STRUCTURE APPROACH EMBANKMENT
Salv	SALVAGE
SAPP	STRUCTURAL ALUMINUM PLATE PIPE
SB	SOUTHBOUND
SC	SAND CUSHION
SCSP	SLOTTED CORRUGATED STEEL PIPE
SD	STORM DRAIN
Sec	SECOND,
	SECTION
Sep	SEPARATION
SG	SUBGRADE
Shld	SHOULDER
Sht	SHEET
Sim	SIMILAR
℄	STATION LINE
SM	SELECTED MATERIAL
Spec	SPECIAL,
	SPECIFICATIONS
SPP	SLOTTED PLASTIC PIPE
SS	SLOPE STAKE
SSBM	STRAP AND SADDLE BRACKET METHOD
SSD	STRUCTURAL SECTION DRAIN
SSPA	STRUCTURAL STEEL PLATE ARCH
SSPP	STRUCTURAL STEEL PLATE PIPE
SSPPA	STRUCTURAL STEEL PLATE PIPE ARCH
SSRP	STEEL SPIRAL RIB PIPE
St	STREET
Sta	STATION
STBB	SINGLE THRIE BEAM BARRIER
Std	STANDARD
Str	STRUCTURE
Surf	SURFACING
SW	SIDEWALK,
	SOUND WALL
Swr	SEWER
Sym	SYMMETRICAL
S4S	SURFACE 4 SIDES

T

T	SEMI-TANGENT
Tan	TANGENT
TBB	THRIE BEAM BARRIER
Tbr	TIMBER
TC	TOP OF CURB
TCB	TRAFFIC CONTROL BOX
TCE	TEMPORARY CONSTRUCTION EASEMENT
Tel	TELEPHONE
Temp	TEMPORARY
TG	TOP OF GRADE
Tot	TOTAL
TP	TELEPHONE POLE
TPB	TREATED PERMEABLE BASE
TPM	TREATED PERMEABLE MATERIAL
Trans	TRANSITION

T continued

TS	TRANSVERSE,
	TRAFFIC SIGNAL,
	TUBULAR STEEL
Typ	TYPICAL

U

UC	UNDERCROSSING
UD	UNDERDRAIN
UG	UNDERGROUND
UON	UNLESS OTHERWISE NOTED
UP	UNDERPASS

V

V	VALVE,
	DESIGN SPEED
Var	VARIABLE,
	VARIES
VC	VERTICAL CURVE
VCP	VITRIFIED CLAY PIPE
Vert	VERTICAL
Via	VIADUCT
Vol	VOLUME

W

W	WEST,
	WIDTH
WB	WESTBOUND
WH	WEEP HOLE
WM	WIRE MESH
WS	WATER SURFACE
WSP	WELDED STEEL PIPE
Wt	WEIGHT
WV	WATER VALVE
WW	WINGWALL
WWLOL	WINGWALL LAYOUT LINE

X

X Sec	CROSS SECTION
Xing	CROSSING

Y

Yr	YEAR
Yrs	YEARS

Dist	COUNTY	ROUTE	POST MILES TOTAL PROJECT	SHEET No.	TOTAL SHEETS
07	LA	101	11.8/35.3	112	192

Grace M. Tsushima
REGISTERED CIVIL ENGINEER

July 19, 2013
PLANS APPROVAL DATE

REGISTERED PROFESSIONAL ENGINEER
Grace M. Tsushima
No. C49814
Exp. 9-30-14
CIVIL
STATE OF CALIFORNIA

THE STATE OF CALIFORNIA OR ITS OFFICERS OR AGENTS SHALL NOT BE RESPONSIBLE FOR THE ACCURACY OR COMPLETENESS OF SCANNED COPIES OF THIS PLAN SHEET.

TO ACCOMPANY PLANS DATED 2-18-14

UNIT OF MEASUREMENT SYMBOLS:

Some of the symbols used in the project plan quantity tables and in the Bid Item List are:

TABLE A

SYMBOL USED	DEFINITIONS
ACRE	ACRE
CF	CUBIC FOOT
CY	CUBIC YARD
EA	EACH
GAL	GALLON
LB	POUND
LF	LINEAR FOOT
SQFT	SQUARE FOOT
SQYD	SQUARE YARD
STA	100 FEET
TAB	TABLET
TON	2,000 POUNDS

Some of the symbols used in the plans other than in the project plan quantity tables are:

TABLE B

SYMBOL USED	DEFINITIONS
ksi	KIPS PER SQUARE INCH
ksf	KIPS PER SQUARE FOOT
psi	POUNDS PER SQUARE INCH
psf	POUNDS PER SQUARE FOOT
lb/ft^3, pcf	POUNDS PER CUBIC FOOT
tsf	TONS PER SQUARE FOOT
mph, MPH *	MILES PER HOUR
ø	NOMINAL DIAMETER
oz	OUNCE
lb	POUND
kip	1,000 POUNDS
cal	CALORIE
ft	FOOT OR FEET
gal	GALLON

* For use on a sign panel only

STATE OF CALIFORNIA
DEPARTMENT OF TRANSPORTATION

ABBREVIATIONS (SHEET 2 OF 2)

NO SCALE

RSP A10B DATED JULY 19, 2013 SUPERSEDES STANDARD PLAN A10B DATED MAY 20, 2011 - PAGE 2 OF THE STANDARD PLANS BOOK DATED 2010.

REVISED STANDARD PLAN RSP A10B

2010 REVISED STANDARD PLAN RSP A10B

6-7-13

Dist	COUNTY	ROUTE	POST MILES TOTAL PROJECT	SHEET No.	TOTAL SHEETS
07	LA	101	11.8/35.3	113	192

REGISTERED CIVIL ENGINEER

July 19, 2013
PLANS APPROVAL DATE

REGISTERED PROFESSIONAL ENGINEER Roberta L. McLaughlin No. C40375 Exp. 3-31-15 CIVIL STATE OF CALIFORNIA

THE STATE OF CALIFORNIA OR ITS OFFICERS OR AGENTS SHALL NOT BE RESPONSIBLE FOR THE ACCURACY OR COMPLETENESS OF SCANNED COPIES OF THIS PLAN SHEET.

TO ACCOMPANY PLANS DATED 2-18-14

EXIT RAMP NEUTRAL AREA (GORE) TREATMENT

DETAIL 36

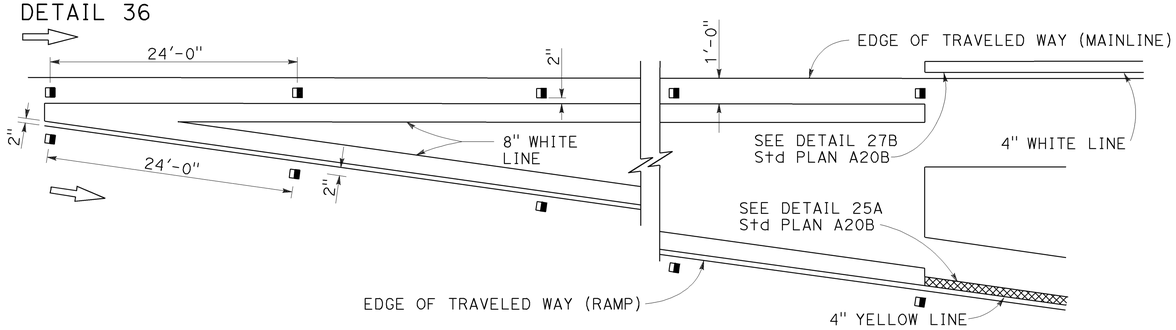

ENTRANCE RAMP NEUTRAL AREA (MERGE) TREATMENT

DETAIL 36A

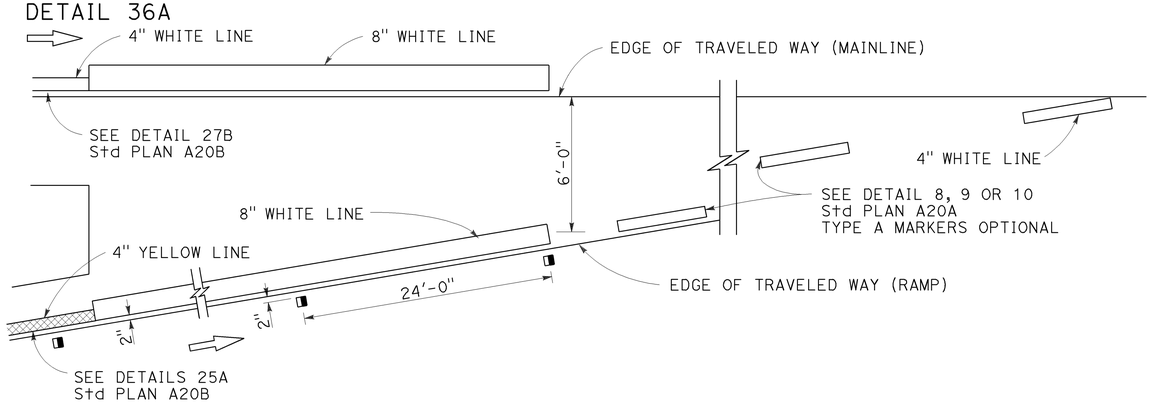

ENTRANCE RAMP NEUTRAL AREA (ACCELERATION LANE) TREATMENT

DETAIL 36B

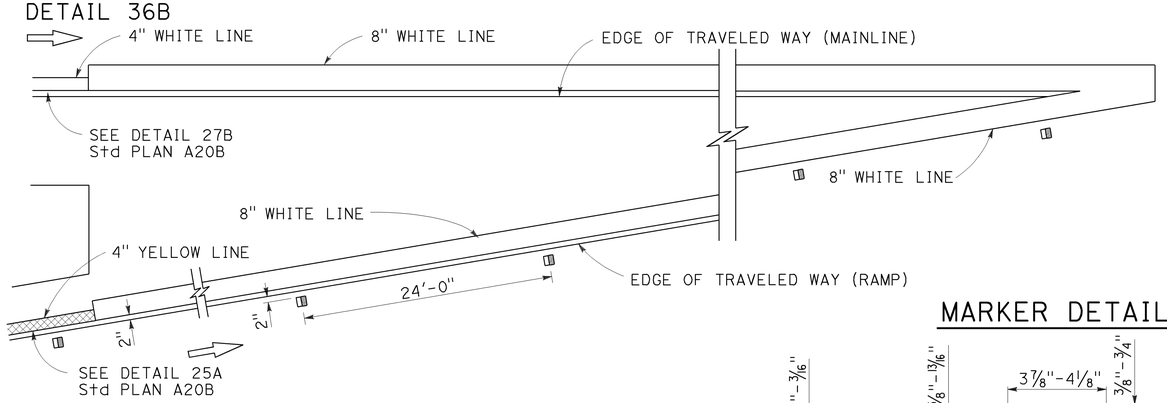

LANE DROP AT EXIT RAMPS

DETAIL 37

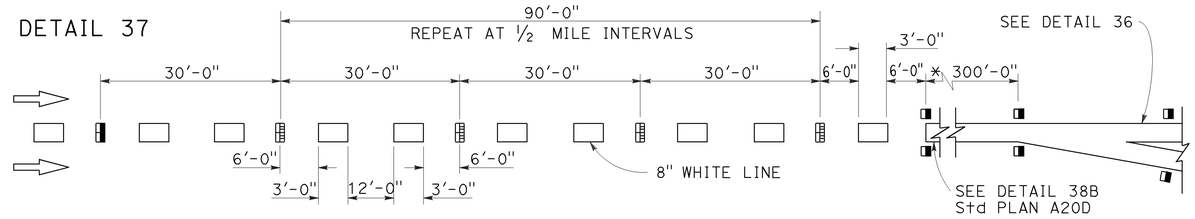

DETAIL 37A

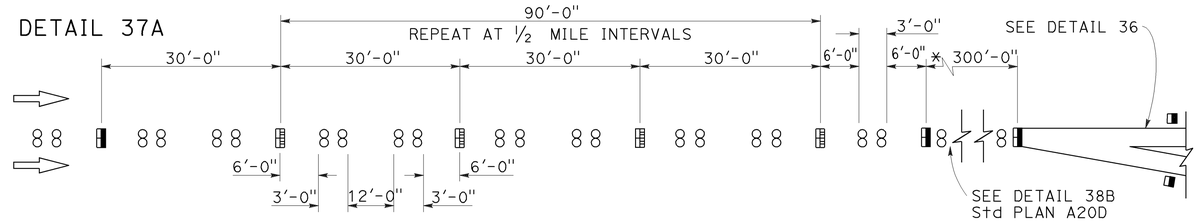

* The solid channelizing line shown may be omitted on short auxiliary lanes where weaving length is critical.

LANE DROP AT INTERSECTIONS

DETAIL 37B

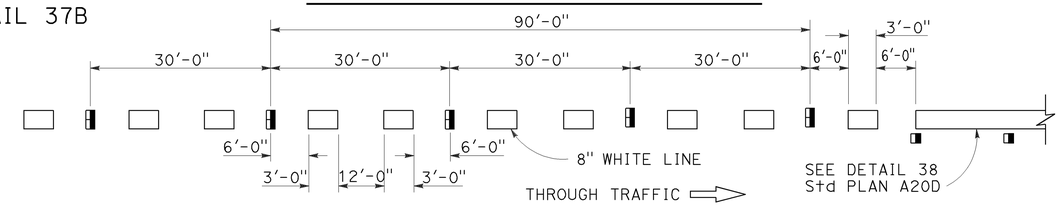

DETAIL 37C

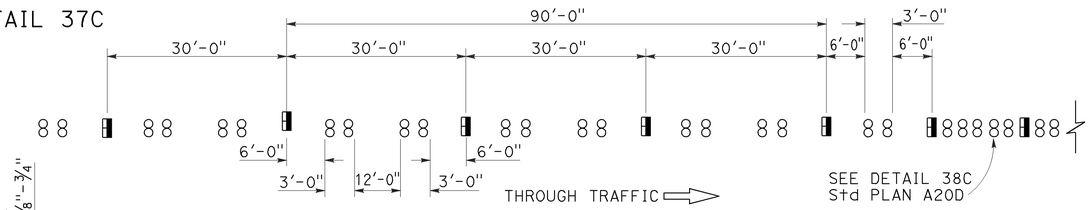

MARKER DETAILS

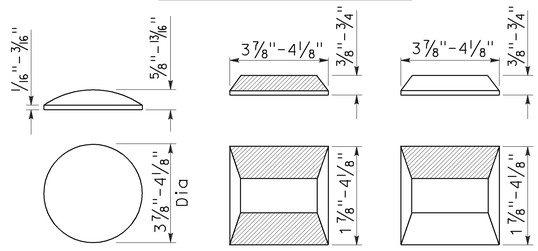

RETROREFLECTIVE FACE

LEGEND:

MARKERS

- ○ TYPE A WHITE NON-REFLECTIVE
- ⊟ TYPE C RED-CLEAR RETROREFLECTIVE
- ◨ TYPE G ONE-WAY CLEAR RETROREFLECTIVE

STATE OF CALIFORNIA
DEPARTMENT OF TRANSPORTATION

PAVEMENT MARKERS AND TRAFFIC LINE TYPICAL DETAILS

NO SCALE

RSP A20C DATED JULY 19, 2013 SUPERSEDES STANDARD PLAN A20C DATED MAY 20, 2011 - PAGE 11 OF THE STANDARD PLANS BOOK DATED 2010.

REVISED STANDARD PLAN RSP A20C

2010 REVISED STANDARD PLAN RSP A20C

4-29-13

Dist	COUNTY	ROUTE	POST MILES TOTAL PROJECT	SHEET No.	TOTAL SHEETS
07	LA	101	11.8/35.3	114	192

REGISTERED CIVIL ENGINEER

April 20, 2012
PLANS APPROVAL DATE

REGISTERED PROFESSIONAL ENGINEER
Roberta L. McLaughlin
No. C40375
Exp. 3-31-13
CIVIL
STATE OF CALIFORNIA

THE STATE OF CALIFORNIA OR ITS OFFICERS OR AGENTS SHALL NOT BE RESPONSIBLE FOR THE ACCURACY OR COMPLETENESS OF SCANNED COPIES OF THIS PLAN SHEET.

TO ACCOMPANY PLANS DATED 2-18-14

2010 REVISED STANDARD PLAN RSP A24A

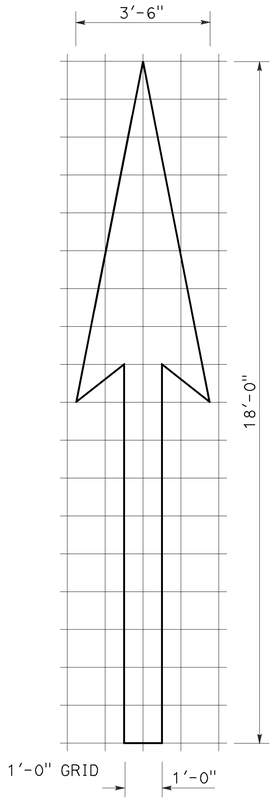

A=25 ft^2

TYPE I 18'-0" ARROW

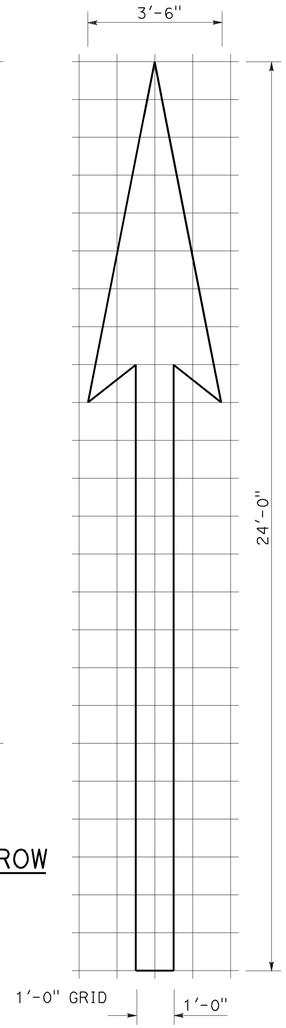

A=31 ft^2

TYPE I 24'-0" ARROW

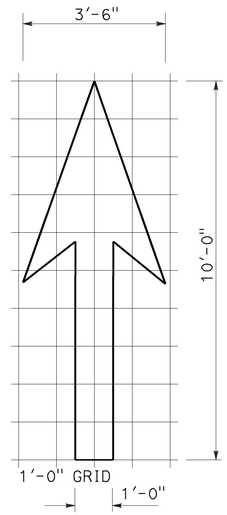

A=14 ft^2

TYPE I 10'-0" ARROW

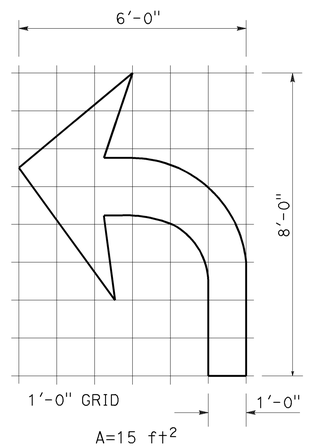

A=15 ft^2

TYPE IV (L) ARROW

(For Type IV (R) arrow, use mirror image)

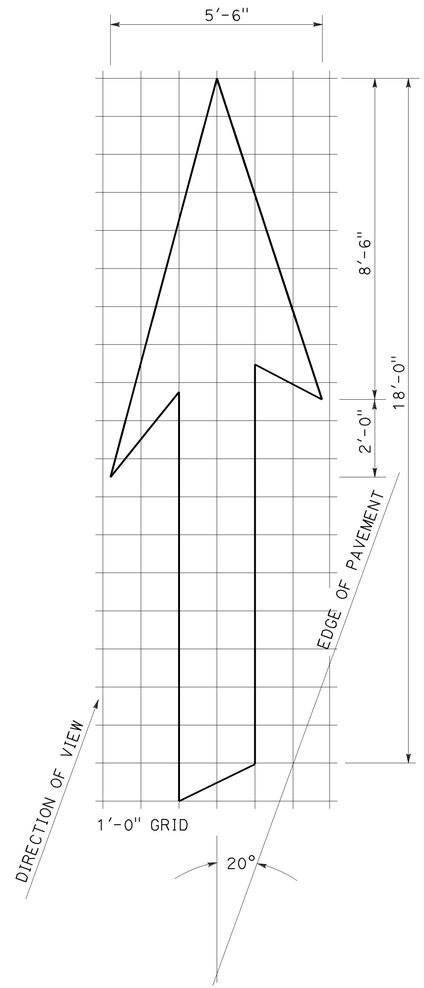

A=42 ft^2

TYPE VI ARROW

Right lane drop arrow
(For left lane, use mirror image)

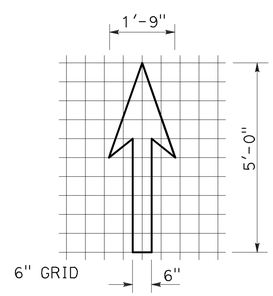

A=3.5 ft^2

BIKE LANE ARROW

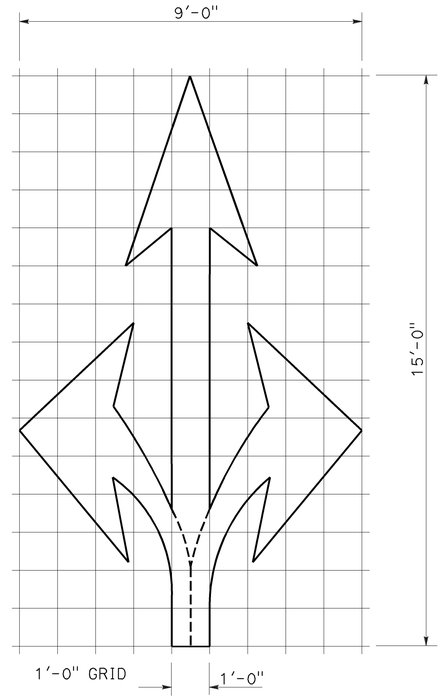

A=36 ft^2

TYPE VIII ARROW

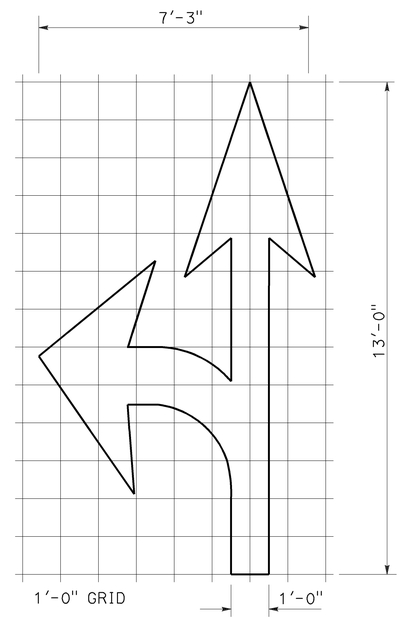

A=27 ft^2

TYPE VII (L) ARROW

(For Type VII (R) arrow, use mirror image)

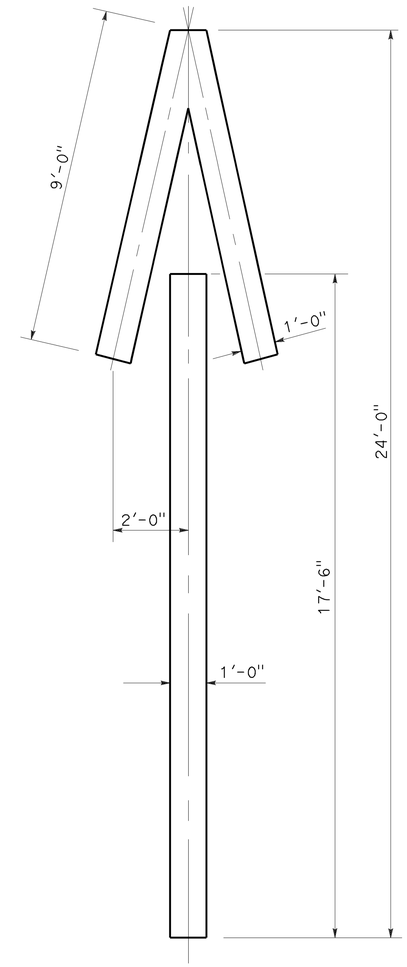

A=33 ft^2

TYPE V ARROW

NOTE:
Minor variations in dimensions may be accepted by the Engineer.

STATE OF CALIFORNIA
DEPARTMENT OF TRANSPORTATION

PAVEMENT MARKINGS ARROWS

NO SCALE

RSP A24A DATED APRIL 20, 2012 SUPERSEDES STANDARD PLAN A24A DATED MAY 20, 2011 - PAGE 13 OF THE STANDARD PLANS BOOK DATED 2010.

REVISED STANDARD PLAN RSP A24A

3-14-12

Dist	COUNTY	ROUTE	POST MILES TOTAL PROJECT	SHEET No.	TOTAL SHEETS
07	LA	101	11.8/35.3	115	192

REGISTERED CIVIL ENGINEER

July 20, 2012
PLANS APPROVAL DATE

REGISTERED PROFESSIONAL ENGINEER
Roberta L. McLaughlin
No. C40375
Exp. 3-31-13
CIVIL
STATE OF CALIFORNIA

THE STATE OF CALIFORNIA OR ITS OFFICERS OR AGENTS SHALL NOT BE RESPONSIBLE FOR THE ACCURACY OR COMPLETENESS OF SCANNED COPIES OF THIS PLAN SHEET.

TO ACCOMPANY PLANS DATED 2-18-14

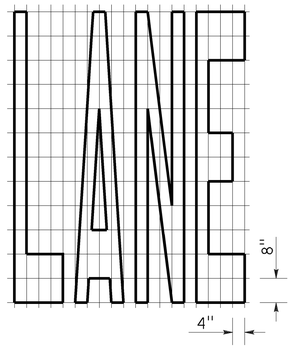

A=24 ft^2

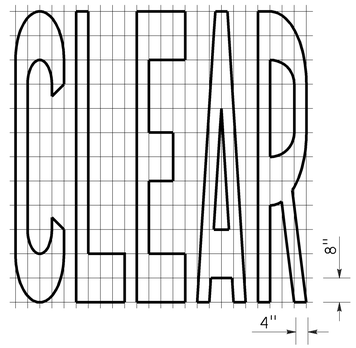

A=27 ft^2

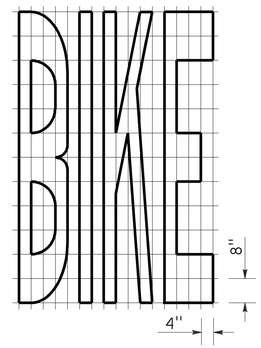

A=21 ft^2

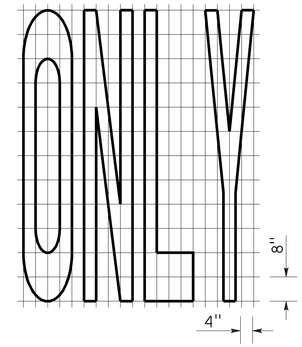

A=22 ft^2

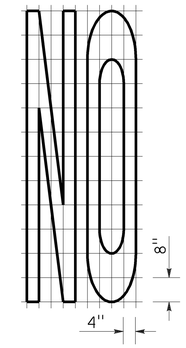

A=14 ft^2

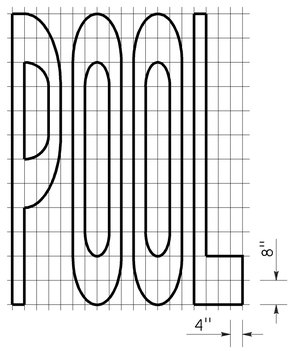

A=23 ft^2

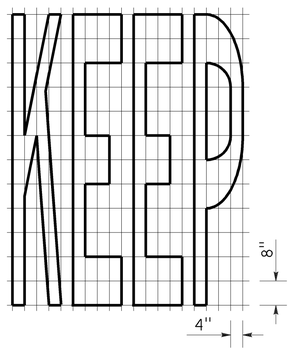

A=24 ft^2

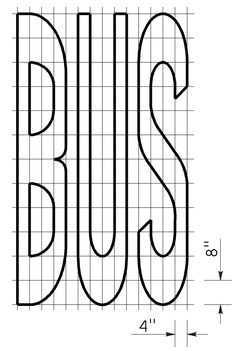

A=20 ft^2

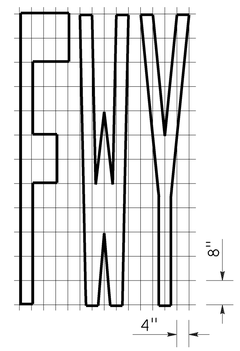

A=16 ft^2

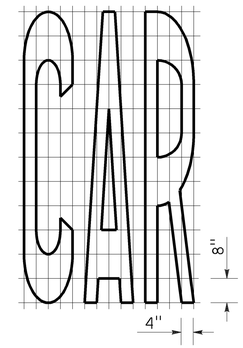

A=17 ft^2

WORD MARKINGS			
ITEM	ft^2	ITEM	ft^2
LANE	24	NO	14
POOL	23	BIKE	21
CAR	17	BUS	20
CLEAR	27	ONLY	22
KEEP	24	FWY	16

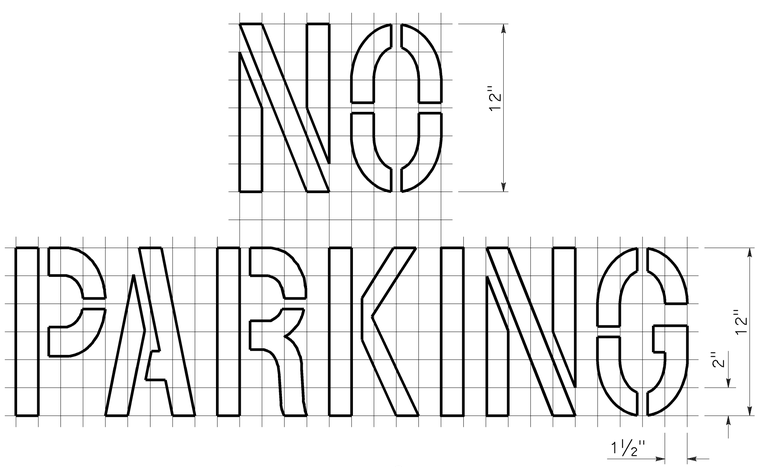

A=2 ft^2

See Notes 6 and 7

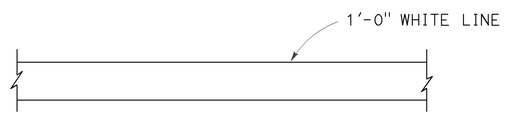

LIMIT LINE (STOP LINE)

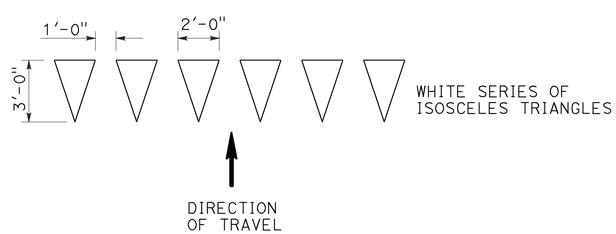

YIELD LINE

NOTES:

1. If a message consists of more than one word, it should read "UP", i.e., the first word should be nearest the driver.
2. The space between words should be at least four times the height of the characters for low speed roads, but not more than ten times the height of the characters. The space may be reduced appropriately where there is limited space because of local conditions.
3. Minor variations in dimensions may be accepted by the Engineer.
4. Portions of a letter, number or symbol may be separated by connecting segments not to exceed 2" in width.
5. The words "NO PARKING" pavement marking is to be used for parking facilities. For typical locations of markings, see Standard Plans A90A and A90B.
6. The words "NO PARKING", shall be painted in white letters no less than 1'-0" high on a contrasting background and located so that it is visible to traffic enforcement officials.

STATE OF CALIFORNIA
DEPARTMENT OF TRANSPORTATION

PAVEMENT MARKINGS WORDS, LIMIT AND YIELD LINES

NO SCALE

RSP A24E DATED JULY 20, 2012 SUPERSEDES STANDARD PLAN A24E
DATED MAY 20, 2011 - PAGE 17 OF THE STANDARD PLANS BOOK DATED 2010.

REVISED STANDARD PLAN RSP A24E

2010 REVISED STANDARD PLAN RSP A24E

6-12-12

Dist	COUNTY	ROUTE	POST MILES TOTAL PROJECT	SHEET No.	TOTAL SHEETS
07	LA	101	11.8/35.3	116	192

Randell D. Hiatt
REGISTERED CIVIL ENGINEER

July 19, 2013
PLANS APPROVAL DATE

REGISTERED PROFESSIONAL ENGINEER
Randell D. Hiatt
No. C50200
Exp. 6-30-15
CIVIL
STATE OF CALIFORNIA

THE STATE OF CALIFORNIA OR ITS OFFICERS OR AGENTS SHALL NOT BE RESPONSIBLE FOR THE ACCURACY OR COMPLETENESS OF SCANNED COPIES OF THIS PLAN SHEET.

TO ACCOMPANY PLANS DATED 2-18-14

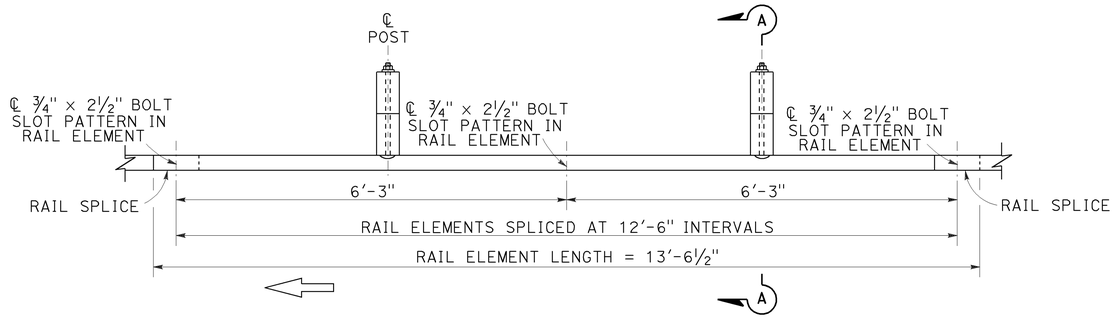

PLAN

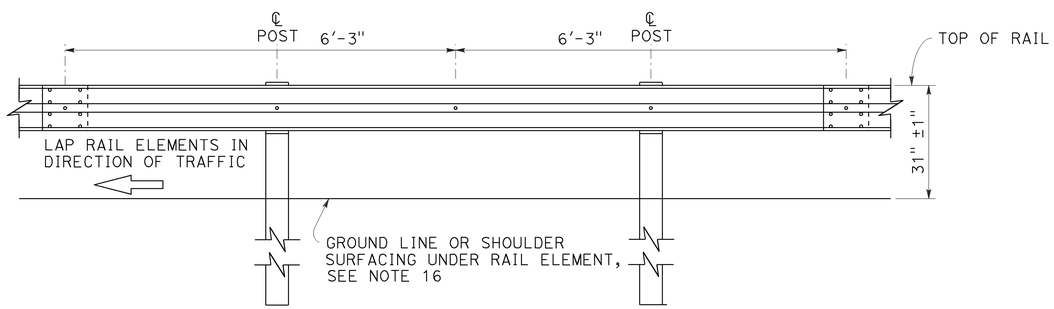

ELEVATION

MIDWEST GUARDRAIL SYSTEM WITH WOOD POST AND BLOCKS

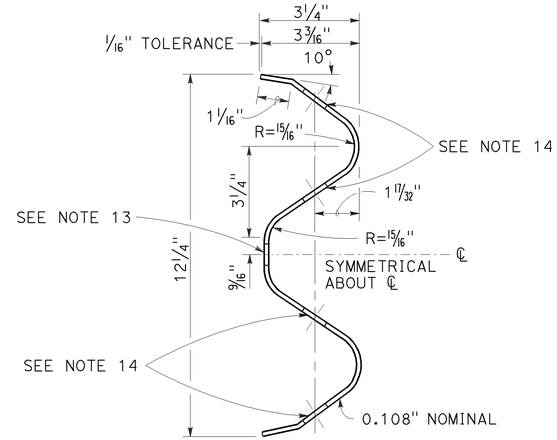

SECTION THRU RAIL ELEMENT

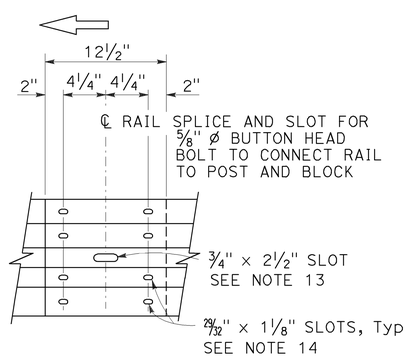

ELEVATION

RAIL ELEMENT SPLICE DETAIL

a) Connect the over lapped end of the rail elements with ⅝" ø × 1⅜" button head oval shoulder splice bolts inserted into the 29⁄32" × 1⅛" slots and bolted together with ⅝" ø recessed hex nuts. Recess of hex nut points toward rail element. A total of 8 bolts and nuts are to be used at each rail splice connection.

b) The ends of the rail elements are to be overlapped in the direction of traffic (see details).

c) Where end cap is to be attached to the end of a rail element, a total of 4 of the above described splice bolts and nuts are to be used.

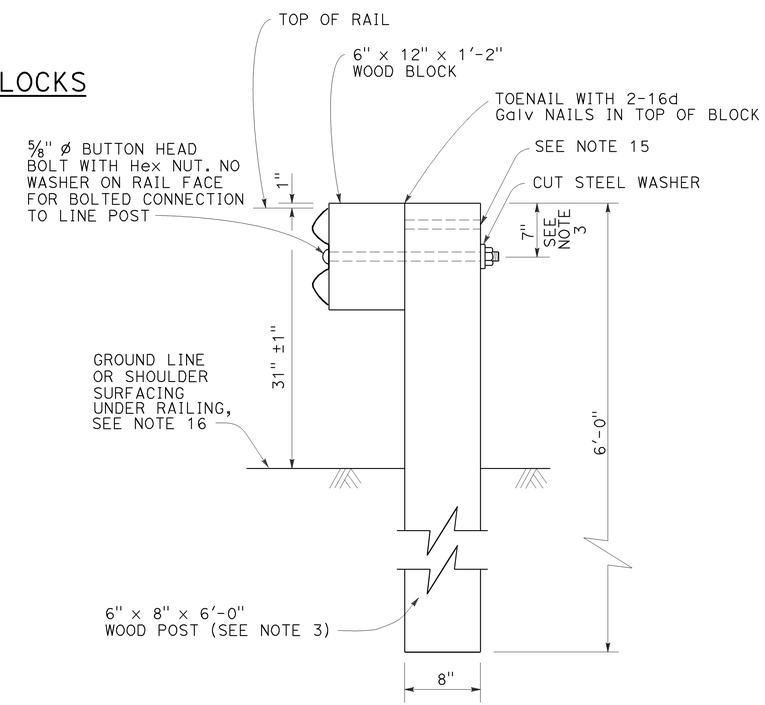

SECTION A-A

TYPICAL WOOD LINE POST INSTALLATION

See Note 4

NOTES:

1. For details of steel post installations, see Revised Standard Plan RSP A77L2.
2. For details of standard hardware used to construct MGS, see Revised Standard Plan RSP A77M1.
3. For details of wood posts and wood blocks used to construct MGS, see Revised Standard Plan RSP A77N1.
4. For additional installation details, see Revised Standard Plan RSP A77N3.
5. MGS post spacing to be 6'-3" center to center, except as otherwise noted.
6. For MGS typical layouts, see the A77P, A77Q and A77R Series of Standard Plans.
7. If railing is connected to terminal system end treatment, use 31" height terminal system end treatment.
8. For MGS end anchor details, see Revised Standard Plans RSP A77S1 and RSP A77T2.
9. For details of MGS transition to bridge railing, see Revised Standard Plan RSP A77U4.
10. For additional details of MSG connection to bridge railing, see Revised Standard Plans RSP A77U1, RSP A77U2 and RSP A77V1.
11. For MGS connection details to abutments and walls, see Revised Standard Plan RSP A77U3.
12. For typical MGS delineation and dike positioning details, see Revised Standard Plan RSP A77N4.
13. Slotted hole for bolted connection of rail element to block and post. See "Section Thru Rail Element".
14. Slotted holes for splice bolts to overlap ends of rail element. See "Section Thru Rail Element".
15. Additional hole in uppermost portion of line post is for potential future adjustments of railing height. See Revised Standard Plan RSP A77N1.
16. Install posts in soil.

STATE OF CALIFORNIA
DEPARTMENT OF TRANSPORTATION

MIDWEST GUARDRAIL SYSTEM STANDARD RAILING SECTION (WOOD POST WITH WOOD BLOCK)

NO SCALE

RSP A77L1 DATED JULY 19, 2013 SUPPLEMENTS STANDARD PLANS BOOK DATED 2010.

REVISED STANDARD PLAN RSP A77L1

2010 REVISED STANDARD PLAN RSP A77L1

7-3-13

Dist	COUNTY	ROUTE	POST MILES TOTAL PROJECT	SHEET No.	TOTAL SHEETS
07	LA	101	11.8/35.3	117	192

Randell D. Hiatt
REGISTERED CIVIL ENGINEER

July 19, 2013
PLANS APPROVAL DATE

REGISTERED PROFESSIONAL ENGINEER
Randell D. Hiatt
No. C50200
Exp. 6-30-15
CIVIL
STATE OF CALIFORNIA

THE STATE OF CALIFORNIA OR ITS OFFICERS OR AGENTS SHALL NOT BE RESPONSIBLE FOR THE ACCURACY OR COMPLETENESS OF SCANNED COPIES OF THIS PLAN SHEET.

TO ACCOMPANY PLANS DATED 2-18-14

2010 REVISED STANDARD PLAN RSP A77L2

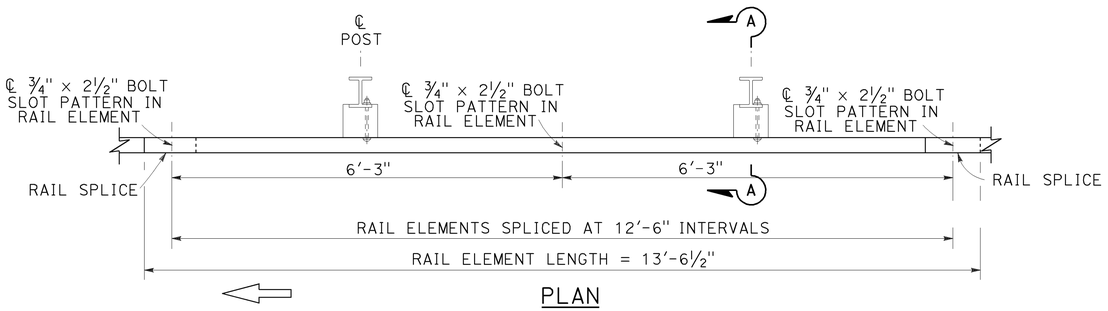

PLAN

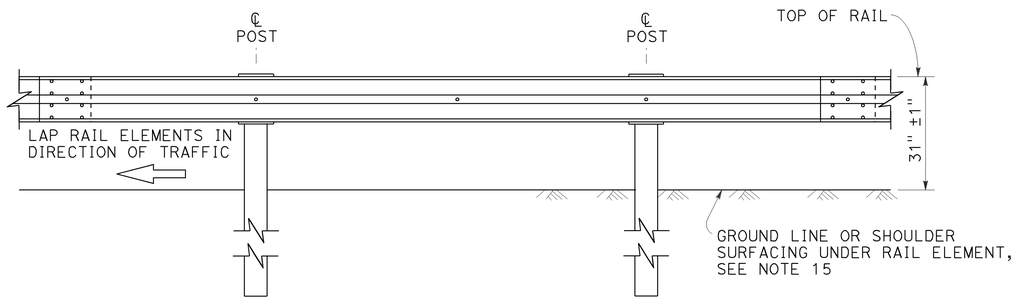

ELEVATION

MIDWEST GUARDRAIL SYSTEM WITH STEEL POSTS AND NOTCHED WOOD OR NOTCHED RECYCLED PLASTIC BLOCKS

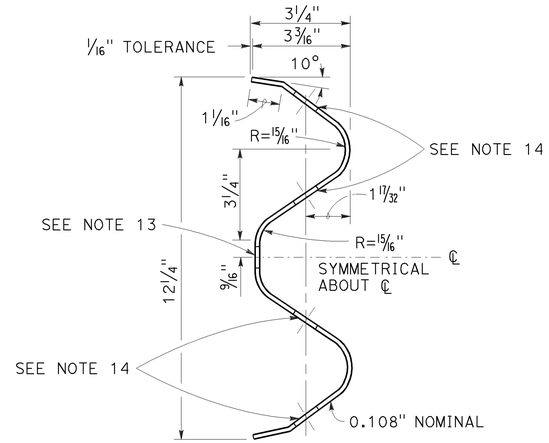

SECTION THRU RAIL ELEMENT

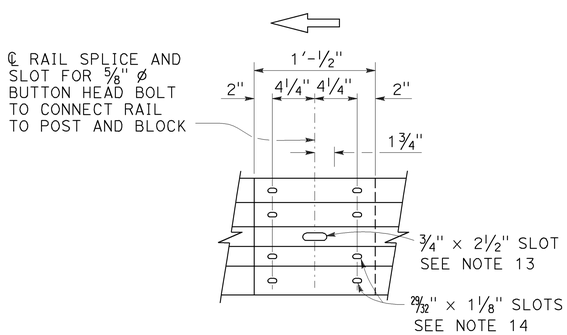

ELEVATION

RAIL ELEMENT SPLICE DETAIL

a) Connect the over lapped end of the rail elements with ⅝" ø × 1⅜" button head oval shoulder splice bolts inserted into the 29⁄32" × 1⅛" slots and bolted together with ⅝" ø recessed hex nuts. Recess of hex nut points toward rail element. A total of 8 bolts and nuts are to be used at each rail splice connection.

b) The ends of the rail elements are to be overlapped in the direction of traffic (see details).

c) Where end cap is to be attached to the end of a rail element, a total of 4 of the above described splice bolts and nuts are to be used.

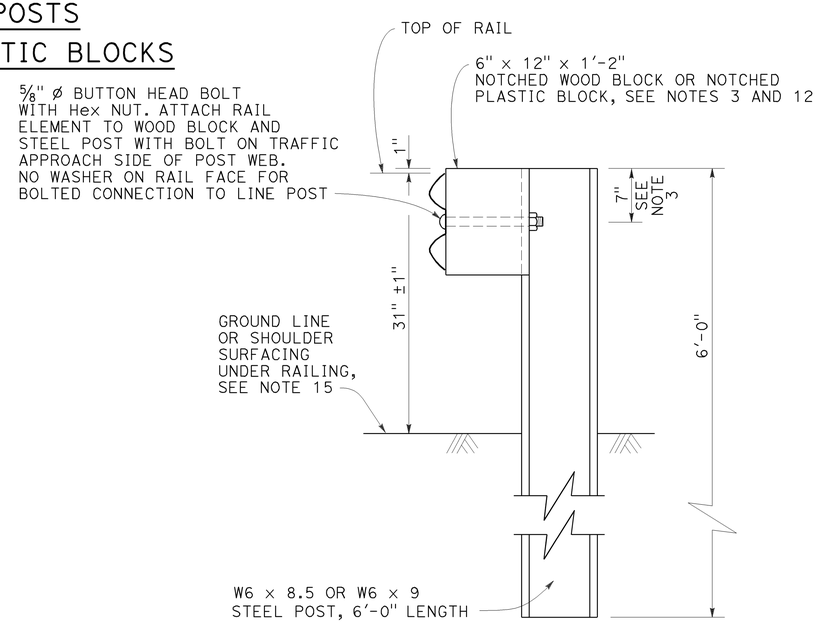

SECTION A-A

TYPICAL STEEL LINE POST INSTALLATION

See Note 4

NOTES:

1. For details of wood post installations, see Revised Standard Plan RSP A77L1.
2. For details of standard hardware used to construct MGS, see Revised Standard Plan RSP A77M1.
3. For details of steel posts and notched wood blocks used to construct MGS, see Revised Standard Plan RSP A77N2.
4. For additional installation details, see Revised Standard Plan RSP A77N3.
5. MGS post spacing to be 6'-3" center to center, except as otherwise noted.
6. For MGS typical layouts, see the A77P, A77Q and A77R Series of Standard Plans.
7. If railing is connected to terminal system end treatment, use 31" height terminal system end treatment.
8. For MGS end anchor details, see Revised Standard Plans RSP A77S1 and RSP A77T2.
9. For details of MGS transition to bridge railing, see Revised Standard Plan RSP A77U4.
10. For additional details of MGS connection to bridge railings, see Revised Standard Plans RSP A77U1, RSP A77U2 and RSP A77V1.
11. For dike positioning and MGS delineation details, see Revised Standard Plan RSP A77N4.
12. Notched face of block faces steel post.
13. Slotted hole for bolted connection of rail element to block and post. See "Section Thru Rail Element".
14. Slotted holes for splice bolts to overlap ends of rail element. See "Section Thru Rail Element".
15. Install posts in soil.

STATE OF CALIFORNIA
DEPARTMENT OF TRANSPORTATION

MIDWEST GUARDRAIL SYSTEM STANDARD RAILING SECTION (STEEL POST WITH NOTCHED WOOD OR NOTCHED RECYCLED PLASTIC BLOCK)

NO SCALE

RSP A77L2 DATED JULY 19, 2013 SUPPLEMENTS THE STANDARD PLANS BOOK DATED 2010.

REVISED STANDARD PLAN RSP A77L2

Dist	COUNTY	ROUTE	POST MILES TOTAL PROJECT	SHEET No.	TOTAL SHEETS
07	LA	101	11.8/35.3	118	192

Randell D. Hiatt
REGISTERED CIVIL ENGINEER

July 19, 2013
PLANS APPROVAL DATE

REGISTERED PROFESSIONAL ENGINEER
Randell D. Hiatt
No. C50200
Exp. 6-30-15
CIVIL
STATE OF CALIFORNIA

THE STATE OF CALIFORNIA OR ITS OFFICERS OR AGENTS SHALL NOT BE RESPONSIBLE FOR THE ACCURACY OR COMPLETENESS OF SCANNED COPIES OF THIS PLAN SHEET.

TO ACCOMPANY PLANS DATED 2-18-14

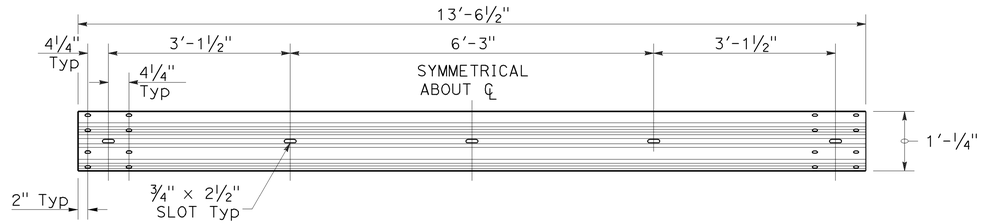

TYPICAL RAIL ELEMENT

NOTE:

1. Slotted holes for splice bolts to overlap ends of rail element.

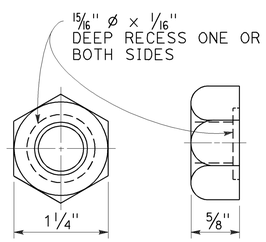

⅝" ø RECESS NUT

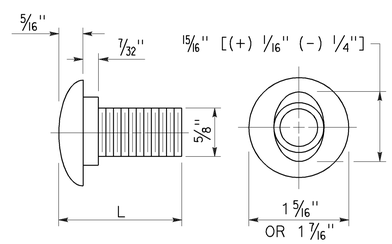

⅝" ø BUTTON HEAD BOLT

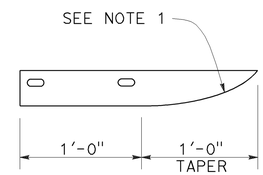

PLAN

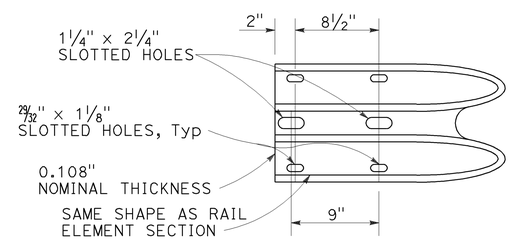

ELEVATION

END CAP
(TYPE A)

BUTTON HEAD BOLT

L	THREAD LENGTH
1⅜"	FULL THREAD LENGTH
2"	FULL THREAD LENGTH
10"	4" Min THREAD LENGTH
18"	4" Min THREAD LENGTH
20"	4" Min THREAD LENGTH
22"	4" Min THREAD LENGTH
26"	4" Min THREAD LENGTH
36"	4" Min THREAD LENGTH
** 2¾"	2" Min THREAD LENGTH
** 19"	4" Min THREAD LENGTH

** For nested rail applications.

STATE OF CALIFORNIA
DEPARTMENT OF TRANSPORTATION

MIDWEST GUARDRAIL SYSTEM STANDARD HARDWARE

NO SCALE

RSP A77M1 DATED JULY 19, 2013 SUPPLEMENTS THE STANDARD PLANS BOOK DATED 2010.

REVISED STANDARD PLAN RSP A77M1

2010 REVISED STANDARD PLAN RSP A77M1

7-3-13

Dist	COUNTY	ROUTE	POST MILES TOTAL PROJECT	SHEET No.	TOTAL SHEETS
07	LA	101	11.8/35.3	119	192

Randell D. Hiatt
REGISTERED CIVIL ENGINEER

July 19, 2013
PLANS APPROVAL DATE

REGISTERED PROFESSIONAL ENGINEER
Randell D. Hiatt
No. C50200
Exp. 6-30-15
CIVIL
STATE OF CALIFORNIA

THE STATE OF CALIFORNIA OR ITS OFFICERS OR AGENTS SHALL NOT BE RESPONSIBLE FOR THE ACCURACY OR COMPLETENESS OF SCANNED COPIES OF THIS PLAN SHEET.

TO ACCOMPANY PLANS DATED 2-18-14

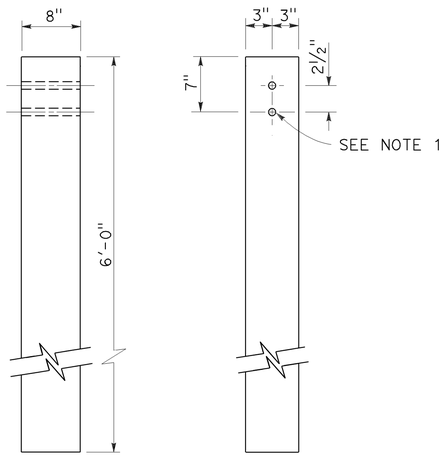

SIDE FRONT

6" x 8" WOOD POST
See Note 3

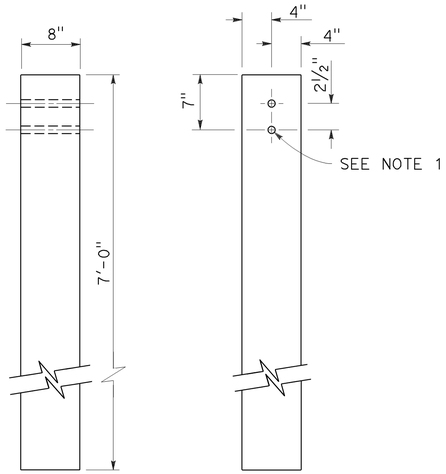

SIDE FRONT

8" x 8" WOOD POST
See Note 4

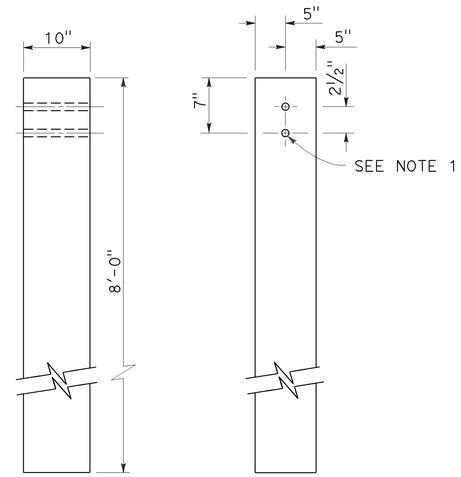

SIDE FRONT

10" x 10" WOOD POST
See Note 5

NOTES:

1. All holes in wood posts and blocks shall be ¾" Dia ± 1/16".
2. Dimensions shown for wood post are nominal.
3. This post and block combination used for standard line post sections of MGS.
4. This post and 8" x 12" block combination used for line post sections of MGS on narrow roadways.
5. This post and 8" x 12" block combination is typically used where strengthened line post sections of MGS are warranted to shield fixed objects.
6. See Revised Standard Plan RSP A77L3 for use of 6" x 8" and 8" x 8" wood blocks.

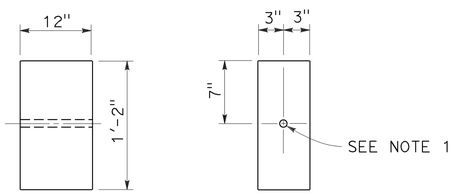

SIDE FRONT

6" x 12" WOOD BLOCK
See Note 3

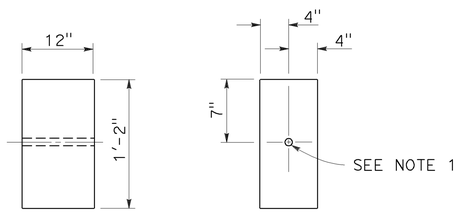

SIDE FRONT

8" x 12" WOOD BLOCK

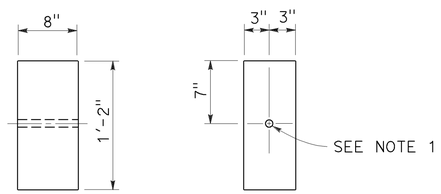

SIDE FRONT

6" x 8" WOOD BLOCK
Only for use with metal beam guard rail see Note 6

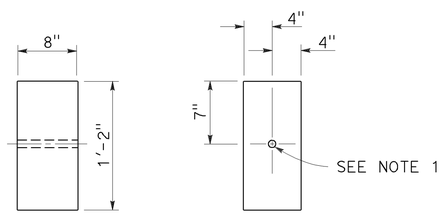

SIDE FRONT

8" x 8" WOOD BLOCK
Only for use with metal beam guard rail see Note 6

STATE OF CALIFORNIA
DEPARTMENT OF TRANSPORTATION

MIDWEST GUARDRAIL SYSTEM WOOD POST AND WOOD BLOCK DETAILS

NO SCALE

RSP A77N1 DATED JULY 19, 2013 SUPPLEMENTS THE STANDARD PLANS BOOK DATED 2010.

REVISED STANDARD PLAN RSP A77N1

2010 REVISED STANDARD PLAN RSP A77N1

7-3-13

Dist	COUNTY	ROUTE	POST MILES TOTAL PROJECT	SHEET No.	TOTAL SHEETS
07	LA	101	11.8/35.3	120	192

Randell D. Hiatt
REGISTERED CIVIL ENGINEER

November 15, 2013
PLANS APPROVAL DATE

REGISTERED PROFESSIONAL ENGINEER
Randell D. Hiatt
No. C50200
Exp. 6-30-15
CIVIL
STATE OF CALIFORNIA

THE STATE OF CALIFORNIA OR ITS OFFICERS OR AGENTS SHALL NOT BE RESPONSIBLE FOR THE ACCURACY OR COMPLETENESS OF SCANNED COPIES OF THIS PLAN SHEET.

TO ACCOMPANY PLANS DATED 2-18-14

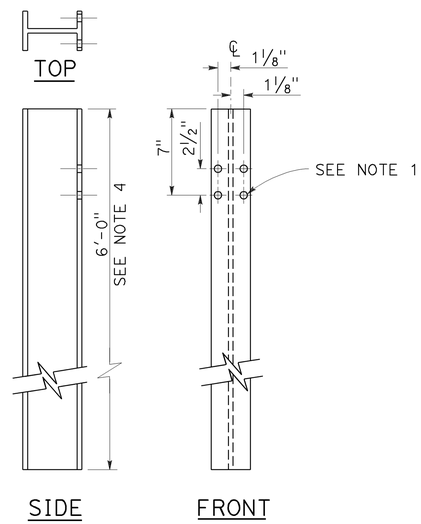

W6 x 9 OR W6 x 8.5
STEEL POST
See Note 4

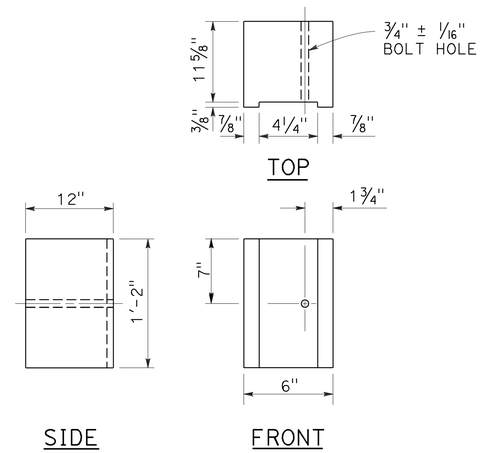

6" x 12"
NOTCHED WOOD BLOCK
See Notes 2 and 3

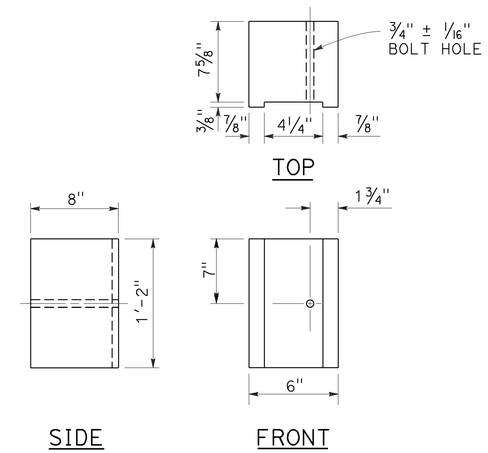

6" x 8"
NOTCHED WOOD BLOCK
Only for use with metal beam guard railing. See Note 5

NOTES:

1. All holes in steel post shall be 13/16" Dia maximum.
2. Dimensions shown for wood block are nominal.
3. Notched face of block faces steel post.
4. 6'-0" length posts to be used for typical roadway installation. See Revised Standard Plan RSP A77N3.
5. See Revised Standard Plan RSP A77L3 for use of 6" x 8" and 8" x 8" notched wood blocks.
6. This post and 8" x 12" block combination to be used for line post sections of MGS on narrow roadways and where strengthened line post sections of MGS are warranted to shield fixed objects.

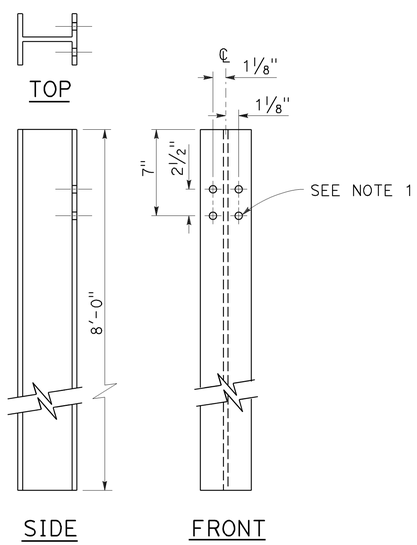

W6 x 15
STEEL POST
See Note 6

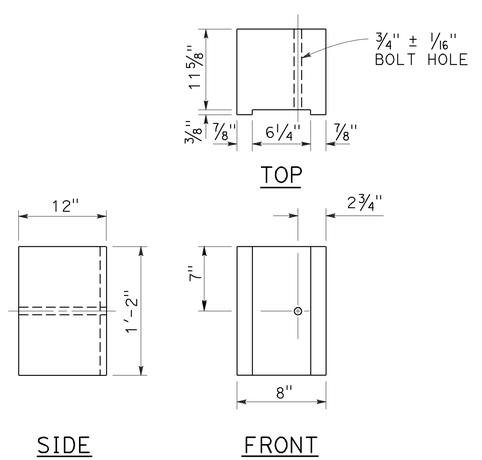

8" x 12"
NOTCHED WOOD BLOCK
See Notes 2 and 3

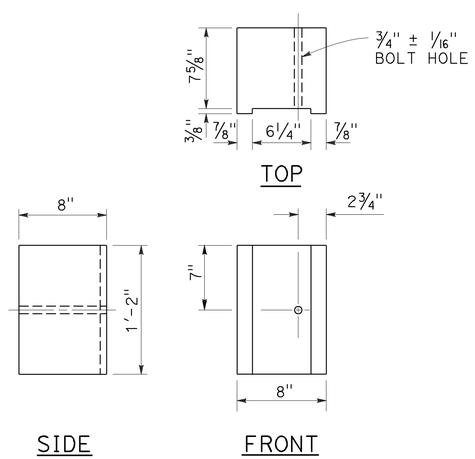

8" x 8"
NOTCHED WOOD BLOCK
Only for use with metal beam guard railing. See Note 5

STATE OF CALIFORNIA
DEPARTMENT OF TRANSPORTATION

MIDWEST GUARDRAIL SYSTEM STEEL POST AND NOTCHED WOOD BLOCK DETAILS

NO SCALE

RSP A77N2 DATED NOVEMBER 15, 2013 SUPERSEDES RSP A77N2
DATED JULY 19, 2013 THAT SUPPLEMENTS THE STANDARD PLANS BOOK DATED 2010.

REVISED STANDARD PLAN RSP A77N2

2010 REVISED STANDARD PLAN RSP A77N2

10-29-13

Dist	COUNTY	ROUTE	POST MILES TOTAL PROJECT	SHEET No.	TOTAL SHEETS
07	LA	101	11.8/35.3	121	192

Randell D. Hiatt
REGISTERED CIVIL ENGINEER

November 15, 2013
PLANS APPROVAL DATE

REGISTERED PROFESSIONAL ENGINEER
Randell D. Hiatt
No. C50200
Exp. 6-30-15
CIVIL
STATE OF CALIFORNIA

THE STATE OF CALIFORNIA OR ITS OFFICERS OR AGENTS SHALL NOT BE RESPONSIBLE FOR THE ACCURACY OR COMPLETENESS OF SCANNED COPIES OF THIS PLAN SHEET.

TO ACCOMPANY PLANS DATED 2-18-14

2010 REVISED STANDARD PLAN RSP A77N3

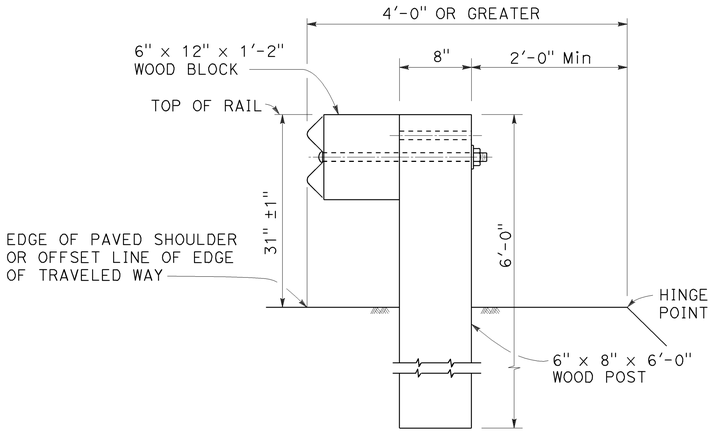

DETAIL A

TYPICAL ROADWAY INSTALLATION

See Note 1

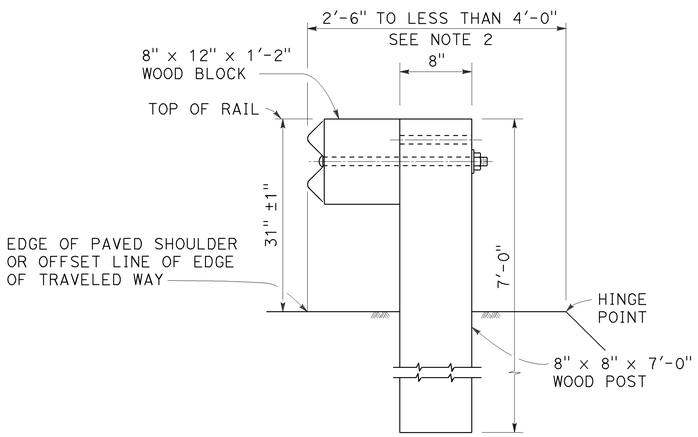

DETAIL B

NARROW ROADWAY INSTALLATION

See Note 1

POST EMBEDMENT

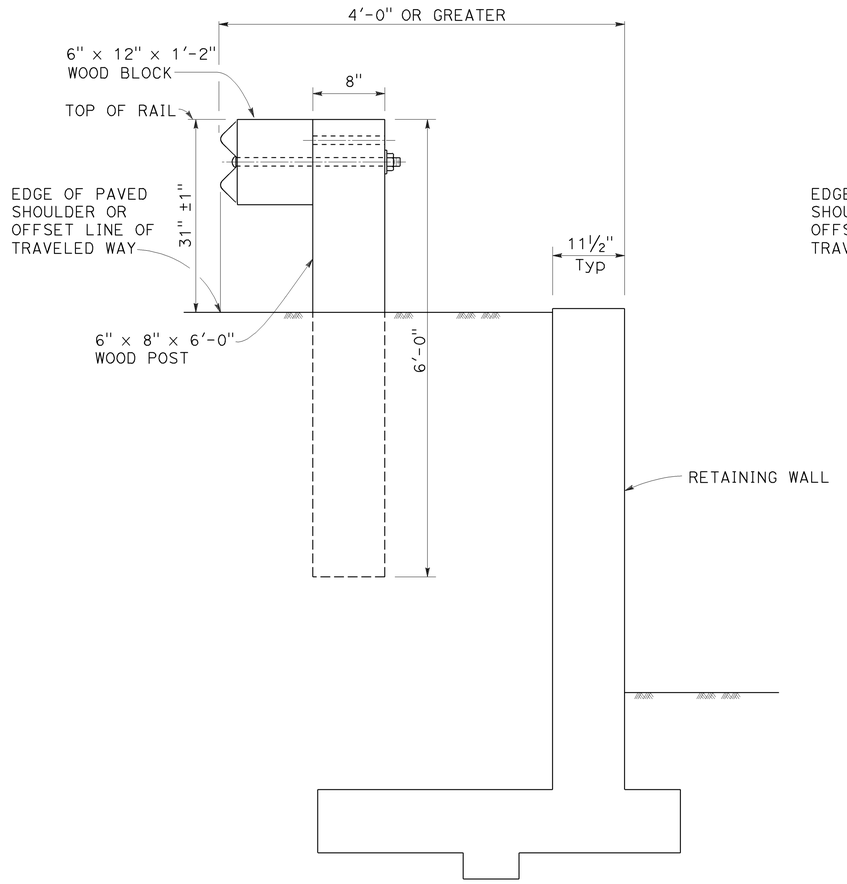

DETAIL C

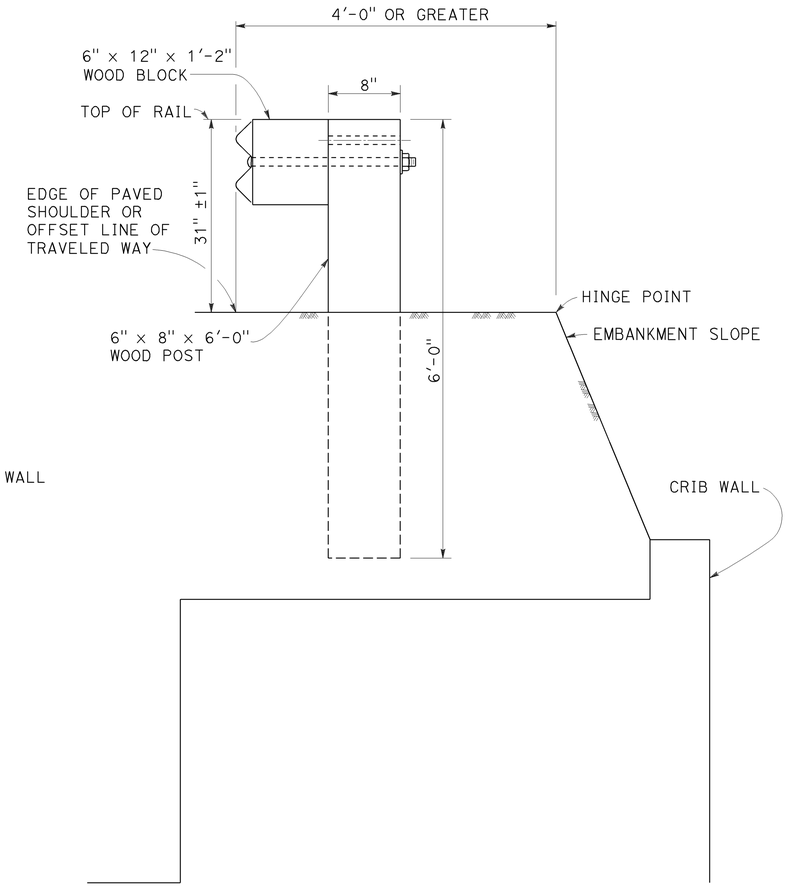

DETAIL D

INSTALLATION AT EARTH RETAINING WALLS

NOTES:

1. These installation details also applicable to steel line post installations. For Detail A, C, and D, where steel line post installations are constructed, W6 x 8.5 or W6 x 9 steel post, 6'-0" in length, with 6" x 12" x 1'-2" notched wood blocks or notched recycled plastic blocks are to be used in place of the size of wood post and wood block shown. For Detail B, where steel line post installations are constructed, W6 x 15 steel post, 8'-0" in length, with 8" x 12" x 1'-2" notched wood blocks or notched recycled plastic blocks are to be used in place of the size of wood post and wood block shown. For additional installation details, see Revised Standard Plan RSP A77L1 and RSP A77L2.
2. Where the distance between the face of the rail and the hinge point is less than 2'-6", see the Project Plans for special details.
3. For dike positioning with MGS installations, see Revised Standard Plan RSP A77N4.

STATE OF CALIFORNIA
DEPARTMENT OF TRANSPORTATION

MIDWEST GUARDRAIL SYSTEM TYPICAL LINE POST EMBEDMENT AND HINGE POINT OFFSET DETAILS

NO SCALE

RSP A77N3 DATED NOVEMBER 15, 2013 SUPERSEDES RSP A77N3
DATED JULY 19, 2013 THAT SUPPLEMENTS THE STANDARD PLANS BOOK DATED 2010.

REVISED STANDARD PLAN RSP A77N3

Dist	COUNTY	ROUTE	POST MILES TOTAL PROJECT	SHEET No.	TOTAL SHEETS
07	LA	101	11.8/35.3	122	192

Randell D. Hiatt
REGISTERED CIVIL ENGINEER

July 19, 2013
PLANS APPROVAL DATE

REGISTERED PROFESSIONAL ENGINEER
Randell D. Hiatt
No. C50200
Exp. 6-30-15
CIVIL
STATE OF CALIFORNIA

THE STATE OF CALIFORNIA OR ITS OFFICERS OR AGENTS SHALL NOT BE RESPONSIBLE FOR THE ACCURACY OR COMPLETENESS OF SCANNED COPIES OF THIS PLAN SHEET.

TO ACCOMPANY PLANS DATED 2-18-14

NOTES:

1. When necessary to place dike more than 7" in front of face of MGS, only Type C dike may be used. For dike details, see Revised Standard Plan RSP A87B.
2. For standard railing post embedment, see Revised Standard Plan RSP A77N3.
3. MGS delineation to be used where shown on the Project Plans.
4. When dike or curb is placed under MGS, the maximum height of the dike or curb shall be 6". Mountable dike should not be used. For dike and curb details, see Revised Standard Plans RSP A87A and RSP A87B.
5. For details of typical distance between the face of rail and hinge point, see Revised Standard Plan RSP A77N3.
6. For steel line posts, use 1/4 - 20 self-tapping screws in 0.22" diameter holes or 1/4" bolts in 9/32" diameter holes.

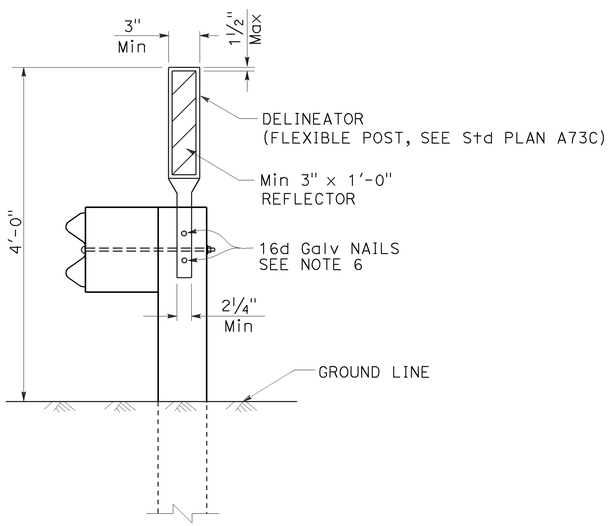

MGS DELINEATION

See Note 3

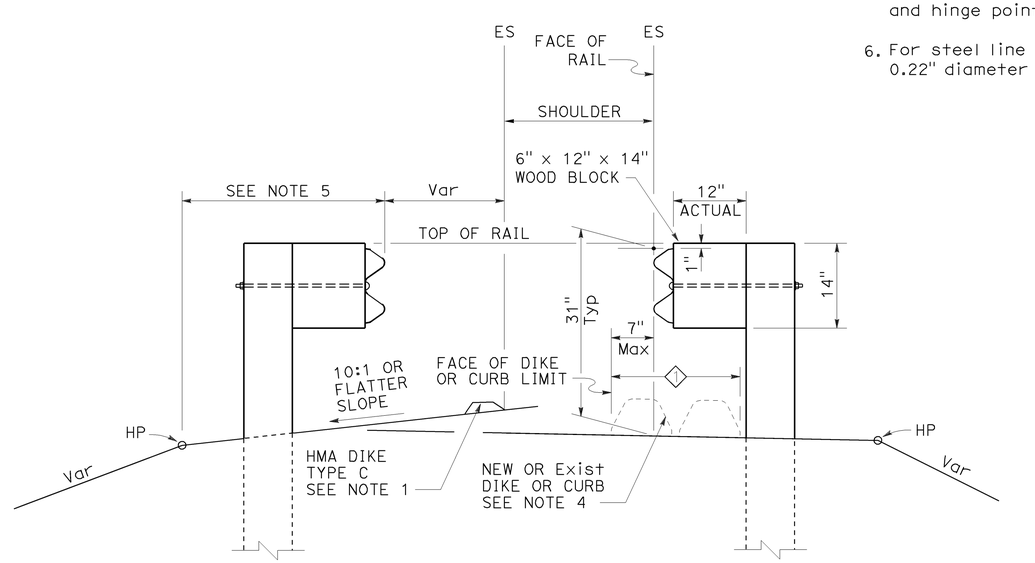

DIKE POSITIONING

See Note 1

1 PERMISSIBLE DIKE OR CURB PLACEMENT AREA

STATE OF CALIFORNIA
DEPARTMENT OF TRANSPORTATION

MIDWEST GUARDRAIL SYSTEM TYPICAL RAILING DELINEATION AND DIKE POSITIONING DETAILS

NO SCALE

RSP A77N4 DATED JULY 19, 2013 SUPPLEMENTS THE STANDARD PLANS BOOK DATED 2010.

REVISED STANDARD PLAN RSP A77N4

2010 REVISED STANDARD PLAN RSP A77N4

7-10-13

Dist	COUNTY	ROUTE	POST MILES TOTAL PROJECT	SHEET No.	TOTAL SHEETS
07	LA	101	11.8/35.3	123	192

Randell D. Hiatt
REGISTERED CIVIL ENGINEER

July 19, 2013
PLANS APPROVAL DATE

REGISTERED PROFESSIONAL ENGINEER
Randell D. Hiatt
No. C50200
Exp. 6-30-15
CIVIL
STATE OF CALIFORNIA

THE STATE OF CALIFORNIA OR ITS OFFICERS OR AGENTS SHALL NOT BE RESPONSIBLE FOR THE ACCURACY OR COMPLETENESS OF SCANNED COPIES OF THIS PLAN SHEET.

TO ACCOMPANY PLANS DATED 2-18-14

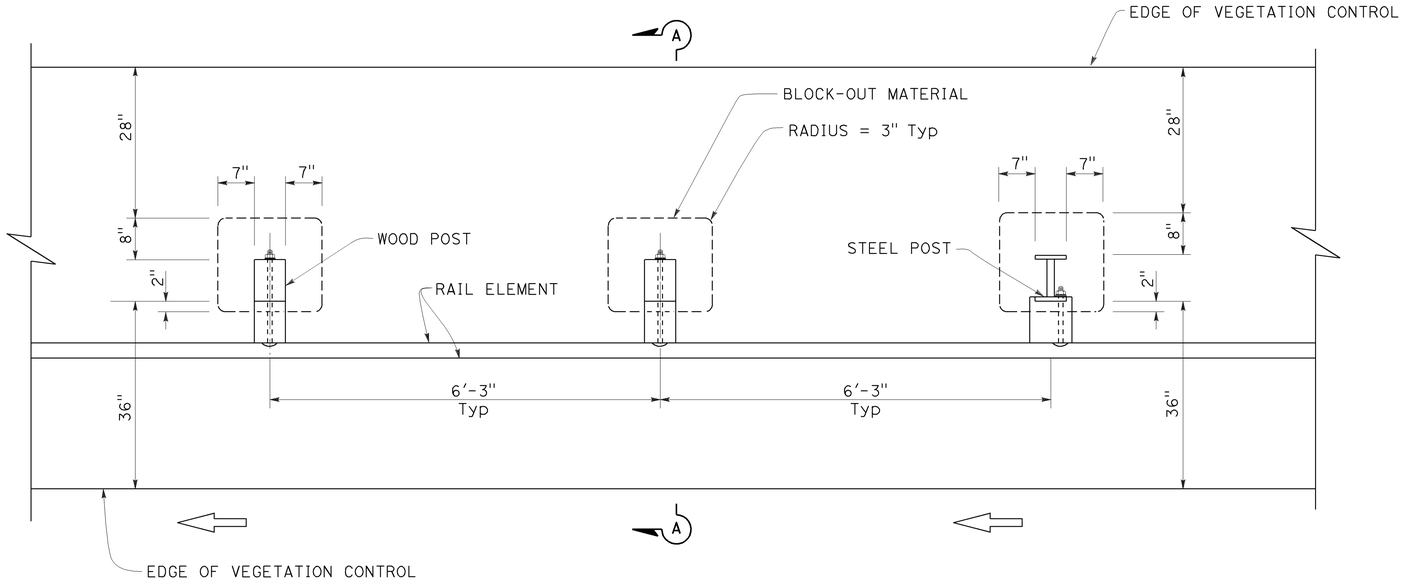

PLAN

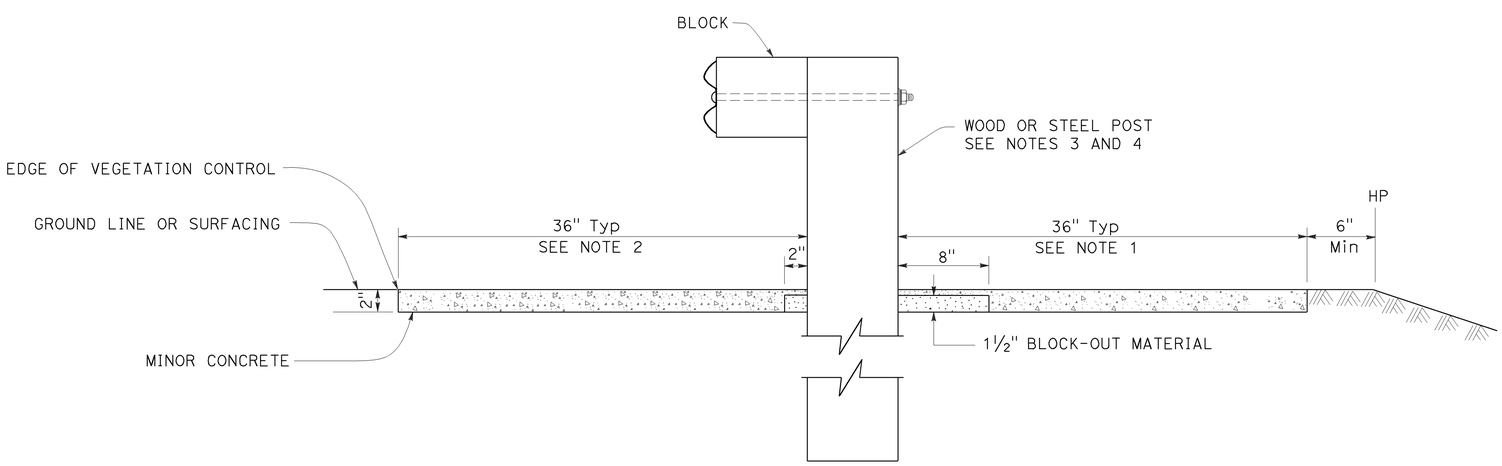

SECTION A-A

NOTES:

1. Where the distance between back of post and hinge point is less than 42", construct vegetation control to 6" from hinge point while maintaining the 8" block-out at back of post. If the 8" block-out at back of post can not be maintained, construct vegetation control flush with the back edge of post.
2. Where dike is constructed under railing, construct vegetation control to back edge of dike. Where paved shoulder is constructed within 36" in front of the post, construct vegetation control to the edge of paved shoulder.
3. For wood post sizes, see Revised Standard Plan RSP A77N1.
4. For steel post sizes, see Revised Standard Plan RSP A77N2.
5. For details not shown, see Revised Standard Plans RSP A77L1 and RSP A77L2.

STATE OF CALIFORNIA
DEPARTMENT OF TRANSPORTATION

MIDWEST GUARDRAIL SYSTEM TYPICAL VEGETATION CONTROL STANDARD RAILING SECTION

NO SCALE

RSP A77N5 DATED JULY 19, 2013 SUPPLEMENTS THE STANDARD PLANS BOOK DATED 2010.

REVISED STANDARD PLAN RSP A77N5

2010 REVISED STANDARD PLAN RSP A77N5

7-3-13

Dist	COUNTY	ROUTE	POST MILES TOTAL PROJECT	SHEET No.	TOTAL SHEETS
07	LA	101	11.8/35.3	124	192

Randell D. Hiatt
REGISTERED CIVIL ENGINEER

July 19, 2013
PLANS APPROVAL DATE

REGISTERED PROFESSIONAL ENGINEER
Randell D. Hiatt
No. C50200
Exp. 6-30-15
CIVIL
STATE OF CALIFORNIA

THE STATE OF CALIFORNIA OR ITS OFFICERS OR AGENTS SHALL NOT BE RESPONSIBLE FOR THE ACCURACY OR COMPLETENESS OF SCANNED COPIES OF THIS PLAN SHEET.

TO ACCOMPANY PLANS DATED 2-18-14

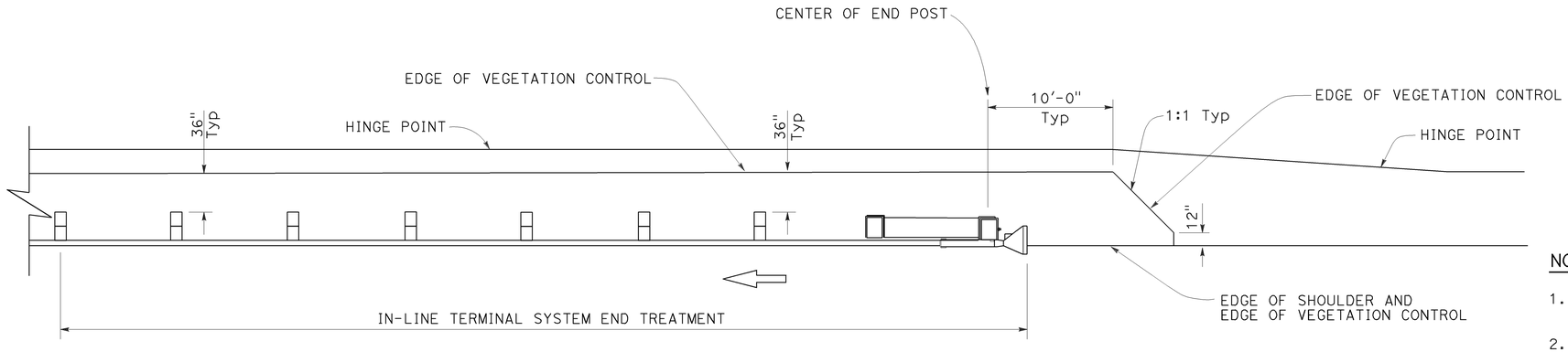

PLAN

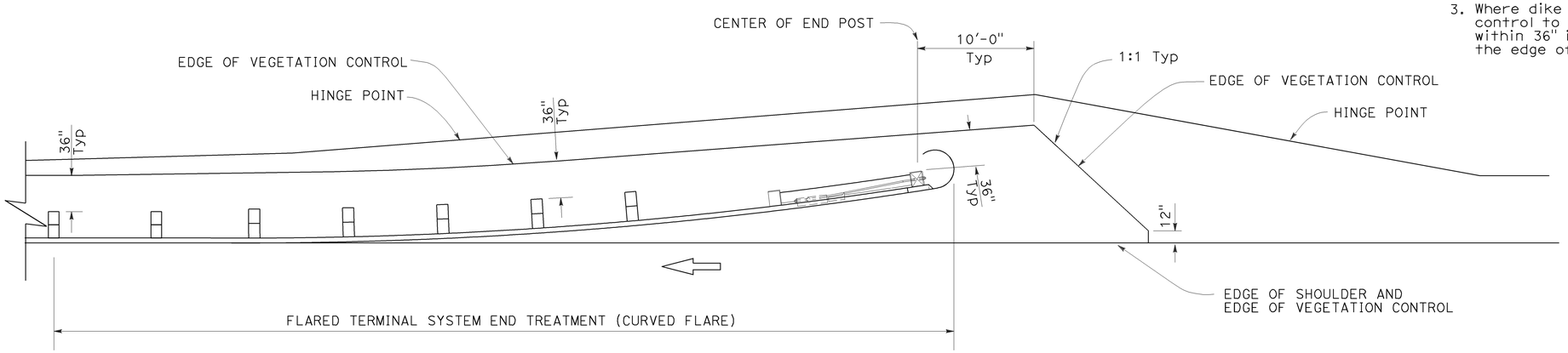

PLAN

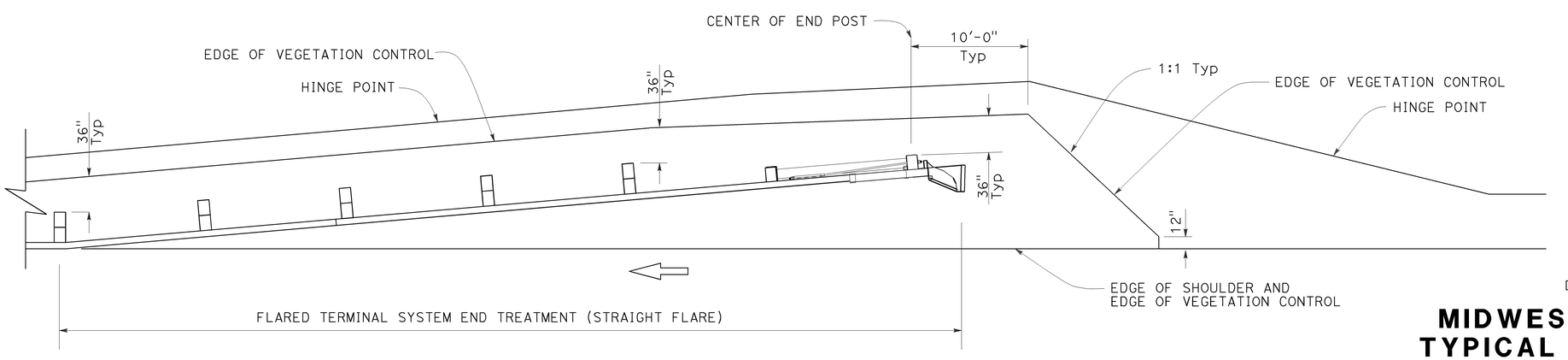

PLAN

NOTES:

1. See Revised Standard Plan RSP A77N5 for additional vegetation control details.
2. Where the distance between back of post and hinge point is less than 42", construct vegetation control to 6" from hinge point while maintaining the 8" block-out at back of post. If the 8" block-out at back of post can not be maintained, construct vegetation control flush with the back edge of post.
3. Where dike is constructed under railing, construct vegetation control to back edge of dike. Where paved shoulder is constructed within 36" in front of the post, construct vegetation control to the edge of paved shoulder.

STATE OF CALIFORNIA
DEPARTMENT OF TRANSPORTATION

MIDWEST GUARDRAIL SYSTEM TYPICAL VEGETATION CONTROL FOR TERMINAL SYSTEM END TREATMENTS

NO SCALE

RSP A77N6 DATED JULY 19, 2013 SUPPLEMENTS THE STANDARD PLANS BOOK DATED 2010.

REVISED STANDARD PLAN RSP A77N6

2010 REVISED STANDARD PLAN RSP A77N6

6-12-13

Dist	COUNTY	ROUTE	POST MILES TOTAL PROJECT	SHEET No.	TOTAL SHEETS
07	LA	101	11.8/35.3	125	192

Randell D. Hiatt
REGISTERED CIVIL ENGINEER

July 19, 2013
PLANS APPROVAL DATE

REGISTERED PROFESSIONAL ENGINEER
Randell D. Hiatt
No. C50200
Exp. 6-30-15
CIVIL
STATE OF CALIFORNIA

THE STATE OF CALIFORNIA OR ITS OFFICERS OR AGENTS SHALL NOT BE RESPONSIBLE FOR THE ACCURACY OR COMPLETENESS OF SCANNED COPIES OF THIS PLAN SHEET.

TO ACCOMPANY PLANS DATED 2-18-14

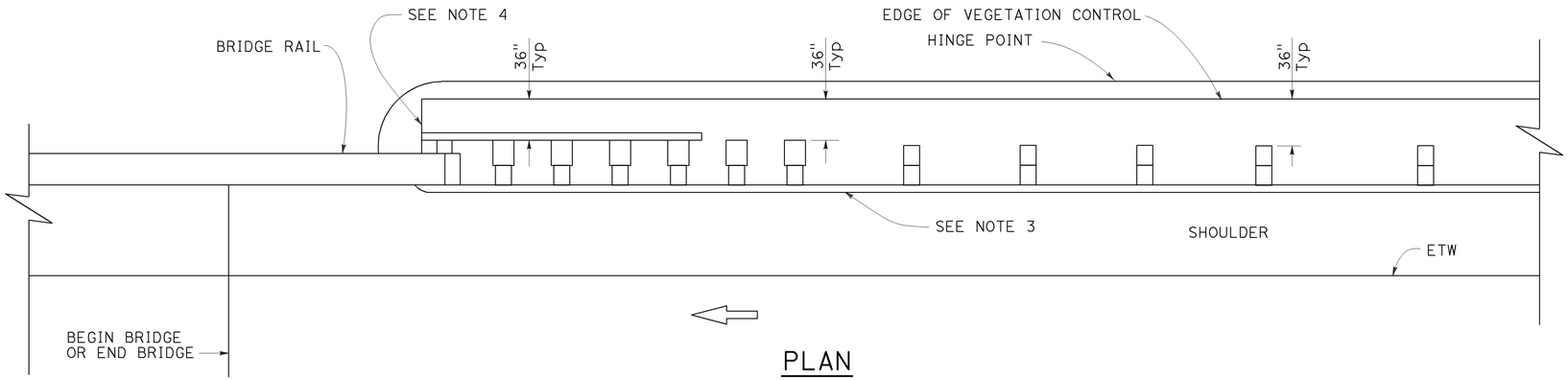

PLAN

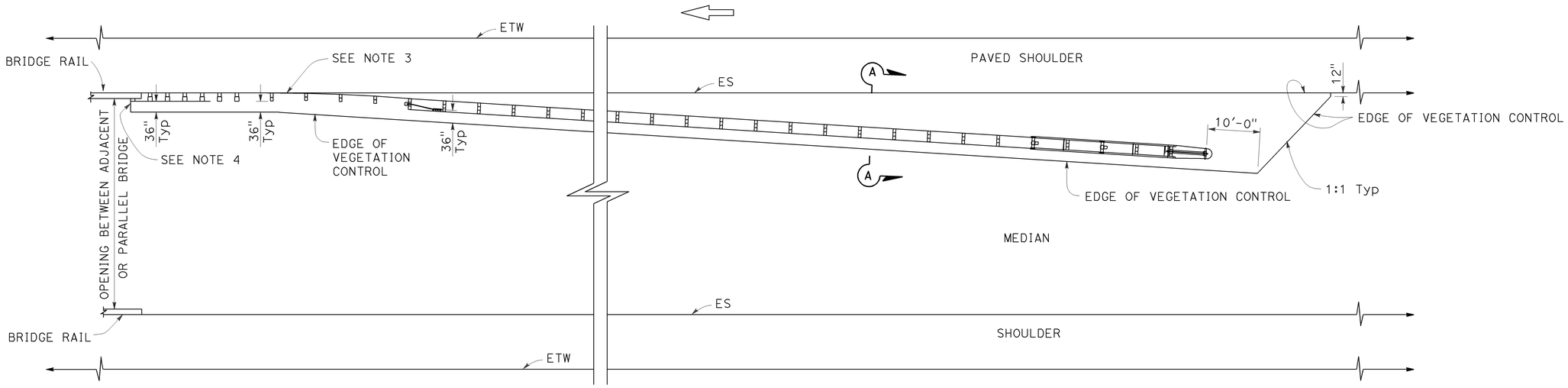

PLAN

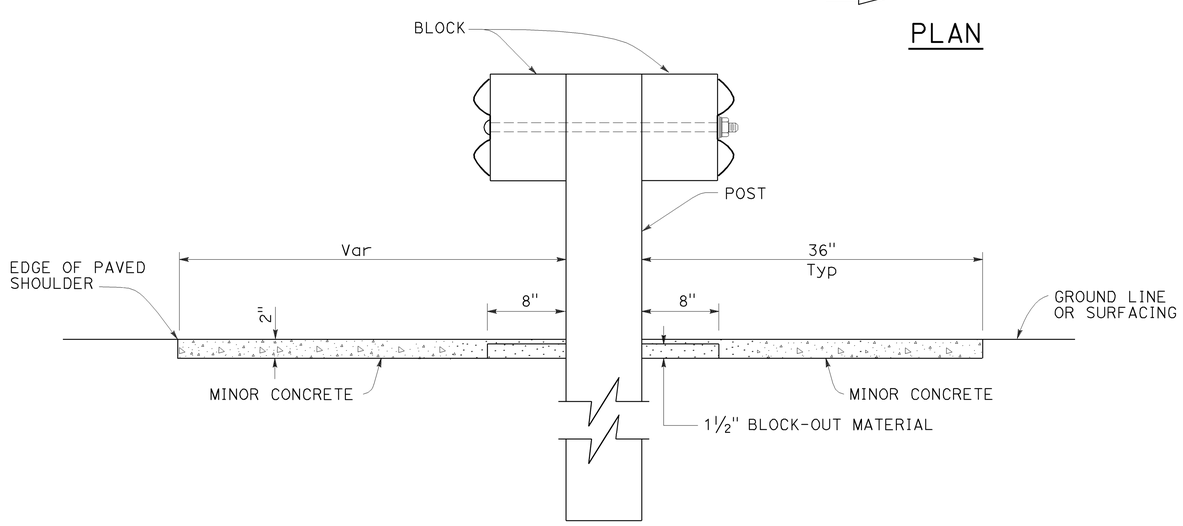

SECTION A-A

NOTES:

1. See Revised Standard Plan RSP A77N5 for additional vegetation control details.
2. Where the distance between back of post and hinge point is less than 42", construct vegetation control to 6" from hinge point while maintaining the 8" block-out at back of post. If the 8" block-out at back of post can not be maintained, construct vegetation control flush with the back edge of post.
3. Where dike is constructed under railing, construct vegetation control to back edge of dike. Where paved shoulder is constructed within 36" in front of the post, construct vegetation control to the edge of paved shoulder.
4. End vegetation control at end of backside rail element.

STATE OF CALIFORNIA
DEPARTMENT OF TRANSPORTATION

MIDWEST GUARDRAIL SYSTEM TYPICAL VEGETATION CONTROL AT STRUCTURE APPROACH

NO SCALE

RSP A77N7 DATED JULY 19, 2013 SUPPLEMENTS THE STANDARD PLANS BOOK DATED 2010.

REVISED STANDARD PLAN RSP A77N7

2010 REVISED STANDARD PLAN RSP A77N7

6-12-13

Dist	COUNTY	ROUTE	POST MILES TOTAL PROJECT	SHEET No.	TOTAL SHEETS
07	LA	101	11.8/35.3	126	192

Randell D. Hiatt
REGISTERED CIVIL ENGINEER

July 19, 2013
PLANS APPROVAL DATE

REGISTERED PROFESSIONAL ENGINEER
Randell D. Hiatt
No. C50200
Exp. 6-30-15
CIVIL
STATE OF CALIFORNIA

THE STATE OF CALIFORNIA OR ITS OFFICERS OR AGENTS SHALL NOT BE RESPONSIBLE FOR THE ACCURACY OR COMPLETENESS OF SCANNED COPIES OF THIS PLAN SHEET.

TO ACCOMPANY PLANS DATED 2-18-14

NOTES:

1. See Revised Standard Plan RSP A77N5 for additional vegetation control details.
2. Where the distance between back of post and hinge point is less than 42", construct vegetation control to 6" from hinge point while maintaining the 8" block-out at back of post. If the 8" block-out at back of post can not be maintained, construct vegetation control flush with the back edge of post.
3. Where dike is constructed under railing, construct vegetation control to back edge of dike. Where paved shoulder is constructed within 36" in front of the post, construct vegetation control to the edge of paved shoulder.

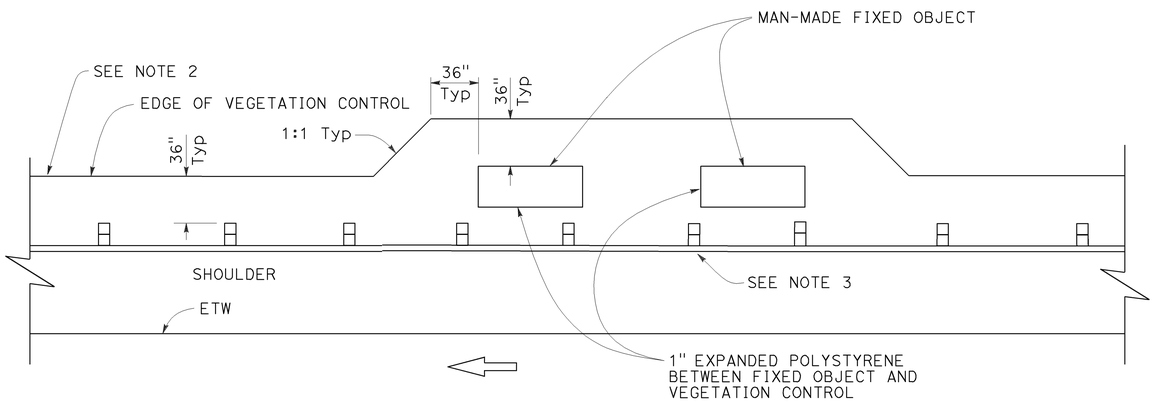

PLAN

Fixed object(s) on shoulder

STATE OF CALIFORNIA
DEPARTMENT OF TRANSPORTATION

MIDWEST GUARDRAIL SYSTEM TYPICAL VEGETATION CONTROL AT FIXED OBJECT

NO SCALE

RSP A77N8 DATED JULY 19, 2013 SUPPLEMENTS THE STANDARD PLANS BOOK DATED 2010.

REVISED STANDARD PLAN RSP A77N8

2010 REVISED STANDARD PLAN RSP A77N8

6-12-13

Dist	COUNTY	ROUTE	POST MILES TOTAL PROJECT	SHEET No.	TOTAL SHEETS
07	LA	101	11.8/35.3	127	192

Randell D. Hiatt
REGISTERED CIVIL ENGINEER

July 19, 2013
PLANS APPROVAL DATE

REGISTERED PROFESSIONAL ENGINEER
Randell D. Hiatt
No. C50200
Exp. 6-30-15
CIVIL
STATE OF CALIFORNIA

THE STATE OF CALIFORNIA OR ITS OFFICERS OR AGENTS SHALL NOT BE RESPONSIBLE FOR THE ACCURACY OR COMPLETENESS OF SCANNED COPIES OF THIS PLAN SHEET.

TO ACCOMPANY PLANS DATED 2-18-14

2010 REVISED STANDARD PLAN RSP A77N9

NOTES:

1. See Revised Standard Plan RSP A77N5 for additional vegetation control details.
2. Where dike is constructed under railing, construct vegetation control to back edge of dike. Where paved shoulder is constructed within 36" in front of the post, construct vegetation control to the edge of paved shoulder.

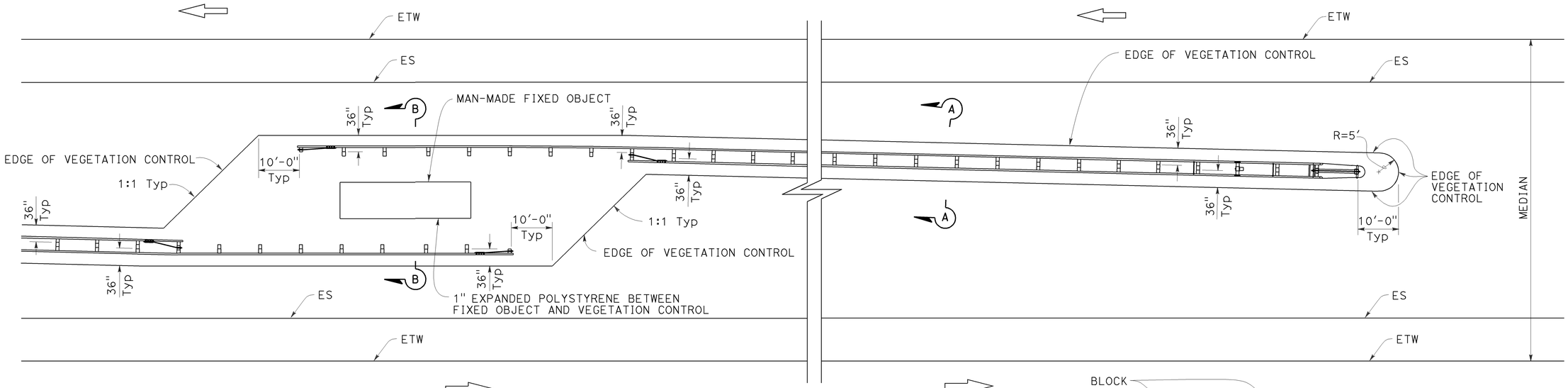

PLAN

Fixed object(s) in median

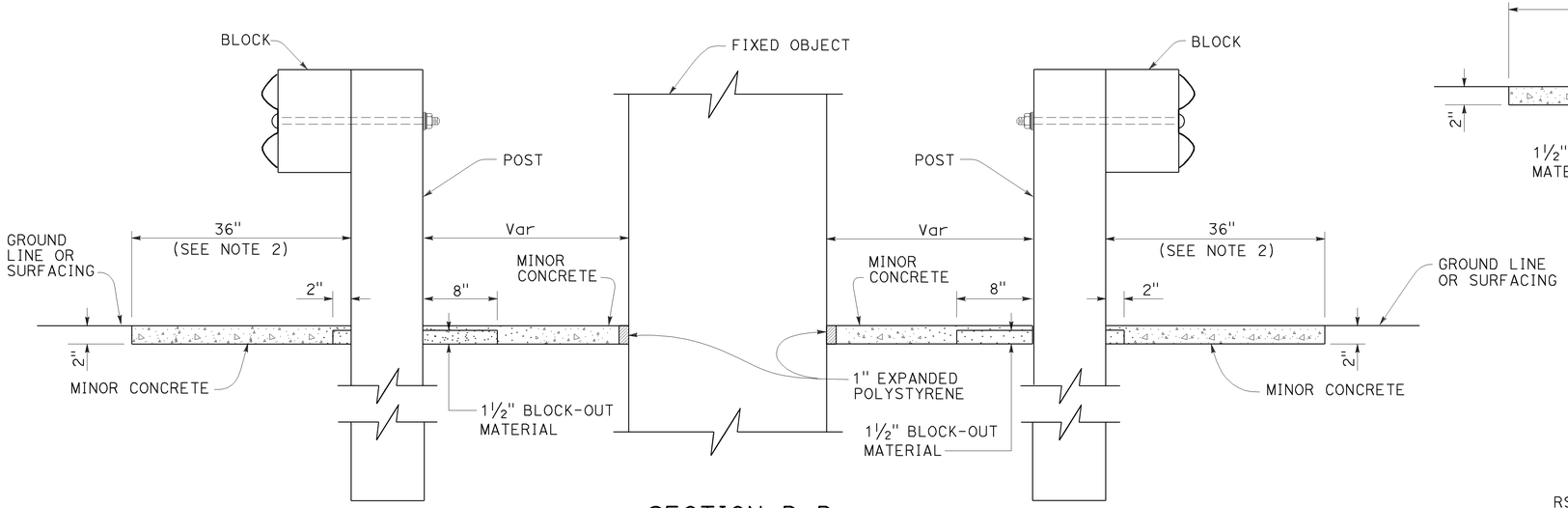

SECTION B-B

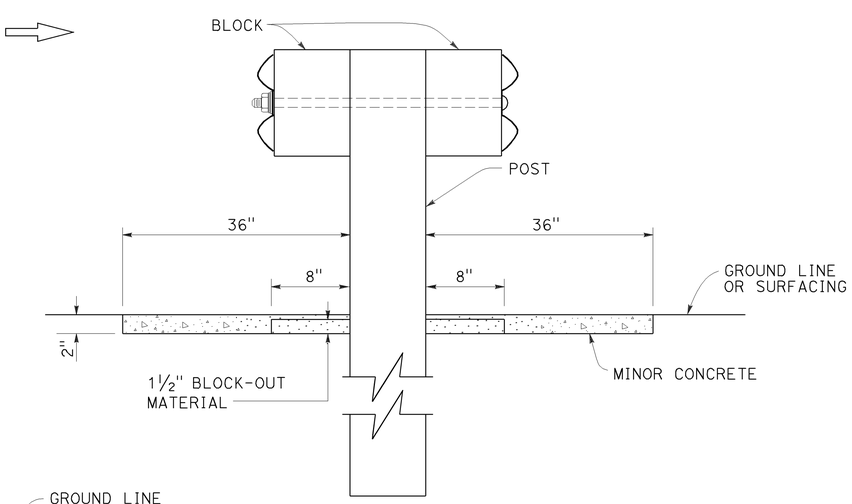

SECTION A-A

STATE OF CALIFORNIA
DEPARTMENT OF TRANSPORTATION

MIDWEST GUARDRAIL SYSTEM TYPICAL VEGETATION CONTROL AT FIXED OBJECT

NO SCALE

RSP A77N9 DATED JULY 19, 2013 SUPPLEMENTS THE STANDARD PLANS BOOK DATED 2010.

REVISED STANDARD PLAN RSP A77N9

6-12-13

Dist	COUNTY	ROUTE	POST MILES TOTAL PROJECT	SHEET No.	TOTAL SHEETS
07	LA	101	11.8/35.3	128	192

Randell D. Hiatt
REGISTERED CIVIL ENGINEER

July 19, 2013
PLANS APPROVAL DATE

REGISTERED PROFESSIONAL ENGINEER
Randell D. Hiatt
No. C50200
Exp. 6-30-15
CIVIL
STATE OF CALIFORNIA

THE STATE OF CALIFORNIA OR ITS OFFICERS OR AGENTS SHALL NOT BE RESPONSIBLE FOR THE ACCURACY OR COMPLETENESS OF SCANNED COPIES OF THIS PLAN SHEET.

TO ACCOMPANY PLANS DATED 2-18-14

2010 REVISED STANDARD PLAN RSP A77N10

NOTES:

1. See Revised Standard Plan RSP A77N5 for additional vegetation control details.
2. Where dike is constructed under railing, construct vegetation control to back edge of dike. Where paved shoulder is constructed within 36" in front of the post, construct vegetation control to the edge of paved shoulder.

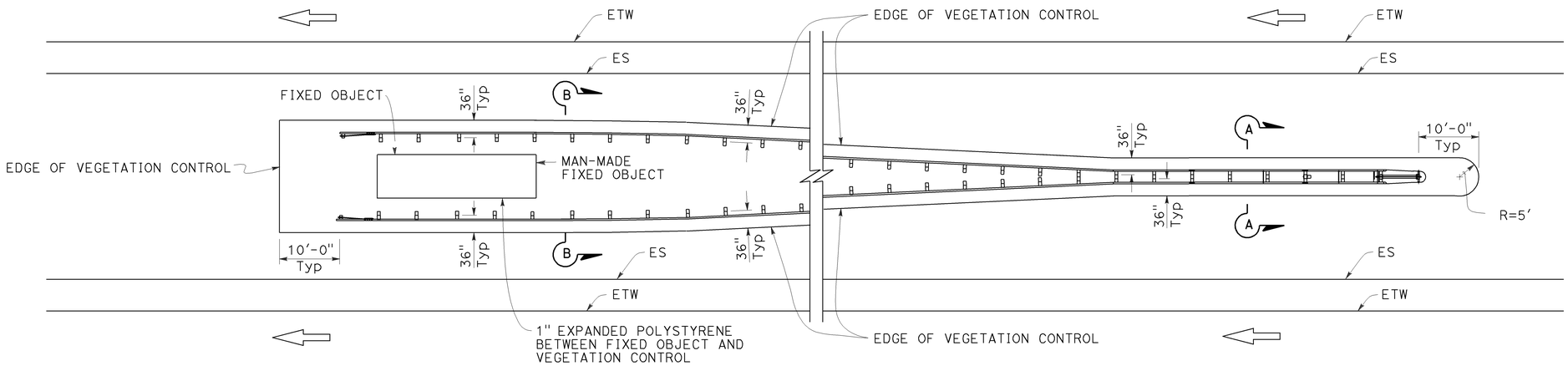

PLAN

Fixed object(s) between separate roadbeds
(One-Way Traffic)

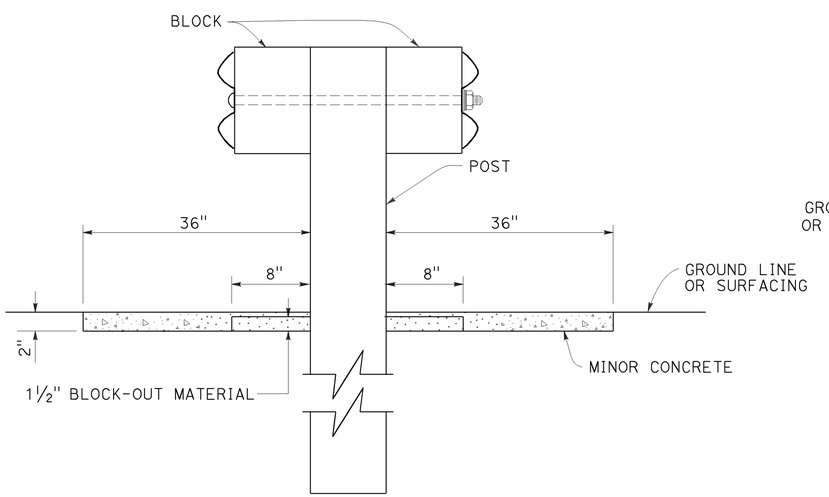

SECTION A-A

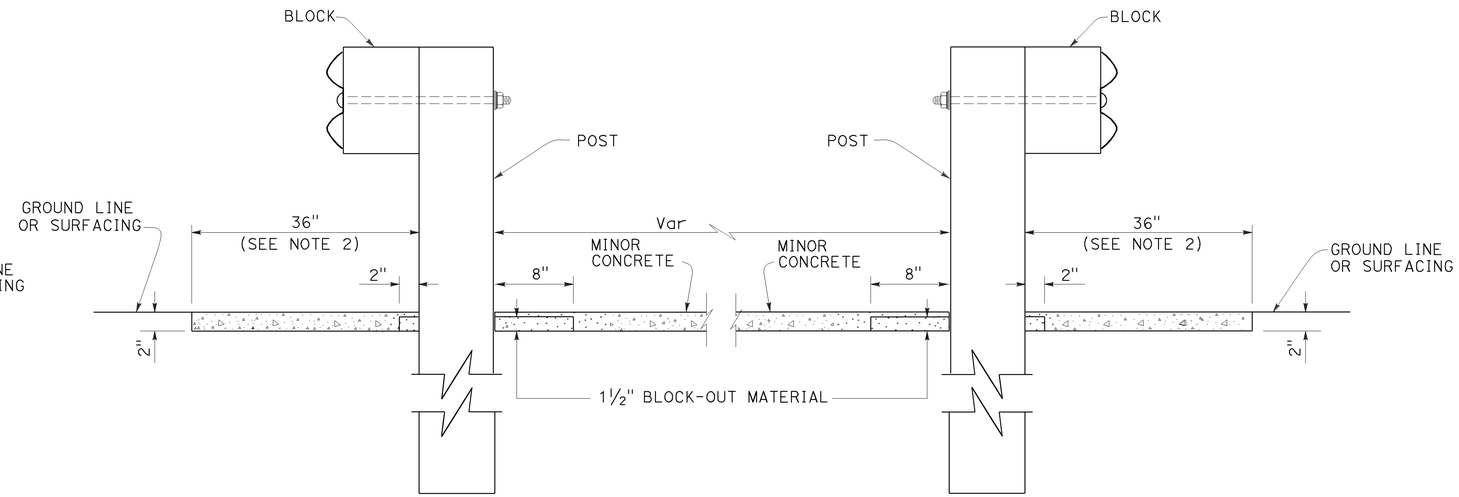

SECTION B-B

STATE OF CALIFORNIA
DEPARTMENT OF TRANSPORTATION

MIDWEST GUARDRAIL SYSTEM TYPICAL VEGETATION CONTROL AT FIXED OBJECT

NO SCALE

RSP A77N10 DATED JULY 19, 2013 SUPPLEMENTS THE STANDARD PLANS BOOK DATED 2010.

REVISED STANDARD PLAN RSP A77N10

6-12-13

Dist	COUNTY	ROUTE	POST MILES TOTAL PROJECT	SHEET No.	TOTAL SHEETS
07	LA	101	11.8/35.3	129	192

Randell D. Hiatt
REGISTERED CIVIL ENGINEER

November 15, 2013
PLANS APPROVAL DATE

REGISTERED PROFESSIONAL ENGINEER
Randell D. Hiatt
No. C50200
Exp. 6-30-15
CIVIL
STATE OF CALIFORNIA

THE STATE OF CALIFORNIA OR ITS OFFICERS OR AGENTS SHALL NOT BE RESPONSIBLE FOR THE ACCURACY OR COMPLETENESS OF SCANNED COPIES OF THIS PLAN SHEET.

TO ACCOMPANY PLANS DATED 2-18-14

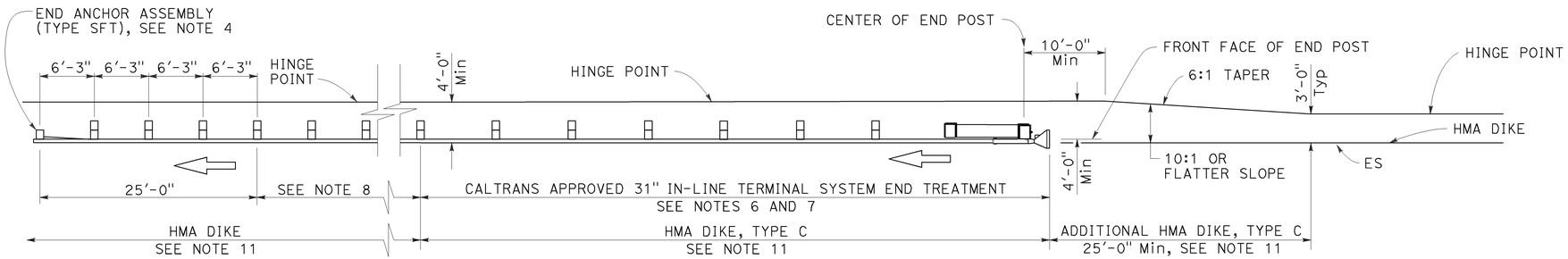

TYPE 11A LAYOUT

(Embankment MGS installation with 31" in-line end treatment at traffic approach end of railing) see Note 5

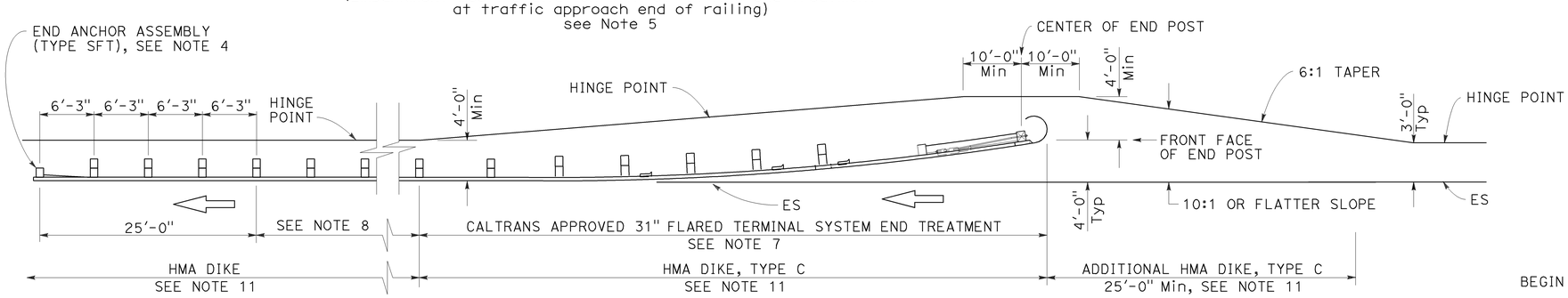

TYPE 11B LAYOUT

(Embankment MGS installation with 31" flared end treatment at traffic approach end of railing) see Note 5

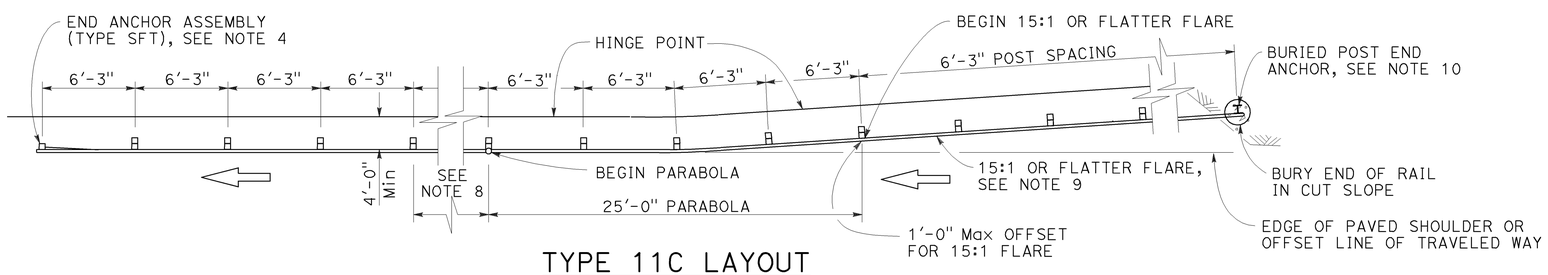

TYPE 11C LAYOUT

(Embankment MGS installation with buried end anchor treatment at traffic approach end of railing) see Notes 5 and 11

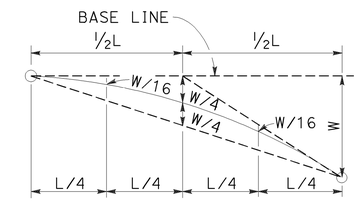

TYPICAL PARABOLIC LAYOUT

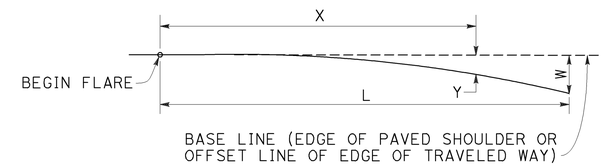

$$Y = \frac{WX^2}{L^2}$$

Y = OFFSET FROM BASE LINE
W = MAXIMUM OFFSET
X = DISTANCE ALONG BASE LINE
L = LENGTH OF FLARE

PARABOLIC FLARE OFFSETS

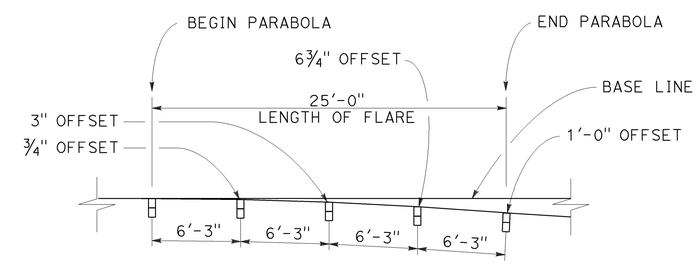

TYPICAL FLARE OFFSETS FOR 1 FOOT Max END OFFSET

NOTES:

1. Line post, blocks and hardware to be used are shown on Revised Standard Plans RSP A77L1, RSP A77L2, RSP A77M1, RSP A77N1 and RSP A77N2.
2. MGS post spacing to be 6'-3" center to center, except as otherwise noted.
3. Except as noted, line posts are 6" x 8" x 6'-0" wood with 6" x 12" x 1'-2" wood blocks. W6 x 8.5 or W6 x 9 steel posts, 6'-0" in length, with 6" x 12" x 1'-2" notched wood blocks or recycled plastic blocks may be used for 6" x 8" x 6'-0" wood post with 6" x 12" x 1'-2" wood blocks where applicable and when specified.
4. For End Anchor Assembly (Type SFT) details, see Revised Standard Plan RSP A77S1.
5. Layout Types 11A, 11B or 11C are typically used where MGS is recommended to shield embankment slopes and a crashworthy end treatment is required for only one direction of traffic.
6. 31" in-line terminal system end treatments are used where site conditions will not accommodate a flared end treatment.
7. The type of 31" terminal system end treatment to be used will be shown on the Project Plans.
8. Dependent on site conditions (embankment height and side slope), construction of additional MGS (length equal to multiples of 12'-6" with 6'-3" post spacing) may be advisable.
9. The 15:1 or flatter flare used with buried end anchors is based on the edge of the paved shoulder or offset line of edge of the traveled way. The length of MGS within the 15:1 or flatter flare is based on site conditions and should be a length equal to multiples of 12'-6".
10. For details of the buried post end anchor used with Type 11C Layout, see Revised Standard Plan RSP A77T2.
11. Where placement of dike is required with MGS installations, see Revised Standard Plan RSP A77N4 for dike positioning details.

STATE OF CALIFORNIA
DEPARTMENT OF TRANSPORTATION

MIDWEST GUARDRAIL SYSTEM TYPICAL LAYOUTS FOR EMBANKMENTS

NO SCALE

RSP A77P1 DATED NOVEMBER 15, 2013 SUPERSEDES RSP A77P1 DATED JULY 19, 2013 THAT SUPPLEMENTS THE STANDARD PLANS BOOK DATED 2010.

REVISED STANDARD PLAN RSP A77P1

2010 REVISED STANDARD PLAN RSP A77P1

10-4-13

Dist	COUNTY	ROUTE	POST MILES TOTAL PROJECT	SHEET No.	TOTAL SHEETS
07	LA	101	11.8/35.3	130	192

Randell D. Hiatt
REGISTERED CIVIL ENGINEER

July 19, 2013
PLANS APPROVAL DATE

REGISTERED PROFESSIONAL ENGINEER
Randell D. Hiatt
No. C50200
Exp. 6-30-15
CIVIL
STATE OF CALIFORNIA

THE STATE OF CALIFORNIA OR ITS OFFICERS OR AGENTS SHALL NOT BE RESPONSIBLE FOR THE ACCURACY OR COMPLETENESS OF SCANNED COPIES OF THIS PLAN SHEET.

TO ACCOMPANY PLANS DATED 2-18-14

2010 REVISED STANDARD PLAN RSP A77P2

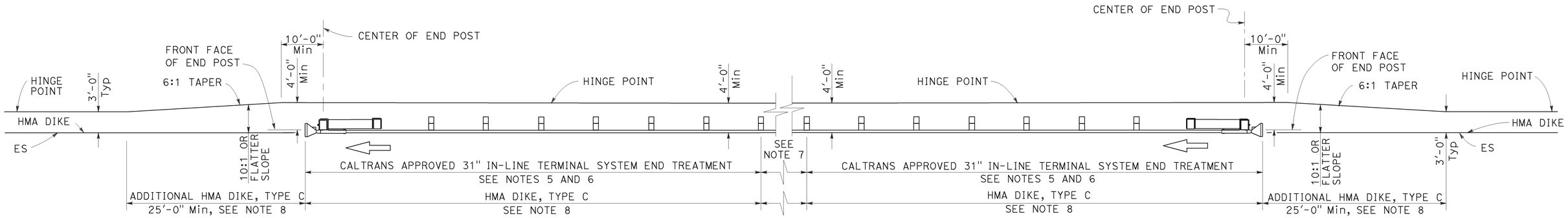

TYPE 11D LAYOUT

(Embankment MGS installation with
31" in-line end treatment at each end of railing)
See Note 4

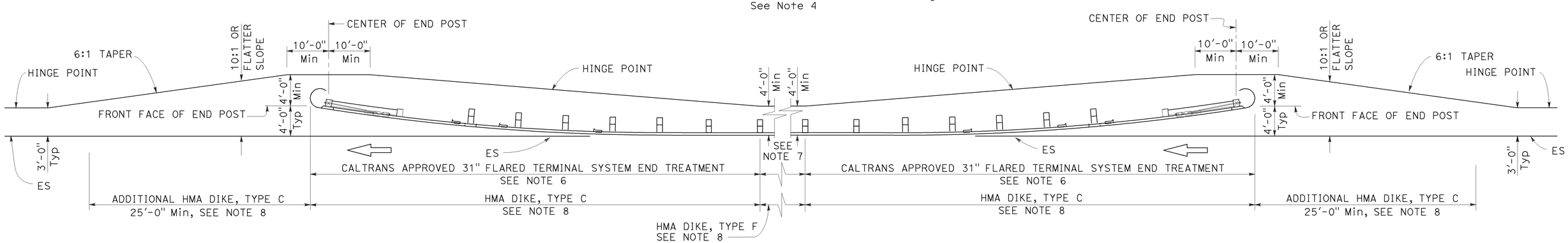

TYPE 11E LAYOUT

(Embankment MGS installation with
31" flared end treatment at each end of railing)
See Note 4

NOTES:

1. Line post, blocks and hardware to be used are shown on Revised Standard Plans RSP A77L1, RSP A77L2, RSP A77M1, RSP A77N1 and RSP A77N2.
2. MGS post spacing to be 6'-3" center to center, except as otherwise noted.
3. Except as noted, line posts are 6" x 8" x 6'-0" wood with 6" x 12" x 1'-2" wood blocks. W6 x 8.5 or W6 x 9 steel posts, 6'-0" in length, with 6" x 12" x 1'-2" notched wood blocks or plastic blocks may be used for 6" x 8" x 6'-0" wood post with 6" x 12" x 1'-2" wood blocks where applicable and when specified.
4. Layout Types 11D through 11L, shown on the A77P Series of Standard Plans, are typically used where MGS is recommended to shield embankment slopes and a crashworthy 31" end treatment is required for both directions of traffic.
5. 31" in-line terminal system end treatments are used where site conditions will not accommodate a flared end treatment.
6. The type of 31" terminal system end treatment to be used will be shown on the Project Plans.
7. Dependent on site conditions (embankment height and side slope), construction of additional MGS (length equal to multiples of 12'-6" with 6'-3" post spacing) may be advisable.
8. Where placement of dike is required with MGS installations, see Revised Standard Plan RSP A77N4 for dike positioning details.

STATE OF CALIFORNIA
DEPARTMENT OF TRANSPORTATION

MIDWEST GUARDRAIL SYSTEM TYPICAL LAYOUTS FOR EMBANKMENTS

NO SCALE

RSP A77P2 DATED JULY 19, 2013 SUPPLEMENTS THE STANDARD PLANS BOOK DATED 2010.

REVISED STANDARD PLAN RSP A77P2

Dist	COUNTY	ROUTE	POST MILES TOTAL PROJECT	SHEET No.	TOTAL SHEETS
07	LA	101	11.8/35.3	131	192

Randell D. Hiatt
REGISTERED CIVIL ENGINEER

July 19, 2013
PLANS APPROVAL DATE

REGISTERED PROFESSIONAL ENGINEER
Randell D. Hiatt
No. C50200
Exp. 6-30-15
CIVIL
STATE OF CALIFORNIA

THE STATE OF CALIFORNIA OR ITS OFFICERS OR AGENTS SHALL NOT BE RESPONSIBLE FOR THE ACCURACY OR COMPLETENESS OF SCANNED COPIES OF THIS PLAN SHEET.

TO ACCOMPANY PLANS DATED 2-18-14

2010 REVISED STANDARD PLAN RSP A77P3

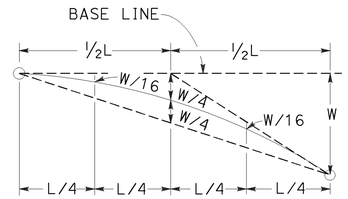

TYPICAL PARABOLIC LAYOUT

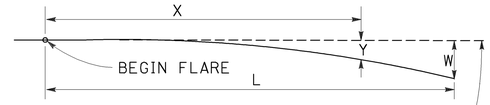

BASE LINE (EDGE OF PAVED SHOULDER OR OFFSET LINE OF EDGE OF TRAVELED WAY)

$$Y = \frac{WX^2}{L^2}$$

Y = OFFSET FROM BASE LINE
W = MAXIMUM OFFSET
X = DISTANCE ALONG BASE LINE
L = LENGTH OF FLARE

PARABOLIC FLARE OFFSETS

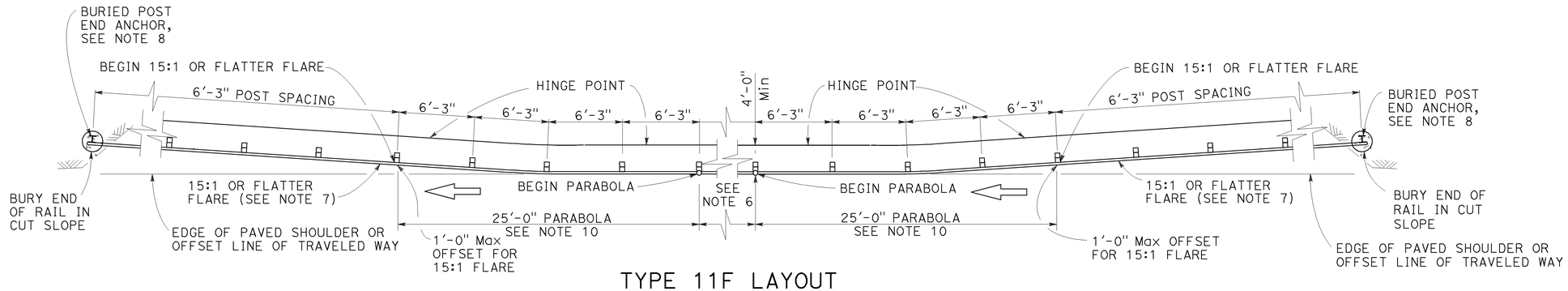

TYPE 11F LAYOUT

(Embankment MGS installation with a buried end anchor treatment at each end of railing)
See Notes 4 and 9

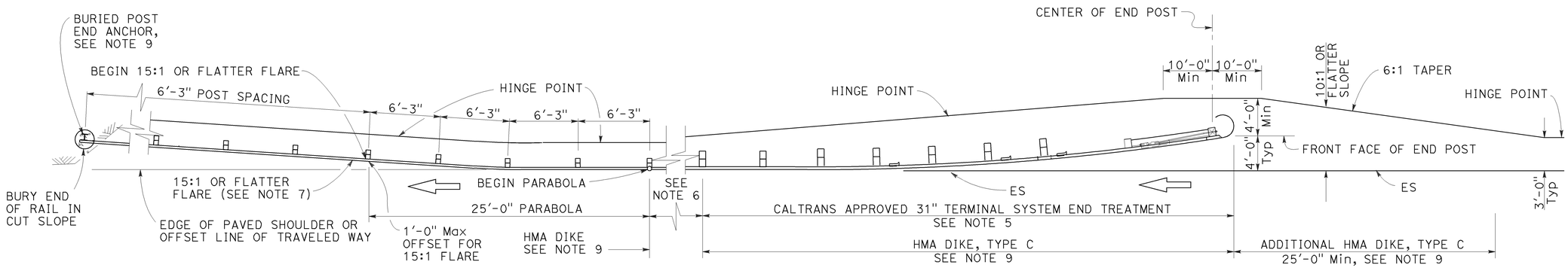

TYPE 11G LAYOUT

(Embankment MGS installation with 31" flared end treatment and a buried end anchor treatment at the ends of railing)
See Notes 4 and 9

NOTES:

1. Line post, blocks and hardware to be used are shown on Revised Standard Plans RSP A77L1, RSP A77L2, RSP A77M1, RSP A77N1 and RSP A77N2.
2. MGS post spacing to be 6'-3" center to center, except as otherwise noted.
3. Except as noted, line posts are 6" x 8" x 6'-0" wood with 6" x 12" x 1'-2" wood blocks. W6 x 8.5 or W6 x 9 steel posts, 6'-0" in length, with 6" x 12" x 1'-2" notched wood blocks or plastic blocks may be used for 6" x 8" x 6'-0" wood post with 6" x 12" x 1'-2" wood blocks where applicable and when specified.
4. Layout Types 11D through 11L, shown on the A77P Series of Standard Plans, are typically used where MGS is recommended to shield embankment slopes and a crashworthy 31" end treatment is required for both directions of traffic.
5. The type of 31" terminal system end treatment to be used will be shown on the Project Plans.
6. Dependent on site conditions (embankment height and side slope), construction of additional MGS (length equal to multiples of 12'-6" with 6'-3" post spacing) may be advisable.
7. The 15:1 or flatter flare used with buried end anchors is based on the edge of the paved shoulder or offset line of edge of the traveled way. The length of MGS within the 15:1 or flatter flare is based on site conditions and should be a length equal to multiples of 12'-6".
8. For details of the buried post end anchor used with Type 11F and 11G Layouts, see Revised Standard Plan RSP A77T2.
9. Where placement of dike is required with MGS installations, see Revised Standard Plan RSP A77N4 for dike positioning details.
10. For typical flare offsets for 25'-0" length parabola with maximum offset of 1'-0", see Revised Standard Plan RSP A77P1.

STATE OF CALIFORNIA
DEPARTMENT OF TRANSPORTATION

MIDWEST GUARDRAIL SYSTEM TYPICAL LAYOUTS FOR EMBANKMENTS

NO SCALE

RSP A77P3 DATED JULY 19, 2013 SUPPLEMENTS THE STANDARD PLANS BOOK DATED 2010.

REVISED STANDARD PLAN RSP A77P3

6-19-13

Dist	COUNTY	ROUTE	POST MILES TOTAL PROJECT	SHEET No.	TOTAL SHEETS
07	LA	101	11.8/35.3	132	192

Randell D. Hiatt
REGISTERED CIVIL ENGINEER

July 19, 2013
PLANS APPROVAL DATE

REGISTERED PROFESSIONAL ENGINEER
Randell D. Hiatt
No. C50200
Exp. 6-30-15
CIVIL
STATE OF CALIFORNIA

THE STATE OF CALIFORNIA OR ITS OFFICERS OR AGENTS SHALL NOT BE RESPONSIBLE FOR THE ACCURACY OR COMPLETENESS OF SCANNED COPIES OF THIS PLAN SHEET.

TO ACCOMPANY PLANS DATED 2-18-14

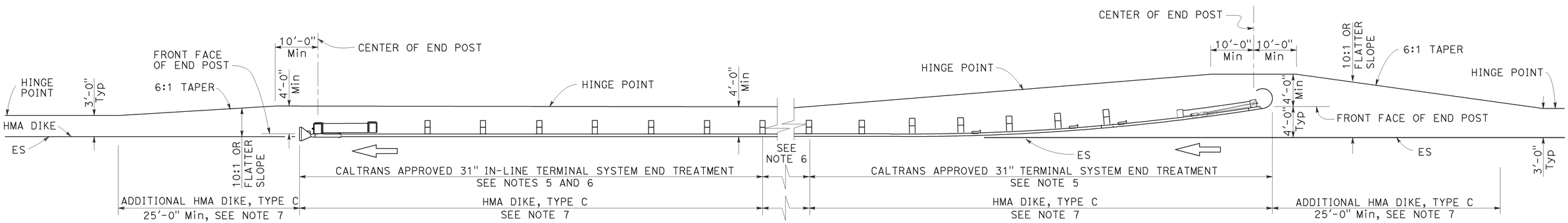

TYPE 11H LAYOUT

(Embankment MGS installation with 31" flared end treatment
and 31" in-line treatment at the ends of railing)
See Notes 4 and 7

NOTES:

1. Line post, blocks and hardware to be used are shown on Revised Standard Plans RSP A77L1, RSP A77L2, RSP A77M1, RSP A77N1 and RSP A77N2.
2. MGS post spacing to be 6'-3" center to center, except as otherwise noted.
3. Except as noted, line posts are 6" x 8" x 6'-0" wood with 6" x 12" x 1'-2" wood blocks. W6 x 8.5 or W6 x 9 steel posts, 6'-0" in length, with 6" x 12" x 1'-2" notched wood blocks or plastic blocks may be used for 6" x 8" x 6'-0" wood post with 6" x 12" x 1'-2" wood blocks where applicable and when specified.
4. Layout Types 11D through 11L, shown on the A77P Series of Standard Plans, are typically used where MGS is recommended to shield embankment slopes and a crashworthy 31" end treatment is required for both directions of traffic.
5. The type of 31" terminal system end treatment to be used will be shown on the Project Plans.
6. Dependent on site conditions (embankment height and side slope), construction of additional MGS (length equal to multiples of 12'-6" with 6'-3" post spacing) may be advisable.
7. Where placement of dike is required with MGS installations, see Revised Standard Plan RSP A77N4 for dike positioning details.

STATE OF CALIFORNIA
DEPARTMENT OF TRANSPORTATION

MIDWEST GUARDRAIL SYSTEM TYPICAL LAYOUTS FOR EMBANKMENTS

NO SCALE

RSP A77P4 DATED JULY 19, 2013 SUPPLEMENTS THE STANDARD PLANS BOOK DATED 2010.

REVISED STANDARD PLAN RSP A77P4

2010 REVISED STANDARD PLAN RSP A77P4

Dist	COUNTY	ROUTE	POST MILES TOTAL PROJECT	SHEET No.	TOTAL SHEETS
07	LA	101	11.8/35.3	133	192

Randell D. Hiatt
REGISTERED CIVIL ENGINEER

July 19, 2013
PLANS APPROVAL DATE

REGISTERED PROFESSIONAL ENGINEER
Randell D. Hiatt
No. C50200
Exp. 6-30-15
CIVIL
STATE OF CALIFORNIA

THE STATE OF CALIFORNIA OR ITS OFFICERS OR AGENTS SHALL NOT BE RESPONSIBLE FOR THE ACCURACY OR COMPLETENESS OF SCANNED COPIES OF THIS PLAN SHEET.

TO ACCOMPANY PLANS DATED 2-18-14

2010 REVISED STANDARD PLAN RSP A77P5

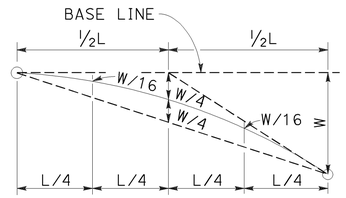

TYPICAL PARABOLIC LAYOUT

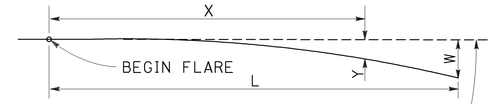

BASE LINE (EDGE OF PAVED SHOULDER OR OFFSET LINE OF EDGE OF TRAVELED WAY)

$$Y = \frac{WX^2}{L^2}$$

Y = OFFSET FROM BASE LINE
W = MAXIMUM OFFSET
X = DISTANCE ALONG BASE LINE
L = LENGTH OF FLARE

PARABOLIC FLARE OFFSETS

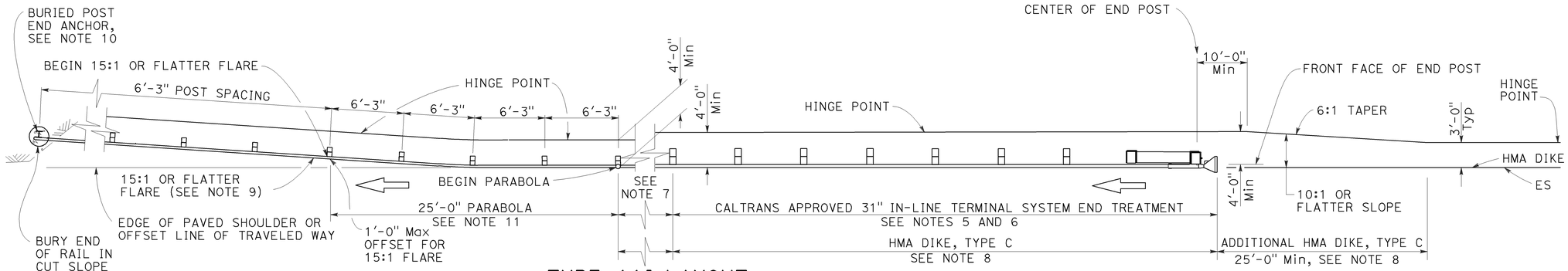

TYPE 11I LAYOUT

(Embankment MGS installation with 31" in-line end treatment and a buried end anchor treatment at the ends of railing)
See Note 4

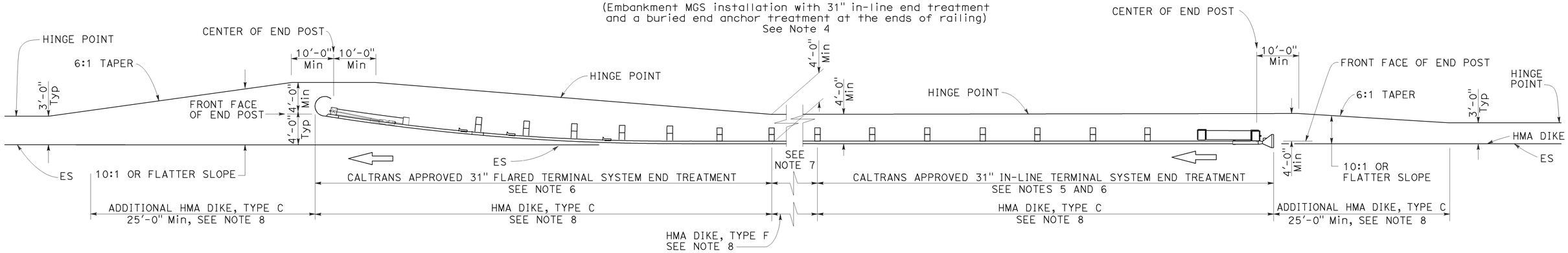

TYPE 11J LAYOUT

(Embankment MGS installation with 31" in-line end treatment and 31" flared end treatment at the ends of railing)
See Note 4

NOTES:

1. Line post, blocks and hardware to be used are shown on Revised Standard Plans RSP A77L1, RSP A77L2, RSP A77M1, RSP A77N1 and RSP A77N2.
2. MGS post spacing to be 6'-3" center to center, except as otherwise noted.
3. Except as noted, line posts are 6" x 8" x 6'-0" wood with 6" x 12" x 1'-2" wood blocks. W6 x 8.5 or W6 x 9 steel posts, 6'-0" in length, with 6" x 12" x 1'-2" notched wood blocks or plastic blocks may be used for 6" x 8" x 6'-0" wood post with 6" x 12" x 1'-2" wood blocks where applicable and when specified.
4. Layout Types 11D through 11L, shown on the A77P Series of Standard Plans, are typically used where MGS is recommended to shield embamkment slopes and a crashworthy 31" end treatment is required for both directions of traffic.
5. 31" in-line terminal system end treatments are used where site conditions will not accommodate a 31" flared end treatment.
6. The type of 31" terminal system end treatment to be used will be shown on the Project Plans.
7. Dependent on site conditions (embankment height and side slope), construction of additional MGS (length equal to multiples of 12'-6" with 6'-3" post spacing) may be advisable.
8. Where placement of dike is required with MGS installations, see Revised Standard Plan RSP A77N4 for dike positioning details.
9. The 15:1 or flatter flare used with buried end anchors is based on the edge of the paved shoulder or offset line of edge of the traveled way. The length of MGS within the 15:1 or flatter flare is based on site conditions and should be a length equal to multiples of 12'-6".
10. For details of the buried post end anchor used with Type 11I Layout, see Revised Standard Plan RSP A77T2.
11. For typical flare offsets for 25'-0" length parabola with maximum offset of 1'-0", see Revised Standard Plan RSP A77P1.

STATE OF CALIFORNIA
DEPARTMENT OF TRANSPORTATION

MIDWEST GUARDRAIL SYSTEM TYPICAL LAYOUTS FOR EMBANKMENTS

NO SCALE

RSP A77P5 DATED JULY 19, 2013 SUPPLEMENTS THE STANDARD PLANS BOOK DATED 2010.

REVISED STANDARD PLAN RSP A77P5

6-19-13

Dist	COUNTY	ROUTE	POST MILES TOTAL PROJECT	SHEET No.	TOTAL SHEETS
07	LA	101	11.8/35.3	134	192

Randell D. Hiatt
REGISTERED CIVIL ENGINEER

July 19, 2013
PLANS APPROVAL DATE

REGISTERED PROFESSIONAL ENGINEER
Randell D. Hiatt
No. C50200
Exp. 6-30-15
CIVIL
STATE OF CALIFORNIA

THE STATE OF CALIFORNIA OR ITS OFFICERS OR AGENTS SHALL NOT BE RESPONSIBLE FOR THE ACCURACY OR COMPLETENESS OF SCANNED COPIES OF THIS PLAN SHEET.

TO ACCOMPANY PLANS DATED 2-18-14

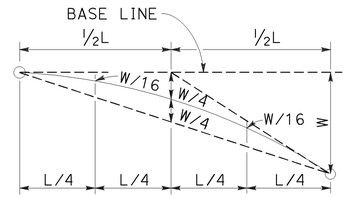

TYPICAL PARABOLIC LAYOUT

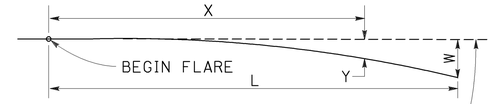

BASE LINE (EDGE OF PAVED SHOULDER OR OFFSET LINE OF EDGE OF TRAVELED WAY)

$$Y = \frac{WX^2}{L^2}$$

Y = OFFSET FROM BASE LINE
W = MAXIMUM OFFSET
X = DISTANCE ALONG BASE LINE
L = LENGTH OF FLARE

PARABOLIC FLARE OFFSETS

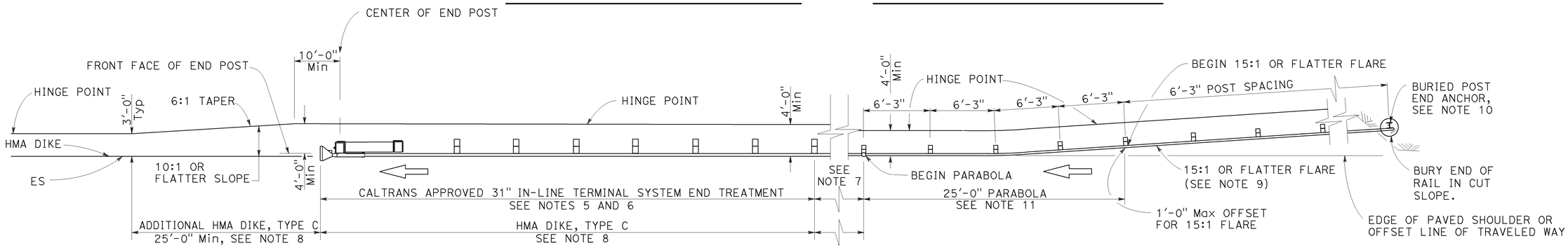

TYPE 11K LAYOUT

(Embankment MGS installation with a buried end anchor treatment and a 31" in-line end treatment at the ends of railing)
See Note 4

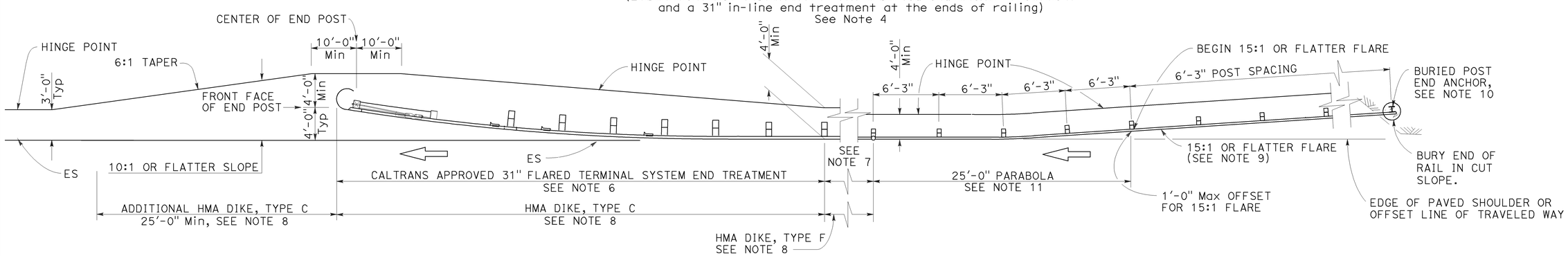

TYPE 11L LAYOUT

(Embankment MGS installation with a buried end anchor treatment and a 31" flared end treatment at the ends of railing)
See Note 4

NOTES:

1. Line post, blocks and hardware to be used are shown on Revised Standard Plans RSP A77L1, RSP A77L2, RSP A77M1, RSP A77N1 and RSP A77N2.
2. MGS post spacing to be 6'-3" center to center, except as otherwise noted.
3. Except as noted, line posts are 6" x 8" x 6'-0" wood with 6" x 12" x 1'-2" wood blocks. W6 x 8.5 or W6 x 9 steel posts, 6'-0" in length, with 6" x 12" x 1'-2" notched wood blocks or plastic blocks may be used for 6" x 8" x 6'-0" wood post with 6" x 12" x 1'-2" wood blocks where applicable and when specified.
4. Layout Types 11D through 11L, shown on the A77P Series of Standard Plans, are typically used where MGS is recommended to shield embamkment slopes and a crashworthy 31" end treatment is required for both directions of traffic.
5. 31" in-line terminal system end treatments are used where site conditions will not accommodate a 31" flared end treatment.
6. The type of 31" terminal system end treatment to be used will be shown on the Project Plans.
7. Dependent on site conditions (embankment height and side slope), construction of additional MGS (length equal to multiples of 12'-6" with 6'-3" post spacing) may be advisable.
8. Where placement of dike is required with MGS installations, see Revised Standard Plan RSP A77N4 for dike positioning details.
9. The 15:1 or flatter flare used with buried end anchors is based on the edge of the paved shoulder or offset line of edge of the traveled way. The length of MGS within the 15:1 or flatter flare is based on site conditions and should be a length equal to multiples of 12'-6".
10. For details of the buried post end anchor used with Type 11K and 11L Layouts, see Revised Standard Plan RSP A77T2.
11. For typical flare offsets for 25'-0" length parabola with maximum offset of 1'-0", see Revised Standard Plan RSP A77P1.

STATE OF CALIFORNIA
DEPARTMENT OF TRANSPORTATION

MIDWEST GUARDRAIL SYSTEM TYPICAL LAYOUTS FOR EMBANKMENTS

NO SCALE

RSP A77P6 DATED JULY 19, 2013 SUPPLEMENTS THE STANDARD PLANS BOOK DATED 2010.

REVISED STANDARD PLAN RSP A77P6

2010 REVISED STANDARD PLAN RSP A77P6

6-19-13

Dist	COUNTY	ROUTE	POST MILES TOTAL PROJECT	SHEET No.	TOTAL SHEETS
07	LA	101	11.8/35.3	135	192

Randell D. Hiatt
REGISTERED CIVIL ENGINEER

July 19, 2013
PLANS APPROVAL DATE

REGISTERED PROFESSIONAL ENGINEER
Randell D. Hiatt
No. C50200
Exp. 6-30-15
CIVIL
STATE OF CALIFORNIA

THE STATE OF CALIFORNIA OR ITS OFFICERS OR AGENTS SHALL NOT BE RESPONSIBLE FOR THE ACCURACY OR COMPLETENESS OF SCANNED COPIES OF THIS PLAN SHEET.

TO ACCOMPANY PLANS DATED 2-18-14

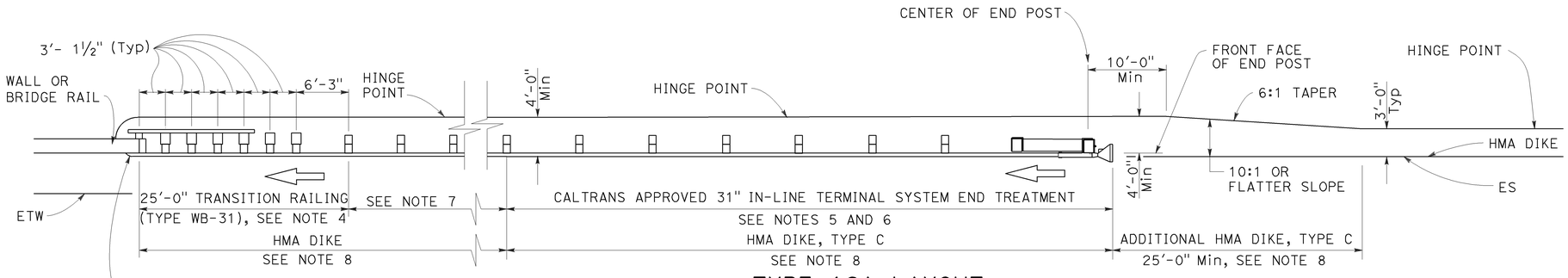

TYPE 12A LAYOUT

(MGS installation at structure approach with
31" In-line end treatment at traffic approach end of railing)
See Notes 9

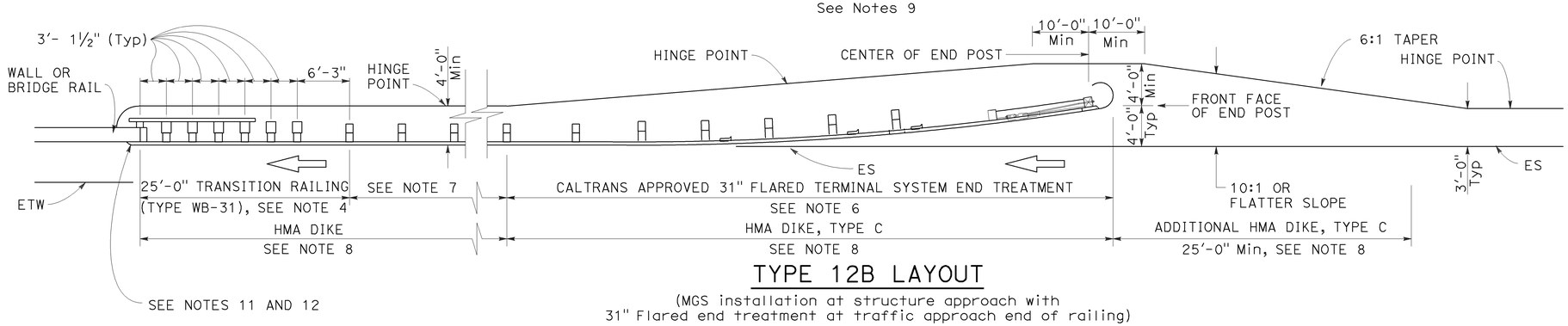

TYPE 12B LAYOUT

(MGS installation at structure approach with
31" Flared end treatment at traffic approach end of railing)
See Notes 9

NOTES:

1. Line post, blocks and hardware to be used are shown on Revised Standard Plans RSP A77L1, RSP A77L2, RSP A77M1, RSP A77N1 and RSP A77N2.
2. MGS post spacing to be 6'-3" center to center, except as otherwise noted.
3. Except as noted, line posts are 6" x 8" x 6'-0" wood with 6" x 12" x 1'-2" wood blocks. W6 x 8.5 or W6 x 9 steel posts, 6'-0" in length, with 6" x 12" x 1'-2" notched wood blocks or plastic blocks may be used for 6" x 8" x 6'-0" wood posts with 6" x 12" x 1'-2" wood blocks where applicable and when specified.
4. For Transition Railing (Type WB-31) details for Types 12A and 12B Layouts, see Revised Standard Plan RSP A77U4.
5. 31" in-line terminal system end treatments are used where site conditions will not accommodate a 31" flared end treatment.
6. The type 31" of terminal system end treatment to be used will be shown on the Project Plans.
7. Dependent on site conditions (embankment height, side slopes, or other fixed objects), it may be advisable to construct additional guard railing (a length equal to multiples of 12'-6" with 6'-3" post spacing) between the transition railing and end treatment. A 12.5 degree angle of departure can be drawn on the Project Plans from the edge of traveled way through the outer most point of the fixed object to determine the additional length of railing needed.
8. Where placement of dike is required with guard railing installations, see Revised Standard Plan RSP A77N4 for dike positioning details.
9. Type 12A or Type 12B Layouts are typically used:
   a. To the right of approaching traffic, at the end of a structure, on two-lane conventional highway where the roadbed width across the structure is less than 40 feet.
   b. To the left of approaching traffic, at the end of a structure, on two-lane conventional highway where the roadbed width across the structure is less than 40 feet.
   c. To the right of approaching traffic at the end of each structure on multilane freeways or expressways with separate adjacent or parallel bridges.
   d. To the right of approaching traffic at the end of the structure on multilane freeways or expressways with decked median on the bridge.
10. See Revised Standard Plan RSP A77Q3 for typical layout used left of approaching traffic at the ends of each structure on multilane freeways or expressways with separate adjacent or parallel bridges.
11. For additional details of typical connections to bridge rail, see Connection Detail AA on Revised Standard Plans RSP A77U1 and RSP A77U2 and Connection Detail FF on Revised Standard Plans RSP A77V1 and RSP A77V2.
12. For additional details of a typical connection to walls or abutments, see Revised Standard Plan RSP A77U3.

STATE OF CALIFORNIA
DEPARTMENT OF TRANSPORTATION

MIDWEST GUARDRAIL SYSTEM TYPICAL LAYOUTS FOR STRUCTURE APPROACH

NO SCALE

RSP A77Q1 DATED JULY 19, 2013 SUPPLEMENTS THE STANDARD PLANS BOOK DATED 2010.

REVISED STANDARD PLAN RSP A77Q1

2010 REVISED STANDARD PLAN RSP A77Q1

Dist	COUNTY	ROUTE	POST MILES TOTAL PROJECT	SHEET No.	TOTAL SHEETS
07	LA	101	11.8/35.3	136	192

Randell D. Hiatt
REGISTERED CIVIL ENGINEER

July 19, 2013
PLANS APPROVAL DATE

REGISTERED PROFESSIONAL ENGINEER
Randell D. Hiatt
No. C50200
Exp. 6-30-15
CIVIL
STATE OF CALIFORNIA

THE STATE OF CALIFORNIA OR ITS OFFICERS OR AGENTS SHALL NOT BE RESPONSIBLE FOR THE ACCURACY OR COMPLETENESS OF SCANNED COPIES OF THIS PLAN SHEET.

TO ACCOMPANY PLANS DATED 2-18-14

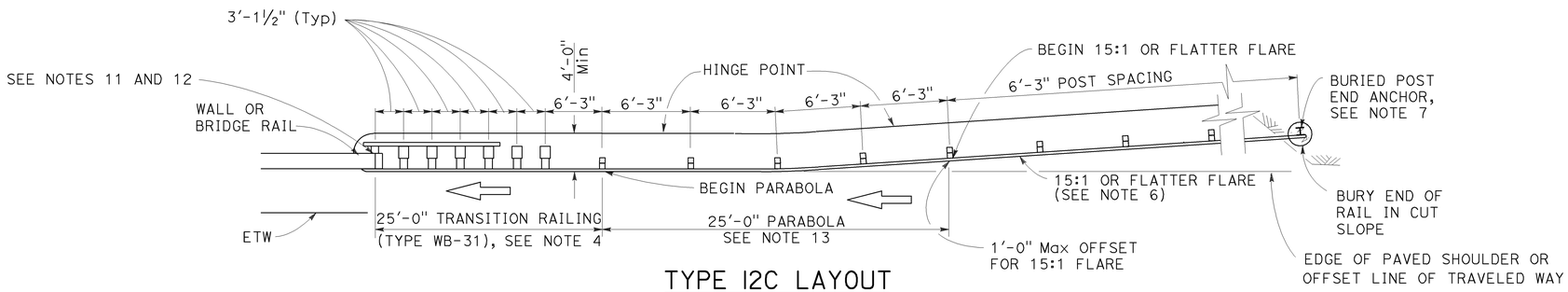

TYPE 12C LAYOUT

(MGS installation at structure approach with a Buried end anchor treatment at traffic approach end of railing)
See Notes 8 and 9

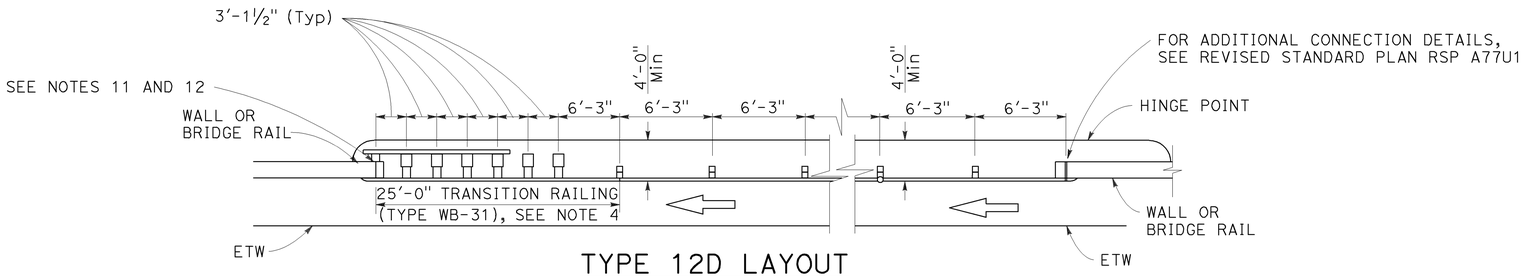

TYPE 12D LAYOUT

(Continuous MGS installation between structures)
See Notes 5 and 9

BASE LINE (EDGE OF PAVED SHOULDER OR OFFSET LINE OF EDGE OF TRAVELED WAY)

$$Y = \frac{WX^2}{L^2}$$

Y = OFFSET FROM BASE LINE
W = MAXIMUM OFFSET
X = DISTANCE ALONG BASE LINE
L = LENGTH OF FLARE

PARABOLIC FLARE OFFSETS

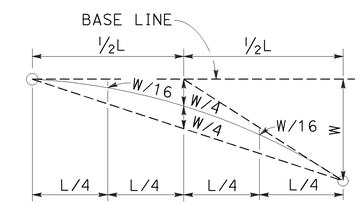

TYPICAL PARABOLIC LAYOUT

NOTES:

1. Line post, blocks and hardware to be used are shown on Revised Standard Plans RSP A77L1, RSP A77L2, RSP A77M1, RSP A77N1 and RSP A77N2.
2. MGS post spacing to be 6'-3" center to center, except as otherwise noted.
3. Except as noted, line posts are 6" x 8" x 6'-0" m wood with 6" x 12" x 1'-2" wood blocks. W6 x 8.5 or W6 x 9 steel posts, 6'-0" in length, with 6" x 12" x 1'-2" notched wood blocks or plastic blocks may be used for 6" x 8" x 6'-0" wood posts with 6" x 12" x 1'-2" wood blocks where applicable and when specified.
4. For Transition Railing (Type WB-31) details for Types 12C and 12D Layouts, see Revised Standard Plan RSP A77U4.
5. Type 12D layout is typically used where continous MGS is recommended between structures.
6. The 15:1 or flatter flare for Type 12C Layout is based on the edge of the paved shoulder or offset line of edge of the traveled way. The length of MGS with the 15:1 or flatter flare is based on site conditions and should be a length equal to multiples of 12'-6".
7. For details of the buried post end anchor used with Type 12C Layout, see Revised Standard Plan RSP A77T2.
8. Where placement of dike is required with MGS installations, see Revised Standard Plan RSP A77N4 for dike positioning details.
9. Type 12C Layout is typically used:
   a. To the right of approaching traffic, at the end of the structure, on two-lane conventional highway where the roadbed width across the structure is less than 40 feet.
   b. To the left of approaching traffic, at each of a structure, on two-lane conventional highway where the roadbed width across the structure is less than 40 feet.
   c. To the right of approaching traffic at the end of each structure on multilane freeways or expressways with separate adjacent or parallel bridges.
   d. To the right of approaching traffic at the end of the structure on multilane freeways or expressways with decked median on the bridge.
10. See Revised Standard Plan RSP A77Q3 for typical layout used left of approaching traffic at the ends of each structure on multilane freeways or expressways with separate adjacent or parallel bridges.
11. For additional details of typical connections to bridge rail, see Connection Detail AA on Revised Standard Plans RSP A77U1 and RSP A77U2 and Connection Detail FF on Revised Standard Plans RSP A77V1 and RSP A77V2.
12. For additional details of a typical connection to walls or abutments, see Revised Standard Plan RSP A77U3.
13. For typical flare offsets for 25'-0" length parabola with maximum offset of 1'-0", see Revised Standard Plan RSP A77P1.

STATE OF CALIFORNIA
DEPARTMENT OF TRANSPORTATION

MIDWEST GUARDRAIL SYSTEM TYPICAL LAYOUTS FOR STRUCTURE APPROACH AND BETWEEN STRUCTURES

NO SCALE

RSP A77Q2 DATED JULY 19, 2013 SUPPLEMENTS THE STANDARD PLANS BOOK DATED 2010.

REVISED STANDARD PLAN RSP A77Q2

2010 REVISED STANDARD PLAN RSP A77Q2

7-8-13

Dist	COUNTY	ROUTE	POST MILES TOTAL PROJECT	SHEET No.	TOTAL SHEETS
07	LA	101	11.8/35.3	137	192

Randell D. Hiatt
REGISTERED CIVIL ENGINEER

July 19, 2013
PLANS APPROVAL DATE

REGISTERED PROFESSIONAL ENGINEER
Randell D. Hiatt
No. C50200
Exp. 6-30-15
CIVIL
STATE OF CALIFORNIA

THE STATE OF CALIFORNIA OR ITS OFFICERS OR AGENTS SHALL NOT BE RESPONSIBLE FOR THE ACCURACY OR COMPLETENESS OF SCANNED COPIES OF THIS PLAN SHEET.

TO ACCOMPANY PLANS DATED 2-18-14

2010 REVISED STANDARD PLAN RSP A77Q3

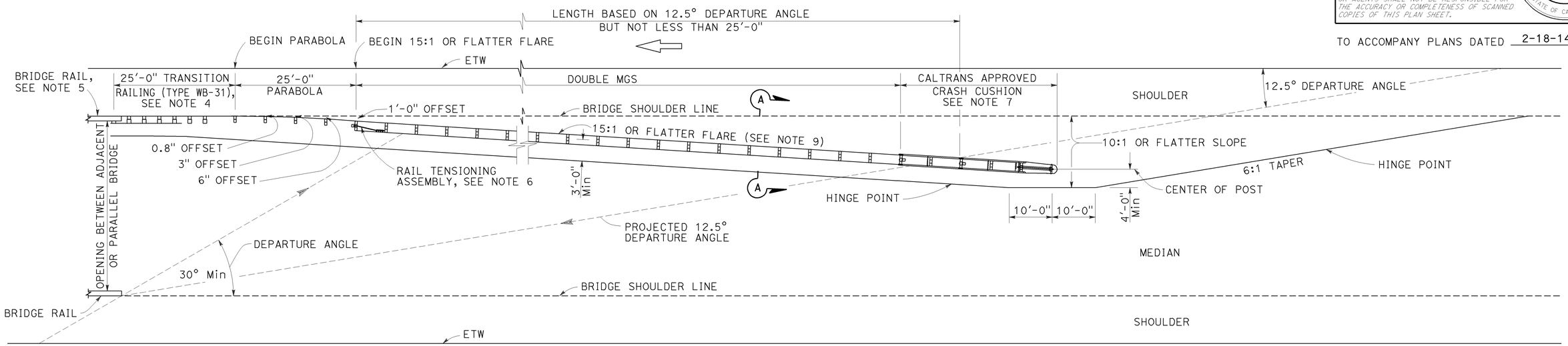

TYPE 12E LAYOUT

See Note 9

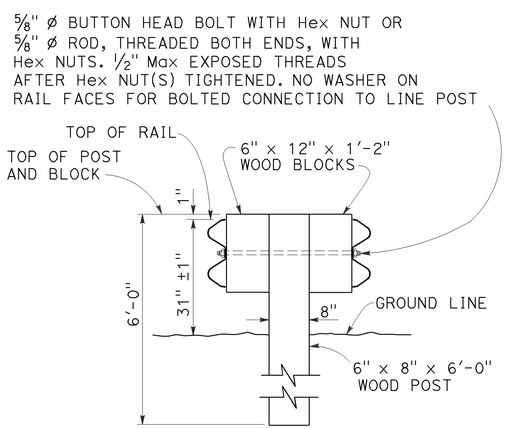

SECTION A-A

TYPICAL DOUBLE MIDWEST GUARDRAIL SYSTEM

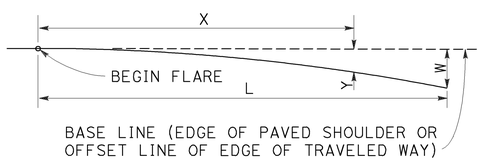

$$Y = \frac{WX^2}{L^2}$$

Y = OFFSET FROM BASE LINE
W = MAXIMUM OFFSET
X = DISTANCE ALONG BASE LINE
L = LENGTH OF FLARE

PARABOLIC FLARE OFFSETS

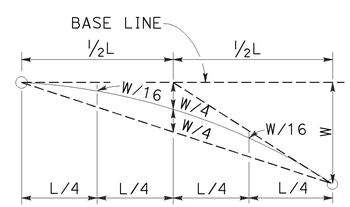

TYPICAL PARABOLIC LAYOUT

NOTES:

1. Line post, blocks and hardware to be used are shown on Revised Standard Plans RSP A77L1, RSP A77L2, RSP A77M1, RSP A77N1 and RSP A77N2.
2. MGS post spacing to be 6'-3" center to center, except as otherwise noted.
3. Except as noted, line posts are 6" x 8" x 6'-0" wood with 6" x 12" x 1'-2" wood blocks. W6 x 8.5 or W6 x 9 steel posts, 6'-0" in length, with 6" x 12" x 1'-2" notched wood blocks or notched recycled plastic blocks may be used for 6" x 8" x 6'-0" wood line posts with 6" x 12" x 1'-2" wood blocks where applicable and when specified.
4. For Transition Railing (Type WB-31) details, see Revised Standard Plan RSP A77U4.
5. For additional details of a typical connection to bridge rail, see Connection Detail AA on Revised Standard Plan RSP A77U1.
6. For Rail Tensioning Assembly details, see Revised Standard Plan RSP A77S2.
7. The type of Crash Cushion to be used will be shown on the Project Plans.
8. Type 12E Layout is typically used left of approaching traffic at the end of each structure on multilane freeways or expressways where a median type barrier is not constructed between separated roadbeds.
9. The 15:1 or flatter flare is measured off of the edge of traveled way.

STATE OF CALIFORNIA
DEPARTMENT OF TRANSPORTATION

MIDWEST GUARDRAIL SYSTEM TYPICAL LAYOUTS FOR STRUCTURE APPROACH

NO SCALE

RSP A77Q3 DATED JULY 19, 2013 SUPPLEMENTS THE STANDARD PLANS BOOK DATED 2010.

REVISED STANDARD PLAN RSP A77Q3

Dist	COUNTY	ROUTE	POST MILES TOTAL PROJECT	SHEET No.	TOTAL SHEETS
07	LA	101	11.8/35.3	138	192

Randell D. Hiatt
REGISTERED CIVIL ENGINEER

July 19, 2013
PLANS APPROVAL DATE

REGISTERED PROFESSIONAL ENGINEER
Randell D. Hiatt
No. C50200
Exp. 6-30-15
CIVIL
STATE OF CALIFORNIA

THE STATE OF CALIFORNIA OR ITS OFFICERS OR AGENTS SHALL NOT BE RESPONSIBLE FOR THE ACCURACY OR COMPLETENESS OF SCANNED COPIES OF THIS PLAN SHEET.

TO ACCOMPANY PLANS DATED 2-18-14

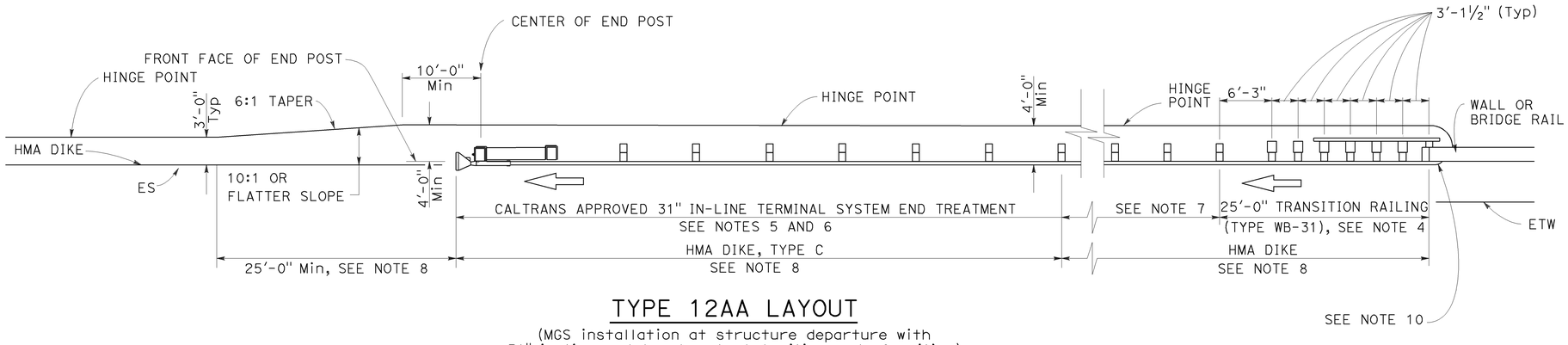

TYPE 12AA LAYOUT

(MGS installation at structure departure with
31" in-line end treatment at trailing end of railing)
See Notes 8 and 9

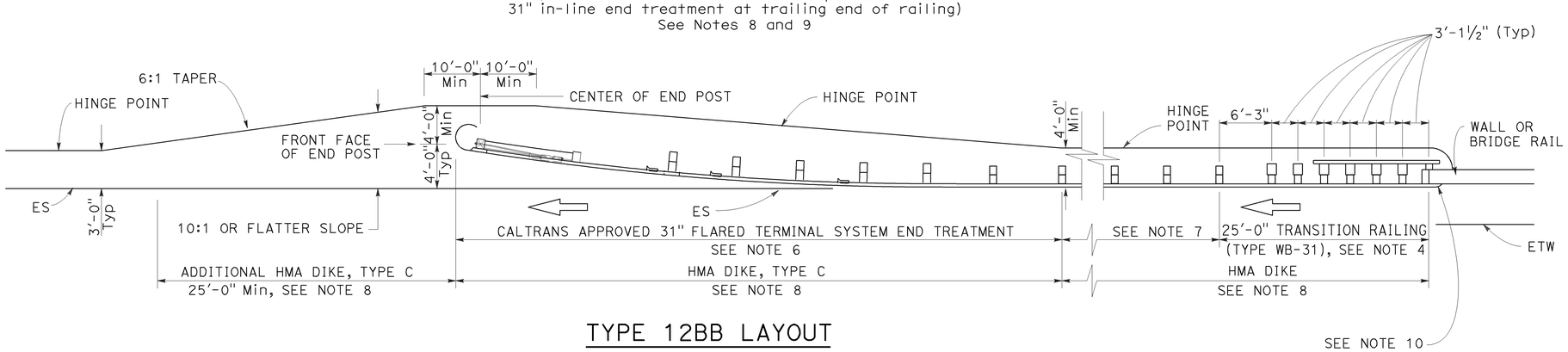

TYPE 12BB LAYOUT

(MGS installation at structure departure with
31" flared end treatment at trailing end of railing)
See Notes 8 and 9

NOTES:

1. Line post, blocks and hardware to be used are shown on Revised Standard Plans RSP A77L1, RSP A77L2, RSP A77M1, RSP A77N1 and RSP A77N2.
2. MGS post spacing to be 6'-3" center to center, except as otherwise noted.
3. Except as noted, line posts are 6" x 8" x 6'-0" wood with 6" x 12" x 1'-2" wood blocks. W6 x 8.5 or W6 x 9 steel posts, 6'-0" in length, with 6" x 12" x 1-2" notched wood blocks or notched recycled plastic blocks may be used for 6" x 8" x 6'-0" wood posts with 6" x 12" x 1'-2" wood blocks where applicable and when specified.
4. For Transition Railing (Type WB-31) details for Types 12AA and 12BB Layouts, see Revised Standard Plan RSP A77U4.
5. 31" in-line terminal system treatments are used where site conditions will not accommodate a 31" flared end treatment.
6. The type of 31" terminal system to be used will be shown on the Project Plans.
7. Dependent on site conditions (embankment height, side slopes, other fixed objects), it may be advisable to construct additional MGS (a length equal to multiples of 12'-6" with 6'-3" post spacing) between the transition railing and 31" end treatments.
8. Where placement of dike is required with MGS installations, see Revised Standard Plan RSP A77N4 for dike positioning details.
9. Type 12AA or Type 12BB Layouts are typically used to the right of traffic departing a structure on two-way conventional highways where the roadbed width across the structure is less than 40 feet.
10. For additional details of typical connections to bridge rail, see Connection Detail CC on Revised Standard Plan RSP A77U2 and Connection Detail HH on Revised Standard Plan RSP A77V2.

STATE OF CALIFORNIA
DEPARTMENT OF TRANSPORTATION

MIDWEST GUARDRAIL SYSTEM TYPICAL LAYOUTS FOR STRUCTURE DEPARTURE

NO SCALE

RSP A77Q4 DATED JULY 19, 2013 SUPPLEMENTS THE STANDARD PLANS BOOK DATED 2010.

REVISED STANDARD PLAN RSP A77Q4

2010 REVISED STANDARD PLAN RSP A77Q4

6-19-13

Dist	COUNTY	ROUTE	POST MILES TOTAL PROJECT	SHEET No.	TOTAL SHEETS
07	LA	101	11.8/35.3	139	192

Randell D. Hiatt
REGISTERED CIVIL ENGINEER

July 19, 2013
PLANS APPROVAL DATE

REGISTERED PROFESSIONAL ENGINEER
Randell D. Hiatt
No. C50200
Exp. 6-30-15
CIVIL
STATE OF CALIFORNIA

THE STATE OF CALIFORNIA OR ITS OFFICERS OR AGENTS SHALL NOT BE RESPONSIBLE FOR THE ACCURACY OR COMPLETENESS OF SCANNED COPIES OF THIS PLAN SHEET.

TO ACCOMPANY PLANS DATED 2-18-14

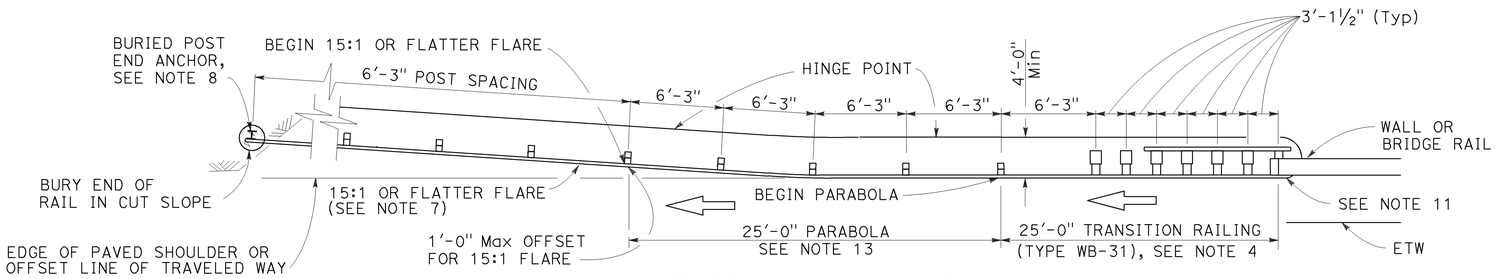

TYPE 12CC LAYOUT

(MGS installation at structure departure with a
Buried end anchor treatment at trailing end of railing)
See Notes 9 and 10

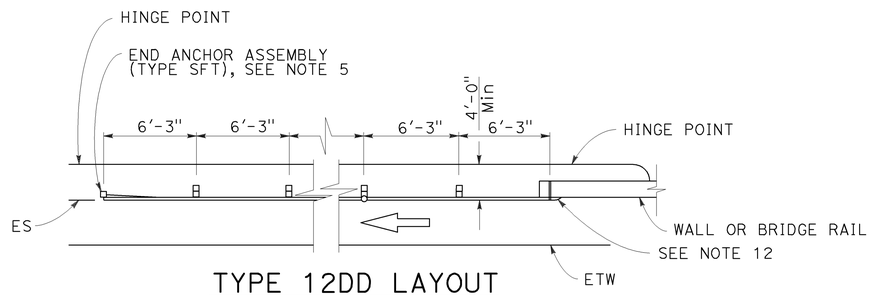

TYPE 12DD LAYOUT

(MGS installation at structure departure
With end anchor assembly at trailing end of railing)
See Notes 6 and 9

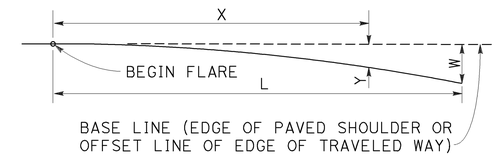

$$Y = \frac{WX^2}{L^2}$$

Y = OFFSET FROM BASE LINE
W = MAXIMUM OFFSET
X = DISTANCE ALONG BASE LINE
L = LENGTH OF FLARE

PARABOLIC FLARE OFFSETS

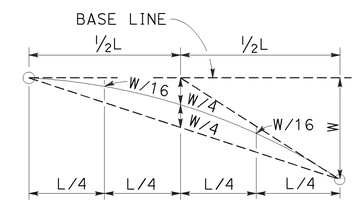

TYPICAL PARABOLIC LAYOUT

NOTES:

1. Line post, blocks and hardware to be used are shown on Revised Standard Plans RSP A77L1, RSP A77L2, RSP A77M1, RSP A77N1 and RSP A77N2.
2. MSG post spacing to be 6'-3" center to center, except as otherwise noted.
3. Except as noted, line posts are 6" x 8" x 6'-0" wood with 6" x 12" x 1'-2" wood blocks. W6 x 8.5 or W6 x 9 steel posts, 6'-0" in length, with 6" x 12" x 1'-2" notched wood blocks or notched recycled plastic blocks may be used for 6" x 8" x 6'-0" wood line posts with 6" x 12" x 1'-2" wood blocks where applicable and when specified.
4. For Transition Railing (Type WB-31) details for Type 12CC Layout, see Revised Standard Plan RSP A77U4.
5. For details of End Anchor Assembly (Type SFT) used with Type 12DD Layout, see Revised Standard Plan RSP A77S1.
6. Type 12DD layout is typically used to the right of traffic departing a structure on two-way conventional highways where the roadbed width across the structure is equal to or greater than 40 feet and MGS is recommended (embankment height, side slopes, other fixed objects). Length of railing to be equal to multiples of 12'-6". For MGS connection details to bridge rail, see Revised Standard Plans RSP A77U1 and RSP A77V1. For MGS connection details to wall, see Revised Standard Plan RSP A77U3.
7. The 15:1 or flatter flare for Type 12CC Layout is based on the edge of the paved shoulder or offset line of edge of the traveled way. The length of MGS within the 15:1 or flatter flare is based on site conditions and should be a length equal to multiples of 12'-6".
8. For details of the buried post end anchor used with Type 12CC Layout, see Revised Standard Plan RSP A77T2.
9. Where placement of dike is required with MGS installations, see Revised Standard Plan RSP A77N4 for dike positioning details.
10. Type 12CC Layout is typically used to the right of traffic departing a structure on two-way conventional highways where the roadbed width across the structure is less than 40 feet.
11. For additional details of a typical connection to bridge rail for Layout Type 12CC, see Connection Detail CC on Revised Standard Plan RSP A77U2 and Connection Detail HH on Revised Standard Plan RSP A77V2.
12. For additional details of a typical connection to bridge rail for Layout Type 12DD, see Connection Detail BB on Revised Standard Plan RSP A77U1 and Connection Detail GG on Revised Standard Plan RSP A77V1.
13. For typical flare offsets for 25'-0" length parabola with maximum offset of 1'-0", see Revised Standard Plan RSP A77P1.

STATE OF CALIFORNIA
DEPARTMENT OF TRANSPORTATION

MIDWEST GUARDRAIL SYSTEM TYPICAL LAYOUTS FOR STRUCTURE DEPARTURE

NO SCALE

RSP A77Q5 DATED JULY 19, 2013 SUPPLEMENTS THE STANDARD PLANS BOOK DATED 2010.

REVISED STANDARD PLAN RSP A77Q5

2010 REVISED STANDARD PLAN RSP A77Q5

6-20-13

Dist	COUNTY	ROUTE	POST MILES TOTAL PROJECT	SHEET No.	TOTAL SHEETS
07	LA	101	11.8/35.3	140	192

Randell D. Hiatt
REGISTERED CIVIL ENGINEER

July 19, 2013
PLANS APPROVAL DATE

REGISTERED PROFESSIONAL ENGINEER — Randell D. Hiatt, No. C50200, Exp. 6-30-15, CIVIL, STATE OF CALIFORNIA

THE STATE OF CALIFORNIA OR ITS OFFICERS OR AGENTS SHALL NOT BE RESPONSIBLE FOR THE ACCURACY OR COMPLETENESS OF SCANNED COPIES OF THIS PLAN SHEET.

TO ACCOMPANY PLANS DATED 2-18-14

2010 REVISED STANDARD PLAN RSP A77R1

NOTES:

1. Line post, blocks and hardware to be used are shown on Revised Standard Plans RSP A77L1, RSP A77L2, RSP A77M1, RSP A77N1, and RSP A77N2.
2. MGS post spacing to be 6′-3″ center to center, except as otherwise noted.
3. Except as noted, line posts are 6″ x 8″ x 6′-0″ wood with 6″ x 12″ x 1′-2″ wood blocks. W6 x 8.5 or W6 x 9 steel posts, 6′-0″ in length, with 6″ x 12″ x 1′-2″ notched wood blocks or notched recycled plastic blocks may be used for 6″ x 8″ x 6′-0″ wood line posts with 6″ x 12″ x 1′-2″ wood blocks where applicable and when specified.
4. A 4′-0″ minimum clearance is required between the face of the railing and the face of a fixed object located directly behind MGS sections with post spacing of 6′-3″. Construct MGS as shown in the detail "Strengthened Midwest Guardrail System Sections for Fixed Object" on this plan, where the clearance between the face of the railing and the face of a fixed object is less than 4′-0″, but not less than 3′-0″. Where the clearance is less than 3′-0″, a concrete wall or barrier should be constructed to shield the fixed object(s).
5. For End Anchor Assembly (Type SFT) details, see Revised Standard Plan RSP A77S1.
6. For details of Rail Tensioning Assembly, see Revised Standard Plan RSP A77S2.
7. The type of crash cushion to be used will be shown on the Project Plans.
8. Type 14A layout is typically used on multilane freeways or expressways to shield fixed objects where a median type barrier is not constructed between the separated roadbeds.
9. For typical flare offsets for 25′-0″ length parabola with maximum offset of 1′-0″, see Revised Standard Plan RSP A77P1.
10. The 15:1 or flatter flare is measured off of the edge of traveled way.
11. W6 x 15 steel post, 8′-0″ in length, with 8″ x 12″ x 1′-2″ notched wood block or notched recycled plastic block may be used in place of the 10″ x 10″ x 8′-0″ wood post with 8″ x 12″ x 1′-2″ wood block shown in the detail "Strengthened Midwest Guardrail System Sections for Fixed Object".

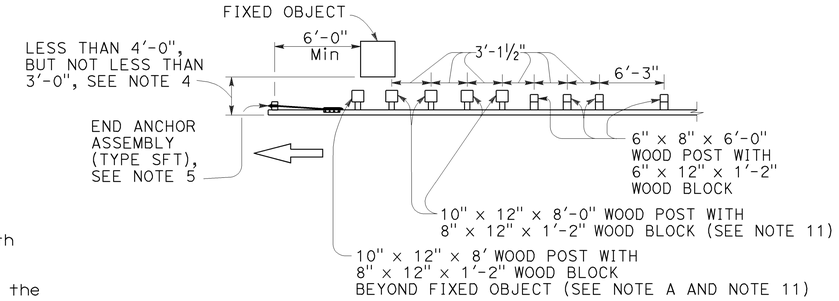

NOTE A: For a series of fixed objects (bridge columns, overhead sign supports, etc.) additional 10″ x 10″ x 8′-0″ wood post with 8″ x 12″ x 1′-2″ wood blocks at 3′-1½″ center to center spacing are to be used between fixed objects.

STRENGTHENED MIDWEST GUARDRAIL SYSTEM SECTIONS FOR FIXED OBJECT

Use strengthened MGS sections with Type 14A layout where minimum clearance between the face of the railing and fixed object(s) is less than 4′-0″, but not less than 3′-0″, See Note 4.

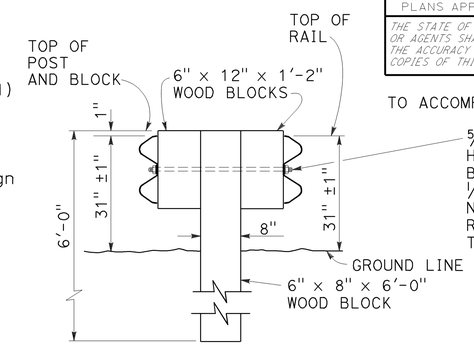

SECTION A-A
TYPICAL DOUBLE MIDWEST GUARDRAIL SYSTEM

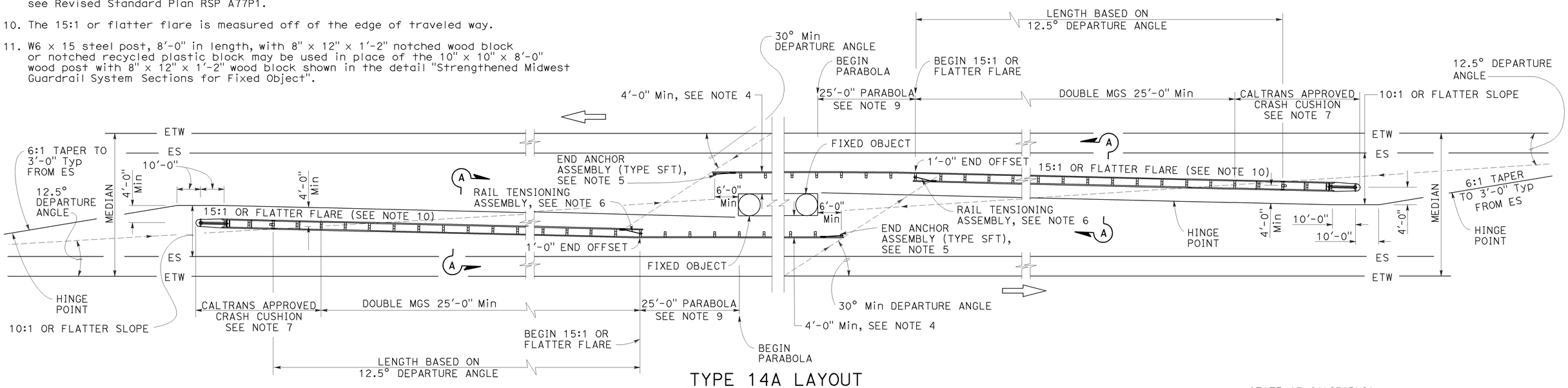

TYPE 14A LAYOUT

See Note 8

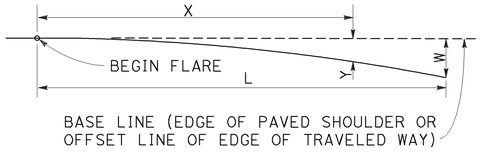

$$Y = \frac{WX^2}{L^2}$$

Y = OFFSET FROM BASE LINE
W = MAXIMUM OFFSET
X = DISTANCE ALONG BASE LINE
L = LENGTH OF FLARE

PARABOLIC FLARE OFFSETS

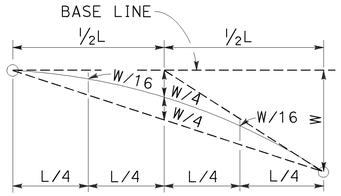

TYPICAL PARABOLIC LAYOUT

STATE OF CALIFORNIA
DEPARTMENT OF TRANSPORTATION

MIDWEST GUARDRAIL SYSTEM TYPICAL LAYOUTS FOR FIXED OBJECTS BETWEEN SEPARATE ROADBEDS (TWO-WAY TRAFFIC)

NO SCALE

RSP A77R1 DATED JULY 19, 2013 SUPPLEMENTS THE STANDARD PLANS BOOK DATED 2010.

REVISED STANDARD PLAN RSP A77R1

7-16-13

Dist	COUNTY	ROUTE	POST MILES TOTAL PROJECT	SHEET No.	TOTAL SHEETS
07	LA	101	11.8/35.3	141	192

Randell D. Hiatt
REGISTERED CIVIL ENGINEER

July 19, 2013
PLANS APPROVAL DATE

REGISTERED PROFESSIONAL ENGINEER
Randell D. Hiatt
No. C50200
Exp. 6-30-15
CIVIL
STATE OF CALIFORNIA

THE STATE OF CALIFORNIA OR ITS OFFICERS OR AGENTS SHALL NOT BE RESPONSIBLE FOR THE ACCURACY OR COMPLETENESS OF SCANNED COPIES OF THIS PLAN SHEET.

TO ACCOMPANY PLANS DATED 2-18-14

NOTES:

1. Line post, blocks and hardware to be used are shown on Revised Standard Plans RSP A77L1, RSP A77L2, RSP A77M1, RSP A77N1 and RSP A77N2.
2. MGS post spacing to be 6'-3" center to center, except as otherwise noted.
3. Except as noted, line posts are 6" x 8" x 6'-0" wood with 6" x 12" x 1'-2" wood blocks. W6 x 8.5 or W6 x 9 steel posts, 6'-0" in length, with 6" x 12" x 1'-2" notched wood blocks or notched recycled plastic blocks may be used for 6" x 8" x 6'-0" wood line posts with 6" x 12" x 1'-2" wood blocks where applicable and when specified.
4. A 4'-0" minimum clearance is required between the face of the railing and the face of a fixed object located directly behind MGS section with post spacing of 6'-3". Construct MGS as shown in the detail "Strengthened Midwest Guardrail System Sections for Fixed Object" on this plan, where the clearance between the face of the railing and the face of a fixed object is less than 4'-0", but not less than 3'-0". Where the clearance is less than 3'-0", a concrete wall or barrier should be constructed to shield the fixed object(s).
5. For End Anchor Assembly (Type SFT) details, see Standard Plan RSP A77S1.
6. Type of crash cushion to be used will be shown on the Project Plans.
7. Type 15A layout is typically used on multilane freeways or expressways to shield fixed objects in the area between separated one-way roadbeds.
8. For typical flare offsets for 25'-0" length parabola with maximum offset of 1'-0", see Revised Standard Plan RSP A77P1.
9. The 15:1 or flatter flare is measured off of the edge of the traveled way.
10. W6 x 15 steel post, 8'-0" in length, with 8" x 12" x 1'-2" notched wood block or notched recycled plastic blocks may be used in place of the 10" x 10" x 8'-0" wood post with 8" x 12" x 1'-2" wood block shown in the detail "Strengthened Midwest Guardrail System Sections for Fixed Object".

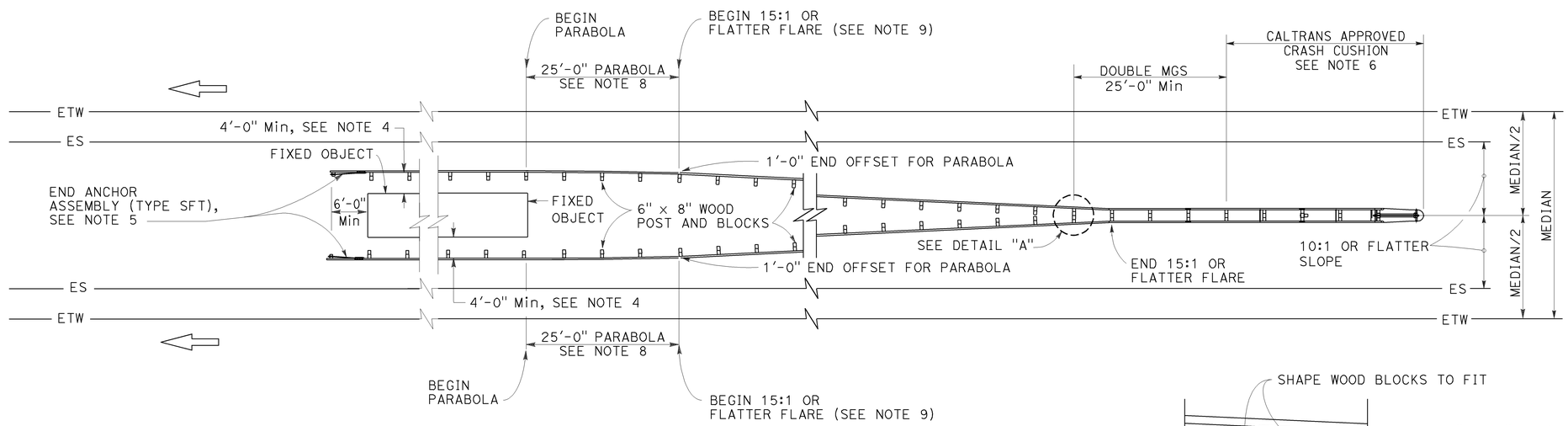

TYPE 15A LAYOUT

See Note 7

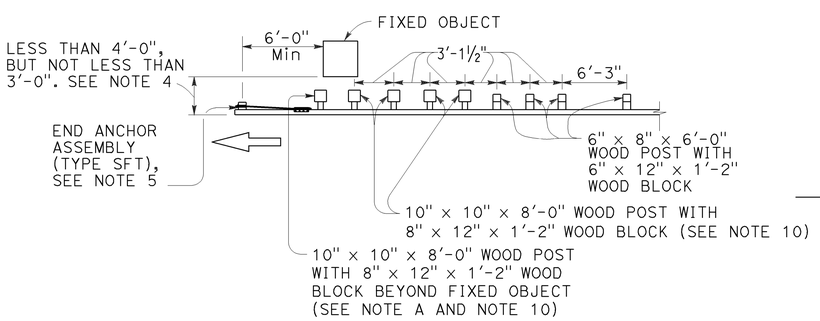

NOTE A: For a series of fixed objects (bridge columns, overhead sign supports, etc.) additional 10" x 10" x 8'-0" wood post with 8" x 12" x 1'-2" wood blocks at 3'-1½" center to center spacing are to be used between fixed objects.

STRENGTHENED MIDWEST GUARDRAIL SYSTEM SECTIONS FOR FIXED OBJECT

Use strengthened MGS sections with Type 15A layout where minimum clearance between the face of the MGS and the fixed object(s) is less than 4'-0", but not less than 3'-0". See Note 4.

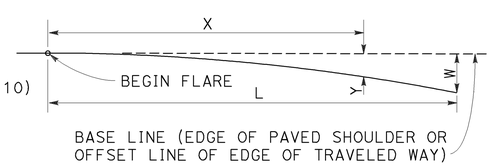

$$Y = \frac{WX^2}{L^2}$$

Y = OFFSET FROM BASE LINE
W = MAXIMUM OFFSET
X = DISTANCE ALONG BASE LINE
L = LENGTH OF FLARE

PARABOLIC FLARE OFFSETS

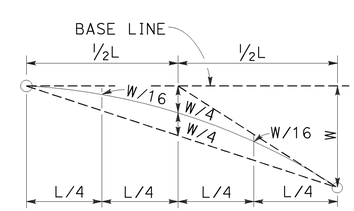

TYPICAL PARABOLIC LAYOUT

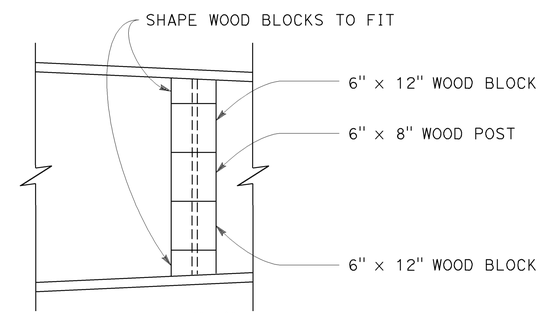

DETAIL "A"

STATE OF CALIFORNIA
DEPARTMENT OF TRANSPORTATION

MIDWEST GUARDRAIL SYSTEM TYPICAL LAYOUTS FOR FIXED OBJECTS BETWEEN SEPARATE ROADBEDS (ONE-WAY TRAFFIC)

NO SCALE

RSP A77R2 DATED JULY 19, 2013 SUPPLEMENTS THE STANDARD PLANS BOOK DATED 2010.

REVISED STANDARD PLAN RSP A77R2

2010 REVISED STANDARD PLAN RSP A77R2

Dist	COUNTY	ROUTE	POST MILES TOTAL PROJECT	SHEET No.	TOTAL SHEETS
07	LA	101	11.8/35.3	142	192

Randell D. Hiatt
REGISTERED CIVIL ENGINEER

July 19, 2013
PLANS APPROVAL DATE

REGISTERED PROFESSIONAL ENGINEER
Randell D. Hiatt
No. C50200
Exp. 6-30-15
CIVIL
STATE OF CALIFORNIA

THE STATE OF CALIFORNIA OR ITS OFFICERS OR AGENTS SHALL NOT BE RESPONSIBLE FOR THE ACCURACY OR COMPLETENESS OF SCANNED COPIES OF THIS PLAN SHEET.

TO ACCOMPANY PLANS DATED 2-18-14

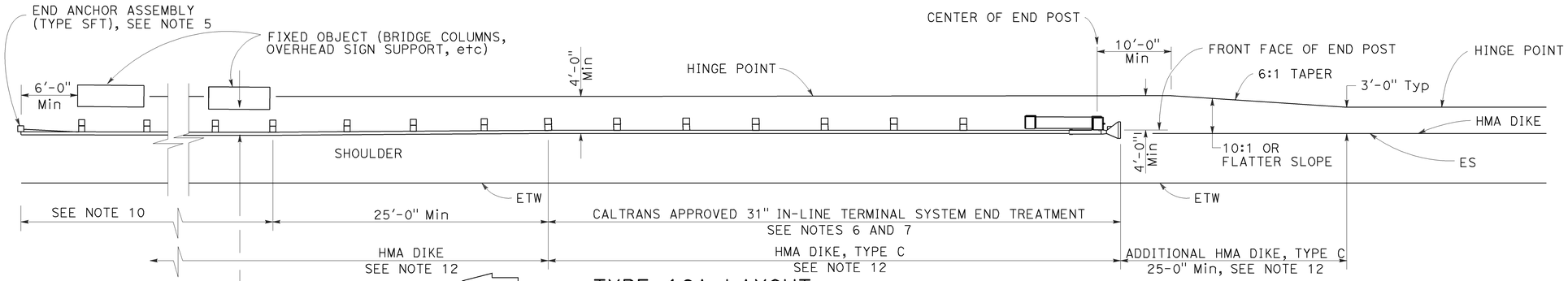

TYPE 16A LAYOUT

(MGS installation at roadside fixed object or objects with 31" in-line end treatment at traffic approach end of railing)
See Notes 11 and 12

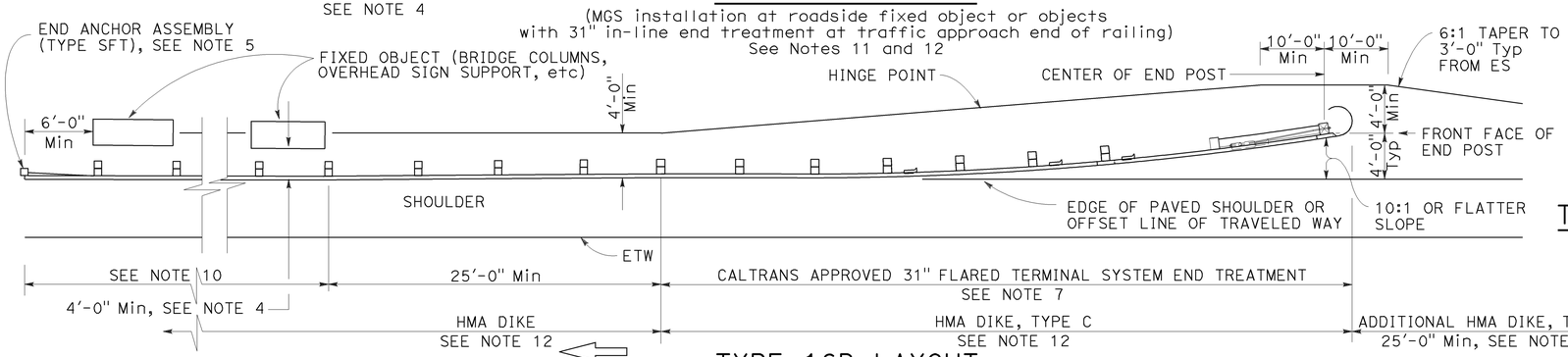

TYPE 16B LAYOUT

(MGS installation at roadside fixed object or objects with 31' flared end treatment at traffic approach end of railing)
See Notes 11 and 12

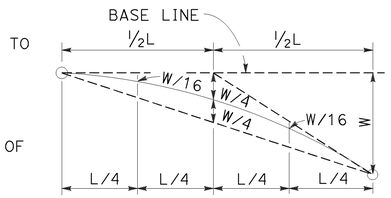

TYPIC AL PARABOLIC LAYOUT

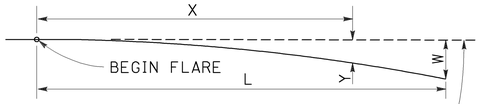

BASE LINE (EDGE OF PAVED SHOULDER OR OFFSET LINE OF EDGE OF TRAVELED WAY)

$$Y = \frac{WX^2}{L^2}$$

Y = OFFSET FROM BASE LINE
W = MAXIMUM OFFSET
X = DISTANCE ALONG BASE LINE
L = LENGTH OF FLARE

PARABOLIC FLARE OFFSETS

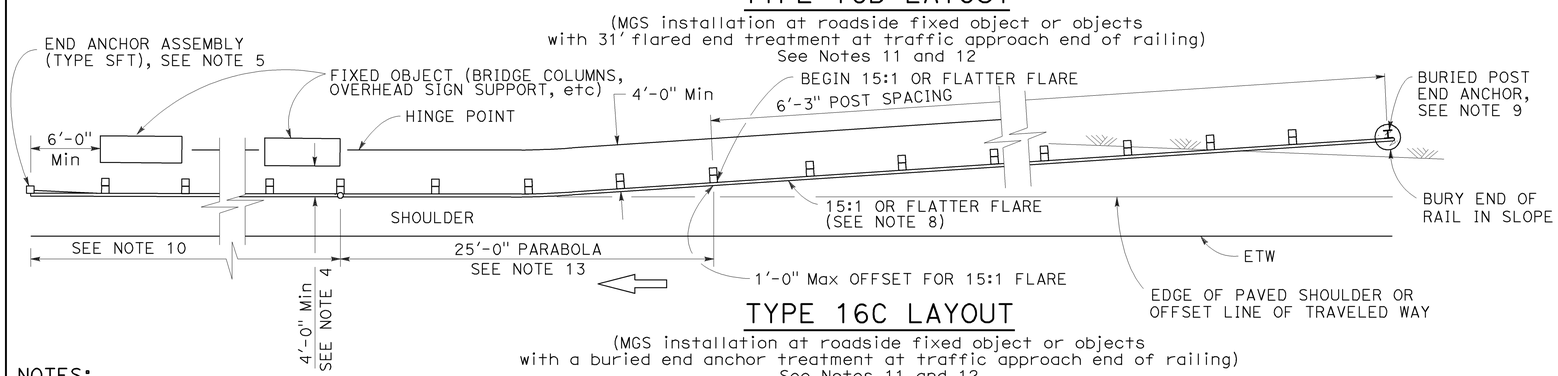

TYPE 16C LAYOUT

(MGS installation at roadside fixed object or objects with a buried end anchor treatment at traffic approach end of railing)
See Notes 11 and 12

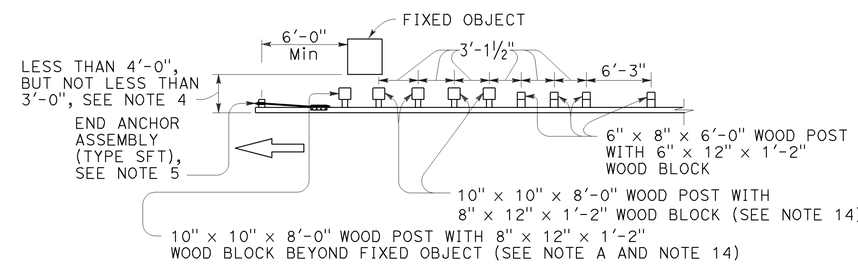

NOTE A: For a series of fixed objects (bridge columns, overhead sign supports, etc.) additional 10" x 10" x 8'-0" wood post with 8" x 12" x 1'-2" wood blocks at 3'-1½" center to center spacing are to be used between fixed objects.

STRENGTHENED MIDWEST GUARDRAIL SYSTEM SECTIONS FOR FIXED OBJECT

Use strengthened MGS sections with Types 16A, 16B or 16C layouts where minimum clearance between the face of the railing and fixed object(s) is less than 4'-0", but not less than 3'-0". See Note 4

NOTES:

1. Line post, blocks and hardware to be used are shown on Revised Standard Plans RSP A77L1, RSP A77L2, RSP A77M1, RSP A77N1 and RSP A77N2.
2. MGS post spacing to be 6'-3" center to center, except as otherwise noted.
3. Except as noted, line posts are 6" x 8" x 6'-0" wood with 6" x 12" x 1'-2" wood blocks. W6 x 8.5 or W6 x 9 steel posts, 6'-0" in length, with 6" x 12" x 1'-2" notched wood blocks or notched recycled plastic blocks may be used for 6" x 8" x 6'-0" wood line posts with 6" x 12" x 1'-2" wood blocks where applicable and when specified.
4. A 4'-0" minimum clearance is required between the face of the railing and the face of a fixed object located directly behind MGS sections with post spacing of 6'-3". Construct MGS as shown in the detail "Strengthened Midwest Guardrail System Sections for Fixed Object" on this plan, where the clearance between the face of the railing and the face of a fixed object is less than 4'-0", but not less than 3'-0". Where the clearance is less than 3'-0", a concrete wall or barrier should be constructed to shield the fixed object(s).
5. For End Anchor Assembly (Type SFT) details, see Revised Standard Plan RSP A77S1.
6. 31" in-line terminal system end treatments are used where site conditions will not accommodate a 31" flared end treatment.
7. The type of 31" terminal system to be used will be shown on the Project Plans.
8. The 15:1 or flatter flare used with Type 16C Layout is based on the edge of the paved shoulder or offset line of edge of the traveled way. The length of MGS within the 15:1 or flatter flare is based on site conditions and should be a length equal to multiples of 12'-6".
9. For details of the Buried Post End Anchor used with Type 16C Layout, see Revised Standard Plan RSP A77T2.
10. As site conditions dictate, construct additional MGS to shield fixed object(s). Additional MGS length equal to multiples of 12'-6". Post spacing at 6'-3" except as specified in Note 4.
11. Layout Types 16A, 16B or 16C are typically used where MGS is recommended to shield roadside fixed object(s) and a crashworthy 31" end treatment is required for only one direction of traffic.
12. Where placement of dike is required with MGS, see Revised Standard Plan RSP A77N4 for dike positioning details.
13. For typical flare offsets for 25'-0" length parabola with maximum offset of 1'-0", see Revised Standard Plan RSP A77P1.
14. W6 x 15 steel post, 8'-0" in length, with 8" x 12" x 1'-2" notched wood block or notched recycled plastic blocks may be used in place of the 10" x 10" x 8'-0" wood post with 8" x 12" x 1'-2" wood block shown in the detail "Strengthened Midwest Guardrail System Sections for Fixed Object".

STATE OF CALIFORNIA
DEPARTMENT OF TRANSPORTATION

MIDWEST GUARDRAIL SYSTEM TYPICAL LAYOUTS FOR ROADSIDE FIXED OBJECTS

NO SCALE

RSP A77R3 DATED JULY 19, 2013 SUPPLEMENTS THE STANDARD PLANS BOOK DATED 2010.

REVISED STANDARD PLAN RSP A77R3

2010 REVISED STANDARD PLAN RSP A77R3

6-20-13

Dist	COUNTY	ROUTE	POST MILES TOTAL PROJECT	SHEET No.	TOTAL SHEETS
07	LA	101	11.8/35.3	143	192

Randell D. Hiatt
REGISTERED CIVIL ENGINEER

July 19, 2013
PLANS APPROVAL DATE

REGISTERED PROFESSIONAL ENGINEER
Randell D. Hiatt
No. C50200
Exp. 6-30-15
CIVIL
STATE OF CALIFORNIA

THE STATE OF CALIFORNIA OR ITS OFFICERS OR AGENTS SHALL NOT BE RESPONSIBLE FOR THE ACCURACY OR COMPLETENESS OF SCANNED COPIES OF THIS PLAN SHEET.

TO ACCOMPANY PLANS DATED 2-18-14

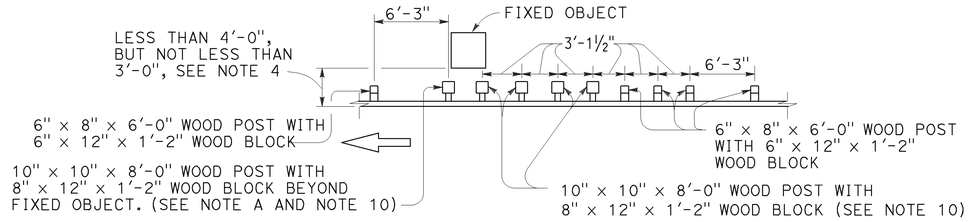

NOTE A: For a series of fixed objects (bridge columns, overhead sign supports, etc.) additional 10" x 10" x 8'-0" wood post with 8" x 12" x 1'-2" wood blocks at 3'-1½" center to center spacing are to be used between fixed object(s).

STRENGTHENED MIDWEST GUARDRAIL SYSTEM SECTIONS FOR FIXED OBJECT

Use strengthened MGS sections with layout Types 16D or 16E where minimum clearance between the face of the MGS and fixed object(s) is less than 4'-0", but not less than 3'-0". See Note 4.

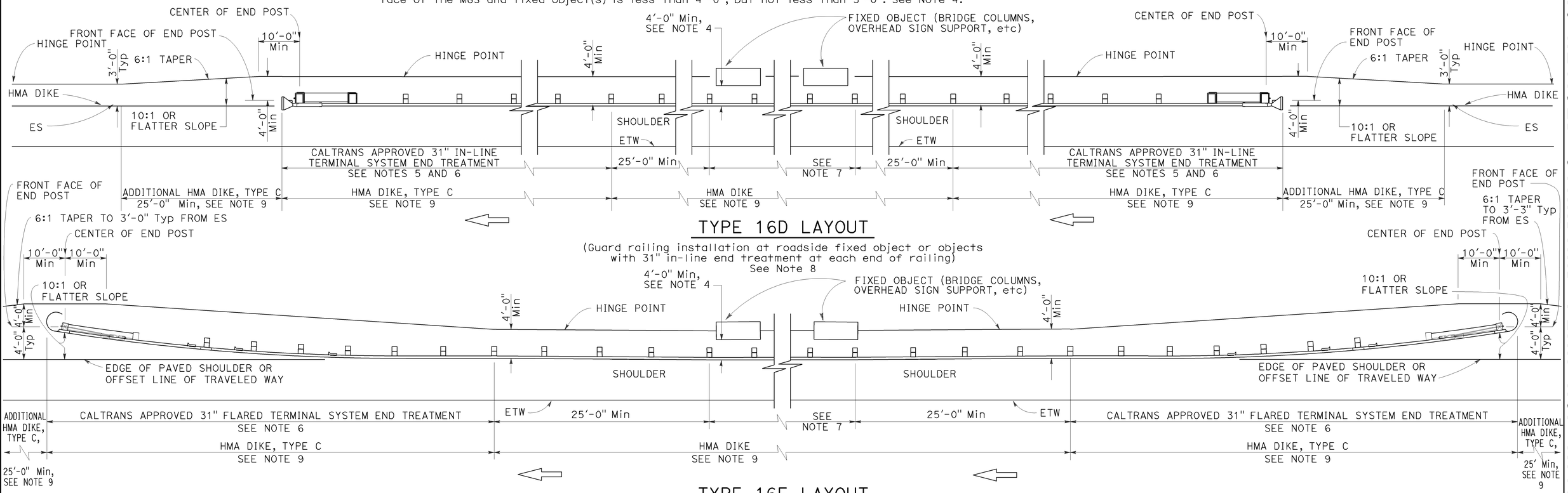

TYPE 16D LAYOUT

(Guard railing installation at roadside fixed object or objects with 31" in-line end treatment at each end of railing)
See Note 8

TYPE 16E LAYOUT

(MGS installation at roadside fixed object or objects with 31" flared end treatment at each end of railing)
See Note 8

NOTES:

1. Line post, blocks and hardware to be used are shown on Revised Standard Plans RSP A77L1, RSP A77L2, RSP A77M1, RSP A77N1 and RSP A77N2.
2. MGS post spacing to be 6'-3" center to center, except as otherwise noted.
3. Except as noted, line posts are 6" x 8" x 6'-0" wood with 6" x 12" x 1'-2" wood blocks. W6 x 8.5 or W6 x 9 steel posts, 6'-0" in length, with 6" x 12" x 1'-2" notched wood blocks or notched recycled plastic blocks may be used for 6" x 8" x 6'-0" wood line posts with 6" x 12" x 1'-2" wood blocks where applicable and when specified.
4. A 4'-0" minimum clearance is required between the face of the railing and the face of a fixed object located directly behind MGS sections with post spacing at 6'-3". Construct MGS as shown in the detail "Strengthened Midwest Guardrail System Sections for Fixed Object". on this plan, where the clearance between the face of the railing and the face of a fixed object is less than 4'-0", but not less than 3'-0". Where the clearance is less than 3'-0", a concrete wall or barrier should be constructed to shield the fixed object(s).
5. 31" in-line terminal system end treatments are used where site conditions will not accommodate a 31" flared end treatment.
6. The type of 31" terminal system to be used will be shown on the Project Plans.
7. As site conditions dictate, construct additional MGS to shield fixed object(s). Additional MGS length equal to multiples of 12'-6". Post spacing at 6'-3", except as specified in Note 4.
8. Layout Types 16D through 16L, shown on the A77R Series of Standard Plans, are typically used where MGS is recommended to shield roadside fixed object(s) and a crashworthy 31" end treatment is required for both directions of traffic.
9. Where placement of dike is required with MGS, see Revised Standard Plan RSP A77N4 for dike positioning details.
10. W6 x 15 steel post, 8'-0" in length, with 8" x 12" x 1'-2" notched wood block or notched recycled plastic block may be used in place of the 10" x 10" x 8'-0" wood post with 8" x 12" x 1'-2" wood block shown in the detail "Strengthened Midwest Guardrail System Sections for Fixed Object".

STATE OF CALIFORNIA
DEPARTMENT OF TRANSPORTATION

MIDWEST GUARDRAIL SYSTEM TYPICAL LAYOUTS FOR ROADSIDE FIXED OBJECTS

NO SCALE

RSP A77R4 DATED JULY 19, 2013 SUPPLEMENTS THE STANDARD PLANS BOOK DATED 2010.

REVISED STANDARD PLAN RSP A77R4

2010 REVISED STANDARD PLAN RSP A77R4

6-12-13

Dist	COUNTY	ROUTE	POST MILES TOTAL PROJECT	SHEET No.	TOTAL SHEETS
07	LA	101	11.8/35.3	144	192

Randell D. Hiatt
REGISTERED CIVIL ENGINEER

July 19, 2013
PLANS APPROVAL DATE

REGISTERED PROFESSIONAL ENGINEER Randell D. Hiatt No. C50200 Exp. 6-30-15 CIVIL STATE OF CALIFORNIA

THE STATE OF CALIFORNIA OR ITS OFFICERS OR AGENTS SHALL NOT BE RESPONSIBLE FOR THE ACCURACY OR COMPLETENESS OF SCANNED COPIES OF THIS PLAN SHEET.

TO ACCOMPANY PLANS DATED 2-18-14

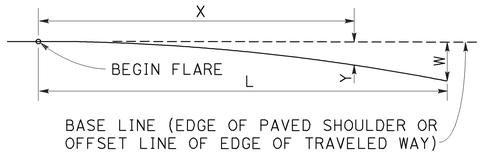

$$Y = \frac{WX^2}{L^2}$$

Y = OFFSET FROM BASE LINE
W = MAXIMUM OFFSET
X = DISTANCE ALONG BASE LINE
L = LENGTH OF FLARE

PARABOLIC FLARE OFFSETS

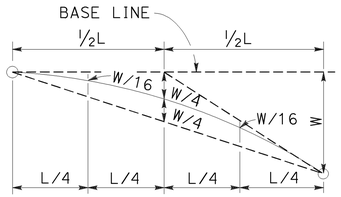

TYPICAL PARABOLIC LAYOUT

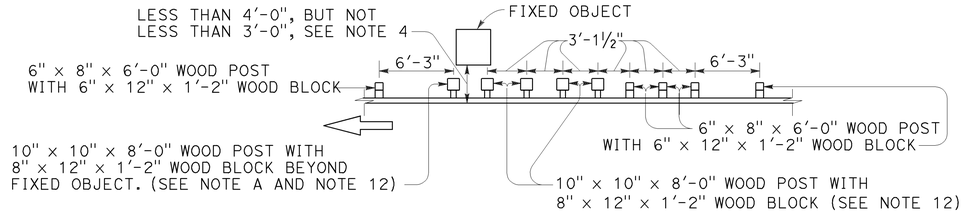

NOTE A: For a series of fixed objects (bridge columns, overhead sign supports, etc) additional 10" x 10" x 8'-0" wood post with 8" x 12" x 1'-2" wood blocks at 3'-1½" center to center spacing are to be used between fixed object(s).

STRENGTHENED MIDWEST GUARDRAIL SYSTEM SECTIONS FOR FIXED OBJECT

Use strengthened MGS sections with layout Types 16F or 16G where minimum clearance between the face of the MGS and fixed object(s) is less than 4'-0", but not less than 3'-0". See Note 4.

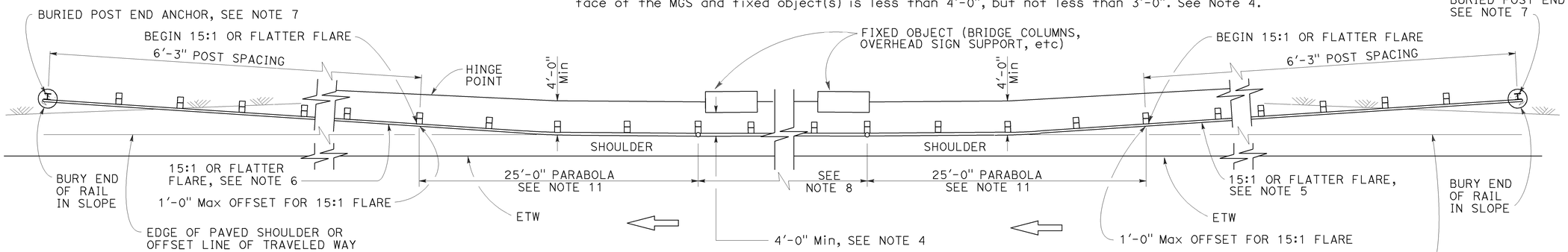

TYPE 16F LAYOUT

(MGS installation at roadside fixed object or objects With a buried end anchor treatment at each end of railing) See Notes 9 and 10

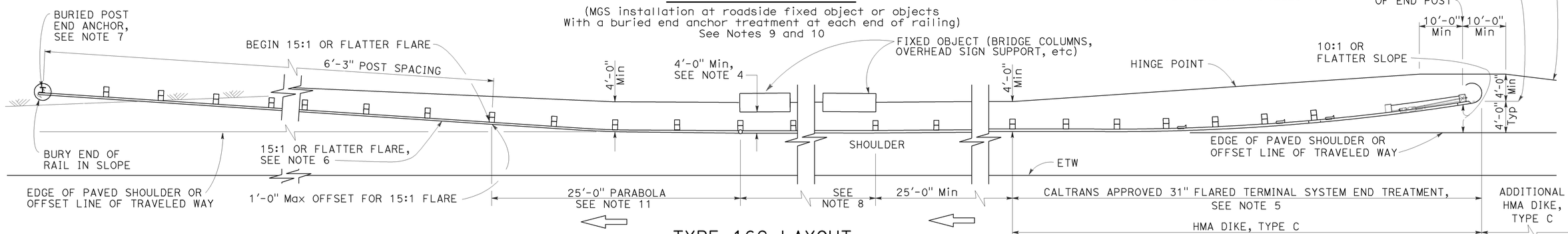

TYPE 16G LAYOUT

(MGS installation at roadside fixed object or objects with 31" flared end treatment and a buried end anchor treatment at the ends of railing) See Notes 9 and 10

NOTES:

1. Line post, blocks and hardware to be used are shown on Revised Standard Plans RSP A77L1, RSP A77L2, RSP A77M1, RSP A77N1 and RSP A77N2.
2. MGS post spacing to be 6'-3" center to center, except as otherwise noted.
3. Except as noted, line posts are 6" x 8" x 6'-0" wood with 6" x 12" x 1'-2" wood blocks. W6 x 8.5 or W6 x 9 steel posts, 6'-0" in length, with 8" x 12" x 1'-2" notched wood blocks or notched recycled plastic blocks may be used for 6" x 8" x 6'-0" wood posts with 6" x 12" x 1'-2" wood blocks where applicable and when specified.
4. A 4'-0" minimum clearance is required between the face of the railing and the face of a fixed object located directly behind MGS sections with post spacing at 6'-3". Construct MGS as shown in the detail "Strengthened Midwest Guardrail System Sections for Fixed Objects" on this plan, where the clearance between the face of the railing and the face of a fixed object is less than 4'-0", but not less than 3'-0". Where the clearance is less than 3'-0", a concrete wall or barrier should be constructed to shield the fixed object(s).
5. The type of 31" terminal system to be used will be shown on the Project Plans.
6. The 15:1 or flatter flare for the buried post anchor is based on the edge of the paved shoulder or offset line of edge of the traveled way. The length of MGS within the 15:1 or flatter flare is based on site conditions and should be a length equal to multiples of 12'-6".
7. For details of the Buried Post End Anchor, see Revised Standard Plan RSP A77T2.
8. As site conditions dictate, construct additional MGS to shield fixed object(s). Additional MGS length equal to multiples of 12'-6". Post spacing at 6'-3", except as specified in Note 4.
9. Layout Types 16D through 16L, shown on the A77R Series of Standard Plans, are typically used on highways where MGS is recommended to shield roadside fixed object(s) and a crashworthy 31" end treatment is required for both directions of traffic.
10. Where placement of dike is required with MGS, see Revised Standard Plan RSP A77N4 for dike positioning details.
11. For typical flare offsets for 25'-0" length parabola with maximum offset of 1'-0", see Revised Standard Plan RSP A77P1.
12. W6 x 15 steel post, 8'-0" in length, with 8" x 12" x 1'-2" notched wood block or notched recycled plastic blocks may be used in place of the 10" x 10" x 8'-0" wood post with 8" x 12" x 1'-2" wood block shown in the detail "Strengthened Midwest Guardrail System Sections for Fixed Object".

STATE OF CALIFORNIA
DEPARTMENT OF TRANSPORTATION

MIDWEST GUARDRAIL SYSTEM TYPICAL LAYOUTS FOR ROADSIDE FIXED OBJECTS

NO SCALE

RSP A77R5 DATED JULY 19, 2013 SUPPLEMENTS THE STANDARD PLANS BOOK DATED 2010.

REVISED STANDARD PLAN RSP A77R5

2010 REVISED STANDARD PLAN RSP A77R5

6-12-13

Dist	COUNTY	ROUTE	POST MILES TOTAL PROJECT	SHEET No.	TOTAL SHEETS
07	LA	101	11.8/35.3	145	192

Randell D. Hiatt
REGISTERED CIVIL ENGINEER

July 19, 2013
PLANS APPROVAL DATE

REGISTERED PROFESSIONAL ENGINEER
Randell D. Hiatt
No. C50200
Exp. 6-30-15
CIVIL
STATE OF CALIFORNIA

THE STATE OF CALIFORNIA OR ITS OFFICERS OR AGENTS SHALL NOT BE RESPONSIBLE FOR THE ACCURACY OR COMPLETENESS OF SCANNED COPIES OF THIS PLAN SHEET.

TO ACCOMPANY PLANS DATED 2-18-14

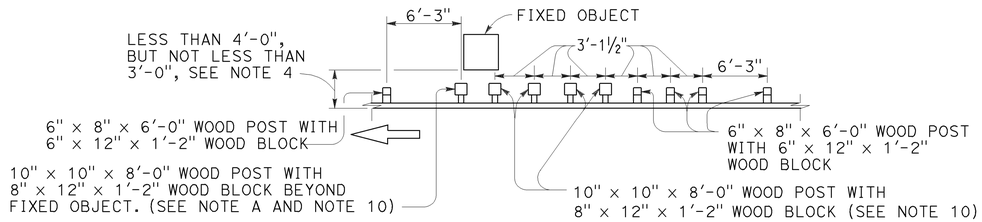

NOTE A: For a series of fixed objects (bridge columns, overhead sign supports, etc.) additional 10" x 10" x 8'-0" wood post with 8" x 12" x 1'-2" wood blocks at 3'-1½" center to center spacing are to be used between fixed object(s).

STRENGTHENED MIDWEST GUARDRAIL SYSTEM SECTIONS FOR FIXED OBJECT

Use strengthened MGS sections with layout Type 16H where minimum clearance between the face of the MGS and fixed object(s) is less than 4'-0", but not less than 3'-0". See Note 4.

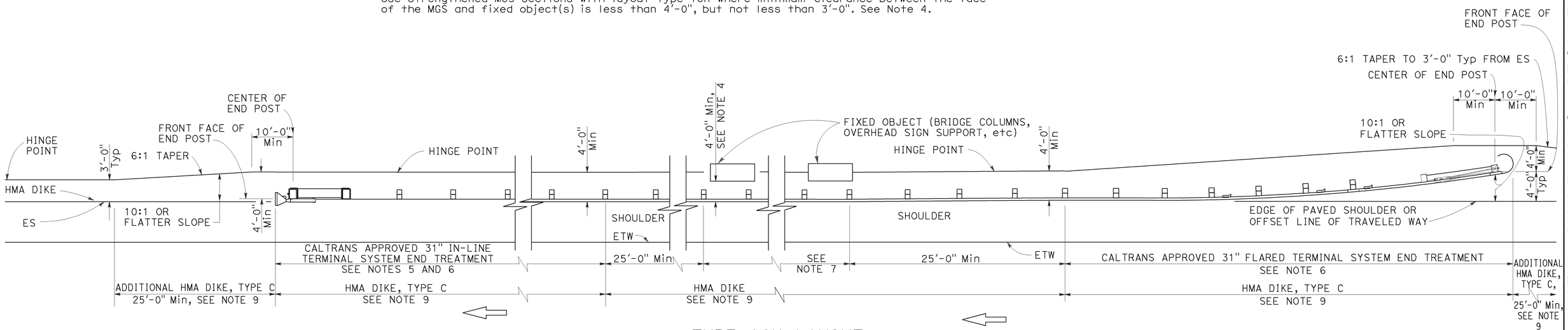

TYPE 16H LAYOUT

(MGS installation at roadside fixed object or objects with 31" flared end treatment and 31" in-line end treatment at the ends of railing)
See Note 8

NOTES:

1. Line post, blocks and hardware to be used are shown on Revised Standard Plans RSP A77L1, RSP A77L2, RSP A77M1, RSP A77N1 and RSP A77N2.
2. MGS post spacing to be 6'-3" center to center, except as otherwise noted.
3. Except as noted, line posts are 6" x 8" x 6'-0" wood with 6" x 12" x 1'-2" wood blocks. W6 x 8.5 or W6 x 9 steel posts, 6'-0" in length, with 6" x 12" x 1'-2" notched wood blocks or notched recycled plastic blocks may be used for 6" x 8" x 6'-0" wood posts with 6" x 12" x 1'-2" wood blocks where applicable and when specified.
4. A 4'-0" minimum clearance is required between the face of the railing and the face of a fixed object located directly behind MGS sections with post spacing at 6'-3". Construct MGS as shown in the detail "Strengthened Midwest Guardrail System Sections for Fixed Objects" on this plan, where the clearance between the face of the railing and the face of a fixed object is less than 4'-0", but not less than 3'-0". Where the clearance is less than 3'-0", a concrete wall or barrier should be constructed to shield the fixed object(s).
5. 31" in-line terminal system end treatments are used where site conditions will not accommodate a 31" flared end treatment.
6. The type of 31" terminal system to be used will be shown on the Project Plans.
7. As site conditions dictate, construct additional MGS to shield fixed object(s). Additional MGS length equal to multiples of 12'-6". Post spacing at 6'-3", except as specified in Note 4.
8. Layout Types 16D through 16L, shown on the A77R Series of Standard PLans, typically used where MGS is recommended to shield roadside fixed object(s) and a crashworthy 31" end treatment is required for both directions of traffic.
9. Where placement of dike is required with MGS, see Revised Standard Plan RSP A77N4 for dike positioning details.
10. W6 x 15 steel post, 8'-0" in length, with 8" x 12" x 1'-2" notched wood block or notched recycled plastic blocks may be used in place of the 10" x 10" x 8'-0" wood post with 8" x 12" x 1'-2" wood block shown in the detail "Strengthened Midwest Guardrail System Sections for Fixed Object".

STATE OF CALIFORNIA
DEPARTMENT OF TRANSPORTATION

MIDWEST GUARDRAIL SYSTEM TYPICAL LAYOUTS FOR ROADSIDE FIXED OBJECTS

NO SCALE

RSP A77R6 DATED JULY 19, 2013 SUPPLEMENTS THE STANDARD PLANS BOOK DATED 2010.

REVISED STANDARD PLAN RSP A77R6

2010 REVISED STANDARD PLAN RSP A77R6

6-19-13

Dist	COUNTY	ROUTE	POST MILES TOTAL PROJECT	SHEET No.	TOTAL SHEETS
07	LA	101	11.8/35.3	146	192

Randell D. Hiatt
REGISTERED CIVIL ENGINEER

July 19, 2013
PLANS APPROVAL DATE

REGISTERED PROFESSIONAL ENGINEER Randell D. Hiatt No. C50200 Exp. 6-30-15 CIVIL STATE OF CALIFORNIA

THE STATE OF CALIFORNIA OR ITS OFFICERS OR AGENTS SHALL NOT BE RESPONSIBLE FOR THE ACCURACY OR COMPLETENESS OF SCANNED COPIES OF THIS PLAN SHEET.

TO ACCOMPANY PLANS DATED 2-18-14

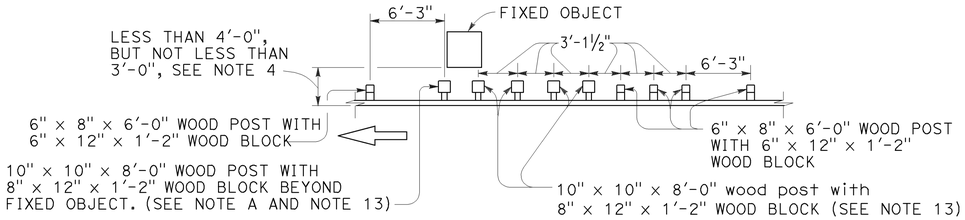

NOTE A: For a series of fixed objects (bridge columns, overhead sign supports, etc.) additional 10" x 10" x 8'-0" wood post with 8" x 12" x 1'-2" wood blocks at 3'-1½" center to center spacing are to be used between fixed object(s).

STRENGTHENED MIDWEST GUARDRAIL SYSTEM SECTIONS FOR FIXED OBJECT

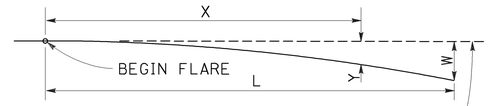

BASE LINE (EDGE OF PAVED SHOULDER OR OFFSET LINE OF EDGE OF TRAVELED WAY)

$$Y = \frac{WX^2}{L^2}$$

Y = OFFSET FROM BASE LINE
W = MAXIMUM OFFSET
X = DISTANCE ALONG BASE LINE
L = LENGTH OF FLARE

PARABOLIC FLARE OFFSETS

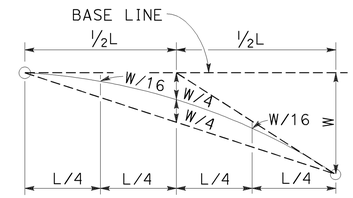

TYPICAL PARABOLIC LAYOUT

Use strengthened MGS sections with layout Types 16I or 16J Layouts where minimum clearance between the face of the MGS and fixed object(s) is less than 4'-0", but not less than 3'-0". See Note 4.

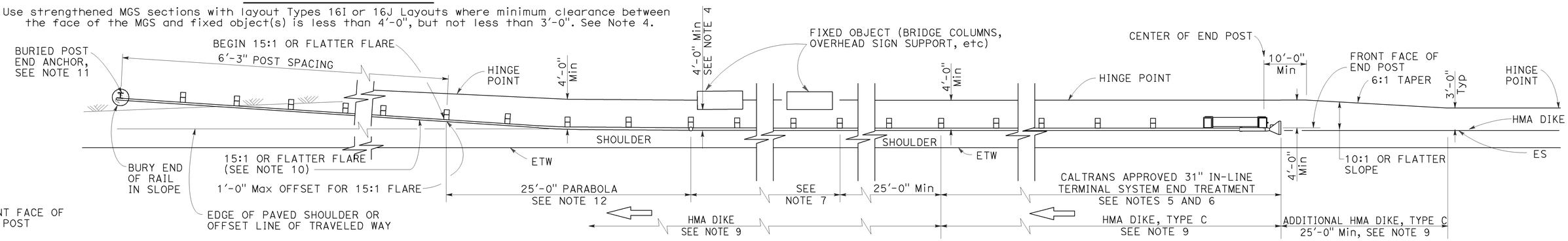

TYPE 16I LAYOUT

(MGS installation at roadside fixed object or objects with 31" in-line end treatment and a buried end anchor treatment at the ends of railing) See Note 8

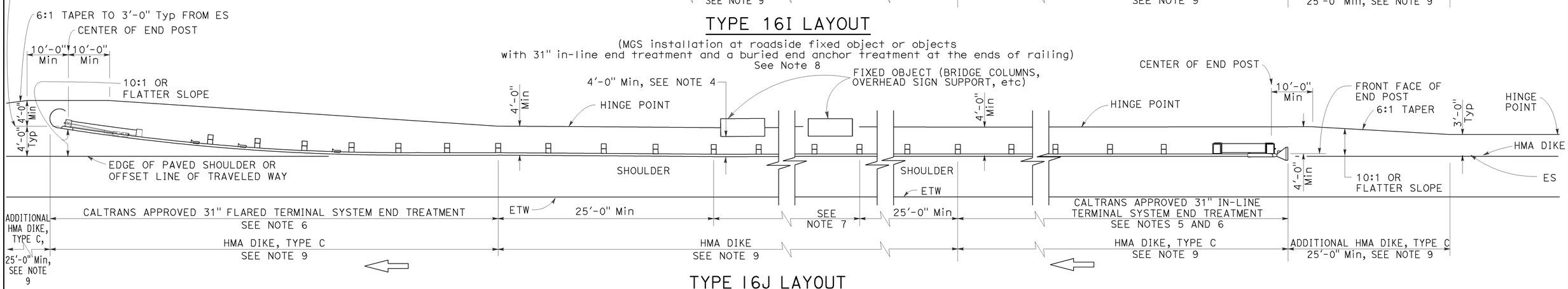

TYPE 16J LAYOUT

(MGS installation at roadside fixed object or objects With a 31" in-line end treatment and a 31" flared end treatment at the ends of railing) See Note 8

NOTES:

1. Line post, blocks and hardware to be used are shown on Revised Standard Plans RSP A77L1, RSP A77L2, RSP A77M1, RSP A77N1 and RSP A77N2.
2. MGS post spacing to be 6'-3" center to center, except as otherwise noted.
3. Except as noted, line posts are 6" x 8" x 6'-0" wood with 6" x 12" x 1'-2" wood blocks. W6 x 8.5 or W6 x 9 steel posts, 6'-0" in length, with 6" x 12" x 1'-2" notched wood blocks or notched recycled plastic blocks may be used for 6" x 8" x 6'-0" wood posts with 6" x 12" x 1'-2" wood blocks where applicable and when specified.
4. A 4'-0" minimum clearance is required between the face of the railing and the face of a fixed object located directly behind MGS sections with post spacing at 6'-3". Construct MGS as shown in the detail "Strengthened Midwest Guardrail System Sections for Fixed Objects" on this plan, where the clearance between the face of the railing and the face of a fixed object is less than 4'-0", but not less than 3'-0". Where the clearance is less than 3'-0", a concrete wall or barrier should be constructed to shield the fixed object(s).
5. 31" in-line terminal system end treatments are used where site conditions will not accommodate a 31" flared end treatment.
6. The type of 31" terminal system to be used will be shown on the Project Plans.
7. As site conditions dictate, construct additional MGS to shield fixed object(s). Additional MGS length equal to multiples of 12'-6". Post spacing at 6'-3", except as specified in Note 4.
8. Layout Types 16D through 16L, shown on the A77R Series of Standard Plans, are typically used where MGS is recommended to shield roadside fixed object(s) and a crashworthy 31" end treatment is required for both directions of traffic.
9. Where placement of dike is required with guard railing, see Revised Standard Plan RSP A77N4 for dike positioning details.
10. The 15:1 or flatter flare for the buried post anchor is based on the edge of the paved shoulder or offset line of edge of the traveled way. The length of MGS within the 15:1 or flatter flare is based on site conditions and should be a length equal to multiples of 12'-6".
11. For details of Buried Post End Anchor, see Revised Standard Plan RSP A77T2.
12. For typical flare offsets for 25'-0" length parabola with maximum offset of 1'-0", see Revised Standard Plan RSP A77P1.
13. W6 x 15 steel post, 8'-0" in length, with 8" x 12" x 1'-2" notched wood block or notched recycled plastic blocks may be used in place of the 10" x 10" x 8'-0" wood post with 8" x 12" x 1'-2" wood block shown in the detail "Strengthened Midwest Guardrail System Sections for Fixed Object".

STATE OF CALIFORNIA
DEPARTMENT OF TRANSPORTATION

MIDWEST GUARDRAIL SYSTEM TYPICAL LAYOUTS FOR ROADSIDE FIXED OBJECTS

NO SCALE

RSP A77R7 DATED JULY 19, 2013 SUPPLEMENTS THE STANDARD PLANS BOOK DATED 2010.

REVISED STANDARD PLAN RSP A77R7

2010 REVISED STANDARD PLAN RSP A77R7

6-19-13

Dist	COUNTY	ROUTE	POST MILES TOTAL PROJECT	SHEET No.	TOTAL SHEETS
07	LA	101	11.8/35.3	147	192

Randell D. Hiatt
REGISTERED CIVIL ENGINEER

July 19, 2013
PLANS APPROVAL DATE

REGISTERED PROFESSIONAL ENGINEER Randell D. Hiatt No. C50200 Exp. 6-30-15 CIVIL STATE OF CALIFORNIA

THE STATE OF CALIFORNIA OR ITS OFFICERS OR AGENTS SHALL NOT BE RESPONSIBLE FOR THE ACCURACY OR COMPLETENESS OF SCANNED COPIES OF THIS PLAN SHEET.

TO ACCOMPANY PLANS DATED 2-18-14

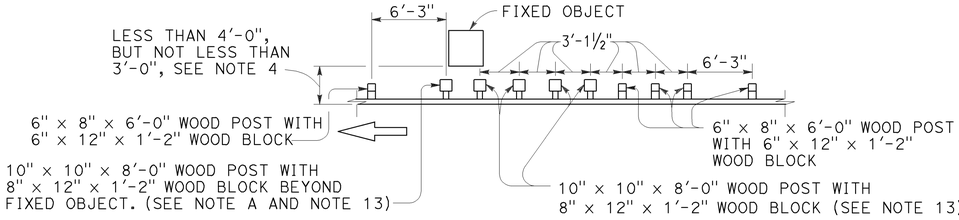

NOTE A: For a series of fixed objects (bridge columns, overhead sign supports, etc.) additional 10" x 10" x 8'-0" wood post with 8" x 12" x 1'-2" wood blocks at 3'-1½" center to center spacing are to be used between fixed object(s).

STRENGTHENED MIDWEST GUARDRAIL SYSTEM SECTIONS FOR FIXED OBJECT

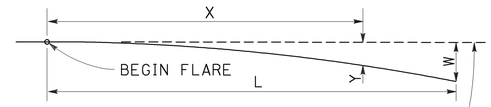

BASE LINE (EDGE OF PAVED SHOULDER OR OFFSET LINE OF EDGE OF TRAVELED WAY)

$$Y = \frac{WX^2}{L^2}$$

Y = OFFSET FROM BASE LINE
W = MAXIMUM OFFSET
X = DISTANCE ALONG BASE LINE
L = LENGTH OF FLARE

PARABOLIC FLARE OFFSETS

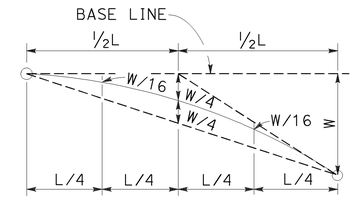

TYPICAL PARABOLIC LAYOUT

Use strengthened MGS sections with layout Types 16K or 16L layouts where minimum clearance between the face of the MGS and fixed object(s) is less than 4'-0", but not less than 3'-0". See Note 4.

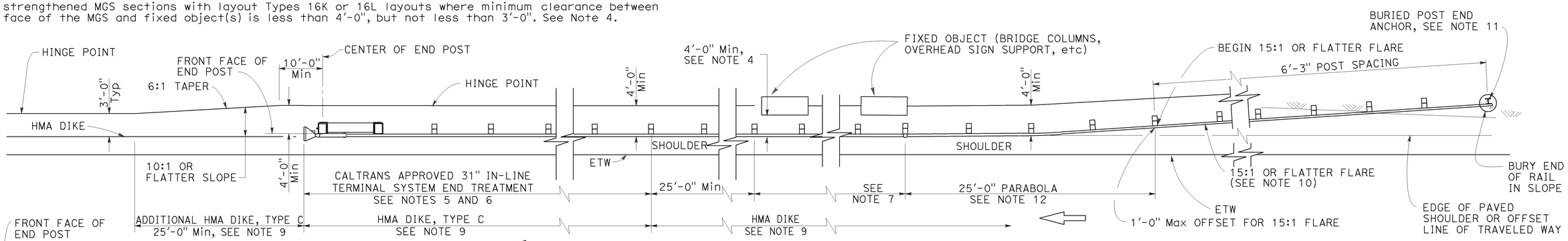

TYPE 16K LAYOUT

(MGS installation at roadside fixed object or objects with a buried end anchor treatment and a 31" in-line end treatment at the ends of railing) See Note 8

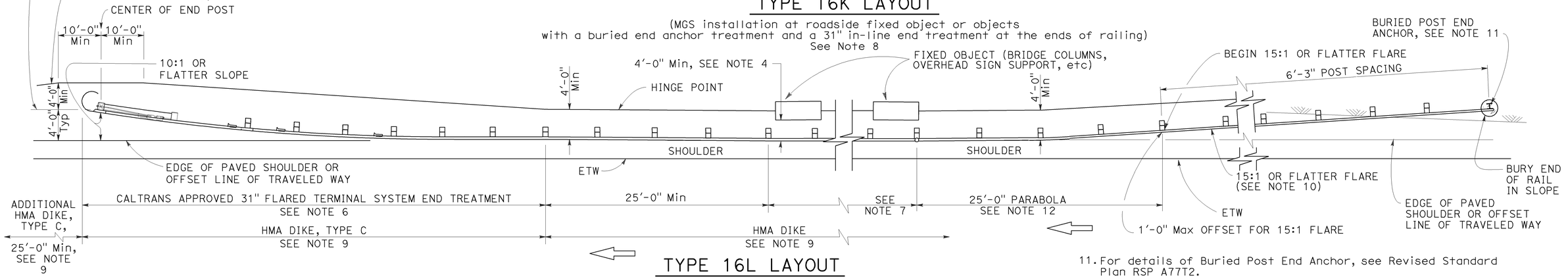

TYPE 16L LAYOUT

(MGS installation at roadside fixed object or objects with a buried end anchor treatment and a 31" flared end treatment at the ends of railing) See Note 8

NOTES:

1. Line post, blocks and hardware to be used are shown on Revised Standard Plans RSP A77L1, RSP A77L2, RSP A77M1, RSP A77N1 and RSP A77N2.
2. MGS post spacing to be 6'-3" center to center, except as otherwise noted.
3. Except as noted, line posts are 6" x 8" x 6'-0" wood with 6" x 12" x 1'-2" wood blocks. W6 x 8.5 or W6 x 9 steel posts, 6'-0" in length, with 6" x 12" x 1'-2" notched wood blocks or notched recycled plastic blocks may be used for 6" x 8" x 6'-0" wood posts with 6" x 12" x 1'-2" wood blocks where applicable and when specified.
4. A 4'-0" minimum clearance is required between the face of the railing and the face of a fixed object located directly behind MGS sections with post spacing at 6'-3". Construct MGS as shown in the detail "Strengthened Midwest Guardrail System Sections for Fixed Objects" on this plan, where the clearance between the face of the railing and the face of a fixed object is less than 4'-0", but not less than 3'-0". Where the clearance is less than 3'-0", a concrete wall or barrier should be constructed to shield the fixed object(s).
5. 31" in-line terminal system end treatments are used where site conditions will not accommodate a 31" flared end treatment.
6. The type of 31" terminal system to be used will be shown on the Project Plans.
7. As site conditions dictate, construct additional MGS to shield fixed object(s). Additional MGS length equal to multiples of 12'-6". Post spacing at 6'-3", except as specified in Note 4.
8. Layout Types 16D through 16L, shown on the A77R Series of Standard Plans are typically used where MGS is recommended to shield roadside fixed object(s) and a crashworthy 31" end treatment is required for both directions of traffic.
9. Where placement of dike is required with MGS, see Revised Standard Plan RSP A77N4 for dike positioning details.
10. The 15:1 or flatter flare for the buried post anchor is based on the edge of the paved shoulder or offset line of edge of the traveled way. The length of MGS within the 15:1 or flatter flare is based on site conditions and should be a length equal to multiples of 12'-6".
11. For details of Buried Post End Anchor, see Revised Standard Plan RSP A77T2.
12. For typical flare offsets for 25'-0" length parabola with maximum offset of 1'-0", see Revised Standard Plan RSP A77P1.
13. W6 x 15 steel post, 8'-0" in length, with 8" x 12" x 1'-2" notched wood block or notched recycled plastic blocks may be used in place of the 10" x 10" x 8'-0" wood post with 8" x 12" x 1'-2" wood block shown in the detail "Strengthened Midwest Guardrail System Sections for Fixed Object".

STATE OF CALIFORNIA
DEPARTMENT OF TRANSPORTATION

MIDWEST GUARDRAIL SYSTEM TYPICAL LAYOUTS FOR ROADSIDE FIXED OBJECTS

NO SCALE

RSP A77R8 DATED JULY 19, 2013 SUPPLEMENTS THE STANDARD PLANS BOOK DATED 2010.

REVISED STANDARD PLAN RSP A77R8

2010 REVISED STANDARD PLAN RSP A77R8

6-19-13

Dist	COUNTY	ROUTE	POST MILES TOTAL PROJECT	SHEET No.	TOTAL SHEETS
07	LA	101	11.8/35.3	148	192

Randell D. Hiatt
REGISTERED CIVIL ENGINEER

November 15, 2013
PLANS APPROVAL DATE

REGISTERED PROFESSIONAL ENGINEER
Randell D. Hiatt
No. C50200
Exp. 6-30-15
CIVIL
STATE OF CALIFORNIA

THE STATE OF CALIFORNIA OR ITS OFFICERS OR AGENTS SHALL NOT BE RESPONSIBLE FOR THE ACCURACY OR COMPLETENESS OF SCANNED COPIES OF THIS PLAN SHEET.

TO ACCOMPANY PLANS DATED 2-18-14

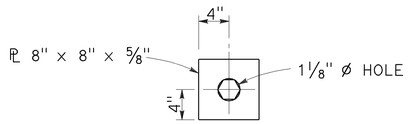

DETAIL "A"
CABLE CONNECTION
END PLATE

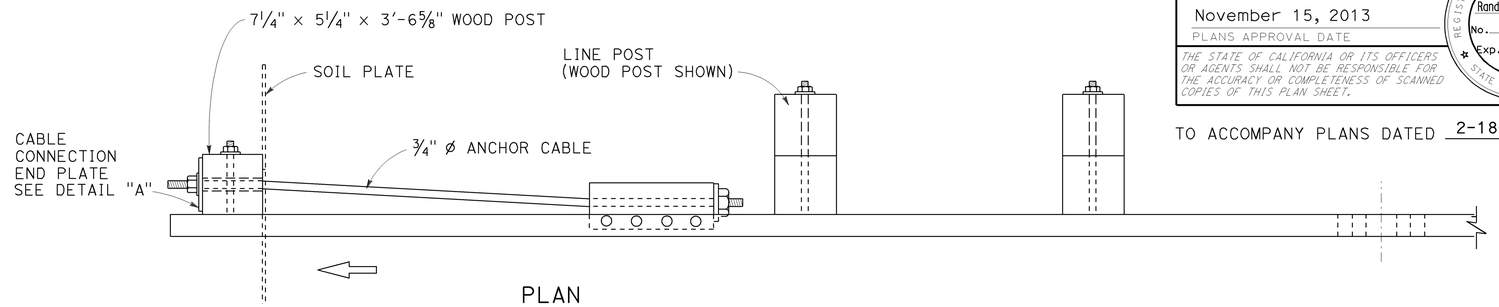

PLAN

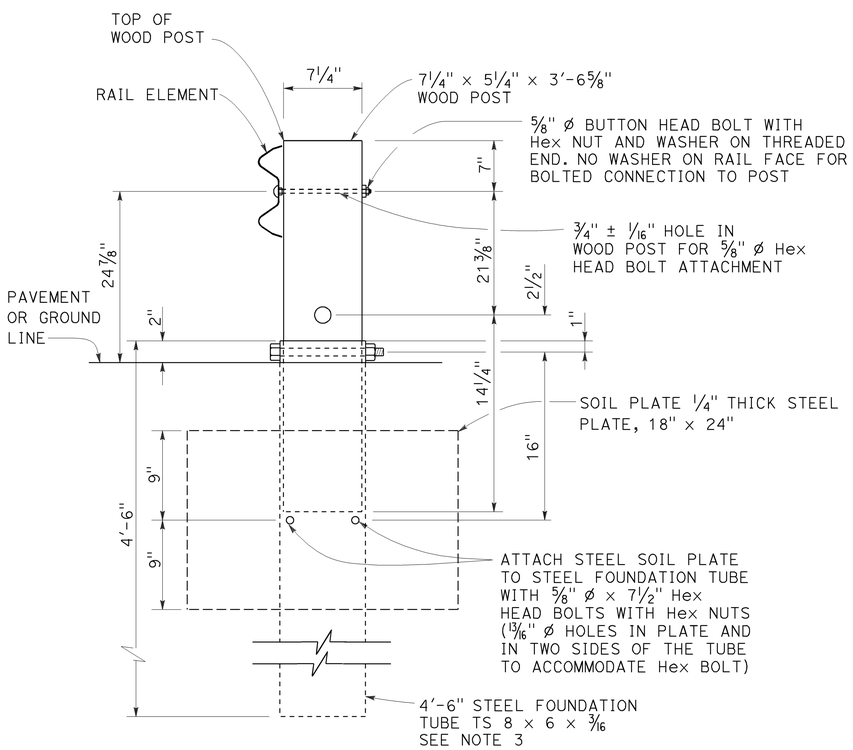

SECTION A-A

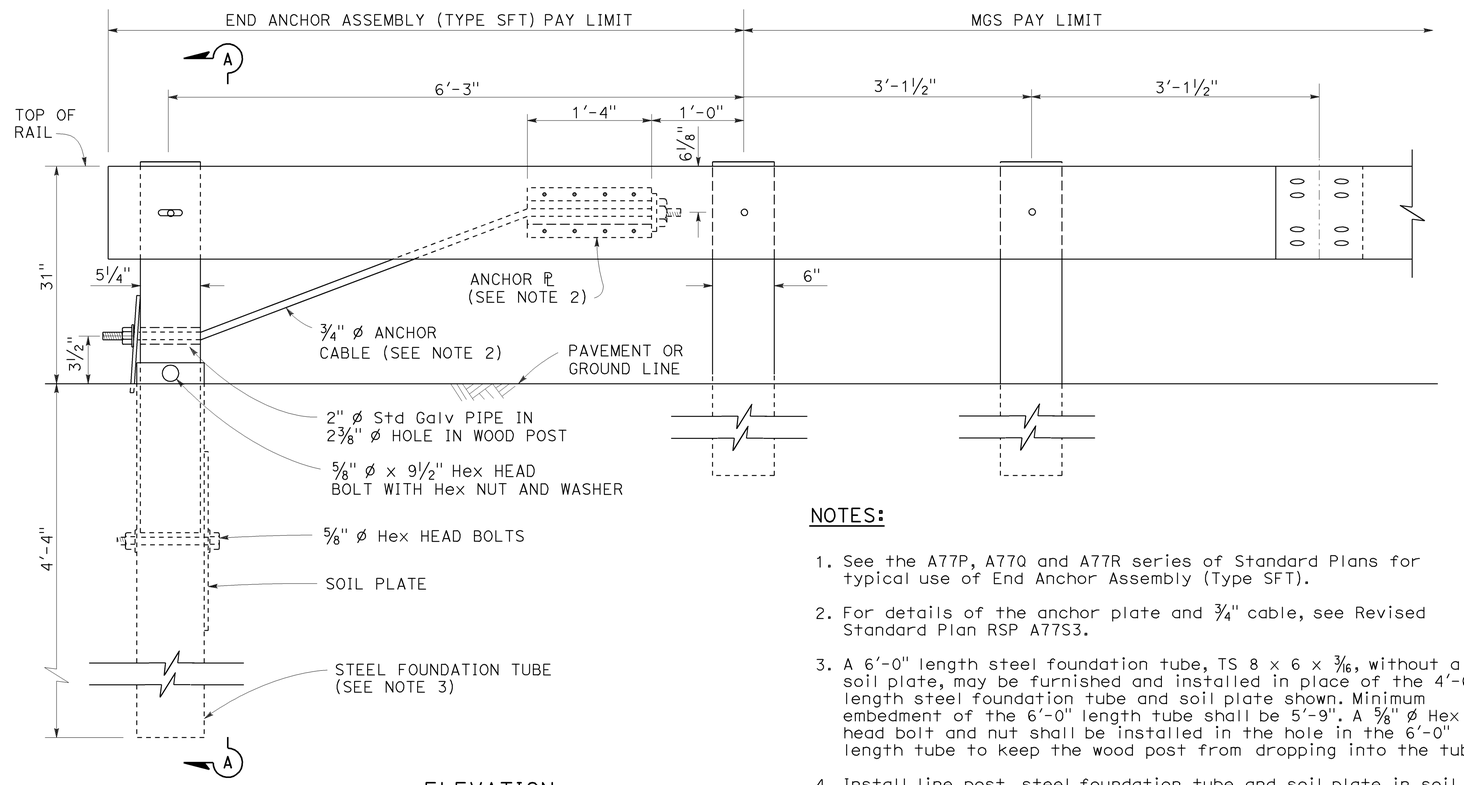

ELEVATION

END ANCHOR
ASSEMBLY (TYPE SFT)
See Note 1

NOTES:

1. See the A77P, A77Q and A77R series of Standard Plans for typical use of End Anchor Assembly (Type SFT).
2. For details of the anchor plate and 3/4" cable, see Revised Standard Plan RSP A77S3.
3. A 6'-0" length steel foundation tube, TS 8 x 6 x 3/16, without a soil plate, may be furnished and installed in place of the 4'-6" length steel foundation tube and soil plate shown. Minimum embedment of the 6'-0" length tube shall be 5'-9". A 5/8" ø Hex head bolt and nut shall be installed in the hole in the 6'-0" length tube to keep the wood post from dropping into the tube.
4. Install line post, steel foundation tube and soil plate in soil.

STATE OF CALIFORNIA
DEPARTMENT OF TRANSPORTATION

MIDWEST GUARDRAIL SYSTEM END ANCHOR ASSEMBLY (TYPE SFT)

NO SCALE

RSP A77S1 DATED NOVEMBER 15, 2013 SUPERSEDES RSP A77S1
DATED JULY 19, 2013 THAT SUPPLEMENTS THE STANDARD PLANS BOOK DATED 2010.

REVISED STANDARD PLAN RSP A77S1

2010 REVISED STANDARD PLAN RSP A77S1

10-4-13

Dist	COUNTY	ROUTE	POST MILES TOTAL PROJECT	SHEET No.	TOTAL SHEETS
07	LA	101	11.8/35.3	149	192

Randell D. Hiatt
REGISTERED CIVIL ENGINEER

July 19, 2013
PLANS APPROVAL DATE

REGISTERED PROFESSIONAL ENGINEER
Randell D. Hiatt
No. C50200
Exp. 6-30-15
CIVIL
STATE OF CALIFORNIA

THE STATE OF CALIFORNIA OR ITS OFFICERS OR AGENTS SHALL NOT BE RESPONSIBLE FOR THE ACCURACY OR COMPLETENESS OF SCANNED COPIES OF THIS PLAN SHEET.

TO ACCOMPANY PLANS DATED 2-18-14

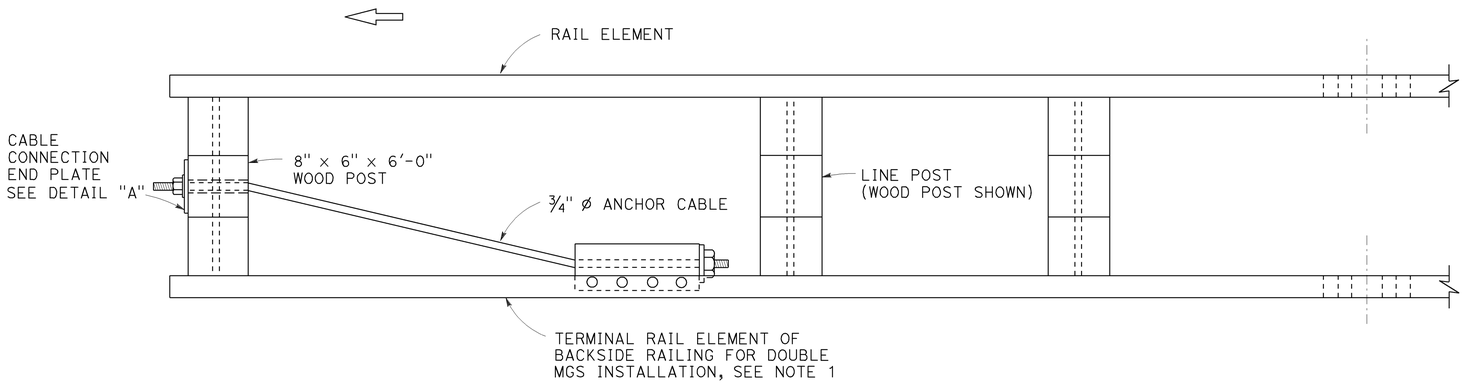

PLAN

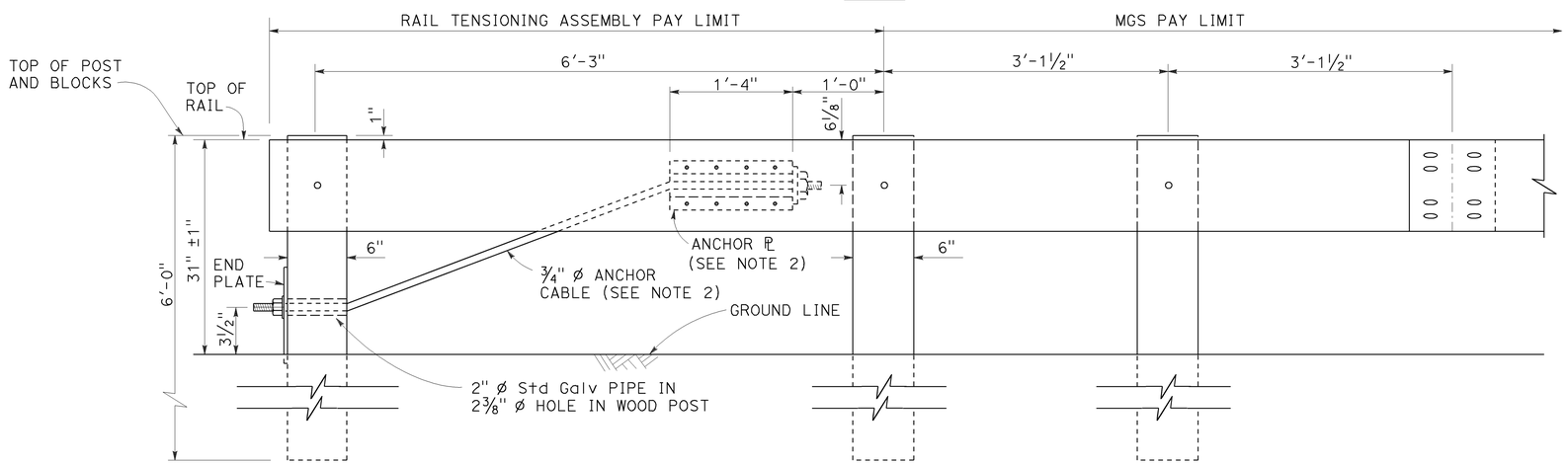

ELEVATION
RAIL TENSIONING ASSEMBLY
See Note 1

NOTES:

1. See Revised Standard Plans RSP A77Q3 and RSP A77R1 for typical use of rail tensioning assembly.
2. For details of the anchor plate and ¾" cable, see Revised Standard Plan RSP A77S3.

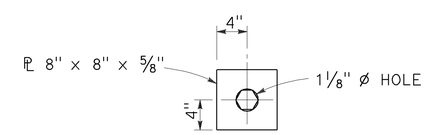

DETAIL "A"
CABLE CONNECTION END PLATE

STATE OF CALIFORNIA
DEPARTMENT OF TRANSPORTATION

MIDWEST GUARDRAIL SYSTEM RAIL TENSIONING ASSEMBLY

NO SCALE

RSP A77S2 DATED JULY 19, 2013 SUPPLEMENTS THE STANDARD PLANS BOOK DATED 2010.

REVISED STANDARD PLAN RSP A77S2

2010 REVISED STANDARD PLAN RSP A77S2

7-3-13

Dist	COUNTY	ROUTE	POST MILES TOTAL PROJECT	SHEET No.	TOTAL SHEETS
07	LA	101	11.8/35.3	150	192

Randell D. Hiatt
REGISTERED CIVIL ENGINEER

November 15, 2013
PLANS APPROVAL DATE

REGISTERED PROFESSIONAL ENGINEER
Randell D. Hiatt
No. C50200
Exp. 6-30-15
CIVIL
STATE OF CALIFORNIA

THE STATE OF CALIFORNIA OR ITS OFFICERS OR AGENTS SHALL NOT BE RESPONSIBLE FOR THE ACCURACY OR COMPLETENESS OF SCANNED COPIES OF THIS PLAN SHEET.

TO ACCOMPANY PLANS DATED 2-18-14

2010 REVISED STANDARD PLAN RSP A77S3

NOTE:

See Revised Standard Plans RSP A77S1, RSP A77S2 and RSP A77T1 for typical use of anchor cable and anchor plate.

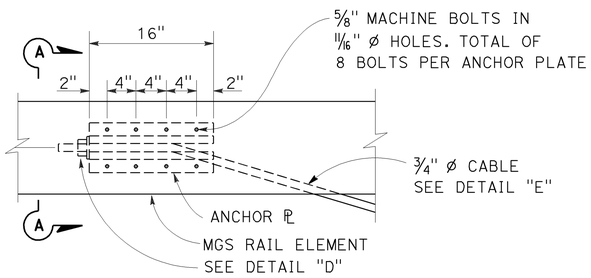

ANCHOR PLATE DETAIL
(MGS shown, TBB similar)

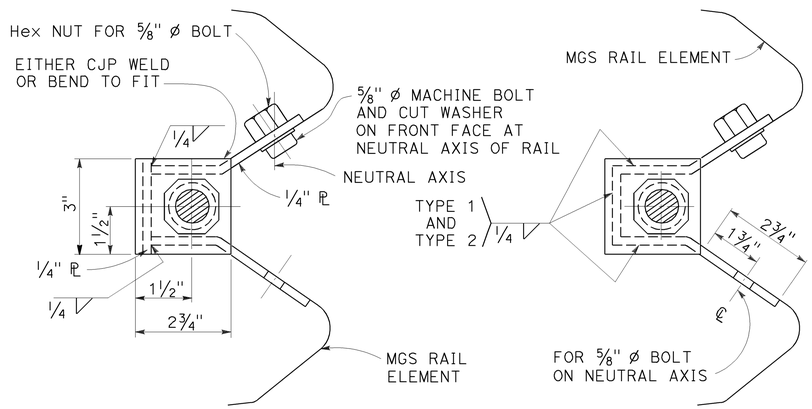

NOTE:
Dimensioning applies to both types.

SECTION A-A
(ALTERNATIVE TYPE 1)

SECTION A-A
(ALTERNATIVE TYPE 2)

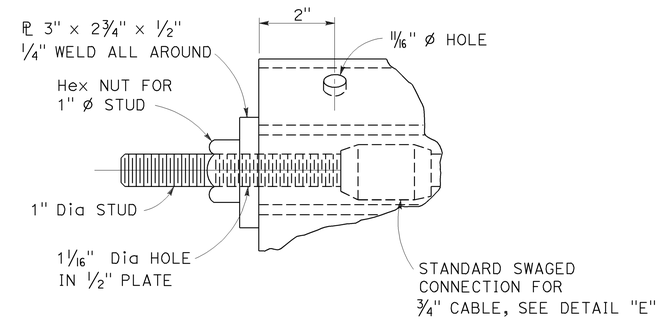

DETAIL "D"

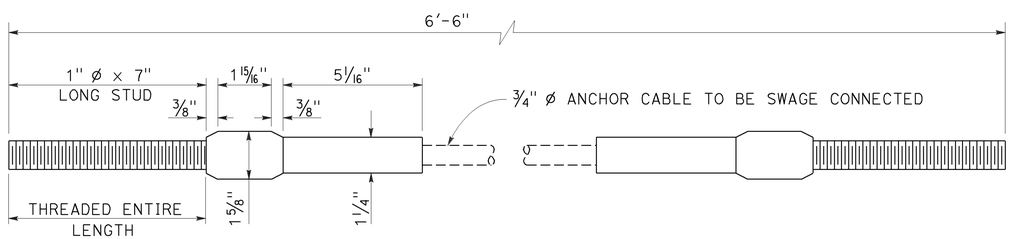

ANCHOR CABLE WITH
SWAGED FITTING AND STUD
DETAIL "E"

STATE OF CALIFORNIA
DEPARTMENT OF TRANSPORTATION

METAL RAILING ANCHOR CABLE AND ANCHOR PLATE DETAILS

NO SCALE

RSP A77S3 DATED NOVEMBER 15, 2013 SUPERSEDES RSP A77S3
DATED JULY 19, 2013 THAT SUPPLEMENTS THE STANDARD PLANS BOOK DATED 2010.

REVISED STANDARD PLAN RSP A77S3

10-4-13

Dist	COUNTY	ROUTE	POST MILES TOTAL PROJECT	SHEET No.	TOTAL SHEETS
07	LA	101	11.8/35.3	151	192

Randell D. Hiatt
REGISTERED CIVIL ENGINEER

November 15, 2013
PLANS APPROVAL DATE

REGISTERED PROFESSIONAL ENGINEER
Randell D. Hiatt
No. C50200
Exp. 6-30-15
CIVIL
STATE OF CALIFORNIA

THE STATE OF CALIFORNIA OR ITS OFFICERS OR AGENTS SHALL NOT BE RESPONSIBLE FOR THE ACCURACY OR COMPLETENESS OF SCANNED COPIES OF THIS PLAN SHEET.

TO ACCOMPANY PLANS DATED 2-18-14

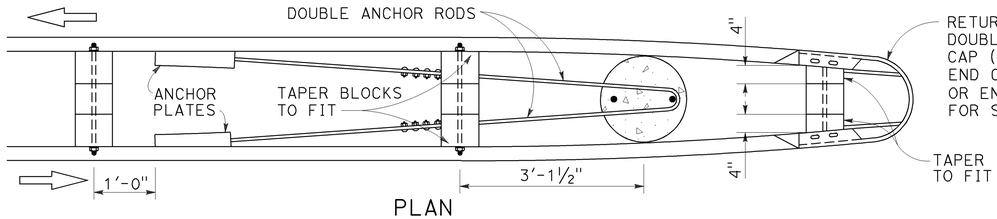

PLAN
See Note 4

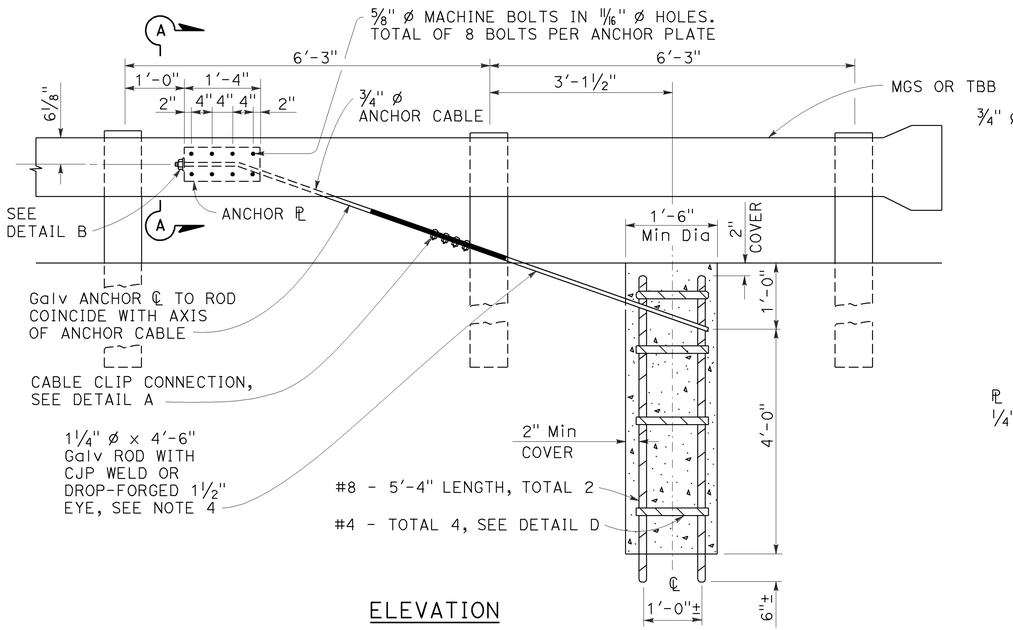

ELEVATION
END ANCHOR ASSEMBLY
(TYPE CA)
(Wood post, MGS shown, details similar for Thrie Beam Barrier.)

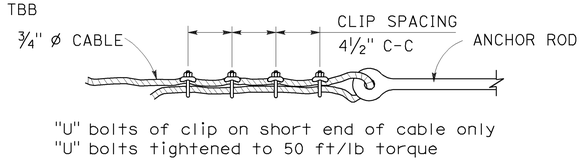

DETAIL A
CABLE CLIP CONNECTION

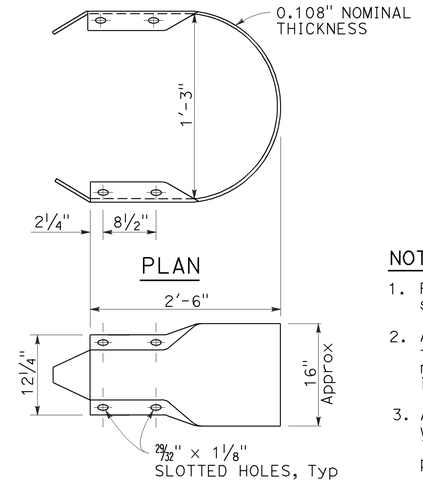

PLAN
ELEVATION
RETURN CAP
(TYPE A)

TO ACCOMPANY PLANS DATED 2-18-14

NOTES:

1. For typical use of this type of end anchor, see Revised Standard Plan RSP A78E2.
2. Anchor cable to be parallel to railing for straight runs of rail. Anchor cable may have angle point at anchor plate if railing is curved.
3. Anchor rod hooks to be in contact with anchor reinforcement when concrete is placed. Wire ties may be used to position anchor rods.
4. Single sided railing installations require only one anchor plate, anchor rod and anchor cable. Single sided railing will not have a rail element or blockouts on backside of line posts as shown in the plan view.

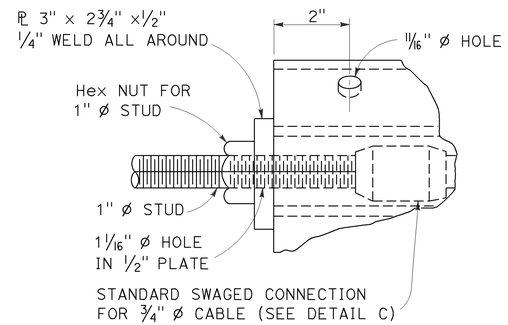

DETAIL B

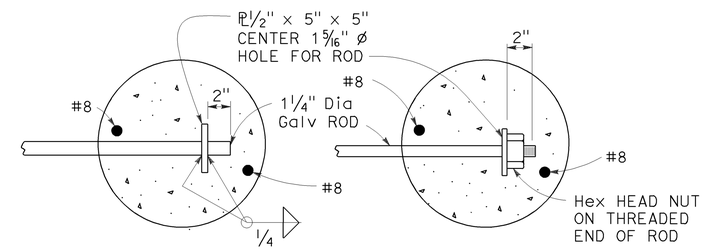

OPTIONAL ENDS ON SINGLE ANCHOR ROD
(Not to be used for double anchors)

NOTE:
Use two 1¼" Ø Galv rods with hook and eye for double MGS anchor.

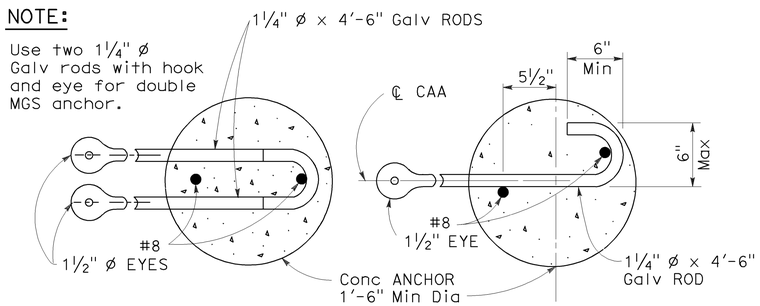

DOUBLE ANCHOR
SINGLE ANCHOR
ANCHOR RODS

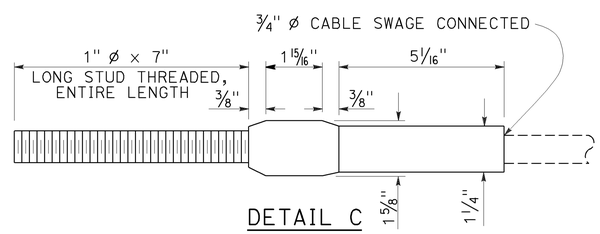

DETAIL C

ANCHOR CABLE WITH
SWAGED FITTING AND STUD

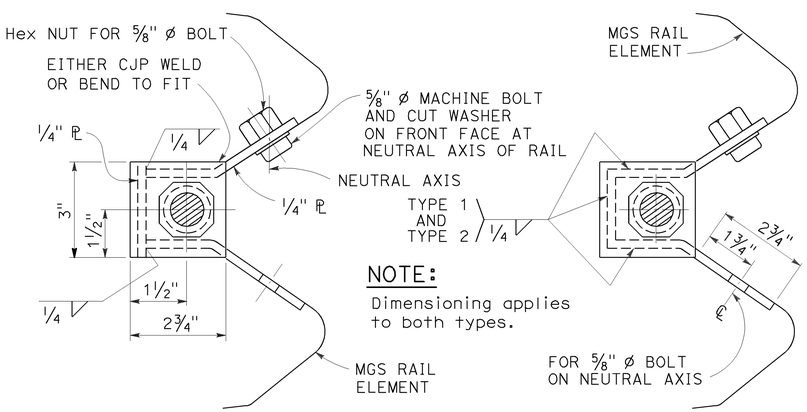

NOTE:
Dimensioning applies to both types.

SECTION A-A
(Alternative Type 1)

SECTION A-A
(Alternative Type 2)

ANCHOR PLATE DETAILS

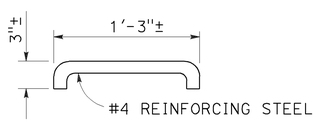

DETAIL D

STATE OF CALIFORNIA
DEPARTMENT OF TRANSPORTATION

METAL RAILING END ANCHOR ASSEMBLY (TYPE CA)

NO SCALE

RSP A77T1 DATED NOVEMBER 15, 2013 SUPERSEDES RSP A77T1 DATED JULY 19, 2013 THAT SUPPLEMENTS THE STANDARD PLANS BOOK DATED 2010.

REVISED STANDARD PLAN RSP A77T1

2010 REVISED STANDARD PLAN RSP A77T1

10-22-13

Dist	COUNTY	ROUTE	POST MILES TOTAL PROJECT	SHEET No.	TOTAL SHEETS
07	LA	101	11.8/35.3	152	192

Randell D. Hiatt
REGISTERED CIVIL ENGINEER

November 15, 2013
PLANS APPROVAL DATE

REGISTERED PROFESSIONAL ENGINEER
Randell D. Hiatt
No. C50200
Exp. 6-30-15
CIVIL
STATE OF CALIFORNIA

THE STATE OF CALIFORNIA OR ITS OFFICERS OR AGENTS SHALL NOT BE RESPONSIBLE FOR THE ACCURACY OR COMPLETENESS OF SCANNED COPIES OF THIS PLAN SHEET.

TO ACCOMPANY PLANS DATED 2-18-14

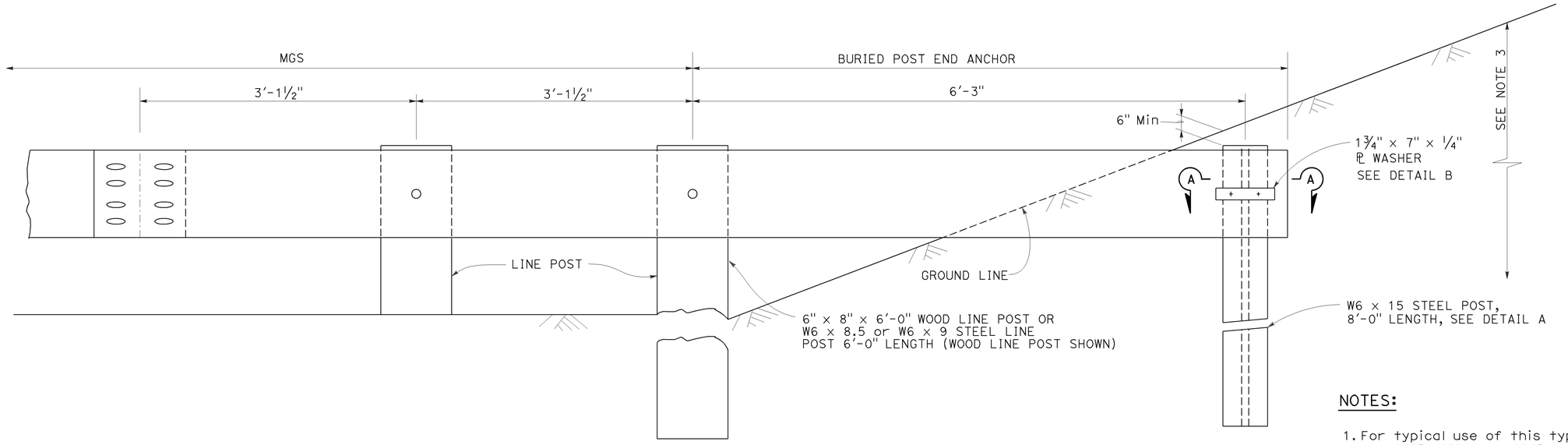

BURIED POST END ANCHOR

See Note 3

NOTES:

1. For typical use of this type of end anchor with MGS see the A77P, A77Q and A77R Series of the Standard Plans.
2. Holes excavation in the slope to construct the buried post end anchor shall be backfilled with selected earth, placed in layers approximately 1'-0" thick. Each layer shall be moistened and thoroughly compacted.
3. The buried post end anchor shall only be constructed at those locations where the slope perpendicular to the roadway is non-traversable.

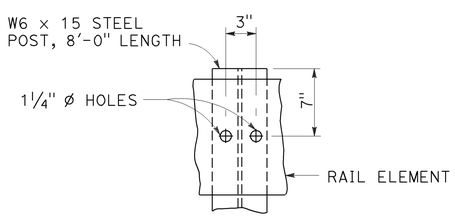

DETAIL A

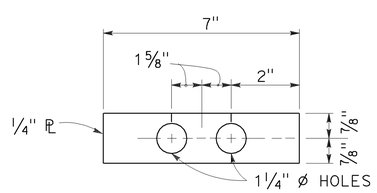

DETAIL B

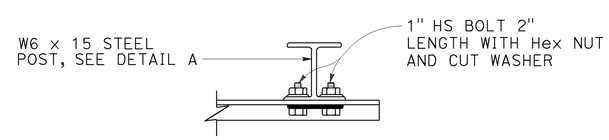

SECTION A-A

STATE OF CALIFORNIA
DEPARTMENT OF TRANSPORTATION

MIDWEST GUARDRAIL SYSTEM BURIED POST END ANCHOR

NO SCALE

RSP A77T2 DATED NOVEMBER 15, 2013 SUPERSEDES RSP A77T2
DATED JULY 19, 2013 THAT SUPPLEMENTS THE STANDARD PLANS BOOK DATED 2010.

REVISED STANDARD PLAN RSP A77T2

2010 REVISED STANDARD PLAN RSP A77T2

10-4-13

Dist	COUNTY	ROUTE	POST MILES TOTAL PROJECT	SHEET No.	TOTAL SHEETS
07	LA	101	11.8/35.3	153	192

Randell D. Hiatt
REGISTERED CIVIL ENGINEER

July 19, 2013
PLANS APPROVAL DATE

REGISTERED PROFESSIONAL ENGINEER
Randell D. Hiatt
No. C50200
Exp. 6-30-15
CIVIL
STATE OF CALIFORNIA

THE STATE OF CALIFORNIA OR ITS OFFICERS OR AGENTS SHALL NOT BE RESPONSIBLE FOR THE ACCURACY OR COMPLETENESS OF SCANNED COPIES OF THIS PLAN SHEET.

TO ACCOMPANY PLANS DATED 2-18-14

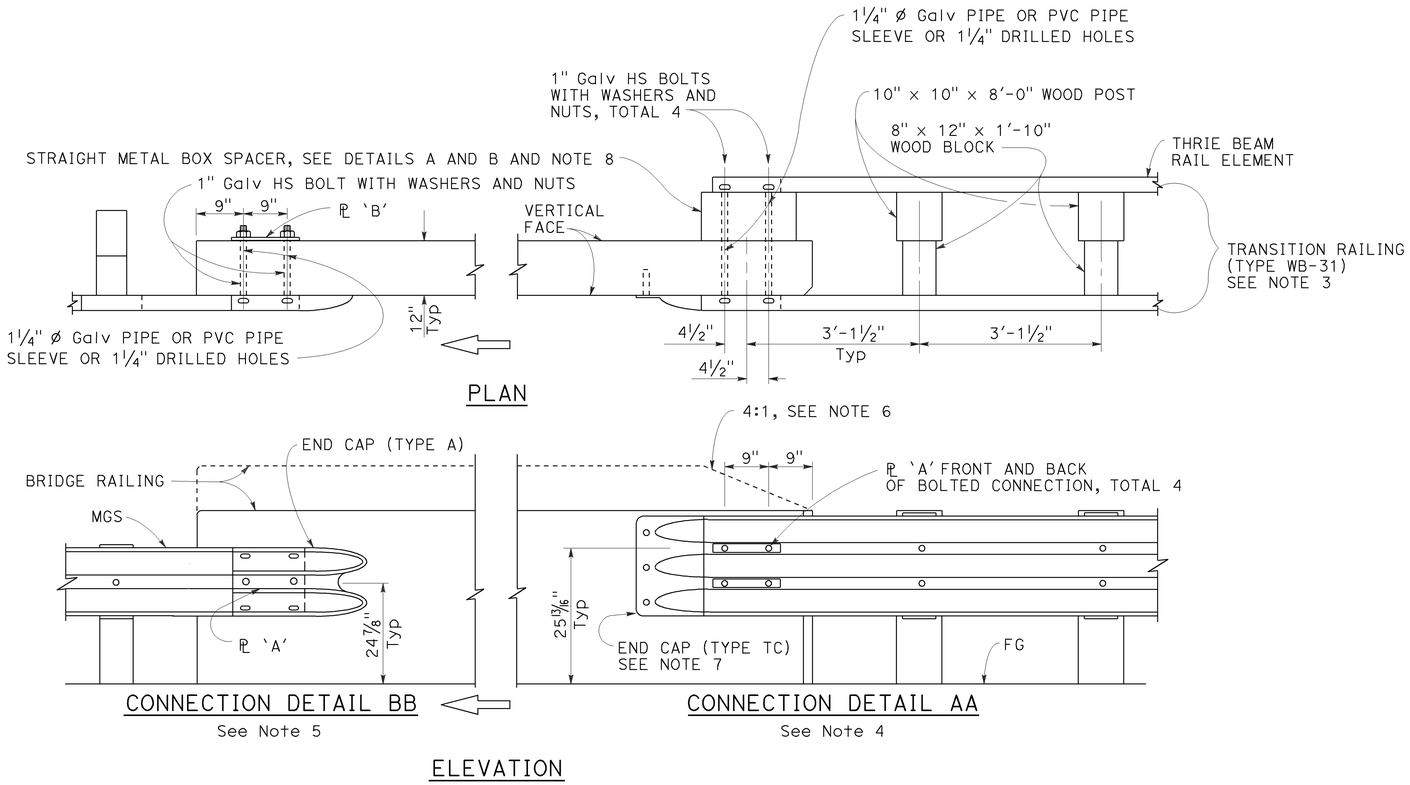

MIDWEST GUARDRAIL SYSTEM CONNECTION TO BRIDGE RAILING WITHOUT SIDEWALK

NOTES:

1. See Revised Standard Plan RSP A77U2 for additional connection details to bridges without sidewalks.
2. Additional details of posts, blocks and hardware are shown on Revised Standard Plans RSP A77M1, RSP A77N1 and RSP A77N2.
3. For additional details of Transition Railing (Type WB-31), see Revised Standard Plan RSP A77U4. Transition Railing (Type WB-31) transitions the 12 gauge MGS railing section to a heavier gage nested thrie beam railing section which is connected to the concrete bridge railing.
4. For typical use of Connection Detail AA, see Layout Types 12A and 12B on Revised Standard Plan RSP A77Q1, Layout Types 12C and 12D on Revised Standard Plan RSP A77Q2, and Layout Type 12E on Revised Standard Plan RSP A77Q3.
5. For typical use of Connection Detail BB, see Layout Type 12D (structure departure railing connection) on Revised Standard Plan RSP A77Q2 and Layout Type 12DD on Revised Standard Plan RSP A77Q5.
6. Where the height of the bridge railing exceeds the height of the thrie beam railing by more than 1" at Connection Detail AA, taper the top of the end of the bridge railing at 4:1 to match the top elevation of the thrie beam rail.
7. For details of End Cap (Type TC), see Revised Standard Plan RSP A77U4.
8. See Revised Standard Plan RSP A77U4 for additional details regarding depth dimension for straight metal box spacer.

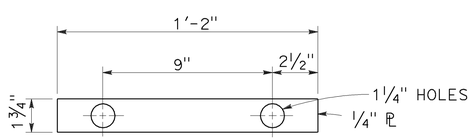

PLATE 'A'

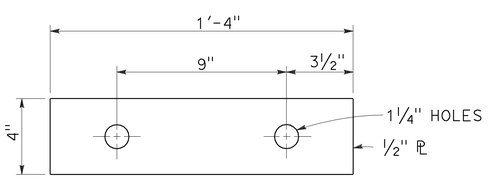

PLATE 'B'
(For backside of connection BB)

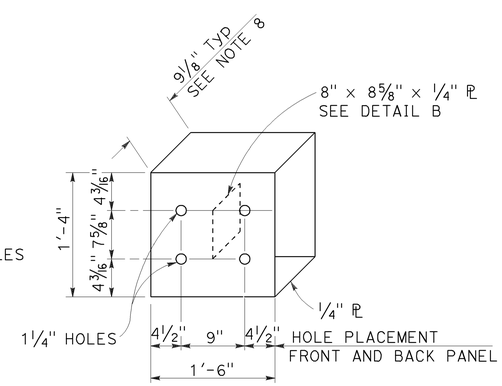

DETAIL A

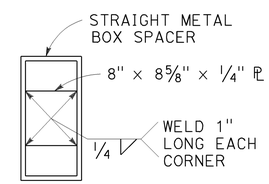

DETAIL B

STRAIGHT METAL BOX SPACER

STATE OF CALIFORNIA
DEPARTMENT OF TRANSPORTATION

MIDWEST GUARDRAIL SYSTEM CONNECTIONS TO BRIDGE RAILINGS WITHOUT SIDEWALKS DETAILS No. 1

NO SCALE

RSP A77U1 DATED JULY 19, 2013 SUPPLEMENTS THE STANDARD PLANS BOOK DATED 2010.

REVISED STANDARD PLAN RSP A77U1

2010 REVISED STANDARD PLAN RSP A77U1

7-8-13

Dist	COUNTY	ROUTE	POST MILES TOTAL PROJECT	SHEET No.	TOTAL SHEETS
07	LA	101	11.8/35.3	154	192

Randell D. Hiatt
REGISTERED CIVIL ENGINEER

July 19, 2013
PLANS APPROVAL DATE

REGISTERED PROFESSIONAL ENGINEER
Randell D. Hiatt
No. C50200
Exp. 6-30-15
CIVIL
STATE OF CALIFORNIA

THE STATE OF CALIFORNIA OR ITS OFFICERS OR AGENTS SHALL NOT BE RESPONSIBLE FOR THE ACCURACY OR COMPLETENESS OF SCANNED COPIES OF THIS PLAN SHEET.

TO ACCOMPANY PLANS DATED 2-18-14

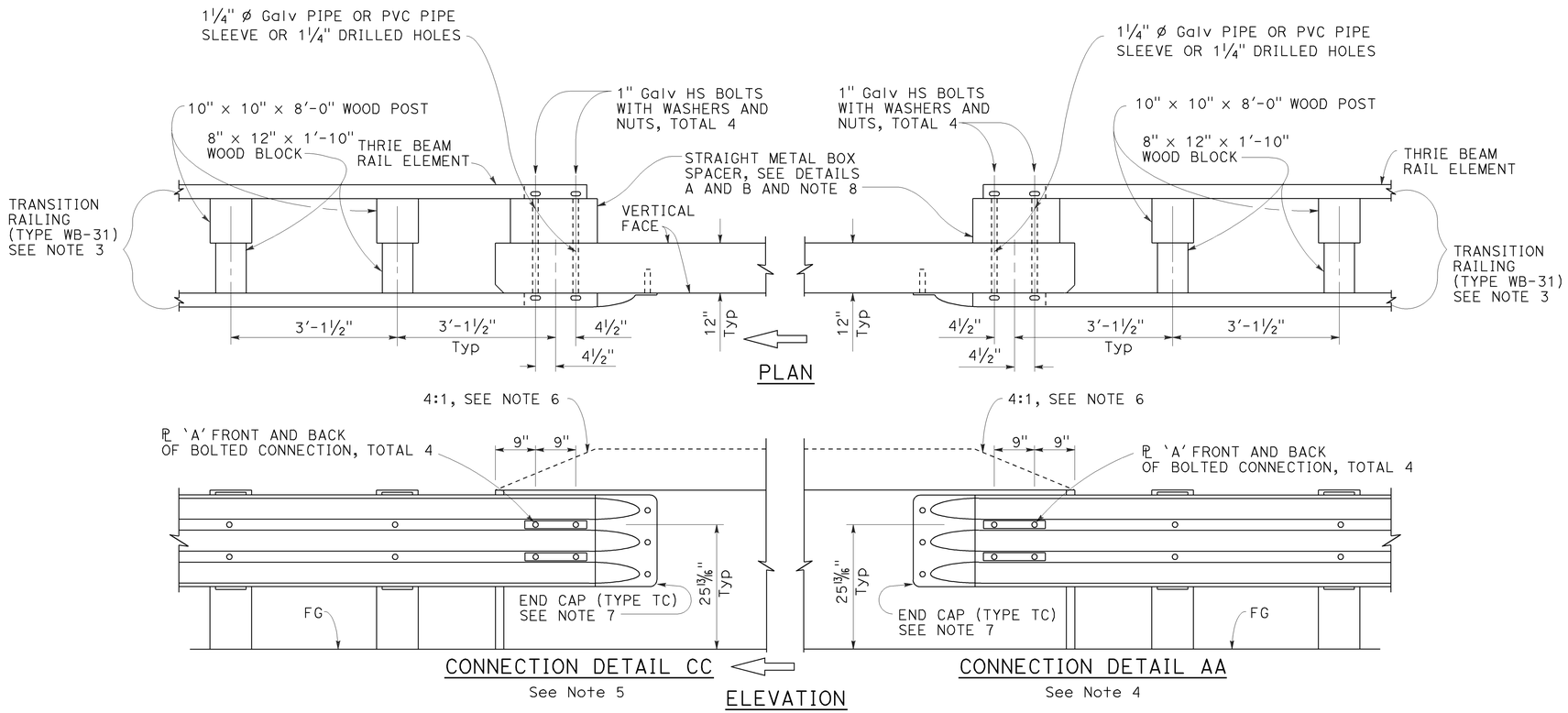

MIDWEST GUARDRAIL SYSTEM CONNECTION TO BRIDGE RAILING WITHOUT SIDEWALK

NOTES:

1. See Revised Standard Plan RSP A77U1 for additional connection details to bridges without sidewalks.
2. Additional details of posts, blocks and hardware are shown on Revised Standard Plans RSP A77M1, RSP A77N1 and RSP A77N2.
3. For additional details of Transition Railing (Type WB-31), see Revised Standard Plan RSP A77U4. Transition Railing (Type WB-31) transitions the 12 gauge MGS railing section to a heavier gage nested thrie beam railing section which is connected to the concrete bridge railing.
4. For typical use of Connection Detail AA, see Layout Types 12A and 12B on Revised Standard Plan RSP A77Q1, Layout Types 12C and 12D on Revised Standard Plan RSP A77Q2, and Layout Type 12E on Revised Standard Plan RSP A77Q3.
5. For typical use of Connection Detail CC, see Layout Types 12AA and 12BB on Revised Standard Plan RSP A77Q4 and Layout Type 12CC on Revised Standard Plan RSP A77Q5.
6. Where the height of the bridge railing exceeds the height of the thrie beam railing by more than 1" at Connection Detail AA and connection Detail CC, taper the top of the end of the bridge railing at 4:1 to match the top elevation of the thrie beam railing.
7. For details of End Cap (Type TC), see Revised Standard Plan RSP A77U4.
8. See Revised Standard Plan RSP A77U4 for additional details regarding depth dimension for straight metal box spacer.

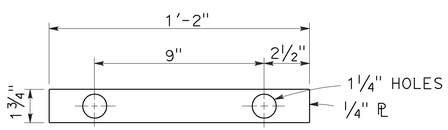

PLATE 'A'

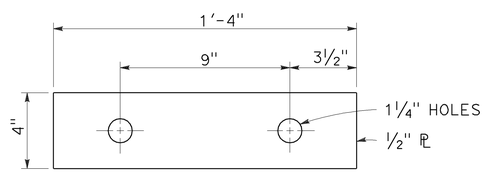

PLATE 'B'
(For backside of connection BB)

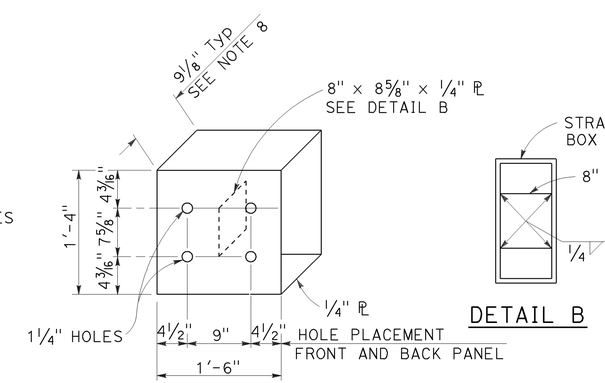

DETAIL A

STRAIGHT METAL BOX SPACER

STATE OF CALIFORNIA
DEPARTMENT OF TRANSPORTATION

MIDWEST GUARDRAIL SYSTEM CONNECTIONS TO BRIDGE RAILINGS WITHOUT SIDEWALKS DETAILS No. 2

NO SCALE

RSP A77U2 DATED JULY 19, 2013 SUPPLEMENTS THE STANDARD PLANS BOOK DATED 2010.

REVISED STANDARD PLAN RSP A77U2

2010 REVISED STANDARD PLAN RSP A77U2

6-20-13

Dist	COUNTY	ROUTE	POST MILES TOTAL PROJECT	SHEET No.	TOTAL SHEETS
07	LA	101	11.8/35.3	155	192

Randell D. Hiatt
REGISTERED CIVIL ENGINEER

July 19, 2013
PLANS APPROVAL DATE

REGISTERED PROFESSIONAL ENGINEER
Randell D. Hiatt
No. C50200
Exp. 6-30-15
CIVIL
STATE OF CALIFORNIA

THE STATE OF CALIFORNIA OR ITS OFFICERS OR AGENTS SHALL NOT BE RESPONSIBLE FOR THE ACCURACY OR COMPLETENESS OF SCANNED COPIES OF THIS PLAN SHEET.

TO ACCOMPANY PLANS DATED 2-18-14

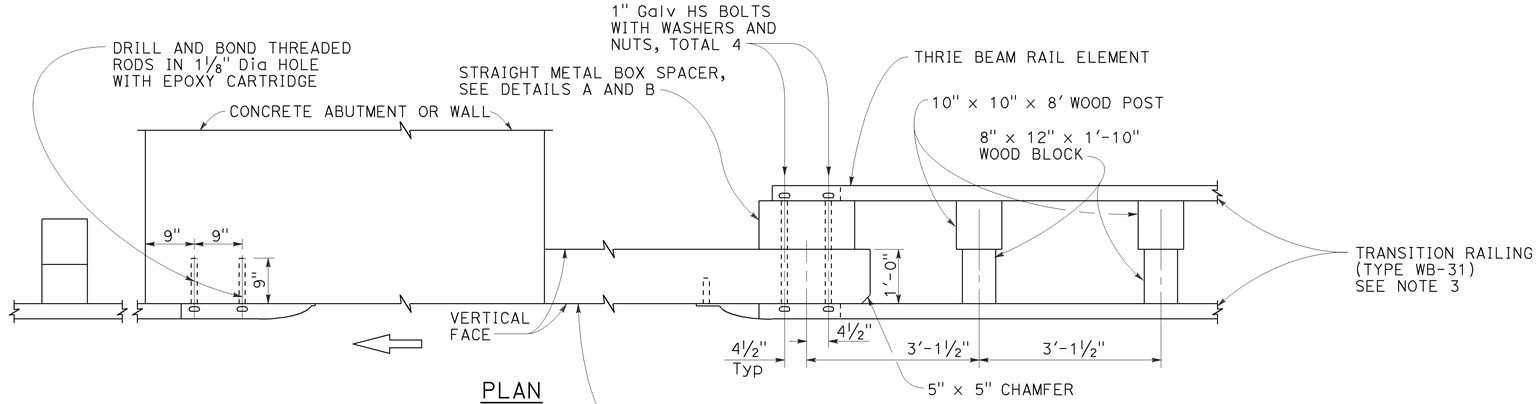

PLAN

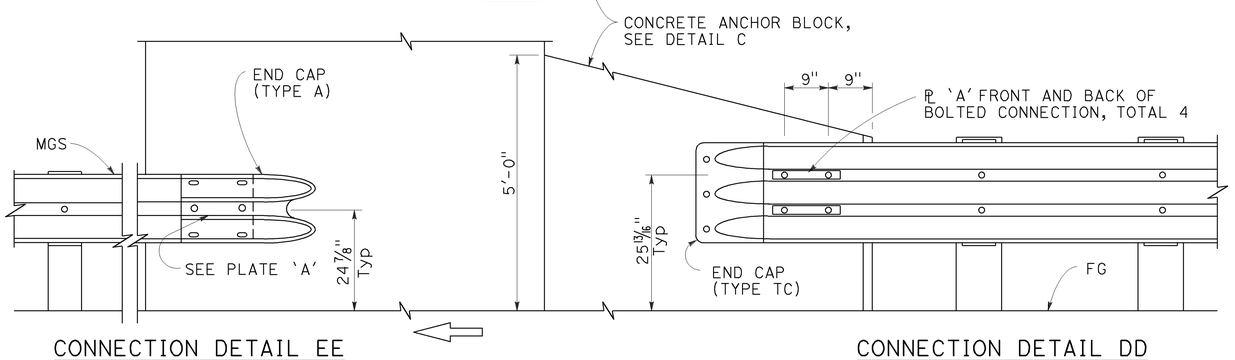

CONNECTION DETAIL EE
See Note 5

CONNECTION DETAIL DD
See Note 4

ELEVATION

MIDWEST GUARDRAIL SYSTEM CONNECTION TO ABUTMENT OR WALL

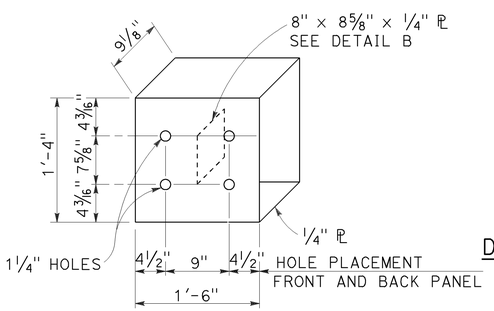

DETAIL A

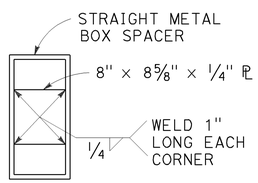

DETAIL B

STRAIGHT METAL BOX SPACER

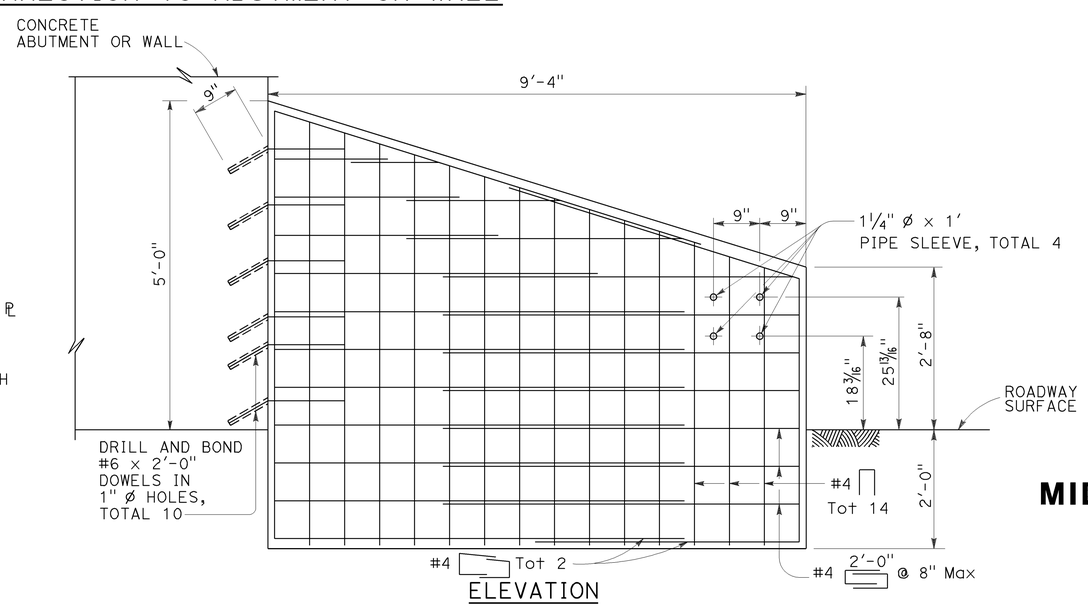

ELEVATION

ANCHOR BLOCK FOR TRANSITION RAILING CONNECTION

DETAIL C

NOTES:

1. These connection details apply to abutments and walls.
2. Additional details of posts, blocks and hardware are shown on Revised Standard Plans RSP A77M1, RSP A77N1 and RSP A77N2.
3. For additional details of Transition Railing (Type WB-31), see Revised Standard Plan RSP A77U4. Transition Railing (Type WB-31) transitions the 12 gauge MGS railing section to a heavier gage nested thrie beam railingsection which is connected to the concrete anchor block.
4. For typical use of Connection Details DD, see Layout Types 12A and 12B on Revised Standard Plan RSP A77Q1 and Layout Types 12C and 12D on Revised Standard Plan RSP A77Q2.
5. For typical use of Connection Detail EE, see Layout Type 12D on Revised Standard Plan RSP A77Q2 and Layout Type 12DD on Revised Standard Plan RSP A77Q5.

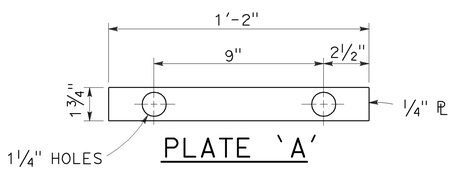

PLATE 'A'

STATE OF CALIFORNIA
DEPARTMENT OF TRANSPORTATION

MIDWEST GUARDRAIL SYSTEM CONNECTIONS TO ABUTMENTS AND WALLS

NO SCALE

RSP A77U3 DATED JULY 19, 2013 SUPPLEMENTS THE STANDARD PLANS BOOK DATED 2010.

REVISED STANDARD PLAN RSP A77U3

2010 REVISED STANDARD PLAN RSP A77U3

7-8-13

Dist	COUNTY	ROUTE	POST MILES TOTAL PROJECT	SHEET No.	TOTAL SHEETS
07	LA	101	11.8/35.3	156	192

Randell D. Hiatt
REGISTERED CIVIL ENGINEER

November 15, 2013
PLANS APPROVAL DATE

REGISTERED PROFESSIONAL ENGINEER
Randell D. Hiatt
No. C50200
Exp. 6-30-15
CIVIL
STATE OF CALIFORNIA

THE STATE OF CALIFORNIA OR ITS OFFICERS OR AGENTS SHALL NOT BE RESPONSIBLE FOR THE ACCURACY OR COMPLETENESS OF SCANNED COPIES OF THIS PLAN SHEET.

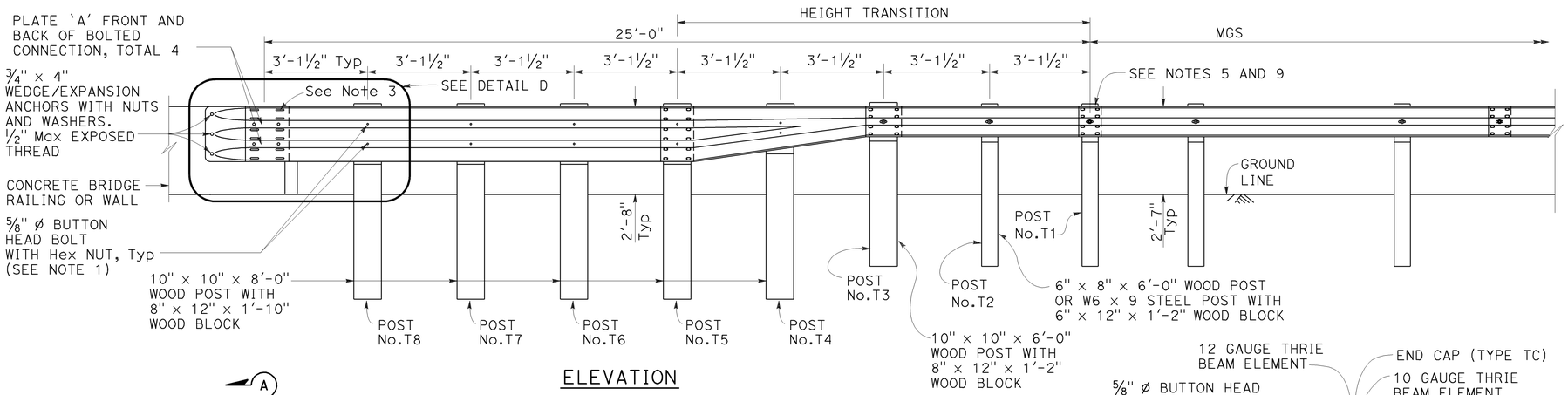

ELEVATION

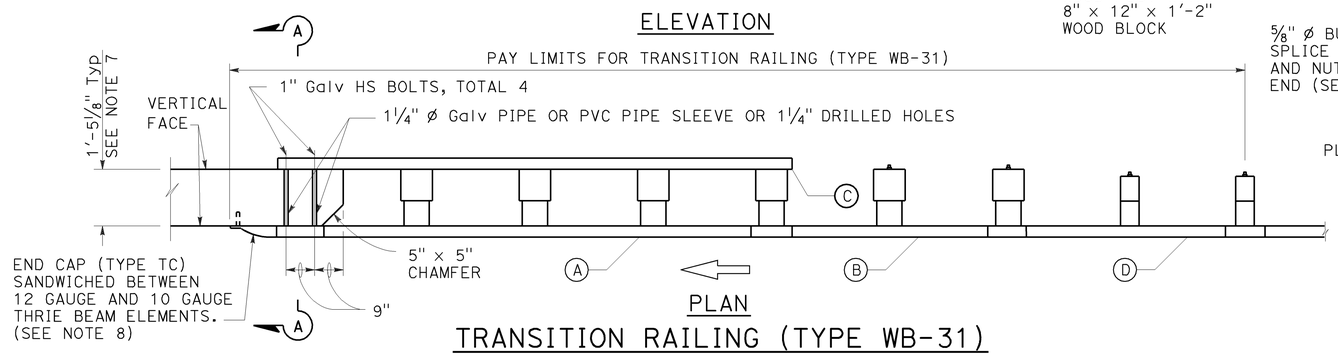

PLAN

TRANSITION RAILING (TYPE WB-31)

(No Blockout Attachment)

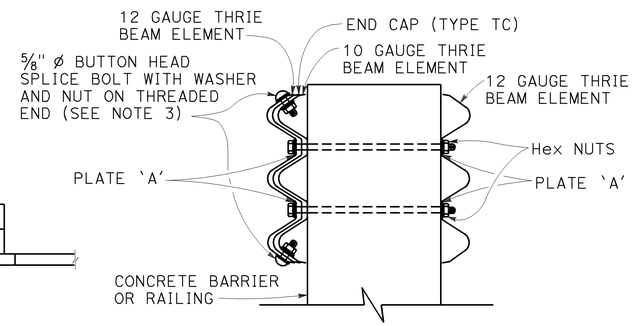

SECTION A-A

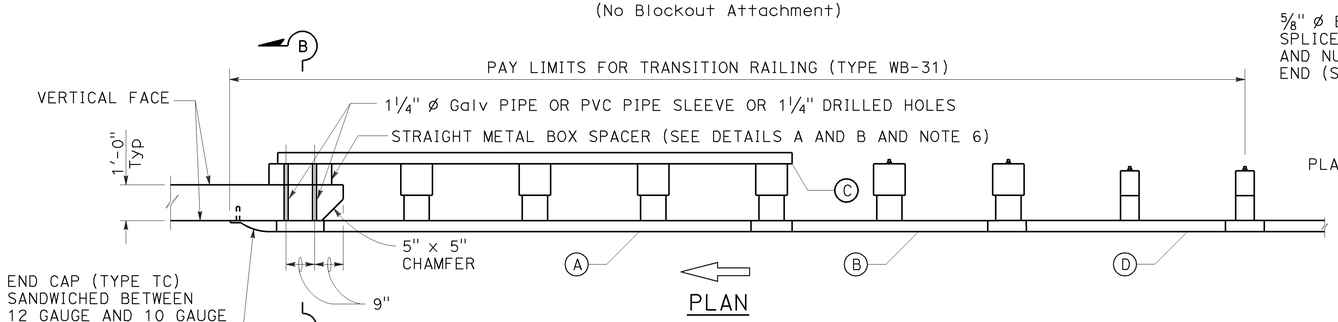

PLAN

TRANSITION RAILING (TYPE WB-31)

(Blockout Attachment)

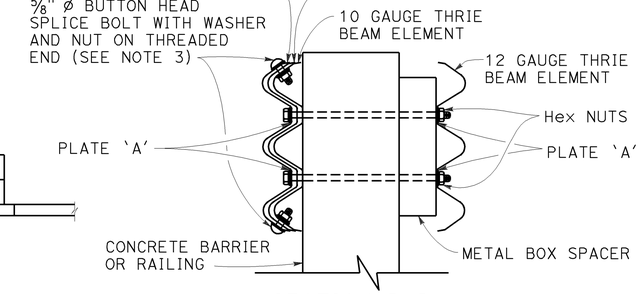

SECTION B-B

NOTES:

TO ACCOMPANY PLANS DATED 2-18-14

1. Use 5/8" ø Button head bolts and hex nuts for connections to posts. No washer on rail face for bolted connections to post.
2. The nested rail elements, end cap, and 'W' beam to thrie beam element may be spliced together prior to bolting the elements to the wood post and concrete barrier or railing.
3. Exterior splice bolt holes for rail element splices at Post No. T5 and the connection to the concrete barrier or railing shall be the standard 29/32" x 1 1/8" slot size. Interior splice bolt holes at these locations may be increased up to 1 1/4" ø. Only the top 4 and the bottom 4 splice bolts with washers and nuts are required for rail splices at Post No. T5 and the connection to the concrete barrier or railing.
4. The top elevation of Posts No. T2 through No. T7 shall not project more than 1" above the top elevation of the rail element.
5. Typically, the railing connected to Transition Railing (Type WB-31) will be either standard railing section of MGS with height transition ratio of 150:1 or a Caltrans approved 31" end treatment attached to Post No. T1.
6. The depth of the metal box spacer varies from the 9 1/8" to 1 1/2" and is dependent on the width of the concrete railing or wall. The combined dimension for the depth of the metal box spacer plus the width of railing or wall is typically 21 1/8". Where the space between the backside of the concrete railing or wall and the rear thrie beam element is less than 1 1/2", metal plates similar to Plate 'A' are to be used as spacers.
7. Where the width of the concrete railing or wall is greater than 17 1/8", wood blocks are to be used to fill the space created between the backside of Posts No. T5 through No. T8 and the rear thrie beam element. These wood blocks shall be 8" in width and 1'-2" in length. The dimension between the front thrie beam element and the rear thrie beam element is to match the width of the concrete railing or wall.
8. End cap may be installed over 12 gauge and 10 gauge thrie beam elements where transition railing is installed on the departure end of bridge railing.
9. Conform standard railing section height to 31" at Post No. T1 using height transition ratio of 150:1.

LEGEND:

(A) NESTED THRIE BEAM ELEMENTS (ONE 12 GAUGE ELEMENT NESTED OVER ONE 10 GAUGE ELEMENT).

(B) ONE ASYMMETRICAL 10 GAUGE "W" BEAM TO THRIE BEAM ELEMENT.

(C) ONE 12 GAUGE THRIE BEAM ELEMENT.

(D) ONE 10 GAUGE "W" BEAM RAIL ELEMENT (7'-3 1/2" LENGTH)

10 GAUGE = 0.138" THICK
12 GAUGE = 0.108" THICK

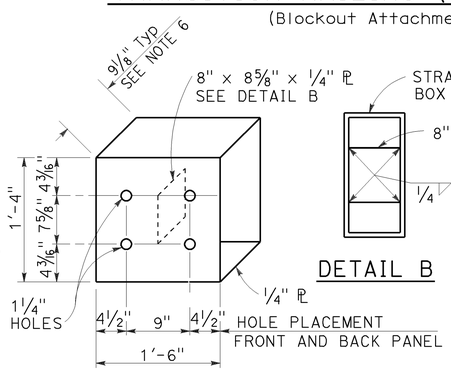

DETAIL A

STRAIGHT METAL BOX SPACER

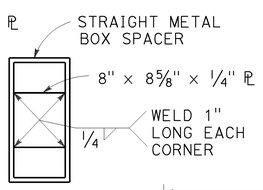

DETAIL B

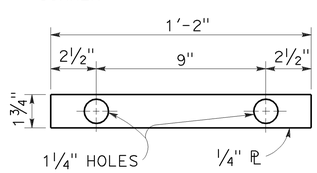

DETAIL C

PLATE 'A'

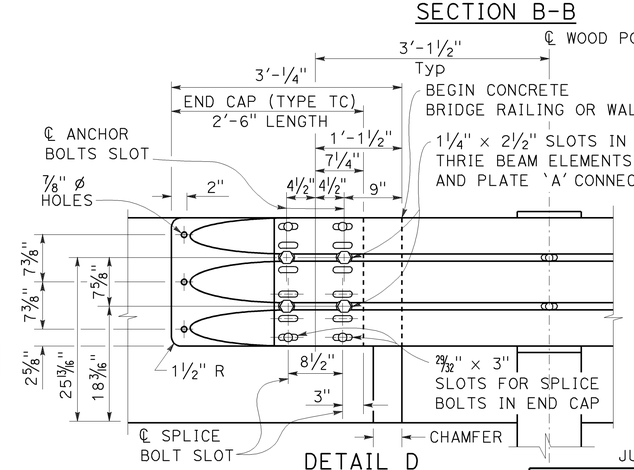

DETAIL D

STATE OF CALIFORNIA
DEPARTMENT OF TRANSPORTATION

MIDWEST GUARDRAIL SYSTEM TRANSITION RAILING (TYPE WB-31)

NO SCALE

RSP A77U4 DATED NOVEMBER 15, 2013 SUPERSEDES RSP A77U4 DATED JULY 19, 2013 THAT SUPPLEMENTS THE STANDARD PLANS BOOK DATED 2010.

REVISED STANDARD PLAN RSP A77U4

2010 REVISED STANDARD PLAN RSP A77U4

10-4-13

Dist	COUNTY	ROUTE	POST MILES TOTAL PROJECT	SHEET No.	TOTAL SHEETS
07	LA	101	11.8/35.3	157	192

Randell D. Hiatt
REGISTERED CIVIL ENGINEER

July 19, 2013
PLANS APPROVAL DATE

REGISTERED PROFESSIONAL ENGINEER
Randell D. Hiatt
No. C50200
Exp. 6-30-15
CIVIL
STATE OF CALIFORNIA

THE STATE OF CALIFORNIA OR ITS OFFICERS OR AGENTS SHALL NOT BE RESPONSIBLE FOR THE ACCURACY OR COMPLETENESS OF SCANNED COPIES OF THIS PLAN SHEET.

TO ACCOMPANY PLANS DATED 2-18-14

NOTES:

1. Refer to Revised Standard Plans RSP A77L1 and RSP A77L2 for component details for MGS not shown on this plan.
2. All posts for any standard barrier run shall be of the same type: Wood or Steel.
3. Install posts in soil.

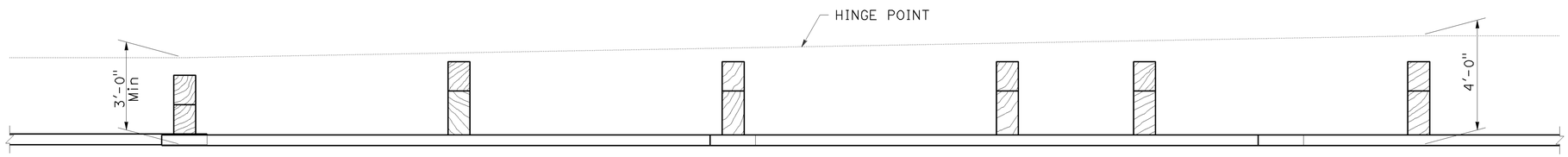

PLAN

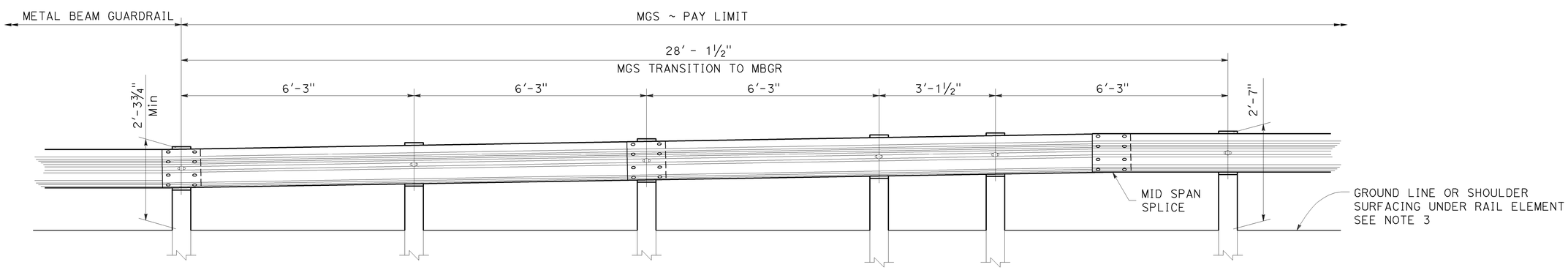

ELEVATION

STATE OF CALIFORNIA
DEPARTMENT OF TRANSPORTATION

MIDWEST GUARDRAIL SYSTEM TRANSITION TO METAL BEAM GUARDRAIL

NO SCALE

RSP A77U5 DATED JULY 19, 2013 SUPPLEMENTS THE STANDARD PLANS BOOK DATED 2010.

REVISED STANDARD PLAN RSP A77U5

2010 REVISED STANDARD PLAN RSP A77U5

Dist	COUNTY	ROUTE	POST MILES TOTAL PROJECT	SHEET No.	TOTAL SHEETS
07	LA	101	11.8/35.3	158	192

Randell D. Hiatt
REGISTERED CIVIL ENGINEER

July 19, 2013
PLANS APPROVAL DATE

REGISTERED PROFESSIONAL ENGINEER
Randell D. Hiatt
No. C50200
Exp. 6-30-15
CIVIL
STATE OF CALIFORNIA

THE STATE OF CALIFORNIA OR ITS OFFICERS OR AGENTS SHALL NOT BE RESPONSIBLE FOR THE ACCURACY OR COMPLETENESS OF SCANNED COPIES OF THIS PLAN SHEET.

TO ACCOMPANY PLANS DATED 2-18-14

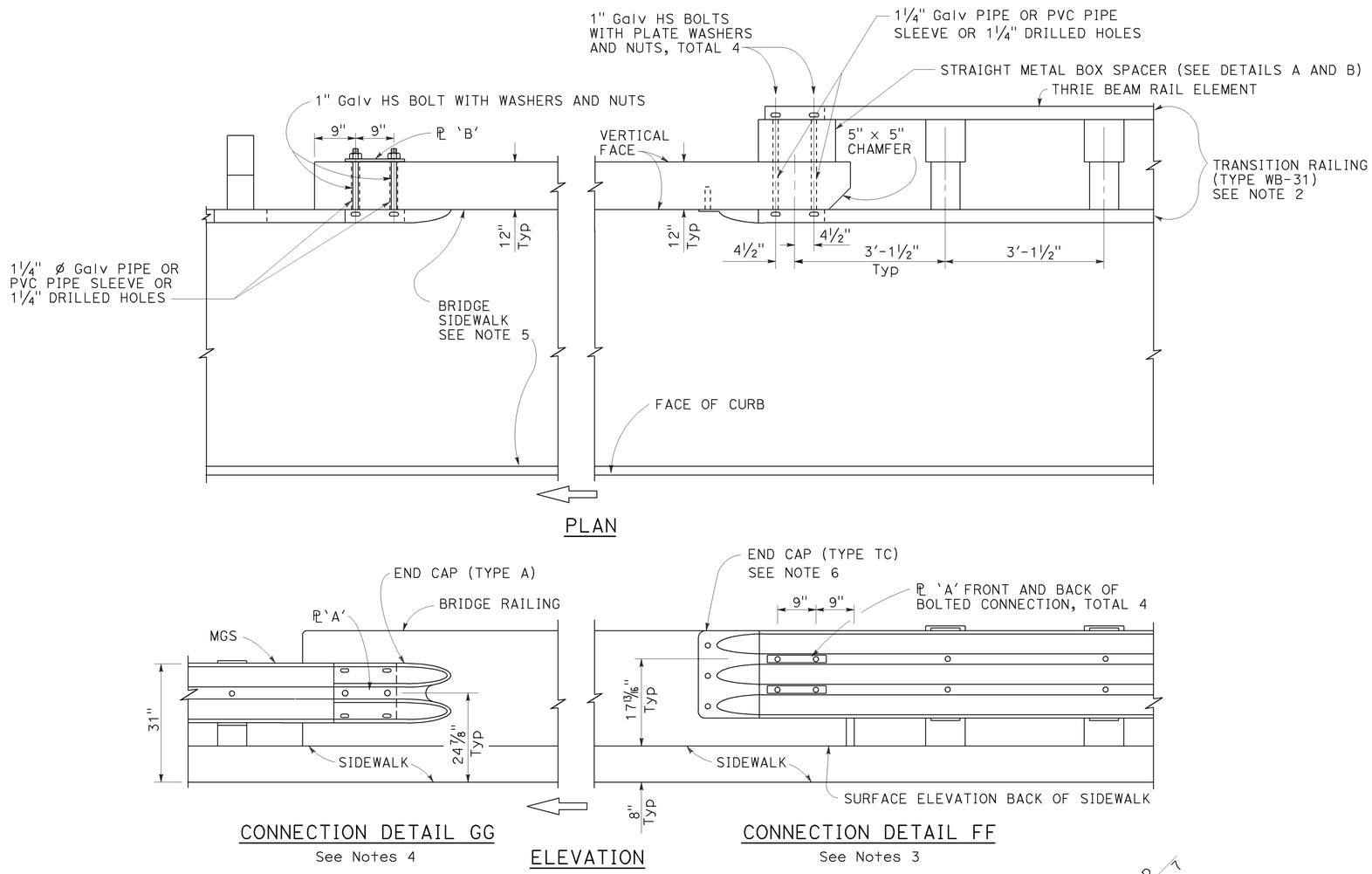

MIDWEST GUARDRAIL SYSTEM CONNECTION TO BRIDGE RAILING WITH SIDEWALKS

NOTES:

1. See Revised Standard Plan RSP A77V2 for additional connection details to bridges with sidewalks.
2. For additional details of Transition Railing (Type WB-31), see Revised Standard Plan RSP A77U4. Transition Railing (Type WB-31) transitions the 12 gauge MGS railing section to a heavier gage nested thrie beam railing section which is connected to the concrete bridge railing.
3. For typical use of Connection Detail FF, see Layout Types 12A and 12B on Revised Standard Plan RSP A77Q1.
4. For typical use of Connection Detail GG, see Layout Type 12D on Revised Standard Plan RSP A77Q2 and Layout Type 12DD on Revised Standard Plan RSP A77Q5.
5. Where the bridge sidewalk is not continued beyond the end of the bridge railing, the portion of the sidewalk beyond each end of the bridge railing shall be transitioned down from the top elevation of the sidewalk, for its entire width, to the finished grade of the adjacent roadbed. The longitudinal slope of each sidewalk elevation transition shall not exceed 8.33 percent.
6. For details of End Cap (Type TC), see Revised Standard Plan RSP A77U4.
7. See Revised Standard Plan RSP A77U4 for additional details regarding depth dimension for straight metal box spacer.

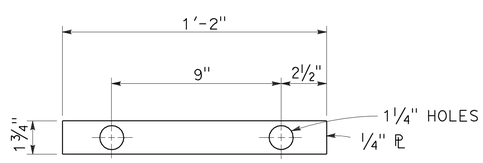

PLATE 'A'

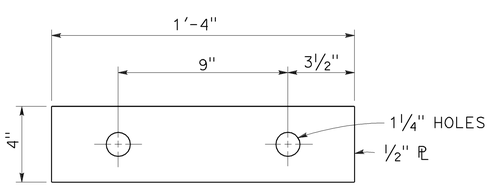

PLATE 'B'
(For backside of connection SB)

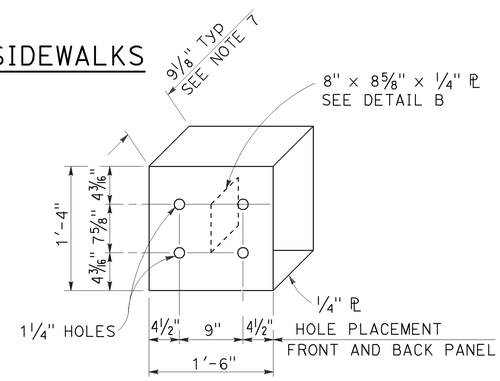

DETAIL A

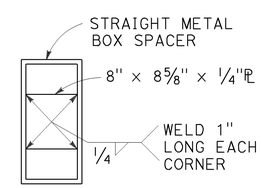

DETAIL B

STRAIGHT METAL BOX SPACER

STATE OF CALIFORNIA
DEPARTMENT OF TRANSPORTATION

MIDWEST GUARDRAIL SYSTEM CONNECTIONS TO BRIDGE RAILINGS WITH SIDEWALKS DETAILS No. 1

NO SCALE

RSP A77V1 DATED JULY 19, 2013 SUPPLEMENTS THE STANDARD PLANS BOOK DATED 2010.

REVISED STANDARD PLAN RSP A77V1

2010 REVISED STANDARD PLAN RSP A77V1

7-8-13

Dist	COUNTY	ROUTE	POST MILES TOTAL PROJECT	SHEET No.	TOTAL SHEETS
07	LA	101	11.8/35.3	159	192

Randell D. Hiatt
REGISTERED CIVIL ENGINEER

July 19, 2013
PLANS APPROVAL DATE

REGISTERED PROFESSIONAL ENGINEER
Randell D. Hiatt
No. C50200
Exp. 6-30-15
CIVIL
STATE OF CALIFORNIA

THE STATE OF CALIFORNIA OR ITS OFFICERS OR AGENTS SHALL NOT BE RESPONSIBLE FOR THE ACCURACY OR COMPLETENESS OF SCANNED COPIES OF THIS PLAN SHEET.

TO ACCOMPANY PLANS DATED 2-18-14

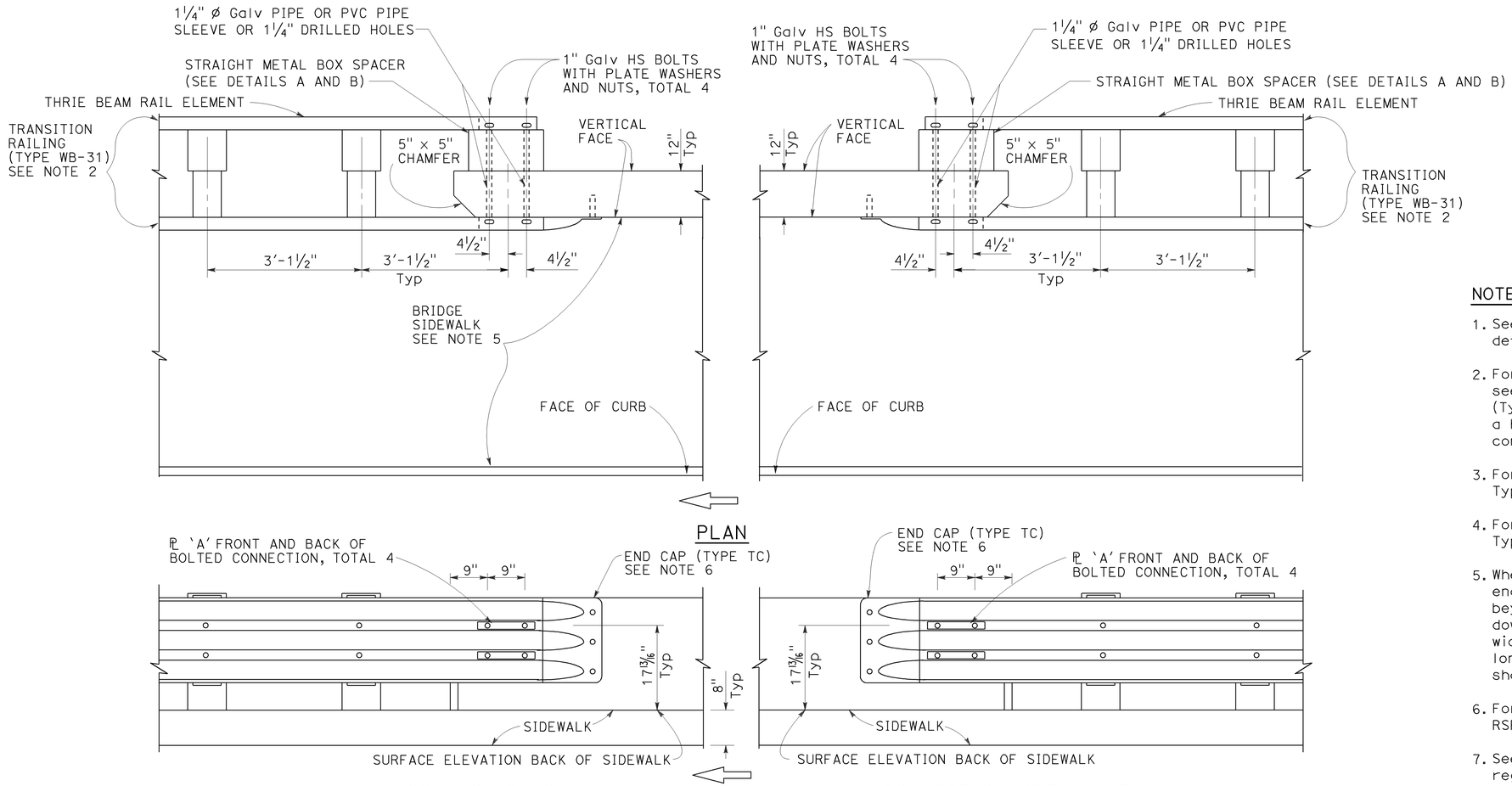

MIDWEST GUARDRAIL SYSTEM CONNECTION TO BRIDGE RAILING WITH SIDEWALKS

NOTES:

1. See Revised Standard Plan RSP A77V1 for additional connection details to bridges with sidewalks.
2. For additional details of Transition Railing (Type WB-31), see Revised Standard Plan RSP A77U4. Transition Railing (Type WB-31) transitions the 12 gauge MGS railing section to a heavier gage nested thrie beam railing section which is connected to the concrete bridge railing.
3. For typical use of Connection Detail FF, see Layout Types 12A and 12B on Revised Standard Plan RSP A77Q1.
4. For typical use of Connection Detail HH, see Layout Types 12AA and 12BB on Revised Standard Plan RSP A77Q4.
5. Where the bridge sidewalk is not continued beyond the end of the bridge railing, the portion of the sidewalk beyond each end of the bridge railing shall be transitioned down from the top elevation of the sidewalk, for its entire width, to the finished grade of the adjacent roadbed. The longitudinal slope of each sidewalk elevation transition shall not exceed 8.33 percent.
6. For details of End Cap (Type TC), see Revised Standard Plan RSP A77U4.
7. See Revised Standard Plan RSP A77U4 for additional details regarding depth dimension for straight metal box spacer.

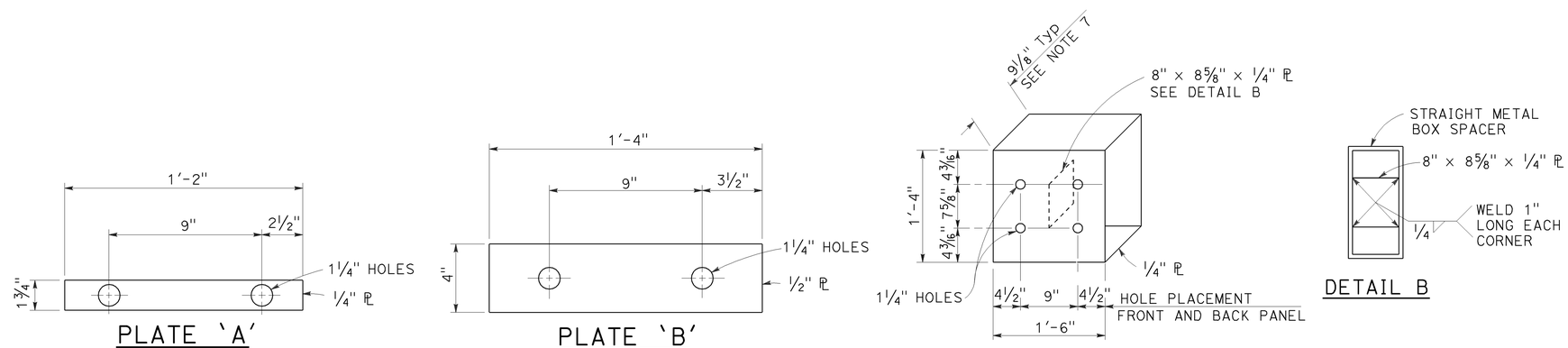

STRAIGHT METAL BOX SPACER

STATE OF CALIFORNIA
DEPARTMENT OF TRANSPORTATION

MIDWEST GUARDRAIL SYSTEM CONNECTIONS TO BRIDGE RAILINGS WITH SIDEWALKS DETAILS No. 2

NO SCALE

RSP A77V2 DATED JULY 19, 2013 SUPPLEMENTS THE STANDARD PLANS BOOK DATED 2010.

REVISED STANDARD PLAN RSP A77V2

2010 REVISED STANDARD PLAN RSP A77V2

6-20-13

Dist	COUNTY	ROUTE	POST MILES TOTAL PROJECT	SHEET No.	TOTAL SHEETS
07	LA	101	11.8/35.3	160	192

REGISTERED CIVIL ENGINEER

October 19, 2012
PLANS APPROVAL DATE

REGISTERED PROFESSIONAL ENGINEER Glenn DeCou No. C34547 Exp. 9-30-13 CIVIL STATE OF CALIFORNIA

THE STATE OF CALIFORNIA OR ITS OFFICERS OR AGENTS SHALL NOT BE RESPONSIBLE FOR THE ACCURACY OR COMPLETENESS OF SCANNED COPIES OF THIS PLAN SHEET.

TO ACCOMPANY PLANS DATED 2-18-14

2010 REVISED STANDARD PLAN RSP A85B

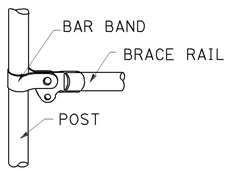

BRACE RAIL

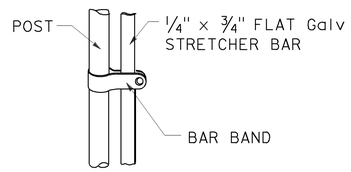

STRETCHER BAR

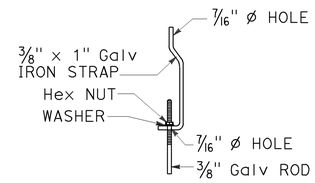

TRUSS TIGHTENER

NOTES:

1. All material for abutment connection to be galvanized.
2. The chain link fabric shall be replaced by barbed wire strands at 12" maximum centers between the double posts.
3. When the width of the culvert makes it necessary to anchor a post to the top of the culvert, a cast iron shoe or other device approved by the Engineer shall be used.
4. Fencing over stream and around headwall may also use Barbed Wire or Wire Mesh fencing with either wood post or steel post installation.
5. See Standard Plan A85 for Chain Link fence dimensions. See Standard Plan A86 for Barbed Wire and Wire Mesh fence dimensions and for wood post and steel post installation.

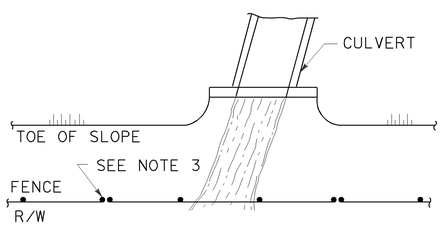

PLAN

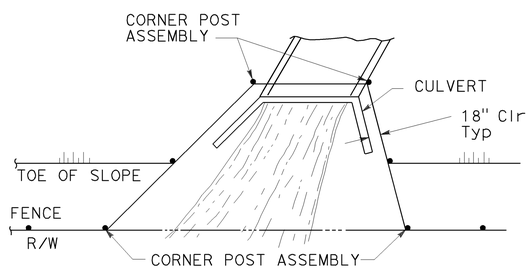

PLAN

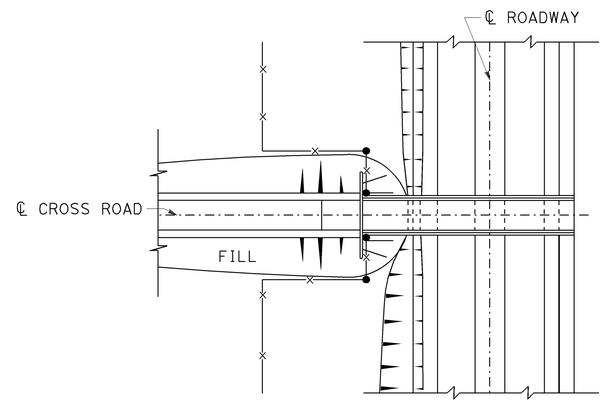

PLAN OF ROADWAY - OVERCROSSING

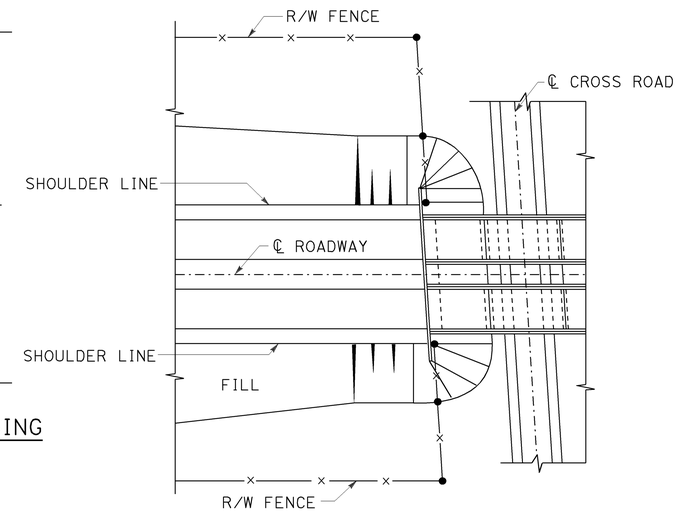

PLAN OF ROADWAY - UNDERCROSSING

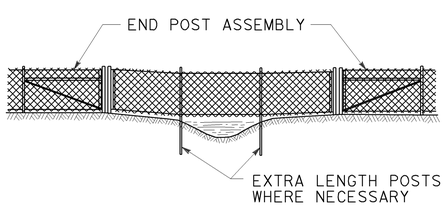

ELEVATION

INSTALLATION OVER STREAM

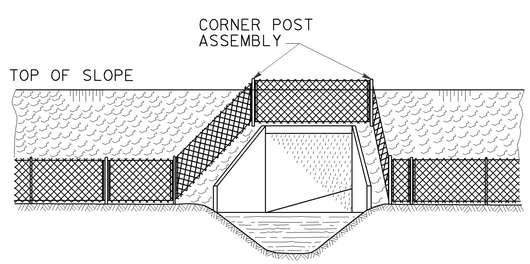

ELEVATION

INSTALLATION AROUND HEADWALL

See Note 4

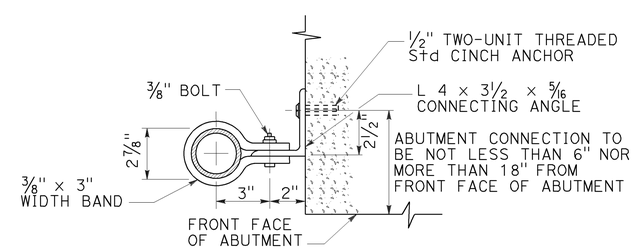

ABUTMENT CONNECTION

TYPICAL INSTALLATION AT BRIDGES

STATE OF CALIFORNIA
DEPARTMENT OF TRANSPORTATION

CHAIN LINK FENCE DETAILS

NO SCALE

RSP A85B DATED OCTOBER 19, 2012 SUPERSEDES STANDARD PLAN A85B DATED MAY 20, 2011 - PAGE 114 OF THE STANDARD PLANS BOOK DATED 2010.

REVISED STANDARD PLAN RSP A85B

7-19-12

Dist	COUNTY	ROUTE	POST MILES TOTAL PROJECT	SHEET No.	TOTAL SHEETS
07	LA	101	11.8/35.3	161	192

REGISTERED CIVIL ENGINEER

July 19, 2013
PLANS APPROVAL DATE

REGISTERED PROFESSIONAL ENGINEER Michael Janzen No. 44788 Exp. 03-31-14 CIVIL STATE OF CALIFORNIA

THE STATE OF CALIFORNIA OR ITS OFFICERS OR AGENTS SHALL NOT BE RESPONSIBLE FOR THE ACCURACY OR COMPLETENESS OF SCANNED COPIES OF THIS PLAN SHEET.

TO ACCOMPANY PLANS DATED 2-18-14

2010 REVISED STANDARD PLAN RSP A87A

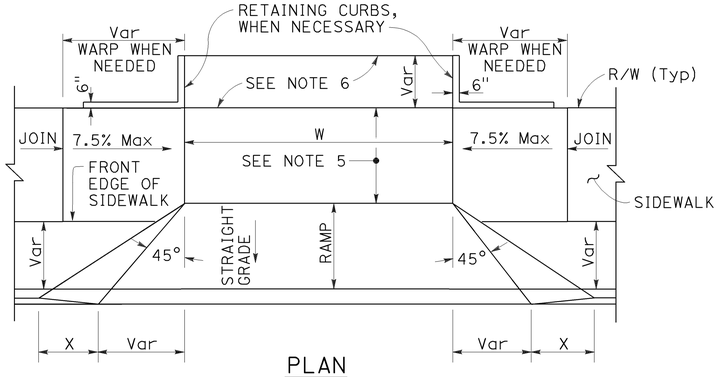

PLAN

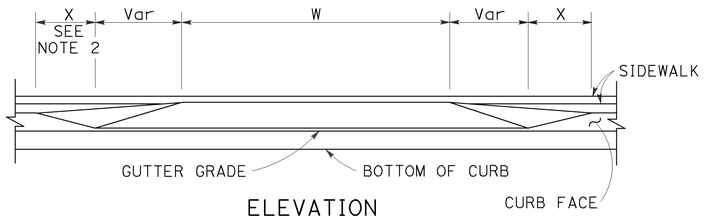

ELEVATION

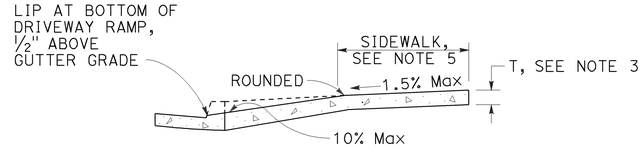

CASE A

Typical driveway, sidewalk not depressed

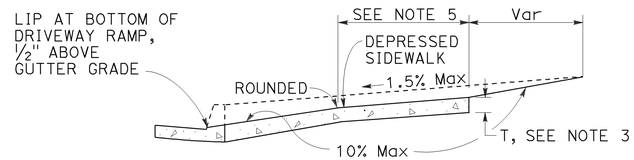

CASE B

Driveway with depressed sidewalk

SECTIONS

DRIVEWAYS

TABLE A

CURB TYPE	DIMENSIONS			
	"H1"	"H2"	"W1"	"W2"
A1-6	1'-2"	6"	7½"	1½"
A1-8	1'-4"	8"	8"	2"
A2-6	1'-0"	6"	2'-7½"	1½"
A2-8	1'-2"	8"	2'-8"	2"
A3-6	6"	5"	7¼"	1¼"
A3-8	8"	7"	7¾"	1¾"
B1-4	1'-0"	4"	7½"	2½"
B1-6	1'-2"	6"	9"	4"
B2-4	10"	4"	2'-7½"	2½"
B2-6	1'-0"	6"	2'-9"	4"
B3-4	4"	3"	7"	2"
B3-6	6"	5"	8½"	3½"
D-4	10"	4"	1'-6"	1'-1"
D-6	1'-0"	6"	2'-2"	1'-9"

CURB QUANTITIES

TYPE	CUBIC YARDS PER LINEAR FOOT
A1-6	0.02585
A1-8	0.03084
A2-6	0.05903
A2-8	0.06379
A3-6	0.01036
A3-8	0.01435
B1-4	0.02185
B1-6	0.02930
B2-4	0.05515
B2-6	0.06171
B3-4	0.00641
B3-6	0.01074
B4	0.05709
D-4	0.04083
D-6	0.06804
E	0.06661

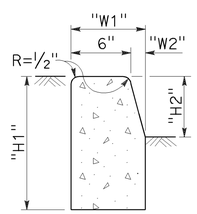

TYPE A1 CURBS

See Table A

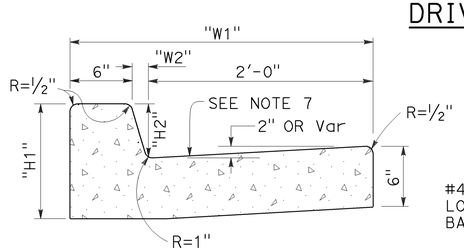

TYPE A2 CURBS

See Table A

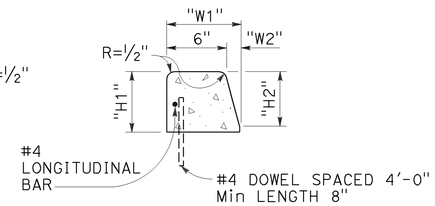

TYPE A3 CURBS

Superimposed on existing pavement
See Table A

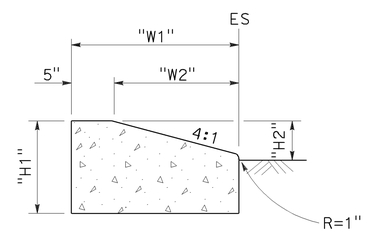

TYPE D CURBS

See Table A

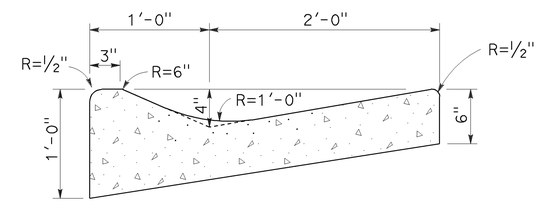

TYPE E CURB

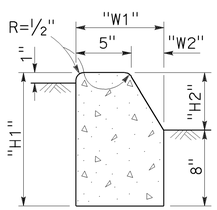

TYPE B1 CURBS

See Table A

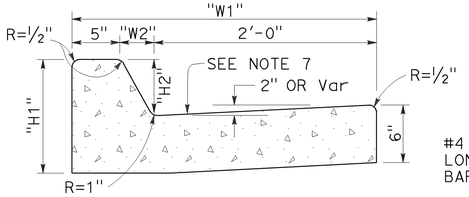

TYPE B2 CURBS

See Table A

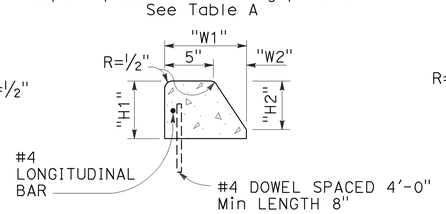

TYPE B3 CURBS

Superimposed on existing pavement
See Table A

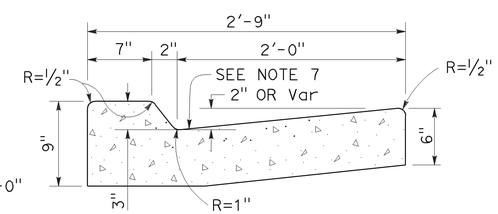

TYPE B4 CURBS

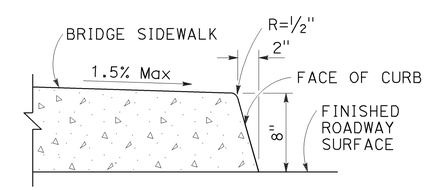

TYPE H CURB

On Bridges

CURBS

NOTES:

1. Case A driveway section typically applies.
2. X=3'-0" except for curb heights over 10" where 4:1 slopes shall be used on curb slope.
3. Sidewalk and ramp thickness "T" at driveway shall be 4" for residental and 6" for commercial.
4. Difference in slope of the driveway ramp and the slope of a line between the gutter and a point on the roadway 5'-0" from gutter line shall not exceed 15%. Reduce driveway ramp slope, not gutter slope, where required.
5. Minimum width of clear passageway for sidewalk shall be 4'-2".
6. Retaining curbs and acquisition of construction easement may be necessary for narrow sidewalks or curb heights in excess of 6".
7. Across the pedestrian route at curb ramp locations, the gutter pan slope shall not exceed 1" of depth for each 2'-0" of width.

STATE OF CALIFORNIA
DEPARTMENT OF TRANSPORTATION

CURBS AND DRIVEWAYS

NO SCALE

RSP A87A DATED JULY 19, 2013 SUPERSEDES STANDARD PLAN A87A
DATED MAY 20, 2011 - PAGE 119 OF THE STANDARD PLANS BOOK DATED 2010.

REVISED STANDARD PLAN RSP A87A

Dist	COUNTY	ROUTE	POST MILES TOTAL PROJECT	SHEET No.	TOTAL SHEETS
07	LA	101	11.8/35.3	162	192

REGISTERED CIVIL ENGINEER

July 19, 2013
PLANS APPROVAL DATE

REGISTERED PROFESSIONAL ENGINEER
Michael Janzen
No. 44788
Exp. 03-31-14
CIVIL
STATE OF CALIFORNIA

THE STATE OF CALIFORNIA OR ITS OFFICERS OR AGENTS SHALL NOT BE RESPONSIBLE FOR THE ACCURACY OR COMPLETENESS OF SCANNED COPIES OF THIS PLAN SHEET.

TO ACCOMPANY PLANS DATED 2-18-14

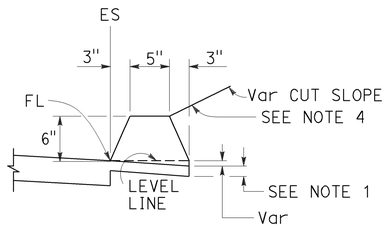

TYPE A
See Note 3

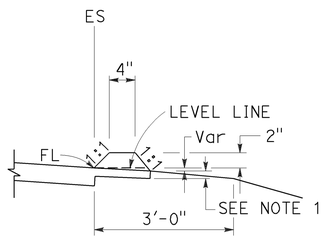

TYPE C

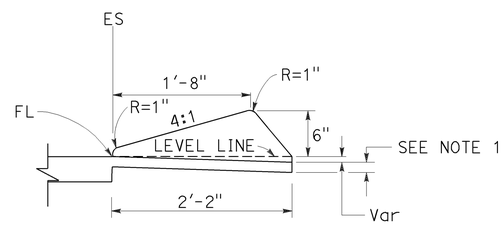

TYPE D

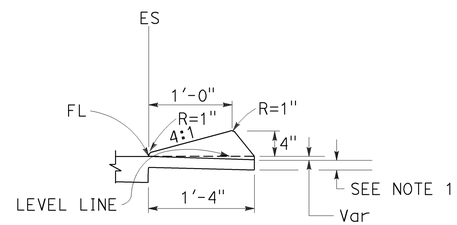

TYPE E

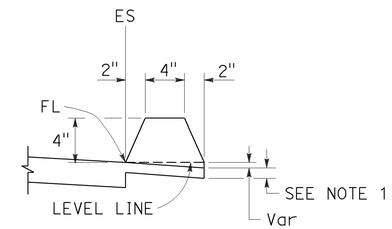

TYPE F
See Note 5

DIKES

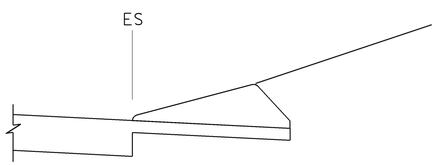

CASE C-1
Cut Slope

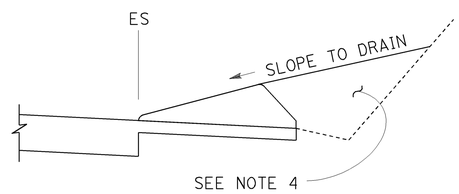

CASE C-2
Cut Slope

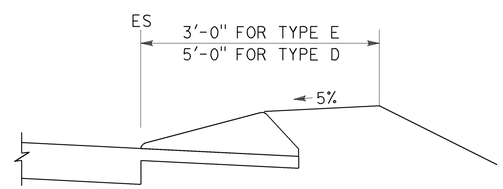

CASE F

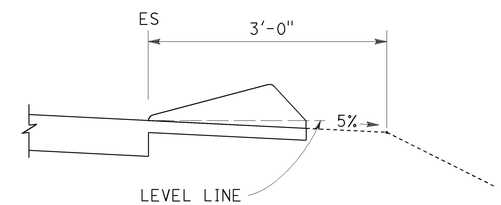

CASE R
See Note 2

TYPE D AND E BACKFILL DETAILS

NOTES:

1. For HMA shoulders only, extend top layer of HMA placed on the shoulder under dike with no joint at the ES. For projects with OGFC shoulders, do not extend OGFC under dike. See project plans for modified dike detail.
2. Case R applies to retrofit only projects where restrictive conditions do not provide enough width for Case F backfill.
3. Type A dike only to be used where restrictive slope conditions do not provide enough width to use Type D or Type E dike.
4. Fill and compact with excavated material to top of dike.
5. Use Type F dike, where dike is required with guard railing installations. See Revised Standard Plan RSP A77N4 for dike positioning details.

DIKE QUANTITIES

TYPE	CUBIC YARDS PER LINEAR FOOT
A	0.0135
C	0.0038
D	0.0293
E	0.0130
F	0.0066

Quantities based on 5% cross slope.

STATE OF CALIFORNIA
DEPARTMENT OF TRANSPORTATION

HOT MIX ASPHALT DIKES

NO SCALE

RSP A87B DATED JULY 19, 2013 SUPERSEDES STANDARD PLAN A87B DATED MAY 20, 2011 - PAGE 120 OF THE STANDARD PLANS BOOK DATED 2010.

REVISED STANDARD PLAN RSP A87B

2010 REVISED STANDARD PLAN RSP A87B

6-27-13

Dist	COUNTY	ROUTE	POST MILES TOTAL PROJECT	SHEET No.	TOTAL SHEETS
07	LA	101	11.8/35.3	163	192

REGISTERED CIVIL ENGINEER

July 19, 2013
PLANS APPROVAL DATE

REGISTERED PROFESSIONAL ENGINEER Hector David Cordova No. C41957 Exp. 3-31-14 CIVIL STATE OF CALIFORNIA

THE STATE OF CALIFORNIA OR ITS OFFICERS OR AGENTS SHALL NOT BE RESPONSIBLE FOR THE ACCURACY OR COMPLETENESS OF SCANNED COPIES OF THIS PLAN SHEET.

TO ACCOMPANY PLANS DATED 2-18-14

2010 REVISED STANDARD PLAN RSP A88A

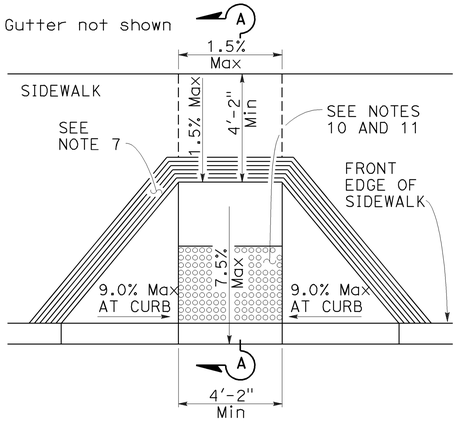

CASE A

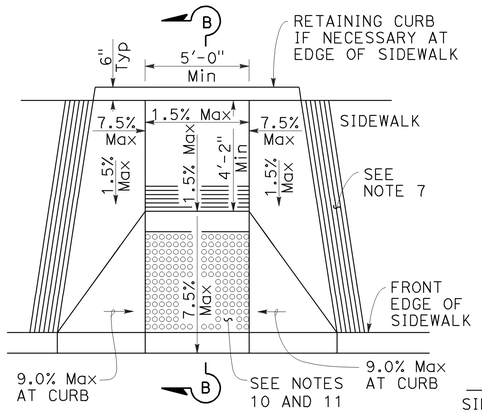

CASE B

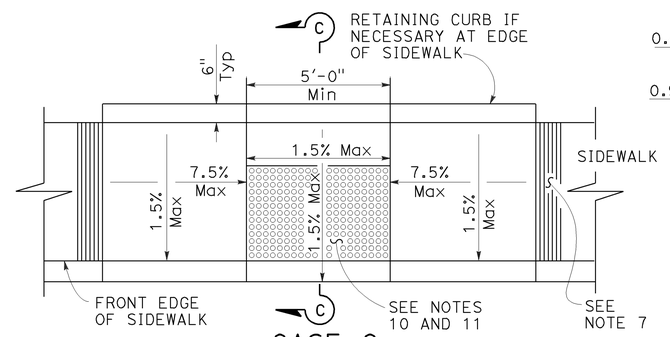

CASE C

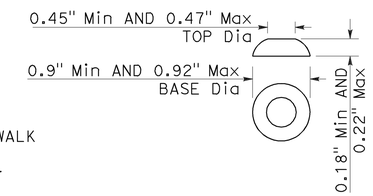

RAISED TRUNCATED DOME

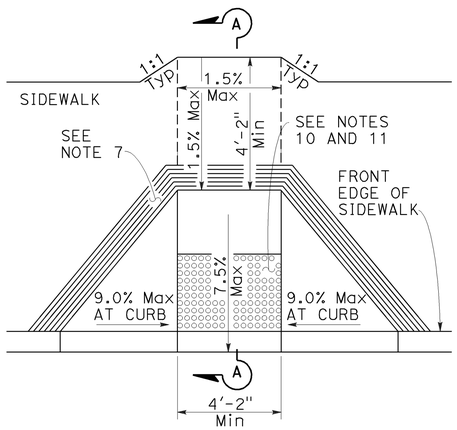

CASE D

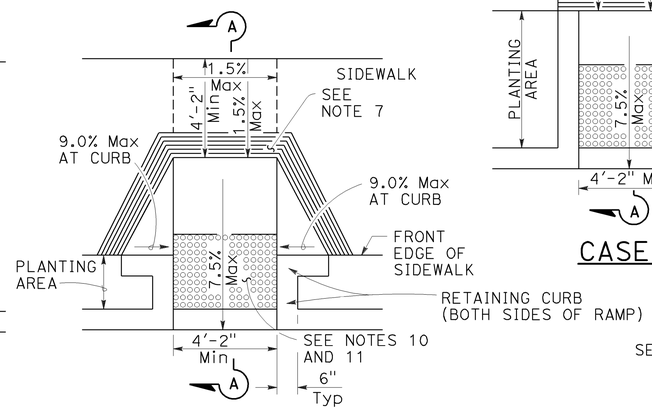

CASE E

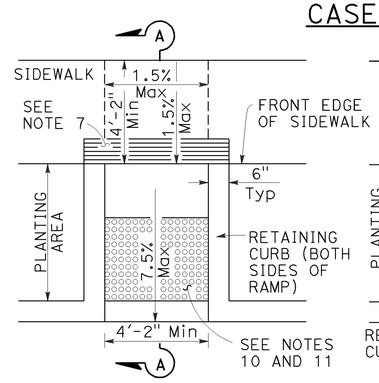

CASE F

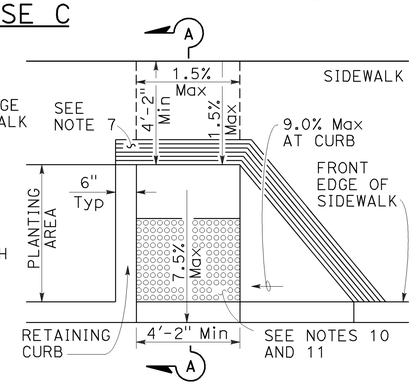

CASE G

See Note 4

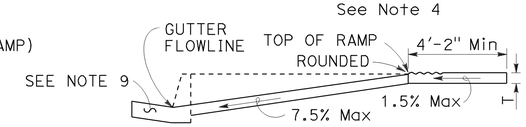

SECTION A-A

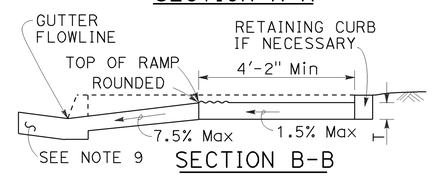

SECTION B-B

Depress entire sidewalk as required

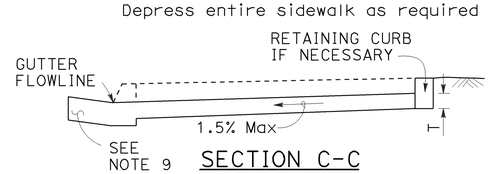

SECTION C-C

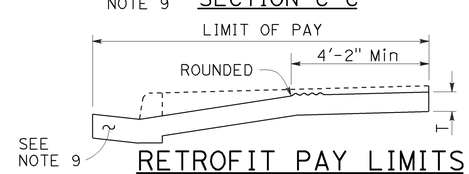

RETROFIT PAY LIMITS

Existing curb and sidewalk

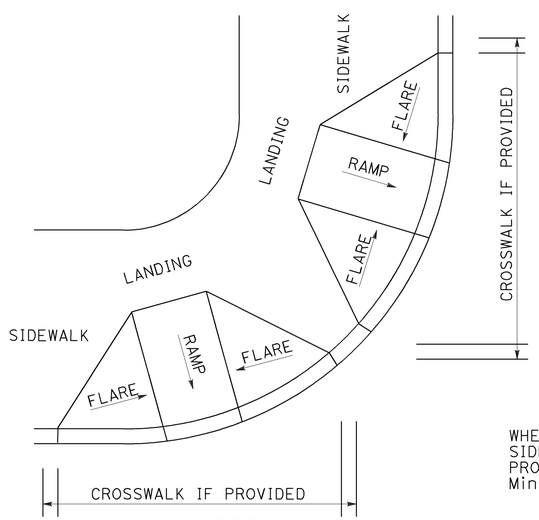

DETAIL A

TYPICAL TWO-RAMP CORNER INSTALLATION

See Note 1

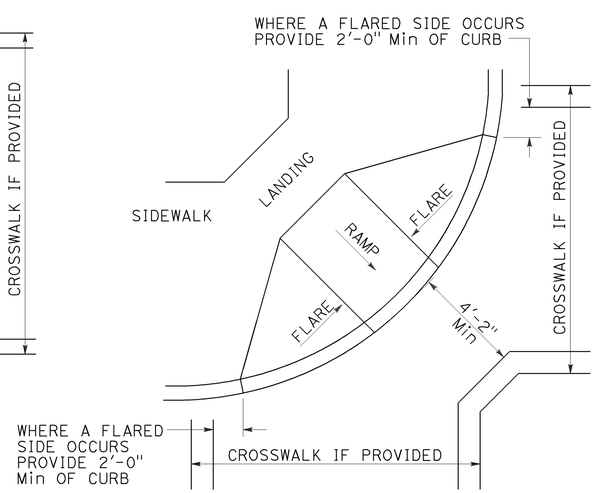

DETAIL B

TYPICAL ONE-RAMP CORNER INSTALLATION

See Notes 1 and 3

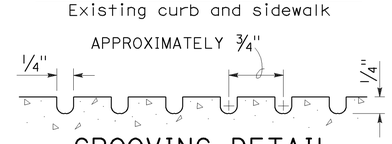

GROOVING DETAIL

NOTES:

1. As site conditions dictate, Case A through Case G curb ramps may be used for corner installations similar to those shown in Detail A and Detail B. The case of curb ramps used in Detail A do not have to be the same. Case A through Case G curb ramps also may be used at mid block locations, as site conditions dictate.
2. If distance from curb to back of sidewalk is too short to accommodate ramp and 4'-2" platform (landing) as shown in Case A, the sidewalk may be depressed longitudinally as in Case B, or C or may be widened as in Case D.
3. When ramp is located in center of curb return, crosswalk configuration must be similar to that shown for Detail B.
4. As site conditions dictate, the retaining curb side and the flared side of the Case G ramp shall be constructed in reversed position.
5. If located on a curve, the sides of the ramp need not be parallel, but the minimum width of the ramp shall be 4'-2".
6. Side slope of ramp flares vary uniformly from a maximum of 9.0% at curb to conform with longitudinal sidewalk slope adjacent to top of the ramp, except in Case C and Case F.
7. The curb ramp shall be outlined, as shown, with a 1'-0" wide border with 1/4" grooves approximately 3/4" on center. See grooving detail.
8. Transitions from ramps and landing to walks, gutters or streets shall be flush (no lip) and free of abrupt changes.
9. Counter slopes of adjoining gutters and road surfaces immediately adjacent to and within 24 inches of the curb ramp shall not be steeper than 1:20 (5.0%). Gutter pan slope shall not exceed 1" of depth for each 2'-0" of width.
10. Curb ramps shall have a detectable warning surface that extends the full width and 3'-0" depth of the ramp. Detectable Warning Surfaces shall conform to the details on this plan and the requirements in the Standard Specifications.
11. The edge of the detectable warning surface nearest the street shall be between 6" and 8" from the gutter flowline.
12. Sidewalk and ramp thickness, "T", shall be 3 1/2" minimum.
13. Utility pull boxes, manholes, vaults and all other utility facilities within the boundaries of the curb ramp will be relocated or adjusted to grade by the owner prior to, or in conjunction with, curb ramp construction.
14. Detectable warning surface may have to be cut to allow removal of utility covers while maintaining full detectable warning width and depth.

RAISED TRUNCATED DOME PATTERN (IN-LINE)

DETECTABLE WARNING SURFACE

See Note 10

STATE OF CALIFORNIA
DEPARTMENT OF TRANSPORTATION

CURB RAMP DETAILS

NO SCALE

RSP A88A DATED JULY 19, 2013 SUPERSEDES STANDARD PLAN A88A
DATED MAY 20, 2011 - PAGE 121 OF THE STANDARD PLANS BOOK DATED 2010.

REVISED STANDARD PLAN RSP A88A

7-8-13

Dist	COUNTY	ROUTE	POST MILES TOTAL PROJECT	SHEET No.	TOTAL SHEETS
07	LA	101	11.8/35.3	164	192

REGISTERED CIVIL ENGINEER

July 19, 2013
PLANS APPROVAL DATE

REGISTERED PROFESSIONAL ENGINEER
Hector David Cordova
No. C41957
Exp. 3-31-14
CIVIL
STATE OF CALIFORNIA

THE STATE OF CALIFORNIA OR ITS OFFICERS OR AGENTS SHALL NOT BE RESPONSIBLE FOR THE ACCURACY OR COMPLETENESS OF SCANNED COPIES OF THIS PLAN SHEET.

TO ACCOMPANY PLANS DATED 2-18-14

Gutter not shown

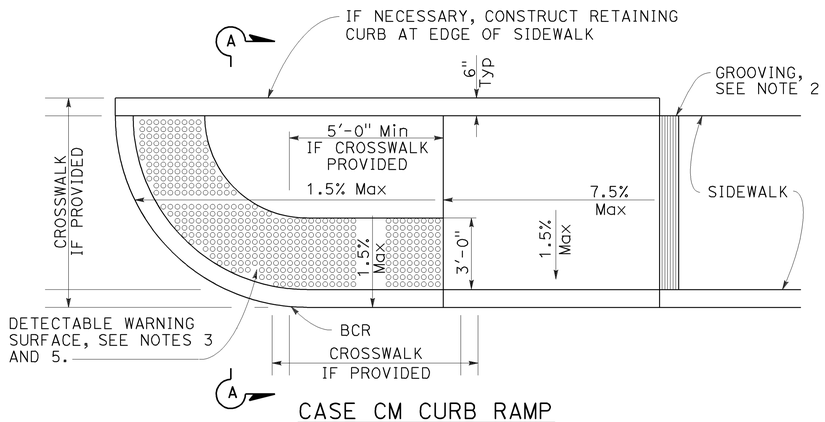

CASE CM CURB RAMP

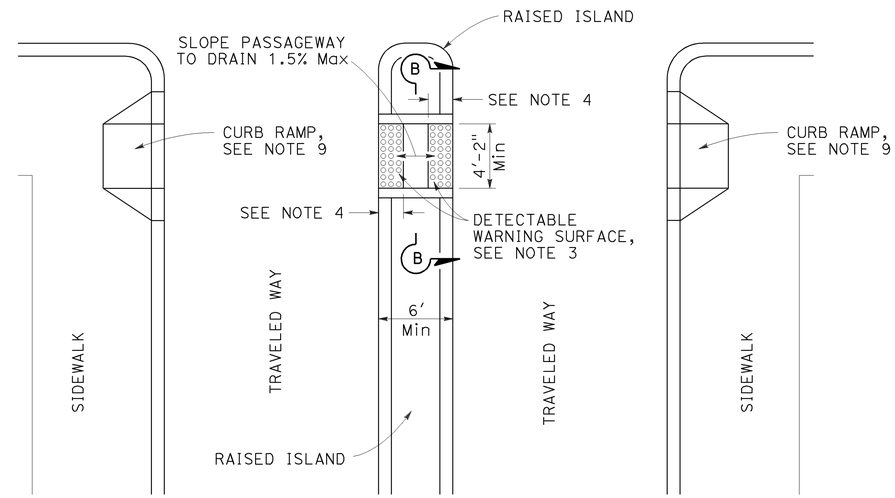

TYPE A PASSAGEWAY

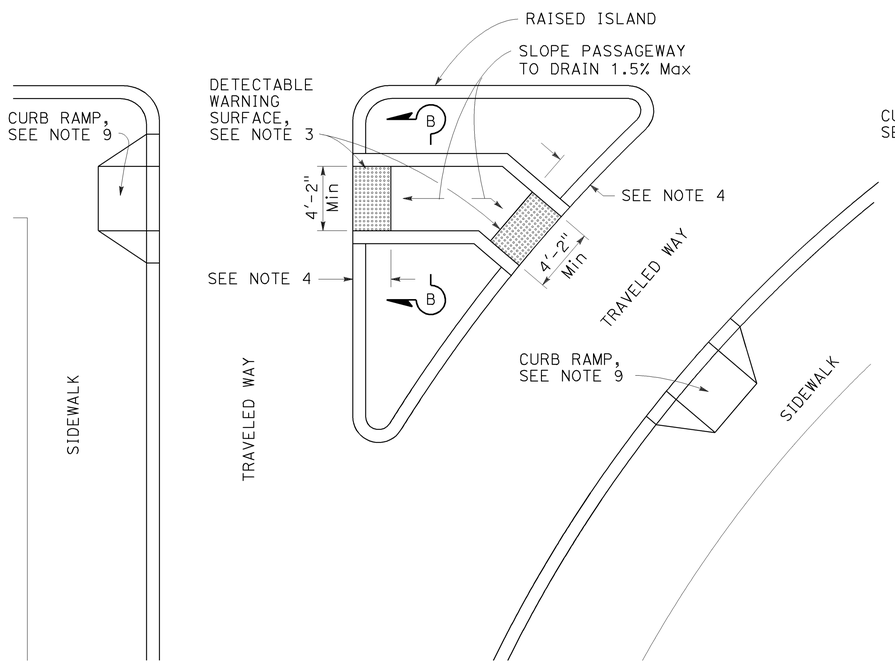

TYPE B PASSAGEWAY

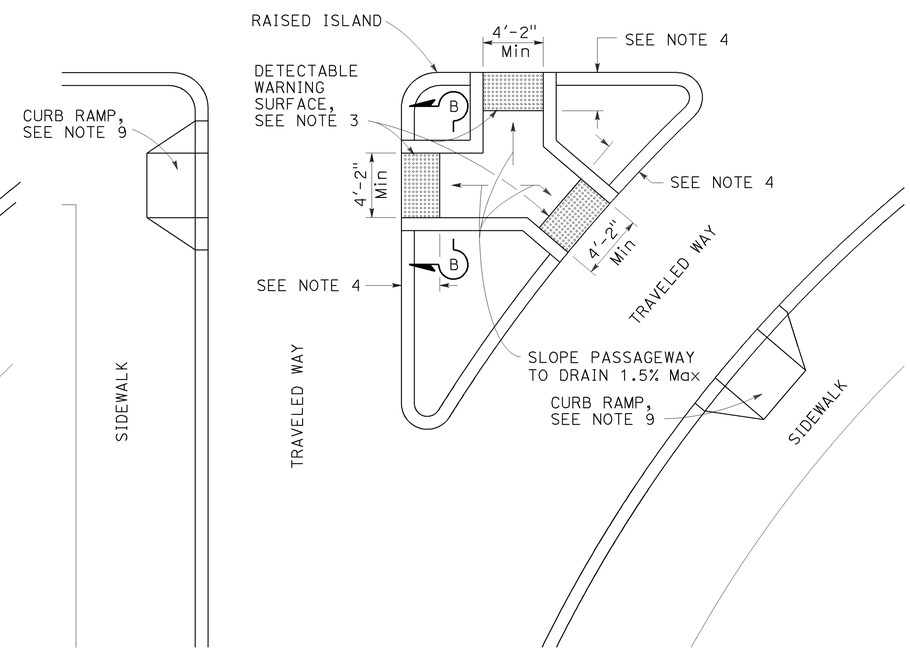

TYPE C PASSAGEWAY

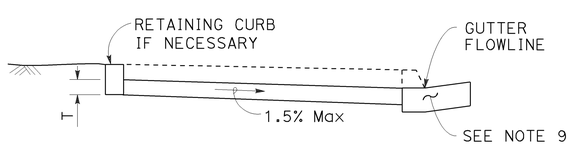

SECTION A-A

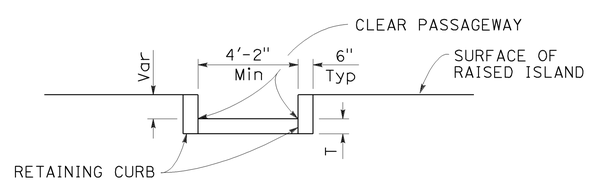

SECTION B-B

NOTES:

1. Sidewalk, ramp and passageway thickness, "T", shall be 3½" minimum.
2. For details of grooving used with Case CM curb ramp, see Revised Standard Plan RSP A88A.
3. For details of detectable warning surfaces, see Revised Standard Plan RSP A88A.
4. Where an island passageway length is greater than or equal to 6'-0", but less than 8'-0", each detectable warning surface shall extend the full width and 2'-0" depth of the passageway length. Where an island passageway length is greater than or equal to 8'-0", each detectable warning surface shall extend the full width and 3'-0" depth of the passageway length.
5. For Case CM curb ramp, the edge of the detectable warning surface nearest the street shall be between 6" and 8" from the gutter flowline.
6. Transitions from ramps to walks, gutters or streets shall be flush (no lip) and free of abrupt changes.
7. Utility pull boxes, manholes, vaults and all other utility facilities within the boundaries of the curb ramp will be relocated or adjusted to grade by the owner prior to, or in conjunction with, curb ramp construction.
8. Detectable warning surface may have to be cut to allow removal of utility covers while maintaining full detectable warning width and depth.
9. For additional curb ramp details, see Revised Standard Plan RSP A88A.

STATE OF CALIFORNIA
DEPARTMENT OF TRANSPORTATION

CURB RAMP AND ISLAND PASSAGEWAY DETAILS

NO SCALE

RSP A88B DATED JULY 19, 2013 SUPERSEDES STANDARD PLAN A88B DATED MAY 20, 2011 - PAGE 122 OF THE STANDARD PLANS BOOK DATED 2010.

REVISED STANDARD PLAN RSP A88B

2010 REVISED STANDARD PLAN RSP A88B

6-25-13

Dist	COUNTY	ROUTE	POST MILES TOTAL PROJECT	SHEET No.	TOTAL SHEETS
07	LA	101	11.8/35.3	165	192

William K. Farnbach
REGISTERED CIVIL ENGINEER

July 19, 2013
PLANS APPROVAL DATE

REGISTERED PROFESSIONAL ENGINEER William K. Farnbach No. C49042 Exp. 9-30-14 CIVIL STATE OF CALIFORNIA

THE STATE OF CALIFORNIA OR ITS OFFICERS OR AGENTS SHALL NOT BE RESPONSIBLE FOR THE ACCURACY OR COMPLETENESS OF SCANNED COPIES OF THIS PLAN SHEET.

TO ACCOMPANY PLANS DATED 2-18-14

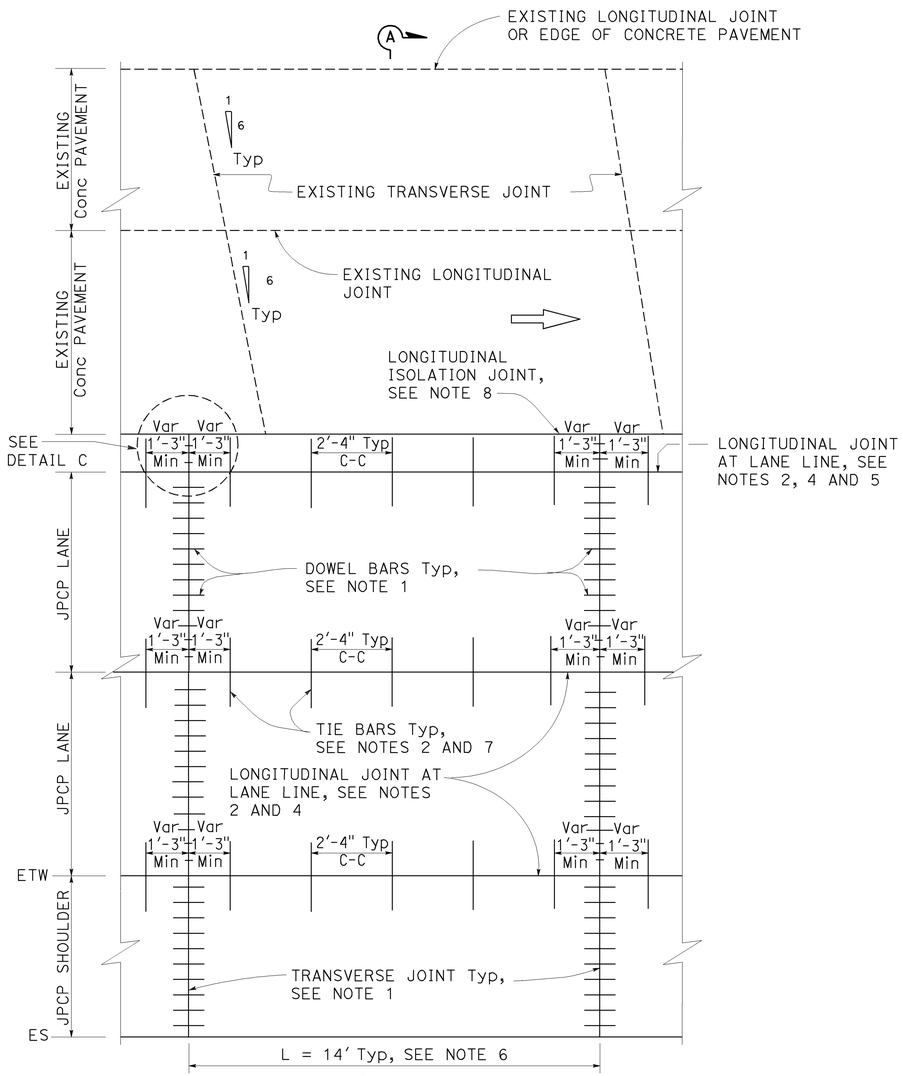

PLAN
ISOLATED
See Note 3

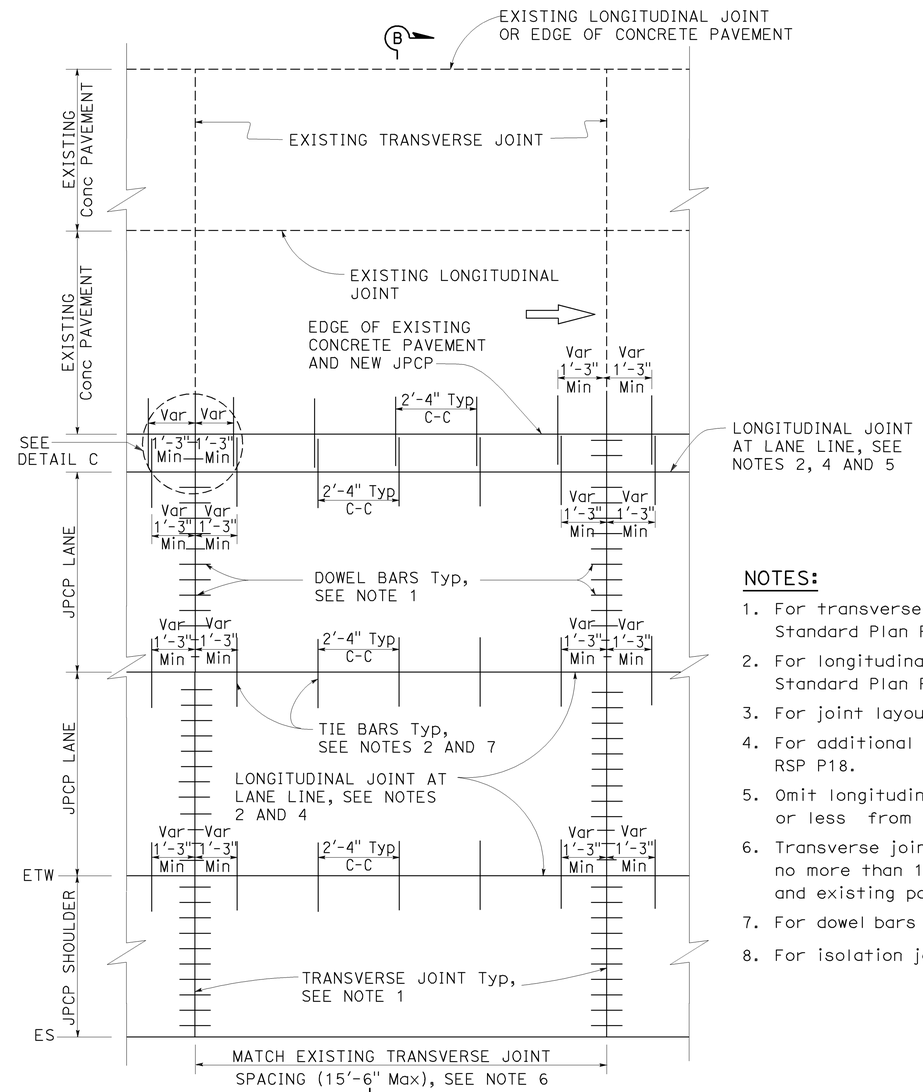

PLAN
TIED
See Note 3

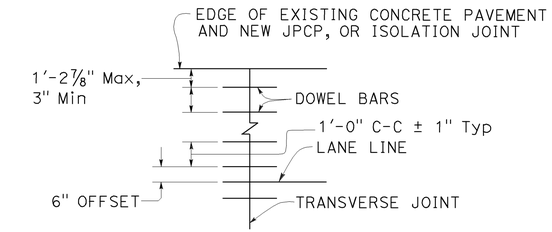

DETAIL C

NOTES:

1. For transverse joint and dowel bar details not shown, see Revised Standard Plan RSP P10.
2. For longitudinal joint and tie bar details not shown, see Revised Standard Plan RSP P15.
3. For joint layout at intersections, see Project Plans.
4. For additional longitudinal joint details, see Revised Standard Plan RSP P18.
5. Omit longitudinal joint when edge of new concrete pavement is 3'-3" or less from JPCP lane line.
6. Transverse joint spacing may be adjusted to no less than 10' and no more than 15'-6" to conform to bridges, change in pavement type and existing pavement.
7. For dowel bars at longitudinal joint. see Revised Standard Plan RSP P18.
8. For isolation joints, see Detail A on Revised Standard Plan RSP P18.

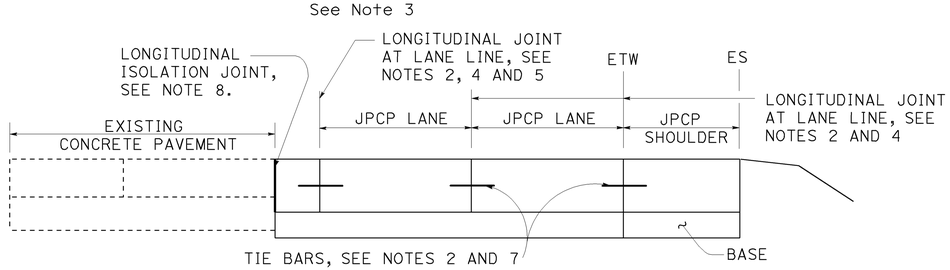

SECTION A-A

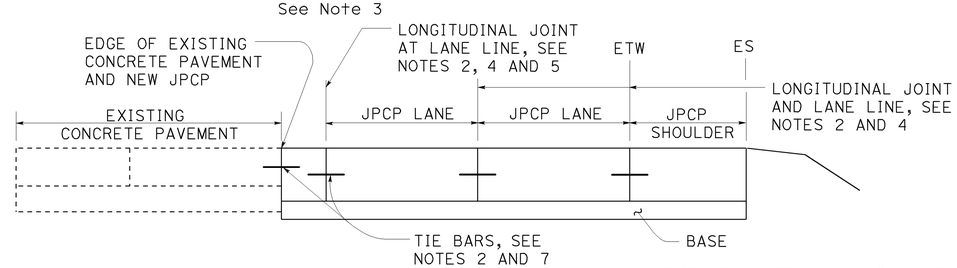

SECTION B-B

STATE OF CALIFORNIA
DEPARTMENT OF TRANSPORTATION

JOINTED PLAIN CONCRETE PAVEMENT LANE & SHOULDER ADDITION OR REPLACEMENT

NO SCALE

RSP P3A DATED JULY 19, 2013 SUPPLEMENTS THE STANDARD PLANS BOOK DATED 2010.

REVISED STANDARD PLAN RSP P3A

2010 REVISED STANDARD PLAN RSP P3A

5-31-13

Dist	COUNTY	ROUTE	POST MILES TOTAL PROJECT	SHEET No.	TOTAL SHEETS
07	LA	101	11.8/35.3	166	192

William K. Farnbach
REGISTERED CIVIL ENGINEER

July 19, 2013
PLANS APPROVAL DATE

REGISTERED PROFESSIONAL ENGINEER
William K. Farnbach
No. C49042
Exp. 9-30-14
CIVIL
STATE OF CALIFORNIA

THE STATE OF CALIFORNIA OR ITS OFFICERS OR AGENTS SHALL NOT BE RESPONSIBLE FOR THE ACCURACY OR COMPLETENESS OF SCANNED COPIES OF THIS PLAN SHEET.

TO ACCOMPANY PLANS DATED 2-18-14

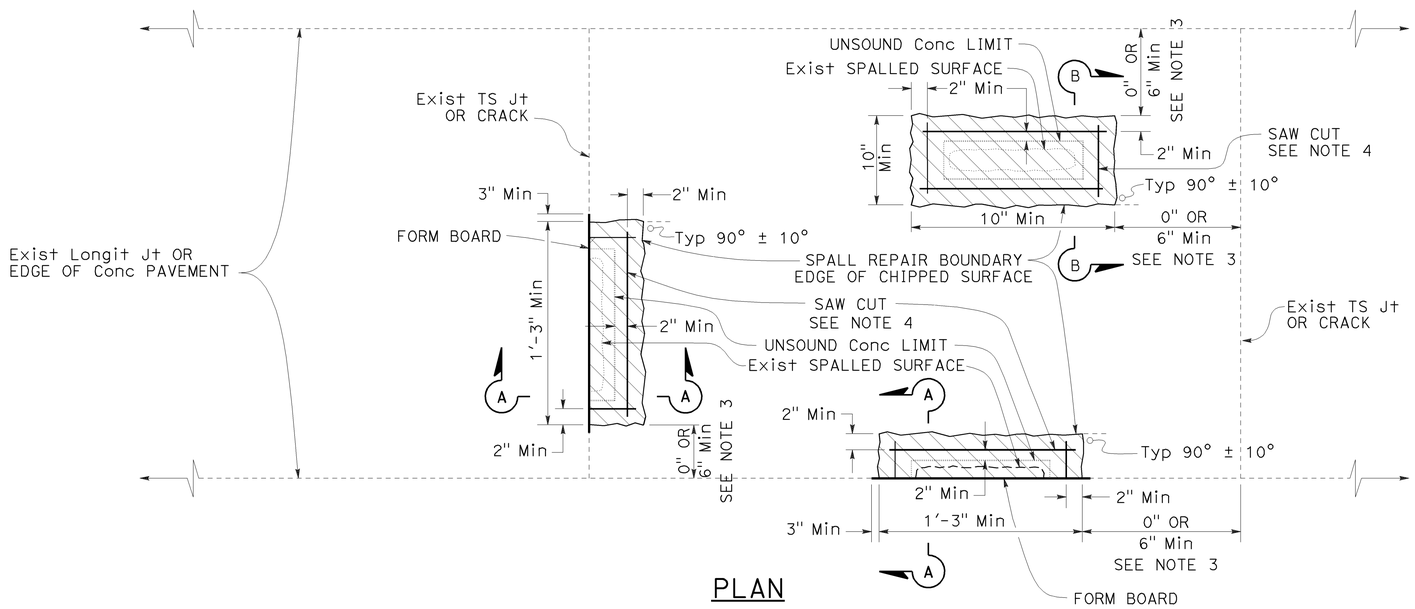

PLAN

LEGEND

SPALL REPAIR

NOTES:

1. See Project Plans for spall repair locations.
2. Combine spall repair areas closer than 2' apart.
3. If the spall repair area is less than 6" from a joint, extend the repair to the joint.
4. Cut at least 2" beyond the rectangular limits of unsound concrete determined by the Engineer. Determine the saw cut depth using the following table:

Conc MATERIAL	SAW CUT DEPTH	
	Min	Max
FAST-SETTING	2"	3½"
POLYESTER	1½"	3½"

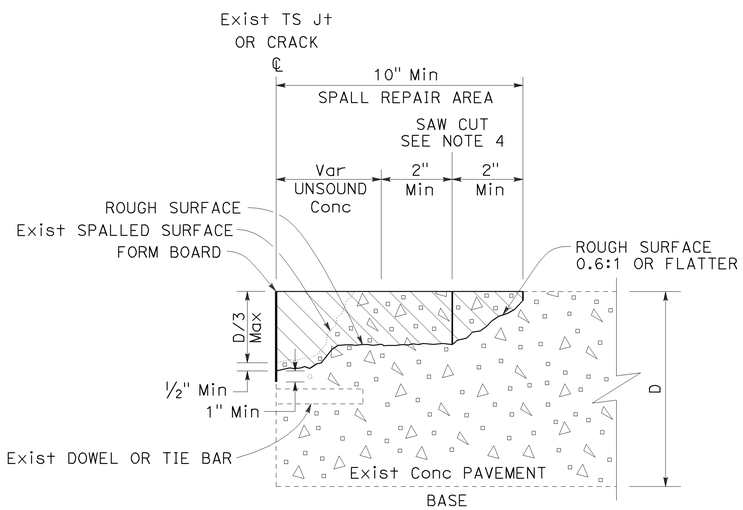

SECTION A-A

JOINT, CRACK, OR EDGE OF CONCRETE PAVEMENT REPAIR

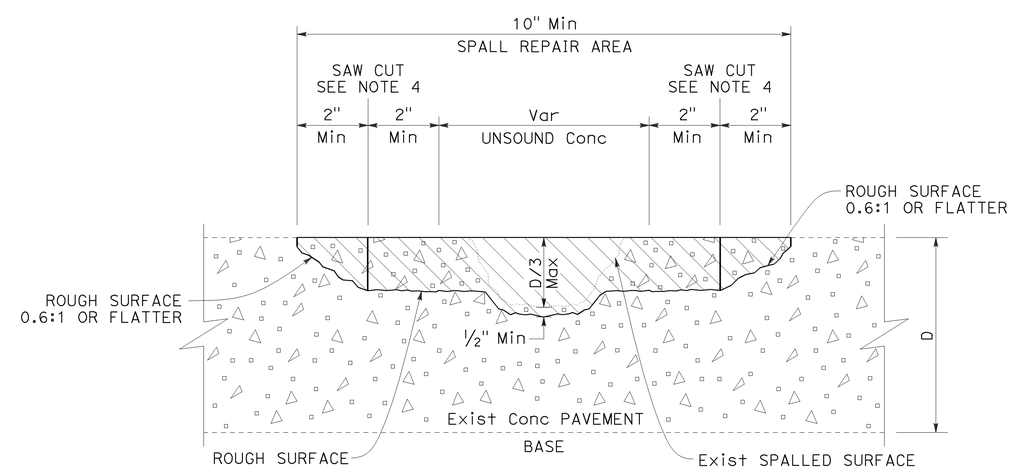

SECTION B-B

MISCELLANEOUS SPALL REPAIR

STATE OF CALIFORNIA
DEPARTMENT OF TRANSPORTATION

SPALL REPAIR

NO SCALE

RSP P6 DATED JULY 19, 2013 SUPPLEMENTS THE STANDARD PLANS BOOK DATED 2010.

REVISED STANDARD PLAN RSP P6

2010 REVISED STANDARD PLAN RSP P6

5-31-13

Dist	COUNTY	ROUTE	POST MILES TOTAL PROJECT	SHEET No.	TOTAL SHEETS
07	LA	101	11.8/35.3	167	192

William K. Farnbach
REGISTERED CIVIL ENGINEER

July 19, 2013
PLANS APPROVAL DATE

REGISTERED PROFESSIONAL ENGINEER William K. Farnbach No. C49042 Exp. 9-30-14 CIVIL STATE OF CALIFORNIA

THE STATE OF CALIFORNIA OR ITS OFFICERS OR AGENTS SHALL NOT BE RESPONSIBLE FOR THE ACCURACY OR COMPLETENESS OF SCANNED COPIES OF THIS PLAN SHEET.

TO ACCOMPANY PLANS DATED 2-18-14

NOTES:

1. Details for skewed joints also apply to perpendicular joints.
2. Use 1′-6" ± 1/4" long dowel bars with a 1 1/4" diameter except 1" diameter dowel bars may be used if D < 0.70′.
3. Caulk existing transverse joint at bottom and sides of the dowel bar slot prior to placing dowel bar and foam insert.
4. Foam insert thickness must match width of existing transverse joint or crack.

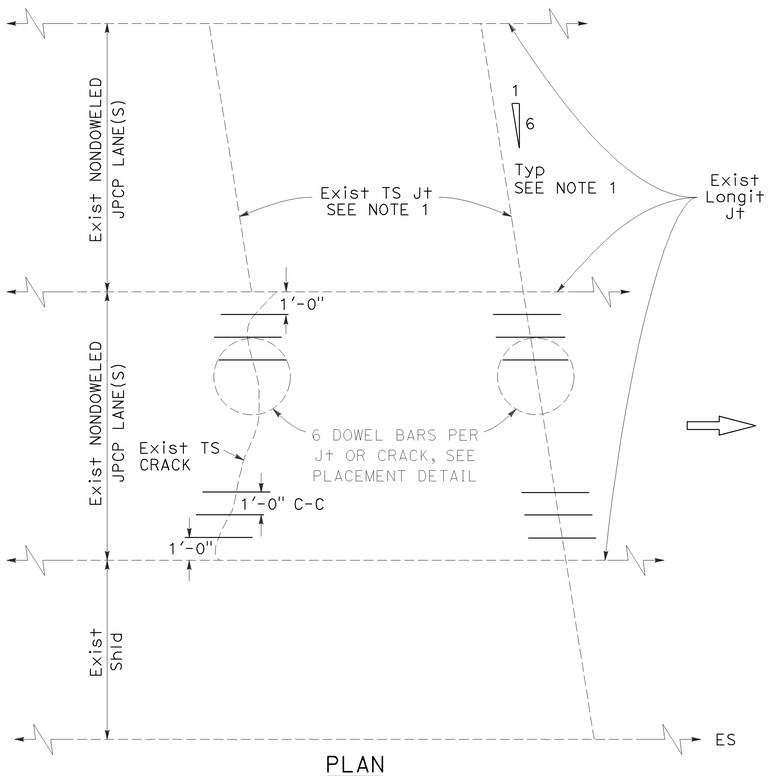

PLAN

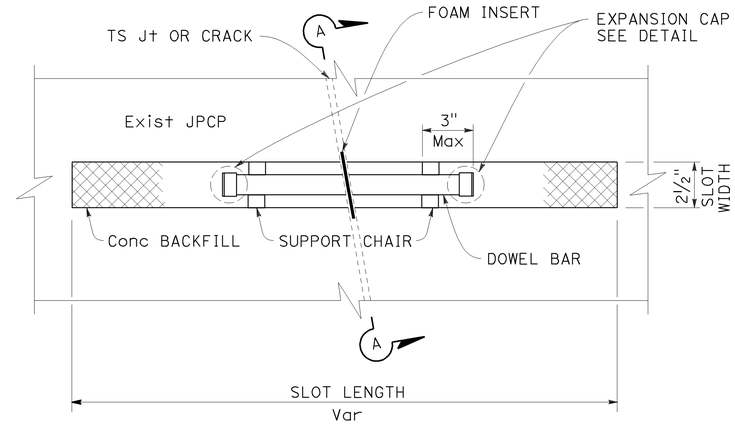

PLAN

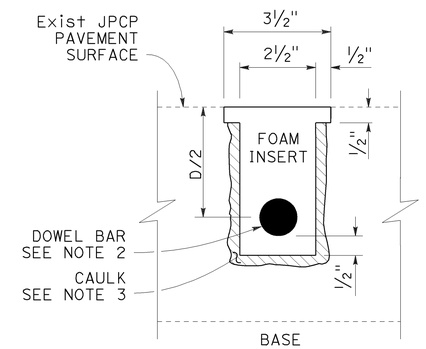

SECTION A-A

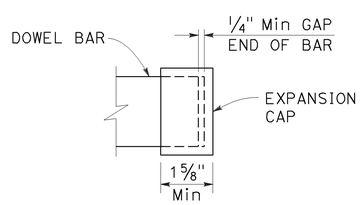

EXPANSION CAP DETAIL

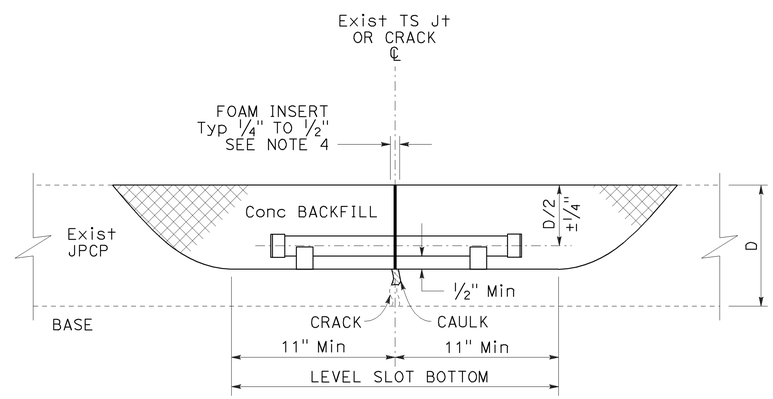

ELEVATION

DOWEL BAR PLACEMENT DETAIL

STATE OF CALIFORNIA
DEPARTMENT OF TRANSPORTATION

DOWEL BAR RETROFIT

NO SCALE

RSP P7 DATED JULY 19, 2013 SUPERSEDES STANDARD PLAN P7
DATED MAY 20, 2011 - PAGE 129 OF THE STANDARD PLANS BOOK DATED 2010.

REVISED STANDARD PLAN RSP P7

2010 REVISED STANDARD PLAN RSP P7

6-17-13

Dist	COUNTY	ROUTE	POST MILES TOTAL PROJECT	SHEET No.	TOTAL SHEETS
07	LA	101	11.8/35.3	168	192

William K. Farnbach
REGISTERED CIVIL ENGINEER

July 19, 2013
PLANS APPROVAL DATE

REGISTERED PROFESSIONAL ENGINEER William K. Farnbach No. C49042 Exp. 9-30-14 CIVIL STATE OF CALIFORNIA

THE STATE OF CALIFORNIA OR ITS OFFICERS OR AGENTS SHALL NOT BE RESPONSIBLE FOR THE ACCURACY OR COMPLETENESS OF SCANNED COPIES OF THIS PLAN SHEET.

TO ACCOMPANY PLANS DATED 2-18-14

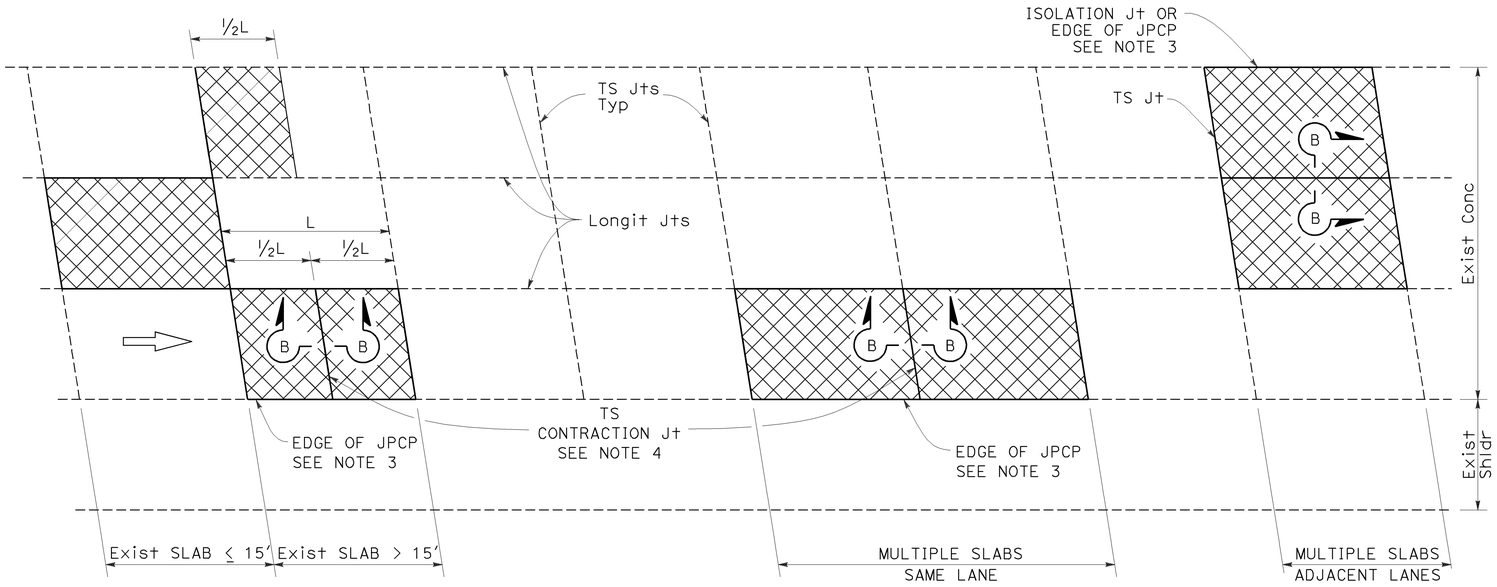

PLAN

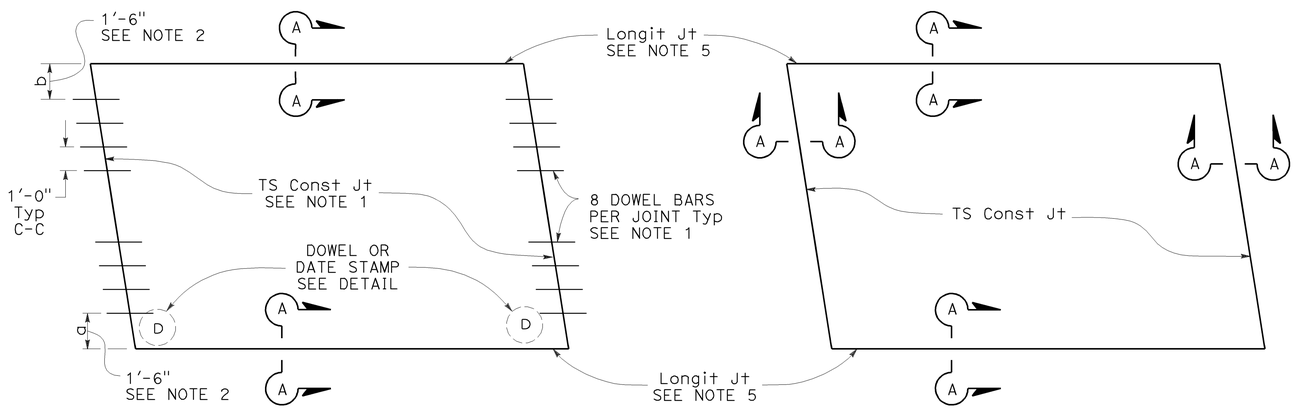

TYPE I
See Design Note 1

TYPE II
See Design Note 2

SLAB LAYOUT

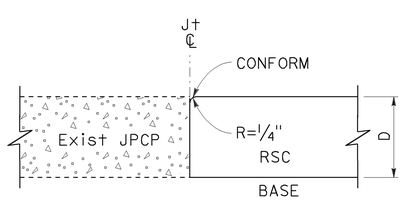

SECTION A-A

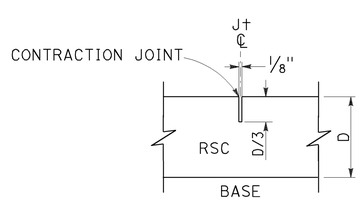

SECTION B-B

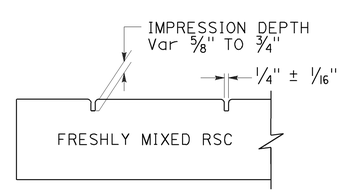

SECTION C-C

LEGEND:

RSC RAPID STRENGTH CONCRETE

INDIVIDUAL SLAB REPLACEMENT WITH RSC

NOTES:

1. For details not shown, see Revised Standard Plan RSP P10.
2. Where the existing outside shoulder is asphalt concrete pavement, "a" = 1'-0" and "b" = 2'-0".
3. Use side forms where edge of RSC pavement is adjacent to asphalt concrete.
4. Transverse contraction joint to match skew of existing joint. Omit dowel bars.
5. Do not place tie bars at longitudinal joints.

DESIGN NOTES:

1. For concrete slab repair with at least 5 years design life.
2. For short term repairs < 5 yrs design life or for slab replacements with cracking and seating.

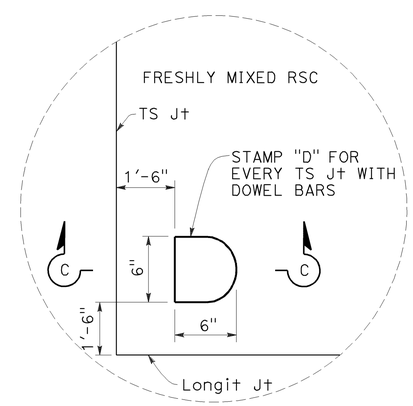

DOWEL STAMP DETAIL

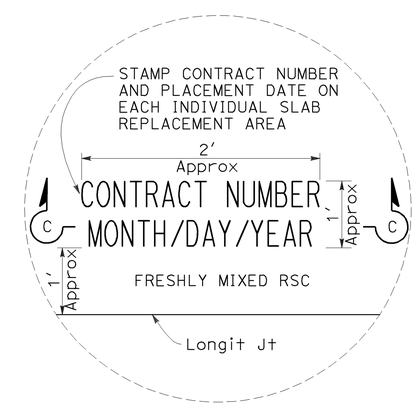

DATE STAMP DETAIL

STATE OF CALIFORNIA
DEPARTMENT OF TRANSPORTATION

INDIVIDUAL SLAB REPLACEMENT WITH RAPID STRENGTH CONCRETE

NO SCALE

RSP P8 DATED JULY 19, 2013 SUPERSEDES RSP P8 DATED APRIL 20, 2012 AND STANDARD PLAN P8 DATED MAY 20, 2011 - PAGE 130 OF THE STANDARD PLANS BOOK DATED 2010.

REVISED STANDARD PLAN RSP P8

2010 REVISED STANDARD PLAN RSP P8

5-31-13

Dist	COUNTY	ROUTE	POST MILES TOTAL PROJECT	SHEET No.	TOTAL SHEETS
07	LA	101	11.8/35.3	169	192

REGISTERED CIVIL ENGINEER

July 19, 2013
PLANS APPROVAL DATE

REGISTERED PROFESSIONAL ENGINEER William K. Farnbach No. C49042 Exp. 9-30-14 CIVIL STATE OF CALIFORNIA

THE STATE OF CALIFORNIA OR ITS OFFICERS OR AGENTS SHALL NOT BE RESPONSIBLE FOR THE ACCURACY OR COMPLETENESS OF SCANNED COPIES OF THIS PLAN SHEET.

TO ACCOMPANY PLANS DATED 2-18-14

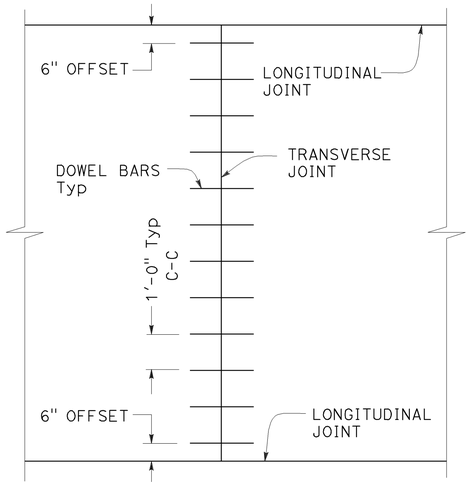

TRANSVERSE JOINT DOWEL BAR LAYOUT

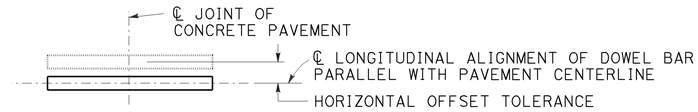

PLAN

HORIZONTAL OFFSET TOLERANCE

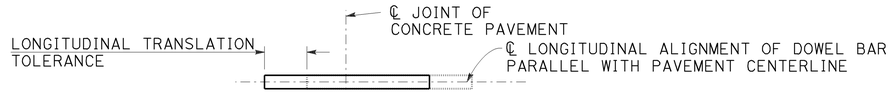

PLAN

LONGITUDINAL TRANSLATION TOLERANCE

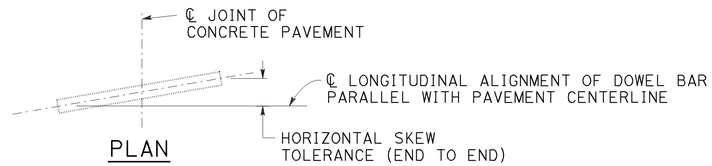

PLAN

HORIZONTAL SKEW TOLERANCE

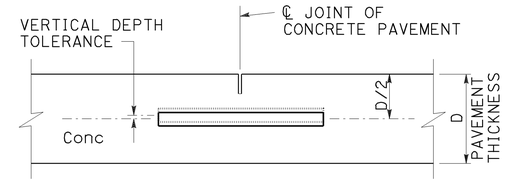

ELEVATION

VERTICAL DEPTH TOLERANCE

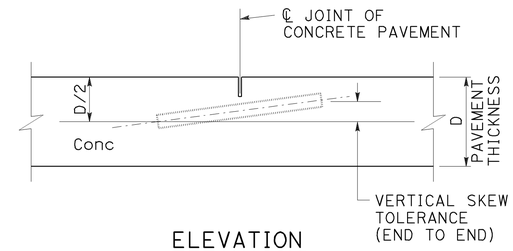

ELEVATION

VERTICAL SKEW TOLERANCE

NOTES:

1. See Revised Standard Plan RSP P1 for typical dowel bar placement and locations.
2. Where fresh concrete pavement is placed against new concrete or existing concrete pavement, rounding the corner of the existing concrete pavement is not required.
3. May also use ¾" Dia dowel bars 2'-4" ± ¼" in length. Center the length of dowel bars at the centerline of longitudinal joint.

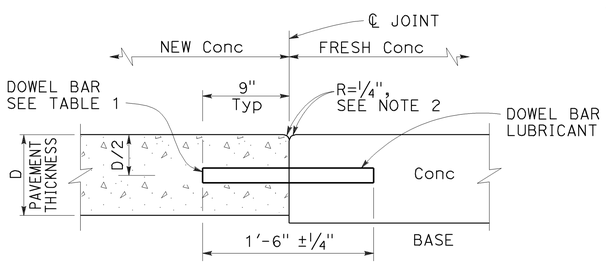

TRANSVERSE CONSTRUCTION JOINT DETAIL

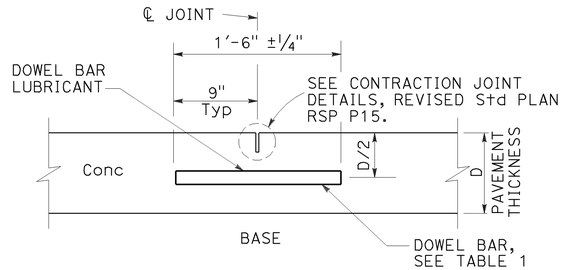

TRANSVERSE CONTRACTION JOINT

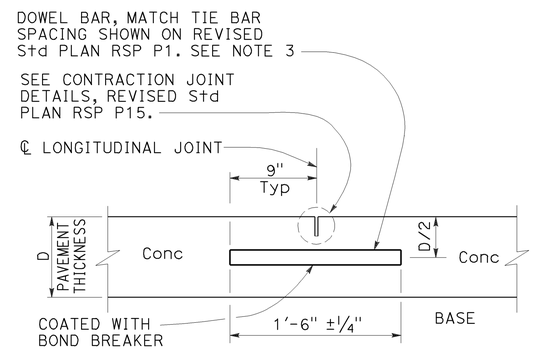

LONGITUDINAL CONTRACTION JOINT WITH DOWEL BARS

See Revised Std Plan RSP P18

TABLE 1

DOWEL BAR DIAMETER TABLE			
PAVEMENT THICKNESS	0.65'	> 0.65' - 0.85'	> 0.85'
MINIMUM DOWEL * BAR DIAMETER	1"	1¼"	1½"

* The drilled hole diameter must be ⅛" to 3/16" larger than the bar diameter.

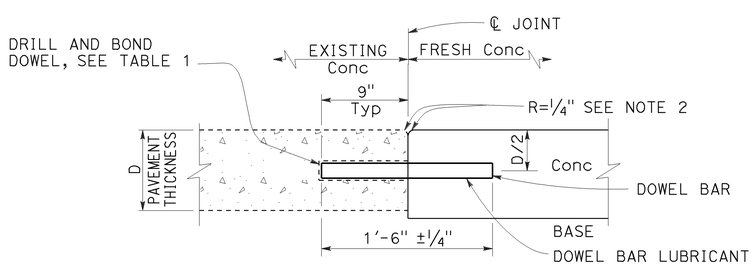

TRANSVERSE CONSTRUCTION JOINT FOR EXISTING CONCRETE PAVEMENT

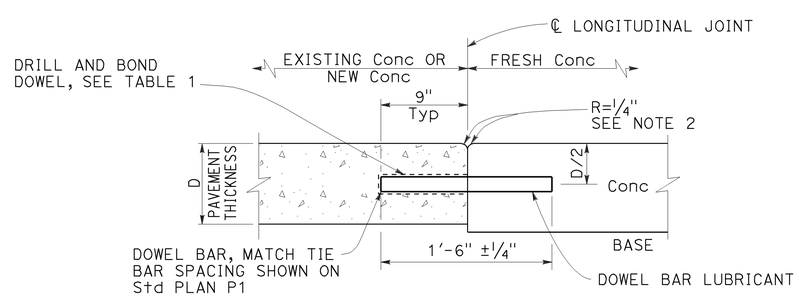

LONGITUDINAL CONSTRUCTION JOINT WITH DOWEL BARS

See Revised Std Plan RSP P18

STATE OF CALIFORNIA
DEPARTMENT OF TRANSPORTATION

CONCRETE PAVEMENT DOWEL BAR DETAILS

NO SCALE

RSP P10 DATED JULY 19, 2013 SUPERSEDES RSP P10 DATED APRIL 20, 2012 AND STANDARD PLAN P10 DATED MAY 20, 2011 - PAGE 131 OF THE STANDARD PLANS BOOK DATED 2010.

REVISED STANDARD PLAN RSP P10

2010 REVISED STANDARD PLAN RSP P10

5-31-13

Dist	COUNTY	ROUTE	POST MILES TOTAL PROJECT	SHEET No.	TOTAL SHEETS
07	LA	101	11.8/35.3	170	192

William K. Farnbach
REGISTERED CIVIL ENGINEER

July 19, 2013
PLANS APPROVAL DATE

REGISTERED PROFESSIONAL ENGINEER William K. Farnbach No. C49042 Exp. 9-30-14 CIVIL STATE OF CALIFORNIA

THE STATE OF CALIFORNIA OR ITS OFFICERS OR AGENTS SHALL NOT BE RESPONSIBLE FOR THE ACCURACY OR COMPLETENESS OF SCANNED COPIES OF THIS PLAN SHEET.

TO ACCOMPANY PLANS DATED 2-18-14

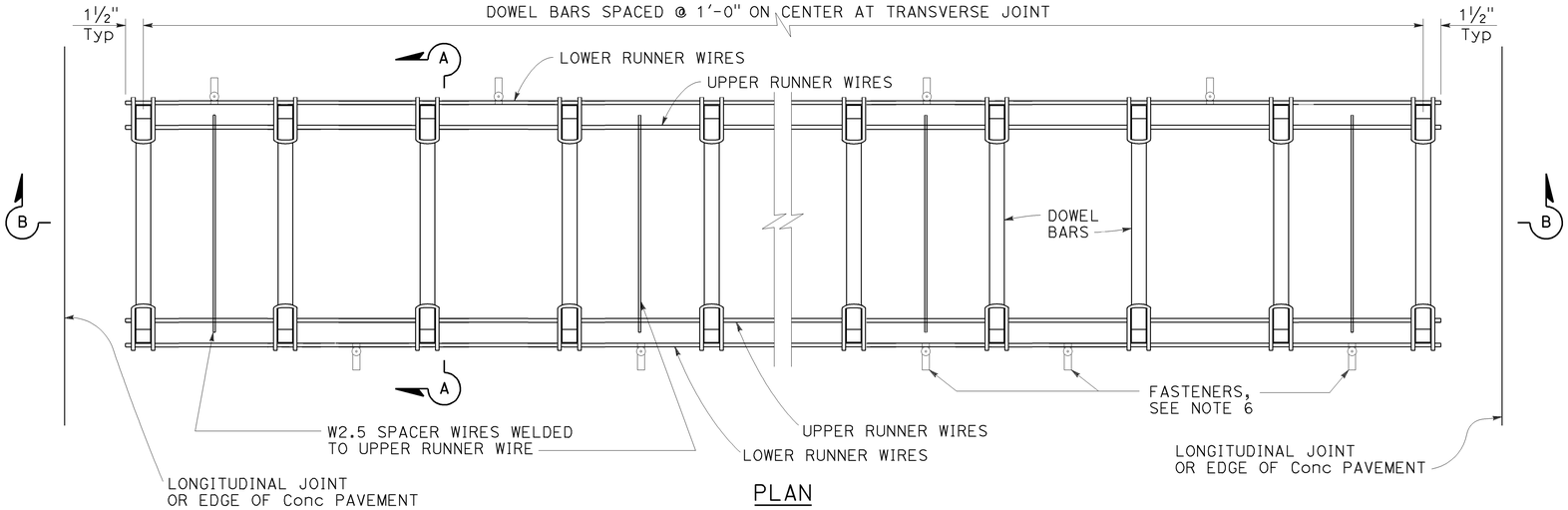

PLAN

DOWEL BAR BASKET (TRANSVERSE JOINT)

See Note 1

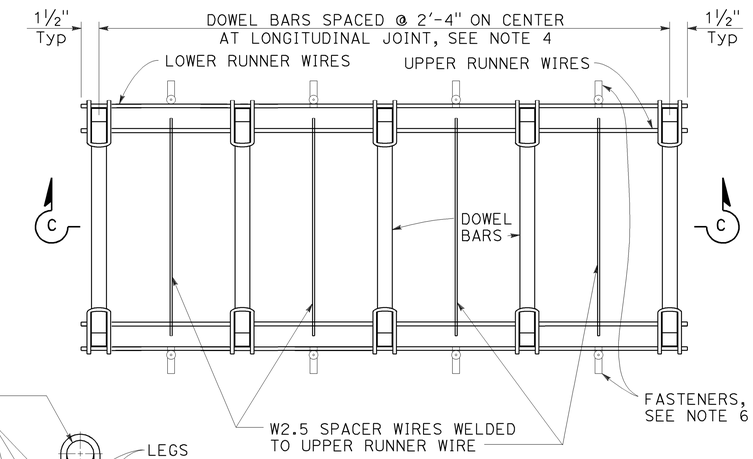

PLAN

DOWEL BAR BASKET (LONGITUDINAL JOINT)

See Note 1

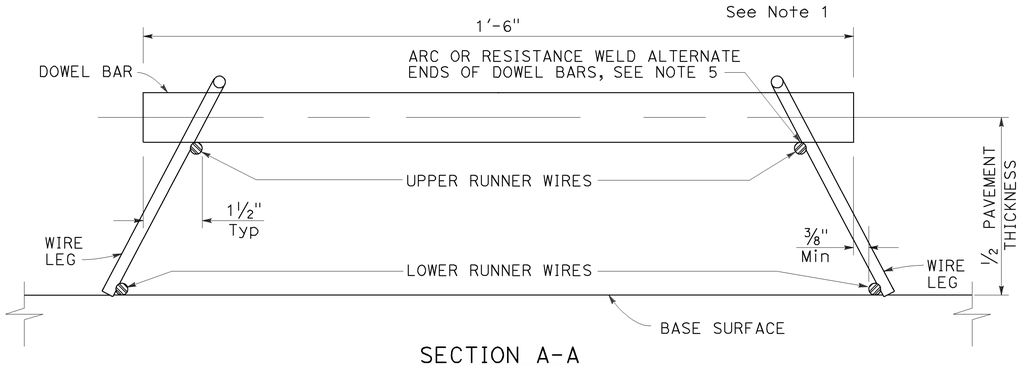

SECTION A-A

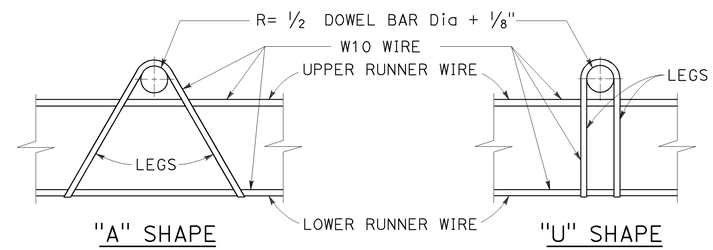

ASSEMBLY FRAME DETAILS

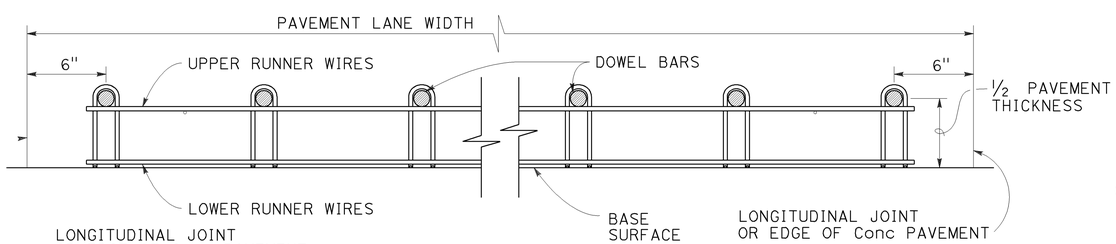

SECTION B-B

See Note 1

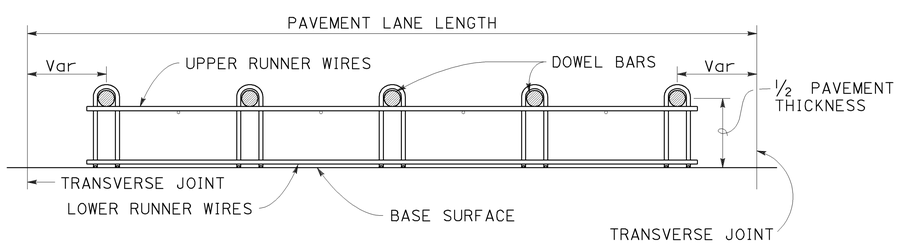

SECTION C-C

See Notes 1 and 4

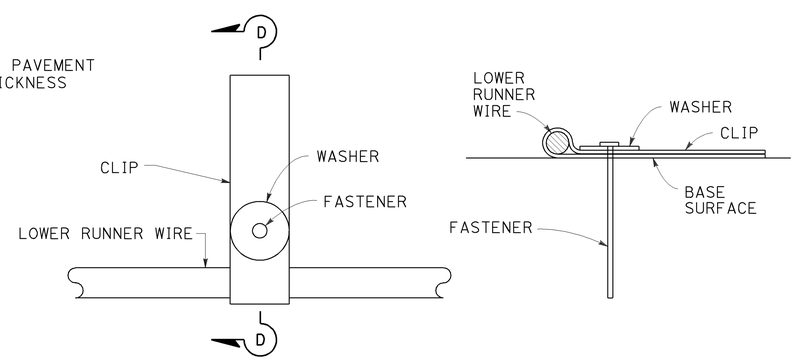

PLAN

SECTION D-D

FASTENER DETAIL

See Note 6

NOTES:

1. "U" frame shape assembly shown. Use either "U" frame shape or "A" frame shape.
2. Wire sizes shown are the minimum required.
3. All wire intersections must be resistance welded.
4. Use tie bar spacing for longitudinal dowel bar locations. See Revised Standard Plans RSP P1, RSP P2, RSP P3A, and RSP P3B for tie bar requirements.
5. Weld may be at the top or bottom of the dowel bar.
6. Use anchor pins where soil or granular base is used. See Revised Standard Plan RSP P17 for Anchor Pin Detail.

STATE OF CALIFORNIA
DEPARTMENT OF TRANSPORTATION

CONCRETE PAVEMENT DOWEL BAR BASKET DETAILS

NO SCALE

RSP P12 DATED JULY 19, 2013 SUPERSEDES STANDARD PLAN P12
DATED MAY 20, 2011 - PAGE 132 OF THE STANDARD PLANS BOOK DATED 2010.

REVISED STANDARD PLAN RSP P12

2010 REVISED STANDARD PLAN RSP P12

5-31-13

Dist	COUNTY	ROUTE	POST MILES TOTAL PROJECT	SHEET No.	TOTAL SHEETS
07	LA	101	11.8/35.3	171	192

William K. Farnbach
REGISTERED CIVIL ENGINEER

July 19, 2013
PLANS APPROVAL DATE

REGISTERED PROFESSIONAL ENGINEER William K. Farnbach No. C49042 Exp. 9-30-14 CIVIL STATE OF CALIFORNIA

THE STATE OF CALIFORNIA OR ITS OFFICERS OR AGENTS SHALL NOT BE RESPONSIBLE FOR THE ACCURACY OR COMPLETENESS OF SCANNED COPIES OF THIS PLAN SHEET.

TO ACCOMPANY PLANS DATED 2-18-14

2010 REVISED STANDARD PLAN RSP P18

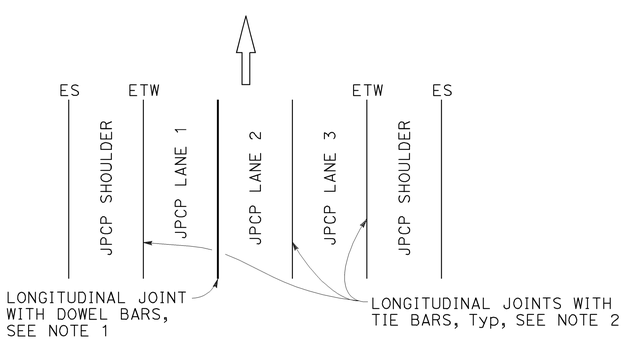

3 LANES WITH CONCRETE SHOULDERS
PLAN

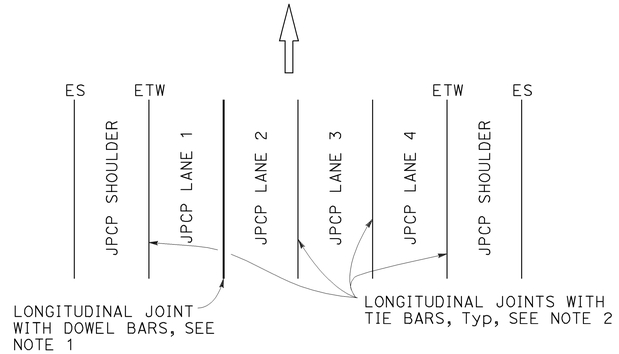

4 LANES WITH CONCRETE SHOULDERS
PLAN

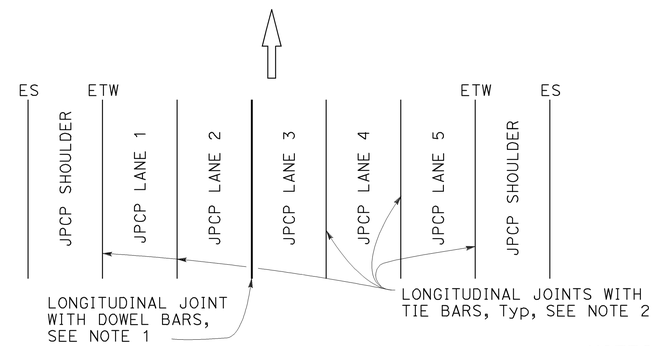

5 LANES WITH CONCRETE SHOULDERS
PLAN

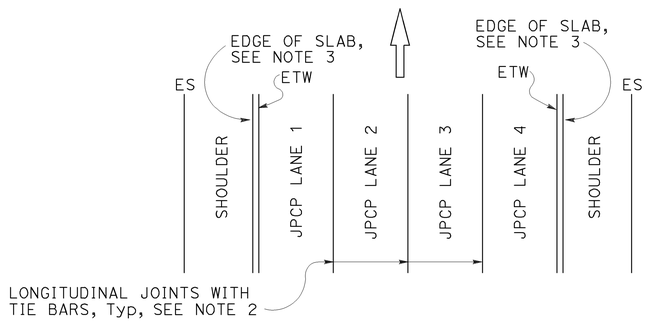

4 LANES OR LESS WITH AC SHOULDERS
PLAN

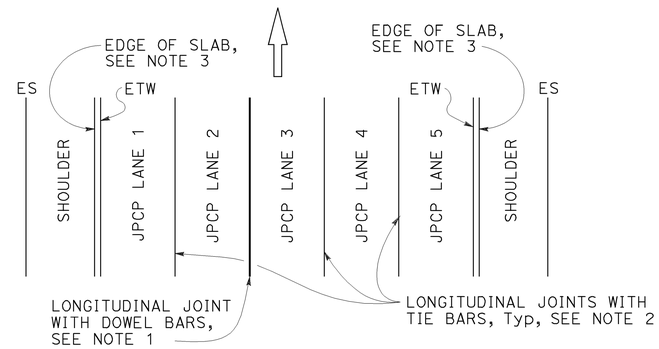

5 LANES WITH AC SHOULDERS
PLAN

NEW CONSTRUCTION

Location of Longitudinal Joints
For JPCP

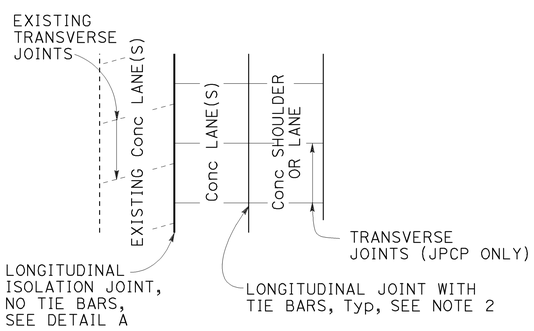

CASE 1
PLAN

Transverse Joints do not align between new and existing.

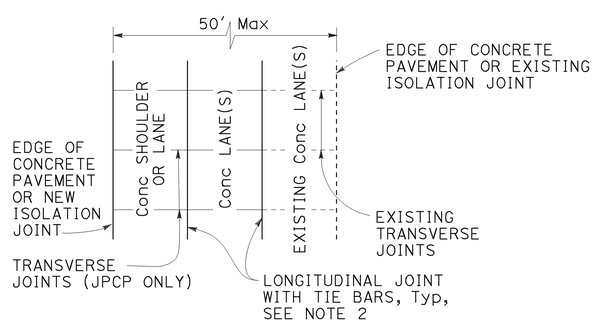

CASE 2
PLAN

Transverse Joints align between new and existing.
(For JPCP only)

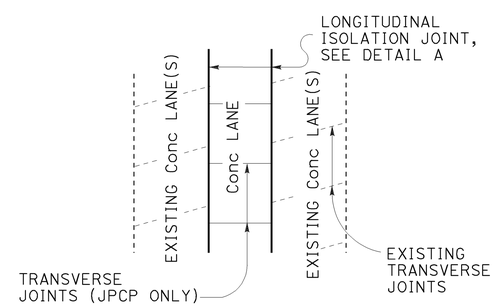

CASE 3 (INTERIOR LANE REPLACEMENT)
PLAN

Transverse Joints do not align between new and existing.

LANE/SHOULDER ADDITION OR RECONSTRUCTION

For JPCP and CRCP

NOTES:

1. See Revised Standard Plan RSP P10 for longitudinal joint with dowel bars.
2. See Revised Standard Plan RSP P15 for longitudinal joint with tie bars.
3. S= Reservoir depth.
   S= 7/8" ± 1/16" for asphalt rubber seals
   S= 9/16" ± 1/16" for silicone seals
   Preformed compression seals must be 13/16" wide and S= 1 11/16" ± 1/16"

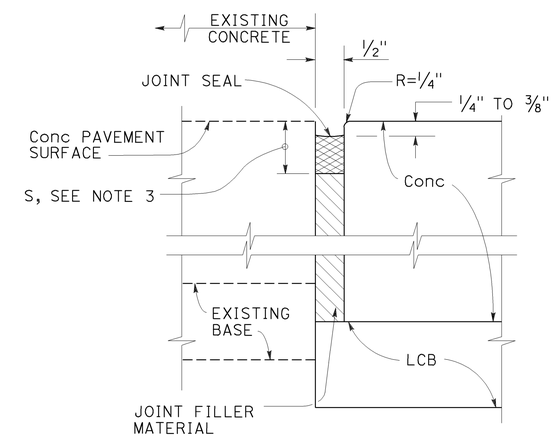

DETAIL "A"

ISOLATION JOINT

STATE OF CALIFORNIA
DEPARTMENT OF TRANSPORTATION

CONCRETE PAVEMENT LANE SCHEMATICS AND ISOLATION JOINT DETAIL

NO SCALE

RSP P18 DATED JULY 19, 2013 SUPERSEDES RSP P18 DATED APRIL 20, 2012 AND STANDARD PLAN P18 DATED MAY 20, 2011 - PAGE 135 OF THE STANDARD PLANS BOOK DATED 2010.

REVISED STANDARD PLAN RSP P18

5-31-13

Dist	COUNTY	ROUTE	POST MILES TOTAL PROJECT	SHEET No.	TOTAL SHEETS
07	LA	101	11.8/35.3	172	192

William K. Farnbach
REGISTERED CIVIL ENGINEER

July 19, 2013
PLANS APPROVAL DATE

REGISTERED PROFESSIONAL ENGINEER
William K. Farnbach
No. C49042
Exp. 9-30-14
CIVIL
STATE OF CALIFORNIA

THE STATE OF CALIFORNIA OR ITS OFFICERS OR AGENTS SHALL NOT BE RESPONSIBLE FOR THE ACCURACY OR COMPLETENESS OF SCANNED COPIES OF THIS PLAN SHEET.

TO ACCOMPANY PLANS DATED 2-18-14

2010 REVISED STANDARD PLAN RSP P20

NOTES:

1. Details do not apply to isolation joints and longitudinal construction joints.
2. Tie bars, dowel bars, and bar reinforcement are not shown.
3. Depths are measured from the final concrete pavement surface elevation after any grinding.

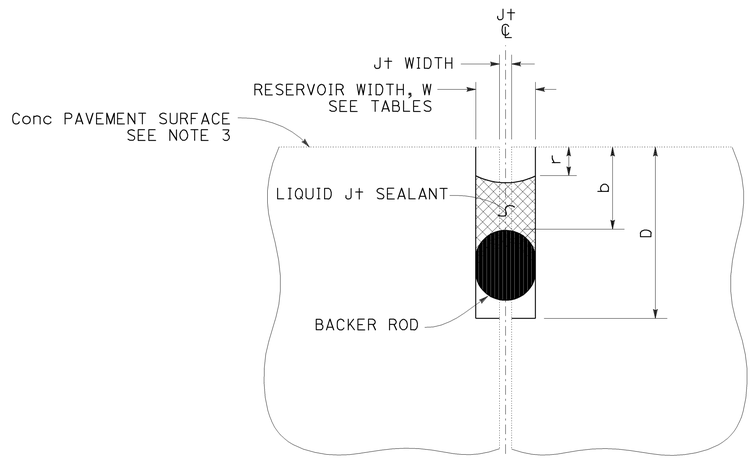

LIQUID JOINT SEALANT

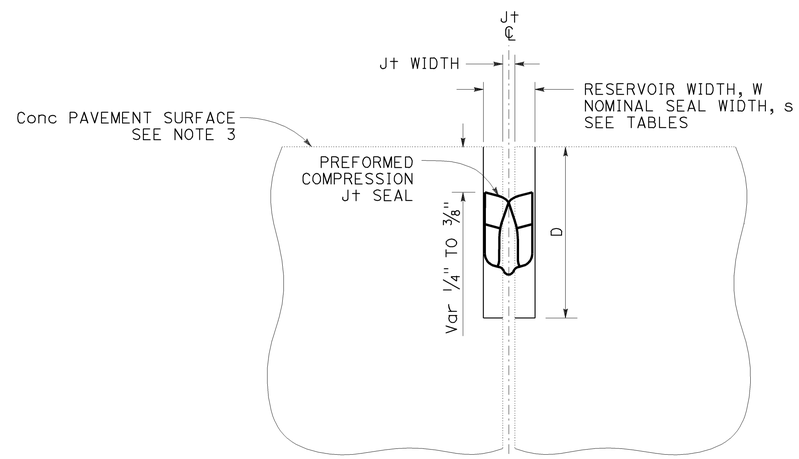

PREFORMED COMPRESSION JOINT SEAL

Const SEASON	Min RESERVOIR WIDTH * W ± 1/16"
WINTER	1/4"
SPRING	3/8"
SUMMER	
FALL	

* Minimum reservoir width for replace joint seal = existing joint width + 1/8"

RESERVOIR WIDTH W ±1/16"	LIQUID JOINT SEALANT DIMENSIONS					
	BACKER ROD NOMINAL Dia *	DEPTHS (ASPHALT RUBBER) **		DEPTHS (SILICONE)		
		RESERVOIR D ± 1/4"	BACKER ROD b ± 1/16"	RESERVOIR D ± 1/4"	BACKER ROD b ± 1/16"	RECESS r ± 1/16"
1/4"	3/8"	1 3/4"	7/8"	1 3/8"	1/2"	1/4"
3/8"	1/2"	1 7/8"	7/8"	1 1/2"	1/2"	1/4"
1/2"	3/4"	2"	7/8"	1 3/4"	9/16"	5/16"
5/8"	7/8"	2 1/4"	1"	2"	5/8"	5/16"
3/4"	1"	2 3/4"	1 1/8"	2 1/4"	3/4"	3/8"
7/8"	1 1/4"	3"	1 1/4"	2 1/2"	13/16"	3/8"
1"	1 1/2"	3 1/4"	1 3/8"	2 5/8"	7/8"	3/8"
1 1/8"	1 1/2"	3 1/2"	1 1/2"	2 13/16"	1"	1/2"

* Larger diameter backer rods may be substituted according to manufacturer recommendations if reservoir depth is increased equivalently.

** Asphalt rubber sealant recess depth "r" varies from 1/4" to 3/8"

RESERVOIR WIDTH W ±1/16"	PREFORMED COMPRESSION JOINT SEAL DIMENSIONS	
	NOMINAL SEAL WIDTH s	RESERVOIR DEPTH D ± 1/4"
1/4"	7/16"	1 1/4"
3/8"	11/16"	1 7/16"
1/2"	13/16"	1 11/16"
5/8"	1"	1 7/8"
3/4"	1 1/4"	2 1/8"
7/8"	1 5/8"	2 5/8"
1"	1 5/8"	2 5/8"
1 1/8"	2"	2 7/8"

STATE OF CALIFORNIA
DEPARTMENT OF TRANSPORTATION

JOINT SEALS

NO SCALE

RSP P20 DATED JULY 19, 2013 SUPERSEDES STANDARD PLAN P20
DATED MAY 20, 2011 - PAGE 136 OF THE STANDARD PLANS BOOK DATED 2010.

REVISED STANDARD PLAN RSP P20

6-17-13

Dist	COUNTY	ROUTE	POST MILES TOTAL PROJECT	SHEET No.	TOTAL SHEETS
07	LA	101	11.8/35.3	173	192

REGISTERED CIVIL ENGINEER

July 19, 2013
PLANS APPROVAL DATE

REGISTERED PROFESSIONAL ENGINEER William K. Farnbach No. C49042 Exp. 9-30-14 CIVIL STATE OF CALIFORNIA

THE STATE OF CALIFORNIA OR ITS OFFICERS OR AGENTS SHALL NOT BE RESPONSIBLE FOR THE ACCURACY OR COMPLETENESS OF SCANNED COPIES OF THIS PLAN SHEET.

TO ACCOMPANY PLANS DATED 2-18-14

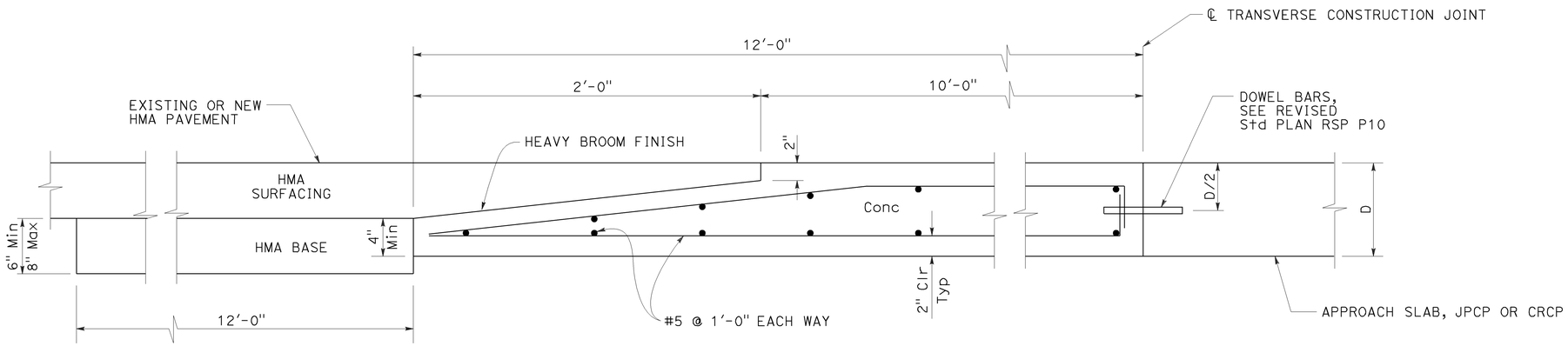

ELEVATION

CONCRETE PAVEMENT TRANSITION PANEL

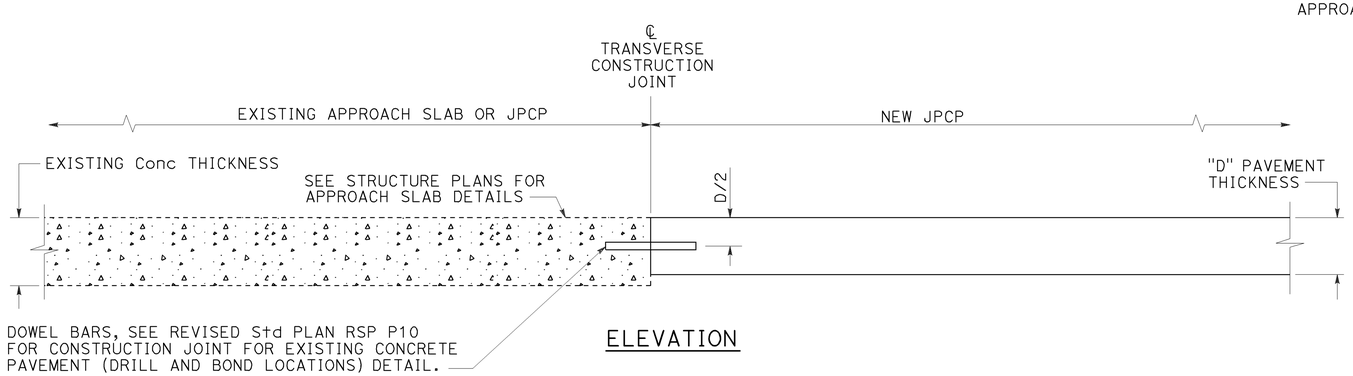

ELEVATION

TERMINAL JOINT TYPE 1

For Exist JPCP or Approach Slab

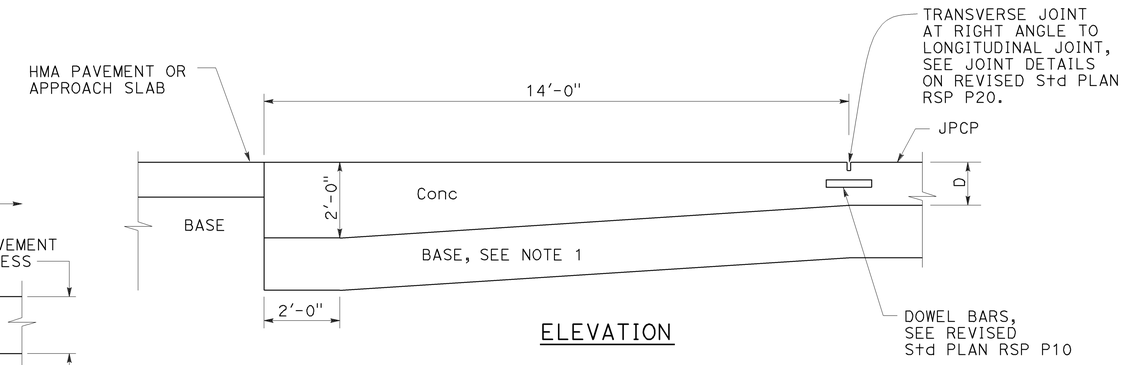

ELEVATION

PAVEMENT END ANCHOR

For HMA Pvmt or Approach Slab

NOTE:

1. Maintain same base thickness as JPCP.

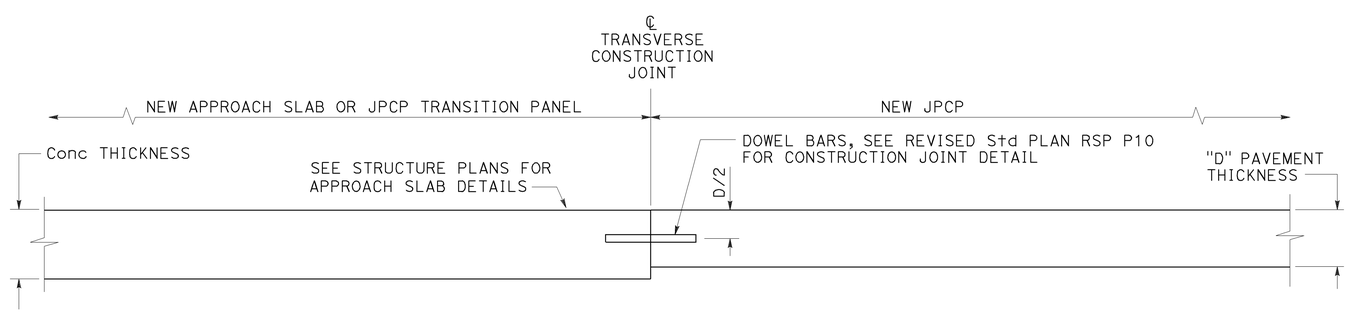

ELEVATION

TERMINAL JOINT TYPE 2

For JPCP Transition Panel or Approach Slab

STATE OF CALIFORNIA
DEPARTMENT OF TRANSPORTATION

CONCRETE PAVEMENT-END PANEL PAVEMENT TRANSITIONS

NO SCALE

RSP P30 DATED JULY 19, 2013 SUPERSEDES RSP P30 DATED APRIL 20, 2012 AND STANDARD PLAN P30 DATED MAY 20, 2011 - PAGE 137 OF THE STANDARD PLANS BOOK DATED 2010.

REVISED STANDARD PLAN RSP P30

2010 REVISED STANDARD PLAN RSP P30

3-26-13

DIST	COUNTY	ROUTE	POST MILES TOTAL PROJECT	SHEET No.	TOTAL SHEETS
07	LA	101	11.8/35.3	174	192

REGISTERED CIVIL ENGINEER

November 15, 2013
PLANS APPROVAL DATE

REGISTERED PROFESSIONAL ENGINEER Cornelis M. Hakim No. C55610 Exp. 12-31-14 CIVIL STATE OF CALIFORNIA

THE STATE OF CALIFORNIA OR ITS OFFICERS OR AGENTS SHALL NOT BE RESPONSIBLE FOR THE ACCURACY OR COMPLETENESS OF SCANNED COPIES OF THIS PLAN SHEET.

TO ACCOMPANY PLANS DATED 2-18-14

2010 REVISED STANDARD PLAN RSP P74

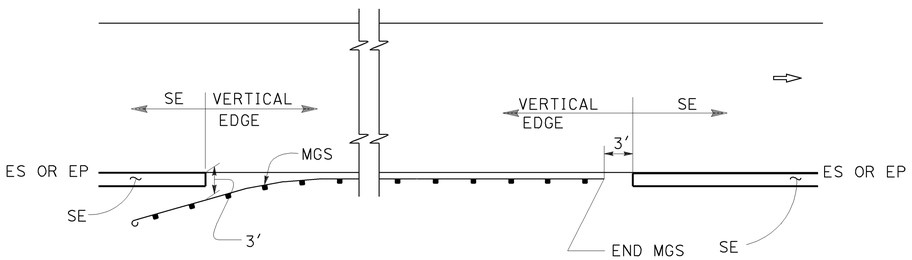

MGS

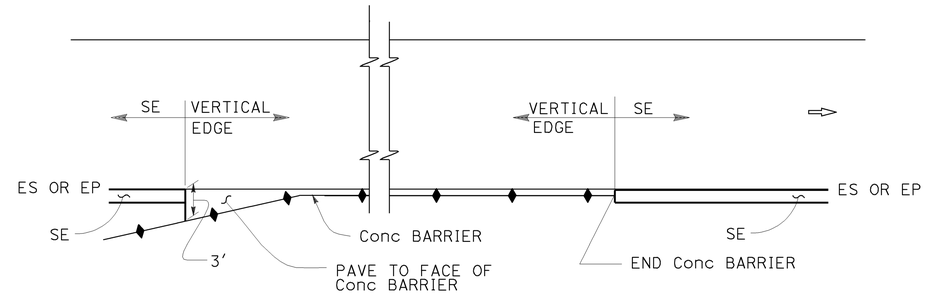

CONCRETE BARRIER

ABBREVIATIONS:

SE SAFETY EDGE

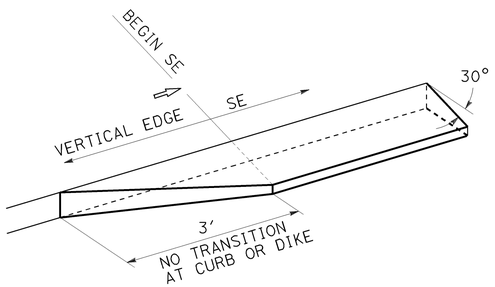

TRANSITION DETAIL FOR CONCRETE ONLY

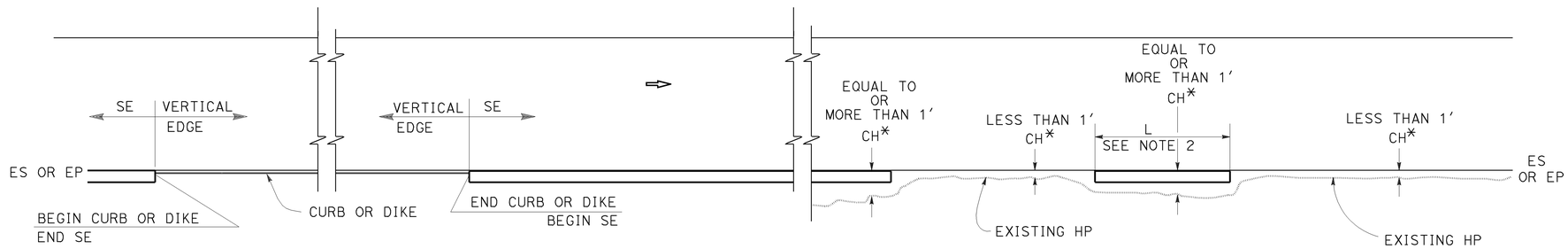

CURB OR DIKE

NARROW SIDE SLOPE

* CH = Distance from ES or EP to existing HP.

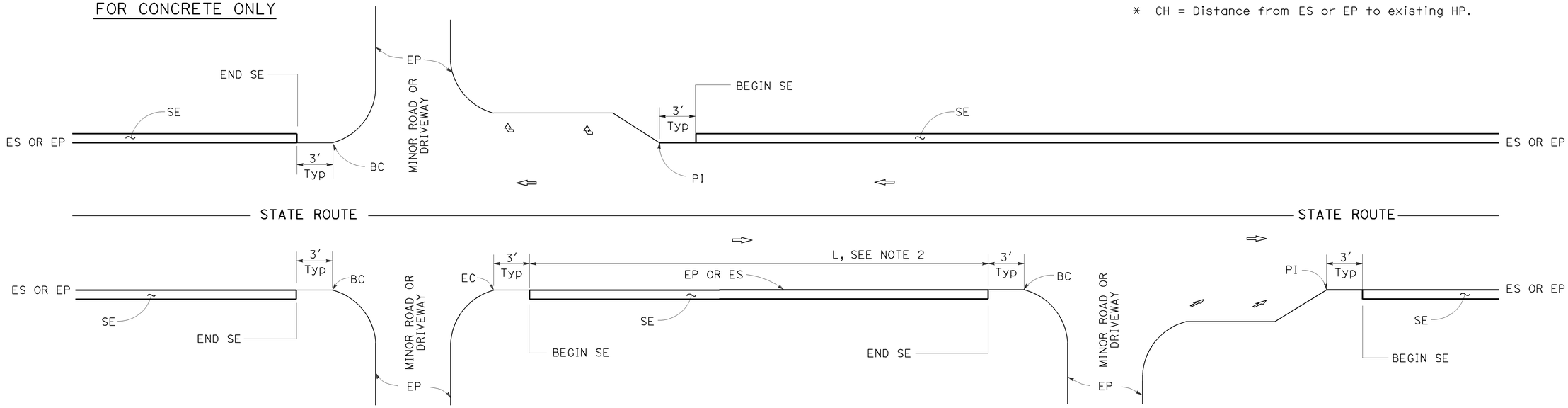

INTERSECTION

MINOR ROADWAY OR DRIVEWAY

DRIVEWAY AND INTERSECTION

STATE OF CALIFORNIA
DEPARTMENT OF TRANSPORTATION

PAVEMENT EDGE TREATMENTS

NO SCALE

RSP P74 DATED NOVEMBER 15, 2013 SUPERSEDES RSP P74 DATED JANUARY 20, 2012 THAT SUPPLEMENTS THE STANDARD PLANS BOOK DATED 2010.

NOTES:

1. For details not shown, see Revised Standard Plans RSP P75 and RSP P76.
2. Safety edge is optional when L is less than 30′.

REVISED STANDARD PLAN RSP P74

10-11-13

DIST	COUNTY	ROUTE	POST MILES TOTAL PROJECT	SHEET No.	TOTAL SHEETS
07	LA	101	11.8/35.3	175	192

REGISTERED CIVIL ENGINEER

November 15, 2013
PLANS APPROVAL DATE

REGISTERED PROFESSIONAL ENGINEER Cornelis M. Hakim No. C55610 Exp. 12-31-14 CIVIL STATE OF CALIFORNIA

THE STATE OF CALIFORNIA OR ITS OFFICERS OR AGENTS SHALL NOT BE RESPONSIBLE FOR THE ACCURACY OR COMPLETENESS OF SCANNED COPIES OF THIS PLAN SHEET.

TO ACCOMPANY PLANS DATED 2-18-14

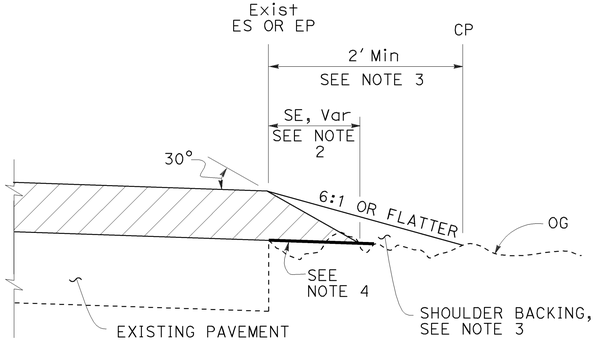

CASE A
Safety Edge

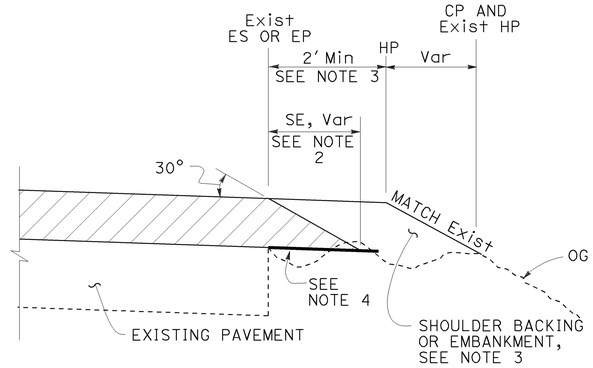

CASE B
Safety Edge

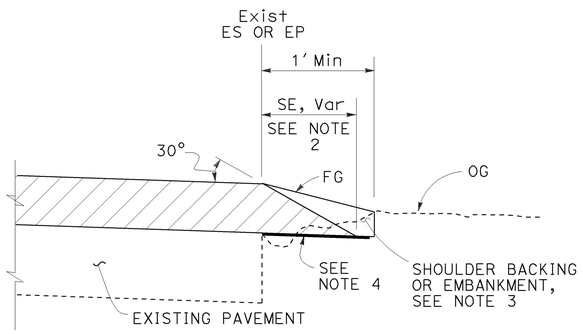

CASE C
Safety Edge

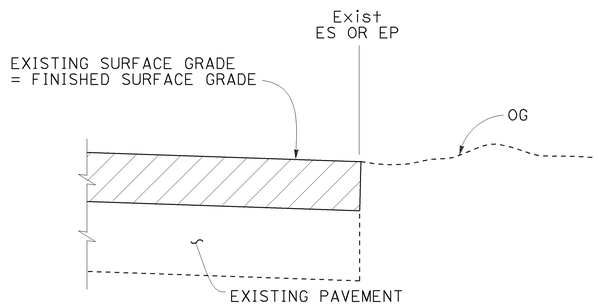

CASE D
Vertical Edge

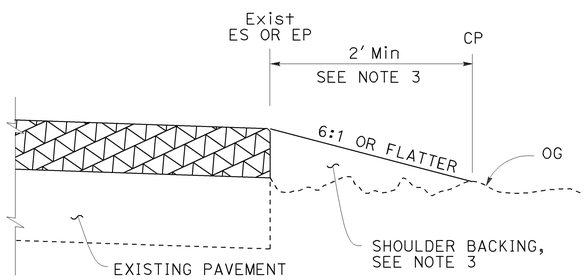

CASE E
Vertical Edge

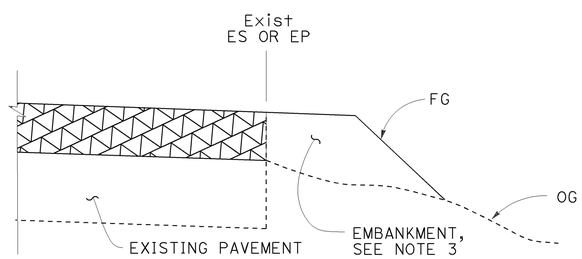

CASE F
Vertical Edge
* See Table A and Revised Std Plan RSP P74

LEGEND:

- HMA OVERLAY
- HMA OR CONCRETE OVERLAY
- CONCRETE OVERLAY

ABBREVIATIONS:

SE SAFETY EDGE
TT TOTAL THICKNESS OF SE

TABLE A
EDGE TREATMENT FOR VARIOUS OVERLAY THICKNESS AND CONDITIONS

	OVERLAY THICKNESS	
FIELD CONDITION	LESS THAN 0.15′	0.15′ OR MORE
Exist SLOPE 6:1 OR FLATTER	CASE E	CASE A
Exist SLOPE 3:1 TO 6:1	CASE E	CASE B
Exist SLOPE STEEPER THAN 3:1	CASE F	CASE F
CUT SECTION (REPLACE, COLD PLANE, MILL PAVEMENT)	CASE D	CASE C

ADDITIONAL HMA OR CONCRETE QUANTITIES FOR SE/SIDE/MILE

TYPICAL CROSS SECTION	TT	TOTAL ADDITIONAL MATERIAL FOR SE/SIDE/MILE		
		HMA (TON)	CONCRETE (CY)*	CONCRETE (CY)**
TT	0.15′	NA	NA	NA
	0.20′	13.7	NA	NA
	0.30′	30.9	NA	NA
	0.40′	54.9	NA	NA
	0.45′	69.4	NA	NA
TT 0.43′	0.50′	84.2	NA	NA
	0.60′	113.9	NA	NA
	0.70′	143.6	70.9	94.2
	0.80′	173.3	85.6	112.2
	0.90′	203.0	100.3	130.2
	1.00′	232.7	114.9	148.2
	1.10′	262.4	129.6	166.2
	1.20′	292.1	144.3	184.2

* For Detail "A"
** For Optional Detail "A"

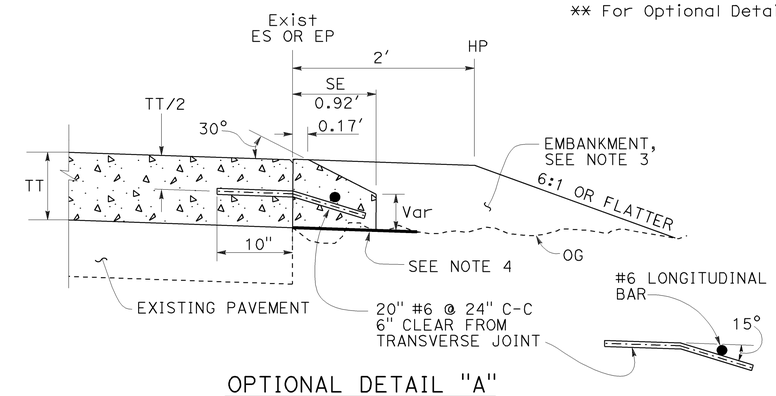

OPTIONAL DETAIL "A"
For concrete overlay
See Note 5

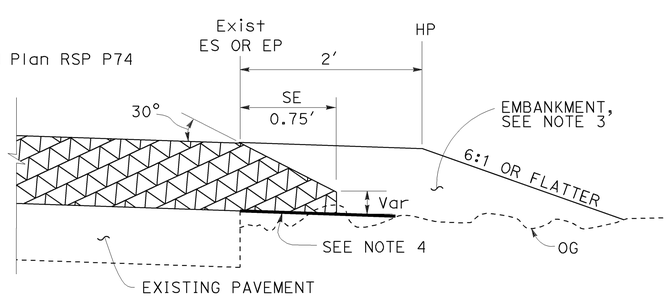

DETAIL "A"
For HMA overlay thickness more than 0.43′ or concrete overlay

NOTES:

1. For limits of safety edge and vertical edge treatments, see Revised Standard Plan RSP P74.
2. Details shown for HMA overlay thickness less than 0.43′. See Detail "A" for HMA overlay thickness more than 0.43′ or concrete overlay.
3. For locations and limits of shoulder backing or embankment see project plans.
4. Grade existing ground to place safety edge. 1′ minimum width
5. Safety edge transverse joint must match overlay transverse joint. End of #6 longitudinal bar must be 2" ±½" clear from transverse joint.
6. Safety edge is not needed in the area of MGS, barrier, right turn lane and acceleration lane. See Revised Standard Plan RSP P74.

STATE OF CALIFORNIA
DEPARTMENT OF TRANSPORTATION

PAVEMENT EDGE TREATMENTS-OVERLAYS

NO SCALE

RSP P75 DATED NOVEMBER 15, 2013 SUPERSEDES RSP P75 DATED JANUARY 20, 2012 THAT SUPPLEMENTS THE STANDARD PLANS BOOK DATED 2010.

REVISED STANDARD PLAN RSP P75

2010 REVISED STANDARD PLAN RSP P75

10-4-13

Dist	COUNTY	ROUTE	POST MILES TOTAL PROJECT	SHEET No.	TOTAL SHEETS
07	LA	101	11.8/35.3	176	192

Gregory A. Balzer
LICENSED LANDSCAPE ARCHITECT

July 19, 2013
PLANS APPROVAL DATE

THE STATE OF CALIFORNIA OR ITS OFFICERS OR AGENTS SHALL NOT BE RESPONSIBLE FOR THE ACCURACY OR COMPLETENESS OF SCANNED COPIES OF THIS PLAN SHEET.

LICENSED LANDSCAPE ARCHITECT
Gregory A. Balzer 2576
Gregory A. Balzer
07-19-13
Renewal Date
2-28-15
Renewal Date
7-19-13
Date
STATE OF CALIFORNIA

TO ACCOMPANY PLANS DATED 2-18-14

A

AB	AGGREGATE BASE
ABS	ACRYLONITRILE-BUTADIENE-STYRENE
AC	ASPHALT CONCRETE
ACC	ARMOR-CLAD CONDUCTORS
Adj	ADJACENT/ADJUSTABLE
AIC	AUXILIARY IRRIGATION CONTROLLER
Alt	ALTERNATIVE
AMEND	AMENDMENT
ARV	AIR RELEASE VALVE
AUTO	AUTOMATIC
AUX	AUXILIARY
AVB	ATMOSPHERIC VACUUM BREAKER

B

B&B	BALLED AND BURLAPPED
B/B	BRASS/BRONZE
B/B/PL	BRASS/BRONZE/PLASTIC
B/PL	BRASS/PLASTIC
BFM	BONDED FIBER MATRIX
Bit Ctd	BITUMINOUS COATED
BP	BOOSTER PUMP
BPA	BACKFLOW PREVENTER ASSEMBLY
BPE	BACKFLOW PREVENTER ENCLOSURE
BV	BALL VALVE

C

C	CONDUIT
CAP	CORRUGATED ALUMINUM PIPE
CARV	COMBINATION AIR RELEASE VALVE
CB	COUPLING BAND
CCA	CAM COUPLER ASSEMBLY
CEC	CONTROLLER ENCLOSURE CABINET
CHDPE	CORRUGATED HIGH DENSITY POLYETHYLENE
CL	CHAIN LINK
CNC	CONTROL AND NEUTRAL CONDUCTORS
Conc	CONCRETE
CP	COPPER PIPE
CS	COMPOST SOCK
CSP	CORRUGATED STEEL PIPE
CST	CENTER STRIP
CV	CHECK VALVE

D

Dia	DIAMETER
DIP	DUCTILE IRON PIPE
DIT	DRIP IRRIGATION TUBING
DG	DECOMPOSED GRANITE
DN	DIAMETER NOMINAL
DVA	DRIP VALVE ASSEMBLY

E

EC	EROSION CONTROL
ECTC	EROSION CONTROL TECHNOLOGY COUNCIL
Elect	ELECTRIC/ELECTRICAL
Elev	ELEVATION
ELL	ELBOW
ENCL	ENCLOSURE
EP	EDGE OF PAVEMENT
ES	EDGE OF SHOULDER
EST	END STRIP
ESTB	ESTABLISHMENT
ETW	EDGE OF TRAVELED WAY

F

F	FULL CIRCLE
F/P	FULL/PART CIRCLE
FCV	FLOW CONTROL VALVE
FERT	FERTILIZER
FG	FINISHED GRADE
FH	FLEXIBLE HOSE
FIPT	FEMALE IRON PIPE THREAD
FIS	FERTILIZER INJECTOR SYSTEM
FL	FLOW LINE
FR	FIBER ROLL
FS	FLOW SENSOR
FSC	FLOW SENSOR CABLE
FV	FLUSH VALVE

G

Galv	GALVANIZED
GARV	GARDEN VALVE
GARVA	GARDEN VALVE ASSEMBLY
GM	GRAVEL MULCH
GPH	GALLONS PER HOUR
GPM	GALLONS PER MINUTE
GSP	GALVANIZED STEEL PIPE
GV	GATE VALVE

H

H	HALF CIRCLE
HDPE	HIGH DENSITY POLYETHYLENE
HP	HORSEPOWER/HINGE POINT
HPL	HIGH PRESSURE LINE
Hwy	HIGHWAY

I

IC	IRRIGATION CONTROLLER
ICC	IRRIGATION CONTROLLER(S) IN CONTROLLER ENCLOSURE CABINET
ID	INSIDE DIAMETER
IFS	IRRIGATION FILTRATION SYSTEM
IPS	IRON PIPE SIZE
IPT	IRON PIPE THREAD
Irr	IRRIGATION

L

L	LENGTH

M

Max	MAXIMUM
MBGR	METAL BEAM GUARD RAILING
MCV	MANUAL CONTROL VALVE
MIC	MASTER IRRIGATION CONTROLLER
Min	MINIMUM
MIPT	MALE IRON PIPE THREAD
Misc	MISCELLANEOUS
Mtl	MATERIAL
MVP	MAINTENANCE VEHICLE PULLOUT

N

NCN	NO COMMON NAME
NL	NOZZLE LINE
No.	NUMBER
NPT	NATIONAL PIPE THREAD

O

O/C	ON CENTER
OD	OUTSIDE DIAMETER
OL	OVERLAP

P

P	PART CIRCLE
PB	PULL BOX
PCC	PORTLAND CEMENT CONCRETE
PE	POLYETHYLENE
Pkt	PACKET
PL	PLASTIC
PLS	PURE LIVE SEED
PLT	PLANT/PLANTING
PLT ESTB	PLANT ESTABLISHMENT
PM	POST MILE
PR	PRESSURE RATED
PRLV	PRESSURE RELIEF VALVE
PRV	PRESSURE REGULATING VALVE
PVC	POLYVINYL CHLORIDE
Pvmt	PAVEMENT

Q

Q	QUARTER CIRCLE
QCV	QUICK COUPLING VALVE

R

R	RADIUS
RCP	REINFORCED CONCRETE PIPE
RCV	REMOTE CONTROL VALVE
RCVM	REMOTE CONTROL VALVE (MASTER)
RCVMF	REMOTE CONTROL VALVE (MASTER) W/FLOW SENSOR
RCVP	REMOTE CONTROL VALVE W/PRESSURE REGULATOR
RCW	RECYCLED WATER
RECP	ROLLED EROSION CONTROL PRODUCT
REQ	REQUIRED
RICS	REMOTE IRRIGATION CONTROL SYSTEM
R/W	RIGHT OF WAY

S

S	SLIP
SCH	SCHEDULE
SF	STATE-FURNISHED
Shld	SHOULDER
Sq	SQUARE
SST	SIDE STRIP
Sta	STATION
Std	STANDARD
SW	SIDEWALK/SOUND WALL

T

T	THIRD CIRCLE/THREAD
TLS	TRUCK LOADING STANDPIPE
TQ	THREE QUARTER CIRCLE
TRM	TURF REINFORCEMENT MAT
TT	TWO-THIRDS CIRCLE
TWSA	TREE WELL SPRINKLER ASSEMBLY
Typ	TYPICAL

U

UG	UNDERGROUND

W

W	WIDTH
W/	WITH
WM	WATER METER
WS	WYE STRAINER
WSA	WYE STRAINER ASSEMBLY
WSP	WELDED STEEL PIPE
WWM	WELDED WIRE MESH

NOTE:

For additional abbreviations, see Standard Plans A10A and A10B.

STATE OF CALIFORNIA
DEPARTMENT OF TRANSPORTATION

LANDSCAPE AND EROSION CONTROL ABBREVIATIONS

NO SCALE

RSP H1 DATED JULY 19, 2013 SUPERSEDES STANDARD PLAN H1 DATED MAY 20, 2011 - PAGE 218 OF THE STANDARD PLANS BOOK DATED 2010.

REVISED STANDARD PLAN RSP H1

2010 REVISED STANDARD PLAN RSP H1

6-28-13

Dist	COUNTY	ROUTE	POST MILES TOTAL PROJECT	SHEET No.	TOTAL SHEETS
07	LA	101	11.8/35.3	177	192

Gregory A. Balzer
LICENSED LANDSCAPE ARCHITECT

November 15, 2013
PLANS APPROVAL DATE

LICENSED LANDSCAPE ARCHITECT
Gregory A. Balzer 2576
Signature
2-28-15
Renewal Date
11-15-13
Date
STATE OF CALIFORNIA

THE STATE OF CALIFORNIA OR ITS OFFICERS OR AGENTS SHALL NOT BE RESPONSIBLE FOR THE ACCURACY OR COMPLETENESS OF SCANNED COPIES OF THIS PLAN SHEET.

TO ACCOMPANY PLANS DATED 2-18-14

EXISTING	NEW	ITEM DESCRIPTION
		WATER METER (WM)
		BACKFLOW PREVENTER ASSEMBLY (BPA)
		BACKFLOW PREVENTER ENCLOSURE (BPE)
		BOOSTER PUMP (BP)
		TRUCK LOADING STANDPIPE (TLS)
FS	FS	FLOW SENSOR (FS)
X		MASTER IRRIGATION CONTROLLER (MIC)
		AUXILIARY IRRIGATION CONTROLLER (AIC)
		IRRIGATION CONTROLLER (IC) IRRIGATION CONTROLLER (IC) (BATTERY) IRRIGATION CONTROLLER (IC) (SOLAR) IRRIGATION CONTROLLER (IC) (TWO WIRE) IRRIGATION CONTROLLER(S) IN CONTROLLER ENCLOSURE CABINET (ICC)
acc	ACC	ARMOR-CLAD CONDUCTORS (ACC)
cnc	CNC	CONTROL AND NEUTRAL CONDUCTORS (CNC)
		IRRIGATION CONDUIT
		EXTEND IRRIGATION CONDUIT
dip	DIP	DUCTILE IRON PIPE (SUPPLY LINE) (MAIN) (DIP)
		GALVANIZED STEEL PIPE (SUPPLY LINE) (MAIN) (GSP)
		GALVANIZED STEEL PIPE (SUPPLY LINE) (LATERAL) (GSP)
		PLASTIC PIPE (SUPPLY LINE) (MAIN)
		PLASTIC PIPE (SUPPLY LINE) (LATERAL)
cp	CP	COPPER PIPE (SUPPLY LINE)
dit	DIT	DRIP IRRIGATION TUBING
		REMOTE CONTROL VALVE (RCV) REMOTE CONTROL VALVE (MASTER) (RCVM) REMOTE CONTROL VALVE (MASTER) W/FLOW METER (RCVMF)
P	P	REMOTE CONTROL VALVE W/PRESSURE REGULATOR (RCVP)
		EXISTING MANUAL CONTROL VALVE (MCV)
		DRIP VALVE ASSEMBLY (DVA)
		WYE STRAINER ASSEMBLY (WSA)

EXISTING	NEW	ITEM DESCRIPTION
		GATE VALVE (GV)
		BALL VALVE (BV)
		QUICK COUPLING VALVE (QCV)
		CAM COUPLER ASSEMBLY (CCA)
		GARDEN VALVE ASSEMBLY (GARVA)
		PRESSURE REGULATING VALVE (PRV)
		PRESSURE RELIEF VALVE (PRLV)
		FLOW CONTROL VALVE (FCV)
		COMBINATION AIR RELEASE VALVE (CARV)
		CHECK VALVE (CV)
		FLUSH VALVE (FV)
		EXISTING NOZZLE LINE W/TURNING UNION
		EXISTING IRRIGATION SYSTEM
		EXISTING IRRIGATION SYSTEM TO BE REMOVED
		CHAIN LINK GATE
		QUICK COUPLING VALVE W/SPRINKLER PROTECTOR
3	3	SPRINKLER W/SPRINKLER PROTECTOR
	C	CONNECT TO EXISTING SYSTEM
		CAP
		CAP EXISTING
	\\\FR\\\	FIBER ROLL
	\\\CS\\\	COMPOST SOCK

RCV SIZE
IRRIGATION CONTROLLER
CONTROLLER STATION
VALVE IN PARALLEL (IF APPLICABLE)
GPM
QUANTITY OF SPRINKLERS (WHEN SHOWN)

* 2½"-A-2b-40-60

VALVE CODE

* VALVE CODES FOR EXISTING VALVES ARE SHOWN IN A DASHED ENCLOSURE.

STATE OF CALIFORNIA
DEPARTMENT OF TRANSPORTATION

LANDSCAPE AND EROSION CONTROL SYMBOLS

NO SCALE

RSP H2 DATED NOVEMBER 15, 2013 SUPERSEDES RSP H2 DATED JULY 19, 2013 AND STANDARD PLAN H2 DATED MAY 20, 2011 - PAGE 219 OF THE STANDARD PLANS BOOK DATED 2010.

REVISED STANDARD PLAN RSP H2

2010 REVISED STANDARD PLAN RSP H2

10-9-13

Dist	COUNTY	ROUTE	POST MILES TOTAL PROJECT	SHEET No.	TOTAL SHEETS
07	LA	101	11.8/35.3	178	192

Gregory A Balzer
LICENSED LANDSCAPE ARCHITECT

July 19, 2013
PLANS APPROVAL DATE

LICENSED LANDSCAPE ARCHITECT
Gregory A. Balzer 2576
Signature
2-28-15
Renewal Date
7-19-13
Date
STATE OF CALIFORNIA

THE STATE OF CALIFORNIA OR ITS OFFICERS OR AGENTS SHALL NOT BE RESPONSIBLE FOR THE ACCURACY OR COMPLETENESS OF SCANNED COPIES OF THIS PLAN SHEET.

TO ACCOMPANY PLANS DATED 2-18-14

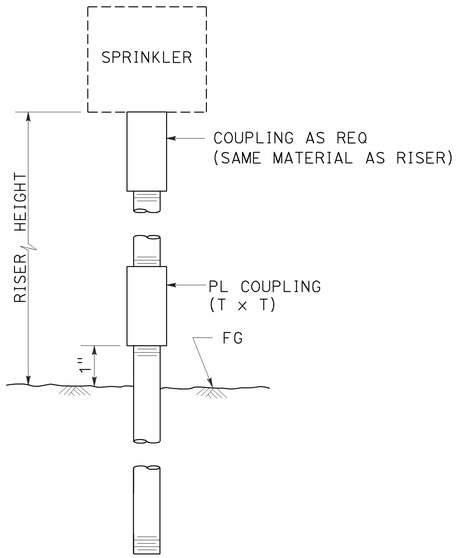

ELEVATION

RISER SPRINKLER ASSEMBLY TYPE I

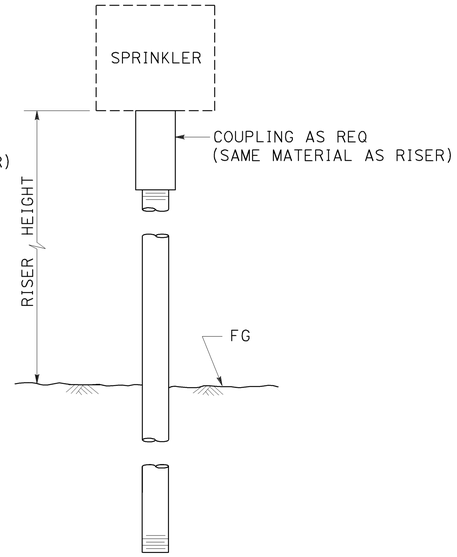

ELEVATION

RISER SPRINKLER ASSEMBLY TYPE II

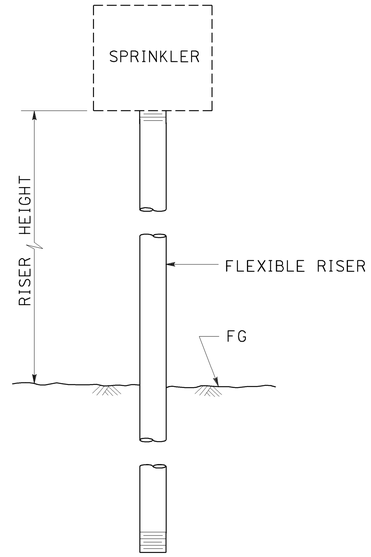

ELEVATION

RISER SPRINKLER ASSEMBLY TYPE III

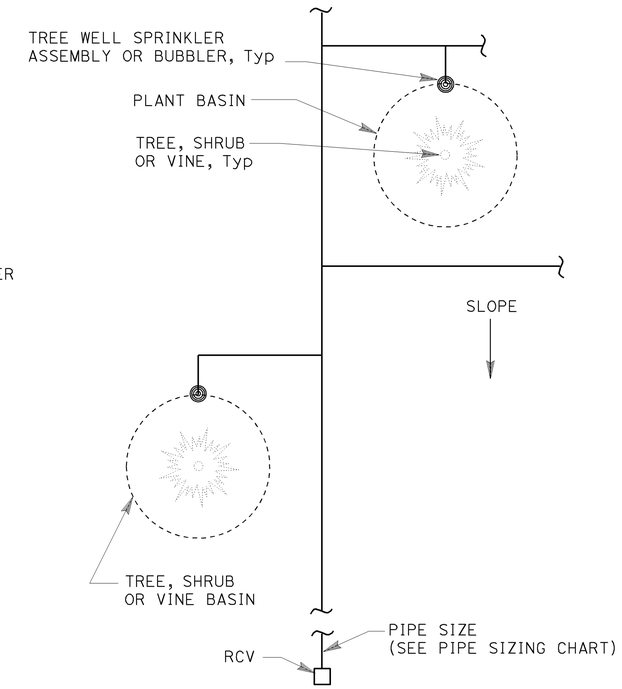

PLAN

NOTES:

1. Install tree well sprinkler assembly on up-hill side of plant when on slope.
2. Install bubbler within basin.

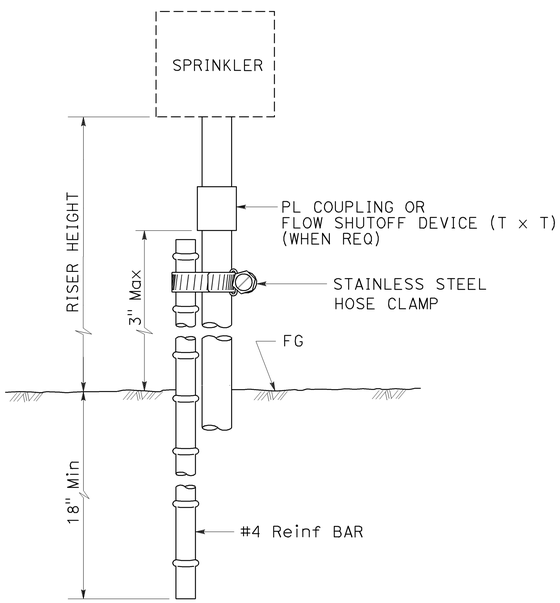

ELEVATION

RISER SPRINKLER ASSEMBLY TYPE IV

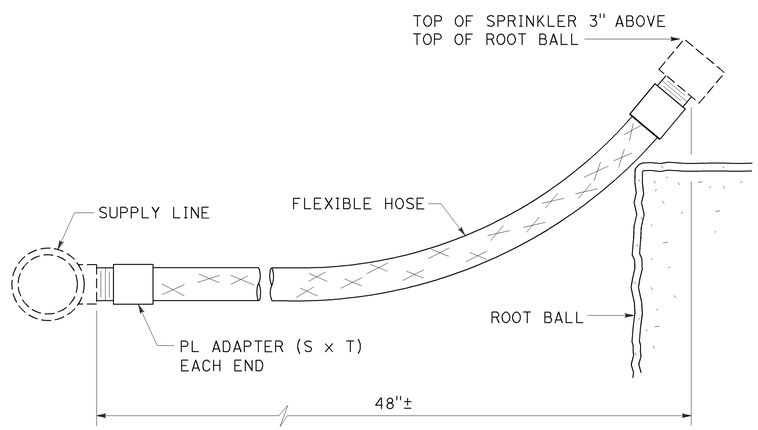

ELEVATION

RISER SPRINKLER ASSEMBLY TYPE V

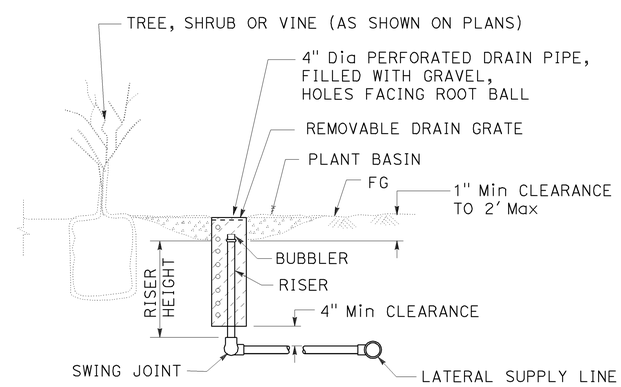

SECTION

TREE WELL SPRINKLER ASSEMBLY

STATE OF CALIFORNIA
DEPARTMENT OF TRANSPORTATION

LANDSCAPE DETAILS

NO SCALE

RSP H5 DATED JULY 19, 2013 SUPERSEDES STANDARD PLAN H5
DATED MAY 20, 2011 - PAGE 222 OF THE STANDARD PLANS BOOK DATED 2010.

REVISED STANDARD PLAN RSP H5

2010 REVISED STANDARD PLAN RSP H5

6-28-13

Dist	COUNTY	ROUTE	POST MILES TOTAL PROJECT	SHEET No.	TOTAL SHEETS
07	LA	101	11.8/35.3	179	192

Gregory A. Balzer
LICENSED LANDSCAPE ARCHITECT

July 19, 2013
PLANS APPROVAL DATE

LICENSED LANDSCAPE ARCHITECT
Gregory A. Balzer 2576
Signature
2-28-15
Renewal Date
7-19-13
Date
STATE OF CALIFORNIA

THE STATE OF CALIFORNIA OR ITS OFFICERS OR AGENTS SHALL NOT BE RESPONSIBLE FOR THE ACCURACY OR COMPLETENESS OF SCANNED COPIES OF THIS PLAN SHEET.

TO ACCOMPANY PLANS DATED 2-18-14

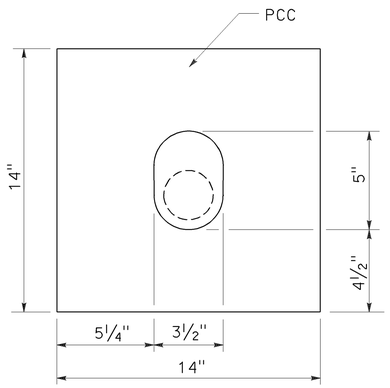

PLAN

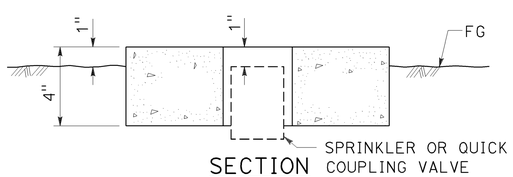

SECTION
SPRINKLER PROTECTOR TYPE I

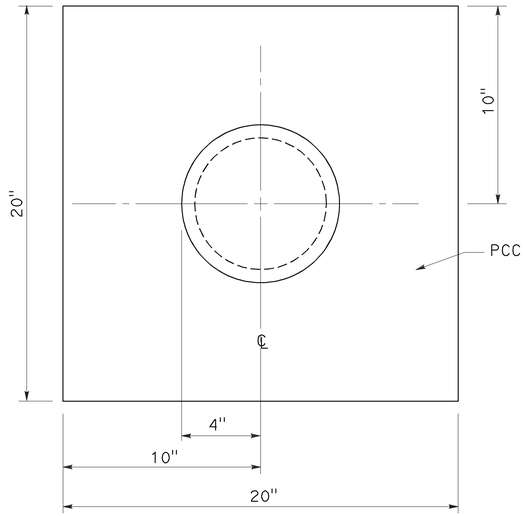

PLAN

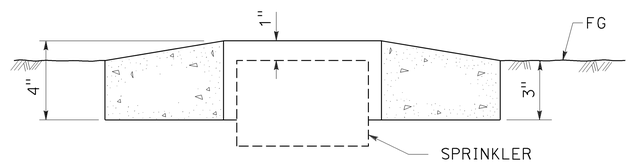

SECTION
SPRINKLER PROTECTOR TYPE II

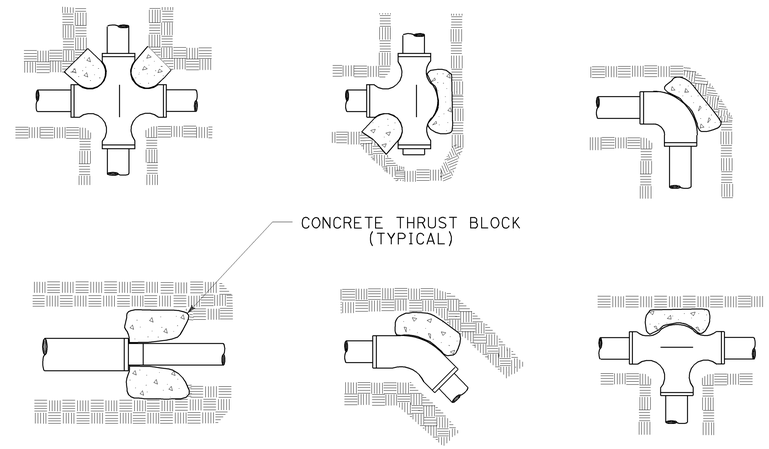

TYPICAL THRUST BLOCKS

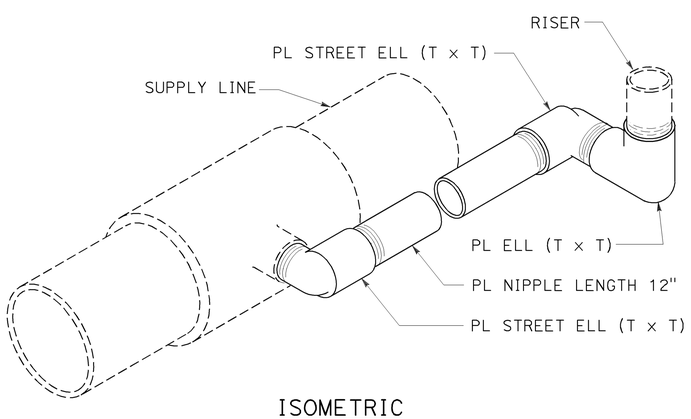

ISOMETRIC
POP-UP SPRINKLER ASSEMBLY TYPE I

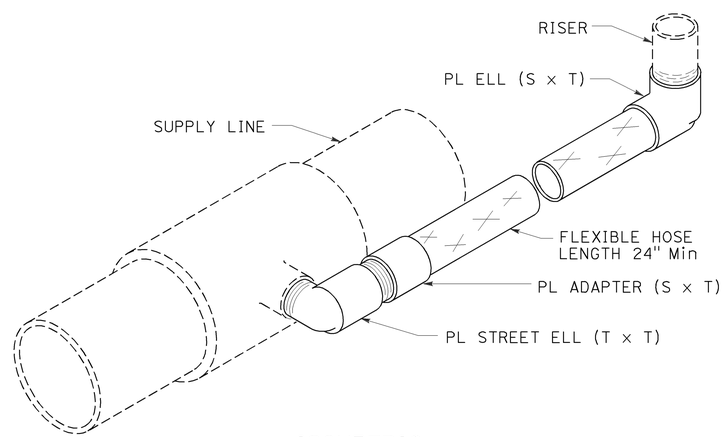

ISOMETRIC
POP-UP SPRINKLER ASSEMBLY TYPE II

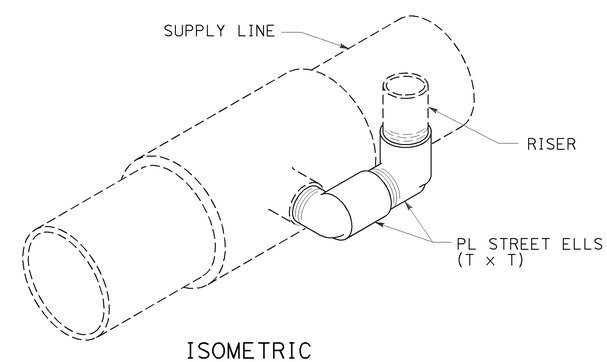

ISOMETRIC
POP-UP SPRINKLER ASSEMBLY TYPE III

STATE OF CALIFORNIA
DEPARTMENT OF TRANSPORTATION

LANDSCAPE DETAILS

NO SCALE

RSP H6 DATED JULY 19, 2013 SUPERSEDES STANDARD PLAN H6
DATED MAY 20, 2011 - PAGE 223 OF THE STANDARD PLANS BOOK DATED 2010.

REVISED STANDARD PLAN RSP H6

2010 REVISED STANDARD PLAN RSP H6

6-28-13

Dist	COUNTY	ROUTE	POST MILES TOTAL PROJECT	SHEET No.	TOTAL SHEETS
07	LA	101	11.8/35.3	180	192

Gregory A Balzer
LICENSED LANDSCAPE ARCHITECT

July 19, 2013
PLANS APPROVAL DATE

LICENSED LANDSCAPE ARCHITECT
Gregory A. Balzer 2576
Signature
2-28-15
Renewal Date
7-19-13
Date
STATE OF CALIFORNIA

THE STATE OF CALIFORNIA OR ITS OFFICERS OR AGENTS SHALL NOT BE RESPONSIBLE FOR THE ACCURACY OR COMPLETENESS OF SCANNED COPIES OF THIS PLAN SHEET.

TO ACCOMPANY PLANS DATED 2-18-14

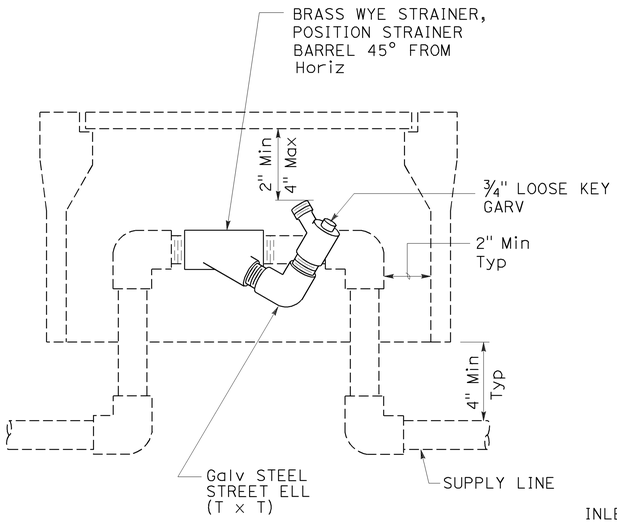

ELEVATION
WYE STRAINER ASSEMBLY

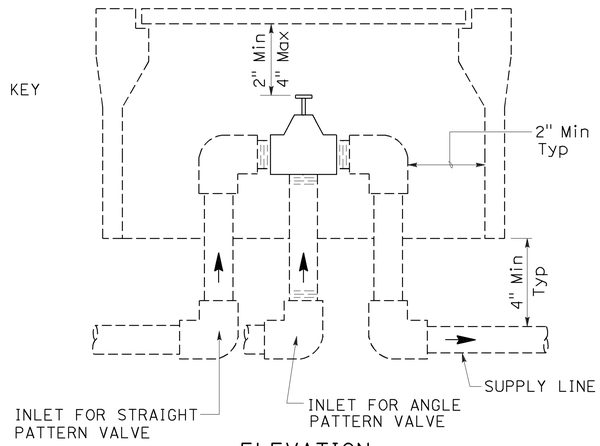

ELEVATION
VALVE

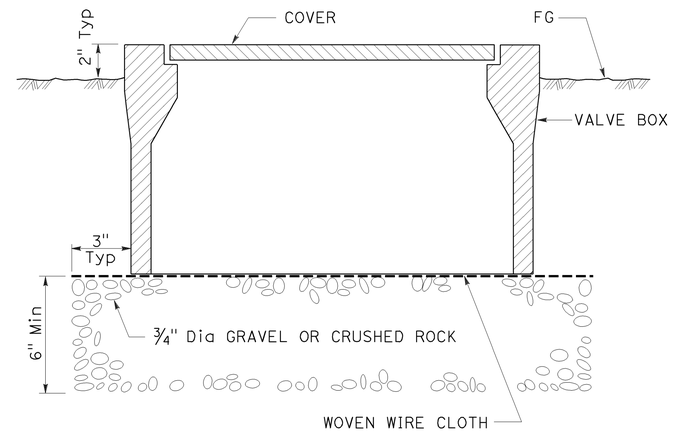

SECTION
VALVE BOX

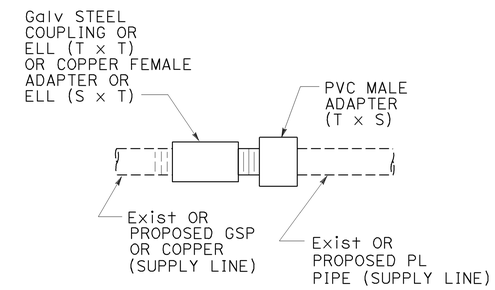

GALVANIZED OR COPPER PIPE
CONNECTION TO PLASTIC PIPE

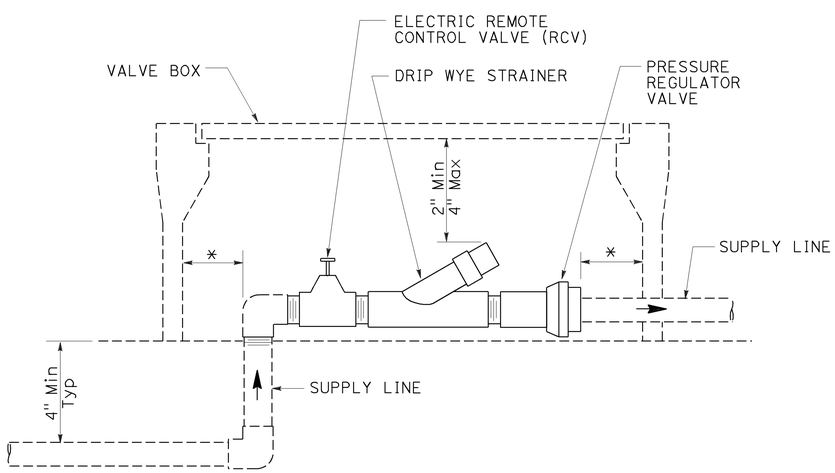

* 2" CLEARANCE ON ALL SIDES

ELEVATION
DRIP VALVE ASSEMBLY

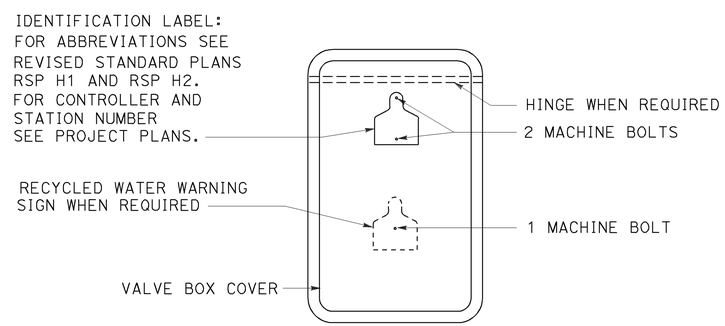

PLAN

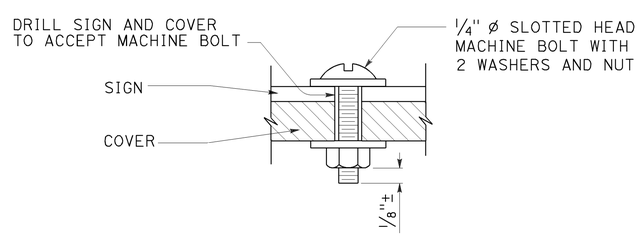

SECTION
VALVE BOX IDENTIFICATION

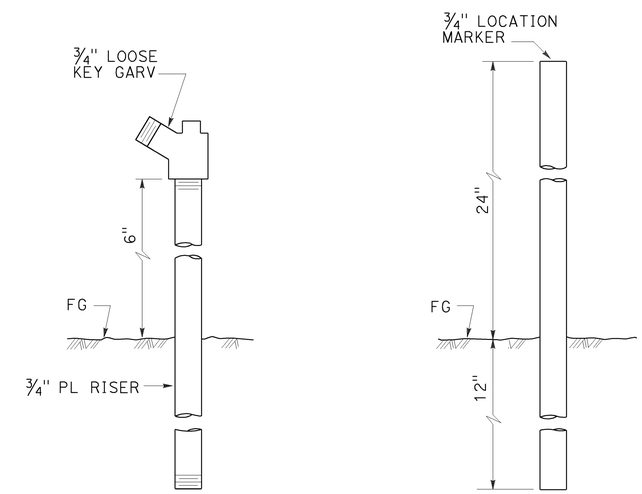

ELEVATION
GARDEN VALVE ASSEMBLY

ELEVATION
LOCATION MARKER

GARDEN VALVE ASSEMBLY

STATE OF CALIFORNIA
DEPARTMENT OF TRANSPORTATION

LANDSCAPE DETAILS

NO SCALE

RSP H7 DATED JULY 19, 2013 SUPERSEDES STANDARD PLAN H7
DATED MAY 20, 2011 - PAGE 224 OF THE STANDARD PLANS BOOK DATED 2010.

REVISED STANDARD PLAN RSP H7

2010 REVISED STANDARD PLAN RSP H7

6-20-13

Dist	COUNTY	ROUTE	POST MILES TOTAL PROJECT	SHEET No.	TOTAL SHEETS
07	LA	101	11.8/35.3	181	192

Gregory A Balzer
LICENSED LANDSCAPE ARCHITECT

July 19, 2013
PLANS APPROVAL DATE

LICENSED LANDSCAPE ARCHITECT
Gregory A. Balzer 2576
Signature
2-28-15
Renewal Date
7-19-13
Date
STATE OF CALIFORNIA

THE STATE OF CALIFORNIA OR ITS OFFICERS OR AGENTS SHALL NOT BE RESPONSIBLE FOR THE ACCURACY OR COMPLETENESS OF SCANNED COPIES OF THIS PLAN SHEET.

TO ACCOMPANY PLANS DATED 2-18-14

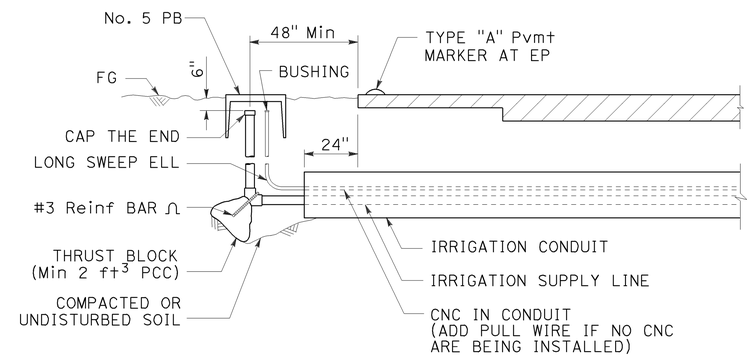

SECTION

IRRIGATION CONDUIT

UNDER TRAVELED WAY

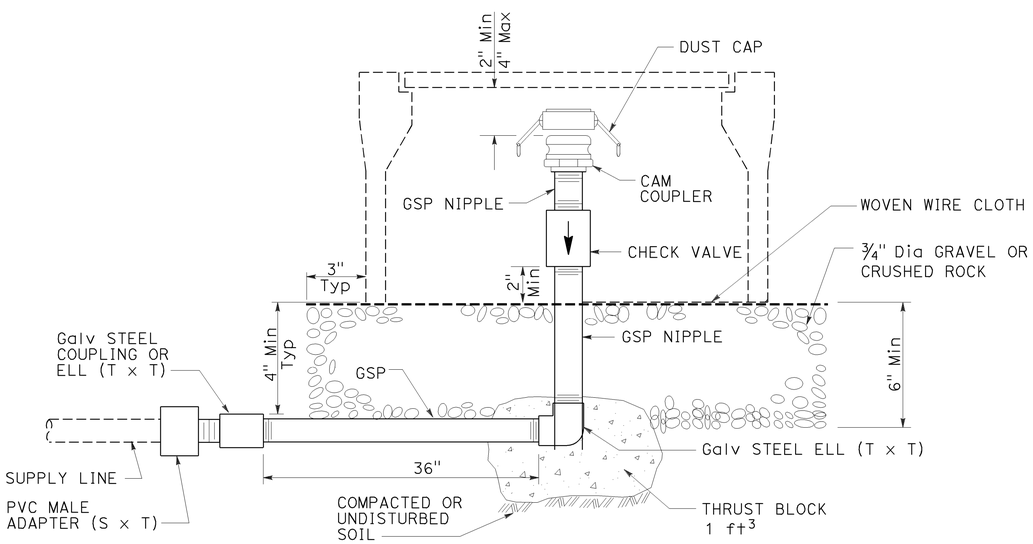

ELEVATION

CAM COUPLER ASSEMBLY

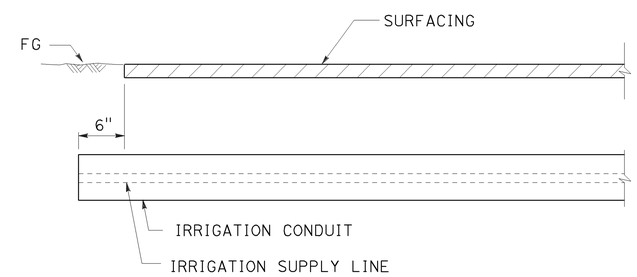

SECTION

IRRIGATION CONDUIT

UNDER SIDEWALKS, DRIVEWAYS AND PATHS

STATE OF CALIFORNIA
DEPARTMENT OF TRANSPORTATION

LANDSCAPE DETAILS

NO SCALE

RSP H9 DATED JULY 19, 2013 SUPERSEDES STANDARD PLAN H9
DATED MAY 20, 2011 - PAGE 226 OF THE STANDARD PLANS BOOK DATED 2010.

REVISED STANDARD PLAN RSP H9

2010 REVISED STANDARD PLAN RSP H9

6-28-13

Dist	COUNTY	ROUTE	POST MILES TOTAL PROJECT	SHEET No.	TOTAL SHEETS
07	LA	101	11.8/35.3	182	192

REGISTERED CIVIL ENGINEER

July 19, 2013
PLANS APPROVAL DATE

REGISTERED PROFESSIONAL ENGINEER
Gurinderpal Bhullar
No. C48815
Exp. 9-30-14
CIVIL
STATE OF CALIFORNIA

THE STATE OF CALIFORNIA OR ITS OFFICERS OR AGENTS SHALL NOT BE RESPONSIBLE FOR THE ACCURACY OR COMPLETENESS OF SCANNED COPIES OF THIS PLAN SHEET.

TO ACCOMPANY PLANS DATED 2-18-14

TABLE 1

TAPER LENGTH CRITERIA AND CHANNELIZING DEVICE SPACING

SPEED (S)	MINIMUM TAPER LENGTH * FOR WIDTH OF OFFSET 12 FEET (W)				MAXIMUM CHANNELIZING DEVICE SPACING		
					X	Y	Z **
	TANGENT 2L	MERGING L	SHIFTING L/2	SHOULDER L/3	TAPER	TANGENT	CONFLICT
mph	ft	ft	ft	ft	ft	ft	ft
20	160	80	40	27	20	40	10
25	250	125	63	42	25	50	12
30	360	180	90	60	30	60	15
35	490	245	123	82	35	70	17
40	640	320	160	107	40	80	20
45	1080	540	270	180	45	90	22
50	1200	600	300	200	50	100	25
55	1320	660	330	220	55	110	27
60	1440	720	360	240	60	120	30
65	1560	780	390	260	65	130	32
70	1680	840	420	280	70	140	35

* - For other offsets, use the following merging taper length formula for L:
For speed of 40 mph or less, $L = WS^2/60$
For speed of 45 mph or more, $L = WS$

Where: L = Taper length in feet
W = Width of offset in feet
S = Posted speed limit, off-peak 85th-percentile speed prior to work starting, or the anticipated operating speed in mph

** - Use for taper and tangent sections where there are no pavement markings or where there is a conflict between existing pavement markings and channelizers (CA).

TABLE 2

LONGITUDINAL BUFFER SPACE AND FLAGGER STATION SPACING

SPEED *	Min D **	DOWNGRADE Min D ***		
		-3%	-6%	-9%
mph	ft	ft	ft	ft
20	115	116	120	126
25	155	158	165	173
30	200	205	215	227
35	250	257	271	287
40	305	315	333	354
45	360	378	400	427
50	425	446	474	507
55	495	520	553	593
60	570	598	638	686
65	645	682	728	785
70	730	771	825	891

* - Speed is posted speed limit, off-peak 85th-percentile speed prior to work starting, or the anticipated operating speed in mph

** - Longitudinal buffer space or flagger station spacing

*** - Use on sustained downgrade steeper than -3 percent and longer than 1 mile.

TABLE 3

ADVANCE WARNING SIGN SPACING

ROAD TYPE	DISTANCE BETWEEN SIGNS *		
	A	B	C
	ft	ft	ft
URBAN - 25 mph OR LESS	100	100	100
URBAN - MORE THAN 25 mph TO 40 mph	250	250	250
URBAN - MORE THAN 40 mph	350	350	350
RURAL	500	500	500
EXPRESSWAY / FREEWAY	1000	1500	2640

* - The distances are approximate, are intended for guidance purposes only, and should be applied with engineering judgment. These distances should be adjusted by the Engineer for field conditions, if necessary, by increasing or decreasing the recommmended distances.

STATE OF CALIFORNIA
DEPARTMENT OF TRANSPORTATION

TRAFFIC CONTROL SYSTEM TABLES FOR LANE AND RAMP CLOSURES

NO SCALE

RSP T9 DATED JULY 19, 2013 SUPERSEDES RSP T9 DATED APRIL 19, 2013 THAT SUPPLEMENTS THE STANDARD PLANS BOOK DATED 2010.

REVISED STANDARD PLAN RSP T9

2010 REVISED STANDARD PLAN RSP T9

4-30-13

TO ACCOMPANY PLANS DATED 2-18-14

Dist	COUNTY	ROUTE	POST MILES TOTAL PROJECT	SHEET No.	TOTAL SHEETS
07	LA	101	11.8/35.3	183	192

REGISTERED CIVIL ENGINEER

April 19, 2013
PLANS APPROVAL DATE

REGISTERED PROFESSIONAL ENGINEER Gurinderpal Bhullar No. C48815 Exp. 9-30-14 CIVIL STATE OF CALIFORNIA

THE STATE OF CALIFORNIA OR ITS OFFICERS OR AGENTS SHALL NOT BE RESPONSIBLE FOR THE ACCURACY OR COMPLETENESS OF SCANNED COPIES OF THIS PLAN SHEET.

NOTES:

See Revised Standard Plan RSP T9 for tables.

Use cone spacing X for taper segment, Y for tangent segment or Z for conflict situations, as approriate, per Table 1, unless X, Y, or Z cone spacing is shown on this sheet.

Unless otherwise specified in the special provisions, all temporary warning signs shall have black legend on fluorescent orange background.

California codes are designated by (CA). Otherwise, Federal (MUTCD) codes are shown.

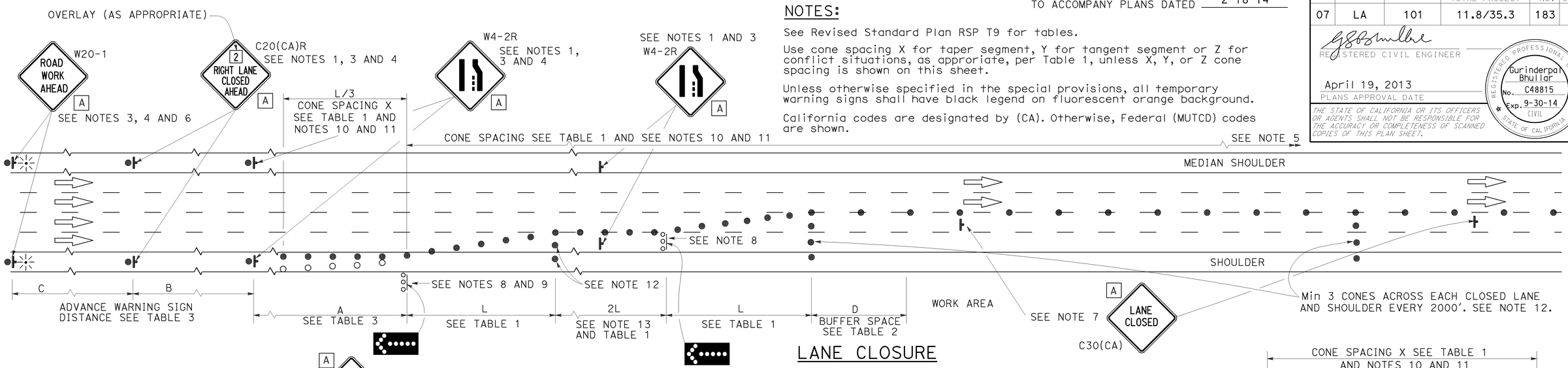

LANE CLOSURE

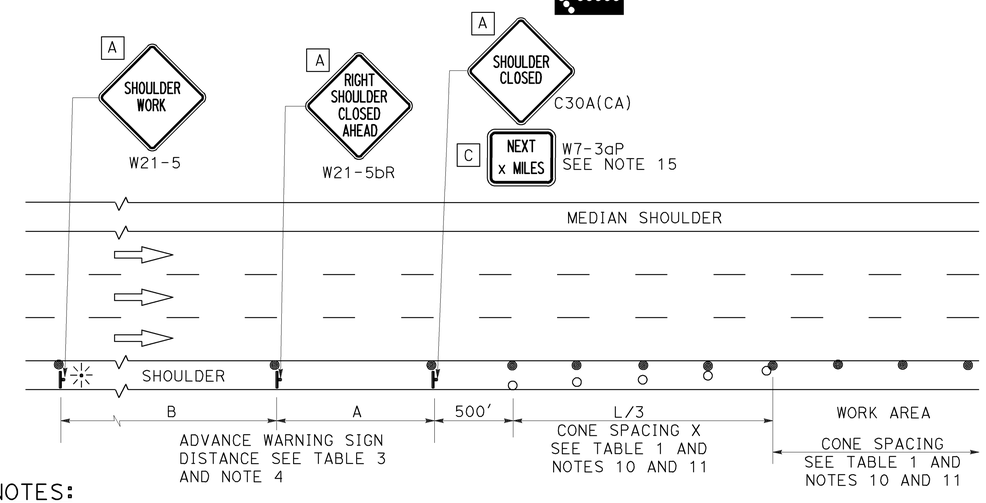

SHOULDER CLOSURE

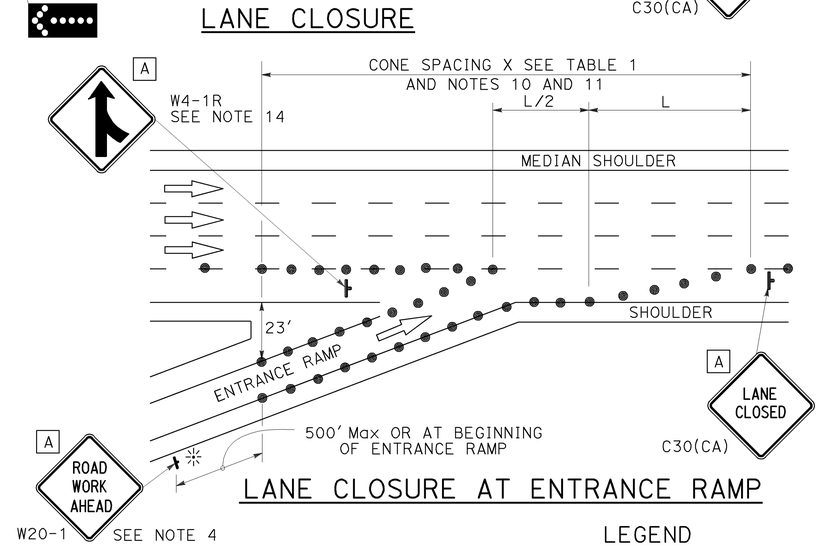

LANE CLOSURE AT ENTRANCE RAMP

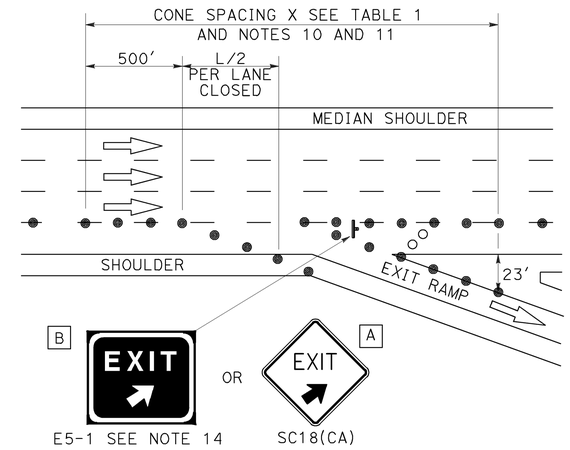

LANE CLOSURE AT EXIT RAMP

NOTES:

1. Median lane closures shall conform to the details as shown except that C20(CA)L and W4-2L signs shall be used.
2. At least one person shall be assigned to provide full time maintenance of traffic control devices for lane closures.
3. Duplicate sign installations are not required:
   a) On opposite shoulder if at least one-half of the available lanes remain open to traffic.
   b) In the median if the width of the median shoulder is less than 8' and the outside lanes are to be closed.
4. Each advance warning sign on each side of the roadway shall be equipped with at least two flags for daytime closure. Each flag shall be at least 16" x 16" in size and shall be orange or fluorescent red-orange in color. Flashing beacons shall be placed at the locations indicated for lane closure during hours of darkness.
5. A G20-2 "END ROAD WORK" sign, with minimum size of 48" x 24" as appropriate, shall be placed at the end of the lane closure unless the end of work area is obvious or ends within a larger project's limits.
6. If the W20-1 sign would follow within 2000' of a stationary W20-1 or G20-1 "ROAD WORK NEXT _____ MILES", use a C20(CA) sign for the first advance warning sign.
7. Place a C30(CA) sign every 2000' throughout length of lane closure.
8. One flashing arrow sign for each lane closed. The flashing arrow signs shall be Type I.
9. A minimum 1500' of sight distance shall be provided where possible for vehicles approaching the first flashing arrow sign. Lane closures shall not begin at top of crest vertical curve or on a horizontal curve.
10. All cones used for lane closures during the hours of darkness shall be fitted with retroreflective bands (or sleeves) as specified in the specifications.
11. Portable delineators, placed at one-half the spacing indicated for traffic cones may be used instead of cones for daytime closures only.
12. Unless otherwise specified in the special provisions, a minimum of 3 cones shall be placed transversely across each closed lane and shoulder at each location where a taper across a traffic lane ends and every 2000' as shown on the "Lane Closure" detail. Two Type II barricades may be used instead of the 3 cones. The transverse alignment of the cones or barricades on the closed shoulder may be shifted from the transverse alignment to provide access to the work.
13. Unless otherwise specified in the special provisions, the 2L tangent shown along lane lines shall be used between the L tapers required for each closed traffic lane.
14. Unless otherwise specified in the special provisions, the E5-1 or SC18(CA) and W4-1 signs shall be used as shown.
15. A W7-3aP "NEXT____ MILES" plaque must be used if theshoulder closure extends beyond the distance that can be perceived by road users.

LEGEND

- TRAFFIC CONE
- TRAFFIC CONE (OPTIONAL TAPER)
- TEMPORARY TRAFFIC CONTROL SIGN
- FLASHING ARROW SIGN (FAS)
- FAS SUPPORT OR TRAILER
- PORTABLE FLASHING BEACON

SIGN PANEL SIZE (Min)

A	48" x 48"
B	72" x 60"
C	36" x 30"

STATE OF CALIFORNIA
DEPARTMENT OF TRANSPORTATION

TRAFFIC CONTROL SYSTEM FOR LANE CLOSURE ON FREEWAYS AND EXPRESSWAYS

NO SCALE

RSP T10 DATED APRIL 19, 2013 SUPERSEDES STANDARD PLAN T10 DATED MAY 20, 2011 - PAGE 237 OF THE STANDARD PLANS BOOK DATED 2010.

REVISED STANDARD PLAN RSP T10

2010 REVISED STANDARD PLAN RSP T10

12-18-12

TO ACCOMPANY PLANS DATED 2-18-14

Dist	COUNTY	ROUTE	POST MILES TOTAL PROJECT	SHEET No.	TOTAL SHEETS
07	LA	101	11.8/35.3	184	192

REGISTERED CIVIL ENGINEER

April 19, 2013
PLANS APPROVAL DATE

REGISTERED PROFESSIONAL ENGINEER Gurinderpal Bhullar No. C48815 Exp. 9-30-14 CIVIL STATE OF CALIFORNIA

THE STATE OF CALIFORNIA OR ITS OFFICERS OR AGENTS SHALL NOT BE RESPONSIBLE FOR THE ACCURACY OR COMPLETENESS OF SCANNED COPIES OF THIS PLAN SHEET.

NOTES: See Revised Standard Plan RSP T9 for tables.

Use cone spacing X for taper segment, Y for tangent segment or Z for conflict situations, as approriate, per Table 1, unless X, Y, or Z cone spacing is shown on this sheet.

Unless otherwise specified in the special provisions, all temporary warning signs shall have black legend on fluorescent orange background.

California codes are designated by (CA). Otherwise, Federal (MUTCD) codes are shown.

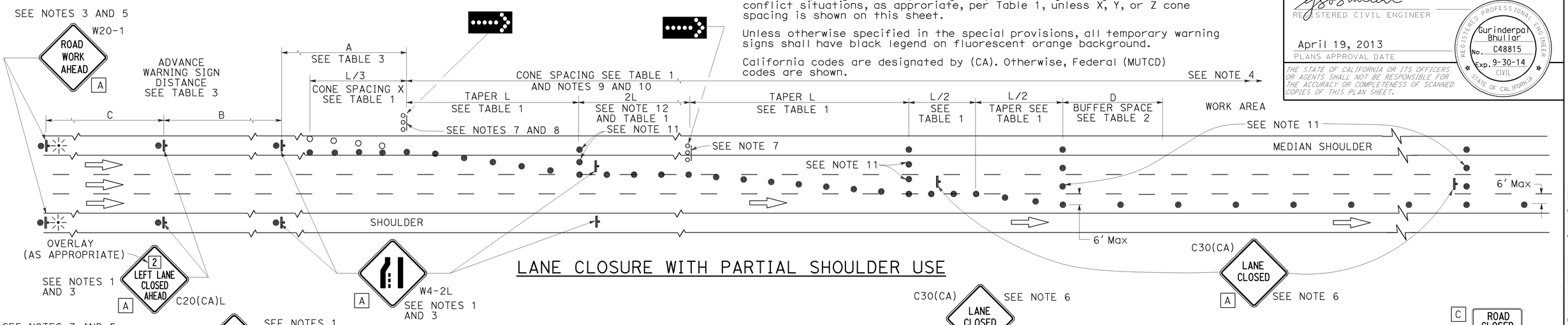

LANE CLOSURE WITH PARTIAL SHOULDER USE

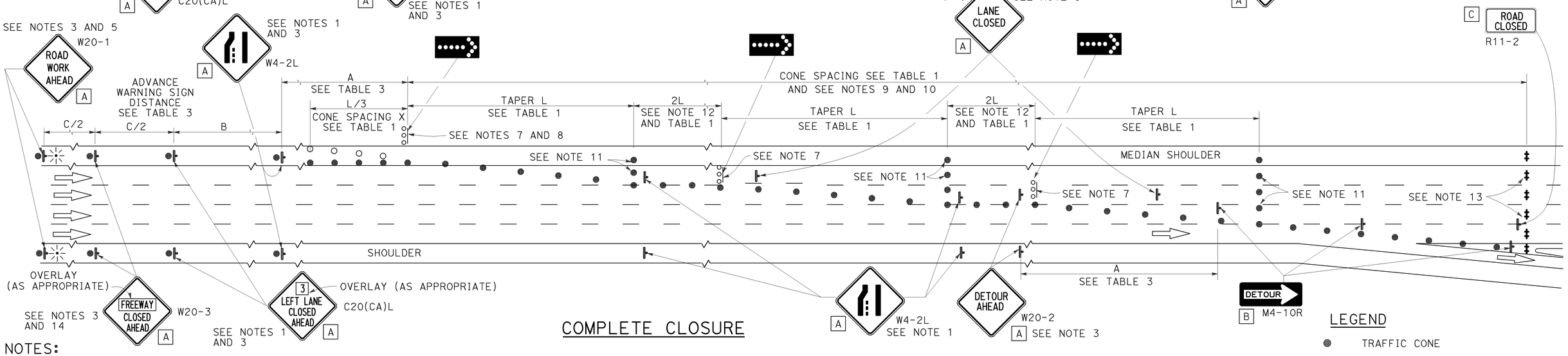

COMPLETE CLOSURE

NOTES:

1. Lane closures on the right side using partial median shoulder as a traffic lane shall conform to the details as shown except that C20(CA)R and W4-2R signs shall be used.
2. At least one person shall be assigned to provide full time maintenance of traffic control devices for lane closures.
3. Each advance warning sign on each side of the roadway shall be equipped with at least two flags for daytime closure. Each flag shall be at least 16" X 16" in size and shall be orange or fluorescent red-orange in color. Flashing beacons shall be placed at the locations indicated for lane closure during hours of darkness.
4. A G20-2 "END ROAD WORK" sign, with minimum size of 48" x 24" as appropriate, shall be placed at the end of the lane closure unless the end of work area is obvious or ends within a larger project's limits.
5. If the W20-1 sign would follow within 2000' of a stationary W20-1 or G20-1 "ROAD WORK NEXT ___ MILES", use a C20(CA) sign for the first advance warning sign.
6. Place a C30(CA) sign every 2000' throughout length of lane closure.
7. One flashing arrow sign for each lane closed. The flashing arrow signs shall be Type I.
8. A minimum 1500' of sight distance shall be provided where possible for vehicles approaching the first flashing arrow sign. Lane closures shall not begin at the top of crest vertical curve or on a horizontal curve.
9. All cones used for lane closures during the hours of darkness shall be fitted with retroreflective bands (or sleeves) as specified in the specifications.
10. Portable delineators, placed at one-half the spacing indicated for traffic cones, may be used instead of cones for daytime closures only.
11. Unless otherwise specified in the special provisions, a minimum of 3 cones shall be placed transversely across each closed lane and shoulder at each location where a taper across a traffic lane ends and every 2000' as shown on the "Lane Closure With Partial Shoulder Use" detail. Two Type II barricades may be used instead of the 3 cones. The transverse alignment of the cones or barricades on the closed shoulder may be shifted from the transverse alignment to provide access to the work.
12. Unless otherwise specified in the special provisions, the 2L tangent shown along lane lines shall be used between the L tapers required for each closed traffic lane.
13. A minimum of Two Type II or III barricades shall be placed across each closed lane and shoulder at the location shown and every 2000' within the complete closure area. Within the complete closure area, the transverse alignment of the barricades on the closed shoulder may be shifted from the transverse alignment to provide access to the work.
14. When specified in the special provisions, a W20-2 "DETOUR AHEAD" sign is to be used in place of the W20-3 "FREEWAY CLOSED AHEAD" sign.

SIGN PANEL SIZE (Min)

A	48" x 48"
B	48" x 18"
C	48" x 30"

LEGEND

- TRAFFIC CONE
- TRAFFIC CONE (OPTIONAL TAPER)
- TEMPORARY TRAFFIC CONTROL SIGN
- FLASHING ARROW SIGN (FAS)
- FAS SUPPORT OR TRAILER
- PORTABLE FLASHING BEACON

STATE OF CALIFORNIA
DEPARTMENT OF TRANSPORTATION

TRAFFIC CONTROL SYSTEM FOR LANE CLOSURES ON FREEWAYS AND EXPRESSWAYS

NO SCALE

RSP T10A DATED APRIL 19, 2013 SUPERSEDES STANDARD PLAN T10A DATED MAY 20, 2011 - PAGE 238 OF THE STANDARD PLANS BOOK DATED 2010.

REVISED STANDARD PLAN RSP T10A

2010 REVISED STANDARD PLAN RSP T10A

12-18-12

Dist	COUNTY	ROUTE	POST MILES TOTAL PROJECT	SHEET No.	TOTAL SHEETS
07	LA	101	11.8/35.3	185	192

REGISTERED CIVIL ENGINEER

April 19, 2013
PLANS APPROVAL DATE

REGISTERED PROFESSIONAL ENGINEER Gurinderpal Bhullar No. C48815 Exp. 9-30-14 CIVIL STATE OF CALIFORNIA

THE STATE OF CALIFORNIA OR ITS OFFICERS OR AGENTS SHALL NOT BE RESPONSIBLE FOR THE ACCURACY OR COMPLETENESS OF SCANNED COPIES OF THIS PLAN SHEET.

TO ACCOMPANY PLANS DATED 2-18-14

TYPICAL RAMP CLOSURES

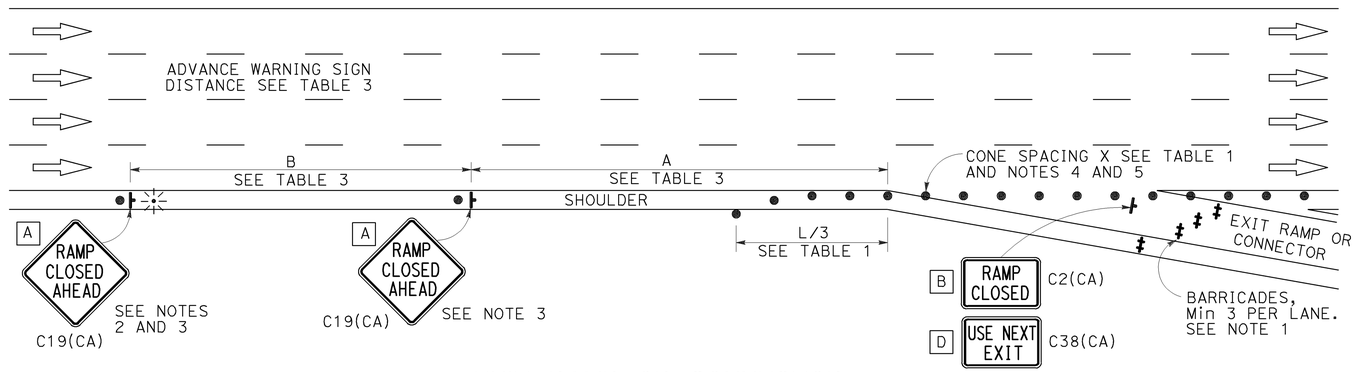

EXIT RAMP OR CONNECTOR

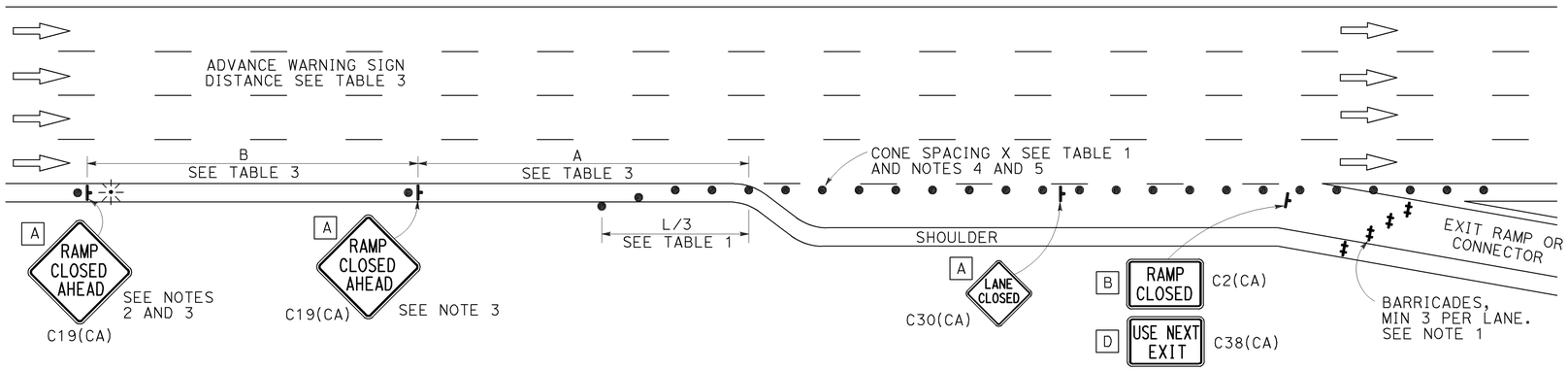

EXIT RAMP OR CONNECTOR WITH ADDITIONAL LANE

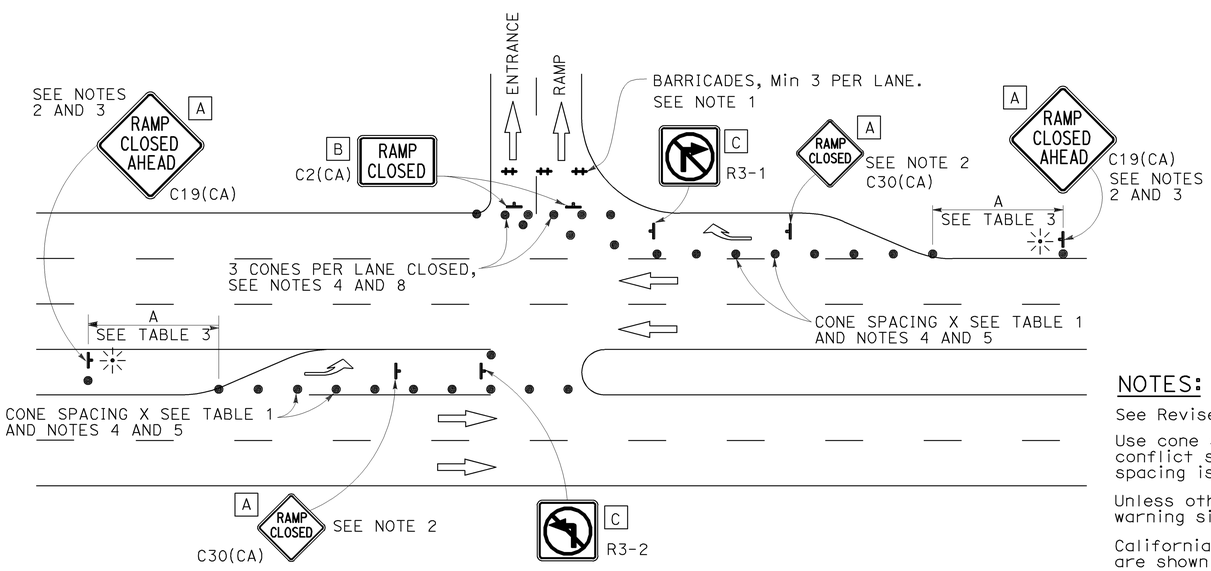

ENTRANCE RAMP WITH TURNING POCKETS

SIGN PANEL SIZE (Min)

- A 48" × 48"
- B 48" × 30"
- C 36" × 36"
- D 48" × 36"

LEGEND

- TRAFFIC CONE
- TEMPORARY TRAFFIC CONTROL SIGN
- BARRICADES
- PORTABLE FLASHING BEACON

NOTES:

1. Barricades shall be Type I, II, or III for closures lasting one week or less and Type III for closures lasting longer than one week.
2. In addition to placing the C19(CA) "RAMP CLOSED AHEAD" and C30(CA) "RAMP CLOSED" signs, black on orange overlay plates with the word "CLOSED" may be mounted, as directed by the Engineer, on all guide signs that refer to the closed ramp. The letter size on the overlay shall be the same as the guide sign.
3. Each advance C19(CA) "RAMP CLOSED AHEAD" sign shall be equipped with at least two flags for daytime closure. Each flag shall be at least 16" × 16" in size and shall be orange or fluorescent red-orange in color. A flashing beacon shall be placed on top of the first C19(CA) sign during hours of darkness.
4. All cones used for ramp closures during the hours of darkness shall be fitted with retroreflective bands (or sleeves) as specified in the specifications.
5. Portable delineators, placed at one-half the spacing indicated for traffic cones, may be used instead of cones for daytime ramp closures only.
6. At least one person shall be assigned to provide full time maintenance of traffic control devices, unless otherwise directed by the Engineer.
7. The existing "EXIT" signs shall be covered during ramp closures.
8. A minimum of 3 cones shall be placed transversely across each closed lane and shoulder.

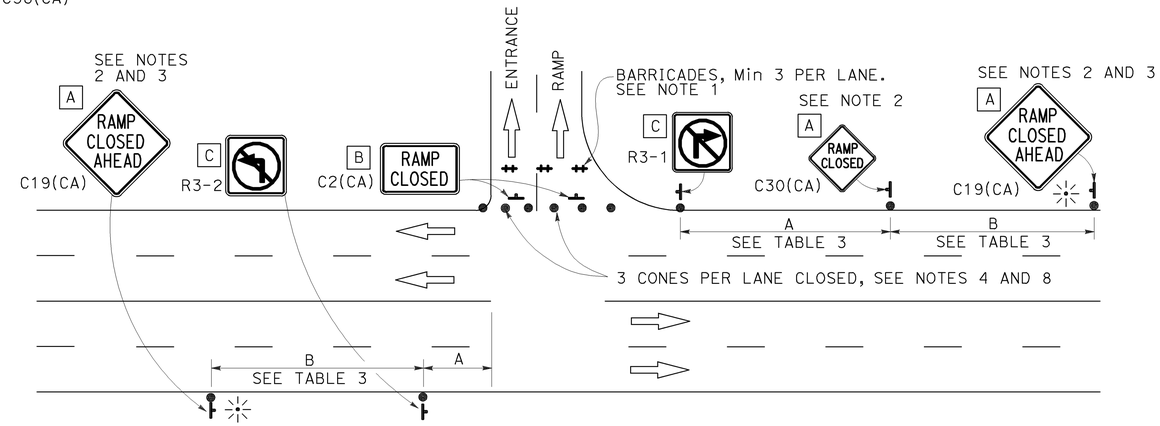

ENTRANCE RAMP WITHOUT TURNING POCKETS

NOTES:

See Revised Standard Plan RSP T9 for tables.

Use cone spacing X for taper segment, Y for tangent segment or Z for conflict situations, as approriate, per Table 1, unless X, Y, or Z cone spacing is shown on this sheet.

Unless otherwise specified in the special provisions, all temporary warning signs shall have black legend on fluorescent orange background.

California codes are designated by (CA). Otherwise, Federal (MUTCD) codes are shown.

STATE OF CALIFORNIA
DEPARTMENT OF TRANSPORTATION

TRAFFIC CONTROL SYSTEM FOR RAMP CLOSURE

NO SCALE

RSP T14 DATED APRIL 19, 2013 SUPERSEDES STANDARD PLAN T14
DATED MAY 20, 2011 - PAGE 242 OF THE STANDARD PLANS BOOK DATED 2010.

REVISED STANDARD PLAN RSP T14

2010 REVISED STANDARD PLAN RSP T14

12-18-12

Dist	COUNTY	ROUTE	POST MILES TOTAL PROJECT	SHEET No.	TOTAL SHEETS
07	LA	101	11.8/35.3	186	192

REGISTERED CIVIL ENGINEER

October 21, 2011
PLANS APPROVAL DATE

REGISTERED PROFESSIONAL ENGINEER Tillat Satter No. C42892 Exp. 3-31-12 CIVIL STATE OF CALIFORNIA

THE STATE OF CALIFORNIA OR ITS OFFICERS OR AGENTS SHALL NOT BE RESPONSIBLE FOR THE ACCURACY OR COMPLETENESS OF SCANNED COPIES OF THIS PLAN SHEET.

TO ACCOMPANY PLANS DATED 2-18-14

2010 REVISED STANDARD PLAN RSP B11-47

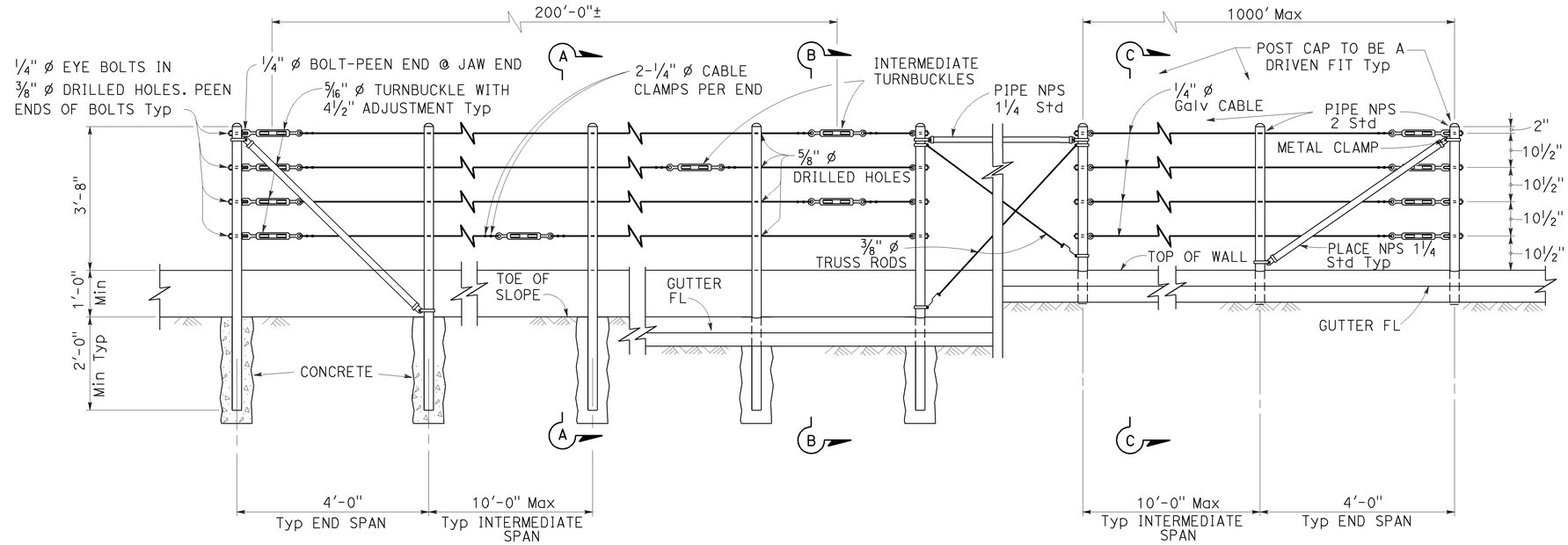

EXISTING WALL (WITHOUT GUTTER)
Existing

RETAINING WALL (WITH GUTTER)
Existing

RETAINING WALL (WITH GUTTER)
New construction

ELEVATION

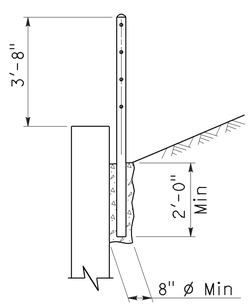

SECTION A-A
Existing

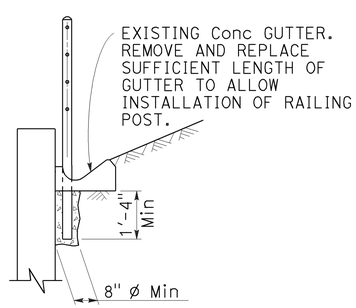

SECTION B-B
Existing

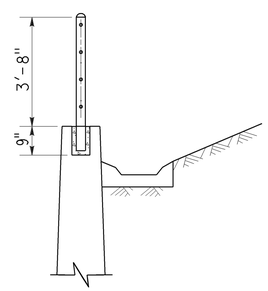

SECTION C-C
New construction

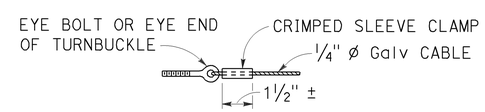

ALTERNATIVE CABLE CONNECTION

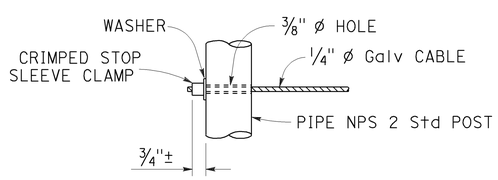

ALTERNATIVE DEAD END ANCHORAGE

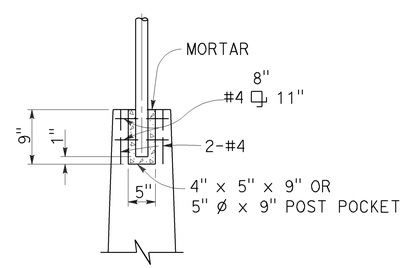

POST POCKET

NOTES:

1. Maximum distance between turnbuckles shall be 200'-0"±.
2. Intermediate turnbuckles to be placed in adjacent spans.
3. Cable shall not be spliced between intermediate turnbuckles and end posts.
4. Posts to be vertical.
5. Alignment of holes in posts may vary to conform to slope of top of retaining wall.
6. The Contractor shall verify all dependent dimensions in the field before ordering or fabricating any material.
7. Line posts shall be braced horizontally and trussed diagonally in both directions at intervals not to exceed 1000'.
8. Post pockets to be centered in top of wall.
9. Typical end spans, braced in both directions, shall be constructed at changes in line where the angle of deflection is 15° or more.
10. Provide thimbles at all cable loops.

STATE OF CALIFORNIA
DEPARTMENT OF TRANSPORTATION

CABLE RAILING

NO SCALE

RSP B11-47 DATED OCTOBER 21, 2011 SUPERSEDES STANDARD PLAN B11-47 DATED MAY 20, 2011 - PAGE 293 OF THE STANDARD PLANS BOOK DATED 2010.

REVISED STANDARD PLAN RSP B11-47

9-14-11

Dist	COUNTY	ROUTE	POST MILES TOTAL PROJECT	SHEET No.	TOTAL SHEETS
07	LA	101	11.8/35.3	187	192

REGISTERED CIVIL ENGINEER

November 15, 2013
PLANS APPROVAL DATE

REGISTERED PROFESSIONAL ENGINEER Tillat Satter No. C42892 Exp. 3-31-14 CIVIL STATE OF CALIFORNIA

THE STATE OF CALIFORNIA OR ITS OFFICERS OR AGENTS SHALL NOT BE RESPONSIBLE FOR THE ACCURACY OR COMPLETENESS OF SCANNED COPIES OF THIS PLAN SHEET.

TO ACCOMPANY PLANS DATED 2-18-14

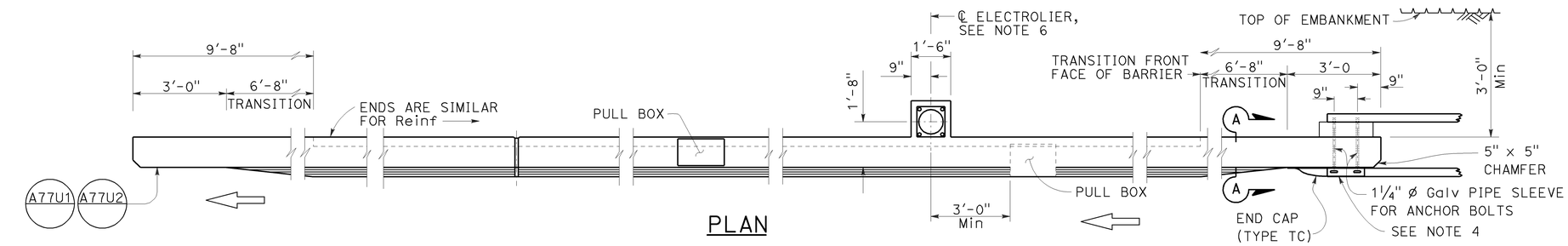

PLAN

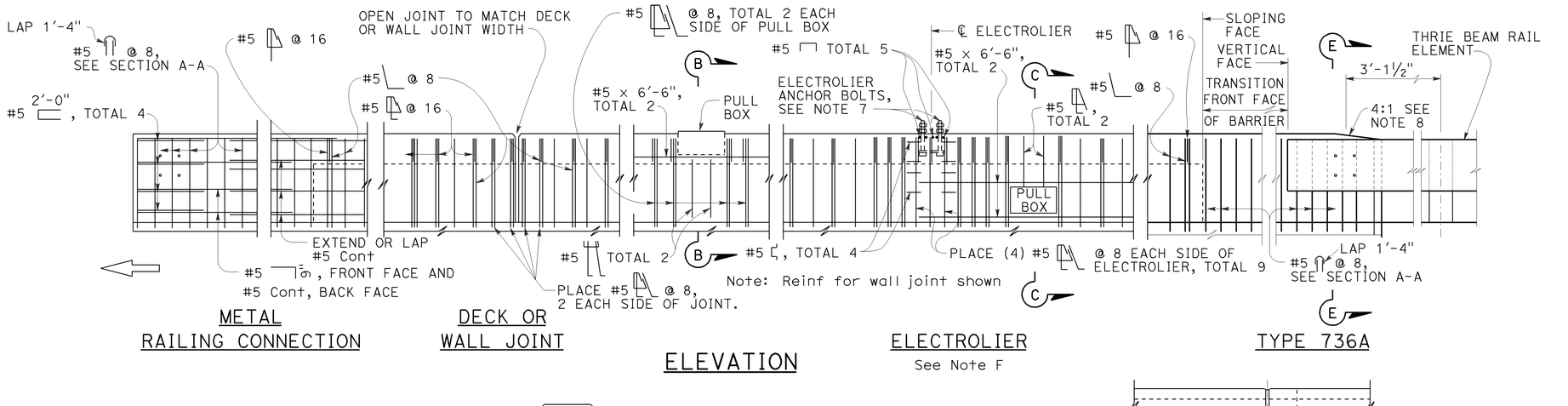

METAL RAILING CONNECTION

DECK OR WALL JOINT

ELEVATION

ELECTROLIER
See Note F

TYPE 736A

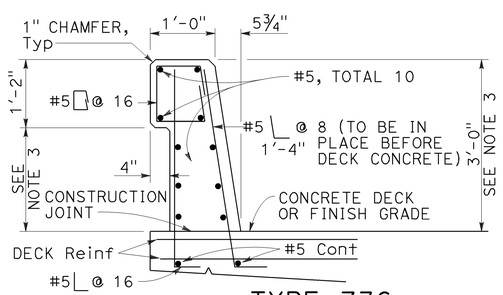

TYPE 736

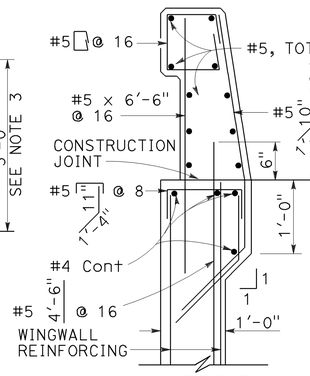

TYPE 736A

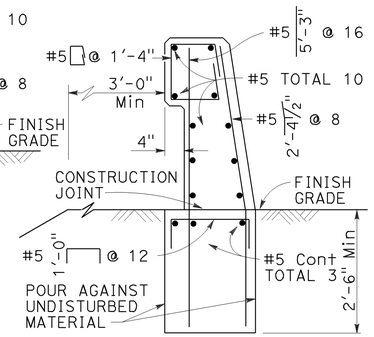

TYPE 736B

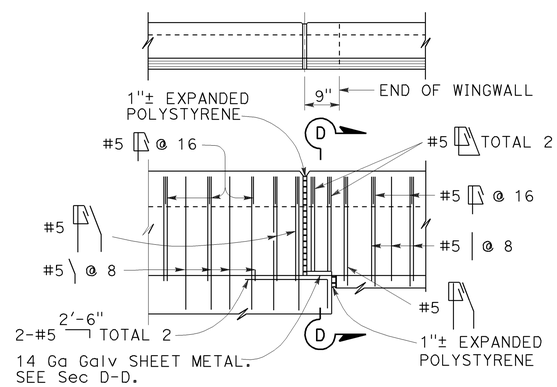

TYPE 736A TYPE 736B

NOTES:

1. Walls are to be backfilled before barrier is placed.
2. Clearance to reinforcing steel in barrier to be 1", except as noted. Longitudinal reinforcement to stop at all expansion joints.
3. Dimensions may vary with roadway cross slope and with certain thickness of surfacing. See Project Plans.
4. For typical metal railing connection details not shown, see Revised Standard Plans RSP A77U1 and RSP A77U2.
5. See Standard Plans ES-9A, ES-9B, ES-9C, ES-9D and ES-9E for electrical details. The maximum number of conduits in the barrier is limited to two 2" conduits along with one 3" conduit. When a 3" conduit is used, it is restricted to the base of the barrier.
6. For electrolier mounting details, See Standard Plans ES-6A and ES-6B.
7. Minimum concrete edge distance, to the reinforcing shown, shall be maintained. Edge distance may be adjusted to accommodate increase in concrete cover for architectual treatment.
8. Taper the top of the end of the bridge railing at 4:1 to match the top elevation of the thrie beam rail element.

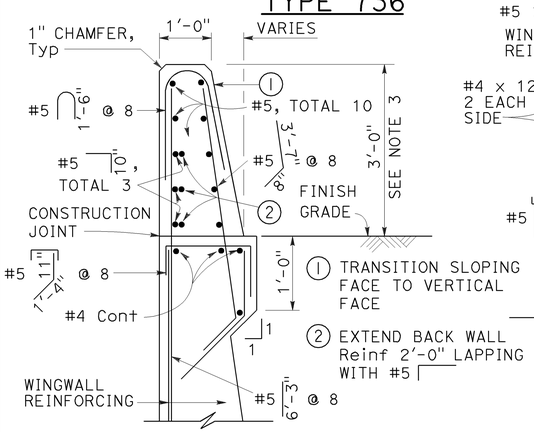

SECTION A-A

Details shown for barrier anchorage to Type 736A. Anchorgae for barrier Types 736 and 736B are similar to their respective details.

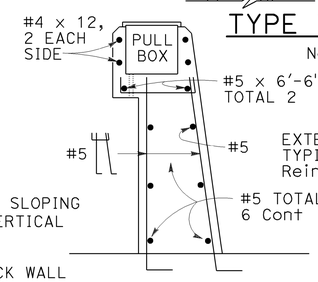

SECTION B-B

Note: Types 736A & 736B are similar to Type 736 except as noted

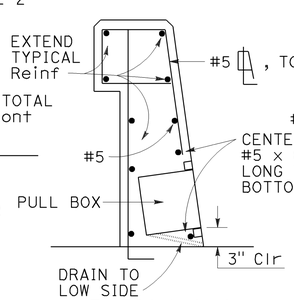

SECTION C-C
See Notes

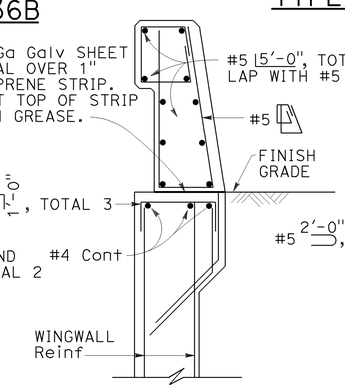

SECTION D-D

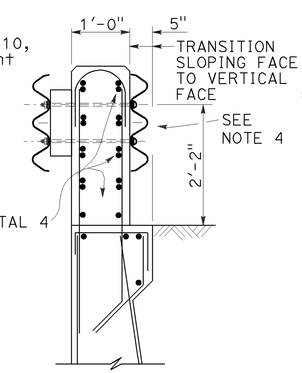

SECTION E-E
See Notes

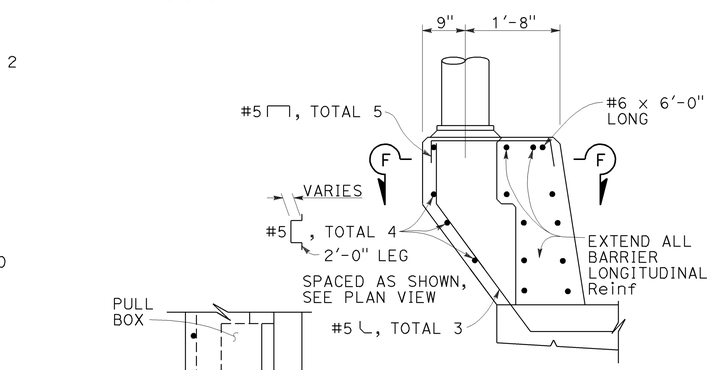

PEDESTAL ELEVATION

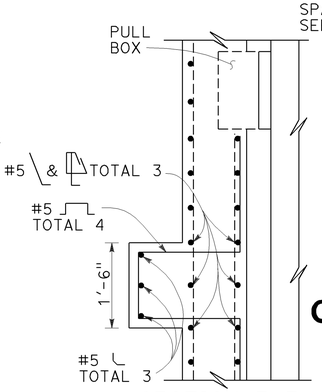

SECTION F-F

STATE OF CALIFORNIA
DEPARTMENT OF TRANSPORTATION

CONCRETE BARRIER TYPE 736

NO SCALE

RSP B11-56 DATED NOVEMBER 15, 2013 SUPERSEDES RSP B11-56 DATED JULY 19, 2013 AND STANDARD PLAN B11-56 DATED MAY 20, 2011 - PAGE 298 OF THE STANDARD PLANS BOOK DATED 2010.

REVISED STANDARD PLAN RSP B11-56

2010 REVISED STANDARD PLAN RSP B11-56

10-4-13

Dist	COUNTY	ROUTE	POST MILES TOTAL PROJECT	SHEET No.	TOTAL SHEETS
07	LA	101	11.8/35.3	188	192

Theresa Gabriel
REGISTERED ELECTRICAL ENGINEER

July 19, 2013
PLANS APPROVAL DATE

REGISTERED PROFESSIONAL ENGINEER Theresa Aziz Gabriel No. E15129 Exp. 6-30-14 ELECTRICAL STATE OF CALIFORNIA

THE STATE OF CALIFORNIA OR ITS OFFICERS OR AGENTS SHALL NOT BE RESPONSIBLE FOR THE ACCURACY OR COMPLETENESS OF SCANNED COPIES OF THIS PLAN SHEET.

TO ACCOMPANY PLANS DATED 2-18-14

LEGEND:

AB	ABANDON. IF APPLIED TO CONDUIT, REMOVE CONDUCTORS
BC	INSTALL PULL BOX IN EXISTING CONDUIT RUN
BP	PEDESTRIAN BARRICADE, TYPE AS INDICATED ON PLAN
CB	INSTALL CONDUIT INTO EXISTING PULL BOX
CC	CONNECT NEW AND EXISTING CONDUIT. REMOVE EXISTING CONDUCTORS AND INSTALL CONDUCTORS AS INDICATED
CF	CONDUIT TO REMAIN FOR FUTURE USE. REMOVE CONDUCTORS. INSTALL PULL TAPE
DH	DETECTOR HANDHOLE
FA	FOUNDATION TO BE ABANDONED
IS	INSTALL SIGN ON SIGNAL MAST ARM
NS	NO SLIP BASE ON STANDARD
PEC	PHOTOELECTRIC CONTROL
PEU	PHOTOELECTRIC UNIT
RC	EQUIPMENT OR MATERIAL TO BE REMOVED AND BECOME THE PROPERTY OF THE CONTRACTOR
RE	REMOVE ELECTROLIER, FUSES AND BALLAST. TAPE ENDS OF CONDUCTORS
RL	RELOCATE EQUIPMENT
RR	REMOVE AND REUSE EQUIPMENT
RS	REMOVE AND SALVAGE EQUIPMENT
SC	SPLICE NEW TO EXISTING CONDUCTORS
SD	SERVICE DISCONNECT
TSP	TELEPHONE SERVICE POINT

ABBREVIATIONS

APS	ACCESSIBLE PEDESTRIAN SIGNAL
BBS	BATTERY BACKUP SYSTEM
BC	BOLT CIRCLE
BPB	BICYCLE PUSH BUTTON
C	CONDUIT
CB	CIRCUIT BREAKER
CCTV	CLOSED CIRCUIT TELEVISION
Ckt	CIRCUIT
CMS	CHANGEABLE MESSAGE SIGN
Ctid	CALTRANS IDENTIFICATION
Comm	COMMUNICATION
DLC	LOOP DETECTOR LEAD-IN CABLE
EMS	EXTINGUISHABLE MESSAGE SIGN
EVUC	EMERGENCY VEHICLE UNIT CABLE
EVUD	EMERGENCY VEHICLE UNIT DETECTOR
FB	FLASHING BEACON
FBCA	FLASHING BEACON CONTROL ASSEMBLY
FBS	FLASHING BEACON WITH SLIP BASE
FO	FIBER OPTIC
G	EQUIPMENT GROUNDING CONDUCTOR
GB	GROUND BUS
GFCI	GROUND FAULT CIRCUIT INTERRUPTER
HAR	HIGHWAY ADVISORY RADIO
Hex	HEXAGONAL
HPS	HIGH PRESSURE SODIUM
IISNS	INTERNALLY ILLUMINATED STREET NAME SIGN
ISL	INDUCTION SIGN LIGHTING
LED	LIGHT EMITTING DIODE
LMA	LUMINAIRE MAST ARM
LPS	LOW PRESSURE SODIUM
Ltg	LIGHTING
Lum	LUMINAIRE
M	METERED
MAT	MAST ARM MOUNTING TOP ATTACHMENT
MAS	MAST ARM MOUNTING SIDE ATTACHMENT
M/M	MULTIPLE TO MULTIPLE TRANSFORMER
Mtg	MOUNTING
MV	MERCURY VAPOR LIGHTING FIXTURE
MVDS	MICROWAVE VEHICLE DETECTION SYSTEM
N	NEUTRAL (GROUNDED CONDUCTOR)
NB	NEUTRAL BUS
NC	NORMALLY CLOSE
NO	NORMALLY OPEN
P	CIRCUIT BREAKER'S POLE
PB	PULL BOX
PBA	PUSH BUTTON ASSEMBLY
PEC	PHOTOELECTRIC CONTROL
Ped	PEDESTRIAN
PEU	PHOTOELECTRIC UNIT
PT	CONDUIT WITH PULL TAPE
RE	RELOCATED EQUIPMENT
RM	RAMP METERING
RWIS	ROADSIDE WEATHER INFORMATION SYSTEM
SB	SLIP BASE
SIC	SIGNAL INTERCONNECT CABLE
Sig	SIGNAL
SMA	SIGNAL MAST ARM
SNS	STREET NAME SIGN
SP	SERVICE POINT
TDC	TELEPHONE DEMARCATION CABINET
TMS	TRAFFIC MONITORING STATION
TOS	TRAFFIC OPERATIONS SYSTEM
Veh	VEHICLE
VIVDS	VIDEO IMAGE VEHICLE DETECTION SYSTEM
WIM	WEIGH-IN-MOTION
Xfmr	TRANSFORMER

SOFFIT AND WALL MOUNTED LUMINAIRES

PENDANT, 70 W HPS UNLESS OTHERWISE SPECIFIED

FLUSH, 70 W HPS UNLESS OTHERWISE SPECIFIED

WALL SURFACE, 70 W HPS UNLESS OTHERWISE SPECIFIED

EXISTING SOFFIT OR WALL LUMINAIRE TO REMAIN UNMODIFIED

EXISTING SOFFIT OR WALL LUMINAIRE TO BE MODIFIED AS SPECIFIED

NOTE:

Arrow indicates "street side" of luminaire.

COMMONLY USED SYMBOLS FOR UNITED STATES CUSTOMARY UNITS OF MEASUREMENT:

SYMBOL USED	DEFINITIONS
Ω	OHMS
min	MINUTE
s	SECOND
bps	BITS PER SECOND
Bps	BYTES PER SECOND
A	AMPERE
V	VOLT
V(dc)	VOLT (DIRECT CURRENT)
V(ac)	VOLT (ALTERNATING CURRENT)
FC	FOOT - CANDLE
W	WATTS
VA	VOLT-AMPERE
M	MEGA
k	KILO
m	MILLI
μ	MICRO
P	PICO
Hz	HERTZ

MISCELLANEOUS ELECTROLIERS

NEW	EXISTING	
		LUMINAIRE ON WOOD POLE
		NON-STANDARD ELECTROLIER (SEE PROJECT NOTES OR PROJECT PLANS)
		CITY ELECTROLIER
		ELECTROLIER FOUNDATION (FUTURE INSTALLATION)

NOTES:

1. HPS luminaires shall be 310 W HPS when installed on Type 21, 21D, 30, 31 and 32 Standards, unless otherwise specified. HPS luminaires shall be 200 W when installed on other type standards or poles, unless otherwise specified.
2. LED luminaires shall be 235 W when installed on Type 21, 21D, 30, 31 and 32 Standards, unless otherwise specified. LED luminaires shall be 165 W when installed on other type standards or poles, unless otherwise specified.
3. Luminaires shall be the cutoff type, ANSI Type III medium cutoff lighting distribution, unless otherwise specified.

STANDARD ELECTROLIER

NEW	EXISTING	STANDARD TYPE
		15
		15D
		15 STRUCTURE
		15D STRUCTURE
		21
		21D
		21 STRUCTURE
		21D STRUCTURE
		30
		31
		32

STATE OF CALIFORNIA
DEPARTMENT OF TRANSPORTATION

ELECTRICAL SYSTEMS (LEGEND AND ABBREVIATIONS)

NO SCALE

RSP ES-1A DATED JULY 19, 2013 SUPERSEDES STANDARD PLAN ES-1A DATED MAY 20, 2011 - PAGE 425 OF THE STANDARD PLANS BOOK DATED 2010.

REVISED STANDARD PLAN RSP ES-1A

2010 REVISED STANDARD PLAN RSP ES-1A

Dist	COUNTY	ROUTE	POST MILES TOTAL PROJECT	SHEET No.	TOTAL SHEETS
07	LA	101	11.8/35.3	189	192

Theresa Gabriel
REGISTERED ELECTRICAL ENGINEER

July 19, 2013
PLANS APPROVAL DATE

REGISTERED PROFESSIONAL ENGINEER
Theresa Aziz Gabriel
No. E15129
Exp. 6-30-14
ELECTRICAL
STATE OF CALIFORNIA

THE STATE OF CALIFORNIA OR ITS OFFICERS OR AGENTS SHALL NOT BE RESPONSIBLE FOR THE ACCURACY OR COMPLETENESS OF SCANNED COPIES OF THIS PLAN SHEET.

TO ACCOMPANY PLANS DATED 2-18-14

CONDUIT

NEW	EXISTING	
		LIGHTING CONDUIT, UNLESS OTHERWISE INDICATED OR NOTED
		TRAFFIC SIGNAL CONDUIT
C	c	COMMUNICATION CONDUIT
T	t	TELEPHONE CONDUIT
F	f	FIRE ALARM CONDUIT
FO	fo	FIBER OPTIC CONDUIT
		CONDUIT TERMINATION
R	r	CONDUIT RISER ATTACHED TO THE STRUCTURE OR SERVICE POLE

SERVICE EQUIPMENT

NEW	EXISTING	
OH	oh	OVERHEAD LINES
U	U	WOOD POLE, "U" INDICATES UTILITY OWNED
		POLE GUY WITH ANCHOR
		UTILITY TRANSFORMER - GROUND MOUNTED
III	III	SERVICE EQUIPMENT ENCLOSURE TYPE. DOOR INDICATES FRONT OF ENCLOSURE
T	t	TELEPHONE DEMARCATION CABINET

POLE-MOUNTED SERVICE DESIGNATION

TYPE H SERVICE, 28'-10" — TYPE OF INSTALLATION AND POLE HEIGHT ABOVE GRADE

FLASHING BEACON

NEW	EXISTING	
R	R	FLASHING BEACON (ONE VEHICLE SIGNAL HEAD WITH BACKPLATE AND VISOR) "R" INDICATES RED INDICATION, "Y" INDICATES YELLOW INDICATION
Y Y	Y Y	FLASHING BEACON WITH TYPE 15-FBS STANDARD AND A SIGN.
R R	R R	FLASHING BEACON WITH TYPES 9, 9A OR 9B SIGN UNLESS OTHERWISE SPECIFIED OR INDICATED

SIGNAL EQUIPMENT

NEW	EXISTING	
C	C	PEDESTRIAN SIGNAL HEAD "C" INDICATES COUNTDOWN PEDESTRIAN HEAD
		PUSH BUTTON ASSEMBLY POST
		PEDESTRIAN BARRICADE
		VEHICLE SIGNAL HEAD (WITH BACKPLATE AND 3-SECTIONS: RED, YELLOW AND GREEN)
		VEHICLE SIGNAL HEAD WITH ANGLE VISOR
PV	PV	MODIFICATIONS OF BASIC SYMBOL: "L" INDICATES ALL NON-ARROW SECTIONS LOUVERED "LG" INDICATES LOUVERED GREEN SECTION ONLY "PV" INDICATES ALL 12" SECTIONS PROGRAMMED VISIBILITY "8" INDICATES ALL 8" SECTIONS (ONLY WHEN SPECIFIED)
		VEHICLE SIGNAL HEAD CONSISTING OF RED, YELLOW AND GREEN LEFT ARROW SECTIONS
		VEHICLE SIGNAL HEAD CONSISTING OF RED AND YELLOW SECTIONS WITH AN UP GREEN ARROW SECTION
		VEHICLE SIGNAL HEAD (5 SECTION) CONSISTING OF RED, YELLOW AND GREEN SECTIONS WITH YELLOW AND GREEN RIGHT ARROW SECTIONS
		TYPE 15TS STANDARD WITH VEHICLE SIGNAL HEAD AND LUMINAIRE
		TYPE 21TS STANDARD WITH VEHICLE SIGNAL HEAD AND LUMINAIRE
		STANDARD WITH LUMINAIRE AND SIGNAL MAST ARMS AND ATTACHED VEHICLE SIGNAL HEADS
		TYPE 1 STANDARD WITH ATTACHED VEHICLE SIGNAL HEADS
		STANDARD WITH A SIGNAL MAST ARM, ATTACHED VEHICLE SIGNAL HEADS AND INTERNALLY ILLUMINATED STREET NAME SIGN
		CONTROLLER ASSEMBLY. DOOR INDICATES FRONT OF CABINET

SIGNAL EQUIPMENT Cont

NEW	EXISTING	
		GUARD POST
		TYPE 1 STANDARD WITH RAMP METERING SIGN
		OPTICAL DETECTOR FOR THE EMERGENCY VEHICLE DETECTION SYSTEM

NOTES:

1. All signal sections shall be 12" unless shown otherwise.
2. Signal heads shall be provided with backplates unless shown otherwise.

ILLUMINATED OVERHEAD SIGN

NEW	EXISTING	
		SINGLE POST, SINGLE ILLUMINATED SIGN, BALANCED BUTTERFLY
		SINGLE POST, DOUBLE ILLUMINATED SIGN, BALANCED BUTTERFLY
		SINGLE POST, SINGLE ILLUMINATED SIGN, FULL CANTILEVER
		DOUBLE POST, SINGLE ILLUMINATED SIGN
		SINGLE ILLUMINATED SIGN MOUNTED ON STRUCTURE
		DOUBLE POST, SINGLE ILLUMINATED SIGN WITH ELECTROLIER

STATE OF CALIFORNIA
DEPARTMENT OF TRANSPORTATION

ELECTRICAL SYSTEMS (LEGEND AND ABBREVIATIONS)

NO SCALE

RSP ES-1B DATED JULY 19, 2013 SUPERSEDES STANDARD PLAN ES-1B DATED MAY 20, 2011 - PAGE 426 OF THE STANDARD PLANS BOOK DATED 2010.

REVISED STANDARD PLAN RSP ES-1B

2010 REVISED STANDARD PLAN RSP ES-1B

7-15-13

Dist	COUNTY	ROUTE	POST MILES TOTAL PROJECT	SHEET No.	TOTAL SHEETS
07	LA	101	11.8/35.3	190	192

Theresa Gabriel
REGISTERED ELECTRICAL ENGINEER

July 19, 2013
PLANS APPROVAL DATE

REGISTERED PROFESSIONAL ENGINEER
Theresa Aziz Gabriel
No. E15129
Exp. 6-30-14
ELECTRICAL
STATE OF CALIFORNIA

THE STATE OF CALIFORNIA OR ITS OFFICERS OR AGENTS SHALL NOT BE RESPONSIBLE FOR THE ACCURACY OR COMPLETENESS OF SCANNED COPIES OF THIS PLAN SHEET.

TO ACCOMPANY PLANS DATED 2-18-14

EQUIPMENT IDENTIFICATION

ILLUMINATED SIGN IDENTIFICATION NUMBER:

SIGN No. 12345
10 ISL SCI 1.0

- SIGN NUMBER - PLACE ON POST OR STRUCTURE
- TRANSFORMER RATING (kVA)
- LIGHTING CONTROL TYPE
- NUMBER AND TYPE OF FIXTURES

DO NOT PLACE ON STANDARD OR STRUCTURE

ELECTROLIER OR EQUIPMENT IDENTIFICATION NUMBER:

12345 - 15'-0"

- MAST ARM LENGTH, IF SHOWN. DO NOT PLACE ON STANDARD OR STRUCTURE
- EQUIPMENT NUMBER - PLACE ON STANDARD OR STRUCTURE. EXISTING EQUIPMENT NUMBERS ARE SHOWN IN PARENTHESIS

CONDUIT AND CONDUCTOR IDENTIFICATION:

1½"C, 2#10, 15#14, 2 DLC, 12P#18

- PAIR
- NUMBER AND SIZE OF CONDUCTORS AND CABLES
- SIZE OF CONDUIT IN INCHES

ø1, ø2, ø2P, etc.	TRAFFIC PHASE IDENTIFICATION FOR SIGNAL FACES, DETECTORS AND PHASE DIAGRAMS
1 2 3	LEGEND NUMBERS
A B C	EQUIPMENT, SIGNAL POLES, INSTALLATION OR ITEMS
1 2 3	CONDUIT RUN NUMBERS

SIGNAL AND LIGHTING STANDARD (TYPICAL DESIGNATION):

19A - 3 - 100

- WIND VELOCITY = 100 mph
- CASE 3 ARM LOADING
- STANDARD TYPE
- STANDARD PLAN SHEET NUMBER
- DETAIL, NUMBER, SECTION, TYPE OR ELEVATION

MISCELLANEOUS EQUIPMENT

NEW	EXISTING	
CMS	cms	CHANGEABLE MESSAGE SIGN
		CLOSED CIRCUIT TELEVISION CAMERA
		HIGHWAY ADVISORY RADIO POLE AND ANTENNA
EMS	ems	EXTINGUISHABLE MESSAGE SIGN
M V	m v	DETECTION DEVICE M = MICROWAVE SENSOR V = VIDEO IMAGE SENSOR

WIRING DIAGRAM LEGEND

----	EXTERNAL CONDUCTOR
———	CONDUCTOR OR BUS
	TIE POINT
	CONTACTOR COIL
	CONTACTOR, NO CONTACT
	TERMINAL BLOCKS
	CONTACTOR, NC CONTACT
	ENCLOSURE BOND
	GROUNDING ELECTRODE
	CIRCUIT BREAKER
	RECEPTACLE

PULL BOXES

NEW	EXISTING	
		PULL BOX, No. 5 UNLESS OTHERWISE INDICATED OR NOTED
3	9A(21)	PULL BOX, ADDITIONAL DESIGNATIONS OR DESCRIPTIONS

3 No. 3½ PULL BOX
5 No. 5 PULL BOX
6 No. 6 PULL BOX
7 No. 7 (CEILING PULL BOX)
8 No. 8 (PENDANT SOFFIT PULL BOX)
9 No. 9 PULL BOX
9A No. 9A PULL BOX

(C) COMMUNICATIONS PULL BOX
(E) PULL BOX WITH EXTENSION
(S) SPRINKLER CONTROL PULL BOX
(21) ANCHOR BOLTS AND CONDUIT FOR FUTURE INSTALLATION OF TYPE 21 STANDARD
(T) TRAFFIC PULL BOX

VEHICLE DETECTORS

5 J 9 U

- VEHICLE DETECTOR DESIGNATION
- U = UPPER
  L = LOWER
- SLOT NUMBER IN INPUT FILE
- INPUT FILE (I OR J)
- PHASE

NEW	EXISTING	
		TYPE A DETECTOR LOOP. OUTLINE OF SAWCUT SHOWN
		TYPE B DETECTOR LOOP. OUTLINE OF SAWCUT SHOWN
		TYPE C DETECTOR LOOP. OUTLINE OF SAWCUT SHOWN
		TYPE D DETECTOR LOOP. OUTLINE OF SAWCUT SHOWN
		TYPE E DETECTOR LOOP. OUTLINE OF SAWCUT SHOWN
		TYPE Q DETECTOR LOOP. OUTLINE OF SAWCUT SHOWN
		MAGNETIC DETECTOR
DH	dh	DETECTOR HANDHOLE
		MICROWAVE OR VIDEO DETECTION ZONE

STATE OF CALIFORNIA
DEPARTMENT OF TRANSPORTATION

ELECTRICAL SYSTEMS (LEGEND AND ABBREVIATIONS)

NO SCALE

RSP ES-1C DATED JULY 19, 2013 SUPERSEDES STANDARD PLAN ES-1C DATED MAY 20, 2011 - PAGE 427 OF THE STANDARD PLANS BOOK DATED 2010.

REVISED STANDARD PLAN RSP ES-1C

2010 REVISED STANDARD PLAN RSP ES-1C

7-11-13

Dist	COUNTY	ROUTE	POST MILES TOTAL PROJECT	SHEET No.	TOTAL SHEETS
07	LA	101	11.8/35.3	191	192

Theresa Gabriel
REGISTERED ELECTRICAL ENGINEER

July 19, 2013
PLANS APPROVAL DATE

REGISTERED PROFESSIONAL ENGINEER Theresa Aziz Gabriel No. E15129 Exp. 6-30-14 ELECTRICAL STATE OF CALIFORNIA

THE STATE OF CALIFORNIA OR ITS OFFICERS OR AGENTS SHALL NOT BE RESPONSIBLE FOR THE ACCURACY OR COMPLETENESS OF SCANNED COPIES OF THIS PLAN SHEET.

TO ACCOMPANY PLANS DATED 2-18-14

2010 REVISED STANDARD PLAN RSP ES-5B

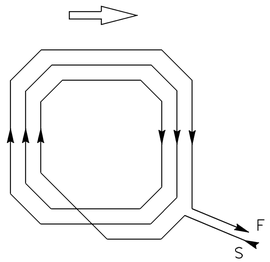

WINDING DETAIL

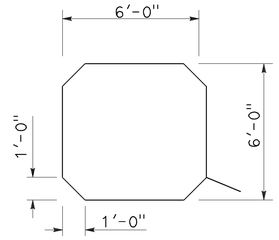

SAWCUT DETAIL

TYPE A LOOP DETECTOR CONFIGURATION

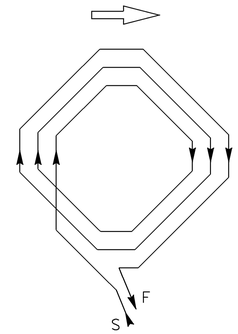

WINDING DETAIL

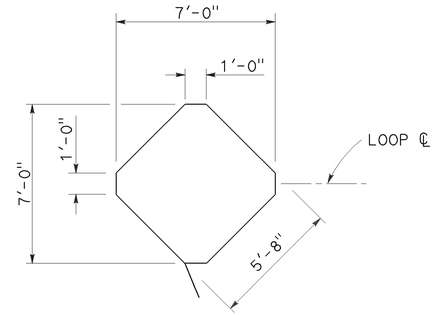

SAWCUT DETAIL

TYPE B LOOP DETECTOR CONFIGURATION

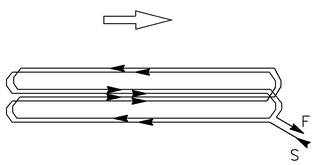

WINDING DETAIL

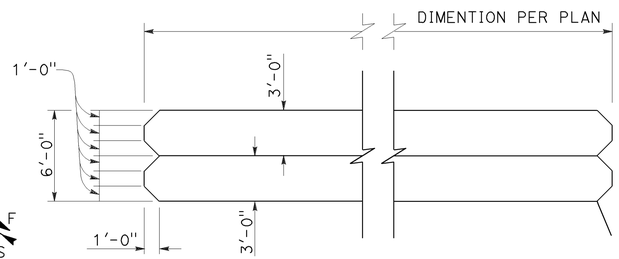

SAWCUT DETAIL

TYPE C LOOP DETECTOR CONFIGURATION

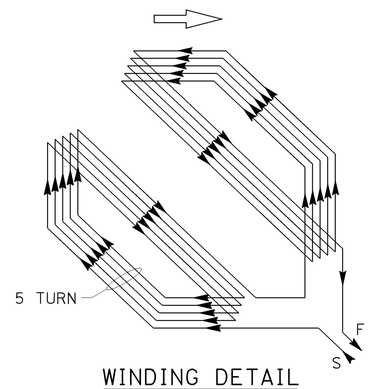

WINDING DETAIL

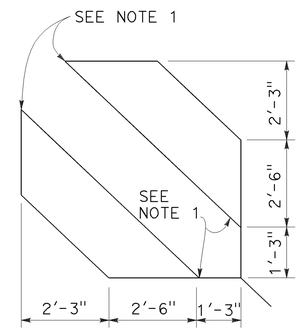

SAWCUT DETAIL

TYPE D LOOP DETECTOR CONFIGURATION

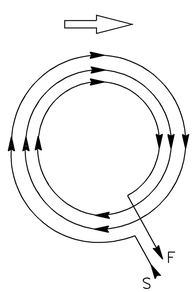

WINDING DETAIL

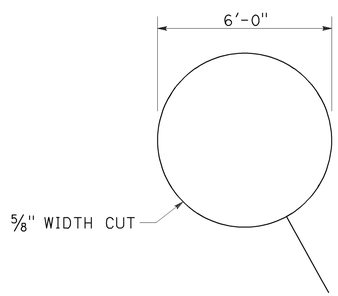

SAWCUT DETAIL

TYPE E LOOP DETECTOR CONFIGURATION

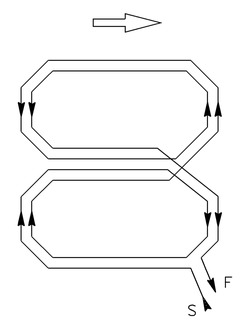

WINDING DETAIL

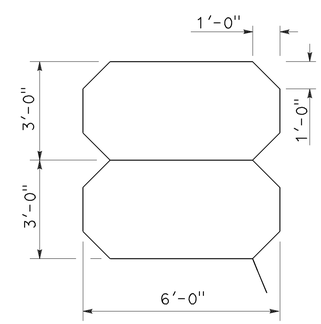

SAWCUT DETAIL

TYPE Q LOOP DETECTOR CONFIGURATION

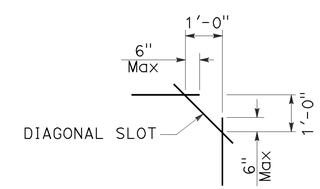

PLAN VIEW OF DIAGONAL SLOT AT CORNERS

NOTES:

1. Round corners of acute angle sawcuts to prevent damage to conductors.
2. Typical distance separating loops from edge to edge is 10' for Type A, B, D and E installation in single lane.

STATE OF CALIFORNIA
DEPARTMENT OF TRANSPORTATION

ELECTRICAL SYSTEMS (DETECTORS)

NO SCALE

RSP ES-5B DATED JULY 19, 2013 SUPERSEDES STANDARD PLAN ES-5B DATED MAY 20, 2011 - PAGE 449 OF THE STANDARD PLANS BOOK DATED 2010.

REVISED STANDARD PLAN RSP ES-5B

Dist	COUNTY	ROUTE	POST MILES TOTAL PROJECT	SHEET No.	TOTAL SHEETS
07	LA	101	11.8/35.3	192	192

Theresa Gabriel
REGISTERED ELECTRICAL ENGINEER

July 19, 2013
PLANS APPROVAL DATE

REGISTERED PROFESSIONAL ENGINEER Theresa Aziz Gabriel No. E15129 Exp. 6-30-14 ELECTRICAL STATE OF CALIFORNIA

THE STATE OF CALIFORNIA OR ITS OFFICERS OR AGENTS SHALL NOT BE RESPONSIBLE FOR THE ACCURACY OR COMPLETENESS OF SCANNED COPIES OF THIS PLAN SHEET.

TO ACCOMPANY PLANS DATED 2-18-14

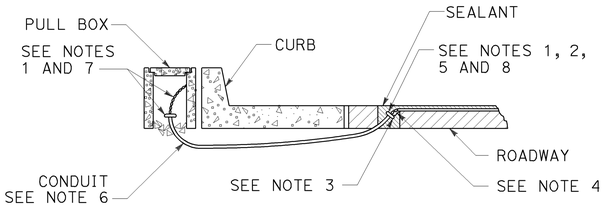

TYPE A
CURB TERMINATION DETAIL

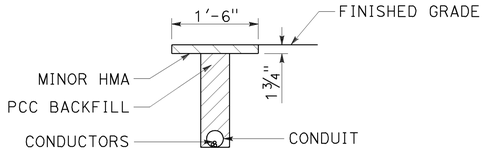

"T" TRENCH
DETAIL T

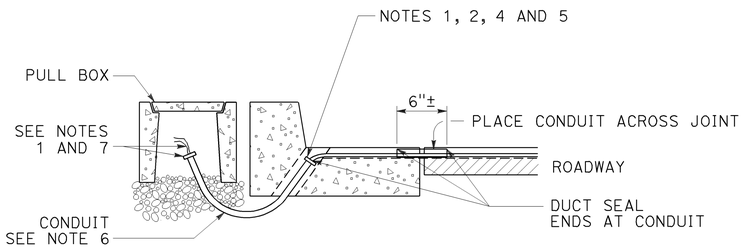

CROSS SECTION

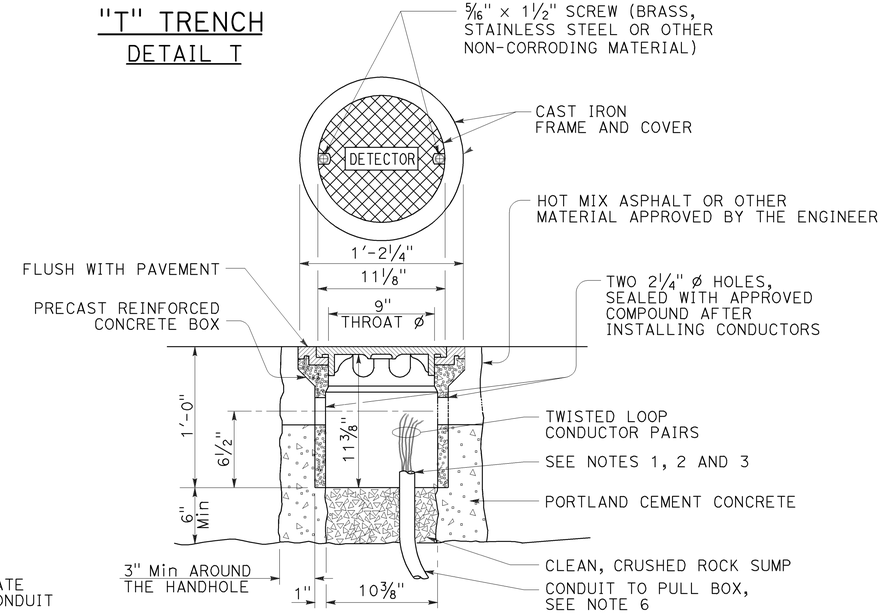

DETECTOR HANDHOLE DETAIL

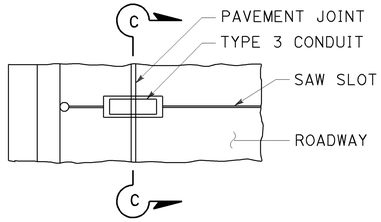

PLAN VIEW

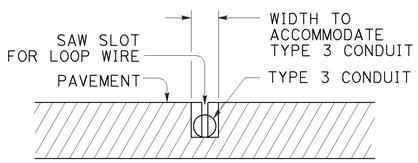

SECTION C-C

TYPE B
CURB TERMINATION DETAIL

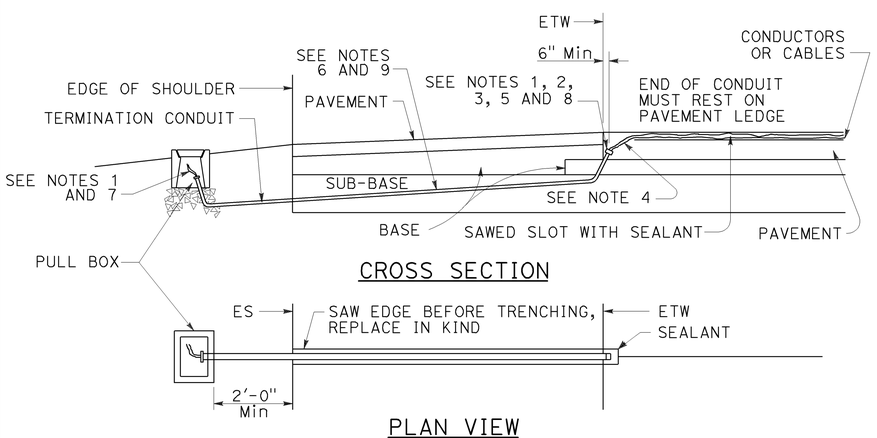

CROSS SECTION

PLAN VIEW

SHOULDER TERMINATION DETAILS

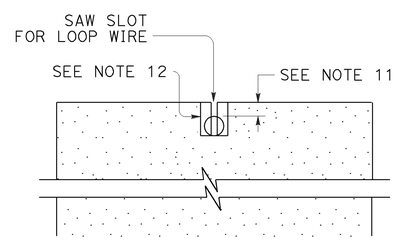

SECTION A-A

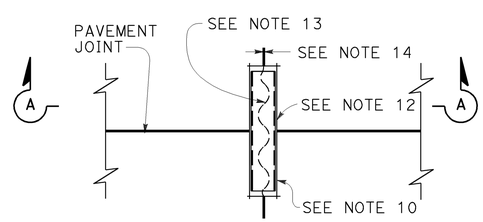

PLAN VIEW

TYPICAL LOOP LEAD-IN DETAIL
AT PAVEMENT JOINT

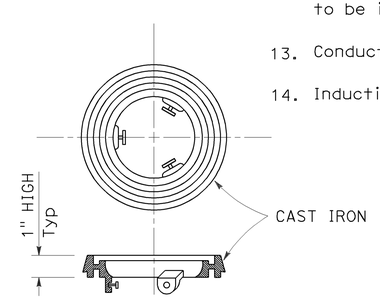

LOCKING GRADE RING

NOTES:

1. Bushing shall be used at end of conduit.
2. Tape detector conductors or cables 3" each side of bushings.
3. Install duct seal compound to each end of termination conduit before installing sealant.
4. Round all sharp edges where detector conductors or cables have to pass.
5. End of conduit shall be 3⅛" below roadway surface.
6. Conduit size / Loop conductors
   - 1"C minimum — 1 to 2 pairs
   - 1½"C minimum — 3 to 4 pairs
   - 2"C minimum — 5 or more pairs
7. Splice detector conductors or cables to detector lead-in-cable.
8. Location of detector handhole when shown on plans.
9. When the shoulder and traveled way are paved with the same material and there is no joint between them, the conduit shall extend only 2'-0" into the shoulder pavement.
10. ¾"C, Type 3 conduit 6" long minimum, plug both ends with duct compound to keep out sealant.
11. ½" Minimum between top of conduit and pavement surface.
12. Sawcut shall not exceed 1" in width and ⅛" longer than conduit to be installed.
13. Conductors with ½" minimum slack inside conduit.
14. Inductive loop detector saw slot.

STATE OF CALIFORNIA
DEPARTMENT OF TRANSPORTATION

ELECTRICAL SYSTEMS (CURB TERMINATION AND HANDHOLE)

NO SCALE

RSP ES-5D DATED JULY 19, 2013 SUPERSEDES STANDARD PLAN ES-5D DATED MAY 20, 2011 - PAGE 451 OF THE STANDARD PLANS BOOK DATED 2010.

REVISED STANDARD PLAN RSP ES-5D

2010 REVISED STANDARD PLAN RSP ES-5D

7-9-13