DIST	COUNTY	ROUTE	POST MILES TOTAL PROJECT	SHEET No.	TOTAL SHEETS
07	LA	47	0.9/2.0	18	38

REGISTERED CIVIL ENGINEER 2-6-15 DATE

6-29-15
PLANS APPROVAL DATE

REGISTERED PROFESSIONAL ENGINEER
Foued Zayati
No. 57046
Exp. 6/30/17
CIVIL
STATE OF CALIFORNIA

The State of California or its officers or agents shall not be responsible for the accuracy or completeness of scanned copies of this plan sheet.

GENERAL NOTES
LOAD AND RESISTANCE FACTOR DESIGN

DESIGN CRITERIA:

Vincent Thomas Bridge Design Criteria Dated February 20, 1996 and Subsequent Revisions.

DESIGN:

AASHTO LRFD Bridge Design Specifications, Sixth Edition and the California Amendments, preface dated January 2014

LIVE LOADING:

HL93 and permit design load.

SEISMIC LOADING:

Site Specific Ground Motion Time Histories For The Safety Evaluation Earthquake (Refer Design Criteria).

STRUCTURAL STEEL (new construction):

All structural steel shall be galvanized.

ASTM A709 Grade 50 Fy = 50 ksi

BUCKLING RESTRAINED BRACE (BRB):

3 ~~Brace Core ASTM A1010 Grade 50 Fy = 50 ksi~~
Brace Core Stainless Steel ASTM A276, Type 304
(or another Type that meets the BRB performance requirements)

FASTENERS (new construction):

All fasteners shall be galvanized.
Minimum bolt edge distance is 1½" unless otherwise shown.

Bolts

ASTM A325

Threaded rods

ASTM A722 Type II Fu = 150 ksi

RECESSED PINS:

Side Span At Towers:
ASTM A564-Type 630, Condition H1150,
Fy= 105 ksi; Supplied with Spacers, Nuts and washers.

Side Span at Cable Bents, and Main Span at Towers:
ASTM A564-Type 630, Condition H1075,
Fy= 125 ksi; Supplied with Spacers, Nuts and washers.

Side Span Fuse:
ASTM A564-Type 630, Condition H1025,
Fy= 145 ksi; Supplied with Spacers, Nuts and washers.

MISCELLANEOUS METAL:

ASTM A709 Grade 50 Fy = 50 ksi

ABBREVIATIONS:

BRB Buckling Restrained Brace
EDC Energy Dissipation Capacity

INDEX TO PLANS

SHEET No.	TITLE
1.	GENERAL PLAN
2.	GENERAL NOTES
3.	DAMPER AND BRB LOCATIONS
4.	DAMPER BRACKET DETAILS NO. 1
5.	DAMPER BRACKET DETAILS NO. 2
6.	SIDE SPAN TRUSS FUSE NO. 1
7.	SIDE SPAN TRUSS FUSE NO. 2
8.	DAMPER/BRB DETAILS
9.	DECK SHEAR CONNECTOR DETAILS
10.	TRAVELER RAIL DETAILS NO. 1
11.	TRAVELER RAIL DETAILS NO. 2
12.	CABLE BENT EXPANSION JOINT DETAILS NO. 1
13.	CABLE BENT EXPANSION JOINT DETAILS NO. 2
14.	TOWER EXPANSION JOINT DETAILS NO. 1
15.	TOWER EXPANSION JOINT DETAILS NO. 2
16.	MO-0 LEGENDS AND ABBREVIATIONS
17.	MO-1 MECHANICAL SITE PLAN
18.	MO-2 TRAVELER WORK SCHEDULE
19.	M1-1 EAST AND WEST APPROACH TRAVELERS
20.	M1-2 EAST AND WEST APPROACH TRAVELER SECTION
21.	M1-3 MAIN, EAST SIDE, AND WEST SIDE SPAN TRAVELERS
22.	M1-4 MECHANICAL DETAILS

QUANTITIES

BRIDGE REMOVAL (PORTION)	LUMP	SUM
FURNISH STRUCTURAL STEEL (BRIDGE)	46,400	LB
ERECT STRUCTURAL STEEL (BRIDGE)	46,400	LB
WELD EXISTING SPLICE PLATES	860	LF
REPLACE VISCOUS DAMPERS	40	EA
FURNISH AND INSTALL BUCKLING RESTRAINED BRACES	8	EA
CLEAN STRUCTURAL STEEL (EXISTING BRIDGE)	LUMP	SUM
PAINT STRUCTURAL STEEL (EXISTING BRIDGE)	LUMP	SUM
CLEAN AND PAINT STRUCTURAL STEEL	LUMP	SUM
SPOT BLAST CLEAN AND PAINT UNDERCOAT	7,000	SQFT
MISCELLANEOUS METAL (BRIDGE)	80,000	LB
MECHANICAL WORK	LUMP	SUM

STANDARD PLANS DATED JULY 2010

	A10A	ABBREVIATIONS (SHEET 1 OF 2)
RSP	A10B	ABBREVIATIONS (SHEET 2 OF 2)
	A10C	LINES AND SYMBOLS (SHEET 1 OF 3)
	A10D	LINES AND SYMBOLS (SHEET 2 OF 3)
	A10E	LINES AND SYMBOLS (SHEET 3 OF 3)
	B0-5	BRIDGE DETAILS

STANDARD PLAN SHEET. NO.

DETAIL NO.

NOTE:
THE CONTRACTOR MUST VERIFY ALL CONTROLLING FIELD DIMENSIONS BEFORE ORDERING OR FABRICATING ANY MATERIAL.

3 **REVISED PER ADDENDUM No. 3 DATED NOVEMBER 9, 2015**

	BY	CHECKED
DESIGN	M. Okimura	B. Addlespurger
DETAILS	L. Goldthwait	B. Addlespurger
QUANTITIES	J. Peterson	P. Peterson

STATE OF CALIFORNIA
DEPARTMENT OF TRANSPORTATION

DIVISION OF ENGINEERING SERVICES
STRUCTURE DESIGN
DESIGN BRANCH 14

BRIDGE NO. 53-1471
POST MILE 0.86

VINCENT THOMAS BRIDGE RETROFIT
GENERAL NOTES

STRUCTURES DESIGN DETAIL SHEET (ENGLISH) (REV. 09-01-10)

ORIGINAL SCALE IN INCHES FOR REDUCED PLANS 0 1 2 3

UNIT: 3613
PROJECT NUMBER & PHASE: 07120000761
CONTRACT NO.: 07-290704

DISREGARD PRINTS BEARING EARLIER REVISION DATES

REVISION DATES: ~~12-05-14~~ ~~12-05-14~~ ~~1-13-15~~ 3-4-15

SHEET 2 OF 22

FILE => 53-1471_b_gn-a.dwg

USERNAME => s123624 DATE PLOTTED => 03-NOV-2015 TIME PLOTTED => 13:24

DIST	COUNTY	ROUTE	POST MILES TOTAL PROJECT	SHEET No.	TOTAL SHEETS
07	LA	47	0.9/2.0	23	38

REGISTERED CIVIL ENGINEER — DATE 2-6-15

6-29-15
PLANS APPROVAL DATE

REGISTERED PROFESSIONAL ENGINEER — Foued Zayati No. 57046 Exp. 6/30/17 CIVIL — STATE OF CALIFORNIA

The State of California or its officers or agents shall not be responsible for the accuracy or completeness of scanned copies of this plan sheet.

3

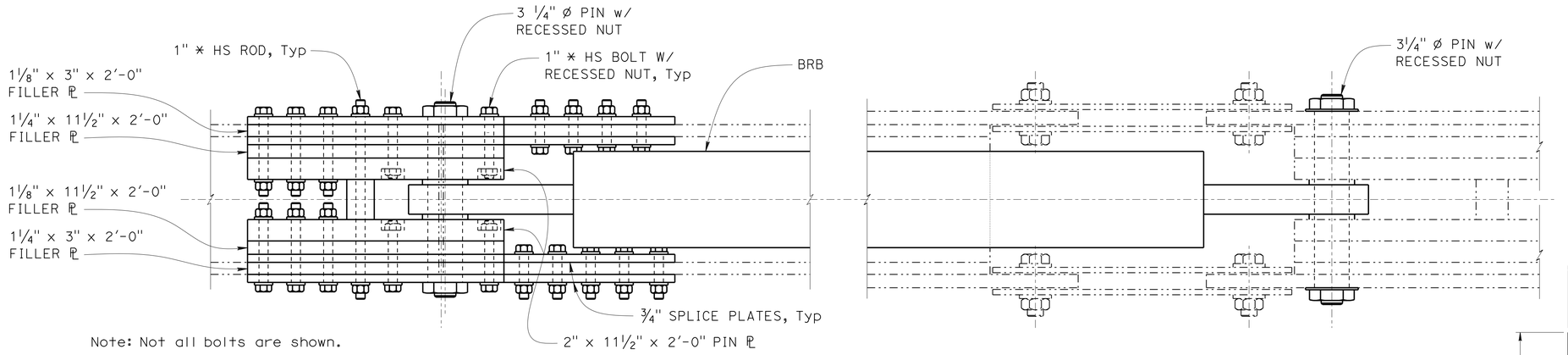

Note: Not all bolts are shown.

PLAN - BRB CONNECTION TO BOTTOM CHORD

2"=1'-0"

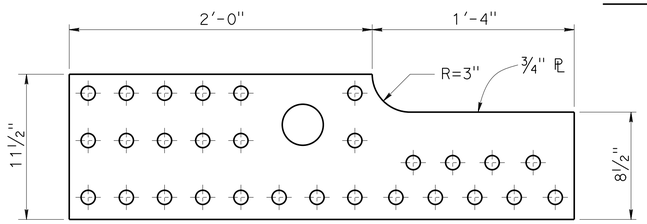

INTERIOR SPLICE PL DETAIL

2"=1'-0"

NOTES:

1. All new steel on this sheet is 'Structural Steel Bridge'.
2. Filler plate thickness may be adjusted to accomodate the BRB clevis.
3. BRB length is measured between center line of pins. Location of pin holes on the pin, filler, and splice plates must be field verified prior to fabrication.
4. Use spacers to center BRB clevis between pin plates, when the gap betwen pin plates exceeds clevis width by more than 1/4 inch.

——— Indicates new construction
-·-·- Indicates existing structure

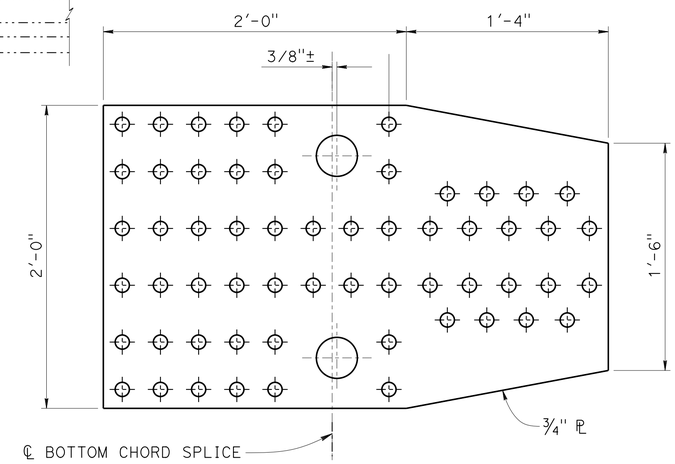

EXTERIOR SPLICE PL DETAIL

2"=1'-0"

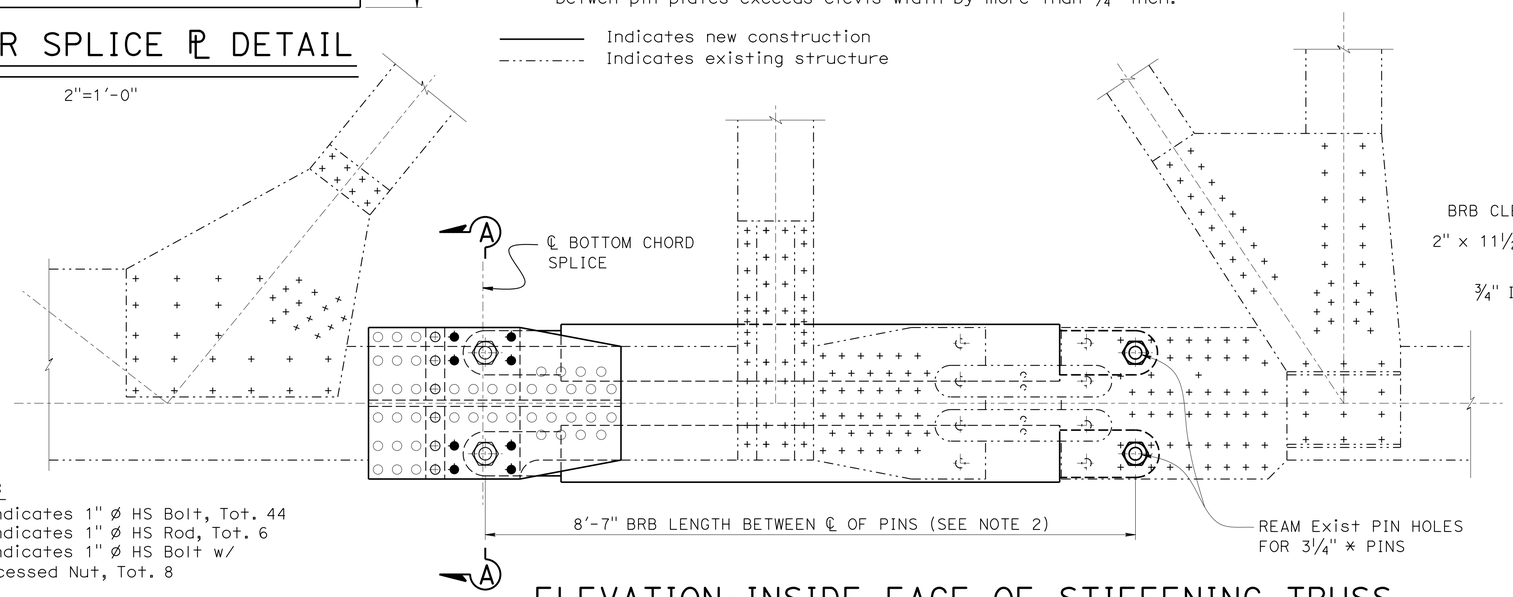

NOTES:

- ○ Indicates 1" ø HS Bolt, Tot. 44
- ⊕ Indicates 1" ø HS Rod, Tot. 6
- ● Indicates 1" ø HS Bolt w/ Rcessed Nut, Tot. 8

ELEVATION-INSIDE FACE OF STIFFENING TRUSS

1"=1'-0"

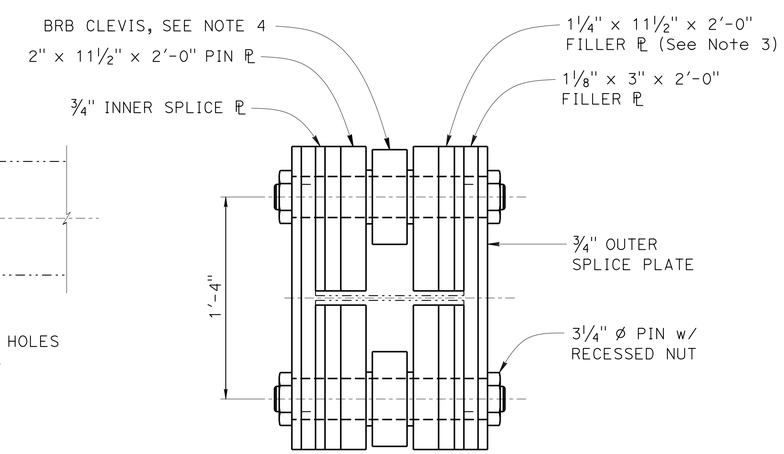

SECTION A-A

2"=1'-0"

NOTE:
THE CONTRACTOR MUST VERIFY ALL CONTROLLING FIELD DIMENSIONS BEFORE ORDERING OR FABRICATION ANY MATERIALS.

3 **REVISED PER ADDENDUM No. 3 DATED NOVEMBER 9, 2015**

	BY	CHECKED
DESIGN	F. Zayati	B. Addlespurger
DETAILS	F. Zayati	B. Addlespurger
QUANTITIES	J. Peterson	P. Peterson

STATE OF CALIFORNIA
DEPARTMENT OF TRANSPORTATION

DIVISION OF ENGINEERING SERVICES
STRUCTURE DESIGN
DESIGN BRANCH 14

BRIDGE NO. 53-1471
POST MILE 0.86

VINCENT THOMAS BRIDGE RETROFIT
SIDE SPAN TRUSS FUSE NO. 2

STRUCTURES DESIGN DETAIL SHEET (ENGLISH) (REV. 09-01-10)

ORIGINAL SCALE IN INCHES FOR REDUCED PLANS 0 1 2 3

UNIT: 3613
PROJECT NUMBER & PHASE: 07120000761
CONTRACT NO.: 07-290704

DISREGARD PRINTS BEARING EARLIER REVISION DATES

REVISION DATES: 10-31-14 12-08-14 03-05-15 03-18-15

SHEET 7 OF 22

FILE => 53-1471_j_brb02-a.dgn

USERNAME => s125624 DATE PLOTTED => 03-NOV-2015 TIME PLOTTED => 13:24

DIST	COUNTY	ROUTE	POST MILES TOTAL PROJECT	SHEET No.	TOTAL SHEETS
07	LA	47	0.9/2.0	24	38

REGISTERED CIVIL ENGINEER — Foued Zayati — DATE 2-6-15

6-29-15
PLANS APPROVAL DATE

REGISTERED PROFESSIONAL ENGINEER — Foued Zayati — No. 57046 — Exp. 6/30/17 — CIVIL — STATE OF CALIFORNIA

The State of California or its officers or agents shall not be responsible for the accuracy or completeness of scanned copies of this plan sheet.

NOTES:

1. Dampers must be fitted with friction locks that will resist the "Maximum Friction Force" with no displacement. Friction locks must maintain their capacity during damper stroking.
2. Dampers with internal static pressure in excess of 100 psi are not allowed.
3. Metal shield and attachment hardware must be galvanized.
4. Cable bent dampers must be replaced in pairs.
5. A temporary strut with a service axial capacity of at least 200 kips in tension and compression must connect the bottom chord to the cable bent before the dampers at that chord are removed. Temporary struts must remain in place until new dampers are installed.
6. No more than 4 tower dampers may be removed and replaced at one time, at the same tower. These 4 dampers must be either top chord or bottom chord dampers within the same span.
7. Each Damper must be equipped with one fill port, and one integral fluid level indicator. Fluid level indicator must be visible to the naked eye from a distance of at least 36 inches. Location and orientation of fill port and fluid level indicator shall be as approved by the Engineer.
8. BRB clevises must be fitted with spherical bearings with ±5% maximum transverse rotation capacity.
9. BRB casing must be galvanized.

3 **REVISED PER ADDENDUM No. 3 DATED NOVEMBER 9, 2015** 3

BRB PROPERTIES

BRB Length (in)	Yield Length (in)	Max casing Length (in)	Maximum BRB Diameter Dc (in)	Design Δd (in)	Design Pu (kip)	Clevis W (in)	Total Number of Units
103	75	84	9.0	2.85	500	2¾-3½	8

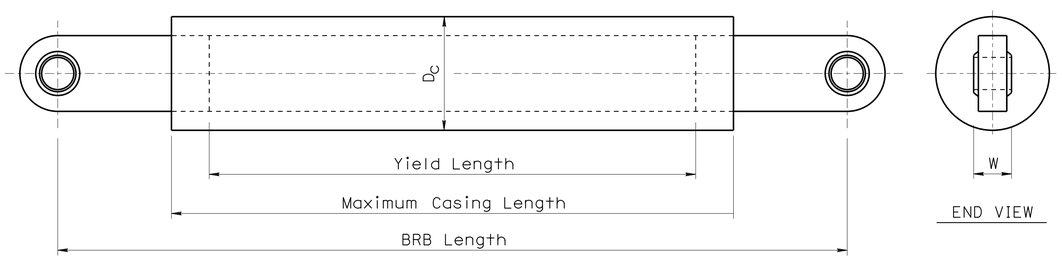

TYPICAL BUCKLING RESTRAINED BRACE (BRB)

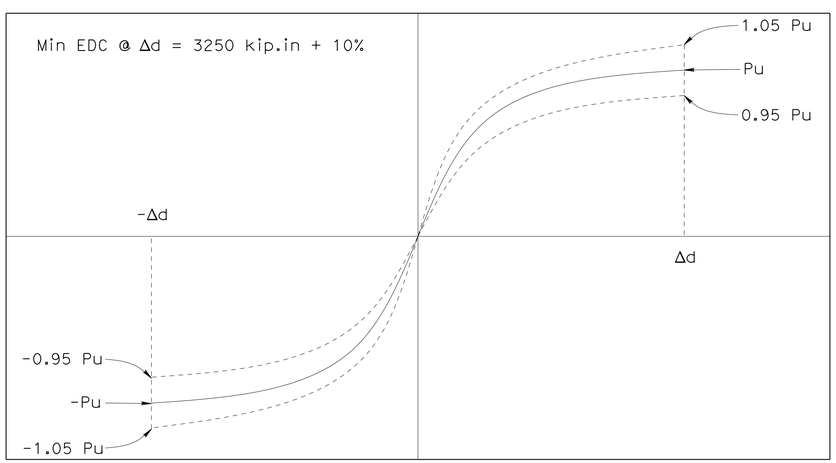

BRB PERFORMANCE

VISCOUS DAMPERS PROPERTIES

Location	Damper Type	Total Stroke (in)	Mid-Stroke Length (in)	Maximum Velocity Vmax (in/sec)	Maximum Friction Force (Kips)	Maximum Damping Force F_{Dmax} (Kips)	Dimensions: Max D_S (in)	Pin ø (in)	Max R (in)	Clevis W (in)	Min L_{c1} (in)	Min L_{c2} (in)	Velocity Exponent b ($F_D=CV^b$)	Total Number of Units	EDC* kip.in
Side Span at Cable Bent	A	48	170	86	100	165	12	2¾	4½	2 - 3½	4¼	4¼	1.0	8	12400
Side Span at Tower	B	44	160½	60	10	75	8.5	2½	3⅞	2 - 3½	4¼	10¼	1.0	16	5180
Main Span at Tower	C	52	187	96	10	260	10	2¾	4½	2 - 3½	4¼	10¼	0.3	16	24800

*EDC is based on total damper stroke and maximum velocity.

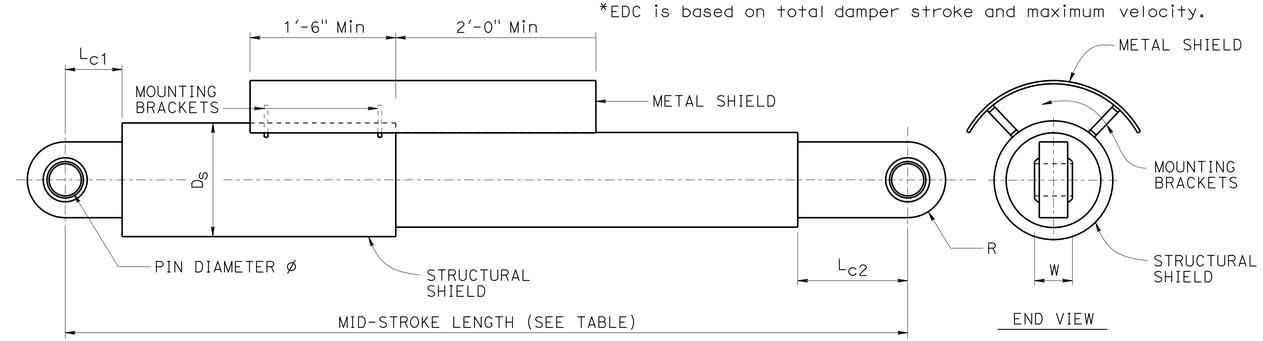

TYPICAL DAMPER

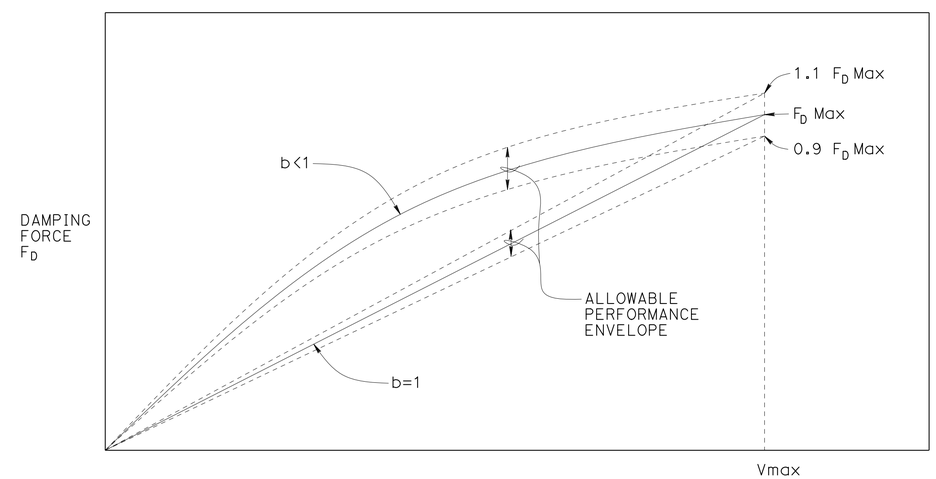

VISCOUS DAMPER PERFORMANCE

NO SCALE

NOTE:
THE CONTRACTOR MUST VERIFY ALL CONTROLLING FIELD DIMENSIONS BEFORE ORDERING OR FABRICATING ANY MATERIAL.

	BY	CHECKED
DESIGN	F. Zayati	D. Lee/M. Okimura
DETAILS	F. Zayati	D. Lee/M. Okimura
QUANTITIES	J. Peterson	P. Peterson

STATE OF CALIFORNIA DEPARTMENT OF TRANSPORTATION

DIVISION OF ENGINEERING SERVICES STRUCTURE DESIGN DESIGN BRANCH 14

BRIDGE NO. 53-1471 POST MILE 0.86

VINCENT THOMAS BRIDGE RETROFIT
DAMPER/BRB DETAILS

STRUCTURES DESIGN DETAIL SHEET (ENGLISH) (REV. 09-01-10)

ORIGINAL SCALE IN INCHES FOR REDUCED PLANS 0 1 2 3

UNIT: 3613
PROJECT NUMBER & PHASE: 07120000761
CONTRACT NO.: 07-290704

DISREGARD PRINTS BEARING EARLIER REVISION DATES → 8-14-14 12-08-14 3-5-15 03-18-15

SHEET 8 OF 22

FILE => 53-1471_j_damp-dt-a.dgn

USERNAME => s129624 DATE PLOTTED => 03-NOV-2015 TIME PLOTTED => 13:24

DIST	COUNTY	ROUTE	POST MILES TOTAL PROJECT	SHEET No.	TOTAL SHEETS
07	LA	47	0.9/2.0	27	38

REGISTERED CIVIL ENGINEER — DATE 2-6-15

6-29-15
PLANS APPROVAL DATE

REGISTERED PROFESSIONAL ENGINEER — Foued Zayati — No. 57046 — Exp. 6/30/17 — CIVIL — STATE OF CALIFORNIA

The State of California or its officers or agents shall not be responsible for the accuracy or completeness of scanned copies of this plan sheet.

NOTES:

1. Outside face of rail shown, inside face similar. Total 2 plates per joint.
2. Weld splice plates on both sides of rail web.
3. Total 47 splices per traveler rail in main span.
4. Total 15 splices per traveler rail in each side span.
5. Remove existing bolts after welding and prior to Spot clean and paint steel.
6. All new steel on this sheet is miscellaneous metal.

LEGEND:

- Indicates New Weld on one side rail
- Indicates New Weld opposite side of rail
- Indicates Exist Weld
- Indicates limits of spot blast clean and paint undercoat and clean and paint steel

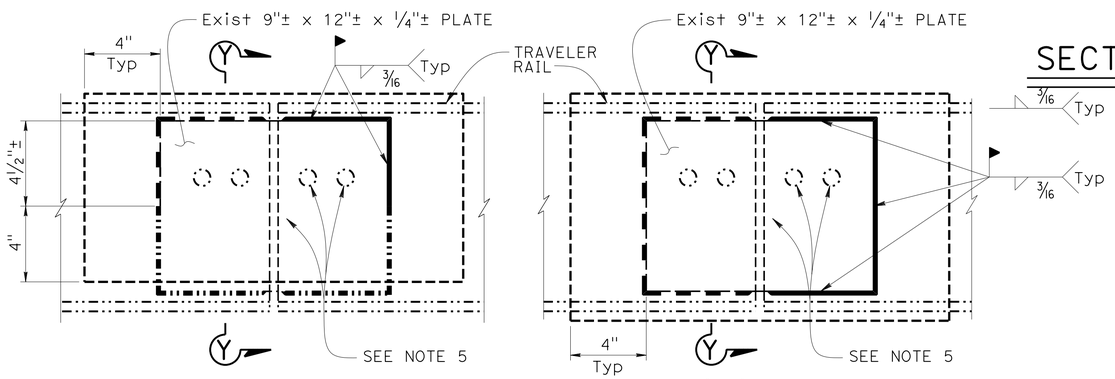

DETAIL 'W'-SIDE SPAN

3"=1'-0"

DETAIL 'W'-MAIN SPAN

3"=1'-0"

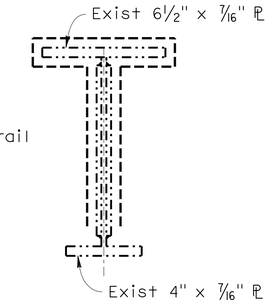

SECTION Y-Y SIDE SPAN

3"=1'-0"

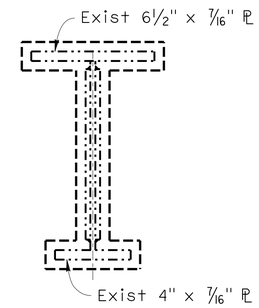

SECTION Y-Y MAIN SPAN

3"=1'-0"

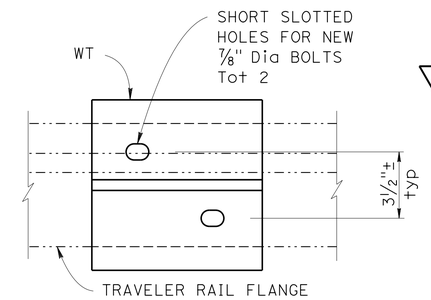

SECTION L-L

3"=1'-0"

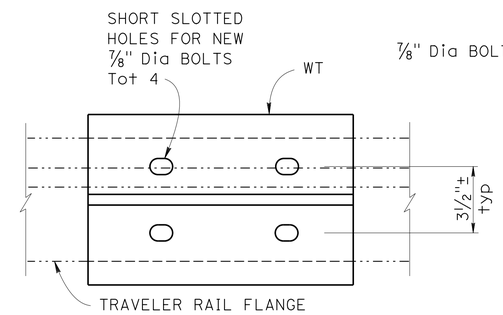

SECTION K-K

3"=1'-0"

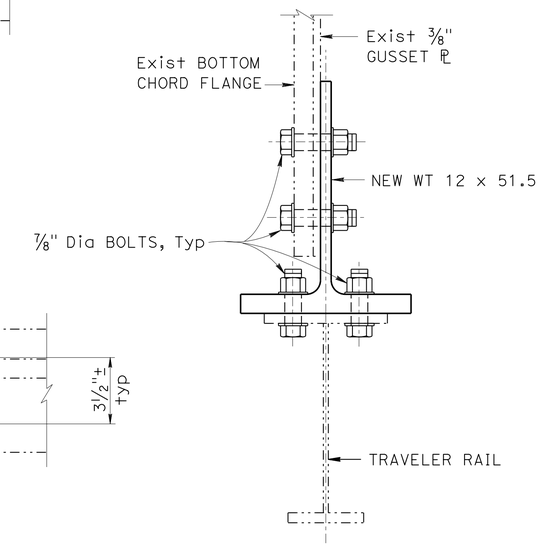

SECTION H-H

3"=1'-0"

3 REVISED PER ADDENDUM No. 3 DATED NOVEMBER 9, 2015

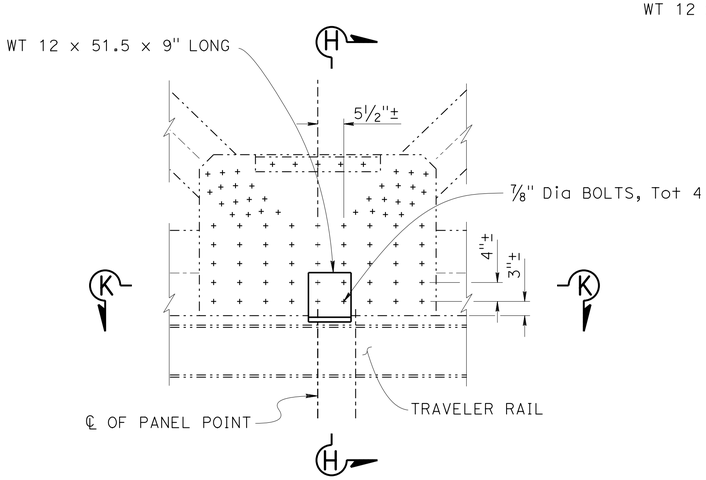

DETAIL 'A'-NEW

3/4"=1'-0"

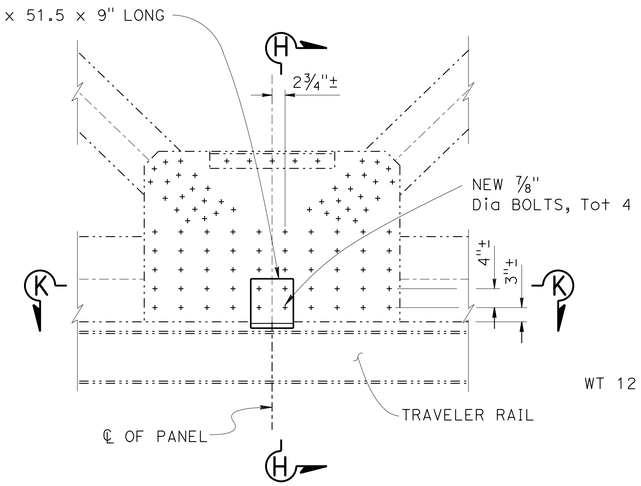

DETAIL 'C'-NEW

3/4"=1'-0"

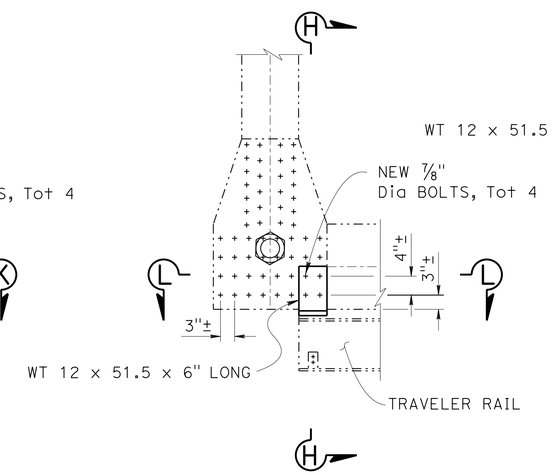

DETAIL 'D'-NEW

3/4"=1'-0"

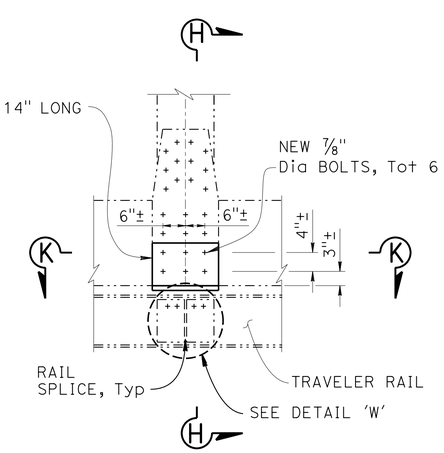

DETAIL 'B'-NEW

3/4"=1'-0"

NOTE:
THE CONTRACTOR MUST VERIFY ALL CONTROLLING FIELD DIMENSIONS BEFORE ORDERING OR FABRICATING ANY MATERIAL.

	BY	CHECKED
DESIGN	M. Okimura	B. Addlespurger
DETAILS	L. Goldthwait	B. Addlespurger
QUANTITIES	J. Peterson	P. Peterson

STATE OF CALIFORNIA
DEPARTMENT OF TRANSPORTATION

DIVISION OF ENGINEERING SERVICES
STRUCTURE DESIGN
DESIGN BRANCH 14

BRIDGE NO. 53-1471
POST MILE 0.86

VINCENT THOMAS BRIDGE RETROFIT
TRAVELER RAIL DETAILS NO. 2

STRUCTURES DESIGN DETAIL SHEET (ENGLISH) (REV. 09-01-10)

ORIGINAL SCALE IN INCHES FOR REDUCED PLANS 0 1 2 3

UNIT: 3613
PROJECT NUMBER & PHASE: 07120000761
CONTRACT NO.: 07-290704

DISREGARD PRINTS BEARING EARLIER REVISION DATES

REVISION DATES: 03-05-15 03-18-15 12-09-14 1-16-15

SHEET 11 OF 22

FILE => 53-1471_m_rail02-a.dgn

USERNAME => s125624 DATE PLOTTED => 03-NOV-2015 TIME PLOTTED => 13:24