Dist	COUNTY	ROUTE	POST MILES TOTAL PROJECT	SHEET No.	TOTAL SHEETS
07	LA	210	R10.5/R15.7	1	116

STATE OF CALIFORNIA

DEPARTMENT OF TRANSPORTATION

ACNHPI-210-1(828)E

INDEX OF PLANS

SHEET No.	DESCRIPTION
1	TITLE AND LOCATION MAP
2	LOCATIONS OF CONSTRUCTION
3-9	LAYOUTS
10-54	WATER POLLUTION CONTROL PLANS, PROFILES, DETAILS AND QUANTITIES
55-56	CONTOUR GRADING PLANS
57	CONSTRUCTION AREA SIGNS
58-63	TRAFFIC HANDLING PLAN, DETAILS AND QUANTITIES
64	PAVEMENT DELINEATION PLAN
65-66	SUMMARY OF QUANTITIES
67-76	LANDSCAPE PLANS
77-116	REVISED STANDARD PLANS

THE STANDARD PLANS LIST APPLICABLE TO THIS CONTRACT IS INCLUDED IN THE NOTICE TO BIDDERS AND SPECIAL PROVISIONS BOOK.

PROJECT PLANS FOR CONSTRUCTION ON

STATE HIGHWAY

IN LOS ANGELES COUNTY
IN LOS ANGELES AND GLENDALE
FROM SOUTH BRANCH BIG TUJUNGA WASH BRIDGE TO LOWELL AVENUE UNDERCROSSING

TO BE SUPPLEMENTED BY STANDARD PLANS DATED 2010

LOCATION MAP

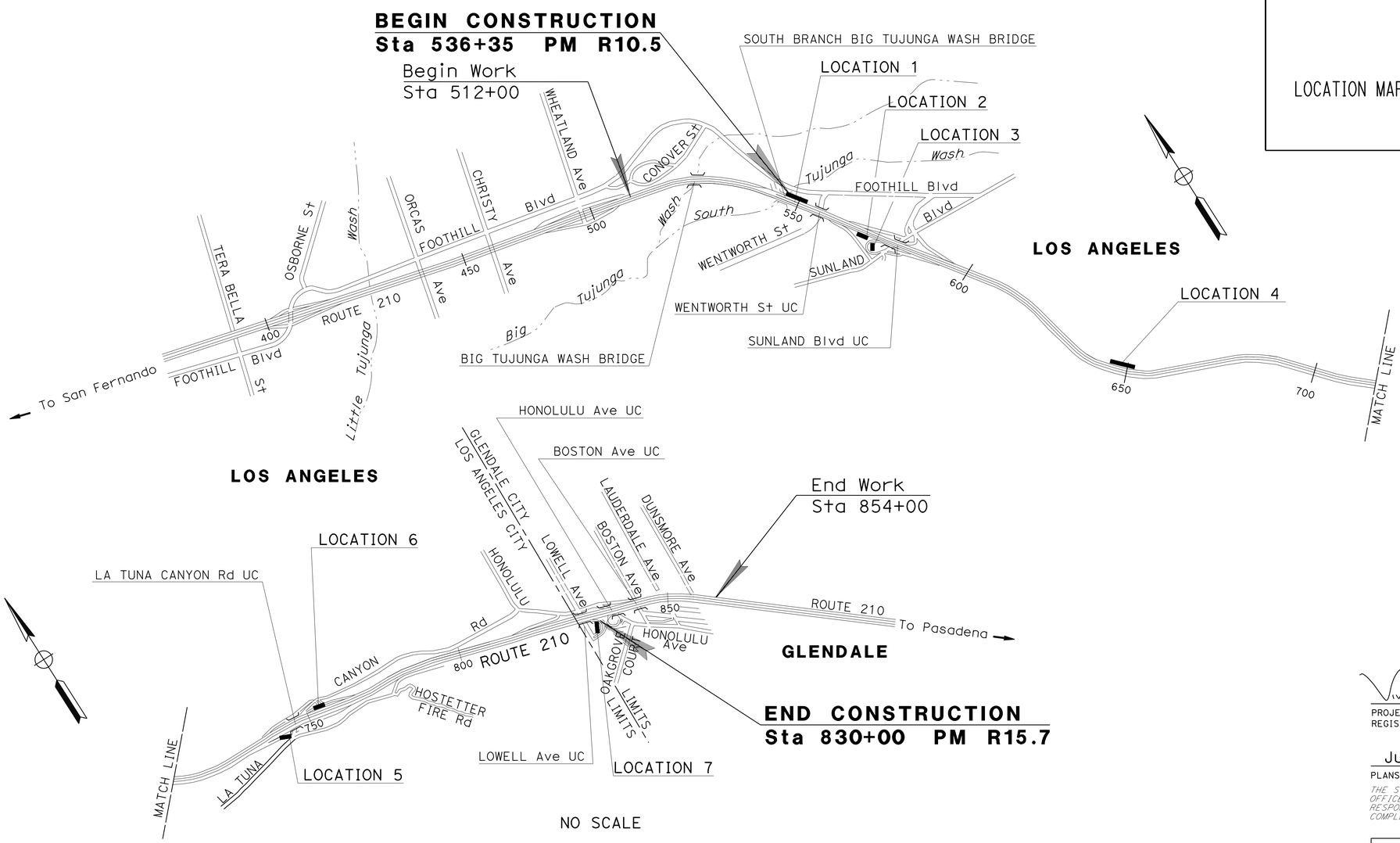

THE CONTRACTOR SHALL POSSESS THE CLASS (OR CLASSES) OF LICENSE AS SPECIFIED IN THE "NOTICE TO BIDDERS."

PROJECT MANAGER: SHAHRIAR YADEGARI

DESIGN MANAGER: OJI KALU

PROJECT ENGINEER REGISTERED CIVIL ENGINEER — DATE 3-20-15

June 1, 2015
PLANS APPROVAL DATE

REGISTERED PROFESSIONAL ENGINEER — VIVIAN NGUYEN — No. C73723 — Exp. 06/30/15 — CIVIL — STATE OF CALIFORNIA

THE STATE OF CALIFORNIA OR ITS OFFICERS OR AGENTS SHALL NOT BE RESPONSIBLE FOR THE ACCURACY OR COMPLETENESS OF SCANNED COPIES OF THIS PLAN SHEET.

DATE PLOTTED => 18-JUN-2015
TIME PLOTTED => 07:24

CONTRACT No.	07-288024
PROJECT ID	0713000361

LAST REVISION 10-01-14

Dist	COUNTY	ROUTE	POST MILES TOTAL PROJECT	SHEET No.	TOTAL SHEETS
07	LA	210	R10.5/R15.7	2	116

REGISTERED CIVIL ENGINEER 3-20-15 DATE

6-1-15
PLANS APPROVAL DATE

REGISTERED PROFESSIONAL ENGINEER
VIVIAN NGUYEN
No. C73723
Exp. 6/30/15
CIVIL
STATE OF CALIFORNIA

THE STATE OF CALIFORNIA OR ITS OFFICERS OR AGENTS SHALL NOT BE RESPONSIBLE FOR THE ACCURACY OR COMPLETENESS OF SCANNED COPIES OF THIS PLAN SHEET.

LOCATIONS OF CONSTRUCTION

LOCATION No.(#)	ROUTE	DIR/PM	LOCAL STREET	DEVICE TYPE
1	210	WB/R10.5	WENTWORTH St	GROSS SOLIDS REMOVAL DEVICE
1	210	WB/R10.53	WENTWORTH St	AUSTIN VAULT SAND FILTER
2	210	EB/R10.87	SUNLAND Blvd	BIOFILTRATION SWALE
3	210	EB/11.04	SUNLAND Blvd	BIOFILTRATION STRIP
4	210	WB/R12.28	————————	BIOFILTRATION STRIP
5	210	EB/R14.10	LA TUNA CANYON Rd	BIOFILTRATION SWALE
5	210	EB/R14.10	LA TUNA CANYON Rd	AUSTIN VAULT SAND FILTER
6	210	WB/R14.30	LA TUNA CANYON Rd	BIOFILTRATION STRIP
6	210	WB/R14.30	LA TUNA CANYON Rd	BIOFILTRATION STRIP
7	210	EB/R15.65	LOWELL Ave	BIOFILTRATION SWALE

LOCATIONS OF CONSTRUCTION

LC-1

STATE OF CALIFORNIA - DEPARTMENT OF TRANSPORTATION
Caltrans DESIGN

FUNCTIONAL SUPERVISOR: OJI KALU
CALCULATED-DESIGNED BY: VIVIAN NGUYEN
CHECKED BY: MOE MIRZA
REVISED BY
DATE REVISED

LAST REVISION 07-18-14
DATE PLOTTED => 18-JUN-2015
TIME PLOTTED => 07:24

Dist	COUNTY	ROUTE	POST MILES TOTAL PROJECT	SHEET No.	TOTAL SHEETS
07	LA	210	R10.5/R15.7	3	116

REGISTERED CIVIL ENGINEER — DATE 3-20-15

6-1-15
PLANS APPROVAL DATE

REGISTERED PROFESSIONAL ENGINEER — VIVIAN NGUYEN — No. C73723 — Exp. 6/30/15 — CIVIL — STATE OF CALIFORNIA

THE STATE OF CALIFORNIA OR ITS OFFICERS OR AGENTS SHALL NOT BE RESPONSIBLE FOR THE ACCURACY OR COMPLETENESS OF SCANNED COPIES OF THIS PLAN SHEET.

NOTES:

1. FOR ACCURATE RIGHT OF WAY DATA, CONTACT RIGHT OF WAY ENGINEERING AT THE DISTRICT OFFICE.
2. CONSTRUCTION ACCESS FOR GSRD's (53, 53a, 53b, 53c, 53d) ARE PROVIDED VIA FOOTHILL BLVD.
3. "UTILITY INVESTIGATIONS HAVE BEEN COMPLETED AND NO UTILITIES WERE FOUND NEAR LIMITS OF WORK FOR EACH EXCAVATION LOCATION. EXISTING UTILITY INFORMATION IS NOT INCLUDED ON THESE PLANS"

ABBREVIATIONS:

AVSF AUSTIN VAULT SAND FILTER
GSRD GROSS SOLIDS REMOVAL DEVICE

LEGEND:

STRUCTURAL SECTION TYPE 1
STRUCTURAL SECTION TYPE 2
24' CHAIN LINK GATE (TYPE CL-6)

PAVEMENT STRUCTURAL SECTIONS

1:
0.95' JPCP
--- BASE BOND BREAKER
0.35' LCB
0.60' CLASS 3 AB

2:
0.2' RHMA
0.4' HMA (TYPE A)
0.60 LCB
1.15' CLASS 3 AB

3:
0.50' JPCP
0.50' CLASS 3 AB

CURVE DATA

No. ⊕	R	Δ	T	L
1	4000'	42°24'23"	1551.75'	2960.52'
2	24'	69°14'25"	16.87'	29.52'
3	17'	93°41'03"	18.00'	27.60'
4	187'	20°13'34"	33.31'	65.92'

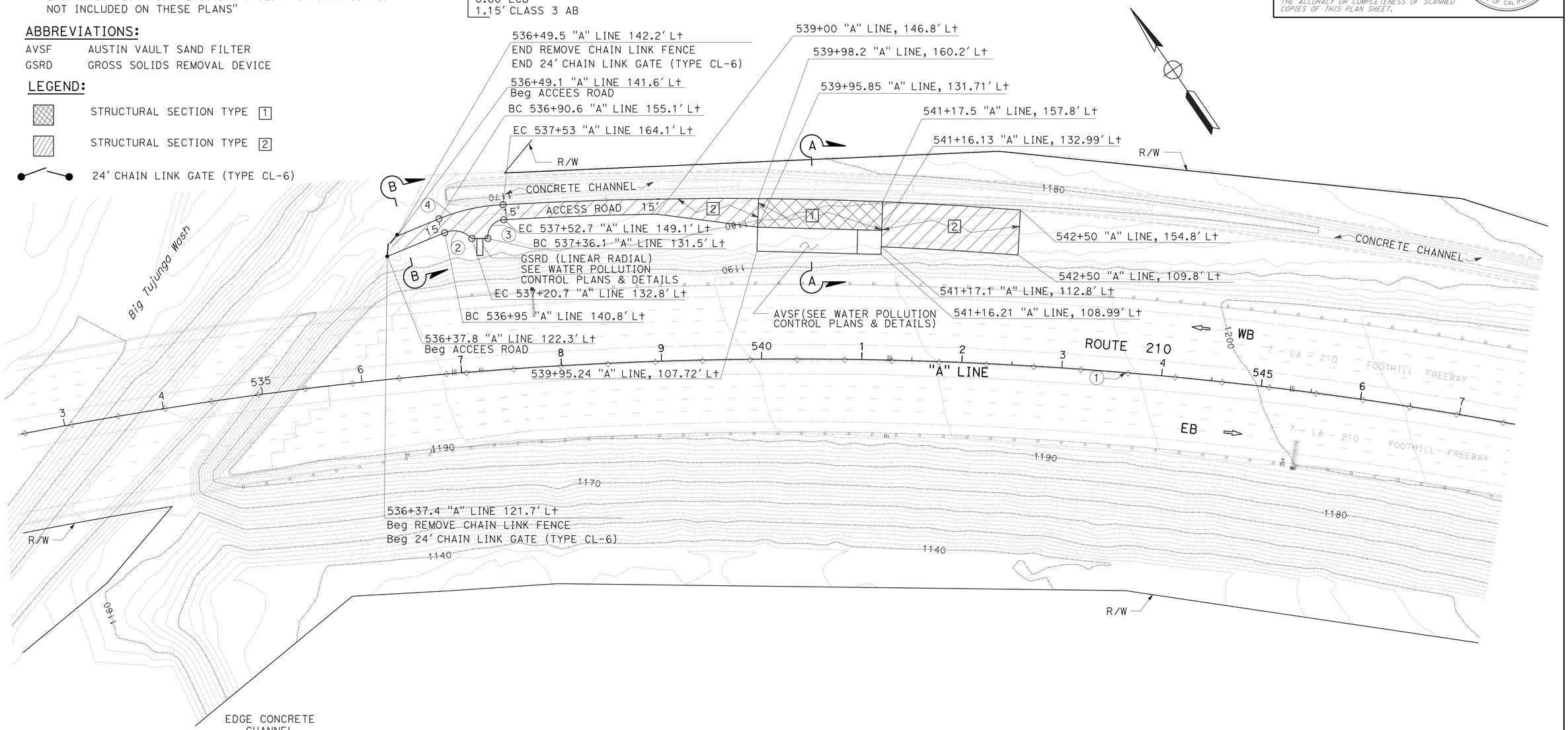

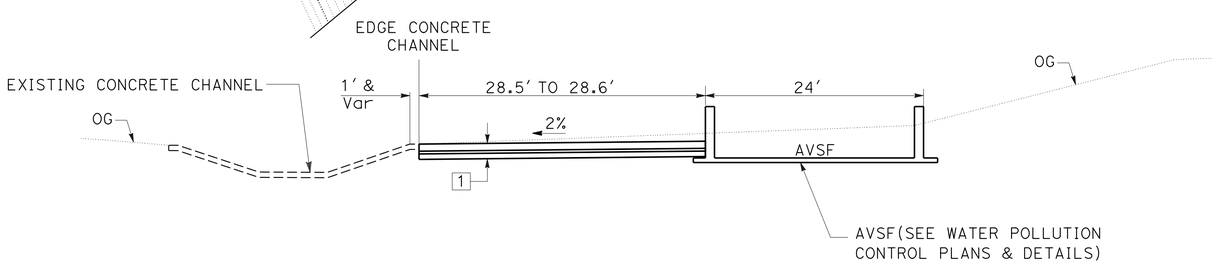

SECTION A-A
NO SCALE

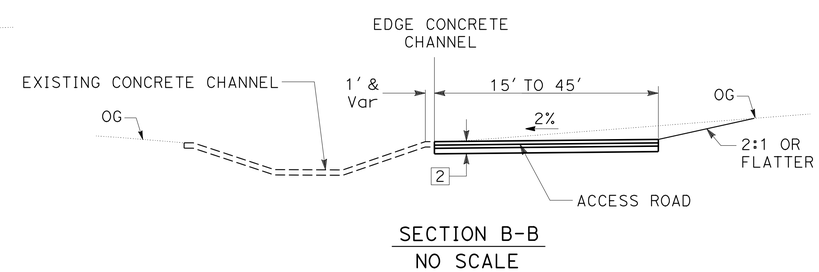

SECTION B-B
NO SCALE

LAYOUT
LOCATION 1
SCALE: 1" = 50'

L-1

STATE OF CALIFORNIA - DEPARTMENT OF TRANSPORTATION
DESIGN
FUNCTIONAL SUPERVISOR: OJI KALU
CALCULATED-DESIGNED BY: VIVIAN NGUYEN
CHECKED BY: MOE MIRZA
REVISED BY
DATE REVISED

LAST REVISION 06-05-14
DATE PLOTTED => 18-JUN-2015
TIME PLOTTED => 07:24

Dist	COUNTY	ROUTE	POST MILES TOTAL PROJECT	SHEET No.	TOTAL SHEETS
07	LA	210	R10.5/R15.7	4	116

REGISTERED CIVIL ENGINEER 3-20-15 DATE

6-1-15
PLANS APPROVAL DATE

REGISTERED PROFESSIONAL ENGINEER VIVIAN NGUYEN No. C73723 Exp 6/30/15 CIVIL STATE OF CALIFORNIA

THE STATE OF CALIFORNIA OR ITS OFFICERS OR AGENTS SHALL NOT BE RESPONSIBLE FOR THE ACCURACY OR COMPLETENESS OF SCANNED COPIES OF THIS PLAN SHEET.

NOTES:

1. FOR ACCURATE RIGHT OF WAY DATA, CONTACT RIGHT OF WAY ENGINEERING AT THE DISTRICT OFFICE.
2. "UTILITY INVESTIGATIONS HAVE BEEN COMPLETED AND NO UTILITIES WERE FOUND NEAR LIMITS OF WORK FOR EACH EXCAVATION LOCATION. EXISTING UTILITY INFORMATION IS NOT INCLUDED ON THESE PLANS"

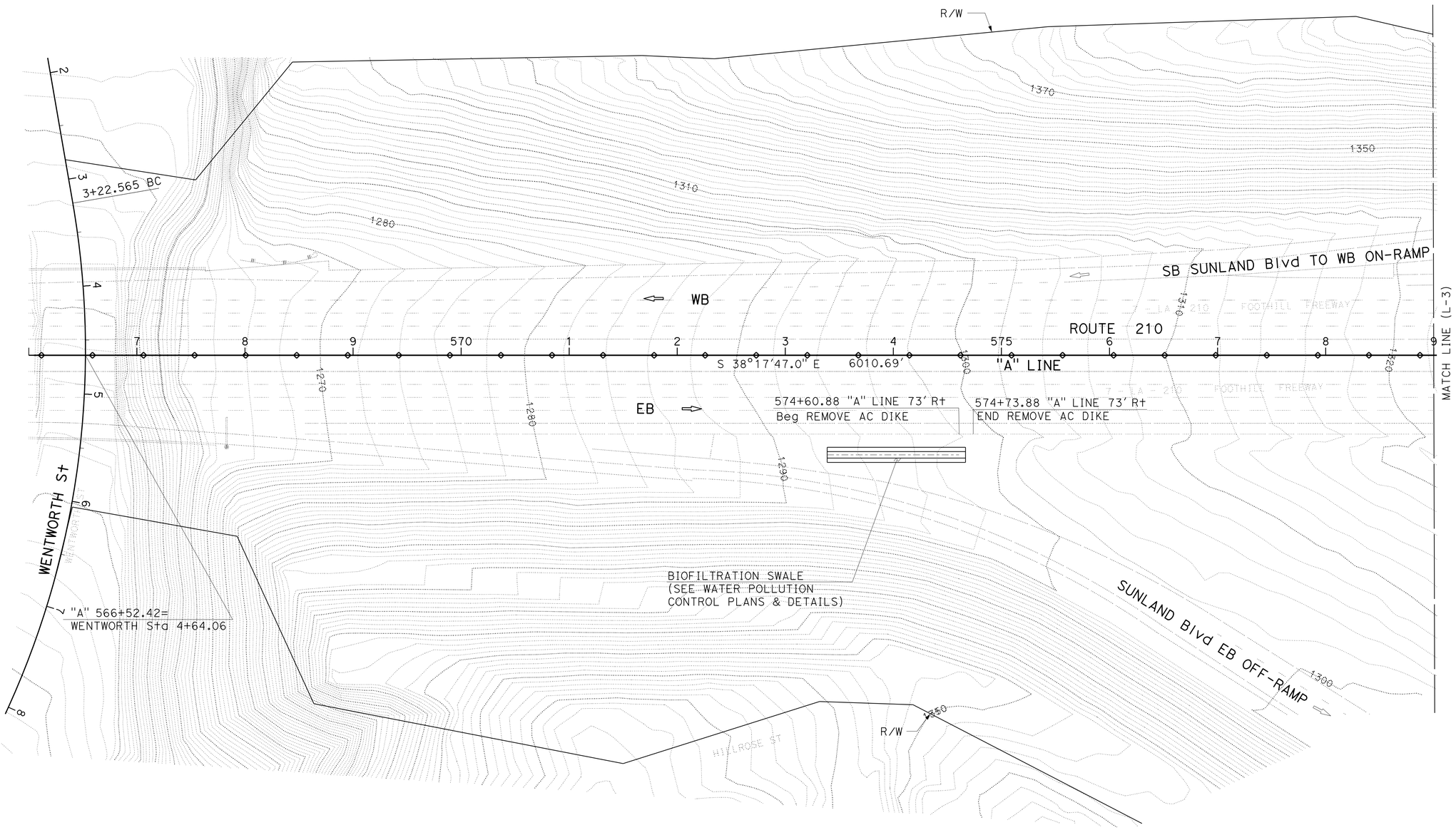

LAYOUT
LOCATION 2
SCALE: 1" = 50'

L-2

STATE OF CALIFORNIA - DEPARTMENT OF TRANSPORTATION
Caltrans
DESIGN

FUNCTIONAL SUPERVISOR: OJI KALU
CALCULATED-DESIGNED BY: VIVIAN NGUYEN
CHECKED BY: MOE MIRZA
REVISED BY
DATE REVISED

LAST REVISION 11-20-14
DATE PLOTTED => 18-JUN-2015
TIME PLOTTED => 07:24

Dist	COUNTY	ROUTE	POST MILES TOTAL PROJECT	SHEET No.	TOTAL SHEETS
07	LA	210	R10.5/R15.7	5	116

REGISTERED CIVIL ENGINEER 3-20-15 DATE

6-1-15
PLANS APPROVAL DATE

REGISTERED PROFESSIONAL ENGINEER VIVIAN NGUYEN No. C73723 Exp. 6/30/15 CIVIL STATE OF CALIFORNIA

THE STATE OF CALIFORNIA OR ITS OFFICERS OR AGENTS SHALL NOT BE RESPONSIBLE FOR THE ACCURACY OR COMPLETENESS OF SCANNED COPIES OF THIS PLAN SHEET.

NOTES:

1. FOR ACCURATE RIGHT OF WAY DATA, CONTACT RIGHT OF WAY ENGINEERING AT THE DISTRICT OFFICE.
2. "UTILITY INVESTIGATIONS HAVE BEEN COMPLETED AND NO UTILITIES WERE FOUND NEAR LIMITS OF WORK FOR EACH EXCAVATION LOCATION. EXISTING UTILITY INFORMATION IS NOT INCLUDED ON THESE PLANS"

CURVE DATA

No. ⊕	R	Δ	T	L
1	176′	125°43′28"	343.38′	386.20′
2	186′	41°20′15"	70.17′	134.19′
3	190′	59°59′56"	109.69′	198.96′

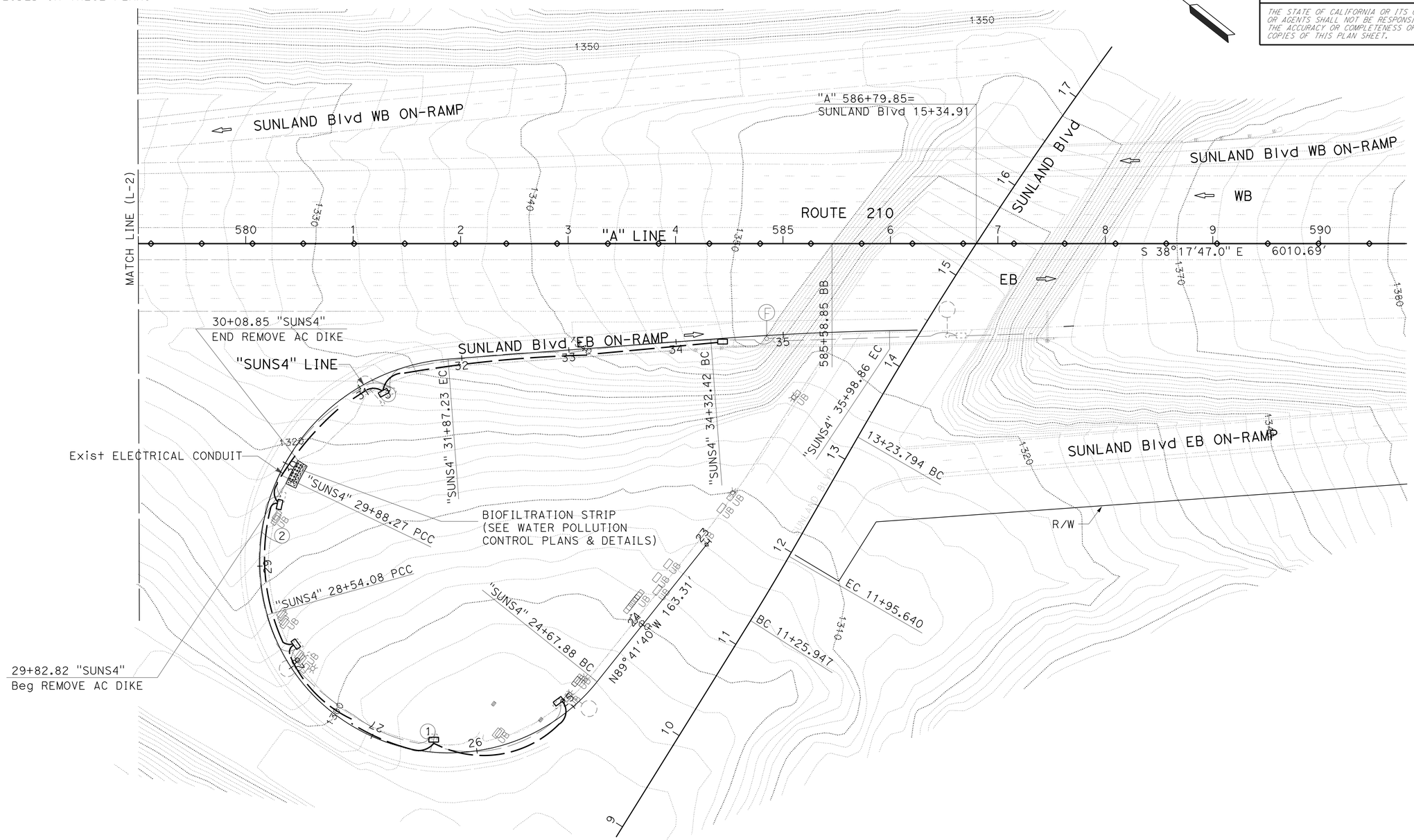

LAYOUT
LOCATION 3
SCALE: 1" = 50′

L-3

STATE OF CALIFORNIA - DEPARTMENT OF TRANSPORTATION
Caltrans
DESIGN

FUNCTIONAL SUPERVISOR: OJI KALU
CALCULATED-DESIGNED BY: VIVIAN NGUYEN
CHECKED BY: MOE MIRZA
REVISED BY
DATE REVISED

LAST REVISION 06-16-14
DATE PLOTTED => 18-JUN-2015
TIME PLOTTED => 07:24

Dist	COUNTY	ROUTE	POST MILES TOTAL PROJECT	SHEET No.	TOTAL SHEETS
07	LA	210	R10.5/R15.7	6	116

REGISTERED CIVIL ENGINEER 3-20-15 DATE

6-1-15
PLANS APPROVAL DATE

REGISTERED PROFESSIONAL ENGINEER VIVIAN NGUYEN No. C73723 Exp. 6/30/15 CIVIL STATE OF CALIFORNIA

THE STATE OF CALIFORNIA OR ITS OFFICERS OR AGENTS SHALL NOT BE RESPONSIBLE FOR THE ACCURACY OR COMPLETENESS OF SCANNED COPIES OF THIS PLAN SHEET.

NOTES:

1. FOR ACCURATE RIGHT OF WAY DATA, CONTACT RIGHT OF WAY ENGINEERING AT THE DISTRICT OFFICE.
2. "UTILITY INVESTIGATIONS HAVE BEEN COMPLETED AND NO UTILITIES WERE FOUND NEAR LIMITS OF WORK FOR EACH EXCAVATION LOCATION. EXISTING UTILITY INFORMATION IS NOT INCLUDED ON THESE PLANS"

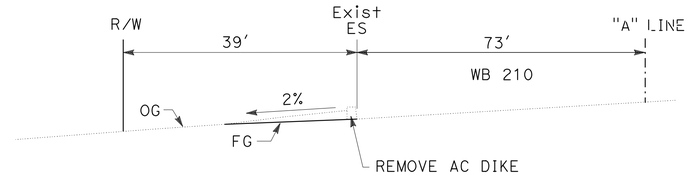

SECTION A-A
NO SCALE

CURVE DATA

No. (#)	R	Δ	T	L
1	3000'	61°30'13"	1784.94'	3220.32'

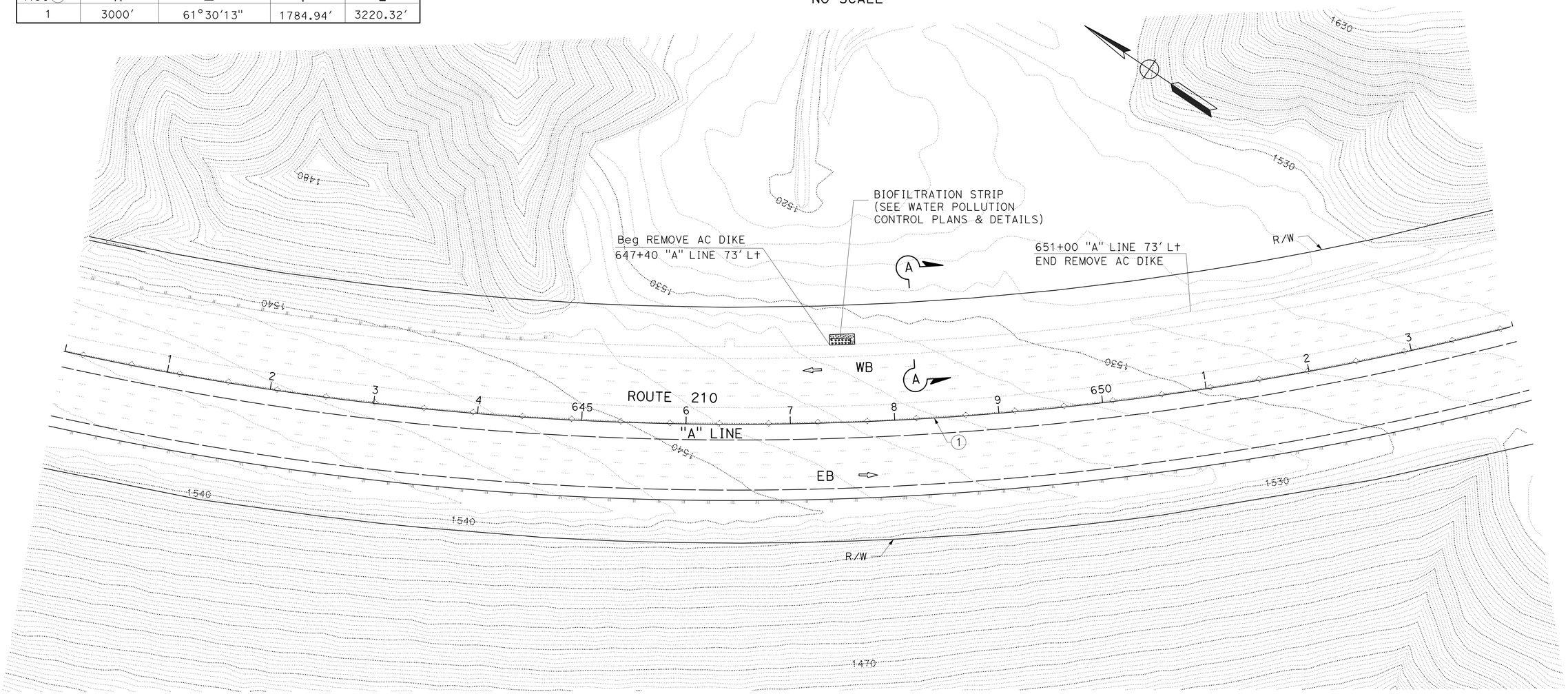

LAYOUT
LOCATION 4
SCALE: 1" = 50'

L-4

STATE OF CALIFORNIA - DEPARTMENT OF TRANSPORTATION
Caltrans
DESIGN

FUNCTIONAL SUPERVISOR: OJI KALU
CALCULATED-DESIGNED BY: VIVIAN NGUYEN
CHECKED BY: MOE MIRZA
REVISED BY
DATE REVISED

LAST REVISION 06-05-14
DATE PLOTTED => 18-JUN-2015
TIME PLOTTED => 07:24

Dist	COUNTY	ROUTE	POST MILES TOTAL PROJECT	SHEET No.	TOTAL SHEETS
07	LA	210	R10.5/R15.7	7	116

REGISTERED CIVIL ENGINEER 3-20-15 DATE

6-1-15
PLANS APPROVAL DATE

REGISTERED PROFESSIONAL ENGINEER VIVIAN NGUYEN No. C73723 Exp. 6/30/15 CIVIL STATE OF CALIFORNIA

THE STATE OF CALIFORNIA OR ITS OFFICERS OR AGENTS SHALL NOT BE RESPONSIBLE FOR THE ACCURACY OR COMPLETENESS OF SCANNED COPIES OF THIS PLAN SHEET.

NOTE:

1. FOR ACCURATE RIGHT OF WAY DATA, CONTACT RIGHT OF WAY ENGINEERING AT THE DISTRICT OFFICE.

CURVE DATA

No. ⊕	R	Δ	T	L
1	4000′	16°08′09"	566.99′	1126.47′
2	400′	47°34′56"	176.35′	332.19′
3	800′	19°22′19"	136.55′	270.48′
4	800′	30°03′27"	214.79′	419.68′

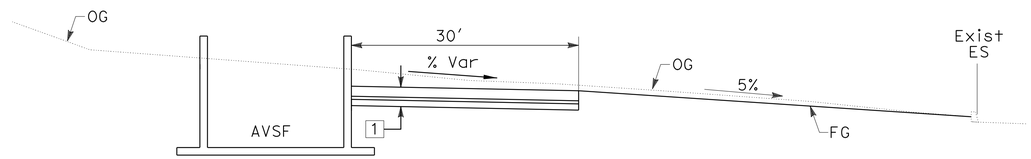

SECTION A-A
NO SCALE

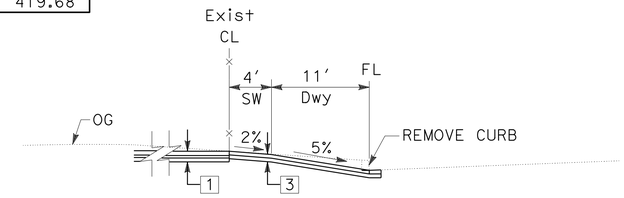

SECTION B-B
NO SCALE

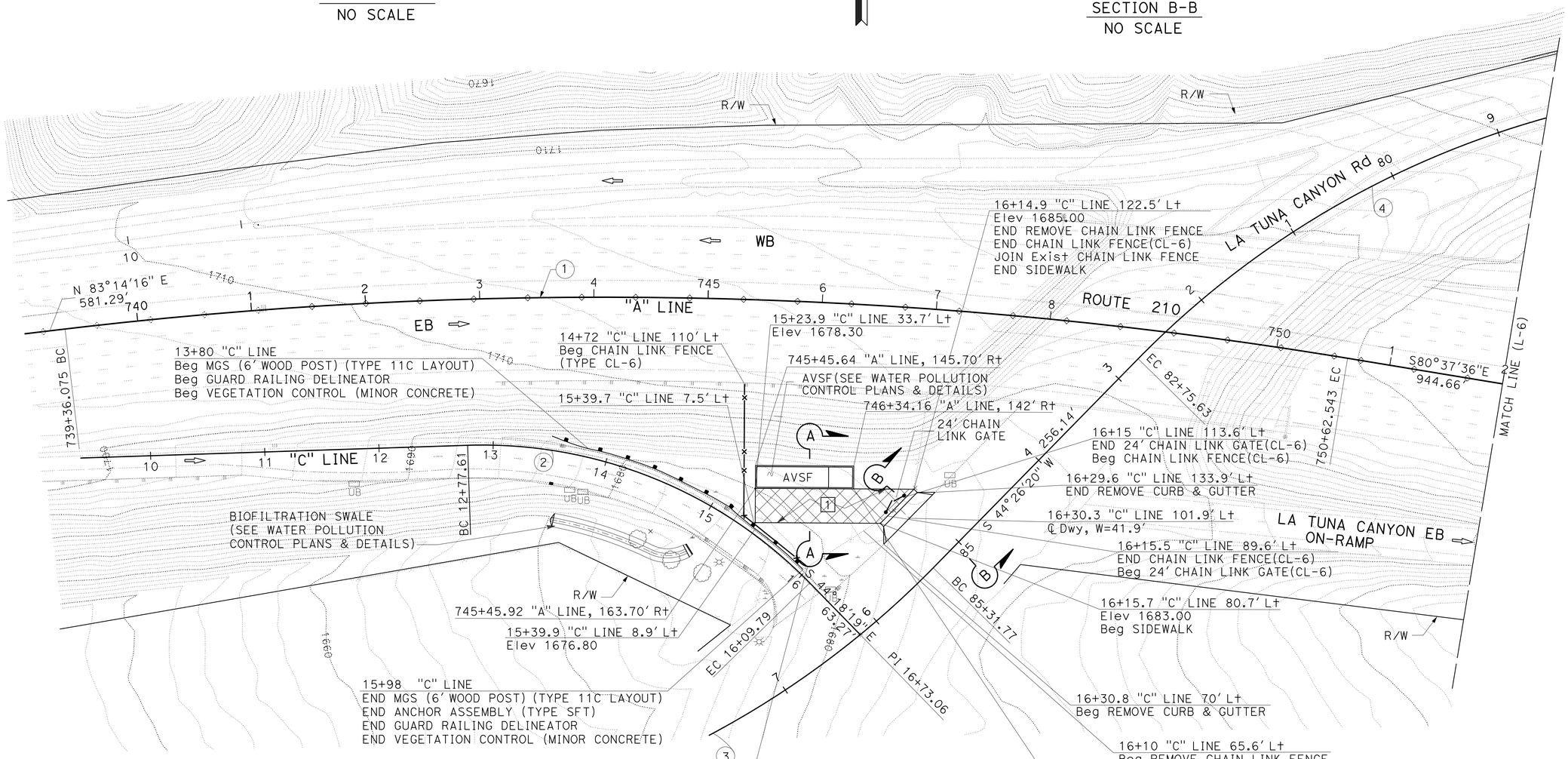

NOTE:

1. "UTILITY INVESTIGATIONS HAVE BEEN COMPLETED AND NO UTILITIES WERE FOUND NEAR LIMITS OF WORK FOR EACH EXCAVATION LOCATION. EXISTING UTILITY INFORMATION IS NOT INCLUDED ON THESE PLANS"

LAYOUT
LOCATION 5
SCALE: 1" = 50′

L-5

STATE OF CALIFORNIA - DEPARTMENT OF TRANSPORTATION
Caltrans
DESIGN
FUNCTIONAL SUPERVISOR: OJI KALU
CALCULATED-DESIGNED BY: VIVIAN NGUYEN
CHECKED BY: MOE MIRZA
REVISED BY
DATE REVISED

LAST REVISION 06-05-14
DATE PLOTTED => 18-JUN-2015
TIME PLOTTED => 07:24

Dist	COUNTY	ROUTE	POST MILES TOTAL PROJECT	SHEET No.	TOTAL SHEETS
07	LA	210	R10.5/R15.7	8	116

REGISTERED CIVIL ENGINEER 3-20-15 DATE

6-1-15
PLANS APPROVAL DATE

REGISTERED PROFESSIONAL ENGINEER VIVIAN NGUYEN No. C73723 Exp. CIVIL STATE OF CALIFORNIA

THE STATE OF CALIFORNIA OR ITS OFFICERS OR AGENTS SHALL NOT BE RESPONSIBLE FOR THE ACCURACY OR COMPLETENESS OF SCANNED COPIES OF THIS PLAN SHEET.

NOTE:

1. FOR ACCURATE RIGHT OF WAY DATA, CONTACT RIGHT OF WAY ENGINEERING AT THE DISTRICT OFFICE.

LEGEND:

REMOVE AC AND BASE

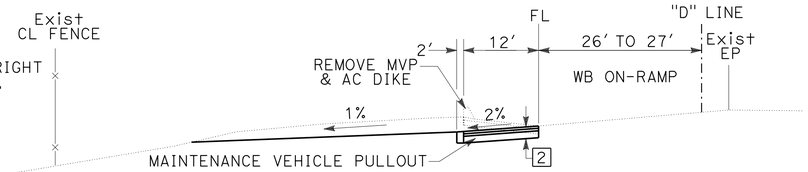

SECTION C-C
NO SCALE

CURVE DATA

No. ⊕	R	Δ	T	L
1	4000′	08°28′38"	296.45′	591.81′
2	3000′	03°33′48"	93.31′	186.55′
3	200′	25°45′59"	45.74′	89.94′
4	76′	85°25′47"	70.17′	113.32′
5	150′	86°15′06"	140.49′	225.81′

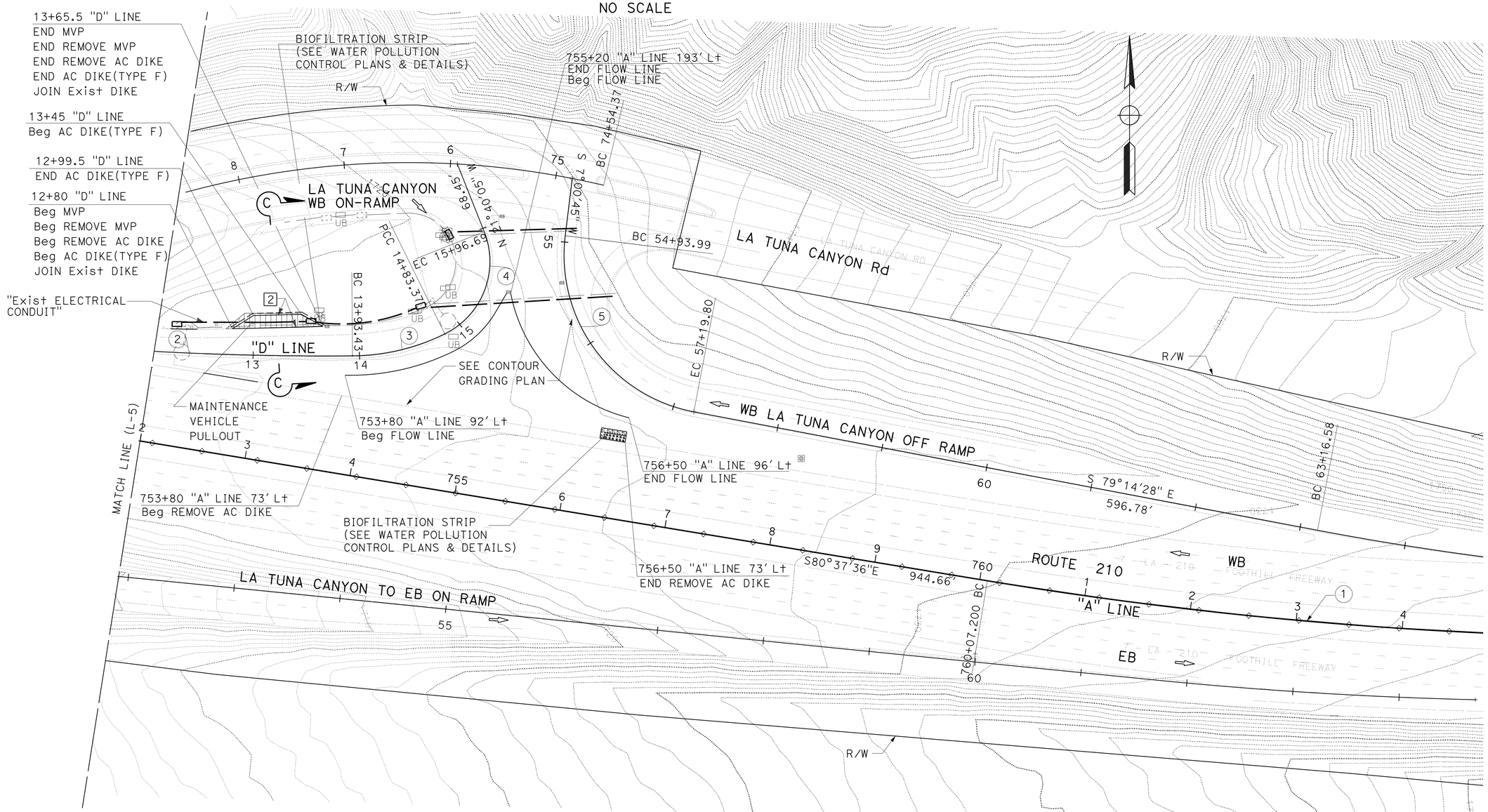

NOTE:

1. "UTILITY INVESTIGATIONS HAVE BEEN COMPLETED AND NO UTILITIES WERE FOUND NEAR LIMITS OF WORK FOR EACH EXCAVATION LOCATION. EXISTING UTILITY INFORMATION IS NOT INCLUDED ON THESE PLANS"

LAYOUT
LOCATION 6
SCALE: 1" = 50′

L-6

REVISED BY | DATE REVISED
VIVIAN NGUYEN | MOE MIRZA
CALCULATED-DESIGNED BY | CHECKED BY
FUNCTIONAL SUPERVISOR: OJI KALU
STATE OF CALIFORNIA - DEPARTMENT OF TRANSPORTATION
Caltrans
DESIGN

LAST REVISION 02-26-15 | DATE PLOTTED => 18-JUN-2015 | TIME PLOTTED => 07:24

Dist	COUNTY	ROUTE	POST MILES TOTAL PROJECT	SHEET No.	TOTAL SHEETS
07	LA	210	R10.5/R15.7	9	116

REGISTERED CIVIL ENGINEER 3-20-15 DATE

6-1-15
PLANS APPROVAL DATE

REGISTERED PROFESSIONAL ENGINEER VIVIAN NGUYEN No. C73723 Exp. 6/30/15 CIVIL STATE OF CALIFORNIA

THE STATE OF CALIFORNIA OR ITS OFFICERS OR AGENTS SHALL NOT BE RESPONSIBLE FOR THE ACCURACY OR COMPLETENESS OF SCANNED COPIES OF THIS PLAN SHEET.

NOTES:

1. FOR ACCURATE RIGHT OF WAY DATA, CONTACT RIGHT OF WAY ENGINEERING AT THE DISTRICT OFFICE.
2. "UTILITY INVESTIGATIONS HAVE BEEN COMPLETED AND NO UTILITIES WERE FOUND NEAR LIMITS OF WORK FOR EACH EXCAVATION LOCATION. EXISTING UTILITY INFORMATION IS NOT INCLUDED ON THESE PLANS"

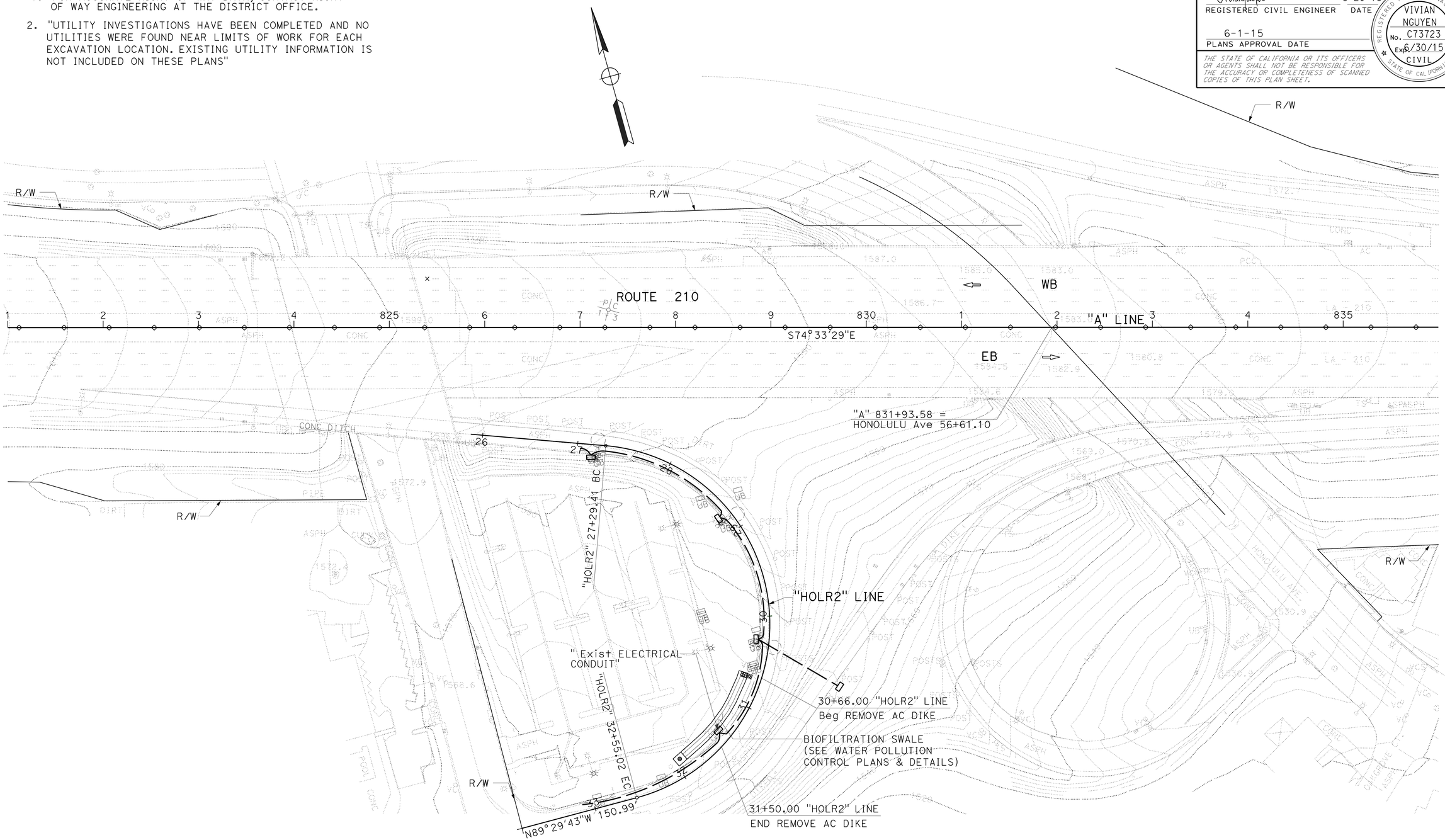

LAYOUT
LOCATION 7
SCALE: 1" = 50'

L-7

STATE OF CALIFORNIA - DEPARTMENT OF TRANSPORTATION
Caltrans
DESIGN

FUNCTIONAL SUPERVISOR: OJI KALU

CALCULATED-DESIGNED BY: VIVIAN NGUYEN
CHECKED BY: MOE MIRZA

REVISED BY | DATE REVISED

LAST REVISION 02-26-15 | DATE PLOTTED => 18-JUN-2015 | TIME PLOTTED => 07:24

Dist	COUNTY	ROUTE	POST MILES TOTAL PROJECT	SHEET No.	TOTAL SHEETS
07	LA	210	R10.5/R15.7	10	116

Paul Fong 3-20-15
REGISTERED CIVIL ENGINEER DATE

6-1-15
PLANS APPROVAL DATE

REGISTERED PROFESSIONAL ENGINEER
PAUL FONG
No. C67053
Exp. 9-30-16
CIVIL
STATE OF CALIFORNIA

THE STATE OF CALIFORNIA OR ITS OFFICERS OR AGENTS SHALL NOT BE RESPONSIBLE FOR THE ACCURACY OR COMPLETENESS OF SCANNED COPIES OF THIS PLAN SHEET.

NOTES:

1. FOR ACCURATE RIGHT OF WAY DATA, CONTACT RIGHT OF WAY ENGINEERING AT THE DISTRICT OFFICE.
2. VERIFY LOCATIONS AND ELEVATIONS OF EXISTING DRAINAGE SYSTEMS BEFORE COMMENCEMENT OF WORK.
3. "UTILITY INVESTIGATIONS HAVE BEEN COMPLETED AND NO UTILITIES WERE FOUND NEAR LIMITS OF WORK FOR EACH EXCAVATION LOCATION. EXISTING UTILITY INFORMATION IS NOT INCLUDED ON THESE PLANS"

LEGEND:

- DRAINAGE SYSTEM No.
- DRAINAGE UNIT
- DRAINAGE CURVE No.

1

- (a) REMOVE 24" x 53.0' CSP
- (b) 18" x 40.0' RCP
- (c) LINEAR RADIAL TYPE LR-2 (8'-0")
- (d) REMOVE 5.0' x 3.0' x 1.0' CUTOFF WALL
- (e) 5.0' x 3.0' x 1.0' CUTOFF WALL

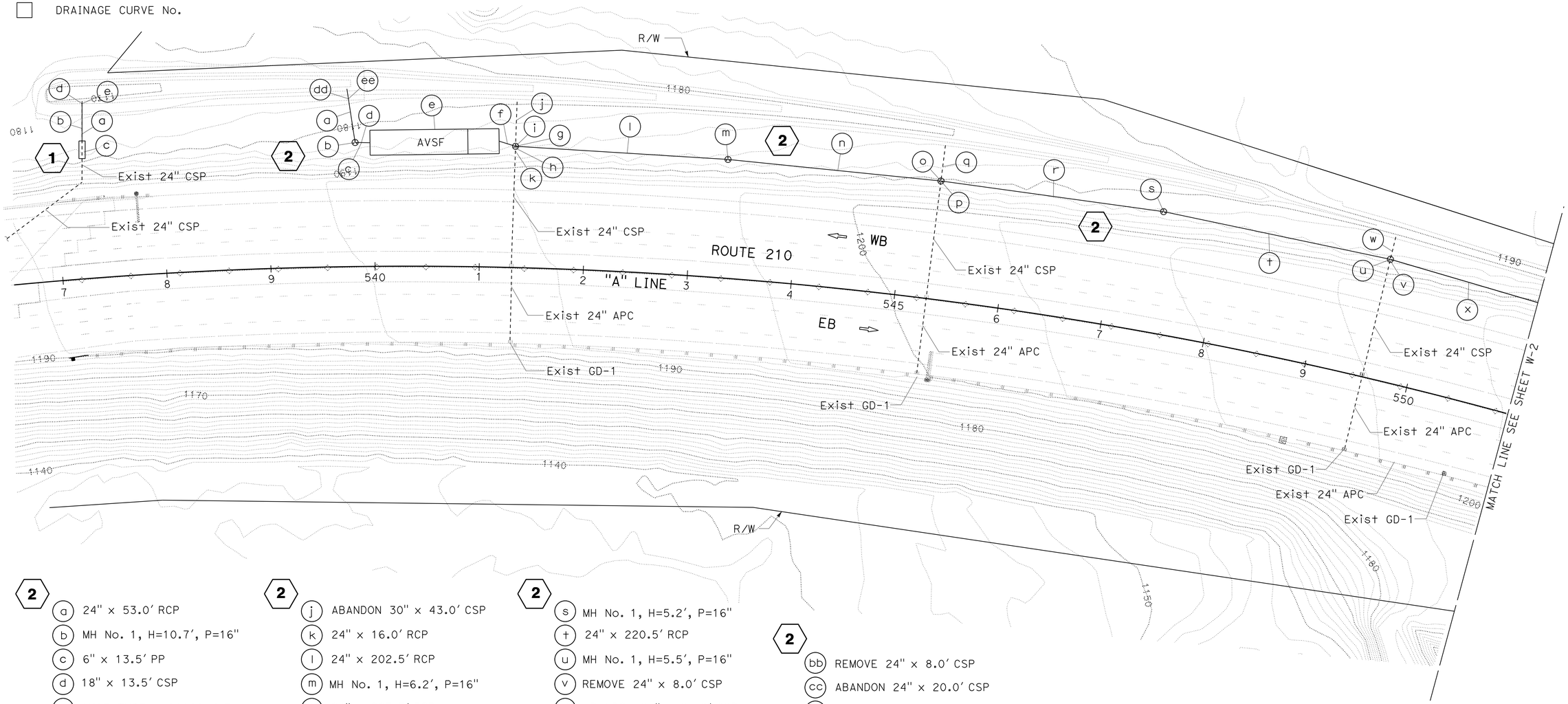

2

- (a) 24" x 53.0' RCP
- (b) MH No. 1, H=10.7', P=16"
- (c) 6" x 13.5' PP
- (d) 18" x 13.5' CSP
- (e) AVSF TYPE L-10000-4.5
- (f) 24" x 14.5' RCP
- (g) MH No. 1, H=5.9', P=16"
- (h) REMOVE 24" x 8.0' CSP
- (j) REMOVE 30" x 14.0' CSP

2

- (j) ABANDON 30" x 43.0' CSP
- (k) 24" x 16.0' RCP
- (l) 24" x 202.5' RCP
- (m) MH No. 1, H=6.2', P=16"
- (n) 24" x 203.5' RCP
- (o) MH No. 1, H=6.5', P=16"
- (p) REMOVE 24" x 8.0' CSP
- (q) ABANDON 24" x 38.0' CSP
- (r) 24" x 213.5' RCP

2

- (s) MH No. 1, H=5.2', P=16"
- (t) 24" x 220.5' RCP
- (u) MH No. 1, H=5.5', P=16"
- (v) REMOVE 24" x 8.0' CSP
- (w) ABANDON 24" x 23.0' CSP
- (x) 24" x 219.5' RCP
- (y) MH No. 1, H=5.7', P=16"
- (z) 24" x 211.5' RCP
- (aa) MH No. 1, H=6.5', P=16"

2

- (bb) REMOVE 24" x 8.0' CSP
- (cc) ABANDON 24" x 20.0' CSP
- (dd) REMOVE 5.0' x 3.0' x 1.0' CUT WALL
- (ee) 5.0' x 3.0' x 1.0' CUT WALL

APPROVED FOR WATER POLLUTION CONTROL WORK ONLY

WATER POLLUTION CONTROL PLAN

SCALE: 1" = 50'

W-1

STATE OF CALIFORNIA - DEPARTMENT OF TRANSPORTATION
Caltrans HYDRAULICS

PAUL FONG | ROMULO ROBENIOL | DAVE BHALLA

CALCULATED-DESIGNED BY | CHECKED BY | REVISED BY | DATE REVISED

LAST REVISION 03-21-15 | DATE PLOTTED => 18-JUN-2015 | TIME PLOTTED => 07:24

Dist	COUNTY	ROUTE	POST MILES TOTAL PROJECT	SHEET No.	TOTAL SHEETS
07	LA		R10.5/R15.7	11	116

Paul Fong 3-20-15
REGISTERED CIVIL ENGINEER DATE

6-1-15
PLANS APPROVAL DATE

REGISTERED PROFESSIONAL ENGINEER
PAUL FONG
No. C67053
Exp. 9-30-16
CIVIL
STATE OF CALIFORNIA

THE STATE OF CALIFORNIA OR ITS OFFICERS OR AGENTS SHALL NOT BE RESPONSIBLE FOR THE ACCURACY OR COMPLETENESS OF SCANNED COPIES OF THIS PLAN SHEET.

NOTES:

1. FOR ACCURATE RIGHT OF WAY DATA, CONTACT RIGHT OF WAY ENGINEERING AT THE DISTRICT OFFICE.
2. "UTILITY INVESTIGATIONS HAVE BEEN COMPLETED AND NO UTILITIES WERE FOUND NEAR LIMITS OF WORK FOR EACH EXCAVATION LOCATION. EXISTING UTILITY INFORMATION IS NOT INCLUDED ON THESE PLANS"

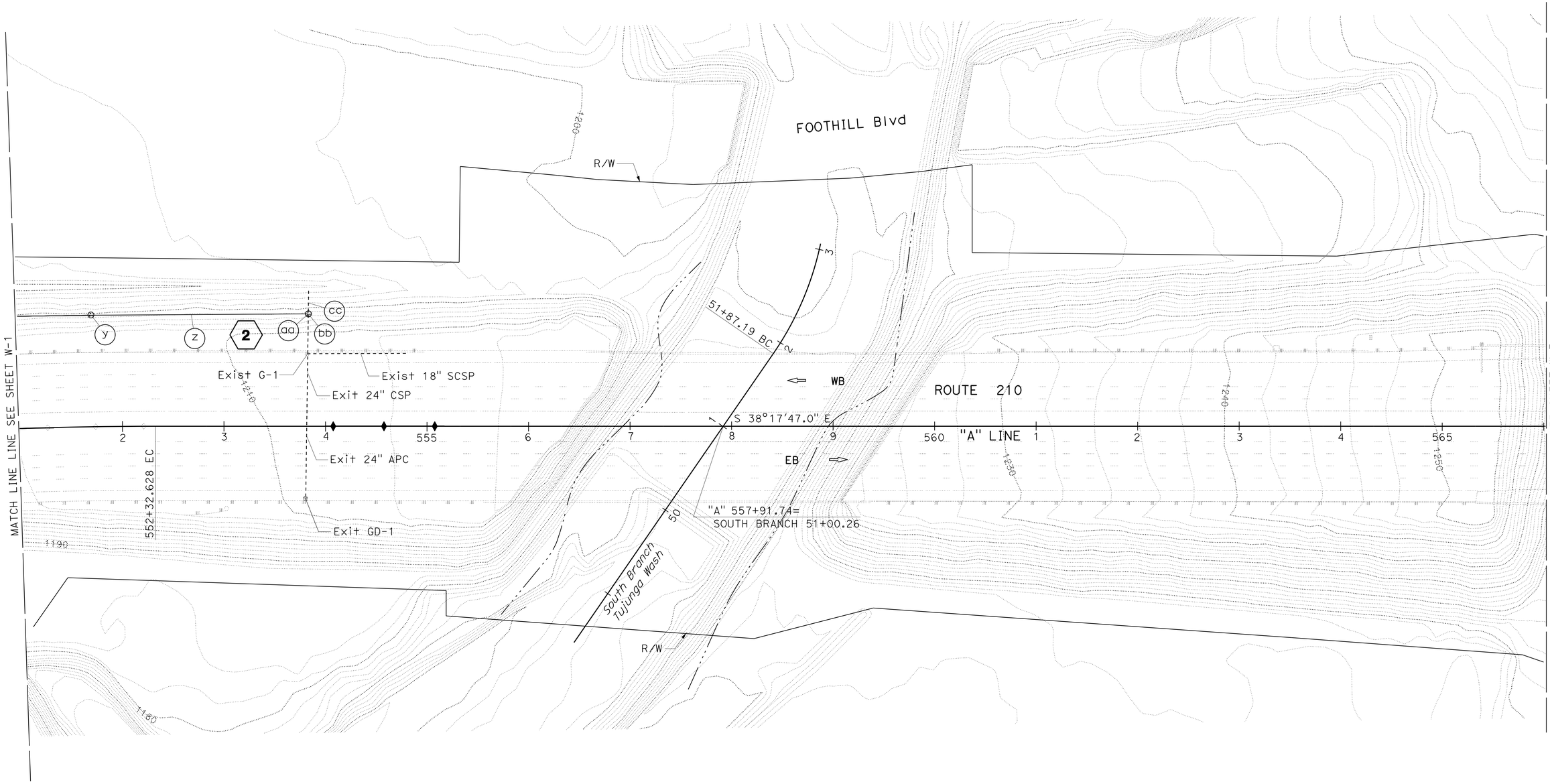

APPROVED FOR WATER POLLUTION CONTROL WORK ONLY

WATER POLLUTION CONTROL PLAN

SCALE: 1" = 50'

W-2

STATE OF CALIFORNIA - DEPARTMENT OF TRANSPORTATION
Caltrans
HYDRAULICS

FUNCTIONAL SUPERVISOR: DAVE BHALLA
CALCULATED-DESIGNED BY: PAUL FONG
CHECKED BY: ROMULO ROBENIOL
REVISED BY
DATE REVISED

LAST REVISION 03-21-15
DATE PLOTTED => 18-JUN-2015
TIME PLOTTED => 07:24

Dist	COUNTY	ROUTE	POST MILES TOTAL PROJECT	SHEET No.	TOTAL SHEETS
07	LA	210	R10.5/R15.7	12	116

Paul Fong 3-20-15
REGISTERED CIVIL ENGINEER DATE

6-1-15
PLANS APPROVAL DATE

REGISTERED PROFESSIONAL ENGINEER
PAUL FONG
No. C67053
Exp. 9-30-16
CIVIL
STATE OF CALIFORNIA

THE STATE OF CALIFORNIA OR ITS OFFICERS OR AGENTS SHALL NOT BE RESPONSIBLE FOR THE ACCURACY OR COMPLETENESS OF SCANNED COPIES OF THIS PLAN SHEET.

NOTES:

1. FOR ACCURATE RIGHT OF WAY DATA, CONTACT RIGHT OF WAY ENGINEERING AT THE DISTRICT OFFICE.
2. "UTILITY INVESTIGATIONS HAVE BEEN COMPLETED AND NO UTILITIES WERE FOUND NEAR LIMITS OF WORK FOR EACH EXCAVATION LOCATION. EXISTING UTILITY INFORMATION IS NOT INCLUDED ON THESE PLANS"

3
- a 18" x 18.5' CSP
- b TYPE G1 INLET, H=2.0'
- c Conc APRON, 12.0' x 14.0'
- d EARTH DITCH BIOSWALE, L=128.0'
- e RSP (FACING, METHOD B), L=6.0'
- f OVERSIDE DRAIN, L=14.0'

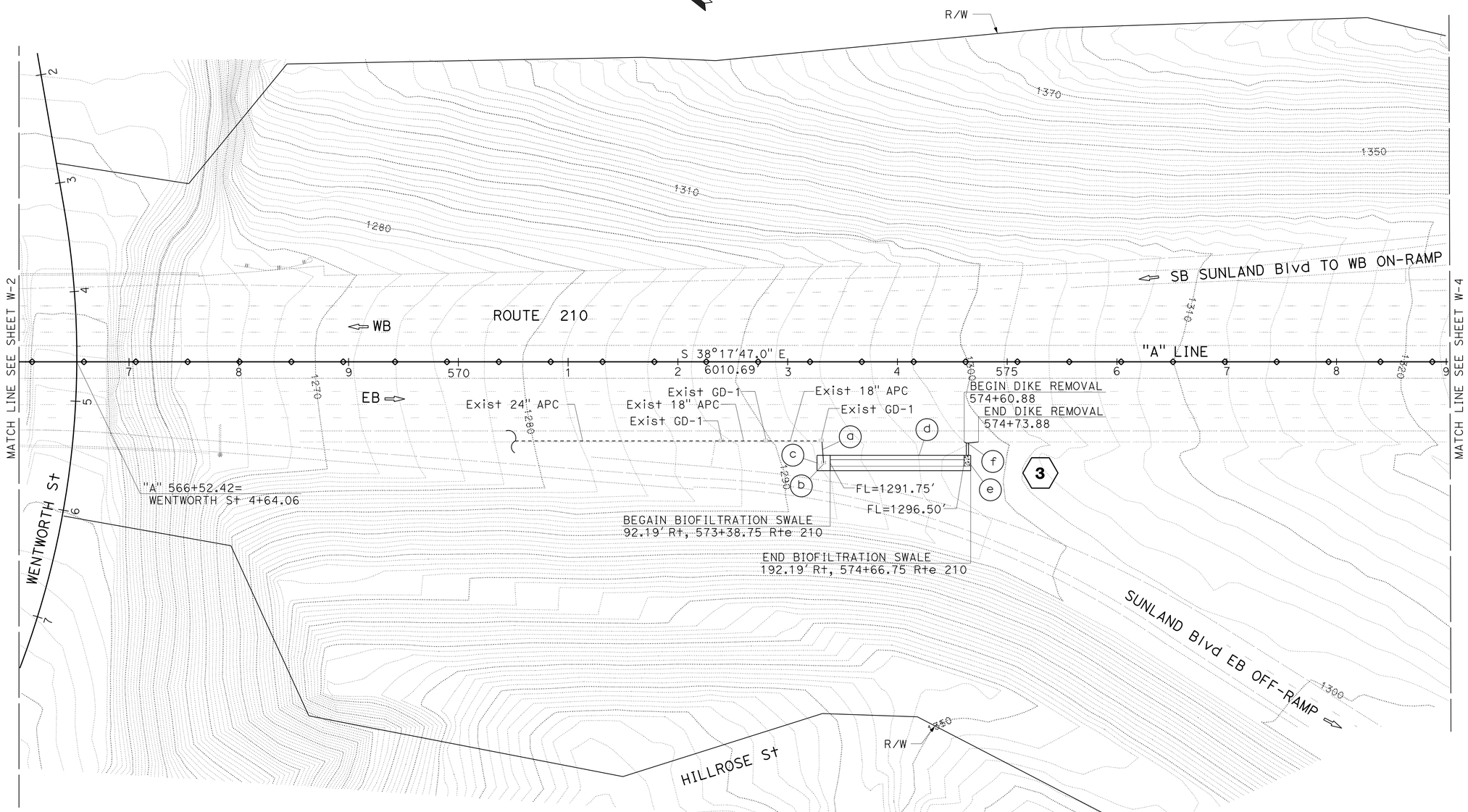

WATER POLLUTION CONTROL PLAN

SCALE: 1" = 50'

W-3

APPROVED FOR WATER POLLUTION CONTROL WORK ONLY

STATE OF CALIFORNIA - DEPARTMENT OF TRANSPORTATION
Caltrans
HYDRAULICS

FUNCTIONAL SUPERVISOR: DAVE BHALLA
CALCULATED-DESIGNED BY: ROMULO ROBENIOL
CHECKED BY: PAUL FONG
REVISED BY
DATE REVISED

LAST REVISION 03-21-15
DATE PLOTTED => 18-JUN-2015
TIME PLOTTED => 07:25

Dist	COUNTY	ROUTE	POST MILES TOTAL PROJECT	SHEET No.	TOTAL SHEETS
07	LA	210	R10.5/R15.7	13	116

Paul Fong 3-20-15
REGISTERED CIVIL ENGINEER DATE

6-1-15
PLANS APPROVAL DATE

REGISTERED PROFESSIONAL ENGINEER
PAUL FONG
No. C67053
Exp. 9-30-16
CIVIL
STATE OF CALIFORNIA

THE STATE OF CALIFORNIA OR ITS OFFICERS OR AGENTS SHALL NOT BE RESPONSIBLE FOR THE ACCURACY OR COMPLETENESS OF SCANNED COPIES OF THIS PLAN SHEET.

NOTES:

1. FOR ACCURATE RIGHT OF WAY DATA, CONTACT RIGHT OF WAY ENGINEERING AT THE DISTRICT OFFICE.
2. "UTILITY INVESTIGATIONS HAVE BEEN COMPLETED AND NO UTILITIES WERE FOUND NEAR LIMITS OF WORK FOR EACH EXCAVATION LOCATION. EXISTING UTILITY INFORMATION IS NOT INCLUDED ON THESE PLANS"

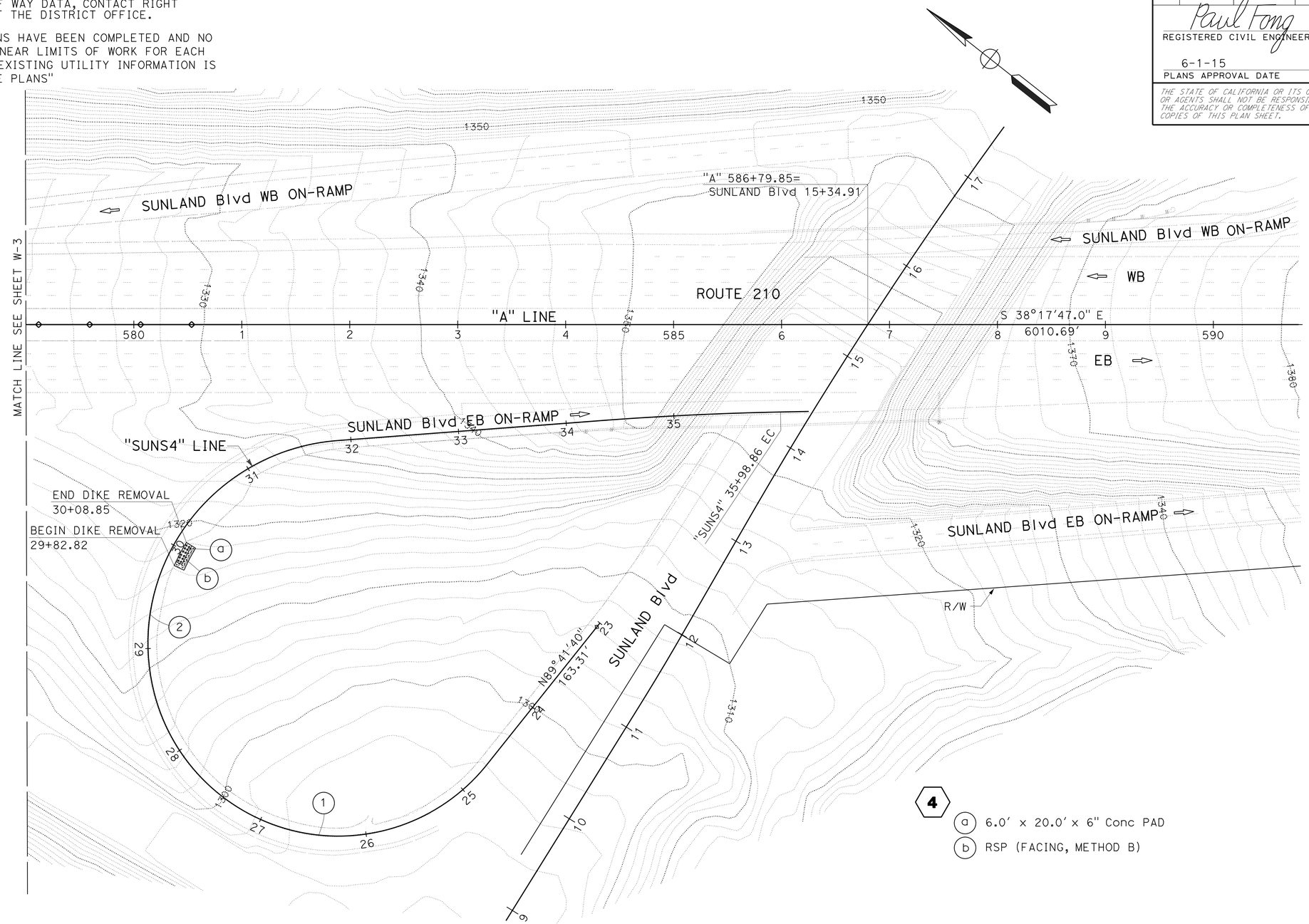

APPROVED FOR WATER POLLUTION CONTROL WORK ONLY

WATER POLLUTION CONTROL PLAN

SCALE: 1" = 50'

W-4

STATE OF CALIFORNIA - DEPARTMENT OF TRANSPORTATION
Caltrans
HYDRAULICS

FUNCTIONAL SUPERVISOR: DAVE BHALLA
CALCULATED-DESIGNED BY: PAUL FONG
CHECKED BY: ROMULO ROBENIOL
REVISED BY
DATE REVISED

LAST REVISION 03-21-15
DATE PLOTTED => 18-JUN-2015
TIME PLOTTED => 07:25

Dist	COUNTY	ROUTE	POST MILES TOTAL PROJECT	SHEET No.	TOTAL SHEETS
07	LA	210	R10.5/R15.7	14	116

Paul Fong 3-20-15
REGISTERED CIVIL ENGINEER DATE

6-1-15
PLANS APPROVAL DATE

REGISTERED PROFESSIONAL ENGINEER
PAUL FONG
No. C67053
Exp. 9-30-16
CIVIL
STATE OF CALIFORNIA

THE STATE OF CALIFORNIA OR ITS OFFICERS OR AGENTS SHALL NOT BE RESPONSIBLE FOR THE ACCURACY OR COMPLETENESS OF SCANNED COPIES OF THIS PLAN SHEET.

NOTES:

1. FOR ACCURATE RIGHT OF WAY DATA, CONTACT RIGHT OF WAY ENGINEERING AT THE DISTRICT OFFICE.
2. "UTILITY INVESTIGATIONS HAVE BEEN COMPLETED AND NO UTILITIES WERE FOUND NEAR LIMITS OF WORK FOR EACH EXCAVATION LOCATION. EXISTING UTILITY INFORMATION IS NOT INCLUDED ON THESE PLANS"

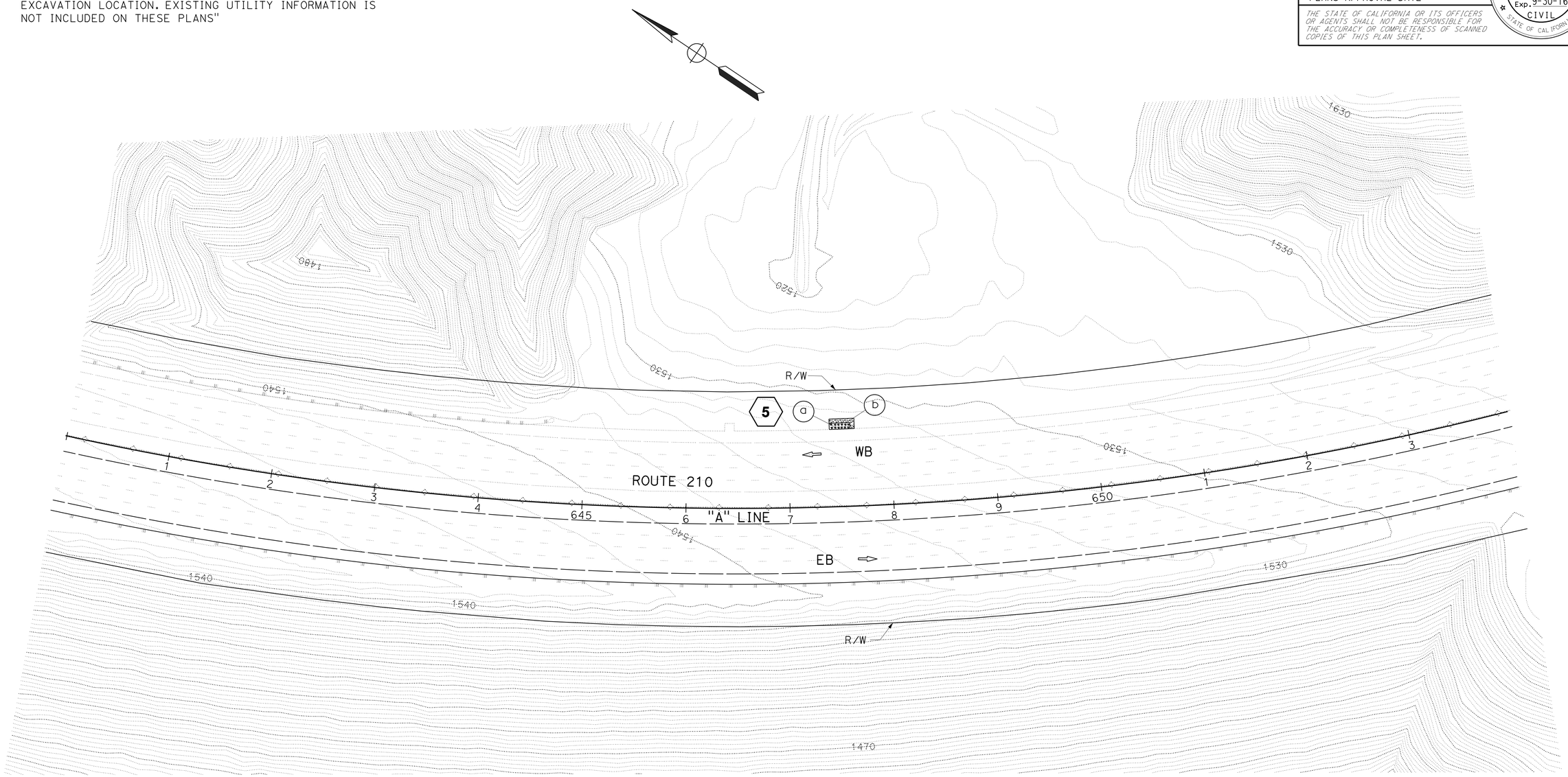

5
a 6.0′ x 20.0′ x 6" Conc PAD
b RSP (FACING, METHOD B)

APPROVED FOR WATER POLLUTION CONTROL WORK ONLY

WATER POLLUTION CONTROL PLAN

SCALE: 1" = 50′

W-5

STATE OF CALIFORNIA - DEPARTMENT OF TRANSPORTATION
Caltrans
HYDRAULICS
FUNCTIONAL SUPERVISOR: DAVE BHALLA
CALCULATED-DESIGNED BY: PAUL FONG
CHECKED BY: ROMULO ROBENIOL
REVISED BY
DATE REVISED

LAST REVISION 03-21-15
DATE PLOTTED => 18-JUN-2015
TIME PLOTTED => 07:25

Dist	COUNTY	ROUTE	POST MILES TOTAL PROJECT	SHEET No.	TOTAL SHEETS
07	LA	210	R10.5/R15.7	15	116

Paul Fong 3-20-15
REGISTERED CIVIL ENGINEER DATE

6-1-15
PLANS APPROVAL DATE

REGISTERED PROFESSIONAL ENGINEER
PAUL FONG
No. C67053
Exp. 9-30-16
CIVIL
STATE OF CALIFORNIA

THE STATE OF CALIFORNIA OR ITS OFFICERS OR AGENTS SHALL NOT BE RESPONSIBLE FOR THE ACCURACY OR COMPLETENESS OF SCANNED COPIES OF THIS PLAN SHEET.

NOTES:

1. FOR ACCURATE RIGHT OF WAY DATA, CONTACT RIGHT OF WAY ENGINEERING AT THE DISTRICT OFFICE.
2. "UTILITY INVESTIGATIONS HAVE BEEN COMPLETED AND NO UTILITIES WERE FOUND NEAR LIMITS OF WORK FOR EACH EXCAVATION LOCATION. EXISTING UTILITY INFORMATION IS NOT INCLUDED ON THESE PLANS"

7

- (a) REMOVE 18" x 83.5' CSP
- (b) JUNCTION CHAMBER No. 3-C Mod, V=8.2'
- (c) 18" x 109.7' CSP
- (d) JUNCTION CHAMBER No. 3-C Mod, V=8.1'
- (e) 18" x 26.6' CSP
- (f) AVSF TYPE L-5000-4.5
- (g) 6" x 28.0' PP
- (h) 18" x 29.0' CSP
- (i) JUNCTION CHAMBER No. 3-C Mod, V=8.6'
- (j) 18" x 24.0' RCP
- (k) TYPE G1 INLET, H=4.0'
- (l) 18" x 54.5' CSP
- (m) TYPE G1 INLET, H=4.2'
- (n) 18" x 32.8' RCP

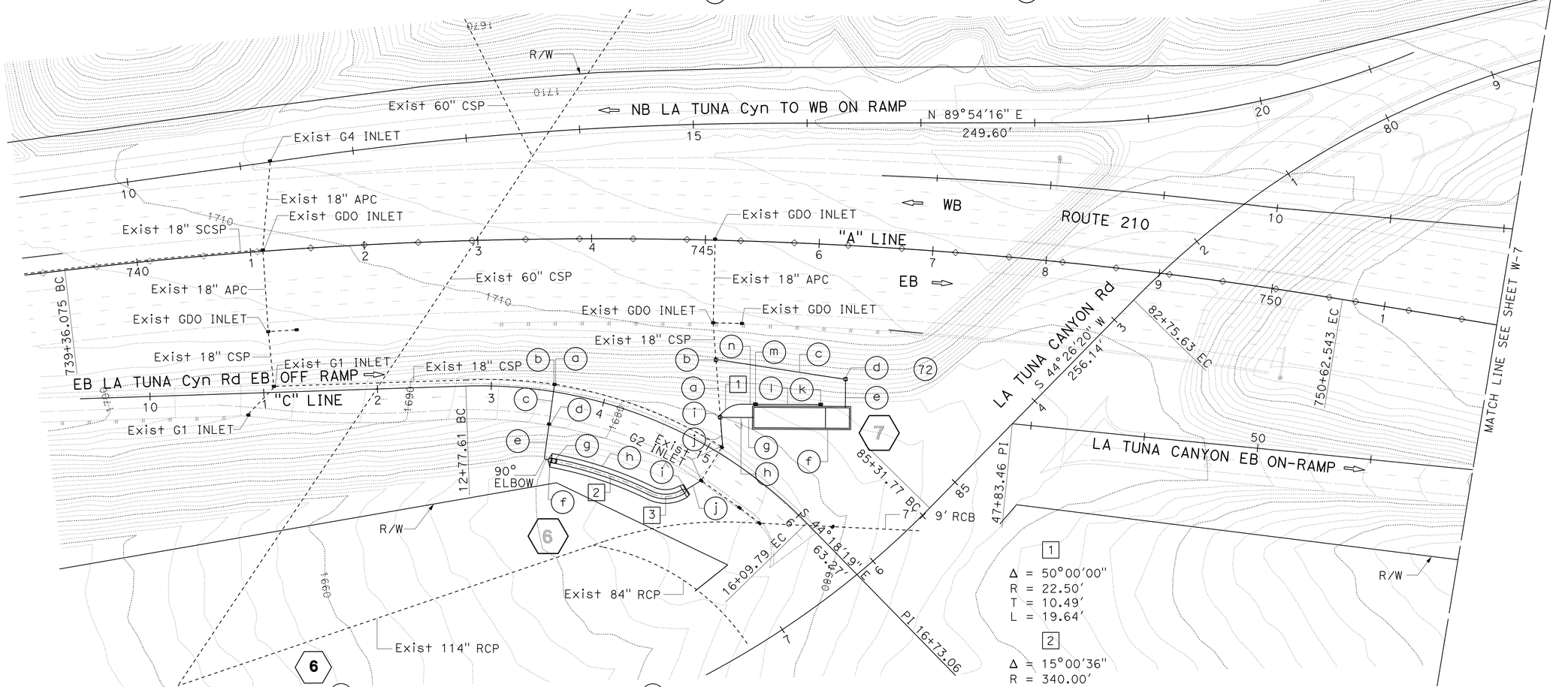

6

- (a) REMOVE TYPE G1 INLET
- (b) TYPE G1 INLET, H=4.9'
- (c) 18" x 31.2' RCP
- (d) TYPE G1 INLET, H=5.3'
- (e) 18" x 36.1' CSP
- (f) 18" STEEL FES
- (g) RSP (FACING, METHOD B) L=5.0'
- (h) BIOFILTRATION SWALE, L=125.0'
- (i) PIPE CULVERT STRAIGHT HEADWALL
- (j) 18" x 14.6' RCP

1

Δ = 50°00'00"
R = 22.50'
T = 10.49'
L = 19.64'

2

Δ = 15°00'36"
R = 340.00'
T = 44.79'
L = 89.07'

3

Δ = 57°10'33"
R = 30.00'
T = 16.35'
L = 29.94'

APPROVED FOR WATER POLLUTION CONTROL WORK ONLY

WATER POLLUTION CONTROL PLAN

SCALE: 1" = 50'

W-6

STATE OF CALIFORNIA - DEPARTMENT OF TRANSPORTATION
Caltrans
HYDRAULICS

FUNCTIONAL SUPERVISOR: DAVE BHALLA
CALCULATED-DESIGNED BY: ROMULO ROBENIOL
CHECKED BY: PAUL FONG
REVISED BY
DATE REVISED

LAST REVISION 03-21-15
DATE PLOTTED => 18-JUN-2015
TIME PLOTTED => 07:25

Dist	COUNTY	ROUTE	POST MILES TOTAL PROJECT	SHEET No.	TOTAL SHEETS
07		210	R9.7/R16.1	16	116

Paul Fong 3-20-15
REGISTERED CIVIL ENGINEER DATE

6-1-15
PLANS APPROVAL DATE

REGISTERED PROFESSIONAL ENGINEER
PAUL FONG
No. C67053
Exp. 9-30-16
CIVIL
STATE OF CALIFORNIA

THE STATE OF CALIFORNIA OR ITS OFFICERS OR AGENTS SHALL NOT BE RESPONSIBLE FOR THE ACCURACY OR COMPLETENESS OF SCANNED COPIES OF THIS PLAN SHEET.

NOTES:

1. FOR ACCURATE RIGHT OF WAY DATA, CONTACT RIGHT OF WAY ENGINEERING AT THE DISTRICT OFFICE.
2. "UTILITY INVESTIGATIONS HAVE BEEN COMPLETED AND NO UTILITIES WERE FOUND NEAR LIMITS OF WORK FOR EACH EXCAVATION LOCATION. EXISTING UTILITY INFORMATION IS NOT INCLUDED ON THESE PLANS"

8 (a) CAP INLET

9 (a) 6.0′ x 20.0′ x 6" Conc PAD
(b) RSP (FACING, METHOD B)

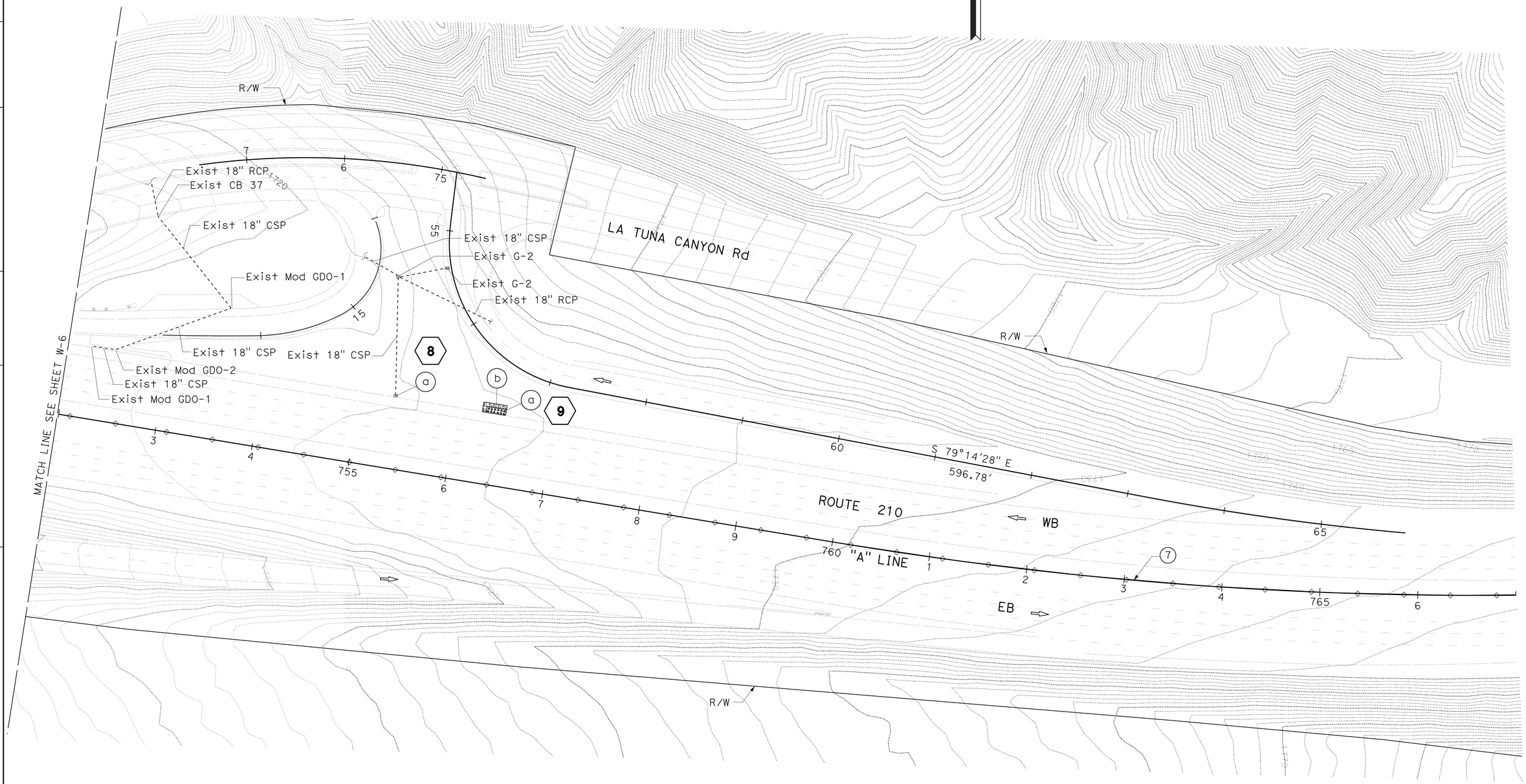

APPROVED FOR WATER POLLUTION CONTROL WORK ONLY

WATER POLLUTION CONTROL PLAN

SCALE: 1" = 50′

W-7

STATE OF CALIFORNIA - DEPARTMENT OF TRANSPORTATION
Caltrans
HYDRAULICS

FUNCTIONAL SUPERVISOR: DAVE BHALLA
CALCULATED-DESIGNED BY: PAUL FONG
CHECKED BY: ROMULO ROBENIOL
REVISED BY
DATE REVISED

LAST REVISION 03-21-15
DATE PLOTTED => 18-JUN-2015
TIME PLOTTED => 07:25

Dist	COUNTY	ROUTE	POST MILES TOTAL PROJECT	SHEET No.	TOTAL SHEETS
07	LA	210	R10.5/R15.7	17	116

Paul Fong 3-20-15
REGISTERED CIVIL ENGINEER DATE

6-1-15
PLANS APPROVAL DATE

REGISTERED PROFESSIONAL ENGINEER
PAUL FONG
No. C67053
Exp. 9-30-16
CIVIL
STATE OF CALIFORNIA

THE STATE OF CALIFORNIA OR ITS OFFICERS OR AGENTS SHALL NOT BE RESPONSIBLE FOR THE ACCURACY OR COMPLETENESS OF SCANNED COPIES OF THIS PLAN SHEET.

NOTES:

1. FOR ACCURATE RIGHT OF WAY DATA, CONTACT RIGHT OF WAY ENGINEERING AT THE DISTRICT OFFICE.
2. "UTILITY INVESTIGATIONS HAVE BEEN COMPLETED AND NO UTILITIES WERE FOUND NEAR LIMITS OF WORK FOR EACH EXCAVATION LOCATION. EXISTING UTILITY INFORMATION IS NOT INCLUDED ON THESE PLANS"

10

- (a) REMOVE 18" x 3.0' CSP
- (b) GD-1 INLET, H=2.3'
- (c) Conc APRON, 11.0' x 10.0'
- (d) BIOFILTRATION SWALE, L=110.0'
- (e) RSP (FACING, METHOD B), L=5.0'

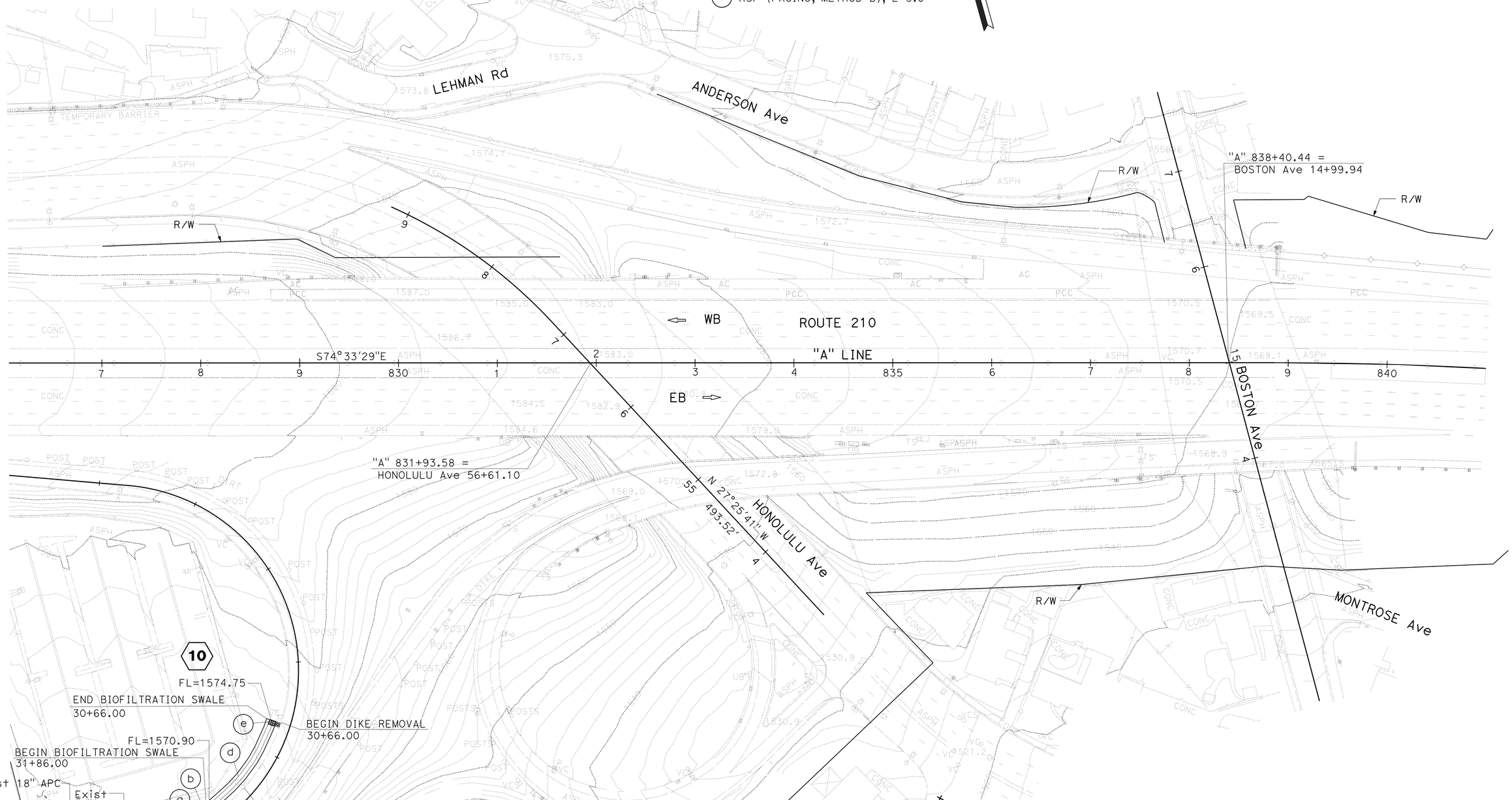

APPROVED FOR WATER POLLUTION CONTROL WORK ONLY

WATER POLLUTION CONTROL PLAN

SCALE: 1" = 50'

W-8

STATE OF CALIFORNIA - DEPARTMENT OF TRANSPORTATION
HYDRAULICS
Caltrans

FUNCTIONAL SUPERVISOR: DAVE BHALLA
CALCULATED-DESIGNED BY: PAUL FONG
CHECKED BY: ROMULO ROBENIOL
REVISED BY
DATE REVISED

LAST REVISION 03-21-15
DATE PLOTTED => 18-JUN-2015
TIME PLOTTED => 07:25

Dist	COUNTY	ROUTE	POST MILES TOTAL PROJECT	SHEET No.	TOTAL SHEETS
07	LA	210	R10.5/R15.7	18	116

Paul Fong 3-20-15
REGISTERED CIVIL ENGINEER DATE

6-1-15
PLANS APPROVAL DATE

REGISTERED PROFESSIONAL ENGINEER
PAUL FONG
No. C67053
Exp. 9-30-16
CIVIL
STATE OF CALIFORNIA

THE STATE OF CALIFORNIA OR ITS OFFICERS OR AGENTS SHALL NOT BE RESPONSIBLE FOR THE ACCURACY OR COMPLETENESS OF SCANNED COPIES OF THIS PLAN SHEET.

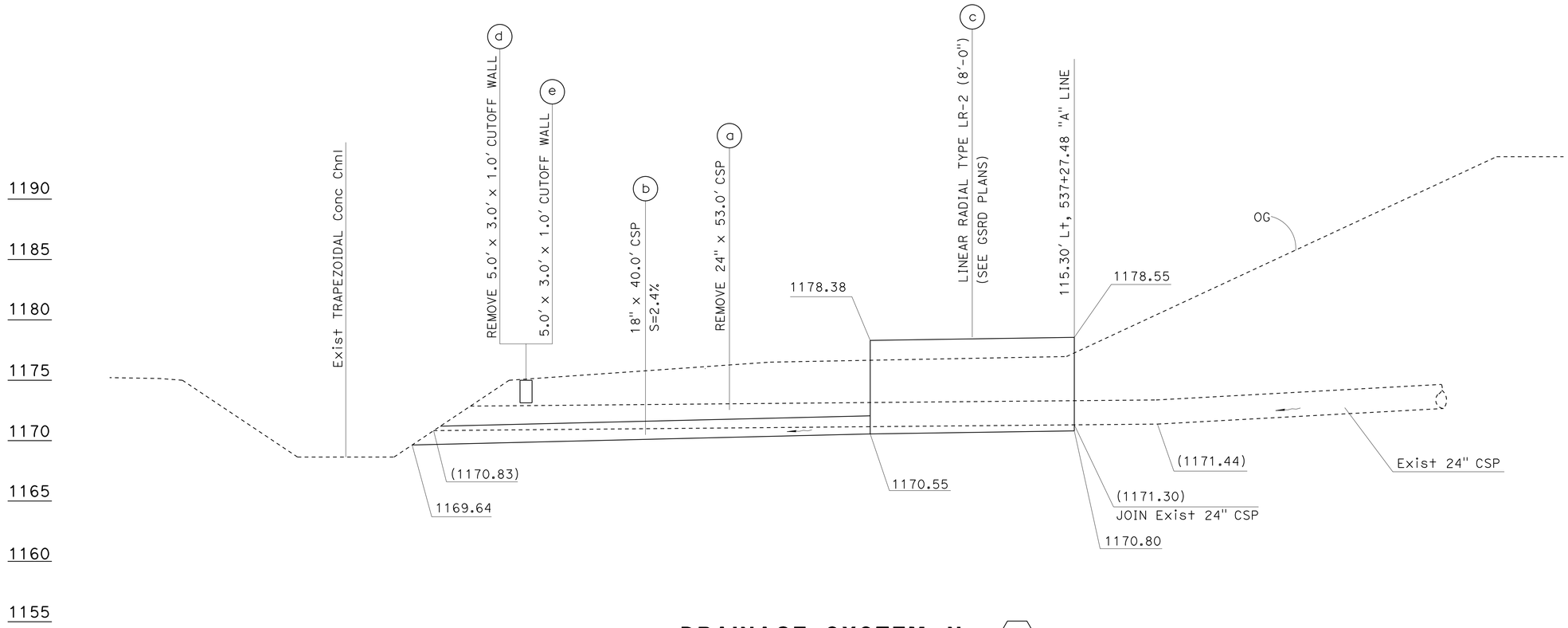

DRAINAGE SYSTEM No. 1

SCALES: Horiz 1" = 5'
Vert 1" = 5'

WATER POLLUTION CONTROL PROFILE

WP-1

STATE OF CALIFORNIA - DEPARTMENT OF TRANSPORTATION
Caltrans
HYDRAULICS

FUNCTIONAL SUPERVISOR: DAVE BHALLA
CALCULATED-DESIGNED BY: PAUL FONG
CHECKED BY: ROMULO ROBENIOL
REVISED BY
DATE REVISED

LAST REVISION 03-21-15
DATE PLOTTED => 18-JUN-2015
TIME PLOTTED => 07:25

Dist	COUNTY	ROUTE	POST MILES TOTAL PROJECT	SHEET No.	TOTAL SHEETS
07	LA	210	R10.5/R15.7	19	116

Paul Fong 3-20-15
REGISTERED CIVIL ENGINEER DATE

6-1-15
PLANS APPROVAL DATE

REGISTERED PROFESSIONAL ENGINEER
PAUL FONG
No. C67053
Exp. 9-30-16
CIVIL
STATE OF CALIFORNIA

THE STATE OF CALIFORNIA OR ITS OFFICERS OR AGENTS SHALL NOT BE RESPONSIBLE FOR THE ACCURACY OR COMPLETENESS OF SCANNED COPIES OF THIS PLAN SHEET.

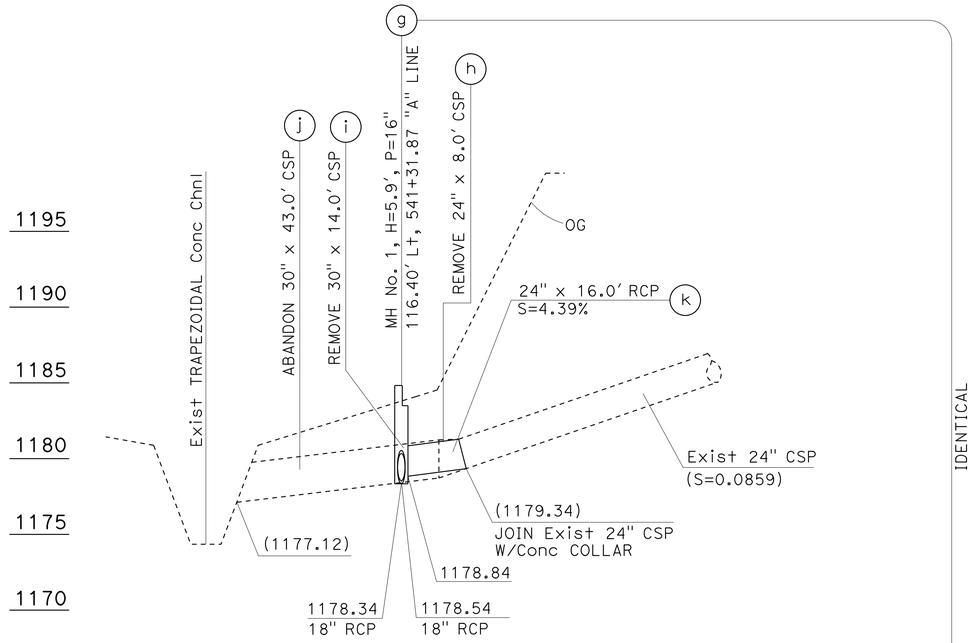

DRAINAGE SYSTEM No. 2

SCALES: Horiz 1" = 20'
Vert 1" = 5'

	STATION
WE1	108.99' Lt, 541+16.21 "A" LINE
WE3	107.72' Lt, 539+95.24 "A" LINE
WE4	131.71' Lt, 539+95.85 "A" LINE
WE6	132.99' Lt, 541+16.13 "A" LINE

DESIGN BASIN WALL	DESIGN WALL Ht. H	FOOTING THICKNESS	
		SEDIMENT BASIN	FILTRATION BASIN
Sed	10'-0"	15"	18"
Fil	12'-0"		

WALL DESIGN TABLE

TOP OF WALL ELEVATION					
WE1	WE2	WE3	WE4	WE5	WE6
1185.67	1185.67	1185.67	1185.67	1185.67	1185.67
TOP OF FOOTING ELEVATION					
FE0	FE1	FE2	FE3	FE4	FE5
1177.75	1177.71	1177.11	1174.61	1173.67	1173.65
FINISHED GRADE ELEVATION					
FG1	FG2	FG3	FG4	FG5	FG6
1185.17	1185.17	1185.17	1181.03	1181.03	1181.03

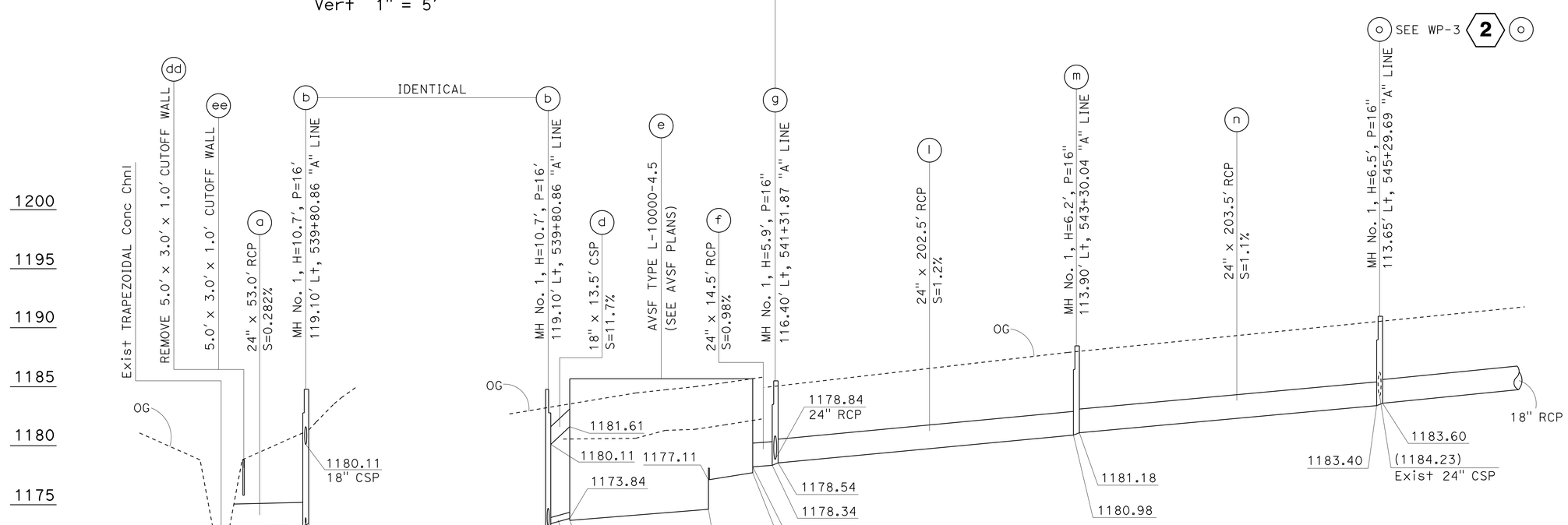

DRAINAGE SYSTEM No. 2

SCALES: Horiz 1" = 40'
Vert 1" = 5'

WATER POLLUTION CONTROL PROFILE

WP-2

STATE OF CALIFORNIA - DEPARTMENT OF TRANSPORTATION
Caltrans
HYDRAULICS

FUNCTIONAL SUPERVISOR: DAVE BHALLA
CALCULATED-DESIGNED BY: PAUL FONG
CHECKED BY: ROMULO ROBENIOL
REVISED BY
DATE REVISED

LAST REVISION 03-21-15
DATE PLOTTED => 18-JUN-2015
TIME PLOTTED => 07:25

Dist	COUNTY	ROUTE	POST MILES TOTAL PROJECT	SHEET No.	TOTAL SHEETS
07	LA	210	R10.5/R15.7	20	116

Paul Fong 3-20-15
REGISTERED CIVIL ENGINEER DATE

6-1-15
PLANS APPROVAL DATE

REGISTERED PROFESSIONAL ENGINEER PAUL FONG No. C67053 Exp. 9-30-16 CIVIL STATE OF CALIFORNIA

THE STATE OF CALIFORNIA OR ITS OFFICERS OR AGENTS SHALL NOT BE RESPONSIBLE FOR THE ACCURACY OR COMPLETENESS OF SCANNED COPIES OF THIS PLAN SHEET.

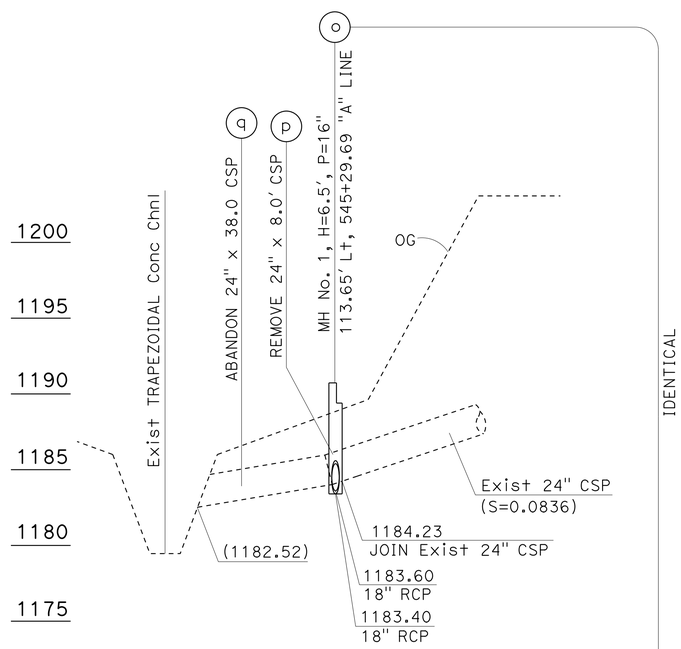

DRAINAGE SYSTEM No. 2
SCALES: Horiz 1" = 20'
Vert 1" = 5'

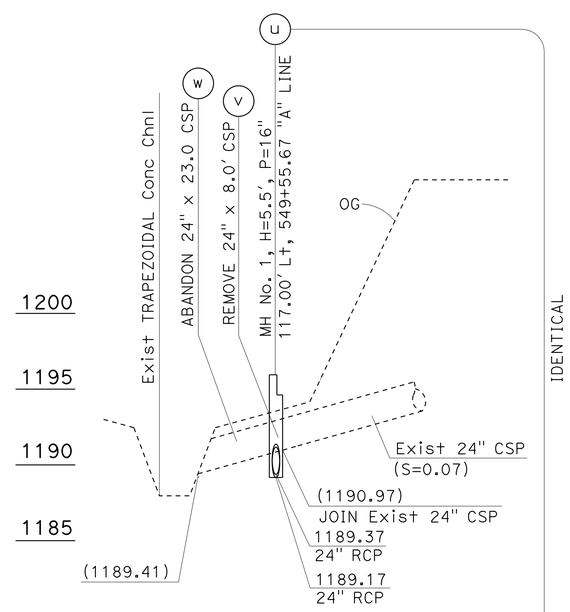

DRAINAGE SYSTEM No. 2
SCALES: Horiz 1" = 20'
Vert 1" = 5'

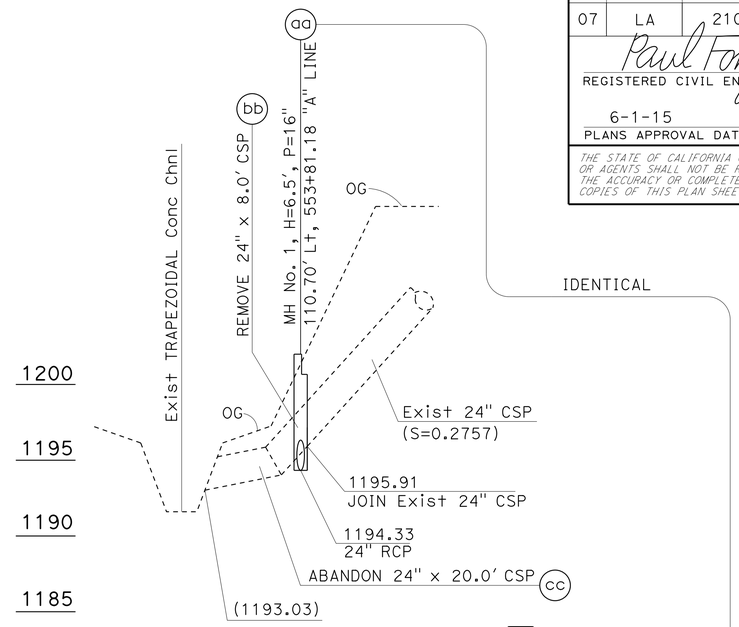

DRAINAGE SYSTEM No. 2
SCALES: Horiz 1" = 20'
Vert 1" = 5'

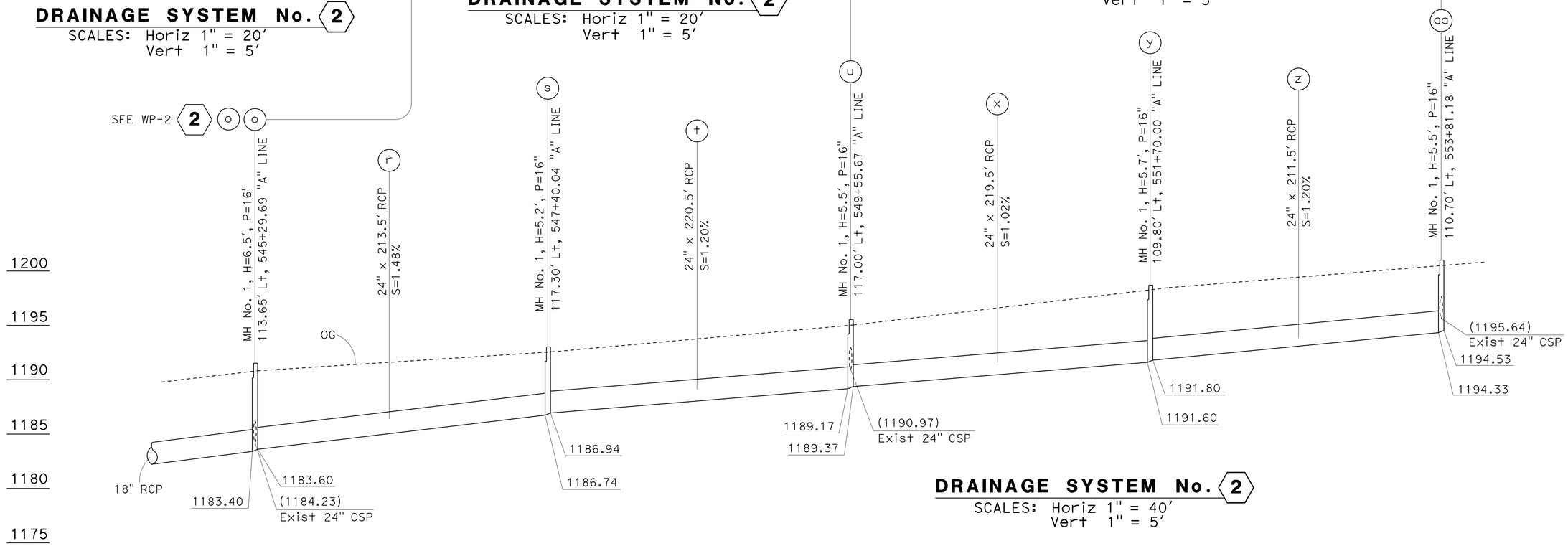

DRAINAGE SYSTEM No. 2
SCALES: Horiz 1" = 40'
Vert 1" = 5'

WATER POLLUTION CONTROL PROFILE

WP-3

STATE OF CALIFORNIA - DEPARTMENT OF TRANSPORTATION
Caltrans HYDRAULICS

FUNCTIONAL SUPERVISOR: DAVE BHALLA
CALCULATED-DESIGNED BY: PAUL FONG
CHECKED BY: ROMULO ROBENIOL
REVISED BY
DATE REVISED

LAST REVISION 03-21-15
DATE PLOTTED => 18-JUN-2015
TIME PLOTTED => 07:25

Dist	COUNTY	ROUTE	POST MILES TOTAL PROJECT	SHEET No.	TOTAL SHEETS
07	LA	210	R10.5/R15.7	21	116

REGISTERED CIVIL ENGINEER Paul Fong 3-20-15 DATE

6-1-15
PLANS APPROVAL DATE

REGISTERED PROFESSIONAL ENGINEER PAUL FONG No. C67053 Exp. 9-30-16 CIVIL STATE OF CALIFORNIA

THE STATE OF CALIFORNIA OR ITS OFFICERS OR AGENTS SHALL NOT BE RESPONSIBLE FOR THE ACCURACY OR COMPLETENESS OF SCANNED COPIES OF THIS PLAN SHEET.

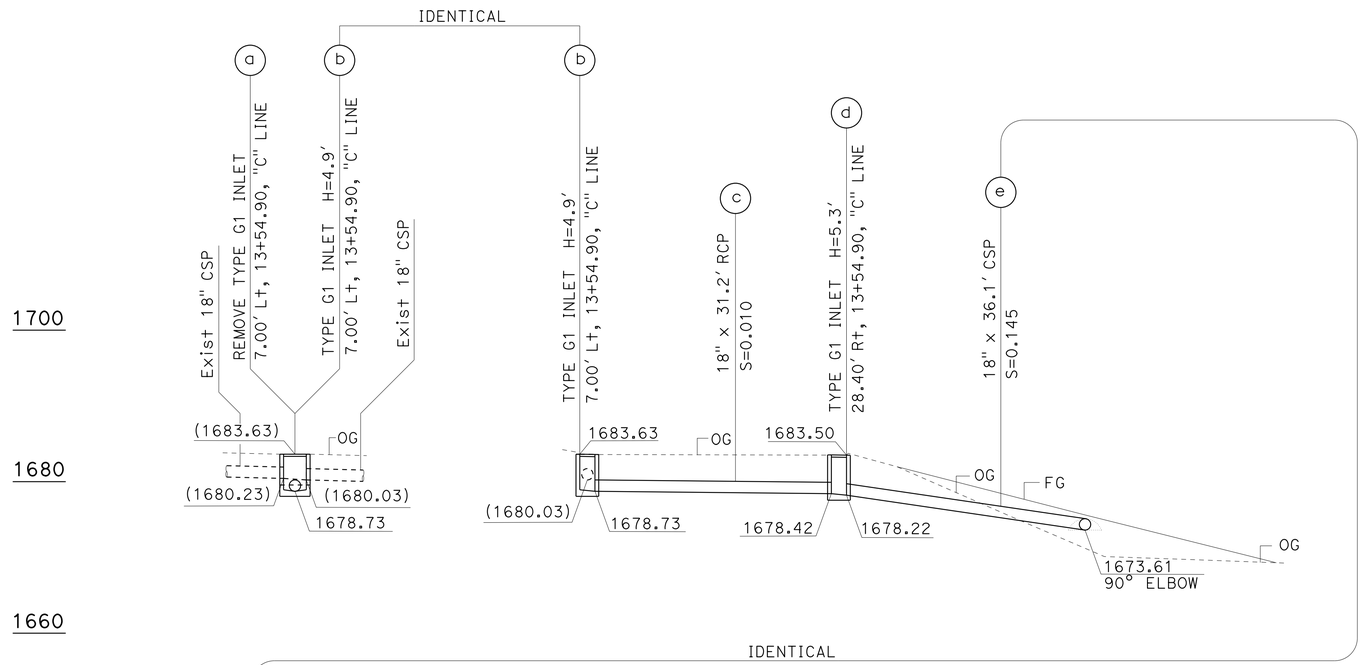

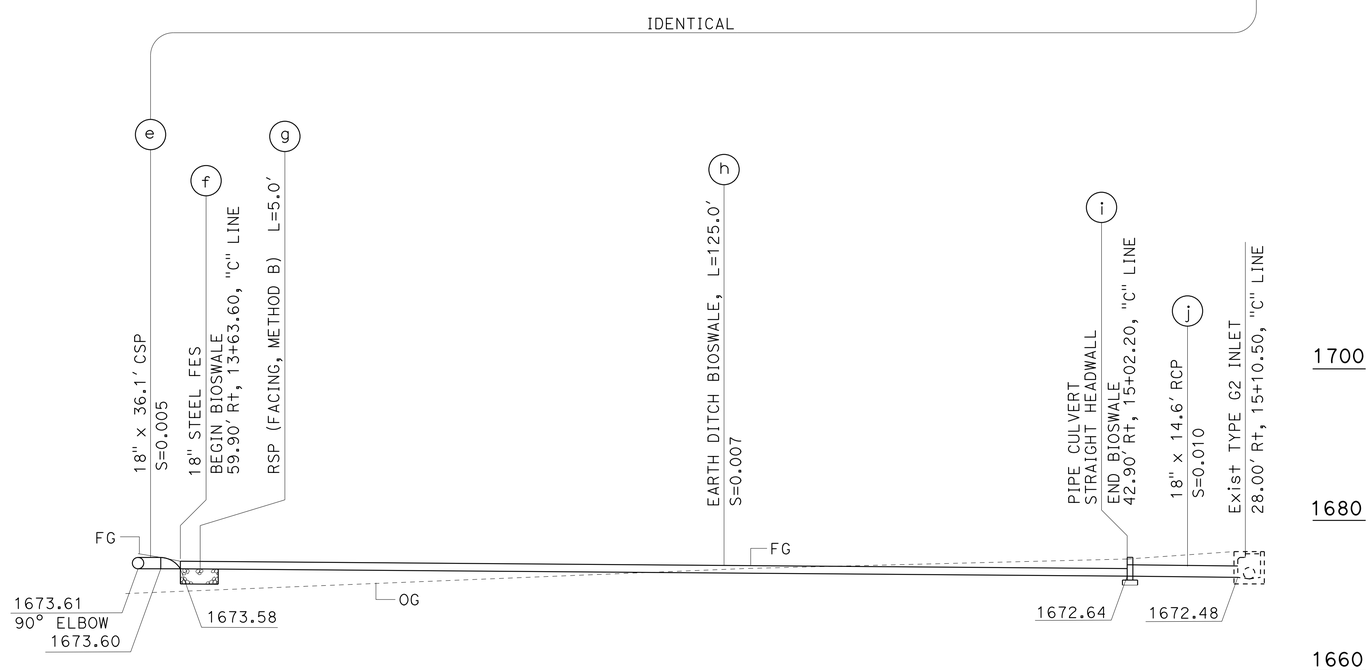

DRAINAGE SYSTEM No. 6

SCALES: Horiz 1" = 10'
Vert 1" = 10'

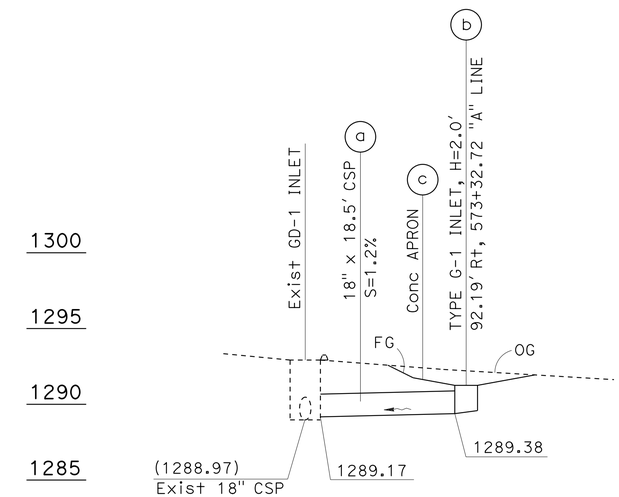

DRAINAGE SYSTEM No. 3

SCALES: Horiz 1" = 10'
Vert 1" = 5'

WATER POLLUTION CONTROL PROFILE

WP-4

STATE OF CALIFORNIA - DEPARTMENT OF TRANSPORTATION
Caltrans
HYDRAULICS
FUNCTIONAL SUPERVISOR: DAVE BHALLA
CALCULATED-DESIGNED BY: ROMULO ROBENIOL
CHECKED BY: PAUL FONG
REVISED BY
DATE REVISED

LAST REVISION 03-21-15
DATE PLOTTED => 18-JUN-2015
TIME PLOTTED => 07:25

Dist	COUNTY	ROUTE	POST MILES TOTAL PROJECT	SHEET No.	TOTAL SHEETS
07	LA	210	R10.5/R15.7	22	116

Paul Fong 3-20-15
REGISTERED CIVIL ENGINEER DATE

6-1-15
PLANS APPROVAL DATE

REGISTERED PROFESSIONAL ENGINEER
PAUL FONG
No. C67053
Exp. 9-30-16
CIVIL
STATE OF CALIFORNIA

THE STATE OF CALIFORNIA OR ITS OFFICERS OR AGENTS SHALL NOT BE RESPONSIBLE FOR THE ACCURACY OR COMPLETENESS OF SCANNED COPIES OF THIS PLAN SHEET.

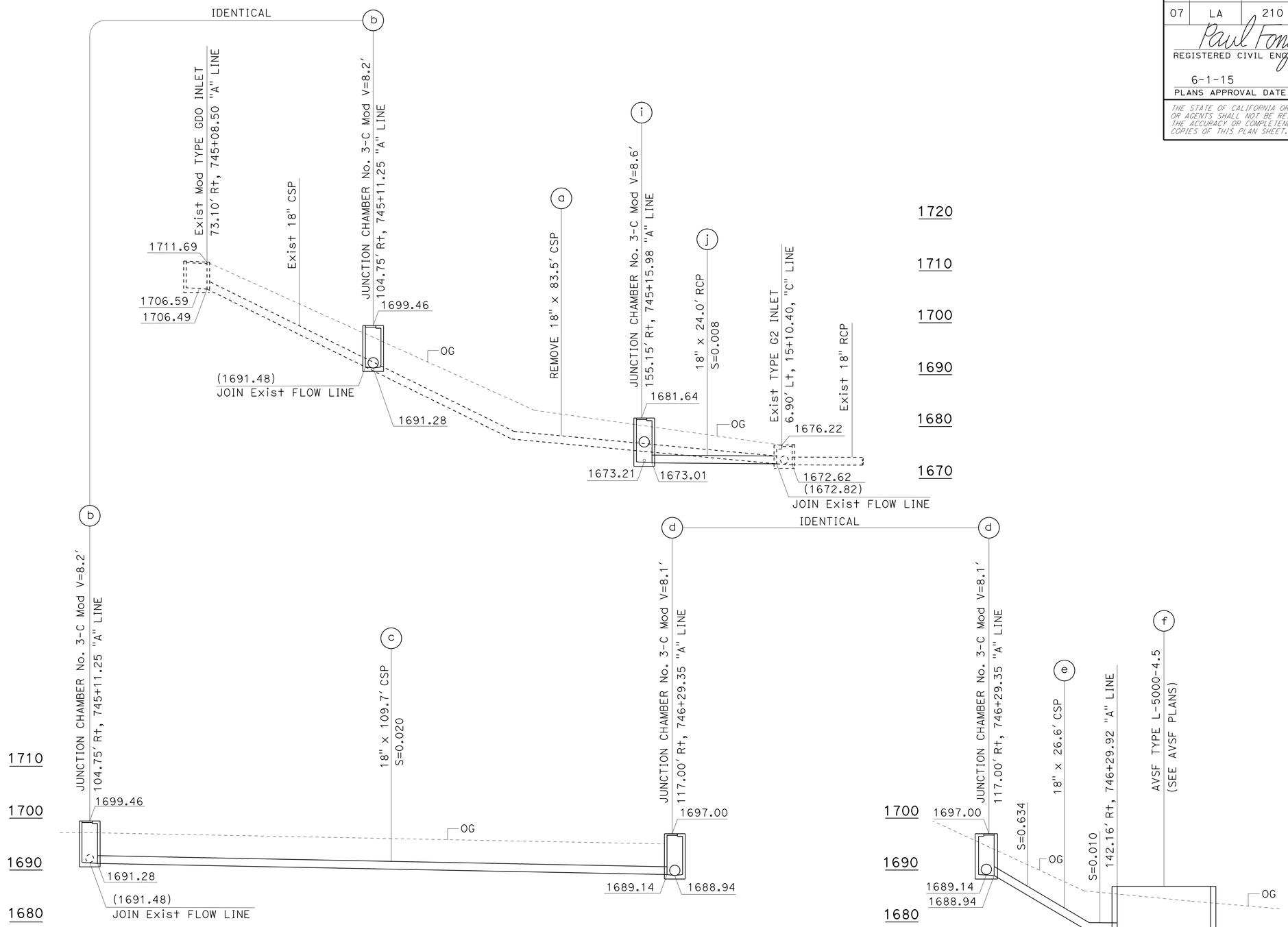

DRAINAGE SYSTEM No. 7

SCALES: 1" = 10' Horiz
1" = 10' Vert

WATER POLLUTION CONTROL PROFILE

WP-5

STATE OF CALIFORNIA - DEPARTMENT OF TRANSPORTATION
Caltrans
HYDRAULICS

FUNCTIONAL SUPERVISOR: DAVE BHALLA
CALCULATED-DESIGNED BY: ROMULO ROBENIOL
CHECKED BY: PAUL FONG
REVISED BY
DATE REVISED

LAST REVISION 03-21-15
DATE PLOTTED => 18-JUN-2015
TIME PLOTTED => 07:25

Dist	COUNTY	ROUTE	POST MILES TOTAL PROJECT	SHEET No.	TOTAL SHEETS
07	LA	210	R10.5/R15.7	23	116

Paul Fong 3-20-15
REGISTERED CIVIL ENGINEER DATE

6-1-15
PLANS APPROVAL DATE

REGISTERED PROFESSIONAL ENGINEER
PAUL FONG
No. C67053
Exp. 9-30-16
CIVIL
STATE OF CALIFORNIA

THE STATE OF CALIFORNIA OR ITS OFFICERS OR AGENTS SHALL NOT BE RESPONSIBLE FOR THE ACCURACY OR COMPLETENESS OF SCANNED COPIES OF THIS PLAN SHEET.

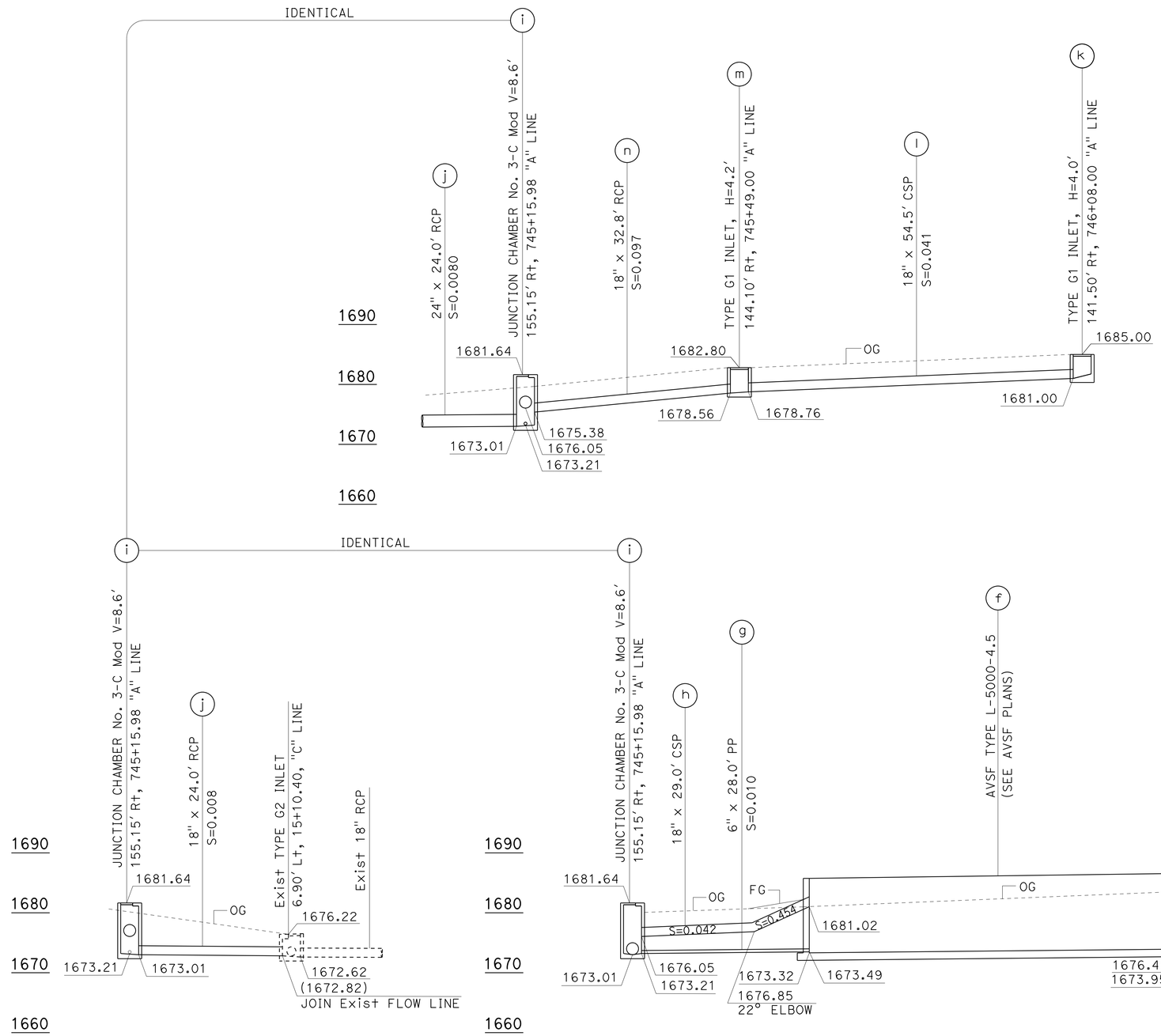

	STATION
WE1	159.97' Rt, 746+35.02 "A" LINE
WE3	163.70' Rt, 745+45.92 "A" LINE
WE4	145.70' Rt, 745+45.64 "A" LINE
WE6	142.00' Rt, 746+34.16 "A" LINE

WALL DESIGN TABLE

TOP OF WALL ELEVATION					
WE1	WE2	WE3	WE4	WE5	WE6
1686.87	1686.59	1685.75	1685.75	1686.59	1686.87
TOP OF FOOTING ELEVATION					
FE0	FE1	FE2	FE3	FE4	FE5
1676.91	1676.87	1676.45	1673.95	1673.32	1673.30
FINISHED GRADE ELEVATION					
FG1	FG2	FG3	FG4	FG5	FG6
1679.77	1679.10	1677.13	1682.80	1685.00	1685.40

DESIGN BASIN WALL	DESIGN WALL Ht. H	FOOTING THICKNESS	
		SEDIMENT BASIN	FILTRATION BASIN
Sed	12'-0"	18"	21"
Fil	14'-0"		

DRAINAGE SYSTEM No. 7

SCALES: 1" = 10' Horiz
1" = 10' Vert

WATER POLLUTION CONTROL PROFILE

WP-6

STATE OF CALIFORNIA - DEPARTMENT OF TRANSPORTATION
Caltrans
HYDRAULICS

FUNCTIONAL SUPERVISOR: DAVE BHALLA
CALCULATED-DESIGNED BY: ROMULO ROBENIOL
CHECKED BY: PAUL FONG
REVISED BY
DATE REVISED

LAST REVISION 03-21-15
DATE PLOTTED => 18-JUN-2015
TIME PLOTTED => 07:25

Dist	COUNTY	ROUTE	POST MILES TOTAL PROJECT	SHEET No.	TOTAL SHEETS
07	LA	210	R10.5/R15.7	24	116

Paul Fong 3-20-15
REGISTERED CIVIL ENGINEER DATE

6-1-15
PLANS APPROVAL DATE

REGISTERED PROFESSIONAL ENGINEER
PAUL FONG
No. C67053
Exp. 9-30-16
CIVIL
STATE OF CALIFORNIA

THE STATE OF CALIFORNIA OR ITS OFFICERS OR AGENTS SHALL NOT BE RESPONSIBLE FOR THE ACCURACY OR COMPLETENESS OF SCANNED COPIES OF THIS PLAN SHEET.

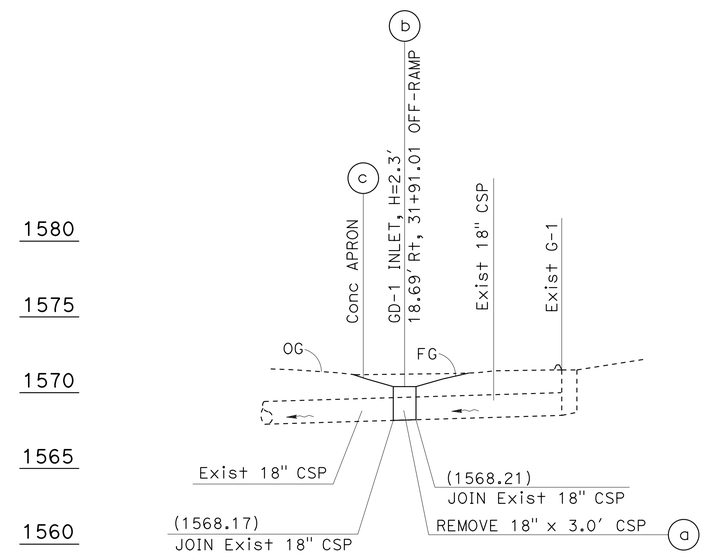

DRAINAGE SYSTEM No. 10

SCALES: Horiz 1" = 10'
Vert 1" = 5'

WATER POLLUTION CONTROL PROFILE

WP-7

STATE OF CALIFORNIA - DEPARTMENT OF TRANSPORTATION
Caltrans
HYDRAULICS

FUNCTIONAL SUPERVISOR: DAVE BHALLA
CALCULATED-DESIGNED BY: PAUL FONG
CHECKED BY: ROMULO ROBENIOL
REVISED BY
DATE REVISED

LAST REVISION 03-21-15
DATE PLOTTED => 18-JUN-2015
TIME PLOTTED => 07:25

Dist	COUNTY	ROUTE	POST MILES TOTAL PROJECT	SHEET No.	TOTAL SHEETS
07	LA	210	R10.5/R15.7	25	116

Paul Fong 3-20-15
REGISTERED CIVIL ENGINEER DATE

6-1-15
PLANS APPROVAL DATE

REGISTERED PROFESSIONAL ENGINEER
PAUL FONG
No. C67053
Exp. 9-30-16
CIVIL
STATE OF CALIFORNIA

THE STATE OF CALIFORNIA OR ITS OFFICERS OR AGENTS SHALL NOT BE RESPONSIBLE FOR THE ACCURACY OR COMPLETENESS OF SCANNED COPIES OF THIS PLAN SHEET.

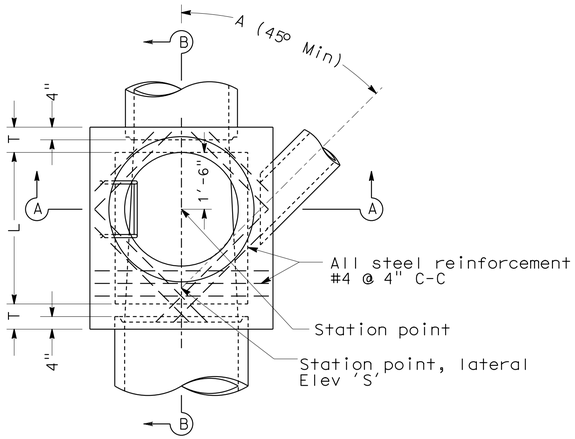

PLAN
(Shaft not shown)

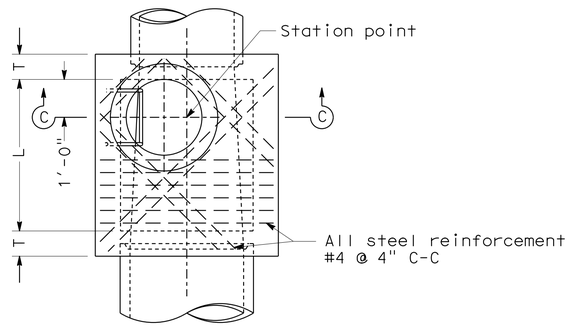

PLAN
DETAIL N
(Shaft not shown)

NOTES:

1. Height 'H' (in Sec A-A and Sec B-B) shall be not less than 4'-8", but may be increased provided that the value of 'M' shall be not less than the minimum specified and that the reducer shall be used. For 'H' (in Sec C-C) see Note 4.
2. Length 'L' shall be 4' unless otherwise shown on drainage plan.
3. Shaft shall be constructed as per Sec C-C and Detail N when depth 'M' from street grade to top of box is less than 2'-10 1/2" for paved streets or 3'-6" for unpaved streets.
4. Depth 'P' may be reduced to an absolute limit of 6" when larger values of 'P' would reduce 'H' (in Sec C-C) to 3'-6" or less.
5. 'T' shall be 8" for values of 'H' up to and including 8'. 'T' shall be 10" for values of 'H' over 8'.
6. Lowest step shall be not more than 16" above the ledge at the side of manhole floor.
7. Body of manhole shall be poured in one continuous operation, except that the Contractor shall have the option of placing at the spring line a construction joint with a longitudinal keyway.
8. Reinforcing steel shall be 1 1/2" clear from face of concrete.
9. Floor of manhole shall be steel-troweled to spring line.
10. Rings, reducer, and pipe for access shaft shall be seated in 1:2 cement mortar and neatly pointed or wiped inside shaft.
11. Manhole frame and cover per Standard Plan B7-11 detail 'U45'.
12. Step detail per Standard Plans D74C.

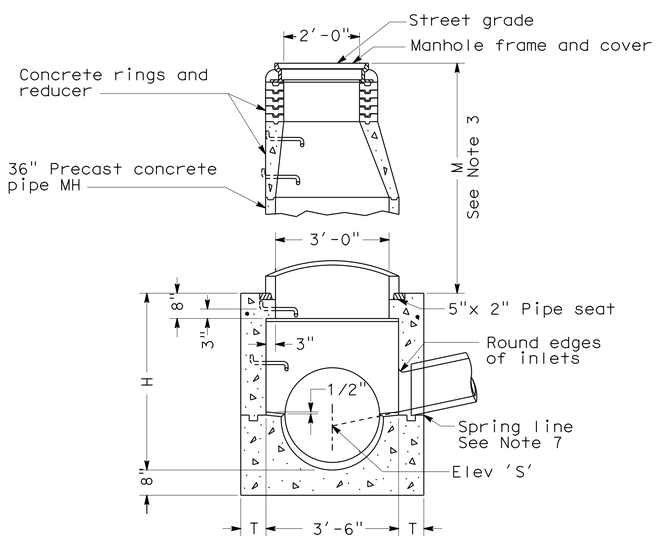

SECTION A-A

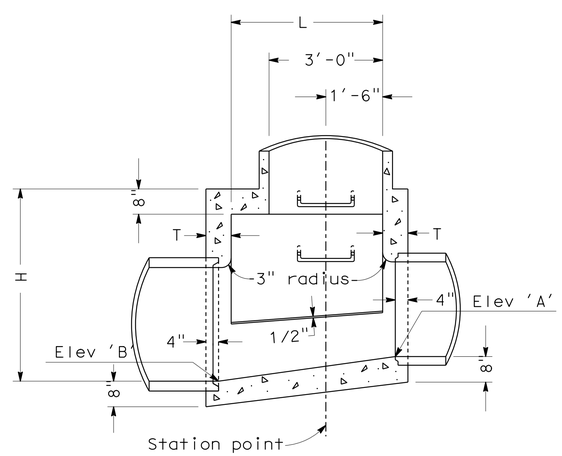

SECTION B-B

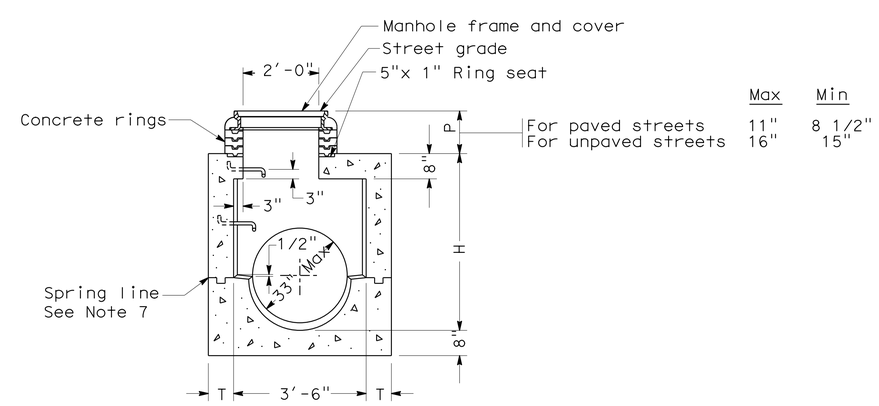

	Max	Min
For paved streets	11"	8 1/2"
For unpaved streets	16"	15"

SECTION C-C

MANHOLE No. 1 (MH No. 1)

WATER POLLUTION CONTROL DETAILS

NO SCALE

WD-1

STATE OF CALIFORNIA - DEPARTMENT OF TRANSPORTATION
Caltrans
HYDRAULICS
FUNCTIONAL SUPERVISOR: DAVE BHALLA
ROMULO ROBENIOL | PAUL FONG
REVISED BY | DATE REVISED
CALCULATED-DESIGNED BY | CHECKED BY

LAST REVISION 03-21-15 | DATE PLOTTED => 18-JUN-2015 | TIME PLOTTED => 07:25

Dist	COUNTY	ROUTE	POST MILES TOTAL PROJECT	SHEET No.	TOTAL SHEETS
07	LA	210	R10.5/R15.7	26	116

Paul Fong 3-20-15
REGISTERED CIVIL ENGINEER DATE

6-1-15
PLANS APPROVAL DATE

REGISTERED PROFESSIONAL ENGINEER
PAUL FONG
No. C67053
Exp. 9-30-16
CIVIL
STATE OF CALIFORNIA

THE STATE OF CALIFORNIA OR ITS OFFICERS OR AGENTS SHALL NOT BE RESPONSIBLE FOR THE ACCURACY OR COMPLETENESS OF SCANNED COPIES OF THIS PLAN SHEET.

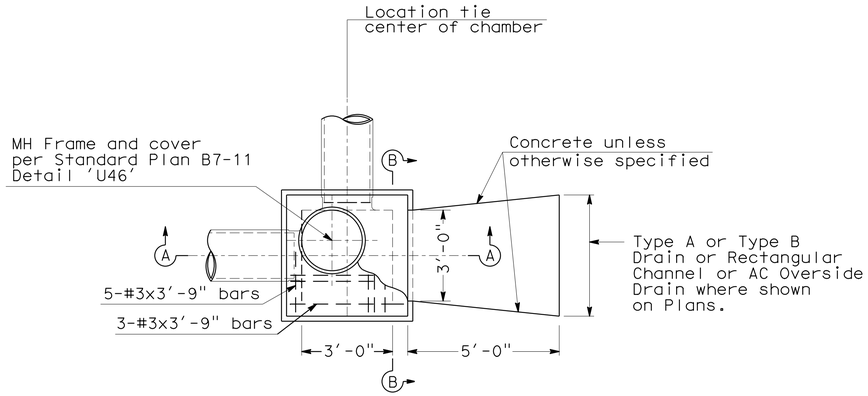

PLAN

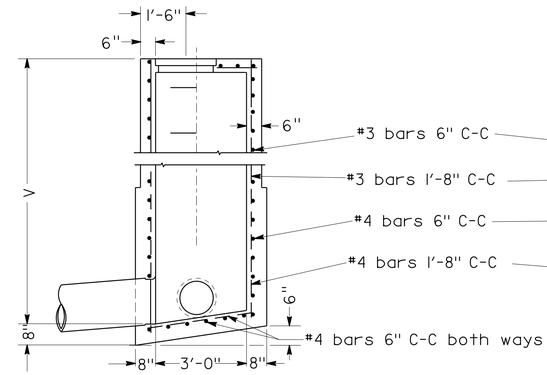

SECTION A-A

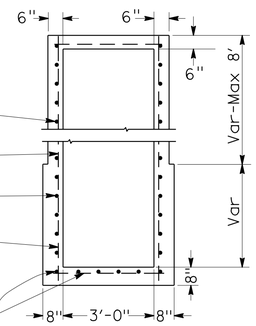

SECTION B-B

JUNCTION CHAMBER No. 3-C (JC 3-C) MOD

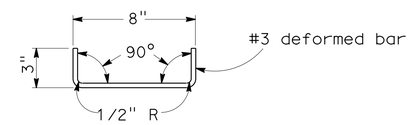

DETAIL OF DOWEL

One at each corner to be used
when top is poured separate

NOTES:

1. CONNECTION pipes may be placed in any position around the walls provided they point in the proper direction and the position is otherwise consistent with the Drainage Plan.
2. DIMENSIONS: D=18" unless otherwise specified.
   V=3'-6" unless otherwise specified.
3. EXPOSED SURFACE of the Junction Chamber shall conform in slope, grade, color, finish and scoring to existing sidewalk adjacent to the Junction Chamber. Where no sidewalk exists, the top shall be finished to conform to standard sidewalk slope and finish, and scoring lines shall conform as nearly as possible to 20" squares.
4. FLOOR of chamber shall be given a steel-troweled finish and shall slope from all directions to outlet.
5. MANHOLE shall be placed in corner nearest outlet.
6. OUTLET pipe shall be connected to Junction Chamber with Monolithic Connection.
7. REINFORCING steel not required in walls when V=6' or less.
8. STEPS: None required where V=3'-6" or less.
   Install one step 16"± above floor when V is more than 3'-6" and less than 5'-0".
   Where V is more than 5'-0" steps shall be evenly spaced at 12"± intervals from 16"± above floor to within 12"± of the top of the box.

WATER POLLUTION CONTROL DETAILS

NO SCALE

WD-2

STATE OF CALIFORNIA - DEPARTMENT OF TRANSPORTATION
Caltrans
HYDRAULICS

FUNCTIONAL SUPERVISOR: DAVE BHALLA
CALCULATED-DESIGNED BY: ROMULO ROBENIOL
CHECKED BY: PAUL FONG
REVISED BY
DATE REVISED

LAST REVISION 03-21-15
DATE PLOTTED => 18-JUN-2015
TIME PLOTTED => 07:25

Dist	COUNTY	ROUTE	POST MILES TOTAL PROJECT	SHEET No.	TOTAL SHEETS
07	LA	210	R10.5/R15.7	27	116

REGISTERED CIVIL ENGINEER 3-20-15 DATE

6-1-15
PLANS APPROVAL DATE

REGISTERED PROFESSIONAL ENGINEER
PAUL FONG
No. C67053
Exp. 9-30-16
CIVIL
STATE OF CALIFORNIA

THE STATE OF CALIFORNIA OR ITS OFFICERS OR AGENTS SHALL NOT BE RESPONSIBLE FOR THE ACCURACY OR COMPLETENESS OF SCANNED COPIES OF THIS PLAN SHEET.

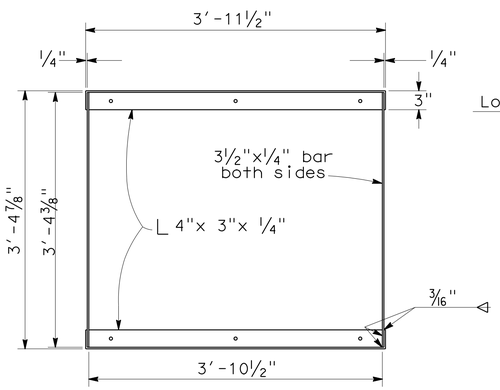

GRATE FRAME DETAIL

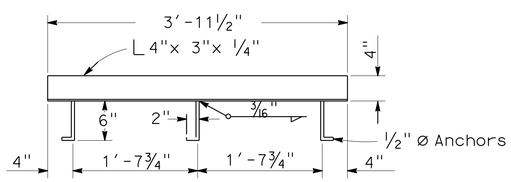

ANCHOR PLACEMENT DETAIL

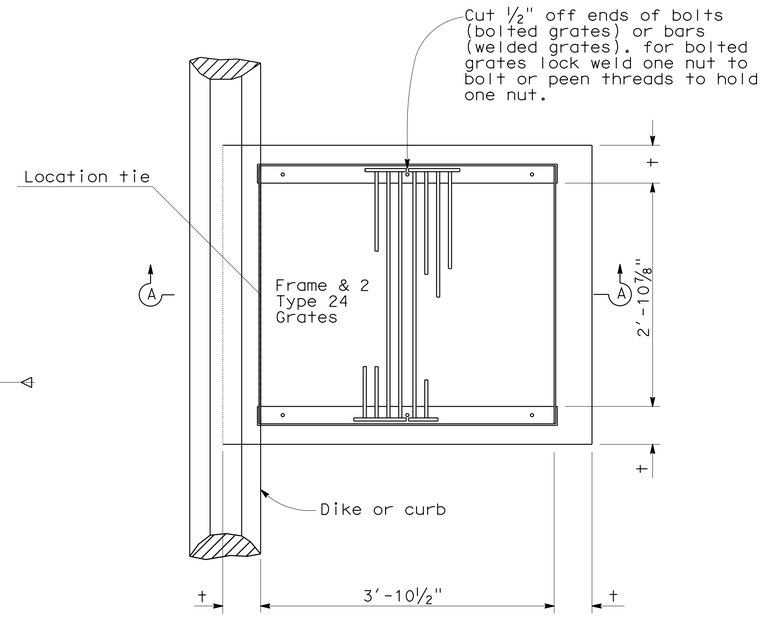

PLAN

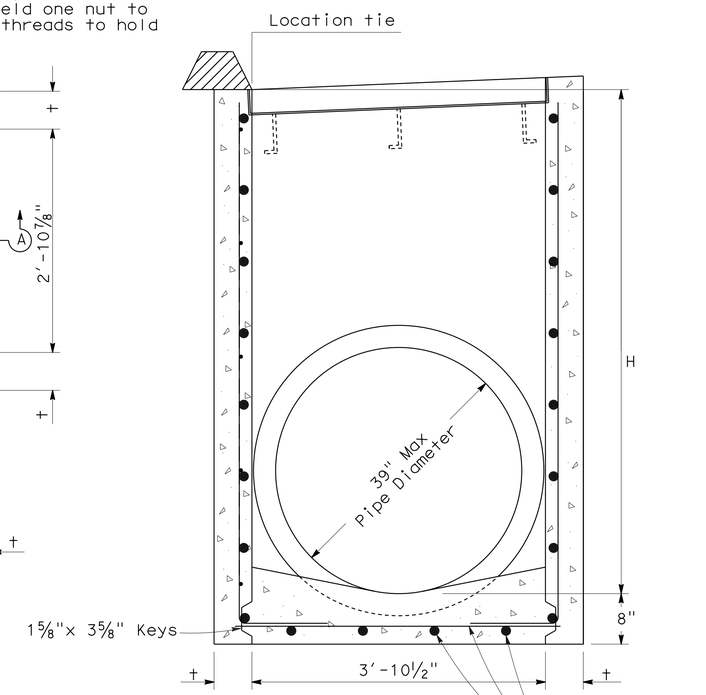

SECTION A-A
(For pipe diameters 39" or less)

NOTES:

1. 'H' is the difference in elevation between the outlet pipe flow line and the flow line of the grates.
2. Steps - None required when 'H' is 3'-6" or less. Install one step 16"± above floor when 'H' is more than 3'-6" and less than 5'-0". Where 'H' is more than 5'-0" steps shall be evenly spaced @ 12"± intervals from 16"± above floor to within 12"± of the top of the box. Place steps in wall without pipe openings. See Standard Plan D74C for step detail.
3. Pipe(s) can be placed in any wall.
4. Reinforcing steel in walls and invert shall be #4 bars @ 12"± centers placed 1½" clear to inside of box.
5. For grate, frame and anchor placement details see standard plans.

MISCELLANEOUS IRON & STEEL

Inlet Type	Grate Type	Weight
GD-1	24 - 12	580
	24 - 10C	379
	24 - 10S	433
	24 - 12X	453
	24 - 13	351

H	+
8'-0" or less	6"
8'1" to 20'- 0"	8"

GD-1
DRAINAGE INLET

WATER POLLUTION CONTROL DETAILS

NO SCALE

WD-3

STATE OF CALIFORNIA - DEPARTMENT OF TRANSPORTATION
Caltrans
HYDRAULICS

FUNCTIONAL SUPERVISOR: DAVE BHALLA
CALCULATED-DESIGNED BY: ROMULO ROBENIOL
CHECKED BY: PAUL FONG
REVISED BY
DATE REVISED

LAST REVISION 03-21-15
DATE PLOTTED => 18-JUN-2015
TIME PLOTTED => 07:25

Dist	COUNTY	ROUTE	POST MILES TOTAL PROJECT	SHEET No.	TOTAL SHEETS
07	LA	210	R10.5/R15.7	28	116

REGISTERED CIVIL ENGINEER 3-20-15 DATE

6-1-15
PLANS APPROVAL DATE

REGISTERED PROFESSIONAL ENGINEER PAUL FONG No. C67053 Exp. 9-30-16 CIVIL STATE OF CALIFORNIA

THE STATE OF CALIFORNIA OR ITS OFFICERS OR AGENTS SHALL NOT BE RESPONSIBLE FOR THE ACCURACY OR COMPLETENESS OF SCANNED COPIES OF THIS PLAN SHEET.

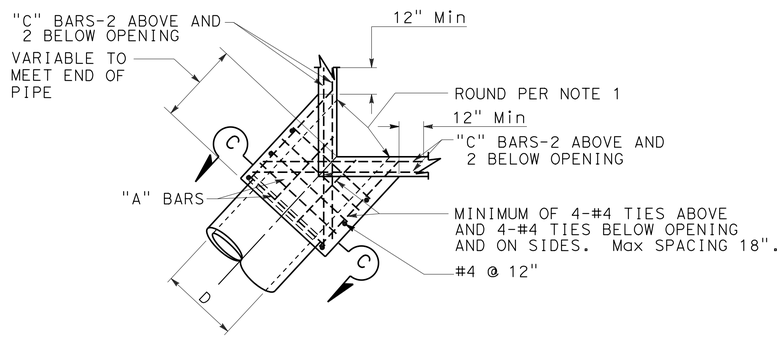

PLAN
CORNER CONNECTION

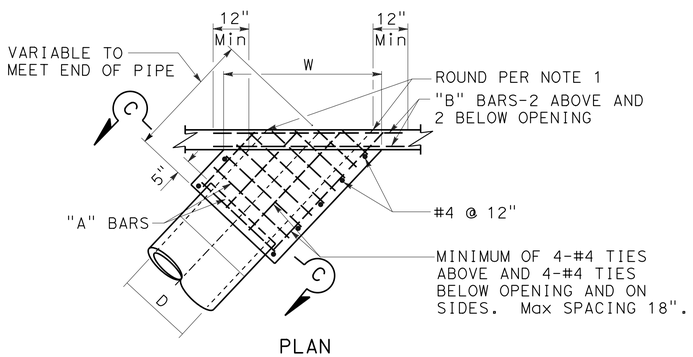

PLAN
SIDE CONNECTION

MONOLITHIC CONNECTION
FOR PIPES 12" TO 72" INCLUSIVE

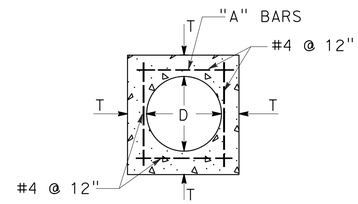

SECTION C-C

D	T	"A"	"B"-"C"
12"	4-½"	#4 @ 6"	#5
15"	4-½"		
18"	5"		
21"	5-½"		
24"	6"		
27"	6-½"		
30"	7"		
33"	7"		
36"	7-½"		
39"	8"		
42"	8"		
45"	8"	#5 @ 6"	#6
48"	8"		
51"	8"		
54"	8"		
57"	10"		
60"	10"		
63"	10"		
66"	11"		
69"	11"		
72"	11"		

NOTES:

1. ROUND EDGE OF OUTLET TO 3" RADIUS.
2. REINFORCEMENT SHALL BE 1½" CLEAR FROM THE FACE OF CONCRETE.
3. IN CONNECTING TO AN EXISTING STRUCTURE BREAK OUT PORTIONS OF THE EXISTING STRUCTURE SIX INCHES OUTSIDE ITS INTERSECTION WITH THE NEW CONNECTION. BEND ENDS OF #4 BARS OVER CONNECTION OPENING AS REQUIRED.

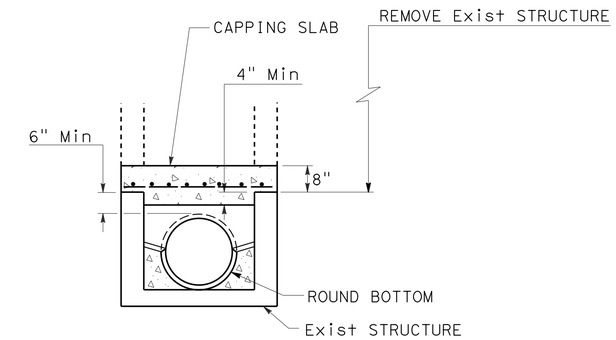

SECTION A-A

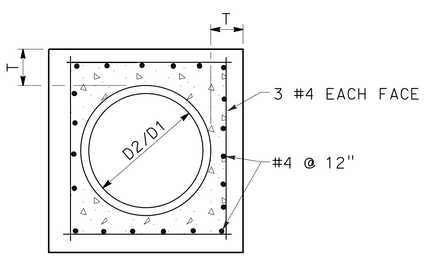

SECTION B-B

D	L	T
12"	1.0'	4"
18"	1.0'	5"
24"	1.0'	6"
36"	1.5'	8"
48"	1.5'	10"
54"	1.5'	10"
60"	1.75'	11"
66"	1.75'	11"
72"	2.0'	12"

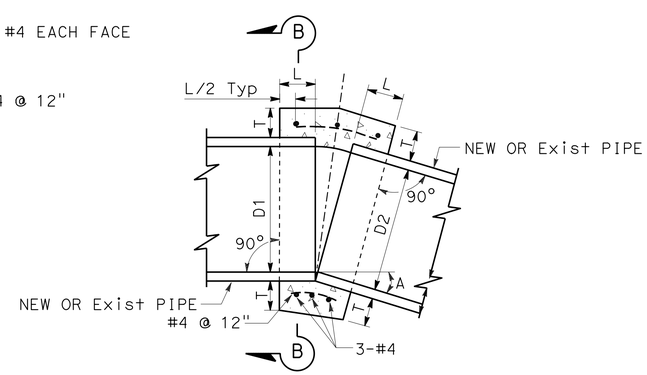

CONCRETE COLLAR

NOTES:

1. WHERE PIPES OF DIFFERENT DIAMETERS ARE JOINED WITH A CONCRETE COLLAR, 'L' AND 'T' SHALL BE THOSE OF THE LARGER PIPE. D=D1 OR D2, WHICHEVER IS GREATER.
2. FOR PIPE SIZE NOT LISTED USE NEXT SIZE LARGER.
3. OMIT REINFORCING ON PIPES 24" AND LESS IN DIAMETER AND ON ALL PIPES WHERE ANGLE A IS LESS THAN 10°.
4. JOIN PIPES AT INVERTS.
5. REINFORCEMENT SHALL BE PLACED 1½" CLEAR FROM OUTSIDE DIAMETER OF PIPE.

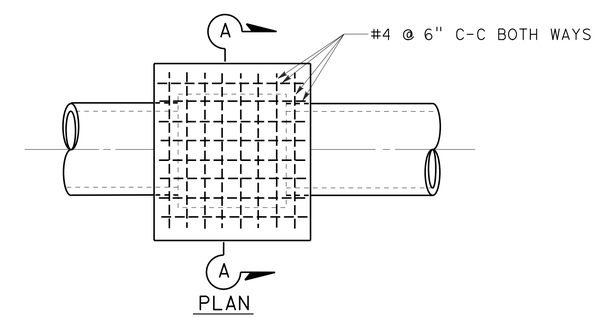

PLAN
CAP INLET DETAIL

WATER POLLUTION CONTROL DETAILS

NO SCALE

WD-4

STATE OF CALIFORNIA - DEPARTMENT OF TRANSPORTATION
Caltrans
HYDRAULICS

FUNCTIONAL SUPERVISOR: DAVE BHALLA
CALCULATED-DESIGNED BY: ROMULO ROBENIOL
CHECKED BY: PAUL FONG
REVISED BY
DATE REVISED

LAST REVISION 03-21-15
DATE PLOTTED => 18-JUN-2015
TIME PLOTTED => 07:25

Dist	COUNTY	ROUTE	POST MILES TOTAL PROJECT	SHEET No.	TOTAL SHEETS
07	LA	210	R10.5/R15.7	29	116

Paul Fong 3-20-15
REGISTERED CIVIL ENGINEER DATE

6-1-15
PLANS APPROVAL DATE

REGISTERED PROFESSIONAL ENGINEER
PAUL FONG
No. C67053
Exp. 9-30-16
CIVIL
STATE OF CALIFORNIA

THE STATE OF CALIFORNIA OR ITS OFFICERS OR AGENTS SHALL NOT BE RESPONSIBLE FOR THE ACCURACY OR COMPLETENESS OF SCANNED COPIES OF THIS PLAN SHEET.

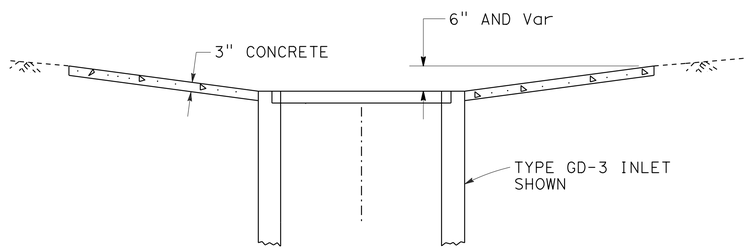

SECTION A-A

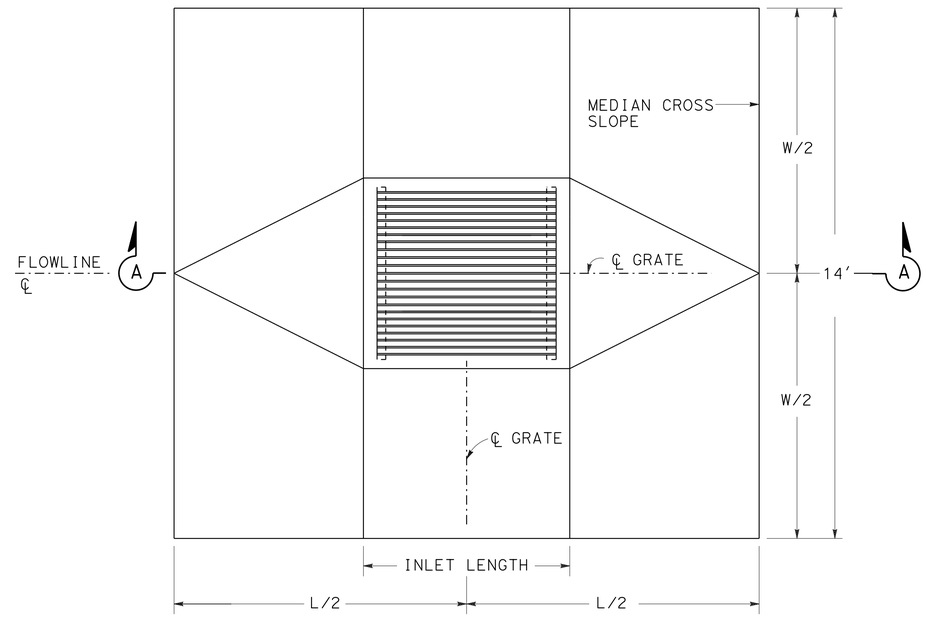

PLAN

MEDIAN INLET CONCRETE APRON DETAIL

DRAINAGE SYSTEM	L (FT)	W (FT)	D (FT)
3 (C)	12.0	14.0	0.25
10 (C)	11.0	10.0	0.25

WATER POLLUTION CONTROL DETAILS

NO SCALE

WD-5

STATE OF CALIFORNIA - DEPARTMENT OF TRANSPORTATION
Caltrans
HYDRAULICS

FUNCTIONAL SUPERVISOR: DAVE BHALLA
CALCULATED-DESIGNED BY: ROMULO ROBENIOL
CHECKED BY: PAUL FONG
REVISED BY
DATE REVISED

LAST REVISION 03-25-15
DATE PLOTTED => 18-JUN-2015
TIME PLOTTED => 07:25

Dist	COUNTY	ROUTE	POST MILES TOTAL PROJECT	SHEET No.	TOTAL SHEETS
07	LA	210	R9.7/R16.1	30	116

Paul Fong 3-20-15
REGISTERED CIVIL ENGINEER DATE

6-1-15
PLANS APPROVAL DATE

REGISTERED PROFESSIONAL ENGINEER
PAUL FONG
No. C67053
Exp. 9-30-16
CIVIL
STATE OF CALIFORNIA

THE STATE OF CALIFORNIA OR ITS OFFICERS OR AGENTS SHALL NOT BE RESPONSIBLE FOR THE ACCURACY OR COMPLETENESS OF SCANNED COPIES OF THIS PLAN SHEET.

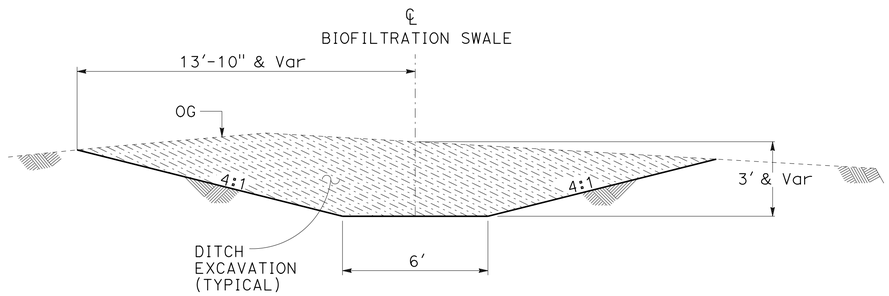

L = 128′
S = 3.71%
L = LENGTH OF BIOSWALE
S = LONGITUDINAL SLOPE

DRAINAGE SYSTEM 3 d

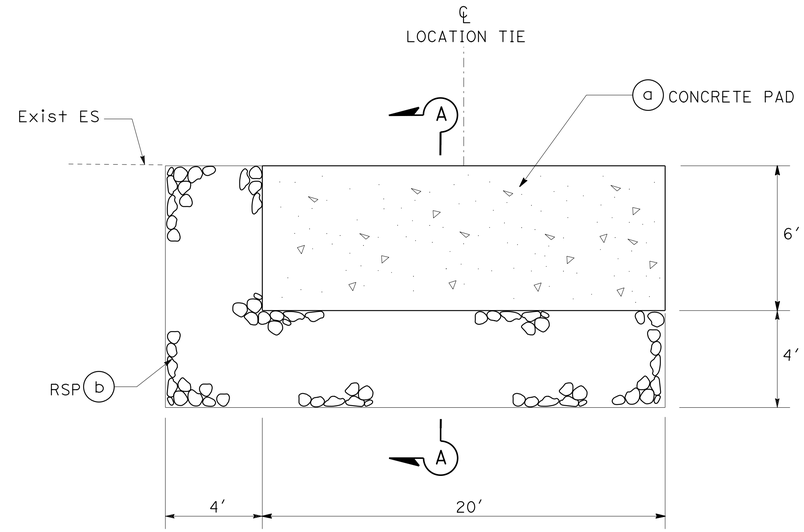

PLAN

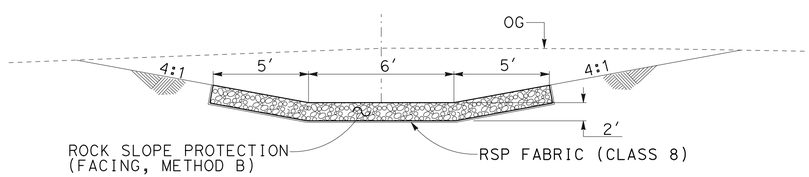

CROSS SECTION

ROCK SLOPE PROTECTION DETAIL

(FACING, METHOD B)

L = 8′
L = LENGTH OF RSP

DRAINAGE SYSTEM 3 e

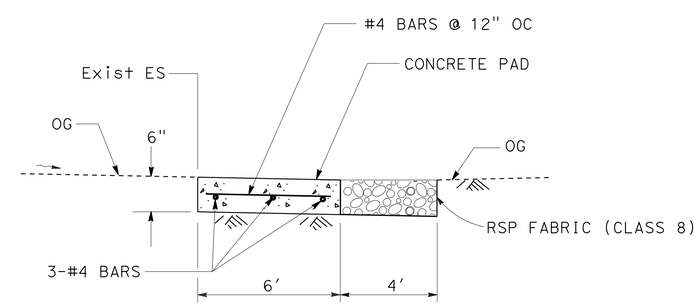

SECTION A-A

DRAINAGE SYSTEM 4 5 9

WATER POLLUTION CONTROL DETAILS

NO SCALE

WD-6

STATE OF CALIFORNIA - DEPARTMENT OF TRANSPORTATION
Caltrans
HYDRAULICS
FUNCTIONAL SUPERVISOR: DAVE BHALLA
CALCULATED-DESIGNED BY: ROMULO ROBENIOL
CHECKED BY: PAUL FONG
REVISED BY
DATE REVISED

LAST REVISION 03-25-15
DATE PLOTTED => 18-JUN-2015
TIME PLOTTED => 07:25

Dist	COUNTY	ROUTE	POST MILES TOTAL PROJECT	SHEET No.	TOTAL SHEETS
07	LA	210	R10.5/R15.7	31	116

Paul Fong 3-20-15
REGISTERED CIVIL ENGINEER DATE

6-1-15
PLANS APPROVAL DATE

REGISTERED PROFESSIONAL ENGINEER
PAUL FONG
No. C67053
Exp. 9-30-16
CIVIL
STATE OF CALIFORNIA

THE STATE OF CALIFORNIA OR ITS OFFICERS OR AGENTS SHALL NOT BE RESPONSIBLE FOR THE ACCURACY OR COMPLETENESS OF SCANNED COPIES OF THIS PLAN SHEET.

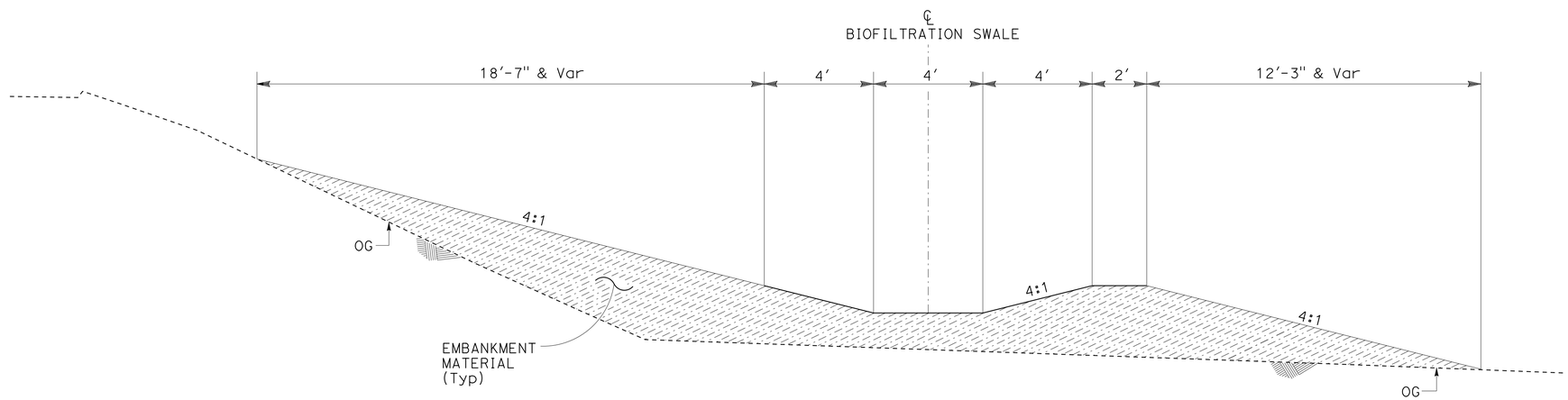

L = 125'
S = 0.75%
L = LENGTH OF BIOSWALE
S = LONGITUDINAL SLOPE

DRAINAGE SYSTEM 6 h

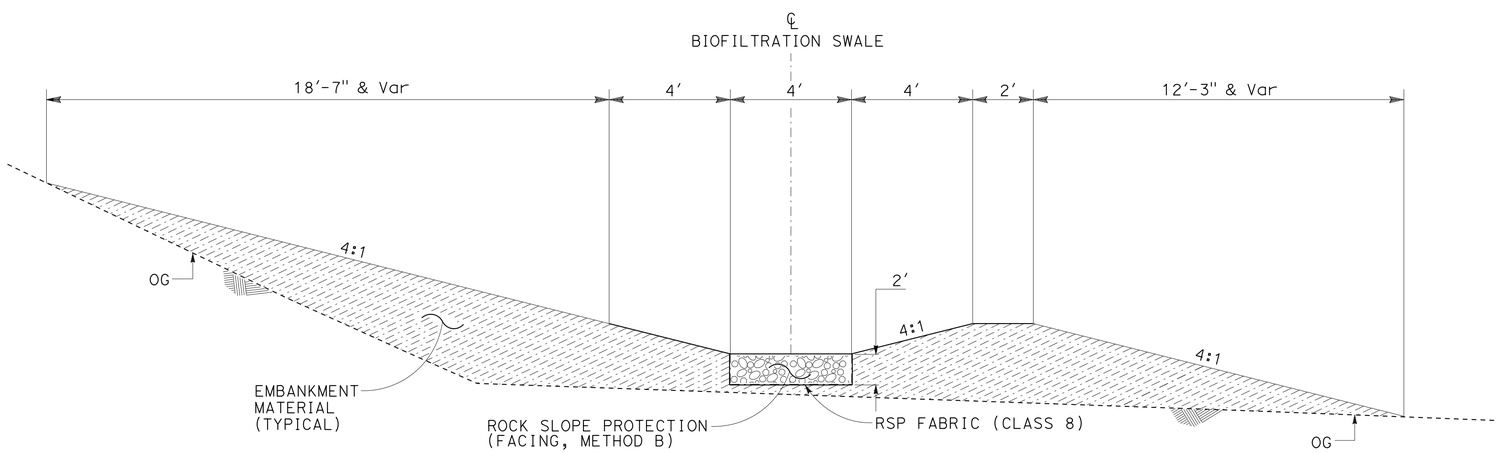

L = 5.0'
L = LENGTH OF RSP

DRAINAGE SYSTEM 6 g

WATER POLLUTION CONTROL DETAILS

NO SCALE

WD-7

STATE OF CALIFORNIA - DEPARTMENT OF TRANSPORTATION
Caltrans
HYDRAULICS

FUNCTIONAL SUPERVISOR: DAVE BHALLA
CALCULATED-DESIGNED BY: ROMULO ROBENIOL
CHECKED BY: PAUL FONG
REVISED BY
DATE REVISED

LAST REVISION 03-25-15
DATE PLOTTED => 18-JUN-2015
TIME PLOTTED => 07:25

Dist	COUNTY	ROUTE	POST MILES TOTAL PROJECT	SHEET No.	TOTAL SHEETS
07	LA	210	R10.5/R15.7	32	116

Paul Fong 3-20-15
REGISTERED CIVIL ENGINEER DATE

6-1-15
PLANS APPROVAL DATE

REGISTERED PROFESSIONAL ENGINEER
PAUL FONG
No. C67053
Exp. 9-30-16
CIVIL
STATE OF CALIFORNIA

THE STATE OF CALIFORNIA OR ITS OFFICERS OR AGENTS SHALL NOT BE RESPONSIBLE FOR THE ACCURACY OR COMPLETENESS OF SCANNED COPIES OF THIS PLAN SHEET.

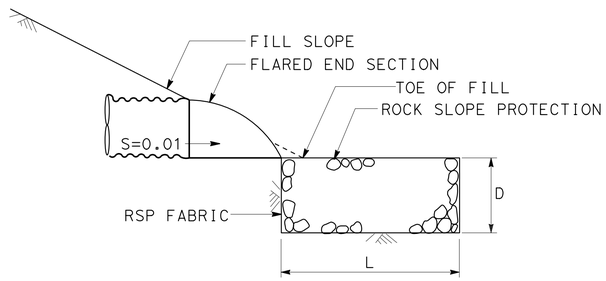

PROFILE

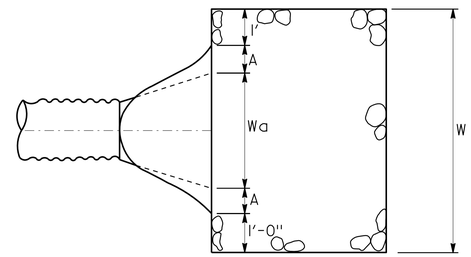

PLAN

ROCK SLOPE PROTECTION DETAIL

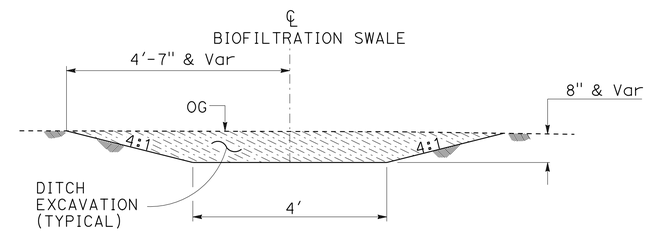

L = 110'
S = 3.66%
L = LENGTH OF BIOSWALE
S = LONGITUDINAL SLOPE

DRAINAGE SYSTEM 10 d

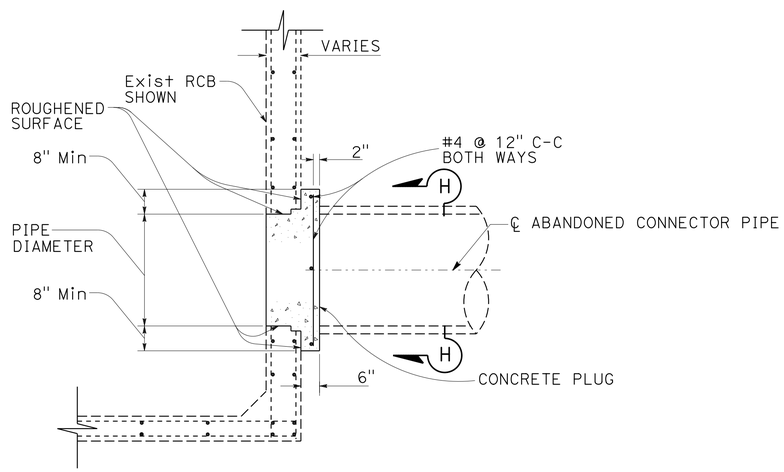

PLAN

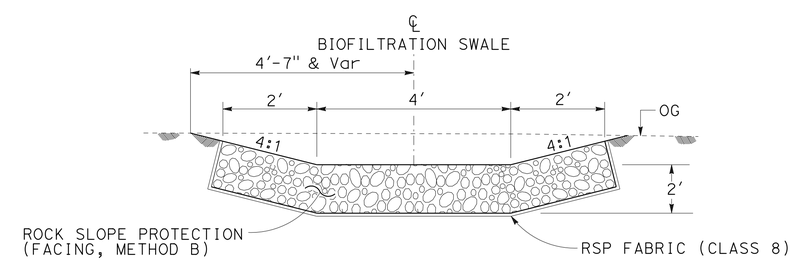

CROSS SECTION

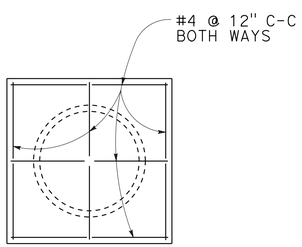

SECTION H-H

ABANDONMENT SEAL

ROCK SLOPE PROTECTION DETAIL

(FACING, METHOD B)

L = 5'
L = LENGTH OF RSP

DRAINAGE SYSTEM 10 e

WATER POLLUTION CONTROL DETAILS

NO SCALE

WD-8

STATE OF CALIFORNIA - DEPARTMENT OF TRANSPORTATION
Caltrans
HYDRAULICS

FUNCTIONAL SUPERVISOR: DAVE BHALLA
CALCULATED-DESIGNED BY: ROMULO ROBENIOL
CHECKED BY: PAUL FONG
REVISED BY
DATE REVISED

LAST REVISION 03-25-15
DATE PLOTTED => 18-JUN-2015
TIME PLOTTED => 07:25

Dist	COUNTY	ROUTE	POST MILES TOTAL PROJECT	SHEET No.	TOTAL SHEETS
07	LA	210	R10.5/R15.7	33	116

Timothy B. Sobelman 12-12-12
REGISTERED CIVIL ENGINEER DATE

6-1-15
PLANS APPROVAL DATE

REGISTERED PROFESSIONAL ENGINEER TIMOTHY B. SOBELMAN No. 59249 Exp. 6-30-15 CIVIL STATE OF CALIFORNIA

THE STATE OF CALIFORNIA OR ITS OFFICERS OR AGENTS SHALL NOT BE RESPONSIBLE FOR THE ACCURACY OR COMPLETENESS OF SCANNED COPIES OF THIS PLAN SHEET.

GENERAL NOTES

Designation:
Types of Gross Solids Removal Devices (GSRDs) are Linear Radial (LR) and Inclined Screen. The Linear Radial has either a standard or high velocity configuration noted as Linear Radial or Linear Radial (HV). All GSRD BMP Detail Drawings are applicable for velocities up to 20 fps.

Special Reinforcement Coverage:
GSRD BMP Detail Drawings are not to be used in a corrosive environment or where there is a severe abrasive flow condition or in freeze-thaw locations.

Special Design:
Required for ground water conditions above bottom of GSRD, surcharge loads exceeding HS20 truck load, design bearing pressures or sizes greater than those on this plan.

Traffic Loading:
No traffic load is allowed over GSRDs. As determined by the Engineer, barriers or MBGR shall be provided between GSRDs and traffic lanes.

LINEAR RADIAL DESIGN CHART

GSRD TYPE	TOTAL SCREENED PIPE LENGTH "T_S"	FLOW RATE (cfs)	DEBRIS AREA (acres)	INSIDE LENGTH "L"	HIGH VELOCITY INSIDE LENGTH "L_{HV}" *	No. OF INTERMEDIATE SCREENED PIPES
LR-1	5′-6"	3.54	0.79	11′-11"	14′-3¾"	0
LR-2	10′-6"	7.07	1.58	16′-11"	19′-3¾"	1
LR-3	15′-6"	10.96	2.25	21′-11"	24′-3¾"	2
LR-4	20′-6"	14.49	3.16	26′-11"	29′-3¾"	3
LR-5	25′-6"	18.38	3.95	31′-11"	34′-3¾"	4
LR-6	30′-6"	21.91	4.74	36′-11"	39′-3¾"	5

* High velocity is achieved when inlet Velocity exceeds 8.2 fps.

NOTES:

1. The total screened pipe length "T_S" is the sum of the end screened and intermediate screened pipes. For dimension "T_S" and location of end screened pipe and intermediate screened pipes, see "GSRD Layout" sheet.
2. Example of Linear Radial nomenclature is LR-1 (6′-0"); for high velocity type LR(HV)-3 (3′-0"). The wall height is the number represented in the parentheses.
3. The inside length "L" is shown on the "Linear Radial Layout" sheet, see plan view. Like wise the inside length "L_{HV}" is shown on the "Linear Radial (High Velocity) Layout sheet, see plan view.

DESIGN NOTES

Specifications:
Design:
Bridge Design Specification April 2000 (LFD) (1996 AASHTO) with interims and revisions by Caltrans

Wall (LFD) : 1.5 D + 1.5 E and 1.5 D + W
Footing (LFD): 1.5 D + 1.5 E
Where D = Dead Load
E = Earth Load

Capacity reduction factor is included.

Earth Load:
125 lb/ft^3 vertical,

Water Load:
62.4 lb/ft^3 horizontal,

Equivalent Fluid Pressure =
100 lb/ft^3 horizontal (Case I).

Earth pressure for 2:1 unlimited slope determined from Rankine's formula with ϕ = 33°42′ (Case II).

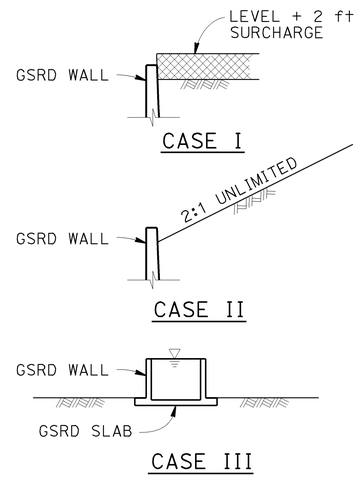

DETAIL OF DESIGN LOADING CASES

CASE I Level + 2′-0" surcharge, GSRD empty
CASE II 2:1 Unlimited slope, GSRD empty
CASE III GSRD full of water, no soil pressure

Grating (LL) Load :
0.5 psi

Unit Stresses:
f'_c = 3.6 ksi
f_y = 60 ksi (bar reinforcing)

Design Soil Bearing Pressure (Service Load) = 20 psi

ABBREVIATIONS

cfs	CUBIC FEET PER SECOND
fps	FEET PER SECOND
GSRD	GROSS SOLIDS REMOVAL DEVICE
HV	HIGH VELOCITY
LL	LIVE LOAD
LR	LINEAR RADIAL

LEGEND

DESIGN WATER DEPTH

STANDARD PLAN SHEET No.

DETAIL No.

NOTES

Expansion joints:
Inverts - No expansion joints shall be permitted.
Walls - Place ½" expansion joint filler vertically at 26′-0" centers with strip water stop (B0-1 / 1-3).

Construction Joints:
Construction joints may be permitted if normal (or radial) to ℄ of GSRD.

Backfill:
See Standard Specifications, except the difference in backfill shall not exceed 4 ft between side walls and shall not exceed the lesser of wall height "H" or 4 ft between inlet and outlet walls.

Earthwork:
Excavation and Backfill with Cut and Exposed conditions:

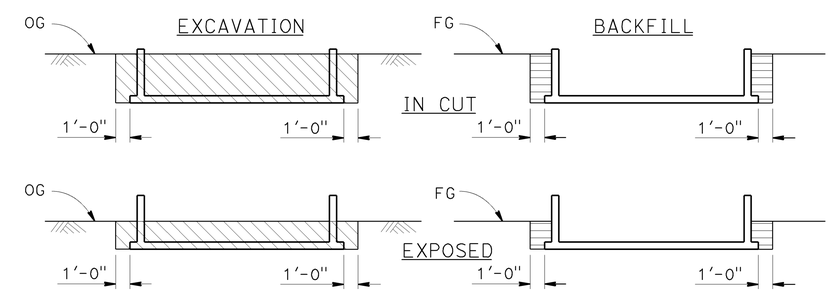

LINEAR RADIAL

LEGEND

STRUCTURE EXCAVATION

STRUCTURE BACKFILL
90% RELATIVE COMPACTION

NOTES

1. Slope or shore excavation sides as necessary.
2. Dimensions shown are minimum.

WATER POLLUTION CONTROL DETAILS
GROSS SOLIDS REMOVAL DEVICE
LINEAR RADIAL LEGEND

NO SCALE

WD-9

STATE OF CALIFORNIA - DEPARTMENT OF TRANSPORTATION
DIVISION OF DESIGN
OFFICE OF STORM WATER MANAGEMENT
Caltrans

FUNCTIONAL SUPERVISOR: TIMOTHY B. SOBELMAN
CALCULATED-DESIGNED BY: D. WANG
CHECKED BY: L. HE
REVISED BY
DATE REVISED

LAST REVISION 10-15-13
DATE PLOTTED => 06-FEB-2014
TIME PLOTTED => 08:53

Dist	COUNTY	ROUTE	POST MILES TOTAL PROJECT	SHEET No.	TOTAL SHEETS
07	LA	210	R10.5/R15.7	34	116

Timothy B. Sobelman 12-12-12
REGISTERED CIVIL ENGINEER DATE

6-1-15
PLANS APPROVAL DATE

REGISTERED PROFESSIONAL ENGINEER TIMOTHY B. SOBELMAN No. 59249 Exp. 6-30-15 CIVIL STATE OF CALIFORNIA

THE STATE OF CALIFORNIA OR ITS OFFICERS OR AGENTS SHALL NOT BE RESPONSIBLE FOR THE ACCURACY OR COMPLETENESS OF SCANNED COPIES OF THIS PLAN SHEET.

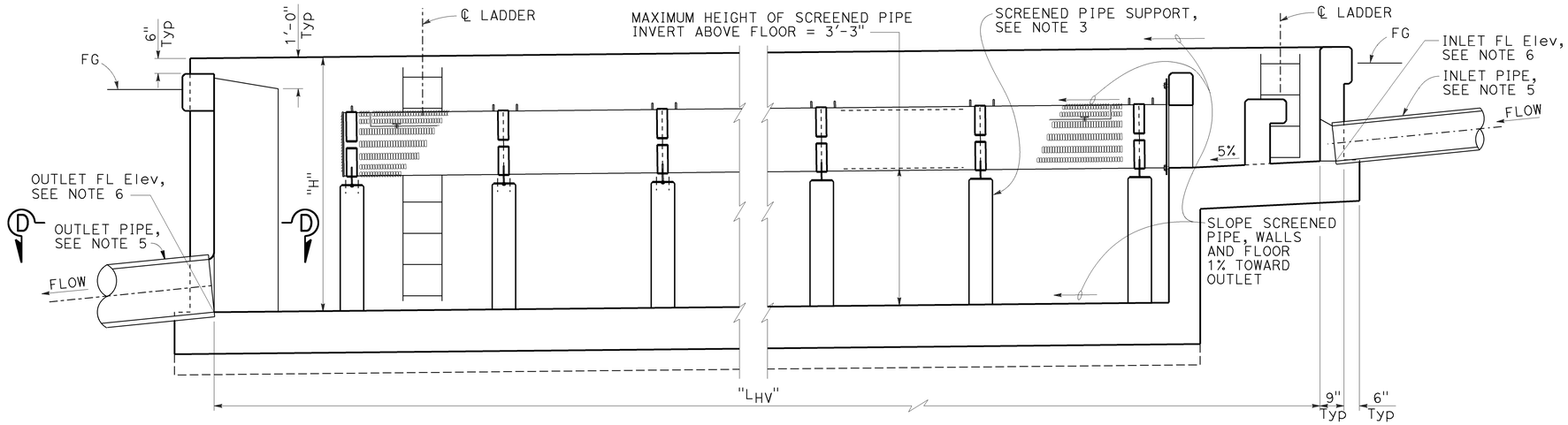

LONGITUDINAL SECTION - MAXIMUM SCREENED PIPE HEIGHT

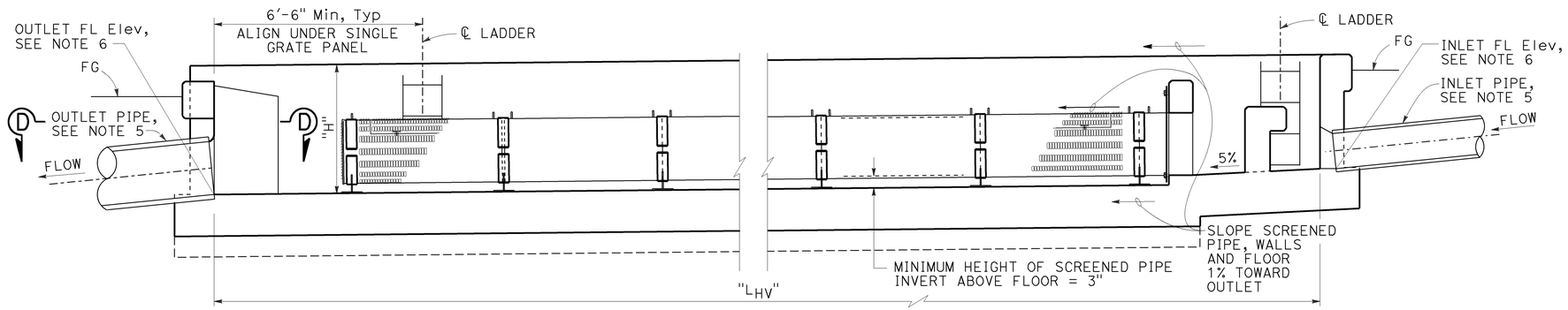

LONGITUDINAL SECTION - MINIMUM SCREENED PIPE HEIGHT

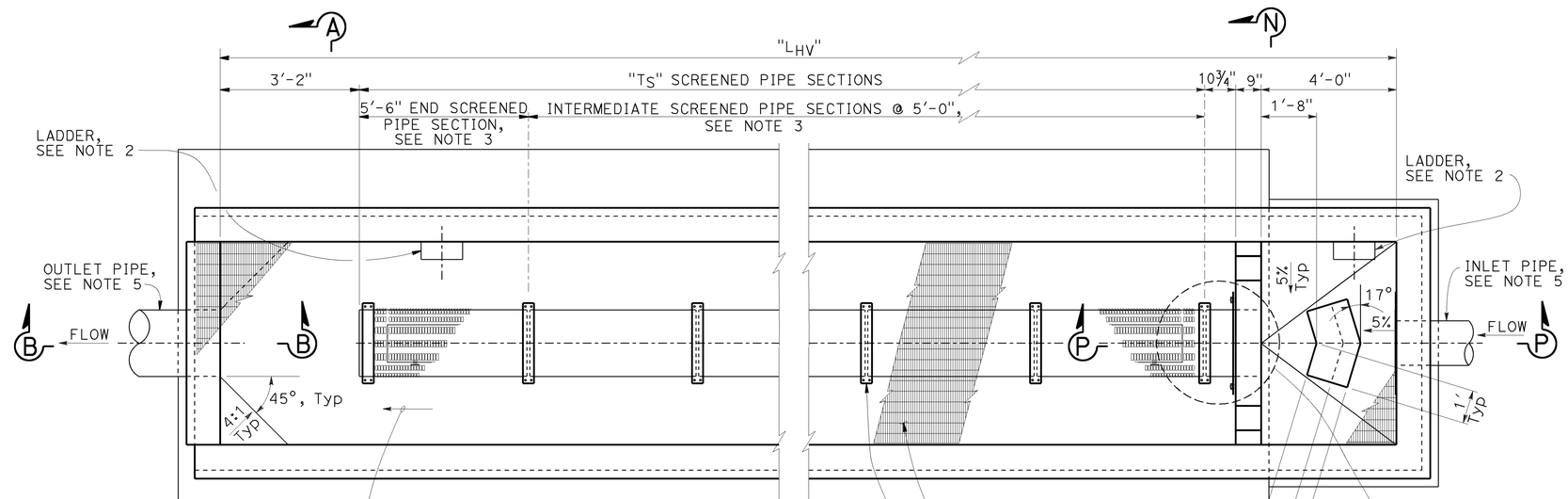

PLAN

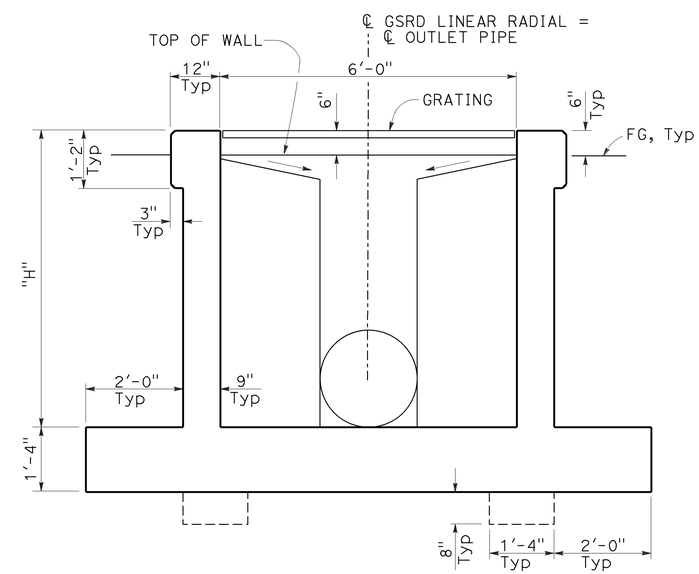

TYPICAL SECTION

NOTES (THIS SHEET ONLY):

1. For Section A-A, B-B, and D-D, see "Linear Radial Details" sheet.
2. For ladder details see "Linear Radial Ladder Details" sheet.
3. For end and intermediate screened pipe details, see "Linear Radial Screened Pipe Details" sheet.
4. For grate details, see "Linear Radial Grate Panel Details" sheet.
5. For layout of inlet and outlet pipes, see "Drainage Plans".
6. For FL elevations of inlet and outlet pipes, see "Drainage Profiles".
7. For dimension "L_{HV}", "T_S" and other design data, see Design Chart on "Linear Radial Legend" sheet.
8. For dimension "H", see "Linear Radial Details sheet.
9. For Section M-M and N-N, see "Linear Radial (High Velocity) Details No. 1" sheet.

WATER POLLUTION CONTROL DETAILS
GROSS SOLIDS REMOVAL DEVICE
LINEAR RADIAL (HIGH VELOCITY) LAYOUT

NO SCALE

WD-10

STATE OF CALIFORNIA - DEPARTMENT OF TRANSPORTATION
DIVISION OF DESIGN
OFFICE OF STORM WATER MANAGEMENT
Caltrans

FUNCTIONAL SUPERVISOR: TIMOTHY B. SOBELMAN
CALCULATED-DESIGNED BY: D. WANG
CHECKED BY: L. HE
REVISED BY
DATE REVISED

LAST REVISION 10-15-13
DATE PLOTTED => 06-FEB-2014
TIME PLOTTED => 08:53

Dist	COUNTY	ROUTE	POST MILES TOTAL PROJECT	SHEET No.	TOTAL SHEETS
07	LA	210	R10.5/R15.7	35	116

REGISTERED CIVIL ENGINEER 12-12-12 DATE

6-1-15
PLANS APPROVAL DATE

REGISTERED PROFESSIONAL ENGINEER TIMOTHY B. SOBELMAN No. 59249 Exp. 6-30-15 CIVIL STATE OF CALIFORNIA

THE STATE OF CALIFORNIA OR ITS OFFICERS OR AGENTS SHALL NOT BE RESPONSIBLE FOR THE ACCURACY OR COMPLETENESS OF SCANNED COPIES OF THIS PLAN SHEET.

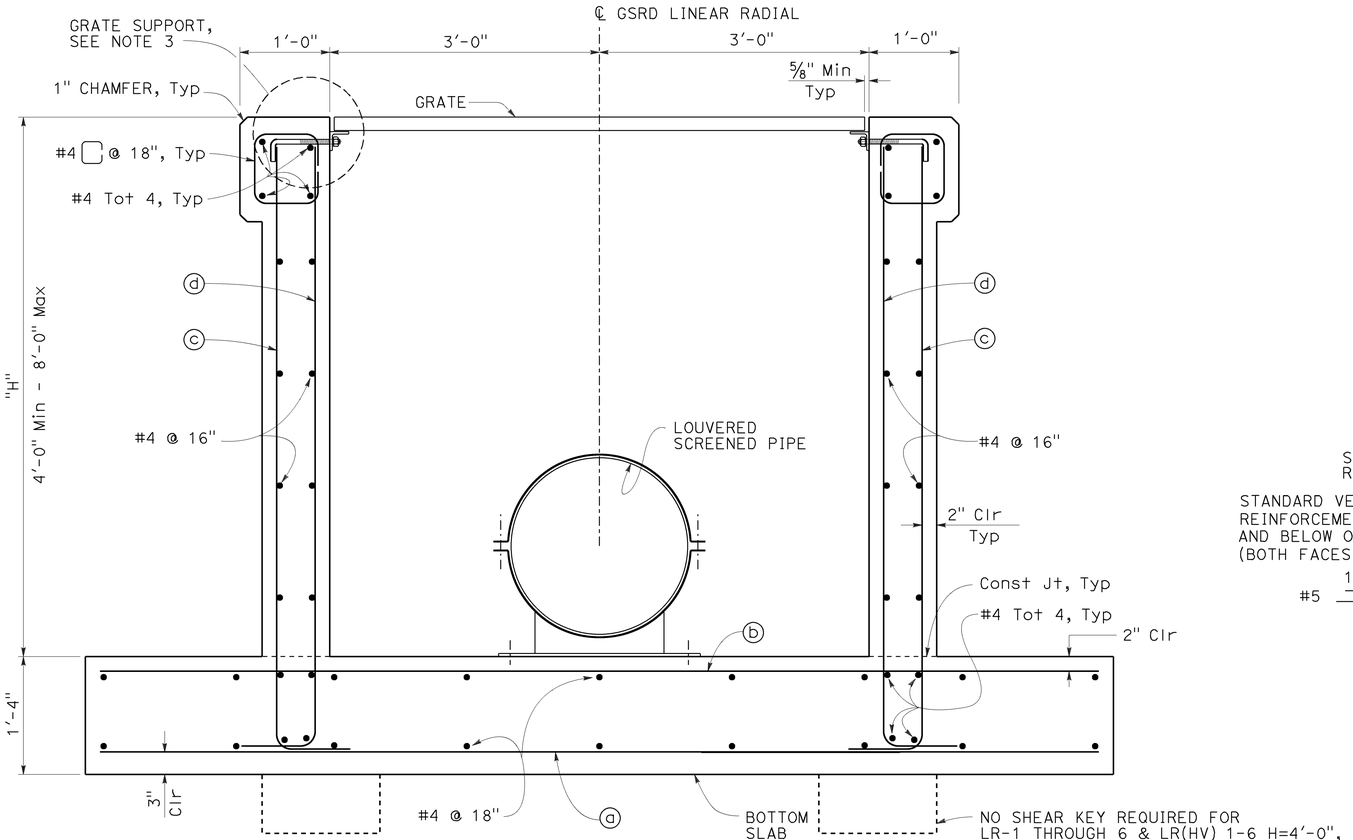

SECTION A-A

NOTES (THIS SHEET ONLY):

1. For location of sections A-A, B-B, C-C and D-D, see "Linear Radial Layout" sheet.
2. For invert elevation differential between inlet and outlet, see "Drainage Profiles" sheets.
3. For grate support detail, see "Linear Radial Grate Panel Details" sheet.

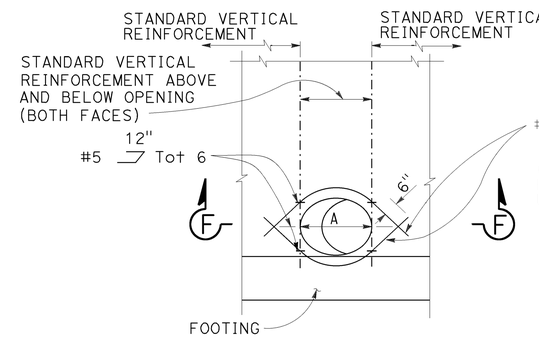

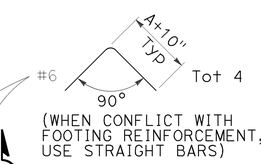

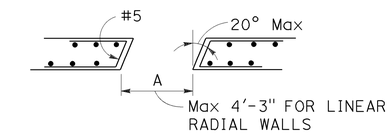

SECTION F-F

NOTE:
In all opening locations, horizontal reinforcement to be standard except as shown. All reinforcement to clear opening by 2" minimum.

WALL OPENING DETAILS

To be used at Linear Radial inlet and outlet pipe locations

REINFORCING STEEL AND DATA FOR WALLS

Design "H"	4'-0"	6'-0"	8'-0"
ⓐ BARS	#4 @ 18"	#5 @ 12"	#5 @ 8"
ⓑ BARS	#4 @ 18"	#4 @ 18"	#5 @ 16"
ⓒ BARS ⌊	#5 @ 14"	#5 @ 9"	#5 @ 4"
ⓓ BARS ⌋	#5 @ 14"	#5 @ 14"	#5 @ 12"

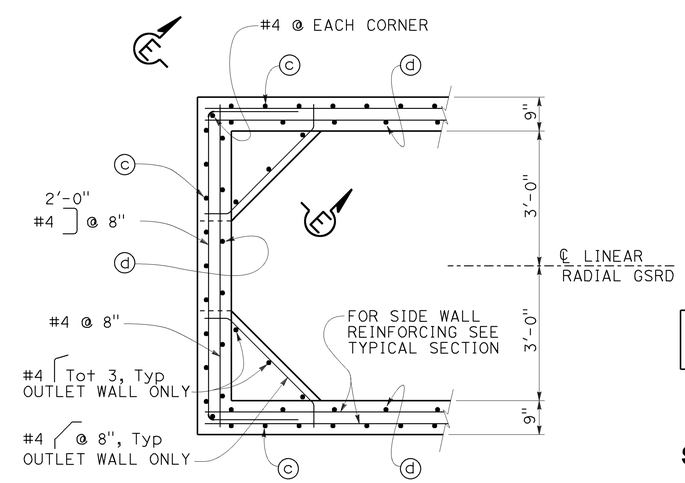

SECTION D-D

NOTE: OUTLET WALL SHOWN, INLET WALL SIMILAR.

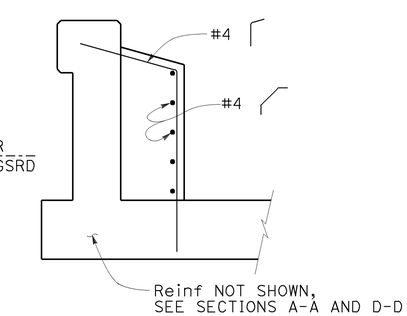

SECTION E-E

(OUTLET END ONLY)

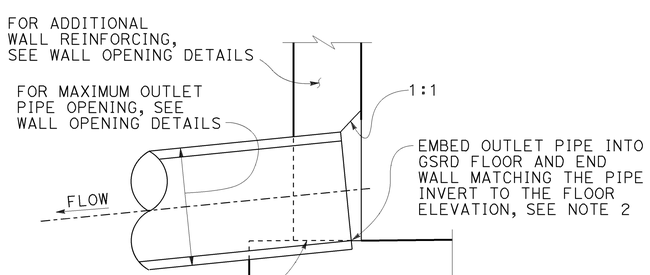

SECTION B-B

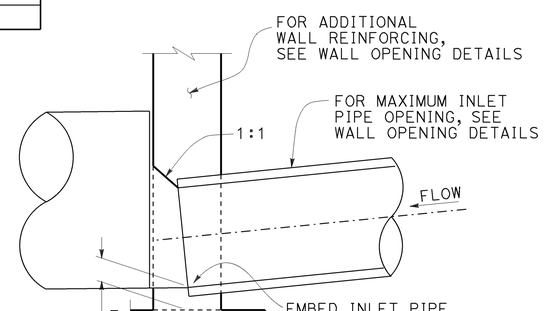

SECTION C-C

WATER POLLUTION CONTROL DETAILS
GROSS SOLIDS REMOVAL DEVICE
LINEAR RADIAL DETAILS

NO SCALE

WD-11

STATE OF CALIFORNIA - DEPARTMENT OF TRANSPORTATION
DIVISION OF DESIGN
OFFICE OF STORM WATER MANAGEMENT
Caltrans

FUNCTIONAL SUPERVISOR: TIMOTHY B. SOBELMAN
CALCULATED-DESIGNED BY: D. WANG
CHECKED BY: L. HE
REVISED BY
DATE REVISED

LAST REVISION 10-15-13
DATE PLOTTED => 06-FEB-2014
TIME PLOTTED => 08:53

Dist	COUNTY	ROUTE	POST MILES TOTAL PROJECT	SHEET No.	TOTAL SHEETS
07	LA	210	R9.7/R16.1	36	116

Timothy B. Sobelman 12-12-12
REGISTERED CIVIL ENGINEER DATE

6-1-15
PLANS APPROVAL DATE

REGISTERED PROFESSIONAL ENGINEER TIMOTHY B. SOBELMAN No. 59249 Exp. 6-30-15 CIVIL STATE OF CALIFORNIA

THE STATE OF CALIFORNIA OR ITS OFFICERS OR AGENTS SHALL NOT BE RESPONSIBLE FOR THE ACCURACY OR COMPLETENESS OF SCANNED COPIES OF THIS PLAN SHEET.

NOTE (THIS SHEET ONLY):

1. All metal components of screen pipe including connections to concrete must be stainless steel.

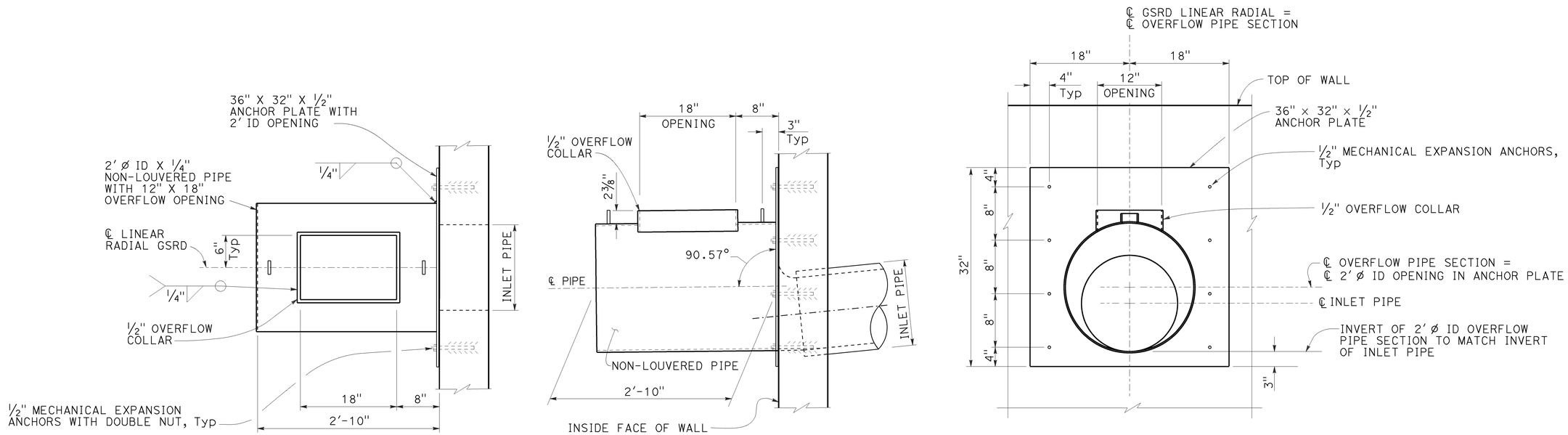

OVERFLOW PIPE AND ANCHOR PLATE DETAILS

WATER POLLUTION CONTROL DETAILS
GROSS SOLIDS REMOVAL DEVICE
LINEAR RADIAL OVERFLOW PIPE DETAILS

NO SCALE

WD-12

REVISED BY	DATE REVISED

CALCULATED-DESIGNED BY: D. WANG
CHECKED BY: L. HE
FUNCTIONAL SUPERVISOR: TIMOTHY B. SOBELMAN

STATE OF CALIFORNIA - DEPARTMENT OF TRANSPORTATION
Caltrans
DIVISION OF DESIGN
OFFICE OF STORM WATER MANAGEMENT

LAST REVISION 10-15-13 | DATE PLOTTED => 06-FEB-2014 | TIME PLOTTED => 08:53

Dist	COUNTY	ROUTE	POST MILES TOTAL PROJECT	SHEET No.	TOTAL SHEETS
07	LA	210	R10.5/R15.7	37	116

Timothy B. Sobelman 12-12-12
REGISTERED CIVIL ENGINEER DATE

6-1-15
PLANS APPROVAL DATE

REGISTERED PROFESSIONAL ENGINEER TIMOTHY B. SOBELMAN No. 59249 Exp. 6-30-15 CIVIL STATE OF CALIFORNIA

THE STATE OF CALIFORNIA OR ITS OFFICERS OR AGENTS SHALL NOT BE RESPONSIBLE FOR THE ACCURACY OR COMPLETENESS OF SCANNED COPIES OF THIS PLAN SHEET.

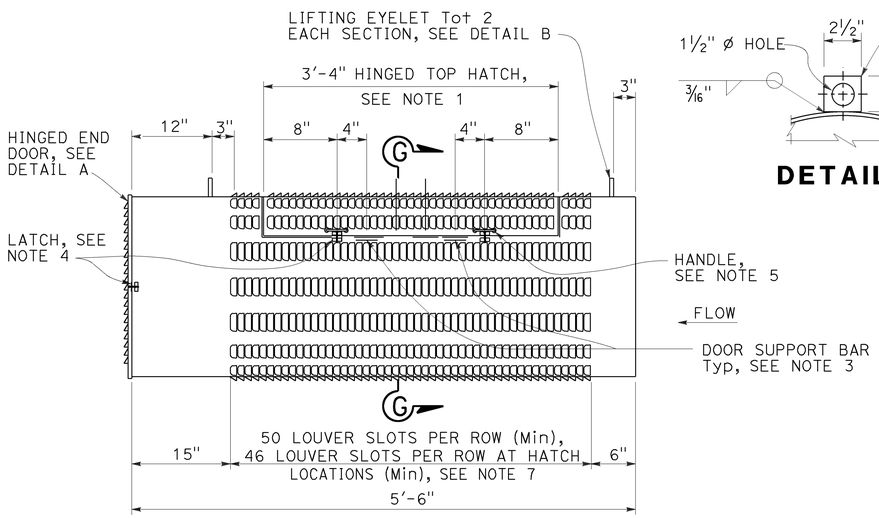

END SCREENED PIPE

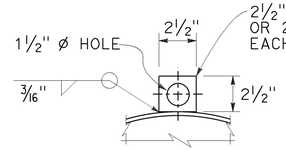

DETAIL B

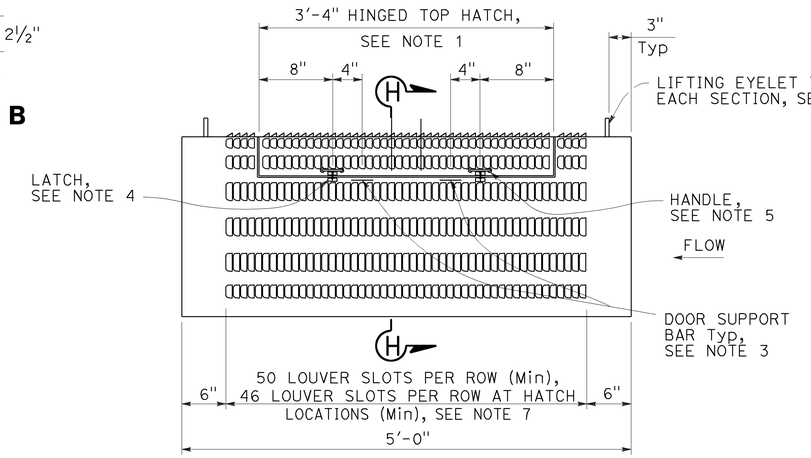

INTERMEDIATE SCREENED PIPE

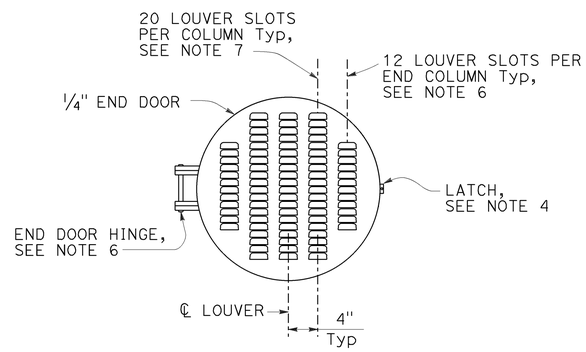

DETAIL A

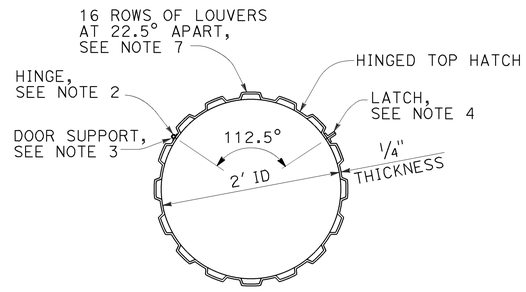

SECTION G-G

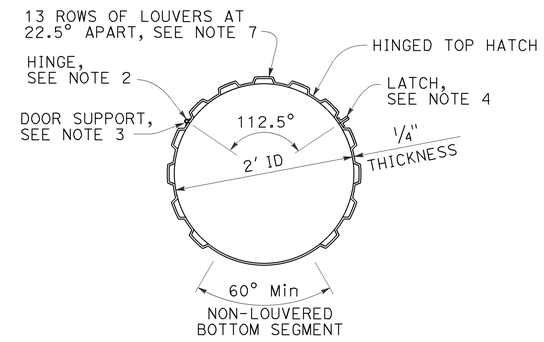

SECTION H-H

NOTES (THIS SHEET ONLY):

1. Provide 1" x 3/16" stainless steel bar at all cut edges to provide a seat and support for all doors when closed.
2. Provide stainless steel ¼" thick heavy duty hinges 4" x 4" thick with ⅝" Dia pin. Use fillet weld at cover and frame. Total 2 each door, evenly spaced.
3. Attach 2- 1" x 1" x 3" stainless steel bars (or fabricator equivalent design) to support doors when in an open position. Mechanical stops can be welded on hinges.
4. Provide latch. Latch must have threaded U-bolt for adjustment. Latch to have ⅜" total adjustability and 1 7/16" drawing movement and be rated at 360 LB.
5. Provide stainless steel handles at locations indicated.
6. End door to be secured to end screen with ⅜" Dia x 10" continuous bolt with lock nut through flat bars.
7. The aperture size of each louver slot must be 3/16" wide x 2½" long. Louver slot apertures must meet the following requirements:

Width	% of Total
0.189" - 0.209"	90
0.181" - 0.209"	95
0.169" - 0.209"	100

Length	% of Total
2.250" - 2.750"	90
2.000" - 3.000"	100

8. If inlet invert height above floor is at the minimum 3 inch height, use anchor bolts to mount the pipe support base plate to the floor. Otherwise, construct concrete support.

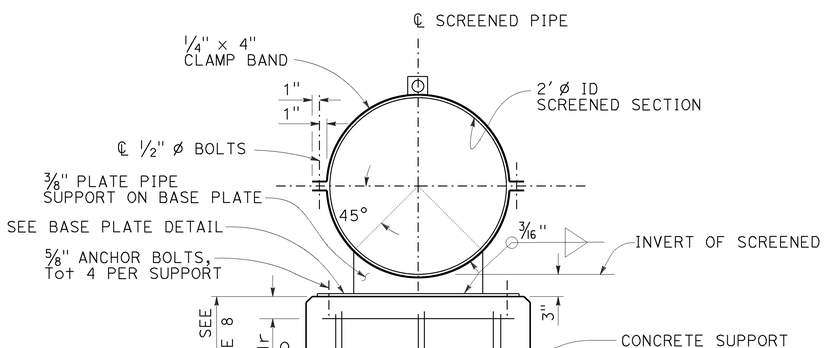

SECTION I-I

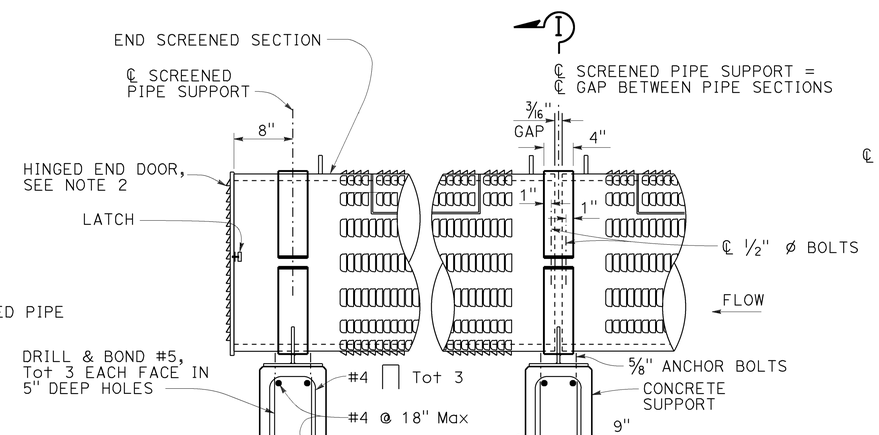

SCREENED PIPE SUPPORT

SIDE VIEW

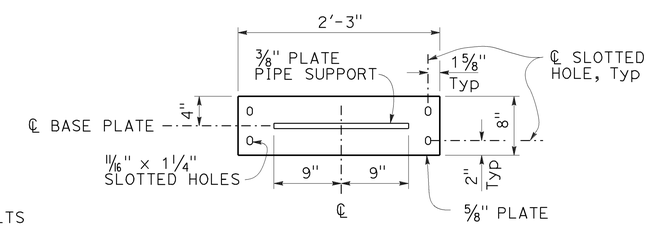

BASE PLATE DETAIL

WATER POLLUTION CONTROL DETAILS
GROSS SOLIDS REMOVAL DEVICE
LINEAR RADIAL SCREENED PIPE DETAILS

NO SCALE

WD-13

STATE OF CALIFORNIA - DEPARTMENT OF TRANSPORTATION
DIVISION OF DESIGN
OFFICE OF STORM WATER MANAGEMENT
Caltrans

FUNCTIONAL SUPERVISOR: TIMOTHY B. SOBELMAN
CALCULATED-DESIGNED BY: D. WANG
CHECKED BY: L. HE
REVISED BY
DATE REVISED

LAST REVISION 10-15-13
DATE PLOTTED => 06-FEB-2014
TIME PLOTTED => 08:53

Dist	COUNTY	ROUTE	POST MILES TOTAL PROJECT	SHEET No.	TOTAL SHEETS
07	LA	210	R10.5/R15.7	38	116

REGISTERED CIVIL ENGINEER 12-12-12 DATE

6-1-15
PLANS APPROVAL DATE

REGISTERED PROFESSIONAL ENGINEER TIMOTHY B. SOBELMAN No. 59249 Exp. 6-30-15 CIVIL STATE OF CALIFORNIA

THE STATE OF CALIFORNIA OR ITS OFFICERS OR AGENTS SHALL NOT BE RESPONSIBLE FOR THE ACCURACY OR COMPLETENESS OF SCANNED COPIES OF THIS PLAN SHEET.

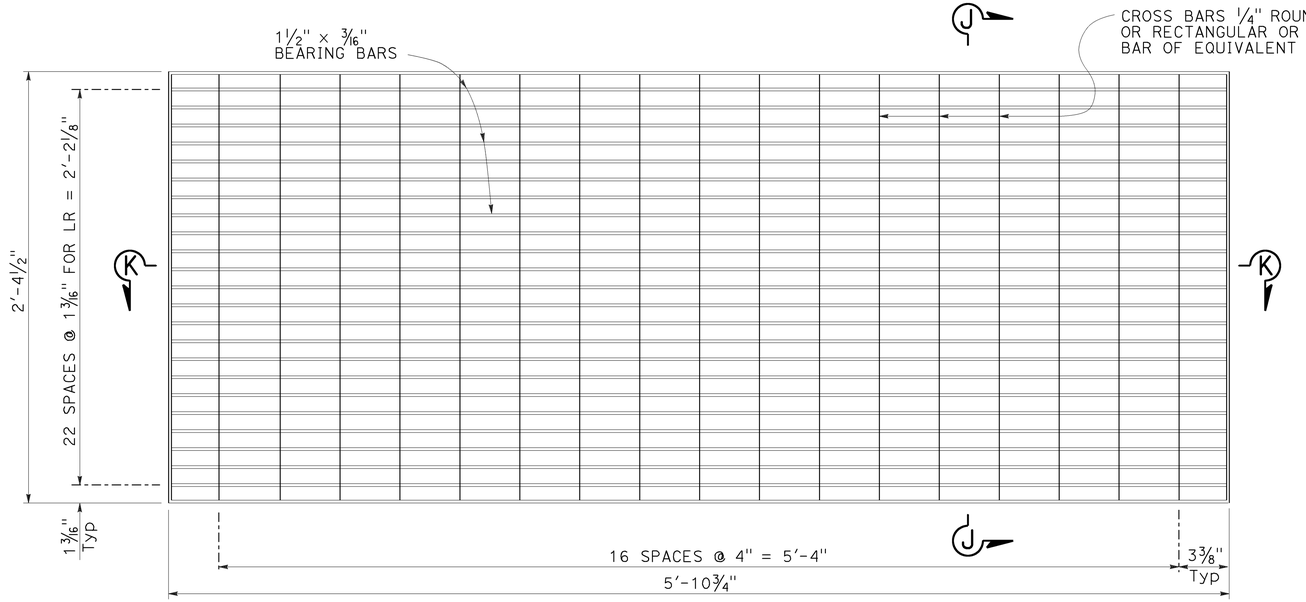

GRATE PANEL

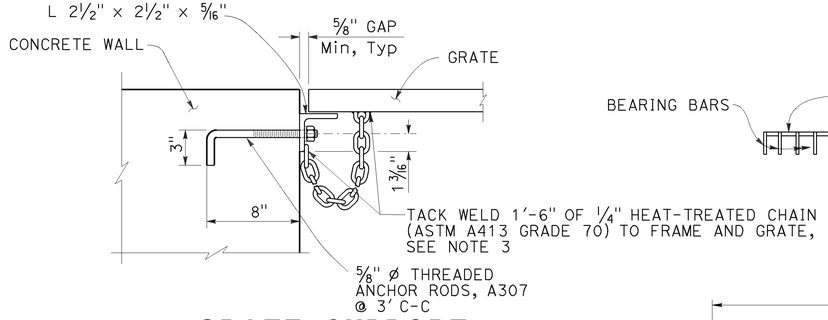

GRATE SUPPORT

SECTION J-J

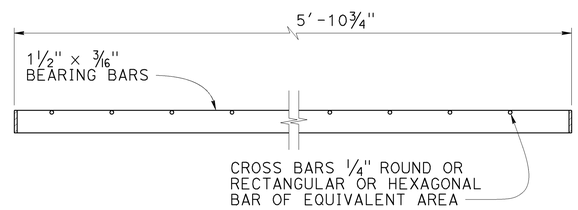

SECTION K-K

NOTE: CROSS BARS MAYBE FILLET WELDED, RESISTANCE WELDED OR ELECTROFORGED TO BEARING BARS.

No. OF INTERMEDIATE SCREENED PIPES	LR No. OF GRATES	LR(HV) No. OF GRATES
0	5	6
1	7	8
2	9	10
3	11	12
4	13	14
5	15	16

NOTES (THIS SHEET ONLY):

1. Gap between grate panels is 1".
2. All metal components of grating including connections to wall must be galvanized.
3. Attach "heat-treated chain" per grate on wall opposite of service ladder, see "Grate Support Detail" this sheet.

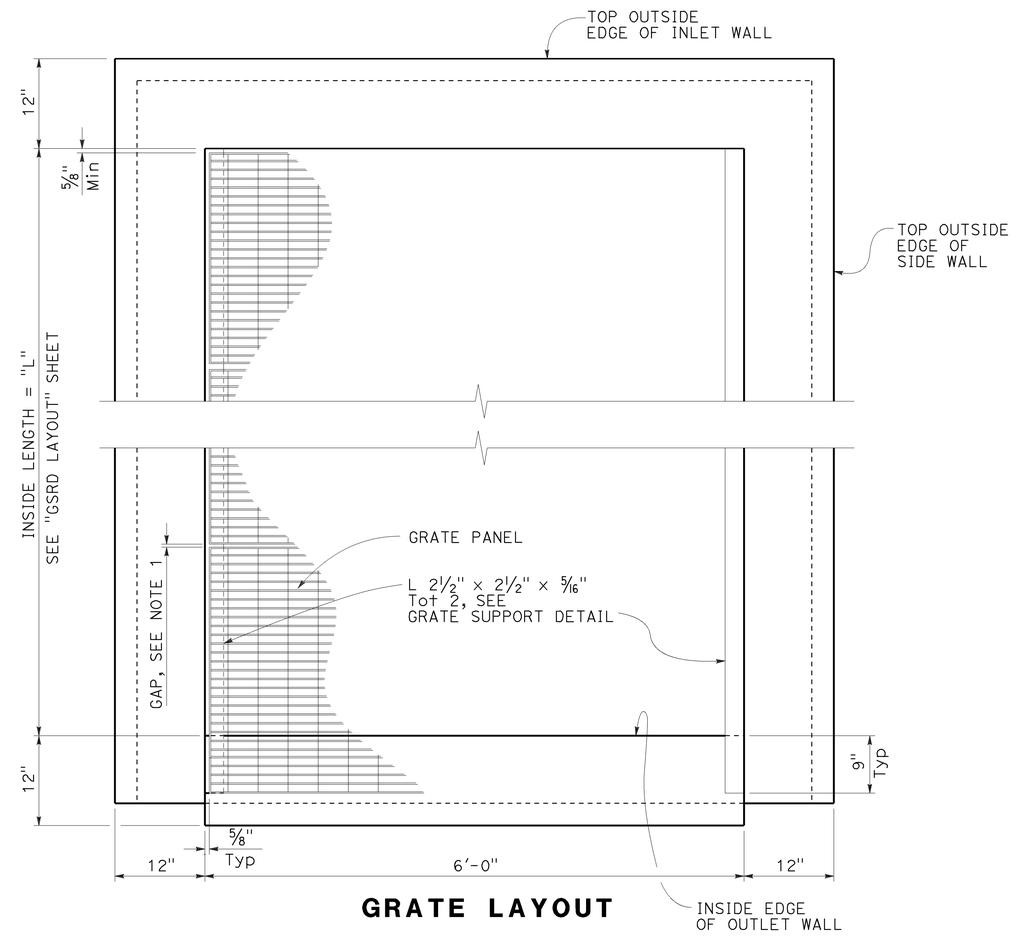

GRATE LAYOUT

WATER POLLUTION CONTROL DETAILS
GROSS SOLIDS REMOVAL DEVICE
LINEAR RADIAL GRATE PANEL DETAILS

NO SCALE

WD-14

STATE OF CALIFORNIA - DEPARTMENT OF TRANSPORTATION
DIVISION OF DESIGN
OFFICE OF STORM WATER MANAGEMENT

FUNCTIONAL SUPERVISOR: TIMOTHY B. SOBELMAN
CALCULATED-DESIGNED BY: D. WANG
CHECKED BY: L. HE
REVISED BY
DATE REVISED

LAST REVISION 10-15-13
DATE PLOTTED => 06-FEB-2014
TIME PLOTTED => 08:53

Dist	COUNTY	ROUTE	POST MILES TOTAL PROJECT	SHEET No.	TOTAL SHEETS
07	LA	210	R10.5/R15.7	39	116

Timothy B. Sobelman 12-12-12
REGISTERED CIVIL ENGINEER DATE

6-1-15
PLANS APPROVAL DATE

REGISTERED PROFESSIONAL ENGINEER TIMOTHY B. SOBELMAN No. 59249 Exp. 6-30-15 CIVIL STATE OF CALIFORNIA

THE STATE OF CALIFORNIA OR ITS OFFICERS OR AGENTS SHALL NOT BE RESPONSIBLE FOR THE ACCURACY OR COMPLETENESS OF SCANNED COPIES OF THIS PLAN SHEET.

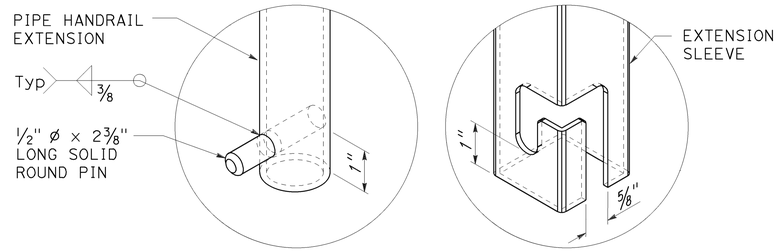

EXTENDABLE HANDRAIL LATCH

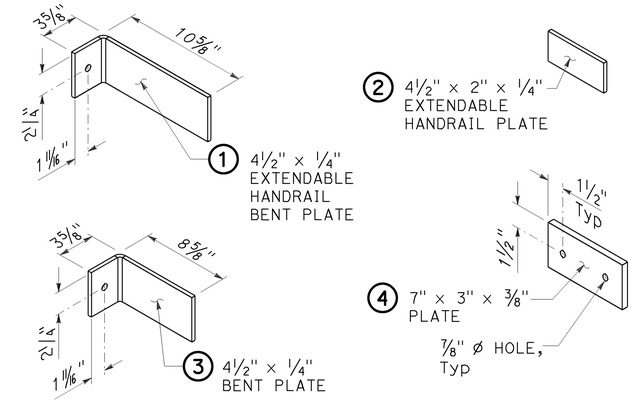

BRACKET DETAILS

NOTES (THIS SHEET ONLY):

1. Rungs must be skid resistant.
2. Use handrails for vault depths between 4'-0" and 6'-6". For deeper vaults use extendable handrail detail. Vault depth is distance between top of wall and either top of floor slab or top of filter media material (use which ever distance is less). Ladders must not extend into filter media material.
3. No handrail required for Linear Radial GSRD 4'-0" depth, due to grate conflict.

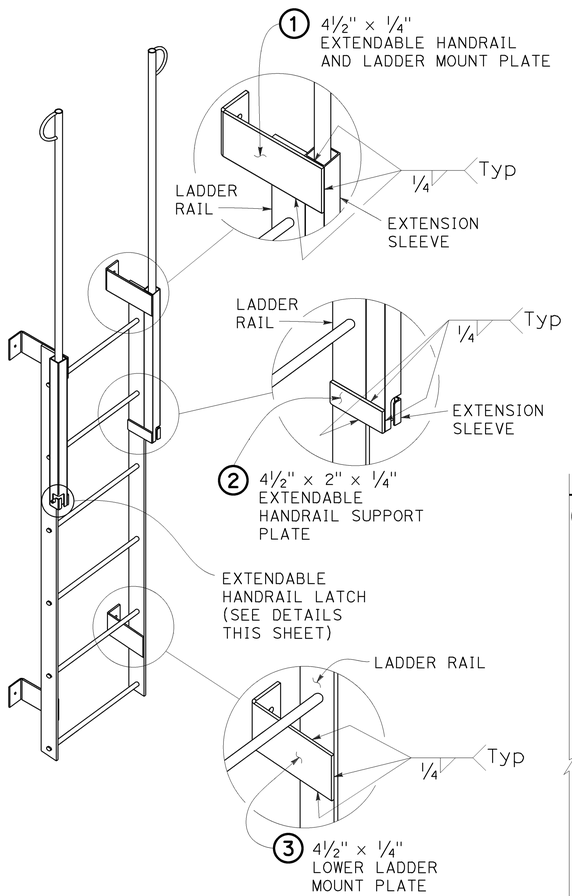

LADDER

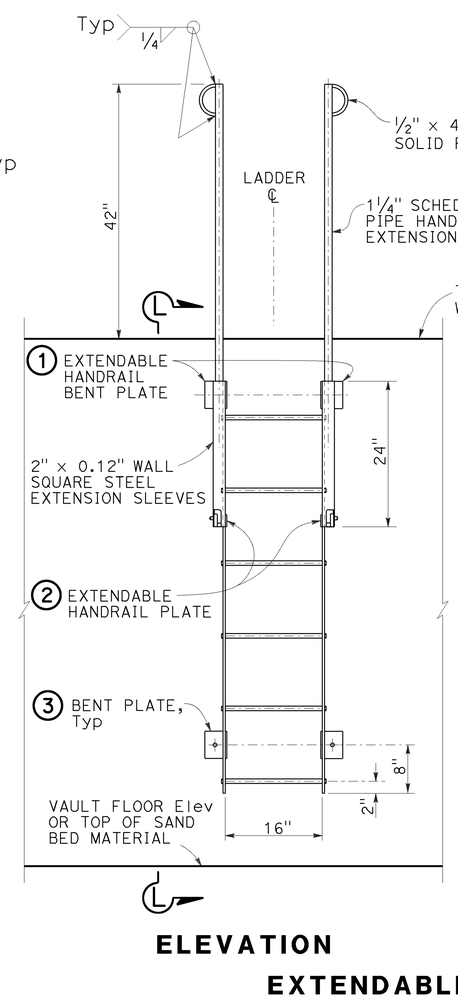

ELEVATION

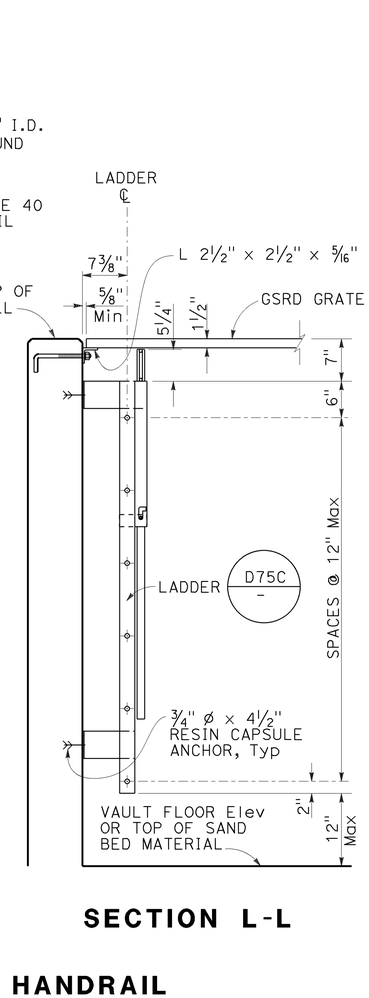

SECTION L-L

EXTENDABLE HANDRAIL

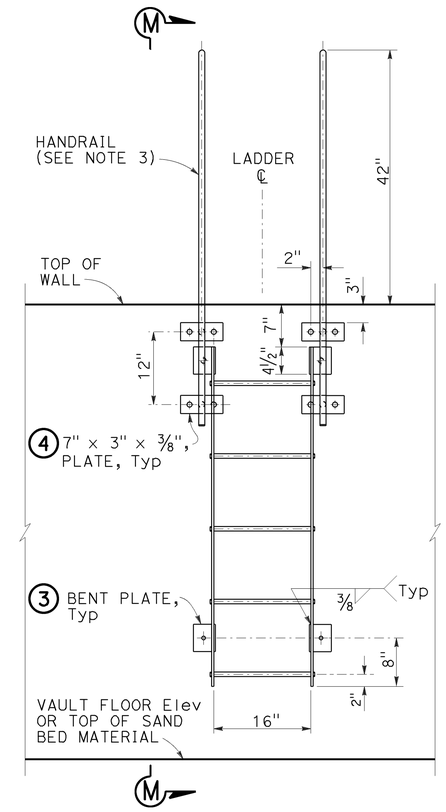

ELEVATION

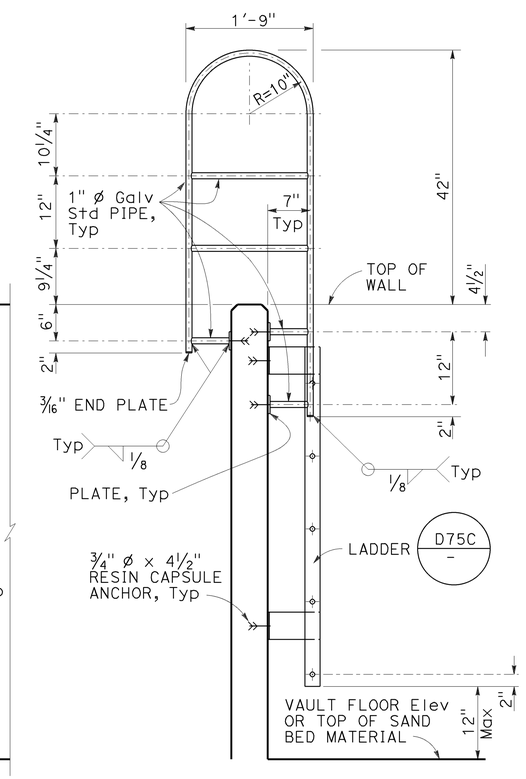

SECTION M-M

WALL MOUNTED HANDRAIL

WATER POLLUTION CONTROL DETAILS
GROSS SOLIDS REMOVAL DEVICE
LINEAR RADIAL LADDER DETAILS

NO SCALE

WD-15

STATE OF CALIFORNIA - DEPARTMENT OF TRANSPORTATION
DIVISION OF DESIGN
OFFICE OF STORM WATER MANAGEMENT

FUNCTIONAL SUPERVISOR: TIMOTHY B. SOBELMAN
CALCULATED-DESIGNED BY: D. WANG
CHECKED BY: L. HE
REVISED BY
DATE REVISED

LAST REVISION 10-15-13
DATE PLOTTED => 06-FEB-2014
TIME PLOTTED => 08:53

Dist	COUNTY	ROUTE	POST MILES TOTAL PROJECT	SHEET No.	TOTAL SHEETS
07	LA	210	R10.5/R15.7	40	116

Timothy B. Sobelman 12-12-12
REGISTERED CIVIL ENGINEER DATE

6-1-15
PLANS APPROVAL DATE

REGISTERED PROFESSIONAL ENGINEER TIMOTHY B. SOBELMAN No. 59249 Exp. 6-30-15 CIVIL STATE OF CALIFORNIA

THE STATE OF CALIFORNIA OR ITS OFFICERS OR AGENTS SHALL NOT BE RESPONSIBLE FOR THE ACCURACY OR COMPLETENESS OF SCANNED COPIES OF THIS PLAN SHEET.

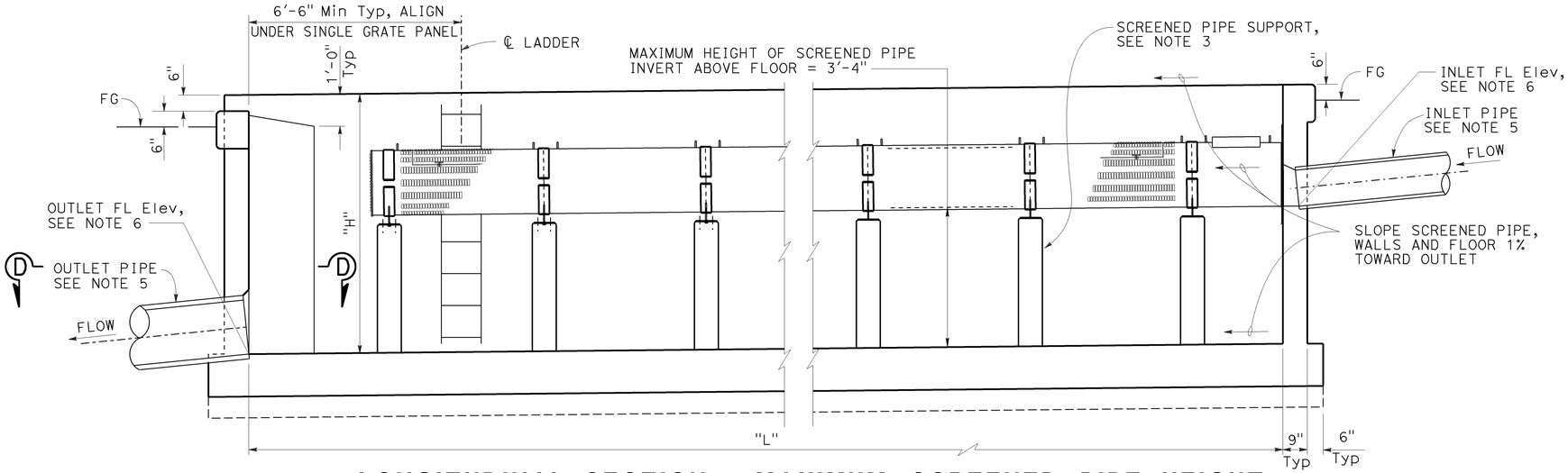

LONGITUDINAL SECTION - MAXIMUM SCREENED PIPE HEIGHT

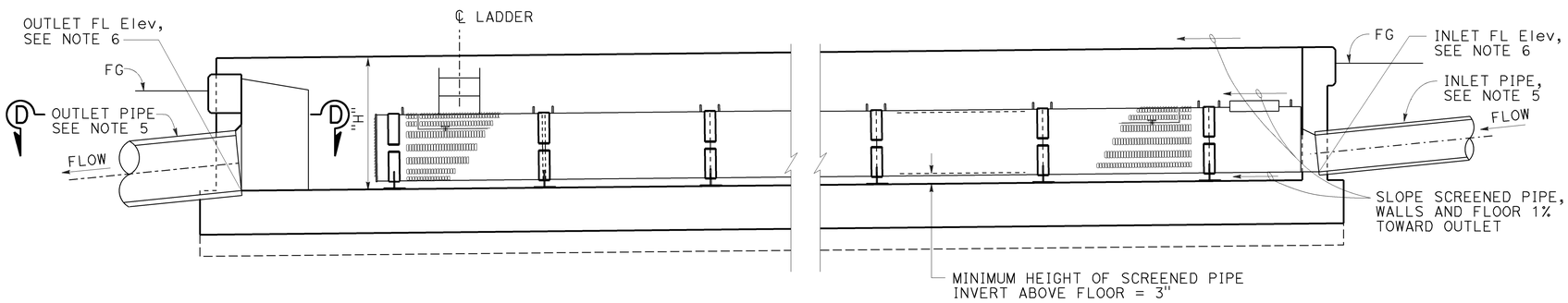

LONGITUDINAL SECTION - MINIMUM SCREENED PIPE HEIGHT

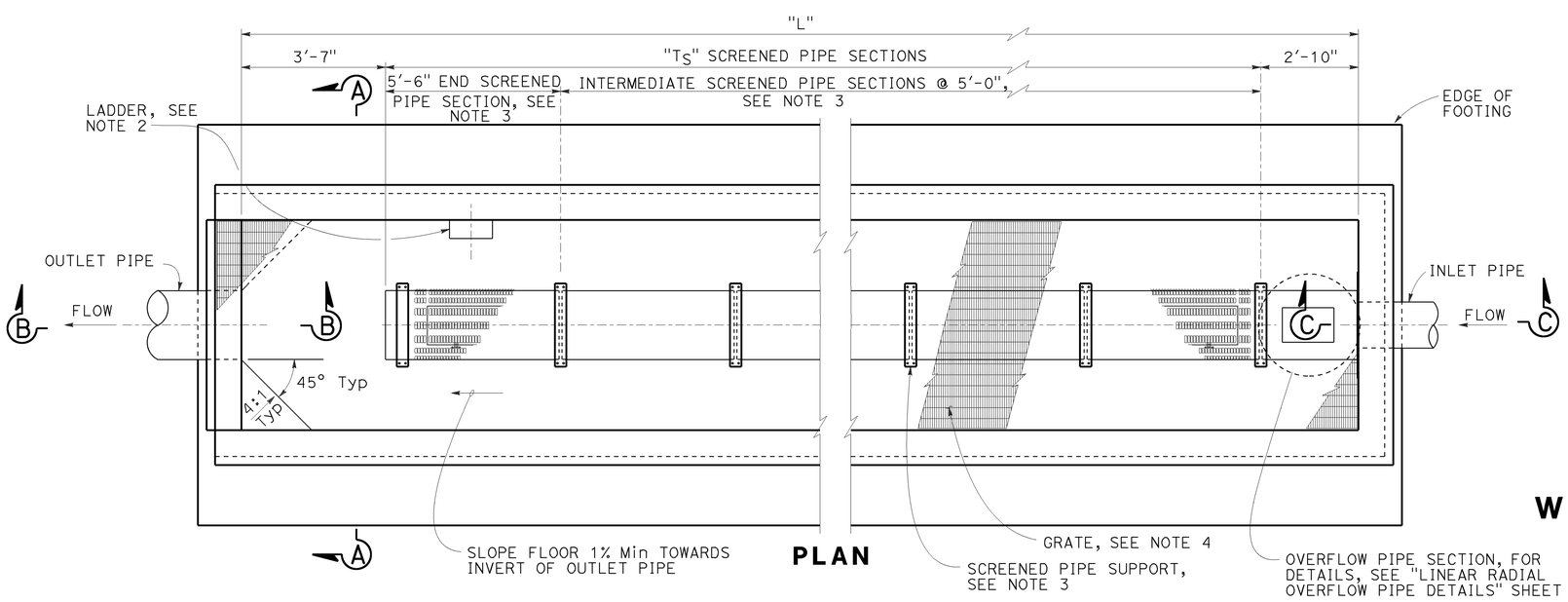

PLAN

NOTES (THIS SHEET ONLY):

1. For Section A-A, B-B, C-C and D-D, see "Linear Radial Details" sheet.
2. For ladder details see "Linear Radial Ladder Details" sheet.
3. For end and intermediate screened pipe details, see "Linear Radial Screened Pipe Details" sheet.
4. For grate details, see "Linear Radial Grate Panel Details" sheet.
5. For layout of inlet and outlet pipes, see "Drainage Plans".
6. For FL elevation of inlet and outlet pipes, see "Drainage Profiles".
7. For dimension "L", "Ts" and other design data, see Design Chart on "Linear Radial Legend" sheet.
8. For dimension "H", see "Linear Radial Details sheet.

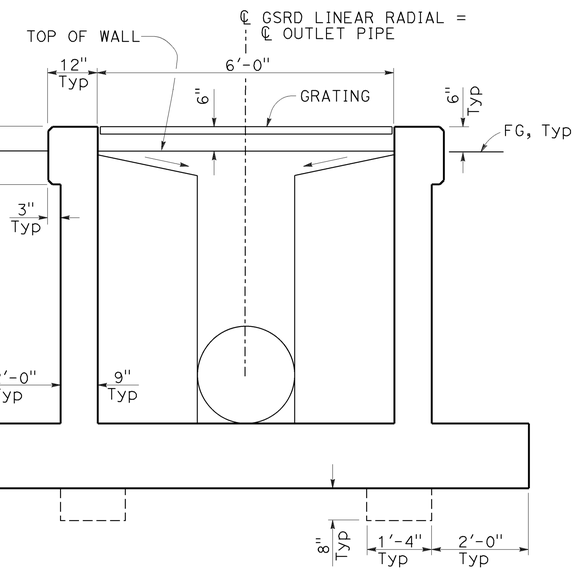

TYPICAL SECTION

WATER POLLUTION CONTROL DETAILS
GROSS SOLIDS REMOVAL DEVICE
LINEAR RADIAL LAYOUT

NO SCALE

WD-16

STATE OF CALIFORNIA - DEPARTMENT OF TRANSPORTATION
DIVISION OF DESIGN
OFFICE OF STORM WATER MANAGEMENT
Caltrans

FUNCTIONAL SUPERVISOR: TIMOTHY B. SOBELMAN
CALCULATED-DESIGNED BY: D. WANG
CHECKED BY: L. HE
REVISED BY
DATE REVISED

LAST REVISION 10-15-13
DATE PLOTTED => 06-FEB-2014
TIME PLOTTED => 08:53

Dist	COUNTY	ROUTE	POST MILES TOTAL PROJECT	SHEET No.	TOTAL SHEETS
07	LA	210	R10.5/R15.7	41	116

Timothy B. Sobelman 12-12-12
REGISTERED CIVIL ENGINEER DATE

6-1-15
PLANS APPROVAL DATE

REGISTERED PROFESSIONAL ENGINEER TIMOTHY B. SOBELMAN No. 59249 Exp. 6-30-15 CIVIL STATE OF CALIFORNIA

THE STATE OF CALIFORNIA OR ITS OFFICERS OR AGENTS SHALL NOT BE RESPONSIBLE FOR THE ACCURACY OR COMPLETENESS OF SCANNED COPIES OF THIS PLAN SHEET.

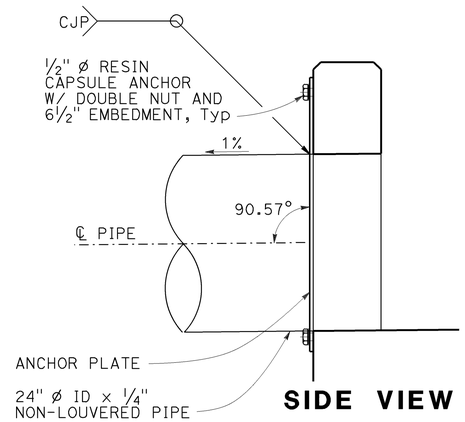

SIDE VIEW

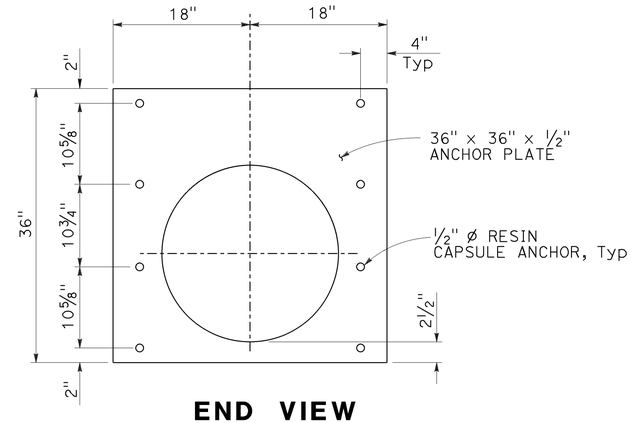

END VIEW
(ANCHOR PLATE ONLY)

ANCHOR PLATE DETAILS

NOTES:

1. For location of Sections M-M and N-N, see "Linear Radial (High Velocity) Layout" sheet.
2. For Grate Support Details, see "Linear Radial Grate Panel Details" sheet.
3. For bottom slab details not shown, see Section A-A on "Linear Radial Details" sheet.

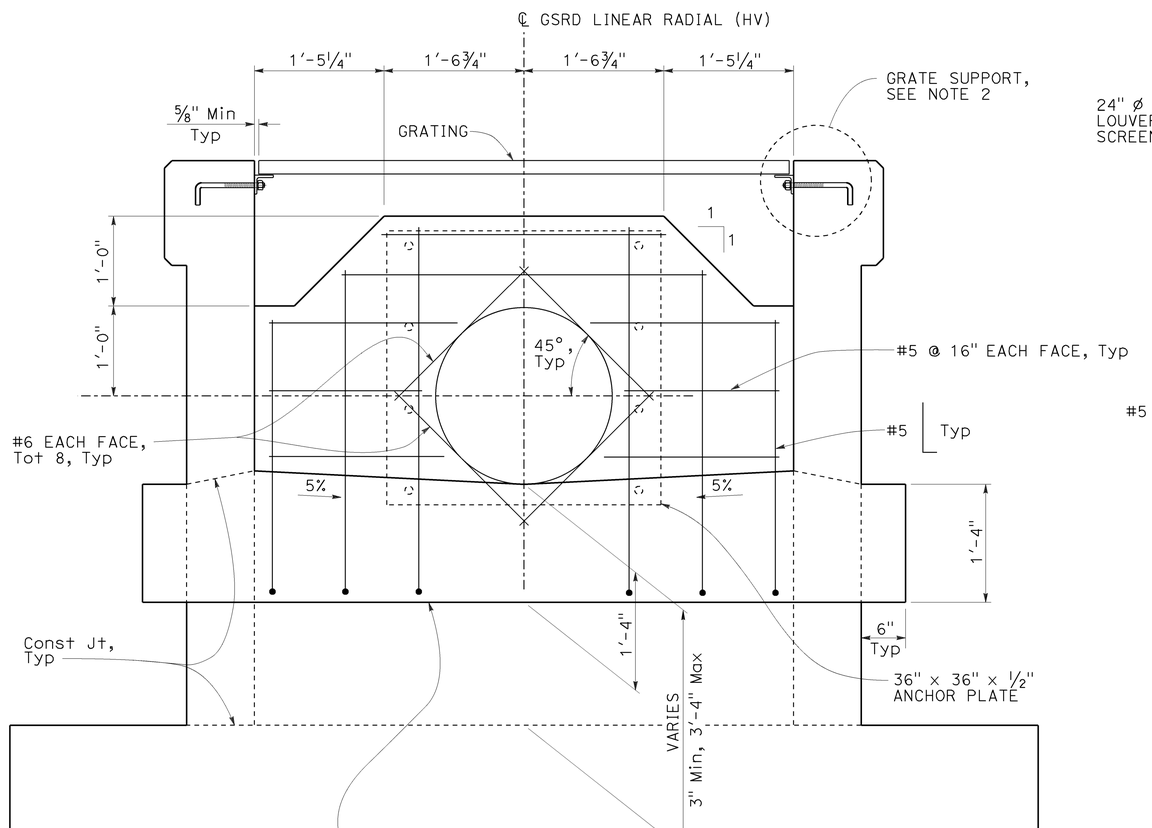

SECTION N-N

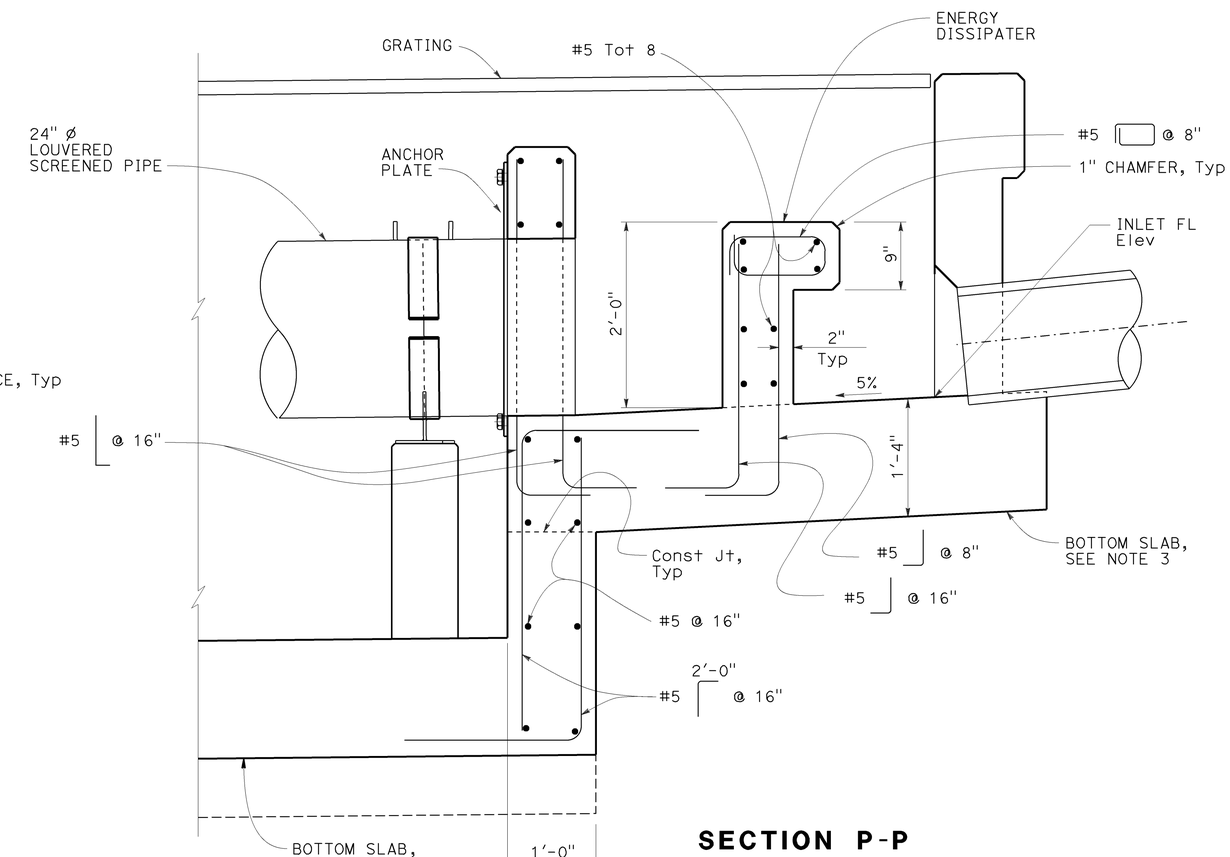

SECTION P-P
NOTE: Ladder not shown for clarity.

WATER POLLUTION CONTROL DETAILS
GROSS SOLIDS REMOVAL DEVICE
LINEAR RADIAL (HIGH VELOCITY) DETAILS

NO SCALE

WD-17

STATE OF CALIFORNIA - DEPARTMENT OF TRANSPORTATION
DIVISION OF DESIGN
OFFICE OF STORM WATER MANAGEMENT

FUNCTIONAL SUPERVISOR: TIMOTHY B. SOBELMAN
CALCULATED-DESIGNED BY: D. WANG
CHECKED BY: L. HE
REVISED BY
DATE REVISED

LAST REVISION 10-15-13
DATE PLOTTED => 06-FEB-2014
TIME PLOTTED => 08:54

Dist	COUNTY	ROUTE	POST MILES TOTAL PROJECT	SHEET No.	TOTAL SHEETS
07	LA	210	R10.5/R15.7	42	116

Timothy B. Sobelman 11-16-12
REGISTERED CIVIL ENGINEER DATE

6-1-15
PLANS APPROVAL DATE

REGISTERED PROFESSIONAL ENGINEER TIMOTHY B. SOBELMAN No. 59249 Exp. 6-30-15 CIVIL STATE OF CALIFORNIA

THE STATE OF CALIFORNIA OR ITS OFFICERS OR AGENTS SHALL NOT BE RESPONSIBLE FOR THE ACCURACY OR COMPLETENESS OF SCANNED COPIES OF THIS PLAN SHEET.

GENERAL NOTES

Designation:
Partial Austin Vault Sand Filters (AVSFs) are open air reinforced concrete vaults utilizing both sedimentation and sand filtration basins. Type designation is based on length configuration, water quality volume to be drained in a 24 hour period, and average depth of water.

Standard configurations are noted for the following design water quality volumes (WQV): 5,000, 10,000, and 15,000 cubic feet. Length configurations are either short (S) or long (L). The average water depth can be either 3 ft, 4.5 ft, or 6 ft as designed in Design Water Quality Volumes (WQV) table.

Special Reinforcement Coverage:
AVSF Standard Details are not to be used in a corrosive environment or where there is a severe abrasive flow condition or in freeze-thaw locations.

Special Design:
Required for the following conditions: ground water conditions above bottom of AVSF, surcharge loads exceeding HS20 truck load, design bearing pressures or sizes greater than those on this plan, inlet velocities which exceed 8.0 ft/sec at gabion wall, and settlement due to liquefaction.

DESIGN WATER QUALITY VOLUMES (WQV)

AVSF Type*	WQV (ft^3)	W(ft)	L_S(ft)	L_f(ft)	H_W(ft)
S-3500-3	3,500	21	14	38	3
L-3500-3	3,500	15	18	53	3
S-3500-4.5	4,380	21	14	38	4.5
L-3500-4.5	4,380	15	18	53	4.5
S-3500-6	5,260	21	14	38	6
L-3500-6	5,260	15	18	53	6
S-5000-3	5,000	27	15	42	3
L-5000-3	5,000	18	21	63	3
S-5000-4.5	6,250	27	15	42	4.5
L-5000-4.5	6,250	18	21	63	4.5
S-5000-6	7,500	27	15	42	6
L-5000-6	7,500	18	21	63	6
S-10000-3	10,000	36	21	63	3
L-10000-3	10,000	24	30	94	3
S-10000-4.5	12,500	36	21	63	4.5
L-10000-4.5	12,500	24	30	94	4.5
S-10000-6	15,000	36	21	63	6
L-10000-6	15,000	24	30	94	6
S-15000-3	15,000	45	25	76	3
L-15000-3	15,000	30	37	115	3
S-15000-4.5	18,750	45	25	76	4.5
L-15000-4.5	18,750	30	37	115	4.5
S-15000-6	22,500	45	25	76	6
L-15000-6	22,500	30	37	115	6

* AVSF TYPE = LENGTH CONFIGURATION (S OR L) - WATER QUALITY VOLUME (CF) - DESIGN WATER DEPTH (H_W ELEVATION)

DESIGN NOTES

Specifications:
Design:
Bridge Design Specification April 2000 (LFD)
(1996 AASHTO) with interims and revisions by Caltrans

Wall & Footing (LFD): 1.5 D + 1.5 E + 1.5 W + 1.5 SC
Where D = Dead Load
E = Earth Load
W = Water Load
SC = Surcharge

Capacity reduction factor is included.

Earth Load:
125 lb/ft^3 vertical,

Water Load:
62.4 lb/ft^3 horizontal/vertical,

Earth pressure for 2:1 unlimited slope determined from Rankine's formula with ϕ = 33°42′ (Case II).

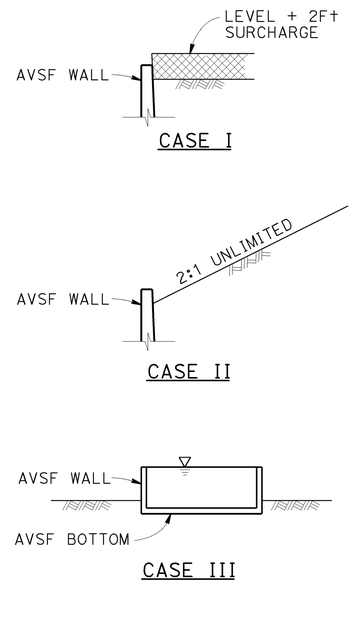

DETAIL OF DESIGN LOADING CASES

CASE I LEVEL + 2FT SURCHARGE, AVSF EMPTY
CASE II 2:1 UNLIMITED SLOPE, AVSF EMPTY
CASE III AVSF FULL OF WATER, NO SOIL PRESSURE

UNIT STRESSES:
f'_c = 4,000 psi
f_y = 60,000 psi

ABBREVIATIONS

AVSF - AUSTIN VAULT SAND FILTER
EWT&B - EACH WAY TOP AND BOTTOM
H_W - GABION WALL HEIGHT (TYPICALLY SET AT DESIGN WATER DEPTH)
L_f - LENGTH OF FILTRATION BASIN
L_S - LENGTH OF SEDIMENT BASIN
T - WALL THICKNESS
W - WIDTH OF AVSF
WQV - WATER QUALITY VOLUME

LEGEND

DESIGN WATER DEPTH
STANDARD PLAN SHEET No.
DETAIL No.

NOTES

Expansion joints:
Inverts and sidewalls - Place ½" expansion joint filler and waterstop where indicated. See "Austin Vault Sand Filter Details No. 2" sheet for specific wall & invert details.

Construction Joints:
Must be placed where indicated on plans.

Backfill:
See Standard Specifications, except the difference in backfill must not exceed 8′-0" between side walls and inlet and outlet walls.

Earthwork:
Limits of payment for excavation and backfill.

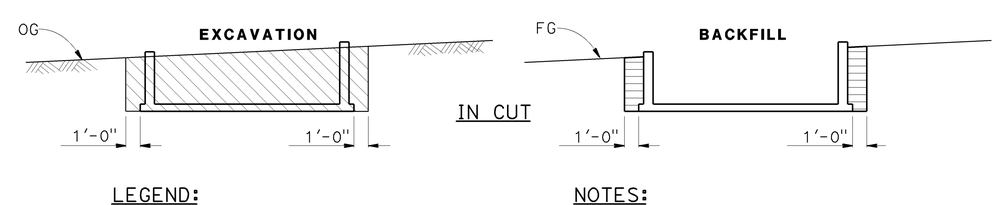

LEGEND:
STRUCTURE EXCAVATION
STRUCTURE BACKFILL

NOTES:
1. Slope or shore excavation sides as necessary.
2. Dimensions shown are minimum.
3. 95% compaction 1′-0" below floor slabs.

AUSTIN VAULT SAND FILTER

WATER POLLUTION CONTROL DETAILS
AUSTIN VAULT SAND FILTER
LEGEND
NO SCALE

WD-18

STATE OF CALIFORNIA - DEPARTMENT OF TRANSPORTATION
DIVISION OF DESIGN
OFFICE OF STORM WATER MANAGEMENT
Caltrans

FUNCTIONAL SUPERVISOR: TIMOTHY B. SOBELMAN
CALCULATED-DESIGNED BY: D. WANG
CHECKED BY: L. HE
REVISED BY
DATE REVISED

LAST REVISION 04-12-13
DATE PLOTTED => 06-FEB-2014
TIME PLOTTED => 08:43

Dist	COUNTY	ROUTE	POST MILES TOTAL PROJECT	SHEET No.	TOTAL SHEETS
07	LA	210	R10.5/R15.7	43	116

Timothy B. Sobelman 11-16-12
REGISTERED CIVIL ENGINEER DATE

6-1-15
PLANS APPROVAL DATE

REGISTERED PROFESSIONAL ENGINEER TIMOTHY B. SOBELMAN No. 59249 Exp. 6-30-15 CIVIL STATE OF CALIFORNIA

THE STATE OF CALIFORNIA OR ITS OFFICERS OR AGENTS SHALL NOT BE RESPONSIBLE FOR THE ACCURACY OR COMPLETENESS OF SCANNED COPIES OF THIS PLAN SHEET.

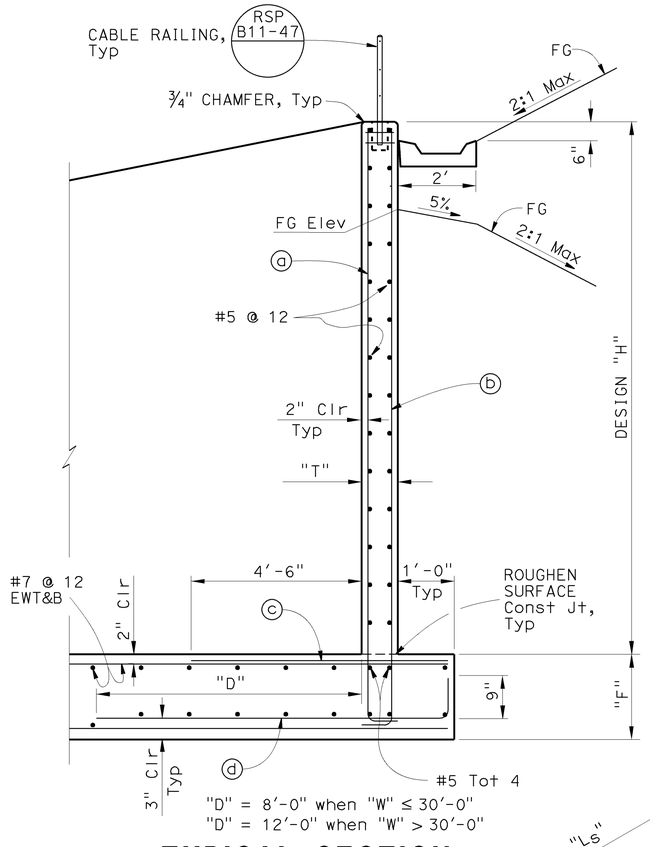

TYPICAL SECTION

REINFORCING STEEL AND DATA FOR WALLS

Design "H"	6'	8'	10'	12'	14'	16'
"T"	12"	12"	12"	12"	14"	14"
"F"	1'-3"	1'-3"	1'-3"	1'-6"	1'-9"	1'-9"
ⓐ bars ⌊	#6 @ 12	#6 @ 12	#6 @ 8	#7 @ 8	#8 @ 8	#9 @ 6
ⓑ bars ⌋	#6 @ 12	#6 @ 12	#6 @ 8	#7 @ 8	#8 @ 8	#8 @ 6
ⓒ bars	#6 @ 12	#6 @ 12	#6 @ 8	#6 @ 8	#7 @ 8	#7 @ 6
ⓓ bars ⌣	#6 @ 12	#6 @ 12	#6 @ 8	#6 @ 8	#7 @ 8	#7 @ 6

NOTES (THIS SHEET ONLY):

1. For dimensions "W", "Ls", "Lf" and "Hw", see Design WQV table on "Austin Vault Sand Filter Legend" sheet.
2. For footing details not shown, see "Austin Wall Sand Filter Details No. 1 and No. 2" sheets.
3. The contractor has the option of matching the Sedimentation Basin wall thickness with the Filtration Basin wall thickness. Thicker design wall must be used at no additional cost to the Department.
4. For additional corner reinforcement not shown see Typical Corner Detail on "Austin Wall Sand Filter Details No. 1" sheet.
5. * - For details see "Drainage Plans".
6. For project specific AVFS elevations, see Wall Design Elevation Table on the drainage profile sheets.

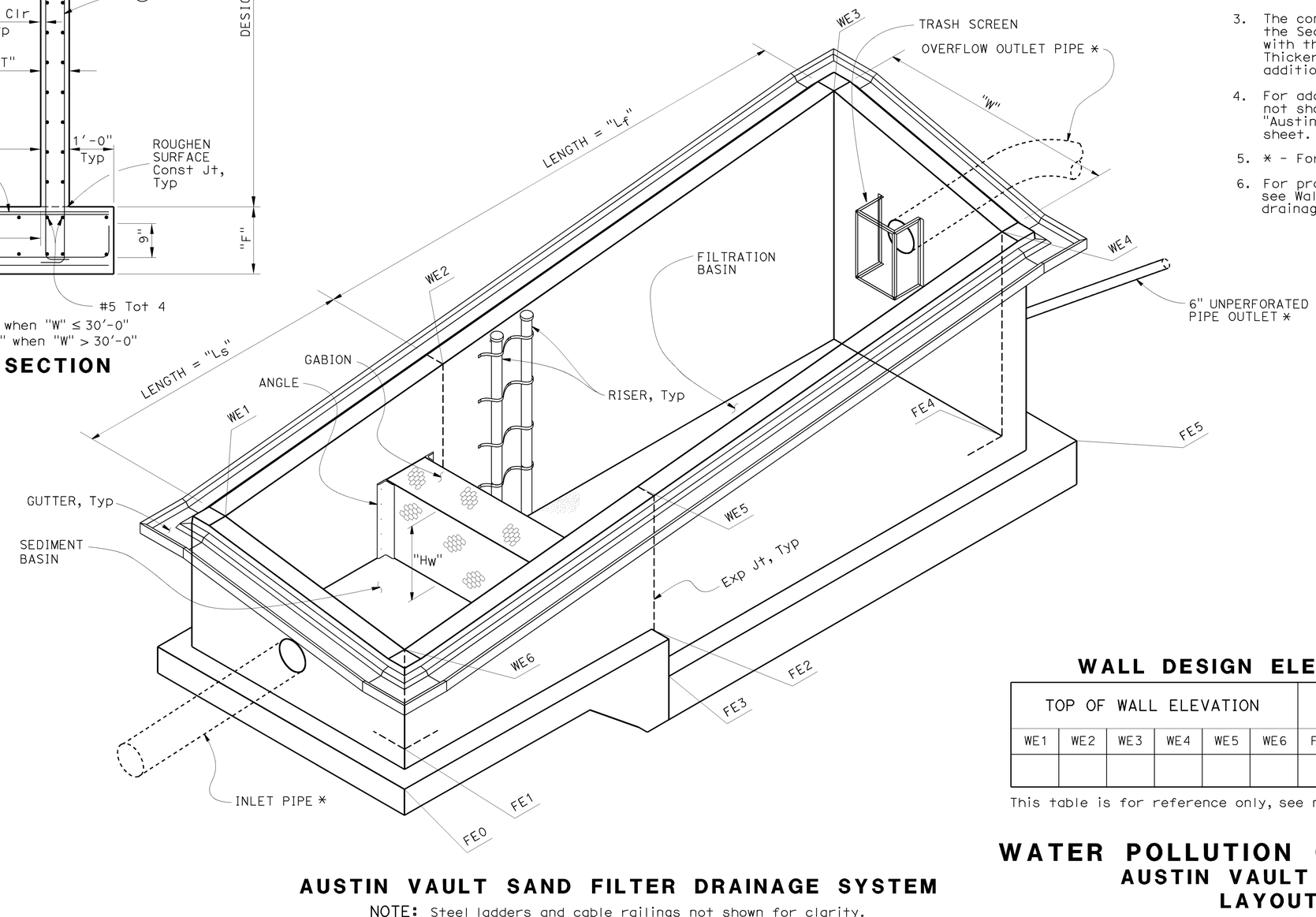

AUSTIN VAULT SAND FILTER DRAINAGE SYSTEM

NOTE: Steel ladders and cable railings not shown for clarity.

WALL DESIGN ELEVATION TABLE

TOP OF WALL ELEVATION						TOP OF FOOTING ELEVATION					
WE1	WE2	WE3	WE4	WE5	WE6	FE0	FE1	FE2	FE3	FE4	FE5

This table is for reference only, see note 6.

WATER POLLUTION CONTROL DETAILS
AUSTIN VAULT SAND FILTER
LAYOUT No. 1

NO SCALE

WD-19

STATE OF CALIFORNIA - DEPARTMENT OF TRANSPORTATION
DIVISION OF DESIGN
OFFICE OF STORM WATER MANAGEMENT

FUNCTIONAL SUPERVISOR: TIMOTHY B. SOBELMAN
CALCULATED-DESIGNED BY: D. WANG
CHECKED BY: L. HE
REVISED BY
DATE REVISED

LAST REVISION 04-12-13
DATE PLOTTED => 06-FEB-2014
TIME PLOTTED => 08:43

Dist	COUNTY	ROUTE	POST MILES TOTAL PROJECT	SHEET No.	TOTAL SHEETS
07	LA	210	R10.5/R15.7	44	116

Timothy G Sobelman 11-16-12
REGISTERED CIVIL ENGINEER DATE

6-1-15
PLANS APPROVAL DATE

REGISTERED PROFESSIONAL ENGINEER TIMOTHY B. SOBELMAN No. 59249 Exp. 6-30-15 CIVIL STATE OF CALIFORNIA

THE STATE OF CALIFORNIA OR ITS OFFICERS OR AGENTS SHALL NOT BE RESPONSIBLE FOR THE ACCURACY OR COMPLETENESS OF SCANNED COPIES OF THIS PLAN SHEET.

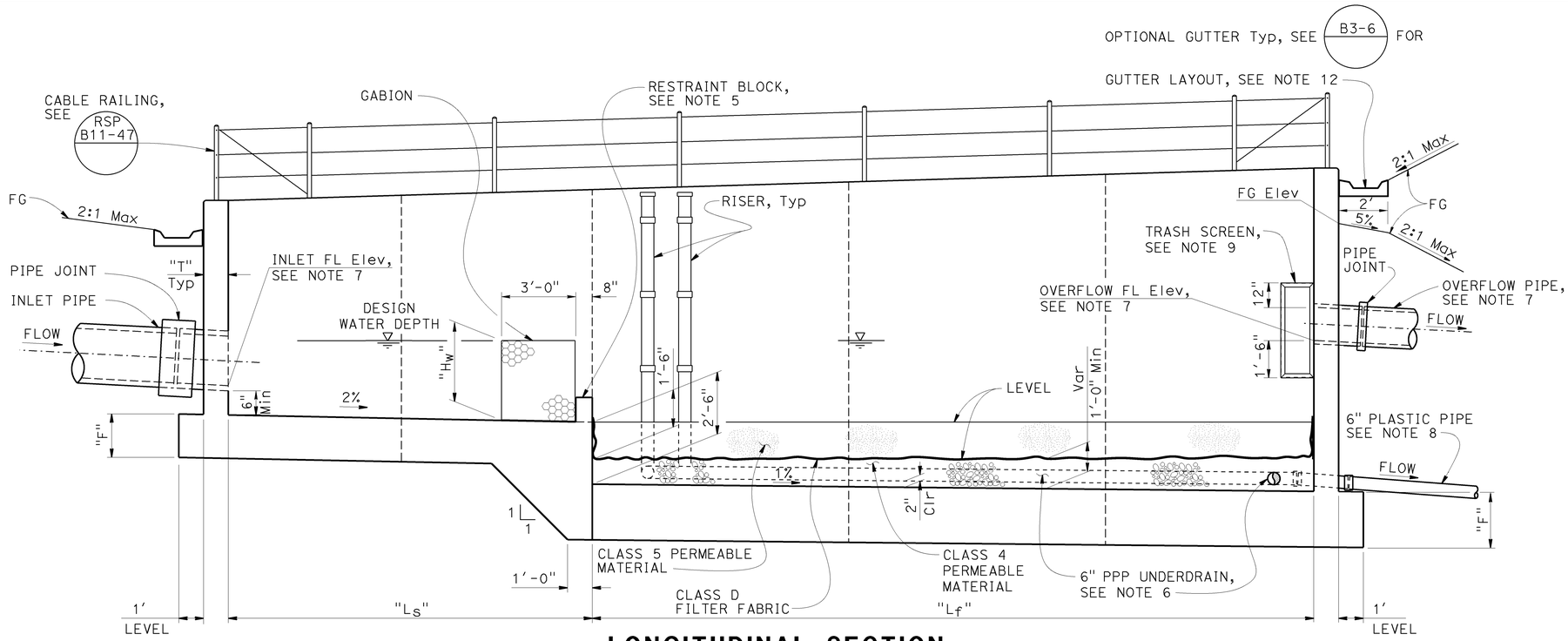

LONGITUDINAL SECTION

NOTE: Ladder not shown for clarity.

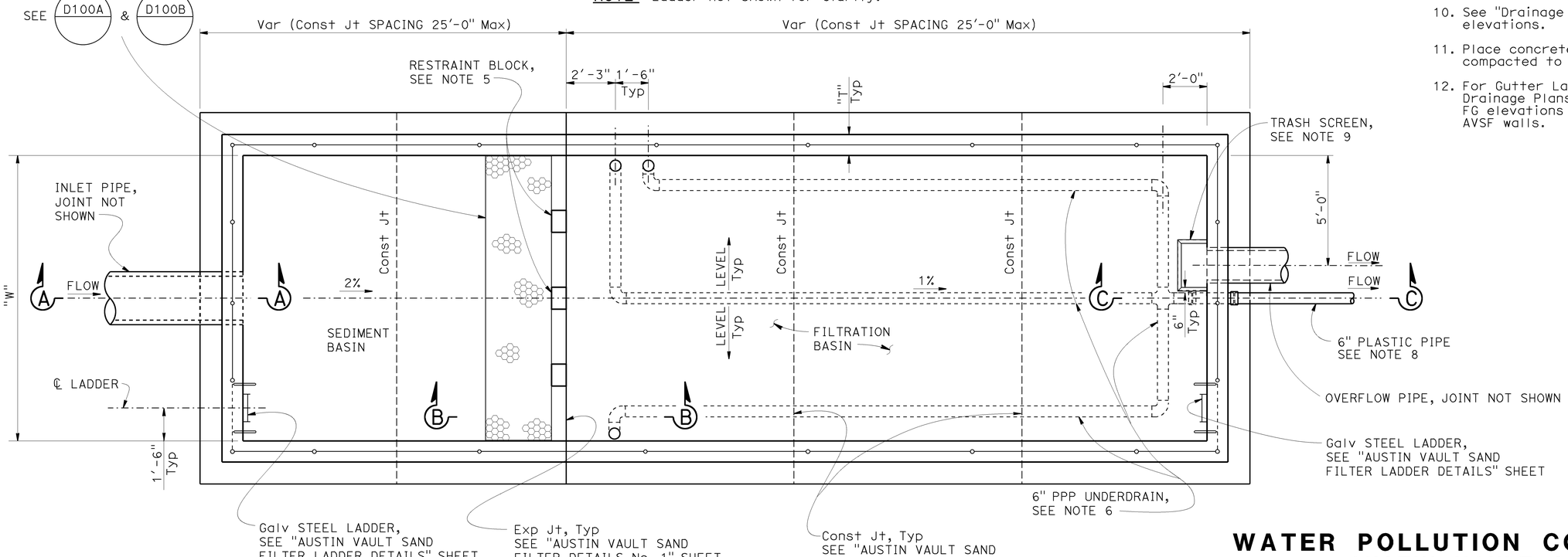

PLAN

NOTE: Gutter not shown for clarity.

NOTES (THIS SHEET ONLY)

1. For dimensions "W", "Ls", "Lf" and "Hw", see Design WQV table on "Austin Vault Sand Filter Legend" sheet.
2. For dimensions "T" and "F", see "Austin Vault Sand Filter Layout No. 1" sheet.
3. For Typical Section, see "Austin Vault Sand Filter Layout No. 1" sheet.
4. For Section A-A, B-B and C-C, see "Austin Vault Sand Filter Details No. 1" sheet.
5. For restraint block details, see "Austin Vault Sand Filter Details No. 1" and "Details No. 2" sheets.
6. For details of PPP underdrain system, see "Austin Vault Sand Filter Underdrain Details" sheet.
7. For Layout and FL elevations of inlet and overflow pipe, see "Drainage Plans and Drainage Profiles" sheets.
8. For slope of outlet plastic pipe, see "Drainage Profiles".
9. For trash screen details (frame and perforated metal skin), see "Austin Vault Sand Filter Trash Screen Details" sheet.
10. See "Drainage Profiles" for top of wall elevations.
11. Place concrete on base or native material compacted to 95% relative compaction.
12. For Gutter Layout and FL elevations, see Drainage Plans and Drainage Profiles. Show FG elevations at all grade breaks along the AVSF walls.

WATER POLLUTION CONTROL DETAILS
AUSTIN VAULT SAND FILTER
LAYOUT No. 2

NO SCALE

WD-20

STATE OF CALIFORNIA - DEPARTMENT OF TRANSPORTATION
DIVISION OF DESIGN
OFFICE OF STORM WATER MANAGEMENT
Caltrans

FUNCTIONAL SUPERVISOR: TIMOTHY B. SOBELMAN
CALCULATED-DESIGNED BY: D. WANG
CHECKED BY: L. HE
REVISED BY
DATE REVISED

LAST REVISION 04-12-13
DATE PLOTTED => 06-FEB-2014
TIME PLOTTED => 08:43

Dist	COUNTY	ROUTE	POST MILES TOTAL PROJECT	SHEET No.	TOTAL SHEETS
07	LA	210	R10.5/R15.7	45	116

Timothy B. Sobelman 11-16-12
REGISTERED CIVIL ENGINEER DATE

6-1-15
PLANS APPROVAL DATE

REGISTERED PROFESSIONAL ENGINEER TIMOTHY B. SOBELMAN No. 59249 Exp. 6-30-15 CIVIL STATE OF CALIFORNIA

THE STATE OF CALIFORNIA OR ITS OFFICERS OR AGENTS SHALL NOT BE RESPONSIBLE FOR THE ACCURACY OR COMPLETENESS OF SCANNED COPIES OF THIS PLAN SHEET.

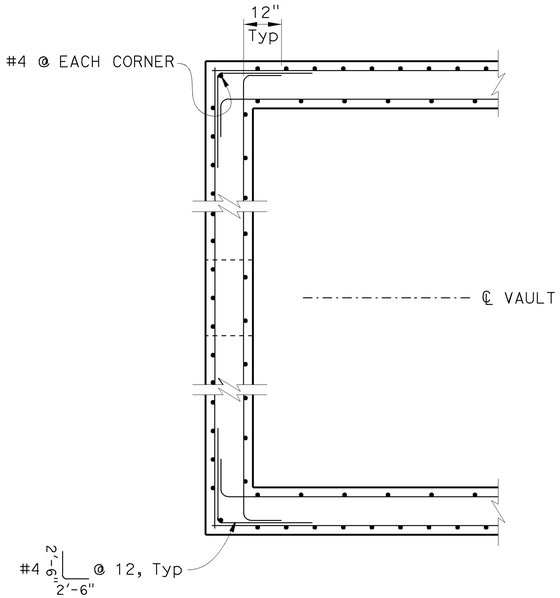

TYPICAL CORNER DETAIL

Inlet wall shown, outlet wall similar.

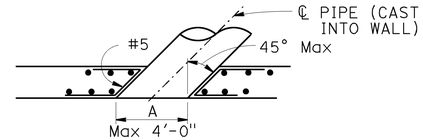

SECTION D-D

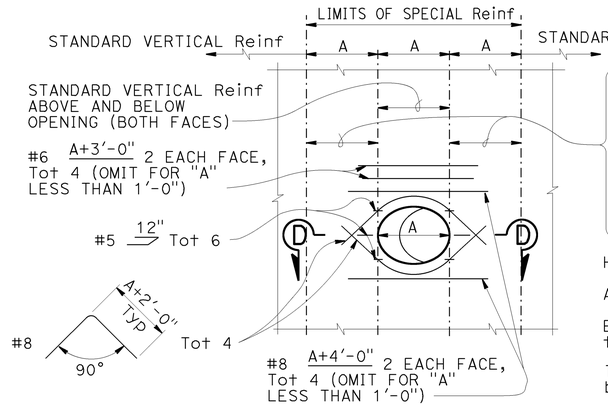

Standard vertical reinforcement plus additional vertical bars corresponding in size and number to bars cut by the opening. Place half on each side. Extend the additional bars into the footing the same as other vertical wall reinforcement and to a minimum of 60 bar diameters above the top of utility opening if wall height permits. Bundle bars as required.

Horizontal Reinf to be standard except as shown.

All Reinf to clear opening by 2" minimum.

Expansion joints must not be located within the limits of special reinforcing.

The rebar lengths shown are maximum and must be adjusted due to the limitations of space.

WALL OPENING DETAIL

To be used at inlet, outlet and overflow pipe locations

NOTES (THIS SHEET ONLY):

1. For locations of section A-A, B-B, and C-C, see "Austin Vault Sand Filter Layout No. 2" sheet.
2. For wall and footing reinforcement details, see Typical Section on "Austin Vault Sand Filter Layout No. 1" sheet.

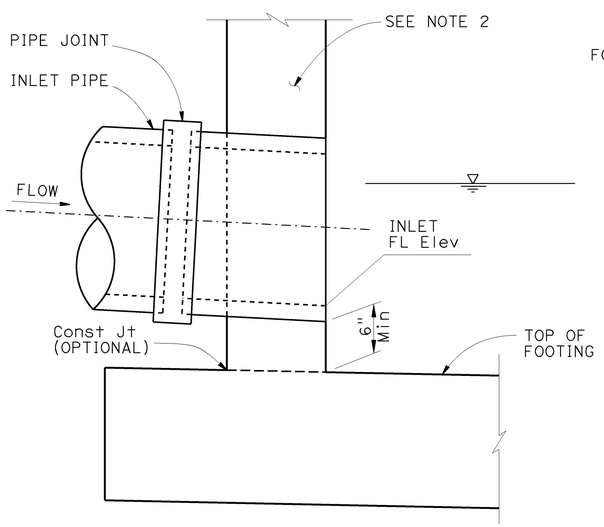

SECTION A-A

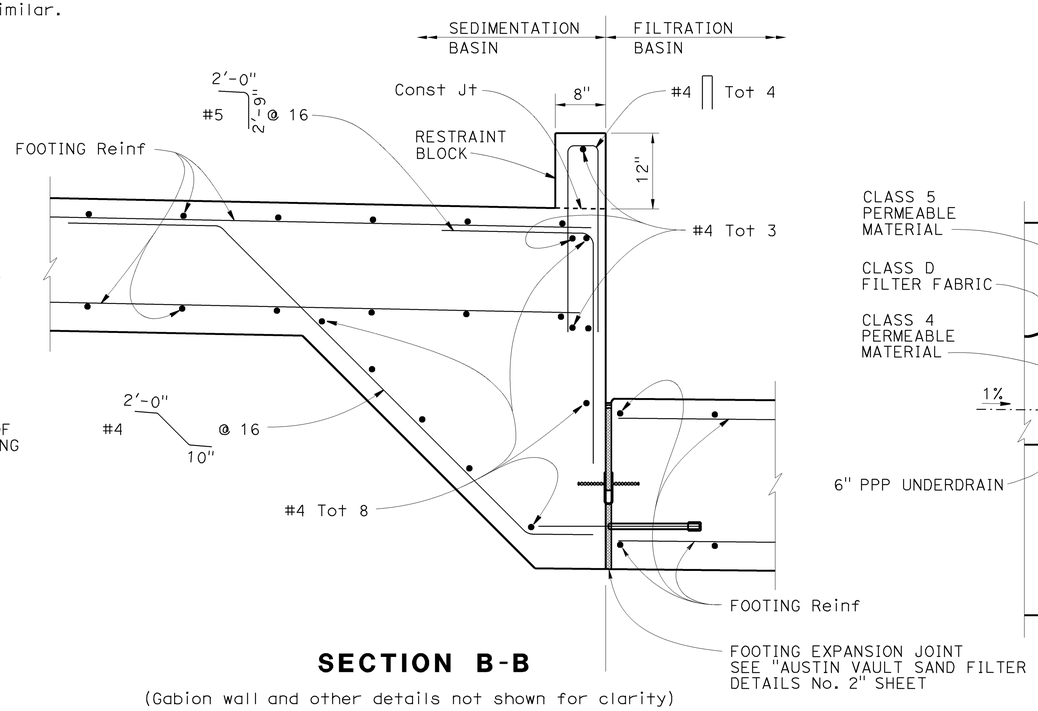

SECTION B-B

(Gabion wall and other details not shown for clarity)

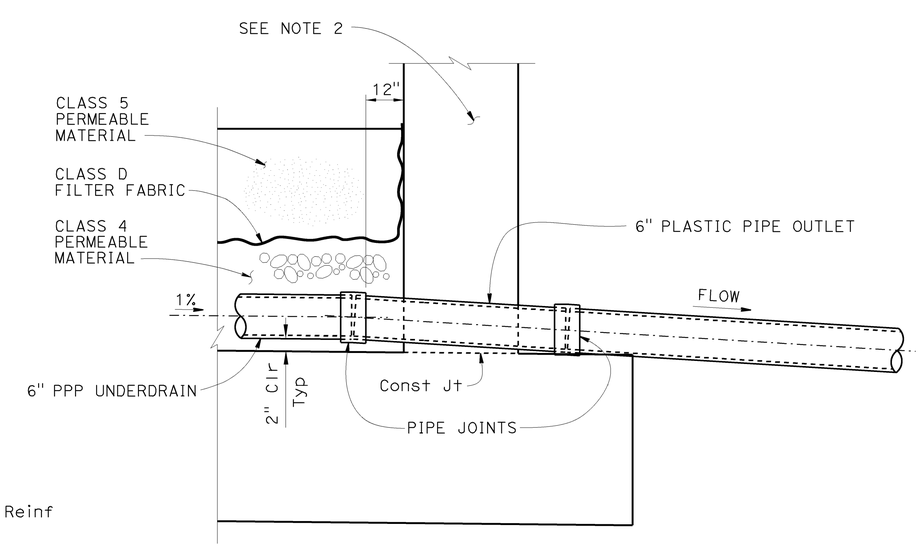

SECTION C-C

WATER POLLUTION CONTROL DETAILS
AUSTIN VAULT SAND FILTER
DETAILS No. 1

NO SCALE

WD-21

STATE OF CALIFORNIA - DEPARTMENT OF TRANSPORTATION
DIVISION OF DESIGN
OFFICE OF STORM WATER MANAGEMENT
Caltrans

FUNCTIONAL SUPERVISOR: TIMOTHY B. SOBELMAN
CALCULATED-DESIGNED BY: D. WANG
CHECKED BY: L. HE
REVISED BY
DATE REVISED

LAST REVISION 04-12-13
DATE PLOTTED => 06-FEB-2014
TIME PLOTTED => 08:43

Dist	COUNTY	ROUTE	POST MILES TOTAL PROJECT	SHEET No.	TOTAL SHEETS
07	LA	210	R10.5/R15.7	46	116

REGISTERED CIVIL ENGINEER 11-16-12 DATE

6-1-15
PLANS APPROVAL DATE

REGISTERED PROFESSIONAL ENGINEER TIMOTHY B. SOBELMAN No. 59249 Exp. 6-30-15 CIVIL STATE OF CALIFORNIA

THE STATE OF CALIFORNIA OR ITS OFFICERS OR AGENTS SHALL NOT BE RESPONSIBLE FOR THE ACCURACY OR COMPLETENESS OF SCANNED COPIES OF THIS PLAN SHEET.

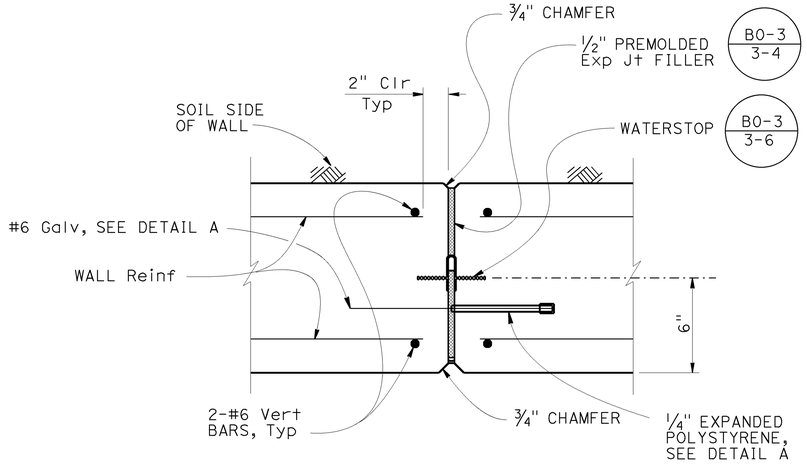

WALL EXPANSION JOINT DETAIL - PLAN SECTION

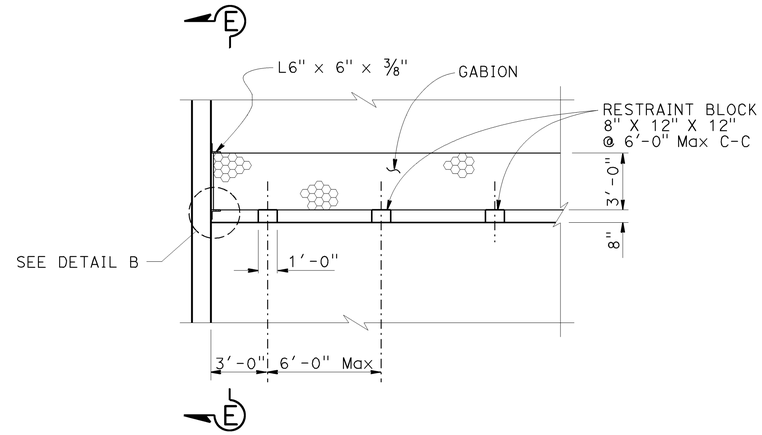

RESTRAINT BLOCK DETAIL

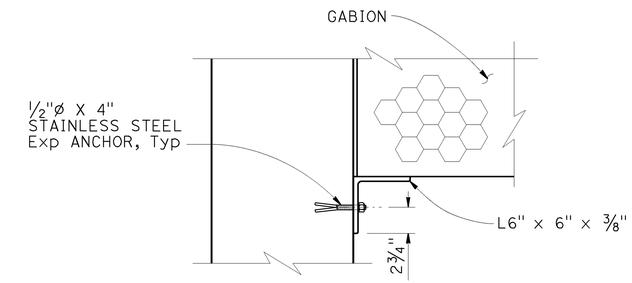

DETAIL B

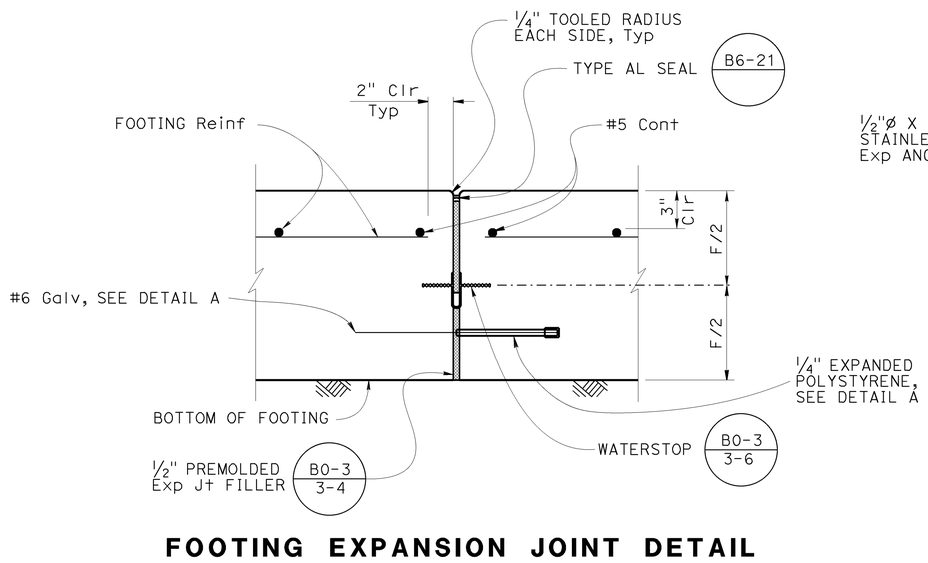

FOOTING EXPANSION JOINT DETAIL

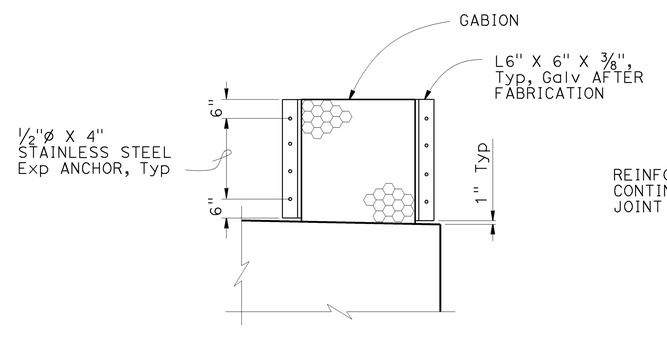

SECTION E-E

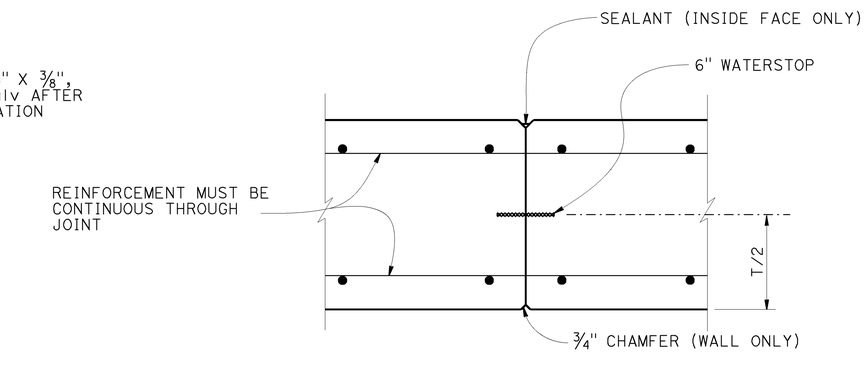

WALL CONSTRUCTION JOINT DETAIL

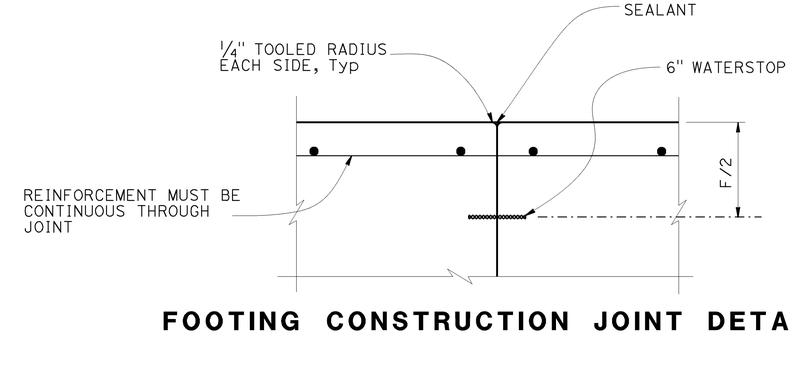

FOOTING CONSTRUCTION JOINT DETAIL

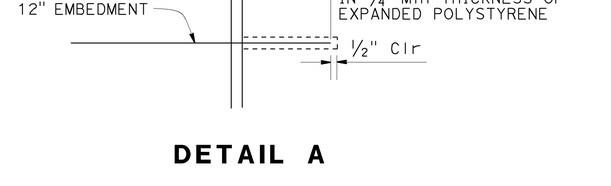

DETAIL A

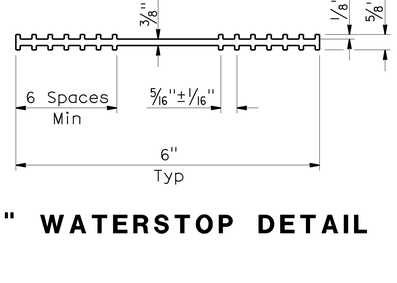

6" WATERSTOP DETAIL

WATER POLLUTION CONTROL DETAILS
AUSTIN VAULT SAND FILTER
DETAILS No. 2

NO SCALE

WD-22

STATE OF CALIFORNIA - DEPARTMENT OF TRANSPORTATION
DIVISION OF DESIGN
OFFICE OF STORM WATER MANAGEMENT

FUNCTIONAL SUPERVISOR: TIMOTHY B. SOBELMAN
CALCULATED-DESIGNED BY: D. WANG
CHECKED BY: L. HE
REVISED BY
DATE REVISED

LAST REVISION 04-12-13
DATE PLOTTED => 06-FEB-2014
TIME PLOTTED => 08:43

Dist	COUNTY	ROUTE	POST MILES TOTAL PROJECT	SHEET No.	TOTAL SHEETS
07	LA	210	R10.5/R15.7	47	116

REGISTERED CIVIL ENGINEER 11-16-12 DATE

6-1-15
PLANS APPROVAL DATE

REGISTERED PROFESSIONAL ENGINEER TIMOTHY B. SOBELMAN No. 59249 Exp. 6-30-15 CIVIL STATE OF CALIFORNIA

THE STATE OF CALIFORNIA OR ITS OFFICERS OR AGENTS SHALL NOT BE RESPONSIBLE FOR THE ACCURACY OR COMPLETENESS OF SCANNED COPIES OF THIS PLAN SHEET.

NOTES (THIS SHEET ONLY):

1. All angles, screws and perforated metal must be galvanized.
2. Paint all weld joints with zinc rich paint or galvanize after welding.
3. Dimension "D1" is to be equal to inside diameter of overflow pipe.

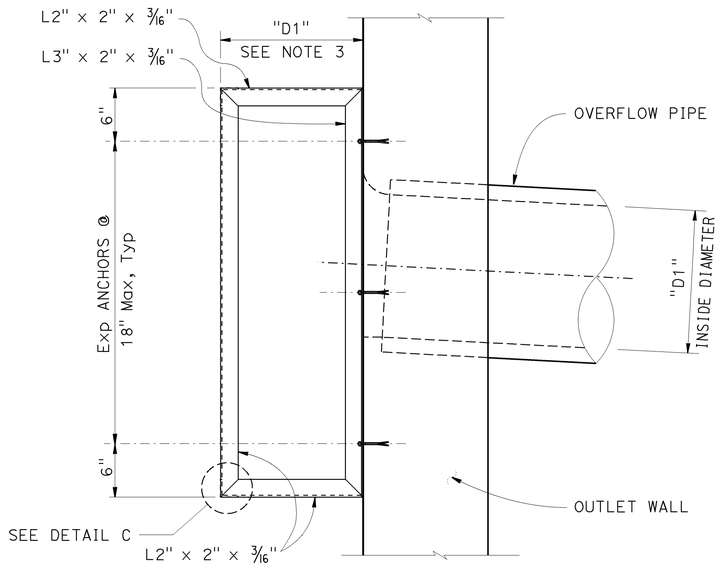

ELEVATION

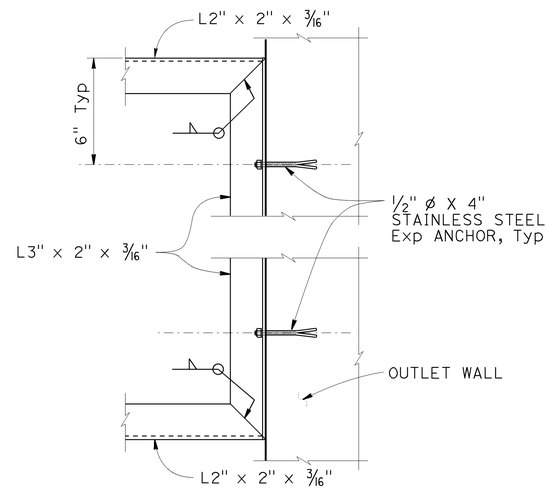

SECTION F - F

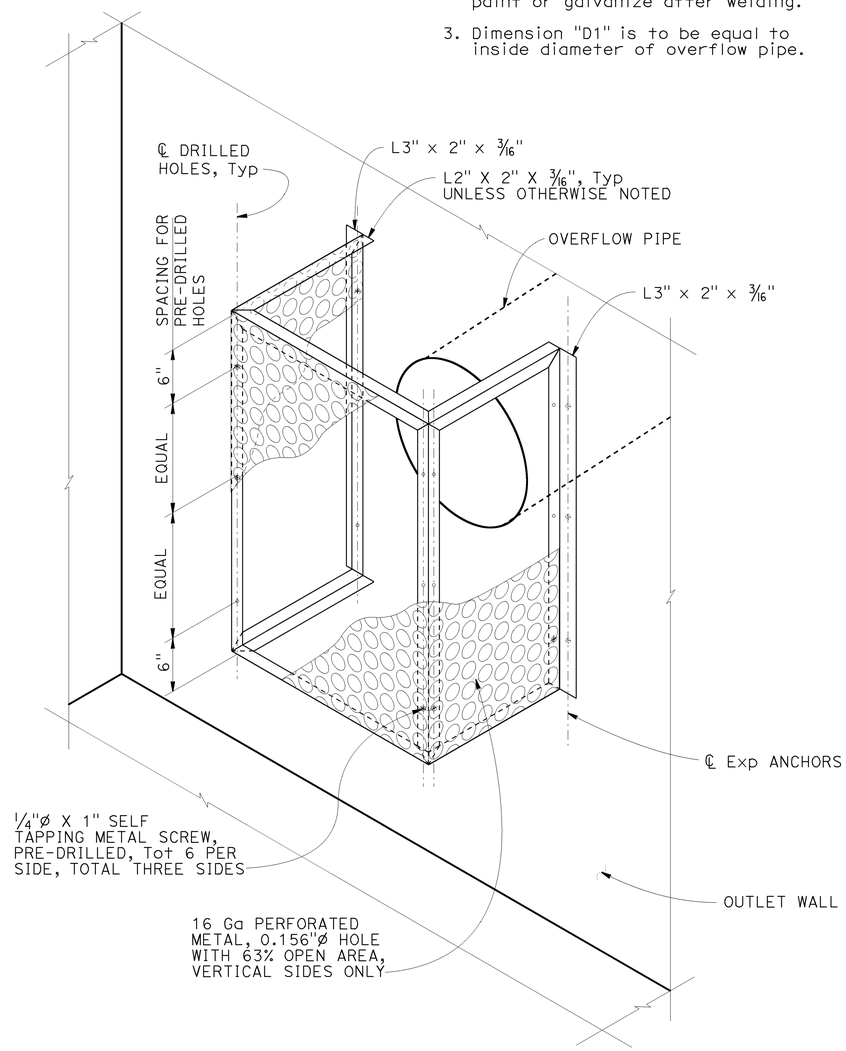

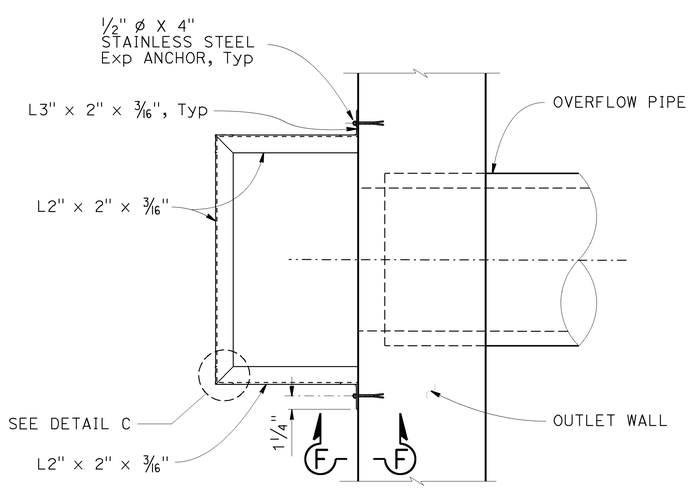

PLAN

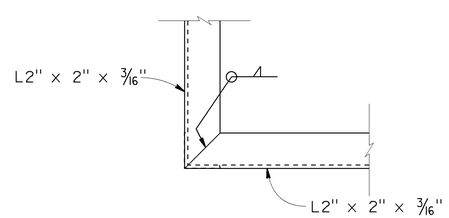

DETAIL C
TYPICAL CORNER DETAIL

WATER POLLUTION CONTROL DETAILS
AUSTIN VAULT SAND FILTER
TRASH SCREEN DETAILS

NO SCALE

WD-23

STATE OF CALIFORNIA - DEPARTMENT OF TRANSPORTATION
DIVISION OF DESIGN
OFFICE OF STORM WATER MANAGEMENT

FUNCTIONAL SUPERVISOR: TIMOTHY B. SOBELMAN
CALCULATED-DESIGNED BY: D. WANG
CHECKED BY: L. HE
REVISED BY
DATE REVISED

LAST REVISION 04-12-13
DATE PLOTTED => 06-FEB-2014
TIME PLOTTED => 08:44

Dist	COUNTY	ROUTE	POST MILES TOTAL PROJECT	SHEET No.	TOTAL SHEETS
07	LA	210	R10.5/R15.7	48	116

REGISTERED CIVIL ENGINEER 11-16-12 DATE

6-1-15
PLANS APPROVAL DATE

REGISTERED PROFESSIONAL ENGINEER TIMOTHY B. SOBELMAN No. 59249 Exp. 6-30-15 CIVIL STATE OF CALIFORNIA

THE STATE OF CALIFORNIA OR ITS OFFICERS OR AGENTS SHALL NOT BE RESPONSIBLE FOR THE ACCURACY OR COMPLETENESS OF SCANNED COPIES OF THIS PLAN SHEET.

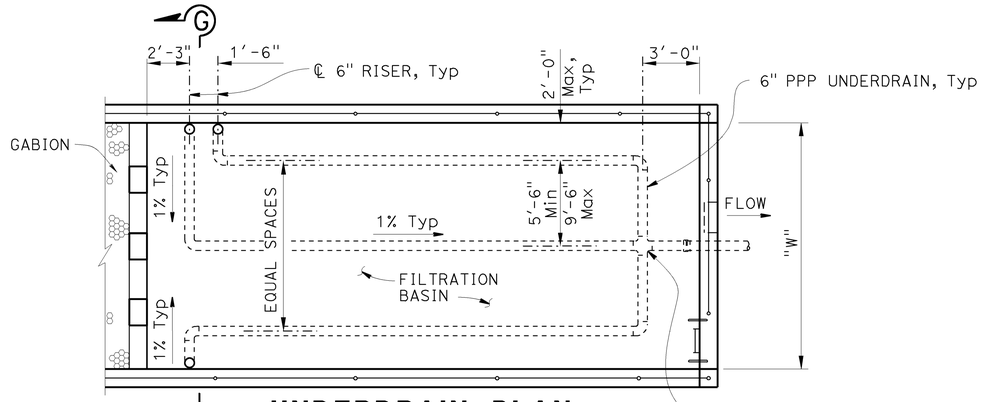

UNDERDRAIN PLAN (FILTRATION BASIN)

"W" = 15' or 21'
AVSF Type = (S or L 3,500)

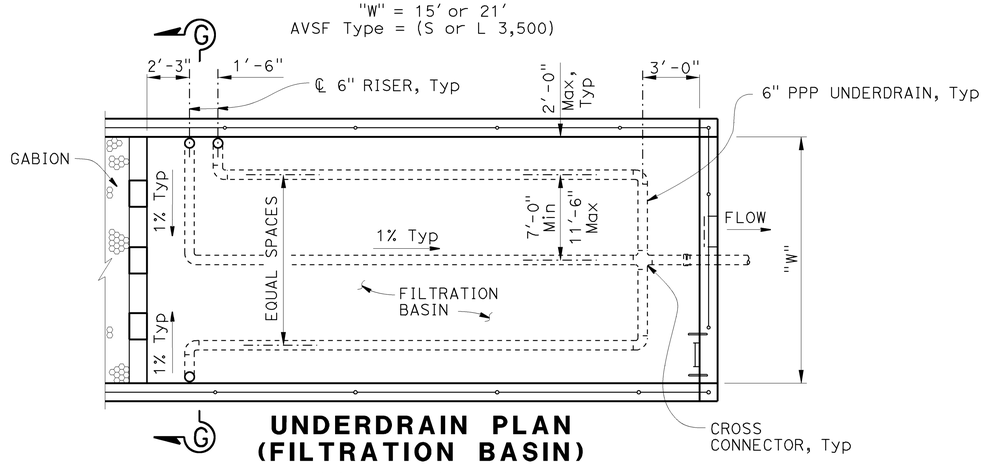

UNDERDRAIN PLAN (FILTRATION BASIN)

"W" = 18', 24' or 27'
AVSF Type = (S or L 5,000, L 10,000)

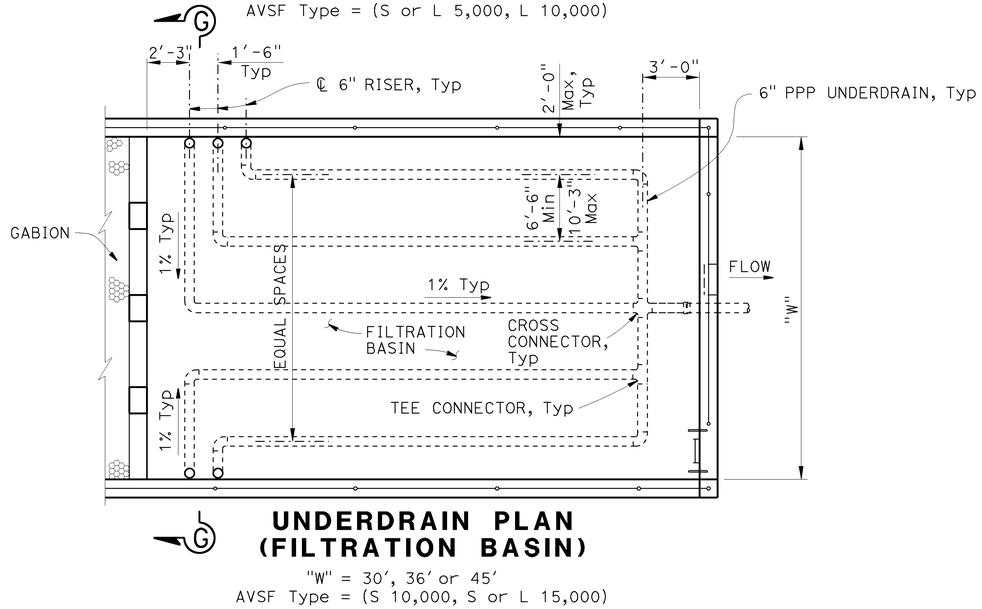

UNDERDRAIN PLAN (FILTRATION BASIN)

"W" = 30', 36' or 45'
AVSF Type = (S 10,000, S or L 15,000)

NOTE (THIS SHEET ONLY):

1. For typical cover and depth of permeable material, see "Austin Vault Sand Filter Layout No. 2" sheet.

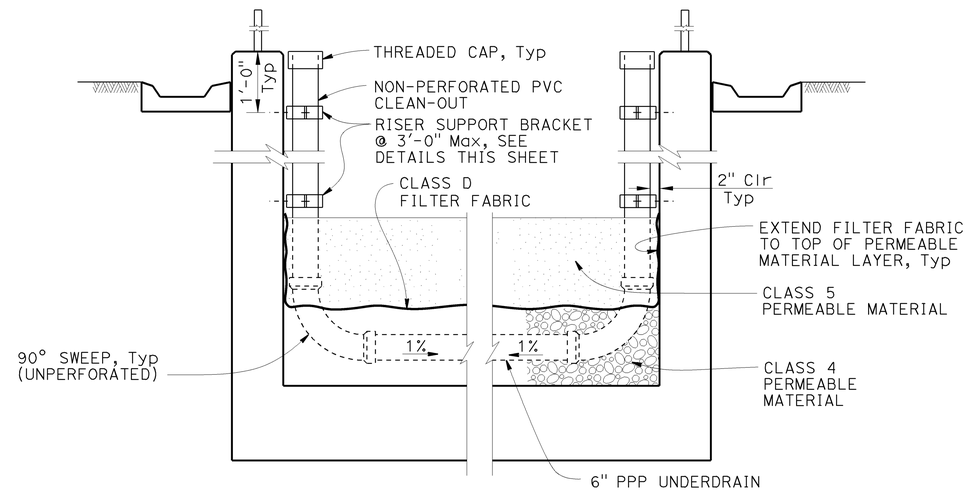

SECTION G - G

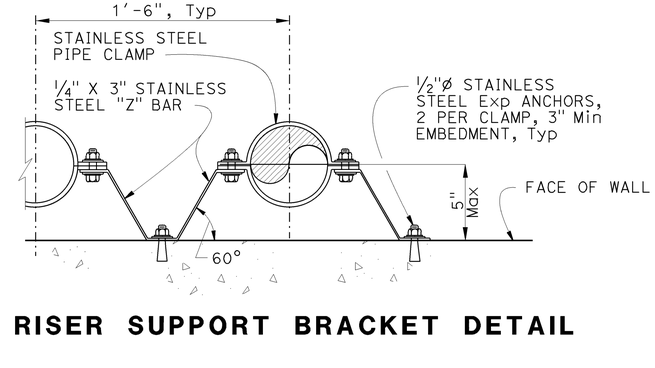

RISER SUPPORT BRACKET DETAIL

WATER POLLUTION CONTROL DETAILS
AUSTIN VAULT SAND FILTER UNDERDRAIN DETAILS

NO SCALE

WD-24

STATE OF CALIFORNIA - DEPARTMENT OF TRANSPORTATION
DIVISION OF DESIGN
OFFICE OF STORM WATER MANAGEMENT

FUNCTIONAL SUPERVISOR: TIMOTHY B. SOBELMAN
CALCULATED-DESIGNED BY: D. WANG
CHECKED BY: L. HE
REVISED BY
DATE REVISED

LAST REVISION 04-12-13
DATE PLOTTED => 06-FEB-2014
TIME PLOTTED => 08:44

Dist	COUNTY	ROUTE	POST MILES TOTAL PROJECT	SHEET No.	TOTAL SHEETS
07	LA	210	R10.5/R15.7	49	116

REGISTERED CIVIL ENGINEER 11-16-12 DATE

6-1-15
PLANS APPROVAL DATE

REGISTERED PROFESSIONAL ENGINEER TIMOTHY B. SOBELMAN No. 59249 Exp. 6-30-15 CIVIL STATE OF CALIFORNIA

THE STATE OF CALIFORNIA OR ITS OFFICERS OR AGENTS SHALL NOT BE RESPONSIBLE FOR THE ACCURACY OR COMPLETENESS OF SCANNED COPIES OF THIS PLAN SHEET.

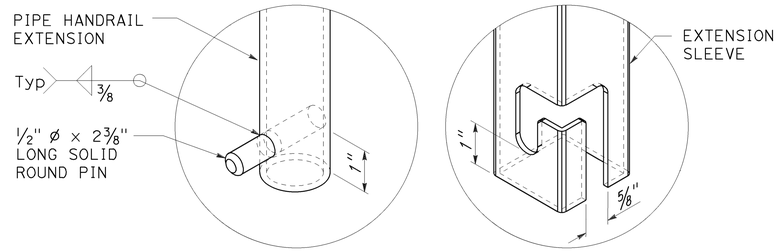

EXTENDABLE HANDRAIL LATCH

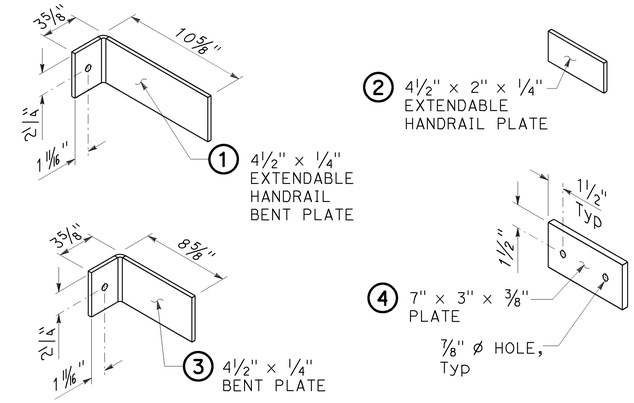

BRACKET DETAILS

NOTES (THIS SHEET ONLY):

1. Rungs must be skid resistant.
2. Use wall mounted handrail for vault depths between 4'-0" and 6'-6". For deeper vaults use extendable handrail detail. Vault depth is distance between top of wall and either top of floor slab or top of filter media material (use which ever distance is less). Ladders must not extend into filter media material.
3. No handrail required for Linear Radial GSRD 4'-0" depth, due to grate conflict.

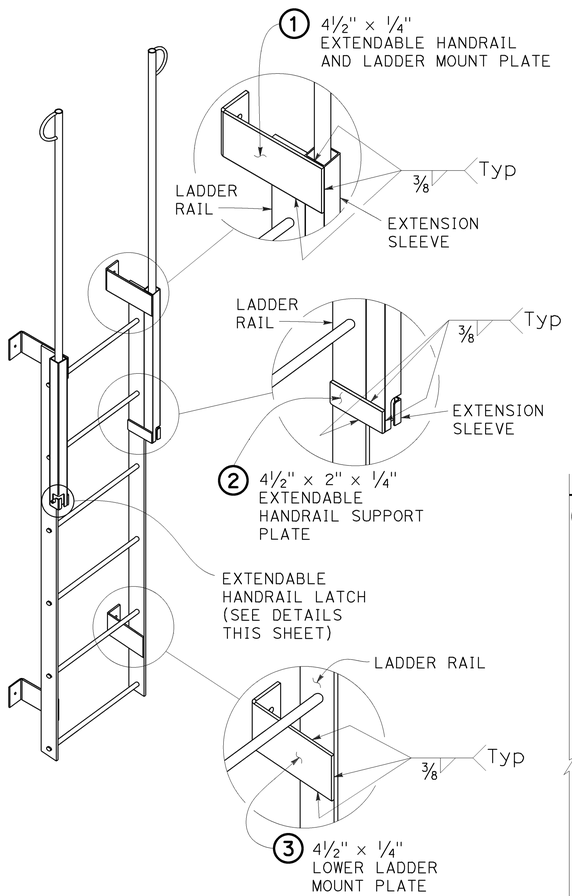

LADDER

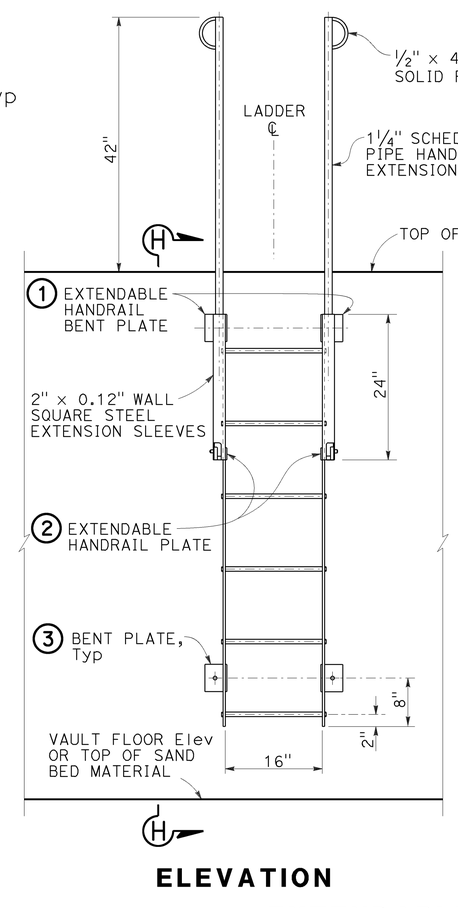

ELEVATION

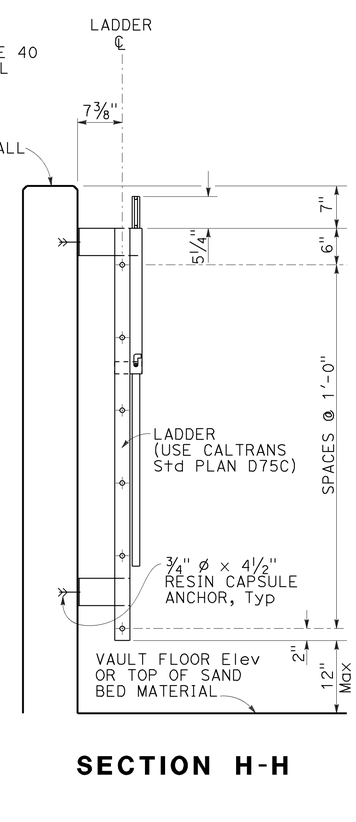

SECTION H-H

EXTENDABLE HANDRAIL

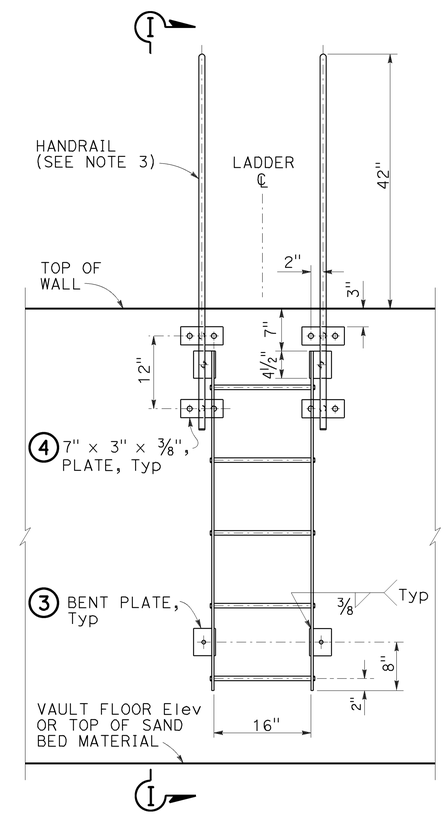

ELEVATION

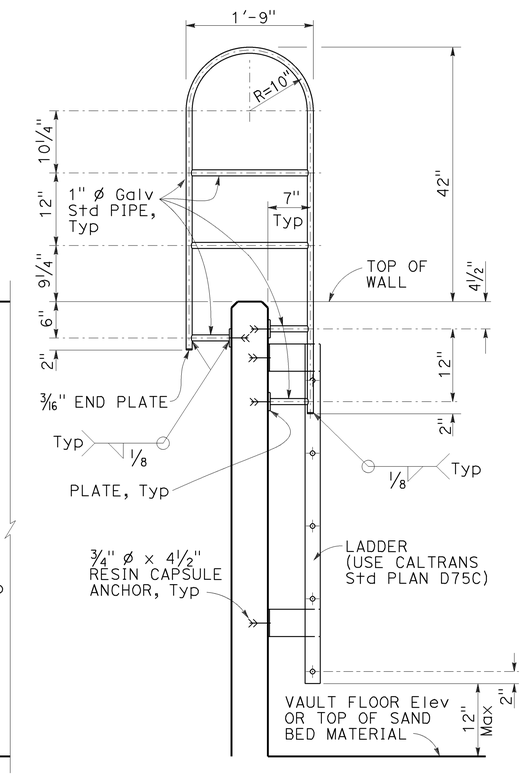

SECTION I-I

WALL MOUNTED HANDRAIL

WATER POLLUTION CONTROL DETAILS
AUSTIN VAULT SAND FILTER
LADDER DETAILS

NO SCALE

WD-25

STATE OF CALIFORNIA - DEPARTMENT OF TRANSPORTATION
DIVISION OF DESIGN
OFFICE OF STORM WATER MANAGEMENT
Caltrans

FUNCTIONAL SUPERVISOR: TIMOTHY B. SOBELMAN
CALCULATED-DESIGNED BY: D. WANG
CHECKED BY: L. HE
REVISED BY
DATE REVISED

LAST REVISION 04-12-13
DATE PLOTTED => 06-FEB-2014
TIME PLOTTED => 08:44

Dist	COUNTY	ROUTE	POST MILES TOTAL PROJECT	SHEET No.	TOTAL SHEETS
07	LA	210	R10.5/R15.7	50	116

Paul Fong 3-20-15
REGISTERED CIVIL ENGINEER DATE

6-1-15
PLANS APPROVAL DATE

REGISTERED PROFESSIONAL ENGINEER
PAUL FONG
No. C67053
Exp. 9-30-16
CIVIL
STATE OF CALIFORNIA

THE STATE OF CALIFORNIA OR ITS OFFICERS OR AGENTS SHALL NOT BE RESPONSIBLE FOR THE ACCURACY OR COMPLETENESS OF SCANNED COPIES OF THIS PLAN SHEET.

NOTES:

1. PIPE JOINTS ARE STANDARD OR AS NOTED ON PLANS.
2. (N) NOT A SEPARATE PAY ITEM, FOR INFORMATION ONLY.

SUMMARY OF DRAINAGE QUANTITIES

DRAINAGE SHEET	DRAINAGE SYSTEM No. ⬡	DRAINAGE UNIT ○	HEIGHT OF INLET H OR V (N)	MINOR CONCRETE (MINOR STRUCTURE)	CONCRETE (CONCRETE APRON)	MISCELLANEOUS IRON AND STEEL	ROCK SLOPE PROTECTION (FACING, METHOD B)	ROCK SLOPE PROTECTION FABRIC (CLASS 8)	DITCH EXCAVATION	REMOVE INLET	REMOVE PIPE	ABANDON CULVERT	CAP INLET	REMOVE CONCRETE	SAND BACKFILL	18" CORRUGATED STEEL PIPE (0.109" THICK)	18" REINFORCED CONCRETE PIPE	24" REINFORCED CONCRETE PIPE	18" STEEL FLARED END SECTION	36" PRECAST Conc PIPE MANHOLE	6" NON-PERFORATED PLASTIC PIPE UNDERDRAIN	HOT MIX ASPHALT (TYPE A) *	PLACE HOT MIX (Misc AREA) *	TYPE 24-12 FRAME AND GRATE (N)	MANHOLE FRAME AND COVER (N)	MAXIMUM COVER (N)	AUSTIN VAULT SAND FILTER/GROSS SOLIDS REMOVAL DEVICE														DESCRIPTION	STATION
																											STRUCTURE EXCAVATION	STRUCTURE BACKFILL	STRUCTURAL CONCRETE	BAR REINFORCING STEEL	CLASS 4 PERMEABLE MATERIAL	CLASS 5 PERMEABLE MATERIAL	GABION	CABLE RAILING	FRAME AND GRATE	CLASS D FILTER FABRIC	6" NON-PERFORATED PLASTIC PIPE UNDERDRAIN	6" PERFORATED PLASTIC PIPE UNDERDRAIN	JOINT SEAL (TYPE AL)	MISCELLANEOUS METAL	MISCELLANEOUS METAL (SCREENED PIPE)		
			F†	CY	CY	LB	CY	SQYD	CY	EA	LF	LF	EA	CY	CY	LF	LF	LF	EA	LF	LF	TON	SQYD	EA	EA	F†	CY	CY	CY	LB	CY	CY	CY	LF	EA	SQYD	LF	LF	LF	LB	LB		
W-1	1	a									53																															REMOVE 24" CSP	
		b															40									6.3																18" CSP	
		c																									130	30	25	4,504				46	7					1,400	1,091	LINEAR RADIAL TYPE LR-2 GSRD	115.30′ L†, 537+27.48, "A" LINE
		d												.60																												REMOVE CUTOFF WALL	
		e		.60																																						CUTOFF WALL	
W-1	2	a																53								6.4																24" RCP	
		b	10.7	7.03		435														1.4					1																	MANHOLE No. 1	119.10′ L†, 539+80.86, "A" LINE
		c																			13.5					10																6" PLASTIC PIPE	
		d														13.5										2.3																18" CSP	
		e																									1,746	275	325	75,539	125	123	12	293		290	60	440	196	115		AVSF TYPE L-10000-4.5	
		f																14.5								5.3																24" RCP	
		g	5.9	3.48		435														1.4					1																	MANHOLE No. 1	116.40′ L†, 541+31.87, "A" LINE
		h									8																															REMOVE 24" CSP	
		i									14																															REMOVE 30" CSP	
		j										43			7.82																											ABANDON 30" CSP	
		k																16								1.5																24" RCP	
		l																202.5								4.1																24" RCP	
SHEET TOTAL			16.16	11.11		870					75	43		.60	7.82	13.5	40	286		2.8	13.5				2	35.9	1,876	305	350	80,043	125	123	12	339	7	290	60	440	196	1,515	1,091		

* INCLUDE IN HIGHWAY QUANTITIES

WATER POLLUTION CONTROL QUANTITIES

WQ-1

ROMULO ROBENIOL — REVISED BY — DATE REVISED
PAUL FONG — CALCULATED-DESIGNED BY — CHECKED BY
DAVE BHALLA — FUNCTIONAL SUPERVISOR
STATE OF CALIFORNIA - DEPARTMENT OF TRANSPORTATION
Caltrans® HYDRAULICS

LAST REVISION 03-26-15 | DATE PLOTTED => 2015 | TIME PLOTTED => 07:26

Dist	COUNTY	ROUTE	POST MILES TOTAL PROJECT	SHEET No.	TOTAL SHEETS
07	LA	210	R10.5/R15.7	51	116

REGISTERED CIVIL ENGINEER Paul Fong DATE 3-20-15

PLANS APPROVAL DATE 6-1-15

REGISTERED PROFESSIONAL ENGINEER PAUL FONG No. C67053 Exp. 9-30-16 CIVIL STATE OF CALIFORNIA

THE STATE OF CALIFORNIA OR ITS OFFICERS OR AGENTS SHALL NOT BE RESPONSIBLE FOR THE ACCURACY OR COMPLETENESS OF SCANNED COPIES OF THIS PLAN SHEET.

NOTES:

1. PIPE JOINTS ARE STANDARD OR AS NOTED ON PLANS.
2. (N) NOT A SEPARATE PAY ITEM, FOR INFORMATION ONLY.

SUMMARY OF DRAINAGE QUANTITIES

DRAINAGE SHEET	DRAINAGE SYSTEM No. ⬡	DRAINAGE UNIT ○	HEIGHT OF INLET H OR V (N)	MINOR CONCRETE (MINOR STRUCTURE)	CONCRETE (CONCRETE APRON)	MISCELLANEOUS IRON AND STEEL	ROCK SLOPE PROTECTION (FACING, METHOD B)	ROCK SLOPE PROTECTION FABRIC (CLASS 8)	DITCH EXCAVATION	REMOVE INLET	REMOVE PIPE	ABANDON CULVERT	CAP INLET	REMOVE CONCRETE	SAND BACKFILL	18" CORRUGATED STEEL PIPE (0.109" THICK)	18" REINFORCED CONCRETE PIPE	24" REINFORCED CONCRETE PIPE	18" STEEL FLARED END SECTION	36" PRECAST Conc PIPE MANHOLE	6" NON-PERFORATED PLASTIC PIPE UNDERDRAIN	HOT MIX ASPHALT (TYPE A) *	PLACE HOT MIX (Misc AREA) *	TYPE 24-12 FRAME AND GRATE (N)	MANHOLE FRAME AND COVER (N)	MAXIMUM COVER (N)	AUSTIN VAULT SAND FILTER/GROSS SOLIDS REMOVAL DEVICE: STRUCTURE EXCAVATION	STRUCTURE BACKFILL	STRUCTURAL CONCRETE	BAR REINFORCING STEEL	CLASS 4 PERMEABLE MATERIAL	CLASS 5 PERMEABLE MATERIAL	GABION	CABLE RAILING	FRAME AND GRATE	CLASS D FILTER FABRIC	6" NON-PERFORATED PLASTIC PIPE UNDERDRAIN	6" PERFORATED PLASTIC PIPE UNDERDRAIN	JOINT SEAL (TYPE AL)	MISCELLANEOUS METAL	MISCELLANEOUS METAL (SCREENED PIPE)	DESCRIPTION	STATION
			F†	CY	CY	LB	CY	SQYD	CY	EA	LF	LF	EA	CY	CY	LF	LF	LF	EA	LF	LF	TON	SQYD	EA	EA	F†	CY	CY	CY	LB	CY	CY	CY	LF	EA	SQYD	LF	LF	LF	LB	LB		
W-1	2	m	6.2	3.61		435														1.4					1																		MANHOLE No. 1	113.90′ L†, 543+30.04, "A" LINE
		n																203.5								5.5																		24" RCP	
		o	6.5	3.74		435														1.4					1																		MANHOLE No. 1	113.65′ L†, 545+29.69, "A" LINE
		p									8																																REMOVE 24" CSP	
		q										38			4.42																												ABANDON 24" CSP	
		r																213.5								5.8																		24" RCP	
		s	5.2	3.17		435														1.4					1																		MANHOLE No. 1	117.30′ L†, 547+40.04, "A" LINE
		†																220.5								4.8																		24" RCP	
		u	5.5	3.3		435														1.4					1																		MANHOLE No. 1	117.00′ L†, 549+55.67, "A" LINE
		v									8																																REMOVE 24" CSP	
		w										23			2.68																												ABANDON 24" CSP	
W-1		x																219.5								3.5																		24" RCP	
W-2		y	5.7	3.39		435														1.4					1																		MANHOLE No. 1	109.80′ L†, 551+70.00, "A" LINE
		z																211.5								3.5																		24" RCP	
		aa	6.5	3.74		435														1.4					1																		MANHOLE No. 1	110.70′ L†, 553+81.18, "A" LINE
		bb									8																																REMOVE 24" CSP	
		cc										20			2.33																												ABANDON 24" CSP	
		dd												.60																														REMOVE CUTOFF WALL	
		ee		.60																																								CUTOFF WALL	
SHEET TOTAL			35.6	21.55		2,610					24	81		.60	9.43			1,068.5		8.4					6	23.1																			

* INCLUDED IN HIGHWAY QUANTITIES

WATER POLLUTION CONTROL QUANTITIES

WQ-2

STATE OF CALIFORNIA - DEPARTMENT OF TRANSPORTATION

Caltrans HYDRAULICS

ROMULO ROBENIOL — PAUL FONG — DAVE BHALLA

REVISED BY / DATE REVISED / CALCULATED-DESIGNED BY / CHECKED BY / FUNCTIONAL SUPERVISOR

LAST REVISION 03-26-15 — DATE PLOTTED => 18-JUN-2015 — TIME PLOTTED => 07:26

Dist	COUNTY	ROUTE	POST MILES TOTAL PROJECT	SHEET No.	TOTAL SHEETS
07	LA	210	R10.5/R15.7	52	116

REGISTERED CIVIL ENGINEER Paul Fong DATE 3-20-15

PLANS APPROVAL DATE 6-1-15

REGISTERED PROFESSIONAL ENGINEER PAUL FONG No. C67053 Exp. 9-30-16 CIVIL STATE OF CALIFORNIA

THE STATE OF CALIFORNIA OR ITS OFFICERS OR AGENTS SHALL NOT BE RESPONSIBLE FOR THE ACCURACY OR COMPLETENESS OF SCANNED COPIES OF THIS PLAN SHEET.

NOTES:

1. PIPE JOINTS ARE STANDARD OR AS NOTED ON PLANS.
2. (N) NOT A SEPARATE PAY ITEM, FOR INFORMATION ONLY.

SUMMARY OF DRAINAGE QUANTITIES

DRAINAGE SHEET	DRAINAGE SYSTEM No. ⬡	DRAINAGE UNIT ○	HEIGHT OF INLET H OR V (N)	MINOR CONCRETE (MINOR STRUCTURE)	CONCRETE (CONCRETE APRON)	MISCELLANEOUS IRON AND STEEL	ROCK SLOPE PROTECTION (FACING, METHOD B)	ROCK SLOPE PROTECTION FABRIC (CLASS 8)	DITCH EXCAVATION	REMOVE INLET	REMOVE PIPE	ABANDON CULVERT	CAP INLET	REMOVE CONCRETE	SAND BACKFILL	18" CORRUGATED STEEL PIPE (0.109" THICK)	18" REINFORCED CONCRETE PIPE	24" REINFORCED CONCRETE PIPE	18" STEEL FLARED END SECTION	36" PRECAST Conc PIPE MANHOLE	6" NON-PERFORATED PLASTIC PIPE UNDERDRAIN	HOT MIX ASPHALT (TYPE A) *	PLACE HOT MIX (Misc AREA) *	TYPE 24-12 FRAME AND GRATE (N)	MANHOLE FRAME AND COVER (N)	MAXIMUM COVER (N)	DESCRIPTION	STATION
			F†	CY	CY	LB	CY	SQYD	CY	EA	LF	LF	EA	CY	CY	LF	LF	LF	EA	LF	LF	TON	SQYD	EA	EA	F†		
W-3	3	a														18.5										2.5	18" CSP	
		b	2	.73		326																		1			TYPE G1 INLET	92.19′ R†, 573+32.72, "A" LINE
		c			1.6																						CONCRETE APRON	
		d							247																		BIOFILTRATION SWALE	
		e					7.5		13.5																		RSP (FACING, METHOD B)	
		f							3.1													1.1	6.1				OVERSIDE DRAIN	73.00′ R†, 574+63.90, "A" LINE
W-4	4	a		2.25																							CONCRETE PAD	5.40′ R†, 29+76.00, "SUNS4" LINE
		b					4.5		16.8																		RSP (FACING, METHOD B)	
W-5	5	a		2.25																							CONCRETE PAD	74.50′ L†, 647+50.00, "A" LINE
		b					4.5		16.8																		RSP (FACING, METHOD B)	
W-6	6	a								1																	REMOVE TYPE GI INLET	7.00′ L†, 13+54.90, "C" LINE
		b	4.9	1.37		326																		1			TYPE G1 INLET	7.00′ L†, 13+54.90, "C" LINE
		c															31.2									3.8	18" RCP	
		d	5.3	1.46		326																		1			TYPE G1 INLET	28.40′ R†, 13+54.90, "C" LINE
		e														36.1										3.8	18" CSP	
SHEET TOTAL			12.2	8.06	1.6	978	16.5	47.1	250.1	1						54.6	31.2					1.1	6.1	3		10.1		

AUSTIN VAULT SAND FILTER/GROSS SOLIDS REMOVAL DEVICE

DRAINAGE UNIT	STRUCTURE EXCAVATION	STRUCTURE BACKFILL	STRUCTURAL CONCRETE	BAR REINFORCING STEEL	CLASS 4 PERMEABLE MATERIAL	CLASS 5 PERMEABLE MATERIAL	GABION	CABLE RAILING	FRAME AND GRATE	CLASS D FILTER FABRIC	6" NON-PERFORATED PLASTIC PIPE UNDERDRAIN	6" PERFORATED PLASTIC PIPE UNDERDRAIN	JOINT SEAL (TYPE AL)	MISCELLANEOUS METAL	MISCELLANEOUS METAL (INCLINED SCREEN)
	CY	CY	CY	LB	CY	CY	CY	LF	EA	SQYD	LF	LF	LF	LB	LB

* INCLUDED IN HIGHWAY QUANTITIES

WATER POLLUTION CONTROL QUANTITIES

WQ-3

STATE OF CALIFORNIA - DEPARTMENT OF TRANSPORTATION
Caltrans HYDRAULICS

FUNCTIONAL SUPERVISOR: DAVE BHALLA
CALCULATED-DESIGNED BY: ROMULO ROBENIOL
CHECKED BY: PAUL FONG
REVISED BY / DATE REVISED

LAST REVISION 03-26-15 | DATE PLOTTED => 18-JUN-2015 | TIME PLOTTED => 07:26

Dist	COUNTY	ROUTE	POST MILES TOTAL PROJECT	SHEET No.	TOTAL SHEETS
07	LA	210	R10.5/R15.7	53	116

Paul Fong 3-20-15
REGISTERED CIVIL ENGINEER DATE

6-1-15
PLANS APPROVAL DATE

REGISTERED PROFESSIONAL ENGINEER PAUL FONG No. C67053 Exp. 9-30-16 CIVIL STATE OF CALIFORNIA

THE STATE OF CALIFORNIA OR ITS OFFICERS OR AGENTS SHALL NOT BE RESPONSIBLE FOR THE ACCURACY OR COMPLETENESS OF SCANNED COPIES OF THIS PLAN SHEET.

NOTES:

1. PIPE JOINTS ARE STANDARD OR AS NOTED ON PLANS.
2. (N) NOT A SEPARATE PAY ITEM, FOR INFORMATION ONLY.

SUMMARY OF DRAINAGE QUANTITIES

DRAINAGE SHEET	DRAINAGE SYSTEM No. ⬡	DRAINAGE UNIT ○	HEIGHT OF INLET H OR V (N)	MINOR CONCRETE (MINOR STRUCTURE)	CONCRETE (CONCRETE APRON)	MISCELLANEOUS IRON AND STEEL	ROCK SLOPE PROTECTION (FACING, METHOD B)	ROCK SLOPE PROTECTION FABRIC (CLASS 8)	DITCH EXCAVATION	REMOVE INLET	REMOVE PIPE	ABANDON CULVERT	CAP INLET	REMOVE CONCRETE	SAND BACKFILL	18" CORRUGATED STEEL PIPE (0.109" THICK)	18" REINFORCED CONCRETE PIPE	24" REINFORCED CONCRETE PIPE	18" STEEL FLARED END SECTION	36" PRECAST Conc PIPE MANHOLE	6" NON-PERFORATED PLASTIC PIPE UNDERDRAIN	HOT MIX ASPHALT (TYPE A) *	PLACE HOT MIX (Misc AREA) *	TYPE 24-12 FRAME AND GRATE (N)	MANHOLE FRAME AND COVER (N)	MAXIMUM COVER (N)	AUSTIN VAULT SAND FILTER/GROSS SOLIDS REMOVAL DEVICE: STRUCTURE EXCAVATION	STRUCTURE BACKFILL	STRUCTURAL CONCRETE	BAR REINFORCING STEEL	CLASS 4 PERMEABLE MATERIAL	CLASS 5 PERMEABLE MATERIAL	GABION	CABLE RAILING	FRAME AND GRATE	CLASS D FILTER FABRIC	6" NON-PERFORATED PLASTIC PIPE UNDERDRAIN	6" PERFORATED PLASTIC PIPE UNDERDRAIN	JOINT SEAL (TYPE AL)	MISCELLANEOUS METAL	MISCELLANEOUS METAL (INCLINED SCREEN)	DESCRIPTION	STATION
			F†	CY	CY	LB	CY	SQYD	CY	EA	LF	LF	EA	CY	CY	LF	LF	LF	EA	LF	LF	TON	SQYD	EA	EA	F†	CY	CY	CY	LB	CY	CY	CY	LF	EA	SQYD	LF	LF	LF	LB	LB		
W-6	6	f																	1																							18" STEEL FES	59.90′ R†, 13+63.60, "C" LINE
		g					1.5	4.7																																		RSP (FACING, METHOD B)	
		h							24																																	BIOFILTRATION SWALE, L=125.0′	
		i		.91																																						PIPE CULVERT STRAIGHT HEADWALL	42.90′ R†, 15+02.20, "C" LINE
		j															14.6									2																18" RCP	
W-6	7	a									83.5																															REMOVE 18" CSP	
		b	8.2	3.56		235																			1																	JUNCTION CHAMBER No. 3-C Mod	104.75′ R†, 745+11.25, "A" LINE
		c														109.7										4.1																18" CSP	
		d	8.1	3.52		235																			1																	JUNCTION CHAMBER No. 3-C Mod	117.00′ R†, 746+29.35, "A" LINE
		e														26.6										5.6																18" CSP	
		f																									1,113	220	240	59,423	63	55	9	201		153	42	174	180	115		AVSF TYPE L-5000-4.5	
		g																			28					8.1																	6" PLASTIC PIPE	
		h														29										2.5																	18" CSP	
		i	8.6	3.71		235																			1																		JUNCTION CHAMBER No. 3-C Mod	155.15′ R†, 745+15.98, "A" LINE
		j															24									5.3																	18" RCP	
		k	4	1.17		326																		1																			TYPE G1 INLET	141.50′ R†, 746+08.00, "A" LINE
		l														54.5										2.7																	18" CSP	
SHEET TOTAL			28.9	12.87		1,031	1.5	4.7	24		83.5					219.8	38.6		1		28			1	3	30.3	1,113	220	240	59,423	63	55	9	201		153	42	174	180	115			

* INCLUDED IN HIGHWAY QUANTITIES

WATER POLLUTION CONTROL QUANTITIES

WQ-4

ROMULO ROBENIOL — REVISED BY
PAUL FONG — DATE REVISED
CALCULATED-DESIGNED BY
CHECKED BY
FUNCTIONAL SUPERVISOR
DAVE BHALLA

STATE OF CALIFORNIA - DEPARTMENT OF TRANSPORTATION
Caltrans
HYDRAULICS

LAST REVISION 03-26-15 | DATE PLOTTED => 18-JUN-2015 | TIME PLOTTED => 07:26

Dist	COUNTY	ROUTE	POST MILES TOTAL PROJECT	SHEET No.	TOTAL SHEETS
07	LA	210	R10.5/R15.7	54	116

REGISTERED CIVIL ENGINEER Paul Fong DATE 3-20-15

PLANS APPROVAL DATE 6-1-15

REGISTERED PROFESSIONAL ENGINEER PAUL FONG No. C67053 Exp. 9-30-16 CIVIL STATE OF CALIFORNIA

THE STATE OF CALIFORNIA OR ITS OFFICERS OR AGENTS SHALL NOT BE RESPONSIBLE FOR THE ACCURACY OR COMPLETENESS OF SCANNED COPIES OF THIS PLAN SHEET.

NOTES:

1. PIPE JOINTS ARE STANDARD OR AS NOTED ON PLANS.
2. (N) NOT A SEPARATE PAY ITEM, FOR INFORMATION ONLY.

SUMMARY OF DRAINAGE QUANTITIES

DRAINAGE SHEET	DRAINAGE SYSTEM No. ⬡	DRAINAGE UNIT ○	HEIGHT OF INLET H OR V (N)	MINOR CONCRETE (MINOR STRUCTURE)	CONCRETE (CONCRETE APRON)	MISCELLANEOUS IRON AND STEEL	ROCK SLOPE PROTECTION (FACING, METHOD B)	ROCK SLOPE PROTECTION FABRIC (CLASS 8)	DITCH EXCAVATION	REMOVE INLET	REMOVE PIPE	ABANDON CULVERT	CAP INLET	REMOVE CONCRETE	SAND BACKFILL	18" CORRUGATED STEEL PIPE (0.109" THICK)	18" REINFORCED CONCRETE PIPE	24" REINFORCED CONCRETE PIPE	18" STEEL FLARED END SECTION	36" PRECAST Conc PIPE MANHOLE	6" NON-PERFORATED PLASTIC PIPE UNDERDRAIN	HOT MIX ASPHALT (TYPE A) *	PLACE HOT MIX (Misc AREA) *	TYPE 24-12 FRAME AND GRATE (N)	MANHOLE FRAME AND COVER (N)	MAXIMUM COVER (N)	AUSTIN VAULT SAND FILTER/GROSS SOLIDS REMOVAL DEVICE: STRUCTURE EXCAVATION	STRUCTURE BACKFILL	STRUCTURAL CONCRETE	BAR REINFORCING STEEL	CLASS 4 PERMEABLE MATERIAL	CLASS 5 PERMEABLE MATERIAL	GABION	CABLE RAILING	FRAME AND GRATE	CLASS D FILTER FABRIC	6" NON-PERFORATED PLASTIC PIPE UNDERDRAIN	6" PERFORATED PLASTIC PIPE UNDERDRAIN	JOINT SEAL (TYPE AL)	MISCELLANEOUS METAL	MISCELLANEOUS METAL (SCREENED PIPE)	DESCRIPTION	STATION
			Ft	CY	CY	LB	CY	SQYD	CY	EA	LF	LF	EA	CY	CY	LF	LF	LF	EA	LF	LF	TON	SQYD	EA	EA	Ft	CY	CY	CY	LB	CY	CY	CY	LF	EA	SQYD	LF	LF	LF	LB	LB		
W-6	7	m	4.2	1.22		326																		1																			TYPE G1 INLET	144.10′ R+, 745+49.00, "A" LINE
		n															32.8									2.7																	18" RCP	
W-7	8	a											1																														CAP TYPE GDO INLET	73.00′ L+, 755+36.30, "A" LINE
	9	a		2.25																																							CONCRETE PAD	73.00′ L+, 756+40.00, "A" LINE
		b					4.5	16.8																																			RSP (FACING, METHOD B)	
W-8	10	a									3																																REMOVE 18" CSP	
		b	2.3	1.14		580																		2																			GD-1 INLET	18.69′ R+, 31+91.01, OFF-RAMP
		c			1.1																																						CONCRETE APRON	
		d							25																																		BIOFILTRATION SWALE, L=110.0′	
		e					3	9.5																																			RSP (FACING, METHOD B)	
SHEET TOTAL				4.61	1.1	906	7.5	26.3	25		3		1				32.8							3		2.7																		
TOTAL				58.2	2.7	6,395	25.5	78.1	299.1	1	185.5	124	1	1.2	17.25	287.9	142.6	1,354.5	1	11.2	41.5	1.1	6.1				2,989	525	590	139,466	188	178	21	540	7	443	102	614	376	1,630	1,091		

143.5

* INCLUDED IN HIGHWAY QUANTITIES

WATER POLLUTION CONTROL QUANTITIES

WQ-5

STATE OF CALIFORNIA - DEPARTMENT OF TRANSPORTATION

Caltrans HYDRAULICS

FUNCTIONAL SUPERVISOR: DAVE BHALLA

CALCULATED-DESIGNED BY: ROMULO ROBENIOL

CHECKED BY: PAUL FONG

REVISED BY / DATE REVISED

LAST REVISION 03-26-15

DATE PLOTTED => 18-JUN-2015
TIME PLOTTED => 07:26

Dist	COUNTY	ROUTE	POST MILES TOTAL PROJECT	SHEET No.	TOTAL SHEETS
07	LA	210	R10.5/R15.7	55	116

REGISTERED CIVIL ENGINEER 3-20-15 DATE

6-1-15
PLANS APPROVAL DATE

REGISTERED PROFESSIONAL ENGINEER
VIVIAN NGUYEN
No. C73723
Exp. 6/30/15
CIVIL
STATE OF CALIFORNIA

THE STATE OF CALIFORNIA OR ITS OFFICERS OR AGENTS SHALL NOT BE RESPONSIBLE FOR THE ACCURACY OR COMPLETENESS OF SCANNED COPIES OF THIS PLAN SHEET.

NOTES:

1. FOR ACCURATE RIGHT OF WAY DATA, CONTACT RIGHT OF WAY ENGINEERING AT THE DISTRICT OFFICE.

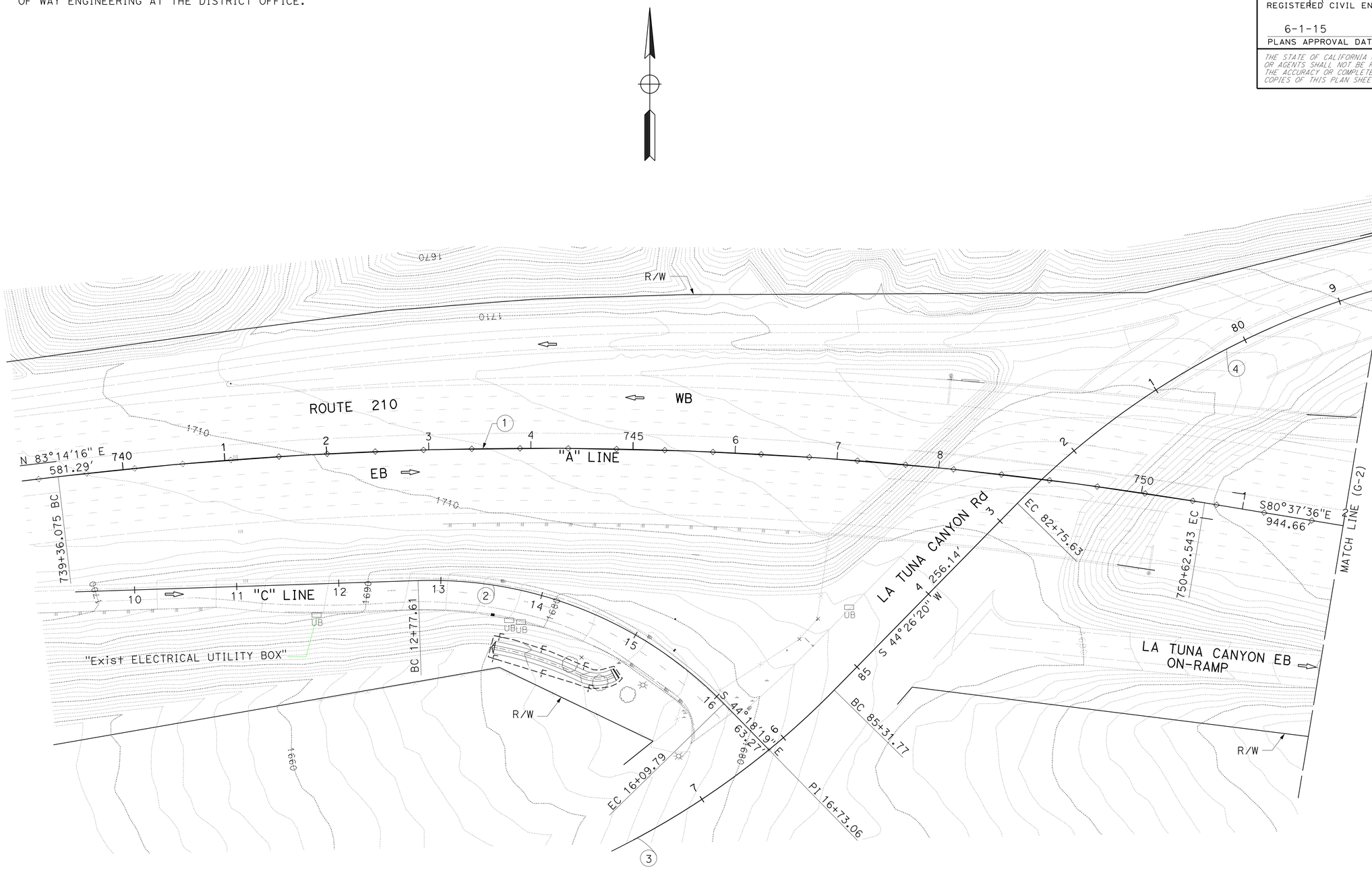

CONTOUR GRADING PLAN
LOCATION 5
SCALE: 1" = 50'

G-1

APPROVED FOR CONTOUR GRADING WORK ONLY

STATE OF CALIFORNIA - DEPARTMENT OF TRANSPORTATION
Caltrans
DESIGN

FUNCTIONAL SUPERVISOR: OJI KALU

CALCULATED-DESIGNED BY: VIVIAN NGUYEN
CHECKED BY: MOE MIRZA

REVISED BY
DATE REVISED

LAST REVISION 06-05-14
DATE PLOTTED => 18-JUN-2015
TIME PLOTTED => 07:26

Dist	COUNTY	ROUTE	POST MILES TOTAL PROJECT	SHEET No.	TOTAL SHEETS
07	LA	210	R10.5/R15.7	56	116

REGISTERED CIVIL ENGINEER 3-20-15 DATE

6-1-15
PLANS APPROVAL DATE

REGISTERED PROFESSIONAL ENGINEER VIVIAN NGUYEN No. C73723 Exp. 6/30/15 CIVIL STATE OF CALIFORNIA

THE STATE OF CALIFORNIA OR ITS OFFICERS OR AGENTS SHALL NOT BE RESPONSIBLE FOR THE ACCURACY OR COMPLETENESS OF SCANNED COPIES OF THIS PLAN SHEET.

NOTE:

1. FOR ACCURATE RIGHT OF WAY DATA, CONTACT RIGHT OF WAY ENGINEERING AT THE DISTRICT OFFICE.

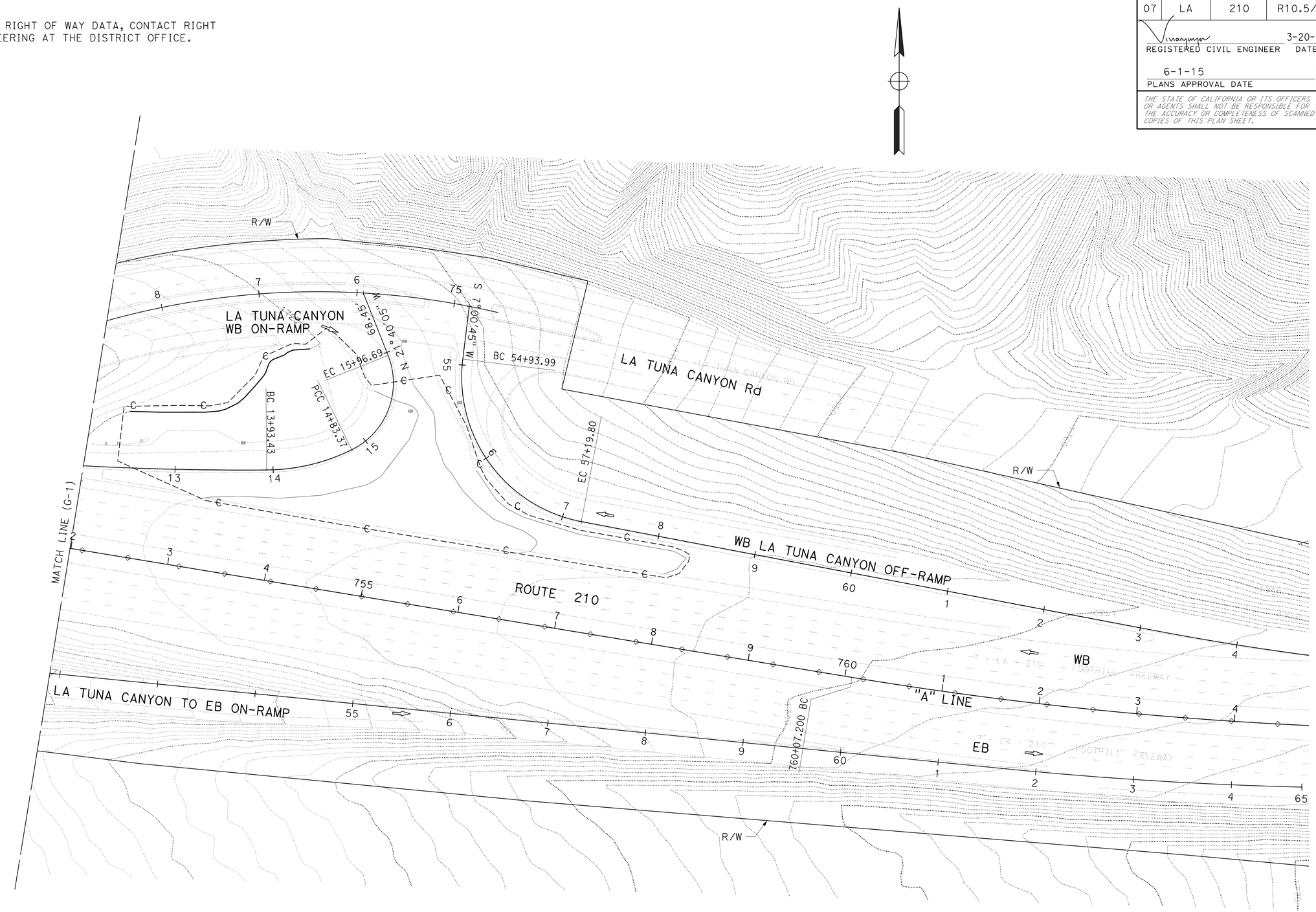

CONTOUR GRADING PLAN

LOCATION 6

SCALE: 1" = 50'

G-2

APPROVED FOR CONTOUR GRADING WORK ONLY

STATE OF CALIFORNIA - DEPARTMENT OF TRANSPORTATION

Caltrans

DESIGN

FUNCTIONAL SUPERVISOR: OJI KALU

CALCULATED-DESIGNED BY: VIVIAN NGUYEN

CHECKED BY: MOE MIRZA

REVISED BY

DATE REVISED

LAST REVISION 01-26-15

DATE PLOTTED => 18-JUN-2015
TIME PLOTTED => 07:26

Dist	COUNTY	ROUTE	POST MILES TOTAL PROJECT	SHEET No.	TOTAL SHEETS
07	LA	210	R10.5/R15.7	57	116

REGISTERED CIVIL ENGINEER 3-20-15 DATE

6-1-15
PLANS APPROVAL DATE

REGISTERED PROFESSIONAL ENGINEER VIVIAN NGUYEN No. C73723 Exp. 6/30/15 CIVIL STATE OF CALIFORNIA

THE STATE OF CALIFORNIA OR ITS OFFICERS OR AGENTS SHALL NOT BE RESPONSIBLE FOR THE ACCURACY OR COMPLETENESS OF SCANNED COPIES OF THIS PLAN SHEET.

NOTES:

1. LOCATION OF CONSTRUCTION AREA SIGNS ARE APPROXIMATE. EXACT LOCATIONS WILL BE DETERMINED BY THE ENGINEER.
2. "TRAFFIC FINES DOUBLED IN CONSTRUCTION ZONES" SIGN, WHERE SHOWN ON PLANS, SHALL BE PLACE APPROXIMATELY 500 FEET IN ADVANCE OF "ROAD WORK AHEAD" SIGN OR AS DETERMINED BY THE ENGINEER.
3. SEE TRAFFIC HANDLING PLAN FOR ADDITIONAL CONSTRUCTION AREA SIGNS.

STATIONARY MOUNTED CONSTRUCTION AREA SIGNS

SIGN ⓧ SYMBOL	SIGN CODE FEDERAL	PANEL SIZE	SIGN MESSAGE	NUMBER OF POSTS AND SIZE	No. OF SIGNS
A	C11(CA)	90" x 48"	ROAD WORK NEXT 8 MILES	2 - 6" X 6"	2
B	W20-1	48" x 48"	ROAD WORK AHEAD	1 - 6" X 6"	9
C	G20-2	36" x 18"	END ROAD WORK	1 - 4" X 4"	5
D	C40(CA)	108" x 42"	TRAFFIC FINES DOUBLED IN CONSTRUCTION ZONES	2 - 6" X 6"	2
E	G20-2	48" x 24"	END ROAD WORK	1 - 4" X 6"	1

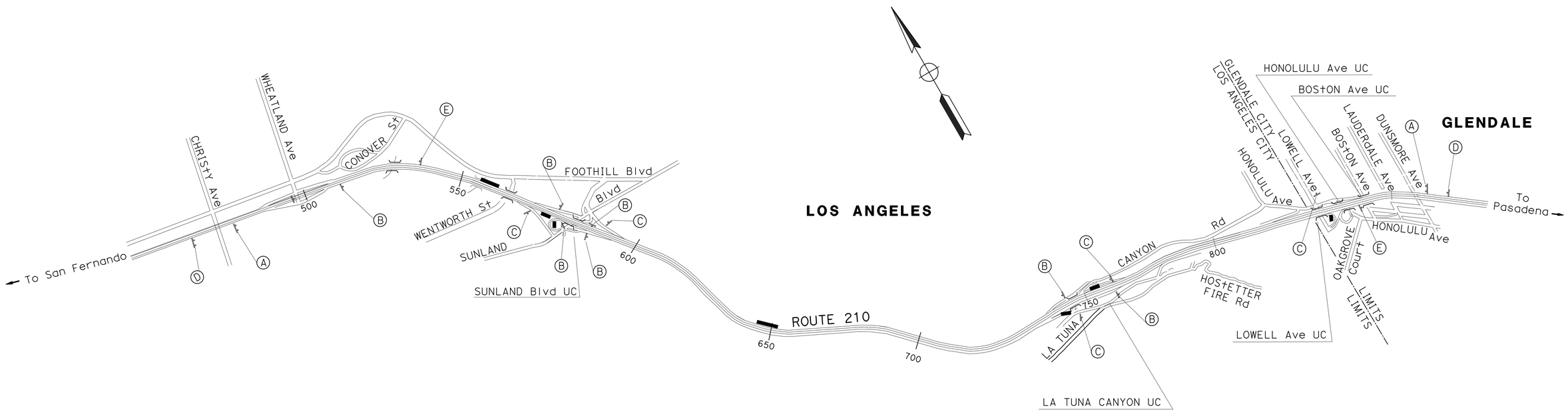

CONSTRUCTION AREA SIGNS

NO SCALE

APPROVED FOR CONSTRUCTION AREA SIGN WORK ONLY

CS-1

REVISED BY	DATE REVISED
	12/2014

CALCULATED-DESIGNED BY: VIVIAN NGUYEN
CHECKED BY: DAN TRAN
FUNCTIONAL SUPERVISOR: OJI KALU

STATE OF CALIFORNIA - DEPARTMENT OF TRANSPORTATION
Caltrans
DESIGN

LAST REVISION 12-12-12
DATE PLOTTED => 18-JUN-2015
TIME PLOTTED => 07:26

Dist	COUNTY	ROUTE	POST MILES TOTAL PROJECT	SHEET No.	TOTAL SHEETS
07	LA	210	R10.5/R15.7	58	116

REGISTERED CIVIL ENGINEER 3-20-15 DATE

6-1-15
PLANS APPROVAL DATE

REGISTERED PROFESSIONAL ENGINEER VIVIAN NGUYEN No. C73723 Exp. 6/30/15 CIVIL STATE OF CALIFORNIA

THE STATE OF CALIFORNIA OR ITS OFFICERS OR AGENTS SHALL NOT BE RESPONSIBLE FOR THE ACCURACY OR COMPLETENESS OF SCANNED COPIES OF THIS PLAN SHEET.

NOTE:

FOR ACCURATE RIGHT OF WAY DATA, CONTACT RIGHT OF WAY ENGINEERING AT THE DISTRICT OFFICE.

LEGEND:

- WORK AREA
- CHANNELIZER (SURFACE MOUNTED)
- TEMPORARY RAILING (TYPE K)
- XX — Exist TRAFFIC STRIPE DETAIL No.
- R XX — REMOVE THERMOPLASTIC TRAFFIC STRIPE DETAIL No.
- XX — TRAFFIC STRIPE DETAIL No.
- TEMPORARY CRASH CUSHION
- BARRICADE (TYPE III)

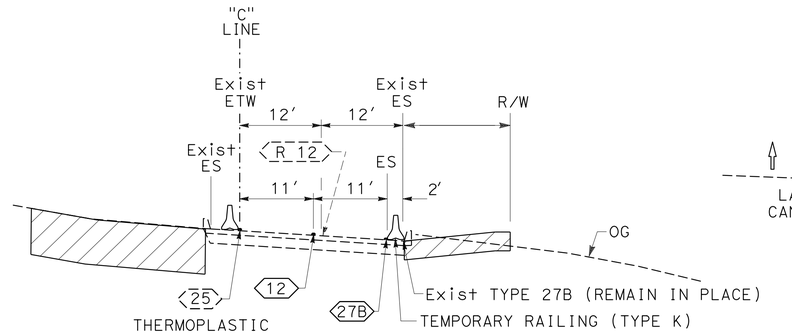

SECTION A-A
NO SCALE

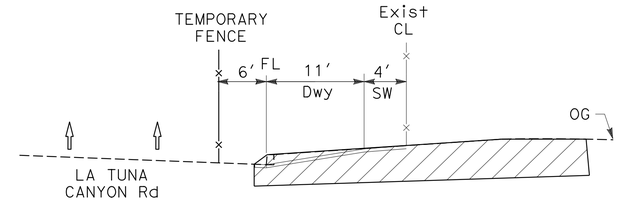

SECTION B-B
NO SCALE

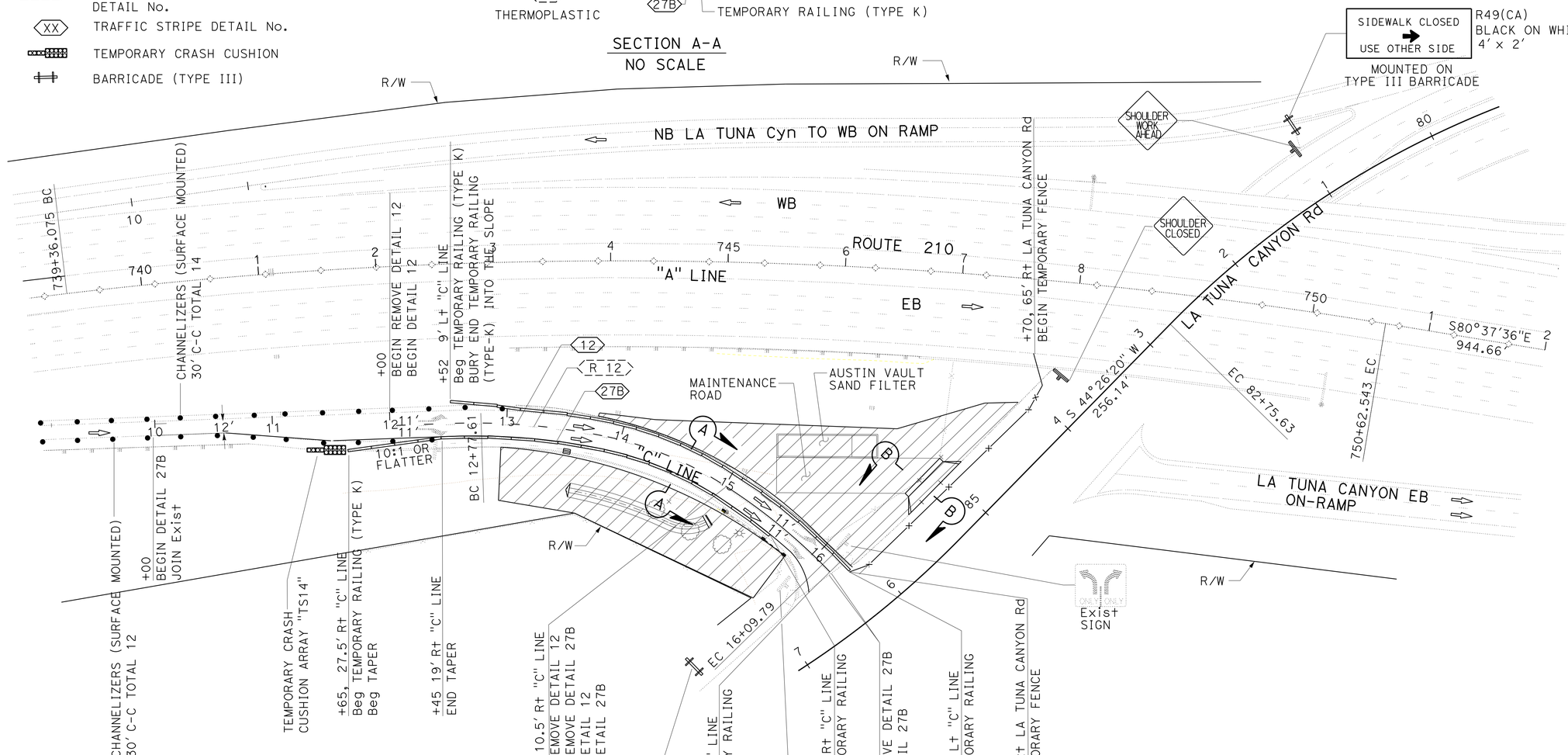

TRAFFIC HANDLING PLAN

SCALE: 1" = 50'

TH-1

APPROVED FOR TRAFFIC HANDLING WORK ONLY

STATE OF CALIFORNIA - DEPARTMENT OF TRANSPORTATION
Caltrans DESIGN

FUNCTIONAL SUPERVISOR: OJI KALU
CALCULATED-DESIGNED BY: DAN TRAN
CHECKED BY: MOE MIRZA
REVISED BY
DATE REVISED

LAST REVISION 06-05-14
DATE PLOTTED => 18-JUN-2015
TIME PLOTTED => 07:26

Dist	COUNTY	ROUTE	POST MILES TOTAL PROJECT	SHEET No.	TOTAL SHEETS
07	LA	210	R10.5/R15.7	59	116

REGISTERED CIVIL ENGINEER 10-21-14 DATE

6-1-15
PLANS APPROVAL DATE

REGISTERED PROFESSIONAL ENGINEER DENNIS DO No. C68587 Exp. 9-30-15 CIVIL STATE OF CALIFORNIA

THE STATE OF CALIFORNIA OR ITS OFFICERS OR AGENTS SHALL NOT BE RESPONSIBLE FOR THE ACCURACY OR COMPLETENESS OF SCANNED COPIES OF THIS PLAN SHEET.

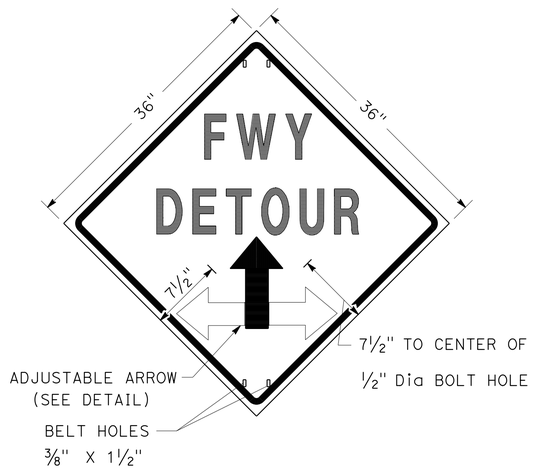

SIGN SP-2

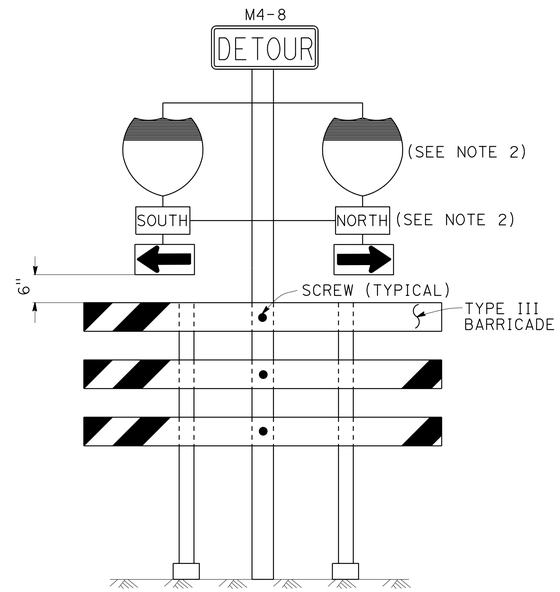

SIGN SP-6 (SEE NOTE 1)

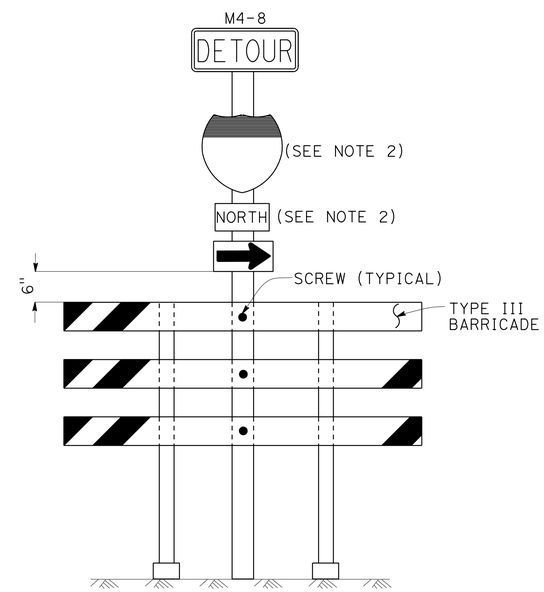

SIGN SP-7 (SEE NOTE 1)

NOTES: SIGN SP-2

1. LETTERS - 6" SERIES E.
2. LETTERS, BORDER AND ARROW - BLACK ON RETROREFLECTORIZED ORANGE BACKGROUND.
3. BASE MATERIAL FOR SIGNS AND ARROWS MUST BE ALUMINUM (MINIMUM 0.06").
4. BELTS (LUGGAGE STRAPS) MUST BE 1" WIDE BY 48" LONG, MADE OF COTTON OR POLYPROPYLENE WEB MATERIAL.
5. SIGNS MUST BE MOUNTED WITH BOTTOMS OF SIGNS A MINIMUM OF 7' ABOVE GROUND EXCEPT AS OTHERWISE SHOWN ON OTHER TRAFFIC HANDLING DETAILS PLANS.

NOTES: SIGNS SP-6 & SP-7

1. IN LIEU OF PLACING SIGNS ON TYPE III BARRICADES, SIGNS, INCLUDING POSTS, MAY BE PLACED INTO THE GROUND OR FASTENED ONTO ELECTROLIERS.
2. USE APPROPRIATE ROUTE MARKER [G26-2(CA), G27-2(CA), G28-2(CA)] AND CARDINAL DIRECTION [NORTH (M3-1), SOUTH (M3-3), EAST (M3-2), WEST (M3-4)].

SPECIAL PORTABLE FREEWAY DETOUR SIGNS

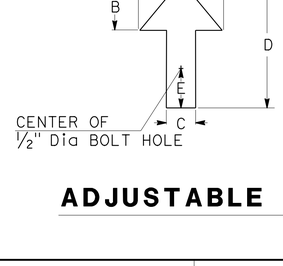

DIMENSIONS				
A	B	C	D	E
6"	3"	2"	8"	1"

ADJUSTABLE ARROW DETAIL

ABBREVIATION

(CA) CALIFORNIA CODE

TRAFFIC HANDLING DETAILS

TRAFFIC CONTROL SYSTEM FOR RAMP CLOSURES, DETOUR SIGNS, AND MISCELLANEOUS DETAILS

SHEET 2 OF 2

NO SCALE

THD-2

STATE OF CALIFORNIA - DEPARTMENT OF TRANSPORTATION
Caltrans DTM

FUNCTIONAL SUPERVISOR: ALI BAMSHAD
CALCULATED-DESIGNED BY: ALBERT K YU
CHECKED BY: JOCELYN C CHIANG
REVISED BY: JC
DATE REVISED: 2/14

LAST REVISION: DATE PLOTTED => 18-JUN-2015 TIME PLOTTED => 07:26
00-00-00

Dist	COUNTY	ROUTE	POST MILES TOTAL PROJECT	SHEET No.	TOTAL SHEETS
07	LA	210	R10.5/R15.7	60	116

REGISTERED CIVIL ENGINEER 10-21-14 DATE

6-1-15
PLANS APPROVAL DATE

REGISTERED PROFESSIONAL ENGINEER DENNIS DO No. C68587 Exp. 9-30-15 CIVIL STATE OF CALIFORNIA

THE STATE OF CALIFORNIA OR ITS OFFICERS OR AGENTS SHALL NOT BE RESPONSIBLE FOR THE ACCURACY OR COMPLETENESS OF SCANNED COPIES OF THIS PLAN SHEET.

LEGEND

- SIGN SP-2
- AND/OR — DESIGNATED DETOUR ROUTE
- DETOUR DIRECTION
- CONTROLLED INTERSECTION

NOTES:

1. SP-2 SIGNS MAY BE STRAPPED ON EXISTING ELECTROLIER, SIGNAL POST OR SIGN POST.
2. SP-2 SIGNS MUST NOT BE INSTALLED ON BARRICADES EXCEPT AS OTHERWISE SHOWN.
3. SIGN LOCATIONS ARE APPROXIMATE. EXACT LOCATIONS WILL BE DETERMINED BY THE ENGINEER.
4. SP-2 SIGNS MUST BE POSTED AT EACH CONTROLLED INTERSECTION (EXCEPT AT COMMERCIAL PROPERTY, RESIDENTIAL COMPLEX OR T-INTERSECTION FROM ONE-WAY STREET) ALONG THE DESIGNATED DETOUR ROUTE.
5. UNLESS OTHERWISE SHOWN ON OTHER THD PLANS, WHEN CONTROLLED INTERSECTIONS ALONG THE DESIGNATED DETOUR ROUTE ARE CLOSELY SPACED, PLACE SP-2 SIGNS AT CONTROLLED INTERSECTIONS AT A DISTANCE NOT TO EXCEED 1/4 MILE FROM THE PRECEDING DETOUR SIGN.
6. EXCEPT AS OTHERWISE SHOWN ON OTHER PLANS OR SPECIFIED IN THE SPECIAL PROVISIONS, SP-2 SIGNS MUST BE PLACED AS SHOWN ON THIS PLAN.

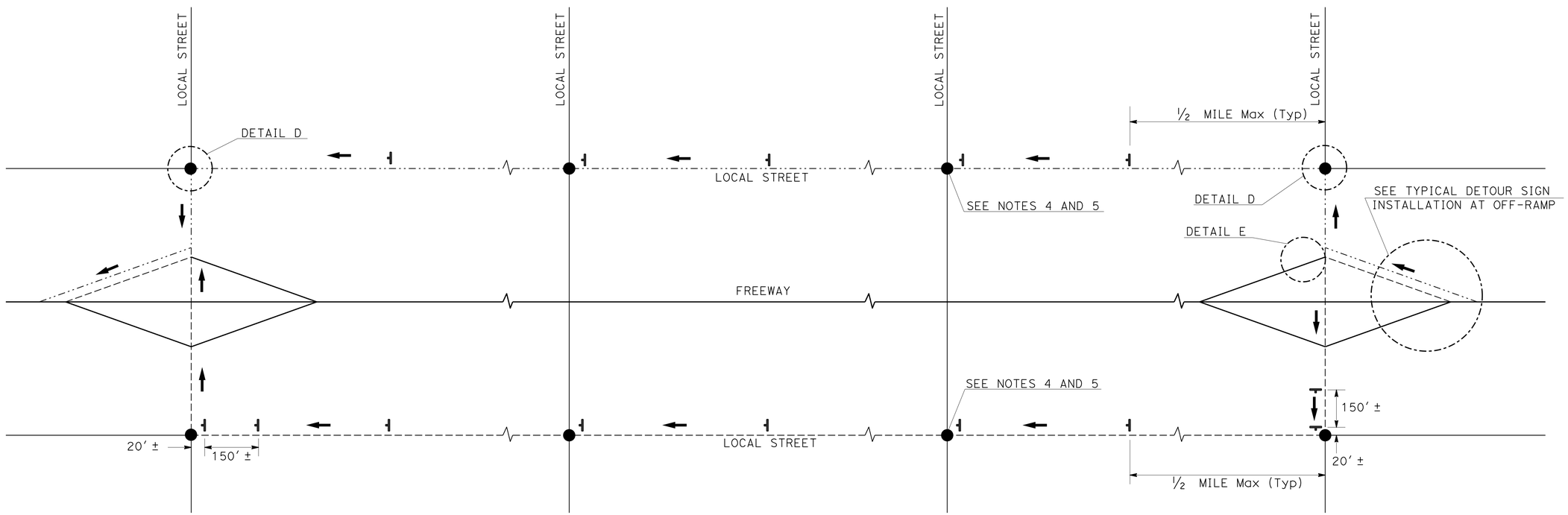

TYPICAL DETOUR SIGN INSTALLATION ALONG DESIGNATED DETOUR ROUTE

TRAFFIC HANDLING DETAILS

TRAFFIC CONTROL SYSTEM FOR DETOUR SIGN INSTALLATION ALONG DESIGNATED DETOUR ROUTE

SHEET 1 OF 3

NO SCALE

THD-3

STATE OF CALIFORNIA - DEPARTMENT OF TRANSPORTATION
Caltrans
DTM

FUNCTIONAL SUPERVISOR: ALI BAMSHAD
CALCULATED-DESIGNED BY: ALBERT K YU
CHECKED BY: JOCELYN C CHIANG
REVISED BY: JC
DATE REVISED: 2/14

LAST REVISION 00-00-00
DATE PLOTTED => 18-JUN-2015
TIME PLOTTED => 07:26

Dist	COUNTY	ROUTE	POST MILES TOTAL PROJECT	SHEET No.	TOTAL SHEETS
07	LA	210	R10.5/R15.7	61	116

REGISTERED CIVIL ENGINEER 10-21-14 DATE

6-1-15
PLANS APPROVAL DATE

REGISTERED PROFESSIONAL ENGINEER DENNIS DO No. C68587 Exp. 9-30-15 CIVIL STATE OF CALIFORNIA

THE STATE OF CALIFORNIA OR ITS OFFICERS OR AGENTS SHALL NOT BE RESPONSIBLE FOR THE ACCURACY OR COMPLETENESS OF SCANNED COPIES OF THIS PLAN SHEET.

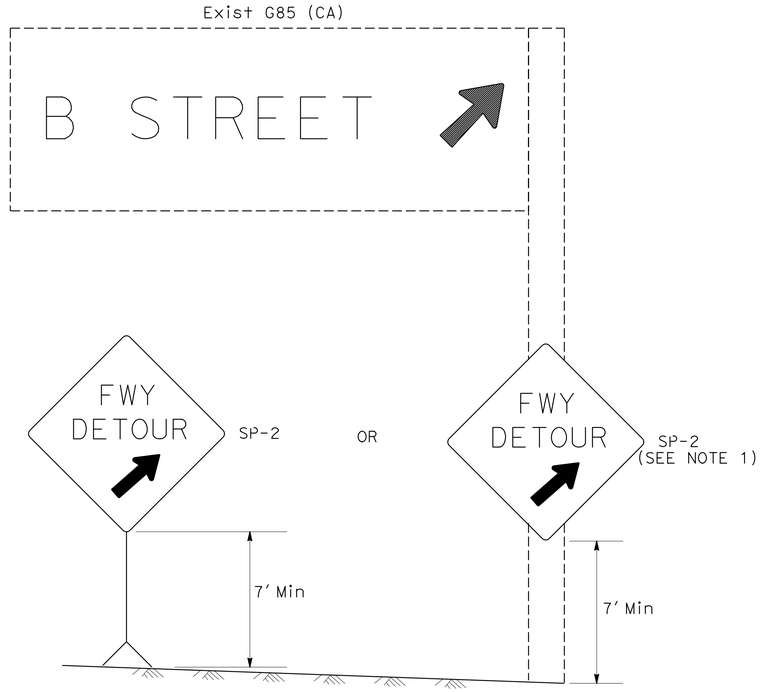

DETAIL A (SEE NOTE 3)

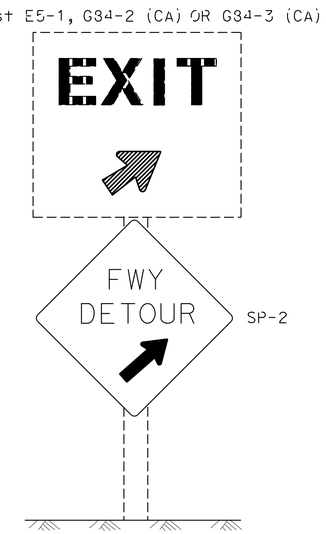

DETAIL B (SEE NOTE 3)

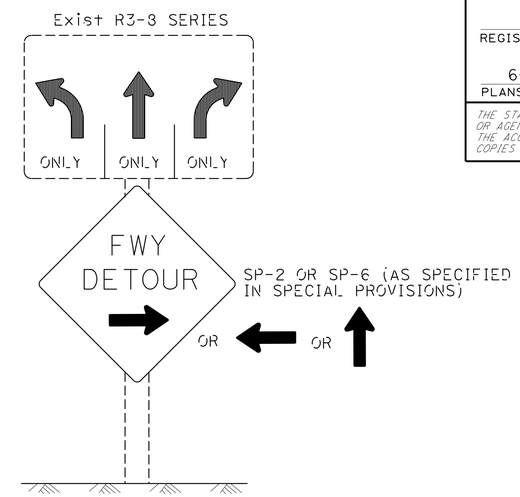

DETAIL C (SEE NOTES 4, 5, AND 6)

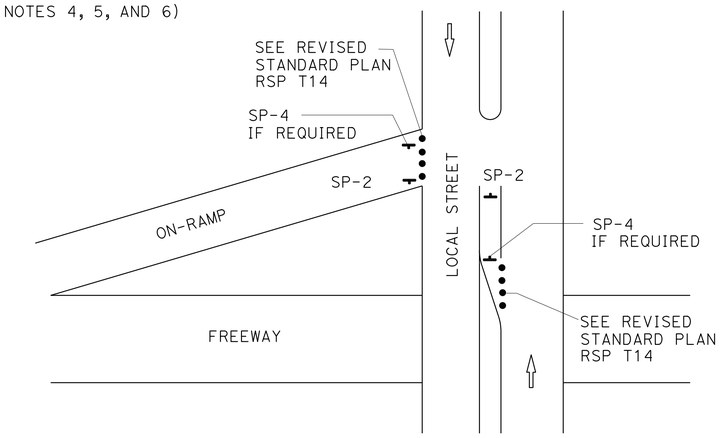

DETAIL E

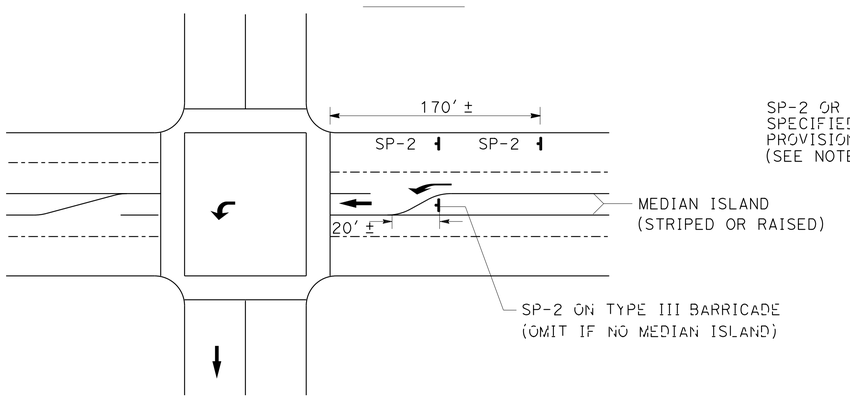

DETAIL D

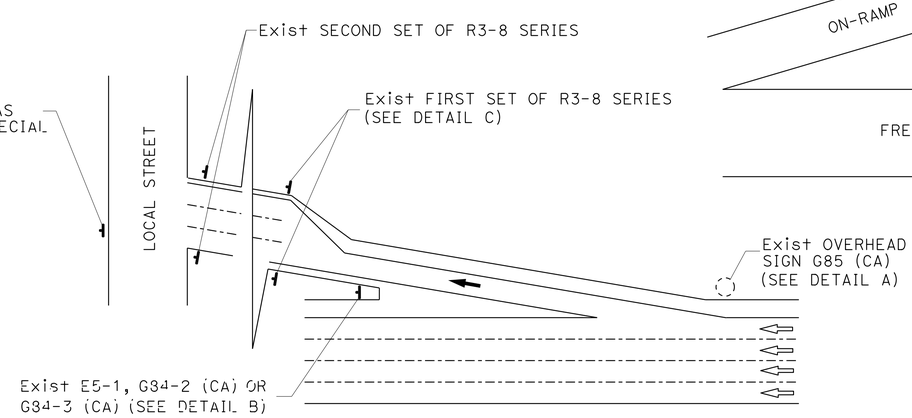

TYPICAL DETOUR SIGN INSTALLATION AT OFF-RAMP

LEGEND

- • TRAFFIC CONE
- TEMPORARY TRAFFIC CONTROL SIGN
- → DETOUR DIRECTION
- ◌ EXISTING OVERHEAD SIGN

NOTES: SIGN SP-2

1. SP-2 SIGNS MAY BE STRAPPED ON EXISTING ELECTROLIER, SIGNAL POST OR SIGN POST.
2. SP-2 SIGNS MUST NOT BE INSTALLED ON BARRICADES EXCEPT AS OTHERWISE SHOWN.
3. OMIT DETAILS A AND B FOR FULL FREEWAY CLOSURES.
4. SEE TRAFFIC HANDLING DETAILS-TRAFFIC CONTROL SYSTEM FOR RAMP CLOSURES, DETOUR SIGNS, AND MISCELLANEOUS DETAILS PLAN SHEET 2 OF 2 FOR SP-6 SIGN DETAILS.
5. IF R3-8 SERIES SIGNS ARE NOT PRESENT AT THE OFF-RAMP, SP-2 OR SP-6 SIGNS MUST BE FASTENED ONTO EXISTING ELECTROLIER, SIGNAL POST OR SIGN POST.
6. EXCEPT FOR DETAILS A & B, OMIT SP-2 SIGNS IF RAMP HAS MANDATORY SINGLE MOVE.

SIGN CODE LEGEND

XXYY-Y: FEDERAL SIGN CODE PER MANUAL ON UNIFORM TRAFFIC CONTROL DEVICES (MUTCD)

XXYY-Y (CA): CALIFORNIA SIGN CODE PER CALIFORNIA MUTCD

TRAFFIC HANDLING DETAILS
TRAFFIC CONTROL SYSTEM FOR DETOUR SIGN INSTALLATION ALONG DESIGNATED DETOUR ROUTE
SHEET 2 OF 3

NO SCALE **THD-4**

STATE OF CALIFORNIA - DEPARTMENT OF TRANSPORTATION
Caltrans® DTM

FUNCTIONAL SUPERVISOR: ALI BAMSHAD
CALCULATED-DESIGNED BY: ALBERT K YU
CHECKED BY: JOCELYN C CHIANG
REVISED BY: JC
DATE REVISED: 2/14

LAST REVISION 00-00-00
DATE PLOTTED => 18-JUN-2015
TIME PLOTTED => 07:26

Dist	COUNTY	ROUTE	POST MILES TOTAL PROJECT	SHEET No.	TOTAL SHEETS
07	LA	210	R10.5/R15.7	62	116

REGISTERED CIVIL ENGINEER 10-21-14 DATE

6-1-15
PLANS APPROVAL DATE

REGISTERED PROFESSIONAL ENGINEER
DENNIS DO
No. C68587
Exp. 9-30-15
CIVIL
STATE OF CALIFORNIA

THE STATE OF CALIFORNIA OR ITS OFFICERS OR AGENTS SHALL NOT BE RESPONSIBLE FOR THE ACCURACY OR COMPLETENESS OF SCANNED COPIES OF THIS PLAN SHEET.

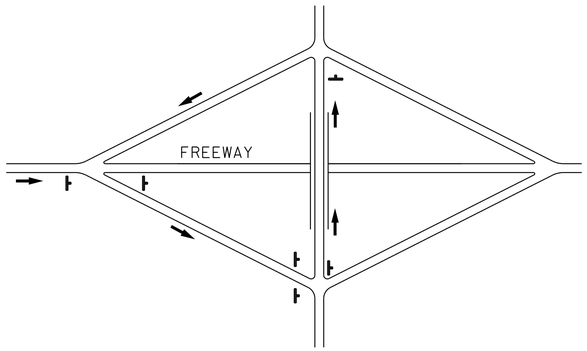

TYPE I

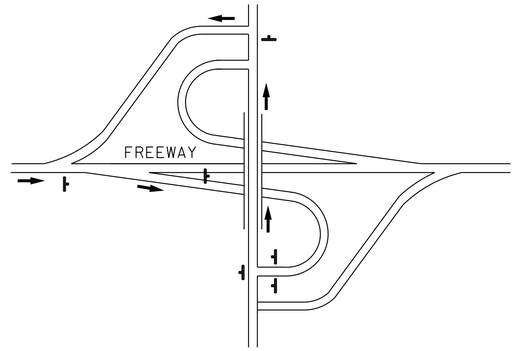

TYPE II

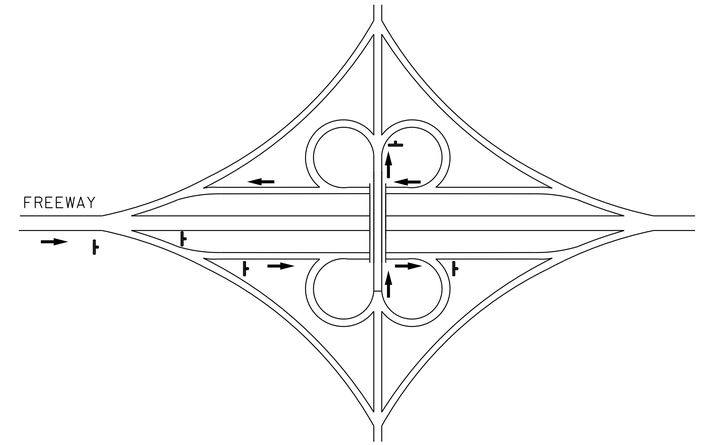

TYPE III

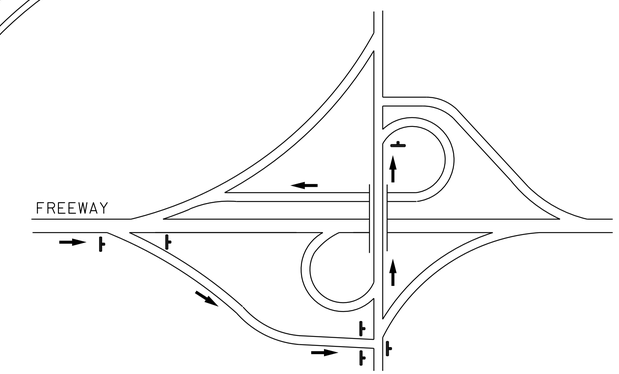

TYPE IV

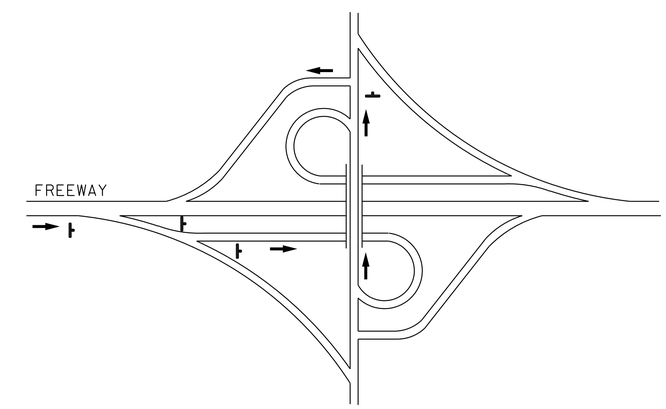

TYPE V

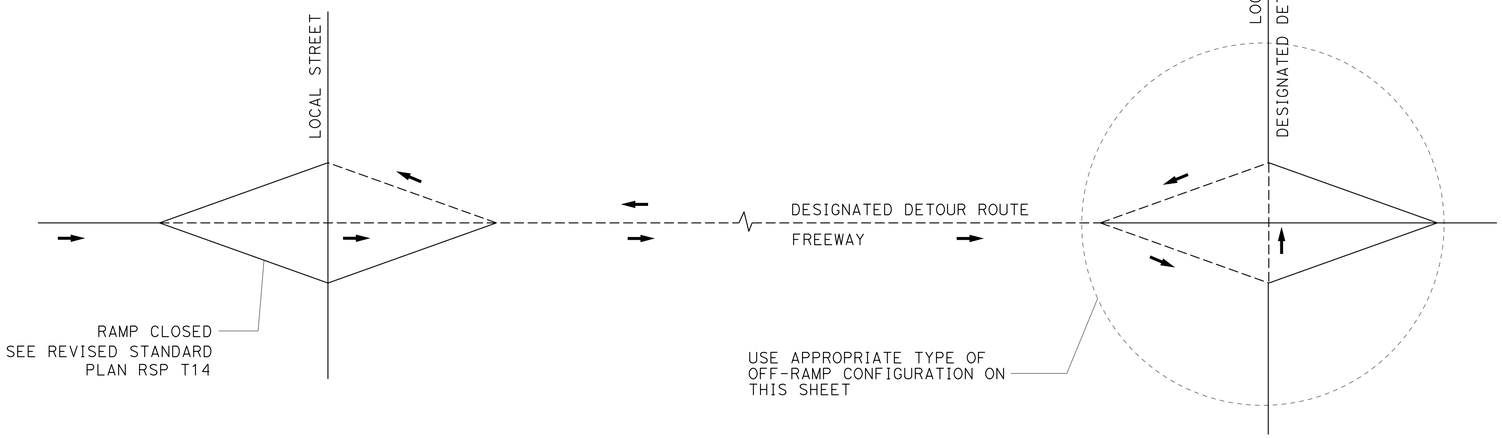

TYPE OF OFF-RAMP CONFIGURATION	MINIMUM No. OF SP-2
TYPE I	6
TYPE II	6
TYPE III	5
TYPE IV	6
TYPE V	4

TYPICAL DETOUR SIGN INSTALLATION FOR OFF-RAMP CLOSURE

NOTES:

1. FOR RAMP CONFIGURATIONS NOT SHOWN, THE EXACT LOCATIONS AND MINIMUM NUMBER OF SP-2 SIGNS MUST BE DETERMINED BY THE ENGINEER.
2. SEE TRAFFIC HANDLING DETAILS-TRAFFIC CONTROL SYSTEM FOR RAMP CLOSURES, DETOUR SIGNS, AND MISCELLANEOUS DETAILS PLAN SHEET 2 OF 2 FOR SP-2 SIGN DETAILS.

LEGEND

- SIGN SP-2
- DETOUR DIRECTION
- ----- DESIGNATED DETOUR ROUTE

TRAFFIC HANDLING DETAILS
TRAFFIC CONTROL SYSTEM FOR DETOUR SIGN INSTALLATION ALONG DESIGNATED DETOUR ROUTE
SHEET 3 OF 3

NO SCALE

THD-5

STATE OF CALIFORNIA - DEPARTMENT OF TRANSPORTATION
Caltrans DTM

FUNCTIONAL SUPERVISOR: ALI BAMSHAD
CALCULATED-DESIGNED BY: ALBERT K YU
CHECKED BY: JOCELYN C CHIANG
REVISED BY: JC
DATE REVISED: 2/14

LAST REVISION 00-00-00
DATE PLOTTED => 18-JUN-2015
TIME PLOTTED => 07:26

Dist	COUNTY	ROUTE	POST MILES TOTAL PROJECT	SHEET No.	TOTAL SHEETS
07	LA	210	R10.5/R15.7	63	116

REGISTERED CIVIL ENGINEER 3-20-15 DATE

6-1-15
PLANS APPROVAL DATE

REGISTERED PROFESSIONAL ENGINEER VIVIAN NGUYEN No. C73723 Exp. 6/30/15 CIVIL STATE OF CALIFORNIA

THE STATE OF CALIFORNIA OR ITS OFFICERS OR AGENTS SHALL NOT BE RESPONSIBLE FOR THE ACCURACY OR COMPLETENESS OF SCANNED COPIES OF THIS PLAN SHEET.

TEMPORARY PAVEMENT DELINEATION & TRAFFIC HANDLING QUANTITIES

SHEET No.	LOCATION	REMOVE: THERMOPLASTIC TRAFFIC STRIPE WHITE	REMOVE: PAINTED TRAFFIC STRIPE WHITE	REMOVE: PAVEMENT MARKER	INSTALLATION: 4" PAINT TRAFFIC STRIPE (2-COAT): DETAIL 12 (BROKEN 18'-12')	INSTALLATION: 4" PAINT TRAFFIC STRIPE (2-COAT): DETAIL 27B SOLID WHITE STRIPE	PAVEMENT MARKER (RETROREFLECTIVE) TYPE G	TEMPORARY RAILING (TYPE K)	CHANNELIZER (SURFACE MOUNTED)	TEMPORARY CRASH CUSHION	TYPE III BARRICADE	TEMPORARY FENCE (TYPE CL-6)
		LF	LF	EA	LF	LF	EA	LF	EA	EA	EA	LF
TH1	EB 210 LA TUNA CANYON OFF-RAMP	195	815	20	300	740	10	760	26	14	2	260
					1040							

TRAFFIC HANDLING QUANTITIES

THQ-1

STATE OF CALIFORNIA - DEPARTMENT OF TRANSPORTATION
Caltrans DESIGN

FUNCTIONAL SUPERVISOR: OJI KALU
CALCULATED-DESIGNED BY: DAN TRAN
CHECKED BY: MOE MIRZA
REVISED BY
DATE REVISED

LAST REVISION 06-05-14
DATE PLOTTED => 18-JUN-2015
TIME PLOTTED => 07:26

Dist	COUNTY	ROUTE	POST MILES TOTAL PROJECT	SHEET No.	TOTAL SHEETS
07	LA	210	R10.5/R15.7	64	116

REGISTERED CIVIL ENGINEER 3-20-15 DATE

6-1-15
PLANS APPROVAL DATE

REGISTERED PROFESSIONAL ENGINEER VIVIAN NGUYEN No. C73723 Exp. 6/30/15 CIVIL STATE OF CALIFORNIA

THE STATE OF CALIFORNIA OR ITS OFFICERS OR AGENTS SHALL NOT BE RESPONSIBLE FOR THE ACCURACY OR COMPLETENESS OF SCANNED COPIES OF THIS PLAN SHEET.

PAVEMENT DELINEATION QUANTITIES

LOCATION	PAVEMENT MARKER (RETROREFLECTIVE)	4" THERMOPLASTIC TRAFFIC STRIPE		
	TYPE G	DETAIL 12 (BROKEN 18'-12')	DETAIL 25 SOLID YELLOW STRIPE	DETAIL 27B SOLID WHITE STRIPE
	EA	LF	LF	LF
EB 210 LA TUNA CANYON OFF-RAMP	10	300	620	740
EB 210 WHEATLAND Ave ON-RAMP	-	-	865	-
FROM THQ-1	10	-	-	-
TOTAL	20	300	2225	

STATE OF CALIFORNIA - DEPARTMENT OF TRANSPORTATION
Caltrans DESIGN

FUNCTIONAL SUPERVISOR: OJI KALU
CALCULATED-DESIGNED BY: VIVIAN NGUYEN
CHECKED BY: MOE MIRZA
REVISED BY
DATE REVISED

PAVEMENT DELINEATION QUANTITIES

PDQ-1

LAST REVISION 06-05-14
DATE PLOTTED => 25-AUG-2015
TIME PLOTTED => 09:13

Dist	COUNTY	ROUTE	POST MILES TOTAL PROJECT	SHEET No.	TOTAL SHEETS
07	LA	210	R10.5/R15.7	65	116

REGISTERED CIVIL ENGINEER 12-5-14 DATE

6-1-15
PLANS APPROVAL DATE

REGISTERED PROFESSIONAL ENGINEER VIVIAN NGUYEN No. C73723 Exp. 6-30-15 CIVIL STATE OF CALIFORNIA

THE STATE OF CALIFORNIA OR ITS OFFICERS OR AGENTS SHALL NOT BE RESPONSIBLE FOR THE ACCURACY OR COMPLETENESS OF SCANNED COPIES OF THIS PLAN SHEET.

ROADWAY QUANTITIES

LOCATIONS AND DESCRIPTIONS	REMOVE ASPHALT CONCRETE DIKE	REMOVE CHAIN LINK FENCE	REMOVE CONCRETE (CURB & GUTTER)	CHAIN LINK FENCE (TYPE CL-6)	24' CHAIN LINK GATE (TYPE CL-6)	MIDWEST GUARDRAIL SYSTEM (WOOD POST)	END ANCHOR ASSEMBLY (TYPE SFT)	JOINTED PLAIN CONCRETE PAVEMENT	RUBBERIZED HOT MIX ASPHALT	HOT MIX ASPHALT (TYPE A)	PLACE HOT MIX ASPHALT (TYPE F)	LEAN CONCRETE BASE	CLASS 3 AGGREGATE BASE	BASE BOND BREAKER	VEGETATION CONTROL (MINOR CONCRETE)	MINOR CONCRETE (CURB, GUTTER, SIDEWALK AND DRIVEWAY)	TACK COAT
	LF	LF	LF	LF	EA	LF	EA	CY	TON	TON	LF	CY	CY	SQYD	SQYD	CY	TON
SHEET L-1, LOC 1					1			138	184	368		341	643	436			1.5
SHEET L-2, LOC 2	13																
SHEET L-3, LOC 3	26																
SHEET L-4, LOC 4	360																
SHEET L-5, LOC 5		72	64	300	1	250	1	132				48	83	414	250	14	
SHEET L-6, LOC 6	315								14	28	40	17	39				0.5
SHEET L-7, LOC 7	84																
TOTAL	798	72	64	300	2	250	1	270	198	396	40	406	765	850	250	14	2

(N) NOT A SEPARATE PAY ITEM, FOR INFORMATION ONLY

EARTHWORK QUANTITIES SUMMARY

LOCATIONS AND DESCRIPTIONS	ROADWAY EXCAVATION	EMBANKMENT
	CY	CY
SHEET L-1, LOC 1	1,960	
SHEET L-2, LOC 2	240	
SHEET L-3, LOC 3	6	
SHEET L-4, LOC 4	40	
SHEET L-5, LOC 5	347	227
SHEET L-6, LOC 6	1236	
SHEET L-7, LOC 7	36	
TOTAL	3,865	227

SUMMARY OF QUANTITIES

Q-1

STATE OF CALIFORNIA - DEPARTMENT OF TRANSPORTATION
Caltrans DESIGN

FUNCTIONAL SUPERVISOR: OJI KALU
CALCULATED-DESIGNED BY: VIVIAN NGUYEN
CHECKED BY: MOE MIRZA
REVISED BY
DATE REVISED

LAST REVISION 02-02-15
DATE PLOTTED => 18-JUN-2015
TIME PLOTTED => 07:26

Dist	COUNTY	ROUTE	POST MILES TOTAL PROJECT	SHEET No.	TOTAL SHEETS
07	LA	210	R10.5/R15.7	66	116

REGISTERED CIVIL ENGINEER 12-5-14 DATE

6-1-15
PLANS APPROVAL DATE

REGISTERED PROFESSIONAL ENGINEER VIVIAN NGUYEN No. C73723 Exp. 6-30-15 CIVIL STATE OF CALIFORNIA

THE STATE OF CALIFORNIA OR ITS OFFICERS OR AGENTS SHALL NOT BE RESPONSIBLE FOR THE ACCURACY OR COMPLETENESS OF SCANNED COPIES OF THIS PLAN SHEET.

TEMPORARY WATER POLLUTION CONTROL QUANTITIES

LOCATION AND DESCRIPTION	LINE DESIGNATION	STATION	DIRECTION	TEMPORARY SILT FENCE	TEMPORARY FIBER ROLL	TEMPORARY CONSTRUCTION ENTRANCE	TEMPORARY DRAINAGE INLET PROTECTION	TEMPORARY GRAVEL BAG BERM	TEMPORARY COVER	RAIN EVENT ACTION PLAN	STOM WATER SAMPLING & ANALYSIS DAY	STORM WATER ANNUAL REPORT
				LF	LF	EA	EA	LF	SQYD	EA	EA	EA
SHEET L-1, LOC 1	"A"	537+00 TO 542+50	WB	300	300							
SHEET L-2, LOC 2	"A"	573+38 TO 574+75	EB	100	100							
SHEET L-3, LOC 3	"SUNS4"	29+65 TO 29+87	EB				1	10				
SHEET L-4, LOC 4	"A"	644+80 TO 651+00	WB									
SHEET L-5, LOC 5	"C"	13+50 TO 15+80	EB	300	300	1	3	30	1500	8	1	2
SHEET L-5, LOC 5	"C"	15+05 TO 16+15	EB									
SHEET L-6, LOC 6	"A"	753+80 TO 756+50	WB				3	50				
SHEET L-6, LOC 6	"D"	12+80 TO 13+65	WB									
SHEET L-7, LOC 7	"HOLR2"	30+60 TO 31+86	EB	120	120	1	1	10				
TOTAL				820	820	2	8	100	1500	8	1	2

SUMMARY OF QUANTITIES

Q-2

STATE OF CALIFORNIA - DEPARTMENT OF TRANSPORTATION
Caltrans DESIGN

FUNCTIONAL SUPERVISOR: OJI KALU
CALCULATED-DESIGNED BY: VIVIAN NGUYEN
CHECKED BY: MOE MIRZA
REVISED BY
DATE REVISED

LAST REVISION 12-05-14 | DATE PLOTTED => 18-JUN-2015 | TIME PLOTTED => 07:26

Dist	COUNTY	ROUTE	POST MILES TOTAL PROJECT	SHEET No.	TOTAL SHEETS
07	LA	210	R10.5/R15.7	67	116

LICENSED LANDSCAPE ARCHITECT

6-1-15
PLANS APPROVAL DATE

LICENSED LANDSCAPE ARCHITECT
DUC T. TRINH
No. 5457
Signature
11-30-15
Renewal Date
03-28-15
Date
STATE OF CALIFORNIA

THE STATE OF CALIFORNIA OR ITS OFFICERS OR AGENTS SHALL NOT BE RESPONSIBLE FOR THE ACCURACY OR COMPLETENESS OF SCANNED COPIES OF THIS PLAN SHEET.

IRRIGATION LEGEND

SYMBOL	DESCRIPTION	SPRAY PATTERN	OPERATING PRESSURE (psi)	PRESSURE COMPENSATING	PLUS/MINUS 5% ② DISCHARGE: GALLONS PER MINUTE (GPM)	DISCHARGE: GALLONS PER HOUR (GPH)	RADIUS (ft)	WIDTH x LENGTH (ft)	FLOW SHUTOFF DEVICE	SPRINKLER ASSEMBLY: RISER: TYPE	RISER: MATERIAL: PLASTIC	RISER: MATERIAL: GALVANIZED	RISER: SIZE (IPS INCH)	RISER: HEIGHT (INCH)	POP-UP: TYPE	POP-UP: INLET CONNECTION (NPT INCH)	POP-UP: SPRINKLER PROTECTOR (TYPE)	TREE WELL: HEIGHT (INCH)	REMARKS
①	A-1 GEAR DRIVEN	P	25	—	1.73	—	12	—	⑥	IV	—	X	—	18	—	¾	—	—	

X IN BOX DENOTES REQUIREMENT

APPLICABLE WHEN CIRCLED BELOW:

1 - SEE SPECIAL PROVISIONS.
② - IF A PRESSURE COMPENSATING DEVICE IS SPECIFIED, THE DISCHARGE AND RADII SHOWN REFLECT ITS USE.
3 - VINYL-COATED CAST IRON HOUSING.
4 - SWING JOINTS REQUIRED ADJACENT TO SHOULDERS, CURBS, SIDEWALKS, AND DIKES.
5 - UNLESS OTHERWISE SHOWN ON PLANS.
⑥ - FLOW SHUT OFF DEVICE REQUIRED ADJACENT TO SHOULDER.

SPRINKLERS (A-1) SIZING CHART	
NUMBER OF SPRINKLERS	PIPE SIZE
1-6	¾"
7-12	1"
13-21	1¼"
22-30	1½"
31-40	2"

IRRIGATION SPRINKLER SCHEDULE
ISS-1

REVISED BY | DATE REVISED
LEE DO | DUC T. TRINH
CALCULATED-DESIGNED BY | CHECKED BY
SENIOR LANDSCAPE ARCHITECT
PATTY WATANABE

STATE OF CALIFORNIA - DEPARTMENT OF TRANSPORTATION
Caltrans® LANDSCAPE ARCHITECTURE

LAST REVISION 00-00-00 | DATE PLOTTED => 18-JUN-2015 | TIME PLOTTED => 07:26

Dist	COUNTY	ROUTE	POST MILES TOTAL PROJECT	SHEET No.	TOTAL SHEETS
07	LA	210	R10.5/R15.7	68	116

LICENSED LANDSCAPE ARCHITECT

6-1-15
PLANS APPROVAL DATE

LICENSED LANDSCAPE ARCHITECT
DUC T. TRINH
No. 5457
Signature
11-30-15
Renewal date
03-28-15
Date
STATE OF CALIFORNIA

THE STATE OF CALIFORNIA OR ITS OFFICERS OR AGENTS SHALL NOT BE RESPONSIBLE FOR THE ACCURACY OR COMPLETENESS OF SCANNED COPIES OF THIS PLAN SHEET.

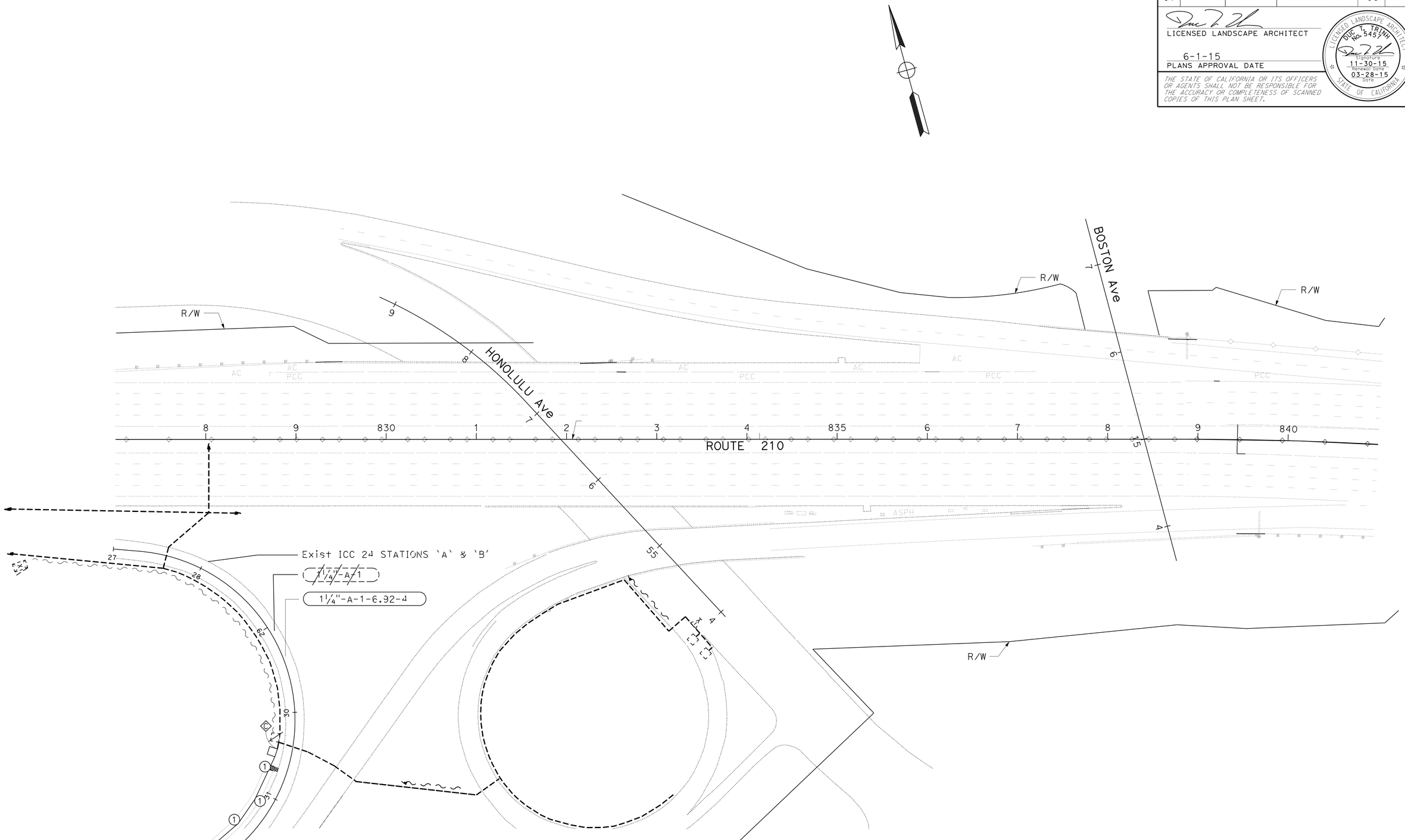

APPROVED FOR IRRIGATION WORK ONLY

IRRIGATION PLAN

SCALE: 1" = 50'

IP-1

STATE OF CALIFORNIA - DEPARTMENT OF TRANSPORTATION
Caltrans® LANDSCAPE ARCHITECTURE

SENIOR LANDSCAPE ARCHITECT: PATTY WATANABE

CALCULATED-DESIGNED BY: LEE DO
CHECKED BY: DUC T TRINH

REVISED BY
DATE REVISED

LAST REVISION 00-00-00
DATE PLOTTED => 18-JUN-2015
TIME PLOTTED => 07:26

Dist	COUNTY	ROUTE	POST MILES TOTAL PROJECT	SHEET No.	TOTAL SHEETS
07	LA	210	R10.5/R15.7	69	116

LICENSED LANDSCAPE ARCHITECT

6-1-15
PLANS APPROVAL DATE

LICENSED LANDSCAPE ARCHITECT DUC T. TRINH No. 5457 Signature 11-30-15 Renewal Date 03-28-15 Date STATE OF CALIFORNIA

THE STATE OF CALIFORNIA OR ITS OFFICERS OR AGENTS SHALL NOT BE RESPONSIBLE FOR THE ACCURACY OR COMPLETENESS OF SCANNED COPIES OF THIS PLAN SHEET.

SUBTOTALS PER VALVE ON LATERAL SUPPLY SIDE OF CONTROL VALVE

DESCRIPTION		UNIT	VALVE OR ASSEMBLY NUMBER IP-1	SUBTOTALS	UNIT	DESCRIPTION	
PLASTIC PIPE SUPPLY LINE SCHEDULE 40	1 INCH	LF	120	120	LF	1 INCH	PLASTIC PIPE SUPPLY LINE SCHEDULE 40
	1¼ INCH	LF	10	10	LF	1¼ INCH	
GSP							GSP
DIP							DIP
SPRINKLER TYPE			4	4	EA	POP-UP (GEAR DRIVEN)	SPRINKLER TYPE

IRRIGATION QUANTITIES

IQ-1

STATE OF CALIFORNIA - DEPARTMENT OF TRANSPORTATION
Caltrans LANDSCAPE ARCHITECTURE

SENIOR LANDSCAPE ARCHITECT: PATTY WATANABE
CALCULATED-DESIGNED BY: LEE DO
CHECKED BY: DUC T. TRINH
REVISED BY
DATE REVISED

LAST REVISION 00-00-00
DATE PLOTTED => 18-JUN-2015
TIME PLOTTED => 07:26

Dist	COUNTY	ROUTE	POST MILES TOTAL PROJECT	SHEET No.	TOTAL SHEETS
07	LA	210	R10.5/R15.7	70	116

LICENSED LANDSCAPE ARCHITECT

6-1-15
PLANS APPROVAL DATE

LICENSED LANDSCAPE ARCHITECT DUC T. TRINH No. 5457 STATE OF CALIFORNIA
Signature
11-30-15
Renewal date
03-28-15
Date

THE STATE OF CALIFORNIA OR ITS OFFICERS OR AGENTS SHALL NOT BE RESPONSIBLE FOR THE ACCURACY OR COMPLETENESS OF SCANNED COPIES OF THIS PLAN SHEET.

SUBTOTALS PER PLAN SHEET ON MAIN SUPPLY SIDE OF CONTROL VALVE

DESCRIPTION			UNIT	SHEET NUMBER IP-1	SUBTOTALS
BPA	ENCLOSURE				
BOOSTER PUMP					
IRRIGATION CONTROLLER	STATION				
	STATION				
	STATION				
	CEC	SINGLE			
		DOUBLE			
VALVES AND ASSEMBLIES	RCV	1¼"	EA	1	1
	GV				
	QCV				
	FV				
	FAU				
CONDUIT	CSP				
	WSP				
PLASTIC PIPE SUPPLY LINE	PR 315 SCHEDULE 40	1 INCH		120	
		1¼ INCH		10	
GSP					
DIP					
SPRINKLER TYPE				4	

TOTAL QUANTITIES

TOTALS	UNIT	DESCRIPTION		
		ENCLOSURE		BPA
		BOOSTER PUMP		
		STATION		IRRIGATION CONTROLLER
		STATION		
		STATION		
		SINGLE	CEC	
		DOUBLE		
1	EA	1¼"	RCV	VALVES AND ASSEMBLIES
			GV	
			QCV	
			FV	
			FAU	
			CSP	CONDUIT
			WSP	
120	LF	1 INCH	PR 315 SCHEDULE 40	PLASTIC PIPE SUPPLY LINE
10	LF	1¼ INCH		
			GSP	
			DIP	
4	EA	POP-UP (GEAR DRIVEN)		SPRINKLER TYPE

IRRIGATION QUANTITIES

IQ-2

STATE OF CALIFORNIA - DEPARTMENT OF TRANSPORTATION
Caltrans® LANDSCAPE ARCHITECTURE

SENIOR LANDSCAPE ARCHITECT: PATTY WATANABE
CALCULATED-DESIGNED BY: LEE DO
CHECKED BY: DUC T. TRINH
REVISED BY
DATE REVISED

LAST REVISION 00-00-00
DATE PLOTTED => 18-JUN-2015
TIME PLOTTED => 07:26

Dist	COUNTY	ROUTE	POST MILES TOTAL PROJECT	SHEET No.	TOTAL SHEETS
07	LA	210	R10.5/R15.7	71	116

LICENSED LANDSCAPE ARCHITECT

6-1-15
PLANS APPROVAL DATE

LICENSED LANDSCAPE ARCHITECT DUC T. TRINH No. 5457 Signature 11-30-15 Renewal Date 03-28-15 Date STATE OF CALIFORNIA

THE STATE OF CALIFORNIA OR ITS OFFICERS OR AGENTS SHALL NOT BE RESPONSIBLE FOR THE ACCURACY OR COMPLETENESS OF SCANNED COPIES OF THIS PLAN SHEET.

PLANTING LEGEND

PLANT GROUP	PLANT No.	SYMBOL	BOTANICAL NAME	COMMON NAME	SIZE	QUANTITY EACH	HOLE SIZE (INCH) Dia	HOLE SIZE (INCH) DEPTH	BASIN TYPE	SOIL AMENDMENT ① TYPE	SOIL AMENDMENT ① RATE	IRON SULFATE ① RATE	COMMERCIAL FERTILIZER ① PLANTING	COMMERCIAL FERTILIZER ① PLT ESTB	BASIN MULCH TYPE	BASIN MULCH CY	STAKING	PLANTING LIMITS MINIMUM DISTANCE (ft) FROM ETW	Pvmt	FENCE	WALL	PAVED DITCH	EARTH DITCH	ON CENTER (ft)	REMARKS
A	1		MUHLENBERGIA RIGENS	DEER GRASS	No. 1	116	③	③	II	--	--	--	4 oz	4 oz		0.05 CY	--	--	2	--	--	2	2	3	GRASS

NOTE:
UNDERLINED PORTIONS OF BOTANICAL NAME INDICATE ABBREVIATIONS USED ON PLANTING PLANS.

APPLICABLE WHEN CIRCLED:

① - QUANTITIES SHOWN ARE "PER PLANT" UNLESS SHOWN AS SQFT OR SQYD APPLICATION RATES
2 - BASIN MULCH IS INCLUDED WITH MULCH QUANTITIES SHOWN ON PLANTING PLAN
③ - SUFFICIENT TO RECEIVE ROOT BALL AND AMENDMENTS IF REQUIRED
4 - SEE DETAIL
5 - SEE SPECIAL PROVISIONS
6 - SEE STANDARD SPECIFICATIONS
7 - AS SHOWN ON PLANS
8 - UNLESS OTHERWISE SHOWN ON PLANS
9 - FOLIAGE PROTECTOR REQUIRED
10 - ROOT PROTECTOR REQUIRED
11 - ROOT BARRIER REQUIRED
12 - DEPARTMENT-FURNISHED

ABBREVIATIONS:

S - SPHAGNUM PEAT MOSS
N - NITROLIZED FIR BARK
V - VERMICULITE
P - PERLITE
TB - TREE BARK
WC - WOOD CHIP
SB - SHREDDED BARK
TT - TREE TRIMMING

LEGEND:

EROSION CONTROL TYPE 1

EROSTION CONTROL TYPE 1

SEQUENCE	ITEM	MATERIAL DESCRIPTION	MATERIAL TYPE	APPLICATION RATE
STEP 1	COMPOST	COMPOST	MEDIUM	130 LB/ACRE
STEP 2	HYDROSEED	SEED	MIX 1	27 LB/ACRE
		FIBER	WOOD	500 LB/ACRE
STEP 3	HYDROMULCH	FIBER	WOOD	1500 LB/ACRE
		TACKIFIER	GUAR	125 LB/ACRE

EROSION CONTROL QUANTITIES

SHEET	EROSION CONTROL LOCATION NUMBER	DESCRIPTION	COMPOST SQFT	HYDROSEED SQFT	HYDROMULCH SQFT
PP-1	1	EC TYPE 1	13,131	13,131	13,131
PP-2	1	EC TYPE 1	5,423	5,423	5,423
PP-3	1	EC TYPE 1	8,514	8,514	8,514
PP-4	1	EC TYPE 1	59,012	59,012	59,012
		TOTAL	86,080	86,080	86,080

SEED MIX

SEED	BOTANICAL NAME (COMMON NAME)	PERCENT GERMINATION (MINIMUM)	POUNDS PURE LIVE SEED PER ACRE (SLOPE MEASUREMENT)
MIX 1	ACHILLEA MILLEFOLIUM (WHITE YARROW)	85	7
	BROMUS CARINATUS (CALIFORNIA BROME)	85	20
	ESCHSCHOLZIA CALIFORNICA (CALIFORNIA POPPY)	80	10
	VULPIA MICROSTACHYS (SMALL FESCUE)	90	5

PLANT LIST
PL-1

REVISED BY | DATE REVISED
LEE DO | DUC T. TRINH
CALCULATED-DESIGNED BY | CHECKED BY
SENIOR LANDSCAPE ARCHITECT | PATTY WATANABE
STATE OF CALIFORNIA - DEPARTMENT OF TRANSPORTATION
Caltrans® LANDSCAPE ARCHITECTURE

LAST REVISION 00-00-00 | DATE PLOTTED => 18-JUN-2015 | TIME PLOTTED => 07:26

Dist	COUNTY	ROUTE	POST MILES TOTAL PROJECT	SHEET No.	TOTAL SHEETS
07	LA	210	R10.5/R15.7	72	116

LICENSED LANDSCAPE ARCHITECT

6-1-15
PLANS APPROVAL DATE

LICENSED LANDSCAPE ARCHITECT
DUC T. TRINH
No. 5457
Signature
11-30-15
Renewal Date
03-28-15
Date
STATE OF CALIFORNIA

THE STATE OF CALIFORNIA OR ITS OFFICERS OR AGENTS SHALL NOT BE RESPONSIBLE FOR THE ACCURACY OR COMPLETENESS OF SCANNED COPIES OF THIS PLAN SHEET.

NOTES:

1. FOR ACCURATE RIGHT OF WAY DATA, CONTACT RIGHT OF WAY ENGINEERING AT THE DISTRICT OFFICE.
2. EXISTING UTILITY FACILITIES HAVE NOT BEEN PLOTTED ON THESE PLANS.

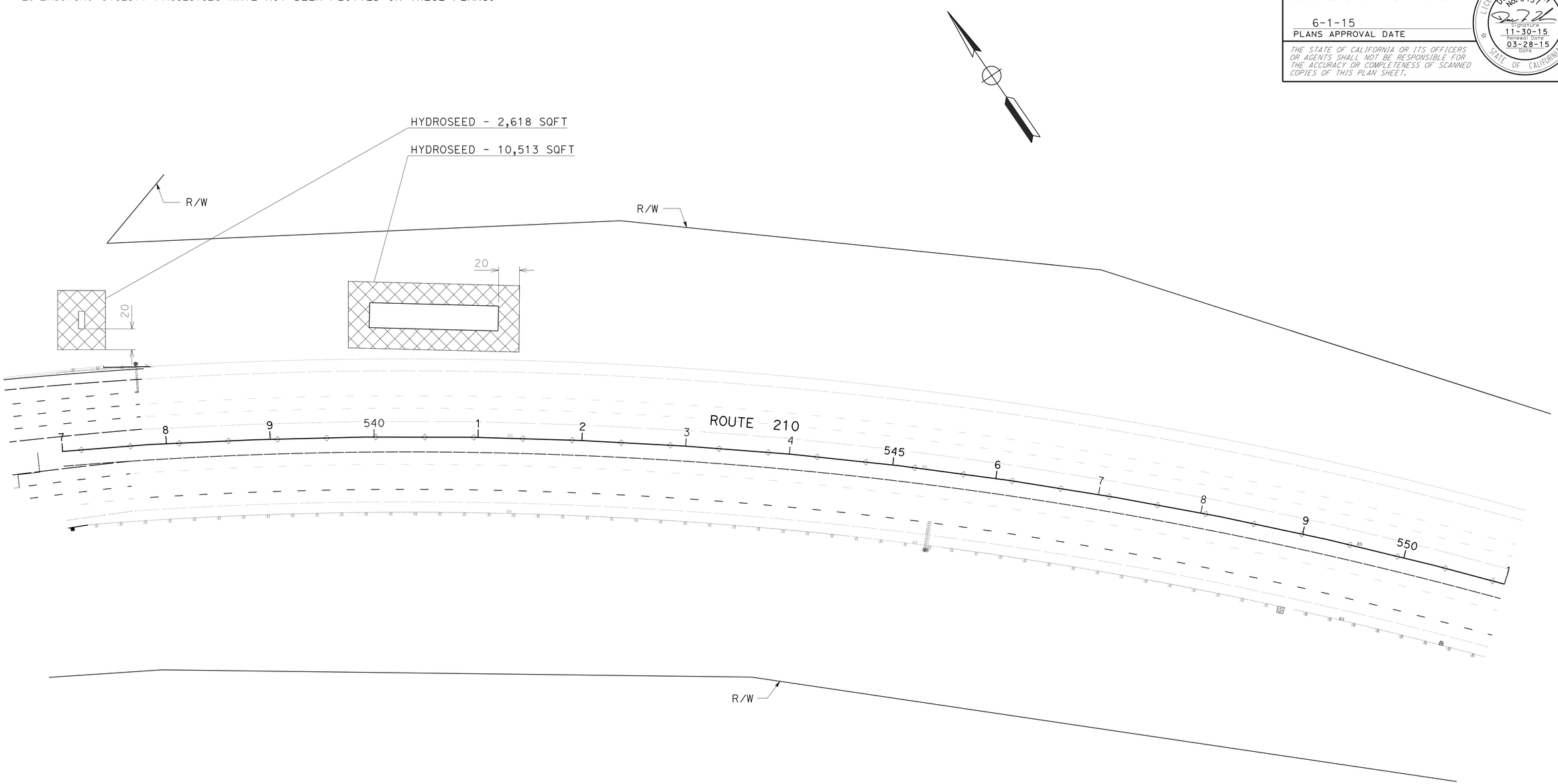

APPROVED FOR PLANTING WORK ONLY

PLANTING PLAN

SCALE: 1" = 50'

PP-1

STATE OF CALIFORNIA - DEPARTMENT OF TRANSPORTATION
Caltrans LANDSCAPE ARCHITECTURE

SENIOR LANDSCAPE ARCHITECT: PATTY WATANABE
CALCULATED-DESIGNED BY: LEE DO
CHECKED BY: DUC T TRINH
REVISED BY
DATE REVISED

LAST REVISION 00-00-00
DATE PLOTTED => 18-JUN-2015
TIME PLOTTED => 07:26

Dist	COUNTY	ROUTE	POST MILES TOTAL PROJECT	SHEET No.	TOTAL SHEETS
07	LA	210	R10.5/R15.7	73	116

LICENSED LANDSCAPE ARCHITECT

6-1-15
PLANS APPROVAL DATE

LICENSED LANDSCAPE ARCHITECT
DUC T. TRINH
No. 5457
Signature
11-30-15
Renewal Date
03-28-15
Date
STATE OF CALIFORNIA

THE STATE OF CALIFORNIA OR ITS OFFICERS OR AGENTS SHALL NOT BE RESPONSIBLE FOR THE ACCURACY OR COMPLETENESS OF SCANNED COPIES OF THIS PLAN SHEET.

NOTES:

1. FOR ACCURATE RIGHT OF WAY DATA, CONTACT RIGHT OF WAY ENGINEERING AT THE DISTRICT OFFICE.
2. EXISTING UTILITY FACILITIES HAVE NOT BEEN PLOTTED ON THESE PLANS.

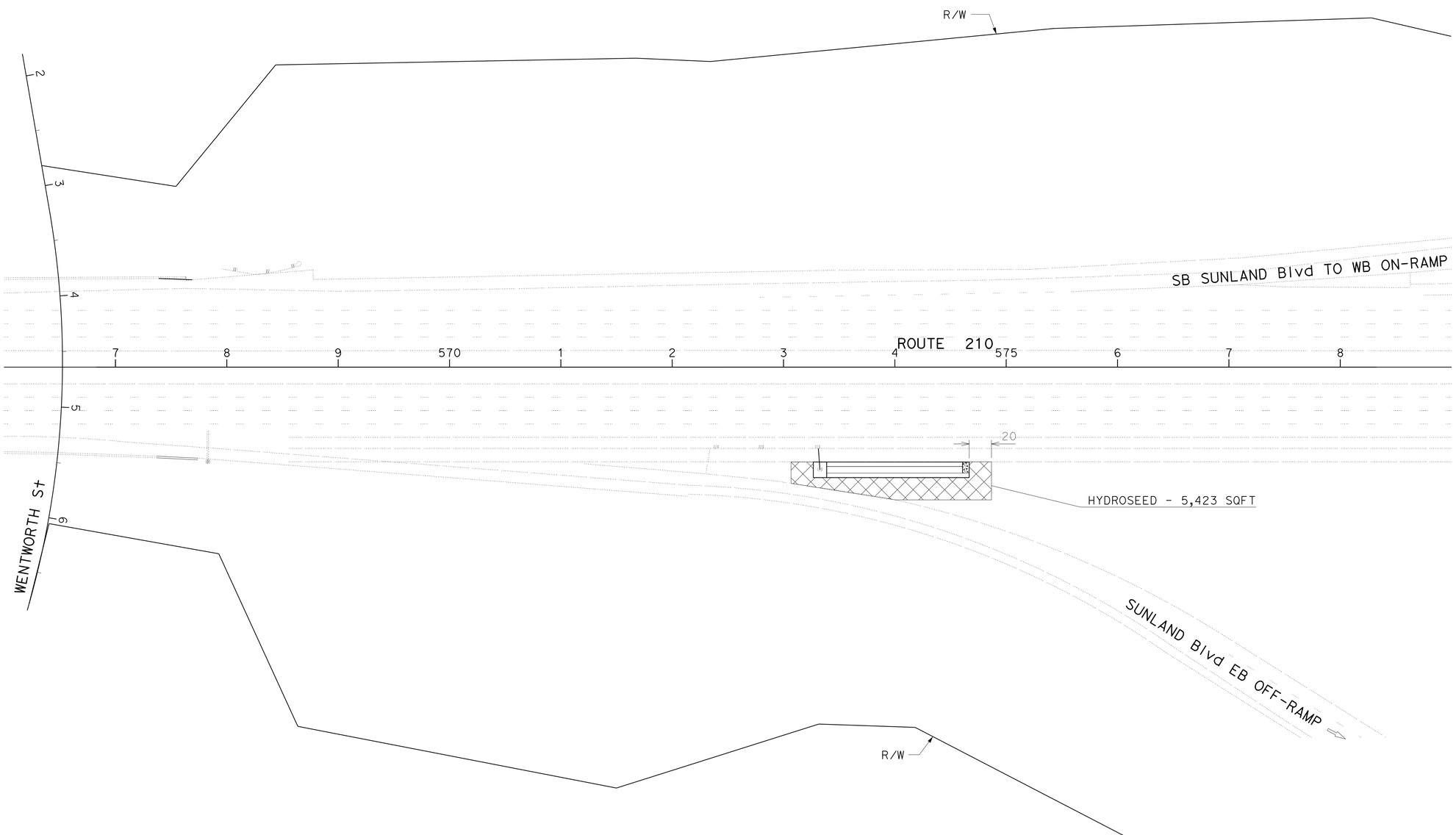

PLANTING PLAN

SCALE: 1" = 50'

PP-2

APPROVED FOR PLANTING WORK ONLY

REVISED BY | DATE REVISED

LEE DO | DUC T TRINH

CALCULATED-DESIGNED BY | CHECKED BY

SENIOR LANDSCAPE ARCHITECT: PATTY WATANABE

STATE OF CALIFORNIA - DEPARTMENT OF TRANSPORTATION
Caltrans LANDSCAPE ARCHITECTURE

LAST REVISION 00-00-00 | DATE PLOTTED => 18-JUN-2015 | TIME PLOTTED => 07:27

Dist	COUNTY	ROUTE	POST MILES TOTAL PROJECT	SHEET No.	TOTAL SHEETS
07	LA	210	R10.5/R15.7	74	116

LICENSED LANDSCAPE ARCHITECT

6-1-15
PLANS APPROVAL DATE

LICENSED LANDSCAPE ARCHITECT
DUC T. TRINH
No. 5457
Signature
11-30-15
Renewal date
03-28-15
Date
STATE OF CALIFORNIA

THE STATE OF CALIFORNIA OR ITS OFFICERS OR AGENTS SHALL NOT BE RESPONSIBLE FOR THE ACCURACY OR COMPLETENESS OF SCANNED COPIES OF THIS PLAN SHEET.

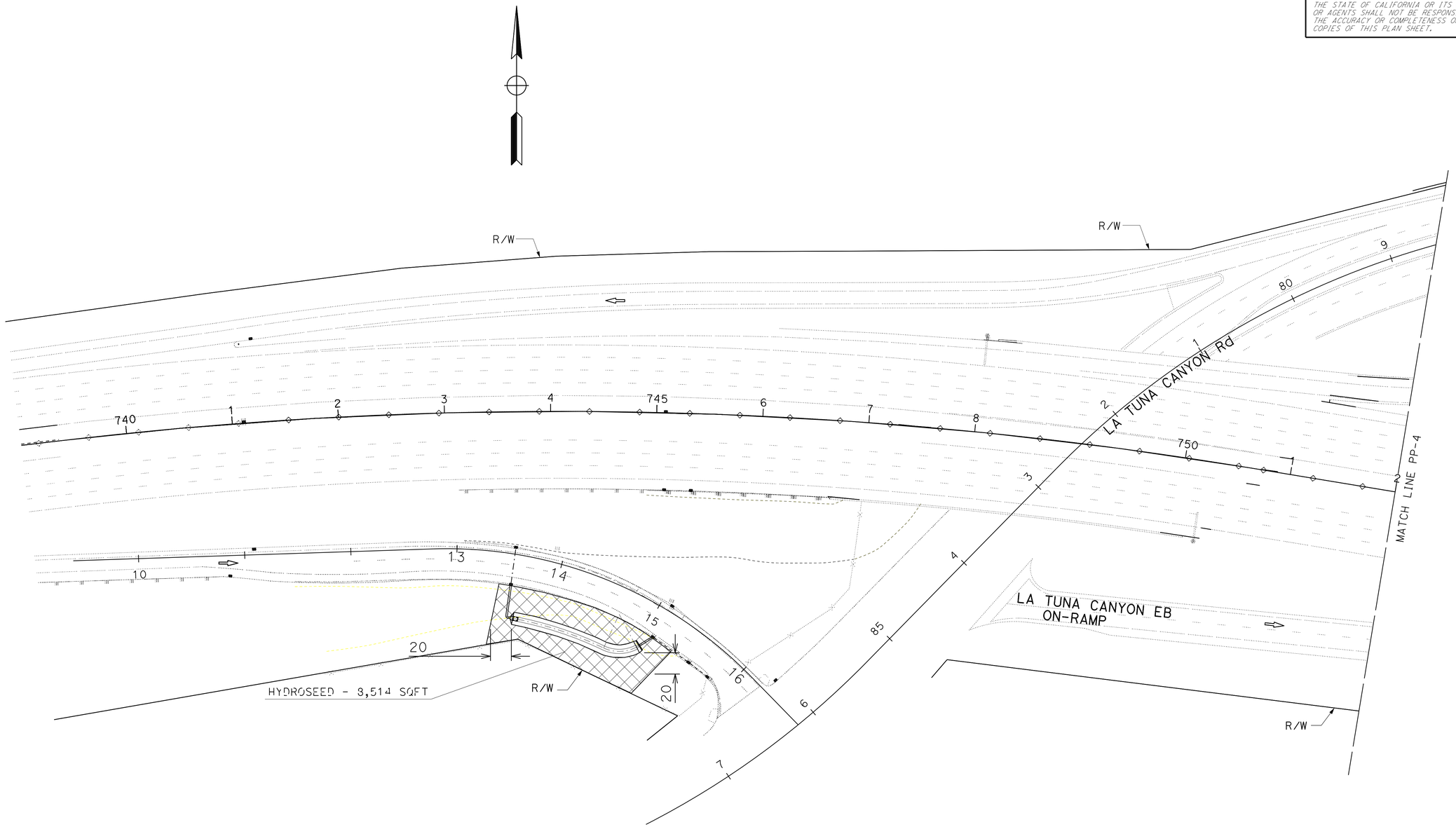

APPROVED FOR PLANTING WORK ONLY

PLANTING PLAN

SCALE: 1" = 50'

PP-3

REVISED BY | DATE REVISED

LEE DO | DUC T TRINH

CALCULATED-DESIGNED BY | CHECKED BY

SENIOR LANDSCAPE ARCHITECT

PATTY WATANABE

STATE OF CALIFORNIA - DEPARTMENT OF TRANSPORTATION

Caltrans LANDSCAPE ARCHITECTURE

LAST REVISION 00-00-00 | DATE PLOTTED => 18-JUN-2015 | TIME PLOTTED => 07:27

Dist	COUNTY	ROUTE	POST MILES TOTAL PROJECT	SHEET No.	TOTAL SHEETS
07	LA	210	R10.5/R15.7	75	116

LICENSED LANDSCAPE ARCHITECT

6-1-15
PLANS APPROVAL DATE

LICENSED LANDSCAPE ARCHITECT
DUC T. TRINH
No. 5457
Signature
11-30-15
Renewal Date
03-28-15
Date
STATE OF CALIFORNIA

THE STATE OF CALIFORNIA OR ITS OFFICERS OR AGENTS SHALL NOT BE RESPONSIBLE FOR THE ACCURACY OR COMPLETENESS OF SCANNED COPIES OF THIS PLAN SHEET.

NOTES:

1. FOR ACCURATE RIGHT OF WAY DATA, CONTACT RIGHT OF WAY ENGINEERING AT THE DISTRICT OFFICE.
2. EXISTING UTILITY FACILITIES HAVE NOT BEEN PLOTTED ON THESE PLANS.

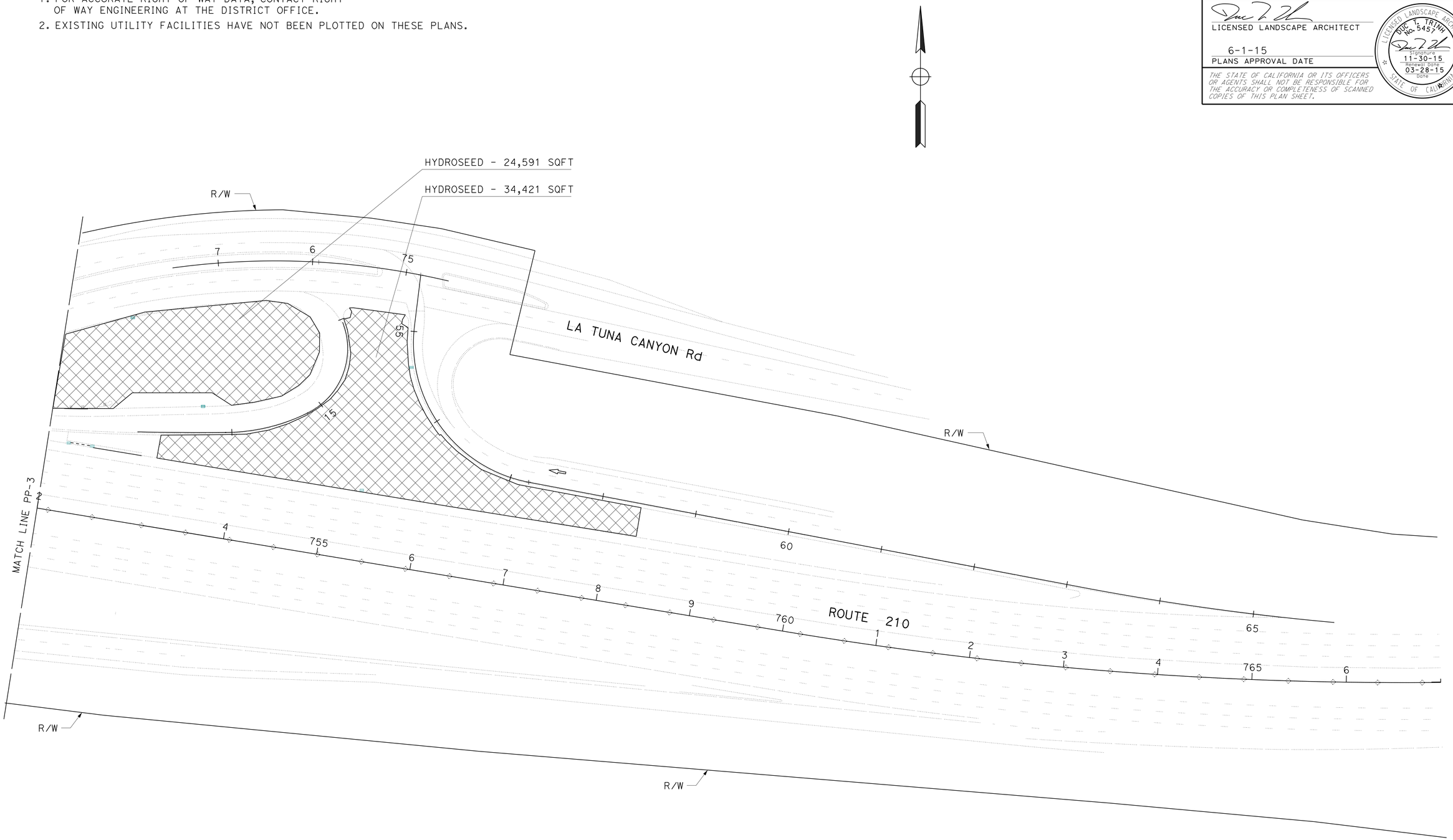

PLANTING PLAN

SCALE: 1" = 50'

PP-4

APPROVED FOR PLANTING WORK ONLY

STATE OF CALIFORNIA - DEPARTMENT OF TRANSPORTATION
Caltrans LANDSCAPE ARCHITECTURE

SENIOR LANDSCAPE ARCHITECT: PATTY WATANABE
CALCULATED-DESIGNED BY: LEE DO
CHECKED BY: DUC T TRINH
REVISED BY
DATE REVISED

LAST REVISION 00-00-00
DATE PLOTTED => 18-JUN-2015
TIME PLOTTED => 07:27

Dist	COUNTY	ROUTE	POST MILES TOTAL PROJECT	SHEET No.	TOTAL SHEETS
07	LA	210	R10.5/R15.7	76	116

LICENSED LANDSCAPE ARCHITECT

6-1-15
PLANS APPROVAL DATE

LICENSED LANDSCAPE ARCHITECT
DUC T. TRINH
No. 5457
Signature
11-30-15
Renewal Date
03-28-15
Date
STATE OF CALIFORNIA

THE STATE OF CALIFORNIA OR ITS OFFICERS OR AGENTS SHALL NOT BE RESPONSIBLE FOR THE ACCURACY OR COMPLETENESS OF SCANNED COPIES OF THIS PLAN SHEET.

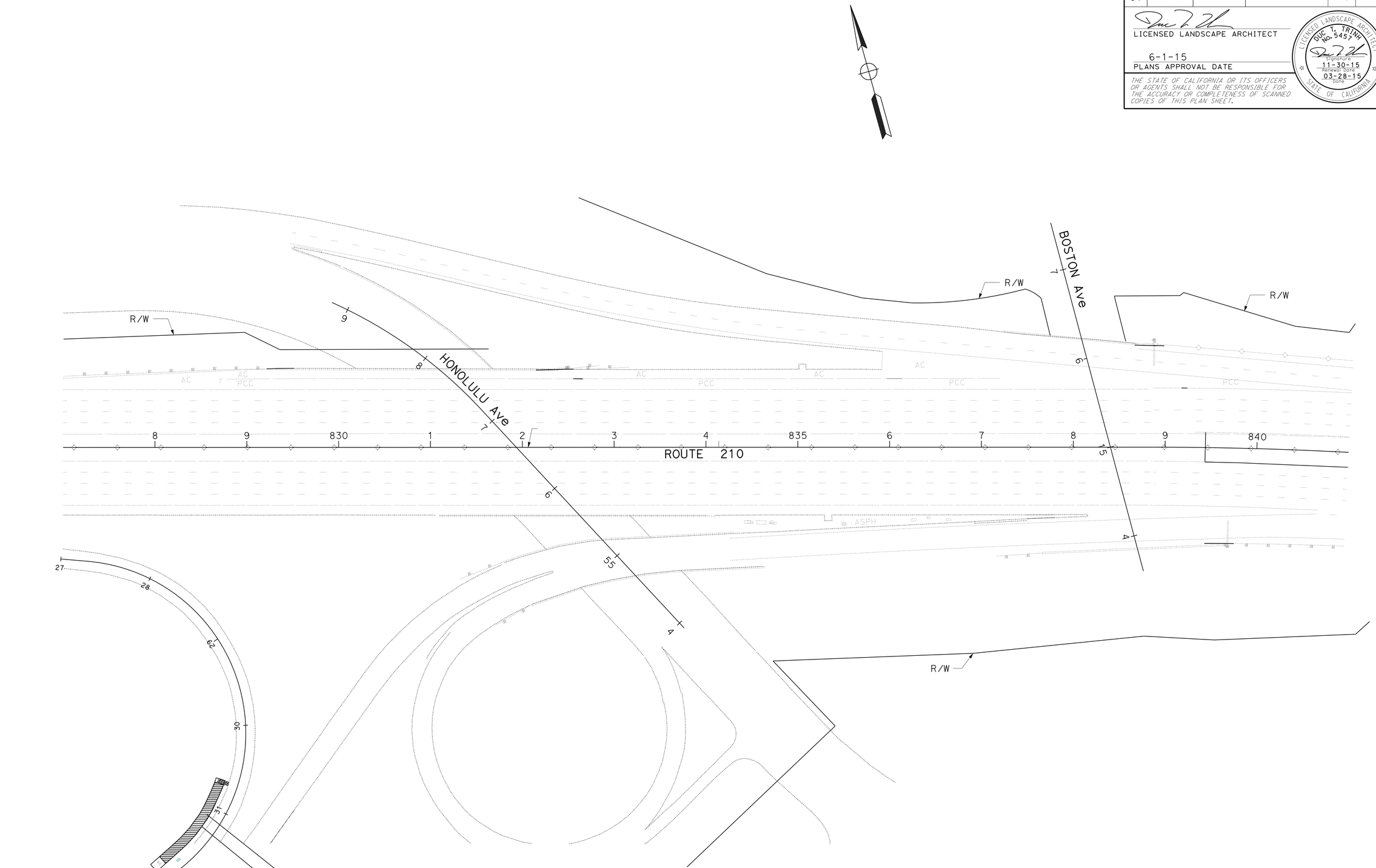

APPROVED FOR PLANTING WORK ONLY

PLANTING PLAN

SCALE: 1" = 50'

PP-5

STATE OF CALIFORNIA - DEPARTMENT OF TRANSPORTATION
Caltrans LANDSCAPE ARCHITECTURE

SENIOR LANDSCAPE ARCHITECT: PATTY WATANABE
CALCULATED-DESIGNED BY: LEE DO
CHECKED BY: DUC T TRINH
REVISED BY
DATE REVISED

LAST REVISION 00-00-00
DATE PLOTTED => 18-JUN-2015
TIME PLOTTED => 07:27

M

Maint	MAINTENANCE
Max	MAXIMUM
MB	METAL BEAM
MBB	METAL BEAM BARRIER
MBGR	METAL BEAM GUARD RAILING
Med	MEDIAN
MGS	MIDWEST GUARDRAIL SYSTEM
MH	MANHOLE
Min	MINIMUM
Misc	MISCELLANEOUS
Misc I & S	MISCELLANEOUS IRON AND STEEL
Mkr	MARKER
Mod	MODIFIED,
	MODIFY
Mon	MONUMENT
MP	METAL PLATE
MPGR	METAL PLATE GUARD RAILING
MR	MOVEMENT RATING
MSE	MECHANICALLY STABILIZED EMBANKMENT
Mt	MOUNTAIN, MOUNT
Mtl	MATERIAL
MVP	MAINTENANCE VEHICLE PULLOUT

N

N	NORTH
NB	NORTHBOUND
No.	NUMBER (MUST HAVE PERIOD)
Nos.	NUMBERS (MUST HAVE PERIOD)
NPS	NOMINAL PIPE SIZE
NS	NEAR SIDE
NSP	NEW STANDARD PLAN
NTS	NOT TO SCALE

O

Oblr	OBLITERATE
OC	OVERCROSSING
OD	OUTSIDE DIAMETER
OF	OUTSIDE FACE
OG	ORIGINAL GROUND
OGAC	OPEN GRADED ASPHALT CONCRETE
OGFC	OPEN GRADED FRICTION COURSE
OH	OVERHEAD
OHWM	ORDINARY HIGH WATER MARK
O-O	OUT TO OUT
Opp	OPPOSITE
OSD	OVERSIDE DRAIN

P

p	PAGE
PAP	PERFORATED ALUMINUM PIPE
PB	PULL BOX
PC	POINT OF CURVATURE,
	PRECAST
PCC	POINT OF COMPOUND CURVE,
	PORTLAND CEMENT CONCRETE
PCMS	PORTABLE CHANGEABLE MESSAGE SIGN
PCP	PERFORATED CONCRETE PIPE,
	PRESTRESSED CONCRETE PIPE
PCVC	POINT OF COMPOUND VERTICAL CURVE
PEC	PERMIT TO ENTER AND CONSTRUCT
Ped	PEDESTRIAN
Ped OC	PEDESTRIAN OVERCROSSING
Ped UC	PEDESTRIAN UNDERCROSSING
Perm Mtl	PERMEABLE MATERIAL

P continued

PG	PROFILE GRADE
PI	POINT OF INTERSECTION
PJP	PARTIAL JOINT PENETRATION
Pkwy	PARKWAY
ℙ,PL	PLATE
P/L	PROPERTY LINE
PM	POST MILE,
	TIME FROM NOON TO MIDNIGHT
PN	PAVING NOTCH
POC	POINT OF HORIZONTAL CURVE
POT	POINT OF TANGENT
POVC	POINT OF VERTICAL CURVE
PP	PIPE PILE,
	PLASTIC PIPE,
	POWER POLE
PPL	PREFORMED PERMEABLE LINER
PPP	PERFORATED PLASTIC PIPE
PRC	POINT OF REVERSE CURVE
PRF	PAVEMENT REINFORCING FABRIC
PRVC	POINT OF REVERSE VERTICAL CURVE
PS&E	PLANS, SPECIFICATIONS AND ESTIMATES
PS, P/S	PRESTRESSED
PSP	PERFORATED STEEL PIPE
PT	POINT OF TANGENCY
PVC	POLYVINYL CHLORIDE
Pvmt	PAVEMENT

Q

Qty	QUANTITY

R

R	RADIUS
R & D	REMOVE AND DISPOSE
R & S	REMOVE AND SALVAGE
R/C	RATE OF CHANGE
RCA	REINFORCED CONCRETE ARCH
RCB	REINFORCED CONCRETE BOX
RCP	REINFORCED CONCRETE PIPE
RCPA	REINFORCED CONCRETE PIPE ARCH
Rd	ROAD
Reinf	REINFORCED,
	REINFORCEMENT,
	REINFORCING
Rel	RELOCATE
Repl	REPLACEMENT
Ret	RETAINING
Rev	REVISED, REVISION
Rdwy	ROADWAY
RHMA	RUBBERIZED HOT MIX ASPHALT
Riv	RIVER
RM	ROAD-MIXED
RP	RADIUS POINT,
	REFERENCE POINT
RR	RAILROAD
RSP	ROCK SLOPE PROTECTION,
	REVISED STANDARD PLAN
Rt	RIGHT
Rte	ROUTE
RW	REDWOOD,
	RETAINING WALL
R/W	RIGHT OF WAY
Rwy	RAILWAY

S

S	SOUTH,
	SUPPLEMENT
SAE	STRUCTURE APPROACH EMBANKMENT
Salv	SALVAGE
SAPP	STRUCTURAL ALUMINUM PLATE PIPE
SB	SOUTHBOUND
SC	SAND CUSHION
SCSP	SLOTTED CORRUGATED STEEL PIPE
SD	STORM DRAIN
Sec	SECOND,
	SECTION
Sep	SEPARATION
SG	SUBGRADE
Shld	SHOULDER
Sht	SHEET
Sim	SIMILAR
℄	STATION LINE
SM	SELECTED MATERIAL
Spec	SPECIAL,
	SPECIFICATIONS
SPP	SLOTTED PLASTIC PIPE
SS	SLOPE STAKE
SSBM	STRAP AND SADDLE BRACKET METHOD
SSD	STRUCTURAL SECTION DRAIN
SSPA	STRUCTURAL STEEL PLATE ARCH
SSPP	STRUCTURAL STEEL PLATE PIPE
SSPPA	STRUCTURAL STEEL PLATE PIPE ARCH
SSRP	STEEL SPIRAL RIB PIPE
St	STREET
Sta	STATION
STBB	SINGLE THRIE BEAM BARRIER
Std	STANDARD
Str	STRUCTURE
Surf	SURFACING
SW	SIDEWALK,
	SOUND WALL
Swr	SEWER
Sym	SYMMETRICAL
S4S	SURFACE 4 SIDES

T

T	SEMI-TANGENT
Tan	TANGENT
TBB	THRIE BEAM BARRIER
Tbr	TIMBER
TC	TOP OF CURB
TCB	TRAFFIC CONTROL BOX
TCE	TEMPORARY CONSTRUCTION EASEMENT
Tel	TELEPHONE
Temp	TEMPORARY
TG	TOP OF GRADE
Tot	TOTAL
TP	TELEPHONE POLE
TPB	TREATED PERMEABLE BASE
TPM	TREATED PERMEABLE MATERIAL
Trans	TRANSITION

T continued

TS	TRANSVERSE,
	TRAFFIC SIGNAL,
	TUBULAR STEEL
Typ	TYPICAL

U

UC	UNDERCROSSING
UD	UNDERDRAIN
UG	UNDERGROUND
UON	UNLESS OTHERWISE NOTED
UP	UNDERPASS

V

V	VALVE,
	DESIGN SPEED
Var	VARIABLE,
	VARIES
VC	VERTICAL CURVE
VCP	VITRIFIED CLAY PIPE
Vert	VERTICAL
Via	VIADUCT
Vol	VOLUME

W

W	WEST,
	WIDTH
WB	WESTBOUND
WH	WEEP HOLE
WM	WIRE MESH
WS	WATER SURFACE
WSP	WELDED STEEL PIPE
Wt	WEIGHT
WV	WATER VALVE
WW	WINGWALL
WWLOL	WINGWALL LAYOUT LINE

X

X Sec	CROSS SECTION
Xing	CROSSING

Y

Yr	YEAR
Yrs	YEARS

Dist	COUNTY	ROUTE	POST MILES TOTAL PROJECT	SHEET No.	TOTAL SHEETS
07	LA	210	R10.5/R15.7	77	116

Grace M. Tsushima
REGISTERED CIVIL ENGINEER

July 19, 2013
PLANS APPROVAL DATE

REGISTERED PROFESSIONAL ENGINEER Grace M. Tsushima No. C49814 Exp. 9-30-14 CIVIL STATE OF CALIFORNIA

THE STATE OF CALIFORNIA OR ITS OFFICERS OR AGENTS SHALL NOT BE RESPONSIBLE FOR THE ACCURACY OR COMPLETENESS OF SCANNED COPIES OF THIS PLAN SHEET.

TO ACCOMPANY PLANS DATED 6-1-15

UNIT OF MEASUREMENT SYMBOLS:

Some of the symbols used in the project plan quantity tables and in the Bid Item List are:

TABLE A

SYMBOL USED	DEFINITIONS
ACRE	ACRE
CF	CUBIC FOOT
CY	CUBIC YARD
EA	EACH
GAL	GALLON
LB	POUND
LF	LINEAR FOOT
SQFT	SQUARE FOOT
SQYD	SQUARE YARD
STA	100 FEET
TAB	TABLET
TON	2,000 POUNDS

Some of the symbols used in the plans other than in the project plan quantity tables are:

TABLE B

SYMBOL USED	DEFINITIONS
ksi	KIPS PER SQUARE INCH
ksf	KIPS PER SQUARE FOOT
psi	POUNDS PER SQUARE INCH
psf	POUNDS PER SQUARE FOOT
lb/ft^3, pcf	POUNDS PER CUBIC FOOT
tsf	TONS PER SQUARE FOOT
mph, MPH *	MILES PER HOUR
ø	NOMINAL DIAMETER
oz	OUNCE
lb	POUND
kip	1,000 POUNDS
cal	CALORIE
ft	FOOT OR FEET
gal	GALLON

* For use on a sign panel only

STATE OF CALIFORNIA
DEPARTMENT OF TRANSPORTATION

ABBREVIATIONS (SHEET 2 OF 2)

NO SCALE

RSP A10B DATED JULY 19, 2013 SUPERSEDES STANDARD PLAN A10B DATED MAY 20, 2011 - PAGE 2 OF THE STANDARD PLANS BOOK DATED 2010.

REVISED STANDARD PLAN RSP A10B

2010 REVISED STANDARD PLAN RSP A10B

6-7-13

Dist	COUNTY	ROUTE	POST MILES TOTAL PROJECT	SHEET No.	TOTAL SHEETS
07	LA	210	R10.5/R15.7	78	116

REGISTERED CIVIL ENGINEER

July 19, 2013
PLANS APPROVAL DATE

REGISTERED PROFESSIONAL ENGINEER Roberta L. McLaughlin No. C40375 Exp. 3-31-15 CIVIL STATE OF CALIFORNIA

THE STATE OF CALIFORNIA OR ITS OFFICERS OR AGENTS SHALL NOT BE RESPONSIBLE FOR THE ACCURACY OR COMPLETENESS OF SCANNED COPIES OF THIS PLAN SHEET.

TO ACCOMPANY PLANS DATED 6-1-15

2010 REVISED STANDARD PLAN RSP A20C

EXIT RAMP NEUTRAL AREA (GORE) TREATMENT

DETAIL 36

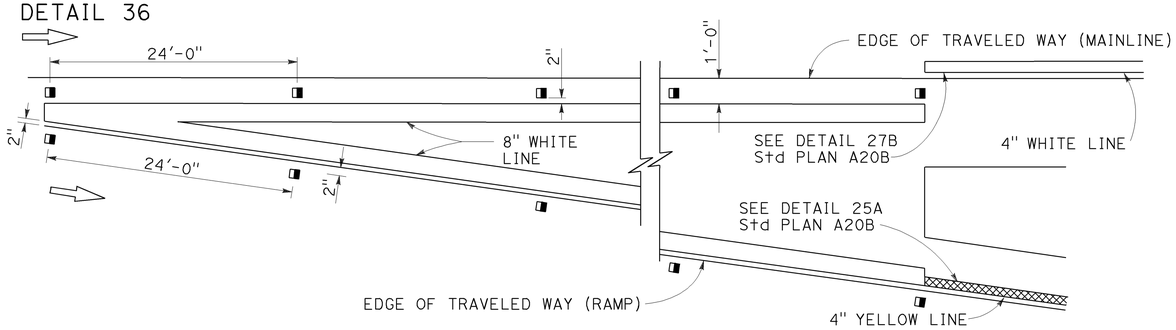

ENTRANCE RAMP NEUTRAL AREA (MERGE) TREATMENT

DETAIL 36A

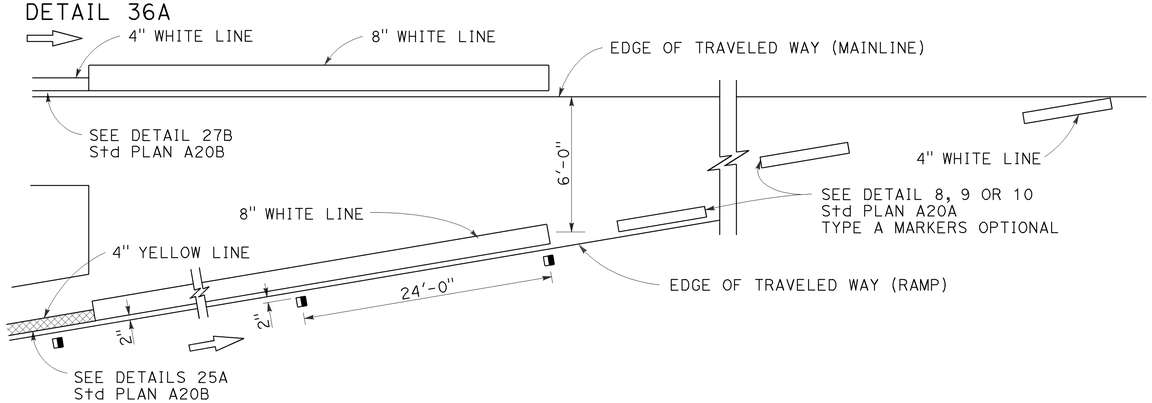

ENTRANCE RAMP NEUTRAL AREA (ACCELERATION LANE) TREATMENT

DETAIL 36B

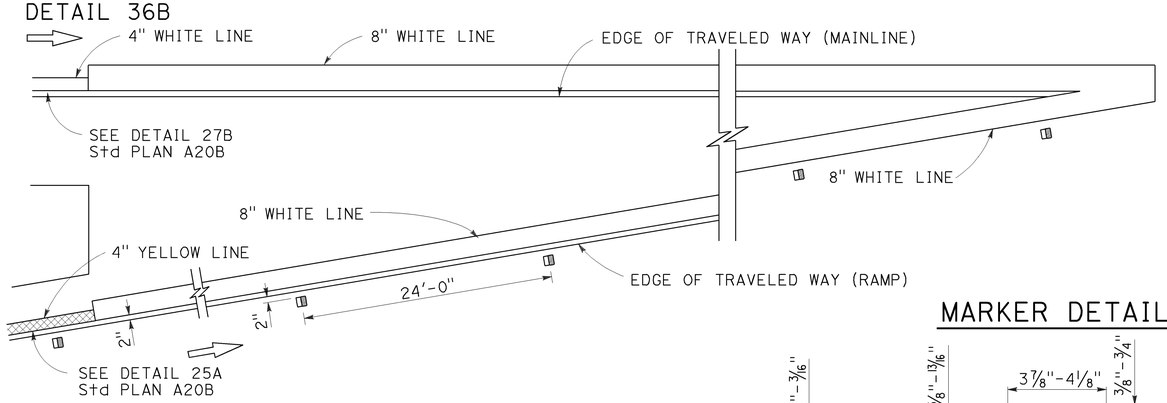

LANE DROP AT EXIT RAMPS

DETAIL 37

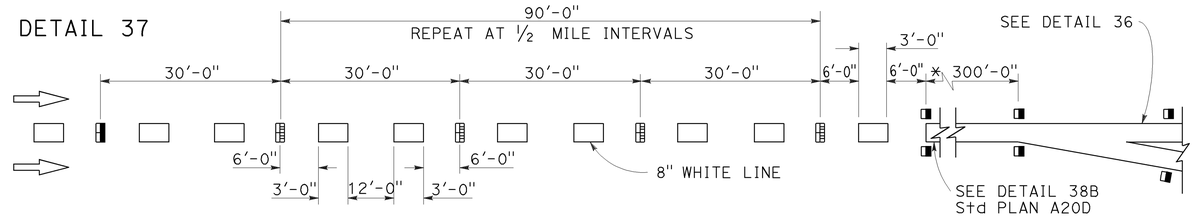

DETAIL 37A

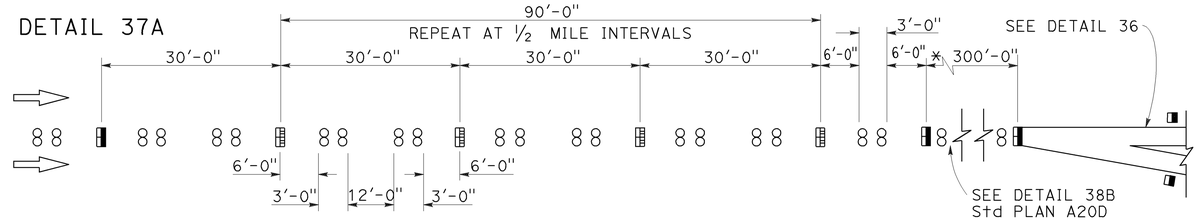

* The solid channelizing line shown may be omitted on short auxiliary lanes where weaving length is critical.

LANE DROP AT INTERSECTIONS

DETAIL 37B

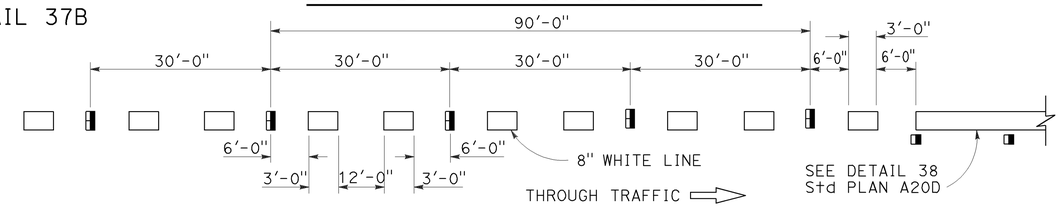

DETAIL 37C

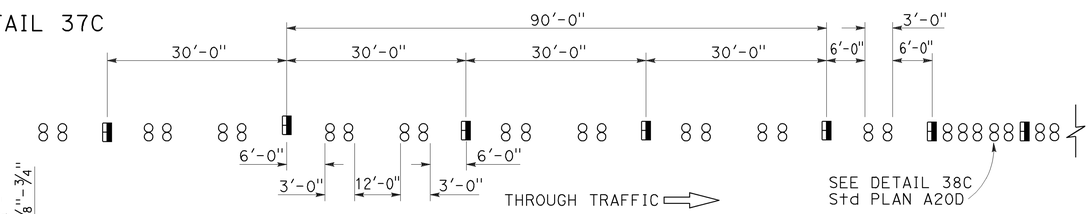

MARKER DETAILS

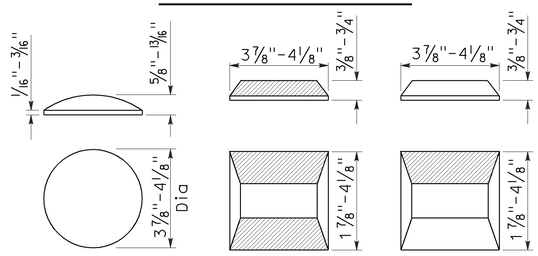

RETROREFLECTIVE FACE

LEGEND:

MARKERS

- ○ TYPE A WHITE NON-REFLECTIVE
- ⊟ TYPE C RED-CLEAR RETROREFLECTIVE
- ◨ TYPE G ONE-WAY CLEAR RETROREFLECTIVE

STATE OF CALIFORNIA
DEPARTMENT OF TRANSPORTATION

PAVEMENT MARKERS AND TRAFFIC LINE TYPICAL DETAILS

NO SCALE

RSP A20C DATED JULY 19, 2013 SUPERSEDES STANDARD PLAN A20C DATED MAY 20, 2011 - PAGE 11 OF THE STANDARD PLANS BOOK DATED 2010.

REVISED STANDARD PLAN RSP A20C

4-29-13

Dist	COUNTY	ROUTE	POST MILES TOTAL PROJECT	SHEET No.	TOTAL SHEETS
07	LA	210	R10.5/R15.7	79	116

REGISTERED CIVIL ENGINEER

July 18, 2014
PLANS APPROVAL DATE

REGISTERED PROFESSIONAL ENGINEER
Carl M. Duan
No. C59976
Exp. 6-30-16
CIVIL
STATE OF CALIFORNIA

THE STATE OF CALIFORNIA OR ITS OFFICERS OR AGENTS SHALL NOT BE RESPONSIBLE FOR THE ACCURACY OR COMPLETENESS OF SCANNED COPIES OF THIS PLAN SHEET.

TO ACCOMPANY PLANS DATED 6-1-15

2010 REVISED STANDARD PLAN RSP A62DA

DESIGN NOTES:

Design: AASHTO LRFD Bridge Design Specifications, 4th edition with California Amendments. ACPA DESIGN DATA 1, October 2007. INDIRECT DESIGN METHOD

Soil: w Fe = 162 pcf Installation Type 1
w Fe = 168 pcf Installation Types 2 & 3
w = Unit weight of soil (pcf)
Fe = Soil-structure interaction factor

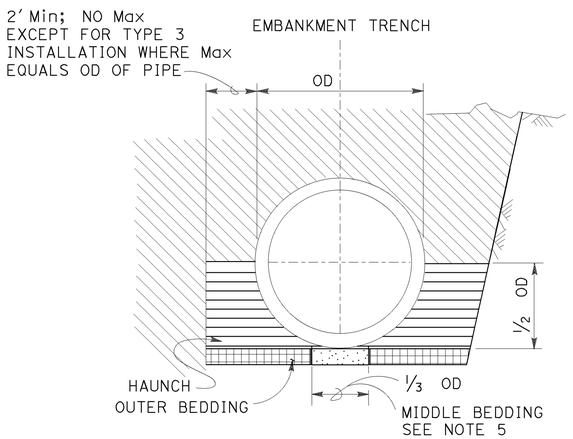

BACKFILL

LEGEND:

- ROADWAY EMBANKMENT
- STRUCTURE BACKFILL (CULVERT) FOR HAUNCH SEE NOTE 6
- STRUCTURE BACKFILL (CULVERT) FOR OUTER BEDDING SEE NOTE 6
- LOOSE BACKFILL
- STRUCTURE EXCAVATION (CULVERT)

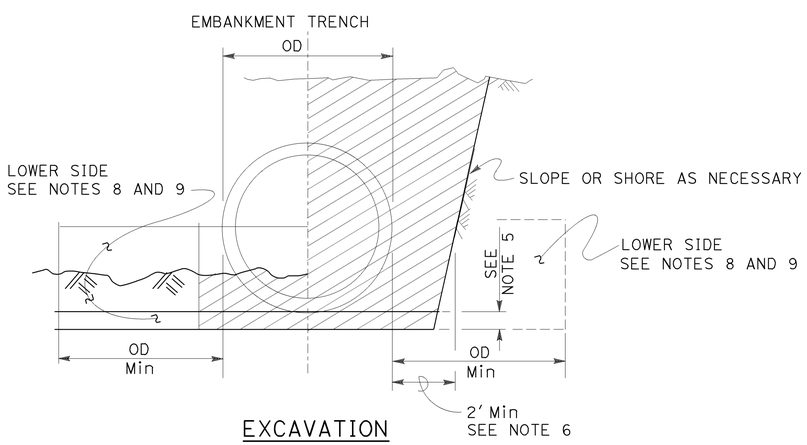

EXCAVATION

INSTALLATION TYPE 1:

The haunch and outer bedding shall be compacted to a minimum 90 percent relative compaction. In addition, the minimum sand equivalent in these areas shall be 30 and the maximum percentage passing the No. 200 sieve size shall be 12.

INSTALLATION TYPE 2:

The haunch and outer bedding shall be compacted to a minimum 90 percent relative compaction. In addition, the minimum sand equivalent in these areas shall be 25.

INSTALLATION TYPE 3:

The haunch and outer bedding shall be compacted to a minimum 85 percent relative compaction. 90 percent relative compaction will be required where the fill over the pipe is less than 4′-0″ or ½ OD. In addition, the minimum sand equivalent in these areas shall be 25 and the material shall not contain rocks, broken concrete, or other solid material exceeding 3″ in greatest dimension.

INSTALLATION TYPE 1

MINIMUM CLASS AND D-LOAD	COVER	
	60″ Dia AND SMALLER	OVER 60″ Dia TO 120″ Dia Max
CLASS II 1000D	14.9′	12.9′
CLASS III 1350D	15.0′ - 21.9′	13.0′ - 18.9′
CLASS III SPECIAL 1700D	22.0′ - 27.9′	19.0′ - 24.9′
CLASS IV 2000D	28.0′ - 32.9′	25.0′ - 29.9′
CLASS IV SPECIAL 2500D	33.0′ - 41.9′	30.0′ - 38.9′
CLASS V 3000D	42.0′ - 49.9′	39.0′ - 46.9′
CLASS V SPECIAL 3600D	50.0′ - 60.0′	47.0′ - 58.0′

INSTALLATION TYPE 2

MINIMUM CLASS AND D-LOAD	COVER	
	60″ Dia AND SMALLER	OVER 60″ Dia TO 120″ Dia Max
CLASS II 1000D	11.9′	9.9′
CLASS III 1350D	12.0′ - 15.9′	10.0′ - 14.9′
CLASS III SPECIAL 1700D	16.0′ - 20.9′	15.0′ - 19.9′
CLASS IV 2000D	21.0′ - 24.9′	20.0′ - 23.9′
CLASS IV SPECIAL 2500D	25.0′ - 31.9′	24.0′ - 30.9′
CLASS V 3000D	32.0′ - 37.9′	31.0′ - 37.9′
CLASS V SPECIAL 3600D	38.0′ - 46.0′	38.0′ - 46.0′

INSTALLATION TYPE 3

MINIMUM CLASS AND D-LOAD	COVER	
	60″ Dia AND SMALLER	OVER 60″ Dia TO 120″ Dia Max
CLASS II 1000D	8.9′	5.9′
CLASS III 1350D	9.0′ - 11.9′	6.0′ - 10.9′
CLASS III SPECIAL 1700D	12.0′ - 15.9′	11.0′ - 13.9′
CLASS IV 2000D	16.0′ - 18.9′	14.0′ - 17.9′
CLASS IV SPECIAL 2500D	19.0′ - 24.9′	18.0′ - 22.9′
CLASS V 3000D	25.0′ - 29.9′	23.0′ - 28.9′
CLASS V SPECIAL 3600D	30.0′ - 36.0′	29.0′ - 35.0′

NOTES:

1. Unless otherwise shown on the plans or specified in the special provision, the Contractor shall have the option of selecting the class of RCP and the type of installation to be used, provided the height of cover does not exceed the value shown for the RCP selected.
   Example: 24″ RCP culvert with maximum cover of 24′-0″ the options are:
   a) Class III Special or stronger with Installation Type 1.
   b) Class IV or stronger with Installation Type 2.
   c) Class IV Special or stronger with Installation Type 3.
   Cover is defined as the maximum vertical distance from top of the pipe to finished grade within the length of any given culvert.
2. The class of RCP and Installation Type selected shall be the same throughout the length of any given culvert.
3. The "length of any culvert" is defined as the culvert between:
   a) Successive drainage structure (inlets, junction boxes, headwalls, etc.).
   b) A drainage structure and the inlet or outlet end of the culvert.
   c) The inlet and outlet end of the culvert when there are no intervening drainage structures.
4. Oval and arch shaped RCP shall not be used.
5. Bedding depth: 1/25 OD Min, not less than 3″.
6. Slurry cement backfill may be substituted for backfill in the outer bedding and haunch areas. If slurry is used, the outer and middle beddings shall be omitted. Prior to installation, the soil under the middle ⅓ of the outside diameter of the pipe shall be softened by scarifying or other means to a minimum depth of 1/25 OD, but not less than 3″. Where slurry cement backfill is used, clear distance to trench wall may be reduced as set forth in the Standard Specifications.
7. Backfill shall be placed full width of excavation except where dimensions are shown for backfill width or thickness. Dimensions shown are minimum.
8. Lower side shall be suitable material as determined by the Engineer. Otherwise it shall be considered unsuitable as set forth in of the Standard Specifications. See Note 9.
9. Where the pipe is placed in a trench, if the trench walls are sloped at 5 vertical to 1 horizontal or steeper for at least 90 percent of the trench height or up to not less than 12″ from the grading plane, the firmness of the soil in the lower side need not be considered.
10. Non-reinforced precast concrete pipe sizes 3′-0″ or smaller may be placed under installation Types 1, 2 or 3.

STATE OF CALIFORNIA
DEPARTMENT OF TRANSPORTATION

EXCAVATION AND BACKFILL CONCRETE PIPE CULVERTS INDIRECT DESIGN METHOD

NO SCALE

RSP A62DA DATED JULY 18, 2014 SUPERSEDES STANDARD PLAN A62DA DATED MAY 20, 2011 - PAGE 24 OF THE STANDARD PLANS BOOK DATED 2010.

REVISED STANDARD PLAN RSP A62DA

Dist	COUNTY	ROUTE	POST MILES TOTAL PROJECT	SHEET No.	TOTAL SHEETS
07	LA	210	R10.5/R15.7	80	116

Randell D. Hiatt
REGISTERED CIVIL ENGINEER

July 19, 2013
PLANS APPROVAL DATE

REGISTERED PROFESSIONAL ENGINEER
Randell D. Hiatt
No. C50200
Exp. 6-30-15
CIVIL
STATE OF CALIFORNIA

THE STATE OF CALIFORNIA OR ITS OFFICERS OR AGENTS SHALL NOT BE RESPONSIBLE FOR THE ACCURACY OR COMPLETENESS OF SCANNED COPIES OF THIS PLAN SHEET.

TO ACCOMPANY PLANS DATED 6-1-15

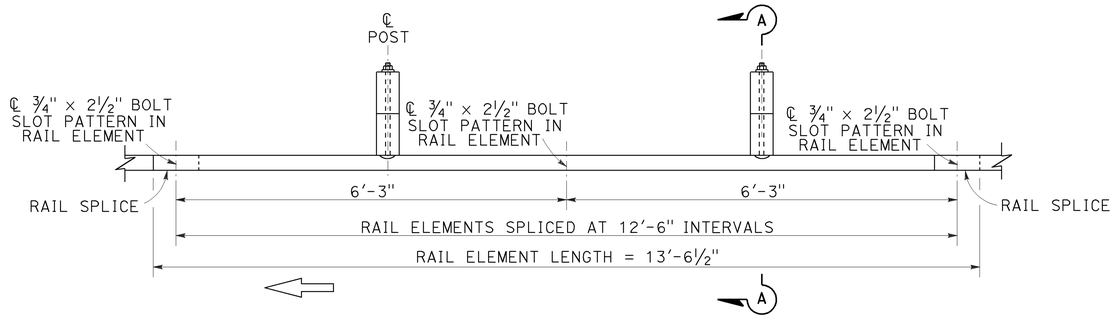

PLAN

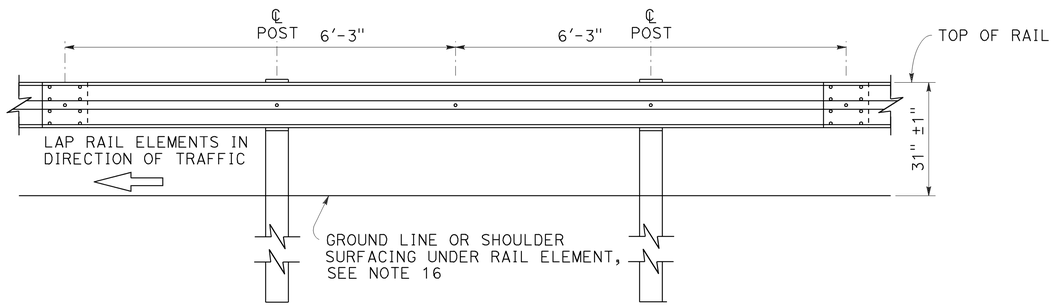

ELEVATION

MIDWEST GUARDRAIL SYSTEM WITH WOOD POST AND BLOCKS

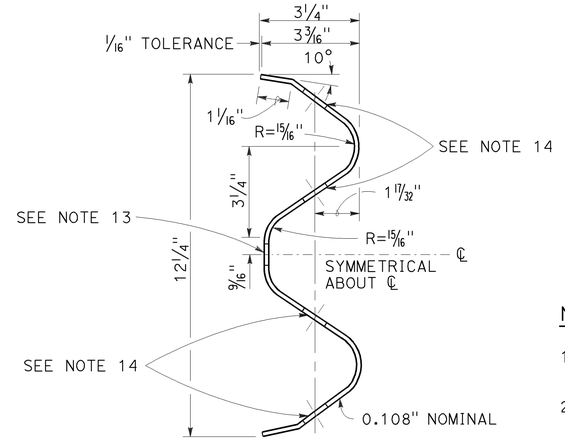

SECTION THRU RAIL ELEMENT

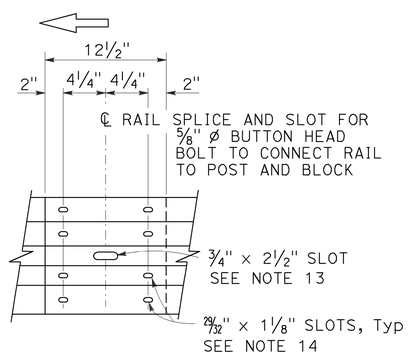

ELEVATION

RAIL ELEMENT SPLICE DETAIL

a) Connect the over lapped end of the rail elements with ⅝" ø × 1⅜" button head oval shoulder splice bolts inserted into the 29⁄32" × 1⅛" slots and bolted together with ⅝" ø recessed hex nuts. Recess of hex nut points toward rail element. A total of 8 bolts and nuts are to be used at each rail splice connection.

b) The ends of the rail elements are to be overlapped in the direction of traffic (see details).

c) Where end cap is to be attached to the end of a rail element, a total of 4 of the above described splice bolts and nuts are to be used.

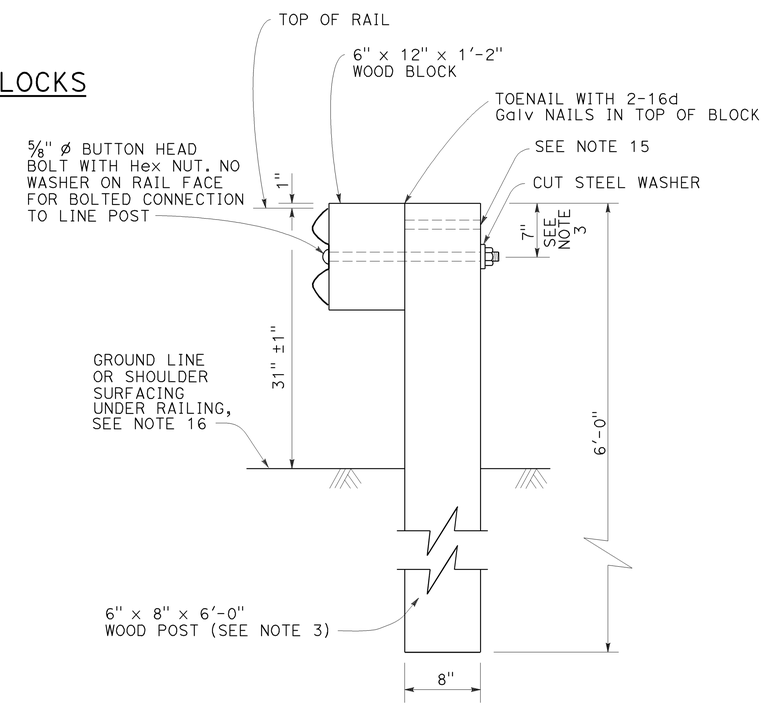

SECTION A-A

TYPICAL WOOD LINE POST INSTALLATION

See Note 4

NOTES:

1. For details of steel post installations, see Revised Standard Plan RSP A77L2.
2. For details of standard hardware used to construct MGS, see Revised Standard Plan RSP A77M1.
3. For details of wood posts and wood blocks used to construct MGS, see Revised Standard Plan RSP A77N1.
4. For additional installation details, see Revised Standard Plan RSP A77N3.
5. MGS post spacing to be 6'-3" center to center, except as otherwise noted.
6. For MGS typical layouts, see the A77P, A77Q and A77R Series of Standard Plans.
7. If railing is connected to terminal system end treatment, use 31" height terminal system end treatment.
8. For MGS end anchor details, see Revised Standard Plans RSP A77S1 and RSP A77T2.
9. For details of MGS transition to bridge railing, see Revised Standard Plan RSP A77U4.
10. For additional details of MSG connection to bridge railing, see Revised Standard Plans RSP A77U1, RSP A77U2 and RSP A77V1.
11. For MGS connection details to abutments and walls, see Revised Standard Plan RSP A77U3.
12. For typical MGS delineation and dike positioning details, see Revised Standard Plan RSP A77N4.
13. Slotted hole for bolted connection of rail element to block and post. See "Section Thru Rail Element".
14. Slotted holes for splice bolts to overlap ends of rail element. See "Section Thru Rail Element".
15. Additional hole in uppermost portion of line post is for potential future adjustments of railing height. See Revised Standard Plan RSP A77N1.
16. Install posts in soil.

STATE OF CALIFORNIA
DEPARTMENT OF TRANSPORTATION

MIDWEST GUARDRAIL SYSTEM STANDARD RAILING SECTION (WOOD POST WITH WOOD BLOCK)

NO SCALE

RSP A77L1 DATED JULY 19, 2013 SUPPLEMENTS STANDARD PLANS BOOK DATED 2010.

REVISED STANDARD PLAN RSP A77L1

2010 REVISED STANDARD PLAN RSP A77L1

7-3-13

Dist	COUNTY	ROUTE	POST MILES TOTAL PROJECT	SHEET No.	TOTAL SHEETS
07	LA	210	R10.5/R15.7	81	116

Randell D. Hiatt
REGISTERED CIVIL ENGINEER

July 19, 2013
PLANS APPROVAL DATE

REGISTERED PROFESSIONAL ENGINEER
Randell D. Hiatt
No. C50200
Exp. 6-30-15
CIVIL
STATE OF CALIFORNIA

THE STATE OF CALIFORNIA OR ITS OFFICERS OR AGENTS SHALL NOT BE RESPONSIBLE FOR THE ACCURACY OR COMPLETENESS OF SCANNED COPIES OF THIS PLAN SHEET.

TO ACCOMPANY PLANS DATED 6-1-15

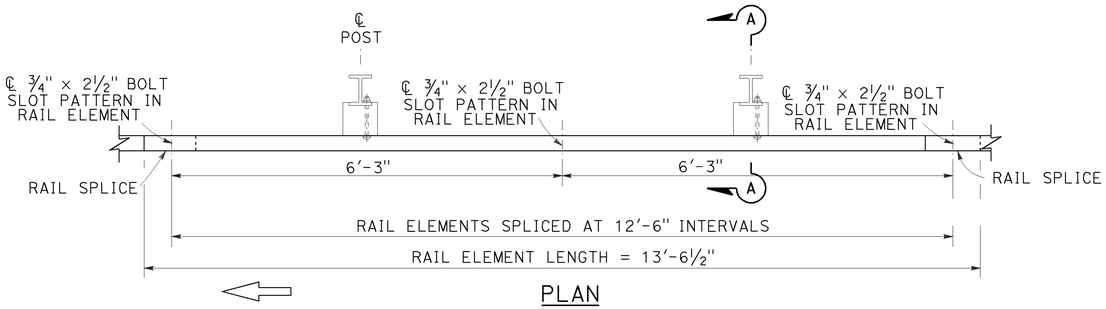

PLAN

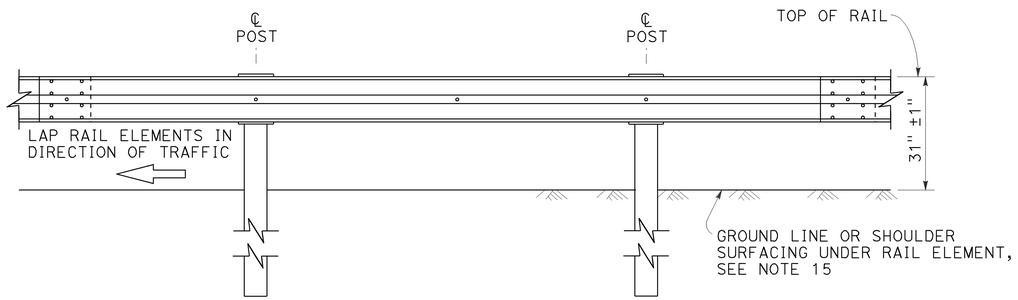

ELEVATION

MIDWEST GUARDRAIL SYSTEM WITH STEEL POSTS AND NOTCHED WOOD OR NOTCHED RECYCLED PLASTIC BLOCKS

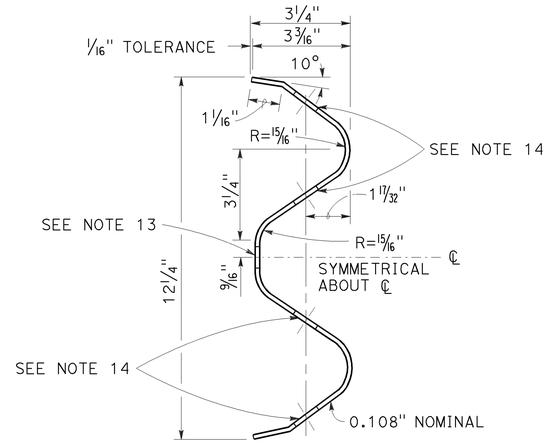

SECTION THRU RAIL ELEMENT

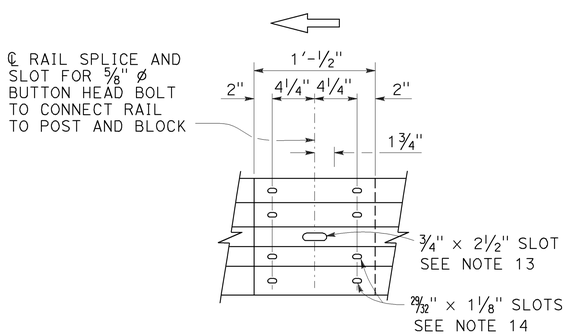

ELEVATION

RAIL ELEMENT SPLICE DETAIL

a) Connect the over lapped end of the rail elements with ⅝" ø × 1⅜" button head oval shoulder splice bolts inserted into the 29⁄32" × 1⅛" slots and bolted together with ⅝" ø recessed hex nuts. Recess of hex nut points toward rail element. A total of 8 bolts and nuts are to be used at each rail splice connection.

b) The ends of the rail elements are to be overlapped in the direction of traffic (see details).

c) Where end cap is to be attached to the end of a rail element, a total of 4 of the above described splice bolts and nuts are to be used.

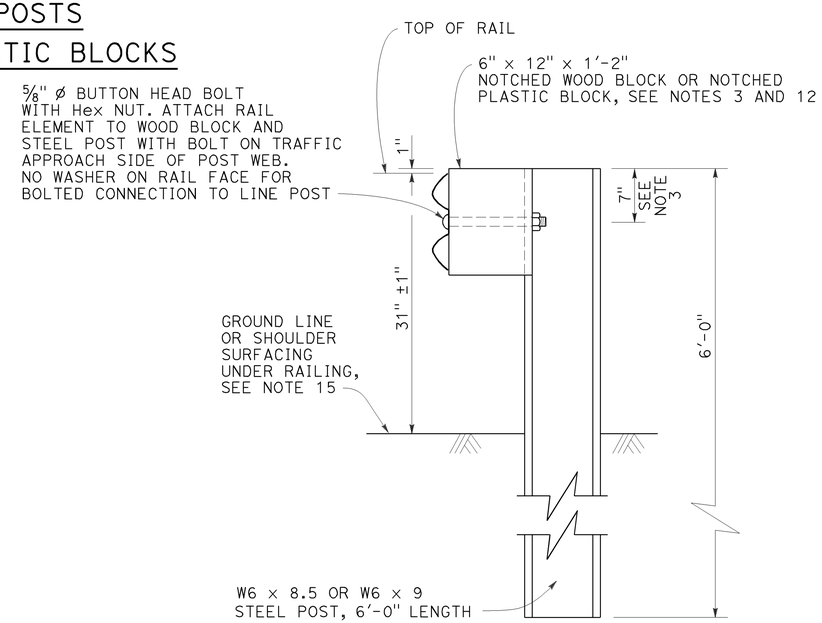

SECTION A-A

TYPICAL STEEL LINE POST INSTALLATION

See Note 4

NOTES:

1. For details of wood post installations, see Revised Standard Plan RSP A77L1.
2. For details of standard hardware used to construct MGS, see Revised Standard Plan RSP A77M1.
3. For details of steel posts and notched wood blocks used to construct MGS, see Revised Standard Plan RSP A77N2.
4. For additional installation details, see Revised Standard Plan RSP A77N3.
5. MGS post spacing to be 6'-3" center to center, except as otherwise noted.
6. For MGS typical layouts, see the A77P, A77Q and A77R Series of Standard Plans.
7. If railing is connected to terminal system end treatment, use 31" height terminal system end treatment.
8. For MGS end anchor details, see Revised Standard Plans RSP A77S1 and RSP A77T2.
9. For details of MGS transition to bridge railing, see Revised Standard Plan RSP A77U4.
10. For additional details of MGS connection to bridge railings, see Revised Standard Plans RSP A77U1, RSP A77U2 and RSP A77V1.
11. For dike positioning and MGS delineation details, see Revised Standard Plan RSP A77N4.
12. Notched face of block faces steel post.
13. Slotted hole for bolted connection of rail element to block and post. See "Section Thru Rail Element".
14. Slotted holes for splice bolts to overlap ends of rail element. See "Section Thru Rail Element".
15. Install posts in soil.

STATE OF CALIFORNIA
DEPARTMENT OF TRANSPORTATION

MIDWEST GUARDRAIL SYSTEM STANDARD RAILING SECTION (STEEL POST WITH NOTCHED WOOD OR NOTCHED RECYCLED PLASTIC BLOCK)

NO SCALE

RSP A77L2 DATED JULY 19, 2013 SUPPLEMENTS THE STANDARD PLANS BOOK DATED 2010.

REVISED STANDARD PLAN RSP A77L2

2010 REVISED STANDARD PLAN RSP A77L2

7-3-13

Dist	COUNTY	ROUTE	POST MILES TOTAL PROJECT	SHEET No.	TOTAL SHEETS
07	LA	210	R10.5/R15.7	82	116

Randell D. Hiatt
REGISTERED CIVIL ENGINEER

July 19, 2013
PLANS APPROVAL DATE

REGISTERED PROFESSIONAL ENGINEER
Randell D. Hiatt
No. C50200
Exp. 6-30-15
CIVIL
STATE OF CALIFORNIA

THE STATE OF CALIFORNIA OR ITS OFFICERS OR AGENTS SHALL NOT BE RESPONSIBLE FOR THE ACCURACY OR COMPLETENESS OF SCANNED COPIES OF THIS PLAN SHEET.

TO ACCOMPANY PLANS DATED 6-1-15

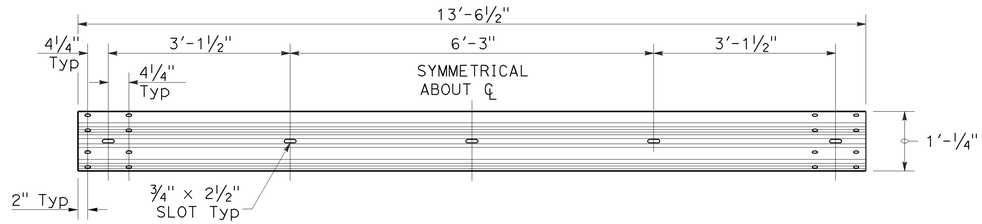

TYPICAL RAIL ELEMENT

NOTE:

1. Slotted holes for splice bolts to overlap ends of rail element.

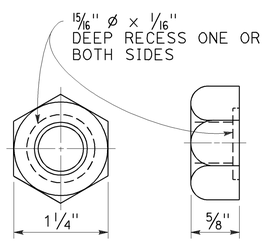

⅝" Ø RECESS NUT

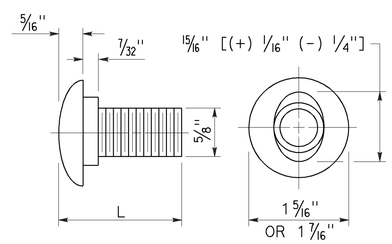

⅝" Ø BUTTON HEAD BOLT

BUTTON HEAD BOLT

L	THREAD LENGTH
1⅜"	FULL THREAD LENGTH
2"	FULL THREAD LENGTH
10"	4" Min THREAD LENGTH
18"	4" Min THREAD LENGTH
20"	4" Min THREAD LENGTH
22"	4" Min THREAD LENGTH
26"	4" Min THREAD LENGTH
36"	4" Min THREAD LENGTH
** 2¾"	2" Min THREAD LENGTH
** 19"	4" Min THREAD LENGTH

** For nested rail applications.

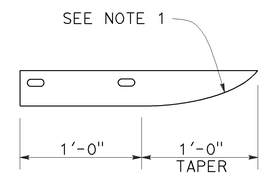

PLAN

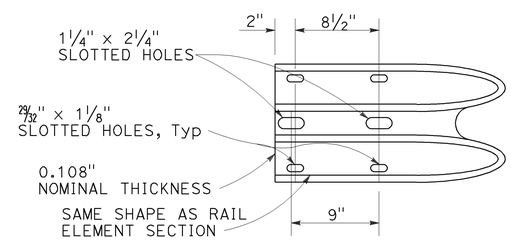

ELEVATION

END CAP
(TYPE A)

STATE OF CALIFORNIA
DEPARTMENT OF TRANSPORTATION

MIDWEST GUARDRAIL SYSTEM STANDARD HARDWARE

NO SCALE

RSP A77M1 DATED JULY 19, 2013 SUPPLEMENTS THE STANDARD PLANS BOOK DATED 2010.

REVISED STANDARD PLAN RSP A77M1

2010 REVISED STANDARD PLAN RSP A77M1

7-3-13

Dist	COUNTY	ROUTE	POST MILES TOTAL PROJECT	SHEET No.	TOTAL SHEETS
07	LA	210	R10.5/R15.7	83	116

Randell D. Hiatt
REGISTERED CIVIL ENGINEER

July 19, 2013
PLANS APPROVAL DATE

REGISTERED PROFESSIONAL ENGINEER
Randell D. Hiatt
No. C50200
Exp. 6-30-15
CIVIL
STATE OF CALIFORNIA

THE STATE OF CALIFORNIA OR ITS OFFICERS OR AGENTS SHALL NOT BE RESPONSIBLE FOR THE ACCURACY OR COMPLETENESS OF SCANNED COPIES OF THIS PLAN SHEET.

TO ACCOMPANY PLANS DATED 6-1-15

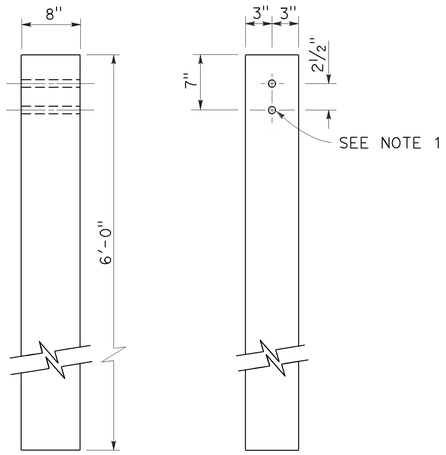

SIDE FRONT

6" x 8" WOOD POST
See Note 3

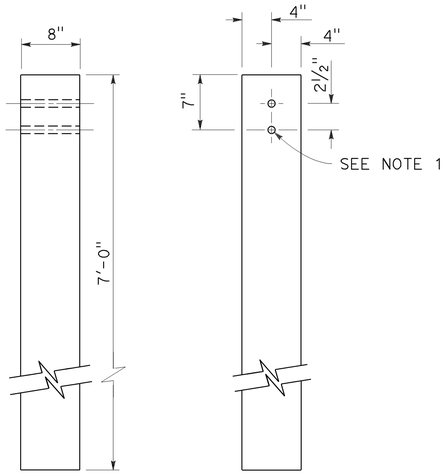

SIDE FRONT

8" x 8" WOOD POST
See Note 4

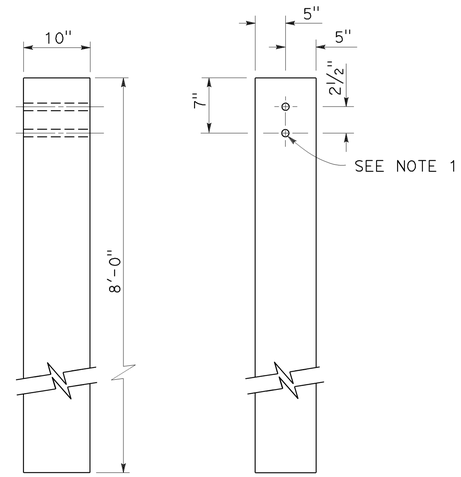

SIDE FRONT

10" x 10" WOOD POST
See Note 5

NOTES:

1. All holes in wood posts and blocks shall be ¾" Dia ± 1/16".
2. Dimensions shown for wood post are nominal.
3. This post and block combination used for standard line post sections of MGS.
4. This post and 8" x 12" block combination used for line post sections of MGS on narrow roadways.
5. This post and 8" x 12" block combination is typically used where strengthened line post sections of MGS are warranted to shield fixed objects.
6. See Revised Standard Plan RSP A77L3 for use of 6" x 8" and 8" x 8" wood blocks.

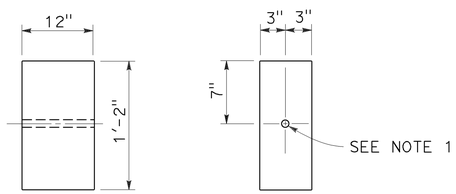

SIDE FRONT

6" x 12" WOOD BLOCK
See Note 3

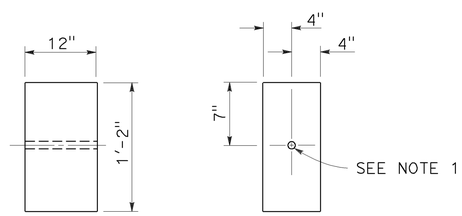

SIDE FRONT

8" x 12" WOOD BLOCK

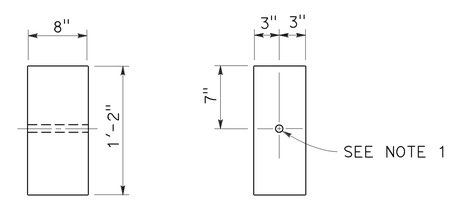

SIDE FRONT

6" x 8" WOOD BLOCK
Only for use with metal beam guard rail see Note 6

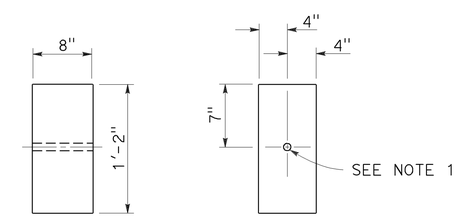

SIDE FRONT

8" x 8" WOOD BLOCK
Only for use with metal beam guard rail see Note 6

STATE OF CALIFORNIA
DEPARTMENT OF TRANSPORTATION

MIDWEST GUARDRAIL SYSTEM WOOD POST AND WOOD BLOCK DETAILS

NO SCALE

RSP A77N1 DATED JULY 19, 2013 SUPPLEMENTS THE STANDARD PLANS BOOK DATED 2010.

REVISED STANDARD PLAN RSP A77N1

2010 REVISED STANDARD PLAN RSP A77N1

7-3-13

Dist	COUNTY	ROUTE	POST MILES TOTAL PROJECT	SHEET No.	TOTAL SHEETS
07	LA	210	R10.5/R15.7	84	116

Randell D. Hiatt
REGISTERED CIVIL ENGINEER

November 15, 2013
PLANS APPROVAL DATE

REGISTERED PROFESSIONAL ENGINEER
Randell D. Hiatt
No. C50200
Exp. 6-30-15
CIVIL
STATE OF CALIFORNIA

THE STATE OF CALIFORNIA OR ITS OFFICERS OR AGENTS SHALL NOT BE RESPONSIBLE FOR THE ACCURACY OR COMPLETENESS OF SCANNED COPIES OF THIS PLAN SHEET.

TO ACCOMPANY PLANS DATED 6-1-15

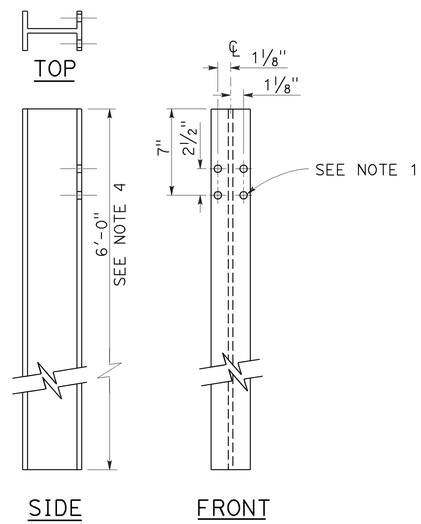

W6 x 9 OR W6 x 8.5
STEEL POST
See Note 4

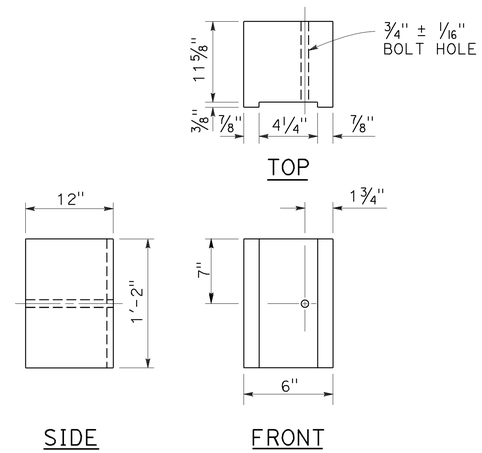

6" x 12"
NOTCHED WOOD BLOCK
See Notes 2 and 3

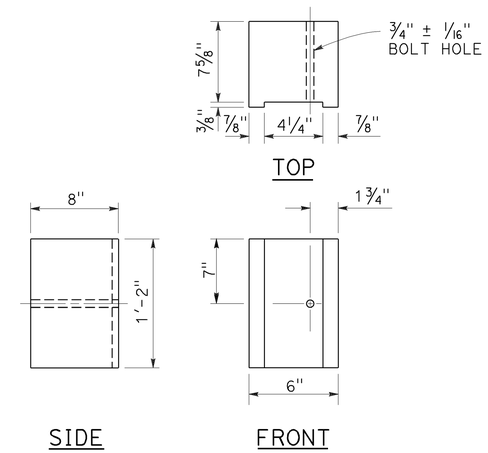

6" x 8"
NOTCHED WOOD BLOCK
Only for use with metal beam guard railing. See Note 5

NOTES:

1. All holes in steel post shall be 13/16" Dia maximum.
2. Dimensions shown for wood block are nominal.
3. Notched face of block faces steel post.
4. 6'-0" length posts to be used for typical roadway installation. See Revised Standard Plan RSP A77N3.
5. See Revised Standard Plan RSP A77L3 for use of 6" x 8" and 8" x 8" notched wood blocks.
6. This post and 8" x 12" block combination to be used for line post sections of MGS on narrow roadways and where strengthened line post sections of MGS are warranted to shield fixed objects.

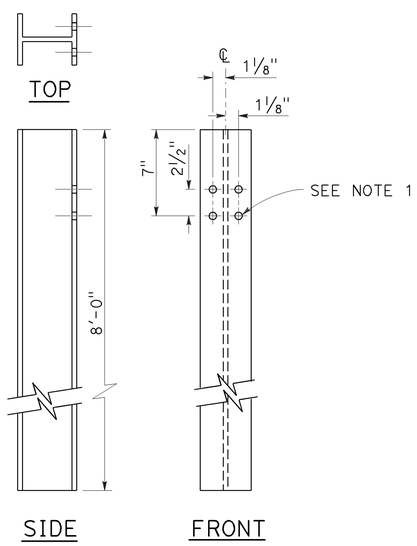

W6 x 15
STEEL POST
See Note 6

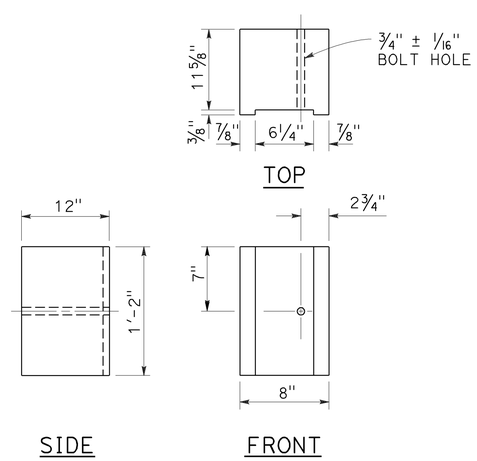

8" x 12"
NOTCHED WOOD BLOCK
See Notes 2 and 3

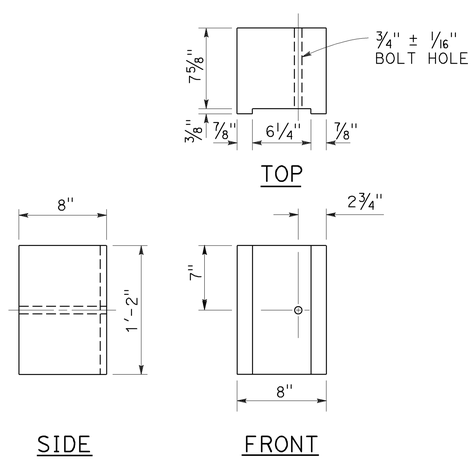

8" x 8"
NOTCHED WOOD BLOCK
Only for use with metal beam guard railing. See Note 5

STATE OF CALIFORNIA
DEPARTMENT OF TRANSPORTATION

MIDWEST GUARDRAIL SYSTEM STEEL POST AND NOTCHED WOOD BLOCK DETAILS

NO SCALE

RSP A77N2 DATED NOVEMBER 15, 2013 SUPERSEDES RSP A77N2
DATED JULY 19, 2013 THAT SUPPLEMENTS THE STANDARD PLANS BOOK DATED 2010.

REVISED STANDARD PLAN RSP A77N2

2010 REVISED STANDARD PLAN RSP A77N2

10-29-13

Dist	COUNTY	ROUTE	POST MILES TOTAL PROJECT	SHEET No.	TOTAL SHEETS
07	LA	210	R10.5/R15.7	85	116

Randell D. Hiatt
REGISTERED CIVIL ENGINEER

November 15, 2013
PLANS APPROVAL DATE

REGISTERED PROFESSIONAL ENGINEER
Randell D. Hiatt
No. C50200
Exp. 6-30-15
CIVIL
STATE OF CALIFORNIA

THE STATE OF CALIFORNIA OR ITS OFFICERS OR AGENTS SHALL NOT BE RESPONSIBLE FOR THE ACCURACY OR COMPLETENESS OF SCANNED COPIES OF THIS PLAN SHEET.

TO ACCOMPANY PLANS DATED 6-1-15

2010 REVISED STANDARD PLAN RSP A77N3

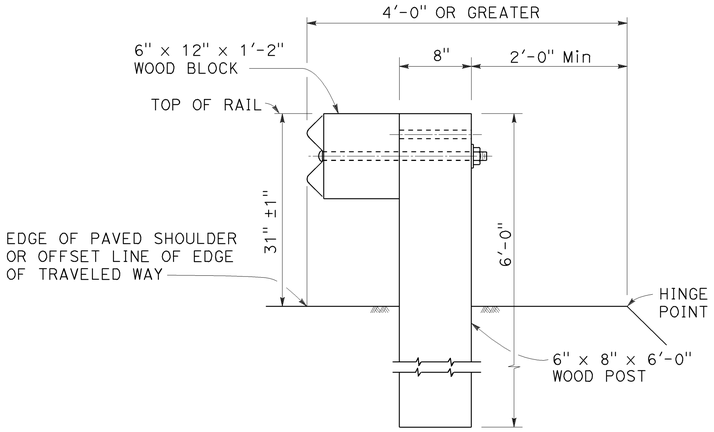

DETAIL A

TYPICAL ROADWAY INSTALLATION

See Note 1

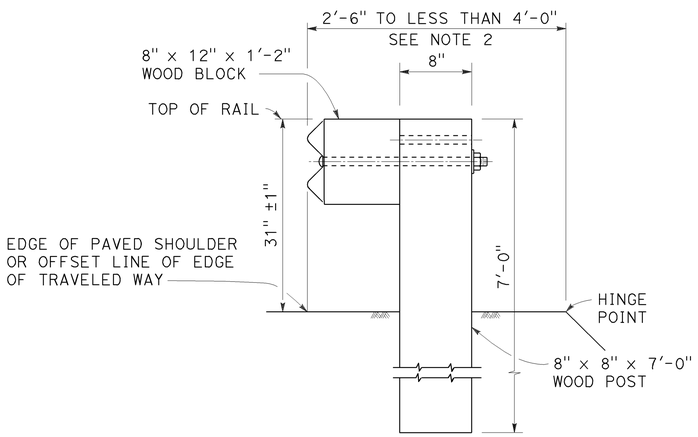

DETAIL B

NARROW ROADWAY INSTALLATION

See Note 1

POST EMBEDMENT

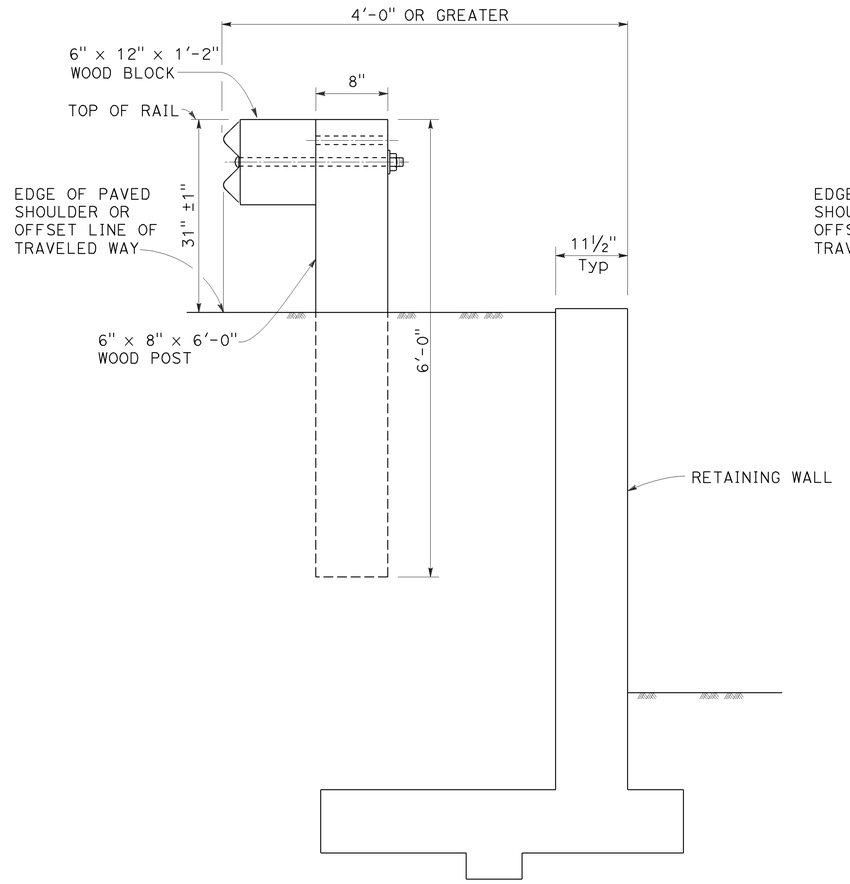

DETAIL C

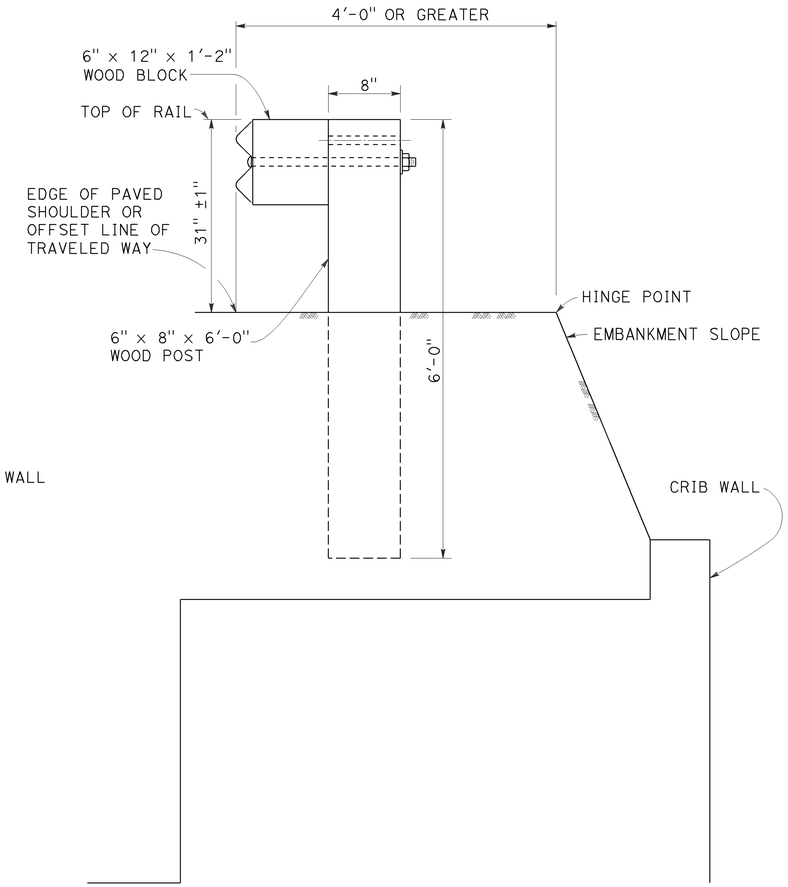

DETAIL D

INSTALLATION AT EARTH RETAINING WALLS

NOTES:

1. These installation details also applicable to steel line post installations. For Detail A, C, and D, where steel line post installations are constructed, W6 x 8.5 or W6 x 9 steel post, 6'-0" in length, with 6" x 12" x 1'-2" notched wood blocks or notched recycled plastic blocks are to be used in place of the size of wood post and wood block shown. For Detail B, where steel line post installations are constructed, W6 x 15 steel post, 8'-0" in length, with 8" x 12" x 1'-2" notched wood blocks or notched recycled plastic blocks are to be used in place of the size of wood post and wood block shown. For additional installation details, see Revised Standard Plan RSP A77L1 and RSP A77L2.
2. Where the distance between the face of the rail and the hinge point is less than 2'-6", see the Project Plans for special details.
3. For dike positioning with MGS installations, see Revised Standard Plan RSP A77N4.

STATE OF CALIFORNIA
DEPARTMENT OF TRANSPORTATION

MIDWEST GUARDRAIL SYSTEM TYPICAL LINE POST EMBEDMENT AND HINGE POINT OFFSET DETAILS

NO SCALE

RSP A77N3 DATED NOVEMBER 15, 2013 SUPERSEDES RSP A77N3
DATED JULY 19, 2013 THAT SUPPLEMENTS THE STANDARD PLANS BOOK DATED 2010.

REVISED STANDARD PLAN RSP A77N3

10-29-13

Dist	COUNTY	ROUTE	POST MILES TOTAL PROJECT	SHEET No.	TOTAL SHEETS
07	LA	210	R10.5/R15.7	86	116

Randell D. Hiatt
REGISTERED CIVIL ENGINEER

July 19, 2013
PLANS APPROVAL DATE

REGISTERED PROFESSIONAL ENGINEER
Randell D. Hiatt
No. C50200
Exp. 6-30-15
CIVIL
STATE OF CALIFORNIA

THE STATE OF CALIFORNIA OR ITS OFFICERS OR AGENTS SHALL NOT BE RESPONSIBLE FOR THE ACCURACY OR COMPLETENESS OF SCANNED COPIES OF THIS PLAN SHEET.

TO ACCOMPANY PLANS DATED 6-1-15

NOTES:

1. When necessary to place dike more than 7" in front of face of MGS, only Type C dike may be used. For dike details, see Revised Standard Plan RSP A87B.
2. For standard railing post embedment, see Revised Standard Plan RSP A77N3.
3. MGS delineation to be used where shown on the Project Plans.
4. When dike or curb is placed under MGS, the maximum height of the dike or curb shall be 6". Mountable dike should not be used. For dike and curb details, see Revised Standard Plans RSP A87A and RSP A87B.
5. For details of typical distance between the face of rail and hinge point, see Revised Standard Plan RSP A77N3.
6. For steel line posts, use 1/4 - 20 self-tapping screws in 0.22" diameter holes or 1/4" bolts in 9/32" diameter holes.

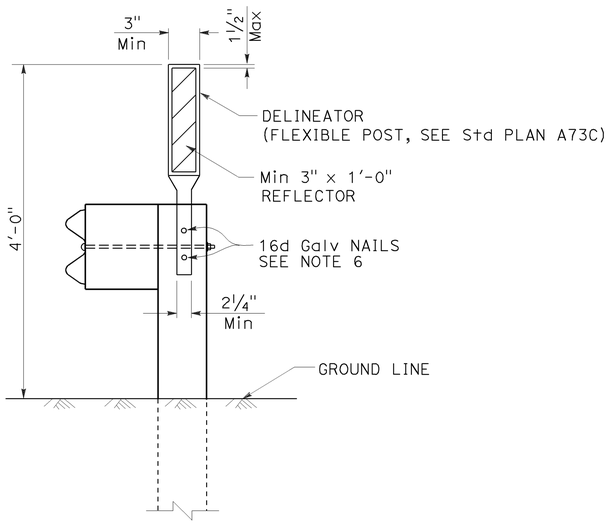

MGS DELINEATION

See Note 3

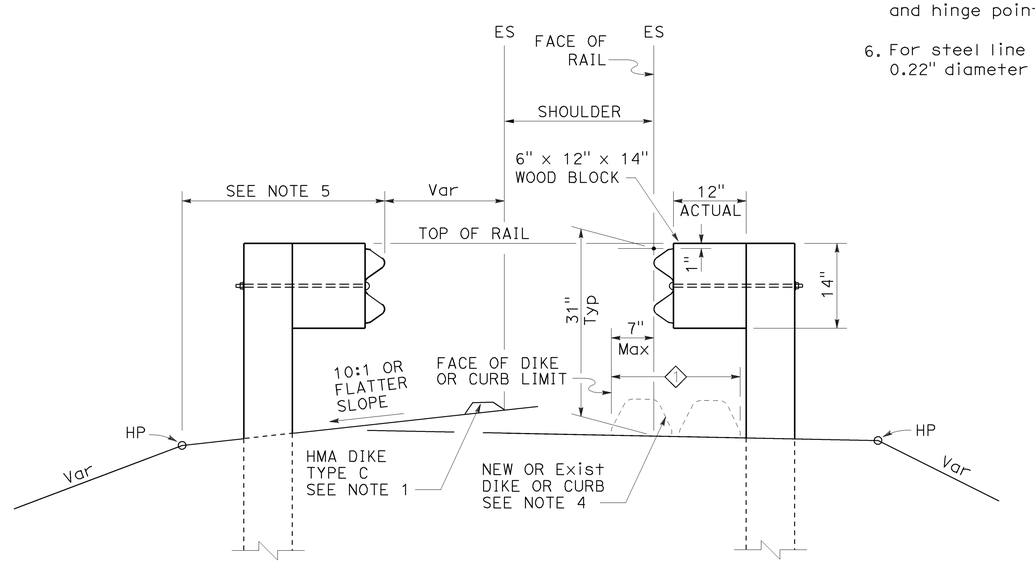

DIKE POSITIONING

See Note 1

1 PERMISSIBLE DIKE OR CURB PLACEMENT AREA

STATE OF CALIFORNIA
DEPARTMENT OF TRANSPORTATION

MIDWEST GUARDRAIL SYSTEM TYPICAL RAILING DELINEATION AND DIKE POSITIONING DETAILS

NO SCALE

RSP A77N4 DATED JULY 19, 2013 SUPPLEMENTS THE STANDARD PLANS BOOK DATED 2010.

REVISED STANDARD PLAN RSP A77N4

2010 REVISED STANDARD PLAN RSP A77N4

7-10-13

Dist	COUNTY	ROUTE	POST MILES TOTAL PROJECT	SHEET No.	TOTAL SHEETS
07	LA	210	R10.5/R15.7	87	116

Randell D. Hiatt
REGISTERED CIVIL ENGINEER

July 19, 2013
PLANS APPROVAL DATE

REGISTERED PROFESSIONAL ENGINEER
Randell D. Hiatt
No. C50200
Exp. 6-30-15
CIVIL
STATE OF CALIFORNIA

THE STATE OF CALIFORNIA OR ITS OFFICERS OR AGENTS SHALL NOT BE RESPONSIBLE FOR THE ACCURACY OR COMPLETENESS OF SCANNED COPIES OF THIS PLAN SHEET.

TO ACCOMPANY PLANS DATED 6-1-15

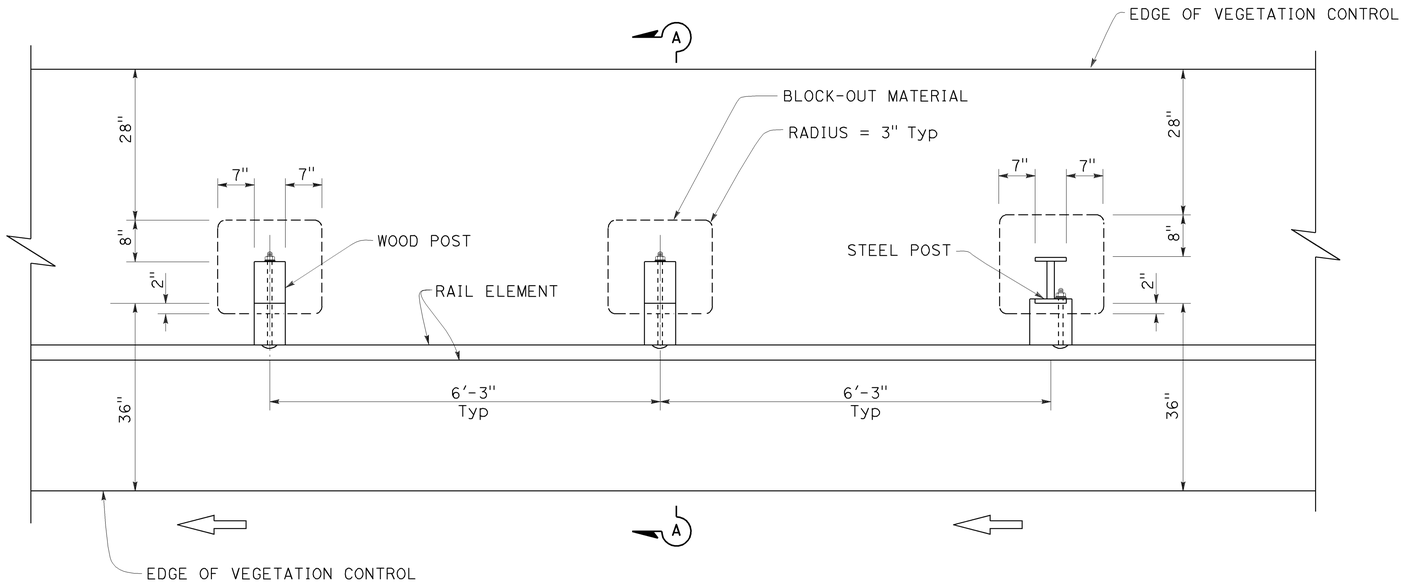

PLAN

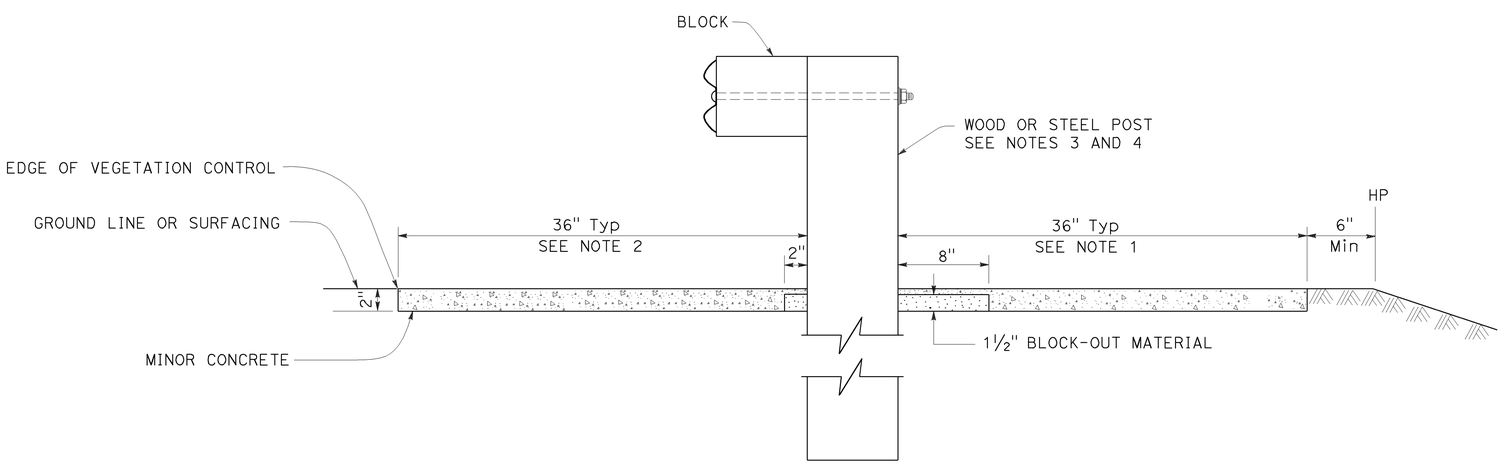

SECTION A-A

NOTES:

1. Where the distance between back of post and hinge point is less than 42", construct vegetation control to 6" from hinge point while maintaining the 8" block-out at back of post. If the 8" block-out at back of post can not be maintained, construct vegetation control flush with the back edge of post.
2. Where dike is constructed under railing, construct vegetation control to back edge of dike. Where paved shoulder is constructed within 36" in front of the post, construct vegetation control to the edge of paved shoulder.
3. For wood post sizes, see Revised Standard Plan RSP A77N1.
4. For steel post sizes, see Revised Standard Plan RSP A77N2.
5. For details not shown, see Revised Standard Plans RSP A77L1 and RSP A77L2.

STATE OF CALIFORNIA
DEPARTMENT OF TRANSPORTATION

MIDWEST GUARDRAIL SYSTEM TYPICAL VEGETATION CONTROL STANDARD RAILING SECTION

NO SCALE

RSP A77N5 DATED JULY 19, 2013 SUPPLEMENTS THE STANDARD PLANS BOOK DATED 2010.

REVISED STANDARD PLAN RSP A77N5

2010 REVISED STANDARD PLAN RSP A77N5

7-3-13

Dist	COUNTY	ROUTE	POST MILES TOTAL PROJECT	SHEET No.	TOTAL SHEETS
07	LA	210	R10.5/R15.7	88	116

Randell D. Hiatt
REGISTERED CIVIL ENGINEER

July 19, 2013
PLANS APPROVAL DATE

REGISTERED PROFESSIONAL ENGINEER
Randell D. Hiatt
No. C50200
Exp. 6-30-15
CIVIL
STATE OF CALIFORNIA

THE STATE OF CALIFORNIA OR ITS OFFICERS OR AGENTS SHALL NOT BE RESPONSIBLE FOR THE ACCURACY OR COMPLETENESS OF SCANNED COPIES OF THIS PLAN SHEET.

TO ACCOMPANY PLANS DATED 6-1-15

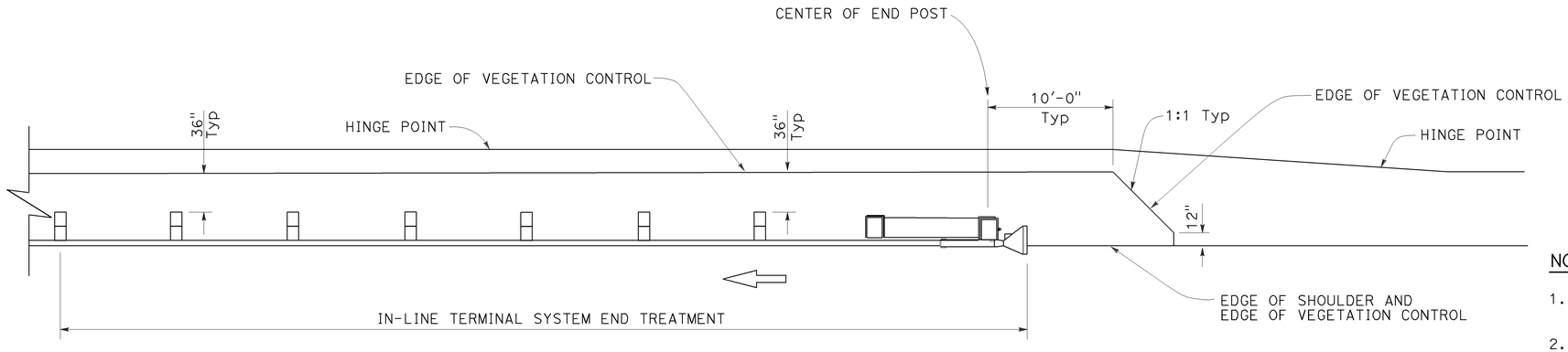

PLAN

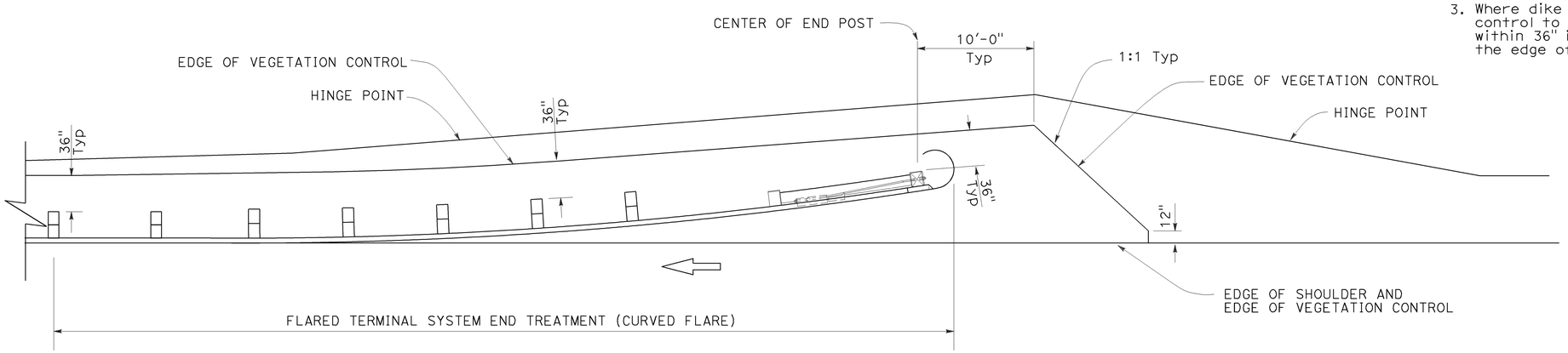

PLAN

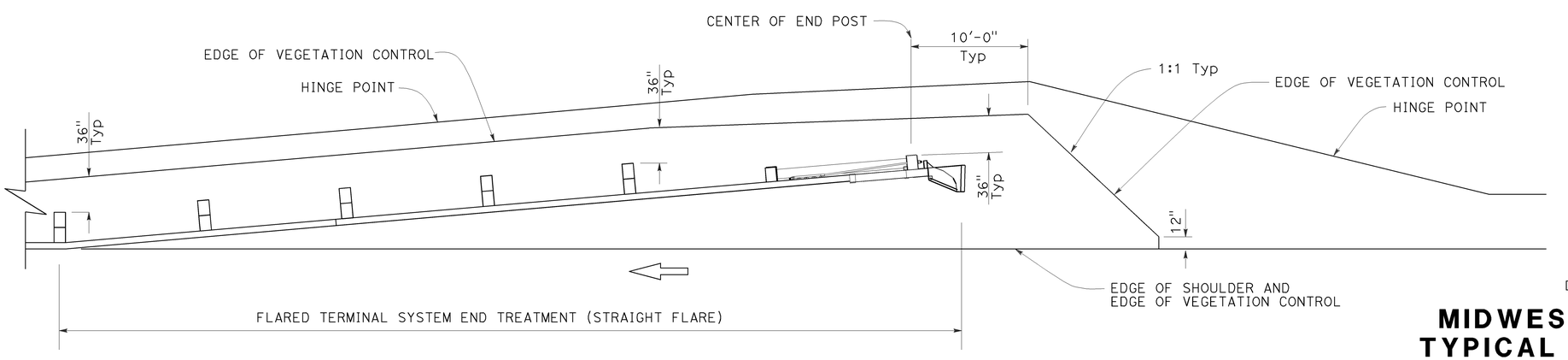

PLAN

NOTES:

1. See Revised Standard Plan RSP A77N5 for additional vegetation control details.
2. Where the distance between back of post and hinge point is less than 42", construct vegetation control to 6" from hinge point while maintaining the 8" block-out at back of post. If the 8" block-out at back of post can not be maintained, construct vegetation control flush with the back edge of post.
3. Where dike is constructed under railing, construct vegetation control to back edge of dike. Where paved shoulder is constructed within 36" in front of the post, construct vegetation control to the edge of paved shoulder.

STATE OF CALIFORNIA
DEPARTMENT OF TRANSPORTATION

MIDWEST GUARDRAIL SYSTEM TYPICAL VEGETATION CONTROL FOR TERMINAL SYSTEM END TREATMENTS

NO SCALE

RSP A77N6 DATED JULY 19, 2013 SUPPLEMENTS THE STANDARD PLANS BOOK DATED 2010.

REVISED STANDARD PLAN RSP A77N6

2010 REVISED STANDARD PLAN RSP A77N6

6-12-13

Dist	COUNTY	ROUTE	POST MILES TOTAL PROJECT	SHEET No.	TOTAL SHEETS
07	LA	210	R10.5/R15.7	89	116

Randell D. Hiatt
REGISTERED CIVIL ENGINEER

July 19, 2013
PLANS APPROVAL DATE

REGISTERED PROFESSIONAL ENGINEER
Randell D. Hiatt
No. C50200
Exp. 6-30-15
CIVIL
STATE OF CALIFORNIA

THE STATE OF CALIFORNIA OR ITS OFFICERS OR AGENTS SHALL NOT BE RESPONSIBLE FOR THE ACCURACY OR COMPLETENESS OF SCANNED COPIES OF THIS PLAN SHEET.

TO ACCOMPANY PLANS DATED 6-1-15

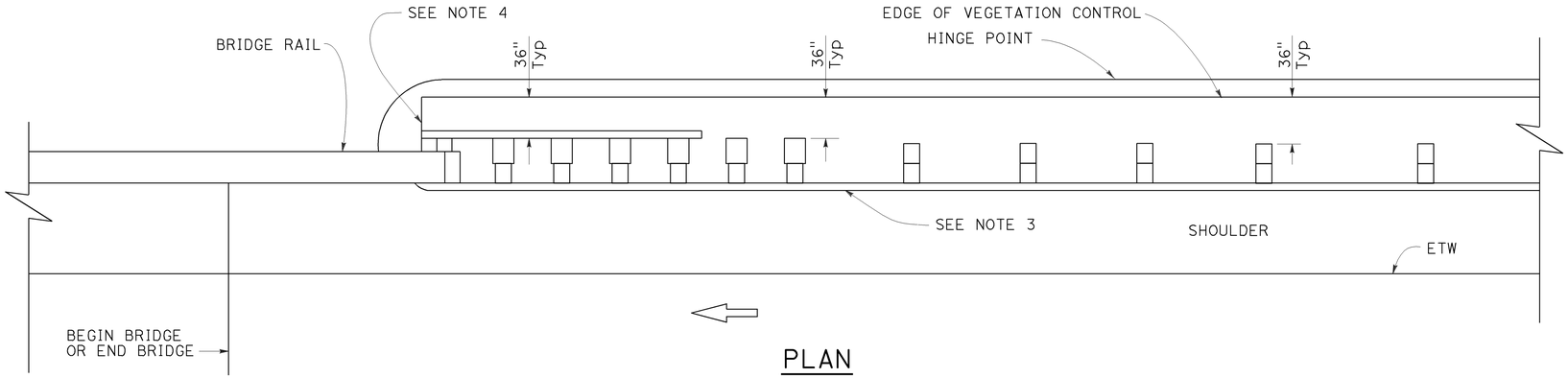

PLAN

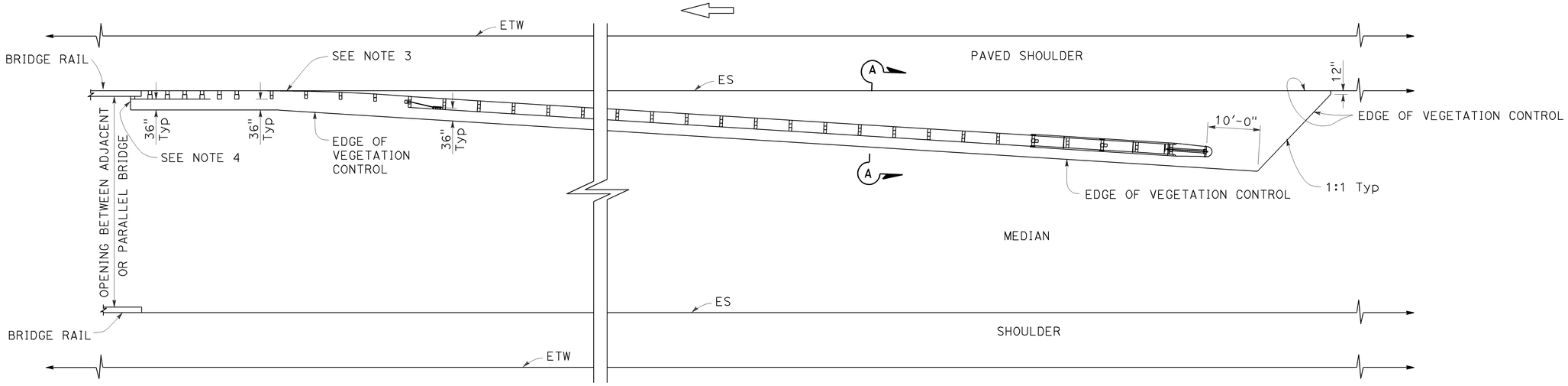

PLAN

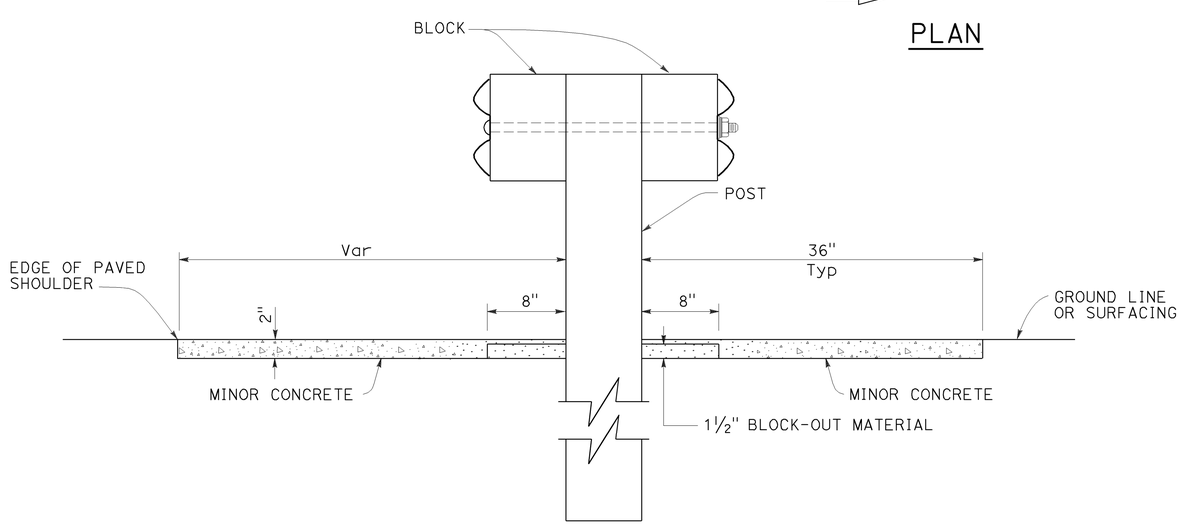

SECTION A-A

NOTES:

1. See Revised Standard Plan RSP A77N5 for additional vegetation control details.
2. Where the distance between back of post and hinge point is less than 42", construct vegetation control to 6" from hinge point while maintaining the 8" block-out at back of post. If the 8" block-out at back of post can not be maintained, construct vegetation control flush with the back edge of post.
3. Where dike is constructed under railing, construct vegetation control to back edge of dike. Where paved shoulder is constructed within 36" in front of the post, construct vegetation control to the edge of paved shoulder.
4. End vegetation control at end of backside rail element.

STATE OF CALIFORNIA
DEPARTMENT OF TRANSPORTATION

MIDWEST GUARDRAIL SYSTEM TYPICAL VEGETATION CONTROL AT STRUCTURE APPROACH

NO SCALE

RSP A77N7 DATED JULY 19, 2013 SUPPLEMENTS THE STANDARD PLANS BOOK DATED 2010.

REVISED STANDARD PLAN RSP A77N7

2010 REVISED STANDARD PLAN RSP A77N7

6-12-13

Dist	COUNTY	ROUTE	POST MILES TOTAL PROJECT	SHEET No.	TOTAL SHEETS
07	LA	210	R10.5/R15.7	90	116

Randell D. Hiatt
REGISTERED CIVIL ENGINEER

July 19, 2013
PLANS APPROVAL DATE

REGISTERED PROFESSIONAL ENGINEER
Randell D. Hiatt
No. C50200
Exp. 6-30-15
CIVIL
STATE OF CALIFORNIA

THE STATE OF CALIFORNIA OR ITS OFFICERS OR AGENTS SHALL NOT BE RESPONSIBLE FOR THE ACCURACY OR COMPLETENESS OF SCANNED COPIES OF THIS PLAN SHEET.

TO ACCOMPANY PLANS DATED 6-1-15

NOTES:

1. See Revised Standard Plan RSP A77N5 for additional vegetation control details.
2. Where the distance between back of post and hinge point is less than 42", construct vegetation control to 6" from hinge point while maintaining the 8" block-out at back of post. If the 8" block-out at back of post can not be maintained, construct vegetation control flush with the back edge of post.
3. Where dike is constructed under railing, construct vegetation control to back edge of dike. Where paved shoulder is constructed within 36" in front of the post, construct vegetation control to the edge of paved shoulder.

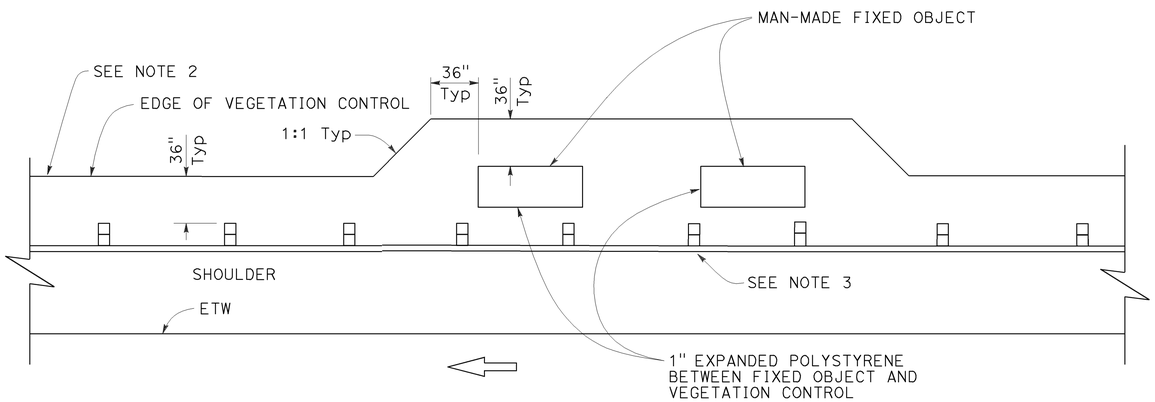

PLAN

Fixed object(s) on shoulder

STATE OF CALIFORNIA
DEPARTMENT OF TRANSPORTATION

MIDWEST GUARDRAIL SYSTEM TYPICAL VEGETATION CONTROL AT FIXED OBJECT

NO SCALE

RSP A77N8 DATED JULY 19, 2013 SUPPLEMENTS THE STANDARD PLANS BOOK DATED 2010.

REVISED STANDARD PLAN RSP A77N8

2010 REVISED STANDARD PLAN RSP A77N8

6-12-13

Dist	COUNTY	ROUTE	POST MILES TOTAL PROJECT	SHEET No.	TOTAL SHEETS
07	LA	210	R10.5/R15.7	91	116

Randell D. Hiatt
REGISTERED CIVIL ENGINEER

July 19, 2013
PLANS APPROVAL DATE

REGISTERED PROFESSIONAL ENGINEER
Randell D. Hiatt
No. C50200
Exp. 6-30-15
CIVIL
STATE OF CALIFORNIA

THE STATE OF CALIFORNIA OR ITS OFFICERS OR AGENTS SHALL NOT BE RESPONSIBLE FOR THE ACCURACY OR COMPLETENESS OF SCANNED COPIES OF THIS PLAN SHEET.

TO ACCOMPANY PLANS DATED 6-1-15

2010 REVISED STANDARD PLAN RSP A77N9

NOTES:

1. See Revised Standard Plan RSP A77N5 for additional vegetation control details.
2. Where dike is constructed under railing, construct vegetation control to back edge of dike. Where paved shoulder is constructed within 36" in front of the post, construct vegetation control to the edge of paved shoulder.

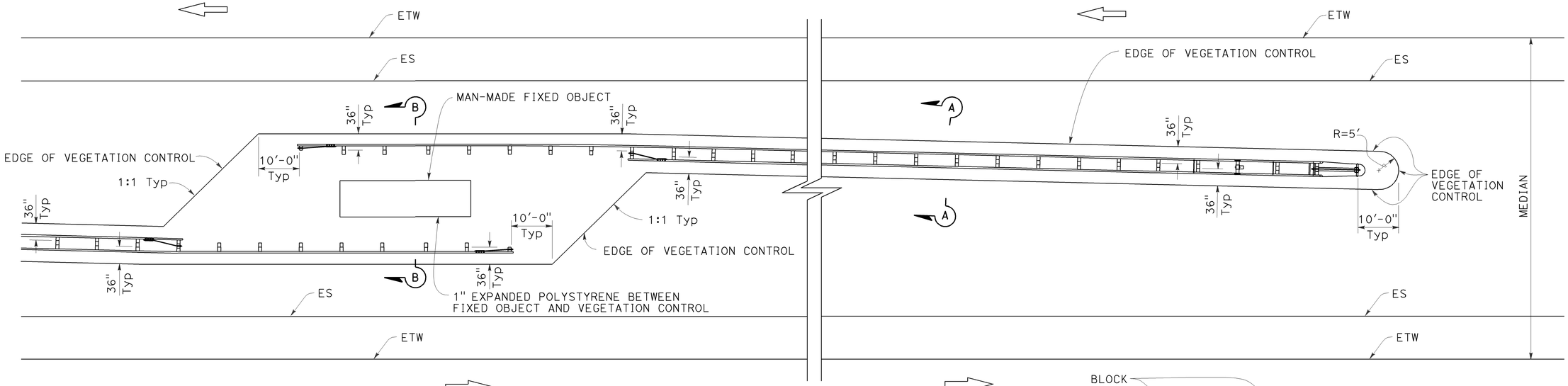

PLAN

Fixed object(s) in median

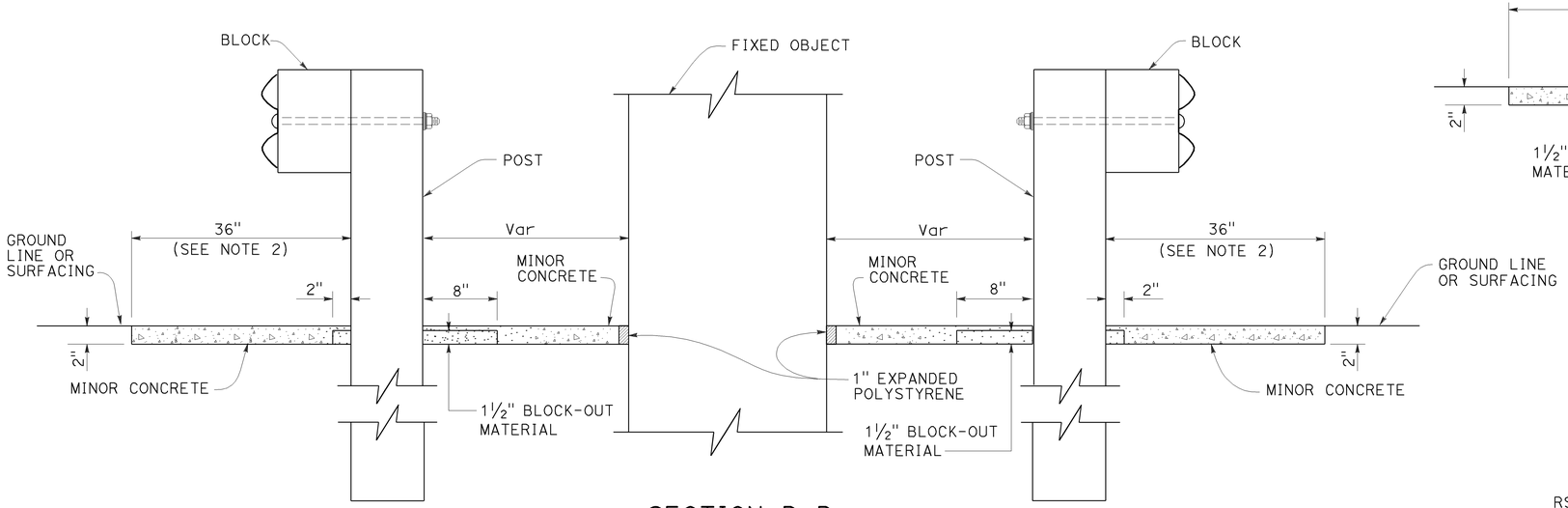

SECTION B-B

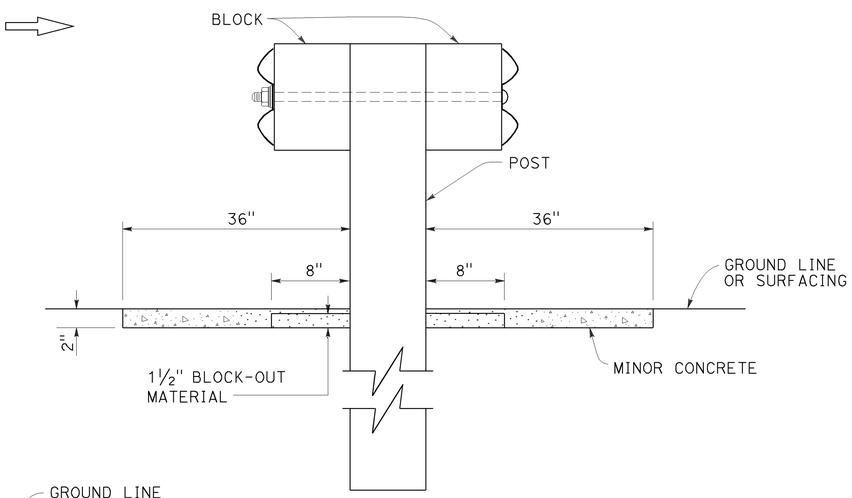

SECTION A-A

STATE OF CALIFORNIA
DEPARTMENT OF TRANSPORTATION

MIDWEST GUARDRAIL SYSTEM TYPICAL VEGETATION CONTROL AT FIXED OBJECT

NO SCALE

RSP A77N9 DATED JULY 19, 2013 SUPPLEMENTS THE STANDARD PLANS BOOK DATED 2010.

REVISED STANDARD PLAN RSP A77N9

6-12-13

Dist	COUNTY	ROUTE	POST MILES TOTAL PROJECT	SHEET No.	TOTAL SHEETS
07	LA	210	R10.5/R15.7	92	116

Randell D. Hiatt
REGISTERED CIVIL ENGINEER

July 19, 2013
PLANS APPROVAL DATE

REGISTERED PROFESSIONAL ENGINEER
Randell D. Hiatt
No. C50200
Exp. 6-30-15
CIVIL
STATE OF CALIFORNIA

THE STATE OF CALIFORNIA OR ITS OFFICERS OR AGENTS SHALL NOT BE RESPONSIBLE FOR THE ACCURACY OR COMPLETENESS OF SCANNED COPIES OF THIS PLAN SHEET.

TO ACCOMPANY PLANS DATED 6-1-15

2010 REVISED STANDARD PLAN RSP A77N10

NOTES:

1. See Revised Standard Plan RSP A77N5 for additional vegetation control details.
2. Where dike is constructed under railing, construct vegetation control to back edge of dike. Where paved shoulder is constructed within 36" in front of the post, construct vegetation control to the edge of paved shoulder.

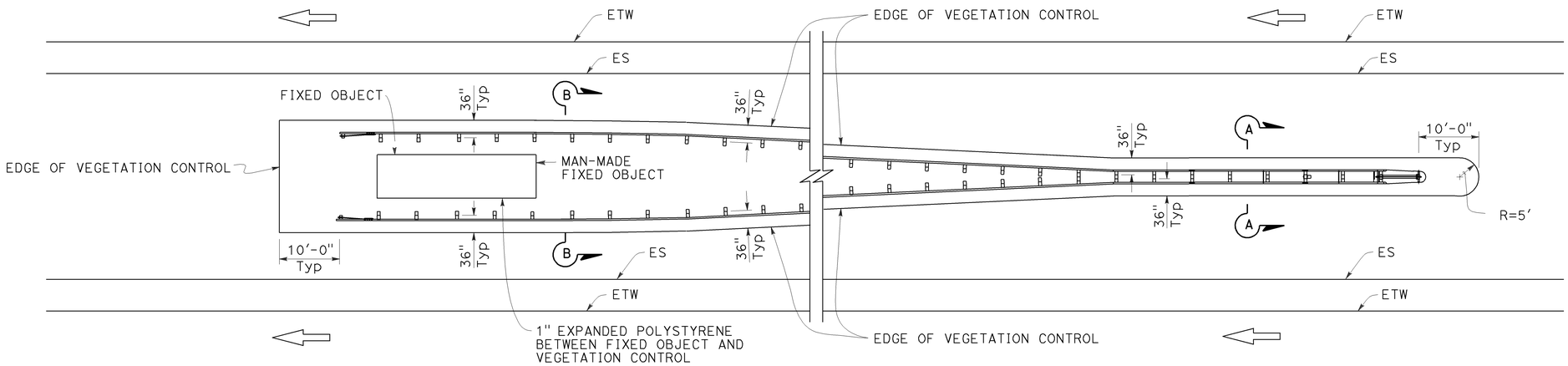

PLAN

Fixed object(s) between separate roadbeds
(One-Way Traffic)

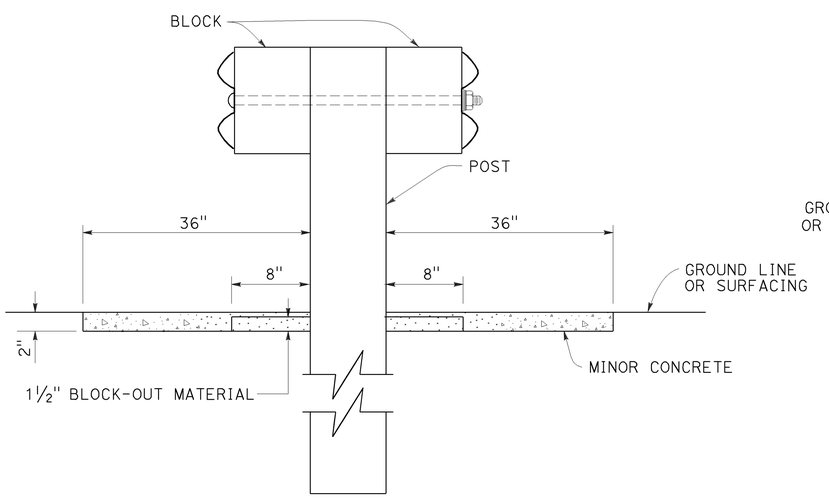

SECTION A-A

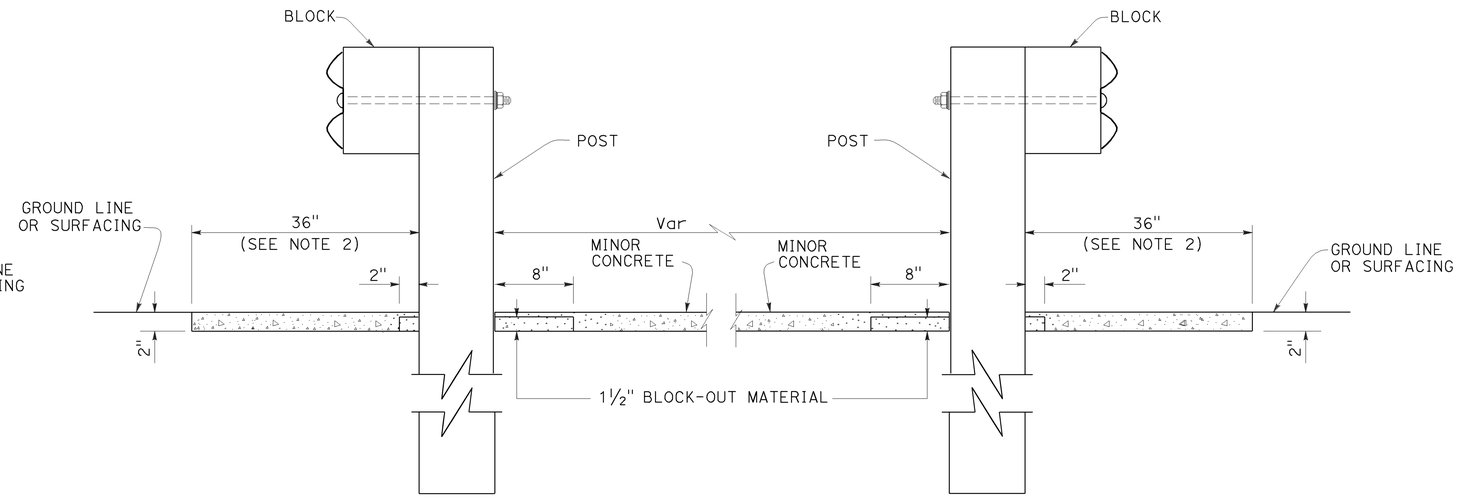

SECTION B-B

STATE OF CALIFORNIA
DEPARTMENT OF TRANSPORTATION

MIDWEST GUARDRAIL SYSTEM TYPICAL VEGETATION CONTROL AT FIXED OBJECT

NO SCALE

RSP A77N10 DATED JULY 19, 2013 SUPPLEMENTS THE STANDARD PLANS BOOK DATED 2010.

REVISED STANDARD PLAN RSP A77N10

6-12-13

Dist	COUNTY	ROUTE	POST MILES TOTAL PROJECT	SHEET No.	TOTAL SHEETS
07	LA	210	R10.5/R15.7	93	116

Randell D. Hiatt
REGISTERED CIVIL ENGINEER

November 15, 2013
PLANS APPROVAL DATE

REGISTERED PROFESSIONAL ENGINEER
Randell D. Hiatt
No. C50200
Exp. 6-30-15
CIVIL
STATE OF CALIFORNIA

THE STATE OF CALIFORNIA OR ITS OFFICERS OR AGENTS SHALL NOT BE RESPONSIBLE FOR THE ACCURACY OR COMPLETENESS OF SCANNED COPIES OF THIS PLAN SHEET.

TO ACCOMPANY PLANS DATED 6-1-15

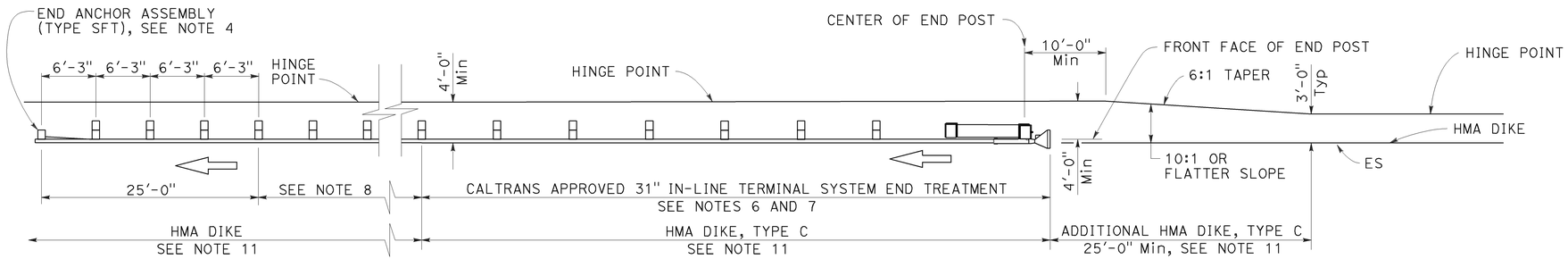

TYPE 11A LAYOUT

(Embankment MGS installation with 31" in-line end treatment at traffic approach end of railing) see Note 5

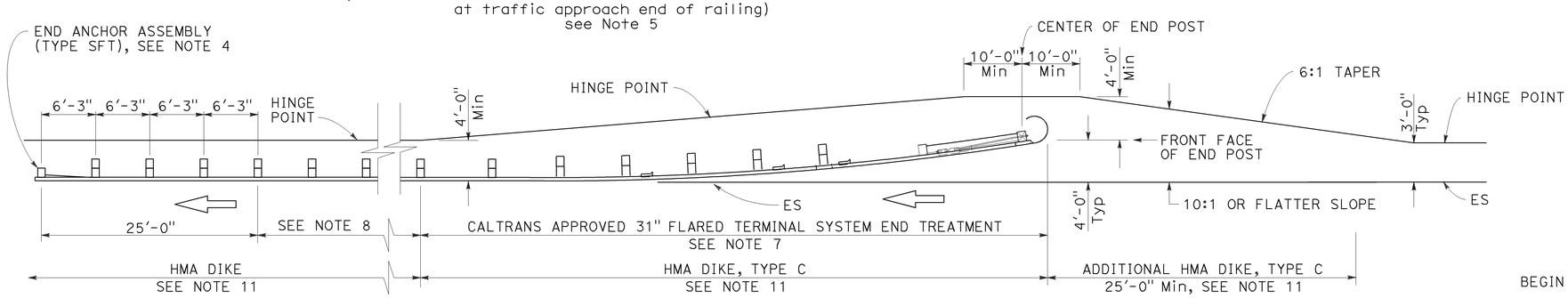

TYPE 11B LAYOUT

(Embankment MGS installation with 31" flared end treatment at traffic approach end of railing) see Note 5

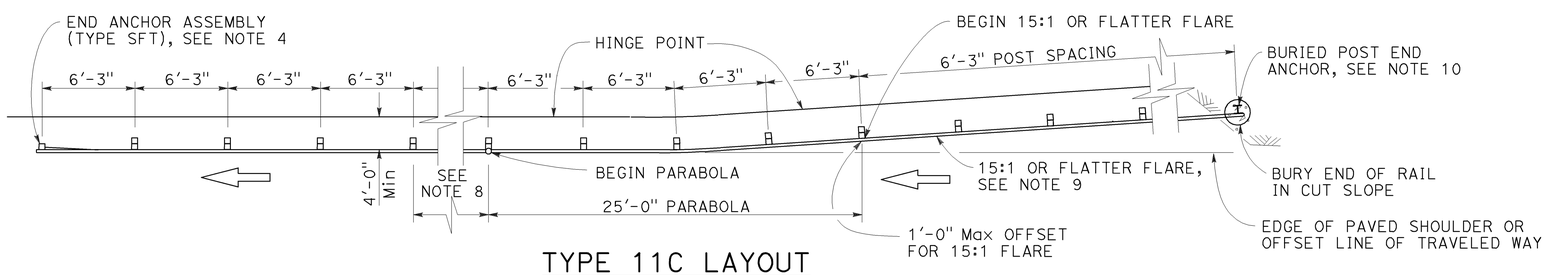

TYPE 11C LAYOUT

(Embankment MGS installation with buried end anchor treatment at traffic approach end of railing) see Notes 5 and 11

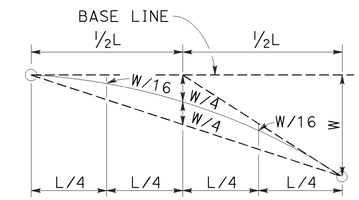

TYPICAL PARABOLIC LAYOUT

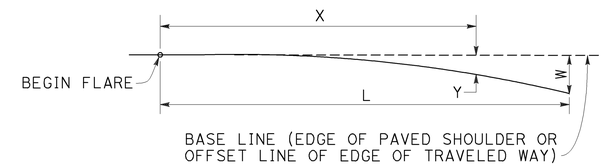

$$Y = \frac{WX^2}{L^2}$$

Y = OFFSET FROM BASE LINE
W = MAXIMUM OFFSET
X = DISTANCE ALONG BASE LINE
L = LENGTH OF FLARE

PARABOLIC FLARE OFFSETS

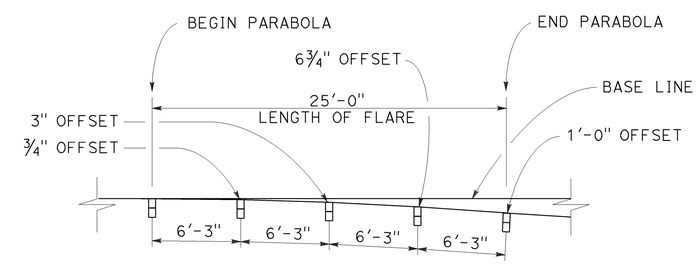

TYPICAL FLARE OFFSETS FOR 1 FOOT Max END OFFSET

NOTES:

1. Line post, blocks and hardware to be used are shown on Revised Standard Plans RSP A77L1, RSP A77L2, RSP A77M1, RSP A77N1 and RSP A77N2.
2. MGS post spacing to be 6'-3" center to center, except as otherwise noted.
3. Except as noted, line posts are 6" x 8" x 6'-0" wood with 6" x 12" x 1'-2" wood blocks. W6 x 8.5 or W6 x 9 steel posts, 6'-0" in length, with 6" x 12" x 1'-2" notched wood blocks or recycled plastic blocks may be used for 6" x 8" x 6'-0" wood post with 6" x 12" x 1'-2" wood blocks where applicable and when specified.
4. For End Anchor Assembly (Type SFT) details, see Revised Standard Plan RSP A77S1.
5. Layout Types 11A, 11B or 11C are typically used where MGS is recommended to shield embankment slopes and a crashworthy end treatment is required for only one direction of traffic.
6. 31" in-line terminal system end treatments are used where site conditions will not accommodate a flared end treatment.
7. The type of 31" terminal system end treatment to be used will be shown on the Project Plans.
8. Dependent on site conditions (embankment height and side slope), construction of additional MGS (length equal to multiples of 12'-6" with 6'-3" post spacing) may be advisable.
9. The 15:1 or flatter flare used with buried end anchors is based on the edge of the paved shoulder or offset line of edge of the traveled way. The length of MGS within the 15:1 or flatter flare is based on site conditions and should be a length equal to multiples of 12'-6".
10. For details of the buried post end anchor used with Type 11C Layout, see Revised Standard Plan RSP A77T2.
11. Where placement of dike is required with MGS installations, see Revised Standard Plan RSP A77N4 for dike positioning details.

STATE OF CALIFORNIA
DEPARTMENT OF TRANSPORTATION

MIDWEST GUARDRAIL SYSTEM TYPICAL LAYOUTS FOR EMBANKMENTS

NO SCALE

RSP A77P1 DATED NOVEMBER 15, 2013 SUPERSEDES RSP A77P1 DATED JULY 19, 2013 THAT SUPPLEMENTS THE STANDARD PLANS BOOK DATED 2010.

REVISED STANDARD PLAN RSP A77P1

2010 REVISED STANDARD PLAN RSP A77P1

10-4-13

Dist	COUNTY	ROUTE	POST MILES TOTAL PROJECT	SHEET No.	TOTAL SHEETS
07	LA	210	R10.5/R15.7	94	116

Randell D. Hiatt
REGISTERED CIVIL ENGINEER

November 15, 2013
PLANS APPROVAL DATE

REGISTERED PROFESSIONAL ENGINEER
Randell D. Hiatt
No. C50200
Exp. 6-30-15
CIVIL
STATE OF CALIFORNIA

THE STATE OF CALIFORNIA OR ITS OFFICERS OR AGENTS SHALL NOT BE RESPONSIBLE FOR THE ACCURACY OR COMPLETENESS OF SCANNED COPIES OF THIS PLAN SHEET.

TO ACCOMPANY PLANS DATED 6-1-15

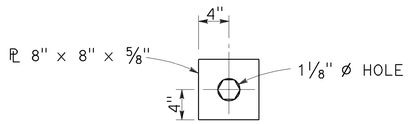

DETAIL "A"
CABLE CONNECTION
END PLATE

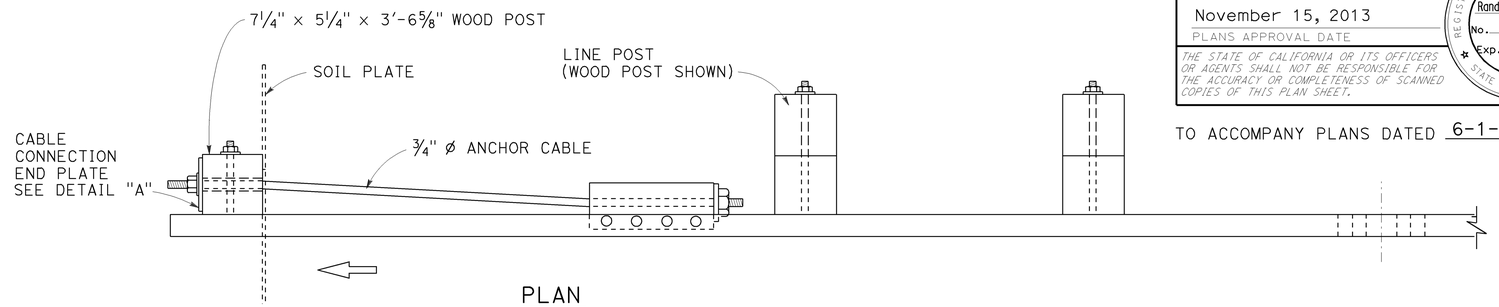

PLAN

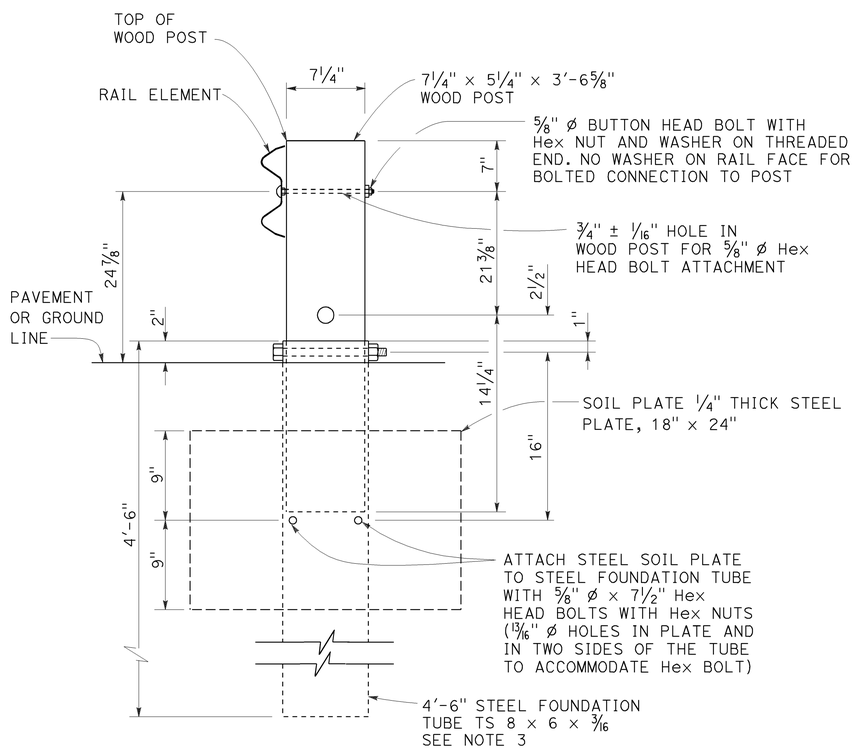

SECTION A-A

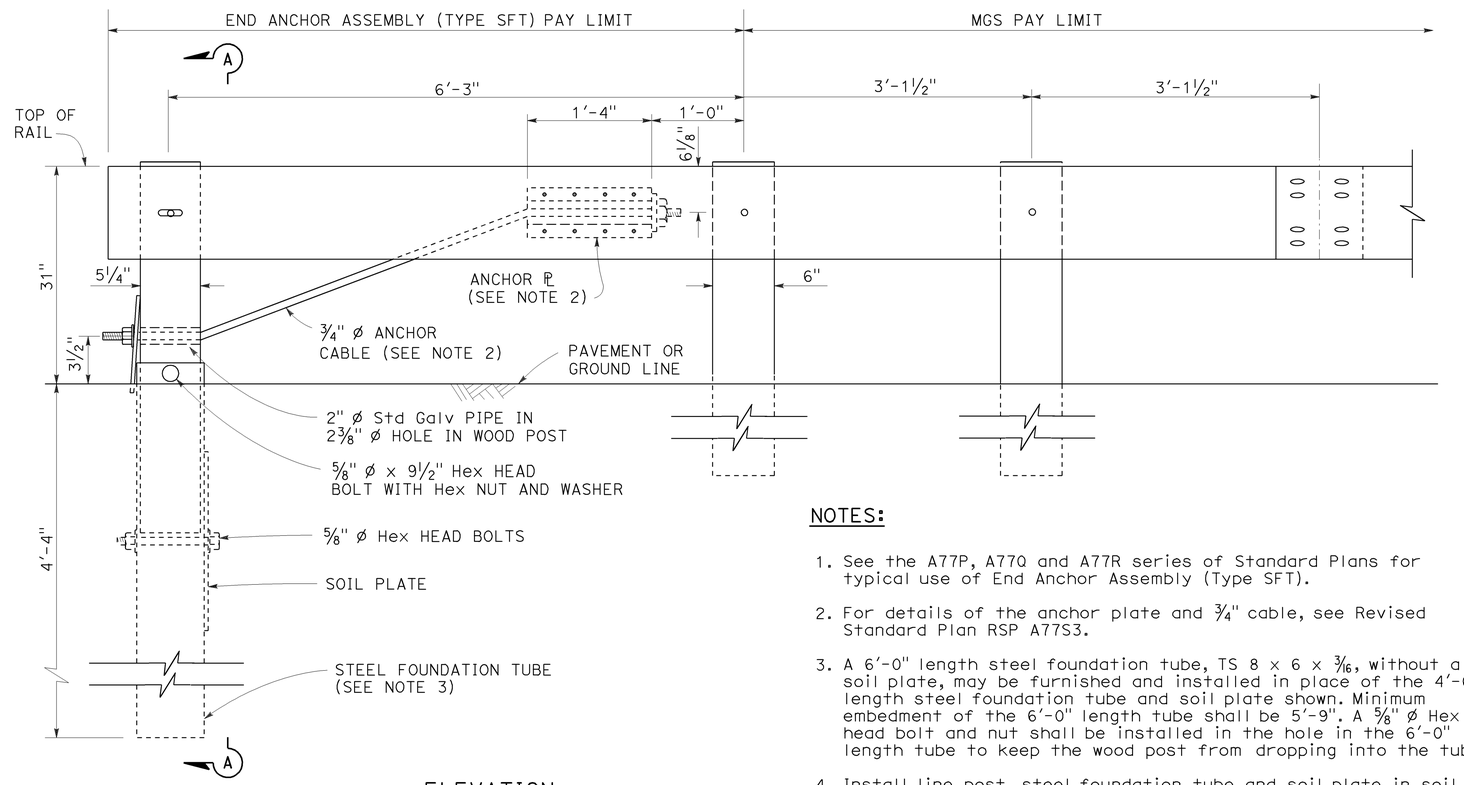

ELEVATION

END ANCHOR
ASSEMBLY (TYPE SFT)
See Note 1

NOTES:

1. See the A77P, A77Q and A77R series of Standard Plans for typical use of End Anchor Assembly (Type SFT).
2. For details of the anchor plate and 3/4" cable, see Revised Standard Plan RSP A77S3.
3. A 6'-0" length steel foundation tube, TS 8 x 6 x 3/16, without a soil plate, may be furnished and installed in place of the 4'-6" length steel foundation tube and soil plate shown. Minimum embedment of the 6'-0" length tube shall be 5'-9". A 5/8" ø Hex head bolt and nut shall be installed in the hole in the 6'-0" length tube to keep the wood post from dropping into the tube.
4. Install line post, steel foundation tube and soil plate in soil.

STATE OF CALIFORNIA
DEPARTMENT OF TRANSPORTATION

MIDWEST GUARDRAIL SYSTEM END ANCHOR ASSEMBLY (TYPE SFT)

NO SCALE

RSP A77S1 DATED NOVEMBER 15, 2013 SUPERSEDES RSP A77S1
DATED JULY 19, 2013 THAT SUPPLEMENTS THE STANDARD PLANS BOOK DATED 2010.

REVISED STANDARD PLAN RSP A77S1

2010 REVISED STANDARD PLAN RSP A77S1

10-4-13

Dist	COUNTY	ROUTE	POST MILES TOTAL PROJECT	SHEET No.	TOTAL SHEETS
07	LA	210	R10.5/R15.7	95	116

Randell D. Hiatt
REGISTERED CIVIL ENGINEER

July 19, 2013
PLANS APPROVAL DATE

REGISTERED PROFESSIONAL ENGINEER
Randell D. Hiatt
No. C50200
Exp. 6-30-15
CIVIL
STATE OF CALIFORNIA

THE STATE OF CALIFORNIA OR ITS OFFICERS OR AGENTS SHALL NOT BE RESPONSIBLE FOR THE ACCURACY OR COMPLETENESS OF SCANNED COPIES OF THIS PLAN SHEET.

TO ACCOMPANY PLANS DATED 6-1-15

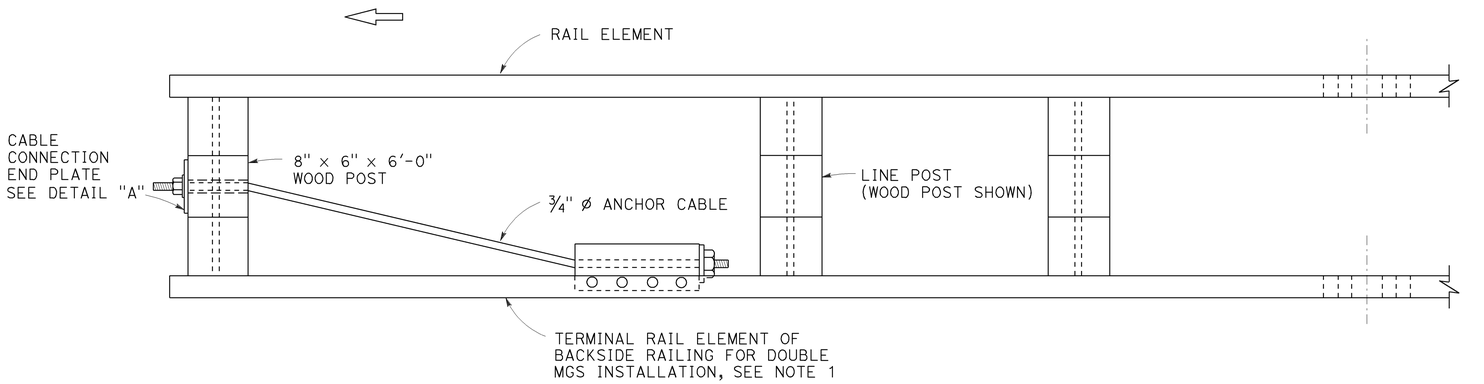

PLAN

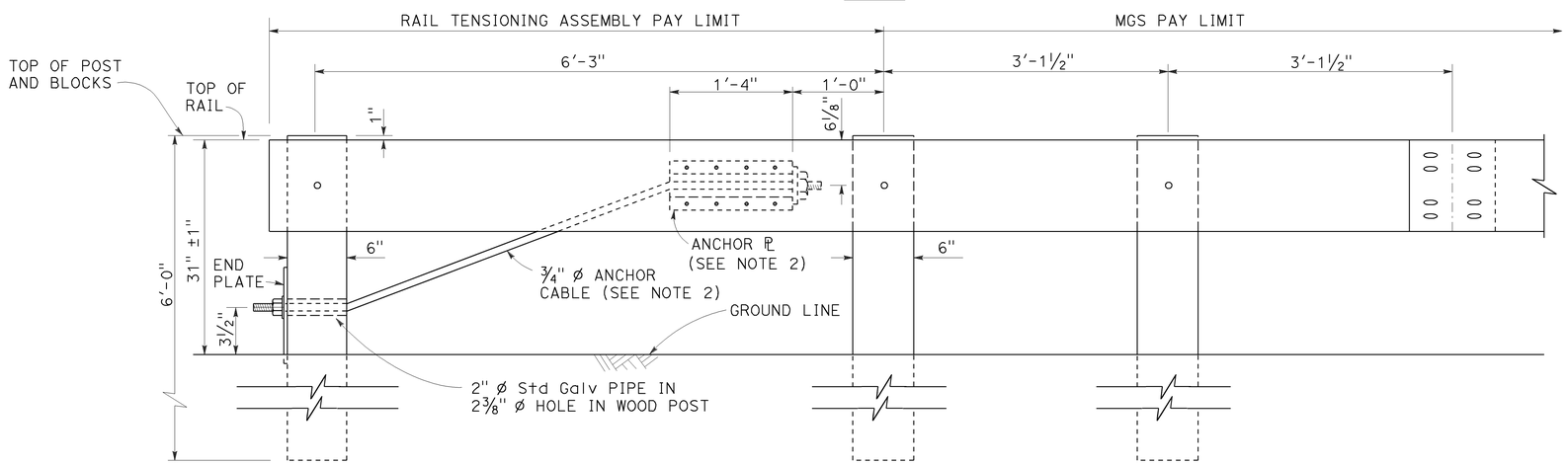

ELEVATION
RAIL TENSIONING ASSEMBLY
See Note 1

NOTES:

1. See Revised Standard Plans RSP A77Q3 and RSP A77R1 for typical use of rail tensioning assembly.
2. For details of the anchor plate and ¾" cable, see Revised Standard Plan RSP A77S3.

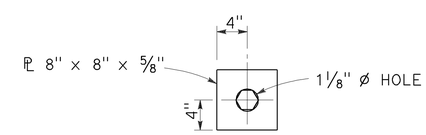

DETAIL "A"
CABLE CONNECTION END PLATE

STATE OF CALIFORNIA
DEPARTMENT OF TRANSPORTATION

MIDWEST GUARDRAIL SYSTEM RAIL TENSIONING ASSEMBLY

NO SCALE

RSP A77S2 DATED JULY 19, 2013 SUPPLEMENTS THE STANDARD PLANS BOOK DATED 2010.

REVISED STANDARD PLAN RSP A77S2

2010 REVISED STANDARD PLAN RSP A77S2

7-3-13

Dist	COUNTY	ROUTE	POST MILES TOTAL PROJECT	SHEET No.	TOTAL SHEETS
07	LA	210	R10.5/R15.7	96	116

Randell D. Hiatt
REGISTERED CIVIL ENGINEER

November 15, 2013
PLANS APPROVAL DATE

REGISTERED PROFESSIONAL ENGINEER
Randell D. Hiatt
No. C50200
Exp. 6-30-15
CIVIL
STATE OF CALIFORNIA

THE STATE OF CALIFORNIA OR ITS OFFICERS OR AGENTS SHALL NOT BE RESPONSIBLE FOR THE ACCURACY OR COMPLETENESS OF SCANNED COPIES OF THIS PLAN SHEET.

TO ACCOMPANY PLANS DATED 6-1-15

2010 REVISED STANDARD PLAN RSP A77S3

NOTE:

See Revised Standard Plans RSP A77S1, RSP A77S2 and RSP A77T1 for typical use of anchor cable and anchor plate.

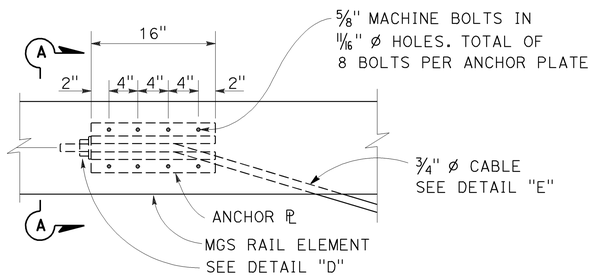

ANCHOR PLATE DETAIL
(MGS shown, TBB similar)

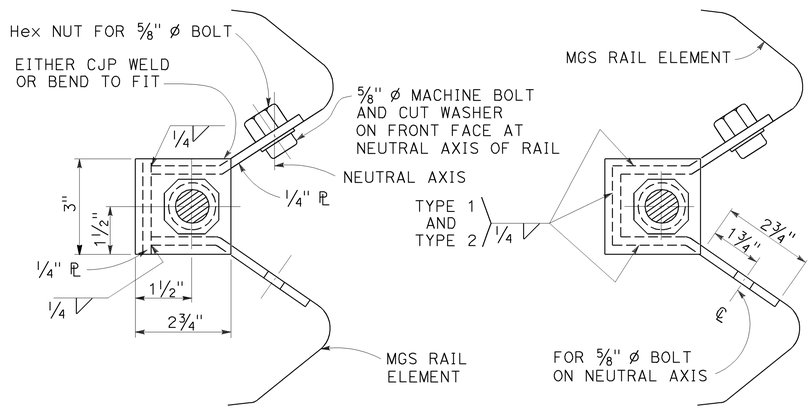

NOTE:
Dimensioning applies to both types.

SECTION A-A
(ALTERNATIVE TYPE 1)

SECTION A-A
(ALTERNATIVE TYPE 2)

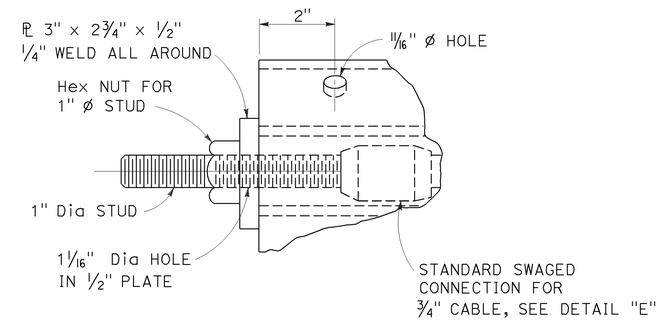

DETAIL "D"

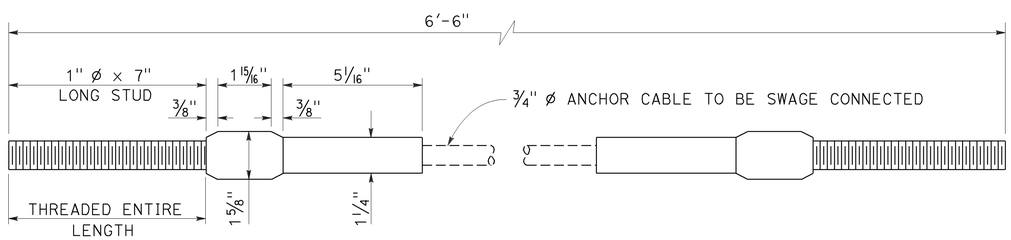

ANCHOR CABLE WITH
SWAGED FITTING AND STUD
DETAIL "E"

STATE OF CALIFORNIA
DEPARTMENT OF TRANSPORTATION

METAL RAILING ANCHOR CABLE AND ANCHOR PLATE DETAILS

NO SCALE

RSP A77S3 DATED NOVEMBER 15, 2013 SUPERSEDES RSP A77S3
DATED JULY 19, 2013 THAT SUPPLEMENTS THE STANDARD PLANS BOOK DATED 2010.

REVISED STANDARD PLAN RSP A77S3

10-4-13

Dist	COUNTY	ROUTE	POST MILES TOTAL PROJECT	SHEET No.	TOTAL SHEETS
07	LA	210	R10.5/R15.7	97	116

Randell D. Hiatt
REGISTERED CIVIL ENGINEER

November 15, 2013
PLANS APPROVAL DATE

REGISTERED PROFESSIONAL ENGINEER Randell D. Hiatt No. C50200 Exp. 6-30-15 CIVIL STATE OF CALIFORNIA

THE STATE OF CALIFORNIA OR ITS OFFICERS OR AGENTS SHALL NOT BE RESPONSIBLE FOR THE ACCURACY OR COMPLETENESS OF SCANNED COPIES OF THIS PLAN SHEET.

TO ACCOMPANY PLANS DATED 6-1-15

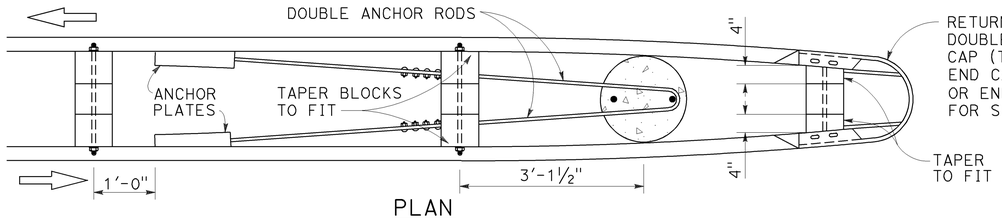

PLAN
See Note 4

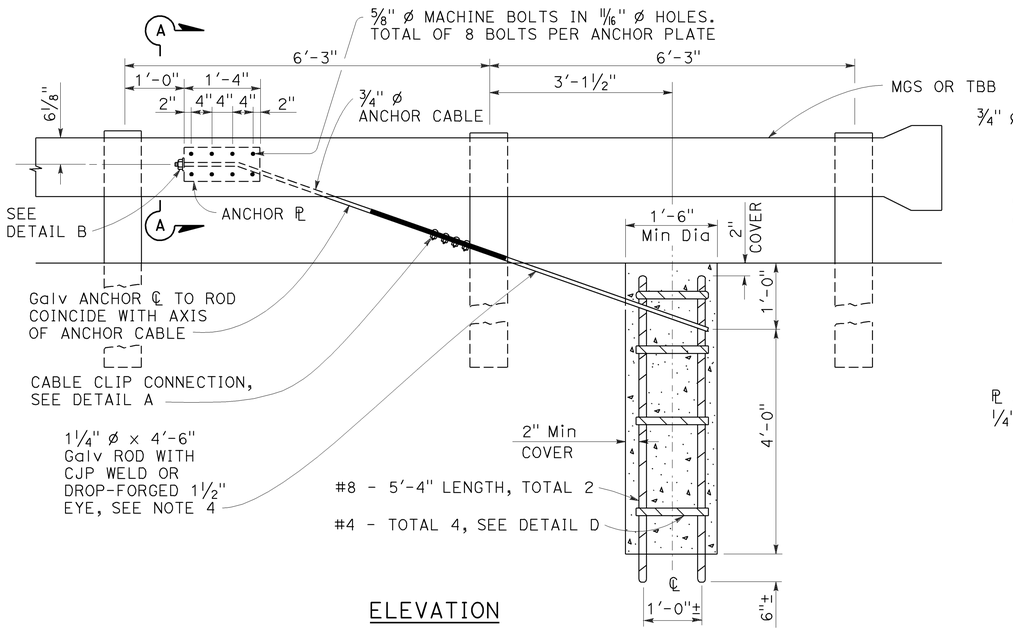

ELEVATION
END ANCHOR ASSEMBLY
(TYPE CA)
(Wood post, MGS shown, details similar for Thrie Beam Barrier.)

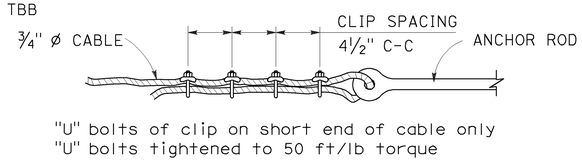

DETAIL A
CABLE CLIP CONNECTION

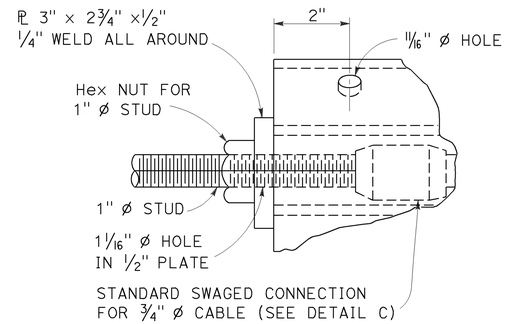

DETAIL B

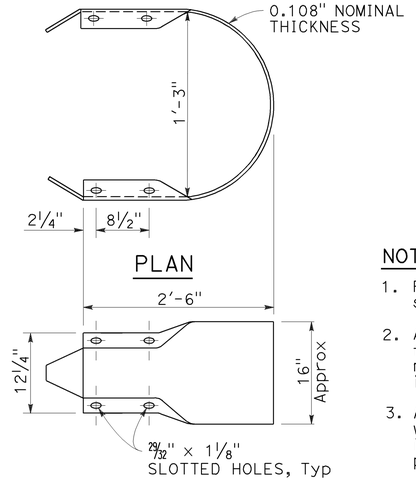

PLAN

ELEVATION
RETURN CAP
(TYPE A)

NOTES:

1. For typical use of this type of end anchor, see Revised Standard Plan RSP A78E2.
2. Anchor cable to be parallel to railing for straight runs of rail. Anchor cable may have angle point at anchor plate if railing is curved.
3. Anchor rod hooks to be in contact with anchor reinforcement when concrete is placed. Wire ties may be used to position anchor rods.
4. Single sided railing installations require only one anchor plate, anchor rod and anchor cable. Single sided railing will not have a rail element or blockouts on backside of line posts as shown in the plan view.

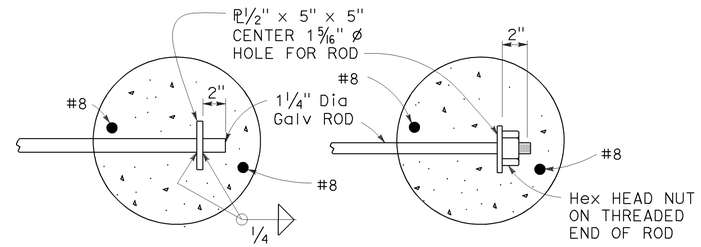

OPTIONAL ENDS ON SINGLE ANCHOR ROD
(Not to be used for double anchors)

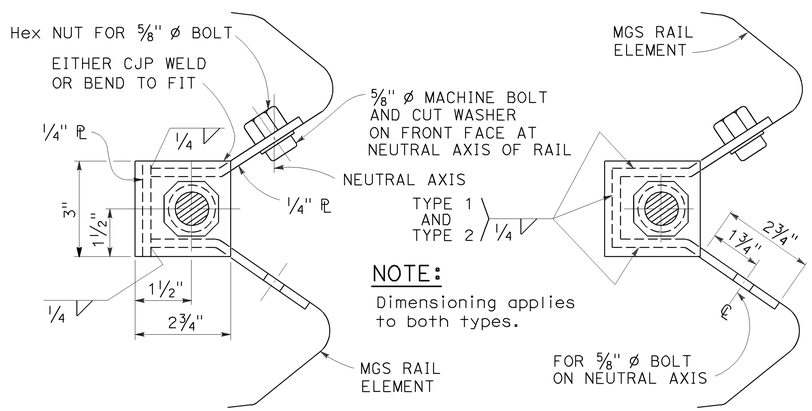

SECTION A-A
(Alternative Type 1)

SECTION A-A
(Alternative Type 2)

ANCHOR PLATE DETAILS

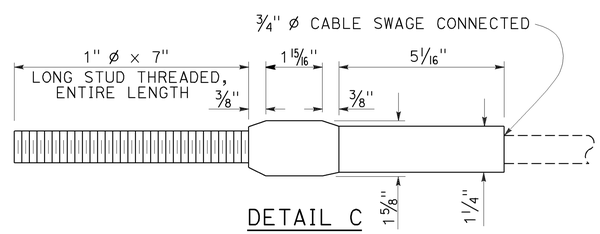

DETAIL C

ANCHOR CABLE WITH
SWAGED FITTING AND STUD

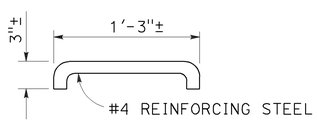

DETAIL D

NOTE:
Use two 1¼" Ø Galv rods with hook and eye for double MGS anchor.

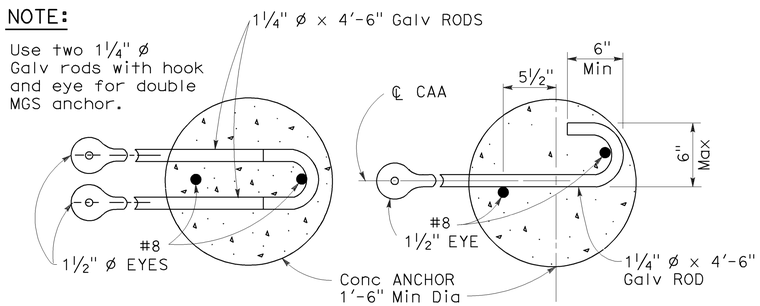

DOUBLE ANCHOR SINGLE ANCHOR

ANCHOR RODS

STATE OF CALIFORNIA
DEPARTMENT OF TRANSPORTATION

METAL RAILING END ANCHOR ASSEMBLY (TYPE CA)

NO SCALE

RSP A77T1 DATED NOVEMBER 15, 2013 SUPERSEDES RSP A77T1 DATED JULY 19, 2013 THAT SUPPLEMENTS THE STANDARD PLANS BOOK DATED 2010.

REVISED STANDARD PLAN RSP A77T1

2010 REVISED STANDARD PLAN RSP A77T1

10-22-13

Dist	COUNTY	ROUTE	POST MILES TOTAL PROJECT	SHEET No.	TOTAL SHEETS
07	LA	210	R10.5/R15.7	98	116

Randell D. Hiatt
REGISTERED CIVIL ENGINEER

November 15, 2013
PLANS APPROVAL DATE

REGISTERED PROFESSIONAL ENGINEER
Randell D. Hiatt
No. C50200
Exp. 6-30-15
CIVIL
STATE OF CALIFORNIA

THE STATE OF CALIFORNIA OR ITS OFFICERS OR AGENTS SHALL NOT BE RESPONSIBLE FOR THE ACCURACY OR COMPLETENESS OF SCANNED COPIES OF THIS PLAN SHEET.

TO ACCOMPANY PLANS DATED 6-1-15

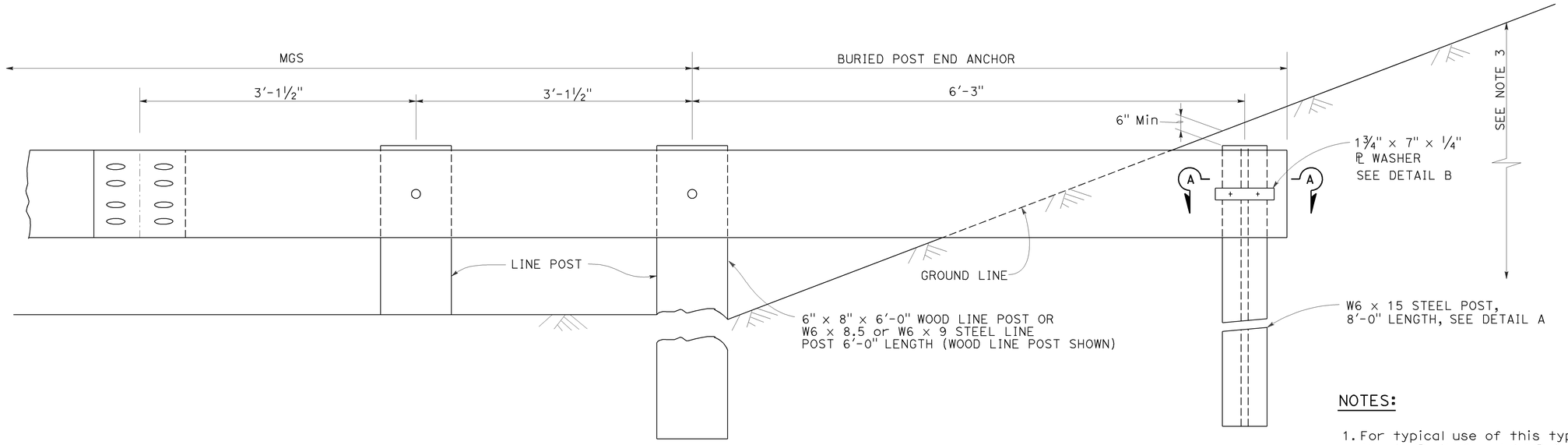

BURIED POST END ANCHOR

See Note 3

NOTES:

1. For typical use of this type of end anchor with MGS see the A77P, A77Q and A77R Series of the Standard Plans.
2. Holes excavation in the slope to construct the buried post end anchor shall be backfilled with selected earth, placed in layers approximately 1'-0" thick. Each layer shall be moistened and thoroughly compacted.
3. The buried post end anchor shall only be constructed at those locations where the slope perpendicular to the roadway is non-traversable.

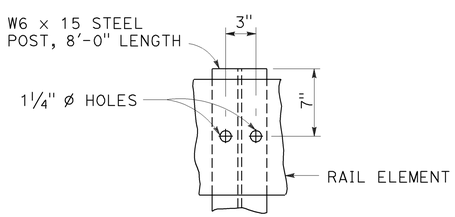

DETAIL A

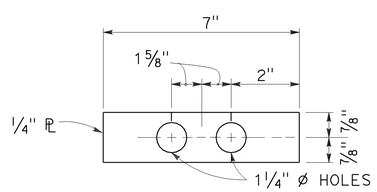

DETAIL B

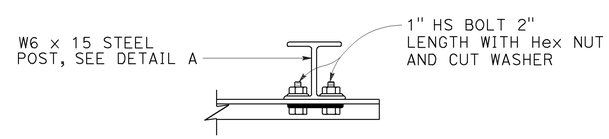

SECTION A-A

STATE OF CALIFORNIA
DEPARTMENT OF TRANSPORTATION

MIDWEST GUARDRAIL SYSTEM BURIED POST END ANCHOR

NO SCALE

RSP A77T2 DATED NOVEMBER 15, 2013 SUPERSEDES RSP A77T2
DATED JULY 19, 2013 THAT SUPPLEMENTS THE STANDARD PLANS BOOK DATED 2010.

REVISED STANDARD PLAN RSP A77T2

2010 REVISED STANDARD PLAN RSP A77T2

10-4-13

Dist	COUNTY	ROUTE	POST MILES TOTAL PROJECT	SHEET No.	TOTAL SHEETS
07	LA	210	R10.5/R15.7	99	116

Randell D. Hiatt
REGISTERED CIVIL ENGINEER

January 23, 2015
PLANS APPROVAL DATE

REGISTERED PROFESSIONAL ENGINEER Randell D. Hiatt No. C50200 Exp. 6-30-15 CIVIL STATE OF CALIFORNIA

THE STATE OF CALIFORNIA OR ITS OFFICERS OR AGENTS SHALL NOT BE RESPONSIBLE FOR THE ACCURACY OR COMPLETENESS OF SCANNED COPIES OF THIS PLAN SHEET.

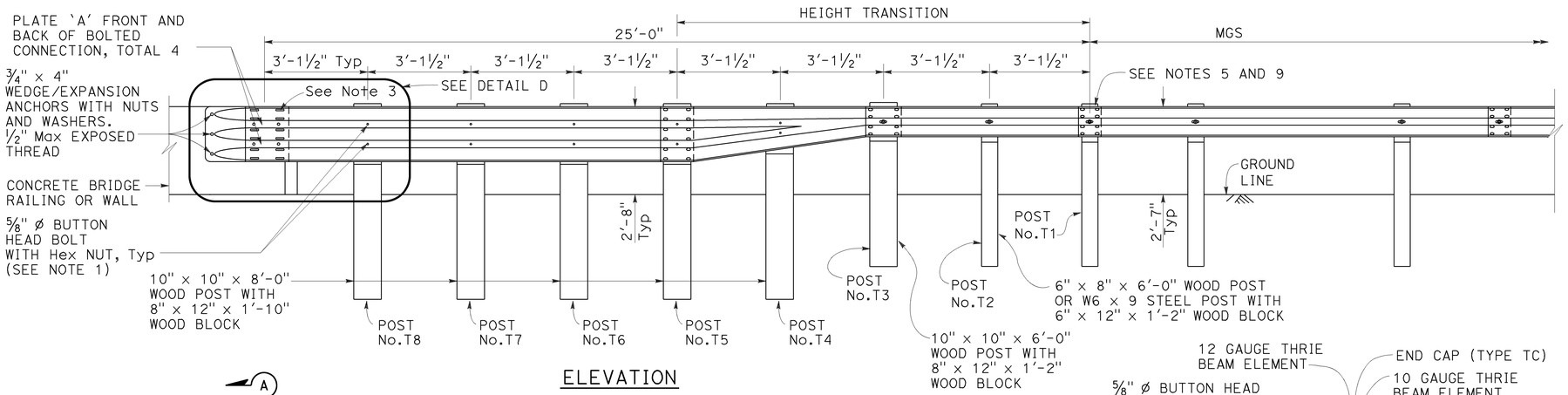

ELEVATION

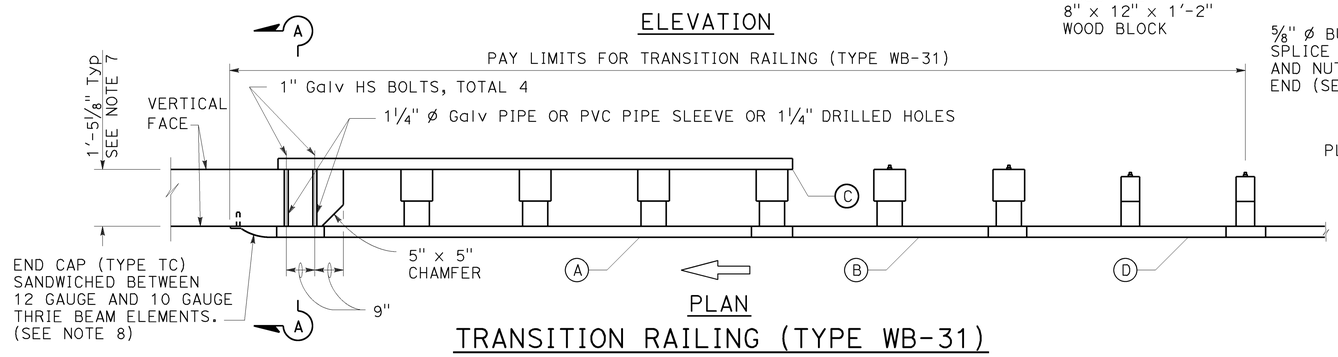

PLAN

TRANSITION RAILING (TYPE WB-31)

(No Blockout Attachment)

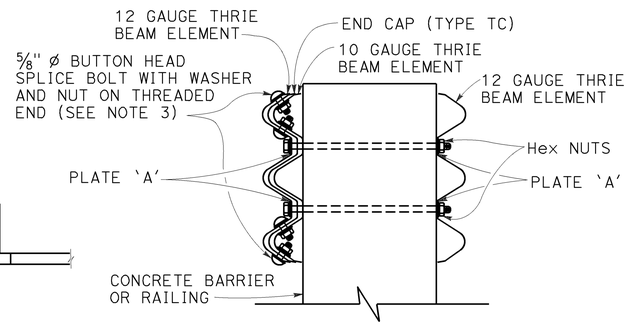

SECTION A-A

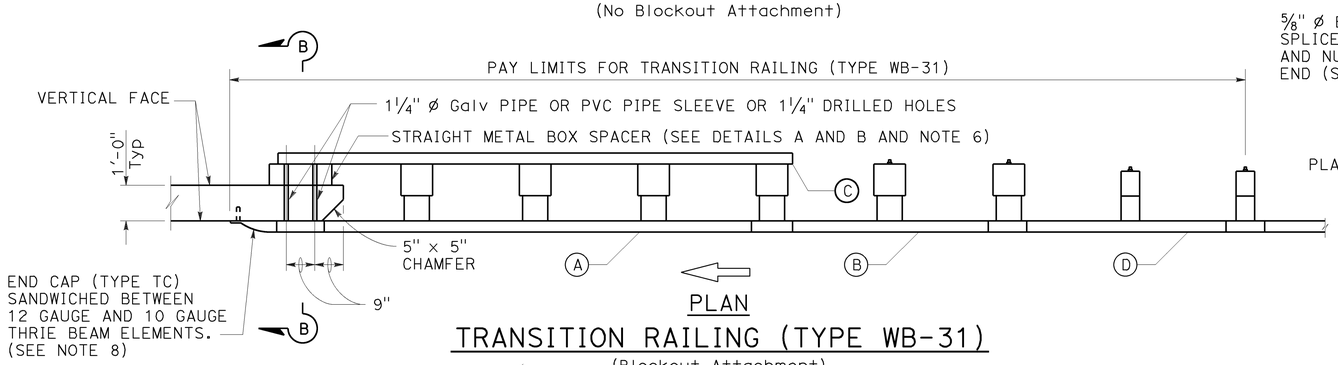

PLAN

TRANSITION RAILING (TYPE WB-31)

(Blockout Attachment)

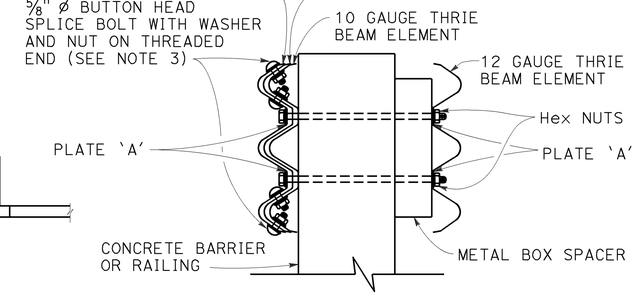

SECTION B-B

LEGEND:

- (A) NESTED THRIE BEAM ELEMENTS (ONE 12 GAUGE ELEMENT NESTED OVER ONE 10 GAUGE ELEMENT).
- (B) ONE ASYMMETRICAL 10 GAUGE "W" BEAM TO THRIE BEAM ELEMENT.
- (C) ONE 12 GAUGE THRIE BEAM ELEMENT.
- (D) ONE 10 GAUGE "W" BEAM RAIL ELEMENT (7'-3 1/2"LENGTH)

10 GAUGE = 0.138" THICK
12 GAUGE = 0.108" THICK

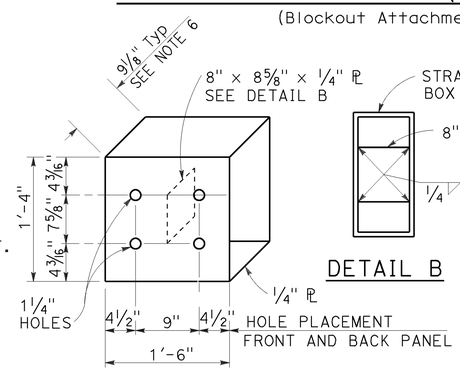

DETAIL A

STRAIGHT METAL BOX SPACER

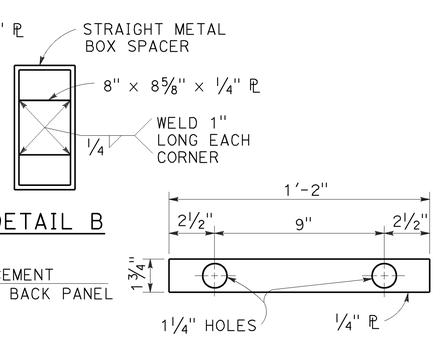

DETAIL B

DETAIL C

PLATE 'A'

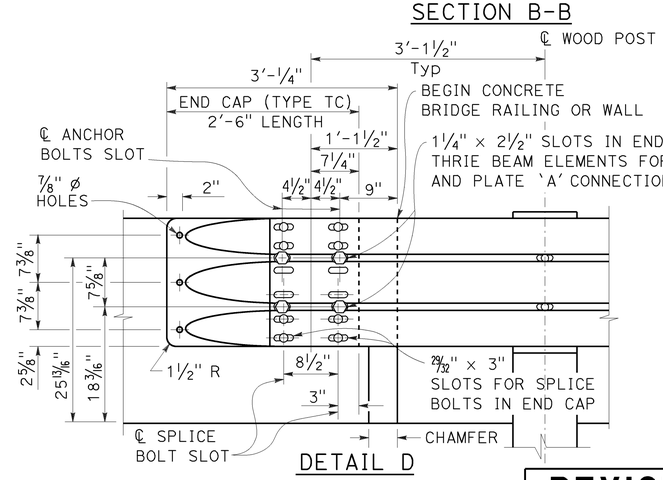

DETAIL D

NOTES:

TO ACCOMPANY PLANS DATED 6-1-15

1. Use 5/8" ø Button head bolts and hex nuts for connections to posts. No washer on rail face for bolted connections to post.
2. The nested rail elements, end cap, and 'W' beam to thrie beam element may be spliced together prior to bolting the elements to the wood post and concrete barrier or railing.
3. Exterior splice bolt holes for rail element splices at Post No. T5 and the connection to the concrete barrier or railing shall be the standard 29/32" x 1 1/8" slot size. Interior splice bolt holes at these locations may be increased up to 1 1/4" ø. Only the top 4 and the bottom 4 splice bolts with washers and nuts are required for rail splices at Post No. T5 and the connection to the concrete barrier or railing.
4. The top elevation of Posts No. T2 through No. T7 shall not project more than 1" above the top elevation of the rail element.
5. Typically, the railing connected to Transition Railing (Type WB-31) will be either standard railing section of MGS with height transition ratio of 150:1 or a Caltrans approved 31" end treatment attached to Post No. T1.
6. The depth of the metal box spacer varies from the 9 1/8" to 1 1/2" and is dependent on the width of the concrete railing or wall. The combined dimension for the depth of the metal box spacer plus the width of railing or wall is typically 21 1/8". Where the space between the backside of the concrete railing or wall and the rear thrie beam element is less than 1 1/2", metal plates similar to Plate 'A' are to be used as spacers.
7. Where the width of the concrete railing or wall is greater than 17 1/8", wood blocks are to be used to fill the space created between the backside of Posts No. T5 through No. T8 and the rear thrie beam element. These wood blocks shall be 8" in width and 1'-2" in length. The dimension between the front thrie beam element and the rear thrie beam element is to match the width of the concrete railing or wall.
8. End cap may be installed over 12 gauge and 10 gauge thrie beam elements where transition railing is installed on the departure end of bridge railing.
9. Conform standard railing section height to 31" at Post No. T1 using height transition ratio of 150:1.

STATE OF CALIFORNIA
DEPARTMENT OF TRANSPORTATION

MIDWEST GUARDRAIL SYSTEM TRANSITION RAILING (TYPE WB-31)

NO SCALE

RSP A77U4 DATED JANUARY 23, 2015 SUPERSEDES RSP A77U4 DATED NOVEMBER 15, 2013 AND RSP A77U4 DATED JULY 19, 2013 THAT SUPPLEMENTS THE STANDARD PLANS BOOK DATED 2010.

REVISED STANDARD PLAN RSP A77U4

2010 REVISED STANDARD PLAN RSP A77U4

1-8-15

Dist	COUNTY	ROUTE	POST MILES TOTAL PROJECT	SHEET No.	TOTAL SHEETS
07	LA	210	R10.5/R15.7	100	116

Randell D. Hiatt
REGISTERED CIVIL ENGINEER

July 19, 2013
PLANS APPROVAL DATE

REGISTERED PROFESSIONAL ENGINEER
Randell D. Hiatt
No. C50200
Exp. 6-30-15
CIVIL
STATE OF CALIFORNIA

THE STATE OF CALIFORNIA OR ITS OFFICERS OR AGENTS SHALL NOT BE RESPONSIBLE FOR THE ACCURACY OR COMPLETENESS OF SCANNED COPIES OF THIS PLAN SHEET.

TO ACCOMPANY PLANS DATED 6-1-15

NOTES:

1. Refer to Revised Standard Plans RSP A77L1 and RSP A77L2 for component details for MGS not shown on this plan.
2. All posts for any standard barrier run shall be of the same type: Wood or Steel.
3. Install posts in soil.

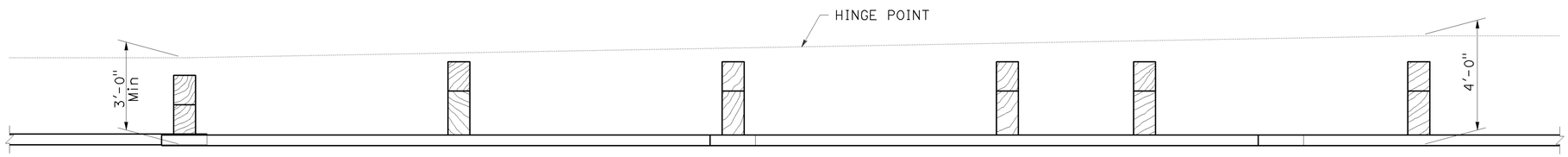

PLAN

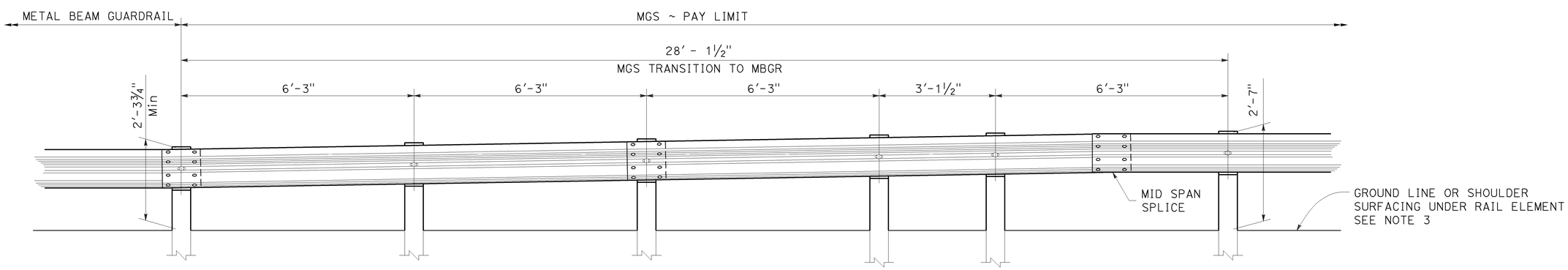

ELEVATION

STATE OF CALIFORNIA
DEPARTMENT OF TRANSPORTATION

MIDWEST GUARDRAIL SYSTEM TRANSITION TO METAL BEAM GUARDRAIL

NO SCALE

RSP A77U5 DATED JULY 19, 2013 SUPPLEMENTS THE STANDARD PLANS BOOK DATED 2010.

REVISED STANDARD PLAN RSP A77U5

2010 REVISED STANDARD PLAN RSP A77U5