Dist	COUNTY	ROUTE	POST MILES TOTAL PROJECT	SHEET No.	TOTAL SHEETS
07	LA	210	R9.7/R16.1	1	349

NHPI-2101(816)E

STATE OF CALIFORNIA

DEPARTMENT OF TRANSPORTATION

PROJECT PLANS FOR CONSTRUCTION ON

STATE HIGHWAY

IN LOS ANGELES COUNTY
IN LOS ANGELES AND GLENDALE
FROM 0.2 MILE WEST OF BIG TUJUNGA WASH BRIDGE TO DUNSMORE AVENUE UNDERCROSSING

TO BE SUPPLEMENTED BY STANDARD PLANS DATED 2010

INDEX OF PLANS

SHEET No.	DESCRIPTION
1	TITLE AND LOCATION MAP
2-7	TYPICAL CROSS SECTIONS
8-32	LAYOUTS
33-56	PROFILES
57-71	CONSTRUCTION DETAILS
72-122	DRAINAGE PLANS, PROFILES, DETAILS AND QUANTITIES
123-145	UTILITY PLANS
146	CONSTRUCTION AREA SIGNS
147-209	STAGE CONSTRUCTION PLANS, DETAILS AND QUANTITIES
210-221	MOTORIST INFORMATION PLANS, DETAILS AND QUANTITIES
222-231	TRAFFIC HANDLING PLANS
232-233	PAVEMENT DELINEATION PLANS, DETAILS AND QUANTITIES
234-254	SIGN PLANS, DETAILS AND QUANTITIES
255-262	SUMMARY OF QUANTITIES
263-317	ELECTRICAL PLANS
318-340	REVISED STANDARD PLANS
STRUCTURE PLANS	
341-349	STRUCTURE APPROACH AND MEDIAN BARRIER REPLACEMENT

THE STANDARD PLANS LIST APPLICABLE TO THIS CONTRACT IS INCLUDED IN THE NOTICE TO BIDDERS AND SPECIAL PROVISIONS BOOK.

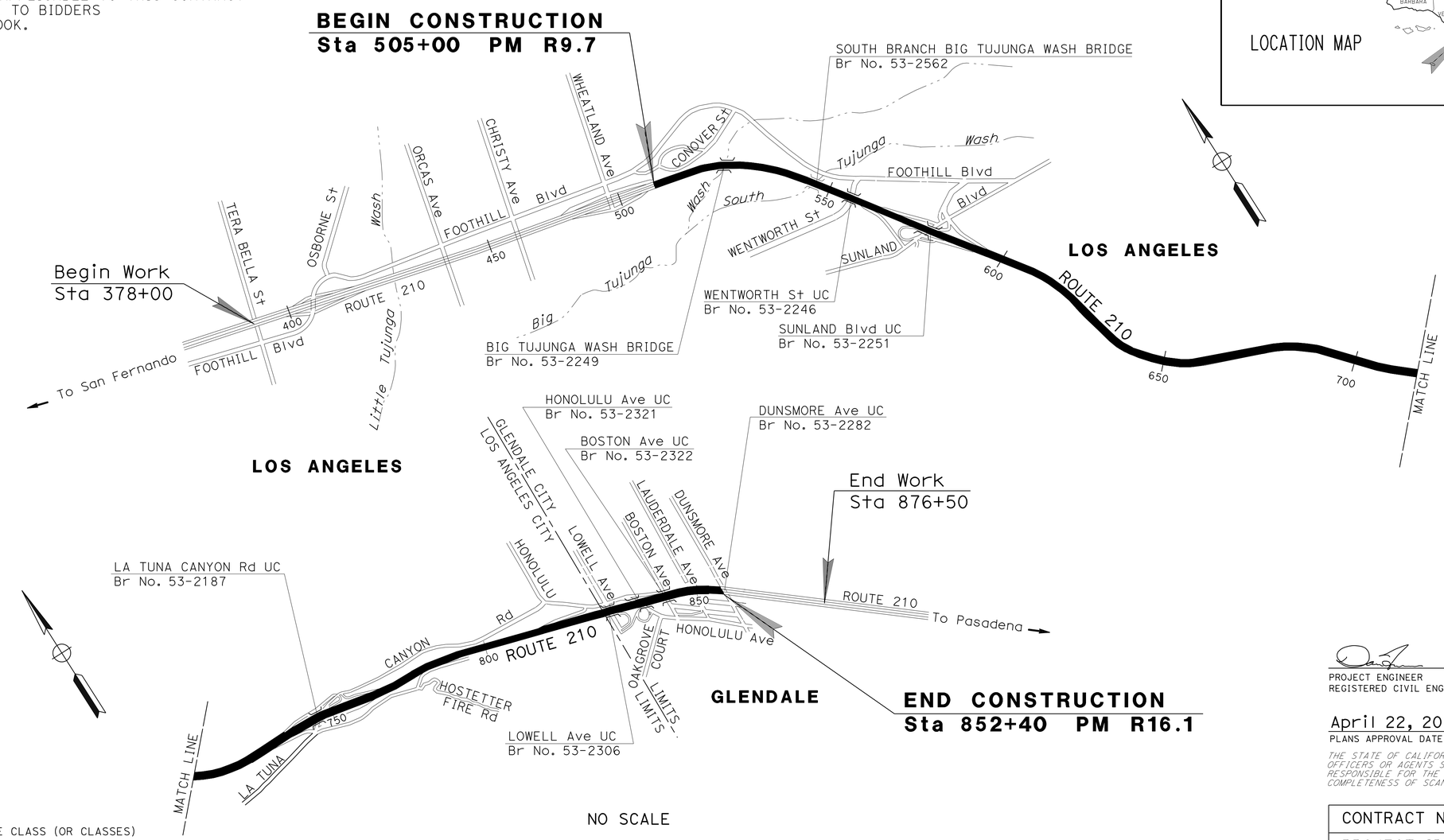

THE CONTRACTOR SHALL POSSESS THE CLASS (OR CLASSES) OF LICENSE AS SPECIFIED IN THE "NOTICE TO BIDDERS."

PROJECT MANAGER: JOHN K. LEE

DESIGN ENGINEER: DAN TRAN

PROJECT ENGINEER
REGISTERED CIVIL ENGINEER — DATE 3-5-13

April 22, 2013
PLANS APPROVAL DATE

REGISTERED PROFESSIONAL ENGINEER — DAN TRAN — No. 63456 — Exp. 09/30/14 — CIVIL — STATE OF CALIFORNIA

THE STATE OF CALIFORNIA OR ITS OFFICERS OR AGENTS SHALL NOT BE RESPONSIBLE FOR THE ACCURACY OR COMPLETENESS OF SCANNED COPIES OF THIS PLAN SHEET.

CONTRACT No.	07-288014
PROJECT ID	0700020957

LAST REVISION 00-00-00 — DATE PLOTTED => 17-JUL-2013 — TIME PLOTTED => 11:17

Dist	COUNTY	ROUTE	POST MILES TOTAL PROJECT	SHEET No.	TOTAL SHEETS
07	LA	210	R9.7/R16.1	2	349

REGISTERED CIVIL ENGINEER — DATE 3-5-13

4-22-13
PLANS APPROVAL DATE

REGISTERED PROFESSIONAL ENGINEER — DAN TRAN No. 63456 Exp. 09/30/14 CIVIL — STATE OF CALIFORNIA

THE STATE OF CALIFORNIA OR ITS OFFICERS OR AGENTS SHALL NOT BE RESPONSIBLE FOR THE ACCURACY OR COMPLETENESS OF SCANNED COPIES OF THIS PLAN SHEET.

NOTES:

1. DIMENSIONS OF THE PAVEMENT STRUCTURES (STRUCTURAL SECTIONS) ARE SUBJECT TO TOLERANCES SPECIFIED IN THE STANDARD SPECIFICATIONS.
2. SUPERELEVATION AS SHOWN OR AS DIRECTED BY THE ENGINEER.
3. FOR ACCURATE RIGHT OF WAY DATA, CONTACT RIGHT OF WAY ENGINEERING AT THE DISTRICT OFFICE.
4. EXACT LOCATIONS AND STRUCTURAL SECTION OF INDIVIDUAL SLAB REPLACEMENT (RSC) WILL BE DETERMINED BY THE ENGINEER. SEE QUANTITY SHEETS FOR LIMITS.
5. SEE QUANTITY SHEETS FOR LIMITS OF GRIND EXISTING CONCRETE PAVEMENT. EXACT LOCATIONS WILL BE DETERMINED BY THE ENGINEER. APPROACH SLABS AND BRIDGE DECKS ARE EXCLUDED FROM GRINDING.

ABBREVIATIONS:

ISR - INDIVIDUAL SLAB REPLACEMENT
LCBRS - LEAN CONCRETE BASE RAPID SETTING
RSC - RAPID STRENGTH CONCRETE
HMA-A (WMA) - HOT MIX ASPHALT (TYPE A-WARM MIX ASPHALT)
JPCP (RCC) - JOINTED PLAIN CONCRETE PAVEMENT (ROLLER COMPACTED CONCRETE)

DESIGN DESINATION

ADT	(2013)	55,502	D	67%
ADT	(2023)	63,600	T	9%
DHV		25,000	V	70 mph
ESAL		70,250,000	TI	15

PAVEMENT CLIMATE REGION

INLAND VALLEY

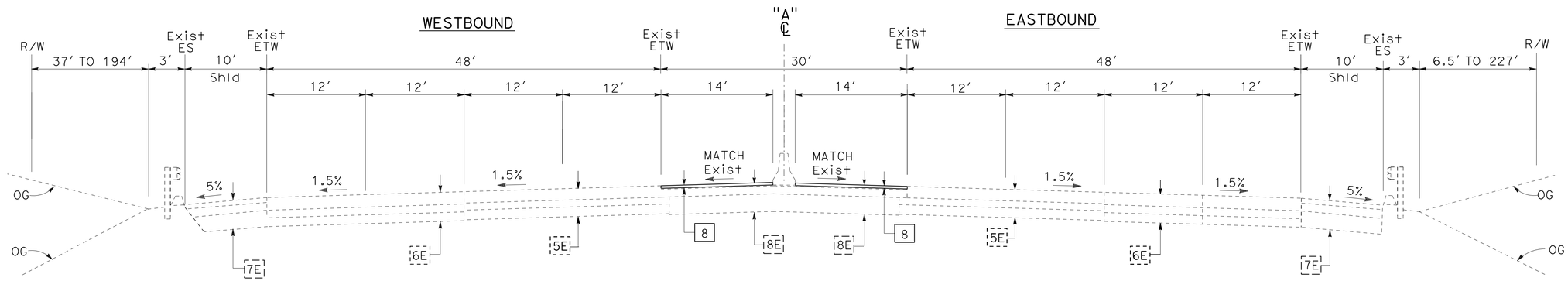

"A" Sta 505+00 TO Sta 507+00

ROUTE 210

TYPICAL STRUCTURAL SECTION

1
1.05' JPCP
---- BASE BOND BREAKER
0.35' LCB
0.70' CLASS 3 AB

2
1.05' JPCP (RSC)
---- BASE BOND BREAKER
0.35' LCBRS
0.70' CLASS 3 AB

3
0.65' ISR (RSC)
---- BASE BOND BREAKER

4
0.50' HMA (TYPE A)
0.50' LCB
0.95' CLASS 3 AB

5
0.10' COLD PLANE
0.15' RHMA-G (WMA)

6
0.85' JPCP
---- BASE BOND BREAKER
0.35' LCB

7
0.85' JPCP (RSC)
---- BASE BOND BREAKER
0.35' LCBRS

8
0.20' HMA (TYPE A)

9
0.25' HMA (TYPE A)

10
0.15' RHMA-G (WMA)
0.20' HMA-A (WMA)

11
0.75' JPCP (RCC)

12
0.75' JPCP (RCC)
0.95' CLASS 3 AB

EXISTING STRUCTURAL SECTION

3E
0.70' PCC
0.45' CLASS A CTB
0.20' CLASS 3 AB

4E
0.65' PCC
0.45' CLASS A CTB
0.25' CLASS 3 AB

5E
0.65' PCC
0.45' CLASS A CTB
0.55' CLASS 3 AB

6E
0.70' PCC
0.45' CLASS A CTB
0.50' CLASS 3 AB

7E
0.25' AC (TYPE B)
0.50' CLASS 2 AB
0.90' & Var CLASS 4 AS

8E
0.20' AC (TYPE B)
0.45' CLASS 2 AB
1.00' & Var CLASS 4 AS

9E
0.25' AC (TYPE B)
0.50' CLASS 2 AB
Var CLASS 5 AS

10E
0.20' AC (TYPE B)
0.45' CLASS 2 AB
0.70' CLASS 5 AS (CUT SECTION) OR
1.70' CLASS 5 AS (FILL SECTION)

11E
0.70' PCC
0.45' CLASS A CTB
0.20' CLASS 3 AB
1.00' CLASS 5 AS (FILL SECTION)

12E
0.65' PCC
0.45' CLASS A CTB
0.25' CLASS 3 AB
1.00' CLASS 5 AS (FILL SECTION)

13E
0.25' AC (TYPE B)
0.50' CLASS 2 AB

14E
0.65' PCC
0.45' CLASS A CTB
0.20' CLASS 3 AB

15E
0.65' PCC
0.45' CLASS A CTB
0.25' CLASS 3 AB

16E
0.25' AC (TYPE B)
0.40' CLASS 2 AB

17E
0.35' AC (TYPE B)
0.70' CLASS A CTB
0.25' CLASS 3 AB

18E
0.30' AC (TYPE B)
0.50' CLASS 2 AB

19E
0.25' AC (TYPE B)
0.35' CLASS 2 AB

TYPICAL CROSS SECTIONS

NO SCALE

X-1

REVISED BY | DATE REVISED
MOE MIRZA | DAN TRAN
CALCULATED-DESIGNED BY | CHECKED BY
FUNCTIONAL SUPERVISOR
OJI KALU

STATE OF CALIFORNIA - DEPARTMENT OF TRANSPORTATION
Caltrans
DESIGN

LAST REVISION 12-12-12 | DATE PLOTTED => 26-APR-2013 | TIME PLOTTED => 11:04

Dist	COUNTY	ROUTE	POST MILES TOTAL PROJECT	SHEET No.	TOTAL SHEETS
07	LA	210	R9.7/R16.1	3	349

REGISTERED CIVIL ENGINEER 3-5-13 DATE

4-22-13
PLANS APPROVAL DATE

REGISTERED PROFESSIONAL ENGINEER DAN TRAN No. 63456 Exp. 9/30/14 CIVIL STATE OF CALIFORNIA

THE STATE OF CALIFORNIA OR ITS OFFICERS OR AGENTS SHALL NOT BE RESPONSIBLE FOR THE ACCURACY OR COMPLETENESS OF SCANNED COPIES OF THIS PLAN SHEET.

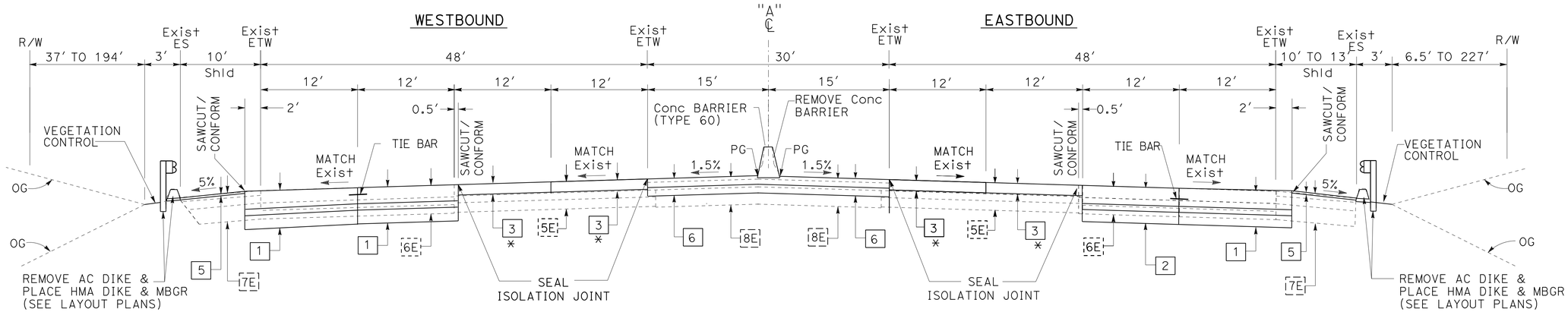

"A" Sta 515+00 TO Sta 521+65

ROUTE 210

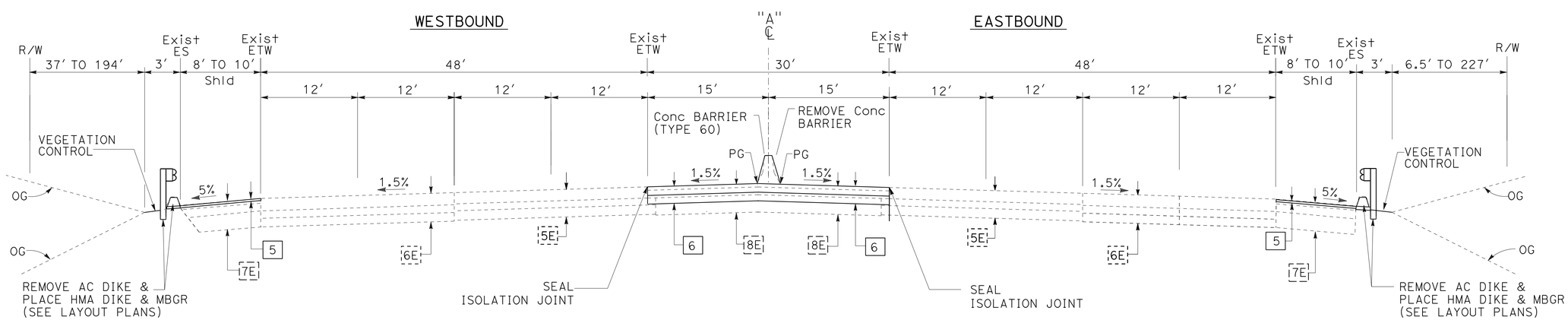

"A" Sta 507+00 TO Sta 515+00

ROUTE 210

* SEE SUMMARY OF QUANTITIES Q-1 FOR LOCATION OF ISR (RSC)

TYPICAL CROSS SECTIONS

NO SCALE

X-2

STATE OF CALIFORNIA - DEPARTMENT OF TRANSPORTATION
Caltrans
DESIGN
FUNCTIONAL SUPERVISOR: OJI KALU
CALCULATED-DESIGNED BY: MOE MIRZA
CHECKED BY: DAN TRAN
REVISED BY
DATE REVISED

LAST REVISION 12-12-12
DATE PLOTTED => 29-APR-2013
TIME PLOTTED => 13:06

Dist	COUNTY	ROUTE	POST MILES TOTAL PROJECT	SHEET No.	TOTAL SHEETS
07	LA	210	R9.7/R16.1	4	349

REGISTERED CIVIL ENGINEER 3-5-13 DATE

4-22-13
PLANS APPROVAL DATE

REGISTERED PROFESSIONAL ENGINEER DAN TRAN No. 63456 Exp. 9/30/14 CIVIL STATE OF CALIFORNIA

THE STATE OF CALIFORNIA OR ITS OFFICERS OR AGENTS SHALL NOT BE RESPONSIBLE FOR THE ACCURACY OR COMPLETENESS OF SCANNED COPIES OF THIS PLAN SHEET.

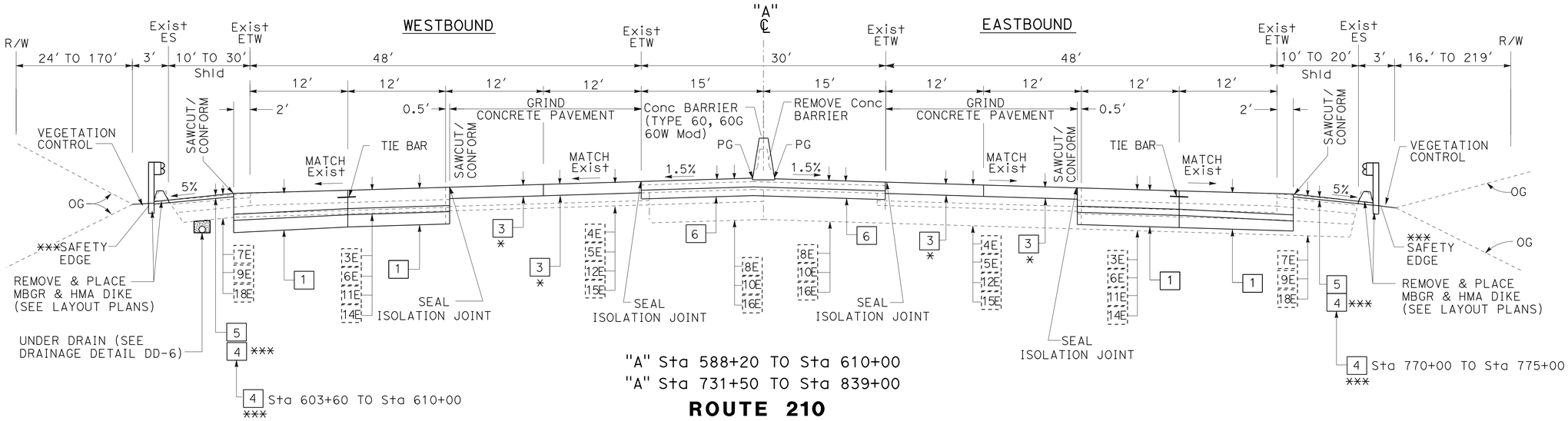

"A" Sta 588+20 TO Sta 610+00
"A" Sta 731+50 TO Sta 839+00

ROUTE 210

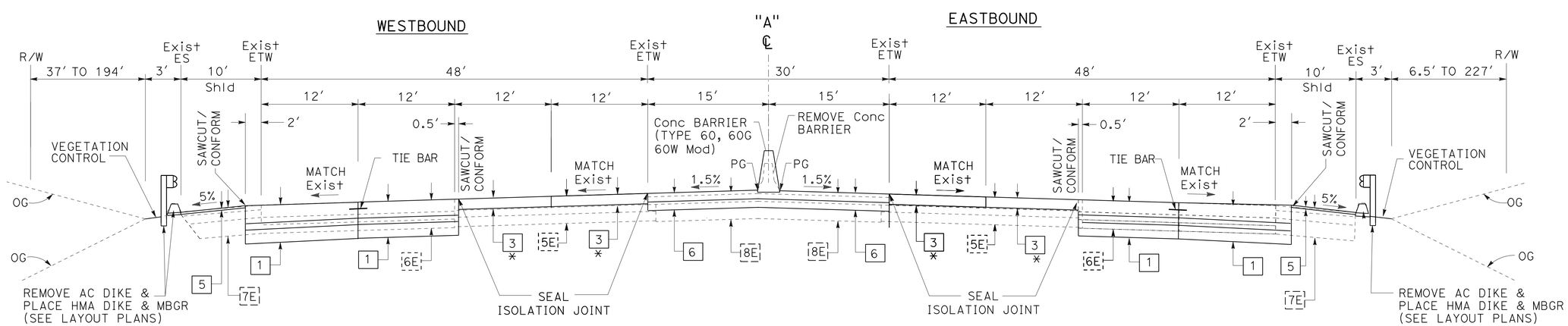

"A" Sta 521+65 TO Sta 588+20

ROUTE 210

* SEE SUMMARY OF QUANTITIES Q-1 FOR LOCATION OF ISR (RSC)

TYPICAL CROSS SECTIONS

NO SCALE

X-3

STATE OF CALIFORNIA - DEPARTMENT OF TRANSPORTATION
Caltrans® DESIGN
FUNCTIONAL SUPERVISOR: OJI KALU
CALCULATED-DESIGNED BY: MOE MIRZA
CHECKED BY: DAN TRAN
REVISED BY / DATE REVISED

LAST REVISION 12-12-12
DATE PLOTTED => 01-MAY-2013
TIME PLOTTED => 11:02

Dist	COUNTY	ROUTE	POST MILES TOTAL PROJECT	SHEET No.	TOTAL SHEETS
07	LA	210	R9.7/R16.1	5	349

REGISTERED CIVIL ENGINEER 3-5-13 DATE

4-22-13
PLANS APPROVAL DATE

REGISTERED PROFESSIONAL ENGINEER DAN TRAN No. 63456 Exp. 9/30/14 CIVIL STATE OF CALIFORNIA

THE STATE OF CALIFORNIA OR ITS OFFICERS OR AGENTS SHALL NOT BE RESPONSIBLE FOR THE ACCURACY OR COMPLETENESS OF SCANNED COPIES OF THIS PLAN SHEET.

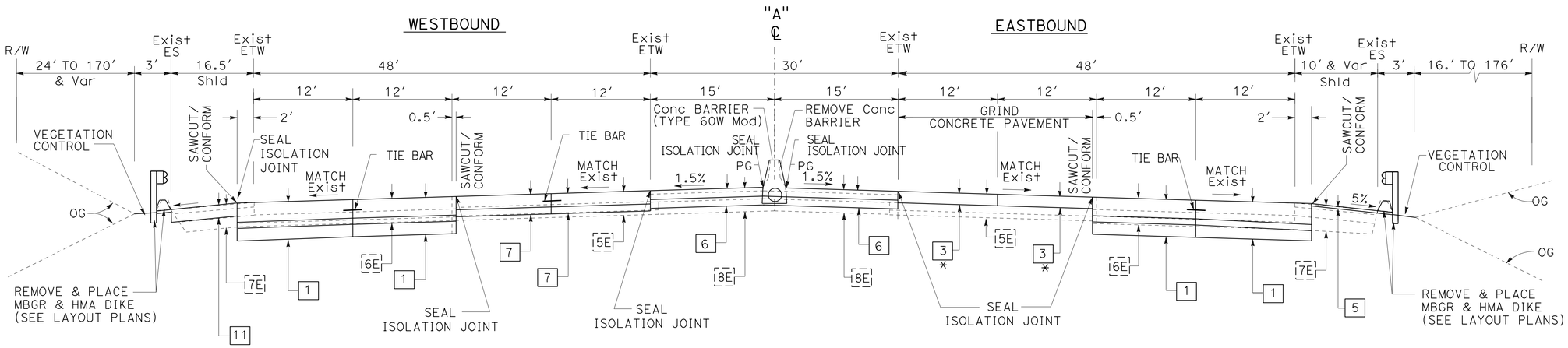

"A" Sta 612+50 TO Sta 617+00

ROUTE 210

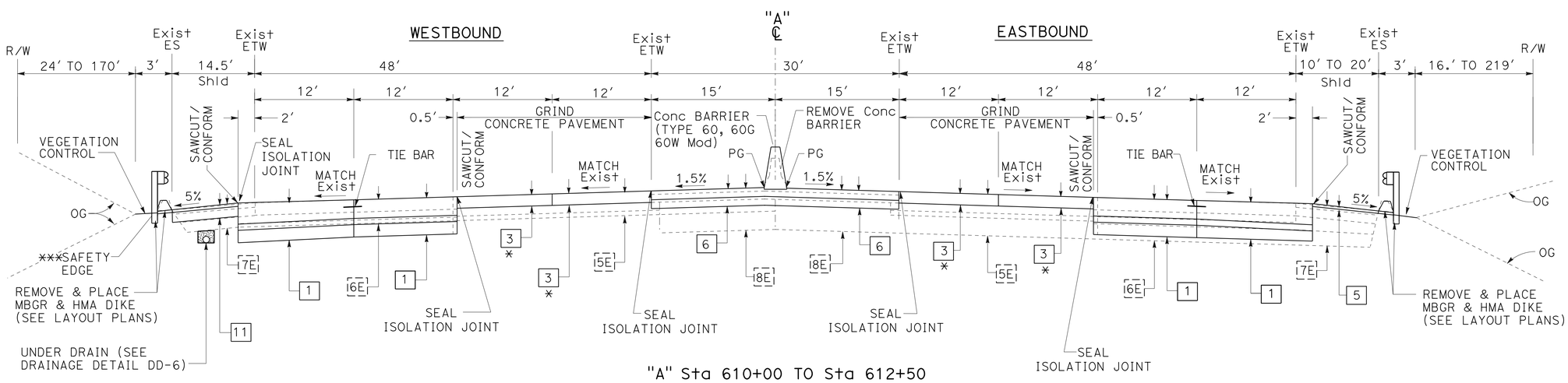

"A" Sta 610+00 TO Sta 612+50

ROUTE 210

* SEE SUMMARY OF QUANTITIES Q-1 FOR LOCATION OF ISR (RSC)

TYPICAL CROSS SECTIONS

NO SCALE

X-4

STATE OF CALIFORNIA - DEPARTMENT OF TRANSPORTATION
Caltrans®
DESIGN
FUNCTIONAL SUPERVISOR: OJI KALU
CALCULATED-DESIGNED BY: MOE MIRZA
CHECKED BY: DAN TRAN
REVISED BY
DATE REVISED

LAST REVISION 12-12-12
DATE PLOTTED => 26-APR-2013
TIME PLOTTED => 11:04

Dist	COUNTY	ROUTE	POST MILES TOTAL PROJECT	SHEET No.	TOTAL SHEETS
07	LA	210	R9.7/R16.1	6	349

REGISTERED CIVIL ENGINEER 3-5-13 DATE

4-22-13
PLANS APPROVAL DATE

REGISTERED PROFESSIONAL ENGINEER
DAN TRAN
No. 63456
Exp. 9/30/14
CIVIL
STATE OF CALIFORNIA

THE STATE OF CALIFORNIA OR ITS OFFICERS OR AGENTS SHALL NOT BE RESPONSIBLE FOR THE ACCURACY OR COMPLETENESS OF SCANNED COPIES OF THIS PLAN SHEET.

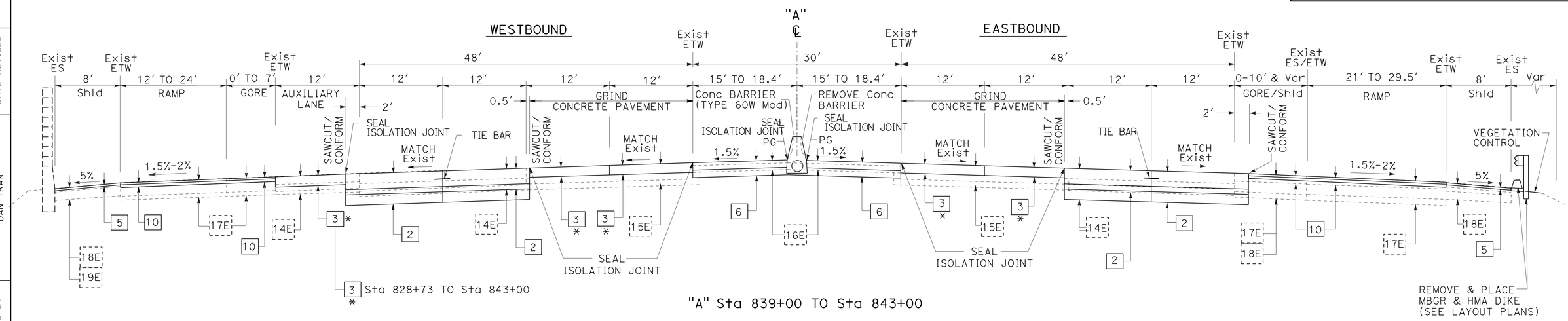

"A" Sta 839+00 TO Sta 843+00

ROUTE 210

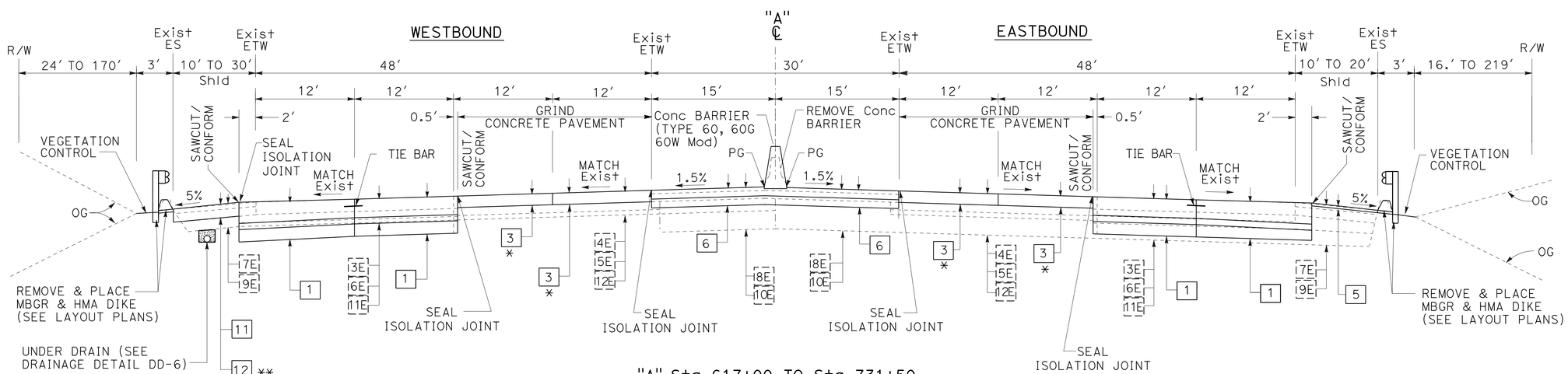

"A" Sta 617+00 TO Sta 731+50

ROUTE 210

* SEE SUMMARY OF QUANTITIES Q-1 FOR LOCATION OF ISR (RSC)

TYPICAL CROSS SECTIONS

NO SCALE

X-5

STATE OF CALIFORNIA - DEPARTMENT OF TRANSPORTATION
Caltrans
DESIGN
FUNCTIONAL SUPERVISOR: OJI KALU
CALCULATED-DESIGNED BY: MOE MIRZA
CHECKED BY: DAN TRAN
REVISED BY
DATE REVISED

LAST REVISION 12-12-12
DATE PLOTTED => 29-APR-2013
TIME PLOTTED => 13:10

Dist	COUNTY	ROUTE	POST MILES TOTAL PROJECT	SHEET No.	TOTAL SHEETS
07	LA	210	R9.7/R16.1	7	349

REGISTERED CIVIL ENGINEER 3-5-13 DATE

4-22-13
PLANS APPROVAL DATE

REGISTERED PROFESSIONAL ENGINEER DAN TRAN No. 63456 Exp. 9/30/14 CIVIL STATE OF CALIFORNIA

THE STATE OF CALIFORNIA OR ITS OFFICERS OR AGENTS SHALL NOT BE RESPONSIBLE FOR THE ACCURACY OR COMPLETENESS OF SCANNED COPIES OF THIS PLAN SHEET.

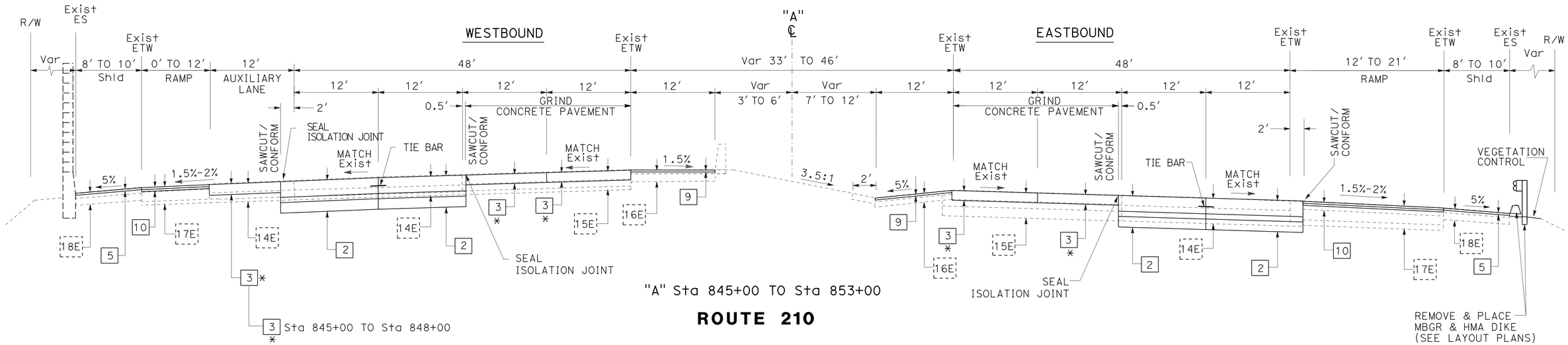

"A" Sta 845+00 TO Sta 853+00

ROUTE 210

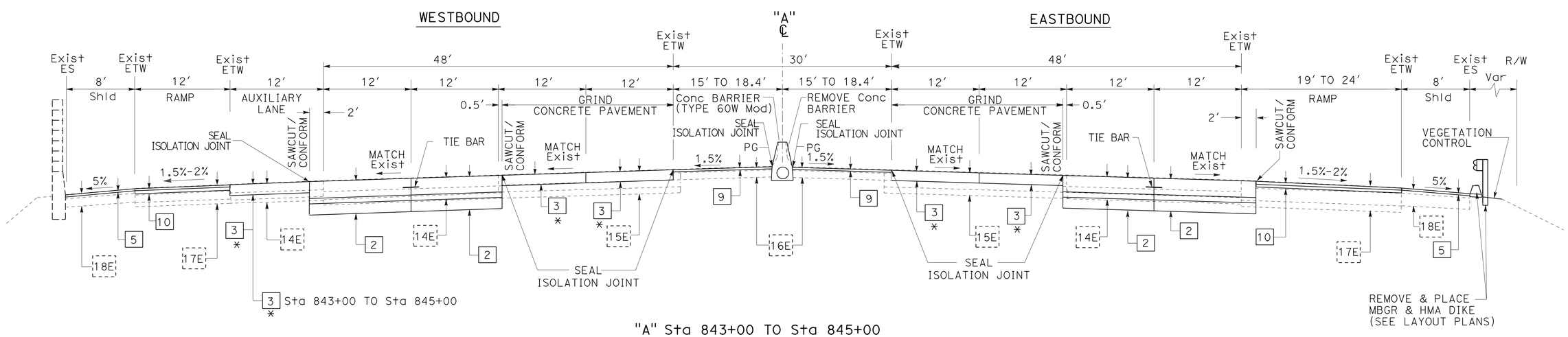

"A" Sta 843+00 TO Sta 845+00

ROUTE 210

* SEE SUMMARY OF QUANTITIES Q-1 FOR LOCATION OF ISR (RSC)

TYPICAL CROSS SECTIONS

NO SCALE

X-6

REVISED BY	DATE REVISED
MOE MIRZA	DAN TRAN
CALCULATED-DESIGNED BY	CHECKED BY
FUNCTIONAL SUPERVISOR	OJI KALU

STATE OF CALIFORNIA - DEPARTMENT OF TRANSPORTATION
Caltrans
DESIGN

LAST REVISION 12-12-12 | DATE PLOTTED => 26-APR-2013 | TIME PLOTTED => 11:04

Dist	COUNTY	ROUTE	POST MILES TOTAL PROJECT	SHEET No.	TOTAL SHEETS
07	LA	210	R9.7/R16.1	8	349

REGISTERED CIVIL ENGINEER 3-5-13 DATE

4-22-13
PLANS APPROVAL DATE

REGISTERED PROFESSIONAL ENGINEER DAN TRAN C63456 No. 9/30/14 Exp. CIVIL STATE OF CALIFORNIA

THE STATE OF CALIFORNIA OR ITS OFFICERS OR AGENTS SHALL NOT BE RESPONSIBLE FOR THE ACCURACY OR COMPLETENESS OF SCANNED COPIES OF THIS PLAN SHEET.

NOTES:

1. FOR ACCURATE RIGHT OF WAY DATA, CONTACT RIGHT OF WAY ENGINEERING AT THE DISTRICT OFFICE.
2. ALL MEDIAN CONCRETE BARRIER SHALL HAVE RUSTIC ROCK BARRIER PATTERN APPLIED TO BOTH SIDES OF THE BARRIER.
3. SEE QUANTITY SHEETS FOR LIMITS OF GRIND EXISTING CONCRETE PAVEMENT. EXACT LOCATIONS WILL BE DETERMINED BY THE ENGINEER. APPROACH SLABS AND BRIDGE DECKS ARE EXCLUDED FROM GRINDING.
4. EXACT LOCATIONS OF INDIVIDUAL SLAB REPLACEMENT WILL BE DETERMINED BY THE FIELD ENGINEER.

LEGEND:

APPROACH/DEPARTURE SLABS

MINOR CONCRETE (STAMPED CONCRETE)

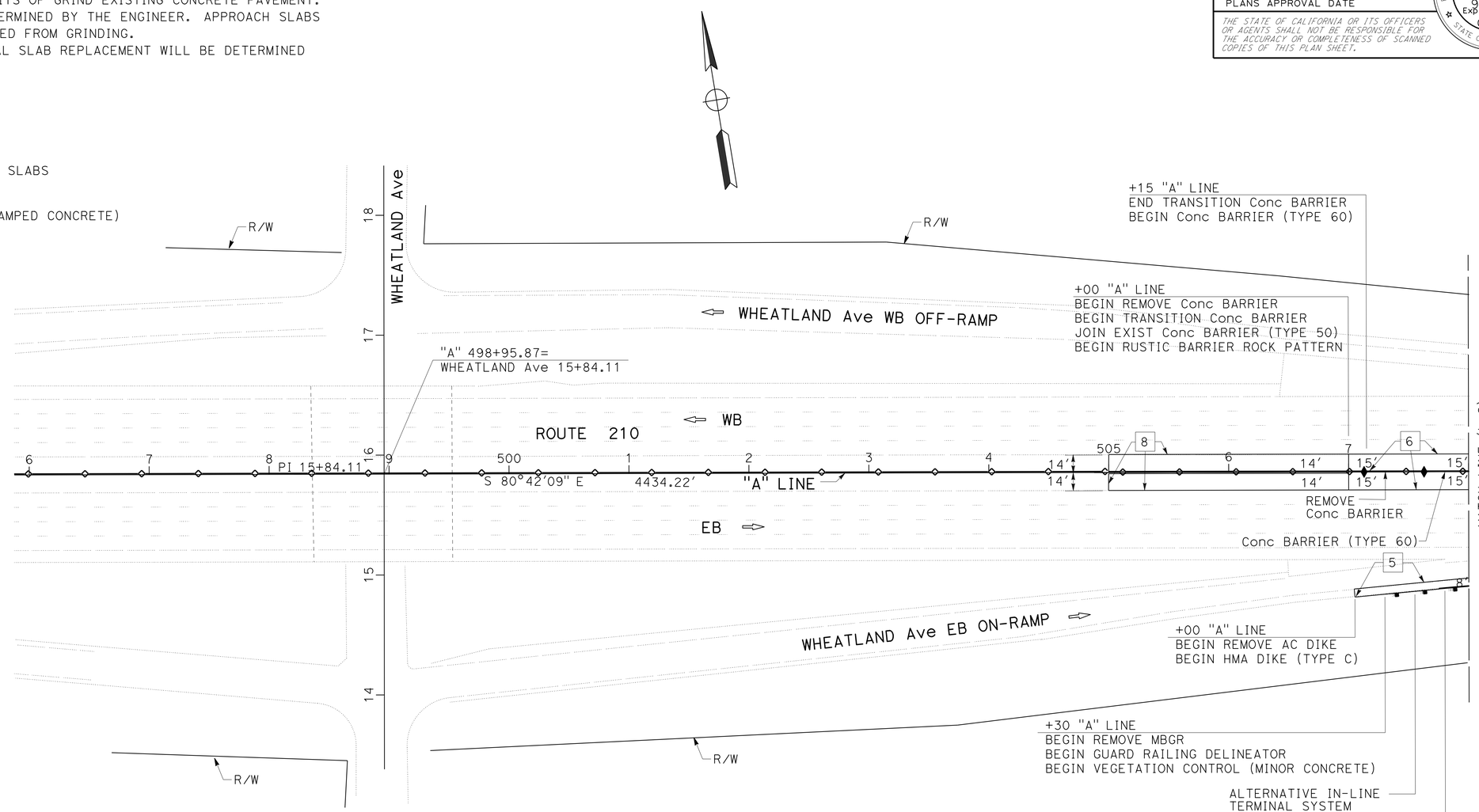

LAYOUT

SCALE: 1" = 50'

L-1

REVISED BY	DATE REVISED
DAN TRAN	MOE MIRZA
CALCULATED-DESIGNED BY	CHECKED BY
FUNCTIONAL SUPERVISOR	OJI KALU

STATE OF CALIFORNIA - DEPARTMENT OF TRANSPORTATION
Caltrans
DESIGN

LAST REVISION 12-12-12 | DATE PLOTTED => 26-APR-2013 | TIME PLOTTED => 11:19

Dist	COUNTY	ROUTE	POST MILES TOTAL PROJECT	SHEET No.	TOTAL SHEETS
07	LA	210	R9.7/R16.1	9	349

REGISTERED CIVIL ENGINEER 3-4-13 DATE

4-22-13
PLANS APPROVAL DATE

REGISTERED PROFESSIONAL ENGINEER DAN TRAN No. C63456 Exp. 9/30/14 CIVIL STATE OF CALIFORNIA

THE STATE OF CALIFORNIA OR ITS OFFICERS OR AGENTS SHALL NOT BE RESPONSIBLE FOR THE ACCURACY OR COMPLETENESS OF SCANNED COPIES OF THIS PLAN SHEET.

NOTE:

FOR ACCURATE RIGHT OF WAY DATA, CONTACT RIGHT OF WAY ENGINEERING AT THE DISTRICT OFFICE.

CURVE DATA

No. ⊗	R	Δ	T	L
1	4000′	42°24′23″	1551.75′	2960.52′

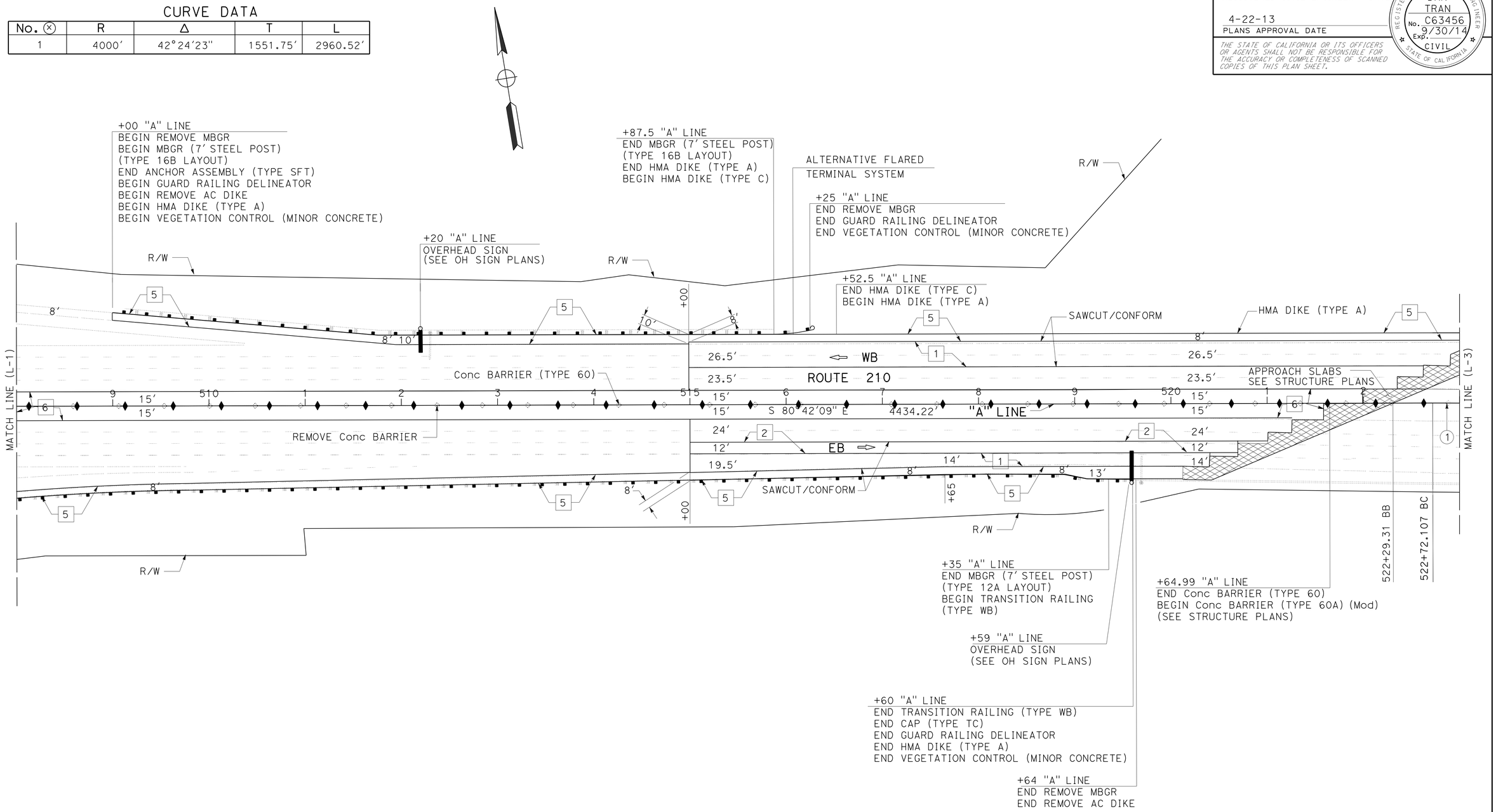

LAYOUT

SCALE: 1" = 50′

L-2

STATE OF CALIFORNIA - DEPARTMENT OF TRANSPORTATION
Caltrans
DESIGN

FUNCTIONAL SUPERVISOR: OJI KALU
CALCULATED-DESIGNED BY: DAN TRAN
CHECKED BY: MOE MIRZA
REVISED BY
DATE REVISED

LAST REVISION 12-12-12
DATE PLOTTED => 26-APR-2013
TIME PLOTTED => 11:19

Dist	COUNTY	ROUTE	POST MILES TOTAL PROJECT	SHEET No.	TOTAL SHEETS
07	LA	210	R9.7/R16.1	10	349

REGISTERED CIVIL ENGINEER 3-5-13 DATE

4-22-13
PLANS APPROVAL DATE

REGISTERED PROFESSIONAL ENGINEER DAN TRAN No. C63456 Exp. 9/30/14 CIVIL STATE OF CALIFORNIA

THE STATE OF CALIFORNIA OR ITS OFFICERS OR AGENTS SHALL NOT BE RESPONSIBLE FOR THE ACCURACY OR COMPLETENESS OF SCANNED COPIES OF THIS PLAN SHEET.

NOTE:

FOR ACCURATE RIGHT OF WAY DATA, CONTACT RIGHT OF WAY ENGINEERING AT THE DISTRICT OFFICE.

CURVE DATA

No. ⓧ	R	Δ	T	L
1	4000′	42°24′23"	1551.75′	2960.52′

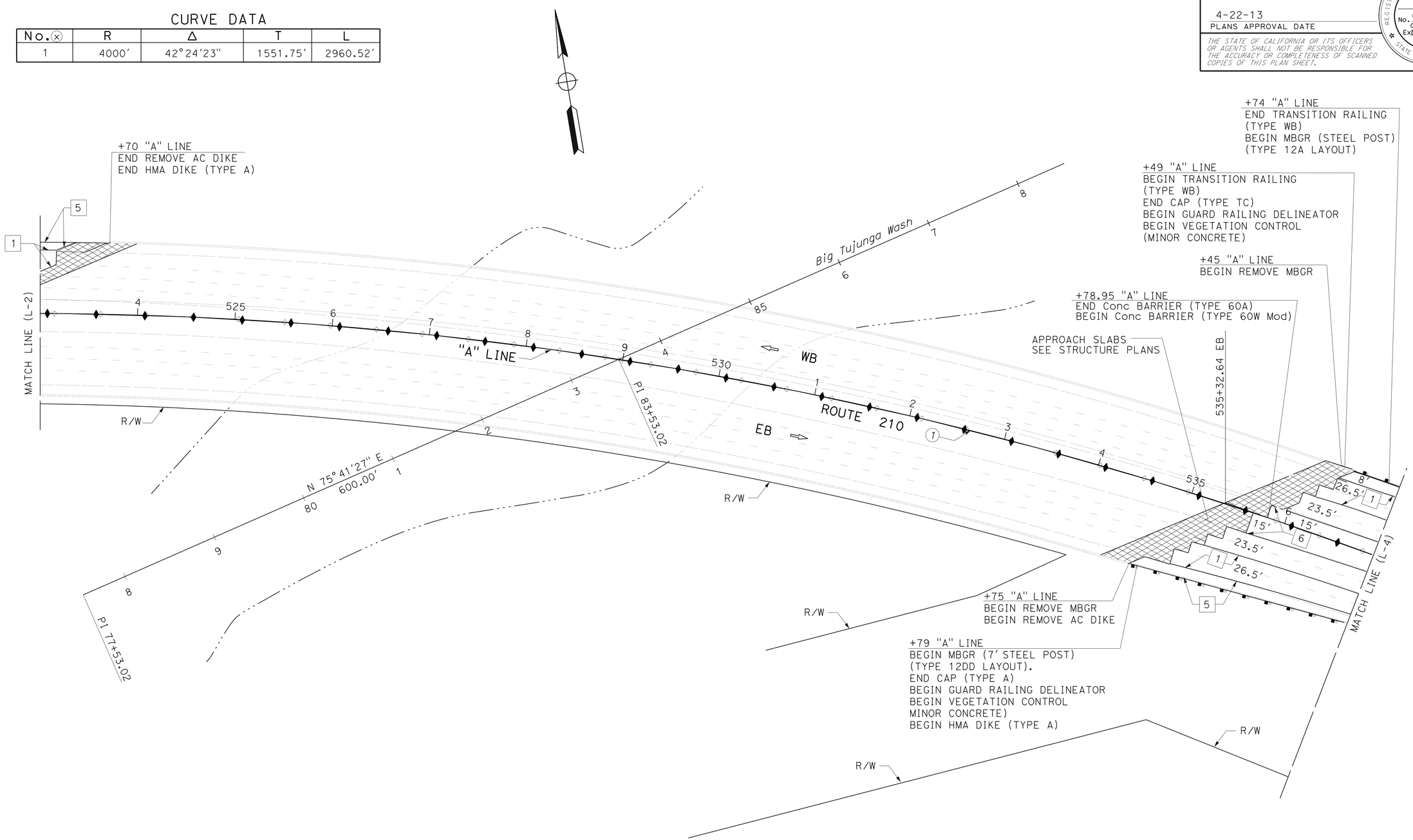

LAYOUT

SCALE: 1" = 50′

L-3

STATE OF CALIFORNIA - DEPARTMENT OF TRANSPORTATION
Caltrans
DESIGN

FUNCTIONAL SUPERVISOR: OJI KALU
CALCULATED-DESIGNED BY: DAN TRAN
CHECKED BY: MOE MIRZA
REVISED BY
DATE REVISED

LAST REVISION 12-12-12
DATE PLOTTED => 26-APR-2013
TIME PLOTTED => 12:44

Dist	COUNTY	ROUTE	POST MILES TOTAL PROJECT	SHEET No.	TOTAL SHEETS
07	LA	210	R9.7/R16.1	11	349

REGISTERED CIVIL ENGINEER 3-5-13 DATE

4-22-13
PLANS APPROVAL DATE

REGISTERED PROFESSIONAL ENGINEER DAN TRAN No. C63456 Exp. 9/30/14 CIVIL STATE OF CALIFORNIA

THE STATE OF CALIFORNIA OR ITS OFFICERS OR AGENTS SHALL NOT BE RESPONSIBLE FOR THE ACCURACY OR COMPLETENESS OF SCANNED COPIES OF THIS PLAN SHEET.

NOTE:

FOR ACCURATE RIGHT OF WAY DATA, CONTACT RIGHT OF WAY ENGINEERING AT THE DISTRICT OFFICE.

CURVE DATA

No. ⊗	R	Δ	T	L
1	4000′	42°24′23″	1551.75′	2960.52′

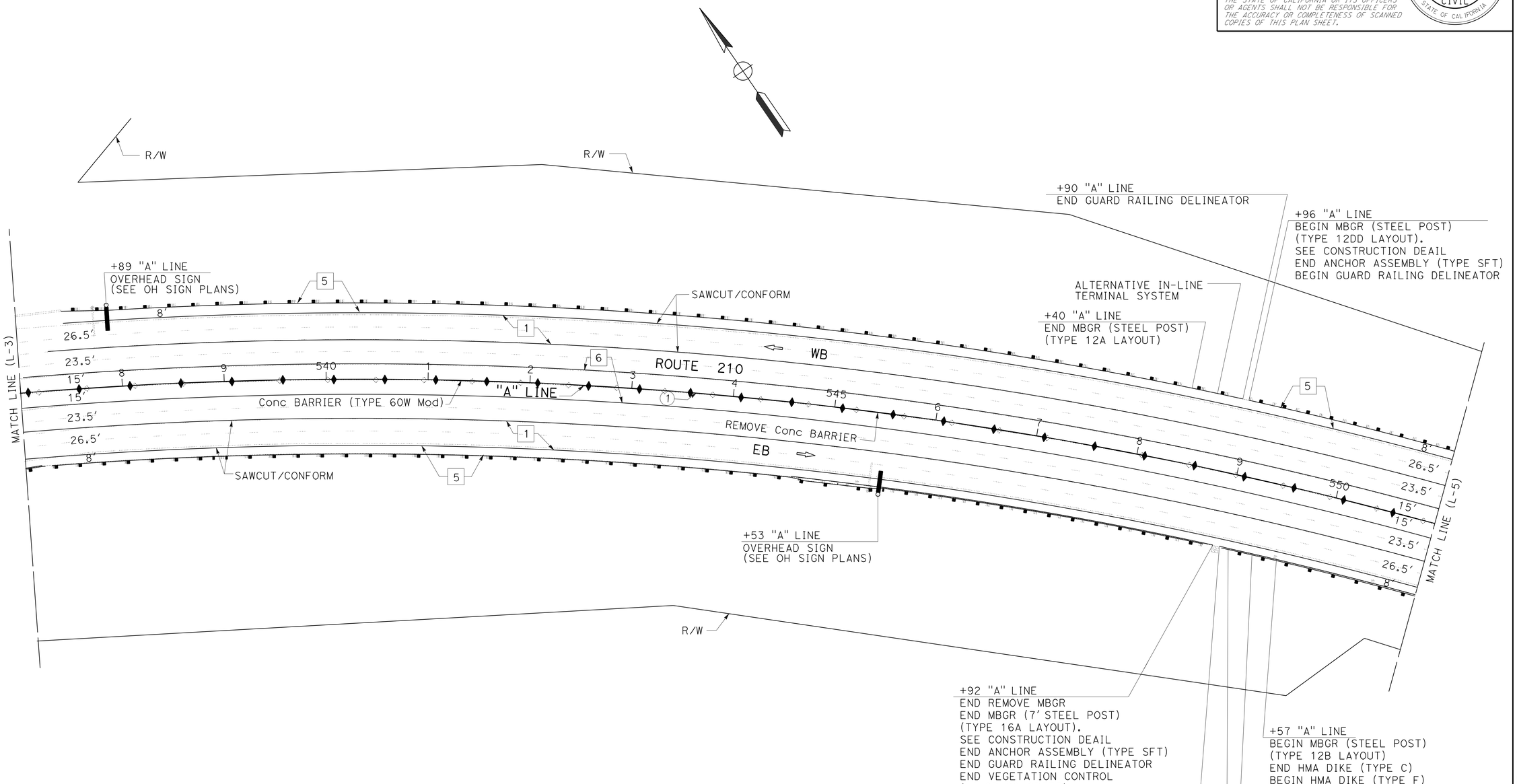

LAYOUT

SCALE: 1" = 50′

L-4

REVISED BY | DATE REVISED
DAN TRAN | MOE MIRZA
CALCULATED-DESIGNED BY | CHECKED BY
FUNCTIONAL SUPERVISOR: OJI KALU

STATE OF CALIFORNIA - DEPARTMENT OF TRANSPORTATION
Caltrans
DESIGN

LAST REVISION 12-12-12 | DATE PLOTTED => 26-APR-2013 | TIME PLOTTED => 11:04

Dist	COUNTY	ROUTE	POST MILES TOTAL PROJECT	SHEET No.	TOTAL SHEETS
07	LA	210	R9.7/R16.1	12	349

REGISTERED CIVIL ENGINEER 3-5-13 DATE

4-22-13
PLANS APPROVAL DATE

REGISTERED PROFESSIONAL ENGINEER DAN TRAN No. C63456 Exp. 9/30/14 CIVIL STATE OF CALIFORNIA

THE STATE OF CALIFORNIA OR ITS OFFICERS OR AGENTS SHALL NOT BE RESPONSIBLE FOR THE ACCURACY OR COMPLETENESS OF SCANNED COPIES OF THIS PLAN SHEET.

NOTE:

FOR ACCURATE RIGHT OF WAY DATA, CONTACT RIGHT OF WAY ENGINEERING AT THE DISTRICT OFFICE.

CURVE DATA

No. ⊗	R	Δ	T	L
1	4000′	42°24′23"	1551.75′	2960.52′

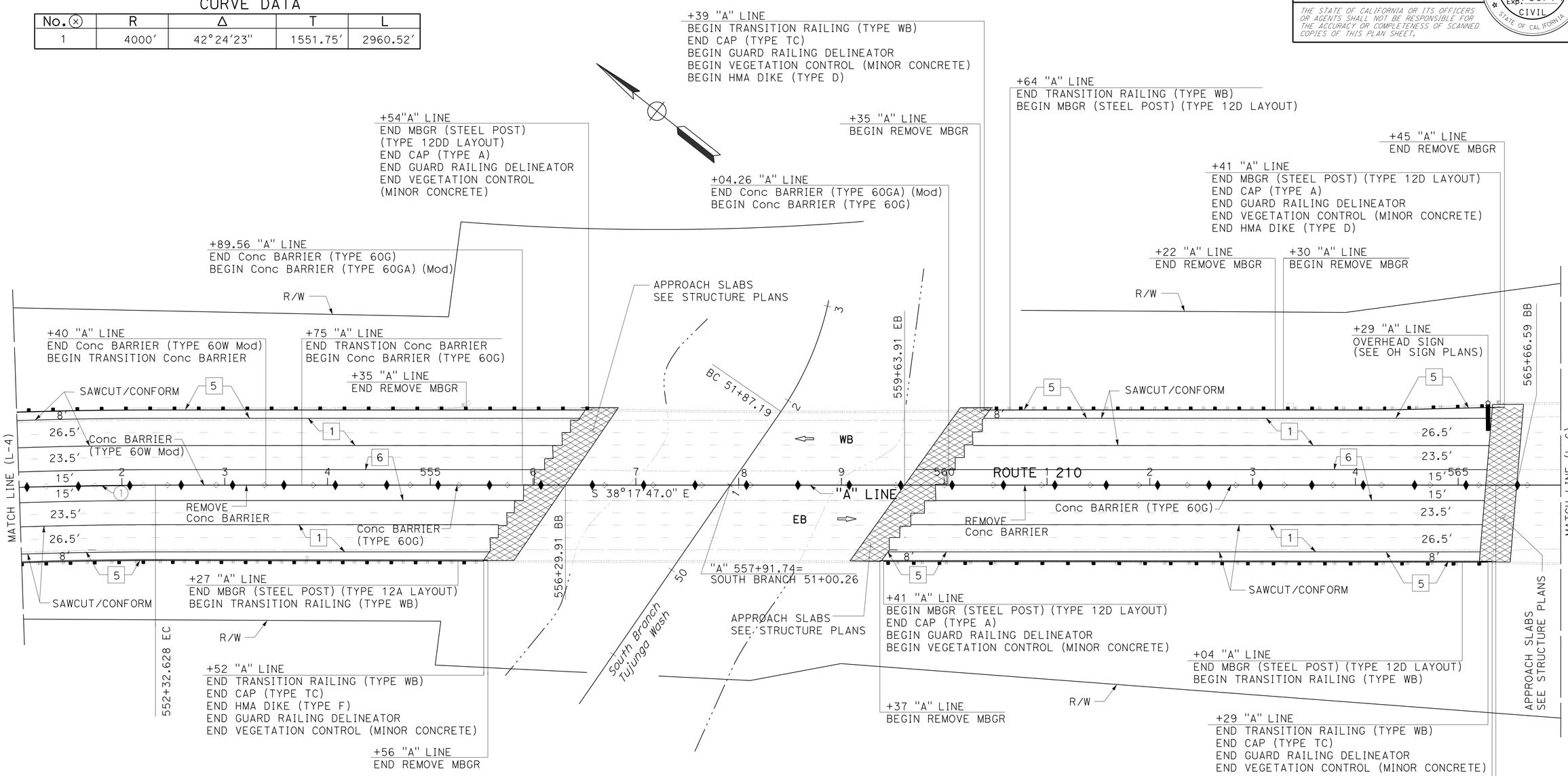

LAYOUT

SCALE: 1" = 50′

L-5

STATE OF CALIFORNIA - DEPARTMENT OF TRANSPORTATION
Caltrans
DESIGN

FUNCTIONAL SUPERVISOR: OJI KALU
CALCULATED-DESIGNED BY: DAN TRAN
CHECKED BY: MOE MIRZA
REVISED BY
DATE REVISED

LAST REVISION 12-12-12
DATE PLOTTED => 26-APR-2013
TIME PLOTTED => 11:04

Dist	COUNTY	ROUTE	POST MILES TOTAL PROJECT	SHEET No.	TOTAL SHEETS
07	LA	210	R9.7/R16.1	13	349

REGISTERED CIVIL ENGINEER 3-5-13 DATE

4-22-13
PLANS APPROVAL DATE

REGISTERED PROFESSIONAL ENGINEER DAN TRAN No. C63456 Exp. 9/30/14 CIVIL STATE OF CALIFORNIA

THE STATE OF CALIFORNIA OR ITS OFFICERS OR AGENTS SHALL NOT BE RESPONSIBLE FOR THE ACCURACY OR COMPLETENESS OF SCANNED COPIES OF THIS PLAN SHEET.

NOTE:

FOR ACCURATE RIGHT OF WAY DATA, CONTACT RIGHT OF WAY ENGINEERING AT THE DISTRICT OFFICE.

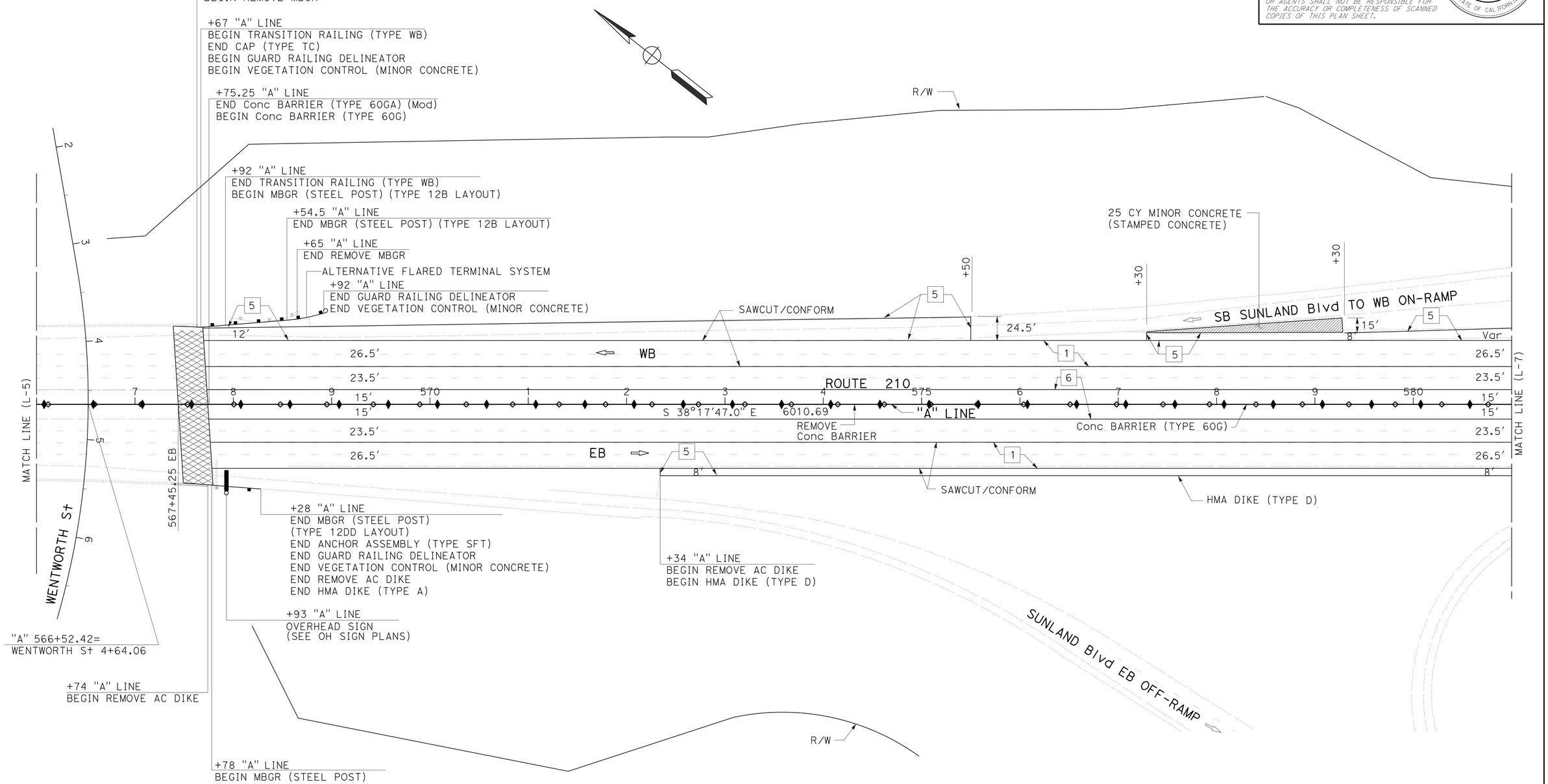

LAYOUT

SCALE: 1" = 50'

L-6

STATE OF CALIFORNIA - DEPARTMENT OF TRANSPORTATION
Caltrans® **DESIGN**

FUNCTIONAL SUPERVISOR: OJI KALU
CALCULATED-DESIGNED BY: DAN TRAN
CHECKED BY: MOE MIRZA
REVISED BY
DATE REVISED

LAST REVISION 12-12-12
DATE PLOTTED => 26-APR-2013
TIME PLOTTED => 11:04

Dist	COUNTY	ROUTE	POST MILES TOTAL PROJECT	SHEET No.	TOTAL SHEETS
07	LA	210	R9.7/R16.1	14	349

REGISTERED CIVIL ENGINEER 3-5-13 DATE

4-22-13
PLANS APPROVAL DATE

REGISTERED PROFESSIONAL ENGINEER DAN TRAN No. C63456 Exp. 9/30/14 CIVIL STATE OF CALIFORNIA

THE STATE OF CALIFORNIA OR ITS OFFICERS OR AGENTS SHALL NOT BE RESPONSIBLE FOR THE ACCURACY OR COMPLETENESS OF SCANNED COPIES OF THIS PLAN SHEET.

NOTE:

FOR ACCURATE RIGHT OF WAY DATA, CONTACT RIGHT OF WAY ENGINEERING AT THE DISTRICT OFFICE.

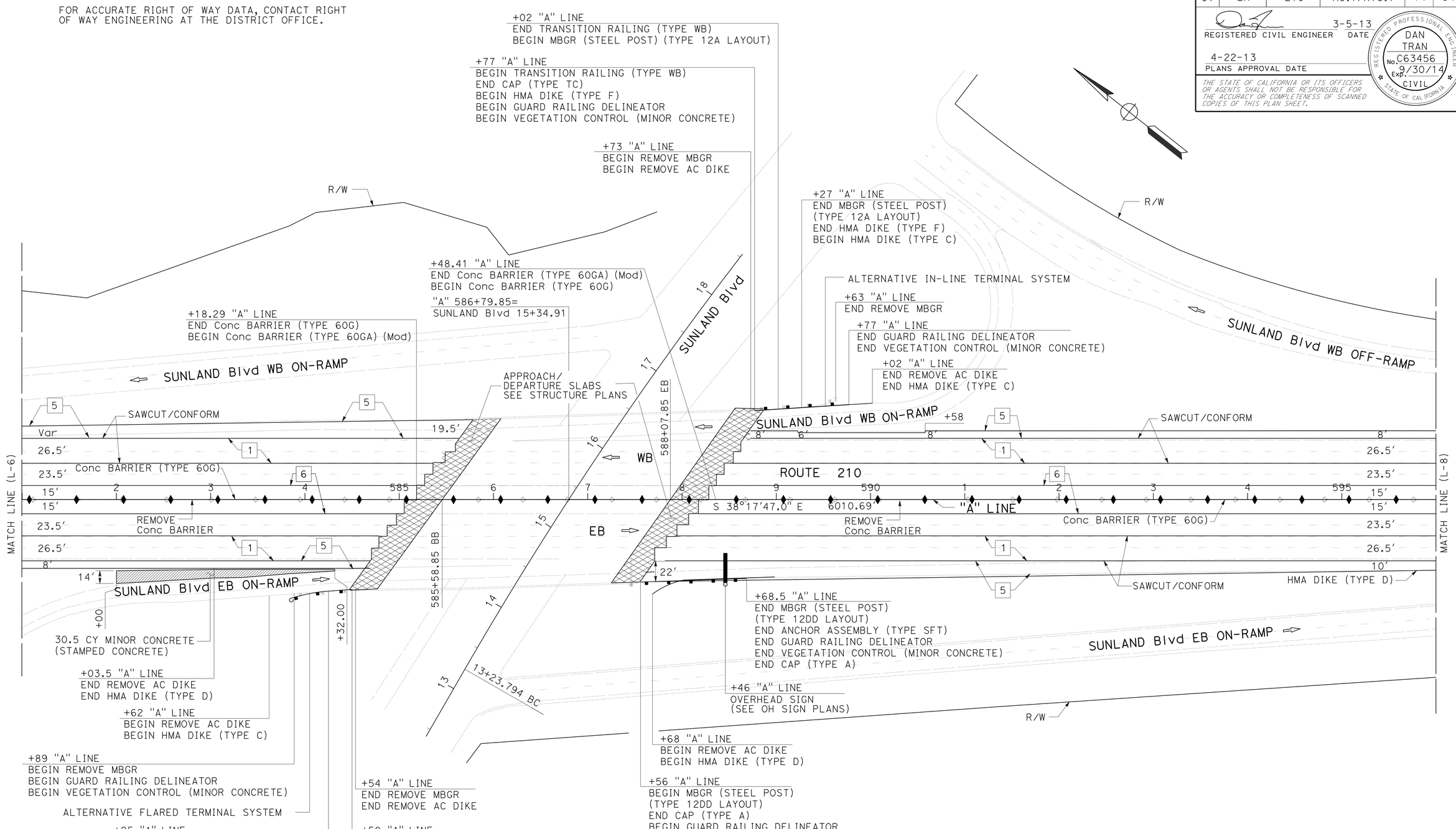

LAYOUT

SCALE: 1" = 50'

L-7

REVISED BY	DATE REVISED
DAN TRAN	MOE MIRZA

CALCULATED-DESIGNED BY / CHECKED BY

FUNCTIONAL SUPERVISOR: OJI KALU

STATE OF CALIFORNIA - DEPARTMENT OF TRANSPORTATION

Caltrans® DESIGN

LAST REVISION 12-12-12 | DATE PLOTTED => 26-APR-2013 | TIME PLOTTED => 11:04

Dist	COUNTY	ROUTE	POST MILES TOTAL PROJECT	SHEET No.	TOTAL SHEETS
07	LA	210	R9.7/R16.1	15	349

REGISTERED CIVIL ENGINEER 3-5-13 DATE

4-22-13
PLANS APPROVAL DATE

REGISTERED PROFESSIONAL ENGINEER DAN TRAN No. C63456 Exp. 9/30/14 CIVIL STATE OF CALIFORNIA

THE STATE OF CALIFORNIA OR ITS OFFICERS OR AGENTS SHALL NOT BE RESPONSIBLE FOR THE ACCURACY OR COMPLETENESS OF SCANNED COPIES OF THIS PLAN SHEET.

NOTE:

FOR ACCURATE RIGHT OF WAY DATA, CONTACT RIGHT OF WAY ENGINEERING AT THE DISTRICT OFFICE.

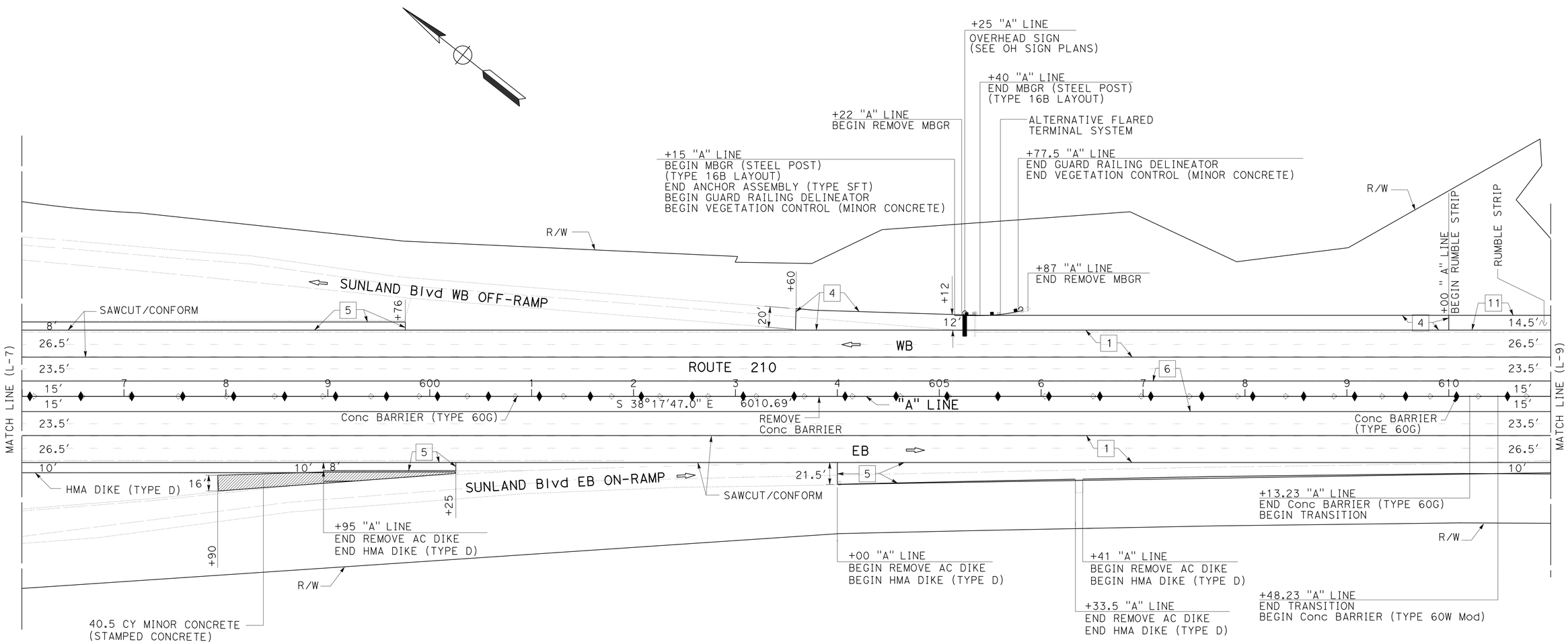

LAYOUT

SCALE: 1" = 50'

L-8

REVISED BY	DATE REVISED
DAN TRAN	MOE MIRZA
CALCULATED-DESIGNED BY	CHECKED BY
FUNCTIONAL SUPERVISOR	OJI KALU

STATE OF CALIFORNIA - DEPARTMENT OF TRANSPORTATION

Caltrans DESIGN

LAST REVISION 12-12-12 | DATE PLOTTED => 26-APR-2013 | TIME PLOTTED => 08:28

Dist	COUNTY	ROUTE	POST MILES TOTAL PROJECT	SHEET No.	TOTAL SHEETS
07	LA	210	R9.7/R16.1	16	349

REGISTERED CIVIL ENGINEER 3-5-13 DATE

4-22-13
PLANS APPROVAL DATE

REGISTERED PROFESSIONAL ENGINEER DAN TRAN No. C63456 Exp. 9/30/14 CIVIL STATE OF CALIFORNIA

THE STATE OF CALIFORNIA OR ITS OFFICERS OR AGENTS SHALL NOT BE RESPONSIBLE FOR THE ACCURACY OR COMPLETENESS OF SCANNED COPIES OF THIS PLAN SHEET.

NOTE:

FOR ACCURATE RIGHT OF WAY DATA, CONTACT RIGHT OF WAY ENGINEERING AT THE DISTRICT OFFICE.

CURVE DATA

No. ⓧ	R	Δ	T	L
2	3000′	24°10′37″	642.52′	1265.92′

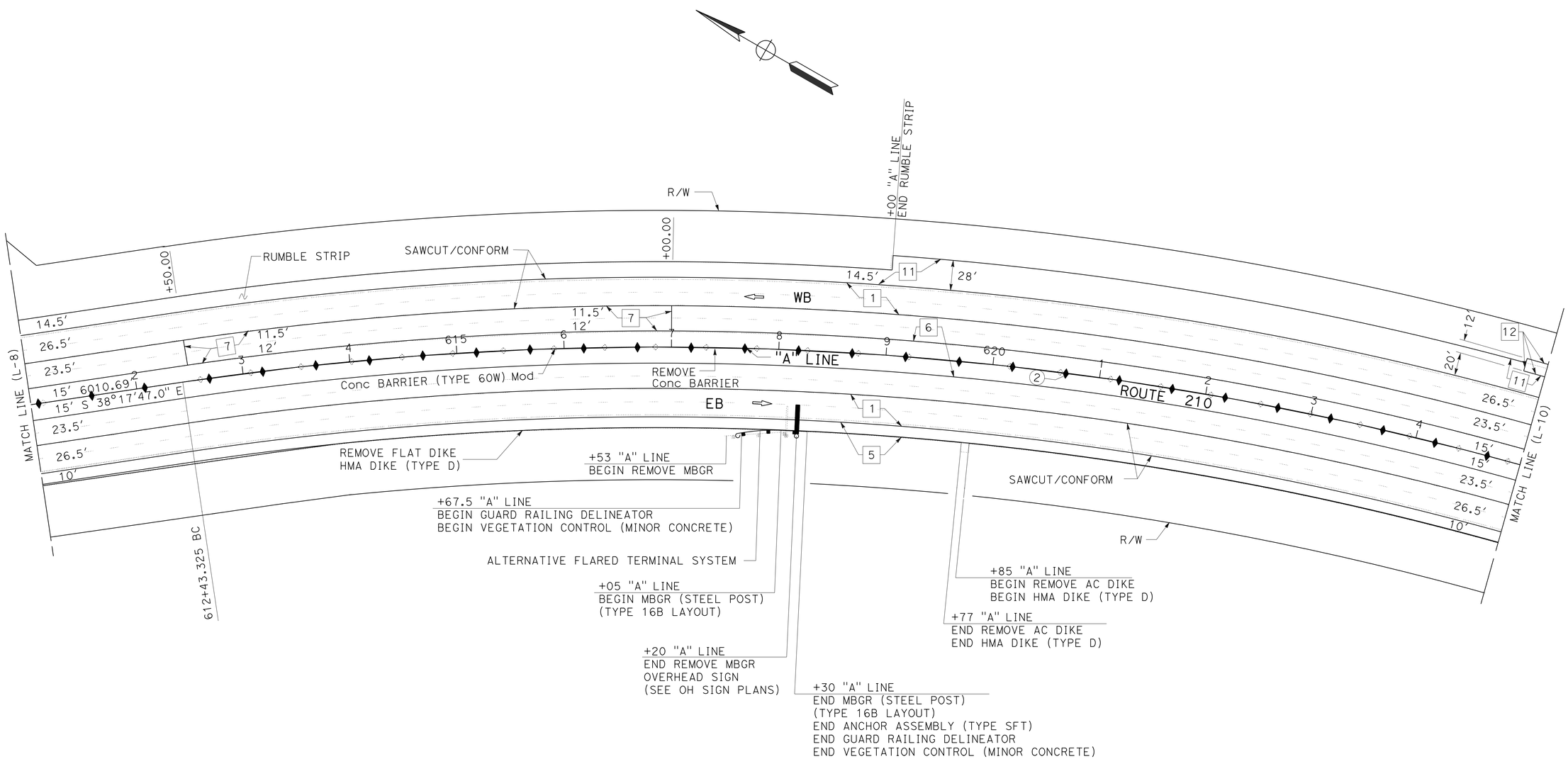

LAYOUT

SCALE: 1" = 50′

L-9

STATE OF CALIFORNIA - DEPARTMENT OF TRANSPORTATION

Caltrans

DESIGN

FUNCTIONAL SUPERVISOR: OJI KALU

CALCULATED-DESIGNED BY: DAN TRAN

CHECKED BY: MOE MIRZA

REVISED BY

DATE REVISED

LAST REVISION 12-12-12

DATE PLOTTED => 26-APR-2013
TIME PLOTTED => 08:28

Dist	COUNTY	ROUTE	POST MILES TOTAL PROJECT	SHEET No.	TOTAL SHEETS
07	LA	210	R9.7/R16.1	17	349

REGISTERED CIVIL ENGINEER 3-5-13 DATE

4-22-13
PLANS APPROVAL DATE

REGISTERED PROFESSIONAL ENGINEER DAN TRAN No. C63456 Exp. 9/30/14 CIVIL STATE OF CALIFORNIA

THE STATE OF CALIFORNIA OR ITS OFFICERS OR AGENTS SHALL NOT BE RESPONSIBLE FOR THE ACCURACY OR COMPLETENESS OF SCANNED COPIES OF THIS PLAN SHEET.

NOTE:

FOR ACCURATE RIGHT OF WAY DATA, CONTACT RIGHT OF WAY ENGINEERING AT THE DISTRICT OFFICE.

CURVE DATA

No. ⊗	R	Δ	T	L
2	3000′	24°10′37″	642.52′	1265.92′
3	3000′	61°30′13″	1784.94′	3220.32′

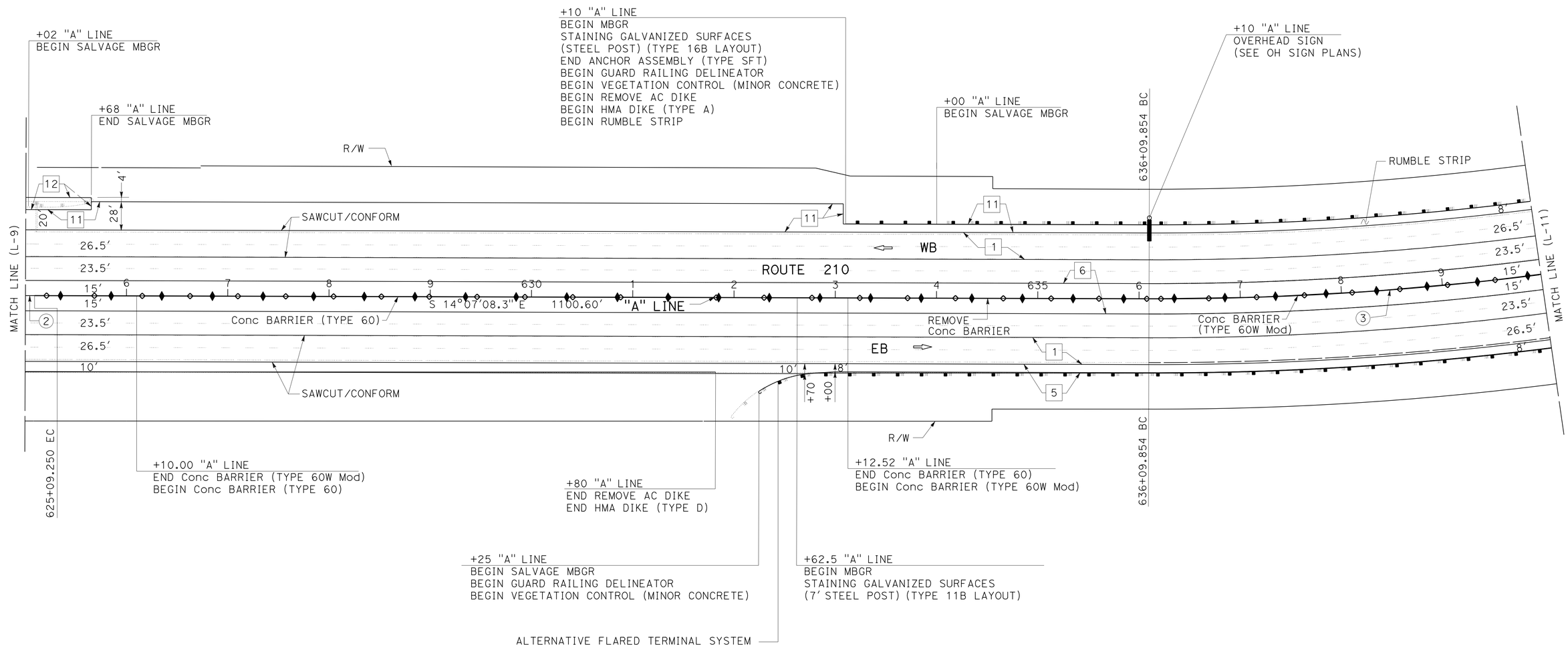

LAYOUT

SCALE: 1" = 50′

L-10

STATE OF CALIFORNIA - DEPARTMENT OF TRANSPORTATION
DESIGN

FUNCTIONAL SUPERVISOR: OJI KALU
CALCULATED-DESIGNED BY: DAN TRAN
CHECKED BY: MOE MIRZA
REVISED BY
DATE REVISED

LAST REVISION 12-12-12
DATE PLOTTED => 26-APR-2013
TIME PLOTTED => 08:36

Dist	COUNTY	ROUTE	POST MILES TOTAL PROJECT	SHEET No.	TOTAL SHEETS
07	LA	210	R9.7/R16.1	18	349

REGISTERED CIVIL ENGINEER 3-5-13 DATE

4-22-13
PLANS APPROVAL DATE

REGISTERED PROFESSIONAL ENGINEER DAN TRAN No. C63456 Exp. 9/30/14 CIVIL STATE OF CALIFORNIA

THE STATE OF CALIFORNIA OR ITS OFFICERS OR AGENTS SHALL NOT BE RESPONSIBLE FOR THE ACCURACY OR COMPLETENESS OF SCANNED COPIES OF THIS PLAN SHEET.

NOTE:

FOR ACCURATE RIGHT OF WAY DATA, CONTACT RIGHT OF WAY ENGINEERING AT THE DISTRICT OFFICE.

CURVE DATA

No. ⊗	R	Δ	T	L
3	3000′	61°30′13″	1784.94′	3220.32′

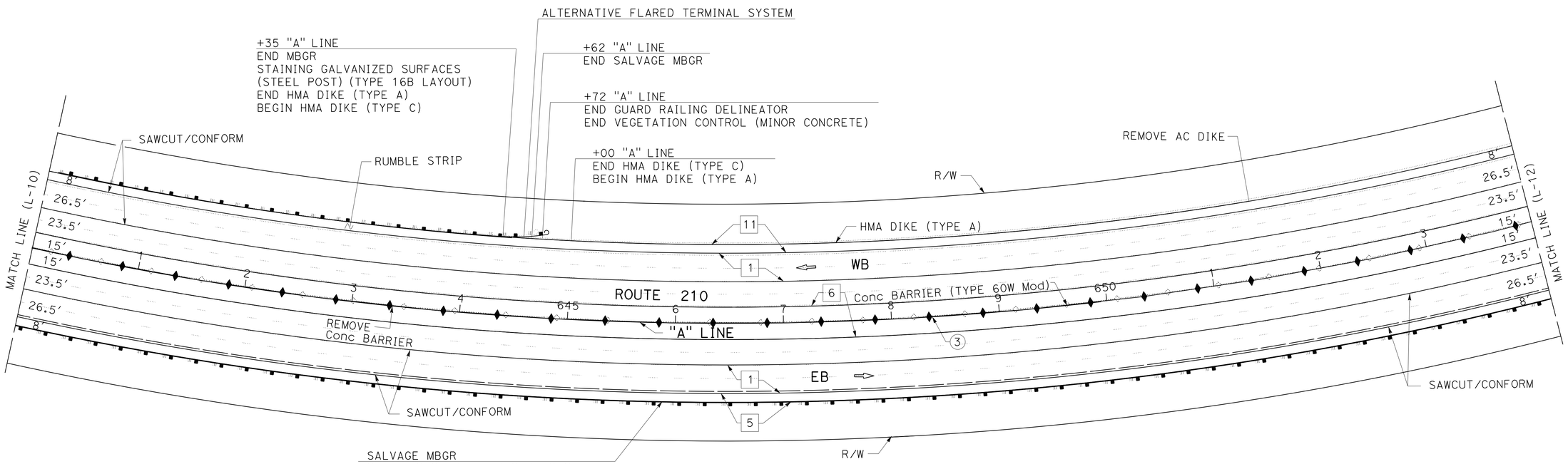

LAYOUT

SCALE: 1" = 50′

L-11

STATE OF CALIFORNIA - DEPARTMENT OF TRANSPORTATION
Caltrans DESIGN

FUNCTIONAL SUPERVISOR: OJI KALU
CALCULATED-DESIGNED BY: DAN TRAN
CHECKED BY: MOE MIRZA
REVISED BY
DATE REVISED

LAST REVISION 12-12-12
DATE PLOTTED => 26-APR-2013
TIME PLOTTED => 08:28

Dist	COUNTY	ROUTE	POST MILES TOTAL PROJECT	SHEET No.	TOTAL SHEETS
07	LA	210	R9.7/R16.1	19	349

REGISTERED CIVIL ENGINEER 3-5-13 DATE

4-22-13
PLANS APPROVAL DATE

REGISTERED PROFESSIONAL ENGINEER DAN TRAN No. C63456 Exp. 9/30/14 CIVIL STATE OF CALIFORNIA

THE STATE OF CALIFORNIA OR ITS OFFICERS OR AGENTS SHALL NOT BE RESPONSIBLE FOR THE ACCURACY OR COMPLETENESS OF SCANNED COPIES OF THIS PLAN SHEET.

NOTE:

FOR ACCURATE RIGHT OF WAY DATA, CONTACT RIGHT OF WAY ENGINEERING AT THE DISTRICT OFFICE.

CURVE DATA

No. ⊗	R	Δ	T	L
3	3000′	61°30′13″	1784.94′	3220.32′

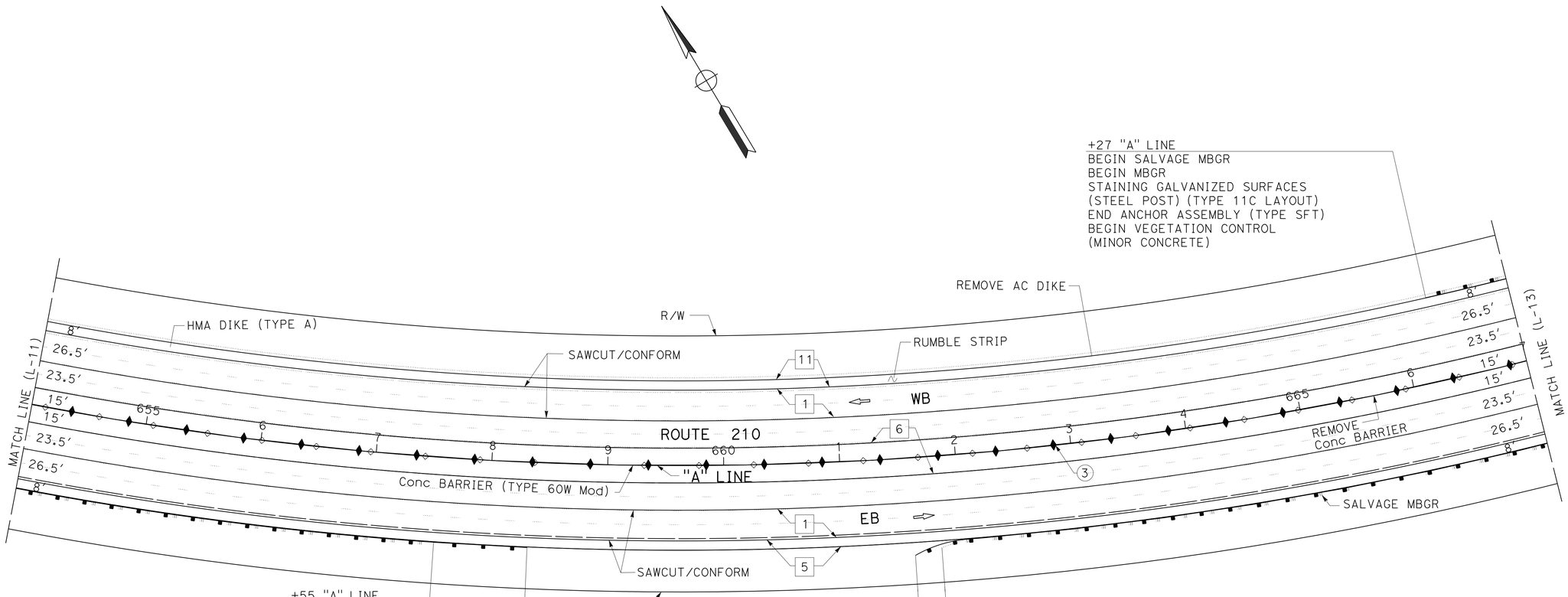

LAYOUT

SCALE: 1" = 50′

L-12

STATE OF CALIFORNIA - DEPARTMENT OF TRANSPORTATION
Caltrans® DESIGN

FUNCTIONAL SUPERVISOR: OJI KALU
CALCULATED-DESIGNED BY: DAN TRAN
CHECKED BY: MOE MIRZA
REVISED BY
DATE REVISED

LAST REVISION 12-12-12 | DATE PLOTTED => 26-APR-2013 | TIME PLOTTED => 08:28

Dist	COUNTY	ROUTE	POST MILES TOTAL PROJECT	SHEET No.	TOTAL SHEETS
07	LA	210	R9.7/R16.1	20	349

REGISTERED CIVIL ENGINEER 3-5-13 DATE

4-22-13
PLANS APPROVAL DATE

REGISTERED PROFESSIONAL ENGINEER DAN TRAN No. C63456 Exp. 9/30/14 CIVIL STATE OF CALIFORNIA

THE STATE OF CALIFORNIA OR ITS OFFICERS OR AGENTS SHALL NOT BE RESPONSIBLE FOR THE ACCURACY OR COMPLETENESS OF SCANNED COPIES OF THIS PLAN SHEET.

NOTE:

FOR ACCURATE RIGHT OF WAY DATA, CONTACT RIGHT OF WAY ENGINEERING AT THE DISTRICT OFFICE.

CURVE DATA

No. ⊗	R	Δ	T	L
3	3000′	61°30′13"	1784.94′	3220.32′
4	3000′	26°56′54"	718.81′	1411.02′

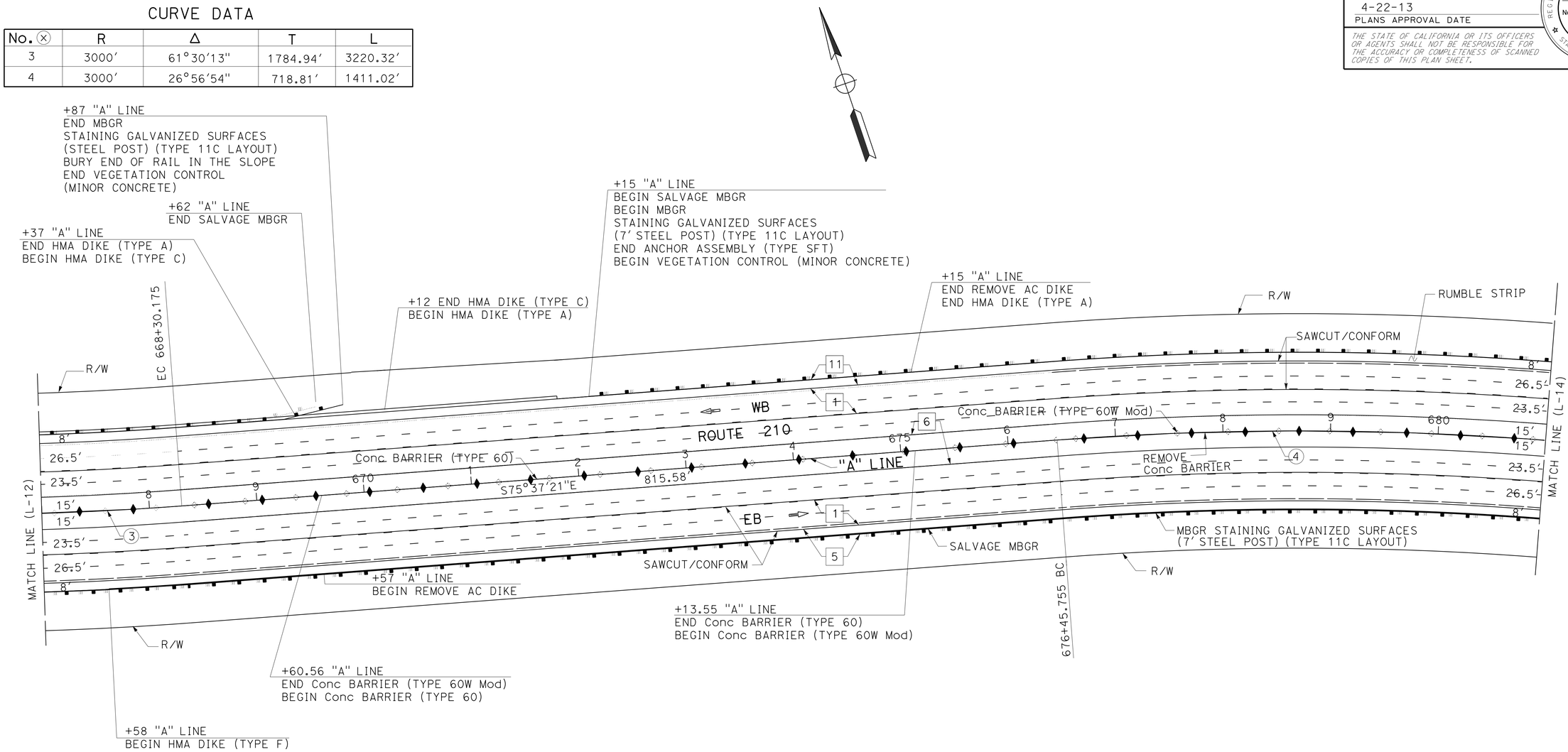

LAYOUT

SCALE: 1" = 50′

L-13

STATE OF CALIFORNIA - DEPARTMENT OF TRANSPORTATION
Caltrans DESIGN

FUNCTIONAL SUPERVISOR: OJI KALU
CALCULATED-DESIGNED BY: DAN TRAN
CHECKED BY: MOE MIRZA
REVISED BY
DATE REVISED

LAST REVISION 12-12-12
DATE PLOTTED => 29-APR-2013
TIME PLOTTED => 13:15

Dist	COUNTY	ROUTE	POST MILES TOTAL PROJECT	SHEET No.	TOTAL SHEETS
07	LA	210	R9.7/R16.1	21	349

REGISTERED CIVIL ENGINEER 3-5-13 DATE

4-22-13
PLANS APPROVAL DATE

REGISTERED PROFESSIONAL ENGINEER DAN TRAN No. C63456 Exp. 9/30/14 CIVIL STATE OF CALIFORNIA

THE STATE OF CALIFORNIA OR ITS OFFICERS OR AGENTS SHALL NOT BE RESPONSIBLE FOR THE ACCURACY OR COMPLETENESS OF SCANNED COPIES OF THIS PLAN SHEET.

NOTE:

FOR ACCURATE RIGHT OF WAY DATA, CONTACT RIGHT OF WAY ENGINEERING AT THE DISTRICT OFFICE.

CURVE DATA

No. ⊗	R	Δ	T	L
4	3000.0′	26°56′54″	718.81′	1411.02′

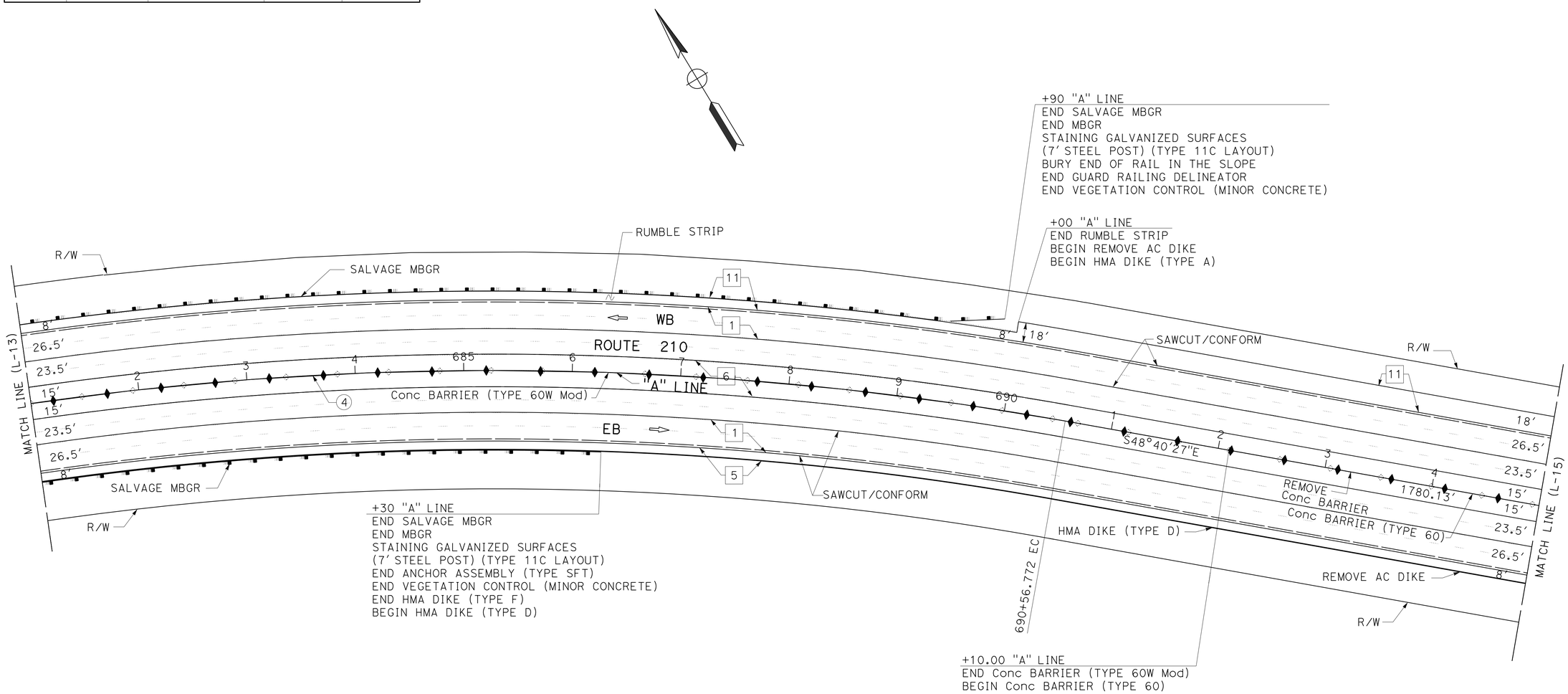

LAYOUT

SCALE: 1" = 50′

L-14

STATE OF CALIFORNIA - DEPARTMENT OF TRANSPORTATION

Caltrans® **DESIGN**

FUNCTIONAL SUPERVISOR: OJI KALU

CALCULATED-DESIGNED BY: DAN TRAN

CHECKED BY: MOE MIRZA

REVISED BY

DATE REVISED

LAST REVISION 12-12-12 DATE PLOTTED => 26-APR-2013 TIME PLOTTED => 08:28

Dist	COUNTY	ROUTE	POST MILES TOTAL PROJECT	SHEET No.	TOTAL SHEETS
07	LA	210	R9.7/R16.1	22	349

REGISTERED CIVIL ENGINEER 3-5-13 DATE

4-22-13
PLANS APPROVAL DATE

REGISTERED PROFESSIONAL ENGINEER DAN TRAN C63456 No. 9/30/14 Exp. CIVIL STATE OF CALIFORNIA

THE STATE OF CALIFORNIA OR ITS OFFICERS OR AGENTS SHALL NOT BE RESPONSIBLE FOR THE ACCURACY OR COMPLETENESS OF SCANNED COPIES OF THIS PLAN SHEET.

NOTE:

FOR ACCURATE RIGHT OF WAY DATA, CONTACT RIGHT OF WAY ENGINEERING AT THE DISTRICT OFFICE.

CURVE DATA

No. ⊗	R	Δ	T	L
5	3000′	48°05′18″	1338.45′	2517.89′

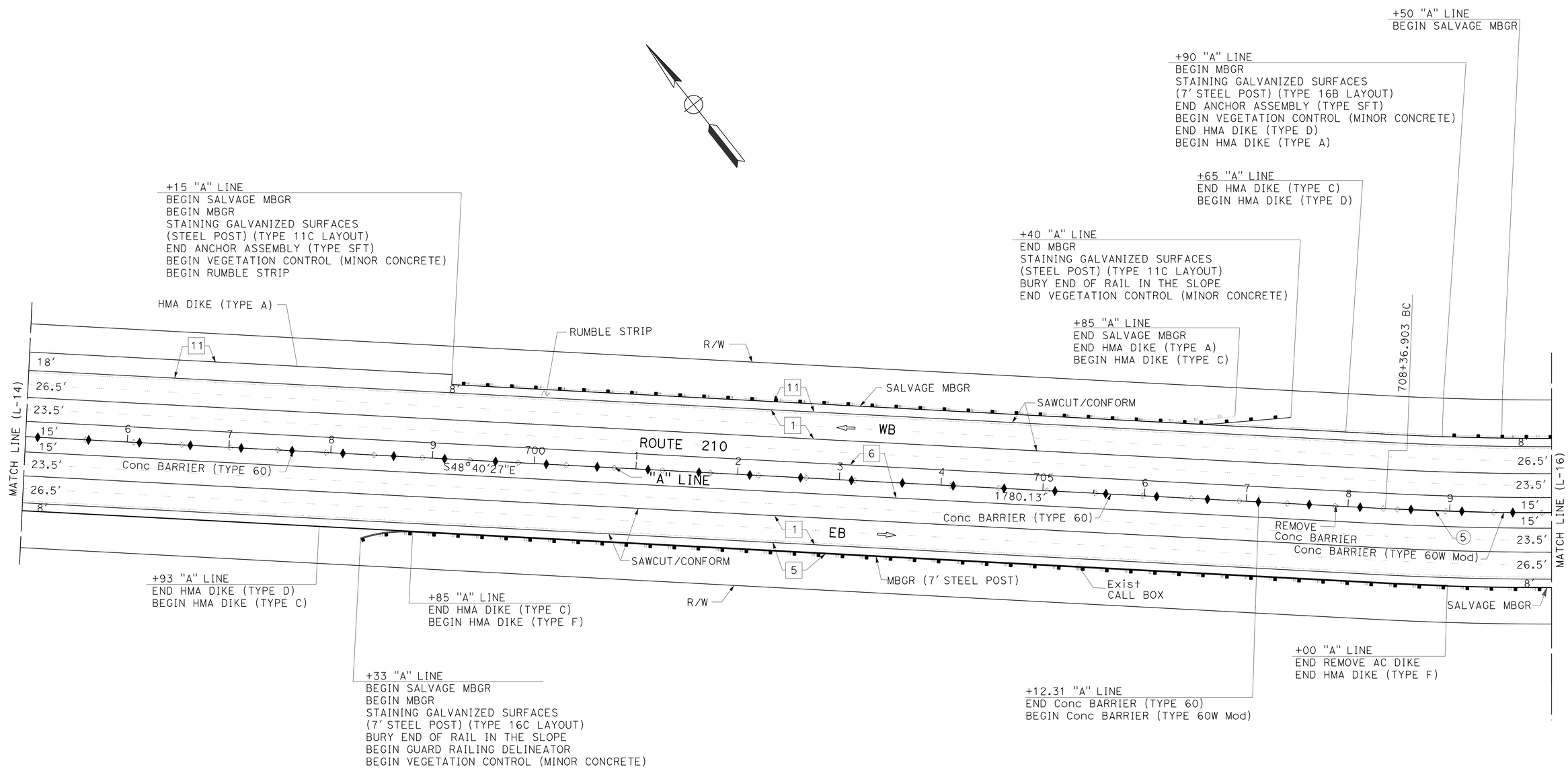

LAYOUT

SCALE: 1" = 50′

L-15

STATE OF CALIFORNIA - DEPARTMENT OF TRANSPORTATION
Caltrans® **DESIGN**

FUNCTIONAL SUPERVISOR: OJI KALU
CALCULATED-DESIGNED BY: DAN TRAN
CHECKED BY: MOE MIRZA
REVISED BY
DATE REVISED

LAST REVISION 12-12-12 | DATE PLOTTED => 29-APR-2013 | TIME PLOTTED => 13:17

Dist	COUNTY	ROUTE	POST MILES TOTAL PROJECT	SHEET No.	TOTAL SHEETS
07	LA	210	R9.7/R16.1	23	349

REGISTERED CIVIL ENGINEER 3-5-13 DATE

4-22-13
PLANS APPROVAL DATE

REGISTERED PROFESSIONAL ENGINEER DAN TRAN No. C63456 Exp. 9/30/14 CIVIL STATE OF CALIFORNIA

THE STATE OF CALIFORNIA OR ITS OFFICERS OR AGENTS SHALL NOT BE RESPONSIBLE FOR THE ACCURACY OR COMPLETENESS OF SCANNED COPIES OF THIS PLAN SHEET.

NOTE:

FOR ACCURATE RIGHT OF WAY DATA, CONTACT RIGHT OF WAY ENGINEERING AT THE DISTRICT OFFICE.

CURVE DATA

No. ⊗	R	Δ	T	L
5	3000.00′	48°05′17″	1338.45′	2517.89′

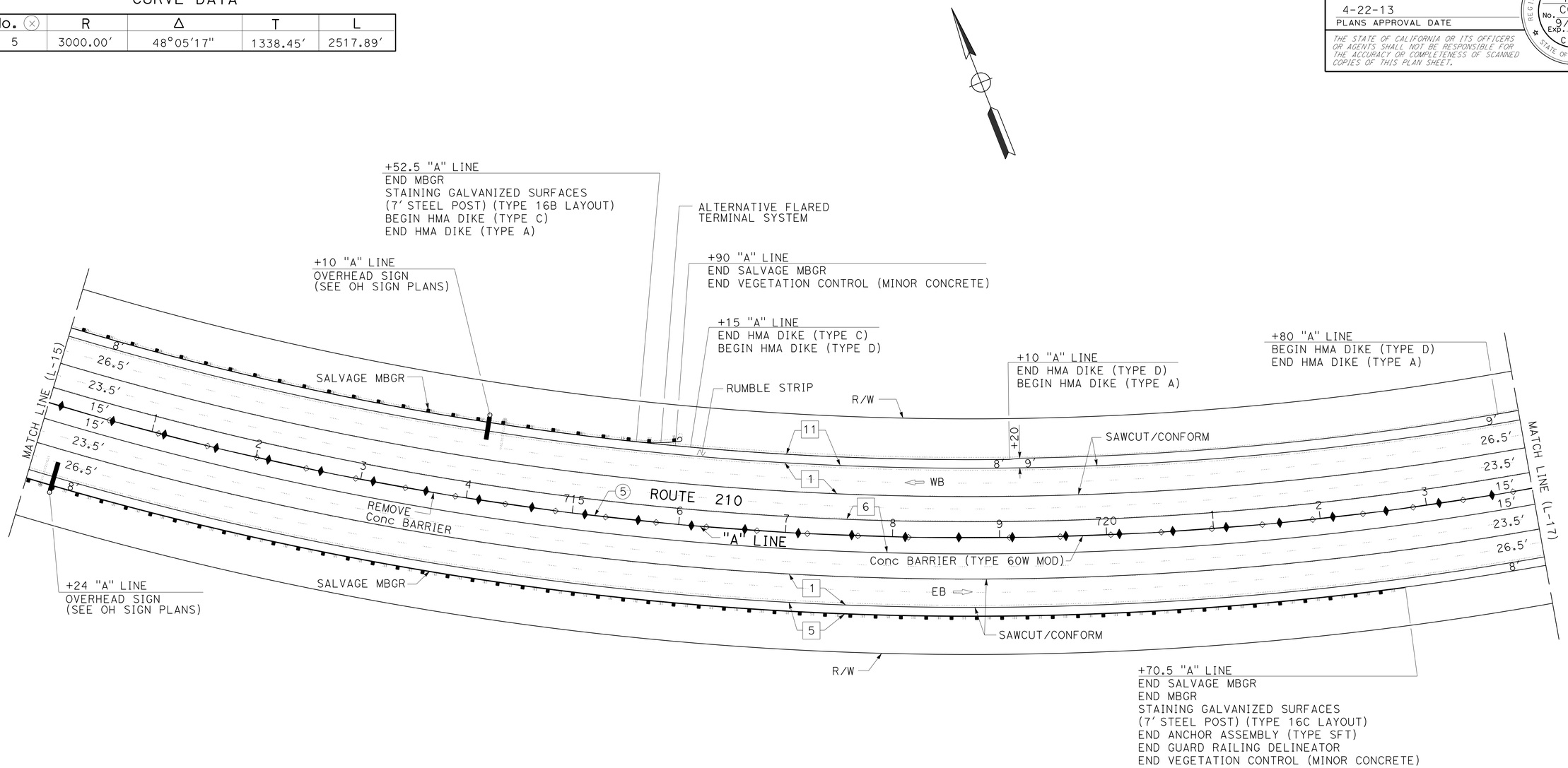

LAYOUT

SCALE: 1" = 50′

L-16

REVISED BY | DATE REVISED
DAN TRAN | MOE MIRZA
CALCULATED-DESIGNED BY | CHECKED BY
FUNCTIONAL SUPERVISOR
OJI KALU

STATE OF CALIFORNIA - DEPARTMENT OF TRANSPORTATION
Caltrans
DESIGN

LAST REVISION 12-12-12 | DATE PLOTTED => 26-APR-2013 | TIME PLOTTED => 08:28

Dist	COUNTY	ROUTE	POST MILES TOTAL PROJECT	SHEET No.	TOTAL SHEETS
07	LA	210	R9.7/R16.1	24	349

REGISTERED CIVIL ENGINEER 3-5-13 DATE

4-22-13
PLANS APPROVAL DATE

REGISTERED PROFESSIONAL ENGINEER DAN TRAN C63456 No. 9/30/14 Exp. CIVIL STATE OF CALIFORNIA

THE STATE OF CALIFORNIA OR ITS OFFICERS OR AGENTS SHALL NOT BE RESPONSIBLE FOR THE ACCURACY OR COMPLETENESS OF SCANNED COPIES OF THIS PLAN SHEET.

NOTE:

FOR ACCURATE RIGHT OF WAY DATA, CONTACT RIGHT OF WAY ENGINEERING AT THE DISTRICT OFFICE.

CURVE DATA

No. ⊗	R	Δ	T	L
5	3000′	48°05′17″	1338.45′	2517.89′

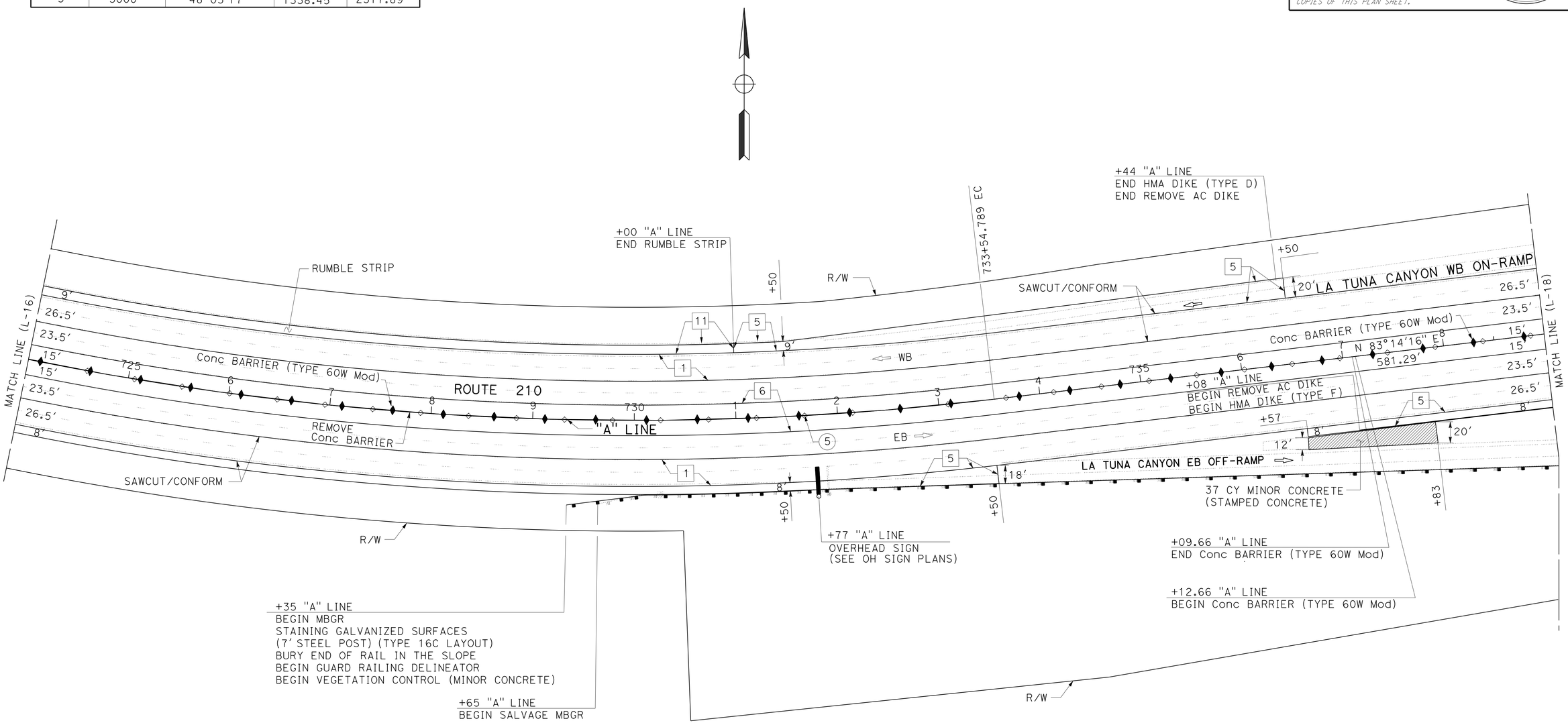

LAYOUT

SCALE: 1" = 50′

L-17

STATE OF CALIFORNIA - DEPARTMENT OF TRANSPORTATION
Caltrans® DESIGN

FUNCTIONAL SUPERVISOR: OJI KALU
CALCULATED-DESIGNED BY: DAN TRAN
CHECKED BY: MOE MIRZA
REVISED BY
DATE REVISED

LAST REVISION 12-12-12
DATE PLOTTED => 26-APR-2013
TIME PLOTTED => 08:28

Dist	COUNTY	ROUTE	POST MILES TOTAL PROJECT	SHEET No.	TOTAL SHEETS
07	LA	210	R9.7/R16.1	25	349

REGISTERED CIVIL ENGINEER 3-5-13 DATE

4-22-13
PLANS APPROVAL DATE

REGISTERED PROFESSIONAL ENGINEER DAN TRAN C63456 No. 9/30/14 Exp. CIVIL STATE OF CALIFORNIA

THE STATE OF CALIFORNIA OR ITS OFFICERS OR AGENTS SHALL NOT BE RESPONSIBLE FOR THE ACCURACY OR COMPLETENESS OF SCANNED COPIES OF THIS PLAN SHEET.

NOTE:

FOR ACCURATE RIGHT OF WAY DATA, CONTACT RIGHT OF WAY ENGINEERING AT THE DISTRICT OFFICE.

CURVE DATA

No. ⊗	R	Δ	T	L
6	4000′	16°08′07″	566.99′	1126.47′

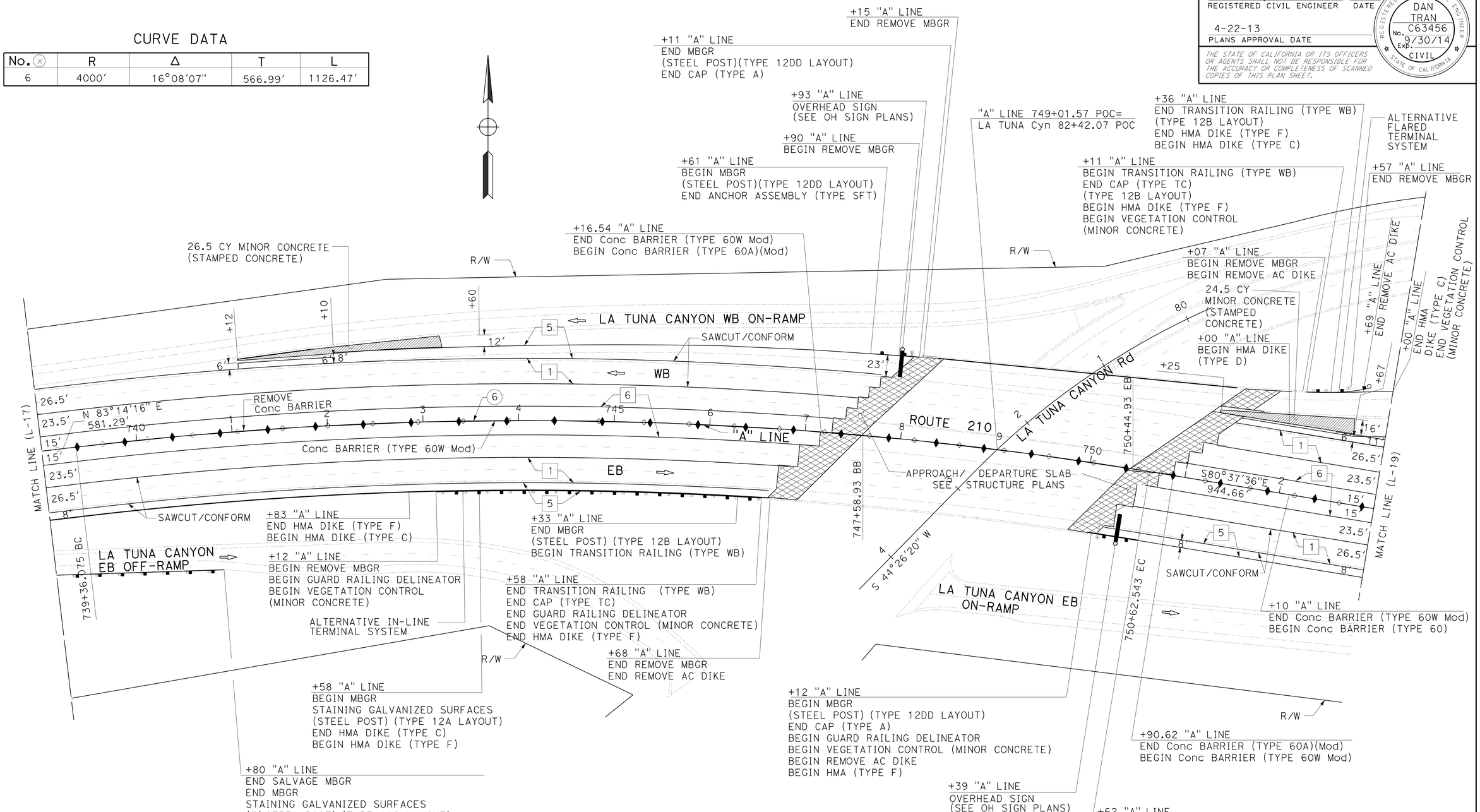

LAYOUT

SCALE: 1" = 50′

L-18

STATE OF CALIFORNIA - DEPARTMENT OF TRANSPORTATION
Caltrans
DESIGN

FUNCTIONAL SUPERVISOR: OJI KALU
CALCULATED-DESIGNED BY: DAN TRAN
CHECKED BY: MOE MIRZA
REVISED BY / DATE REVISED

LAST REVISION 12-12-12
DATE PLOTTED => 26-APR-2013
TIME PLOTTED => 08:28

Dist	COUNTY	ROUTE	POST MILES TOTAL PROJECT	SHEET No.	TOTAL SHEETS
07	LA	210	R9.7/R16.1	26	349

REGISTERED CIVIL ENGINEER 3-5-13 DATE

4-22-13
PLANS APPROVAL DATE

REGISTERED PROFESSIONAL ENGINEER DAN TRAN C63456 No. 9/30/14 Exp. CIVIL STATE OF CALIFORNIA

THE STATE OF CALIFORNIA OR ITS OFFICERS OR AGENTS SHALL NOT BE RESPONSIBLE FOR THE ACCURACY OR COMPLETENESS OF SCANNED COPIES OF THIS PLAN SHEET.

NOTE:

FOR ACCURATE RIGHT OF WAY DATA, CONTACT RIGHT OF WAY ENGINEERING AT THE DISTRICT OFFICE.

CURVE DATA

No. ⊗	R	Δ	T	L
7	4000′	12°38′52″	443.29′	882.98′

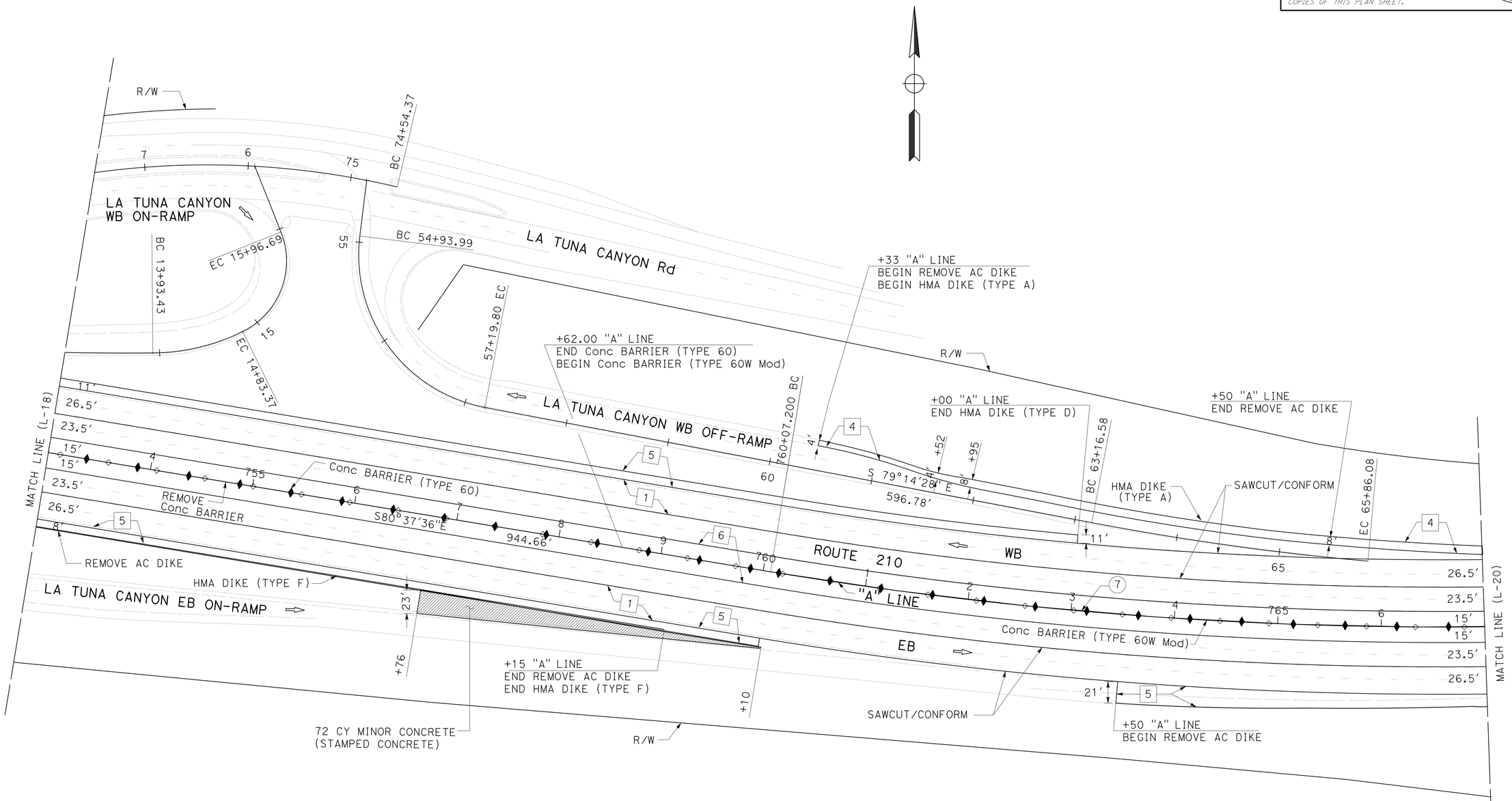

LAYOUT

SCALE: 1" = 50′

L-19

STATE OF CALIFORNIA - DEPARTMENT OF TRANSPORTATION
Caltrans
DESIGN

FUNCTIONAL SUPERVISOR: OJI KALU
CALCULATED-DESIGNED BY: DAN TRAN
CHECKED BY: MOE MIRZA
REVISED BY
DATE REVISED

LAST REVISION 12-12-12
DATE PLOTTED => 26-APR-2013
TIME PLOTTED => 07:31

Dist	COUNTY	ROUTE	POST MILES TOTAL PROJECT	SHEET No.	TOTAL SHEETS
07	LA	210	R9.7/R16.1	27	349

REGISTERED CIVIL ENGINEER 3-5-13 DATE

4-22-13
PLANS APPROVAL DATE

REGISTERED PROFESSIONAL ENGINEER DAN TRAN C63456 No. 9/30/14 Exp. CIVIL STATE OF CALIFORNIA

THE STATE OF CALIFORNIA OR ITS OFFICERS OR AGENTS SHALL NOT BE RESPONSIBLE FOR THE ACCURACY OR COMPLETENESS OF SCANNED COPIES OF THIS PLAN SHEET.

NOTE:

FOR ACCURATE RIGHT OF WAY DATA, CONTACT RIGHT OF WAY ENGINEERING AT THE DISTRICT OFFICE.

CURVE DATA

No. ⊗	R	Δ	T	L
7	4000′	12°38′52"	443.29′	882.98′
8	3000′	18°42′59"	494.40′	979.99′

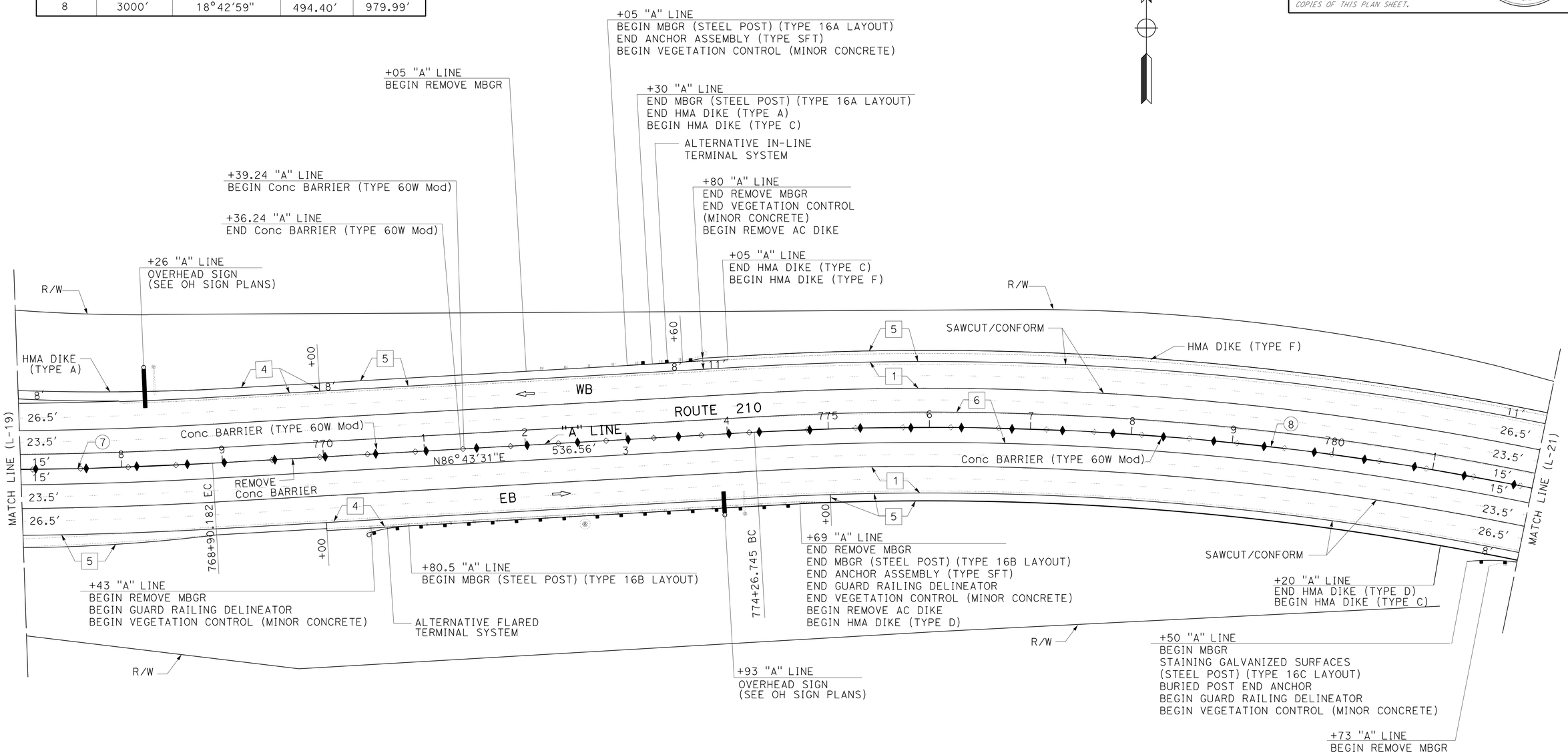

LAYOUT

SCALE: 1" = 50′

L-20

STATE OF CALIFORNIA - DEPARTMENT OF TRANSPORTATION
Caltrans
DESIGN

FUNCTIONAL SUPERVISOR: OJI KALU
CALCULATED-DESIGNED BY: DAN TRAN
CHECKED BY: MOE MIRZA
REVISED BY
DATE REVISED

LAST REVISION 12-12-12
DATE PLOTTED => 26-APR-2013
TIME PLOTTED => 07:31

Dist	COUNTY	ROUTE	POST MILES TOTAL PROJECT	SHEET No.	TOTAL SHEETS
07	LA	210	R9.7/R16.1	28	349

REGISTERED CIVIL ENGINEER 3-5-13 DATE

4-22-13
PLANS APPROVAL DATE

REGISTERED PROFESSIONAL ENGINEER DAN TRAN C63456 No. 9/30/14 Exp. CIVIL STATE OF CALIFORNIA

THE STATE OF CALIFORNIA OR ITS OFFICERS OR AGENTS SHALL NOT BE RESPONSIBLE FOR THE ACCURACY OR COMPLETENESS OF SCANNED COPIES OF THIS PLAN SHEET.

NOTE:

FOR ACCURATE RIGHT OF WAY DATA, CONTACT RIGHT OF WAY ENGINEERING AT THE DISTRICT OFFICE.

CURVE DATA

No. ⊗	R	Δ	T	L
8	3000′	18°42′59″	494.40′	979.99′

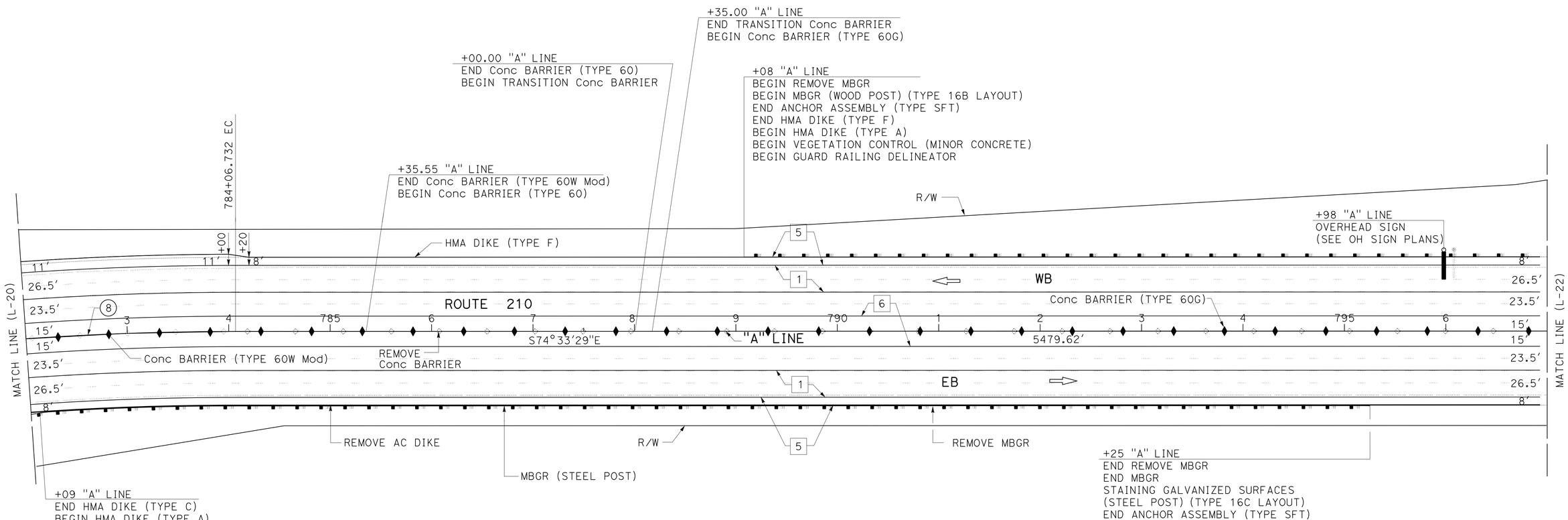

LAYOUT

SCALE: 1" = 50′

L-21

STATE OF CALIFORNIA - DEPARTMENT OF TRANSPORTATION
Caltrans® DESIGN

FUNCTIONAL SUPERVISOR: OJI KALU
CALCULATED-DESIGNED BY: DAN TRAN
CHECKED BY: MOE MIRZA
REVISED BY
DATE REVISED

LAST REVISION 12-12-12
DATE PLOTTED => 26-APR-2013
TIME PLOTTED => 07:31

Dist	COUNTY	ROUTE	POST MILES TOTAL PROJECT	SHEET No.	TOTAL SHEETS
07	LA	210	R9.7/R16.1	29	349

REGISTERED CIVIL ENGINEER 3-5-13 DATE

4-22-13
PLANS APPROVAL DATE

REGISTERED PROFESSIONAL ENGINEER DAN TRAN C63456 No. 9/30/14 Exp. CIVIL STATE OF CALIFORNIA

THE STATE OF CALIFORNIA OR ITS OFFICERS OR AGENTS SHALL NOT BE RESPONSIBLE FOR THE ACCURACY OR COMPLETENESS OF SCANNED COPIES OF THIS PLAN SHEET.

NOTE:

FOR ACCURATE RIGHT OF WAY DATA, CONTACT RIGHT OF WAY ENGINEERING AT THE DISTRICT OFFICE.

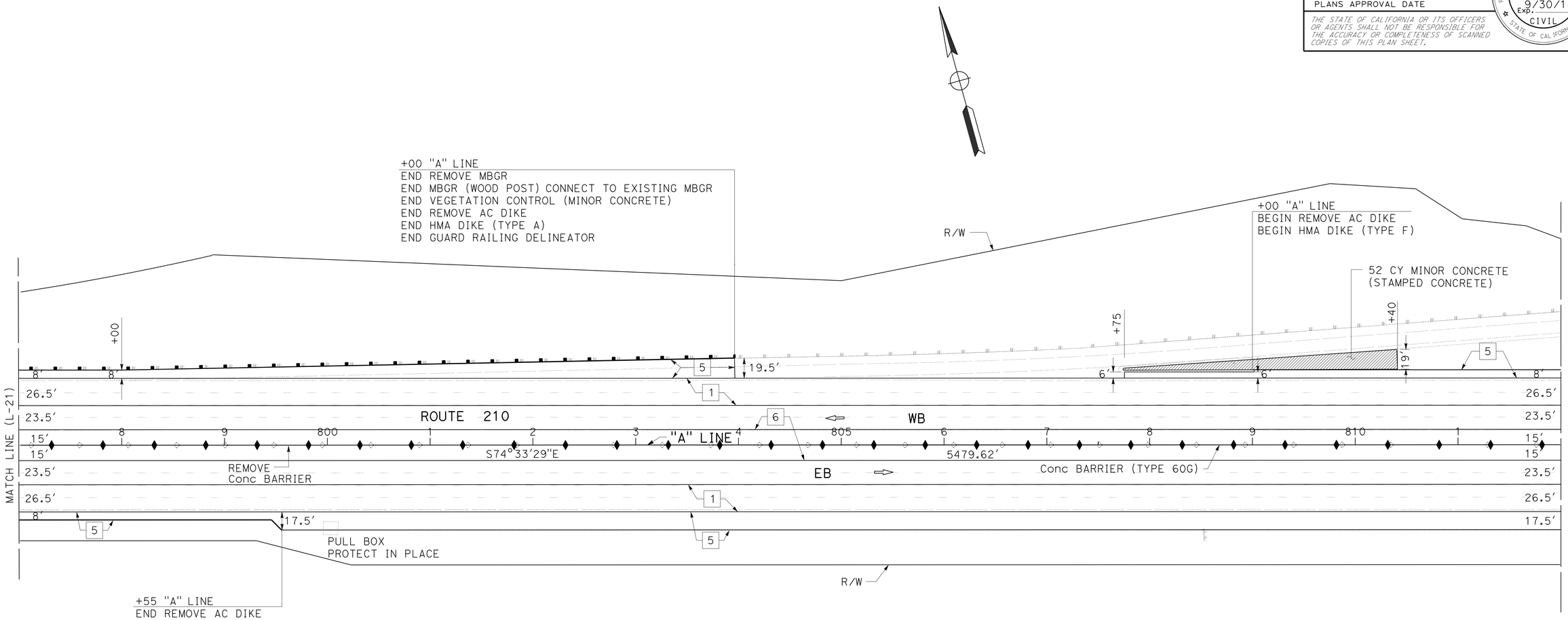

LAYOUT

SCALE: 1" = 50′

L-22

REVISED BY	DATE REVISED

CALCULATED-DESIGNED BY	CHECKED BY
DAN TRAN	MOE MIRZA

FUNCTIONAL SUPERVISOR: OJI KALU

STATE OF CALIFORNIA - DEPARTMENT OF TRANSPORTATION

Caltrans DESIGN

LAST REVISION 12-12-12 | DATE PLOTTED => 26-APR-2013 | TIME PLOTTED => 07:32

Dist	COUNTY	ROUTE	POST MILES TOTAL PROJECT	SHEET No.	TOTAL SHEETS
07	LA	210	R9.7/R16.1	30	349

REGISTERED CIVIL ENGINEER 3-5-13 DATE

4-22-13
PLANS APPROVAL DATE

REGISTERED PROFESSIONAL ENGINEER DAN TRAN C63456 No. 9/30/14 Exp. CIVIL STATE OF CALIFORNIA

THE STATE OF CALIFORNIA OR ITS OFFICERS OR AGENTS SHALL NOT BE RESPONSIBLE FOR THE ACCURACY OR COMPLETENESS OF SCANNED COPIES OF THIS PLAN SHEET.

NOTE:

FOR ACCURATE RIGHT OF WAY DATA, CONTACT RIGHT OF WAY ENGINEERING AT THE DISTRICT OFFICE.

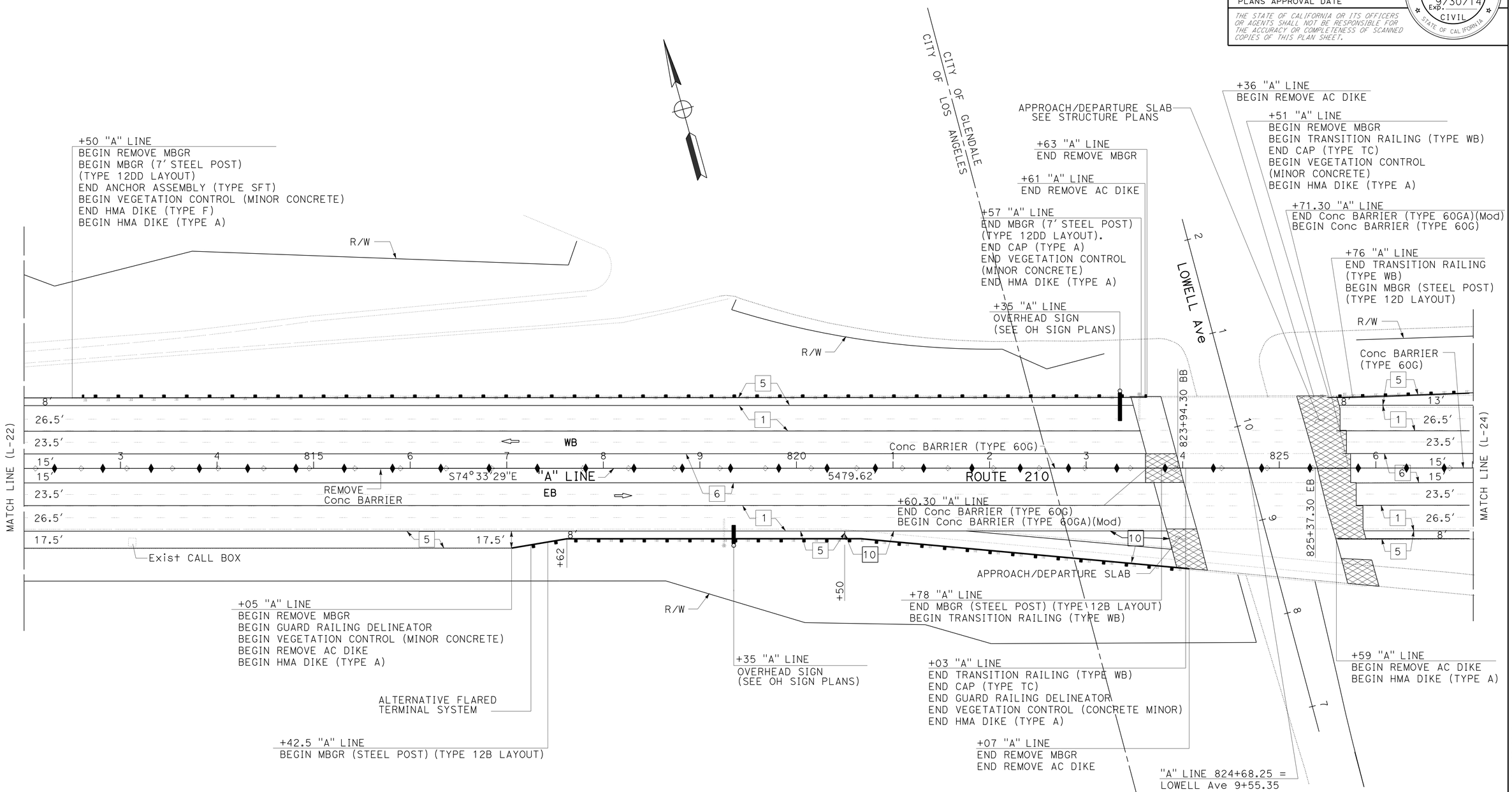

LAYOUT

SCALE: 1" = 50'

L-23

STATE OF CALIFORNIA - DEPARTMENT OF TRANSPORTATION
Caltrans
DESIGN

FUNCTIONAL SUPERVISOR: OJI KALU
CALCULATED-DESIGNED BY: DAN TRAN
CHECKED BY: MOE MIRZA
REVISED BY
DATE REVISED

LAST REVISION 12-12-12
DATE PLOTTED => 26-APR-2013
TIME PLOTTED => 07:32

Dist	COUNTY	ROUTE	POST MILES TOTAL PROJECT	SHEET No.	TOTAL SHEETS
07	LA	210	R9.7/R16.1	31	349

REGISTERED CIVIL ENGINEER 3-5-13 DATE

4-22-13
PLANS APPROVAL DATE

REGISTERED PROFESSIONAL ENGINEER DAN TRAN C63456 No. 9/30/14 Exp. CIVIL STATE OF CALIFORNIA

THE STATE OF CALIFORNIA OR ITS OFFICERS OR AGENTS SHALL NOT BE RESPONSIBLE FOR THE ACCURACY OR COMPLETENESS OF SCANNED COPIES OF THIS PLAN SHEET.

NOTE:

FOR ACCURATE RIGHT OF WAY DATA, CONTACT RIGHT OF WAY ENGINEERING AT THE DISTRICT OFFICE.

CURVE DATA

No. ⊗	R	Δ	T	L
9	4000′	21°08′30″	746.50′	1476.01′

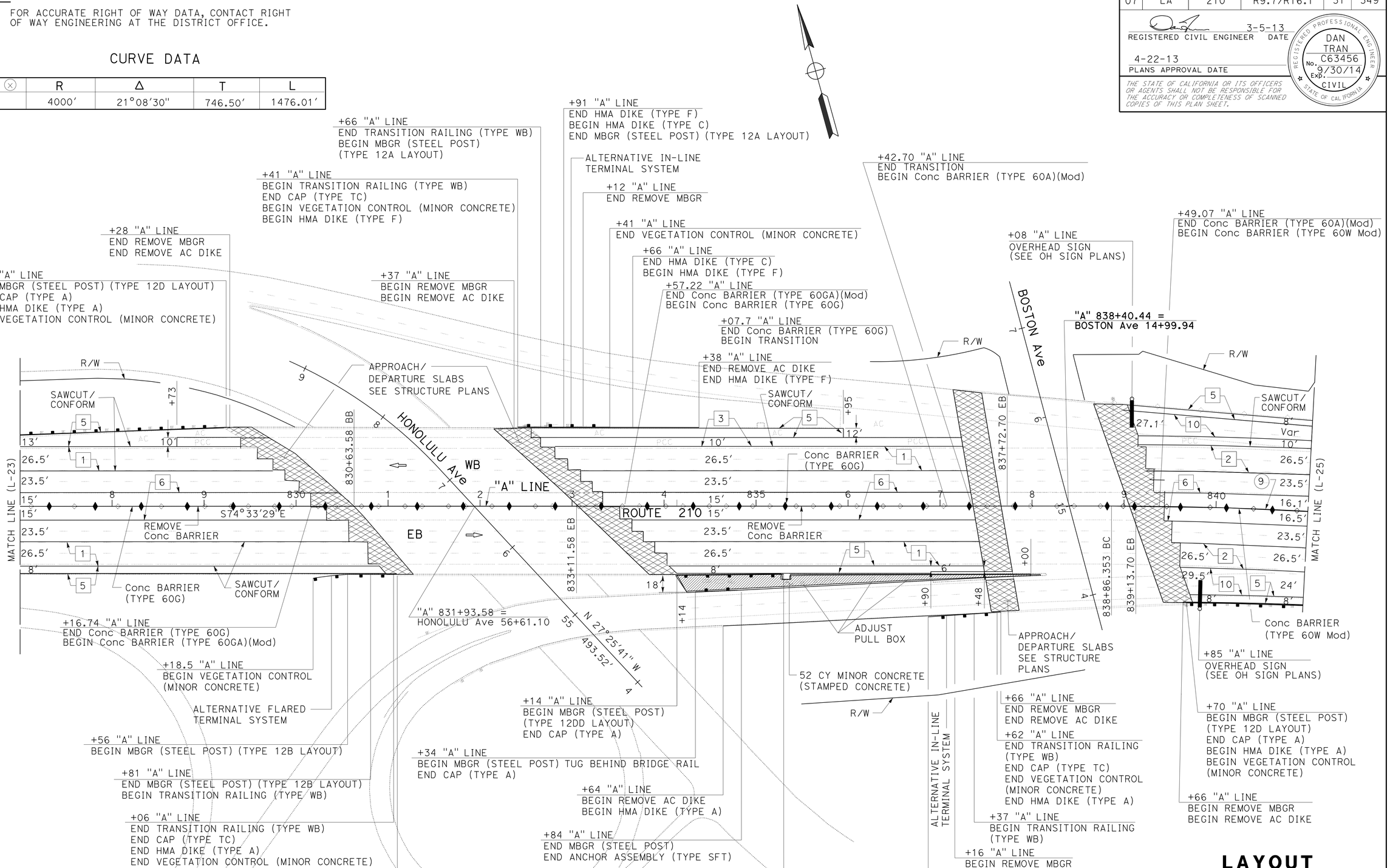

LAYOUT

SCALE: 1" = 50′

L-24

REVISED BY	DATE REVISED
DAN TRAN	MOE MIRZA
CALCULATED-DESIGNED BY	CHECKED BY
FUNCTIONAL SUPERVISOR	OJI KALU

STATE OF CALIFORNIA - DEPARTMENT OF TRANSPORTATION

Caltrans® **DESIGN**

LAST REVISION 12-12-12 | DATE PLOTTED => 26-APR-2013 | TIME PLOTTED => 07:32

Dist	COUNTY	ROUTE	POST MILES TOTAL PROJECT	SHEET No.	TOTAL SHEETS
07	LA	210	R9.7/R16.1	32	349

REGISTERED CIVIL ENGINEER 3-5-13 DATE

4-22-13
PLANS APPROVAL DATE

REGISTERED PROFESSIONAL ENGINEER DAN TRAN No. C63456 Exp. 9/30/14 CIVIL STATE OF CALIFORNIA

THE STATE OF CALIFORNIA OR ITS OFFICERS OR AGENTS SHALL NOT BE RESPONSIBLE FOR THE ACCURACY OR COMPLETENESS OF SCANNED COPIES OF THIS PLAN SHEET.

NOTE:

FOR ACCURATE RIGHT OF WAY DATA, CONTACT RIGHT OF WAY ENGINEERING AT THE DISTRICT OFFICE.

CURVE DATA

No. ⊗	R	Δ	T	L
9	4000′	21°08′30″	746.50′	1476.01′

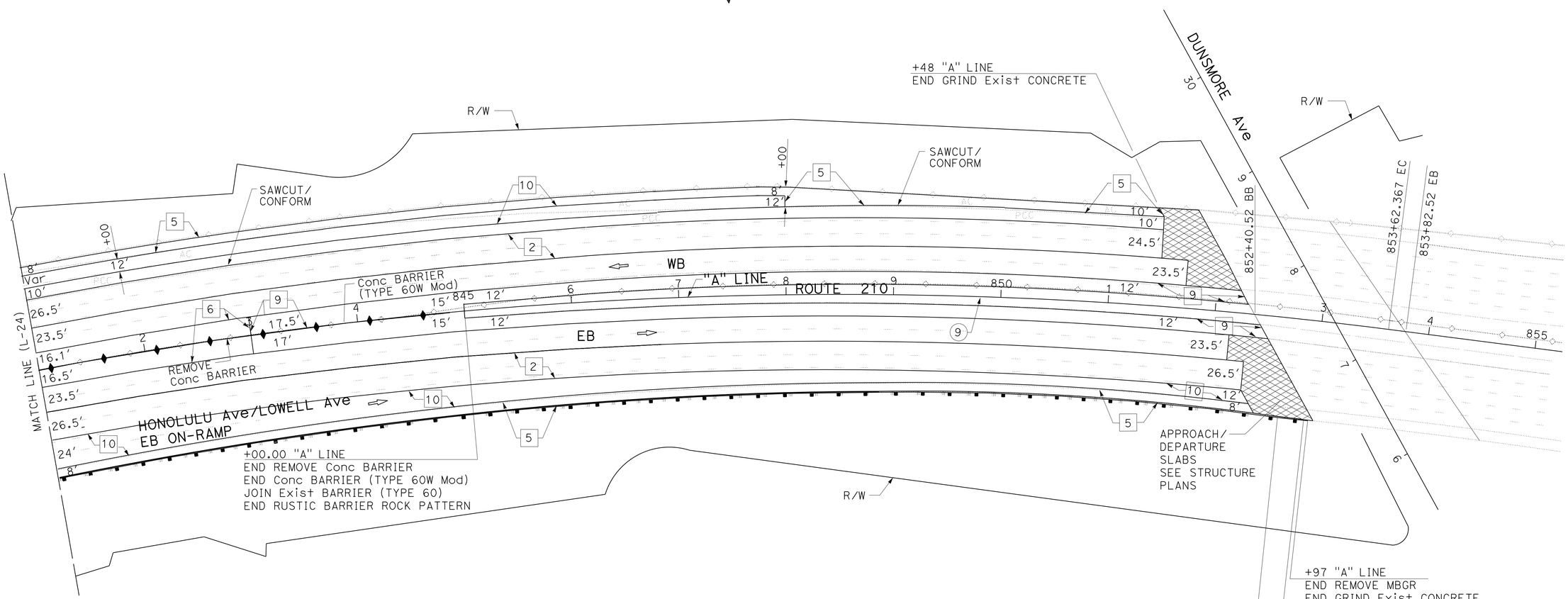

LAYOUT

SCALE: 1" = 50′

L-25

STATE OF CALIFORNIA - DEPARTMENT OF TRANSPORTATION
Caltrans
DESIGN

FUNCTIONAL SUPERVISOR: OJI KALU
CALCULATED-DESIGNED BY: DAN TRAN
CHECKED BY: MOE MIRZA
REVISED BY
DATE REVISED

LAST REVISION 12-12-12
DATE PLOTTED => 26-APR-2013
TIME PLOTTED => 07:32

Dist	COUNTY	ROUTE	POST MILES TOTAL PROJECT	SHEET No.	TOTAL SHEETS
07	LA	210	R9.7/R16.1	33	349

REGISTERED CIVIL ENGINEER 3-5-13 DATE

4-22-13
PLANS APPROVAL DATE

REGISTERED PROFESSIONAL ENGINEER DAN TRAN No. C63456 Exp. 9/30/14 CIVIL STATE OF CALIFORNIA

THE STATE OF CALIFORNIA OR ITS OFFICERS OR AGENTS SHALL NOT BE RESPONSIBLE FOR THE ACCURACY OR COMPLETENESS OF SCANNED COPIES OF THIS PLAN SHEET.

NOTE:
Exist Elev = (xxxx.xx)

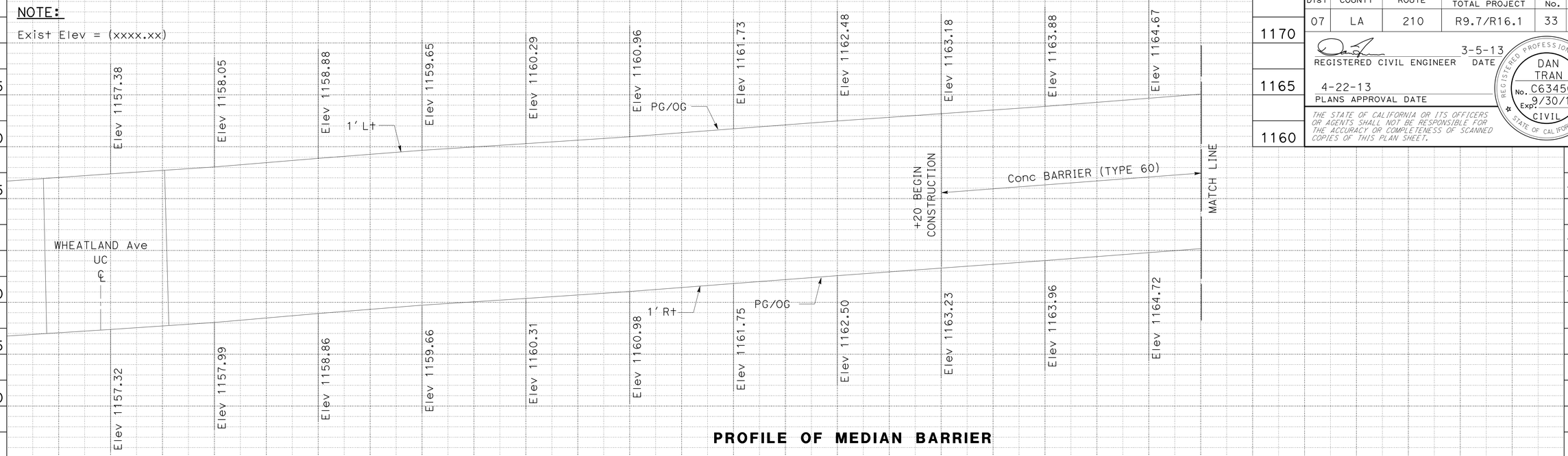

PROFILE OF MEDIAN BARRIER

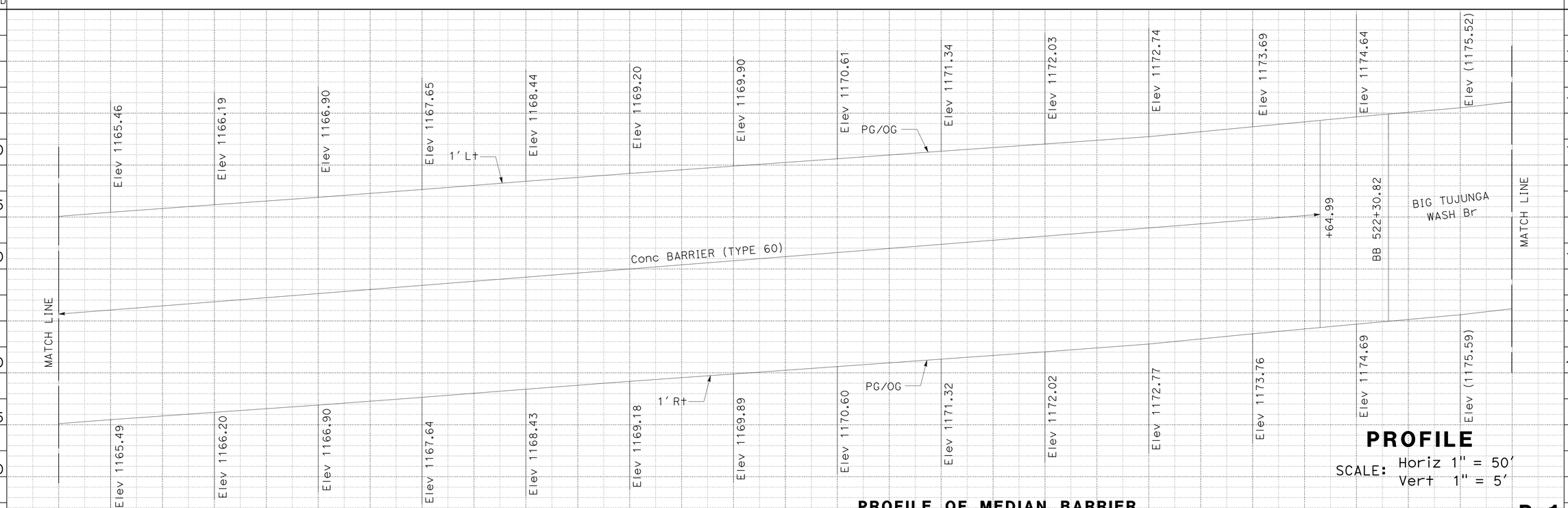

PROFILE OF MEDIAN BARRIER

PROFILE
SCALE: Horiz 1" = 50'
Vert 1" = 5'

P-1

REVISED BY | DATE REVISED
DARRYL MAYS | DAN TRAN
CALCULATED-DESIGNED BY | CHECKED BY
FUNCTIONAL SUPERVISOR
OJI KALU

STATE OF CALIFORNIA - DEPARTMENT OF TRANSPORTATION
Caltrans
DESIGN

LAST REVISION 12-12-12
DATE PLOTTED => 26-APR-2013
TIME PLOTTED => 07:36

Dist	COUNTY	ROUTE	POST MILES TOTAL PROJECT	SHEET No.	TOTAL SHEETS
07	LA	210	R9.7/R16.1	34	349

REGISTERED CIVIL ENGINEER 3-5-13 DATE

4-22-13
PLANS APPROVAL DATE

REGISTERED PROFESSIONAL ENGINEER DAN TRAN No. C63456 Exp. 9/30/14 CIVIL STATE OF CALIFORNIA

THE STATE OF CALIFORNIA OR ITS OFFICERS OR AGENTS SHALL NOT BE RESPONSIBLE FOR THE ACCURACY OR COMPLETENESS OF SCANNED COPIES OF THIS PLAN SHEET.

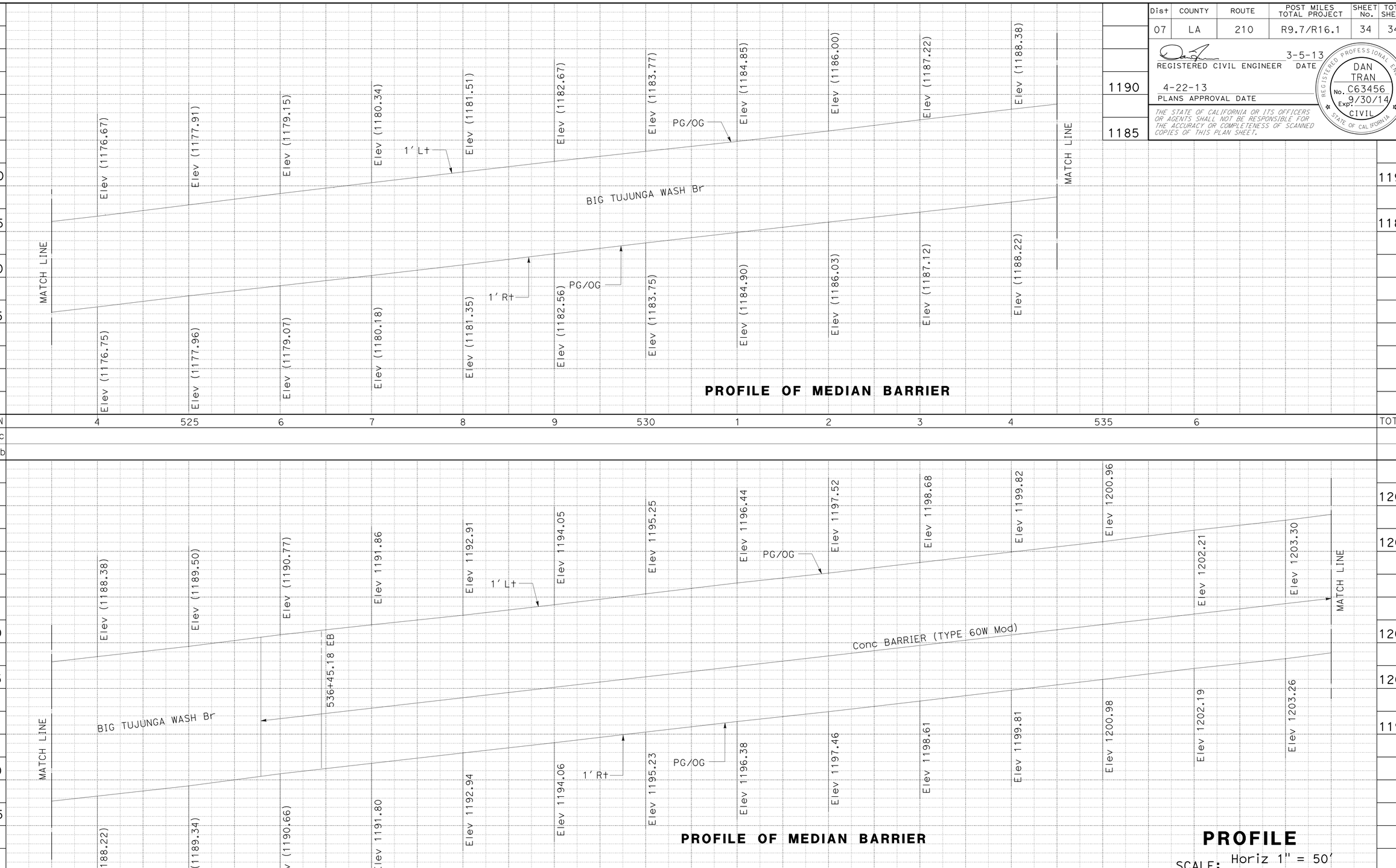

PROFILE OF MEDIAN BARRIER

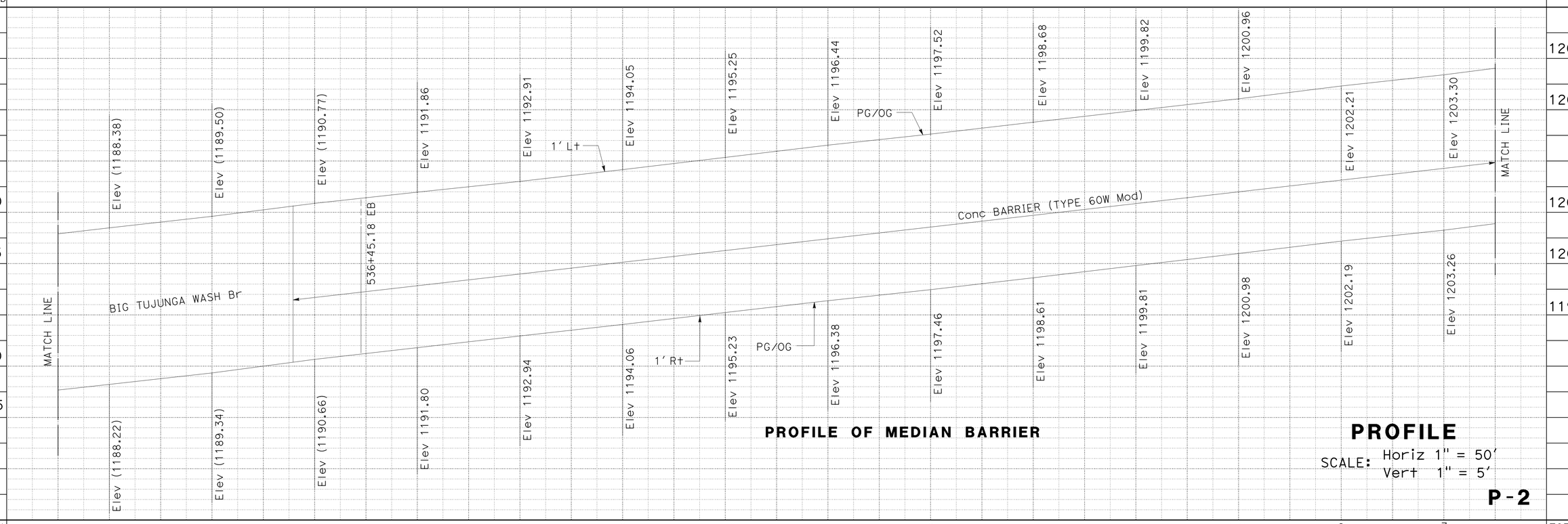

PROFILE OF MEDIAN BARRIER

PROFILE

SCALE: Horiz 1" = 50'
Vert 1" = 5'

P-2

REVISED BY | DATE REVISED
DARRYL MAYS | DAN TRAN
CALCULATED-DESIGNED BY | CHECKED BY
FUNCTIONAL SUPERVISOR
OJI KALU

STATE OF CALIFORNIA - DEPARTMENT OF TRANSPORTATION
Caltrans®
DESIGN

LAST REVISION 12-12-12
DATE PLOTTED => 26-APR-2013
TIME PLOTTED => 07:36

Dist	COUNTY	ROUTE	POST MILES TOTAL PROJECT	SHEET No.	TOTAL SHEETS
07	LA	210	R9.7/R16.1	35	349

REGISTERED CIVIL ENGINEER 3-5-13 DATE

4-22-13
PLANS APPROVAL DATE

REGISTERED PROFESSIONAL ENGINEER DAN TRAN No. C63456 Exp. 9/30/14 CIVIL STATE OF CALIFORNIA

THE STATE OF CALIFORNIA OR ITS OFFICERS OR AGENTS SHALL NOT BE RESPONSIBLE FOR THE ACCURACY OR COMPLETENESS OF SCANNED COPIES OF THIS PLAN SHEET.

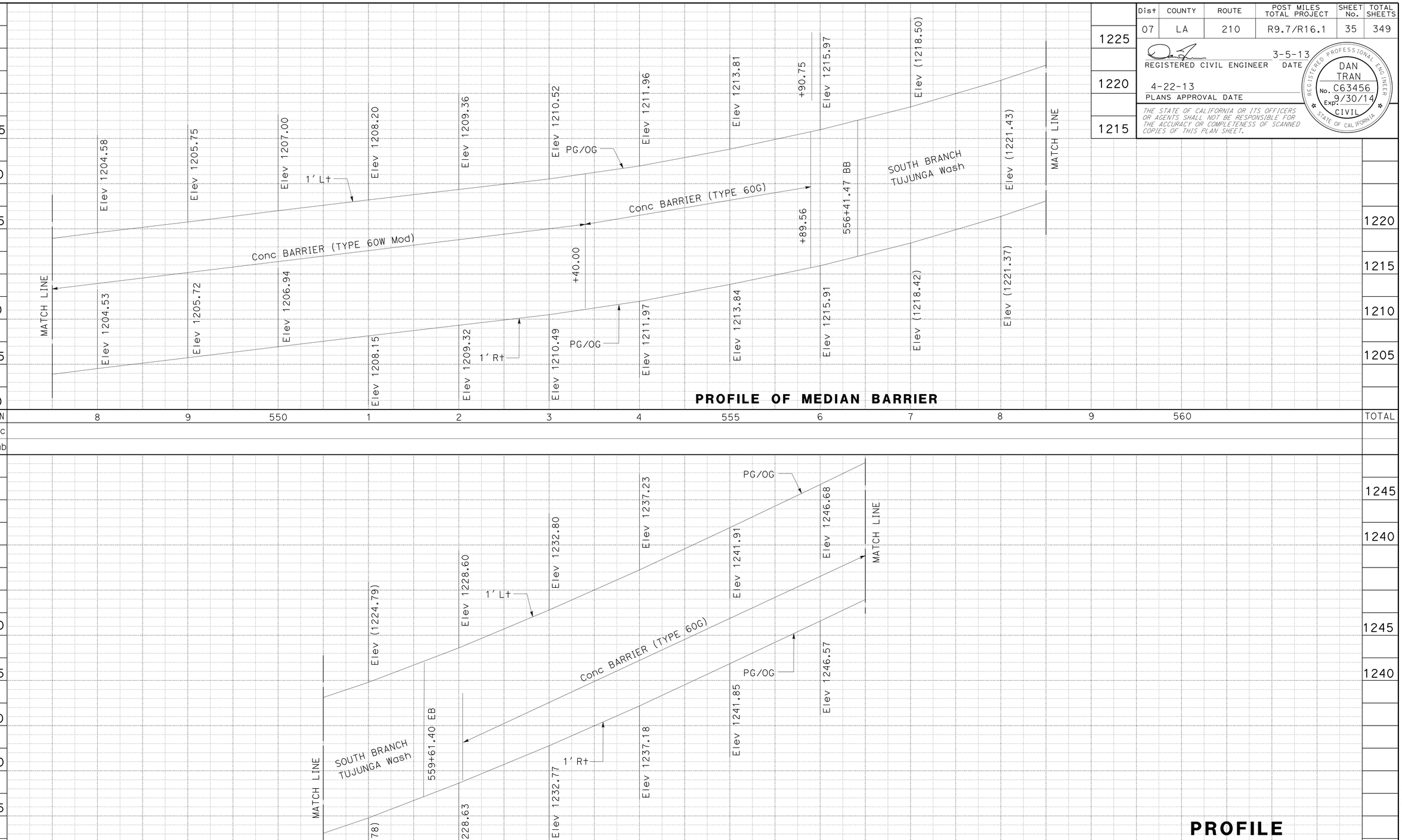

PROFILE OF MEDIAN BARRIER

PROFILE OF MEDIAN BARRIER

PROFILE

SCALE: Horiz 1" = 50'
Vert 1" = 5'

P-3

REVISED BY | DATE REVISED

DARRYL MAYS | DAN TRAN

CALCULATED-DESIGNED BY | CHECKED BY

FUNCTIONAL SUPERVISOR: OJI KALU

STATE OF CALIFORNIA - DEPARTMENT OF TRANSPORTATION

Caltrans® **DESIGN**

LAST REVISION 12-12-12 | DATE PLOTTED => 26-APR-2013 | TIME PLOTTED => 07:36

Dist	COUNTY	ROUTE	POST MILES TOTAL PROJECT	SHEET No.	TOTAL SHEETS
07	LA	210	R9.7/R16.1	36	349

REGISTERED CIVIL ENGINEER 3-5-13 DATE

4-22-13
PLANS APPROVAL DATE

REGISTERED PROFESSIONAL ENGINEER DAN TRAN No. C63456 Exp. 9/30/14 CIVIL STATE OF CALIFORNIA

THE STATE OF CALIFORNIA OR ITS OFFICERS OR AGENTS SHALL NOT BE RESPONSIBLE FOR THE ACCURACY OR COMPLETENESS OF SCANNED COPIES OF THIS PLAN SHEET.

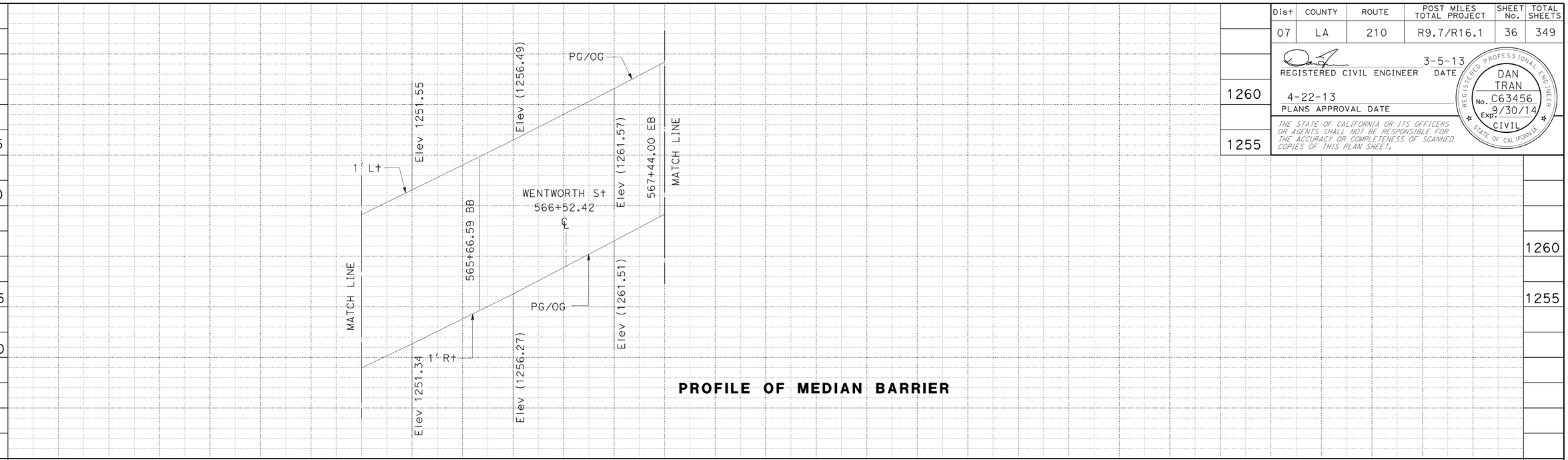

STATION		4	565	6	7	8	9	TOTAL
CY	Exc							
	Emb							

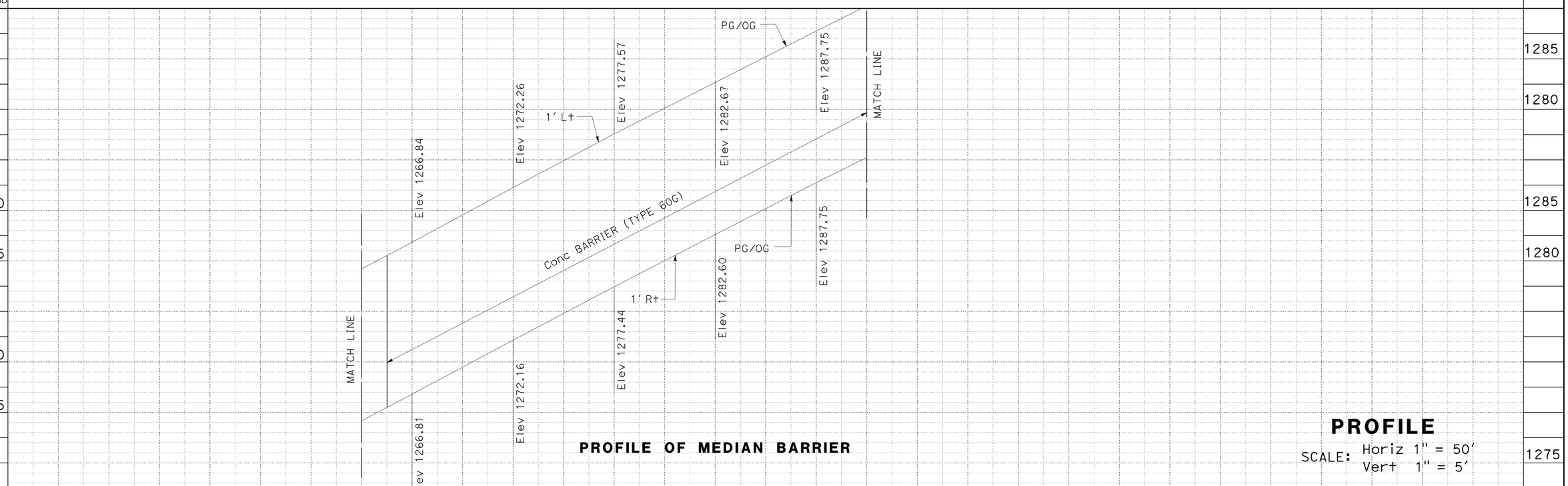

PROFILE

SCALE: Horiz 1" = 50'
Vert 1" = 5'

P-4

STATION		7	8	9	570	1	2	3	TOTAL
CY	Exc								
	Emb								

REVISED BY | DATE REVISED
DARRYL MAYS | DAN TRAN
CALCULATED-DESIGNED BY | CHECKED BY
FUNCTIONAL SUPERVISOR: OJI KALU
STATE OF CALIFORNIA - DEPARTMENT OF TRANSPORTATION
Caltrans® DESIGN

LAST REVISION 12-12-12
DATE PLOTTED => 26-APR-2013
TIME PLOTTED => 07:36

Dist	COUNTY	ROUTE	POST MILES TOTAL PROJECT	SHEET No.	TOTAL SHEETS
07	LA	210	R9.7/R16.1	37	349

REGISTERED CIVIL ENGINEER 3-5-13 DATE

4-22-13
PLANS APPROVAL DATE

REGISTERED PROFESSIONAL ENGINEER DAN TRAN No. C63456 Exp. 9/30/14 CIVIL STATE OF CALIFORNIA

THE STATE OF CALIFORNIA OR ITS OFFICERS OR AGENTS SHALL NOT BE RESPONSIBLE FOR THE ACCURACY OR COMPLETENESS OF SCANNED COPIES OF THIS PLAN SHEET.

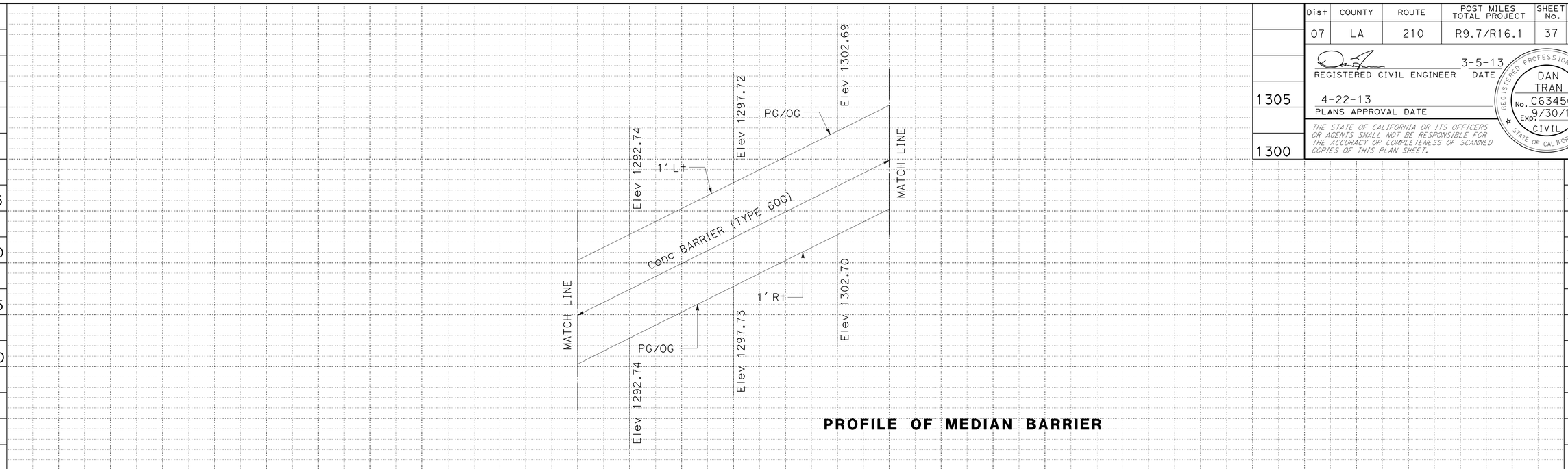

PROFILE OF MEDIAN BARRIER

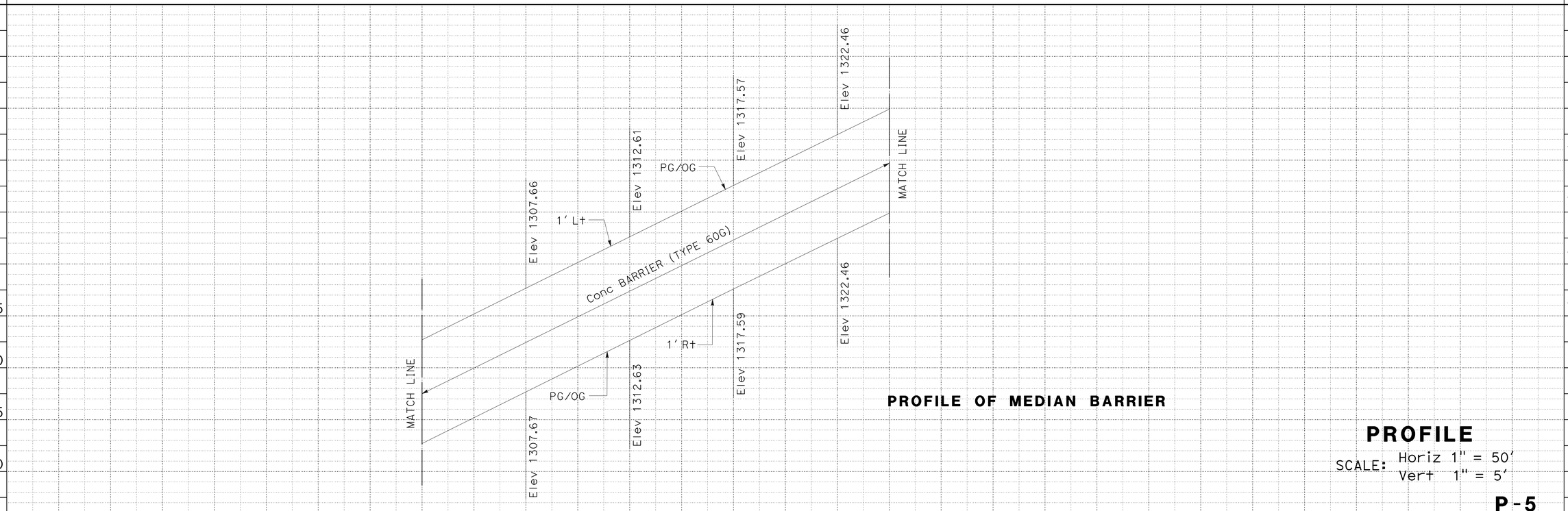

PROFILE OF MEDIAN BARRIER

PROFILE

SCALE: Horiz 1" = 50'
Vert 1" = 5'

P-5

REVISED BY
DATE REVISED
DARRYL MAYS
DAN TRAN
CALCULATED-DESIGNED BY
CHECKED BY
FUNCTIONAL SUPERVISOR
OJI KALU
STATE OF CALIFORNIA - DEPARTMENT OF TRANSPORTATION
Caltrans
DESIGN

LAST REVISION 12-12-12
DATE PLOTTED => 26-APR-2013
TIME PLOTTED => 07:36

Dist	COUNTY	ROUTE	POST MILES TOTAL PROJECT	SHEET No.	TOTAL SHEETS
07	LA	210	R9.7/R16.1	38	349

REGISTERED CIVIL ENGINEER 3-5-13 DATE

4-22-13
PLANS APPROVAL DATE

REGISTERED PROFESSIONAL ENGINEER DAN TRAN No. C63456 Exp. 9/30/14 CIVIL STATE OF CALIFORNIA

THE STATE OF CALIFORNIA OR ITS OFFICERS OR AGENTS SHALL NOT BE RESPONSIBLE FOR THE ACCURACY OR COMPLETENESS OF SCANNED COPIES OF THIS PLAN SHEET.

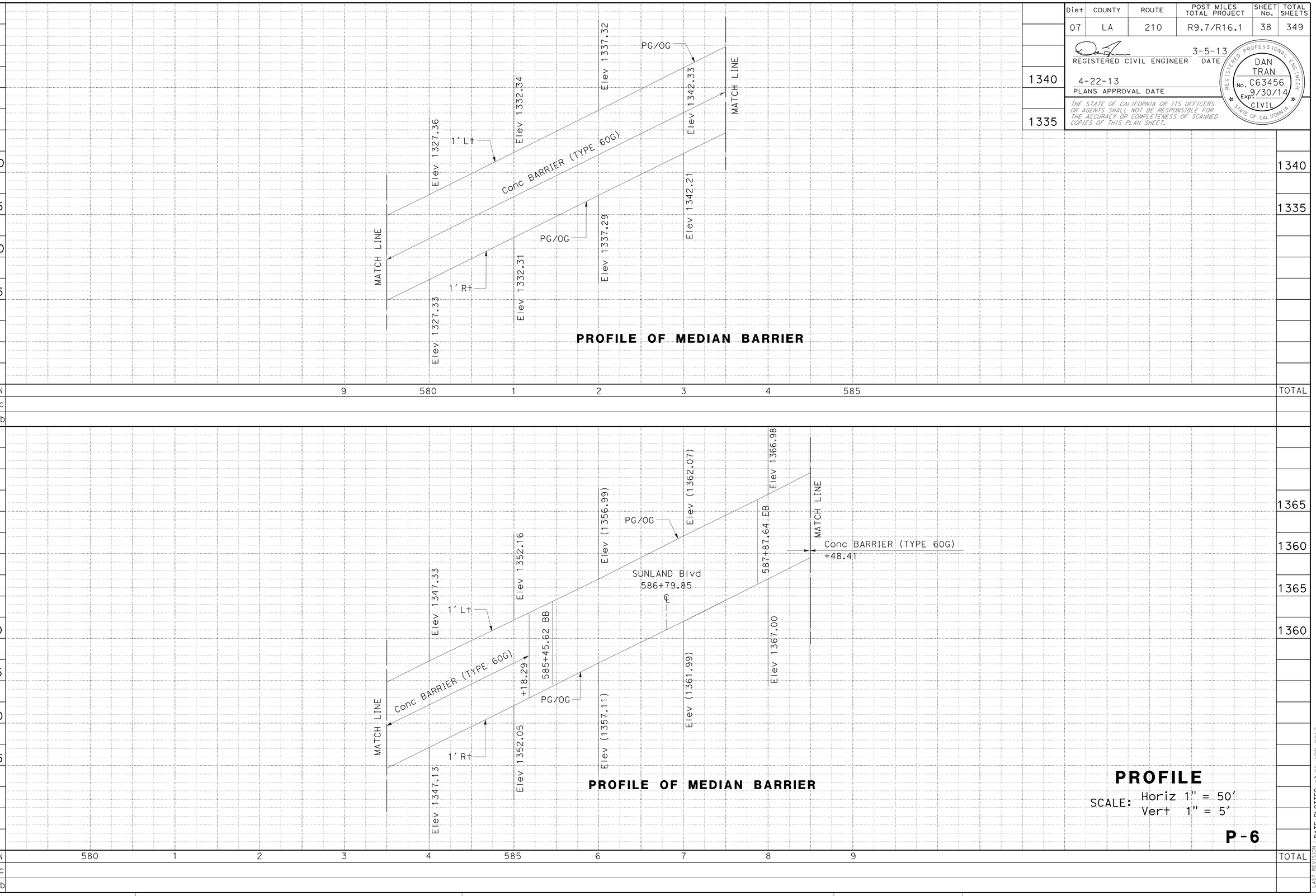

PROFILE OF MEDIAN BARRIER

PROFILE OF MEDIAN BARRIER

PROFILE

SCALE: Horiz 1" = 50'
Vert 1" = 5'

P-6

STATE OF CALIFORNIA - DEPARTMENT OF TRANSPORTATION
Caltrans® DESIGN

FUNCTIONAL SUPERVISOR: OJI KALU
CALCULATED-DESIGNED BY: DARRYL MAYS
CHECKED BY: DAN TRAN
REVISED BY / DATE REVISED

LAST REVISION 12-12-12
DATE PLOTTED => 26-APR-2013
TIME PLOTTED => 07:36

Dist	COUNTY	ROUTE	POST MILES TOTAL PROJECT	SHEET No.	TOTAL SHEETS
07	LA	210	R9.7/R16.1	39	349

REGISTERED CIVIL ENGINEER 3-5-13 DATE

4-22-13
PLANS APPROVAL DATE

REGISTERED PROFESSIONAL ENGINEER DAN TRAN No. C63456 Exp. 9/30/14 CIVIL STATE OF CALIFORNIA

THE STATE OF CALIFORNIA OR ITS OFFICERS OR AGENTS SHALL NOT BE RESPONSIBLE FOR THE ACCURACY OR COMPLETENESS OF SCANNED COPIES OF THIS PLAN SHEET.

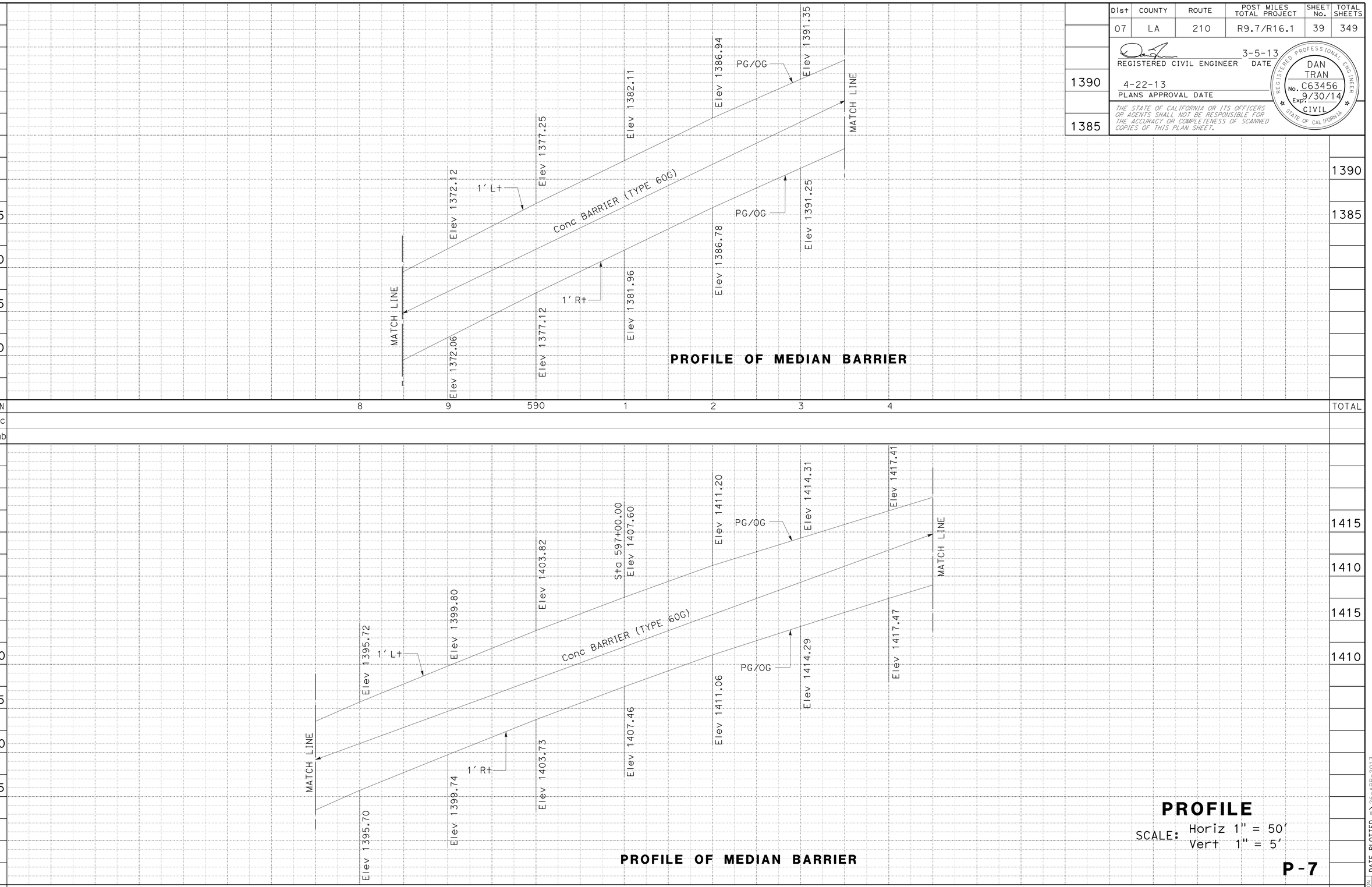

PROFILE OF MEDIAN BARRIER

PROFILE OF MEDIAN BARRIER

PROFILE

SCALE: Horiz 1" = 50'
Vert 1" = 5'

P-7

REVISED BY	DATE REVISED
DARRYL MAYS	DAN TRAN

CALCULATED-DESIGNED BY / CHECKED BY

FUNCTIONAL SUPERVISOR: OJI KALU

STATE OF CALIFORNIA - DEPARTMENT OF TRANSPORTATION

Caltrans® **DESIGN**

LAST REVISION 12-12-12

DATE PLOTTED => 26-APR-2013
TIME PLOTTED => 07:36

Dist	COUNTY	ROUTE	POST MILES TOTAL PROJECT	SHEET No.	TOTAL SHEETS
07	LA	210	R9.7/R16.1	40	349

REGISTERED CIVIL ENGINEER 3-5-13 DATE

4-22-13
PLANS APPROVAL DATE

REGISTERED PROFESSIONAL ENGINEER DAN TRAN No. C63456 Exp. 9/30/14 CIVIL STATE OF CALIFORNIA

THE STATE OF CALIFORNIA OR ITS OFFICERS OR AGENTS SHALL NOT BE RESPONSIBLE FOR THE ACCURACY OR COMPLETENESS OF SCANNED COPIES OF THIS PLAN SHEET.

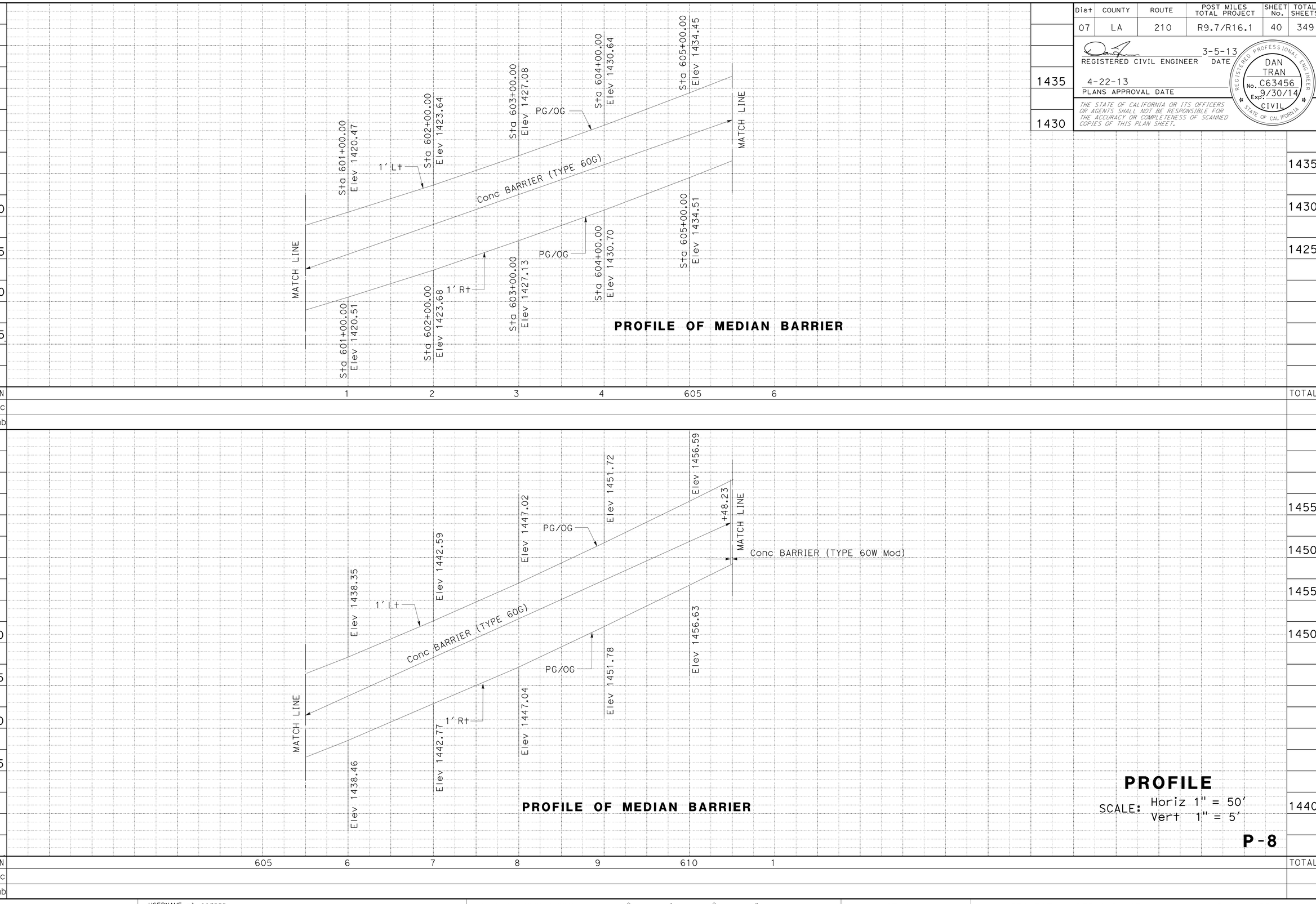

PROFILE OF MEDIAN BARRIER

PROFILE OF MEDIAN BARRIER

PROFILE

SCALE: Horiz 1" = 50'
Vert 1" = 5'

P-8

STATE OF CALIFORNIA - DEPARTMENT OF TRANSPORTATION
Caltrans
DESIGN

FUNCTIONAL SUPERVISOR: OJI KALU

CALCULATED-DESIGNED BY: DARRYL MAYS
CHECKED BY: DAN TRAN

REVISED BY
DATE REVISED

LAST REVISION 12-12-12
DATE PLOTTED => 26-APR-2013
TIME PLOTTED => 07:36

Dist	COUNTY	ROUTE	POST MILES TOTAL PROJECT	SHEET No.	TOTAL SHEETS
07	LA	210	R9.7/R16.1	41	349

REGISTERED CIVIL ENGINEER 3-5-13 DATE

4-22-13
PLANS APPROVAL DATE

REGISTERED PROFESSIONAL ENGINEER DAN TRAN No. C63456 Exp. 9/30/14 CIVIL STATE OF CALIFORNIA

THE STATE OF CALIFORNIA OR ITS OFFICERS OR AGENTS SHALL NOT BE RESPONSIBLE FOR THE ACCURACY OR COMPLETENESS OF SCANNED COPIES OF THIS PLAN SHEET.

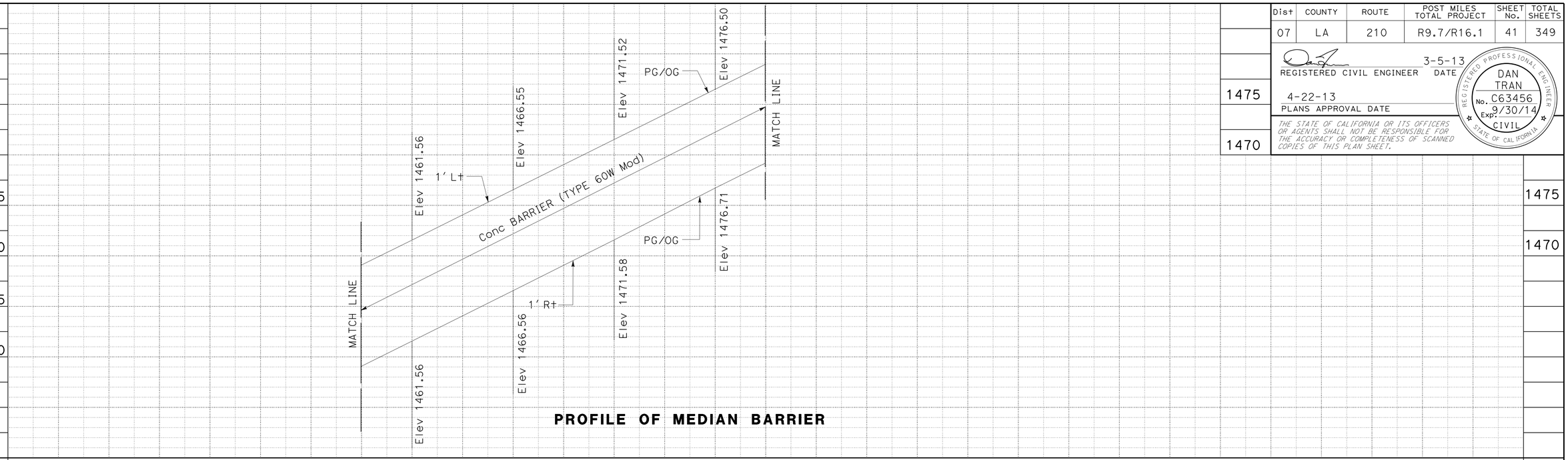

PROFILE OF MEDIAN BARRIER

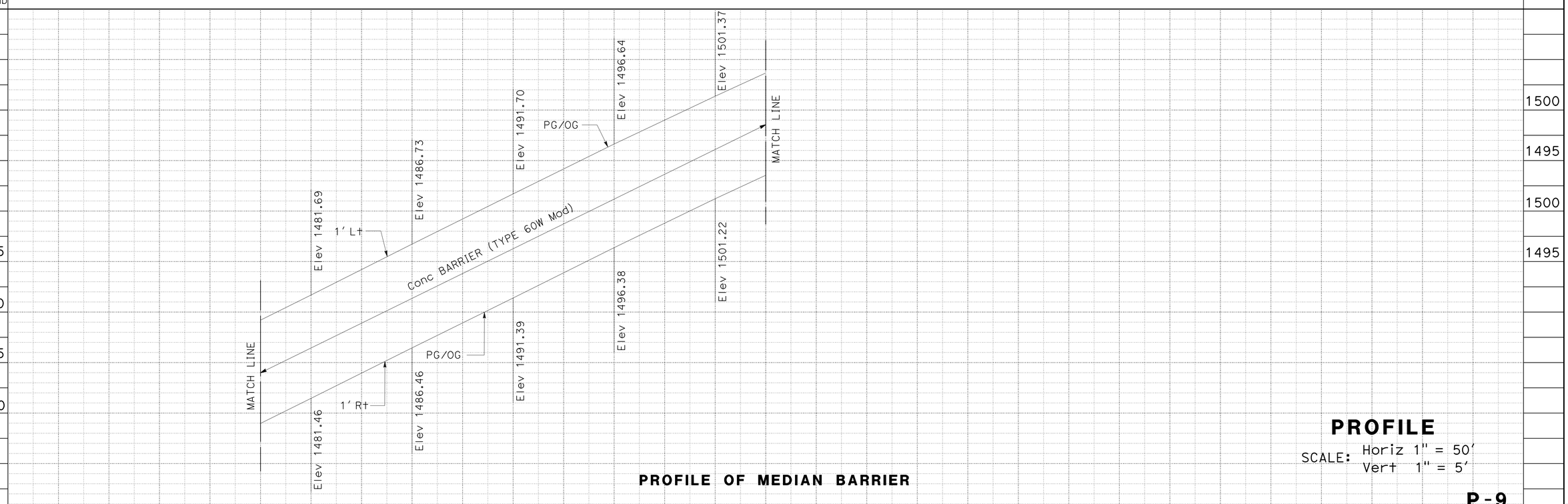

PROFILE OF MEDIAN BARRIER

PROFILE

SCALE: Horiz 1" = 50'
Vert 1" = 5'

P-9

STATE OF CALIFORNIA - DEPARTMENT OF TRANSPORTATION
Caltrans
DESIGN

FUNCTIONAL SUPERVISOR: OJI KALU

CALCULATED-DESIGNED BY: DARRYL MAYS
CHECKED BY: DAN TRAN

REVISED BY
DATE REVISED

LAST REVISION 12-12-12
DATE PLOTTED => 26-APR-2013
TIME PLOTTED => 07:36

Dist	COUNTY	ROUTE	POST MILES TOTAL PROJECT	SHEET No.	TOTAL SHEETS
07	LA	210	R9.7/R16.1	42	349

REGISTERED CIVIL ENGINEER 3-5-13 DATE

4-22-13
PLANS APPROVAL DATE

REGISTERED PROFESSIONAL ENGINEER DAN TRAN No. C63456 Exp. 9/30/14 CIVIL STATE OF CALIFORNIA

THE STATE OF CALIFORNIA OR ITS OFFICERS OR AGENTS SHALL NOT BE RESPONSIBLE FOR THE ACCURACY OR COMPLETENESS OF SCANNED COPIES OF THIS PLAN SHEET.

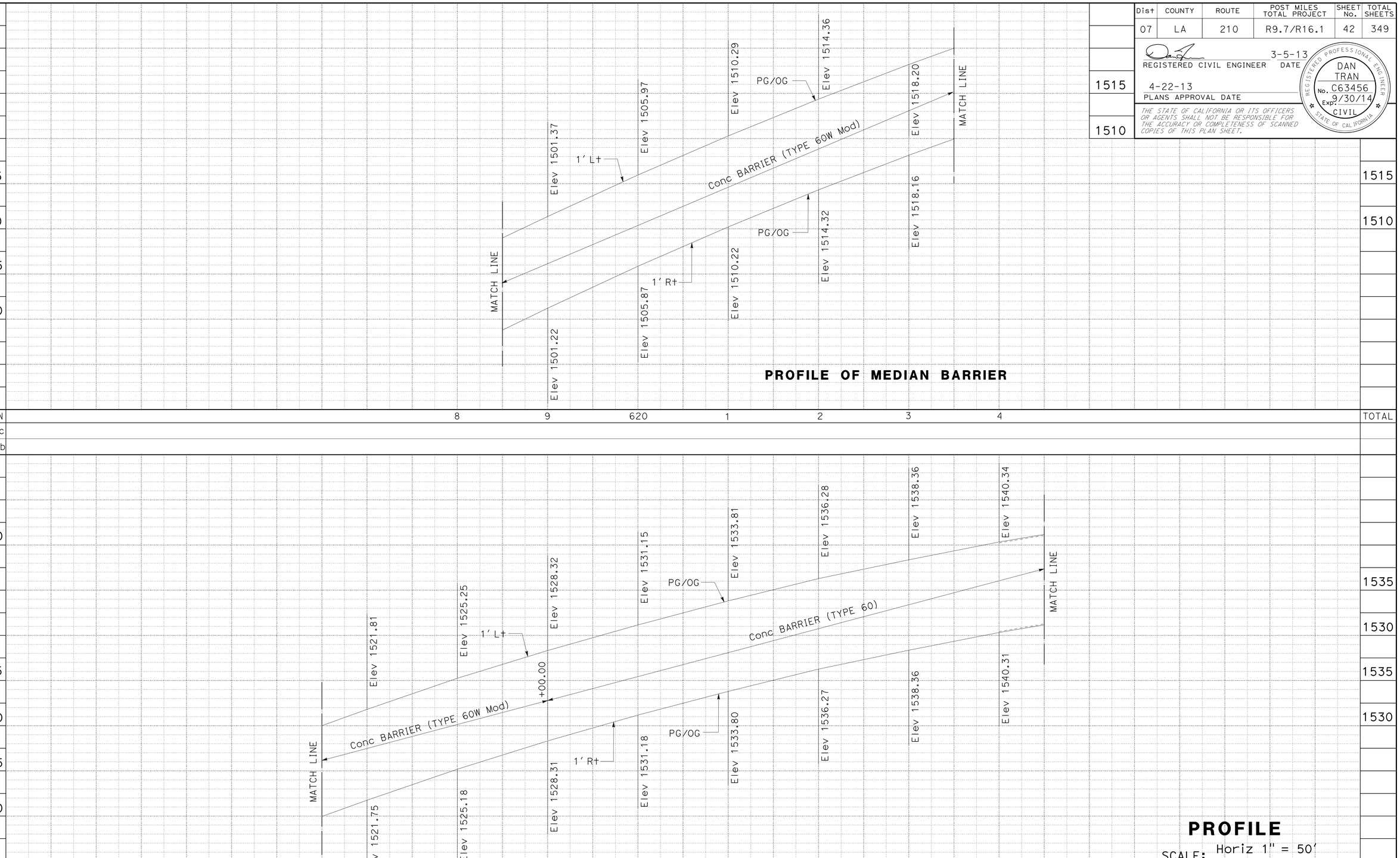

PROFILE OF MEDIAN BARRIER

PROFILE OF MEDIAN BARRIER

PROFILE

SCALE: Horiz 1" = 50'
Vert 1" = 5'

P-10

REVISED BY
DATE REVISED
DARRYL MAYS
DAN TRAN
CALCULATED-DESIGNED BY
CHECKED BY
FUNCTIONAL SUPERVISOR
OJI KALU

STATE OF CALIFORNIA - DEPARTMENT OF TRANSPORTATION
Caltrans
DESIGN

LAST REVISION 12-12-12
DATE PLOTTED => 26-APR-2013
TIME PLOTTED => 07:36

Dist	COUNTY	ROUTE	POST MILES TOTAL PROJECT	SHEET No.	TOTAL SHEETS
07	LA	210	R9.7/R16.1	43	349

REGISTERED CIVIL ENGINEER 3-5-13 DATE

4-22-13
PLANS APPROVAL DATE

REGISTERED PROFESSIONAL ENGINEER DAN TRAN No. C63456 Exp. 9/30/14 CIVIL STATE OF CALIFORNIA

THE STATE OF CALIFORNIA OR ITS OFFICERS OR AGENTS SHALL NOT BE RESPONSIBLE FOR THE ACCURACY OR COMPLETENESS OF SCANNED COPIES OF THIS PLAN SHEET.

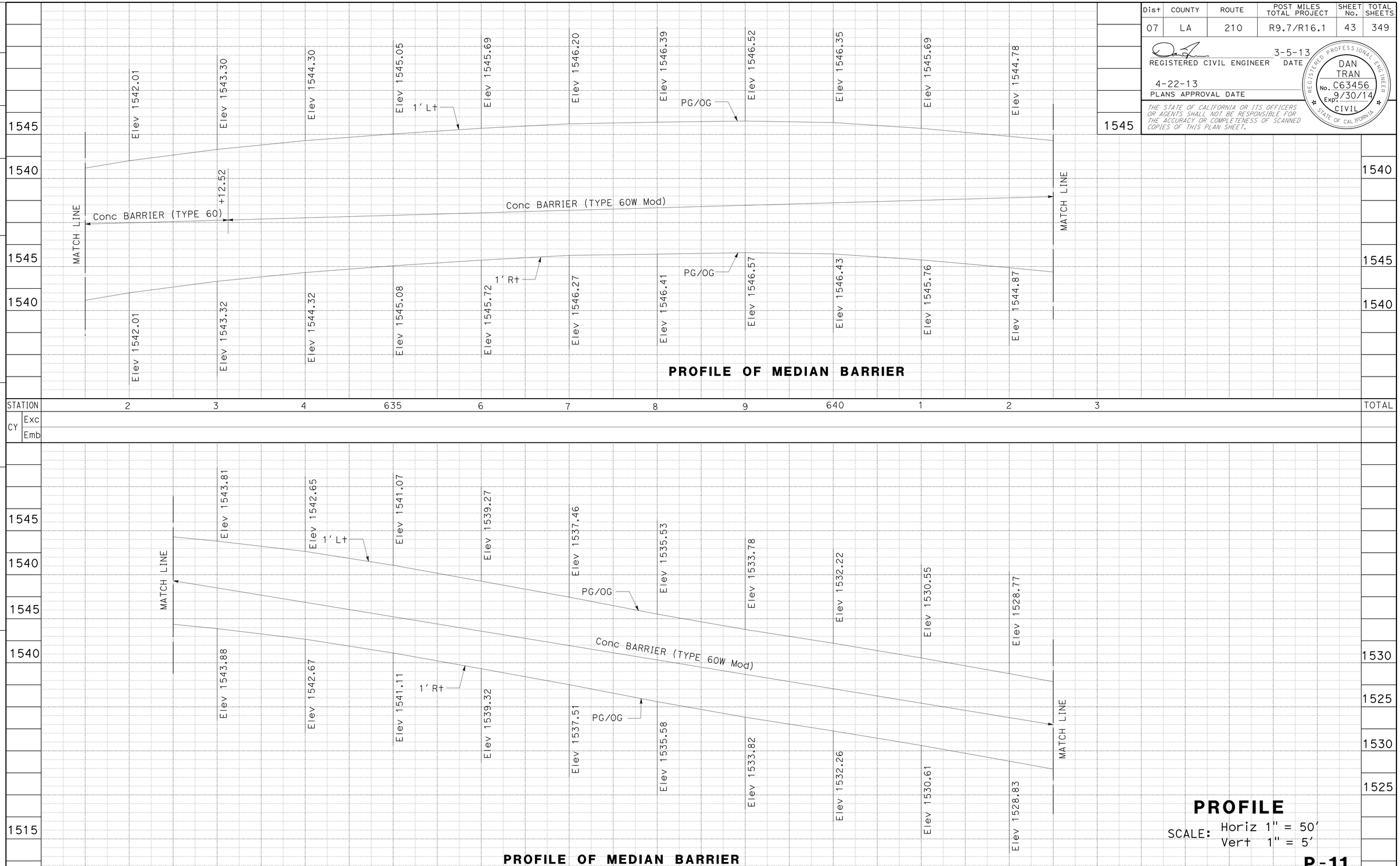

PROFILE

SCALE: Horiz 1" = 50'
Vert 1" = 5'

P-11

REVISED BY | DATE REVISED

DARRYL MAYS | DAN TRAN

CALCULATED-DESIGNED BY | CHECKED BY

FUNCTIONAL SUPERVISOR | OJI KALU

STATE OF CALIFORNIA - DEPARTMENT OF TRANSPORTATION

Caltrans

DESIGN

LAST REVISION 12-12-12

DATE PLOTTED => 26-APR-2013
TIME PLOTTED => 07:36

Dist	COUNTY	ROUTE	POST MILES TOTAL PROJECT	SHEET No.	TOTAL SHEETS
07	LA	210	R9.7/R16.1	44	349

REGISTERED CIVIL ENGINEER 3-5-13 DATE

4-22-13
PLANS APPROVAL DATE

REGISTERED PROFESSIONAL ENGINEER DAN TRAN No. C63456 Exp. 9/30/14 CIVIL STATE OF CALIFORNIA

THE STATE OF CALIFORNIA OR ITS OFFICERS OR AGENTS SHALL NOT BE RESPONSIBLE FOR THE ACCURACY OR COMPLETENESS OF SCANNED COPIES OF THIS PLAN SHEET.

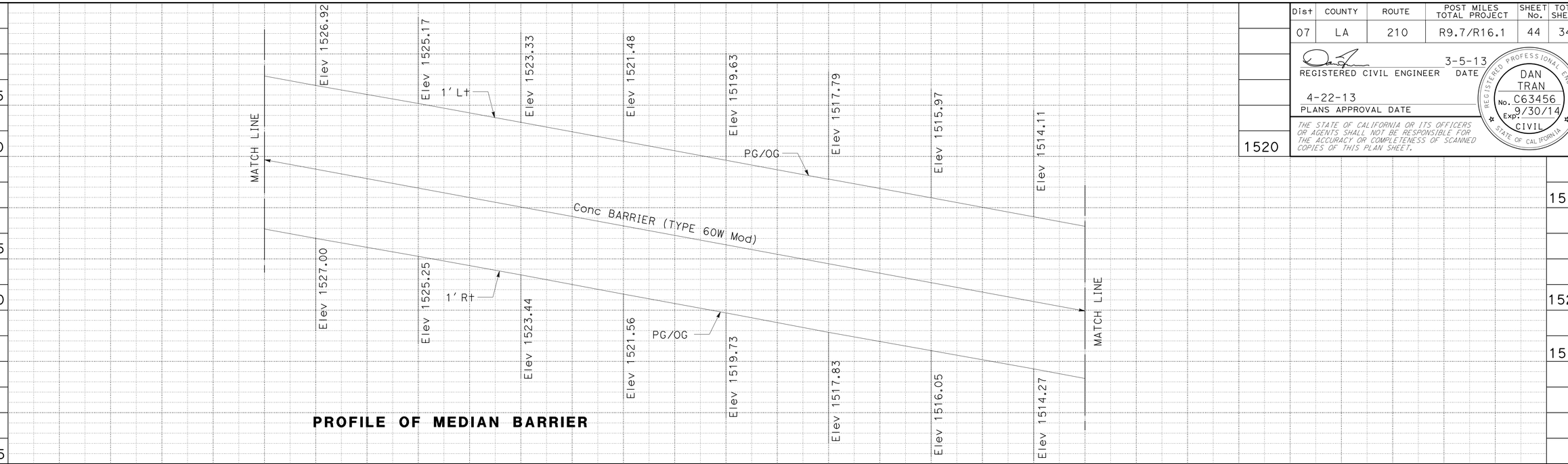

PROFILE OF MEDIAN BARRIER

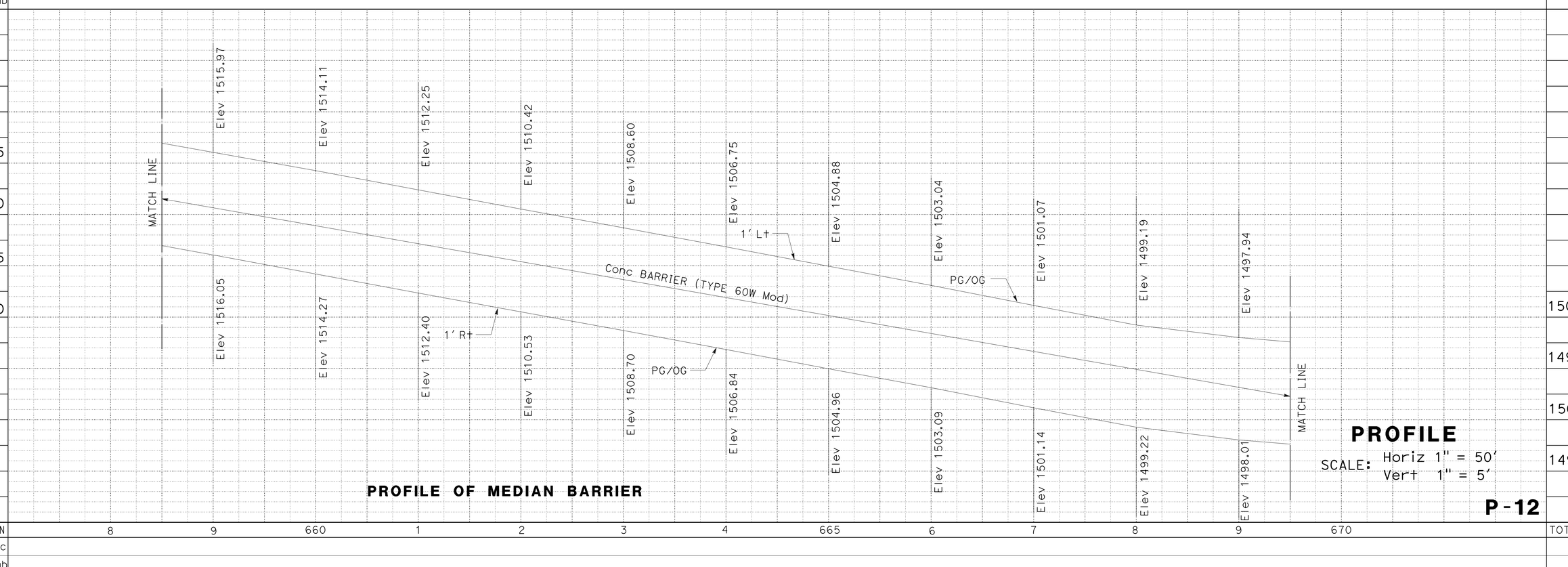

PROFILE OF MEDIAN BARRIER

PROFILE

SCALE: Horiz 1" = 50'
Vert 1" = 5'

P-12

STATE OF CALIFORNIA - DEPARTMENT OF TRANSPORTATION
Caltrans
DESIGN

FUNCTIONAL SUPERVISOR: OJI KALU
CALCULATED-DESIGNED BY: DARRYL MAYS
CHECKED BY: DAN TRAN
REVISED BY
DATE REVISED

LAST REVISION 12-12-12
DATE PLOTTED => 26-APR-2013
TIME PLOTTED => 07:37

Dist	COUNTY	ROUTE	POST MILES TOTAL PROJECT	SHEET No.	TOTAL SHEETS
07	LA	210	R9.7/R16.1	45	349

REGISTERED CIVIL ENGINEER 3-5-13 DATE

4-22-13
PLANS APPROVAL DATE

REGISTERED PROFESSIONAL ENGINEER DAN TRAN No. C63456 Exp. 9/30/14 CIVIL STATE OF CALIFORNIA

THE STATE OF CALIFORNIA OR ITS OFFICERS OR AGENTS SHALL NOT BE RESPONSIBLE FOR THE ACCURACY OR COMPLETENESS OF SCANNED COPIES OF THIS PLAN SHEET.

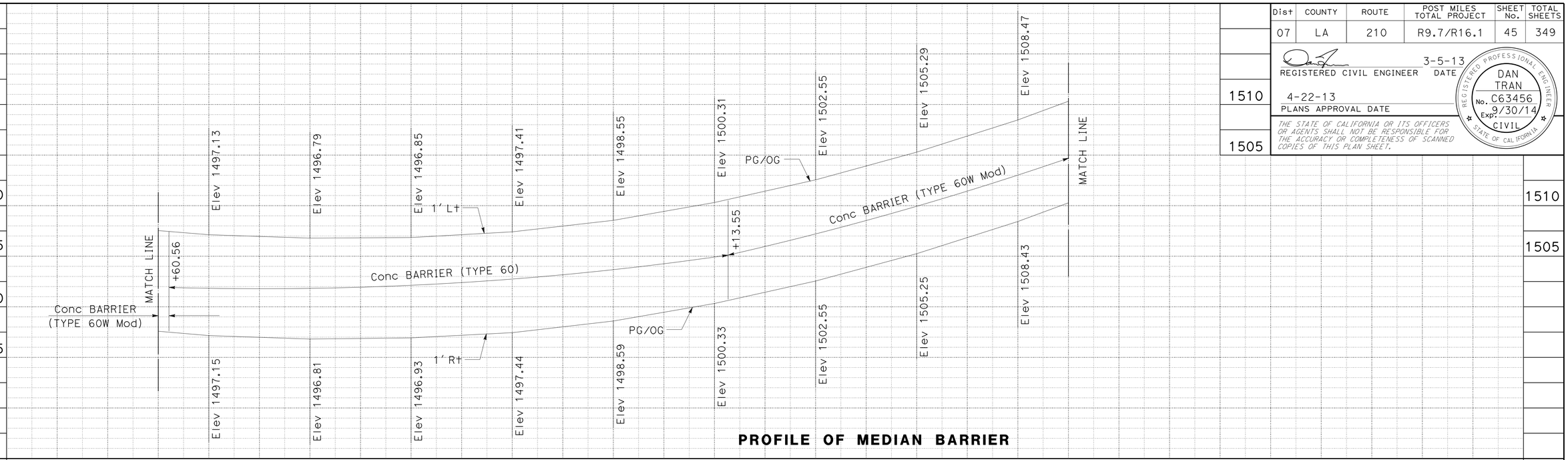

PROFILE OF MEDIAN BARRIER

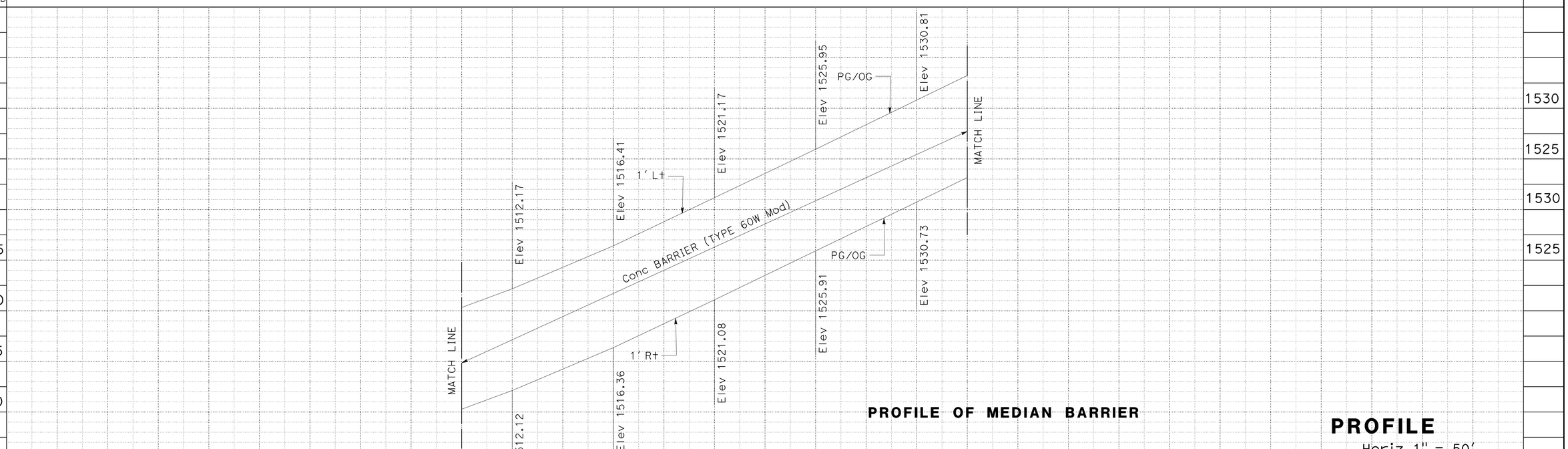

PROFILE OF MEDIAN BARRIER

PROFILE

SCALE: Horiz 1" = 50'
Vert 1" = 5'

P-13

REVISED BY | DATE REVISED
DARRYL MAYS | DAN TRAN
CALCULATED-DESIGNED BY | CHECKED BY
FUNCTIONAL SUPERVISOR
OJI KALU

STATE OF CALIFORNIA - DEPARTMENT OF TRANSPORTATION
Caltrans
DESIGN

LAST REVISION 12-12-12
DATE PLOTTED => 26-APR-2013
TIME PLOTTED => 07:37

Dist	COUNTY	ROUTE	POST MILES TOTAL PROJECT	SHEET No.	TOTAL SHEETS
07	LA	210	R9.7/R16.1	46	349

REGISTERED CIVIL ENGINEER 3-5-13 DATE

4-22-13
PLANS APPROVAL DATE

REGISTERED PROFESSIONAL ENGINEER DAN TRAN No. C63456 Exp. 9/30/14 CIVIL STATE OF CALIFORNIA

THE STATE OF CALIFORNIA OR ITS OFFICERS OR AGENTS SHALL NOT BE RESPONSIBLE FOR THE ACCURACY OR COMPLETENESS OF SCANNED COPIES OF THIS PLAN SHEET.

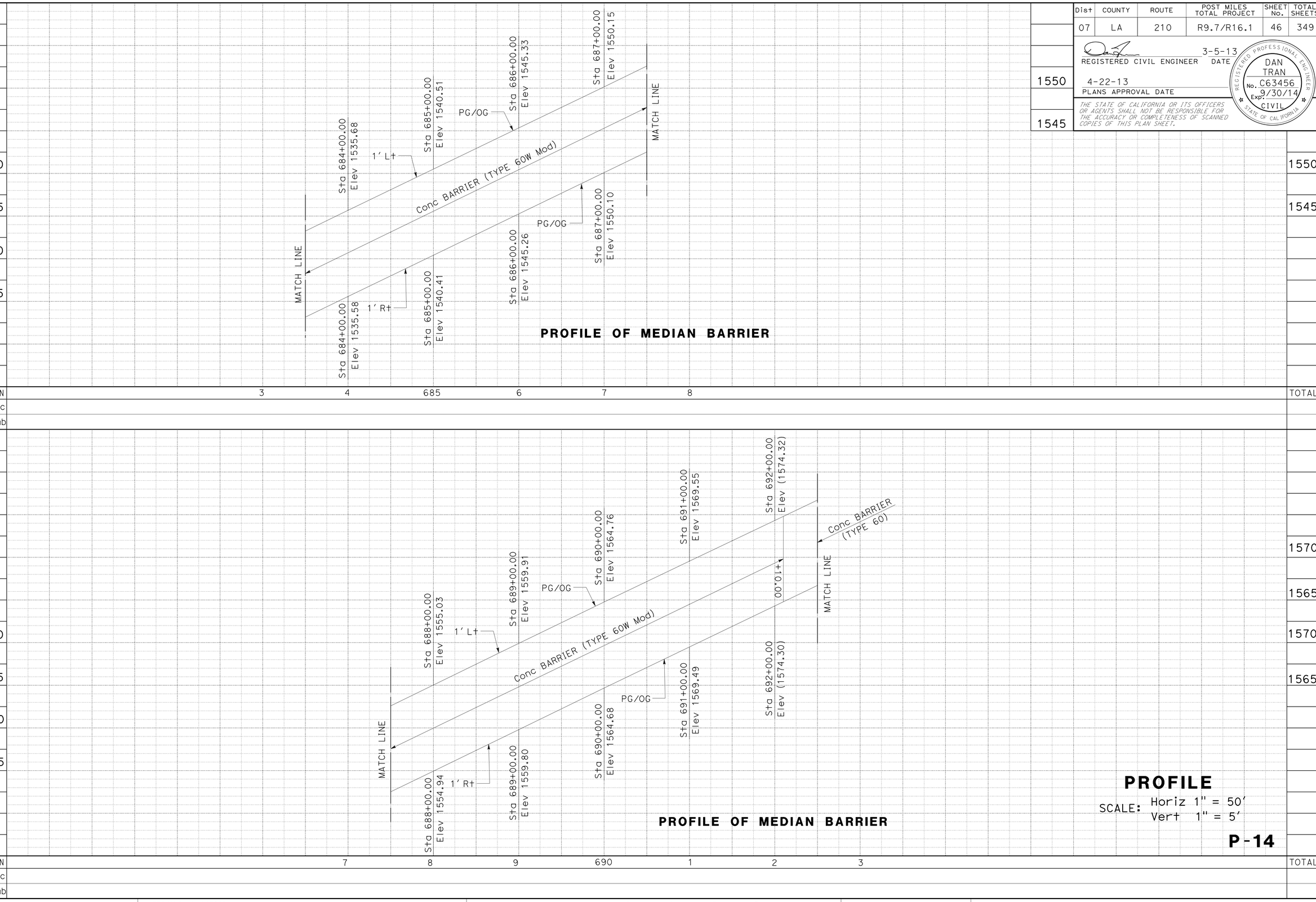

PROFILE OF MEDIAN BARRIER

PROFILE OF MEDIAN BARRIER

PROFILE

SCALE: Horiz 1" = 50'
Vert 1" = 5'

P-14

STATE OF CALIFORNIA - DEPARTMENT OF TRANSPORTATION
Caltrans
DESIGN

FUNCTIONAL SUPERVISOR: OJI KALU
CALCULATED-DESIGNED BY: DARRYL MAYS
CHECKED BY: DAN TRAN
REVISED BY
DATE REVISED

LAST REVISION 12-12-12
DATE PLOTTED => 26-APR-2013
TIME PLOTTED => 07:37

Dist	COUNTY	ROUTE	POST MILES TOTAL PROJECT	SHEET No.	TOTAL SHEETS
07	LA	210	R9.7/R16.1	47	349

REGISTERED CIVIL ENGINEER 3-5-13 DATE

4-22-13
PLANS APPROVAL DATE

REGISTERED PROFESSIONAL ENGINEER DAN TRAN No. C63456 Exp. 9/30/14 CIVIL STATE OF CALIFORNIA

THE STATE OF CALIFORNIA OR ITS OFFICERS OR AGENTS SHALL NOT BE RESPONSIBLE FOR THE ACCURACY OR COMPLETENESS OF SCANNED COPIES OF THIS PLAN SHEET.

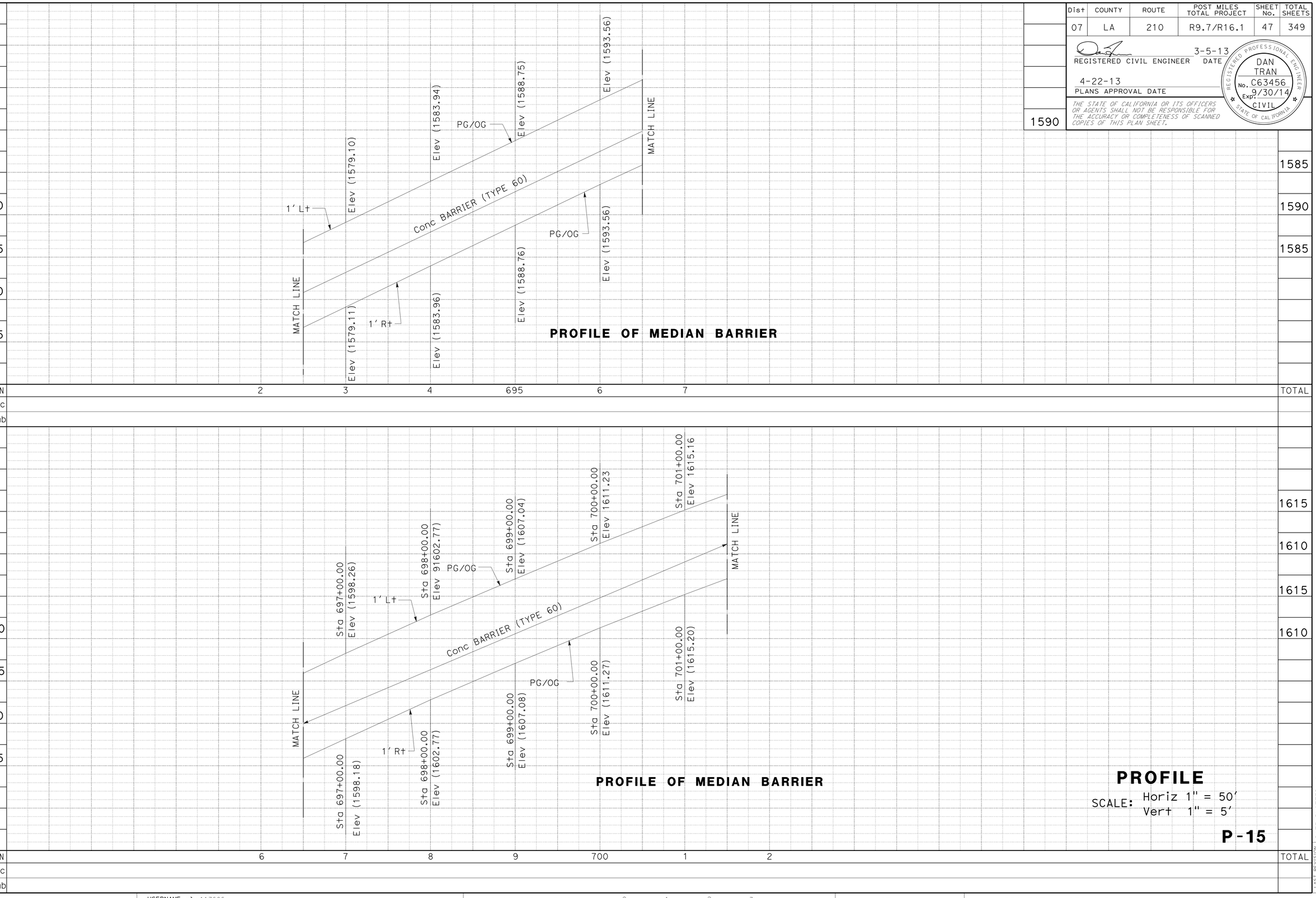

PROFILE

SCALE: Horiz 1" = 50'
Vert 1" = 5'

P-15

STATE OF CALIFORNIA - DEPARTMENT OF TRANSPORTATION
Caltrans
DESIGN

FUNCTIONAL SUPERVISOR: OJI KALU

CALCULATED-DESIGNED BY: DARRYL MAYS
CHECKED BY: DAN TRAN

REVISED BY
DATE REVISED

LAST REVISION 12-12-12
DATE PLOTTED => 26-APR-2013
TIME PLOTTED => 07:37

Dist	COUNTY	ROUTE	POST MILES TOTAL PROJECT	SHEET No.	TOTAL SHEETS
07	LA	210	R9.7/R16.1	48	349

REGISTERED CIVIL ENGINEER 3-5-13 DATE

4-22-13
PLANS APPROVAL DATE

REGISTERED PROFESSIONAL ENGINEER DAN TRAN No. C63456 Exp. 9/30/14 CIVIL STATE OF CALIFORNIA

THE STATE OF CALIFORNIA OR ITS OFFICERS OR AGENTS SHALL NOT BE RESPONSIBLE FOR THE ACCURACY OR COMPLETENESS OF SCANNED COPIES OF THIS PLAN SHEET.

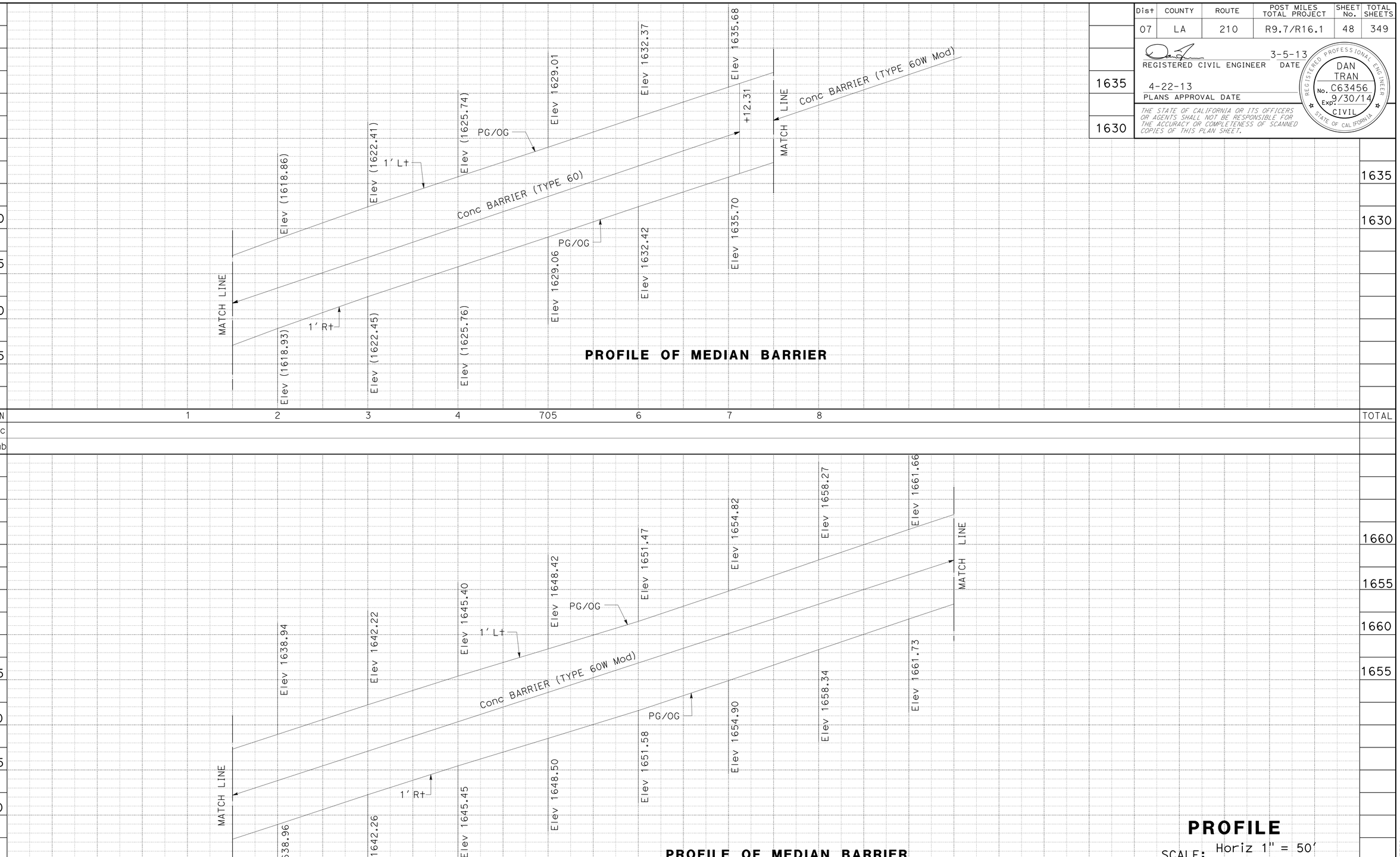

PROFILE OF MEDIAN BARRIER

PROFILE OF MEDIAN BARRIER

PROFILE

SCALE: Horiz 1" = 50'
Vert 1" = 5'

P-16

REVISED BY	DATE REVISED
DARRYL MAYS	DAN TRAN

CALCULATED-DESIGNED BY / CHECKED BY

FUNCTIONAL SUPERVISOR: OJI KALU

STATE OF CALIFORNIA - DEPARTMENT OF TRANSPORTATION

Caltrans

LAST REVISION 12-12-12

DATE PLOTTED => 26-APR-2013
TIME PLOTTED => 07:37

Dist	COUNTY	ROUTE	POST MILES TOTAL PROJECT	SHEET No.	TOTAL SHEETS
07	LA	210	R9.7/R16.1	49	349

REGISTERED CIVIL ENGINEER 3-5-13 DATE

4-22-13
PLANS APPROVAL DATE

REGISTERED PROFESSIONAL ENGINEER DAN TRAN No. C63456 Exp. 9/30/14 CIVIL STATE OF CALIFORNIA

THE STATE OF CALIFORNIA OR ITS OFFICERS OR AGENTS SHALL NOT BE RESPONSIBLE FOR THE ACCURACY OR COMPLETENESS OF SCANNED COPIES OF THIS PLAN SHEET.

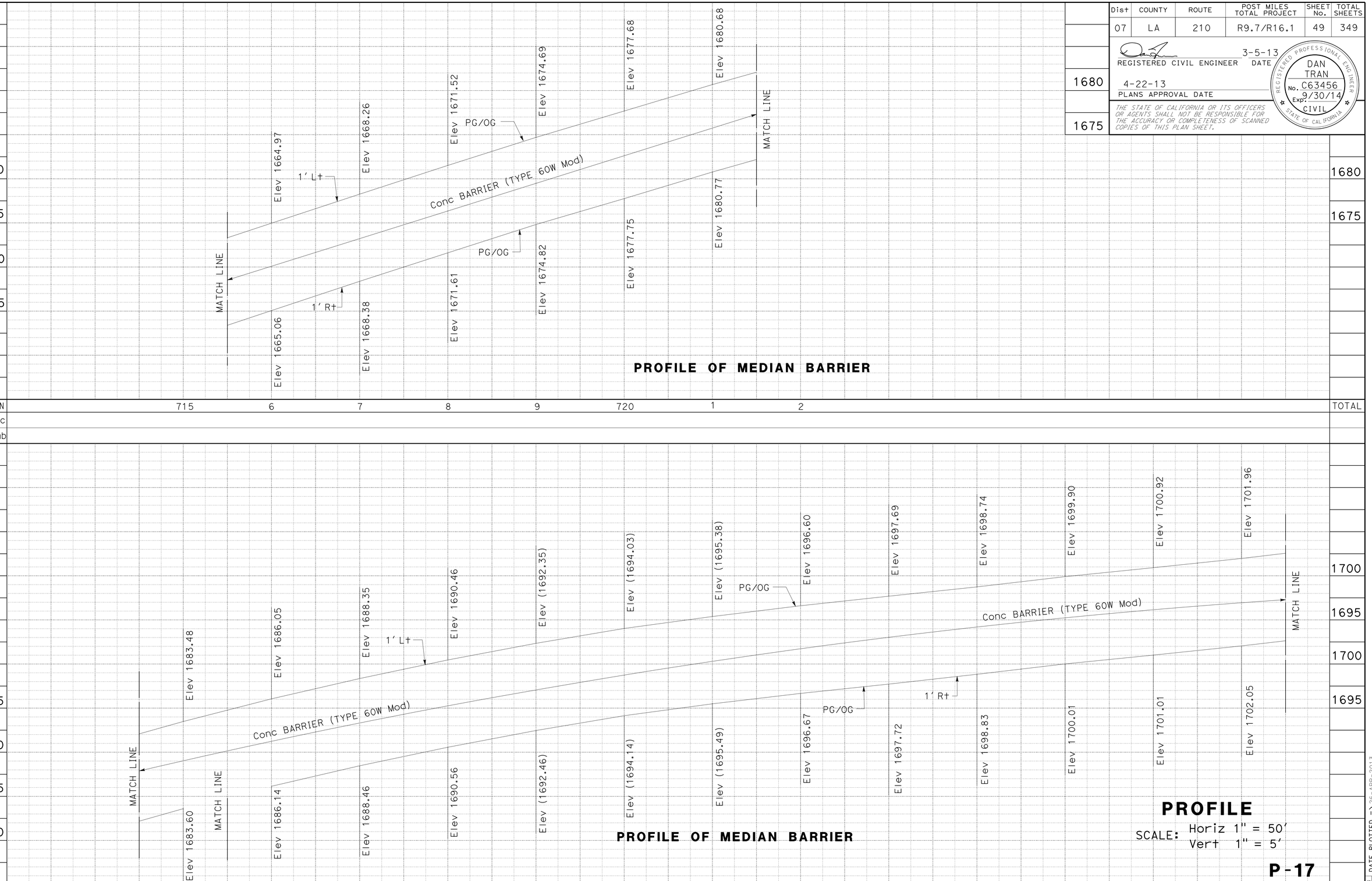

PROFILE

SCALE: Horiz 1" = 50'
Vert 1" = 5'

P-17

REVISED BY	DATE REVISED
DARRYL MAYS	DAN TRAN

CALCULATED-DESIGNED BY / CHECKED BY

FUNCTIONAL SUPERVISOR: OJI KALU

STATE OF CALIFORNIA - DEPARTMENT OF TRANSPORTATION

Caltrans® **DESIGN**

LAST REVISION 12-12-12

DATE PLOTTED => 26-APR-2013
TIME PLOTTED => 07:37

Dist	COUNTY	ROUTE	POST MILES TOTAL PROJECT	SHEET No.	TOTAL SHEETS
07	LA	210	R9.7/R16.1	50	349

REGISTERED CIVIL ENGINEER 3-5-13 DATE

4-22-13
PLANS APPROVAL DATE

REGISTERED PROFESSIONAL ENGINEER DAN TRAN No. C63456 Exp. 9/30/14 CIVIL STATE OF CALIFORNIA

THE STATE OF CALIFORNIA OR ITS OFFICERS OR AGENTS SHALL NOT BE RESPONSIBLE FOR THE ACCURACY OR COMPLETENESS OF SCANNED COPIES OF THIS PLAN SHEET.

PROFILE OF MEDIAN BARRIER

PROFILE OF MEDIAN BARRIER

PROFILE

SCALE: Horiz 1" = 50'
Vert 1" = 5'

P-18

REVISED BY | DATE REVISED
DARRYL MAYS | DAN TRAN
CALCULATED-DESIGNED BY | CHECKED BY
FUNCTIONAL SUPERVISOR
OJI KALU

STATE OF CALIFORNIA - DEPARTMENT OF TRANSPORTATION
Caltrans
DESIGN

LAST REVISION 12-12-12
DATE PLOTTED => 26-APR-2013
TIME PLOTTED => 07:37

Dist	COUNTY	ROUTE	POST MILES TOTAL PROJECT	SHEET No.	TOTAL SHEETS
07	LA	210	R9.7/R16.1	51	349

REGISTERED CIVIL ENGINEER 3-5-13 DATE

4-22-13
PLANS APPROVAL DATE

REGISTERED PROFESSIONAL ENGINEER DAN TRAN No. C63456 Exp. 9/30/14 CIVIL STATE OF CALIFORNIA

THE STATE OF CALIFORNIA OR ITS OFFICERS OR AGENTS SHALL NOT BE RESPONSIBLE FOR THE ACCURACY OR COMPLETENESS OF SCANNED COPIES OF THIS PLAN SHEET.

PROFILE OF MEDIAN BARRIER

PROFILE OF MEDIAN BARRIER

PROFILE

SCALE: Horiz 1" = 50'
Vert 1" = 5'

P-19

REVISED BY | DATE REVISED
DARRYL MAYS | DAN TRAN
CALCULATED-DESIGNED BY | CHECKED BY
FUNCTIONAL SUPERVISOR
OJI KALU

STATE OF CALIFORNIA - DEPARTMENT OF TRANSPORTATION
Caltrans
DESIGN

LAST REVISION 12-12-12
DATE PLOTTED => 26-APR-2013
TIME PLOTTED => 07:37

Dist	COUNTY	ROUTE	POST MILES TOTAL PROJECT	SHEET No.	TOTAL SHEETS
07	LA	210	R9.7/R16.1	52	349

REGISTERED CIVIL ENGINEER 3-5-13 DATE

4-22-13
PLANS APPROVAL DATE

REGISTERED PROFESSIONAL ENGINEER DAN TRAN No. C63456 Exp. 9/30/14 CIVIL STATE OF CALIFORNIA

THE STATE OF CALIFORNIA OR ITS OFFICERS OR AGENTS SHALL NOT BE RESPONSIBLE FOR THE ACCURACY OR COMPLETENESS OF SCANNED COPIES OF THIS PLAN SHEET.

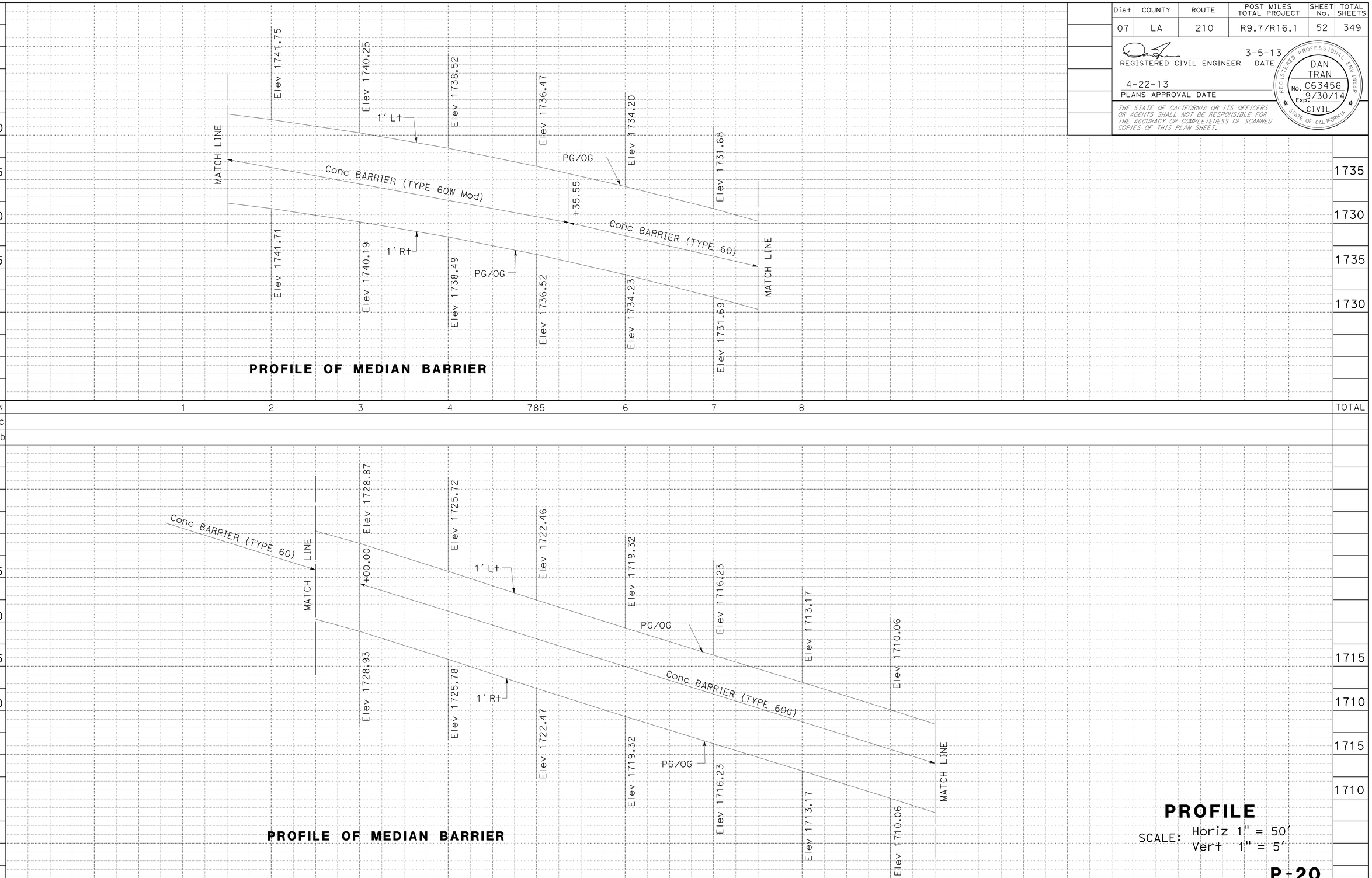

PROFILE OF MEDIAN BARRIER

PROFILE OF MEDIAN BARRIER

PROFILE

SCALE: Horiz 1" = 50'
Vert 1" = 5'

P-20

STATE OF CALIFORNIA - DEPARTMENT OF TRANSPORTATION
Caltrans
DESIGN

FUNCTIONAL SUPERVISOR: OJI KALU
CALCULATED-DESIGNED BY: DARRYL MAYS
CHECKED BY: DAN TRAN
REVISED BY
DATE REVISED

LAST REVISION 12-12-12
DATE PLOTTED => 26-APR-2013
TIME PLOTTED => 07:37

Dist	COUNTY	ROUTE	POST MILES TOTAL PROJECT	SHEET No.	TOTAL SHEETS
07	LA	210	R9.7/R16.1	53	349

REGISTERED CIVIL ENGINEER 3-5-13 DATE

4-22-13
PLANS APPROVAL DATE

REGISTERED PROFESSIONAL ENGINEER DAN TRAN No. C63456 Exp. 9/30/14 CIVIL STATE OF CALIFORNIA

THE STATE OF CALIFORNIA OR ITS OFFICERS OR AGENTS SHALL NOT BE RESPONSIBLE FOR THE ACCURACY OR COMPLETENESS OF SCANNED COPIES OF THIS PLAN SHEET.

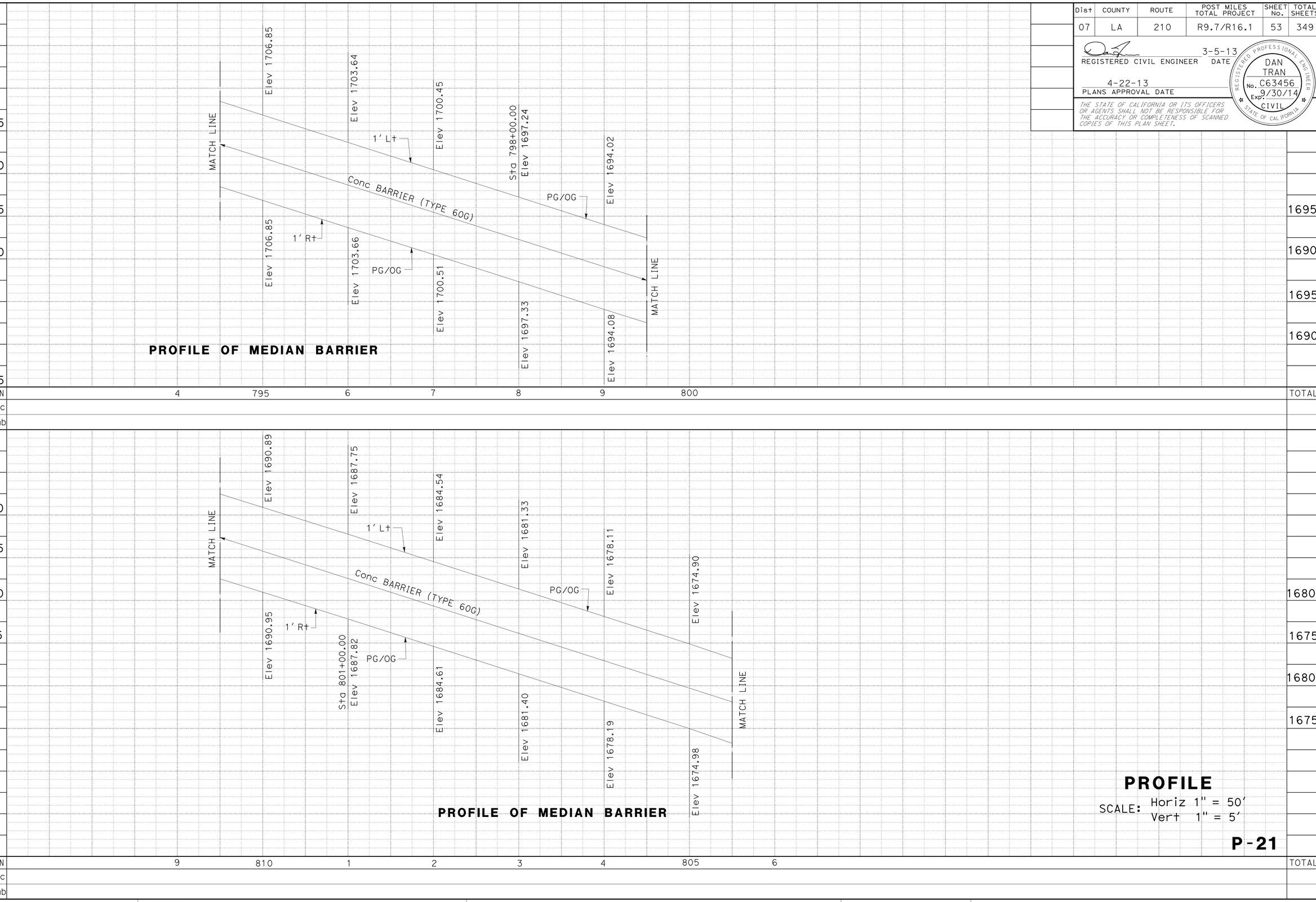

PROFILE

SCALE: Horiz 1" = 50'
Vert 1" = 5'

P-21

STATE OF CALIFORNIA - DEPARTMENT OF TRANSPORTATION

Caltrans® **DESIGN**

FUNCTIONAL SUPERVISOR: OJI KALU

CALCULATED-DESIGNED BY: DARRYL MAYS

CHECKED BY: DAN TRAN

REVISED BY

DATE REVISED

LAST REVISION 12-12-12

DATE PLOTTED => 26-APR-2013
TIME PLOTTED => 17:09

Dist	COUNTY	ROUTE	POST MILES TOTAL PROJECT	SHEET No.	TOTAL SHEETS
07	LA	210	R9.7/R16.1	54	349

REGISTERED CIVIL ENGINEER 3-5-13 DATE

4-22-13
PLANS APPROVAL DATE

REGISTERED PROFESSIONAL ENGINEER DAN TRAN No. C63456 Exp. 9/30/14 CIVIL STATE OF CALIFORNIA

THE STATE OF CALIFORNIA OR ITS OFFICERS OR AGENTS SHALL NOT BE RESPONSIBLE FOR THE ACCURACY OR COMPLETENESS OF SCANNED COPIES OF THIS PLAN SHEET.

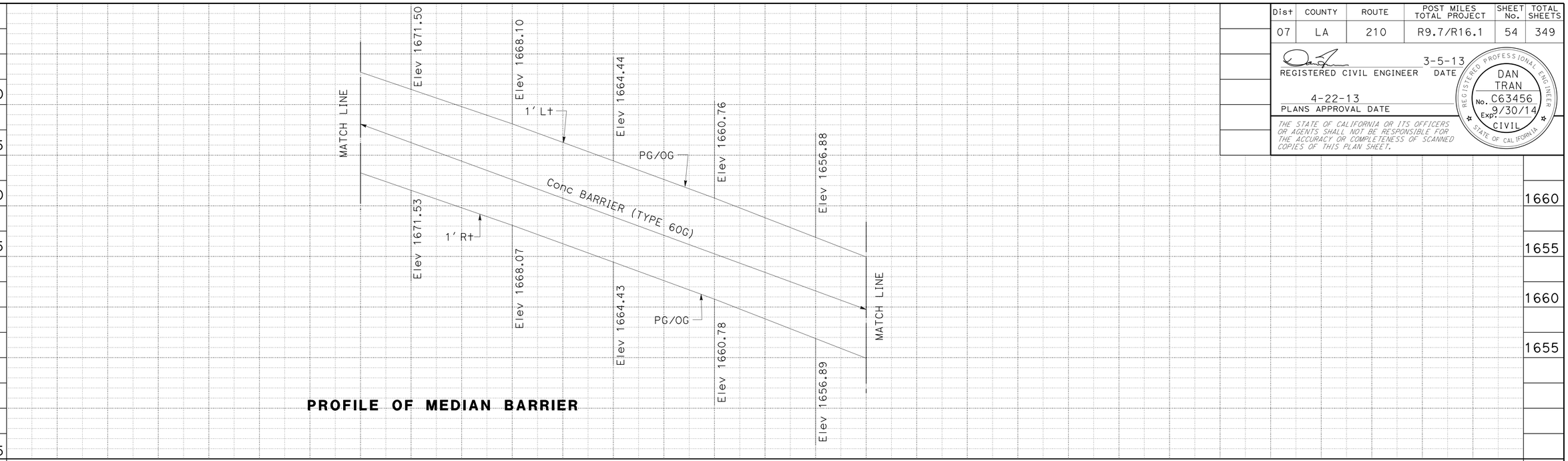

PROFILE OF MEDIAN BARRIER

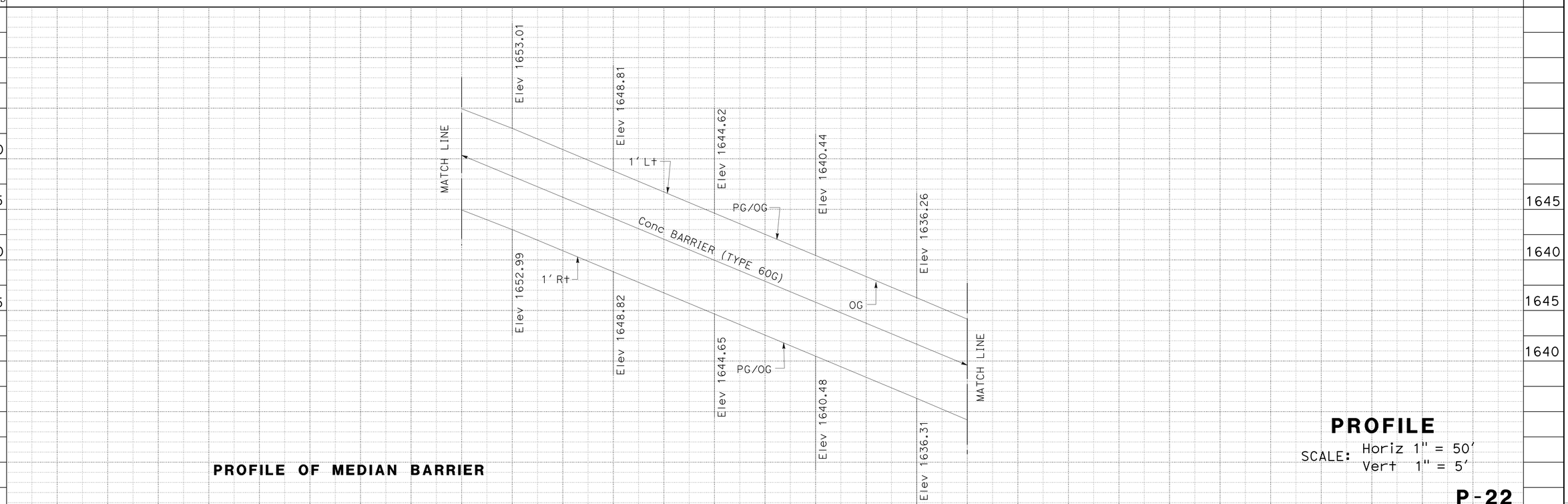

PROFILE OF MEDIAN BARRIER

PROFILE

SCALE: Horiz 1" = 50'
Vert 1" = 5'

P-22

STATE OF CALIFORNIA - DEPARTMENT OF TRANSPORTATION

Caltrans® **DESIGN**

FUNCTIONAL SUPERVISOR: OJI KALU

CALCULATED-DESIGNED BY: DARRYL MAYS

CHECKED BY: DAN TRAN

REVISED BY / DATE REVISED

LAST REVISION 12-12-12 DATE PLOTTED => 26-APR-2013 TIME PLOTTED => 17:09

Dist	COUNTY	ROUTE	POST MILES TOTAL PROJECT	SHEET No.	TOTAL SHEETS
07	LA	210	R9.7/R16.1	55	349

REGISTERED CIVIL ENGINEER 3-5-13 DATE

4-22-13
PLANS APPROVAL DATE

REGISTERED PROFESSIONAL ENGINEER DAN TRAN No. C63456 Exp. 9/30/14 CIVIL STATE OF CALIFORNIA

THE STATE OF CALIFORNIA OR ITS OFFICERS OR AGENTS SHALL NOT BE RESPONSIBLE FOR THE ACCURACY OR COMPLETENESS OF SCANNED COPIES OF THIS PLAN SHEET.

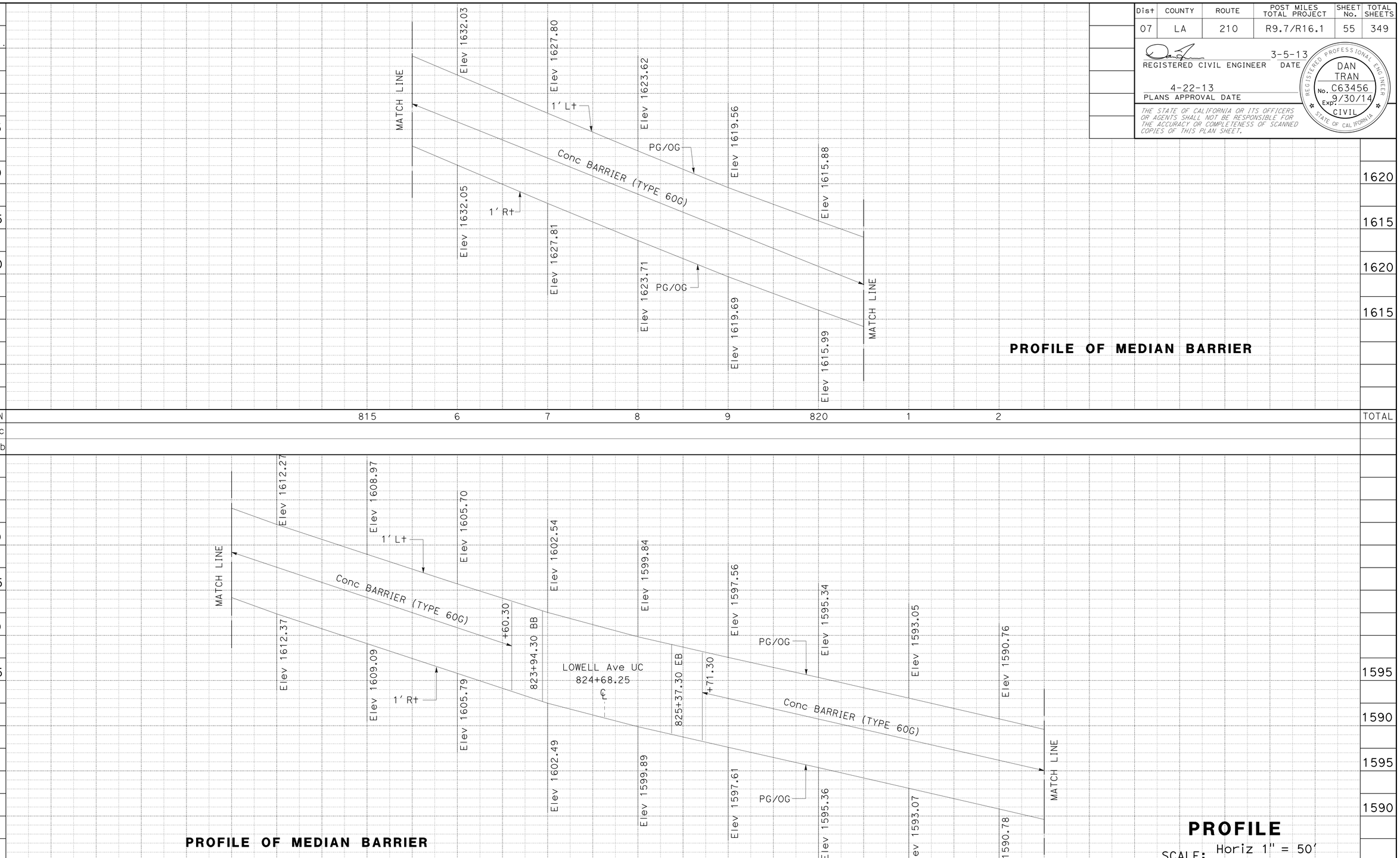

PROFILE OF MEDIAN BARRIER

PROFILE OF MEDIAN BARRIER

PROFILE

SCALE: Horiz 1" = 50'
Vert 1" = 5'

P-23

REVISED BY | DATE REVISED

DARRYL MAYS | DAN TRAN

CALCULATED-DESIGNED BY | CHECKED BY

FUNCTIONAL SUPERVISOR: OJI KALU

STATE OF CALIFORNIA - DEPARTMENT OF TRANSPORTATION

Caltrans® **DESIGN**

LAST REVISION 12-12-12 | DATE PLOTTED => 26-APR-2013 | TIME PLOTTED => 17:09

Dist	COUNTY	ROUTE	POST MILES TOTAL PROJECT	SHEET No.	TOTAL SHEETS
07	LA	210	R9.7/R16.1	56	349

REGISTERED CIVIL ENGINEER 3-5-13 DATE

4-22-13
PLANS APPROVAL DATE

REGISTERED PROFESSIONAL ENGINEER DAN TRAN No. C63456 Exp. 9/30/14 CIVIL STATE OF CALIFORNIA

THE STATE OF CALIFORNIA OR ITS OFFICERS OR AGENTS SHALL NOT BE RESPONSIBLE FOR THE ACCURACY OR COMPLETENESS OF SCANNED COPIES OF THIS PLAN SHEET.

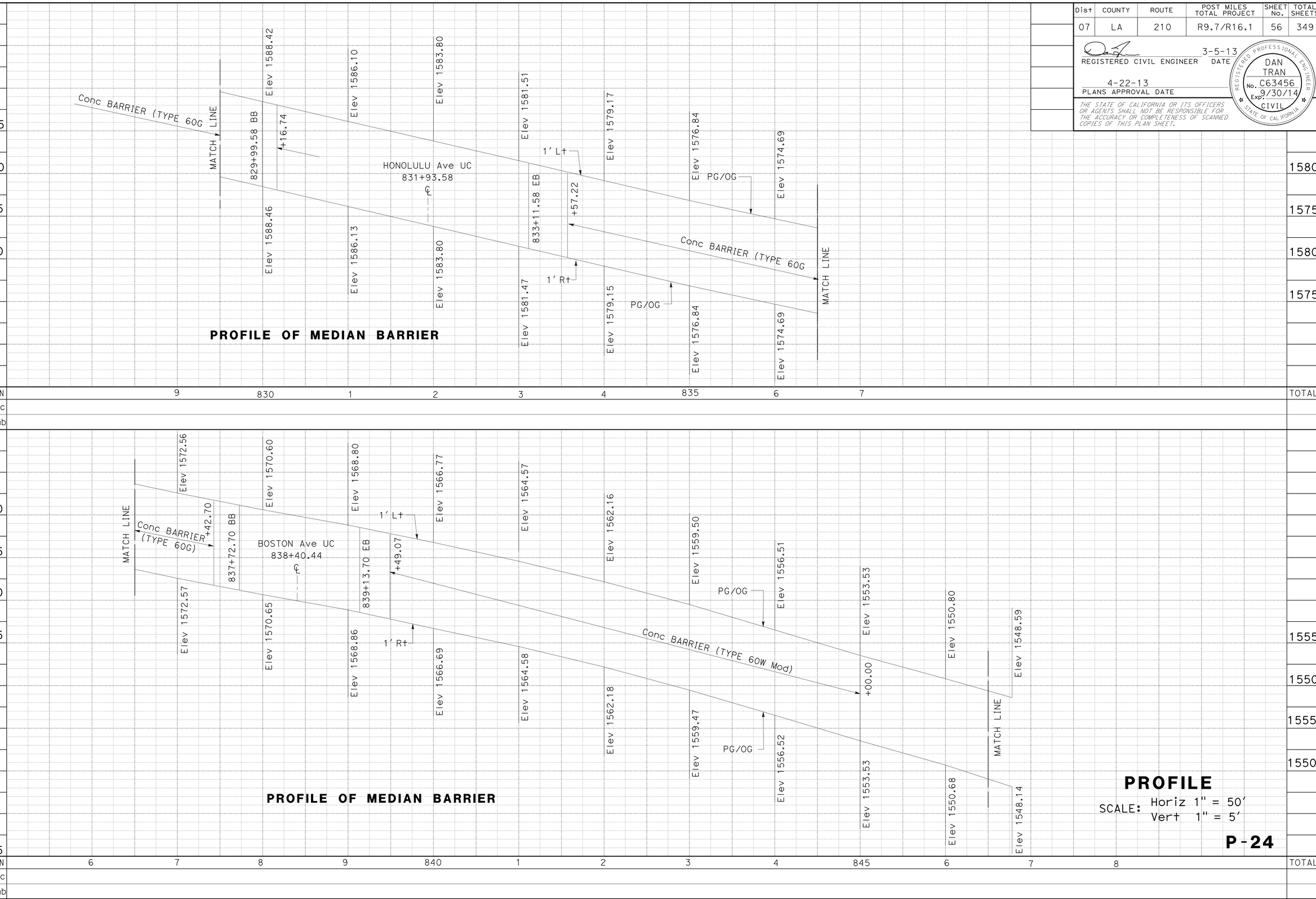

PROFILE OF MEDIAN BARRIER

PROFILE OF MEDIAN BARRIER

PROFILE

SCALE: Horiz 1" = 50'
Vert 1" = 5'

P-24

REVISED BY
DATE REVISED
DARRYL MAYS
DAN TRAN
CALCULATED-DESIGNED BY
CHECKED BY
FUNCTIONAL SUPERVISOR
OJI KALU

STATE OF CALIFORNIA - DEPARTMENT OF TRANSPORTATION
Caltrans®
DESIGN

LAST REVISION 12-12-12
DATE PLOTTED => 26-APR-2013
TIME PLOTTED => 17:09

Dist	COUNTY	ROUTE	POST MILES TOTAL PROJECT	SHEET No.	TOTAL SHEETS
07	LA	210	R9.7/R16.1	57	349

REGISTERED CIVIL ENGINEER 3-5-13 DATE

4-22-13
PLANS APPROVAL DATE

REGISTERED PROFESSIONAL ENGINEER DAN TRAN No. C63456 Exp. 9/30/14 CIVIL STATE OF CALIFORNIA

THE STATE OF CALIFORNIA OR ITS OFFICERS OR AGENTS SHALL NOT BE RESPONSIBLE FOR THE ACCURACY OR COMPLETENESS OF SCANNED COPIES OF THIS PLAN SHEET.

LEGEND:

→ DIRECTION OF TRAVEL

2' JPCP INTRUDE ALONG SHOULDER GORE AREA

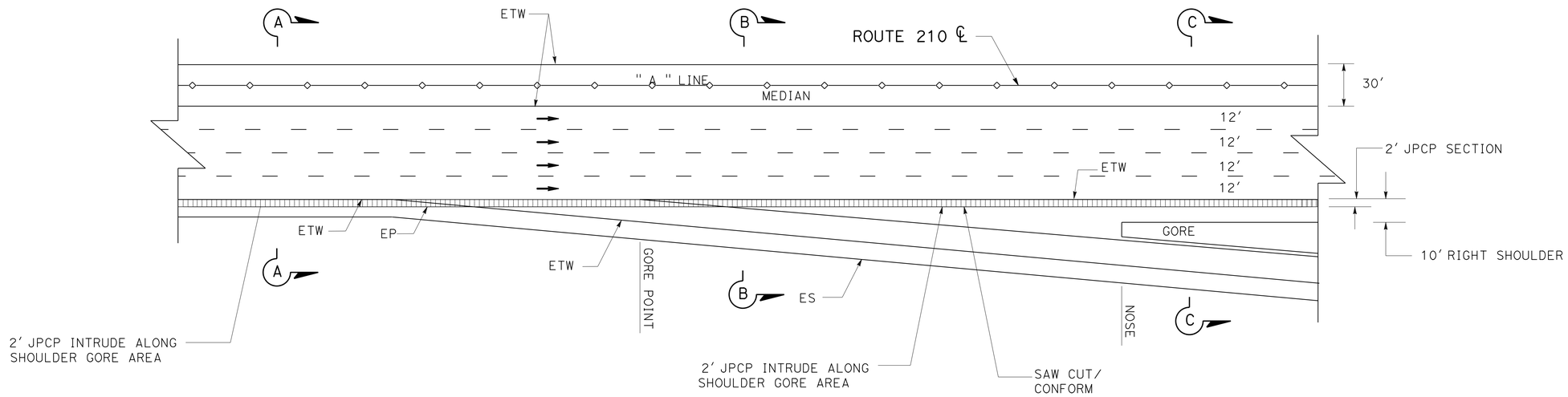

TYPICAL GORE SECTION

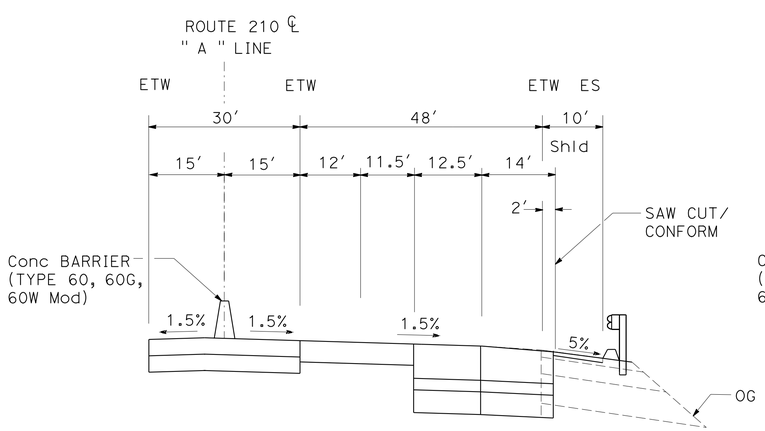

SECTION A-A

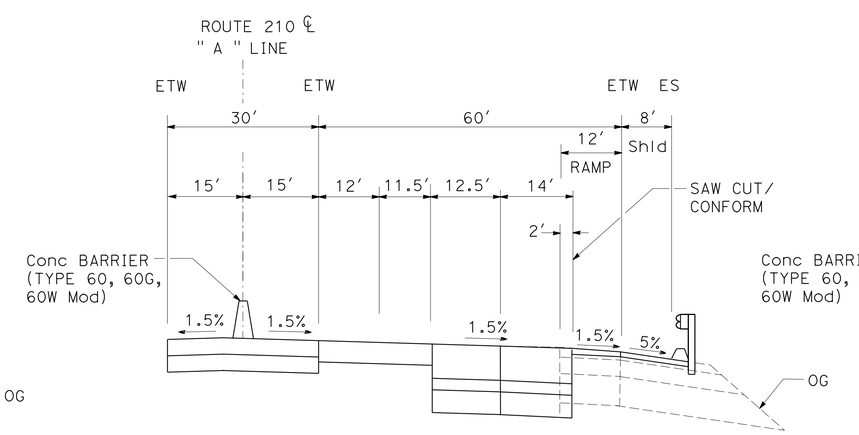

SECTION B-B

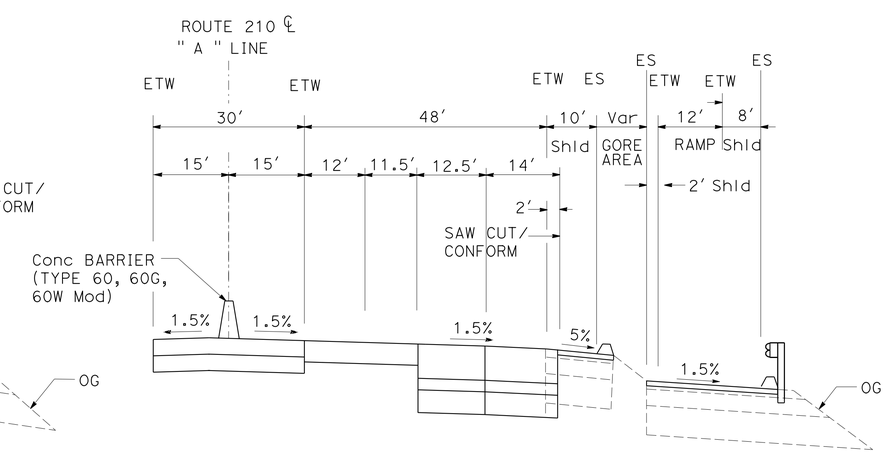

SECTION C-C

CONSTRUCTION DETAILS

NO SCALE

C-1

STATE OF CALIFORNIA - DEPARTMENT OF TRANSPORTATION
Caltrans DESIGN
FUNCTIONAL SUPERVISOR: OJI KALU
DARRYL MAYS | DAN TRAN
CALCULATED-DESIGNED BY | CHECKED BY
REVISED BY | DATE REVISED

LAST REVISION 12-12-12
DATE PLOTTED => 30-APR-2013
TIME PLOTTED => 13:24

Dist	COUNTY	ROUTE	POST MILES TOTAL PROJECT	SHEET No.	TOTAL SHEETS
07	LA	210	R9.7/R16.1	58	349

REGISTERED CIVIL ENGINEER 3-5-13 DATE

4-22-13
PLANS APPROVAL DATE

REGISTERED PROFESSIONAL ENGINEER DAN TRAN No. C63456 Exp. 9/30/14 CIVIL STATE OF CALIFORNIA

THE STATE OF CALIFORNIA OR ITS OFFICERS OR AGENTS SHALL NOT BE RESPONSIBLE FOR THE ACCURACY OR COMPLETENESS OF SCANNED COPIES OF THIS PLAN SHEET.

NOTES:

1. EXISTING DRAINAGE INLETS HAVE NOT BEEN PLOTTED ON THESE PLANS.
2. EXISTING UTILITY FACILITIES HAVE NOT BEEN PLOTTED ON THESE PLANS.

LEGEND:

2' JPCP INTRUDE ALONG SHOULDER GORE AREA

EMERGENCY TRUCK PARKING ZONE

DIRECTION OF TRAFFIC

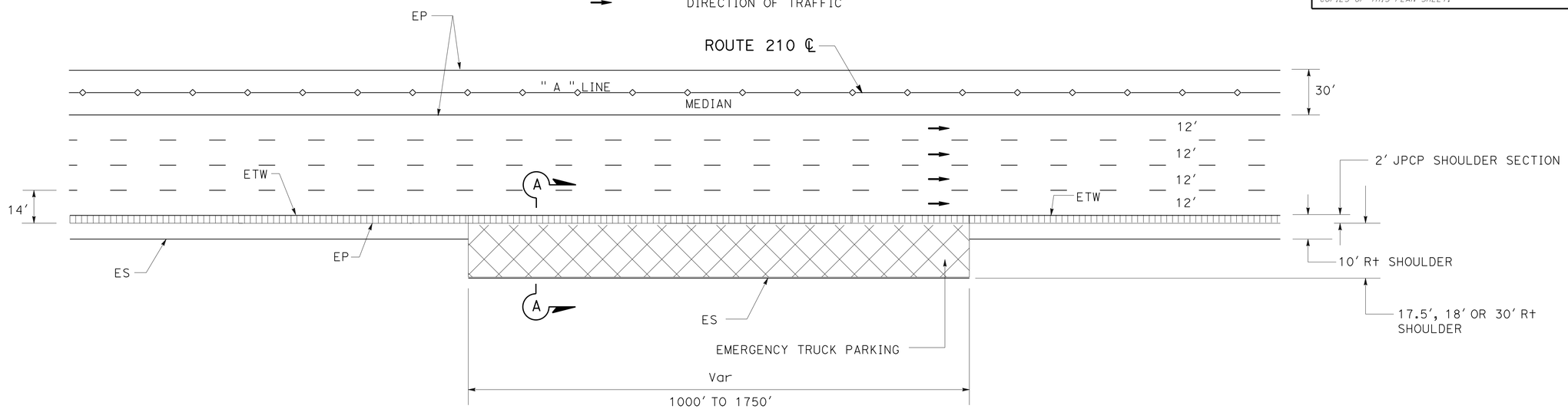

TYPICAL TRUCK PARKING ZONE

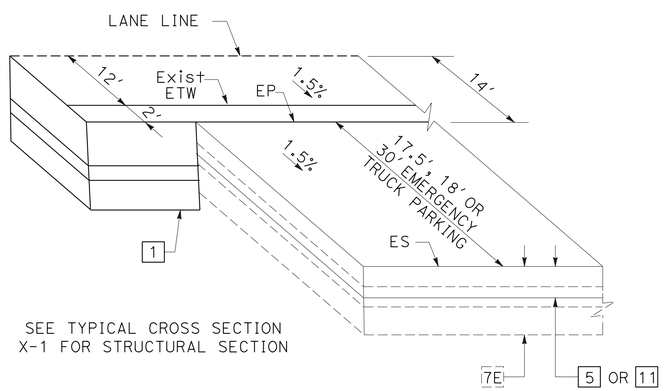

SECTION A-A

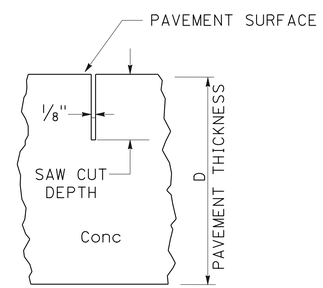

CONTRACTION JOINT DETAIL

CONFORM TO BRIDGE DECK

TYPE C TO TYPE E
HMA DIKE TRANSITION

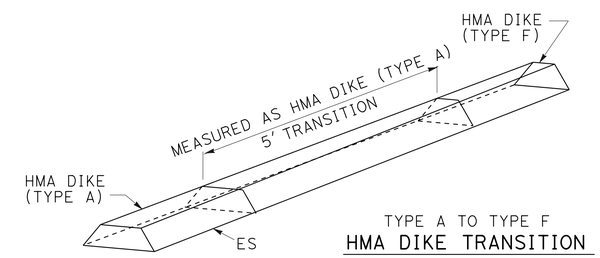

TYPE A TO TYPE F
HMA DIKE TRANSITION

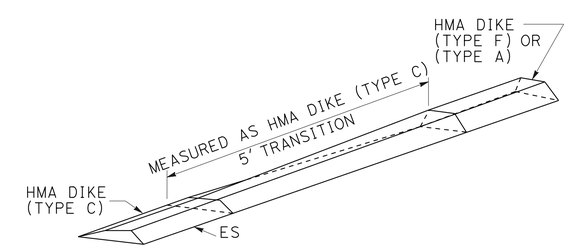

TYPE C TO TYPE F OR TYPE A
HMA DIKE TRANSITION

CONSTRUCTION DETAILS

NO SCALE

C-2

STATE OF CALIFORNIA - DEPARTMENT OF TRANSPORTATION
Caltrans DESIGN

FUNCTIONAL SUPERVISOR: OJI KALU
CALCULATED-DESIGNED BY: DARRYL MAYS
CHECKED BY: DAN TRAN
REVISED BY
DATE REVISED

LAST REVISION 12-12-12
DATE PLOTTED => 30-APR-2013
TIME PLOTTED => 13:26

Dist	COUNTY	ROUTE	POST MILES TOTAL PROJECT	SHEET No.	TOTAL SHEETS
07	LA	210	R9.7/R16.1	59	349

REGISTERED CIVIL ENGINEER 3-5-13 DATE

4-22-13
PLANS APPROVAL DATE

REGISTERED PROFESSIONAL ENGINEER DAN TRAN No. C63456 Exp. 9/30/14 CIVIL STATE OF CALIFORNIA

THE STATE OF CALIFORNIA OR ITS OFFICERS OR AGENTS SHALL NOT BE RESPONSIBLE FOR THE ACCURACY OR COMPLETENESS OF SCANNED COPIES OF THIS PLAN SHEET.

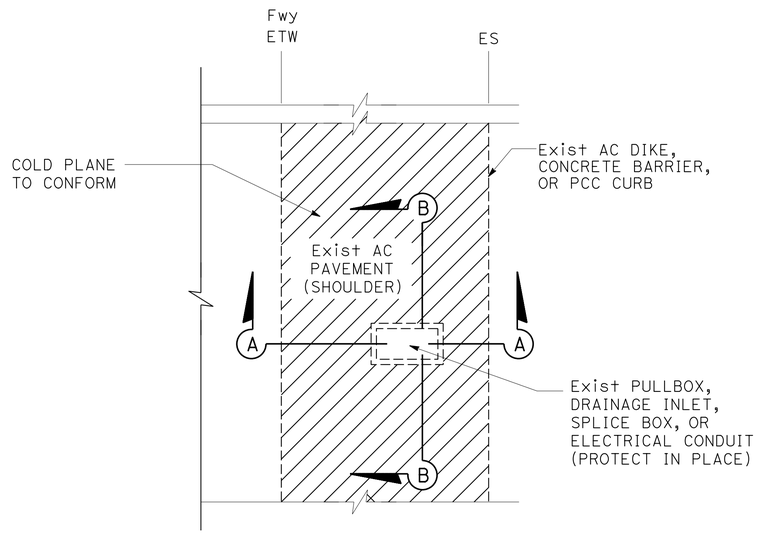

PULLBOX, DRAINAGE INLET OR SPLICEBOX (VARIOUS LOCATIONS)

LEGEND:

0.10′ COLD PLANE
0.15′ RHMA G (WMA)

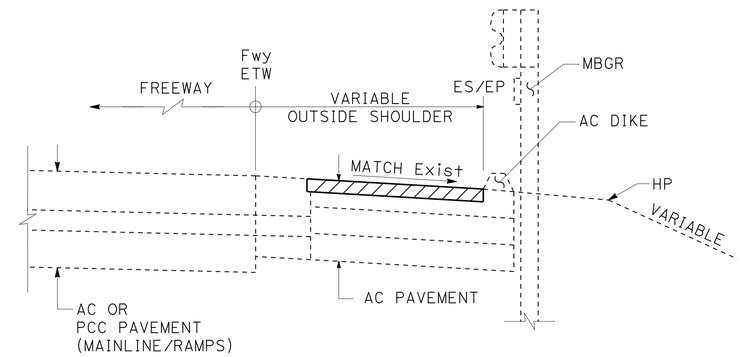

TYPICAL AT METAL BEAM GUARD RAILING

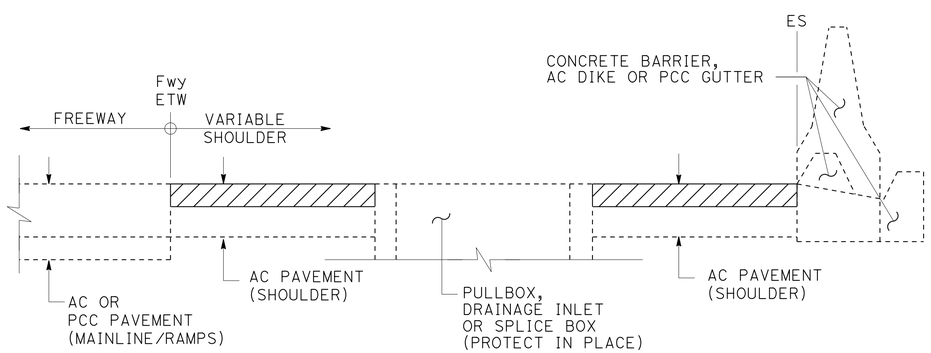

SECTION A-A

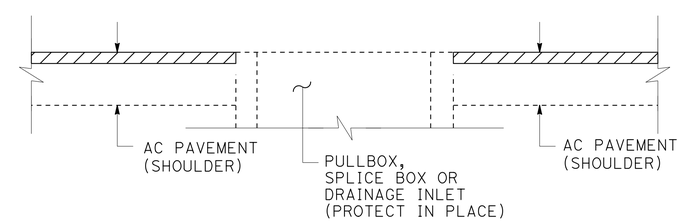

SECTION B-B

TYPICAL PULLBOX, SPLICE BOX OR DRAINAGE INLET

CONSTRUCTION DETAILS

NO SCALE

C-3

STATE OF CALIFORNIA - DEPARTMENT OF TRANSPORTATION
Caltrans® DESIGN
FUNCTIONAL SUPERVISOR: OJI KALU
CALCULATED-DESIGNED BY: DAN TRAN
CHECKED BY: MOE MIRZA
REVISED BY
DATE REVISED

LAST REVISION 12-12-12
DATE PLOTTED => 26-APR-2013
TIME PLOTTED => 17:09

Dist	COUNTY	ROUTE	POST MILES TOTAL PROJECT	SHEET No.	TOTAL SHEETS
07	LA	210	R9.7/R16.1	60	349

Keith Sellers
LICENSED LANDSCAPE ARCHITECT

4-22-13
PLANS APPROVAL DATE

LICENSED LANDSCAPE ARCHITECT
KEITH SELLERS
NO. 5286
Keith Sellers
Signature
04-30-13
Renewal Date
03-10-13
Date
STATE OF CALIFORNIA

THE STATE OF CALIFORNIA OR ITS OFFICERS OR AGENTS SHALL NOT BE RESPONSIBLE FOR THE ACCURACY OR COMPLETENESS OF SCANNED COPIES OF THIS PLAN SHEET.

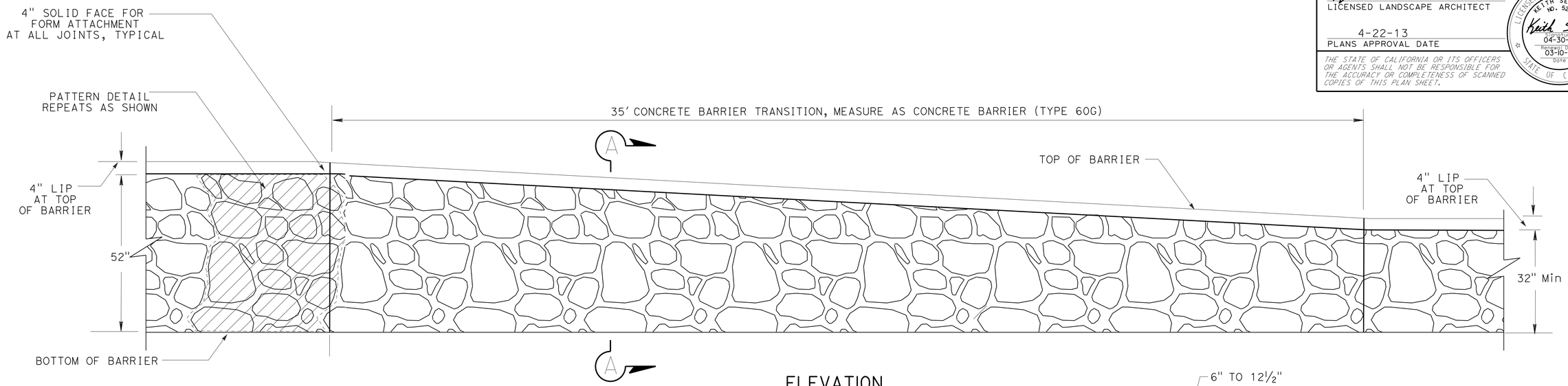

ELEVATION

RUSTIC ROCK SCHEDULE

* ** ROCK SHAPE	DIMENSIONS (approximate)	* ** ROCK SHAPE	DIMENSIONS (approximate)
	8" X 7.5"		10.75" X 6.5"
	7.5" X 9.25"		16" X 8.5"
	9" X 8"		14" X 9"
	9.25" X 10.5"		5" X 8.5"
	4" X 6"		16.5" X 12"
	4" X 5"		
	13" X 11"		15.5" X 20"
	7.5" X 3.25"		
	7.25" X 7.5"		18" X 11"
	8.5" X 7.5"		
	2.5" X 7"		

* NOT ALL WALL PATTERN ROCK SHAPES SHOWN.
** ROCK SHAPE SHOWN TO ESTABLISH GENERAL WALL CHARACTER.

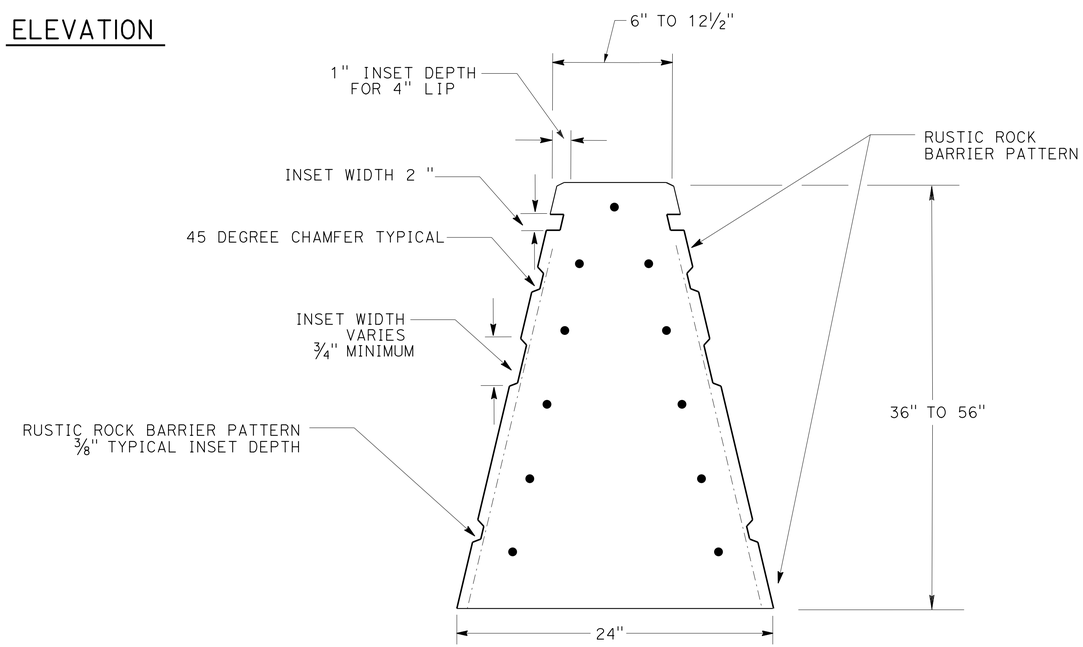

SECTION A-A

CONSTRUCTION DETAILS

NO SCALE

C-4

STATE OF CALIFORNIA - DEPARTMENT OF TRANSPORTATION
Caltrans LANDSCAPE ARCHITECTURE

SENIOR LANDSCAPE ARCHITECT: PATTY WATANABE
CALCULATED-DESIGNED BY: KEITH SELLERS
CHECKED BY: KATHLEEN LEDESMA
REVISED BY
DATE REVISED

LAST REVISION 00-00-00
DATE PLOTTED => 26-APR-2013
TIME PLOTTED => 17:09

Dist	COUNTY	ROUTE	POST MILES TOTAL PROJECT	SHEET No.	TOTAL SHEETS
07	LA	210	R9.7/R16.1	61	349

Keith Sellers
LICENSED LANDSCAPE ARCHITECT

4-22-13
PLANS APPROVAL DATE

LICENSED LANDSCAPE ARCHITECT KEITH SELLERS No. 5288 Keith Sellers Registered Date 04-30-13 Renewal Date 03-10-13 Date STATE OF CALIFORNIA

THE STATE OF CALIFORNIA OR ITS OFFICERS OR AGENTS SHALL NOT BE RESPONSIBLE FOR THE ACCURACY OR COMPLETENESS OF SCANNED COPIES OF THIS PLAN SHEET.

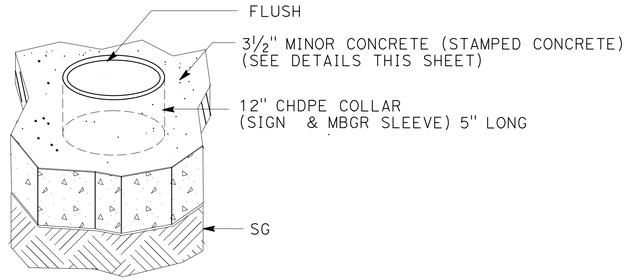

COLLAR DETAIL

NOTE:
PLACE 12" Dia CHDPE COLLAR (5" LENGTH)
AS FORM (CLEAR) AROUND POST

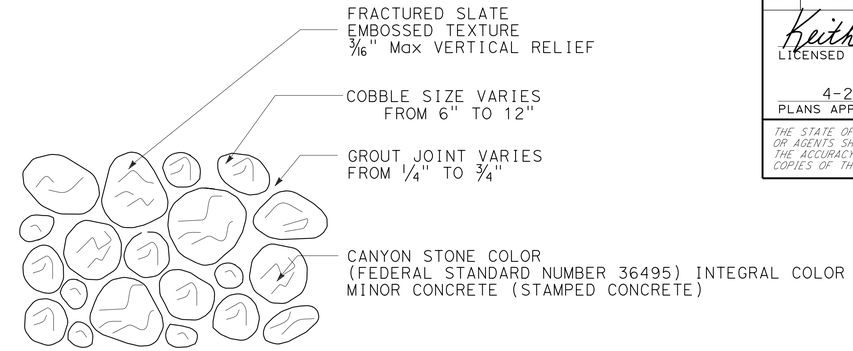

DETAIL A

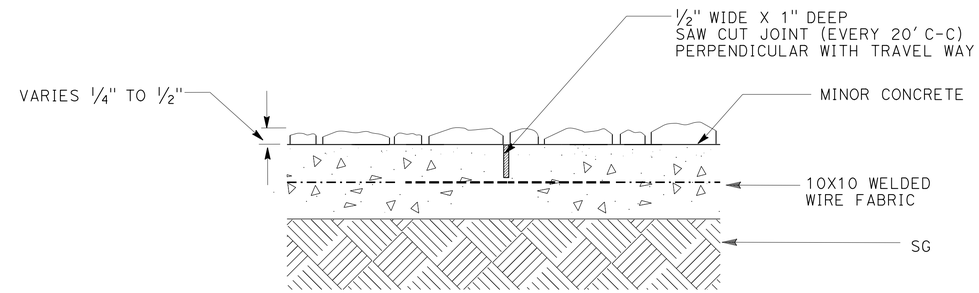

MINOR CONCRETE (STAMPED CONCRETE) SECTION

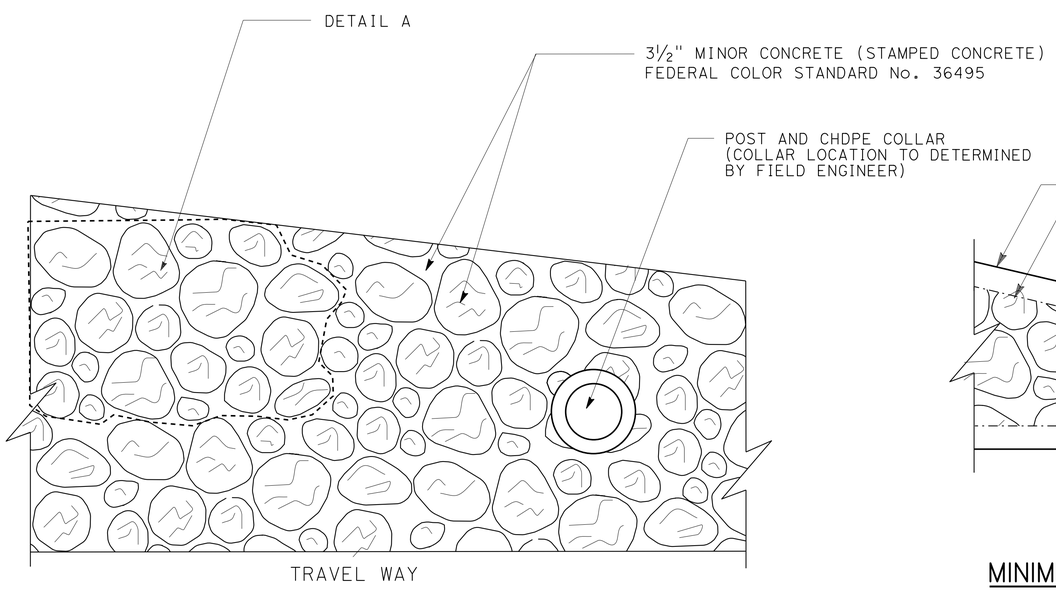

TYPICAL PAVEMENT LAYOUT

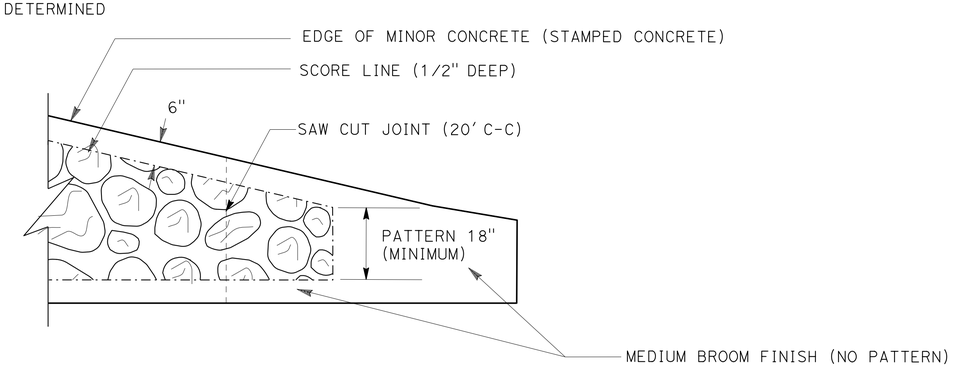

MINIMUM PATTERN DETAIL

CONSTRUCTION DETAILS

NO SCALE

C-5

STATE OF CALIFORNIA - DEPARTMENT OF TRANSPORTATION
Caltrans LANDSCAPE ARCHITECTURE

SENIOR LANDSCAPE ARCHITECT: PATTY WATANABE
CALCULATED-DESIGNED BY: KATHLEEN LEDESMA
CHECKED BY: KEITH SELLERS
REVISED BY
DATE REVISED

LAST REVISION 00-00-00
DATE PLOTTED => 26-APR-2013
TIME PLOTTED => 17:09

Dist	COUNTY	ROUTE	POST MILES TOTAL PROJECT	SHEET No.	TOTAL SHEETS
07	LA	210	R9.7/R16.1	62	349

REGISTERED CIVIL ENGINEER 3-5-13 DATE

4-22-13
PLANS APPROVAL DATE

REGISTERED PROFESSIONAL ENGINEER DAN TRAN No. C63456 Exp. 9/30/14 CIVIL STATE OF CALIFORNIA

THE STATE OF CALIFORNIA OR ITS OFFICERS OR AGENTS SHALL NOT BE RESPONSIBLE FOR THE ACCURACY OR COMPLETENESS OF SCANNED COPIES OF THIS PLAN SHEET.

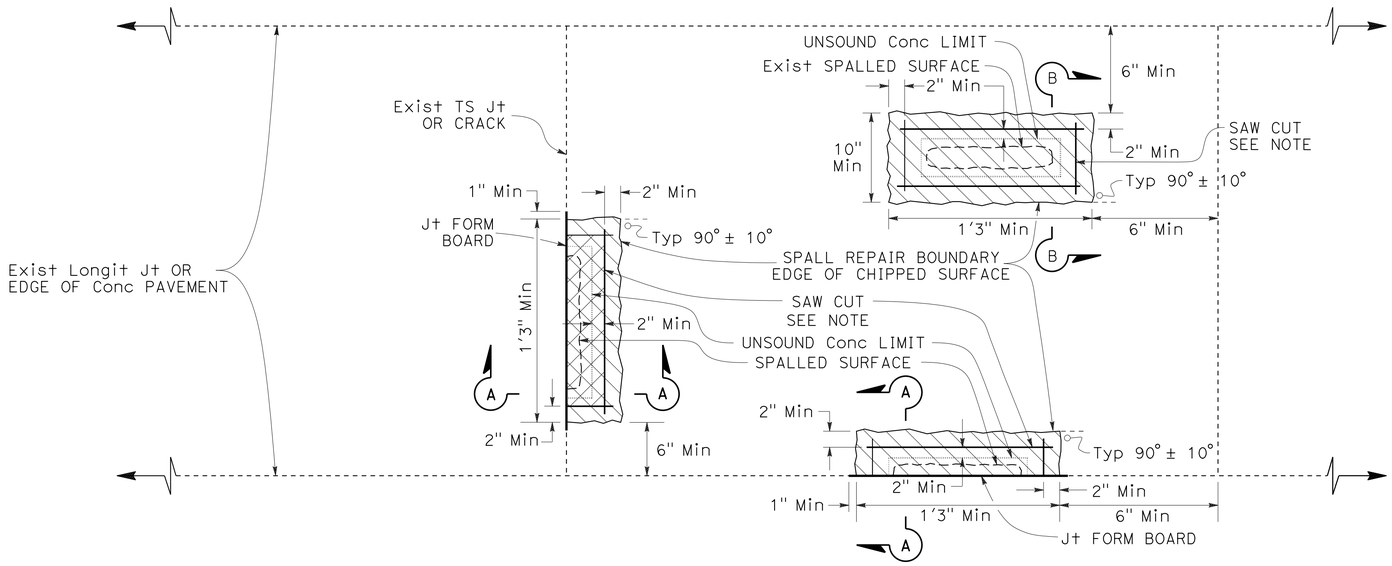

PLAN

LEGEND

REPAIR SPALLS

NOTE:

Saw cut area is measured for payment. Maximum saw cut depth = 3½". For fast-setting grout, minimum saw cut depth = 2". For polyester grout, minimum saw cut depth = 1½".

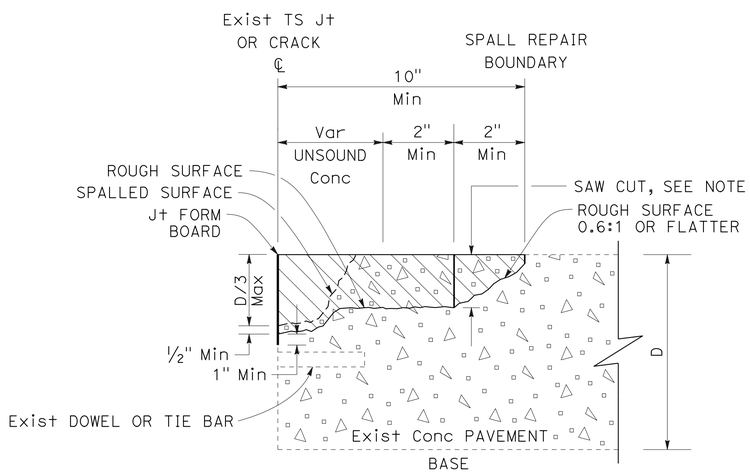

SECTION A-A

JOINT OR CRACK SPALL REPAIR

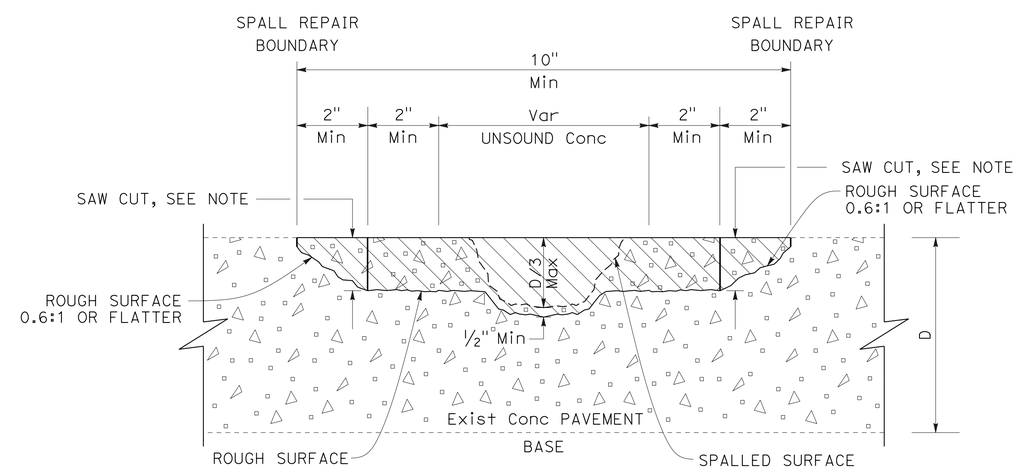

SECTION B-B

MISCELLANEOUS AREA SPALL REPAIR

REPAIR SPALLS CONSTRUCTION DETAILS

NO SCALE

C-6

STATE OF CALIFORNIA - DEPARTMENT OF TRANSPORTATION
Caltrans DESIGN
FUNCTIONAL SUPERVISOR: OJI KALU
CALCULATED-DESIGNED BY: DARRYL MAYS
CHECKED BY: DAN TRAN
REVISED BY
DATE REVISED

LAST REVISION 00-00-00
DATE PLOTTED => 26-APR-2013
TIME PLOTTED => 17:09

Dist	COUNTY	ROUTE	POST MILES TOTAL PROJECT	SHEET No.	TOTAL SHEETS
07	LA	210	R9.7/R16.1	63	349

REGISTERED CIVIL ENGINEER 3-5-13 DATE

4-22-13
PLANS APPROVAL DATE

REGISTERED PROFESSIONAL ENGINEER DAN TRAN No. C63456 Exp. 9/30/14 CIVIL STATE OF CALIFORNIA

THE STATE OF CALIFORNIA OR ITS OFFICERS OR AGENTS SHALL NOT BE RESPONSIBLE FOR THE ACCURACY OR COMPLETENESS OF SCANNED COPIES OF THIS PLAN SHEET.

NOTES:

1. FOR LOCATION OF CALL BOX OPENING SEE LAYOUT PLANS.
2. W6 X 15 STEEL POST, 8'-0' IN LENGTH, WITH 8" X 1'-2" NOTCHED WOOD BLOCK OR NOTCHED RECYCLED PLASTIC BLOCKS MAY BE USED IN PLACE OF THE 10" X 10" X 8'-0" WOOD POST WITH 8" X 8" X 1'-2" WOOD BLOCK SHOWN IN THE "STRENGTHENED RAILING SECTIONS DETAIL".
3. FOR END ANCHOR ASSEMBLY (TYPE SFT) DETAILS, SEE STANDARD PLAN A77H1.

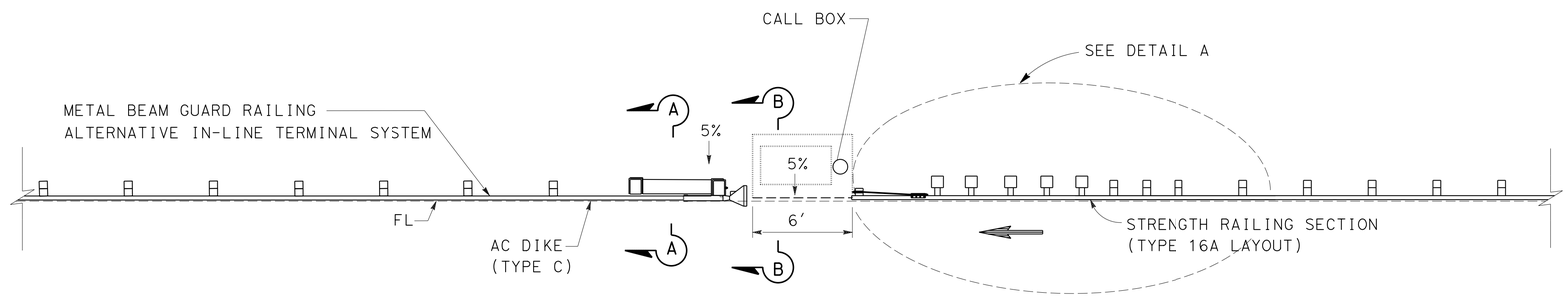

METAL BEAM GUARD RAIL OPENING AT CALL BOX DETAILS

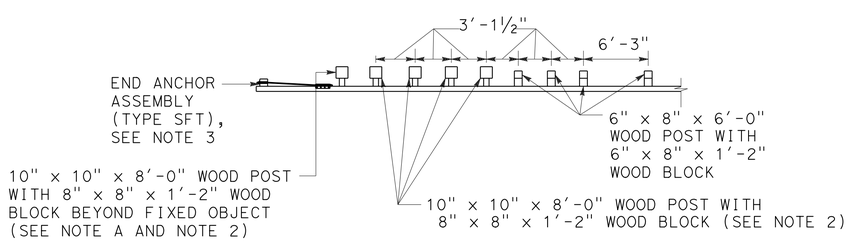

DETAIL A
(TYPE 16A LAYOUT)

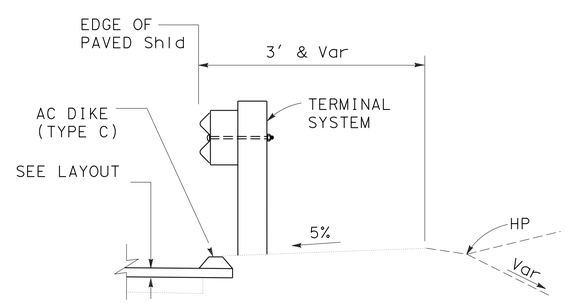

SECTION A-A

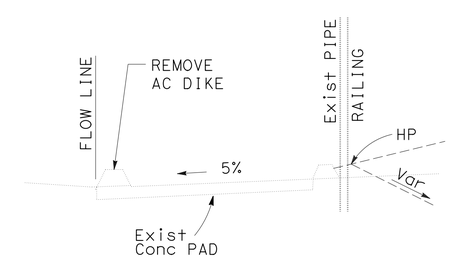

SECTION B-B

STRENGTHENED RAIILING SECTIONS

CONSTRUCTION DETAILS

NO SCALE

C-7

STATE OF CALIFORNIA - DEPARTMENT OF TRANSPORTATION
Caltrans®
DESIGN

FUNCTIONAL SUPERVISOR: OJI KALU
CALCULATED-DESIGNED BY: MOE MIRZA
CHECKED BY: DAN TRAN
REVISED BY
DATE REVISED

LAST REVISION 12-12-12
DATE PLOTTED => 26-APR-2013
TIME PLOTTED => 17:09

Dist	COUNTY	ROUTE	POST MILES TOTAL PROJECT	SHEET No.	TOTAL SHEETS
07	LA	210	R9.7/R16.1	64	349

REGISTERED CIVIL ENGINEER 3-5-13 DATE

4-22-13
PLANS APPROVAL DATE

REGISTERED PROFESSIONAL ENGINEER DAN TRAN No. C63456 Exp. 9/30/14 CIVIL STATE OF CALIFORNIA

THE STATE OF CALIFORNIA OR ITS OFFICERS OR AGENTS SHALL NOT BE RESPONSIBLE FOR THE ACCURACY OR COMPLETENESS OF SCANNED COPIES OF THIS PLAN SHEET.

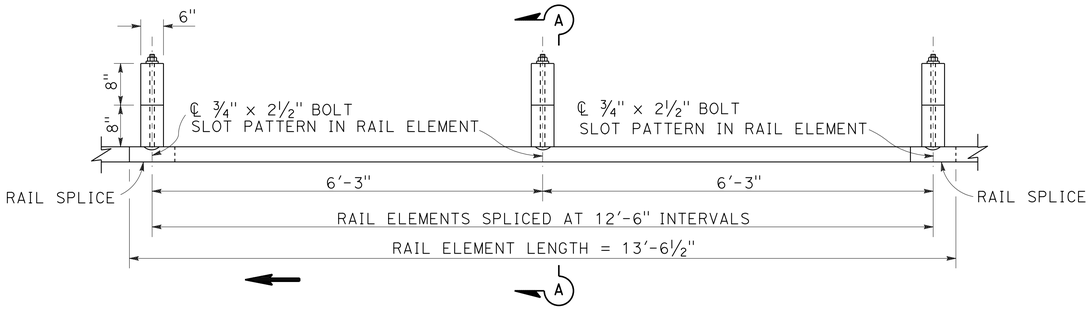

PLAN

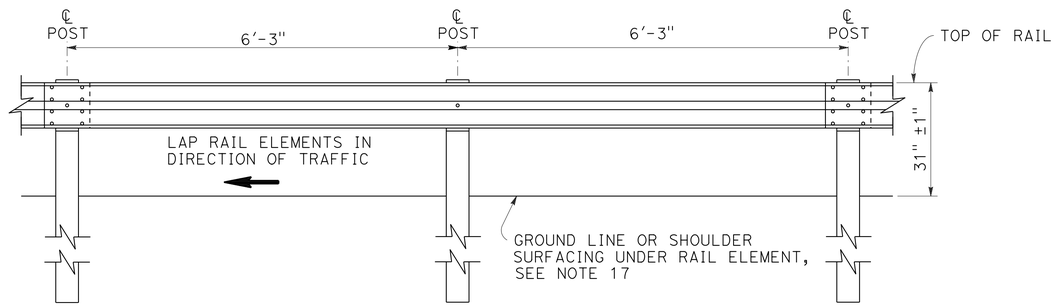

ELEVATION

METAL BEAM GUARD RAILING WITH WOOD POST AND BLOCKS

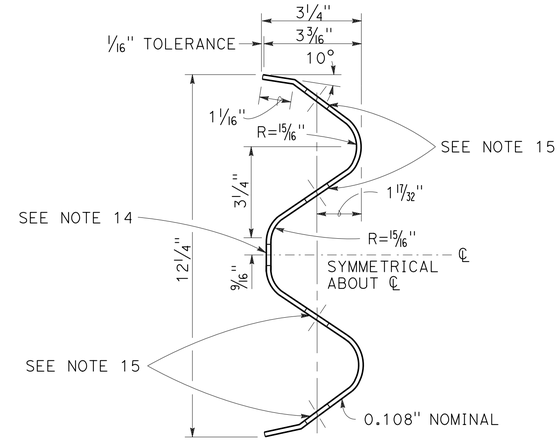

SECTION THRU
RAIL ELEMENT

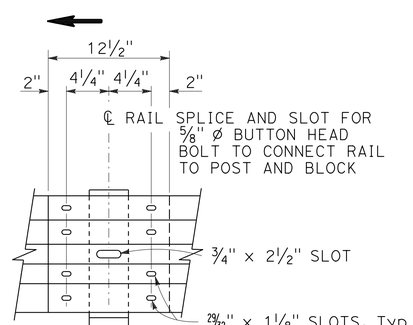

ELEVATION

RAIL ELEMENT SPLICE DETAIL

a) Connect the over lapped end of the rail elements with 5/8" ø x 1 3/8" button head oval shoulder splice bolts inserted into the 29/32" x 1 1/8" slots and bolted together with 5/8" ø recessed hex nuts. Recess of hex nut points toward rail element. A total of 8 bolts and nuts are to be used at each rail splice connection.

b) The ends of the rail elements are to be overlapped in the direction of traffic (see details).

c) Where end cap is to be attached to the end of a rail element, a total of 4 of the above described splice bolts and nuts are to be used.

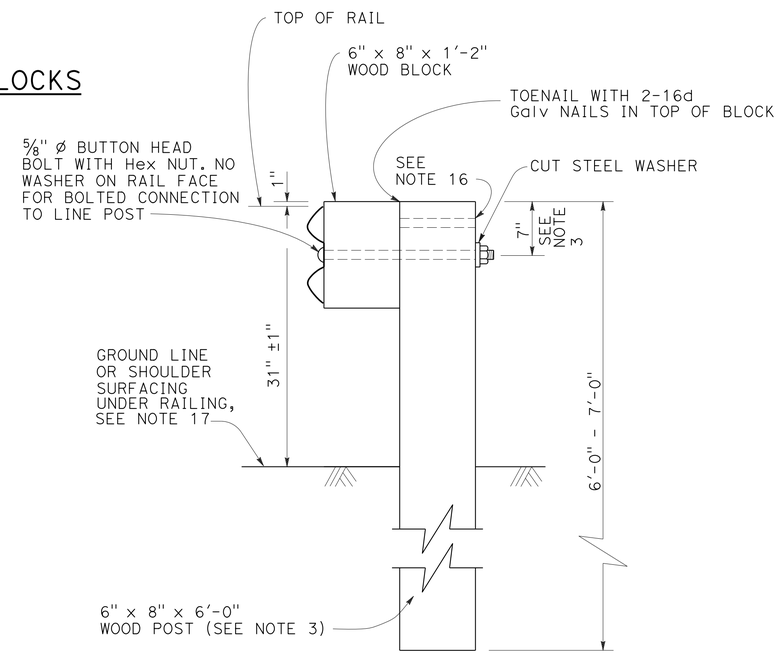

SECTION A-A

TYPICAL WOOD LINE
POST INSTALLATION

See Note 4

NOTES:

1. For details of steel post installations, see Construction Detail C-9.
2. For details of standard hardware used to construct guard railing, see Standard Plan A77B1.
3. For details of wood posts and wood blocks used to construct guard railing, see Standard Plan A77C1.
4. For additional installation details, see Construction Detail C-10.
5. Guard railing post spacing to be 6'-3" center to center, except as otherwise noted.
6. For guard railing typical layouts, see the A77E, A77F and A77G Series of Standard Plans.
7. To connect railing to terminal system end treatment, transition the top of railing height at a ratio of 120:1 to terminal system end treatment height plus one 12'-6" standard railing section at the transitioned height for a horizontal connection to the end treatment.
8. For guard railing end anchor details, see Standard Plans A77H1 and A77I2.
9. For details of guard railing transition to bridge railing, see Standard Plan A77J4.
10. For additional details of guard railing connection to bridge railings, see Standard Plans A77J2 , A77K1 and Construction Detail C-11.
11. For guard railing connection details to abutments and walls, see Standard Plan A77J3.
12. Direction of adjacent traffic indicated by ⟶.
13. For typical guard railing delineation and dike positioning details, see Construction Detail C-10.
14. Slotted hole for bolted connection of rail element to block and post. See "Section Thru Rail Element".
15. Slotted holes for splice bolts to overlap ends of rail element. See "Section Thru Rail Element".
16. Additional hole in uppermost portion of line post is for potential future adjustments of railing height. See Standard Plan A77C1.
17. Install posts in soil.

CONSTRUCTION DETAILS

NO SCALE

C-8

STATE OF CALIFORNIA - DEPARTMENT OF TRANSPORTATION
Caltrans® DESIGN
FUNCTIONAL SUPERVISOR: OJI KALU
CALCULATED-DESIGNED BY: DAN TRAN
CHECKED BY: MOE MIRZA
REVISED BY
DATE REVISED

LAST REVISION 12-12-12
DATE PLOTTED => 26-APR-2013
TIME PLOTTED => 17:09

Dist	COUNTY	ROUTE	POST MILES TOTAL PROJECT	SHEET No.	TOTAL SHEETS
07	LA	210	R9.7/R16.1	65	349

REGISTERED CIVIL ENGINEER 3-5-13 DATE

4-22-13
PLANS APPROVAL DATE

REGISTERED PROFESSIONAL ENGINEER DAN TRAN No. C63456 Exp. 9/30/14 CIVIL STATE OF CALIFORNIA

THE STATE OF CALIFORNIA OR ITS OFFICERS OR AGENTS SHALL NOT BE RESPONSIBLE FOR THE ACCURACY OR COMPLETENESS OF SCANNED COPIES OF THIS PLAN SHEET.

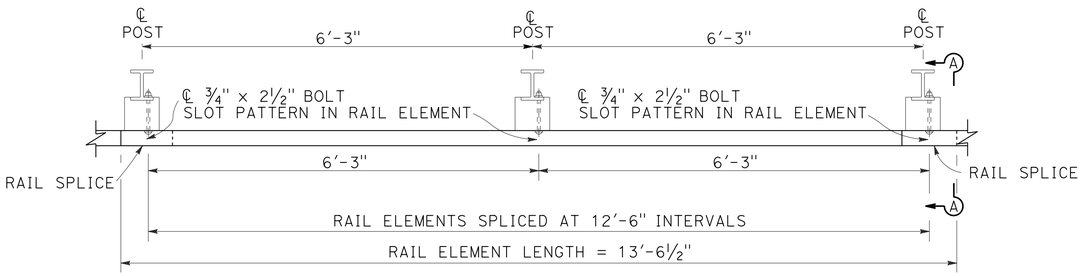

PLAN

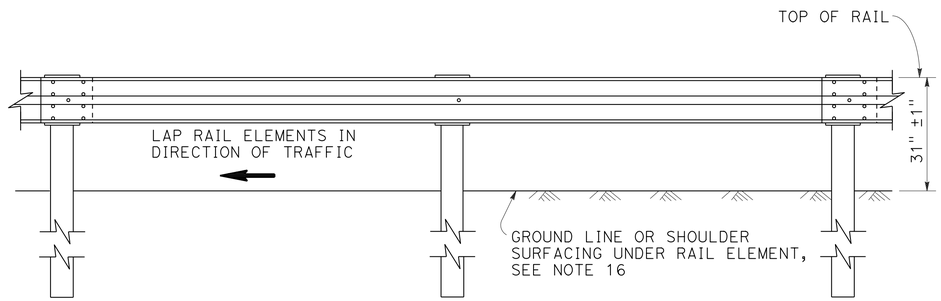

ELEVATION

METAL BEAM GUARD RAILING WITH STEEL POSTS AND NOTCHED WOOD OR NOTCHED RECYCLED PLASTIC BLOCKS

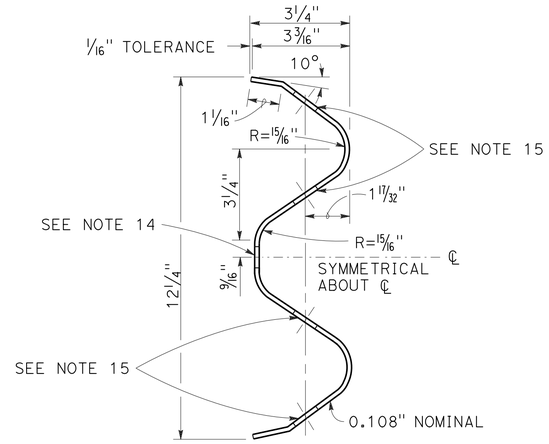

SECTION THRU
RAIL ELEMENT

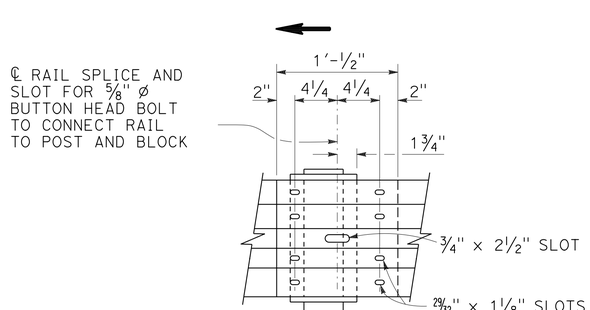

ELEVATION

RAIL ELEMENT SPLICE DETAIL

a) Connect the over lapped end of the rail elements with ⅝" ø x 1⅜" button head oval shoulder splice bolts inserted into the 29⁄32" x 1⅛" slots and bolted together with ⅝" ø recessed hex nuts. Recess of hex nut points toward rail element. A total of 8 bolts and nuts are to be used at each rail splice connection.

b) The ends of the rail elements are to be overlapped in the direction of traffic (see details).

c) Where end cap is to be attached to the end of a rail element, a total of 4 of the above described splice bolts and nuts are to be used.

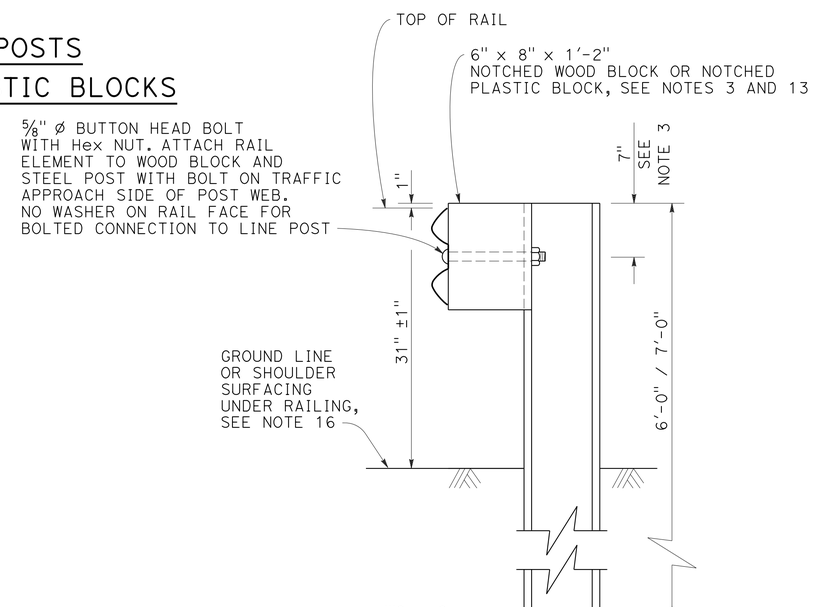

SECTION A-A

TYPICAL STEEL LINE POST INSTALLATION

See Note 4

NOTES:

1. For details of wood post installations, see Construction Detail C-9.
2. For details of standard hardware used to construct guard railing, see Standard Plan A77B1.
3. For details of steel posts and notched wood blocks used to construct guard railing, see Standard Plan A77C2.
4. For additional installation details, see Construction Detail C-10.
5. Guard railing post spacing to be 6'-3" center to center, except as otherwise noted.
6. For guard railing typical layouts, see the A77E, A77F and A77G Series of Standard Plans.
7. To connect railing to terminal system end treatment, transition the top of railing height at a ratio of 120:1 to terminal system end treatment height plus one 12'-6" standard railing section at the transitioned height for a horizontal connection to the end treatment.
8. For guard railing end anchor details, see Standard Plans A77H1 and A77I2.
9. For details of guard railing transition to bridge railing, see Standard Plan A77J4.
10. For additional details of guard railing connection to bridge railings, see Standard Plans A77J2, A77K1 and Construction Detail C-11.
11. For dike positioning and guard railing delineation details, see Construction Detail C-10.
12. Direction of adjacent traffic indicated by ➡ .
13. Notched face of block faces steel post.
14. Slotted hole for bolted connection of rail element to block and post. See "Section Thru Rail Element".
15. Slotted holes for splice bolts to overlap ends of rail element. See "Section Thru Rail Element".
16. Install posts in soil.

CONSTRUCTION DETAILS

NO SCALE

C-9

STATE OF CALIFORNIA - DEPARTMENT OF TRANSPORTATION
Caltrans DESIGN
FUNCTIONAL SUPERVISOR: OJI KALU
CALCULATED-DESIGNED BY: DAN TRAN
CHECKED BY: MOE MIRZA
REVISED BY
DATE REVISED

LAST REVISION 12-12-12
DATE PLOTTED => 26-APR-2013
TIME PLOTTED => 17:09

Dist	COUNTY	ROUTE	POST MILES TOTAL PROJECT	SHEET No.	TOTAL SHEETS
07	LA	210	R9.7/R16.1	66	349

REGISTERED CIVIL ENGINEER 3-5-13 DATE

4-22-13
PLANS APPROVAL DATE

REGISTERED PROFESSIONAL ENGINEER DAN TRAN No. C63456 Exp. 9/30/14 CIVIL STATE OF CALIFORNIA

THE STATE OF CALIFORNIA OR ITS OFFICERS OR AGENTS SHALL NOT BE RESPONSIBLE FOR THE ACCURACY OR COMPLETENESS OF SCANNED COPIES OF THIS PLAN SHEET.

NOTES:

1. When necessary to place dike in front of face of guard railing, only Type C dike may be used. For dike details, see Standard Plan A87B.
2. For standard railing post embedment, see Construction Detail C-10.
3. Guard railing delineation to be used where shown on the Project Plans.
4. When dike or curb is placed under guard railing, the maximum height of the dike or curb shall be 6". Mountable dike should not be used. For dike and curb details, see Standard Plans A87A and A87B.
5. For details of typical distance between the face of rail and hinge point, see Construction Detail C-10.
6. For steel line posts, use ¼ - 20 self-tapping screws in 0.22" diameter holes or ¼" bolts in 9/32" diameter holes.
7. These installation details also applicable to steel line post installations. For Detail A, C, and D, where steel line post installations are constructed, W6 x 9 steel post, 6'-0" in length, with 6" x 8" x 1'-2" notched wood blocks or notched recycled plastic blocks are to be used in place of the size of wood post and wood block shown. For Detail B, where steel line post installations are constructed, W6 x 9 steel post, 7'-0" in length, with 6" x 8" x 1'-2" notched wood blocks or notched recycled plastic blocks are to be used in place of the size of wood post and wood block shown. For additional installation details, see Construction Detail C-8 and C-9.
8. Where the distance between the face of the rail and the hinge point is less than 2'-0", see the Project Plans for special details.
9. For dike positioning with guard railing installations, see Construction Detail C-10.

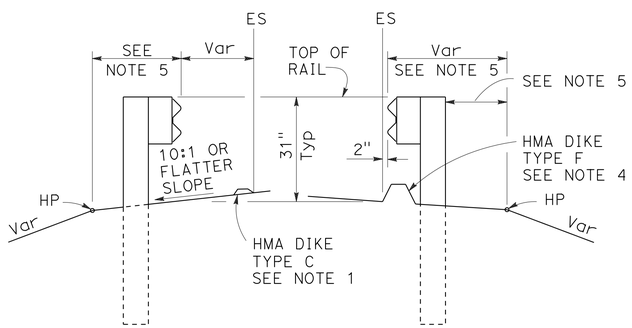

DIKE POSITIONING
See Note 1

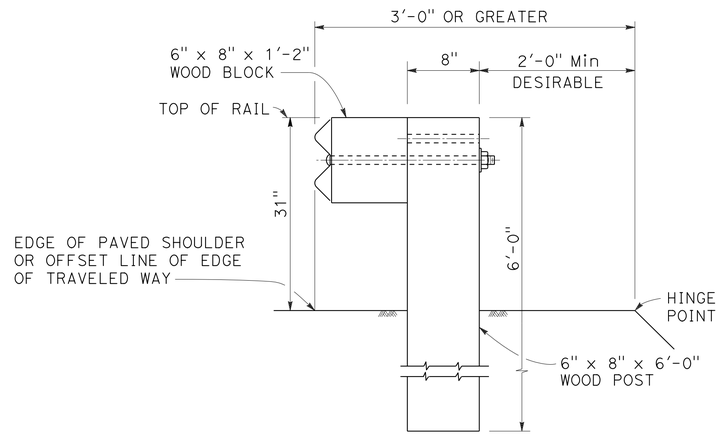

DETAIL A
TYPICAL ROADWAY INSTALLATION
See Note 7

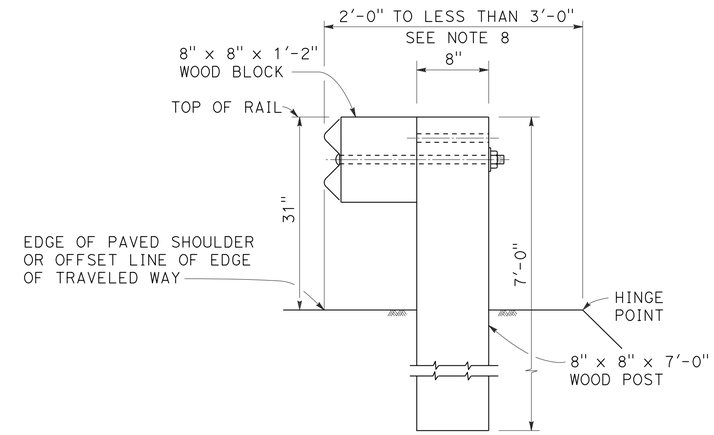

DETAIL B
NARROW ROADWAY INSTALLATION
See Note 7

POST EMBEDMENT

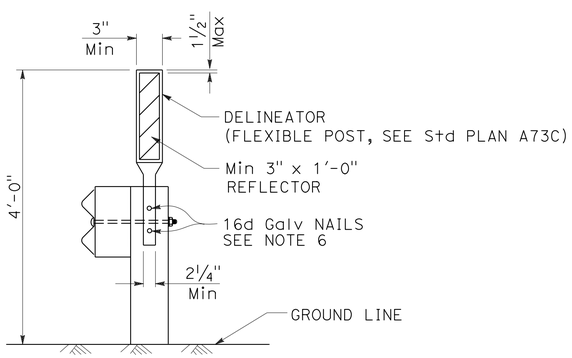

GUARD RAILING DELINEATION
See Note 3

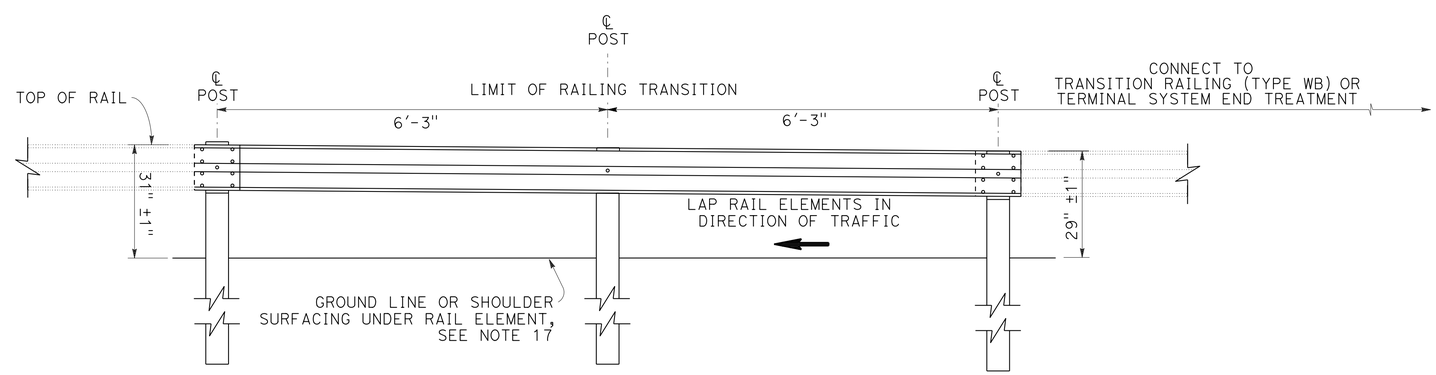

ELEVATION

TRANSITION FROM 29" TO 31" METAL BEAM GUARD RAILING

CONSTRUCTION DETAILS
NO SCALE

C-10

STATE OF CALIFORNIA - DEPARTMENT OF TRANSPORTATION
DESIGN
Caltrans
FUNCTIONAL SUPERVISOR: OJI KALU
CALCULATED-DESIGNED BY: DAN TRAN
CHECKED BY: MOE MIRZA
REVISED BY
DATE REVISED

LAST REVISION 12-12-12 | DATE PLOTTED => 26-APR-2013 | TIME PLOTTED => 17:09

Dist	COUNTY	ROUTE	POST MILES TOTAL PROJECT	SHEET No.	TOTAL SHEETS
07	LA	210	R9.7/R16.1	67	349

REGISTERED CIVIL ENGINEER 3-5-13 DATE

4-22-13
PLANS APPROVAL DATE

REGISTERED PROFESSIONAL ENGINEER DAN TRAN No. C63456 Exp. 9/30/14 CIVIL STATE OF CALIFORNIA

THE STATE OF CALIFORNIA OR ITS OFFICERS OR AGENTS SHALL NOT BE RESPONSIBLE FOR THE ACCURACY OR COMPLETENESS OF SCANNED COPIES OF THIS PLAN SHEET.

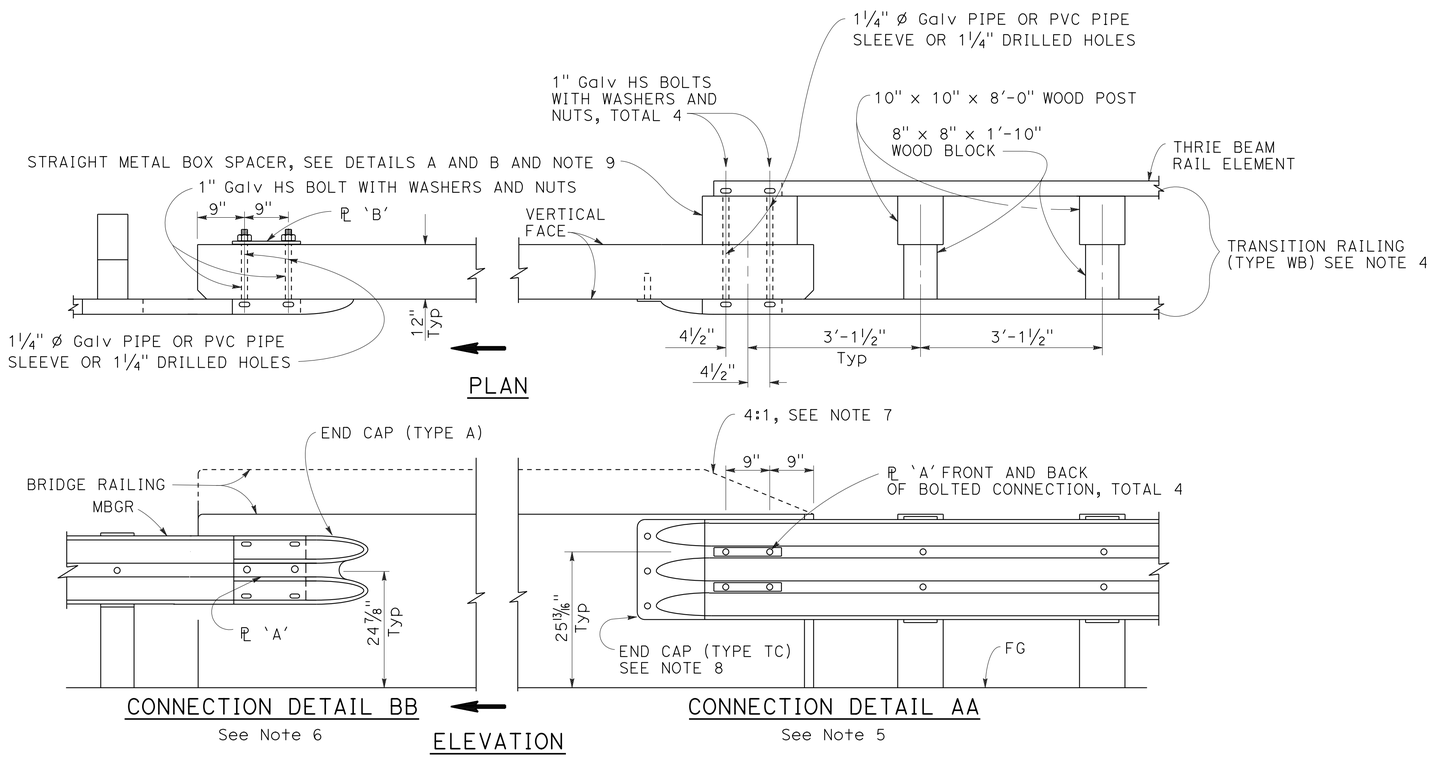

GUARD RAILING CONNECTION TO BRIDGE RAILING WITHOUT SIDEWALK

NOTES:

1. See Standard Plan A77J2 for additional connection details to bridges without sidewalks.
2. Additional details of posts, blocks and hardware are shown on Standard Plan A77B1, A77C1 and A77C2.
3. Direction of adjacent traffic indicated by ➡ .
4. For additional details of Transition Railing (Type WB), see Standard Plan A77J4. Transition Railing (Type WB) transitions the 12 gauge w-beam standard railing section of guard railing to a heavier gage nested thrie beam railing section which is connected to the concrete bridge railing.
5. For typical use of Connection Detail AA, see Layout Types 12A and 12B on Standard Plan A77F1, Layout Types 12C and 12D on Standard Plan A77F2, and Layout Type 12E on Standard Plan A77F3.
6. For typical use of Connection Detail BB, see Layout Type 12D (structure departure railing connection) on Standard Plan A77F2 and Layout Type 12DD on Standard Plan A77F5.
7. Where the height of the bridge railing exceeds the height of the thrie beam railing by more than 1" at Connection Detail AA, taper the top of the end of the bridge railing at 4:1 to match the top elevation of the thrie beam rail.
8. For details of End Cap (Type TC), see Standard Plan A77J4.
9. See Standard Plan A77J4 for additional details regarding depth dimension for straight metal box spacer.

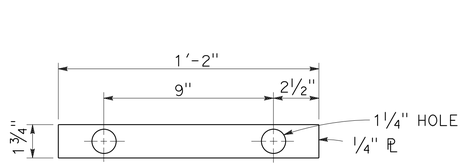

PLATE 'A'

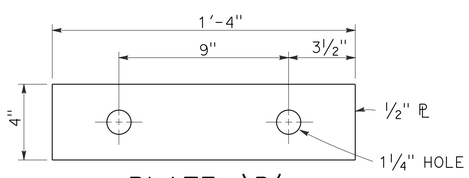

PLATE 'B'
(For backside of connection BB)

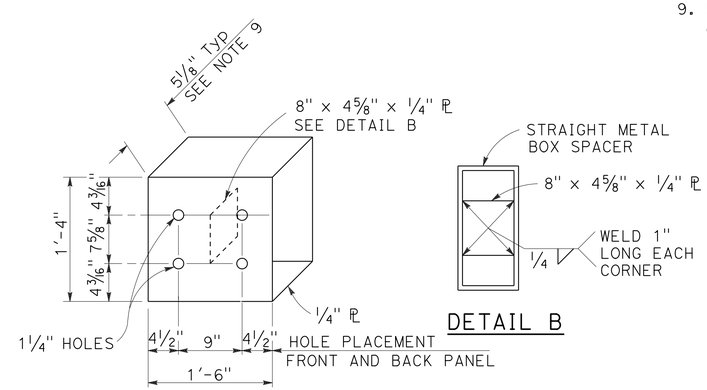

DETAIL A

DETAIL B

STRAIGHT METAL BOX SPACER

METAL BEAM GUARD RAILING CONNECTIONS TO BRIDGE RAILINGS WITHOUT SIDEWALKS

CONSTRUCTION DETAILS

NO SCALE

C-11

STATE OF CALIFORNIA - DEPARTMENT OF TRANSPORTATION
Caltrans DESIGN
FUNCTIONAL SUPERVISOR: OJI KALU
CALCULATED-DESIGNED BY: DAN TRAN
CHECKED BY: MOE MIRZA
REVISED BY
DATE REVISED

LAST REVISION 12-12-12 | DATE PLOTTED => 26-APR-2013 | TIME PLOTTED => 17:09

Dist	COUNTY	ROUTE	POST MILES TOTAL PROJECT	SHEET No.	TOTAL SHEETS
07	LA	210	R9.7/R16.1	68	349

REGISTERED CIVIL ENGINEER 3-5-13 DATE

4-22-13
PLANS APPROVAL DATE

REGISTERED PROFESSIONAL ENGINEER DAN TRAN No. C63456 Exp. 9/30/14 CIVIL STATE OF CALIFORNIA

THE STATE OF CALIFORNIA OR ITS OFFICERS OR AGENTS SHALL NOT BE RESPONSIBLE FOR THE ACCURACY OR COMPLETENESS OF SCANNED COPIES OF THIS PLAN SHEET.

TABLE A

POST OFFSET DIMENSIONS		
Post No.	3'-0" System End Offset	3'-6" System End Offset
1	36"	42"
2	22¼"	27¾"
3	11¾"	16¼"
4	6¾"	10⅝"
5	3"	6"
6	¾"	2¾"
7	0"	¾"
8	0"	0"

See Note 12

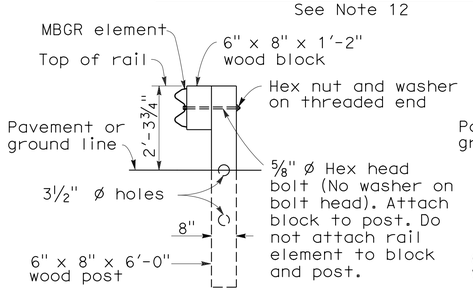

SECTION A-A

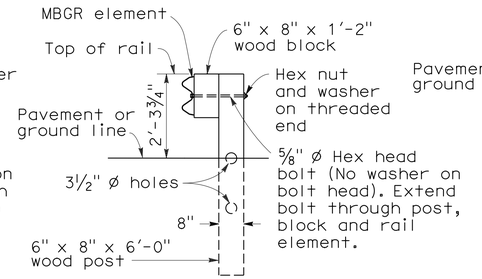

SECTION B-B

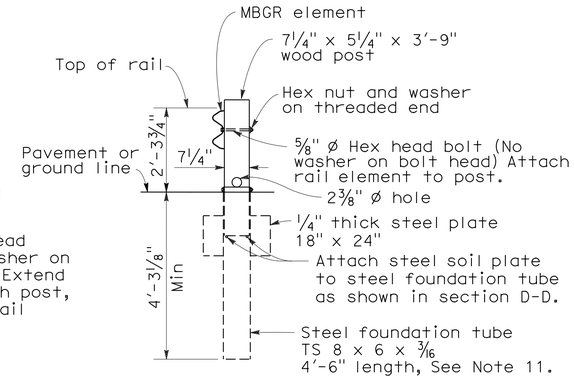

SECTION C-C

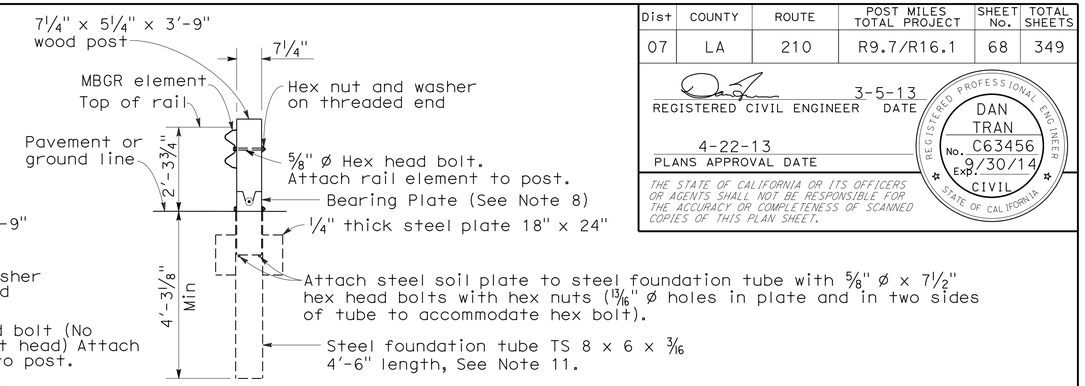

SECTION D-D

(Terminal Section not shown)

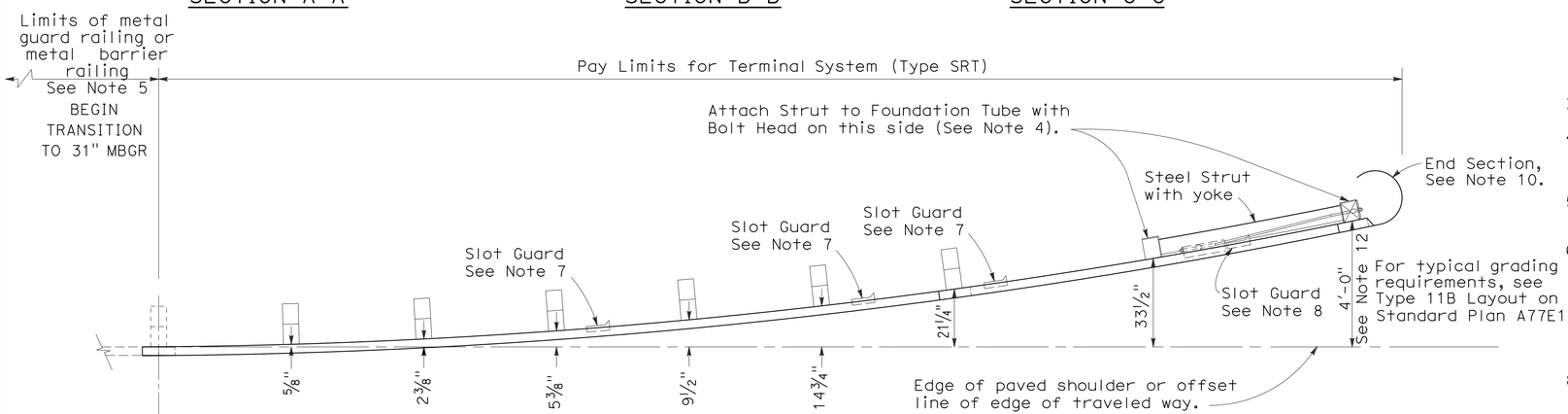

PLAN

Direction of Travel

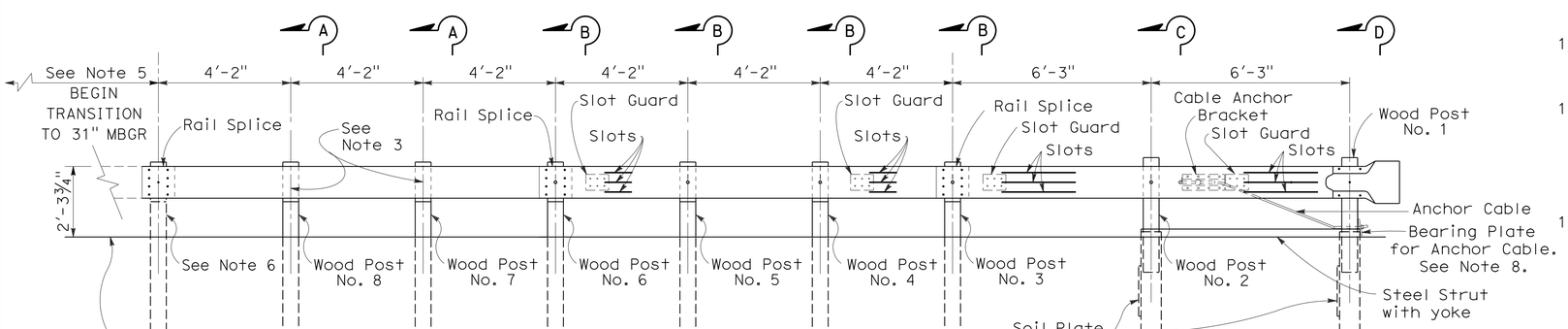

ELEVATION

TERMINAL SYSTEM (TYPE SRT)

(8 Post System)
See Note 9

NOTES:

1. For additional details of Terminal System (Type SRT), refer to the manufacturer's installation instructions.
2. The post offset dimensions are given to the center of the traffic face of the block, except at the first two posts, where the dimension is to the center of the traffic face of the post. Offset points are to be located by chord measurements at the back of the rail equal to the nominal post spacings shown. Posts are to be set approximately radial to the railing at each post locations.
3. Do not attach rail elements to posts 7 and 8.
4. Attach strut to Post Nos. 1 and 2 foundation tubes with ⅝" ø hex head bolts, washers and hex nuts. Bolts extend through the strut, steel foundation tube, and wood posts.
5. For the length and type of metal beam guard railing or metal barrier railing the terminal system is attached to, see the Project Plans.
6. Attach rail element to this post and block. Payment for this post, block and hardware is included in payment for the type of railing or barrier the terminal system is attached to, not part of payment for Terminal System (Type SRT).
7. The deflector angle of the slot guard is to be positioned immediatley downstream of the slots.
8. For bearing plate orientation, refer to the manufacturer's installation instructions.
9. For typical use of this terminal system with guard railing, see the A77E, A77F and A77G Series of Standard Plans. See Standard Plan A78E for typical use of this terminal system with single thrie beam barrier.
10. A complete wrap around end section may continued to be used in existing installations. New installations shall be constructed with the ¾ wrap end section shown.
11. A 6'-0" length steel foundation tube, TS 8 x 6 x 3/16 without a soil plate, may be furnished and installed in place of the 4'-6" length steel foundation tube and soil plate shown. Minimum embedment of the 6'-0" length tube shall be 5'-9". A ⅝" ø hex head bolt and nut shall be installed in the hole in 6'-0" length tube to keep the wood post from dropping into the tube.
12. Where site conditions will not accommodate use of the standard 4'-0" system end offset, 3'-6" or 3'-0" system end offsets, as applicable, may be used. See Table A for post offset dimensions for 3'-6" and 3'-0" system end offsets.

METAL BEAM RAILING TERMINAL SYSTEM (TYPE SRT) CONSTRUCTION DETAIL

NO SCALE

C-12

REVISED BY | DATE REVISED
MOE MIRZA | DAN TRAN
CALCULATED-DESIGNED BY | CHECKED BY
FUNCTIONAL SUPERVISOR
OJI KALU

STATE OF CALIFORNIA - DEPARTMENT OF TRANSPORTATION
Caltrans® DESIGN

LAST REVISION 12-12-12 | DATE PLOTTED => 26-APR-2013 | TIME PLOTTED => 17:09

Dist	COUNTY	ROUTE	POST MILES TOTAL PROJECT	SHEET No.	TOTAL SHEETS
07	LA	210	R9.7/R16.1	69	349

REGISTERED CIVIL ENGINEER 3-5-13 DATE

4-22-13
PLANS APPROVAL DATE

REGISTERED PROFESSIONAL ENGINEER DAN TRAN No. C63456 Exp. 9/30/14 CIVIL STATE OF CALIFORNIA

THE STATE OF CALIFORNIA OR ITS OFFICERS OR AGENTS SHALL NOT BE RESPONSIBLE FOR THE ACCURACY OR COMPLETENESS OF SCANNED COPIES OF THIS PLAN SHEET.

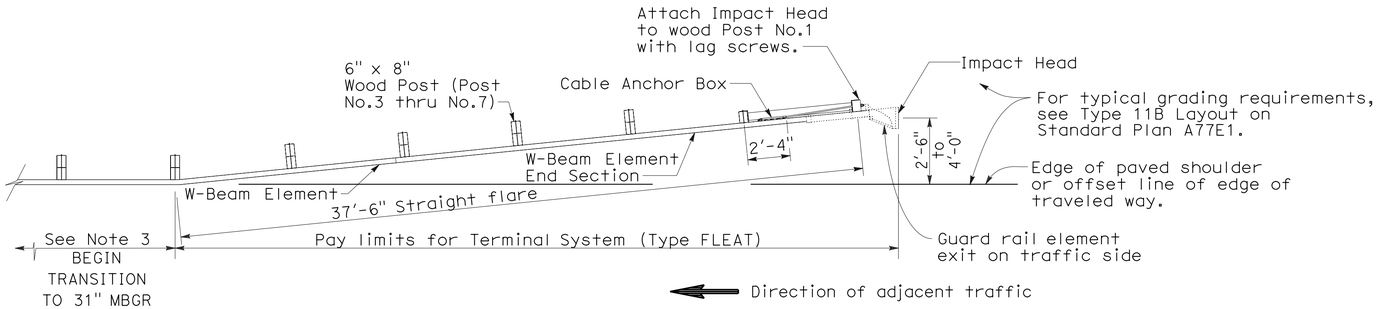

PLAN

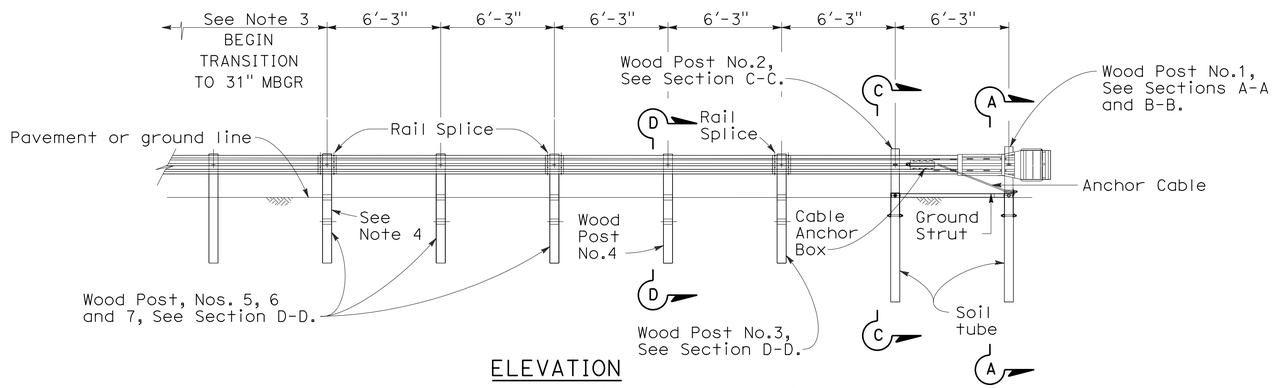

ELEVATION

TERMINAL SYSTEM (TYPE FLEAT)

NOTES:

1. For additional details of Terminal System (Type FLEAT), refer to the manufacturer's installation instructions.
2. Terminal System (Type FLEAT) not to be used where extrusion of the rail on the front side of the installation would be in the path of pedestrian traffic.
3. For the length and type of metal beam guard railing or metal barrier railing the terminal system is attached to, see Project Plans. For typical use of this terminal system with guard railing, see the A77E, A77F and A77G Series of the Standard Plans.
4. Attach rail element to this post and block. Payment for this post, block and attaching hardware is included in payment for Terminal System (Type FLEAT).

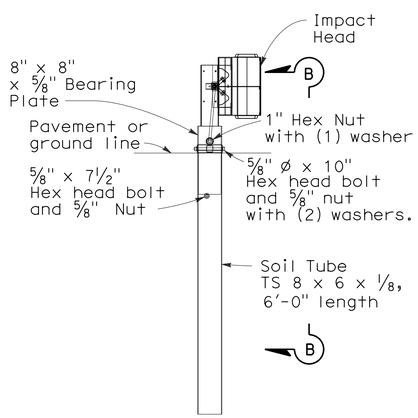

SECTION A-A

Post No.1

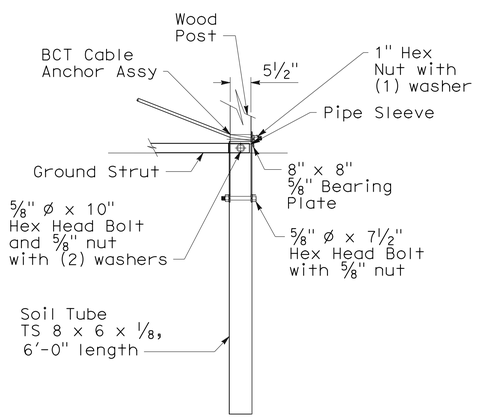

SECTION B-B

Partial view Post No.1

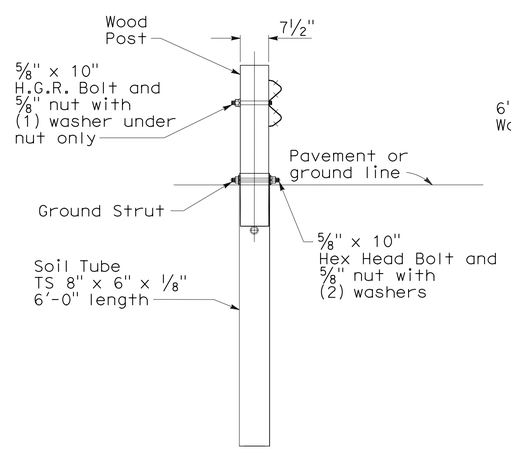

SECTION C-C

at Post No.2

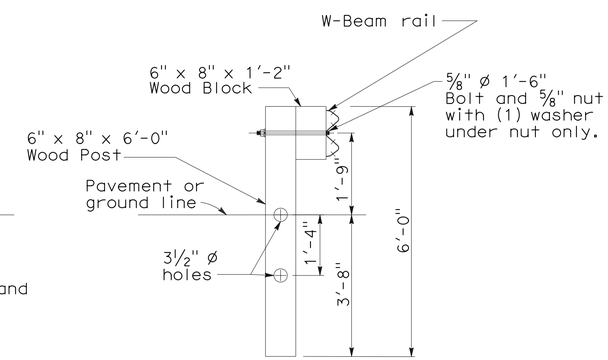

SECTION D-D

Post No.3 through No.7.

METAL BEAM RAILING TERMINAL SYSTEM (TYPE FLEAT) CONSTRUCTION DETAILS

NO SCALE

C-13

STATE OF CALIFORNIA - DEPARTMENT OF TRANSPORTATION
Caltrans DESIGN
FUNCTIONAL SUPERVISOR: OJI KALU
CALCULATED-DESIGNED BY: MOE MIRZA
CHECKED BY: DAN TRAN
REVISED BY
DATE REVISED

LAST REVISION 12-12-12 | DATE PLOTTED => 26-APR-2013 | TIME PLOTTED => 17:09

Dist	COUNTY	ROUTE	POST MILES TOTAL PROJECT	SHEET No.	TOTAL SHEETS
07	LA	210	R9.7/R16.1	70	349

REGISTERED CIVIL ENGINEER 3-5-13 DATE

4-22-13
PLANS APPROVAL DATE

REGISTERED PROFESSIONAL ENGINEER DAN TRAN No. C63456 Exp. 9/30/14 CIVIL STATE OF CALIFORNIA

THE STATE OF CALIFORNIA OR ITS OFFICERS OR AGENTS SHALL NOT BE RESPONSIBLE FOR THE ACCURACY OR COMPLETENESS OF SCANNED COPIES OF THIS PLAN SHEET.

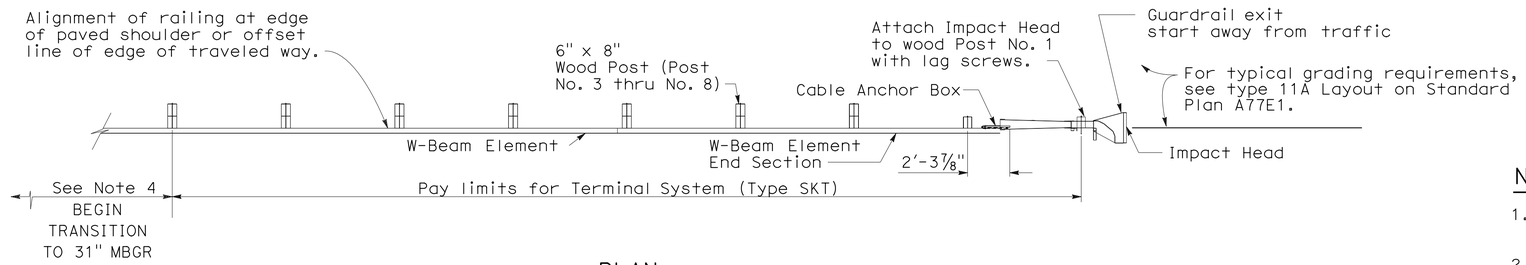

PLAN

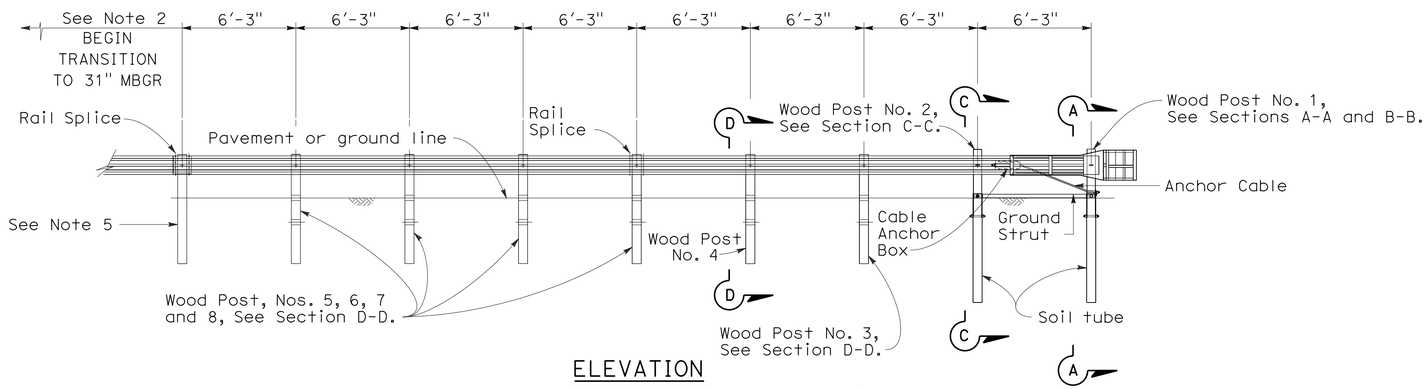

ELEVATION

TERMINAL SYSTEM (TYPE SKT)

NOTES:

1. For additional details of Terminal System (Type SKT), refer to the manufacturer's installation instructions.
2. Terminal System (Type SKT) must be constructed so that the full length of the terminal system guard railing is in straight alignment. Terminal System (Type SKT) can be flared at a maximum rate of 25:1 to prevent the impact head from encroaching on the shoulder. The flare is not required and may be decreased or eliminated for specific installations.
3. Terminal System (Type SKT) not to be used where extrusion of the rail on the back side of the installation would be in the path of pedestrian traffic or where there is less than 25'-0" between the outlet side of the Impacted Head and any adjacent vehicle traffic.
4. For the length and type of metal beam guard railing or metal barrier railing the terminal system is attached to, see Project Plans. For typical use of this terminal system with guard railing, see the A77E, A77F and A77G Series of the Standard Plans.
5. Attach rail element to this post and block. Payment for this post, block and hardware is included in payment for the type of railing or barrier the terminal system is attached to, not part of payment for Terminal System (Type SKT).

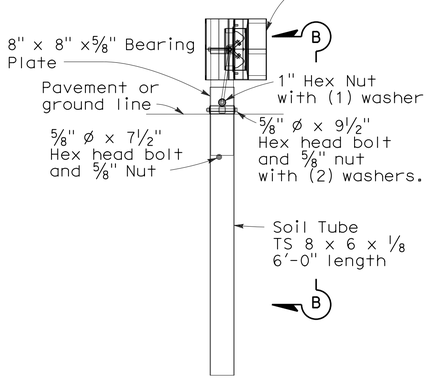

SECTION A-A

Post No. 1

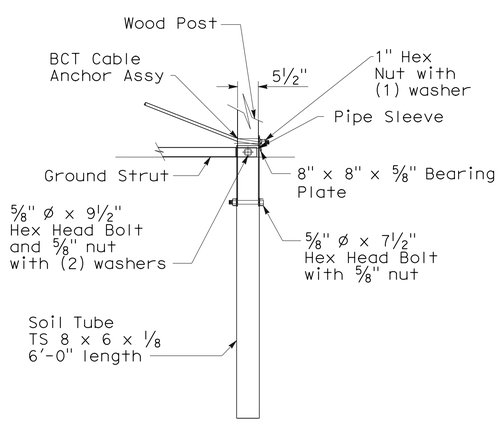

SECTION B-B

Partial view Post No. 1

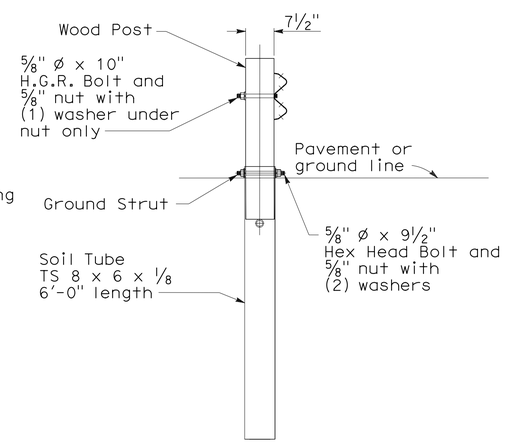

SECTION C-C

at Post No. 2

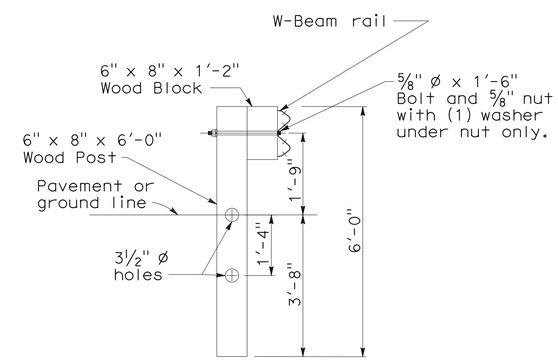

SECTION D-D

Post No. 3 through No. 8

METAL BEAM RAILING TERMINAL SYSTEM (TYPE SKT) CONSTRUCTION DETAILS

NO SCALE

C-14

STATE OF CALIFORNIA - DEPARTMENT OF TRANSPORTATION
Caltrans® DESIGN

FUNCTIONAL SUPERVISOR: OJI KALU
CALCULATED-DESIGNED BY: MOE MIRZA
CHECKED BY: DAN TRAN
REVISED BY
DATE REVISED

LAST REVISION 00-00-00
DATE PLOTTED => 26-APR-2013
TIME PLOTTED => 17:09

Dist	COUNTY	ROUTE	POST MILES TOTAL PROJECT	SHEET No.	TOTAL SHEETS
07	LA	210	R9.7/R16.1	71	349

REGISTERED CIVIL ENGINEER 3-5-13 DATE

4-22-13
PLANS APPROVAL DATE

REGISTERED PROFESSIONAL ENGINEER DAN TRAN No. C63456 Exp. 9/30/14 CIVIL STATE OF CALIFORNIA

THE STATE OF CALIFORNIA OR ITS OFFICERS OR AGENTS SHALL NOT BE RESPONSIBLE FOR THE ACCURACY OR COMPLETENESS OF SCANNED COPIES OF THIS PLAN SHEET.

NOTES:

1. For additional details of Terminal System (Type ET), refer to the manufacturer's installation instructions.
2. Terminal System (Type ET) must be constructed so that the full length of the terminal system guard railing is in straight alignment. The Guard Rail Extruder head of the terminal system shall not encroach upon the adjacent paved shoulder or lane. A traffic approach flare of 50:1 or 25:1 for the full length of Terminal System (Type ET) installation may be used where the Guard Rail Extruder head would encroach upon the adjacent paved shoulder or lane.
3. Slide Guard Rail Extruder over the end of the rail element and attach to Post No.1 with lag screws. Do not bolt rail element to post. Guard Rail Extruder attachment brackets have 3 holes in each bracket to provide tolerance adjustment. Use the holes in the bracket closest to center of Post No.1. Drill 1/4" pilot holes to accommodate lag screws.
4. Attach strut to Post Nos. 1 and 2 foundation tubes with hex head bolts, washers and hex nuts. Bolts extend through the strut, steel foundation tube, and wood posts. Channel side of strut to face downward.
5. For length and type of metal beam guard railing or metal barrier railing the terminal system is attached to, see Project Plans. For typical use of this terminal system, see the A77E, A77F and A77G Series of the Standard Plans.
6. Attach rail element to this post and block. Payment for this post, block and hardware included in payment for the type of railing or barrier the terminal system is attached to, not part of the payment for Terminal System (Type ET).
7. Yellow retroreflective sheeting, as provided by Terminal System (Type ET) manufacturer, shall be adhered to the face of extruder head. The sheeting shall be consistent with the design pattern and colors of a Type P object marker panel.
8. Attach rail to Post No.2 (no wood block) in same manner shown in section A-A. Do not bolt rail to Post No.1, See Note 3.
9. Terminal System (Type ET) not to be used where extrusion of the rail on the back side of the installation would be in the path of pedestrian or vehicular traffic.
10. A continuous rail element section between Post Nos.1 and 5 (no intermediate rail splices) may continue to be used in existing installations. New installations shall be constructed as shown with two rail element sections between Post Nos.1 and 5.
11. A 6'-0" length steel foundation tube, TS 8 x 6 x 3/16", without soil plate, may be used in place of the 4'-6" length steel foundation tube and soil plate shown. Minimum embedment of the 6'-0" length tube shall be 5'-9". A 5/8" ø hex head bolt and nuts shall be installed in the hole in the 6'-0" length tube to keep the wood post from dropping into the tube.

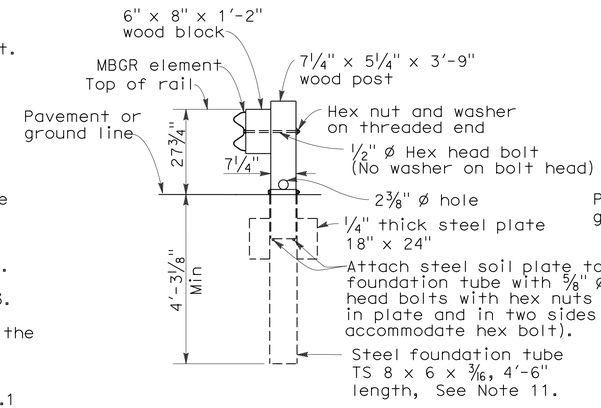

SECTION A-A

Soil plate and wood post attachment to steel foundation tube similar for Post Nos. 1, 2 and 4. Wood blocks not used with Post Nos.1 and 2. See Note 8.

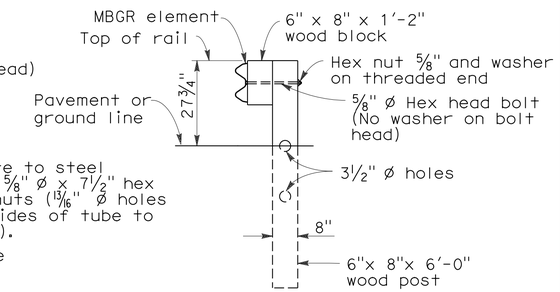

SECTION B-B

Post Nos. 5, 7 and 8 similar except rail elements are not attached to Post Nos. 5 and 7

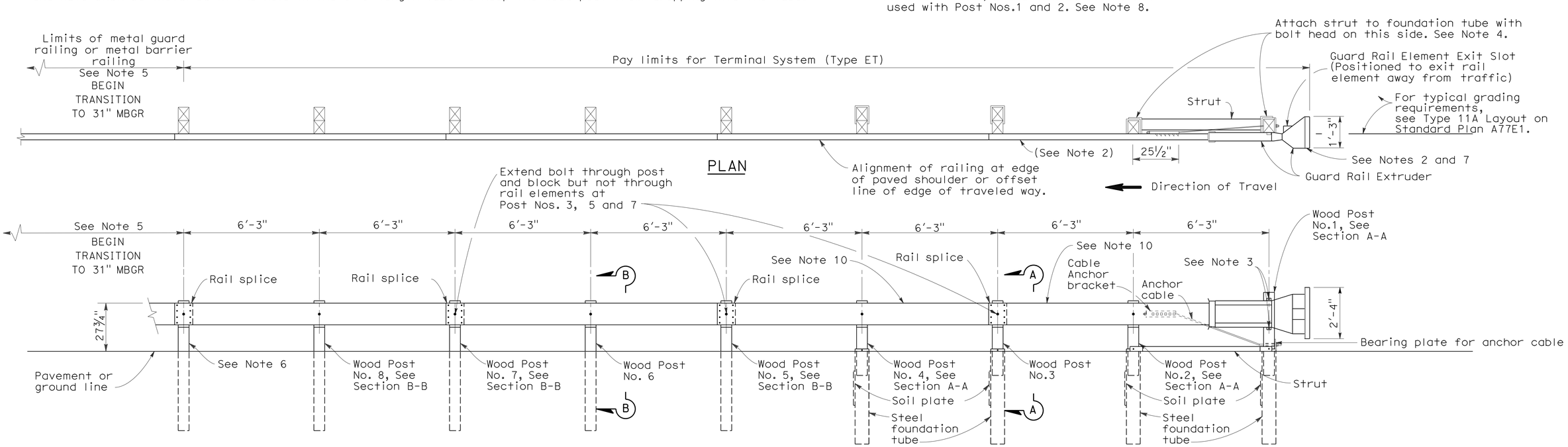

ELEVATION

TERMINAL SYSTEM (TYPE ET)

(Type ET PLUS shown)
See Notes 9 and 10

METAL BEAM RAILING TERMINAL SYSTEM (TYPE ET) CONSTRUCTION DETAILS

NO SCALE

C-15

STATE OF CALIFORNIA - DEPARTMENT OF TRANSPORTATION
Caltrans DESIGN

FUNCTIONAL SUPERVISOR: OJI KALU
CALCULATED-DESIGNED BY: MOE MIRZA
CHECKED BY: DAN TRAN
REVISED BY
DATE REVISED

LAST REVISION 12-12-12
DATE PLOTTED => 26-APR-2013
TIME PLOTTED => 17:09

Dist	COUNTY	ROUTE	POST MILES TOTAL PROJECT	SHEET No.	TOTAL SHEETS
07	LA	210	R9.7/R16.1	72	349

Paul Fong 3-15-13
REGISTERED CIVIL ENGINEER DATE

4-22-13
PLANS APPROVAL DATE

REGISTERED PROFESSIONAL ENGINEER
PAUL FONG
No. C67053
Exp. 9/30/14
CIVIL
STATE OF CALIFORNIA

THE STATE OF CALIFORNIA OR ITS OFFICERS OR AGENTS SHALL NOT BE RESPONSIBLE FOR THE ACCURACY OR COMPLETENESS OF SCANNED COPIES OF THIS PLAN SHEET.

NOTES:

1. FOR ACCURATE RIGHT OF WAY DATA, CONTACT RIGHT OF WAY ENGINEERING AT THE DISTRICT OFFICE.
2. THE CONTRACTOR SHALL VERIFY LOCATIONS AND ELEVATIONS OF EXISTING AND PROPOSED DRAINAGE SYSTEMS BEFORE COMMENCEMENT OF WORK.

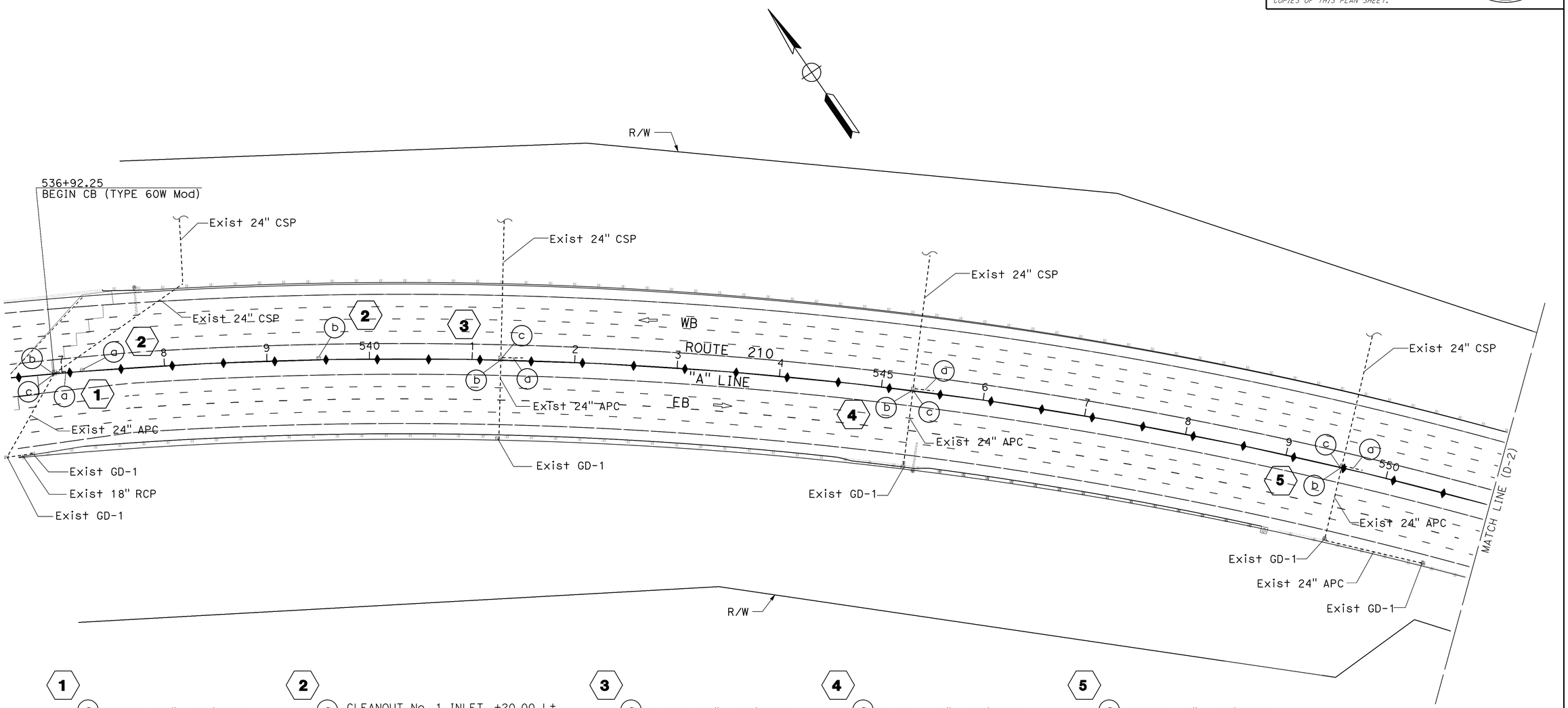

1
- (a) REMOVE 18" x 20' SCSP
- (b) MODIFY INLET
- (c) MODIFY INLET

2
- (a) CLEANOUT No. 1 INLET, +20.00 Lt
- (b) CLEANOUT No. 1 INLET, +50.00 Lt

3
- (a) REMOVE 18" x 20' SCSP
- (b) MODIFY INLET
- (c) MODIFY INLET

4
- (a) REMOVE 18" x 20' SCSP
- (b) MODIFY INLET
- (c) MODIFY INLET

5
- (a) REMOVE 18" x 20' SCSP
- (b) MODIFY INLET
- (c) MODIFY INLET

DRAINAGE PLAN

SCALE: 1" = 50'

D-1

APPROVED FOR DRAINAGE WORK ONLY

STATE OF CALIFORNIA - DEPARTMENT OF TRANSPORTATION
Caltrans
HYDRAULICS

FUNCTIONAL SUPERVISOR: DAVE BHALLA
CALCULATED-DESIGNED BY: PAUL FONG
CHECKED BY: DAVE BHALLA
REVISED BY
DATE REVISED

LAST REVISION 00-00-00
DATE PLOTTED => 26-APR-2013
TIME PLOTTED => 17:09

Dist	COUNTY	ROUTE	POST MILES TOTAL PROJECT	SHEET No.	TOTAL SHEETS
07	LA	210	R9.7/R16.1	73	349

Paul Fong 3-15-13
REGISTERED CIVIL ENGINEER DATE

4-22-13
PLANS APPROVAL DATE

REGISTERED PROFESSIONAL ENGINEER
PAUL FONG
No. C67053
Exp. 9/30/14
CIVIL
STATE OF CALIFORNIA

THE STATE OF CALIFORNIA OR ITS OFFICERS OR AGENTS SHALL NOT BE RESPONSIBLE FOR THE ACCURACY OR COMPLETENESS OF SCANNED COPIES OF THIS PLAN SHEET.

NOTES:

1. FOR ACCURATE RIGHT OF WAY DATA, CONTACT RIGHT OF WAY ENGINEERING AT THE DISTRICT OFFICE.
2. THE CONTRACTOR SHALL VERIFY LOCATIONS AND ELEVATIONS OF EXISTING AND PROPOSED DRAINAGE SYSTEMS BEFORE COMMENCEMENT OF WORK.

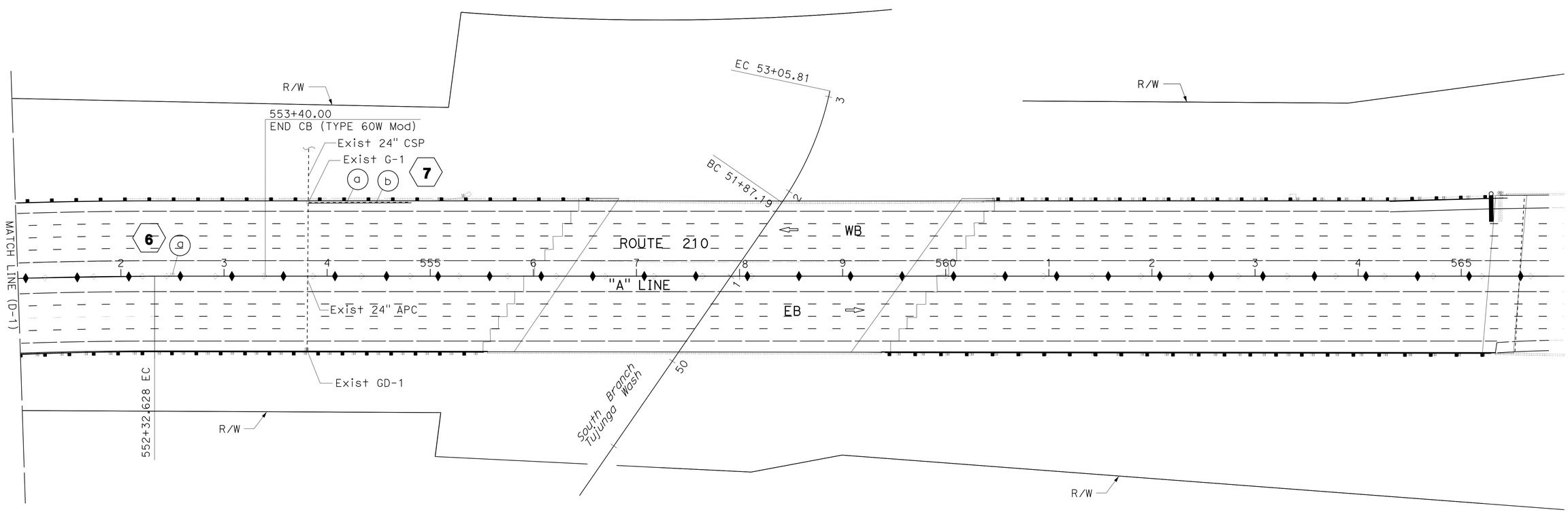

6

(a) CLEANOUT No. 1 INLET, +50.00 Lt

7

(a) REMOVE 18" x 100' SCSP

(b) 18" x 100' SCSP

DRAINAGE PLAN

SCALE: 1" = 50'

D-2

APPROVED FOR DRAINAGE WORK ONLY

STATE OF CALIFORNIA - DEPARTMENT OF TRANSPORTATION
Caltrans
HYDRAULICS

FUNCTIONAL SUPERVISOR: DAVE BHALLA

CALCULATED-DESIGNED BY: PAUL FONG
CHECKED BY: DAVE BHALLA

REVISED BY
DATE REVISED

LAST REVISION 00-00-00
DATE PLOTTED => 26-APR-2013
TIME PLOTTED => 17:09

Dist	COUNTY	ROUTE	POST MILES TOTAL PROJECT	SHEET No.	TOTAL SHEETS
07	LA	210	R9.7/R16.1	74	349

Paul Fong 3-15-13
REGISTERED CIVIL ENGINEER DATE

4-22-13
PLANS APPROVAL DATE

REGISTERED PROFESSIONAL ENGINEER
PAUL FONG
No. C67053
Exp. 9/30/14
CIVIL
STATE OF CALIFORNIA

THE STATE OF CALIFORNIA OR ITS OFFICERS OR AGENTS SHALL NOT BE RESPONSIBLE FOR THE ACCURACY OR COMPLETENESS OF SCANNED COPIES OF THIS PLAN SHEET.

NOTES:

1. FOR ACCURATE RIGHT OF WAY DATA, CONTACT RIGHT OF WAY ENGINEERING AT THE DISTRICT OFFICE.
2. THE CONTRACTOR SHALL VERIFY LOCATIONS AND ELEVATIONS OF EXISTING AND PROPOSED DRAINAGE SYSTEMS BEFORE COMMENCEMENT OF WORK.

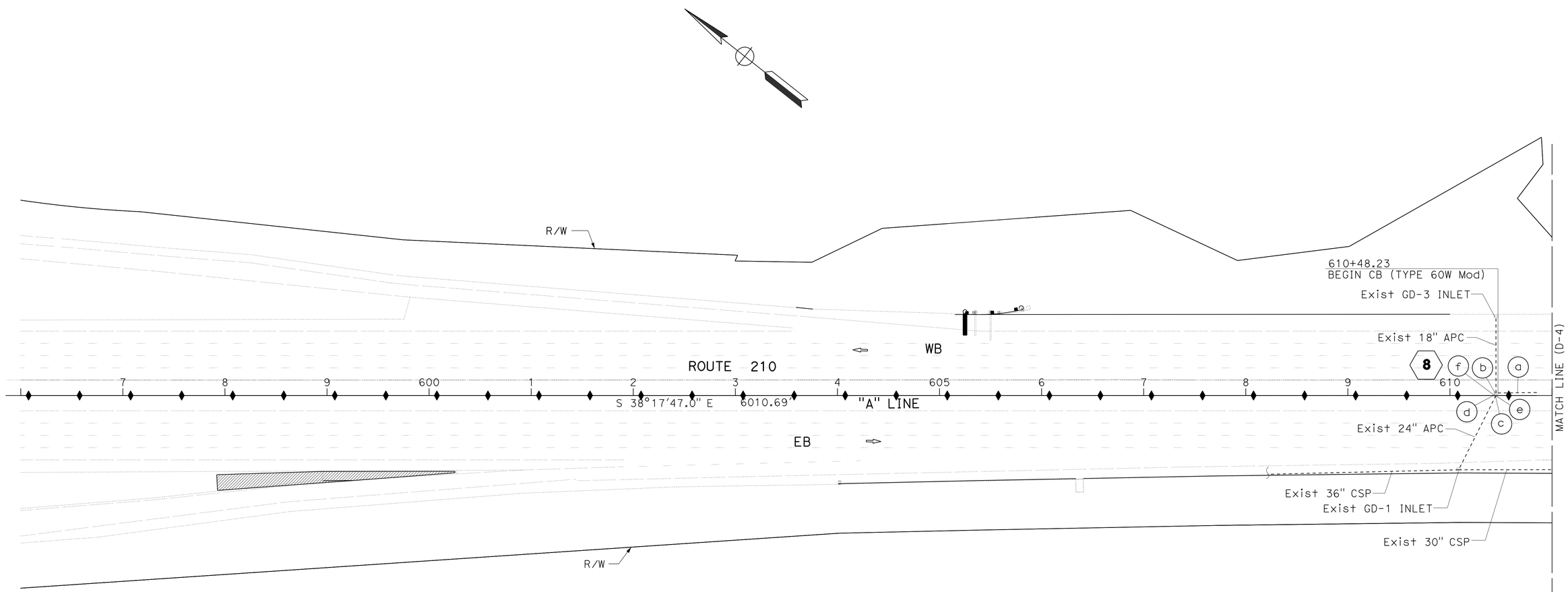

8

- (a) REMOVE 18" x 80' SCSP
- (b) REMOVE INLET
- (c) REMOVE 24" x 2.5' APC
- (d) 18" x 3.0' RCP
- (e) TYPE G1 INLET, H= 5.2'
- (f) MODIFY INLET

DRAINAGE PLAN

SCALE: 1" = 50'

D-3

APPROVED FOR DRAINAGE WORK ONLY

STATE OF CALIFORNIA - DEPARTMENT OF TRANSPORTATION
Caltrans
HYDRAULICS

FUNCTIONAL SUPERVISOR: DAVE BHALLA
CALCULATED-DESIGNED BY: PAUL FONG
CHECKED BY: DAVE BHALLA
REVISED BY
DATE REVISED

LAST REVISION 00-00-00
DATE PLOTTED => 26-APR-2013
TIME PLOTTED => 17:09

Dist	COUNTY	ROUTE	POST MILES TOTAL PROJECT	SHEET No.	TOTAL SHEETS
07	LA	210	R9.7/R16.1	75	349

Paul Fong 3-15-13
REGISTERED CIVIL ENGINEER DATE

4-22-13
PLANS APPROVAL DATE

REGISTERED PROFESSIONAL ENGINEER
PAUL FONG
No. C67053
Exp. 9/30/14
CIVIL
STATE OF CALIFORNIA

THE STATE OF CALIFORNIA OR ITS OFFICERS OR AGENTS SHALL NOT BE RESPONSIBLE FOR THE ACCURACY OR COMPLETENESS OF SCANNED COPIES OF THIS PLAN SHEET.

NOTES:

1. FOR ACCURATE RIGHT OF WAY DATA, CONTACT RIGHT OF WAY ENGINEERING AT THE DISTRICT OFFICE.
2. THE CONTRACTOR SHALL VERIFY LOCATIONS AND ELEVATIONS OF EXISTING AND PROPOSED DRAINAGE SYSTEMS BEFORE COMMENCEMENT OF WORK.

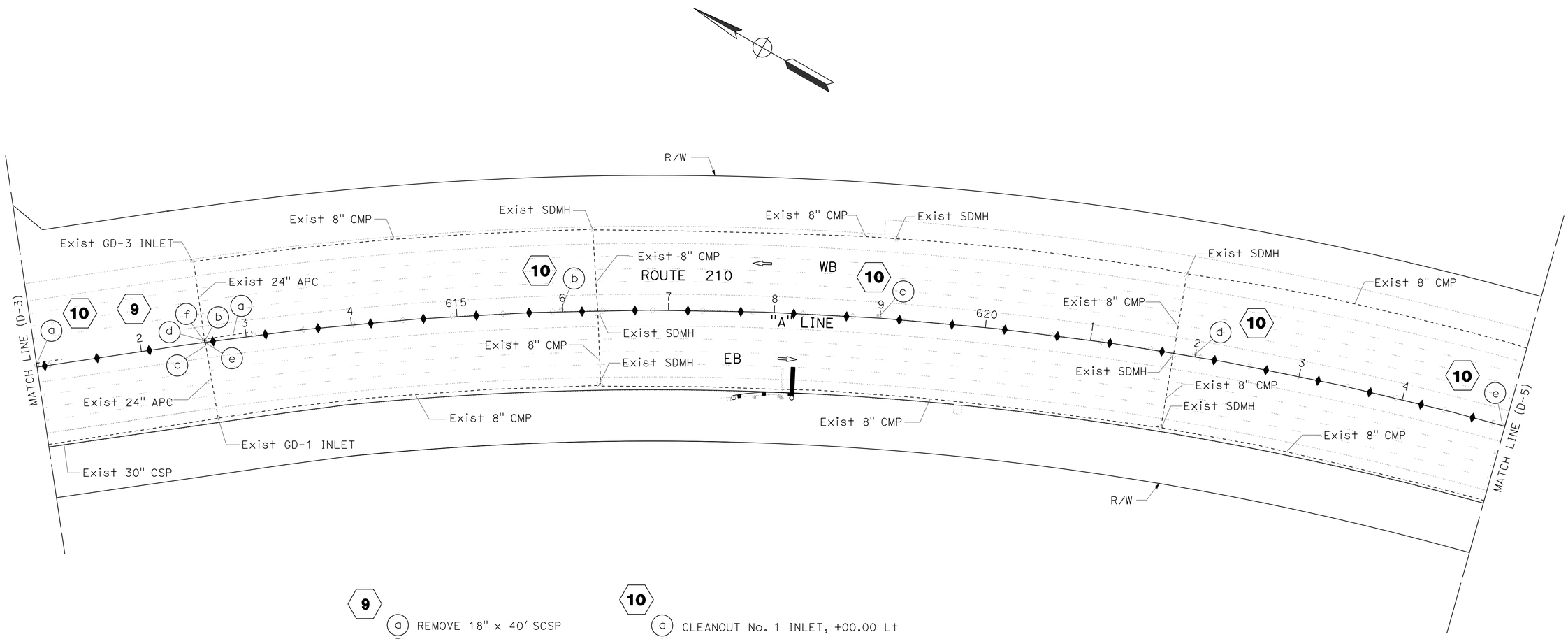

9

- (a) REMOVE 18" x 40' SCSP
- (b) REMOVE INLET
- (c) REMOVE 24" x 3.0' APC
- (d) 24" x 3.0' RCP
- (e) TYPE G2 INLET, H=4.6'
- (f) MODIFY INLET

10

- (a) CLEANOUT No. 1 INLET, +00.00 Lt
- (b) CLEANOUT No. 1 INLET, +00.00 Lt
- (c) CLEANOUT No. 1 INLET, +00.00 Lt
- (d) CLEANOUT No. 1 INLET, +00.00 Lt
- (e) CLEANOUT No. 1 INLET, +00.00 Lt

DRAINAGE PLAN

SCALE: 1" = 50'

D-4

APPROVED FOR DRAINAGE WORK ONLY

STATE OF CALIFORNIA - DEPARTMENT OF TRANSPORTATION
Caltrans
HYDRAULIC
FUNCTIONAL SUPERVISOR: DAVE BHALLA
CALCULATED-DESIGNED BY: PAUL FONG
CHECKED BY: DAVE BHALLA
REVISED BY
DATE REVISED

LAST REVISION 00-00-00
DATE PLOTTED => 26-APR-2013
TIME PLOTTED => 17:09

Dist	COUNTY	ROUTE	POST MILES TOTAL PROJECT	SHEET No.	TOTAL SHEETS
07	LA	210	R9.7/R16.1	76	349

Paul Fong 3-15-13
REGISTERED CIVIL ENGINEER DATE

4-22-13
PLANS APPROVAL DATE

REGISTERED PROFESSIONAL ENGINEER
PAUL FONG
No. C67053
Exp. 9/30/14
CIVIL
STATE OF CALIFORNIA

THE STATE OF CALIFORNIA OR ITS OFFICERS OR AGENTS SHALL NOT BE RESPONSIBLE FOR THE ACCURACY OR COMPLETENESS OF SCANNED COPIES OF THIS PLAN SHEET.

NOTES:

1. FOR ACCURATE RIGHT OF WAY DATA, CONTACT RIGHT OF WAY ENGINEERING AT THE DISTRICT OFFICE.
2. THE CONTRACTOR SHALL VERIFY LOCATIONS AND ELEVATIONS OF EXISTING AND PROPOSED DRAINAGE SYSTEMS BEFORE COMMENCEMENT OF WORK.

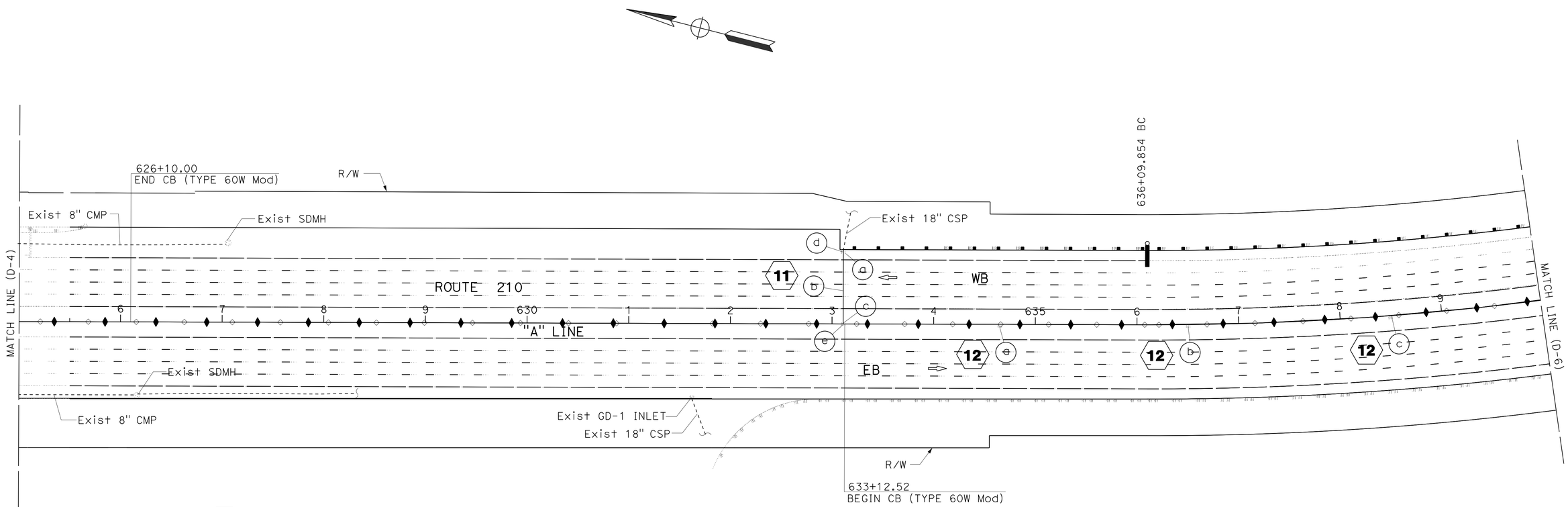

11

- (a) REMOVE INLET
- (b) 18" x 67.0' RCP
- (c) TYPE G2 INLET, H=4.8'
- (d) GD-1 INLET, H=4.3'
- (e) MODIFY INLET

12

- (a) CLEANOUT No. 2 INLET, +65.00 Rt
- (b) CLEANOUT No. 2 INLET, +50.00 Rt
- (c) CLEANOUT No. 2 INLET, +50.00 Rt

DRAINAGE PLAN

SCALE: 1" = 50'

D-5

APPROVED FOR DRAINAGE WORK ONLY

STATE OF CALIFORNIA - DEPARTMENT OF TRANSPORTATION
Caltrans
HYDRAULICS

FUNCTIONAL SUPERVISOR: DAVE BHALLA
CALCULATED-DESIGNED BY: PAUL FONG
CHECKED BY: DAVE BHALLA
REVISED BY
DATE REVISED

LAST REVISION 00-00-00
DATE PLOTTED => 26-APR-2013
TIME PLOTTED => 17:09

Dist	COUNTY	ROUTE	POST MILES TOTAL PROJECT	SHEET No.	TOTAL SHEETS
07	LA	210	R9.7/R16.1	77	349

Paul Fong 3-15-13
REGISTERED CIVIL ENGINEER DATE

4-22-13
PLANS APPROVAL DATE

REGISTERED PROFESSIONAL ENGINEER
PAUL FONG
No. C67053
Exp. 9/30/14
CIVIL
STATE OF CALIFORNIA

THE STATE OF CALIFORNIA OR ITS OFFICERS OR AGENTS SHALL NOT BE RESPONSIBLE FOR THE ACCURACY OR COMPLETENESS OF SCANNED COPIES OF THIS PLAN SHEET.

NOTES:

1. FOR ACCURATE RIGHT OF WAY DATA, CONTACT RIGHT OF WAY ENGINEERING AT THE DISTRICT OFFICE.
2. THE CONTRACTOR SHALL VERIFY LOCATIONS AND ELEVATIONS OF EXISTING AND PROPOSED DRAINAGE SYSTEMS BEFORE COMMENCEMENT OF WORK.

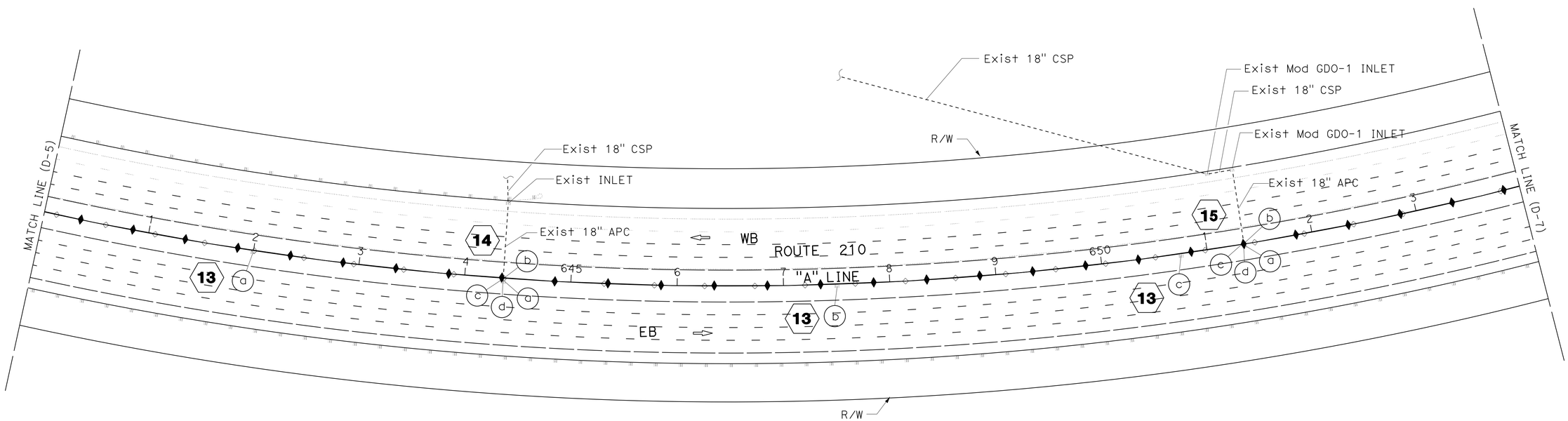

13

- (a) CLEANOUT No. 2 INLET, +00.00 Rt
- (b) CLEANOUT No. 2 INLET, +50.00 Rt
- (c) CLEANOUT No. 2 INLET, +75.00 Rt

14

- (a) REMOVE INLET
- (b) REMOVE 18" x 3.0' APC
- (c) TYPE G2 INLET, H=5.0'
- (d) MODIFY INLET

15

- (a) REMOVE INLET
- (b) REMOVE 18" x 3.0' APC
- (c) TYPE G2 INLET, H=4.8'
- (d) MODIFY INLET

DRAINAGE PLAN

SCALE: 1" = 50'

D-6

APPROVED FOR DRAINAGE WORK ONLY

STATE OF CALIFORNIA - DEPARTMENT OF TRANSPORTATION
Caltrans
HYDRAULICS

FUNCTIONAL SUPERVISOR: DAVE BHALLA

CALCULATED-DESIGNED BY: PAUL FONG
CHECKED BY: DAVE BHALLA

REVISED BY
DATE REVISED

LAST REVISION 00-00-00
DATE PLOTTED => 26-APR-2013
TIME PLOTTED => 17:09

Dist	COUNTY	ROUTE	POST MILES TOTAL PROJECT	SHEET No.	TOTAL SHEETS
07	LA	210	R9.7/R16.1	78	349

Paul Fong 3-15-13
REGISTERED CIVIL ENGINEER DATE

4-22-13
PLANS APPROVAL DATE

REGISTERED PROFESSIONAL ENGINEER
PAUL FONG
No. C67053
Exp. 9/30/14
CIVIL
STATE OF CALIFORNIA

THE STATE OF CALIFORNIA OR ITS OFFICERS OR AGENTS SHALL NOT BE RESPONSIBLE FOR THE ACCURACY OR COMPLETENESS OF SCANNED COPIES OF THIS PLAN SHEET.

NOTES:

1. FOR ACCURATE RIGHT OF WAY DATA, CONTACT RIGHT OF WAY ENGINEERING AT THE DISTRICT OFFICE.

2. THE CONTRACTOR SHALL VERIFY LOCATIONS AND ELEVATIONS OF EXISTING AND PROPOSED DRAINAGE SYSTEMS BEFORE COMMENCEMENT OF WORK.

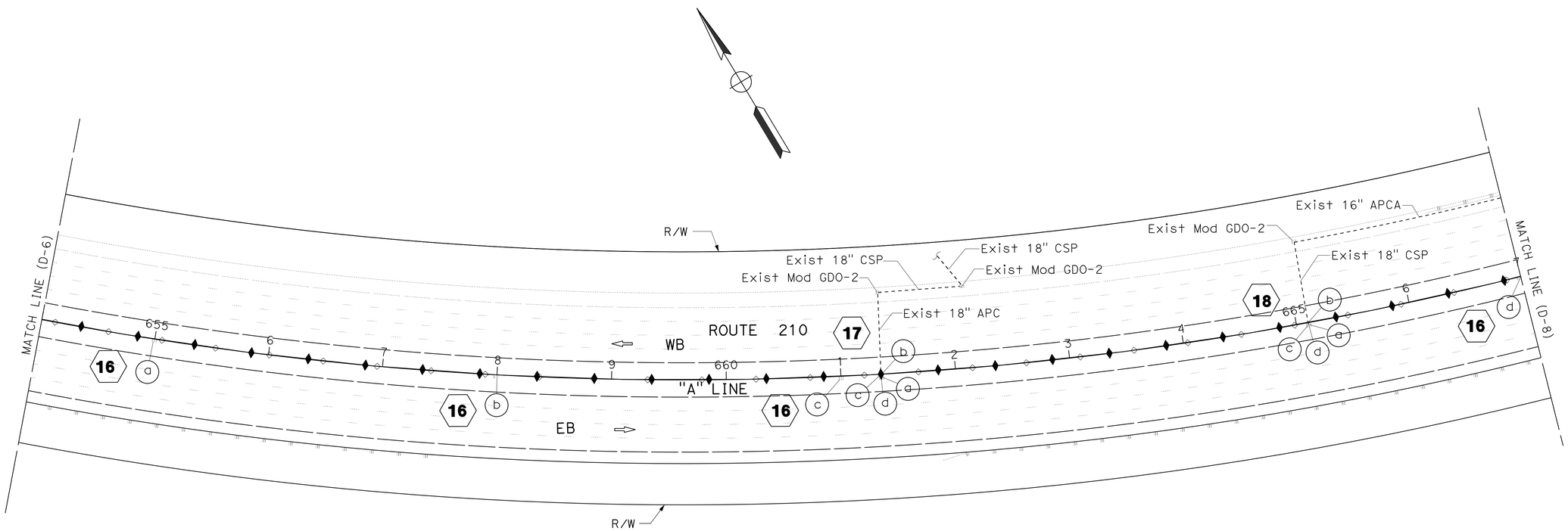

16

- (a) CLEANOUT No. 2 INLET, +00.00 R†
- (b) CLEANOUT No. 2 INLET, +00.00 R†
- (c) CLEANOUT No. 2 INLET, +00.00 R†
- (d) CLEANOUT No. 2 INLET, +00.00 R†

17

- (a) REMOVE INLET
- (b) REMOVE 18" x 3.0' APC'
- (c) TYPE G2 INLET, H=5.5'
- (d) MODIFY INLET

18

- (a) REMOVE INLET
- (b) REMOVE 18" x 3.0' APC'
- (c) TYPE G2 INLET, H=4.6'
- (d) MODIFY INLET

DRAINAGE PLAN

SCALE: 1" = 50'

D-7

APPROVED FOR DRAINAGE WORK ONLY

STATE OF CALIFORNIA - DEPARTMENT OF TRANSPORTATION
Caltrans
HYDRAULICS

FUNCTIONAL SUPERVISOR: DAVE BHALLA
CALCULATED-DESIGNED BY: PAUL FONG
CHECKED BY: DAVE BHALLA
REVISED BY
DATE REVISED

LAST REVISION 00-00-00
DATE PLOTTED => 26-APR-2013
TIME PLOTTED => 17:09

Dist	COUNTY	ROUTE	POST MILES TOTAL PROJECT	SHEET No.	TOTAL SHEETS
07	LA	210	R9.7/R16.1	79	349

Paul Fong 3-15-13
REGISTERED CIVIL ENGINEER DATE

4-22-13
PLANS APPROVAL DATE

REGISTERED PROFESSIONAL ENGINEER
PAUL FONG
No. C67053
Exp. 9/30/14
CIVIL
STATE OF CALIFORNIA

THE STATE OF CALIFORNIA OR ITS OFFICERS OR AGENTS SHALL NOT BE RESPONSIBLE FOR THE ACCURACY OR COMPLETENESS OF SCANNED COPIES OF THIS PLAN SHEET.

NOTES:

1. FOR ACCURATE RIGHT OF WAY DATA, CONTACT RIGHT OF WAY ENGINEERING AT THE DISTRICT OFFICE.
2. THE CONTRACTOR SHALL VERIFY LOCATIONS AND ELEVATIONS OF EXISTING AND PROPOSED DRAINAGE SYSTEMS BEFORE COMMENCEMENT OF WORK.

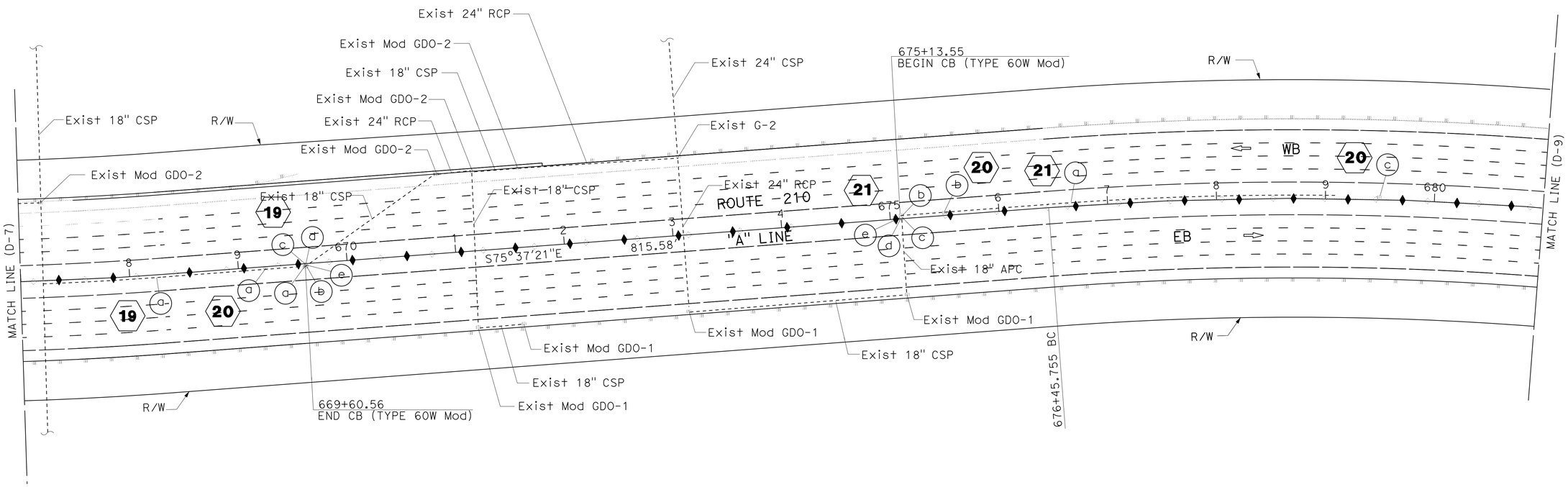

19

- (a) REMOVE 18" x 240.0' SCSP
- (b) REMOVE INLET
- (c) REMOVE 18" x 3.0' APC
- (d) TYPE G2 INLET, H=4.5'
- (e) MODIFY INLET

20

- (a) CLEANOUT No. 1 INLET, +25.00 Rt
- (b) CLEANOUT No. 1 INLET, +50.00 Lt
- (c) CLEANOUT No. 1 INLET, +50.00 Lt

21

- (a) REMOVE 18" x 400' SCSP
- (b) REMOVE INLET
- (c) REMOVE 18" x 3.0' APC
- (d) TYPE G2 INLET, H=4.5'
- (e) MODIFY INLET

DRAINAGE PLAN

SCALE: 1" = 50'

D-8

APPROVED FOR DRAINAGE WORK ONLY

STATE OF CALIFORNIA - DEPARTMENT OF TRANSPORTATION
Caltrans
HYDRAULICS

FUNCTIONAL SUPERVISOR: DAVE BHALLA
CALCULATED-DESIGNED BY: PAUL FONG
CHECKED BY: DAVE BHALLA
REVISED BY
DATE REVISED

LAST REVISION 00-00-00
DATE PLOTTED => 26-APR-2013
TIME PLOTTED => 17:09

Dist	COUNTY	ROUTE	POST MILES TOTAL PROJECT	SHEET No.	TOTAL SHEETS
07	LA	210	R9.7/R16.1	80	349

Paul Fong 3-15-13
REGISTERED CIVIL ENGINEER DATE

4-22-13
PLANS APPROVAL DATE

REGISTERED PROFESSIONAL ENGINEER
PAUL FONG
No. C67053
Exp. 9/30/14
CIVIL
STATE OF CALIFORNIA

THE STATE OF CALIFORNIA OR ITS OFFICERS OR AGENTS SHALL NOT BE RESPONSIBLE FOR THE ACCURACY OR COMPLETENESS OF SCANNED COPIES OF THIS PLAN SHEET.

NOTES:

1. FOR ACCURATE RIGHT OF WAY DATA, CONTACT RIGHT OF WAY ENGINEERING AT THE DISTRICT OFFICE.
2. THE CONTRACTOR SHALL VERIFY LOCATIONS AND ELEVATIONS OF EXISTING AND PROPOSED DRAINAGE SYSTEMS BEFORE COMMENCEMENT OF WORK.

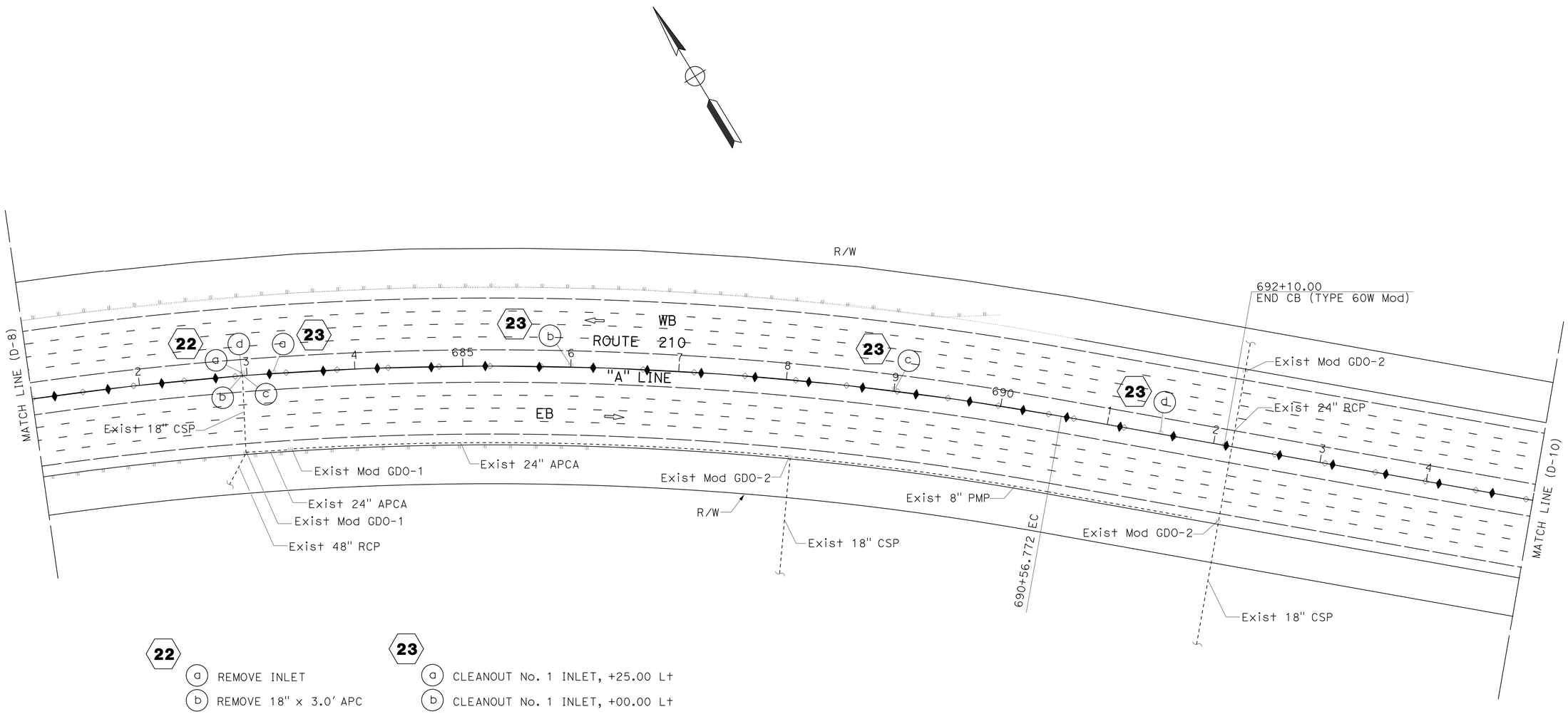

22

- (a) REMOVE INLET
- (b) REMOVE 18" x 3.0' APC
- (c) TYPE G2 INLET, H=4.5'
- (d) MODIFY INLET

23

- (a) CLEANOUT No. 1 INLET, +25.00 Lt
- (b) CLEANOUT No. 1 INLET, +00.00 Lt
- (c) CLEANOUT No. 1 INLET, +00.00 Lt
- (d) CLEANOUT No. 1 INLET, +50.00 Lt

DRAINAGE PLAN

SCALE: 1" = 50'

D-9

APPROVED FOR DRAINAGE WORK ONLY

STATE OF CALIFORNIA - DEPARTMENT OF TRANSPORTATION
Caltrans
HYDRAULICS

FUNCTIONAL SUPERVISOR: DAVE BHALLA
CALCULATED-DESIGNED BY: PAUL FONG
CHECKED BY: DAVE BHALLA
REVISED BY
DATE REVISED

LAST REVISION 00-00-00
DATE PLOTTED => 26-APR-2013
TIME PLOTTED => 17:09

Dist	COUNTY	ROUTE	POST MILES TOTAL PROJECT	SHEET No.	TOTAL SHEETS
07	LA	210	R9.7/R16.1	81	349

Paul Fong 3-15-13
REGISTERED CIVIL ENGINEER DATE

4-22-13
PLANS APPROVAL DATE

REGISTERED PROFESSIONAL ENGINEER
PAUL FONG
No. C67053
Exp. 9/30/14
CIVIL
STATE OF CALIFORNIA

THE STATE OF CALIFORNIA OR ITS OFFICERS OR AGENTS SHALL NOT BE RESPONSIBLE FOR THE ACCURACY OR COMPLETENESS OF SCANNED COPIES OF THIS PLAN SHEET.

NOTES:

1. FOR ACCURATE RIGHT OF WAY DATA, CONTACT RIGHT OF WAY ENGINEERING AT THE DISTRICT OFFICE.

2. THE CONTRACTOR SHALL VERIFY LOCATIONS AND ELEVATIONS OF EXISTING AND PROPOSED DRAINAGE SYSTEMS BEFORE COMMENCEMENT OF WORK.

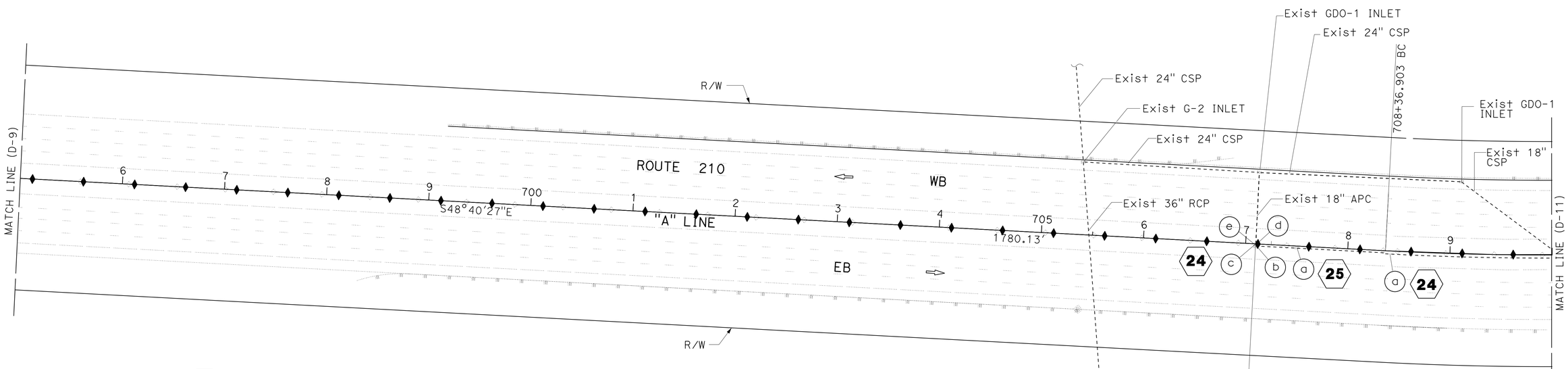

24
- (a) REMOVE 18" x 298' SCSP
- (b) REMOVE INLET
- (c) REMOVE 18" x 3.0' APC
- (d) TYPE G2 INLET, H=4.4'
- (e) MODIFY INLET

25
- (a) CLEANOUT No. 2 INLET, +50.00 Rt

DRAINAGE PLAN

SCALE: 1" = 50'

D-10

APPROVED FOR DRAINAGE WORK ONLY

STATE OF CALIFORNIA - DEPARTMENT OF TRANSPORTATION
Caltrans
HYDRAULICS

FUNCTIONAL SUPERVISOR: DAVE BHALLA

CALCULATED-DESIGNED BY: PAUL FONG
CHECKED BY: DAVE BHALLA

REVISED BY
DATE REVISED

LAST REVISION 00-00-00
DATE PLOTTED => 26-APR-2013
TIME PLOTTED => 17:09

Dist	COUNTY	ROUTE	POST MILES TOTAL PROJECT	SHEET No.	TOTAL SHEETS
07	LA	210	R9.7/R16.1	82	349

Paul Fong 3-15-13
REGISTERED CIVIL ENGINEER DATE

4-22-13
PLANS APPROVAL DATE

REGISTERED PROFESSIONAL ENGINEER
PAUL FONG
No. C67053
Exp. 9/30/14
CIVIL
STATE OF CALIFORNIA

THE STATE OF CALIFORNIA OR ITS OFFICERS OR AGENTS SHALL NOT BE RESPONSIBLE FOR THE ACCURACY OR COMPLETENESS OF SCANNED COPIES OF THIS PLAN SHEET.

NOTES:

1. FOR ACCURATE RIGHT OF WAY DATA, CONTACT RIGHT OF WAY ENGINEERING AT THE DISTRICT OFFICE.
2. THE CONTRACTOR SHALL VERIFY LOCATIONS AND ELEVATIONS OF EXISTING AND PROPOSED DRAINAGE SYSTEMS BEFORE COMMENCEMENT OF WORK.

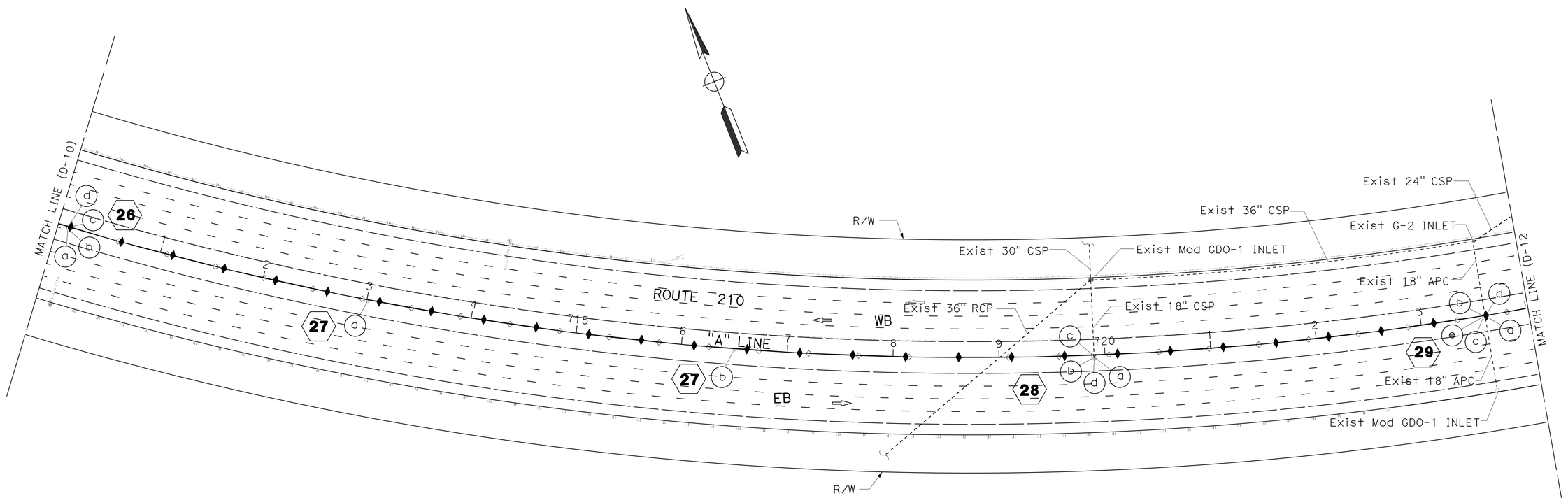

26
- (a) REMOVE INLET
- (b) REMOVE 18" x 3.0' APC
- (c) TYPE G2 INLET, H=5.4'
- (d) MODIFY INLET

27
- (a) CLEANOUT No. 2 INLET, +00.00 Rt
- (b) CLEANOUT No. 2 INLET, +50.00 Rt

28
- (a) REMOVE INLET
- (b) REMOVE 18" x 3.0' APC
- (c) TYPE G2 INLET, H=5.9'
- (d) MODIFY INLET

29
- (a) REMOVE INLET
- (b) REMOVE 18" x 3.0' APC
- (c) 18" x 5.0' RCP
- (d) TYPE G2 INLET, H=4.6'
- (e) MODIFY INLET

DRAINAGE PLAN

SCALE: 1" = 50'

D-11

APPROVED FOR DRAINAGE WORK ONLY

STATE OF CALIFORNIA - DEPARTMENT OF TRANSPORTATION
Caltrans
HYDRAULICS

FUNCTIONAL SUPERVISOR: DAVE BHALLA
CALCULATED-DESIGNED BY: PAUL FONG
CHECKED BY: DAVE BHALLA
REVISED BY
DATE REVISED

LAST REVISION 00-00-00
DATE PLOTTED => 26-APR-2013
TIME PLOTTED => 17:09

Dist	COUNTY	ROUTE	POST MILES TOTAL PROJECT	SHEET No.	TOTAL SHEETS
07	LA	210	R9.7/R16.1	83	349

Paul Fong 3-15-13
REGISTERED CIVIL ENGINEER DATE

4-22-13
PLANS APPROVAL DATE

REGISTERED PROFESSIONAL ENGINEER PAUL FONG No. C67053 Exp. 9/30/14 CIVIL STATE OF CALIFORNIA

THE STATE OF CALIFORNIA OR ITS OFFICERS OR AGENTS SHALL NOT BE RESPONSIBLE FOR THE ACCURACY OR COMPLETENESS OF SCANNED COPIES OF THIS PLAN SHEET.

NOTES:

1. FOR ACCURATE RIGHT OF WAY DATA, CONTACT RIGHT OF WAY ENGINEERING AT THE DISTRICT OFFICE.
2. THE CONTRACTOR SHALL VERIFY LOCATIONS AND ELEVATIONS OF EXISTING AND PROPOSED DRAINAGE SYSTEMS BEFORE COMMENCEMENT OF WORK.

30

(a) CLEANOUT No. 2 INLET, +00.00 R+

(b) CLEANOUT No. 2 INLET, +50.00 R+

(c) CLEANOUT No. 2 INLET, +50.00 R+

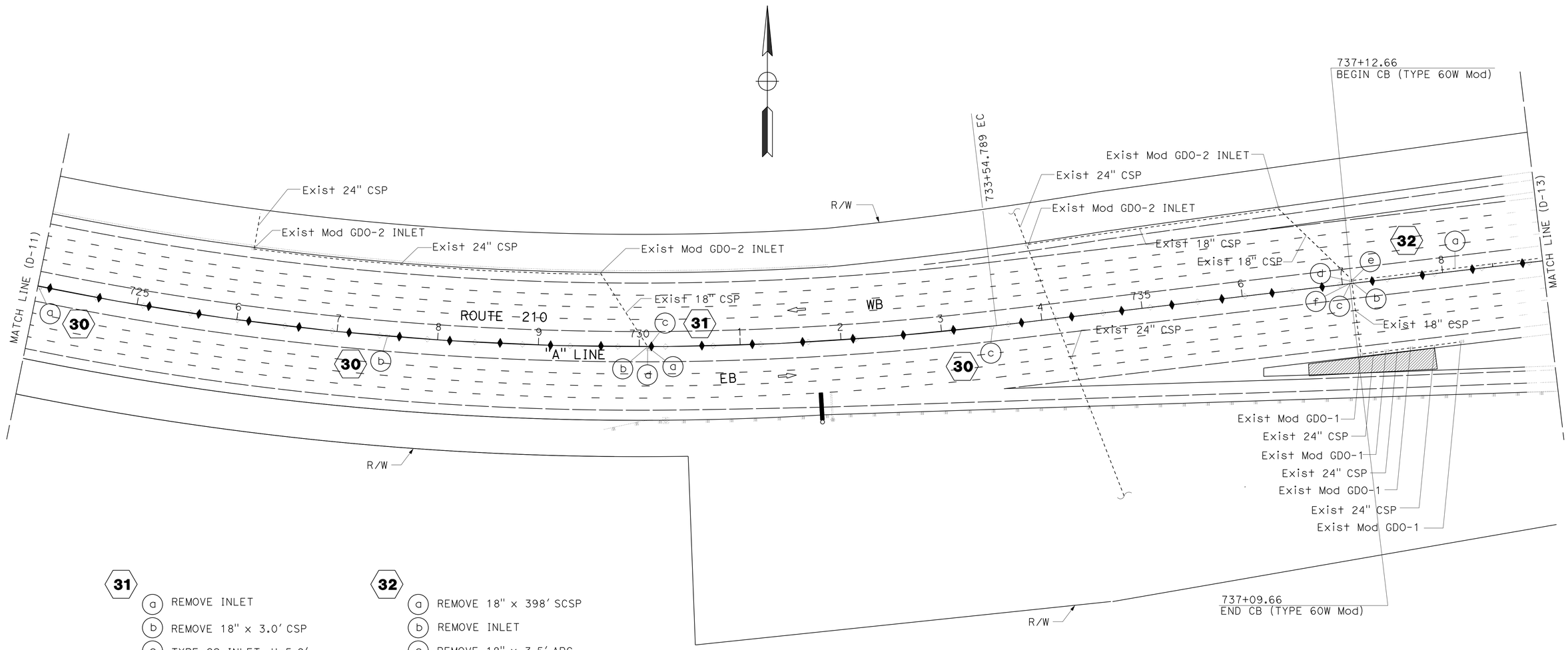

31

(a) REMOVE INLET

(b) REMOVE 18" x 3.0' CSP

(c) TYPE G2 INLET, H=5.9'

(d) MODIFY INLET

32

(a) REMOVE 18" x 398' SCSP

(b) REMOVE INLET

(c) REMOVE 18" x 3.5' APC

(d) 18" x 5.5' RCP

(e) TYPE G2 INLET, H=4.7'

(f) MODIFY INLET

DRAINAGE PLAN

SCALE: 1" = 50'

D-12

APPROVED FOR DRAINAGE WORK ONLY

STATE OF CALIFORNIA - DEPARTMENT OF TRANSPORTATION
Caltrans
HYDRAULICS

FUNCTIONAL SUPERVISOR: DAVE BHALLA
CALCULATED-DESIGNED BY: PAUL FONG
CHECKED BY: DAVE BHALLA
REVISED BY
DATE REVISED

LAST REVISION 00-00-00
DATE PLOTTED => 26-APR-2013
TIME PLOTTED => 17:10

Dist	COUNTY	ROUTE	POST MILES TOTAL PROJECT	SHEET No.	TOTAL SHEETS
07	LA	210	R9.7/R16.1	84	349

Paul Fong 3-15-13
REGISTERED CIVIL ENGINEER DATE

4-22-13
PLANS APPROVAL DATE

REGISTERED PROFESSIONAL ENGINEER
PAUL FONG
No. C67053
Exp. 9/30/14
CIVIL
STATE OF CALIFORNIA

THE STATE OF CALIFORNIA OR ITS OFFICERS OR AGENTS SHALL NOT BE RESPONSIBLE FOR THE ACCURACY OR COMPLETENESS OF SCANNED COPIES OF THIS PLAN SHEET.

NOTES:

1. FOR ACCURATE RIGHT OF WAY DATA, CONTACT RIGHT OF WAY ENGINEERING AT THE DISTRICT OFFICE.
2. THE CONTRACTOR SHALL VERIFY LOCATIONS AND ELEVATIONS OF EXISTING AND PROPOSED DRAINAGE SYSTEMS BEFORE COMMENCEMENT OF WORK.

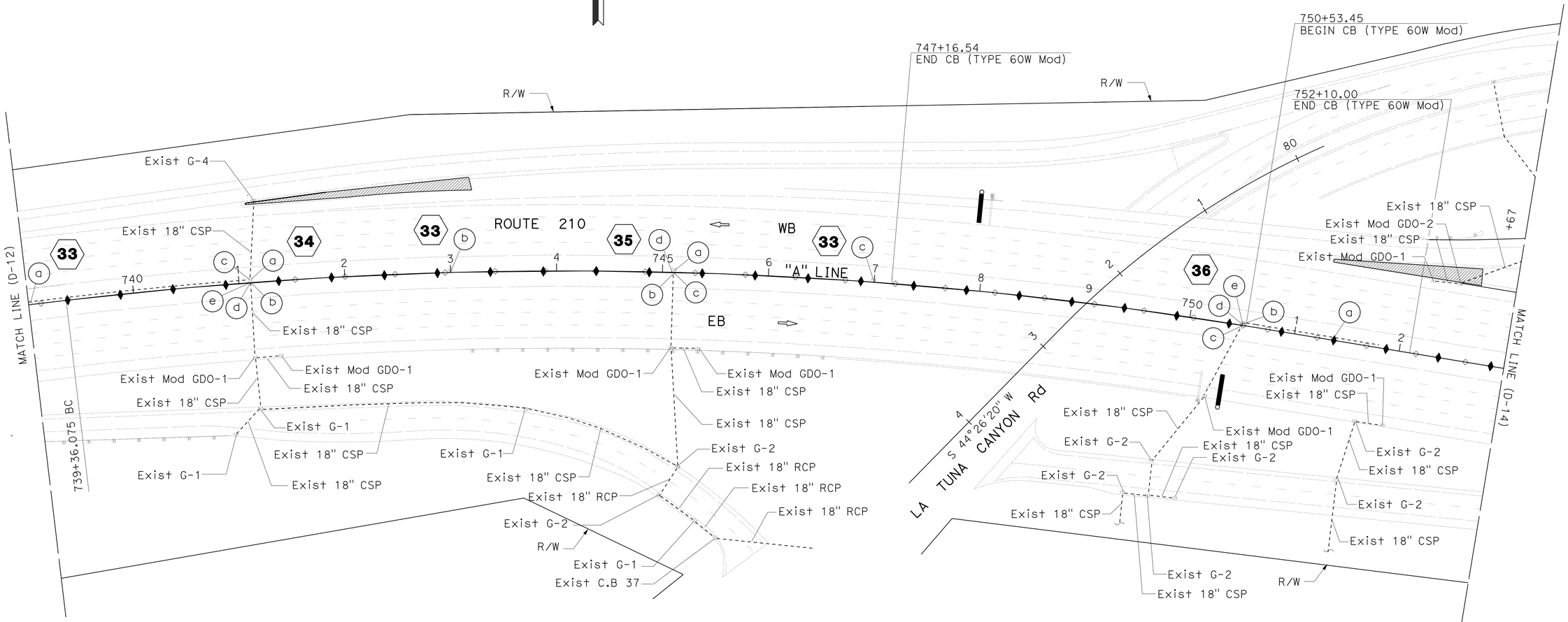

33

- (a) CLEANOUT No. 1 INLET, +00.00 Lt
- (b) CLEANOUT No. 1 INLET, +00.00 Lt
- (c) CLEANOUT No. 1 INLET, +00.00 Lt

34

- (a) REMOVE INLET
- (b) REMOVE 18" x 3.5' CSP
- (c) 18" x 5.5' RCP
- (d) TYPE G2 INLET, H=5.0'
- (e) MODIFY INLET

35

- (a) REMOVE INLET
- (b) REMOVE 18" x 3.0' CSP
- (c) TYPE G2 INLET, H=5.2'
- (d) MODIFY INLET

36

- (a) REMOVE 18" x 130' SCSP
- (b) REMOVE INLET
- (c) REMOVE 18" x 3.0' CSP
- (d) TYPE G2 INLET, H=4.5'
- (e) MODIFY INLET

DRAINAGE PLAN

SCALE: 1" = 50'

D-13

APPROVED FOR DRAINAGE WORK ONLY

STATE OF CALIFORNIA - DEPARTMENT OF TRANSPORTATION
Caltrans
HYDRAULICS

FUNCTIONAL SUPERVISOR: DAVE BHALLA
CALCULATED-DESIGNED BY: PAUL FONG
CHECKED BY: DAVE BHALLA
REVISED BY
DATE REVISED

LAST REVISION 00-00-00
DATE PLOTTED => 26-APR-2013
TIME PLOTTED => 17:10

Dist	COUNTY	ROUTE	POST MILES TOTAL PROJECT	SHEET No.	TOTAL SHEETS
07	LA	210	R9.7/R16.1	85	349

Paul Fong 3-15-13
REGISTERED CIVIL ENGINEER DATE

4-22-13
PLANS APPROVAL DATE

REGISTERED PROFESSIONAL ENGINEER PAUL FONG No. C67053 Exp. 9/30/14 CIVIL STATE OF CALIFORNIA

THE STATE OF CALIFORNIA OR ITS OFFICERS OR AGENTS SHALL NOT BE RESPONSIBLE FOR THE ACCURACY OR COMPLETENESS OF SCANNED COPIES OF THIS PLAN SHEET.

NOTES:

1. FOR ACCURATE RIGHT OF WAY DATA, CONTACT RIGHT OF WAY ENGINEERING AT THE DISTRICT OFFICE.
2. THE CONTRACTOR SHALL VERIFY LOCATIONS AND ELEVATIONS OF EXISTING AND PROPOSED DRAINAGE SYSTEMS BEFORE COMMENCEMENT OF WORK.

37
- (a) REMOVE 18" x 302' SCSP
- (b) REMOVE INLET
- (c) REMOVE 18" x 3.0' CSP
- (d) TYPE G2 INLET, H=4.1'
- (e) MODIFY INLET

38
- (a) REMOVE INLET
- (b) REMOVE 18" x 2.0' CSP
- (c) 18" x 2.0' CSP RISER
- (d) 24" x 5.0' RCP
- (e) TYPE G2 INLET, H=4.7'
- (f) MODIFY INLET

39
- (a) CLEANOUT INLET No. 2, +00.00 Rt
- (b) CLEANOUT INLET No. 2, +75.00 Rt

40
- (a) REMOVE INLET
- (b) REMOVE 18" x 3.0' CSP
- (c) TYPE G2 INLET, H=3.9'
- (d) MODIFY INLET

41
- (a) 8" x 6.0' NON-PERFORATED PLASTIC PIPE UNDERDRAIN
- (b) 8" x 3.2' CSP RISER (VERTICAL)
- (c) 8" x 99.0' PERFORATED PLASTIC PIPE UNDERDRAIN
- (d) 8" x 3.2' CSP RISER (VERTICAL)

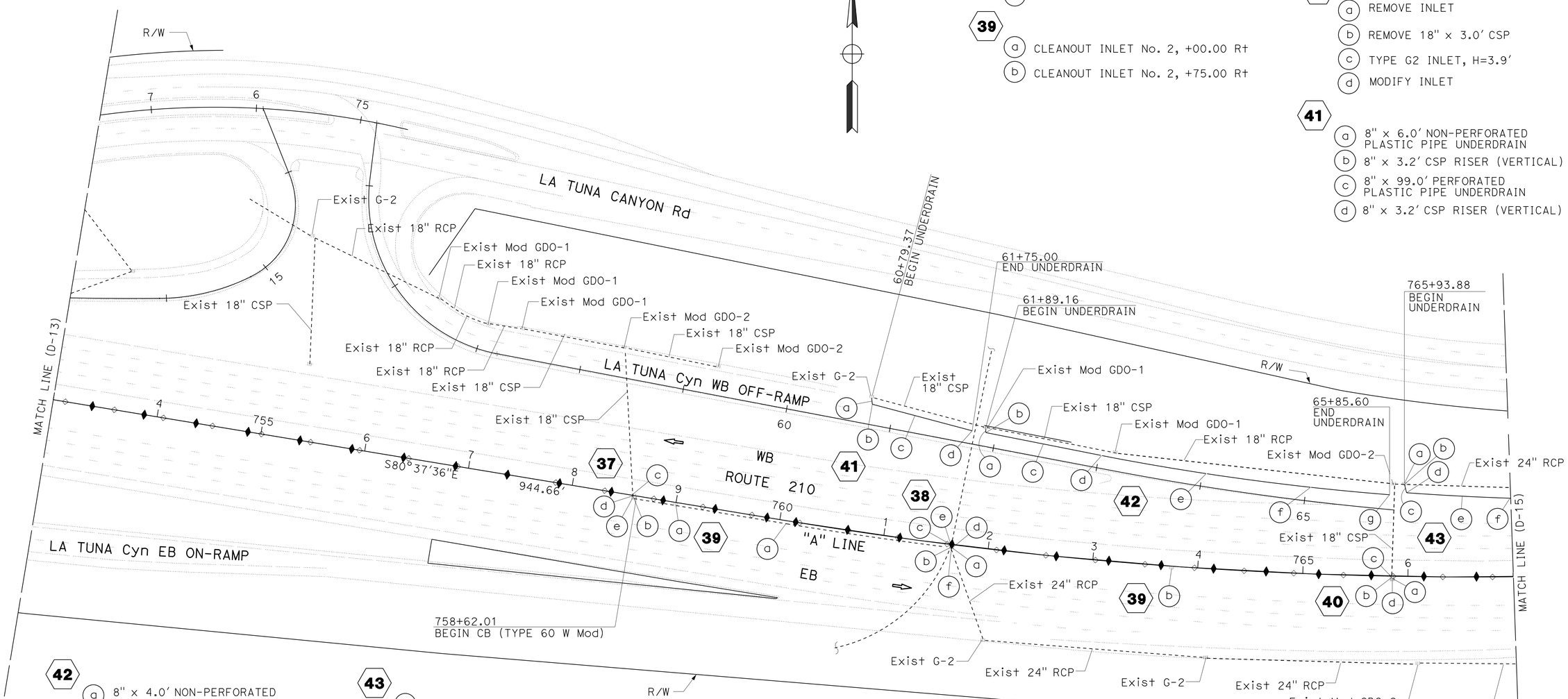

42
- (a) 8" x 4.0' NON-PERFORATED PLASTIC PIPE UNDERDRAIN
- (b) 8" x 3.2' CSP RISER (VERTICAL)
- (c) 8" x 390.0' PERFORATED PLASTIC PIPE UNDERDRAIN
- (d) 8" x 3.2' CSP RISER (VERTICAL)
- (e) 8" x 3.2' CSP RISER (VERTICAL)
- (f) 8" x 3.2' CSP RISER (VERTICAL)
- (g) 8" x 3.2' CSP RISER (VERTICAL)

43
- (a) REMOVE 18" x 3.0' CSP
- (b) TYPE G1 INLET, H=3.3'
- (c) 8" x 9.0' NON-PERFORATED PLASTIC PIPE UNDERDRAIN
- (d) 8" x 3.2' CSP RISER (VERTICAL)
- (e) 8" x 300.0' PERFORATED PLASTIC PIPE UNDERDRAIN
- (f) 8" x 3.2' CSP RISER (VERTICAL)

DRAINAGE PLAN

SCALE: 1" = 50'

D-14

APPROVED FOR DRAINAGE WORK ONLY

STATE OF CALIFORNIA - DEPARTMENT OF TRANSPORTATION
Caltrans
HYDRAULICS

REVISED BY	DATE REVISED
PAUL FONG	DAVE BHALLA
CALCULATED-DESIGNED BY	CHECKED BY
FUNCTIONAL SUPERVISOR	DAVE BHALLA

LAST REVISION 00-00-00 | DATE PLOTTED => 26-APR-2013 | TIME PLOTTED => 17:10

Dist	COUNTY	ROUTE	POST MILES TOTAL PROJECT	SHEET No.	TOTAL SHEETS
07	LA	210	R9.7/R16.1	86	349

Paul Fong 3-15-13
REGISTERED CIVIL ENGINEER DATE

4-22-13
PLANS APPROVAL DATE

REGISTERED PROFESSIONAL ENGINEER
PAUL FONG
No. C67053
Exp. 9/30/14
CIVIL
STATE OF CALIFORNIA

THE STATE OF CALIFORNIA OR ITS OFFICERS OR AGENTS SHALL NOT BE RESPONSIBLE FOR THE ACCURACY OR COMPLETENESS OF SCANNED COPIES OF THIS PLAN SHEET.

NOTES:

1. FOR ACCURATE RIGHT OF WAY DATA, CONTACT RIGHT OF WAY ENGINEERING AT THE DISTRICT OFFICE.

2. THE CONTRACTOR SHALL VERIFY LOCATIONS AND ELEVATIONS OF EXISTING AND PROPOSED DRAINAGE SYSTEMS BEFORE COMMENCEMENT OF WORK.

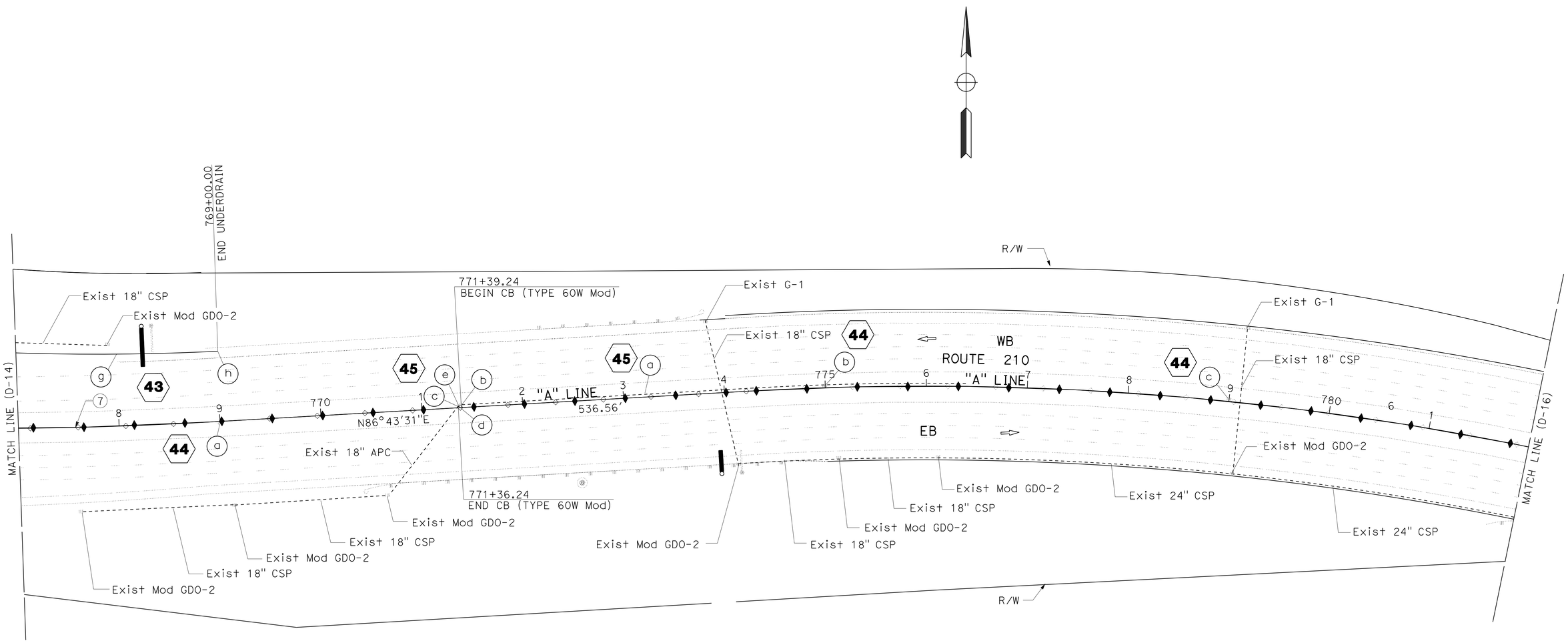

43
- (g) 8" x 3.2' CSP RISER (VERTICAL)
- (h) 8" x 3.2' CSP RISER (VERTICAL)

44
- (a) CLEANOUT INLET No. 2, +00.00 Rt
- (b) CLEANOUT INLET No. 1, +00.00 Lt
- (c) CLEANOUT INLET No. 1, +00.00 Lt

45
- (a) REMOVE 18" x 505' SCSP
- (b) REMOVE INLET
- (c) REMOVE 18" x 3.0' APC
- (d) TYPE G2 INLET, H=4.6'
- (e) MODIFY INLET

DRAINAGE PLAN

SCALE: 1" = 50'

D-15

APPROVED FOR DRAINAGE WORK ONLY

STATE OF CALIFORNIA - DEPARTMENT OF TRANSPORTATION
Caltrans
HYDRAULICS

FUNCTIONAL SUPERVISOR: DAVE BHALLA
CALCULATED-DESIGNED BY: PAUL FONG
CHECKED BY: DAVE BHALLA
REVISED BY
DATE REVISED

LAST REVISION 00-00-00
DATE PLOTTED => 26-APR-2013
TIME PLOTTED => 17:10

Dist	COUNTY	ROUTE	POST MILES TOTAL PROJECT	SHEET No.	TOTAL SHEETS
07	LA	210	R9.7/R16.1	87	349

Paul Fong 3-15-13
REGISTERED CIVIL ENGINEER DATE

4-22-13
PLANS APPROVAL DATE

REGISTERED PROFESSIONAL ENGINEER
PAUL FONG
No. C67053
Exp. 9/30/14
CIVIL
STATE OF CALIFORNIA

THE STATE OF CALIFORNIA OR ITS OFFICERS OR AGENTS SHALL NOT BE RESPONSIBLE FOR THE ACCURACY OR COMPLETENESS OF SCANNED COPIES OF THIS PLAN SHEET.

NOTES:

1. FOR ACCURATE RIGHT OF WAY DATA, CONTACT RIGHT OF WAY ENGINEERING AT THE DISTRICT OFFICE.
2. THE CONTRACTOR SHALL VERIFY LOCATIONS AND ELEVATIONS OF EXISTING AND PROPOSED DRAINAGE SYSTEMS BEFORE COMMENCEMENT OF WORK.

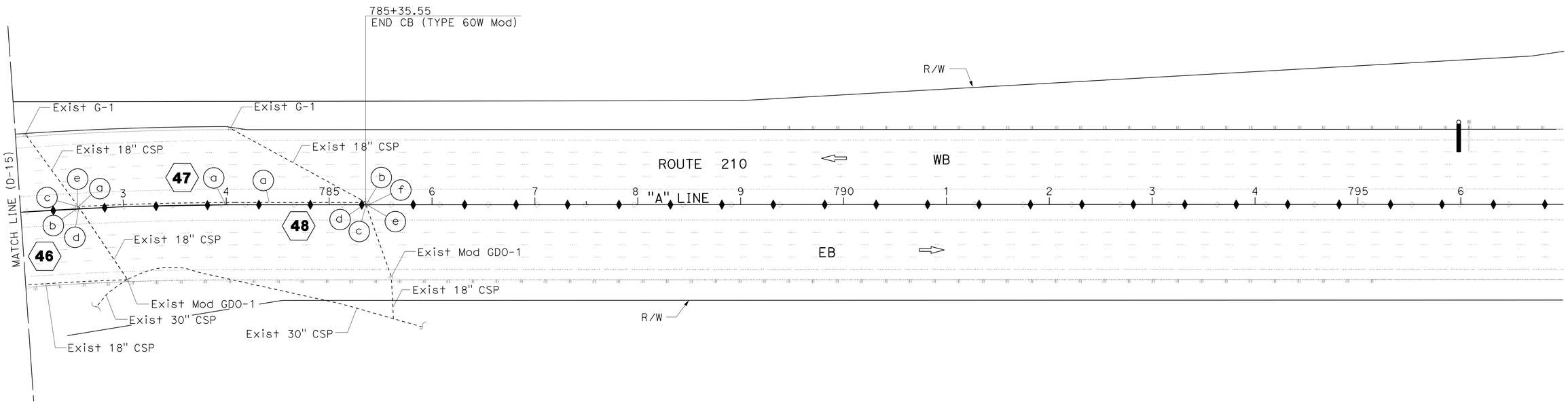

46
- (a) REMOVE INLET
- (b) REMOVE 18" x 3.0' CSP
- (c) 18" x 5.5' RCP
- (d) TYPE G2 INLET, H=4.7'
- (e) MODIFY INLET

47
- (a) CLEANOUT INLET No. 1, +00.00 Lt

48
- (a) REMOVE 18" x 278' SCSP
- (b) REMOVE INLET
- (c) REMOVE 18" x 3.0' CSP
- (d) 18" x 5.5' RCP
- (e) TYPE G2 INLET, H=4.4'
- (f) MODIFY INLET

DRAINAGE PLAN

SCALE: 1" = 50'

D-16

APPROVED FOR DRAINAGE WORK ONLY

STATE OF CALIFORNIA - DEPARTMENT OF TRANSPORTATION
Caltrans
HYDRAULICS

FUNCTIONAL SUPERVISOR: DAVE BHALLA
CALCULATED-DESIGNED BY: PAUL FONG
CHECKED BY: DAVE BHALLA
REVISED BY
DATE REVISED

LAST REVISION 00-00-00
DATE PLOTTED => 26-APR-2013
TIME PLOTTED => 17:10

Dist	COUNTY	ROUTE	POST MILES TOTAL PROJECT	SHEET No.	TOTAL SHEETS
07	LA	210	R9.7/R16.1	88	349

Paul Fong 3-15-13
REGISTERED CIVIL ENGINEER DATE

4-22-13
PLANS APPROVAL DATE

REGISTERED PROFESSIONAL ENGINEER
PAUL FONG
No. C67053
Exp. 9/30/14
CIVIL
STATE OF CALIFORNIA

THE STATE OF CALIFORNIA OR ITS OFFICERS OR AGENTS SHALL NOT BE RESPONSIBLE FOR THE ACCURACY OR COMPLETENESS OF SCANNED COPIES OF THIS PLAN SHEET.

NOTES:

1. FOR ACCURATE RIGHT OF WAY DATA, CONTACT RIGHT OF WAY ENGINEERING AT THE DISTRICT OFFICE.
2. THE CONTRACTOR SHALL VERIFY LOCATIONS AND ELEVATIONS OF EXISTING AND PROPOSED DRAINAGE SYSTEMS BEFORE COMMENCEMENT OF WORK.

49

- (a) REMOVE INLET
- (b) CLEANOUT INLET No. 1, +47.57 L+
- (c) REMOVE INLET
- (d) CLEANOUT INLET No. 1, +87.92 L+

50

- (a) REMOVE 18" x 35.0' SCSP
- (b) REMOVE INLET
- (c) REMOVE 18" x 332.0' SCSP

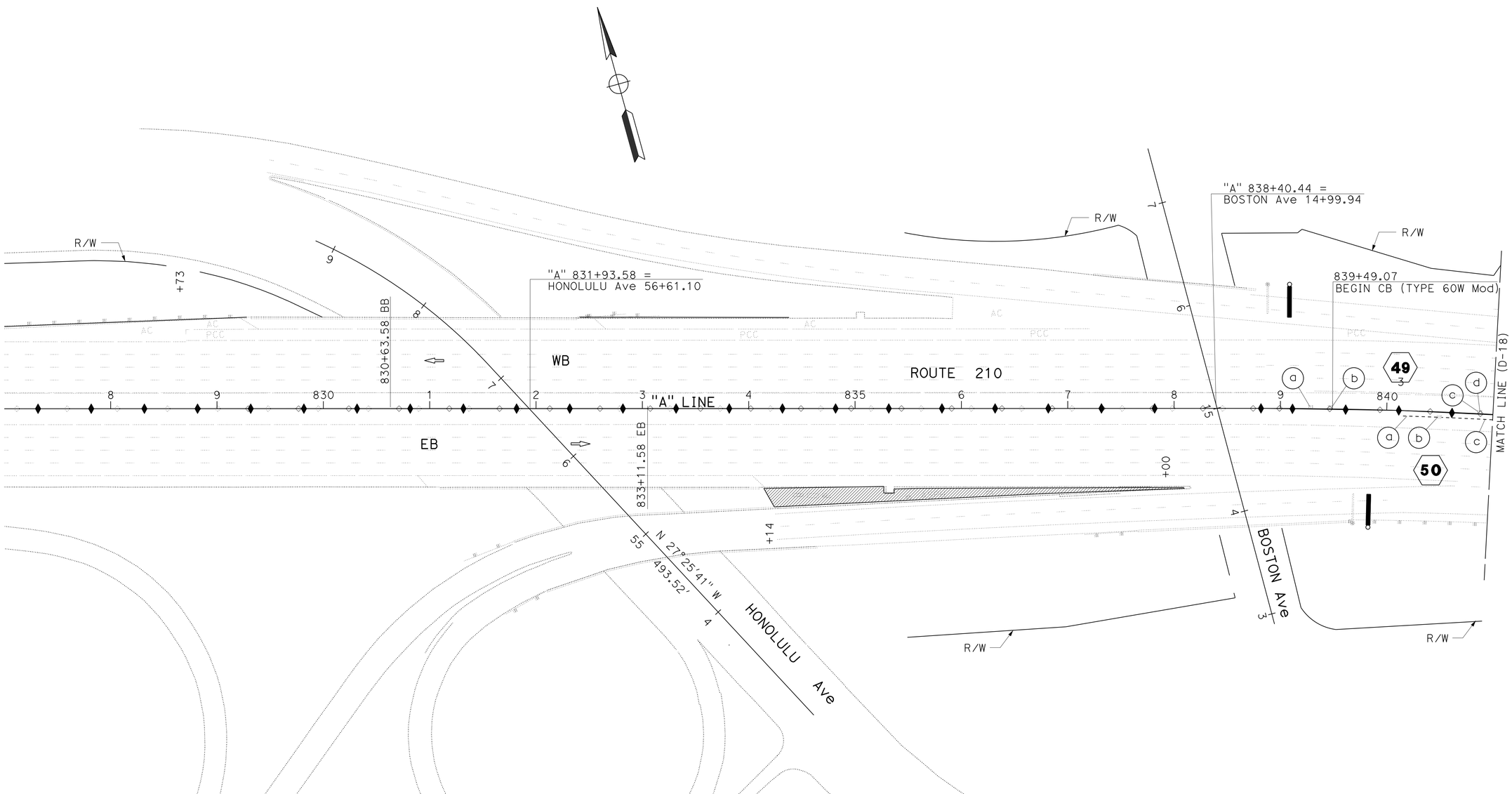

DRAINAGE PLAN

SCALE: 1" = 50'

APPROVED FOR DRAINAGE WORK ONLY

D-17

STATE OF CALIFORNIA - DEPARTMENT OF TRANSPORTATION
Caltrans
HYDRAULICS

FUNCTIONAL SUPERVISOR: DAVE BHALLA
CALCULATED-DESIGNED BY: PAUL FONG
CHECKED BY: DAVE BHALLA
REVISED BY
DATE REVISED

LAST REVISION 00-00-00
DATE PLOTTED => 26-APR-2013
TIME PLOTTED => 17:10

Dist	COUNTY	ROUTE	POST MILES TOTAL PROJECT	SHEET No.	TOTAL SHEETS
07	LA	210	R9.7/R16.1	89	349

Paul Fong 3-15-13
REGISTERED CIVIL ENGINEER DATE

4-22-13
PLANS APPROVAL DATE

REGISTERED PROFESSIONAL ENGINEER
PAUL FONG
No. C67053
Exp. 9/30/14
CIVIL
STATE OF CALIFORNIA

THE STATE OF CALIFORNIA OR ITS OFFICERS OR AGENTS SHALL NOT BE RESPONSIBLE FOR THE ACCURACY OR COMPLETENESS OF SCANNED COPIES OF THIS PLAN SHEET.

NOTES:

1. FOR ACCURATE RIGHT OF WAY DATA, CONTACT RIGHT OF WAY ENGINEERING AT THE DISTRICT OFFICE.
2. THE CONTRACTOR SHALL VERIFY LOCATIONS AND ELEVATIONS OF EXISTING AND PROPOSED DRAINAGE SYSTEMS BEFORE COMMENCEMENT OF WORK.

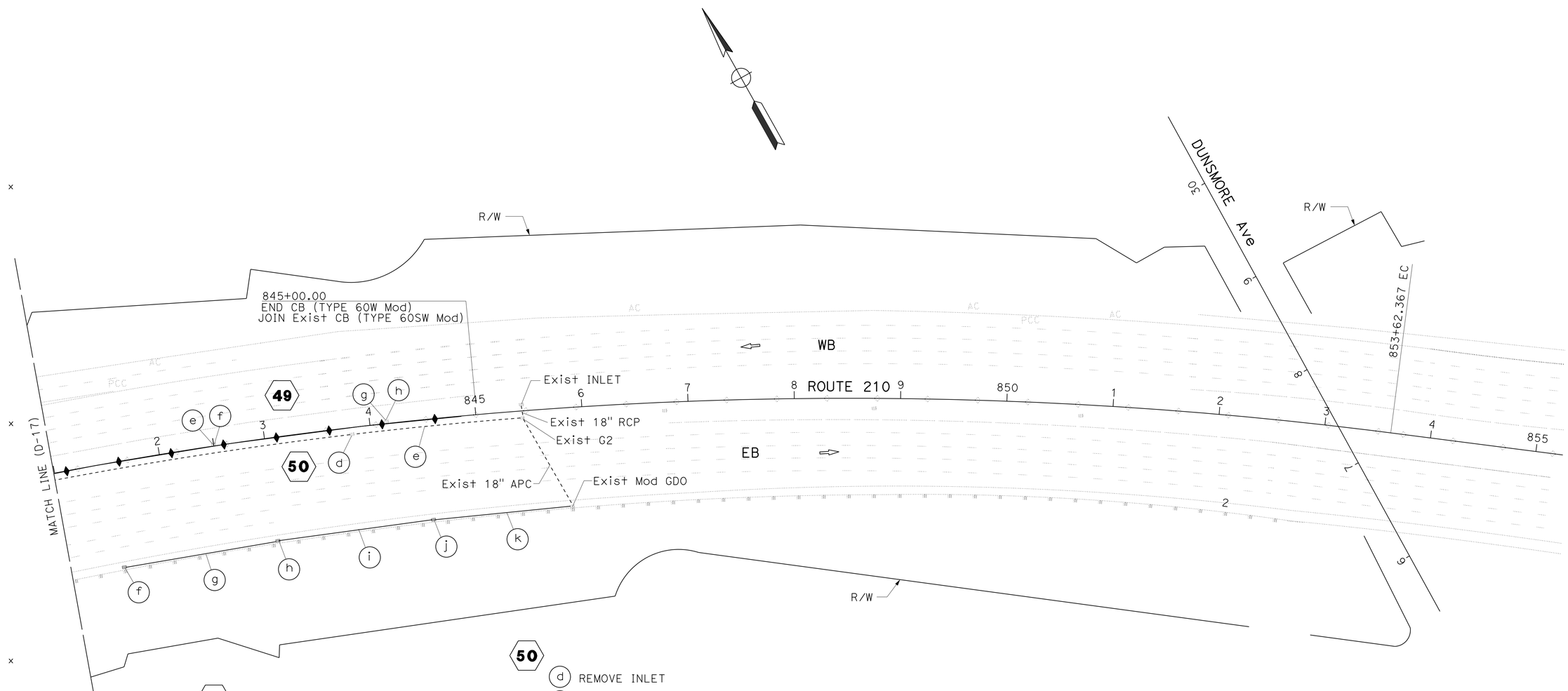

49

- (e) REMOVE INLET
- (f) CLEANOUT INLET No. 1, +51.92 Lt
- (g) REMOVE INLET
- (h) CLEANOUT INLET No. 1, +16.00 Lt

50

- (d) REMOVE INLET
- (e) REMOVE 18" x 164.0 SCSP
- (f) CLEANOUT INLET CASE 1, +50.00, 103.67' Rt
- (g) 18" x 148.0' SCSP
- (h) CLEANOUT INLET CASE 2, +00.00, 101.47' Rt
- (i) 18" x 148.0' SCSP
- (j) CLEANOUT INLET CASE 2, +50.00, 99.93' Rt
- (k) 18" x 135.0' SCSP

DRAINAGE DETAILS

SCALE: 1" = 50'

D-18

APPROVED FOR DRAINAGE WORK ONLY

STATE OF CALIFORNIA - DEPARTMENT OF TRANSPORTATION
Caltrans
HYDRAULICS

FUNCTIONAL SUPERVISOR: DAVE BHALLA
CALCULATED-DESIGNED BY: PAUL FONG
CHECKED BY: DAVE BHALLA
REVISED BY
DATE REVISED

LAST REVISION 00-00-00
DATE PLOTTED => 26-APR-2013
TIME PLOTTED => 17:10

Dist	COUNTY	ROUTE	POST MILES TOTAL PROJECT	SHEET No.	TOTAL SHEETS
07	LA	210	R9.7/R16.1	90	349

Paul Fong 3-15-13
REGISTERED CIVIL ENGINEER DATE

4-22-13
PLANS APPROVAL DATE

REGISTERED PROFESSIONAL ENGINEER PAUL FONG No. C67053 Exp 9/30/14 CIVIL STATE OF CALIFORNIA

THE STATE OF CALIFORNIA OR ITS OFFICERS OR AGENTS SHALL NOT BE RESPONSIBLE FOR THE ACCURACY OR COMPLETENESS OF SCANNED COPIES OF THIS PLAN SHEET.

NOTES:

1. MEDIAN INLETS SHALL BE CONSTRUCTED DURING STAGE 1 OF CONSTRUCTION
2. LOCKING GRATE DEVICES ARE REQUIRED AND SHALL BE PROVIDED FOR ALL INLETS SPECIFIED.

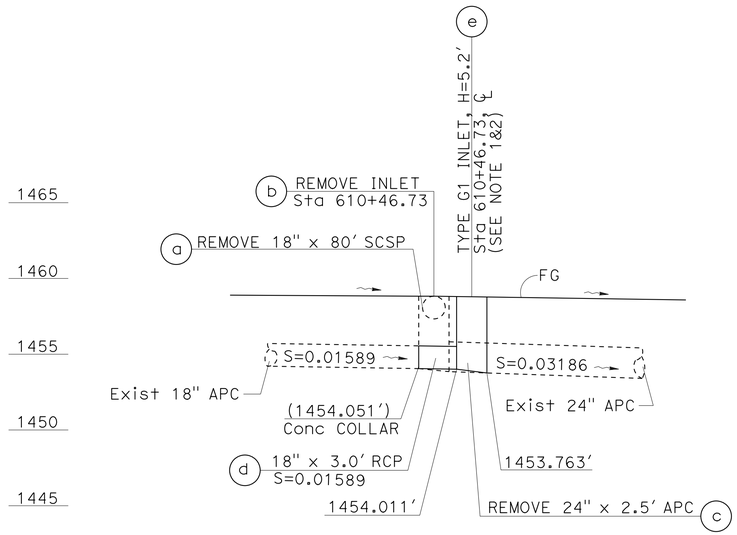

DRAINAGE SYSTEM 8
SCALE: Horiz 1" = 5′
Vert 1" = 5′

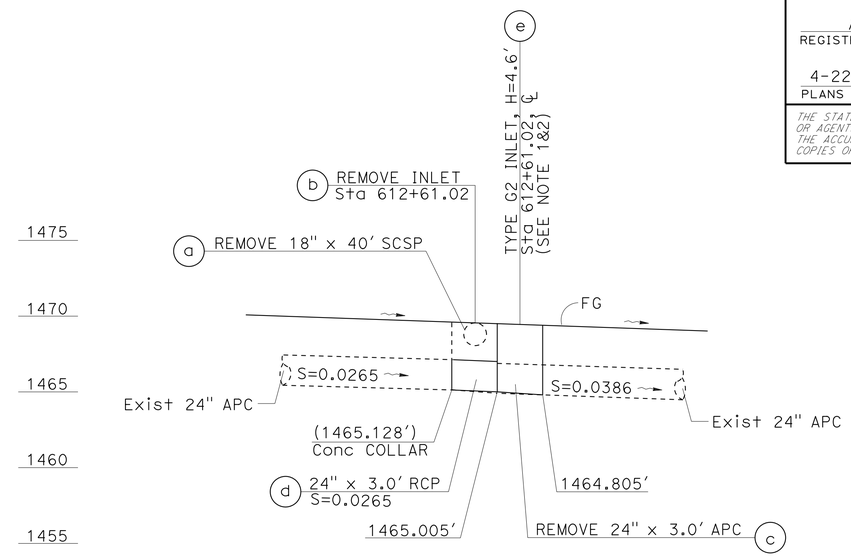

DRAINAGE SYSTEM 9
SCALE: Horiz 1" = 5′
Vert 1" = 5′

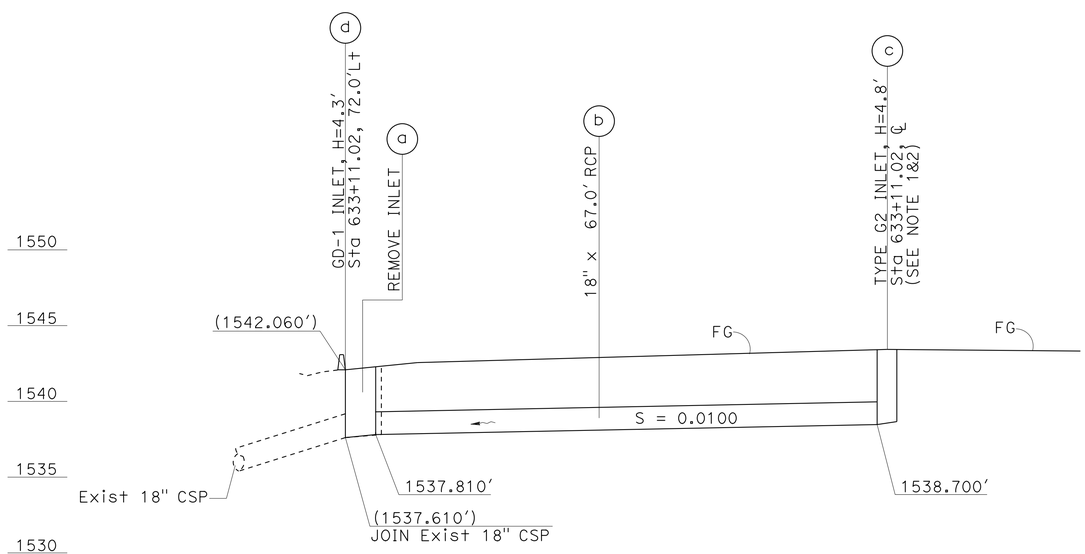

DRAINAGE SYSTEM 11
SCALE: Horiz 1" = 10′
Vert 1" = 5′

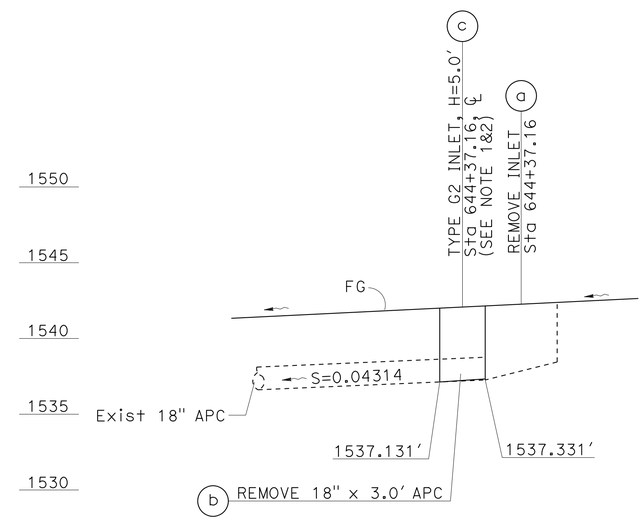

DRAINAGE SYSTEM 14
SCALE: Horiz 1" = 5′
Vert 1" = 5′

DRAINAGE PROFILE

SCALE AS SHOWN

DP-1

STATE OF CALIFORNIA - DEPARTMENT OF TRANSPORTATION
Caltrans
HYDRAULICS
FUNCTIONAL SUPERVISOR: DAVE BHALLA
CALCULATED-DESIGNED BY: PAUL FONG
CHECKED BY: DAVE BHALLA
REVISED BY
DATE REVISED

LAST REVISION
DATE PLOTTED => 26-APR-2013
TIME PLOTTED => 08:15

Dist	COUNTY	ROUTE	POST MILES TOTAL PROJECT	SHEET No.	TOTAL SHEETS
07	LA	210	R9.7/R16.1	91	349

Paul Fong 3-15-13
REGISTERED CIVIL ENGINEER DATE

4-22-13
PLANS APPROVAL DATE

REGISTERED PROFESSIONAL ENGINEER
PAUL FONG
No. C67053
Exp. 9/30/14
CIVIL
STATE OF CALIFORNIA

THE STATE OF CALIFORNIA OR ITS OFFICERS OR AGENTS SHALL NOT BE RESPONSIBLE FOR THE ACCURACY OR COMPLETENESS OF SCANNED COPIES OF THIS PLAN SHEET.

NOTES:

1. MEDIAN INLETS SHALL BE CONSTRUCTED DURING STAGE 1 OF CONSTRUCTION
2. LOCKING GRATE DEVICES ARE REQUIRED AND SHALL BE PROVIDED FOR ALL INLETS SPECIFIED.

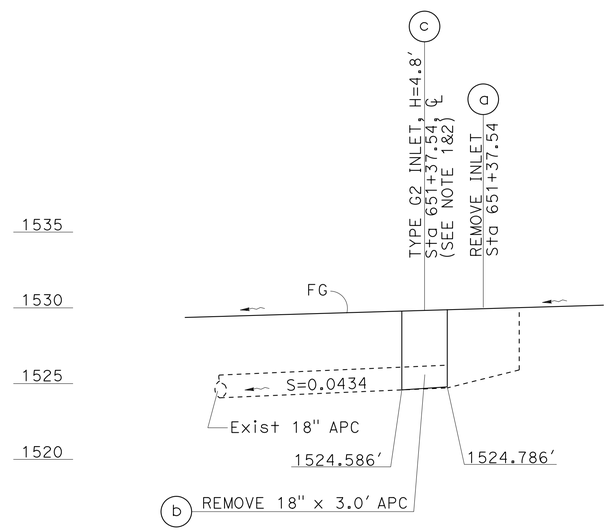

DRAINAGE SYSTEM 15

SCALE: Horiz 1" = 5′
Vert 1" = 5′

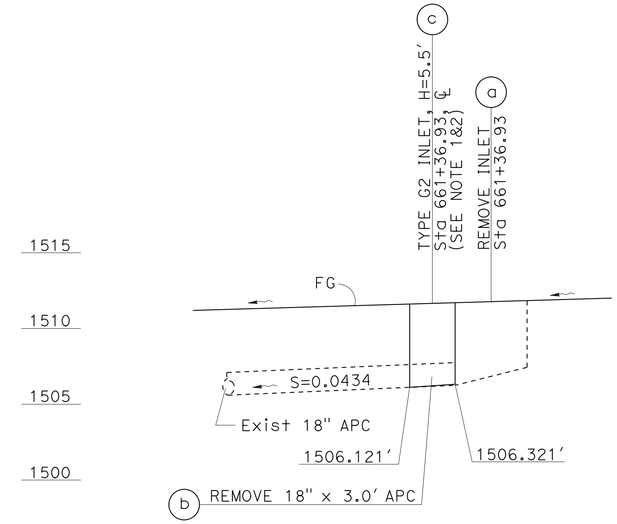

DRAINAGE SYSTEM 17

SCALE: Horiz 1" = 5′
Vert 1" = 5′

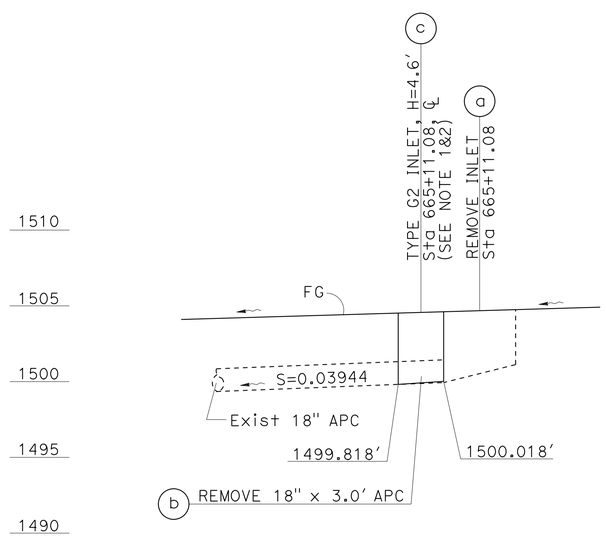

DRAINAGE SYSTEM 18

SCALE: Horiz 1" = 5′
Vert 1" = 5′

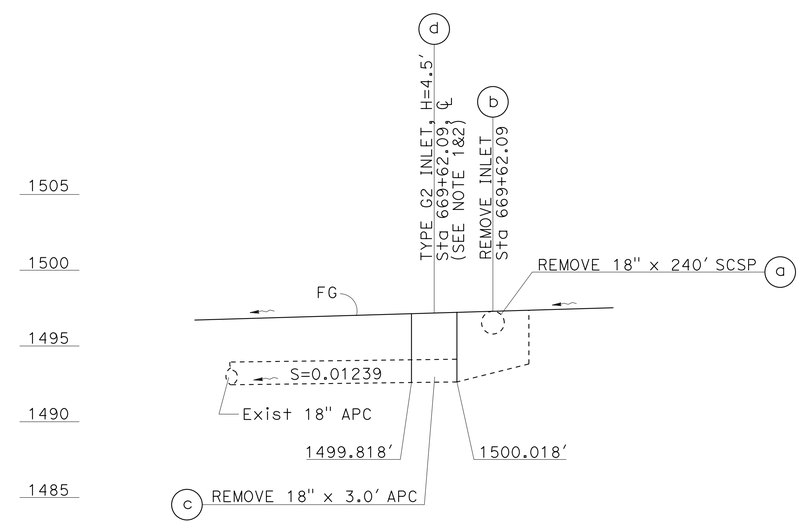

DRAINAGE SYSTEM 19

SCALE: Horiz 1" = 5′
Vert 1" = 5′

DRAINAGE PROFILE

SCALE AS SHOWN

DP-2

STATE OF CALIFORNIA - DEPARTMENT OF TRANSPORTATION
Caltrans
HYDRAULICS
FUNCTIONAL SUPERVISOR: DAVE BHALLA
CALCULATED-DESIGNED BY: PAUL FONG
CHECKED BY: DAVE BHALLA
REVISED BY
DATE REVISED

LAST REVISION
DATE PLOTTED => 26-APR-2013
TIME PLOTTED => 08:15

Dist	COUNTY	ROUTE	POST MILES TOTAL PROJECT	SHEET No.	TOTAL SHEETS
07	LA	210	R9.7/R16.1	92	349

Paul Fong 3-15-13
REGISTERED CIVIL ENGINEER DATE

4-22-13
PLANS APPROVAL DATE

REGISTERED PROFESSIONAL ENGINEER PAUL FONG No. C67053 Exp. 9/30/14 CIVIL STATE OF CALIFORNIA

THE STATE OF CALIFORNIA OR ITS OFFICERS OR AGENTS SHALL NOT BE RESPONSIBLE FOR THE ACCURACY OR COMPLETENESS OF SCANNED COPIES OF THIS PLAN SHEET.

NOTES:

1. MEDIAN INLETS SHALL BE CONSTRUCTED DURING STAGE 1 OF CONSTRUCTION
2. LOCKING GRATE DEVICES ARE REQUIRED AND SHALL BE PROVIDED FOR ALL INLETS SPECIFIED.

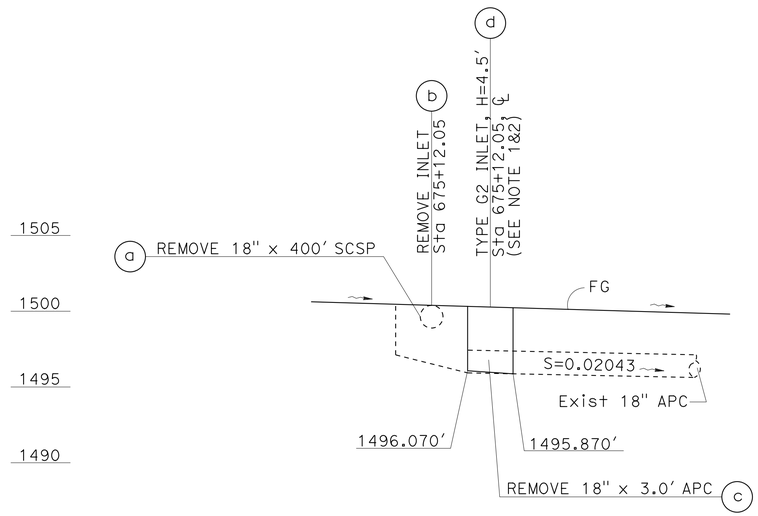

DRAINAGE SYSTEM 21

SCALE: Horiz 1" = 5'
Vert 1" = 5'

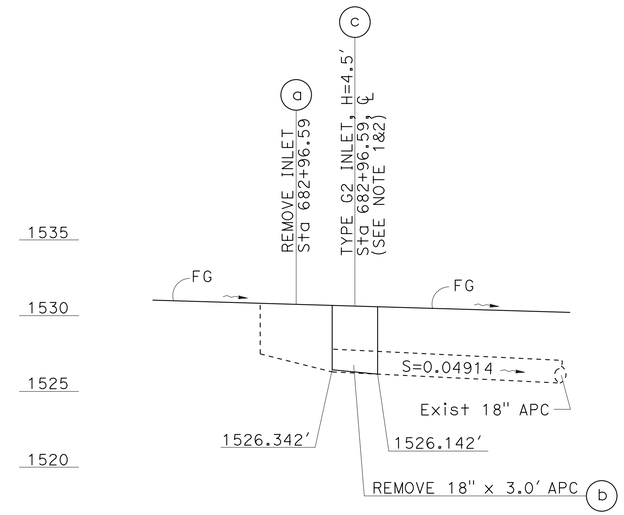

DRAINAGE SYSTEM 22

SCALE: Horiz 1" = 5'
Vert 1" = 5'

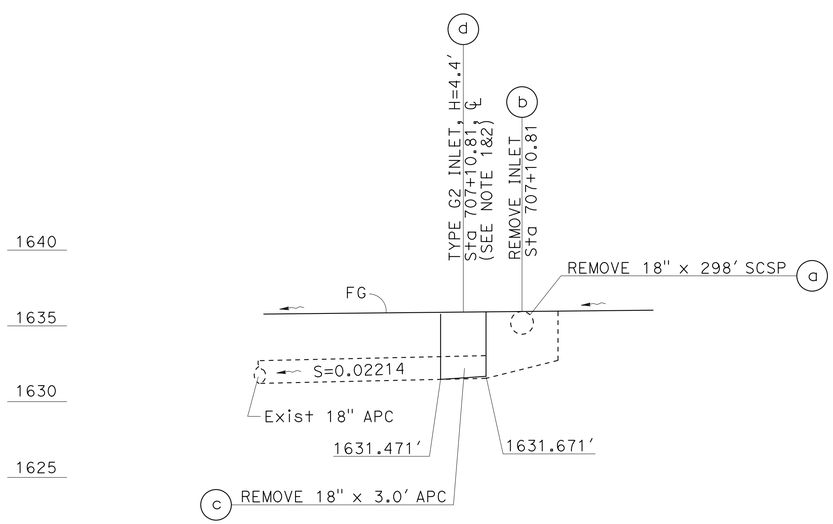

DRAINAGE SYSTEM 24

SCALE: Horiz 1" = 5'
Vert 1" = 5'

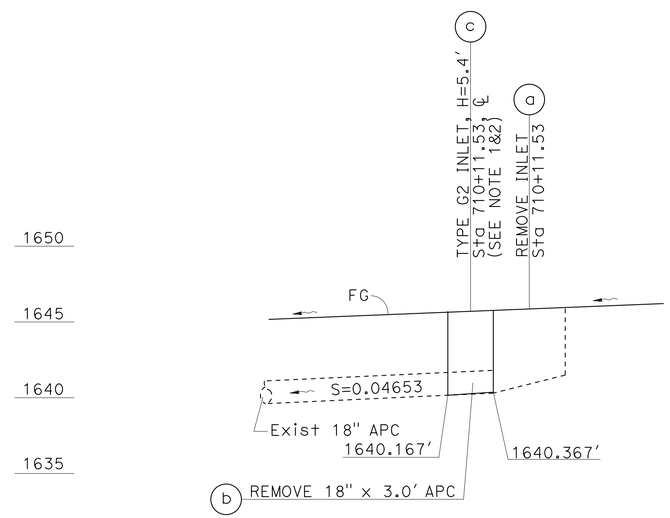

DRAINAGE SYSTEM 26

SCALE: Horiz 1" = 5'
Vert 1" = 5'

DRAINAGE PROFILE

SCALE AS SHOWN

DP-3

STATE OF CALIFORNIA - DEPARTMENT OF TRANSPORTATION
Caltrans
HYDRAULICS
FUNCTIONAL SUPERVISOR: DAVE BHALLA
CALCULATED-DESIGNED BY: PAUL FONG
CHECKED BY: DAVE BHALLA
REVISED BY
DATE REVISED

LAST REVISION
DATE PLOTTED => 26-APR-2013
TIME PLOTTED => 08:15

Dist	COUNTY	ROUTE	POST MILES TOTAL PROJECT	SHEET No.	TOTAL SHEETS
07	LA	210	R9.7/R16.1	93	349

Paul Fong 3-15-13
REGISTERED CIVIL ENGINEER DATE

4-22-13
PLANS APPROVAL DATE

REGISTERED PROFESSIONAL ENGINEER
PAUL FONG
No. C67053
Exp. 9/30/14
CIVIL
STATE OF CALIFORNIA

THE STATE OF CALIFORNIA OR ITS OFFICERS OR AGENTS SHALL NOT BE RESPONSIBLE FOR THE ACCURACY OR COMPLETENESS OF SCANNED COPIES OF THIS PLAN SHEET.

NOTES:

1. MEDIAN INLETS SHALL BE CONSTRUCTED DURING STAGE 1 OF CONSTRUCTION
2. LOCKING GRATE DEVICES ARE REQUIRED AND SHALL BE PROVIDED FOR ALL INLETS SPECIFIED.

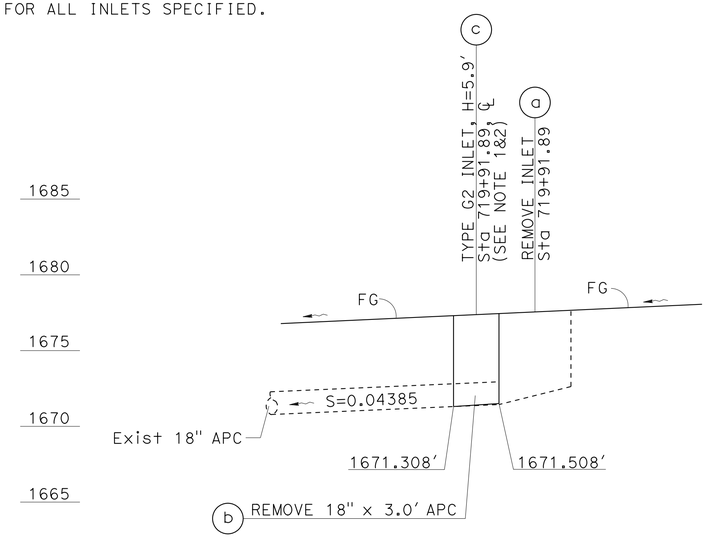

DRAINAGE SYSTEM 28

SCALE: Horiz 1" = 5′
Vert 1" = 5′

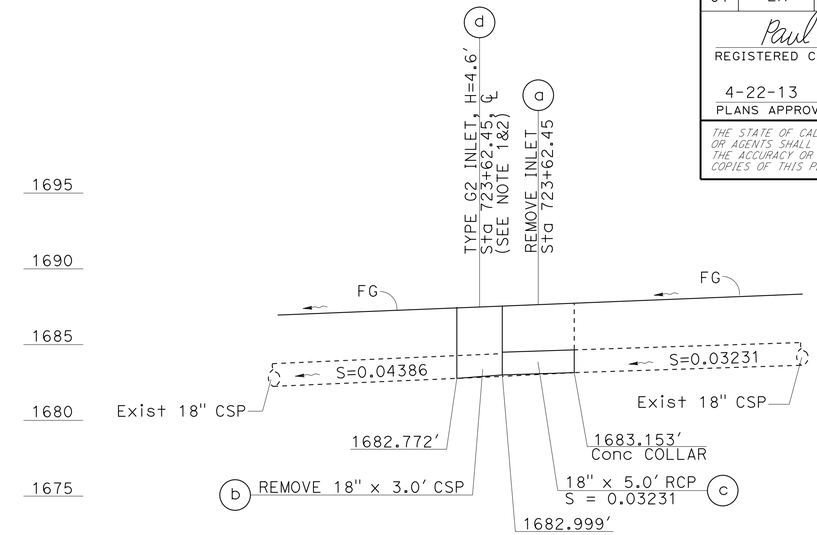

DRAINAGE SYSTEM 29

SCALE: Horiz 1" = 5′
Vert 1" = 5′

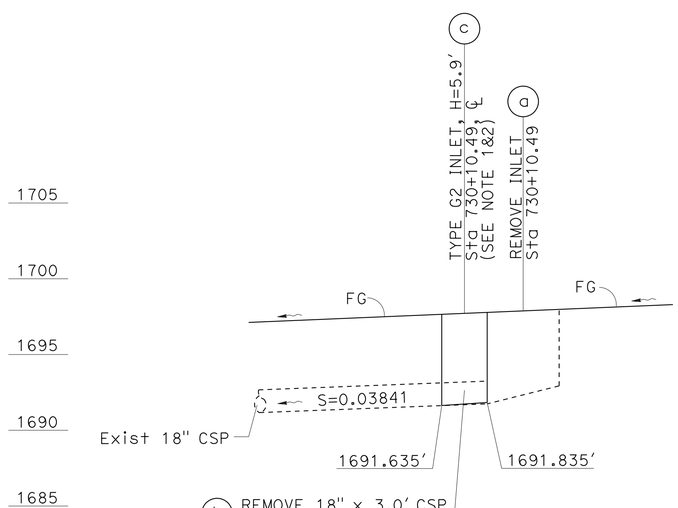

DRAINAGE SYSTEM 31

SCALE: Horiz 1" = 5′
Vert 1" = 5′

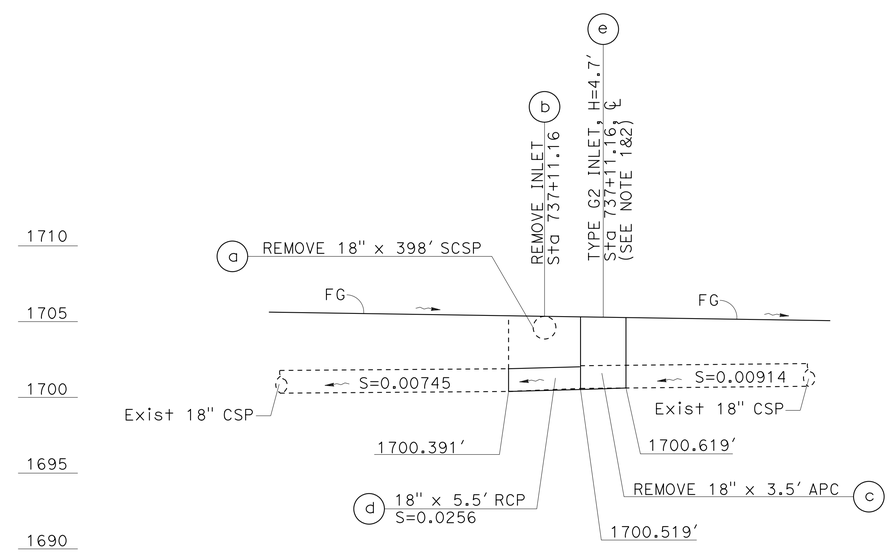

DRAINAGE SYSTEM 32

SCALE: Horiz 1" = 5′
Vert 1" = 5′

DRAINAGE PROFILE

SCALE AS SHOWN

DP-4

STATE OF CALIFORNIA - DEPARTMENT OF TRANSPORTATION
Caltrans
HYDRAULICS
FUNCTIONAL SUPERVISOR: DAVE BHALLA
CALCULATED-DESIGNED BY: PAUL FONG
CHECKED BY: DAVE BHALLA
REVISED BY
DATE REVISED

LAST REVISION
DATE PLOTTED => 26-APR-2013
TIME PLOTTED => 08:15

Dist	COUNTY	ROUTE	POST MILES TOTAL PROJECT	SHEET No.	TOTAL SHEETS
07	LA	210	R9.7/R16.1	94	349

Paul Fong 3-15-13
REGISTERED CIVIL ENGINEER DATE

4-22-13
PLANS APPROVAL DATE

REGISTERED PROFESSIONAL ENGINEER
PAUL FONG
No. C67053
Exp. 9/30/14
CIVIL
STATE OF CALIFORNIA

THE STATE OF CALIFORNIA OR ITS OFFICERS OR AGENTS SHALL NOT BE RESPONSIBLE FOR THE ACCURACY OR COMPLETENESS OF SCANNED COPIES OF THIS PLAN SHEET.

NOTES:

1. MEDIAN INLETS SHALL BE CONSTRUCTED DURING STAGE 1 OF CONSTRUCTION
2. LOCKING GRATE DEVICES ARE REQUIRED AND SHALL BE PROVIDED FOR ALL INLETS SPECIFIED.

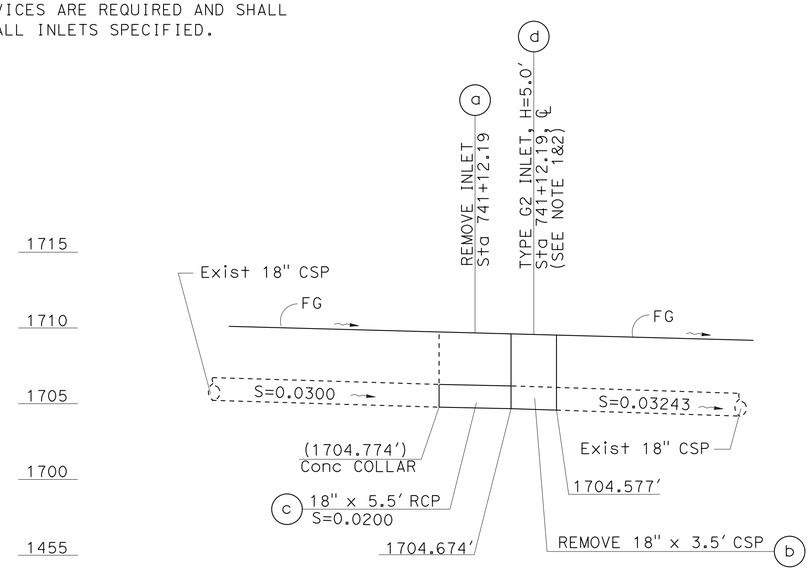

DRAINAGE SYSTEM 34

SCALE: Horiz 1" = 5'
Vert 1" = 5'

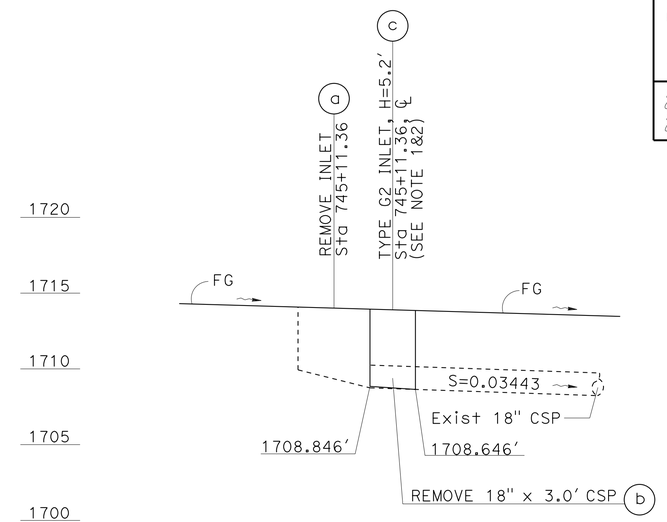

DRAINAGE SYSTEM 35

SCALE: Horiz 1" = 5'
Vert 1" = 5'

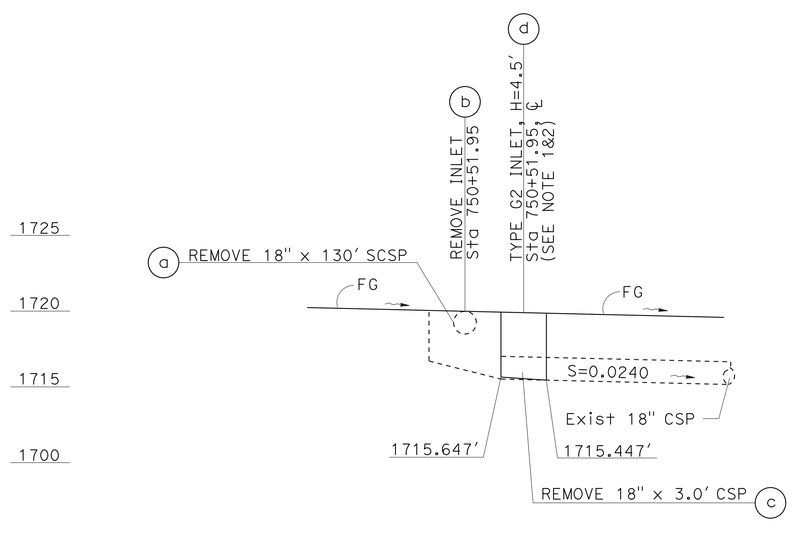

DRAINAGE SYSTEM 36

SCALE: Horiz 1" = 5'
Vert 1" = 5'

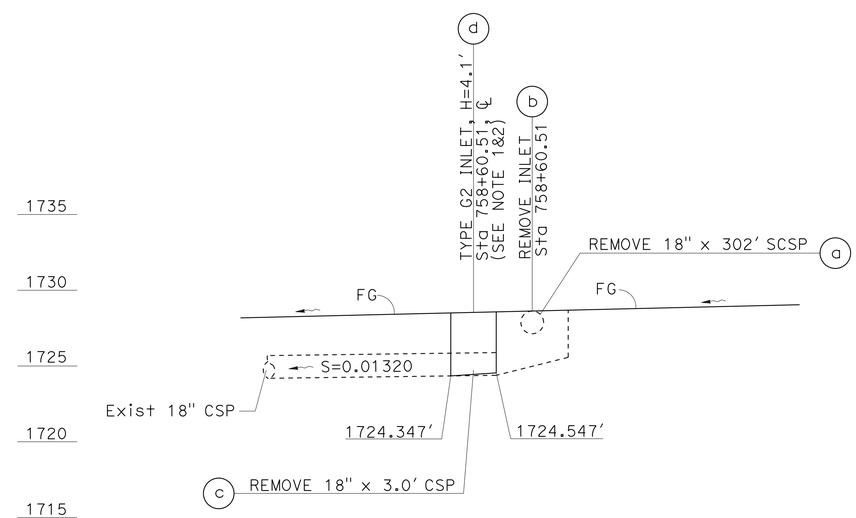

DRAINAGE SYSTEM 37

SCALE: Horiz 1" = 5'
Vert 1" = 5'

DRAINAGE PROFILE

SCALE AS SHOWN

DP-5

STATE OF CALIFORNIA - DEPARTMENT OF TRANSPORTATION
Caltrans
HYDRAULICS

FUNCTIONAL SUPERVISOR: DAVE BHALLA
CALCULATED-DESIGNED BY: PAUL FONG
CHECKED BY: DAVE BHALLA
REVISED BY
DATE REVISED

LAST REVISION
DATE PLOTTED => 26-APR-2013
TIME PLOTTED => 08:15

Dist	COUNTY	ROUTE	POST MILES TOTAL PROJECT	SHEET No.	TOTAL SHEETS
07	LA	210	R9.7/R16.1	95	349

Paul Fong 3-15-13
REGISTERED CIVIL ENGINEER DATE

4-22-13
PLANS APPROVAL DATE

REGISTERED PROFESSIONAL ENGINEER PAUL FONG No. C67053 Exp. 9/30/14 CIVIL STATE OF CALIFORNIA

THE STATE OF CALIFORNIA OR ITS OFFICERS OR AGENTS SHALL NOT BE RESPONSIBLE FOR THE ACCURACY OR COMPLETENESS OF SCANNED COPIES OF THIS PLAN SHEET.

NOTES:

1. MEDIAN INLETS SHALL BE CONSTRUCTED DURING STAGE 1 OF CONSTRUCTION
2. LOCKING GRATE DEVICES ARE REQUIRED AND SHALL BE PROVIDED FOR ALL INLETS SPECIFIED.

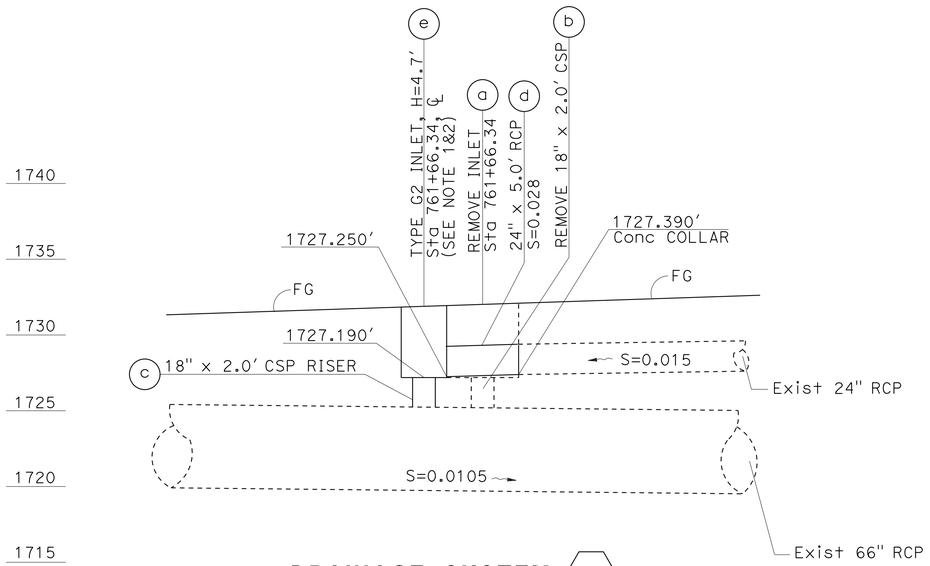

DRAINAGE SYSTEM 38

SCALE: Horiz 1″ = 5′
Vert 1″ = 5′

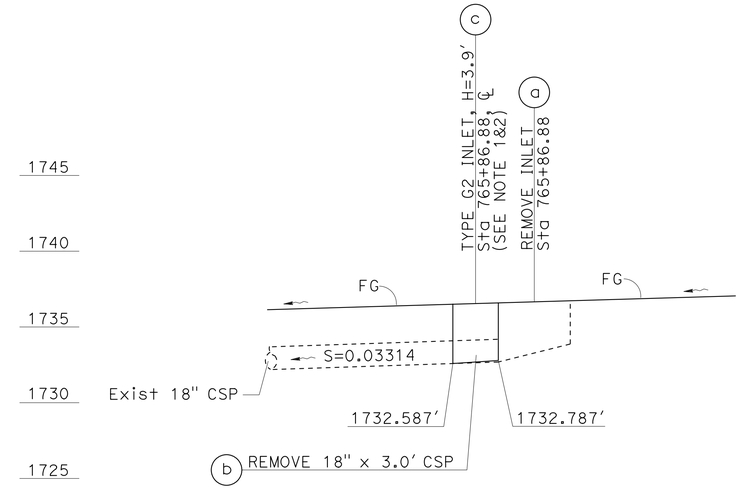

DRAINAGE SYSTEM 40

SCALE: Horiz 1″ = 5′
Vert 1″ = 5′

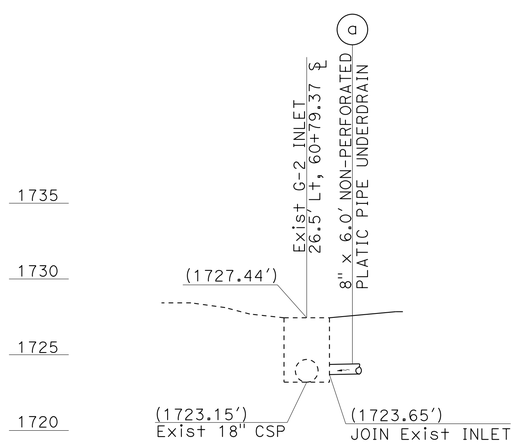

DRAINAGE SYSTEM 41

SCALE: Horiz 1″ = 5′
Vert 1″ = 5′

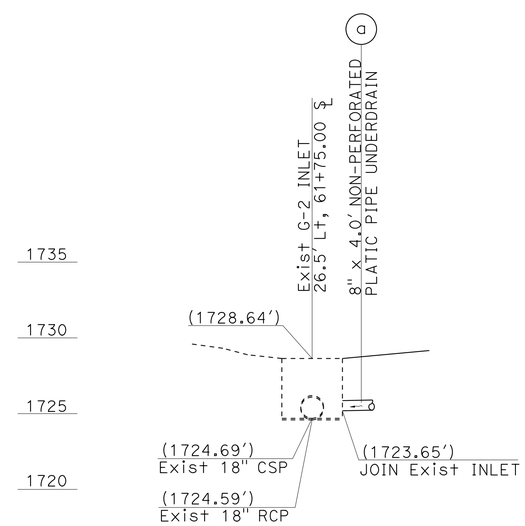

DRAINAGE SYSTEM 42

SCALE: Horiz 1″ = 5′
Vert 1″ = 5′

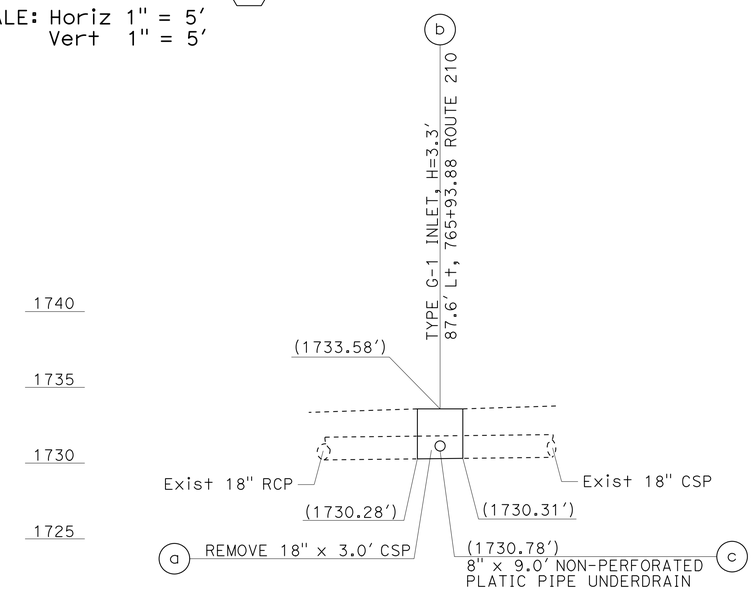

DRAINAGE SYSTEM 43

SCALE: Horiz 1″ = 5′
Vert 1″ = 5′

DRAINAGE PROFILE

SCALE AS SHOWN

DP-6

STATE OF CALIFORNIA - DEPARTMENT OF TRANSPORTATION
Caltrans
HYDRAULICS

FUNCTIONAL SUPERVISOR: DAVE BHALLA
CALCULATED-DESIGNED BY: PAUL FONG
CHECKED BY: DAVE BHALLA
REVISED BY
DATE REVISED

LAST REVISION
DATE PLOTTED => 26-APR-2013
TIME PLOTTED => 08:15

Dist	COUNTY	ROUTE	POST MILES TOTAL PROJECT	SHEET No.	TOTAL SHEETS
07	LA	210	R9.7/R16.1	96	349

Paul Fong 3-15-13
REGISTERED CIVIL ENGINEER DATE

4-22-13
PLANS APPROVAL DATE

REGISTERED PROFESSIONAL ENGINEER
PAUL FONG
No. C67053
Exp. 9/30/14
CIVIL
STATE OF CALIFORNIA

THE STATE OF CALIFORNIA OR ITS OFFICERS OR AGENTS SHALL NOT BE RESPONSIBLE FOR THE ACCURACY OR COMPLETENESS OF SCANNED COPIES OF THIS PLAN SHEET.

NOTES:

1. MEDIAN INLETS SHALL BE CONSTRUCTED DURING STAGE 1 OF CONSTRUCTION
2. LOCKING GRATE DEVICES ARE REQUIRED AND SHALL BE PROVIDED FOR ALL INLETS SPECIFIED.

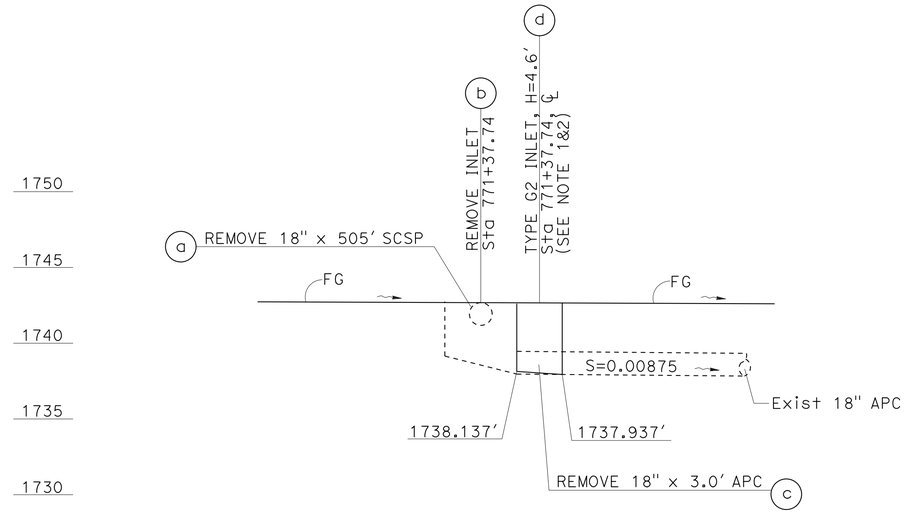

DRAINAGE SYSTEM 45

SCALE: Horiz 1" = 5'
Vert 1" = 5'

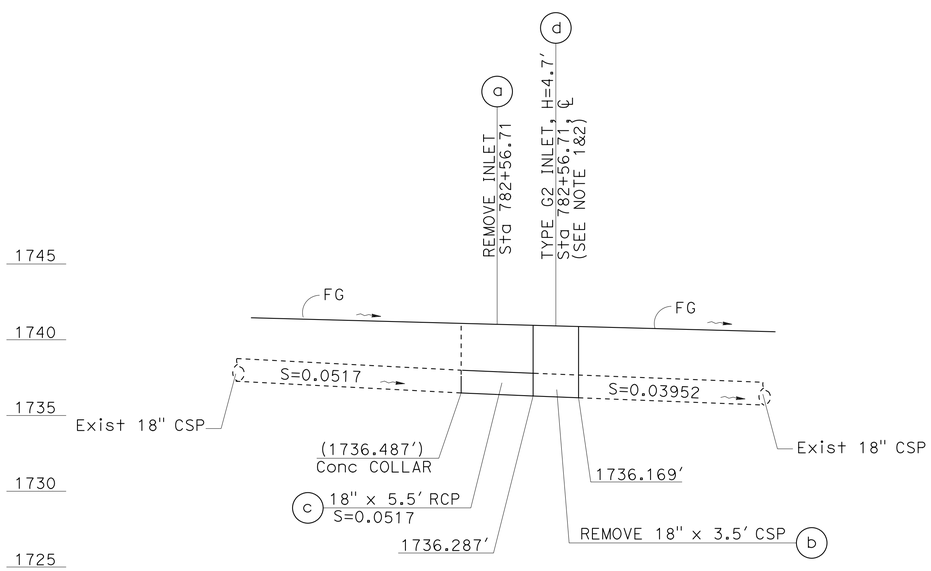

DRAINAGE SYSTEM 46

SCALE: Horiz 1" = 5'
Vert 1" = 5'

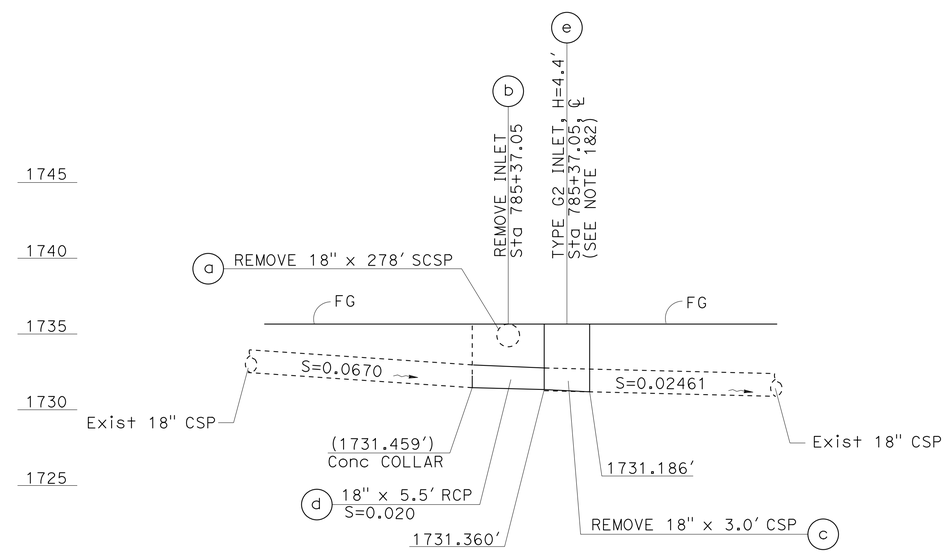

DRAINAGE SYSTEM 48

SCALE: Horiz 1" = 5'
Vert 1" = 5'

DRAINAGE PROFILE

SCALE AS SHOWN

DP-7

STATE OF CALIFORNIA - DEPARTMENT OF TRANSPORTATION
Caltrans
HYDRAULICS
FUNCTIONAL SUPERVISOR: DAVE BHALLA
CALCULATED-DESIGNED BY: PAUL FONG
CHECKED BY: DAVE BHALLA
REVISED BY
DATE REVISED

LAST REVISION
DATE PLOTTED => 26-APR-2013
TIME PLOTTED => 08:15

Dist	COUNTY	ROUTE	POST MILES TOTAL PROJECT	SHEET No.	TOTAL SHEETS
07	LA	210	R9.7/R16.1	97	349

Paul Fong 3-15-13
REGISTERED CIVIL ENGINEER DATE

4-22-13
PLANS APPROVAL DATE

REGISTERED PROFESSIONAL ENGINEER
PAUL FONG
No. C67053
Exp. 9-30-14
CIVIL
STATE OF CALIFORNIA

THE STATE OF CALIFORNIA OR ITS OFFICERS OR AGENTS SHALL NOT BE RESPONSIBLE FOR THE ACCURACY OR COMPLETENESS OF SCANNED COPIES OF THIS PLAN SHEET.

NOTES:

1. EXPOSE AND CLEAN EXISTING BAR REINFORCEMENT FOR SPLICING, IF NO REINFORCEMENT, USE #4 DOWELS @ 12" C-C 12" LONG, EMBEDDED 6".
2. PLACE #4 DOWEL IN CENTER. FILL WITH CONCRETE IF LESS THAN 2.5' FOR THE SAME TYPE AS THE ADJOINING PAVEMENT.
3. MODIFICATION OF MEDIAN INLETS SHALL BE PERFORMED DURING STAGE 1 OF STAGE CONSTRUCTION.

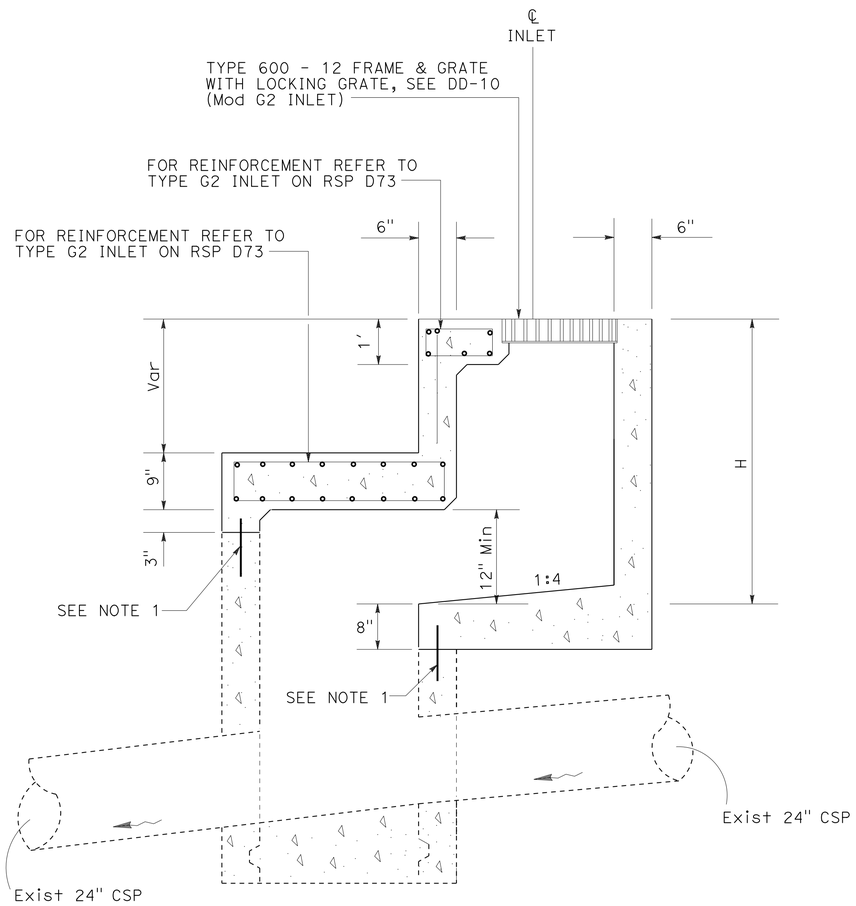

MODIFY EXISTING MEDIAN INLET

TABLE FOR Mod MEDIAN INLET

DRAINAGE SYSTEM No.	STATION	H	DRAINAGE SHEET No.
1 — b	536+92.25	4.0'	D-1
3 — b	541+30.00	3.5'	D-1
4 — b	545+31.50	3.5'	D-1
5 — b	549+56.40	3.5'	D-1

DRAINAGE DETAILS

NO SCALE

DD-1

STATE OF CALIFORNIA - DEPARTMENT OF TRANSPORTATION
Caltrans
HYDRAULICS

FUNCTIONAL SUPERVISOR: DAVE BHALLA
CALCULATED-DESIGNED BY: PAUL FONG
CHECKED BY: DAVE BHALLA
REVISED BY
DATE REVISED

LAST REVISION 03-20-13
DATE PLOTTED => 01-MAY-2013
TIME PLOTTED => 11:02

Dist	COUNTY	ROUTE	POST MILES TOTAL PROJECT	SHEET No.	TOTAL SHEETS
07	LA	210	R9.7/R16.1	98	349

Paul Fong 3-15-13
REGISTERED CIVIL ENGINEER DATE

4-22-13
PLANS APPROVAL DATE

REGISTERED PROFESSIONAL ENGINEER
PAUL FONG
No. C67053
Exp. 9-30-14
CIVIL
STATE OF CALIFORNIA

THE STATE OF CALIFORNIA OR ITS OFFICERS OR AGENTS SHALL NOT BE RESPONSIBLE FOR THE ACCURACY OR COMPLETENESS OF SCANNED COPIES OF THIS PLAN SHEET.

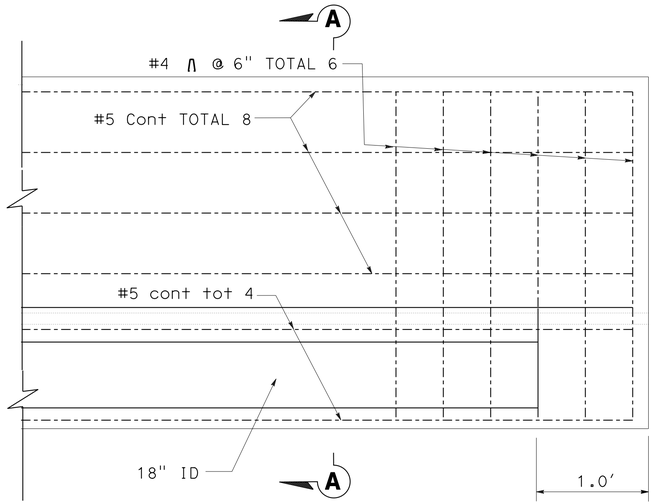

CONCRETE BARRIER END ANCHOR
ELEVATION

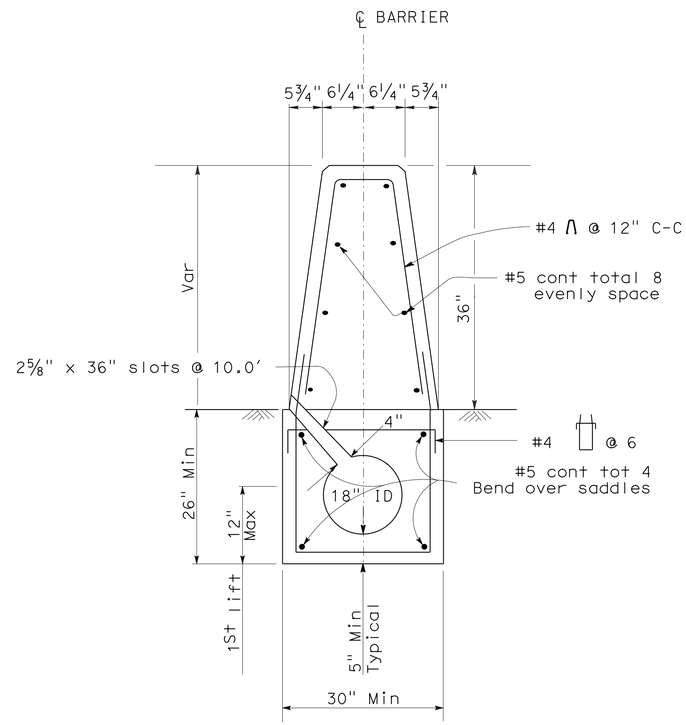

SECTION A-A

Sta 536+92.25 TO Sta 553+40.00
Sta 610+48.23 TO Sta 626+10.00
Sta 675+13.55 TO Sta 692+10.00
Sta 737+12.66 TO Sta 747+16.54
Sta 750+53.45 TO Sta 752+10.00
Sta 771+39.24 TO Sta 785+35.55
Sta 839+49.07 TO Sta 845+00.00

CONCRETE BARRIER (TYPE 60W Mod)
SINGLE SLOT SECTION CAST IN PLACE

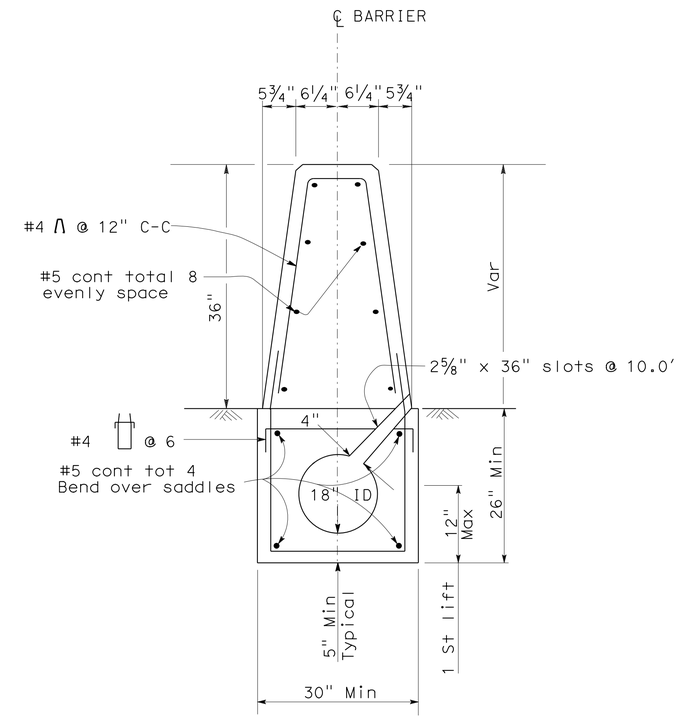

SECTION A-A

Sta 633+12.52 TO Sta 669+60.56
Sta 707+12.31 TO Sta 737+09.66
Sta 758+62.01 TO Sta 771+36.24

CONCRETE BARRIER (TYPE 60W Mod)
SINGLE SLOT SECTION CAST IN PLACE

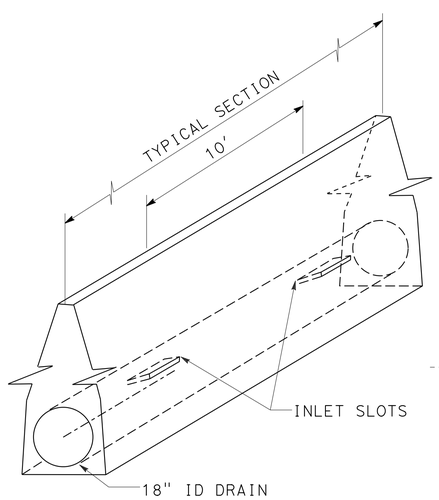

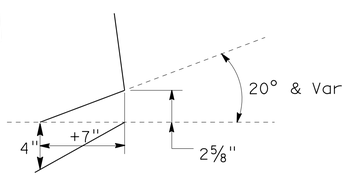

INLET SLOT

(WATER-CARRYING CONCRETE BARRIER)
CONCRETE BARRIER (TYPE 60W Mod)
(WATER-CARRYING CONCRETE BARRIER)

DRAINAGE DETAILS

NO SCALE

DD-2

STATE OF CALIFORNIA - DEPARTMENT OF TRANSPORTATION
Caltrans
HYDRAULICS
FUNCTIONAL SUPERVISOR: DAVE BHALLA
CALCULATED-DESIGNED BY: PAUL FONG
CHECKED BY: DAVE BHALLA
REVISED BY
DATE REVISED

LAST REVISION 03-20-13
DATE PLOTTED => 26-APR-2013
TIME PLOTTED => 08:15

Dist	COUNTY	ROUTE	POST MILES TOTAL PROJECT	SHEET No.	TOTAL SHEETS
07	LA	210	R9.7/R16.1	99	349

Paul Fong 3-15-13
REGISTERED CIVIL ENGINEER DATE

4-22-13
PLANS APPROVAL DATE

REGISTERED PROFESSIONAL ENGINEER
PAUL FONG
No. C67053
Exp. 9-30-14
CIVIL
STATE OF CALIFORNIA

THE STATE OF CALIFORNIA OR ITS OFFICERS OR AGENTS SHALL NOT BE RESPONSIBLE FOR THE ACCURACY OR COMPLETENESS OF SCANNED COPIES OF THIS PLAN SHEET.

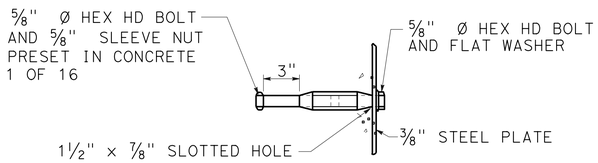

DETAIL "F"

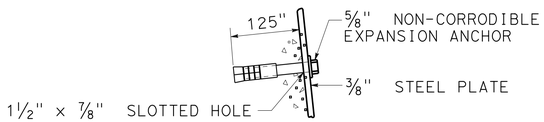

ALTERNATE DETAIL "F"
STEEL PLATE CLOSURE ANCHOR BOLT DETAILS

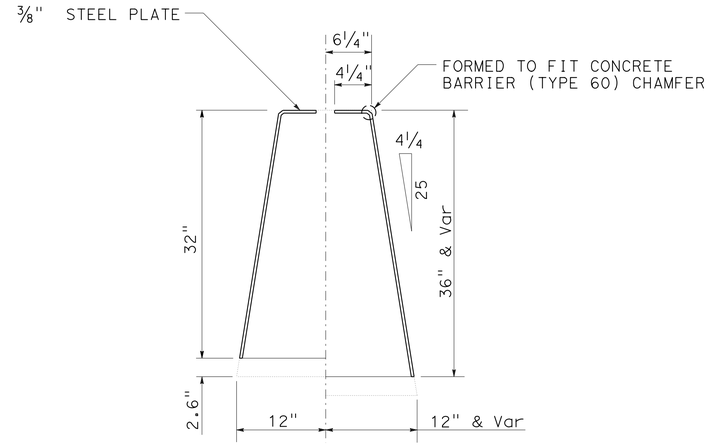

DETAIL "G"

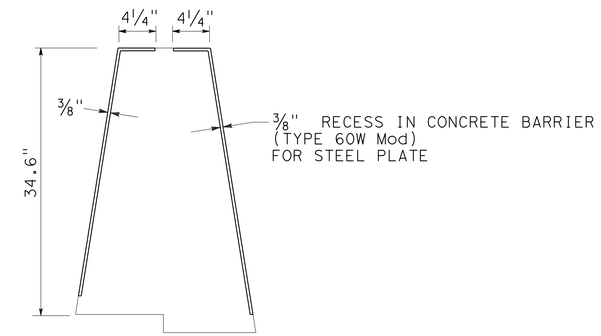

RECESS DETAIL

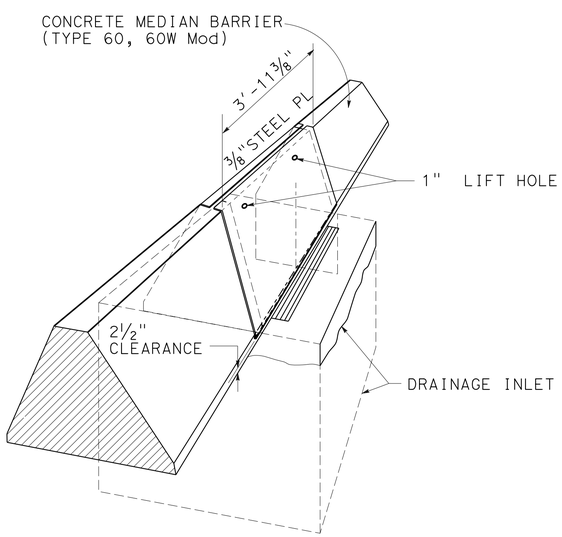

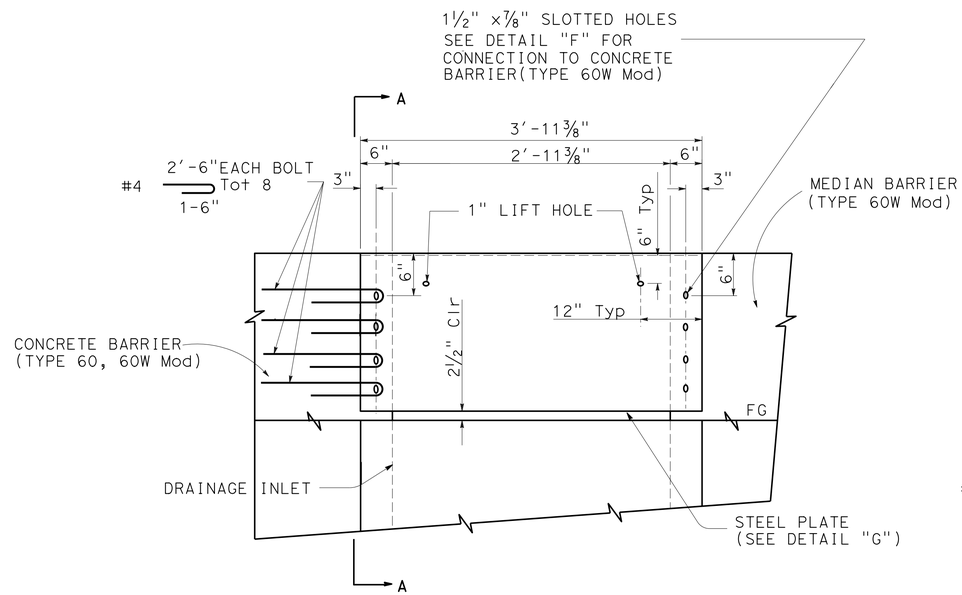

ELEVATION
STEEL PLATE CLOSURE DETAIL
DETAILS OF CONCRETE BARRIER
(TYPE 60W Mod) OVER INLET

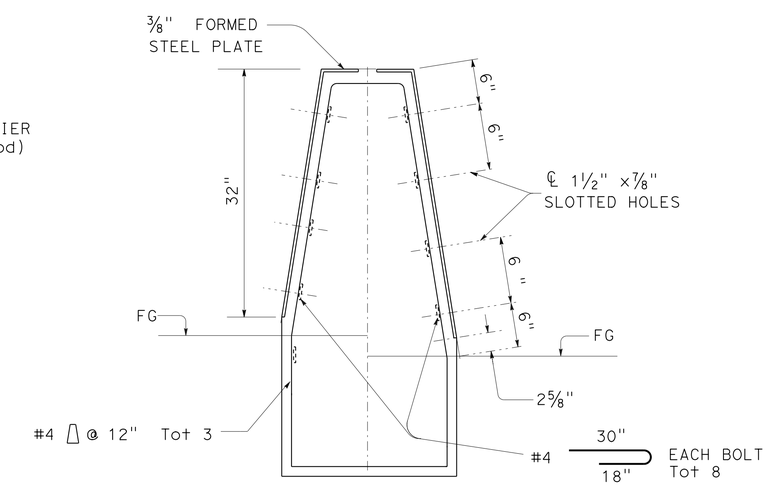

SECTION A-A

DRAINAGE DETAILS

NO SCALE

DD-3

STATE OF CALIFORNIA - DEPARTMENT OF TRANSPORTATION
Caltrans
HYDRAULICS

FUNCTIONAL SUPERVISOR: DAVE BHALLA
CALCULATED-DESIGNED BY: PAUL FONG
CHECKED BY: DAVE BHALLA
REVISED BY
DATE REVISED

LAST REVISION 03-20-13
DATE PLOTTED => 26-APR-2013
TIME PLOTTED => 08:15

Dist	COUNTY	ROUTE	POST MILES TOTAL PROJECT	SHEET No.	TOTAL SHEETS
07	LA	210	R9.7/R16.1	100	349

Paul Fong 3-15-13
REGISTERED CIVIL ENGINEER DATE

4-22-13
PLANS APPROVAL DATE

REGISTERED PROFESSIONAL ENGINEER
PAUL FONG
No. C67053
Exp. 9-30-14
CIVIL
STATE OF CALIFORNIA

THE STATE OF CALIFORNIA OR ITS OFFICERS OR AGENTS SHALL NOT BE RESPONSIBLE FOR THE ACCURACY OR COMPLETENESS OF SCANNED COPIES OF THIS PLAN SHEET.

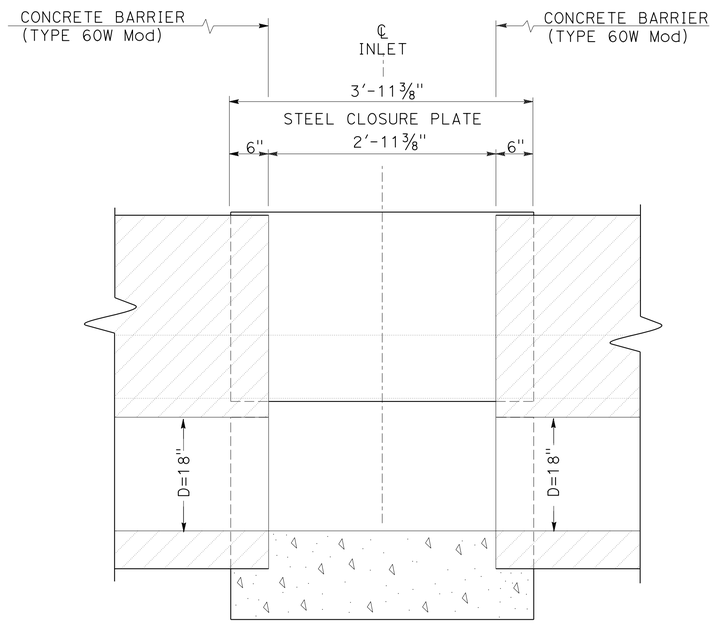

SECTION B-B

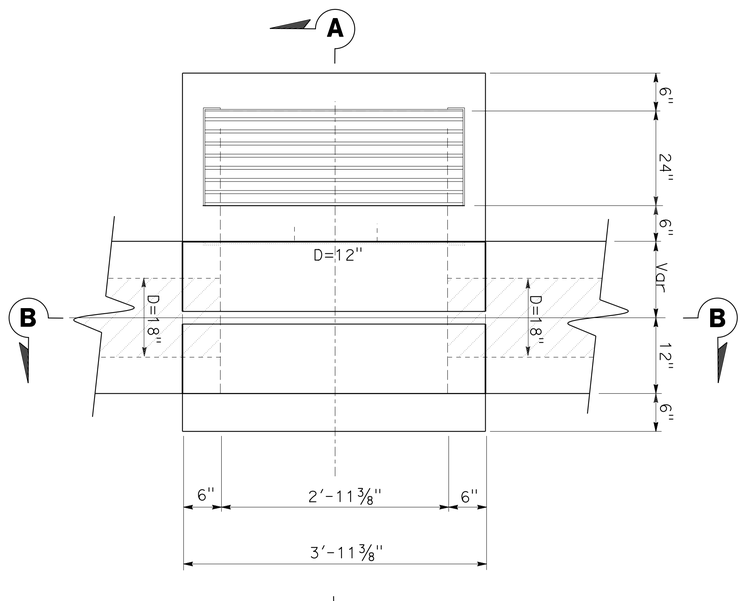

INTERMEDIATE CLEANOUT

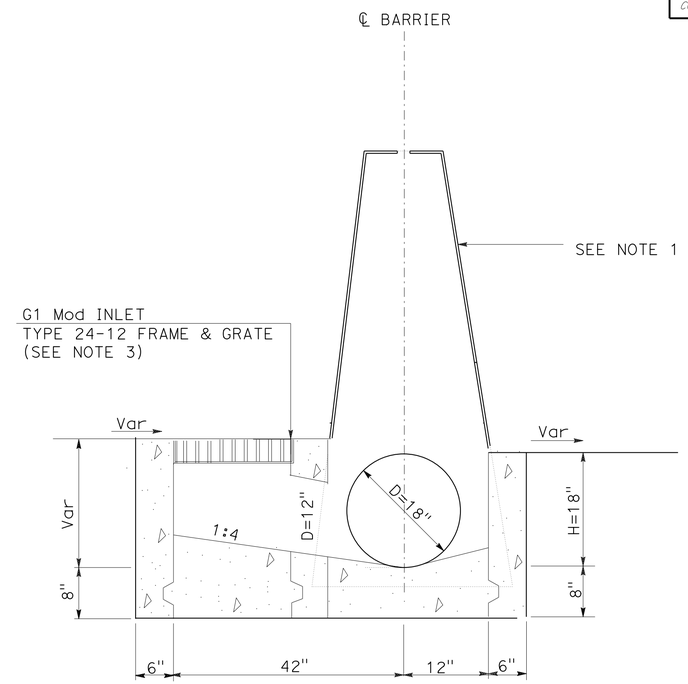

SECTION A-A

NOTES:

1. FOR STEEL CLOSURE PLATE DETAILS. REFER TO SHEET DD-3.
2. ELEVATIONS OF PAVEMENT ON OPPOSITE SIDES OF CONCRETE BARRIER MAY VARY.
3. FOR FRAME AND GRATE INSTALLATION, REFER TO TYPE G1 INLET ON REVISED STANDARD PLAN D73.

PLAN
CLEANOUT No. 1

DRAINAGE DETAILS

NO SCALE

DD-4

STATE OF CALIFORNIA - DEPARTMENT OF TRANSPORTATION
Caltrans
HYDRAULICS

FUNCTIONAL SUPERVISOR: DAVE BHALLA
CALCULATED-DESIGNED BY: PAUL FONG
CHECKED BY: DAVE BHALLA
REVISED BY
DATE REVISED

LAST REVISION 03-20-13
DATE PLOTTED => 26-APR-2013
TIME PLOTTED => 08:15