Dist	COUNTY	ROUTE	POST MILES TOTAL PROJECT	SHEET No.	TOTAL SHEETS
07	LA	60	11.6/R23.6	1	75

ACNH-P060(140)E

STATE OF CALIFORNIA
DEPARTMENT OF TRANSPORTATION

PROJECT PLANS FOR CONSTRUCTION ON
STATE HIGHWAY
IN LOS ANGELES COUNTY
IN CITY OF INDUSTRY AND DIAMOND BAR
FROM ROUTE 60/605 SEPARATION
TO S57/60 SEPARATION

TO BE SUPPLEMENTED BY STANDARD PLANS DATED MAY 2006

INDEX OF PLANS

SHEET No.	DESCRIPTION
1	TITLE AND LOCATION MAP
2-11	TYPICAL CROSS SECTIONS
12-15	CONSTRUCTION DETAILS
16	DRAINAGE PLAN
17-18	DRAINAGE DETAILS
19	DRAINAGE QUANTITIES
20-21	CONSTRUCTION AREA SIGNS
22-23	TRAFFIC HANDLING PLANS
24-32	TRAFFIC HANDLING DETAILS
33	TRAFFIC HANDLING QUANTITIES
34-36	DETOUR PLANS
37-38	MOTORIST INFORMATION PLANS
39	PAVEMENT DELINEATION DETAILS
40-42	PAVEMENT DELINEATION QUANTITIES
43	SIGN PLAN
44-48	SUMMARY OF QUANTITIES
49-52	ELECTRICAL PLANS
53-71	NEW AND REVISED STANDARD PLANS

STRUCTURE PLANS

72-75	ROUTE 60 BRIDGES

THE STANDARD PLANS LIST APPLICABLE TO THIS CONTRACT IS INCLUDED IN THE PROVISION BOOK.

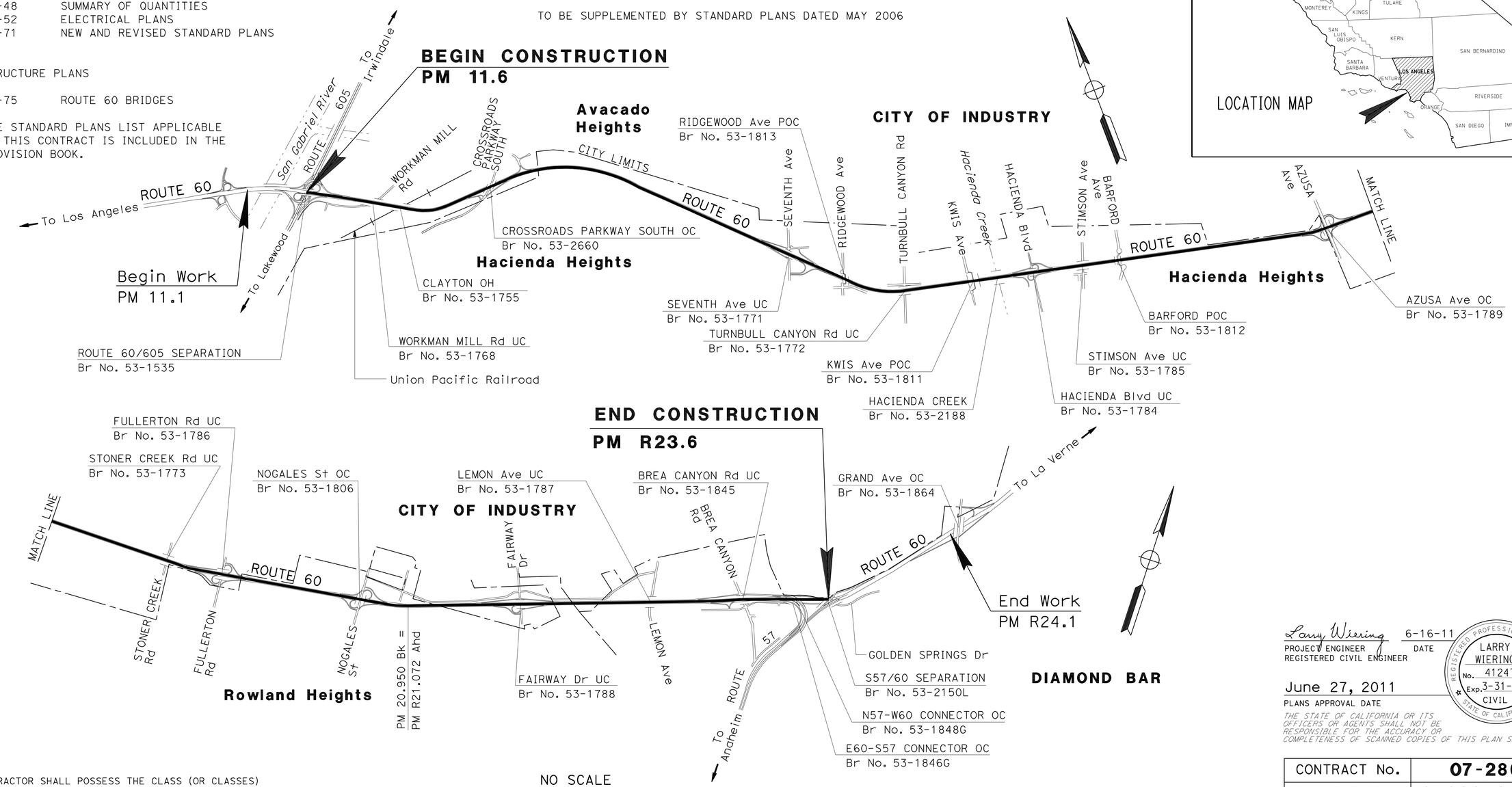

PROJECT MANAGER: JIWANJIT PALAHA

DESIGN ENGINEER: HECTOR OBESO

Larry Wiering — 6-16-11
PROJECT ENGINEER — DATE
REGISTERED CIVIL ENGINEER

June 27, 2011
PLANS APPROVAL DATE

REGISTERED PROFESSIONAL ENGINEER — LARRY WIERING — No. 41247 — Exp. 3-31-13 — CIVIL — STATE OF CALIFORNIA

THE STATE OF CALIFORNIA OR ITS OFFICERS OR AGENTS SHALL NOT BE RESPONSIBLE FOR THE ACCURACY OR COMPLETENESS OF SCANNED COPIES OF THIS PLAN SHEET.

THE CONTRACTOR SHALL POSSESS THE CLASS (OR CLASSES) OF LICENSE AS SPECIFIED IN THE "NOTICE TO BIDDERS."

CONTRACT No.	07-286904
PROJECT ID	0700020897

LAST REVISION 06-27-11 — DATE PLOTTED => 02-AUG-2011 — TIME PLOTTED => 11:05

Dist	COUNTY	ROUTE	POST MILES TOTAL PROJECT	SHEET No.	TOTAL SHEETS
07	LA	60	11.6/R23.6	2	75

Larry Wiering 06-9-11
REGISTERED CIVIL ENGINEER DATE

06-27-11
PLANS APPROVAL DATE

REGISTERED PROFESSIONAL ENGINEER LARRY WIERING No. C41247 Exp. 3-31-13 CIVIL STATE OF CALIFORNIA

THE STATE OF CALIFORNIA OR ITS OFFICERS OR AGENTS SHALL NOT BE RESPONSIBLE FOR THE ACCURACY OR COMPLETENESS OF SCANNED COPIES OF THIS PLAN SHEET.

NOTES:

1. DIMENSIONS OF THE PAVEMENT STRUCTURES (STRUCTURAL SECTIONS) ARE SUBJECT TO TOLERANCES SPECIFIED IN THE STANDARD SPECIFICATIONS.
2. SUPERELEVATION AS SHOWN OR AS DIRECTED BY THE ENGINEER.
3. FOR RIGHT-OF-WAY AND ACCESS DATA, CONTACT RIGHT-OF-WAY ENGINEERING AT THE DISTRICT OFFICE.
4. EXISTING DRAINAGE INLETS HAVE NOT BEEN PLOTTED ON THESE PLANS.
5. EXISTING UTILITY FACILITIES HAVE NOT BEEN PLOTTED ON THESE PLANS.
6. SEE SUMMARY OF QUANTITIES SHEETS FOR LOCATIONS AND QUANTITIES OF REPLACE CONCRETE PAVEMENT (RSC). EXACT LOCATIONS WILL BE DETERMINED BY THE ENGINEER.
7. OMIT GRINDING ON AC PAVEMENT, BRIDGE DECKS, AND APPROACH AND DEPARTURE SLABS.

ABBREVIATION:

RHMA-G	RUBBERIZED HOT MIX ASPHALT (GAP GRADED)
JPCP (RSC)	JOINTED PLAIN CONCRETE PAVEMENT (RAPID STRENGTH CONCRETE)
ISR (RSC)	INDIVIDUAL SLAB REPLACEMENT (RAPID STRENGTH CONCRETE)
LCBRS	LEAN CONCRETE BASE RAPID SETTING
MSL	MECHANICALLY STABILIZED LAYER

DESIGN DESIGNATION

ADT (2011)	340,000	D	55.00%
ADT (2031)	408,000	T	10.06%
DHV	30,600	V	65 mph
ESAL	452,477,875	TI_{20}	17.0

EXISTING STRUCTURAL SECTIONS

A
- 0.75′ PCC
- 0.35′ CLASS A CTB
- 0.35′ CLASS 2 AB
- 0.60′ CLASS 4 AS

B
- 0.70′ PCC
- 0.35′ CLASS A CTB
- 0.35′ CLASS 2 AB
- 0.65′ CLASS 4 AS

C
- 0.35′ AC TYPE B
- 0.70′ CLASS 2 AB
- 1.00′ CLASS 4 AS

D
- 0.35′ AC TYPE B
- 0.50′ CLASS 2 AB
- 1.20′ & VAR CLASS 4 AS

F
- 0.75′ PCC
- 0.50′ CLASS A CTB
- 0.25′ CLASS A AGGR (RMCTB)
- 0.50′ CLASS 4 AS

G
- 0.70′ PCC
- 0.35′ CLASS A CTB
- 0.35′ CLASS A AGGR (RMCTB)
- 0.65′ CLASS 4 AS

H
- 0.85′ PCC
- 0.50′ CLASS A CTB
- 0.25′ CLASS 2 AB
- 0.40′ CLASS 4 AS

I
- 0.35′ AC (TYPE B)
- 0.70′ CLASS 2 AB
- 0.95′ CLASS 4 AS

J
- 0.15′ AC TYPE B
- 0.50′ CLASS 2 AB
- Var CLASS 4 AS

K
- 1.00′ PCC
- 0.50′ LCB
- 0.70′ CLASS 3 AB

L
- 1.30′ (TYPE B)
- 0.35′ CLASS 3 AB

M
- 1.50′ AC (TYPE B)
- 0.35′ CLASS 3 AB

P
- 0.35′ AC TYPE B
- 0.70′ CLASS 2 AB
- 0.95′ CLASS 4 AS

REPLACEMENT STRUCTURAL SECTIONS

1
- 1.00′ JPCP (RSC)
- BOND BREAKER
- 0.50′ LCBRS
- 0.35′ CLASS 3 AB ADDITIVE QUANTITY
- MSL (GEOGRID) ADDITIVE QUANTITY

2
- 1.10′ JPCP (RSC)
- BOND BREAKER
- 0.50′ LCBRS
- 0.35′ CLASS 3 AB ADDITIVE QUANTITY
- MSL (GEOGRID) ADDITIVE QUANTITY

3
- 0.70′ ISR (RSC)
- BOND BREAKER
- LCBRS ADDITIVE QUANTITY

4
- 0.75′ ISR (RSC)
- BOND BREAKER
- LCBRS ADDITIVE QUANTITY

5
- 1.10′ JPCP (RSC)
- BOND BREAKER
- 0.50′ LCBRS
- 0.50′ CLASS 3 AB
- MSL (GEOGRID)
- GEOTEXTILE FABRIC

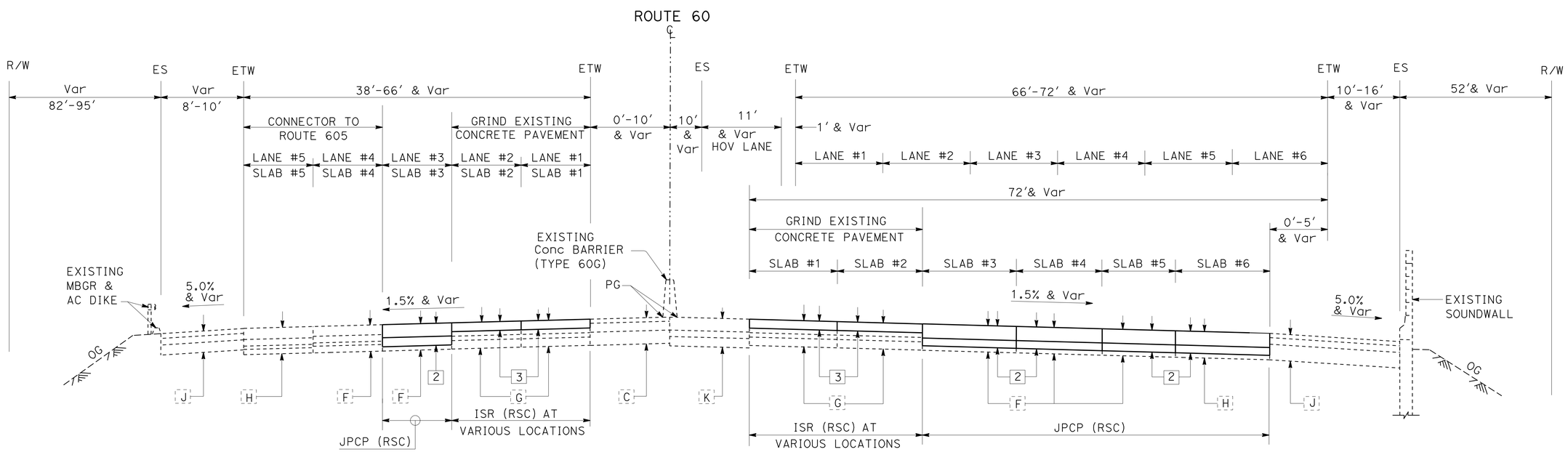

PM 11.6 TO PM 12.0

TYPICAL CROSS SECTIONS

NO SCALE

X-1

STATE OF CALIFORNIA - DEPARTMENT OF TRANSPORTATION
Caltrans MAINTENANCE ENGINEERING

FUNCTIONAL SUPERVISOR: HECTOR OBESO
CALCULATED-DESIGNED BY: VINCENT PANG
CHECKED BY: LARRY WIERING
REVISED BY
DATE REVISED

LAST REVISION 06-27-11
DATE PLOTTED => 23-JUN-2011
TIME PLOTTED => 15:17

Dist	COUNTY	ROUTE	POST MILES TOTAL PROJECT	SHEET No.	TOTAL SHEETS
07	LA	60	11.6/R23.6	3	75

Larry Wiering 06-9-11
REGISTERED CIVIL ENGINEER DATE

06-27-11
PLANS APPROVAL DATE

REGISTERED PROFESSIONAL ENGINEER LARRY WIERING No. C41247 Exp. 3-31-13 CIVIL STATE OF CALIFORNIA

THE STATE OF CALIFORNIA OR ITS OFFICERS OR AGENTS SHALL NOT BE RESPONSIBLE FOR THE ACCURACY OR COMPLETENESS OF SCANNED COPIES OF THIS PLAN SHEET.

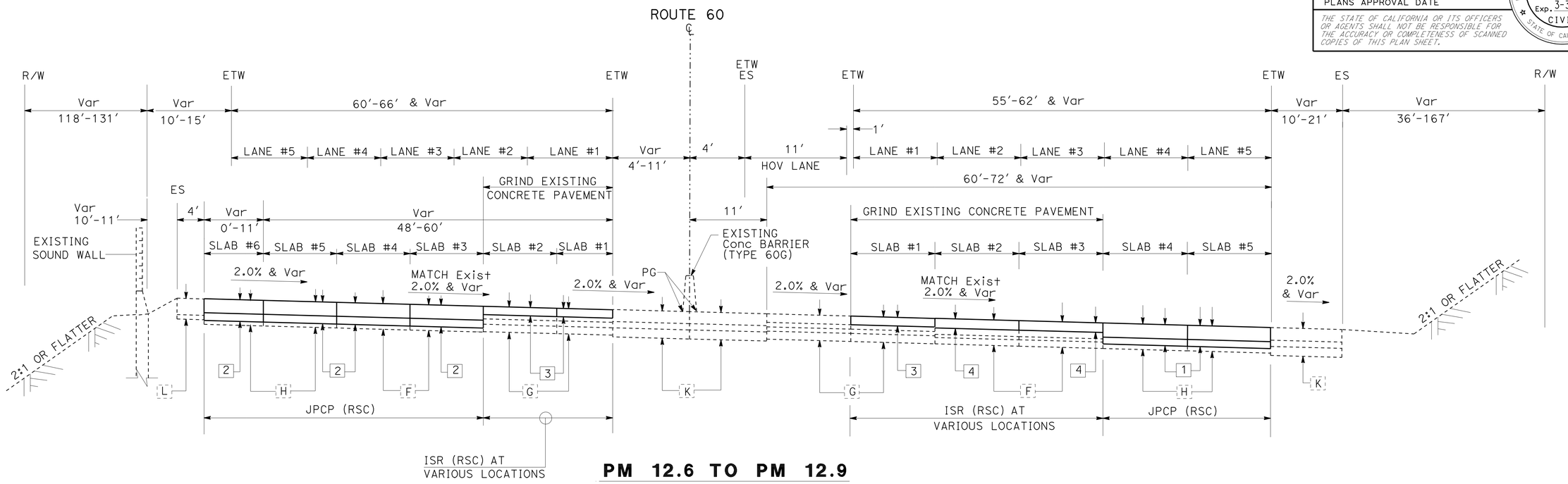

PM 12.6 TO PM 12.9

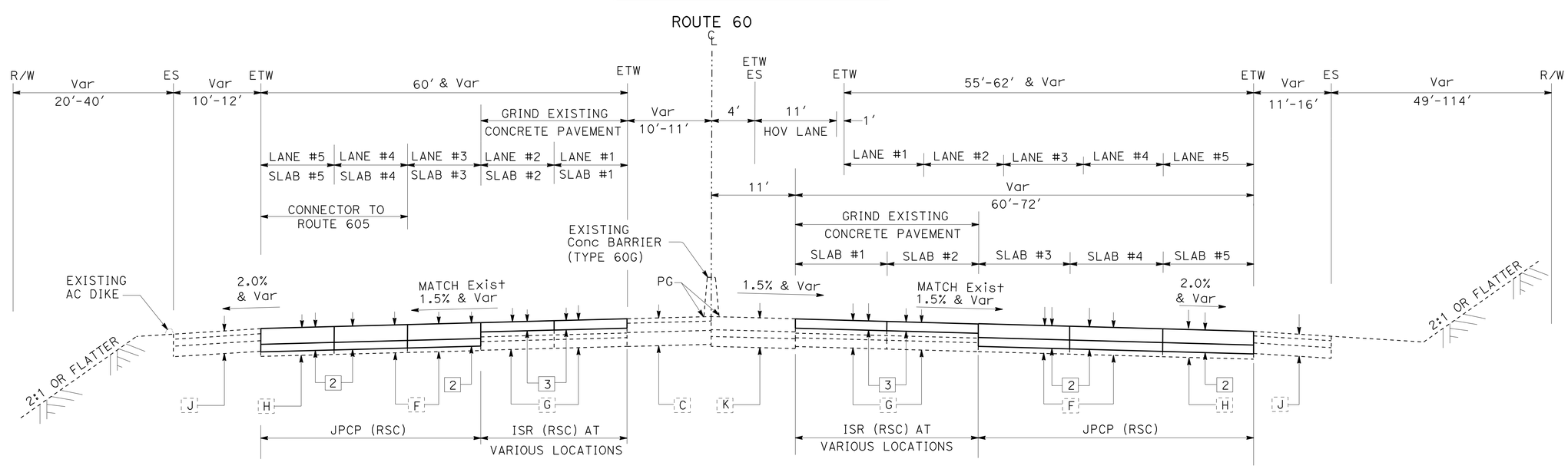

PM 12.0 TO PM 12.6

TYPICAL CROSS SECTIONS

NO SCALE

X-2

STATE OF CALIFORNIA - DEPARTMENT OF TRANSPORTATION
Caltrans MAINTENANCE ENGINEERING

FUNCTIONAL SUPERVISOR: HECTOR OBESO
CALCULATED-DESIGNED BY: VINCENT PANG
CHECKED BY: LARRY WIERING
REVISED BY
DATE REVISED

LAST REVISION 06-27-11
DATE PLOTTED => 23-JUN-2011
TIME PLOTTED => 13:05

Dist	COUNTY	ROUTE	POST MILES TOTAL PROJECT	SHEET No.	TOTAL SHEETS
07	LA	60	11.6/R23.6	4	75

Larry Wiering 06-9-11
REGISTERED CIVIL ENGINEER DATE

06-27-11
PLANS APPROVAL DATE

REGISTERED PROFESSIONAL ENGINEER
LARRY WIERING
No. C41247
Exp. 3-31-13
CIVIL
STATE OF CALIFORNIA

THE STATE OF CALIFORNIA OR ITS OFFICERS OR AGENTS SHALL NOT BE RESPONSIBLE FOR THE ACCURACY OR COMPLETENESS OF SCANNED COPIES OF THIS PLAN SHEET.

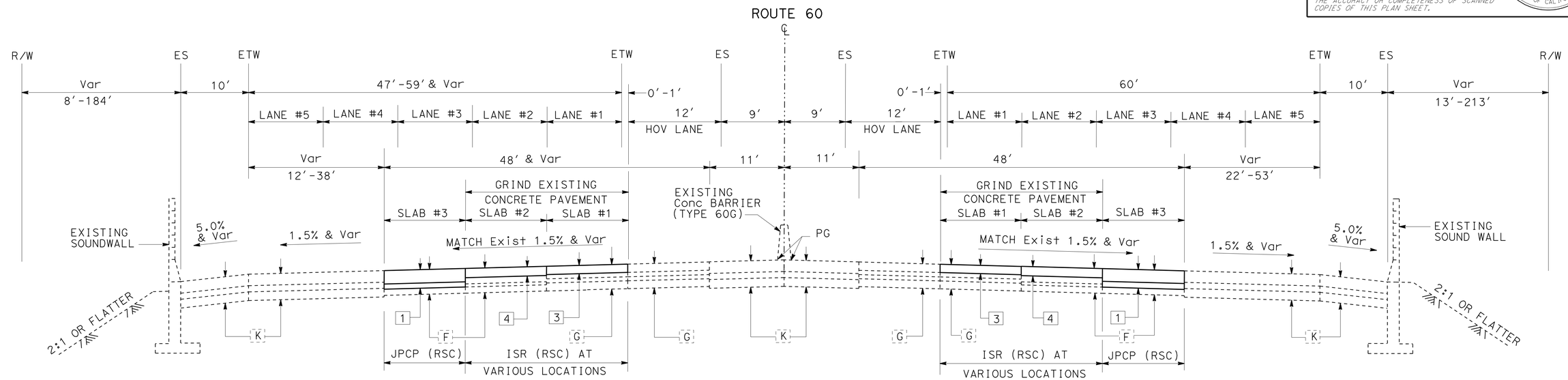

PM 13.6 TO PM 14.3

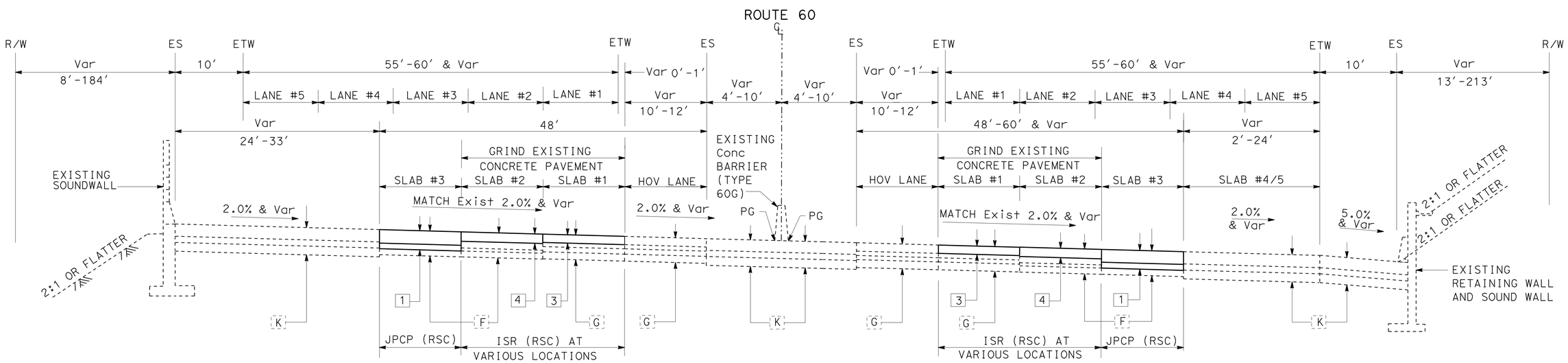

PM 12.9 TO PM 13.6

TYPICAL CROSS SECTIONS

NO SCALE

X-3

REVISED BY	DATE REVISED
VINCENT PANG	LARRY WIERING
CALCULATED-DESIGNED BY	CHECKED BY
FUNCTIONAL SUPERVISOR	HECTOR OBESO

STATE OF CALIFORNIA - DEPARTMENT OF TRANSPORTATION
Caltrans MAINTENANCE ENGINEERING

LAST REVISION 06-27-11
DATE PLOTTED => 23-JUN-2011
TIME PLOTTED => 13:05

Dist	COUNTY	ROUTE	POST MILES TOTAL PROJECT	SHEET No.	TOTAL SHEETS
07	LA	60	11.6/R23.6	5	75

Larry Wiering 06-9-11
REGISTERED CIVIL ENGINEER DATE

06-27-11
PLANS APPROVAL DATE

REGISTERED PROFESSIONAL ENGINEER
LARRY WIERING
No. C41247
Exp. 3-31-13
CIVIL
STATE OF CALIFORNIA

THE STATE OF CALIFORNIA OR ITS OFFICERS OR AGENTS SHALL NOT BE RESPONSIBLE FOR THE ACCURACY OR COMPLETENESS OF SCANNED COPIES OF THIS PLAN SHEET.

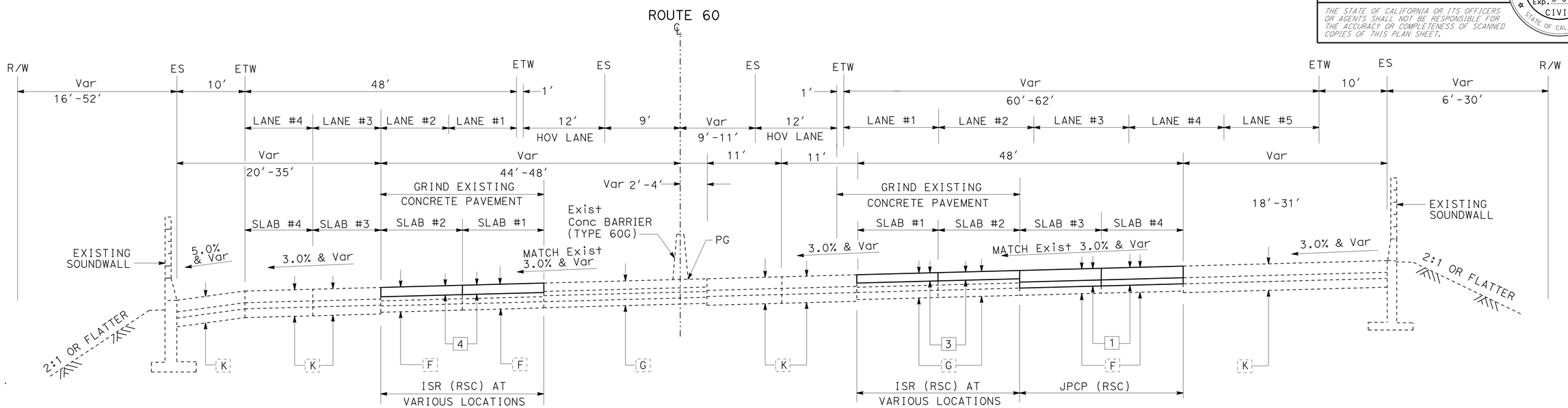

PM 14.7 TO PM 15.1

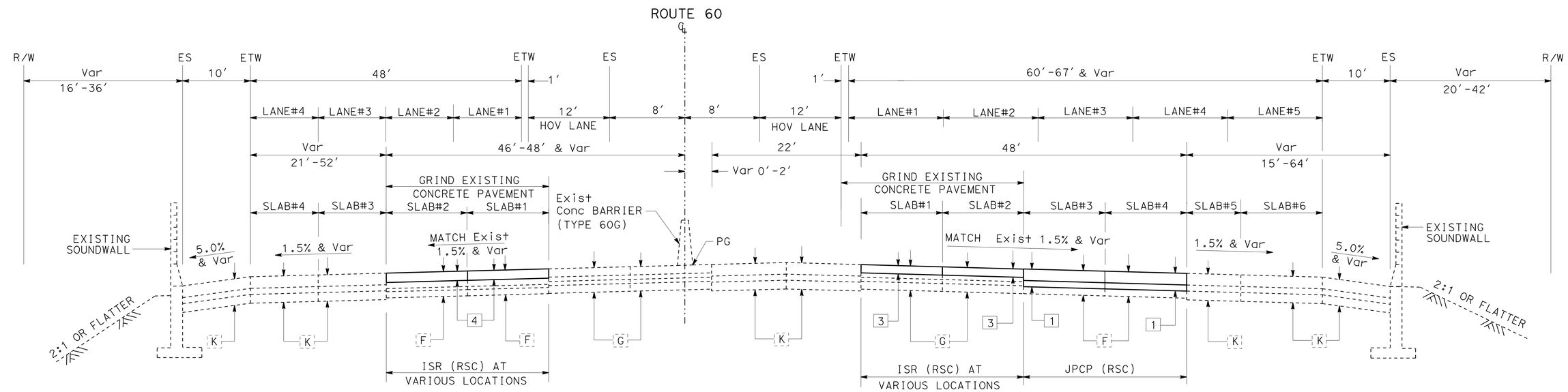

PM 14.3 TO PM 14.7

TYPICAL CROSS SECTIONS

NO SCALE

X-4

STATE OF CALIFORNIA - DEPARTMENT OF TRANSPORTATION
Caltrans MAINTENANCE ENGINEERING

FUNCTIONAL SUPERVISOR: HECTOR OBESO
CALCULATED-DESIGNED BY: VINCENT PANG
CHECKED BY: LARRY WIERING
REVISED BY
DATE REVISED

LAST REVISION 06-27-11
DATE PLOTTED => 23-JUN-2011
TIME PLOTTED => 13:06

Dist	COUNTY	ROUTE	POST MILES TOTAL PROJECT	SHEET No.	TOTAL SHEETS
07	LA	60	11.6/R23.6	6	75

Larry Wiering 06-9-11
REGISTERED CIVIL ENGINEER DATE

06-27-11
PLANS APPROVAL DATE

REGISTERED PROFESSIONAL ENGINEER
LARRY WIERING
No. C41247
Exp. 3-31-13
CIVIL
STATE OF CALIFORNIA

THE STATE OF CALIFORNIA OR ITS OFFICERS OR AGENTS SHALL NOT BE RESPONSIBLE FOR THE ACCURACY OR COMPLETENESS OF SCANNED COPIES OF THIS PLAN SHEET.

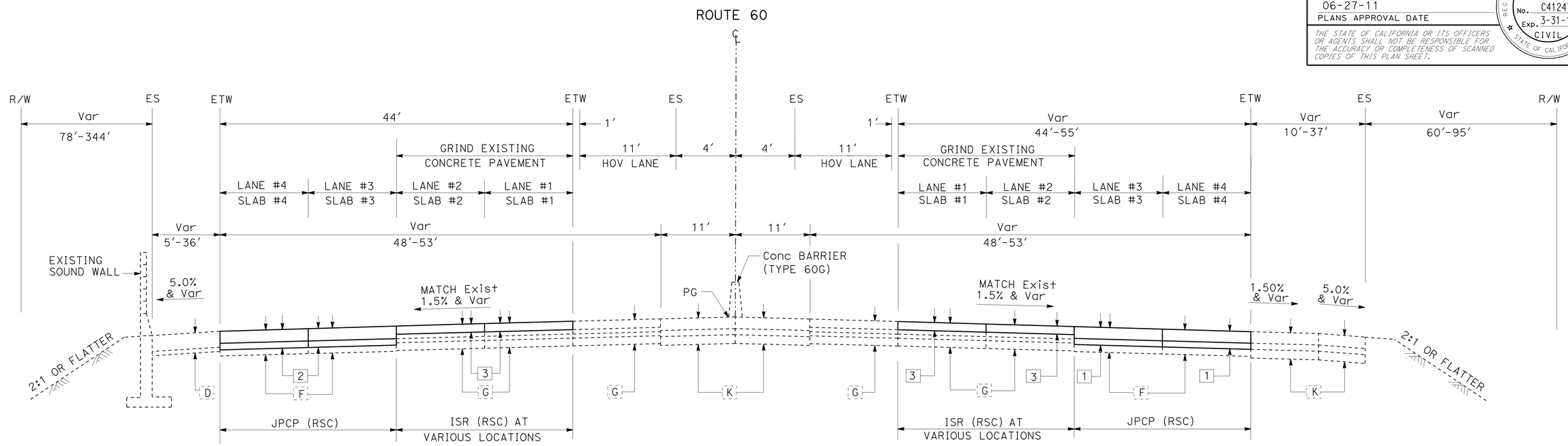

PM 15.9 TO PM 16.3

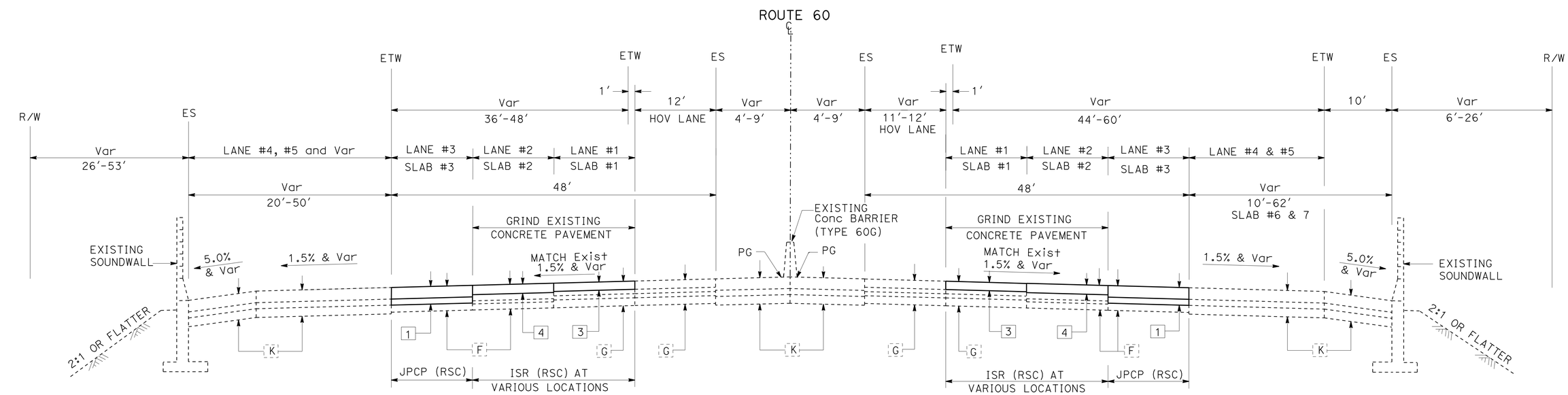

PM 15.1 TO PM 15.9

TYPICAL CROSS SECTIONS

NO SCALE

X-5

STATE OF CALIFORNIA - DEPARTMENT OF TRANSPORTATION
Caltrans MAINTENANCE ENGINEERING

FUNCTIONAL SUPERVISOR: HECTOR OBESO
CALCULATED-DESIGNED BY: VINCENT PANG
CHECKED BY: LARRY WIERING
REVISED BY
DATE REVISED

LAST REVISION 06-27-11
DATE PLOTTED => 29-JUN-2011
TIME PLOTTED => 12:03

Dist	COUNTY	ROUTE	POST MILES TOTAL PROJECT	SHEET No.	TOTAL SHEETS
07	LA	60	11.6/R23.6	7	75

Larry Wiering 06-9-11
REGISTERED CIVIL ENGINEER DATE

06-27-11
PLANS APPROVAL DATE

REGISTERED PROFESSIONAL ENGINEER
LARRY WIERING
No. C41247
Exp. 3-31-13
CIVIL
STATE OF CALIFORNIA

THE STATE OF CALIFORNIA OR ITS OFFICERS OR AGENTS SHALL NOT BE RESPONSIBLE FOR THE ACCURACY OR COMPLETENESS OF SCANNED COPIES OF THIS PLAN SHEET.

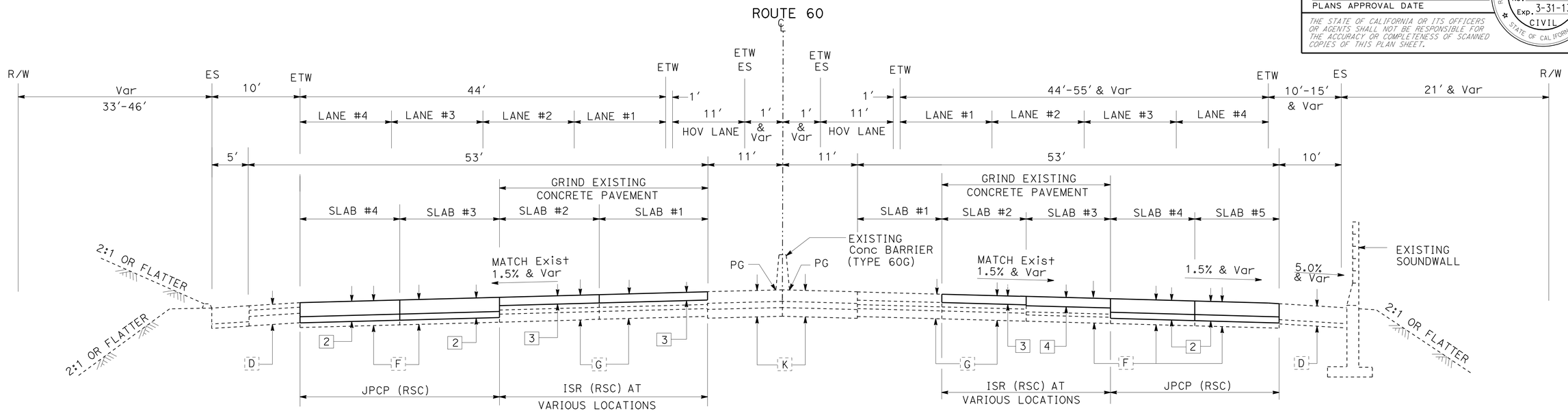

PM 16.5 TO PM 17.1
PM 17.6 TO PM 18.0

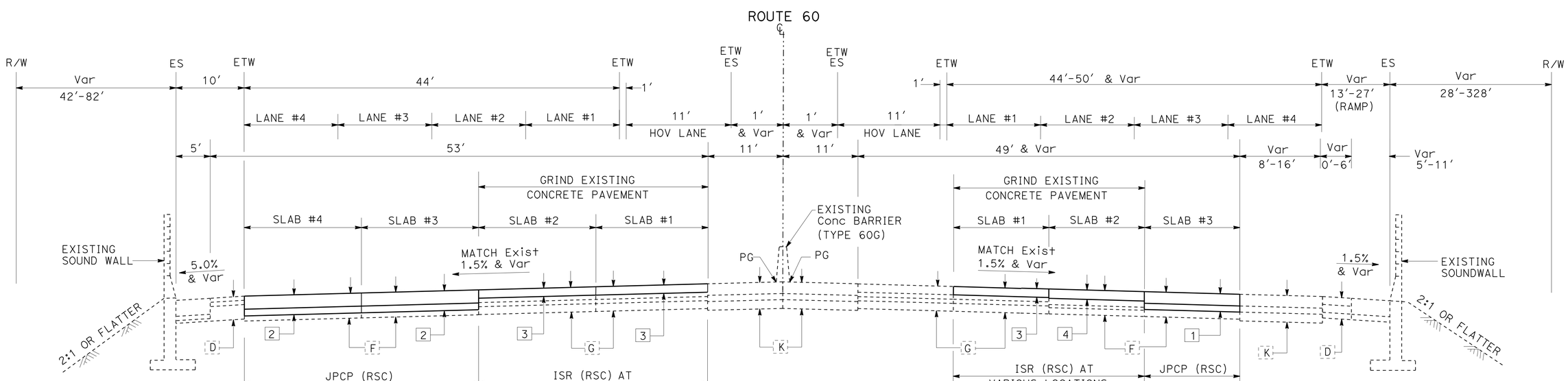

PM 16.3 TO PM 16.5

TYPICAL CROSS SECTIONS

NO SCALE

X-6

STATE OF CALIFORNIA - DEPARTMENT OF TRANSPORTATION
Caltrans MAINTENANCE ENGINEERING

FUNCTIONAL SUPERVISOR: HECTOR OBESO
CALCULATED-DESIGNED BY: VINCENT PANG
CHECKED BY: LARRY WIERING
REVISED BY
DATE REVISED

LAST REVISION 06-27-11
DATE PLOTTED => 23-JUN-2011
TIME PLOTTED => 13:06

Dist	COUNTY	ROUTE	POST MILES TOTAL PROJECT	SHEET No.	TOTAL SHEETS
07	LA	60	11.6/R23.6	8	75

Larry Wiering 06-9-11
REGISTERED CIVIL ENGINEER DATE

06-27-11
PLANS APPROVAL DATE

REGISTERED PROFESSIONAL ENGINEER
LARRY WIERING
No. C41247
Exp. 3-31-13
CIVIL
STATE OF CALIFORNIA

THE STATE OF CALIFORNIA OR ITS OFFICERS OR AGENTS SHALL NOT BE RESPONSIBLE FOR THE ACCURACY OR COMPLETENESS OF SCANNED COPIES OF THIS PLAN SHEET.

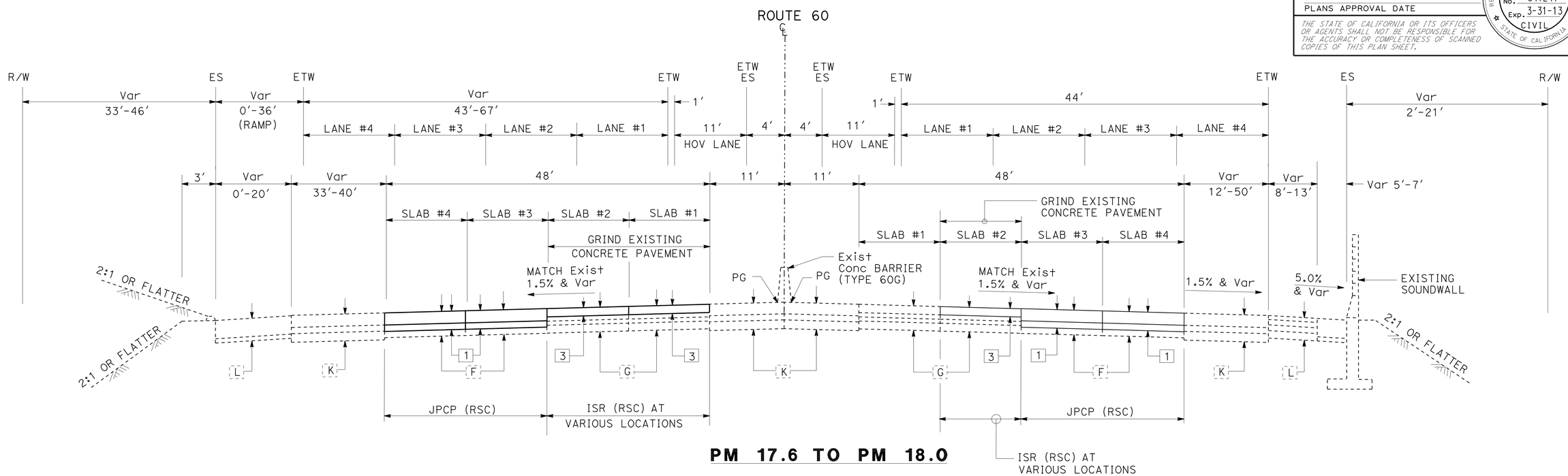

PM 17.6 TO PM 18.0

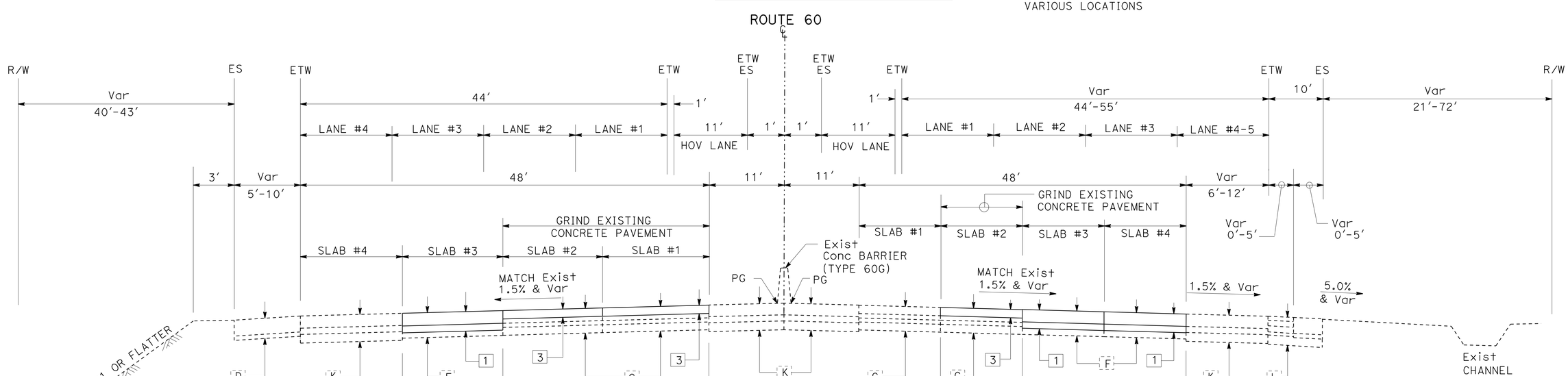

PM 17.1 TO PM 17.6

TYPICAL CROSS SECTIONS

NO SCALE

X-7

STATE OF CALIFORNIA - DEPARTMENT OF TRANSPORTATION
Caltrans MAINTENANCE ENGINEERING

FUNCTIONAL SUPERVISOR: HECTOR OBESO
CALCULATED-DESIGNED BY: VINCENT PANG
CHECKED BY: LARRY WIERING
REVISED BY
DATE REVISED

LAST REVISION 06-27-11
DATE PLOTTED => 23-JUN-2011
TIME PLOTTED => 13:06

Dist	COUNTY	ROUTE	POST MILES TOTAL PROJECT	SHEET No.	TOTAL SHEETS
07	LA	60	11.6/R23.6	9	75

Larry Wiering 06-9-11
REGISTERED CIVIL ENGINEER DATE

06-27-11
PLANS APPROVAL DATE

REGISTERED PROFESSIONAL ENGINEER
LARRY WIERING
No. C41247
Exp. 3-31-13
CIVIL
STATE OF CALIFORNIA

THE STATE OF CALIFORNIA OR ITS OFFICERS OR AGENTS SHALL NOT BE RESPONSIBLE FOR THE ACCURACY OR COMPLETENESS OF SCANNED COPIES OF THIS PLAN SHEET.

LEGEND:

* - FOR DETAIL SEE CONSTRUCTION SHEET C-1

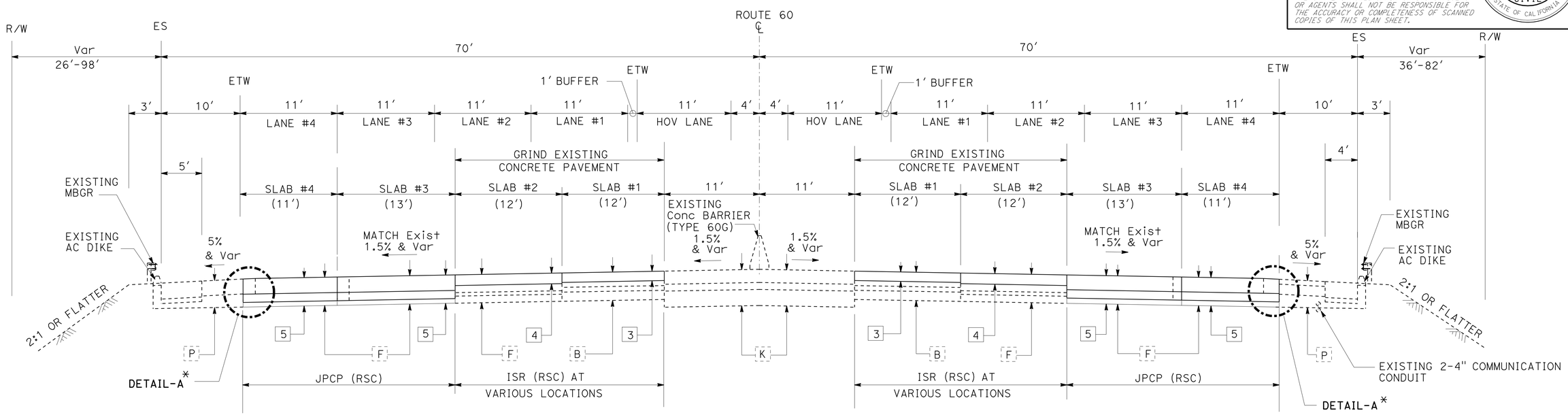

PM 19.5 TO PM 20.4

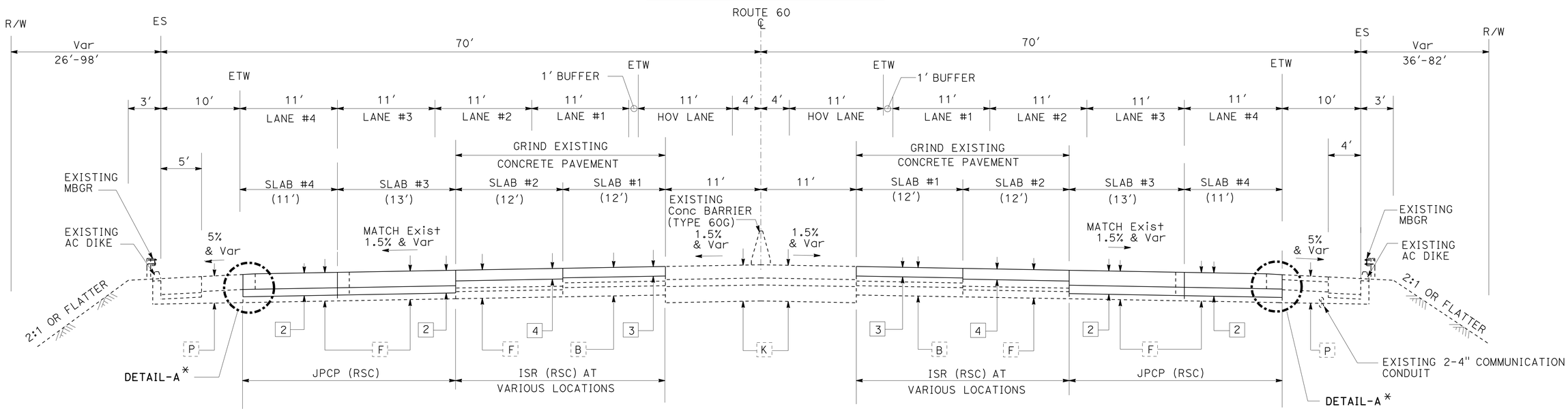

PM 18.0 TO PM 19.5

TYPICAL CROSS SECTIONS

NO SCALE

X-8

STATE OF CALIFORNIA - DEPARTMENT OF TRANSPORTATION
Caltrans MAINTENANCE ENGINEERING

FUNCTIONAL SUPERVISOR: HECTOR OBESO
CALCULATED-DESIGNED BY: VINCENT PANG
CHECKED BY: LARRY WIERING
REVISED BY
DATE REVISED

LAST REVISION 06-27-11
DATE PLOTTED => 23-JUN-2011
TIME PLOTTED => 13:06

Dist	COUNTY	ROUTE	POST MILES TOTAL PROJECT	SHEET No.	TOTAL SHEETS
07	LA	60	11.6/R23.6	10	75

Larry Wiering 06-9-11
REGISTERED CIVIL ENGINEER DATE

06-27-11
PLANS APPROVAL DATE

REGISTERED PROFESSIONAL ENGINEER
LARRY WIERING
No. C41247
Exp. 3-31-13
CIVIL
STATE OF CALIFORNIA

THE STATE OF CALIFORNIA OR ITS OFFICERS OR AGENTS SHALL NOT BE RESPONSIBLE FOR THE ACCURACY OR COMPLETENESS OF SCANNED COPIES OF THIS PLAN SHEET.

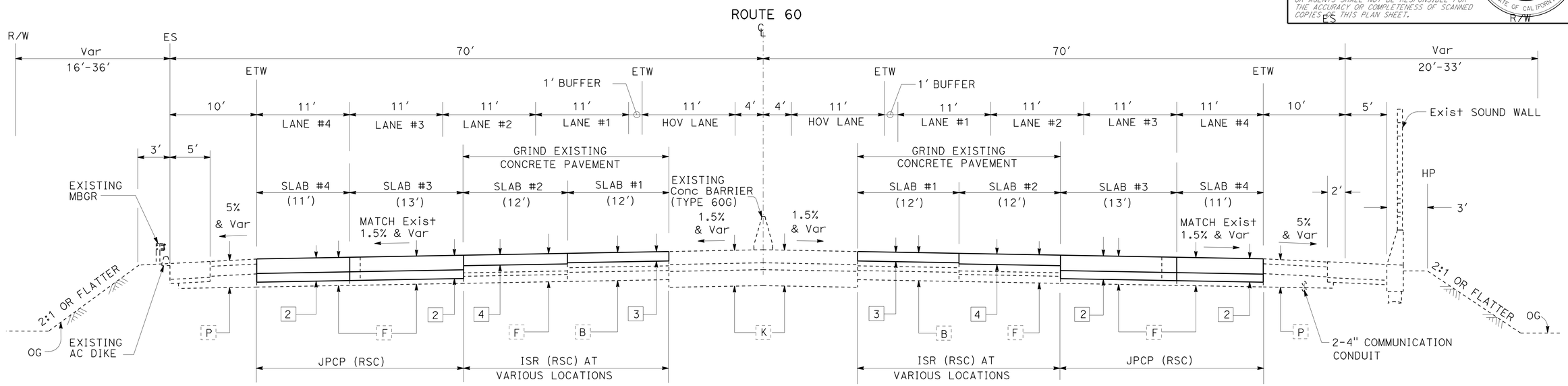

PM R21.5 TO PM R22.4

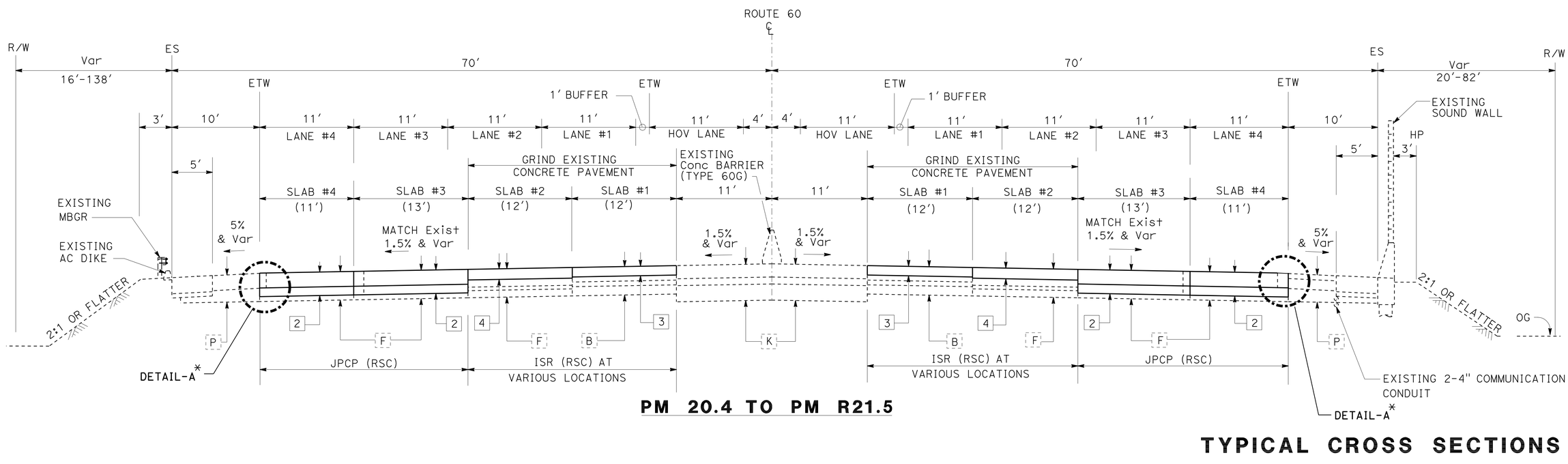

PM 20.4 TO PM R21.5

TYPICAL CROSS SECTIONS

NO SCALE

X-9

STATE OF CALIFORNIA - DEPARTMENT OF TRANSPORTATION
Caltrans MAINTENANCE ENGINEERING

FUNCTIONAL SUPERVISOR: HECTOR OBESO
CALCULATED-DESIGNED BY: VINCENT PANG
CHECKED BY: LARRY WIERING
REVISED BY
DATE REVISED

LAST REVISION 06-27-11
DATE PLOTTED => 23-JUN-2011
TIME PLOTTED => 13:06

Dist	COUNTY	ROUTE	POST MILES TOTAL PROJECT	SHEET No.	TOTAL SHEETS
07	LA	60	11.6/R23.6	11	75

Larry Wiering 06-9-11
REGISTERED CIVIL ENGINEER DATE

06-27-11
PLANS APPROVAL DATE

REGISTERED PROFESSIONAL ENGINEER
LARRY WIERING
No. C41247
Exp. 3-31-13
CIVIL
STATE OF CALIFORNIA

THE STATE OF CALIFORNIA OR ITS OFFICERS OR AGENTS SHALL NOT BE RESPONSIBLE FOR THE ACCURACY OR COMPLETENESS OF SCANNED COPIES OF THIS PLAN SHEET.

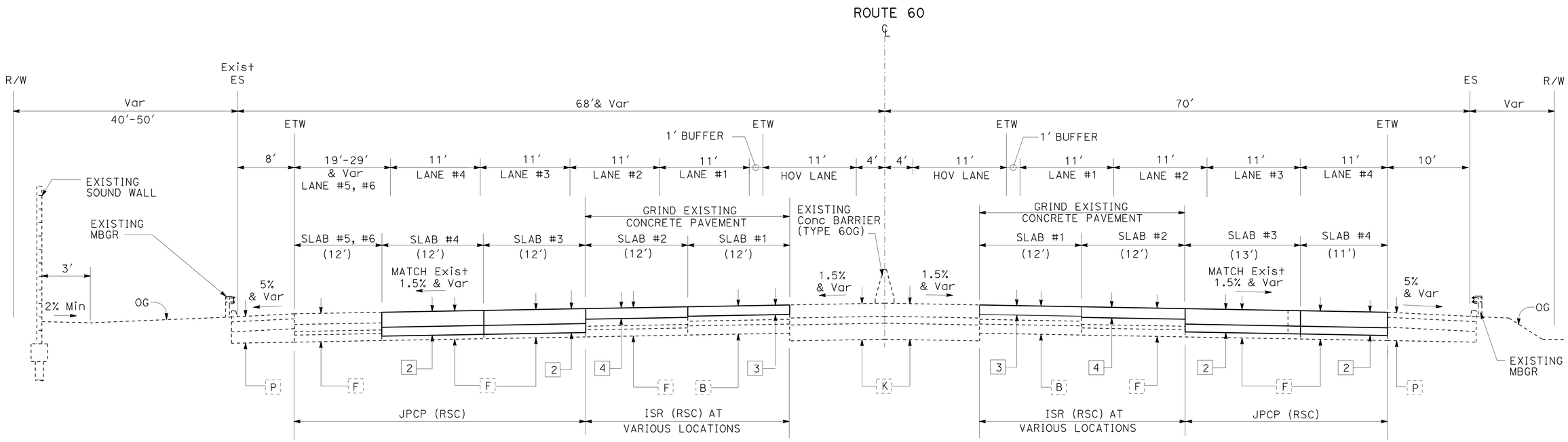

PM R22.4 TO PM R23.6

TYPICAL CROSS SECTIONS

NO SCALE

X-10

STATE OF CALIFORNIA - DEPARTMENT OF TRANSPORTATION
Caltrans MAINTENANCE ENGINEERING

FUNCTIONAL SUPERVISOR: HECTOR OBESO
CALCULATED-DESIGNED BY: VINCENT PANG
CHECKED BY: LARRY WIERING
REVISED BY
DATE REVISED

LAST REVISION 06-27-11
DATE PLOTTED => 23-JUN-2011
TIME PLOTTED => 13:06

Dist	COUNTY	ROUTE	POST MILES TOTAL PROJECT	SHEET No.	TOTAL SHEETS
07	LA	60	11.6/R23.6	12	75

Larry Wiering 06-9-11
REGISTERED CIVIL ENGINEER DATE

06-27-11
PLANS APPROVAL DATE

REGISTERED PROFESSIONAL ENGINEER
LARRY WIERING
No. C41247
Exp. 3-31-13
CIVIL
STATE OF CALIFORNIA

THE STATE OF CALIFORNIA OR ITS OFFICERS OR AGENTS SHALL NOT BE RESPONSIBLE FOR THE ACCURACY OR COMPLETENESS OF SCANNED COPIES OF THIS PLAN SHEET.

NOTE:

1. SEE TYPICAL CROSS SECTIONS FOR LIMITS OF PCC GRINDING

LEGEND:

- REMOVE AC PAVEMENT
- GRIND EXISTING PCC PAVEMENT

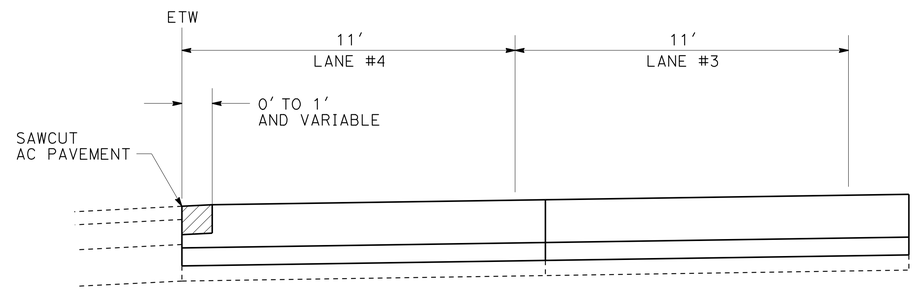

DETAIL A

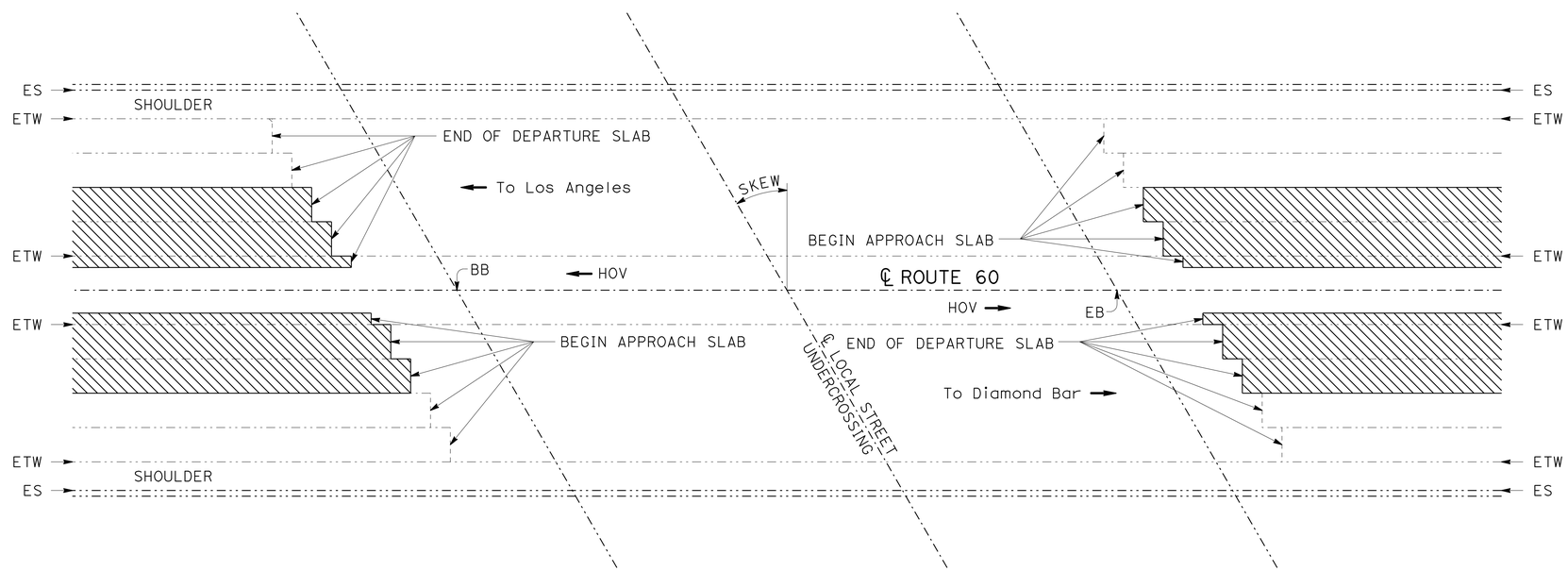

TYPICAL LIMITS OF PCC GRINDING

CONSTRUCTION DETAILS

NO SCALE

C-1

STATE OF CALIFORNIA - DEPARTMENT OF TRANSPORTATION
Caltrans MAINTENANCE ENGINEERING

FUNCTIONAL SUPERVISOR: HECTOR OBESO
CALCULATED-DESIGNED BY: VINCENT PANG
CHECKED BY: LARRY WIERING
REVISED BY
DATE REVISED

LAST REVISION 06-27-11
DATE PLOTTED => 23-JUN-2011
TIME PLOTTED => 13:06

Dist	COUNTY	ROUTE	POST MILES TOTAL PROJECT	SHEET No.	TOTAL SHEETS
07	LA	60	11.6/R23.6	13	75

Larry Wiering 06-9-11
REGISTERED CIVIL ENGINEER DATE

06-27-11
PLANS APPROVAL DATE

REGISTERED PROFESSIONAL ENGINEER
LARRY WIERING
No. C41247
Exp. 3-31-13
CIVIL
STATE OF CALIFORNIA

THE STATE OF CALIFORNIA OR ITS OFFICERS OR AGENTS SHALL NOT BE RESPONSIBLE FOR THE ACCURACY OR COMPLETENESS OF SCANNED COPIES OF THIS PLAN SHEET.

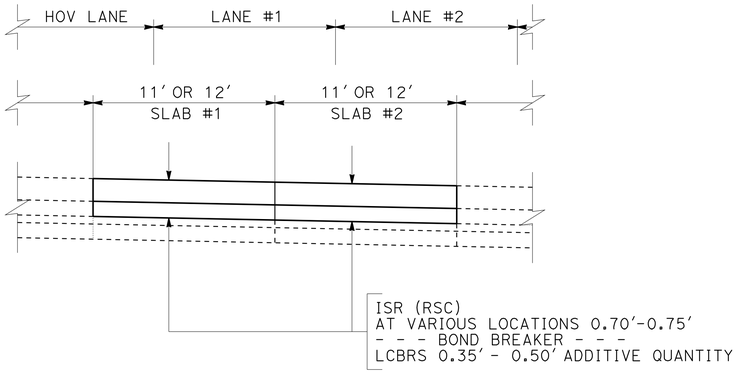

TYPICAL DETAIL FOR ISR (RSC) WITH DAMAGED BASE

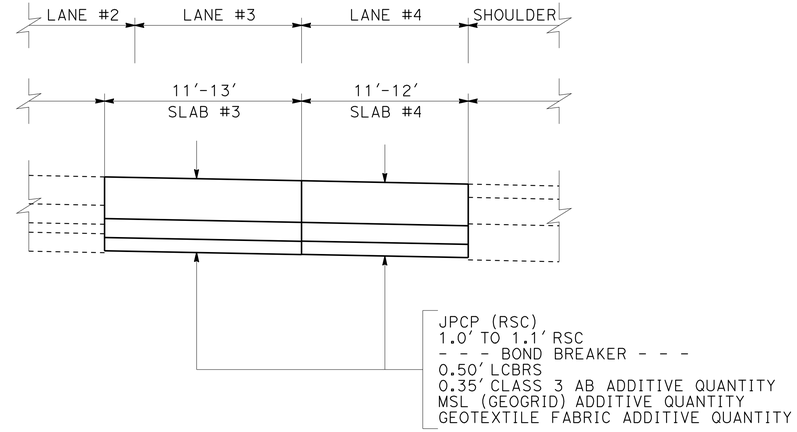

TYPICAL DETAIL FOR JPCP (RSC) WITH DAMAGED BASE

NOTES:

1. EXACT LIMITS OF CONTROL SECTION WILL BE DETERMINED BY THE ENGINEER.
2. SEE TYPICAL CROSS SECTIONS SHEET X-8 FOR STRUCTURAL SECTION.
3. SEE SIGN PLAN SHEET S-1 FOR HIGHWAY CONTROL SECTION MARKER (SIGN NO. (E)).

LEGEND:

CONTROL SECTION NO MSL (GEOGRID)

MSL MECHANICALLY STABILIZED LAYER

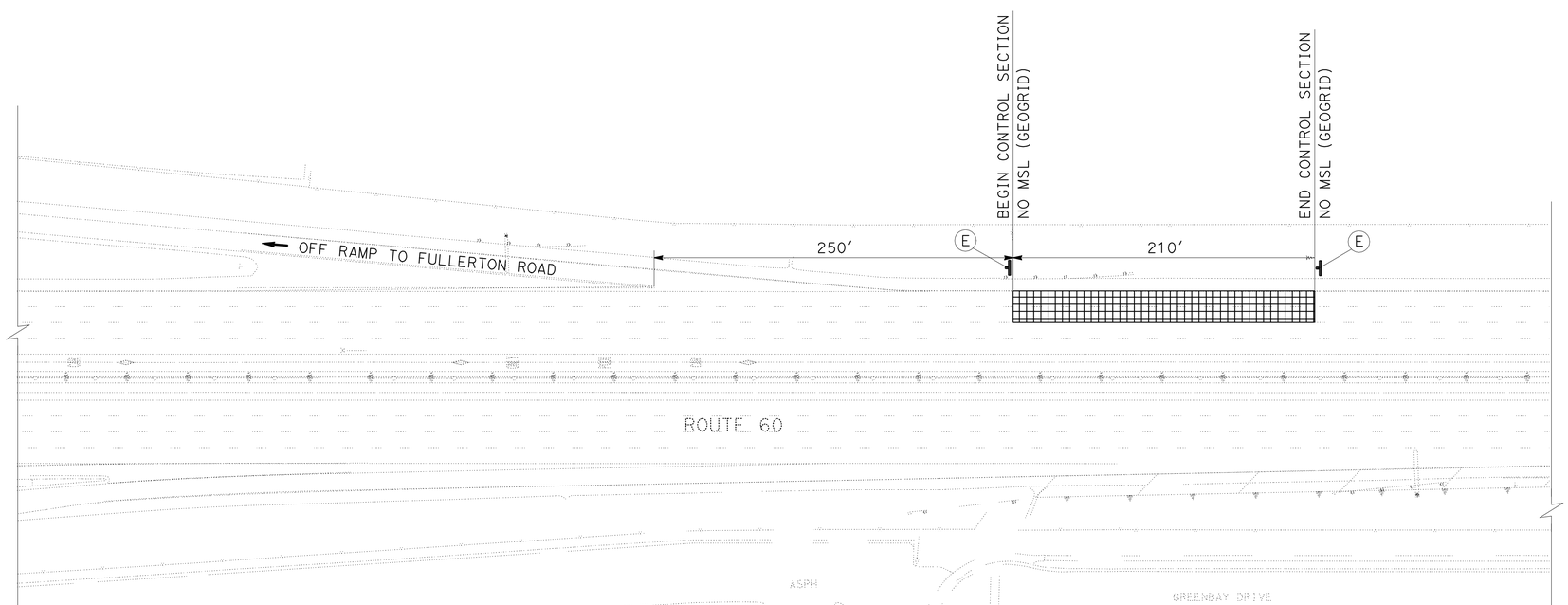

CONSTRUCTION DETAILS
NO SCALE

C-2

STATE OF CALIFORNIA - DEPARTMENT OF TRANSPORTATION
Caltrans MAINTENANCE ENGINEERING

FUNCTIONAL SUPERVISOR: HECTOR OBESO
CALCULATED-DESIGNED BY: VINCENT PANG
CHECKED BY: LARRY WIERING
REVISED BY
DATE REVISED

LAST REVISION 06-27-11
DATE PLOTTED => 23-JUN-2011
TIME PLOTTED => 15:37

Dist	COUNTY	ROUTE	POST MILES TOTAL PROJECT	SHEET No.	TOTAL SHEETS
07	LA	60	11.6/R23.6	14	75

Larry Wiering 06-9-11
REGISTERED CIVIL ENGINEER DATE

06-27-11
PLANS APPROVAL DATE

REGISTERED PROFESSIONAL ENGINEER
LARRY WIERING
No. C41247
Exp. 3-31-13
CIVIL
STATE OF CALIFORNIA

THE STATE OF CALIFORNIA OR ITS OFFICERS OR AGENTS SHALL NOT BE RESPONSIBLE FOR THE ACCURACY OR COMPLETENESS OF SCANNED COPIES OF THIS PLAN SHEET.

NOTES:

1. FOR DIKE POSITIONING IN SECTION A-A, SEE STANDARD PLAN A77C4

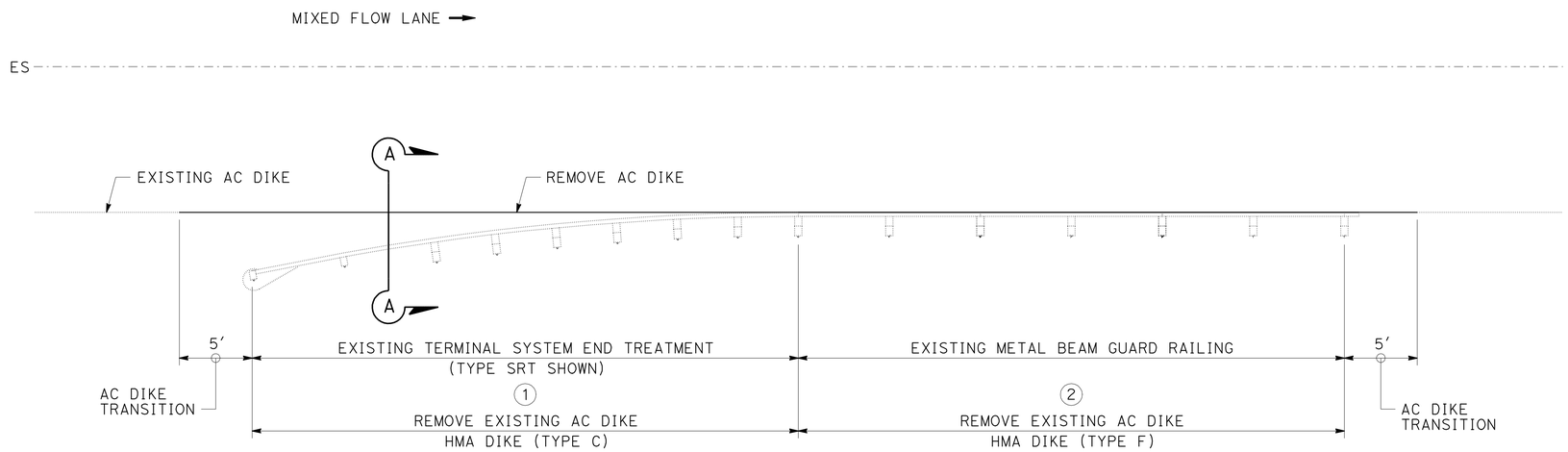

TYPICAL REMOVE AND PLACE AC DIKE DETAILS

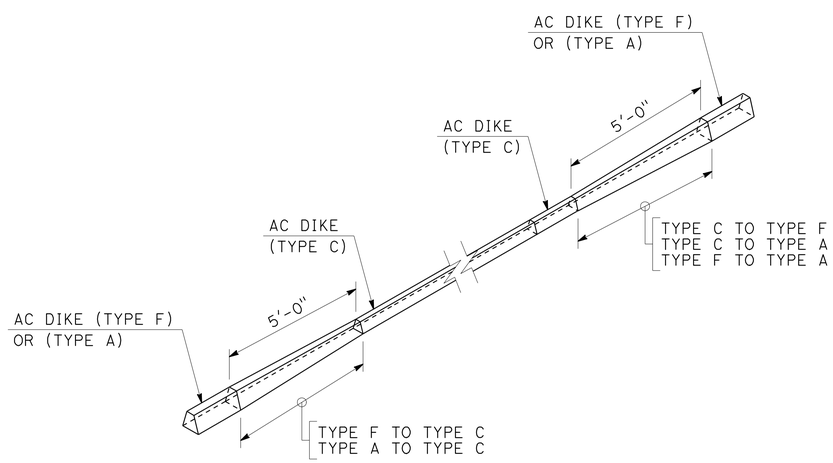

AC DIKE TRANSITION DETAILS

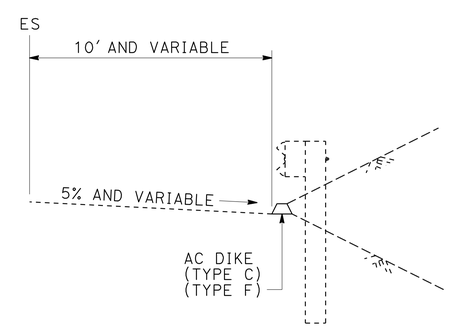

SECTION A-A

CONSTRUCTION DETAILS
NO SCALE

C-3

STATE OF CALIFORNIA - DEPARTMENT OF TRANSPORTATION
Caltrans MAINTENANCE ENGINEERING

FUNCTIONAL SUPERVISOR: HECTOR OBESO
CALCULATED-DESIGNED BY: VINCENT PANG
CHECKED BY: LARRY WIERING
REVISED BY
DATE REVISED

LAST REVISION 06-27-11 | DATE PLOTTED => 23-JUN-2011 | TIME PLOTTED => 13:06

Dist	COUNTY	ROUTE	POST MILES TOTAL PROJECT	SHEET No.	TOTAL SHEETS
07	LA	60	11.6/R23.6	15	75

Larry Wiering 06-9-11
REGISTERED CIVIL ENGINEER DATE

06-27-11
PLANS APPROVAL DATE

REGISTERED PROFESSIONAL ENGINEER
LARRY WIERING
No. C41247
Exp. 3-31-13
CIVIL
STATE OF CALIFORNIA

THE STATE OF CALIFORNIA OR ITS OFFICERS OR AGENTS SHALL NOT BE RESPONSIBLE FOR THE ACCURACY OR COMPLETENESS OF SCANNED COPIES OF THIS PLAN SHEET.

NOTES:

1. EXACT LIMITS OF TEST STRIP WILL BE DETERMINED BY THE ENGINEER.
2. SEE TYPICAL CROSS SECTIONS SHEET X-7 FOR STRUCTURAL SECTION.
3. SEE SIGN PLAN SHEET S-1 FOR HIGHWAY TEST STATION MARKER (SIGN NO. (D)).

LEGEND:

- JPCP (RSC) 550 PSI TEST SECTION

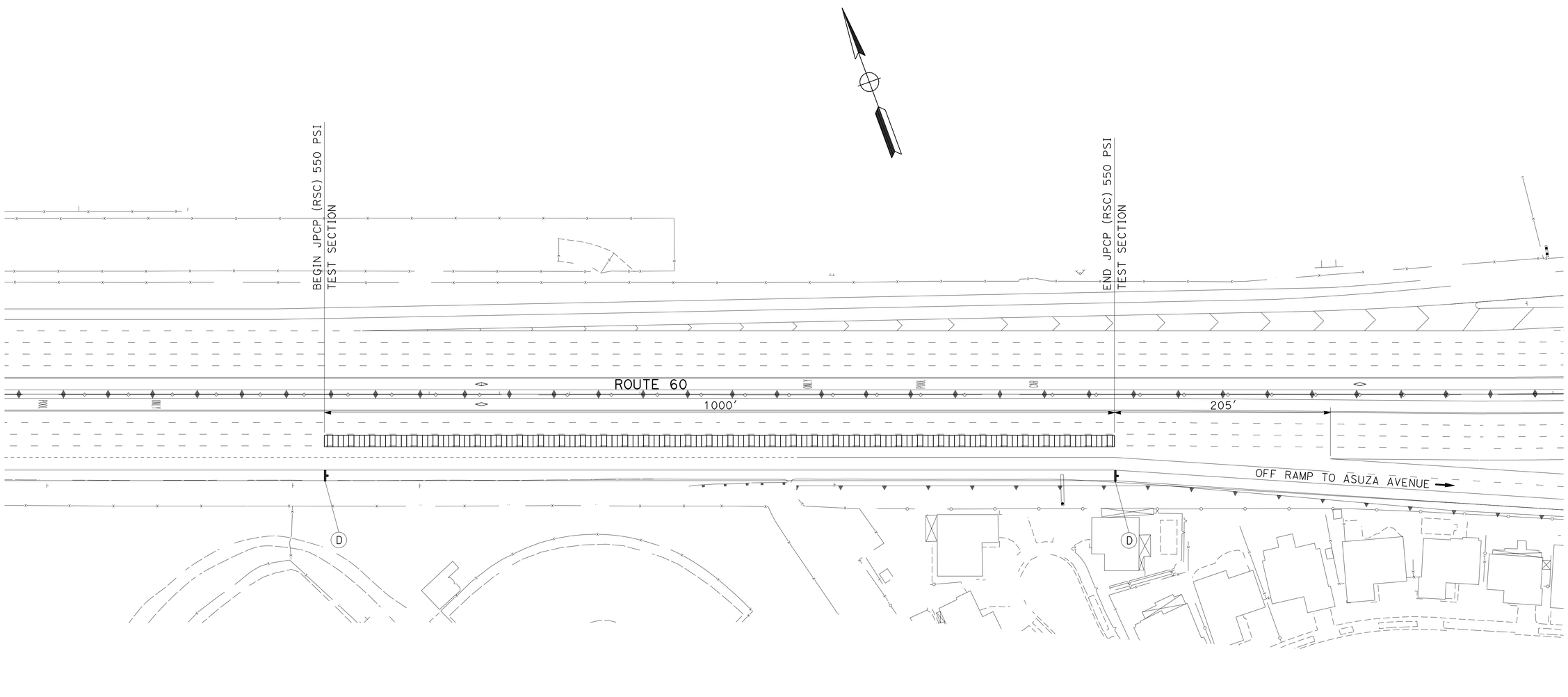

CONSTRUCTION DETAILS

NO SCALE

C-4

STATE OF CALIFORNIA - DEPARTMENT OF TRANSPORTATION
Caltrans MAINTENANCE ENGINEERING

FUNCTIONAL SUPERVISOR: HECTOR OBESO
CALCULATED-DESIGNED BY: VINCENT PANG
CHECKED BY: LARRY WIERING
REVISED BY
DATE REVISED

LAST REVISION 06-27-11
DATE PLOTTED => 23-JUN-2011
TIME PLOTTED => 13:06

Dist	COUNTY	ROUTE	POST MILES TOTAL PROJECT	SHEET No.	TOTAL SHEETS
07	LA	60	11.6/R23.6	16	75

03-30-11
REGISTERED CIVIL ENGINEER DATE

06-27-11
PLANS APPROVAL DATE

REGISTERED PROFESSIONAL ENGINEER WILLIAM C. SHEN No. C27460 Exp. 6-30-13 CIVIL STATE OF CALIFORNIA

THE STATE OF CALIFORNIA OR ITS OFFICERS OR AGENTS SHALL NOT BE RESPONSIBLE FOR THE ACCURACY OR COMPLETENESS OF SCANNED COPIES OF THIS PLAN SHEET.

NOTES:

1. CONTRACTOR SHALL VERIFY EXISTING DRAINS AND UTILITIES BEFORE COMMENCEMENT OF FIELD WORKS.
2. APPLY EROSION CONTROL (HYDROSEED) TO DETENTION BASINS AND BIOFILTRATION SWALE.
3. WHERE ACCESS ROAD JOIN FREEWAY RAMP, REMOVE 6" AC DIKE
4. ACESS ROAD AND RAMP SHALL HAVE 3" CLASS 3 AGGREGATE BASE WITH 3" HMA (TYPE A)

LEGEND:

DRAINAGE SYSTEM

DRAINAGE UNIT

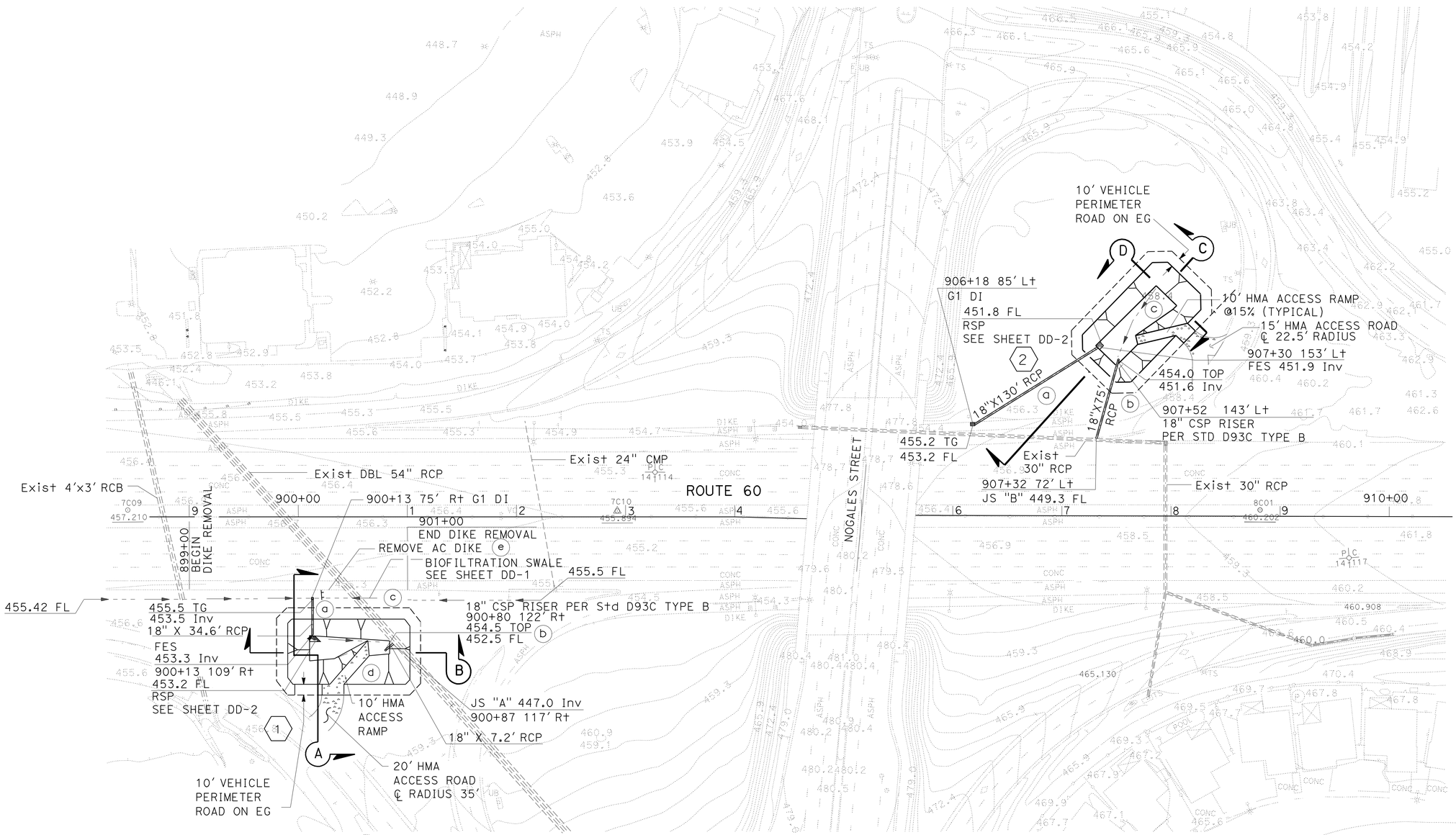

DRAINAGE PLAN

SCALE: 1" = 50'

D-1

STATE OF CALIFORNIA - DEPARTMENT OF TRANSPORTATION
STORM WATER DESIGN

WILLIAM SHEN — CALCULATED-DESIGNED BY
RON RUSSAK — CHECKED BY
RON RUSSAK — FUNCTIONAL SUPERVISOR
REVISED BY — DATE REVISED

LAST REVISION 06-27-11 — DATE PLOTTED => 23-JUN-2011 — TIME PLOTTED => 13:06

Dist	COUNTY	ROUTE	POST MILES TOTAL PROJECT	SHEET No.	TOTAL SHEETS
07	LA	60	11.6/R23.6	17	75

REGISTERED CIVIL ENGINEER 03-30-11 DATE

06-27-11
PLANS APPROVAL DATE

REGISTERED PROFESSIONAL ENGINEER WILLIAM C. SHEN No. C27460 Exp. 6-30-13 CIVIL STATE OF CALIFORNIA

THE STATE OF CALIFORNIA OR ITS OFFICERS OR AGENTS SHALL NOT BE RESPONSIBLE FOR THE ACCURACY OR COMPLETENESS OF SCANNED COPIES OF THIS PLAN SHEET.

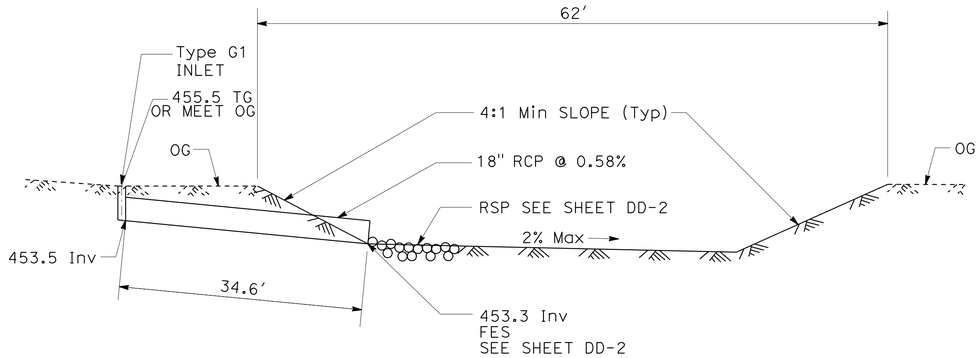

SECTION A-A

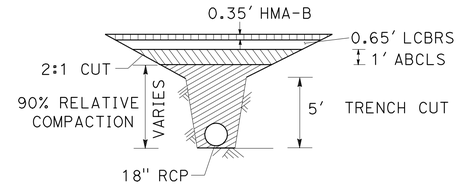

RAMP TRENCH BACKFILL

NO SCALE

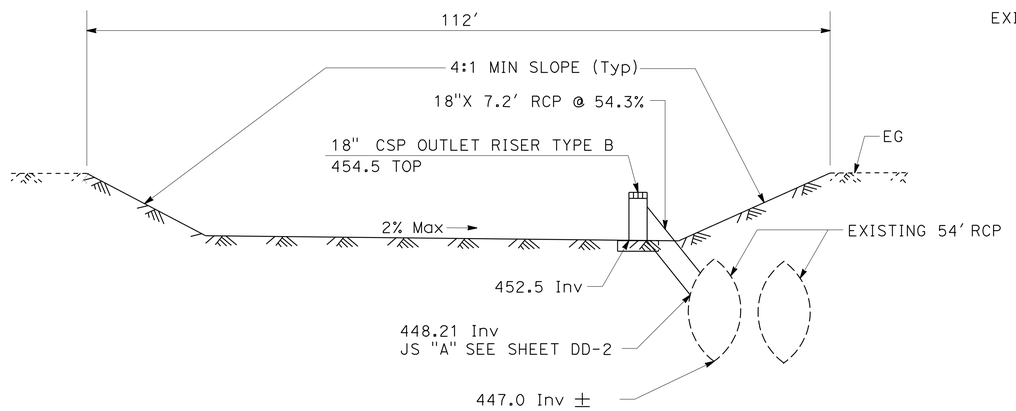

SECTION B-B

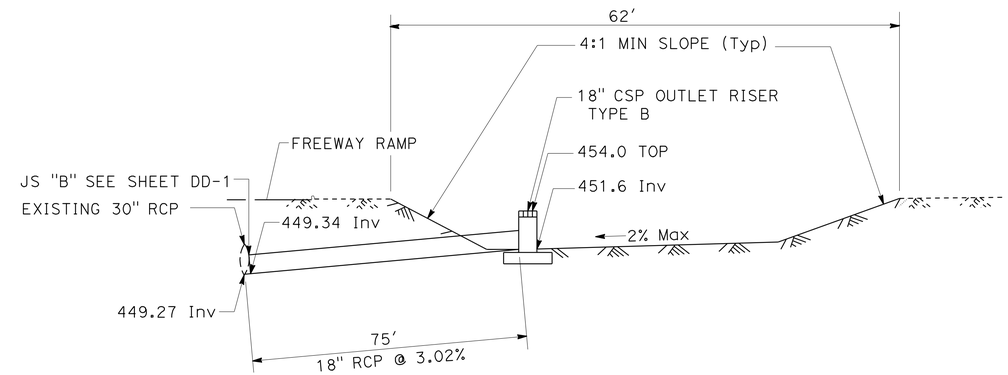

SECTION D-D

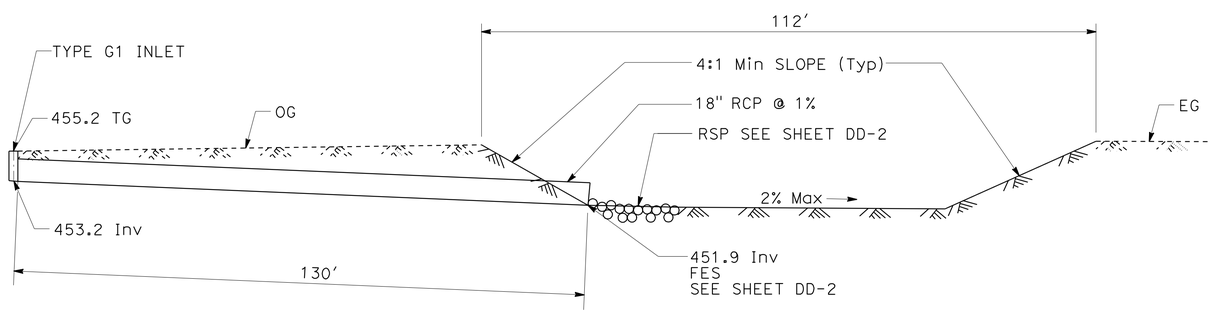

SECTION C-C

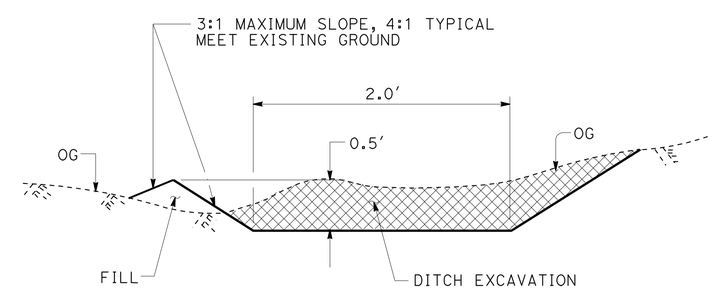

BIOFILTRATION SWALE (TYPICAL)

DRAINAGE DETAILS

NO SCALE

DD-1

STATE OF CALIFORNIA - DEPARTMENT OF TRANSPORTATION
Caltrans® STORM WATER DESIGN

FUNCTIONAL SUPERVISOR: RON RUSSAK
CALCULATED-DESIGNED BY: WILLIAM SHEN
CHECKED BY: RON RUSSAK
REVISED BY
DATE REVISED

LAST REVISION 06-27-11 | DATE PLOTTED => 23-JUN-2011 | TIME PLOTTED => 13:07

Dist	COUNTY	ROUTE	POST MILES TOTAL PROJECT	SHEET No.	TOTAL SHEETS
07	LA	60	11.6/R23.6	18	75

REGISTERED CIVIL ENGINEER 03-30-11 DATE

06-27-11
PLANS APPROVAL DATE

REGISTERED PROFESSIONAL ENGINEER WILLIAM C. SHEN No. C27460 Exp. 6-30-13 CIVIL STATE OF CALIFORNIA

THE STATE OF CALIFORNIA OR ITS OFFICERS OR AGENTS SHALL NOT BE RESPONSIBLE FOR THE ACCURACY OR COMPLETENESS OF SCANNED COPIES OF THIS PLAN SHEET.

NOTES:

1. VALUES FOR 'A', 'B', 'C', 'D1', 'D2', 'E', 'L', Elev 'A', Elev 'B', Elev 'R' AND Elev 'S' ARE SHOWN ON DRAINAGE PLANS.
2. EMBEDMENT 'P' SHALL BE 5" FOR PIPE DIAMETERS 12" TO 96" AND 8" FOR PIPE DIAMETERS 102" TO 144".
3. FLOOR OF STRUCTURE SHALL BE STEEL TROWELED TO SPRING LINE.
4. REINFORCEMENT STEEL SHALL BE 1½" CLEAR FROM FACE OF CONCRETE UNLESS OTHERWISE SHOWN. A AND B BARS NEED NOT BE LONGER THAN THE OUTSIDE DIAGONAL WIDTH OF THE LATER SPUR.
5. STEEL SCHEDULE:

Dia B or D2	A or B bars	C or F bars
12" to 39"	#5 @ 3"	#4 @ 6"
42" to 84"	#6 @ 3"	#5 @ 6"
90" to 144"	#7 @ 3"	#6 @ 6"
Tie bars - #3 @ 18" C-C		

6. Elev 'S' APPLIES AT CENTER OF MAIN LINE ON PROLONGATION OF INVERT OF SPUR.
7. JUNCTION STRUCTURE SHALL BE POURED IN ON CONTINUOUS OPERATION, EXCEPT THAT THE CONTRACTOR SHALL HAVE THE OPTION OF PLACING AT THE SPRING LINE A CONSTRUCTION JOINT WITH A LONGITUDINAL KEYWAY.
8. LATERALS - WHERE LATERALS ENTER BOTH SIDES OF STRUCTURE, SHALL BE DESIGNATED ON THE DRAINAGE PLAN AS A RIGHT OR LEFT, FACING IN THE DIRECTION OF STATIONING.

TABLE OF VALUES FOR F AND T

D2 or B	F or T	D2 or B	F or T
12"	4"	63"	10"
15"	4 1/4"	66"	10 1/4"
18"	4 1/2"	69"	10 3/4"
21"	5"	72"	11"
24"	5 1/4"	78"	11 3/4"
27"	5 1/2"	84"	12 1/2"
30"	6"	90"	13 1/4"
33"	6 1/4"	96"	14"
36"	6 1/2"	102"	15 1/2"
39"	7"	108"	16"
42"	7 1/2"	114"	16 1/2"
45"	7 3/4"	120"	17"
48"	8"	126"	17"
51"	8 1/2"	132"	17 1/2"
54"	9"	138"	17 1/2"
57"	9 1/4"	144"	18"
60"	9 1/2"		

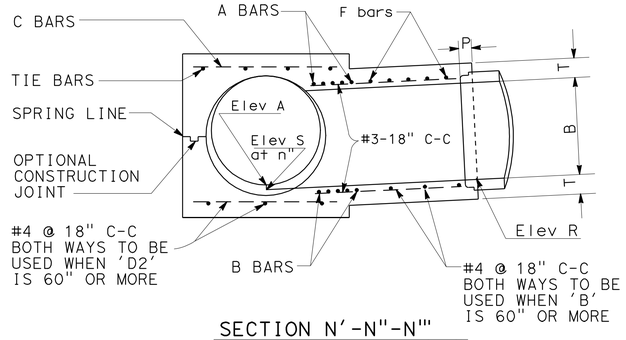

SECTION N'-N''-N'''
PROJECTED ON M-M'-M'''

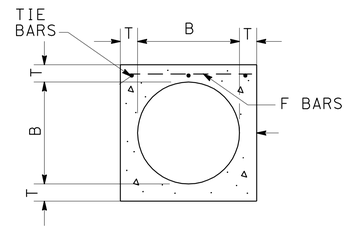

SECTION G-G

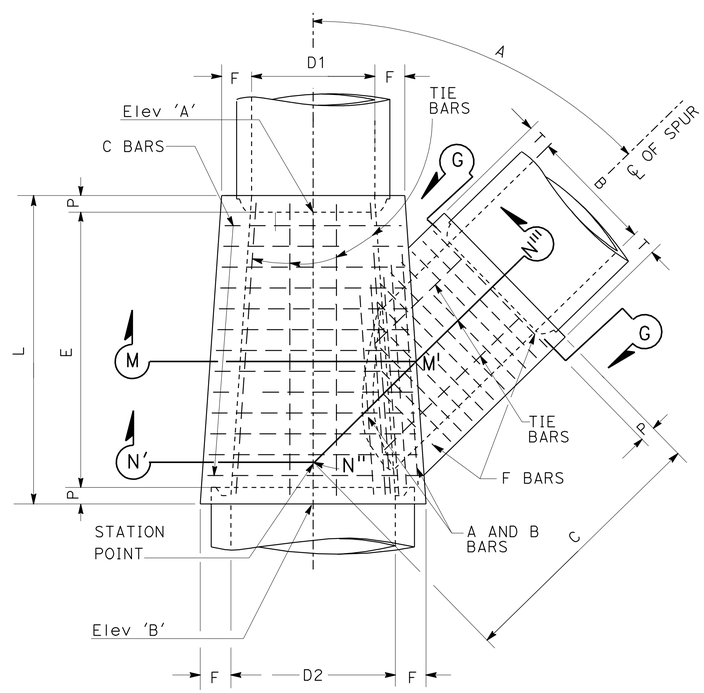

PLAN

D	Min COVER
8"	6"
12"	6"
18"	12"
24"	12"

PIPE SLOPE S - %	Ø	D=8"	D=12"		D=18"		D=24"	
		L_1	L_1	L_2	L_1	L_2	L_1	L_2
10-15	6°-9°	2'-6"	3'-3"	1'-3"	5'-6"	2'-4"	6'-6"	2'-5"
15-20	9°-11°	2'-7"	3'-3"	1'-3"	5'-6"	2'-5"	6'-7"	2'-5"
20-25	11°-14°	2'-7"	3'-4"	1'-3"	5'-7"	2'-5"	6'-7"	2'-6"
25-30	14°-17°	2'-7"	3'-4"	1'-4"	5'-7"	2'-5"	6'-8"	2'-6"
30-35	17°-19°	2'-7"	3'-4"	1'-4"	5'-7"	2'-6"	6'-9"	2'-7"
35-40	19°-22°	2'-7"	3'-5"	1'-4"	5'-8"	2'-6"	6'-9"	2'-7"
40-45	22°-24°	2'-8"	3'-5"	1'-5"	5'-8"	2'-7"	6'-10"	2'-8"
45-50	24°-26°	2'-8"	3'-5"	1'-5"	5'-8"	2'-7"	6'-10"	2'-8"

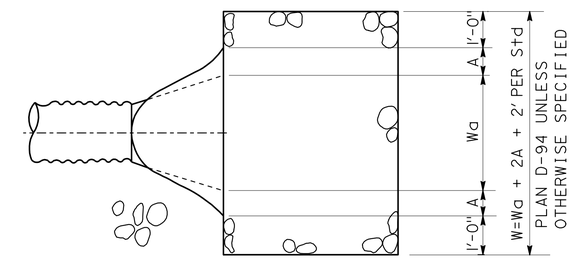

PLAN

ROCK SLOPE PROTECTION (RSP)

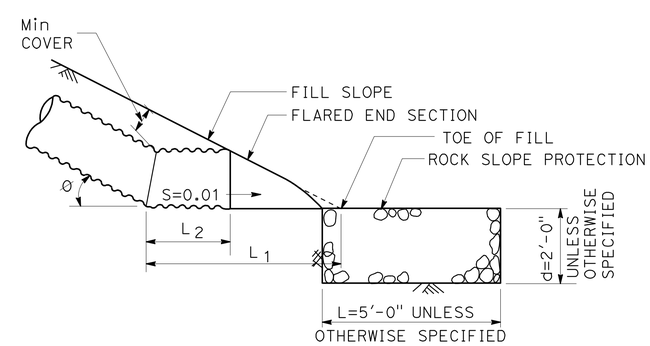

PROFILE

OUTLET DETAIL FOR CSP @ TOE OF SLOPE

JUNCTION STRUCTURE "B"

A = 76.8°
B = 18"
C = 2.25'
D1 = D2 = 30"
E = 2.45'
L = 4.0'
Elev A = 449.30
Elev B = 449.28
Elev R = 449.37
Elev S = 449.27

JUNCTION STRUCTURE "A"

A = 90°
B = 18"
C = 3.25'
D1= D2 = 54"
E = 2.45'
L = 4.0'
Elev A = 447.00
Elev B = 446.84
Elev R = 449.57
Elev S = 446.99

JUNCTION STRUCTURE No. 2 (JS 2)

DRAINAGE DETAILS

NO SCALE

DD-2

STATE OF CALIFORNIA - DEPARTMENT OF TRANSPORTATION
Caltrans® STORM WATER DESIGN

WILLIAM SHEN — REVISED BY
RON RUSSAK — DATE REVISED
CALCULATED-DESIGNED BY
CHECKED BY
FUNCTIONAL SUPERVISOR
RON RUSSAK

LAST REVISION 06-27-11 | DATE PLOTTED => 23-JUN-2011 | TIME PLOTTED => 13:07

Dist	COUNTY	ROUTE	POST MILES TOTAL PROJECT	SHEET No.	TOTAL SHEETS
07	LA	60	11.6/R23.6	19	75

REGISTERED CIVIL ENGINEER 03-30-11 DATE

06-27-11
PLANS APPROVAL DATE

REGISTERED PROFESSIONAL ENGINEER WILLIAM C. SHEN No. C27460 Exp. 6-30-13 CIVIL STATE OF CALIFORNIA

THE STATE OF CALIFORNIA OR ITS OFFICERS OR AGENTS SHALL NOT BE RESPONSIBLE FOR THE ACCURACY OR COMPLETENESS OF SCANNED COPIES OF THIS PLAN SHEET.

ABBREVIATION:

(N) = NOT A SEPARATE PAY ITEM, FOR INFORMATION ONLY.

DRAINAGE QUANTITIES

DRAINAGE PLAN SHEET No.	DRAINAGE SYSTEM No. ⬡	DRAINAGE UNIT ○	MISCELLANEOUS IRON AND STEEL	18" RCP	18" CSP RISER (0.168" THICK)	MINOR CONCRETE (MINOR STRUCTURE)	ROADWAY EXCAVATION	ROADWAY EXCAVATION (TYPE Z-2) (AERIALLY DEPOSITED LEAD)	DITCH EXCAVATION	18" STEEL FLARED END SECTION	ROCK SLOPE PROTECTION (DRAINAGE OUTLET)	HOT MIX ASPHLAT (TYPE A) (3" THICK)	CLASS 3 AGGREGATE BASE (3" THICK)	REMOVE AC DIKE	EROSION CONTROL (HYDROSEED)	BIOFILTRATION SWALE (N)	DRAINAGE INLET HEIGHT (N)	JUNCTION STRUCTURE - 18" X 54" (N)	JUNCTION STRUCTURE - 18" X 30" (N)	G1 INLET (N)	DESCRIPTION	LOCATION	DRAINAGE PLAN SHEET No.	DRAINAGE SYSTEM No. ⬡	DRAINAGE UNIT ○
			LB	LF	LF	CY	CY	CY	CY	EA	CY	TON	CY	LF	SQ FT	LF	LF	EA	EA	EA					
D-1	1	a	263	35		0.8				1	2.0						2.0			1	TYPE G1 INLET/18" RCP	75' Rt 900+13 ℄ ROUTE 60	D-1	1	a
		b		8	2.4	3.4												1			18" RISER/CSP AND JUNCTION Str	122' Rt 900+80 ℄ ROUTE 60			b
		c						15	15							200					BIOFILTRATION SWALE	75' Rt 899+00 TO 901+00 ℄ ROUTE 60			c
		d					407	203				25	11.5		7380						DETENTION BASIN/ACCESS Rd	122' Rt 900+50 ℄ ROUTE 60			d
		e												200							REMOVE AC DIKE	65' Rt 899+00 TO 901+00 ℄ ROUTE 60			e
D-1	2	a	263	130		0.8					2.0						2.0			1	TYPE G1 INLET/18" RCP	85' Lt 906+18 ℄ ROUTE 60	D-1	2	a
		b		75	2.0	1.4													1		18" RISER/CSP AND JUNCTION Str	143' Lt 907+52 ℄ ROUTE 60			b
		c					689	251				20	12.5		7200						DETENTION BASIN/ACCESS Rd	160' Lt 907+40 ℄ ROUTE 60			c
			526	248	4.4	6.4	1096	469	15	1	4.0	45	24.0	200	14,580						TOTAL				

DRAINAGE QUANTITIES

DQ-1

STATE OF CALIFORNIA - DEPARTMENT OF TRANSPORTATION
Caltrans STORM WATER DESIGN

CALCULATED-DESIGNED BY WILLIAM SHEN
CHECKED BY RON RUSSAK
FUNCTIONAL SUPERVISOR RON RUSSAK
REVISED BY
DATE REVISED

LAST REVISION 06-27-11
DATE PLOTTED => 23-JUN-2011
TIME PLOTTED => 13:07

Dist	COUNTY	ROUTE	POST MILES TOTAL PROJECT	SHEET No.	TOTAL SHEETS
07	LA	60	11.6/R23.6	20	75

Larry Wiering 06-9-11
REGISTERED CIVIL ENGINEER DATE

06-27-11
PLANS APPROVAL DATE

REGISTERED PROFESSIONAL ENGINEER LARRY WIERING No. C41247 Exp. 3-31-13 CIVIL STATE OF CALIFORNIA

THE STATE OF CALIFORNIA OR ITS OFFICERS OR AGENTS SHALL NOT BE RESPONSIBLE FOR THE ACCURACY OR COMPLETENESS OF SCANNED COPIES OF THIS PLAN SHEET.

NOTES:

1. LOCATIONS OF CONSTRUCTION AREA SIGNS SHOWN ARE APPROXIMATE. EXACT LOCATION WILL BE DETERMINED BY THE ENGINEER.
2. "TRAFFIC FINES DOUBLED IN CONSTRUCTION ZONES" SIGN SHALL BE PLACED APPROXIMATELY 500 FEET IN ADVANCE OF "ROAD WORK AHEAD" SIGN OF AS DETERMINED BY THE ENGINEER.
3. THE CONSTRUCTION AREA SIGNS ALSO INCLUDE THE DETOUR ROUTE SIGNS SHOWN ON SHEETS DE-1 TO DE-3 .

STATIONARY MOUNTED CONSTRUCTION AREA SIGNS

SIGN NUMBER	SIGN CODE	PANEL SIZE	SIGN MESSAGE	NUMBER OF POSTS AND SIZE	NUMBER OF SIGNS	
					CS-1	CS-2
A	G20-2	48" x 24"	END ROAD WORK	1 - 4" x 6"	11	9
B	W20-1	48" x 48"	ROAD WORK AHEAD	1 - 6" x 6"	15	15
C	C40 (CA)	144" x 60"	TRAFFIC FINES DOUBLED IN CONSTRUCTION ZONES	2 - 6" x 6"	3	2

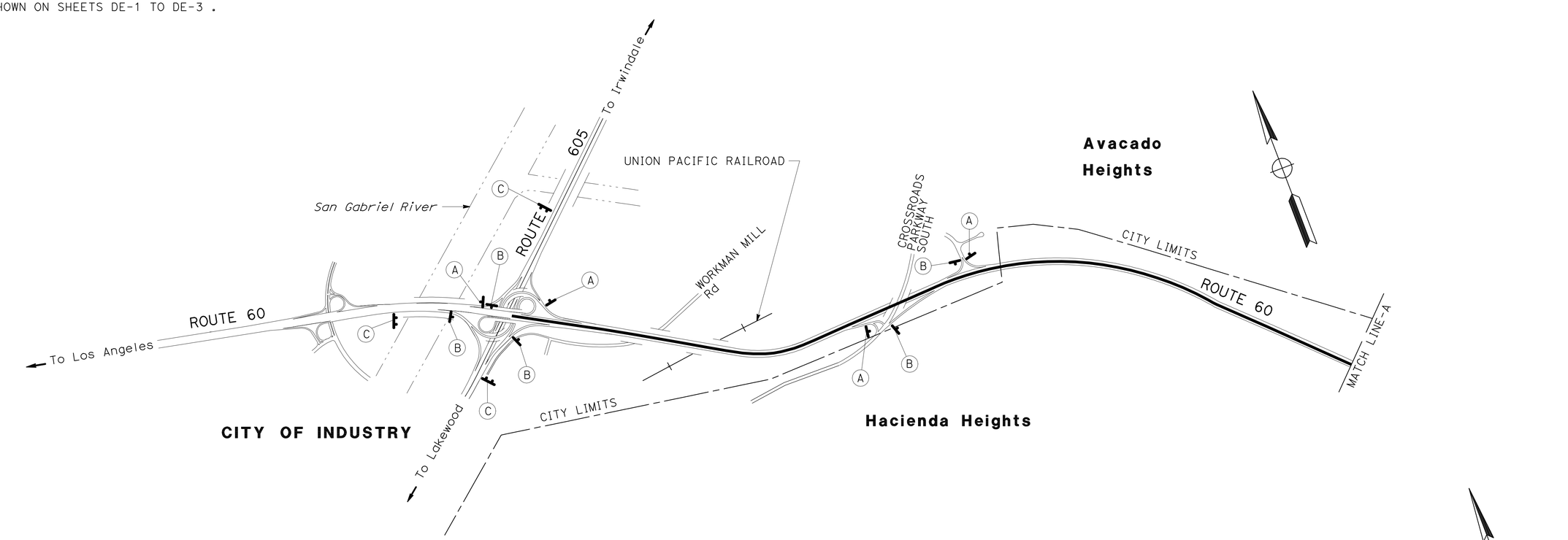

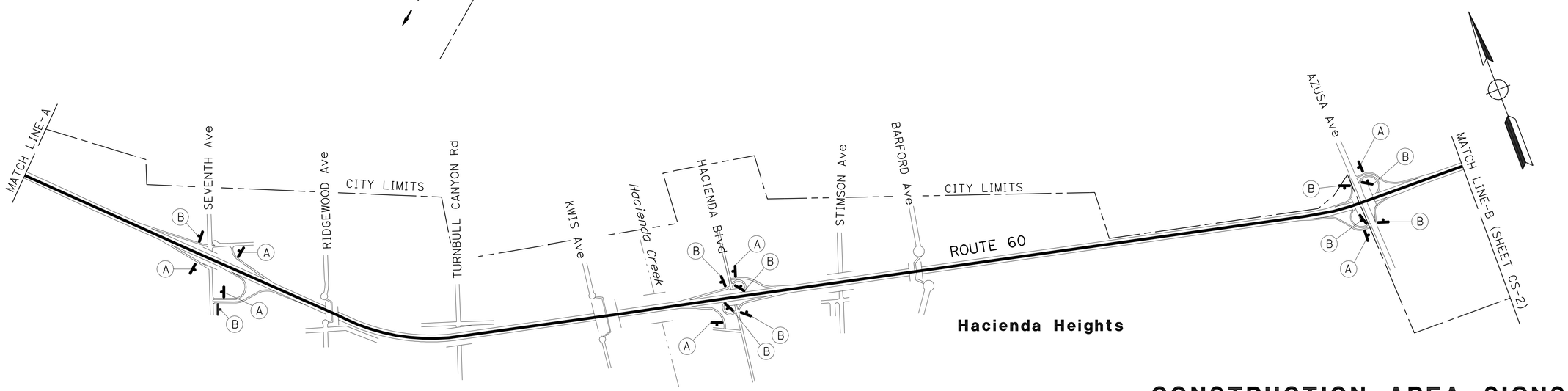

CONSTRUCTION AREA SIGNS

NO SCALE

CS-1

THIS PLAN ACCURATE FOR CONSTRUCTION AREA SIGNS WORK ONLY.

STATE OF CALIFORNIA - DEPARTMENT OF TRANSPORTATION
Caltrans MAINTENANCE ENGINEERING

FUNCTIONAL SUPERVISOR: HECTOR OBESO
CALCULATED-DESIGNED BY: VINCENT PANG
CHECKED BY: LARRY WIERING
REVISED BY
DATE REVISED

LAST REVISION 06-27-11
DATE PLOTTED => 23-JUN-2011
TIME PLOTTED => 13:07

Dist	COUNTY	ROUTE	POST MILES TOTAL PROJECT	SHEET No.	TOTAL SHEETS
07	LA	60	11.6/R23.6	21	75

Larry Wiering 06-9-11
REGISTERED CIVIL ENGINEER DATE

06-27-11
PLANS APPROVAL DATE

REGISTERED PROFESSIONAL ENGINEER
LARRY WIERING
No. C41247
Exp. 3-31-13
CIVIL
STATE OF CALIFORNIA

THE STATE OF CALIFORNIA OR ITS OFFICERS OR AGENTS SHALL NOT BE RESPONSIBLE FOR THE ACCURACY OR COMPLETENESS OF SCANNED COPIES OF THIS PLAN SHEET.

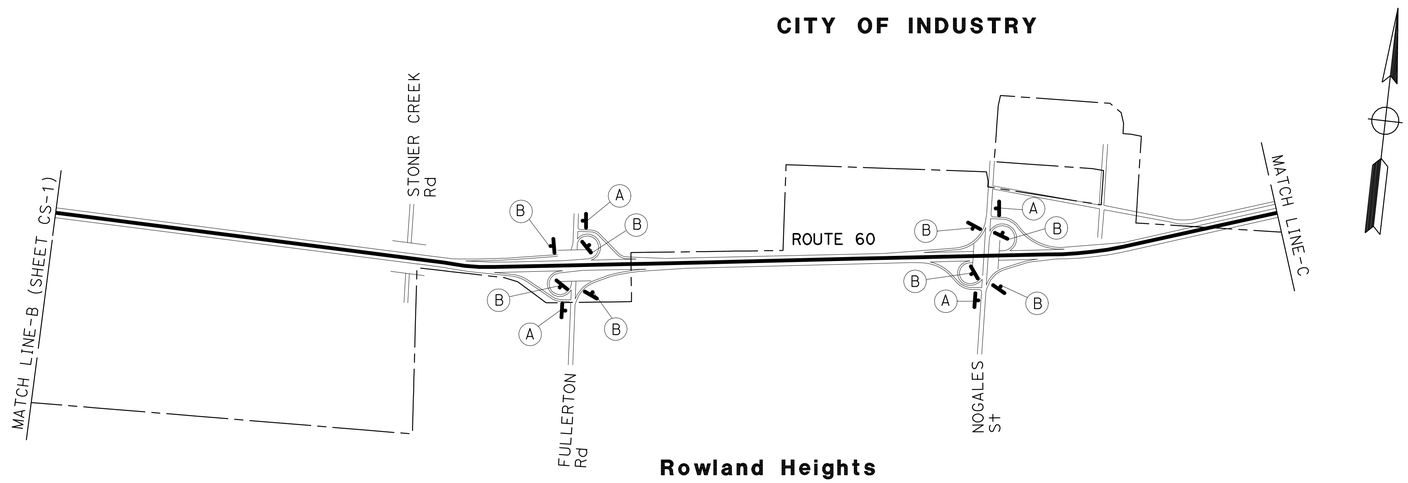

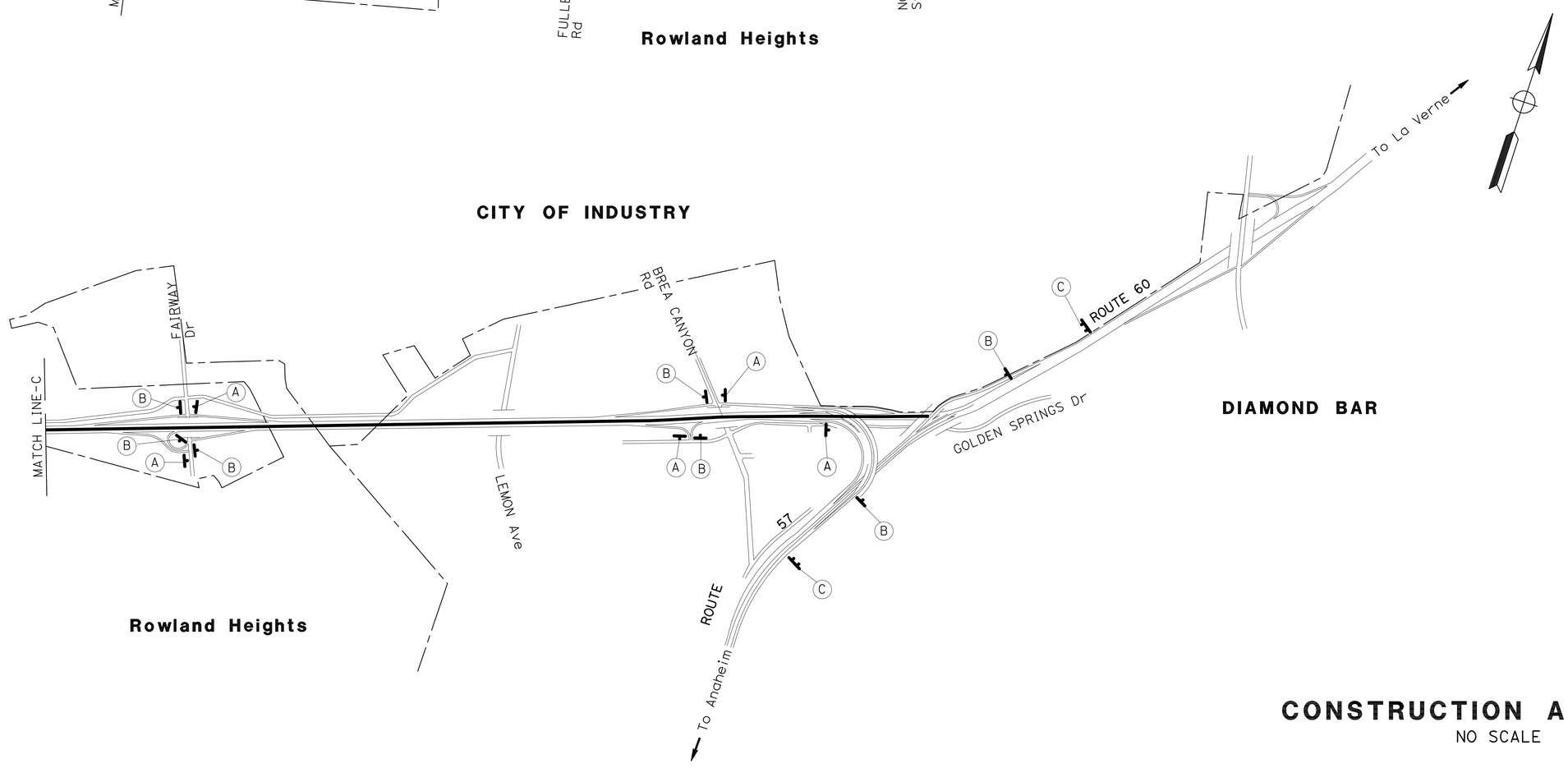

CONSTRUCTION AREA SIGNS

NO SCALE

CS-2

THIS PLAN ACCURATE FOR CONSTRUCTION AREA SIGNS WORK ONLY.

STATE OF CALIFORNIA - DEPARTMENT OF TRANSPORTATION
Caltrans MAINTENANCE ENGINEERING

FUNCTIONAL SUPERVISOR: HECTOR OBESO

CALCULATED-DESIGNED BY: VINCENT PANG
CHECKED BY: LARRY WIERING

REVISED BY
DATE REVISED

LAST REVISION 06-27-11
DATE PLOTTED => 23-JUN-2011
TIME PLOTTED => 13:07

Dist	COUNTY	ROUTE	POST MILES TOTAL PROJECT	SHEET No.	TOTAL SHEETS
07	LA	60	11.6/R23.6	22	75

REGISTERED CIVIL ENGINEER 06-2-11 DATE

06-27-11
PLANS APPROVAL DATE

REGISTERED PROFESSIONAL ENGINEER DARA LOEUNG No. 65470 Exp. 9/30/11 CIVIL STATE OF CALIFORNIA

THE STATE OF CALIFORNIA OR ITS OFFICERS OR AGENTS SHALL NOT BE RESPONSIBLE FOR THE ACCURACY OR COMPLETENESS OF SCANNED COPIES OF THIS PLAN SHEET.

LEGEND:

- CHANNELIZER
- TEMPORARY SIGN
- TYPE II BARRICADES (2 EACH PER LANE)
- TYPE VI ARROWS PAVEMENT MARKING
- FLASHING ARROW SIGN (FAS)
- FAS SUPPORT OR TRAILER
- DIRECTION OF TRAVEL
- PORTABLE FLASHING BEACON
- (No) TEMPORARY TRAFFIC STRIPE DETAIL NUMBER PER STANDARD PLANS (WITH NUMBER, OR NUMBER & LETTER)
- (X) TEMPORARY TRAFFIC STRIPE DETAIL NUMBER PER PAVEMENT DELINEATION DETAIL SHEET (WITH LETTER, OR NUMBER & LETTER)

SIGN CODE LEGEND:

XXX-XX MANUAL ON UNIFORM TRAFFIC CONTROL DEVICES (MUTCD DESIGNATION)

XXX-XX(CA) CALIFORNIA DESIGNATION

NOTES:

1. LOCATIONS OF CONSTRUCTION AREA SIGNS SHOWN ARE APPROXIMATE, EXACT LOCATIONS WILL BE DETERMINED BY ENGINEER.
2. EXACT LOCATIONS OF PCMS WILL BE DETERMINED BY THE ENGINEER.
3. CONFLICTING SIGNING AND PAVEMENT DELINEATION SHALL BE REMOVED.
4. ONE TYPE I FLASHING ARROW SIGN FOR EACH LANE CLOSED.
5. ADVANCE WARNING SIGNS ON EACH SIDE OF THE ROADWAY SHALL BE EQUIPPED WITH AT LEAST TWO FLAGS FOR DAYTIME CLOSURE. FLAGS SHALL BE AT LEAST 16" x 16" AND SHALL BE ORANGE OR FLUORESCENT RED-ORANGE. FLASHING BEACONS SHALL BE PLACED AT THE LOCATIONS INDICATED FOR LANE CLOSURE DURING HOURS OF DARKNESS.
6. COVER CONFLICTING HOV SIGNS DURING CLOSURE.

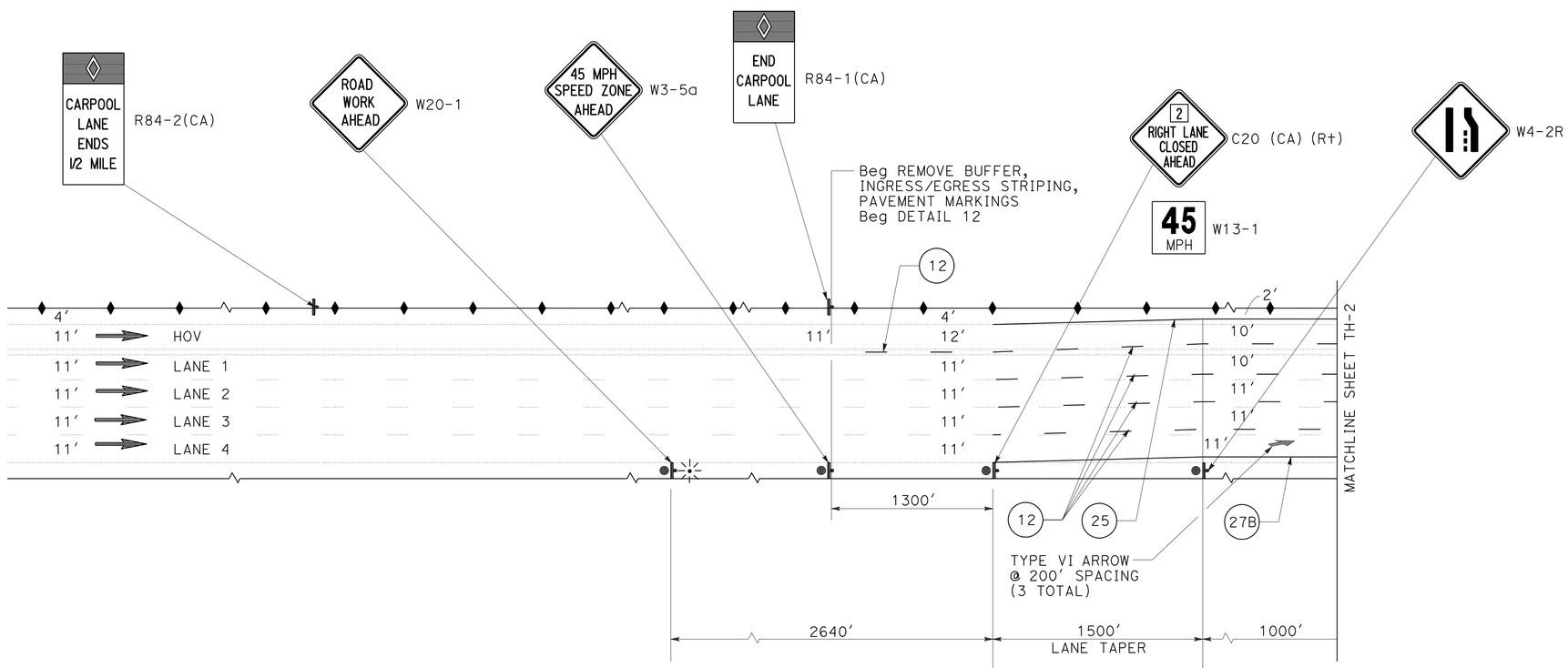

2 LANE CLOSURE TRAFFIC HANDLING PLAN

NO SCALE

TH-1

STATE OF CALIFORNIA - DEPARTMENT OF TRANSPORTATION
Caltrans® TRAFFIC DESIGN

FUNCTIONAL SUPERVISOR: GRISH BIGLARIAN
CALCULATED-DESIGNED BY: EUGENE BRAVO
CHECKED BY: DARA LOEUNG
REVISED BY / DATE REVISED

LAST REVISION 06-27-11 | DATE PLOTTED => 23-JUN-2011 | TIME PLOTTED => 13:07

Dist	COUNTY	ROUTE	POST MILES TOTAL PROJECT	SHEET No.	TOTAL SHEETS
07	LA	60	11.6/R23.6	23	75

REGISTERED CIVIL ENGINEER 06-2-11 DATE

06-27-11
PLANS APPROVAL DATE

REGISTERED PROFESSIONAL ENGINEER DARA LOEUNG No. 65470 Exp. 9/30/11 CIVIL STATE OF CALIFORNIA

THE STATE OF CALIFORNIA OR ITS OFFICERS OR AGENTS SHALL NOT BE RESPONSIBLE FOR THE ACCURACY OR COMPLETENESS OF SCANNED COPIES OF THIS PLAN SHEET.

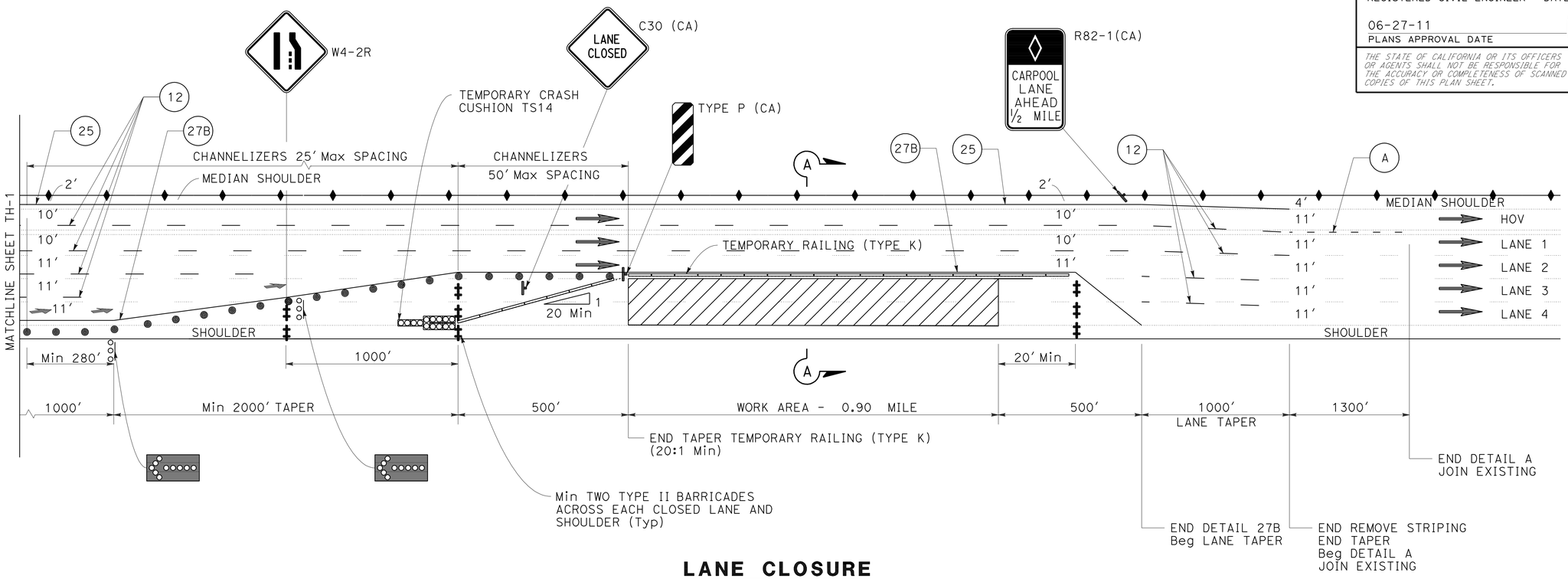

LANE CLOSURE

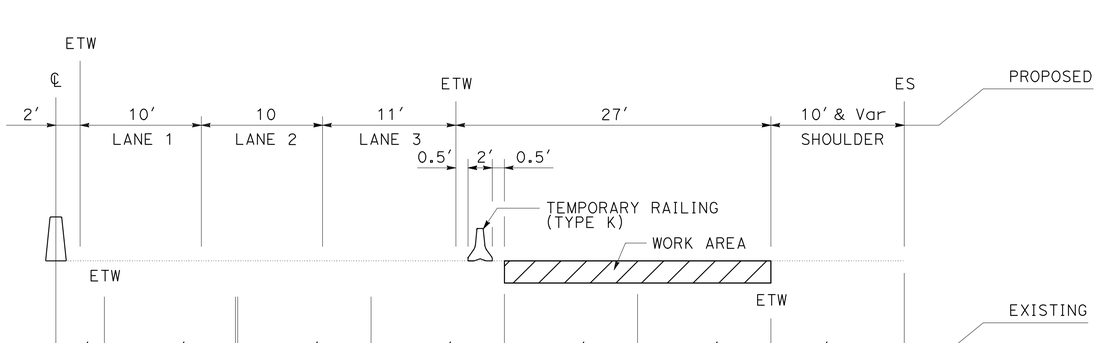

SECTION A-A

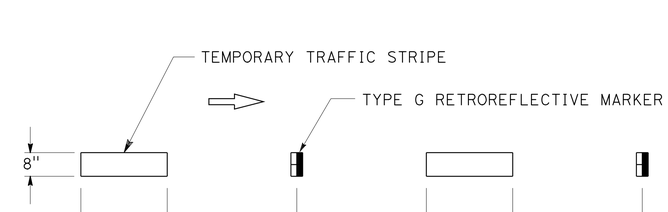

DETAIL A

INGRESS/EGRESS STRIPING DETAIL

2 LANE CLOSURE TRAFFIC HANDLING PLAN

NO SCALE

TH-2

STATE OF CALIFORNIA - DEPARTMENT OF TRANSPORTATION
Caltrans TRAFFIC DESIGN

FUNCTIONAL SUPERVISOR: GRISH BIGLARIAN
CALCULATED-DESIGNED BY: EUGENE BRAVO
CHECKED BY: DARA LOEUNG
REVISED BY / DATE REVISED

LAST REVISION 06-27-11 | DATE PLOTTED => 23-JUN-2011 | TIME PLOTTED => 13:07

Dist	COUNTY	ROUTE	POST MILES TOTAL PROJECT	SHEET No.	TOTAL SHEETS
07	LA	60	11.6/R23.6	24	75

REGISTERED CIVIL ENGINEER 05-24-11 DATE

06-27-11
PLANS APPROVAL DATE

REGISTERED PROFESSIONAL ENGINEER CHEN CHUNG LIU No. C 67562 Exp. 6-30-13 CIVIL STATE OF CALIFORNIA

THE STATE OF CALIFORNIA OR ITS OFFICERS OR AGENTS SHALL NOT BE RESPONSIBLE FOR THE ACCURACY OR COMPLETENESS OF SCANNED COPIES OF THIS PLAN SHEET.

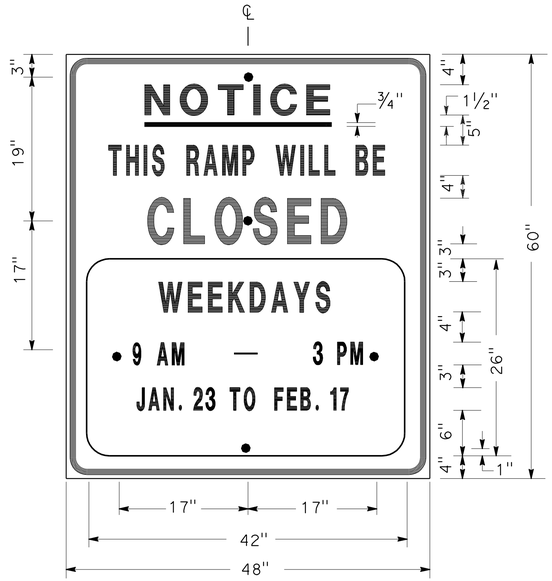

SIGN SP-1

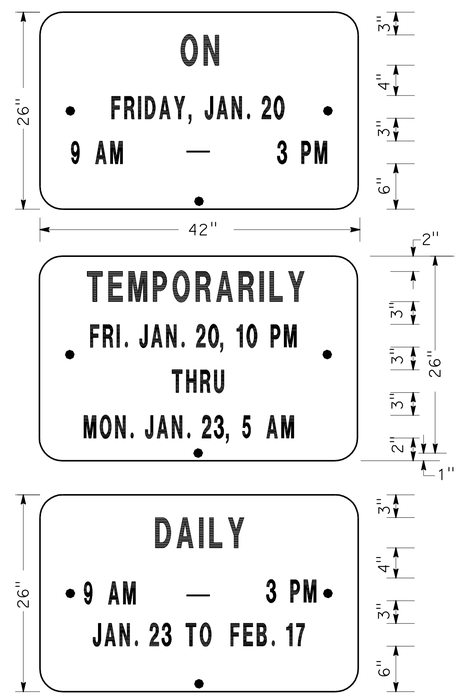

ALTERNATE OVERLAY PANELS (TYPICAL)

SPECIAL ADVANCE NOTICE PUBLICITY SIGN

NOTES: (SIGN SP-1)

1. SIGNS SHALL HAVE ORANGE RETROREFLECTORIZED BACKGROUND WITH BLACK BORDER AND LETTERS.
2. BOLT HOLES SHALL BE 3/8" DIAMETER.
3. BASE MATERIAL SHALL BE ALUMINUM (MINIMUM 0.06").
4. SIGNS SHALL BE MOUNTED WITH BOTTOMS OF SIGNS A MINIMUM OF 6' ABOVE GROUND.

SIZE	BORDER WIDTH	MARGIN WIDTH	LETTER SIZE					CORNER RADIUS
			LINE 1	LINE 2*	LINE 3	LINE 4	LINE 5,6 & 7*	
48"x60"	1 1/4"	3/4"	4E	4D	6E	4D		3"
42"x26"	OVERLAY						3D	1 1/2"
* CONDENSED SPACING IF NECESSARY								

SIGN SP-4

NOTES: (SIGN SP-4)

1. LETTERS - 6" SERIES C.
2. LETTERS AND BORDERS - BLACK ON RETROREFLECTORIZED WHITE BACKGROUND.
3. BASE MATERIAL SHALL BE ALUMINUM (MINIMUM 0.06").
4. SIGNS SHALL BE PLACED AT RAMP ENTRANCES IN ADDITION TO SIGNS POSTED IN ACCORDANCE WITH STANDARD PLAN T14.

SPECIAL SIGN FOR ENTRANCE RAMP CLOSURES

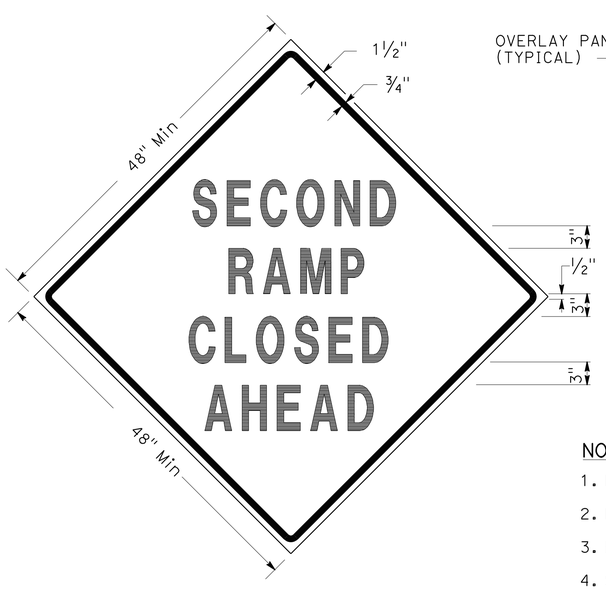

SIGN SP-3

SIGN SP-5

NOTES: (SIGNS SP-3 & SP-5)

1. LETTERS - 6" SERIES D.
2. LETTERS AND BORDERS - BLACK ON RETROREFLECTORIZED ORANGE BACKGROUND.
3. BASE MATERIAL SHALL BE ALUMINUM (MINIMUM 0.06").
4. SIGNS SHALL BE MOUNTED WITH BOTTOMS OF SIGNS A MINIMUM OF 6' ABOVE GROUND.

SPECIAL SIGN FOR EXIT RAMP CLOSURES

TRAFFIC HANDLING DETAILS
TRAFFIC CONTROL SYSTEM FOR RAMP CLOSURES, DETOUR SIGNS AND MISCELLANEOUS DETAILS
SHEET 1 OF 2
NO SCALE

THD-1

STATE OF CALIFORNIA - DEPARTMENT OF TRANSPORTATION
Caltrans DTM

FUNCTIONAL SUPERVISOR: MARTIN OREGEL
CALCULATED-DESIGNED BY: ALBERT K YU
CHECKED BY: JOCELYN C CHIANG
REVISED BY: JC
DATE REVISED: 7/10

LAST REVISION 06-27-11
DATE PLOTTED => 23-JUN-2011
TIME PLOTTED => 13:07

Dist	COUNTY	ROUTE	POST MILES TOTAL PROJECT	SHEET No.	TOTAL SHEETS
07	LA	60	11.6/R23.6	25	75

REGISTERED CIVIL ENGINEER DATE 05-24-11

06-27-11
PLANS APPROVAL DATE

REGISTERED PROFESSIONAL ENGINEER CHEN CHUNG LIU No. C 67562 Exp. 6-30-13 CIVIL STATE OF CALIFORNIA

THE STATE OF CALIFORNIA OR ITS OFFICERS OR AGENTS SHALL NOT BE RESPONSIBLE FOR THE ACCURACY OR COMPLETENESS OF SCANNED COPIES OF THIS PLAN SHEET.

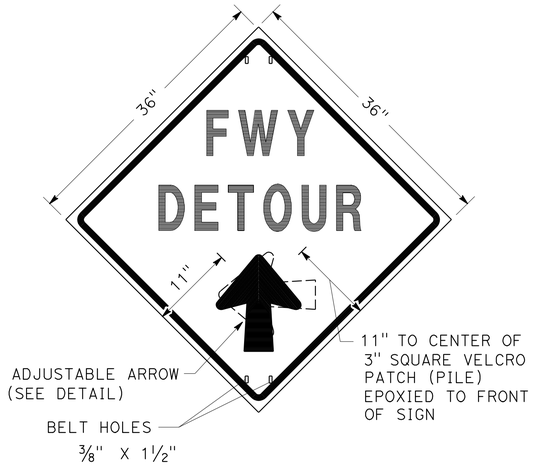

SIGN SP-2

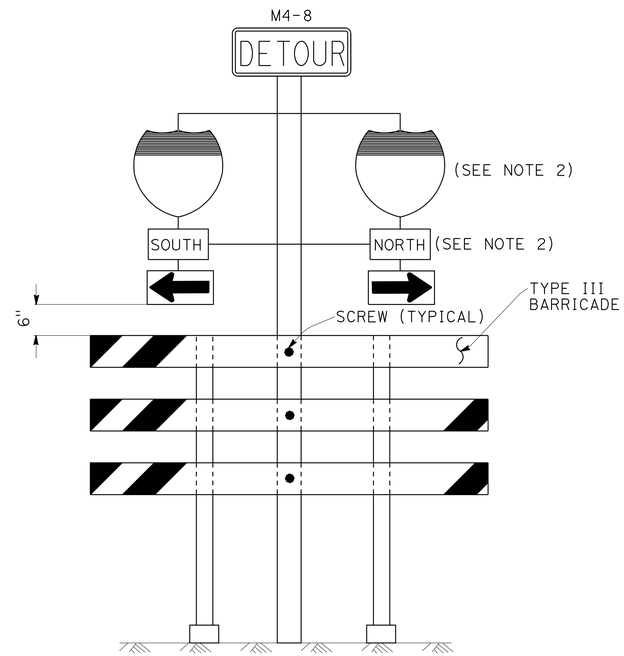

SIGN SP-6 (SEE NOTE 1)

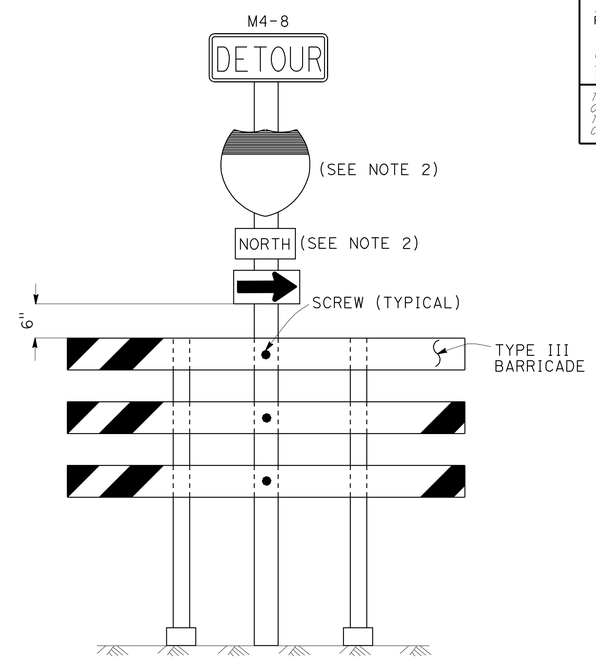

SIGN SP-7 (SEE NOTE 1)

NOTES: (SIGN SP-2)

1. LETTERS -6" SERIES E.
2. LETTERS, BORDER AND ARROW - BLACK ON RETROREFLECTORIZED ORANGE BACKGROUND.
3. BASE MATERIAL FOR SIGNS AND ARROWS SHALL BE ALUMINUM (MINIMUM 0.06").
4. BELTS (LUGGAGE STRAPS) SHALL BE 1" WIDE BY 48" LONG, MADE OF COTTON OR POLYPROPYLENE WEB MATERIAL.
5. SIGNS SHALL BE MOUNTED WITH BOTTOMS OF SIGNS A MINIMUM OF 6' ABOVE GROUND EXCEPT AS OTHERWISE SHOWN ON OTHER TRAFFIC HANDLING DETAILS PLANS.

ABBREVIATION

(CA) CALIFORNIA CODE

NOTES: (SIGNS SP-6 & SP-7)

1. IN LIEU OF PLACING SIGNS ON TYPE III BARRICADES, SIGNS, INCLUDING POSTS, MAY BE PLACED INTO THE GROUND OR FASTENED ONTO ELECTROLIERS.
2. USE APPROPRIATE ROUTE SHIELD [G26-2(CA), G27-2(CA), G28-2(CA)] AND CARDINAL DIRECTION [NORTH (M3-1), SOUTH (M3-3), EAST (M3-2), WEST (M3-4)]

SPECIAL PORTABLE FREEWAY DETOUR SIGNS

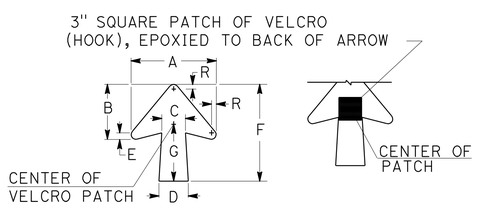

DIMENSIONS							
A	B	C	D	E	F	G	R
11 1/4"	7 1/4"	3 1/8"	4"	7/8"	13"	7 1/2"	5/8"

SPECIAL PORTABLE FREEWAY DETOUR SIGN

ADJUSTABLE ARROW DETAIL

TRAFFIC HANDLING DETAILS

TRAFFIC CONTROL SYSTEM FOR RAMP CLOSURES, DETOUR SIGNS AND MISCELLANEOUS DETAILS

SHEET 2 OF 2

NO SCALE

THD-2

STATE OF CALIFORNIA - DEPARTMENT OF TRANSPORTATION
Caltrans DTM

FUNCTIONAL SUPERVISOR: MARTIN OREGEL
CALCULATED-DESIGNED BY: ALBERT K YU
CHECKED BY: JOCELYN C CHIANG
REVISED BY: JC
DATE REVISED: 7/10

LAST REVISION 06-27-11
DATE PLOTTED => 23-JUN-2011
TIME PLOTTED => 13:07

Dist	COUNTY	ROUTE	POST MILES TOTAL PROJECT	SHEET No.	TOTAL SHEETS
07	LA	60	11.6/R23.6	26	75

REGISTERED CIVIL ENGINEER DATE 05-24-11

06-27-11
PLANS APPROVAL DATE

REGISTERED PROFESSIONAL ENGINEER CHEN CHUNG LIU No. C 67562 Exp. 6-30-13 CIVIL STATE OF CALIFORNIA

THE STATE OF CALIFORNIA OR ITS OFFICERS OR AGENTS SHALL NOT BE RESPONSIBLE FOR THE ACCURACY OR COMPLETENESS OF SCANNED COPIES OF THIS PLAN SHEET.

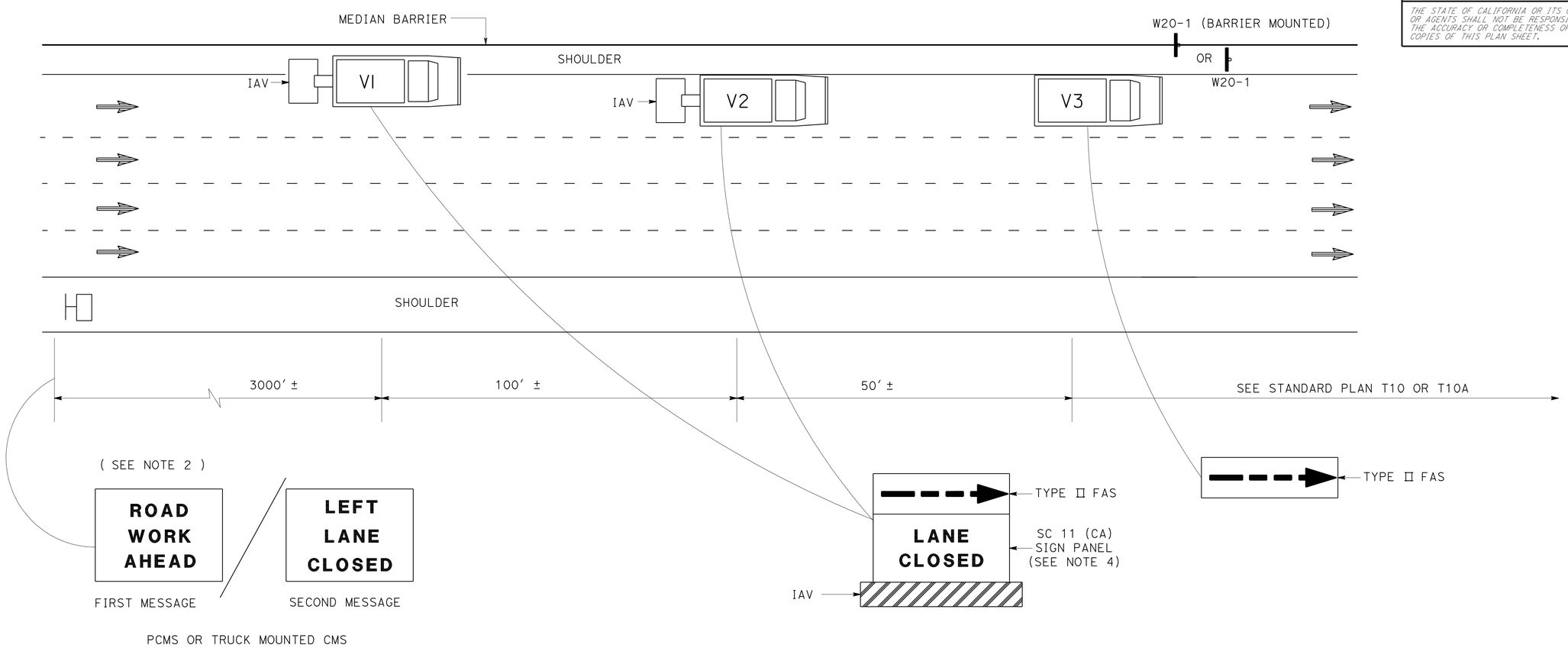

NOTES:

1. LANE CLOSURES SHALL NOT BE PLACED ON CREST VERTICAL CURVES OR ON HORIZONTAL CURVES.
2. PCMS SHALL BE ACTIVATED PRIOR TO TRAFFIC CONTROL ACTIVITIES ON THE LANE.
3. A MINIMUM SIGHT DISTANCE OF 1500′ SHALL BE PROVIDED IN ADVANCE OF PCMS.
4. VEHICLE-MOUNTED SIGN PANELS SHALL BE TYPE III OR IV RETROREFLECTORIZED SHEETING, BLACK ON WHITE OR BLACK ON ORANGE WITH 8" MINIMUM SERIES D LETTERS PER CALTRANS SIGN SPECIFICATIONS.

LEGEND

V1, V2	SHADOW VEHICLE
V3	WORK/APPLICATION VEHICLE
	PORTABLE CHANGEABLE MESSAGE SIGN (PCMS)
	DIRECTION OF TRAVEL
	CONSTRUCTION AREA SIGN

ABBREVIATIONS

FAS	FLASHING ARROW SIGN
IAV	IMPACT ATTENUATOR VEHICLE
CMS	CHANGEABLE MESSAGE SIGN
PCMS	PORTABLE CHANGEABLE MESSAGE SIGN
(CA)	CALIFORNIA CODE

TRAFFIC HANDLING DETAILS
TRAFFIC CONTROL SYSTEM FOR MEDIAN SHOULDERS LESS THAN 8 FEET

NO SCALE

THD-3

STATE OF CALIFORNIA - DEPARTMENT OF TRANSPORTATION
Caltrans DTM

FUNCTIONAL SUPERVISOR: MARTIN OREGEL
CALCULATED-DESIGNED BY: ALBERT K YU
CHECKED BY: JOCELYN C CHIANG
REVISED BY: JC
DATE REVISED: 7/10

LAST REVISION 06-27-11
DATE PLOTTED => 23-JUN-2011
TIME PLOTTED => 13:07

Dist	COUNTY	ROUTE	POST MILES TOTAL PROJECT	SHEET No.	TOTAL SHEETS
07	LA	60	11.6/R23.6	27	75

REGISTERED CIVIL ENGINEER 05-24-11 DATE

06-27-11
PLANS APPROVAL DATE

REGISTERED PROFESSIONAL ENGINEER CHEN CHUNG LIU No. C 67562 Exp. 6-30-13 CIVIL STATE OF CALIFORNIA

THE STATE OF CALIFORNIA OR ITS OFFICERS OR AGENTS SHALL NOT BE RESPONSIBLE FOR THE ACCURACY OR COMPLETENESS OF SCANNED COPIES OF THIS PLAN SHEET.

NOTES:

1. LANE CLOSURES SHALL NOT BE PLACED ON CREST VERTICAL CURVES OR ON HORIZONTAL CURVES.
2. PCMS SHALL BE ACTIVATED PRIOR TO TRAFFIC CONTROL ACTIVITIES ON THE HOV LANE.
3. A MINIMUM SIGHT DISTANCE OF 1500′ SHALL BE PROVIDED IN ADVANCE OF PCMS.
4. VEHICLE-MOUNTED SIGN PANELS SHALL BE TYPE III OR IV RETROREFLECTORIZED SHEETING, BLACK ON WHITE OR BLACK ON ORANGE WITH 8" MINIMUM SERIES D LETTERS PER CALTRANS SIGN SPECIFICATIONS.
5. PLACE PCMS ON THE MEDIAN SHOULDER WHERE SUFFICIENT ROOM (SUCH AS CHP ENFORCEMENT AREAS) EXISTS.

LEGEND

V1, V2	SHADOW VEHICLE
V3	WORK/APPLICATION VEHICLE
	PORTABLE CHANGEABLE MESSAGE SIGN (PCMS)
	DIRECTION OF TRAVEL
	HOV LANE

ABBREVIATIONS

FAS	FLASHING ARROW SIGN
IAV	IMPACT ATTENUATOR VEHICLE
CMS	CHANGEABLE MESSAGE SIGN
(CA)	CALIFORNIA CODE
PCMS	PORTABLE CHANGEABLE MESSAGE SIGN
HOV	HIGH OCCUPANCY VEHICLE

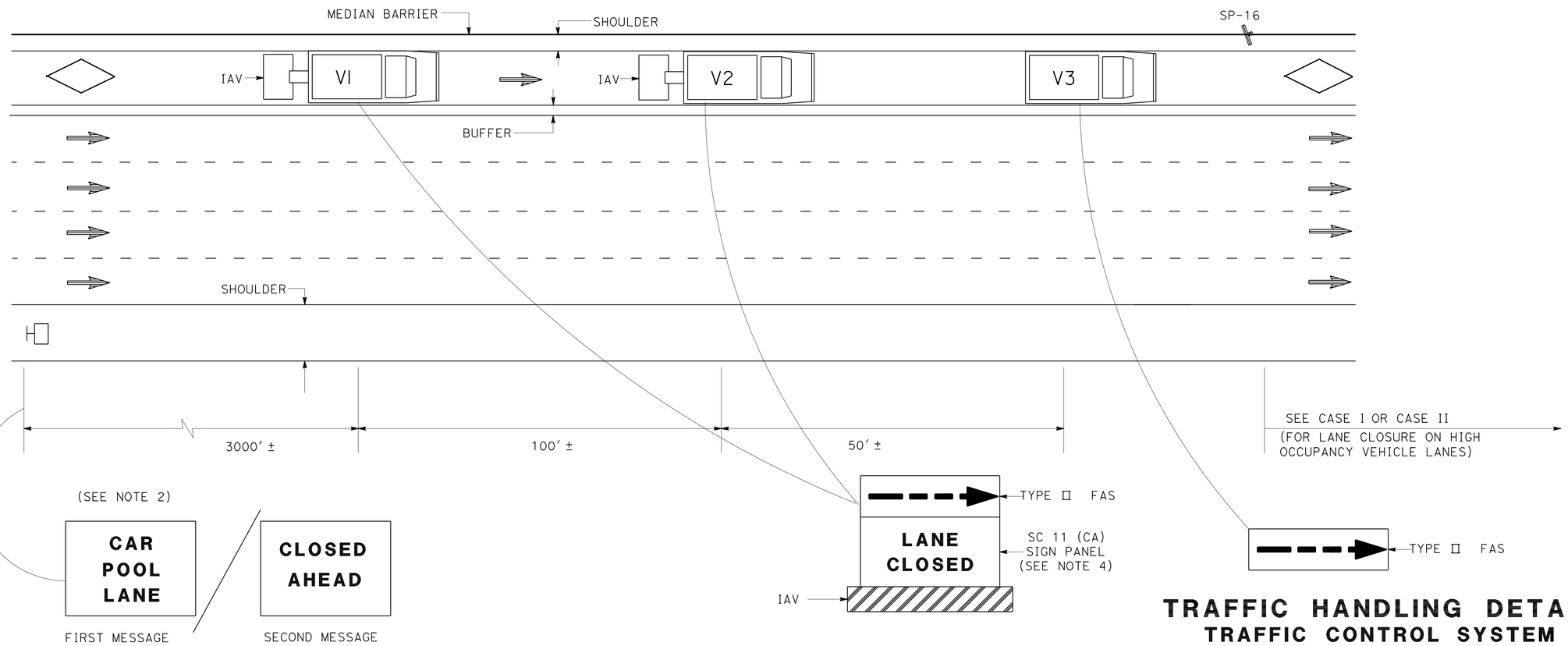

PCMS/TRUCK MOUNTED CMS
(SEE NOTE 5)

TRAFFIC HANDLING DETAILS
TRAFFIC CONTROL SYSTEM FOR HIGH OCCUPANCY VEHICLE LANES WITH MEDIAN SHOULDERS LESS THAN 8 FEET

NO SCALE

THD-4

STATE OF CALIFORNIA - DEPARTMENT OF TRANSPORTATION
Caltrans
DTM

FUNCTIONAL SUPERVISOR: MARTIN OREGEL
CALCULATED-DESIGNED BY: ALBERT K YU
CHECKED BY: JOCELYN C CHIANG
REVISED BY: JC
DATE REVISED: 7/10

LAST REVISION 06-27-11
DATE PLOTTED => 23-JUN-2011
TIME PLOTTED => 13:08

Dist	COUNTY	ROUTE	POST MILES TOTAL PROJECT	SHEET No.	TOTAL SHEETS
07	LA	60	11.6/R23.6	28	75

REGISTERED CIVIL ENGINEER 05-24-11 DATE

06-27-11
PLANS APPROVAL DATE

REGISTERED PROFESSIONAL ENGINEER CHEN CHUNG LIU No. C 67562 Exp. 6-30-13 CIVIL STATE OF CALIFORNIA

THE STATE OF CALIFORNIA OR ITS OFFICERS OR AGENTS SHALL NOT BE RESPONSIBLE FOR THE ACCURACY OR COMPLETENESS OF SCANNED COPIES OF THIS PLAN SHEET.

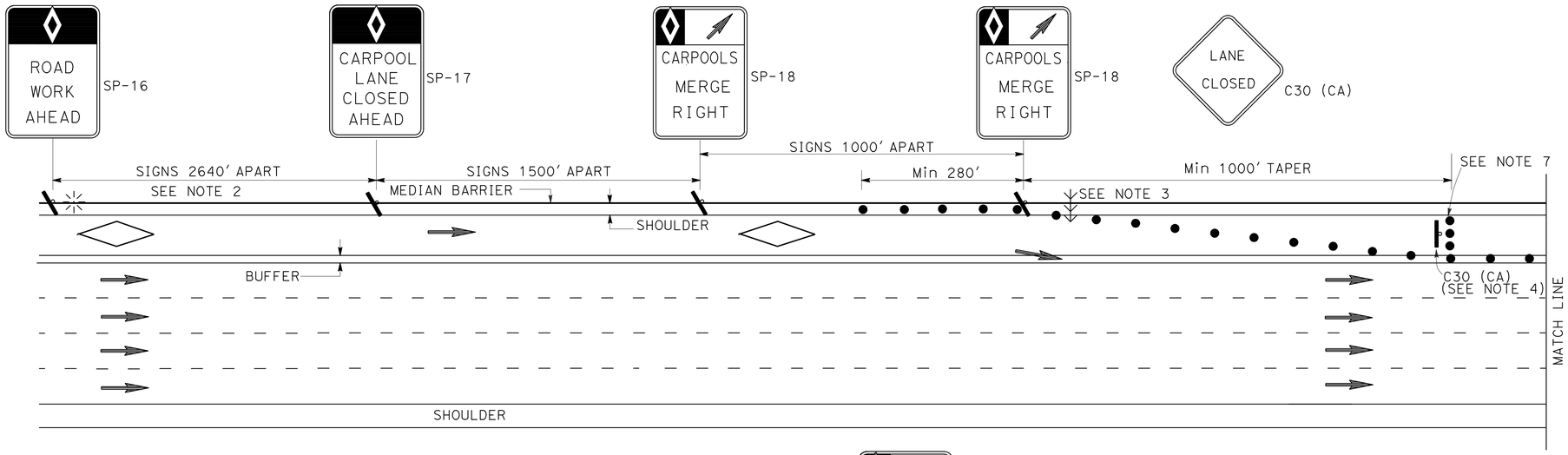

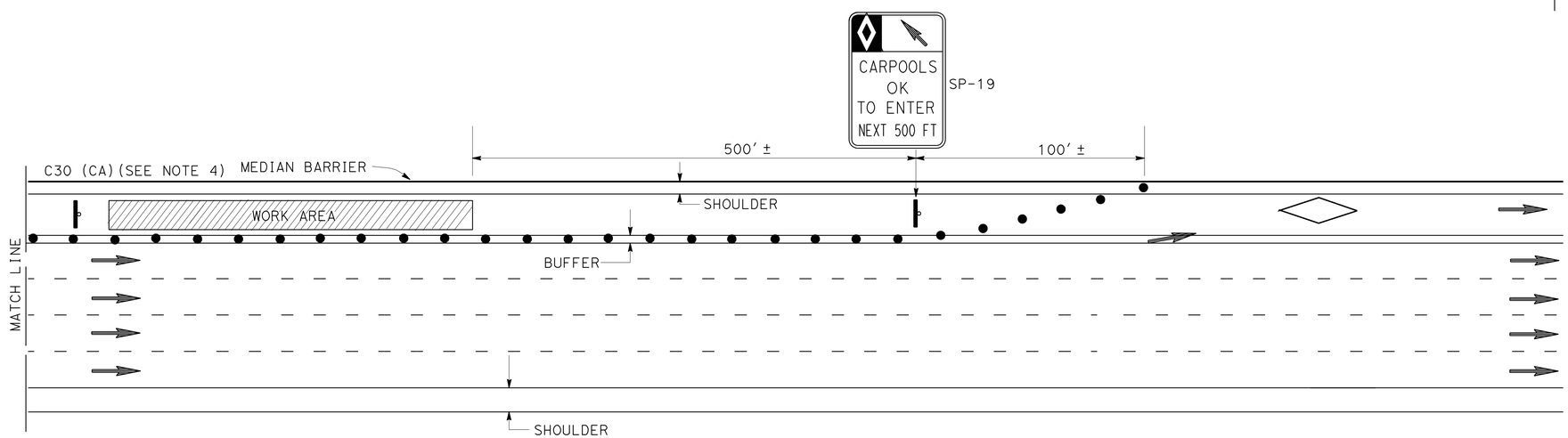

ABBREVIATIONS

(CA) CALIFORNIA CODE

HOV HIGH OCCUPANCY VEHICLE

NOTES: FOR CASE I AND CASE II

1. AT LEAST ONE PERSON SHALL BE ASSIGNED TO FULL TIME MAINTENANCE OF TRAFFIC CONTROL DEVICES ON NIGHT LANE CLOSURES OR DAY-TIME CLOSURES EXCEEDING 1 MILE LENGTH, INCLUDING TAPERS.
2. ADVANCE WARNING SIGN INSTALLATIONS SHALL BE EQUIPPED WITH FLAGS FOR DAYTIME CLOSURES. TYPE B HIGH INTENSITY FLASHING WARNING LIGHTS SHALL BE USED ON SP-16 SIGNS DURING NIGHT LANE CLOSURES. FLAGS AND WARNING LIGHTS SHALL BE ATTACHED TO SIGNS AS APPROVED BY THE ENGINEER.
3. THE FLASHING ARROW SIGN SHALL BE TYPE I.
4. PLACE C30 (CA) SIGNS EVERY 2000' THROUGHOUT THE LENGTH OF LANE CLOSURE.
5. A MINIMUM 1500' OF SIGHT DISTANCE SHALL BE PROVIDED WHERE POSSIBLE FOR VEHICLES APPROACHING THE FLASHING ARROW SIGN. LANE CLOSURES SHALL NOT BE PLACED ON CREST VERTICAL CURVES OR ON HORIZONTAL CURVES.
6. PORTABLE DELINEATORS PLACED AT ONE-HALF THE SPACING INDICATED FOR TRAFFIC CONES MAY BE USED INSTEAD OF CONES FOR DAYTIME CLOSURES.
7. A MINIMUM OF 3 CONES SHALL BE PLACED TRANSVERSELY ACROSS CLOSED LANES WHERE TAPERS END AND EVERY 2000'. TWO TYPE II BARRICADES MAY BE USED INSTEAD OF 3 CONES. THE ALIGNMENT OF CONES OR BARRICADES MAY BE SHIFTED FROM THE TRANSVERSE ALIGNMENT TO PROVIDE ACCESS TO WORK.
8. IF AN INGRESS/EGRESS AREA IS WITHIN 5250' UPSTREAM OR DOWNSTREAM OF THE WORK AREA, LANE CLOSURES SHALL BE EXTENDED TO THAT AREA AS SHOWN IN CASE II.
9. SIGNS SP-16, 17, 18, AND 19 MAY BE OVERLAID ON EXISTING CARPOOL SIGNS IN MEDIANS AS APPROVED BY THE ENGINEER.
10. SIGNS SP-16, 17, 18, AND C30 (CA) SHALL BE BLACK ON ORANGE BACKGROUND. SIGN SP-19 SHALL BE BLACK ON WHITE BACKGROUND. DIAMONDS ON SIGNS SHALL BE WHITE.
11. FOR CLOSURE OF LANE(S) ADJACENT TO HOV LANES, SEE CASE II.
12. THE MAXIMUM SPACING BETWEEN CONES SHALL BE APPROXIMATELY 50' IN TAPERS AND 100' ON TANGENTS.

LEGEND

- CONE
- FLASHING BEACON
- HOV LANE
- FLASHING ARROW SIGN
- PORTABLE SIGN
- DIRECTION OF TRAVEL

SIGN PANEL

SIZE (MIN)

SP-16 36" X 54"
SP-17 36" X 54"
SP-18 36" X 48"
SP-19 36" X 60"
C30 (CA) 30" X 30"
G20-2 48" X 24"

TRAFFIC HANDLING DETAILS
TRAFFIC CONTROL SYSTEM FOR HIGH OCCUPANCY VEHICLE LANES AT NON-INGRESS/EGRESS AREAS
CASE I
NO SCALE

THD-5

STATE OF CALIFORNIA - DEPARTMENT OF TRANSPORTATION
Caltrans DTM

FUNCTIONAL SUPERVISOR: MARTIN OREGEL
CALCULATED-DESIGNED BY: ALBERT K YU
CHECKED BY: JOCELYN C CHIANG
REVISED BY: JC
DATE REVISED: 7/10

LAST REVISION 06-27-11 | DATE PLOTTED => 23-JUN-2011 | TIME PLOTTED => 13:08

Dist	COUNTY	ROUTE	POST MILES TOTAL PROJECT	SHEET No.	TOTAL SHEETS
07	LA	60	11.6/R23.6	29	75

REGISTERED CIVIL ENGINEER 05-24-11 DATE

06-27-11
PLANS APPROVAL DATE

REGISTERED PROFESSIONAL ENGINEER CHEN CHUNG LIU No. C 67562 Exp. 6-30-13 CIVIL STATE OF CALIFORNIA

THE STATE OF CALIFORNIA OR ITS OFFICERS OR AGENTS SHALL NOT BE RESPONSIBLE FOR THE ACCURACY OR COMPLETENESS OF SCANNED COPIES OF THIS PLAN SHEET.

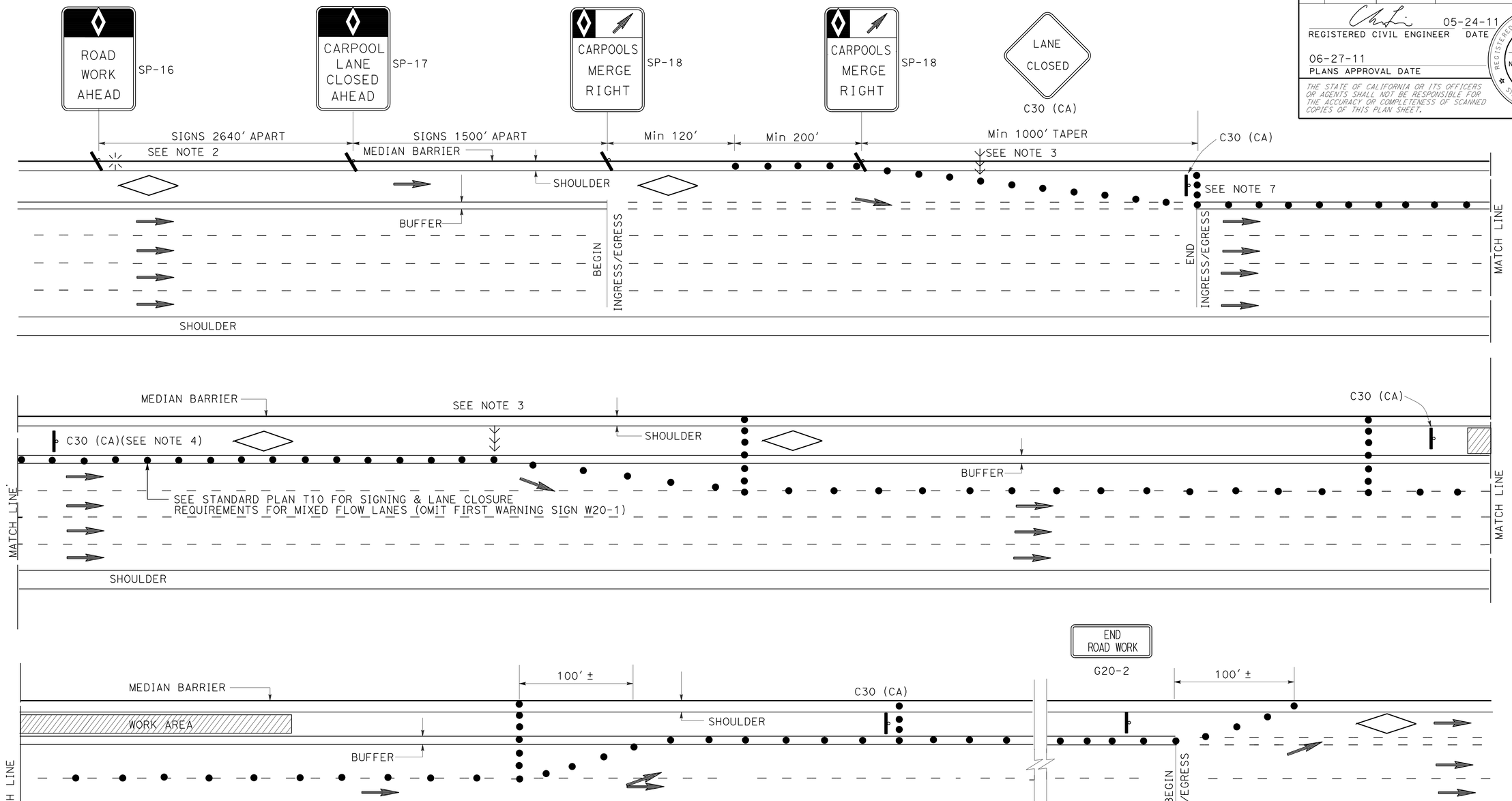

NOTES:

1. SEE CASE I FOR NOTES, LEGENDS AND ABBREVIATIONS FOR THIS SHEET.
2. CLOSURES OF ONE MIXED FLOW TRAFFIC LANE ADJACENT TO HOV LANE SHOWN. MULTIPLE MIXED FLOW LANE CLOSURES ARE SIMILAR.

TRAFFIC HANDLING DETAILS
TRAFFIC CONTROL SYSTEM FOR HIGH OCCUPANCY VEHICLE LANES AND ADJACENT FREEWAY LANES BETWEEN INGRESS/EGRESS AREAS
CASE II

NO SCALE

THD-6

REVISED BY	DATE REVISED
JC	7/10

ALBERT K YU
JOCELYN C CHIANG

CALCULATED-DESIGNED BY
CHECKED BY

FUNCTIONAL SUPERVISOR
MARTIN OREGEL

STATE OF CALIFORNIA - DEPARTMENT OF TRANSPORTATION
DTM
Caltrans

LAST REVISION 06-27-11
DATE PLOTTED => 23-JUN-2011
TIME PLOTTED => 13:08

Dist	COUNTY	ROUTE	POST MILES TOTAL PROJECT	SHEET No.	TOTAL SHEETS
07	LA	60	11.6/R23.6	30	75

REGISTERED CIVIL ENGINEER 06-7-11 DATE

06-27-11
PLANS APPROVAL DATE

REGISTERED PROFESSIONAL ENGINEER CHEN CHUNG LIU No. C 67562 Exp. 6-30-13 CIVIL STATE OF CALIFORNIA

THE STATE OF CALIFORNIA OR ITS OFFICERS OR AGENTS SHALL NOT BE RESPONSIBLE FOR THE ACCURACY OR COMPLETENESS OF SCANNED COPIES OF THIS PLAN SHEET.

NOTES:

1. WORDING DISPLAYED ON PCMS WILL BE APPROVED BY THE ENGINEER.
2. EXACT LOCATIONS OF PCMS WILL BE DETERMINED BY THE ENGINEER.
3. CHANGE PCMS MESSAGE AT THE BEGINNING OF CURE PERIOD TO REFLECT NUMBER OF CLOSED LANES.

ABBREVIATIONS

PCMS PORTABLE CHANGEABLE MESSAGE SIGN

(CA) CALIFORNIA CODE

LEGEND

- CONE
- PORTABLE SIGN
- DIRECTION OF TRAVEL
- PORTABLE CHANGEABLE MESSAGE SIGN (PCMS)
- (CA) CALIFORNIA CODE

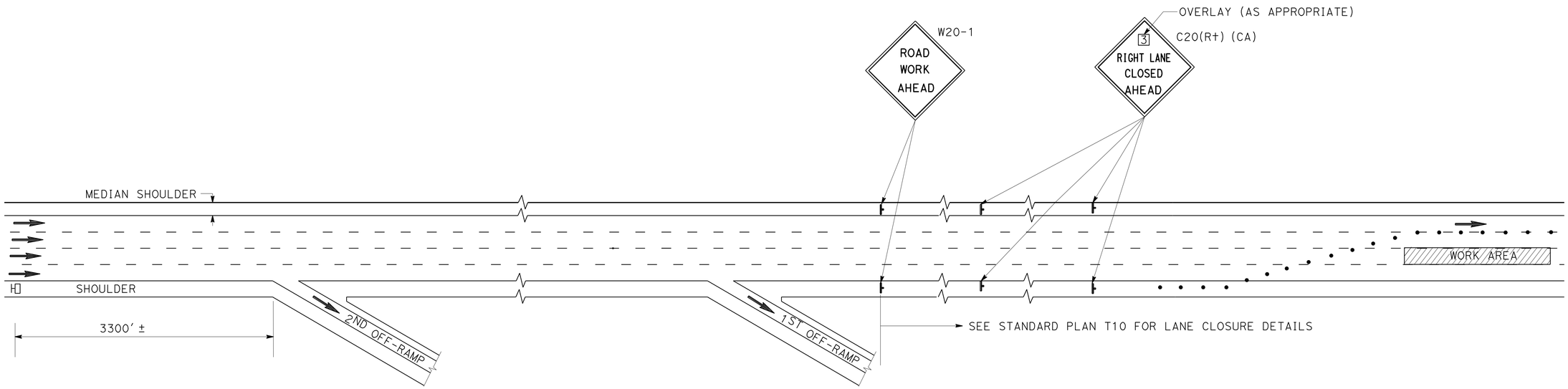

FIRST FLASH MESSAGE	X (NO OF LANES)RIGHT/LEFT	1ST LINE (TYPICAL)
	LANES	2ND LINE (TYPICAL)
	CLOSED	3RD LINE (TYPICAL)
SECOND FLASH MESSAGE	A ST	LIMIT OF CLOSURE (TYPICAL)
	TO	
	B DR	LIMIT OF CLOSURE (TYPICAL)

WORDING FOR PORTABLE CHANGEABLE MESSAGE SIGN

TRAFFIC HANDLING DETAILS
TRAFFIC CONTROL SYSTEM FOR CONCRETE PAVEMENT AND APPROACH SLAB REPLACEMENT
NO SCALE

THD-7

STATE OF CALIFORNIA - DEPARTMENT OF TRANSPORTATION
Caltrans® DTM

FUNCTIONAL SUPERVISOR: MARTIN OREGEL
CALCULATED-DESIGNED BY: ALBERT K YU
CHECKED BY: JOCELYN C CHIANG
REVISED BY: JC
DATE REVISED: 7/10

LAST REVISION 06-27-11
DATE PLOTTED => 23-JUN-2011
TIME PLOTTED => 13:08

Dist	COUNTY	ROUTE	POST MILES TOTAL PROJECT	SHEET No.	TOTAL SHEETS
07	LA	60	11.6/R23.6	31	75

REGISTERED CIVIL ENGINEER DATE 05-24-11

06-27-11
PLANS APPROVAL DATE

REGISTERED PROFESSIONAL ENGINEER
CHEN CHUNG LIU
No. C 67562
Exp. 6-30-13
CIVIL
STATE OF CALIFORNIA

THE STATE OF CALIFORNIA OR ITS OFFICERS OR AGENTS SHALL NOT BE RESPONSIBLE FOR THE ACCURACY OR COMPLETENESS OF SCANNED COPIES OF THIS PLAN SHEET.

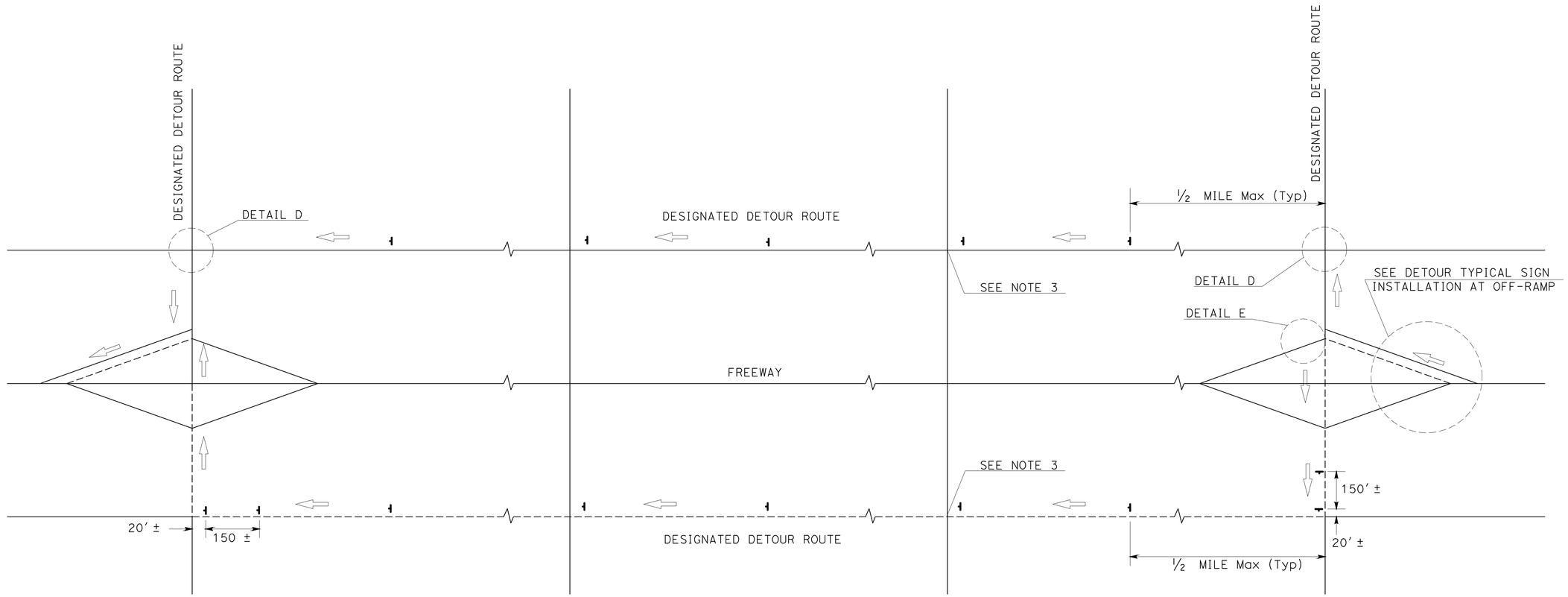

TYPICAL DETOUR SIGN INSTALLATION ALONG DESIGNATED DETOUR ROUTE

LEGEND

- TEMPORARY SIGN (SP-2)
- AND/OR DESIGNATED DETOUR ROUTE
- DIRECTION OF TRAVEL

NOTES:

1. SP-2 SIGNS SHALL NOT BE INSTALLED ON BARRICADES EXCEPT AS OTHERWISE SHOWN.
2. SIGN LOCATIONS ARE APPROXIMATE. EXACT LOCATIONS WILL BE DETERMINED BY THE ENGINEER.
3. SP-2 SIGNS SHALL BE POSTED AT SIGNALIZED INTERSECTIONS ALONG THE DESIGNATED DETOUR ROUTE OR ½ MILE MAXIMUM APART.

TRAFFIC HANDLING DETAILS

TRAFFIC CONTROL SYSTEM FOR DETOUR SIGN INSTALLATION ALONG DESIGNATED DETOUR ROUTE

SHEET 1 OF 2

NO SCALE

THD-8

STATE OF CALIFORNIA - DEPARTMENT OF TRANSPORTATION
Caltrans
DTM

FUNCTIONAL SUPERVISOR: MARTIN OREGEL
CALCULATED-DESIGNED BY: ALBERT K YU
CHECKED BY: JOCELYN C CHIANG
REVISED BY: JC
DATE REVISED: 7/10

LAST REVISION 06-27-11
DATE PLOTTED => 23-JUN-2011
TIME PLOTTED => 13:08

Dist	COUNTY	ROUTE	POST MILES TOTAL PROJECT	SHEET No.	TOTAL SHEETS
07	LA	60	11.6/R23.6	32	75

REGISTERED CIVIL ENGINEER 05-24-11 DATE

06-27-11
PLANS APPROVAL DATE

REGISTERED PROFESSIONAL ENGINEER CHEN CHUNG LIU No. C 67562 Exp. 6-30-13 CIVIL STATE OF CALIFORNIA

THE STATE OF CALIFORNIA OR ITS OFFICERS OR AGENTS SHALL NOT BE RESPONSIBLE FOR THE ACCURACY OR COMPLETENESS OF SCANNED COPIES OF THIS PLAN SHEET.

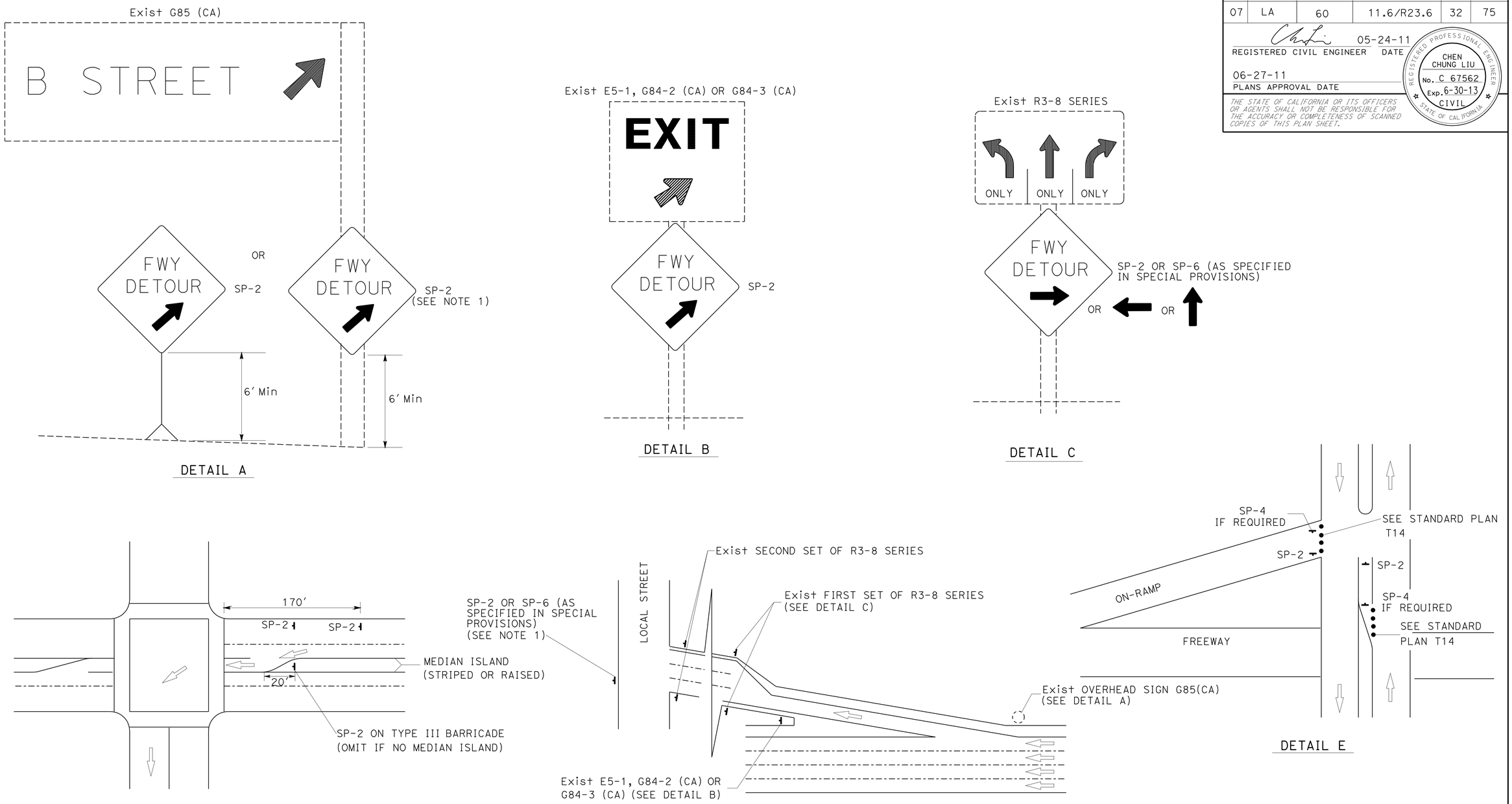

TYPICAL DETOUR SIGN INSTALLATION AT OFF-RAMP

NOTES:

1. TEMPORARY SIGNS MAY BE STRAPPED ON EXISTING ELECTROLIER, SIGNAL POSTS, OR SIGN POSTS.

ABBREVIATIONS

(CA) CALIFORNIA CODE

LEGENDS

- TRAFFIC CONE
- TEMPORARY SIGN
- DIRECTION OF TRAVEL
- EXISTING OVERHEAD SIGN

TRAFFIC HANDLING DETAILS
TRAFFIC CONTROL SYSTEM FOR DETOUR SIGN INSTALLATION ALONG DESIGNATED DETOUR ROUTE
SHEET 2 OF 2

NO SCALE

THD-9

STATE OF CALIFORNIA - DEPARTMENT OF TRANSPORTATION
Caltrans® DTM

FUNCTIONAL SUPERVISOR: MARTIN OREGEL
CALCULATED-DESIGNED BY: ALBERT K YU
CHECKED BY: JOCELYN C CHIANG
REVISED BY: JC
DATE REVISED: 7/10

LAST REVISION 06-27-11
DATE PLOTTED => 23-JUN-2011
TIME PLOTTED => 13:08

Dist	COUNTY	ROUTE	POST MILES TOTAL PROJECT	SHEET No.	TOTAL SHEETS
07	LA	60	11.6/R23.6	33	75

REGISTERED CIVIL ENGINEER 06-2-11 DATE

06-27-11
PLANS APPROVAL DATE

REGISTERED PROFESSIONAL ENGINEER DARA LOEUNG No. 65470 Exp. 9-30-11 CIVIL STATE OF CALIFORNIA

THE STATE OF CALIFORNIA OR ITS OFFICERS OR AGENTS SHALL NOT BE RESPONSIBLE FOR THE ACCURACY OR COMPLETENESS OF SCANNED COPIES OF THIS PLAN SHEET.

TRAFFIC HANDLING QUANTITIES SUMMARY

	PAINT TRAFFIC STRIPE (2-COAT)				PAVEMENT MARKER		PAINT PAVEMENT MARKINGS (2-COAT)			CHANNERLIZER (SURFACE MOUNTED)	TEMPORARY RAILING (TYPE K)	TEMPORARY CRASH CUSHION MODULE	REMARKS
	4" (BROKEN 36-12)	4" SOLID YELLOW	4" SOLID WHITE	8" (BROKEN 36-11.5)	(RETROREFLECTIVE)								
	DETAIL 12	DETAIL 25M	DETAIL 27B	DETAIL A	TYPE G	TYPE H	ARROWS	WORDS	SYMBOL				
	LF	LF	LF	LF	EA	EA	SQFT	SQFT	SQFT	EA	LF	EA	
2 LANE CLOSURE (55 Hrs)	29,804	11,252	10,252	1,300	675	234	168			109	5,272	14	PER CLOSURE
2 LANE CLOSURE (55 Hrs)	59,608	22,504	20,504	2,600	1,350	468	336			436	11,544	56	TOTAL CLOSURES
SUB-TOTAL	59,608	22,504	20,504	2,600	1,350	468	336			436	11,544	56	
TOTAL	105,216				1,818		336			436	11,544	56	

FREEWAY PAVEMENT DELINEATION REMOVAL QUANTITIES

	REMOVE THERMOPLASTIC TRAFFIC STRIPE			REMOVE YELLOW THERMOPLASTIC TRAFFIC STRIPE (HAZARDOUS WASTE)		REMOVE PAVEMENT MARKER		
	4" (BROKEN 36-12)	4" SOLID WHITE	4" SOLID WHITE	4" SOLID YELLOW	4" SOLID YELLOW	(NON-REFLECTIVE)	(RETROREFLECTIVE)	
	DETAIL 13	DETAIL 27B	HOV BUFFER	DETAIL 25M	HOV BUFFER	TYPE A	TYPE G	TYPE H
	LF	LF	LF	LF	LF	EA	EA	EA
2 LANE CLOSURE (55 Hrs)	16,878	20,504	27,704	22,504	50,408	5,626	1,406	2,778
TOTAL	65,086			72,912		9,810		

TRAFFIC HANDLING QUANTITIES

NO SCALE

THQ-1

REVISED BY	DATE REVISED
EUGENE BRAVO	DARA LOEUNG
CALCULATED-DESIGNED BY	CHECKED BY
FUNCTIONAL SUPERVISOR	GRISH BIGLARIAN

STATE OF CALIFORNIA - DEPARTMENT OF TRANSPORTATION
Caltrans® TRAFFIC DESIGN

LAST REVISION 06-27-11 DATE PLOTTED => 23-JUN-2011 TIME PLOTTED => 13:08

Dist	COUNTY	ROUTE	POST MILES TOTAL PROJECT	SHEET No.	TOTAL SHEETS
07	LA	60	11.6/R23.6	34	75

REGISTERED CIVIL ENGINEER 05-19-11 DATE

06-27-11
PLANS APPROVAL DATE

REGISTERED PROFESSIONAL ENGINEER
CHEN CHUNG LIU
No. C 67562
Exp. 6-30-13
CIVIL
STATE OF CALIFORNIA

THE STATE OF CALIFORNIA OR ITS OFFICERS OR AGENTS SHALL NOT BE RESPONSIBLE FOR THE ACCURACY OR COMPLETENESS OF SCANNED COPIES OF THIS PLAN SHEET.

LEGEND:

- CLOSED AREA
- DIRECTION OF DETOUR TRAFFIC
- DETOUR ROUTE SIGN
- PORTABLE CHANGEABLE MESSAGE SIGN (PCMS)
- LIMIT OF CONSTRUCTION

NOTES:

1. SEE STANDARD PLAN T-14 FOR RAMP CLOSURE DETAILS AND ADDITIONAL SIGNS.
2. LOCATIONS OF DETOUR SIGNS SHOWN ARE APPROXIMATE. EXACT LOCATIONS WILL BE DETERMINED BY THE ENGINEER.
3. SEE SHEETS DE-3 FOR SIGN DETAILS.
4. CONFLICTING SIGNS SHALL BE REMOVED OR COVERED DURING CONSTRUCTION AS DIRECTED BY THE ENGINEER.
5. IN LIEU OF WOOD POSTS, SIGNS MAY BE ATTACHED TO THE EXISTING UTILITY POSTS BY STRAP AND SADDLE BRACKET METHOD.
6. LOCATIONS OF PCMS SHOWN ARE APPROXIMATE. EXACT LOCATIONS WILL BE DETERMINED BY THE ENGINEER.

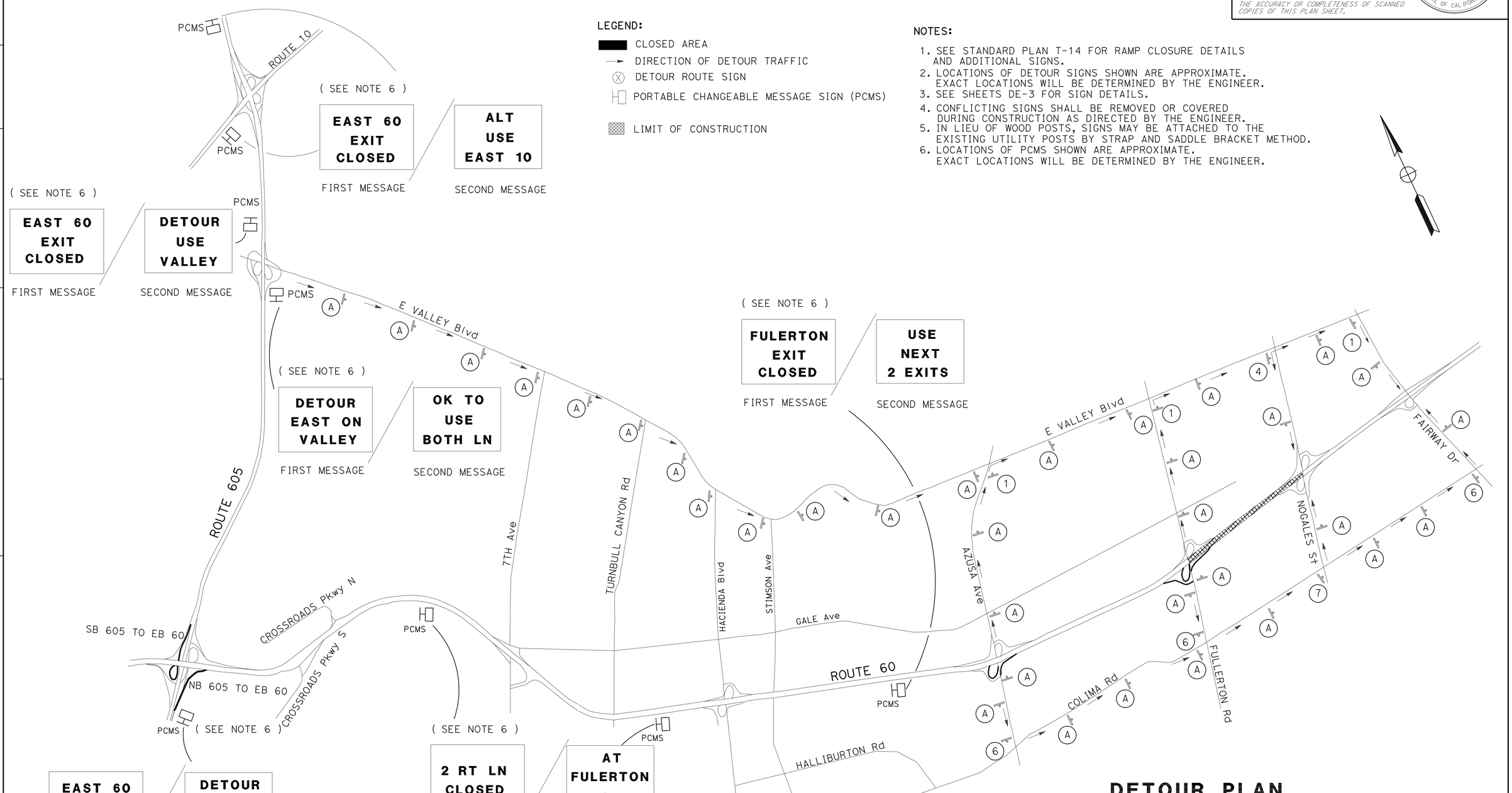

THIS PLAN ACCURATE FOR DETOUR ONLY.

DETOUR PLAN

55 HOUR CLOSURE FOR EASTBOUND ROUTE 60 BETWEEN FULLERTON ROAD AND NOGALES STREET

NO SCALE

DE-1

STATE OF CALIFORNIA - DEPARTMENT OF TRANSPORTATION
Caltrans® DTM

FUNCTIONAL SUPERVISOR: MARTIN OREGEL
CALCULATED-DESIGNED BY: CHEN-CHUNG LIU
CHECKED BY: MARTIN OREGEL
REVISED BY / DATE REVISED

LAST REVISION 06-27-11
DATE PLOTTED => 23-JUN-2011
TIME PLOTTED => 13:08

Dist	COUNTY	ROUTE	POST MILES TOTAL PROJECT	SHEET No.	TOTAL SHEETS
07	LA	60	11.6/R23.6	35	75

REGISTERED CIVIL ENGINEER 05-19-11 DATE

06-27-11
PLANS APPROVAL DATE

REGISTERED PROFESSIONAL ENGINEER
CHEN CHUNG LIU
No. C 67562
Exp. 6-30-13
CIVIL
STATE OF CALIFORNIA

THE STATE OF CALIFORNIA OR ITS OFFICERS OR AGENTS SHALL NOT BE RESPONSIBLE FOR THE ACCURACY OR COMPLETENESS OF SCANNED COPIES OF THIS PLAN SHEET.

LEGEND:

- CLOSED AREA
- DIRECTION OF DETOUR TRAFFIC
- DETOUR ROUTE SIGN
- PORTABLE CHANGEABLE MESSAGE SIGN (PCMS)
- LIMIT OF CONSTRUCTION

NOTES:

1. SEE STANDARD PLAN T-14 FOR RAMP CLOSURE DETAILS AND ADDITIONAL SIGNS.
2. LOCATIONS OF DETOUR SIGNS SHOWN ARE APPROXIMATE. EXACT LOCATIONS WILL BE DETERMINED BY THE ENGINEER.
3. SEE SHEETS DE-3 FOR SIGN DETAILS.
4. CONFLICTING SIGNS SHALL BE REMOVED OR COVERED DURING CONSTRUCTION AS DIRECTED BY THE ENGINEER.
5. IN LIEU OF WOOD POSTS, SIGNS MAY BE ATTACHED TO THE EXISTING UTILITY POSTS BY STRAP AND SADDLE BRACKET METHOD.
6. LOCATIONS OF PCMS SHOWN ARE APPROXIMATE. EXACT LOCATIONS WILL BE DETERMINED BY THE ENGINEER.

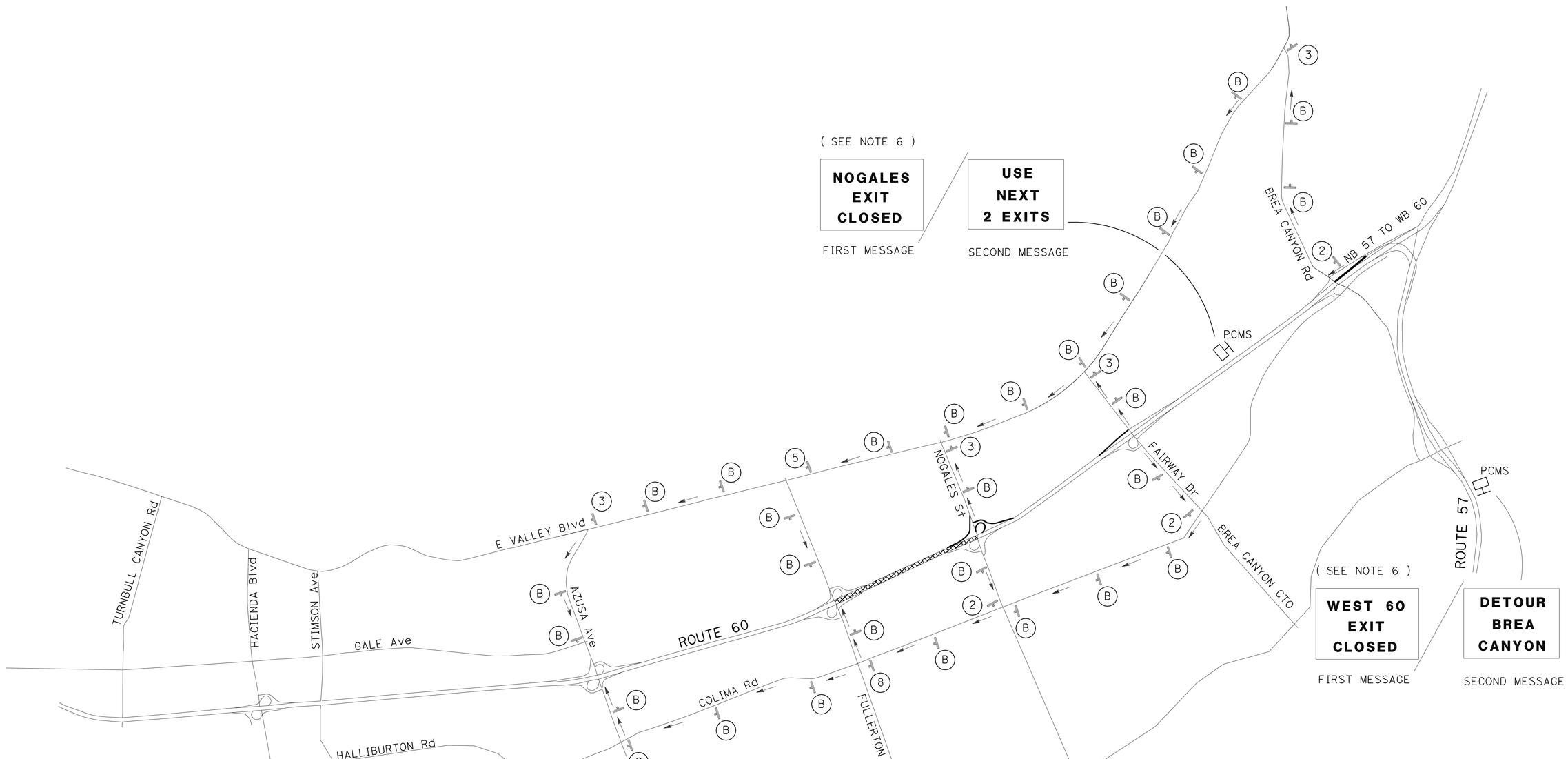

THIS PLAN ACCURATE FOR DETOUR ONLY.

DETOUR PLAN

55 HOUR CLOSURE FOR WESTBOUND ROUTE 60 BETWEEN NOGALES STREET AND FULLERTON ROAD

NO SCALE

DE-2

STATE OF CALIFORNIA - DEPARTMENT OF TRANSPORTATION
Caltrans
DTM

FUNCTIONAL SUPERVISOR: MARTIN OREGEL
CALCULATED-DESIGNED BY: CHEN-CHUNG LIU
CHECKED BY: MARTIN OREGEL
REVISED BY
DATE REVISED

LAST REVISION 06-27-11
DATE PLOTTED => 23-JUN-2011
TIME PLOTTED => 13:08

Dist	COUNTY	ROUTE	POST MILES TOTAL PROJECT	SHEET No.	TOTAL SHEETS
07	LA	60	11.6/R23.6	36	75

REGISTERED CIVIL ENGINEER 05-19-11 DATE

06-27-11
PLANS APPROVAL DATE

REGISTERED PROFESSIONAL ENGINEER CHEN CHUNG LIU No. C 67562 Exp. 6-30-13 CIVIL STATE OF CALIFORNIA

THE STATE OF CALIFORNIA OR ITS OFFICERS OR AGENTS SHALL NOT BE RESPONSIBLE FOR THE ACCURACY OR COMPLETENESS OF SCANNED COPIES OF THIS PLAN SHEET.

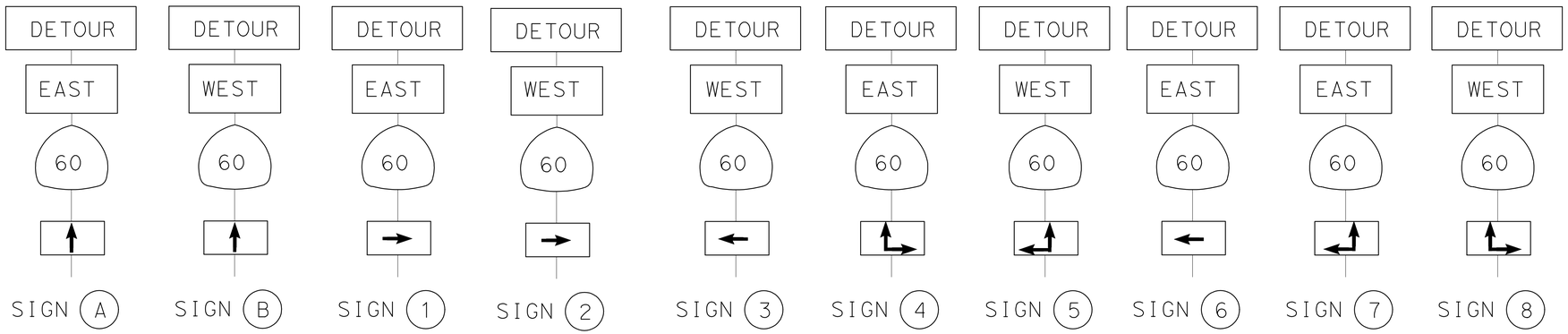

SUMMARY OF QUANTITIES

SIGN No.	SIGN CODE	PANEL SIZE (in)	No. OF POSTS AND SIZE (in)	No. OF SIGNS (EA)	REMARKS
A	M4-8	30x15	1-4 x 4	34	BLACK ON RETROREFLECTIVE ORANGE BACKGROUND
	M3-3	24x12			BLACK ON RETROREFLECTIVE WHITE BACKGROUND
	G28-1	24x24			WHITE AND GREEN
	M6-3	21x15			BLACK ON RETROREFLECTIVE WHITE BACKGROUND
B	M4-8	30x15	1-4 x 4	27	BLACK ON RETROREFLECTIVE ORANGE BACKGROUND
	M3-3	24x12			BLACK ON RETROREFLECTIVE WHITE BACKGROUND
	G28-1	24x24			WHITE AND GREEN
	M6-3	21x15			BLACK ON RETROREFLECTIVE WHITE BACKGROUND
1	M4-8	30x15	1-4 x 4	3	BLACK ON RETROREFLECTIVE ORANGE BACKGROUND
	M3-3	24x12			BLACK ON RETROREFLECTIVE WHITE BACKGROUND
	G28-1	24x24			WHITE AND GREEN
	M6-1	21x15			BLACK ON RETROREFLECTIVE WHITE BACKGROUND
2	M4-8	30x15	1-4 x 4	4	BLACK ON RETROREFLECTIVE ORANGE BACKGROUND
	M3-3	24x12			BLACK ON RETROREFLECTIVE WHITE BACKGROUND
	G28-1	24x24			WHITE AND GREEN
	M6-1	21x15			BLACK ON RETROREFLECTIVE WHITE BACKGROUND
3	M4-8	30x15	1-4 x 4	4	BLACK ON RETROREFLECTIVE ORANGE BACKGROUND
	M3-3	24x12			BLACK ON RETROREFLECTIVE WHITE BACKGROUND
	G28-1	24x24			WHITE AND GREEN
	M6-1	21x15			BLACK ON RETROREFLECTIVE WHITE BACKGROUND
4	M4-8	30x15	1-4 x 4	1	BLACK ON RETROREFLECTIVE ORANGE BACKGROUND
	M3-3	24x12			BLACK ON RETROREFLECTIVE WHITE BACKGROUND
	G28-1	24x24			WHITE AND GREEN
	M6-6	21x15			BLACK ON RETROREFLECTIVE WHITE BACKGROUND
5	M4-8	30x15	1-4 x 4	1	BLACK ON RETROREFLECTIVE ORANGE BACKGROUND
	M3-3	24x12			BLACK ON RETROREFLECTIVE WHITE BACKGROUND
	G28-1	24x24			WHITE AND GREEN
	M6-6	21x15			BLACK ON RETROREFLECTIVE WHITE BACKGROUND

SIGN No.	SIGN CODE	PANEL SIZE (in)	No. OF POSTS AND SIZE (in)	No. OF SIGNS (EA)	REMARKS
6	M4-8	30x15	1-4 x 4	3	BLACK ON RETROREFLECTIVE ORANGE BACKGROUND
	M3-3	24x12			BLACK ON RETROREFLECTIVE WHITE BACKGROUND
	G28-1	24x24			WHITE AND GREEN
	M6-3	21x15			BLACK ON RETROREFLECTIVE WHITE BACKGROUND
7	M4-8	30x15	1-4 x 4	1	BLACK ON RETROREFLECTIVE ORANGE BACKGROUND
	M3-3	24x12			BLACK ON RETROREFLECTIVE WHITE BACKGROUND
	G28-1	24x24			WHITE AND GREEN
	M6-6	21x15			BLACK ON RETROREFLECTIVE WHITE BACKGROUND
8	M4-8	30x15	1-4 x 4	1	BLACK ON RETROREFLECTIVE ORANGE BACKGROUND
	M3-3	24x12			BLACK ON RETROREFLECTIVE WHITE BACKGROUND
	G28-1	24x24			WHITE AND GREEN
	M6-6	21x15			BLACK ON RETROREFLECTIVE WHITE BACKGROUND

THIS PLAN ACCURATE FOR DETOUR ONLY.

DETOUR PLAN
DETOUR SIGNS AND QUANTITIES
NO SCALE

DE-3

REVISED BY | DATE REVISED
CHEN-CHUNG LIU | MARTIN OREGEL
CALCULATED-DESIGNED BY | CHECKED BY
FUNCTIONAL SUPERVISOR: MARTIN OREGEL
STATE OF CALIFORNIA - DEPARTMENT OF TRANSPORTATION
Caltrans DTM

LAST REVISION 06-27-11 | DATE PLOTTED => 23-JUN-2011 | TIME PLOTTED => 13:08

Dist	COUNTY	ROUTE	POST MILES TOTAL PROJECT	SHEET No.	TOTAL SHEETS
07	LA	60	11.6/R23.6	37	75

REGISTERED CIVIL ENGINEER 05-19-11 DATE

06-27-11
PLANS APPROVAL DATE

REGISTERED PROFESSIONAL ENGINEER
CHEN CHUNG LIU
No. C 67562
Exp. 6-30-13
CIVIL
STATE OF CALIFORNIA

THE STATE OF CALIFORNIA OR ITS OFFICERS OR AGENTS SHALL NOT BE RESPONSIBLE FOR THE ACCURACY OR COMPLETENESS OF SCANNED COPIES OF THIS PLAN SHEET.

LEGEND:

PCMS-PORTABLE CHANGEABLE MESSAGE SIGN

LIMIT OF CONSTRUCTION

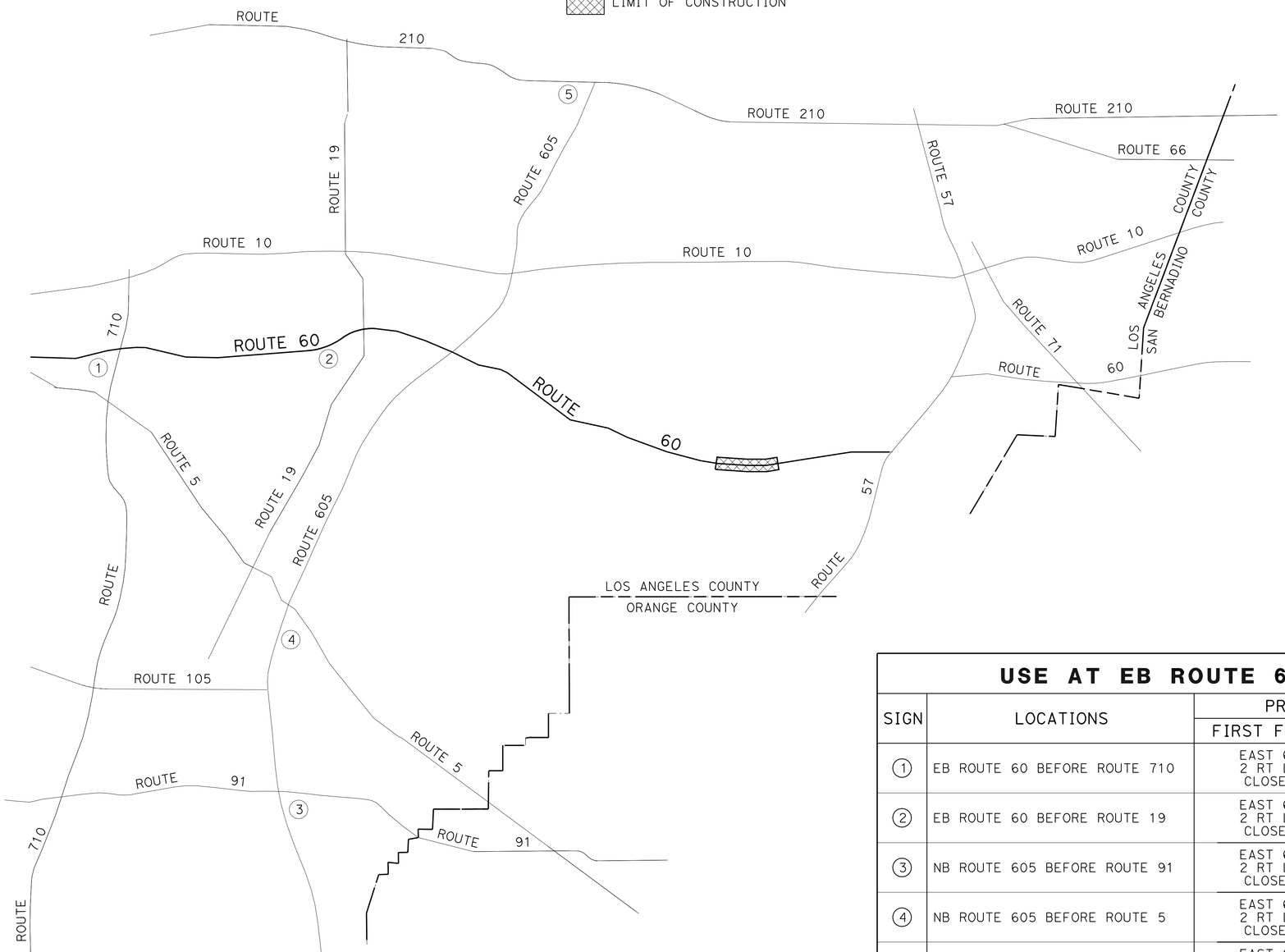

USE AT EB ROUTE 60 DURING 55 HOUR CLOSURE

SIGN	LOCATIONS	PRIMARY MESSAGE		SECONDARY MESSAGE	
		FIRST FLASH	SECOND FLASH	FIRST FLASH	SECOND FLASH
1	EB ROUTE 60 BEFORE ROUTE 710	EAST 60 2 RT LN CLOSED	AT FULLERTON ROAD	EAST 60 TRAFFIC JAMMED	RTE 605 TO RTE 57
2	EB ROUTE 60 BEFORE ROUTE 19	EAST 60 2 RT LN CLOSED	AT FULLERTON ROAD	EAST 60 TRAFFIC JAMMED	RTE 605 TO RTE 57
3	NB ROUTE 605 BEFORE ROUTE 91	EAST 60 2 RT LN CLOSED	AT FULLERTON ROAD	EAST 60 TRAFFIC JAMMED	RTE 605 TO RTE 57
4	NB ROUTE 605 BEFORE ROUTE 5	EAST 60 2 RT LN CLOSED	AT FULLERTON ROAD	EAST 60 TRAFFIC JAMMED	RTE 605 TO RTE 57
5	EB ROUTE 210 BEFORE ROUTE 605	EAST 60 2 RT LN CLOSED	AT FULLERTON ROAD	EAST 60 TRAFFIC JAMMED	RTE 605 TO RTE 57

MOTORIST INFORMATION PLAN FOR 55 HOUR CLOSURE BETWEEN FULLERTON ROAD TO NOGALES STREET ON EASTBOUND ROUTE 60

NO SCALE

MI-1

STATE OF CALIFORNIA - DEPARTMENT OF TRANSPORTATION
Caltrans DTM

FUNCTIONAL SUPERVISOR: MARTIN OREGEL
CALCULATED-DESIGNED BY: CHEN-CHUNG LIU
CHECKED BY: MARTIN OREGEL
REVISED BY
DATE REVISED

LAST REVISION 06-27-11
DATE PLOTTED => 23-JUN-2011
TIME PLOTTED => 13:09

Dist	COUNTY	ROUTE	POST MILES TOTAL PROJECT	SHEET No.	TOTAL SHEETS
07	LA	60	11.6/R23.6	38	75

REGISTERED CIVIL ENGINEER 05-19-11 DATE

06-27-11
PLANS APPROVAL DATE

REGISTERED PROFESSIONAL ENGINEER CHEN CHUNG LIU No. C 67562 Exp. 6-30-13 CIVIL STATE OF CALIFORNIA

THE STATE OF CALIFORNIA OR ITS OFFICERS OR AGENTS SHALL NOT BE RESPONSIBLE FOR THE ACCURACY OR COMPLETENESS OF SCANNED COPIES OF THIS PLAN SHEET.

LEGEND:

○ PCMS-PORTABLE CHANGEABLE MESSAGE SIGN

▨ LIMIT OF CONSTRUCTION

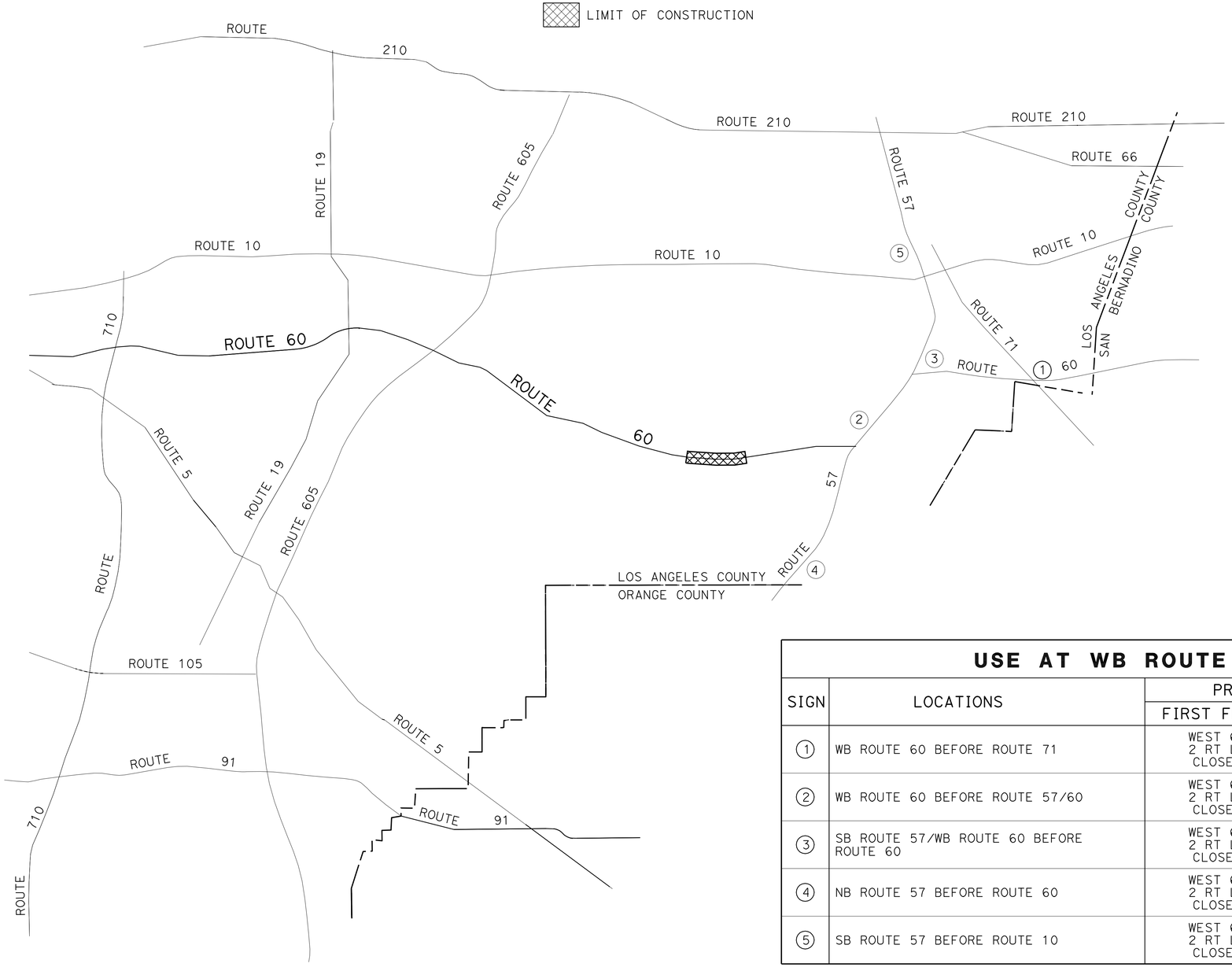

USE AT WB ROUTE 60 DURING 55 HOUR CLOSURE

SIGN	LOCATIONS	PRIMARY MESSAGE		SECONDARY MESSAGE	
		FIRST FLASH	SECOND FLASH	FIRST FLASH	SECOND FLASH
1	WB ROUTE 60 BEFORE ROUTE 71	WEST 60 2 RT LN CLOSED	AT NOGALES ST	WEST 60 TRAFFIC JAMMED	RTE 57 TO RTE 605
2	WB ROUTE 60 BEFORE ROUTE 57/60	WEST 60 2 RT LN CLOSED	AT NOGALES ST	WEST 60 TRAFFIC JAMMED	RTE 57 TO RTE 605
3	SB ROUTE 57/WB ROUTE 60 BEFORE ROUTE 60	WEST 60 2 RT LN CLOSED	AT NOGALES ST	WEST 60 TRAFFIC JAMMED	RTE 57 TO RTE 605
4	NB ROUTE 57 BEFORE ROUTE 60	WEST 60 2 RT LN CLOSED	AT NOGALES ST	WEST 60 TRAFFIC JAMMED	RTE 57 TO RTE 605
5	SB ROUTE 57 BEFORE ROUTE 10	WEST 60 2 RT LN CLOSED	AT NOGALES ST	WEST 60 TRAFFIC JAMMED	RTE 57 TO RTE 605

MOTORIST INFORMATION PLAN FOR 55 HOUR CLOSURE BETWEEN FULLERTON ROAD TO NOGALES STREET ON WESTBOUND ROUTE 60

NO SCALE

MI-2

STATE OF CALIFORNIA - DEPARTMENT OF TRANSPORTATION
Caltrans DTM

FUNCTIONAL SUPERVISOR: MARTIN OREGEL
CALCULATED-DESIGNED BY: CHEN-CHUNG LIU
CHECKED BY: MARTIN OREGEL
REVISED BY / DATE REVISED

LAST REVISION 06-27-11 | DATE PLOTTED => 23-JUN-2011 | TIME PLOTTED => 13:09

Dist	COUNTY	ROUTE	POST MILES TOTAL PROJECT	SHEET No.	TOTAL SHEETS
07	LA	60	11.6/R23.6	39	75

Larry Wiering 06-9-11
REGISTERED CIVIL ENGINEER DATE

06-27-11
PLANS APPROVAL DATE

REGISTERED PROFESSIONAL ENGINEER
LARRY WIERING
No. C41247
Exp. 3-31-13
CIVIL
STATE OF CALIFORNIA

THE STATE OF CALIFORNIA OR ITS OFFICERS OR AGENTS SHALL NOT BE RESPONSIBLE FOR THE ACCURACY OR COMPLETENESS OF SCANNED COPIES OF THIS PLAN SHEET.

NOTES:

1. SEE PAVEMENT DELINEATION QUANTITIES FOR LOCATION AND TYPES OF TRAFFIC STRIPES AND PAVEMENT MARKINGS TO BE PLACED.
2. CONFLICTING STRIPING SHALL BE REMOVED.
3. PLACE DIAGONALS ON RAMP SHOULDERS AT 25′ INTERVALS AND ON MAINLINE SHOULDERS AT 50′ INTERVALS.

LEGEND:

- ⇨ DIRECTION OF TRAFFIC
- HOV HIGH OCCUPANCY VEHICLE
- (N) NOT A SEPARATE PAY ITEM, FOR INFORMATION ONLY.
- 4" WHITE THERMOPLASTIC STRIPE
- 8" WHITE THERMOPLASTIC STRIPE
- 4" PAINTED BLACK CONTRAST STRIPE (N)
- 4" YELLOW THERMOPLASTIC STRIPE
- TYPE H ONE-WAY YELLOW RETROREFLECTIVE MARKER
- 2-TYPE G ONE-WAY CLEAR RETROREFLECTIVE MARKERS

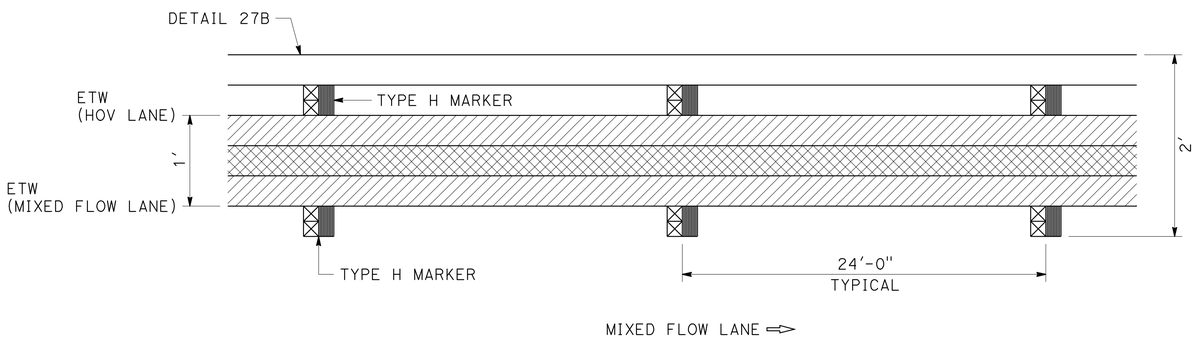

DETAIL A - HOV BUFFER STRIPING

BUFFER WIDTH-1 FOOT

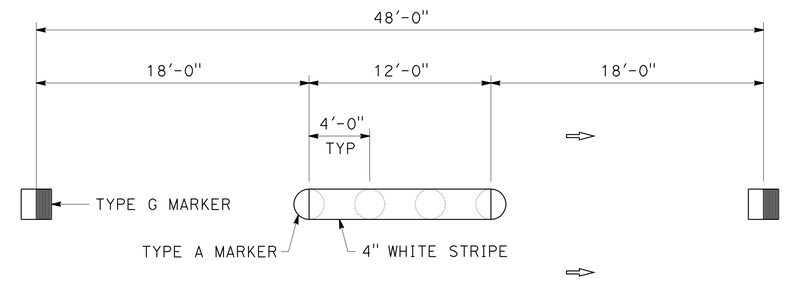

NOTE:

1. APPLY A 4" WIDE THERMOPLASTIC STRIPE ON TOP OF TYPE A MARKERS

DETAIL 13 (MODIFIED)

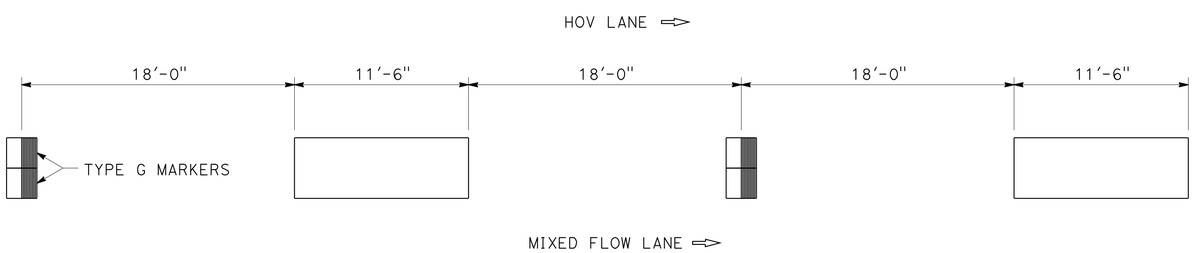

DETAIL M-10 - INGRESS/EGRESS STRIPING

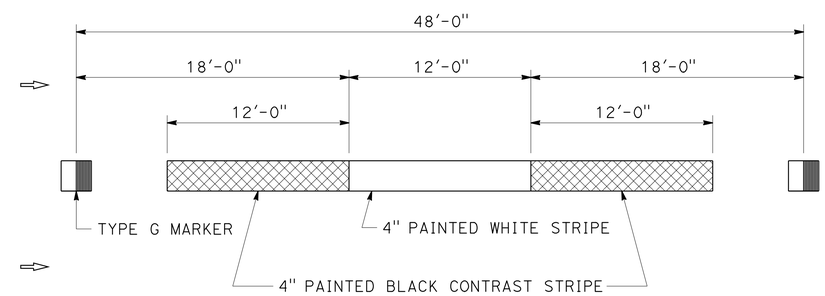

TEMPORARY LANE LINE PAVEMENT DELINEATION

PAVEMENT DELINEATION DETAILS

NO SCALE

PDD-1

STATE OF CALIFORNIA - DEPARTMENT OF TRANSPORTATION
Caltrans MAINTENANCE ENGINEERING

FUNCTIONAL SUPERVISOR: HECTOR OBESO
CALCULATED-DESIGNED BY: VINCENT PANG
CHECKED BY: LARRY WIERING
REVISED BY
DATE REVISED

LAST REVISION 06-27-11
DATE PLOTTED => 23-JUN-2011
TIME PLOTTED => 13:09

Dist	COUNTY	ROUTE	POST MILES TOTAL PROJECT	SHEET No.	TOTAL SHEETS
07	LA	60	11.6/R23.6	40	75

Larry Wiering 06-9-11
REGISTERED CIVIL ENGINEER DATE

06-27-11
PLANS APPROVAL DATE

REGISTERED PROFESSIONAL ENGINEER LARRY WIERING No. C41247 Exp. 3-31-13 CIVIL STATE OF CALIFORNIA

THE STATE OF CALIFORNIA OR ITS OFFICERS OR AGENTS SHALL NOT BE RESPONSIBLE FOR THE ACCURACY OR COMPLETENESS OF SCANNED COPIES OF THIS PLAN SHEET.

(N) NOT A SEPARATE PAY ITEM, FOR INFORMATION ONLY.

PAVEMENT DELINEATION QUANTITIES

DIRECTION	LOCATION	THERMOPLASTIC TRAFFIC STRIPE							DETAIL A	PAVEMENT MARKER (NON-REFLECTIVE)	PAVEMENT MARKER (RETROREFLECTIVE)					THERMOPLASTIC PAVEMENT MARKING		
		DETAIL 13 (Mod)	DETAIL 25	DETAIL 27B	HOV LANE DETAIL A		HOV LANE DETAIL M-10	DETAIL 37		DETAIL 13 (Mod)	DETAIL 37	DETAIL 13 (Mod)	DETAIL M-10	DETAIL A	DETAIL 25	HOV LANE		
		4" WHITE (BROKEN 36-12)	4" SOLID YELLOW	4" SOLID WHITE	4" SOLID YELLOW	4" SOLID WHITE	8" WHITE (BROKEN 36-11.5)	8" WHITE (BROKEN 12-3)	4" PAINTED BLACK CONTRAST STRIPE 2-COAT (N)	TYPE A	TYPE C	TYPE G		TYPE H		CAR POOL ONLY	◇	TYPE VI ARROW
	PM	LF								EA						SQFT		
EB	11.6/12.0	10,560			1,624	812	1,300		812	884		221	56	70		186	66	
	12.0/12.6	12,672		3,168	3,736	1,868	1,300	2,047	1,868	1,060	138	265	56	158		186	66	
	12.6/12.9	6,336		1,584	3,168	1,584			1,584	532		133		134				
	12.9/13.6	11,088			7,392	3,696			3,696	928		232		310		62	22	
	13.6/14.3	11,088			7,392	3,696			3,696	928		232		310		62	22	
	14.3/14.7	6,336			1,624	812	1,300		812	532		133	56	70		186	66	
	14.7/15.1	6,336			4,224	2,112			2,112	532		133		178		62	22	
	15.1/15.9	12,672			8,448	4,224		3,727	4,224	1,060	250	265		354		62	22	
	15.9/16.3	6,336		2,112	4,224	2,112			2,112	532		133		178				
	16.3/16.5	3,168			2,112	1,056			1,056	268		67		90		62	22	
	16.5/17.1 (X-6)	9,504		3,168	3,736	1,868	1,300		1,868	796		199	56	158		186	66	
	17.1/17.6 (X-7)	7,920			5,280	2,640		968	2,640	664	66	166		222		62	22	
	17.6/18.0 (X-6)	6,336		2,112	4,224	2,112			2,112	532		133		178				
	17.6/18.0 (X-7)	6,336			4,224	2,112			2,112	532		133		178				
	18.0/20.4	38,016		12,672	22,744	11,372	1,300		11,372	3,172		793	56	950		434	154	
	20.4/R21.5	17,424		5,808	9,016	4,508	1,300		4,508	1,456		364	56	378		248	88	
	R21.5/R22.4	14,256		4,752	9,504	4,752			4,752	1,192		298		398		62	22	
	R22.4/R23.6	19,008		6,336	12,672	6,336		1,122	6,336	1,588	76	397		530		62	22	
SUBTOTAL		205,392		41,712	115,344	57,672		7,864	57,672	17,188	530	4,297	336	4,844		1,922	682	
TOTAL PDQ-1		205,392	214,728				7,800	7,864	57,672	17,188	10,007					2,604		

PAVEMENT DELINEATION QUANTITIES
PDQ-1

STATE OF CALIFORNIA - DEPARTMENT OF TRANSPORTATION
Caltrans MAINTENANCE ENGINEERING

FUNCTIONAL SUPERVISOR: HECTOR OBESO
CALCULATED-DESIGNED BY: VINCENT PANG
CHECKED BY: LARRY WIERING
REVISED BY
DATE REVISED

LAST REVISION 06-27-11
DATE PLOTTED => 23-JUN-2011
TIME PLOTTED => 13:09

Dist	COUNTY	ROUTE	POST MILES TOTAL PROJECT	SHEET No.	TOTAL SHEETS
07	LA	60	11.6/R23.6	41	75

Larry Wiering 06-9-11
REGISTERED CIVIL ENGINEER DATE

06-27-11
PLANS APPROVAL DATE

REGISTERED PROFESSIONAL ENGINEER
LARRY WIERING
No. C41247
Exp. 3-31-13
CIVIL
STATE OF CALIFORNIA

THE STATE OF CALIFORNIA OR ITS OFFICERS OR AGENTS SHALL NOT BE RESPONSIBLE FOR THE ACCURACY OR COMPLETENESS OF SCANNED COPIES OF THIS PLAN SHEET.

PAVEMENT DELINEATION QUANTITIES

DIRECTION	LOCATION	THERMOPLASTIC TRAFFIC STRIPE							DETAIL A	PAVEMENT MARKER (NON-REFLECTIVE)	PAVEMENT MARKER (RETROREFLECTIVE)					THERMOPLASTIC PAVEMENT MARKING		
		DETAIL 13 (Mod)	DETAIL 25	DETAIL 27B	HOV LANE DETAIL A		HOV LANE DETAIL M-10	DETAIL 37		DETAIL 13 (Mod)	DETAIL 37	DETAIL 13 (Mod)	DETAIL M-10	DETAIL A	DETAIL 25	HOV LANE		
		4" WHITE (BROKEN 36-12)	4" SOLID YELLOW	4" SOLID WHITE	4" SOLID YELLOW	4" SOLID WHITE	8" WHITE (BROKEN 36-11.5)	8" WHITE (BROKEN 12-3)	4" PAINTED BLACK CONTRAST STRIPE 2-COAT (N)	TYPE A	TYPE C	TYPE G		TYPE H		CAR POOL ONLY	◇	TYPE VI ARROW
	PM	LF								EA						SQFT		
WB	11.6/12.0	6,336	2,112							532		133			45			
	12.0/12.6	12,672	3,168	3,168				1,705		1,060	114	265			67			
	12.6/12.9	6,336	1,584	1,584				2,645		532	178	133			34			
	12.9/13.6	11,088			7,392	3,696			3,696	928		232		310				
	13.6/14.3	11,088			7,392	3,696			3,696	928		232		310		62	22	
	14.3/14.7	4,224			4,224	2,112	1,300		2,112	356		89		178		62	22	
	14.7/15.1	4,224			1,624	812	1,300		812	356		89	56	70		186	66	
	15.1/15.9	8,448		4,224	8,448	4,224			4,224	708		177		354		62	22	
	15.9/16.3	6,336		2,112	4,224	2,112			2,112	532		133		178				
	16.3/16.5	3,168		1,056	2,112	1,056			1,056	268		67		90		62	22	
	16.5/17.1 (X-6)	9,504		3,168	3,736	1,868	1,300		1,868	796		199	56	158		186	66	
	17.1/17.6 (X-7)	7,920			5,280	2,640			2,640	664		166		222				
	17.6/18.0 (X-6)	6,336		2,112	4,224	2,112			2,112	532		133		178				
	17.6/18.0 (X-7)	6,336			4,224	2,112			2,112	532		133		178		62	22	
	18.0/20.4	38,016		12,672	22,744	11,372	1,300		11,372	3,172		793	56	950		372	132	
	20.4/R21.5	17,424		5,808	9,016	4,508	1,300		4,508	1,456		364	56	378		310	110	
	R21.5/R22.4	14,256		4,752	9,504	4,752			4,752	1,192		298		398		62	22	
	R22.4/R23.6	25,344		6,336	10,072	5,036	1,300		5,036	2,116		529	56	422		248	88	
SUBTOTAL		199,056	6,864	46,992	104,216	52,108	7,800	4,350	52,108	16,660	292	4,165	280	4,374	146	1,674	594	
TOTAL PDQ-2		199,056	210,180				7,800	4,350	52,108	16,660	9,257					2,268		
TOTAL PDQ-1		205,392	214,728				7,800	7,864	57,672	17,188	10,007					2,604		
GRAND TOTAL		404,448	424,908				15,600	12,214	109,780	33,848	19,264					4,872		

PAVEMENT DELINEATION QUANTITIES
PDQ-2

STATE OF CALIFORNIA - DEPARTMENT OF TRANSPORTATION
Caltrans MAINTENANCE ENGINEERING

FUNCTIONAL SUPERVISOR: HECTOR OBESO
CALCULATED-DESIGNED BY: VINCENT PANG
CHECKED BY: LARRY WIERING
REVISED BY
DATE REVISED

LAST REVISION 06-27-11
DATE PLOTTED => 23-JUN-2011
TIME PLOTTED => 13:09

Dist	COUNTY	ROUTE	POST MILES TOTAL PROJECT	SHEET No.	TOTAL SHEETS
07	LA	60	11.6/R23.6	42	75

Larry Wiering 06-9-11
REGISTERED CIVIL ENGINEER DATE

06-27-11
PLANS APPROVAL DATE

REGISTERED PROFESSIONAL ENGINEER
LARRY WIERING
No. C41247
Exp. 3-31-13
CIVIL
STATE OF CALIFORNIA

THE STATE OF CALIFORNIA OR ITS OFFICERS OR AGENTS SHALL NOT BE RESPONSIBLE FOR THE ACCURACY OR COMPLETENESS OF SCANNED COPIES OF THIS PLAN SHEET.

FREEWAY PAVEMENT DELINEATION REMOVAL QUANTITIES

DIRECTION	LOCATION	REMOVE YELLOW THERMOPLASTIC TRAFFIC STRIPE (HAZARDOUS WASTE)		REMOVE PAVEMENT MARKER				
				(NON-REFLECTIVE)	(RETROREFLECTIVE)			
		DETAIL 25	DETAIL A	DETAIL 13 (Mod)	DETAIL 13 (Mod)	DETAIL M-10	DETAIL 25	DETAIL A
		4" SOLID		TYPE A	TYPE G		TYPE H	
	PM	LF		EA				
EB	11.6/12.0		1,624	884	221	56		70
	12.0/12.6		3,736	1,060	265	56		158
	12.6/12.9		3,168	532	133			134
	12.9/13.6		7,392	928	232			310
	13.6/14.3		7,392	928	232			310
	14.3/14.7		1,624	532	133	56		70
	14.7/15.1		4,224	532	133			178
	15.1/15.9		8,448	1,060	265			354
	15.9/16.3		4,224	532	133			178
	16.3/16.5		2,112	268	67			90
	16.5/17.1 (X-6)		3,736	796	199	56		158
	17.1/17.6 (X-7)		5,280	664	166			222
	17.6/18.0 (X-6)		4,224	532	133			178
	17.6/18.0 (X-7)		4,224	532	133			178
	18.0/20.4		22,744	3,172	793	56		950
	20.4/R21.5		9,016	1,456	364	56		378
	R21.5/R22.4		9,504	1,192	298			398
	R22.4/R23.6		12,672	1,588	397			530
SUBTOTAL			115,344	17,188	4,297	336		4,844
TOTAL EB		115,344		26,665				
TOTAL WB		111,080		25,625				
GRAND TOTAL		226,424		52,290				

FREEWAY PAVEMENT DELINEATION REMOVAL QUANTITIES

DIRECTION	LOCATION	REMOVE YELLOW THERMOPLASTIC TRAFFIC STRIPE (HAZARDOUS WASTE)		REMOVE PAVEMENT MARKER				
				(NON-REFLECTIVE)	(RETROREFLECTIVE)			
		DETAIL 25	DETAIL A	DETAIL 13 (Mod)	DETAIL 13 (Mod)	DETAIL M-10	DETAIL 25	DETAIL A
		4" SOLID		TYPE A	TYPE G		TYPE H	
	PM	LF		EA				
WB	11.6/12.0	2,112		532	133		45	
	12.0/12.6	3,168		1,060	265		67	
	12.6/12.9	1,584		532	133		34	
	12.9/13.6		7,392	928	232			310
	13.6/14.3		7,392	928	232			310
	14.3/14.7		4,224	356	89			178
	14.7/15.1		1,624	356	89	56		70
	15.1/15.9		8,448	708	177			354
	15.9/16.3		4,224	532	133			178
	16.3/16.5		2,112	268	67			90
	16.5/17.1 (X-6)		3,736	796	199	56		158
	17.1/17.6 (X-7)		5,280	664	166			222
	17.6/18.0 (X-6)		4,224	532	133			178
	17.6/18.0 (X-7)		4,224	532	133			178
	18.0/20.4		22,744	3,172	793	56		950
	20.4/R21.5		9,016	1,456	364	56		378
	R21.5/R22.4		9,504	1,192	298			398
	R22.4/R23.6		10,072	2,116	529	56		422
SUBTOTAL		6,864	104216	16,660	4,165	280	146	4,374
TOTAL		111,080		25,625				

PAVEMENT DELINEATION QUANTITIES
PDQ-3

STATE OF CALIFORNIA - DEPARTMENT OF TRANSPORTATION
Caltrans MAINTENANCE ENGINEERING

FUNCTIONAL SUPERVISOR: HECTOR OBESO
CALCULATED-DESIGNED BY: VINCENT PANG
CHECKED BY: LARRY WIERING
REVISED BY
DATE REVISED

LAST REVISION 06-27-11
DATE PLOTTED => 23-JUN-2011
TIME PLOTTED => 13:09

Dist	COUNTY	ROUTE	POST MILES TOTAL PROJECT	SHEET No.	TOTAL SHEETS
07	LA	60	11.6/R23.6	43	75

Larry Wiering 06-9-11
REGISTERED CIVIL ENGINEER DATE

06-27-11
PLANS APPROVAL DATE

REGISTERED PROFESSIONAL ENGINEER
LARRY WIERING
No. C41247
Exp. 3-31-13
CIVIL
STATE OF CALIFORNIA

THE STATE OF CALIFORNIA OR ITS OFFICERS OR AGENTS SHALL NOT BE RESPONSIBLE FOR THE ACCURACY OR COMPLETENESS OF SCANNED COPIES OF THIS PLAN SHEET.

NOTES:

1. SEE STANDARD PLAN A73B FOR ADDITIONAL INFORMATION.
2. THE MARKER SHALL BE WHITE (NON-REFLECTIVE TARGET PLATE WITH BLACK SERIES D NUMERALS AND LETTERS.
3. INFORMATION SHALL BE IN U.S. CUSTOMARY UNITS.

STATIONARY MOUNTED HIGHWAY TEST STATION MARKERS

SIGN No.	SIGN CODE	SIGN MESSAGE	PANEL SIZE	No. OF POSTS	No. OF SPECIAL MARKERS
D	G11-6 (MOD)	TEST STATION MARKER	24" x 8"	1	2
E	G11-6 (MOD)	CONTROL SECTION MARKER	24" x 8"	1	2

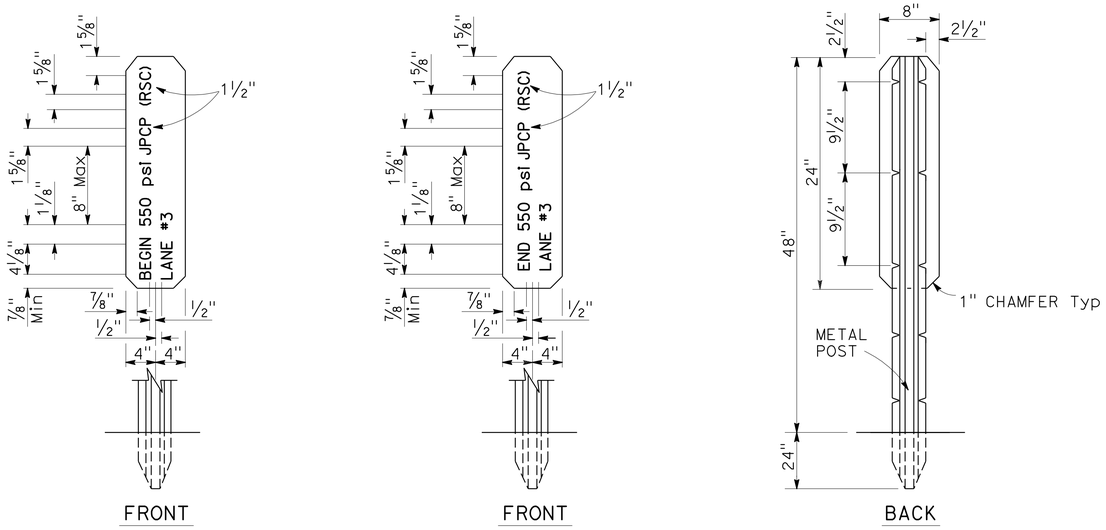

HIGHWAY TEST STATION MARKER

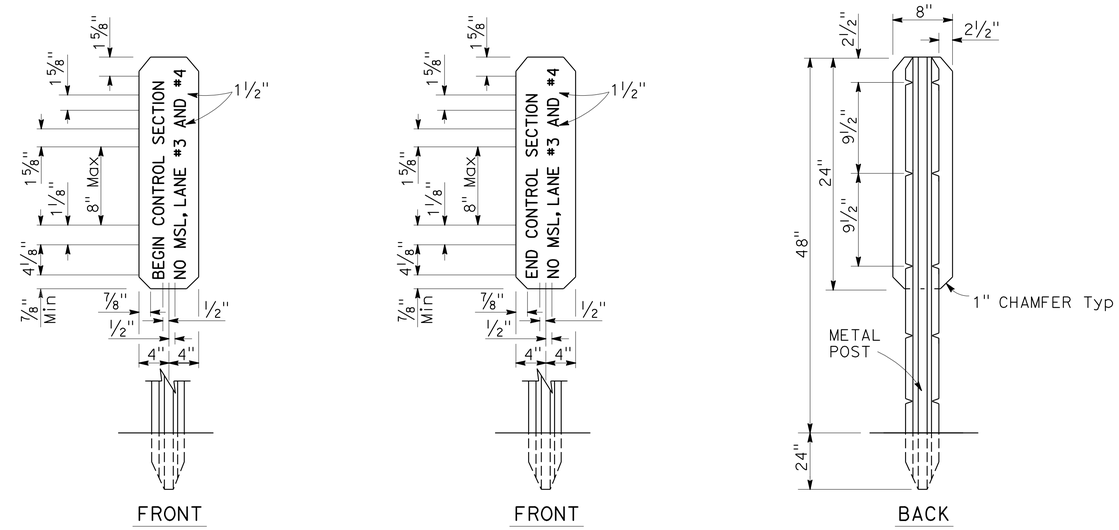

HIGHWAY CONTROL SECTION MARKER

SIGN PLAN

NO SCALE

S-1

STATE OF CALIFORNIA - DEPARTMENT OF TRANSPORTATION
Caltrans MAINTENANCE ENGINEERING

FUNCTIONAL SUPERVISOR: HECTOR OBESO
CALCULATED-DESIGNED BY: VINCENT PANG
CHECKED BY: LARRY WIERING
REVISED BY
DATE REVISED

LAST REVISION: 06-27-11
DATE PLOTTED => 23-JUN-2011
TIME PLOTTED => 15:17

Dist	COUNTY	ROUTE	POST MILES TOTAL PROJECT	SHEET No.	TOTAL SHEETS
07	LA	60	11.6/R23.6	44	75

Larry Wiering 06-9-11
REGISTERED CIVIL ENGINEER DATE

06-27-11
PLANS APPROVAL DATE

REGISTERED PROFESSIONAL ENGINEER LARRY WIERING No. C41247 Exp. 3-31-13 CIVIL STATE OF CALIFORNIA

THE STATE OF CALIFORNIA OR ITS OFFICERS OR AGENTS SHALL NOT BE RESPONSIBLE FOR THE ACCURACY OR COMPLETENESS OF SCANNED COPIES OF THIS PLAN SHEET.

NOTES:

1. WEAKENED PLANE JOINT TO WEAKENED PLANE JOINT CONSTITUTES ONE SLAB.

LEGEND:

(N) NOT A SEPARATE PAY ITEM, FOR INFORMATION ONLY.

ROADWAY QUANTITIES

WESTBOUND LANES

APPROXIMATE SLAB LOCATION		NUMBER OF SLABS (N)					REMOVE CONCRETE PAVEMENT	REPLACE UNDERLYING BASE		ROADWAY EXCAVATION
FROM	TO	LANE No. 1	LANE No. 2	LANE No. 3	LANE No. 4	LANE No. 5			ADDITIVE QUANTITY	
PM	PM	EA	EA	EA	EA	EA	SQYD	CY	CY	CY
11.6	12.0	15	20	142			3,540	805		
12.0	12.6	23	22	142	142	142	9,420	2,414		
12.6	12.9	13	33	105	105	105	7,220	1,785		
12.9	13.6	23	246	246			10,300	1,394		
13.6	14.3	26	246	246			10,360	1,394		
14.3	14.7	40	140				3,600			
14.7	15.1	38	140				3,560			
15.1	15.9	22	26	281			6,580	1,593		
15.9	16.3	12	13	140	140		6,100	1,587		
16.3	16.5	12	14	70	70		3,320	794		
16.5	17.1	8	9	211	211		8,780	2,392		
17.1	17.6	17	18	176			4,220	998		
17.6	18.0	20	19	140	140		6,380	1,587		
18.0	19.1	32	33	388	388		16,820	4,398		
19.1	19.5	20	25	142	142		6,580	1,610		
19.5	20.4	24	28	318	318		13,760			5724
20.4	R21.5	24	26	389	389		16,560	4,409		
R21.5	R22.4	29	31	317	317		13,880	3,593		
R22.4	R23.0	20	22	212	212		9,320	2,403		
R23.0	R23.4	7	8	140	140		5,900	1,587		
R23.4	R23.6	3	2	73	73		3,020	828		
SUBTOTAL		428	1121	3878	2787	247	169,220	35,571	1033	5724
TOTAL		7896					169,220	36,604		5724

SUMMARY OF QUANTITIES

Q-1

STATE OF CALIFORNIA - DEPARTMENT OF TRANSPORTATION
Caltrans MAINTENANCE ENGINEERING

FUNCTIONAL SUPERVISOR: HECTOR OBESO
CALCULATED-DESIGNED BY: VINCENT PANG
CHECKED BY: LARRY WIERING
REVISED BY
DATE REVISED

LAST REVISION 06-27-11
DATE PLOTTED => 23-JUN-2011
TIME PLOTTED => 13:09

Dist	COUNTY	ROUTE	POST MILES TOTAL PROJECT	SHEET No.	TOTAL SHEETS
07	LA	60	11.6/R23.6	45	75

Larry Wiering 06-9-11
REGISTERED CIVIL ENGINEER DATE

06-27-11
PLANS APPROVAL DATE

REGISTERED PROFESSIONAL ENGINEER LARRY WIERING No. C41247 Exp. 3-31-13 CIVIL STATE OF CALIFORNIA

THE STATE OF CALIFORNIA OR ITS OFFICERS OR AGENTS SHALL NOT BE RESPONSIBLE FOR THE ACCURACY OR COMPLETENESS OF SCANNED COPIES OF THIS PLAN SHEET.

NOTES:

1. WEAKENED PLANE JOINT TO WEAKENED PLANE JOINT CONSTITUTES ONE SLAB.

LEGEND:

(N) NOT A SEPARATE PAY ITEM, FOR INFORMATION ONLY.
RSC RAPID STRENGTH CONCRETE

ROADWAY QUANTITIES

EASTBOUND LANES

APPROXIMATE SLAB LOCATION		NUMBER OF SLABS (N)					REMOVE CONCRETE PAVEMENT	REPLACE UNDERLYING BASE		ROADWAY EXCAVATION
FROM	TO	LANE No. 1	LANE No. 2	LANE No. 3	LANE No. 4	LANE No. 5			ADDITIVE QUANTITY	
PM	PM	EA	EA	EA	EA	EA	SQYD	CY	CY	
11.6	12.0	12	15	142	142	142	9,060	2,414		
12.0	12.6	11	19	212	212	212	13,320	3,604		
12.6	12.9	6	28	106	106	106	7,040	1,802		
12.9	13.6	18	246	246			10,200	1,394		
13.6	14.3	16	56	246			6,360	1,394		
14.3	14.7	11	27	142	142		6,440	1,610		
14.7	15.1	14	57	142	142		7,100	1,610		
15.1	15.9	77	84	282			8,860	1,598		
15.9	16.3	18	17	142	142		6,380	1,610		
16.3	16.5	10	70	70			3,000	397		
16.5	17.1	22	25	212	212		9,420	2,403		
17.1	17.6	18	27	176			4,420	998		
17.6	18.0	14	13	140			3,340	414		
18.0	19.1	23	25	388	388		16,480	4,398		
19.1	19.5	26	28	142	142		6,760	1,610		
19.5	20.4	24	29	318	318		13,780			5,724
20.4	R21.5	34	36	389	389		16,960	4,409		
R21.5	R22.4	32	34	318	318		14,040	3,604		
R22.4	R23.0	23	31	212	212		9,560	2,403		
R23.0	R23.4	10	10	142	142		6,080	1,610		
R23.4	R23.6	6	6	70	70		3,040	794		
SUBTOTAL		425	883	4,237	3,077	460	181,640	40,076	865	5,724
TOTAL Q-2		9,082					181,640	40,941		5,724
TOTAL Q-1		7,896					169,220	36,604		5,724
GRAND TOTAL		16,978					350,860	77,545		11,448

JOINTED PLAIN CONCRETE PAVEMENT (RSC) 550 PSI TEST SECTION

APPROXIMATE TEST SECTION LOCATION		DOWEL BARS (N)	REMOVE CONCRETE PAVEMENT	REPLACE UNDERLYING BASE	JOINTED PLAIN CONCRETE PAVEMENT (RSC) 550 PSI	LEAN CONCRETE BASE RS
FROM	TO					
PM	PM	EA	SQYD	CY	CY	CY
17.6	17.8	737	1380	380	491	223
TOTAL		737	1380	380	491	223

SUMMARY OF QUANTITIES

Q-2

STATE OF CALIFORNIA - DEPARTMENT OF TRANSPORTATION
Caltrans MAINTENANCE ENGINEERING

FUNCTIONAL SUPERVISOR: HECTOR OBESO
CALCULATED-DESIGNED BY: VINCENT PANG
CHECKED BY: LARRY WIERING
REVISED BY
DATE REVISED

LAST REVISION 06-27-11
DATE PLOTTED => 23-JUN-2011
TIME PLOTTED => 13:09

Dist	COUNTY	ROUTE	POST MILES TOTAL PROJECT	SHEET No.	TOTAL SHEETS
07	LA	60	11.6/R23.6	46	75

Larry Wiering 06-9-11
REGISTERED CIVIL ENGINEER DATE

06-27-11
PLANS APPROVAL DATE

REGISTERED PROFESSIONAL ENGINEER LARRY WIERING No. C41247 Exp. 3-31-13 CIVIL STATE OF CALIFORNIA

THE STATE OF CALIFORNIA OR ITS OFFICERS OR AGENTS SHALL NOT BE RESPONSIBLE FOR THE ACCURACY OR COMPLETENESS OF SCANNED COPIES OF THIS PLAN SHEET.

NOTES:

1. WEAKENED PLANE JOINT TO WEAKENED PLANE JOINT CONSTITUTES ONE SLAB.

LEGEND:

RSC RAPID STRENGTH CONCRETE
(N) NOT A SEPARATE PAY ITEM, FOR INFORMATION ONLY.
RS RAPID SETTING

ROADWAY QUANTITIES

WESTBOUND LANES

APPROXIMATE SLAB LOCATION		NUMBER OF SLABS (N)					DOWEL BARS (N)	TIE BARS (N)	INDIVIDUAL SLAB REPLACE-MENT (RSC)	JOINTED PLAIN CONCRETE PAVEMENT (RSC)	LEAN CONCRETE BASE RS	CLASS 3 AGGREGATE BASE		MECHANICALLY STABALIZED LAYER (GEOGRID)		SUBGRADE ENHANCEMENT FABRIC
FROM	TO	LANE No. 1	LANE No. 2	LANE No. 3	LANE No. 4	LANE No. 5							ADDITIVE QUANTITY		ADDITIVE QUANTITY	
PM	PM	EA	EA	EA	EA	EA	EA	EA	CY	CY	CY	CY	CY	SQYD	SQYD	SQYD
11.6	12.0	15	20	142			5,247		175	1,042	474					
12.0	12.6	23	22	142	142	142	10,359	994	225	3,124	1,420					
12.6	12.9	13	33	105	105	105	8,179	735	230	2,310	1,050					
12.9	13.6	23	246	246			10,786	1,722	1345	1,640	820					
13.6	14.3	26	246	246			10,906	1,722	1360	1,640	820					
14.3	14.7	40	140				5,393		900							
14.7	15.1	38	140				5,313		890							
15.1	15.9	22	26	281			9,520		240	1,874	937					
15.9	16.3	12	13	140	140		6,626	980	125	2,054	934					
16.3	16.5	12	14	70	70		3,866	490	130	1,027	467					
16.5	17.1	8	9	211	211		9,146	1,477	85	3,095	1,407					
17.1	17.6	17	18	176			6,165		175	1,291	587					
17.6	18.0	20	19	140	140		7,186	980	195	2,054	934					
18.0	19.1	32	33	388	388		18,146	2,716	325	5,691	2,587					
19.1	19.5	20	25	142	142		7,506	994	225	2,083	947					
19.5	20.4	24	28	318	318		14,826	2,226	260	4,664	2,120	2120		13,780		13,780
20.4	R21.5	24	26	389	389		17,586	2,723	250	5,706	2,593					
R21.5	R22.4	29	31	317	317		15,106	2,219	300	4,650	2,114					
R22.4	R23.0	20	22	212	212		10,186	1,484	210	3,110	1,414					
R23.0	R23.4	7	8	140	140		6,226	980	75	2,054	934					
R23.4	R23.6	3	2	73	73		3,146	511	25	1,071	487					
SUBTOTAL		428	1121	3878	2787	247	191,420	22,953	7745	50,180	23,046	2120	4600	13,780	30,000	13,780
TOTAL		7896					191,420	22,953	7745	50,180	23,046	6720		43,780		13,780

SUMMARY OF QUANTITIES

Q-3

STATE OF CALIFORNIA - DEPARTMENT OF TRANSPORTATION
Caltrans MAINTENANCE ENGINEERING

FUNCTIONAL SUPERVISOR: HECTOR OBESO
CALCULATED-DESIGNED BY: VINCENT PANG
CHECKED BY: LARRY WIERING
REVISED BY
DATE REVISED

LAST REVISION 06-27-11
DATE PLOTTED => 23-JUN-2011
TIME PLOTTED => 13:09

Dist	COUNTY	ROUTE	POST MILES TOTAL PROJECT	SHEET No.	TOTAL SHEETS
07	LA	60	11.6/R23.6	47	75

Larry Wiering 06-9-11
REGISTERED CIVIL ENGINEER DATE

06-27-11
PLANS APPROVAL DATE

REGISTERED PROFESSIONAL ENGINEER LARRY WIERING No. C41247 Exp. 3-31-13 CIVIL STATE OF CALIFORNIA

THE STATE OF CALIFORNIA OR ITS OFFICERS OR AGENTS SHALL NOT BE RESPONSIBLE FOR THE ACCURACY OR COMPLETENESS OF SCANNED COPIES OF THIS PLAN SHEET.

NOTES:

1. WEAKENED PLANE JOINT TO WEAKENED PLANE JOINT CONSTITUTES ONE SLAB.

LEGEND:

RSC RAPID STRENGTH CONCRETE
(N) NOT A SEPARATE PAY ITEM, FOR INFORMATION ONLY.
RS RAPID SETTING

ROADWAY QUANTITIES

EASTBOUND LANES

APPROXIMATE SLAB LOCATION		NUMBER OF SLABS (N)					DOWEL BARS (N)	TIE BARS (N)	INDIVIDUAL SLAB REPLACE-MENT (RSC)	JOINTED PLAIN CONCRETE PAVEMENT (RSC)	LEAN CONCRETE BASE RS	CLASS 3 AGGREGATE BASE		MECHANICALLY STABALIZED LAYER (GEOGRID)		SUBGRADE ENHANCEMENT FABRIC
FROM	TO	LANE No. 1	LANE No. 2	LANE No. 3	LANE No. 4	LANE No. 5							ADDITIVE QUANTITY		ADDITIVE QUANTITY	
PM	PM	EA	EA	EA	EA	EA	EA	EA	CY	CY	CY	CY	CY	SQYD	SQYD	SQYD
11.6	12.0	12	15	142	142	142	9,639	994	135	3,124	1,420					
12.0	12.6	11	19	212	212	212	13,959	1,484	150	4,664	2,120					
12.6	12.9	6	28	106	106	106	7,759	742	170	2,120	1,060					
12.9	13.6	18	246	246			10,586	1,722	1,320	1,640	820					
13.6	14.3	16	56	246			9,535		360	1,640	820					
14.3	14.7	11	27	142	142		7,226	994	190	1,894	947					
14.7	15.1	14	57	142	142		8,546	994	355	1,894	947					
15.1	15.9	77	84	282			14,067		805	1,880	940					
15.9	16.3	18	17	142	142		7,106	994	175	1,894	947					
16.3	16.5	10	70	70			3,226	490	400	467	234					
16.5	17.1	22	25	212	212		10,386	1,484	235	3,110	1,414					
17.1	17.6	18	27	176			6,565		225	1,291	587					
17.6	18.0	14	13	140			4,136		135	536	244					
18.0	19.1	23	25	388	388		17,466	2,716	240	5,691	2,587					
19.1	19.5	26	28	142	142		7,866	994	270	2,083	947					
19.5	20.4	24	29	318	318		14,866	2,226	265	4,664	2,120	2120		13,780		13,780
20.4	R21.5	34	36	389	389		18,386	2,723	350	5,706	2,594					
R21.5	R22.4	32	34	318	318		15,386	2,226	330	4,664	2,120					
R22.4	R23.0	23	31	212	212		10,666	1,484	270	3,110	1,413					
R23.0	R23.4	10	10	142	142		6,506	994	100	2,083	947					
R23.4	R23.6	6	6	70	70		3,306	490	60	1,027	467					
SUBTOTAL		425	883	4,237	3,077	460	207,184	23,751	6,540	55,182	25,695	2120	5200	13,780	33,100	13,780
TOTAL Q-4		9,082					207,184	23,751	6,540	55,182	25,695	7,320		46,880		13,780
TOTAL Q-3		7,896					191,420	22,953	7,745	50,180	23,046	6,720		43,780		13,780
GRAND TOTAL		16,978					398,604	46,704	14,285	105,362	48,741	14,040		90,660		27,560

SUMMARY OF QUANTITIES

Q-4

REVISED BY | DATE REVISED
VINCENT PANG | LARRY WIERING
CALCULATED-DESIGNED BY | CHECKED BY
FUNCTIONAL SUPERVISOR | HECTOR OBESO
STATE OF CALIFORNIA - DEPARTMENT OF TRANSPORTATION
Caltrans MAINTENANCE ENGINEERING

LAST REVISION 06-27-11 | DATE PLOTTED => 23-JUN-2011 | TIME PLOTTED => 13:09

Dist	COUNTY	ROUTE	POST MILES TOTAL PROJECT	SHEET No.	TOTAL SHEETS
07	LA	60	11.6/R23.6	48	75

Larry Wiering 06-9-11
REGISTERED CIVIL ENGINEER DATE

06-27-11
PLANS APPROVAL DATE

REGISTERED PROFESSIONAL ENGINEER LARRY WIERING No. C41247 Exp. 3-31-13 CIVIL STATE OF CALIFORNIA

THE STATE OF CALIFORNIA OR ITS OFFICERS OR AGENTS SHALL NOT BE RESPONSIBLE FOR THE ACCURACY OR COMPLETENESS OF SCANNED COPIES OF THIS PLAN SHEET.

SEAL JOINT (EXISTING CONCRETE PAVEMENT)

LIMITS		SEAL EXISTING PAVEMENT TRANSVERSE JOINT		SEAL EXISTING PAVEMENT LONGITUDINAL JOINT	
FROM	TO	EASTBOUND	WESTBOUND	EASTBOUND	WESTBOUND
PM	PM	LF		LF	
11.6	12.0	3,084	3,048	5,526	3,324
12.0	12.6	4,728	7,104	5,436	8,136
12.6	12.9	2,160	2,016	2,148	3,372
12.9	13.6	2,748	2,688	3,156	3,006
13.6	14.3	5,064	2,652	5,232	2,916
14.3	14.7	2,952	1,224	3,084	912
14.7	15.1	2,556	1,248	2,094	972
15.1	15.9	2,820	5,664	1,098	6,348
15.9	16.3	2,988	3,108	3,174	3,474
16.3	16.5	600	1,128	756	1,332
16.5	17.1	3,996	4,836	4,266	5,826
17.1	17.6	3,252	3,396	3,330	3,630
17.6	18.0	2,700	2,412	2,994	2,454
18.0	20.4	16,692	13,620	18,444	18,384
20.4	R21.5	7,560	8,160	8,496	9,396
R21.5	R22.4	6,072	6,192	6,564	6,834
R22.4	R23.6	7,848	8,424	8,742	9,912
SUB TOTAL		77,820	76,920	84,540	90,228
TOTAL		329,508			

SEAL PAVEMENT JOINT

ROUTE DIRECTION		LOCATION	PREFORMED COMPRESSION JOINT SEALANT
			LF
60	EB	MAINLINE PM 11.6 TO PM R23.6	287,112
60	WB	MAINLINE PM 11.6 TO PM R23.6	274,584
		TOTAL	561,696

SEAL ISOLATION JOINT

ROUTE DIRECTION		LOCATION	SEAL LONGITUDINAL ISOLATION JOINT
			LF
60	EB	MAINLINE PM 11.6 TO PM R23.6	72,334
60	WB	MAINLINE PM 11.6 TO PM R23.6	71,786
		TOTAL	144,120

REMOVE AC DIKE

ROUTE DIRECTION		LOCATION	LF
60	EB	PM 11.6 TO PM R23.6 (VARIOUS LOCATIONS)	295
60	WB		
		TOTAL	295

REPAIR SPALLED JOINTS (POLYESTER GROUT)

ROUTE DIRECTION		LOCATION	REPAIR SPALLED JOINTS
			SQYD
60	EB	MAINLINE PM 11.6 TO PM R23.6	180
60	WB	MAINLINE PM 11.6 TO PM R23.6	190
		TOTAL	370

TEMPORARY DRAINAGE INLET PROTECTION

ROUTE DIRECTION		LOCATION	EA
60	EB	PM 11.6 TO PM R23.6 (VARIOUS LOCATIONS)	25
60	WB		
		TOTAL	25

HMA DIKE

Loc ◯	DIR	PM	DESCRIPTION	HMA (TYPE A) AC DIKE TYPE C	HMA (TYPE A) AC DIKE TYPE F	HMA (TYPE A) DIKE TYPE C	HMA (TYPE A) DIKE TYPE F
				TON	TON	LF	LF
1	EB	18.26	1 MILE W OF FULLERTON Rd OFF-RAMP	0.40		43.0	
	EB	19.46	SB FULLERTON Rd ON-RAMP TO EB ROUTE 60	0.40		43.0	
	WB	12.65	CROSSROADS PARKWAY OC	0.40		43.0	
2	EB	12.60	CROSSROADS PARKWAY OC		0.60		43.0
	EB	19.33	FULLERTON CHANNEL		1.10		80.0
	WB	12.65	CROSSROADS PARKWAY OC		0.60		43.0
			SUBTOTAL	1.20	2.30	129.0	166.0
			TOTAL	3.50		129.0	166.0

GRIND EXISTING CONCRETE PAVEMENT

DIRECTION	LOCATION (MAINLINE)	GRIND EXISTING CONCRETE PAVEMENT
		SQYD
EB	MAINLINE PM 11.6 TO PM R23.6	165,386
WB	MAINLINE PM 11.6 TO PM R23.6	169,610
	TOTAL	334,996

SUMMARY OF QUANTITIES

Q-5

STATE OF CALIFORNIA - DEPARTMENT OF TRANSPORTATION
Caltrans MAINTENANCE ENGINEERING

FUNCTIONAL SUPERVISOR: HECTOR OBESO
CALCULATED-DESIGNED BY: VINCENT PANG
CHECKED BY: LARRY WIERING
REVISED BY
DATE REVISED

LAST REVISION 06-27-11
DATE PLOTTED => 23-JUN-2011
TIME PLOTTED => 13:10

Dist	COUNTY	ROUTE	POST MILES TOTAL PROJECT	SHEET No.	TOTAL SHEETS
07	LA	60	11.6/R23.6	49	75

REGISTERED ELECT ENGINEER 5-31-11 DATE

06-27-11
PLANS APPROVAL DATE

REGISTERED PROFESSIONAL ENGINEER C. BURCIAGA No. E015302 Exp. 3/31/13 ELECT STATE OF CALIFORNIA

THE STATE OF CALIFORNIA OR ITS OFFICERS OR AGENTS SHALL NOT BE RESPONSIBLE FOR THE ACCURACY OR COMPLETENESS OF SCANNED COPIES OF THIS PLAN SHEET.

(RAMP METERING SYSTEM) INDUCTIVE LOOP DETECTOR SCHEDULE (ROUTE 60)

PM	LOCATION	CONTROLLER CABINET No.	SEE DETAIL A THIS SHEET FOR TYPICAL LOCATION OF INDUCTIVE LOOP DETECTORS											No. OF STUBOUTS (REPLACE)
			1	2	3	4	5	6	7	8	9	10	11	
12.64	CROSSROADS Pkwy	rms 1508	X	X	X	X	X							1
12.87	CROSSROADS Pkwy	rms 1508						X	X	X	X	X	X	1
12.93	WB ON AND OFF RAMPS AT CROSSROADS Pkwy	rms 4509	X	X	X	X	X							1
14.12	WB ON RAMP FROM SB SEVENTH Ave	rms 1056	X	X	X	X	X							1
14.16	EB OFF RAMP TO SEVENTH Ave	rms 1056						X	X	X	X	X	X	1
14.36	WB OFF RAMP TO SEVENTH Ave	rms 1020	X	X	X	X	X							1
14.44	EB ON RAMP FROM SEVENTH Ave	rms 1020						X	X	X	X	X	X	1
15.78	WB ON RAMP FROM SB HACIENDA Blvd	rms 1055	X	X	X	X	X							1
15.91	EB ON RAMP FROM SB HACIENDA Blvd	rms 1021						X	X	X	X	X		1
15.98	WB ON RAMP FROM NB HACIENDA Blvd	rms 1054	X	X	X	X	X							1
16.12	EB ON RAMP FROM NB HACIENDA Blvd	rms 1022						X	X	X	X	X		1
17.77	WB ON RAMP FROM SB AZUSA Ave	rms 1053	X	X	X	X	X							1
17.94	EB ON RAMP FROM SB AZUSA Ave	rms 1023						X	X	X	X	X		1
18.00	WB ON RAMP FROM NB AZUSA Ave	rms 1052	X	X	X	X	X							1
18.14	EB ON RAMP FROM NB AZUSA Ave	rms 1024						X	X	X	X	X		1
19.31	WB ON RAMP FROM SB FULLERTON Rd	rms 1051	X	X	X	X	X							1
19.42	EB ON RAMP FROM SB FULLERTON Rd	rms 1025						X	X	X	X	X		1
19.52	WB ON RAMP FROM NB FULLERTON Rd	rms 1050	X	X	X	X	X							1
19.61	EB ON RAMP FROM NB FULLERTON Rd	rms 1026						X	X	X	X	X		1
20.34	WB ON RAMP FROM SB NOGALES St	rms 1049	X	X	X	X	X							1
20.38	EB ON RAMP FROM SB NOGALES St	rms 1027						X	X	X	X	X		1
20.47	WB ON RAMP FROM NB NOGALES St	rms 1048	X	X	X	X	X							1
20.53	EB ON RAMP FROM NB NOGALES St	rms 1028						X	X	X	X	X		1
21.31	WB ON RAMP FROM SB FAIRWAY Dr	rms 1047	X	X	X	X	X							1
21.46	EB ON RAMP FROM SB FAIRWAY Dr	rms 1029						X	X	X	X	X		1
21.69	EB ON RAMP FROM NB FAIRWAY Dr	rms 1030						X	X	X	X	X		1
22.79	WB ON RAMP FROM BREA CANYON Rd	rms 1046	X	X	X	X	X							1
22.94	BREA CANYON Rd	rms 1031	X	X	X	X	X	X	X	X	X	X		2

X - INSTALL TYPE E INDUCTIVE LOOP DETECTOR.

GENERAL NOTES: (SHEETS E-1 TO E-3)

1. ABANDON EXISTING STUBOUTS. INSTALL NEW 2"C STUBOUTS FOR NEW INDUCTIVE LOOP DETECTORS.
2. PRIOR TO CONSTRUCTION, THE CONTRACTOR SHALL LOCATE EXISTING INDUCTIVE LOOP DETECTORS.
3. ABANDON EXISTING INDUCTIVE LOOP DETECTORS. INSTALL NEW INDUCTIVE LOOP DETECTORS AT SAME LOCATION.
4. NEW INDUCTIVE LOOP DETECTOR SHALL BE SPLICED TO EXISTING dlc IN ADJACENT PULL BOX.
5. TAG EXISTING dlc IN ADJACENT PULL BOX AND AT CONTROLLER CABINET.
6. ALL NEW HOME RUNS FOR NEW INDUCTIVE LOOP DETECTORS ON THE MAINLINE SHALL BE CUT TO THE RIGHT SHOULDER.

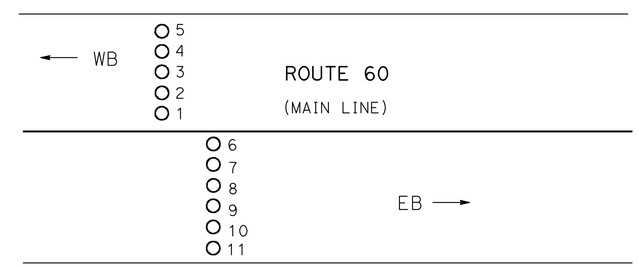

DETAIL A

TYPICAL DETAIL FOR LOOP DETECTOR INSTALLATION

MODIFY RAMP METERING SYSTEM

NO SCALE

E-1

THIS PLAN IS ACCURATE FOR ELECTRICAL WORK ONLY.

STATE OF CALIFORNIA - DEPARTMENT OF TRANSPORTATION
Caltrans TRAFFIC DESIGN

FUNCTIONAL SUPERVISOR: YI TSAU
CALCULATED-DESIGNED BY: QUINCIE TRAN
CHECKED BY: CECILIO BURCIAGA
REVISED BY
DATE REVISED

LAST REVISION 06-27-11
DATE PLOTTED => 23-JUN-2011
TIME PLOTTED => 13:10

Dist	COUNTY	ROUTE	POST MILES TOTAL PROJECT	SHEET No.	TOTAL SHEETS
07	LA	60	11.6/R23.6	50	75

REGISTERED ELECT ENGINEER 5-31-11 DATE

06-27-11
PLANS APPROVAL DATE

REGISTERED PROFESSIONAL ENGINEER C. BURCIAGA No. E015302 Exp. 3/31/13 ELECT STATE OF CALIFORNIA

THE STATE OF CALIFORNIA OR ITS OFFICERS OR AGENTS SHALL NOT BE RESPONSIBLE FOR THE ACCURACY OR COMPLETENESS OF SCANNED COPIES OF THIS PLAN SHEET.

(TRAFFIC MONITORING STATION) INDUCTIVE LOOP DETECTOR SCHEDULE (ROUTE 60)

PM	LOCATION	CONTROLLER CABINET No.	SEE DETAIL A THIS SHEET FOR TYPICAL LOCATION OF INDUCTIVE LOOP DETECTORS												No. OF STUBOUTS (REPLACE)
			1	2	3	4	5	6	7	8	9	10	11	12	
12.10	WORKMAN MILL Rd	tms 2583	X	X	X	X	X		X	X	X	X	X	X	2
12.17	WORKMAN MILL Rd	COUNT STATION 101	X	X	X	X	X		X	X	X	X	X	X	2
13.22	0.55 MILE EAST OF CROSSROAD Pkwy OC	tms 2157	X	X	X	X	X	X	X	X	X	X	X	X	2
14.98	0.2 MILE W OF TURNBULL CANYON Rd (VALENCIA Ave)	tms 2158	X	X	X	X	X		X	X	X	X	X	X	2
15.33	0.28 MILE E OF TURNBULL CANYON Rd	tms 2708	X	X	X	X	X		X	X	X	X	X	X	2
16.56	0.62 MILE E OF HACIENDA Blvd (HINNEN Ave)	tms 2159	X	X	X	X	X		X	X	X	X	X		2
16.56	0.62 MILE E OF HACIENDA Blvd (HINNEN Ave)	COUNT STATION 112	X	X	X	X	X		X	X	X	X	X	X	2
17.03	1 MILE E OF HACIENDA Blvd (JOHNSON Dr AND DARIUS Ct)	tms 2709	X	X	X	X	X		X	X	X	X	X		2
17.44	0.53 MILE W OF AZUSA Ave OC	tms 2710	X	X	X	X	X		X	X	X	X	X		2
18.49	0.52 MILE E OF AZUSA Ave (ALBATROSS Rd AND CASTLETON St)	tms 2711	X	X	X	X	X		X	X	X	X	X		2
18.84	0.85 MILE E OF AZUSA Ave (GALE Ave AND AUTO MALL)	tms 2161	X	X	X	X	X		X	X	X	X	X		2
19.90	0.46 MILE E OF FULLERTON Rd (GREENBAY Dr AND HEATHERTON Ave)	tms 2712	X	X	X	X	X		X	X	X	X	X		2
20.91	0.50 MILE E OF NOGALES St (ADDIS St AND CARVIN Ave)	tms 2713	X	X	X	X	X		X	X	X	X	X		2
22.03	0.56 E OF FAIRWAY Dr (FLINTGATE Dr AND E WALNUT Dr)	tms 2162	X	X	X	X	X		X	X	X	X	X		2
22.47	0.10 MILE EAST OF LEMON Ave UC	tms 2714	X	X	X	X	X		X	X	X	X	X		2

X - INSTALL TYPE E INDUCTIVE LOOP DETECTOR.

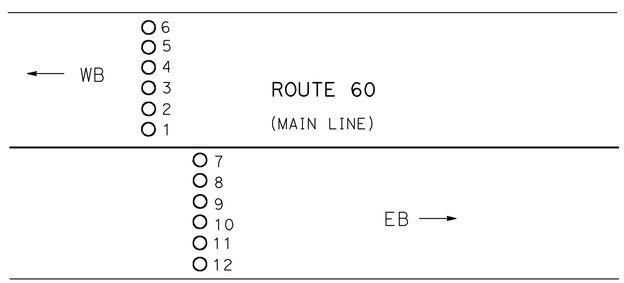

DETAIL A

TYPICAL DETAIL FOR LOOP DETECTOR INSTALLATION

MODIFY TRAFFIC MONITORING STATION

NO SCALE

FOR GENERAL NOTES SEE SHEET E-1.
THIS PLAN IS ACCURATE FOR ELECTRICAL WORK ONLY.

E-2

STATE OF CALIFORNIA - DEPARTMENT OF TRANSPORTATION
Caltrans TRAFFIC DESIGN

FUNCTIONAL SUPERVISOR: YI TSAU
CALCULATED-DESIGNED BY: QUINCIE TRAN
CHECKED BY: CECILIO BURCIAGA
REVISED BY
DATE REVISED

LAST REVISION 06-27-11
DATE PLOTTED => 23-JUN-2011
TIME PLOTTED => 13:10

Dist	COUNTY	ROUTE	POST MILES TOTAL PROJECT	SHEET No.	TOTAL SHEETS
07	LA	60	11.6/R23.6	51	75

REGISTERED ELECT ENGINEER 5-31-11 DATE

06-27-11
PLANS APPROVAL DATE

REGISTERED PROFESSIONAL ENGINEER C.BURCIAGA No.E015302 Exp.3/31/13 ELECT STATE OF CALIFORNIA

THE STATE OF CALIFORNIA OR ITS OFFICERS OR AGENTS SHALL NOT BE RESPONSIBLE FOR THE ACCURACY OR COMPLETENESS OF SCANNED COPIES OF THIS PLAN SHEET.

PROJECT NOTES: (THIS SHEET)

1. INSTALL 10 LOOP DETECTORS AND 20 PIEZO-ELECTRIC AXLE SENSORS. SEE SHEET E-4 FOR INSTALLATION.
2. AB LOOP DETECTORS AND AXLE SENSORS.

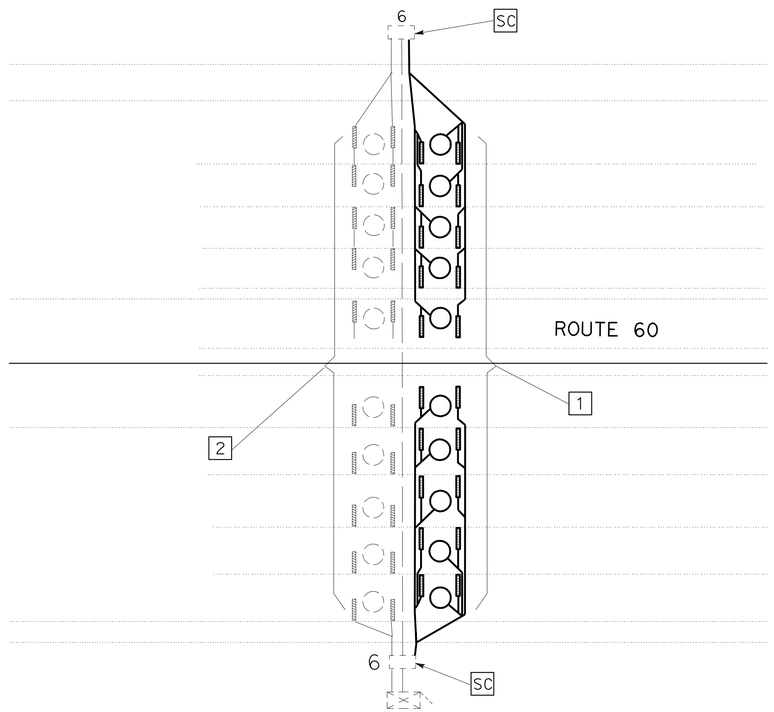

FOR GENERAL NOTES SEE SHEET E-1.
THIS PLAN IS ACCURATE FOR ELECTRICAL WORK ONLY.

MODIFY AUTOMATIC VEHICLE CLASSIFICATION STATION
(STATION 102, PM 20.92)
NO SCALE

E-3

STATE OF CALIFORNIA - DEPARTMENT OF TRANSPORTATION
Caltrans® TRAFFIC DESIGN

FUNCTIONAL SUPERVISOR: YI TSAU
CALCULATED-DESIGNED BY: QUINCIE TRAN
CHECKED BY: CECILIO BURCIAGA
REVISED BY
DATE REVISED

LAST REVISION 06-27-11
DATE PLOTTED => 23-JUN-2011
TIME PLOTTED => 13:10

Dist	COUNTY	ROUTE	POST MILES TOTAL PROJECT	SHEET No.	TOTAL SHEETS
07	LA	60	11.6/R23.6	52	75

REGISTERED ELECT ENGINEER 5-31-11 DATE

06-27-11
PLANS APPROVAL DATE

REGISTERED PROFESSIONAL ENGINEER C. BURCIAGA No. E015302 Exp. 3-31-13 ELECT STATE OF CALIFORNIA

THE STATE OF CALIFORNIA OR ITS OFFICERS OR AGENTS SHALL NOT BE RESPONSIBLE FOR THE ACCURACY OR COMPLETENESS OF SCANNED COPIES OF THIS PLAN SHEET.

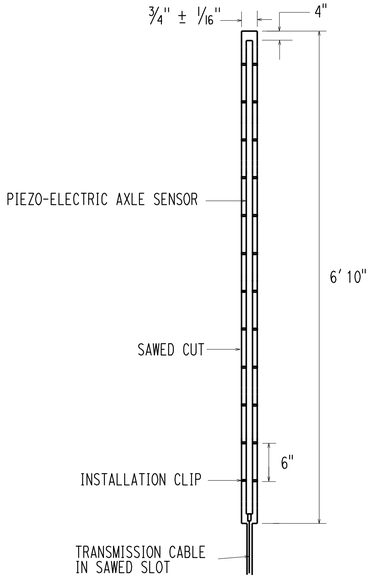

DETAIL A

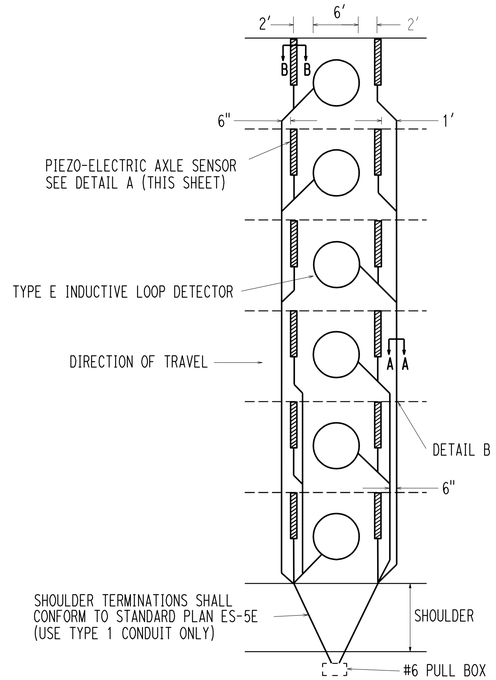

TYPICAL AXLE SENSOR INSTALLATION

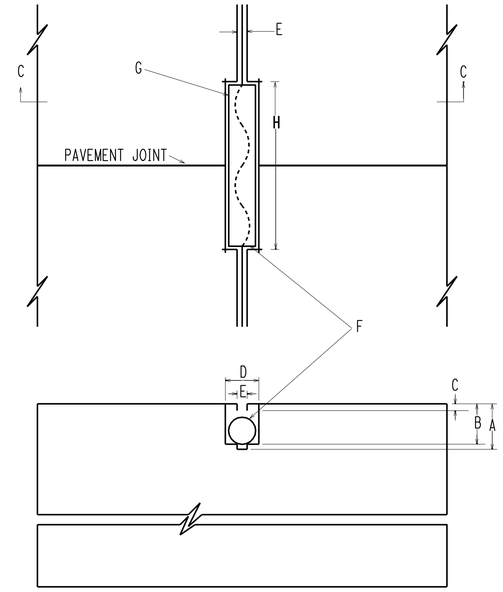

SECTION C-C

DETAIL B
(TYPICAL LEAD-IN AT PAVEMENT JOINT)

NOTES: (FOR DETAIL B THIS SHEET)

A. SAW CUT DEPTH TO ACCOMODATE SPECIFIED NUMBER OF CONDUCTORS WITH A MINIMUM OF 1" FROM TOP OF WIRE TO PAVEMENT SURFACE (3-1/4" MAX.).

B. SLOT SAW-CUT DEPTH TO ACCOMODATE 1" TYPE 3 CONDUIT WITH 1/2" MINIMUM FROM TOP OF CONDUIT TO PAVEMENT SURFACE.

C. 1/2" MINIMUM BETWEEN TOP OF CONDUIT AND PAVEMENT SURFACE.

D. SAW-CUT WIDTH TO ACCOMODATE 1" TYPE 3 CONDUIT WITH 1/8" CLEARANCE.

E. SAW-CUT 1/2" WIDE.

F. 1" TYPE 3 CONDUIT, 6" LONG. PLUG BOTH ENDS WITH CAULKING COMPOUND TO KEEP OUT EPOXY.

G. CONDUCTORS WITH 1/2" MINIMUM SLACK INSIDE CONDUIT.

H. SAW-CUT LENGTH OF SLOT 1/8" LONGER THAN CONDUIT.

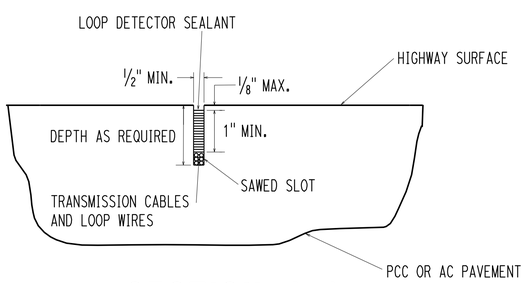

SECTION A-A

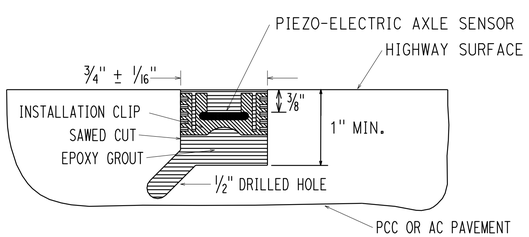

SECTION B-B

AXLE SENSOR INSTALLATION PROCEDURE

1. MARK THE POSITION OF THE AXLE SENSORS AS DIRECTED BY THE ENGINEER. AXLE SENSOR CHANNELS MUST BE PERPENDICULAR TO TRAFFIC.
2. MARK THE POSITION OF THE LOOP DETECTORS. THE DETECTORS SHALL BE CENTERED IN THE LANE AND BETWEEN THE AXLE SENSORS.
3. MARK THE HOME RUN CUTS AS SHOWN IN THE AXLE SENSOR INSTALLATION DETAIL.
4. USING A CONCRETE SAW CUT THE AXLE SENSOR CHANNELS 3/4" WIDE BY 1" DEEP IN A SINGLE PASS. CUTS SHALL BE STRAIGHT AND TRUE.
5. CUT THE LOOP DETECTORS AND HOME RUNS IN ACCORDANCE WITH CALTRANS SPECIFICATIONS.
6. DRILL 1/2" HOLES, 1" DEEP, AT A 45 DEGREE ANGLE AT THE BOTTOM CORNERS OF EACH AXLE SENSOR CHANNEL. HOLES SHALL BE 1' APART AND ON ALTERNATING SIDES OF THE CHANNEL.
7. WASH OUT THE CHANNELS AND ALL SAW CUTS THOROUGHLY WITH HIGH PRESSURE WATER. DRY COMPLETELY WITH AN AIR COMPRESSOR. IN PCC PAVEMENT ONLY, WIPE OUT THE CHANNELS WITH LACQUER THINNER AND CLEAN COTTON RAGS.
8. PLACE 4" DUCT TAPE STRIPS ON THE PAVEMENT AROUND THE CHANNELS.
9. ENSURE THAT EACH SENSOR IS STRAIGHT AND FLAT. BEND EACH END DOWN SLIGHTLY AND PLACE THE INSTALLATION CLIPS ON THE SENSOR.
10. BLOCK OFF THE CABLE END OF THE CHANNEL WITH DUCT SEAL TO PREVENT THE GROUT FLOWING OUT OF THE CHANNEL.
11. INSERT SENSOR EPOXY CARTRIDGE INTO CAULKING GUN. ATTACH STATIC MIXING TUBE ONTO CARTRIDGE.
12. WHILE WEARING PROTECTIVE GLOVES, HALF FILL THE CHANNEL WITH SENSOR EPOXY. ENSURE THAT THE BOTTOM OF THE CHANNEL IS COMPLETELY COVERED, AND THAT THE HOLES DRILLED IN STEP 6 ARE FILLED.
13. PLACE THE SENSOR IN THE CHANNEL WITH THE BRASS ELEMENT 3/8" BELOW THE ROAD SURFACE, WITH NO VOIDS BENEATH THE SENSOR.
14. COMPLETELY FILL THE CHANNEL WITH SENSOR EPOXY. SMOOTH OUT THE EPOXY ON TOP OF THE SENSOR TO ROAD LEVEL, WITH NO TROUGH ON TOP.
15. WHEN SENSOR EPOXY HAS BEGUN TO SET, REMOVE THE DUCT TAPE FROM THE PAVEMENT. REMOVE THE DUCT SEAL FROM THE END OF THE CHANNEL.
16. INSTALL THE LOOP DETECTORS AS PER CALTRANS SPECIFICATIONS.
17. INSTALL ALL LEAD-IN CABLES IN THE HOME RUN SLOTS, INSTALLING TYPE 3 CONDUIT AT THE EXPANSION JOINT CROSSINGS. PULL CABLES THROUGH STUB-OUT CONDUIT AND COIL IN PULL BOX.
18. SEAL ALL SAW CUTS. ELASTOMERIC SEALANT ONLY SHALL BE USED IN ALL CUTS CONTAINING SCREENED TRANSMISSION CABLE.
19. REMOVE ANY HIGH SPOTS IN THE SENSOR EPOXY WITH A HAND GRINDER.
20. CLEAN UP THE SITE. WHEN ALL SEALANTS ARE COMPLETELY CURED, LANES MAY BE OPENED TO TRAFFIC.

THIS PLAN IS ACCURATE FOR ELECTRICAL WORK ONLY.

MODIFY AUTOMATIC VEHICLE CLASSIFICATION STATION
(DETAILS)
NO SCALE

E-4

STATE OF CALIFORNIA - DEPARTMENT OF TRANSPORTATION
Caltrans® TRAFFIC DESIGN

FUNCTIONAL SUPERVISOR: YI TSAU
CALCULATED-DESIGNED BY: QUINCIE TRAN
CHECKED BY: CECILIO BURCIAGA
REVISED BY
DATE REVISED

LAST REVISION 06-27-11
DATE PLOTTED => 23-JUN-2011
TIME PLOTTED => 13:10

Dist	COUNTY	ROUTE	POST MILES TOTAL PROJECT	SHEET No.	TOTAL SHEETS
07	LA	60	11.6/R23.6	53	75

Randell D. Hiatt
REGISTERED CIVIL ENGINEER

May 20, 2011
PLANS APPROVAL DATE

REGISTERED PROFESSIONAL ENGINEER
Randell D. Hiatt
No. C50200
Exp. 6-30-11
CIVIL
STATE OF CALIFORNIA

The State of California or its officers or agents shall not be responsible for the accuracy or completeness of electronic copies of this plan sheet.

To accompany plans dated 06-27-11

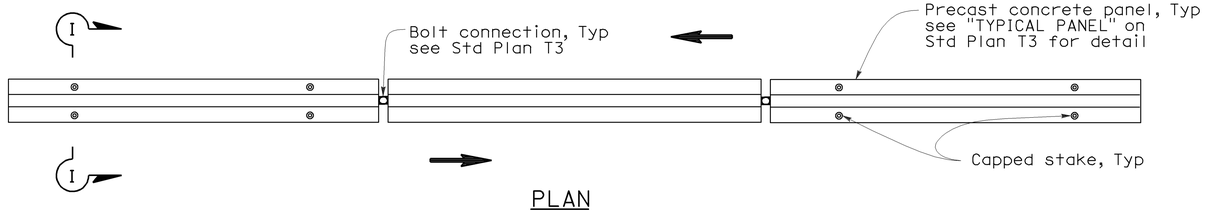

PLAN

RAILING STAKING CONFIGURATION FOR TWO-WAY TRAFFIC

See Note 1

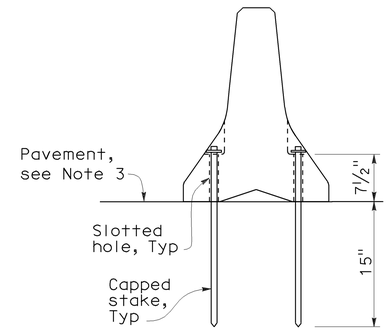

SECTION I-I

NOTES:

1. Where Type K Temporary Railing is placed as a temporary or long term barrier in two-way traffic on highways with less than 24" from the edge of traveled way, use four capped stakes per every other panel with end panels staked.
2. Where Type K Temporary Railing is placed 3" to 24" from the edge of an excavation on highways, use two capped stakes per panel along the traffic side.
3. Staked Type K Temporary Railing must be supported by at least 4" thick concrete, hot mix asphalt or existing asphalt concrete pavement.
4. The minimum yield strength for the washer must be 60,000 psi.
5. Direction of adjacent traffic indicated by ⟹.

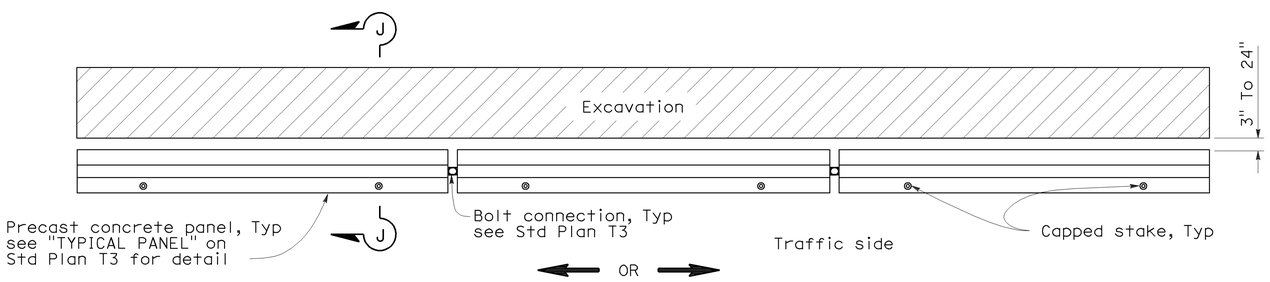

PLAN

RAILING STAKING CONFIGURATION ADJACENT TO AN EXCAVATION

See Note 2

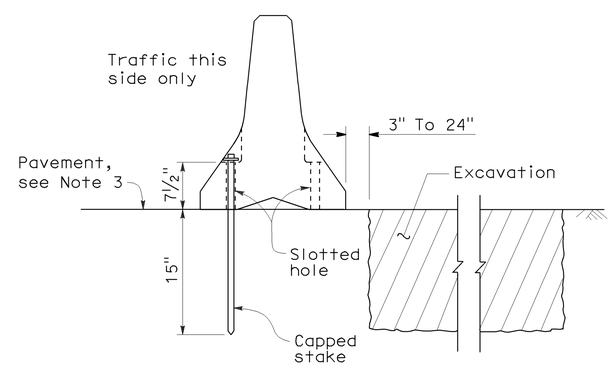

SECTION J-J

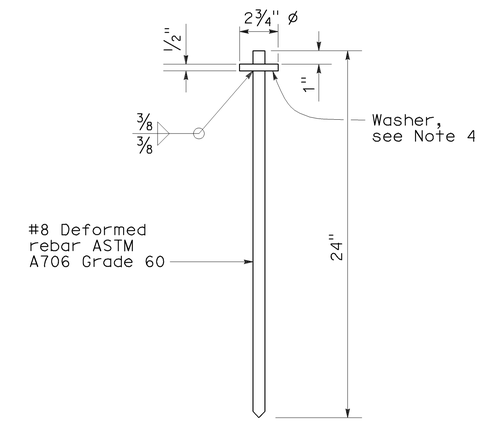

CAPPED STAKE DETAIL

STATE OF CALIFORNIA
DEPARTMENT OF TRANSPORTATION

TEMPORARY RAILING (TYPE K)

NO SCALE

NSP T3A DATED MAY 20, 2011 SUPPLEMENTS
THE STANDARD PLANS BOOK DATED MAY 2006.

NEW STANDARD PLAN NSP T3A

2006 NEW STANDARD PLAN NSP T3A

DIST	COUNTY	ROUTE	POST MILES TOTAL PROJECT	SHEET NO.	TOTAL SHEETS
07	LA	60	11.6/R23.6	54	75

LICENSED LANDSCAPE ARCHITECT

August 15, 2008
PLANS Approval DATE

The State of California or its officers or agents shall not be responsible for the accuracy or completeness of electronic copies of this plan sheet.

LICENSED LANDSCAPE ARCHITECT
Robert B. Schott 3635
Signature
11-04-08
Renewal Date
08-11-08
Date
STATE OF CALIFORNIA

To accompany plans dated 06-27-11

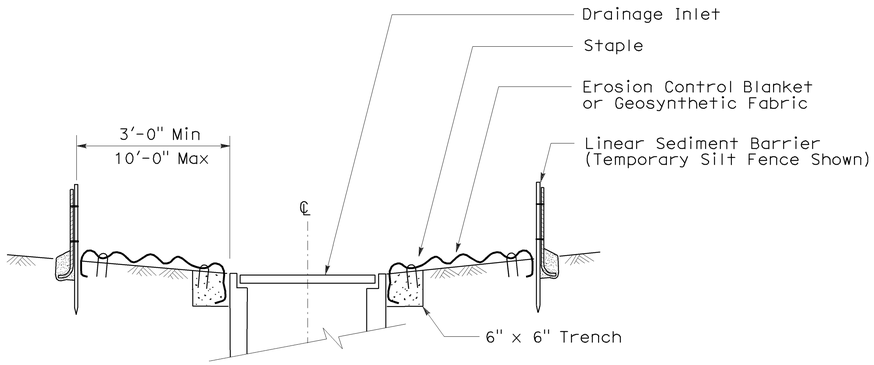

SECTION A-A

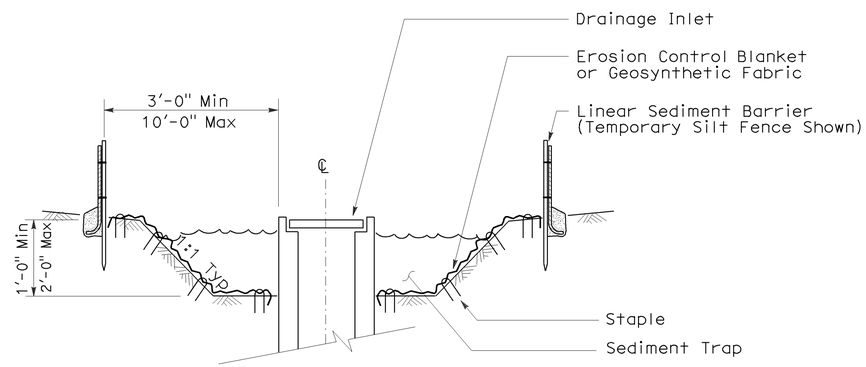

SECTION B-B

NOTES:

1. See Standard Plan T51 for Temporary Silt Fence.
2. Dimensions may vary to fit field conditions.

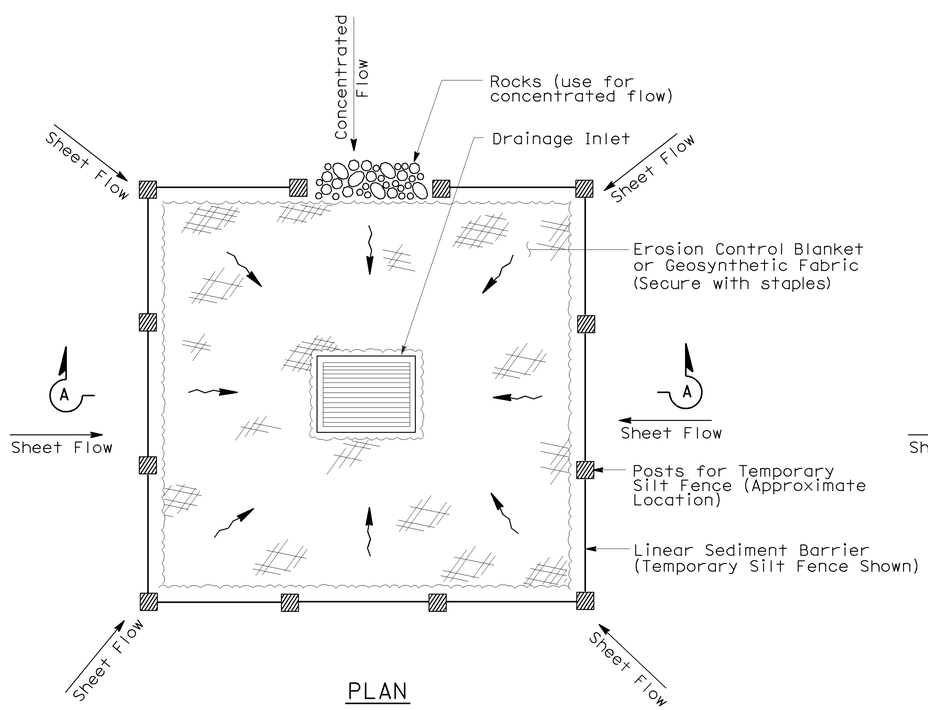

PLAN

TEMPORARY DRAINAGE INLET PROTECTION (TYPE 1)

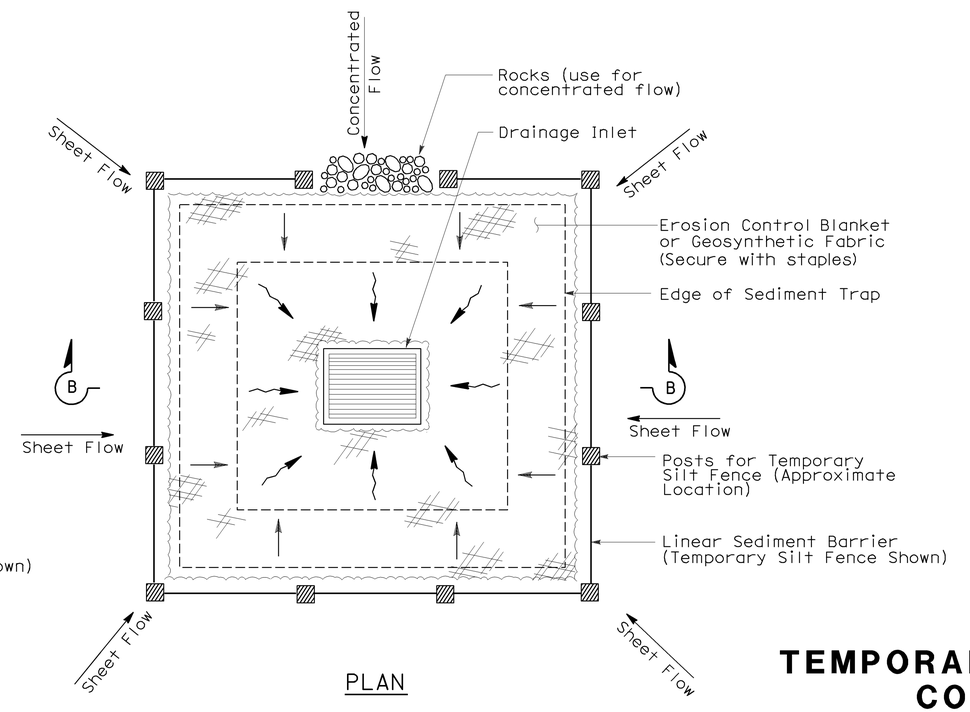

PLAN

TEMPORARY DRAINAGE INLET PROTECTION (TYPE 2) (EXCAVATED SEDIMENT TRAP)

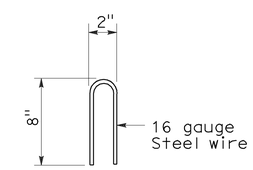

STAPLE DETAIL

STATE OF CALIFORNIA
DEPARTMENT OF TRANSPORTATION

TEMPORARY WATER POLLUTION CONTROL DETAILS (TEMPORARY DRAINAGE INLET PROTECTION)

NO SCALE

Nsp t61 dated august 15, 2008 supplements the standard plans book dated may 2006.

NEW STANDARD PLAN NSP T61

2006 NEW STANDARD PLAN NSP T61

7-11-08

DIST	COUNTY	ROUTE	POST MILES TOTAL PROJECT	SHEET NO.	TOTAL SHEETS
07	LA	60	11.6/R23.6	55	75

LICENSED LANDSCAPE ARCHITECT

August 15, 2008
PLANS APPROVAL DATE

The State of California or its officers or agents shall not be responsible for the accuracy or completeness of electronic copies of this plan sheet.

LICENSED LANDSCAPE ARCHITECT — Robert B. Schott — Signature — 11-04-08 Renewal Date — 08-11-08 Date — STATE OF CALIFORNIA

To accompany plans dated 06-27-11

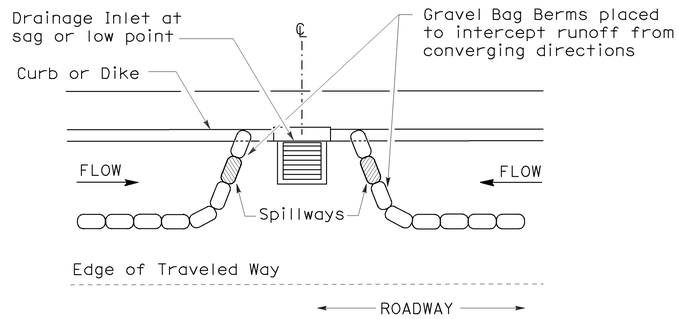

PLAN

CONFIGURATION FOR SAG POINT INLET (GRAVEL BAG BERM)

GRAVEL BAG BERM (TYPE 3A) SPACING TABLE

SLOPE OF ROADWAY (PERCENT)	1 to 3.9	4 to 5.9	6 to 7.9	8 to 10	10+
INTERVAL BETWEEN BERM	100′	75′	50′	25′	12′

For slope of less than 1%, install barriers only if erosion/sediment is prevalent

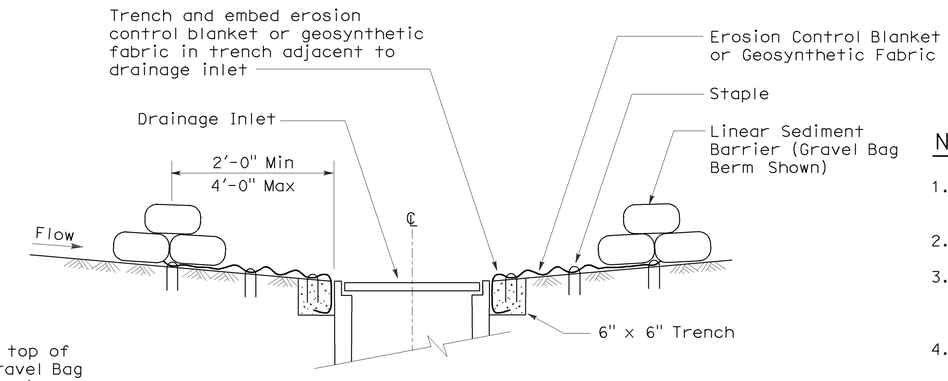

SECTION A-A

NOTES:

1. Place safety cones adjacent to drainage inlet protection.
2. Dimensions may vary to fit field conditions.
3. Install a minimum of 3 gravel bag berms upstream of each drainage inlet to be protected.
4. Position erosion control blanket or geosynthetic fabric at edge of concrete apron and secure in trench.
5. Erosion control blanket or geosynthetic fabric is not required if the area adjacent to the drainage inlet is vegetated or paved.

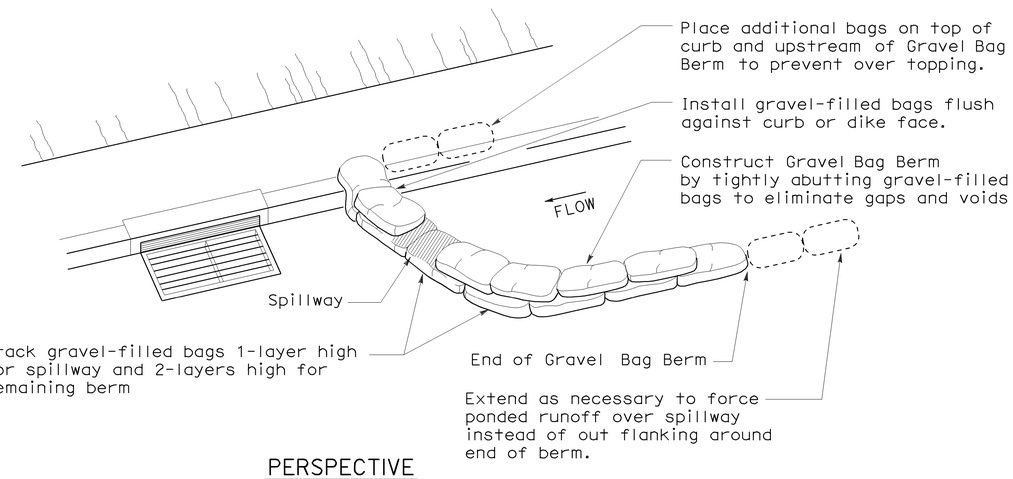

PERSPECTIVE

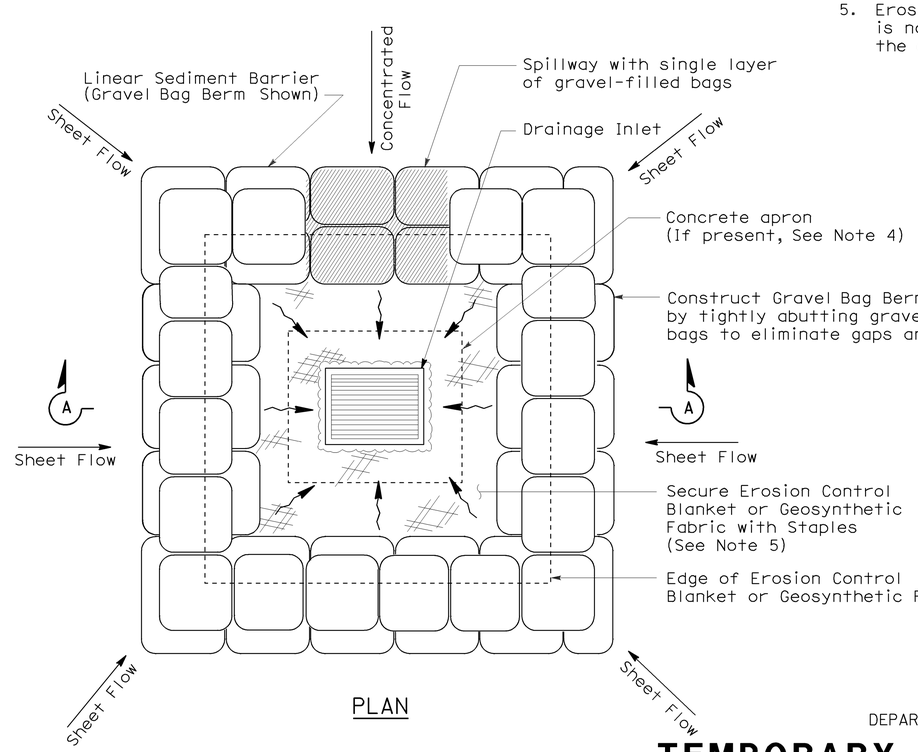

PLAN

TEMPORARY DRAINAGE INLET PROTECTION (TYPE 3B)

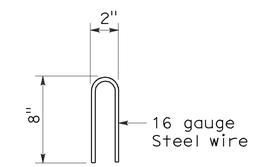

STAPLE DETAIL

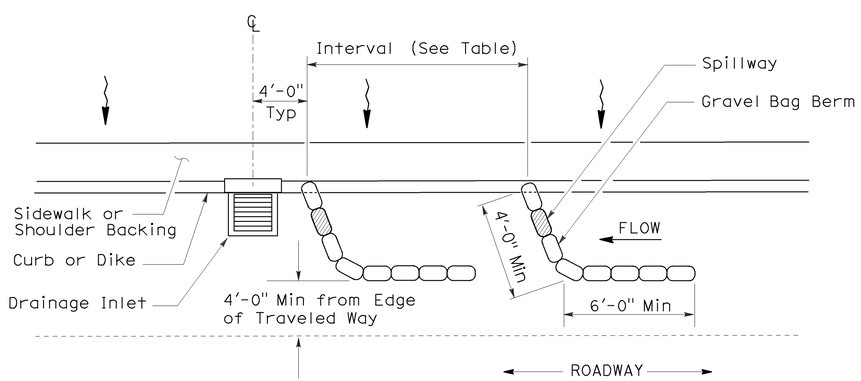

PLAN

TEMPORARY DRAINAGE INLET PROTECTION (TYPE 3A) (GRAVEL BAG BERM)

STATE OF CALIFORNIA
DEPARTMENT OF TRANSPORTATION

TEMPORARY WATER POLLUTION CONTROL DETAILS (TEMPORARY DRAINAGE INLET PROTECTION)

NO SCALE

NSP T62 DATED AUGUST 15, 2008 SUPPLEMENTS THE STANDARD PLANS BOOK DATED MAY 2006.

NEW STANDARD PLAN NSP T62

2006 NEW STANDARD PLAN NSP T62

7-11-08

DIST	COUNTY	ROUTE	POST MILES TOTAL PROJECT	SHEET NO.	TOTAL SHEETS
07	LA	60	11.6/R23.6	56	75

LICENSED LANDSCAPE ARCHITECT

August 15, 2008
PLANS APPROVAL DATE

LICENSED LANDSCAPE ARCHITECT Robert B. Schott 3835 Signature 11-04-08 Renewal Date 08-11-08 Date STATE OF CALIFORNIA

The State of California or its officers or agents shall not be responsible for the accuracy or completeness of electronic copies of this plan sheet.

To accompany plans dated 06-27-11

FLEXIBLE SEDIMENT BARRIER SPACING TABLE

SLOPE OF ROADWAY (PERCENT)	0 to 0.9	1 to 1.9	2 to 2.9	3 to 4	5+
INTERVAL BETWEEN BARRIERS	50′	35′	30′	25′	20′
ANGLE FROM FACE OF CURB	70°	70°	70°	45°	45°
SUGGESTED BARRIER LENGTH	6′	6′	6′	6′	6′

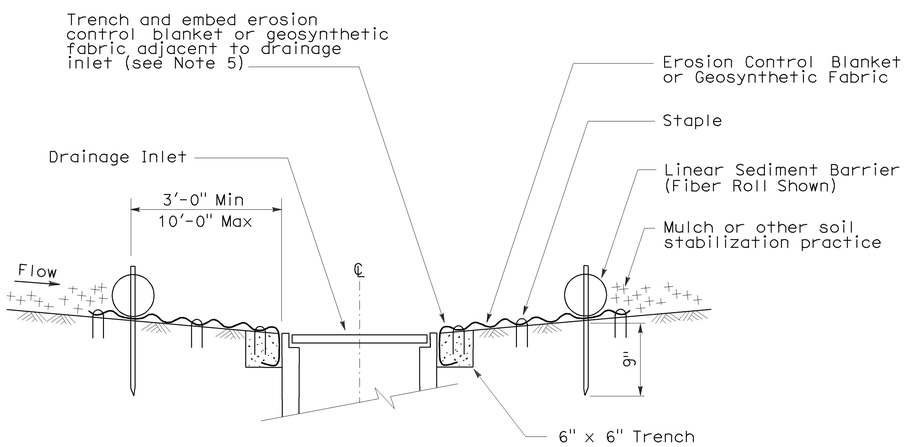

SECTION A-A

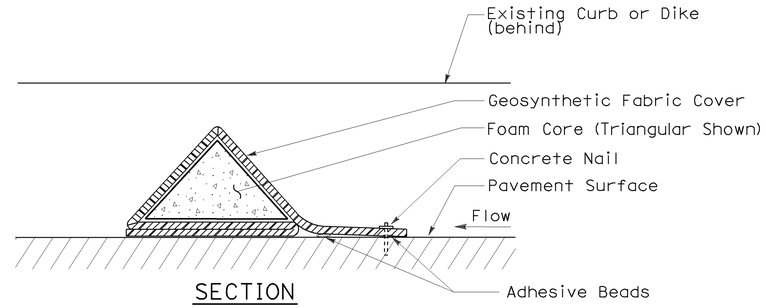

SECTION

FLEXIBLE SEDIMENT BARRIER DETAIL (FOAM BARRIER SHOWN)

NOTES:

1. See Standard Plan T51 for Temporary Silt Fence.
2. Dimensions may vary to fit field conditions.
3. Install a minimum of 3 flexible sediment barriers upstream of each drainage inlet to be protected.
4. Position erosion control blanket or geosynthetic fabric at edge of concrete apron and secure in trench.
5. Erosion control blanket or geosynthetic fabric is not required if the area adjacent to the drainage inlet is vegetated.

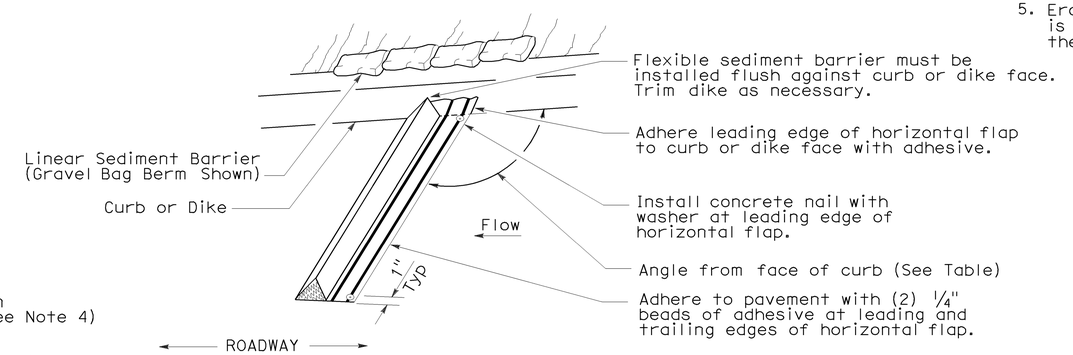

PERSPECTIVE

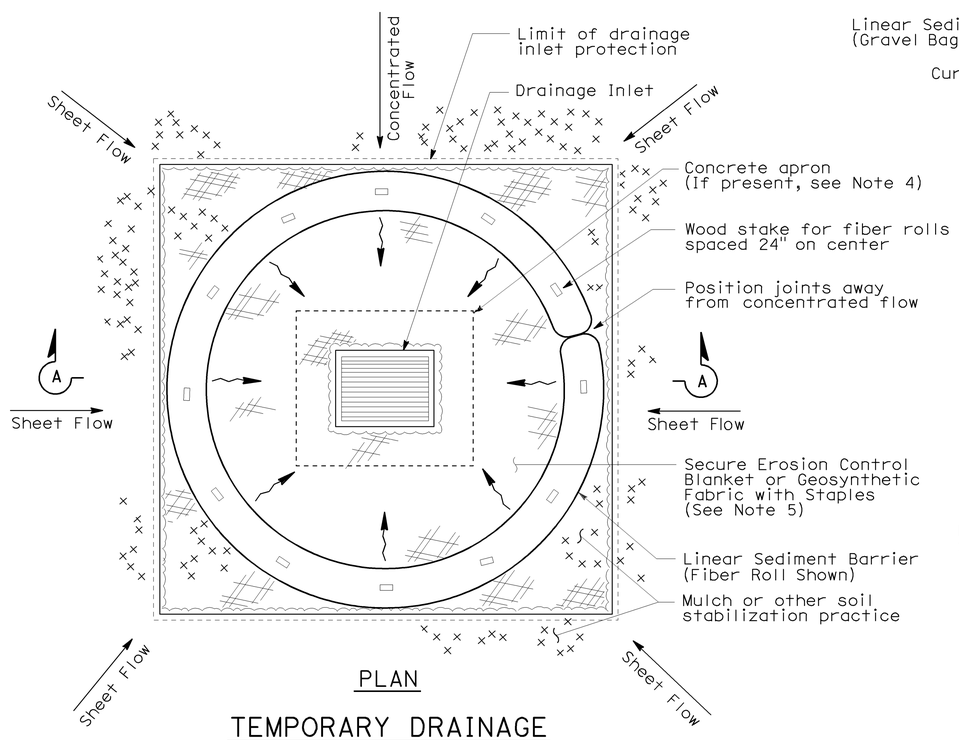

PLAN

TEMPORARY DRAINAGE INLET PROTECTION (TYPE 4A)

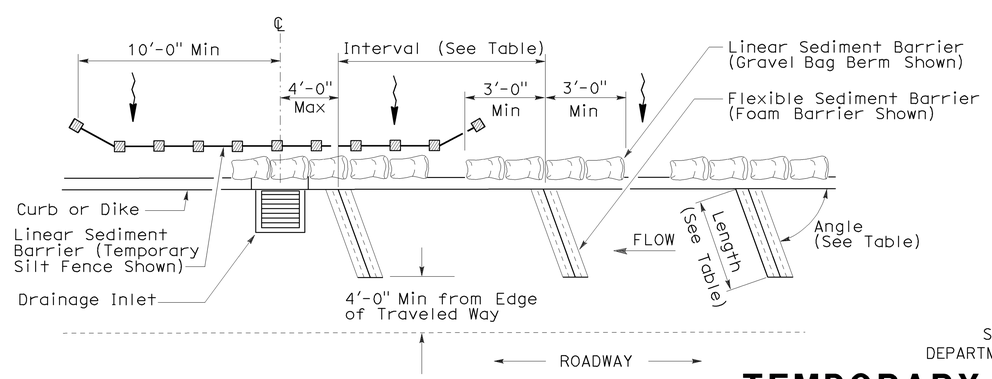

PLAN

TEMPORARY DRAINAGE INLET PROTECTION (TYPE 4B) FLEXIBLE SEDIMENT BARRIER

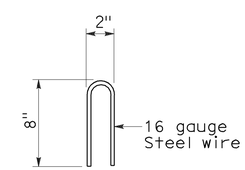

STAPLE DETAIL

STATE OF CALIFORNIA
DEPARTMENT OF TRANSPORTATION

TEMPORARY WATER POLLUTION CONTROL DETAILS (TEMPORARY DRAINAGE INLET PROTECTION)

NO SCALE

NSP T63 DATED AUGUST 15, 2008 SUPPLEMENTS THE STANDARD PLANS BOOK DATED MAY 2006.

NEW STANDARD PLAN NSP T63

2006 NEW STANDARD PLAN NSP T63

7-11-08

DIST	COUNTY	ROUTE	POST MILES TOTAL PROJECT	SHEET NO.	TOTAL SHEETS
07	LA	60	11.6/R23.6	57	75

LICENSED LANDSCAPE ARCHITECT

August 15, 2008
PLANS APPROVAL DATE

The State of California or its officers or agents shall not be responsible for the accuracy or completeness of electronic copies of this plan sheet.

LICENSED LANDSCAPE ARCHITECT — Robert B. Schott — 3635 — Signature — 11-04-08 Renewal Date — 08-11-08 Date — STATE OF CALIFORNIA

To accompany plans dated 06-27-11

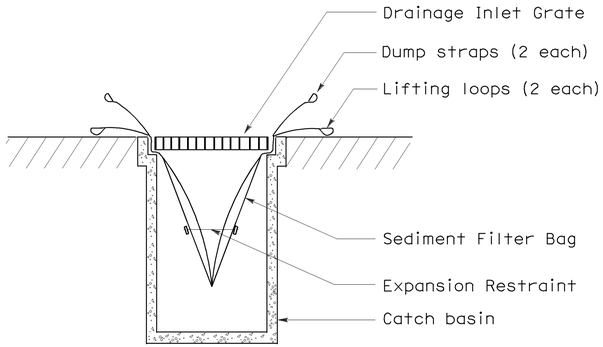

SECTION B-B

SEDIMENT FILTER BAG DETAIL

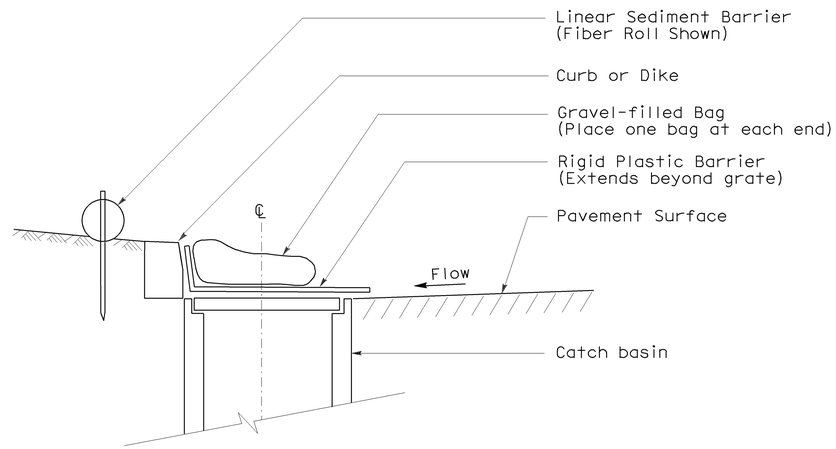

SECTION

TEMPORARY DRAINAGE INLET PROTECTION (TYPE 6A) (CATCH BASIN WITH GRATE)

NOTES:

1. See Standard Plan T51 for Temporary Silt Fence.
2. Dimensions may vary to fit field conditions.

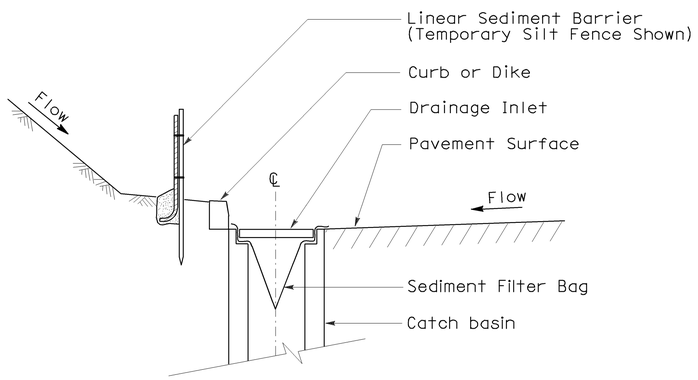

SECTION A-A

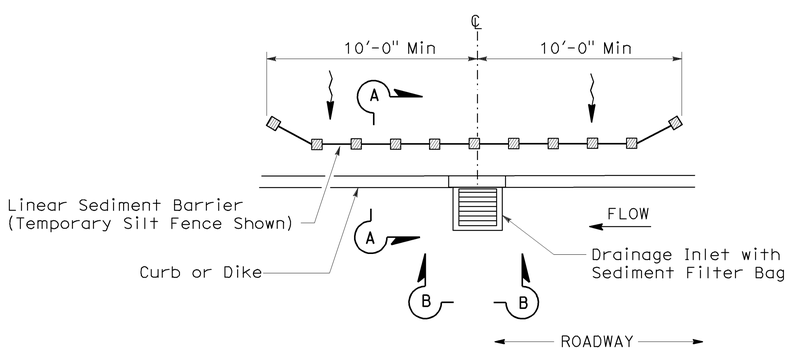

PLAN

TEMPORARY DRAINAGE INLET PROTECTION (TYPE 5) (SEDIMENT FILTER BAG)

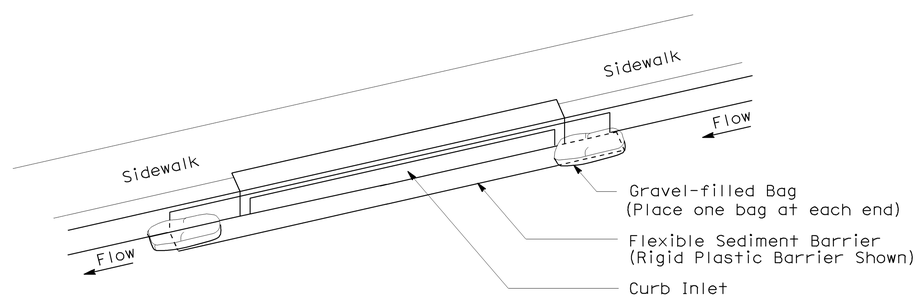

PERSPECTIVE

TEMPORARY DRAINAGE INLET PROTECTION (TYPE 6B) (CURB INLET WITHOUT GRATE)

STATE OF CALIFORNIA
DEPARTMENT OF TRANSPORTATION

TEMPORARY WATER POLLUTION CONTROL DETAILS (TEMPORARY DRAINAGE INLET PROTECTION)

NO SCALE

NSP T64 DATED AUGUST 15, 2008 SUPPLEMENTS THE STANDARD PLANS BOOK DATED MAY 2006.

NEW STANDARD PLAN NSP T64

2006 NEW STANDARD PLAN NSP T64

7-11-08

DIST	COUNTY	ROUTE	POST MILES TOTAL PROJECT	SHEET NO.	TOTAL SHEETS
07	LA	60	11.6/R23.6	58	75

REGISTERED CIVIL ENGINEER

June 6, 2008
PLANS APPROVAL DATE

REGISTERED PROFESSIONAL ENGINEER
Donald E. Howe
No. C46402
Exp. 3-31-09
CIVIL
STATE OF CALIFORNIA

The State of California or its officers or agents shall not be responsible for the accuracy or completeness of electronic copies of this plan sheet.

To accompany plans dated 06-27-11

2006 REVISED STANDARD PLAN RSP A24C

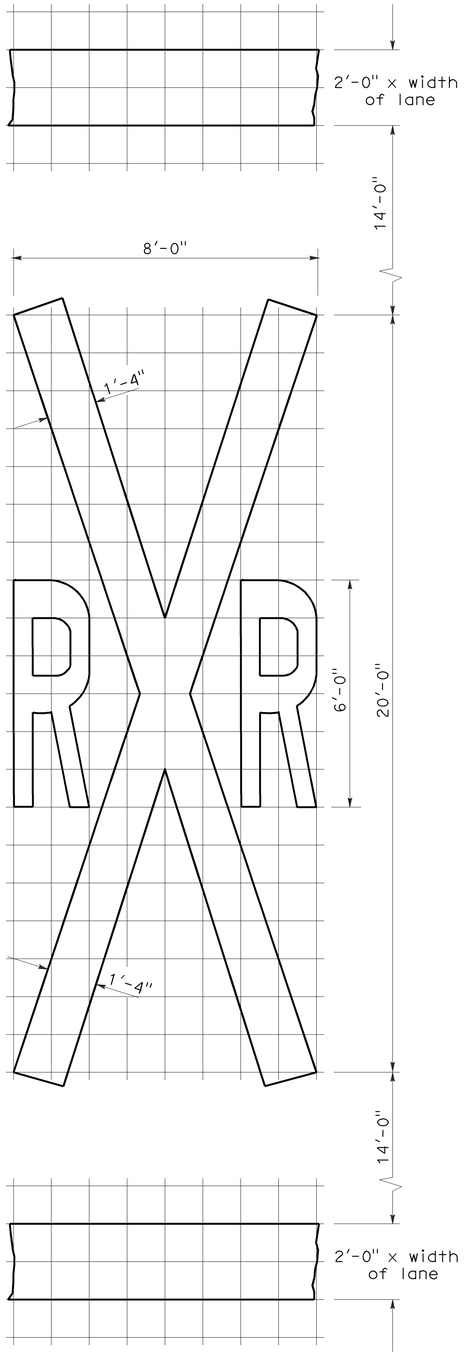

1'-0" GRID
A=70 sq ft ✳

RAILROAD CROSSING SYMBOL

✳70 sq ft DOES NOT INCLUDE THE 2'-0" x VARIABLE WIDTH TRANSVERSE LINES.

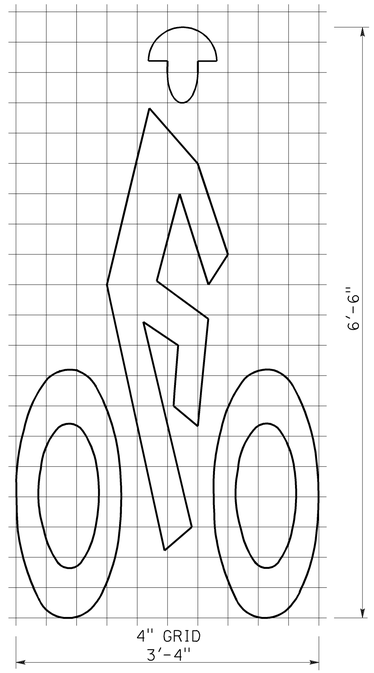

A=7 sq ft

BIKE LANE SYMBOL

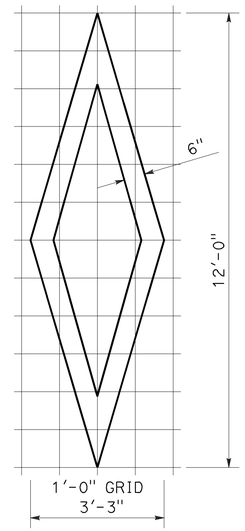

A=11 sq ft

DIAMOND SYMBOL

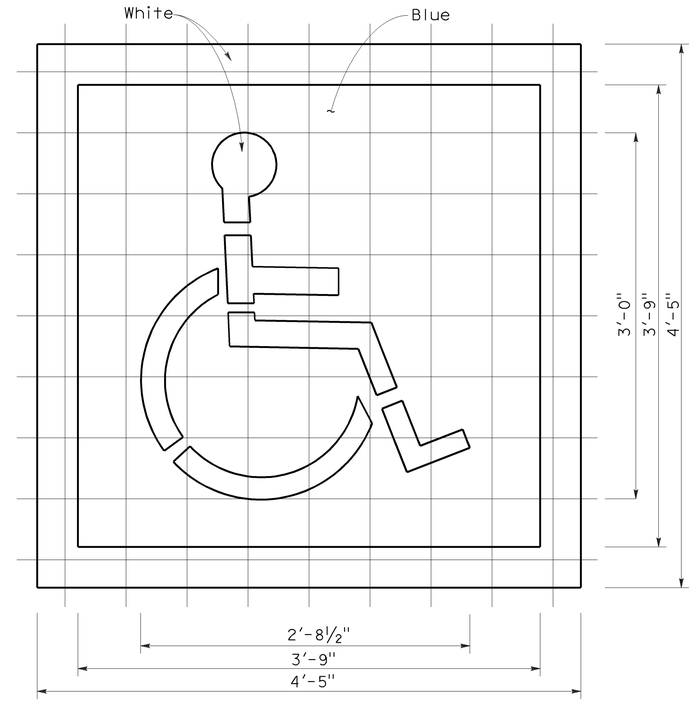

6" GRID
A (White) =9 sq ft
A (Blue) =14 sq ft

INTERNATIONAL SYMBOL OF ACCESSIBILITY MARKING

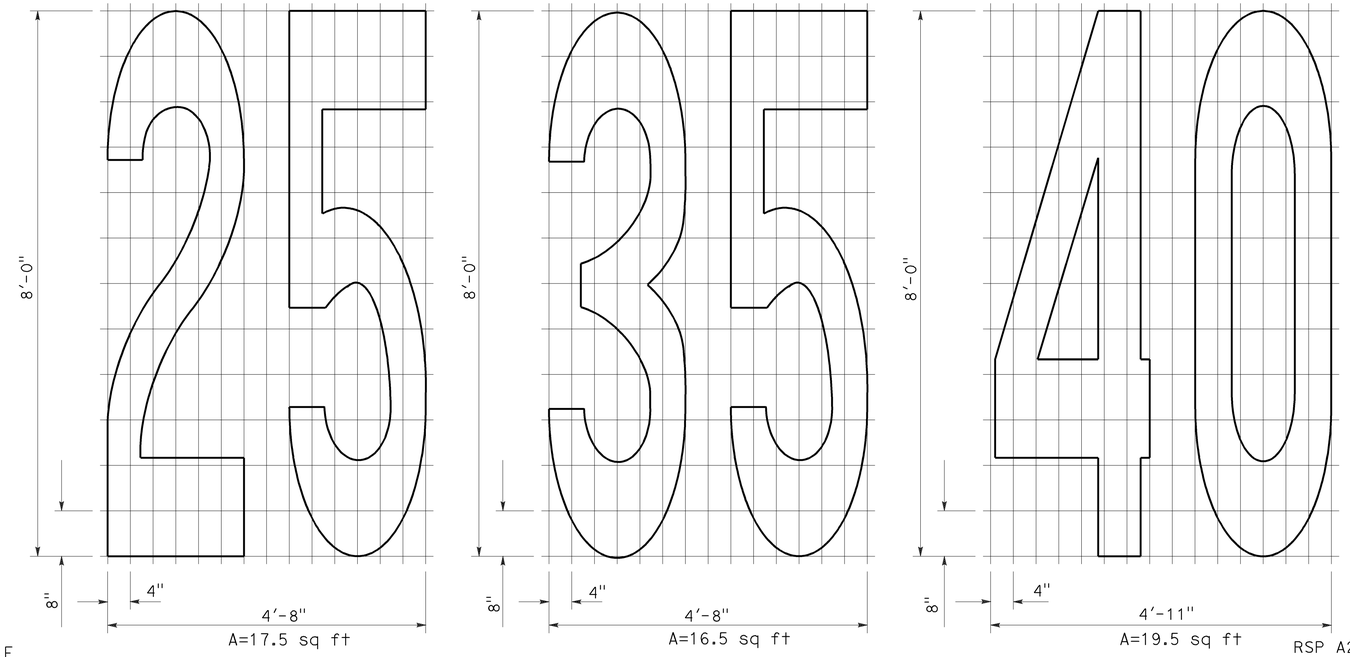

A=17.5 sq ft
A=16.5 sq ft
A=19.5 sq ft

NUMERALS

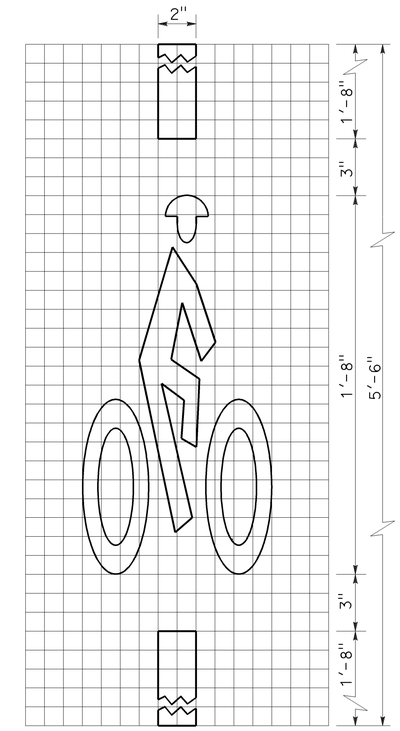

1" GRID
10"
A=2 sq ft

BICYCLE LOOP DETECTOR SYMBOL

NOTE:

1. Minor variations in dimensions may be accepted by the Engineer.

STATE OF CALIFORNIA
DEPARTMENT OF TRANSPORTATION

PAVEMENT MARKINGS SYMBOLS AND NUMERALS

NO SCALE

RSP A24C DATED JUNE 6, 2008 SUPERSEDES STANDARD PLAN A24C DATED MAY 1, 2006 - PAGE 11 OF THE STANDARD PLANS BOOK DATED MAY 2006.

REVISED STANDARD PLAN RSP A24C

5-27-08

DIST	COUNTY	ROUTE	POST MILES TOTAL PROJECT	SHEET NO.	TOTAL SHEETS
07	LA	60	11.6/R23.6	59	75

William K. Farnbach
REGISTERED CIVIL ENGINEER

June 5, 2009
PLANS APPROVAL DATE

REGISTERED PROFESSIONAL ENGINEER
William K. Farnbach
No. C49042
Exp. 9-30-10
CIVIL
STATE OF CALIFORNIA

The State of California or its officers or agents shall not be responsible for the accuracy or completeness of electronic copies of this plan sheet.

To accompany plans dated 06-27-11

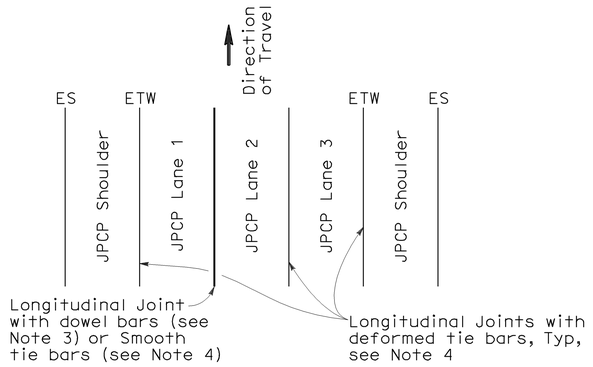

3 LANES WITH TIED CONCRETE SHOULDERS
PLAN

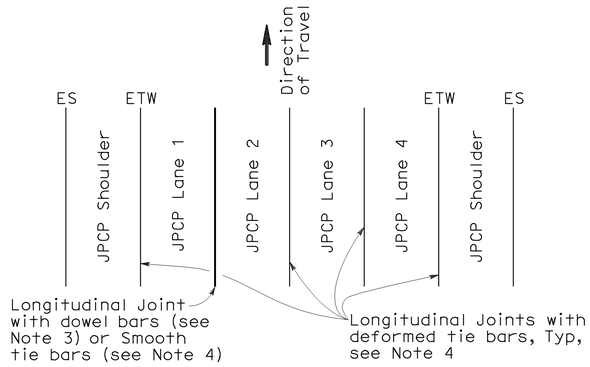

4 LANES WITH TIED CONCRETE SHOULDERS
PLAN

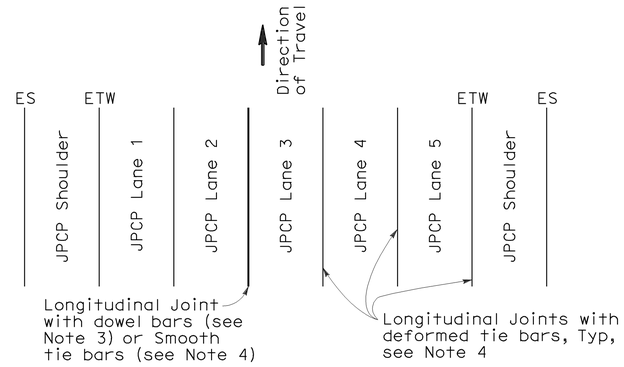

5 LANES WITH TIED CONCRETE SHOULDERS
PLAN

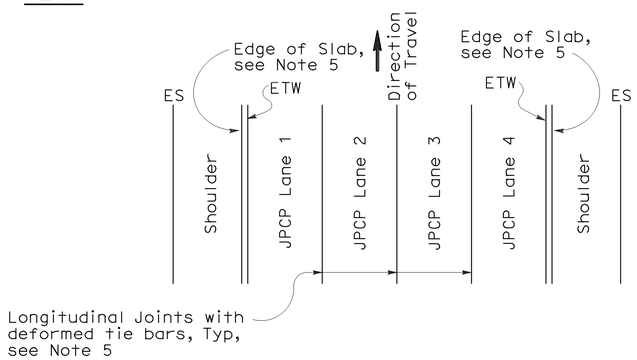

4 LANES OR LESS WITH WIDENED SLAB
PLAN

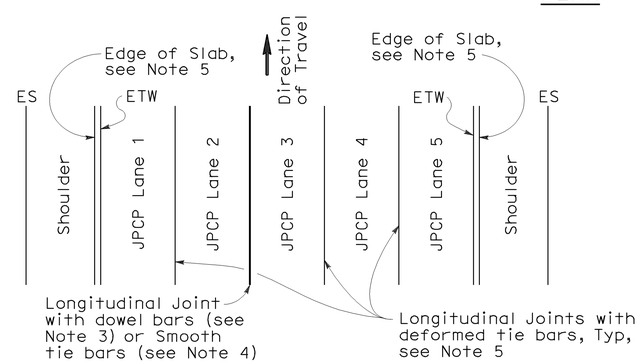

5 LANES WITH WIDENED SLAB
PLAN

NEW CONSTRUCTION

Location of Longitudinal Joints
(For JPCP)

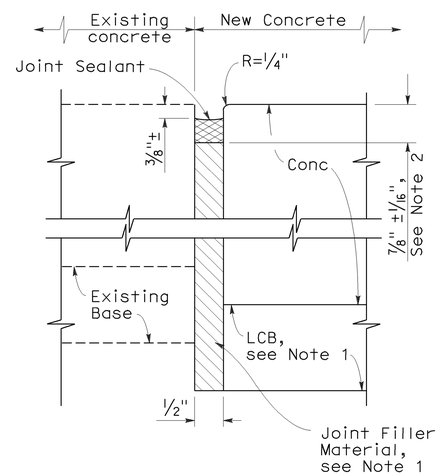

DETAIL A

ISOLATION JOINT

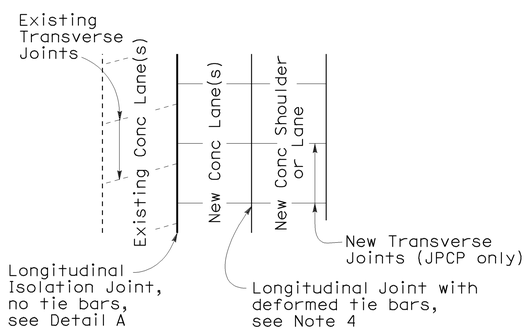

CASE 1
PLAN

Transverse Joints do not align between new and existing

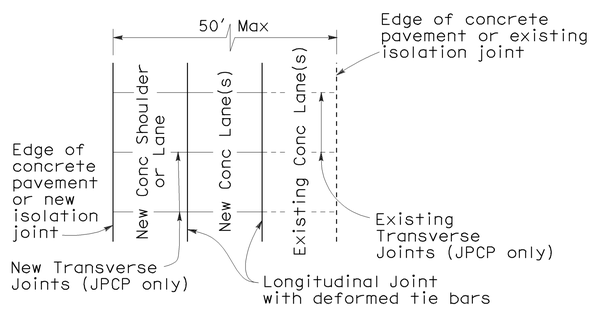

CASE 2
PLAN

Transverse Joints align between new and existing

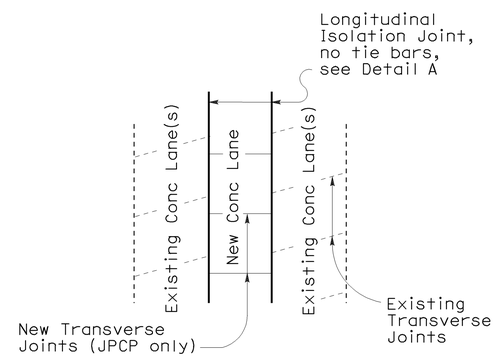

CASE 3 (INTERIOR LANE REPLACEMENT)
PLAN

Transverse Joints do not align between new and existing

LANE/SHOULDER ADDITION OR RECONSTRUCTION

(For JPCP and CRCP)

NOTES:

1. Where Lean Concrete Base is not used as base material, the joint filler material used for the longitudinal isolation joint shall only extend to the bottom of the new concrete slab. See Detail A.
2. Use 5/8" ±1/16" dimension for silicone sealant.
3. See Revised Standard Plan RSP P10 for longitudinal joint with dowel bars.
4. See Revised Standard Plan RSP P1.
5. See Revised Standard Plan RSP P2.

STATE OF CALIFORNIA
DEPARTMENT OF TRANSPORTATION

CONCRETE PAVEMENT-LANE SCHEMATICS AND ISOLATION JOINT DETAIL

NO SCALE

RSP P18 DATED JUNE 5, 2009 SUPERSEDES RSP P18 DATED MAY 15, 2009, RSP P18 DATED NOVEMBER 17, 2006 AND STANDARD PLAN P18 DATED MAY 1, 2006 - PAGE 127 OF THE STANDARD PLANS BOOK DATED MAY 2006.

REVISED STANDARD PLAN RSP P18

2006 REVISED STANDARD PLAN RSP P18

5-14-09

DIST	COUNTY	ROUTE	POST MILES TOTAL PROJECT	SHEET NO.	TOTAL SHEETS
07	LA	60	11.6/R23.6	60	75

William K. Farnbach
REGISTERED CIVIL ENGINEER

May 15, 2009
PLANS APPROVAL DATE

REGISTERED PROFESSIONAL ENGINEER William K. Farnbach No. C49042 Exp. 9-30-10 CIVIL STATE OF CALIFORNIA

The State of California or its officers or agents shall not be responsible for the accuracy or completeness of electronic copies of this plan sheet.

To accompany plans dated 06-27-11

2006 REVISED STANDARD PLAN RSP P20

NOTE:

1. Tie bars, dowel bars, and reinforcement are not shown in joint seal details, see Revised Standard Plans RSP P1, RSP P3, RSP P10, RSP P35, RSP P45, or RSP P46 as applicable.

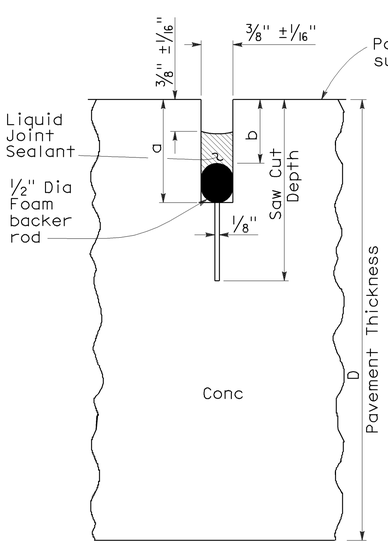

LIQUID SEALANT

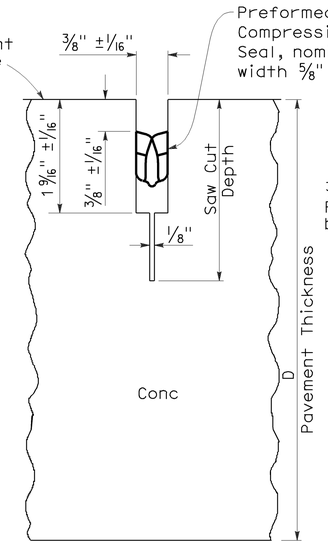

COMPRESSION SEAL

TYPE A1

Transverse Contraction Joints

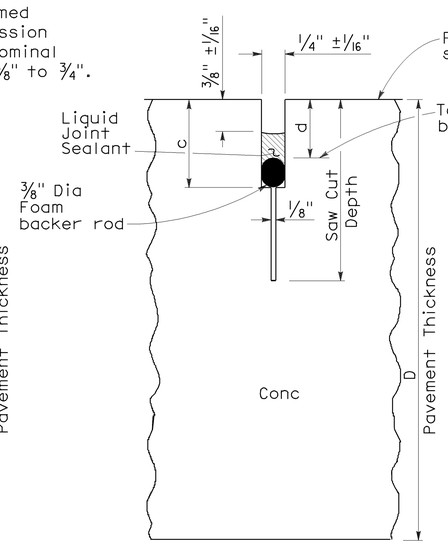

LIQUID SEALANT

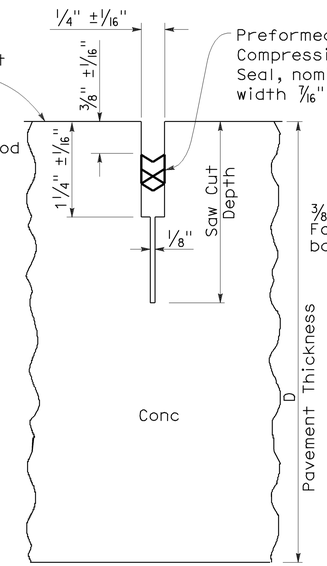

COMPRESSION SEAL

TYPE A2

Longitudinal Contraction Joints

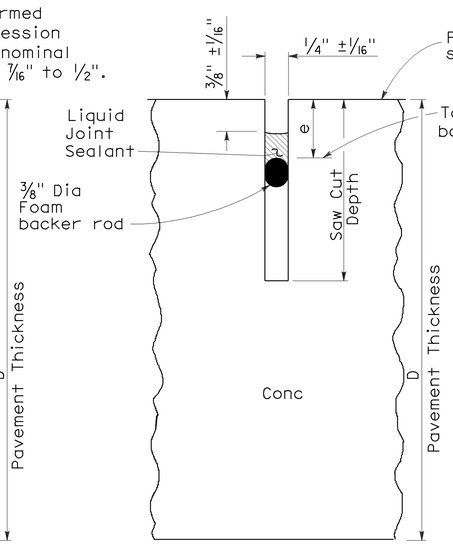

LIQUID SEALANT

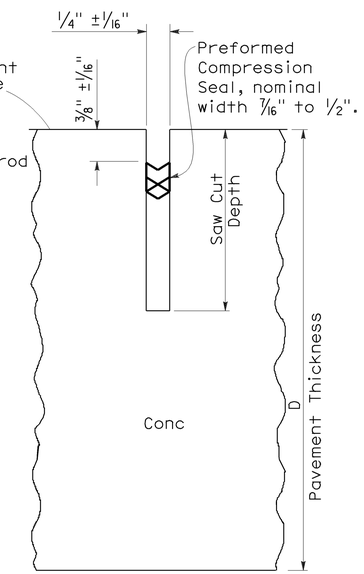

COMPRESSION SEAL

TYPE B

Longitudinal or Transverse Contraction Joint

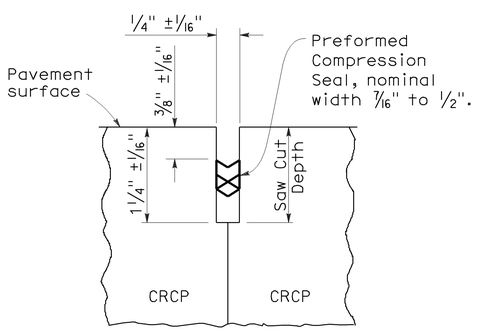

COMPRESSION SEAL

TYPE C

Transverse and Longitudinal Construction Joints (For CRCP)

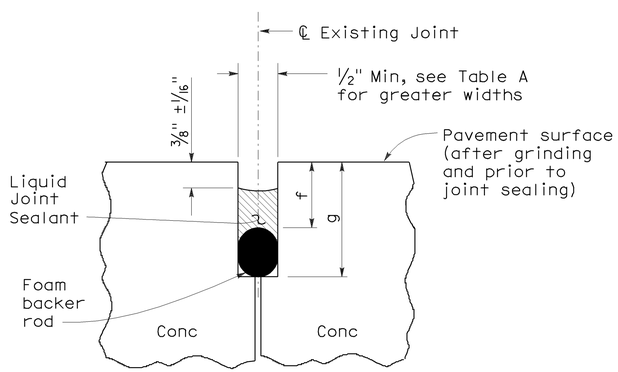

LIQUID SEALANT

TYPE R

Retrofit Transverse and Longitudinal Joints

LIQUID SEALANT RESERVOIR DEPTH

LIQUID SEALANT MATERIAL	3/8" Joint Width Type A1		1/4" Joint Width Type A2		1/4" Joint Width Type B
	DIMENSION		DIMENSION		DIMENSION
	a	b	c	d	e
SILCONE	1" ±1/16"	5/8" ±1/16"	15/16" ±1/16"	9/16" ±1/16"	9/16" ±1/16"
ASPHALT RUBBER	1 3/16" ±1/16"	3/4" ±1/16"	1 1/16" ±1/16"	11/16" ±1/16"	11/16" ±1/16"

TABLE A (TYPE R JOINT)

Sawn Joint Width	Backer Rod Diameter ± 1/16"	DIMENSION "f"	DIMENSION "g"
1"	1 5/16"	7/8"	2 1/4"
7/8"	1 3/16"	13/16"	2"
3/4"	1"	3/4"	1 3/4"
5/8"	7/8"	11/16"	1 1/2"
1/2"	11/16"	5/8"	1 1/4"

STATE OF CALIFORNIA
DEPARTMENT OF TRANSPORTATION

CONCRETE PAVEMENT-JOINT DETAILS

NO SCALE

RSP P20 DATED MAY 15, 2009 SUPERSEDES STANDARD PLAN P20
DATED MAY 1, 2006 - PAGE 128 OF THE STANDARD PLANS BOOK DATED MAY 2006.

REVISED STANDARD PLAN RSP P20

5-8-09

DIST	COUNTY	ROUTE	POST MILES TOTAL PROJECT	SHEET NO.	TOTAL SHEETS
07	LA	60	11.6/R23.6	61	75

REGISTERED CIVIL ENGINEER

June 6, 2008
PLANS APPROVAL DATE

REGISTERED PROFESSIONAL ENGINEER Raymond Don Tsztoo No. C37332 Exp. 6-30-08 CIVIL STATE OF CALIFORNIA

The State of California or its officers or agents shall not be responsible for the accuracy or completeness of electronic copies of this plan sheet.

To accompany plans dated 06-27-11

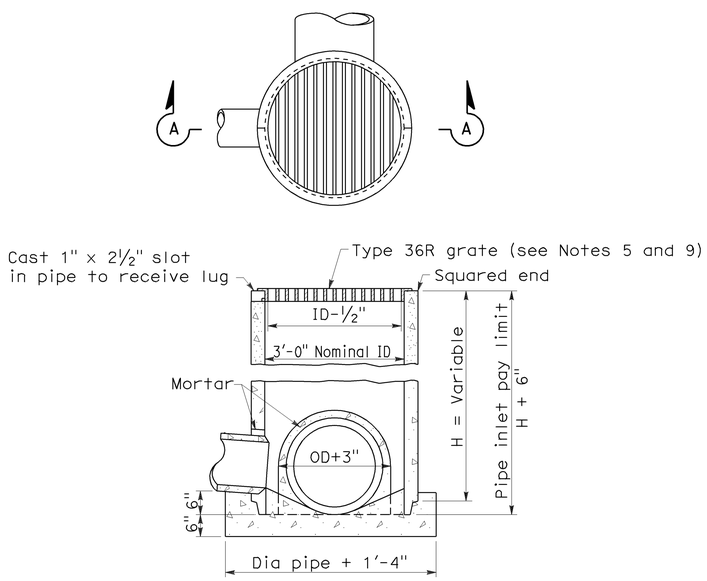

SECTION A-A

TYPE GCP

CONCRETE PIPE INLET WITH GRATE

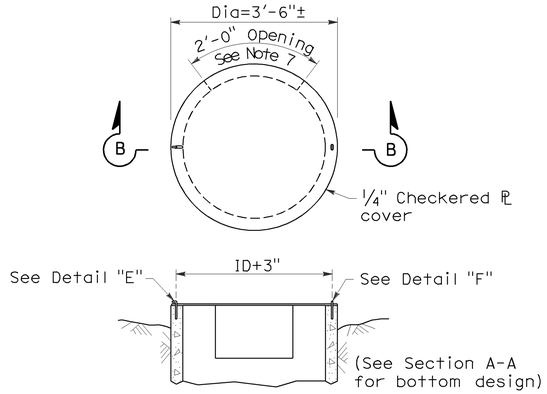

SECTION B-B

TYPE OCP or OCPI

CONCRETE PIPE INLET WITH STEEL COVER
(See Note 6)

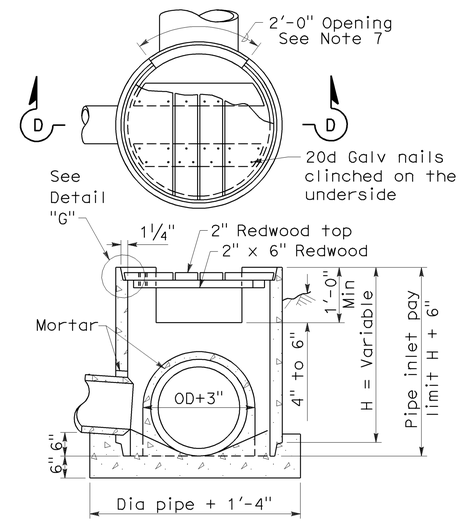

SECTION D-D

TYPE OCP or OCPI

CONCRETE PIPE INLET WITH REDWOOD COVER
(See Notes 6 and 10)

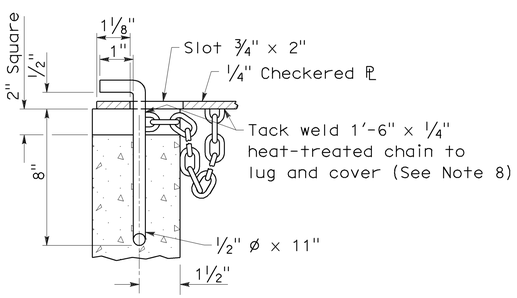

DETAIL "E"

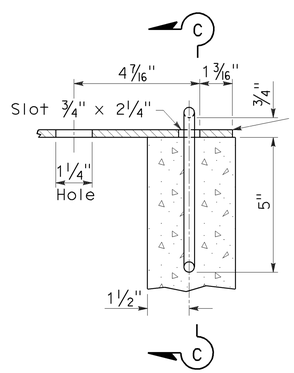

DETAIL "F"

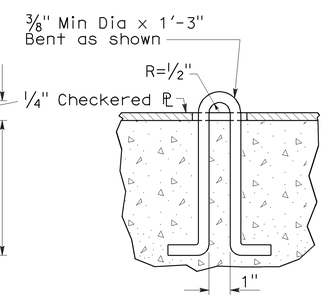

SECTION C-C

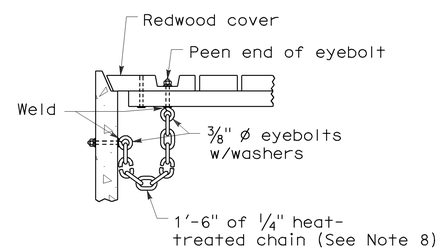

DETAIL "G"

NOTES:

1. For details of steel pipe inlets, see Standard Plan D75A.
2. For details of ladder and steps and when ladder or steps are required, see Standard Plan D75C.
3. Inlet pipes shall not protrude into basin.
4. Except for inlets used for junction boxes, basin floors shall have minimum slope of 4:1 from all directions toward outlet pipe, and a wood trowel finish.
5. See Revised Standard Plan RSP D77A and Standard Plan D77B for Grate and Frame Details and Weights of Miscellaneous Iron and Steel.
6. Designation of Type OCPI pipe inlets on plans indicates trash racks are to be furnished and installed on all side openings. See Standard Plan D75C for Trash Rack details.
7. More than one side opening may be required. Location and number as ordered by the Engineer. Opening may be cast in pipe.
8. Chain to be provided when specified.
9. Place pipe so bars of grate will be parallel with main surface flow.
10. Redwood covers shall only be placed at locations designated on the plans.

STATE OF CALIFORNIA
DEPARTMENT OF TRANSPORTATION

CONCRETE PIPE INLETS

NO SCALE

RSP D75B DATED JUNE 6, 2008 SUPERSEDES STANDARD PLAN D75B
DATED MAY 1, 2006 - PAGE 153 OF THE STANDARD PLANS BOOK DATED MAY 2006.

REVISED STANDARD PLAN RSP D75B

2006 REVISED STANDARD PLAN RSP D75B

5-20-08

DIST	COUNTY	ROUTE	POST MILES TOTAL PROJECT	SHEET NO.	TOTAL SHEETS
07	LA	60	11.6/R23.6	62	75

Raymond Don Tsztoo
REGISTERED CIVIL ENGINEER

January 18, 2008
PLANS APPROVAL DATE

REGISTERED PROFESSIONAL ENGINEER
Raymond Don Tsztoo
No. C37332
Exp. 6-30-08
CIVIL
STATE OF CALIFORNIA

The State of California or its officers or agents shall not be responsible for the accuracy or completeness of electronic copies of this plan sheet.

To accompany plans dated 06-27-11

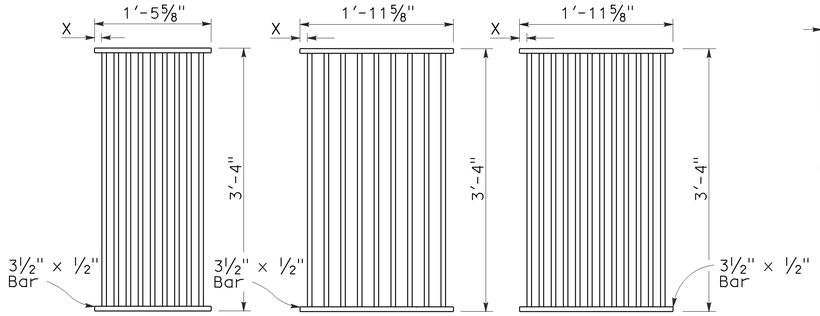

TYPE 18-9

1⅜" Clear spacing. Use within the roadbed on highways where bicycles and pedestrians are excluded.

TYPE 24-9

2" Clear spacing. Use in locations off the roadbed on all types of highways.

TYPE 24-12

1⅜" Clear spacing. Use within the roadbed on highways where bicycles and pedestrians are excluded.

RECTANGULAR GRATE DETAILS

(See table below)

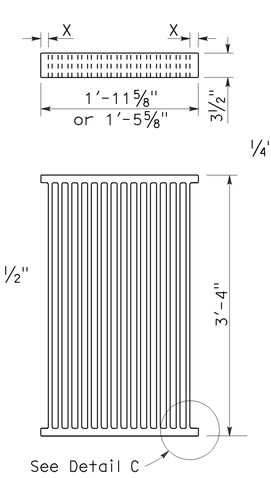

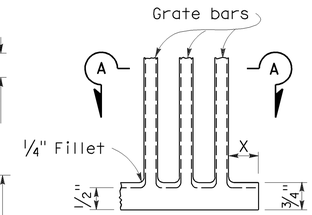

DETAIL C

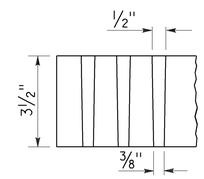

SECTION A-A

ALTERNATIVE CAST NODULAR IRON GRATE OR CAST STEEL GRATE

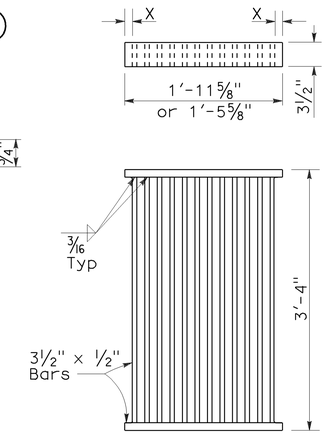

ALTERNATIVE WELDED GRATE

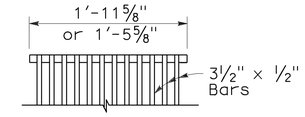

CAST END BLOCK

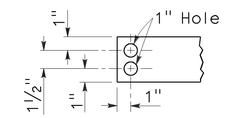

END OF BAR

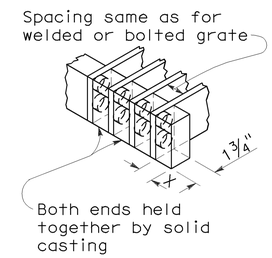

ALTERNATIVE CAST NODULAR IRON OR CAST STEEL END BLOCK GRATE

NOTES:

1. Grate type numbers refer to approximate width of grate in inches and number of bars, respectively.
2. Contractor has the option of using cast nodular iron, cast steel, welded, bolted, or cast end block grate.
3. See Special Provisions for requirements pertaining to galvanizing or asphalt dipping of grates and frames.
4. Rounded top of bars optional on all grates.
5. Pipe inlets with a grate shall be placed so that bars parallel direction of principle surface flow.
6. Full penetration butt welds may be substituted for the fillet welds on all anchors.
7. Standard square, hexagon, round or equivalent headed anchors may be substituted for the right angle hooks on the anchors shown on this plan.
8. Grate and frame weights are based on welded grates (weights of face angles, steps, protection bars, etc. are not included).

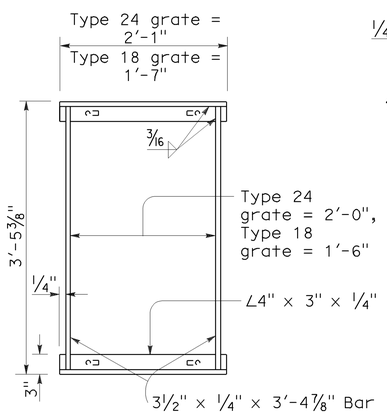

TYPICAL FRAME

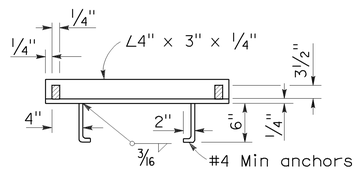

CROSS SECTION

(Thru frame)

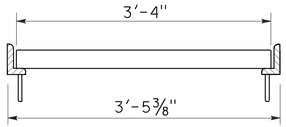

LONGITUDINAL SECTION

(Thru frame and grate)

RECTANGULAR FRAME DETAILS

(For all rectangular grates)

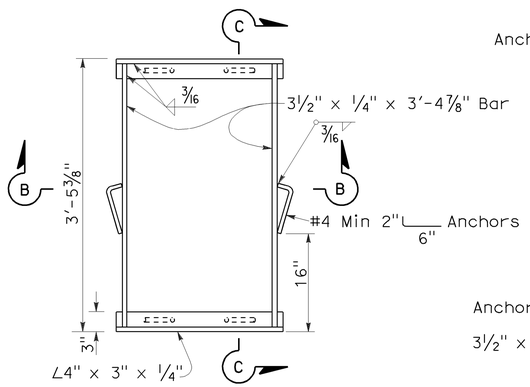

TYPICAL FRAME

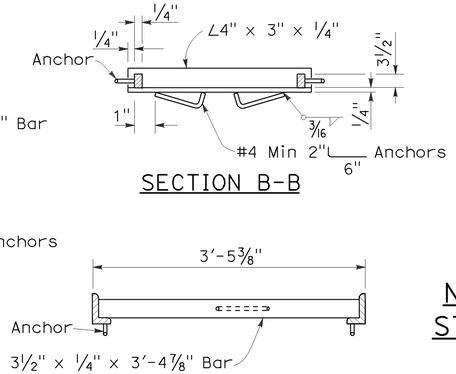

SECTION B-B

SECTION C-C

ALTERNATIVE ANCHOR FOR RECTANGULAR FRAME

(For details not shown, See Rectangular Frame Details)

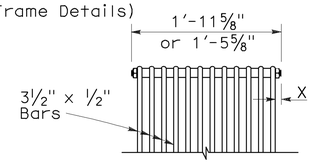

BOLTED END BLOCK

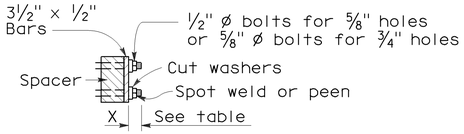

BOLTING DETAIL

ALTERNATIVE BOLTED GRATE

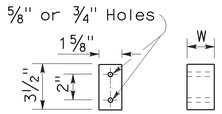

BAR SPACER

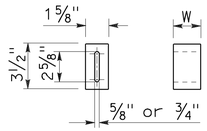

ALTERNATIVE SPACER

W = 1⅜" or 2"

GRATE BAR SPACING TABLE

TYPE	No. OF BARS	CLEAR BAR SPACING	X
18-9	9	1⅜"	1 1/16"
24-9	9	2"	1 9/16"
24-12	12	1⅜"	1¼"

INLET TYPE	COVER TYPE	WEIGHT LB
OS	PLATE	174
OL-7	PLATE	170
OL-10	PLATE	170
OL-14	PLATE	170
OL-21	PLATE	170
OCP	PLATE	112
OCPI	PLATE	112
OCPI	REDWOOD	42
OMP	PLATE	177
OMPI	PLATE	177

INLET TYPE	GRATE TYPE	No. OF GRATES	WEIGHT LB
GDO	24-12	2	634
GOL-7	24-12	1	326
GOL-10	24-12	1	326
GO,G1,G2,G3,G4 (TYPE 24)	24-9	1	263
	24-12	1	326
G4 (TYPE 18),G5,G6	18-9	1	249
GT1	18-9	2	498
GT2	18-9	2	498
GT3	24-12	2	652
GT4	24-12	2	652
TRASH RACK			22

BASIS FOR MISC IRON & STEEL FINAL PAY WEIGHTS FOR DRAINAGE INLETS

(See General Notes, No 8)

STATE OF CALIFORNIA
DEPARTMENT OF TRANSPORTATION

GRATE DETAILS

NO SCALE

RSP D77A DATED JANUARY 18, 2008 SUPERSEDES STANDARD PLAN D77A
DATED MAY 1, 2006 - PAGE 155 OF THE STANDARD PLANS BOOK DATED MAY 2006.

REVISED STANDARD PLAN RSP D77A

2006 REVISED STANDARD PLAN RSP D77A

12-14-07

DIST	COUNTY	ROUTE	POST MILES TOTAL PROJECT	SHEET NO.	TOTAL SHEETS
07	LA	60	11.6/R23.6	63	75

Randell D. Hiatt
REGISTERED CIVIL ENGINEER

June 6, 2008
PLANS APPROVAL DATE

REGISTERED PROFESSIONAL ENGINEER
Randell D. Hiatt
No. C50200
Exp. 6-30-09
CIVIL
STATE OF CALIFORNIA

The State of California or its officers or agents shall not be responsible for the accuracy or completeness of electronic copies of this plan sheet.

To accompany plans dated 06-27-11

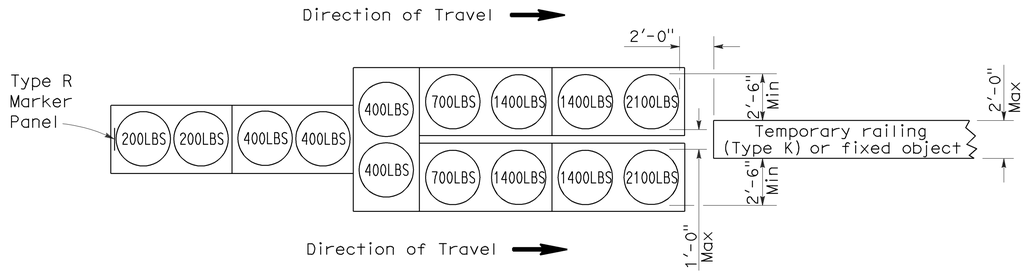

ARRAY 'TU14'

Approach speed 45 mph or more

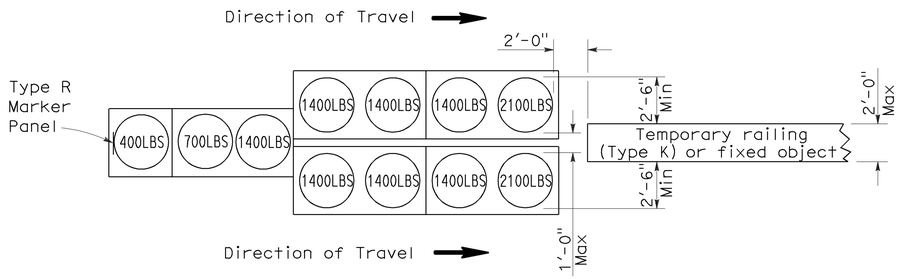

ARRAY 'TU11'

Approach speed less than 45 mph

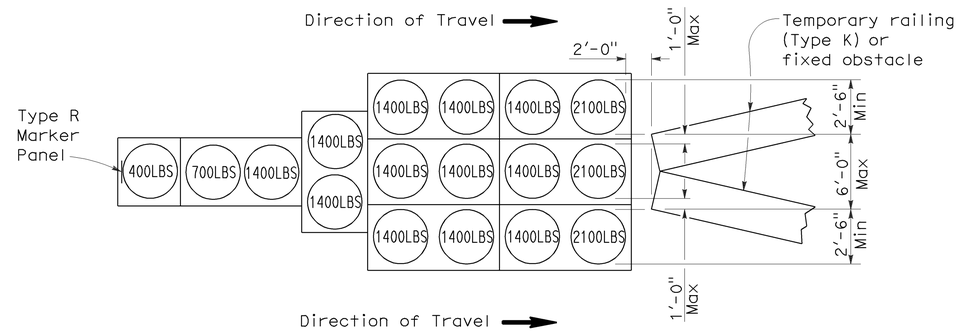

ARRAY 'TU17'

Approach speed less than 45 mph

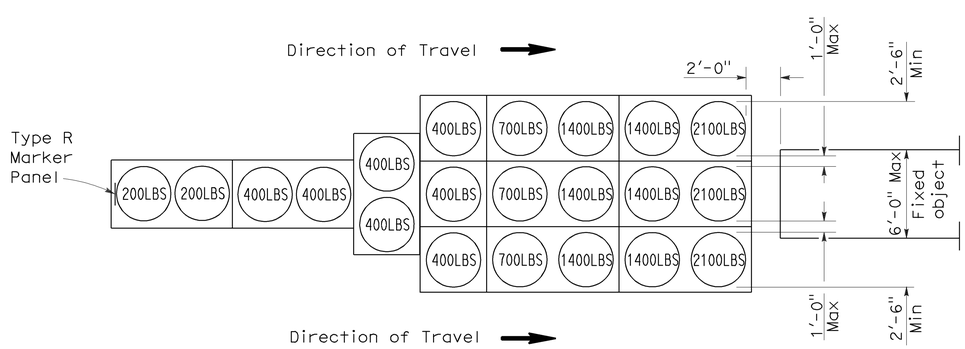

ARRAY 'TU21'

Approach speed 45 mph or more

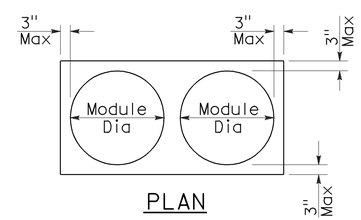

PLAN

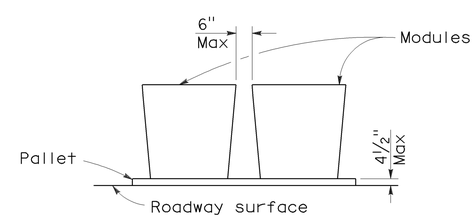

ELEVATION

CRASH CUSHION PALLET DETAIL

See Note 7

NOTES:

1. (XXX) Indicates sand filled module location and weight of sand in pounds for each module. Module spacing is based on the greater diameter of the module.
2. All sand weights are nominal.
3. Temporary crash cushion arrays shall not encroach on the traveled way.
4. Place the top of Type R marker panel 1" below the module lid.
5. Refer to Standard Plan A73B for marker details.
6. Approach speeds indicated conform to NCHRP 350 Report criteria.
7. Use of pallets is optional.

STATE OF CALIFORNIA
DEPARTMENT OF TRANSPORTATION

TEMPORARY CRASH CUSHION, SAND FILLED (UNIDIRECTIONAL)

NO SCALE

RSP T1A DATED JUNE 6, 2008 SUPERSEDES STANDARD PLAN T1A
DATED MAY 1, 2006 - PAGE 211 OF THE STANDARD PLANS BOOK DATED MAY 2006.

REVISED STANDARD PLAN RSP T1A

2006 REVISED STANDARD PLAN RSP T1A

DIST	COUNTY	ROUTE	POST MILES TOTAL PROJECT	SHEET NO.	TOTAL SHEETS
07	LA	60	11.6/R23.6	64	75

Randell D. Hiatt
REGISTERED CIVIL ENGINEER

June 6, 2008
PLANS APPROVAL DATE

REGISTERED PROFESSIONAL ENGINEER
Randell D. Hiatt
No. C50200
Exp. 6-30-09
CIVIL
STATE OF CALIFORNIA

The State of California or its officers or agents shall not be responsible for the accuracy or completeness of electronic copies of this plan sheet.

To accompany plans dated 06-27-11

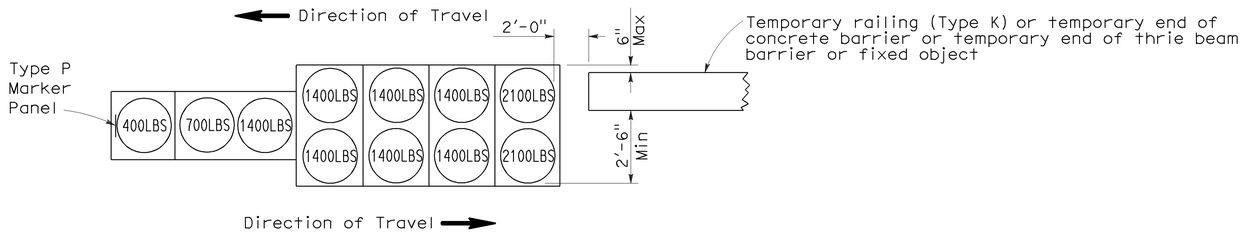

ARRAY 'TB11'

Approach speed less than 45 mph

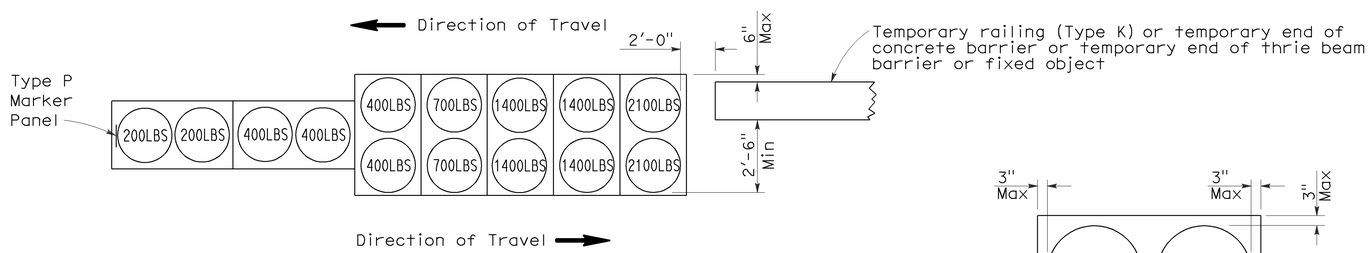

ARRAY 'TB14'

Approach speed 45 mph or more

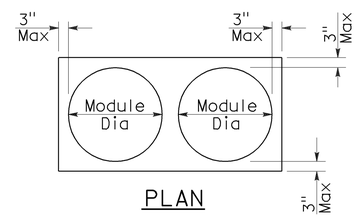

PLAN

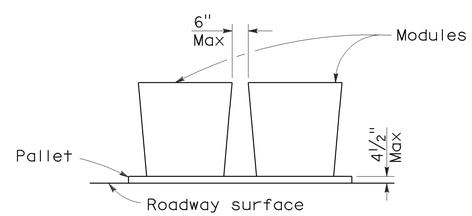

ELEVATION

CRASH CUSHION PALLET DETAIL

See Note 7

NOTES:

1. (XXX) Indicates sand filled module location and weight of sand in pounds for each module. Module spacing is based on the greater diameter of the module.
2. All sand weights are nominal.
3. Temporary crash cushion arrays shall not encroach on the traveled way.
4. Place the Type P marker panel so that the bottom of the panel rests upon the pallet.
5. Refer to Standard Plan A73B for marker details.
6. Approach speeds indicated conform to NCHRP 350 Report criteria.
7. Use of pallets is optional.

STATE OF CALIFORNIA
DEPARTMENT OF TRANSPORTATION

TEMPORARY CRASH CUSHION, SAND FILLED (BIDIRECTIONAL)

NO SCALE

RSP T1B DATED JUNE 6, 2008 SUPERSEDES STANDARD PLAN T1B
DATED MAY 1, 2006 - PAGE 212 OF THE STANDARD PLANS BOOK DATED MAY 2006.

REVISED STANDARD PLAN RSP T1B

2006 REVISED STANDARD PLAN RSP T1B

5-15-08

DIST	COUNTY	ROUTE	POST MILES TOTAL PROJECT	SHEET NO.	TOTAL SHEETS
07	LA	60	11.6/R23.6	65	75

Randell D. Hiatt
REGISTERED CIVIL ENGINEER

June 6, 2008
PLANS APPROVAL DATE

REGISTERED PROFESSIONAL ENGINEER
Randell D. Hiatt
No. C50200
Exp. 6-30-09
CIVIL
STATE OF CALIFORNIA

The State of California or its officers or agents shall not be responsible for the accuracy or completeness of electronic copies of this plan sheet.

To accompany plans dated 06-27-11

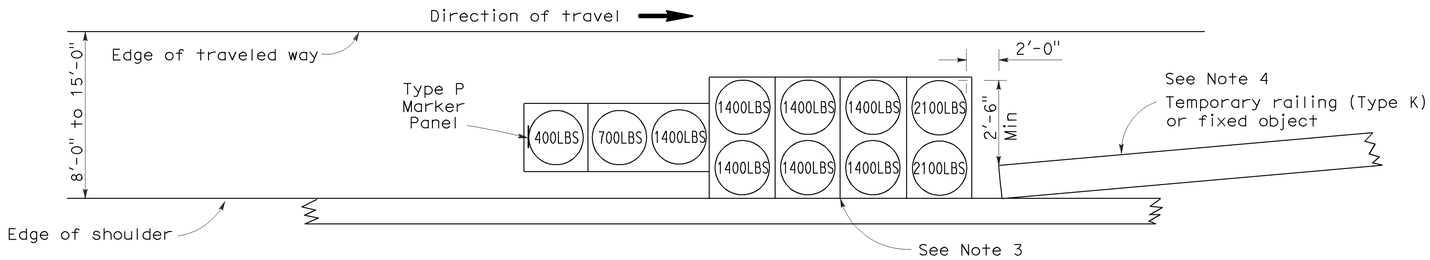

ARRAY 'TS11'

Approach speed less than 45 mph
See Note 9

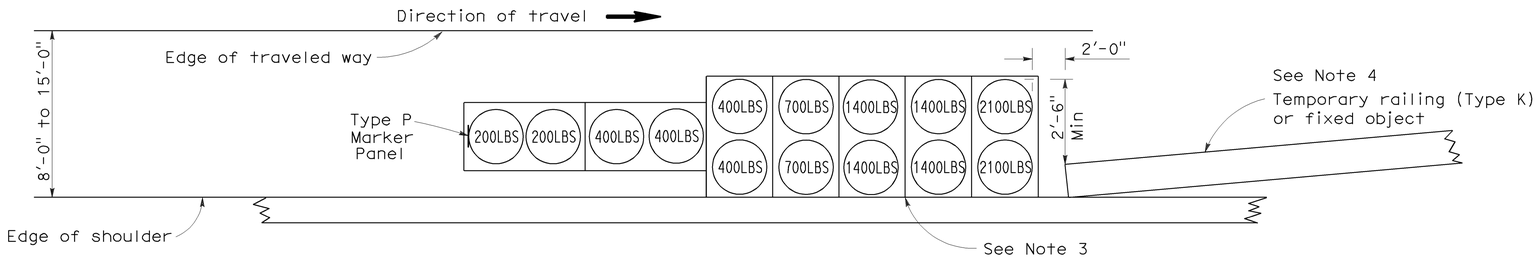

ARRAY 'TS14'

Approach speed 45 mph or more
See Note 9

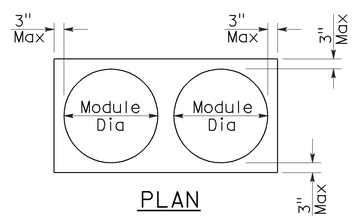

PLAN

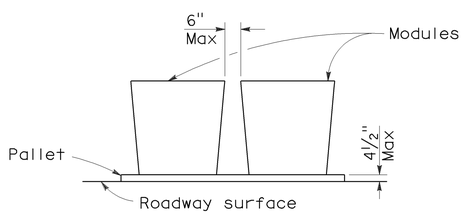

ELEVATION

CRASH CUSHION PALLET DETAIL

See Note 11

NOTES:

1. (XXX) Indicates sand filled module location and weight of sand in pounds for each module. Module spacing is based on the greater diameter of the module.
2. All sand weights are nominal.
3. The temporary crash cushion arrays shown on this plan shall be used only in locations where there will be traffic on one side of the temporary crash cushion array.
4. If the fixed object or approach end of the temporary railing is less than 15'-0" from the edge of traveled way, a temporary crash cushion is required in a construction or work zone.
5. Temporary crash cushion arrays shall not encroach on the traveled way.
6. Arrays for median shoulders shall conform to details shown on this plan for outside shoulders.
7. Place the Type P marker panel so that the bottom of the panel rests upon the pallet and faces traffic.
8. Refer to Standard Plan A73B for marker details.
9. For shoulder widths less than 8'-0", appropriate approved crash cushion protection, other than sand filled modules, shall be provided at fixed objects and at approach ends of temporary railing. The specific type of crash cushion shall be as shown on the project plans or as specified in the Special Provisions, or if not shown on the project plans or specified in the Special Provisions, shall be as approved by the Engineer.
10. Approach speeds indicated conform to NCHRP 350 Report criteria.
11. Use of pallets is optional.

STATE OF CALIFORNIA
DEPARTMENT OF TRANSPORTATION

TEMPORARY CRASH CUSHION, SAND FILLED (SHOULDER INSTALLATIONS)

NO SCALE

RSP T2 DATED JUNE 6, 2008 SUPERSEDES STANDARD PLAN T2
DATED MAY 1, 2006 - PAGE 213 OF THE STANDARD PLANS BOOK DATED MAY 2006.

REVISED STANDARD PLAN RSP T2

2006 REVISED STANDARD PLAN RSP T2

5-15-08

DIST	COUNTY	ROUTE	POST MILES TOTAL PROJECT	SHEET NO.	TOTAL SHEETS
07	LA	60	11.6/R23.6	66	75

REGISTERED CIVIL ENGINEER

November 17, 2006
PLANS APPROVAL DATE

REGISTERED PROFESSIONAL ENGINEER — Greg W. Edwards — No. C36386 — Exp. 6-30-08 — CIVIL — STATE OF CALIFORNIA

The State of California or its officers or agents shall not be responsible for the accuracy or completeness of electronic copies of this plan sheet.

To accompany plans dated 06-27-11

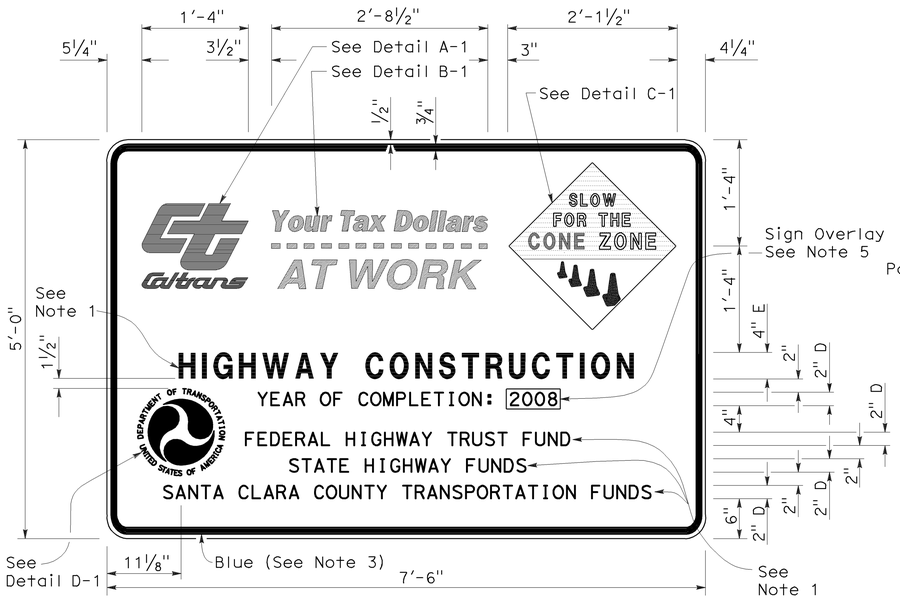

TYPE 1

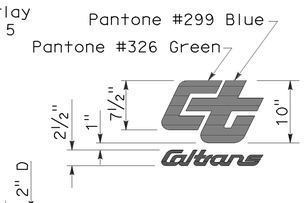

DETAIL A-1

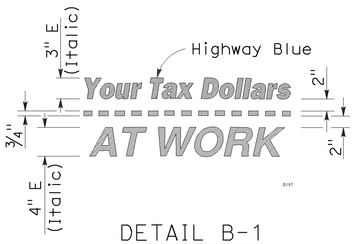

DETAIL B-1
(See Note 3)

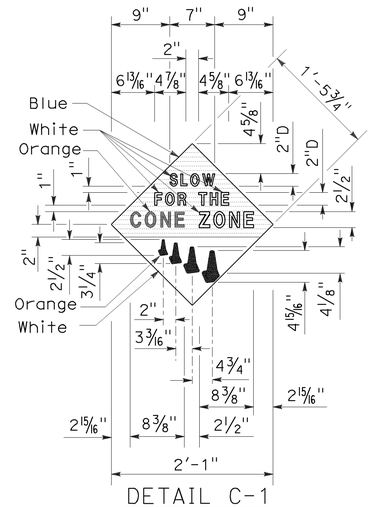

DETAIL C-1
(See Note 4)

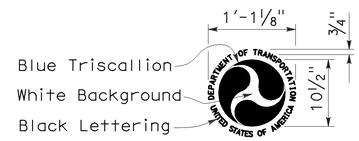

DETAIL D-1
(See Note 6)

NOTES:

1. The sign messages shown for type of project and fund types are examples only. See the Special Provisions for the applicable type of project and fund type messages to be used.
2. Except as otherwise shown, the legend of sign shall be black on a white background (non-reflective).
3. The border of the signs and details "B-1" and "B-2" shall be blue (non-reflective).
4. The diamond in details "C-1" and "C-2" shall be blue for the background of message, " SLOW FOR THE CONE ZONE", and white background for the orange cones. The color and type of font for the "SLOW FOR THE CONE ZONE" message shall be: "SLOW" white D; "FOR THE" white D; "CONE" orange Arial font; "ZONE" white Arial font.
5. Year of completion of project construction shown on the overlay is an example only. See the Special Provisions.
6. Use when the Project involves Federal Highway Trust Fund.

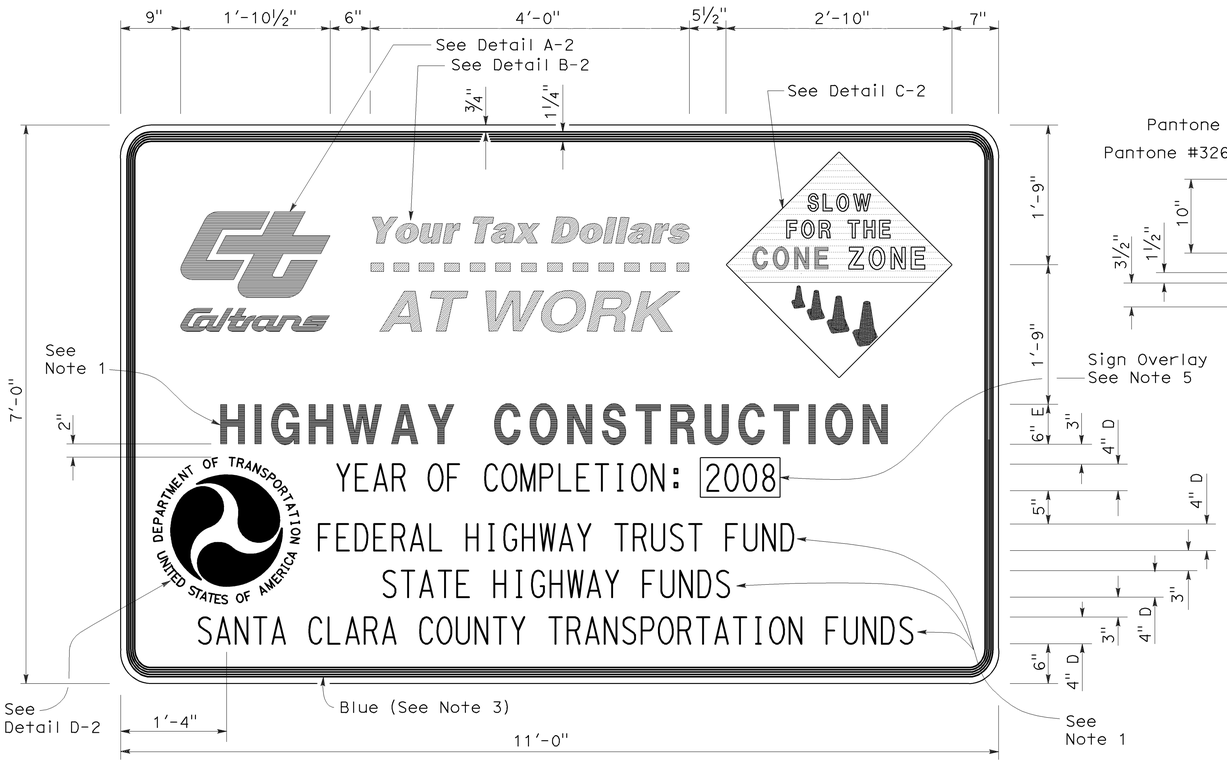

TYPE 2

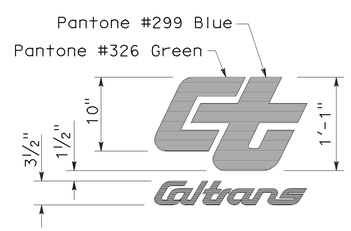

DETAIL A-2

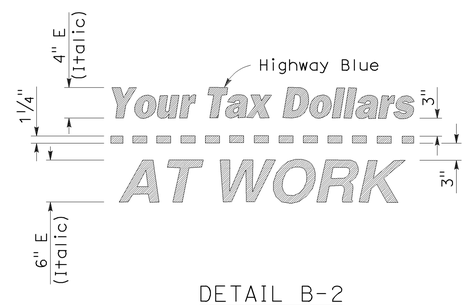

DETAIL B-2
(See Note 3)

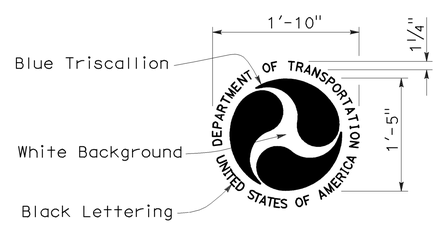

DETAIL D-2
(See Note 6)

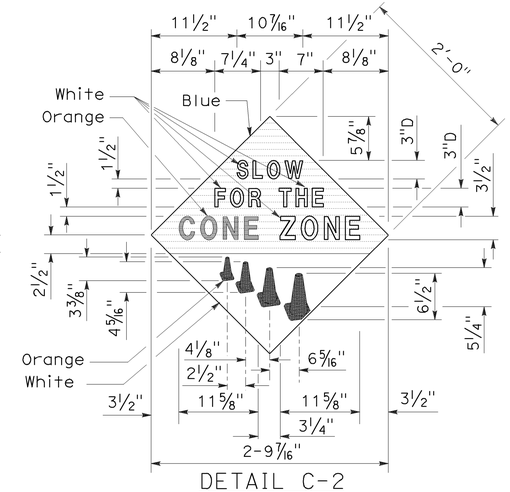

DETAIL C-2
(See Note 4)

STATE OF CALIFORNIA
DEPARTMENT OF TRANSPORTATION

CONSTRUCTION PROJECT FUNDING IDENTIFICATION SIGNS

NO SCALE

RSP T7 DATED NOVEMBER 17, 2006 SUPERSEDES STANDARD PLAN T7
DATED MAY 1, 2006 - PAGE 217 OF THE STANDARD PLANS BOOK DATED MAY 2006.

REVISED STANDARD PLAN RSP T7

2006 REVISED STANDARD PLAN RSP T7

9-7-06

DIST	COUNTY	ROUTE	POST MILES TOTAL PROJECT	SHEET NO.	TOTAL SHEETS
07	LA	60	11.6/R23.6	67	75

REGISTERED CIVIL ENGINEER

October 5, 2007
PLANS APPROVAL DATE

REGISTERED PROFESSIONAL ENGINEER Efthymios Delis No. C51434 Exp. 6-30-08 CIVIL STATE OF CALIFORNIA

The State of California or its officers or agents shall not be responsible for the accuracy or completeness of electronic copies of this plan sheet.

To accompany plans dated 06-27-11

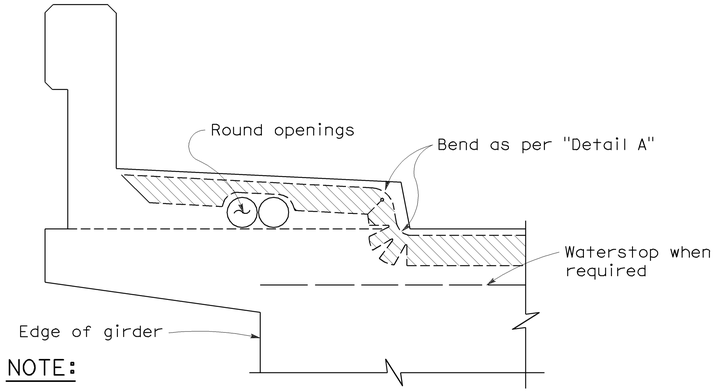

NOTE:

Type "B" seal shown. Type "A" seals to comform to the general path of seal shown, cuts for bending not required. Bend Type "A" seals 3" up into curb or barrier rail on only the low end of the seal.

CONCRETE BARRIER AND SIDEWALK

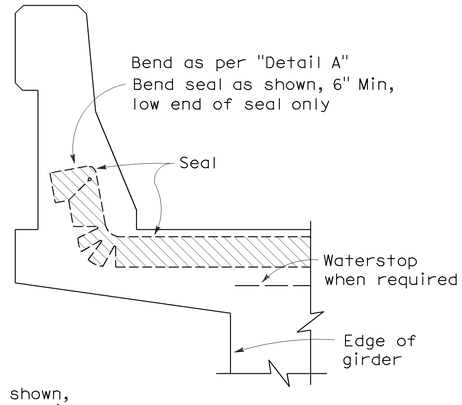

CONCRETE BARRIER

JOINT SEALS DETAILS

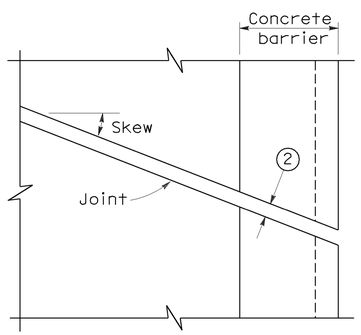

PLAN OF JOINT (SKEW ≤ 20°)

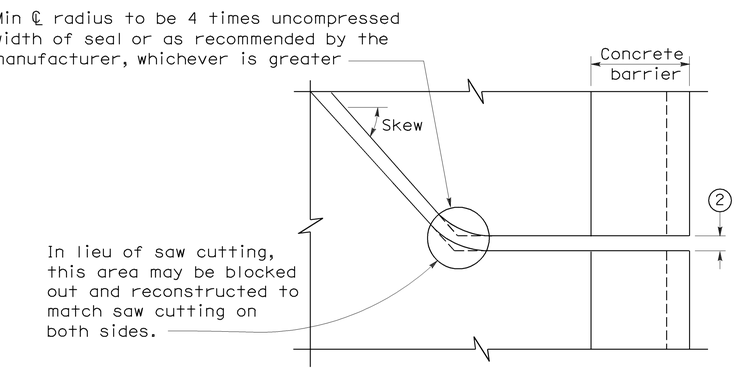

PLAN OF JOINT (SKEW > 20°)

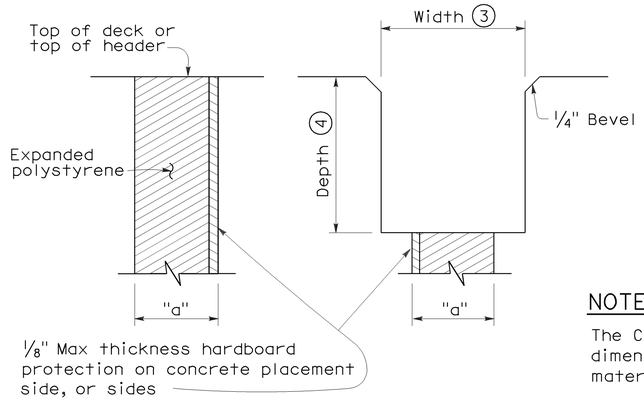

FORMING DETAIL SAWCUT DETAIL

NOTE:

The Contractor shall verify all controlling field dimensions before ordering or fabricatiing any material.

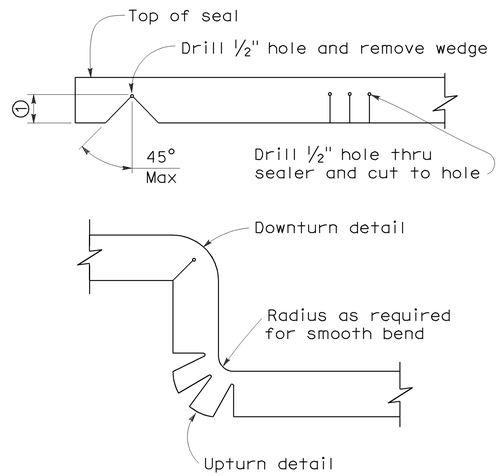

DETAIL A

NOTES:

1. Make smooth cuts from the bottom of seal to 1½" clear of top leaving at least one complete cell between the top of the cut and top of the seal. When necessary cut back of seal to clear conduit and round openings.
2. Opening in barrier to match width of sawn deck joint.
3. Sawcut groove widths shall be as ordered by the Engineer.
4. Depth of sawcut: Type A - Depth to be 2" minimum.
   Type B - Depth to be equal to or greater than the depth of seal measured along the contact surface, when compressed to minimum width position (W_2) plus dimensions shown.
5. MR (movement rating) as shown on other plan sheets.
6. Other depths must be approved by the Engineer.

DIMENSIONS "a" OF JOINT REQUIRED

Movement Rating (MR) 5	Bridge Type	"a" Dimension Deck Concrete Placed		
		Winter	Fall-Spring	Summer
2"	All except CIP/PS	1½"	1¼"	¾"
	CIP/PS	1¼"	1"	½"
1½"	All except CIP/PS	1¼"	1"	½"
	CIP/PS	1"	¾"	½"
1"	All except CIP/PS	1"	¾"	½"
	CIP/PS	¾"	½"	½"
½"	All except CIP/PS	¾"	¾"	½"
	CIP/PS	½"	½"	½"

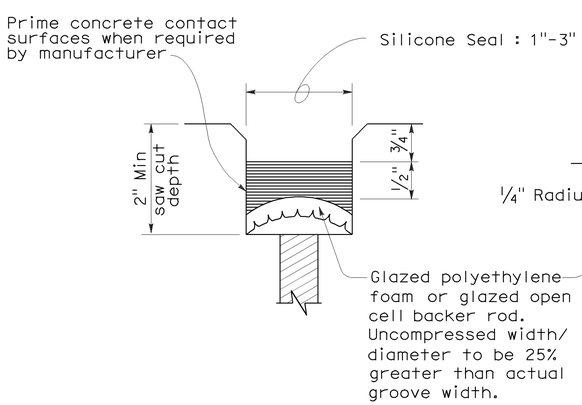

TYPE A SEAL

Movement rating : Silicone = 1" Max

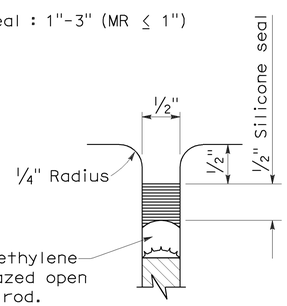

TYPE AL SEAL

Longitudinal joints only

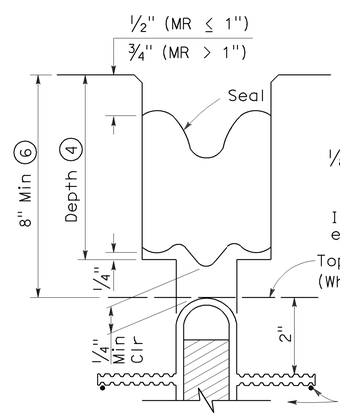

TYPE B JOINT SEAL
IN MINIMUM WIDTH POSITION (W_2)

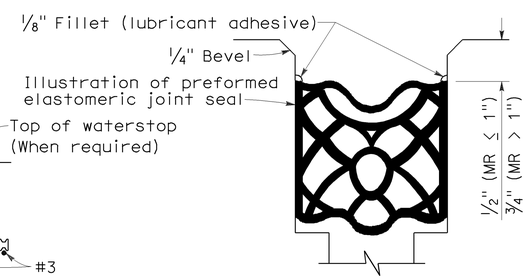

TYPE B SEAL

Movement Rating ≤ 2"

STATE OF CALIFORNIA
DEPARTMENT OF TRANSPORTATION

JOINT SEALS (MAXIMUM MOVEMENT RATING = 2")

NO SCALE

RSP B6-21 DATED OCTOBER 5, 2007 SUPERSEDES STANDARD PLAN B6-21 DATED MAY 1, 2006 - PAGE 258 OF THE STANDARD PLANS BOOK DATED MAY 2006.

REVISED STANDARD PLAN RSP B6-21

2006 REVISED STANDARD PLAN RSP B6-21

5-8-07

DIST	COUNTY	ROUTE	POST MILES TOTAL PROJECT	SHEET NO.	TOTAL SHEETS
07	LA	60	11.6/R23.6	68	75

REGISTERED ELECTRICAL ENGINEER

October 5, 2007
PLANS APPROVAL DATE

REGISTERED PROFESSIONAL ENGINEER Jeffery G. McRae No. E14512 Exp. 6-30-08 ELECTRICAL STATE OF CALIFORNIA

The State of California or its officers or agents shall not be responsible for the accuracy or completeness of electronic copies of this plan sheet.

To accompany plans dated 06-27-11

ELECTROLIERS

STANDARD TYPES
15, 15D
15 STRUCTURE
21, 21D STRUCTURE
30
31
32
35
36-20A

High mast light pole

Double Arm lighting standard

Existing electrolier

Electrolier foundation (Future installation)

NOTES:

1. Luminaires shall be 310 W HPS when installed on Type 21, 21D, 30, 31, 32, 35 and 36-20A Standards, unless otherwise specified. Luminaires shall be 200 W HPS when installed on other type standards or poles, unless otherwise specified.
2. Luminaires shall be the cutoff type, ANSI Type III medium cutoff lighting distribution, unless otherwise specified.
3. Variations noted adjacent to symbol on project plans.

Electrolier (see project notes or project plans)

Luminaire on wood pole

STANDARD NOTES:

- AB — Abandon. If applied to conduit, remove conductors.
- BC — Install pull box in existing conduit run.
- BP — Pedestrian barricade, type as indicated on plan.
- CB — Install conduit into existing pull box.
- CC — Connect new and existing conduit. Remove existing conductors and install conductors as indicated.
- CF — Conduit to remain for future use. Remove conductors. Install pull wire or rope.
- DH — Detector handhole.
- FA — Foundation to be abandoned.
- IS — Install sign on signal mast arm.
- NS — No slip base on standard.
- PEC — Photoelectric control.
- PEU — Photoelectric unit.
- RC — Equipment or material to be removed and become the property of the Contractor.
- RE — Remove electrolier, fuses and ballast. Tape ends of conductors.
- RL — Relocate equipment.
- RR — Remove and reuse equipment.
- RS — Remove and salvage equipment.
- SC — Splice new to existing conductors.
- SD — Service disconnect.
- SF — Standard to remain for future use. Remove luminaire, pole conductors, fuses and ballast.
- TSP — Telephone service point.

ABBREVIATIONS AND EQUIPMENT DESIGNATIONS

PROPOSED	EXISTING	
BBS	bbs	Battery backup system
BC	bc	Bolt circle
C	C	Conduit
CCTV	cctv	Closed circuit television
CKT	ckt	Circuit
CMS	cms	Changeable message sign
DLC	dlc	Loop detector lead-in cable
EMS	ems	Extinguishable message sign
EVC	evc	Emergency vehicle cable
EVD	evd	Emergency vehicle detector
FB	fb	Flashing beacon
FBCA	fbca	Flashing beacon control assembly
FBS	fbs	Flashing beacon with slip base
FO	fo	Fiber optic
G	G	Ground (Equipment Grounding Conductor)
GFCI	GFCI	Ground fault circuit interrupt
HAR	har	Highway advisory radio
HEX	hex	Hexagonal
HPS	hps	High pressure sodium
IISNS	iisns	Internally illuminated street name sign
ISL	isl	Induction sign lighting
LED	led	Light emitting diode
LMA	lma	Luminaire mast arm
LPS	lps	Low pressure sodium
LTG	ltg	Lighting
LUM	lum	Luminaire
MAT	mat	Mast arm mounting vehicle signal faces, top attachment
MAS	mas	Mast arm mounting vehicle signal faces, side attachment
MAS-4A	mas-4A	Mast arm mounting vehicle signal faces, side attachment - 4 signal section
MAS-4B	mas-4B	
MAS-4C	mas-4C	
MAS-5A	mas-5A	Mast arm mounting vehicle signal faces, side attachment - 5 signal section
MAS-5B	mas-5B	
MC	mc	Mercury contactor
M/M	m/m	Multiple to multiple transformer
MT	mt	Conduit with pull wire or rope only
MTG	mtg	Mounting
	mv	Mercury vapor lighting fixture
N	N	Neutral (Grounded Conductor)
NC	NC	Normally closed
NO	NO	Normally open
PB	pb	Pull box
PEC	pec	Photoelectric control (Type I, II, III, IV or V as shown)
PED	ped	Pedestrian
PEU	peu	Photoelectric unit
PPB	ppb	Pedestrian push button
RL		Relocated equipment
RM	rm	Ramp metering
SB	sb	Slip base
SIC	sic	Signal interconnect cable
SIG	sig	Signal
SMA	sma	Signal mast arm
SNS	sns	Street name sign
SP	sp	Service point
TDC	tdc	Telephone demarcation cabinet
TMS	tms	Traffic monitoring station
TOS	tos	Traffic Operations System
VEH	veh	Vehicle
XFMR	xfmr	Transformer
COMM	comm	Communication
RWIS	rwis	Roadway weather information system

SOFFIT AND WALL MOUNTED LUMINAIRES

Pendant, 70 W HPS unless otherwise specified.

Flush, 70 W HPS unless otherwise specified.

Wall surface, 70 W HPS unless otherwise specified.

Existing soffit or wall luminaire to remain unmodified.

Existing soffit or wall luminaire to be modified as specified.

NOTE:

Arrow indicates "street side" of luminaire.

STATE OF CALIFORNIA
DEPARTMENT OF TRANSPORTATION

ELECTRICAL SYSTEMS (SYMBOLS AND ABBREVIATIONS)

NO SCALE

RSP ES-1A DATED OCTOBER 5, 2007 SUPERSEDES STANDARD PLAN ES-1A DATED MAY 1, 2006 - PAGE 400 OF THE STANDARD PLANS BOOK DATED MAY 2006.

REVISED STANDARD PLAN RSP ES-1A

2006 REVISED STANDARD PLAN RSP ES-1A

DIST	COUNTY	ROUTE	POST MILES TOTAL PROJECT	SHEET NO.	TOTAL SHEETS
07	LA	60	11.6/R23.6	69	75

REGISTERED ELECTRICAL ENGINEER

October 5, 2007
PLANS APPROVAL DATE

REGISTERED PROFESSIONAL ENGINEER Jeffery G. McRae No. E14512 Exp. 6-30-08 ELECTRICAL STATE OF CALIFORNIA

The State of California or its officers or agents shall not be responsible for the accuracy or completeness of electronic copies of this plan sheet.

To accompany plans dated 06-27-11

CONDUIT

PROPOSED	EXISTING	
		Lighting Conduit, unless otherwise indicated or noted
		Traffic signal conduit
C	c	Communication conduit
T	t	Telephone conduit
F	f	Fire alarm conduit
FO	fo	Fiber optic conduit
		Conduit termination (RSP ES-9A C)
R	r	Conduit riser in/on structure or service pole

SERVICE EQUIPMENT

PROPOSED	EXISTING	
OH	oh	Overhead lines
U	U	Wood pole "U" indicates utility owned
		Pole guy with anchor
		Utility transformer - ground mounted
III		Service equipment enclosure type
		Service equipment enclosure door indicates front of enclosure
T	t	Telephone demarcation cabinet

POLE-MOUNTED SERVICE DESIGNATION

Type of installation

TYPE H SERVICE - 28'-10" ← Pole height above grade

ILLUMINATED OVERHEAD SIGN

PROPOSED	EXISTING	
		Overhead sign - Single post
		Overhead sign - Two post
		Overhead sign - Mounted on structure
		Overhead sign with electrolier

SIGNAL EQUIPMENT

PROPOSED	EXISTING	
		Pedestrian signal face
		Pedestrian push button post
		Pedestrian barricade
		Vehicle signal face (with backplate, 3-Section: red, yellow and green)
		Vehicle signal face with angle visors
PV	PV	Modifications of basic symbols: "L" indicates all non-arrow sections louvered "LG" indicates louvered green section only "PV" indicates 12" programmed visibility sections "8" indicates all 8" sections (only when specified)
		Type 15TS and Vehicle signal face
		Vehicle signal face with red, yellow and green left arrow sections
		Vehicle signal face with red and yellow sections and up green arrow
		Vehicle signal face (5 Section) with red, yellow and green sections and yellow and green right arrows
		Type 1 Standard and attached vehicle signal faces
		Standard with signal mast arm only and attached vehicle signal faces and internally illuminated street name sign
		Type 33 Standard, Left-turn vehicle signal face and sign
		Standard with luminaire and signal mast arms and attached vehicle signal faces
		Cantilever flashing beacon Type 9 Frame, with a sign unless otherwise specified or indicated
		Type 15-FBS Standard with two vehicle signal face sections with lens, backplate and visor with a sign
R	Y	Flashing beacon. One vehicle signal face section with lens, backplate and visor. "R" indicates red indication, "Y" indicates yellow indication
		Controller assembly. Door indicates front of cabinet

SIGNAL EQUIPMENT Cont

PROPOSED	EXISTING	
		Guard post
		Type 1 Standard with "Meter On" sign
		Emergency Vehicle detector

NOTES:

1. All signal sections shall be 12" unless shown otherwise.
2. Signal heads shall be provided with backplates unless shown otherwise.
3. Signal indication shall be LED.

STATE OF CALIFORNIA
DEPARTMENT OF TRANSPORTATION

ELECTRICAL SYSTEMS (SYMBOLS AND ABBREVIATIONS)

NO SCALE

RSP ES-1B DATED OCTOBER 5, 2007 SUPERCEDES STANDARD PLAN ES-1B DATED MAY 1, 2006 - PAGE 401 OF THE STANDARD PLANS BOOK DATED MAY 2006.

REVISED STANDARD PLAN RSP ES-1B

2006 REVISED STANDARD PLAN RSP ES-1B

7-10-07

DIST	COUNTY	ROUTE	POST MILES TOTAL PROJECT	SHEET NO.	TOTAL SHEETS
07	LA	60	11.6/R23.6	70	75

REGISTERED ELECTRICAL ENGINEER

October 5, 2007
PLANS APPROVAL DATE

REGISTERED PROFESSIONAL ENGINEER Jeffery G. McRae No. E14512 Exp. 6-30-08 ELECTRICAL STATE OF CALIFORNIA

The State of California or its officers or agents shall not be responsible for the accuracy or completeness of electronic copies of this plan sheet.

To accompany plans dated 06-27-11

EQUIPMENT IDENTIFICATION

ILLUMINATED SIGN IDENTIFICATION NUMBER:

Sign No. 12345

- Sign number - Place on post or structure

10 ISL SCI 1.0

- Transformer rating (kVA)
- Lighting control type
- Number and type of fixtures

Do NOT place on standard or structure

ELECTROLIER OR EQUIPMENT IDENTIFICATION NUMBER:

12345 - 15'-0"

- Mast arm length, if shown. Do not place on standard or structure.
- Equipment number - Place on standard or structure. Existing equipment numbers are shown in parenthesis

CONDUIT AND CONDUCTOR IDENTIFICATION:

1½"C, 2#10, 15#14, 2 DLC

- Number and size of conductors and cables
- Size of conduit in inches

ø1, ø2, ø2P, etc.	Traffic phase identification for signal faces, detectors and phase diagrams
1 2 3	Project note numbers
A B C	Equipment description, installation or item numbers
1 2 3	Conduit run numbers

SIGNAL AND LIGHTING STANDARD (TYPICAL DESIGNATION):

19A - 3 - 100

- Wind velocity = 100 mph
- Case 3 arm loading
- Standard type
- Standard Plan sheet number
- Detail number or letter

MISCELLANEOUS EQUIPMENT

PROPOSED	EXISTING	
CMS	cms	Changeable message sign
		Closed circuit television camera
		Highway advisory radio pole and antenna
EMS	ems	Extinguishable message sign
M V	m v	Detection device M = Microwave sensor V = Video image sensor

WIRING DIAGRAM LEGEND

P	Pole
CB	Circuit breaker
A	Ampere
V	Volt
M	Metered
UM	Unmetered
NB	Neutral bus
GB	Ground bus
G	Equipment grounding conductor
N	Grounded conductor (Neutral)

- External conductor
- Conductor or bus
- Tie point
- Contactor coil
- Contactor, Contact NO
- Terminal blocks
- Contactor, Contact NC
- Enclosure bond
- Grounding electrode
- Circuit breaker
- Receptacle

PULL BOXES

PROPOSED EXISTING

Pull box-No. 5 unless otherwise indicated or noted.

3 9A(21)

Pull box-Additional designations or descriptions

3	= No. 3½ pull box
5	= No. 5 pull box
6	= No. 6 pull box
7	= No. 7 (Ceiling pull box)
8	= No. 8 (Pendant soffit pull box)
9	= No. 9 pull box
9A	= No. 9A pull box

(C) = Communications pull box
(E) = Pull box with extension
(S) = Sprinkler control pull box
(21) = Anchor bolts and conduit for future installation of Type 21 Standard
(T) = Traffic pull box

VEHICLE DETECTORS

5 J 9 U

- U = Upper
- L = Lower
- Slot number in input file
- Input file (I or J)
- Phase

PROPOSED EXISTING

	Type A detector loop. Outline of sawcut shown.
	Type B detector loop. Outline of sawcut shown.
	Type C detector loop. Outline of sawcut shown.
	Type D detector loop. Outline of sawcut shown.
	Type E detector loop. Outline of sawcut shown.
	Type Q detector loop. Outline of sawcut shown.
	Magnetic detector
DH dh	Detector handhole
	Microwave or video detection zone

STATE OF CALIFORNIA
DEPARTMENT OF TRANSPORTATION

ELECTRICAL SYSTEMS (SYMBOLS AND ABBREVIATIONS)

NO SCALE

RSP ES-1C DATED OCTOBER 5, 2007 SUPERCEDES STANDARD PLAN ES-1C DATED MAY 1, 2006 - PAGE 402 OF THE STANDARD PLANS BOOK DATED MAY 2006.

REVISED STANDARD PLAN RSP ES-1C

2006 REVISED STANDARD PLAN RSP ES-1C

7-10-07

DIST	COUNTY	ROUTE	POST MILES TOTAL PROJECT	SHEET NO.	TOTAL SHEETS
07	LA	60	11.6/R23.6	71	75

REGISTERED ELECTRICAL ENGINEER

October 5, 2007
PLANS APPROVAL DATE

REGISTERED PROFESSIONAL ENGINEER Jeffery G. McRae No. E14512 Exp. 6-30-08 ELECTRICAL STATE OF CALIFORNIA

The State of California or its officers or agents shall not be responsible for the accuracy or completeness of electronic copies of this plan sheet.

To accompany plans dated 06-27-11

LOOP INSTALLATION PROCEDURE

1. Loops shall be centered in lanes.
2. Saw slots in pavement for loop conductors as shown in details.
3. Distance between side of loop and a lead-in saw cut from adjacent detectors shall be 2'-0" minimum. Distance between lead-in saw cuts shall be 6" minimum.
4. Bottom of saw slot shall be smooth with no sharp edges.
5. Slots shall be washed until clean, blown out and thoroughly dried before installing loop conductors.
6. Adjacent loops on the same sensor unit channel shall be wound in opposite directions.
7. Identify and tag loop circuit pairs in the pull box with loop number, start (S) and finish (F) of conductor. Identify and tag lead-in-cable with sensor number and phase.
8. Install loop conductor in slot using a 3/16" to 1/4" thick wood paddle. Hold loop conductors with wood paddles (at the bottom of the sawed slot) during sealant placement.
9. No more than 2 twisted pairs shall be installed in one sawed slot.
10. Allow additional 5'-0" of slack length of conductor for the lead-in run to pull box.
11. The additional length of each conductor for each loop shall be twisted together into a pair (6 turns per 3'-4" minimum) before being placed in the slot and conduit leading to pull box.
12. Test each loop circuit for continuity, circuit resistance and insulation resistance at the pull box before filling slots.
13. Fill slots as shown in details.
14. Splice loop conductors to lead-in-cable. Splices shall be soldered.
15. End of lead-in-cable and Type 2 loop conductor shall be waterproofed prior to installing in conduit to prevent moisture from entering the cable.
16. Lead-in-cable shall not be spliced between the pull box and the controller cabinet terminals.
17. Test each loop circuit for continuity, circuit resistance and insulation resistance at the controller cabinet location.
18. Where loop conductors are not to be spliced to a lead-in-cable, the ends of the conductors shall be taped and waterproofed with electrical insulating coating.

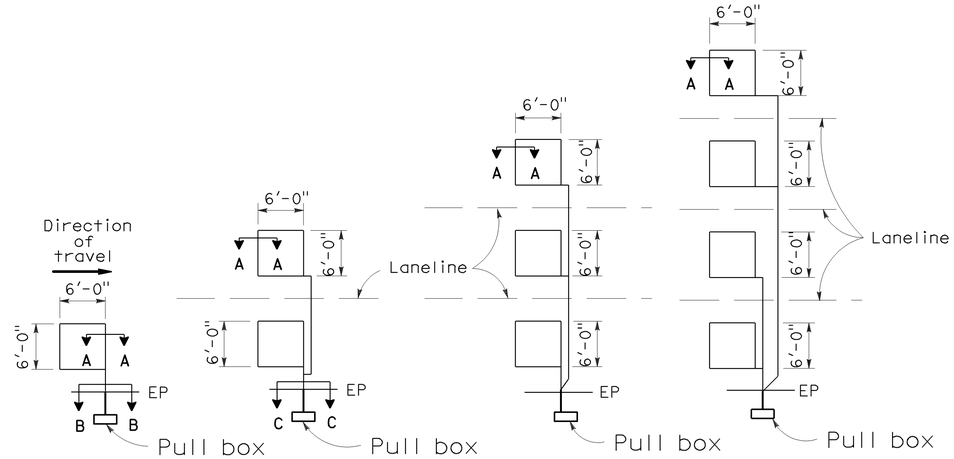

TYPE 1A INSTALLATION | TYPE 2A INSTALLATION | TYPE 3A INSTALLATION | TYPE 4A INSTALLATION

SAWCUT DETAILS

(Type A loop detector configurations illustrated)

1. 1A thru 4A = 1 Type A loop configuration in each lane.
2. 1B thru 4B = 1 Type B loop configuration in each lane.
3. 1C = 1 Type C loop configuration entering lanes as required.
4. 1D thru 4D = 1 Type D loop configuration in each lane.
5. 1E thru 4E = 1 Type E loop configuration in each lane.
6. 1Q thru 4Q = 1 Type Q loop configuration in each lane. (Use Type A, B, C, D, E or Q loop detector configurations only when specified or shown on plans)

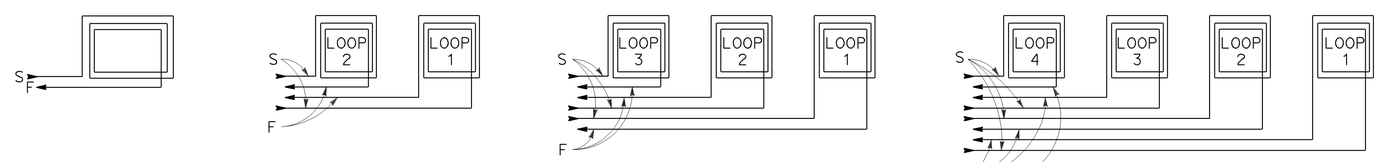

WINDING DETAILS

See Notes 6 and 7

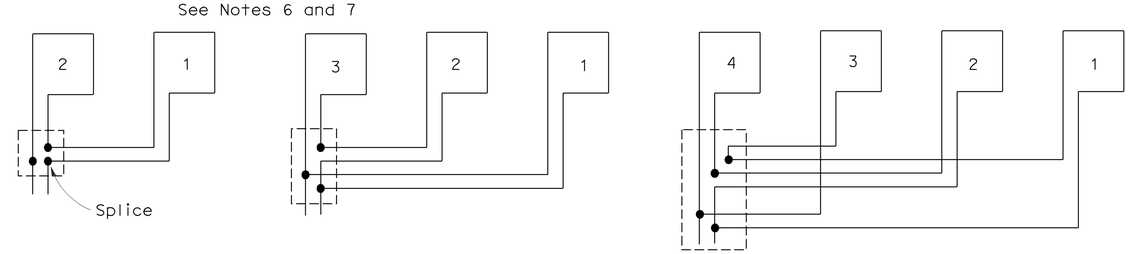

TYPICAL LOOP CONNECTIONS

(Dashed lines represent the pull box)

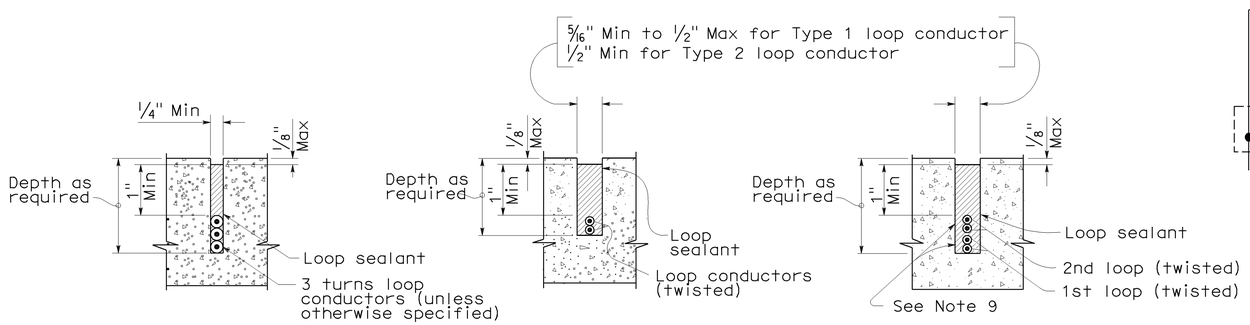

SECTION A-A | SECTION B-B | SECTION C-C

SLOT DETAILS - TYPE 1 AND TYPE 2 LOOP CONDUCTOR

STATE OF CALIFORNIA
DEPARTMENT OF TRANSPORTATION

ELECTRICAL SYSTEMS (DETECTORS)

NO SCALE

RSP ES-5A DATED OCTOBER 5, 2007 SUPERCEDES STANDARD PLAN ES-5A DATED MAY 1, 2006 - PAGE 423 OF THE STANDARD PLANS BOOK DATED MAY 2006.

REVISED STANDARD PLAN RSP ES-5A

2006 REVISED STANDARD PLAN RSP ES-5A

8-17-07

DIST	COUNTY	ROUTE	POST MILES TOTAL PROJECT	SHEET No	TOTAL SHEETS
07	LA	60	11.6/R23.6	72	75

REGISTERED CIVIL ENGINEER 04-21-11 DATE

06-27-11
PLANS APPROVAL DATE

REGISTERED PROFESSIONAL ENGINEER Tony D. Brake No. C57863 Exp. 06/30/12 CIVIL STATE OF CALIFORNIA

The State of California or its officers or agents shall not be responsible for the accuracy or completeness of electronic copies of this plan sheet.

Caltrans now has a web site! To get to the web site, go to: http://www.dot.ca.gov

INDEX TO PLANS

SHEET NO.	TITLE
1	GENERAL PLAN NO. 1
2	QUANTITIES
3	JOINT SEAL DETAILS
4	STRUCTURE APPROACH TYPE R(30D)

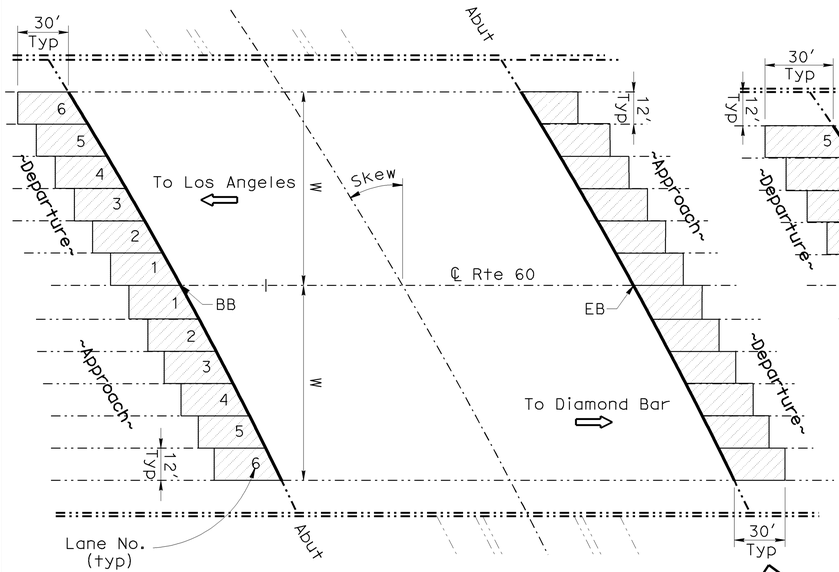

TYPICAL PLAN 1 (6 Drive Lane)

Scale: NTS

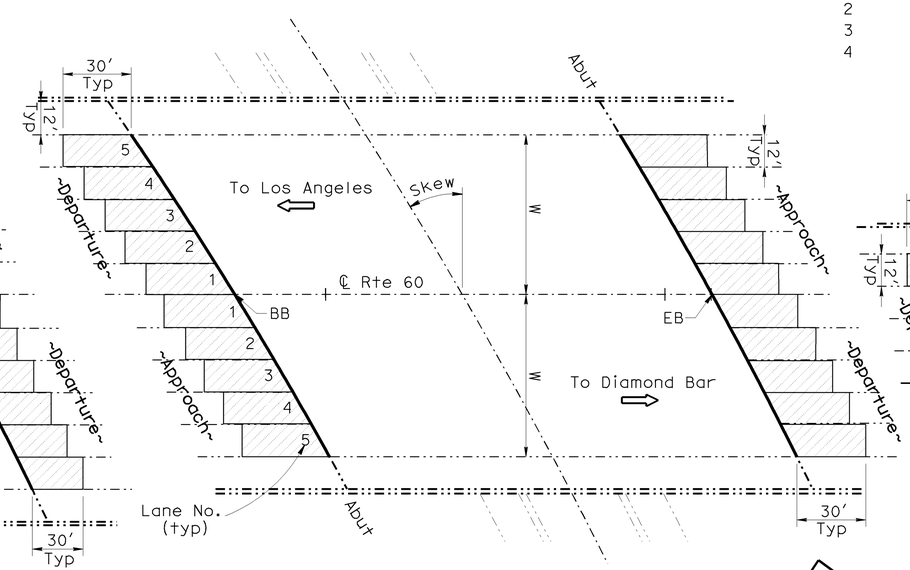

TYPICAL PLAN 2 (5 Drive Lane)

Scale: NTS

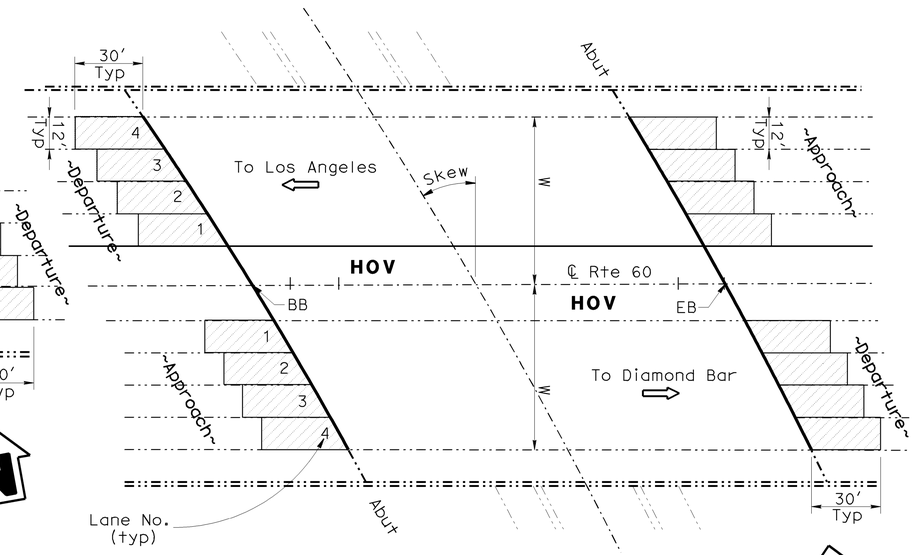

TYPICAL PLAN 3 (4 Drive Lane)

Scale: NTS

SLAB REPLACEMENT TABLE

STRUCTURE APPROACH AND DEPARTURE SLAB REPLACEMENT ON RTE 60

				EASTBOUND ROUTE 60										WESTBOUND ROUTE 60									
				EASTBOUND APPROACH				Eastbound		EASTBOUND DEPARTURE				WESTBOUND APPROACH				Westbound		WESTBOUND DEPARTURE			
BRIDGE NAME	BRIDGE NUMBER	POST MILE	PAVING NOTCH	SKEW	TYPE OF APPROACH SLAB	LANE NO.	JT. REPL	TYPICAL PLAN NO.	Width W (ft)	SKEW	TYPE OF APPROACH SLAB	LANE NO.	JT. REPL	SKEW	TYPE OF APPROACH SLAB	LANE NO.	JT. REPL	TYPICAL PLAN NO.	Width W (ft)	SKEW	TYPE OF APPROACH SLAB	LANE NO.	JT. REPL
WORKMAN MILL ROAD UC	53-1768	12.00	YES	51	R30D	1,2,4,5,6	YES	1	72′	51	N/A	N/A	NO	0	N/A	N/A	NO	1	72′	51	R30D	3,4,5,6	YES
CLAYTON OH	53-1755	12.18	YES	54	R30D	1,2,4,5,6	YES	1	72′	54	R30D	3,4	YES	54	R30D	2,3,4	YES	1	72′	54	R30D	2,3,4	YES
SEVENTH AVE. UC	53-1771	14.26	YES	26	R30D	3,4,5,6	YES	1	72′	26	R30D	1,2,3,4,6	YES	26	R30D	1,2,3,4	YES	3	60′	26	R30D	1,2,3,4	YES
TURNBULL CANYON ROAD UC	53-1772	15.09	YES	4	R30D	1,2,3,4	YES	3	60′	4	R30D	1,2,3,4	YES	4	R30D	1,2,3,4	YES	3	60′	4	R30D	1,2,3,4	YES
HACIENDA BLVD UC	53-1784	15.93	YES	4	R30D	3,4,5	YES	2	60′	4	R30D	3,4,5	YES	4	R30D	2,3,4	YES	2	60′	4	R30D	3,4	YES
STIMSON AVE UC	53-1785	16.30	YES	7	R30D	3,4,5	YES	2	60′	7	R30D	1,2,3,4,5	YES	7	R30D	1,2,3,4	YES	3	60′	7	R30D	1,2,3,4	YES
HORSEMAN OH	53-1773	19.10	YES	4	R30D	1,2,3,4,5	YES	2	60′	4	R30D	1,2,3,4,5	YES	4	R30D	1,2,3,4,5	YES	2	60′	4	R30D	1,2,3,4,5	YES
FULLERTON ROAD UC	53-1786	19.46	YES	4	R30D	1,2,3,4,5	YES	2	60′	4	R30D	1,2,3,4,5	YES	4	R30D	1,2,3,4,5	YES	2	60′	4	R30D	1,2,3,4,5	YES
FAIRWAY Dr UC	53-1788	21.48	YES	5	R30D	1,2,3,4,5	YES	2	60′	5	R30D	1,2,3,4,5	YES	5	R30D	1,2,3,4	YES	3	60′	5	R30D	3,4	YES
LEMON AVE UC	53-1787	22.38	YES	2	R30D	1,2,3,4,5	YES	2	60′	2	R30D	1,2,3,4,5	YES	2	R30D	1,2,3,4	YES	3	60′	2	R30D	1,2,3,4	YES
OLD BREA CANYON Rd UC	53-1845	22.97	YES	19	R30D	3,4,5	YES	2	60′	19	R30D	2,3,4,5	YES	19	R30D	1,2,3,4,5	YES	2	60′	19	R30D	1,2,3,4,5	YES

NOTE:
THE CONTRACTOR SHALL VERIFY ALL CONTROLLING FIELD DIMENSIONS BEFORE ORDERING OR FABRICATING ANY MATERIAL.

LEGEND:

Indicates existing.

Indicates direction of traffic.

Indicates limits of removal of existing bridge approach slabs and construct new approach slabs. As required by the "SLAB REPLACEMENT TABLE". Place paving notch extension prior to constructing new slab. For correctly portrayed end stagger details see the "APPROACH SLAB TRANSVERSE CONTACT JOINT" table on "Structure Approach Type R(30D)" sheet.

Indicates location of existing joint seal removal and placement of new joint seals. Prior to placement of new joint seals, repair joint spalls.

STANDARD PLANS DATED MAY 2006

SHEET NO.	TITLE
A10A	ACRONYMS AND ABBREVIATIONS (SHEET 1 OF 2)
A10B	ACRONYMS AND ABBREVIATIONS (SHEET 2 OF 2)
A10C	SYMBOLS (SHEET 1 OF 2)
A10D	SYMBOLS (SHEET 2 OF 2)
RSP B6-21	JOINT SEALS (MAXIMUM MOVEMENT RATING = 2")

TONY D. BRAKE
DESIGN ENGINEER

	BY	CHECKED
DESIGN	Ramesh Patel	Tony Brake
DETAILS	Ramesh Patel/Clayton Tom	Tony Brake
QUANTITIES	Ramesh Patel	Hong Tien Tran

LOAD FACTOR DESIGN — LIVE LOADING: HS20-44 AND ALTERNATIVE AND PERMIT DESIGN LOAD

	BY	CHECKED
LAYOUT	Clayton Tom	Tony Brake
SPECIFICATIONS	Jennifer Ramirez	PLANS AND SPECS COMPARED Jennifer Ramirez

STATE OF CALIFORNIA
DEPARTMENT OF TRANSPORTATION

DIVISION OF MAINTENANCE
STRUCTURE MAINTENANCE DESIGN

CU 07
EA 286901

BRIDGE NO. Various
POST MILE Varies

ROUTE 60 BRIDGES
GENERAL PLAN NO. 1

STRUCTURES MAINTENANCE GENERAL PLAN SHEET (ENGLISH) (REV. 2/4/05)

ORIGINAL SCALE IN INCHES FOR REDUCED PLANS 0 1 2 3

DISREGARD PRINTS BEARING EARLIER REVISION DATES — REVISION DATES: 01-28-11, 02-23-11, 02-24-11, 02-28-11, 03-02-11, 04-21-11

SHEET 01 OF 04

FILE => 07-286901-a-gp.dgn

USERNAME => s117283 DATE PLOTTED => 21-APR-2011 TIME PLOTTED => 11:10

DIST	COUNTY	ROUTE	POST MILES TOTAL PROJECT	SHEET No	TOTAL SHEETS
07	LA	60	11.6/R23.6	73	75

REGISTERED CIVIL ENGINEER 04-21-11 DATE

06-27-11
PLANS APPROVAL DATE

REGISTERED PROFESSIONAL ENGINEER Tony D. Brake No. C57863 Exp. 06/30/12 CIVIL STATE OF CALIFORNIA

The State of California or its officers or agents shall not be responsible for the accuracy or completeness of electronic copies of this plan sheet.

Caltrans now has a web site! To get to the web site, go to: http://www.dot.ca.gov

WORKMAN MILL ROAD UC #53-1768

QUANTITIES

REMOVE UNSOUND CONCRETE	2 CF
AGGREGATE BASE (APPROACH SLAB)	17 CY
STRUCTURAL CONCRETE, APPROACH SLAB (TYPE R)	167 CY
PAVING NOTCH EXTENSION	143 CF
CLEAN EXPANSION JOINT	54 LF
RAPID SETTING CONCRETE (PATCH)	2 CF
JOINT SEAL (MR 2")	244 LF

CLAYTON OH #53-1755

QUANTITIES

REMOVE UNSOUND CONCRETE	2 CF
AGGREGATE BASE (APPROACH SLAB)	22 CY
STRUCTURAL CONCRETE, APPROACH SLAB (TYPE R)	221 CY
PAVING NOTCH EXTENSION	199 CF
CLEAN EXPANSION JOINT	239 LF
RAPID SETTING CONCRETE (PATCH)	2 CF
JOINT SEAL (MR 2")	504 LF

SEVENTH AVENUE UC #53-1771

QUANTITIES

REMOVE UNSOUND CONCRETE	2 CF
AGGREGATE BASE (APPROACH SLAB)	26 CY
STRUCTURAL CONCRETE, APPROACH SLAB (TYPE R)	259 CY
PAVING NOTCH EXTENSION	170 CF
CLEAN EXPANSION JOINT	47 LF
RAPID SETTING CONCRETE (PATCH)	2 CF
JOINT SEAL (MR 2")	275 LF

TURNBULL CANYON ROAD UC #53-1772

QUANTITIES

REMOVE UNSOUND CONCRETE	2 CF
AGGREGATE BASE (APPROACH SLAB)	22 CY
STRUCTURAL CONCRETE, APPROACH SLAB (TYPE R)	215 CY
PAVING NOTCH EXTENSION	144 CF
CLEAN EXPANSION JOINT	45 LF
RAPID SETTING CONCRETE (PATCH)	2 CF
JOINT SEAL (MR 2")	237 LF

HACIENDA BOULEVARD UC #53-1784

QUANTITIES

REMOVE UNSOUND CONCRETE	2 CF
AGGREGATE BASE (APPROACH SLAB)	15 CY
STRUCTURAL CONCRETE, APPROACH SLAB (TYPE R)	148 CY
PAVING NOTCH EXTENSION	99 CF
CLEAN EXPANSION JOINT	205 LF
RAPID SETTING CONCRETE (PATCH)	2 CF
JOINT SEAL (MR 2")	337 LF

STIMSON AVENUE UC #53-1785

QUANTITIES

REMOVE UNSOUND CONCRETE	2 CF
AGGREGATE BASE (APPROACH SLAB)	22 CY
STRUCTURAL CONCRETE, APPROACH SLAB (TYPE R)	219 CY
PAVING NOTCH EXTENSION	145 CF
CLEAN EXPANSION JOINT	70 LF
RAPID SETTING CONCRETE (PATCH)	2 CF
JOINT SEAL (MR 2")	262 LF

HORSEMAN OH #53-1773

QUANTITIES

REMOVE UNSOUND CONCRETE	2 CF
AGGREGATE BASE (APPROACH SLAB)	27 CY
STRUCTURAL CONCRETE, APPROACH SLAB (TYPE R)	270 CY
PAVING NOTCH EXTENSION	180 CF
CLEAN EXPANSION JOINT	21 LF
RAPID SETTING CONCRETE (PATCH)	2 CF
JOINT SEAL (MR 2")	261 LF

FULLERTON ROAD UC #53-1786

QUANTITIES

REMOVE UNSOUND CONCRETE	2 CF
AGGREGATE BASE (APPROACH SLAB)	27 CY
STRUCTURAL CONCRETE, APPROACH SLAB (TYPE R)	270 CY
PAVING NOTCH EXTENSION	180 CF
CLEAN EXPANSION JOINT	55 LF
RAPID SETTING CONCRETE (PATCH)	2 CF
JOINT SEAL (MR 2")	295 LF

FAIRWAY Dr UC #53-1788

QUANTITIES

REMOVE UNSOUND CONCRETE	2 CF
AGGREGATE BASE (APPROACH SLAB)	22 CY
STRUCTURAL CONCRETE, APPROACH SLAB (TYPE R)	217 CY
PAVING NOTCH EXTENSION	144 CF
CLEAN EXPANSION JOINT	79 LF
RAPID SETTING CONCRETE (PATCH)	2 CF
JOINT SEAL (MR 2")	271 LF

LEMON AVENUE UC #53-1787

QUANTITIES

REMOVE UNSOUND CONCRETE	2 CF
AGGREGATE BASE (APPROACH SLAB)	24 CY
STRUCTURAL CONCRETE, APPROACH SLAB (TYPE R)	242 CY
PAVING NOTCH EXTENSION	162 CF
CLEAN EXPANSION JOINT	20 LF
RAPID SETTING CONCRETE (PATCH)	2 CF
JOINT SEAL (MR 2")	236 LF

OLD BREA CANYON Rd UC #53-1845

QUANTITIES

REMOVE UNSOUND CONCRETE	2 CF
AGGREGATE BASE (APPROACH SLAB)	25 CY
STRUCTURAL CONCRETE, APPROACH SLAB (TYPE R)	246 CY
PAVING NOTCH EXTENSION	162 CF
CLEAN EXPANSION JOINT	96 LF
RAPID SETTING CONCRETE (PATCH)	2 CF
JOINT SEAL (MR 2")	311 LF

NOTE:
THE CONTRACTOR SHALL VERIFY ALL CONTROLLING FIELD DIMENSIONS BEFORE ORDERING OR FABRICATING ANY MATERIAL.

TONY D. BRAKE
DESIGN ENGINEER

	BY	CHECKED
DESIGN	Ramesh Patel	Tony Brake
DETAILS	Ramesh Patel/Clayton Tom	Tony Brake
QUANTITIES	Ramesh Patel	Hong Tien Tran

LOAD FACTOR DESIGN — LIVE LOADING: HS20-44 AND ALTERNATIVE AND PERMIT DESIGN LOAD

	BY	CHECKED
LAYOUT	Clayton Tom	Tony Brake
SPECIFICATIONS	Jennifer Ramirez	PLANS AND SPECS COMPARED Jennifer Ramirez

STATE OF CALIFORNIA
DEPARTMENT OF TRANSPORTATION

DIVISION OF MAINTENANCE
STRUCTURE MAINTENANCE DESIGN

CU 07
EA 286901

BRIDGE NO. Various
POST MILE Varies

ROUTE 60 BRIDGES
QUANTITIES

STRUCTURES MAINTENANCE GENERAL PLAN SHEET (ENGLISH) (REV. 2/4/05)

ORIGINAL SCALE IN INCHES FOR REDUCED PLANS 0 1 2 3

DISREGARD PRINTS BEARING EARLIER REVISION DATES

REVISION DATES: ~~01-28-11~~ ~~02-23-11~~ ~~02-24-11~~ ~~02-28-11~~ ~~03-02-11~~ 04-21-11

SHEET 02 OF 04

FILE => 07-286901-a-qnt.dgn

USERNAME => s117283 DATE PLOTTED => 21-APR-2011 TIME PLOTTED => 11:11

DIST	COUNTY	ROUTE	POST MILES TOTAL PROJECT	SHEET No	TOTAL SHEETS
07	LA	60	11.6/R23.6	74	75

REGISTERED CIVIL ENGINEER 04-21-11 DATE

06-27-11
PLANS APPROVAL DATE

REGISTERED PROFESSIONAL ENGINEER Tony D. Brake No. C57863 Exp. 06/30/12 CIVIL STATE OF CALIFORNIA

The State of California or its officers or agents shall not be responsible for the accuracy or completeness of electronic copies of this plan sheet.

Caltrans now has a web site! To get to the web site, go to: http://www.dot.ca.gov

JOINT SEAL TABLE

BRIDGE NAME	BRIDGE NUMBER	JOINT SEAL LOCATION	MINIMUM "MR" (inches)	EXISTING WATERSTOP	APPROX LENGTH (ft)	APPROX DEPTH TO CLEAN EXPANSION JOINT(inches)	APPROX DEPTH OF JOINT SPALLS (inches)	APPROX WIDTH OF JOINT SPALLS (inches)	APPROX LENGTH OF JOINT SPALLS (Feet)
WORKMAN MILL ROAD UC	53-1768	ABUTMENT 1 PN	2	NO	244	6	3	6	10
CLAYTON OVERHEAD	53-1755	ABUTMENT 1 PN	2	NO	262	6	3	6	10
		ABUTMENT 4 PN	2	NO	242	6	3	6	10
SEVENTH AVENUE UC	53-1771	ABUTMENT 1 PN	2	NO	130	6	3	6	10
		ABUTMENT 4 PN	2	NO	144	6	3	6	10
TURNBULL CANYON ROAD UC	53-1772	ABUTMENT 1 PN	2	NO	119	6	3	6	10
		ABUTMENT 4 PN	2	NO	118	6	3	6	10
HACIENDA BLVD UC	53-1784	ABUTMENT 1 PN	2	NO	168	6	3	6	10
		ABUTMENT 4 PN	2	NO	169	6	3	6	10
STIMSON AVENUE UC	53-1785	ABUTMENT 1 PN	2	NO	131	6	3	6	10
		ABUTMENT 4 PN	2	NO	131	6	3	6	10
HORSEMAN OH	53-1773	ABUTMENT 1 PN	2	NO	130	6	3	6	10
		ABUTMENT 4 PN	2	NO	131	6	3	6	10
FULLERTON ROAD UC	53-1786	ABUTMENT 1 PN	2	NO	147	6	3	6	10
		ABUTMENT 4 PN	2	NO	148	6	3	6	10
FAIRWAY Dr UC	53-1788	ABUTMENT 1 PN	2	NO	135	6	3	6	10
		ABUTMENT 4 PN	2	NO	136	6	3	6	10
LEMON AVENUE UC	53-1787	ABUTMENT 1 PN	2	NO	118	6	3	6	10
		ABUTMENT 2 PN	2	NO	118	6	3	6	10
OLD BREA CANYON Rd UC	53-1845	ABUTMENT 1 PN	2	NO	155	6	3	6	10
		ABUTMENT 3 PN	2	NO	156	6	3	6	10

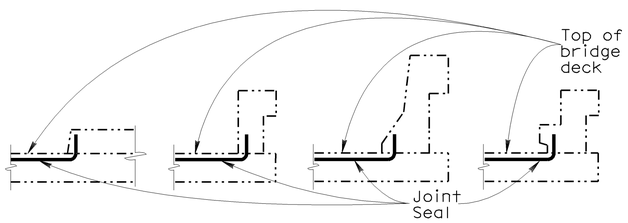

BARRIER RAIL

JOINT SEAL AT LOW SIDE OF DECK

Note: Details shown for illustration purposes only.

For use only where deck joint matches the sidewalk, curb or barrier rail joint.

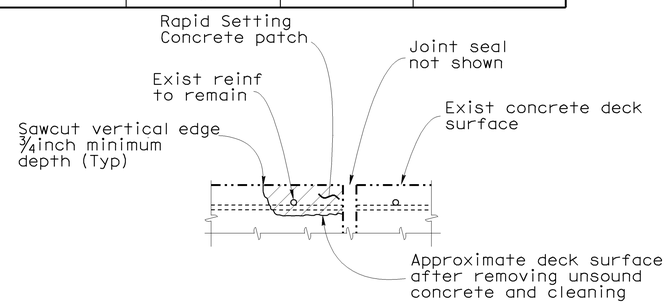

JOINT SPALL REPAIR DETAIL

Note: Reinforcement may be encountered during deck concrete removal and is to remain undamaged.

NOTES:

The following notes apply to JOINT SEAL TYPE A:

Install Joint Seal (MR = ½") or Silicone Joint Seal 3" up into curb or barrier rail on the low side of the deck where deck joint aligns with curb or barrier rail joint.

For details not shown see RSP B6-21.

The following notes apply to JOINT SEAL TYPE B:

1) Seal must satisfy both minimum Movement Rating (MR) and minimum W1 requirements.

2) Minimum W1 is the calculated maximum width of the joint based on field measurements. After the joints have been cleaned, minimum W1 is to be recalculated by the Engineer.

3) W1 shall be the smaller of the values determined as follows:
   A) 0.85 times the manufacturer's designed minimum uncompressed width of the seal.
   B) The width of the seal on the third successive test cycle of the pressure deflection test, when compressed to an average pressure of 3.0 PSI.

4) Bend Type B joint seal 6 inches up into curb or rail on the low side of the deck where deck joint matches curb or rail joint.

For details not shown see RSP B6-21.

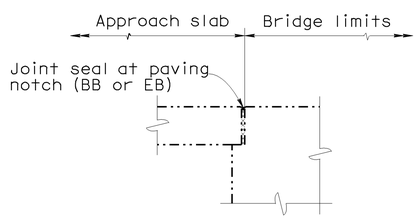

DIAPHRAGM ABUTMENT

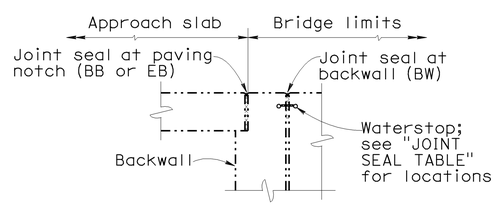

ABUTMENT WITH BACKWALL AND PAVING NOTCH

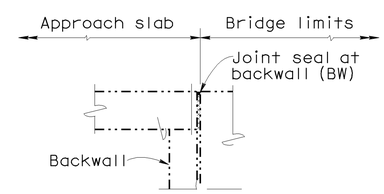

ABUTMENT WITH BACKWALL

JOINT SEAL LOCATION

NO SCALE

NOTE:
THE CONTRACTOR SHALL VERIFY ALL CONTROLLING FIELD DIMENSIONS BEFORE ORDERING OR FABRICATING ANY MATERIAL.

	BY	CHECKED
DESIGN	Ramesh Patel	Tony Brake
DETAILS	Ramesh Patel/Clayton Tom	Tony Brake
QUANTITIES	Ramesh Patel	Hong Tien Tran

STATE OF CALIFORNIA
DEPARTMENT OF TRANSPORTATION

DIVISION OF MAINTENANCE
STRUCTURE MAINTENANCE DESIGN

BRIDGE NO. Various
POST MILE Varies

ROUTE 60 BRIDGES
JOINT SEAL DETAILS

STRUCTURES MAINTENANCE DETAIL SHEET (ENGLISH)

ORIGINAL SCALE IN INCHES FOR REDUCED PLANS 0 1 2 3

CU 07
EA 286901

DISREGARD PRINTS BEARING EARLIER REVISION DATES

REVISION DATES: 01-28-11 02-23-11 02-24-11 02-28-11 03-02-11 04-21-11

SHEET 03 OF 04

FILE => 07-286901-q-jntdt.dgn

USERNAME => rpatel DATE PLOTTED => 2/25/2009 TIME PLOTTED => 2:00 PM

DIST.	COUNTY	ROUTE	MILE POST TOTAL PROJECT	SHEET NO.	TOTAL SHEETS
07	LA	60	11.6/R23.6	75	75

REGISTERED ENGINEER - CIVIL 04-21-11

06-27-11
PLANS APPROVAL DATE

The State of California or its officers or agents shall not be responsible for the accuracy or completeness of electronic copies of this plan sheet.

REGISTERED PROFESSIONAL ENGINEER Tony D. Brake No. C57863 Exp. 06/30/12 CIVIL STATE OF CALIFORNIA

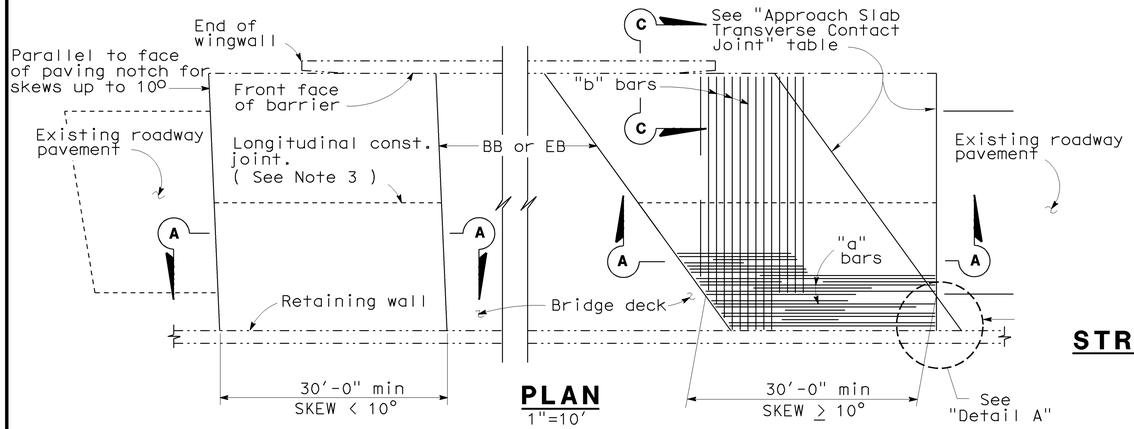

PLAN
1"=10'

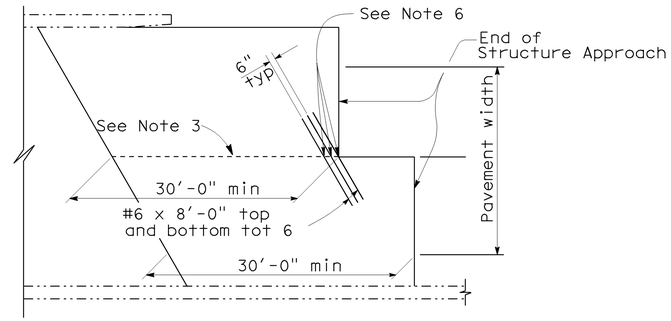

STRUCTURE APPROACH - END STAGGER DETAIL
No Scale

APPROACH SLAB TRANSVERSE CONTACT JOINT		
APPROACH SKEW	WITH AC ROADWAY PAVEMENT	WITH PCC ROADWAY PAVEMENT
< 10°	Parallel to face of paving notch	Parallel to face of paving notch
10° - 45°	Parallel to face of P N use (Detail A)	Stagger lines 24' to 36' apart
> 45°	Parallel to face of P N use (Detail A)	Stagger at each lane line

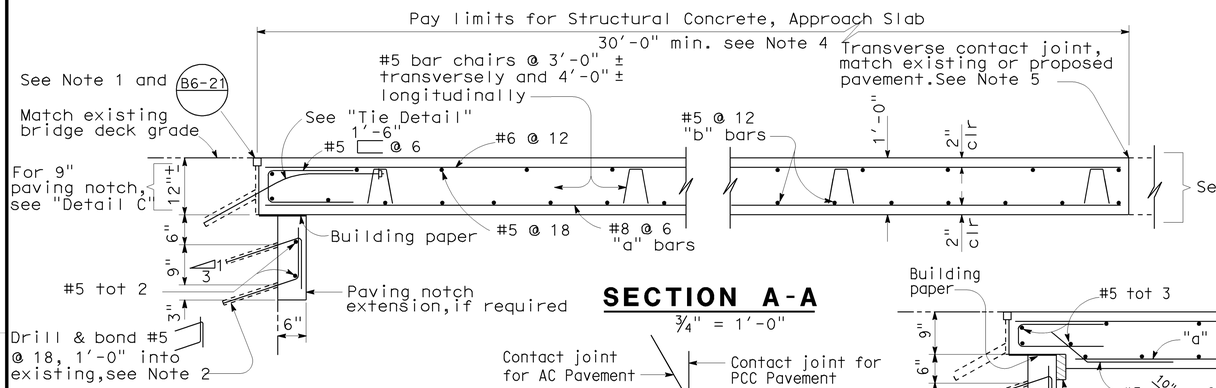

SECTION A-A
¾" = 1'-0"

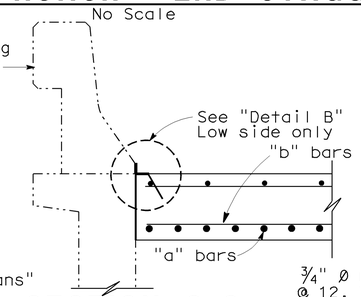

SECTION C-C
¾" = 1'-0"

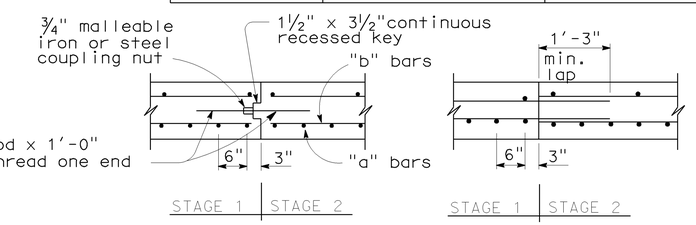

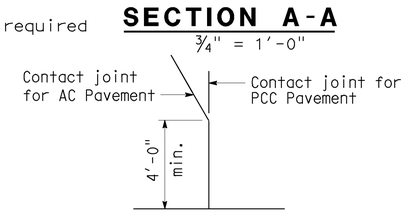

DETAIL A
No Scale

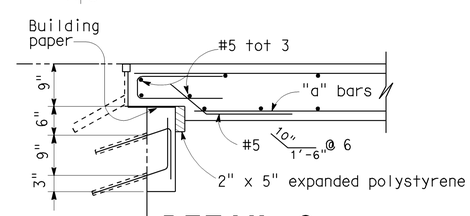

DETAIL C
¾" = 1'-0"

NOTE: For details not shown,see "Section A-A".

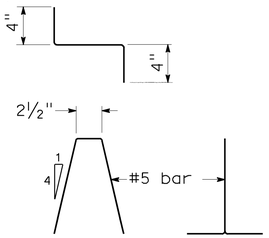

BAR CHAIR DETAIL
1½" = 1'-0"

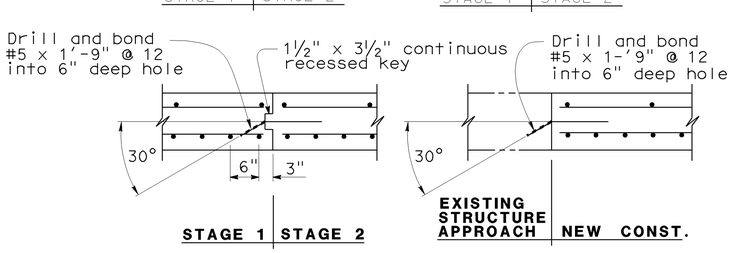

LONGITUDINAL CONSTRUCTION JOINT ALTERNATIVES
¾" = 1'-0"

NOTES:

1. For details not shown or noted,see Structure Plans. Adjust bar reinforcement to clear a sawcut for sealed joint,when required.
2. Space to avoid existing prestress anchorages and main reinforcement.
3. Longitudinal construction joints,when permitted by the Engineer,shall be located on lane lines.
4. Transverse contact joint shall be a minimum of 5'-0" from an existing or constructed weakened plane joint.
5. For transverse contact joint with new PCC paving. refer to Standard Plan P10.
6. Couplers are required for stage construction.
7. End angle or plate at beginning of barrier transition, end of wingwall or end of structure approach as applicable.

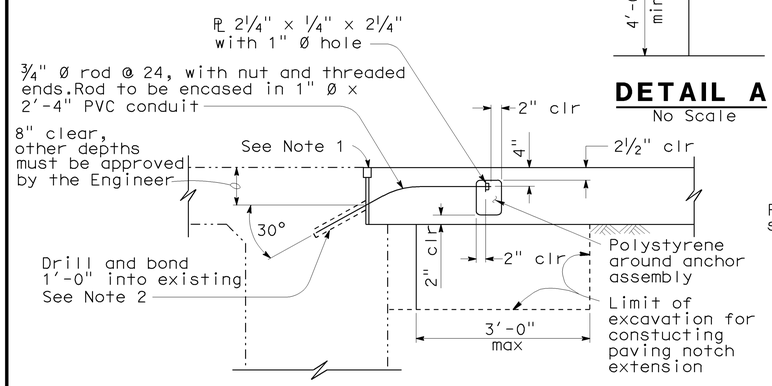

TIE DETAIL
¾" = 1'-0"

NOTE:
THE CONTRACTOR SHALL VERIFY ALL CONTROLLING FIELD DIMENSIONS BEFORE ORDERING OR FABRICATING ANY MATERIAL.

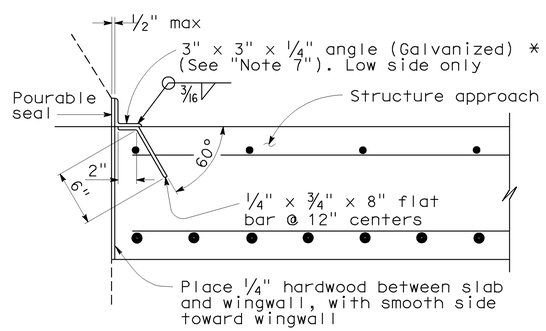

*(TO BE USED WITH TYPE 25 OR TYPE 27 CONCRETE BARRIER)

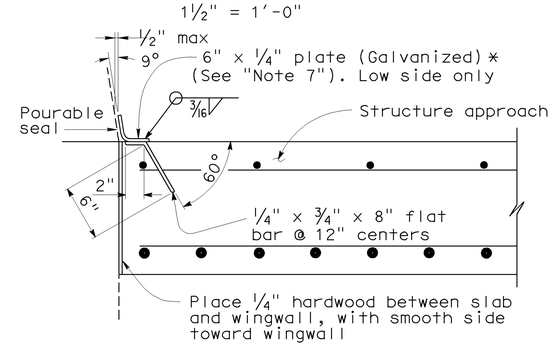

*(TO BE USED WITH TYPE 732 OR TYPE 736 CONCRETE BARRIER)

DETAIL B
1½" = 1'-0"

STANDARD DRAWING				
RELEASE DATE 3/14/05	DESIGN	BY M.TRAFFALIS	CHECKED E.THORKILDSEN	RELEASED BY
	DETAILS	BY R.YEE	CHECKED E.THORKILDSEN	
FILE NO. xs3-140e	SUBMITTED	BY M.HA	DRAWING DATE 8/92	OFFICE CHIEF

STATE OF CALIFORNIA DEPARTMENT OF TRANSPORTATION

DIVISION OF ENGINEERING SERVICES

BRIDGE NO. Various
MILE POST Varies

ROUTE 60 BRIDGES
STRUCTURE APPROACH TYPE R(30D)

DS OSD 2147A (ENGLISH) (REV. X/XX/XX)

ORIGINAL SCALE IN INCHES FOR REDUCED PLANS 0 1 2 3

CU 07
EA 286901

DISREGARD PRINTS BEARING EARLIER REVISION DATES

REVISION DATES (PRELIMINARY STAGE ONLY) 01-26-11 02-23-11 02-24-11 02-28-11 03-02-11 04-21-11

SHEET 04 OF 04

USERNAME => s117283

07-286901-s-sa.dgn

DATE PLOTTED => 21-APR-2011 TIME PLOTTED => 12:44