| Dist | COUNTY | ROUTE | POST MILES TOTAL PROJECT | SHEET No. | TOTAL SHEETS |
|---|---|---|---|---|---|
| 07 | LA | 405 | 4.3 | 2 | 89 |

01-30-13
REGISTERED CIVIL ENGINEER DATE

04-08-13
PLANS APPROVAL DATE

REGISTERED PROFESSIONAL ENGINEER
SIMON KUO
No. C52465
Exp. 12-31-14
CIVIL
STATE OF CALIFORNIA

*THE STATE OF CALIFORNIA OR ITS OFFICERS OR AGENTS SHALL NOT BE RESPONSIBLE FOR THE ACCURACY OR COMPLETENESS OF SCANNED COPIES OF THIS PLAN SHEET.*

NOTES:

1. DIMENSIONS OF THE PAVEMENT STRUCTURES (STRUCTURAL SECTIONS) ARE SUBJECT TO TOLERANCES SPECIFIED IN THE STANDARD SPECIFICATIONS.
2. SUPERELEVATIONS ARE AS SHOWN.

4

**4 REPLACED PER ADDENDUM No. 4 DATED AUGUST 21, 2013**

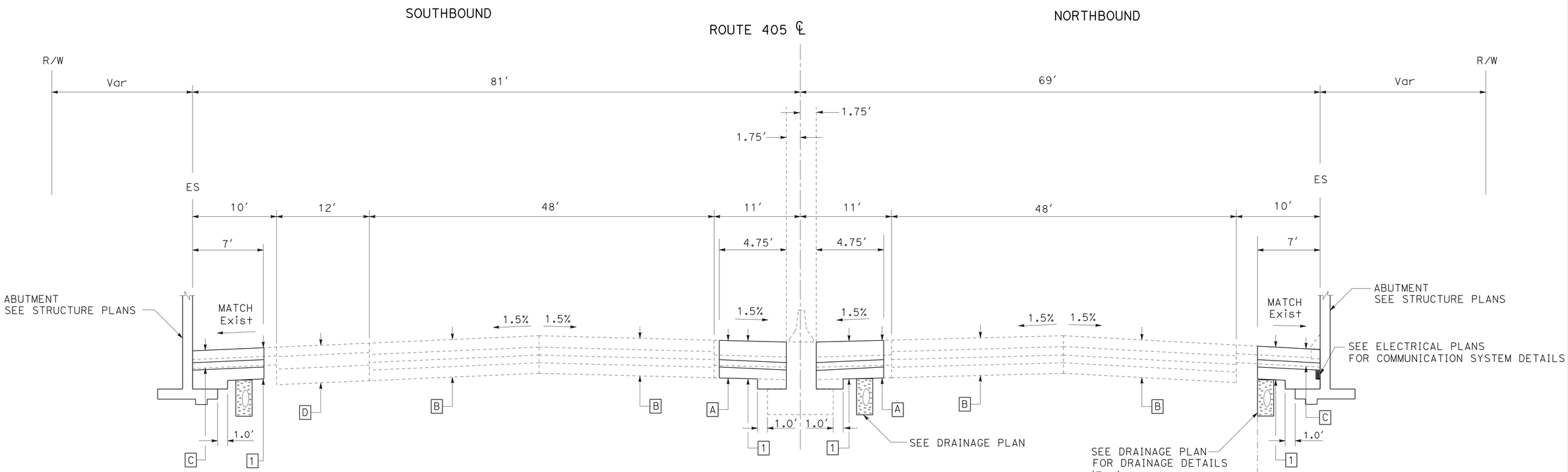


Sta 227+40.00 TO Sta 228+41.79

Sta 227+50.00 TO Sta 229+00.00

Sta 228+35.00 TO Sta 229+46.22

**ROUTE 405**

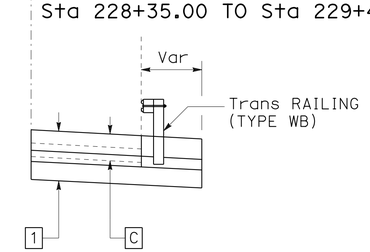


Sta 228+10.98 TO Sta 228+35.00

TYPICAL STRUCTURAL SECTION

1 — 1.05′ JOINTED PLAIN Conc PAVEMENT (JPCP)
0.50′ LEAN Conc BASE (LCB)
0.70′ CLASS 3 AGGREGATE BASE (AB)
& Var

2 — 0.15′ COLD PLANE ASPHALT CONCRETE PAVEMENT
0.15′ HOT MIX ASPHALT (TYPE A)

3 — 0.60′ HOT MIX ASPHALT (TYPE A)
0.90′ CLASS 2 AGGREGATE BASE (AB)
1.00′ CLASS 3 AGGREGATE BASE (AB)

EXISTING STRUCTURAL SECTION

A — 0.85′ PCC
0.50′ LCB
0.70′ AB CL3

B — 0.67′ PCC
0.33′ CTB
0.33′ AB
0.67′ ASB

C — 0.30′ AC (TYPE B)
0.40′ AC BASE

D — 0.33′ AC
0.67′ CTB
1.00′ ASB

E — 0.25′ AC
0.50′ CTB
1.00′ ASB

# TYPICAL CROSS SECTIONS

NO SCALE

**X-1**

REVISED BY | DATE REVISED
SOLANGE PRADO | MAI P. BUI
CALCULATED-DESIGNED BY | CHECKED BY
FUNCTIONAL SUPERVISOR | SIMON KUO
STATE OF CALIFORNIA - DEPARTMENT OF TRANSPORTATION
Caltrans® OFFICE OF DESIGN A

LAST REVISION 00-00-00 | DATE PLOTTED => 20-AUG-2013 | TIME PLOTTED => 10:13

| Dist | COUNTY | ROUTE | POST MILES TOTAL PROJECT | SHEET No. | TOTAL SHEETS |
|---|---|---|---|---|---|
| 07 | LA | 405 | 4.3 | 2A | 89 |

REGISTERED CIVIL ENGINEER 01-30-13 DATE

PLANS APPROVAL DATE 04-08-13

REGISTERED PROFESSIONAL ENGINEER SIMON KUO No. C52465 Exp. 12-31-14 CIVIL STATE OF CALIFORNIA

*THE STATE OF CALIFORNIA OR ITS OFFICERS OR AGENTS SHALL NOT BE RESPONSIBLE FOR THE ACCURACY OR COMPLETENESS OF SCANNED COPIES OF THIS PLAN SHEET.*

4

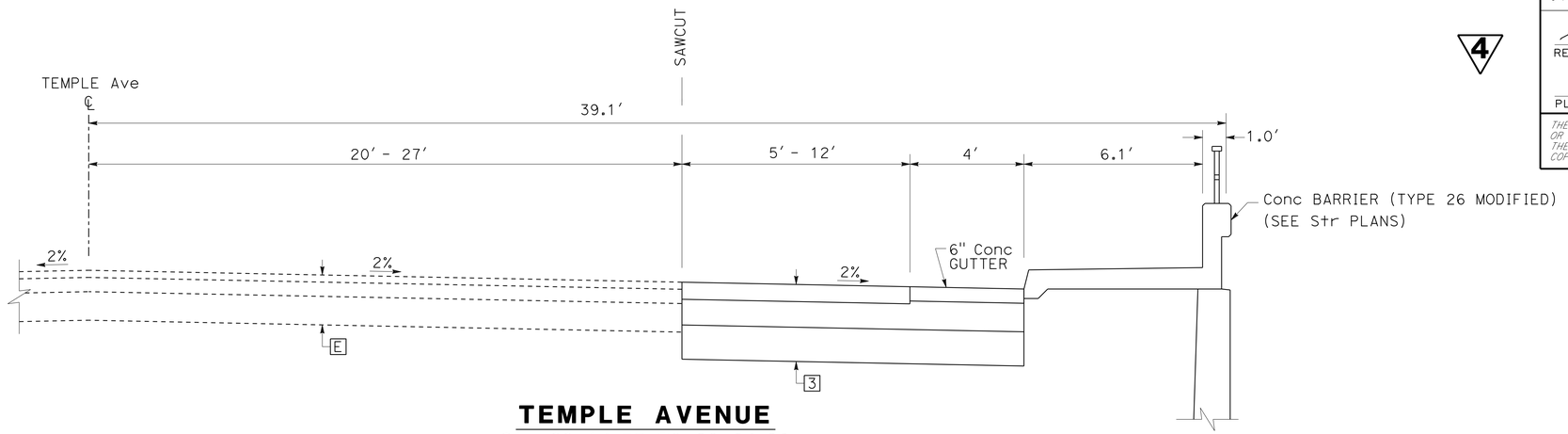


**TEMPLE AVENUE**
Sta 29+14.55 TO 29+64.20
Sta 31+57.19 TO 31+84.19

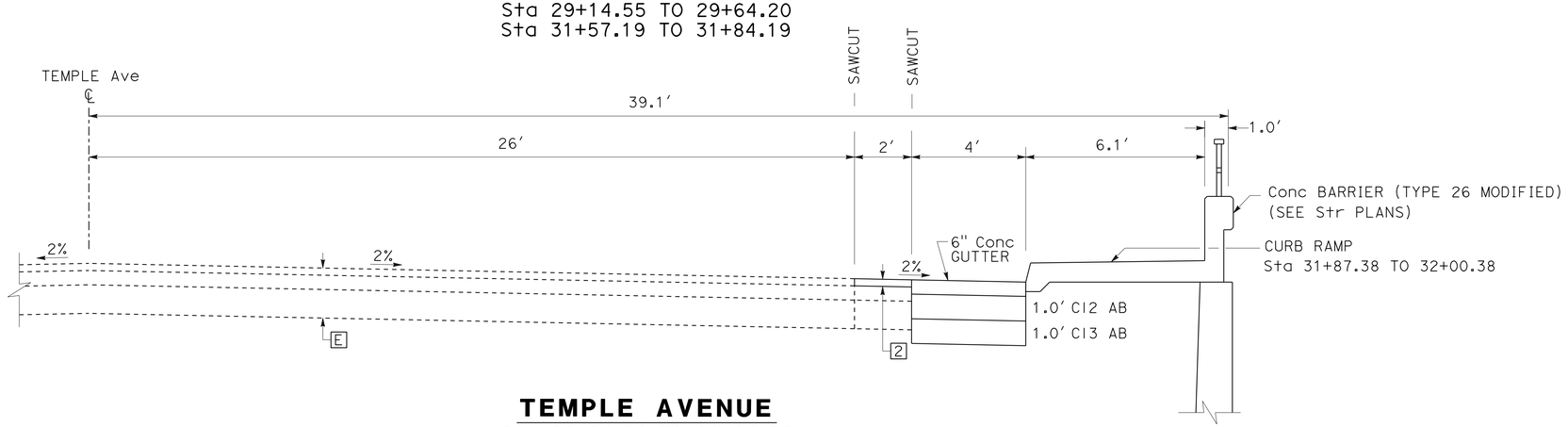


**TEMPLE AVENUE**
Sta 28+84.94 TO 29+14.55
Sta 31+84.19 TO 32+00.38

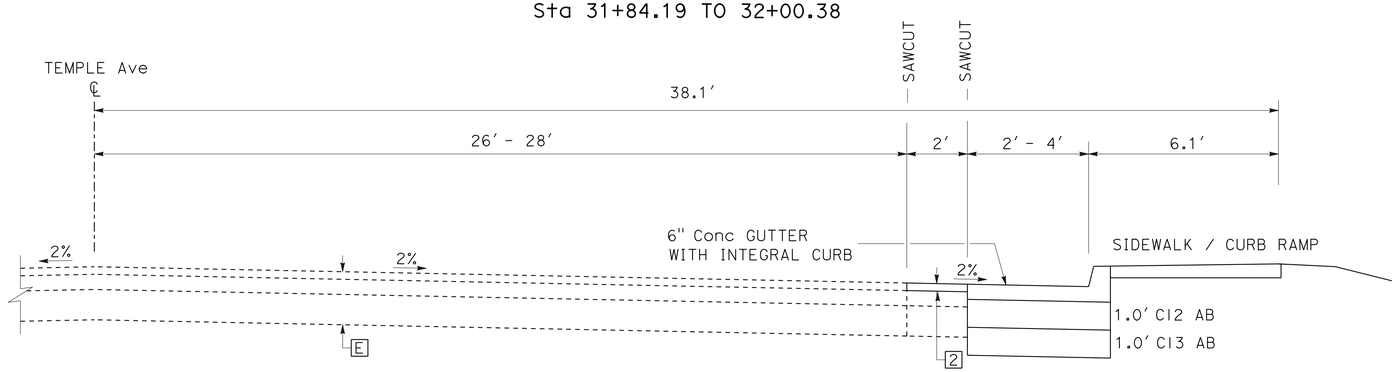


**TEMPLE AVENUE**
Sta 28+56.86 TO 28+84.94

4 **ADDED PER ADDENDUM No. 4 DATED AUGUST 21, 2013**

# TYPICAL CROSS SECTIONS

NO SCALE

**X-2**

STATE OF CALIFORNIA - DEPARTMENT OF TRANSPORTATION
Caltrans® OFFICE OF DESIGN A

FUNCTIONAL SUPERVISOR: SIMON KUO
CALCULATED-DESIGNED BY: SOLANGE PRADO
CHECKED BY: SIMON KUO
REVISED BY
DATE REVISED

LAST REVISION 00-00-00
DATE PLOTTED => 20-AUG-2013
TIME PLOTTED => 10:13

| Dist | COUNTY | ROUTE | POST MILES TOTAL PROJECT | SHEET No. | TOTAL SHEETS |
|---|---|---|---|---|---|
| 07 | LA | 405 | 4.3 | 3 | 89 |

REGISTERED CIVIL ENGINEER 01-30-13 DATE

04-08-13
PLANS APPROVAL DATE

REGISTERED PROFESSIONAL ENGINEER SIMON KUO No. C52465 Exp. 12-31-14 CIVIL STATE OF CALIFORNIA

*THE STATE OF CALIFORNIA OR ITS OFFICERS OR AGENTS SHALL NOT BE RESPONSIBLE FOR THE ACCURACY OR COMPLETENESS OF SCANNED COPIES OF THIS PLAN SHEET.*

NOTE:

1. FOR ACCURATE RIGHT OF WAY DATA, CONTACT RIGHT OF WAY ENGINEERING AT THE DISTRICT OFFICE.

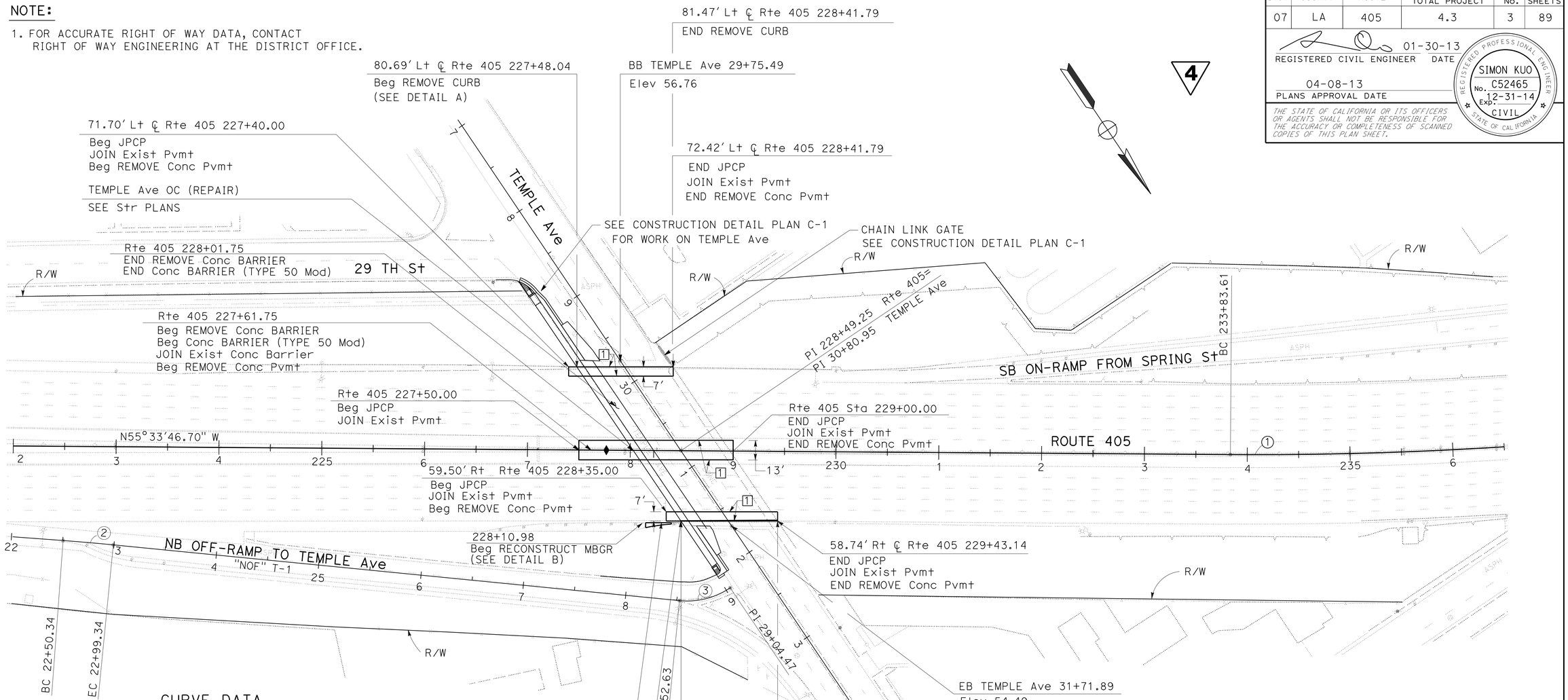


## CURVE DATA

| No. ⓧ | R | Δ | T | L |
|---|---|---|---|---|
| 1 | 3750.00' | 4°18'41" | 141.16' | 282.18' |
| 2 | 1999.97' | 1°24'14" | 24.50' | 49.00' |
| 3 | 75.00' | 39°36'10" | 27.00' | 51.84' |

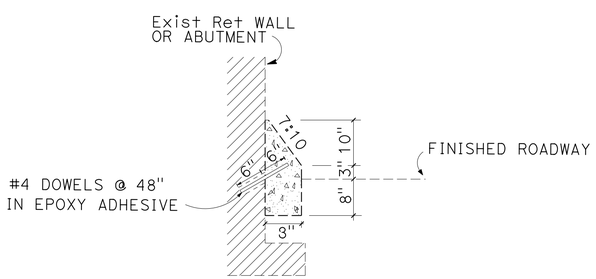


CURB TYPE 'J' AT Exist Ret WALLS AND BRIDGE ABUTMENTS

**DETAIL A**
NO SCALE

**DETAIL B**
NO SCALE

**LAYOUT**
SCALE: 1" = 50'

4 **REPLACED PER ADDENDUM No. 4 DATED AUGUST 21, 2013**

**L-1**

STATE OF CALIFORNIA - DEPARTMENT OF TRANSPORTATION
Caltrans OFFICE OF DESIGN A
FUNCTIONAL SUPERVISOR: SIMON KUO
CALCULATED-DESIGNED BY: SOLANGE PRADO
CHECKED BY: MAI P. BUI
REVISED BY / DATE REVISED

LAST REVISION 00-00-00 DATE PLOTTED => 20-AUG-2013 TIME PLOTTED => 10:13

| Dist | COUNTY | ROUTE | POST MILES TOTAL PROJECT | SHEET No. | TOTAL SHEETS |
|---|---|---|---|---|---|
| 07 | LA | 405 | 4.3 | 4 | 89 |

REGISTERED CIVIL ENGINEER 01-30-13 DATE

04-08-13
PLANS APPROVAL DATE

REGISTERED PROFESSIONAL ENGINEER SIMON KUO No. C52465 Exp. 12-31-14 CIVIL STATE OF CALIFORNIA

*THE STATE OF CALIFORNIA OR ITS OFFICERS OR AGENTS SHALL NOT BE RESPONSIBLE FOR THE ACCURACY OR COMPLETENESS OF SCANNED COPIES OF THIS PLAN SHEET.*

4

## CURVE DATA

| No. ⊗ | R | Δ | T | L |
|---|---|---|---|---|
| 1 | 35.00′ | 34°20′20″ | 10.81′ | 20.98′ |
| 2 | 5.00′ | 102°41′56″ | 6.25′ | 8.96′ |

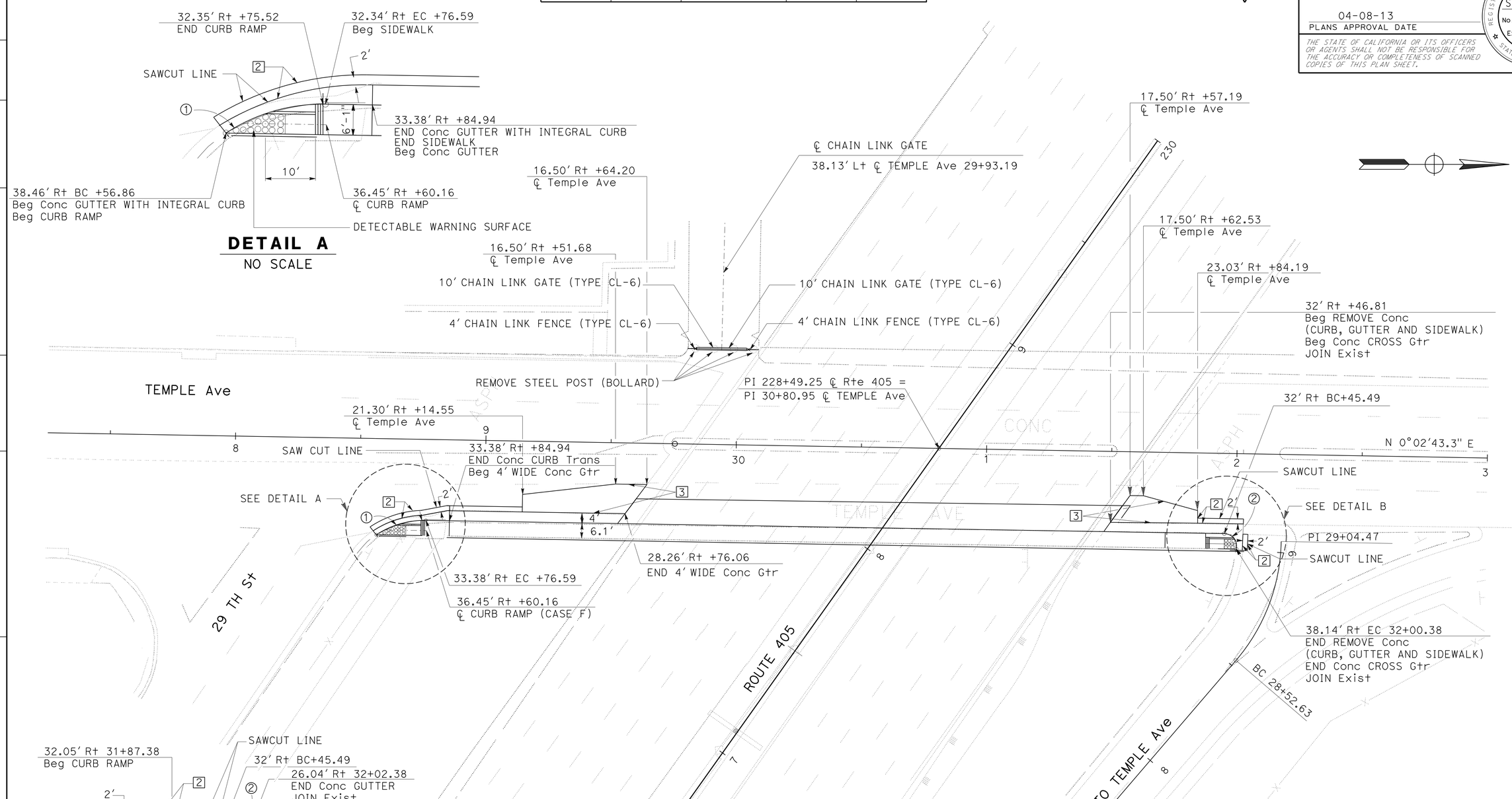


4 REPLACED PER ADDENDUM No. 4 DATED AUGUST 21, 2013

# CONSTRUCTION DETAILS

SCALE: 1″ = 20′

C-1

STATE OF CALIFORNIA - DEPARTMENT OF TRANSPORTATION
Caltrans® OFFICE OF DESIGN A

FUNCTIONAL SUPERVISOR: SIMON KUO
CALCULATED-DESIGNED BY: SOLANGE PRADO
CHECKED BY: MAI P. BUI
REVISED BY
DATE REVISED

LAST REVISION DATE PLOTTED => 20-AUG-2013
00-00-00 TIME PLOTTED => 10:13

| Dist | COUNTY | ROUTE | POST MILES TOTAL PROJECT | SHEET No. | TOTAL SHEETS |
|---|---|---|---|---|---|
| 07 | LA | 405 | 4.3 | 13 | 89 |

REGISTERED CIVIL ENGINEER 01-31-13 DATE

PLANS APPROVAL DATE 04-08-13

REGISTERED PROFESSIONAL ENGINEER SIMON KUO No. C52465 Exp. 12-31-14 CIVIL STATE OF CALIFORNIA

*THE STATE OF CALIFORNIA OR ITS OFFICERS OR AGENTS SHALL NOT BE RESPONSIBLE FOR THE ACCURACY OR COMPLETENESS OF SCANNED COPIES OF THIS PLAN SHEET.*

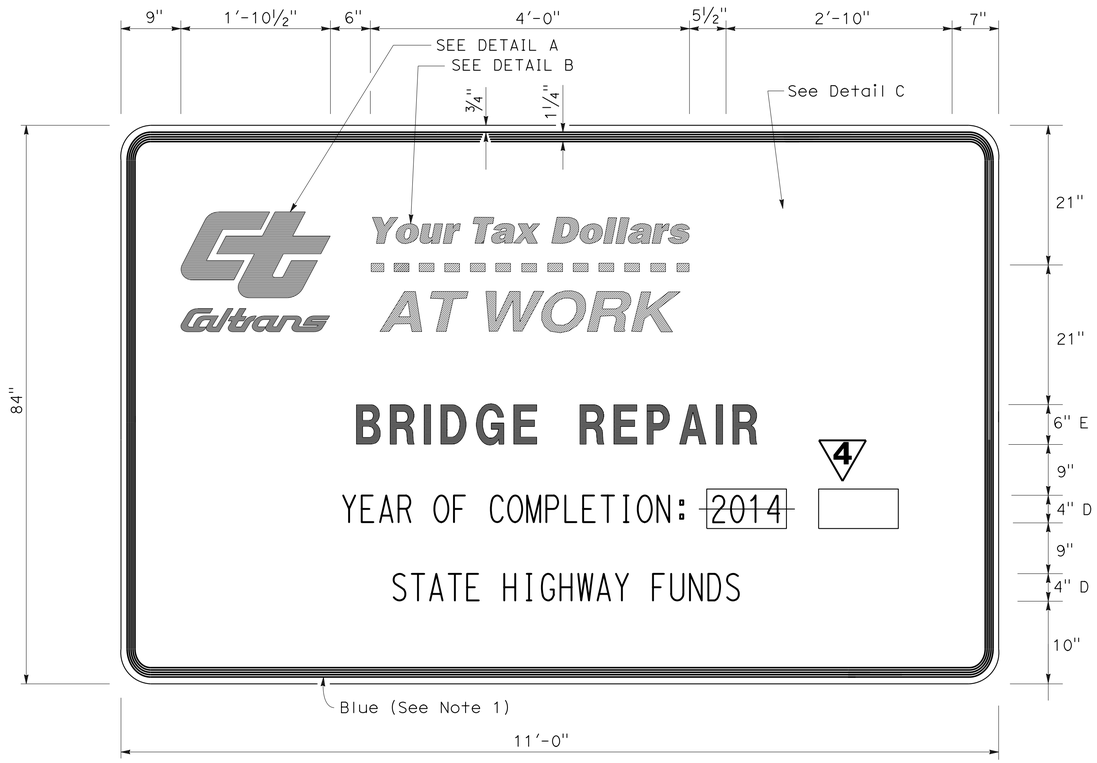


**4 REPLACED PER ADDENDUM No. 4 DATED AUGUST 21, 2013**

**CONSTRUCTION PROJECT FUNDING**

**IDENTIFICATION SIGN**

NOTES:

1. Except as otherwise shown, the legend of sign shall be black on a white background (non-reflective).
2. The border of the sign and detail "B" shall be blue (non-reflective).
3. The diamond in detail "C" shall be blue for the background of message, 'SLOW FOR THE CONE ZONE", and white background for the orange cones. The color and type of font for the "SLOW FOR THE CONE ZONE" message shall be :"SLOW" white D; "FOR THE" white D; 'CONE" orange Arial font; "ZONE" white Arial font.
4. Sign panels shall comply with Standard Plans S93 and S94.

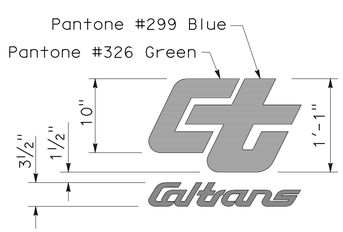


**DETAIL A**

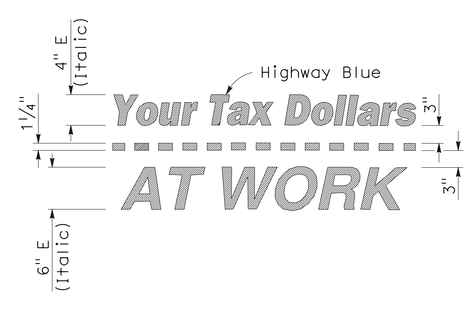


**DETAIL B**

(See Note 2)

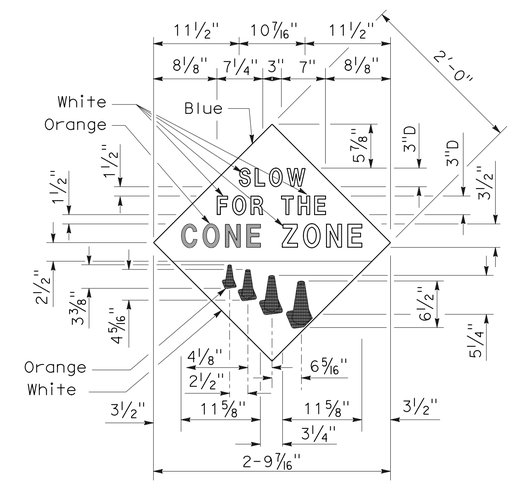


**DETAIL C**

(See Note 3)

*APPROVED FOR CONSTRUCTION AREA SIGN WORK ONLY*

**CONSTRUCTION AREA SIGNS**

NO SCALE

**CS-2**

STATE OF CALIFORNIA - DEPARTMENT OF TRANSPORTATION
Caltrans® OFFICE OF DESIGN A

FUNCTIONAL SUPERVISOR: SIMON KUO
CALCULATED-DESIGNED BY: SOLANGE PRADO
CHECKED BY: MAI P. BUI
REVISED BY
DATE REVISED

LAST REVISION 00-00-00
DATE PLOTTED => 20-AUG-2013
TIME PLOTTED => 10:13

| Dist | COUNTY | ROUTE | POST MILES TOTAL PROJECT | SHEET No. | TOTAL SHEETS |
|---|---|---|---|---|---|
| 07 | LA | 405 | 4.3 | 17 | 89 |

REGISTERED CIVIL ENGINEER 01-03-13 DATE

PLANS APPROVAL DATE 04-08-13

REGISTERED PROFESSIONAL ENGINEER SIMON KUO No. C52465 Exp. 12-31-14 CIVIL STATE OF CALIFORNIA

*THE STATE OF CALIFORNIA OR ITS OFFICERS OR AGENTS SHALL NOT BE RESPONSIBLE FOR THE ACCURACY OR COMPLETENESS OF SCANNED COPIES OF THIS PLAN SHEET.*

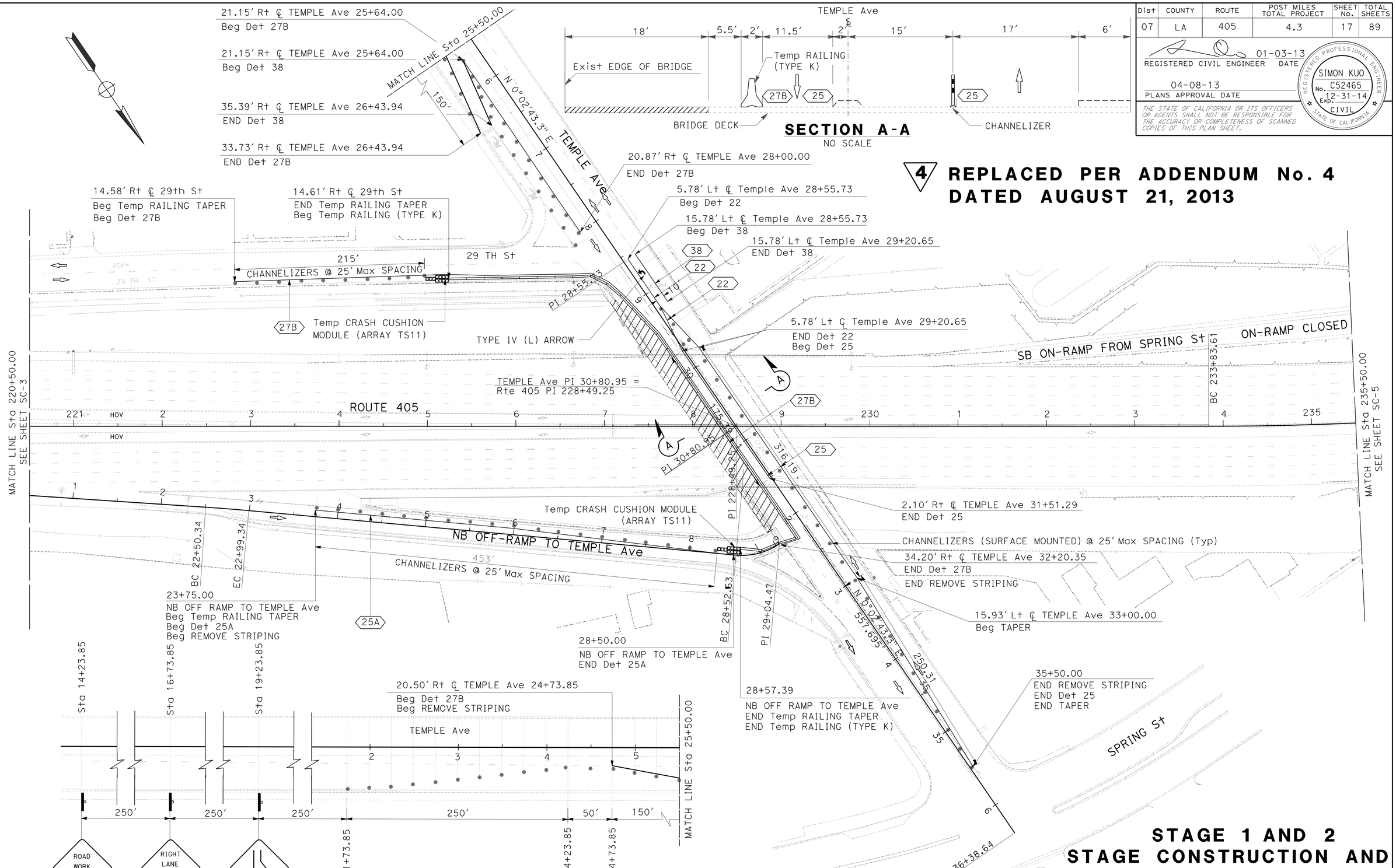


# STAGE 1 AND 2 STAGE CONSTRUCTION AND TRAFFIC HANDLING PLAN

SCALE: 1" = 50'

**SC-4**

*APPROVED FOR STAGE CONSTRUCTION AND TRAFFIC HANDLING WORK ONLY*

STATE OF CALIFORNIA - DEPARTMENT OF TRANSPORTATION

Caltrans® OFFICE OF DESIGN A

FUNCTIONAL SUPERVISOR: SIMON KUO

CALCULATED-DESIGNED BY: SOLANGE PRADO

CHECKED BY: MAI P. BUI

REVISED BY | DATE REVISED

LAST REVISION 00-00-00 | DATE PLOTTED => 20-AUG-2013 | TIME PLOTTED => 10:13

BORDER LAST REVISED 7/2/2010 | USERNAME => s125624 | DGN FILE => 727830ma004.dgn | RELATIVE BORDER SCALE IS IN INCHES 0 1 2 3 | UNIT 1798 | PROJECT NUMBER & PHASE 07000005391

| Dist | COUNTY | ROUTE | POST MILES TOTAL PROJECT | SHEET No. | TOTAL SHEETS |
|---|---|---|---|---|---|
| 07 | LA | 405 | 4.3 | 22 | 89 |

REGISTERED CIVIL ENGINEER 01-30-13 DATE

04-08-13
PLANS APPROVAL DATE

REGISTERED PROFESSIONAL ENGINEER SIMON KUO No. C52465 Exp. 12-31-14 CIVIL STATE OF CALIFORNIA

*THE STATE OF CALIFORNIA OR ITS OFFICERS OR AGENTS SHALL NOT BE RESPONSIBLE FOR THE ACCURACY OR COMPLETENESS OF SCANNED COPIES OF THIS PLAN SHEET.*

# TRAFFIC HANDLING QUANTITIES

| SHEET | LOCATION | STATION | DETAIL No PAVEMENT MARKING | PAVEMENT MARKER NON-REFLECTIVE TYPE A | PAVEMENT MARKER RETROREFLECTIVE TYPE C | PAVEMENT MARKER RETROREFLECTIVE TYPE G | PAVEMENT MARKER RETROREFLECTIVE TYPE H | PAVEMENT MARKER RETROREFLECTIVE TYPE D | PAINT TRAFFIC STRIPE (2-COAT) 4" | PAINT TRAFFIC STRIPE (2-COAT) 8" | PAINT PAVEMENT MARKING (2-COAT) WORDS | PAINT PAVEMENT MARKING (2-COAT) SYMBOLS | REMOVE THERMOPLASTIC PAVEMENT MARKING "SIGNAL" | REMOVE THERMOPLASTIC PAVEMENT MARKING "AHEAD" | REMOVE THERMOPLASTIC PAVEMENT MARKING TYPE III (L) (R) ARROW | REMOVE THERMOPLASTIC PAVEMENT MARKING LIMIT LINE | REMOVE PAVEMENT MARKER NON-REFLECTIVE TYPE A | REMOVE PAVEMENT MARKER TYPE G | REMOVE PAVEMENT MARKER TYPE H | REMOVE PAVEMENT MARKER TYPE D | REMOVE THERMOPLASTIC TRAFFIC STRIPE | REMOVE YELLOW THERMOPLASTIC TRAFFIC STRIPE (HAZARDOUS WASTE) | TEMPORARY RAILING (TYPE K) | TEMPORARY CRASH CUSHION MODULE | CHANNELIZER (SURFACE MOUNTED) | TYPE II BARRICADE | TEMPORARY TERMINAL SECTION (TYPE K) | REMARKS |
|---|---|---|---|---|---|---|---|---|---|---|---|---|---|---|---|---|---|---|---|---|---|---|---|---|---|---|---|---|
| | | | | EA | EA | EA | EA | EA | LF | LF | SQFT | SQFT | SQFT | SQFT | SQFT | SQFT | EA | EA | EA | EA | LF | LF | LF | EA | EA | EA | EA | |
| SC-1 | NB Rte 405 | 205+00 TO 206+50 | 37 | | | 10 | | | | 300* | | | | | | | | | | | | | | | | | | STAGE 1 |
| | NB Rte 405 | 205+00 TO 206+50 | 13 Mod | | | | | | | | | | | | | | 14 | 4 | | | 42 | | | | | | | |
| SC-2 | NB Rte 405 | 206+50 TO 217+75 | 37 | | 8 | 68 | | | | 2,250* | | | | | | | | | | | | | | | | | | |
| | NB Rte 405 | 217+75 TO 220+50 | 38B | | | 24 | | | | 550* | | | | | | | | | | | | | | | | | | |
| | NB Rte 405 | 206+50 TO 220+50 | 13 Mod | | | | | | | | | | | | | | 115 | 29 | | | 348 | | | | | | | |
| SC-3 | NB Rte 405 | 220+50 TO 221+73 | 36 | | | 11 | | | | 492* | | | | | | | | | | | | | | | | | | |
| | NB Rte 405 | 221+73 TO 230+41 | 27B | | | | | | 868 | | | | | | | | | | | | | | | | | | | |
| | NB Rte 405 | 226+41 TO 230+41 | | | | | | | | | | | | | | | | | | | | | 400 | 14 | 19 | | | |
| | NB Rte 405 | 220+50 TO 230+41 | 13 Mod | | | | | | | | | | | | | | 35 | 48 | | | 348 | | | | | | | |
| | SB Rte 405 | 224+00 TO 229+91 | 27B | | | | | | 591 | | | | | | | | | | | | | | | | | | | |
| | SB Rte 405 | 225+92 TO 231+75 | | | | | | | | | | | | | | | | | | | | | 580 | | | | | |
| SC-4 | NB OFF-RAMP | 23+75 TO 28+50 | 25A | | | | 20 | | 475 | | | | | | | | | | | | | | | 11 | 20 | | | |
| | Temple Ave | 24+74 TO 35+50 | 27B | | | | | | 836 | | | 15 | | | | | | | | | | | 440 ~~400~~ | 4 | 67 | | | |
| | Temple Ave | 28+56 TO 29+21 | 22 | | | | | 17 | 370 | | | | | | | | | | | | | | | | | | | |
| | Temple Ave | 25+64 TO 26+44 | 38 | | | 5 | | | | 160* | | | | | | | | | | | | | | | | | | |
| | Temple Ave | 28+56 TO 29+21 | 38 | | | 4 | | | | 130* | | | | | | | | 3 | | | 130 | | | | | | | |
| | Temple Ave | 29+21 TO 35+50 | 25 | | | | 19 | | 861 | | | | | | | | | | 8 | | | 344 | | | | | | |
| | 29th St | | 27B | | | | | | 395 | | | | | | | | | | | | | | 160 ~~140~~ | 11 | 10 | | | |
| | NB OFF-RAMP | 23+75 TO 28+53 | 12 | | | | | | | | | | 64 | 62 | 168 | 50 | | 7 | | | 134 | | | | | | | |
| | Temple Ave | 24+74 TO 35+50 | 12 | | | | | | | | | | | | | | | 30 | | | 360 | | | | | | | |
| | Temple Ave | 28+56 TO 31+52 | 22 | | | | | | | | | | | | | | | | | 30 | | 329 | | | | | | |
| SC-5 | Spring St | Rte 405 238+89 TO 244+53 | 27B | | | | | | 598 | | | | | | | | | | | | | | | | | | | STAGE 2 |
| | Spring St | | | | | | | | | | | | | | | | | | | | | | 220 | 14 | 21 | 5 | | |
| SC-8 | NB Rte 405 | 223+60 TO 232+21 | 27B | | | | | | 861 | | | | | | | | | | | | 861 | | | | | | | |
| | NB Rte 405 | 223+60 TO 232+21 | 13 Mod | 215 | | 54 | | | 2,583 | | | | | | | | 215 | 55 | | | 646 | | | | | | | |
| | NB Rte 405 | 223+60 TO 232+21 | HOV BUFFER | | | | 38 | | 1,722 | | | | | | | | | | 38 | | | 1,722 | | | | | | |
| | NB Rte 405 | 223+60 TO 232+21 | 25 | | | | 19 | | 861 | | | | | | | | | | 19 | | | 861 | | | | | | |
| | NB Rte 405 | 226+22 TO 228+62 | | | | | | | | | | | | | | | | | | | | | 240 | | 21 | | | |
| | SB Rte 405 | 224+01 TO 231+65 | 27B | | | | | | 764 | | | | | | | | | | | | 764 | | | | | | 2 | |
| | SB Rte 405 | 224+01 TO 231+65 | 13 Mod | 255 | | 64 | | | 3,056 | | | | | | | | 255 | 65 | | | 764 | | | | | | | |
| | SB Rte 405 | 224+01 TO 231+65 | HOV BUFFER | | | 8 | 25 | | 1,198 | 329* | 46 | 11 | | | | | | 8 | 25 | | | 1,198 | | | | | | |
| | SB Rte 405 | 224+01 TO 231+65 | 25 | | | | 17 | | 764 | | | | | | | | | | 17 | | | 764 | | | | | | |
| | SB Rte 405 | 227+61 TO 230+00 | | | | | | | | | | | | | | | | | | | | | 240 | | | | | |
| SUBTOTAL | | | | 470 | 8 | 248 | 138 | 17 | 16,803 | 4,211 | 46 | 26 | 64 | 62 | 168 | 50 | 634 | 249 | 107 | 30 | 4,397 | 5,218 | 2,280 ~~2,220~~ | 50 | 158 | 5 | 2 | |
| SHEET TOTAL | | | | 470 | 411 | | | | 21,014 | | 72 | | 344 | | | | 1,020 | | | | 4,397 | 5,218 | 2,280 ~~2,220~~ | 50 | 158 | 5 | 2 | |

* 8" WIDE STRIPES ARE MEASURED AS 2 TRAFFIC STRIPES.

4 REPLACED PER ADDENDUM No. 4 DATED AUGUST 21, 2013

4 STAGE CONSTRUCTION AND TRAFFIC HANDLING QUANTITIES

SCQ-1

STATE OF CALIFORNIA - DEPARTMENT OF TRANSPORTATION
Caltrans® OFFICE OF DESIGN A

FUNCTIONAL SUPERVISOR: SIMON KUO
CALCULATED-DESIGNED BY: SOLANGE PRADO
CHECKED BY: MAI P. BUI
REVISED BY
DATE REVISED

LAST REVISION 00-00-00
DATE PLOTTED => 20-AUG-2013
TIME PLOTTED => 10:13

| Dist | COUNTY | ROUTE | POST MILES TOTAL PROJECT | SHEET No. | TOTAL SHEETS |
|---|---|---|---|---|---|
| 07 | LA | 405 | 4.3 | 24 | 89 |

R.M. Mishreki 9-4-12
REGISTERED CIVIL ENGINEER DATE

04-08-13
PLANS APPROVAL DATE

REGISTERED PROFESSIONAL ENGINEER R.M. MISHREKI No. C68484 Exp. 9-30-13 CIVIL STATE OF CALIFORNIA

*THE STATE OF CALIFORNIA OR ITS OFFICERS OR AGENTS SHALL NOT BE RESPONSIBLE FOR THE ACCURACY OR COMPLETENESS OF SCANNED COPIES OF THIS PLAN SHEET.*

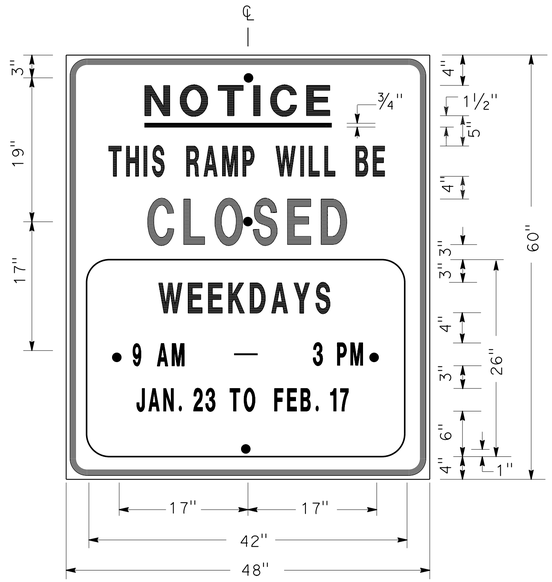


SIGN SP-1

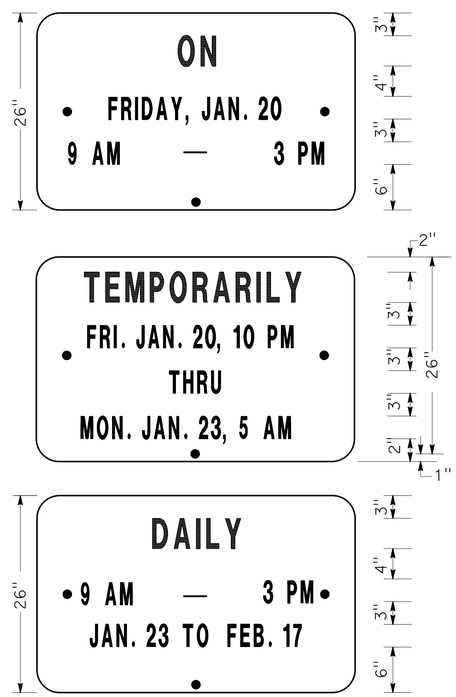


ALTERNATE OVERLAY PANELS (TYPICAL)

## SPECIAL ADVANCE NOTICE PUBLICITY SIGN

NOTES: (SIGN SP-1)

1. LETTERS AND BORDER SHALL BE BLACK ON REFLECTORIZED ORANGE BACKGROUND.
2. BOLT HOLES SHALL BE 3/8" DIAMETER.
3. BASE MATERIAL SHALL BE ALUMINUM (MINIMUM 0.06").
4. SIGNS SHALL BE MOUNTED WITH BOTTOMS OF SIGNS A MINIMUM OF 7' ABOVE GROUND.

| SIZE | BORDER WIDTH | MARGIN WIDTH | LETTER SIZE | | | | | CORNER RADIUS |
|---|---|---|---|---|---|---|---|---|
| | | | LINE 1 | LINE 2* | LINE 3 | LINE 4 | LINE 5, 6, & 7* | |
| 48"x60" | 1 1/4" | 3/4" | 4E | 4D | 6E | 4D | | 3" |
| 42"x26" | OVERLAY | | | | | | 3D | 1 1/2" |
| * CONDENSED SPACING IF NECESSARY | | | | | | | | |

SIGN SP-4

NOTES: (SIGN SP-4)

1. LETTERS - 6" SERIES C.
2. LETTERS AND BORDER SHALL BE BLACK ON REFLECTORIZED WHITE BACKGROUND.
3. BOLT HOLES SHALL BE 3/8" DIAMETER.
4. BASE MATERIAL SHALL BE ALUMINUM (MINIMUM 0.06").
5. SIGNS SHALL BE PLACED AT RAMP ENTRANCES IN ADDITION TO SIGNS POSTED IN ACCORDANCE WITH ~~STANDARD PLAN T14.~~ PLAN SHEET TCS-5

4

## SPECIAL SIGN FOR ENTRANCE RAMP CLOSURES

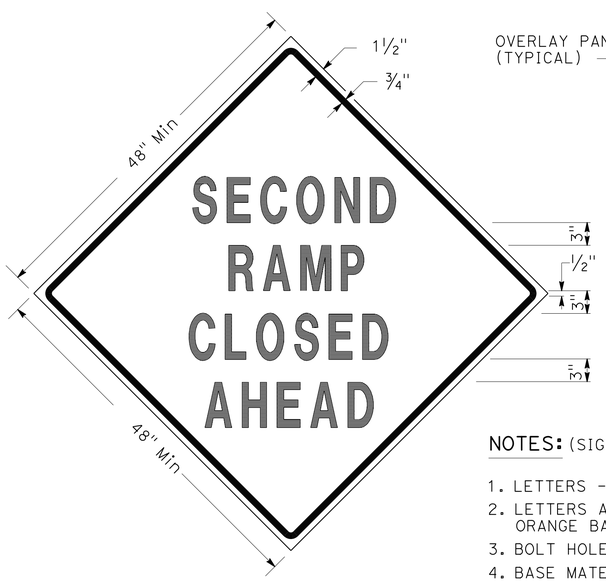


SIGN SP-3

SIGN SP-5

NOTES: (SIGNS SP-3 & SP-5)

1. LETTERS - 6" SERIES D.
2. LETTERS AND BORDER SHALL BE BLACK ON REFLECTORIZED ORANGE BACKGROUND.
3. BOLT HOLES SHALL BE 3/8" DIAMETER.
4. BASE MATERIAL SHALL BE ALUMINUM (MINIMUM 0.06").
5. SIGNS SHALL BE MOUNTED WITH BOTTOMS OF SIGNS A MINIMUM OF 7' ABOVE GROUND.
6. SIGN SP-5 SHALL BE USED IF THE OFF-RAMP TO BE CLOSED FOLLOWS A FREEWAY OFF-CONNECTOR.

## SPECIAL SIGNS FOR EXIT RAMP CLOSURES

4 **REPLACED PER ADDENDUM No. 4 DATED AUGUST 21, 2013**

# TRAFFIC HANDLING DETAILS

## TRAFFIC CONTROL SYSTEM FOR RAMP CLOSURES, DETOUR SIGNS, AND MISCELLANEOUS DETAILS

SHEET 1 OF 2

NO SCALE

**THD-1**

STATE OF CALIFORNIA - DEPARTMENT OF TRANSPORTATION
Caltrans DTM

FUNCTIONAL SUPERVISOR: DENIS KATAYAMA
CALCULATED-DESIGNED BY: ALBERT K YU
CHECKED BY: JOCELYN C CHIANG
REVISED BY: JC
DATE REVISED: 3/12

LAST REVISION: 00-00-00
DATE PLOTTED => 20-AUG-2013
TIME PLOTTED => 10:13

| Dist | COUNTY | ROUTE | POST MILES TOTAL PROJECT | SHEET No. | TOTAL SHEETS |
|---|---|---|---|---|---|
| 07 | LA | 405 | 4.3 | 27 | 89 |

R.M. Mishreki 9-4-12
REGISTERED CIVIL ENGINEER DATE

04-08-13
PLANS APPROVAL DATE

REGISTERED PROFESSIONAL ENGINEER R.M. MISHREKI No. C68484 Exp. 9-30-13 CIVIL STATE OF CALIFORNIA

*THE STATE OF CALIFORNIA OR ITS OFFICERS OR AGENTS SHALL NOT BE RESPONSIBLE FOR THE ACCURACY OR COMPLETENESS OF SCANNED COPIES OF THIS PLAN SHEET.*

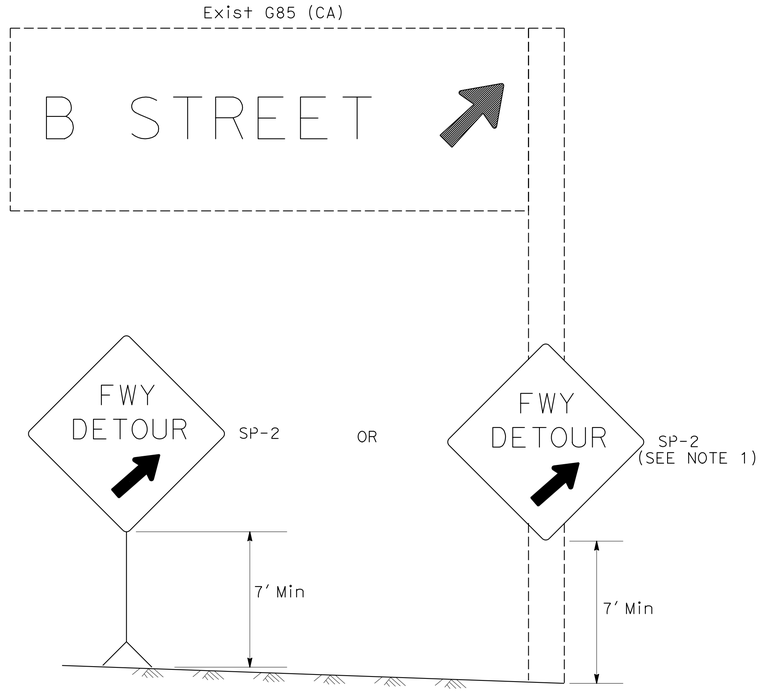


DETAIL A (SEE NOTE 3)

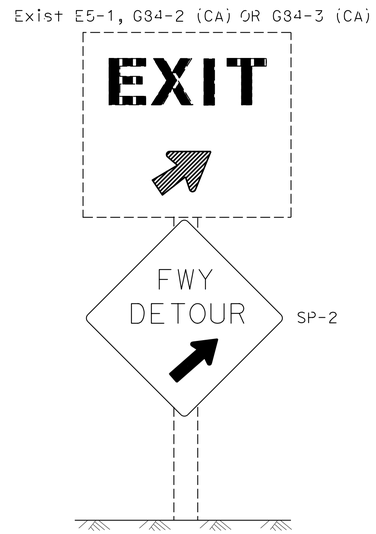


DETAIL B (SEE NOTE 3)

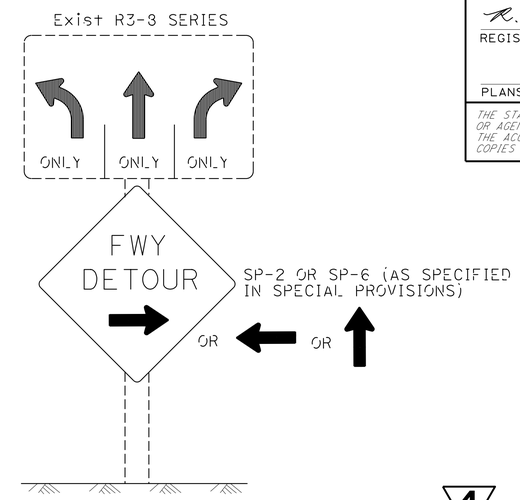


DETAIL C (SEE NOTES 4, 5, AND 6)

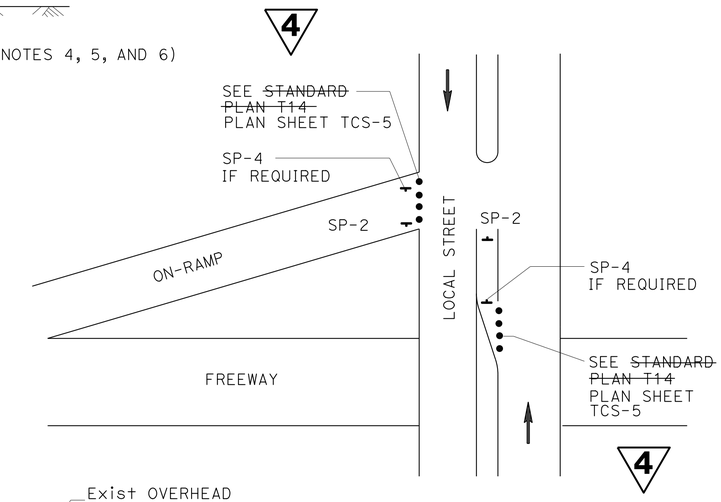


DETAIL E

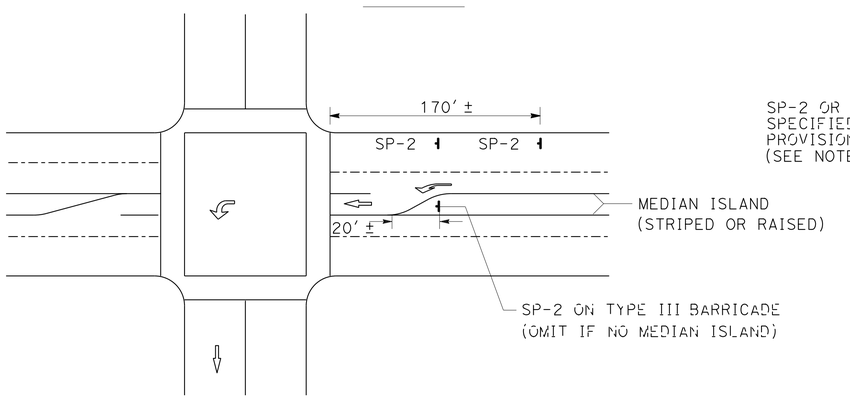


DETAIL D

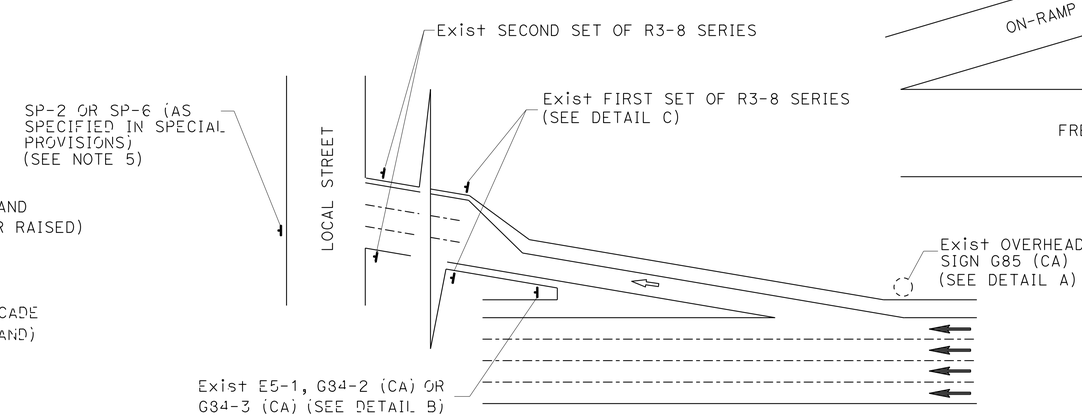


## TYPICAL DETOUR SIGN INSTALLATION AT OFF-RAMP

**4 REPLACED PER ADDENDUM No. 4 DATED AUGUST 21, 2013**

LEGEND

- CONE
- PORTABLE SIGN
- DIRECTION OF TRAVEL
- DETOUR DIRECTION
- EXISTING OVERHEAD SIGN

NOTES: SIGN SP-2

1. SP-2 SIGNS MAY BE STRAPPED ON EXISTING ELECTROLIER, SIGNAL POST OR SIGN POST.
2. SP-2 SIGNS SHALL NOT BE INSTALLED ON BARRICADES EXCEPT AS OTHERWISE SHOWN.
3. OMIT DETAILS A AND B FOR FULL FREEWAY CLOSURES.
4. SEE TRAFFIC HANDLING DETAILS-TRAFFIC CONTROL SYSTEM FOR RAMP CLOSURES, DETOUR SIGNS, AND MISCELLANEOUS DETAILS PLAN SHEET 2 OF 2 FOR SP-6 SIGN DETAILS.
5. IF R3-8 SERIES SIGNS ARE NOT PRESENT AT THE OFF-RAMP, SP-2 OR SP-6 SIGNS SHALL BE FASTENED ONTO EXISTING ELECTROLIER, SIGNAL POST OR SIGN POST.
6. EXCEPT FOR DETAILS A & B, OMIT SP-2 SIGNS IF RAMP HAS MANDATORY SINGLE MOVE.

SIGN CODE LEGEND

XXYY-Y: FEDERAL SIGN CODE PER MANUAL ON UNIFORM TRAFFIC CONTROL DEVICES (MUTCD)

XXYY-Y (CA): CALIFORNIA SIGN CODE PER CALIFORNIA MUTCD

# TRAFFIC HANDLING DETAILS
## TRAFFIC CONTROL SYSTEM FOR DETOUR SIGN INSTALLATION ALONG DESIGNATED DETOUR ROUTE
## SHEET 2 OF 3

NO SCALE

**THD-4**

STATE OF CALIFORNIA - DEPARTMENT OF TRANSPORTATION
Caltrans DTM

FUNCTIONAL SUPERVISOR: DENIS KATAYAMA
CALCULATED-DESIGNED BY: ALBERT K YU
CHECKED BY: JOCELYN C CHIANG
REVISED BY: JC
DATE REVISED: 3/12

LAST REVISION 00-00-00 DATE PLOTTED => 20-AUG-2013 TIME PLOTTED => 10:13

| Dist | COUNTY | ROUTE | POST MILES TOTAL PROJECT | SHEET No. | TOTAL SHEETS |
|---|---|---|---|---|---|
| 07 | LA | 405 | 4.3 | 30 | 89 |

R.M. Mishreki 9-4-12
REGISTERED CIVIL ENGINEER DATE

04-08-13
PLANS APPROVAL DATE

R.M. MISHREKI No. C68484 Exp. 9-30-13 CIVIL — REGISTERED PROFESSIONAL ENGINEER — STATE OF CALIFORNIA

*THE STATE OF CALIFORNIA OR ITS OFFICERS OR AGENTS SHALL NOT BE RESPONSIBLE FOR THE ACCURACY OR COMPLETENESS OF SCANNED COPIES OF THIS PLAN SHEET.*

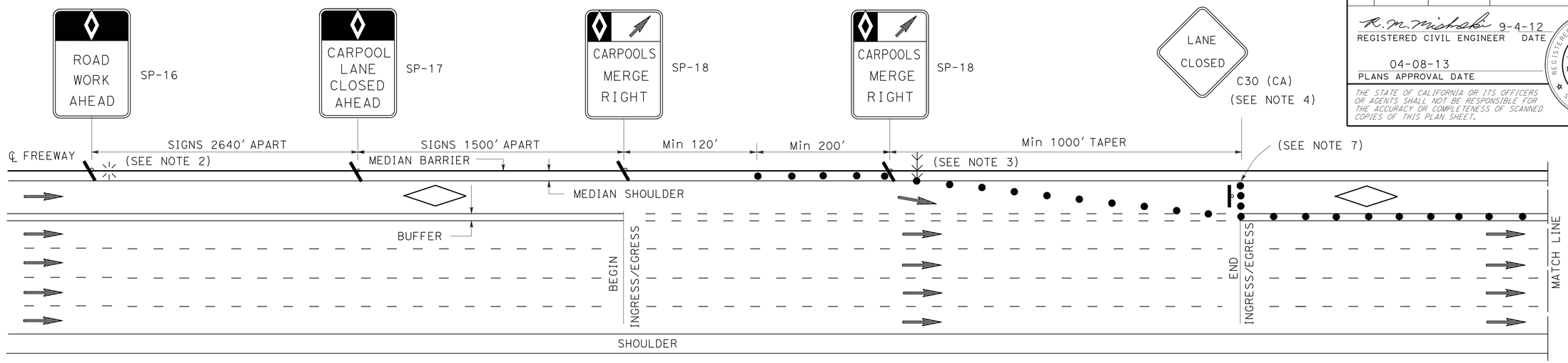


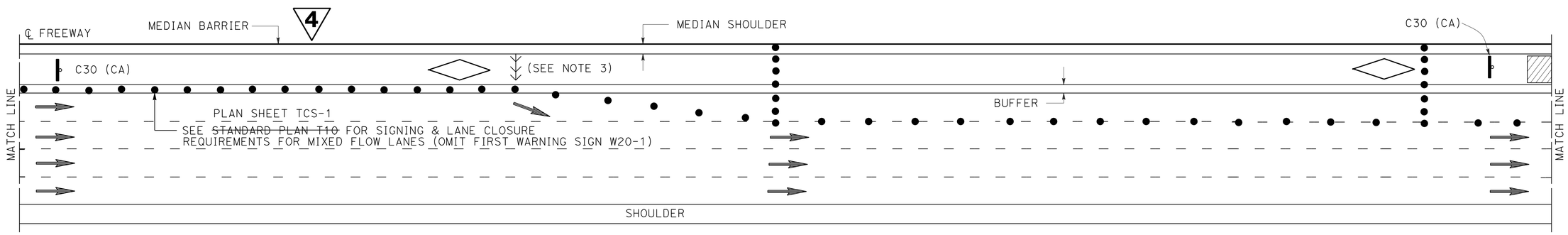


**4 REPLACED PER ADDENDUM No. 4 DATED AUGUST 21, 2013**

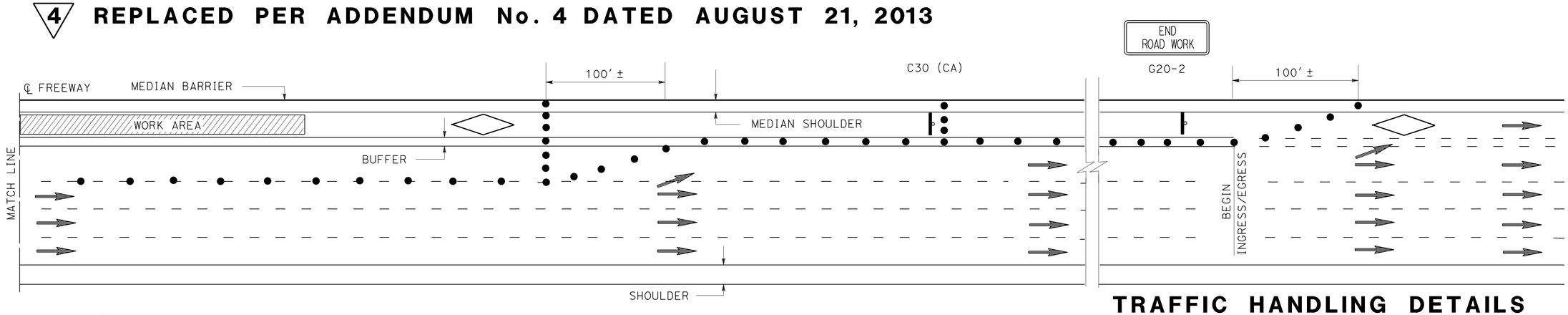


NOTES:

1. SEE CASE I FOR NOTES, LEGEND, SIGN PANEL, AND ABBREVIATIONS FOR THIS SHEET.
2. CLOSURES OF ONE MIXED FLOW TRAFFIC LANE ADJACENT TO HOV LANE SHOWN ON THIS SHEET. MULTIPLE MIXED FLOW LANE CLOSURES ARE SIMILAR.

# TRAFFIC HANDLING DETAILS
## TRAFFIC CONTROL SYSTEM FOR HIGH OCCUPANCY VEHICLE LANES AND ADJACENT FREEWAY LANES BETWEEN INGRESS/EGRESS AREAS
## CASE II

NO SCALE

**THD-7**

| REVISED BY | DATE REVISED |
|---|---|
| JC | 3/12 |

ALBERT K YU — JOCELYN C CHIANG — CALCULATED-DESIGNED BY — CHECKED BY

FUNCTIONAL SUPERVISOR: DENIS KATAYAMA

STATE OF CALIFORNIA - DEPARTMENT OF TRANSPORTATION — DTM — Caltrans

LAST REVISION 00-00-00 — DATE PLOTTED => 20-AUG-2013 — TIME PLOTTED => 10:13

| Dist | COUNTY | ROUTE | POST MILES TOTAL PROJECT | SHEET No. | TOTAL SHEETS |
|---|---|---|---|---|---|
| 07 | LA | 405 | 4.3 | 40 | 89 |

REGISTERED CIVIL ENGINEER 01-30-13 DATE

PLANS APPROVAL DATE 04-08-13

REGISTERED PROFESSIONAL ENGINEER SIMON KUO No. C52465 Exp. 12-31-14 CIVIL STATE OF CALIFORNIA

THE STATE OF CALIFORNIA OR ITS OFFICERS OR AGENTS SHALL NOT BE RESPONSIBLE FOR THE ACCURACY OR COMPLETENESS OF SCANNED COPIES OF THIS PLAN SHEET.

4 **REPLACED PER ADDENDUM No. 4 DATED AUGUST 21, 2013** 4

## ROADWAY QUANTITIES

| SHEET NUMBER | LOCATION | REMOVE CONCRETE BARRIER | REMOVE STEEL PIPE (BOLLARD) | REMOVE Conc Pvmt | REMOVE Conc (CURB, GUTTER AND SIDEWALK) | ROADWAY EXCAVATION | REMOVE CURB | REMOVE METAL BEAM GUARD RAILING | REMOVE ASPHALT CONCRETE DIKE | EMBANKMENT (N) | MINOR CONCRETE (MINOR STRUCTURE) | HOT MIX ASPHALT (TYPE A) | PLACE HOT MIX ASPHALT DIKE (TYPE A) | CLASS 2 AGGREGATE BASE | CLASS 3 AGGREGATE BASE | LEAN CONCRETE BASE | JOINTED PLAIN CONCRETE PAVEMENT (JPCP) | MINOR CONCRETE (MISCELLANEOUS CONSTRUCTION) | CONCRETE BARRIER (TYPE 50 Mod) | SEAL PAVEMENT JOINT | SEAL ISOLATION JOINT | CHAIN LINK FENCE (TYPE CL-6) | 10' CHAIN LINK GATE (TYPE CL-6) | Transition RAILING (TYPE WB) | END CAP (TYPE TC) | RECONSTRUCT METAL BEAM GUARD RAILING | DETECTABLE WARNING SURFACE | COLD PLANE ASPHALT Conc PAVEMENT |
|---|---|---|---|---|---|---|---|---|---|---|---|---|---|---|---|---|---|---|---|---|---|---|---|---|---|---|---|---|
| | | LF | EA | SQYD | CY | CY | LF | LF | LF | CY | CY | TON | LF | CY | CY | CY | CY | CY | LF | LF | LF | LF | EA | EA | EA | LF | SQFT | SQYD |
| L-1 | Rte 405 | 40 | | 440 | | 308 | 188 | 34 | 38 | 250 | 2.1 | 0.8 | 38 | | 106 | 76 | 160 | | 40 | 979 | 516 | | | 1 | 1 | 13 | | |
| C-1 | TEMPLE Ave | | 4 | | 30 | 451 | | | | | | 33 | | 48 | 50 | 5 | | 13 | | | | 8 | 2 | | | | 53 | 106 |
| | SUBTOTAL | 40 | 4 | 440 | 30 | 759 | 188 | 34 | 38 | 250 | 2.1 | 33.8 | 38 | 48 | 156 | 81 | 160 | 13 | 40 | 979 | 516 | 8 | 2 | 1 | 1 | 13 | 53 | 106 |

(N) NOT A SEPARATE PAY ITEM. FOR INFORMATION ONLY.

## TEMPORARY WATER POLLUTION CONTROL QUANTITIES

| LOCATION | TEMPORARY EROSION CONTROL BLANKET | TEMPORARY DRAINAGE INLET PROTECTION | TEMPORARY FIBER ROLL | TEMPORARY SILT FENCE |
|---|---|---|---|---|
| | SQYD | EA | LF | LF |
| Rte 405 Sta 182+50 TO Sta 270+25 | 2,460 | 5 | 1,800 | 700 |
| | | | | |
| | | | | |
| TOTAL | 2,460 | 5 | 1,800 | 700 |

# SUMMARY OF QUANTITIES

## Q-1

REVISED BY | DATE REVISED

SOLANGE PRADO | MAI P. BUI

CALCULATED-DESIGNED BY | CHECKED BY

FUNCTIONAL SUPERVISOR: SIMON KUO

STATE OF CALIFORNIA - DEPARTMENT OF TRANSPORTATION

Caltrans OFFICE OF DESIGN A

LAST REVISION 00-00-00 | DATE PLOTTED => 20-AUG-2013 | TIME PLOTTED => 10:13

| Dist | COUNTY | ROUTE | POST MILES TOTAL PROJECT | SHEET No. | TOTAL SHEETS |
|---|---|---|---|---|---|
| 07 | LA | 405 | 4.3 | 45 | 89 |

George Olguin
LICENSED LANDSCAPE ARCHITECT

04-08-13
PLANS APPROVAL DATE

LICENSED LANDSCAPE ARCHITECT GEORGE OLGUIN NO. 4333 George Olguin Signature 08-31-14 Renewal Date 11-04-12 Date STATE OF CALIFORNIA

*THE STATE OF CALIFORNIA OR ITS OFFICERS OR AGENTS SHALL NOT BE RESPONSIBLE FOR THE ACCURACY OR COMPLETENESS OF SCANNED COPIES OF THIS PLAN SHEET.*

# PLANT LIST AND PLANTING SPECIFICATIONS

| PLANT GROUP | PLANT No. | SYMBOL | BOTANICAL NAME | COMMON NAME | SIZE | QUANTITY EACH | HOLE SIZE (INCH) Dia | HOLE SIZE (INCH) DEPTH | BASIN TYPE | IRON SULFATE ① | SOIL AMEND | COMMERCIAL FERTILIZER ① PLANTING | COMMERCIAL FERTILIZER ① PLT ESTB | BASIN MULCH (CY) | STAKING | PLANTING LIMITS MINIMUM DISTANCE (ft) FROM ETW | Pvmt | FENCE | WALL | PAVED DITCH | EARTH DITCH | ON CENTER (ft) | REMARKS |
|---|---|---|---|---|---|---|---|---|---|---|---|---|---|---|---|---|---|---|---|---|---|---|---|
| H | | | CARPOBROTUS EDULIS | HOTTENTOT FIG | CUTTINGS | 9833 ~~5200~~ | — | — | — | — | ⑦ | 6.6 LBS/ 1,000 SQFT | 6.6 LBS/ 1,000 SQFT | — | — | — | 6 | 6 | 6 | 6 | 8 | 1.5 | GROUND COVER |
| | | | | | | 4 | | | | | | | | | | | | | | | | | |

**APPLICABLE WHEN CIRCLED:**

① - QUANTITIES SHOWN ARE "PER PLANT" UNLESS SHOWN AS SQFT OR SQYD APPLICATION RATES
2 - BASIN MULCH IS INCLUDED WITH MULCH QUANTITIES SHOWN ON PLANTING PLAN
3 - SUFFICIENT TO RECEIVE ROOT BALL AND AMENDMENTS IF REQUIRED
4 - SEE DETAIL
5 - SEE SPECIAL PROVISIONS
6 - SEE STANDARD SPECIFICATIONS
⑦ - AS SHOWN ON PLANS
8 - UNLESS OTHERWISE SHOWN ON PLANS
9 - FOLIAGE PROTECTOR REQUIRED
10 - ROOT PROTECTOR REQUIRED
11 - ROOT BARRIER REQUIRED
12 - STATE-FURNISHED

NOTE:
UNDERLINED PORTIONS OF BOTANICAL NAME INDICATE ABBREVIATIONS USED ON PLANTING PLANS.

LEGEND

RC — ROADSIDE CLEARING (REMOVE Exist PLANTS EXCEPT TREES) (UNLESS OTHERWISE NOTED.)

SOIL AMEND CY

4 REPLACED PER ADDENDUM No. 4 DATED AUGUST 21, 2013

PLANT LIST

PL-1

STATE OF CALIFORNIA - DEPARTMENT OF TRANSPORTATION
Caltrans® LANDSCAPE ARCHITECTURE
SENIOR LANDSCAPE ARCHITECT: JENNIFER TAIRA
CALCULATED-DESIGNED BY: GEORGE OLGUIN
CHECKED BY
REVISED BY
DATE REVISED
Y1 SU

LAST REVISION 00-00-00
DATE PLOTTED => 20-AUG-2013
TIME PLOTTED => 10:13

| Dist | COUNTY | ROUTE | POST MILES TOTAL PROJECT | SHEET No. | TOTAL SHEETS |
|---|---|---|---|---|---|
| 07 | LA | 405 | 4.3 | 47 | 89 |

REGISTERED ELECTRICAL ENGINEER DATE

04-08-13
PLANS APPROVAL DATE

REGISTERED PROFESSIONAL ENGINEER JACQUELINE C.TAN No. E015611 Exp.12/31/13 ELECTRICAL STATE OF CALIFORNIA

*THE STATE OF CALIFORNIA OR ITS OFFICERS OR AGENTS SHALL NOT BE RESPONSIBLE FOR THE ACCURACY OR COMPLETENESS OF SCANNED COPIES OF THIS PLAN SHEET.*

NOTE:

1. FOR ACCURATE RIGHT OF WAY DATA, CONTACT RIGHT OF WAY ENGINEERING AT THE DISTRICT OFFICE.

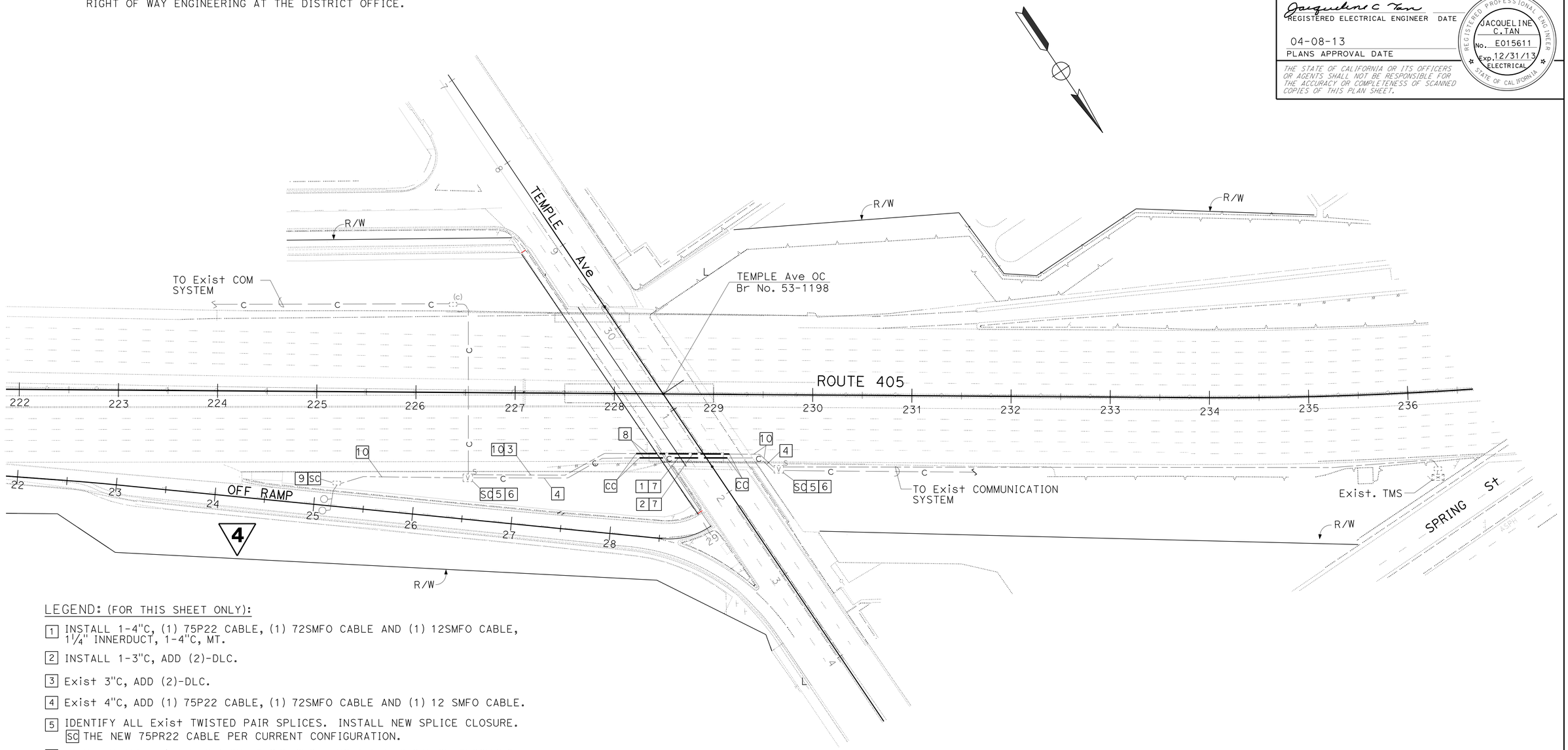


LEGEND: (FOR THIS SHEET ONLY):

1. INSTALL 1-4"C, (1) 75P22 CABLE, (1) 72SMFO CABLE AND (1) 12SMFO CABLE, 1¼" INNERDUCT, 1-4"C, MT.
2. INSTALL 1-3"C, ADD (2)-DLC.
3. Exist 3"C, ADD (2)-DLC.
4. Exist 4"C, ADD (1) 75P22 CABLE, (1) 72SMFO CABLE AND (1) 12 SMFO CABLE.
5. IDENTIFY ALL Exist TWISTED PAIR SPLICES. INSTALL NEW SPLICE CLOSURE. SC THE NEW 75PR22 CABLE PER CURRENT CONFIGURATION.
6. IDENTIFY ALL Exist FIBER OPTIC SPLICES. INSTALL NEW SPLICE CLOSURES. SC THE NEW 72SMFO AND 12SMFO CABLE PER CURRENT CONFIGURATION.
7. TRENCH AND INSTALL CONDUITS IN NEW CONCRETE PAVEMENT. SEE SHEET E-3 FOR DETAIL.
8. INSTALL CONDUITS IN THE SAME TRENCH.
9. RESPLICE dlc WITH LOOP DETECTOR CABLES.
10. RE-INSTALL Exist dlc. SEE NOTE 3 ON SHEET E-4.

4 **REPLACED PER ADDENDUM No. 4 DATED AUGUST 21, 2013**

4 ~~**MODIFY**~~ **COMMUNICATION SYSTEM (MODIFY)**

SCALE: 1" = 50'

**E-1**

*APPROVED FOR ELECTRICAL WORK ONLY*

REVISED BY | DATE REVISED

HIEU LUU | CALCULATED-DESIGNED BY

JACQUELINE C TAN | CHECKED BY

JACQUELINE C TAN | FUNCTIONAL SUPERVISOR

STATE OF CALIFORNIA - DEPARTMENT OF TRANSPORTATION
Caltrans
**OFFICE OF ITS**

LAST REVISION 00-00-00 | DATE PLOTTED => 20-AUG-2013 | TIME PLOTTED => 10:13

| Dist | COUNTY | ROUTE | POST MILES TOTAL PROJECT | SHEET No. | TOTAL SHEETS |
|---|---|---|---|---|---|
| 07 | LA | 405 | 4.3 | 48 | 89 |

REGISTERED ELECTRICAL ENGINEER DATE

04-08-13
PLANS APPROVAL DATE

REGISTERED PROFESSIONAL ENGINEER JACQUELINE C. TAN No. E015611 Exp. 12/31/13 ELECTRICAL STATE OF CALIFORNIA

*THE STATE OF CALIFORNIA OR ITS OFFICERS OR AGENTS SHALL NOT BE RESPONSIBLE FOR THE ACCURACY OR COMPLETENESS OF SCANNED COPIES OF THIS PLAN SHEET.*

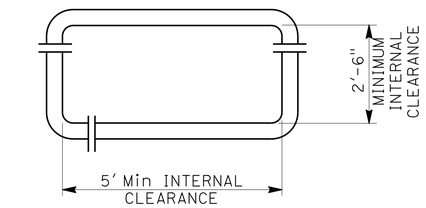


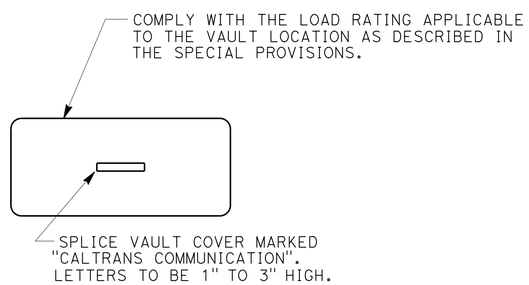


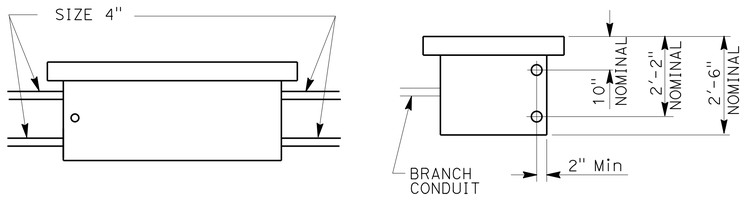


## SPLICE VAULT DIMENSIONS

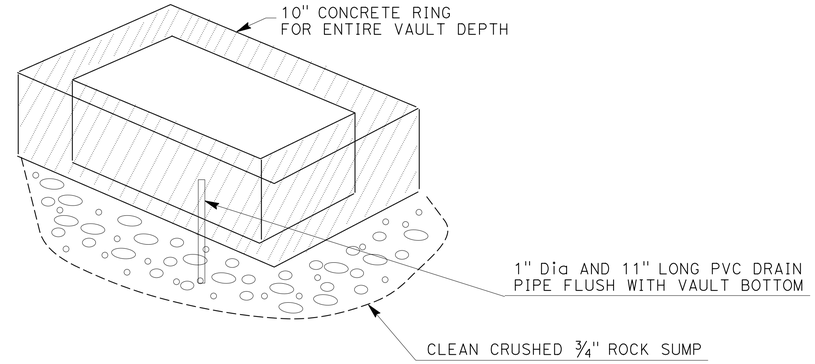


## DETAIL A

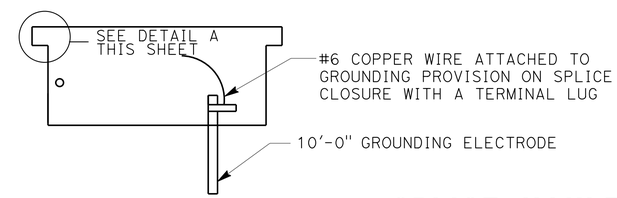


## SPLICE VAULT INSTALLATION

INSTALLATION NOTES:

1. CONCRETE RING MUST BE MINOR CONCRETE.
2. CONCRETE ENCASEMENT RING DIMENSION, D, TO BE EQUAL TO DESIGN PAVEMENT DEPTH

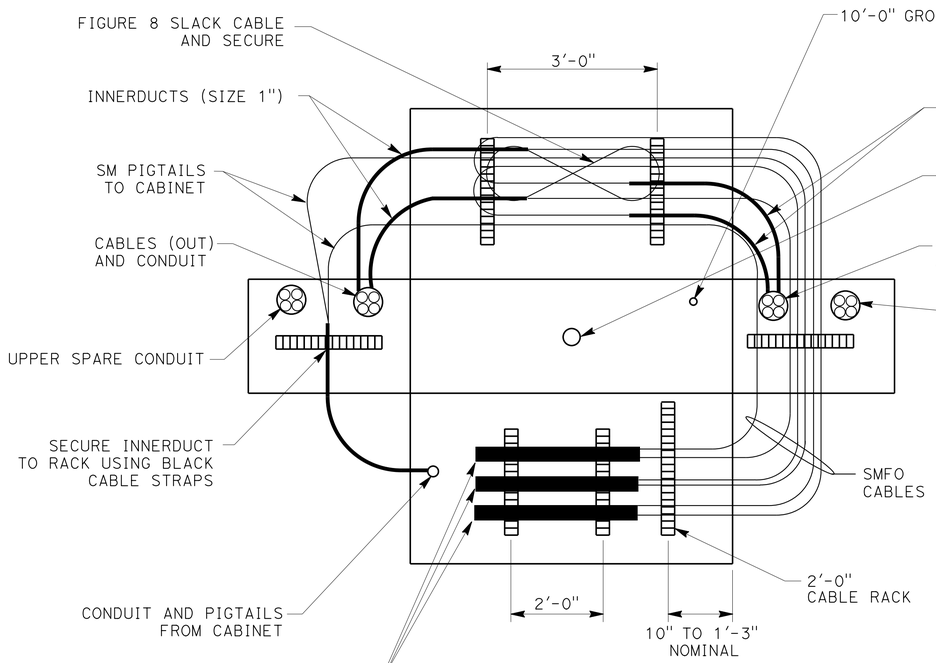


## FIBER OPTIC CABLE INSTALLATION

TOP VIEW - WALLS FOLDED DOWN FOR CLARITY

NOTES:(THIS SHEET ONLY)

1. UPON ACCEPTANCE OF THE WORK ALL CONDUITS MUST BE SEALED WITH COMPATIBLE SEALANT MATERIAL.
2. ALL GROUND CONNECTIONS MUST BE COATED WITH OXIDATION PROHIBITING COMPOUND.
3. ALL CABLE STRAPS MUST BE DESIGNED TO WITHSTAND ULTRA-VIOLET EXPOSURE.
4. THE VAULT MUST BE CAULKED AFTER ALL KNOWN ENTRANCES HAVE BEEN MADE.
5. INSTALL ALL CABLES IN LOWER SIZE 4" CONDUIT.
6. UPPER SIZE 4" CONDUIT IS MT.
7. VAULT MUST HAVE INTEGRAL BASE OR MUST BE GROUTED PER STANDARD SPECIFICATION OF PULL BOXES.
8. NUMBER OF SPLICE CLOSURES AND INNERDUCTS MAY VARY.

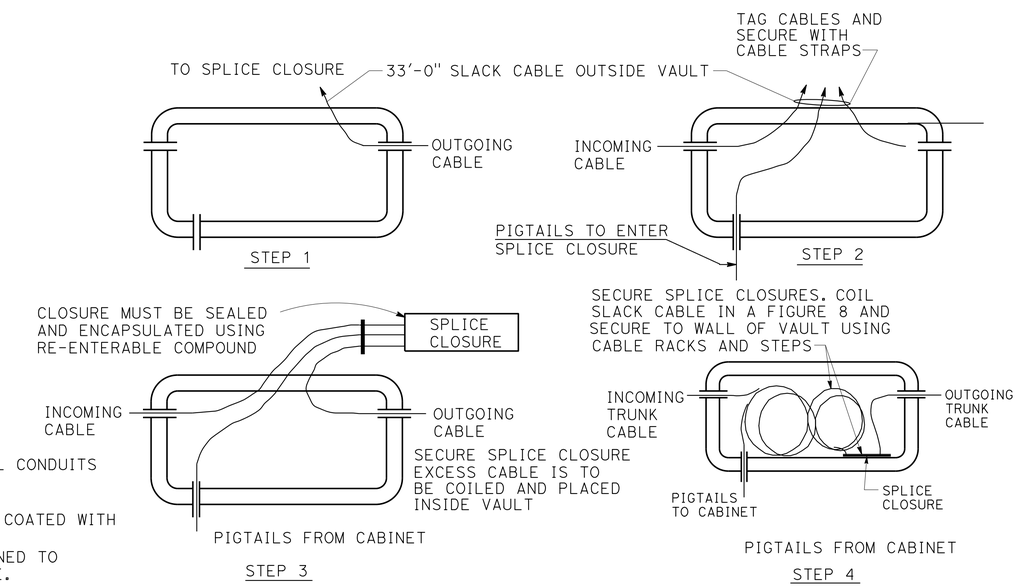


## SPLICE PROCEDURE

ALL DIMENSIONS ARE IN FEET UNLESS OTHERWISE SHOWN

# ~~MODIFY~~ COMMUNICATION SYSTEM (MODIFY)

## (SPLICE VAULT DETAILS)

NO SCALE

4 **REPLACED PER ADDENDUM No. 4 DATED AUGUST 21, 2013** 4

*APPROVED FOR ELECTRICAL WORK ONLY*

E-2

STATE OF CALIFORNIA - DEPARTMENT OF TRANSPORTATION
Caltrans® OFFICE OF ITS

FUNCTIONAL SUPERVISOR: JACQUELINE C. TAN
CALCULATED-DESIGNED BY: HIEU LUU
CHECKED BY: JACQUELINE C. TAN
REVISED BY / DATE REVISED

LAST REVISION 00-00-00 | DATE PLOTTED => 20-AUG-2013 | TIME PLOTTED => 10:13

| Dist | COUNTY | ROUTE | POST MILES TOTAL PROJECT | SHEET No. | TOTAL SHEETS |
|---|---|---|---|---|---|
| 07 | LA | 405 | 4.3 | 49 | 89 |

REGISTERED ELECTRICAL ENGINEER — DATE

04-08-13
PLANS APPROVAL DATE

REGISTERED PROFESSIONAL ENGINEER — JACQUELINE C. TAN — No. E015611 — Exp. 12/31/13 — ELECTRICAL — STATE OF CALIFORNIA

*THE STATE OF CALIFORNIA OR ITS OFFICERS OR AGENTS SHALL NOT BE RESPONSIBLE FOR THE ACCURACY OR COMPLETENESS OF SCANNED COPIES OF THIS PLAN SHEET.*

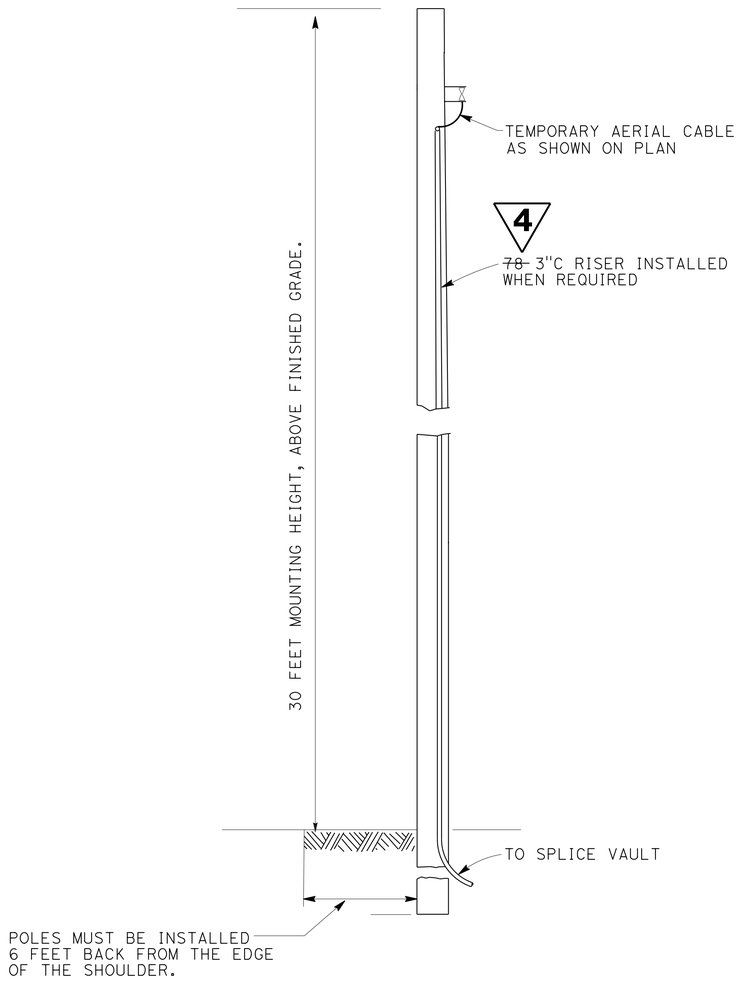


TEMPORARY WOOD POLE

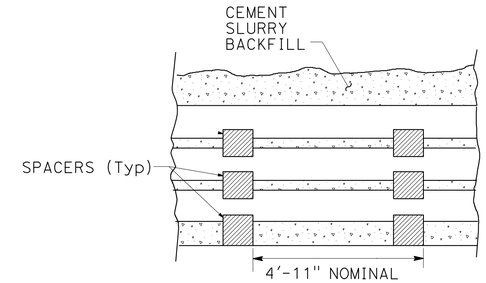


## CONDUIT SPACER PLACEMENT (SIDE VIEW)

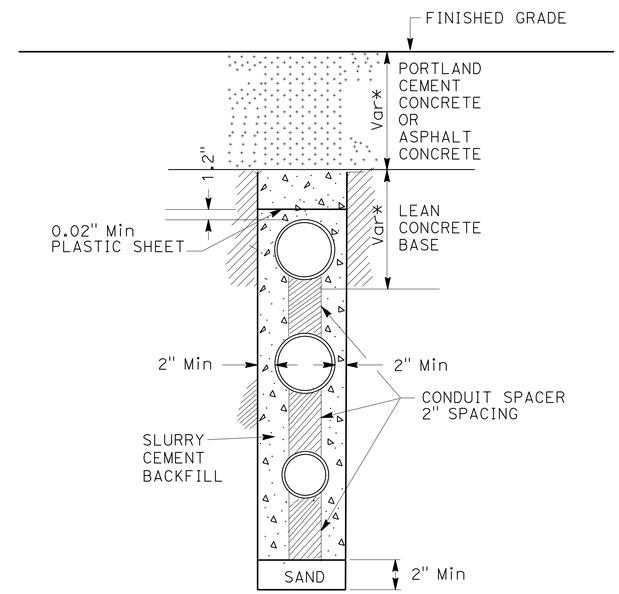


## TRENCH IN NEW PAVEMENT

(* PAVEMENT THICKNESS, SEE TYPICAL CROSS SECTION PLANS)

**NOTES:** (THIS SHEET ONLY):

~~1. TRENCH TO BE CENTERED IN SHOULDER.~~

~~1. MAINTAIN 24" MINIMUM COVER AND BACKFILL TRENCH WITH SLURRY CEMENT BETWEEN PULL BOX AND PAVED SHOULDER.~~ 4

~~3. ANCHOR/RESTRAIN TOP CONDUIT FROM FLOATING DURING SLURRY CEMENT BACKFILL.~~

~~4. CONDUITS MUST BE INSTALLED IN NEW CONCRETE PAVEMENT AFTER AGGREGATE BASE IS PLACED AND COMPACTED.~~

1. ALL OVERHEAD CABLE MUST BE SLACK SPANNED WITH 20 FEET MINIMUM OVERHEAD CLEARANCE.
2. POLES MUST BE BREAST BLOCKED, GUYED OR RAKED WHERE NECESSARY.

4 **REPLACED PER ADDENDUM No. 4 DATED AUGUST 21, 2013**

*APPROVED FOR ELECTRICAL WORK ONLY*

# ELECTRICAL DETAILS

NO SCALE

**E-3**

STATE OF CALIFORNIA - DEPARTMENT OF TRANSPORTATION
Caltrans® **OFFICE OF ITS**

FUNCTIONAL SUPERVISOR: JACQUELINE C. TAN
CALCULATED-DESIGNED BY: HIEU LUU
CHECKED BY: JACQUELINE C. TAN
REVISED BY
DATE REVISED

LAST REVISION 00-00-00 | DATE PLOTTED => 20-AUG-2013 | TIME PLOTTED => 10:13

| Dist | COUNTY | ROUTE | POST MILES TOTAL PROJECT | SHEET No. | TOTAL SHEETS |
|---|---|---|---|---|---|
| 07 | LA | 405 | 4.3 | 50 | 51 |

REGISTERED ELECTRICAL ENGINEER — DATE

04-08-13
PLANS APPROVAL DATE

REGISTERED PROFESSIONAL ENGINEER — JACQUELINE C. TAN — No. E015611 — Exp. 12/31/13 — ELECTRICAL — STATE OF CALIFORNIA

*THE STATE OF CALIFORNIA OR ITS OFFICERS OR AGENTS SHALL NOT BE RESPONSIBLE FOR THE ACCURACY OR COMPLETENESS OF SCANNED COPIES OF THIS PLAN SHEET.*

NOTES:
1. FOR ACCURATE RIGHT OF WAY DATA, CONTACT RIGHT OF WAY ENGINEERING AT THE DISTRICT OFFICE.

**4 REPLACED PER ADDENDUM No. 4 DATED AUGUST 21, 2013**

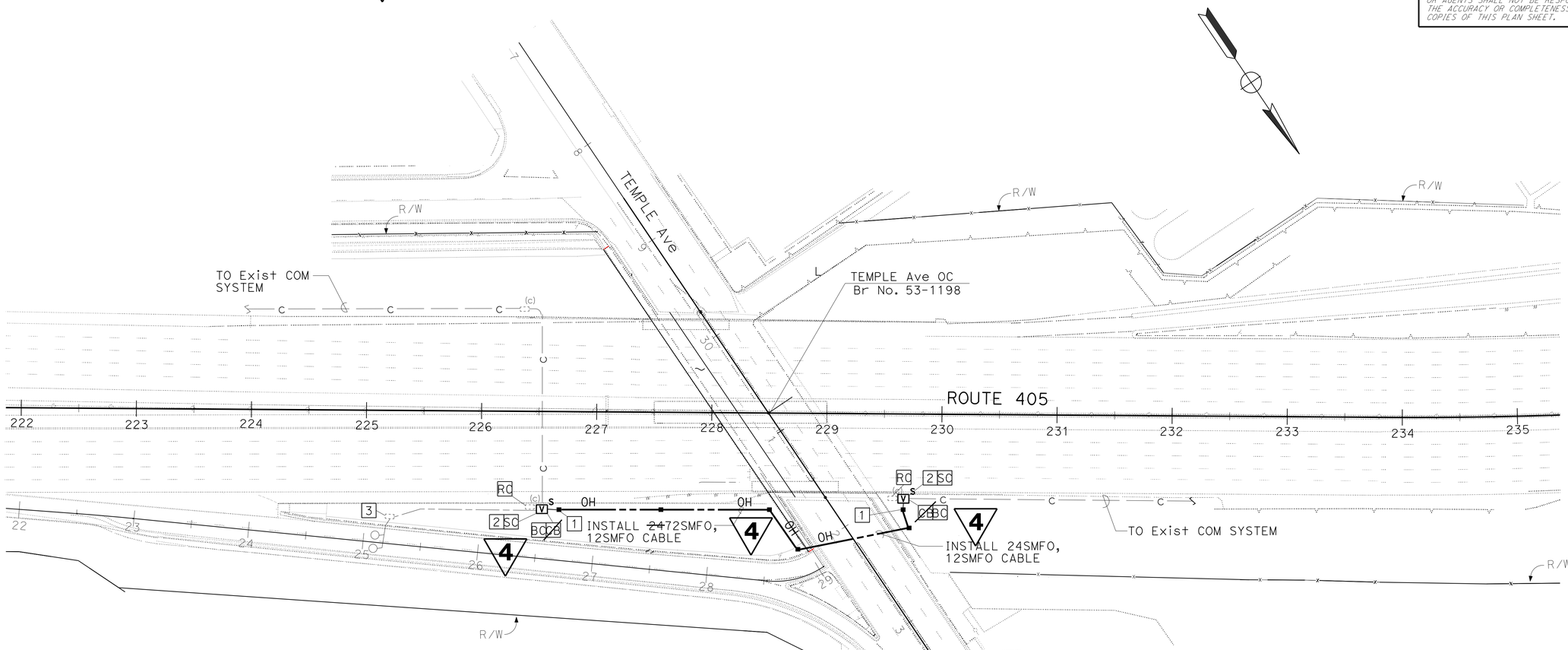


GENERAL NOTES: (FOR THIS SHEET ONLY): 4

1. TEMPORARY COMMUNICATION ~~24~~72SMFO AND 12 SMFO CABLE MUST BE INSTALLED, SPLICED AND TESTED BEFORE BRIDGE WIDENING CONSTRUCTION OF THE PROJECT.
2. RC TEMPORARY COMMUNICATION FIBER OPTIC CABLES AND WOOD POLES WHEN NO LONGER NEEDED.

LEGEND: (FOR THIS SHEET ONLY): 4

1 INSTALL WOOD POLE WITH ~~78~~ 3"C RISER.

2 IDENTIFY ALL Exist FIBER OPTIC SPLICES. INSTALL NEW SPLICE VAULT AND FIBER OPTIC SPLICE CLOSURES. SC THE NEW 24SMFO AND 12SMFO CABLE PER CURRENT CONFIGURATION.

3 DISCONNECT 2 EXIST dlc. PULL BACK AND COIL AT THE SPLICE VAULT STA 229+60 FOR RE-INSTALLATION.

LEGEND:

■ TEMPORARY WOOD POLE. SEE DETAIL ON SHEET E-3.

4

# ~~TEMPORARY~~ COMMUNICATION SYSTEM ~~ROUTING~~ (TEMPORARY)

## ~~(AERIAL FIBER OPTIC CABLES)~~

SCALE: 1" = 50'

*APPROVED FOR ELECTRICAL WORK ONLY*

**E-4**

STATE OF CALIFORNIA - DEPARTMENT OF TRANSPORTATION
Caltrans® OFFICE OF ITS

FUNCTIONAL SUPERVISOR: JACQUELINE C TAN
CALCULATED-DESIGNED BY: HIEU LUU
CHECKED BY: JACQUELINE C TAN
REVISED BY
DATE REVISED

LAST REVISION 00-00-00
DATE PLOTTED => 20-AUG-2013
TIME PLOTTED => 10:13

| Dist | COUNTY | ROUTE | POST MILES TOTAL PROJECT | SHEET No. | TOTAL SHEETS |
|---|---|---|---|---|---|
| 07 | LA | 405 | 4.3 | 51 | 89 |

REGISTERED ELECTRICAL ENGINEER DATE

04-08-13
PLANS APPROVAL DATE

REGISTERED PROFESSIONAL ENGINEER JACQUELINE C.TAN No. E015611 Exp. 12/31/13 ELECTRICAL STATE OF CALIFORNIA

THE STATE OF CALIFORNIA OR ITS OFFICERS OR AGENTS SHALL NOT BE RESPONSIBLE FOR THE ACCURACY OR COMPLETENESS OF SCANNED COPIES OF THIS PLAN SHEET.

4

## ~~MODIFY~~ COMMUNICATION SYSTEM (MODIFY)

| SHEET No. | (N) FIBER OPTIC SPLICE CLOSURE | (N) TWISTED PAIR SPLICE CLOSURE | (N) 75P22 CABLE | (N) 72SMFO CABLE | (N) 12SMFO CABLE | (N) 4"C, TYPE 3 | (N) 3"C, TYPE 3 |
|---|---|---|---|---|---|---|---|
| | EA | EA | LF | LF | LF | LF | LF |
| E-1 | 2 | 2 | 600 | 600 | 600 | 140 | 140 |

4

## ~~TEMPORARY~~ COMMUNICATION SYSTEM ~~ROUTING~~ (TEMPORARY)

| SHEET No. | (N) SPLICE VAULT | (N) FIBER OPTIC SPLICE CLOSURE | (N) WOOD POLE | (N) 72SMFO CABLE | (N) 12SMFO CABLE |
|---|---|---|---|---|---|
| | EA | EA | EA | LF | LF |
| E-4 | 2 | 2 | 6 | 700 | 700 |

4 **REPLACED PER ADDENDUM No. 4 DATED AUGUST 21, 2013**

(N) - NOT A SEPARATE PAY ITEM, FOR INFORMATION ONLY.

# ELECTRICAL QUANTITIES

E-5

STATE OF CALIFORNIA - DEPARTMENT OF TRANSPORTATION
Caltrans® OFFICE OF ITS

FUNCTIONAL SUPERVISOR: JACQUELINE C TAN
CALCULATED-DESIGNED BY: HIEU LUU
CHECKED BY: JACQUELINE C TAN
REVISED BY
DATE REVISED

LAST REVISION 07-11-12
DATE PLOTTED => 20-AUG-2013
TIME PLOTTED => 10:13

| DIST | COUNTY | ROUTE | POST MILES TOTAL PROJECT | SHEET No. | TOTAL SHEETS |
|---|---|---|---|---|---|
| 07 | LA | 405 | 4.3 | 63 | 89 |

REGISTERED CIVIL ENGINEER 06/28/12 DATE

4-08-2013
PLANS APPROVAL DATE

REGISTERED PROFESSIONAL ENGINEER BIN SHEN No. C76221 Exp. 06-30-14 CIVIL STATE OF CALIFORNIA

*The State of California or its officers or agents shall not be responsible for the accuracy or completeness of electronic copies of this plan sheet.*

LEGEND:

- Indicates existing structure
- Indicates new structure
- Indicates direction of traffic
- Indicates limit of bridge removal See "LIMITS OF BRIDGE REMOVAL, PORTION" sheet
- Point of minimum vertical clearance

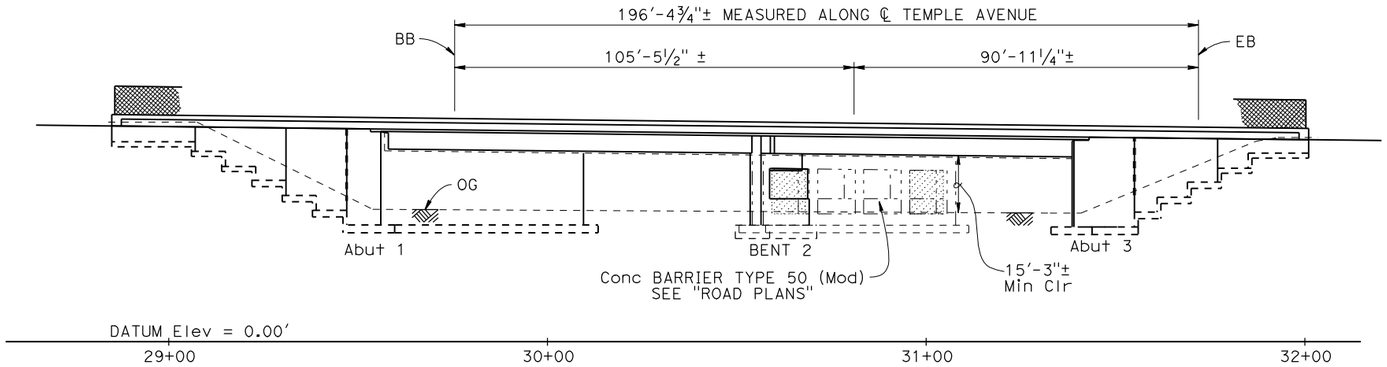


## ELEVATION

1" = 20'

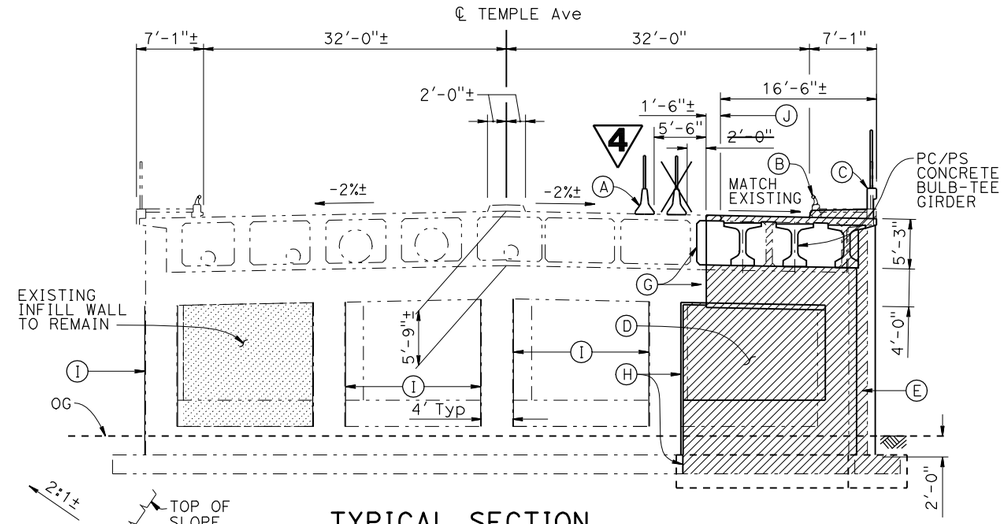


## TYPICAL SECTION

⅛" = 1'-0"

NOTES:

(A) Temporary Railing, Type K, see "ROAD PLANS"
(B) Remove concrete barrier and sidewalk, salvage metal bridge railing and chain link railing posts.
(C) Concrete Barrier Type 26 (Mod) with Chain Link Railing Type 7
(D) Existing infill wall to be removed
(E) New Pier Wall with end element
(F) Remove Median Concrete Barrier by District
(G) Refinish existing girder and end of bent cap
(H) Refinish existing column and footing
(I) Composite Column Casing
(J) Closure Pour

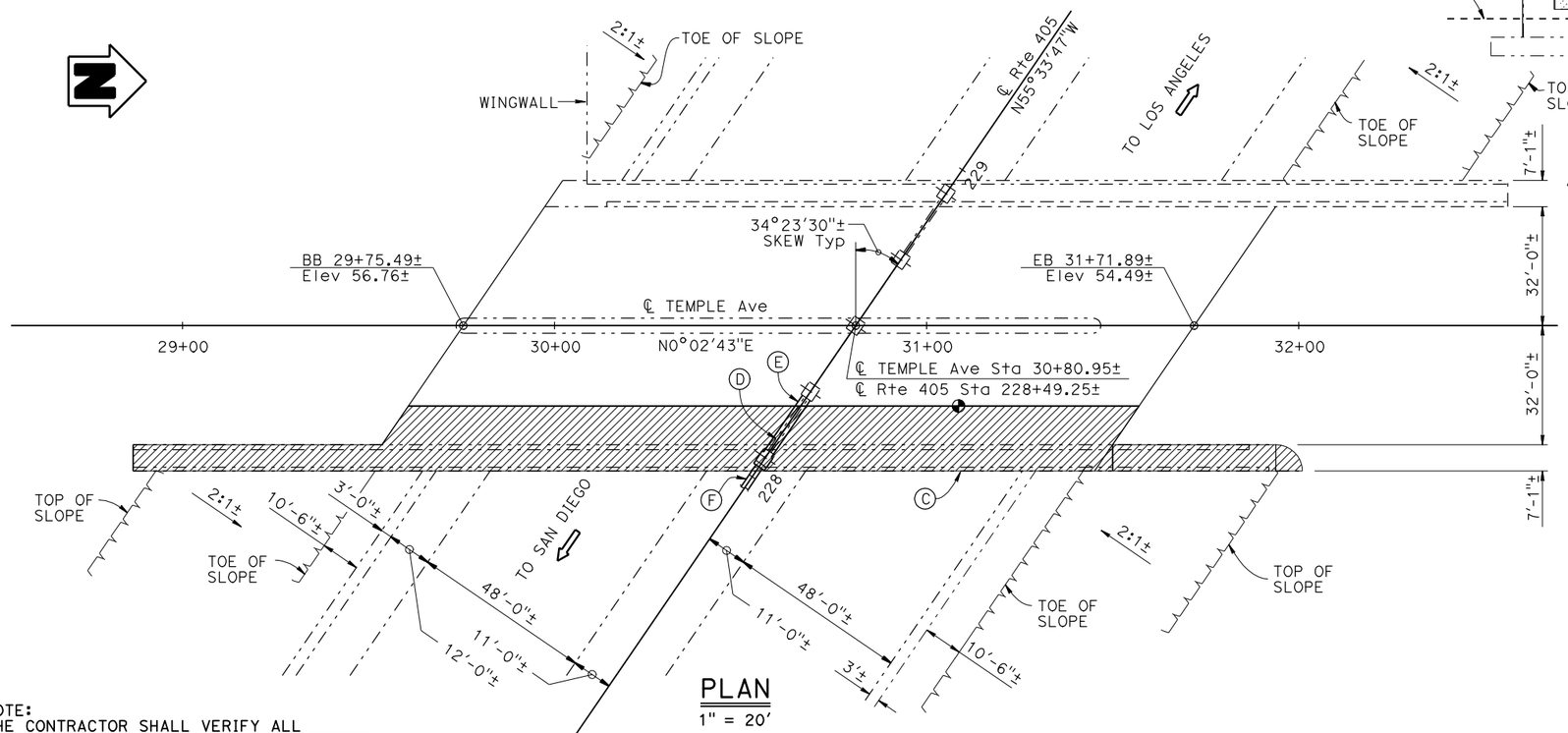


## PLAN

1" = 20'

NOTE:
THE CONTRACTOR SHALL VERIFY ALL CONTROLLING FIELD DIMENSIONS BEFORE ORDERING OR FABRICATING ANY MATERIAL.

**REPLACED PER ADDENDUM NO. 4 DATED AUGUST 21, 2013**

QUANTITIES

| | | |
|---|---|---|
| SALVAGE METAL BRIDGE RAILING | 600 | LF |
| BRIDGE REMOVAL (PORTION) | LUMP | SUM |
| ASBESTOS COMPLIANCE PLAN | LUMP | SUM |
| STRUCTURE EXCAVATION (BRIDGE) | 326 | CY |
| STRUCTURE EXCAVATION (TYPE Z-2)(AERIALLY DEPOSITED LEAD) | 4 | CY |
| STRUCTURE BACKFILL (BRIDGE) | 885 | CY |
| PRESTRESSING PRECAST GIRDER | LUMP | SUM |
| STRUCTURAL CONCRETE, BRIDGE FOOTING | 173 | CY |
| STRUCTURAL CONCRETE, BRIDGE | 346 | CY |
| DRILL AND BOND DOWEL | 354 | LF |
| FURNISH PRECAST PRESTRESSED CONCRETE BULB-TEE GIRDER (80'-90') | 3 | EA |
| FURNISH PRECAST PRESTRESSED CONCRETE BULB-TEE GIRDER (90'-100') | 3 | EA |
| ERECT PRECAST PRESTRESSED CONCRETE GIRDER | 6 | EA |
| REFINISH CONCRETE SURFACE | 1,219 | SQFT |
| JOINT SEAL (MR 1 1/2") | 44 | LF |
| BAR REINFORCING STEEL (BRIDGE) | 110,500 | LB |
| COMPOSITE COLUMN CASING | 3,360 | SQFT |
| CHAIN LINK RAILING (TYPE 7) | 315 | LF |
| CONCRETE BARRIER (TYPE 26 MODIFIED) | 315 | LF |

MINA PEZESHPOUR
DESIGN ENGINEER

| | BY | CHECKED |
|---|---|---|
| DESIGN | B. Shen | J. Wu |
| DETAILS | B. Jenko / J. Valencia | B. Shen |
| QUANTITIES | B. Shen | J. Wu |

LOAD & RESISTANCE FACTOR DESIGN — LIVE LOADING: HL93 W/"LOW-BOY": PERMIT DESIGN VEHICLE

| | BY | CHECKED |
|---|---|---|
| LAYOUT | B. Jenko | B. Shen |
| SPECIFICATIONS | M. Pan | PLANS AND SPECS COMPARED M. Pan |

ORIGINAL SCALE IN INCHES FOR REDUCED PLANS 0 1 2 3

STATE OF CALIFORNIA
DEPARTMENT OF TRANSPORTATION

DIVISION OF ENGINEERING SERVICES
STRUCTURE DESIGN
DESIGN BRANCH 22

BRIDGE NO. 53-1198
POST MILE 4.3

# TEMPLE AVENUE OC (REPAIR)
# GENERAL PLAN

UNIT: 3626
PROJECT NUMBER & PHASE: 07000005391
CONTRACT NO.: 07-278304

DISREGARD PRINTS BEARING EARLIER REVISION DATES
REVISION DATES 11-15-10 06-28-12 07-24-13 1-31-12
SHEET 1 OF 27

FILE => 53-1198-a-gp01.add

STRUCTURES DESIGN GENERAL PLAN SHEET (ENGLISH) (REV.09-01-10)

USERNAME => s135307 DATE PLOTTED => 20-AUG-2013 TIME PLOTTED => 08:05

| DIST | COUNTY | ROUTE | POST MILES TOTAL PROJECT | SHEET No. | TOTAL SHEETS |
|---|---|---|---|---|---|
| 07 | LA | 405 | 4.3 | 68 | 89 |

REGISTERED CIVIL ENGINEER 06/28/12 DATE

4-08-2013
PLANS APPROVAL DATE

REGISTERED PROFESSIONAL ENGINEER BIN SHEN No. C76221 Exp. 06-30-14 CIVIL STATE OF CALIFORNIA

*The State of California or its officers or agents shall not be responsible for the accuracy or completeness of electronic copies of this plan sheet.*

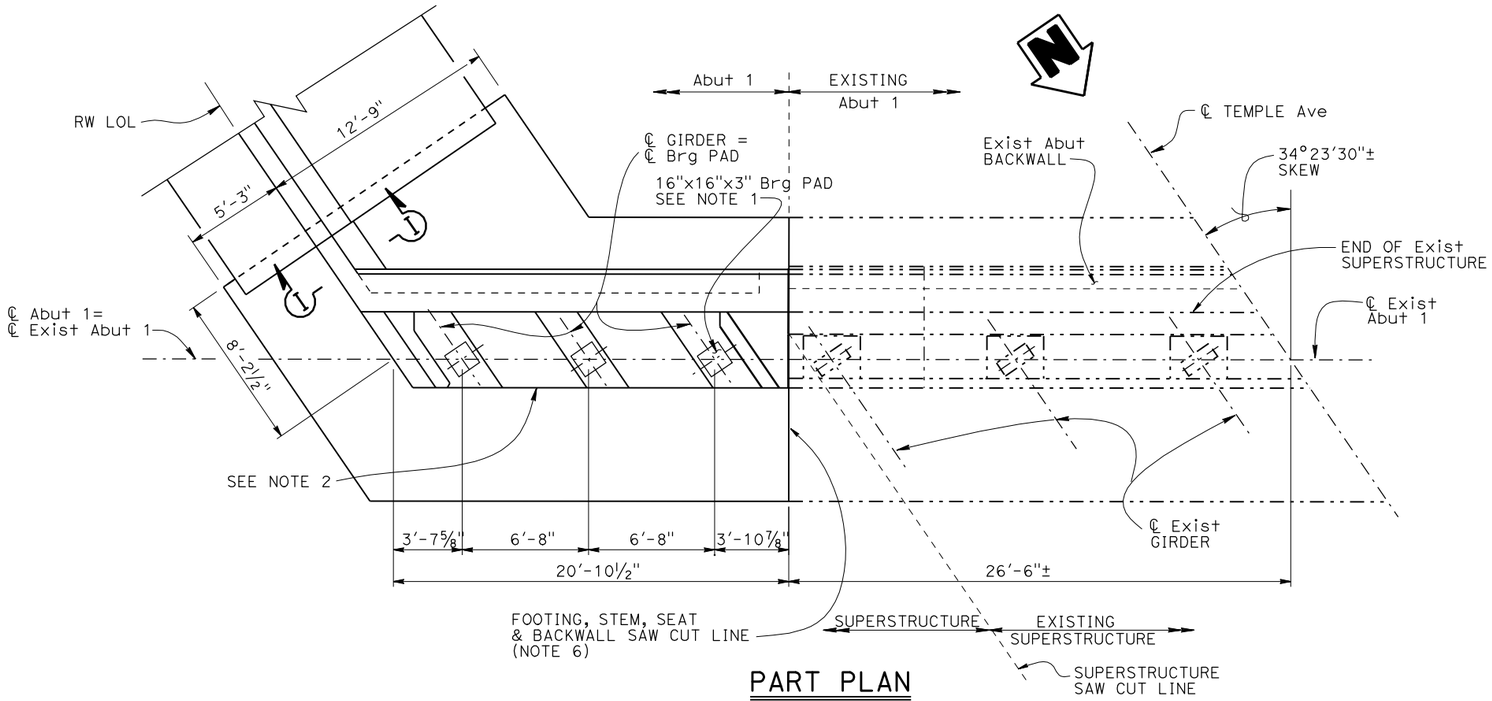


## PART PLAN

¼"=1'-0"

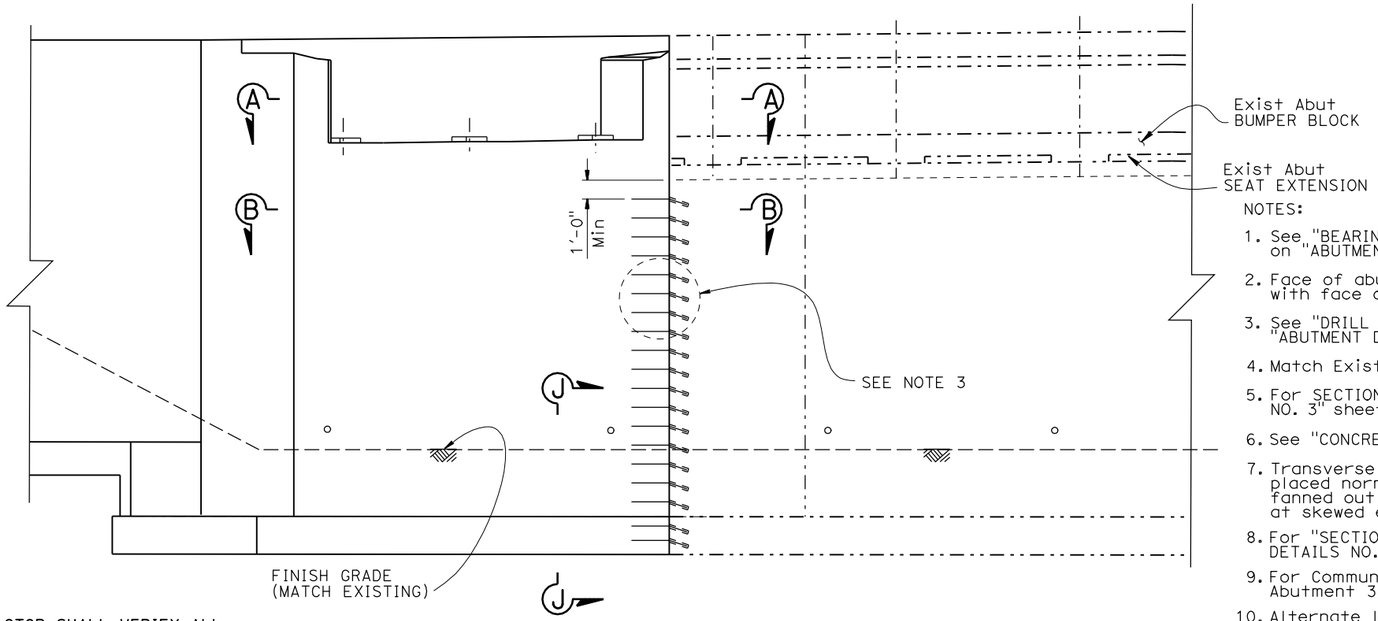


## PART ELEVATION

¼"=1'-0"

NOTES:

1. See "BEARING PAD DETAIL" on "ABUTMENT LAYOUT NO.3" sheet.
2. Face of abutment to match with face of existing abutment.
3. See "DRILL AND BOND DETAIL" on "ABUTMENT DETAILS NO. 3" sheet.
4. Match Exist paving notch.
5. For SECTION I-I, see "ABUTMENT DETAILS NO. 3" sheet.
6. See "CONCRETE REMOVAL LIMITS" sheet.
7. Transverse reinforcement above stem to be placed normal to ℄ Abut and to be fanned out and evenly distributed at skewed end.
8. For "SECTION A-A & B-B", see "ABUTMENT DETAILS NO. 1" sheet.
9. For Communication conduits on Abutment 3 Footing, see "ROAD PLANS".
10. Alternate long and short #11 reinforcement, do not bundle.

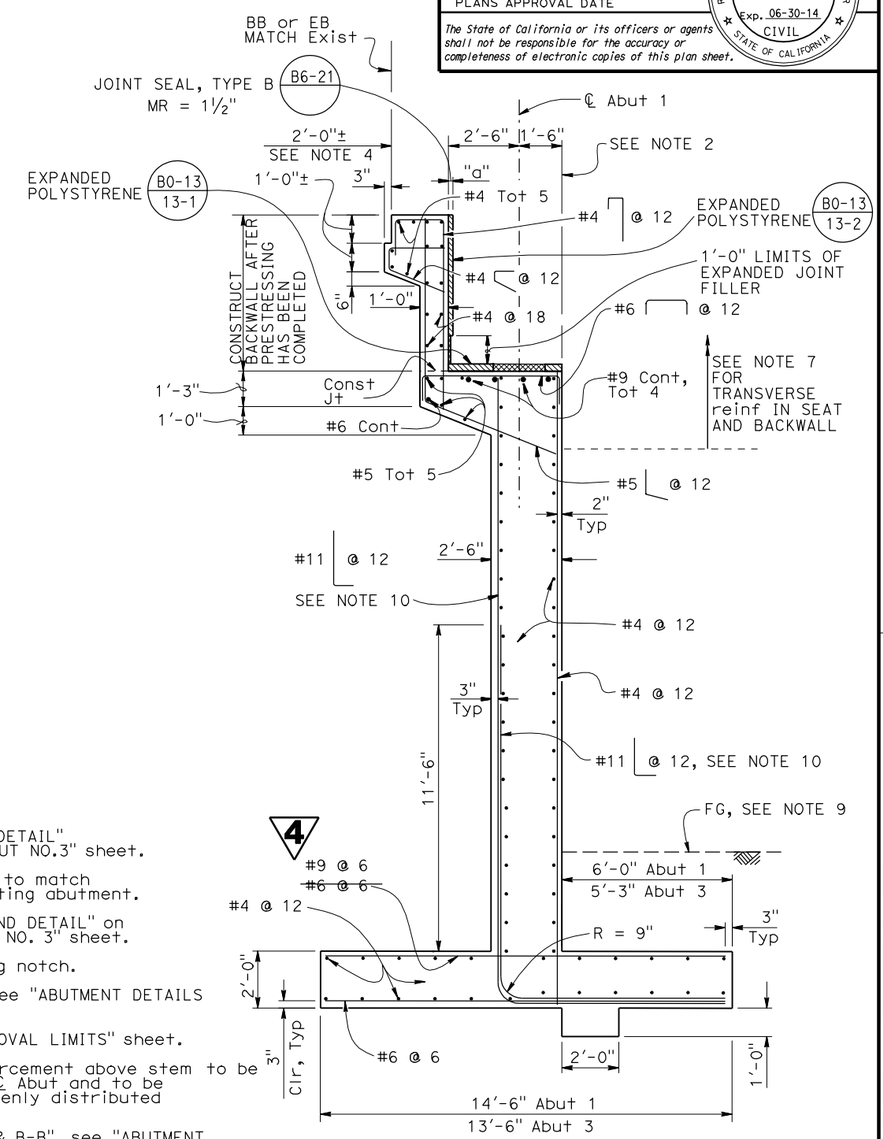


## TYPICAL SECTION

⅜"=1'-0"

NOTE: Abut 1 SHOWN, Abut 3 SIMILAR

NOTE:
THE CONTRACTOR SHALL VERIFY ALL CONTROLLING FIELD DIMENSIONS BEFORE ORDERING OR FABRICATING ANY MATERIAL.

4 **REPLACED PER ADDENDUM NO. 4 DATED AUGUST 21, 2013**

| | | | |
|---|---|---|---|
| DESIGN | BY B. Shen | CHECKED J. Wu | |
| DETAILS | BY B. Jenko / J. Valencia | CHECKED B. Shen | |
| QUANTITIES | BY B. Shen | CHECKED J. Wu | |

STATE OF CALIFORNIA
DEPARTMENT OF TRANSPORTATION

DIVISION OF ENGINEERING SERVICES
STRUCTURE DESIGN
DESIGN BRANCH 22

BRIDGE NO. 53-1198
POST MILE 4.3

# TEMPLE AVENUE OC (REPAIR)
# ABUTMENT 1 LAYOUT

STRUCTURES DESIGN DETAIL SHEET (ENGLISH) (REV. 09-01-10)

ORIGINAL SCALE IN INCHES FOR REDUCED PLANS 0 1 2 3

UNIT: 3626
PROJECT NUMBER & PHASE: 07000005391
CONTRACT NO.: 07-278304

DISREGARD PRINTS BEARING EARLIER REVISION DATES

REVISION DATES: 8-10-11 12-26-11 06-28-12 07-24-13

SHEET 6 OF 27

FILE => 53-1198-f-a01_lo.add

USERNAME => s135307 DATE PLOTTED => 20-AUG-2013 TIME PLOTTED => 08:05

| DIST | COUNTY | ROUTE | POST MILES TOTAL PROJECT | SHEET No. | TOTAL SHEETS |
|---|---|---|---|---|---|
| 07 | LA | 405 | 4.3 | 72 | 89 |

REGISTERED CIVIL ENGINEER 06/28/12 DATE

4-08-2013
PLANS APPROVAL DATE

REGISTERED PROFESSIONAL ENGINEER BIN SHEN No. C76221 Exp. 06-30-14 CIVIL STATE OF CALIFORNIA

*The State of California or its officers or agents shall not be responsible for the accuracy or completeness of electronic copies of this plan sheet.*

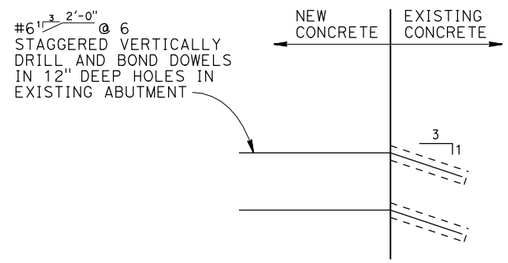


## DRILL AND BOND DETAIL

NO SCALE

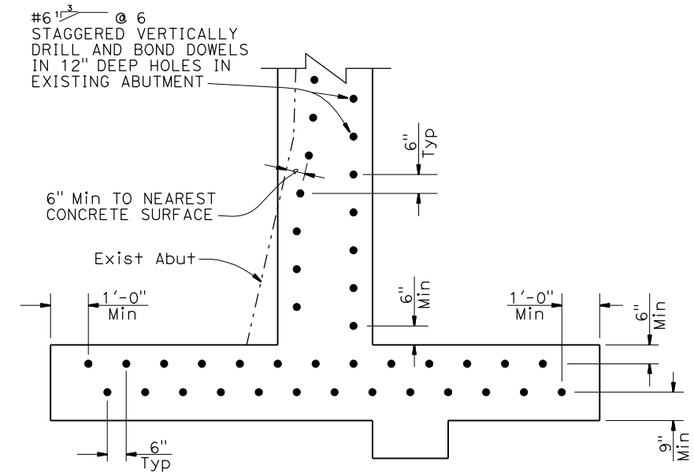


NOTE: drill & bond details

## SECTION J-J

½"=1'-0"

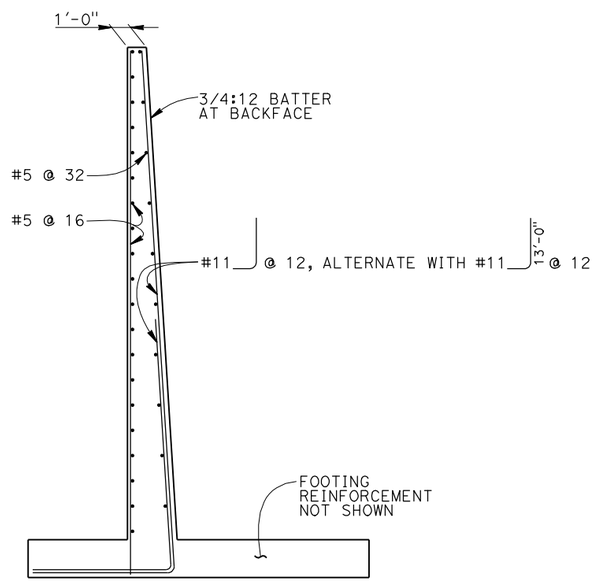


## SECTION I-I

¼"=1'-0"

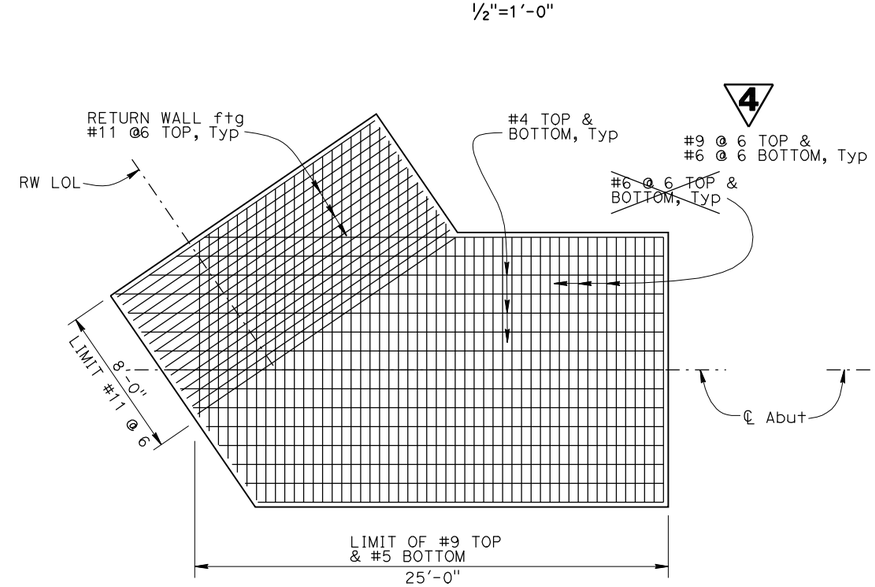


## ABUTMENT 1

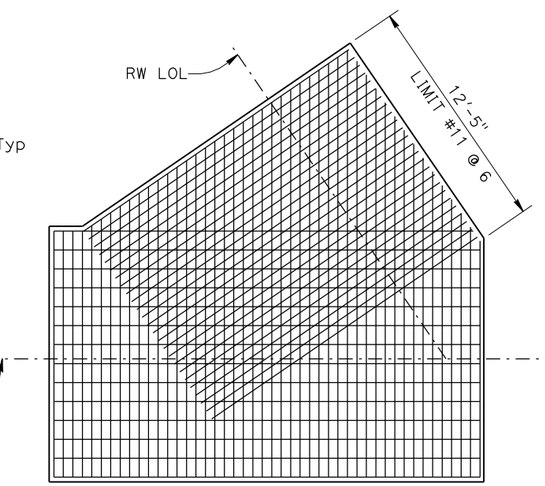


## ABUTMENT 3

4 **REPLACED PER ADDENDUM NO. 4 DATED AUGUST 21, 2013**

## ABUTMENT FOOTING DETAIL PLAN

¼"=1'-0"

NOTE:
THE CONTRACTOR SHALL VERIFY ALL CONTROLLING FIELD DIMENSIONS BEFORE ORDERING OR FABRICATING ANY MATERIAL.

| | BY | CHECKED |
|---|---|---|
| DESIGN | B. Shen | J. Wu |
| DETAILS | B. Jenko | B. Shen |
| QUANTITIES | B. Shen | J. Wu |

STATE OF CALIFORNIA DEPARTMENT OF TRANSPORTATION

DIVISION OF ENGINEERING SERVICES STRUCTURE DESIGN DESIGN BRANCH 22

BRIDGE NO. 53-1198
POST MILE 4.3

**TEMPLE AVENUE OC (REPAIR)**

**ABUTMENT DETAILS NO. 3**

STRUCTURES DESIGN DETAIL SHEET (ENGLISH) (REV. 09-01-10)

ORIGINAL SCALE IN INCHES FOR REDUCED PLANS 0 1 2 3

UNIT: 3626
PROJECT NUMBER & PHASE: 07000005391
CONTRACT NO.: 07-278304

DISREGARD PRINTS BEARING EARLIER REVISION DATES

REVISION DATES: 7-28-11 1-26-12 06-28-12 07-24-13

SHEET 10 OF 27

FILE => 53-1198-g-a01dt03.add

USERNAME => s133307 DATE PLOTTED => 20-AUG-2013 TIME PLOTTED => 08:05

| DIST | COUNTY | ROUTE | POST MILES TOTAL PROJECT | SHEET No. | TOTAL SHEETS |
|---|---|---|---|---|---|
| 07 | LA | 405 | 4.3 | 77 | 89 |

REGISTERED CIVIL ENGINEER 06/28/12 DATE

4-08-2013
PLANS APPROVAL DATE

REGISTERED PROFESSIONAL ENGINEER BIN SHEN No. C76221 Exp. 06-30-14 CIVIL STATE OF CALIFORNIA

*The State of California or its officers or agents shall not be responsible for the accuracy or completeness of electronic copies of this plan sheet.*

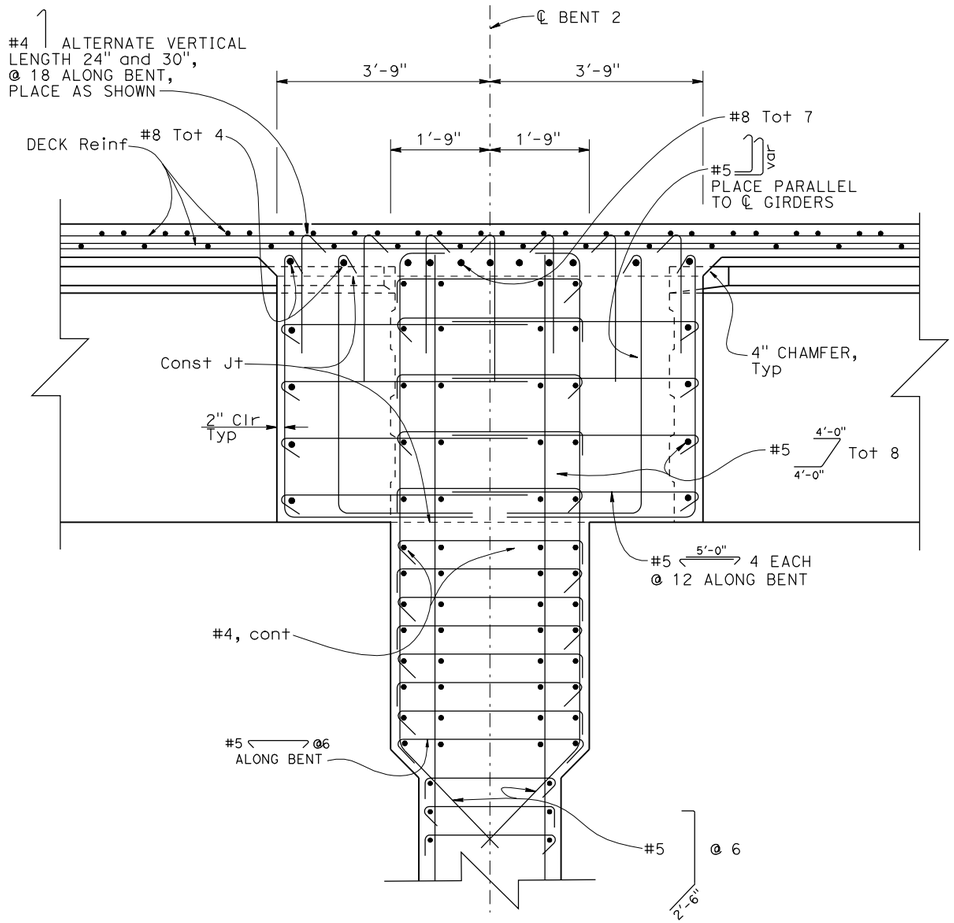


SECTION B-B
3/4"=1'-0"

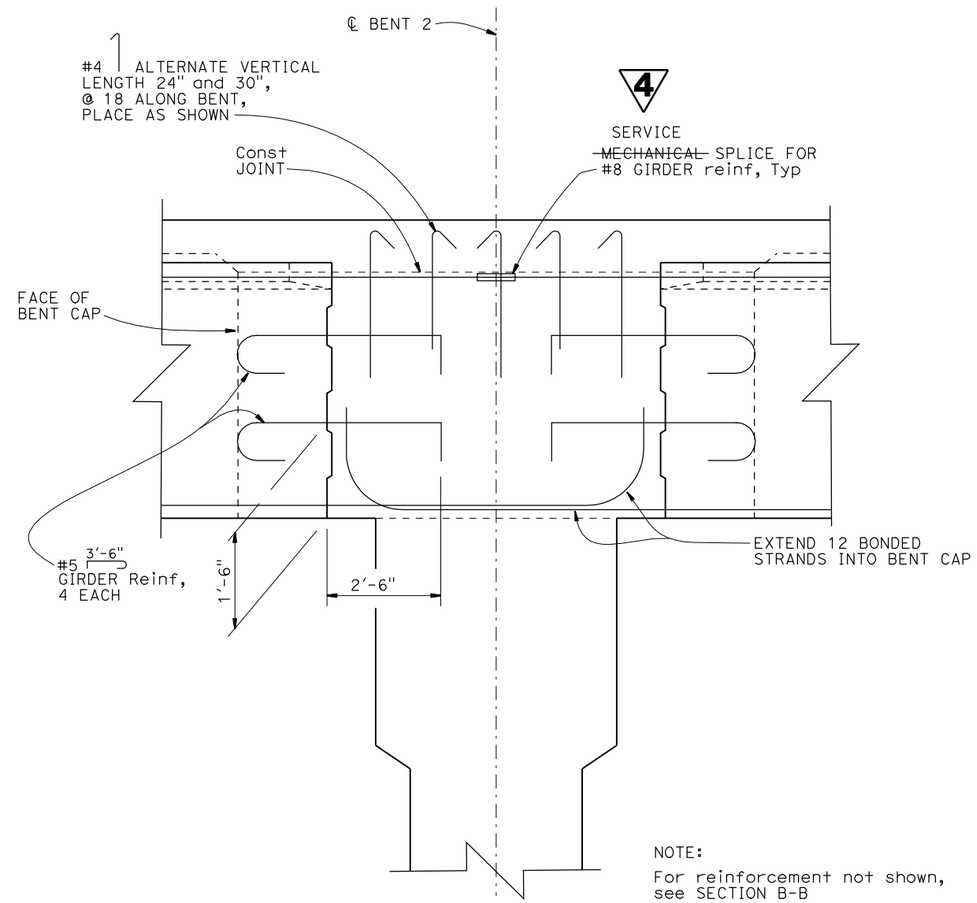


NOTE:
For reinforcement not shown, see SECTION B-B

SECTION C-C
3/4"=1'-0"

NOTE:
THE CONTRACTOR SHALL VERIFY ALL CONTROLLING FIELD DIMENSIONS BEFORE ORDERING OR FABRICATING ANY MATERIAL.

4 **REPLACED PER ADDENDUM NO. 4 DATED AUGUST 21, 2013**

| | BY | CHECKED |
|---|---|---|
| DESIGN | B. Shen | J. Wu |
| DETAILS | B. Jenko | B. Shen |
| QUANTITIES | B. Shen | J. Wu |

STATE OF CALIFORNIA
DEPARTMENT OF TRANSPORTATION

DIVISION OF ENGINEERING SERVICES
STRUCTURE DESIGN
DESIGN BRANCH 22

BRIDGE NO. 53-1198
POST MILE 4.3

# TEMPLE AVENUE OC (REPAIR)
## BENT DETAILS NO. 1

STRUCTURES DESIGN DETAIL SHEET (ENGLISH) (REV. 09-01-10)

ORIGINAL SCALE IN INCHES FOR REDUCED PLANS 0 1 2 3

UNIT: 3626
PROJECT NUMBER & PHASE: 07000005391
CONTRACT NO.: 07-278304

DISREGARD PRINTS BEARING EARLIER REVISION DATES
REVISION DATES 11-3-11 2-15-12 6-28-12 7-24-13
SHEET 15 OF 27

FILE => 53-1198-h-b01d101.dgn

USERNAME => s135307 DATE PLOTTED => 20-AUG-2013 TIME PLOTTED => 08:05

| DIST | COUNTY | ROUTE | POST MILES TOTAL PROJECT | SHEET No. | TOTAL SHEETS |
|---|---|---|---|---|---|
| 07 | LA | 405 | 4.3 | 80 | 89 |

REGISTERED CIVIL ENGINEER 06/28/12 DATE

4-08-2013
PLANS APPROVAL DATE

REGISTERED PROFESSIONAL ENGINEER BIN SHEN No. C76221 Exp. 06-30-14 CIVIL STATE OF CALIFORNIA

*The State of California or its officers or agents shall not be responsible for the accuracy or completeness of electronic copies of this plan sheet.*

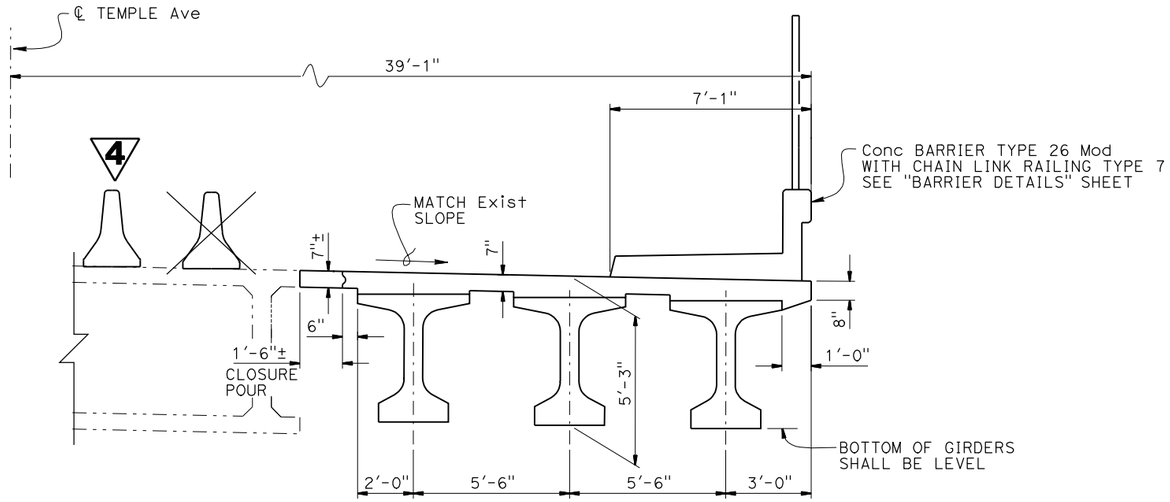


## TYPICAL SECTION

3/8"=1'-0"

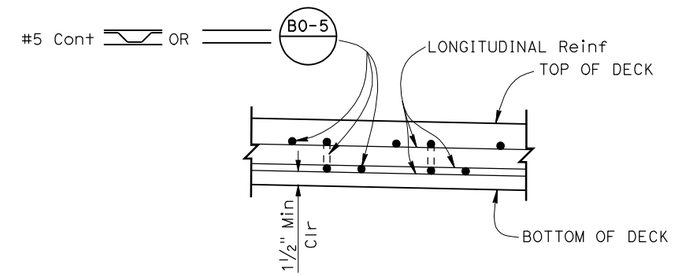


## SECTION A-A

1½" = 1'-0"

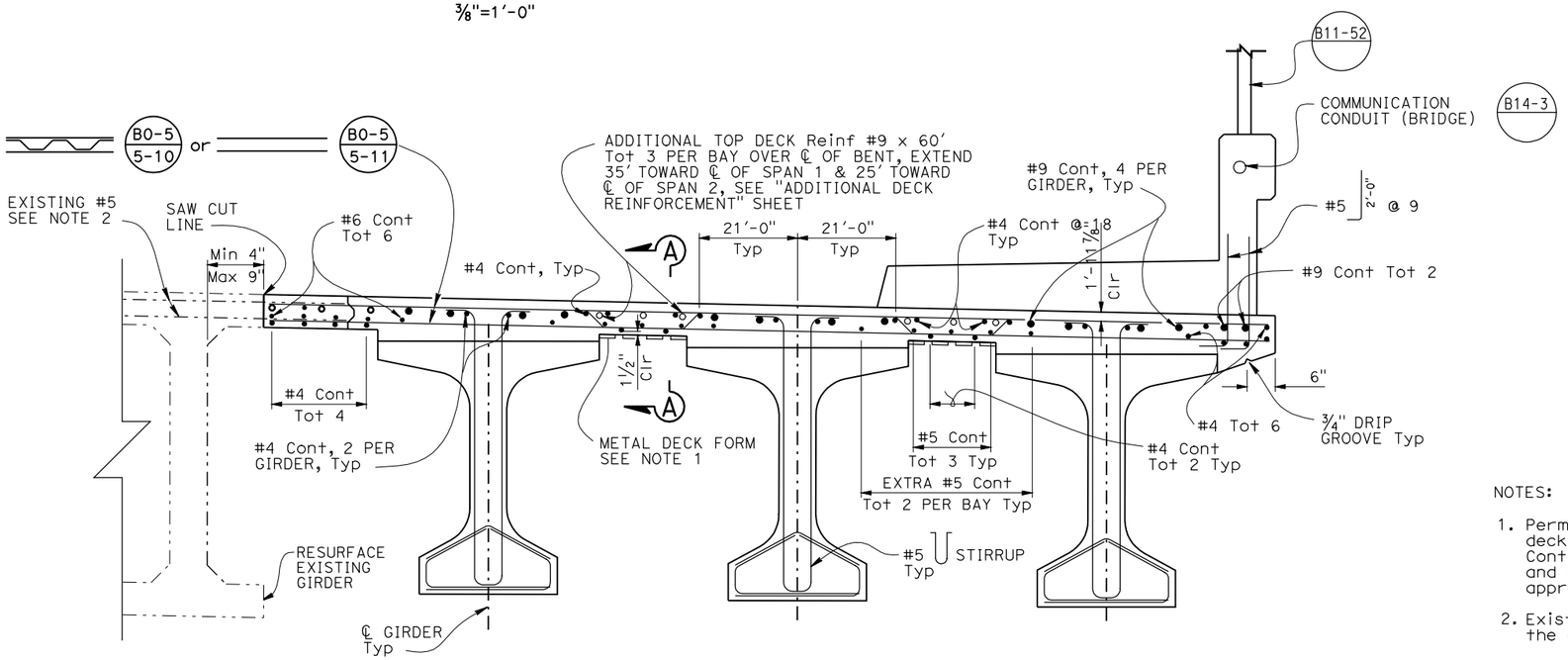


## PART TYPICAL SECTION

B0-5 B11-52 B14-3

¾"=1'-0"

NOTES:

1. Permanent metal deck forms are required for deck construction except at overhang. Contractor shall provide design calculations and support details to the Engineer for approval prior to construction.
2. Existing reinforcement to be protected in place in the closure pour section.

LEGEND:

— · · — Indicates existing structure.

NOTE:
THE CONTRACTOR SHALL VERIFY ALL CONTROLLING FIELD DIMENSIONS BEFORE ORDERING OR FABRICATING ANY MATERIAL.

**4 REPLACED PER ADDENDUM NO. 4 DATED AUGUST 21, 2013**

| | BY | CHECKED |
|---|---|---|
| DESIGN | B. Shen | J. Wu |
| DETAILS | B. Jenko | B. Shen |
| QUANTITIES | B. Shen | J. Wu |

STATE OF CALIFORNIA
DEPARTMENT OF TRANSPORTATION

DIVISION OF ENGINEERING SERVICES
STRUCTURE DESIGN
DESIGN BRANCH 22

BRIDGE NO. 53-1198
POST MILE 4.3

# TEMPLE AVENUE OC (REPAIR)
## TYPICAL SECTION

STRUCTURES DESIGN DETAIL SHEET (ENGLISH) (REV. 09-01-10)

ORIGINAL SCALE IN INCHES FOR REDUCED PLANS 0 1 2 3

UNIT: 3626
PROJECT NUMBER & PHASE: 07000005391
CONTRACT NO.: 07-278304

DISREGARD PRINTS BEARING EARLIER REVISION DATES

REVISION DATES: 6-9-11 8-24-11 11-17-11 7-24-13

SHEET 18 OF 27

FILE => 53-1198-k-ts01.add

USERNAME => s135307 DATE PLOTTED => 20-AUG-2013 TIME PLOTTED => 08:05

| DIST | COUNTY | ROUTE | POST MILES TOTAL PROJECT | SHEET No. | TOTAL SHEETS |
|---|---|---|---|---|---|
| 07 | LA | 405 | 4.3 | 83 | 89 |

REGISTERED CIVIL ENGINEER 06/28/12 DATE

4-08-2013
PLANS APPROVAL DATE

REGISTERED PROFESSIONAL ENGINEER BIN SHEN No. C76221 Exp. 06-30-14 CIVIL STATE OF CALIFORNIA

*The State of California or its officers or agents shall not be responsible for the accuracy or completeness of electronic copies of this plan sheet.*

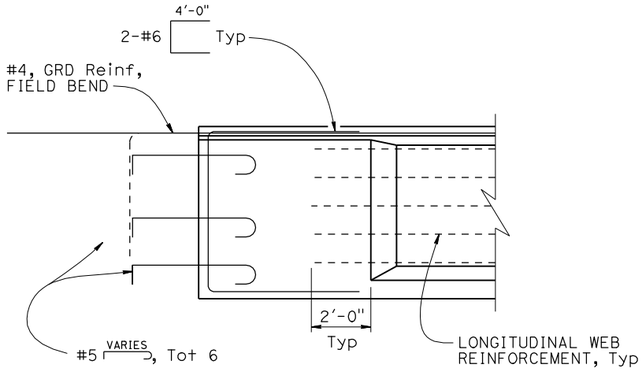


## GIRDER END BLOCK (AT ABUTMENT)

NO SCALE

NOTE:
All girder reinforcement extending out keep 3" clearance to face of end diaphragm

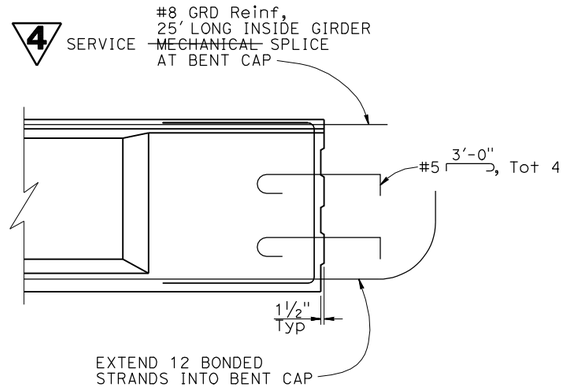


## GIRDER END BLOCK (AT BENT)

NO SCALE

NOTE:
For "GIRDER ELEVATION", "GIRDER PLAN" and "TYPICAL GIRDER SECTION", see "PC/PS BULB-TEE GIRDER DETAILS NO. 1" sheet

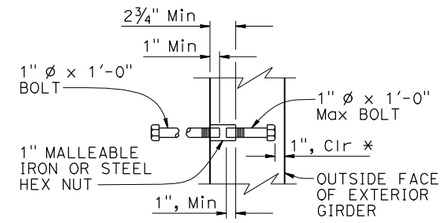


* Dimensin may be increased when insert assembly is used at end block

## INSERT ASSEMBLY

NO SCALE

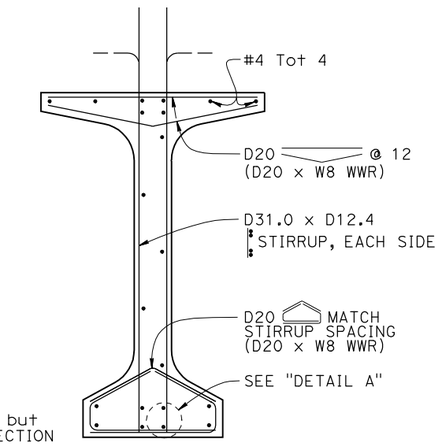


NOTES:
1. For details shown but not noted, see "SECTION A-A" detail
2. W8 WWR not shown

## WELDED WIRE REINFORCEMENT (WWR) ALTERNATIVE

NO SCALE

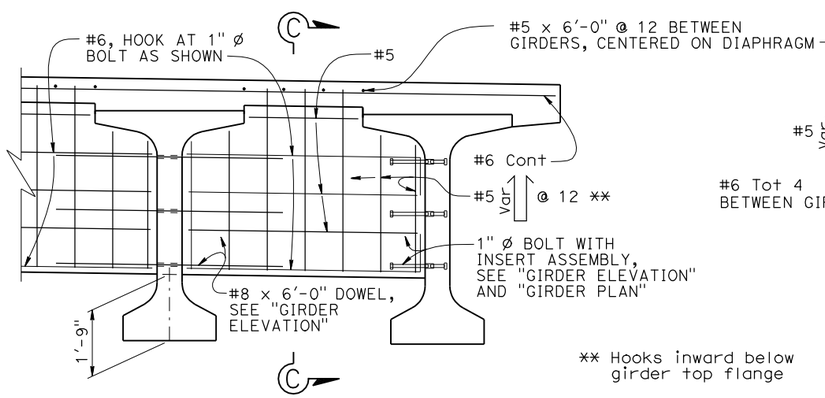


** Hooks inward below girder top flange

## INTERMEDIATE DIAPHRAGM

NO SCALE

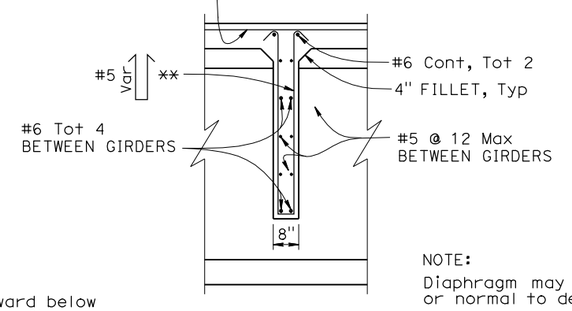


NOTE:
Diaphragm may be vertical or normal to deck grade

## SECTION C-C

NO SCALE

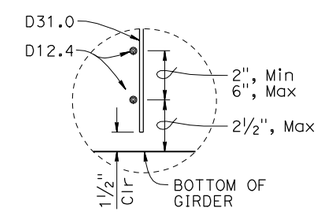


## DETAIL A

NO SCALE

NOTES:
1. Bottom of stirrup WWR detail shown, top similar
2. Longitudinal wire area shall be 40% or greater of vertical deformed wire's area

NOTE:
THE CONTRACTOR SHALL VERIFY ALL CONTROLLING FIELD DIMENSIONS BEFORE ORDERING OR FABRICATING ANY MATERIAL.

**4 REPLACED PER ADDENDUM NO. 4 DATED AUGUST 21, 2013**

| | BY | CHECKED |
|---|---|---|
| DESIGN | B. Shen | J. Wu |
| DETAILS | B. Jenko | B. Shen |
| QUANTITIES | B. Shen | J. Wu |

STATE OF CALIFORNIA
DEPARTMENT OF TRANSPORTATION

DIVISION OF ENGINEERING SERVICES
STRUCTURE DESIGN
DESIGN BRANCH 22

BRIDGE NO. 53-1198
POST MILE 4.3

# TEMPLE AVENUE OC (REPAIR)

## PC/PS BULB-TEE GIRDER DETAILS NO. 2

STRUCTURES DESIGN DETAIL SHEET (ENGLISH) (REV. 09-01-10)

ORIGINAL SCALE IN INCHES FOR REDUCED PLANS 0 1 2 3

UNIT: 3626
PROJECT NUMBER & PHASE: 07000005391
CONTRACT NO.: 07-278304

DISREGARD PRINTS BEARING EARLIER REVISION DATES

REVISION DATES: 8-29-11 10-24-11 1-3-12 7-24-13

SHEET 21 OF 27

FILE => 53-1198-1-gdt02.dgn

USERNAME => s135307 DATE PLOTTED => 20-AUG-2013 TIME PLOTTED => 08:05