Dist	COUNTY	ROUTE	POST MILES TOTAL PROJECT	SHEET No.	TOTAL SHEETS
07	LA	1	18.0/39.3	1	85

INDEX OF PLANS

SHEET No.	DESCRIPTION
1	TITTLE AND LOCATION MAP
2-15	CONSTRUCTION DETAILS
16-18	DRAINAGE PLAN, DETAIL, AND QUANTITIES
19-31	UTILITY PLANS
32-33	CONSTRUCTION AREA SIGNS
34-50	TRAFFIC HANDLING PLANS AND QUANTITIES
51-55	PAVEMENT DELINEATION PLANS AND QUANTITIES
56	SIGN QUANTITIES
57	SUMMARY OF QUANTITIES
58-67	ELECTRICAL PLANS
68-85	REVISED AND NEW STANDARD PLANS

THE STANDARD PLANS LIST APPLICABLE TO THE CONTRACT IS INCLUDED IN THE NOTICE TO BIDDERS AND SPECIAL PROVISION BOOK.

STATE OF CALIFORNIA

DEPARTMENT OF TRANSPORTATION

PROJECT PLANS FOR CONSTRUCTION ON STATE HIGHWAY

IN LOS ANGELES COUNTY AT VARIOUS LOCATIONS FROM CAMINO DE LAS COLINAS TO SUNSET BOULEVARD

TO BE SUPPLEMENTED BY STANDARD PLANS DATED MAY 2006

LOCATION MAP

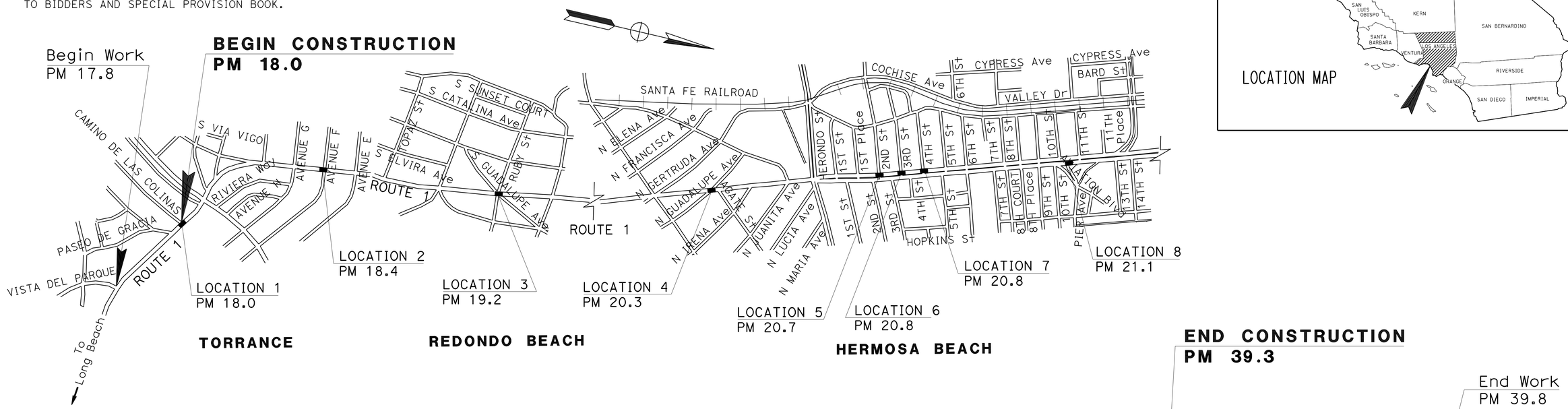

NO SCALE

N. Celina Aviles 04-19-11
PROJECT ENGINEER DATE
REGISTERED CIVIL ENGINEER

July 11, 2011
PLANS APPROVAL DATE

REGISTERED PROFESSIONAL ENGINEER N. CELINA AVILES No. 57106 Exp. 12/31/11 CIVIL STATE OF CALIFORNIA

THE STATE OF CALIFORNIA OR ITS OFFICERS OR AGENTS SHALL NOT BE RESPONSIBLE FOR THE ACCURACY OR COMPLETENESS OF SCANNED COPIES OF THIS PLAN SHEET.

THE CONTRACTOR SHALL POSSESS THE CLASS (OR CLASSES) OF OF LICENSE AS SPECIFIED IN THE "NOTICE TO BIDDERS."

CONTRACT No.	07-277804
PROJECT ID	0700000536

PROJECT MANAGER SYED HUQ
DESIGN ENGINEER THUAN CAO

LAST REVISION 05-18-11
DATE PLOTTED => 15-AUG-2011
TIME PLOTTED => 11:50

Dist	COUNTY	ROUTE	POST MILES TOTAL PROJECT	SHEET No.	TOTAL SHEETS
07	LA	1	18.0/39.3	2	85

N. Celina Aviles 5-18-11
REGISTERED CIVIL ENGINEER DATE

7-11-11
PLANS APPROVAL DATE

REGISTERED PROFESSIONAL ENGINEER N. CELINA AVILES No. 57106 Exp. 12/31/11 CIVIL STATE OF CALIFORNIA

THE STATE OF CALIFORNIA OR ITS OFFICERS OR AGENTS SHALL NOT BE RESPONSIBLE FOR THE ACCURACY OR COMPLETENESS OF SCANNED COPIES OF THIS PLAN SHEET.

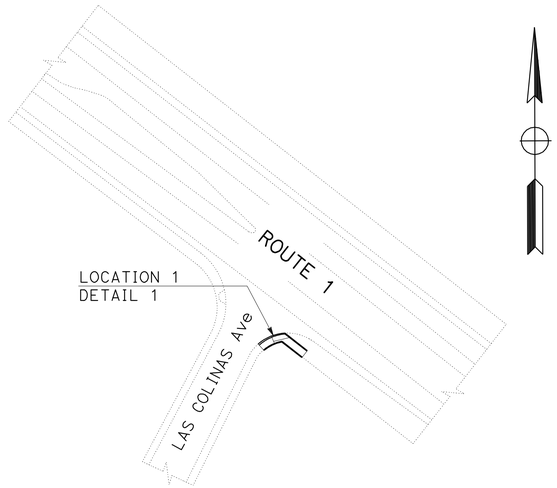

LOCATION 1
CAMINO DE LAS COLINAS (SE CORNER)

NOTES:

1. FOR ACCURATE RIGHT OF WAY DATA, CONTACT RIGHT OF WAY ENGINEERING AT THE DISTRICT OFFICE
2. REFERENCE POINT IS DETERMINED FROM FIELD MEASUREMENT

LEGEND:

DETECTABLE WARNING SURFACE

GROOVING

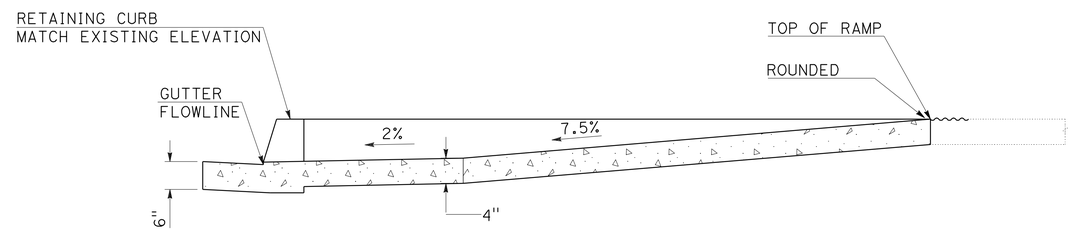

SECTION C-C

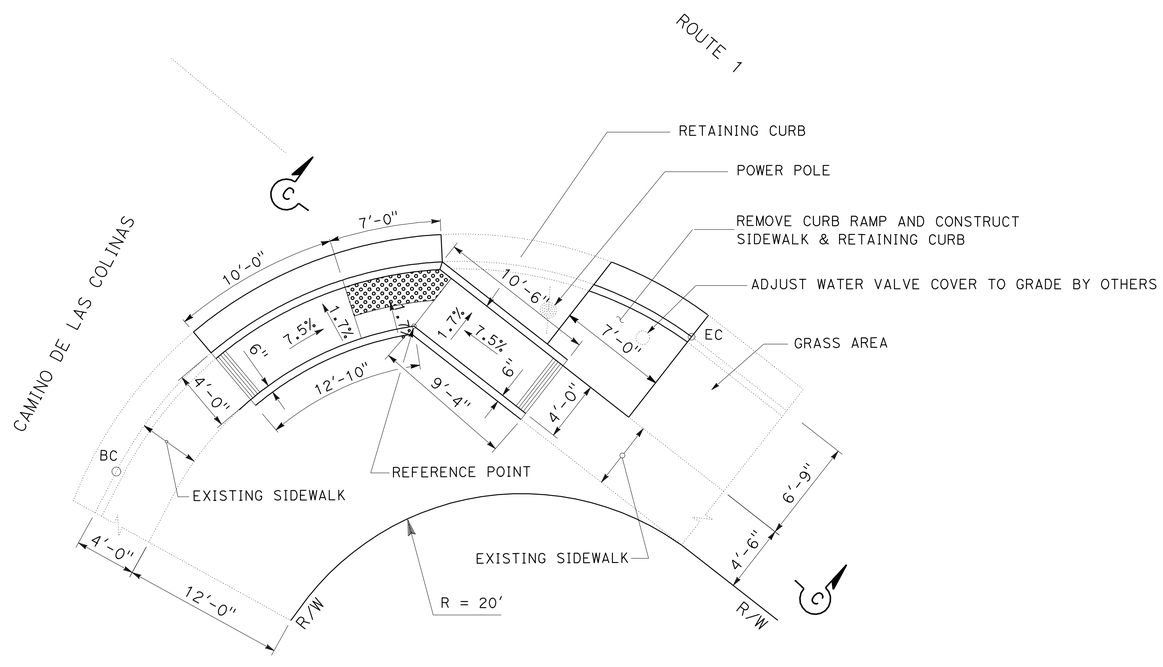

LOCATION 1-SE CORNER
DETAIL 1 - CASE C Mod

CONSTRUCTION DETAILS

NO SCALE

C-1

REVISED BY	DATE REVISED
TC	05-18-11

CALCULATED-DESIGNED BY	CHECKED BY
THUAN CAO	CELINA AVILES

FUNCTIONAL SUPERVISOR
CELINA AVILES

STATE OF CALIFORNIA - DEPARTMENT OF TRANSPORTATION
Caltrans
DESIGN

LAST REVISION 05-18-11 | DATE PLOTTED => 15-AUG-2011 | TIME PLOTTED => 11:50

Dist	COUNTY	ROUTE	POST MILES TOTAL PROJECT	SHEET No.	TOTAL SHEETS
07	LA	1	18.0/39.3	3	85

N. Celina Aviles 5-18-11
REGISTERED CIVIL ENGINEER DATE

7-11-11
PLANS APPROVAL DATE

REGISTERED PROFESSIONAL ENGINEER N. CELINA AVILES No. 57106 Exp. 12/31/11 CIVIL STATE OF CALIFORNIA

THE STATE OF CALIFORNIA OR ITS OFFICERS OR AGENTS SHALL NOT BE RESPONSIBLE FOR THE ACCURACY OR COMPLETENESS OF SCANNED COPIES OF THIS PLAN SHEET.

NOTE:

1. FOR ACCURATE RIGHT OF WAY DATA, CONTACT RIGHT OF WAY ENGINEERING AT THE DISTRICT OFFICE

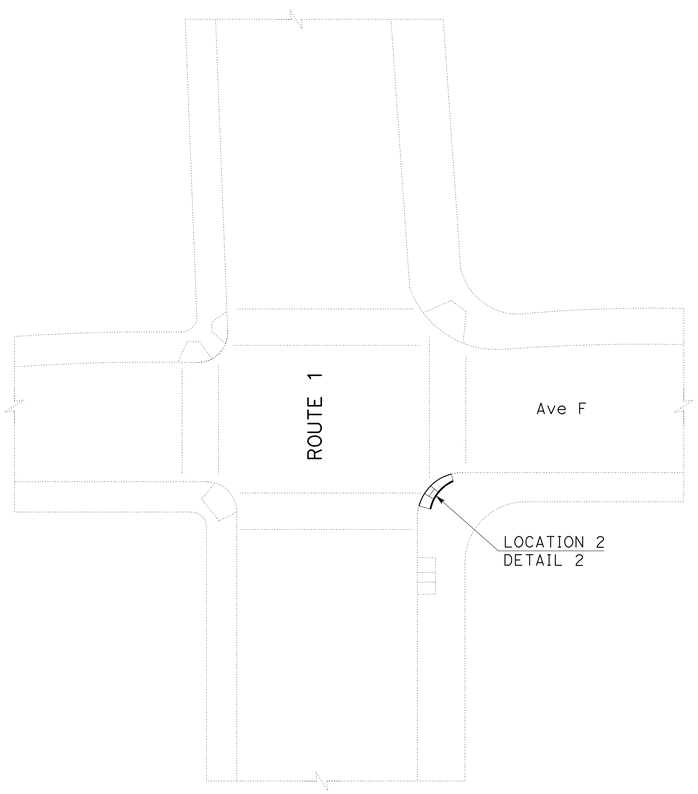

LOCATION 2
Ave F (SE CORNER)

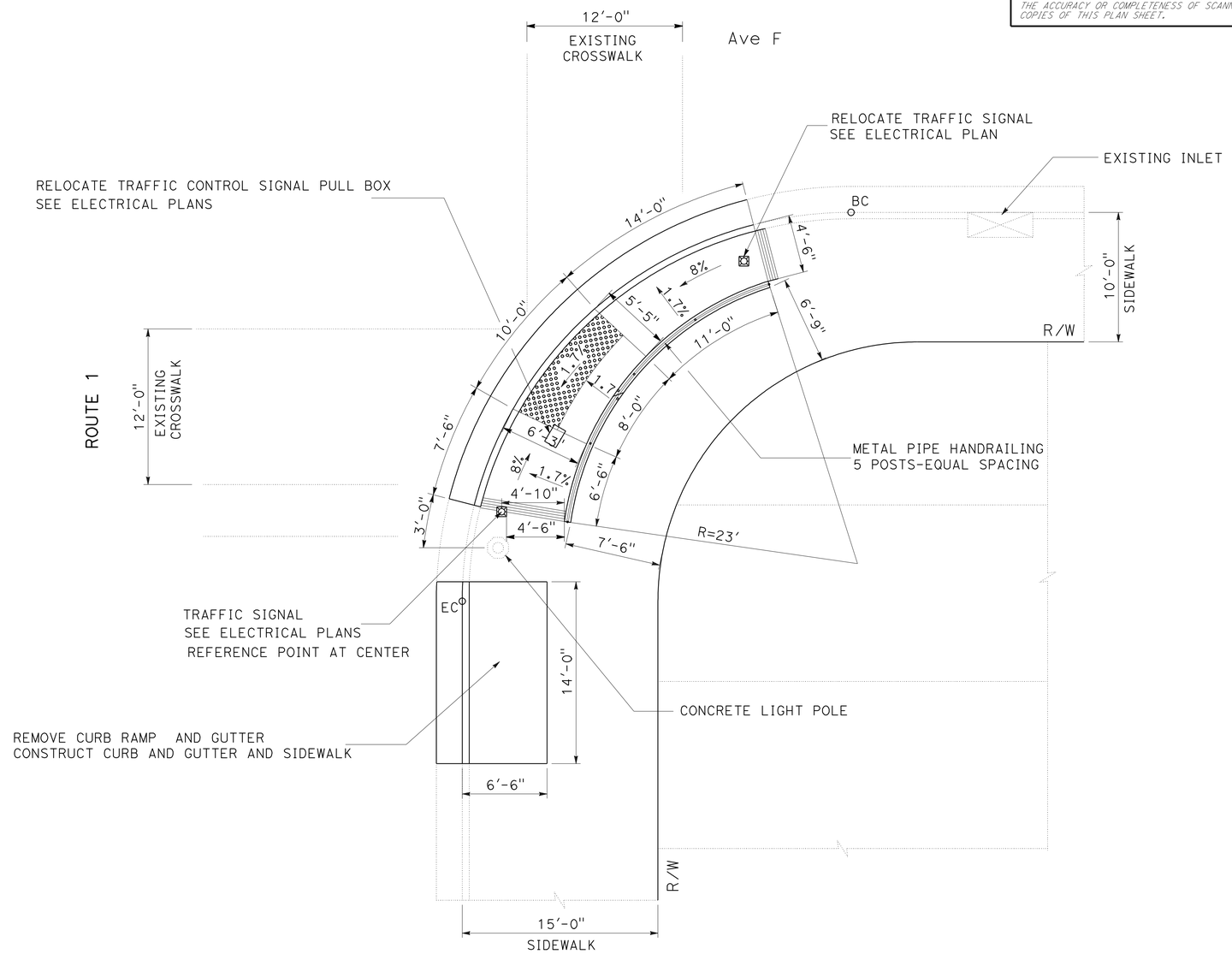

LOCATION 2 (SE CORNER)
DETAIL 2 (CASE DOUBLE C Mod)

CONSTRUCTION DETAILS

NO SCALE

C-2

STATE OF CALIFORNIA - DEPARTMENT OF TRANSPORTATION
Caltrans
DESIGN

FUNCTIONAL SUPERVISOR: CELINA AVILES
CALCULATED-DESIGNED BY: THUAN CAO
CHECKED BY: CELINA AVILES
REVISED BY: TC
DATE REVISED: 05-18-11

LAST REVISION 05-18-11 | DATE PLOTTED => 15-AUG-2011 | TIME PLOTTED => 11:50

Dist	COUNTY	ROUTE	POST MILES TOTAL PROJECT	SHEET No.	TOTAL SHEETS
07	LA	1	18.0/39.3	4	85

N. Celina Aviles 5-18-11
REGISTERED CIVIL ENGINEER DATE

7-11-11
PLANS APPROVAL DATE

REGISTERED PROFESSIONAL ENGINEER N. CELINA AVILES No. 57106 Exp. 12/31/11 CIVIL STATE OF CALIFORNIA

THE STATE OF CALIFORNIA OR ITS OFFICERS OR AGENTS SHALL NOT BE RESPONSIBLE FOR THE ACCURACY OR COMPLETENESS OF SCANNED COPIES OF THIS PLAN SHEET.

NOTE:

1. FOR ACCURATE RIGHT OF WAY DATA, CONTACT RIGHT OF WAY ENGINEERING AT THE DISTRICT OFFICE

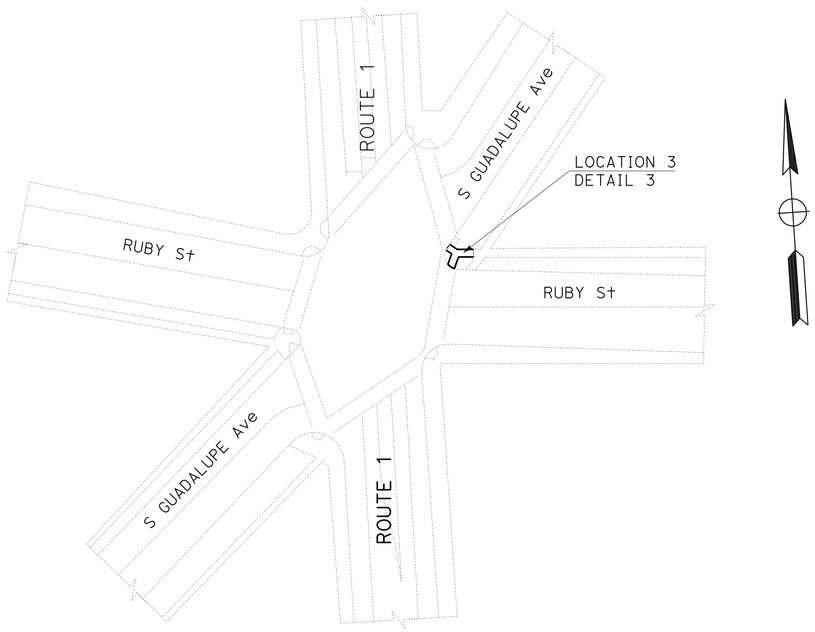

LOCATION 3
RUBY St/GUADALUPE Ave (SE CORNER)

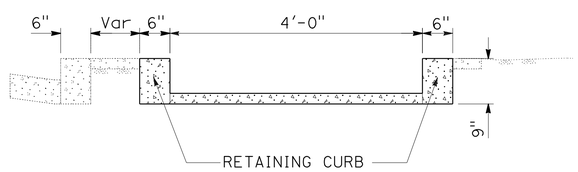

DETAIL 3
SECTION L-L

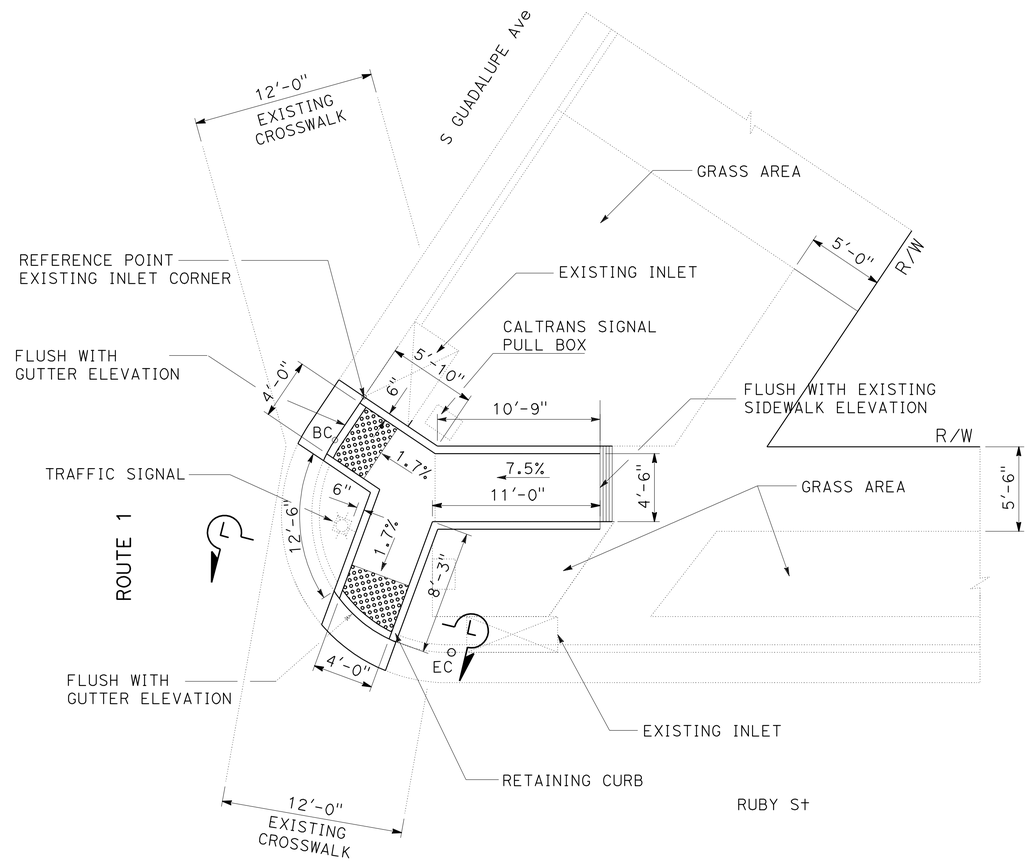

LOCATION 3 (SE CORNER)
DETAIL 3 (TYPE C PASSAGEWAY Mod)

CONSTRUCTION DETAILS

NO SCALE

C-3

THUAN CAO	TC	REVISED BY	
CELINA AVILES	05-18-11	DATE REVISED	
CALCULATED-DESIGNED BY			
CHECKED BY			
FUNCTIONAL SUPERVISOR			
CELINA AVILES			

STATE OF CALIFORNIA - DEPARTMENT OF TRANSPORTATION
DESIGN
Caltrans

LAST REVISION 05-18-11
DATE PLOTTED => 15-AUG-2011
TIME PLOTTED => 11:50

Dist	COUNTY	ROUTE	POST MILES TOTAL PROJECT	SHEET No.	TOTAL SHEETS
07	LA	1	18.0/39.3	5	85

N. Celina Aviles 5-18-11
REGISTERED CIVIL ENGINEER DATE

7-11-11
PLANS APPROVAL DATE

REGISTERED PROFESSIONAL ENGINEER
N. CELINA AVILES
No. 57106
Exp. 12/31/11
CIVIL
STATE OF CALIFORNIA

THE STATE OF CALIFORNIA OR ITS OFFICERS OR AGENTS SHALL NOT BE RESPONSIBLE FOR THE ACCURACY OR COMPLETENESS OF SCANNED COPIES OF THIS PLAN SHEET.

NOTE:

1. FOR ACCURATE RIGHT OF WAY DATA, CONTACT RIGHT OF WAY ENGINEERING AT THE DISTRICT OFFICE

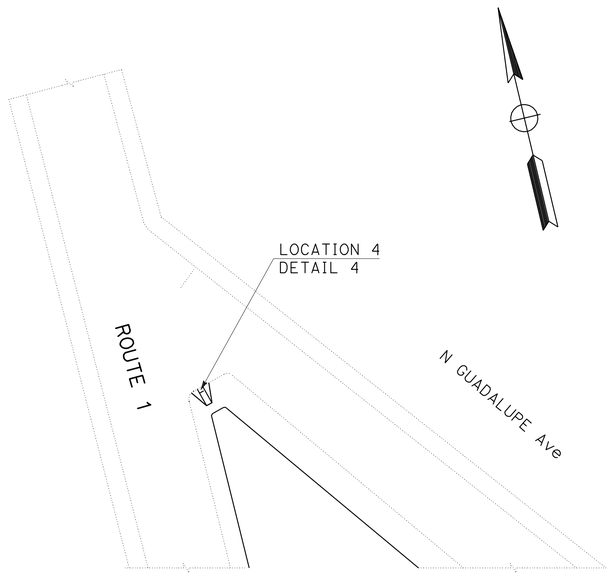

LOCATION 4
N GUADALUPE Ave (SE CORNER)

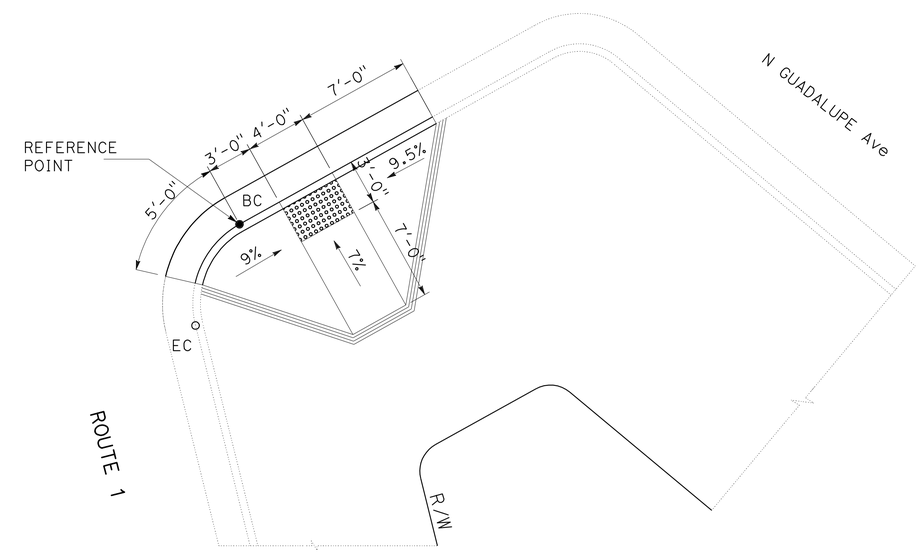

LOCATION 4 (SE CORNER)
DETAIL 4 (CASE A)

CONSTRUCTION DETAILS

NO SCALE

C-4

CALCULATED-DESIGNED BY	THUAN CAO	REVISED BY	TC
CHECKED BY	CELINA AVILES	DATE REVISED	05-18-11

FUNCTIONAL SUPERVISOR: CELINA AVILES

STATE OF CALIFORNIA - DEPARTMENT OF TRANSPORTATION
Caltrans®
DESIGN

LAST REVISION 05-18-11 | DATE PLOTTED => 15-AUG-2011 | TIME PLOTTED => 11:50

Dist	COUNTY	ROUTE	POST MILES TOTAL PROJECT	SHEET No.	TOTAL SHEETS
07	LA	1	18.0/39.3	6	85

N. Celina Aviles 5-18-11
REGISTERED CIVIL ENGINEER DATE

7-11-11
PLANS APPROVAL DATE

REGISTERED PROFESSIONAL ENGINEER N. CELINA AVILES No. 57106 Exp. 12/31/11 CIVIL STATE OF CALIFORNIA

THE STATE OF CALIFORNIA OR ITS OFFICERS OR AGENTS SHALL NOT BE RESPONSIBLE FOR THE ACCURACY OR COMPLETENESS OF SCANNED COPIES OF THIS PLAN SHEET.

NOTE:

1. FOR ACCURATE RIGHT OF WAY DATA, CONTACT RIGHT OF WAY ENGINEERING AT THE DISTRICT OFFICE

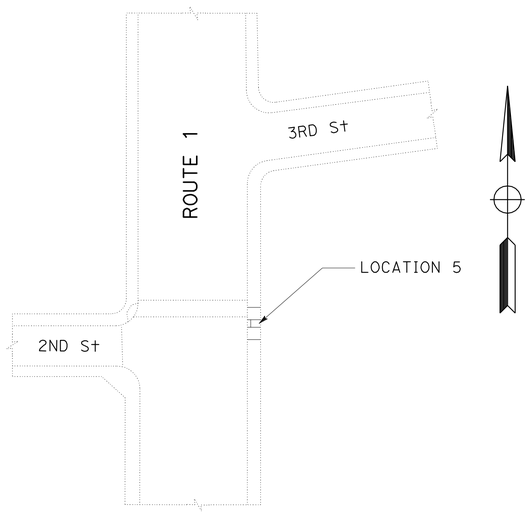

LOCATION 5
2nd St (EAST SIDE)

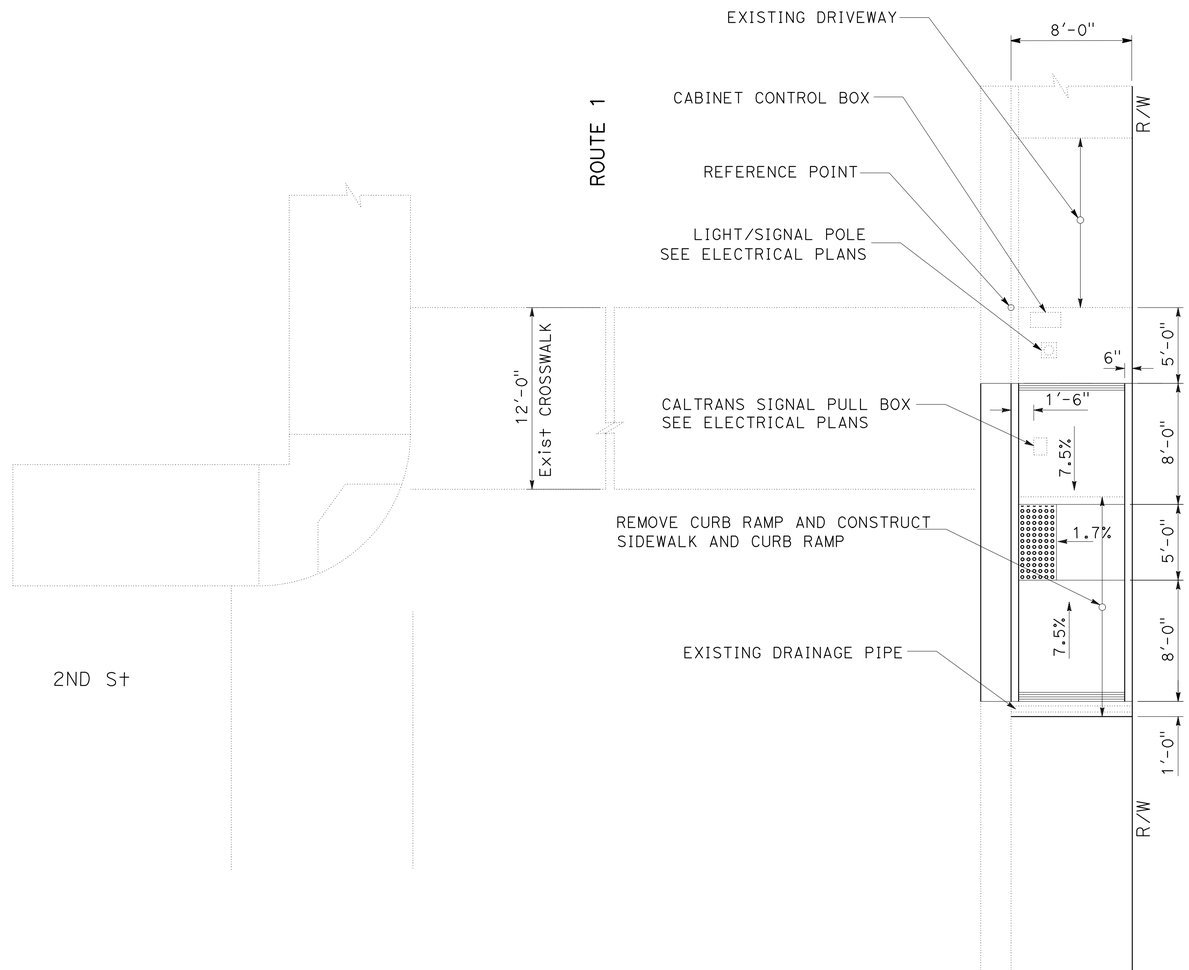

LOCATION 5 (EAST SIDE)
DETAIL 5 (CASE C)

CONSTRUCTION DETAILS

NO SCALE

C-5

REVISED BY	TC
DATE REVISED	05-18-11
CALCULATED-DESIGNED BY	THUAN CAO
CHECKED BY	CELINA AVILES
FUNCTIONAL SUPERVISOR	CELINA AVILES

STATE OF CALIFORNIA - DEPARTMENT OF TRANSPORTATION
Caltrans
DESIGN

LAST REVISION 05-18-11 | DATE PLOTTED => 15-AUG-2011 | TIME PLOTTED => 11:50

Dist	COUNTY	ROUTE	POST MILES TOTAL PROJECT	SHEET No.	TOTAL SHEETS
07	LA	1	18.0/39.3	7	85

REGISTERED CIVIL ENGINEER 5-18-11 DATE

7-11-11
PLANS APPROVAL DATE

REGISTERED PROFESSIONAL ENGINEER KHAN M-A HOSSAIN No. C59005 Exp. 6/30/13 CIVIL STATE OF CALIFORNIA

THE STATE OF CALIFORNIA OR ITS OFFICERS OR AGENTS SHALL NOT BE RESPONSIBLE FOR THE ACCURACY OR COMPLETENESS OF SCANNED COPIES OF THIS PLAN SHEET.

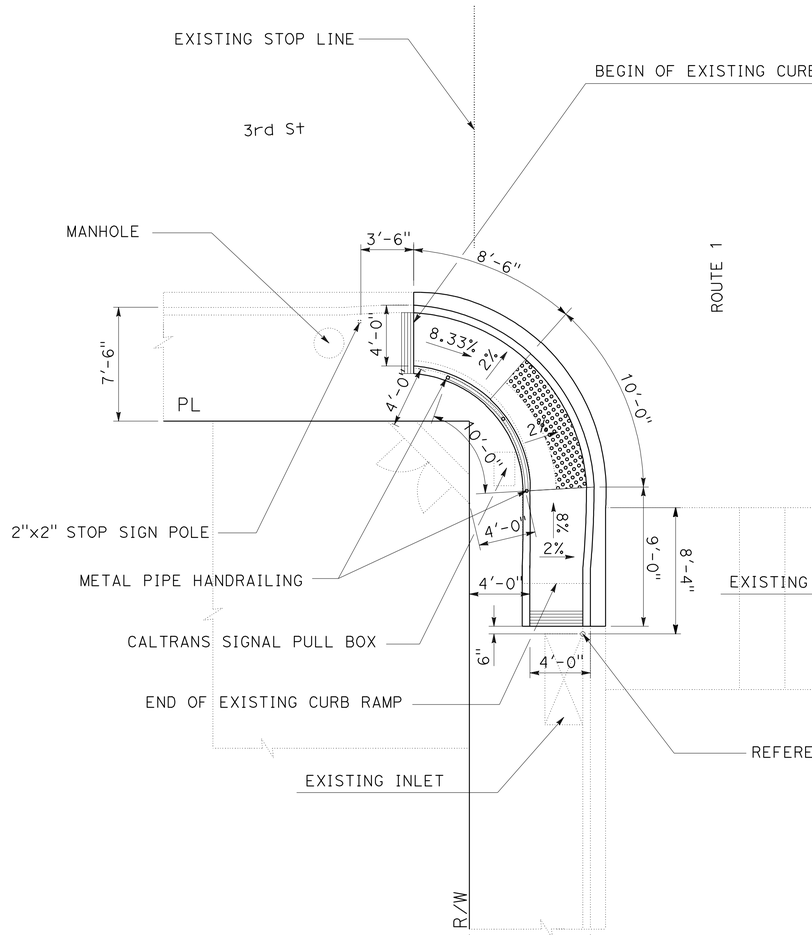

LOCATION 6A (WEST SIDE)
DETAIL 6A (CASE DOUBLE C Mod)

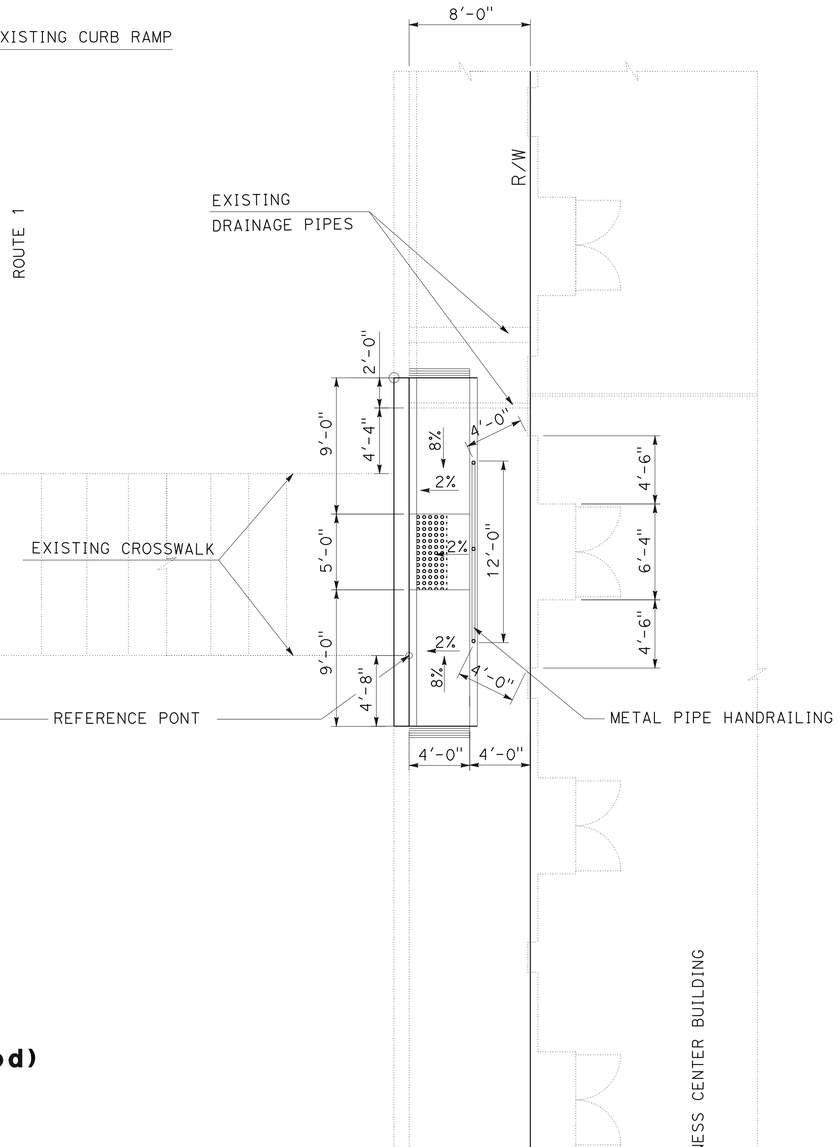

LOCATION 6B (EAST SIDE)

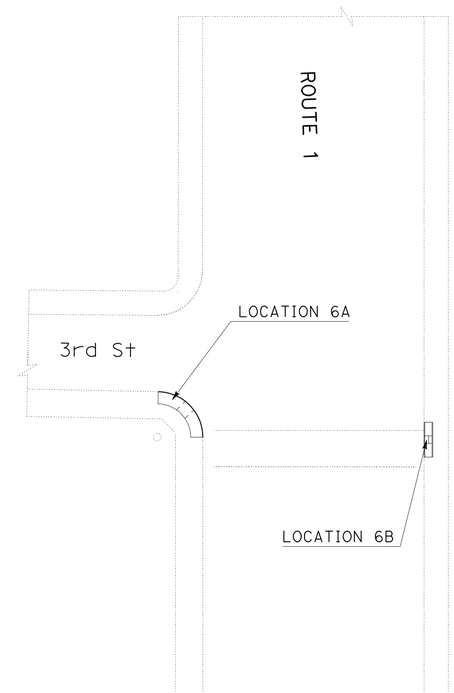

LOCATION 6
3rd St (EAST & WEST SIDE)

CONSTRUCTION DETAILS

NO SCALE

C-6

REVISED BY	DATE REVISED
TC	05-18-11

THUAN CAO — KHAN A HOSSAIN
CALCULATED-DESIGNED BY — CHECKED BY
FUNCTIONAL SUPERVISOR — KHAN A HOSSAIN

STATE OF CALIFORNIA - DEPARTMENT OF TRANSPORTATION
Caltrans
DESIGN

LAST REVISION 05-18-11 | DATE PLOTTED => 15-AUG-2011 | TIME PLOTTED => 11:50

Dist	COUNTY	ROUTE	POST MILES TOTAL PROJECT	SHEET No.	TOTAL SHEETS
07	LA	1	18.0/39.3	8	85

N. Celina Aviles 5-18-11
REGISTERED CIVIL ENGINEER DATE

7-11-11
PLANS APPROVAL DATE

REGISTERED PROFESSIONAL ENGINEER
N. CELINA AVILES
No. 57106
Exp. 12/31/11
CIVIL
STATE OF CALIFORNIA

THE STATE OF CALIFORNIA OR ITS OFFICERS OR AGENTS SHALL NOT BE RESPONSIBLE FOR THE ACCURACY OR COMPLETENESS OF SCANNED COPIES OF THIS PLAN SHEET.

NOTE:

1. FOR ACCURATE RIGHT OF WAY DATA, CONTACT RIGHT OF WAY ENGINEERING AT THE DISTRICT OFFICE

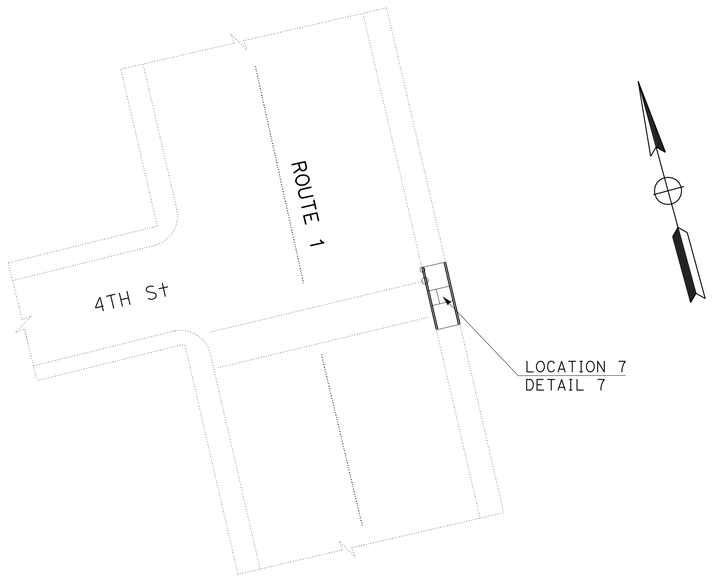

LOCATION 7
4th St (EAST SIDE)

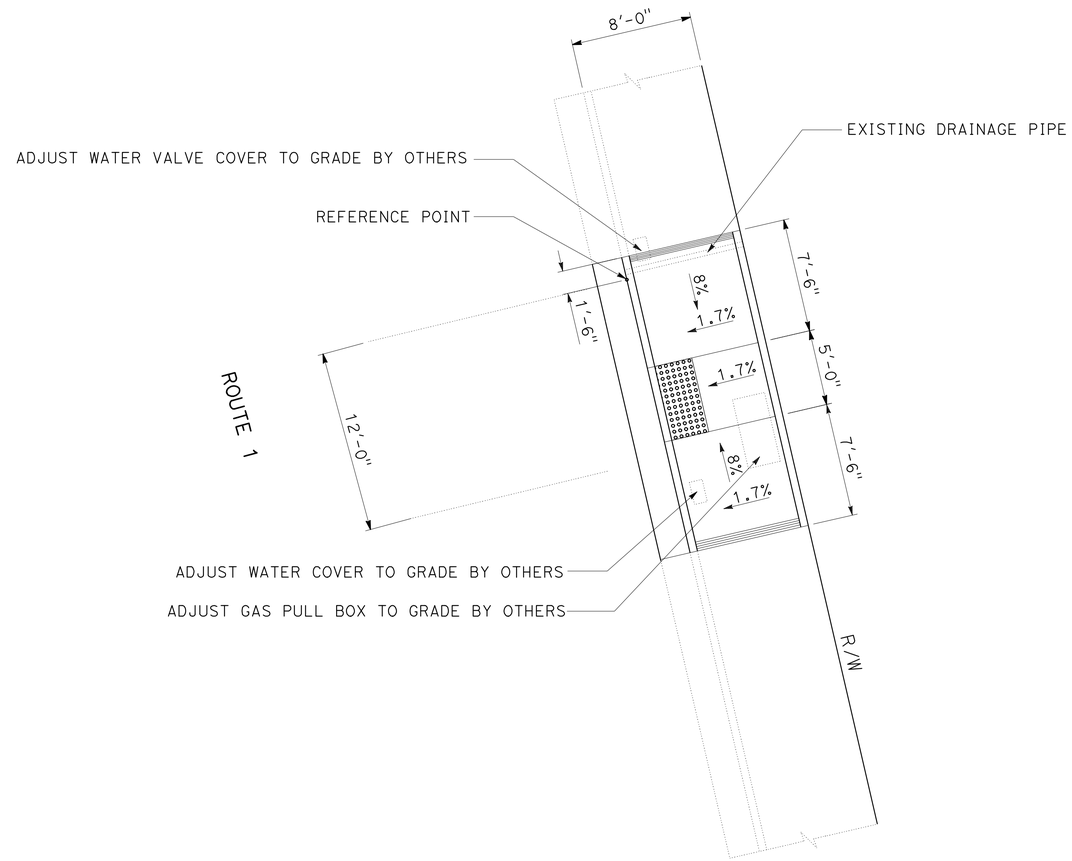

LOCATION 7 (EAST SIDE)
DETAIL 7 (CASE C)

CONSTRUCTION DETAILS

NO SCALE

C-7

REVISED BY	TC
DATE REVISED	05-18-11
CALCULATED-DESIGNED BY	THUAN CAO
CHECKED BY	CELINA AVILES
FUNCTIONAL SUPERVISOR	CELINA AVILES

STATE OF CALIFORNIA - DEPARTMENT OF TRANSPORTATION
Caltrans
DESIGN

LAST REVISION 05-18-11
DATE PLOTTED => 15-AUG-2011
TIME PLOTTED => 11:50

Dist	COUNTY	ROUTE	POST MILES TOTAL PROJECT	SHEET No.	TOTAL SHEETS
07	LA	1	18.0/39.3	9	85

N. Celina Aviles 5-18-11
REGISTERED CIVIL ENGINEER DATE

7-11-11
PLANS APPROVAL DATE

REGISTERED PROFESSIONAL ENGINEER N. CELINA AVILES No. 57106 Exp. 12/31/11 CIVIL STATE OF CALIFORNIA

THE STATE OF CALIFORNIA OR ITS OFFICERS OR AGENTS SHALL NOT BE RESPONSIBLE FOR THE ACCURACY OR COMPLETENESS OF SCANNED COPIES OF THIS PLAN SHEET.

NOTE:

1. FOR ACCURATE RIGHT OF WAY DATA, CONTACT RIGHT OF WAY ENGINEERING AT THE DISTRICT OFFICE

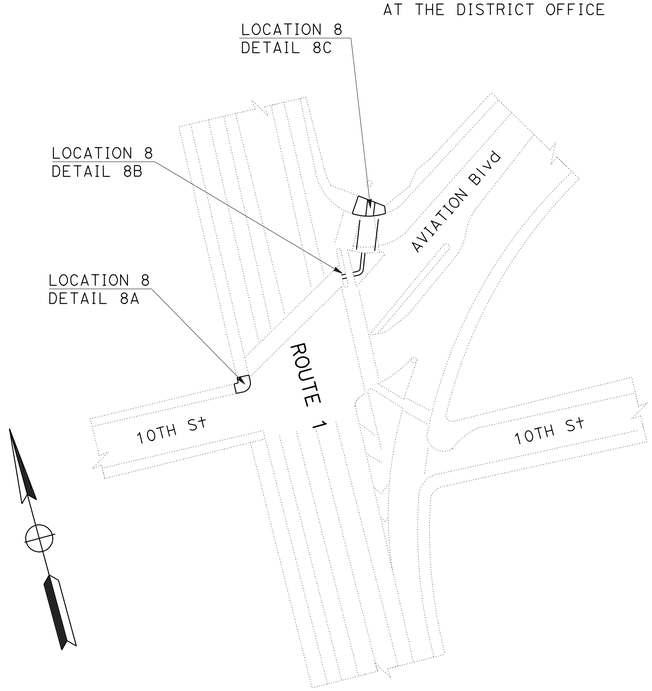

LOCATION 8
AVIATION BOULEVARD & 10th St

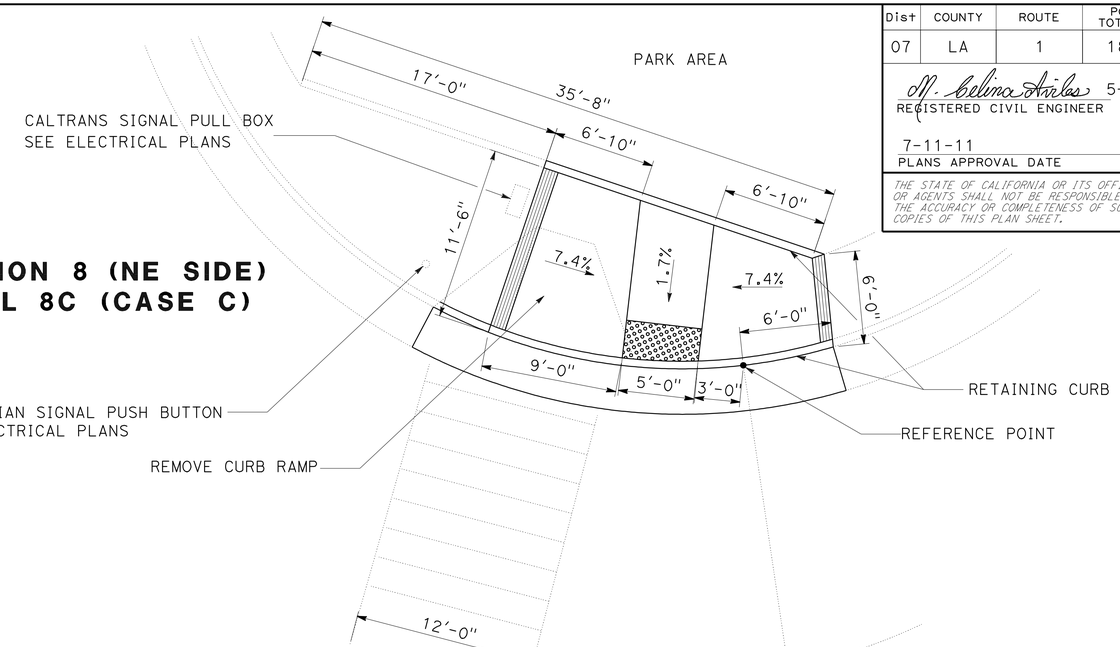

LOCATION 8 (NE SIDE)
DETAIL 8C (CASE C)

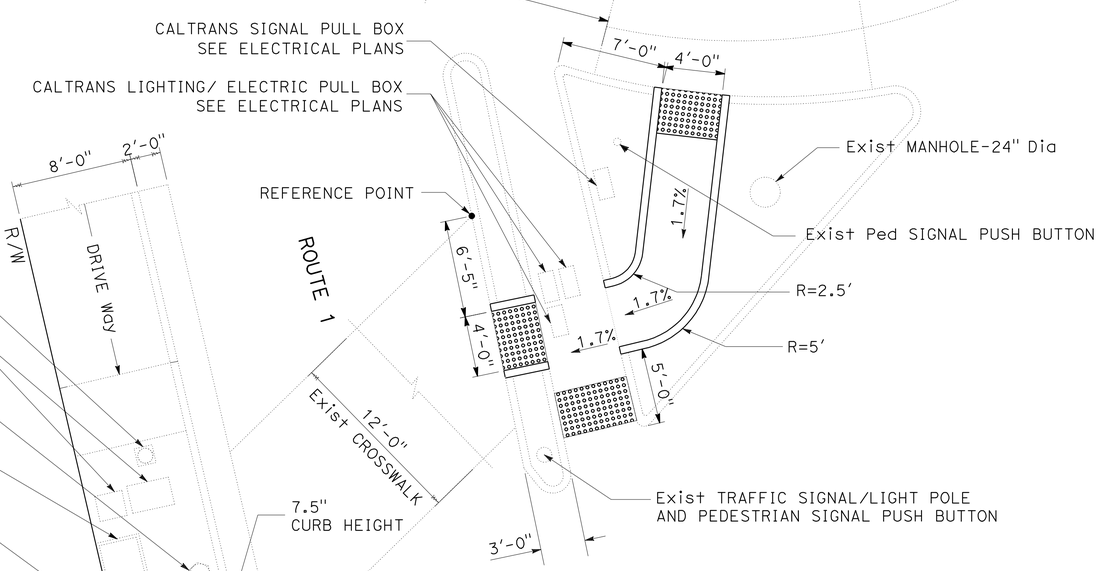

LOCATION 8 (NE SIDE)
DETAIL 8B (TYPE B PASSAGE WAY)

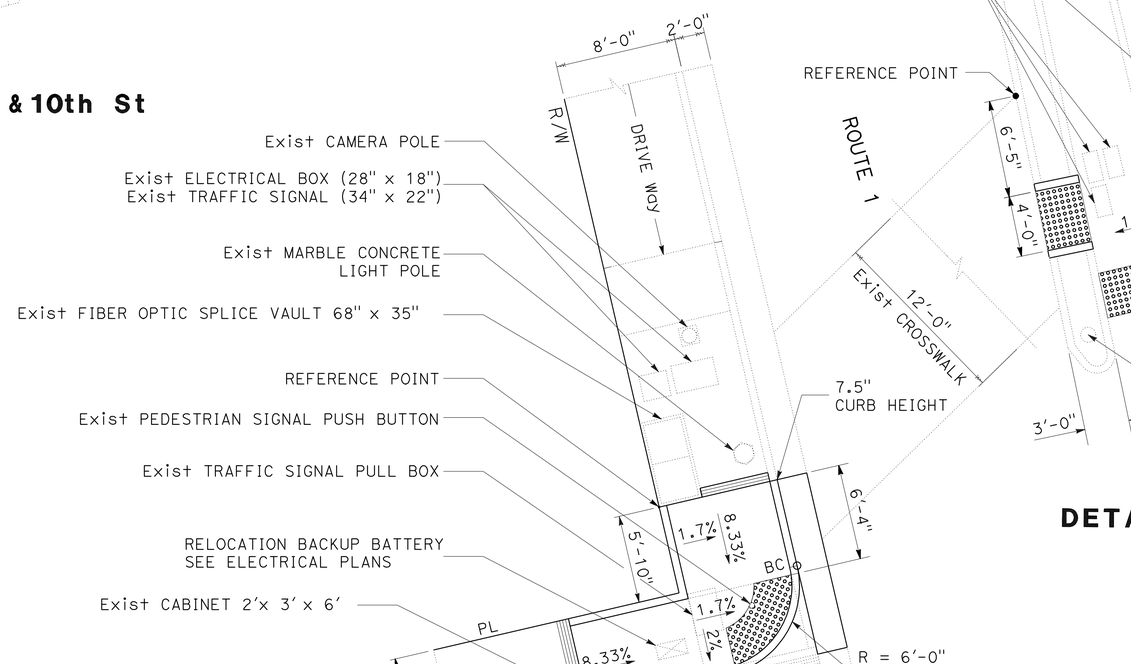

LOCATION 8 (NW SIDE)
DETAIL 8A (CASE C Mod)

CONSTRUCTION DETAILS

NO SCALE

C-8

REVISED BY	DATE REVISED
TC	05-18-11

CALCULATED-DESIGNED BY: THUAN CAO
CHECKED BY: CELINA AVILES
FUNCTIONAL SUPERVISOR: CELINA AVILES

STATE OF CALIFORNIA - DEPARTMENT OF TRANSPORTATION
Caltrans
DESIGN

LAST REVISION 05-18-11
DATE PLOTTED => 15-AUG-2011
TIME PLOTTED => 11:50

Dist	COUNTY	ROUTE	POST MILES TOTAL PROJECT	SHEET No.	TOTAL SHEETS
07	LA	1	18.0/39.3	10	85

N. Celina Aviles 5-18-11
REGISTERED CIVIL ENGINEER DATE

7-11-11
PLANS APPROVAL DATE

REGISTERED PROFESSIONAL ENGINEER N. CELINA AVILES No. 57106 Exp. 12/31/11 CIVIL STATE OF CALIFORNIA

THE STATE OF CALIFORNIA OR ITS OFFICERS OR AGENTS SHALL NOT BE RESPONSIBLE FOR THE ACCURACY OR COMPLETENESS OF SCANNED COPIES OF THIS PLAN SHEET.

NOTE:

1. FOR ACCURATE RIGHT OF WAY DATA, CONTACT RIGHT OF WAY ENGINEERING AT THE DISTRICT OFFICE

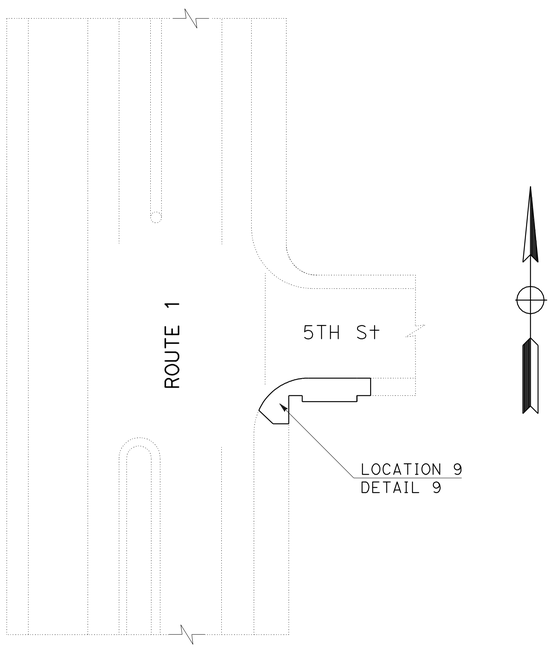

LOCATION 9
5th St (SE CORNER)

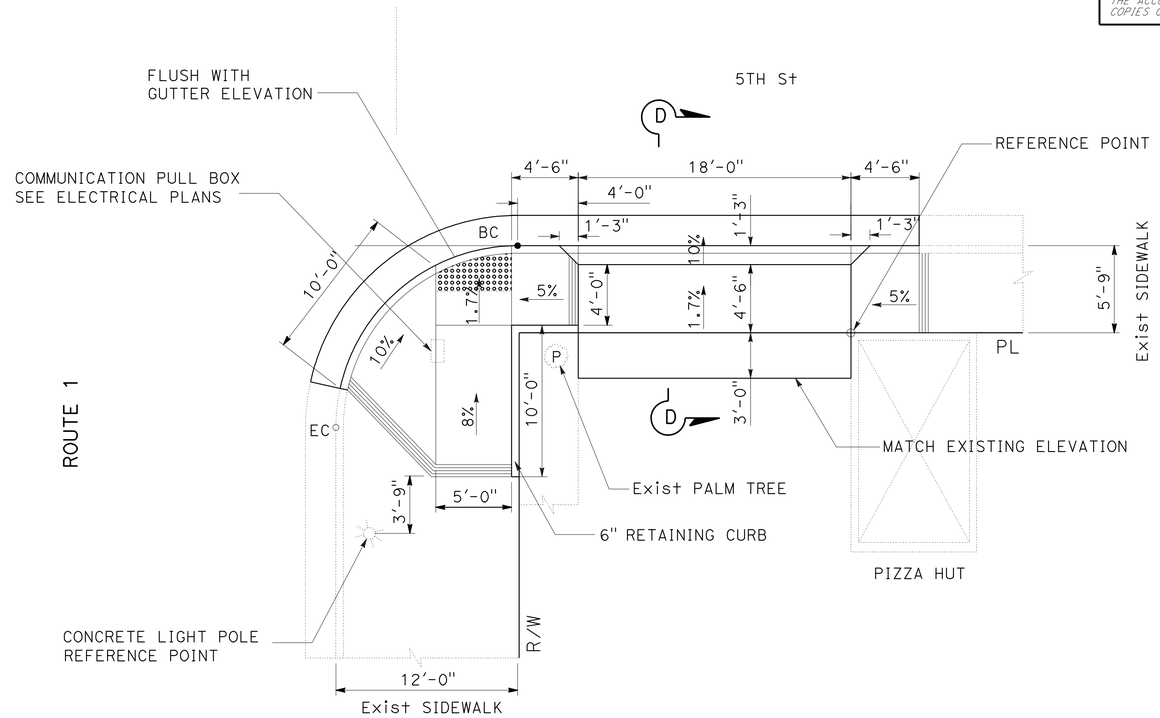

LOCATION 9
DETAIL 9 (CASE C Mod)

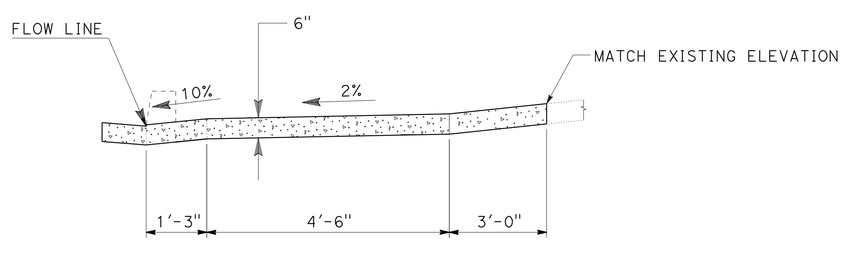

SECTION D-D

CONSTRUCTION DETAILS

NO SCALE

C-9

REVISED BY	DATE REVISED
TC	05-18-11

CALCULATED-DESIGNED BY	CHECKED BY
THUAN CAO	CELINA AVILES

FUNCTIONAL SUPERVISOR: CELINA AVILES

STATE OF CALIFORNIA - DEPARTMENT OF TRANSPORTATION
Caltrans
DESIGN

LAST REVISION 05-18-11 | DATE PLOTTED => 15-AUG-2011 | TIME PLOTTED => 11:50

Dist	COUNTY	ROUTE	POST MILES TOTAL PROJECT	SHEET No.	TOTAL SHEETS
07	LA	1	18.0/39.3	11	85

N. Celina Aviles 5-18-11
REGISTERED CIVIL ENGINEER DATE

7-11-11
PLANS APPROVAL DATE

REGISTERED PROFESSIONAL ENGINEER N. CELINA AVILES No. 57106 Exp. 12/31/11 CIVIL STATE OF CALIFORNIA

THE STATE OF CALIFORNIA OR ITS OFFICERS OR AGENTS SHALL NOT BE RESPONSIBLE FOR THE ACCURACY OR COMPLETENESS OF SCANNED COPIES OF THIS PLAN SHEET.

NOTE:

1. FOR ACCURATE RIGHT OF WAY DATA, CONTACT RIGHT OF WAY ENGINEERING AT THE DISTRICT OFFICE

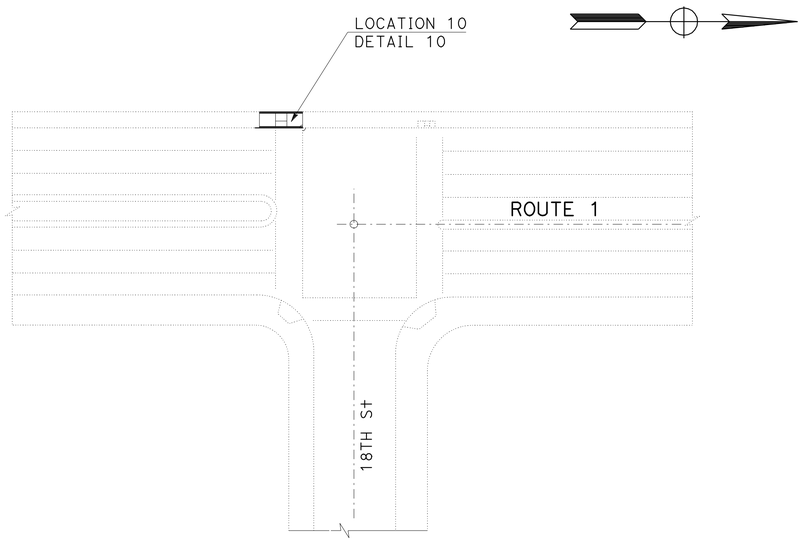

LOCATION 10
8th St (WEST SIDE)

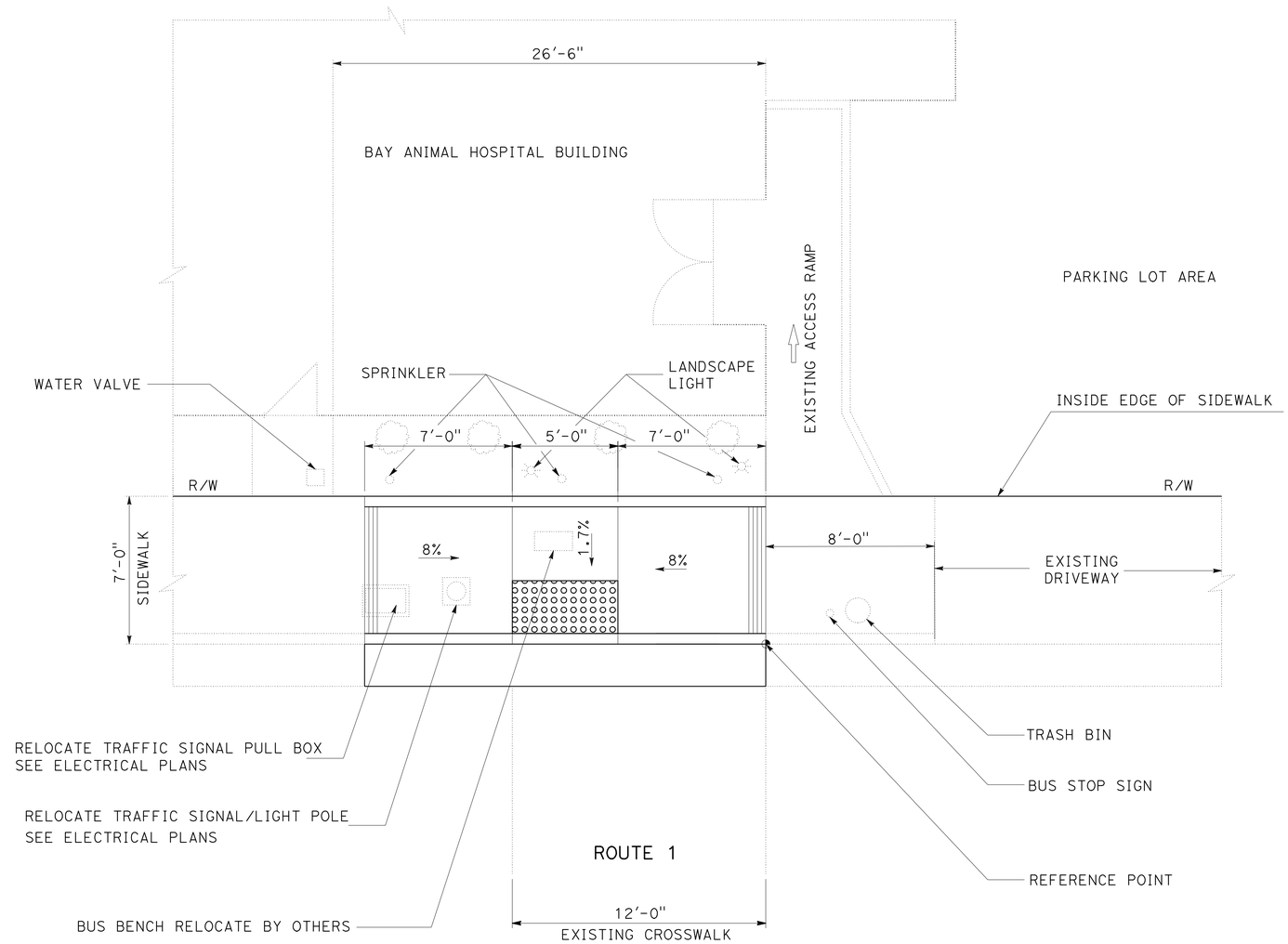

LOCATION 10 (WEST SIDE)
DETAIL 10 (CASE C)

CONSTRUCTION DETAILS

NO SCALE

C-10

REVISED BY	DATE REVISED
TC	05-18-11

CALCULATED-DESIGNED BY	CHECKED BY
THUAN CAO	CELINA AVILES

FUNCTIONAL SUPERVISOR
CELINA AVILES

STATE OF CALIFORNIA - DEPARTMENT OF TRANSPORTATION
Caltrans
DESIGN

LAST REVISION 05-18-11 | DATE PLOTTED => 15-AUG-2011 | TIME PLOTTED => 11:50

Dist	COUNTY	ROUTE	POST MILES TOTAL PROJECT	SHEET No.	TOTAL SHEETS
07	LA	1	18.0/39.3	12	85

N. Celina Aviles 5-18-11
REGISTERED CIVIL ENGINEER DATE

7-11-11
PLANS APPROVAL DATE

REGISTERED PROFESSIONAL ENGINEER N. CELINA AVILES No. 57106 Exp. 12/31/11 CIVIL STATE OF CALIFORNIA

THE STATE OF CALIFORNIA OR ITS OFFICERS OR AGENTS SHALL NOT BE RESPONSIBLE FOR THE ACCURACY OR COMPLETENESS OF SCANNED COPIES OF THIS PLAN SHEET.

NOTE:

1. FOR ACCURATE RIGHT OF WAY DATA, CONTACT RIGHT OF WAY ENGINEERING AT THE DISTRICT OFFICE

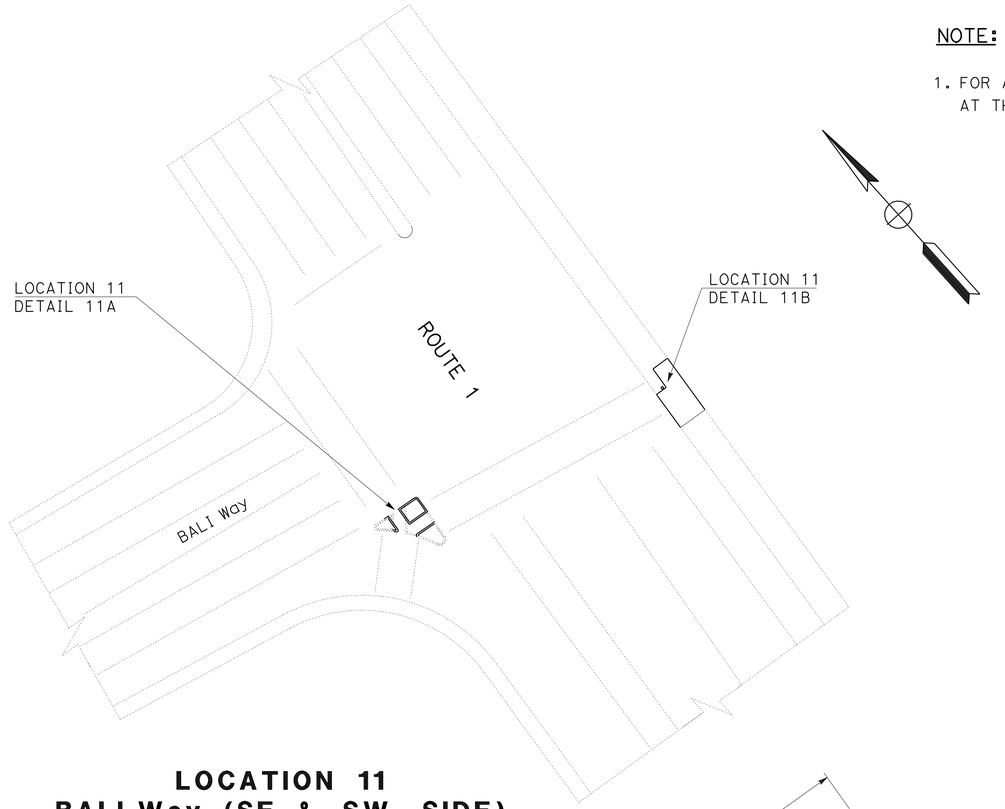

LOCATION 11
BALI Way (SE & SW SIDE)

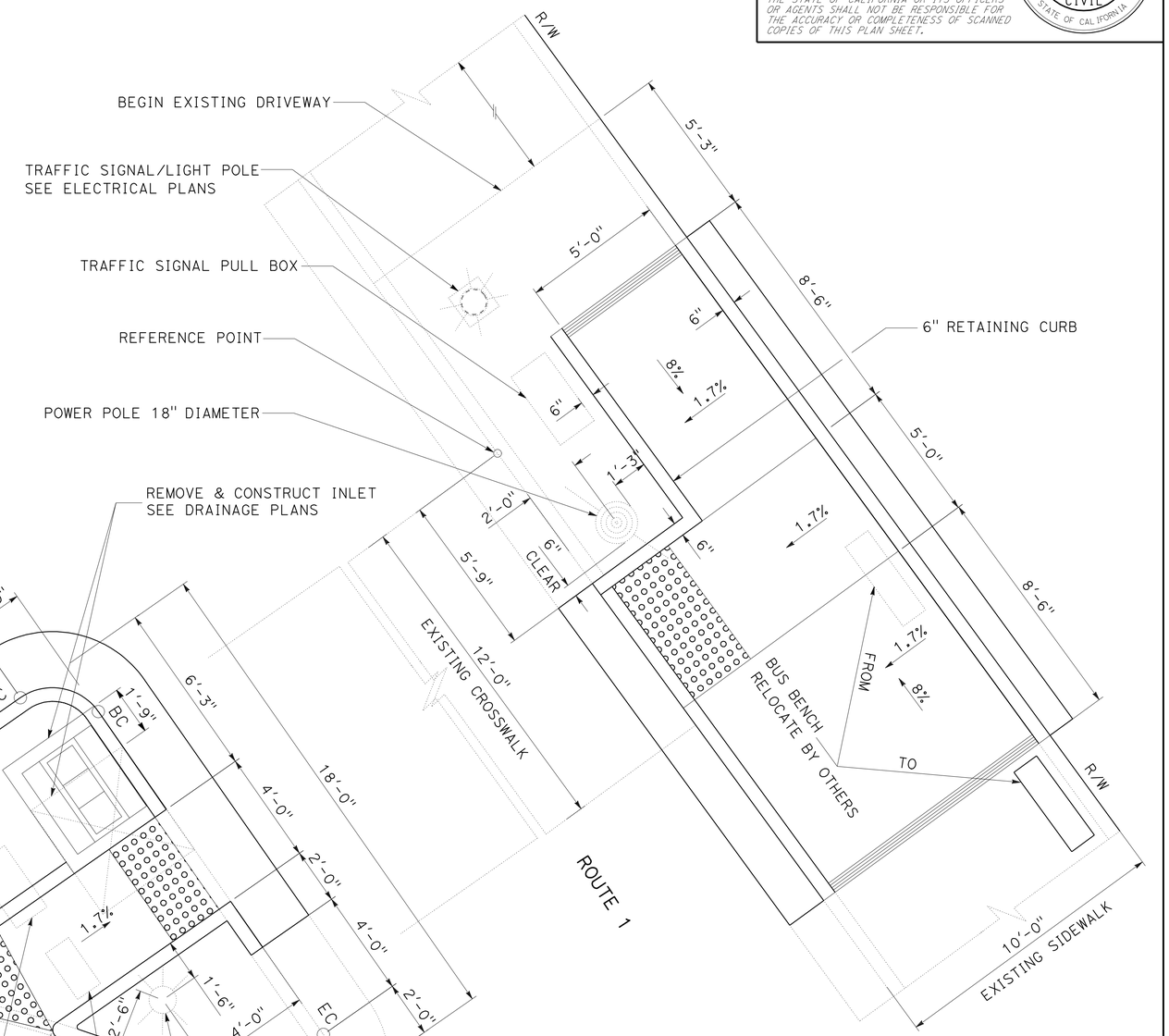

LOCATION 11B (SE CORNER)
DETAIL 11B (CASE C Mod)

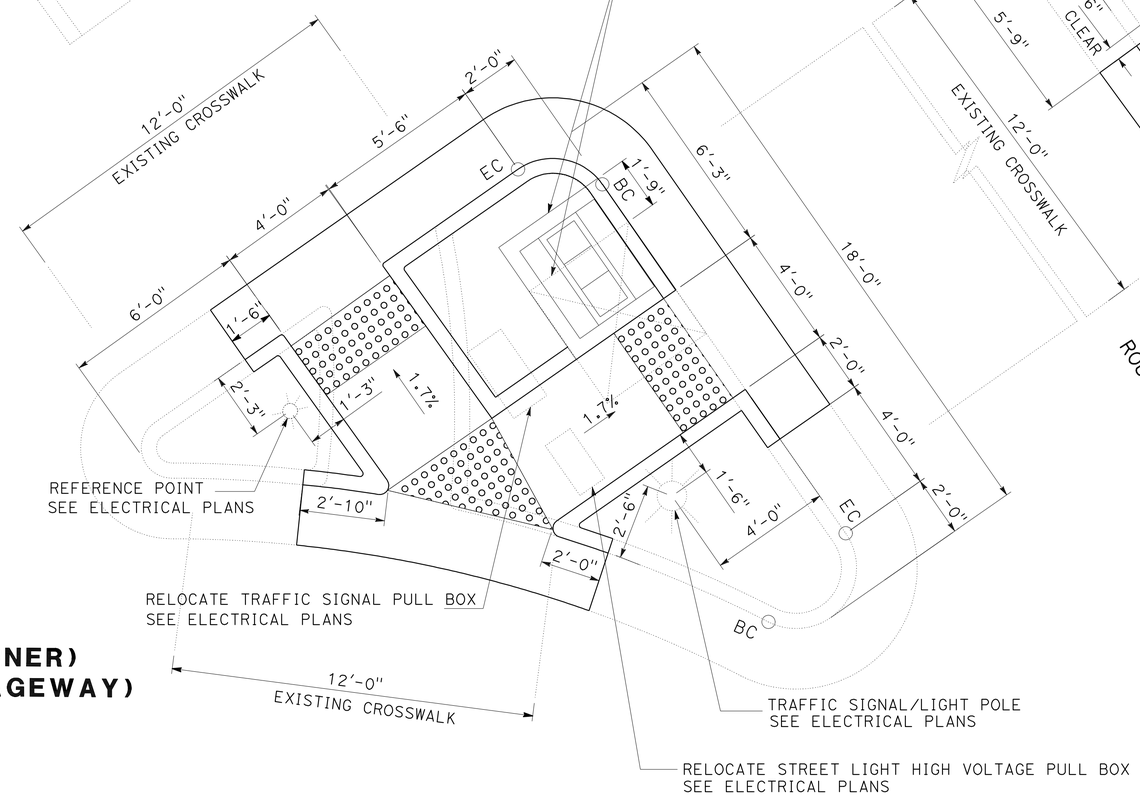

LOCATION 11A (SW CORNER)
DETAIL 11A (TYPE C PASSAGEWAY)

CONSTRUCTION DETAILS

NO SCALE

C-11

STATE OF CALIFORNIA - DEPARTMENT OF TRANSPORTATION	FUNCTIONAL SUPERVISOR	REVISED BY	TC
Caltrans	CELINA AVILES	DATE REVISED	05-18-11
DESIGN	CALCULATED-DESIGNED BY	THUAN CAO	
	CHECKED BY	CELINA AVILES	

LAST REVISION 05-18-11 | DATE PLOTTED => 15-AUG-2011 | TIME PLOTTED => 11:50

Dist	COUNTY	ROUTE	POST MILES TOTAL PROJECT	SHEET No.	TOTAL SHEETS
07	LA	1	18.0/39.3	13	85

N. Celina Aviles 5-18-11
REGISTERED CIVIL ENGINEER DATE

7-11-11
PLANS APPROVAL DATE

REGISTERED PROFESSIONAL ENGINEER
N. CELINA AVILES
No. 57106
Exp. 12/31/11
CIVIL
STATE OF CALIFORNIA

THE STATE OF CALIFORNIA OR ITS OFFICERS OR AGENTS SHALL NOT BE RESPONSIBLE FOR THE ACCURACY OR COMPLETENESS OF SCANNED COPIES OF THIS PLAN SHEET.

NOTE:

1. FOR ACCURATE RIGHT OF WAY DATA, CONTACT RIGHT OF WAY ENGINEERING AT THE DISTRICT OFFICE

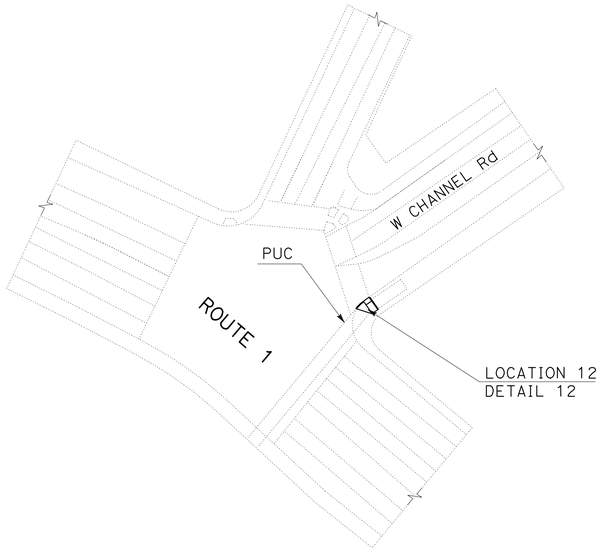

LOCATION 12
W CHANNEL Rd (SE CORNER)

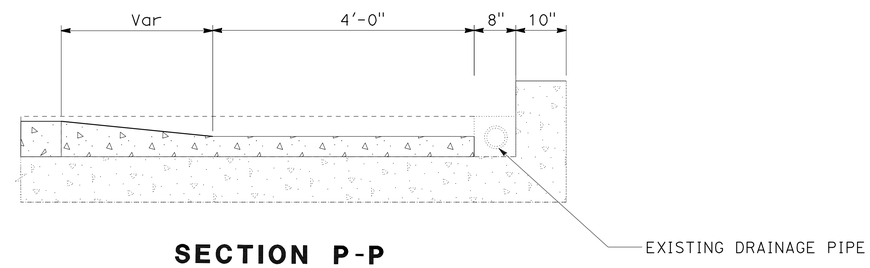

SECTION P-P

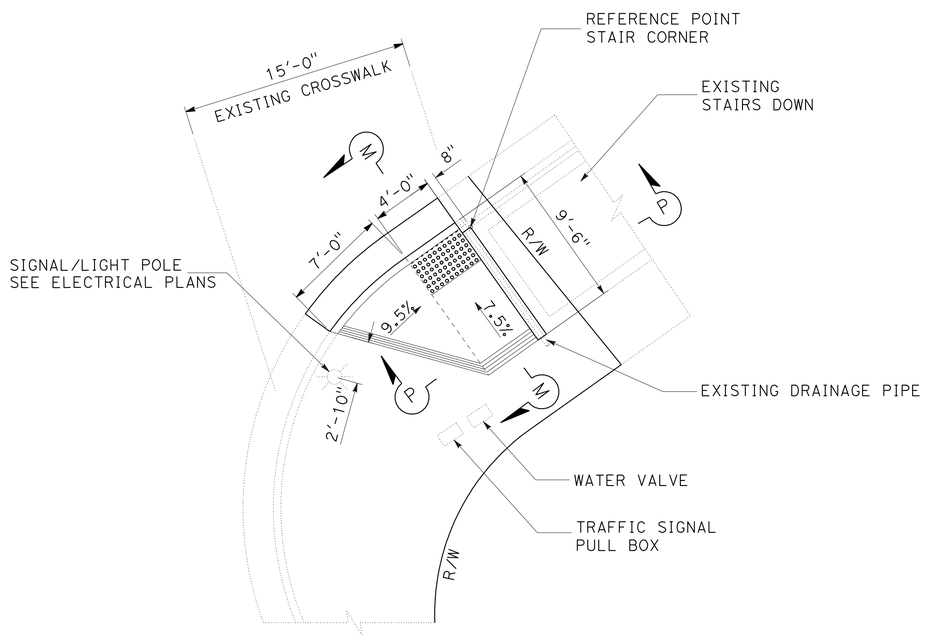

LOCATION 12 (SE CORNER)
DETAIL 12 (CASE G)

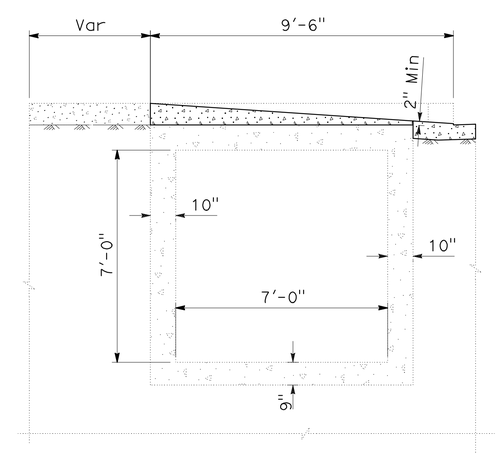

SECTION M-M

CONSTRUCTION DETAILS

NO SCALE

C-12

STATE OF CALIFORNIA - DEPARTMENT OF TRANSPORTATION
Caltrans®
DESIGN

FUNCTIONAL SUPERVISOR: CELINA AVILES
CALCULATED-DESIGNED BY: THUAN CAO
CHECKED BY: CELINA AVILES
REVISED BY: TC
DATE REVISED: 05-18-11

LAST REVISION: 05-18-11
DATE PLOTTED => 15-AUG-2011
TIME PLOTTED => 11:50

Dist	COUNTY	ROUTE	POST MILES TOTAL PROJECT	SHEET No.	TOTAL SHEETS
07	LA	1	18.0/39.3	14	85

N. Celina Aviles 5-18-11
REGISTERED CIVIL ENGINEER DATE

7-11-11
PLANS APPROVAL DATE

REGISTERED PROFESSIONAL ENGINEER
N. CELINA AVILES
No. 57106
Exp. 12/31/11
CIVIL
STATE OF CALIFORNIA

THE STATE OF CALIFORNIA OR ITS OFFICERS OR AGENTS SHALL NOT BE RESPONSIBLE FOR THE ACCURACY OR COMPLETENESS OF SCANNED COPIES OF THIS PLAN SHEET.

NOTE:

1. FOR ACCURATE RIGHT OF WAY DATA, CONTACT RIGHT OF WAY ENGINEERING AT THE DISTRICT OFFICE

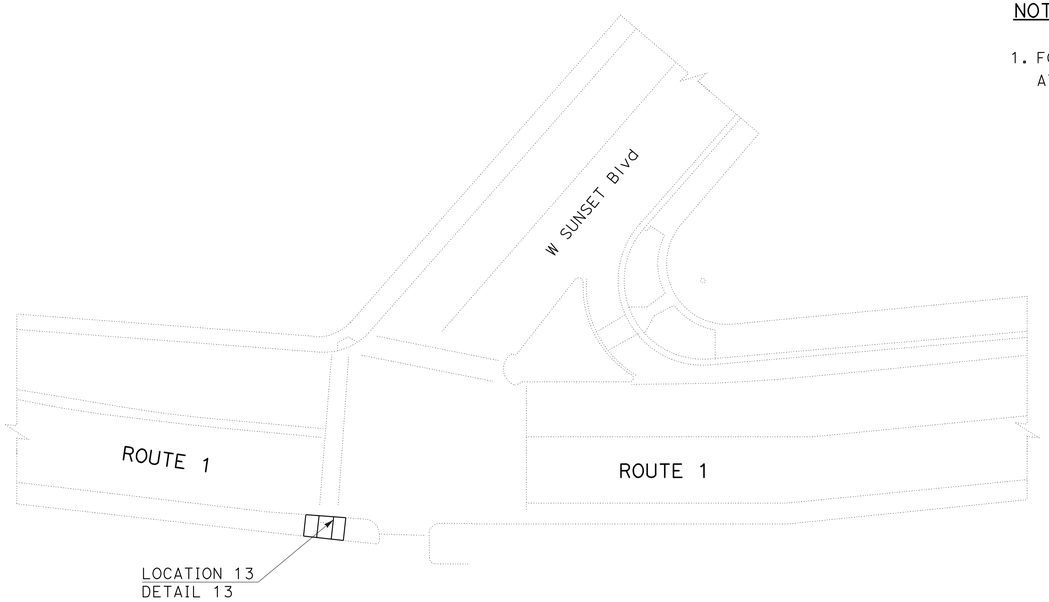

LOCATION 13
W SUNSET Blvd (SOUTHWEST CORNER)

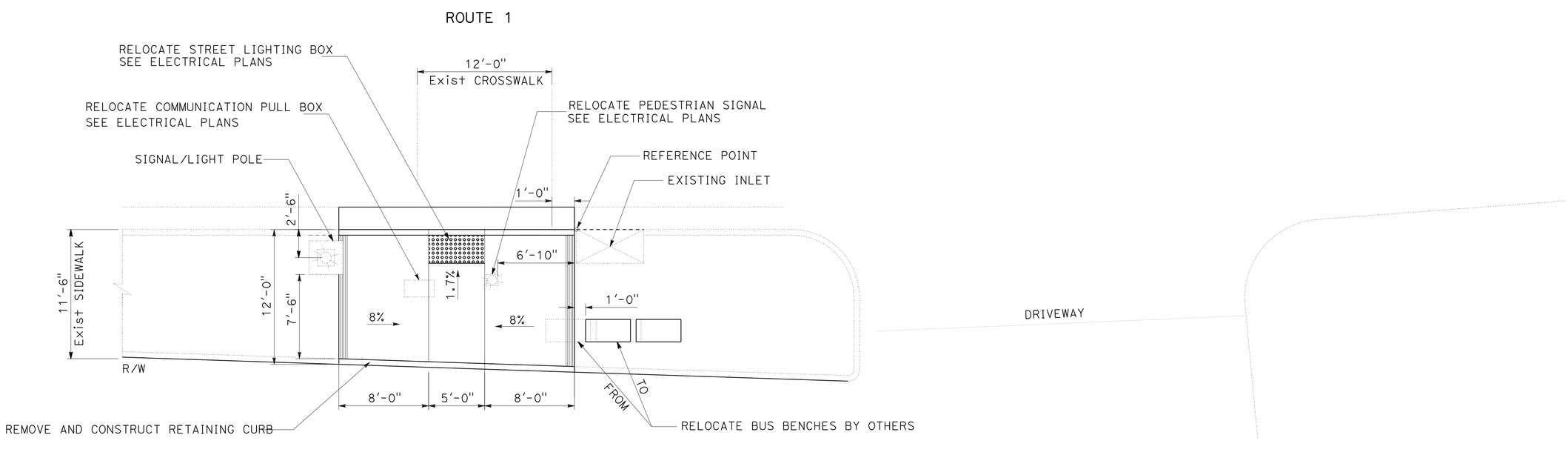

LOCATION 13 (SOUTHWEST CORNER)
DETAIL 13 (CASE C)

CONSTRUCTION DETAILS

NO SCALE

C-13

REVISED BY	DATE REVISED
TC	05-18-11

CALCULATED-DESIGNED BY	CHECKED BY
THUAN CAO	CELINA AVILES

FUNCTIONAL SUPERVISOR: CELINA AVILES

STATE OF CALIFORNIA - DEPARTMENT OF TRANSPORTATION
Caltrans®
DESIGN

LAST REVISION 05-18-11
DATE PLOTTED => 15-AUG-2011
TIME PLOTTED => 11:51

Dist	COUNTY	ROUTE	POST MILES TOTAL PROJECT	SHEET No.	TOTAL SHEETS
07	LA	1	18.0/39.3	15	85

N. Celina Aviles 5-18-11
REGISTERED CIVIL ENGINEER DATE

7-11-11
PLANS APPROVAL DATE

REGISTERED PROFESSIONAL ENGINEER
N. CELINA AVILES
No. 57106
Exp. 12/31/11
CIVIL
STATE OF CALIFORNIA

THE STATE OF CALIFORNIA OR ITS OFFICERS OR AGENTS SHALL NOT BE RESPONSIBLE FOR THE ACCURACY OR COMPLETENESS OF SCANNED COPIES OF THIS PLAN SHEET.

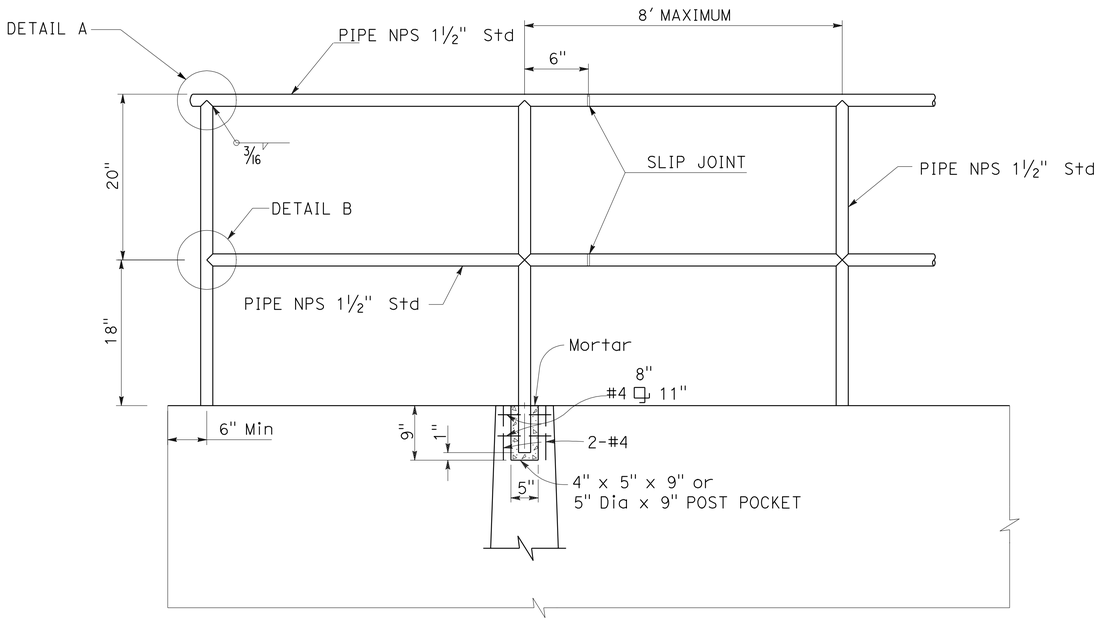

ELEVATION AND POST POCKET

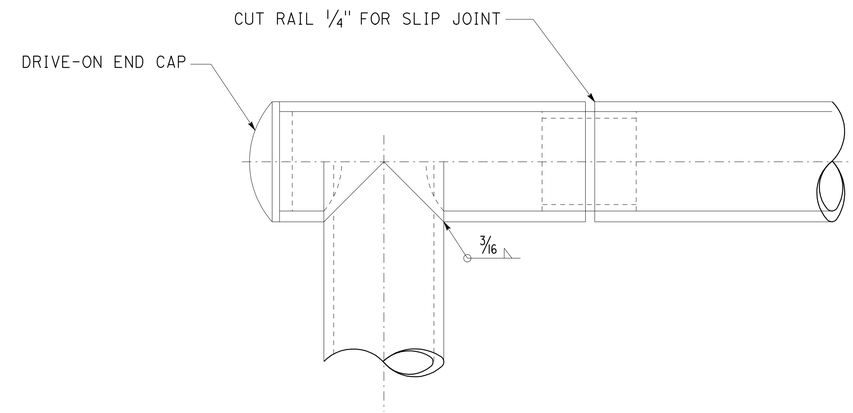

CONNECTION DETAILS A

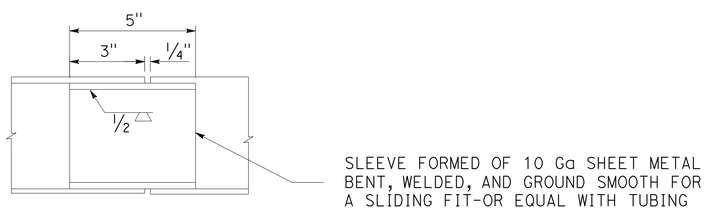

DETAIL OF SLIP JOINT

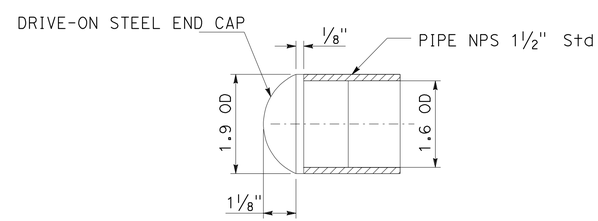

CAP DETAIL FOR METAL PIPE HANDRAILING

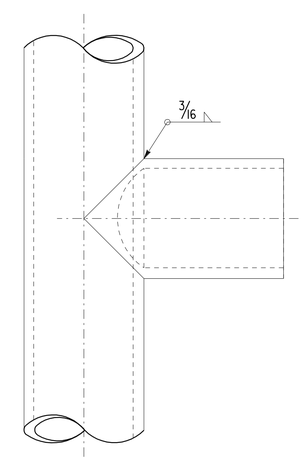

CONNECTION DETAILS B

CONSTRUCTION DETAILS

NO SCALE

C-14

REVISED BY	TC
DATE REVISED	06-21-11
THUAN CAO	
CELINA AVILES	
CALCULATED-DESIGNED BY	
CHECKED BY	
FUNCTIONAL SUPERVISOR	
CELINA AVILES	

STATE OF CALIFORNIA - DEPARTMENT OF TRANSPORTATION
Caltrans
DESIGN

LAST REVISION 06-21-11
DATE PLOTTED => 15-AUG-2011
TIME PLOTTED => 11:51

Dist	COUNTY	ROUTE	POST MILES TOTAL PROJECT	SHEET No.	TOTAL SHEETS
07	LA	1	18.0/39.3	16	85

REGISTERED CIVIL ENGINEER 6-28-11 DATE

7-11-11
PLANS APPROVAL DATE

REGISTERED PROFESSIONAL ENGINEER ARA JITECHIAN No. C54893 Exp. 6/30/12 CIVIL STATE OF CALIFORNIA

THE STATE OF CALIFORNIA OR ITS OFFICERS OR AGENTS SHALL NOT BE RESPONSIBLE FOR THE ACCURACY OR COMPLETENESS OF SCANNED COPIES OF THIS PLAN SHEET.

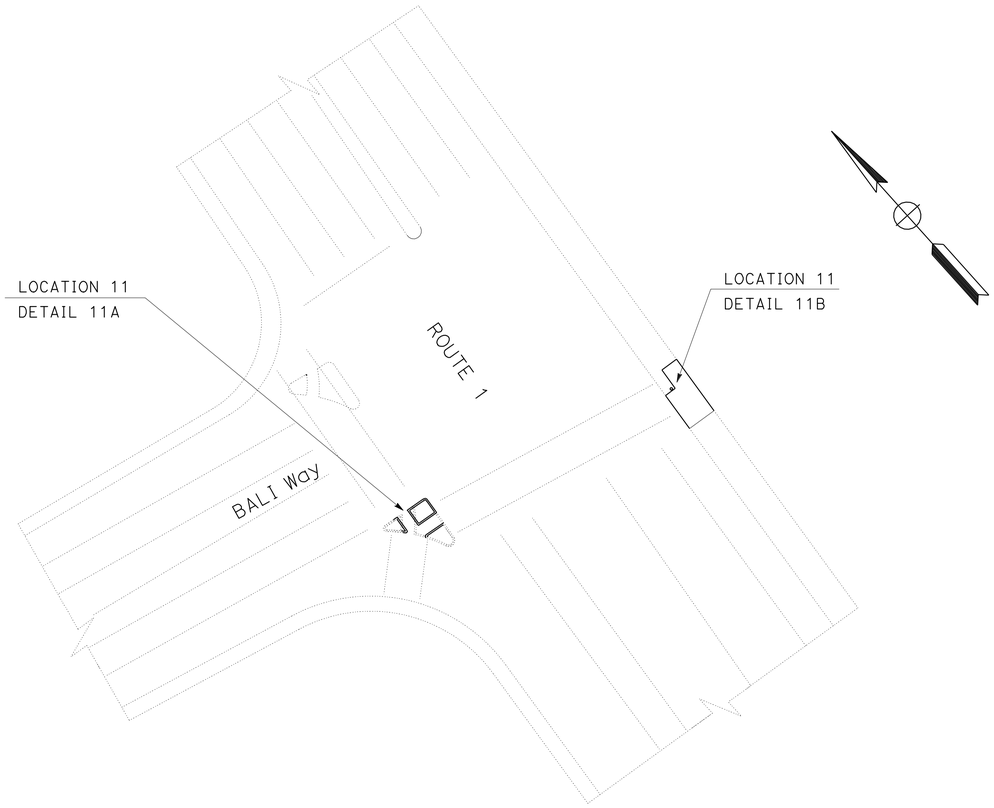

LOCATION 11
BALI WAY-SE & SW SIDE

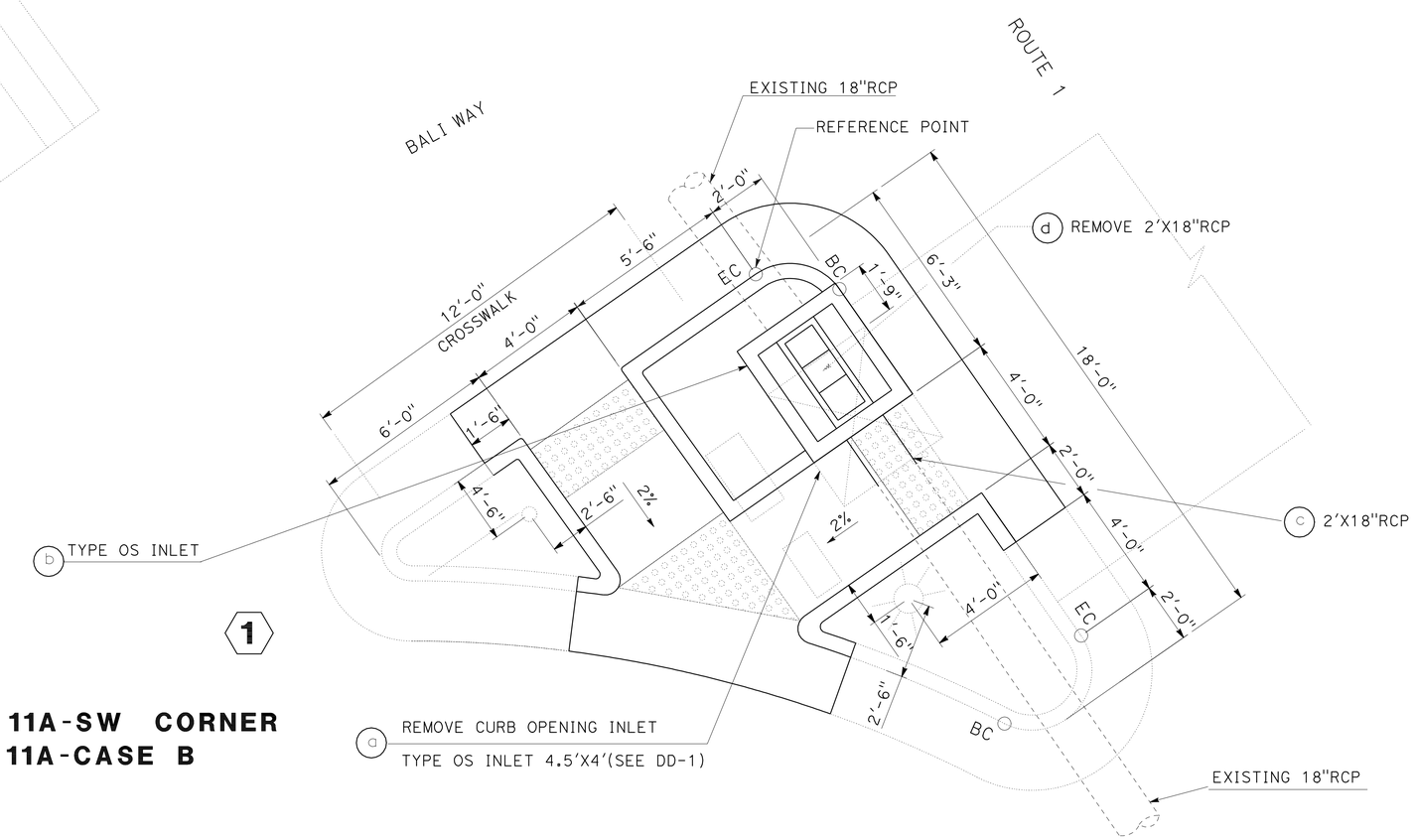

LOCATION 11A-SW CORNER
DETAIL 11A-CASE B

THIS PLAN ACCURATE FOR DRAINAGE WORK ONLY

DRAINAGE PLAN

NO SCALE

D-1

CALCULATED-DESIGNED BY	ARA JITECHIAN	REVISED BY	AJ
CHECKED BY	DAVE BHALLA	DATE REVISED	04-13-11

FUNCTIONAL SUPERVISOR: DAVE BHALLA

STATE OF CALIFORNIA - DEPARTMENT OF TRANSPORTATION
Caltrans
HYDRAULICS

LAST REVISION 04-13-11 | DATE PLOTTED => 15-AUG-2011 | TIME PLOTTED => 11:51

Dist	COUNTY	ROUTE	POST MILES TOTAL PROJECT	SHEET No.	TOTAL SHEETS
07	LA	1	18.0/39.3	17	85

REGISTERED CIVIL ENGINEER 6-28-11 DATE

7-11-11
PLANS APPROVAL DATE

REGISTERED PROFESSIONAL ENGINEER
ARA JITECHIAN
No. C54893
Exp. 6/30/12
CIVIL
STATE OF CALIFORNIA

THE STATE OF CALIFORNIA OR ITS OFFICERS OR AGENTS SHALL NOT BE RESPONSIBLE FOR THE ACCURACY OR COMPLETENESS OF SCANNED COPIES OF THIS PLAN SHEET.

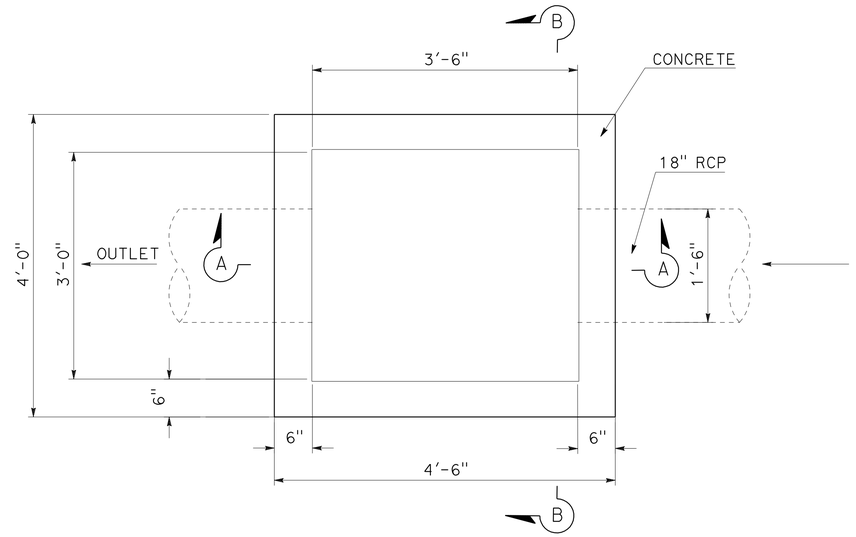

TYPE OS INLET

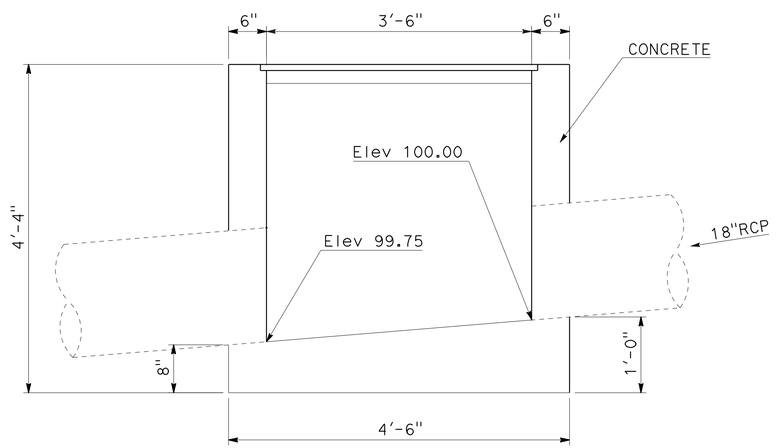

SECTION A-A

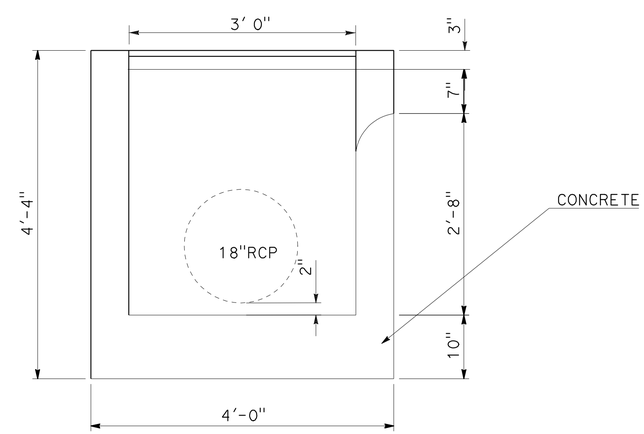

SECTION B-B

THIS PLAN ACCURATE FOR DRAINAGE WORK ONLY

DRAINAGE DETAILS

NO SCALE

DD-1

STATE OF CALIFORNIA - DEPARTMENT OF TRANSPORTATION
Caltrans
HYDRAULICS

CONSULTANT FUNCTIONAL SUPERVISOR: DAVE BHALLA
CALCULATED-DESIGNED BY: ARA JITECHIAN
CHECKED BY: DAVE BHALLA
REVISED BY: AJ
DATE REVISED: 04-13-11

LAST REVISION 04-13-11
DATE PLOTTED => 15-AUG-2011
TIME PLOTTED => 11:51

Dist	COUNTY	ROUTE	POST MILES TOTAL PROJECT	SHEET No.	TOTAL SHEETS
07	LA	1	18.0/39.3	18	85

A. Jitechian 6-28-11
REGISTERED CIVIL ENGINEER DATE

7-11-11
PLANS APPROVAL DATE

REGISTERED PROFESSIONAL ENGINEER
ARA JITECHIAN
No. C54893
Exp. 6/30/12
CIVIL
STATE OF CALIFORNIA

THE STATE OF CALIFORNIA OR ITS OFFICERS OR AGENTS SHALL NOT BE RESPONSIBLE FOR THE ACCURACY OR COMPLETENESS OF SCANNED COPIES OF THIS PLAN SHEET.

DRAINAGE QUANTITIES

DRAINAGE SHEET No	DRAINAGE SYSTEM No ⬡	DRAINAGE UNIT No ○	REMOVE INLET EA	18" REINFORCED CONCTRETE PIPE LF	MINOR CONCRETE (MINOR STRUCTURE) CY	MISCELLANEOUS IRON AND STEEL LB	REMOVE 18" REINFORCED CONCRETE PIPE LF	DESCRIPTION	STATION
D-1	1	a	1					REMOVE OPEN CURB TYPE OS INLET	PM 31.11, SW CORNER OF PCH AND BALI WAY
D-1	1	b			4.1	174		TYPE OS INLET	PM 31.11, SW CORNER OF PCH AND BALI WAY
D-1	1	c		2				2'X18" RCP	PM 31.11, SW CORNER OF PCH AND BALI WAY
D-1	1	d					2	REMOVE 2'X18" RCP	PM 31.11, SW CORNER OF PCH AND BALI WAY
TOTAL			1	2	4.1	174	2		

DRAINAGE QUANTITIES

DQ-1

STATE OF CALIFORNIA - DEPARTMENT OF TRANSPORTATION
Caltrans
HYDRAULICS

CONSULTANT FUNCTIONAL SUPERVISOR: DAVE BHALLA
CALCULATED-DESIGNED BY: ARA JITECHIAN
CHECKED BY: DAVE BHALLA
REVISED BY: AJ
DATE REVISED: 04-13-11

LAST REVISION 04-13-11
DATE PLOTTED => 15-AUG-2011
TIME PLOTTED => 11:51

Dist	COUNTY	ROUTE	POST MILES TOTAL PROJECT	SHEET No.	TOTAL SHEETS
07	LA	1	18.0/39.3	19	85

REGISTERED CIVIL ENGINEER 4-21-11 DATE

7-11-11
PLANS APPROVAL DATE

REGISTERED PROFESSIONAL ENGINEER MEHRDAD MOLAEI No. C54400 Exp. 12/31/11 CIVIL STATE OF CALIFORNIA

THE STATE OF CALIFORNIA OR ITS OFFICERS OR AGENTS SHALL NOT BE RESPONSIBLE FOR THE ACCURACY OR COMPLETENESS OF SCANNED COPIES OF THIS PLAN SHEET.

NOTE:

1. LOCATIONS OF UTILITIES SHOWN ON THESE PLANS ARE APPROXIMATE AND SHALL BE VERIFIED BY THE CONTRACTOR PRIOR TO CONSTRUCTION.

LEGEND:

ACD	ABESTOS CEMENT DUCT
AC	ABESTOS CEMENT
CB	CATCH BASIN
FH	FIRE HYDRANT
GIP	GALVANIZED IRON PIPE
HP	HIGH PRESSURE
M	MEDIUM PRESSURE
MTD	MULTIPLE TILE DUCT
SHP	STEEL PRESSURE
CP	CLAY PIPE
NS	NORTH OF SOUTHERN RIGHT OF WAY
EW	EAST OF WEST RIGHT OF WAY

UTILITY OWNERSHIP:

ELECTRIC:	
So Cal Ed Co	SOUTHERN CALIFORNIA EDISON COMPANY
GAS:	
So Cal Gas Co	SOUTHERN CALIFORNIA GAS COMPANY
OIL:	
STD Oil Co	STANDARD OIL COMPANY
WATER:	
Cal Wtr Serv	CALIFORNIA WATER SERVICE
LAW&P	LOS ANGELES WATER & POWER
So Cal Wtr	SOUTHERN CALIFORNIA WATER
TELEPHONE:	
Gen Tel Co	GENERAL TELEPHONE COMPANY
PT&T	PACIFIC TELEPHONE & TELEGRAPH
CHC TRAFFIC SIGNALS	CHC TRAFFIC SIGNALS
CHC Stm Dr	CHC STORM DRAINS
Hm Bch Swr	HERMOSA BEACH SANITARY SEWER
LACFCD	LOS ANGELES COUNTY FLOOD CONTROL DISTRICT
LAC Swr	LOS ANGELES COUNTY SEWER
Man Bch Swr	MANHATTAN BEACH MUNICIPAL STORM DRAIN
Rdd Bch Swr	REDONDO BEACH SEWER
Torr Mun San Swr	TORRANCE MUNICIPAL SANITARY

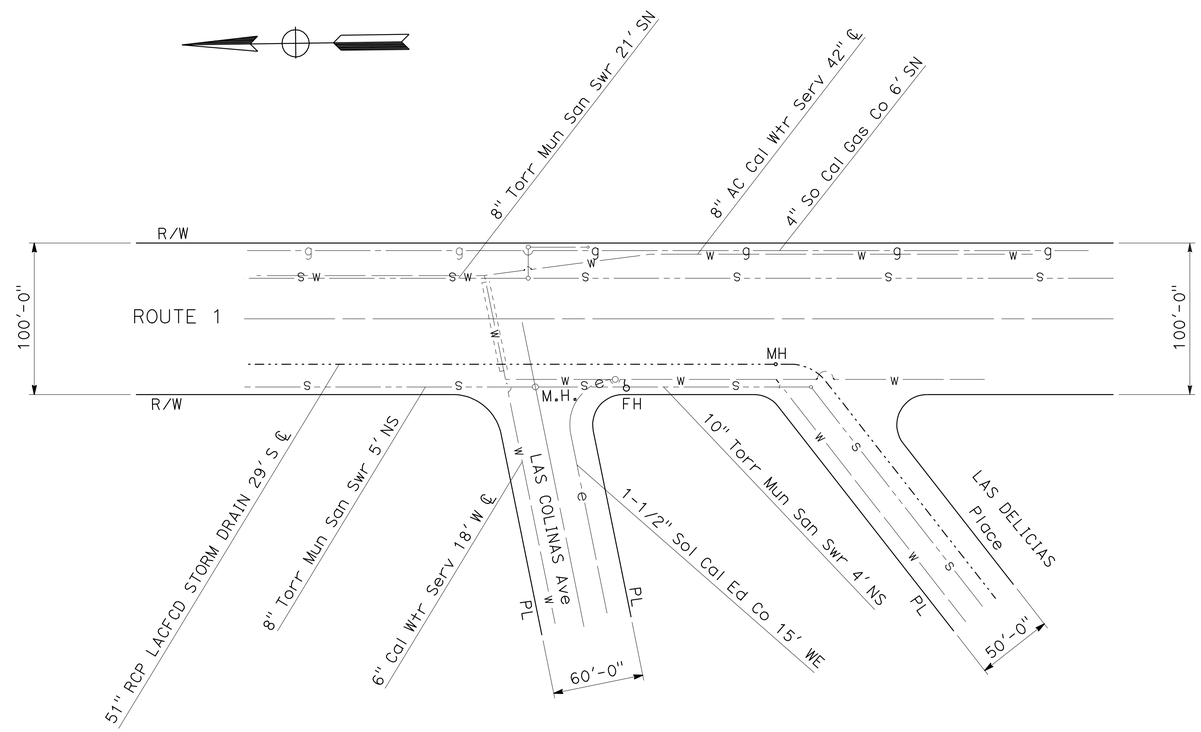

LOCATION 1
LAS COLINAS Ave (SE CORNER)

THIS PLAN ACCURATE FOR EXISTING UTLITIES ONLY.

UTILITY PLAN

NO SCALE

U-1

STATE OF CALIFORNIA - DEPARTMENT OF TRANSPORTATION
Caltrans UTILITIES ENGINEERING

FUNCTIONAL SUPERVISOR: PARVIZ YEGANEH

CALCULATED-DESIGNED BY: MEHRDAD MOLAEI
CHECKED BY: PARVIZ YEGANEH

REVISED BY: TC
DATE REVISED: 12-01-08

LAST REVISION 04-21-11 | DATE PLOTTED => 15-AUG-2011 | TIME PLOTTED => 11:51

Dist	COUNTY	ROUTE	POST MILES TOTAL PROJECT	SHEET No.	TOTAL SHEETS
07	LA	1	18.0/39.3	20	85

REGISTERED CIVIL ENGINEER 4-21-11 DATE

7-11-11
PLANS APPROVAL DATE

REGISTERED PROFESSIONAL ENGINEER MEHRDAD MOLAEI No. C54400 Exp. 12/31/11 CIVIL STATE OF CALIFORNIA

THE STATE OF CALIFORNIA OR ITS OFFICERS OR AGENTS SHALL NOT BE RESPONSIBLE FOR THE ACCURACY OR COMPLETENESS OF SCANNED COPIES OF THIS PLAN SHEET.

NOTE:

1. LOCATIONS OF UTILITIES SHOWN ON THESE PLANS ARE APPROXIMATE AND SHALL BE VERIFIED BY THE CONTRACTOR PRIOR TO CONSTRUCTION.

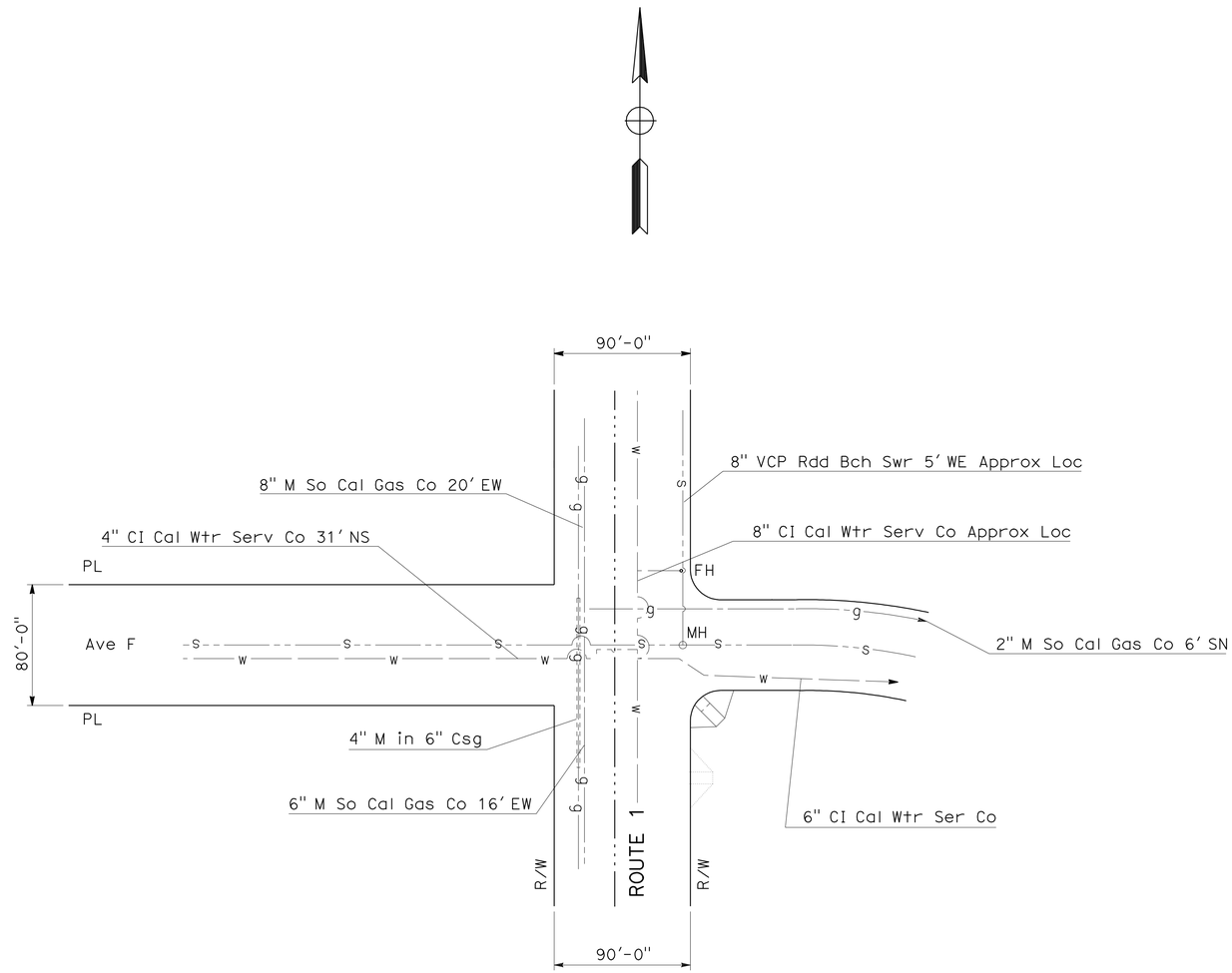

LOCATION 2
Ave F (SE CORNER)

THIS PLAN ACCURATE FOR EXISTING UTLITIES ONLY.

UTILITY PLAN

NO SCALE

U-2

REVISED BY	TC
DATE REVISED	12-01-08
CALCULATED-DESIGNED BY	MEHRDAD MOLAEI
CHECKED BY	PARVIZ YEGANEH
FUNCTIONAL SUPERVISOR	PARVIZ YEGANEH

STATE OF CALIFORNIA - DEPARTMENT OF TRANSPORTATION
Caltrans UTILITIES ENGINEERING

LAST REVISION 04-21-11 | DATE PLOTTED => 15-AUG-2011 | TIME PLOTTED => 11:51

Dist	COUNTY	ROUTE	POST MILES TOTAL PROJECT	SHEET No.	TOTAL SHEETS
07	LA	1	18.0/39.3	21	85

REGISTERED CIVIL ENGINEER 4-21-11 DATE

7-11-11
PLANS APPROVAL DATE

REGISTERED PROFESSIONAL ENGINEER MEHRDAD MOLAEI No. C54400 Exp. 12/31/11 CIVIL STATE OF CALIFORNIA

THE STATE OF CALIFORNIA OR ITS OFFICERS OR AGENTS SHALL NOT BE RESPONSIBLE FOR THE ACCURACY OR COMPLETENESS OF SCANNED COPIES OF THIS PLAN SHEET.

NOTE:

1. LOCATIONS OF UTILITIES SHOWN ON THESE PLANS ARE APPROXIMATE AND SHALL BE VERIFIED BY THE CONTRACTOR PRIOR TO CONSTRUCTION.

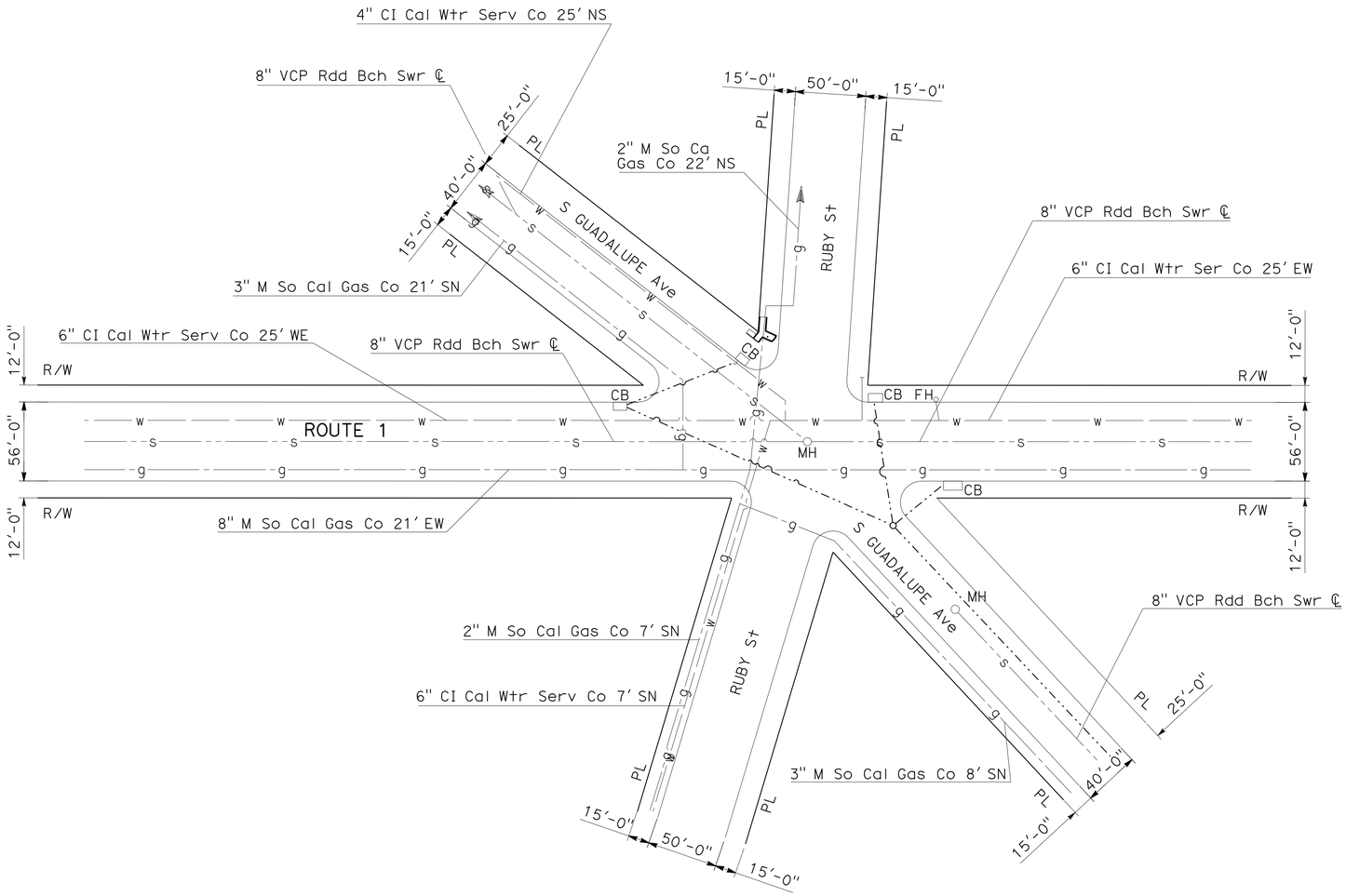

LOCATION 3
RUBY St/GUADALUPE Ave (SE CORNER)

THIS PLAN IS ACCURATE FOR EXISTING UTILITIES ONLY

UTILITY PLAN

NO SCALE

U-3

STATE OF CALIFORNIA - DEPARTMENT OF TRANSPORTATION
Caltrans UTILITIES ENGINEERING

FUNCTIONAL SUPERVISOR: PARVIZ YEGANEH
CALCULATED-DESIGNED BY: MEHRDAD MOLAEI
CHECKED BY: PARVIZ YEGANEH
REVISED BY: TC
DATE REVISED: 12-01-08

LAST REVISION 04-21-11
DATE PLOTTED => 15-AUG-2011
TIME PLOTTED => 11:51

Dist	COUNTY	ROUTE	POST MILES TOTAL PROJECT	SHEET No.	TOTAL SHEETS
07	LA	1	18.0/39.3	22	85

REGISTERED CIVIL ENGINEER 4-21-11 DATE

7-11-11
PLANS APPROVAL DATE

REGISTERED PROFESSIONAL ENGINEER MEHRDAD MOLAEI No. C54400 Exp. 12/31/11 CIVIL STATE OF CALIFORNIA

THE STATE OF CALIFORNIA OR ITS OFFICERS OR AGENTS SHALL NOT BE RESPONSIBLE FOR THE ACCURACY OR COMPLETENESS OF SCANNED COPIES OF THIS PLAN SHEET.

NOTE:

1. LOCATIONS OF UTILITIES SHOWN ON THESE PLANS ARE APPROXIMATE AND SHALL BE VERIFIED BY THE CONTRACTOR PRIOR TO CONSTRUCTION.

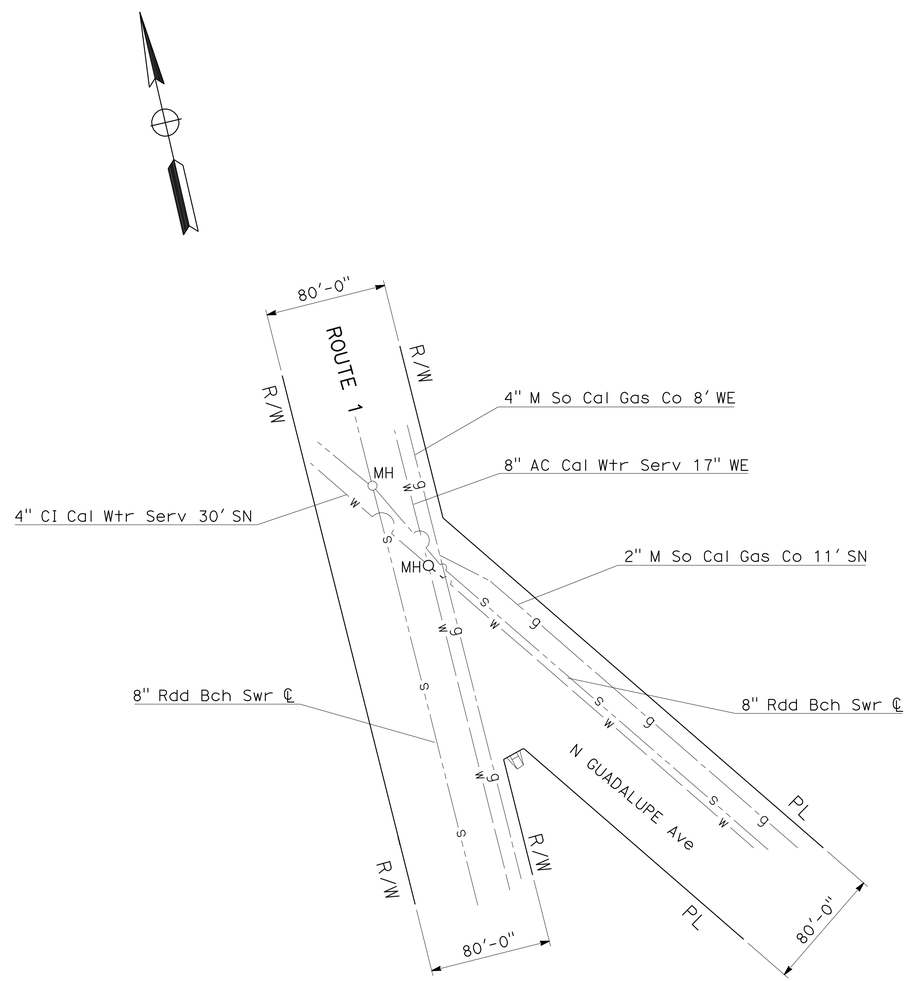

LOCATION 4
NORTH GUADALUPE Ave (SE CORNER)

THIS PLAN IS ACCURATE FOR EXISTING UTILITIES ONLY

UTILITY PLAN

NO SCALE

U-4

STATE OF CALIFORNIA - DEPARTMENT OF TRANSPORTATION
Caltrans UTILITIES ENGINEERING

FUNCTIONAL SUPERVISOR: PARVIZ YEGANEH
CALCULATED-DESIGNED BY: MEHRDAD MOLAEI
CHECKED BY: PARVIZ YEGANEH
REVISED BY: TC
DATE REVISED: 12-01-08

LAST REVISION 04-21-11
DATE PLOTTED => 15-AUG-2011
TIME PLOTTED => 11:51

Dist	COUNTY	ROUTE	POST MILES TOTAL PROJECT	SHEET No.	TOTAL SHEETS
07	LA	1	18.0/39.3	23	85

REGISTERED CIVIL ENGINEER 4-21-11 DATE

7-11-11
PLANS APPROVAL DATE

REGISTERED PROFESSIONAL ENGINEER MEHRDAD MOLAEI No. C54400 Exp. 12/31/11 CIVIL STATE OF CALIFORNIA

THE STATE OF CALIFORNIA OR ITS OFFICERS OR AGENTS SHALL NOT BE RESPONSIBLE FOR THE ACCURACY OR COMPLETENESS OF SCANNED COPIES OF THIS PLAN SHEET.

NOTE:

1. LOCATIONS OF UTILITIES SHOWN ON THESE PLANS ARE APPROXIMATE AND SHALL BE VERIFIED BY THE CONTRACTOR PRIOR TO CONSTRUCTION.

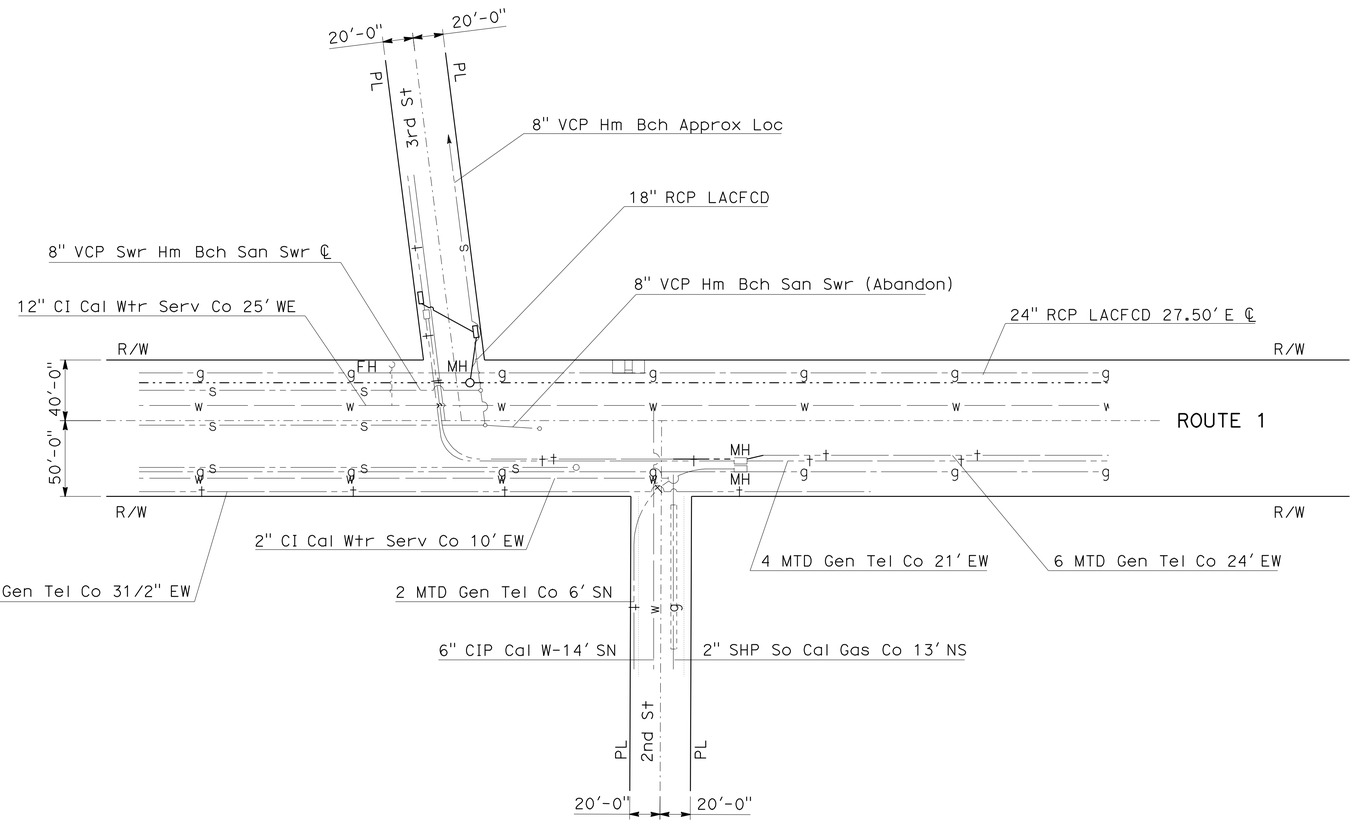

LOCATION 5
2nd & 3rd St (EAST SIDE)

THIS PLAN ACCURATE FOR EXISITNG UTLITIES ONLY.

UTILITY PLAN

NO SCALE

U-5

STATE OF CALIFORNIA - DEPARTMENT OF TRANSPORTATION
Caltrans UTILITIES ENGINEERING

FUNCTIONAL SUPERVISOR: PARVIZ YEGANEH

CALCULATED-DESIGNED BY: MEHRDAD MOLAEI
CHECKED BY: PARVIZ YEGANEH

REVISED BY: TC
DATE REVISED: 12-01-08

LAST REVISION: DATE PLOTTED => 15-AUG-2011 TIME PLOTTED => 11:51
04-21-11

Dist	COUNTY	ROUTE	POST MILES TOTAL PROJECT	SHEET No.	TOTAL SHEETS
07	LA	1	18.0/39.3	24	85

REGISTERED CIVIL ENGINEER 4-21-11 DATE

7-11-11
PLANS APPROVAL DATE

REGISTERED PROFESSIONAL ENGINEER MEHRDAD MOLAEI No. C54400 Exp. 12/31/11 CIVIL STATE OF CALIFORNIA

THE STATE OF CALIFORNIA OR ITS OFFICERS OR AGENTS SHALL NOT BE RESPONSIBLE FOR THE ACCURACY OR COMPLETENESS OF SCANNED COPIES OF THIS PLAN SHEET.

NOTE:

1. LOCATIONS OF UTILITIES SHOWN ON THESE PLANS ARE APPROXIMATE AND SHALL BE VERIFIED BY THE CONTRACTOR PRIOR TO CONSTRUCTION.

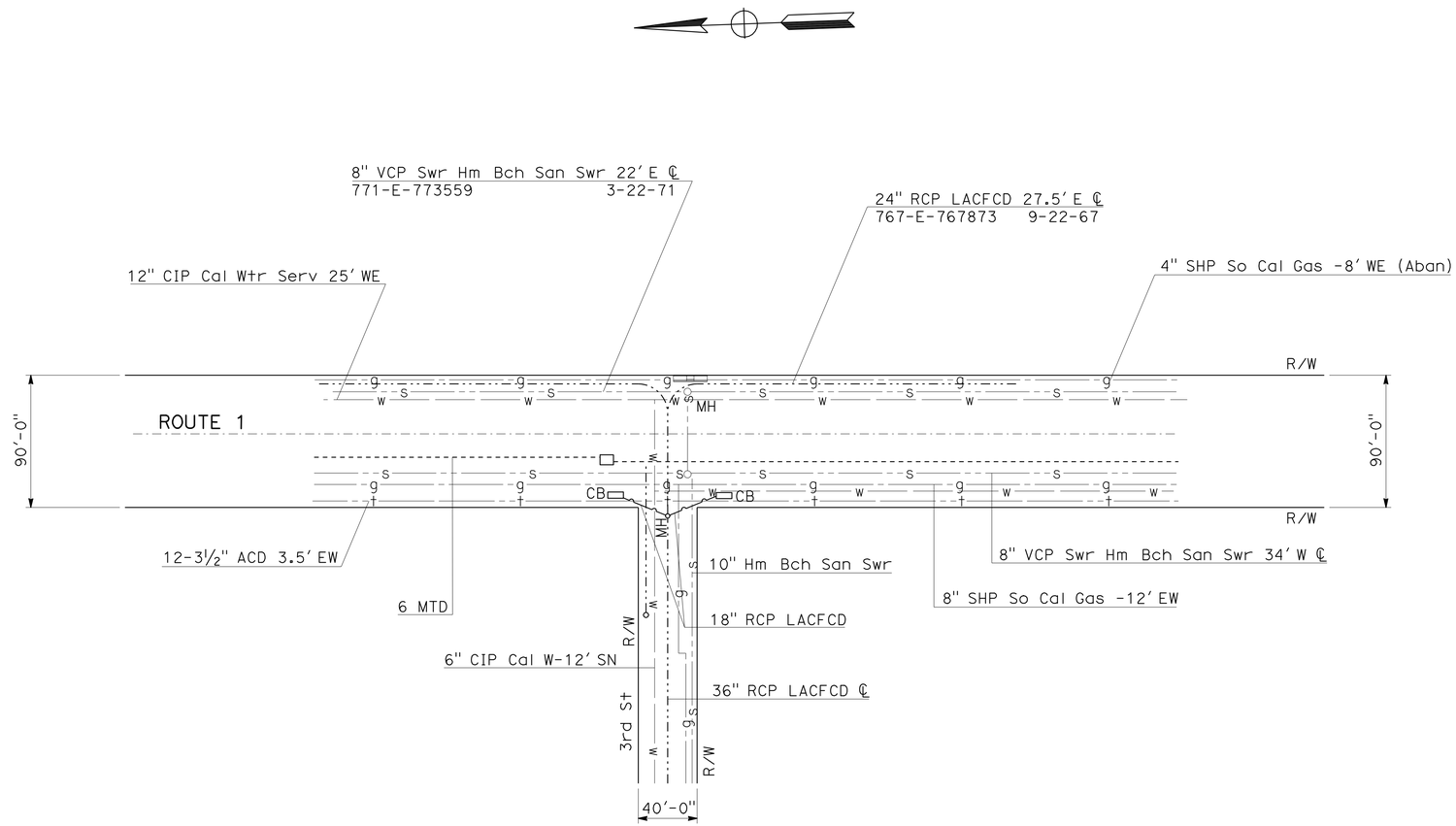

LOCATION 6
3rd St (EAST SIDE)
NO SCALE

THIS PLAN IS ACCURATE FOR EXISTING UTILITIES ONLY

UTILITY PLAN

SCALE AS SHOWN

U-6

STATE OF CALIFORNIA - DEPARTMENT OF TRANSPORTATION
Caltrans UTILITIES ENGINEERING

FUNCTIONAL SUPERVISOR: PARVIZ YEGANEH
CALCULATED-DESIGNED BY: MEHRDAD MOLAEI
CHECKED BY: PARVIZ YEGANEH
REVISED BY: TC
DATE REVISED: 12-01-08

LAST REVISION 04-21-11 | DATE PLOTTED => 15-AUG-2011 | TIME PLOTTED => 11:51

Dist	COUNTY	ROUTE	POST MILES TOTAL PROJECT	SHEET No.	TOTAL SHEETS
07	LA	1	18.0/39.3	25	85

REGISTERED CIVIL ENGINEER 4-21-11 DATE

7-11-11
PLANS APPROVAL DATE

REGISTERED PROFESSIONAL ENGINEER MEHRDAD MOLAEI No. C54400 Exp. 12/31/11 CIVIL STATE OF CALIFORNIA

THE STATE OF CALIFORNIA OR ITS OFFICERS OR AGENTS SHALL NOT BE RESPONSIBLE FOR THE ACCURACY OR COMPLETENESS OF SCANNED COPIES OF THIS PLAN SHEET.

NOTE:

1. LOCATIONS OF UTILITIES SHOWN ON THESE PLANS ARE APPROXIMATE AND SHALL BE VERIFIED BY THE CONTRACTOR PRIOR TO CONSTRUCTION.

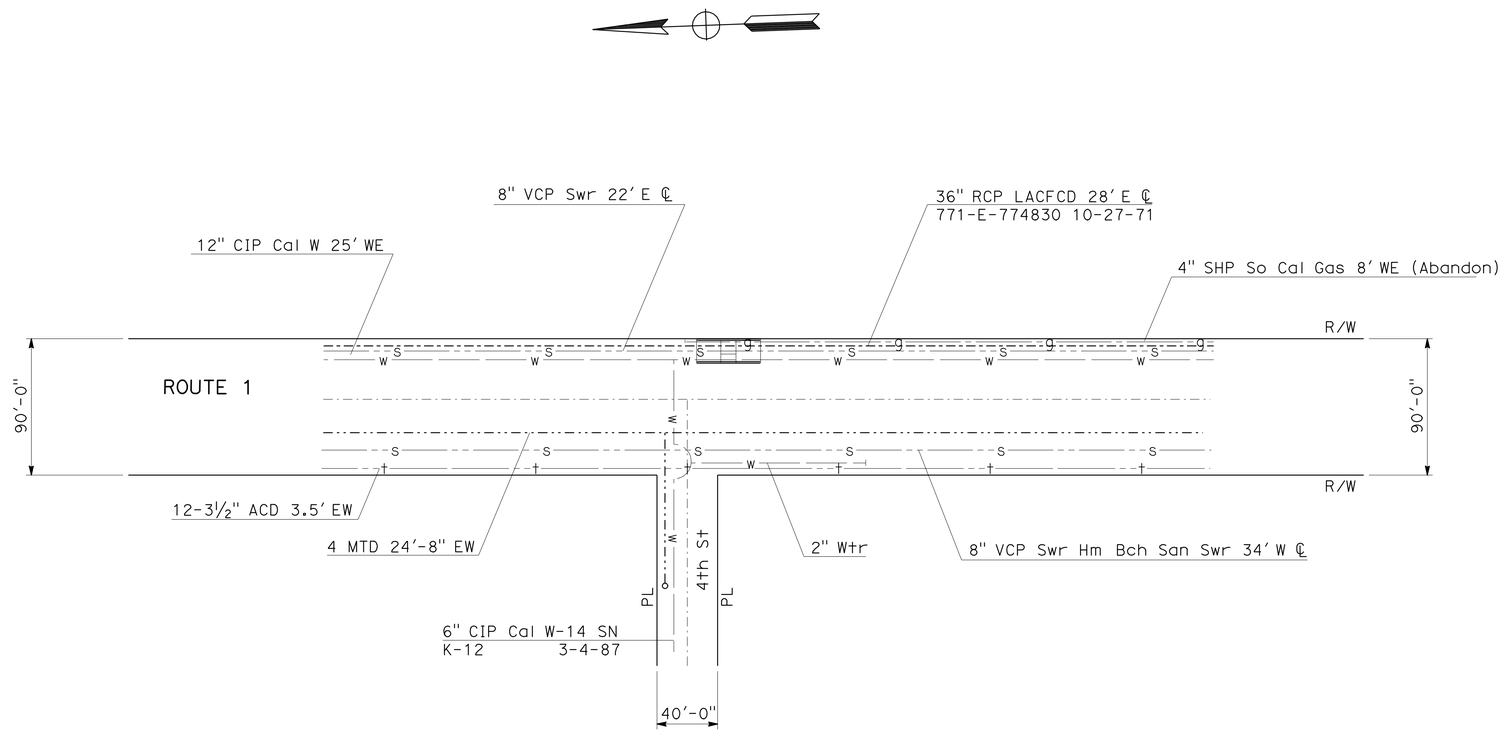

LOCATION 7
4th St (EAST SIDE)

THIS PLAN IS ACCURATE FOR EXISTING UTILITIES ONLY

UTILITY PLAN

NO SCALE

U-7

STATE OF CALIFORNIA - DEPARTMENT OF TRANSPORTATION
Caltrans UTILITIES ENGINEERING

FUNCTIONAL SUPERVISOR: PARVIZ YEGANEH
CALCULATED-DESIGNED BY: MEHRDAD MOLAEI
CHECKED BY: PARVIZ YEGANEH
REVISED BY: TC
DATE REVISED: 12-01-08

LAST REVISION 04-21-11
DATE PLOTTED => 15-AUG-2011
TIME PLOTTED => 11:51

Dist	COUNTY	ROUTE	POST MILES TOTAL PROJECT	SHEET No.	TOTAL SHEETS
07	LA	1	18.0/39.3	26	85

REGISTERED CIVIL ENGINEER 4-21-11 DATE

7-11-11
PLANS APPROVAL DATE

REGISTERED PROFESSIONAL ENGINEER MEHRDAD MOLAEI No. C54400 Exp. 12/31/11 CIVIL STATE OF CALIFORNIA

THE STATE OF CALIFORNIA OR ITS OFFICERS OR AGENTS SHALL NOT BE RESPONSIBLE FOR THE ACCURACY OR COMPLETENESS OF SCANNED COPIES OF THIS PLAN SHEET.

NOTE:

1. LOCATIONS OF UTILITIES SHOWN ON THESE PLANS ARE APPROXIMATE AND SHALL BE VERIFIED BY THE CONTRACTOR PRIOR TO CONSTRUCTION.

POTHOLE LOCATION TABLE

X	UTILITY	NORTHING	EASTING	ELEVATION	DEPTH
1	So Cal Gas Co	1772629.53	6442493.55	96.64′	41"
2	So Cal Gas Co	1772562.03	6442509.78	95.61′	40"

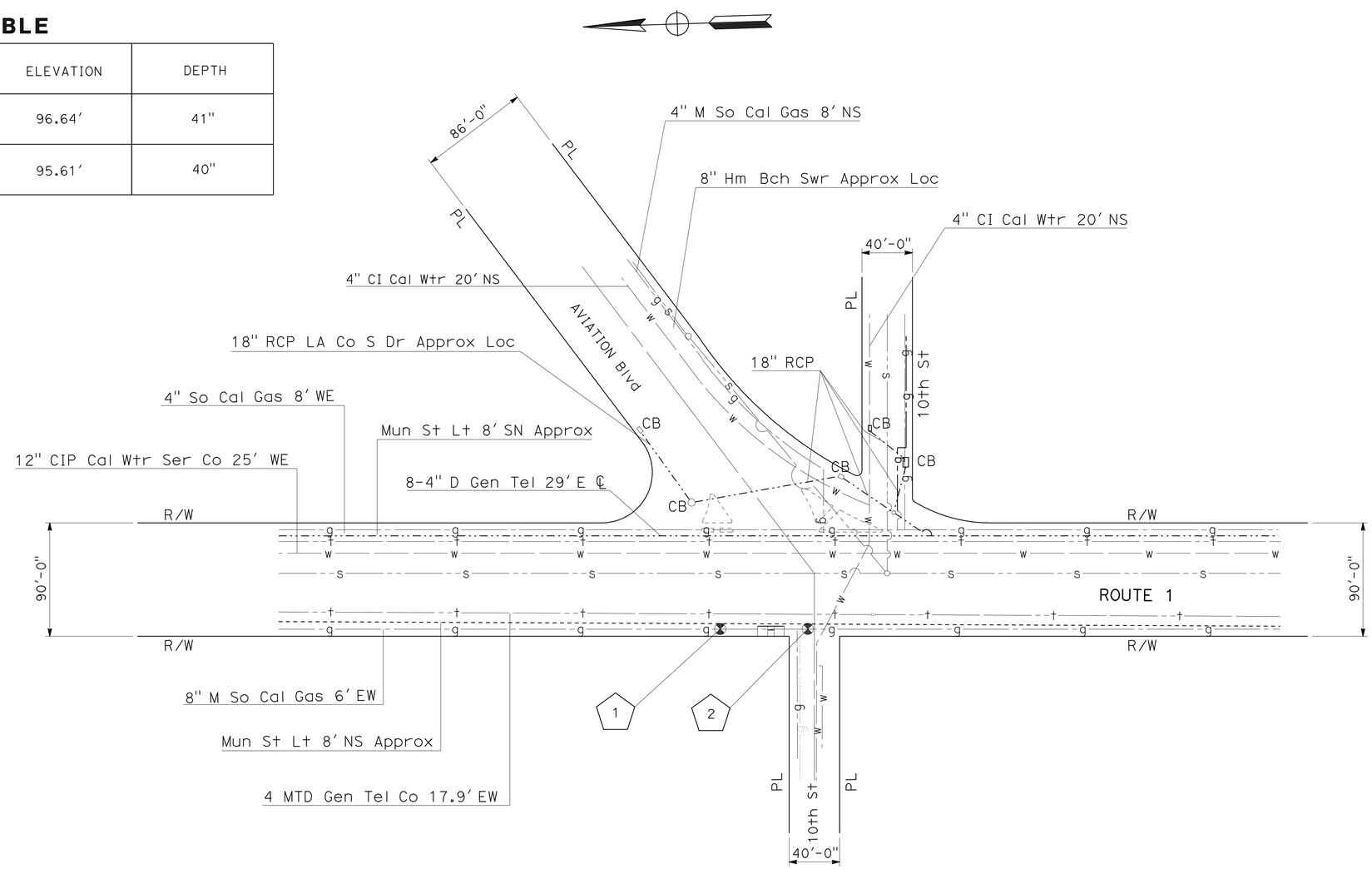

LOCATION 8
AVIATION Blvd & 10th St

THIS PLAN ACCURATE FOR EXISTING UTLITIES ONLY.

UTILITY PLAN

NO SCALE

U-8

STATE OF CALIFORNIA - DEPARTMENT OF TRANSPORTATION
Caltrans UTILITIES ENGINEERING

FUNCTIONAL SUPERVISOR: PARVIZ YEGANEH
CALCULATED-DESIGNED BY: MEHRDAD MOLAEI
CHECKED BY: PARVIZ YEGANEH
REVISED BY: TC
DATE REVISED: 12-01-08

LAST REVISION 04-21-11
DATE PLOTTED => 15-AUG-2011
TIME PLOTTED => 11:51

Dist	COUNTY	ROUTE	POST MILES TOTAL PROJECT	SHEET No.	TOTAL SHEETS
07	LA	1	18.0/39.3	27	85

REGISTERED CIVIL ENGINEER 4-21-11 DATE

7-11-11
PLANS APPROVAL DATE

REGISTERED PROFESSIONAL ENGINEER MEHRDAD MOLAEI No. C54400 Exp. 12/31/11 CIVIL STATE OF CALIFORNIA

THE STATE OF CALIFORNIA OR ITS OFFICERS OR AGENTS SHALL NOT BE RESPONSIBLE FOR THE ACCURACY OR COMPLETENESS OF SCANNED COPIES OF THIS PLAN SHEET.

NOTE:

1. LOCATIONS OF UTILITIES SHOWN ON THESE PLANS ARE APPROXIMATE AND SHALL BE VERIFIED BY THE CONTRACTOR PRIOR TO CONSTRUCTION.

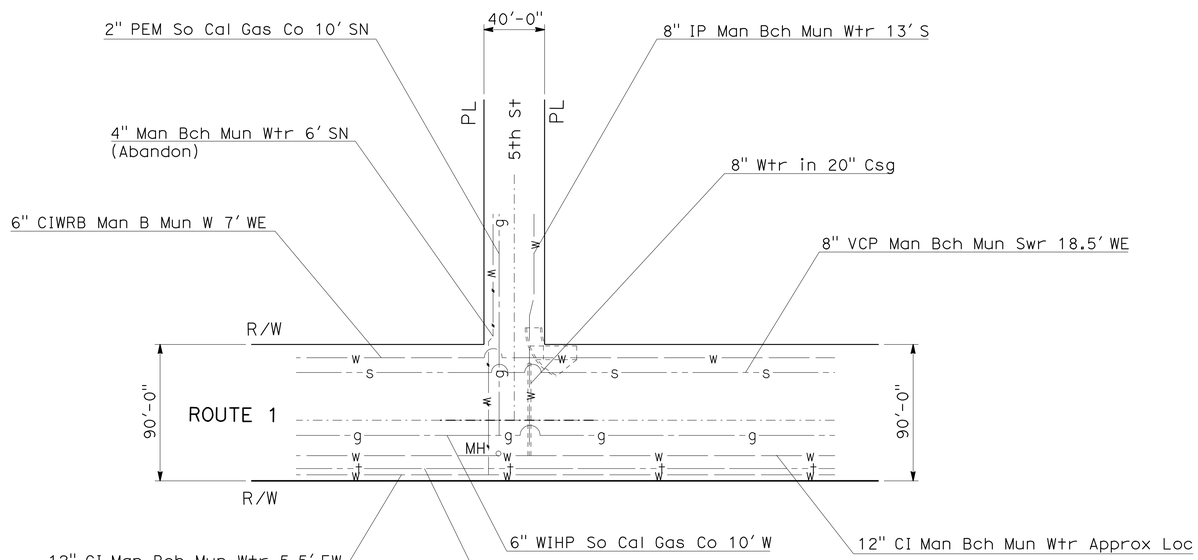

LOCATION 9
5th St (SE CORNER)

THIS PLAN ACCURATE FOR EXISITNG UTLITIES ONLY.

UTILITY PLAN

NO SCALE

U-9

MEHRDAD MOLAEI	REVISED BY	TC
PARVIZ YEGANEH	DATE REVISED	12-01-08
CALCULATED-DESIGNED BY	
CHECKED BY	
FUNCTIONAL SUPERVISOR	
PARVIZ YEGANEH	

STATE OF CALIFORNIA - DEPARTMENT OF TRANSPORTATION
Caltrans UTILITIES ENGINEERING

LAST REVISION 04-21-11 | DATE PLOTTED => 15-AUG-2011 | TIME PLOTTED => 11:51

Dist	COUNTY	ROUTE	POST MILES TOTAL PROJECT	SHEET No.	TOTAL SHEETS
07	LA	1	18.0/39.3	28	85

REGISTERED CIVIL ENGINEER 4-21-11 DATE

7-11-11
PLANS APPROVAL DATE

REGISTERED PROFESSIONAL ENGINEER MEHRDAD MOLAEI No. C54400 Exp. 12/31/11 CIVIL STATE OF CALIFORNIA

THE STATE OF CALIFORNIA OR ITS OFFICERS OR AGENTS SHALL NOT BE RESPONSIBLE FOR THE ACCURACY OR COMPLETENESS OF SCANNED COPIES OF THIS PLAN SHEET.

NOTE:

1. LOCATIONS OF UTILITIES SHOWN ON THESE PLANS ARE APPROXIMATE AND SHALL BE VERIFIED BY THE CONTRACTOR PRIOR TO CONSTRUCTION.

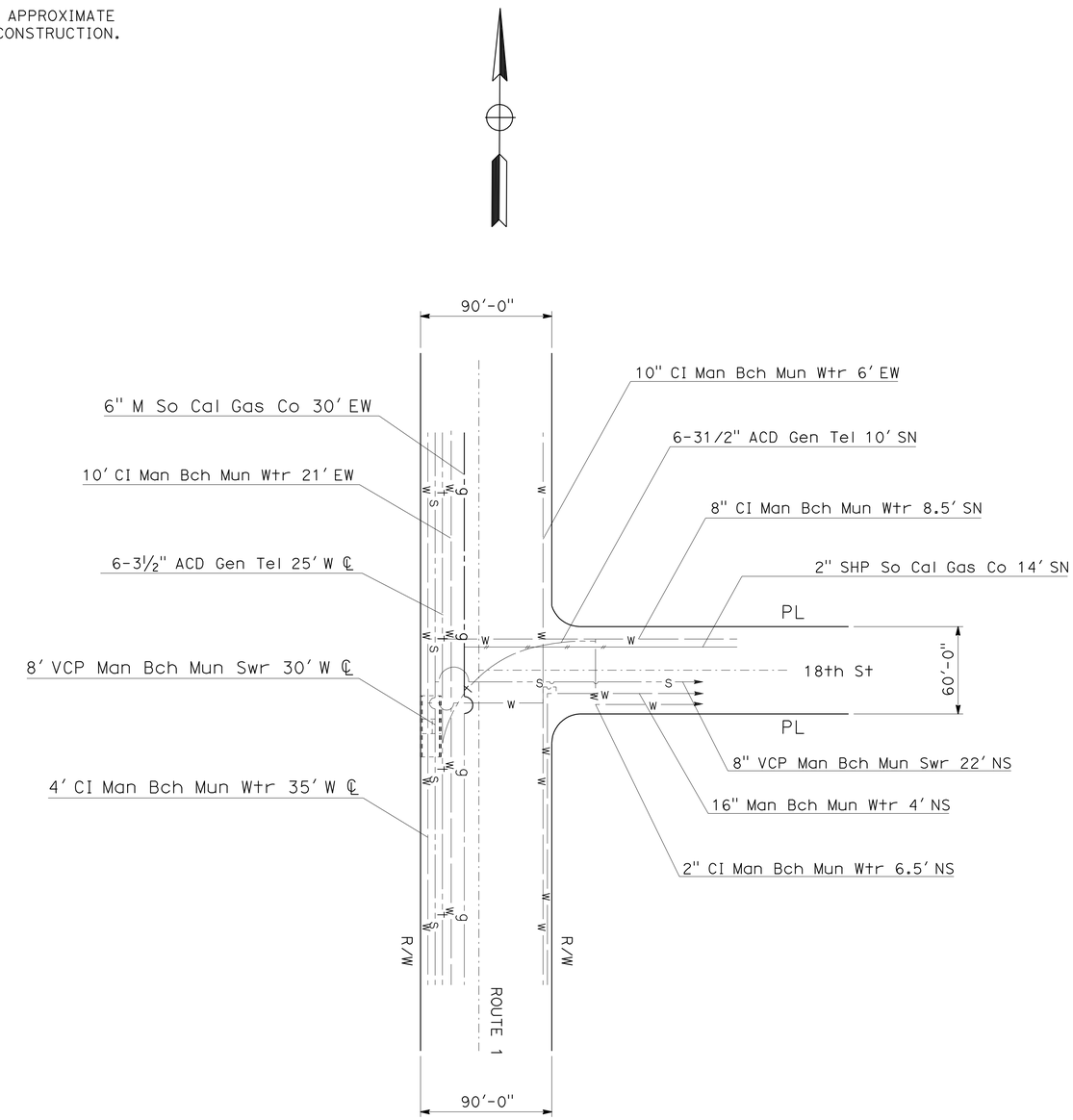

LOCATION 10
18th St (WEST SIDE)

THIS PLAN ACCURATE FOR EXISTING UTLITIES ONLY.

UTILITY PLAN

NO SCALE

U-10

STATE OF CALIFORNIA - DEPARTMENT OF TRANSPORTATION
Caltrans UTILITIES ENGINEERING

FUNCTIONAL SUPERVISOR: PARVIZ YEGANEH

CALCULATED-DESIGNED BY: MEHRDAD MOLAEI
CHECKED BY: PARVIZ YEGANEH

REVISED BY: TC
DATE REVISED: 12-01-08

LAST REVISION 04-21-11
DATE PLOTTED => 15-AUG-2011
TIME PLOTTED => 11:51

Dist	COUNTY	ROUTE	POST MILES TOTAL PROJECT	SHEET No.	TOTAL SHEETS
07	LA	1	18.0/39.3	29	85

REGISTERED CIVIL ENGINEER 4-21-11 DATE

7-11-11
PLANS APPROVAL DATE

REGISTERED PROFESSIONAL ENGINEER MEHRDAD MOLAEI No. C54400 Exp. 12/31/11 CIVIL STATE OF CALIFORNIA

THE STATE OF CALIFORNIA OR ITS OFFICERS OR AGENTS SHALL NOT BE RESPONSIBLE FOR THE ACCURACY OR COMPLETENESS OF SCANNED COPIES OF THIS PLAN SHEET.

NOTE:

1. LOCATIONS OF UTILITIES SHOWN ON THESE PLANS ARE APPROXIMATE AND SHALL BE VERIFIED BY THE CONTRACTOR PRIOR TO CONSTRUCTION.

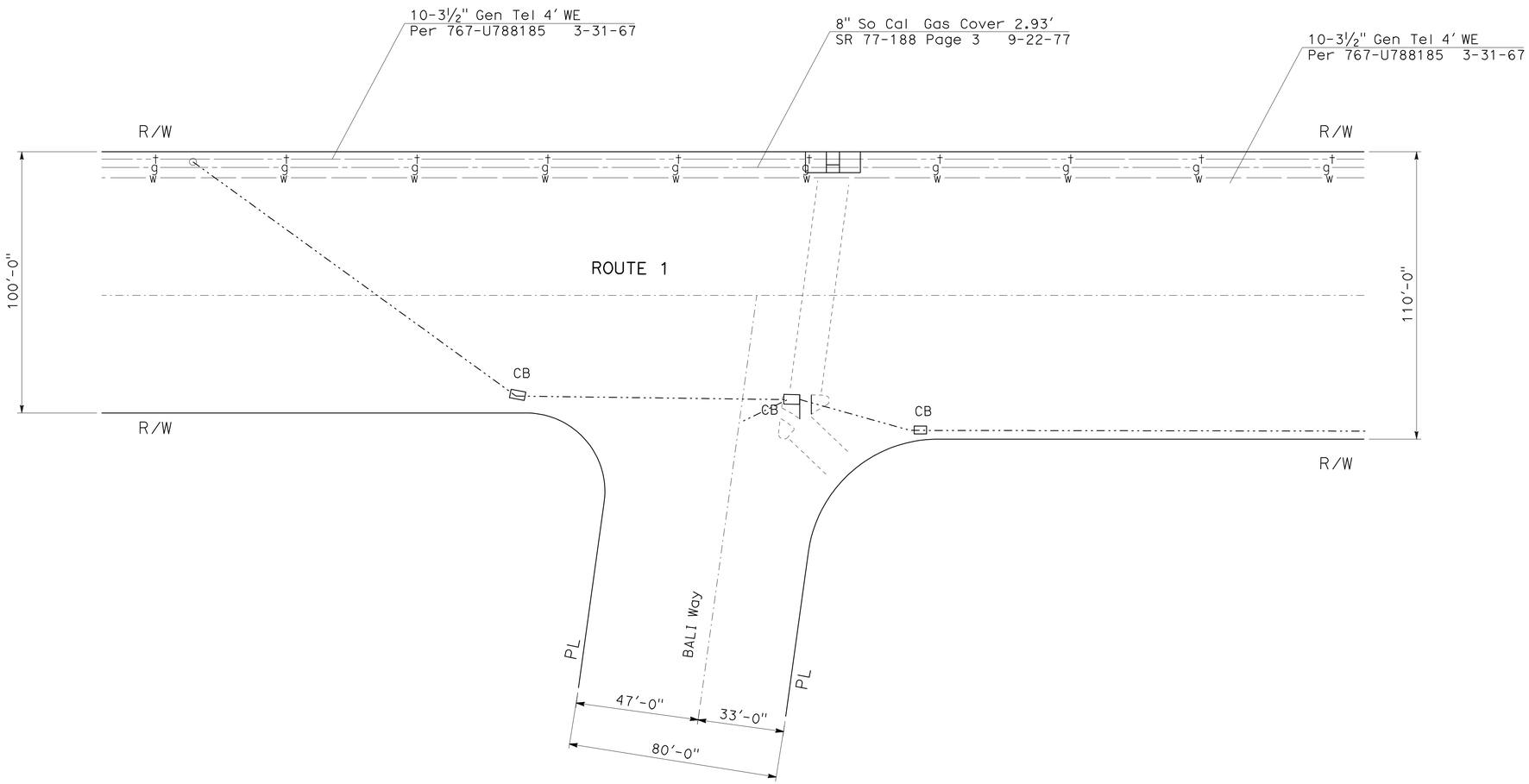

LOCATION 11
BALI Way

THIS PLAN ACCURATE FOR EXISTING UTLITIES ONLY.

UTILITY PLAN

NO SCALE

U-11

STATE OF CALIFORNIA - DEPARTMENT OF TRANSPORTATION
Caltrans UTILITIES ENGINEERING

FUNCTIONAL SUPERVISOR: PARVIZ YEGANEH

CALCULATED-DESIGNED BY: MEHRDAD MOLAEI
CHECKED BY: PARVIZ YEGANEH

REVISED BY: TC
DATE REVISED: 12-01-08

LAST REVISION 04-21-11
DATE PLOTTED => 15-AUG-2011
TIME PLOTTED => 11:51

Dist	COUNTY	ROUTE	POST MILES TOTAL PROJECT	SHEET No.	TOTAL SHEETS
07	LA	1	18.0/39.3	30	85

REGISTERED CIVIL ENGINEER 4-21-11 DATE

7-11-11
PLANS APPROVAL DATE

REGISTERED PROFESSIONAL ENGINEER MEHRDAD MOLAEI No. C54400 Exp. 12/31/11 CIVIL STATE OF CALIFORNIA

THE STATE OF CALIFORNIA OR ITS OFFICERS OR AGENTS SHALL NOT BE RESPONSIBLE FOR THE ACCURACY OR COMPLETENESS OF SCANNED COPIES OF THIS PLAN SHEET.

NOTE:

1. LOCATIONS OF UTILITIES SHOWN ON THESE PLANS ARE APPROXIMATE AND SHALL BE VERIFIED BY THE CONTRACTOR PRIOR TO CONSTRUCTION.

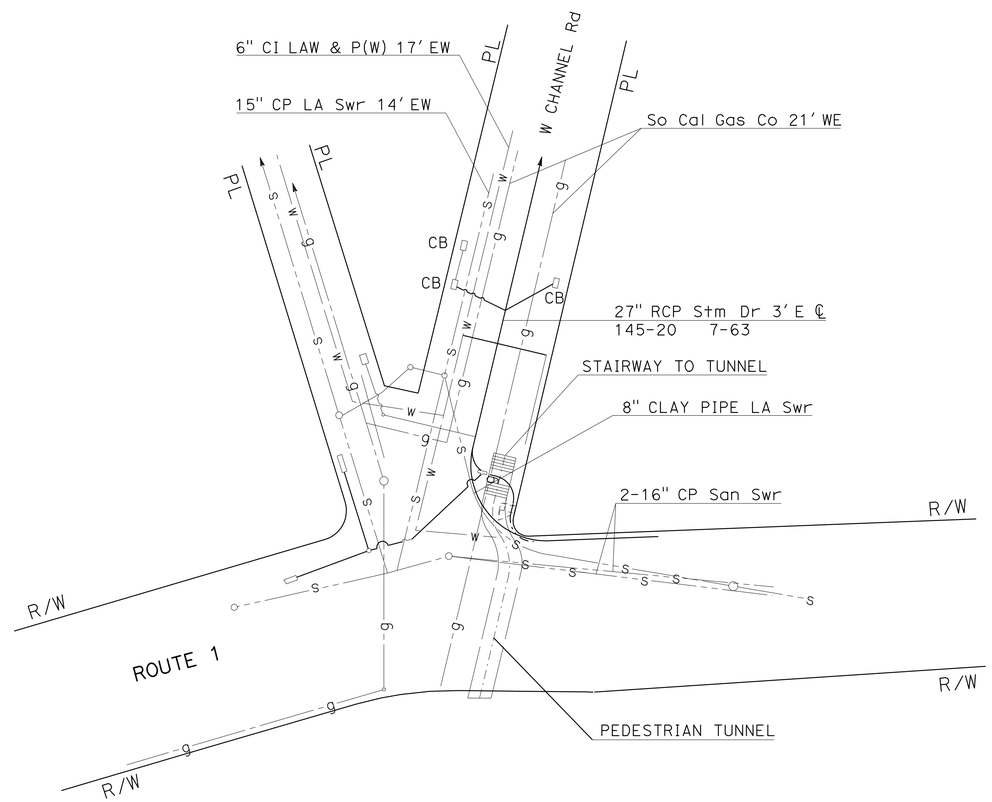

LOCATION 12
W CHANNEL Rd

THIS PLAN ACCURATE FOR EXISTING UTLITIES ONLY.

UTILITY PLAN

NO SCALE

U-12

STATE OF CALIFORNIA - DEPARTMENT OF TRANSPORTATION
Caltrans UTILITIES ENGINEERING

FUNCTIONAL SUPERVISOR: PARVIZ YEGANEH

CALCULATED-DESIGNED BY: MEHRDAD MOLAEI
CHECKED BY: PARVIZ YEGANEH

REVISED BY: TC
DATE REVISED: 12-01-08

LAST REVISION 04-21-11
DATE PLOTTED => 15-AUG-2011
TIME PLOTTED => 11:51

Dist	COUNTY	ROUTE	POST MILES TOTAL PROJECT	SHEET No.	TOTAL SHEETS
07	LA	1	18.0/39.3	31	85

REGISTERED CIVIL ENGINEER 4-21-11 DATE

7-11-11
PLANS APPROVAL DATE

REGISTERED PROFESSIONAL ENGINEER MEHRDAD MOLAEI No. C54400 Exp. 12/31/11 CIVIL STATE OF CALIFORNIA

THE STATE OF CALIFORNIA OR ITS OFFICERS OR AGENTS SHALL NOT BE RESPONSIBLE FOR THE ACCURACY OR COMPLETENESS OF SCANNED COPIES OF THIS PLAN SHEET.

NOTE:

1. LOCATIONS OF UTILITIES SHOWN ON THESE PLANS ARE APPROXIMATE AND SHALL BE VERIFIED BY THE CONTRACTOR PRIOR TO CONSTRUCTION.

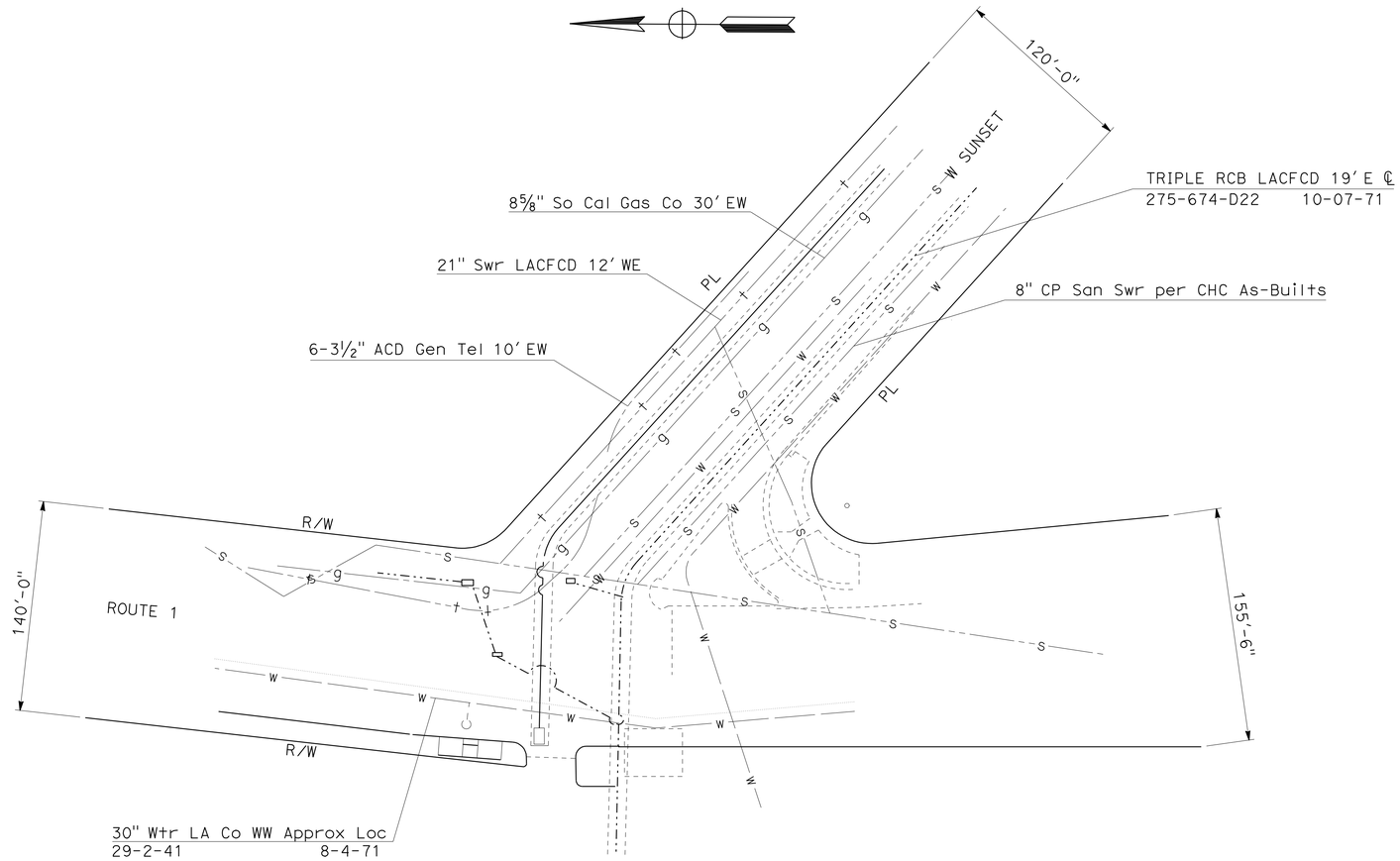

LOCATION 13
W SUNSET Blvd (WEST SIDE)

THIS PLAN ACCURATE FOR EXISTING UTLITIES ONLY.

UTILITY PLAN

NO SCALE

U-13

STATE OF CALIFORNIA - DEPARTMENT OF TRANSPORTATION
Caltrans UTILITIES ENGINEERING

FUNCTIONAL SUPERVISOR: PARVIZ YEGANEH
CALCULATED-DESIGNED BY: MEHRDAD MOLAEI
CHECKED BY: PARVIZ YEGANEH
REVISED BY: TC
DATE REVISED: 12-01-08

LAST REVISION: 04-21-11
DATE PLOTTED => 15-AUG-2011
TIME PLOTTED => 11:51

Dist	COUNTY	ROUTE	POST MILES TOTAL PROJECT	SHEET No.	TOTAL SHEETS
07	LA	1	18.0/39.3	32	85

N. Celina Aviles 4-20-11
REGISTERED CIVIL ENGINEER DATE

7-11-11
PLANS APPROVAL DATE

REGISTERED PROFESSIONAL ENGINEER N. CELINA AVILES No. 57106 Exp. 12/31/11 CIVIL STATE OF CALIFORNIA

THE STATE OF CALIFORNIA OR ITS OFFICERS OR AGENTS SHALL NOT BE RESPONSIBLE FOR THE ACCURACY OR COMPLETENESS OF SCANNED COPIES OF THIS PLAN SHEET.

STATIONARY MOUNTED CONSTRUCTION AREA SIGNS

SIGN NUMBER	SIGN CODE	PANEL SIZE	SIGN MESSAGE	NUMBER OF POSTS AND SIZE	NUMBER OF SIGNS
1	W20-1	36" x 36"	ROAD WORK AHEAD	1-6" x 6"	37
2	G20-1	36" x 18"	ROAD WORK NEXT XX MILES	2-4" x 4"	10
3	G20-2	36" x 18"	END ROAD WORK	2-4" x 4"	2
4	C40 (CA)	108" x 42"	TRAFFIC FINES DOUBLED IN CONSTRUCTION ZONES	2-4" x 6"	2

NOTE:

1. LOCATIONS OF CONSTRUCTION AREA SIGNS SHOWN ARE APPROXIMATE THE ENGINEER WILL DETERMINE THE EXACT LOCATIONS.

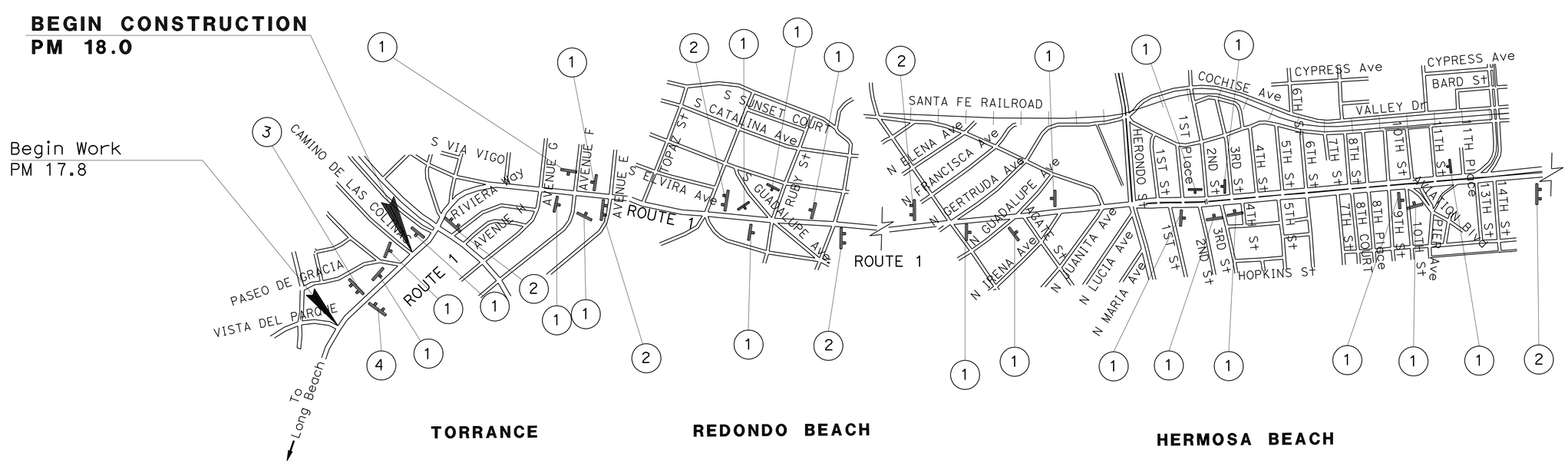

CONSTRUCTION AREA SIGNS

NO SCALE

CS-1

THIS PLAN IS ACCURATE FOR CONSTRUCTION AREA SIGN WORK ONLY

TC	12-01-10	THUAN CAO	CALCULATED-DESIGNED BY
REVISED BY	DATE REVISED	CELINA AVILES	CHECKED BY
FUNCTIONAL SUPERVISOR		CELINA AVILES	

STATE OF CALIFORNIA - DEPARTMENT OF TRANSPORTATION
Caltrans
DESIGN

LAST REVISION 04-25-11
DATE PLOTTED => 15-AUG-2011
TIME PLOTTED => 11:51

Dist	COUNTY	ROUTE	POST MILES TOTAL PROJECT	SHEET No.	TOTAL SHEETS
07	LA	1	18.0/39.3	33	85

N. Celina Aviles 4-20-11
REGISTERED CIVIL ENGINEER DATE

7-11-11
PLANS APPROVAL DATE

REGISTERED PROFESSIONAL ENGINEER
N. CELINA AVILES
No. 57106
Exp. 12/31/11
CIVIL
STATE OF CALIFORNIA

THE STATE OF CALIFORNIA OR ITS OFFICERS OR AGENTS SHALL NOT BE RESPONSIBLE FOR THE ACCURACY OR COMPLETENESS OF SCANNED COPIES OF THIS PLAN SHEET.

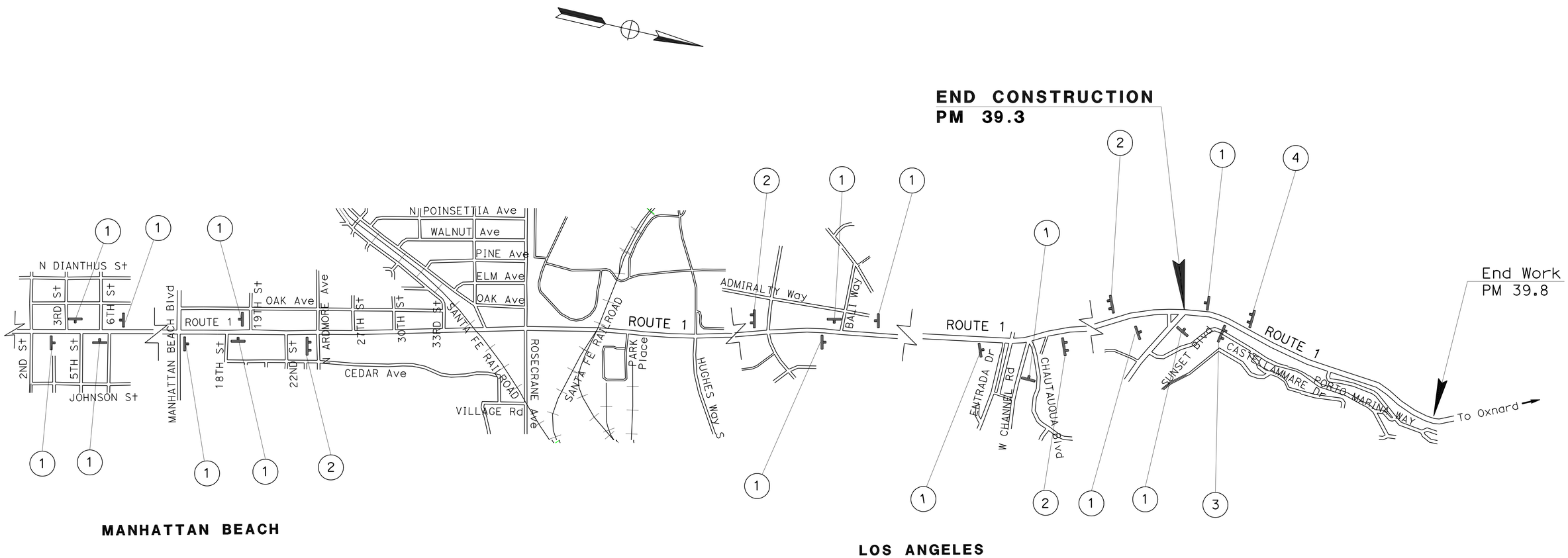

CONSTRUCTION AREA SIGNS

NO SCALE

CS-2

THIS PLAN IS ACCURATE FOR CONSTRUCTION AREA SIGN WORK ONLY

CALCULATED-DESIGNED BY	THUAN CAO	REVISED BY	TC
CHECKED BY	CELINA AVILES	DATE REVISED	12-01-10

FUNCTIONAL SUPERVISOR: CELINA AVILES

STATE OF CALIFORNIA - DEPARTMENT OF TRANSPORTATION
Caltrans
DESIGN

LAST REVISION 04-25-11
DATE PLOTTED => 15-AUG-2011
TIME PLOTTED => 11:51

Dist	COUNTY	ROUTE	POST MILES TOTAL PROJECT	SHEET No.	TOTAL SHEETS
07	LA	1	18.0/39.3	34	85

N. Celina Aviles 4-20-11
REGISTERED CIVIL ENGINEER DATE

7-11-11
PLANS APPROVAL DATE

REGISTERED PROFESSIONAL ENGINEER
N. CELINA AVILES
No. 57106
Exp. 12/31/11
CIVIL
STATE OF CALIFORNIA

THE STATE OF CALIFORNIA OR ITS OFFICERS OR AGENTS SHALL NOT BE RESPONSIBLE FOR THE ACCURACY OR COMPLETENESS OF SCANNED COPIES OF THIS PLAN SHEET.

LEGEND:

XX-XX TEMPORARY CONSTRUCTION SIGN No.

CONSTRUCTION SIGN

TYPE III BARRICADE

CONSTRUCTION AREA

NOTES:

1. CONFLICTING SIGNS SHALL BE REMOVED OR COVERED DURING CONSTRUCTION AS DIRECTED BY THE ENGINEER.
2. AT LEAST ONE PERSON SHALL BE ASSIGNED TO PROVIDE FULL TIME MAINTENANCE OF TRAFFIC CONTROL DEVICES.
3. LOCATIONS OF CONSTRUCTION AREA SIGNS SHOWN ARE APPROXIMATE. EXACT LOCATIONS WILL BE DETERMINED BY THE ENGINEER.
4. TRAFFIC CONTROL FOR LOCAL STREET CONSTRUCTION SHALL COMPLY WITH THE W.A.T.C.H. MANUAL AND M.U.T.C.D. REQUIREMENTS.
5. SIGNS MAY BE ATTACHED TO THE EXISTING POLES BY STRAP AND SADDLE METHOD UPON APPROVAL OF LOCAL AGENCY.

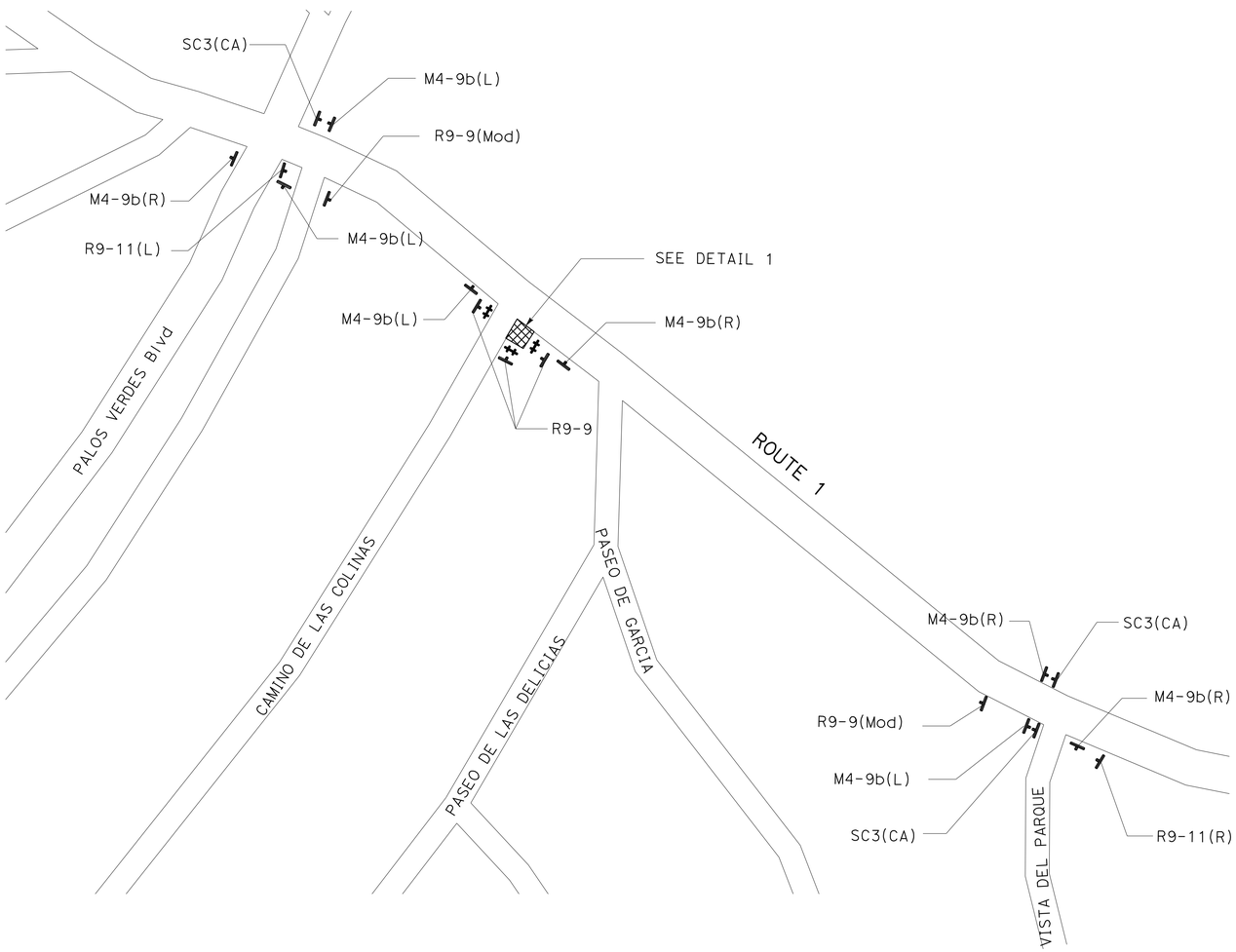

LOCATION 1
CAMINO DE LAS COLINAS (SE CORNER)

DETAIL 1

TRAFFIC HANDLING PLAN (PEDESTRIAN DETOUR)

NO SCALE

TH-1

THIS PLAN IS ACCURATE FOR TRAFFIC HANDLING AND PEDESTRIAN DETOUR WORK ONLY

STATE OF CALIFORNIA - DEPARTMENT OF TRANSPORTATION
Caltrans
DESIGN

FUNCTIONAL SUPERVISOR: CELINA AVILES
CALCULATED-DESIGNED BY: DAN PHAM
CHECKED BY: THUAN CAO
REVISED BY
DATE REVISED

LAST REVISION 04-28-11
DATE PLOTTED => 15-AUG-2011
TIME PLOTTED => 11:51

Dist	COUNTY	ROUTE	POST MILES TOTAL PROJECT	SHEET No.	TOTAL SHEETS
07	LA	1	18.0/39.3	35	85

N. Celina Aviles 4-20-11
REGISTERED CIVIL ENGINEER DATE

7-11-11
PLANS APPROVAL DATE

REGISTERED PROFESSIONAL ENGINEER
N. CELINA AVILES
No. 57106
Exp. 12/31/11
CIVIL
STATE OF CALIFORNIA

THE STATE OF CALIFORNIA OR ITS OFFICERS OR AGENTS SHALL NOT BE RESPONSIBLE FOR THE ACCURACY OR COMPLETENESS OF SCANNED COPIES OF THIS PLAN SHEET.

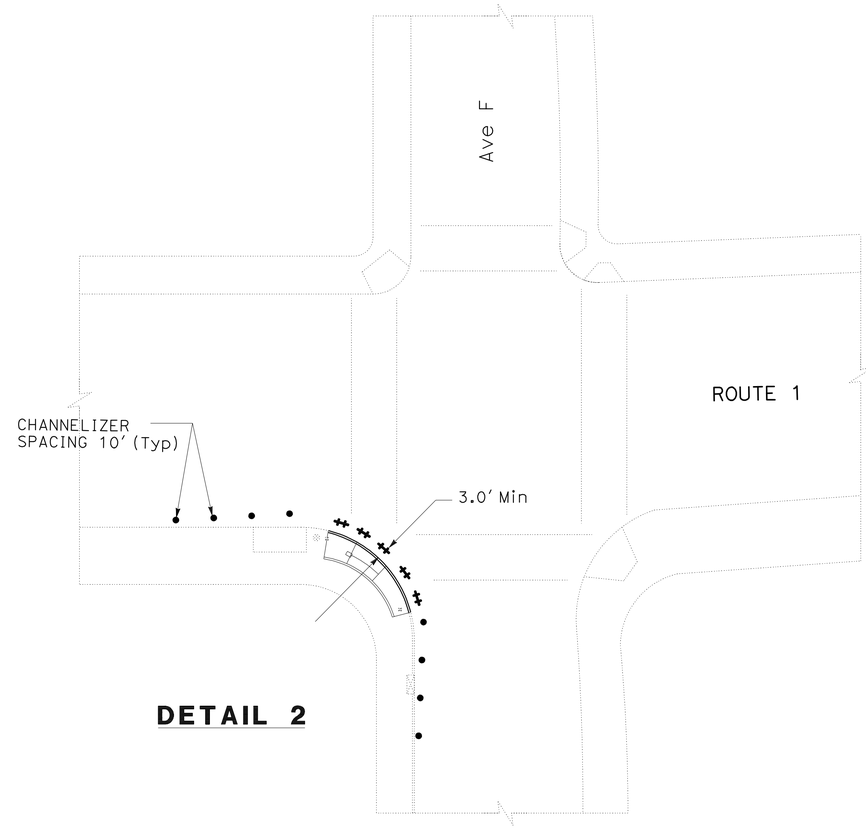

DETAIL 2

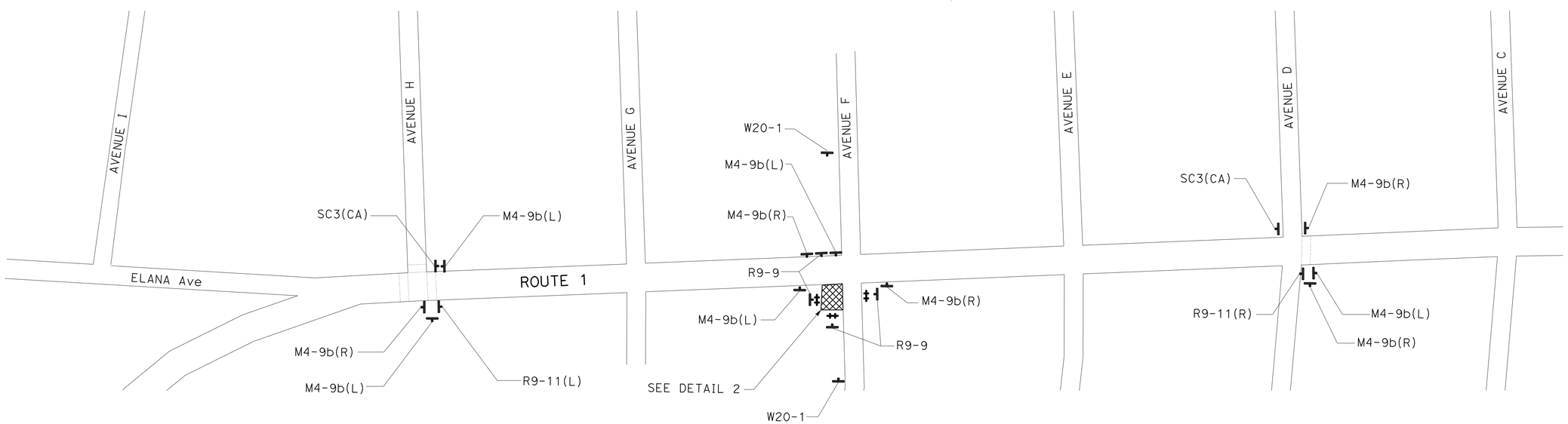

LOCATION 2
AVENUE F (SE CORNER)

TRAFFIC HANDLING PLAN (PEDESTRIAN DETOUR)

NO SCALE

TH-2

THIS PLAN IS ACCURATE FOR TRAFFIC HANDLING AND PEDESTRIAN DETOUR WORK ONLY

REVISED BY | DATE REVISED
DAN PHAM | THUAN CAO
CALCULATED-DESIGNED BY | CHECKED BY
FUNCTIONAL SUPERVISOR
CELINA AVILES

STATE OF CALIFORNIA - DEPARTMENT OF TRANSPORTATION
Caltrans®
DESIGN

LAST REVISION 04-28-11
DATE PLOTTED => 15-AUG-2011
TIME PLOTTED => 11:52

Dist	COUNTY	ROUTE	POST MILES TOTAL PROJECT	SHEET No.	TOTAL SHEETS
07	LA	1	18.0/39.3	36	85

N. Celina Aviles 4-20-11
REGISTERED CIVIL ENGINEER DATE

7-11-11
PLANS APPROVAL DATE

REGISTERED PROFESSIONAL ENGINEER
N. CELINA AVILES
No. 57106
Exp. 12/31/11
CIVIL
STATE OF CALIFORNIA

THE STATE OF CALIFORNIA OR ITS OFFICERS OR AGENTS SHALL NOT BE RESPONSIBLE FOR THE ACCURACY OR COMPLETENESS OF SCANNED COPIES OF THIS PLAN SHEET.

NOTE:

1. 3'-0" MINIMUM CLEAR WIDTH SHALL BE MAINTAINED AT ALL TIMES.

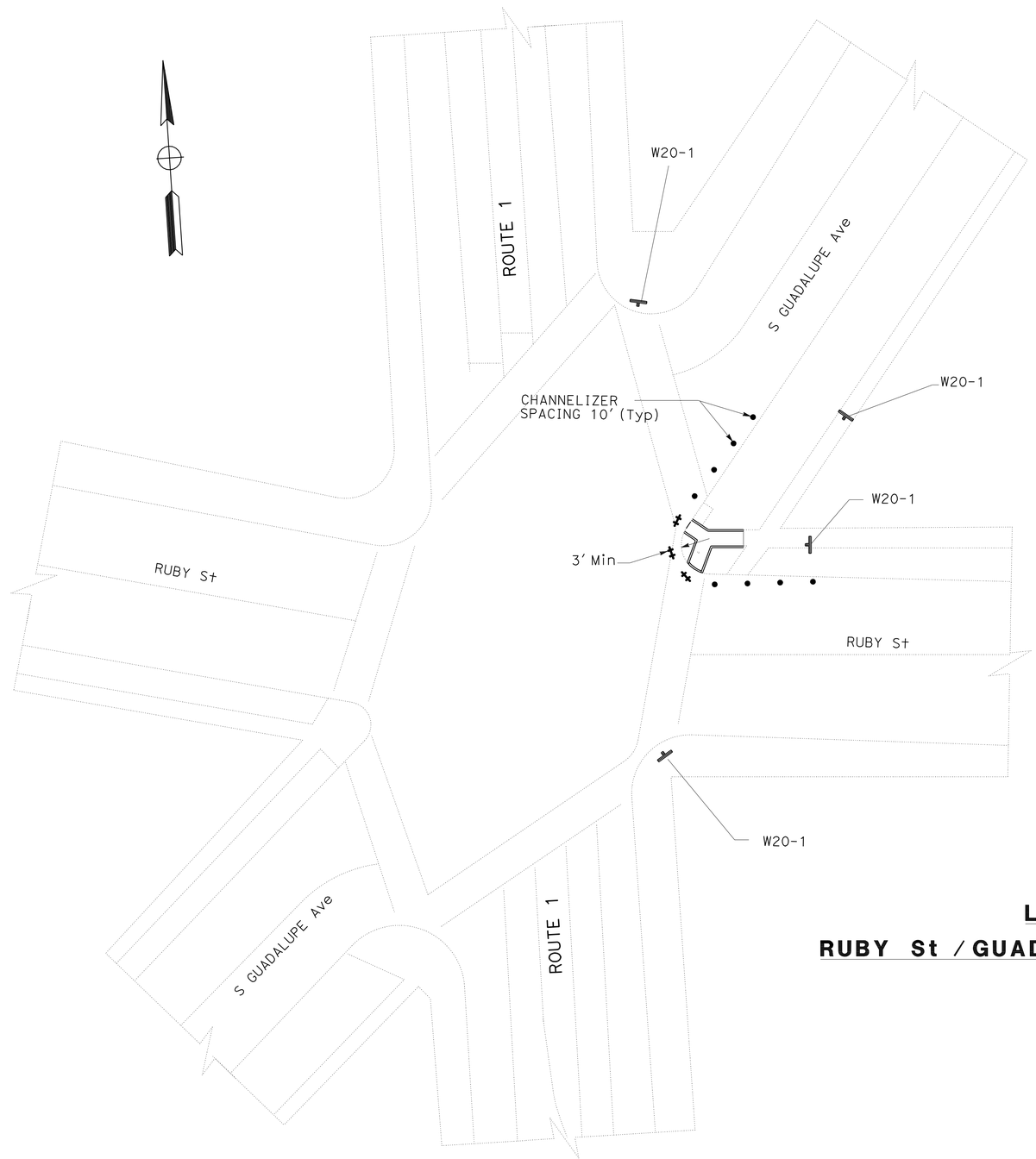

LOCATION 3
RUBY St / GUADALUPE Ave (SE CORNER)

TRAFFIC HANDLING PLAN (PEDESTRIAN DETOUR)

NO SCALE

TH-3

THIS PLAN IS ACCURATE FOR TRAFFIC HANDLING AND PEDESTRIAN DETOUR WORK ONLY

STATE OF CALIFORNIA - DEPARTMENT OF TRANSPORTATION
Caltrans
DESIGN

FUNCTIONAL SUPERVISOR: CELINA AVILES
CALCULATED-DESIGNED BY: DAN PHAM
CHECKED BY: THUAN CAO
REVISED BY
DATE REVISED

LAST REVISION 04-28-11
DATE PLOTTED => 15-AUG-2011
TIME PLOTTED => 11:52

Dist	COUNTY	ROUTE	POST MILES TOTAL PROJECT	SHEET No.	TOTAL SHEETS
07	LA	1	18.0/39.3	37	85

N. Celina Aviles 4-20-11
REGISTERED CIVIL ENGINEER DATE

7-11-11
PLANS APPROVAL DATE

REGISTERED PROFESSIONAL ENGINEER
N. CELINA AVILES
No. 57106
Exp. 12/31/11
CIVIL
STATE OF CALIFORNIA

THE STATE OF CALIFORNIA OR ITS OFFICERS OR AGENTS SHALL NOT BE RESPONSIBLE FOR THE ACCURACY OR COMPLETENESS OF SCANNED COPIES OF THIS PLAN SHEET.

NOTE:

1. 3'-0" MINIMUM CLEAR WIDTH SHALL BE MAINTAINED AT ALL TIMES.

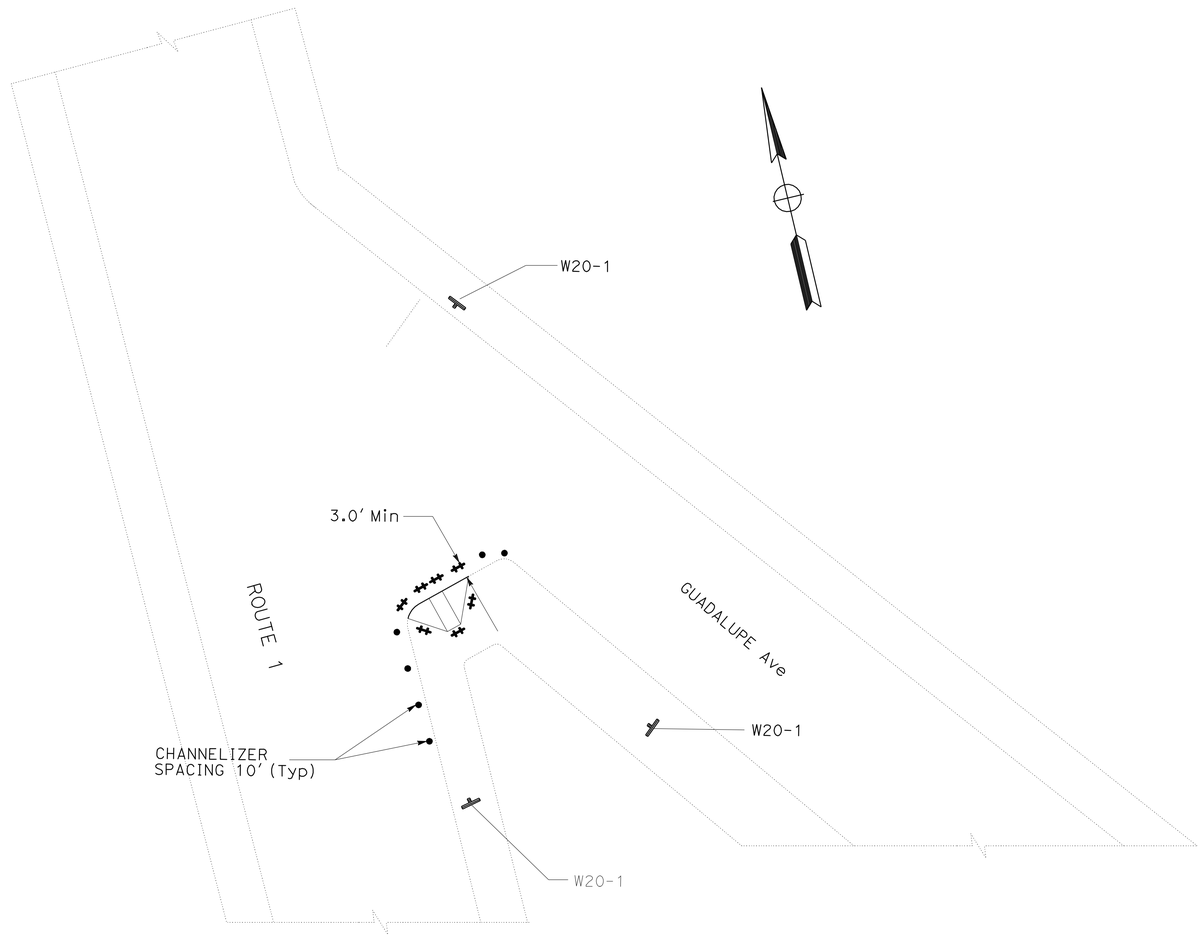

LOCATION 4
N GUADALUPE Ave (SE CORNER)

TRAFFIC HANDLING PLAN (PEDESTRIAN DETOUR)

NO SCALE

TH-4

THIS PLAN IS ACCURATE FOR TRAFFIC HANDLING AND PEDESTRIAN DETOUR WORK ONLY

STATE OF CALIFORNIA - DEPARTMENT OF TRANSPORTATION
Caltrans
DESIGN

FUNCTIONAL SUPERVISOR: CELINA AVILES
CALCULATED-DESIGNED BY: DAN PHAM
CHECKED BY
REVISED BY
DATE REVISED

LAST REVISION 04-28-11
DATE PLOTTED => 15-AUG-2011
TIME PLOTTED => 11:52

Dist	COUNTY	ROUTE	POST MILES TOTAL PROJECT	SHEET No.	TOTAL SHEETS
07	LA	1	18.0/39.3	38	85

N. Celina Aviles 4-20-11
REGISTERED CIVIL ENGINEER DATE

7-11-11
PLANS APPROVAL DATE

REGISTERED PROFESSIONAL ENGINEER
N. CELINA AVILES
No. 57106
Exp. 12/31/11
CIVIL
STATE OF CALIFORNIA

THE STATE OF CALIFORNIA OR ITS OFFICERS OR AGENTS SHALL NOT BE RESPONSIBLE FOR THE ACCURACY OR COMPLETENESS OF SCANNED COPIES OF THIS PLAN SHEET.

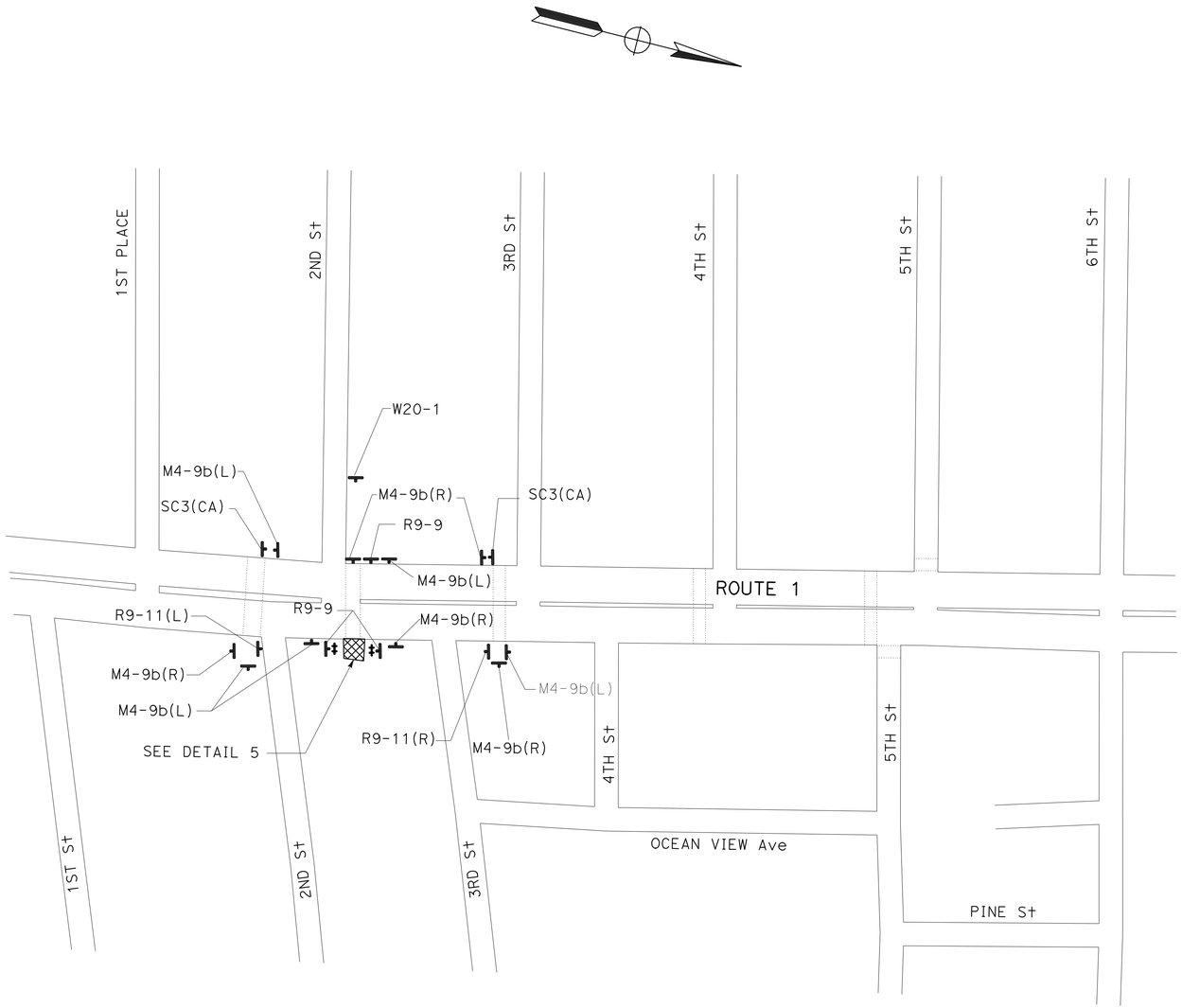

LOCATION 5
2nd St (EAST SIDE)

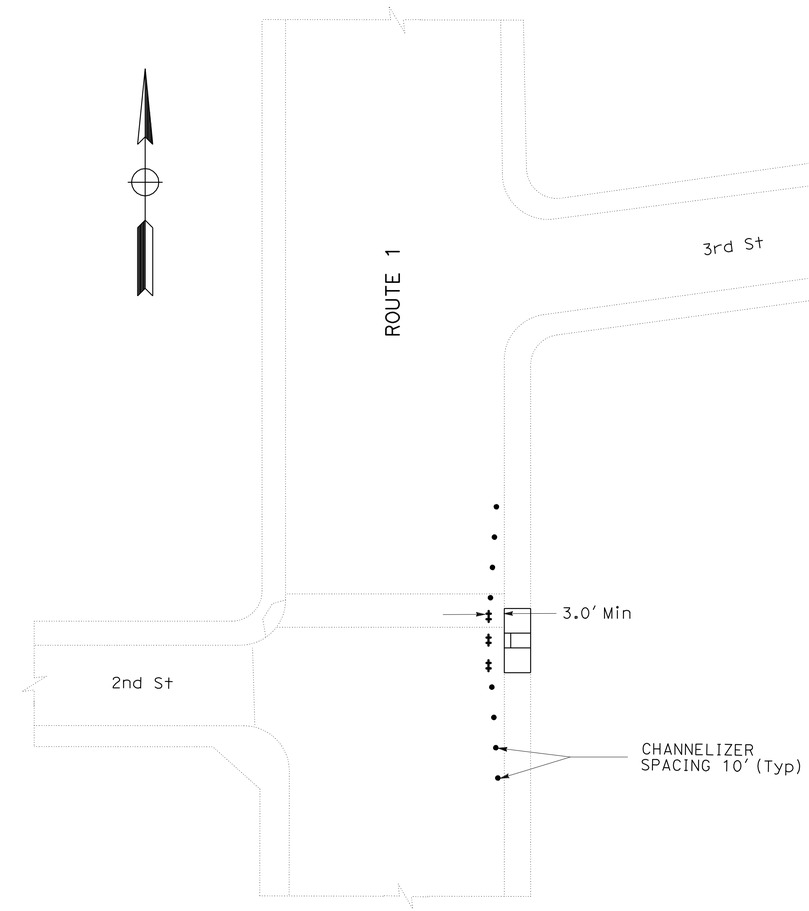

DETAIL 5

TRAFFIC HANDLING PLAN (PEDESTRIAN DETOUR)

NO SCALE

THIS PLAN IS ACCURATE FOR TRAFFIC HANDLING AND PEDESTRIAN DETOUR WORK ONLY

TH-5

STATE OF CALIFORNIA - DEPARTMENT OF TRANSPORTATION
DESIGN
Caltrans

FUNCTIONAL SUPERVISOR: CELINA AVILES
CALCULATED-DESIGNED BY: DAN PHAM
CHECKED BY: THUAN CAO
REVISED BY
DATE REVISED

LAST REVISION 04-28-11
DATE PLOTTED => 15-AUG-2011
TIME PLOTTED => 11:52

Dist	COUNTY	ROUTE	POST MILES TOTAL PROJECT	SHEET No.	TOTAL SHEETS
07	LA	1	18.0/39.3	39	85

REGISTERED CIVIL ENGINEER 4-20-11 DATE

7-11-11
PLANS APPROVAL DATE

REGISTERED PROFESSIONAL ENGINEER KHAN M-A HOSSAIN No. C59005 Exp. 6/30/13 CIVIL STATE OF CALIFORNIA

THE STATE OF CALIFORNIA OR ITS OFFICERS OR AGENTS SHALL NOT BE RESPONSIBLE FOR THE ACCURACY OR COMPLETENESS OF SCANNED COPIES OF THIS PLAN SHEET.

NOTE:

1. 3'-0" MINIMUM CLEAR WIDTH SHALL BE MAINTAINED AT ALL TIMES.

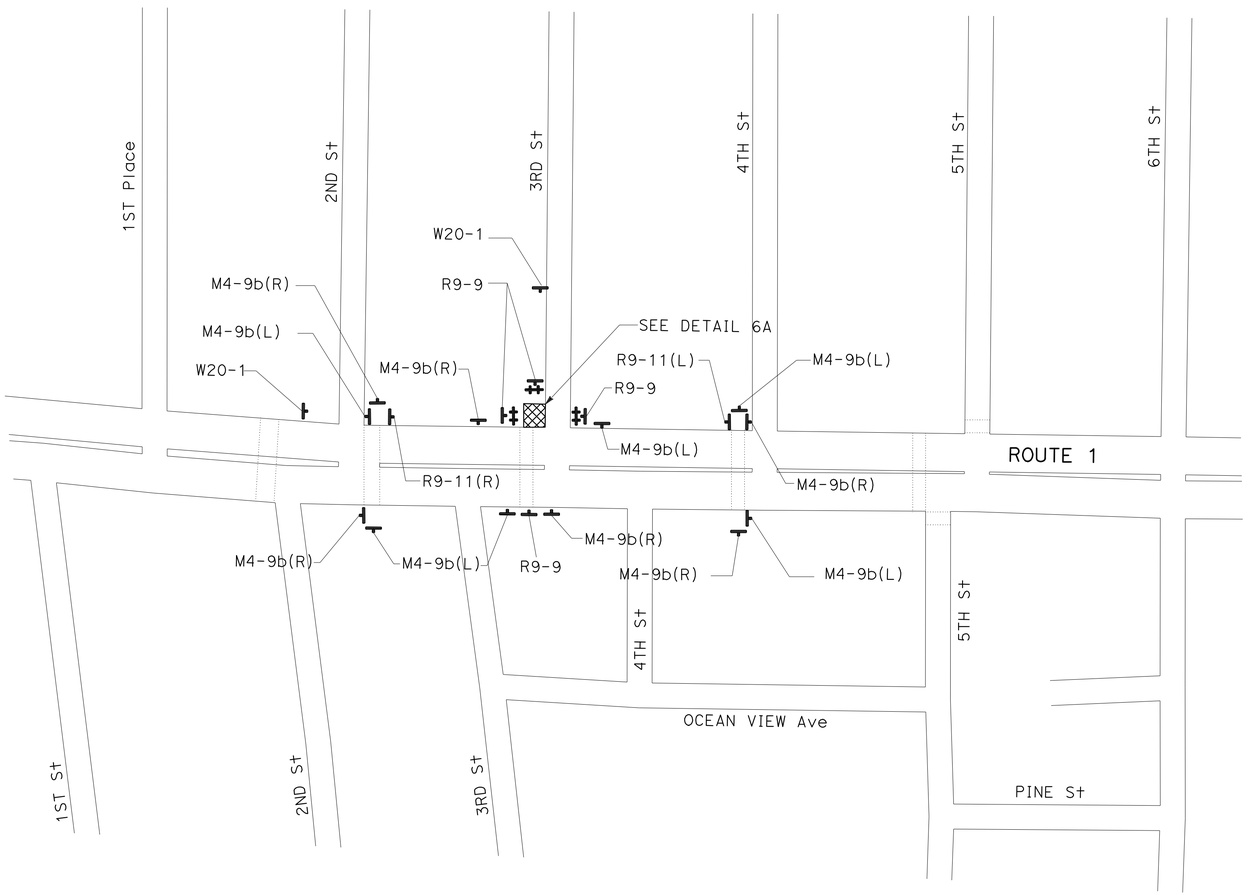

LOCATION 6A
3rd St (WEST SIDE)

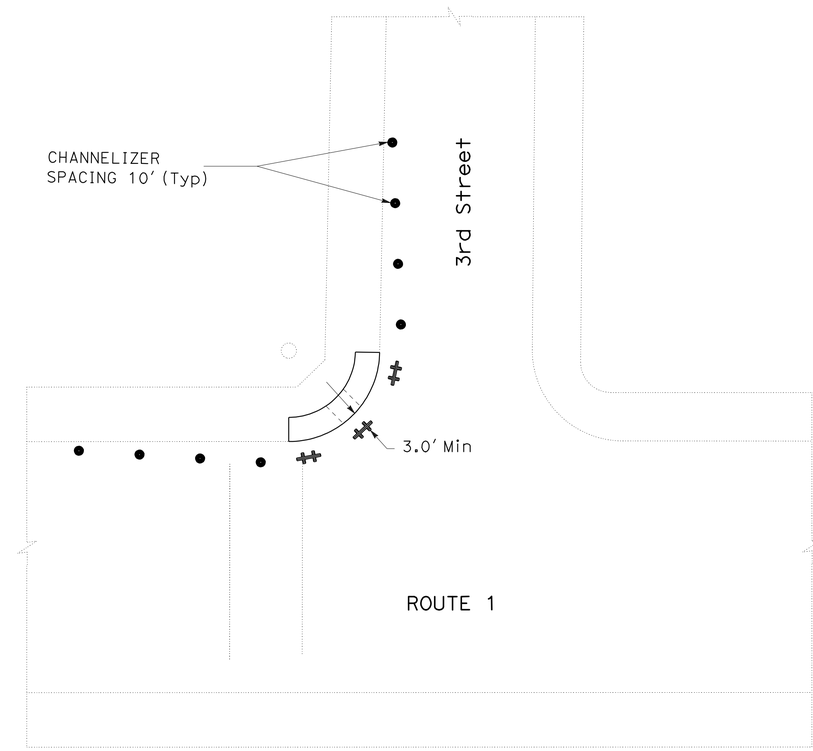

DETAIL 6A

THIS PLAN IS ACCURATE FOR TRAFFIC HANDLING AND PEDESTRIAN DETOUR WORK ONLY

TRAFFIC HANDLING PLAN (PEDESTRIAN DETOUR)

NO SCALE

TH-6

STATE OF CALIFORNIA - DEPARTMENT OF TRANSPORTATION
Caltrans
DESIGN

FUNCTIONAL SUPERVISOR: KHAN A HOSSAIN
CALCULATED-DESIGNED BY: DAN PHAM
CHECKED BY: THUAN CAO
REVISED BY
DATE REVISED

LAST REVISION 04-28-11
DATE PLOTTED => 15-AUG-2011
TIME PLOTTED => 11:52

Dist	COUNTY	ROUTE	POST MILES TOTAL PROJECT	SHEET No.	TOTAL SHEETS
07	LA	1	18.0/39.3	40	85

REGISTERED CIVIL ENGINEER 4-20-11 DATE

7-11-11
PLANS APPROVAL DATE

REGISTERED PROFESSIONAL ENGINEER KHAN M-A HOSSAIN No. C59005 Exp. 6/30/13 CIVIL STATE OF CALIFORNIA

THE STATE OF CALIFORNIA OR ITS OFFICERS OR AGENTS SHALL NOT BE RESPONSIBLE FOR THE ACCURACY OR COMPLETENESS OF SCANNED COPIES OF THIS PLAN SHEET.

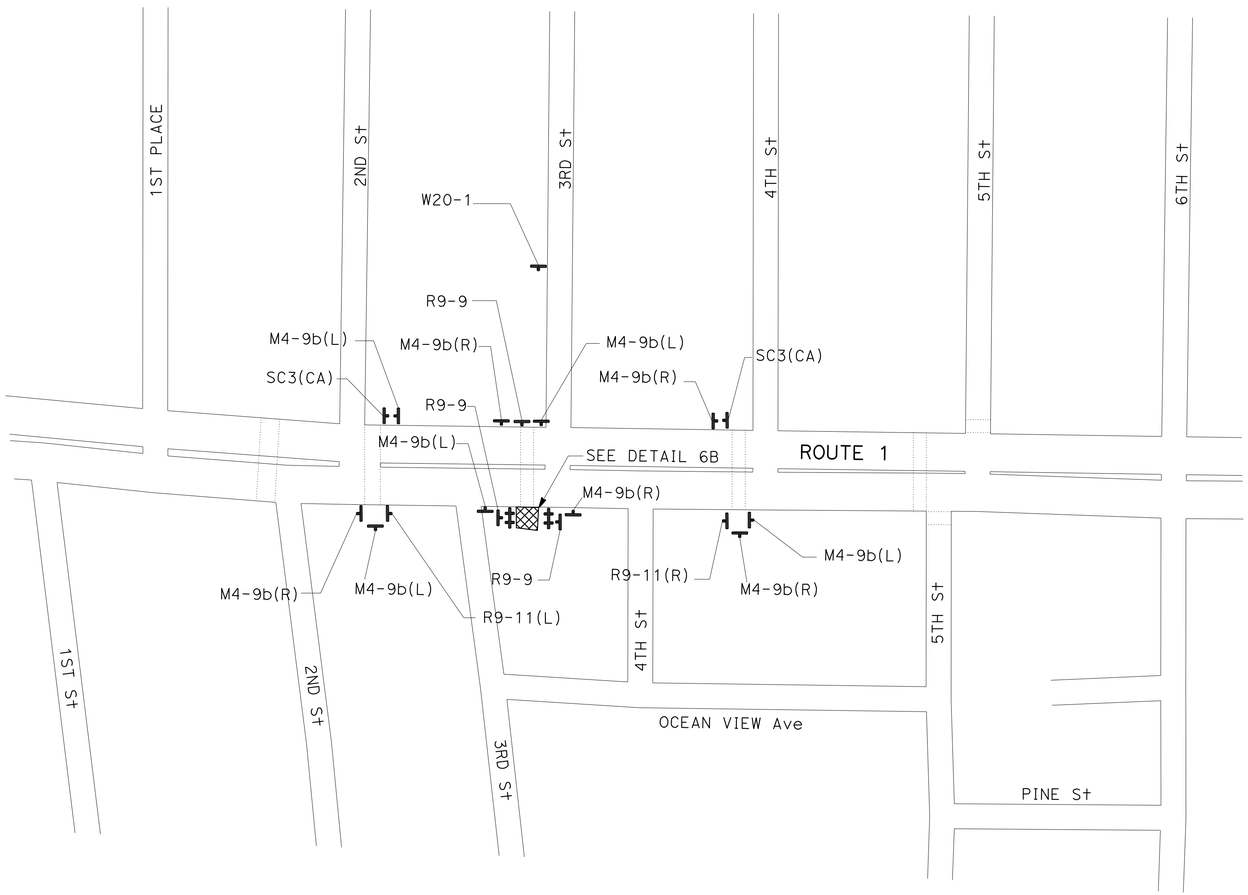

LOCATION 6B
3rd St (EAST SIDE)

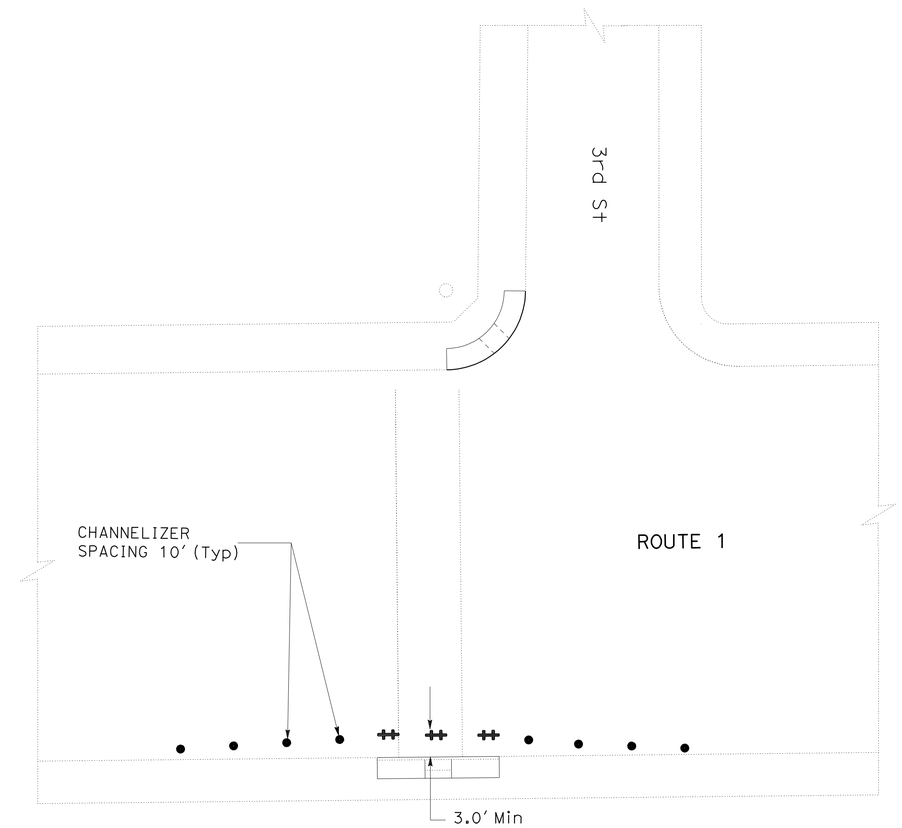

DETAIL 6B

TRAFFIC HANDLING PLAN (PEDESTRIAN DETOUR)

NO SCALE

TH-7

THIS PLAN IS ACCURATE FOR TRAFFIC HANDLING AND PEDESTRIAN DETOUR WORK ONLY

STATE OF CALIFORNIA - DEPARTMENT OF TRANSPORTATION
Caltrans
DESIGN

FUNCTIONAL SUPERVISOR: KHAN A HOSSAIN
CALCULATED-DESIGNED BY: DAN PHAM
CHECKED BY: THUAN CAO
REVISED BY
DATE REVISED

LAST REVISION 04-28-11
DATE PLOTTED => 15-AUG-2011
TIME PLOTTED => 11:52

Dist	COUNTY	ROUTE	POST MILES TOTAL PROJECT	SHEET No.	TOTAL SHEETS
07	LA	1	18.0/39.3	41	85

N. Celina Aviles 4-20-11
REGISTERED CIVIL ENGINEER DATE

7-11-11
PLANS APPROVAL DATE

REGISTERED PROFESSIONAL ENGINEER
N. CELINA AVILES
No. 57106
Exp. 12/31/11
CIVIL
STATE OF CALIFORNIA

THE STATE OF CALIFORNIA OR ITS OFFICERS OR AGENTS SHALL NOT BE RESPONSIBLE FOR THE ACCURACY OR COMPLETENESS OF SCANNED COPIES OF THIS PLAN SHEET.

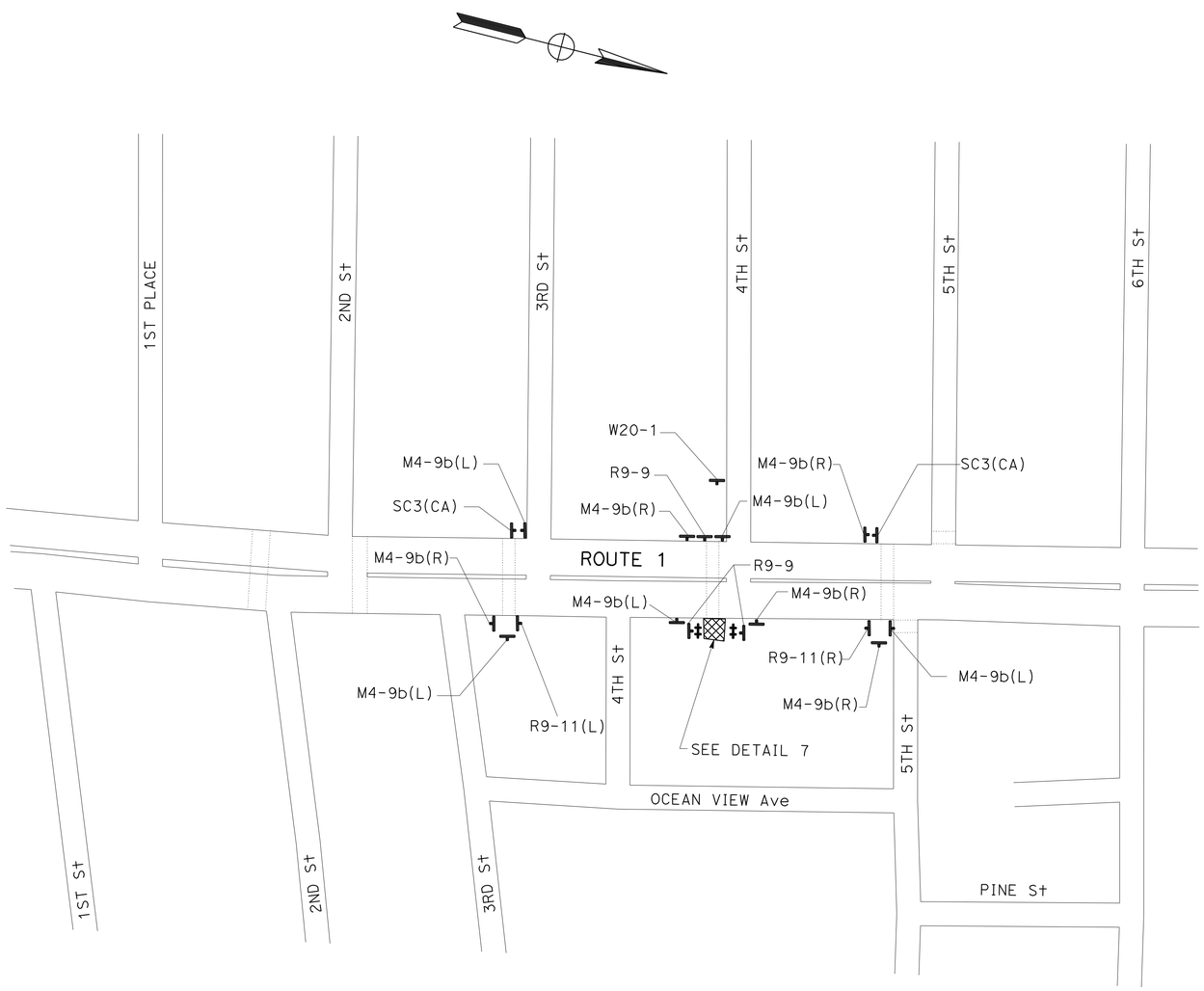

LOCATION 7
4th St (EAST SIDE)

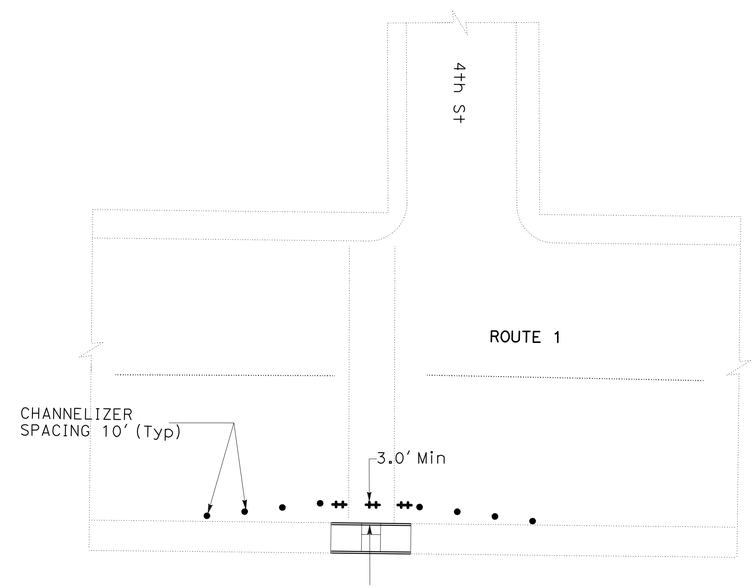

DETAIL 7

TRAFFIC HANDLING PLAN (PEDESTRIAN DETOUR)

NO SCALE

TH-8

THIS PLAN IS ACCURATE FOR TRAFFIC HANDLING AND PEDESTRIAN DETOUR WORK ONLY

STATE OF CALIFORNIA - DEPARTMENT OF TRANSPORTATION
DESIGN
Caltrans

FUNCTIONAL SUPERVISOR: CELINA AVILES
CALCULATED-DESIGNED BY: DAN PHAM
CHECKED BY: THUAN CAO
REVISED BY
DATE REVISED

LAST REVISION 04-28-11
DATE PLOTTED => 15-AUG-2011
TIME PLOTTED => 11:52

Dist	COUNTY	ROUTE	POST MILES TOTAL PROJECT	SHEET No.	TOTAL SHEETS
07	LA	1	18.0/39.3	42	85

N. Celina Aviles 4-20-11
REGISTERED CIVIL ENGINEER DATE

7-11-11
PLANS APPROVAL DATE

REGISTERED PROFESSIONAL ENGINEER
N. CELINA AVILES
No. 57106
Exp. 12/31/11
CIVIL
STATE OF CALIFORNIA

THE STATE OF CALIFORNIA OR ITS OFFICERS OR AGENTS SHALL NOT BE RESPONSIBLE FOR THE ACCURACY OR COMPLETENESS OF SCANNED COPIES OF THIS PLAN SHEET.

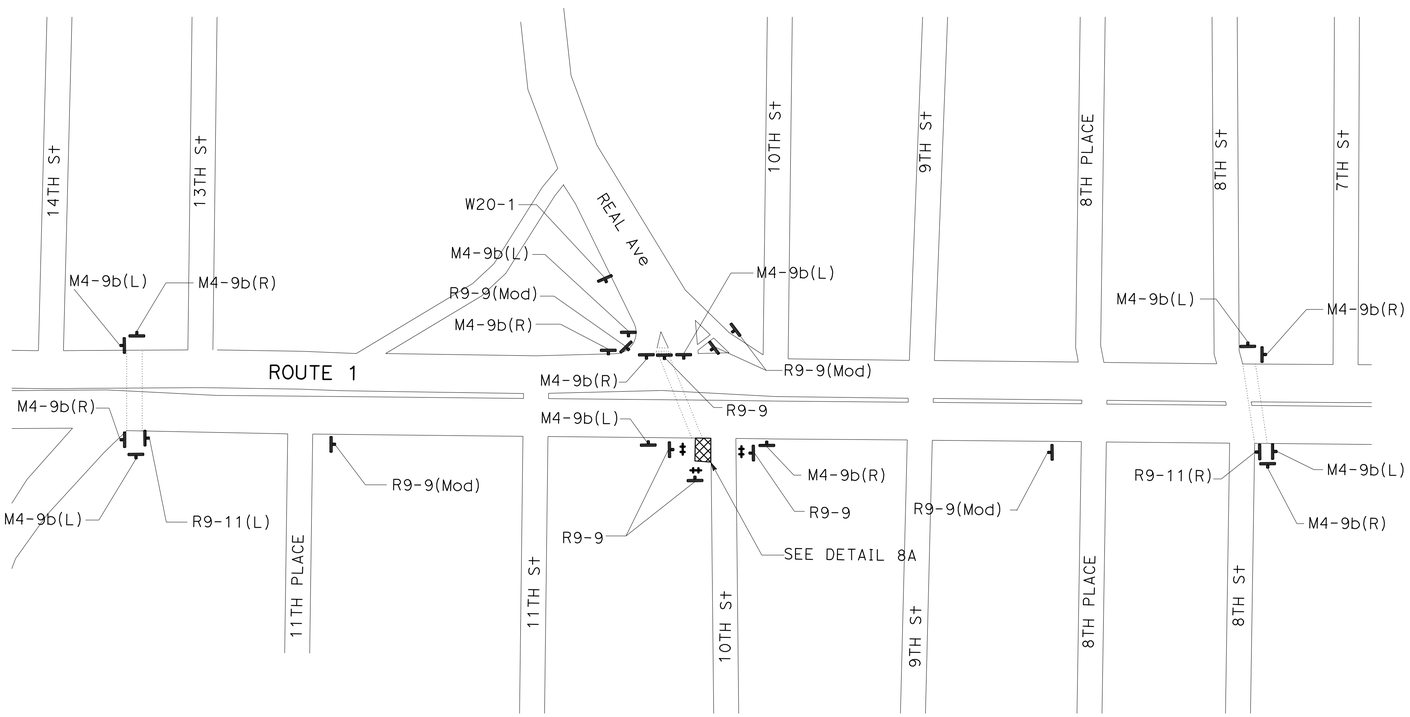

LOCATION 8A
AVIATION Blvd & 10th St

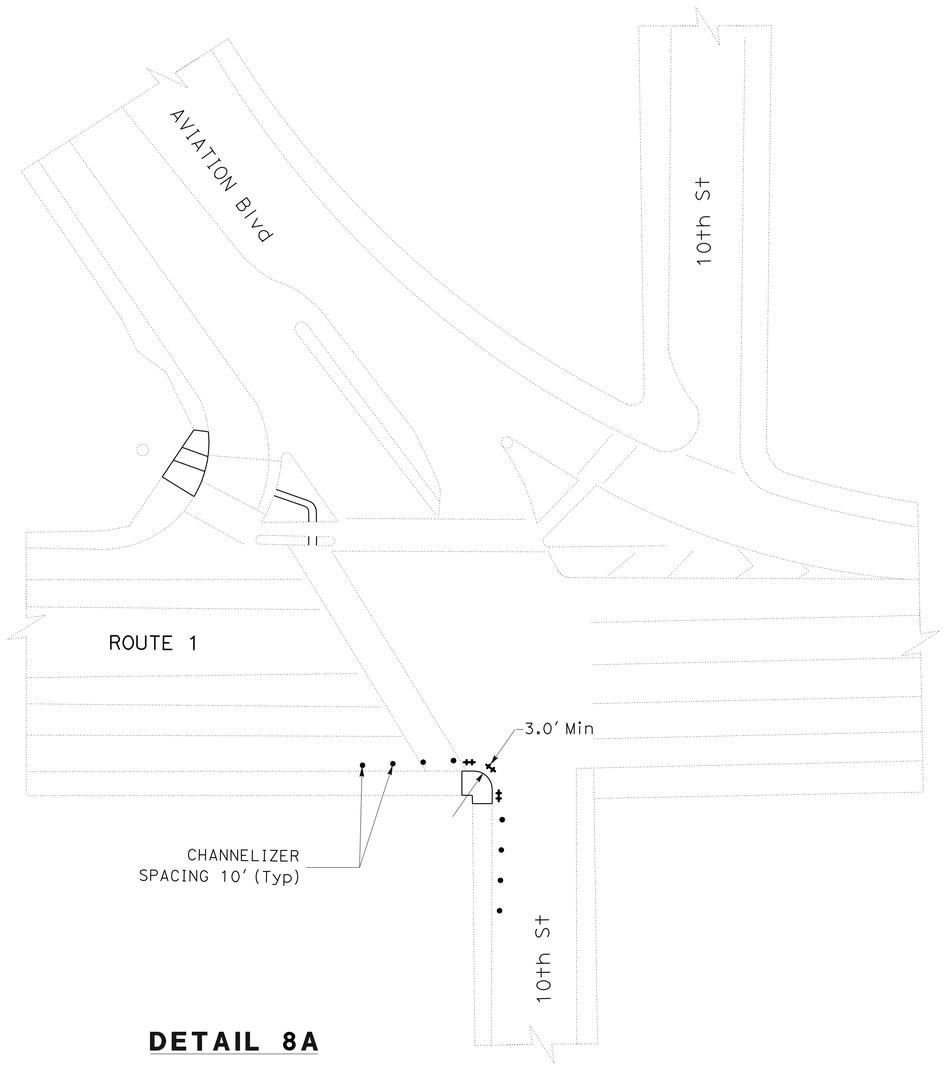

DETAIL 8A

TRAFFIC HANDLING PLAN (PEDESTRIAN DETOUR)

NO SCALE

TH-9

THIS PLAN IS ACCURATE FOR TRAFFIC HANDLING AND PEDESTRIAN DETOUR WORK ONLY

STATE OF CALIFORNIA - DEPARTMENT OF TRANSPORTATION
Caltrans
DESIGN

FUNCTIONAL SUPERVISOR: CELINA AVILES
CALCULATED-DESIGNED BY: DAN PHAM
CHECKED BY: THUAN CAO
REVISED BY
DATE REVISED

LAST REVISION 04-28-11
DATE PLOTTED => 15-AUG-2011
TIME PLOTTED => 11:52

Dist	COUNTY	ROUTE	POST MILES TOTAL PROJECT	SHEET No.	TOTAL SHEETS
07	LA	1	18.0/39.3	43	85

N. Celina Aviles 4-20-11
REGISTERED CIVIL ENGINEER DATE

7-11-11
PLANS APPROVAL DATE

REGISTERED PROFESSIONAL ENGINEER
N. CELINA AVILES
No. 57106
Exp. 12/31/11
CIVIL
STATE OF CALIFORNIA

THE STATE OF CALIFORNIA OR ITS OFFICERS OR AGENTS SHALL NOT BE RESPONSIBLE FOR THE ACCURACY OR COMPLETENESS OF SCANNED COPIES OF THIS PLAN SHEET.

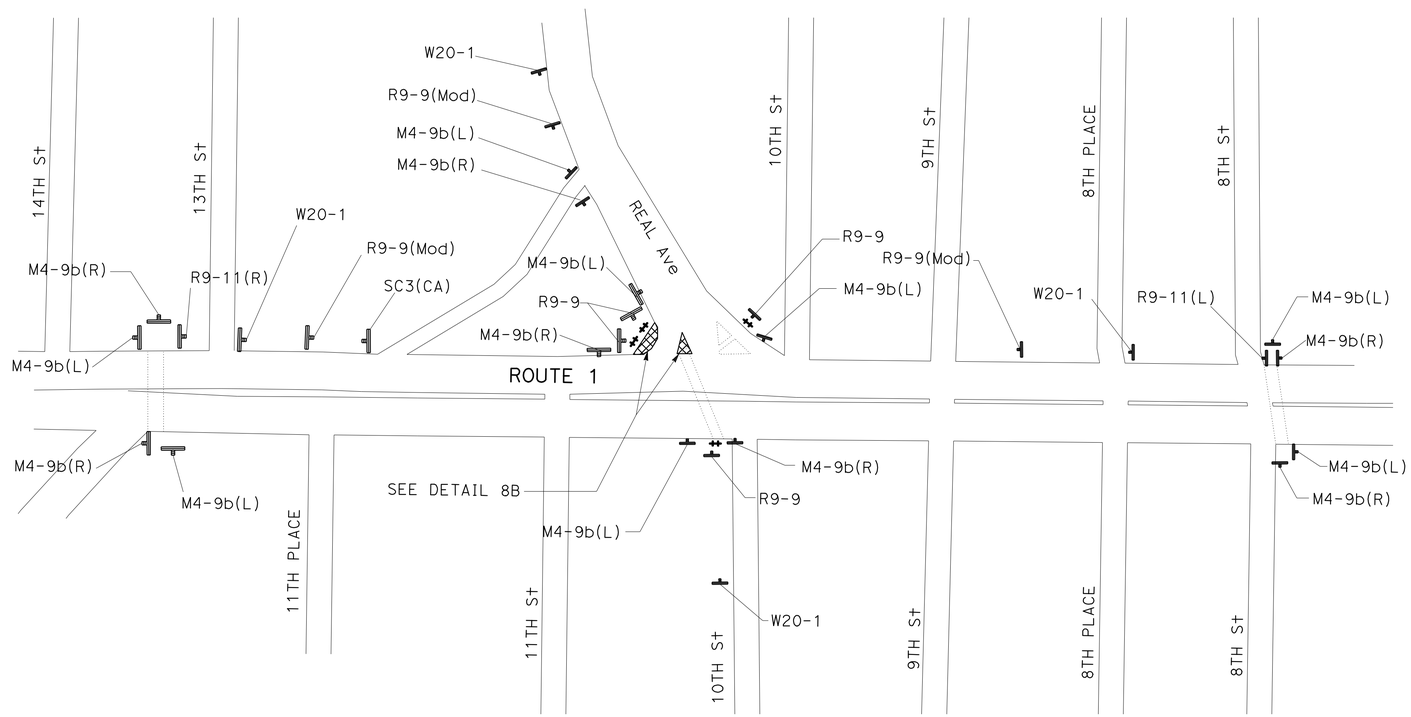

LOCATION 8B & 8C
AVIATION Blvd & 10th St

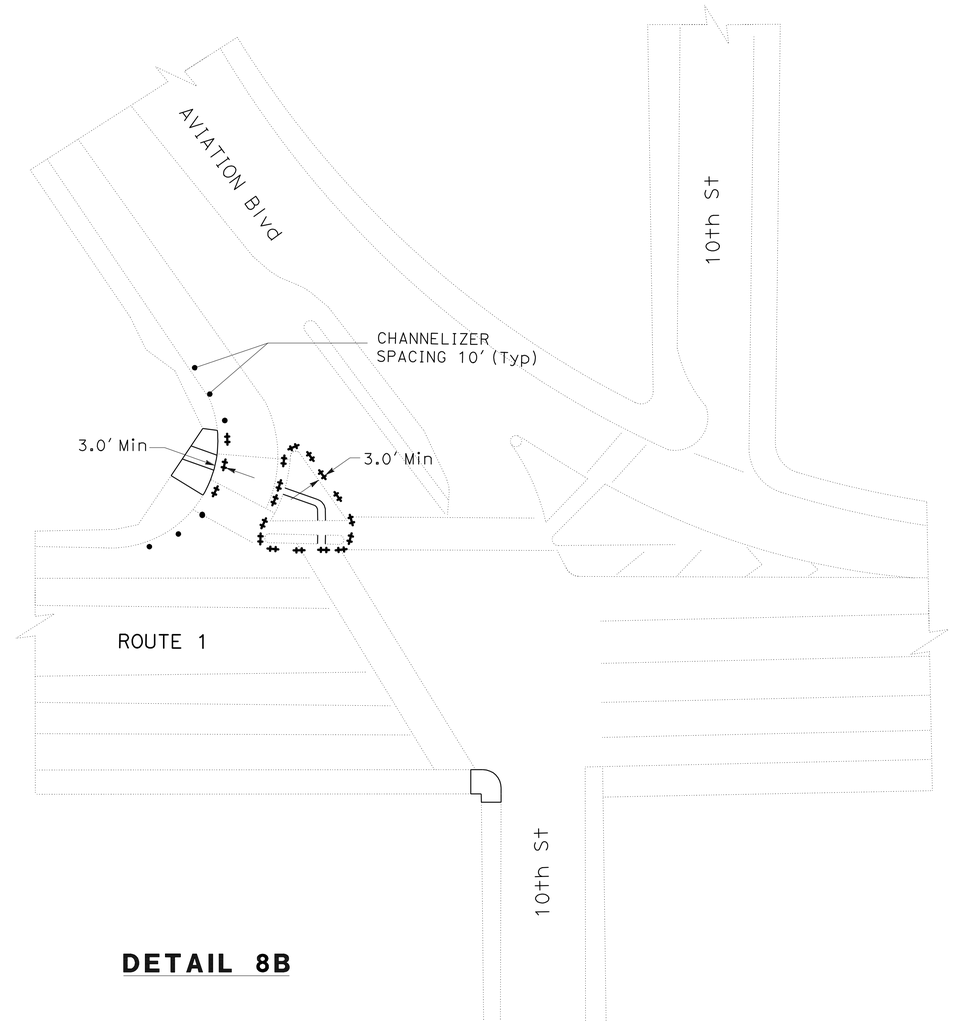

DETAIL 8B

TRAFFIC HANDLING PLAN (PEDESTRIAN DETOUR)

NO SCALE

TH-10

THIS PLAN IS ACCURATE FOR TRAFFIC HANDLING AND PEDESTRIAN DETOUR WORK ONLY

REVISED BY	DATE REVISED
DAN PHAM	THUAN CAO
CALCULATED-DESIGNED BY	CHECKED BY
FUNCTIONAL SUPERVISOR	CELINA AVILES

STATE OF CALIFORNIA - DEPARTMENT OF TRANSPORTATION
Caltrans
DESIGN

LAST REVISION 04-28-11 | DATE PLOTTED => 15-AUG-2011 | TIME PLOTTED => 11:52

Dist	COUNTY	ROUTE	POST MILES TOTAL PROJECT	SHEET No.	TOTAL SHEETS
07	LA	1	18.0/39.3	44	85

N. Celina Aviles 4-20-11
REGISTERED CIVIL ENGINEER DATE

7-11-11
PLANS APPROVAL DATE

REGISTERED PROFESSIONAL ENGINEER
N. CELINA AVILES
No. 57106
Exp. 12/31/11
CIVIL
STATE OF CALIFORNIA

THE STATE OF CALIFORNIA OR ITS OFFICERS OR AGENTS SHALL NOT BE RESPONSIBLE FOR THE ACCURACY OR COMPLETENESS OF SCANNED COPIES OF THIS PLAN SHEET.

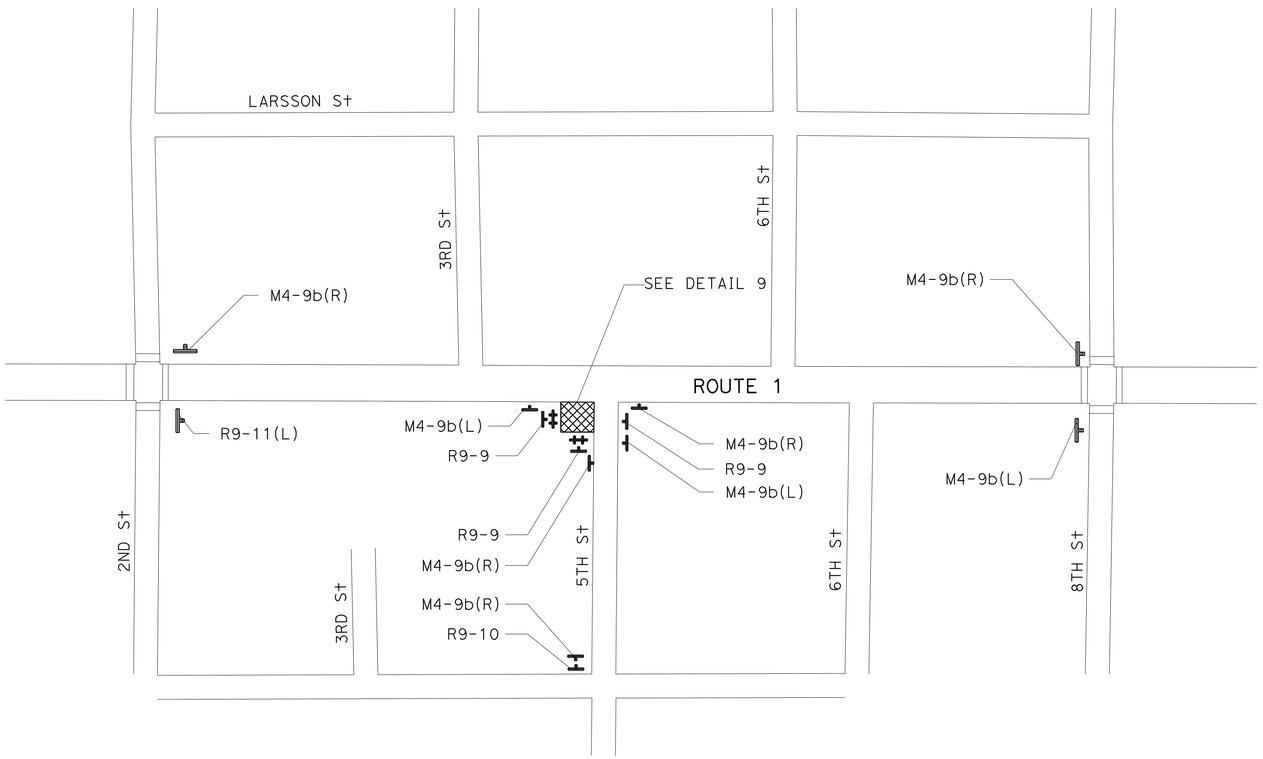

LOCATION 9
5th St (SE CORNER)

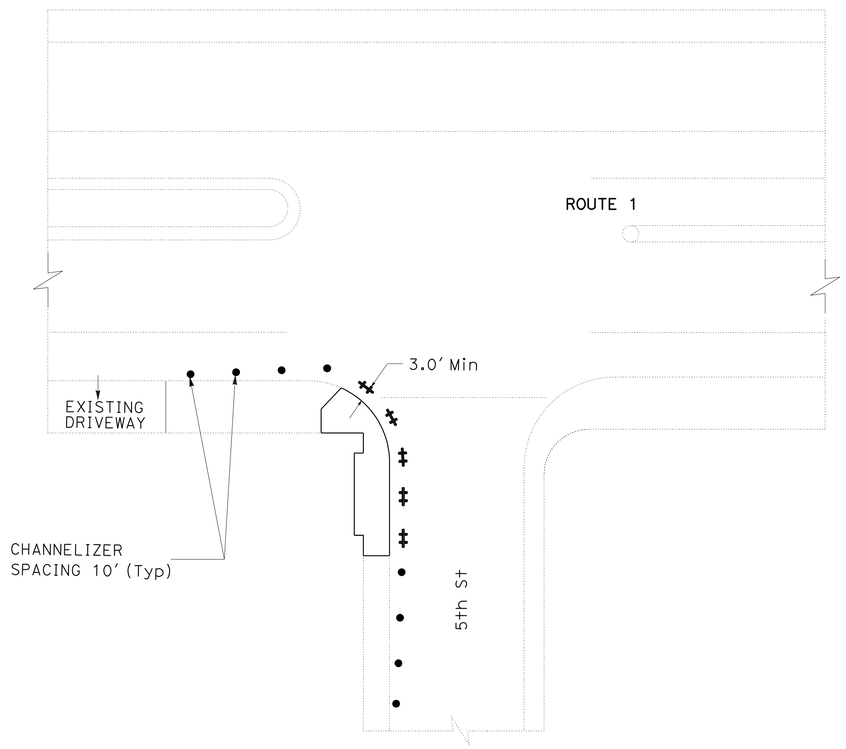

DETAIL 9

TRAFFIC HANDLING PLAN (PEDESTRIAN DETOUR)

NO SCALE

TH-11

THIS PLAN IS ACCURATE FOR TRAFFIC HANDLING AND PEDESTRIAN DETOUR WORK ONLY

STATE OF CALIFORNIA - DEPARTMENT OF TRANSPORTATION
Caltrans
DESIGN

FUNCTIONAL SUPERVISOR: CELINA AVILES
CALCULATED-DESIGNED BY: COUNG T. TRAN
CHECKED BY: THUAN CAO
REVISED BY
DATE REVISED

LAST REVISION 04-28-11
DATE PLOTTED => 15-AUG-2011
TIME PLOTTED => 11:52

Dist	COUNTY	ROUTE	POST MILES TOTAL PROJECT	SHEET No.	TOTAL SHEETS
07	LA	1	18.0/39.3	45	85

N. Celina Aviles 4-20-11
REGISTERED CIVIL ENGINEER DATE

7-11-11
PLANS APPROVAL DATE

REGISTERED PROFESSIONAL ENGINEER
N. CELINA AVILES
No. 57106
Exp. 12/31/11
CIVIL
STATE OF CALIFORNIA

THE STATE OF CALIFORNIA OR ITS OFFICERS OR AGENTS SHALL NOT BE RESPONSIBLE FOR THE ACCURACY OR COMPLETENESS OF SCANNED COPIES OF THIS PLAN SHEET.

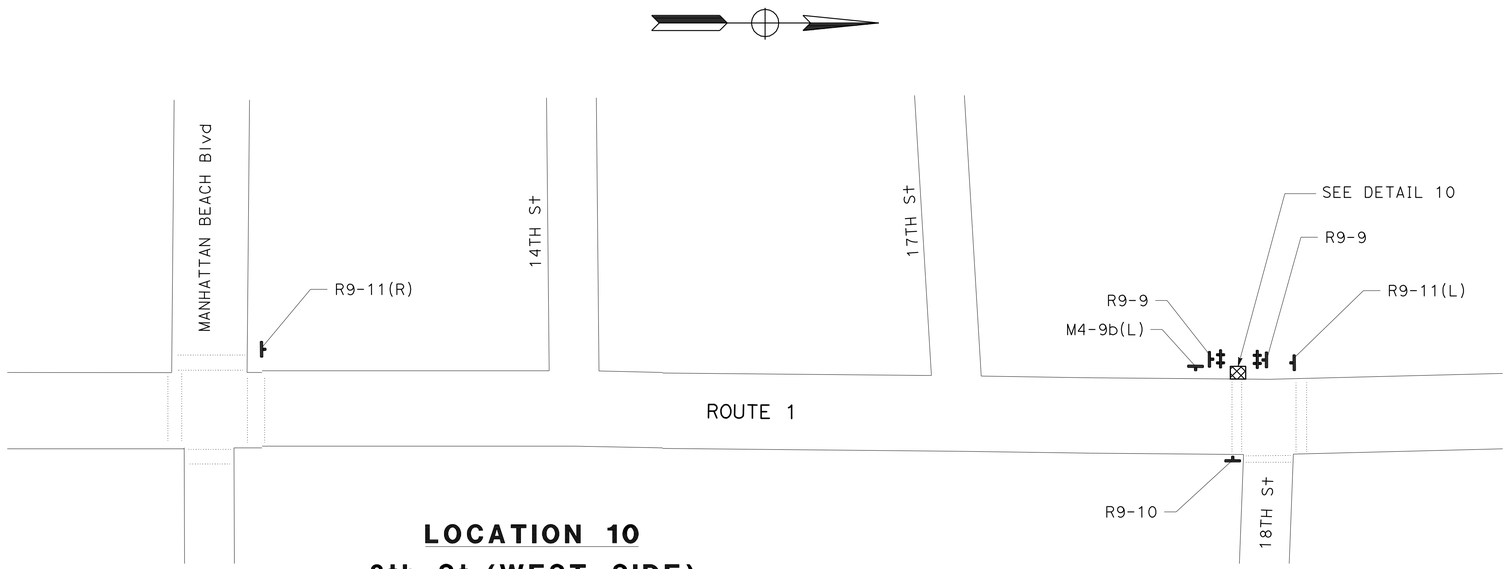

LOCATION 10
8th St (WEST SIDE)

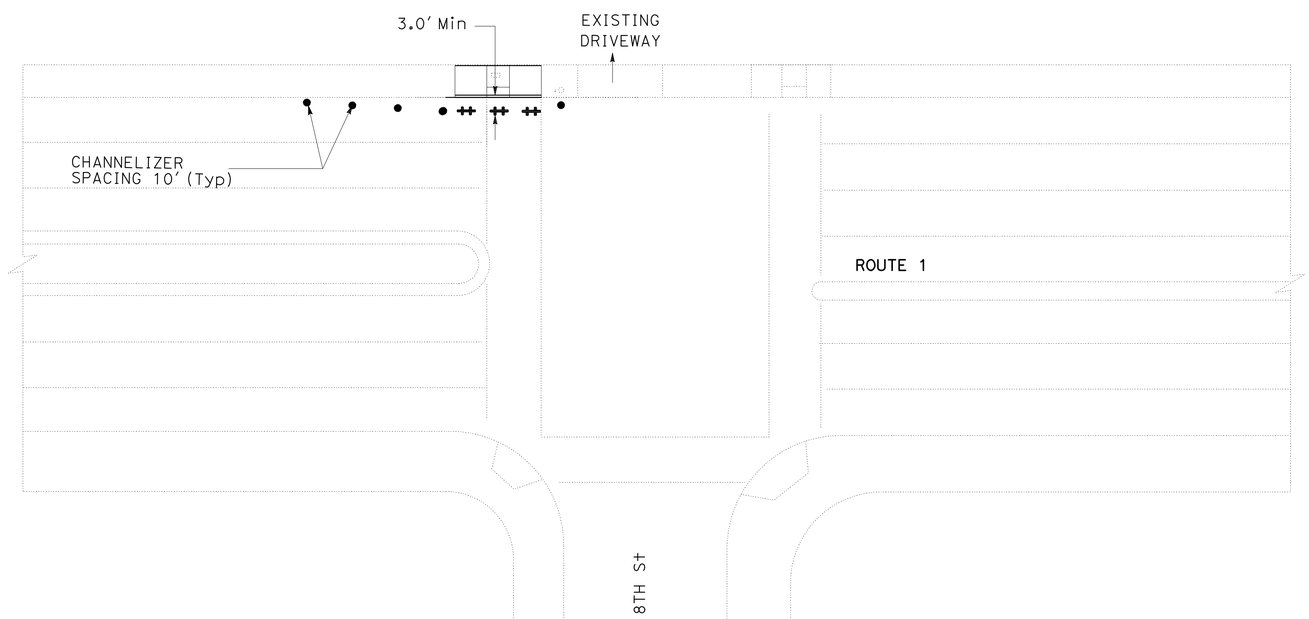

DETAIL 10

TRAFFIC HANDLING PLAN (PEDESTRIAN DETOUR)

NO SCALE

TH-12

THIS PLAN IS ACCURATE FOR TRAFFIC HANDLING AND PEDESTRIAN DETOUR WORK ONLY

STATE OF CALIFORNIA - DEPARTMENT OF TRANSPORTATION
Caltrans
DESIGN

FUNCTIONAL SUPERVISOR: CELINA AVILES
CALCULATED-DESIGNED BY: COUNG T. TRAN
CHECKED BY: THUAN CAO
REVISED BY
DATE REVISED

LAST REVISION 04-28-11
DATE PLOTTED => 15-AUG-2011
TIME PLOTTED => 11:52

	COUNTY	ROUTE	POST MILES TOTAL PROJECT	SHEET No.	TOTAL SHEETS
07	LA	1	18.0/39.3	46	85

N. Celina Aviles 4-20-11
REGISTERED CIVIL ENGINEER DATE

7-11-11
PLANS APPROVAL DATE

REGISTERED PROFESSIONAL ENGINEER
N. CELINA AVILES
No. 57106
Exp. 12/31/11
CIVIL
STATE OF CALIFORNIA

THE STATE OF CALIFORNIA OR ITS OFFICERS OR AGENTS SHALL NOT BE RESPONSIBLE FOR THE ACCURACY OR COMPLETENESS OF SCANNED COPIES OF THIS PLAN SHEET.

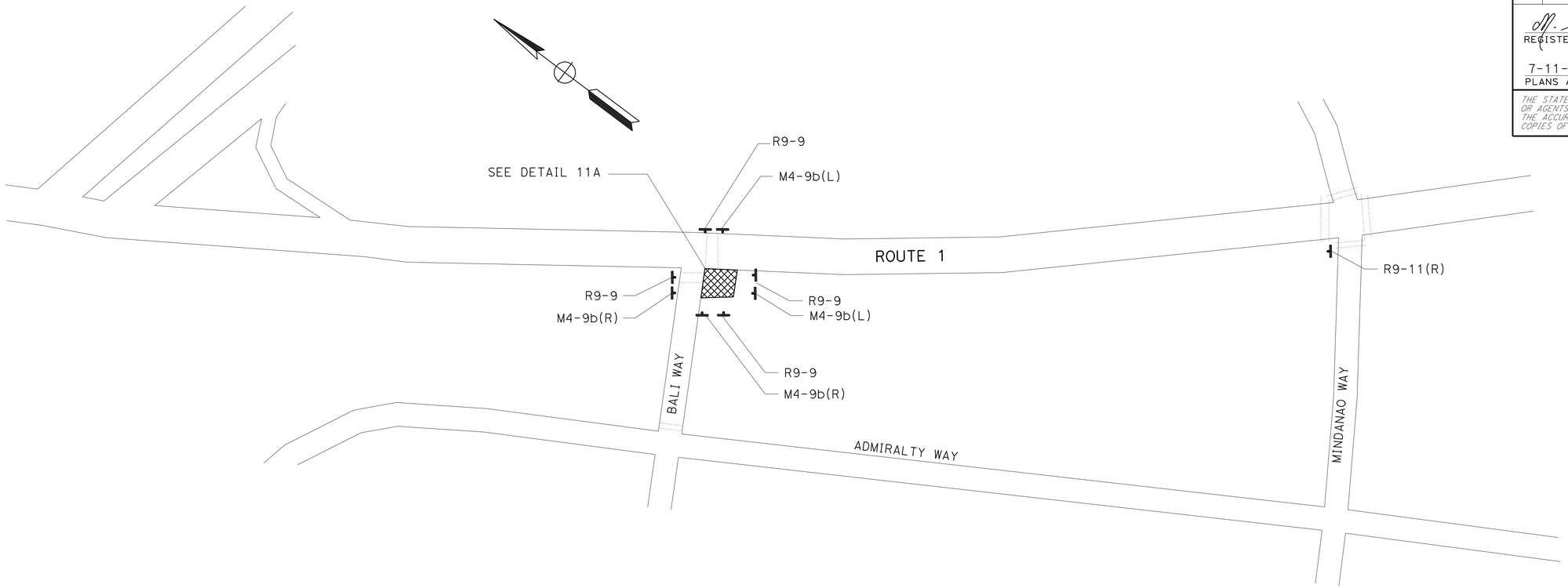

LOCATION 11A
BALI WAY (SE & SW CORNER)

DETAIL 11A

TRAFFIC HANDLING PLAN (PEDESTRIAN DETOUR)

NO SCALE

TH-13

THIS PLAN IS ACCURATE FOR TRAFFIC HANDLING AND PEDESTRIAN DETOUR WORK ONLY

STATE OF CALIFORNIA - DEPARTMENT OF TRANSPORTATION
Caltrans
DESIGN

FUNCTIONAL SUPERVISOR: CELINA AVILES
CALCULATED-DESIGNED BY: COUNG T. TRAN
CHECKED BY: THUAN CAO
REVISED BY
DATE REVISED

LAST REVISION 04-28-11 | DATE PLOTTED => 15-AUG-2011 | TIME PLOTTED => 11:52

Dist	COUNTY	ROUTE	POST MILES TOTAL PROJECT	SHEET No.	TOTAL SHEETS
07	LA	1	18.0/39.3	47	85

N. Celina Aviles 4-20-11
REGISTERED CIVIL ENGINEER DATE

7-11-11
PLANS APPROVAL DATE

REGISTERED PROFESSIONAL ENGINEER
N. CELINA AVILES
No. 57106
Exp. 12/31/11
CIVIL
STATE OF CALIFORNIA

THE STATE OF CALIFORNIA OR ITS OFFICERS OR AGENTS SHALL NOT BE RESPONSIBLE FOR THE ACCURACY OR COMPLETENESS OF SCANNED COPIES OF THIS PLAN SHEET.

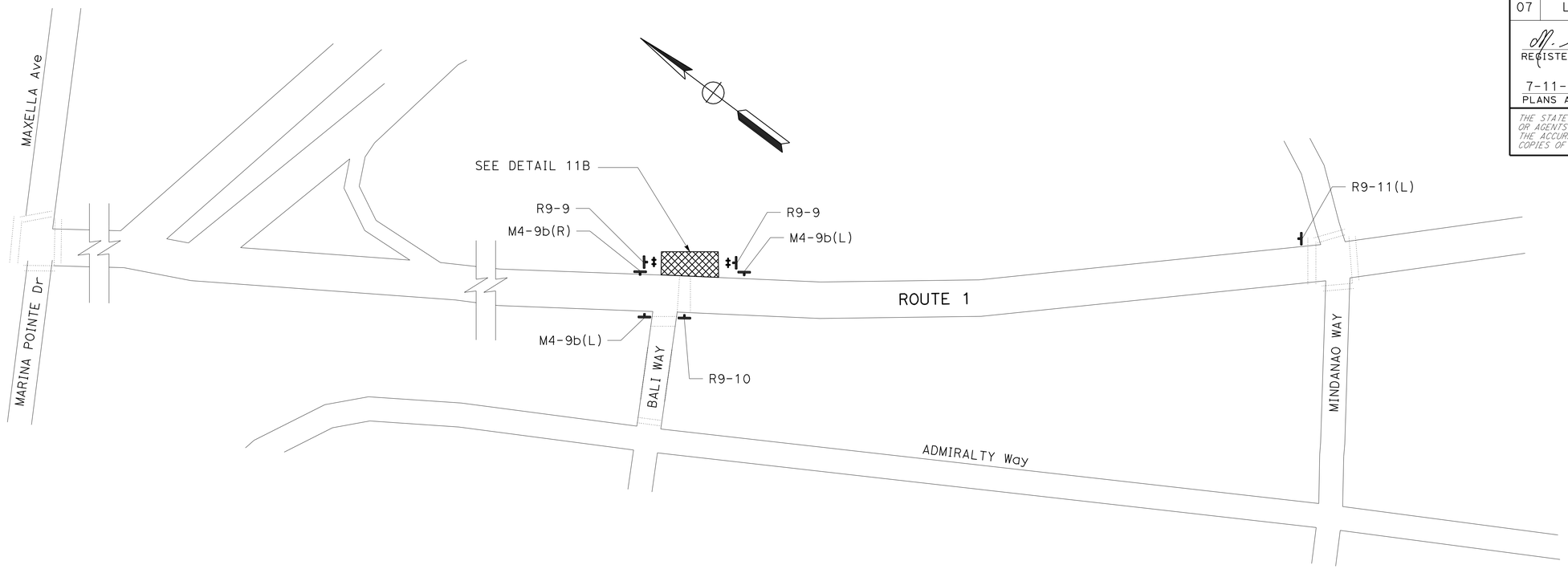

LOCATION 11B
BALI WAY (SE & SW CORNER)

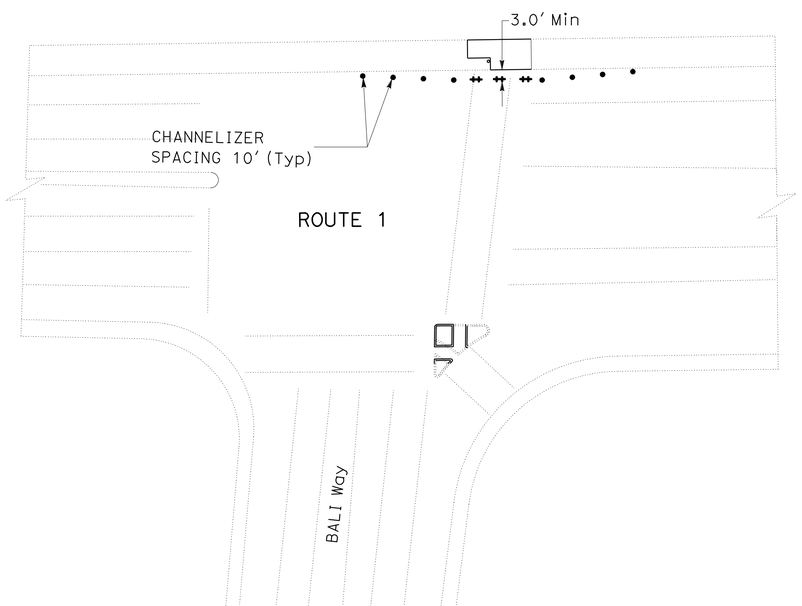

DETAIL 11B

TRAFFIC HANDLING PLAN (PEDESTRIAN DETOUR)

NO SCALE

TH-14

THIS PLAN IS ACCURATE FOR TRAFFIC HANDLING AND PEDESTRIAN DETOUR WORK ONLY

STATE OF CALIFORNIA - DEPARTMENT OF TRANSPORTATION
Caltrans
DESIGN

FUNCTIONAL SUPERVISOR: CELINA AVILES
CALCULATED-DESIGNED BY: COUNG T. TRAN
CHECKED BY: THUAN CAO
REVISED BY
DATE REVISED

LAST REVISION 04-28-11
DATE PLOTTED => 15-AUG-2011
TIME PLOTTED => 11:52

Dist	COUNTY	ROUTE	POST MILES TOTAL PROJECT	SHEET No.	TOTAL SHEETS
07	LA	1	18.0/39.3	48	85

N. Celina Aviles 4-20-11
REGISTERED CIVIL ENGINEER DATE

7-11-11
PLANS APPROVAL DATE

REGISTERED PROFESSIONAL ENGINEER
N. CELINA AVILES
No. 57106
Exp. 12/31/11
CIVIL
STATE OF CALIFORNIA

THE STATE OF CALIFORNIA OR ITS OFFICERS OR AGENTS SHALL NOT BE RESPONSIBLE FOR THE ACCURACY OR COMPLETENESS OF SCANNED COPIES OF THIS PLAN SHEET.

NOTE:

1. 3'-0" MINIMUM CLEAR WIDTH SHALL BE MAINTAINED AT ALL TIMES.

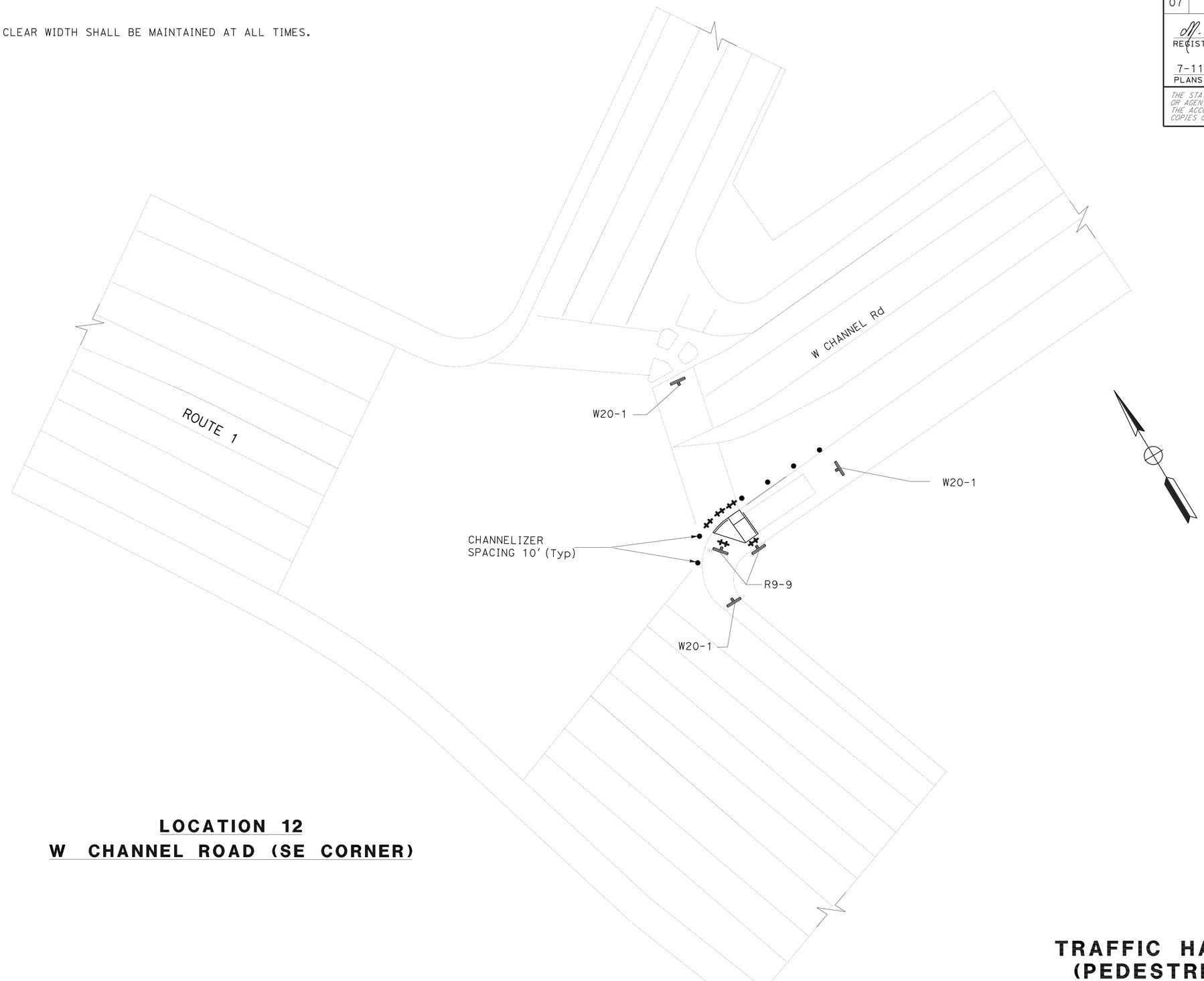

LOCATION 12
W CHANNEL ROAD (SE CORNER)

THIS PLAN IS ACCURATE FOR TRAFFIC HANDLING AND PEDESTRIAN DETOUR WORK ONLY

TRAFFIC HANDLING PLAN (PEDESTRIAN DETOUR)

NO SCALE

TH-15

STATE OF CALIFORNIA - DEPARTMENT OF TRANSPORTATION
Caltrans
DESIGN

FUNCTIONAL SUPERVISOR: CELINA AVILES
CALCULATED-DESIGNED BY: DAN PHAM
CHECKED BY: THUAN CAO
REVISED BY
DATE REVISED

LAST REVISION 04-28-11
DATE PLOTTED => 15-AUG-2011
TIME PLOTTED => 11:52

Dist	COUNTY	ROUTE	POST MILES TOTAL PROJECT	SHEET No.	TOTAL SHEETS
07	LA	1	18.0/39.3	49	85

N. Celina Aviles 4-20-11
REGISTERED CIVIL ENGINEER DATE

7-11-11
PLANS APPROVAL DATE

REGISTERED PROFESSIONAL ENGINEER
N. CELINA AVILES
No. 57106
Exp. 12/31/11
CIVIL
STATE OF CALIFORNIA

THE STATE OF CALIFORNIA OR ITS OFFICERS OR AGENTS SHALL NOT BE RESPONSIBLE FOR THE ACCURACY OR COMPLETENESS OF SCANNED COPIES OF THIS PLAN SHEET.

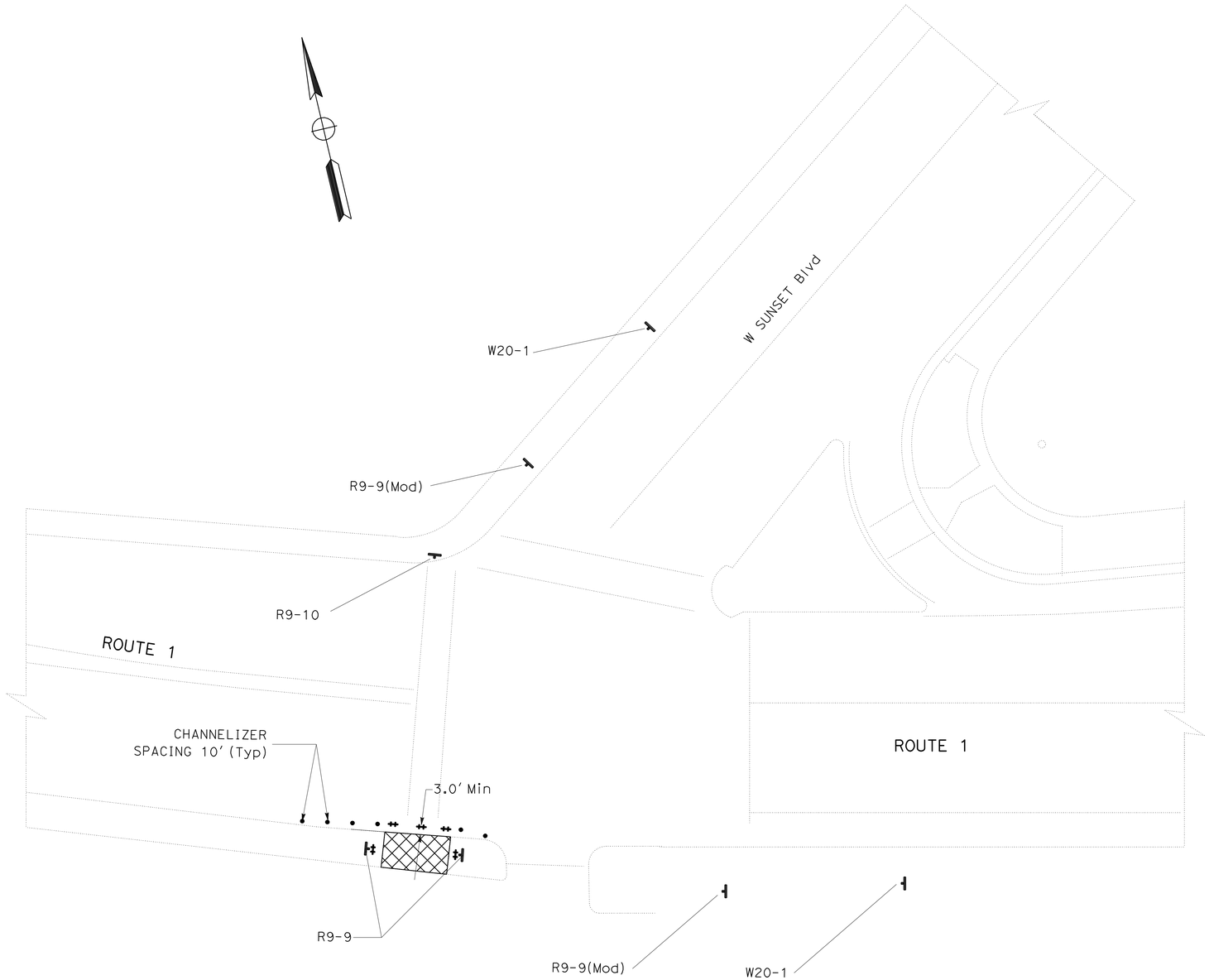

LOCATION 13
W SUNSET Blvd (SW CORNER)

TRAFFIC HANDLING PLAN (PEDESTRIAN DETOUR)

NO SCALE

TH-16

THIS PLAN IS ACCURATE FOR TRAFFIC HANDLING AND PEDESTRIAN DETOUR WORK ONLY

STATE OF CALIFORNIA - DEPARTMENT OF TRANSPORTATION
Caltrans
DESIGN

FUNCTIONAL SUPERVISOR: CELINA AVILES
CALCULATED-DESIGNED BY: DAN PHAM
CHECKED BY: THUAN CAO
REVISED BY
DATE REVISED

LAST REVISION 04-28-11
DATE PLOTTED => 15-AUG-2011
TIME PLOTTED => 11:52

Dist	COUNTY	ROUTE	POST MILES TOTAL PROJECT	SHEET No.	TOTAL SHEETS
07	LA	1	18.0/39.3	50	85

N. Celina Aviles 4-20-11
REGISTERED CIVIL ENGINEER DATE

7-11-11
PLANS APPROVAL DATE

REGISTERED PROFESSIONAL ENGINEER N. CELINA AVILES No. 57106 Exp. 12/31/11 CIVIL STATE OF CALIFORNIA

THE STATE OF CALIFORNIA OR ITS OFFICERS OR AGENTS SHALL NOT BE RESPONSIBLE FOR THE ACCURACY OR COMPLETENESS OF THOANNED COPIES OF THIS PLAN SHEET.

STATIONARY MOUNTED CONSTRUCTION AREA SIGN DESCRIPTIONS

SIGN CODE		PANEL SIZE	No. OF POST	POST SIZE	SIGN MESSAGE
FEDERAL	CALIFORNIA		ONE POST	4"X4"	
R9-9(Mod)		2' x 1.5'	X	X	SIDEWALK CLOSED AHEAD
R9-9		2' x 1'	X	X	SIDEWALK CLOSED
R9-11(L)		2' x 1'	X	X	SIDEWALK CLOSED AHEAD, CROSS HERE (LEFT)
R9-11(R)		2' x 1'	X	X	SIDEWALK CLOSED AHEAD, CROSS HERE (RIGHT)
M4-9b(R)		2.5' x 2'	X	X	PEDESTRIAN DETOUR (WITH ARROW) (RIGHT)
M4-9b(L)		2.5' x 2'	X	X	PEDESTRIAN DETOUR (WITH ARROW) (LEFT)
	SC3(CA)	3' x 1'	X	X	DETOUR (WITH ARROW)
R9-10		2' x 1'	X	X	SIDEWALK CLOSED, USE OTHER SIDE
W20-1		3' x 3'	X	X	ROAD WORK AHEAD

TRAFFIC HANDLING QUANTITIES

SHEET No.	SIGNS									TYPE III BARRICADE	CHANNELIZER
	R9-9(Mod)	R9-9	R9-11(L)	R9-11(R)	M4-9b(R)	M4-9b(L)	SC3(CA)	R9-10	W20-1		
	EA									EA	EA
TH-1	2	3	1	1	4	4	3			7	8
TH-2		4	1	1	5	5	2		2	8	8
TH-3									4	3	8
TH-4									3	7	6
TH-5		3	1	1	5	5	2		1	5	8
TH-6		4	1	1	5	5			1	6	8
TH-7		3	1	1	5	5	2		1	5	8
TH-8		3	1	1	5	5	2		1	5	8
TH-9	5	4	1	1	7	7			1	6	8
TH-10	3	4	1	1	7	8	1		4	22	6
TH-11		3	1		5	3		1		7	8
TH-12		2	1	1		1		1		5	5
TH-13		4		1	2	2				13	
TH-14		2	1		1	2		1		5	8
TH-15		2							3	5	6
TH-16	2	2						1	2	3	6
SUB-TOTAL	12	43	11	10	51	52	12	4	23	112	109
TOTAL	218									112	109

TRAFFIC HANDLING QUANTITIES

THQ-1

STATE OF CALIFORNIA - DEPARTMENT OF TRANSPORTATION
Caltrans® DESIGN

FUNCTIONAL SUPERVISOR: CELINA AVILES
CALCULATED-DESIGNED BY: DAN PHAM
CHECKED BY: THUAN CAO
REVISED BY
DATE REVISED

LAST REVISION 04-20-11
DATE PLOTTED => 15-AUG-2011
TIME PLOTTED => 11:52

Dist	COUNTY	ROUTE	POST MILES TOTAL PROJECT	SHEET No.	TOTAL SHEETS
07	LA	1	18.0/39.3	51	85

Jennifer Nguyen 6/22/11
REGISTERED CIVIL ENGINEER DATE

7-11-11
PLANS APPROVAL DATE

REGISTERED PROFESSIONAL ENGINEER JENNIFER NGUYEN No. C65953 Exp. 06/30/12 CIVIL STATE OF CALIFORNIA

THE STATE OF CALIFORNIA OR ITS OFFICERS OR AGENTS SHALL NOT BE RESPONSIBLE FOR THE ACCURACY OR COMPLETENESS OF SCANNED COPIES OF THIS PLAN SHEET.

CURVE TABLE

CURVE	RADIUS
1	73.41′
2	68.74′
3	45.58′
4	85.47′

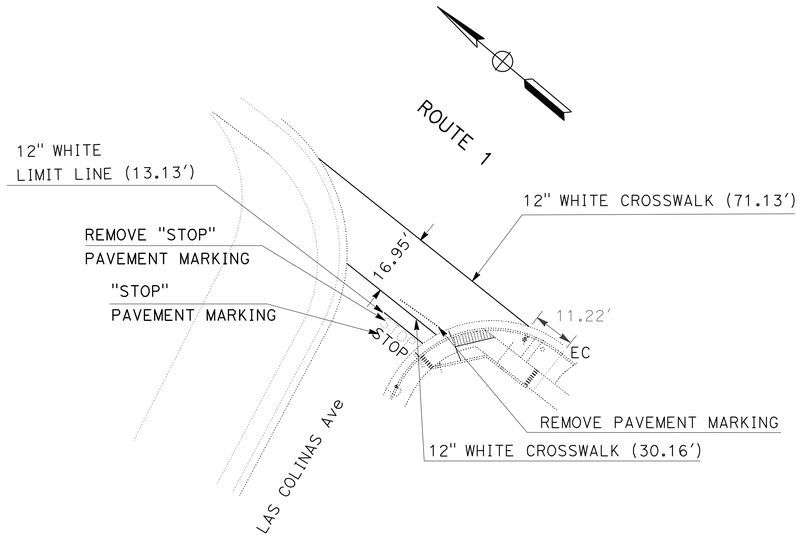

LOCATION 1

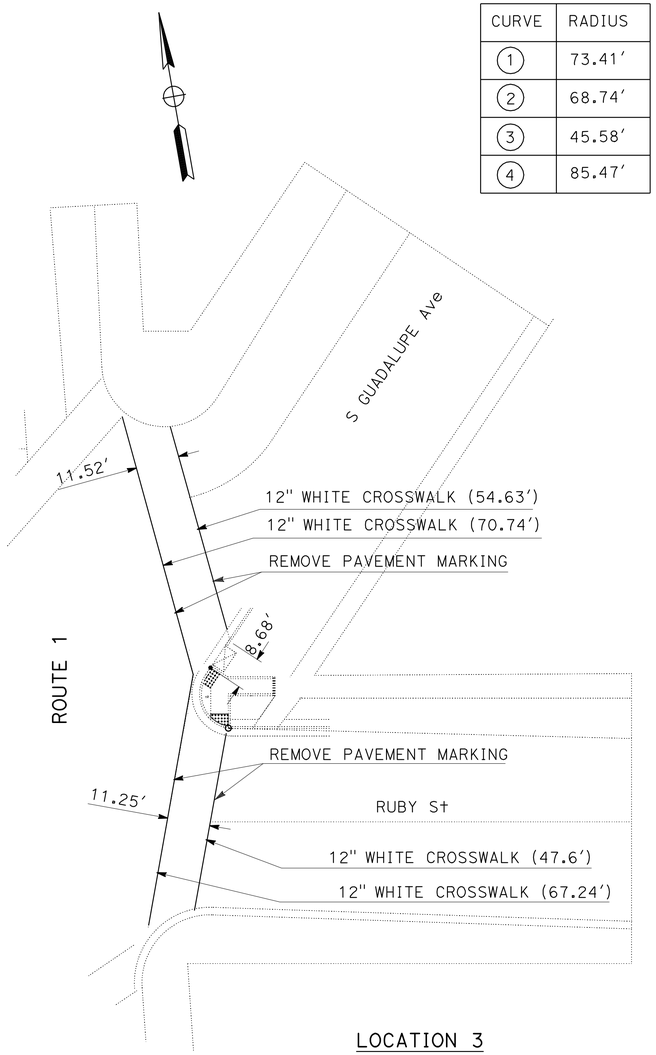

LOCATION 3

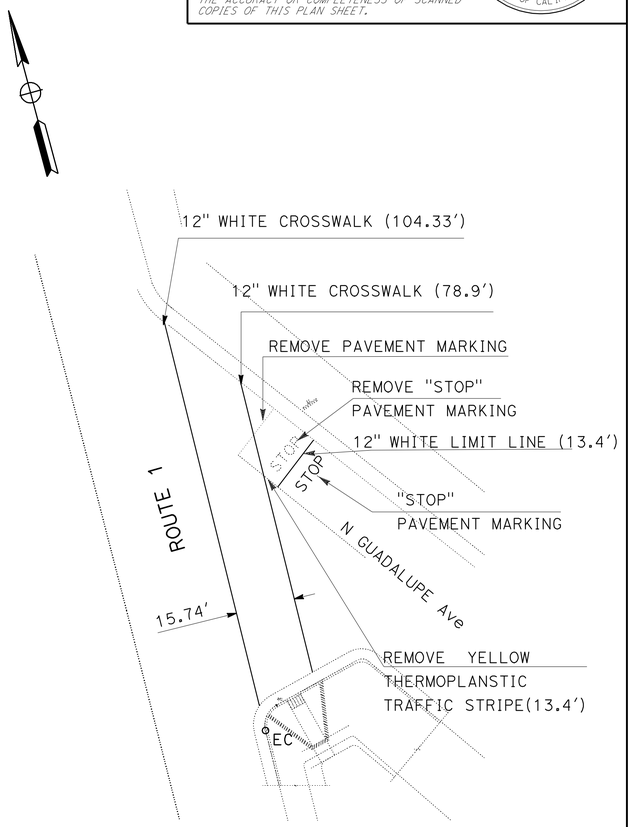

LOCATION 4

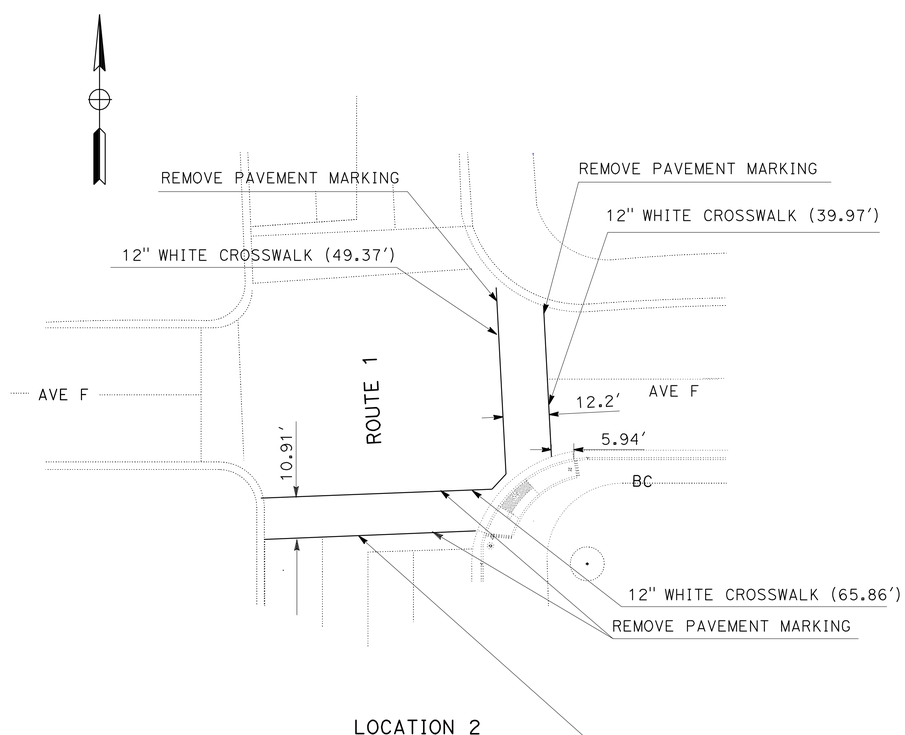

LOCATION 2

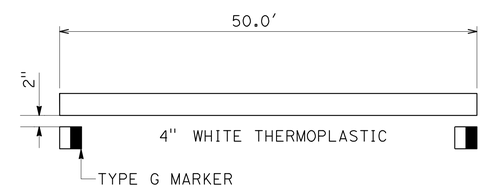

DETAIL 50
NO SCALE

PAVEMENT DELINEATION AND SIGN PLAN

NO SCALE

PD-1

THIS PLAN ACCURATE FOR PAVEMENT DELINEATION AND SIGN WORK ONLY.

REVISED BY | DATE REVISED
MIAN ALI | JENNIFER NGUYEN
CALCULATED-DESIGNED BY | CHECKED BY
FUNCTIONAL SUPERVISOR: ANH NGUYEN

STATE OF CALIFORNIA - DEPARTMENT OF TRANSPORTATION
Caltrans® TRAFFIC DESIGN

S:\projects\277801\07-277801\727780na001.dgn

LAST REVISION 00-00-00 | DATE PLOTTED => 15-AUG-2011 | TIME PLOTTED => 11:52

Dist	COUNTY	ROUTE	POST MILES TOTAL PROJECT	SHEET No.	TOTAL SHEETS
07	LA	1	18.0/39.3	52	85

Jennifer Nguyen 6/22/11
REGISTERED CIVIL ENGINEER DATE

7-11-11
PLANS APPROVAL DATE

REGISTERED PROFESSIONAL ENGINEER JENNIFER NGUYEN No. C65953 Exp. 06/30/12 CIVIL STATE OF CALIFORNIA

THE STATE OF CALIFORNIA OR ITS OFFICERS OR AGENTS SHALL NOT BE RESPONSIBLE FOR THE ACCURACY OR COMPLETENESS OF SCANNED COPIES OF THIS PLAN SHEET.

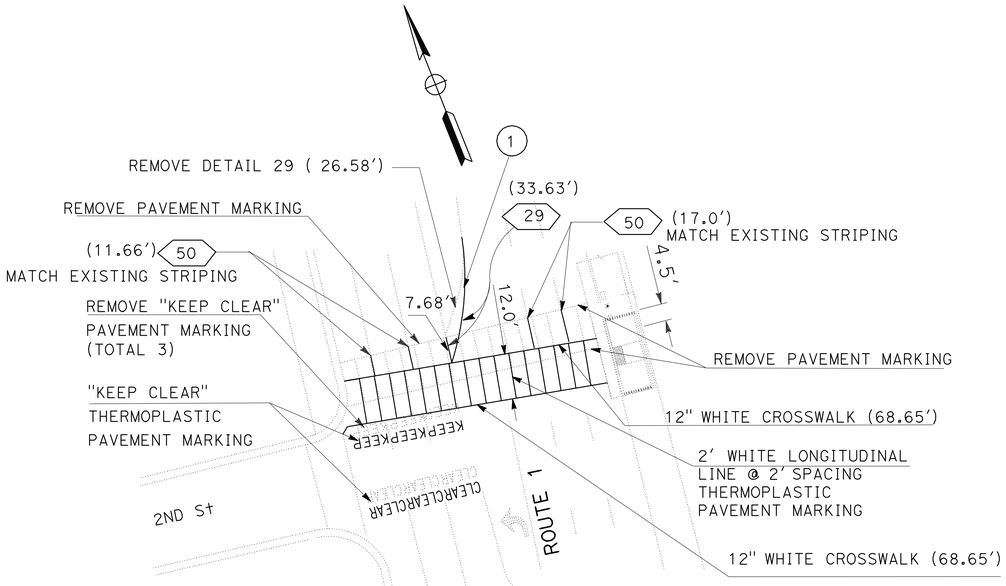

LOCATION 5

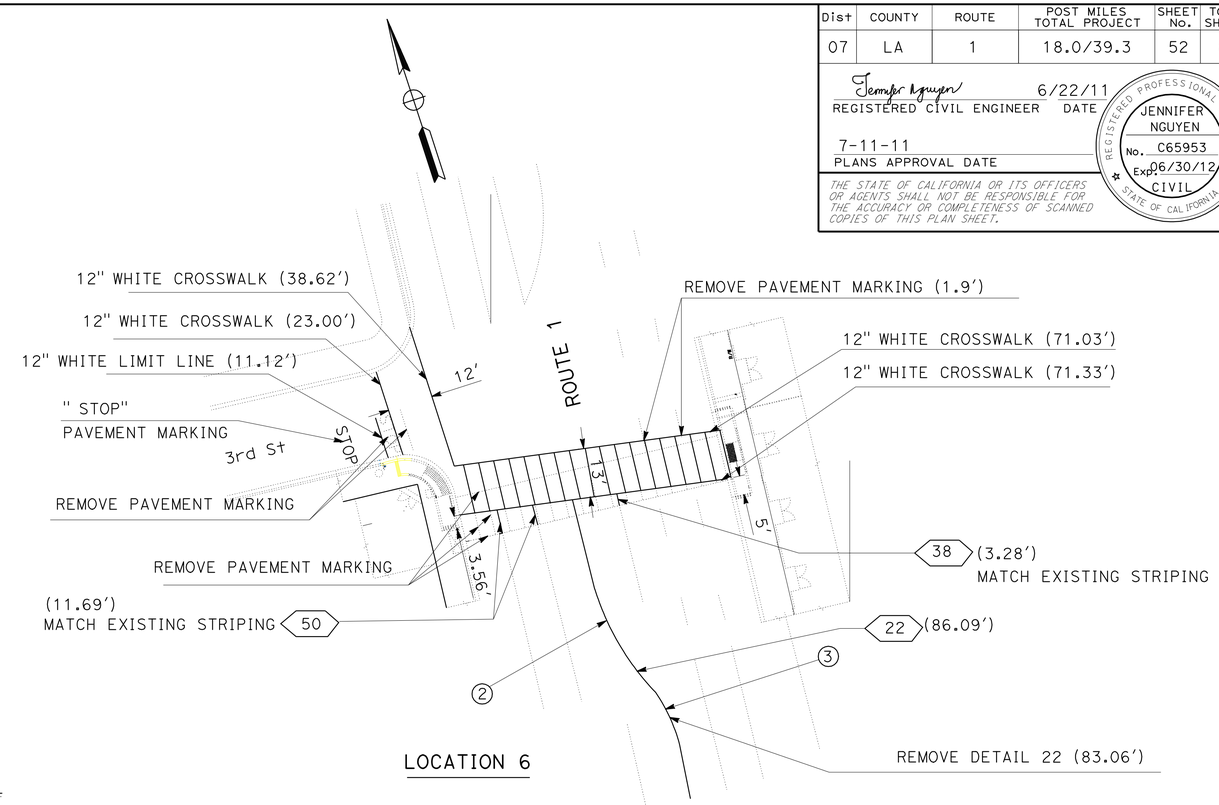

LOCATION 6

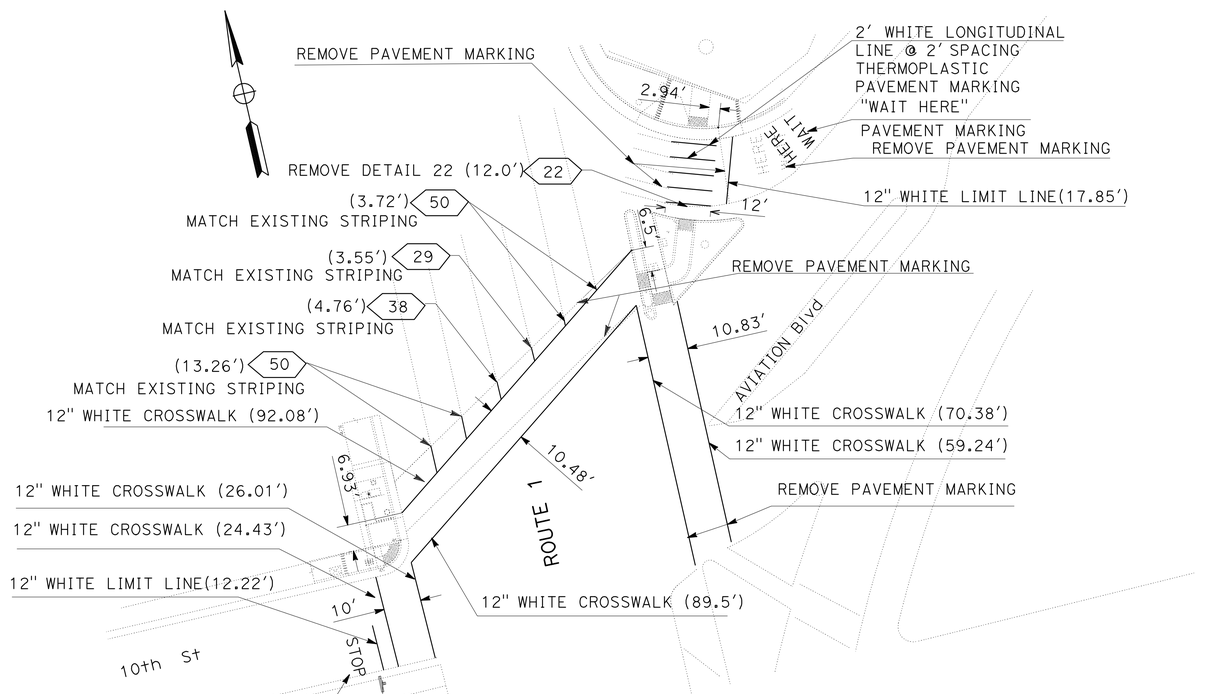

LOCATION 8

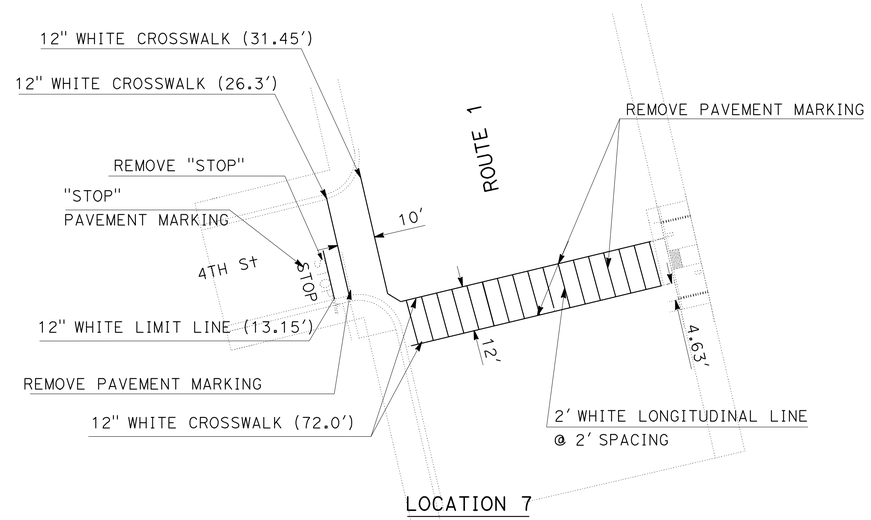

LOCATION 7

THIS PLAN ACCURATE FOR PAVEMENT DELINEATION AND SIGN WORK ONLY

PAVEMENT DELINEATION AND SIGN PLAN

NO SCALE

PD-2

STATE OF CALIFORNIA - DEPARTMENT OF TRANSPORTATION
Caltrans® TRAFFIC DESIGN

FUNCTIONAL SUPERVISOR: ANH NGUYEN
CALCULATED-DESIGNED BY: MIAN ALI
CHECKED BY: JENNIFER NGUYEN
REVISED BY / DATE REVISED

LAST REVISION 00-00-00 | DATE PLOTTED => 15-AUG-2011 | TIME PLOTTED => 11:52

Dist	COUNTY	ROUTE	POST MILES TOTAL PROJECT	SHEET No.	TOTAL SHEETS
07	LA	1	18.0/39.3	53	85

Jennifer Nguyen 6/22/11
REGISTERED CIVIL ENGINEER DATE

7-11-11
PLANS APPROVAL DATE

REGISTERED PROFESSIONAL ENGINEER
JENNIFER NGUYEN
No. C65953
Exp. 06/30/12
CIVIL
STATE OF CALIFORNIA

THE STATE OF CALIFORNIA OR ITS OFFICERS OR AGENTS SHALL NOT BE RESPONSIBLE FOR THE ACCURACY OR COMPLETENESS OF SCANNED COPIES OF THIS PLAN SHEET.

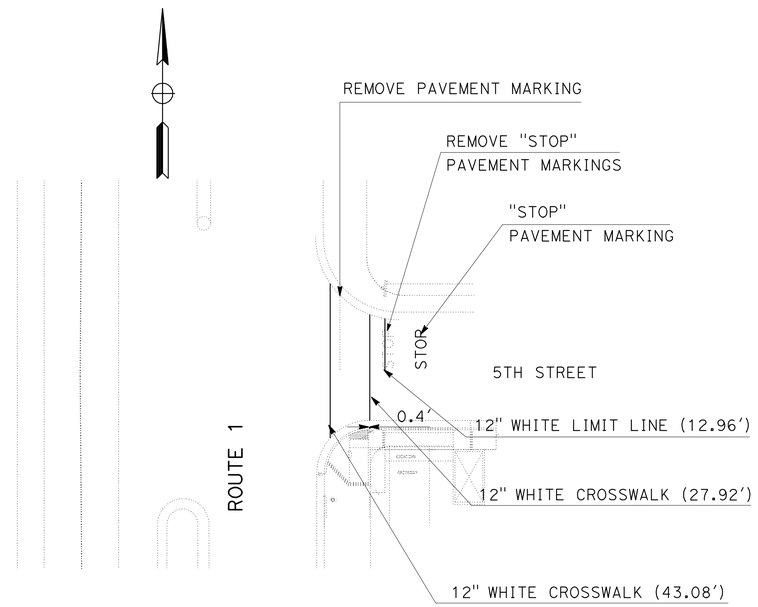

LOCATION 9

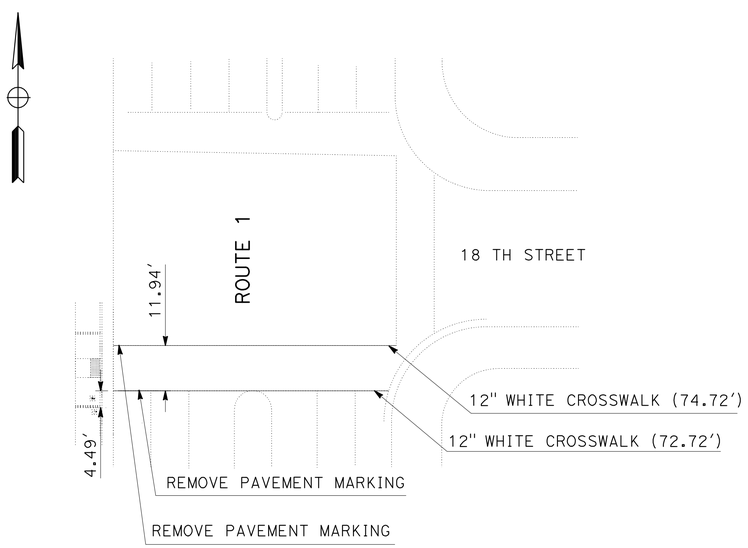

LOCATION 10

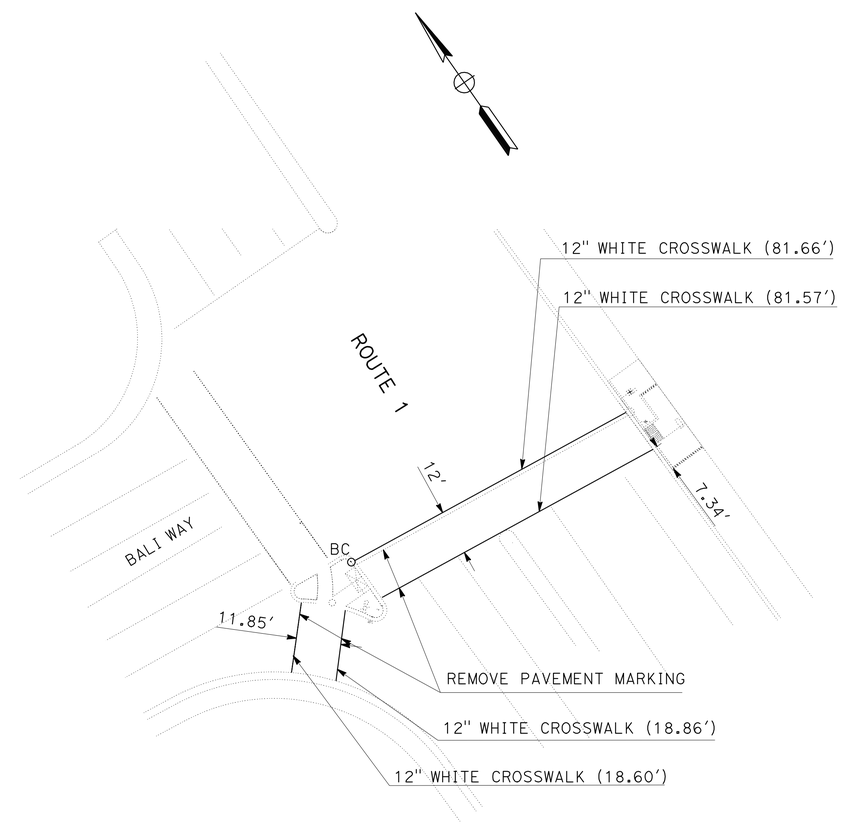

LOCATION 11

THIS PLAN ACCURATE FOR PAVEMENT DELINEATION AND SIGN WORK ONLY.

PAVEMENT DELINEATION AND SIGN PLAN

NO SCALE

PD-3

REVISED BY	DATE REVISED

CALCULATED-DESIGNED BY: MIAN ALI
CHECKED BY: JENNIFER NGUYEN
FUNCTIONAL SUPERVISOR: ANH NGUYEN

STATE OF CALIFORNIA - DEPARTMENT OF TRANSPORTATION
Caltrans TRAFFIC DESIGN

S:\projects\277801\07-277801\727780na003.dgn

LAST REVISION 00-00-00 | DATE PLOTTED => 15-AUG-2011 | TIME PLOTTED => 11:52

Dist	COUNTY	ROUTE	POST MILES TOTAL PROJECT	SHEET No.	TOTAL SHEETS
07	LA	1	18.0/39.3	54	85

Jennifer Nguyen 6/22/11
REGISTERED CIVIL ENGINEER DATE

7-11-11
PLANS APPROVAL DATE

REGISTERED PROFESSIONAL ENGINEER
JENNIFER NGUYEN
No. C65953
Exp. 06/30/12
CIVIL
STATE OF CALIFORNIA

THE STATE OF CALIFORNIA OR ITS OFFICERS OR AGENTS SHALL NOT BE RESPONSIBLE FOR THE ACCURACY OR COMPLETENESS OF SCANNED COPIES OF THIS PLAN SHEET.

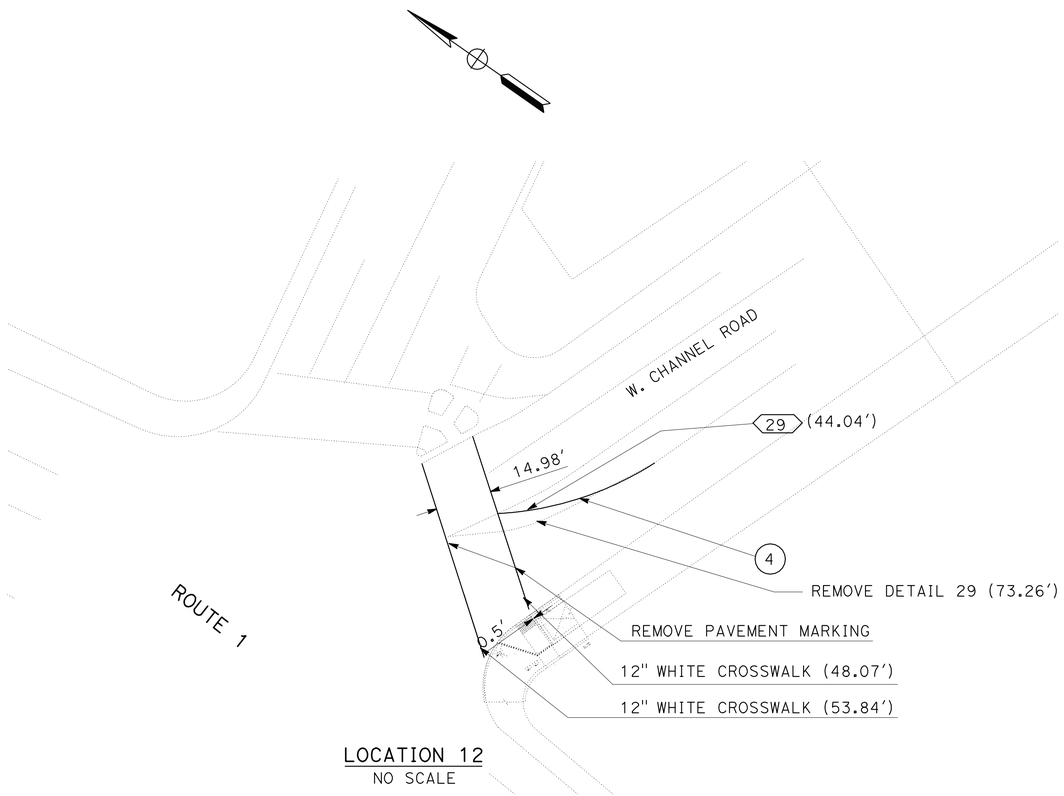

LOCATION 12
NO SCALE

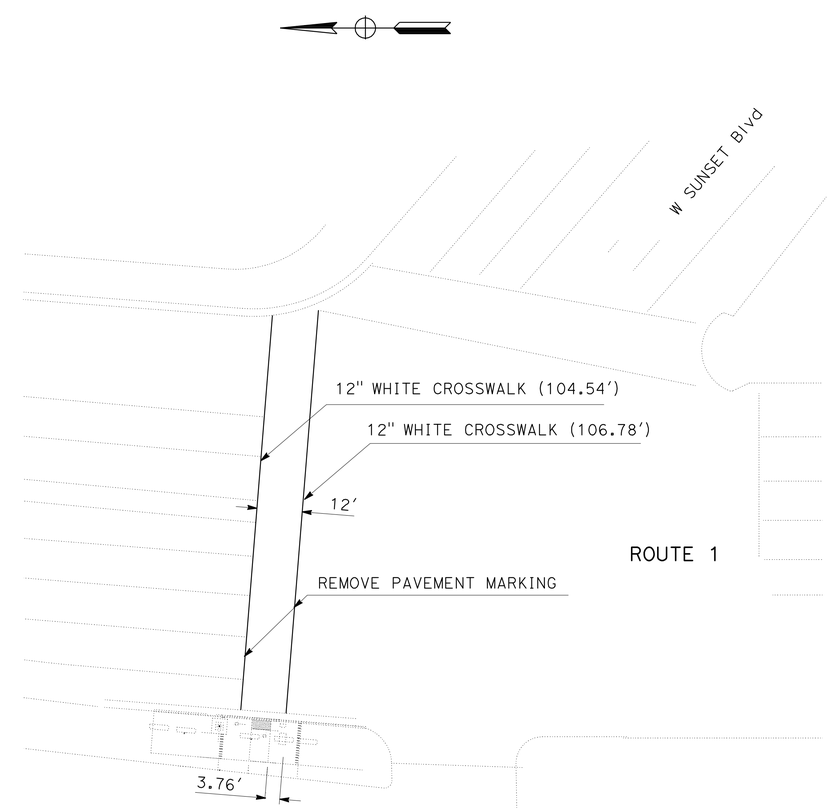

LOCATION 13
NO SCALE

THIS PLAN ACCURATE FOR PAVEMENT DELINEATION AND SIGN WORK ONLY.

PAVEMENT DELINEATION AND SIGN PLAN

NO SCALE

PD-4

REVISED BY	DATE REVISED

CALCULATED-DESIGNED BY	CHECKED BY
MIAN ALI	JENNIFER NGUYEN

FUNCTIONAL SUPERVISOR: ANH NGUYEN

STATE OF CALIFORNIA - DEPARTMENT OF TRANSPORTATION
Caltrans
TRAFFIC DESIGN

S:\projects\277801\07-277801\727780na004.dgn

LAST REVISION 00-00-00
DATE PLOTTED => 15-AUG-2011
TIME PLOTTED => 11:53

Dist	COUNTY	ROUTE	POST MILES TOTAL PROJECT	SHEET No.	TOTAL SHEETS
07	LA	1	18.0/39.3	55	85

Jennifer Nguyen 6/22/11
REGISTERED CIVIL ENGINEER DATE

7-11-11
PLANS APPROVAL DATE

REGISTERED PROFESSIONAL ENGINEER JENNIFER NGUYEN No. C65953 Exp. 06/30/12 CIVIL STATE OF CALIFORNIA

THE STATE OF CALIFORNIA OR ITS OFFICERS OR AGENTS SHALL NOT BE RESPONSIBLE FOR THE ACCURACY OR COMPLETENESS OF SCANNED COPIES OF THIS PLAN SHEET.

PAVEMENT DELINEATION QUANTITIES

SHEET No.	LOCATION No.	THERMOPLASTIC TRAFFIC STRIPE				PAVEMENT MARKER			THERMOPLASTIC						REMOVE							
		DETAIL 38	DETAIL 50	DETAIL 22	DETAIL 29	RETROREFLECTIVE			PAVEMENT MARKING						THERMOPLASTIC TRAFFIC STRIPE	THERMOPLASTIC PAVEMENT MARKING						PAVEMENT MARKER
		8" SOLID WHITE	4" SOLID WHITE	4" SOLID YELLOW	4" SOLID YELLOW	TYPE C	TYPE D	TYPE G	KEEP CLEAR	STOP	LIMIT LINES	WAIT HERE	CROSSWALKS	LONGITUDNAL	4" SOLID YELLOW	WHITE WAIT HERE	WHITE KEEP CLEAR	WHITE STOP	WHITE LIMIT LINE	WHITE CROSSWALK	WHITE LONGITUDINAL	
		LF	LF		LF	EA	EA	EA	SQFT	SQFT	SQFT	SQFT	SQFT	SQFT	LF	SQFT		SQFT	SQFT	SQFT	SQFT	EA
PD-1	1									22	13		102					22	13			
	2												211		12					203		
	3												241							241		
	4												184		40				16			
PD-2	5		29		83	1	6	4	153				141	384	53		153			142	384	7
	6	3		172		2	9	9		22	11		204	567	166			22	13	142	576	20
	7									22	13		202	408				22	11	144	408	
	8	5	17		7	1	2	9		22	30	45	362	120	12	45			18	303	120	11
PD-3	9									22	13		71					22	21			
	10												148							148		
	11												202							202		
PD-4	12				88		4						102		147					102		6
	13												212							212		
SUB TOTAL		8	46	172	178	4	21	22	153	110	80	45	2382	1499	430	45	153	88	92	1833	1468	44
TOTAL		8	396			47			4269						430	3705						44

PAVEMENT DELINEATION QUANTITIES

PDQ-1

STATE OF CALIFORNIA - DEPARTMENT OF TRANSPORTATION
Caltrans TRAFFIC DESIGN

FUNCTIONAL SUPERVISOR: ANH NGUYEN
CALCULATED-DESIGNED BY: MIAN ALI
CHECKED BY: JENNIFER NGUYEN
REVISED BY
DATE REVISED

S:\projects\277801\07-277801\727780nc001.dgn

LAST REVISION 00-00-00 | DATE PLOTTED => 15-AUG-2011 | TIME PLOTTED => 11:53

Dist	COUNTY	ROUTE	POST MILES TOTAL PROJECT	SHEET No.	TOTAL SHEETS
07	LA	1	18.0/39.3	56	85

Jennifer Nguyen 6/22/11
REGISTERED CIVIL ENGINEER DATE

7-11-11
PLANS APPROVAL DATE

REGISTERED PROFESSIONAL ENGINEER
JENNIFER NGUYEN
No. C65953
Exp 06/30/12
CIVIL
STATE OF CALIFORNIA

THE STATE OF CALIFORNIA OR ITS OFFICERS OR AGENTS SHALL NOT BE RESPONSIBLE FOR THE ACCURACY OR COMPLETENESS OF SCANNED COPIES OF THIS PLAN SHEET.

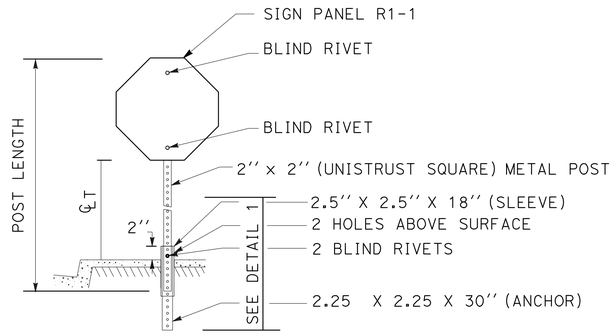

METAL POST DETAIL
(NO SCALE)

METAL SIGN POST INSTALLATION

NOTE:

1. POSTS FOR WARNING AND REGULATORY SIGNS SHALL BE INSTALLED AT 90 ANGLE TO THE CURB.
2. PERFORATED SQUARE STEEL TUBING

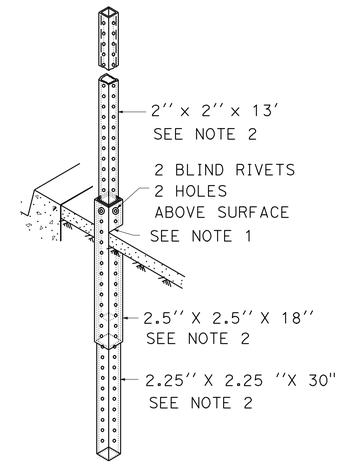

DETAIL 1

SUMMARY OF ROADSIDE SIGN QUANTITIES

SHEET No.	SIGN CODE	SIGN AREA	PANEL SIZE	SINGLE FACED	POST DATA			BACKGROUND		LEGEND		GRAFFITI FILM		ROADSIDE SIGN	REMARKS
					CLEARANCE (C_{LT})	SIZE	TOTAL LENGTH	RETROREFLECTIVE ASTM TYPE	SHEETING COLOR	RETROREFLECTIVE ASTM TYPE	SHEETING COLOR	PREMIUM	FURNISH SINGLE SHEET UNFRAMED ALUMINUM 0.063 INCH	INSTALL ROADSIDE SIGN - METAL POST	
		SQFT			FT	INCH	LF						SQFT	EA	
PD-2	R1-1	5.12	30" X 30"	X	7.0	2'' X 2''	11.20	III	RED	III	WHITE	X	5.00	1	
TOTAL													5.00	1	

SIGN QUANTITIES

SQ-1

STATE OF CALIFORNIA - DEPARTMENT OF TRANSPORTATION
Caltrans TRAFFIC DESIGN

FUNCTIONAL SUPERVISOR: ANH NGUYEN
CALCULATED-DESIGNED BY: MIAN ALI
CHECKED BY: JENNIFER NGUYEN
REVISED BY
DATE REVISED

LAST REVISION 00-00-00 | DATE PLOTTED => 15-AUG-2011 | TIME PLOTTED => 11:53

Dist	COUNTY	ROUTE	POST MILES TOTAL PROJECT	SHEET No.	TOTAL SHEETS
07	LA	1	18.0/39.3	57	85

N. Celina Aviles 4-20-11
REGISTERED CIVIL ENGINEER DATE

7-11-11
PLANS APPROVAL DATE

REGISTERED PROFESSIONAL ENGINEER
N. CELINA AVILES
No. 57106
Exp. 12/31/11
CIVIL
STATE OF CALIFORNIA

THE STATE OF CALIFORNIA OR ITS OFFICERS OR AGENTS SHALL NOT BE RESPONSIBLE FOR THE ACCURACY OR COMPLETENESS OF SCANNED COPIES OF THIS PLAN SHEET.

CURB RAMPS

LOCATION	INTERSECTION/CORNER	MINOR CONCRETE (CURB,GUTTER, CURB RAMP,SIDEWALK AND DRIVEWAY)	REMOVE CONCRETE	ROADWAY EXCAVATION	HANDRAILING
		CY	CY	CY	LF
1	SR1/LAS COLINAS-S.E	4.6	4.6	5.2	
2	SR1/Ave. F- S.E	4.2	4.2	5.0	26.0
3	SR1/N.GUADALUPE & RUBY St.-S.E	3.3	3.3	3.6	
4	SR1/GUADALUPE Ave.-S.E	3.8	3.8	4.5	
5	SR1/2nd & 3rd St.-EAST SIDE	4.1	4.1	4.8	
6	SR1/3rd St.-EAST & WEST SIDE	5.5	5.5	7.0	22.0
7	SR1/4th St.-EAST SIDE	4.1	4.1	4.8	
8	SR1/Aviation Blvd.-N.E/N.W	11.3	11.3	15.8	
9	SR1/5th St.-S.E	3.7	3.7	4.4	
10	SR1/18th-WEST SIDE	3.7	3.7	4.4	
11	SR1/Bali St.-S.E/S.W	4.5	4.5	5.5	
12	SR1/W. Channel Rd.-S.E	2.4	2.4	2.4	
13	SR1/W. Sunset Blvd.-WEST SIDE	5.2	5.2	6.6	
	TOTAL	60.4	60.4	74.0	48.0

TEMPORARY WATER POLLUTION CONTROL

TEMPORARY DRAINAGE INLET PROTECTION
EA
4

SUMMARY OF QUANTITIES

Q-1

REVISED BY	TC	THUAN CAO	CALCULATED-DESIGNED BY	FUNCTIONAL SUPERVISOR
DATE REVISED	07-20-11	CELINA AVILES	CHECKED BY	CELINA AVILES

STATE OF CALIFORNIA - DEPARTMENT OF TRANSPORTATION
Caltrans
DESIGN

LAST REVISION 07-20-11
DATE PLOTTED => 15-AUG-2011
TIME PLOTTED => 11:53

Dist	COUNTY	ROUTE	POST MILES TOTAL PROJECT	SHEET No.	TOTAL SHEETS
07	LA	1	18.0/39.3	58	85

REGISTERED ELECTRICAL ENGINEER 6/22/11 DATE

7-11-11
PLANS APPROVAL DATE

REGISTERED PROFESSIONAL ENGINEER CESAR HERNANDEZ No. E15805 Exp. 12/31/12 ELECTRICAL STATE OF CALIFORNIA

THE STATE OF CALIFORNIA OR ITS OFFICERS OR AGENTS SHALL NOT BE RESPONSIBLE FOR THE ACCURACY OR COMPLETENESS OF SCANNED COPIES OF THIS PLAN SHEET.

FOR ACCURATE RIGHT OF WAY DATA, CONTACT
RIGHT OF WAY ENGINEERING AT THE DISTRICT OFFICE.

CONDUCTOR AND CONDUIT SCHEDULE

AWG OR CABLE	CONDUCTOR RUN	CONDUIT RUN 1	2	3
#14	Ø2	3(N)	3	3
	Ø4	3(N)	3	3
	Ø2P	2(N)	2	2
	Ø4P	2(N)	2	2
	Ø4PPB	2(N)	2	2
	SPARES	3(N)	3	3
	TOTAL	15(N)	15	15
2#12	Ø4P DETECTOR	-	2	2
	25 PAIR #19 SHIELDED INTERCONNECT CABLE	-	-	-
#12	INTERNALLY ILLUMINATED STREET NAME SIGN	-	2	2
#10	SIGNAL COMMON	1(N)	1	1
	LUMINAIRE	-	2	2
	TOTAL	1(N)	3	3
#8	SERVICE	-	-	-
	EMERGENCY VEHICLE DETECTOR	-	-	1
CONDUIT SIZE		2½"	2½"	2½"

(N) NEW

PHASE DIAGRAM

Ø1	Ø2	Ø3	Ø4
Ø5	Ø6	Ø7	Ø8

POLE AND EQUIPMENT SCHEDULE

No.	TYPE	STANDARD HEIGHT	SMA	LMA	LUMINAIRE W/O GLARE SH (W) HPS	SIGNAL MOUNTING VEHICLE POLE	MA	PED	PPB Ø
1	17-2-80	30′	20′	8′	250	SV-1-T	mas	SP-1-T	4(N)
2	1-A	10′	-	-	-	TV-2-T	-	SP-1-T	-
3	1-A (N)	10′	-	-	-	TV-1-T(N)	-	SP-1-T(N)	-
4	1-A	10′	-	-	-	TV-1	-	SP-1-T	4(N)
5	17-2-80	30′	20′	8′	250	SV-2-TA	mas	SP-2-T	4(N)
6	1-A	10′	-	-	-	TV-2-T	-	SP-2-T	4(N)

(N) NEW

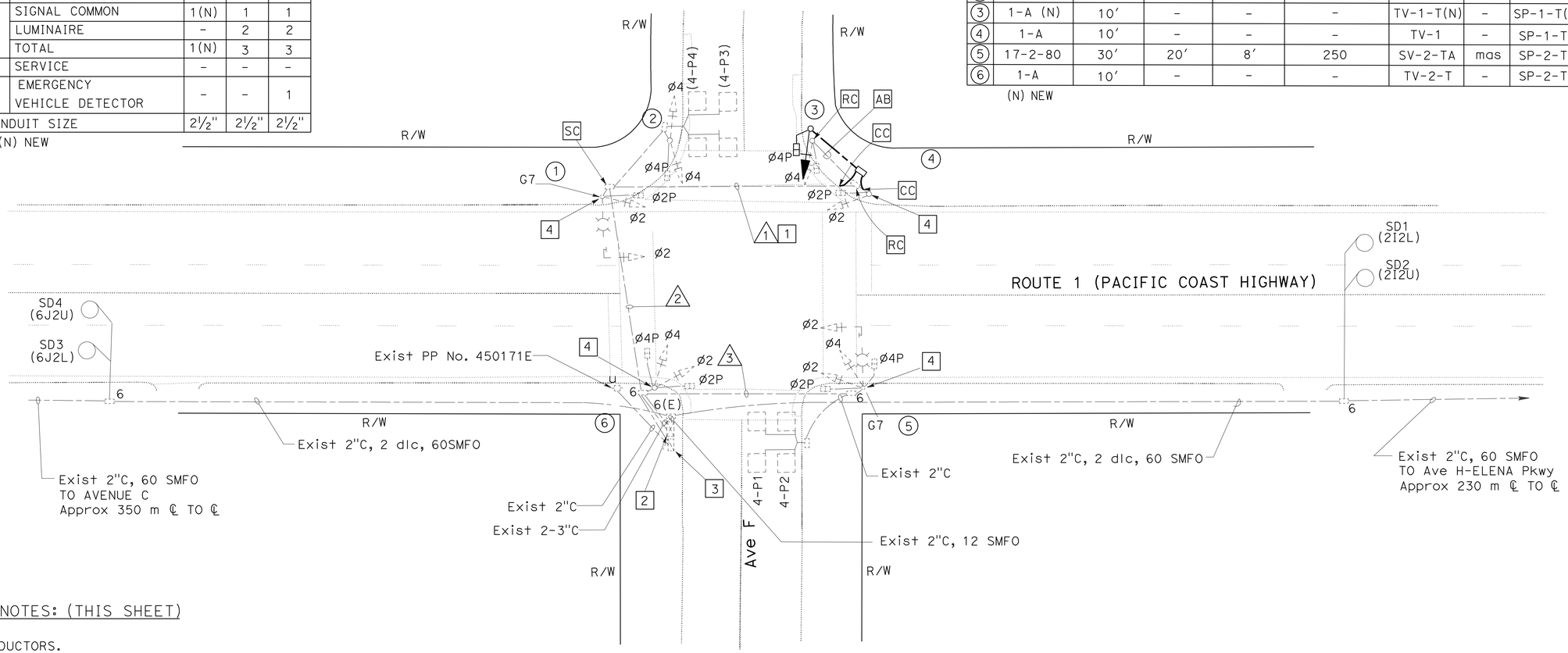

PROJECT NOTES: (THIS SHEET)

1. RC CONDUCTORS.
2. CONTROLLER CABINET.
3. SERVICE EQUIPMENT ENCLOSURE.
4. REPLACE EXISTING PHASE 4 ppb WITH NEW PPB.

MODIFY SIGNAL AND LIGHTING
(ROUTE 1 AT AVENUE F)
(LOCATION 2)

SCALE: 1" = 20′

E-1

THIS PLAN IS ACCURATE FOR ELECTRICAL WORK ONLY.

STATE OF CALIFORNIA - DEPARTMENT OF TRANSPORTATION
Caltrans® TRAFFIC DESIGN

FUNCTIONAL SUPERVISOR: HASSAN MANNAA
CALCULATED-DESIGNED BY: CESAR HERNANDEZ
CHECKED BY: HASSAN MANNAA
REVISED BY
DATE REVISED

LAST REVISION 00-00-00
DATE PLOTTED => 15-AUG-2011
TIME PLOTTED => 11:53

Dist	COUNTY	ROUTE	POST MILES TOTAL PROJECT	SHEET No.	TOTAL SHEETS
07	LA	1	18.0/39.3	59	85

REGISTERED ELECTRICAL ENGINEER 6/22/11 DATE

7-11-11
PLANS APPROVAL DATE

REGISTERED PROFESSIONAL ENGINEER
CESAR HERNANDEZ
No. E15805
Exp. 12/31/12
ELECTRICAL
STATE OF CALIFORNIA

THE STATE OF CALIFORNIA OR ITS OFFICERS OR AGENTS SHALL NOT BE RESPONSIBLE FOR THE ACCURACY OR COMPLETENESS OF SCANNED COPIES OF THIS PLAN SHEET.

FOR ACCURATE RIGHT OF WAY DATA, CONTACT
RIGHT OF WAY ENGINEERING AT THE DISTRICT OFFICE.

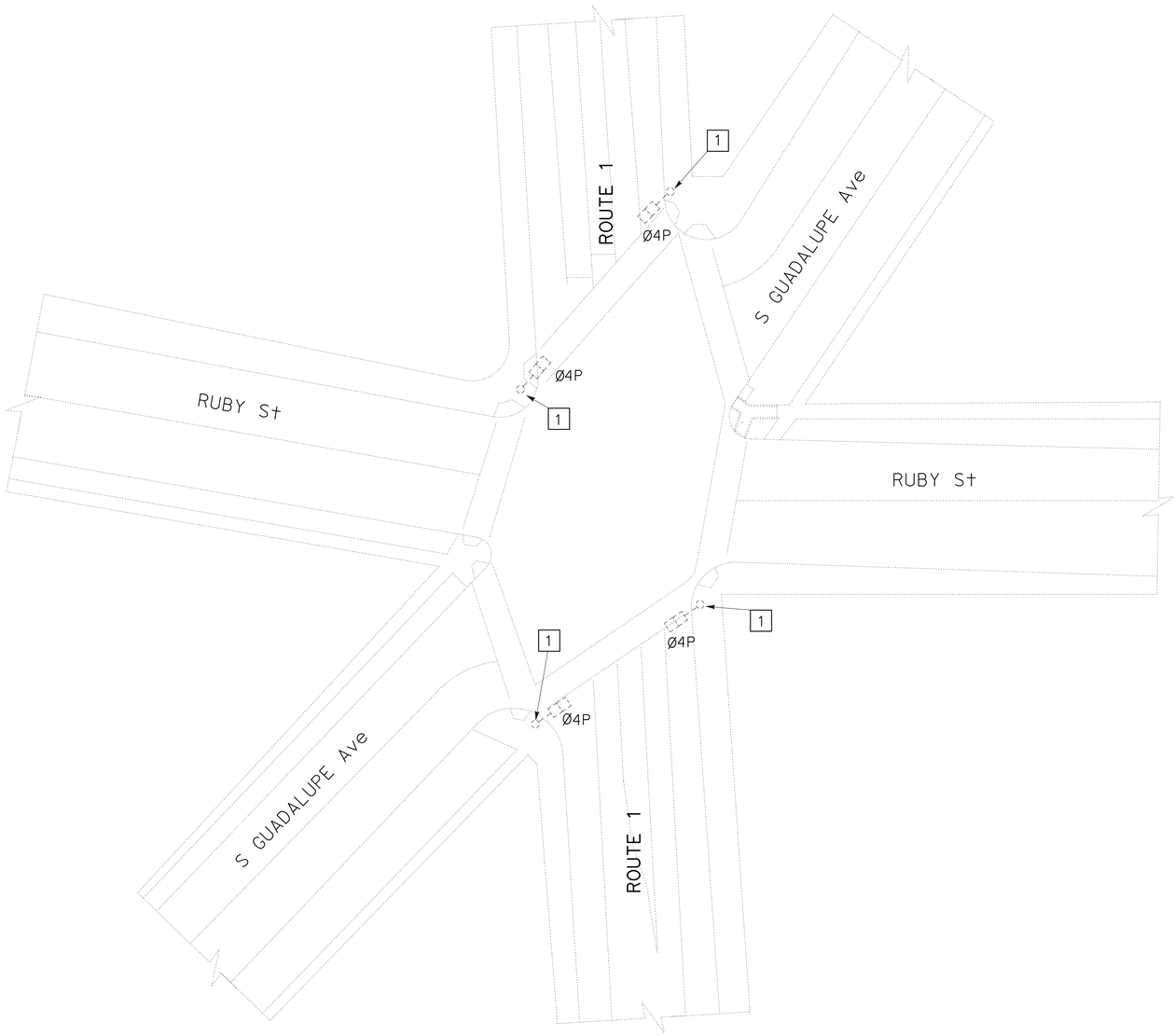

LOCATION 3
RUBY St/GUADALUPE Ave

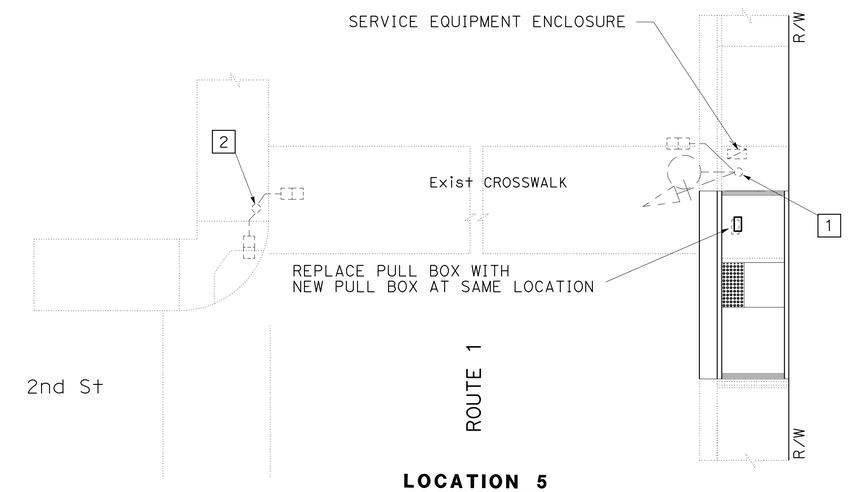

LOCATION 5
2nd St

PROJECT NOTES: (THIS SHEET)

1 REPLACE EXISTING ppb WITH NEW PPB.

2 REPLACE THE TWO EXISTING ppbs WITH NEW PPBs.

THIS PLAN IS ACCURATE FOR ELECTRICAL WORK ONLY.

MODIFY SIGNAL AND LIGHTING
(ROUTE 1 AT RUBY St/GUADALUPE AVENUE)
(LOCATION 3)
(ROUTE 1 AT 2nd STREET)
(LOCATION 5)

NO SCALE

E-2

STATE OF CALIFORNIA - DEPARTMENT OF TRANSPORTATION
Caltrans® TRAFFIC DESIGN

FUNCTIONAL SUPERVISOR: HASSAN MANNAA
CALCULATED-DESIGNED BY: CESAR HERNANDEZ
CHECKED BY: HASSAN MANNAA
REVISED BY
DATE REVISED

LAST REVISION 00-00-00
DATE PLOTTED => 15-AUG-2011
TIME PLOTTED => 11:53

FOR ACCURATE RIGHT OF WAY DATA, CONTACT
RIGHT OF WAY ENGINEERING AT THE DISTRICT OFFICE.

Dist	COUNTY	ROUTE	POST MILES TOTAL PROJECT	SHEET No.	TOTAL SHEETS
07	LA	1	18.0/39.3	60	85

REGISTERED ELECTRICAL ENGINEER 6/22/11 DATE

7-11-11
PLANS APPROVAL DATE

REGISTERED PROFESSIONAL ENGINEER
CESAR HERNANDEZ
No. E15805
Exp. 12/31/12
ELECTRICAL
STATE OF CALIFORNIA

THE STATE OF CALIFORNIA OR ITS OFFICERS OR AGENTS SHALL NOT BE RESPONSIBLE FOR THE ACCURACY OR COMPLETENESS OF SCANNED COPIES OF THIS PLAN SHEET.

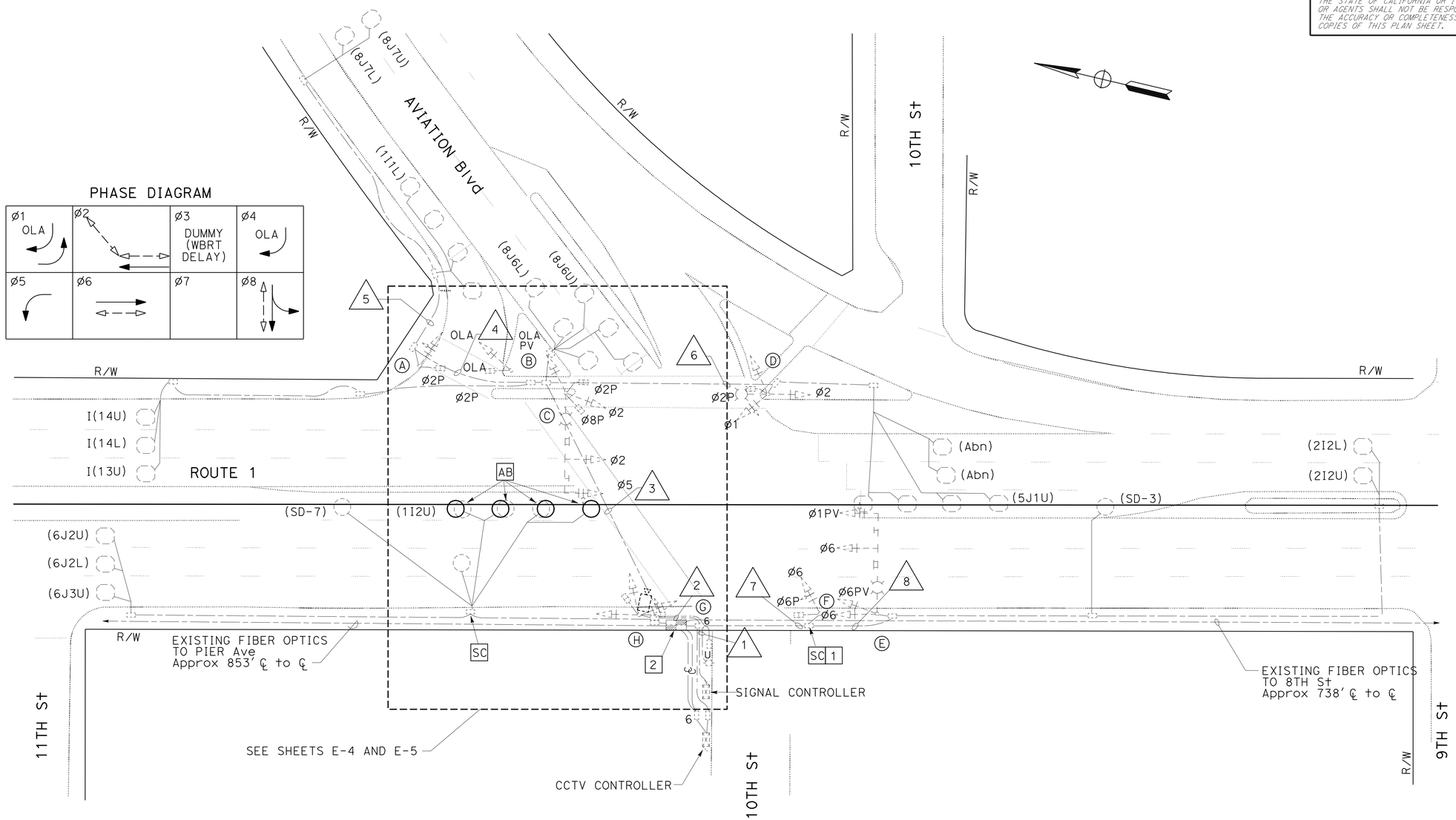

PROJECT NOTES: (THIS SHEET)

1. DISCONNECT EXISTING EVP CABLES FROM CONTROLLER AND COIL THEM UP IN PULL BOX. REROUTE EVP CABLES THROUGH NEW CONDUITS AND RECONNECT TO CONTROLLER.
2. DISCONNECT EXISTING 12 SMFO CABLE FROM SIGNAL CONTROLLER AND COIL IT UP IN SPLICE VAULT. REROUTE FO CABLE THROUGH NEW CONDUITS AND RECONNECT TO CONTROLLER.

LEGEND: (SHEETS E-3 AND E-4)

EVP - EMERGENCY VEHICLE PRE-EMPTION

▨ - EXISTING SPLICE VAULT

THIS PLAN IS ACCURATE FOR ELECTRICAL WORK ONLY.

MODIFY SIGNAL AND LIGHTING
(ROUTE 1 AT AVIATION BOULEVARD)
(LOCATION 8)

SCALE: 1"=20'

E-3

STATE OF CALIFORNIA - DEPARTMENT OF TRANSPORTATION
Caltrans® TRAFFIC DESIGN

FUNCTIONAL SUPERVISOR: HASSAN MANNAA
CALCULATED-DESIGNED BY: CESAR HERNANDEZ
CHECKED BY: HASSAN MANNAA
REVISED BY
DATE REVISED

LAST REVISION 00-00-00
DATE PLOTTED => 15-AUG-2011
TIME PLOTTED => 11:53

Dist	COUNTY	ROUTE	POST MILES TOTAL PROJECT	SHEET No.	TOTAL SHEETS
07	LA	1	18.0/39.3	61	85

REGISTERED ELECTRICAL ENGINEER 6/22/11 DATE

7-11-11
PLANS APPROVAL DATE

REGISTERED PROFESSIONAL ENGINEER CESAR HERNANDEZ No. E15805 Exp. 12/31/12 ELECTRICAL STATE OF CALIFORNIA

THE STATE OF CALIFORNIA OR ITS OFFICERS OR AGENTS SHALL NOT BE RESPONSIBLE FOR THE ACCURACY OR COMPLETENESS OF SCANNED COPIES OF THIS PLAN SHEET.

FOR ACCURATE RIGHT OF WAY DATA, CONTACT
RIGHT OF WAY ENGINEERING AT THE DISTRICT OFFICE.

PROJECT NOTES: (THIS SHEET)

1. RELOCATE BATTERY BACK UP SYSTEM CABINET TO NEW FOUNDATION. PROVIDE A MINIMUM OF 48 INCH SIDEWALK CLEARANCE.
2. MODEL 332 CONTROLLER EQUIPMENT ENCLOSURE (SIGNAL).
3. PP No. 611925E WITH TYPE E SERVICE.
4. RC EXISTING ppb AND PEDESTRIAN SIGNAL HEAD.
5. DISCONNECT dlcs AND EVP CABLE FROM CONTROLLER, AND COIL THEM UP IN PULL BOX. REROUTE dlcs AND EVP CABLE THROUGH NEW CONDUITS AND RECONNECT TO CONTROLLER.
6. RC SIGNAL, IISNS, LIGHTING.
7. RC EXISTING ppb and PHASE 8 PEDESTRIAN SIGNAL HEAD.
8. RC EXISTING ppbs.
9. MODEL 334-TV CONTROLLER EQUIPMENT ENCLOSURE (CCTV).

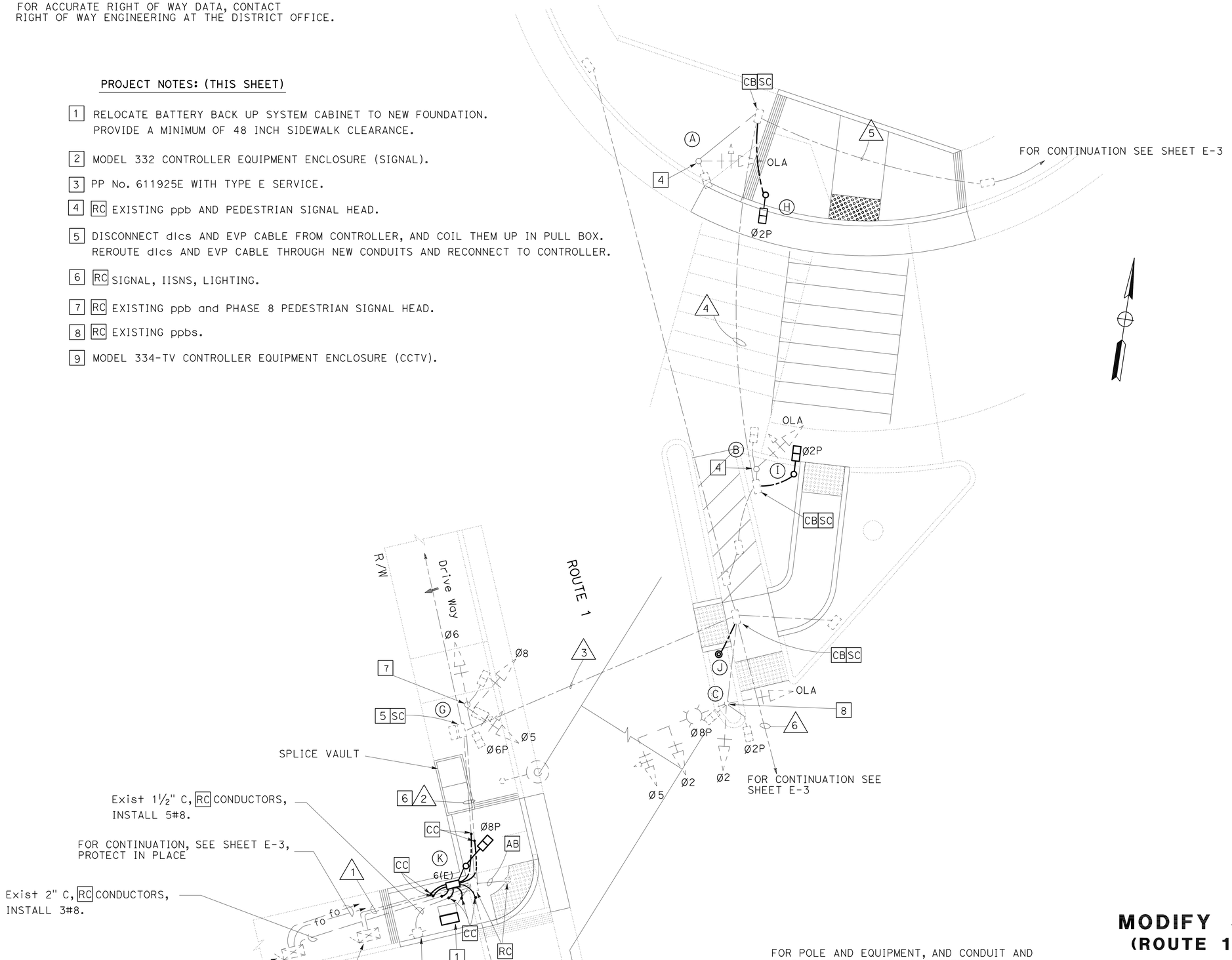

FOR POLE AND EQUIPMENT, AND CONDUIT AND CONDUCTOR SCHEDULES SEE SHEET E-4.

THIS PLAN IS ACCURATE FOR ELECTRICAL WORK ONLY.

MODIFY SIGNAL AND LIGHTING
(ROUTE 1 AT AVIATION BOULEVARD)
(LOCATION 8)

NO SCALE

E-4

STATE OF CALIFORNIA - DEPARTMENT OF TRANSPORTATION
Caltrans® TRAFFIC DESIGN

FUNCTIONAL SUPERVISOR: HASSAN MANNAA
CALCULATED-DESIGNED BY: CESAR HERNANDEZ
CHECKED BY: HASSAN MANNAA
REVISED BY
DATE REVISED

LAST REVISION 00-00-00
DATE PLOTTED => 15-AUG-2011
TIME PLOTTED => 11:53

Dist	COUNTY	ROUTE	POST MILES TOTAL PROJECT	SHEET No.	TOTAL SHEETS
07	LA	1	18.0/39.3	62	85

REGISTERED ELECTRICAL ENGINEER DATE 6/22/11

7-11-11
PLANS APPROVAL DATE

REGISTERED PROFESSIONAL ENGINEER CESAR HERNANDEZ No. E15805 Exp. 12/31/12 ELECTRICAL STATE OF CALIFORNIA

THE STATE OF CALIFORNIA OR ITS OFFICERS OR AGENTS SHALL NOT BE RESPONSIBLE FOR THE ACCURACY OR COMPLETENESS OF SCANNED COPIES OF THIS PLAN SHEET.

CONDUIT AND CONDUCTOR SCHEDULE (SEE E-3 AND E-4)

AWG OR CABLE	CONDUCTOR RUN	CONDUIT RUN 1	2	3	4	5	6	7	8
#14	Ø1	6(N)	3(N)	3	-	-	3	3(N)	3
	Ø2	3(N)	3(N)	3	-	-	3	-	-
	Ø3	-	-	-	-	-	-	-	-
	Ø4	-	-	-	-	-	-	-	-
	Ø5	3(N)	3(N)	3	-	-	-	-	-
	Ø6	6(N)	3(N)	-	-	-	-	3(N)	3
	Ø7	-	-	-	-	-	-	-	-
	Ø8	6(N)	3(N)	3	-	-	3	3(N)	3
	OLA	3(N)	3(N)	3	3	-	-	-	-
	Ø2PED	2(N)	2(N)	2	2	-	2	-	-
	Ø4PED	-	-	-	-	-	-	-	-
	Ø6PED	2(N)	2(N)	-	-	-	-	2(N)	-
	Ø8PED	2(N)	2(N)	2	-	-	-	-	-
	Ø2PPB	1(N)	1(N)	1	1	-	1	-	-
	Ø4PPB	-	-	-	-	-	-	-	-
	Ø6PPB	2(N)	-	-	-	-	-	1(N)	-
	Ø8PPB	1(N)	1(N)	1	-	-	-	-	-
	PPB COMMON	2(N)	1(N)	1	1	-	1	1(N)	-
	SPARES	6(N)	3(N)	3	3	3	3	3(N)	3
	TOTAL	45(N)	30(N)	25	10	3	16	16(N)	12
2#12 dlc (TYPE A)	Ø1 DETECTORS	2	2	1	1	1	-	-	-
	Ø2 DETECTORS	2	-	-	-	-	-	2	2
	Ø3 DETECTORS	-	-	-	-	-	-	-	-
	Ø4 DETECTORS	-	-	-	-	-	-	-	-
	Ø5 DETECTORS	1	1	1	-	-	1	-	-
	Ø6 DETECTORS	3	3	-	-	-	-	-	-
	Ø7 DETECTORS	-	-	-	-	-	-	-	-
	Ø8 DETECTORS	4	4	4	2	2	-	-	-
	NB SAMPLING DETECTORS	3	3	3	-	-	-	-	-
	SB SAMPLING DETECTORS	2	-	-	-	-	-	2	2
	TOTAL	17	13	9	3	3	1	4	4
#10	LUMINAIRE	-	2(N)	2	-	-	2	2(N)	2
	SIGNAL COMMON	2(N)	1(N)	1	1	1	1	1(N)	1
	TOTAL	2(N)	3(N)	3	1	1	3	3(N)	3
#12	IISNS	-	2(N)	2	-	-	-	2(N)	2
2#8	SIGNAL SERVICE	2(N)	-	-	-	-	-	-	-
12 smfo	FIBER OPTIC CABLE	1	-	-	-	-	-	-	-
	EVP CABLE	3	1	1	-	-	-	2	1
	CONDUIT SIZE	2-3"	2-3"	2½"	2"	1½"	2"	2"	2"

(N) = NEW

POLE AND EQUIPMENT SCHEDULE (SEE E-3 AND E-4)

No.	STANDARD Type	SMA (Ft)	LMA (Ft)	VEH SIG MTG Mast Arm	Pole	PED SIGNAL MTG	PPB Ø	ARROW	HPS	IISNS
A	1-A	—	—	—	TV-1-T	—	—			
B	1-A	—	—	—	TV-1-T	—	—			
C	26-4-129	35′	8′	MAT, MAS	SV-2-TA	SP-2-T	2	→	200 W	← AVIATION BL 10th ST →
D	MARBELITE	—	6′	—	SV-3-TB	SP-1-T	2	←	200 W	
E	26-4-129	35′	8′	MAT, MAS	SV-2-TA	—	—	—	200 W	← AVIATION BL 10th ST →
F	1-A	—	—	—	TV-1-T	SP-1-T	6	←		
G	CCTV 45	—	—	—	SV-3-TA	SP-1-T(N)	—	—	—	
H	1-A(7′)(N)	—	—	—	—	TP-1-T(N)	2(N)	←		
I	1-A(7′)(N)	—	—	—	—	TP-1-T(N)	2(N)	→		
J	PPB POST (N)	—	—	—	—	—	2(N), 8(N)	←		
K	1-A (N)	—	—	—	—	TP-1-T(N)	6(N), 8(N)	→		

(N) = NEW

THIS PLAN IS ACCURATE FOR ELECTRICAL WORK ONLY.

MODIFY SIGNAL AND LIGHTING
(ROUTE 1 AT AVIATION BOULEVARD)
(LOCATION 8)

E-5

STATE OF CALIFORNIA - DEPARTMENT OF TRANSPORTATION
Caltrans® TRAFFIC DESIGN

FUNCTIONAL SUPERVISOR: HASSAN MANNAA
CALCULATED-DESIGNED BY: CESAR HERNANDEZ
CHECKED BY: HASSAN MANNAA
REVISED BY
DATE REVISED

LAST REVISION 00-00-00
DATE PLOTTED => 15-AUG-2011
TIME PLOTTED => 11:53

Dist	COUNTY	ROUTE	POST MILES TOTAL PROJECT	SHEET No.	TOTAL SHEETS
07	LA	1	18.0/39.3	63	85

6/22/11
REGISTERED ELECTRICAL ENGINEER DATE

7-11-11
PLANS APPROVAL DATE

REGISTERED PROFESSIONAL ENGINEER
CESAR HERNANDEZ
No. E15805
Exp. 12/31/12
ELECTRICAL
STATE OF CALIFORNIA

THE STATE OF CALIFORNIA OR ITS OFFICERS OR AGENTS SHALL NOT BE RESPONSIBLE FOR THE ACCURACY OR COMPLETENESS OF SCANNED COPIES OF THIS PLAN SHEET.

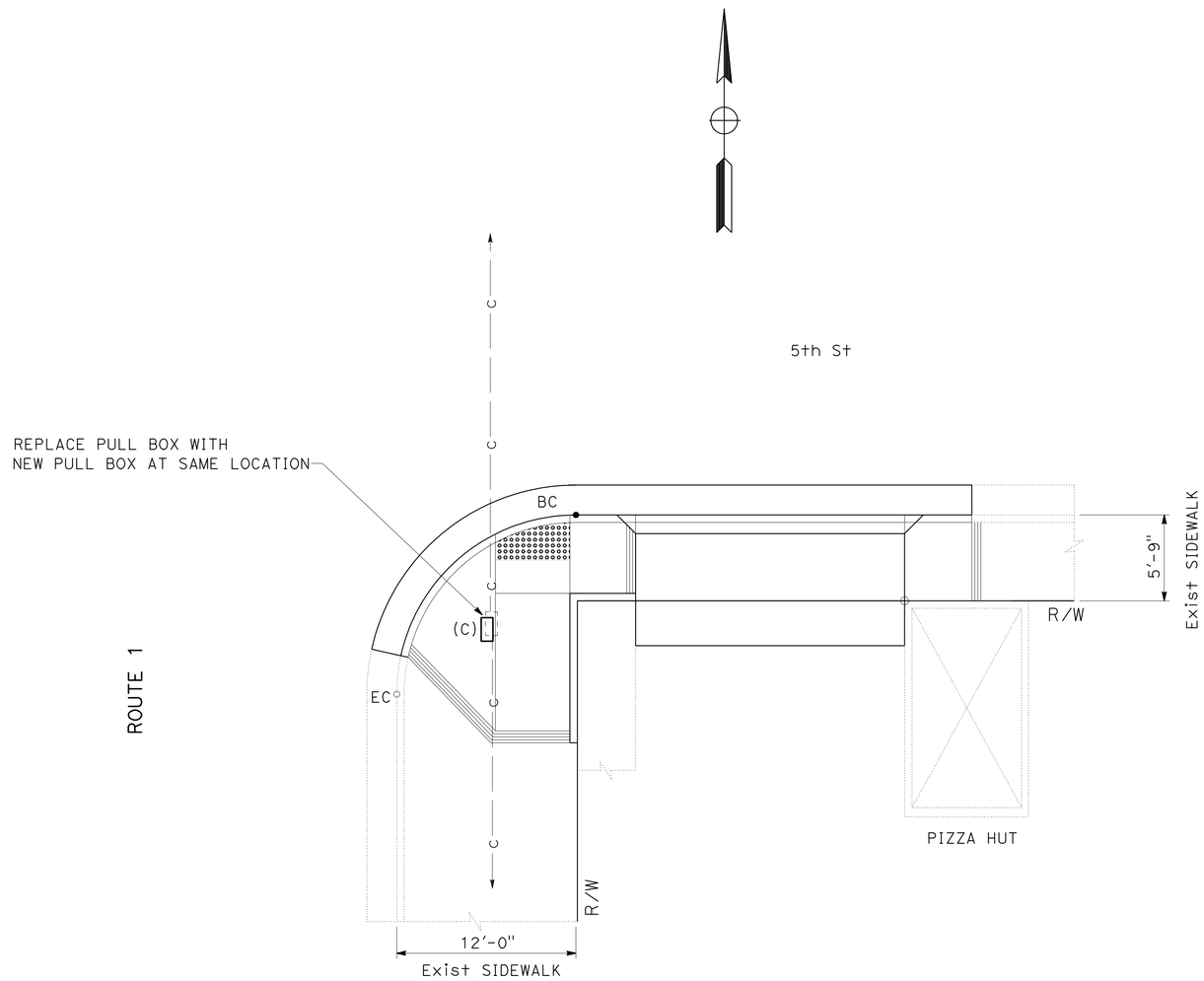

THIS PLAN IS ACCURATE FOR ELECTRICAL WORK ONLY.

MODIFY SIGNAL AND LIGHTING
(ROUTE 1 AT 5th STREET)
(LOCATION 9)

NO SCALE

E-6

REVISED BY	DATE REVISED

CESAR HERNANDEZ — CALCULATED-DESIGNED BY
HASSAN MANNAA — CHECKED BY
HASSAN MANNAA — FUNCTIONAL SUPERVISOR

STATE OF CALIFORNIA - DEPARTMENT OF TRANSPORTATION
Caltrans® TRAFFIC DESIGN

LAST REVISION 00-00-00 | DATE PLOTTED => 15-AUG-2011 | TIME PLOTTED => 11:53

Dist	COUNTY	ROUTE	POST MILES TOTAL PROJECT	SHEET No.	TOTAL SHEETS
07	LA	1	18.0/39.3	64	85

REGISTERED ELECTRICAL ENGINEER DATE 6/22/11

7-11-11
PLANS APPROVAL DATE

REGISTERED PROFESSIONAL ENGINEER CESAR HERNANDEZ No. E15805 Exp. 12/31/12 ELECTRICAL STATE OF CALIFORNIA

THE STATE OF CALIFORNIA OR ITS OFFICERS OR AGENTS SHALL NOT BE RESPONSIBLE FOR THE ACCURACY OR COMPLETENESS OF SCANNED COPIES OF THIS PLAN SHEET.

FOR ACCURATE RIGHT OF WAY DATA, CONTACT RIGHT OF WAY ENGINEERING AT THE DISTRICT OFFICE.

CONDUCTOR AND CONDUIT SCHEDULE

AWG OR CABLE	CONDUCTOR RUN	CONDUIT RUN 1	2	3	4	5	6	7	8
SCC	SIGNAL CONDUCTOR CABLE 28	2(N)	2	2	1	2	2	-	4
#12	SIGN LIGHTING	3(N)	3	3	-	-	3	3	-
#10	LUMINAIRE	3(N)	3	3	-	-	3	3	-
#6	SIGNAL SERVICE	-	-	-	-	-	-	2	2
	TOTAL	6(N)	6	6	-	-	6	8	2
	EVPE	-	1	1	-	-	1	-	2
2#12 dlc	Ø2 DETECTOR	-	-	-	-	2	2	-	2
	Ø6 DETECTOR	-	-	-	-	-	-	2	2
	Ø4 DETECTOR	-	-	-	-	-	1	-	1
	TOTAL	-	-	-	-	2	3	2	5
CONDUIT SIZE		3"	3"	3"	3"	3"	3"	2"	2-3"

(N) = NEW

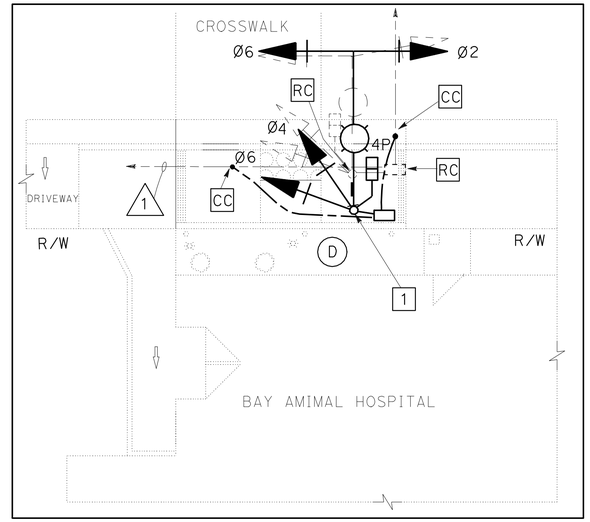

DETAIL A
NO SCALE

PHASE DIAGRAM

	Ø2P		Ø4P
Ø1	Ø2	Ø3	Ø4
Ø5	Ø6	Ø7	Ø8

PROJECT NOTE: (THIS SHEET)

1 RELOCATE EXISTING R10-11a SIGN AND IISNS TO NEW POLE.

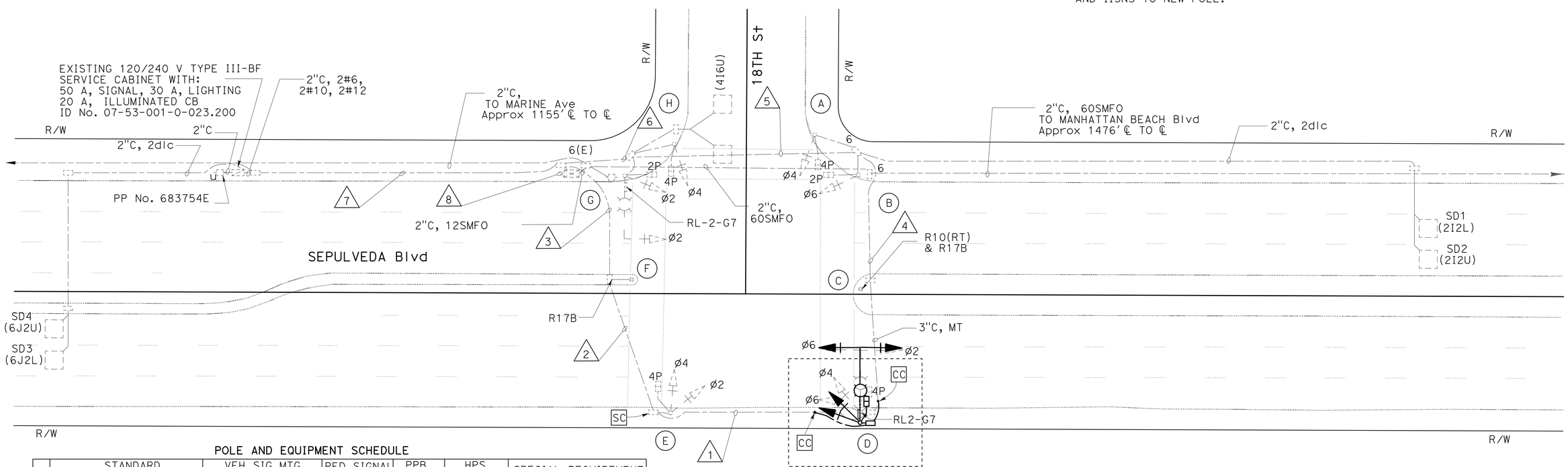

POLE AND EQUIPMENT SCHEDULE

No.	STANDARD TYPE	SMA	LMA	VEH SIG MTG MAST Arm	POLE	PED SIGNAL MTG	PPB Ø	ARROW	HPS LUMINAIRE (W)	SPECIAL REQUIREMENT IISNS MESSAGE
A	1-A	-	-	-	-	TP-1-T	2	←	-	-
B	1-A	-	-	-	TV-1-T	SP-1-T	4	→	-	-
C	PPB POST	-	-	-	-	-	4	↔	-	-
D	19-4-100(N)	25'(N)	12'(N)	MAS(N) MAS(N)	SV-1-T(N)	SP-1-T(N)	4(N)	←	200(N)	18TH STREET(R)
E	1-A	-	-	-	TV-2-T	SP-1-T	4	←	-	-
F	PPB POST	-	-	-	-	-	4	↔	-	-
G	17-2-129	20'	12'	MAS	SV-1-T	SP-1-T	4	←	200	18TH STREET
H	1-A	-	-	-	-	TP-1-T	2	→	-	-

(N) = NEW
(R) = RELOCATED

THIS PLAN IS ACCURATE FOR ELECTRICAL WORK ONLY.

MODIFY SIGNAL AND LIGHTING
(ROUTE 1 AT 18 TH STREET)
(LOCATION 10)

SCALE: 1" = 20'

E-7

STATE OF CALIFORNIA - DEPARTMENT OF TRANSPORTATION
Caltrans® TRAFFIC DESIGN

REVISED BY | DATE REVISED
CESAR HERNANDEZ | HASSAN MANNAA
CALCULATED-DESIGNED BY | CHECKED BY
FUNCTIONAL SUPERVISOR: HASSAN MANNAA

LAST REVISION 00-00-00 | DATE PLOTTED => 15-AUG-2011 | TIME PLOTTED => 11:53

Dist	COUNTY	ROUTE	POST MILES TOTAL PROJECT	SHEET No.	TOTAL SHEETS
07	LA	1	18.0/39.3	65	85

REGISTERED ELECTRICAL ENGINEER 6/22/11 DATE

7-11-11
PLANS APPROVAL DATE

REGISTERED PROFESSIONAL ENGINEER CESAR HERNANDEZ No. E15805 Exp. 12/31/12 ELECTRICAL STATE OF CALIFORNIA

THE STATE OF CALIFORNIA OR ITS OFFICERS OR AGENTS SHALL NOT BE RESPONSIBLE FOR THE ACCURACY OR COMPLETENESS OF SCANNED COPIES OF THIS PLAN SHEET.

FOR ACCURATE RIGHT OF WAY DATA, CONTACT
RIGHT OF WAY ENGINEERING AT THE DISTRICT OFFICE.

PHASE DIAGRAM

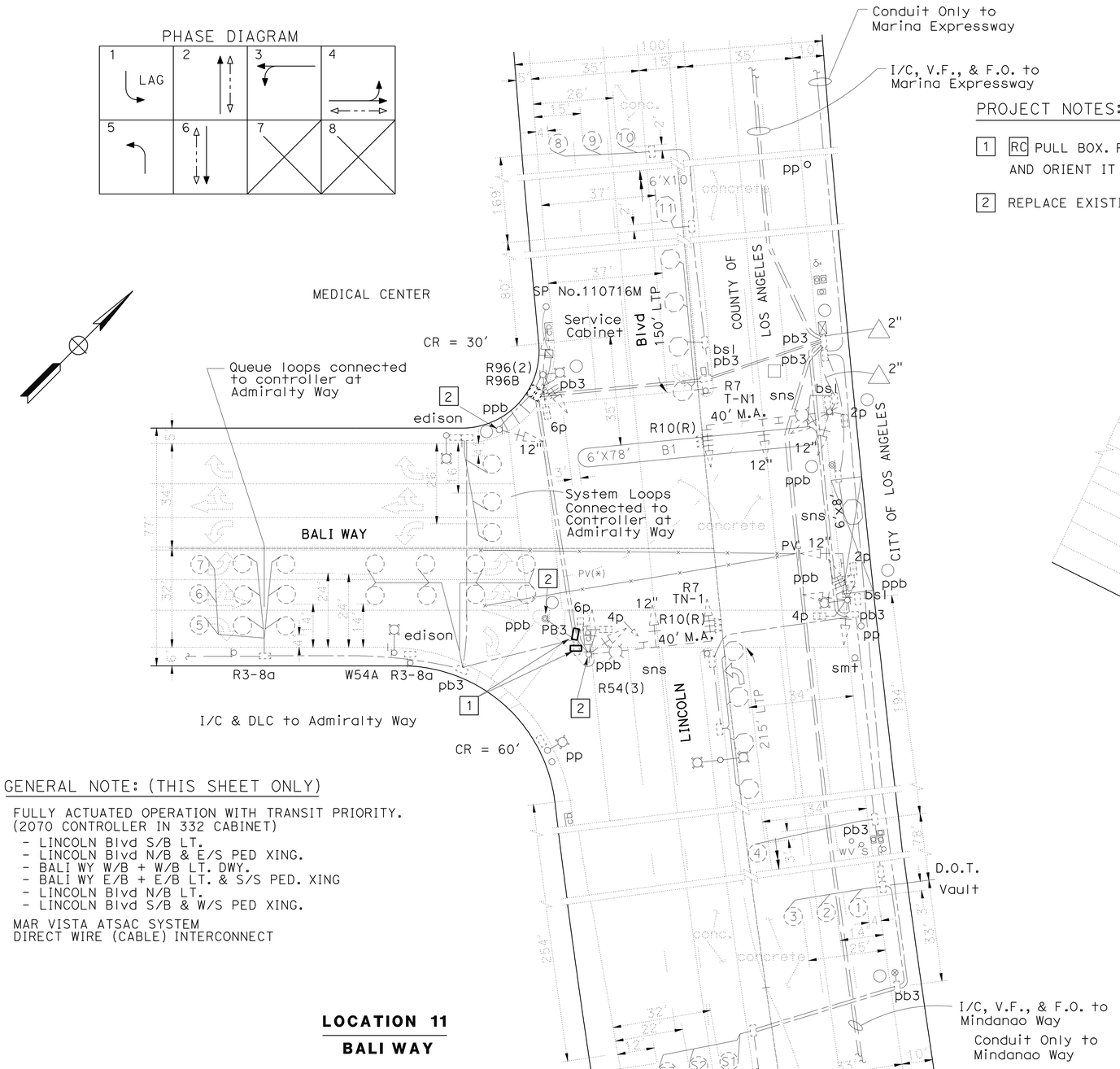

PROJECT NOTES: (THIS SHEET ONLY)

1 RC PULL BOX. PLACE NEW PULL BOX ON RAISED ISLAND PORTION AND ORIENT IT TO AVOID RECESED ACCESS AREA.

2 REPLACE EXISTING ppb WITH NEW PPB.

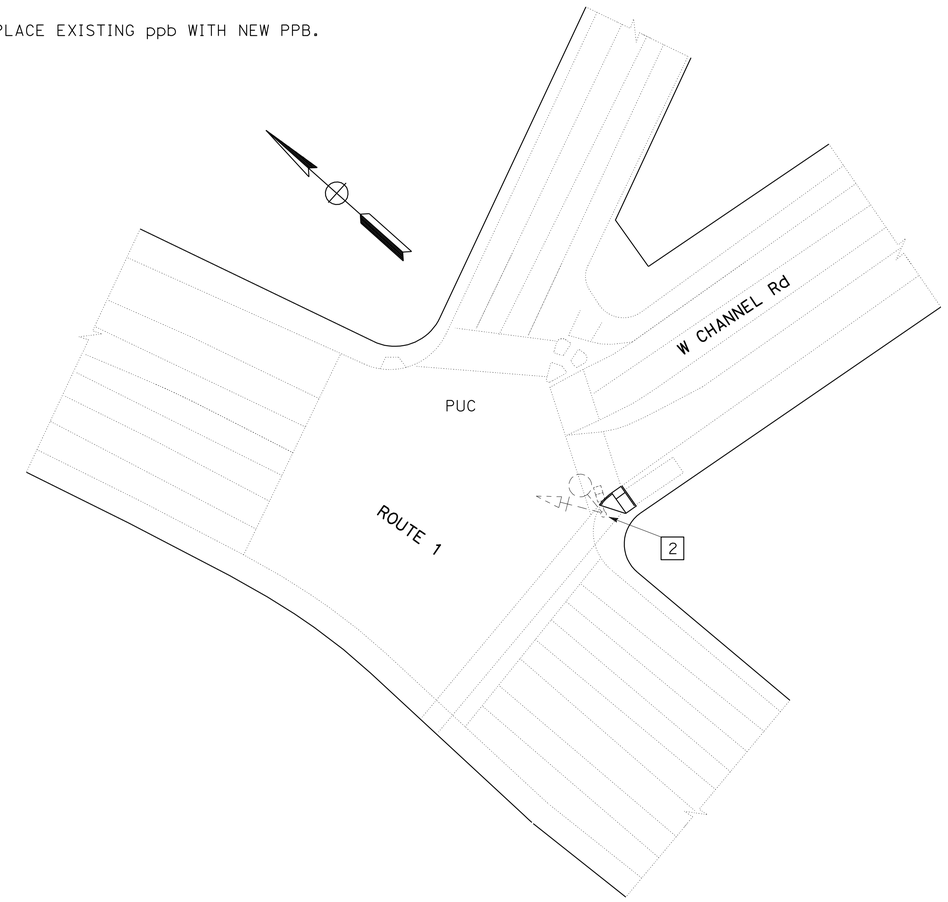

GENERAL NOTE: (THIS SHEET ONLY)

FULLY ACTUATED OPERATION WITH TRANSIT PRIORITY.
(2070 CONTROLLER IN 332 CABINET)
- LINCOLN Blvd S/B LT.
- LINCOLN Blvd N/B & E/S PED XING.
- BALI WY W/B + W/B LT. DWY.
- BALI WY E/B + E/B LT. & S/S PED. XING
- LINCOLN Blvd N/B LT.
- LINCOLN Blvd S/B & W/S PED XING.

MAR VISTA ATSAC SYSTEM
DIRECT WIRE (CABLE) INTERCONNECT

LOCATION 11
BALI WAY

LOCATION 12
W CHANNEL Rd

MODIFY SIGNAL AND LIGHTING
(ROUTE 1 AT BALI WAY)
(LOCATION 11)
SCALE: 1"= 20'

(ROUTE 1 AT W CHANNEL ROAD)
(LOCATION 12)
NO SCALE

THIS PLAN IS ACCURATE FOR ELECTRICAL WORK ONLY.

E-8

STATE OF CALIFORNIA - DEPARTMENT OF TRANSPORTATION
Caltrans® TRAFFIC DESIGN

FUNCTIONAL SUPERVISOR: HASSAN MANNAA
CESAR HERNANDEZ | HASSAN MANNAA
CALCULATED-DESIGNED BY | CHECKED BY
REVISED BY | DATE REVISED

LAST REVISION 00-00-00 | DATE PLOTTED => 15-AUG-2011 | TIME PLOTTED => 11:53

Dist	COUNTY	ROUTE	POST MILES TOTAL PROJECT	SHEET No.	TOTAL SHEETS
07	LA	1	18.0/39.3	66	85

REGISTERED ELECTRICAL ENGINEER DATE 6/22/11

7-11-11
PLANS APPROVAL DATE

REGISTERED PROFESSIONAL ENGINEER CESAR HERNANDEZ No. E15805 Exp. 12/31/12 ELECTRICAL STATE OF CALIFORNIA

THE STATE OF CALIFORNIA OR ITS OFFICERS OR AGENTS SHALL NOT BE RESPONSIBLE FOR THE ACCURACY OR COMPLETENESS OF SCANNED COPIES OF THIS PLAN SHEET.

FOR ACCURATE RIGHT OF WAY DATA, CONTACT
RIGHT OF WAY ENGINEERING AT THE DISTRICT OFFICE.

EXISTING PHASE DIAGRAM

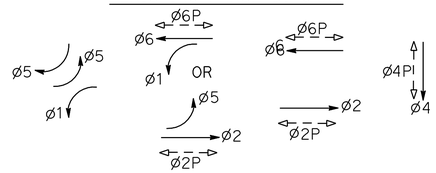

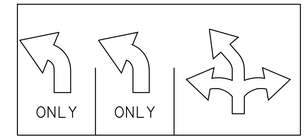

DETAIL A

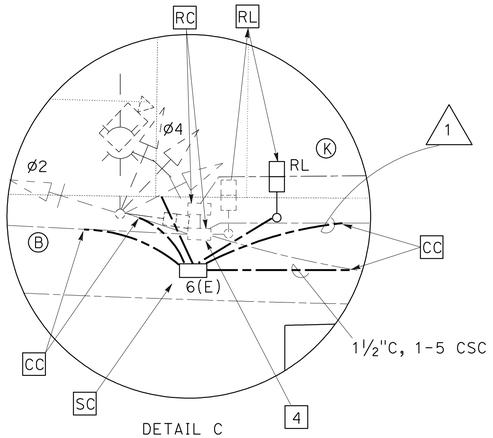

DETAIL C
NO SCALE

YELLOW ARROW TO INDICATE DURING Ø5 YELLOW

GREEN ARROW TO INDICATE DURING Ø5 GREEN

DETAIL B

LEGEND: (THIS SHEET)

— SPLICE VAULT

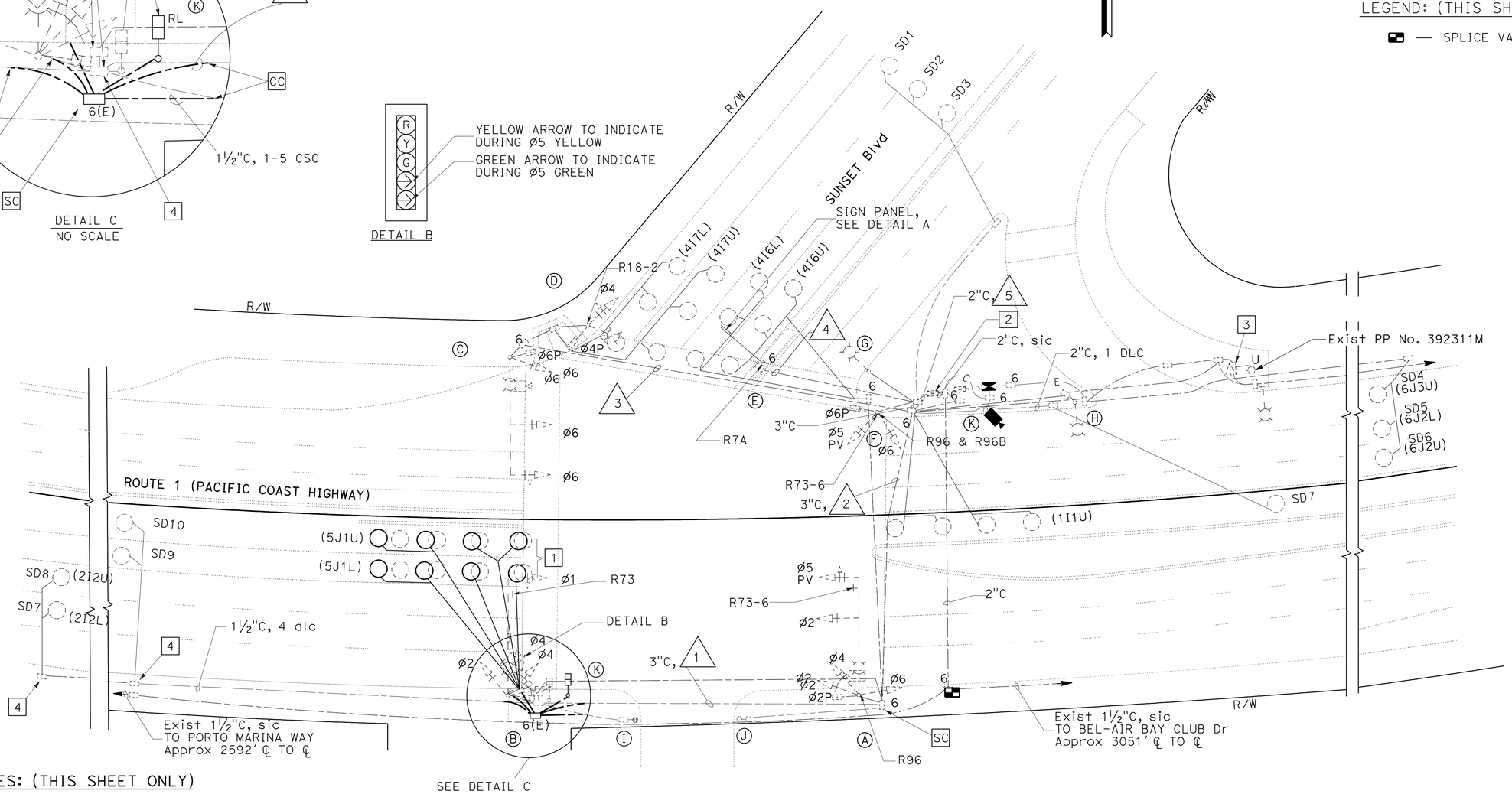

PROJECT NOTES: (THIS SHEET ONLY)

1 AB LEFT TURN POCKET LOOP DETECTORS (PHASE 5).

2 MODEL 332 CONTROLLER CABINET

3 120/240 V SERVICE EQUIPMENT ENCLOSURE.

4 DISCONNECT VIDEO DETECTION CABLE AND dlcs FOR PHASES 2, 5, SD9 AND SD10.
PULL-OUT AND COIL CONDUCTORS IN PULL BOX AT POLE Ⓐ.
RE-CONNECT VIDEO DETECTION CABLE AND dlcs TO LOOP WIRES ONCE NEW CONDUITS AND PULL BOXES ARE INSTALLED AS NOTED.

FOR POLE AND EQUIPMENT, AND CONDUIT AND CONDUCTOR SCHEDULES SEE E-10.

THIS PLAN IS ACCURATE FOR ELECTRICAL WORK ONLY.

MODIFY SIGNAL AND LIGHTING
(ROUTE 1 AT SUNSET BOULEVARD)
(LOCATION 13)

SCALE: 1" = 20'

E-9

STATE OF CALIFORNIA - DEPARTMENT OF TRANSPORTATION
Caltrans® TRAFFIC DESIGN

FUNCTIONAL SUPERVISOR: HASSAN MANNAA
CALCULATED-DESIGNED BY: CESAR HERNANDEZ
CHECKED BY: HASSAN MANNAA
REVISED BY
DATE REVISED

LAST REVISION 00-00-00
DATE PLOTTED => 15-AUG-2011
TIME PLOTTED => 11:53

Dist	COUNTY	ROUTE	POST MILES TOTAL PROJECT	SHEET No.	TOTAL SHEETS
07	LA	1	18.0/39.3	67	85

REGISTERED ELECTRICAL ENGINEER 6/22/11 DATE

7-11-11
PLANS APPROVAL DATE

REGISTERED PROFESSIONAL ENGINEER CESAR HERNANDEZ No. E15805 Exp. 12/31/12 ELECTRICAL STATE OF CALIFORNIA

THE STATE OF CALIFORNIA OR ITS OFFICERS OR AGENTS SHALL NOT BE RESPONSIBLE FOR THE ACCURACY OR COMPLETENESS OF SCANNED COPIES OF THIS PLAN SHEET.

CONDUCTOR SCHEDULE (SEE E-9)

AWG OR CABLE	CONDUCTOR RUN	CONDUIT RUN 1	2	3	4	5
28 CONDUCTOR CABLE	Ø1	2(N)	2	2	1	4
	Ø2					
	Special Green Arrow & Yellow Arrow					
	Ø4					
	Ø5					
	Ø6					
	Ø2 P					
	Ø6 P					
	Ø4 P					
	Ø2 PPB					
	Ø6 PPB					
	Ø4 PPB					
	Spares					
	TOTAL					
2 #12 cable	Ø1 Detector	—	—	—	—	1
	Ø2 Detector	2	2	—	—	2
	Ø4 Detector	—	—	2	4	4
	Ø5 Detector	2	2	—	—	2
	Ø6 Detector	—	—	—	—	3
	TOTAL	4	4	2	4	12
#12	Sign Lighting	—	—	—	2	—
	IISNS	—	2	2	2	—
	TOTAL	—	2	2	4	—
#8	Luminaire	2(N)	2	2	2	—
	Service	—	—	—	—	2
Video Detection Cable		1	2	1	1	3
Conduit size		3"	3"	3"	3"	2-3"

(N) = NEW

POLE AND EQUIPMENT SCHEDULE (SEE E-9)

NO.	STANDARD Type	Sig M.A.	Lum M.A.	VEH SIG MTG Mast Arm	Pole	PED SIGNAL MTG	PPB Ø	ARROW	HPS LUMINAIRE	STREET NAME SIGN
Ⓐ	26-4-70	40′	31.2′m	2-MAS	SV-1-T SV-2-TB	SP-1-T	—	—	250W	Sunset → (IISNS)
Ⓑ	26-4-70	40′	12′	1-MAS	SV-1-T SV-3-TB	SP-2-T	4	←	250W	Sunset → (IISNS)
Ⓒ	26-4-70	40′	12′	2-MAS	SV-1-T	SP-1-T	4	→	250W	—
Ⓓ	15	—	12′	—	SV-1-T	SP-1-T	6	→	250W	—
Ⓔ	Sign post	—	—	—	—	—	6	←→	—	—
Ⓕ	15	—	12′	—	SV-2-TB	SP-1-T	6	←	250W	—
Ⓖ	15	—	12′	—	—	—	—	—	250W	—
Ⓗ	15	—	12′	—	—	—	—	—	250W	—
Ⓘ	PPB post	—	—	—	—	—	2	→	—	—
Ⓙ	PPB post	—	—	—	—	—	2	←	—	—
Ⓚ	1-A (7′)(R)	—	—	—	—	TP-1-T (R)	—	—	—	—

(R) = RELOCATED

THIS PLAN IS ACCURATE FOR ELECTRICAL WORK ONLY.

MODIFY SIGNAL AND LIGHTING
(ROUTE 1 AT SUNSET BOULEVARD)
(LOCATION 13)

E-10

REVISED BY | DATE REVISED
CESAR HERNANDEZ | HASSAN MANNAA
CALCULATED-DESIGNED BY | CHECKED BY
FUNCTIONAL SUPERVISOR: HASSAN MANNAA
STATE OF CALIFORNIA - DEPARTMENT OF TRANSPORTATION
Caltrans TRAFFIC DESIGN

LAST REVISION 00-00-00 | DATE PLOTTED => 15-AUG-2011 | TIME PLOTTED => 11:53

DIST	COUNTY	ROUTE	POST MILES TOTAL PROJECT	SHEET NO.	TOTAL SHEETS
07	LA	1	18.0/39.3	68	85

REGISTERED CIVIL ENGINEER

November 17, 2006
PLANS APPROVAL DATE

REGISTERED PROFESSIONAL ENGINEER Dallas Forester No. C37765 Exp. 12-31-06 CIVIL STATE OF CALIFORNIA

The State of California or its officers or agents shall not be responsible for the accuracy or completeness of electronic copies of this plan sheet.

To accompany plans dated 7-11-11

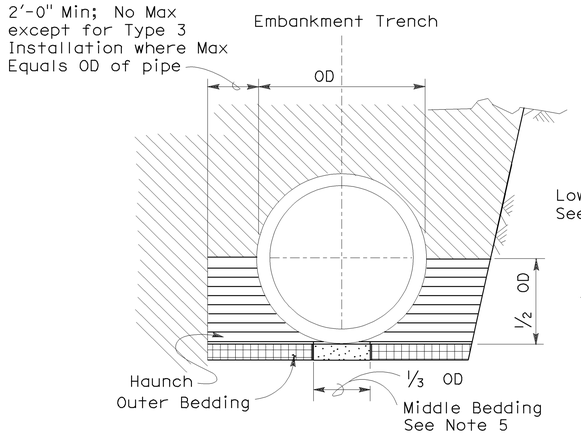

BACKFILL

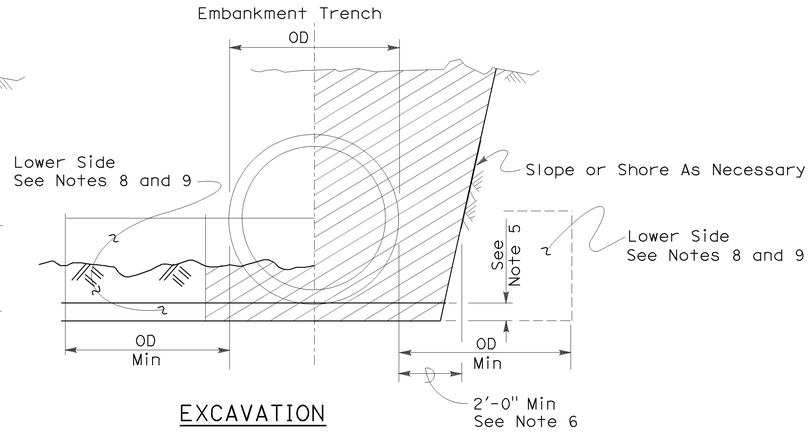

EXCAVATION

Roadway Embankment

Structure Backfill (Culvert) See Note 6

Structure Backfill (Culvert) See Note 6

Loose Backfill

Excavation Structure (Culvert)

TYPE 1 INSTALLATION:

The haunch and outer bedding shall be compacted to a minimum 90 percent relative compaction. In addition, the minimum sand equivalent in these areas shall be 30 and the maximum percentage passing the 75 μm sieve size shall be 12.

TYPE 2 INSTALLATION:

The haunch and outer bedding shall be compacted to a minimum 90 percent relative compaction. In addition, the minimum sand equivalent in these areas shall be 25.

TYPE 3 INSTALLATION:

The haunch and outer bedding shall be compacted to a minimum 85 percent relative compaction. 90 percent relative compaction will be required where the fill over the pipe is less than 4'-0" or 1/2 OD.

NOTES:

1. Unless otherwise shown on the plans or specified in the special provision, the Contractor shall have the option of selecting the class of RCP and the type of installation to be used, provided the height of cover does not exceed the value shown for the RCP selected.
   Example: 24" RCP culvert with maximum cover of 19'-0" the options are:
   a) Class II or stronger with Installation Type 1.
   b) Class III Special or stronger with Installation Type 2.
   c) Class IV Special or stronger with Installation Type 3.
   Cover is defined as the maximum vertical distance from top of the pipe to finished grade within the length of any given culvert.
2. The class of RCP and Installation Type selected shall be the same throughout the length of any given culvert.
3. The "length of any culvert" is defined as the culvert between:
   a) Successive drainage structure (inlets, junction boxes, headwalls, etc.).
   b) A drainage structure and the inlet or outlet end of the culvert.
   c) The inlet and outlet end of the culvert when there are no intervening drainage structures.
4. Oval and arch shaped RCP shall not be used.
5. 1/25 OD Min, not less than 3".
6. Slurry cement backfill may be substituted for backfill in the outer bedding and haunch areas. If slurry is used the outer and middle beddings shall be omitted. Prior to installation the soil under the middle 1/3 of the outside diameter of the pipe shall be softened by scarifying or other means to a minimum depth of 1/25 OD, but not less than 3". Where slurry cement backfill is used clear distance to trench wall may be reduced as set forth in Section 19-3.062 of the Standard Specifications.
7. Backfill shall be placed full width of excavation except where dimensions are shown for backfill width or thickness. Dimensions shown are minimums.
8. Lower side shall be suitable material as determined by the Engineer. Otherwise it shall be considered unsuitable as set forth in Section 19-2.02 of the Standard Specifications. See Note 9.
9. Where the pipe is placed in a trench, if the trench walls are sloped at 5 vertical to 1 horizontal or steeper for at least 90 percent of the trench height or up to not less than 12" from the grading plane, the firmness of the soil in the lower side need not be considered.
10. Non-reinforced precast concrete pipe sizes 3'-0" or smaller may be placed under installation Types 1, 2 or 3.

INSTALLATION TYPE 1

MINIMUM CLASS AND D-LOAD	COVER	
	108" Dia AND SMALLER	OVER 108" Dia
Class II 1000D	14.9'	12.9'
Class III 1350D	15.0' - 20.9'	13.0' - 18.9'
Class III Special 1700D	21.0' - 26.9'	19.0' - 24.9'
Class IV 2000D	27.0' - 31.9'	25.0' - 29.9'
Class IV Special 2500D	32.0' - 40.9'	30.0' - 38.9'
Class V 3000D	41.0' - 49.9'	39.0' - 46.9'
Class V Special 3600D	50.0' - 59.0'	47.0' - 58.0'

INSTALLATION TYPE 2

MINIMUM CLASS AND D-LOAD	COVER
Class II 1000D	9.9'
Class III 1350D	10.0'- 14.9'
Class III Special 1700D	15.0' - 19.9'
Class IV 2000D	20.0' - 24.9'
Class IV Special 2500D	25.0' - 31.9'
Class V 3000D	32.0' - 38.9'
Class V Special 3600D	39.0' - 47.0'

INSTALLATION TYPE 3

MINIMUM CLASS AND D-LOAD	COVER	
	48" Dia AND SMALLER	OVER 48" Dia
Class II 1000D	7.9'	5.9'
Class III 1350D	8.0' - 10.9'	6.0' - 8.9'
Class III Special 1700D	11.0' - 14.9'	9.0' - 12.9'
Class IV 2000D	15.0' - 17.9'	13.0' - 15.9'
Class IV Special 2500D	18.0' - 21.9'	16.0' - 19.9'
Class V 3000D	22.0' - 26.9'	20.0' - 24.9'
Class V Special 3600D	30.0' - 33.0'	25.0' - 31.0'

STATE OF CALIFORNIA
DEPARTMENT OF TRANSPORTATION

EXCAVATION AND BACKFILL CONCRETE PIPE CULVERTS

NO SCALE

RSP A62DA DATED NOVEMBER 17, 2006 SUPERSEDES STANDARD PLAN A62DA DATED MAY 1, 2006 - PAGE 20 OF THE STANDARD PLANS BOOK DATED MAY 2006.

REVISED STANDARD PLAN RSP A62DA

2006 REVISED STANDARD PLAN RSP A62DA

10-26-06

DIST	COUNTY	ROUTE	POST MILES TOTAL PROJECT	SHEET NO.	TOTAL SHEETS
07	LA	1	18.0/39.3	69	85

REGISTERED CIVIL ENGINEER

November 17, 2006
PLANS APPROVAL DATE

REGISTERED PROFESSIONAL ENGINEER Michael Janzen No. 44788 Exp. 03-31-08 CIVIL STATE OF CALIFORNIA

The State of California or its officers or agents shall not be responsible for the accuracy or completeness of electronic copies of this plan sheet.

To accompany plans dated 7-11-11

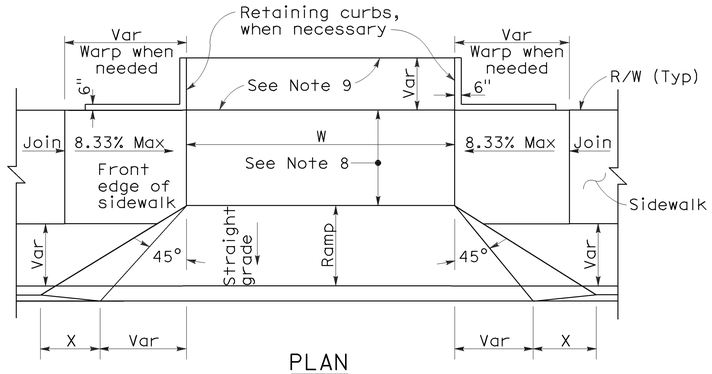

PLAN

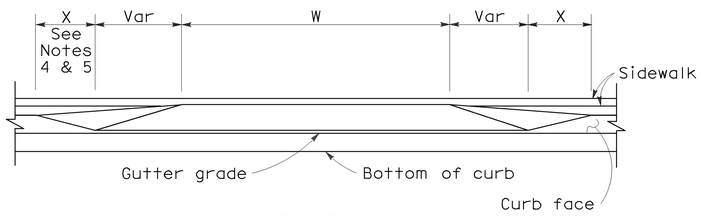

ELEVATION

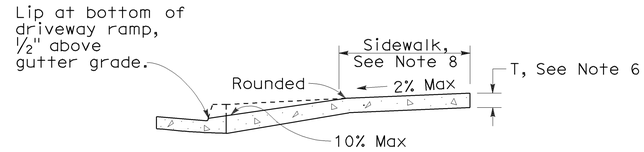

CASE A

Typical driveway, sidewalk not depressed

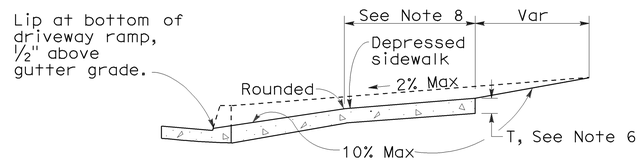

CASE B

Driveway with depressed sidewalk

SECTIONS

DRIVEWAYS

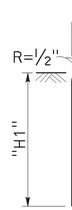

TYPE A1 CURBS

See Table A

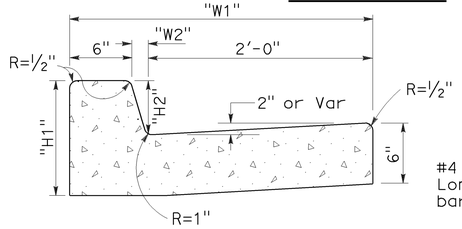

TYPE A2 CURBS

See Table A

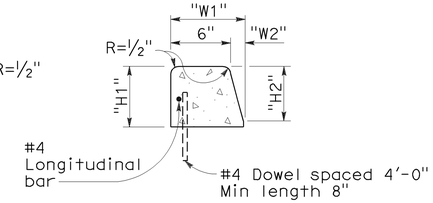

TYPE A3 CURBS

Superimposed on existing pavement
See Table A

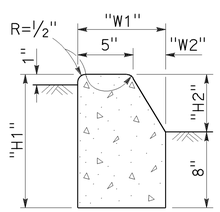

TYPE B1 CURBS

See Table A

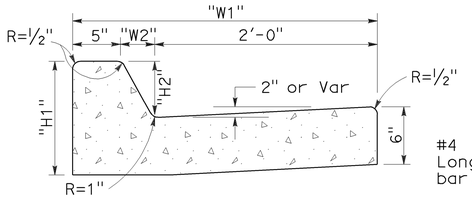

TYPE B2 CURBS

See Table A

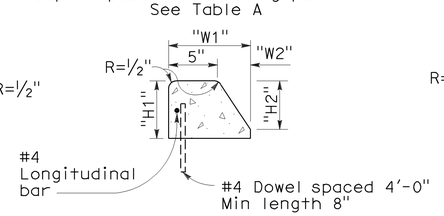

TYPE B3 CURBS

Superimposed on existing pavement
See Table A

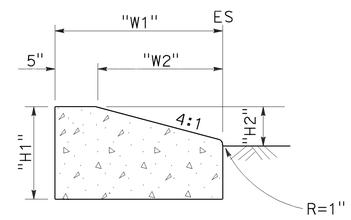

TYPE D CURBS

See Table A

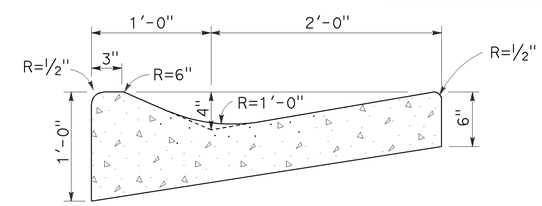

TYPE E CURB

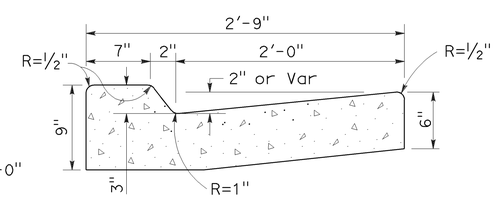

TYPE B4 CURBS

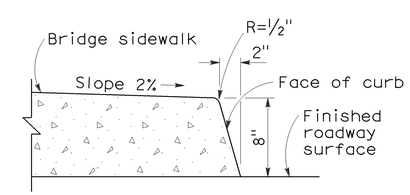

TYPE H CURB

On Bridges

CURBS

CURB QUANTITIES

TYPE	CUBIC YARDS PER LINEAR FOOT
A1-6	0.02585
A1-8	0.03084
A2-6	0.05903
A2-8	0.06379
A3-6	0.01036
A3-8	0.01435
B1-4	0.02185
B1-6	0.02930
B2-4	0.05515
B2-6	0.06171
B3-4	0.00641
B3-6	0.01074
B4	0.05709
D-4	0.04083
D-6	0.06804
E	0.06661

TABLE A

CURB TYPE	DIMENSIONS "H1"	"H2"	"W1"	"W2"
A1-6	1'-2"	6"	7½"	1½"
A1-8	1'-4"	8"	8"	2"
A2-6	1'-0"	6"	2'-7½"	1½"
A2-8	1'-2"	8"	2'-8"	2"
A3-6	6"	5"	7¼"	1¼"
A3-8	8"	7"	7¾"	1¾"
B1-4	1'-0"	4"	7½"	2½"
B1-6	1'-2"	6"	9"	4"
B2-4	10"	4"	2'-7½"	2½"
B2-6	1'-0"	6"	2'-9"	4"
B3-4	4"	3"	7"	2"
B3-6	6"	5"	8½"	3½"
D-4	10"	4"	1'-6"	1'-1"
D-6	1'-0"	6"	2'-2"	1'-8"

NOTES:

1. Case A driveway section typically applies.
2. Use Case B driveway section when ramp slopes would exceed 10% in Case A.
3. Use Case B driveway section when sidewalk cross slope would exceed 2% in Case A.
4. X=3'-0" except for curb heights over 10" where 4:1 slopes shall be used on curb slope.
5. X is a variable when sidewalk is located where wheelchairs may traverse the surface. Slopes shall not exceed 8.33%.
6. Sidewalk and ramp thickness "T" at driveway shall be 4" for residental and 6" for commercial.
7. Difference in slope of the driveway ramp and the slope of a line between the gutter and a point on the roadway 5'-0" from gutter line shall not exceed 15%. Reduce driveway ramp slope, not gutter slope, where required.
8. Minimum width of clear passageway for sidewalk shall be 4'-0".
9. Retaining curbs and acquisition of construction easement may be necessary for narrow sidewalks or curb heights in excess of 6".
10. Across the pedestrian route at curb ramp locations, the gutter pan slope shall not exceed 1" of depth for each 2'-0" of width.

STATE OF CALIFORNIA
DEPARTMENT OF TRANSPORTATION

CURBS AND DRIVEWAYS

NO SCALE

RSP A87A DATED NOVEMBER 17, 2006 SUPERSEDES STANDARD PLAN A87A DATED MAY 1, 2006 - PAGE 113 OF THE STANDARD PLANS BOOK DATED MAY 2006.

REVISED STANDARD PLAN RSP A87A

2006 REVISED STANDARD PLAN RSP A87A

10-25-06

DIST	COUNTY	ROUTE	POST MILES TOTAL PROJECT	SHEET NO.	TOTAL SHEETS
07	LA	1	18.0/39.3	70	85

REGISTERED CIVIL ENGINEER

September 1, 2006
PLANS APPROVAL DATE

REGISTERED PROFESSIONAL ENGINEER Hector David Cordova No. C41957 Exp. 3-31-08 CIVIL STATE OF CALIFORNIA

The State of California or its officers or agents shall not be responsible for the accuracy or completeness of electronic copies of this plan sheet.

To accompany plans dated 7-11-11

2006 REVISED STANDARD PLAN RSP A88A

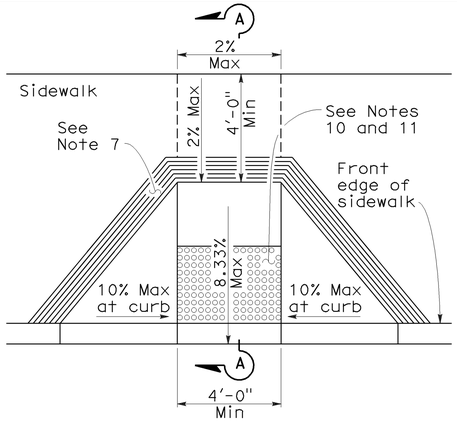

CASE A

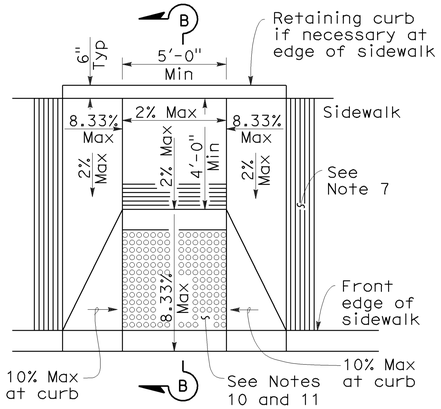

CASE B

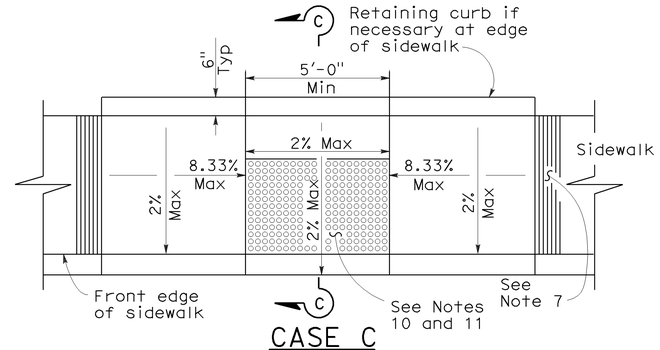

CASE C

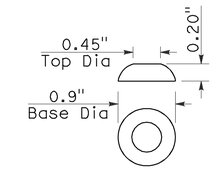

RAISED TRUNCATED DOME

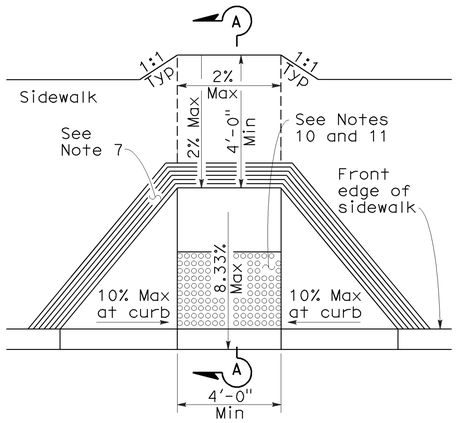

CASE D

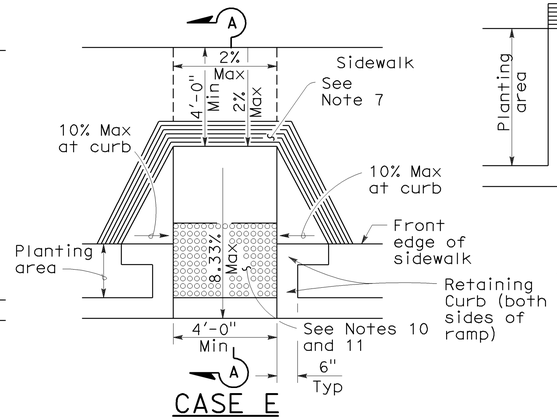

CASE E

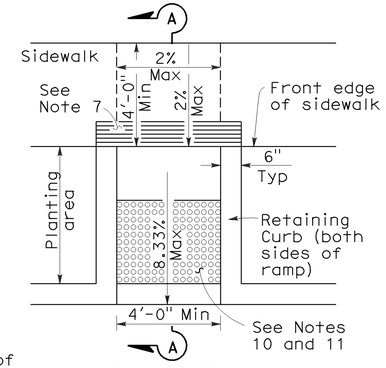

CASE F

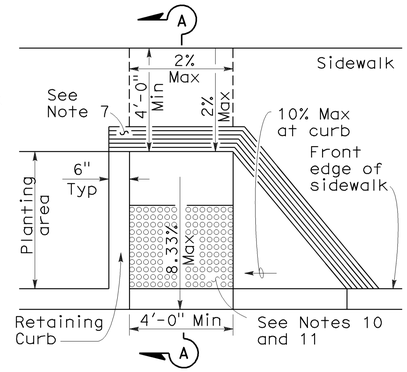

CASE G

See Note 4

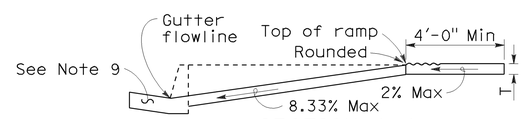

SECTION A-A

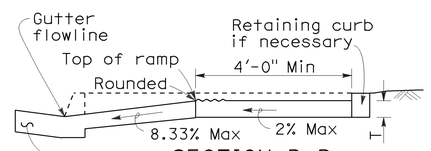

SECTION B-B

Depress entire sidewalk as required

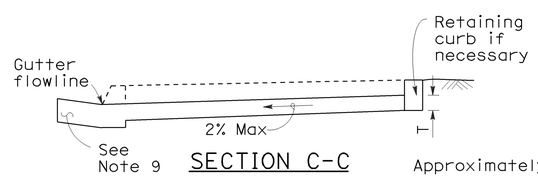

SECTION C-C

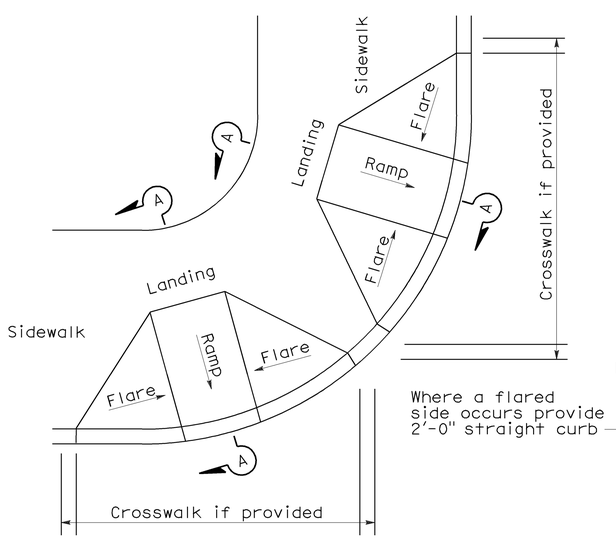

DETAIL A

TYPICAL TWO-RAMP CORNER INSTALLATION

See Note 1

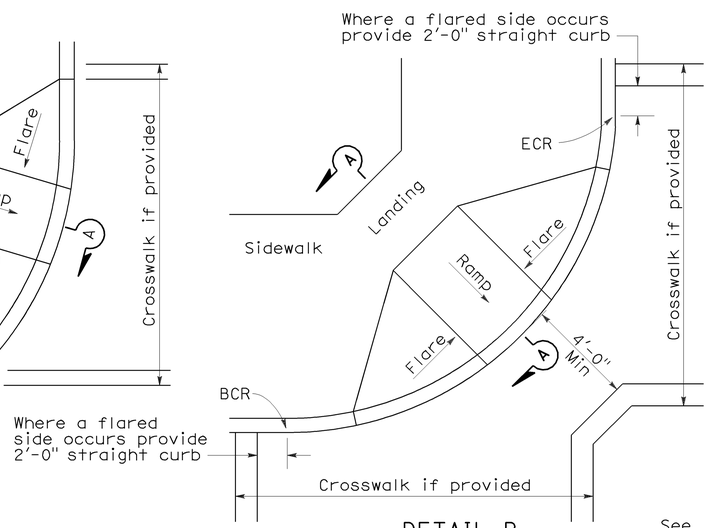

DETAIL B

TYPICAL ONE-RAMP CORNER INSTALLATION

See Notes 1 and 3

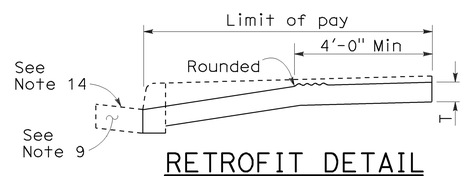

RETROFIT DETAIL

Existing curb and sidewalk

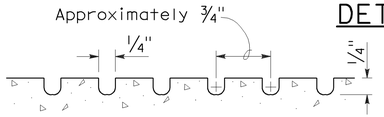

GROOVING DETAIL

NOTES:

1. As site conditions dictate, Case A through Case G curb ramps may be used for corner installations similar to those shown in Detail A and Detail B. The case of curb ramps used in Detail A do not have to be the same. Case A through Case G curb ramps also may be used at mid block locations, as site conditions dictate.
2. If distance from curb to back of sidewalk is too short to accommodate ramp and 4'-0" platform (landing) as shown in Case A, the sidewalk may be depressed longitudinally as in Case B, or C or may be widened as in Case D.
3. When ramp is located in center of curb return, crosswalk configuration must be similar to that shown for Detail B.
4. As site conditions dictate, the retaining curb side and the flared side of the Case G ramp shall be constructed in reversed position.
5. If located on a curve, the sides of the ramp need not be parallel, but the minimum width of the ramp shall be 4'-0".
6. Side slope of ramp flares vary uniformly from a maximum of 10% at curb to conform with longitudinal sidewalk slope adjacent to top of the ramp, except in Case C and Case F.
7. The curb ramp shall be outlined, as shown, with a 1'-0" wide border with 1/4" grooves approximately 3/4" on center. See grooving detail.
8. Transitions from ramps and landing to walks, gutters or streets shall be flush and free of abrupt changes.
9. Maximum slopes of adjoining gutters, the road surface immediately adjacent to the curb ramp or accessible route shall not exceed 5 percent within 4'-0" of the top and bottom of the curb ramp.
10. Curb ramps shall have a detectable warning surface that extends the full width and 3'-0" depth of the ramp. Detectable Warning Surfaces shall conform to the details on this plan and the requirements in the Special Provisions.
11. The edge of the detectable warning surface nearest the street shall be between 6" and 8" from the gutter flowline.
12. Sidewalk and ramp thickness, "T", shall be 3½" minimum.
13. Utility pull boxes, manholes, vaults and all other utility facilities within the boundaries of the curb ramp will be relocated or adjusted to grade by the owner prior to, or in conjunction with, curb ramp construction.
14. For retrofit conditions, removal and replacement of curb apron will be at the Contractor's option, unless otherwise shown on project plans.

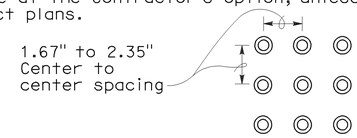

RAISED TRUNCATED DOME PATTERN (IN-LINE)

DETECTABLE WARNING SURFACE

See Note 10

STATE OF CALIFORNIA
DEPARTMENT OF TRANSPORTATION

CURB RAMP DETAILS

NO SCALE

RSP A88A DATED SEPTEMBER 1, 2006 SUPERSEDES STANDARD PLAN A88A DATED MAY 1, 2006 - PAGE 115 OF THE STANDARD PLANS BOOK DATED MAY 2006.

REVISED STANDARD PLAN RSP A88A

8-3-06

DIST	COUNTY	ROUTE	POST MILES TOTAL PROJECT	SHEET NO.	TOTAL SHEETS
07	LA	1	18.0/39.3	71	85

Raymond Don Tsztoo
REGISTERED CIVIL ENGINEER

January 18, 2008
PLANS APPROVAL DATE

REGISTERED PROFESSIONAL ENGINEER
Raymond Don Tsztoo
No. C37332
Exp. 6-30-08
CIVIL
STATE OF CALIFORNIA

The State of California or its officers or agents shall not be responsible for the accuracy or completeness of electronic copies of this plan sheet.

To accompany plans dated 7-11-11

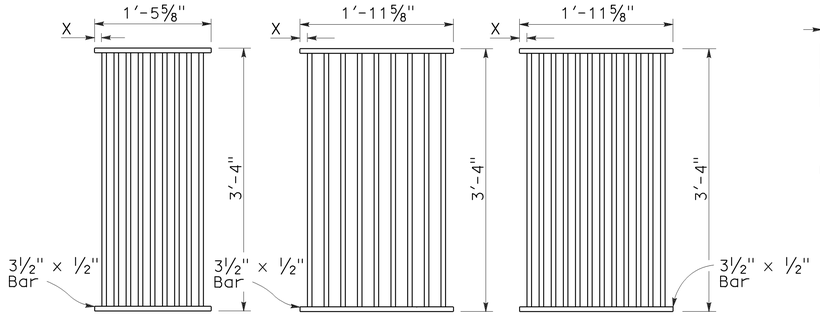

TYPE 18-9

1⅜" Clear spacing. Use within the roadbed on highways where bicycles and pedestrians are excluded.

TYPE 24-9

2" Clear spacing. Use in locations off the roadbed on all types of highways.

TYPE 24-12

1⅜" Clear spacing. Use within the roadbed on highways where bicycles and pedestrians are excluded.

RECTANGULAR GRATE DETAILS

(See table below)

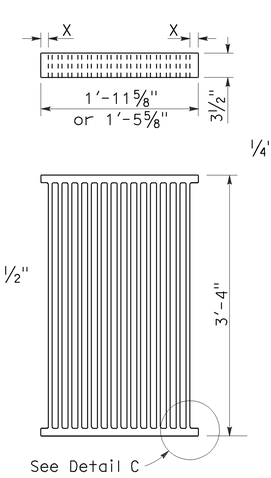

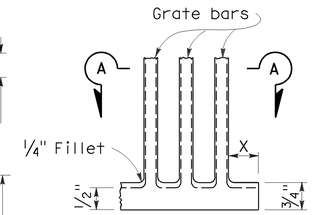

DETAIL C

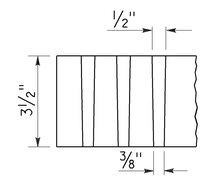

SECTION A-A

ALTERNATIVE CAST NODULAR IRON GRATE OR CAST STEEL GRATE

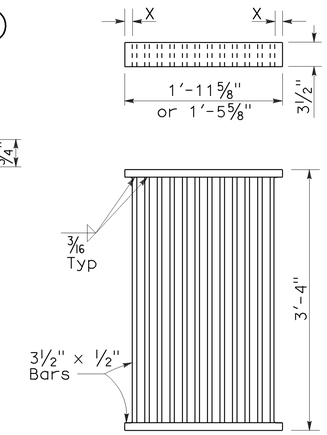

ALTERNATIVE WELDED GRATE

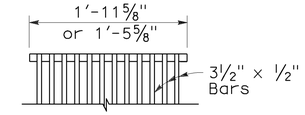

CAST END BLOCK

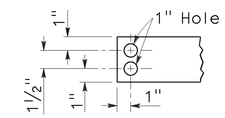

END OF BAR

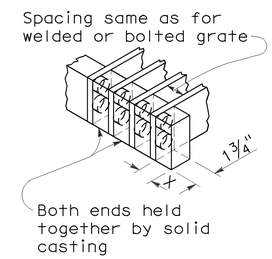

ALTERNATIVE CAST NODULAR IRON OR CAST STEEL END BLOCK GRATE

NOTES:

1. Grate type numbers refer to approximate width of grate in inches and number of bars, respectively.
2. Contractor has the option of using cast nodular iron, cast steel, welded, bolted, or cast end block grate.
3. See Special Provisions for requirements pertaining to galvanizing or asphalt dipping of grates and frames.
4. Rounded top of bars optional on all grates.
5. Pipe inlets with a grate shall be placed so that bars parallel direction of principle surface flow.
6. Full penetration butt welds may be substituted for the fillet welds on all anchors.
7. Standard square, hexagon, round or equivalent headed anchors may be substituted for the right angle hooks on the anchors shown on this plan.
8. Grate and frame weights are based on welded grates (weights of face angles, steps, protection bars, etc. are not included).

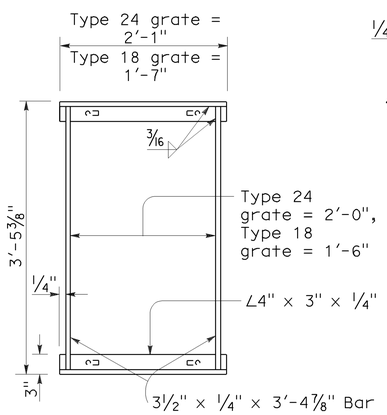

TYPICAL FRAME

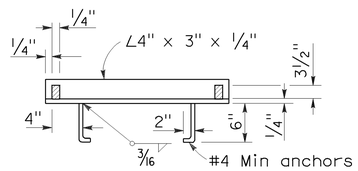

CROSS SECTION

(Thru frame)

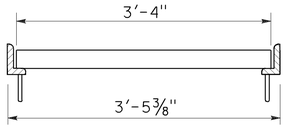

LONGITUDINAL SECTION

(Thru frame and grate)

RECTANGULAR FRAME DETAILS

(For all rectangular grates)

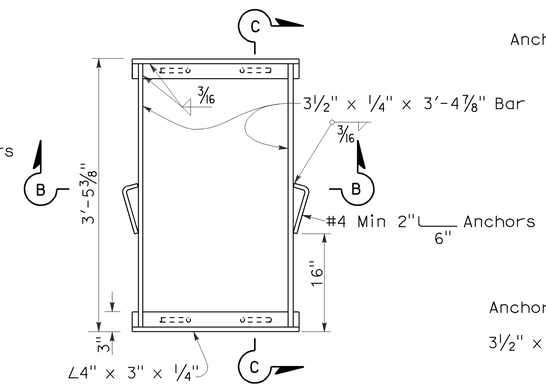

TYPICAL FRAME

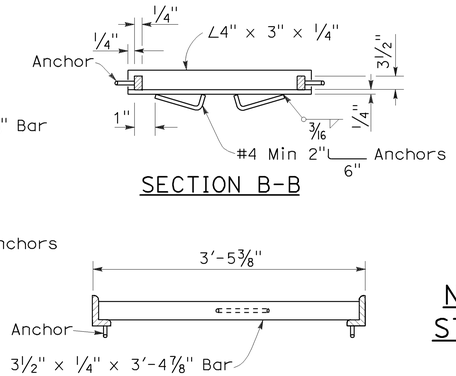

SECTION B-B

SECTION C-C

ALTERNATIVE ANCHOR FOR RECTANGULAR FRAME

(For details not shown, See Rectangular Frame Details)

INLET TYPE	GRATE TYPE	No. OF GRATES	WEIGHT LB
GDO	24-12	2	634
GOL-7	24-12	1	326
GOL-10	24-12	1	326
GO,G1,G2,G3,G4 (TYPE 24)	24-9	1	263
	24-12	1	326
G4 (TYPE 18),G5,G6	18-9	1	249
GT1	18-9	2	498
GT2	18-9	2	498
GT3	24-12	2	652
GT4	24-12	2	652
TRASH RACK			22

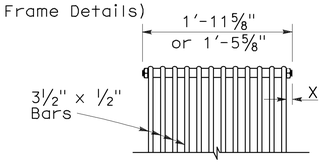

BOLTED END BLOCK

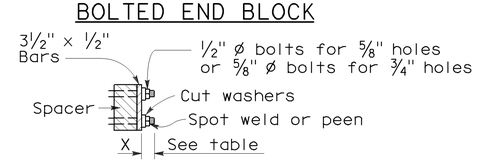

BOLTING DETAIL

ALTERNATIVE BOLTED GRATE

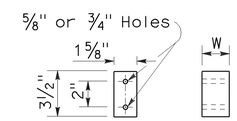

BAR SPACER

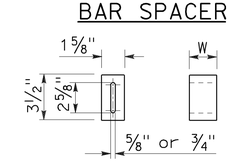

ALTERNATIVE SPACER

W = 1⅜" or 2"

GRATE BAR SPACING TABLE

TYPE	No. OF BARS	CLEAR BAR SPACING	X
18-9	9	1⅜"	1 1/16"
24-9	9	2"	1 9/16"
24-12	12	1⅜"	1¼"

INLET TYPE	COVER TYPE	WEIGHT LB
OS	PLATE	174
OL-7	PLATE	170
OL-10	PLATE	170
OL-14	PLATE	170
OL-21	PLATE	170
OCP	PLATE	112
OCPI	PLATE	112
OCPI	REDWOOD	42
OMP	PLATE	177
OMPI	PLATE	177

BASIS FOR MISC IRON & STEEL FINAL PAY WEIGHTS FOR DRAINAGE INLETS

(See General Notes, No 8)

STATE OF CALIFORNIA
DEPARTMENT OF TRANSPORTATION

GRATE DETAILS

NO SCALE

RSP D77A DATED JANUARY 18, 2008 SUPERSEDES STANDARD PLAN D77A DATED MAY 1, 2006 - PAGE 155 OF THE STANDARD PLANS BOOK DATED MAY 2006.

REVISED STANDARD PLAN RSP D77A

2006 REVISED STANDARD PLAN RSP D77A

12-14-07

DIST	COUNTY	ROUTE	POST MILES TOTAL PROJECT	SHEET NO.	TOTAL SHEETS
07	LA	1	18.0/39.3	72	85

Randell D. Hiatt
REGISTERED CIVIL ENGINEER

June 6, 2008
PLANS APPROVAL DATE

REGISTERED PROFESSIONAL ENGINEER
Randell D. Hiatt
No. C50200
Exp. 6-30-09
CIVIL
STATE OF CALIFORNIA

The State of California or its officers or agents shall not be responsible for the accuracy or completeness of electronic copies of this plan sheet.

To accompany plans dated 7-11-11

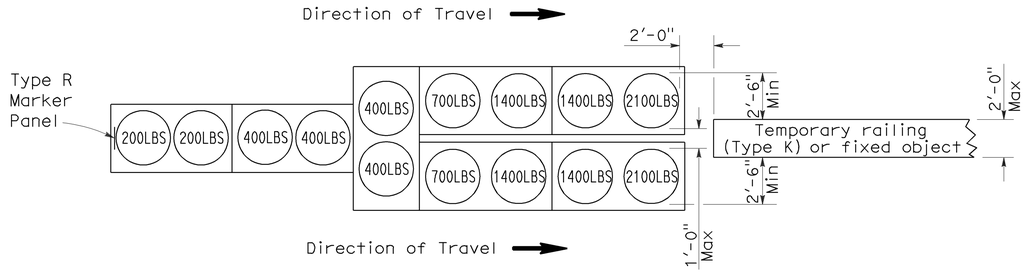

ARRAY 'TU14'

Approach speed 45 mph or more

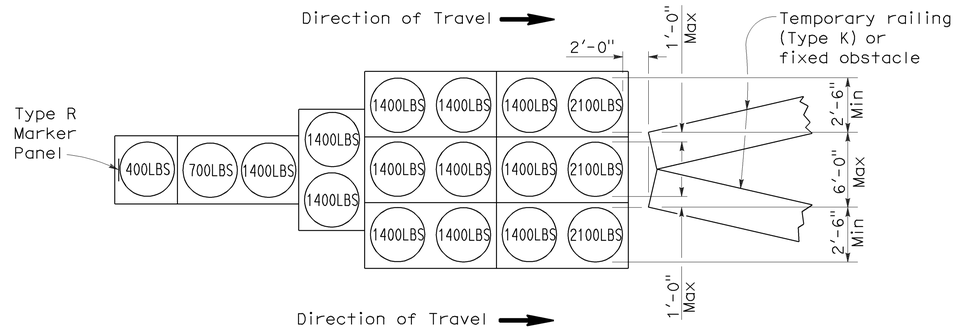

ARRAY 'TU17'

Approach speed less than 45 mph

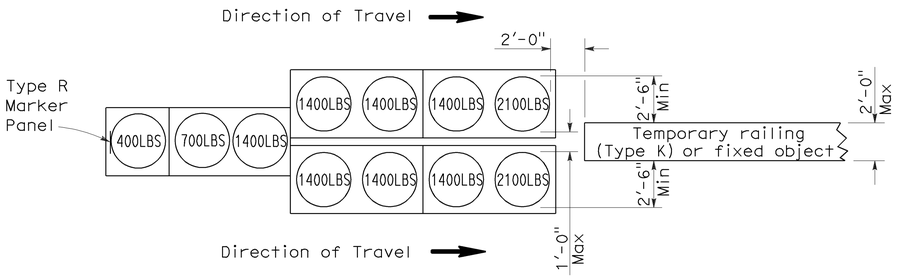

ARRAY 'TU11'

Approach speed less than 45 mph

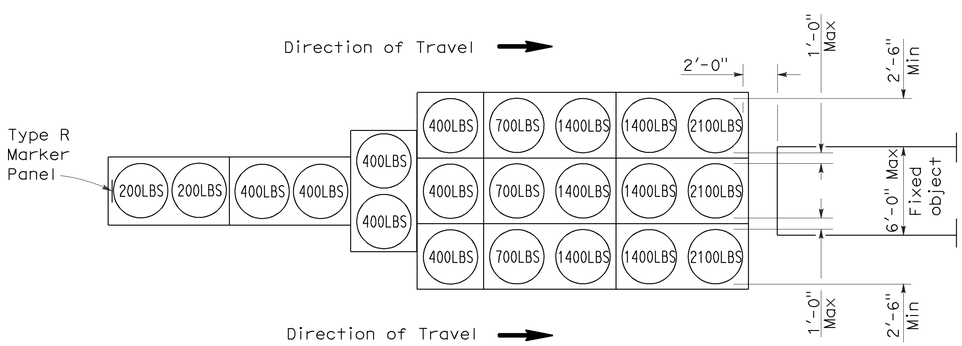

ARRAY 'TU21'

Approach speed 45 mph or more

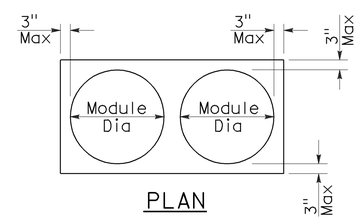

PLAN

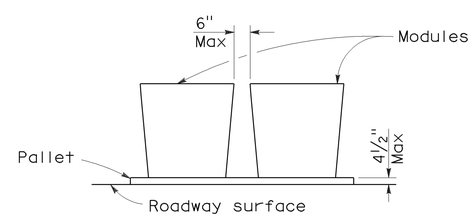

ELEVATION

CRASH CUSHION PALLET DETAIL

See Note 7

NOTES:

1. (XXX) Indicates sand filled module location and weight of sand in pounds for each module. Module spacing is based on the greater diameter of the module.
2. All sand weights are nominal.
3. Temporary crash cushion arrays shall not encroach on the traveled way.
4. Place the top of Type R marker panel 1" below the module lid.
5. Refer to Standard Plan A73B for marker details.
6. Approach speeds indicated conform to NCHRP 350 Report criteria.
7. Use of pallets is optional.

STATE OF CALIFORNIA
DEPARTMENT OF TRANSPORTATION

TEMPORARY CRASH CUSHION, SAND FILLED (UNIDIRECTIONAL)

NO SCALE

RSP T1A DATED JUNE 6, 2008 SUPERSEDES STANDARD PLAN T1A
DATED MAY 1, 2006 - PAGE 211 OF THE STANDARD PLANS BOOK DATED MAY 2006.

REVISED STANDARD PLAN RSP T1A

2006 REVISED STANDARD PLAN RSP T1A

DIST	COUNTY	ROUTE	POST MILES TOTAL PROJECT	SHEET NO.	TOTAL SHEETS
07	LA	1	18.0/39.3	73	85

Randell D. Hiatt
REGISTERED CIVIL ENGINEER

June 6, 2008
PLANS APPROVAL DATE

REGISTERED PROFESSIONAL ENGINEER
Randell D. Hiatt
No. C50200
Exp. 6-30-09
CIVIL
STATE OF CALIFORNIA

The State of California or its officers or agents shall not be responsible for the accuracy or completeness of electronic copies of this plan sheet.

To accompany plans dated 7-11-11

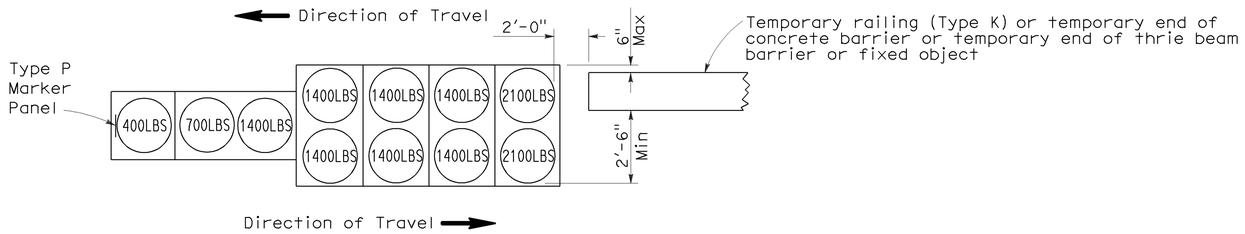

ARRAY 'TB11'

Approach speed less than 45 mph

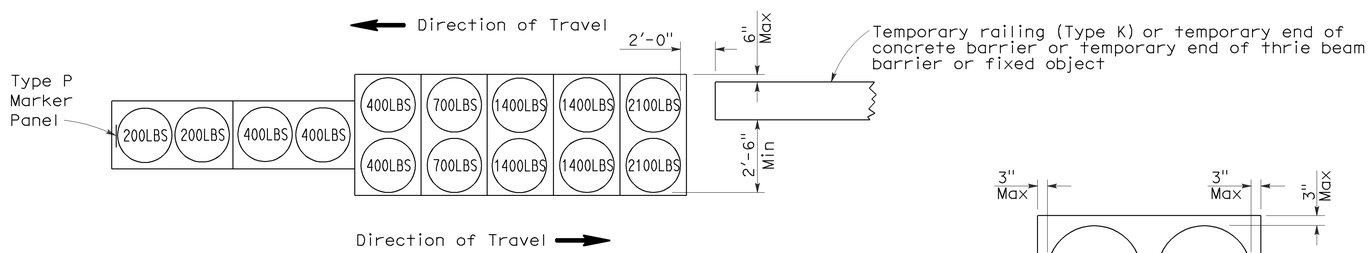

ARRAY 'TB14'

Approach speed 45 mph or more

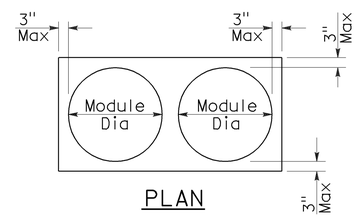

PLAN

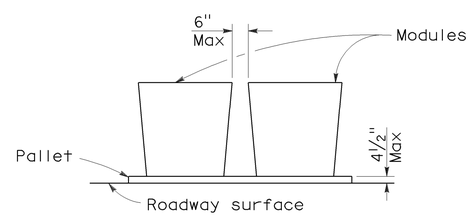

ELEVATION

CRASH CUSHION PALLET DETAIL

See Note 7

NOTES:

1. (XXX) Indicates sand filled module location and weight of sand in pounds for each module. Module spacing is based on the greater diameter of the module.
2. All sand weights are nominal.
3. Temporary crash cushion arrays shall not encroach on the traveled way.
4. Place the Type P marker panel so that the bottom of the panel rests upon the pallet.
5. Refer to Standard Plan A73B for marker details.
6. Approach speeds indicated conform to NCHRP 350 Report criteria.
7. Use of pallets is optional.

STATE OF CALIFORNIA
DEPARTMENT OF TRANSPORTATION

TEMPORARY CRASH CUSHION, SAND FILLED (BIDIRECTIONAL)

NO SCALE

RSP T1B DATED JUNE 6, 2008 SUPERSEDES STANDARD PLAN T1B
DATED MAY 1, 2006 - PAGE 212 OF THE STANDARD PLANS BOOK DATED MAY 2006.

REVISED STANDARD PLAN RSP T1B

2006 REVISED STANDARD PLAN RSP T1B

5-15-08

DIST	COUNTY	ROUTE	POST MILES TOTAL PROJECT	SHEET NO.	TOTAL SHEETS
07	LA	1	18.0/39.3	74	85

Randell D. Hiatt
REGISTERED CIVIL ENGINEER

June 6, 2008
PLANS APPROVAL DATE

REGISTERED PROFESSIONAL ENGINEER
Randell D. Hiatt
No. C50200
Exp. 6-30-09
CIVIL
STATE OF CALIFORNIA

The State of California or its officers or agents shall not be responsible for the accuracy or completeness of electronic copies of this plan sheet.

To accompany plans dated 7-11-11

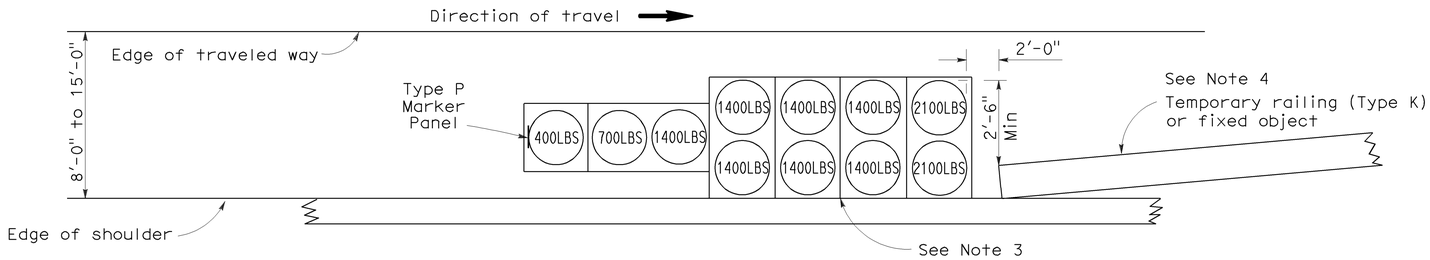

ARRAY 'TS11'

Approach speed less than 45 mph
See Note 9

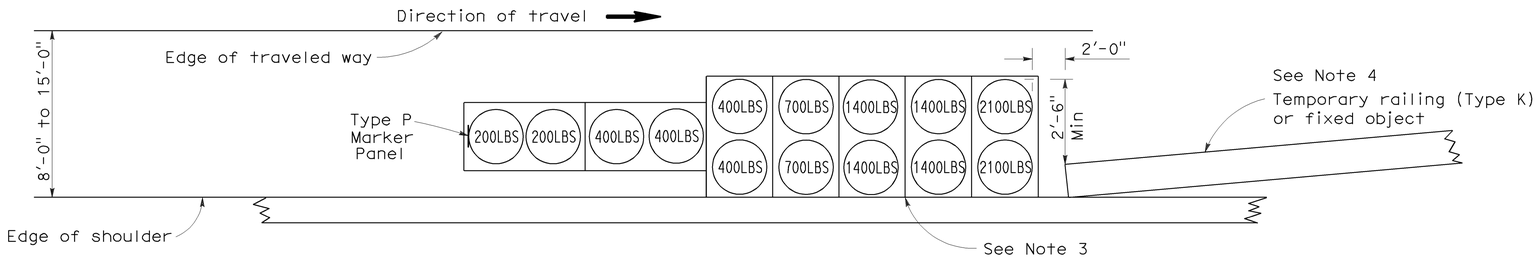

ARRAY 'TS14'

Approach speed 45 mph or more
See Note 9

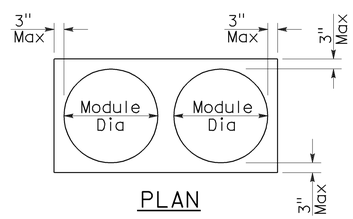

PLAN

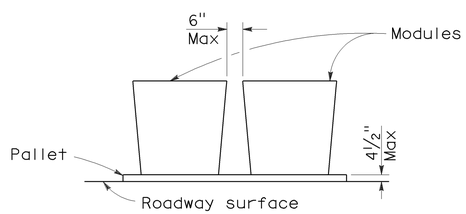

ELEVATION

CRASH CUSHION PALLET DETAIL

See Note 11

NOTES:

1. (XXX) Indicates sand filled module location and weight of sand in pounds for each module. Module spacing is based on the greater diameter of the module.
2. All sand weights are nominal.
3. The temporary crash cushion arrays shown on this plan shall be used only in locations where there will be traffic on one side of the temporary crash cushion array.
4. If the fixed object or approach end of the temporary railing is less than 15'-0" from the edge of traveled way, a temporary crash cushion is required in a construction or work zone.
5. Temporary crash cushion arrays shall not encroach on the traveled way.
6. Arrays for median shoulders shall conform to details shown on this plan for outside shoulders.
7. Place the Type P marker panel so that the bottom of the panel rests upon the pallet and faces traffic.
8. Refer to Standard Plan A73B for marker details.
9. For shoulder widths less than 8'-0", appropriate approved crash cushion protection, other than sand filled modules, shall be provided at fixed objects and at approach ends of temporary railing. The specific type of crash cushion shall be as shown on the project plans or as specified in the Special Provisions, or if not shown on the project plans or specified in the Special Provisions, shall be as approved by the Engineer.
10. Approach speeds indicated conform to NCHRP 350 Report criteria.
11. Use of pallets is optional.

STATE OF CALIFORNIA
DEPARTMENT OF TRANSPORTATION

TEMPORARY CRASH CUSHION, SAND FILLED (SHOULDER INSTALLATIONS)

NO SCALE

RSP T2 DATED JUNE 6, 2008 SUPERSEDES STANDARD PLAN T2
DATED MAY 1, 2006 - PAGE 213 OF THE STANDARD PLANS BOOK DATED MAY 2006.

REVISED STANDARD PLAN RSP T2

2006 REVISED STANDARD PLAN RSP T2

5-15-08

Dist	COUNTY	ROUTE	POST MILES TOTAL PROJECT	SHEET No.	TOTAL SHEETS
07	LA	1	18.0/39.3	75	85

Randell D. Hiatt
REGISTERED CIVIL ENGINEER

May 20, 2011
PLANS APPROVAL DATE

REGISTERED PROFESSIONAL ENGINEER
Randell D. Hiatt
No. C50200
Exp. 6-30-11
CIVIL
STATE OF CALIFORNIA

The State of California or its officers or agents shall not be responsible for the accuracy or completeness of electronic copies of this plan sheet.

To accompany plans dated 7-11-11

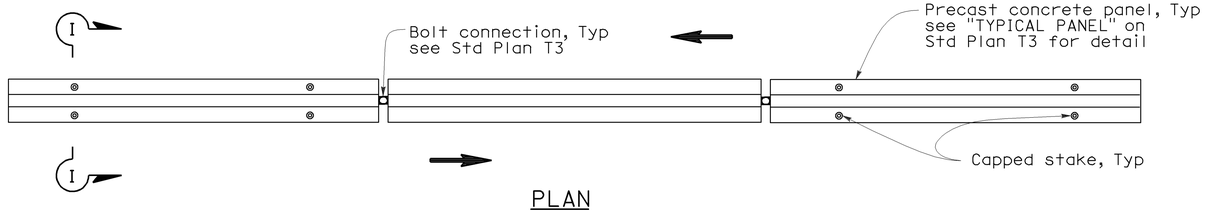

PLAN

RAILING STAKING CONFIGURATION FOR TWO-WAY TRAFFIC

See Note 1

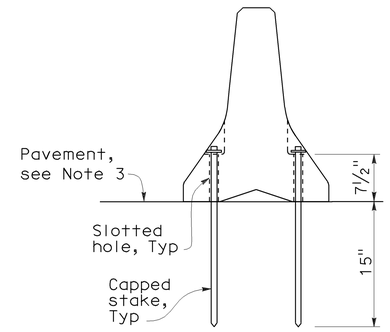

SECTION I-I

NOTES:

1. Where Type K Temporary Railing is placed as a temporary or long term barrier in two-way traffic on highways with less than 24" from the edge of traveled way, use four capped stakes per every other panel with end panels staked.
2. Where Type K Temporary Railing is placed 3" to 24" from the edge of an excavation on highways, use two capped stakes per panel along the traffic side.
3. Staked Type K Temporary Railing must be supported by at least 4" thick concrete, hot mix asphalt or existing asphalt concrete pavement.
4. The minimum yield strength for the washer must be 60,000 psi.
5. Direction of adjacent traffic indicated by ⟹.

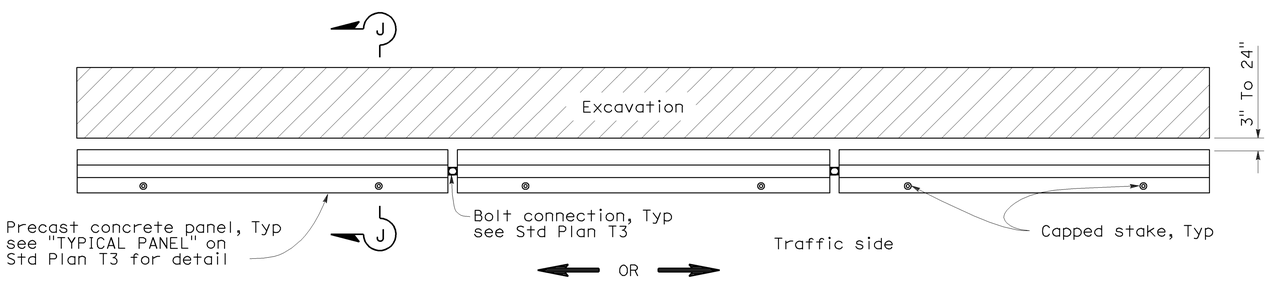

PLAN

RAILING STAKING CONFIGURATION ADJACENT TO AN EXCAVATION

See Note 2

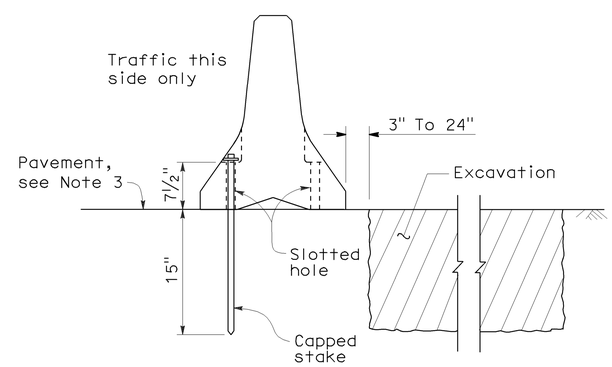

SECTION J-J

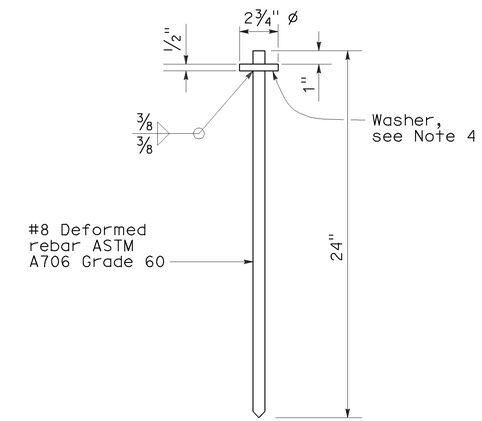

CAPPED STAKE DETAIL

STATE OF CALIFORNIA
DEPARTMENT OF TRANSPORTATION

TEMPORARY RAILING (TYPE K)

NO SCALE

NSP T3A DATED MAY 20, 2011 SUPPLEMENTS
THE STANDARD PLANS BOOK DATED MAY 2006.

NEW STANDARD PLAN NSP T3A

2006 NEW STANDARD PLAN NSP T3A

DIST	COUNTY	ROUTE	POST MILES TOTAL PROJECT	SHEET NO.	TOTAL SHEETS
07	LA	1	18.0/39.3	76	85

LICENSED LANDSCAPE ARCHITECT

August 15, 2008
PLANS APPROVAL DATE

LICENSED LANDSCAPE ARCHITECT Robert B. Schott 3635 Signature 11-04-08 Renewal Date 08-11-08 Date STATE OF CALIFORNIA

The State of California or its officers or agents shall not be responsible for the accuracy or completeness of electronic copies of this plan sheet.

To accompany plans dated 7-11-11

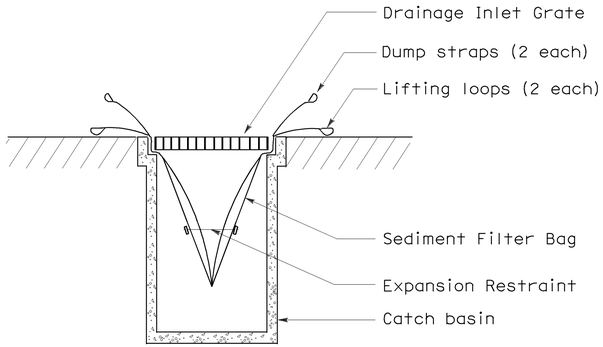

SECTION B-B

SEDIMENT FILTER BAG DETAIL

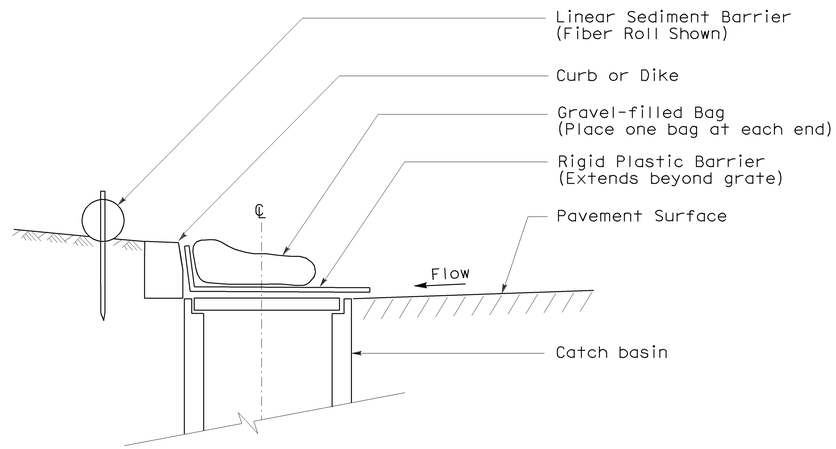

SECTION

TEMPORARY DRAINAGE INLET PROTECTION (TYPE 6A) (CATCH BASIN WITH GRATE)

NOTES:

1. See Standard Plan T51 for Temporary Silt Fence.
2. Dimensions may vary to fit field conditions.

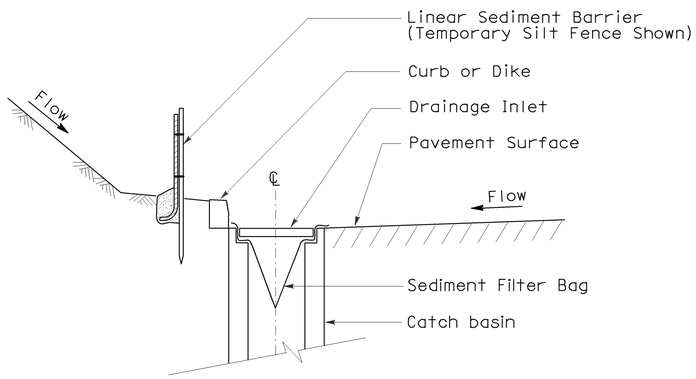

SECTION A-A

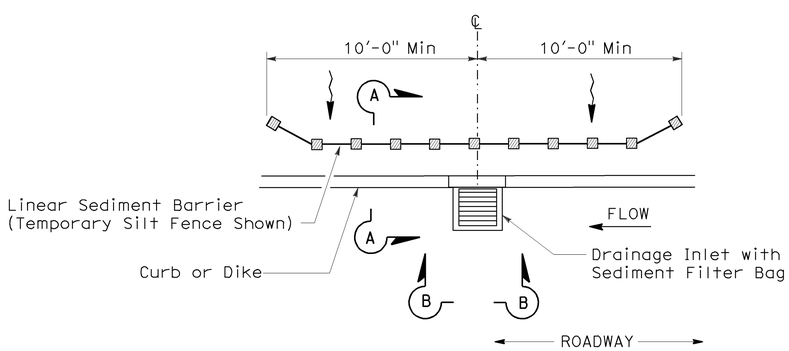

PLAN

TEMPORARY DRAINAGE INLET PROTECTION (TYPE 5) (SEDIMENT FILTER BAG)

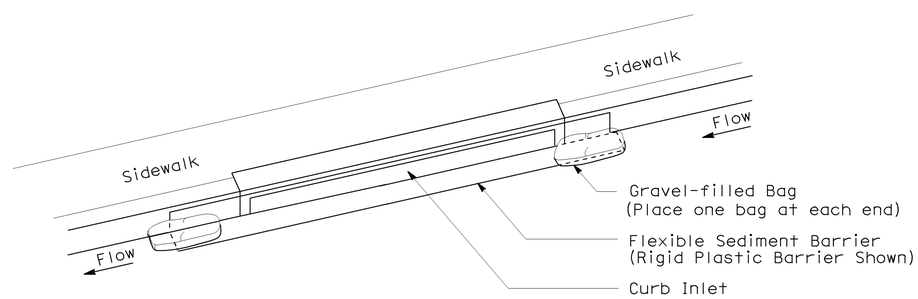

PERSPECTIVE

TEMPORARY DRAINAGE INLET PROTECTION (TYPE 6B) (CURB INLET WITHOUT GRATE)

STATE OF CALIFORNIA
DEPARTMENT OF TRANSPORTATION

TEMPORARY WATER POLLUTION CONTROL DETAILS (TEMPORARY DRAINAGE INLET PROTECTION)

NO SCALE

NSP T64 DATED AUGUST 15, 2008 SUPPLEMENTS THE STANDARD PLANS BOOK DATED MAY 2006.

NEW STANDARD PLAN NSP T64

2006 NEW STANDARD PLAN NSP T64

7-11-08

DIST	COUNTY	ROUTE	POST MILES TOTAL PROJECT	SHEET NO.	TOTAL SHEETS
07	LA	1	18.0/39.3	77	85

REGISTERED ELECTRICAL ENGINEER

October 5, 2007
PLANS APPROVAL DATE

REGISTERED PROFESSIONAL ENGINEER Jeffery G. McRae No. E14512 Exp. 6-30-08 ELECTRICAL STATE OF CALIFORNIA

The State of California or its officers or agents shall not be responsible for the accuracy or completeness of electronic copies of this plan sheet.

To accompany plans dated 7-11-11

ELECTROLIERS

STANDARD TYPES
15, 15D
15 STRUCTURE
21, 21D STRUCTURE
30
31
32
35
36-20A

High mast light pole

Double Arm lighting standard

Existing electrolier

Electrolier foundation (Future installation)

NOTES:

1. Luminaires shall be 310 W HPS when installed on Type 21, 21D, 30, 31, 32, 35 and 36-20A Standards, unless otherwise specified. Luminaires shall be 200 W HPS when installed on other type standards or poles, unless otherwise specified.
2. Luminaires shall be the cutoff type, ANSI Type III medium cutoff lighting distribution, unless otherwise specified.
3. Variations noted adjacent to symbol on project plans.

Electrolier (see project notes or project plans)

Luminaire on wood pole

STANDARD NOTES:

- AB — Abandon. If applied to conduit, remove conductors.
- BC — Install pull box in existing conduit run.
- BP — Pedestrian barricade, type as indicated on plan.
- CB — Install conduit into existing pull box.
- CC — Connect new and existing conduit. Remove existing conductors and install conductors as indicated.
- CF — Conduit to remain for future use. Remove conductors. Install pull wire or rope.
- DH — Detector handhole.
- FA — Foundation to be abandoned.
- IS — Install sign on signal mast arm.
- NS — No slip base on standard.
- PEC — Photoelectric control.
- PEU — Photoelectric unit.
- RC — Equipment or material to be removed and become the property of the Contractor.
- RE — Remove electrolier, fuses and ballast. Tape ends of conductors.
- RL — Relocate equipment.
- RR — Remove and reuse equipment.
- RS — Remove and salvage equipment.
- SC — Splice new to existing conductors.
- SD — Service disconnect.
- SF — Standard to remain for future use. Remove luminaire, pole conductors, fuses and ballast.
- TSP — Telephone service point.

ABBREVIATIONS AND EQUIPMENT DESIGNATIONS

PROPOSED	EXISTING	
BBS	bbs	Battery backup system
BC	bc	Bolt circle
C	C	Conduit
CCTV	cctv	Closed circuit television
CKT	ckt	Circuit
CMS	cms	Changeable message sign
DLC	dlc	Loop detector lead-in cable
EMS	ems	Extinguishable message sign
EVC	evc	Emergency vehicle cable
EVD	evd	Emergency vehicle detector
FB	fb	Flashing beacon
FBCA	fbca	Flashing beacon control assembly
FBS	fbs	Flashing beacon with slip base
FO	fo	Fiber optic
G	G	Ground (Equipment Grounding Conductor)
GFCI	GFCI	Ground fault circuit interrupt
HAR	har	Highway advisory radio
HEX	hex	Hexagonal
HPS	hps	High pressure sodium
IISNS	iisns	Internally illuminated street name sign
ISL	isl	Induction sign lighting
LED	led	Light emitting diode
LMA	lma	Luminaire mast arm
LPS	lps	Low pressure sodium
LTG	ltg	Lighting
LUM	lum	Luminaire
MAT	mat	Mast arm mounting vehicle signal faces, top attachment
MAS	mas	Mast arm mounting vehicle signal faces, side attachment
MAS-4A	mas-4A	Mast arm mounting vehicle signal faces, side attachment - 4 signal section
MAS-4B	mas-4B	
MAS-4C	mas-4C	
MAS-5A	mas-5A	Mast arm mounting vehicle signal faces, side attachment - 5 signal section
MAS-5B	mas-5B	
MC	mc	Mercury contactor
M/M	m/m	Multiple to multiple transformer
MT	mt	Conduit with pull wire or rope only
MTG	mtg	Mounting
	mv	Mercury vapor lighting fixture
N	N	Neutral (Grounded Conductor)
NC	NC	Normally closed
NO	NO	Normally open
PB	pb	Pull box
PEC	pec	Photoelectric control (Type I, II, III, IV or V as shown)
PED	ped	Pedestrian
PEU	peu	Photoelectric unit
PPB	ppb	Pedestrian push button
RL		Relocated equipment
RM	rm	Ramp metering
SB	sb	Slip base
SIC	sic	Signal interconnect cable
SIG	sig	Signal
SMA	sma	Signal mast arm
SNS	sns	Street name sign
SP	sp	Service point
TDC	tdc	Telephone demarcation cabinet
TMS	tms	Traffic monitoring station
TOS	tos	Traffic Operations System
VEH	veh	Vehicle
XFMR	xfmr	Transformer
COMM	comm	Communication
RWIS	rwis	Roadway weather information system

SOFFIT AND WALL MOUNTED LUMINAIRES

Pendant, 70 W HPS unless otherwise specified.

Flush, 70 W HPS unless otherwise specified.

Wall surface, 70 W HPS unless otherwise specified.

Existing soffit or wall luminaire to remain unmodified.

Existing soffit or wall luminaire to be modified as specified.

NOTE:

Arrow indicates "street side" of luminaire.

STATE OF CALIFORNIA
DEPARTMENT OF TRANSPORTATION

ELECTRICAL SYSTEMS (SYMBOLS AND ABBREVIATIONS)

NO SCALE

RSP ES-1A DATED OCTOBER 5, 2007 SUPERSEDES STANDARD PLAN ES-1A DATED MAY 1, 2006 - PAGE 400 OF THE STANDARD PLANS BOOK DATED MAY 2006.

REVISED STANDARD PLAN RSP ES-1A

2006 REVISED STANDARD PLAN RSP ES-1A

DIST	COUNTY	ROUTE	POST MILES TOTAL PROJECT	SHEET NO.	TOTAL SHEETS
07	LA	1	18.0/39.3	78	85

REGISTERED ELECTRICAL ENGINEER

October 5, 2007
PLANS APPROVAL DATE

REGISTERED PROFESSIONAL ENGINEER Jeffery G. McRae No. E14512 Exp. 6-30-08 ELECTRICAL STATE OF CALIFORNIA

The State of California or its officers or agents shall not be responsible for the accuracy or completeness of electronic copies of this plan sheet.

To accompany plans dated 7-11-11

CONDUIT

PROPOSED	EXISTING	
		Lighting Conduit, unless otherwise indicated or noted
		Traffic signal conduit
C	c	Communication conduit
T	t	Telephone conduit
F	f	Fire alarm conduit
FO	fo	Fiber optic conduit
		Conduit termination (RSP ES-9A C)
R	r	Conduit riser in/on structure or service pole

SERVICE EQUIPMENT

PROPOSED	EXISTING	
OH	oh	Overhead lines
U	U	Wood pole "U" indicates utility owned
		Pole guy with anchor
		Utility transformer - ground mounted
III		Service equipment enclosure type
		Service equipment enclosure door indicates front of enclosure
T	t	Telephone demarcation cabinet

POLE-MOUNTED SERVICE DESIGNATION

Type of installation

TYPE H SERVICE - 28'-10" ← Pole height above grade

ILLUMINATED OVERHEAD SIGN

PROPOSED	EXISTING	
		Overhead sign - Single post
		Overhead sign - Two post
		Overhead sign - Mounted on structure
		Overhead sign with electrolier

SIGNAL EQUIPMENT

PROPOSED	EXISTING	
		Pedestrian signal face
		Pedestrian push button post
		Pedestrian barricade
		Vehicle signal face (with backplate, 3-Section: red, yellow and green)
		Vehicle signal face with angle visors
PV	PV	Modifications of basic symbols: "L" indicates all non-arrow sections louvered; "LG" indicates louvered green section only; "PV" indicates 12" programmed visibility sections; "8" indicates all 8" sections (only when specified)
		Type 15TS and Vehicle signal face
		Vehicle signal face with red, yellow and green left arrow sections
		Vehicle signal face with red and yellow sections and up green arrow
		Vehicle signal face (5 Section) with red, yellow and green sections and yellow and green right arrows
		Type 1 Standard and attached vehicle signal faces
		Standard with signal mast arm only and attached vehicle signal faces and internally illuminated street name sign
		Type 33 Standard, Left-turn vehicle signal face and sign
		Standard with luminaire and signal mast arms and attached vehicle signal faces
		Cantilever flashing beacon Type 9 Frame, with a sign unless otherwise specified or indicated
		Type 15-FBS Standard with two vehicle signal face sections with lens, backplate and visor with a sign
R	Y	Flashing beacon. One vehicle signal face section with lens, backplate and visor. "R" indicates red indication, "Y" indicates yellow indication
		Controller assembly. Door indicates front of cabinet

SIGNAL EQUIPMENT Cont

PROPOSED	EXISTING	
		Guard post
		Type 1 Standard with "Meter On" sign
		Emergency Vehicle detector

NOTES:

1. All signal sections shall be 12" unless shown otherwise.
2. Signal heads shall be provided with backplates unless shown otherwise.
3. Signal indication shall be LED.

STATE OF CALIFORNIA
DEPARTMENT OF TRANSPORTATION

ELECTRICAL SYSTEMS (SYMBOLS AND ABBREVIATIONS)

NO SCALE

RSP ES-1B DATED OCTOBER 5, 2007 SUPERCEDES STANDARD PLAN ES-1B DATED MAY 1, 2006 - PAGE 401 OF THE STANDARD PLANS BOOK DATED MAY 2006.

REVISED STANDARD PLAN RSP ES-1B

2006 REVISED STANDARD PLAN RSP ES-1B

7-10-07

DIST	COUNTY	ROUTE	POST MILES TOTAL PROJECT	SHEET NO.	TOTAL SHEETS
07	LA	1	18.0/39.3	79	85

Jeffery G. McRae
REGISTERED ELECTRICAL ENGINEER

October 5, 2007
PLANS APPROVAL DATE

REGISTERED PROFESSIONAL ENGINEER
Jeffery G. McRae
No. E14512
Exp. 6-30-08
ELECTRICAL
STATE OF CALIFORNIA

The State of California or its officers or agents shall not be responsible for the accuracy or completeness of electronic copies of this plan sheet.

To accompany plans dated 7-11-11

EQUIPMENT IDENTIFICATION

ILLUMINATED SIGN IDENTIFICATION NUMBER:

Sign No. 12345

10 ISL SCI 1.0

- Sign number - Place on post or structure
- Transformer rating (kVA)
- Lighting control type
- Number and type of fixtures

Do NOT place on standard or structure

ELECTROLIER OR EQUIPMENT IDENTIFICATION NUMBER:

12345 - 15'-0"

- Mast arm length, if shown. Do not place on standard or structure.
- Equipment number - Place on standard or structure. Existing equipment numbers are shown in parenthesis

CONDUIT AND CONDUCTOR IDENTIFICATION:

1½"C, 2#10, 15#14, 2 DLC

- Number and size of conductors and cables
- Size of conduit in inches

Ø1, Ø2, Ø2P, etc.	Traffic phase identification for signal faces, detectors and phase diagrams
1 2 3	Project note numbers
A B C	Equipment description, installation or item numbers
1 2 3	Conduit run numbers

SIGNAL AND LIGHTING STANDARD (TYPICAL DESIGNATION):

19A - 3 - 100

- Wind velocity = 100 mph
- Case 3 arm loading
- Standard type
- Standard Plan sheet number
- Detail number or letter

MISCELLANEOUS EQUIPMENT

PROPOSED	EXISTING	
CMS	cms	Changeable message sign
		Closed circuit television camera
		Highway advisory radio pole and antenna
EMS	ems	Extinguishable message sign
M V	m v	Detection device M = Microwave sensor V = Video image sensor

WIRING DIAGRAM LEGEND

P	Pole
CB	Circuit breaker
A	Ampere
V	Volt
M	Metered
UM	Unmetered
NB	Neutral bus
GB	Ground bus
G	Equipment grounding conductor
N	Grounded conductor (Neutral)

- External conductor
- Conductor or bus
- Tie point
- Contactor coil
- Contactor, Contact NO
- Terminal blocks
- Contactor, Contact NC
- Enclosure bond
- Grounding electrode
- Circuit breaker
- Receptacle

PULL BOXES

PROPOSED EXISTING

Pull box-No. 5 unless otherwise indicated or noted.

3 9A(21)

Pull box-Additional designations or descriptions

3	= No. 3½ pull box
5	= No. 5 pull box
6	= No. 6 pull box
7	= No. 7 (Ceiling pull box)
8	= No. 8 (Pendant soffit pull box)
9	= No. 9 pull box
9A	= No. 9A pull box

(C) = Communications pull box
(E) = Pull box with extension
(S) = Sprinkler control pull box
(21) = Anchor bolts and conduit for future installation of Type 21 Standard
(T) = Traffic pull box

VEHICLE DETECTORS

5 J 9 U

- U = Upper
- L = Lower
- Slot number in input file
- Input file (I or J)
- Phase

PROPOSED EXISTING

	Type A detector loop. Outline of sawcut shown.
	Type B detector loop. Outline of sawcut shown.
	Type C detector loop. Outline of sawcut shown.
	Type D detector loop. Outline of sawcut shown.
	Type E detector loop. Outline of sawcut shown.
	Type Q detector loop. Outline of sawcut shown.
	Magnetic detector
DH dh	Detector handhole
	Microwave or video detection zone

STATE OF CALIFORNIA
DEPARTMENT OF TRANSPORTATION

ELECTRICAL SYSTEMS (SYMBOLS AND ABBREVIATIONS)

NO SCALE

RSP ES-1C DATED OCTOBER 5, 2007 SUPERCEDES STANDARD PLAN ES-1C DATED MAY 1, 2006 - PAGE 402 OF THE STANDARD PLANS BOOK DATED MAY 2006.

REVISED STANDARD PLAN RSP ES-1C

2006 REVISED STANDARD PLAN RSP ES-1C

DIST	COUNTY	ROUTE	POST MILES TOTAL PROJECT	SHEET NO.	TOTAL SHEETS
07	LA	1	18.0/39.3	80	85

REGISTERED ELECTRICAL ENGINEER

June 6, 2008
PLANS APPROVAL DATE

REGISTERED PROFESSIONAL ENGINEER Jeffery G. McRae No. E14512 Exp. 6-30-10 ELECTRICAL STATE OF CALIFORNIA

The State of California or its officers or agents shall not be responsible for the accuracy or completeness of electronic copies of this plan sheet.

To accompany plans dated 7-11-11

VISORS

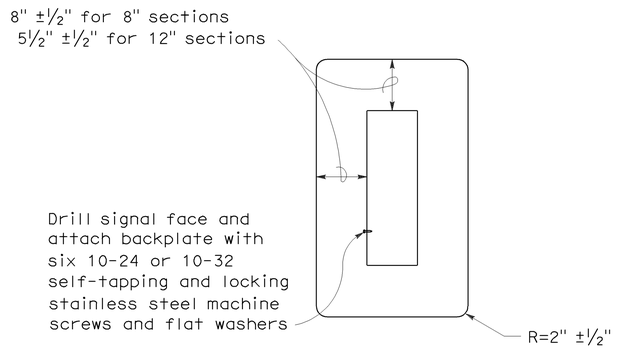

8" AND 12" SECTIONS

BACKPLATE

1/16" minimum thickness
3001-14 aluminum, or plastic when specified

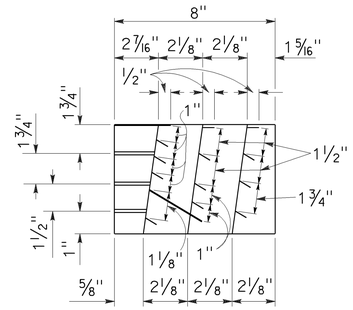

SECTION A-A

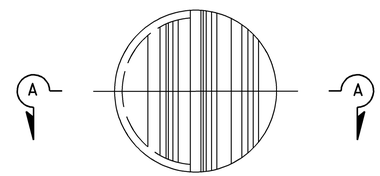

FRONT VIEW

DIRECTIONAL LOUVER

Directional louvers shall be oriented as directed by the Engineer and secured in place with one plated brass machine screw and nut.

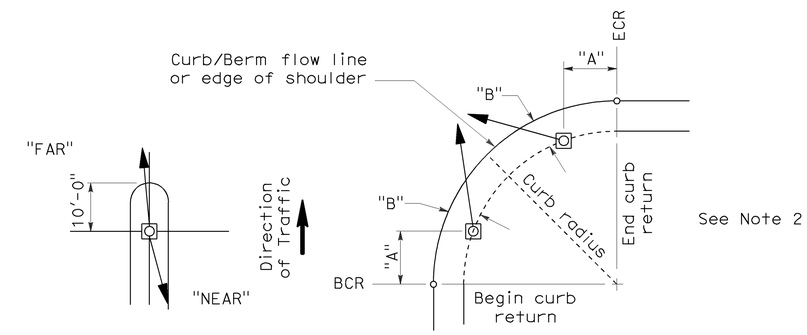

NOTES:

1. Typical signal pole placement unless dimensioned on plans.
2. For "A" and "B" dimensions, see Pole Schedule, or as directed by the Engineer.

SIGNAL STANDARD PLACEMENT DIMENSIONS AND EQUIPMENT LOCATIONS

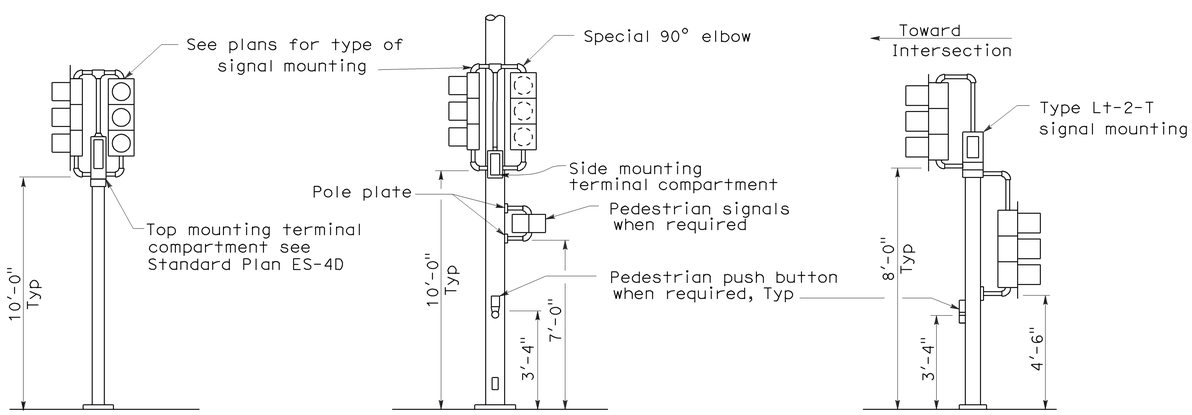

TOP MOUNTED SIGNALS (TV)

Type 1-A, 1-B, 1-C and 1-D standard as indicated on the plans

SIDE MOUNTED SIGNALS (SV AND SP)

Normally used on standards with luminaire or signal mast arm

LEFT TURN LANE SIGNAL

Type 1-A, 1-B, 1-C and 1-D standard as indicated on plans

TYPICAL SIGNAL INSTALLATIONS

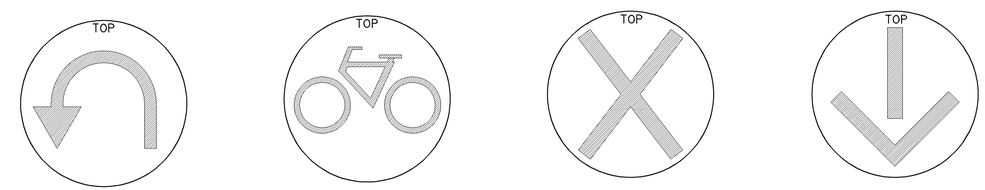

U-TURN SIGNAL FACE

BICYCLE SIGNAL FACE

LANE CONTROL SIGNAL FACE

LANE CONTROL SIGNAL FACE

STATE OF CALIFORNIA
DEPARTMENT OF TRANSPORTATION

ELECTRICAL SYSTEMS (SIGNAL HEADS AND MOUNTINGS)

NO SCALE

RSP ES-4C DATED JUNE 6, 2008 SUPERSEDES STANDARD PLAN ES-4C DATED MAY 1, 2006 - PAGE 420 OF THE STANDARD PLANS BOOK DATED MAY 2006.

REVISED STANDARD PLAN RSP ES-4C

2006 REVISED STANDARD PLAN RSP ES-4C

5-19-08

DIST	COUNTY	ROUTE	POST MILES TOTAL PROJECT	SHEET NO.	TOTAL SHEETS
07	LA	1	18.0/39.3	81	85

REGISTERED ELECTRICAL ENGINEER

June 6, 2008
PLANS APPROVAL DATE

REGISTERED PROFESSIONAL ENGINEER Jeffery G. McRae No. E14512 Exp. 6-30-10 ELECTRICAL STATE OF CALIFORNIA

The State of California or its officers or agents shall not be responsible for the accuracy or completeness of electronic copies of this plan sheet.

To accompany plans dated 7-11-11

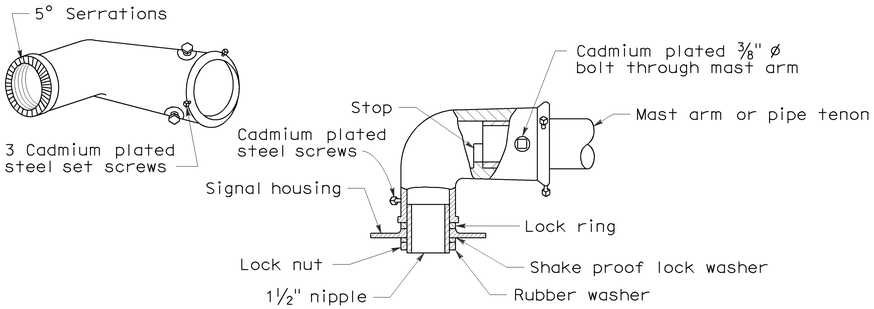

MAST ARM MOUNTING - TYPE "MAT"

For 2 NPS pipe, see Note 1.

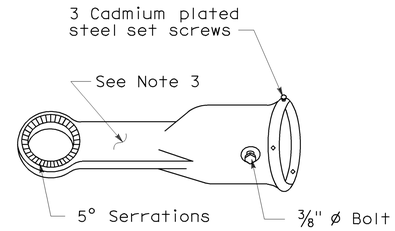

MAST ARM MOUNTING - TYPE "MAS"

For 2 NPS pipe. See Note 1.

SIGNAL SLIP FITTERS

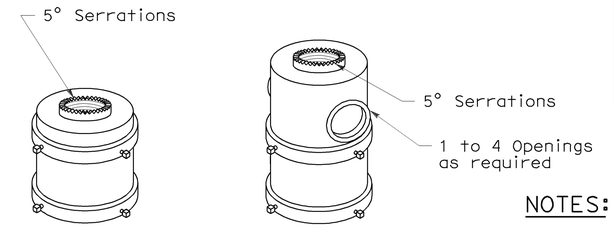

For one mounting For mulitiple mountings

TOP MOUNTINGS

For 4 NPS pipe, see Note 2.

NOTES:

1. After mast arm signal has been plumbed and secured, drill 7/16" hole through mast arm tenon in line with slip fitter hole. Place a cadmium plated 3/8" ø galvanized bolt with washer under bolt head through hole and secure with washer, nut, and locknut. Seal openings between mast arm mountings and mast arm with mastic.
2. (a) Threaded top mounted slip fitter openings shall be 1½ NPS.
   (b) Serrations in fittings shall match those on bottom of signal heads or in lock ring.
   (c) Top opening shall be offset when backplate is used.
3. Wireway shall have a cross section area of 0.95 square inch minimum. Minimum width of ½".

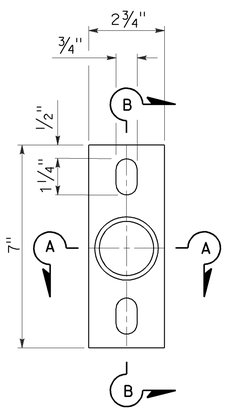

POLE PLATE

For side mountings

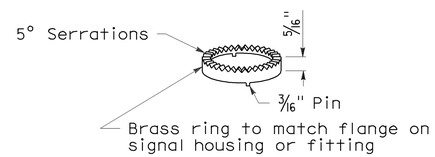

LOCK RING

Use where locking ring is not integral with signal housing or fitting.

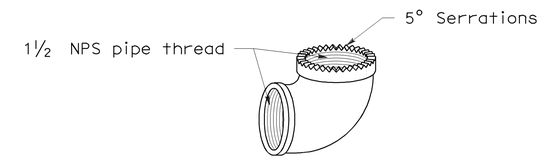

SPECIAL 90° ELBOW

One for each signal head, except those with special slip fitter mounting

MISCELLANEOUS MOUNTING HARDWARE

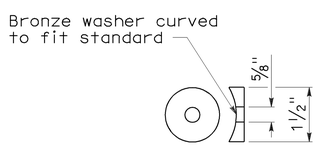

DETAIL "C"

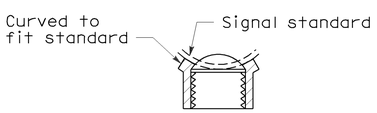

SECTION A-A

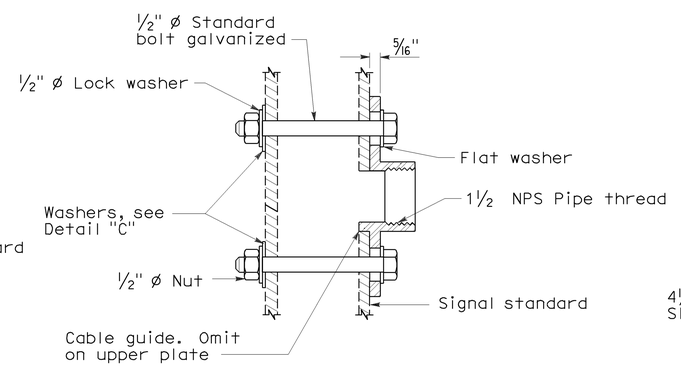

SECTION B-B

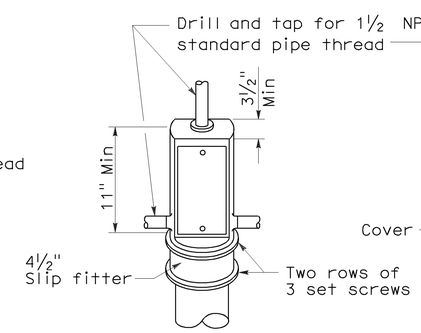

TOP MOUNTING

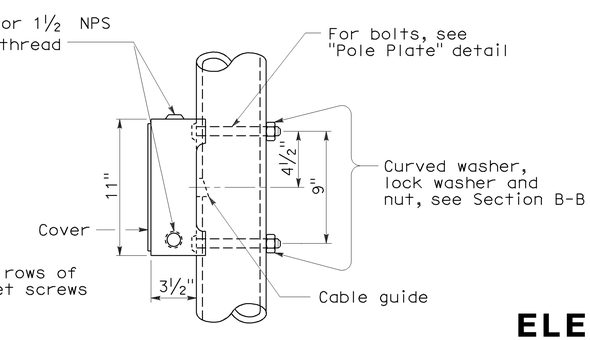

SIDE MOUNTING

TERMINAL COMPARTMENTS

STATE OF CALIFORNIA
DEPARTMENT OF TRANSPORTATION

ELECTRICAL SYSTEMS (SIGNAL HEADS AND MOUNTINGS)

NO SCALE

RSP ES-4D DATED June 6, 2008 SUPERSEDES STANDARD PLAN ES-4D
DATED MAY 1, 2006 - PAGE 421 OF THE STANDARD PLANS BOOK DATED MAY 2006.

REVISED STANDARD PLAN RSP ES-4D

2006 REVISED STANDARD PLAN RSP ES-4D

5-19-08

DIST	COUNTY	ROUTE	POST MILES TOTAL PROJECT	SHEET NO.	TOTAL SHEETS
07	LA	1	18.0/39.3	82	85

REGISTERED ELECTRICAL ENGINEER

October 5, 2007
PLANS APPROVAL DATE

REGISTERED PROFESSIONAL ENGINEER Jeffery G. McRae No. E14512 Exp. 6-30-08 ELECTRICAL STATE OF CALIFORNIA

The State of California or its officers or agents shall not be responsible for the accuracy or completeness of electronic copies of this plan sheet.

To accompany plans dated 7-11-11

LOOP INSTALLATION PROCEDURE

1. Loops shall be centered in lanes.
2. Saw slots in pavement for loop conductors as shown in details.
3. Distance between side of loop and a lead-in saw cut from adjacent detectors shall be 2'-0" minimum. Distance between lead-in saw cuts shall be 6" minimum.
4. Bottom of saw slot shall be smooth with no sharp edges.
5. Slots shall be washed until clean, blown out and thoroughly dried before installing loop conductors.
6. Adjacent loops on the same sensor unit channel shall be wound in opposite directions.
7. Identify and tag loop circuit pairs in the pull box with loop number, start (S) and finish (F) of conductor. Identify and tag lead-in-cable with sensor number and phase.
8. Install loop conductor in slot using a 3/16" to 1/4" thick wood paddle. Hold loop conductors with wood paddles (at the bottom of the sawed slot) during sealant placement.
9. No more than 2 twisted pairs shall be installed in one sawed slot.
10. Allow additional 5'-0" of slack length of conductor for the lead-in run to pull box.
11. The additional length of each conductor for each loop shall be twisted together into a pair (6 turns per 3'-4" minimum) before being placed in the slot and conduit leading to pull box.
12. Test each loop circuit for continuity, circuit resistance and insulation resistance at the pull box before filling slots.
13. Fill slots as shown in details.
14. Splice loop conductors to lead-in-cable. Splices shall be soldered.
15. End of lead-in-cable and Type 2 loop conductor shall be waterproofed prior to installing in conduit to prevent moisture from entering the cable.
16. Lead-in-cable shall not be spliced between the pull box and the controller cabinet terminals.
17. Test each loop circuit for continuity, circuit resistance and insulation resistance at the controller cabinet location.
18. Where loop conductors are not to be spliced to a lead-in-cable, the ends of the conductors shall be taped and waterproofed with electrical insulating coating.

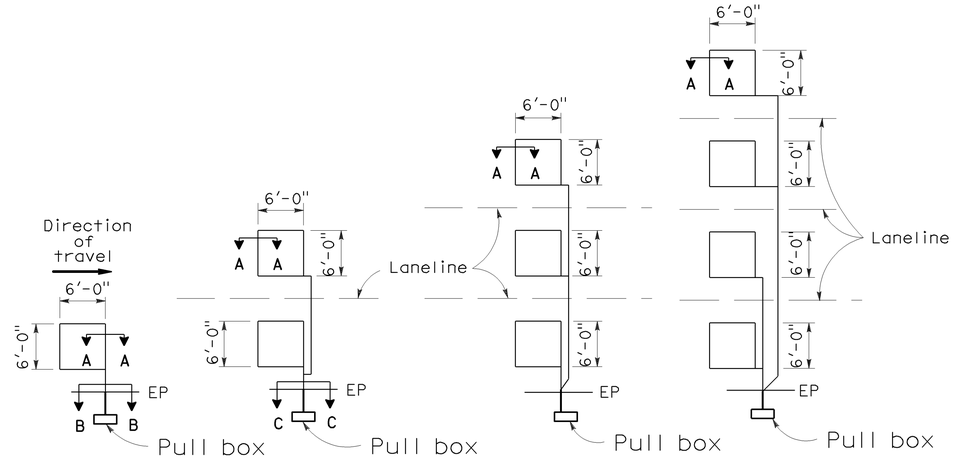

TYPE 1A INSTALLATION | TYPE 2A INSTALLATION | TYPE 3A INSTALLATION | TYPE 4A INSTALLATION

SAWCUT DETAILS

(Type A loop detector configurations illustrated)

1. 1A thru 4A = 1 Type A loop configuration in each lane.
2. 1B thru 4B = 1 Type B loop configuration in each lane.
3. 1C = 1 Type C loop configuration entering lanes as required.
4. 1D thru 4D = 1 Type D loop configuration in each lane.
5. 1E thru 4E = 1 Type E loop configuration in each lane.
6. 1Q thru 4Q = 1 Type Q loop configuration in each lane. (Use Type A, B, C, D, E or Q loop detector configurations only when specified or shown on plans)

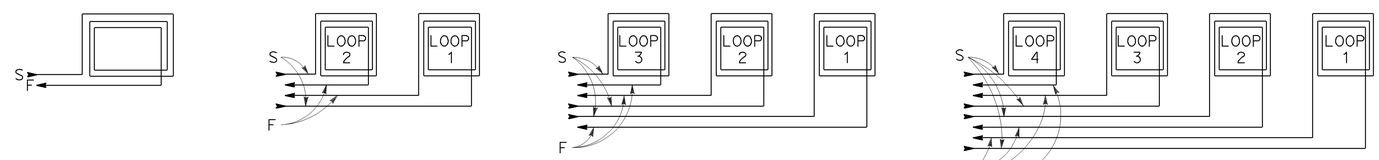

WINDING DETAILS

See Notes 6 and 7

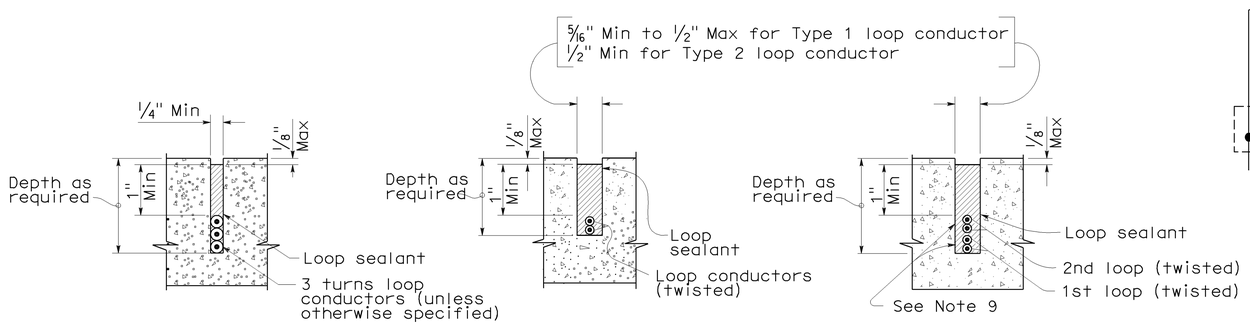

SECTION A-A | SECTION B-B | SECTION C-C

SLOT DETAILS - TYPE 1 AND TYPE 2 LOOP CONDUCTOR

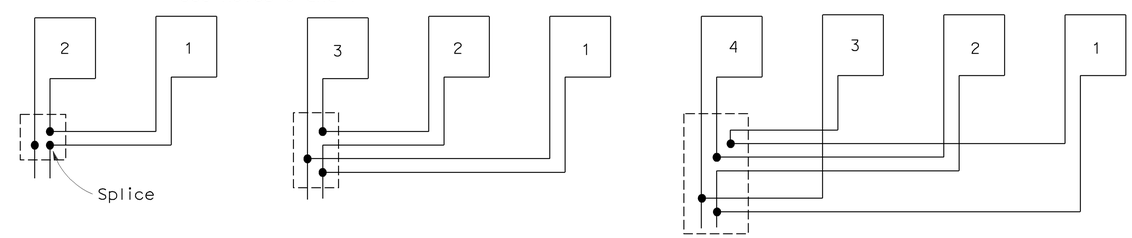

TYPICAL LOOP CONNECTIONS

(Dashed lines represent the pull box)

STATE OF CALIFORNIA
DEPARTMENT OF TRANSPORTATION

ELECTRICAL SYSTEMS (DETECTORS)

NO SCALE

RSP ES-5A DATED OCTOBER 5, 2007 SUPERCEDES STANDARD PLAN ES-5A DATED MAY 1, 2006 - PAGE 423 OF THE STANDARD PLANS BOOK DATED MAY 2006.

REVISED STANDARD PLAN RSP ES-5A

2006 REVISED STANDARD PLAN RSP ES-5A

8-17-07

DIST	COUNTY	ROUTE	POST MILES TOTAL PROJECT	SHEET NO.	TOTAL SHEETS
07	LA	1	18.0/39.3	83	85

REGISTERED CIVIL ENGINEER

October 5, 2007
PLANS APPROVAL DATE

REGISTERED PROFESSIONAL ENGINEER Stanley P. Johnson No. C57793 Exp. 3-31-08 CIVIL STATE OF CALIFORNIA

The State of California or its officers or agents shall not be responsible for the accuracy or completeness of electronic copies of this plan sheet.

To accompany plans dated 7-11-11

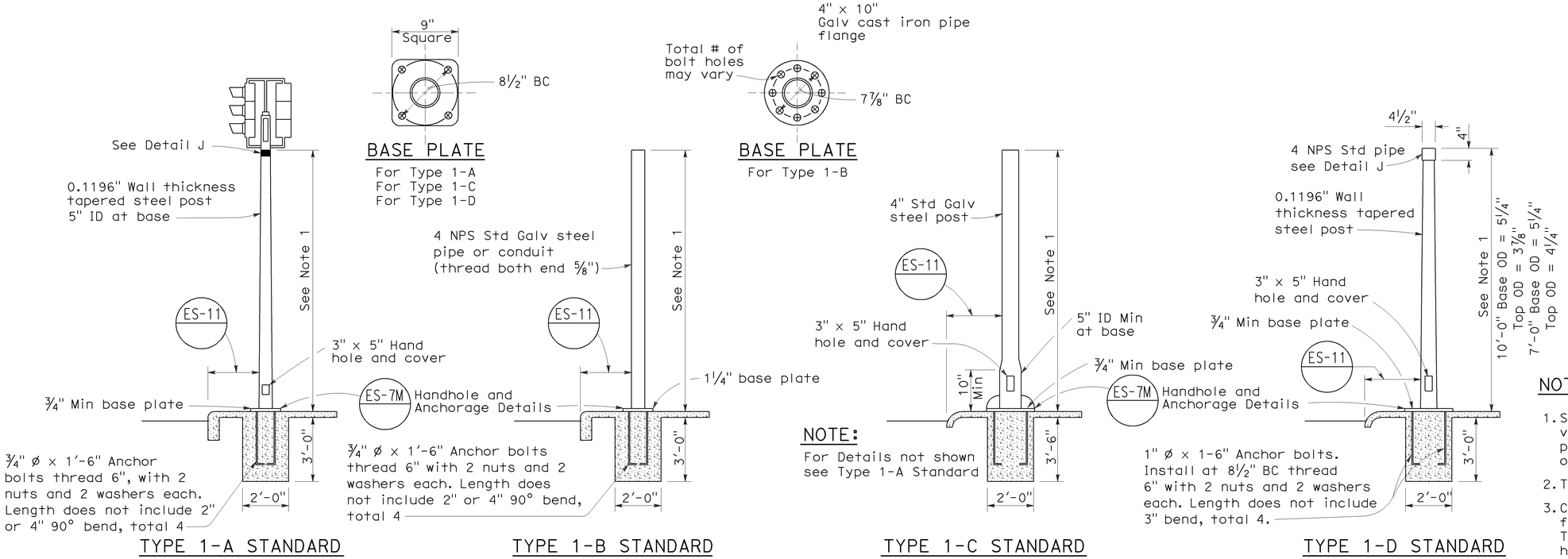

TYPE 1 SIGNAL STANDARDS

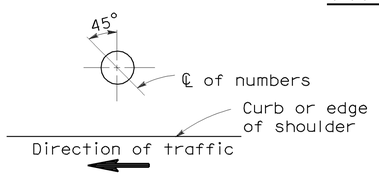

PLAN

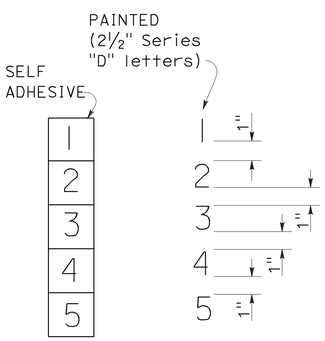

NUMBER DETAIL

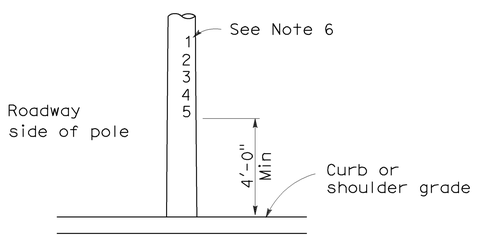

TYPICAL NUMBER FORMAT

LOCATION OF EQUIPMENT NUMBERS ON STANDARDS AND POSTS

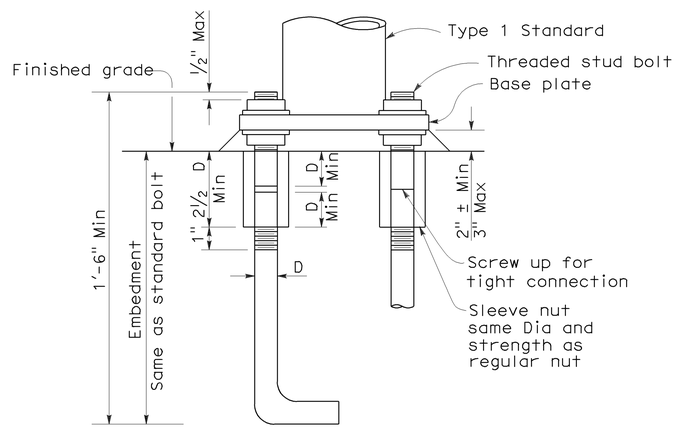

ANCHOR BOLTS WITH SLEEVE NUTS

Sleeve nuts to be used only when shown or specified on Project Plans

D = Diameter of anchor bolt

NOTES:

1. Standards shall be 10'-0" ± 2" for vehicle signals and 7'-0" ± 2" for pedestrian signals unless otherwise noted on plans.
2. Top of standards shall be 4½" OD.
3. Conduits shall extend 2" maximum above finished surface of foundation and for Types 1-A, 1-C and 1-D shall be sloped toward handhole.
4. Anchor bolts shall be bonded to conduit or grounding conductor.
5. Conduit between standard and adjacent pull box shall be 2" minimum.
6. Paint numbers on roadway side facing traffic when electrolier or post is left of direction of traffic.

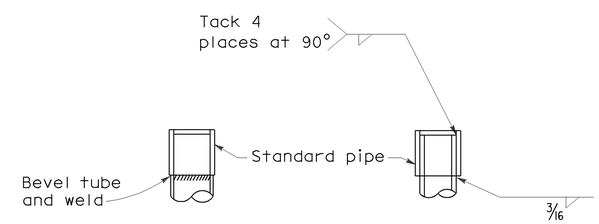

DETAIL J

Tube may be inserted into pipe or butted as required

STATE OF CALIFORNIA
DEPARTMENT OF TRANSPORTATION

ELECTRICAL SYSTEMS (SIGNAL AND LIGHTING STANDARD TYPE 1 STANDARD AND EQUIPMENT NUMBERING)

NO SCALE

RSP ES-7B DATED OCTOBER 5, 2007 SUPERCEDES STANDARD PLAN ES-7B DATED MAY 1, 2006 - PAGE 438 OF THE STANDARD PLANS BOOK DATED MAY 2006.

REVISED STANDARD PLAN RSP ES-7B

2006 REVISED STANDARD PLAN RSP ES-7B

7-10-07

DIST	COUNTY	ROUTE	POST MILES TOTAL PROJECT	SHEET NO.	TOTAL SHEETS
07	LA	1	18.0/39.3	84	85

REGISTERED CIVIL ENGINEER

June 15, 2007
PLANS APPROVAL DATE

REGISTERED PROFESSIONAL ENGINEER Stanley P. Johnson No. C57793 Exp. 3-31-08 CIVIL STATE OF CALIFORNIA

The State of California or its officers or agents shall not be responsible for the accuracy or completeness of electronic copies of this plan sheet.

To accompany plans dated 7-11-11

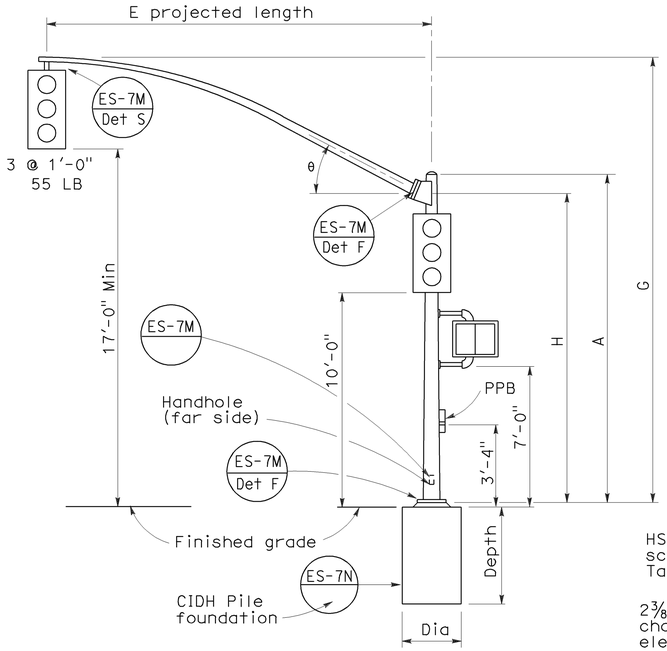

ELEVATION

TYPE 16-1-100, 18-1-100

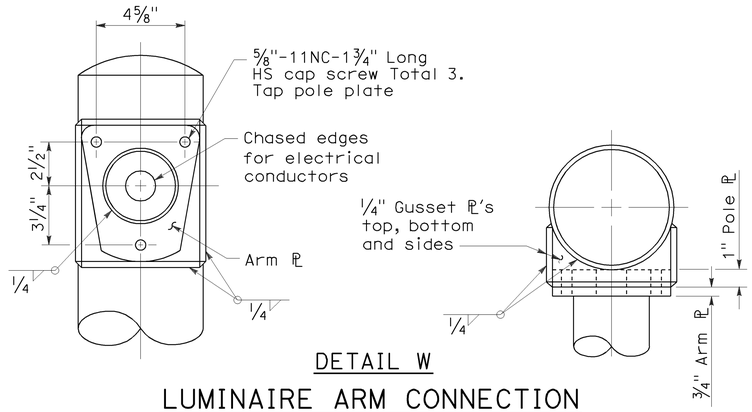

DETAIL W

LUMINAIRE ARM CONNECTION

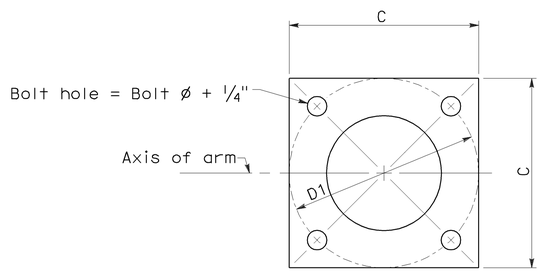

BASE PLATE

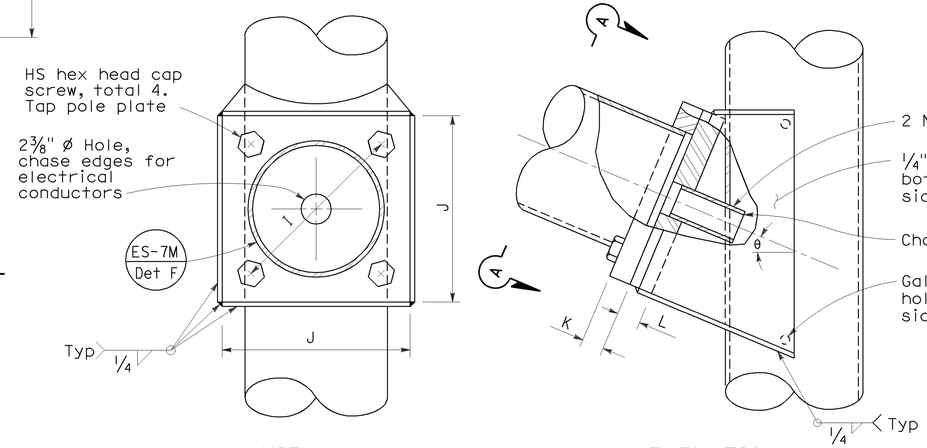

VIEW A-A

ELEVATION

SIGNAL ARM CONNECTION DETAILS

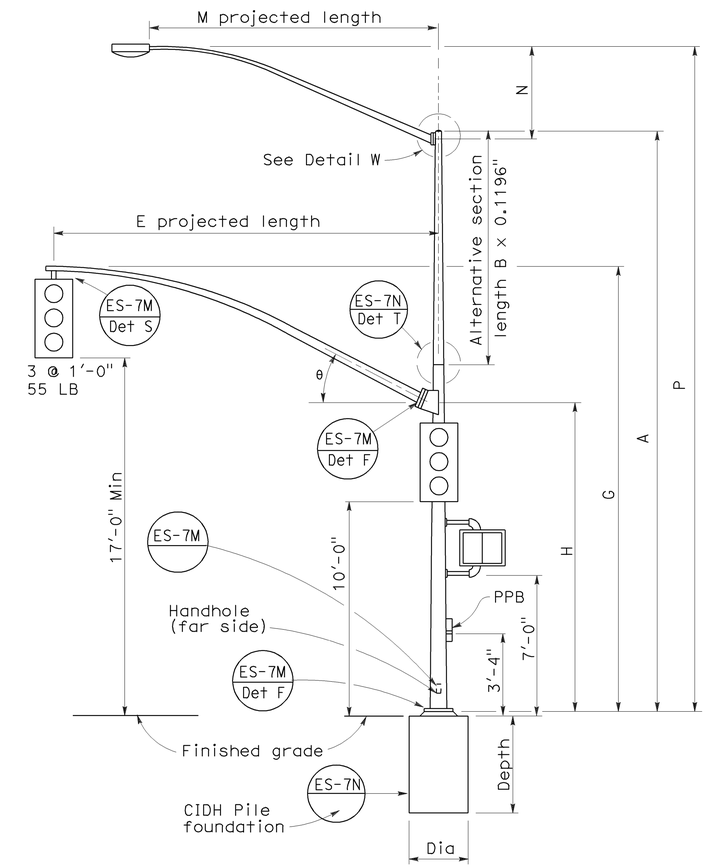

ELEVATION

TYPE 19-1-100, 19A-1-100

SIGNAL ARM DATA										
E Projected Length	G Mounting Height	H	Min OD At Pole	Thickness	I Bolt Circle	HS Cap Screws	J Plate size	K Arm ℙ Thickness	L Pole ℙ Thickness	θ
15'-0"	21'-8"±	17'-6"	7"	0.1196"	12"	1¼"-7NC-3"	1'-0"	1¼"	1½"	23°
20'-0"	21'-8"±		7⅛"							
25'-0"	22'-8"±	16'-0"	7 5/16"							
30'-0"	23'-0"±		8"							

LUMINAIRE ARM DATA					
M Projected Length	N Rise	Min OD at Pole	Thickness	P Mounting Height 30'-0" Pole	P Mounting Height 35'-0" Pole
6'-0"	2'-0"±	3¼"	0.1196"	31'-6"±	36'-6"±
8'-0"	2'-6"±	3½"		32'-0"±	37'-0"±
10'-0"	3'-3"±	3⅞"		32'-9"±	37'-9"±
12'-0"	4'-3"±			33'-9"±	38'-9"±
15'-0"	4'-9"±	4¼"		34'-3"±	39'-3"±

Pole Type	Load Case	Wind Velocity mph	POLE DATA: A Height	Min OD Base	Min OD Top	Thickness	Alternative Section B Length	Alternative Section Bottom	Alternative Section Top	BASE PLATE DATA: C	D1 Bolt Circle	Thickness	Anchor Bolts Size	Luminaire Arm	Signal Arm	CIDH PILE FOUNDATION: Diameter	Depth	Reinforced
16-1-100	1	100	18'-6"	10¾"	8¼"	0.1793"	None			1'-6"	1'-5½"	1¼"	1½" ø × 42" × 6"	None	15'-0", 20'-0"	2'-6"	7'-2"	Yes
18-1-100			17'-0"		8 7/16"		None							None				
19-1-100			30'-0"		6⅝"		10'-0"	8"	6⅝"					6'-15' [12'-0"]	25'-0", 30'-0"			
19A-1-100			35'-0"		5 15/16"		15'-0"		5 15/16"					6'-15' [15'-0"]				

☐ Indicates arm length to be used unless otherwise noted on plans.

STATE OF CALIFORNIA
DEPARTMENT OF TRANSPORTATION

ELECTRICAL SYSTEMS (SIGNAL AND LIGHTING STANDARD CASE 1 ARM LOADING WIND VELOCITY = 100 MPH ARM LENGTHS 15' TO 30')

NO SCALE

RSP ES-7C DATED JUNE 15, 2007 SUPERSEDES STANDARD PLAN ES-7C DATED MAY 1, 2006 - PAGE 439 OF THE STANDARD PLANS BOOK DATED MAY 2006.

REVISED STANDARD PLAN RSP ES-7C

2006 REVISED STANDARD PLAN RSP ES-7C

1-26-07

DIST	COUNTY	ROUTE	POST MILES TOTAL PROJECT	SHEET NO.	TOTAL SHEETS
07	LA	1	18.0/39.3	85	85

REGISTERED CIVIL ENGINEER

October 5, 2007
PLANS APPROVAL DATE

REGISTERED PROFESSIONAL ENGINEER Stanley P. Johnson No. C57793 Exp. 3-31-08 CIVIL STATE OF CALIFORNIA

The State of California or its officers or agents shall not be responsible for the accuracy or completeness of electronic copies of this plan sheet.

To accompany plans dated 7-11-11

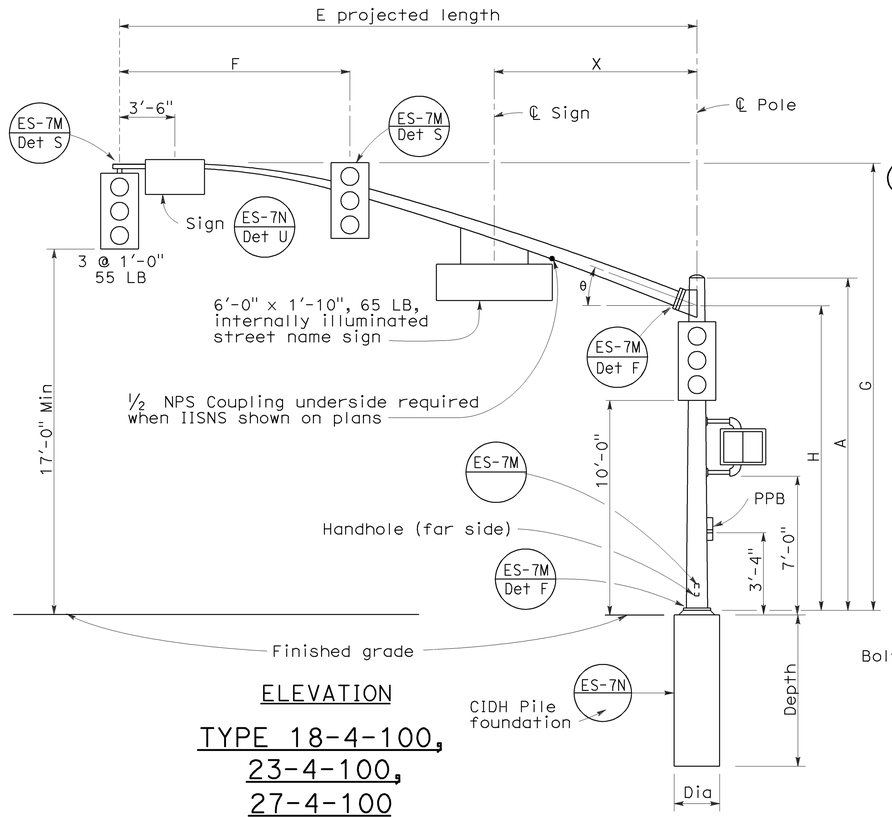

ELEVATION

TYPE 18-4-100, 23-4-100, 27-4-100

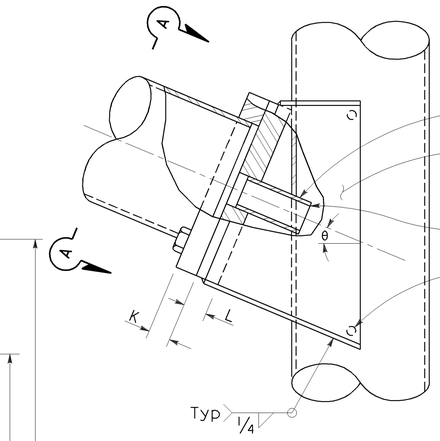

ELEVATION

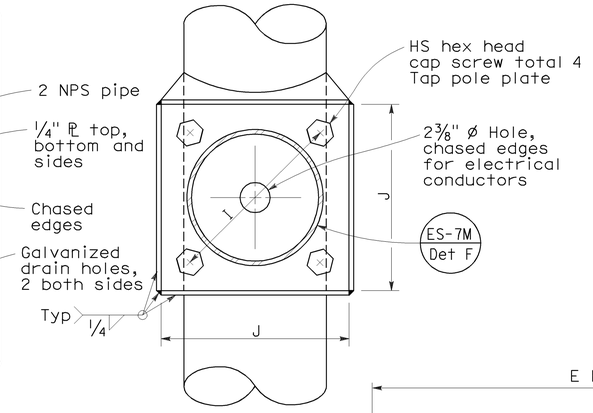

VIEW A-A

SIGNAL ARM CONNECTION DETAILS

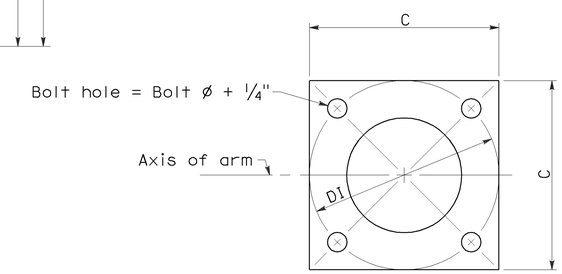

BASE PLATE

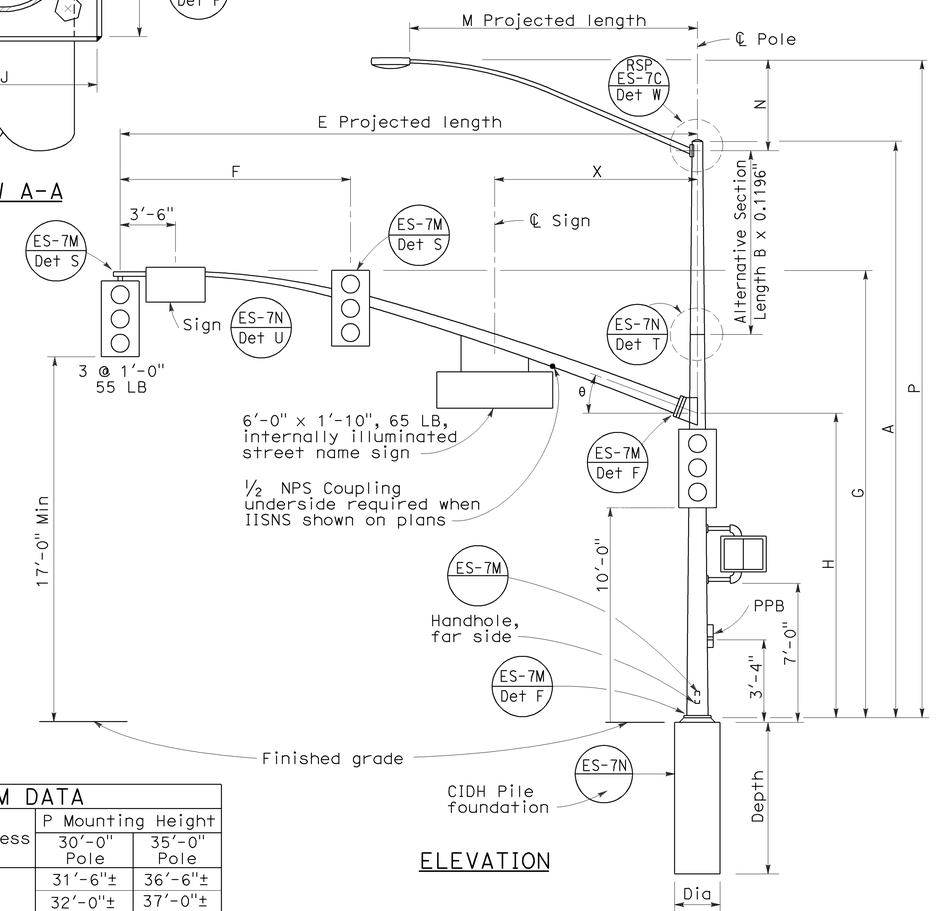

ELEVATION

TYPE 19-4-100, 19A-4-100, 24-4-100, 24A-4-100, 26-4-100, 26A-4-100

SIGNAL ARM DATA

E Projected Length	F Min Spacing	G Mounting Height	H	Min OD at Pole	Thickness	I Bolt Circle	HS Cap Screws	J Plate Size	K Arm PL Thickness	L Pole PL Thickness	θ	X Max
25'-0"	10'-0"	22'-8"±	16'-0"	7 5/16"	0.2391"	12"	1¼"-7NC-3"	1'-0"	1¼"	1½"	23°	10'-6"
30'-0"	12'-0"	23'-0"±		8"								
35'-0"	14'-0"			8 11/16"		13½"		1'-1½"	1½"	1¾"	21°	
40'-0"	15'-0"			9⅜"							15°	13'-0"
45'-0"		23'-8"±		10¼"								

LUMINAIRE ARM DATA

M Projected Length	N Rise	Min OD at Pole	Thickness	P Mounting Height 30'-0" Pole	P Mounting Height 35'-0" Pole
6'-0"	2'-0"±	3¼"	0.1196"	31'-6"±	36'-6"±
8'-0"	2'-6"±	3½"		32'-0"±	37'-0"±
10'-0"	3'-3"±	3⅞"		32'-9"±	37'-9"±
12'-0"	4'-3"±			33'-9"±	38'-9"±
15'-0"	4'-9"±	4¼"		34'-3"±	39'-3"±

POLE DATA / BASE PLATE DATA / CIDH PILE FOUNDATION

Pole Type	Load Case	Wind Velocity mph	A Height	Min OD Base	Min OD Top	Thickness	Alternative Section B Length	Alternative Section Bottom	Alternative Section Top	C	DI Bolt Circle	Thickness	Anchor Bolts Size	Luminaire Arm	Signal Arm	Dia	Depth	Reinforced
18-4-100	4	100	17'-0"	12"	9"	0.2391"	None			1'-6"	1'-6"	1½"	2" Ø x 42" x 6"	None	25'-0", [30'-0"]	3'-0"	9'-0"	Yes
19-4-100			30'-0"		8"		10'-0"	9⅜"	8"					6'-15' [12'-0"]				
19A-4-100			35'-0"		7 5/16"		15'-0'		7 5/16"					6'-15' [15'-0"]				
23-4-100			17'-0"		9"		None							None	35'-0"			
24-4-100			30'-0"		8"		10'-0"	9⅜"	8"					6'-15' [12'-0"]				
24A-4-100			35'-0"		7 5/16"		15'-0"		7 5/16"					6'-15' [15'-0"]				
26-4-100			30'-0"	12½"	8"	0.3125"	10'-0"	9¾"	8⅜"					6'-15' [12'-0"]	40'-0", [45'-0"]			
26A-4-100			35'-0"		7 5/16"		15'-0"		7 11/16"					6'-15' [15'-0"]				
27-4-100			17'-0"		9¾"		None							None				

☐ Indicates arm length to be used unless otherwise noted on plans.

STATE OF CALIFORNIA
DEPARTMENT OF TRANSPORTATION

ELECTRICAL SYSTEMS (SIGNAL AND LIGHTING STANDARD CASE 4 ARM LOADING WIND VELOCITY=100 MPH ARM LENGTHS 25' TO 45')

NO SCALE

RSP ES-7F DATED OCTOBER 5, 2007 SUPERCEDES RSP ES-7F DATED NOVEMBER 17, 2006 AND STANDARD PLAN ES-7F DATED MAY 1, 2006 - PAGE 442 OF THE STANDARD PLANS BOOK DATED MAY 2006.

REVISED STANDARD PLAN RSP ES-7F

2006 REVISED STANDARD PLAN RSP ES-7F

7-10-07