INDEX OF PLANS

SHEET No.	DESCRIPTION
1	TITLE AND LOCATION MAP
2	CONSTRUCTION AREA SIGNS
3-14	TRAFFIC HANDLING DETAILS PLAN
15	PAVEMENT DELINEATION QUANTITIES
16-20	REVISED STANDARD PLANS

STRUCTURE PLANS

21-30	ROUTE 10, 105, 605 BRIDGES

THE STANDARD PLANS LIST APPLICABLE TO THIS CONTRACT IS INCLUDED IN THE NOTICE TO BIDDERS AND SPECIAL PROVISIONS BOOK.

STATE OF CALIFORNIA

DEPARTMENT OF TRANSPORTATION

ACIM-X037(151)E

Dist	COUNTY	ROUTE	POST MILES TOTAL PROJECT	SHEET No.	TOTAL SHEETS
07	LA	10S,105, 605	Var	1	30

PROJECT PLANS FOR CONSTRUCTION ON STATE HIGHWAY

IN LOS ANGELES COUNTY AT VARIOUS LOCATIONS

TO BE SUPPLEMENTED BY STANDARD PLANS DATED MAY 2006

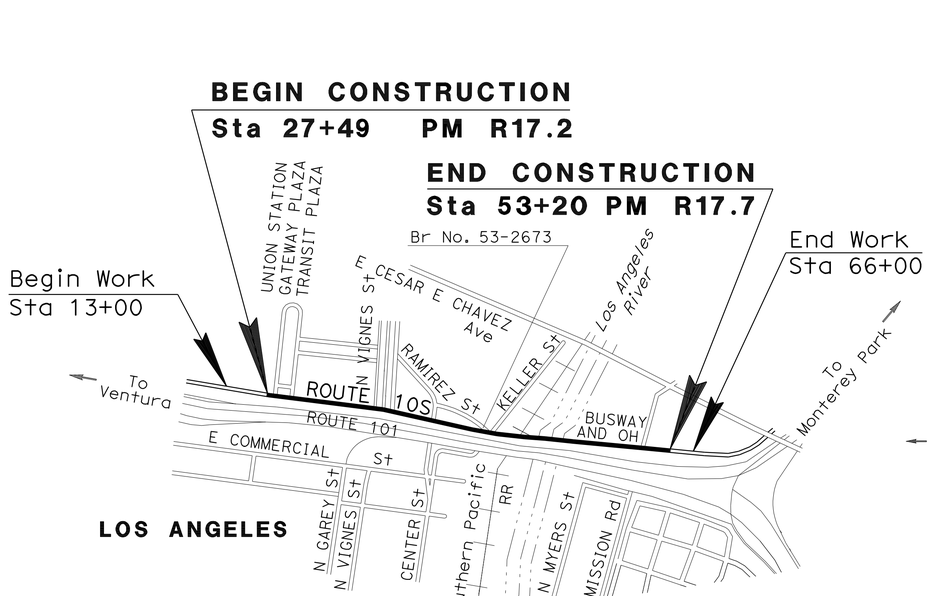

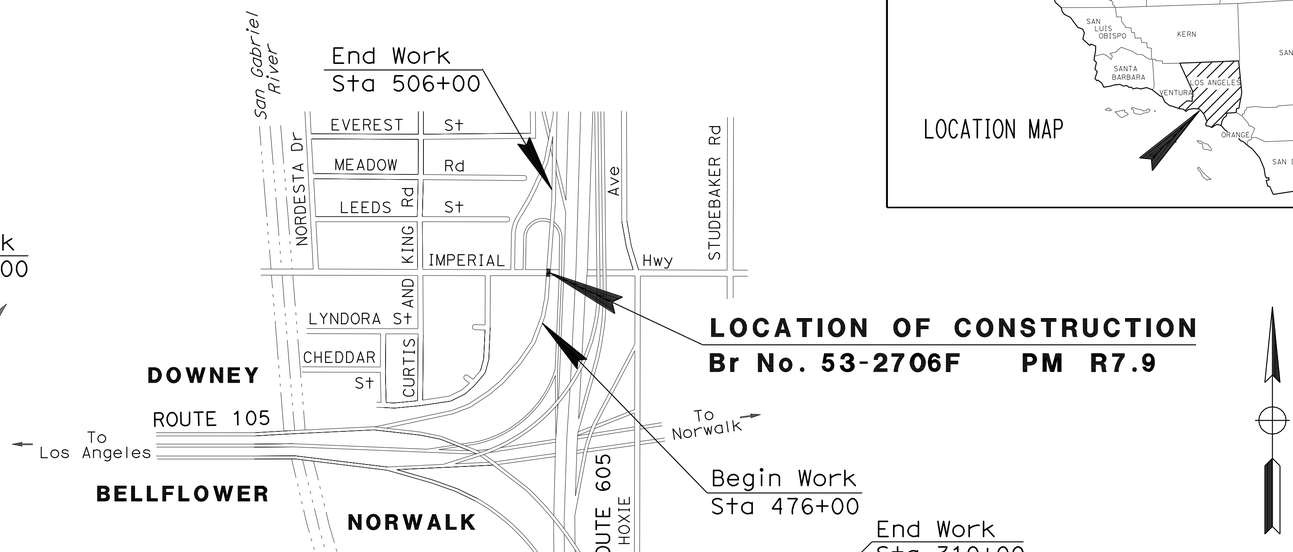

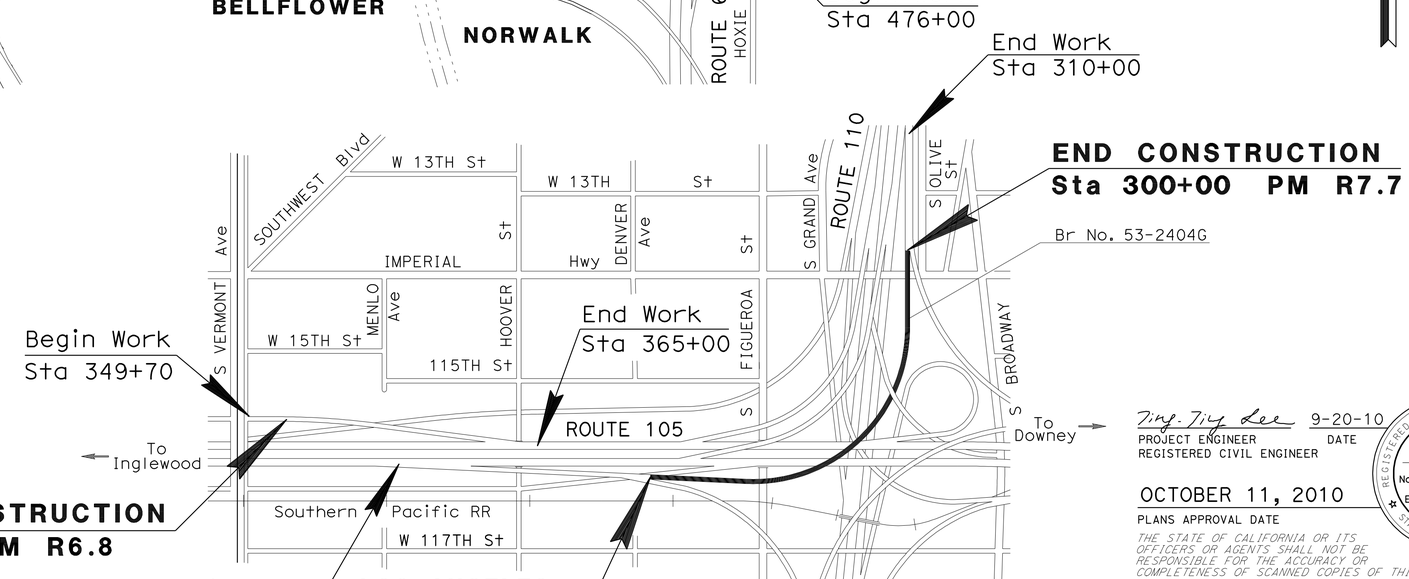

LOCATIONS OF CONSTRUCTION

DESCRIPTION	BRIDGE No.	PM
ROUTE 105 / VERMONT Ave OFF-RAMP OC	53-2675K	R6.8
ROUTE E105-N110 CONNECTOR OC	53-2404G	R7.0
ROUTE S605-W105 / IMPERIAL HIGHWAY	53-2706F	R7.9
ROUTE 10 / LOS ANGELES RIVER BOH	53-2673	17.2

NO SCALE

THE CONTRACTOR SHALL POSSESS THE CLASS (OR CLASSES) OF LICENSE AS SPECIFIED IN THE "NOTICE TO BIDDERS."

Ting-Ting Lee 9-20-10
PROJECT ENGINEER DATE
REGISTERED CIVIL ENGINEER

REGISTERED PROFESSIONAL ENGINEER — TING TING LEE — No. C51642 — Exp. 6-30-12 — CIVIL — STATE OF CALIFORNIA

OCTOBER 11, 2010
PLANS APPROVAL DATE

THE STATE OF CALIFORNIA OR ITS OFFICERS OR AGENTS SHALL NOT BE RESPONSIBLE FOR THE ACCURACY OR COMPLETENESS OF SCANNED COPIES OF THIS PLAN SHEET.

CONTRACT No.	07-264704
PROJECT ID	0700000493

PROJECT MANAGER: SHARAS BANGALORE
DESIGN ENGINEER: TING TING LEE

LAST REVISION 00-00-00 DATE PLOTTED => 30-MAR-2011 TIME PLOTTED => 11:12

BORDER LAST REVISED 7/2/2010 | CALTRANS WEB SITE IS: HTTP//WWW.DOT.CA.GOV/ | RELATIVE BORDER SCALE IS IN INCHES 0 1 2 3 | USERNAME => s119140 DGN FILE => 726470ab001.dgn | UNIT 1796 | PROJECT NUMBER & PHASE 07000004931

Dist	COUNTY	ROUTE	POST MILES TOTAL PROJECT	SHEET No.	TOTAL SHEETS
07	LA	10S,105, 605	Var	2	30

Ting-Ting Lee 9-20-10
REGISTERED CIVIL ENGINEER DATE

10-11-10
PLANS APPROVAL DATE

REGISTERED PROFESSIONAL ENGINEER
TING TING LEE
No. C51642
Exp. 6-30-12
CIVIL
STATE OF CALIFORNIA

THE STATE OF CALIFORNIA OR ITS OFFICERS OR AGENTS SHALL NOT BE RESPONSIBLE FOR THE ACCURACY OR COMPLETENESS OF SCANNED COPIES OF THIS PLAN SHEET.

NOTES:

1. LOCATION OF CONSTRUCTION AREA SIGNS ARE APPROXIMATE. EXACT LOCATIONS WILL BE DETERMINED BY THE ENGINEER.
2. "TRAFFIC FINES DOUBLED IN CONSTRUCTION ZONES" SIGN, WHERE SHOWN ON PLANS, SHALL BE PLACED APPROXIMATELY 500 FEET IN ADVANCE OF "ROAD WORK AHEAD" SIGN OR AS DETERMINED BY THE ENGINEER.
3. EXISTING UTILITY FACILITIES HAVE NOT BEEN PLOTTED ON THE PLAN.

STATIONARY MOUNTED CONSTRUCTION AREA SIGNS

SIGN No. (X)	SIGN CODE		PANEL SIZE	SIGN MESSAGE	No. OF POSTS AND SIZE	No. OF SIGNS
	FEDERAL	CALIFORNIA				
AF	W20-1		60" x 60"	ROAD WORK AHEAD	2- 6" x 6"	5
AR	W20-1		48" x 48"	ROAD WORK AHEAD	1- 6" x 6"	5
BF	G20-2		48" x 24"	END ROAD WORK	1- 4" x 6"	5
BR	G20-2		36" x 18"	END ROAD WORK	1- 4" x 4"	5
C		C40	144" x 60"	TRAFFIC FINES DOUBLED IN CONSTRUCTION ZONES	2- 6" x 8"	5

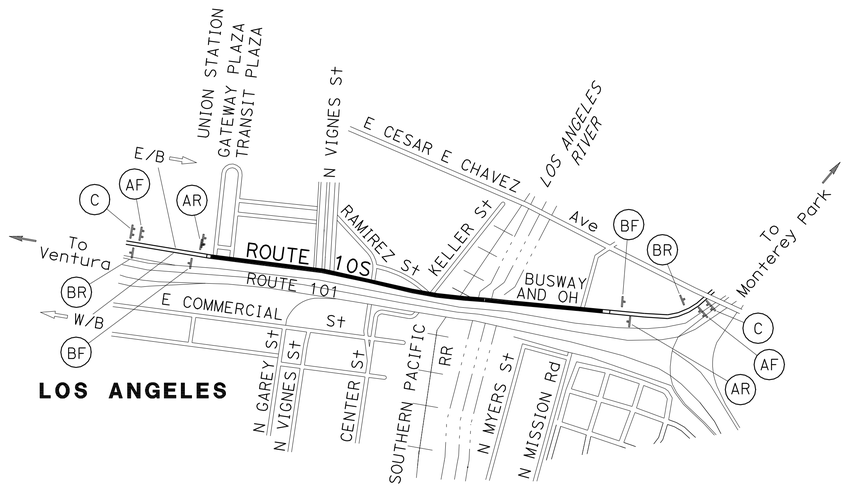

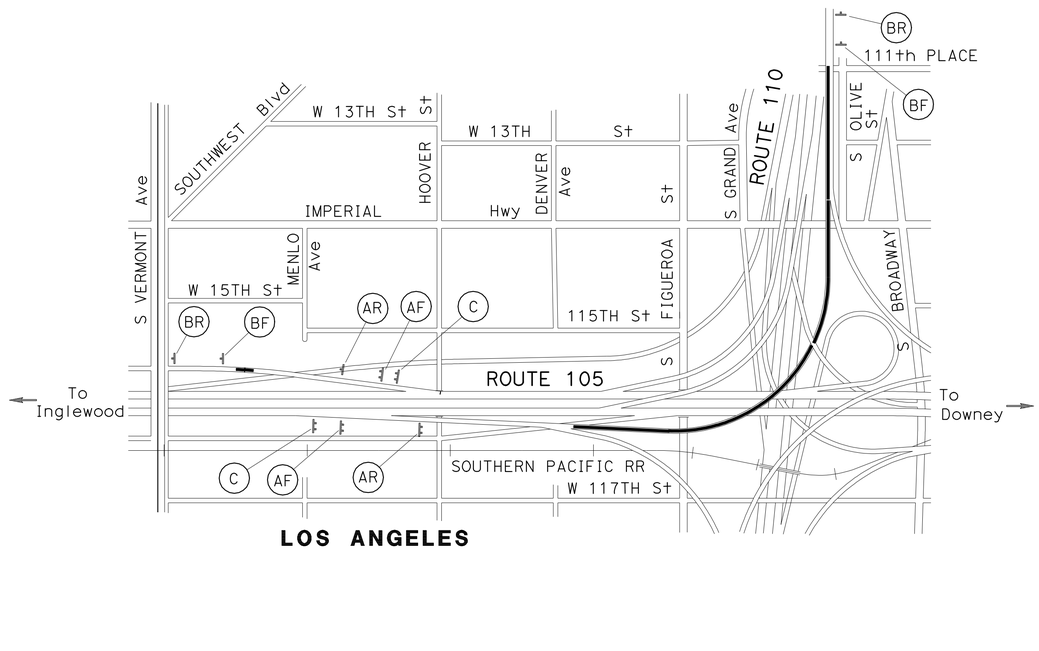

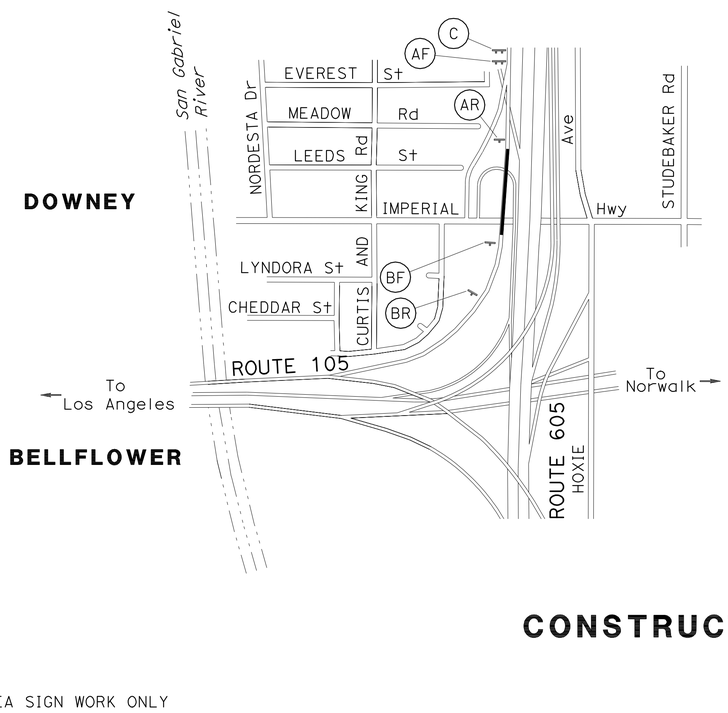

CONSTRUCTION AREA SIGNS

NO SCALE

CS-1

THIS PLAN ACCURATE FOR CONSTRUCTION AREA SIGN WORK ONLY

STATE OF CALIFORNIA - DEPARTMENT OF TRANSPORTATION
Caltrans® OFFICE OF DESIGN A

FUNCTIONAL SUPERVISOR: MARIO A. GUTIERREZ
CALCULATED-DESIGNED BY: EDMUND S. SPIRAUSKAS
CHECKED BY: TING TING LEE
REVISED BY / DATE REVISED:

LAST REVISION: DATE PLOTTED => 30-MAR-2011
00-00-00 TIME PLOTTED => 11:12

BORDER LAST REVISED 7/2/2010
USERNAME => s119140
DGN FILE => 726470la001.dgn
RELATIVE BORDER SCALE IS IN INCHES 0 1 2 3
UNIT 1796
PROJECT NUMBER & PHASE 07000004931

Dist	COUNTY	ROUTE	POST MILES TOTAL PROJECT	SHEET No.	TOTAL SHEETS
07	LA	10S,105, 605	Var	3	30

9/15/10
REGISTERED CIVIL ENGINEER DATE

ALBERT K. YU
No. 43220
Exp. 3/31/12
CIVIL
REGISTERED PROFESSIONAL ENGINEER
STATE OF CALIFORNIA

10-11-10
PLANS APPROVAL DATE

THE STATE OF CALIFORNIA OR ITS OFFICERS OR AGENTS SHALL NOT BE RESPONSIBLE FOR THE ACCURACY OR COMPLETENESS OF SCANNED COPIES OF THIS PLAN SHEET.

PCMS	LOCATION	MESSAGE	
1	BY CALL BOX #66	1ST FLASH	N110/EXIT/CLOSED
		2ND FLASH	DETOUR/S110 TO/EL SEGUNDO

	QUANTITY
SP-2	5

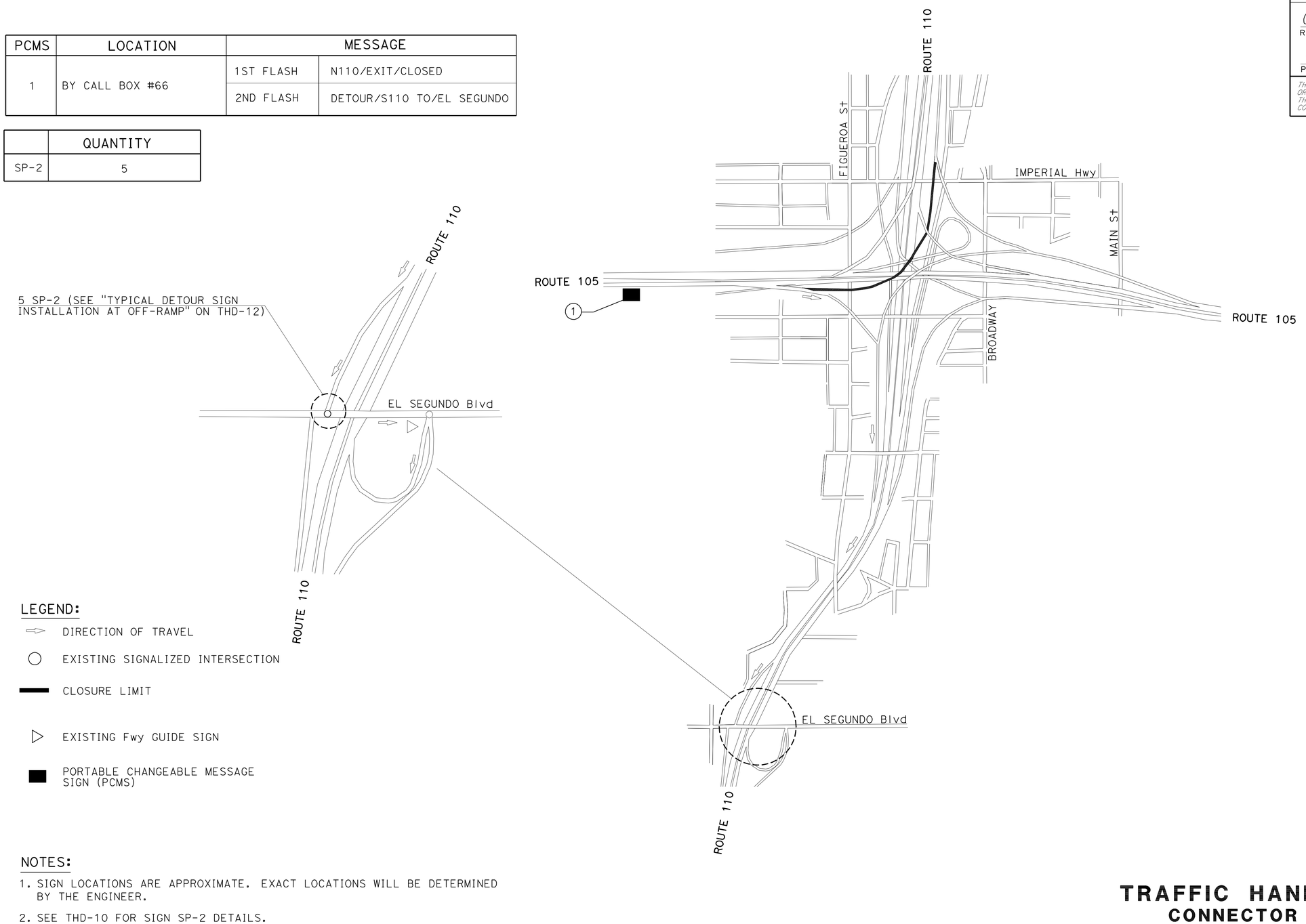

LEGEND:

- DIRECTION OF TRAVEL
- EXISTING SIGNALIZED INTERSECTION
- CLOSURE LIMIT
- EXISTING Fwy GUIDE SIGN
- PORTABLE CHANGEABLE MESSAGE SIGN (PCMS)

NOTES:

1. SIGN LOCATIONS ARE APPROXIMATE. EXACT LOCATIONS WILL BE DETERMINED BY THE ENGINEER.
2. SEE THD-10 FOR SIGN SP-2 DETAILS.
3. PORTABLE CHANGEABLE MESSAGE SIGN SHALL BE PLACED ON THE RIGHT SHOULDER.

TRAFFIC HANDLING DETAILS
CONNECTOR DETOUR PLAN FOR WORK SHIFT CLOSURES EB Rte 105 TO NB Rte 110

NO SCALE

THD-1

REVISED BY	DATE REVISED
KIT LIU	1/28/10
KIT LIU	5/27/10

CALCULATED-DESIGNED BY: JAY NASSER
CHECKED BY: ALBERT YU
FUNCTIONAL SUPERVISOR: JOHN YANG
STATE OF CALIFORNIA - DEPARTMENT OF TRANSPORTATION
DTM
Caltrans

LAST REVISION | DATE PLOTTED => 30-MAR-2011
00-00-00 | TIME PLOTTED => 11:12

BORDER LAST REVISED 7/2/2010
USERNAME => s119140
DGN FILE => 726470me001.dgn
RELATIVE BORDER SCALE IS IN INCHES 0 1 2 3
UNIT 1863
PROJECT NUMBER & PHASE 07000004931

Dist	COUNTY	ROUTE	POST MILES TOTAL PROJECT	SHEET No.	TOTAL SHEETS
07	LA	10S,105, 605	Var	4	30

9/15/10
REGISTERED CIVIL ENGINEER DATE

ALBERT K. YU
No. 43220
Exp. 3/31/12
CIVIL
REGISTERED PROFESSIONAL ENGINEER
STATE OF CALIFORNIA

10-11-10
PLANS APPROVAL DATE

THE STATE OF CALIFORNIA OR ITS OFFICERS OR AGENTS SHALL NOT BE RESPONSIBLE FOR THE ACCURACY OR COMPLETENESS OF SCANNED COPIES OF THIS PLAN SHEET.

LEGEND:

- TEMPORARY SIGN
- DIRECTION OF TRAVEL
- TRAFFIC CONE
- FLASHING ARROW SIGN (FAS)

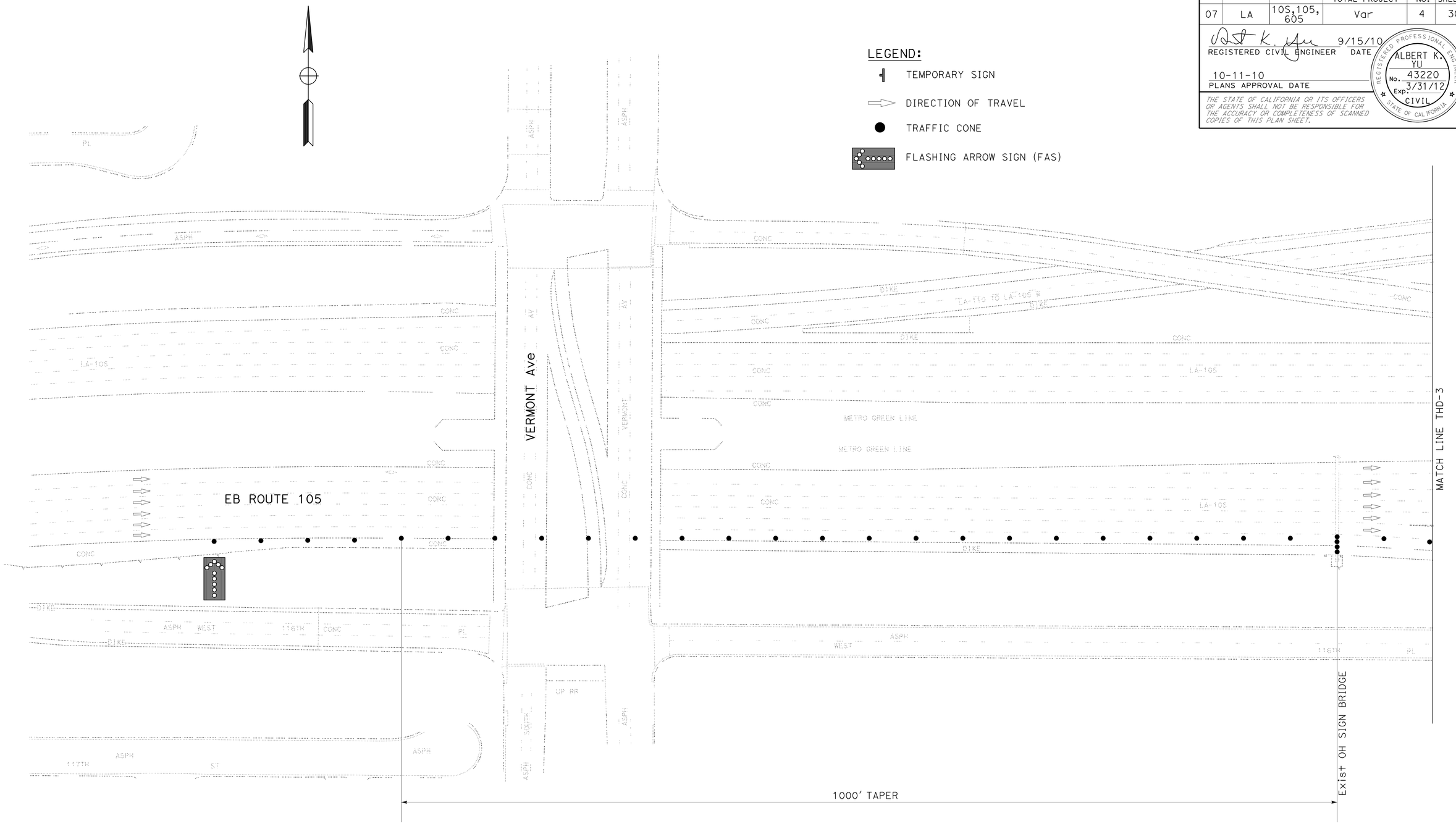

NOTE:

1. SEE STANDARD PLANS T-10 FOR LANE CLOSURE DETAILS NOT SHOWN.

TRAFFIC HANDLING DETAILS
FOR WORK SHIFT CLOSURES
EB Rte 105 TO NB Rte 110 (1/2)

NO SCALE

THD-2

STATE OF CALIFORNIA - DEPARTMENT OF TRANSPORTATION
DTM
FUNCTIONAL SUPERVISOR: JOHN YANG
CALCULATED-DESIGNED BY: KIT LIU
CHECKED BY: ALBERT YU

REVISED BY	DATE REVISED
KIT LIU	1/28/10
KIT LIU	5/27/10

LAST REVISION 00-00-00
DATE PLOTTED => 30-MAR-2011
TIME PLOTTED => 11:12

BORDER LAST REVISED 7/2/2010
USERNAME => s119140
DGN FILE => 726470me002.dgn
RELATIVE BORDER SCALE IS IN INCHES 0 1 2 3
UNIT 1863
PROJECT NUMBER & PHASE 07000004931

Dist	COUNTY	ROUTE	POST MILES TOTAL PROJECT	SHEET No.	TOTAL SHEETS
07	LA	10S,105, 605	Var	5	30

9/15/10
REGISTERED CIVIL ENGINEER DATE

ALBERT K. YU
No. 43220
Exp. 3/31/12
CIVIL
REGISTERED PROFESSIONAL ENGINEER
STATE OF CALIFORNIA

10-11-10
PLANS APPROVAL DATE

THE STATE OF CALIFORNIA OR ITS OFFICERS OR AGENTS SHALL NOT BE RESPONSIBLE FOR THE ACCURACY OR COMPLETENESS OF SCANNED COPIES OF THIS PLAN SHEET.

REVISED BY	DATE REVISED
KIT LIU	5/27/10
KIT LIU	1/28/10

CALCULATED-DESIGNED BY: KIT LIU
CHECKED BY: ALBERT YU

FUNCTIONAL SUPERVISOR: JOHN YANG

STATE OF CALIFORNIA - DEPARTMENT OF TRANSPORTATION
DTM
Caltrans

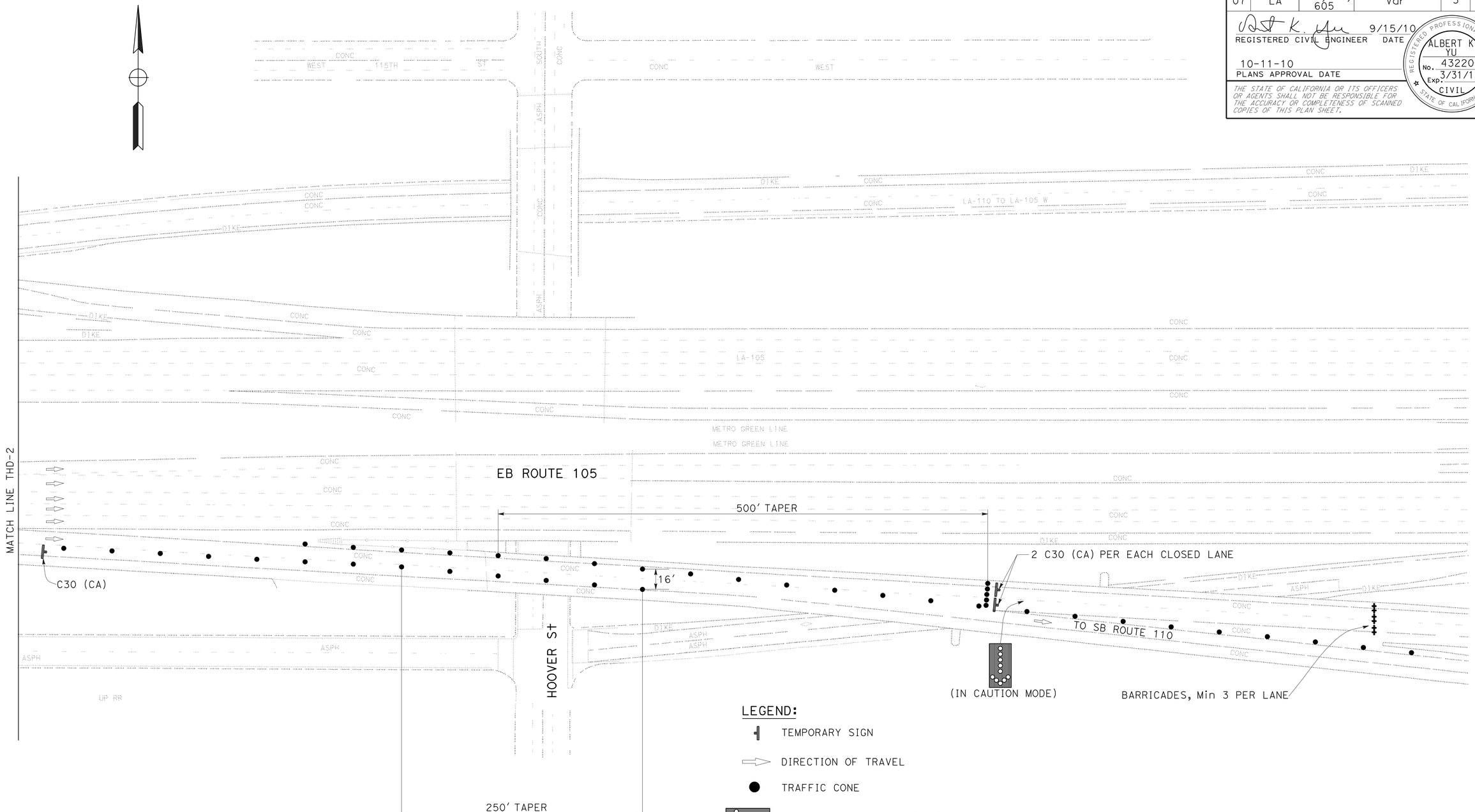

LEGEND:

- TEMPORARY SIGN
- DIRECTION OF TRAVEL
- TRAFFIC CONE
- FLASHING ARROW SIGN (FAS)
- BARRICADE

NOTE:

1. SEE STANDARD PLANS T-10 FOR LANE CLOSURE DETAILS NOT SHOWN.

TRAFFIC HANDLING DETAILS
FOR WORK SHIFT CLOSURES
EB Rte 105 TO NB Rte 110 (2/2)

NO SCALE

THD-3

LAST REVISION | DATE PLOTTED => 30-MAR-2011
00-00-00 | TIME PLOTTED => 11:12

BORDER LAST REVISED 7/2/2010 | USERNAME => s119140 | DGN FILE => 726470me003.dgn | RELATIVE BORDER SCALE IS IN INCHES 0 1 2 3 | UNIT 1863 | PROJECT NUMBER & PHASE 07000004931

Dist	COUNTY	ROUTE	POST MILES TOTAL PROJECT	SHEET No.	TOTAL SHEETS
07	LA	10S,105, 605	Var	6	30

REGISTERED CIVIL ENGINEER — DATE 9/15/10

ALBERT K. YU No. 43220 Exp. 3/31/12 CIVIL — REGISTERED PROFESSIONAL ENGINEER — STATE OF CALIFORNIA

10-11-10
PLANS APPROVAL DATE

THE STATE OF CALIFORNIA OR ITS OFFICERS OR AGENTS SHALL NOT BE RESPONSIBLE FOR THE ACCURACY OR COMPLETENESS OF SCANNED COPIES OF THIS PLAN SHEET.

REVISED BY	DATE REVISED
KIT LIU	1/28/10
KIT LIU	5/27/10

CALCULATED-DESIGNED BY: JAY NASSER
CHECKED BY: ALBERT YU
FUNCTIONAL SUPERVISOR: JOHN YANG

STATE OF CALIFORNIA - DEPARTMENT OF TRANSPORTATION
DTM
Caltrans

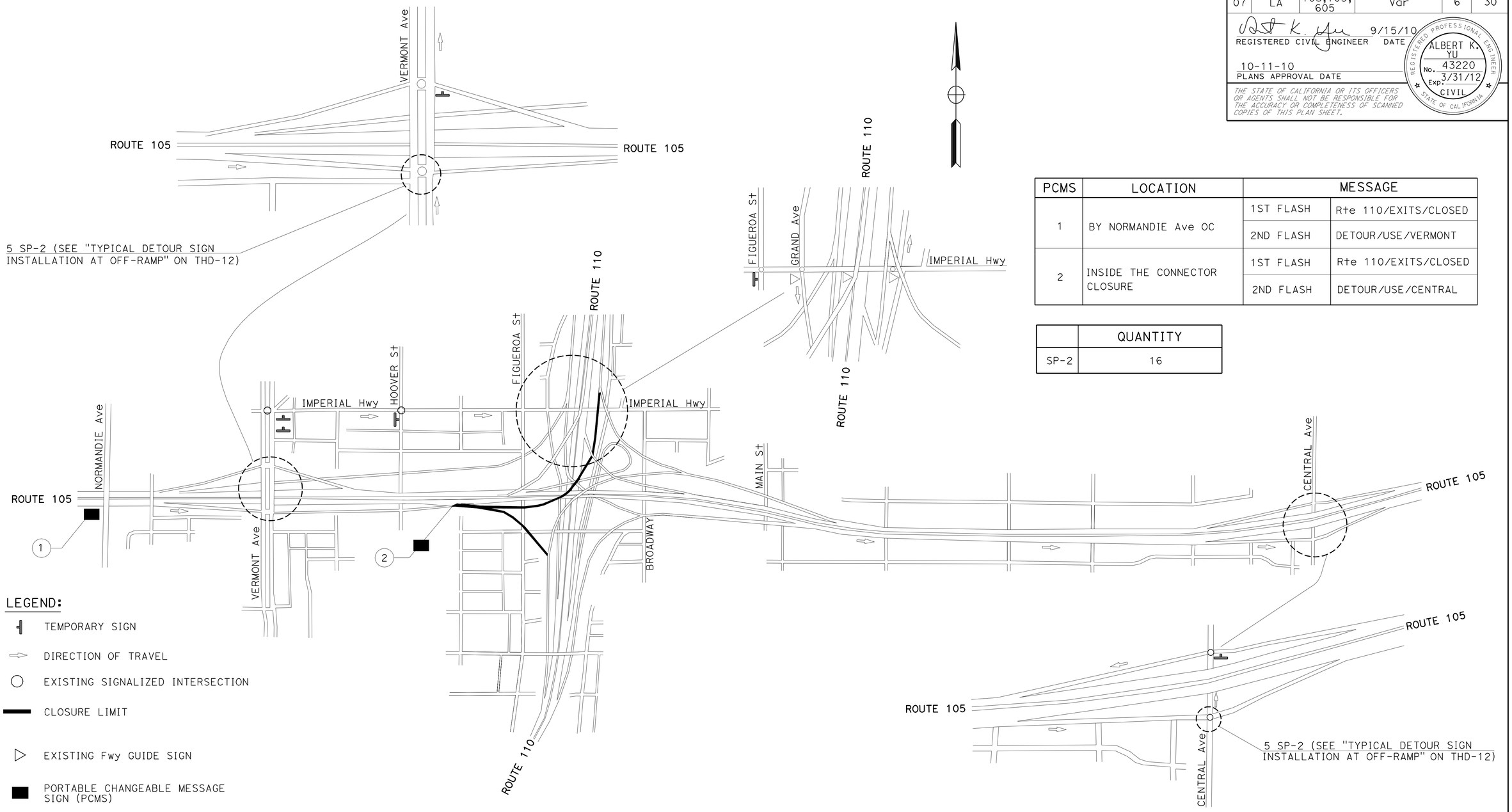

PCMS	LOCATION	MESSAGE	
1	BY NORMANDIE Ave OC	1ST FLASH	Rte 110/EXITS/CLOSED
		2ND FLASH	DETOUR/USE/VERMONT
2	INSIDE THE CONNECTOR CLOSURE	1ST FLASH	Rte 110/EXITS/CLOSED
		2ND FLASH	DETOUR/USE/CENTRAL

	QUANTITY
SP-2	16

LEGEND:

- TEMPORARY SIGN
- DIRECTION OF TRAVEL
- EXISTING SIGNALIZED INTERSECTION
- CLOSURE LIMIT
- EXISTING Fwy GUIDE SIGN
- PORTABLE CHANGEABLE MESSAGE SIGN (PCMS)

NOTES:

1. SIGN LOCATIONS ARE APPROXIMATE. EXACT LOCATIONS WILL BE DETERMINED BY THE ENGINEER.
2. SEE THD-10 FOR SIGN SP-2 DETAILS.
3. EXCEPT WHEN PLACED INSIDE THE CONNECTOR CLOSURE, PORTABLE CHANGEABLE MESSAGE SIGN SHALL BE PLACED ON THE RIGHT SHOULDER.

TRAFFIC HANDLING DETAILS
CONNECTOR DETOUR PLAN FOR WORK SHIFT CLOSURES EB Rte 105 TO Rte 110

NO SCALE

THD-4

LAST REVISION | DATE PLOTTED => 30-MAR-2011
00-00-00 | TIME PLOTTED => 11:12

Dist	COUNTY	ROUTE	POST MILES TOTAL PROJECT	SHEET No.	TOTAL SHEETS
07	LA	10S,105, 605	Var	7	30

9/15/10
REGISTERED CIVIL ENGINEER DATE

ALBERT K. YU No. 43220 Exp. 3/31/12 CIVIL — REGISTERED PROFESSIONAL ENGINEER — STATE OF CALIFORNIA

10-11-10
PLANS APPROVAL DATE

THE STATE OF CALIFORNIA OR ITS OFFICERS OR AGENTS SHALL NOT BE RESPONSIBLE FOR THE ACCURACY OR COMPLETENESS OF SCANNED COPIES OF THIS PLAN SHEET.

PCMS	LOCATION	MESSAGE	
1	BETWEEN STANDFORD Ave AND CALL BOX #85	1ST FLASH	N110/EXIT/CLOSED
		2ND FLASH	DETOUR/USE/VERMONT

	QUANTITY
SP-2	9

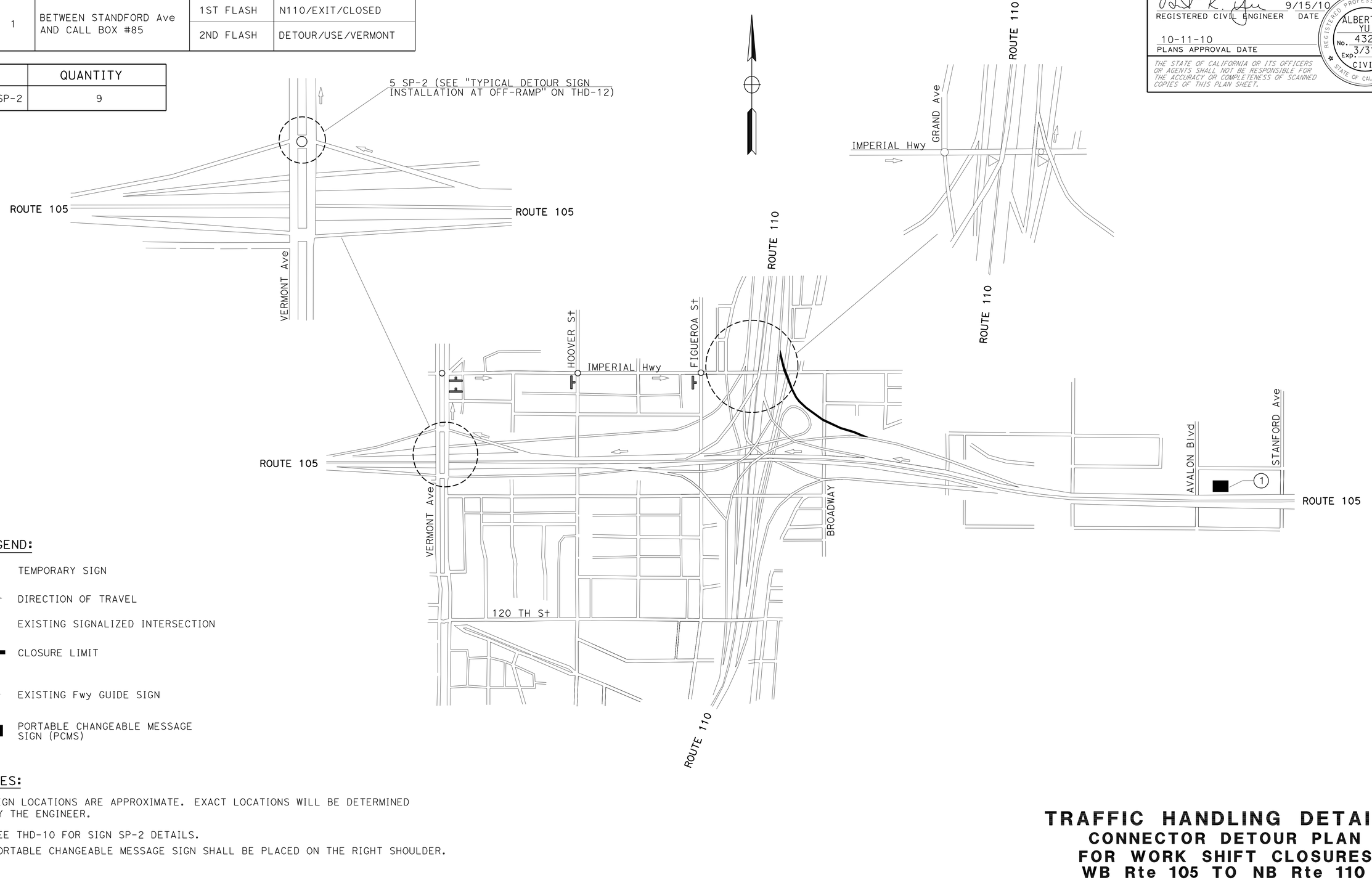

LEGEND:

- TEMPORARY SIGN
- DIRECTION OF TRAVEL
- EXISTING SIGNALIZED INTERSECTION
- CLOSURE LIMIT
- EXISTING Fwy GUIDE SIGN
- PORTABLE CHANGEABLE MESSAGE SIGN (PCMS)

NOTES:

1. SIGN LOCATIONS ARE APPROXIMATE. EXACT LOCATIONS WILL BE DETERMINED BY THE ENGINEER.
2. SEE THD-10 FOR SIGN SP-2 DETAILS.
3. PORTABLE CHANGEABLE MESSAGE SIGN SHALL BE PLACED ON THE RIGHT SHOULDER.

TRAFFIC HANDLING DETAILS
CONNECTOR DETOUR PLAN FOR WORK SHIFT CLOSURES WB Rte 105 TO NB Rte 110

NO SCALE

THD-5

REVISED BY	DATE REVISED
KIT LIU	1/28/10
KIT LIU	5/27/10

CALCULATED-DESIGNED BY
CHECKED BY
FUNCTIONAL SUPERVISOR: JOHN YANG
JAY NASSER
ALBERT YU

STATE OF CALIFORNIA - DEPARTMENT OF TRANSPORTATION
Caltrans® DTM

LAST REVISION | DATE PLOTTED => 30-MAR-2011
00-00-00 | TIME PLOTTED => 11:12

BORDER LAST REVISED 7/2/2010
USERNAME => s119140
DGN FILE => 726470me005.dgn
RELATIVE BORDER SCALE IS IN INCHES 0 1 2 3
UNIT 1863
PROJECT NUMBER & PHASE 07000004931

Dist	COUNTY	ROUTE	POST MILES TOTAL PROJECT	SHEET No.	TOTAL SHEETS
07	LA	10S,105, 605	Var	8	30

REGISTERED CIVIL ENGINEER — DATE 9/15/10

ALBERT K. YU No. 43220 Exp. 3/31/12 CIVIL — REGISTERED PROFESSIONAL ENGINEER — STATE OF CALIFORNIA

PLANS APPROVAL DATE 10-11-10

THE STATE OF CALIFORNIA OR ITS OFFICERS OR AGENTS SHALL NOT BE RESPONSIBLE FOR THE ACCURACY OR COMPLETENESS OF SCANNED COPIES OF THIS PLAN SHEET.

PCMS	LOCATION	MESSAGE	
1	IN ADVANCE OF THE CONNECTOR BY CALL BOX # 93	1ST FLASH	WEST 105/EXIT/CLOSED
		2ND FLASH	DETOUR/USE/IMPERIAL

	QUANTITY
SP-2	11

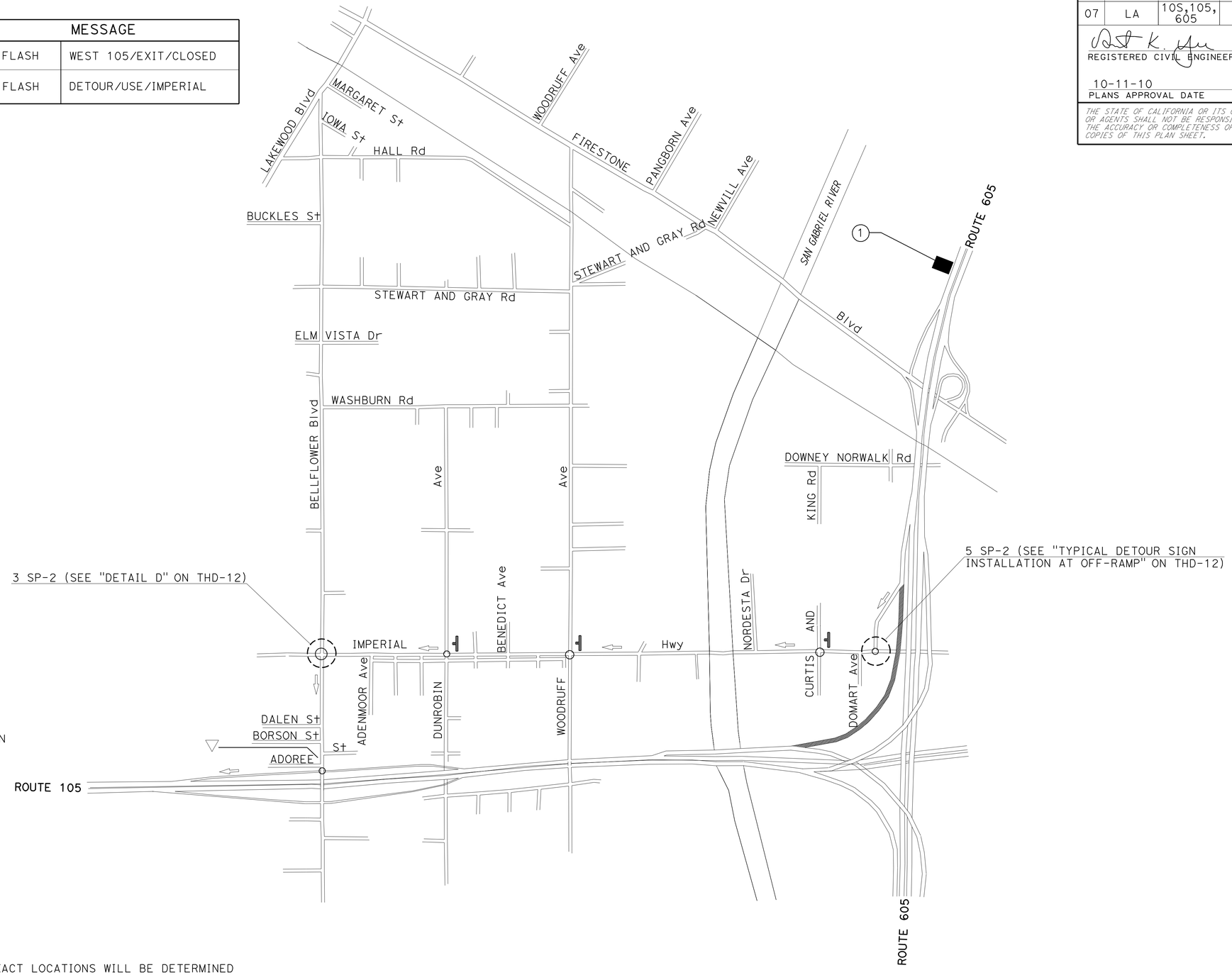

LEGEND:

- TEMPORARY SIGN
- DIRECTION OF TRAVEL
- EXISTING SIGNALIZED INTERSECTION
- CLOSURE LIMIT
- EXISTING Fwy GUIDE SIGN
- PORTABLE CHANGEABLE MESSAGE SIGN (PCMS)

NOTES:

1. SIGN LOCATIONS ARE APPROXIMATE. EXACT LOCATIONS WILL BE DETERMINED BY THE ENGINEER.
2. SEE THD-10 FOR SIGN SP-2 DETAILS.
3. PORTABLE CHANGEABLE MESSAGE SIGN SHALL BE PLACED ON THE RIGHT SHOULDER.

TRAFFIC HANDLING DETAILS
CONNECTOR DETOUR PLAN FOR WORK SHIFT CLOSURES SB Rte 605 TO WB Rte 105

NO SCALE

THD-6

KIT LIU	5/27/10		
KIT LIU	1/28/10		
REVISED BY	DATE REVISED		
RAYMOND SHEHATA	ALBERT YU		
CALCULATED-DESIGNED BY	CHECKED BY		
FUNCTIONAL SUPERVISOR	JOHN YANG		
STATE OF CALIFORNIA - DEPARTMENT OF TRANSPORTATION	DTM	Caltrans	

LAST REVISION DATE PLOTTED => 30-MAR-2011
00-00-00 TIME PLOTTED => 11:12

BORDER LAST REVISED 7/2/2010 | USERNAME => s119140 | DGN FILE => 726470me006.dgn | RELATIVE BORDER SCALE IS IN INCHES 0 1 2 3 | UNIT 1863 | PROJECT NUMBER & PHASE 07000004931

Dist	COUNTY	ROUTE	POST MILES TOTAL PROJECT	SHEET No.	TOTAL SHEETS
07	LA	10S,105, 605	Var	9	30

REGISTERED CIVIL ENGINEER 9/15/10 DATE

10-11-10
PLANS APPROVAL DATE

REGISTERED PROFESSIONAL ENGINEER ALBERT K. YU No. 43220 Exp. 3/31/12 CIVIL STATE OF CALIFORNIA

THE STATE OF CALIFORNIA OR ITS OFFICERS OR AGENTS SHALL NOT BE RESPONSIBLE FOR THE ACCURACY OR COMPLETENESS OF SCANNED COPIES OF THIS PLAN SHEET.

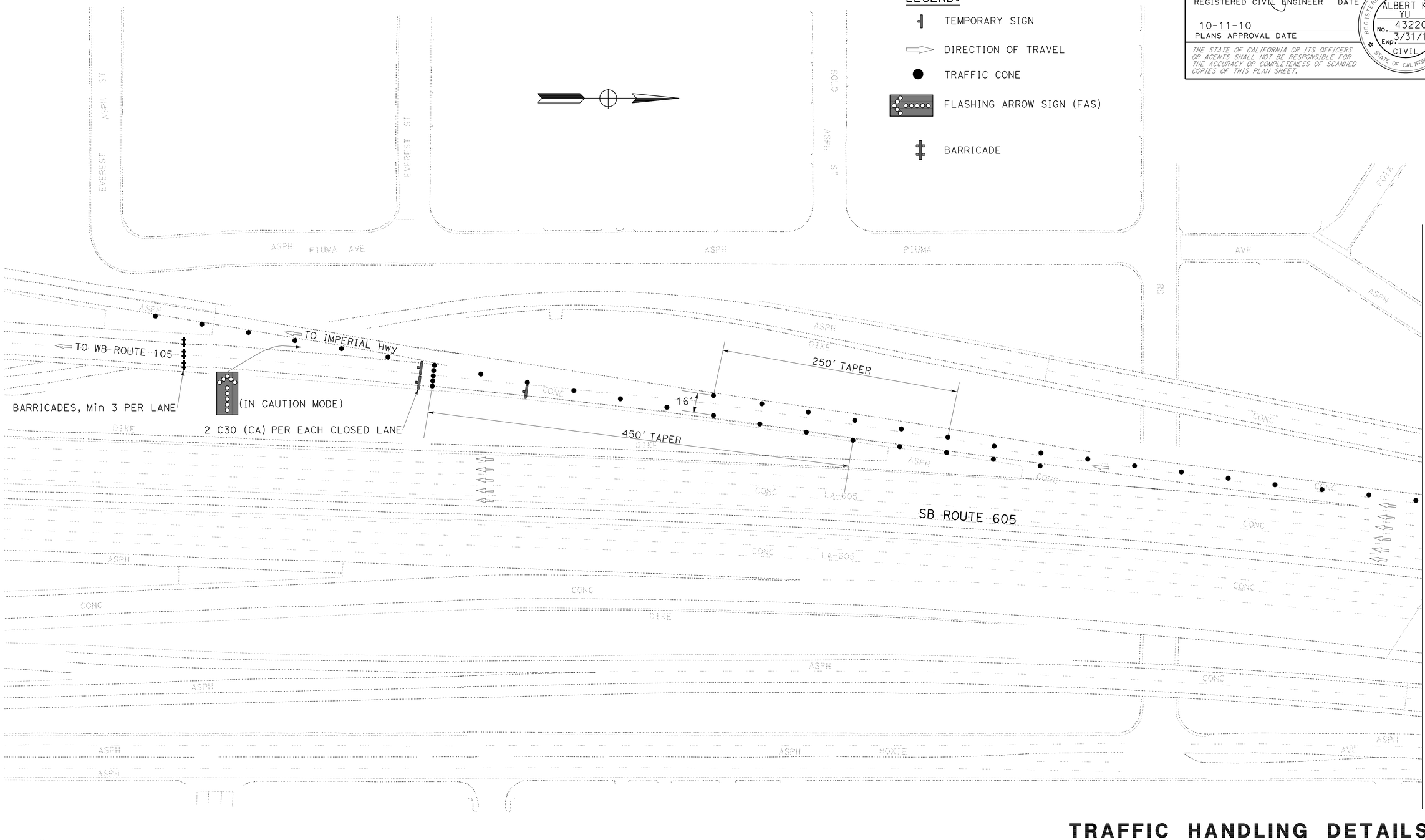

NOTE:

1. SEE STANDARD PLANS T-10 FOR LANE CLOSURE DETAILS NOT SHOWN.

TRAFFIC HANDLING DETAILS
FOR WORK SHIFT CLOSURES
SB Rte 605 TO WB Rte 105 (1/2)

NO SCALE

THD-7

STATE OF CALIFORNIA - DEPARTMENT OF TRANSPORTATION
Caltrans
DTM

FUNCTIONAL SUPERVISOR: JOHN YANG
CALCULATED-DESIGNED BY: KIT LIU
CHECKED BY: ALBERT YU
REVISED BY: KIT LIU
DATE REVISED: 1/28/10
KIT LIU 5/27/10

LAST REVISION 00-00-00
DATE PLOTTED => 30-MAR-2011
TIME PLOTTED => 11:12

Dist	COUNTY	ROUTE	POST MILES TOTAL PROJECT	SHEET No.	TOTAL SHEETS
07	LA	10S,105, 605	Var	10	30

REGISTERED CIVIL ENGINEER — DATE 9/15/10

ALBERT K. YU No. 43220 Exp. 3/31/12 CIVIL — REGISTERED PROFESSIONAL ENGINEER — STATE OF CALIFORNIA

10-11-10
PLANS APPROVAL DATE

THE STATE OF CALIFORNIA OR ITS OFFICERS OR AGENTS SHALL NOT BE RESPONSIBLE FOR THE ACCURACY OR COMPLETENESS OF SCANNED COPIES OF THIS PLAN SHEET.

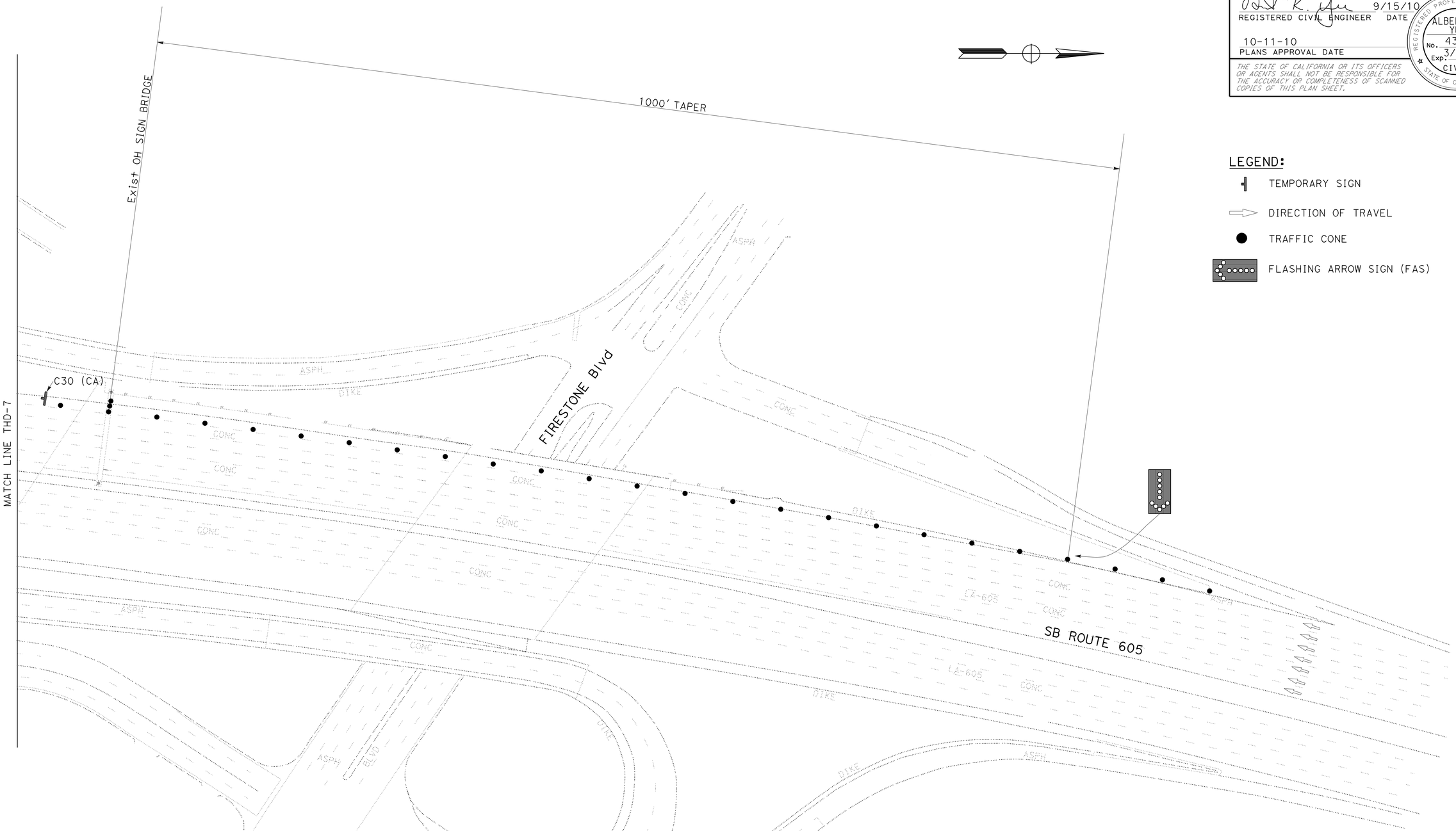

LEGEND:

- TEMPORARY SIGN
- DIRECTION OF TRAVEL
- TRAFFIC CONE
- FLASHING ARROW SIGN (FAS)

NOTE:

1. SEE STANDARD PLANS T-10 FOR LANE CLOSURE DETAILS NOT SHOWN.

TRAFFIC HANDLING DETAILS
FOR WORK SHIFT CLOSURES
SB Rte 605 TO WB Rte 105 (2/2)

NO SCALE

THD-8

REVISED BY	KIT LIU	KIT LIU	KIT LIU
DATE REVISED	1/28/10	5/27/10	
CALCULATED-DESIGNED BY	ALBERT YU		
CHECKED BY			
FUNCTIONAL SUPERVISOR	JOHN YANG		

STATE OF CALIFORNIA - DEPARTMENT OF TRANSPORTATION
Caltrans® DTM

LAST REVISION — DATE PLOTTED => 30-MAR-2011 — TIME PLOTTED => 11:12
00-00-00

BORDER LAST REVISED 7/2/2010

USERNAME => s119140
DGN FILE => 726470me008.dgn

RELATIVE BORDER SCALE IS IN INCHES 0 1 2 3

UNIT 1863 | PROJECT NUMBER & PHASE 07000004931

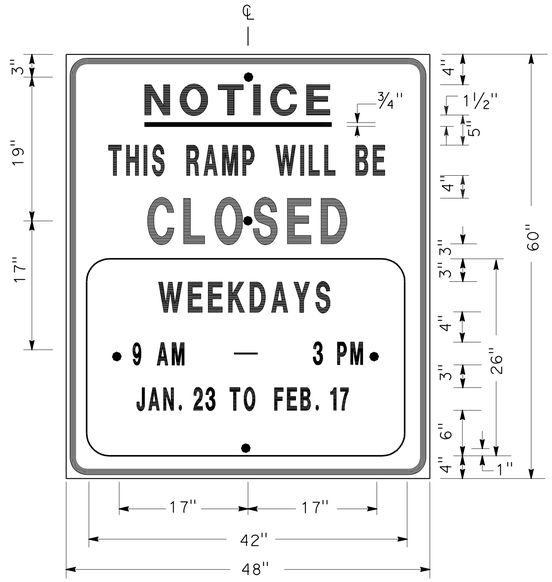

SIGN SP-1

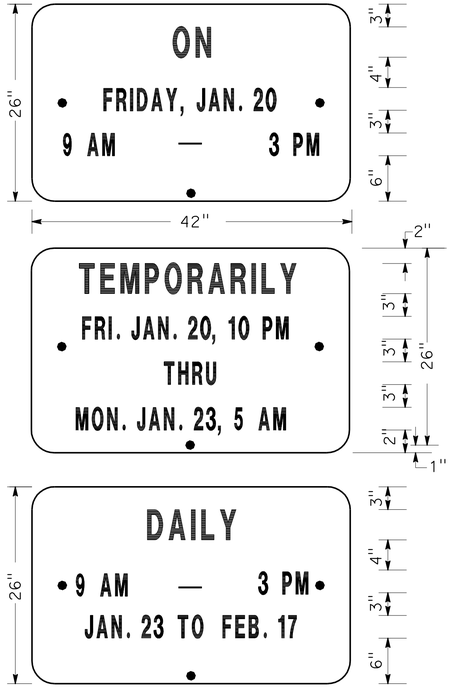

ALTERNATE OVERLAY PANELS (TYPICAL)

SPECIAL ADVANCE NOTICE PUBLICITY SIGN

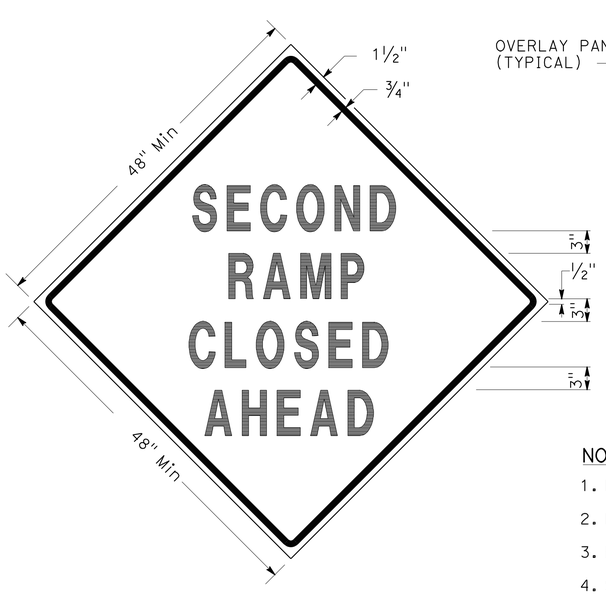

SIGN SP-3

SIGN SP-5

NOTES: (SIGNS SP-3 & SP-5)

1. LETTERS - 6" SERIES D.
2. LETTERS AND BORDERS - BLACK ON RETROREFLECTORIZED ORANGE BACKGROUND.
3. BASE MATERIAL SHALL BE ALUMINUM (MINIMUM 0.06").
4. SIGNS SHALL BE MOUNTED WITH BOTTOMS OF SIGNS A MINIMUM OF 6′ ABOVE GROUND.

SPECIAL SIGN FOR EXIT RAMP CLOSURES

NOTES: (SIGN SP-1)

1. SIGNS SHALL HAVE ORANGE RETROREFLECTORIZED BACKGROUND WITH BLACK BORDER AND LETTERS.
2. BOLT HOLES SHALL BE ⅜" DIAMETER.
3. BASE MATERIAL SHALL BE ALUMINUM (MINIMUM 0.06").
4. SIGNS SHALL BE MOUNTED WITH BOTTOMS OF SIGNS A MINIMUM OF 6′ ABOVE GROUND.

SIZE	BORDER WIDTH	MARGIN WIDTH	LETTER SIZE					CORNER RADIUS
			LINE 1	LINE 2*	LINE 3	LINE 4	LINE 5,6 & 7*	
48"x60"	1¼"	¾"	4E	4D	6E	4D		3"
42"x26"	OVERLAY						3D	1½"
* CONDENSED SPACING IF NECESSARY								

SIGN SP-4

NOTES: (SIGN SP-4)

1. LETTERS - 6" SERIES C.
2. LETTERS AND BORDERS - BLACK ON RETROREFLECTORIZED WHITE BACKGROUND.
3. BASE MATERIAL SHALL BE ALUMINUM (MINIMUM 0.06").
4. SIGNS SHALL BE PLACED AT RAMP ENTRANCES IN ADDITION TO SIGNS POSTED IN ACCORDANCE WITH STANDARD PLAN T14.

SPECIAL SIGN FOR ENTRANCE RAMP CLOSURES

TRAFFIC HANDLING DETAILS
TRAFFIC CONTROL SYSTEM FOR RAMP CLOSURES, DETOUR SIGNS AND MISCELLANEOUS DETAILS

SHEET 1 OF 2

NO SCALE

THD-9

Dist	COUNTY	ROUTE	POST MILES TOTAL PROJECT	SHEET No.	TOTAL SHEETS
07	LA	10S,105, 605	Var	11	30

K. Yu 9/15/10
REGISTERED CIVIL ENGINEER DATE

10-11-10
PLANS APPROVAL DATE

ALBERT K. YU No. 43220 Exp. 3/31/12 CIVIL — REGISTERED PROFESSIONAL ENGINEER — STATE OF CALIFORNIA

THE STATE OF CALIFORNIA OR ITS OFFICERS OR AGENTS SHALL NOT BE RESPONSIBLE FOR THE ACCURACY OR COMPLETENESS OF SCANNED COPIES OF THIS PLAN SHEET.

REVISED BY	DATE REVISED
JC	7/10

ALBERT K YU — CALCULATED-DESIGNED BY
JOCELYN C CHIANG — CHECKED BY

JOHN YANG — FUNCTIONAL SUPERVISOR

STATE OF CALIFORNIA - DEPARTMENT OF TRANSPORTATION
Caltrans® DTM

LAST REVISION DATE PLOTTED => 30-MAR-2011
00-00-00 TIME PLOTTED => 11:12

Dist	COUNTY	ROUTE	POST MILES TOTAL PROJECT	SHEET No.	TOTAL SHEETS
07	LA	10S,105, 605	Var	12	30

9/15/10
REGISTERED CIVIL ENGINEER DATE

ALBERT K. YU No. 43220 Exp. 3/31/12 CIVIL — REGISTERED PROFESSIONAL ENGINEER — STATE OF CALIFORNIA

10-11-10
PLANS APPROVAL DATE

THE STATE OF CALIFORNIA OR ITS OFFICERS OR AGENTS SHALL NOT BE RESPONSIBLE FOR THE ACCURACY OR COMPLETENESS OF SCANNED COPIES OF THIS PLAN SHEET.

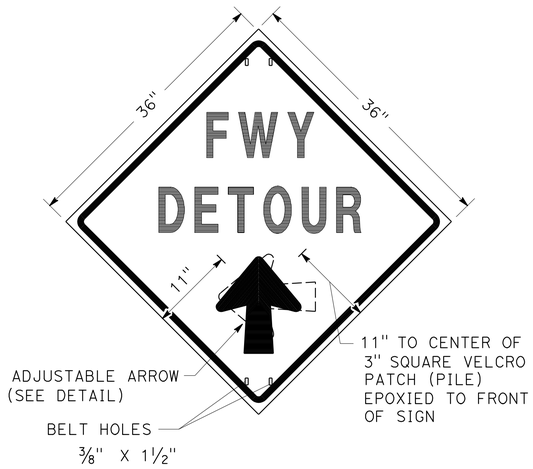

SIGN SP-2

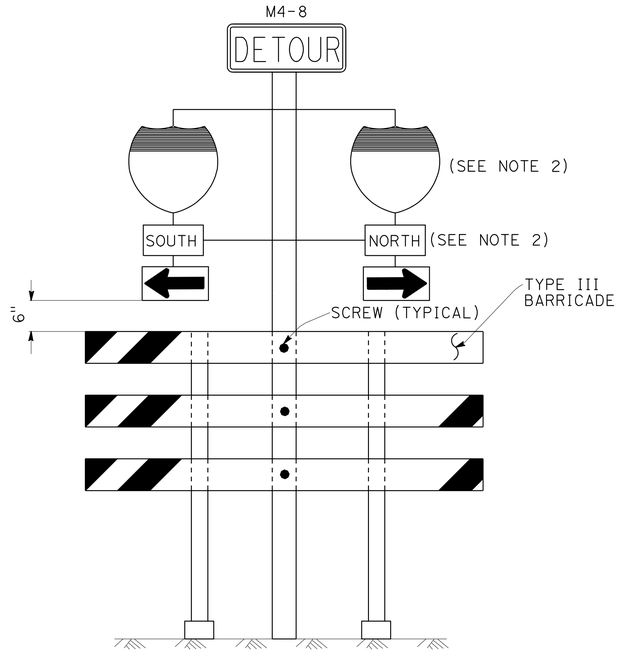

SIGN SP-6 (SEE NOTE 1)

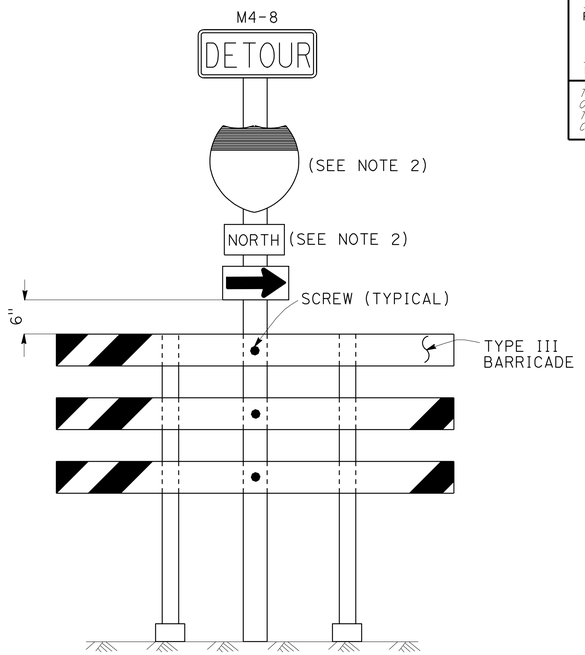

SIGN SP-7 (SEE NOTE 1)

NOTES: (SIGN SP-2)

1. LETTERS -6" SERIES E.
2. LETTERS, BORDER AND ARROW - BLACK ON RETROREFLECTORIZED ORANGE BACKGROUND.
3. BASE MATERIAL FOR SIGNS AND ARROWS SHALL BE ALUMINUM (MINIMUM 0.06").
4. BELTS (LUGGAGE STRAPS) SHALL BE 1" WIDE BY 48" LONG, MADE OF COTTON OR POLYPROPYLENE WEB MATERIAL.
5. SIGNS SHALL BE MOUNTED WITH BOTTOMS OF SIGNS A MINIMUM OF 6' ABOVE GROUND EXCEPT AS OTHERWISE SHOWN ON OTHER TRAFFIC HANDLING DETAILS PLANS.

ABBREVIATION

(CA) CALIFORNIA CODE

NOTES: (SIGNS SP-6 & SP-7)

1. IN LIEU OF PLACING SIGNS ON TYPE III BARRICADES, SIGNS, INCLUDING POSTS, MAY BE PLACED INTO THE GROUND OR FASTENED ONTO ELECTROLIERS.
2. USE APPROPRIATE ROUTE SHIELD [G26-2(CA), G27-2(CA), G28-2(CA)] AND CARDINAL DIRECTION [NORTH (M3-1), SOUTH (M3-3), EAST (M3-2), WEST (M3-4)]

SPECIAL PORTABLE FREEWAY DETOUR SIGNS

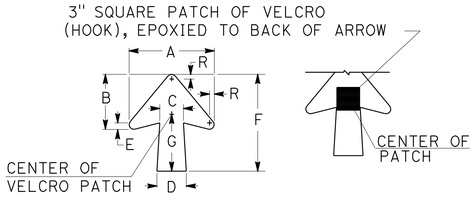

DIMENSIONS							
A	B	C	D	E	F	G	R
11 1/4"	7 1/4"	3 1/8"	4"	7/8"	13"	7 1/2"	5/8"

SPECIAL PORTABLE FREEWAY DETOUR SIGN

ADJUSTABLE ARROW DETAIL

TRAFFIC HANDLING DETAILS

TRAFFIC CONTROL SYSTEM FOR RAMP CLOSURES, DETOUR SIGNS AND MISCELLANEOUS DETAILS

SHEET 2 OF 2

NO SCALE

THD-10

CALCULATED-DESIGNED BY	CHECKED BY	REVISED BY	DATE REVISED
ALBERT K YU	JOCELYN C CHIANG	JC	7/10

FUNCTIONAL SUPERVISOR: JOHN YANG

STATE OF CALIFORNIA - DEPARTMENT OF TRANSPORTATION — DTM — Caltrans

LAST REVISION DATE PLOTTED => 30-MAR-2011
00-00-00 TIME PLOTTED => 11:12

BORDER LAST REVISED 7/2/2010 | USERNAME => s119140 | DGN FILE => 726470me010.dgn | RELATIVE BORDER SCALE IS IN INCHES 0 1 2 3 | UNIT 1863 | PROJECT NUMBER & PHASE 07000004931

Dist	COUNTY	ROUTE	POST MILES TOTAL PROJECT	SHEET No.	TOTAL SHEETS
07	LA	10S,105, 605	Var	13	30

REGISTERED CIVIL ENGINEER — DATE 9/15/10

ALBERT K. YU No. 43220 Exp. 3/31/12 CIVIL — REGISTERED PROFESSIONAL ENGINEER — STATE OF CALIFORNIA

PLANS APPROVAL DATE 10-11-10

THE STATE OF CALIFORNIA OR ITS OFFICERS OR AGENTS SHALL NOT BE RESPONSIBLE FOR THE ACCURACY OR COMPLETENESS OF SCANNED COPIES OF THIS PLAN SHEET.

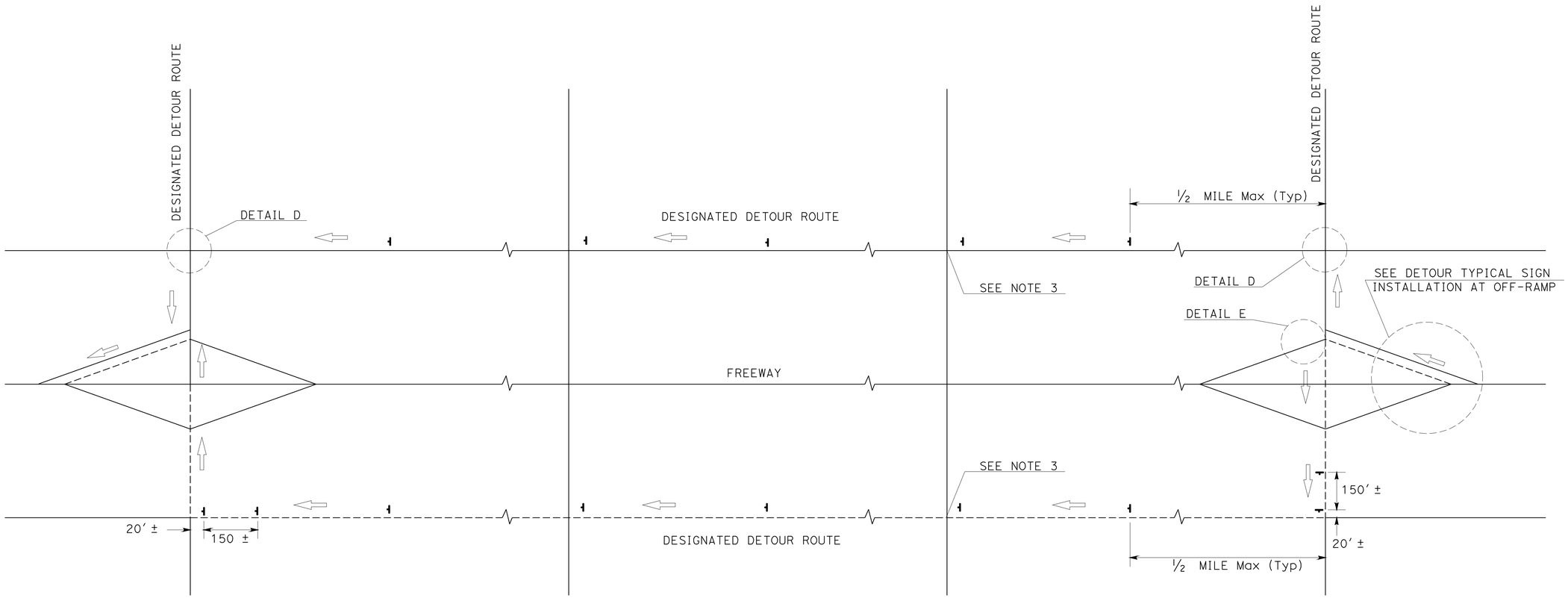

TYPICAL DETOUR SIGN INSTALLATION ALONG DESIGNATED DETOUR ROUTE

LEGEND:

- TEMPORARY SIGN (SP-2)
- AND/OR — DESIGNATED DETOUR ROUTE
- DIRECTION OF TRAVEL

NOTES:

1. SP-2 SIGNS SHALL NOT BE INSTALLED ON BARRICADES EXCEPT AS OTHERWISE SHOWN.
2. SIGN LOCATIONS ARE APPROXIMATE. EXACT LOCATIONS WILL BE DETERMINED BY THE ENGINEER.
3. SP-2 SIGNS SHALL BE POSTED AT SIGNALIZED INTERSECTIONS ALONG THE DESIGNATED DETOUR ROUTE OR ½ MILE MAXIMUM APART.

TRAFFIC HANDLING DETAILS

TRAFFIC CONTROL SYSTEM FOR DETOUR SIGN INSTALLATION ALONG DESIGNATED DETOUR ROUTE

SHEET 1 OF 2

NO SCALE

THD-11

STATE OF CALIFORNIA - DEPARTMENT OF TRANSPORTATION — DTM — Caltrans

FUNCTIONAL SUPERVISOR: JOHN YANG

CALCULATED-DESIGNED BY: ALBERT K YU

CHECKED BY: JOCELYN C CHIANG

REVISED BY	DATE REVISED
JC	7/10

LAST REVISION — DATE PLOTTED => 30-MAR-2011 — TIME PLOTTED => 11:12 — 00-00-00

BORDER LAST REVISED 7/2/2010

USERNAME => s119140
DGN FILE => 726470me011.dgn

RELATIVE BORDER SCALE IS IN INCHES 0 1 2 3

UNIT 1863

PROJECT NUMBER & PHASE 07000004931

Dist	COUNTY	ROUTE	POST MILES TOTAL PROJECT	SHEET No.	TOTAL SHEETS
07	LA	10S,105, 605	Var	14	30

REGISTERED CIVIL ENGINEER — DATE 9/15/10

ALBERT K. YU No. 43220 Exp. 3/31/12 CIVIL — REGISTERED PROFESSIONAL ENGINEER — STATE OF CALIFORNIA

PLANS APPROVAL DATE 10-11-10

THE STATE OF CALIFORNIA OR ITS OFFICERS OR AGENTS SHALL NOT BE RESPONSIBLE FOR THE ACCURACY OR COMPLETENESS OF SCANNED COPIES OF THIS PLAN SHEET.

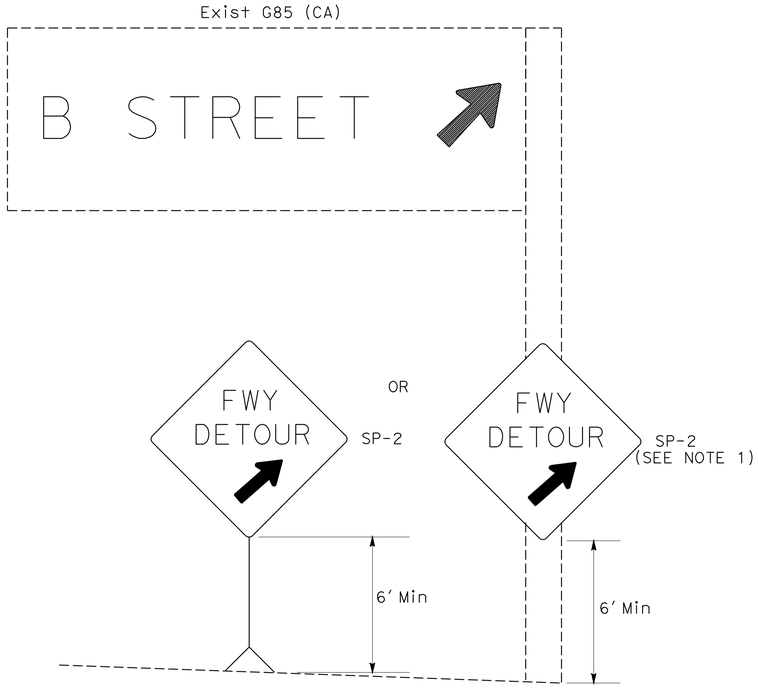

DETAIL A

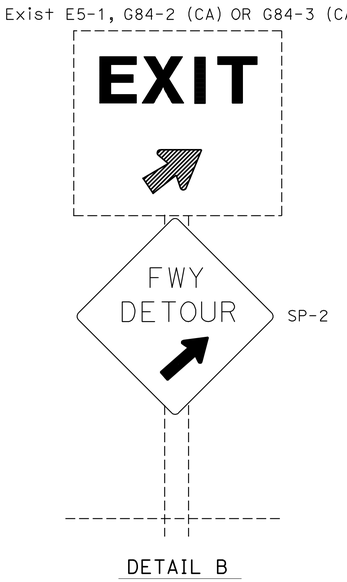

DETAIL B

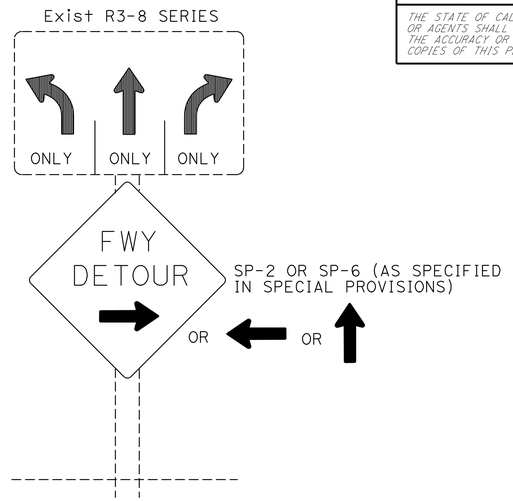

DETAIL C

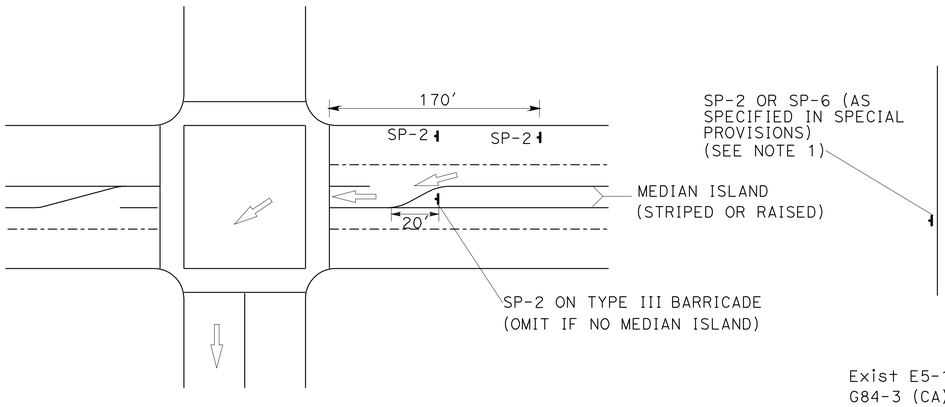

DETAIL D

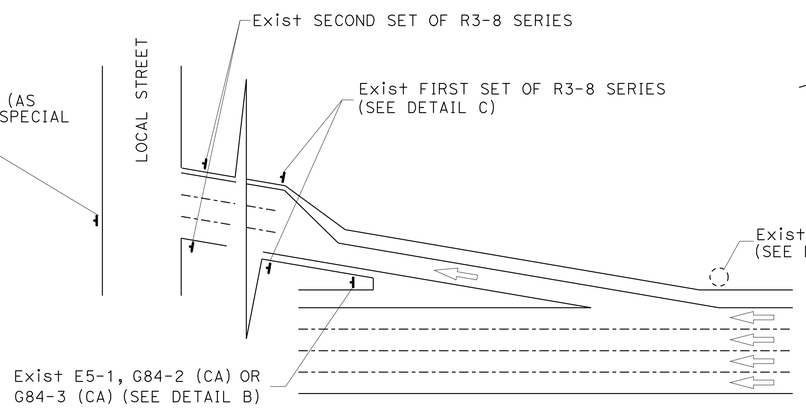

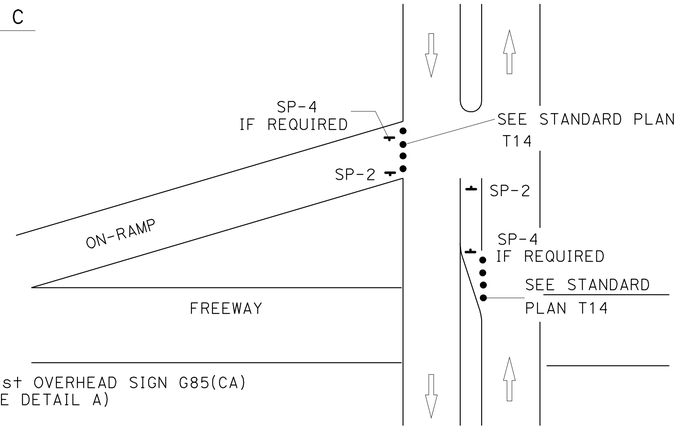

DETAIL E

TYPICAL DETOUR SIGN INSTALLATION AT OFF-RAMP

NOTES:

1. TEMPORARY SIGNS MAY BE STRAPPED ON EXISTING ELECTROLIER, SIGNAL POSTS, OR SIGN POSTS.
2. OMIT DETAIL A AND DETAIL B FOR FULL FREEWAY CLOSURES.
3. SEE TRAFFIC HANDLING DETAILS PLAN-TRAFFIC CONTROL SYSTEM FOR RAMP CLOSURES, DETOUR SIGNS AND MISCELLANEOUS DETAILS SHEET 2 OF 2 FOR SP-6.

ABBREVIATIONS

(CA) CALIFORNIA CODE

LEGENDS

- TRAFFIC CONE
- TEMPORARY SIGN
- DIRECTION OF TRAVEL
- EXISTING OVERHEAD SIGN

TRAFFIC HANDLING DETAILS
TRAFFIC CONTROL SYSTEM FOR DETOUR SIGN INSTALLATION ALONG DESIGNATED DETOUR ROUTE
SHEET 2 OF 2

NO SCALE

THD-12

CALCULATED-DESIGNED BY: JC 8/10
CHECKED BY: ALBERT K YU
REVISED BY: JOCELYN C CHIANG
DATE REVISED:
FUNCTIONAL SUPERVISOR: JOHN YANG

STATE OF CALIFORNIA - DEPARTMENT OF TRANSPORTATION
DTM
Caltrans

LAST REVISION: DATE PLOTTED => 30-MAR-2011
00-00-00 TIME PLOTTED => 11:12

BORDER LAST REVISED 7/2/2010
USERNAME => s119140
DGN FILE => 726470me012.dgn
RELATIVE BORDER SCALE IS IN INCHES 0 1 2 3
UNIT 1863
PROJECT NUMBER & PHASE 07000004931

Dist	COUNTY	ROUTE	POST MILES TOTAL PROJECT	SHEET No.	TOTAL SHEETS
07	LA	10S,105, 605	Var	15	30

Ting-Ting Lee 9-20-10
REGISTERED CIVIL ENGINEER DATE

10-11-10
PLANS APPROVAL DATE

REGISTERED PROFESSIONAL ENGINEER
TING TING LEE
No. C51642
Exp. 6-30-12
CIVIL
STATE OF CALIFORNIA

THE STATE OF CALIFORNIA OR ITS OFFICERS OR AGENTS SHALL NOT BE RESPONSIBLE FOR THE ACCURACY OR COMPLETENESS OF SCANNED COPIES OF THIS PLAN SHEET.

PAVEMENT DELINEATION QUANTITIES

DIRECTION	DESCRIPTION LOCATION						REMOVE				HOV DETAIL					
											THERMOPLASTIC TRAFFIC STRIPE			THERMOPLASTIC PAVEMENT MARKING		RETROREFLECTIVE PAVEMENT MARKER
							THERMOPLASTIC TRAFFIC STRIPE	PAVEMENT MARKER	THERMOPLASTIC PAVEMENT MARKING (DIAGONALS, ARROWS, WORDS)	YELLOW THERMOPLASTIC TRAFFIC STRIPE (HAZARDOUS WASTE)	DETAIL 27B	DETAIL 25	LANE LINE			
											4" WHITE STRIPE	4" YELLOW STRIPE	8" WHITE STRIPE	DIAGONAL MARKINGS	ARROWS, WORDS	TYPE H
	COUNTY	ROUTE	PM	NAME OF BRIDGE	BRIDGE No.		LF	EA	SQFT	LF	LF	LF	LF	SQFT	SQFT	EA
EB	LA	10S	17.20	LOS ANGELES RIVER BUSWAY	53-2673		5943	92	290	2571	2571	2571	3372	15	275	92
WB	LA	10S	17.20	LOS ANGELES RIVER BUSWAY	53-2673		2741	58	536	2351	0	2351	2741	481	55	58
SUB TOTAL							8684	150	826	4922	2571	4922	6113	496	330	150
TOTAL							8684	150	826	4922	7493		6113	826		150

FUNCTIONAL SUPERVISOR: MARIO A. GUTIERREZ
CALCULATED-DESIGNED BY: EDMUND S. SPIRAUSKAS
CHECKED BY: TING TING LEE
REVISED BY
DATE REVISED

STATE OF CALIFORNIA - DEPARTMENT OF TRANSPORTATION
Caltrans® OFFICE OF DESIGN A

PAVEMENT DELINEATION QUANTITIES

PDQ-1

LAST REVISION DATE PLOTTED => 30-MAR-2011
00-00-00 TIME PLOTTED => 11:12

BORDER LAST REVISED 7/2/2010
USERNAME => s119140
DGN FILE => 726470nc001.dgn
RELATIVE BORDER SCALE IS IN INCHES 0 1 2 3
UNIT 1796
PROJECT NUMBER & PHASE 07000004931

DIST	COUNTY	ROUTE	POST MILES TOTAL PROJECT	SHEET NO.	TOTAL SHEETS
07	LA	10S,105, 605	Var	16	30

Randell D. Hiatt
REGISTERED CIVIL ENGINEER

June 6, 2008
PLANS APPROVAL DATE

REGISTERED PROFESSIONAL ENGINEER — Randell D. Hiatt — No. C50200 — Exp. 6-30-09 — CIVIL — STATE OF CALIFORNIA

The State of California or its officers or agents shall not be responsible for the accuracy or completeness of electronic copies of this plan sheet.

To accompany plans dated 10-11-10

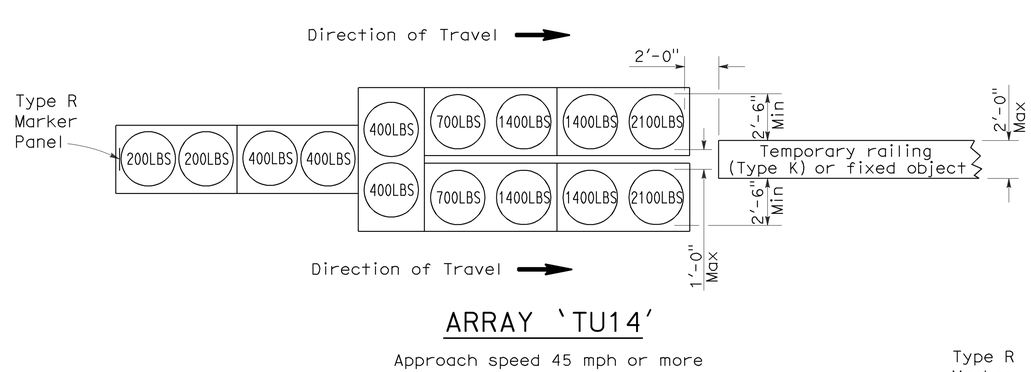

ARRAY 'TU14'

Approach speed 45 mph or more

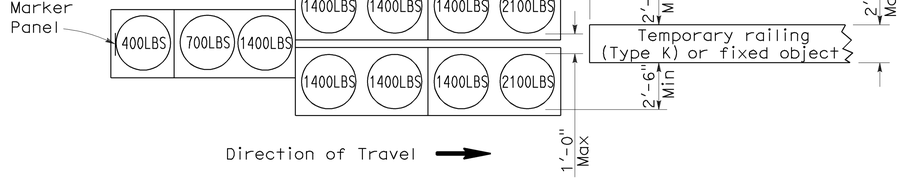

ARRAY 'TU11'

Approach speed less than 45 mph

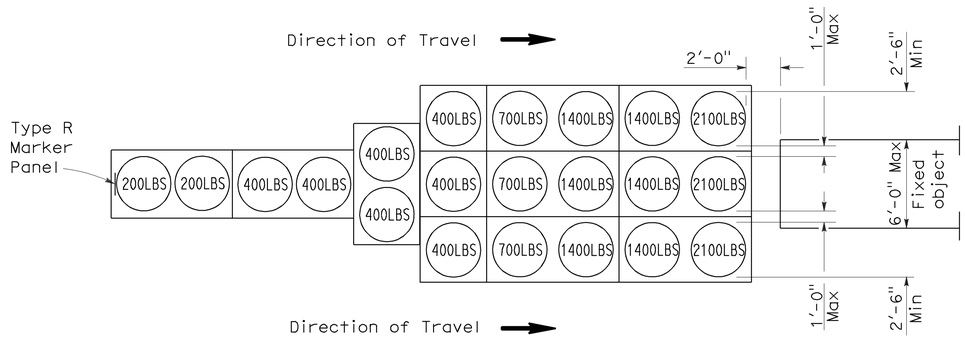

ARRAY 'TU21'

Approach speed 45 mph or more

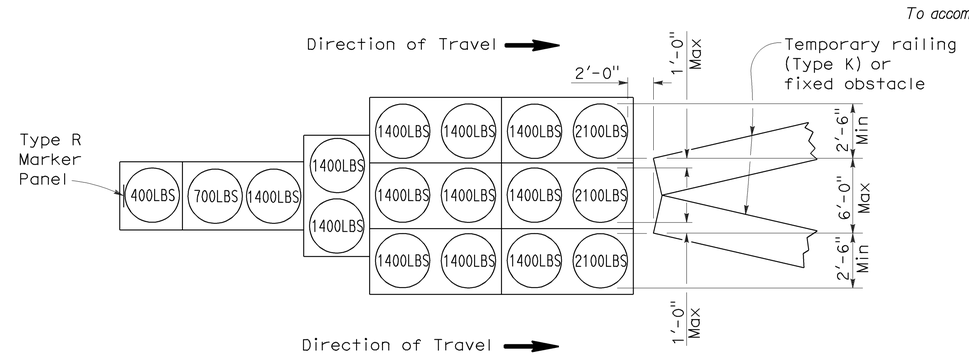

ARRAY 'TU17'

Approach speed less than 45 mph

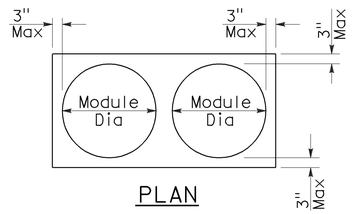

PLAN

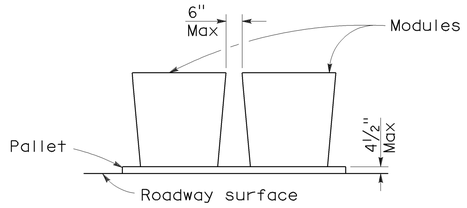

ELEVATION

CRASH CUSHION PALLET DETAIL

See Note 7

NOTES:

1. (XXX) Indicates sand filled module location and weight of sand in pounds for each module. Module spacing is based on the greater diameter of the module.
2. All sand weights are nominal.
3. Temporary crash cushion arrays shall not encroach on the traveled way.
4. Place the top of Type R marker panel 1" below the module lid.
5. Refer to Standard Plan A73B for marker details.
6. Approach speeds indicated conform to NCHRP 350 Report criteria.
7. Use of pallets is optional.

STATE OF CALIFORNIA
DEPARTMENT OF TRANSPORTATION

TEMPORARY CRASH CUSHION, SAND FILLED (UNIDIRECTIONAL)

NO SCALE

RSP T1A DATED JUNE 6, 2008 SUPERSEDES STANDARD PLAN T1A
DATED MAY 1, 2006 - PAGE 211 OF THE STANDARD PLANS BOOK DATED MAY 2006.

REVISED STANDARD PLAN RSP T1A

2006 REVISED STANDARD PLAN RSP T1A

5-15-08

DIST	COUNTY	ROUTE	POST MILES TOTAL PROJECT	SHEET NO.	TOTAL SHEETS
07	LA	10S,105, 605	Var	17	30

Randell D. Hiatt
REGISTERED CIVIL ENGINEER

June 6, 2008
PLANS APPROVAL DATE

The State of California or its officers or agents shall not be responsible for the accuracy or completeness of electronic copies of this plan sheet.

REGISTERED PROFESSIONAL ENGINEER
Randell D. Hiatt
No. C50200
Exp. 6-30-09
CIVIL
STATE OF CALIFORNIA

To accompany plans dated 10-11-10

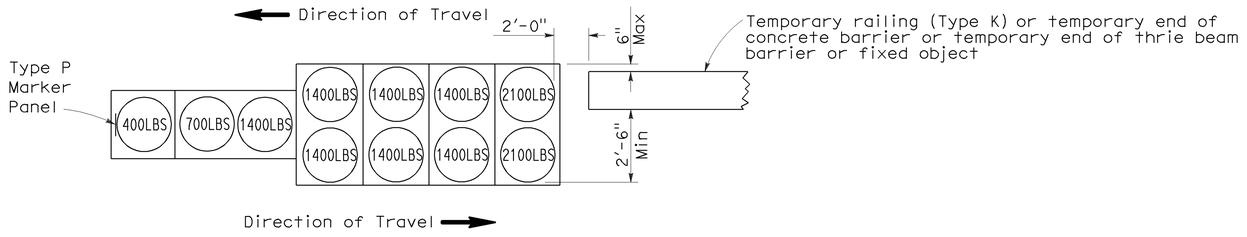

ARRAY 'TB11'

Approach speed less than 45 mph

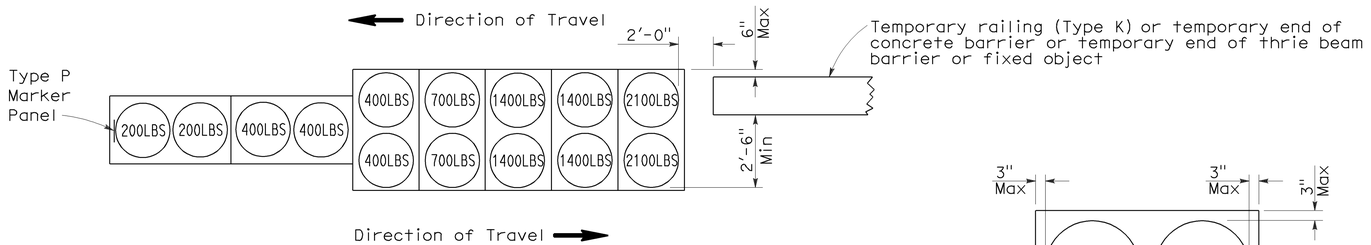

ARRAY 'TB14'

Approach speed 45 mph or more

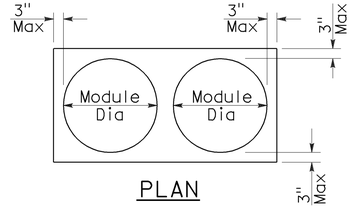

PLAN

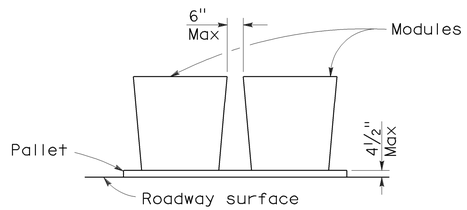

ELEVATION

CRASH CUSHION PALLET DETAIL

See Note 7

NOTES:

1. (XXX) Indicates sand filled module location and weight of sand in pounds for each module. Module spacing is based on the greater diameter of the module.
2. All sand weights are nominal.
3. Temporary crash cushion arrays shall not encroach on the traveled way.
4. Place the Type P marker panel so that the bottom of the panel rests upon the pallet.
5. Refer to Standard Plan A73B for marker details.
6. Approach speeds indicated conform to NCHRP 350 Report criteria.
7. Use of pallets is optional.

STATE OF CALIFORNIA
DEPARTMENT OF TRANSPORTATION

TEMPORARY CRASH CUSHION, SAND FILLED (BIDIRECTIONAL)

NO SCALE

RSP T1B DATED JUNE 6, 2008 SUPERSEDES STANDARD PLAN T1B
DATED MAY 1, 2006 - PAGE 212 OF THE STANDARD PLANS BOOK DATED MAY 2006.

REVISED STANDARD PLAN RSP T1B

2006 REVISED STANDARD PLAN RSP T1B

5-15-08

DIST	COUNTY	ROUTE	POST MILES TOTAL PROJECT	SHEET NO.	TOTAL SHEETS
07	LA	10S,105, 605	Var	18	30

Randell D. Hiatt
REGISTERED CIVIL ENGINEER

June 6, 2008
PLANS APPROVAL DATE

REGISTERED PROFESSIONAL ENGINEER
Randell D. Hiatt
No. C50200
Exp. 6-30-09
CIVIL
STATE OF CALIFORNIA

The State of California or its officers or agents shall not be responsible for the accuracy or completeness of electronic copies of this plan sheet.

To accompany plans dated 10-11-10

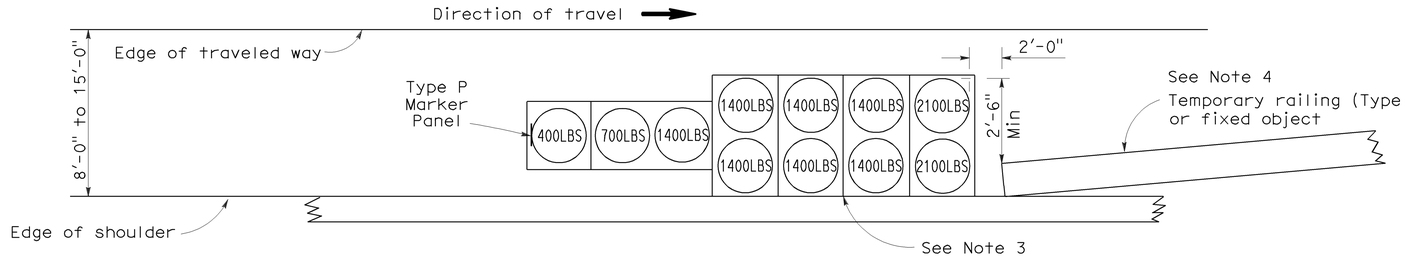

ARRAY 'TS11'

Approach speed less than 45 mph
See Note 9

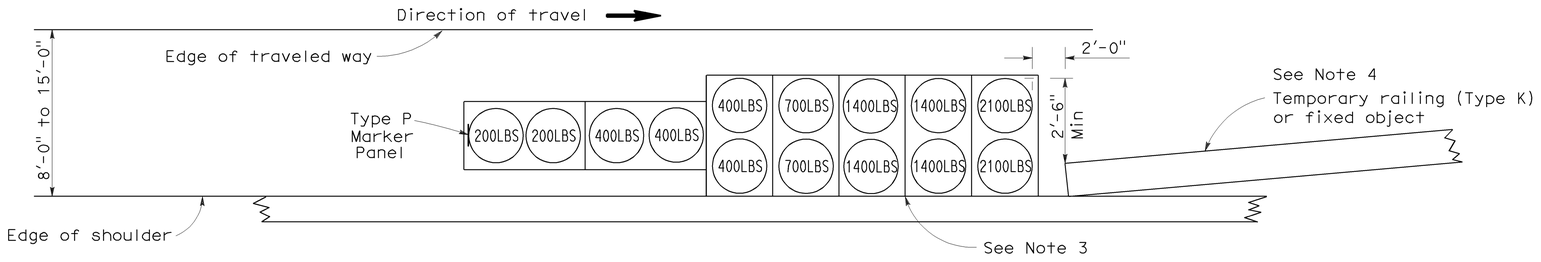

ARRAY 'TS14'

Approach speed 45 mph or more
See Note 9

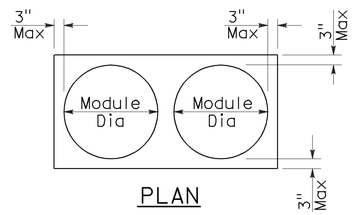

PLAN

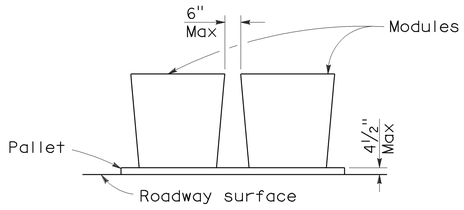

ELEVATION

CRASH CUSHION PALLET DETAIL

See Note 11

NOTES:

1. (XXX) Indicates sand filled module location and weight of sand in pounds for each module. Module spacing is based on the greater diameter of the module.
2. All sand weights are nominal.
3. The temporary crash cushion arrays shown on this plan shall be used only in locations where there will be traffic on one side of the temporary crash cushion array.
4. If the fixed object or approach end of the temporary railing is less than 15'-0" from the edge of traveled way, a temporary crash cushion is required in a construction or work zone.
5. Temporary crash cushion arrays shall not encroach on the traveled way.
6. Arrays for median shoulders shall conform to details shown on this plan for outside shoulders.
7. Place the Type P marker panel so that the bottom of the panel rests upon the pallet and faces traffic.
8. Refer to Standard Plan A73B for marker details.
9. For shoulder widths less than 8'-0", appropriate approved crash cushion protection, other than sand filled modules, shall be provided at fixed objects and at approach ends of temporary railing. The specific type of crash cushion shall be as shown on the project plans or as specified in the Special Provisions, or if not shown on the project plans or specified in the Special Provisions, shall be as approved by the Engineer.
10. Approach speeds indicated conform to NCHRP 350 Report criteria.
11. Use of pallets is optional.

STATE OF CALIFORNIA
DEPARTMENT OF TRANSPORTATION

TEMPORARY CRASH CUSHION, SAND FILLED (SHOULDER INSTALLATIONS)

NO SCALE

RSP T2 DATED JUNE 6, 2008 SUPERSEDES STANDARD PLAN T2
DATED MAY 1, 2006 - PAGE 213 OF THE STANDARD PLANS BOOK DATED MAY 2006.

REVISED STANDARD PLAN RSP T2

2006 REVISED STANDARD PLAN RSP T2

5-15-08

DIST	COUNTY	ROUTE	POST MILES TOTAL PROJECT	SHEET NO.	TOTAL SHEETS
07	LA	10S,105, 605	Var	19	30

Greg W. Edwards
REGISTERED CIVIL ENGINEER

November 17, 2006
PLANS APPROVAL DATE

REGISTERED PROFESSIONAL ENGINEER — Greg W. Edwards — No. C36386 — Exp. 6-30-08 CIVIL — STATE OF CALIFORNIA

The State of California or its officers or agents shall not be responsible for the accuracy or completeness of electronic copies of this plan sheet.

To accompany plans dated 10-11-10

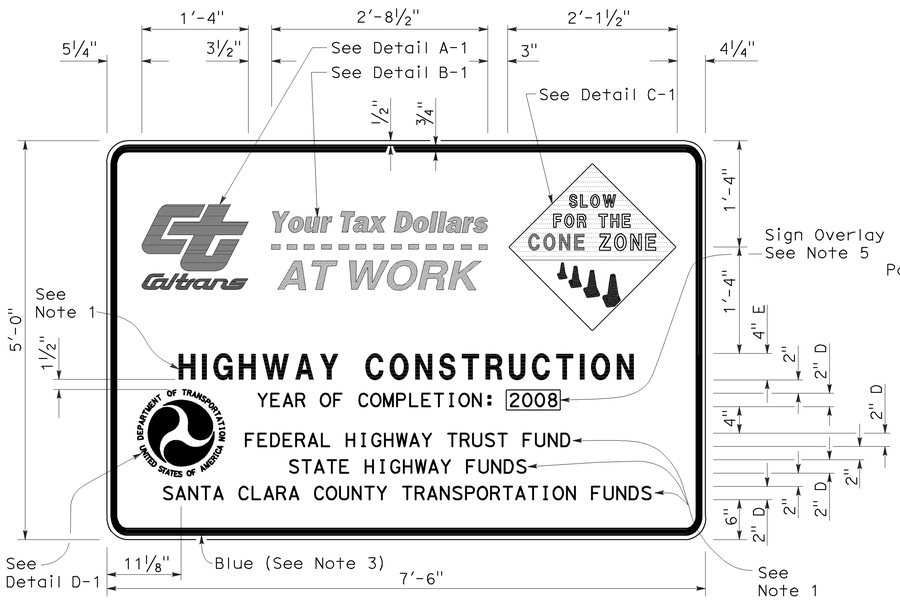

TYPE 1

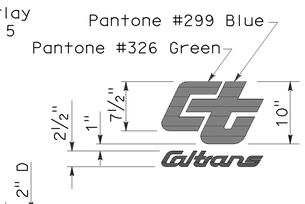

DETAIL A-1

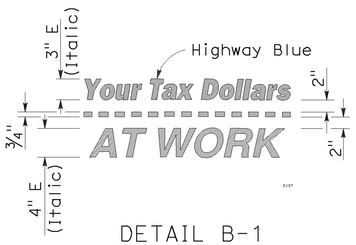

DETAIL B-1
(See Note 3)

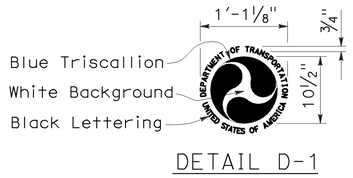

DETAIL D-1
(See Note 6)

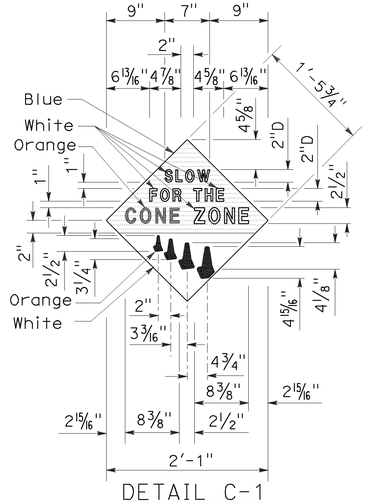

DETAIL C-1
(See Note 4)

NOTES:

1. The sign messages shown for type of project and fund types are examples only. See the Special Provisions for the applicable type of project and fund type messages to be used.
2. Except as otherwise shown, the legend of sign shall be black on a white background (non-reflective).
3. The border of the signs and details "B-1" and "B-2" shall be blue (non-reflective).
4. The diamond in details "C-1" and "C-2" shall be blue for the background of message, " SLOW FOR THE CONE ZONE", and white background for the orange cones. The color and type of font for the "SLOW FOR THE CONE ZONE" message shall be: "SLOW" white D; "FOR THE" white D; "CONE" orange Arial font; "ZONE" white Arial font.
5. Year of completion of project construction shown on the overlay is an example only. See the Special Provisions.
6. Use when the Project involves Federal Highway Trust Fund.

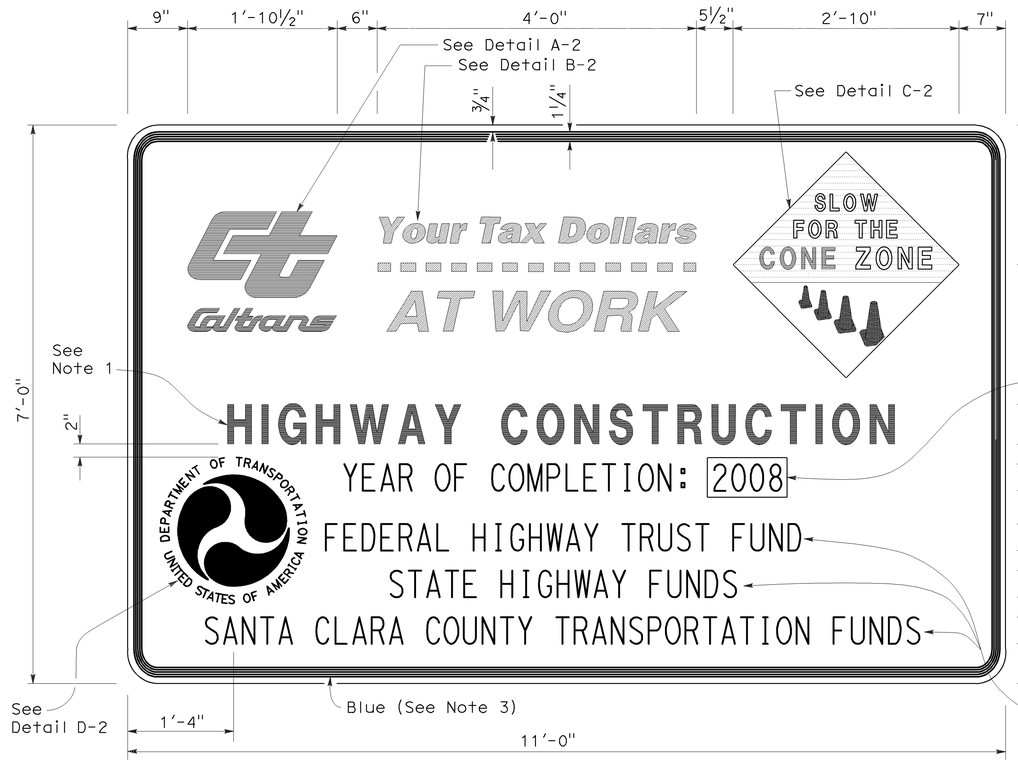

TYPE 2

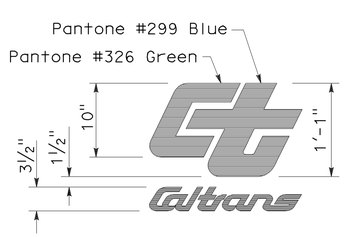

DETAIL A-2

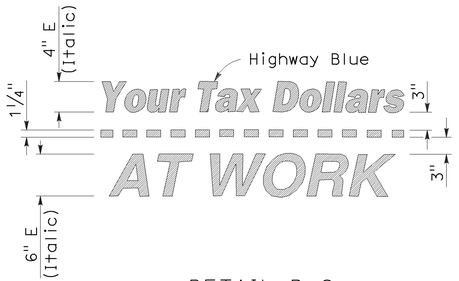

DETAIL B-2
(See Note 3)

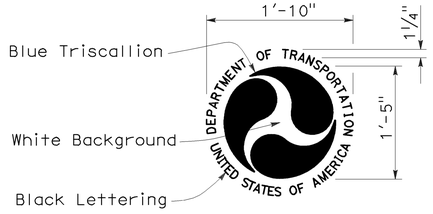

DETAIL D-2
(See Note 6)

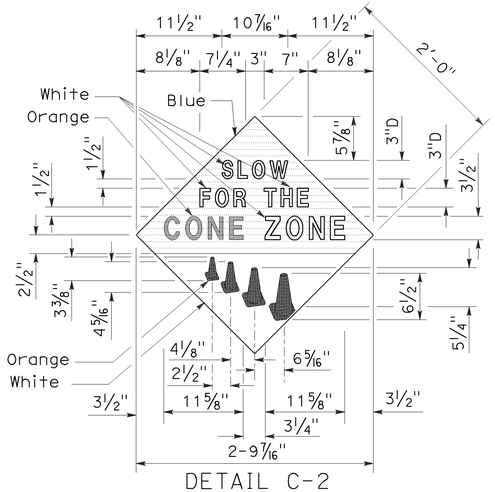

DETAIL C-2
(See Note 4)

STATE OF CALIFORNIA
DEPARTMENT OF TRANSPORTATION

CONSTRUCTION PROJECT FUNDING IDENTIFICATION SIGNS

NO SCALE

RSP T7 DATED NOVEMBER 17, 2006 SUPERSEDES STANDARD PLAN T7
DATED MAY 1, 2006 - PAGE 217 OF THE STANDARD PLANS BOOK DATED MAY 2006.

REVISED STANDARD PLAN RSP T7

2006 REVISED STANDARD PLAN RSP T7

9-7-06

DIST	COUNTY	ROUTE	POST MILES TOTAL PROJECT	SHEET NO.	TOTAL SHEETS
07	LA	10S,105, 605	Var	20	30

REGISTERED CIVIL ENGINEER

Efthymios Delis
No. C51434
Exp. 6-30-08
CIVIL
REGISTERED PROFESSIONAL ENGINEER
STATE OF CALIFORNIA

October 5, 2007
PLANS APPROVAL DATE

The State of California or its officers or agents shall not be responsible for the accuracy or completeness of electronic copies of this plan sheet.

To accompany plans dated 10-11-10

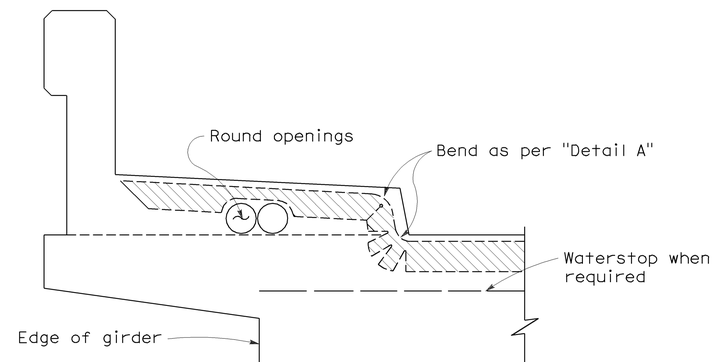

NOTE:

Type "B" seal shown. Type "A" seals to comform to the general path of seal shown, cuts for bending not required. Bend Type "A" seals 3" up into curb or barrier rail on only the low end of the seal.

CONCRETE BARRIER AND SIDEWALK

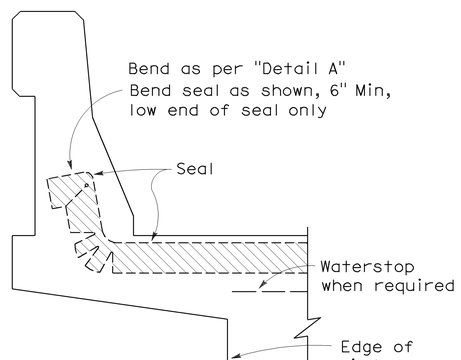

CONCRETE BARRIER

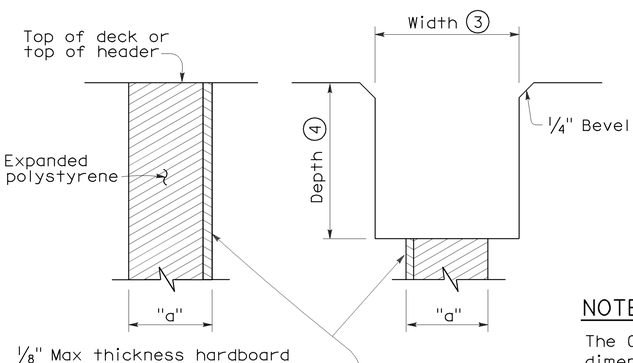

FORMING DETAIL SAWCUT DETAIL

NOTE:

The Contractor shall verify all controlling field dimensions before ordering or fabricatiing any material.

JOINT SEALS DETAILS

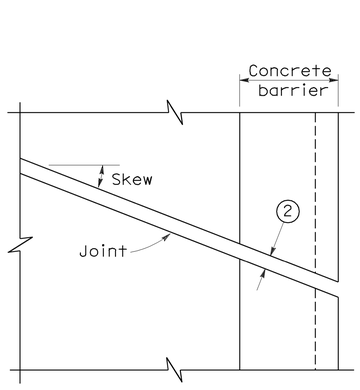

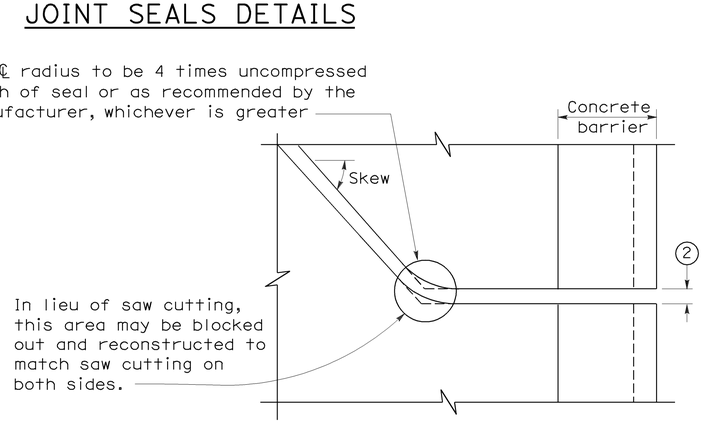

PLAN OF JOINT (SKEW ≤ 20°)

PLAN OF JOINT (SKEW > 20°)

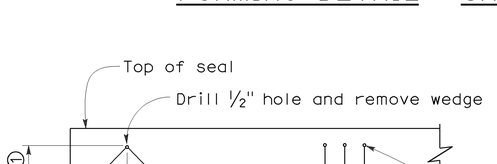

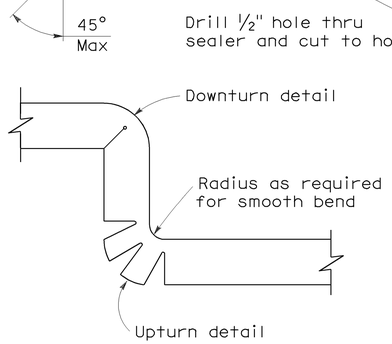

DETAIL A

NOTES:

1. Make smooth cuts from the bottom of seal to 1½" clear of top leaving at least one complete cell between the top of the cut and top of the seal. When necessary cut back of seal to clear conduit and round openings.
2. Opening in barrier to match width of sawn deck joint.
3. Sawcut groove widths shall be as ordered by the Engineer.
4. Depth of sawcut: Type A - Depth to be 2" minimum.
   Type B - Depth to be equal to or greater than the depth of seal measured along the contact surface, when compressed to minimum width position (W_2) plus dimensions shown.
5. MR (movement rating) as shown on other plan sheets.
6. Other depths must be approved by the Engineer.

DIMENSIONS "a" OF JOINT REQUIRED

Movement Rating (MR) (5)	Bridge Type	"a" Dimension Deck Concrete Placed		
		Winter	Fall-Spring	Summer
2"	All except CIP/PS	1½"	1¼"	¾"
	CIP/PS	1¼"	1"	½"
1½"	All except CIP/PS	1¼"	1"	½"
	CIP/PS	1"	¾"	½"
1"	All except CIP/PS	1"	¾"	½"
	CIP/PS	¾"	½"	½"
½"	All except CIP/PS	¾"	¾"	½"
	CIP/PS	½"	½"	½"

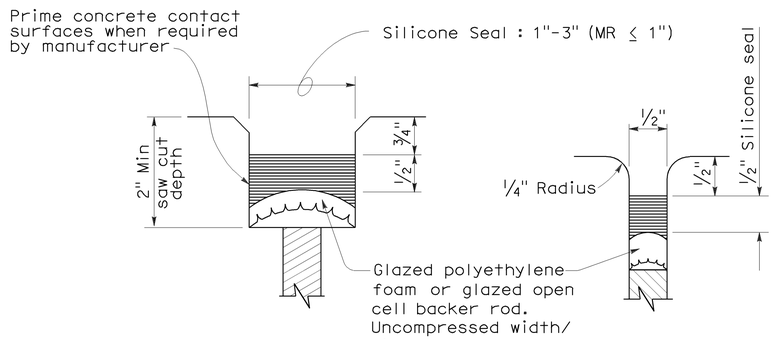

TYPE A SEAL

Movement rating : Silicone = 1" Max

TYPE AL SEAL

Longitudinal joints only

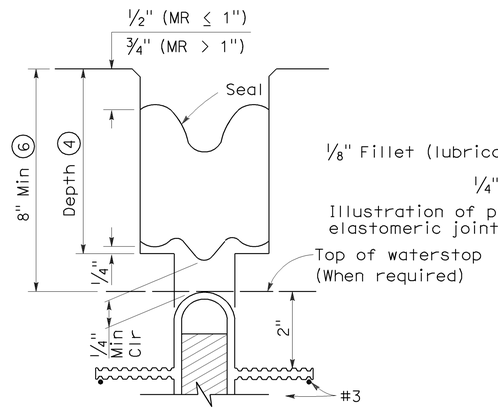

TYPE B JOINT SEAL
IN MINIMUM WIDTH POSITION (W_2)

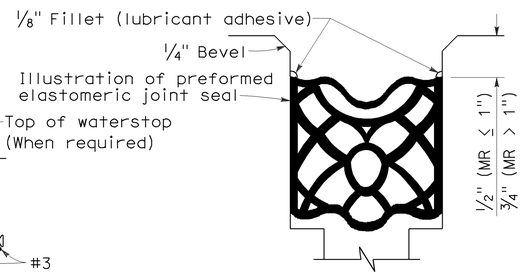

TYPE B SEAL

Movement Rating ≤ 2"

STATE OF CALIFORNIA
DEPARTMENT OF TRANSPORTATION

JOINT SEALS (MAXIMUM MOVEMENT RATING = 2")

NO SCALE

RSP B6-21 DATED OCTOBER 5, 2007 SUPERSEDES STANDARD PLAN B6-21 DATED MAY 1, 2006 - PAGE 258 OF THE STANDARD PLANS BOOK DATED MAY 2006.

REVISED STANDARD PLAN RSP B6-21

2006 REVISED STANDARD PLAN RSP B6-21

5-8-07

NOTES: (APPLY TO ALL SHEETS)

-·-·-·- Indicates existing structure

——— Indicates location of existing aluminum joint seal assembly removal and placement of new joint seal or steel joint seal assembly.

① Indicates limits of clean and treat bridge deck with high moleculate weight methacrylate. Prior to bridge deck treatment, remove unsound concrete and patch with rapid setting concrete.

② Indicates spalled surface area repair

STANDARD PLAN SHEET NO.

DETAIL NO.

STANDARD PLANS DATED MAY 2006

SHEET NO.	TITLE
A10A	ACRONYMS AND ABBREVIATIONS (SHEET 1 OF 2)
A10B	ACRONYMS AND ABBREVIATIONS (SHEET 2 OF 2)
RSP B6-21	JOINT SEALS (MAXIMUM MOVEMENT RATING = 2")

DIST	COUNTY	ROUTE	POST MILES TOTAL PROJECT	SHEET No.	TOTAL SHEETS
07	LA	105,105, 605	Var	21	30

Lihua Han 3-18-10
REGISTERED CIVIL ENGINEER DATE

10-11-10
PLANS APPROVAL DATE

REGISTERED PROFESSIONAL ENGINEER — LIHUA HAN No. C61320 Exp. 06-30-11 CIVIL — STATE OF CALIFORNIA

The State of California or its officers or agents shall not be responsible for the accuracy or completeness of electronic copies of this plan sheet.

To get to the Caltrans web site, go to: http://www.dot.ca.gov

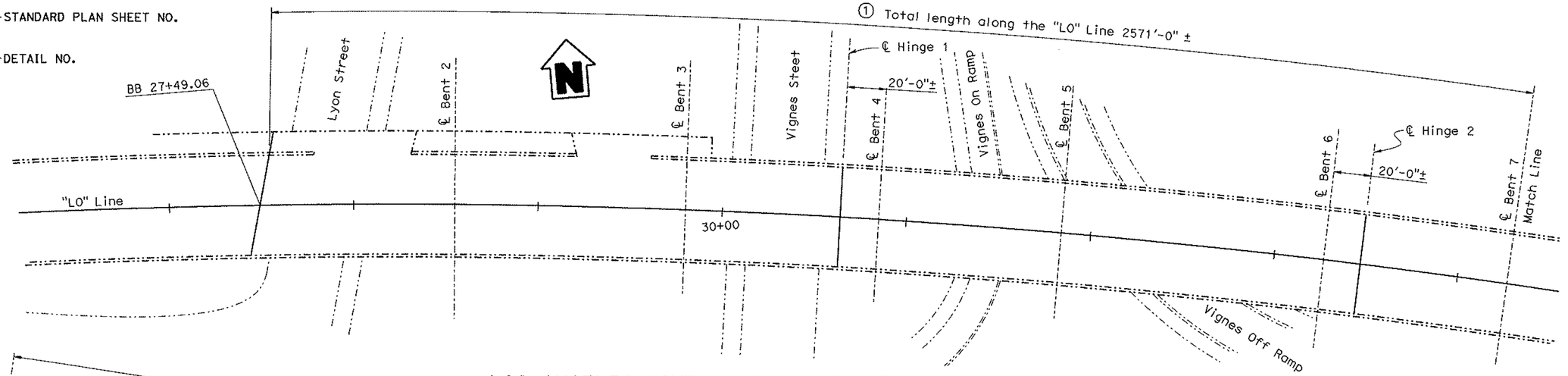

LOS ANGELES RIVER BUSWAY BRIDGE & OH, PLAN NO. 1

BR. NO. 53-2673, ROUTE 10, PM 17.20
1" = 30'

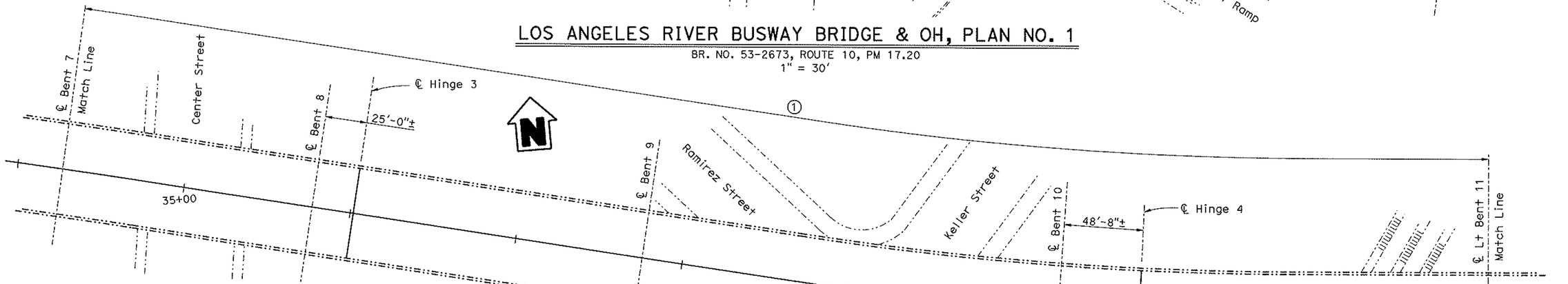

INDEX TO PLAN

SHEET NO.	TITLE
1	GENERAL PLAN NO. 1
2	GENERAL PLAN NO. 2
3	GENERAL PLAN NO. 3
4	GENERAL PLAN NO. 4
5	GENERAL PLAN NO. 5
6	GENERAL PLAN NO. 6
7	GENERAL PLAN NO. 7
8	JOINT SEAL DETAILS
9	TEMPORARY DECK PLATE DETAILS
10	JOINT SEAL ASSEMBLY (MAXIMUM MR = 4")

LOS ANGELES RIVER BUSWAY BRIDGE & OH, PLAN NO. 2

BR. NO. 53-2673, ROUTE 10, PM 17.20
1" = 30'

X Douglas J Dunnal
DESIGN ENGINEER

	BY	CHECKED
DESIGN	J. Han	S. Galgiani
DETAILS	L. Xiong	J. Han
QUANTITIES	J. Han	S. Galgiani

LOAD & RESISTANCE FACTOR DESIGN — LIVE LOADING: HL93 W/"LOW-BOY"; PERMIT DESIGN VEHICLE

	BY	CHECKED
LAYOUT	J. Han	S. Galgiani
SPECIFICATIONS	T. Nedwick	PLANS AND SPECS COMPARED T. Nedwick

ORIGINAL SCALE IN INCHES FOR REDUCED PLANS 0 1 2 3

STATE OF CALIFORNIA
DEPARTMENT OF TRANSPORTATION

DIVISION OF ENGINEERING SERVICES
STRUCTURE DESIGN
DESIGN BRANCH 14

CU 07
EA 264701

BRIDGE NO.	VARIOUS
POST MILE	VARIOUS

ROUTE 10, 105 BRIDGES
GENERAL PLAN NO. 1

DISREGARD PRINTS BEARING EARLIER REVISION DATES →

REVISION DATES										
5-19-09	05-27-09	06-24-09	07-15-09	07-15-09	08-21-09	08-28-09	08-31-09	09-01-09		

SHEET 1 OF 10

FILE => various_01_gp1.dgn

STRUCTURES DESIGN GENERAL PLAN SHEET (ENGLISH) (REV.07-24-06)

USERNAME => lxiong DATE PLOTTED => 30-MAR-2010 TIME PLOTTED => 12:12

DIST	COUNTY	ROUTE	POST MILES TOTAL PROJECT	SHEET No	TOTAL SHEETS
07	LA	105,105, 605	Var	22	30

Lihua Han 3-18-10
REGISTERED CIVIL ENGINEER DATE

10-11-10
PLANS APPROVAL DATE

REGISTERED PROFESSIONAL ENGINEER LIHUA HAN No. C61320 Exp. 06-30-11 CIVIL STATE OF CALIFORNIA

The State of California or its officers or agents shall not be responsible for the accuracy or completeness of electronic copies of this plan sheet.

To get to the Caltrans web site, go to: http://www.dot.ca.gov

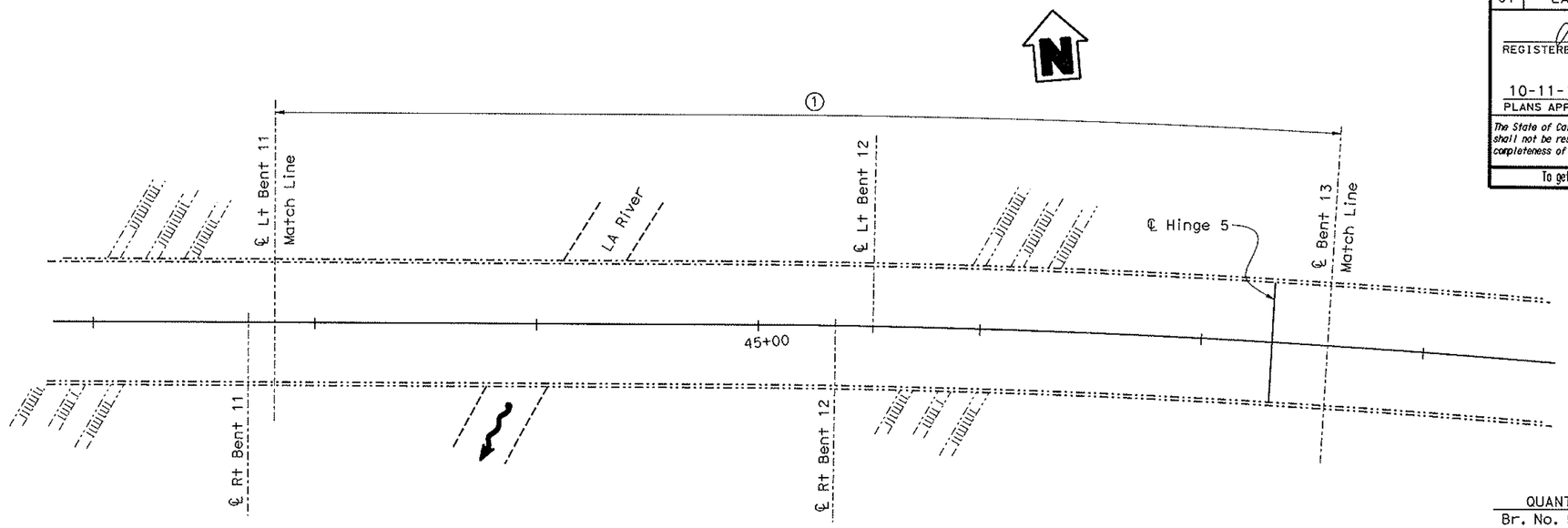

LOS ANGELES RIVER BUSWAY BRIDGE & OH, PLAN NO. 3

BR. NO. 53-2673, ROUTE 10, PM 17.20
1" = 30'

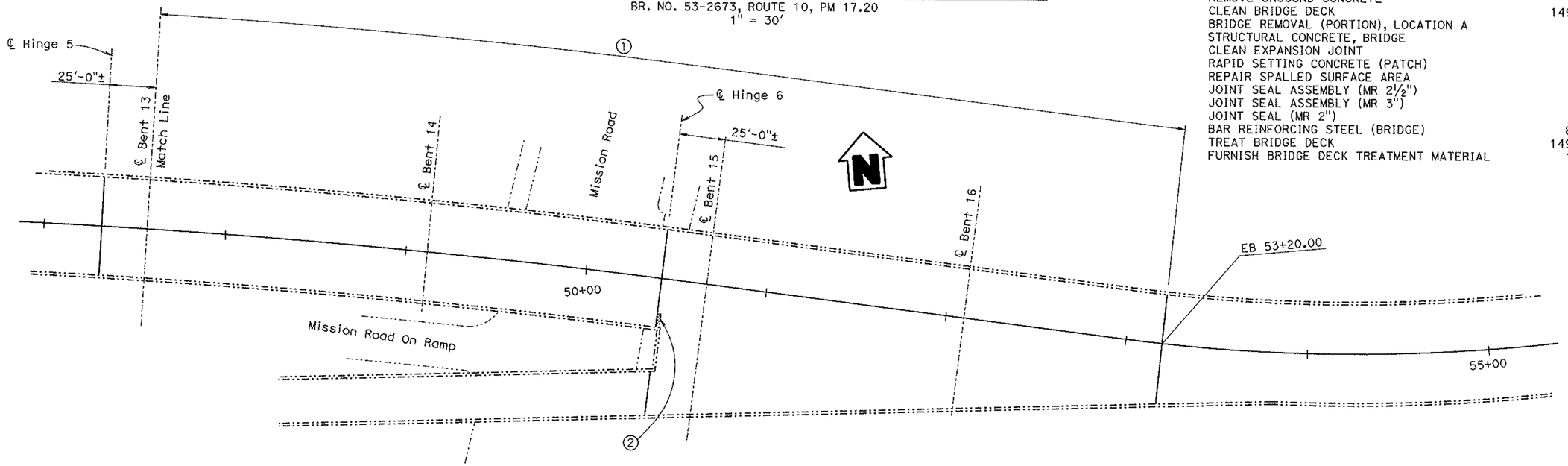

LOS ANGELES RIVER BUSWAY BRIDGE & OH, PLAN NO. 4

BR. NO. 53-2673, ROUTE 10, PM 17.20
1" = 30'

QUANTITIES
Br. No. 53-2673

PUBLIC SAFETY PLAN	LUMP	SUM
REMOVE UNSOUND CONCRETE	470	CF
CLEAN BRIDGE DECK	149,970	SQFT
BRIDGE REMOVAL (PORTION), LOCATION A	LUMP	SUM
STRUCTURAL CONCRETE, BRIDGE	63	CY
CLEAN EXPANSION JOINT	490	LF
RAPID SETTING CONCRETE (PATCH)	470	CF
REPAIR SPALLED SURFACE AREA	5	QFT
JOINT SEAL ASSEMBLY (MR 2½")	248	LF
JOINT SEAL ASSEMBLY (MR 3")	108	LF
JOINT SEAL (MR 2")	134	LF
BAR REINFORCING STEEL (BRIDGE)	8,065	LB
TREAT BRIDGE DECK	149,970	SQFT
FURNISH BRIDGE DECK TREATMENT MATERIAL	1,656	GAL

X Douglas J Dunrud
DESIGN ENGINEER

	BY	CHECKED
DESIGN	J. Han	S. Galgiani
DETAILS	L. Xiong	J. Han
QUANTITIES	J. Han	S. Galgiani

LOAD & RESISTANCE FACTOR DESIGN — LIVE LOADING: HL93 W/"LOW-BOY"; PERMIT DESIGN VEHICLE

	BY	CHECKED
LAYOUT	J. Han	S. Galgiani
SPECIFICATIONS	T. Nedwick	PLANS AND SPECS COMPARED T. Nedwick

ORIGINAL SCALE IN INCHES FOR REDUCED PLANS 0 1 2 3

STATE OF CALIFORNIA
DEPARTMENT OF TRANSPORTATION

DIVISION OF ENGINEERING SERVICES
STRUCTURE DESIGN
DESIGN BRANCH 14

CU 07
EA 264701

BRIDGE NO. VARIOUS
POST MILE VARIOUS

ROUTE 10, 105 BRIDGES
GENERAL PLAN NO. 2

DISREGARD PRINTS BEARING EARLIER REVISION DATES

REVISION DATES: 5-19-09 05-22-09 06-24-09 07-01-09 07-15-09 08-27-09 09-09-09 2-9-10 03-15-10

SHEET 2 OF 10

STRUCTURES DESIGN GENERAL PLAN SHEET (ENGLISH) (REV.07-24-06)

FILE => various_02_gp2.dgn

USERNAME => lxiong DATE PLOTTED => 30-MAR-2010 TIME PLOTTED => 12:12

DIST	COUNTY	ROUTE	POST MILES TOTAL PROJECT	SHEET No	TOTAL SHEETS
07	LA	10S,105, 605	Var	23	30

REGISTERED CIVIL ENGINEER — 3-18-10 DATE

10-11-10
PLANS APPROVAL DATE

REGISTERED PROFESSIONAL ENGINEER — LIHUA HAN No. C61320 Exp. 06-30-11 CIVIL — STATE OF CALIFORNIA

The State of California or its officers or agents shall not be responsible for the accuracy or completeness of electronic copies of this plan sheet.

To get to the Caltrans web site, go to: http://www.dot.ca.gov

QUANTITIES
Br. No. 53-2706F

BRIDGE REMOVAL (PORTION), LOCATION B	LUMP	SUM
STRUCTURAL CONCRETE, BRIDGE	9	CY
CLEAN EXPANSION JOINT	84	LF
JOINT SEAL ASSEMBLY (MR 3")	84	LF
BAR REINFORCING STEEL (BRIDGE)	1,139	LB

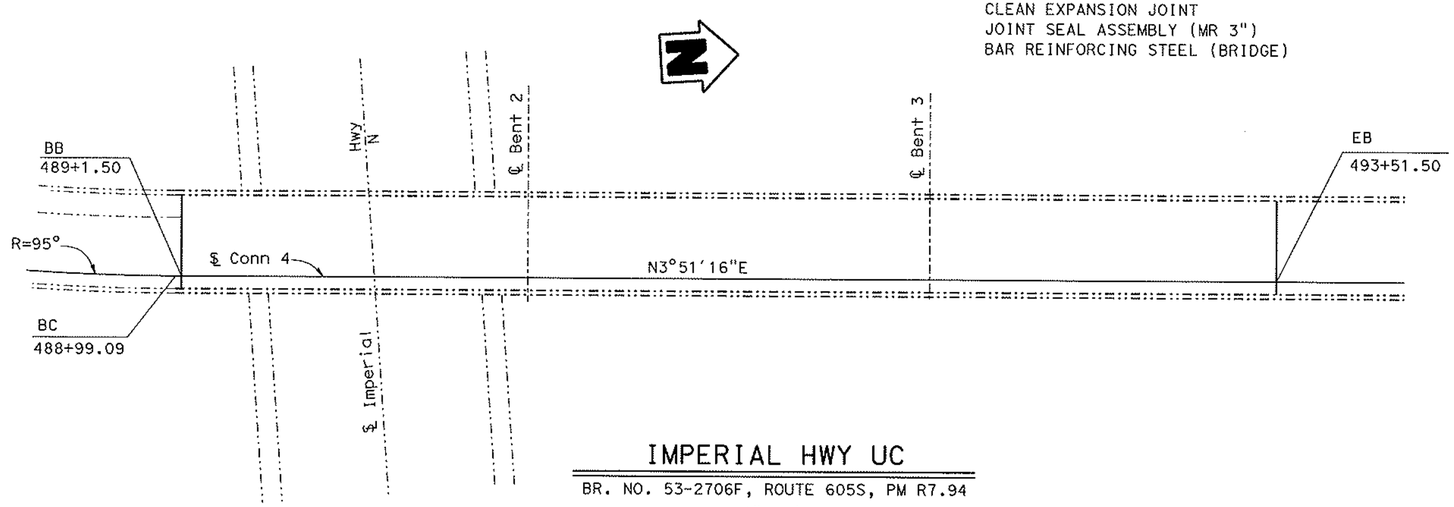

IMPERIAL HWY UC

BR. NO. 53-2706F, ROUTE 605S, PM R7.94
1"-30'

QUANTITIES
Br. No. 53-2675K

BRIDGE REMOVAL (PORTION), LOCATION C	LUMP	SUM
STRUCTURAL CONCRETE, BRIDGE	4	CY
CLEAN EXPANSION JOINT	36	LF
JOINT SEAL ASSEMBLY (MR 2½")	36	LF
BAR REINFORCING STEEL (BRIDGE)	488	LB

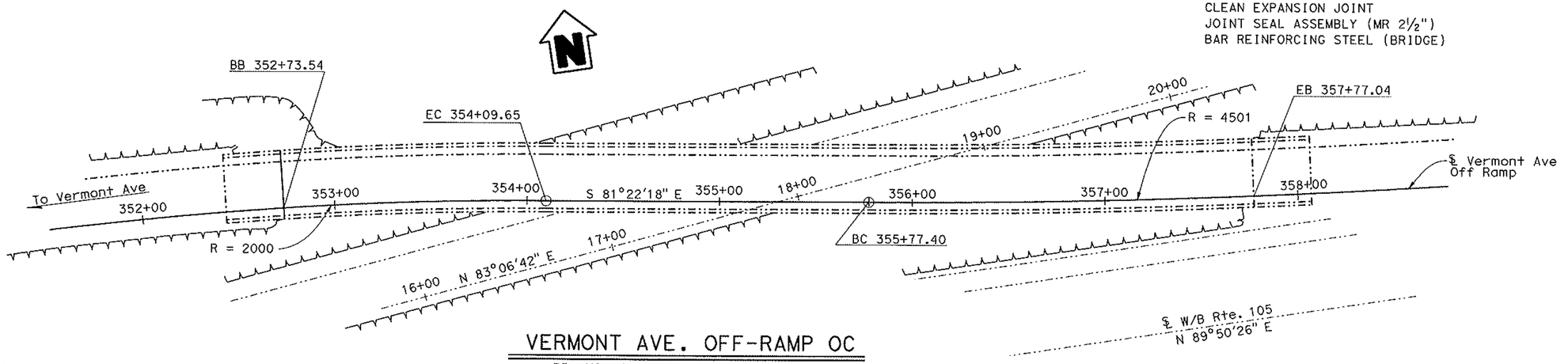

VERMONT AVE. OFF-RAMP OC

BR. NO. 53-2675K, ROUTE 105, PM R6.8
1" = 30'

NOTE:
THE CONTRACTOR SHALL VERIFY ALL CONTROLLING FIELD DIMENSIONS BEFORE ORDERING OR FABRICATING ANY MATERIAL.

X Douglas J Dunn
DESIGN ENGINEER

DESIGN	BY L. Han	CHECKED S. Galgiani	LOAD & RESISTANCE FACTOR DESIGN	LIVE LOADING: HL93 W/"LOW-BOY"; PERMIT DESIGN VEHICLE			
DETAILS	BY K. Kubo	CHECKED L. Han	LAYOUT	BY L. Han	CHECKED S. Galgiani		
QUANTITIES	BY L. Han	CHECKED S. Galgiani	SPECIFICATIONS	BY T. Nedwick	CHECKED PLANS AND SPECS COMPARED T. Nedwick		

ORIGINAL SCALE IN INCHES FOR REDUCED PLANS: 0 1 2 3

STATE OF CALIFORNIA
DEPARTMENT OF TRANSPORTATION

DIVISION OF ENGINEERING SERVICES
STRUCTURE DESIGN
DESIGN BRANCH 14

CU 07
EA 264701

BRIDGE NO.	VARIOUS
POST MILE	VARIOUS

ROUTE 10, 105 BRIDGES
GENERAL PLAN NO. 3

DISREGARD PRINTS BEARING EARLIER REVISION DATES →

REVISION DATES									
03-04-09	3-8-10	03-15-10	3-30-10		05-28-09	06-29-09	07-31-09	08-26-09	08-31-09

SHEET 3 OF 10

FILE => various_03_gp3.dgn

STRUCTURES DESIGN GENERAL PLAN SHEET (ENGLISH) (REV.07-24-06)

USERNAME => lxiong DATE PLOTTED => 30-MAR-2010 TIME PLOTTED => 12:13

DIST	COUNTY	ROUTE	POST MILES TOTAL PROJECT	SHEET No	TOTAL SHEETS
07	LA	105,105, 605	Var	24	30

Lihua Han
REGISTERED CIVIL ENGINEER 3-18-10 DATE

10-11-10
PLANS APPROVAL DATE

REGISTERED PROFESSIONAL ENGINEER LIHUA HAN No. C61320 Exp. 06-30-11 CIVIL STATE OF CALIFORNIA

The State of California or its officers or agents shall not be responsible for the accuracy or completeness of electronic copies of this plan sheet.

To get to the Caltrans web site, go to: http://www.dot.ca.gov

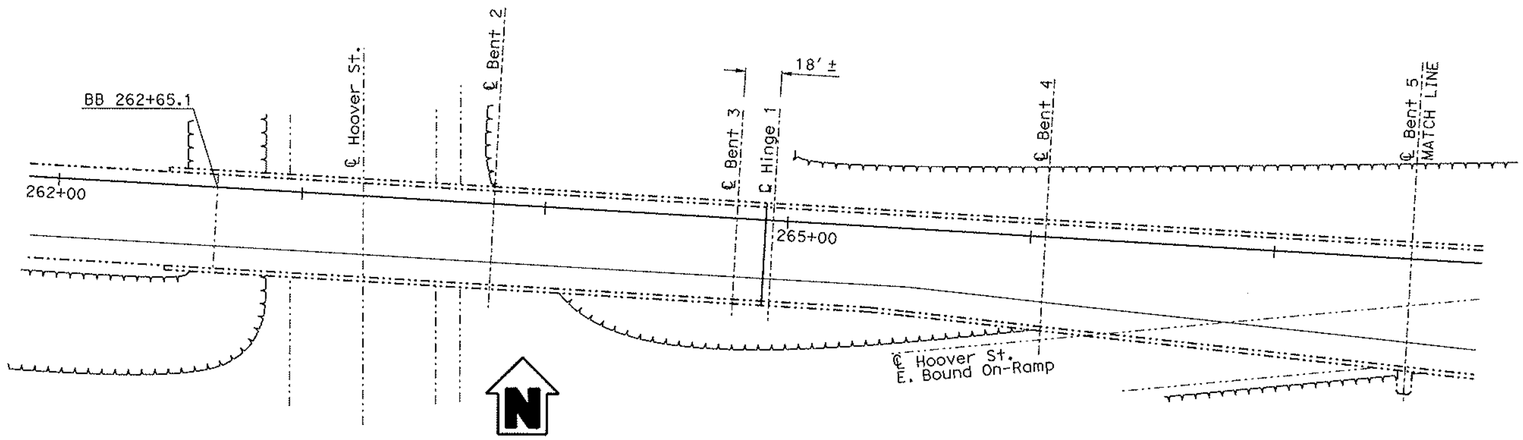

NORTHWEST CONNECTOR OC, PLAN NO. 1

BR. NO. 53-2404G, ROUTE 105 TO 110, PM R7.02
1" = 30'

QUANTITIES
Br. No. 53-2404G

BRIDGE REMOVAL (PORTION), LOCATION D	LUMP	SUM
STRUCTURAL CONCRETE, BRIDGE	84	CY
CLEAN EXPANSION JOINT	627	LF
JOINT SEAL ASSEMBLY (MR 2½")	42	LF
JOINT SEAL ASSEMBLY (MR 3")	585	LF
BAR REINFORCING STEEL (BRIDGE)	11,100	LB

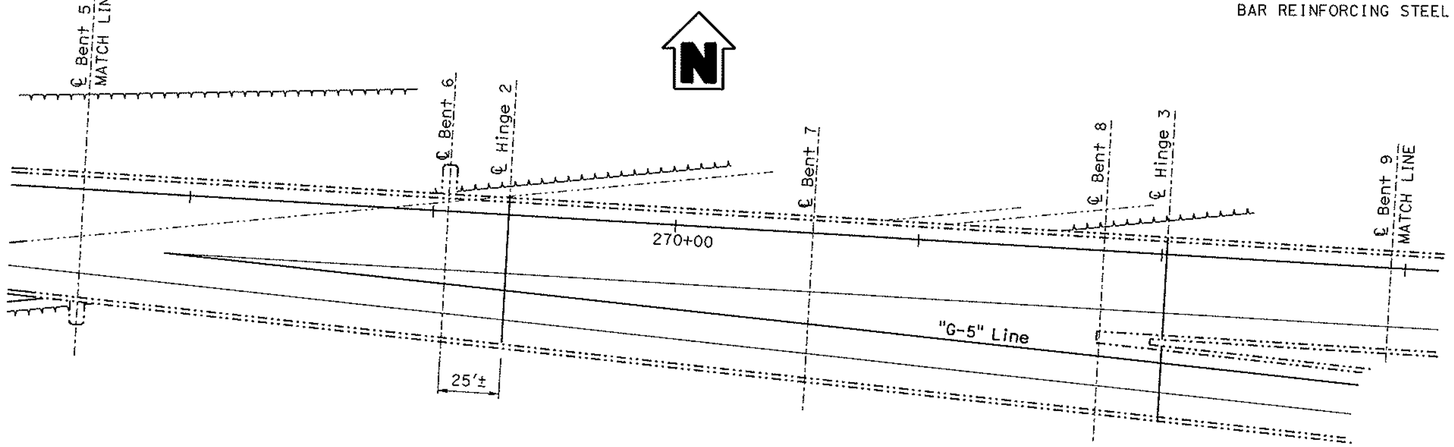

NORTHWEST CONNECTOR OC, PLAN NO. 2

1" = 30'

X Douglas J Dunrud DESIGN ENGINEER	DESIGN	BY L. Han	CHECKED S. Galgiani	LOAD & RESISTANCE FACTOR DESIGN	LIVE LOADING: HL93 W/"LOW-BOY"; PERMIT DESIGN VEHICLE
	DETAILS	BY L. Xiong	CHECKED L. Han	LAYOUT BY L. Han	CHECKED S. Galgiani
	QUANTITIES	BY L. Han	CHECKED S. Galgiani	SPECIFICATIONS BY T. Nedwick	PLANS AND SPECS COMPARED T. Nedwick

ORIGINAL SCALE IN INCHES FOR REDUCED PLANS 0 1 2 3

STATE OF CALIFORNIA
DEPARTMENT OF TRANSPORTATION

DIVISION OF ENGINEERING SERVICES
STRUCTURE DESIGN
DESIGN BRANCH 14

BRIDGE NO. VARIOUS
POST MILE VARIOUS

ROUTE 10, 105 BRIDGES
GENERAL PLAN NO. 4

CU 07
EA 264701

DISREGARD PRINTS BEARING EARLIER REVISION DATES

REVISION DATES: 03-15-10 | 05-13-09 | 05-20-09 | 05-21-09 | 07-01-09 | 07-15-09 | 08-28-09 | 09-09-09 | 3-9-10 | 3-11-10

SHEET 4 OF 10

STRUCTURES DESIGN GENERAL PLAN SHEET (ENGLISH) (REV.07-24-06)

FILE => various_04_gp4.dgn

USERNAME => lxiong DATE PLOTTED => 30-MAR-2010 TIME PLOTTED => 12:13

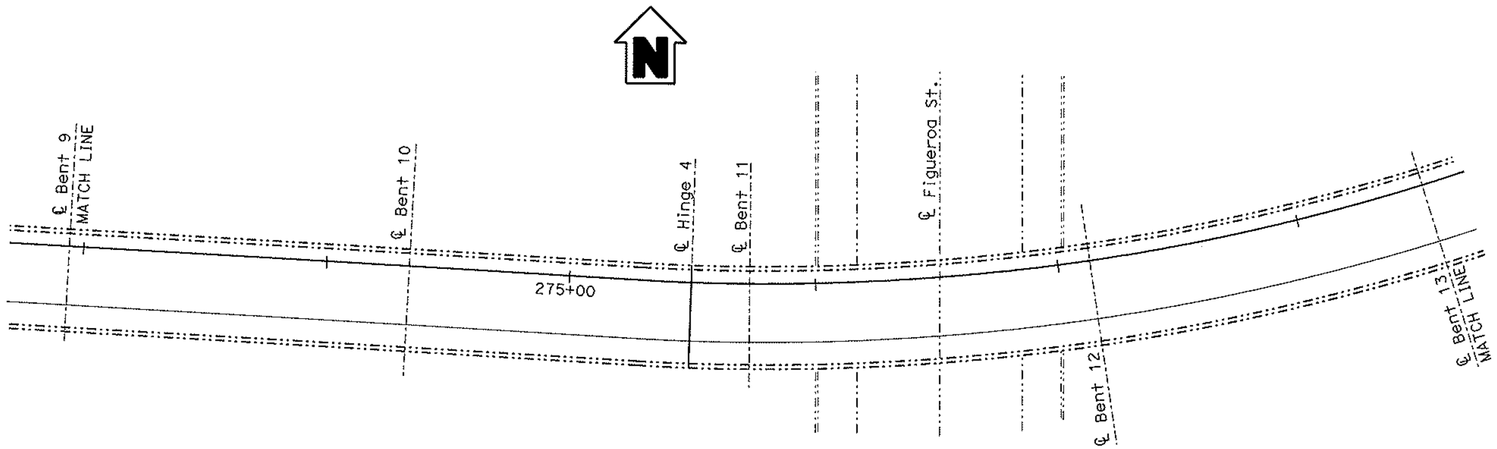

NORTHWEST CONNECTOR OC, PLAN NO. 3

BR. NO. 53-2404G, ROUTE 105 TO 110, PM R7.02
1" = 30'

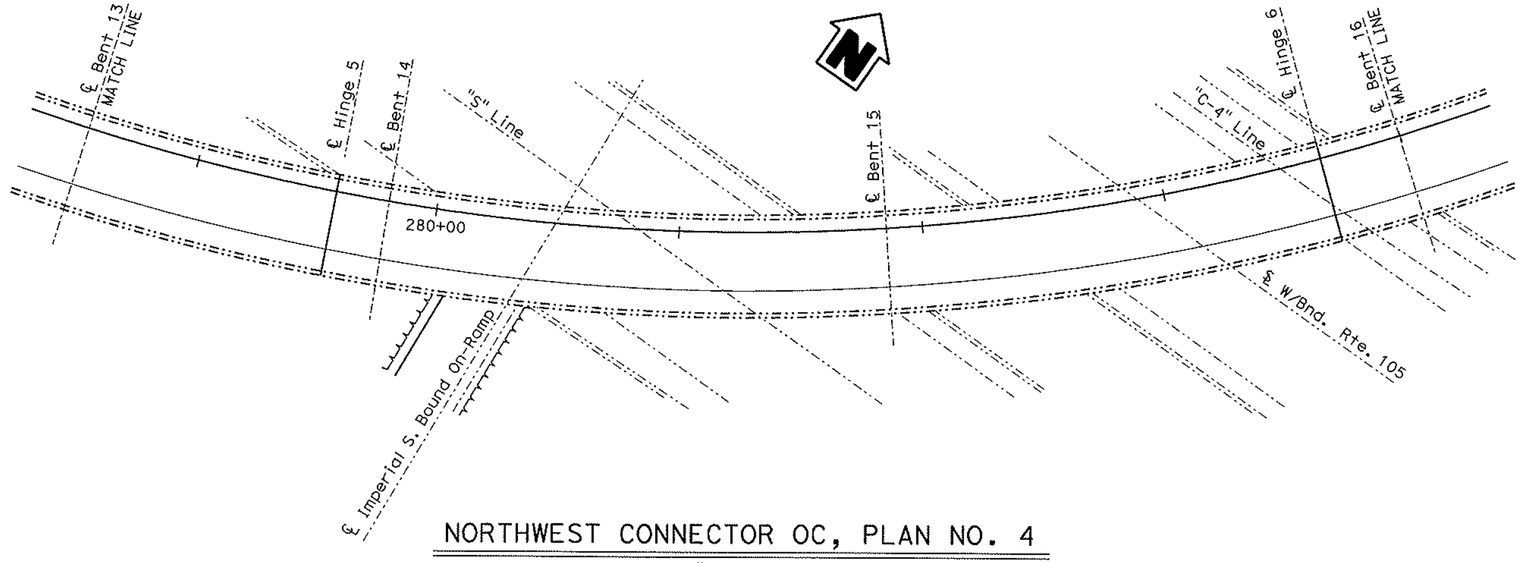

NORTHWEST CONNECTOR OC, PLAN NO. 4

1" = 30'

DIST	COUNTY	ROUTE	POST MILES TOTAL PROJECT	SHEET No	TOTAL SHEETS
07	LA	105,105, 605	Var	25	30

Lihua Han 3-18-10
REGISTERED CIVIL ENGINEER DATE

10-11-10
PLANS APPROVAL DATE

REGISTERED PROFESSIONAL ENGINEER — LIHUA HAN — No. C61320 — Exp. 06-30-11 — CIVIL — STATE OF CALIFORNIA

The State of California or its officers or agents shall not be responsible for the accuracy or completeness of electronic copies of this plan sheet.

To get to the Caltrans web site, go to: http://www.dot.ca.gov

DESIGN	BY L. Han	CHECKED S. Galgiani	LOAD & RESISTANCE FACTOR DESIGN	LIVE LOADING: HL93 W/"LOW-BOY"; PERMIT DESIGN VEHICLE	
DETAILS	BY L. Xiong	CHECKED L. Han	LAYOUT	BY L. Han	CHECKED S. Galgiani
QUANTITIES	BY L. Han	CHECKED S. Galgiani	SPECIFICATIONS	BY T. Nedwick	PLANS AND SPECS COMPARED T. Nedwick

X Douglas P. Dunrud
DESIGN ENGINEER

STATE OF CALIFORNIA
DEPARTMENT OF TRANSPORTATION

DIVISION OF ENGINEERING SERVICES
STRUCTURE DESIGN
DESIGN BRANCH 14

BRIDGE NO.	VARIOUS
POST MILE	VARIOUS

ROUTE 10, 105 BRIDGES
GENERAL PLAN NO. 5

ORIGINAL SCALE IN INCHES FOR REDUCED PLANS 0 1 2 3

CU 07
EA 264701

DISREGARD PRINTS BEARING EARLIER REVISION DATES →

REVISION DATES: 5-8-09 | 05-12-09 | 05-20-09 | 05-21-09 | 01-01-09 | 08-24-09 | 09-08-09

SHEET 5 OF 10

FILE => various_05_gp5.dgn

STRUCTURES DESIGN GENERAL PLAN SHEET (ENGLISH) (REV.07-24-06)

USERNAME => lxiong DATE PLOTTED => 30-MAR-2010 TIME PLOTTED => 12:13

DIST	COUNTY	ROUTE	POST MILES TOTAL PROJECT	SHEET No	TOTAL SHEETS
07	LA	105,105, 605	Var	26	30

Lihua Han 3-18-10
REGISTERED CIVIL ENGINEER DATE

10-11-10
PLANS APPROVAL DATE

REGISTERED PROFESSIONAL ENGINEER LIHUA HAN No. C61320 Exp. 06-30-11 CIVIL STATE OF CALIFORNIA

The State of California or its officers or agents shall not be responsible for the accuracy or completeness of electronic copies of this plan sheet.

To get to the Caltrans web site, go to: http://www.dot.ca.gov

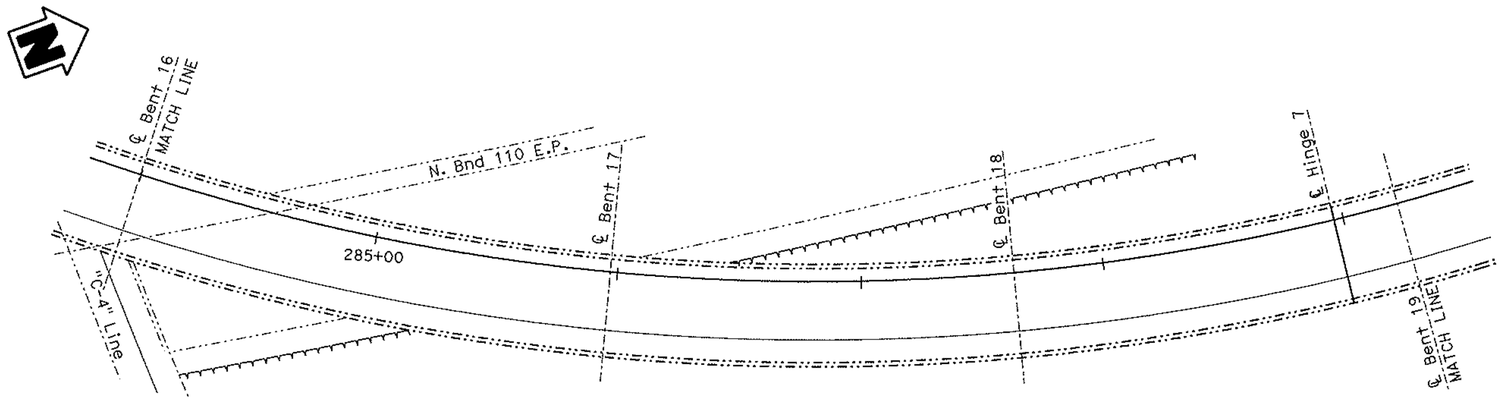

NORTHWEST CONNECTOR OC, PLAN NO. 5

BR. NO. 53-2404G, ROUTE 105 TO 110, PM R7.02
1" = 30'

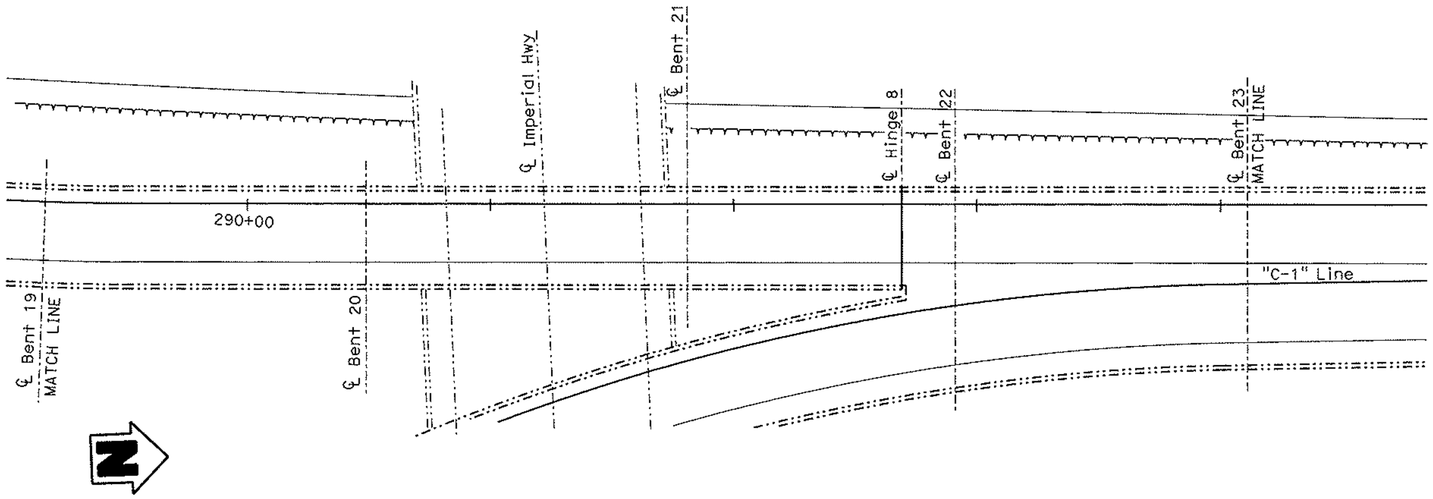

NORTHWEST CONNECTOR OC, PLAN NO. 6

1" = 30'

X Douglas J Dunrad DESIGN ENGINEER	DESIGN	BY L. Han	CHECKED S. Galgiani	LOAD & RESISTANCE FACTOR DESIGN	LIVE LOADING: HL93 W/"LOW-BOY"; PERMIT DESIGN VEHICLE
	DETAILS	BY L. Xiong	CHECKED L. Han	LAYOUT BY L. Han	CHECKED S. Galgiani
	QUANTITIES	BY L. Han	CHECKED S. Galgiani	SPECIFICATIONS BY T. Nedwick	PLANS AND SPECS COMPARED T. Nedwick

ORIGINAL SCALE IN INCHES FOR REDUCED PLANS 0 1 2 3

STATE OF CALIFORNIA
DEPARTMENT OF TRANSPORTATION

DIVISION OF ENGINEERING SERVICES
STRUCTURE DESIGN
DESIGN BRANCH 14

CU 07
EA 264701

BRIDGE NO. VARIOUS
POST MILE VARIOUS

ROUTE 10, 105 BRIDGES
GENERAL PLAN NO. 6

DISREGARD PRINTS BEARING EARLIER REVISION DATES

REVISION DATES: 5-6-09, 05-13-09, 05-20-09, 05-21-09, 07-01-09, 07-15-09, 08-23-09, 09-09-09, 2-9-10

SHEET 6 OF 10

FILE => various_06_gp6.dgn

STRUCTURES DESIGN GENERAL PLAN SHEET (ENGLISH) (REV.07-24-06)

USERNAME => lxiong DATE PLOTTED => 30-MAR-2010 TIME PLOTTED => 12:13

DIST	COUNTY	ROUTE	POST MILES TOTAL PROJECT	SHEET No	TOTAL SHEETS
07	LA	10S,105, 605	Var	27	30

Lihua Han 3-18-10
REGISTERED CIVIL ENGINEER DATE

10-11-10
PLANS APPROVAL DATE

REGISTERED PROFESSIONAL ENGINEER LIHUA HAN No. C61320 Exp. 06-30-11 CIVIL STATE OF CALIFORNIA

The State of California or its officers or agents shall not be responsible for the accuracy or completeness of electronic copies of this plan sheet.

To get to the Caltrans web site, go to: http://www.dot.ca.gov

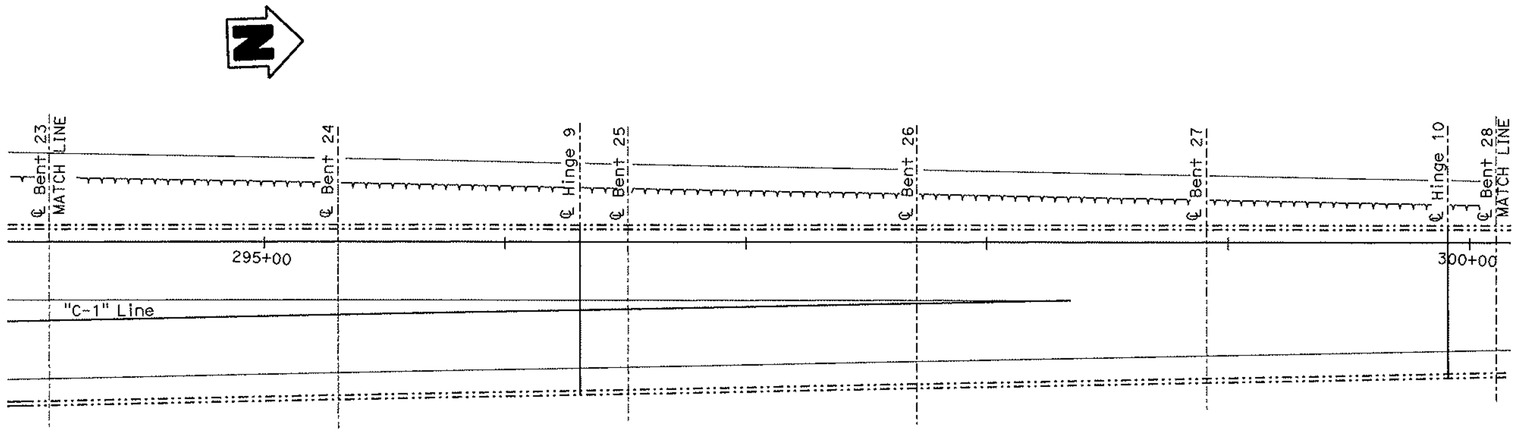

NORTHWEST CONNECTOR OC, PLAN NO. 7

BR. NO. 53-2404G, ROUTE 105 TO 110, PM R7.02
1" = 30'

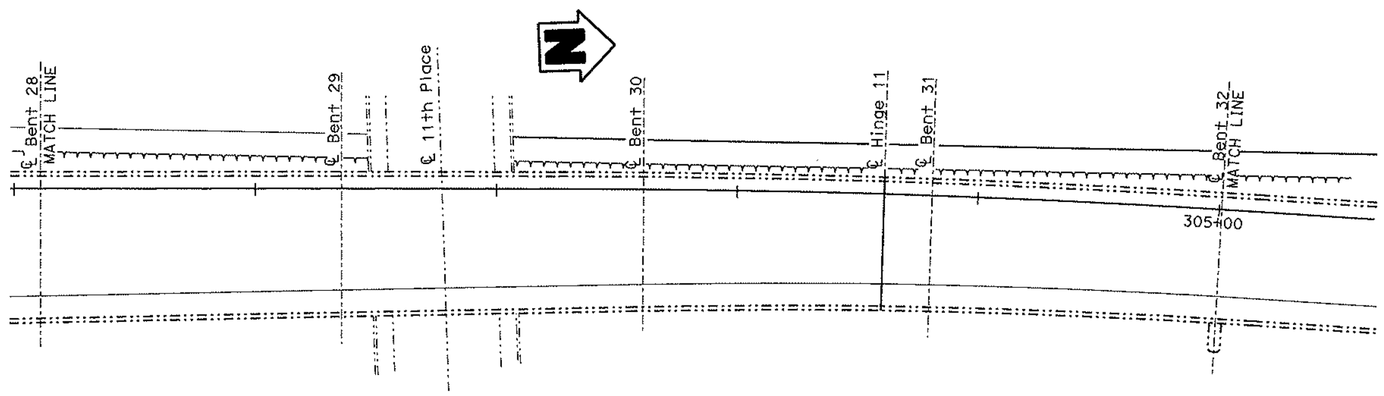

NORTHWEST CONNECTOR OC, PLAN NO. 8

1" = 30'

X Douglas J Dunnel DESIGN ENGINEER	DESIGN	BY L. Han	CHECKED S. Galgiani	LOAD & RESISTANCE FACTOR DESIGN	LIVE LOADING: HL93 W/"LOW-BOY"; PERMIT DESIGN VEHICLE		
	DETAILS	BY L. Xiong	CHECKED L. Han	LAYOUT	BY L. Han	CHECKED S. Galgiani	
	QUANTITIES	BY L. Han	CHECKED S. Galgiani	SPECIFICATIONS	BY T. Nedwick	PLANS AND SPECS COMPARED T. Nedwick	

ORIGINAL SCALE IN INCHES FOR REDUCED PLANS 0 1 2 3

STATE OF CALIFORNIA
DEPARTMENT OF TRANSPORTATION

DIVISION OF ENGINEERING SERVICES
STRUCTURE DESIGN
DESIGN BRANCH 14

CU 07
EA 264701

BRIDGE NO. VARIOUS
POST MILE VARIOUS

ROUTE 10, 105 BRIDGES
GENERAL PLAN NO. 7

DISREGARD PRINTS BEARING EARLIER REVISION DATES

REVISION DATES: 5-6-09 05-18-09 05-20-09 05-21-09 07-01-09 07-15-09 08-28-09 09-08-09 5-20-10 9-1-10

SHEET 7 OF 10

STRUCTURES DESIGN GENERAL PLAN SHEET (ENGLISH) (REV.07-24-06)

FILE => various_07_gp7.dgn

USERNAME => s108715 DATE PLOTTED => 22-SEP-2010 TIME PLOTTED => 10:22

JOINT SEAL TABLE

BRIDGE NO.	LOCATION	MINIMUM "MR" (Inches)	APPROX LENGTH (feet)	EXISTING WATERSTOP	APPROX DEPTH TO CLEAN EXPANSION JOINT (Inches)
53-2673	Abut 1	2	68.0	NO	12
	Hinge 1	2½	54.0	NO	36
	Hinge 2	2½	54.0	NO	36
	Hinge 3	2½	54.0	NO	36
	Hinge 4	3	54.0	NO	36
	Hinge 5	3	54.0	NO	36
	Hinge 6	2½	86.3	NO	36
	Abut 17	2	66.0	NO	12
53-2706F	Abut 1	3	42.0	NO	12
	Abut 4	3	42.0	NO	12
53-2675K	Abut 1	2½	35.5	NO	12
53-2404G	Hinge 1	2½	42.0	NO	12
	Hinge 2	3	62.7	NO	36
	Hinge 3	3	77.5	NO	36
	Hinge 4	3	42.0	NO	36
	Hinge 5	3	42.0	NO	36
	Hinge 6	3	42.0	NO	36
	Hinge 7	3	42.0	NO	36
	Hinge 8	3	87.4	NO	36
	Hinge 9	3	70.1	NO	36
	Hinge 10	3	62.9	NO	36
	Hinge 11	3	56.1	NO	36

DECK REPAIR TABLE

BRIDGE NO.	LOCATION	APPROXIMATE AREA DAMAGED (PERCENT)	APPROXIMATE DEPTH (INCHES)	TOTAL AREA OF DECK REPAIR (SF)
53-2673	BB to Hinge 1	2	4	17838
	Hinge 1 to Hinge 2	1	3	15965
	Hinge 2 to Hinge 3	1	3	14585
	Hinge 3 to Hinge 4	1	3	24703
	Hinge 4 to Hinge 5	1	3	34821
	Hinge 5 to Hinge 6	1	3	32850
	Hinge 6 to EB	1	3	9208

NOTES:

1. Abut 1 shown, Abut 17 of Br. No. 53-2673 and Abut 4 of Br. No. 53-2706F similar
2. Bend Existing Reinforcement as needed to place new assembly. Replace Transverse Reinforcement with new. For "a" dimension see, "JOINT SEAL ASSEMBLY" sheet
3. For additional details, see RSP B6-21
4. Chip off deteriorated concrete then sand blast void area to remove loose concrete and clean rebar from corrosion prior of using the rapid set patching system

Indicates limits of remove existing concrete and place new structure.

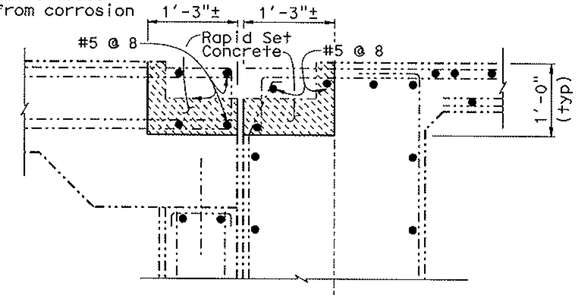

PARTIAL SECTION THRU ABUT 1

Br. No. 53-2673, 53-2706 & 53-2675K
1" = 1'

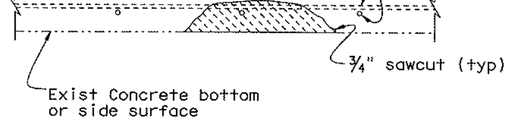

HINGE SPALLED SURFACE REPAIR DETAIL

Reinforcement may be encountered during deck concrete removal.
No Scale

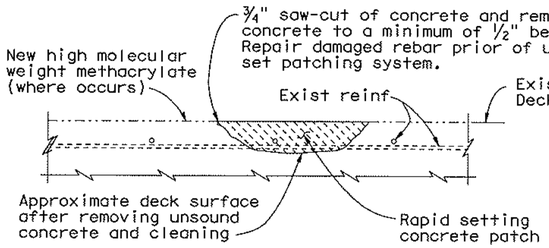

DECK REPAIR DETAIL

Reinforcement may be encountered during deck concrete removal.
No Scale

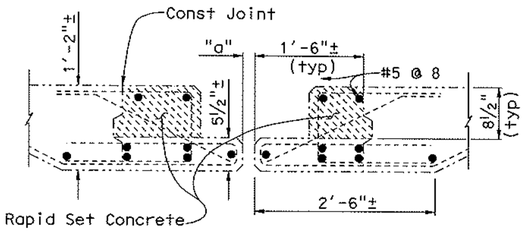

JOINT SEAL ASSEMBLY BLOCKOUT @ DECK OVERHANG

1" = 1'

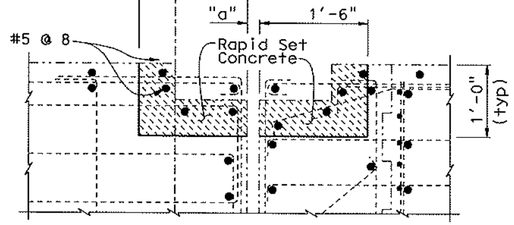

PARTIAL SECTION THRU HINGE

1" = 1'

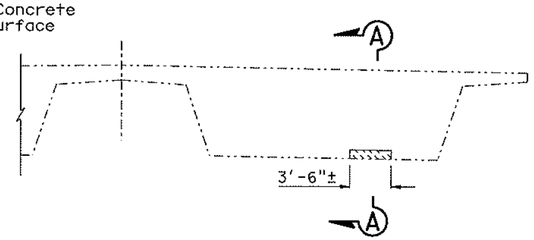

HINGE 6 PART ELEVATION

Br. No. 53-2673
No Scale

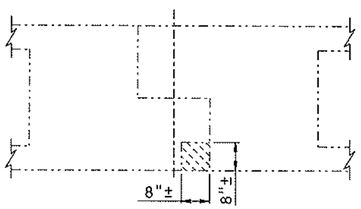

SECTION A-A

No Scale

DIST	COUNTY	ROUTE	POST MILES TOTAL PROJECT	SHEET No	TOTAL SHEETS
07	LA	105,105, 605	Var	28	30

Lihua Han 3-18-10
REGISTERED CIVIL ENGINEER DATE

10-11-10
PLANS APPROVAL DATE

REGISTERED PROFESSIONAL ENGINEER — LIHUA HAN No. C61320 Exp. 06-30-11 CIVIL — STATE OF CALIFORNIA

The State of California or its officers or agents shall not be responsible for the accuracy or completeness of electronic copies of this plan sheet.

To get to the Caltrans web site, go to: http://www.dot.ca.gov

DESIGN	BY L. Han	CHECKED S. Galgiani	
DETAILS	BY L. Xiong	CHECKED L. Han	
QUANTITIES	BY L. Han	CHECKED S. Galgiani	

STATE OF CALIFORNIA
DEPARTMENT OF TRANSPORTATION

DIVISION OF ENGINEERING SERVICES
STRUCTURE DESIGN
DESIGN BRANCH 14

CU 07
EA 264701

BRIDGE NO.	ROUTE 10, 105 BRIDGES
VARIOUS	JOINT SEAL DETAILS
POST MILE VARIOUS	

STRUCTURES DESIGN DETAIL SHEET (ENGLISH) (REV. 10/25/05)

ORIGINAL SCALE IN INCHES FOR REDUCED PLANS 0 1 2 3

DISREGARD PRINTS BEARING EARLIER REVISION DATES

REVISION DATES: 9-1-10 | 03-26-09 | 05-31-09 | 08-09-09 | 09-14-09 | 2-2-10 | 03-08-10 | 3-18-10 | 5-28-10

SHEET 8 OF 10

FILE => various_08_jtsealdet.dgn

USERNAME => s108715 DATE PLOTTED => 22-SEP-2010 TIME PLOTTED => 10:28

DIST	COUNTY	ROUTE	POST MILES TOTAL PROJECT	SHEET No	TOTAL SHEETS
07	LA	105,105, 605	Var	29	30

Lihua Han 3-18-10
REGISTERED CIVIL ENGINEER DATE

10-11-10
PLANS APPROVAL DATE

REGISTERED PROFESSIONAL ENGINEER LIHUA HAN No. C61320 Exp. 06-30-11 CIVIL STATE OF CALIFORNIA

The State of California or its officers or agents shall not be responsible for the accuracy or completeness of electronic copies of this plan sheet.

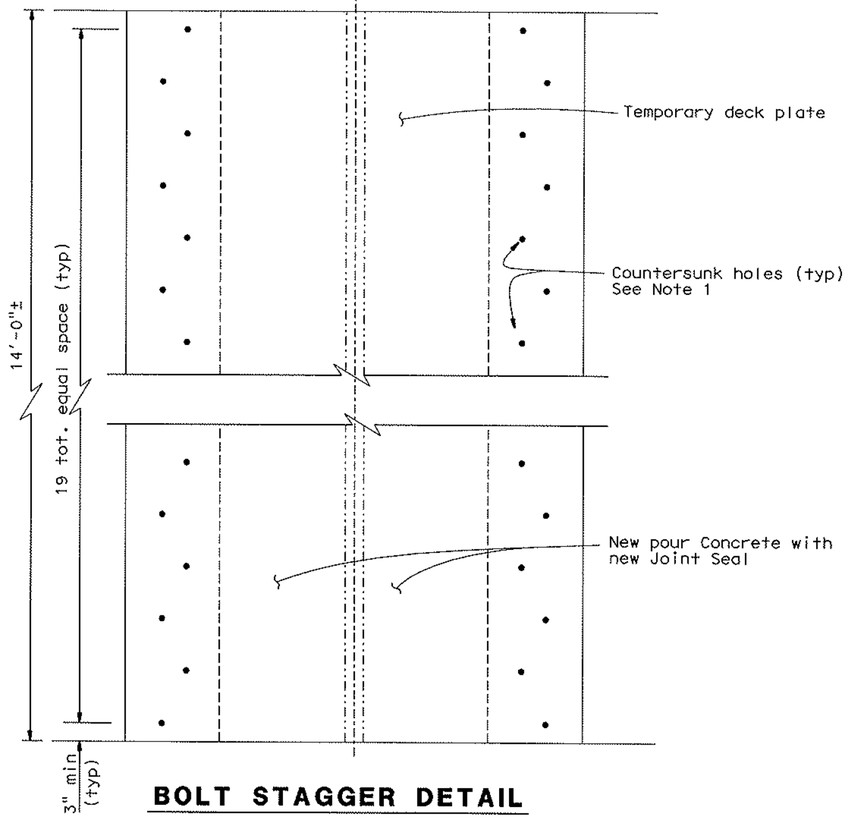

BOLT STAGGER DETAIL

1"=1'-0"

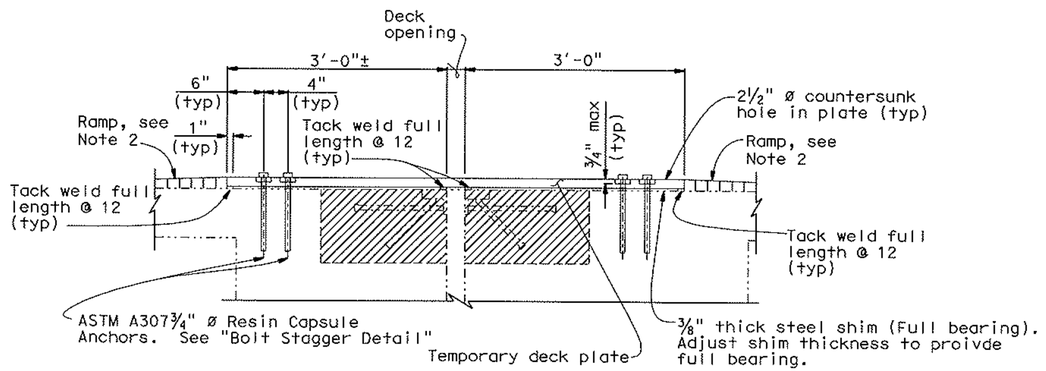

TEMPORARY DECK PLATE CONNECTION

1"=1'-0"

TEMPORARY DECK PLATE LOAD CRITERIA

MOMENT DEMAND/FOOT (kips-ft/ft)	BOLT SHEAR/FOOT (kips/ft)	BOLT TENSION (kips)
5.2	8	8

Plate deflection shall not exceed S/300 (S=Span of Plate). Maximum anchor bolt spacing = 0'-9"

NOTES:

1. Locate existing prestress tendons with ferroscan. Adjust placement of anchor bolts to provide 6" min clearnace from prestress tendons.
2. Place tapered 30:1 (leading/trailing edge =1/2" thick Max) rigid pavement material at approach and departure of construction.

& Indicates limits of remove existing concrete and Finger Joint Assembly. Retain existing reinforcing steel (except where noted otherwise).

	BY	CHECKED
DESIGN	L. Han	S. Galgiani
DETAILS	K. Kubo	L. Han
QUANTITIES	L. Han	S. Galgiani

STATE OF CALIFORNIA
DEPARTMENT OF TRANSPORTATION

DIVISION OF ENGINEERING SERVICES
STRUCTURE DESIGN
DESIGN BRANCH 14

BRIDGE NO. VARIOUS
POST MILE VARIOUS

ROUTE 10, 105 BRIDGES
TEMPORARY DECK PLATE DETAILS

STRUCTURES DESIGN DETAIL SHEET (ENGLISH) (REV. 10/25/05)

ORIGINAL SCALE IN INCHES FOR REDUCED PLANS 0 1 2 3

CU 07
EA 264701

DISREGARD PRINTS BEARING EARLIER REVISION DATES

REVISION DATES 03-28-09 09-09-09 3-11-10

SHEET 9 OF 10

FILE => various_09_platedet.dgn

USERNAME => lxiong DATE PLOTTED => 30-MAR-2010 TIME PLOTTED => 12:14

DIST.	COUNTY	ROUTE	POST MILES TOTAL PROJECT	SHEET NO.	TOTAL SHEETS
07	LA	105,105, 605	Var	30	30

Lihua Han 3-18-10
REGISTERED ENGINEER - CIVIL

10-11-10
PLANS APPROVAL DATE

The State of California or its officers or agents shall not be responsible for the accuracy or completeness of electronic copies of this plan sheet.

REGISTERED PROFESSIONAL ENGINEER — LIHUA HAN No. C61320 Exp. 06-30-11 CIVIL — STATE OF CALIFORNIA

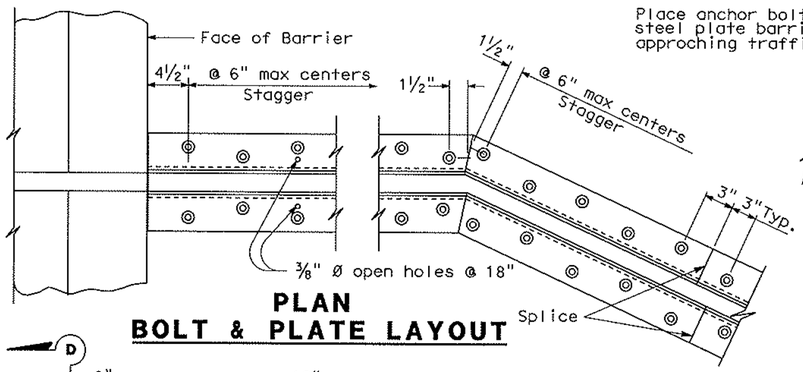

PLAN
BOLT & PLATE LAYOUT

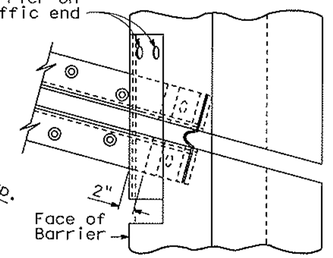

SKEW ≤ 20°

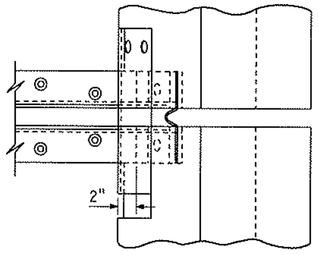

SKEW > 20°

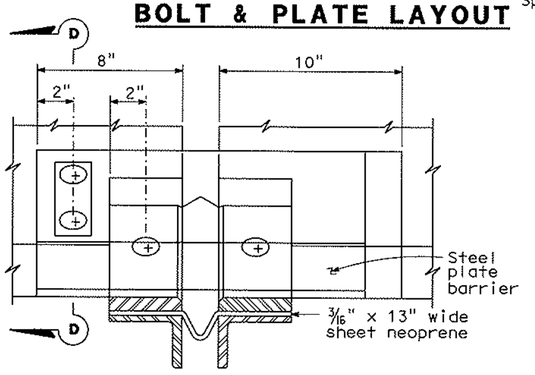

VIEW B-B

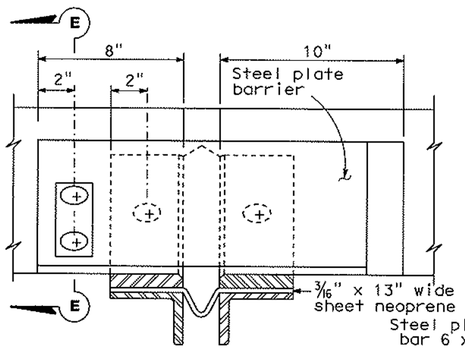

VIEW C-C

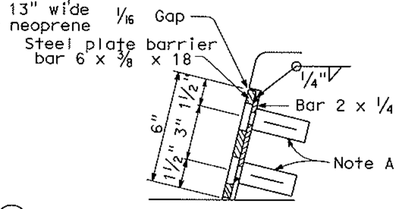

SECTION E-E

SECTION D-D

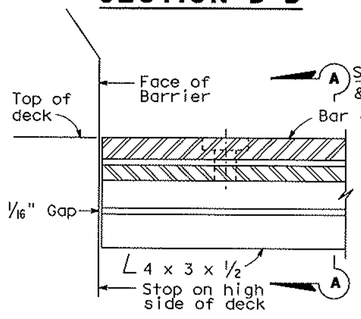

HIGH SIDE BARRIER DETAIL

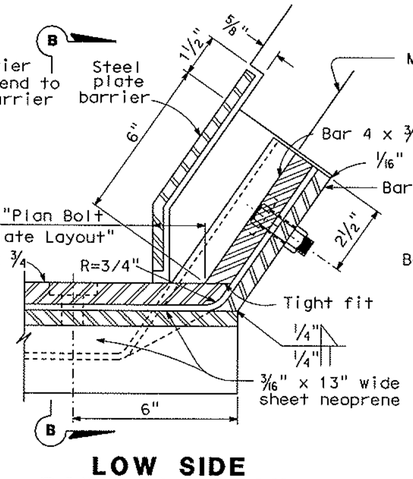

LOW SIDE BARRIER DETAIL
(See Note B)

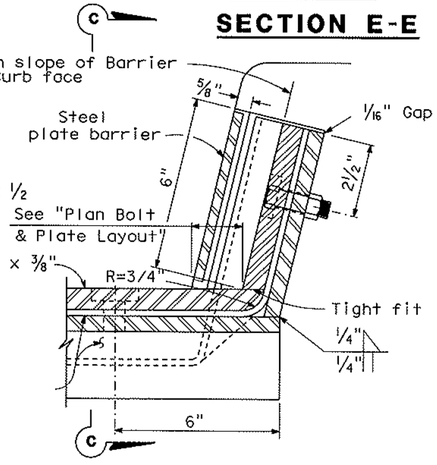

SIDEWALK DETAIL
(See Note B)

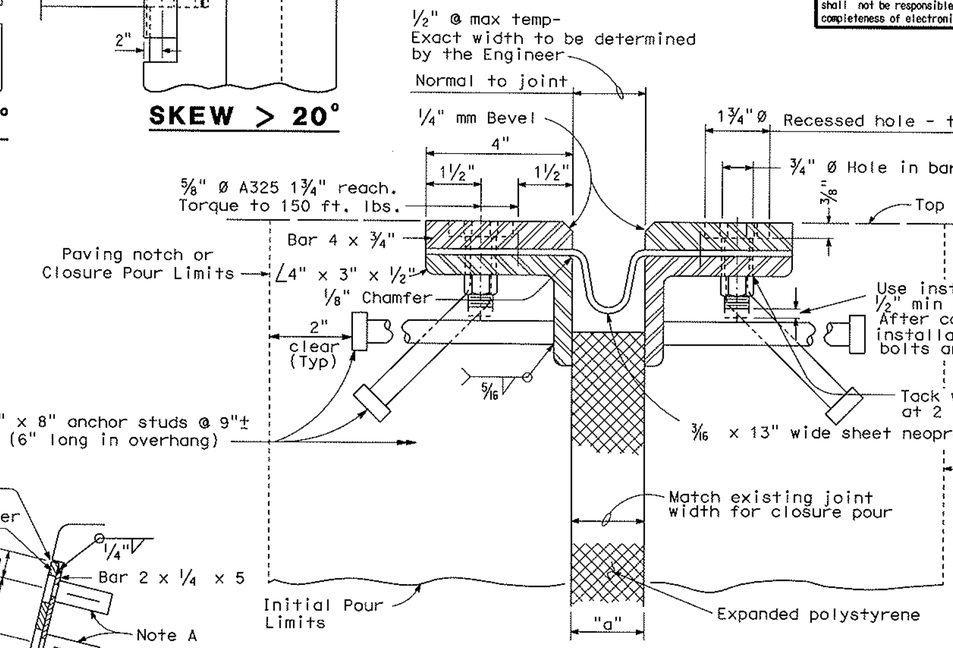

SECTION A-A

Note :
Stagger anchor studs @ 4½"± on centers thus:

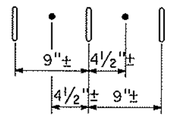

Joint Information	"a" Dimensions (In.)		
Movement Rating (MR)	Winter	Spring & Fall	Summer
2½"	1½"	1"	
3"	2"	1"	½"

NOTES:

Full penetration butt welds may be substituted for fillet welds on all anchor studs.

Alternate types of anchor studs may be permitted subject to the approval by the Engineer.

Joint seal assembly to be used in conjunction with closure pour. (See other sheets for limits). Closure pour shall not be placed until final deck surface is within the tolerances specified.

Use joint at crown of roadway, at any change in traverse slope in deck and at changes in horizontal direction. Place other joints at or near lanes. All metal parts to be painted or galvanized after fabrication.

Sheet neoprene shall be fabricated in one continuous piece or joints shall be vulcanized. Neoprene shall be fabricated to bend around corners. 1" holes in neoprene sheets shall be drilled or punched so that the neoprene is not distorted at the time of installation.

NOTE A

Insert assembly or expansion anchorage for ⅝" x 1¾" A325 bolt.

NOTE B

Use the sidewalk Detail at all sidewalk joints. Use the Barrier Detail at both sides if the roadway is crowned or if the difference in elevation between the ends of the seal is 0.5" or less.

NO SCALE

DATE PLOTTED => 30-MAR-2010 TIME PLOTTED => 12:14

STANDARD DRAWING

FILE NO. xs8-010e

APPROVED BY T. DELIS — RESPONSIBLE TECHNICAL SPECIALIST
APPROVAL DATE 5-8-08

RELEASED BY ROBERTO LACALLE — RESPONSIBLE OFFICE CHIEF
RELEASE DATE 5-8-08

DS OSD 2147A (ENGLISH STANDARD DRAWING "XS" BORDER REV. 01/11/08)

ORIGINAL SCALE IN INCHES FOR REDUCED PLANS 0 1 2 3

STATE OF CALIFORNIA
DEPARTMENT OF TRANSPORTATION

DIVISION OF ENGINEERING SERVICES

CU 07
EA 264701

BRIDGE NO. VARIOUS
POST MILE VARIOUS

ROUTE 10, 105 BRIDGES
JOINT SEAL ASSEMBLY (MAXIMUM MOVEMENT RATING = 4")

DISREGARD PRINTS BEARING EARLIER REVISION DATES →
REVISION DATES (PRELIMINARY STAGE ONLY) 05-27-09 05-29-09 06-25-09 07-16-09 08-28-09 09-09-09

SHEET 10 OF 10

USERNAME => lxiong

various_10_xs8-010e.d