ACNHP-X037(168)E

Dist	COUNTY	ROUTE	POST MILES TOTAL PROJECT	SHEET No.	TOTAL SHEETS
07	LA	5,10,91, 110,134	Var	1	291

STATE OF CALIFORNIA

DEPARTMENT OF TRANSPORTATION

PROJECT PLANS FOR CONSTRUCTION ON

STATE HIGHWAY

IN LOS ANGELES COUNTY AT VARIOUS LOCATIONS

TO BE SUPPLEMENTED BY STANDARD PLANS DATED 2010

INDEX OF PLANS

SHEET No.	DESCRIPTION
1	TITLE AND LOCATION MAP
2	LOCATIONS OF CONSTRUCTION
3	TYPICAL CROSS SECTIONS
4-18	LAYOUTS
19	PROFILES
20-31	CONSTRUCTION DETAILS
32-121	WATER POLLUTION CONTROL PLANS, PROFILES, DETAILS AND QUANTITIES
122-135	CONTOUR GRADING
136-149	UTILITY PLANS
150-169	TRAFFIC HANDLING PLANS, DETAILS AND QUANTITIES
170-171	CONSTRUCTION AREA SIGNS
172-181	PAVEMENT DELINEATION AND SIGN PLANS AND QUANTITIES
182-183	SUMMARY OF QUANTITIES
184	RETAINING WALL 180
185	LANDSCAPE DETAILS
186-201	PLANT LEGEND AND PLANTING PLANS
202-215	IRRIGATION PLANS AND QUANTITIES
216-236	SIGNAL, LIGHTING, TRAFFIC OPERATION SYSTEM AND QUANTITIES
237-291	REVISED STANDARD PLANS

THE STANDARD PLANS LIST APPLICABLE TO THIS CONTRACT IS INCLUDED IN THE NOTICE TO BIDDERS AND SPECIAL PROVISIONS BOOK.

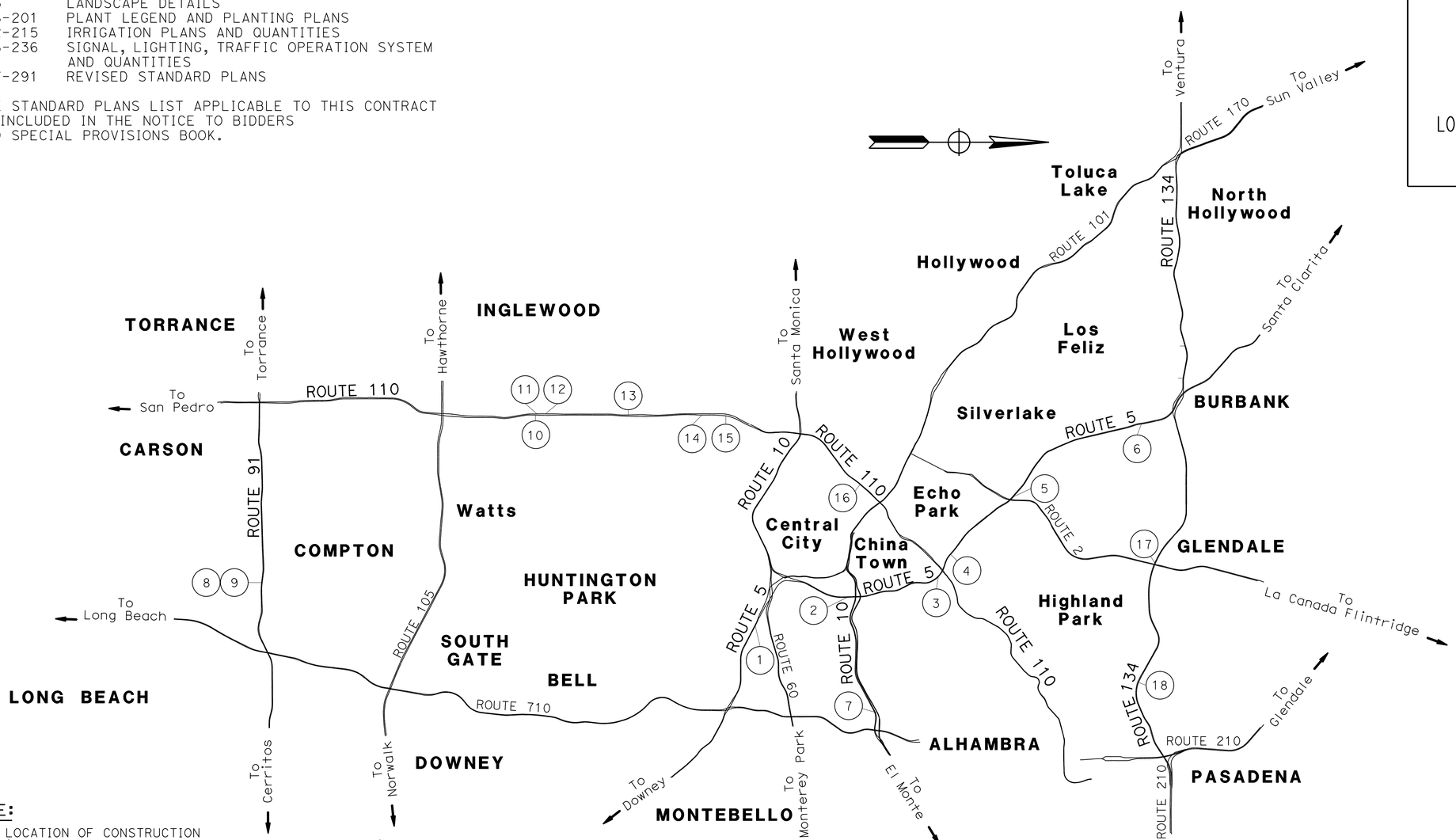

NOTE:

(#) LOCATION OF CONSTRUCTION (FOR LOCATIONS OF CONSTRUCTION, SEE SHEET LC-1)

THE CONTRACTOR SHALL POSSESS THE CLASS (OR CLASSES) OF LICENSE AS SPECIFIED IN THE "NOTICE TO BIDDERS."

NO SCALE

PROJECT ENGINEER REGISTERED CIVIL ENGINEER — DATE 1-13-14

REGISTERED PROFESSIONAL ENGINEER — AMIR AWN ELSHARIEF — No. 72560 — Exp. 6/30/14 — CIVIL — STATE OF CALIFORNIA

June 2, 2014
PLANS APPROVAL DATE

THE STATE OF CALIFORNIA OR ITS OFFICERS OR AGENTS SHALL NOT BE RESPONSIBLE FOR THE ACCURACY OR COMPLETENESS OF SCANNED COPIES OF THIS PLAN SHEET.

CONTRACT No.	07-259024
PROJECT ID	0713000046

PROJECT MANAGER: OJAS SHETH
DESIGN ENGINEER: AMIR ELSHARIEF

LAST REVISION 00-00-00 — DATE PLOTTED => 12-SEP-2014 — TIME PLOTTED => 06:14

Dist	COUNTY	ROUTE	POST MILES TOTAL PROJECT	SHEET No.	TOTAL SHEETS
07	LA	5,10,91, 110,134	Var	2	291

REGISTERED CIVIL ENGINEER 1-13-14 DATE

6-2-14
PLANS APPROVAL DATE

REGISTERED PROFESSIONAL ENGINEER AMIR AWN ELSHARIEF No. 72560 Exp. 6/30/14 CIVIL STATE OF CALIFORNIA

THE STATE OF CALIFORNIA OR ITS OFFICERS OR AGENTS SHALL NOT BE RESPONSIBLE FOR THE ACCURACY OR COMPLETENESS OF SCANNED COPIES OF THIS PLAN SHEET.

LOCATIONS OF CONSTRUCTION

Loc No. (#)	COUNTY	ROUTE	PM	DIRECTION	LOCATION	DEVICE TYPE
1	LA	5	15.72	SB	SOUTH CONCORD St	AUSTIN VAULT SAND FILTER
2	LA	5	18.32	SB	WB ROUTE 10 CONNECTOR TO ROUTE 5	AUSTIN VAULT SAND FILTER
3	LA	5	20.30	NB	ALONG ROUTE 110 BETWEEN SB & NB ROUTE 5 ON RAMPS	AUSTIN VAULT SAND FILTER
4	LA	5	20.84	NB	ON-RAMP FROM SB RIVERSIDE Dr	2 AUSTIN VAULT SAND FILTERS
5	LA	5	22.66	SB	NB RIVERSIDE Dr TO WB ROUTE 2 ON-RAMP	BIOFILTRATION SWALE
6	LA	5	25.89	NB	NB ON-RAMP FROM COLORADO St	AUSTIN VAULT SAND FILTER
7	LA	10	21.07	WB	EAST OF CAMPUS Rd OC	AUSTIN VAULT SAND FILTER
8	LA	91	R10.07	WB	EB ARTESIA Blvd	AUSTIN VAULT SAND FILTER
9	LA	91	R10.18	EB	OFF-RAMP TO SOUTH ALAMEDA St	AUSTIN VAULT SAND FILTER
10	LA	110	15.78	NB	OFF-RAMP TO WEST MANCHESTER Ave	AUSTIN VAULT SAND FILTER
11	LA	110	15.81	SB	ON-RAMP FROM WEST MANCHESTER Ave	AUSTIN VAULT SAND FILTER
12	LA	110	15.97	SB	OFF-RAMP TO WEST MANCHESTER Ave	AUSTIN VAULT SAND FILTER
13	LA	110	17.81	SB	ON-RAMP FROM WEST SLAUSON Ave	AUSTIN VAULT SAND FILTER
14	LA	110	19.31	NB	OFF-RAMP TO WEST MARTIN LUTHER KING JUNIOR Blvd	AUSTIN VAULT SAND FILTER
15	LA	110	19.83	NB	OFF-RAMP TO W 37th St	AUSTIN VAULT SAND FILTER
16	LA	110	23.14	SB	OFF-RAMP TO S BEAUDRY Ave NEAR W 2ND St	BIOFILTRATION STRIP
17	LA	134	R8.90	WB	ROUTE 2 CONNECTOR TO WB ROUTE 134	AUSTIN VAULT SAND FILTER
18	LA	134	R11.60	EB	OFF-RAMP TO NORTH FIGUEROA St	AUSTIN VAULT SAND FILTER

REVISED BY | DATE REVISED

O. BLACKSTOCK | DAN PHAM

CALCULATED-DESIGNED BY | CHECKED BY

FUNCTIONAL SUPERVISOR: AMIR ELSHARIEF

STATE OF CALIFORNIA - DEPARTMENT OF TRANSPORTATION

Caltrans® DESIGN

LOCATIONS OF CONSTRUCTION

LC-1

LAST REVISION | DATE PLOTTED => 12-SEP-2014 | TIME PLOTTED => 06:14

Dist	COUNTY	ROUTE	POST MILES TOTAL PROJECT	SHEET No.	TOTAL SHEETS
07	LA	5,10,91, 110,134	Var	3	291

REGISTERED CIVIL ENGINEER 1-13-14 DATE

6-2-14
PLANS APPROVAL DATE

REGISTERED PROFESSIONAL ENGINEER AMIR AWN ELSHARIEF No. 72560 Exp. 6/30/14 CIVIL STATE OF CALIFORNIA

THE STATE OF CALIFORNIA OR ITS OFFICERS OR AGENTS SHALL NOT BE RESPONSIBLE FOR THE ACCURACY OR COMPLETENESS OF SCANNED COPIES OF THIS PLAN SHEET.

NOTES:

1. DIMENSIONS OF THE STRUCTURAL SECTIONS ARE SUBJECT TO TOLERANCES SPECIFIED IN THE STANDARD SPECIFICATIONS
2. SUPERELEVATION AS SHOWN OR AS DIRECTED BY THE ENGINEER

TYPICAL PAVEMENT STRUCTURAL SECTIONS:

1
- 0.55′ HOT MIX ASPHALT (TYPE A)
- 0.55′ LEAN CONCRETE BASE
- 1.00′ CLASS 3 AGGREGATE BASE

2
- 0.40′ HOT MIX ASPHALT (TYPE A)
- 0.40′ LEAN CONCRETE BASE
- 0.70′ CLASS 3 AGGREGATE BASE

3
- 0.85′ JPCP-RAPID STRENGTH CONCRETE (JPCP-RSC)
- 0.35′ LEAN CONCRETE BASE RAPID SETTING
- 0.60′ CLASS 3 AGGREGATE BASE

4
- 0.60′ HOT MIX ASPHALT (TYPE A)
- 0.60′ LEAN CONCRETE BASE RAPID SETTING
- 1.15′ CLASS 3 AGGREGATE BASE

5
- 0.70′ JPCP
- 0.35′ LEAN CONCRETE BASE
- 0.50′ CLASS 3 AGGREGATE BASE

6
- 0.50′ HOT MIX ASPHALT (TYPE A)

PAVEMENT CLIMATE REGION

SOUTH COAST
INLAND VALLEY

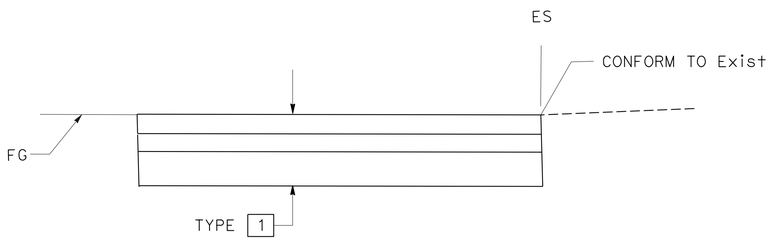

MVP AND SHOULDER

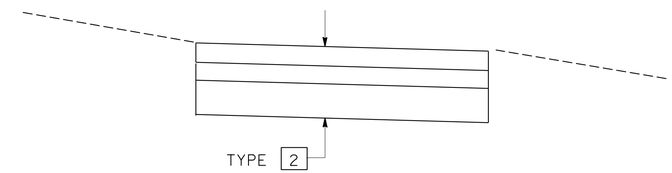

ACCESS ROAD

EXISTING STRUCTURE SECTIONS

ROUTE 91
ALAMEDA St EB OFF RAMP Shld

A
- (SEE LAYOUT PLAN SHEET L-8)
- 0.25′ - 0.35′ ASPHALT CONCRETE
- 0.40′ OR 0.55′ CLASS 2 AGGREGATE BASE
- Var CLASS 4 AGGREGATE SUBBASE

ROUTE 110
NB Shld MAIN LINE

B
- (SEE LAYOUT PLAN SHEET L-9)
- 0.35′ ASPHALT CONCRETE (TYPE B)
- 0.65′ CLASS 2 AGGREGATE BASE
- 1.15′ & Var CLASS 4 AGGREGATE SUBBASE

ROUTE 110
WEST MANCHESTER Ave SB ON RAMP & Shld TO SB ROUTE 110

C
- (SEE LAYOUT PLAN SHEET L-9)
- 0.50′ ASPHALT CONCRETE (TYPE B)
- 0.25′ ASPHALT TREATED PERMEABLE BASE
- 0.45′ CLASS 2 AGGREGATE BASE
- 1.00′ CLASS 4 AGGREGATE SUBBASE

D
- (SEE LAYOUT PLAN SHEET L-9)
- 0.30′ ASPHALT CONCRETE (TYPE B)
- 0.55′ CLASS 2 AGGREGATE BASE
- 1.40′ & Var CLASS 4 AGGREGATE SUBBASE

ROUTE 110
NB Shld MAIN LINE

E
- (SEE LAYOUT PLAN SHEET L-11)
- 0.85′ PORTLAND CEMENT CONCRETE
- 0.25′ ASPHALT TREATED PERMEABLE BASE
- 0.35′ CLASS 3 AGGREGATE BASE
- 0.70′ CLASS 4 AGGREGATE SUBBASE

ROUTE 110
WEST MARTIN LUTHER KING JR Blvd ON RAMP & Shld TO NB ROUTE 110

F
- (SEE LAYOUT PLAN SHEET L-11)
- 0.50′ ASPHALT CONCRETE (TYPE B)
- 0.25′ ASPHALT TREATED PERMEABLE BASE
- 0.50′ CLASS 2 AGGREGATE BASE
- 0.95′ CLASS 4 AGGREGATE SUBBASE

ROUTE 110
NB Shld MAIN LINE

G
- (SEE LAYOUT PLAN SHEET L-12)
- 0.85′ PORTLAND CEMENT CONCRETE
- 0.25′ ASPHALT TREATED PERMEABLE BASE
- 0.35′ CLASS 3 AGGREGATE BASE
- 0.70′ CLASS 4 AGGREGATE SUBBASE

ROUTE 110
WEST 37TH St NB OFF RAMP & Shld

H
- (SEE LAYOUT PLAN SHEET L-12)
- 0.50′ ASPHALT CONCRETE (TYPE B)
- 0.25′ ASPHALT TREATED PERMEABLE BASE
- 0.50′ CLASS 2 AGGREGATE BASE
- 0.95′ CLASS 4 AGGREGATE SUBBASE

I
- (SEE LAYOUT PLAN SHEET L-12)
- 0.30′ ASPHALT CONCRETE (TYPE B)
- 0.55′ CLASS 2 AGGREGATE BASE
- 1.35′ & Var CLASS 4 AGGREGATE SUBBASE

TYPICAL CROSS SECTIONS

NO SCALE

X-1

REVISED BY | DATE REVISED
KATHLEEN PHAM | THUAN CAO
CALCULATED-DESIGNED BY | CHECKED BY
FUNCTIONAL SUPERVISOR: AMIR ELSHARIEF

STATE OF CALIFORNIA - DEPARTMENT OF TRANSPORTATION
Caltrans® DESIGN

LAST REVISION 00-00-00 | DATE PLOTTED => 12-SEP-2014 | TIME PLOTTED => 06:14

Dist	COUNTY	ROUTE	POST MILES TOTAL PROJECT	SHEET No.	TOTAL SHEETS
07	LA	5,10,91, 110,134	Var	4	291

REGISTERED CIVIL ENGINEER 1-13-14 DATE

6-2-14
PLANS APPROVAL DATE

REGISTERED PROFESSIONAL ENGINEER AMIR AWN ELSHARIEF No. 72560 Exp. 6/30/14 CIVIL STATE OF CALIFORNIA

THE STATE OF CALIFORNIA OR ITS OFFICERS OR AGENTS SHALL NOT BE RESPONSIBLE FOR THE ACCURACY OR COMPLETENESS OF SCANNED COPIES OF THIS PLAN SHEET.

NOTES:

1. FOR ACCURATE RIGHT OF WAY DATA, CONTACT RIGHT OF WAY ENGINEERING AT THE DISTRICT OFFICE.
2. EXACT STOCKPILE LOCATION WILL BE DIRECTED BY THE ENGINEER. EXCESS Conc BARRIER (TYPE K) MUST REMAIN AT THE STOCKPILE LOCATION UNLESS DIRECTED OTHERWISE BY THE ENGINEER.

ABBREVIATIONS:

AVSF	AUSTIN VAULT SAND FILTER
BSW	BIOFILTRATION SWALE
BST	BIOFILTRATION STRIP
WPCP	WATER POLLUTION CONTROL PLANS

LEGEND:

- CHAIN LINK GATE (TYPE CL-6)
- STOCKPILE LOCATION FOR Conc BARRIER (TYPE K)
- DIRECTION OF TRAFFIC

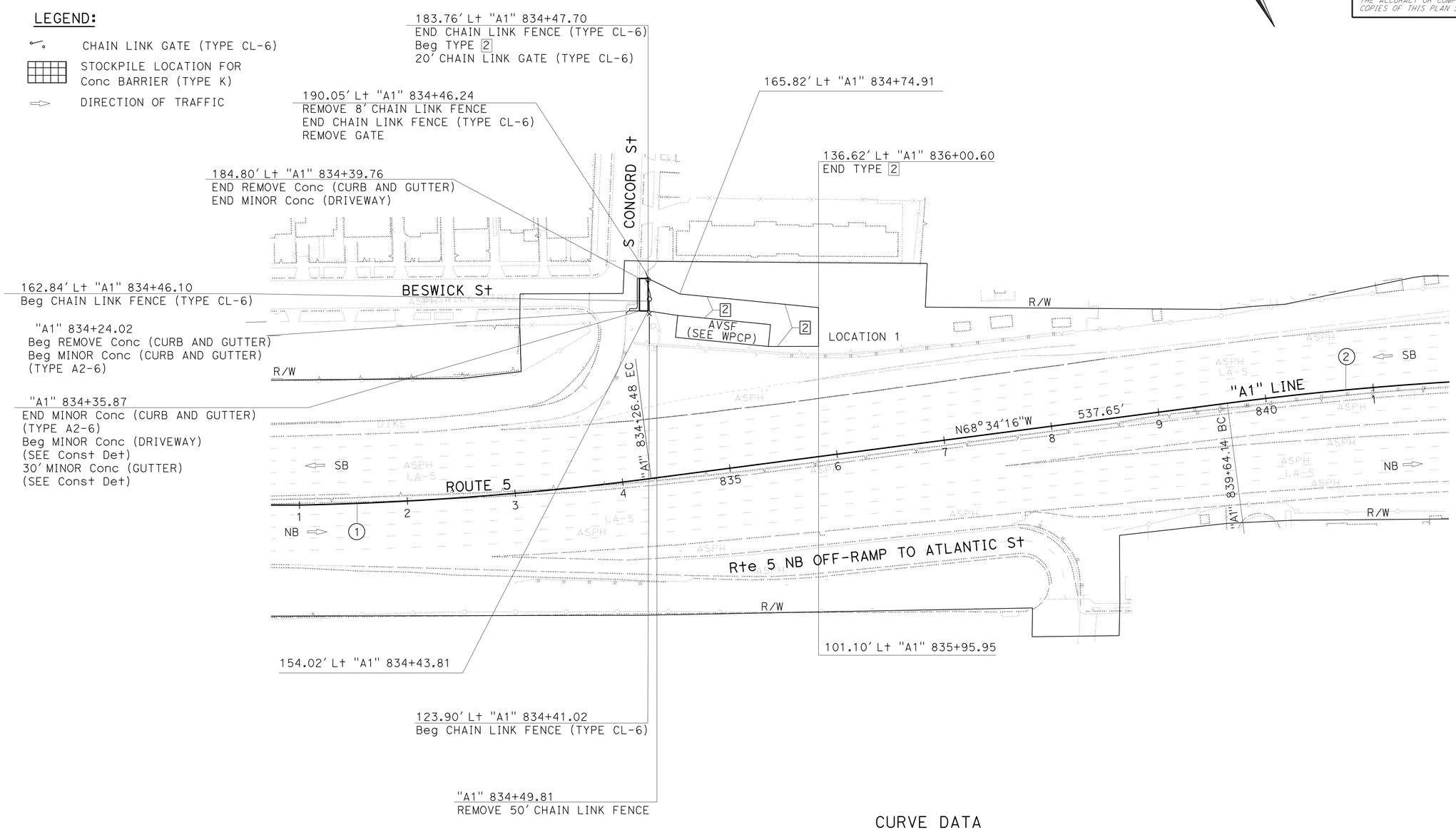

CURVE DATA

No. ⊕	R	Δ	T	L
1	3000'	06°12'02"	162.49'	324.65'
2	3000'	06°53'13"	180.52'	360.60'

LAYOUT

SCALE: 1" = 50'

L-1

STATE OF CALIFORNIA - DEPARTMENT OF TRANSPORTATION
Caltrans
DESIGN

FUNCTIONAL SUPERVISOR: AMIR ELSHARIEF
CALCULATED-DESIGNED BY: KATHY D PHAM
CHECKED BY: DAN PHAM
REVISED BY
DATE REVISED

LAST REVISION 00-00-00
DATE PLOTTED => 12-SEP-2014
TIME PLOTTED => 06:14

Dist	COUNTY	ROUTE	POST MILES TOTAL PROJECT	SHEET No.	TOTAL SHEETS
07	LA	5,10,91, 110,134	Var	5	291

REGISTERED CIVIL ENGINEER 1-13-14 DATE

6-2-14
PLANS APPROVAL DATE

REGISTERED PROFESSIONAL ENGINEER AMIR AWN ELSHARIEF No. 72560 Exp. 6/30/14 CIVIL STATE OF CALIFORNIA

THE STATE OF CALIFORNIA OR ITS OFFICERS OR AGENTS SHALL NOT BE RESPONSIBLE FOR THE ACCURACY OR COMPLETENESS OF SCANNED COPIES OF THIS PLAN SHEET.

NOTE:
FOR ACCURATE RIGHT OF WAY DATA, CONTACT RIGHT OF WAY ENGINEERING AT THE DISTRICT OFFICE.

CURVE DATA

No. (#)	R	Δ	T	L
20	400′	28°05′09"	100.05′	196.08′
21	400′	118°51′57"	677.25′	829.84′
22	50′	22°27′53"	9.93′	19.60′

FENCE AND GATES

No. (X)	LOCATION	NOTE
FC1	65.40′ Lt "A1" LINE 965+99.37	CL FENCE (TYPE CL-6)
FC2	69.96′ Lt "A1" LINE 966+94.65	CL FENCE (TYPE CL-6)
FC3	108.81′ Lt "A1" LINE 966+92.78	CL FENCE (TYPE CL-6)
FC4	128.30′ Lt "A1" LINE 966+91.76	20′ CL GATE (TYPE CL-6)
FC5	129.12′ Lt "A1" LINE 966+84.97	CL FENCE (TYPE CL-6)
FC6	126.63′ Lt "A1" LINE 966+34.81	CL FENCE (TYPE CL-6)
FC7	105.23′ Lt "A1" LINE 965+97.31	CL FENCE (TYPE CL-6)

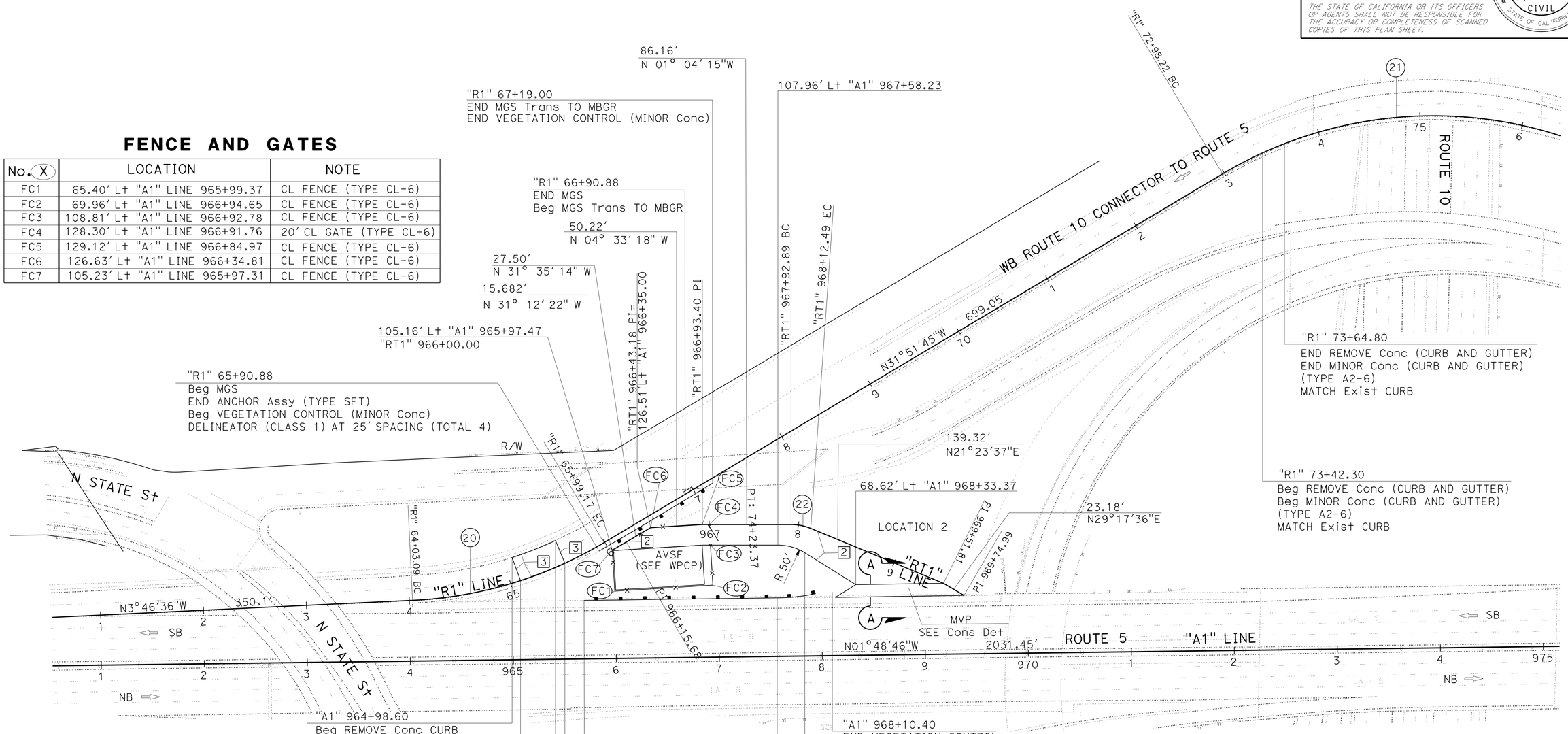

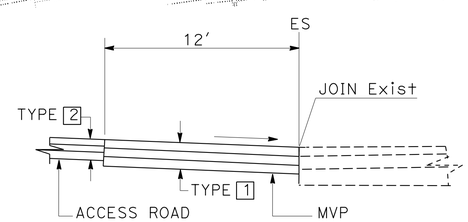

"A1" Sta 968+13.25 TO 969+74.99

SECTION A-A
NO SCALE

LAYOUT
SCALE: 1" = 50′

L-2

REVISED BY | DATE REVISED
KATHY D PHAM | DAN PHAM
CALCULATED-DESIGNED BY | CHECKED BY
FUNCTIONAL SUPERVISOR
AMIR ELSHARIEF

STATE OF CALIFORNIA - DEPARTMENT OF TRANSPORTATION
DESIGN
Caltrans

LAST REVISION 00-00-00 | DATE PLOTTED => 12-SEP-2014 | TIME PLOTTED => 06:14

Dist	COUNTY	ROUTE	POST MILES TOTAL PROJECT	SHEET No.	TOTAL SHEETS
07	LA	5,10,91, 110,134	Var	6	291

REGISTERED CIVIL ENGINEER 1-13-14 DATE

6-2-14
PLANS APPROVAL DATE

REGISTERED PROFESSIONAL ENGINEER AMIR AWN ELSHARIEF No. 72560 Exp. 6/30/14 CIVIL STATE OF CALIFORNIA

THE STATE OF CALIFORNIA OR ITS OFFICERS OR AGENTS SHALL NOT BE RESPONSIBLE FOR THE ACCURACY OR COMPLETENESS OF SCANNED COPIES OF THIS PLAN SHEET.

NOTE:
FOR ACCURATE RIGHT OF WAY DATA, CONTACT RIGHT OF WAY ENGINEERING AT THE DISTRICT OFFICE.

CURVE DATA

No. (#)	R	Δ	T	L
3	2800′	43°31′23"	1117.74′	2126.94′
23	350′	100°37′00"	421.70′	614.63′
24	150′	19°05′54"	25.23′	50.00′
25	62′	79°32′16"	51.18′	85.37′

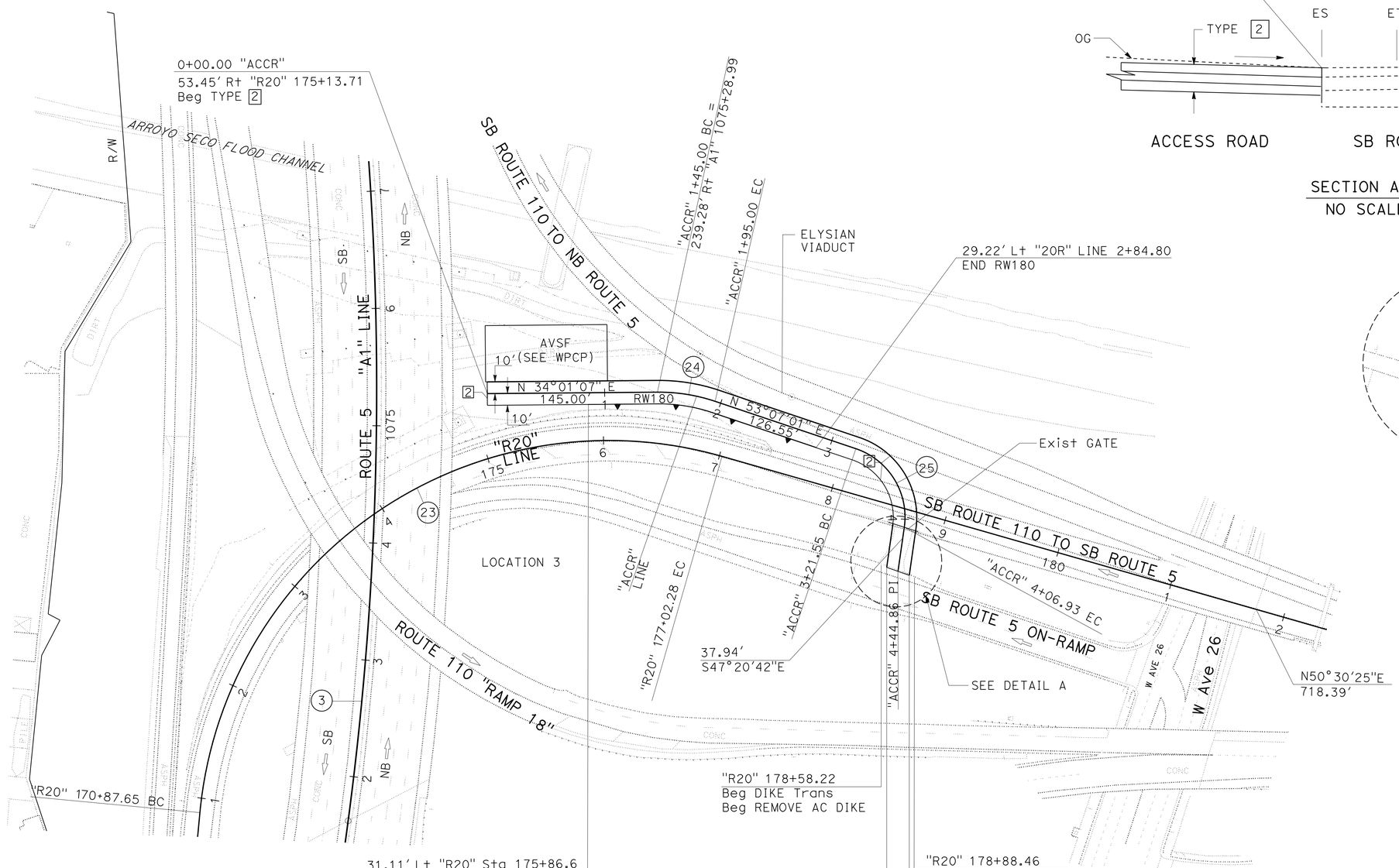

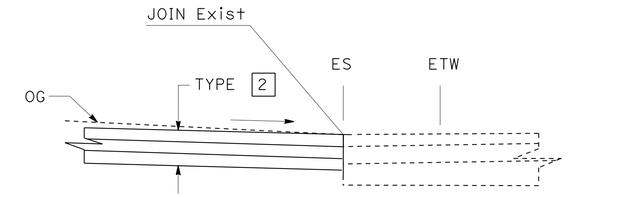

SECTION A-A
NO SCALE

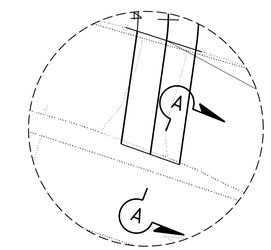

DETAIL A
NO SCALE

LAYOUT
SCALE: 1" = 50′

L-3

STATE OF CALIFORNIA - DEPARTMENT OF TRANSPORTATION
Caltrans
DESIGN
FUNCTIONAL SUPERVISOR: AMIR ELSHARIEF
CUONG T TRAN
DAN PHAM
CALCULATED-DESIGNED BY
CHECKED BY
REVISED BY
DATE REVISED

LAST REVISION 00-00-00 | DATE PLOTTED => 12-SEP-2014 | TIME PLOTTED => 06:14

Dist	COUNTY	ROUTE	POST MILES TOTAL PROJECT	SHEET No.	TOTAL SHEETS
07	LA	5,10,91, 110,134	Var	7	291

REGISTERED CIVIL ENGINEER 1-13-14 DATE

6-2-14
PLANS APPROVAL DATE

REGISTERED PROFESSIONAL ENGINEER AMIR AWN ELSHARIEF No. 72560 Exp. 6/30/14 CIVIL STATE OF CALIFORNIA

THE STATE OF CALIFORNIA OR ITS OFFICERS OR AGENTS SHALL NOT BE RESPONSIBLE FOR THE ACCURACY OR COMPLETENESS OF SCANNED COPIES OF THIS PLAN SHEET.

NOTE:
FOR ACCURATE RIGHT OF WAY DATA, CONTACT RIGHT OF WAY ENGINEERING AT THE DISTRICT OFFICE.

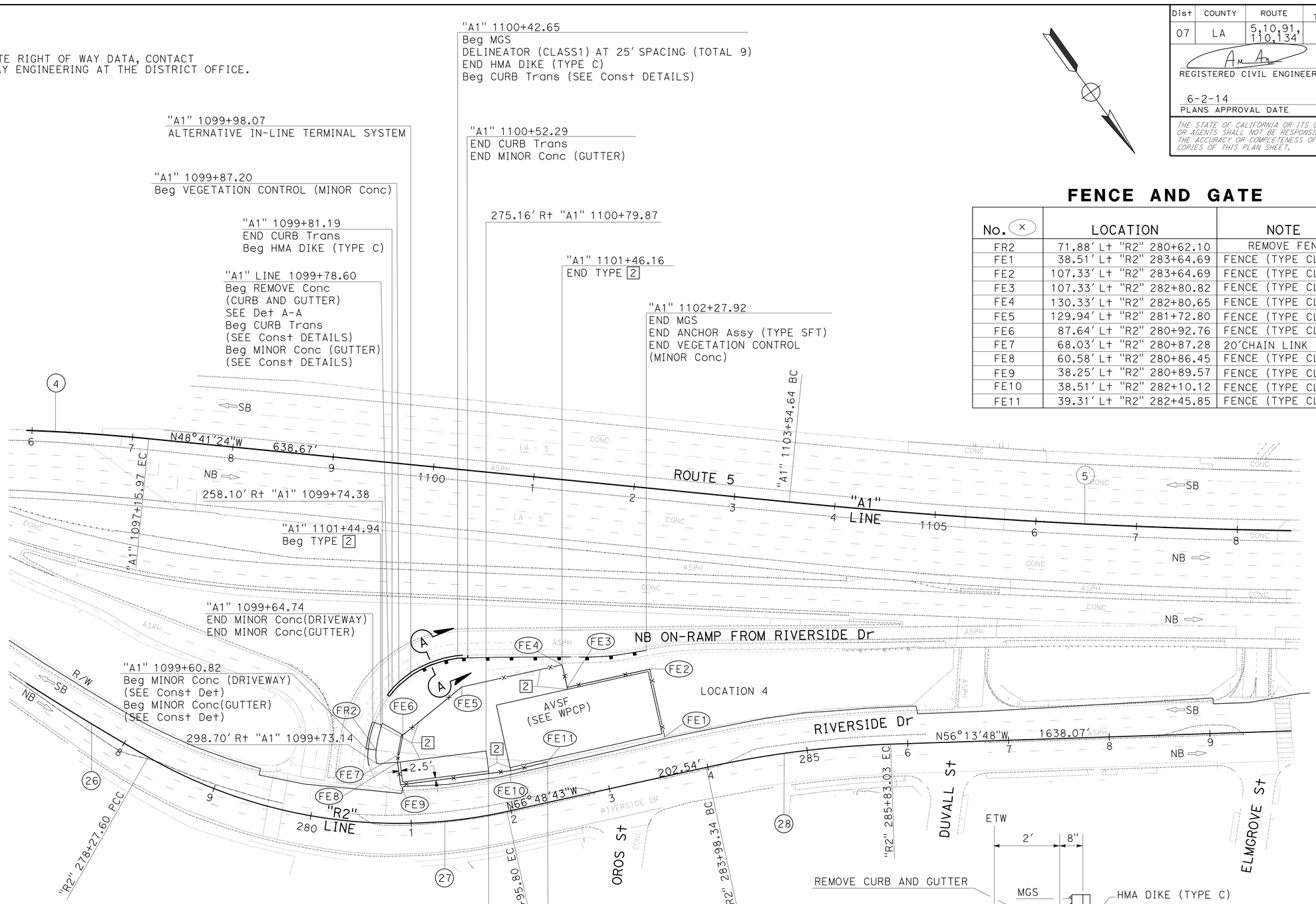

FENCE AND GATE

No. (X)	LOCATION	NOTE
FR2	71.88' Lt "R2" 280+62.10	REMOVE FENCE
FE1	38.51' Lt "R2" 283+64.69	FENCE (TYPE CL-6)
FE2	107.33' Lt "R2" 283+64.69	FENCE (TYPE CL-6)
FE3	107.33' Lt "R2" 282+80.82	FENCE (TYPE CL-6)
FE4	130.33' Lt "R2" 282+80.65	FENCE (TYPE CL-6)
FE5	129.94' Lt "R2" 281+72.80	FENCE (TYPE CL-6)
FE6	87.64' Lt "R2" 280+92.76	FENCE (TYPE CL-6)
FE7	68.03' Lt "R2" 280+87.28	20'CHAIN LINK GATE
FE8	60.58' Lt "R2" 280+86.45	FENCE (TYPE CL-6)
FE9	38.25' Lt "R2" 280+89.57	FENCE (TYPE CL-6)
FE10	38.51' Lt "R2" 282+10.12	FENCE (TYPE CL-6)
FE11	39.31' Lt "R2" 282+45.85	FENCE (TYPE CL-6)

CURVE DATA

No. (#)	R	Δ	T	L
4	2000'	22°24'08"	396.05'	781.99'
5	6000'	04°55'40"	258.18'	516.03'
26	2650'	18°16'02"	426.06'	844.88'
27	500'	42°11'34"	192.90'	368.20'
28	1000'	10°34'56"	92.61'	184.69'

SECTION A-A
NO SCALE

LAYOUT
SCALE: 1" = 50'

L-4

STATE OF CALIFORNIA - DEPARTMENT OF TRANSPORTATION
Caltrans
DESIGN
FUNCTIONAL SUPERVISOR: AMIR ELSHARIEF
CALCULATED-DESIGNED BY: KATHY D PHAM
CHECKED BY: DAN PHAM
REVISED BY
DATE REVISED

LAST REVISION 00-00-00
DATE PLOTTED => 12-SEP-2014
TIME PLOTTED => 06:14

Dist	COUNTY	ROUTE	POST MILES TOTAL PROJECT	SHEET No.	TOTAL SHEETS
07	LA	5,10,91, 110,134	Var	8	291

REGISTERED CIVIL ENGINEER 1-13-14 DATE

6-2-14
PLANS APPROVAL DATE

REGISTERED PROFESSIONAL ENGINEER AMIR AWN ELSHARIEF No. 72560 Exp. 6/30/14 CIVIL STATE OF CALIFORNIA

THE STATE OF CALIFORNIA OR ITS OFFICERS OR AGENTS SHALL NOT BE RESPONSIBLE FOR THE ACCURACY OR COMPLETENESS OF SCANNED COPIES OF THIS PLAN SHEET.

NOTE:
FOR ACCURATE RIGHT OF WAY DATA, CONTACT RIGHT OF WAY ENGINEERING AT THE DISTRICT OFFICE.

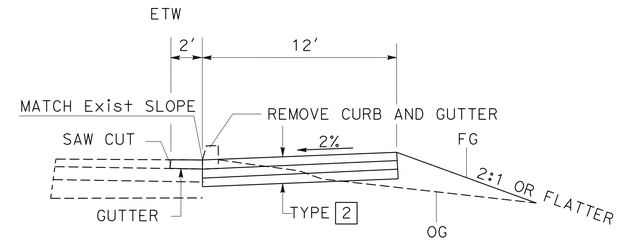

"A1" Sta 1195+99.65 TO 1196+83.23
SECTION A-A
NO SCALE

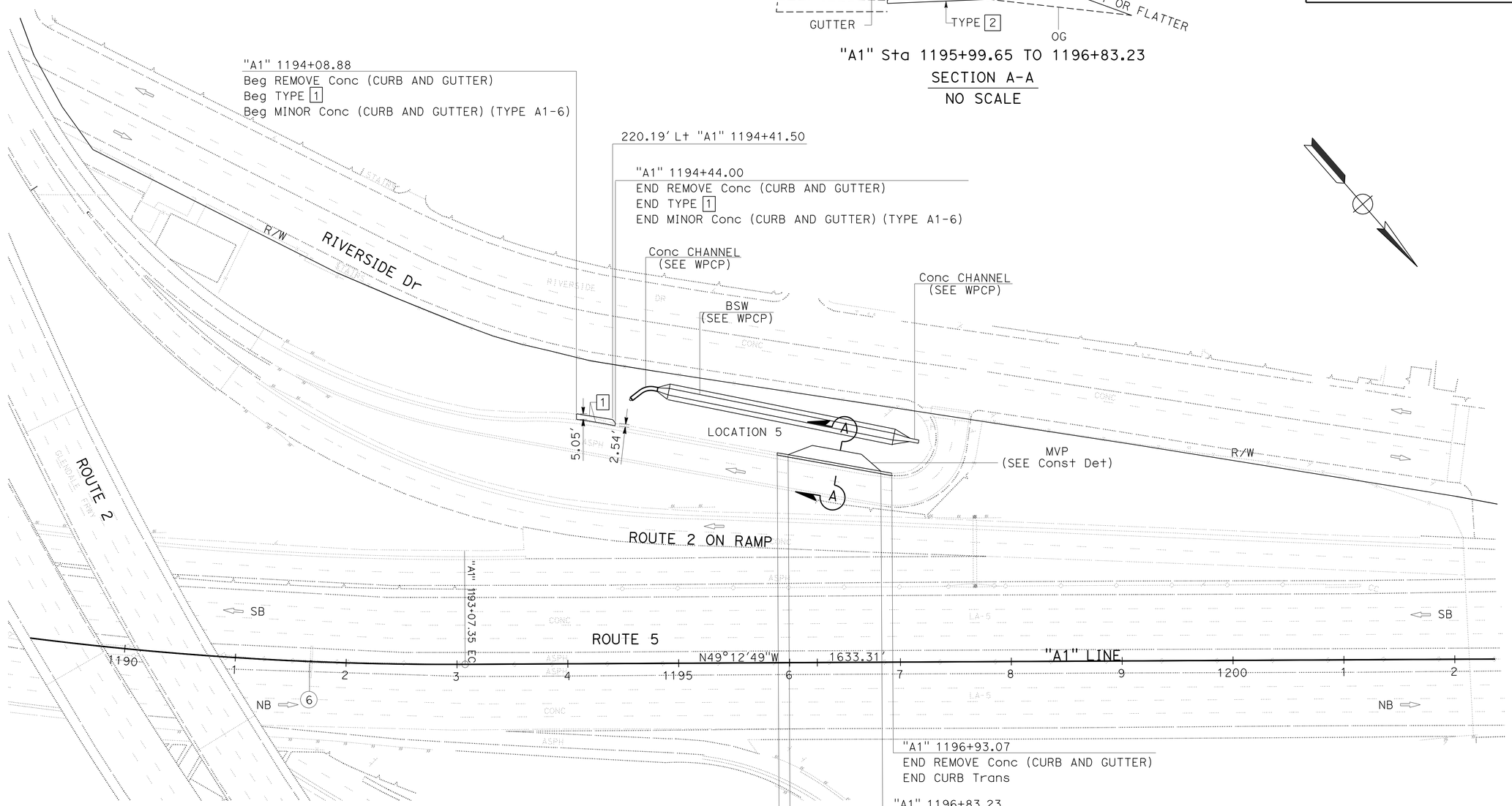

CURVE DATA

No. (#)	R	Δ	T	L
6	3000'	20°32'07"	543.45'	1075.23'

LAYOUT
SCALE: 1" = 50'

L-5

STATE OF CALIFORNIA - DEPARTMENT OF TRANSPORTATION
Caltrans
DESIGN
FUNCTIONAL SUPERVISOR: AMIR ELSHARIEF
CALCULATED-DESIGNED BY: KATHY D PHAM
CHECKED BY: DAN PHAM
REVISED BY
DATE REVISED

LAST REVISION 00-00-00
DATE PLOTTED => 12-SEP-2014
TIME PLOTTED => 06:15

Dist	COUNTY	ROUTE	POST MILES TOTAL PROJECT	SHEET No.	TOTAL SHEETS
07	LA	5,10,91, 110,134	Var	9	291

REGISTERED CIVIL ENGINEER 1-13-14 DATE

6-2-14
PLANS APPROVAL DATE

REGISTERED PROFESSIONAL ENGINEER
AMIR AWN ELSHARIEF
No. 72560
Exp. 6/30/14
CIVIL
STATE OF CALIFORNIA

THE STATE OF CALIFORNIA OR ITS OFFICERS OR AGENTS SHALL NOT BE RESPONSIBLE FOR THE ACCURACY OR COMPLETENESS OF SCANNED COPIES OF THIS PLAN SHEET.

NOTE:
FOR ACCURATE RIGHT OF WAY DATA, CONTACT RIGHT OF WAY ENGINEERING AT THE DISTRICT OFFICE.

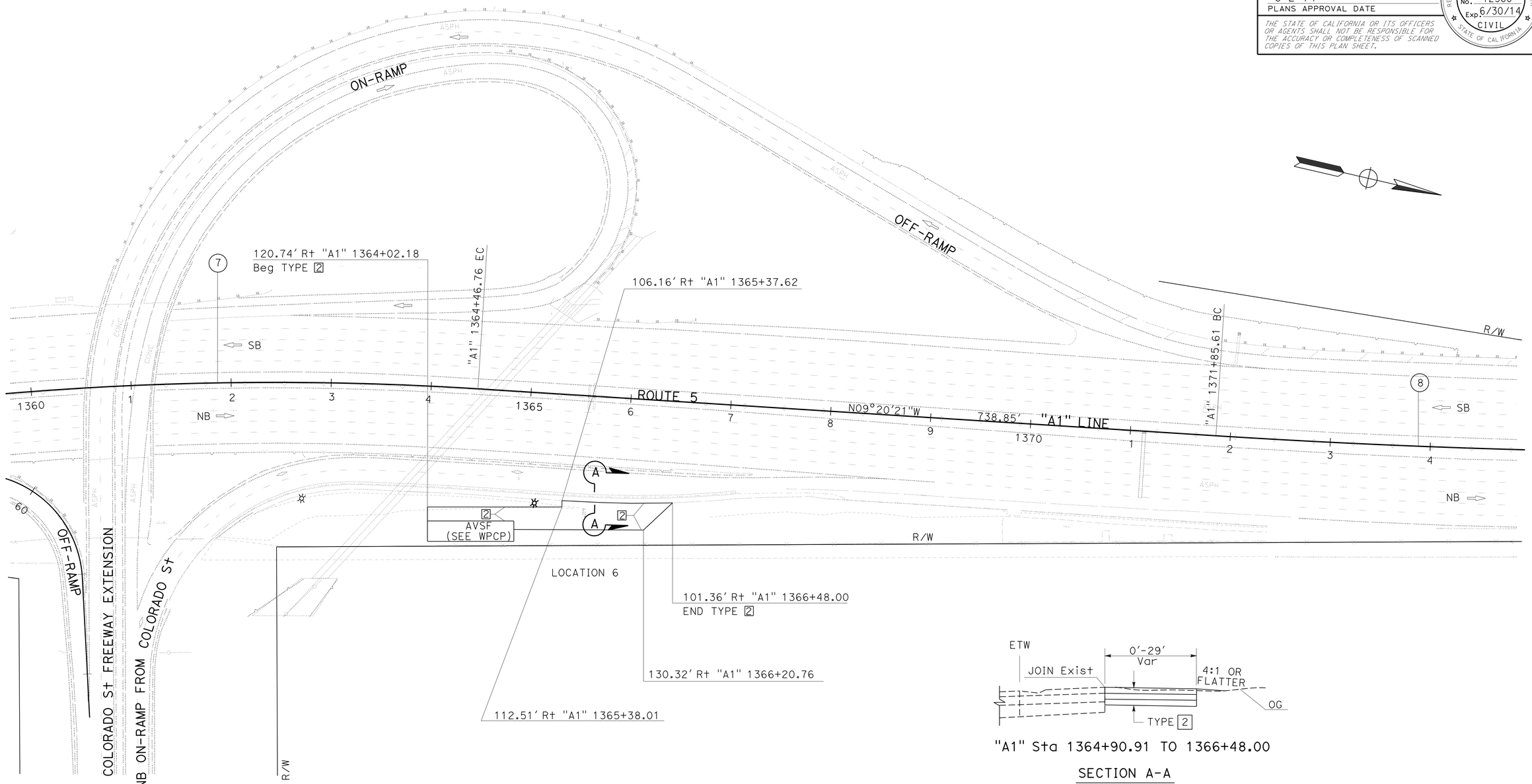

"A1" Sta 1364+90.91 TO 1366+48.00

SECTION A-A
NO SCALE

CURVE DATA "A1" LINE

No. ⊕	R	Δ	T	L
7	3200′	08°58′58″	251.36′	501.70′
8	8500′	03°30′46″	260.65′	521.14′

LAYOUT

SCALE: 1" = 50′

L-6

STATE OF CALIFORNIA - DEPARTMENT OF TRANSPORTATION
Caltrans
DESIGN

FUNCTIONAL SUPERVISOR: AMIR ELSHARIEF
CALCULATED-DESIGNED BY: KATHY D PHAM
CHECKED BY: DAN PHAM
REVISED BY
DATE REVISED

LAST REVISION 00-00-00
DATE PLOTTED => 12-SEP-2014
TIME PLOTTED => 06:15

Dist	COUNTY	ROUTE	POST MILES TOTAL PROJECT	SHEET No.	TOTAL SHEETS
07	LA	5,10,91, 110,134	Var	10	291

REGISTERED CIVIL ENGINEER 1-13-14 DATE

6-2-14
PLANS APPROVAL DATE

REGISTERED PROFESSIONAL ENGINEER AMIR AWN ELSHARIEF No. 72560 Exp. 6/30/14 CIVIL STATE OF CALIFORNIA

THE STATE OF CALIFORNIA OR ITS OFFICERS OR AGENTS SHALL NOT BE RESPONSIBLE FOR THE ACCURACY OR COMPLETENESS OF SCANNED COPIES OF THIS PLAN SHEET.

NOTE:
FOR ACCURATE RIGHT OF WAY DATA, CONTACT RIGHT OF WAY ENGINEERING AT THE DISTRICT OFFICE.

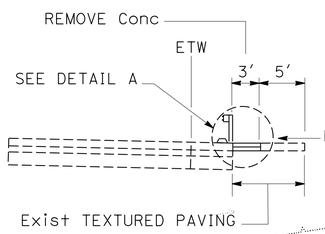

SECTION B-B
NO SCALE

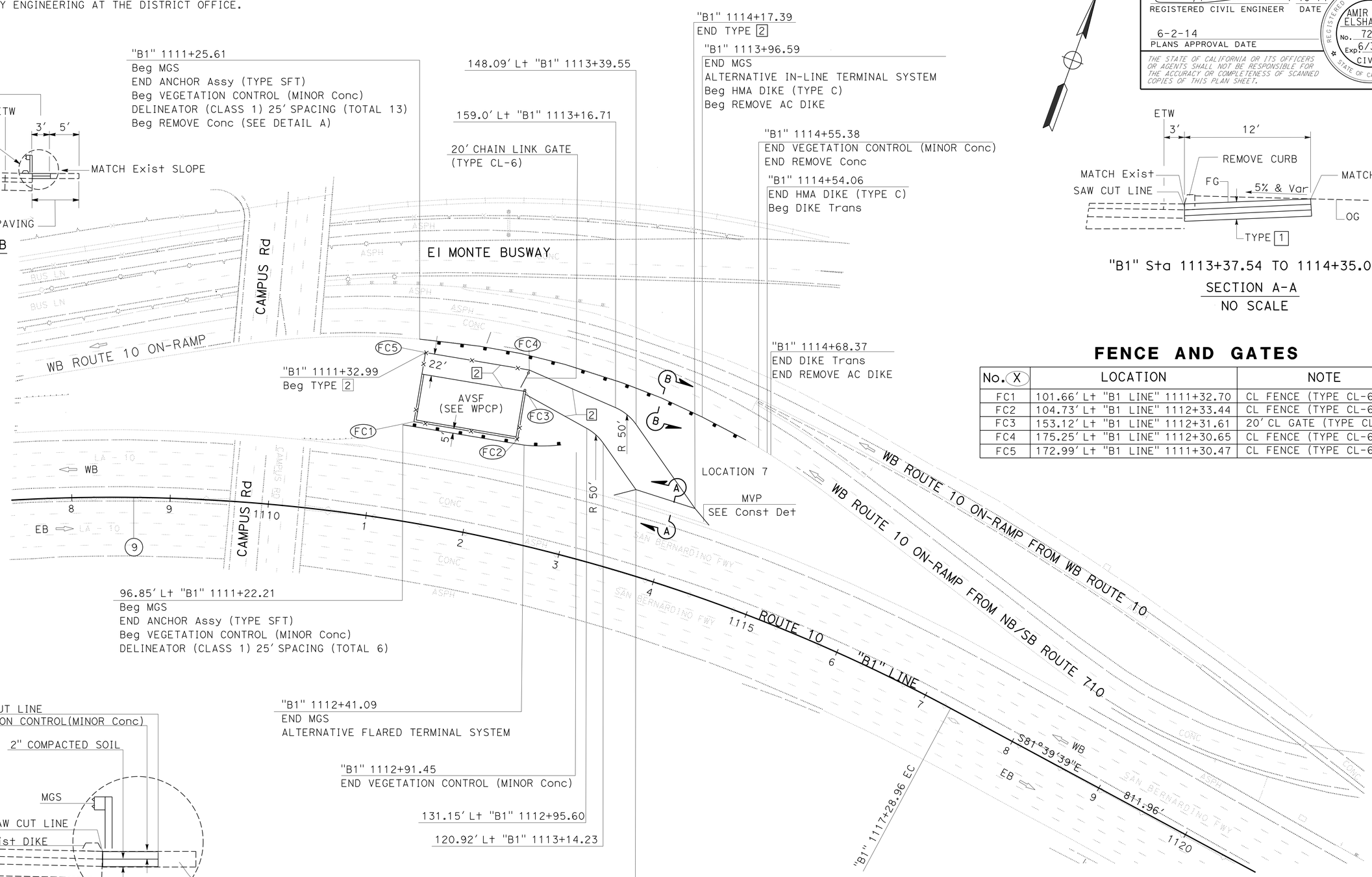

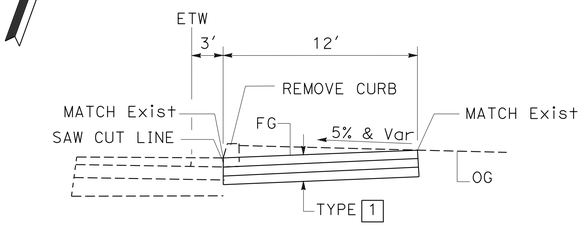

"B1" Sta 1113+37.54 TO 1114+35.09

SECTION A-A
NO SCALE

FENCE AND GATES

No. (X)	LOCATION	NOTE
FC1	101.66' Lt "B1 LINE" 1111+32.70	CL FENCE (TYPE CL-6)
FC2	104.73' Lt "B1 LINE" 1112+33.44	CL FENCE (TYPE CL-6)
FC3	153.12' Lt "B1 LINE" 1112+31.61	20' CL GATE (TYPE CL-6)
FC4	175.25' Lt "B1 LINE" 1112+30.65	CL FENCE (TYPE CL-6)
FC5	172.99' Lt "B1 LINE" 1111+30.47	CL FENCE (TYPE CL-6)

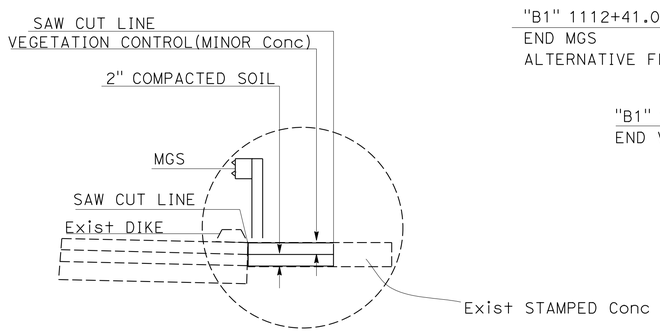

DETAIL A
NO SCALE

CURVE DATA

No. (#)	R	Δ	T	L
9	1800'	36°07'56"	587.15'	1135.13'

LAYOUT
SCALE: 1" = 50'

L-7

STATE OF CALIFORNIA - DEPARTMENT OF TRANSPORTATION
Caltrans® DESIGN
FUNCTIONAL SUPERVISOR: AMIR ELSHARIEF
CALCULATED-DESIGNED BY: KATHY D PHAM
CHECKED BY: DAN PHAM
REVISED BY | DATE REVISED

LAST REVISION 00-00-00 | DATE PLOTTED => 12-SEP-2014 | TIME PLOTTED => 06:15

Dist	COUNTY	ROUTE	POST MILES TOTAL PROJECT	SHEET No.	TOTAL SHEETS
07	LA	5,10,91, 110,134	Var	11	291

REGISTERED CIVIL ENGINEER 1-13-14 DATE

6-2-14
PLANS APPROVAL DATE

REGISTERED PROFESSIONAL ENGINEER AMIR AWN ELSHARIEF No. 72560 Exp. 6/30/14 CIVIL STATE OF CALIFORNIA

THE STATE OF CALIFORNIA OR ITS OFFICERS OR AGENTS SHALL NOT BE RESPONSIBLE FOR THE ACCURACY OR COMPLETENESS OF SCANNED COPIES OF THIS PLAN SHEET.

NOTE:
FOR ACCURATE RIGHT OF WAY DATA, CONTACT RIGHT OF WAY ENGINEERING AT THE DISTRICT OFFICE.

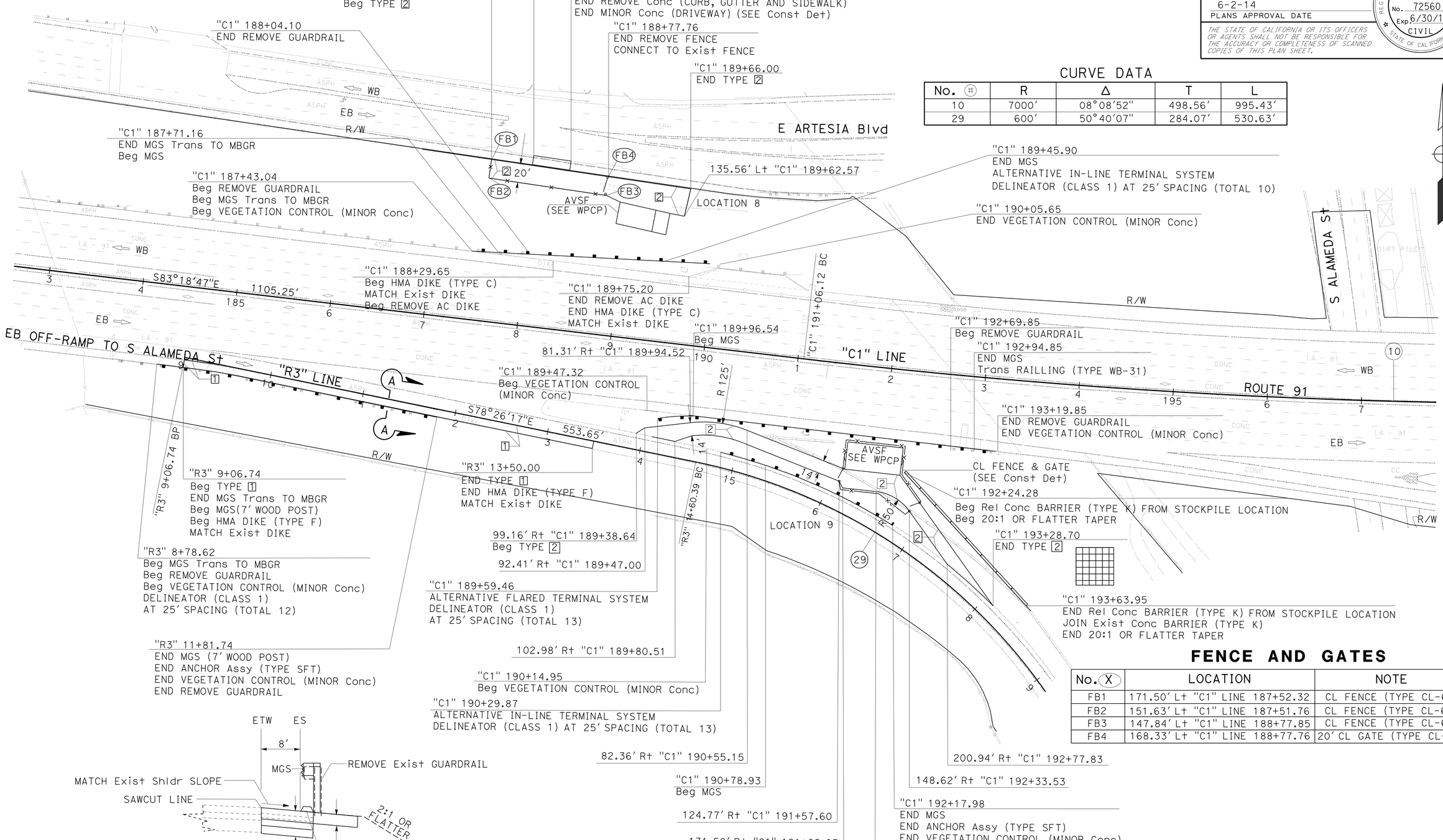

CURVE DATA

No. (#)	R	Δ	T	L
10	7000'	08°08'52"	498.56'	995.43'
29	600'	50°40'07"	284.07'	530.63'

FENCE AND GATES

No. (X)	LOCATION	NOTE
FB1	171.50' Lt "C1" LINE 187+52.32	CL FENCE (TYPE CL-6)
FB2	151.63' Lt "C1" LINE 187+51.76	CL FENCE (TYPE CL-6)
FB3	147.84' Lt "C1" LINE 188+77.85	CL FENCE (TYPE CL-6)
FB4	168.33' Lt "C1" LINE 188+77.76	20' CL GATE (TYPE CL-6)

SECTION A-A
NO SCALE

LAYOUT
SCALE: 1" = 50'

L-8

REVISED BY | DATE REVISED
KATHY D PHAM | DAN PHAM
CALCULATED-DESIGNED BY | CHECKED BY
FUNCTIONAL SUPERVISOR: AMIR ELSHARIEF
STATE OF CALIFORNIA - DEPARTMENT OF TRANSPORTATION
Caltrans DESIGN

LAST REVISION 00-00-00 | DATE PLOTTED => 12-SEP-2014 | TIME PLOTTED => 06:15

Dist	COUNTY	ROUTE	POST MILES TOTAL PROJECT	SHEET No.	TOTAL SHEETS
07	LA	5,10,91, 110,134	Var	12	291

REGISTERED CIVIL ENGINEER 1-13-14 DATE

6-2-14
PLANS APPROVAL DATE

REGISTERED PROFESSIONAL ENGINEER AMIR AWN ELSHARIEF No. 72560 Exp 6/30/14 CIVIL STATE OF CALIFORNIA

THE STATE OF CALIFORNIA OR ITS OFFICERS OR AGENTS SHALL NOT BE RESPONSIBLE FOR THE ACCURACY OR COMPLETENESS OF SCANNED COPIES OF THIS PLAN SHEET.

NOTE:
FOR ACCURATE RIGHT OF WAY DATA, CONTACT RIGHT OF WAY ENGINEERING AT THE DISTRICT OFFICE.

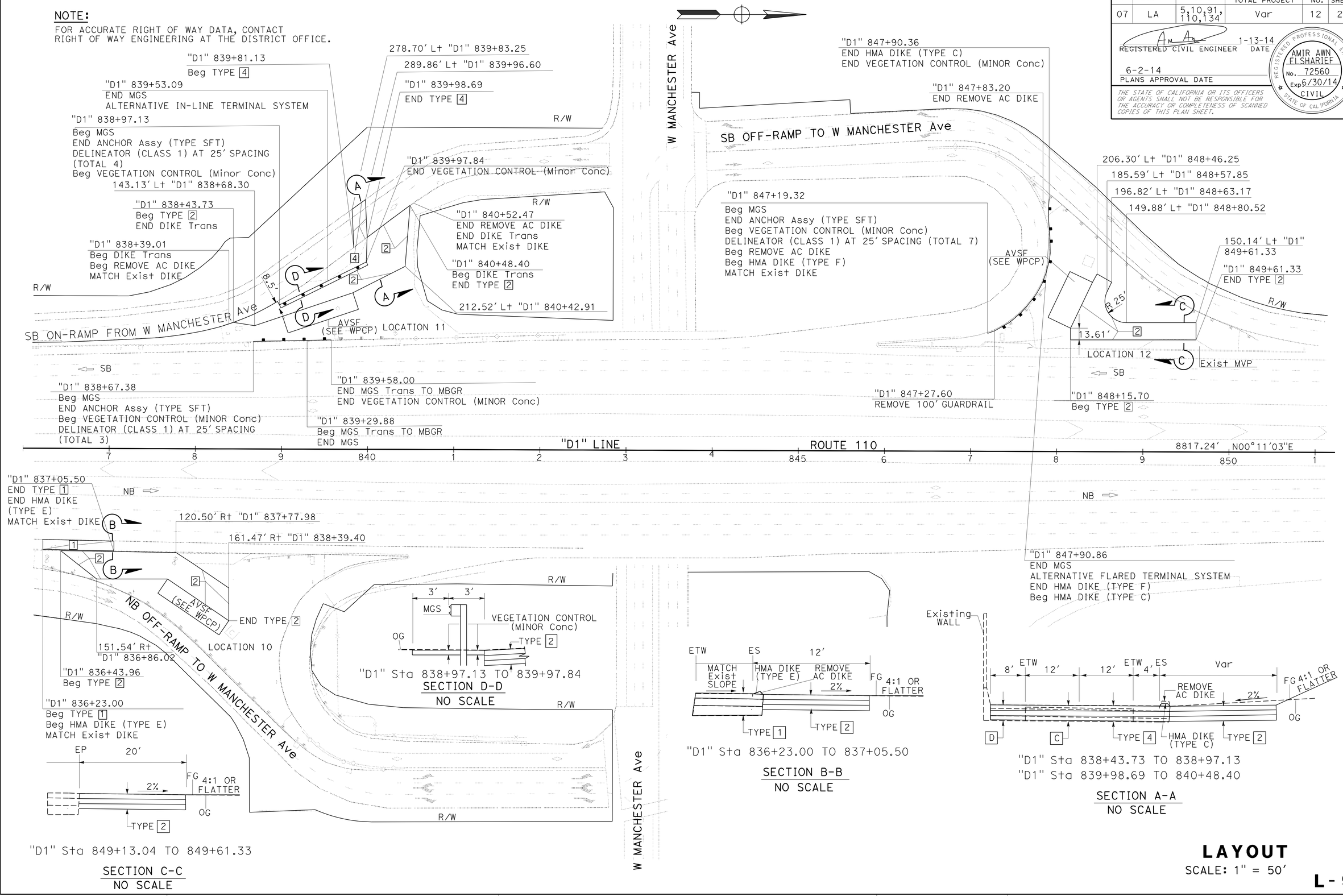

LAYOUT

SCALE: 1" = 50'

L-9

STATE OF CALIFORNIA - DEPARTMENT OF TRANSPORTATION
DESIGN
FUNCTIONAL SUPERVISOR: AMIR ELSHARIEF
CALCULATED-DESIGNED BY: KATHY D PHAM
CHECKED BY: DAN PHAM
REVISED BY
DATE REVISED

LAST REVISION 00-00-00
DATE PLOTTED => 15-SEP-2014
TIME PLOTTED => 14:55

BORDER LAST REVISED 7/2/2010
USERNAME => s128843
DGN FILE => 725902ea009.dgn
RELATIVE BORDER SCALE IS IN INCHES 0 1 2 3
UNIT 1823
PROJECT NUMBER & PHASE 07130000461

Dist	COUNTY	ROUTE	POST MILES TOTAL PROJECT	SHEET No.	TOTAL SHEETS
07	LA	5,10,91, 110,134	Var	13	291

REGISTERED CIVIL ENGINEER 1-13-14 DATE

6-2-14
PLANS APPROVAL DATE

REGISTERED PROFESSIONAL ENGINEER AMIR AWN ELSHARIEF No. 72560 Exp 6/30/14 CIVIL STATE OF CALIFORNIA

THE STATE OF CALIFORNIA OR ITS OFFICERS OR AGENTS SHALL NOT BE RESPONSIBLE FOR THE ACCURACY OR COMPLETENESS OF SCANNED COPIES OF THIS PLAN SHEET.

NOTE:
FOR ACCURATE RIGHT OF WAY DATA, CONTACT RIGHT OF WAY ENGINEERING AT THE DISTRICT OFFICE.

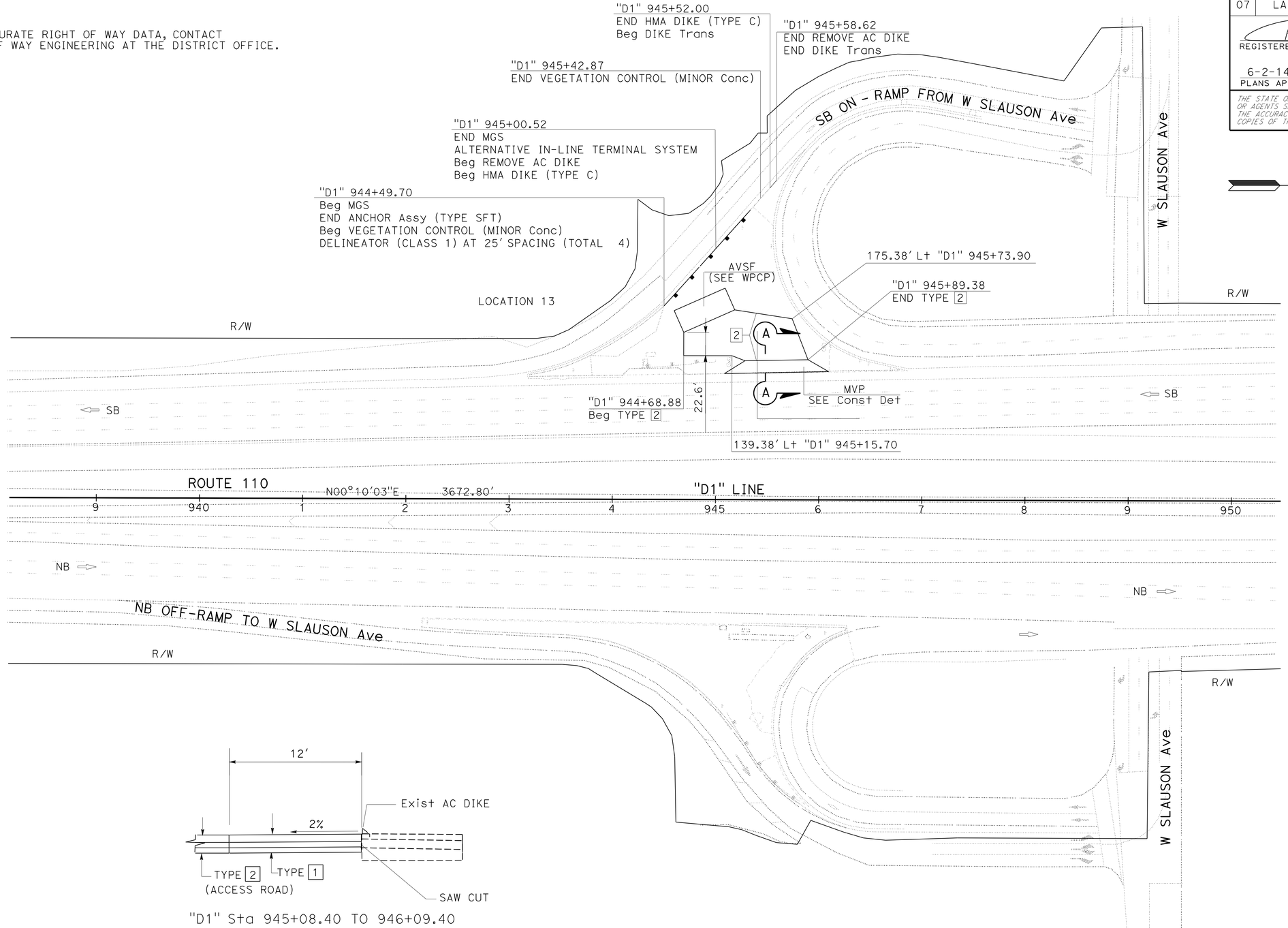

"D1" Sta 945+08.40 TO 946+09.40

SECTION A-A
NO SCALE

LAYOUT
SCALE: 1" = 50'

L-10

STATE OF CALIFORNIA - DEPARTMENT OF TRANSPORTATION
Caltrans® **DESIGN**
FUNCTIONAL SUPERVISOR: AMIR ELSHARIEF
CALCULATED-DESIGNED BY: KATHY D PHAM
CHECKED BY: DAN PHAM
REVISED BY
DATE REVISED

LAST REVISION 00-00-00 | DATE PLOTTED => 12-SEP-2014 | TIME PLOTTED => 06:15

Dist	COUNTY	ROUTE	POST MILES TOTAL PROJECT	SHEET No.	TOTAL SHEETS
07	LA	5,10,91, 110,134	Var	14	291

REGISTERED CIVIL ENGINEER 1-13-14 DATE

6-2-14
PLANS APPROVAL DATE

REGISTERED PROFESSIONAL ENGINEER AMIR AWN ELSHARIEF No. 72560 Exp. 6/30/14 CIVIL STATE OF CALIFORNIA

THE STATE OF CALIFORNIA OR ITS OFFICERS OR AGENTS SHALL NOT BE RESPONSIBLE FOR THE ACCURACY OR COMPLETENESS OF SCANNED COPIES OF THIS PLAN SHEET.

NOTE:
FOR ACCURATE RIGHT OF WAY DATA, CONTACT RIGHT OF WAY ENGINEERING AT THE DISTRICT OFFICE.

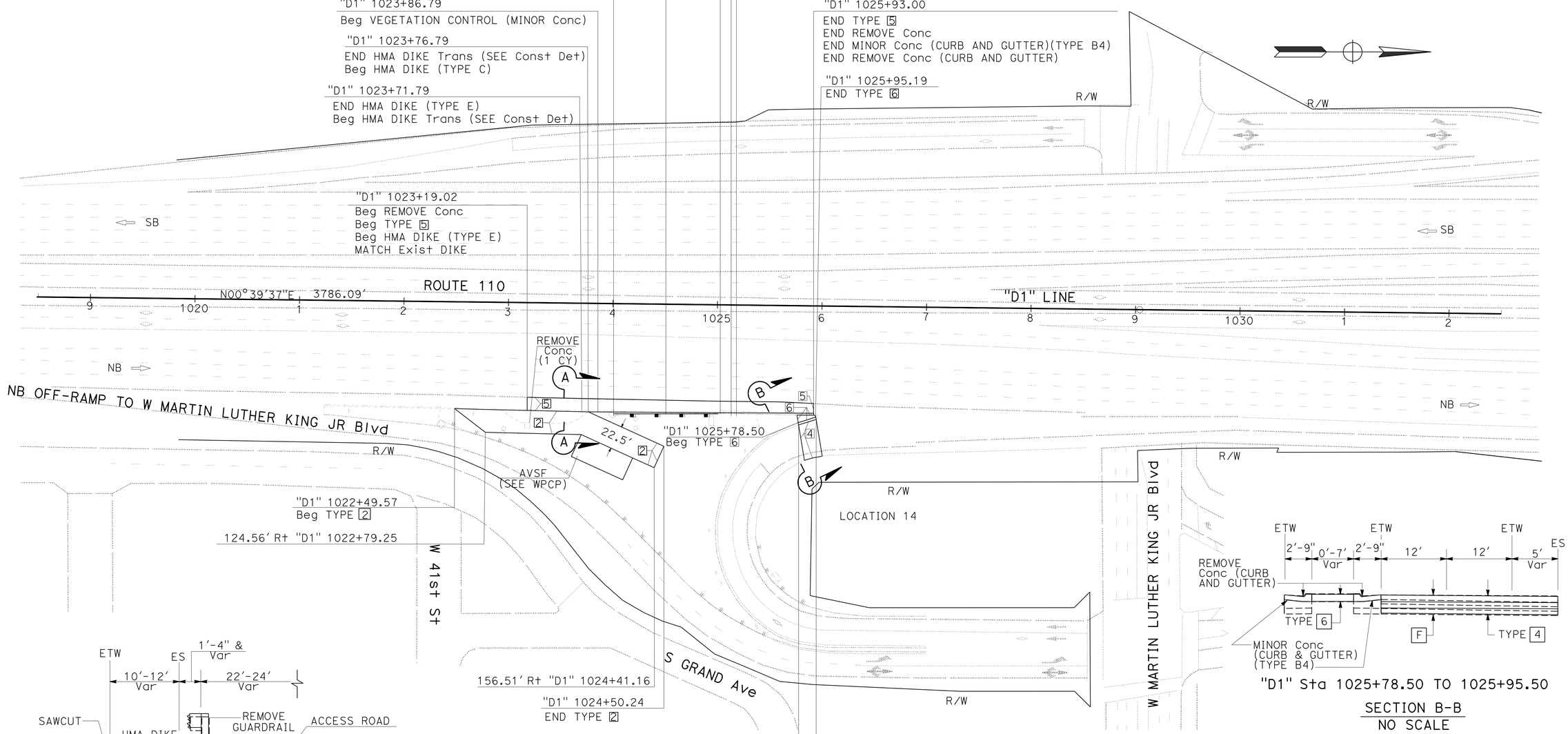

LAYOUT

SCALE: 1" = 50'

L-11

STATE OF CALIFORNIA - DEPARTMENT OF TRANSPORTATION
Caltrans® DESIGN

FUNCTIONAL SUPERVISOR: AMIR ELSHARIEF
CALCULATED-DESIGNED BY: KATHY D PHAM
CHECKED BY: DAN PHAM
REVISED BY / DATE REVISED

LAST REVISION 00-00-00
DATE PLOTTED => 12-SEP-2014
TIME PLOTTED => 06:15

Dist	COUNTY	ROUTE	POST MILES TOTAL PROJECT	SHEET No.	TOTAL SHEETS
07	LA	5,10,91, 110,134	Var	15	291

REGISTERED CIVIL ENGINEER 1-13-14 DATE

6-2-14
PLANS APPROVAL DATE

REGISTERED PROFESSIONAL ENGINEER AMIR AWN ELSHARIEF No. 72560 Exp. 6/30/14 CIVIL STATE OF CALIFORNIA

THE STATE OF CALIFORNIA OR ITS OFFICERS OR AGENTS SHALL NOT BE RESPONSIBLE FOR THE ACCURACY OR COMPLETENESS OF SCANNED COPIES OF THIS PLAN SHEET.

NOTE:
FOR ACCURATE RIGHT OF WAY DATA, CONTACT RIGHT OF WAY ENGINEERING AT THE DISTRICT OFFICE.

FENCE AND GATES

No. (X)	LOCATION	NOTE
FC1	215.45' Rt "D1" LINE 1050+62.83	CHAIN LINK FENCE (TYPE CL-6)
FC2	160.22' Rt "D1" LINE 1050+66.39	CHAIN LINK FENCE (TYPE CL-6)
FC3	147.33' Rt "D1" LINE 1049+02.44	CHAIN LINK FENCE (TYPE CL-6)
FC4	182.31' Rt "D1" LINE 1048+98.69	20' CHAIN LINK GATE (TYPE CL-6)
FC5	202.43' Rt "D1" LINE 1048+96.23	CHAIN LINK FENCE (TYPE CL-6)

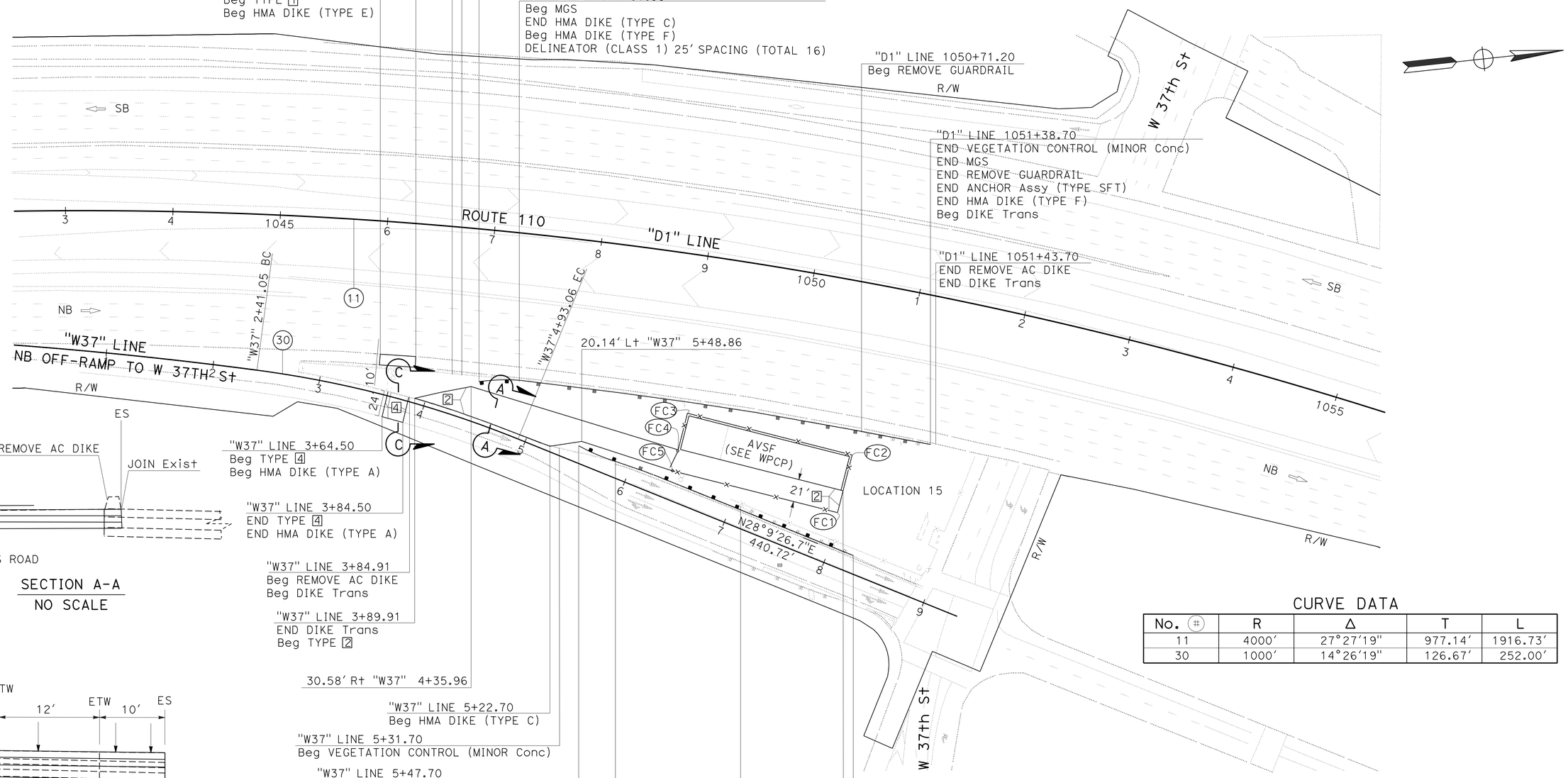

SECTION A-A
NO SCALE

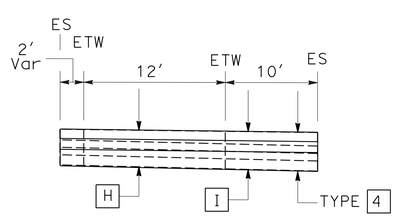

SECTION C-C
NO SCALE

CURVE DATA

No. (#)	R	Δ	T	L
11	4000'	27°27'19"	977.14'	1916.73'
30	1000'	14°26'19"	126.67'	252.00'

LAYOUT

SCALE: 1" = 50'

L-12

STATE OF CALIFORNIA - DEPARTMENT OF TRANSPORTATION
Caltrans DESIGN
FUNCTIONAL SUPERVISOR: AMIR ELSHARIEF
CALCULATED-DESIGNED BY: KATHY D PHAM
CHECKED BY: DAN PHAM
REVISED BY
DATE REVISED

LAST REVISION 00-00-00
DATE PLOTTED => 12-SEP-2014
TIME PLOTTED => 06:15

Dist	COUNTY	ROUTE	POST MILES TOTAL PROJECT	SHEET No.	TOTAL SHEETS
07	LA	5,10,91, 110,134	Var	16	291

REGISTERED CIVIL ENGINEER 1-13-14 DATE

6-2-14
PLANS APPROVAL DATE

REGISTERED PROFESSIONAL ENGINEER AMIR AWN ELSHARIEF No. 72560 Exp 6/30/14 CIVIL STATE OF CALIFORNIA

THE STATE OF CALIFORNIA OR ITS OFFICERS OR AGENTS SHALL NOT BE RESPONSIBLE FOR THE ACCURACY OR COMPLETENESS OF SCANNED COPIES OF THIS PLAN SHEET.

NOTE:
FOR ACCURATE RIGHT OF WAY DATA, CONTACT RIGHT OF WAY ENGINEERING AT THE DISTRICT OFFICE.

CURVE DATA

No. (#)	R	Δ	T	L
12	10000′	06°05′21″	531.88′	1062.75′
13	5000′	05°26′19″	237.48′	474.61′

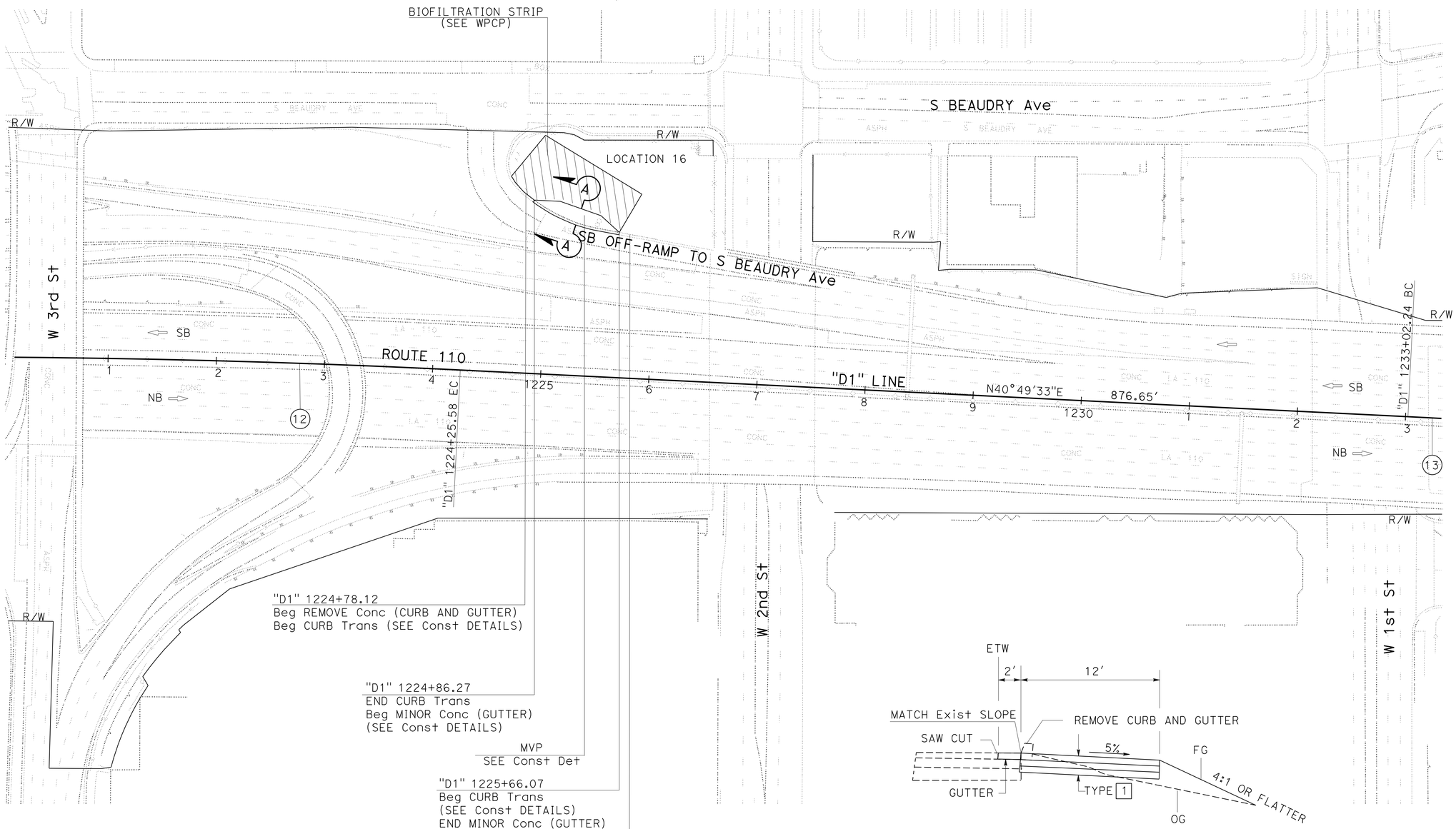

"D1" Sta 1224+86.27 TO 1225+64.65
SECTION A-A
NO SCALE

LAYOUT
SCALE: 1" = 50′

L-13

STATE OF CALIFORNIA - DEPARTMENT OF TRANSPORTATION
Caltrans
DESIGN

FUNCTIONAL SUPERVISOR: AMIR ELSHARIEF
CALCULATED-DESIGNED BY: KATHY D PHAM
CHECKED BY: DAN PHAM
REVISED BY
DATE REVISED

LAST REVISION 00-00-00
DATE PLOTTED => 12-SEP-2014
TIME PLOTTED => 06:15

Dist	COUNTY	ROUTE	POST MILES TOTAL PROJECT	SHEET No.	TOTAL SHEETS
07	LA	5,10,91, 110,134	Var	17	291

REGISTERED CIVIL ENGINEER 1-13-14 DATE

6-2-14
PLANS APPROVAL DATE

REGISTERED PROFESSIONAL ENGINEER AMIR AWN ELSHARIEF No. 72560 Exp 6/30/14 CIVIL STATE OF CALIFORNIA

THE STATE OF CALIFORNIA OR ITS OFFICERS OR AGENTS SHALL NOT BE RESPONSIBLE FOR THE ACCURACY OR COMPLETENESS OF SCANNED COPIES OF THIS PLAN SHEET.

NOTE:
FOR ACCURATE RIGHT OF WAY DATA, CONTACT RIGHT OF WAY ENGINEERING AT THE DISTRICT OFFICE.

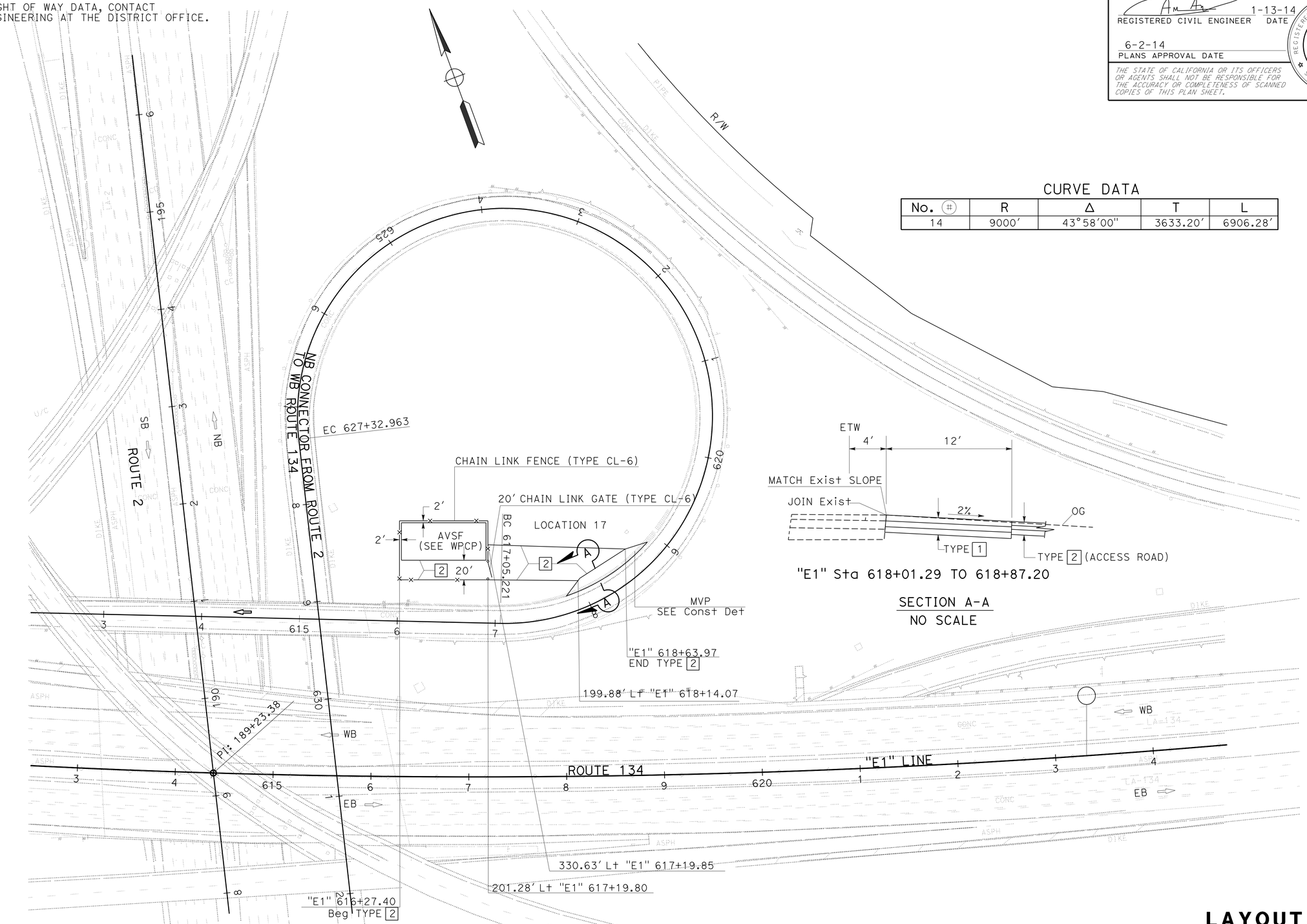

CURVE DATA

No. (#)	R	Δ	T	L
14	9000'	43°58'00"	3633.20'	6906.28'

LAYOUT

SCALE: 1" = 50'

L-14

STATE OF CALIFORNIA - DEPARTMENT OF TRANSPORTATION
Caltrans
DESIGN

FUNCTIONAL SUPERVISOR: AMIR ELSHARIEF
CALCULATED-DESIGNED BY: KATHY D PHAM
CHECKED BY: DAN PHAM
REVISED BY
DATE REVISED

LAST REVISION 00-00-00
DATE PLOTTED => 12-SEP-2014
TIME PLOTTED => 06:15

Dist	COUNTY	ROUTE	POST MILES TOTAL PROJECT	SHEET No.	TOTAL SHEETS
07	LA	5,10,91, 110,134	Var	18	291

REGISTERED CIVIL ENGINEER 1-13-14 DATE

6-2-14
PLANS APPROVAL DATE

REGISTERED PROFESSIONAL ENGINEER AMIR AWN ELSHARIEF No. 72560 Exp. 6/30/14 CIVIL STATE OF CALIFORNIA

THE STATE OF CALIFORNIA OR ITS OFFICERS OR AGENTS SHALL NOT BE RESPONSIBLE FOR THE ACCURACY OR COMPLETENESS OF SCANNED COPIES OF THIS PLAN SHEET.

NOTE:
FOR ACCURATE RIGHT OF WAY DATA, CONTACT RIGHT OF WAY ENGINEERING AT THE DISTRICT OFFICE.

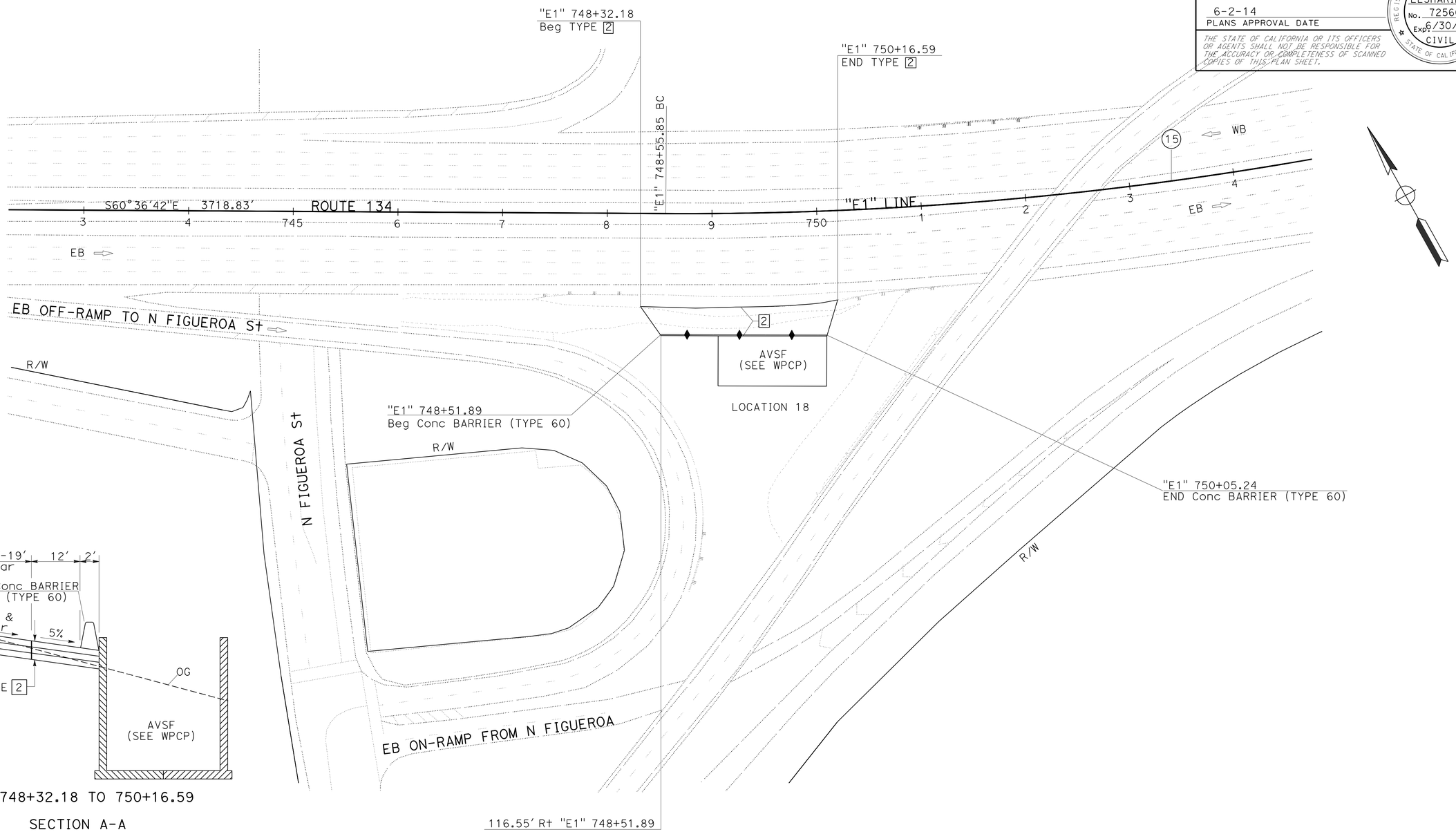

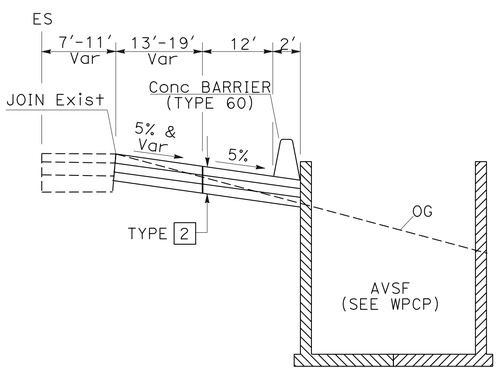

"E1" Sta 748+32.18 TO 750+16.59

SECTION A-A

NO SCALE

CURVE DATA

No. ⊕	R	Δ	T	L
15	3450'	52°51'45"	1714.94'	3183.05'

LAYOUT
SCALE: 1" = 50'

L-15

STATE OF CALIFORNIA - DEPARTMENT OF TRANSPORTATION
Caltrans
DESIGN

FUNCTIONAL SUPERVISOR: AMIR ELSHARIEF
CALCULATED-DESIGNED BY: KATHY D PHAM
CHECKED BY: DAN PHAM
REVISED BY
DATE REVISED

LAST REVISION 00-00-00
DATE PLOTTED => 12-SEP-2014
TIME PLOTTED => 06:15

Dist	COUNTY	ROUTE	POST MILES TOTAL PROJECT	SHEET No.	TOTAL SHEETS
07	LA	5,10,91, 110,134	Var	19	291

REGISTERED CIVIL ENGINEER 1-13-14 DATE

6-2-14
PLANS APPROVAL DATE

REGISTERED PROFESSIONAL ENGINEER AMIR AWN ELSHARIEF No. 72560 Exp 6/30/14 CIVIL STATE OF CALIFORNIA

THE STATE OF CALIFORNIA OR ITS OFFICERS OR AGENTS SHALL NOT BE RESPONSIBLE FOR THE ACCURACY OR COMPLETENESS OF SCANNED COPIES OF THIS PLAN SHEET.

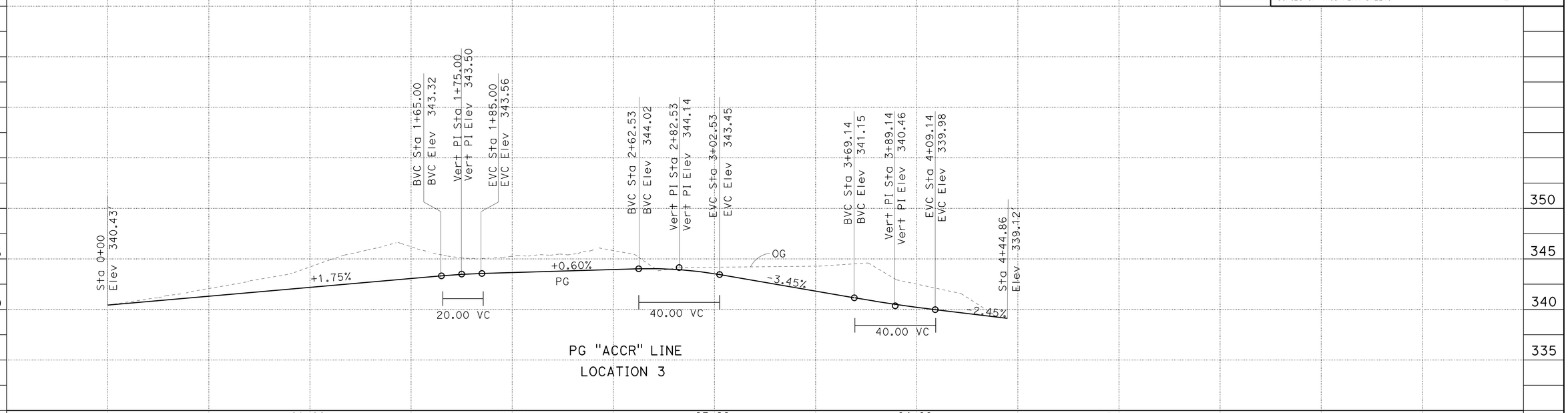

PG "ACCR" LINE
LOCATION 3

STATION		00+00	01+00	02+00	03+00	04+00	05+00	
CY	Exc		176.9	494.00	394.6	429.9	131.2	1626.6
	Emb		00.0	65.8	30.8	00.0	00.0	96.6

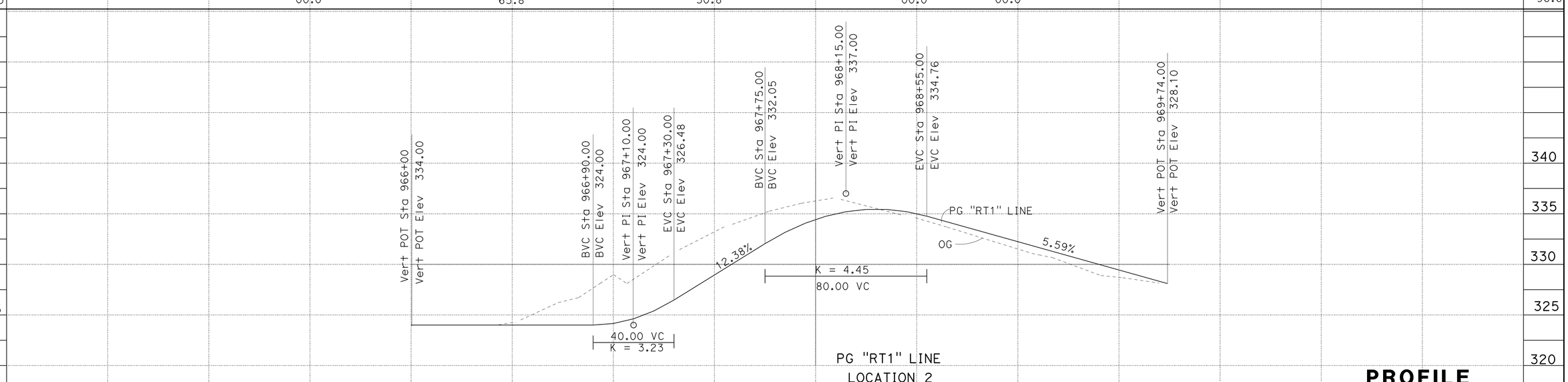

PG "RT1" LINE
LOCATION 2

PROFILE
P-1

STATION		965+00	966+00	967+00	968+00	969+00	670+00	TOTAL
CY	Exc			193.1	493.1	98.3	56.3	840.8
	Emb			00.0	00.0	130.5	00.0	130.5

STATE OF CALIFORNIA - DEPARTMENT OF TRANSPORTATION
DESIGN
Caltrans

FUNCTIONAL SUPERVISOR: AMIR ELSHARIEF
CALCULATED-DESIGNED BY: CUONG T TRAN
CHECKED BY: DAN PHAM
REVISED BY
DATE REVISED

LAST REVISION 00-00-00
DATE PLOTTED => 12-SEP-2014
TIME PLOTTED => 06:15

Dist	COUNTY	ROUTE	POST MILES TOTAL PROJECT	SHEET No.	TOTAL SHEETS
07	LA	5,10,91, 110,134	Var	20	291

REGISTERED CIVIL ENGINEER 1-13-14 DATE

6-2-14
PLANS APPROVAL DATE

REGISTERED PROFESSIONAL ENGINEER AMIR AWN ELSHARIEF No. 72560 Exp 6/30/14 CIVIL STATE OF CALIFORNIA

THE STATE OF CALIFORNIA OR ITS OFFICERS OR AGENTS SHALL NOT BE RESPONSIBLE FOR THE ACCURACY OR COMPLETENESS OF SCANNED COPIES OF THIS PLAN SHEET.

LEGEND:

- ROADWAY EXCAVATION (TYPE Z-2) (AERIALLY DEPOSITED LEAD)
- ROADWAY EXCAVATION (TYPE Z-2) (AERIALLY DEPOSITED LEAD + COPPER)
- ROADWAY EXCAVATION (TYPE Z-2) (AERIALLY DEPOSITED LEAD + ZINC)
- STRUCTURAL EXCAVATION (TYPE Z-2) (AERIALLY DEPOSITED LEAD)
- STRUCTURE EXCAVATION (TYPE Z-2) (AERIALLY DEPOSITED LEAD + COPPER)
- STRUCTURAL EXCAVATION (TYPE Z-2) (AERIALLY DEPOSITED LEAD + ZINC)

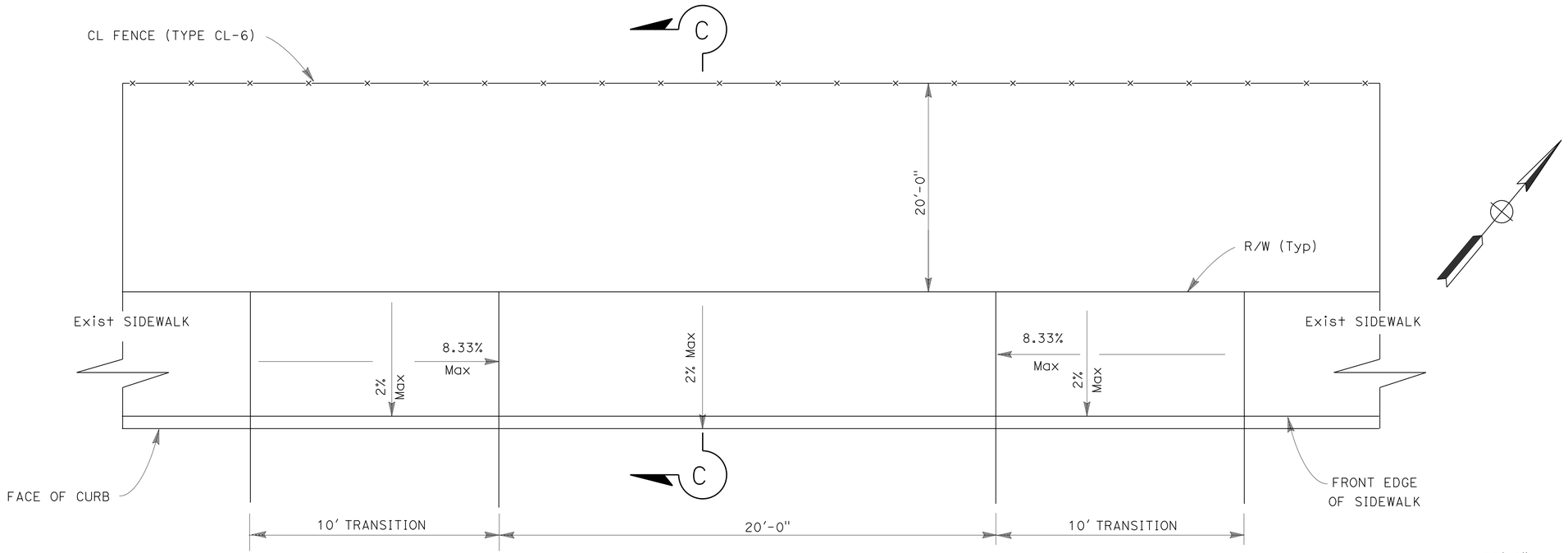

LOCATION 8

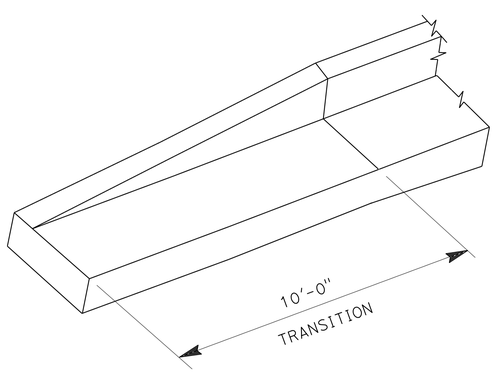

TRANSITION

CURB AND GUTTER
FROM FULL HEIGHT TO ZERO

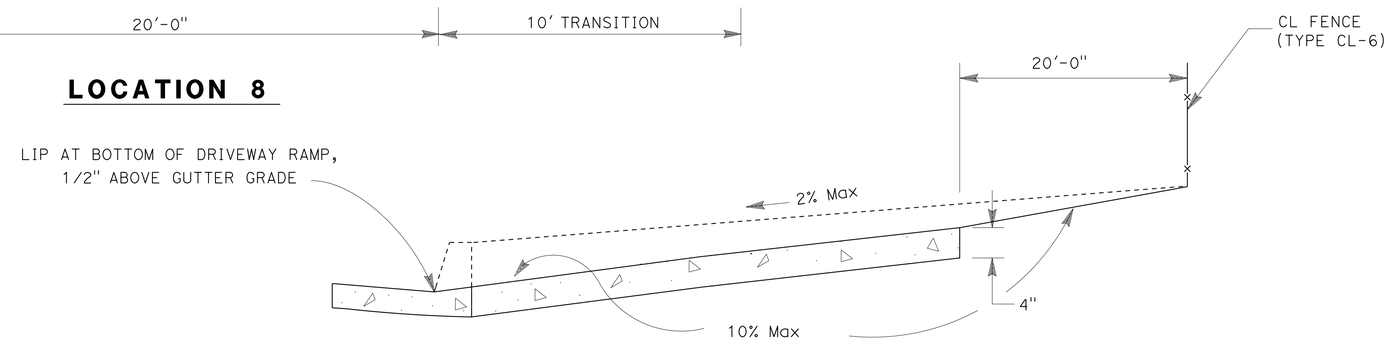

SECTION C-C

CONSTRUCTION DETAILS

NO SCALE

C-1

STATE OF CALIFORNIA - DEPARTMENT OF TRANSPORTATION
Caltrans DESIGN

FUNCTIONAL SUPERVISOR: AMIR ELSHARIEF
CALCULATED-DESIGNED BY: KATHY D PHAM
CHECKED BY: DAN PHAM
REVISED BY: C. TRAN
DATE REVISED: 07/01/10

LAST REVISION 10-04-12
DATE PLOTTED => 12-SEP-2014
TIME PLOTTED => 06:15

Dist	COUNTY	ROUTE	POST MILES TOTAL PROJECT	SHEET No.	TOTAL SHEETS
07	LA	5,10,91, 110,134	Var	21	291

REGISTERED CIVIL ENGINEER 1-13-14 DATE

6-2-14
PLANS APPROVAL DATE

REGISTERED PROFESSIONAL ENGINEER AMIR AWN ELSHARIEF No. 72560 Exp 6/30/14 CIVIL STATE OF CALIFORNIA

THE STATE OF CALIFORNIA OR ITS OFFICERS OR AGENTS SHALL NOT BE RESPONSIBLE FOR THE ACCURACY OR COMPLETENESS OF SCANNED COPIES OF THIS PLAN SHEET.

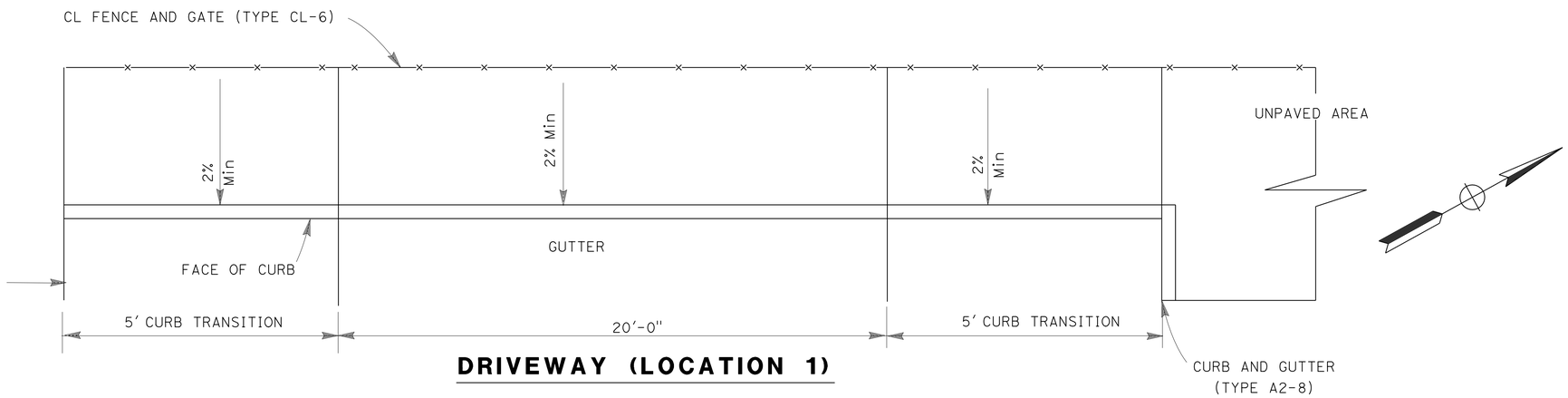

DRIVEWAY (LOCATION 1)

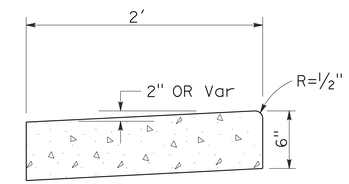

LOCATIONS 1,4 (AT Dwy), 5 AND 16

MINOR Conc (GUTTER)

FENCE AND GATES

No. (X)	LOCATION	NOTE
FA1	133.50' R+ "C1" LINE 191+59.96	CL FENCE (TYPE CL-6)
FA2	133.63' R+ "C1" LINE 192+00.27	CL FENCE (TYPE CL-6)
FA3	152.52' R+ "C1" LINE 192+29.71	CL FENCE (TYPE CL-6)
FA4	138.68' R+ "C1" LINE 192+43.23	14' CL GATE (TYPE CL-6)
FA5	137.26' R+ "C1" LINE 192+44.61	CL FENCE (TYPE CL-6)
FA6	111.05' R+ "C1" LINE 192+22.12	CL FENCE (TYPE CL-6)
FA7	80.64' R+ "C1" LINE 192+22.59	CL FENCE (TYPE CL-6)
FA8	80.33' R+ "C1" LINE 191+60.30	CL FENCE (TYPE CL-6)
FA9	110.87' R+ "C1" LINE 191+60.10	14' CL GATE (TYPE CL-6)

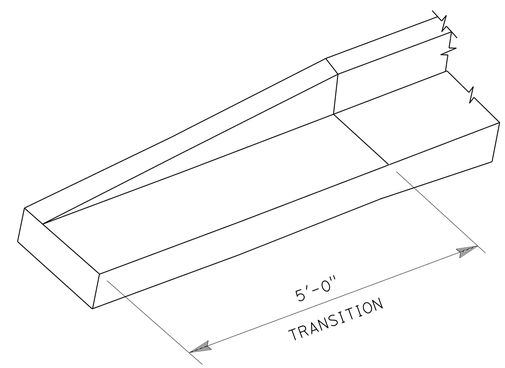

TRANSITION

CURB AND GUTTER
FROM FULL HEIGHT TO ZERO

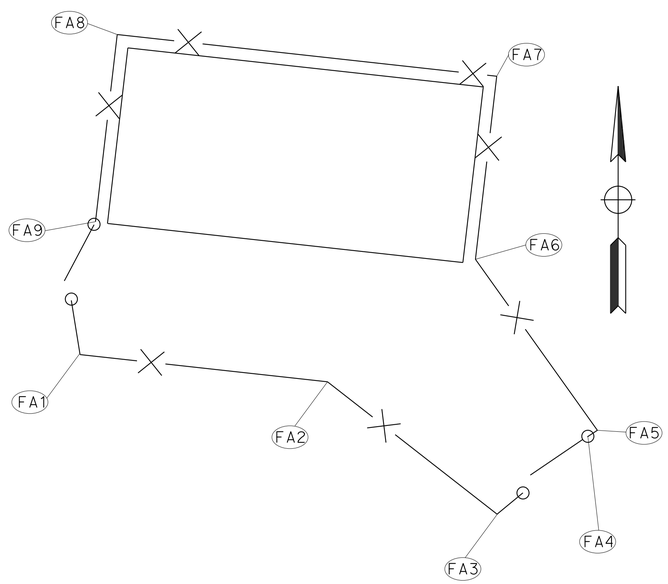

CL FENCE & GATES (LOCATION 9)

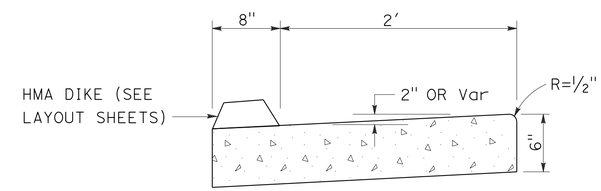

LOCATION 4 (AT MGS)

MINOR Conc (GUTTER)

CONSTRUCTION DETAILS

NO SCALE

C-2

STATE OF CALIFORNIA - DEPARTMENT OF TRANSPORTATION
Caltrans
DESIGN

FUNCTIONAL SUPERVISOR: AMIR ELSHARIEF
CALCULATED-DESIGNED BY: KATHY D PHAM
CHECKED BY: DAN PHAM
REVISED BY: C. TRAN
DATE REVISED: 07/01/10

LAST REVISION 10-04-12
DATE PLOTTED => 12-SEP-2014
TIME PLOTTED => 06:16

Dist	COUNTY	ROUTE	POST MILES TOTAL PROJECT	SHEET No.	TOTAL SHEETS
07	LA	5,10,91, 110,134	Var	22	291

REGISTERED CIVIL ENGINEER 1-13-14 DATE

6-2-14
PLANS APPROVAL DATE

REGISTERED PROFESSIONAL ENGINEER
AMIR AWN ELSHARIEF
No. 72560
Exp. 6/30/14
CIVIL
STATE OF CALIFORNIA

THE STATE OF CALIFORNIA OR ITS OFFICERS OR AGENTS SHALL NOT BE RESPONSIBLE FOR THE ACCURACY OR COMPLETENESS OF SCANNED COPIES OF THIS PLAN SHEET.

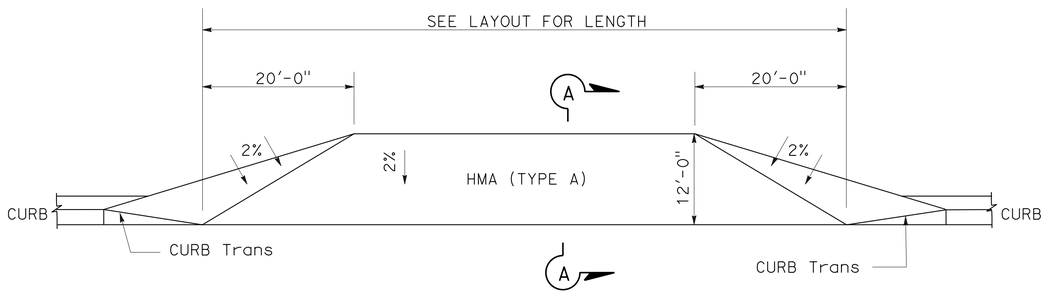

LOCATIONS 5, 7, 16

MAINTENANCE VEHICLE PULLOUT

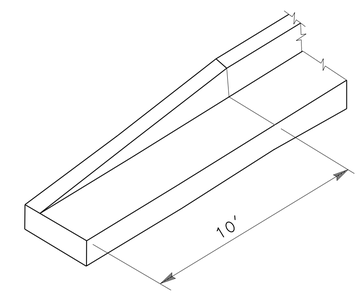

CURB TRANSITION

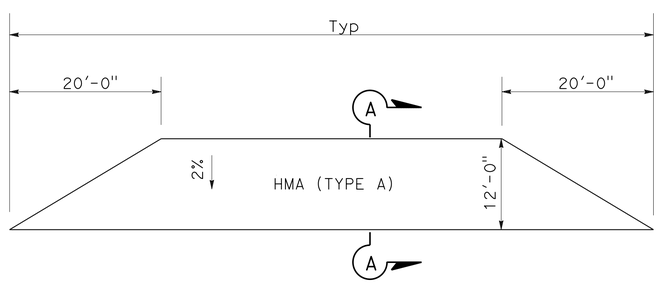

LOCATIONS 2, 12, 13, 17

MAINTENANCE VEHICLE PULLOUT

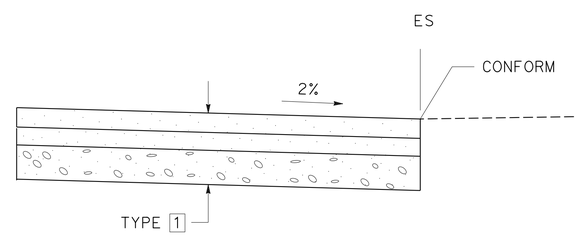

SECTION A-A

CONSTRUCTION DETAILS

NO SCALE

C-3

STATE OF CALIFORNIA - DEPARTMENT OF TRANSPORTATION
Caltrans
DESIGN

FUNCTIONAL SUPERVISOR: AMIR ELSHARIEF
CALCULATED-DESIGNED BY: KATHY D PHAM
CHECKED BY: DAN PHAM
REVISED BY
DATE REVISED

LAST REVISION 10-04-12
DATE PLOTTED => 12-SEP-2014
TIME PLOTTED => 06:16

Dist	COUNTY	ROUTE	POST MILES TOTAL PROJECT	SHEET No.	TOTAL SHEETS
07	LA	5,10,91, 110,134	Var	23	291

REGISTERED CIVIL ENGINEER 1-13-14 DATE

6-2-14
PLANS APPROVAL DATE

REGISTERED PROFESSIONAL ENGINEER
AMIR AWN ELSHARIEF
No. 72560
Exp. 6/30/14
CIVIL
STATE OF CALIFORNIA

THE STATE OF CALIFORNIA OR ITS OFFICERS OR AGENTS SHALL NOT BE RESPONSIBLE FOR THE ACCURACY OR COMPLETENESS OF SCANNED COPIES OF THIS PLAN SHEET.

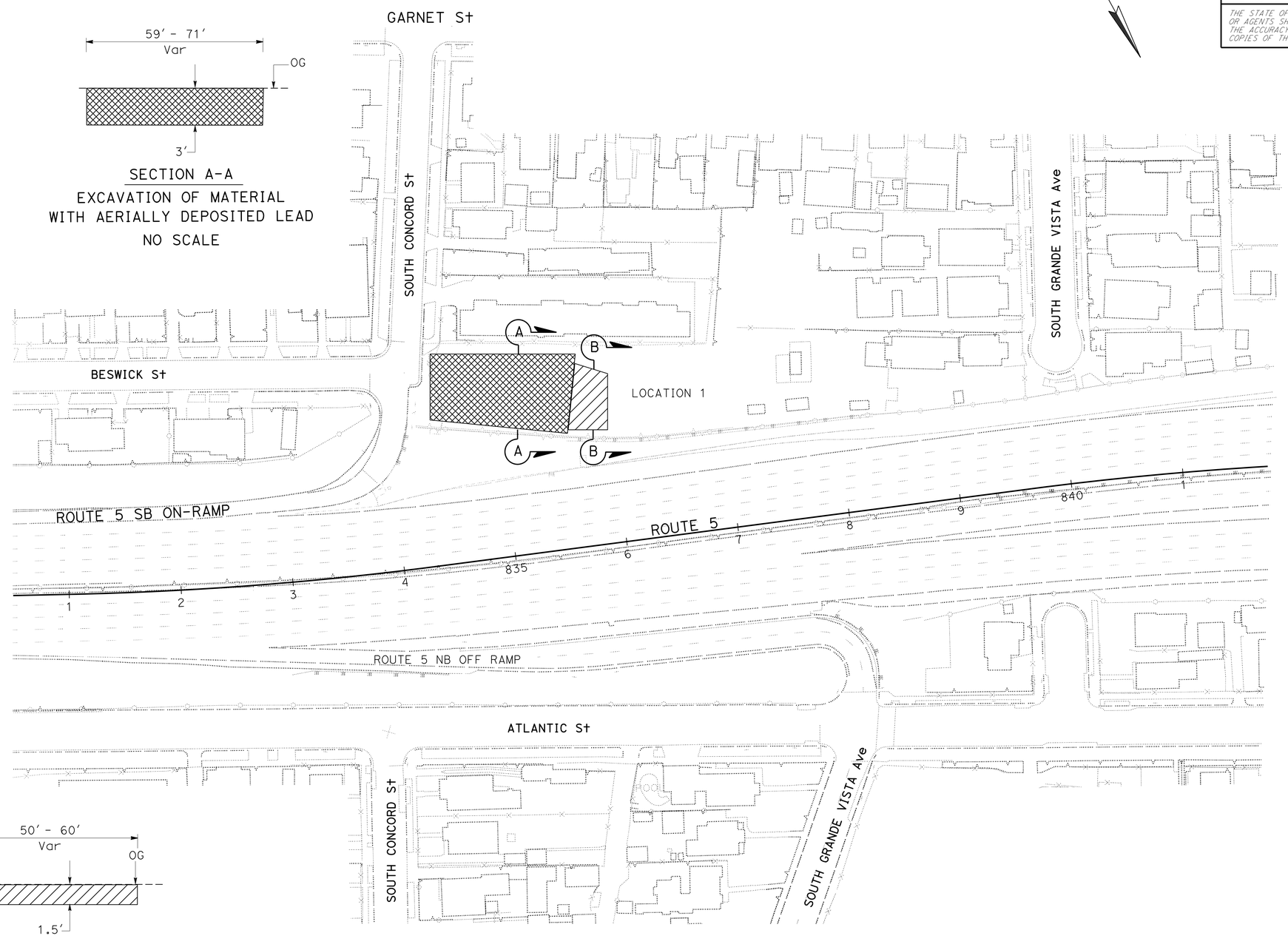

SECTION A-A
EXCAVATION OF MATERIAL
WITH AERIALLY DEPOSITED LEAD
NO SCALE

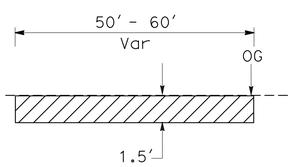

SECTION B-B
EXCAVATION OF MATERIAL
WITH AERIALLY DEPOSITED LEAD
NO SCALE

CONSTRUCTION DETAILS

SCALE: 1" = 50′

C-4

STATE OF CALIFORNIA - DEPARTMENT OF TRANSPORTATION
Caltrans® DESIGN

FUNCTIONAL SUPERVISOR: AMIR ELSHARIEF
CALCULATED-DESIGNED BY: O. BLACKSTOCK
CHECKED BY: DAN PHAM
REVISED BY
DATE REVISED

LAST REVISION 00-00-00
DATE PLOTTED => 12-SEP-2014
TIME PLOTTED => 06:16

Dist	COUNTY	ROUTE	POST MILES TOTAL PROJECT	SHEET No.	TOTAL SHEETS
07	LA	5,10,91, 110,134	Var	24	291

REGISTERED CIVIL ENGINEER 1-13-14 DATE

6-2-14
PLANS APPROVAL DATE

REGISTERED PROFESSIONAL ENGINEER AMIR AWN ELSHARIEF No. 72560 Exp 6/30/14 CIVIL STATE OF CALIFORNIA

THE STATE OF CALIFORNIA OR ITS OFFICERS OR AGENTS SHALL NOT BE RESPONSIBLE FOR THE ACCURACY OR COMPLETENESS OF SCANNED COPIES OF THIS PLAN SHEET.

SECTION B-B

EXCAVATION OF MATERIAL
WITH AERIALLY DEPOSITED LEAD
NO SCALE

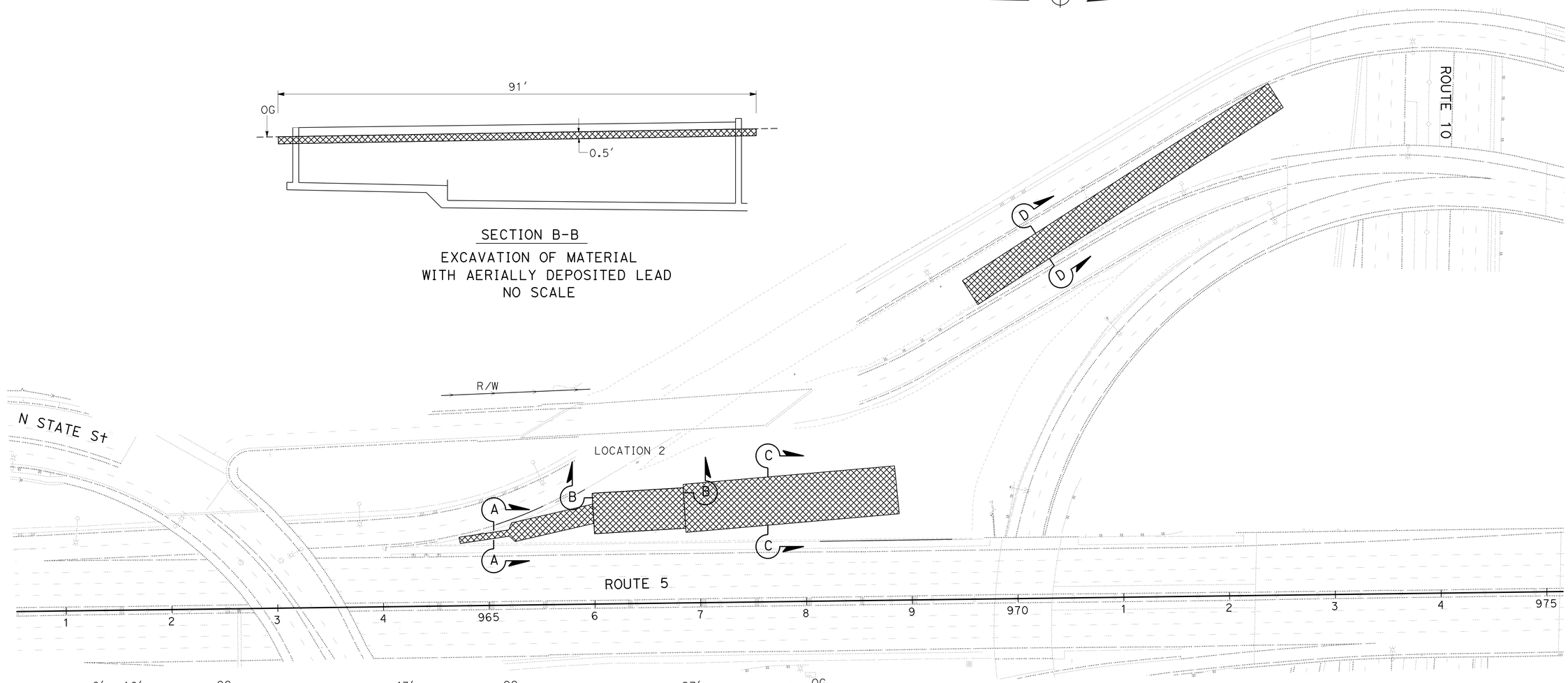

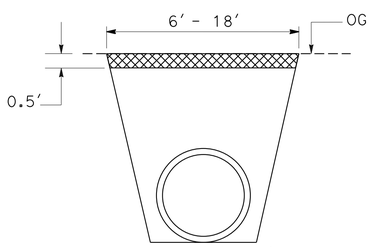

SECTION A-A

EXCAVATION OF MATERIAL
WITH AERIALLY DEPOSITED LEAD
NO SCALE

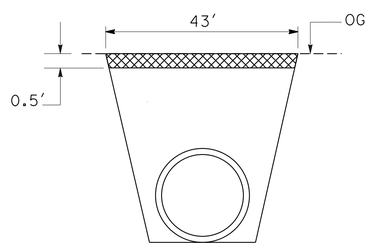

SECTION C-C

EXCAVATION OF MATERIAL
WITH AERIALLY DEPOSITED LEAD
NO SCALE

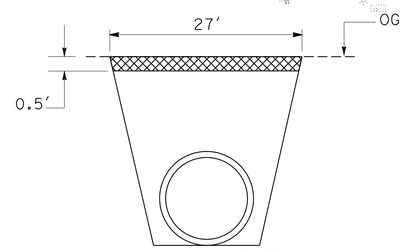

SECTION D-D

EXCAVATION OF MATERIAL
WITH AERIALLY DEPOSITED LEAD
NO SCALE

CONSTRUCTION DETAILS

SCALE: 1" = 50'

C-5

STATE OF CALIFORNIA - DEPARTMENT OF TRANSPORTATION
Caltrans DESIGN

FUNCTIONAL SUPERVISOR: AMIR ELSHARIEF
CALCULATED-DESIGNED BY: KATHY D PHAM
CHECKED BY: DAN PHAM
REVISED BY
DATE REVISED

LAST REVISION 00-00-00
DATE PLOTTED => 12-SEP-2014
TIME PLOTTED => 06:16

Dist	COUNTY	ROUTE	POST MILES TOTAL PROJECT	SHEET No.	TOTAL SHEETS
07	LA	5,10,91, 110,134	Var	25	291

REGISTERED CIVIL ENGINEER 1-13-14 DATE

6-2-14
PLANS APPROVAL DATE

REGISTERED PROFESSIONAL ENGINEER
AMIR AWN ELSHARIEF
No. 72560
Exp. 6/30/14
CIVIL
STATE OF CALIFORNIA

THE STATE OF CALIFORNIA OR ITS OFFICERS OR AGENTS SHALL NOT BE RESPONSIBLE FOR THE ACCURACY OR COMPLETENESS OF SCANNED COPIES OF THIS PLAN SHEET.

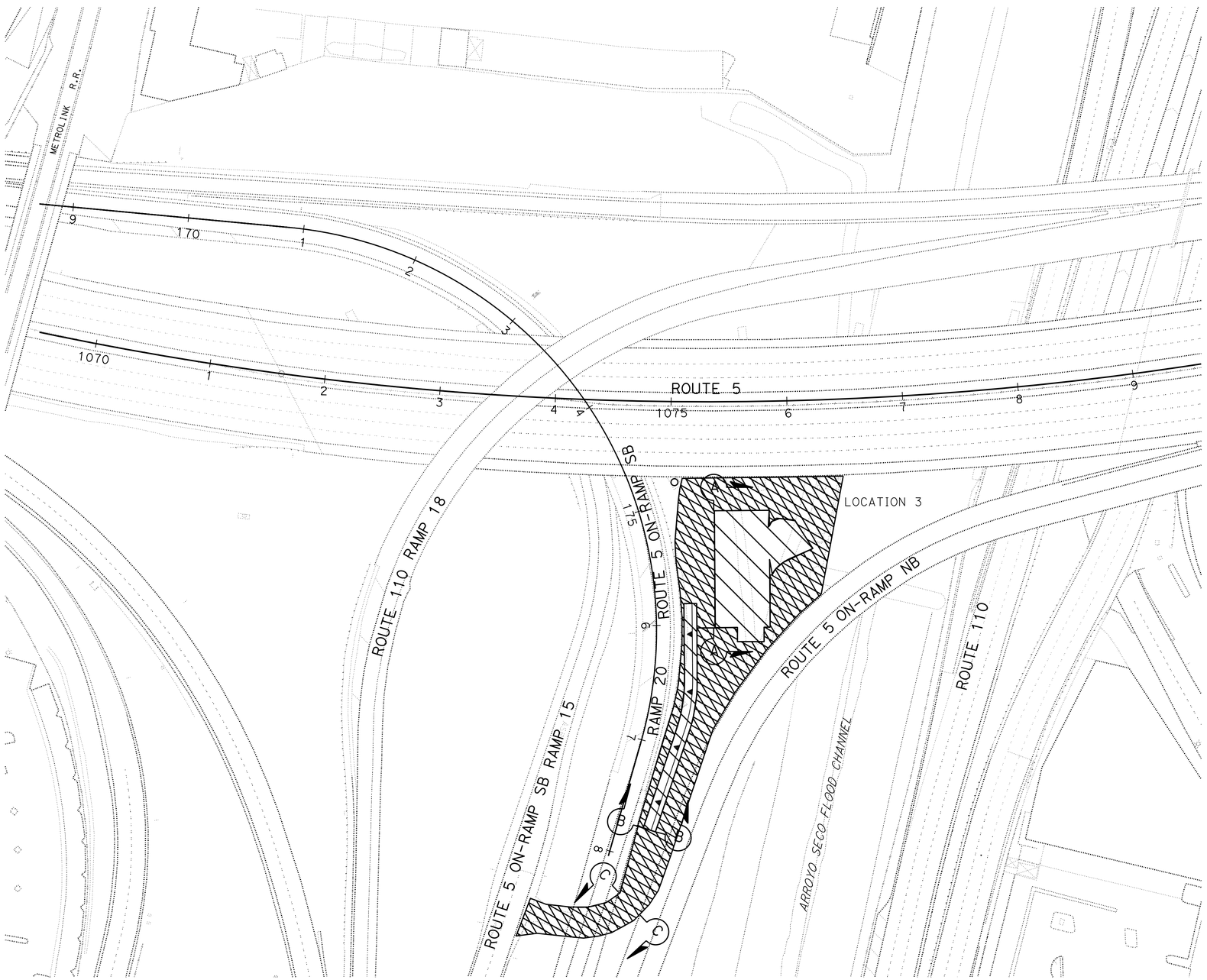

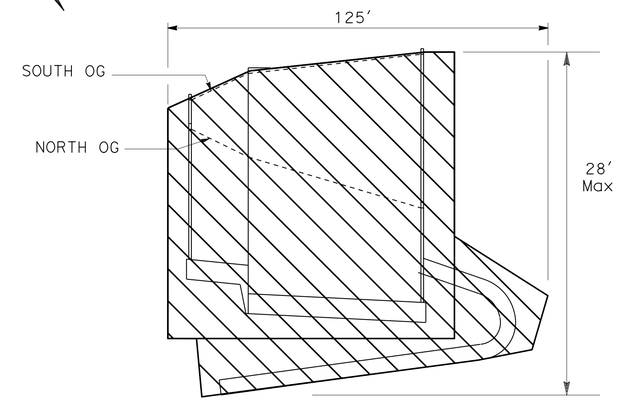

SECTION A-A

EXCAVATION OF MATERIAL
WITH AERIALLY DEPOSITED LEAD + ZINC
NO SCALE

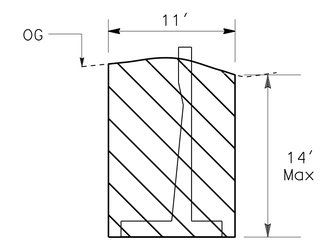

SECTION B-B

EXCAVATION OF MATERIAL
WITH AERIALLY DEPOSITED LEAD + ZINC
NO SCALE

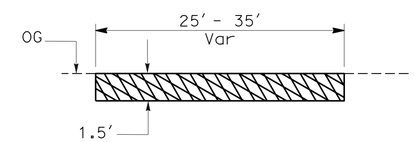

SECTION C-C

EXCAVATION OF MATERIAL
WITH AERIALLY DEPOSITED LEAD + ZINC
NO SCALE

CONSTRUCTION DETAILS

SCALE: 1" = 50′

C-6

STATE OF CALIFORNIA - DEPARTMENT OF TRANSPORTATION
Caltrans
DESIGN

FUNCTIONAL SUPERVISOR: AMIR ELSHARIEF
CALCULATED-DESIGNED BY: O. BLACKSTOCK
CHECKED BY: DAN PHAM
REVISED BY
DATE REVISED

LAST REVISION 00-00-00
DATE PLOTTED => 12-SEP-2014
TIME PLOTTED => 06:16

Dist	COUNTY	ROUTE	POST MILES TOTAL PROJECT	SHEET No.	TOTAL SHEETS
07	LA	5,10,91, 110,134	Var	26	291

REGISTERED CIVIL ENGINEER 1-13-14 DATE

6-2-14
PLANS APPROVAL DATE

REGISTERED PROFESSIONAL ENGINEER
AMIR AWN ELSHARIEF
No. 72560
Exp 6/30/14
CIVIL
STATE OF CALIFORNIA

THE STATE OF CALIFORNIA OR ITS OFFICERS OR AGENTS SHALL NOT BE RESPONSIBLE FOR THE ACCURACY OR COMPLETENESS OF SCANNED COPIES OF THIS PLAN SHEET.

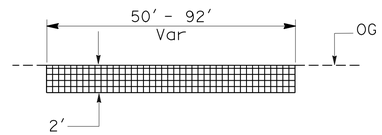

SECTION A-A
EXCAVATION OF MATERIAL
WITH AERIALLY DEPOSITED LEAD + COPPER
NO SCALE

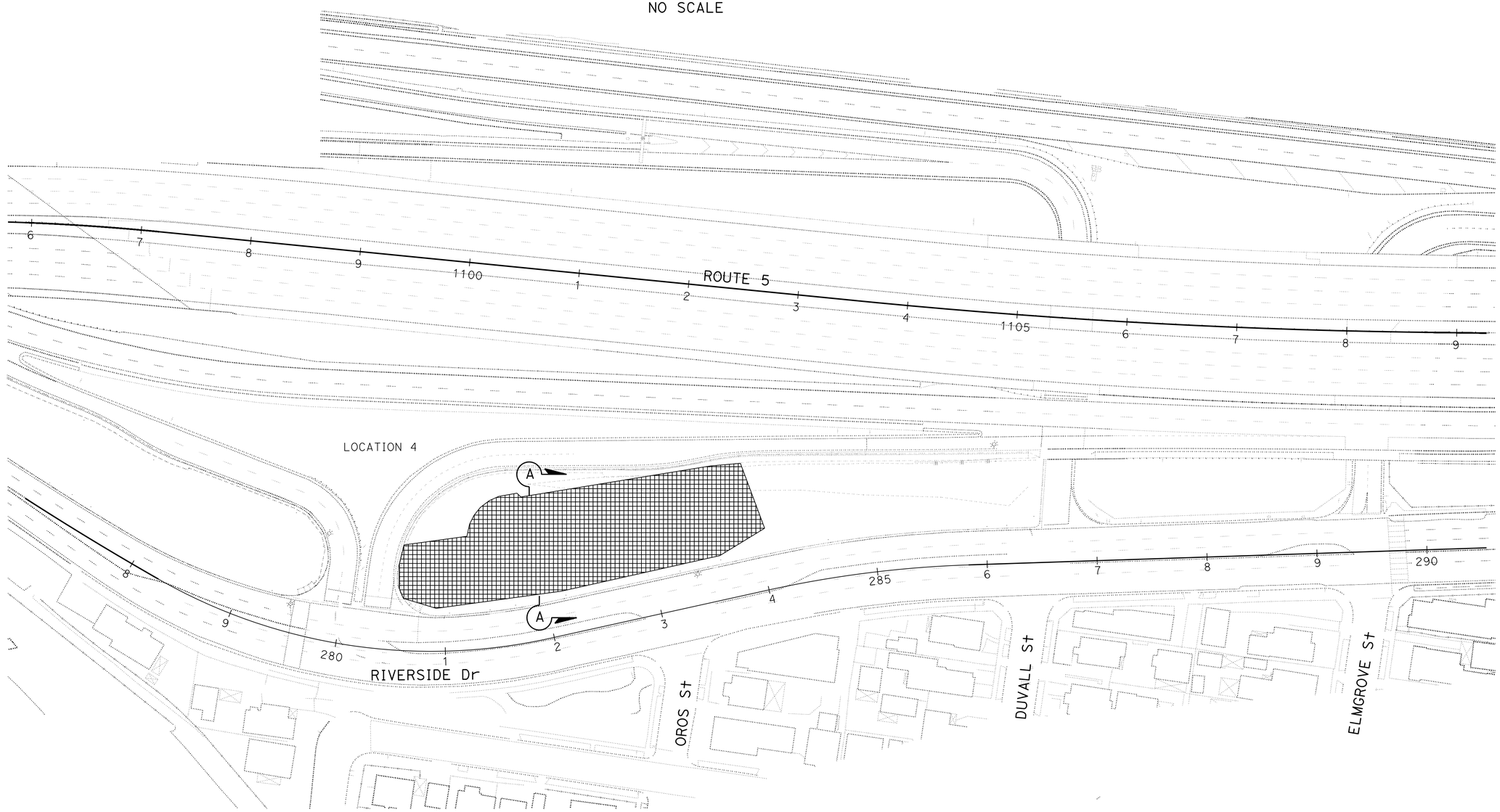

CONSTRUCTION DETAILS

SCALE: 1" = 50′

C-7

STATE OF CALIFORNIA - DEPARTMENT OF TRANSPORTATION
Caltrans
DESIGN

FUNCTIONAL SUPERVISOR: AMIR ELSHARIEF
CALCULATED-DESIGNED BY: O. BLACKSTOCK
CHECKED BY: DAN PHAM
REVISED BY
DATE REVISED

LAST REVISION 00-00-00
DATE PLOTTED => 12-SEP-2014
TIME PLOTTED => 08:16

Dist	COUNTY	ROUTE	POST MILES TOTAL PROJECT	SHEET No.	TOTAL SHEETS
07	LA	5,10,91, 110,134	Var	27	291

REGISTERED CIVIL ENGINEER 1-13-14 DATE

6-2-14
PLANS APPROVAL DATE

REGISTERED PROFESSIONAL ENGINEER
AMIR AWN ELSHARIEF
No. 72560
Exp 6/30/14
CIVIL
STATE OF CALIFORNIA

THE STATE OF CALIFORNIA OR ITS OFFICERS OR AGENTS SHALL NOT BE RESPONSIBLE FOR THE ACCURACY OR COMPLETENESS OF SCANNED COPIES OF THIS PLAN SHEET.

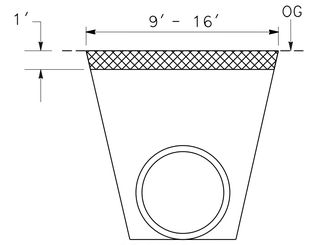

SECTION A-A
EXCAVATION OF MATERIAL
WITH AERIALLY DEPOSITED LEAD
NO SCALE

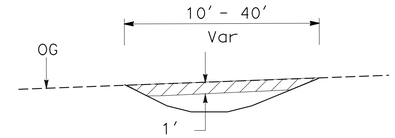

SECTION B-B
EXCAVATION OF MATERIAL
WITH AERIALLY DEPOSITED LEAD
NO SCALE

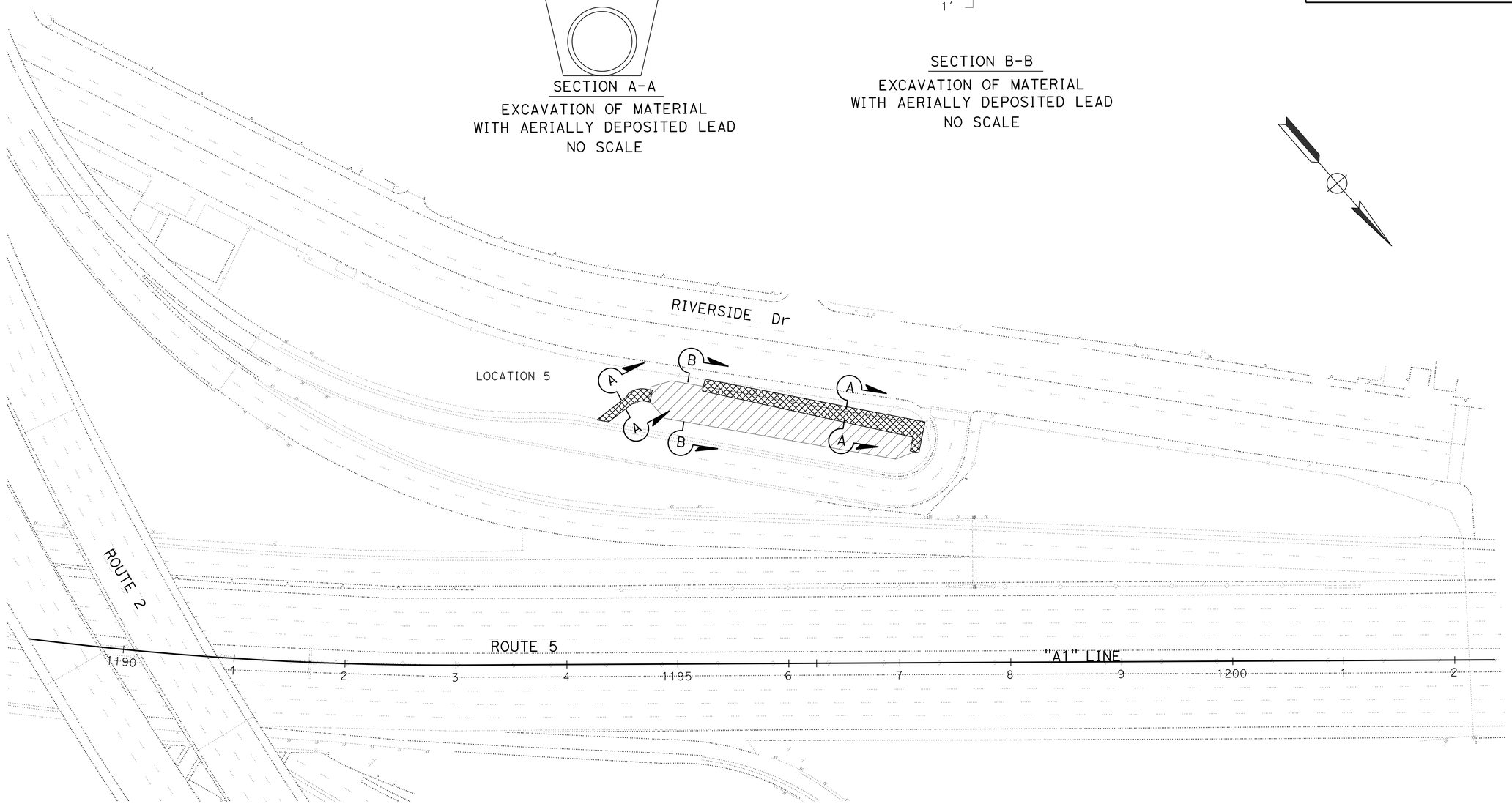

CONSTRUCTION DETAIL

SCALE: 1" = 50'

C-8

REVISED BY	DATE REVISED

CALCULATED-DESIGNED BY	CHECKED BY
KATHY D PHAM	DAN PHAM

FUNCTIONAL SUPERVISOR
AMIR ELSHARIEF

STATE OF CALIFORNIA - DEPARTMENT OF TRANSPORTATION
Caltrans
DESIGN

LAST REVISION 00-00-00
DATE PLOTTED => 12-SEP-2014
TIME PLOTTED => 06:16

Dist	COUNTY	ROUTE	POST MILES TOTAL PROJECT	SHEET No.	TOTAL SHEETS
07	LA	5,10,91, 110,134	Var	28	291

REGISTERED CIVIL ENGINEER 1-13-14 DATE

6-2-14
PLANS APPROVAL DATE

REGISTERED PROFESSIONAL ENGINEER
AMIR AWN ELSHARIEF
No. 72560
Exp. 6/30/14
CIVIL
STATE OF CALIFORNIA

THE STATE OF CALIFORNIA OR ITS OFFICERS OR AGENTS SHALL NOT BE RESPONSIBLE FOR THE ACCURACY OR COMPLETENESS OF SCANNED COPIES OF THIS PLAN SHEET.

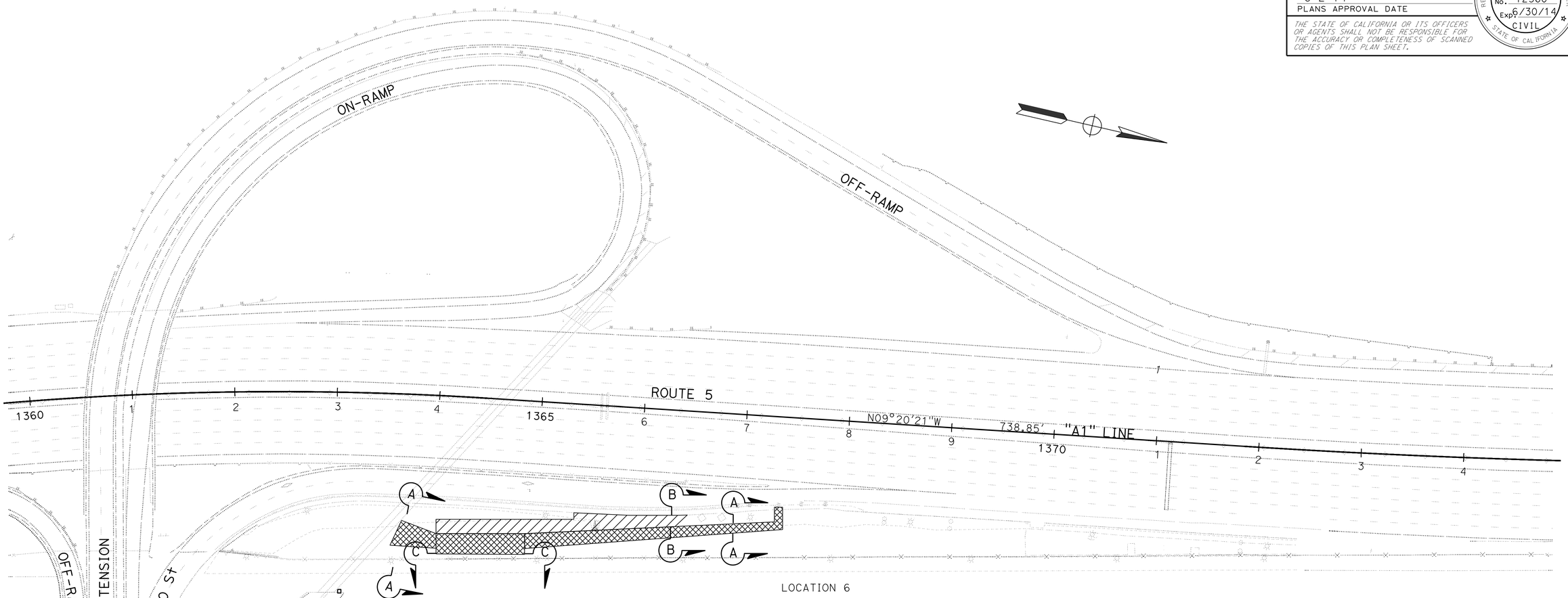

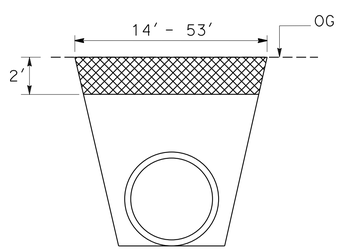

SECTION A-A
EXCAVATION OF MATERIAL
WITH AERIALLY DEPOSITED LEAD
NO SCALE

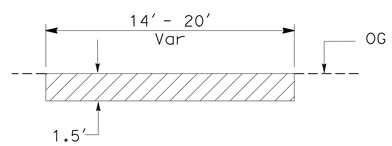

SECTION B-B
EXCAVATION OF MATERIAL
WITH AERIALLY DEPOSITED LEAD
NO SCALE

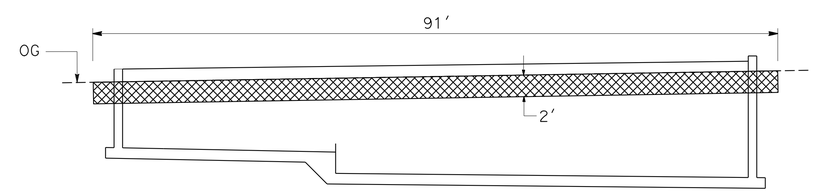

SECTION C-C
EXCAVATION OF MATERIAL
WITH AERIALLY DEPOSITED LEAD
NO SCALE

CONSTRUCTION DETAILS

SCALE: 1" = 50'

C-9

STATE OF CALIFORNIA - DEPARTMENT OF TRANSPORTATION
Caltrans
DESIGN

FUNCTIONAL SUPERVISOR: AMIR ELSHARIEF
CALCULATED-DESIGNED BY: O. BLACKSTOCK
CHECKED BY: DAN PHAM
REVISED BY
DATE REVISED

LAST REVISION 00-00-00
DATE PLOTTED => 12-SEP-2014
TIME PLOTTED => 06:16

Dist	COUNTY	ROUTE	POST MILES TOTAL PROJECT	SHEET No.	TOTAL SHEETS
07	LA	5,10,91, 110,134	Var	29	291

REGISTERED CIVIL ENGINEER 1-13-14 DATE

6-2-14
PLANS APPROVAL DATE

REGISTERED PROFESSIONAL ENGINEER AMIR AWN ELSHARIEF No. 72560 Exp 6/30/14 CIVIL STATE OF CALIFORNIA

THE STATE OF CALIFORNIA OR ITS OFFICERS OR AGENTS SHALL NOT BE RESPONSIBLE FOR THE ACCURACY OR COMPLETENESS OF SCANNED COPIES OF THIS PLAN SHEET.

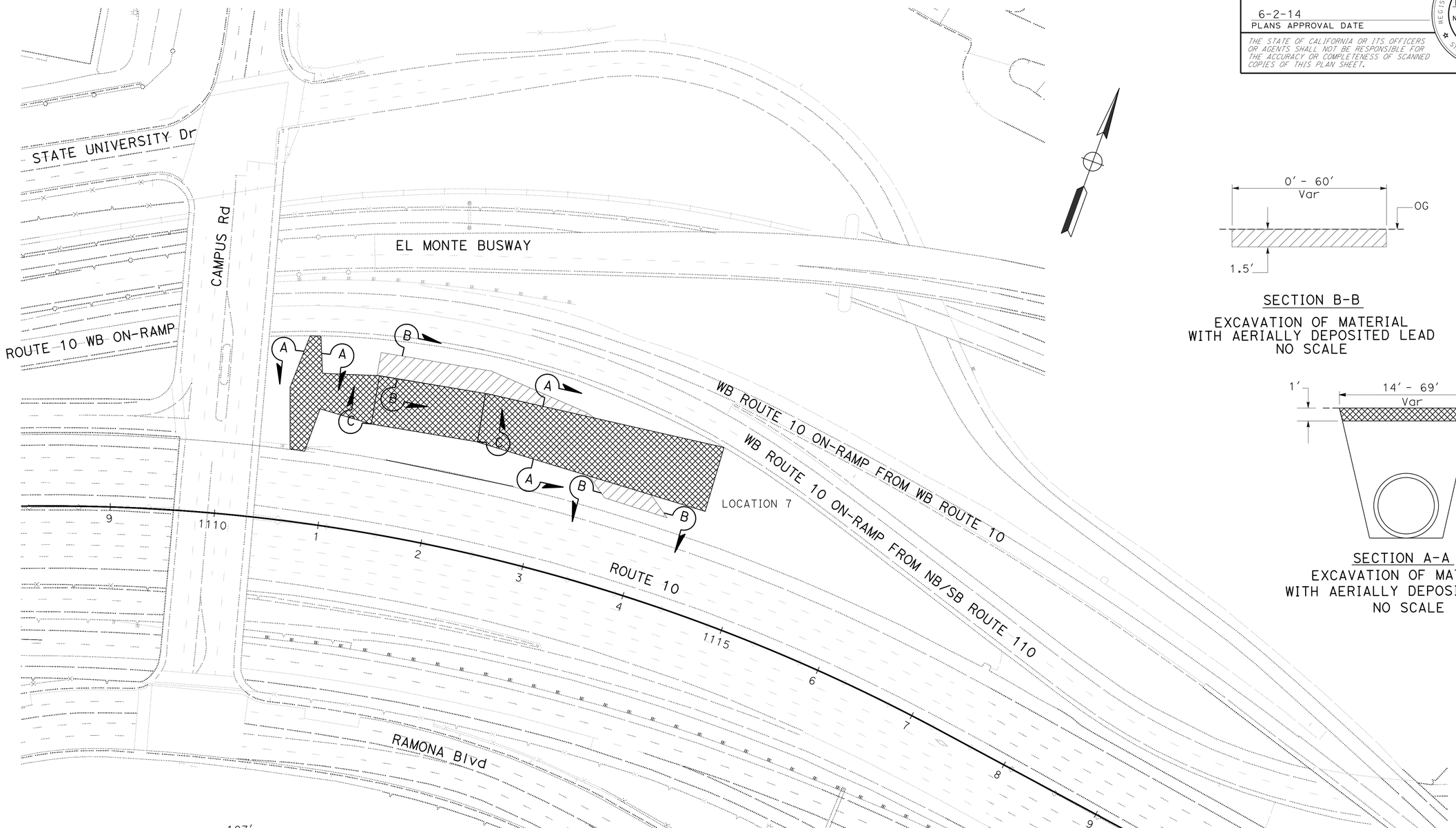

SECTION B-B
EXCAVATION OF MATERIAL
WITH AERIALLY DEPOSITED LEAD
NO SCALE

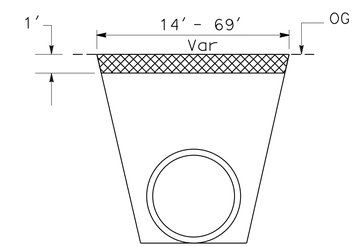

SECTION A-A
EXCAVATION OF MATERIAL
WITH AERIALLY DEPOSITED LEAD
NO SCALE

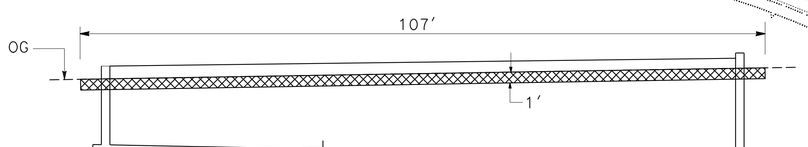

SECTION C-C
EXCAVATION OF MATERIAL
WITH AERIALLY DEPOSITED LEAD
NO SCALE

CONSTRUCTION DETAILS

SCALE: 1" = 50'

C-10

STATE OF CALIFORNIA - DEPARTMENT OF TRANSPORTATION
Caltrans
DESIGN

FUNCTIONAL SUPERVISOR: AMIR ELSHARIEF
CALCULATED-DESIGNED BY: O. BLACKSTOCK
CHECKED BY: DAN PHAM
REVISED BY
DATE REVISED

LAST REVISION 00-00-00
DATE PLOTTED => 12-SEP-2014
TIME PLOTTED => 06:16

Dist	COUNTY	ROUTE	POST MILES TOTAL PROJECT	SHEET No.	TOTAL SHEETS
07	LA	5,10,91, 110,134	Var	30	291

REGISTERED CIVIL ENGINEER 1-13-14 DATE

6-2-14
PLANS APPROVAL DATE

REGISTERED PROFESSIONAL ENGINEER AMIR AWN ELSHARIEF No. 72560 Exp 6/30/14 CIVIL STATE OF CALIFORNIA

THE STATE OF CALIFORNIA OR ITS OFFICERS OR AGENTS SHALL NOT BE RESPONSIBLE FOR THE ACCURACY OR COMPLETENESS OF SCANNED COPIES OF THIS PLAN SHEET.

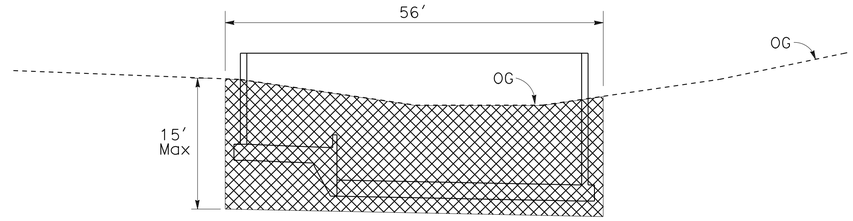

SECTION B-B
EXCAVATION OF MATERIAL
WITH AERIALLY DEPOSITED LEAD
NO SCALE

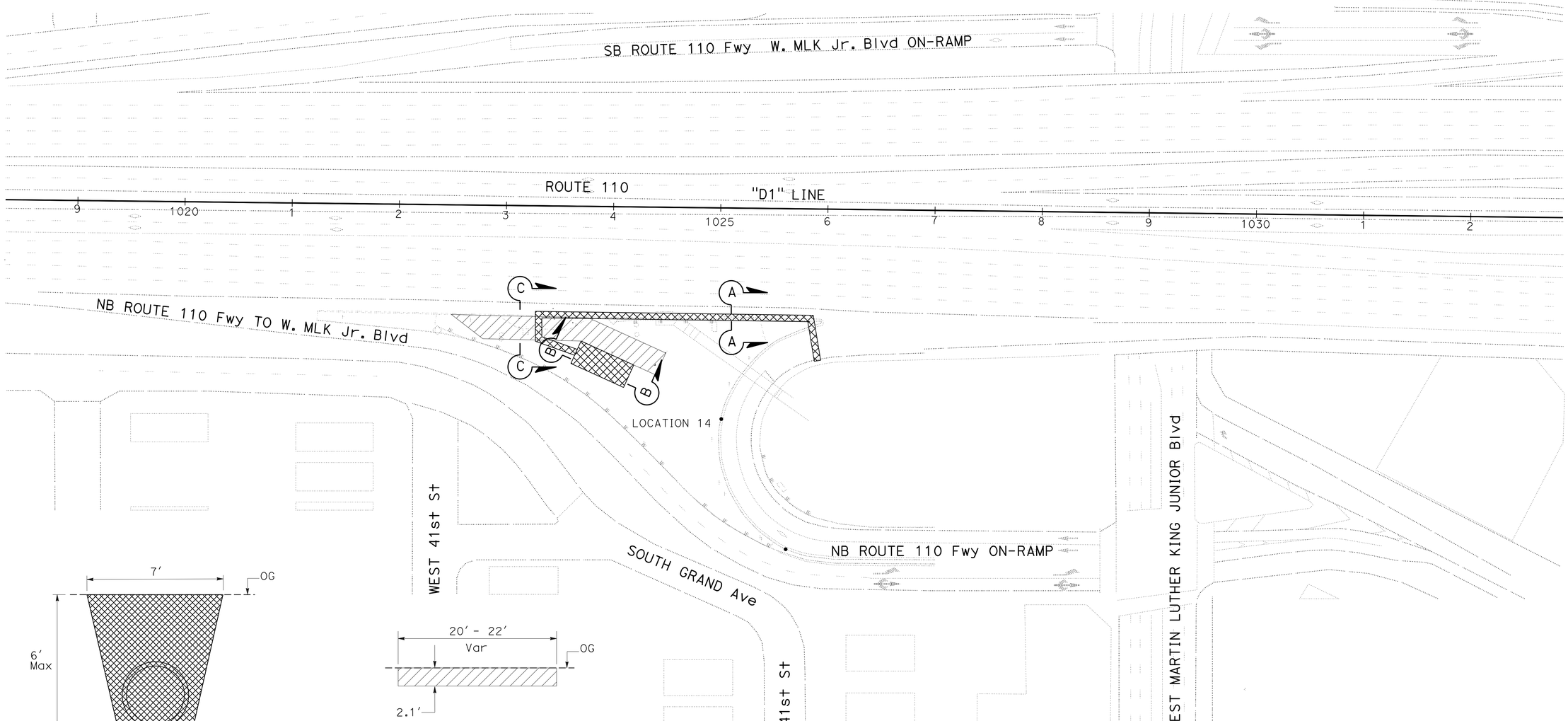

SECTION A-A
EXCAVATION OF MATERIAL
WITH AERIALLY DEPOSITED LEAD
NO SCALE

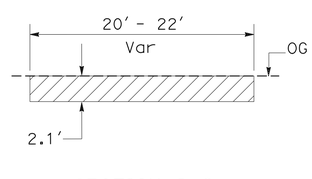

SECTION C-C
EXCAVATION OF MATERIAL
WITH AERIALLY DEPOSITED LEAD
NO SCALE

CONSTRUCTION DETAILS

SCALE: 1" = 50'

C-11

STATE OF CALIFORNIA - DEPARTMENT OF TRANSPORTATION
Caltrans
DESIGN
FUNCTIONAL SUPERVISOR: AMIR ELSHARIEF
CALCULATED-DESIGNED BY: O. BLACKSTOCK
CHECKED BY: DAN PHAM
REVISED BY
DATE REVISED

LAST REVISION 00-00-00
DATE PLOTTED => 12-SEP-2014
TIME PLOTTED => 06:16

Dist	COUNTY	ROUTE	POST MILES TOTAL PROJECT	SHEET No.	TOTAL SHEETS
07	LA	5,10,91, 110,134	Var	31	291

REGISTERED CIVIL ENGINEER 1-13-14 DATE

6-2-14
PLANS APPROVAL DATE

REGISTERED PROFESSIONAL ENGINEER
AMIR AWN ELSHARIEF
No. 72560
Exp. 6/30/14
CIVIL
STATE OF CALIFORNIA

THE STATE OF CALIFORNIA OR ITS OFFICERS OR AGENTS SHALL NOT BE RESPONSIBLE FOR THE ACCURACY OR COMPLETENESS OF SCANNED COPIES OF THIS PLAN SHEET.

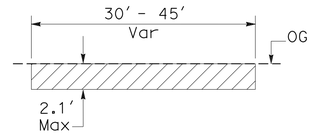

SECTION A-A
EXCAVATION OF MATERIAL
WITH AERIALLY DEPOSITED LEAD
NO SCALE

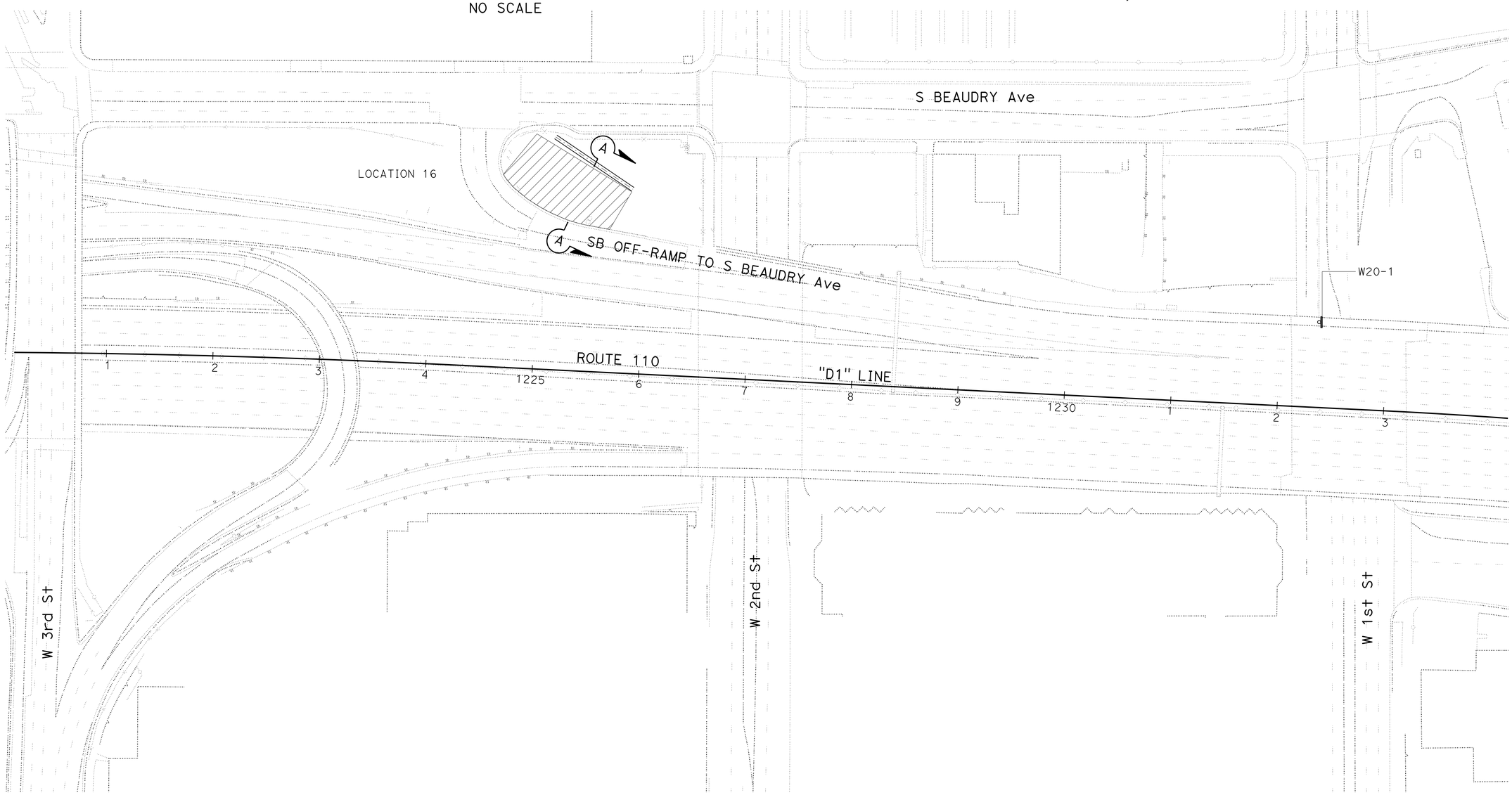

CONSTRUCTION DETAILS

SCALE: 1" = 50'

C-12

STATE OF CALIFORNIA - DEPARTMENT OF TRANSPORTATION
Caltrans
DESIGN

FUNCTIONAL SUPERVISOR: AMIR ELSHARIEF
CALCULATED-DESIGNED BY: O. BLACKSTOCK
CHECKED BY: DAN PHAM
REVISED BY
DATE REVISED

LAST REVISION 00-00-00
DATE PLOTTED => 12-SEP-2014
TIME PLOTTED => 06:16

Dist	COUNTY	ROUTE	POST MILES TOTAL PROJECT	SHEET No.	TOTAL SHEETS
07	LA	5,10,91, 110,134	Var	32	291

REGISTERED CIVIL ENGINEER 1-13-14 DATE

6-2-14
PLANS APPROVAL DATE

REGISTERED PROFESSIONAL ENGINEER F.S. CHANG No. 54884 Exp. 6-30-14 CIVIL STATE OF CALIFORNIA

THE STATE OF CALIFORNIA OR ITS OFFICERS OR AGENTS SHALL NOT BE RESPONSIBLE FOR THE ACCURACY OR COMPLETENESS OF SCANNED COPIES OF THIS PLAN SHEET.

NOTE:

1. VERIFY ELEVATIONS OF EXISTING AND PROPOSED DRAINAGE WORK BEFORE COMMENCEMENT OF WORK.

ABBREVIATIONS:

SST - STAINLESS STEEL TYPE
UV - ULTRAVIOLET
AVSF - AUSTIN VAULT SAND FILTER

LEGEND:

(X) DRAINAGE SYSTEM NUMBER

(X) DRAINAGE UNIT NUMBER

(1)
- (a) 21" x 8.1' RCP W/ 65.7° Conc ELBOW SEE WD SHEET
- (b) REMOVE 21" x 13.3' RCP
- (c) CAP 5' x 4' Conc BOX INLET
- (d) RECONSTRUCT 5' x 4' Conc BOX INLET
- (e) MH ON Conc BOX INLET
- (f) 21" x 10.7' RCP
- (g) MH No. 1
- (h) 24" x 7.0' RCP
- (i) AVSF(L-5000-4.5)
- (j) Conc BOX INLET No. 2 (8.83' W x 8.46' H x 4' L)
- (k) MH ON Conc BOX INLET No. 2
- (l) 24" x 135.2' RCP
- (m) MH No. 1

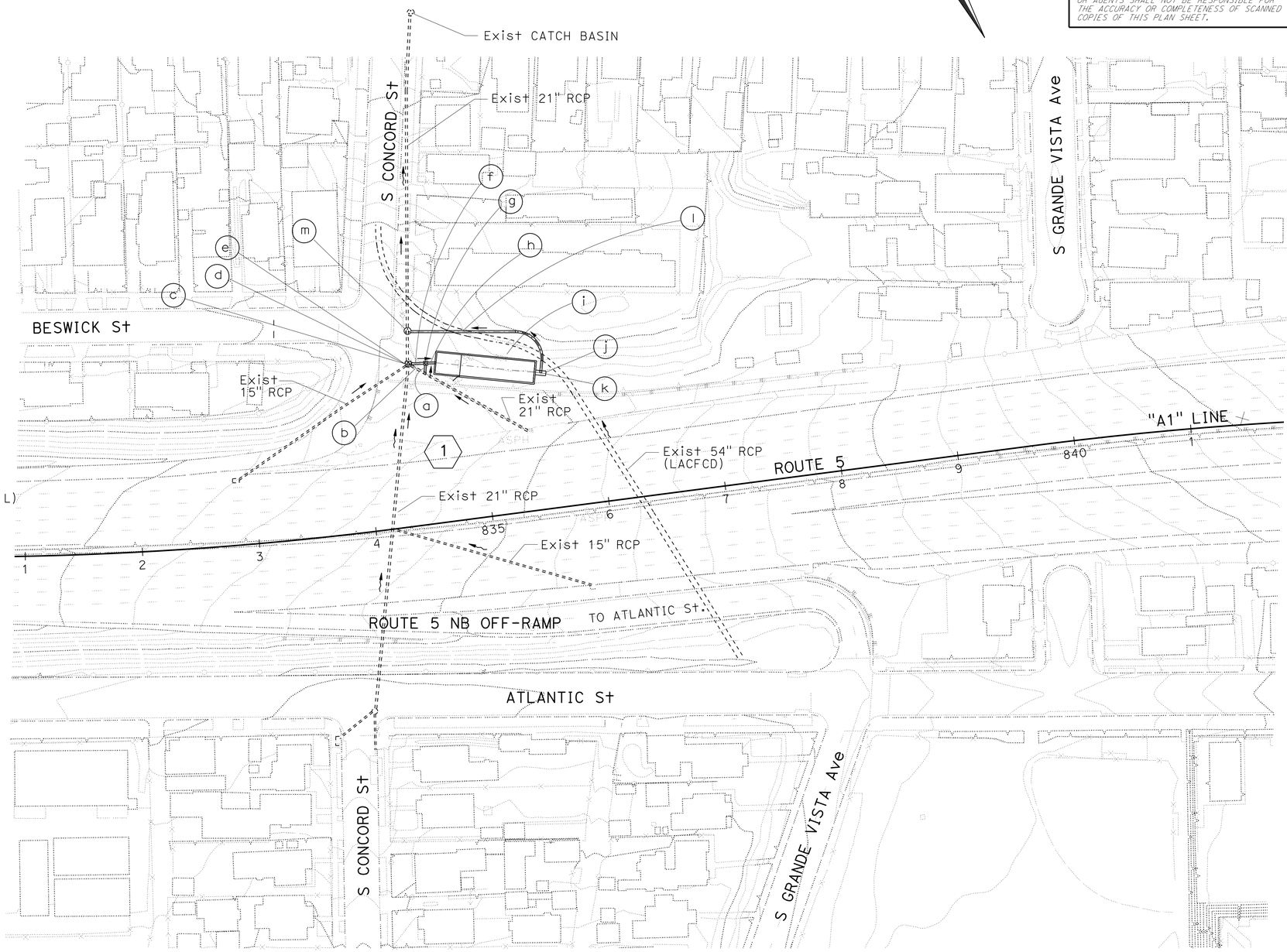

WATER POLLUTION CONTROL PLAN

SCALE: 1" = 50'

APPROVED FOR WATER POLLUTION CONTROL WORK ONLY

W-1

STATE OF CALIFORNIA - DEPARTMENT OF TRANSPORTATION
Caltrans
HYDRAULICS

FUNCTIONAL SUPERVISOR: DAVE BHALLA
CALCULATED-DESIGNED BY: FUSUNG CHANG
CHECKED BY: DAVE BHALLA
REVISED BY
DATE REVISED

LAST REVISION 00-00-00
DATE PLOTTED => 12-SEP-2014
TIME PLOTTED => 06:16

Dist	COUNTY	ROUTE	POST MILES TOTAL PROJECT	SHEET No.	TOTAL SHEETS
07	LA	5,10,91, 110,134	Var	33	291

REGISTERED CIVIL ENGINEER 1-13-14 DATE

6-2-14
PLANS APPROVAL DATE

REGISTERED PROFESSIONAL ENGINEER F.S. CHANG No. 54884 Exp. 6-30-14 CIVIL STATE OF CALIFORNIA

THE STATE OF CALIFORNIA OR ITS OFFICERS OR AGENTS SHALL NOT BE RESPONSIBLE FOR THE ACCURACY OR COMPLETENESS OF SCANNED COPIES OF THIS PLAN SHEET.

NOTE:

1. VERIFY ELEVATIONS OF EXISTING AND PROPOSED DRAINAGE SYSTEM BEFORE COMMENCING THE WORK.

2
- a 24" x 47.3' RCP
- b MH No. 1 W/ FLOW SPLITTER
- c 18" x 78.8' RCP
- d AVSF(S-10000-3)
- e 24" x 10' RCP
- f MH No. 1
- g 18" x 207.1' RCP
- h MH No. 1
- i 18" x 196.9' JACKED RCP (AUGER BORING)
- j MH No. 1
- k 18" x 343.7' RCP
- l REMOVE G5 INLET
- m RECONSTRUCT Mod G5 INLET
- n 24" x 52.0' JACKED RCP (AUGER BORING)
- o REMOVE 18" x 52.0' RCP
- p REMOVE MH No. 4
- q RECONSTRUCT MH No.4

3
- a REMOVE 24" x 74.1' RCP
- b 24" x 38.8' RCP

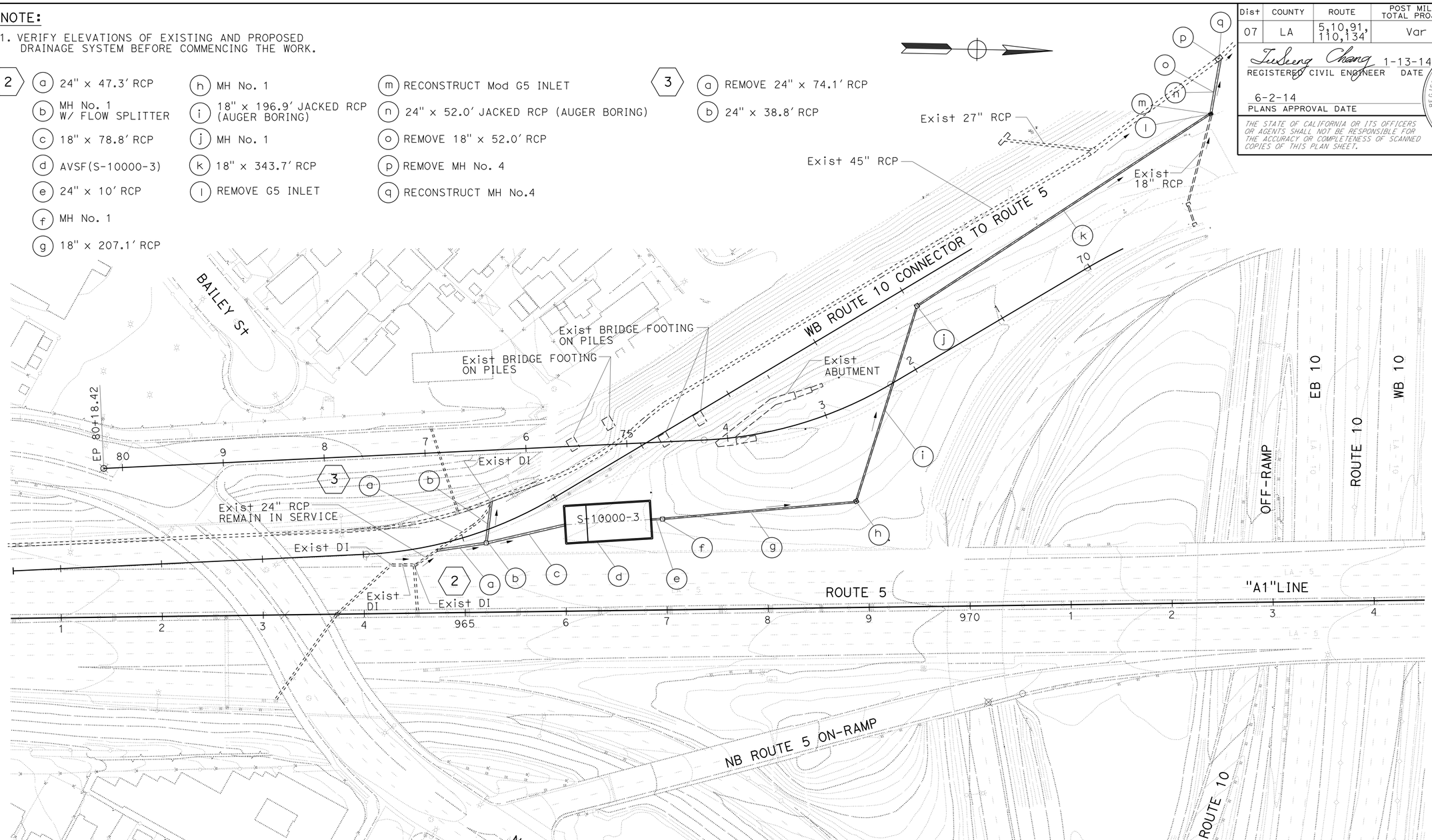

WATER POLLUTION CONTROL PLAN

SCALE: 1" = 50'

APPROVED FOR WATER POLLUTION CONTROL WORK ONLY

W-2

STATE OF CALIFORNIA - DEPARTMENT OF TRANSPORTATION
Caltrans
HYDRAULICS

FUNCTIONAL SUPERVISOR: DAVE BHALLA
CALCULATED-DESIGNED BY: FUSUNG CHANG
CHECKED BY: DAVE BHALLA
REVISED BY
DATE REVISED

LAST REVISION 00-00-00
DATE PLOTTED => 12-SEP-2014
TIME PLOTTED => 06:17

Dist	COUNTY	ROUTE	POST MILES TOTAL PROJECT	SHEET No.	TOTAL SHEETS
07	LA	5,10,91, 110,134	Var	34	291

REGISTERED CIVIL ENGINEER 1-13-14 DATE

6-2-14
PLANS APPROVAL DATE

REGISTERED PROFESSIONAL ENGINEER F.S. CHANG No. 54884 Exp. 6-30-14 CIVIL STATE OF CALIFORNIA

THE STATE OF CALIFORNIA OR ITS OFFICERS OR AGENTS SHALL NOT BE RESPONSIBLE FOR THE ACCURACY OR COMPLETENESS OF SCANNED COPIES OF THIS PLAN SHEET.

NOTE:

1. VERIFY ELEVATIONS OF EXISTING AND PROPOSED DRAINAGE WORK BEFORE COMMENCING THE WORK.

4
- (a) REMOVE MH No. 1
- (b) RECONSTRUCT MH No. 1 W/ FLOW SPLITTER
- (c) 18" x 10' RCP
- (d) MH No. 1
- (e) 18" x 241.6' JACKED RCP (AUGER BORING)
- (f) MH No. 1
- (g) 18" x 205.2' JACKED RCP (AUGER BORING)

5
- (a) AVSF(S-15000-3)
- (b) 24" x 5.2' RCP
- (c) MH No. 1
- (d) 18" x 9.6' RCP
- (e) MH No. 1
- (f) 18" x 100.0' RCP
- (g) Jct Str No. 1

PIPE ℄ CURVE DATA

No.	R	Δ	T	L
②	22.50'	60°20'50"	13.08'	23.70'
BC	136.55' Rt, 1075+81.52, "A1"			
EC	118.99' Rt, 1075+95.16, "A1"			

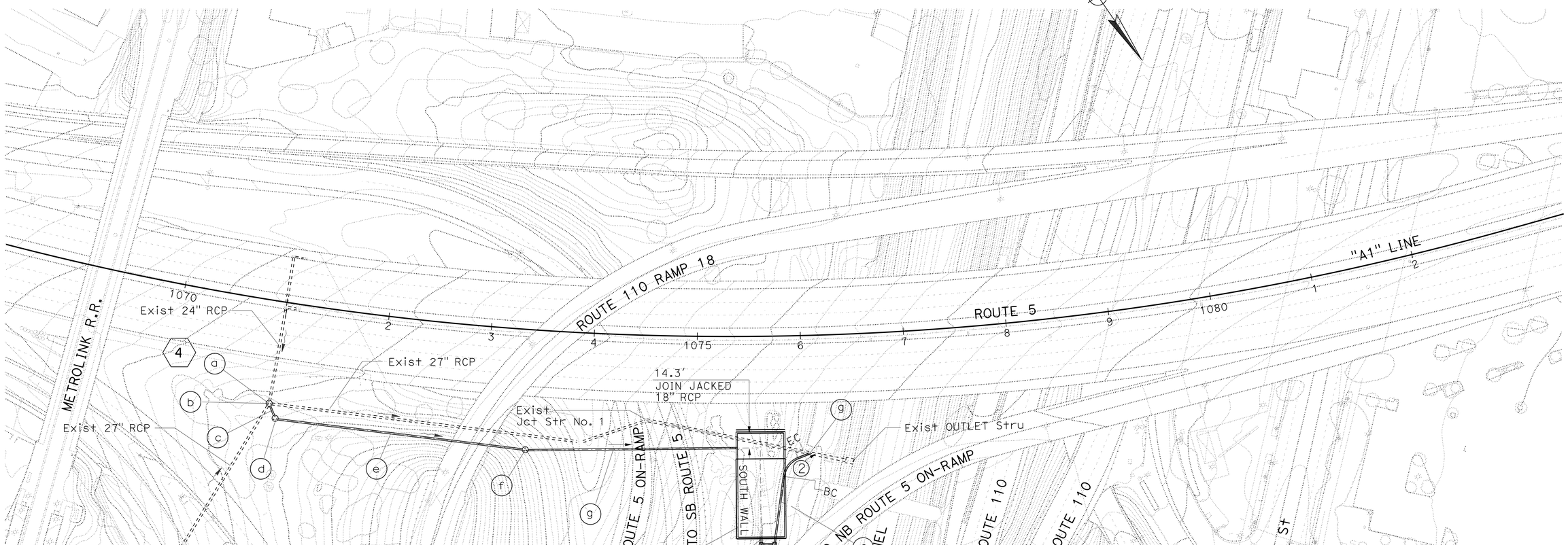

WATER POLLUTION CONTROL PLAN

SCALE: 1" = 50'

APPROVED FOR WATER POLLUTION CONTROL WORK ONLY

W-3

STATE OF CALIFORNIA - DEPARTMENT OF TRANSPORTATION
Caltrans
HYDRAULICS

FUNCTIONAL SUPERVISOR: DAVE BHALLA
CALCULATED-DESIGNED BY: FUSUNG CHANG
CHECKED BY: DAVE BHALLA
REVISED BY
DATE REVISED

LAST REVISION 00-00-00
DATE PLOTTED => 12-SEP-2014
TIME PLOTTED => 06:17

Dist	COUNTY	ROUTE	POST MILES TOTAL PROJECT	SHEET No.	TOTAL SHEETS
07	LA	5,10,91, 110,134	Var	35	291

Fusheng Chang 1-13-14
REGISTERED CIVIL ENGINEER DATE

6-2-14
PLANS APPROVAL DATE

REGISTERED PROFESSIONAL ENGINEER F.S. CHANG No. 54884 Exp. 6-30-14 CIVIL STATE OF CALIFORNIA

THE STATE OF CALIFORNIA OR ITS OFFICERS OR AGENTS SHALL NOT BE RESPONSIBLE FOR THE ACCURACY OR COMPLETENESS OF SCANNED COPIES OF THIS PLAN SHEET.

NOTE:

1. VERIFY LOCATIONS AND ELEVATIONS OF EXISTING AND PROPOSED DRAINAGE SYSTEMS BEFORE COMMENCING THE WORK.

6
- (a) RCP CONNECTION TO Exist 72" RCP SEE JUNCTION Str No. 1
- (b) 30" x 84.0' JACKED RCP (AUGER BORING)
- (c) GD-1 INLET FIT CURVE
- (d) 30" x 78.1' RCP
- (e) MH ON Conc BOX INLET No. 1
- (f) 10' W x 7.5' H x 8' L Conc BOX INLET
- (g) 18" x 36.9' RCP
- (h) MH ON Conc BOX INLET No. 2
- (i) 8.83' W x 10.06' H x 4' L Conc BOX INLET
- (j) AVSF L-15000-6 (SOUTH SIDE)
- (k) 18" x 46' RCP
- (l) MH ON Conc BOX INLET
- (m) 8'W x 6.0'H x 4'L Conc BOX INLET
- (n) 18" x 45.2' RCP
- (o) MH ON Conc BOX INLET No. 2
- (p) 8.83'W x 10.06'H x 4'L Conc BOX INLET
- (q) AVSF L-15000-6 (NORTH SIDE)
- (r) 18" x 35.0' RCP

7
- (a) RCP CONNECTION TO Exist 72" RCP SEE 335-2
- (b) 18" x 96.0' JACKED RCP (AUGER BORING)
- (c) GD-1 INLET FIT TO CURB
- (d) 18" x 25.1' RCP
- (e) MH ON Conc BOX INLET No. 2
- (f) 8.83' W x 9.5' H x 4' L Conc BOX INLET
- (g) AVSF L-5000-6

8
- (a) GD-1 INLET
- (b) REMOVE 18" x 53.2' RCP
- (c) 24" x 94.4' RCP
- (d) REMOVE JUNCTION Str
- (e) REMOVE 21" x 57.7' RCP

9
- (a) REMOVE 33" x 94' RCP
- (b) REMOVE 30" x 212.7' RCP

10
- (a) 24" x 51.9' RCP
- (b) MH No.1
- (c) 24" x 236.04' RCP (BYPASS FLOW)

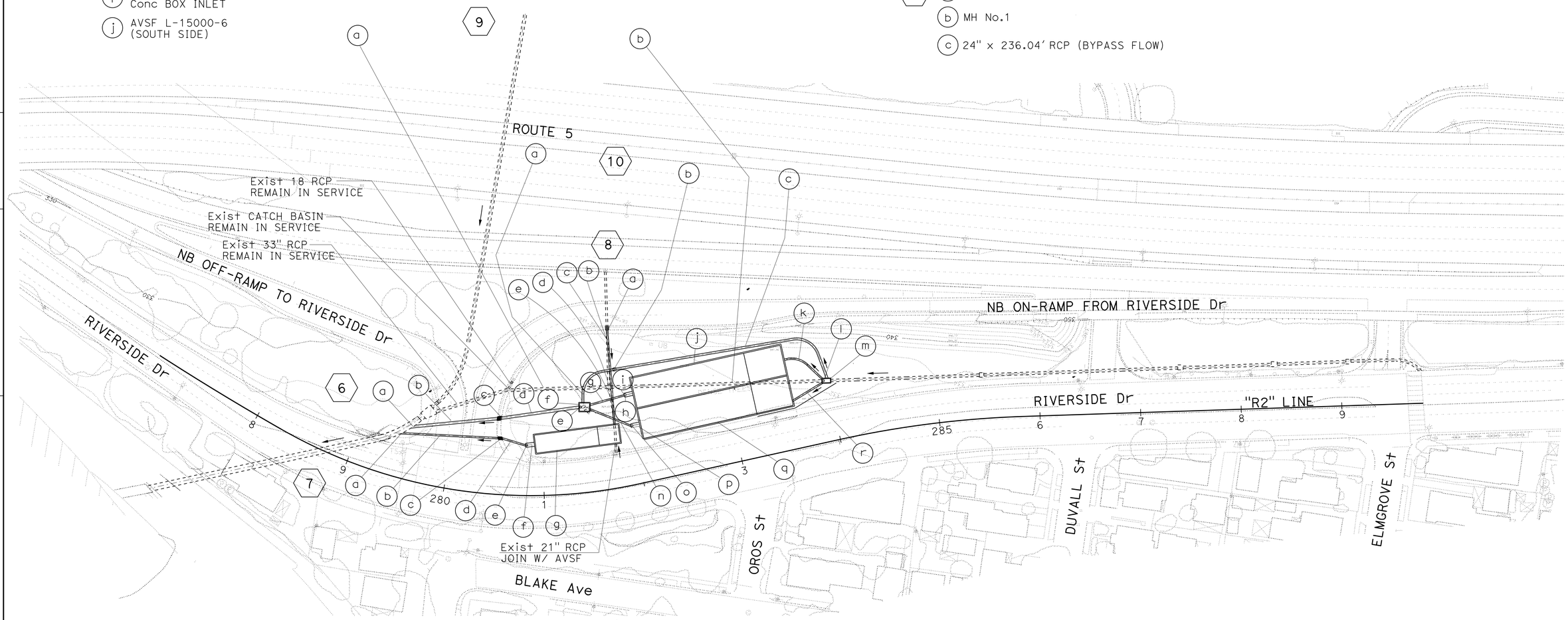

APPROVED FOR WATER POLLUTION CONTROL WORK ONLY

WATER POLLUTION CONTROL PLAN

SCALE: 1" = 50'

W-4

STATE OF CALIFORNIA - DEPARTMENT OF TRANSPORTATION
Caltrans
HYDRAULICS

FUNCTIONAL SUPERVISOR: DAVE BHALLA
CALCULATED-DESIGNED BY: FUSUNG CHANG
CHECKED BY: DAVE BHALLA
REVISED BY
DATE REVISED

LAST REVISION 00-00-00
DATE PLOTTED => 12-SEP-2014
TIME PLOTTED => 06:17

Dist	COUNTY	ROUTE	POST MILES TOTAL PROJECT	SHEET No.	TOTAL SHEETS
07	LA	5,10,91, 110,134	Var	36	291

Prakashyadav 1-13-14
REGISTERED CIVIL ENGINEER DATE

6-2-14
PLANS APPROVAL DATE

REGISTERED PROFESSIONAL ENGINEER PRAKASH YADAV No. C68479 Exp. 9-30-15 CIVIL STATE OF CALIFORNIA

THE STATE OF CALIFORNIA OR ITS OFFICERS OR AGENTS SHALL NOT BE RESPONSIBLE FOR THE ACCURACY OR COMPLETENESS OF SCANNED COPIES OF THIS PLAN SHEET.

NOTE

1. VERIFY ELEVATIONS OF EXISTING AND PROPOSED DRAINAGE WORK BEFORE COMMENCEMENT OF WORK.

(11)
- (a) REMOVE Exist INLET
- (b) Mod G6 INLET, H=6.05′ WITH SPLITTER (SEE WD SHEET)
- (c) 18" x 8.5′ RCP
- (d) Mod G6 INLET,H=6.24′ (SEE WD SHEET)
- (e) 18" x 28.0′ RCP
- (f) 18" Conc FES
- (g) RECTANGULAR Conc Chnl, L=26.52′ INCLUDE STRAIGHT AND CURVE Chnl
- (h) TRANSITION - A, EARTH DITCH L=10′,W/ROCK SLOPE PROTECTION
- (i) EARTH DITCH BIOSWALE, L=207′,W=6′,Z=4:1
- (j) TRANSITION - B,L=15′ EARTH DITCH
- (k) RECTANGULAR Conc Chnl L=5′
- (l) Mod JUNCTION CHAMBER 3-C, V=3.90′
- (m) 18" x 9.4′ RCP
- (n) MH No. 1, H=6.36′, P=1.33′
- (o) 24" x 196.30′ RCP
- (p) RCP CONNECTION TO Exist 48" RCP SEE JUNCTION Str No. 1 (SEE WD SHEET)

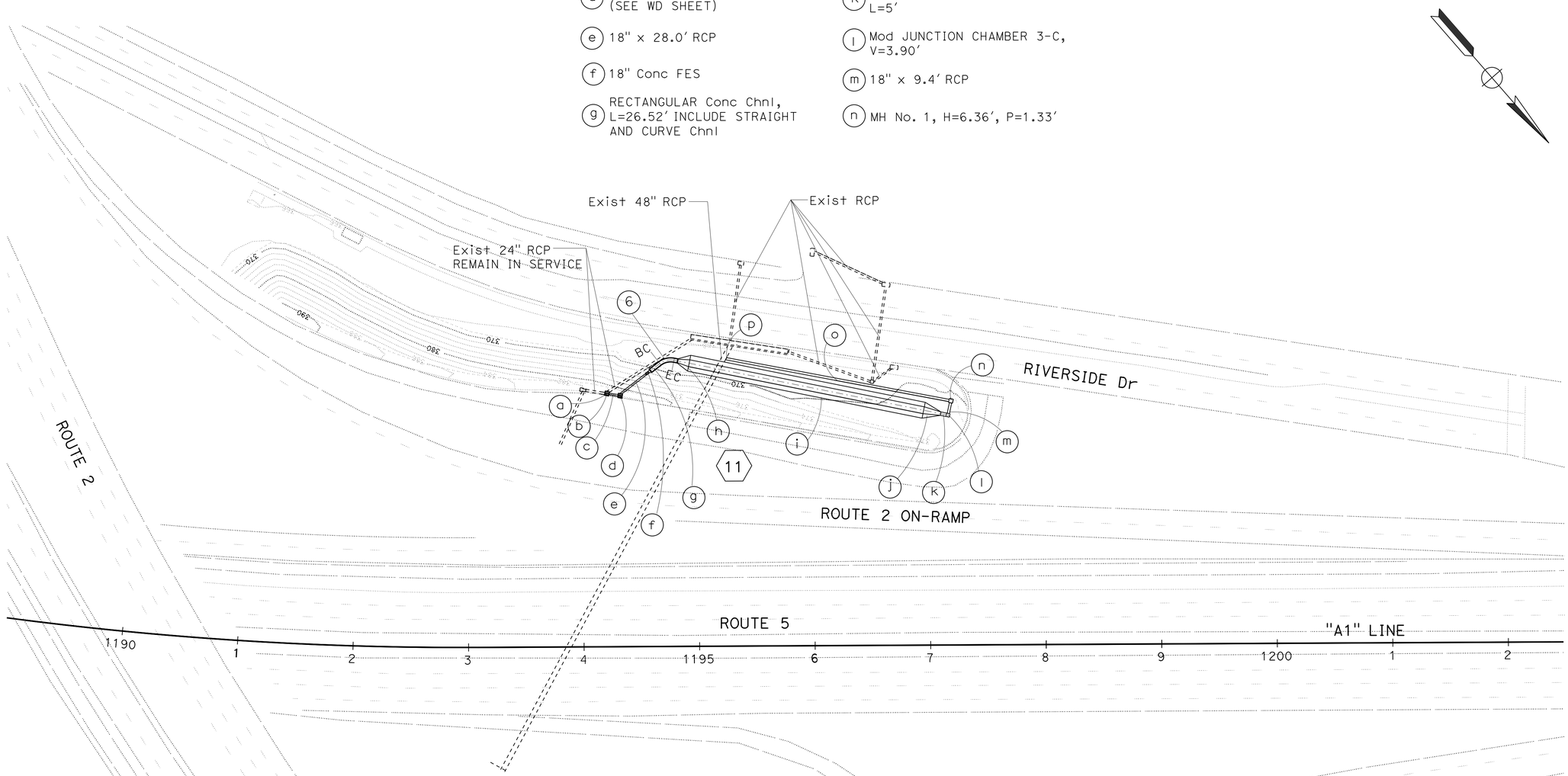

Conc Chnl ℄ CURVE DATA

No.	R	Δ	T	L
6	15.18′	49°4′48"	6.93′	13.00′
BC	245.00′ Lt, Sta 1194+66.80, "A1"			
EC	247.81′ Lt, Sta 1196+79.09, "A1"			

APPROVED FOR WATER POLLUTION CONTROL WORK ONLY

WATER POLLUTION CONTROL PLAN

SCALE: 1" = 50′

W-5

STATE OF CALIFORNIA - DEPARTMENT OF TRANSPORTATION
Caltrans® HYDRAULICS

FUNCTIONAL SUPERVISOR: DAVE BHALLA
CALCULATED-DESIGNED BY: PRAKASH YADAV
CHECKED BY: DAVE BHALLA
REVISED BY
DATE REVISED

LAST REVISION 00-00-00
DATE PLOTTED => 12-SEP-2014
TIME PLOTTED => 06:17

Dist	COUNTY	ROUTE	POST MILES TOTAL PROJECT	SHEET No.	TOTAL SHEETS
07	LA	5,10,91, 110,134	Var	37	291

Prakashyadav 1-13-14
REGISTERED CIVIL ENGINEER DATE

6-2-14
PLANS APPROVAL DATE

REGISTERED PROFESSIONAL ENGINEER
PRAKASH YADAV
No. C68479
Exp. 9-30-15
CIVIL
STATE OF CALIFORNIA

THE STATE OF CALIFORNIA OR ITS OFFICERS OR AGENTS SHALL NOT BE RESPONSIBLE FOR THE ACCURACY OR COMPLETENESS OF SCANNED COPIES OF THIS PLAN SHEET.

NOTES:

1. VERIFY ELEVATIONS OF EXISTING AND PROPOSED DRAINAGE WORK BEFORE COMMENCING THE WORK.
2. UNLESS OTHERWISE SHOWN, SEE WD SHEETS FOR AUSTIN VAULT SAND FILTER PLAN.

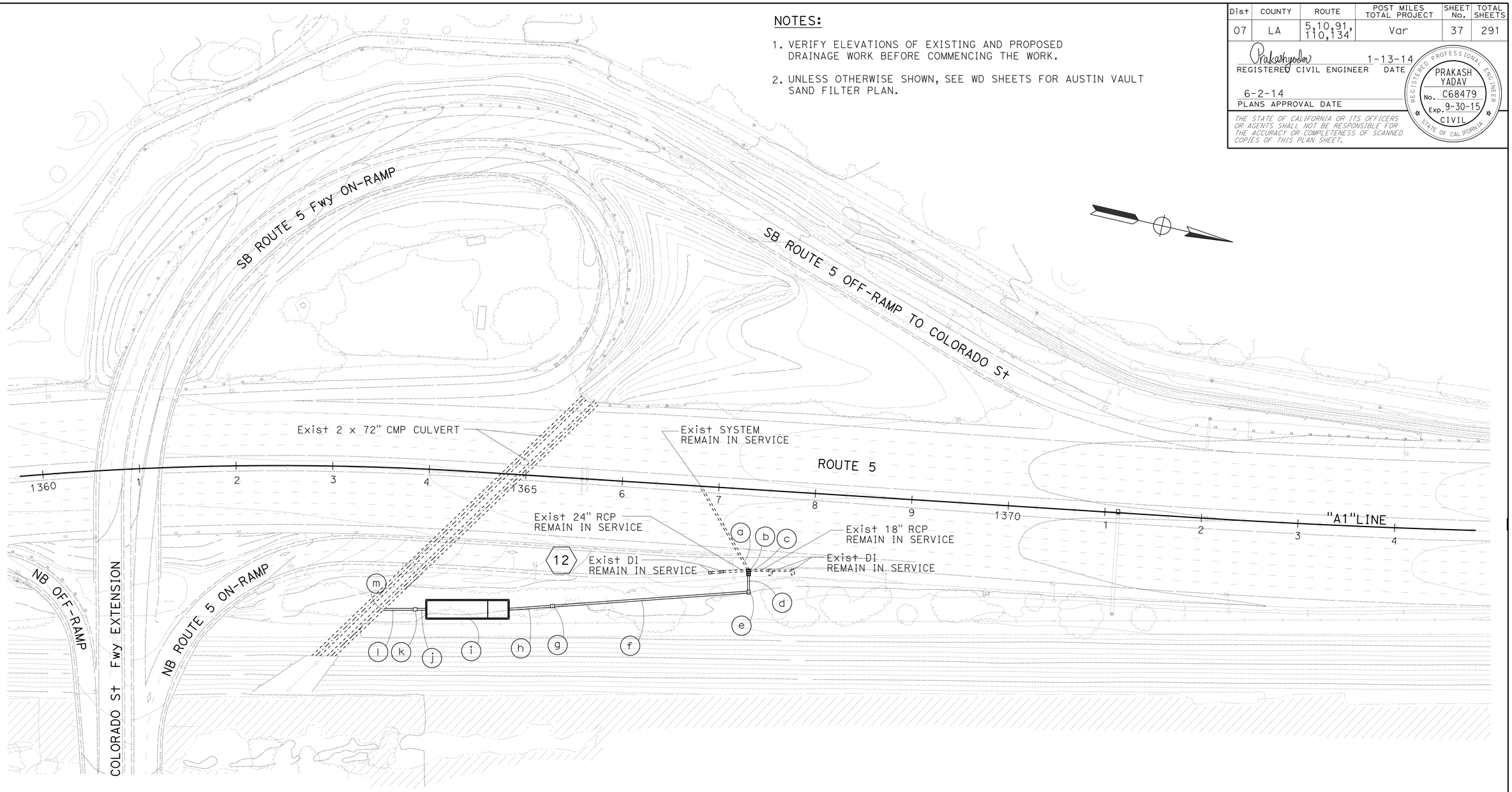

12
- (a) ABANDON Exist RCP PIPE, L=95′
- (b) REMOVE Exist INLET
- (c) MODIFY DRAINAGE INLET (SEE WD SHEET)
- (d) 24" x 15.3′ RCP
- (e) MH No. 1, H=4.67′ ,M=5.12′
- (f) 24" x 199.7′ RCP
- (g) MH No. 1, H=4.67′, M=6.22′
- (h) 24" x 44.0′ RCP
- (i) AVSF, L-5000-4.5
- (j) 24" x 10′ RCP
- (k) MH No. 1, H=5.9′, M=9.55′
- (l) 24" x 30.1′ RCP
- (m) CONNECTION TO Exist 72" CMP, PER (335-2)

APPROVED FOR WATER POLLUTION CONTROL WORK ONLY

WATER POLLUTION CONTROL PLAN

SCALE: 1" = 50′

W-6

STATE OF CALIFORNIA - DEPARTMENT OF TRANSPORTATION
Caltrans
HYDRAULICS

FUNCTIONAL SUPERVISOR: DAVE BHALLA
CALCULATED-DESIGNED BY: PRAKASH YADAV
CHECKED BY: DAVE BHALLA
REVISED BY
DATE REVISED

LAST REVISION 00-00-00
DATE PLOTTED => 12-SEP-2014
TIME PLOTTED => 06:17

Dist	COUNTY	ROUTE	POST MILES TOTAL PROJECT	SHEET No.	TOTAL SHEETS
07	LA	5,10,91, 110,134	Var	38	291

REGISTERED CIVIL ENGINEER 1-13-14 DATE

6-2-14
PLANS APPROVAL DATE

REGISTERED PROFESSIONAL ENGINEER F.S. CHANG No. 54884 Exp. 6-30-14 CIVIL STATE OF CALIFORNIA

THE STATE OF CALIFORNIA OR ITS OFFICERS OR AGENTS SHALL NOT BE RESPONSIBLE FOR THE ACCURACY OR COMPLETENESS OF SCANNED COPIES OF THIS PLAN SHEET.

NOTE:

1. VERIFY LOCATIONS AND ELEVATIONS OF EXISTING AND PROPOSED DRAINAGE SYSTEM BEFORE COMMENCING THE WORK.

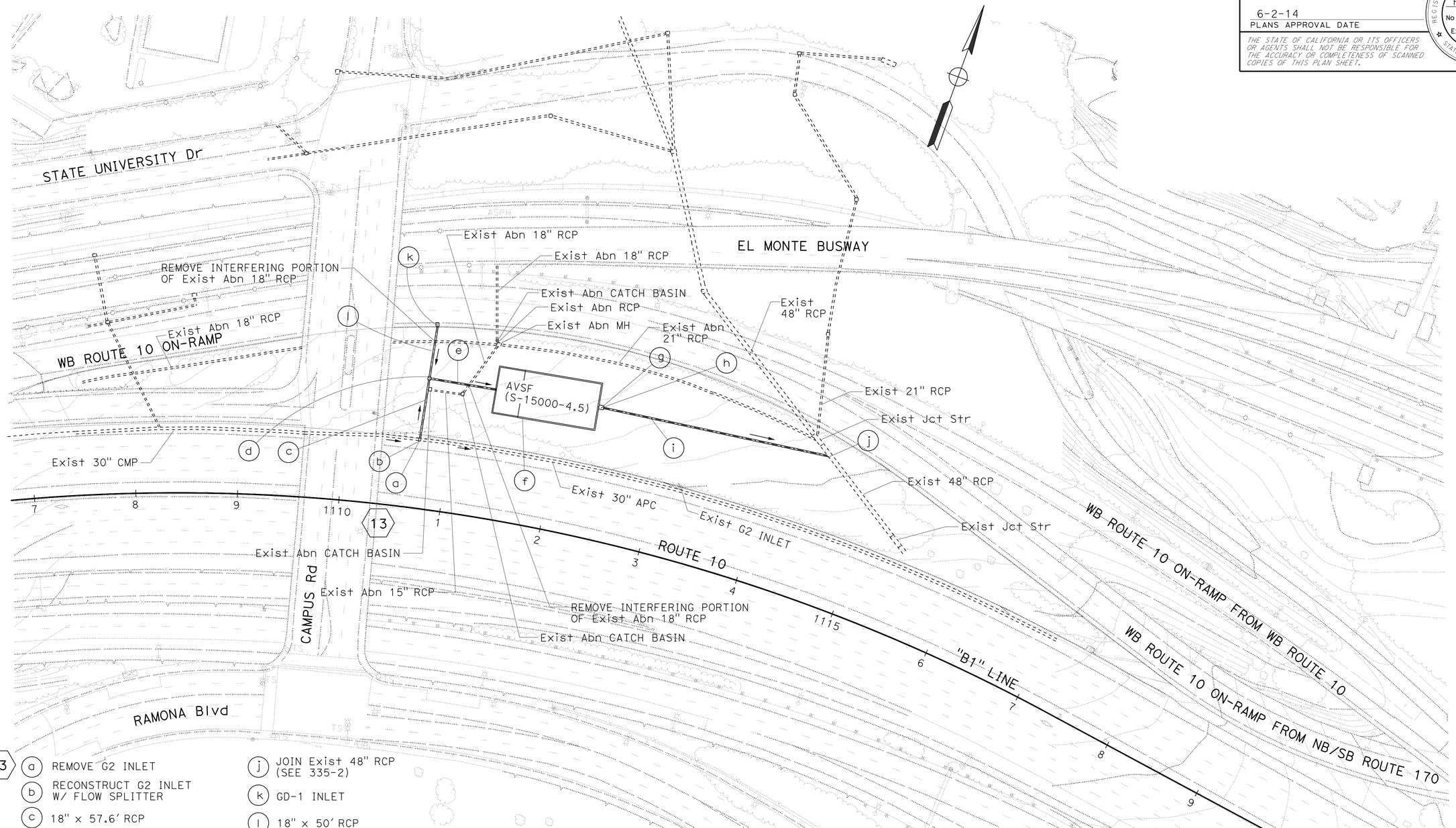

13
- (a) REMOVE G2 INLET
- (b) RECONSTRUCT G2 INLET W/ FLOW SPLITTER
- (c) 18" x 57.6' RCP
- (d) MH No. 1
- (e) 18" x 65.3' RCP
- (f) AVSF (TYPE S-15000-4.5)
- (g) MH ON Conc BOX INLET No. 2
- (h) Conc BOX INLET No. 2 (8.83' W x 10.4' H x 4' L)
- (i) 18" x 234.6' RCP
- (j) JOIN Exist 48" RCP (SEE 335-2)
- (k) GD-1 INLET
- (l) 18" x 50' RCP

APPROVED FOR WATER POLLUTION CONTROL WORK ONLY

WATER POLLUTION CONTROL PLAN

SCALE: 1" = 50'

W-7

STATE OF CALIFORNIA - DEPARTMENT OF TRANSPORTATION
Caltrans
HYDRAULICS
FUNCTIONAL SUPERVISOR: DAVE BHALLA
CALCULATED-DESIGNED BY: FUSUNG CHANG
CHECKED BY: DAVE BHALLA
REVISED BY
DATE REVISED

LAST REVISION 00-00-00
DATE PLOTTED => 12-SEP-2014
TIME PLOTTED => 06:17

Dist	COUNTY	ROUTE	POST MILES TOTAL PROJECT	SHEET No.	TOTAL SHEETS
07	LA	5,10,91, 110,134	Var	39	291

Prakashyadav 1-13-14
REGISTERED CIVIL ENGINEER DATE

6-2-14
PLANS APPROVAL DATE

REGISTERED PROFESSIONAL ENGINEER
PRAKASH YADAV
No. C68479
Exp. 9-30-15
CIVIL
STATE OF CALIFORNIA

THE STATE OF CALIFORNIA OR ITS OFFICERS OR AGENTS SHALL NOT BE RESPONSIBLE FOR THE ACCURACY OR COMPLETENESS OF SCANNED COPIES OF THIS PLAN SHEET.

NOTES:

1. VERIFY ELEVATIONS OF EXISTING AND PROPOSED DRAINAGE WORK BEFORE COMENCEMENT OF WORK.
2. UNLESS OTHERWISE SHOWN, SEE WD SHEET FOR AUSTIN VAULT SAND FILTER PLAN.

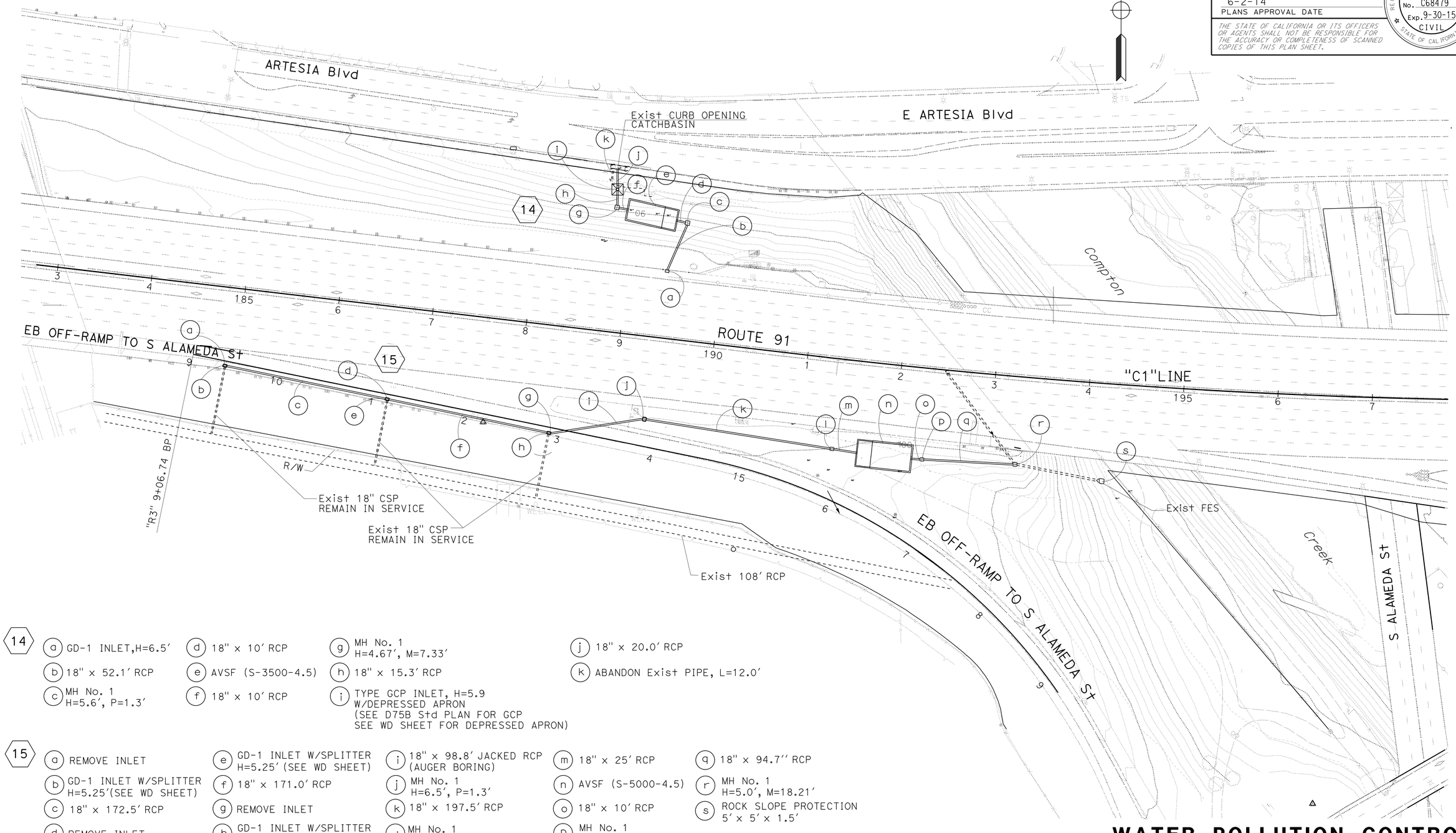

14

- (a) GD-1 INLET, H=6.5'
- (b) 18" x 52.1' RCP
- (c) MH No. 1 H=5.6', P=1.3'
- (d) 18" x 10' RCP
- (e) AVSF (S-3500-4.5)
- (f) 18" x 10' RCP
- (g) MH No. 1 H=4.67', M=7.33'
- (h) 18" x 15.3' RCP
- (i) TYPE GCP INLET, H=5.9 W/DEPRESSED APRON (SEE D75B Std PLAN FOR GCP SEE WD SHEET FOR DEPRESSED APRON)
- (j) 18" x 20.0' RCP
- (k) ABANDON Exist PIPE, L=12.0'

15

- (a) REMOVE INLET
- (b) GD-1 INLET W/SPLITTER H=5.25'(SEE WD SHEET)
- (c) 18" x 172.5' RCP
- (d) REMOVE INLET
- (e) GD-1 INLET W/SPLITTER H=5.25' (SEE WD SHEET)
- (f) 18" x 171.0' RCP
- (g) REMOVE INLET
- (h) GD-1 INLET W/SPLITTER H=5.25' (SEE WD SHEET)
- (i) 18" x 98.8' JACKED RCP (AUGER BORING)
- (j) MH No. 1 H=6.5', P=1.3'
- (k) 18" x 197.5' RCP
- (l) MH No. 1 H=4.67', M=5.38'
- (m) 18" x 25' RCP
- (n) AVSF (S-5000-4.5)
- (o) 18" x 10' RCP
- (p) MH No. 1 H=5.0', M=7.18'
- (q) 18" x 94.7'' RCP
- (r) MH No. 1 H=5.0', M=18.21'
- (s) ROCK SLOPE PROTECTION 5' x 5' x 1.5'

APPROVED FOR WATER POLLUTION CONTROL WORK ONLY

WATER POLLUTION CONTROL PLAN

SCALE: 1" = 50'

W-8

STATE OF CALIFORNIA - DEPARTMENT OF TRANSPORTATION
Caltrans
HYDRAULICS

FUNCTIONAL SUPERVISOR: DAVE BHALLA
CALCULATED-DESIGNED BY: PRAKASH YADAV
CHECKED BY: DAVE BHALLA
REVISED BY
DATE REVISED

LAST REVISION 00-00-00
DATE PLOTTED => 12-SEP-2014
TIME PLOTTED => 06:17

Dist	COUNTY	ROUTE	POST MILES TOTAL PROJECT	SHEET No.	TOTAL SHEETS
07	LA	5,10,91, 110,134	Var	40	291

Paul Fong 2-5-14
REGISTERED CIVIL ENGINEER DATE

6-2-14
PLANS APPROVAL DATE

REGISTERED PROFESSIONAL ENGINEER
PAUL FONG
No. C67053
Exp. 9/30/14
CIVIL
STATE OF CALIFORNIA

THE STATE OF CALIFORNIA OR ITS OFFICERS OR AGENTS SHALL NOT BE RESPONSIBLE FOR THE ACCURACY OR COMPLETENESS OF SCANNED COPIES OF THIS PLAN SHEET.

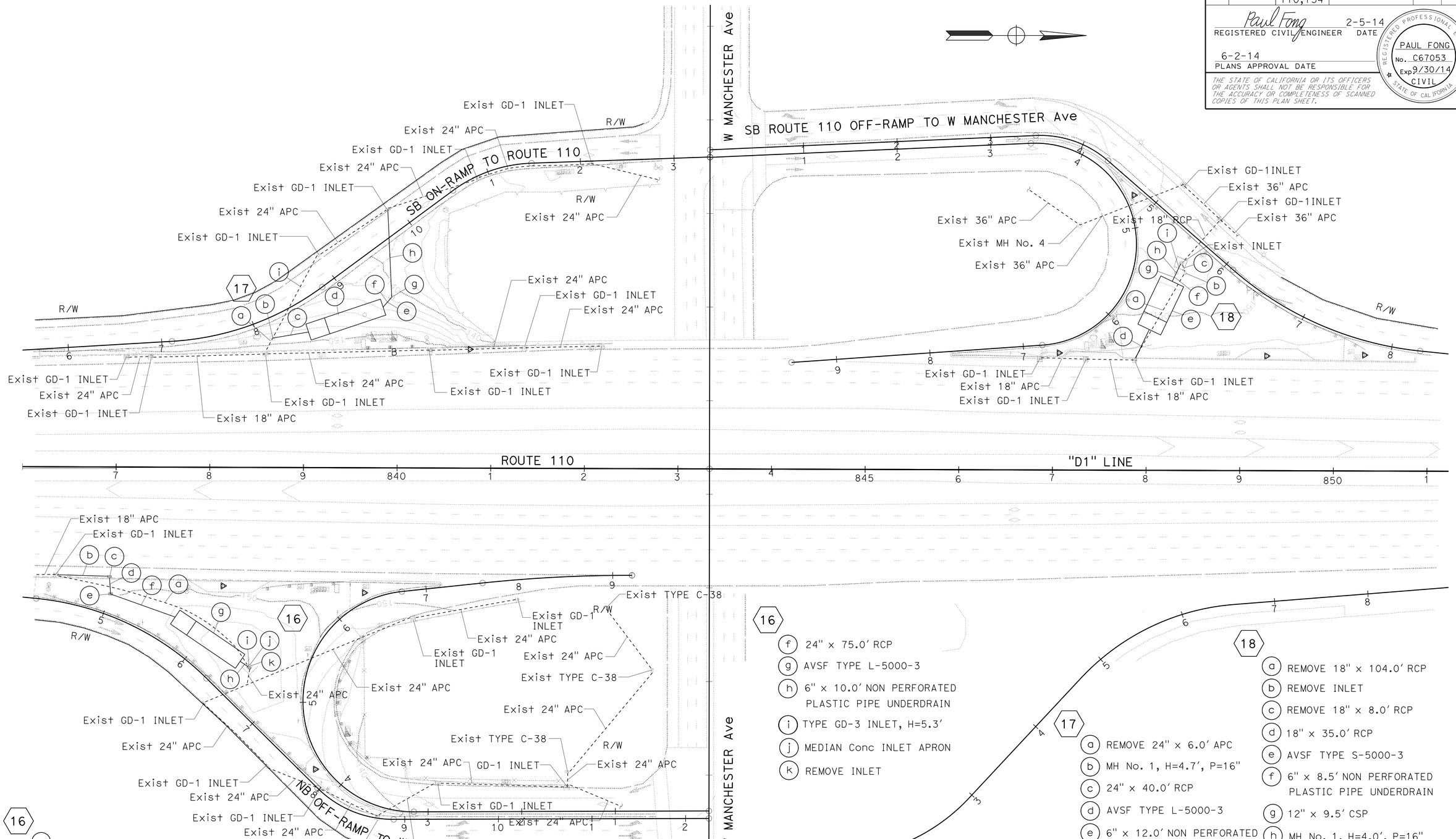

16

- (a) REMOVE 24" x 226.0' APC
- (b) 24" x 55.0' RCP
- (c) TYPE GD-1 INLET, H=5.3'
- (d) 24" x 17.0' RCP
- (e) MH No. 1, H=3.9', P=15"
- (f) 24" x 75.0' RCP
- (g) AVSF TYPE L-5000-3
- (h) 6" x 10.0' NON PERFORATED PLASTIC PIPE UNDERDRAIN
- (i) TYPE GD-3 INLET, H=5.3'
- (j) MEDIAN Conc INLET APRON
- (k) REMOVE INLET

17

- (a) REMOVE 24" x 6.0' APC
- (b) MH No. 1, H=4.7', P=16"
- (c) 24" x 40.0' RCP
- (d) AVSF TYPE L-5000-3
- (e) 6" x 12.0' NON PERFORATED PLASTIC PIPE UNDERDRAIN
- (f) 12" x 12.5' CSP
- (g) MH No. 1, H=9.2', P=16"
- (h) 18" x 93.5' RCP
- (i) ABANDON 24" x 97.0' APC

18

- (a) REMOVE 18" x 104.0' RCP
- (b) REMOVE INLET
- (c) REMOVE 18" x 8.0' RCP
- (d) 18" x 35.0' RCP
- (e) AVSF TYPE S-5000-3
- (f) 6" x 8.5' NON PERFORATED PLASTIC PIPE UNDERDRAIN
- (g) 12" x 9.5' CSP
- (h) MH No. 1, H=4.0', P=16"
- (i) 18" x 10.5' CSP

APPROVED FOR WATER POLLUTION CONTROL WORK ONLY

WATER POLLUTION CONTROL PLAN

SCALE: 1" = 50'

W-9

REVISED BY	DATE REVISED
PAUL FONG	DAVE BHALLA
CALCULATED-DESIGNED BY	CHECKED BY
FUNCTIONAL SUPERVISOR	DAVE BHALLA

STATE OF CALIFORNIA - DEPARTMENT OF TRANSPORTATION
Caltrans® HYDRAULICS

LAST REVISION 00-00-00 | DATE PLOTTED => 12-SEP-2014 | TIME PLOTTED => 06:17

Dist	COUNTY	ROUTE	POST MILES TOTAL PROJECT	SHEET No.	TOTAL SHEETS
07	LA	5,10,91, 110,134	Var	41	291

Prakashyadav 1-13-14
REGISTERED CIVIL ENGINEER DATE

6-2-14
PLANS APPROVAL DATE

REGISTERED PROFESSIONAL ENGINEER PRAKASH YADAV No. C68479 Exp. 9-30-15 CIVIL STATE OF CALIFORNIA

THE STATE OF CALIFORNIA OR ITS OFFICERS OR AGENTS SHALL NOT BE RESPONSIBLE FOR THE ACCURACY OR COMPLETENESS OF SCANNED COPIES OF THIS PLAN SHEET.

NOTES:

1. VERIFY ELEVATIONS OF EXISTING AND PROPOSED DRAINAGE WORK BEFORE COMMENCEMENT OF WORK.
2. UNLESS OTHERWISE SHOWN, SEE WD SHEET FOR AUSTIN VAULT SAND FILTER PLAN.

19
- (a) REMOVE Exist INLET
- (b) GD-1 INLET W/SPLITTER (SEE WD SHEET)
- (c) 18" x 13' CSP W/90° ELBOW
- (d) MH No. 1, H=5.35', M=1.33'
- (e) 18" x 125' RCP
- (f) AVSF (S-3500-3.0)
- (g) 18" x 18.1' RCP
- (h) MH No. 1, H=5.00', M=3.92'
- (i) 18" x 32.3' RCP

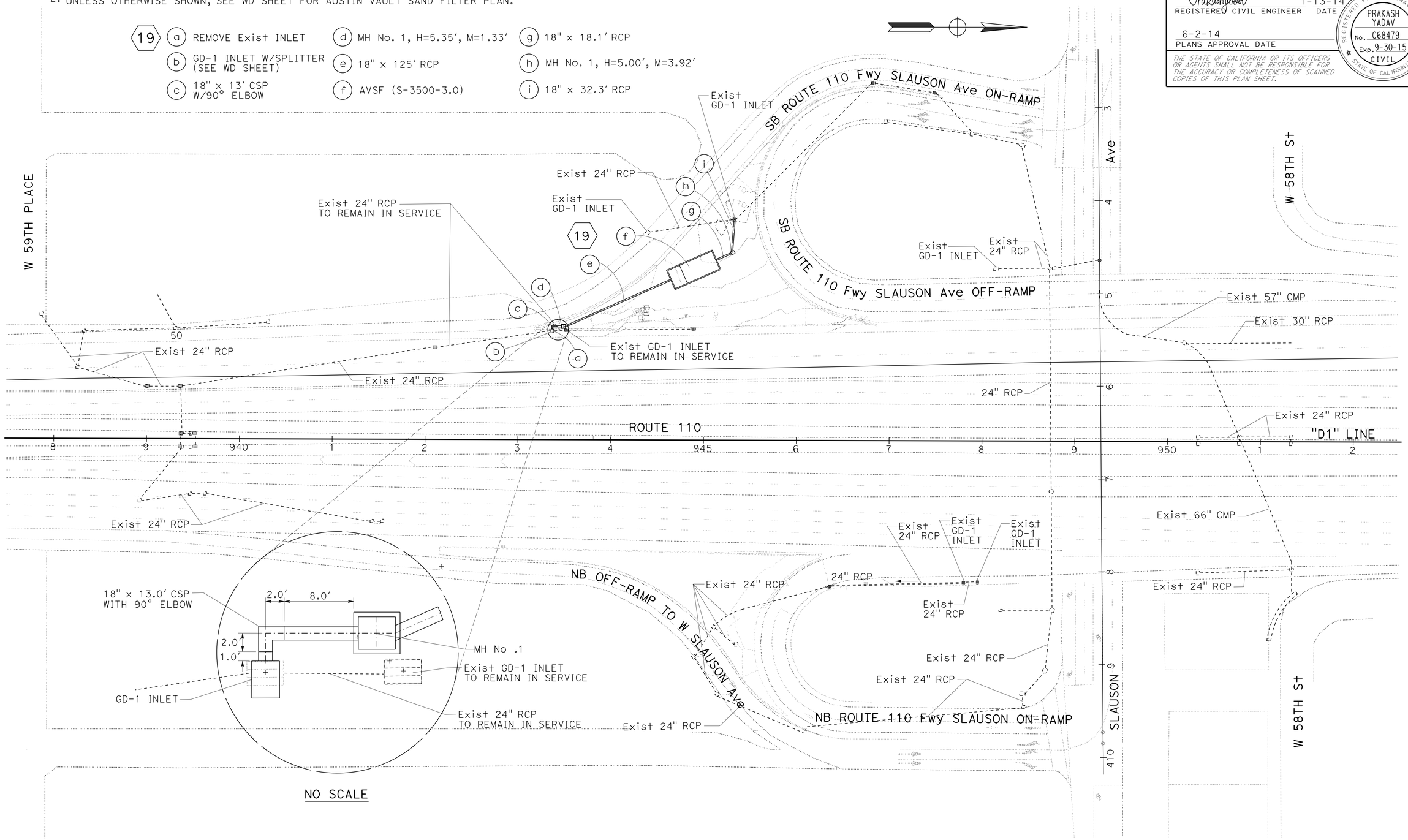

WATER POLLUTION CONTROL PLAN

SCALE: 1" = 50'

W-10

APPROVED FOR WATER POLLUTION CONTROL WORK ONLY

STATE OF CALIFORNIA - DEPARTMENT OF TRANSPORTATION
Caltrans
HYDRAULICS

FUNCTIONAL SUPERVISOR: DAVE BHALLA
CALCULATED-DESIGNED BY: PRAKASH YADAV
CHECKED BY: DAVE BHALLA
REVISED BY
DATE REVISED

LAST REVISION 00-00-00
DATE PLOTTED => 12-SEP-2014
TIME PLOTTED => 06:17

Dist	COUNTY	ROUTE	POST MILES TOTAL PROJECT	SHEET No.	TOTAL SHEETS
07	LA	5,10,91, 110,134	Var	42	291

Paul Fong 2-5-14
REGISTERED CIVIL ENGINEER DATE

6-2-14
PLANS APPROVAL DATE

REGISTERED PROFESSIONAL ENGINEER
PAUL FONG
No. C67053
Exp. 9/30/14
CIVIL
STATE OF CALIFORNIA

THE STATE OF CALIFORNIA OR ITS OFFICERS OR AGENTS SHALL NOT BE RESPONSIBLE FOR THE ACCURACY OR COMPLETENESS OF SCANNED COPIES OF THIS PLAN SHEET.

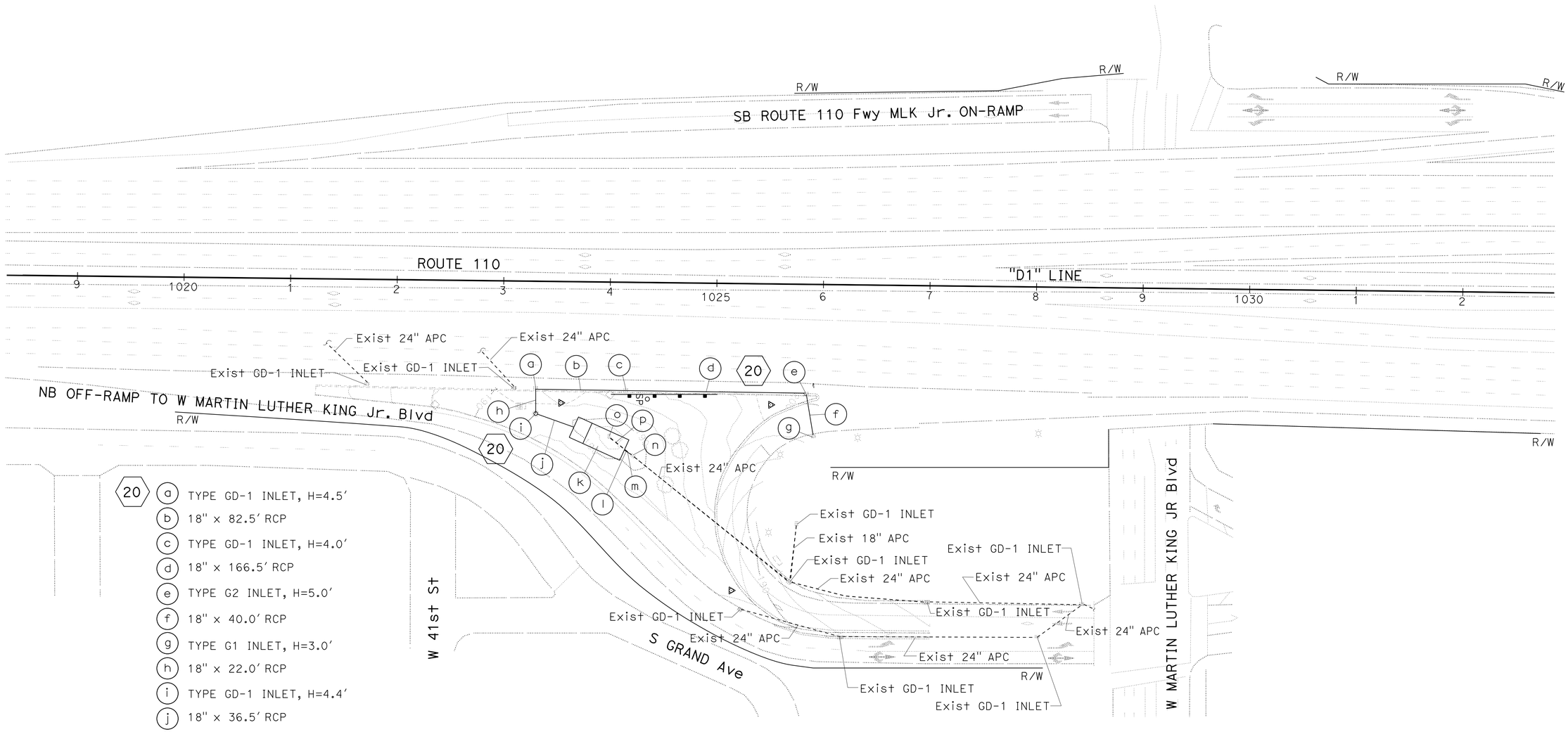

20
- a TYPE GD-1 INLET, H=4.5′
- b 18" x 82.5′ RCP
- c TYPE GD-1 INLET, H=4.0′
- d 18" x 166.5′ RCP
- e TYPE G2 INLET, H=5.0′
- f 18" x 40.0′ RCP
- g TYPE G1 INLET, H=3.0′
- h 18" x 22.0′ RCP
- i TYPE GD-1 INLET, H=4.4′
- j 18" x 36.5′ RCP
- k AVSF (S-3500-3)
- l 6" x 8.5′ NON PERFORATED PLASTIC PIPE UNDERDRAIN
- m 12" x 8.5′ CSP
- n TYPE GD-1 INLET, H=7.5′
- o REMOVE INLET
- p REMOVE 25.0′ x 24" APC

APPROVED FOR WATER POLLUTION CONTROL WORK ONLY

WATER POLLUTION CONTROL PLAN

SCALE: 1" = 50′

W-11

STATE OF CALIFORNIA - DEPARTMENT OF TRANSPORTATION
Caltrans
HYDRAULICS

FUNCTIONAL SUPERVISOR: DAVE BHALLA
CALCULATED-DESIGNED BY: PAUL FONG
CHECKED BY: DAVE BHALLA
REVISED BY
DATE REVISED

LAST REVISION 00-00-00
DATE PLOTTED => 12-SEP-2014
TIME PLOTTED => 06:17

Dist	COUNTY	ROUTE	POST MILES TOTAL PROJECT	SHEET No.	TOTAL SHEETS
07	LA	5,10,91, 110,134	Var	43	291

REGISTERED CIVIL ENGINEER Paul Fong DATE 2-5-14

PLANS APPROVAL DATE 6-2-14

REGISTERED PROFESSIONAL ENGINEER PAUL FONG No. C67053 Exp 9/30/14 CIVIL STATE OF CALIFORNIA

THE STATE OF CALIFORNIA OR ITS OFFICERS OR AGENTS SHALL NOT BE RESPONSIBLE FOR THE ACCURACY OR COMPLETENESS OF SCANNED COPIES OF THIS PLAN SHEET.

21

- (a) REMOVE INLET
- (b) REMOVE 24" x 12.5' APC
- (c) REMOVE INLET
- (d) REMOVE 24" x 42.0' APC
- (e) TYPE GD-1 INLET, H=4.3'
- (f) 18" x 12.5' RCP
- (g) TYPE GD-1 INLET, H=5.8'
- (h) 24" x 10.0' RCP
- (i) MH No.1, H=7.6', P=16"
- (j) 24" x 34.0' RCP
- (k) REMOVE INLET
- (l) TYPE GD-1 INLET, H=4.5'
- (m) 24" x 156.0' RCP
- (n) MH No.1, H=5.5', P=16"
- (o) 24" x 112.0' RCP
- (p) AVSF TYPE L-15000-3
- (q) 6" x 14.5' NON PERFORATED PLASTIC PIPE UNDERDRAIN
- (r) 15" x 15.0' RCP
- (s) MH No.1, H=8.7', P=16"
- (t) 18" x 45.0' RCP

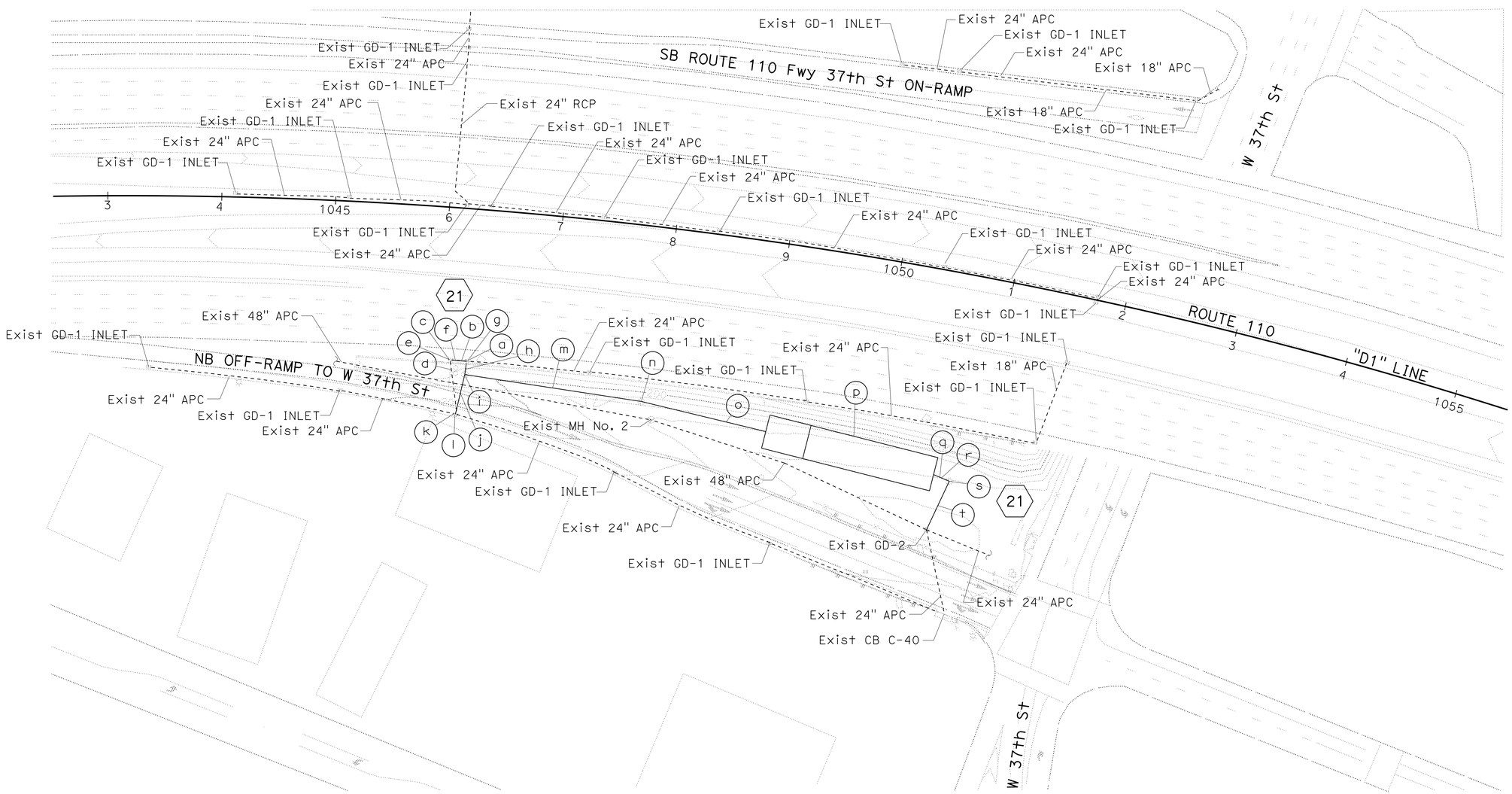

APPROVED FOR WATER POLLUTION CONTROL WORK ONLY

WATER POLLUTION CONTROL PLAN

SCALE: 1" = 50'

W-12

STATE OF CALIFORNIA - DEPARTMENT OF TRANSPORTATION

Caltrans

HYDRAULICS

FUNCTIONAL SUPERVISOR: DAVE BHALLA

CALCULATED-DESIGNED BY: PAUL FONG

CHECKED BY: DAVE BHALLA

REVISED BY

DATE REVISED

LAST REVISION 00-00-00

DATE PLOTTED => 12-SEP-2014

TIME PLOTTED => 06:17

Dist	COUNTY	ROUTE	POST MILES TOTAL PROJECT	SHEET No.	TOTAL SHEETS
07	LA	5,10,91, 110,134	Var	44	291

Paul Fong 2-5-14
REGISTERED CIVIL ENGINEER DATE

6-2-14
PLANS APPROVAL DATE

REGISTERED PROFESSIONAL ENGINEER
PAUL FONG
No. C67053
Exp. 9/30/14
CIVIL
STATE OF CALIFORNIA

THE STATE OF CALIFORNIA OR ITS OFFICERS OR AGENTS SHALL NOT BE RESPONSIBLE FOR THE ACCURACY OR COMPLETENESS OF SCANNED COPIES OF THIS PLAN SHEET.

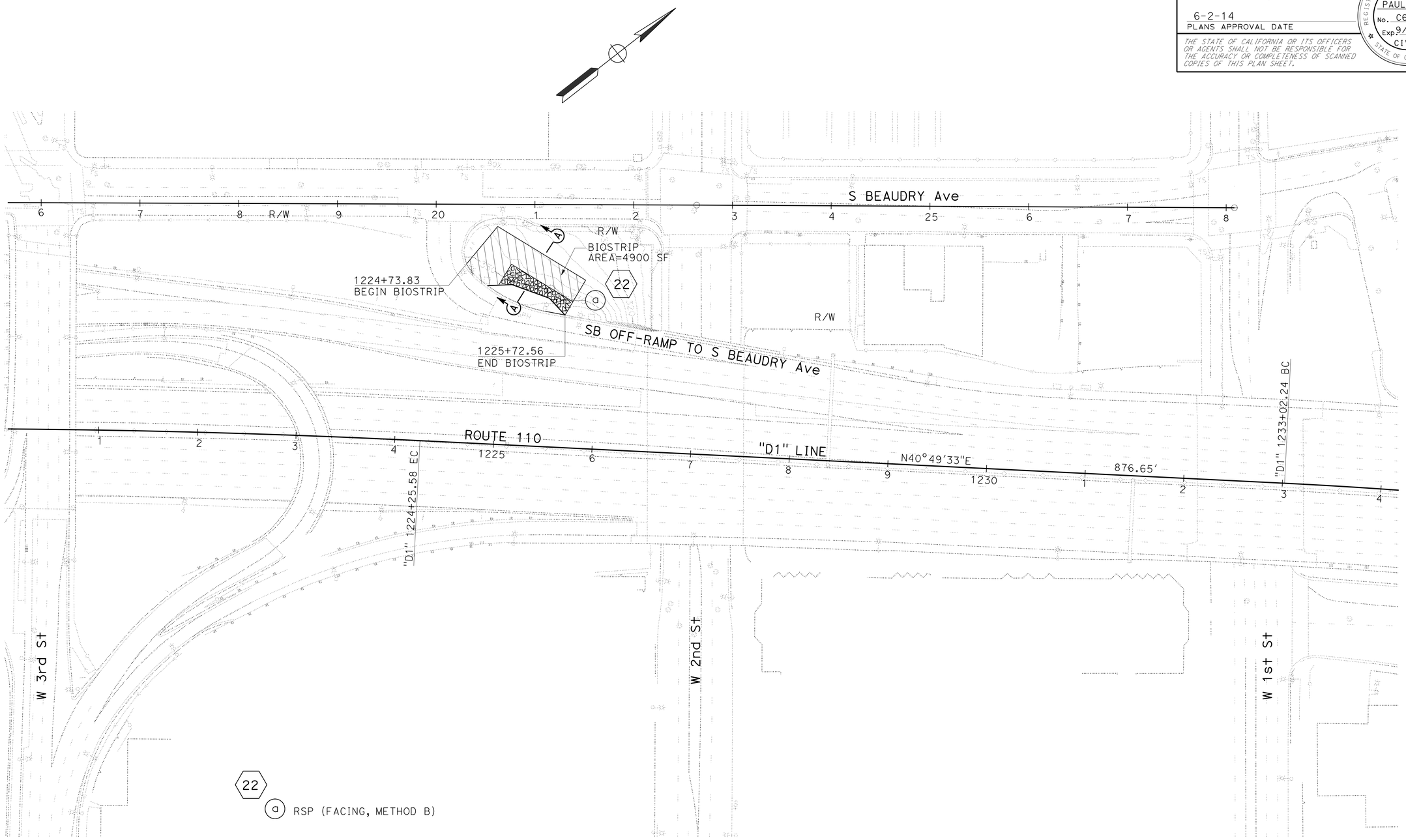

WATER POLLUTION CONTROL PLAN

SCALE: 1" = 50'

W-13

APPROVED FOR WATER POLLUTION CONTROL WORK ONLY

STATE OF CALIFORNIA - DEPARTMENT OF TRANSPORTATION
Caltrans
DESIGN

FUNCTIONAL SUPERVISOR: DAVE BHALLA
CALCULATED-DESIGNED BY: PAUL FONG
CHECKED BY: DAVE BHALLA
REVISED BY
DATE REVISED

LAST REVISION 00-00-00
DATE PLOTTED => 12-SEP-2014
TIME PLOTTED => 06:18

Dist	COUNTY	ROUTE	POST MILES TOTAL PROJECT	SHEET No.	TOTAL SHEETS
07	LA	5,10,91, 110,134	Var	45	291

Paul Fong 2-5-14
REGISTERED CIVIL ENGINEER DATE

6-2-14
PLANS APPROVAL DATE

REGISTERED PROFESSIONAL ENGINEER
PAUL FONG
No. C67053
Exp. 9/30/14
CIVIL
STATE OF CALIFORNIA

THE STATE OF CALIFORNIA OR ITS OFFICERS OR AGENTS SHALL NOT BE RESPONSIBLE FOR THE ACCURACY OR COMPLETENESS OF SCANNED COPIES OF THIS PLAN SHEET.

23

- (a) REMOVE 24" x 16.0' CMP
- (b) 24" x 20.0' RCP
- (c) MH No. 1 H=5.0', P=16"
- (d) 24" x 124.0' CSP
- (e) MH No. 1 H=7.8', M=3'-6"
- (f) 24" x 32.0' RCP
- (g) MH No. 1 H=7.0', M=3-6"
- (h) 24" x 25.0' CSP
- (i) AVSF S-10000-3
- (j) 6" x 14.0' NON PERFORATED PLASTIC PIPE UNDERDRAIN
- (k) 18" x 14.0' CSP
- (l) MH No. 1 H=4.8', M=3'-6"
- (m) 18" x 38.0' CSP
- (n) ABANDON 24" x 100.0' CMP
- (o) MH No. 1 H=4.8', P=16"
- (p) 18" x 44.0' CSP

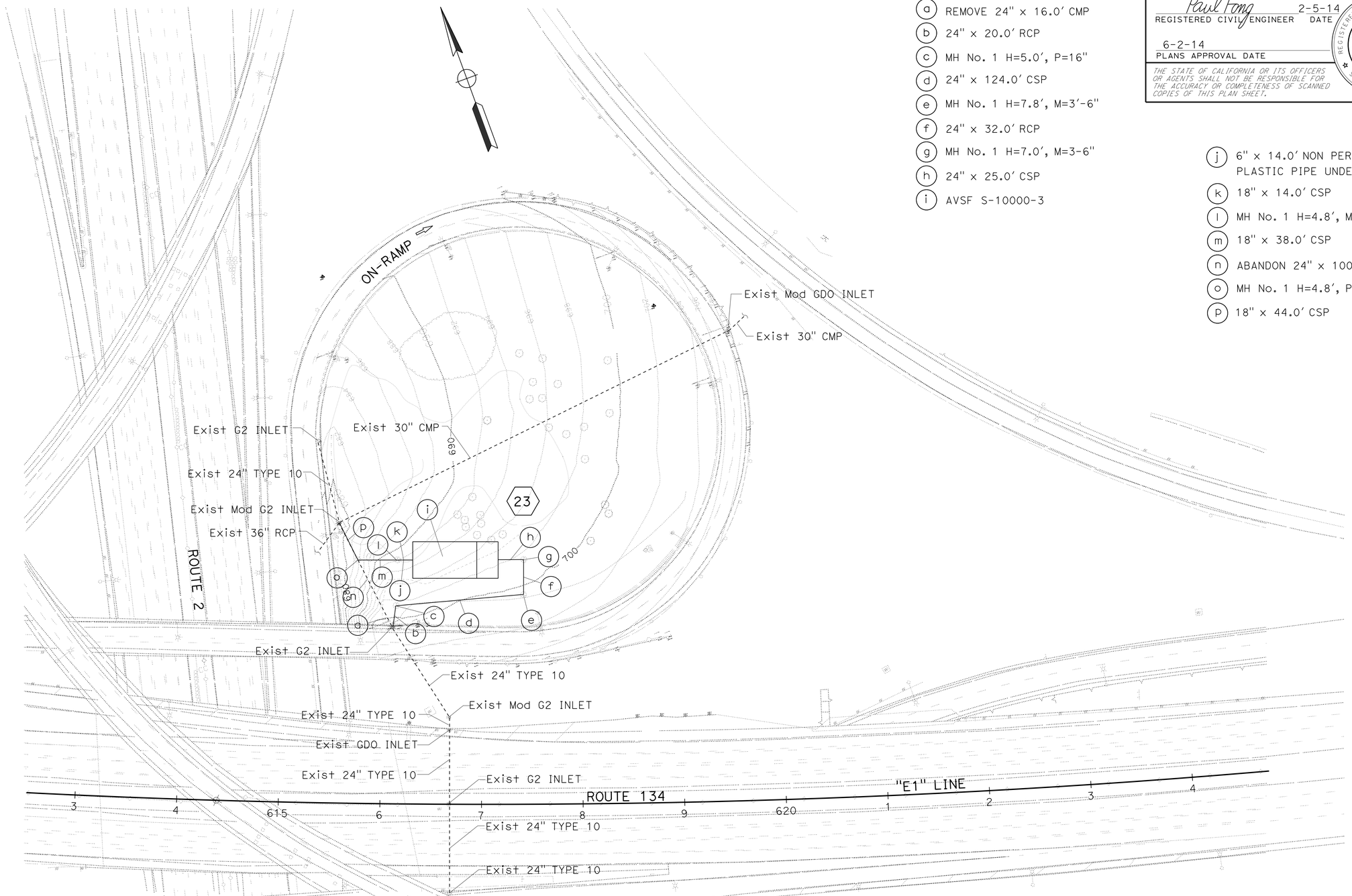

WATER POLLUTION CONTROL PLAN

SCALE: 1" = 50'

W-14

APPROVED FOR WATER POLLUTION CONTROL WORK ONLY

STATE OF CALIFORNIA - DEPARTMENT OF TRANSPORTATION
Caltrans
HYDRAULICS

FUNCTIONAL SUPERVISOR: DAVE BHALLA
CALCULATED-DESIGNED BY: PAUL FONG
CHECKED BY: DAVE BHALLA
REVISED BY
DATE REVISED

LAST REVISION 00-00-00
DATE PLOTTED => 12-SEP-2014
TIME PLOTTED => 06:18

Dist	COUNTY	ROUTE	POST MILES TOTAL PROJECT	SHEET No.	TOTAL SHEETS
07	LA	5,10,91, 110,134	Var	46	291

Paul Fong 2-5-14
REGISTERED CIVIL ENGINEER DATE

6-2-14
PLANS APPROVAL DATE

REGISTERED PROFESSIONAL ENGINEER
PAUL FONG
No. C67053
Exp. 9/30/14
CIVIL
STATE OF CALIFORNIA

THE STATE OF CALIFORNIA OR ITS OFFICERS OR AGENTS SHALL NOT BE RESPONSIBLE FOR THE ACCURACY OR COMPLETENESS OF SCANNED COPIES OF THIS PLAN SHEET.

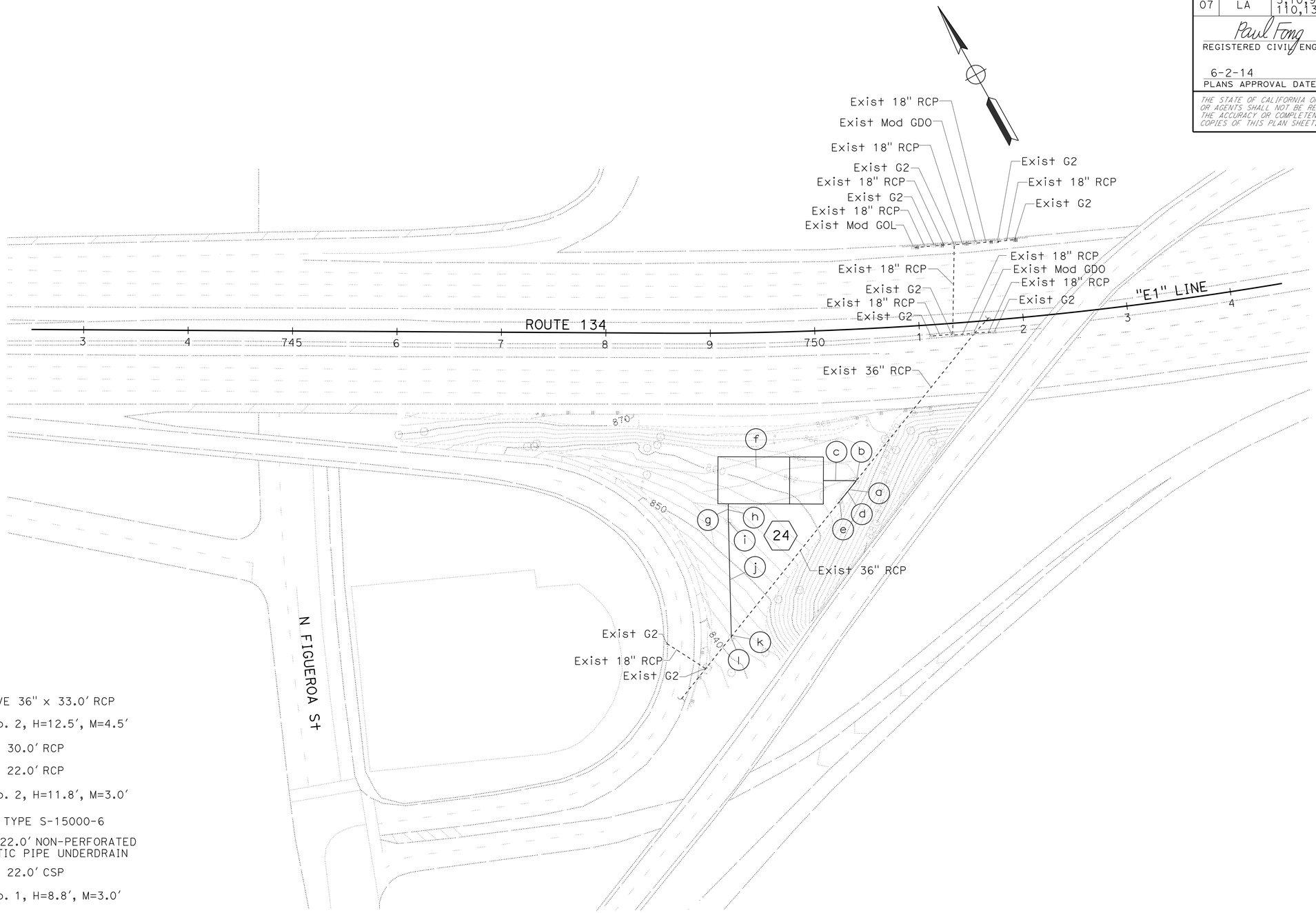

24

- (a) REMOVE 36" x 33.0' RCP
- (b) MH No. 2, H=12.5', M=4.5'
- (c) 36" x 30.0' RCP
- (d) 36" x 22.0' RCP
- (e) MH No. 2, H=11.8', M=3.0'
- (f) AVSF TYPE S-15000-6
- (g) 6" x 22.0' NON-PERFORATED PLASTIC PIPE UNDERDRAIN
- (h) 24" x 22.0' CSP
- (i) MH No. 1, H=8.8', M=3.0'
- (j) 24" x 115.0' CSP
- (k) REMOVE 36" x 6.5' RCP
- (l) MH No. 2, H=5.8', M=3.0'

APPROVED FOR WATER POLLUTION CONTROL WORK ONLY

WATER POLLUTION CONTROL PLAN

SCALE: 1" = 50'

W-15

STATE OF CALIFORNIA - DEPARTMENT OF TRANSPORTATION
Caltrans
DESIGN

FUNCTIONAL SUPERVISOR: DAVE BHALLA
CALCULATED-DESIGNED BY: PAUL FONG
CHECKED BY: DAVE BHALLA
REVISED BY
DATE REVISED

LAST REVISION 00-00-00
DATE PLOTTED => 12-SEP-2014
TIME PLOTTED => 06:18

Dist	COUNTY	ROUTE	POST MILES TOTAL PROJECT	SHEET No.	TOTAL SHEETS
07	LA	5,10,91, 110,134	Var	47	291

REGISTERED CIVIL ENGINEER 2-10-14 DATE

6-2-14
PLANS APPROVAL DATE

REGISTERED PROFESSIONAL ENGINEER F.S. CHANG No. 54884 Exp. 6-30-14 CIVIL STATE OF CALIFORNIA

THE STATE OF CALIFORNIA OR ITS OFFICERS OR AGENTS SHALL NOT BE RESPONSIBLE FOR THE ACCURACY OR COMPLETENESS OF SCANNED COPIES OF THIS PLAN SHEET.

NOTES:
1. ALL MH No. 1 INFORMATION REFERS TO WD SHEET, EXCEPT REINFORCING STEEL IN WALLS MUST BE #4 @ 18" c-c BOTH WAYS WHEN H+M < 20' AND #5 @ 12" c-c BOTH WAYS WHEN H+M > 20'. ALL PLACED 1-1/2" CLEAR TO INSIDE OF BOX.
2. AVSF WALL DESIGN TABLE AND PIPE CURVE DATA ,SEE WD SHEET.
3. FOR FINISHED GRADE AROUND AVSF WALL, SEE CONTOUR GRADING PLANS.

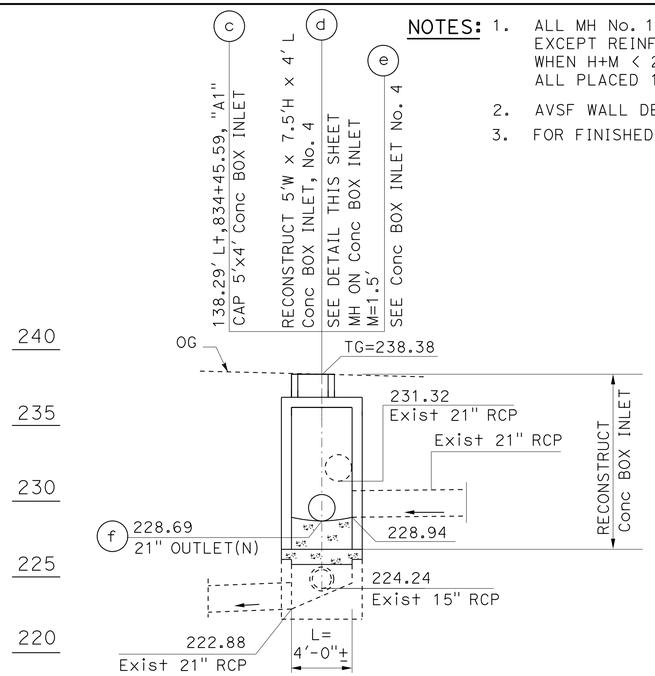

CAP AND RECONSTRUCT Conc BOX INLET
SCALE: Horiz 1" = 5'
Vert 1" = 5'

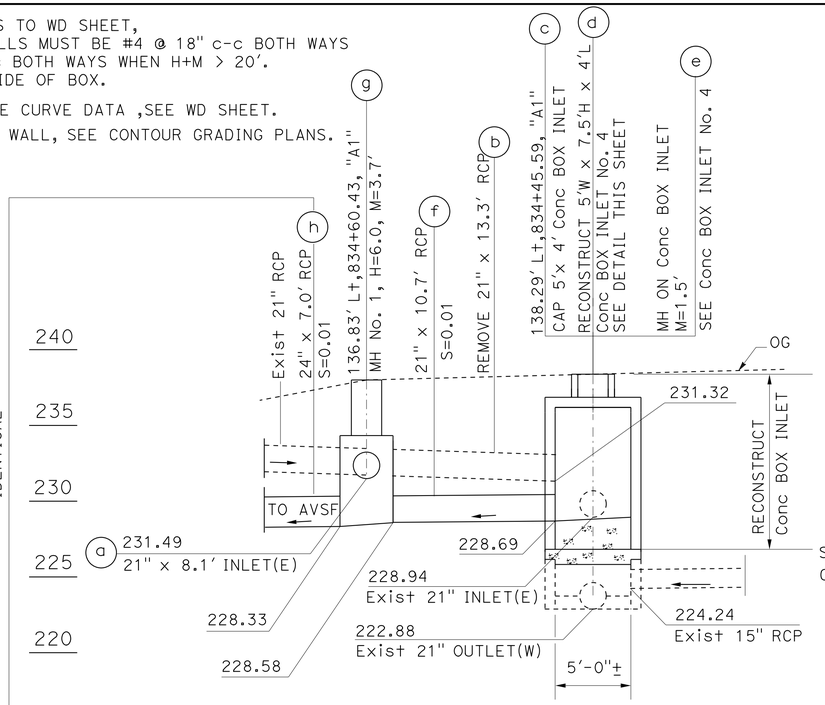

CAP AND RECONSTRUCT Conc BOX INLET
SCALE: Horiz 1" = 5'
Vert 1" = 5'

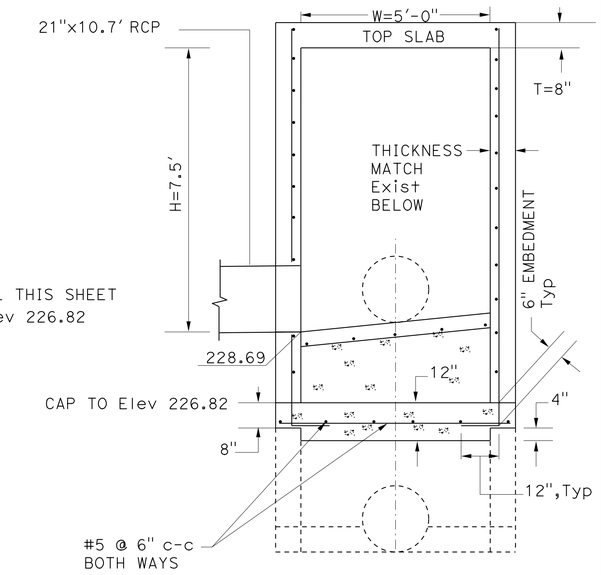

Conc BOX INLET No.4
MH NOT SHOWN FOR CLARITY
NOT TO SCALE

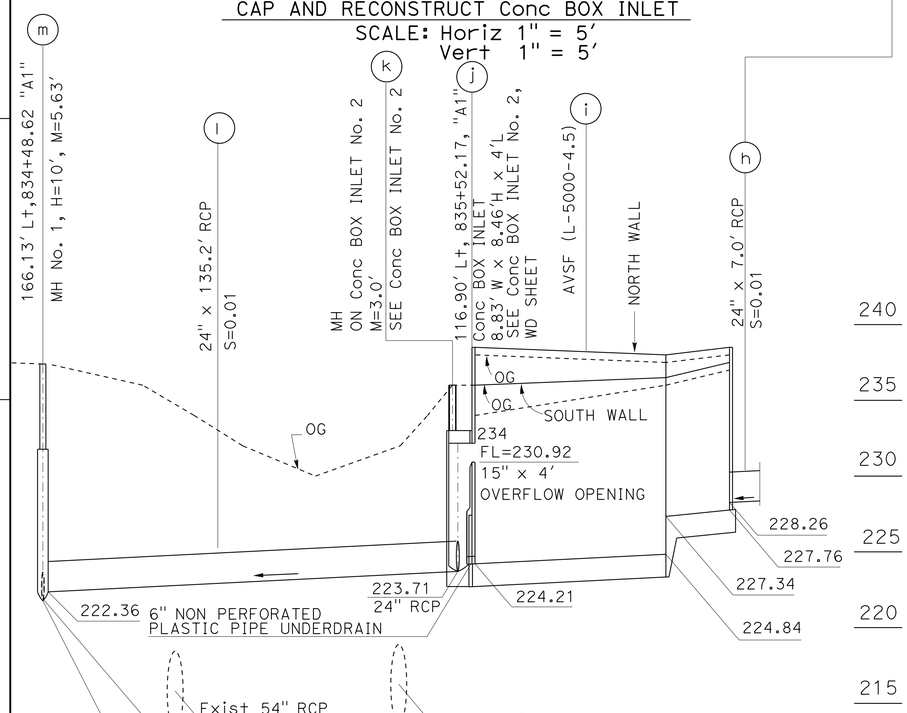

DRAINAGE SYSTEM No. 1
SCALE: Horiz 1" = 25'
Vert 1" = 5'

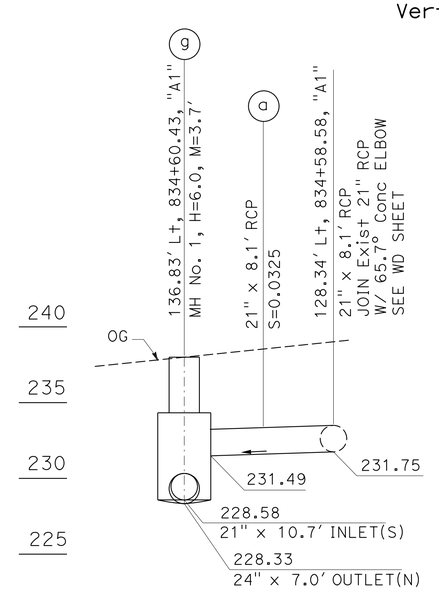

DRAINAGE SYSTEM No. 1
SCALE: Horiz 1" = 5'
Vert 1" = 5'

Conc BOX INLET No.4

NOTES:
1. Reinf STEEL IN WALLS AND FOOTING MUST BE #5 @18" c-c BOTH WAYS LACED 1-1/2" CLEAR TO INSIDE OF BOX.
2. TOP SLAB MUST BE Reinf PER CAST-IN-PLACE Reinf SINGLE BOX CULVERT, Std D-80.
3. Reinf AROUND MH AND Conc RINGS, SEE STEEL AROUND MH ON Conc BOX INLET No. 4 DETAILS, WD SHEET.
4. MH AND COVER PER Std Pln B7-11, DETAILS 'U45'.
5. UNLESS OTHERWISE SHOWN, STEPS MUST BE PLACED 12" ON CENTERS. THE LOWEST STEP MUST BE NOT MORE THAN 16" ABOVE THE INVERT.
6. STEP DETAILS PER Std PLAN D72 & D75C.
7. ALL FLOOR OF BOX INLETS MUST BE GIVEN TROWEL FINISH. SLOPE FLOORS FROM ALL DIRECTION TO THE OUTLET.

WATER POLLUTION CONTROL PROFILE

WP-1

STATE OF CALIFORNIA - DEPARTMENT OF TRANSPORTATION
Caltrans
HYDRAULICS
FUNCTIONAL SUPERVISOR: DAVE BHALLA
CALCULATED-DESIGNED BY: FUSUNG CHNAG
CHECKED BY: DAVE BHALLA
REVISED BY
DATE REVISED

LAST REVISION 00-00-00
DATE PLOTTED => 12-SEP-2014
TIME PLOTTED => 06:18

Dist	COUNTY	ROUTE	POST MILES TOTAL PROJECT	SHEET No.	TOTAL SHEETS
07	LA	5,10,91, 110,134	Var	48	291

REGISTERED CIVIL ENGINEER 2-10-14 DATE

6-2-14
PLANS APPROVAL DATE

REGISTERED PROFESSIONAL ENGINEER F.S. CHANG No. 54884 Exp 6-30-14 CIVIL STATE OF CALIFORNIA

THE STATE OF CALIFORNIA OR ITS OFFICERS OR AGENTS SHALL NOT BE RESPONSIBLE FOR THE ACCURACY OR COMPLETENESS OF SCANNED COPIES OF THIS PLAN SHEET.

NOTES:

1. ALL MH No.1 INFORMATION REFERS TO WD SHEET EXCEPT Reinf STEEL IN WALLS MUST BE #4 @ 18" C-C BOTH WAYS WHEN H+M < 20' AND #5 @ 12" C-C BOTH WAYS WHEN H+M > 20'. ALL PLACED 1-1/2" CLEAR TO INSIDE OF BOX.
2. MH No.4 Info REFERS TO WD sheet, EXCEPT Reinf STEEL IN WALLS AND FOOTING MUST BE #5 @ 12" OC BOTH WAYS. ALL PLACED 1-1/2" CLEAR TO INSIDE OF BOX.
3. FOR INFORMATION NOT SHOWN, SEE WD SHEETS FOR AUSTIN VAULT SAND FILTER PLANS
4. FOR FINISHED GRADE AROUND AVSF WALL, SEE CONTOUR GRADING PLAN.

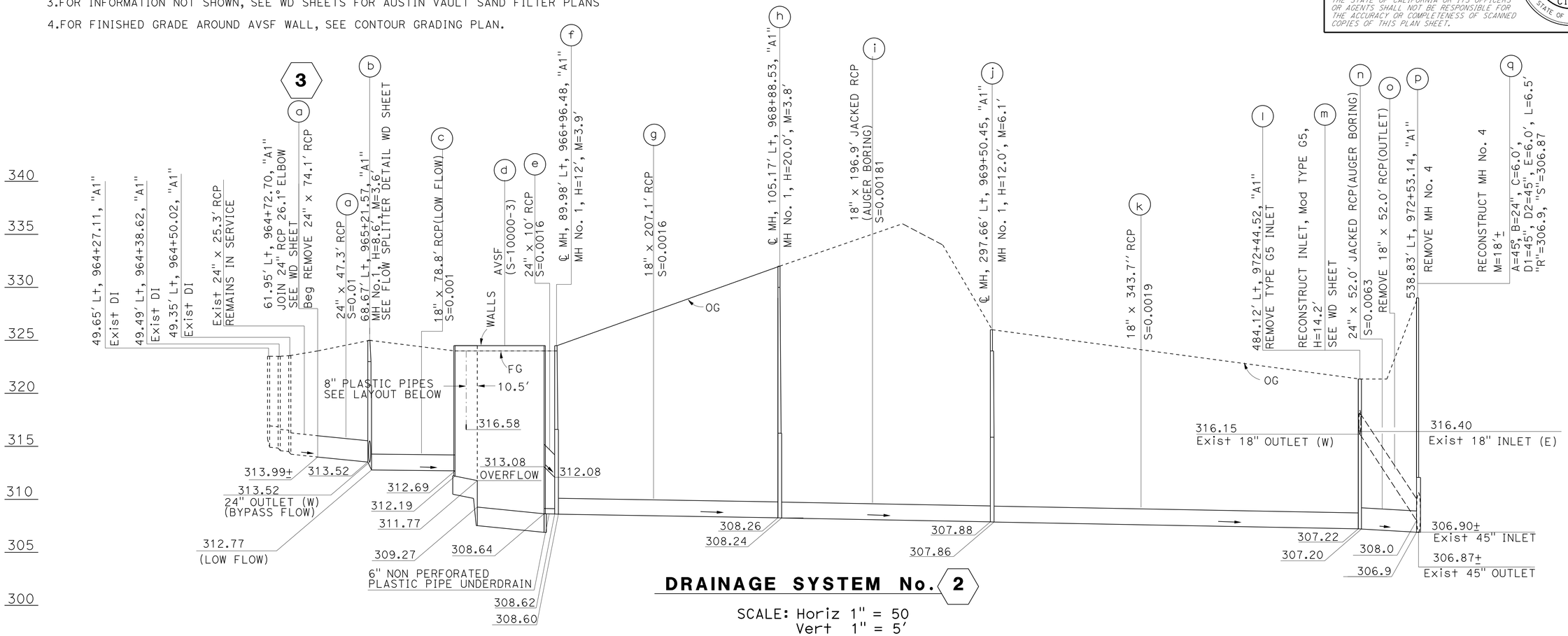

DRAINAGE SYSTEM No. 2

SCALE: Horiz 1" = 50
Vert 1" = 5'

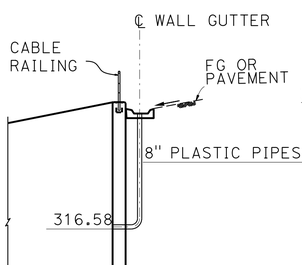

SECTION A-A

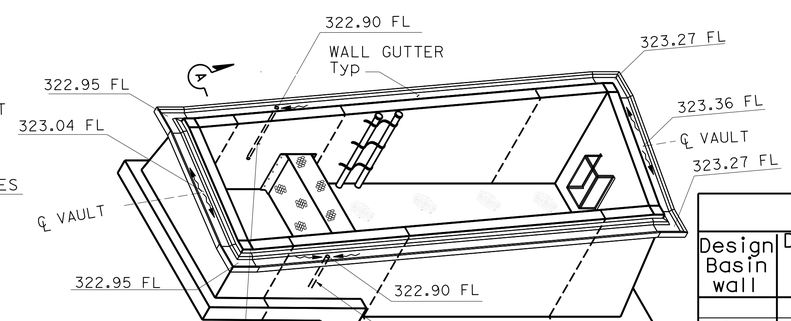

WALL GUTTER LAYOUT

Loc	AVSF(S-10000-3) STATION
WE1	103.63' Lt, Sta 965+99.71, "A1"
WE3	107.65' Lt, Sta 966+83.62, "A1"
WE4	71.69' Lt, Sta 966+85.34, "A1"
WE6	67.67' Lt, Sta 966+01.44, "A1"

WALL DESIGN TABLE

Design Basin wall	Design Wall H	Top of Wall Elevation						Top of Footing Elevation						FOOTING THICKNESS	
		WE1	WE2	WE3	WE4	WE5	WE6	FE0	FE1	FE2	FE3	FE4	FE5	SEDIMENT BASIN	FILTRATION BASIN
		EAST WALL			WEST WALL										
Sed	14'	324.5	324.5	324.5	324.5	324.5	324.5	312.23	312.19	311.77	309.27	308.64	308.63	1'-10"	1'-10"
Fil	16'														

WATER POLLUTION CONTROL PROFILE WP-2

STATE OF CALIFORNIA - DEPARTMENT OF TRANSPORTATION
Caltrans
HYDRAULICS

FUNCTIONAL SUPERVISOR: DAVE BHALLA
CALCULATED-DESIGNED BY: FUSUNG CHANG
CHECKED BY: DAVE BHALLA
REVISED BY
DATE REVISED

LAST REVISION 00-00-00
DATE PLOTTED => 12-SEP-2014
TIME PLOTTED => 06:18

Dist	COUNTY	ROUTE	POST MILES TOTAL PROJECT	SHEET No.	TOTAL SHEETS
07	LA	5,10,91, 110,134	Var	49	291

REGISTERED CIVIL ENGINEER 2-10-14 DATE

6-2-14
PLANS APPROVAL DATE

REGISTERED PROFESSIONAL ENGINEER F.S. CHANG No. 54884 Exp. 6-30-14 CIVIL STATE OF CALIFORNIA

THE STATE OF CALIFORNIA OR ITS OFFICERS OR AGENTS SHALL NOT BE RESPONSIBLE FOR THE ACCURACY OR COMPLETENESS OF SCANNED COPIES OF THIS PLAN SHEET.

NOTE:

1. ALL MH No.1 INFORMATION REFERS TO DETAILS PLAN, WD SHEET EXCEPT Reinf STEEL IN WALLS MUST BE #4 @ 18" c-c BOTH WAYS WHEN H+M < 20' AND #5 @ 12" c-c BOTH WAYS WHEN H+M > 20'. ALL PLACED 1-1/2" CLEAR TO INSIDE OF BOX.

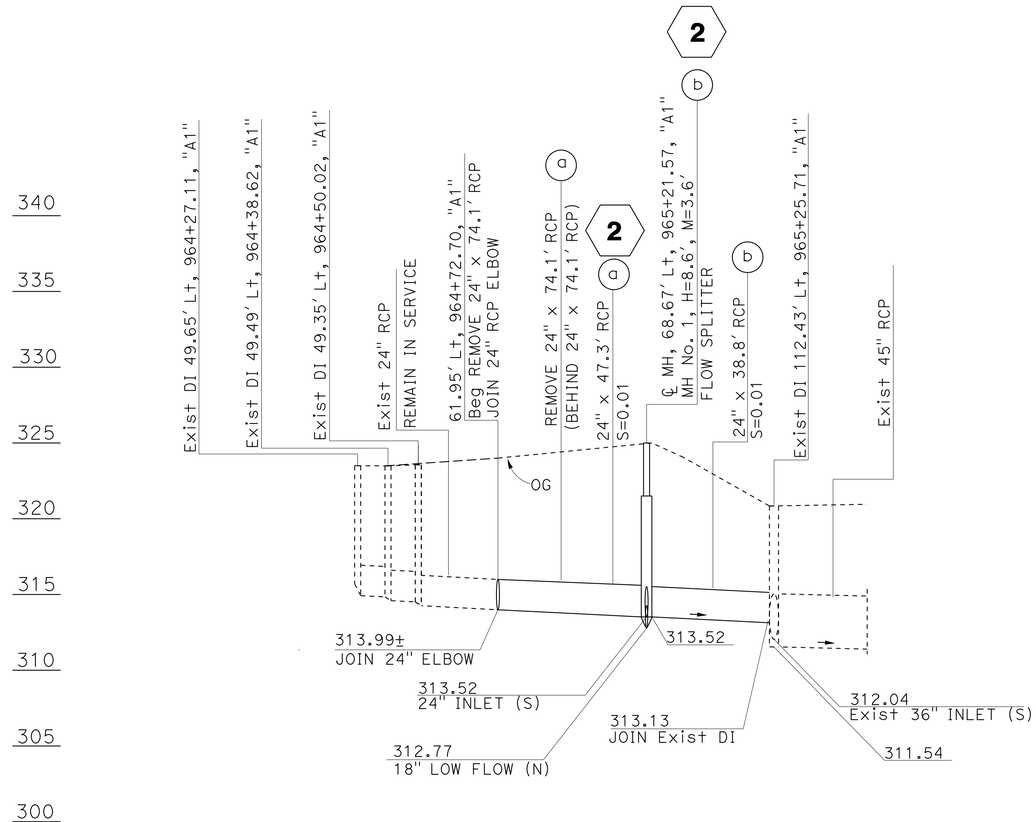

DRAINAGE SYSTEM No. 3

WATER POLLUTION CONTROL PROFILE

SCALE: Horiz 1" = 25
Vert 1" = 5'

WP-3

STATE OF CALIFORNIA - DEPARTMENT OF TRANSPORTATION
Caltrans
HYDRAULICS

FUNCTIONAL SUPERVISOR: DAVE BHALLA
CALCULATED-DESIGNED BY: FUSUNG CHANG
CHECKED BY: DAVE BHALLA
REVISED BY
DATE REVISED

LAST REVISION 00-00-00 | DATE PLOTTED => 12-SEP-2014 | TIME PLOTTED => 06:18

Dist	COUNTY	ROUTE	POST MILES TOTAL PROJECT	SHEET No.	TOTAL SHEETS
07	LA	5,10,91, 110,134	Var	50	291

REGISTERED CIVIL ENGINEER 2-10-14 DATE

6-2-14
PLANS APPROVAL DATE

REGISTERED PROFESSIONAL ENGINEER F.S. CHANG No. 54884 Exp. 6-30-14 CIVIL STATE OF CALIFORNIA

THE STATE OF CALIFORNIA OR ITS OFFICERS OR AGENTS SHALL NOT BE RESPONSIBLE FOR THE ACCURACY OR COMPLETENESS OF SCANNED COPIES OF THIS PLAN SHEET.

NOTES:

1. ALL MH No.1 INFORMATION REFERS TO WD SHEET, EXCEPT Reinf STEEL IN WALLS MUST BE #4 @ 18" c-c BOTH WAYS WHEN H+M < 20' AND #5 @ 12" c-c BOTH WAYS WHEN H+M > 20'. ALL PLACED 1-1/2" CLEAR TO INSIDE OF BOX.
2. FOR FINISHED GRADE AROUND AVSF WALL , SEE CONTOUR GRADING PLANS.

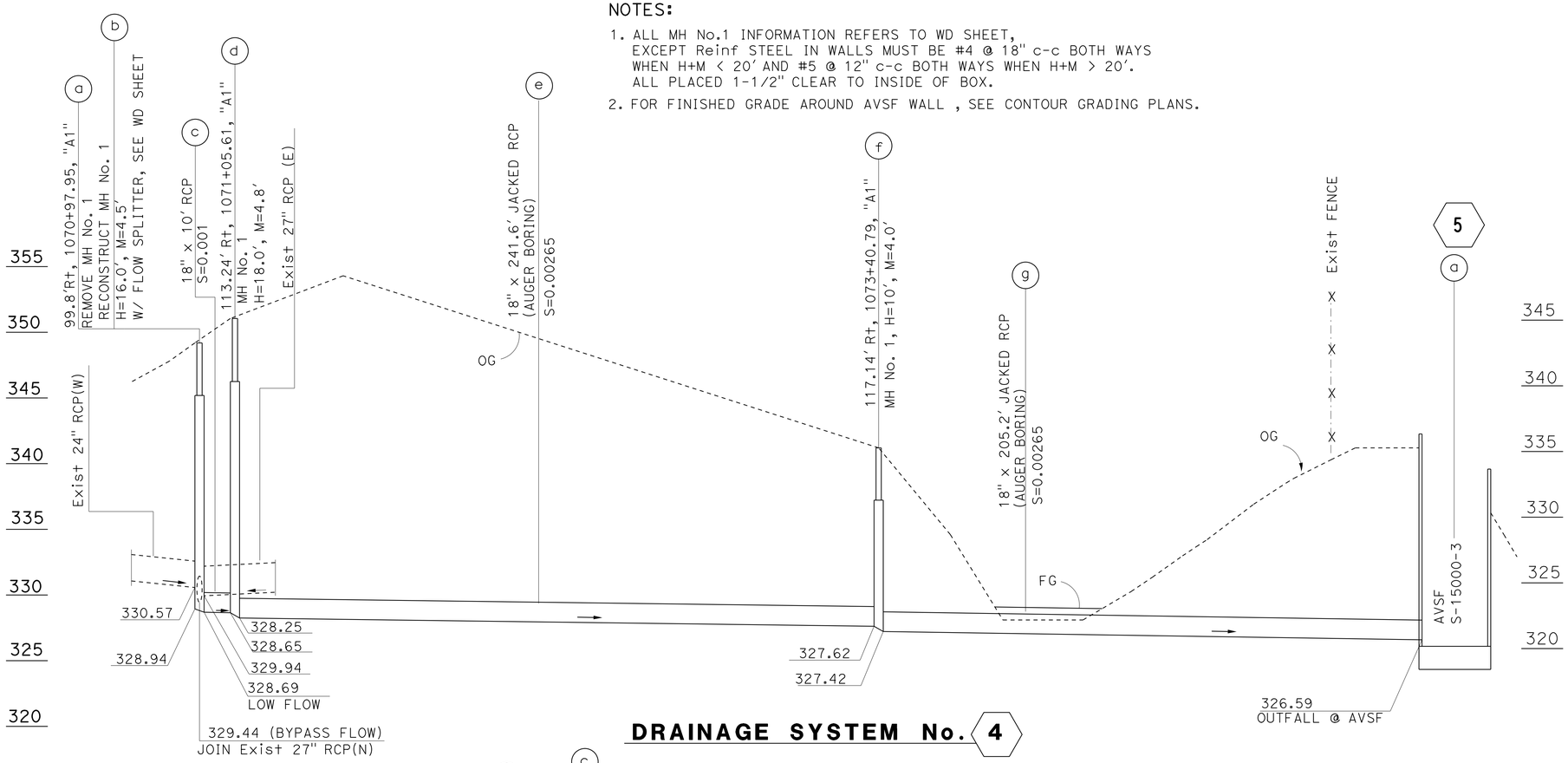

DRAINAGE SYSTEM No. 4

DRAINAGE SYSTEM No. 5

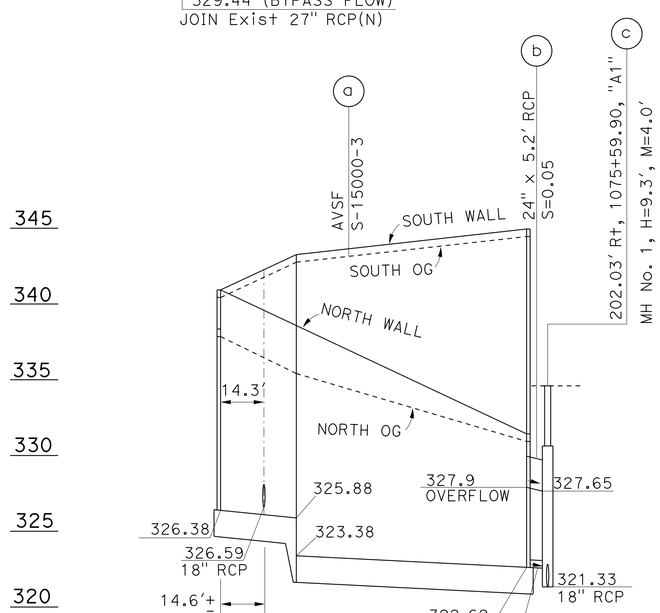

DRAINAGE SYSTEM No. 5

WALL DESIGN TABLE

Design Basin wall	Design Wall H	Top of Wall Elevation						Top of Footing Elevation						FOOTING THICKNESS	
		WE1	WE2	WE3	WE4	WE5	WE6	FE0	FE1	FE2	FE3	FE4	FE5	SEDIMENT BASIN	FILTRATION BASIN
		SOUTH WALL			NORTH WALL										
Sed	18'	340.93	343.26	344.96	331.43	338.58	340.93	326.42	326.38	325.88	323.38	322.62	322.60	22"	25"
Fil	22'														

	AVSF(S-15000-3)
Loc	STATION/ Fwy 5
WE1	94.24' Rt, Sta 1075+81.83, "A1"
WE3	195.23' Rt, Sta 1075+80.95, "A1"
WE4	195.16' Rt, Sta 1075+38.88, "A1"
WE6	94.16' Rt, Sta 1075+38.30, "A1"

WATER POLLUTION CONTROL PROFILE

SCALE: Horiz 1" = 25
Vert 1" = 5'

WP-4

STATE OF CALIFORNIA - DEPARTMENT OF TRANSPORTATION
Caltrans
HYDRAULICS

FUNCTIONAL SUPERVISOR: DAVE BHALLA
CALCULATED-DESIGNED BY: FUSUNG CHANG
CHECKED BY: DAVE BHALLA
REVISED BY
DATE REVISED

LAST REVISION 00-00-00
DATE PLOTTED => 12-SEP-2014
TIME PLOTTED => 06:18

Dist	COUNTY	ROUTE	POST MILES TOTAL PROJECT	SHEET No.	TOTAL SHEETS
07	LA	5,10,91, 110,134	Var	51	291

REGISTERED CIVIL ENGINEER 2-10-14 DATE

6-2-14
PLANS APPROVAL DATE

REGISTERED PROFESSIONAL ENGINEER F.S. CHANG No. 54884 Exp. 6-30-14 CIVIL STATE OF CALIFORNIA

THE STATE OF CALIFORNIA OR ITS OFFICERS OR AGENTS SHALL NOT BE RESPONSIBLE FOR THE ACCURACY OR COMPLETENESS OF SCANNED COPIES OF THIS PLAN SHEET.

NOTES:
1. FOR DEPICTION OF WALL DESIGN, SEE WD SHEETS ISOMETRIC VIEW (1/2) ON MODIFIED AUSTIN VAULT SAND FILTER LAYOUT No. 1A .
2. FOR FINISHED GRADE AROUND AVSF WALL, SEE CONTOUR GRADING PLANS.

WALL DESIGN TABLE (1)

Design Basin wall	Design Wall H	Top of Wall Elevation						Top of Footing Elevation						FOOTING THICKNESS	
		WE1	WE2	WE3	WE4	WE5	WE6	FE0	FE1	FE2	FE3	FE4	FE5	SEDIMENT BASIN	FILTRATION BASIN
					MEDIAN WALL										
Sed	16′	339.40	336.34	331.70	331.70	333.80	335.30	323.90	323.86	323.12	320.62	319.47	319.44	1′-10"	1′-10"
Fil	16′														

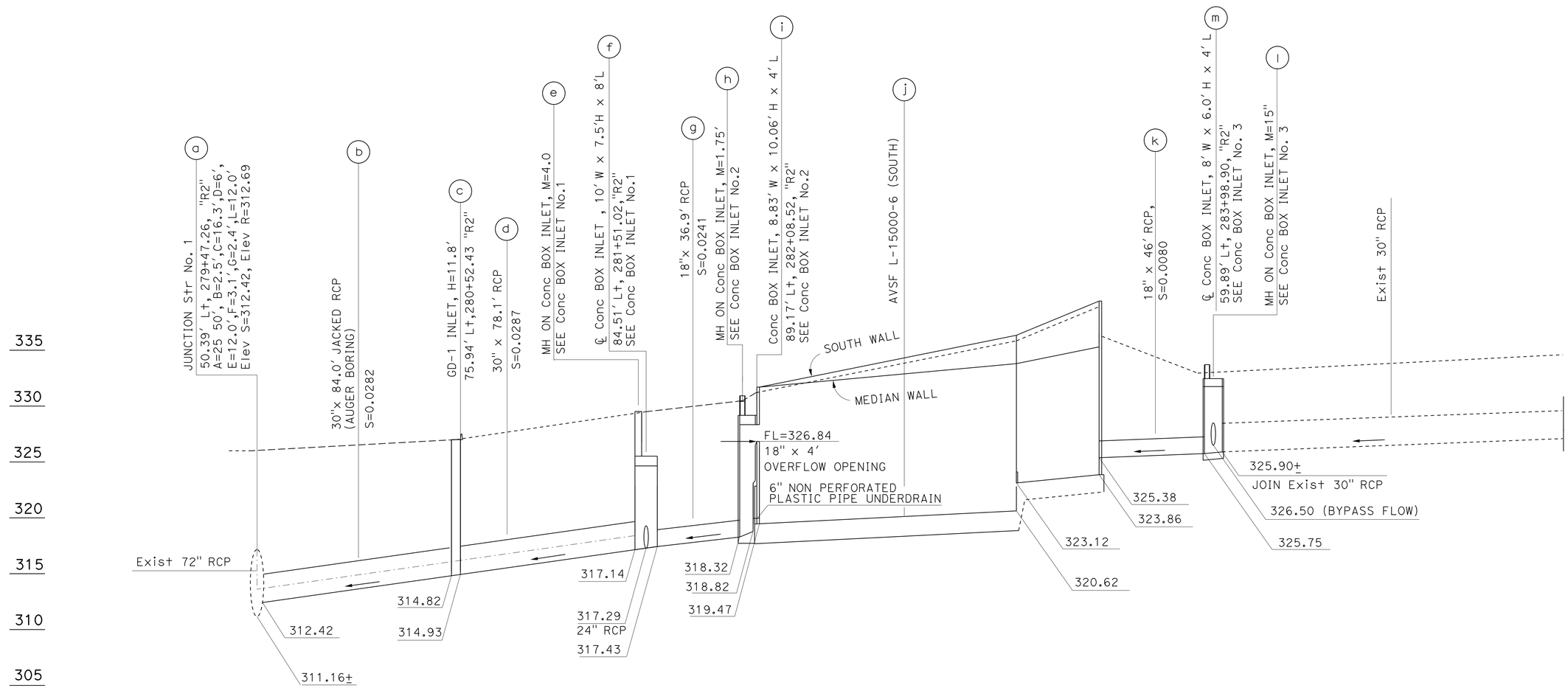

DRAINAGE SYSTEM No. 6

WATER POLLUTION CONTROL PROFILE

SCALE: Horiz 1" = 25′
Vert 1" = 5′

WP-5

STATE OF CALIFORNIA - DEPARTMENT OF TRANSPORTATION
Caltrans
HYDRAULICS
FUNCTIONAL SUPERVISOR: DAVE BHALLA
CALCULATED-DESIGNED BY: FUSUNG CHANG
CHECKED BY: DAVE BHALLA
REVISED BY
DATE REVISED

LAST REVISION 00-00-00
DATE PLOTTED => 12-SEP-2014
TIME PLOTTED => 06:18

Dist	COUNTY	ROUTE	POST MILES TOTAL PROJECT	SHEET No.	TOTAL SHEETS
07	LA	5,10,91, 110,134	Var	52	291

REGISTERED CIVIL ENGINEER 2-10-14 DATE

6-2-14
PLANS APPROVAL DATE

REGISTERED PROFESSIONAL ENGINEER F.S. CHANG No. 54884 Exp. 6-30-14 CIVIL STATE OF CALIFORNIA

THE STATE OF CALIFORNIA OR ITS OFFICERS OR AGENTS SHALL NOT BE RESPONSIBLE FOR THE ACCURACY OR COMPLETENESS OF SCANNED COPIES OF THIS PLAN SHEET.

NOTES:

1. FOR DEPICTION OF WALL DESIGN, SEE WD SHEET ISOMETRIC VIEW (2/2) ON MODIFIED AUSTIN VAULT SAND FILTER LAYOUT No. 1B.
2. FOR FINISHED GRADE AROUND AVSF WALL, SEE CONTOUR GRADING PLANS.

WALL DESIGN TABLE (2)

DESIGN BASIN WALL	DESIGN WALL H	TOP OF WALL ELEVATION						TOP OF FOOTING ELEVATION						FOOTING THICKNESS	
		WE4	WE5	WE6	WE7	WE8	WE9	FE10	FE11	FE12	FE13	FE14	FE15	SEDIMENT BASIN	FILTRATION BASIN
		MEDIAN WALL													
Sed	16′	331.70	333.80	335.30	335.30	333.80	331.70	324.05	324.01	323.27	320.77	319.62	319.60	1′-10"	1′-10"
Fil	16′														

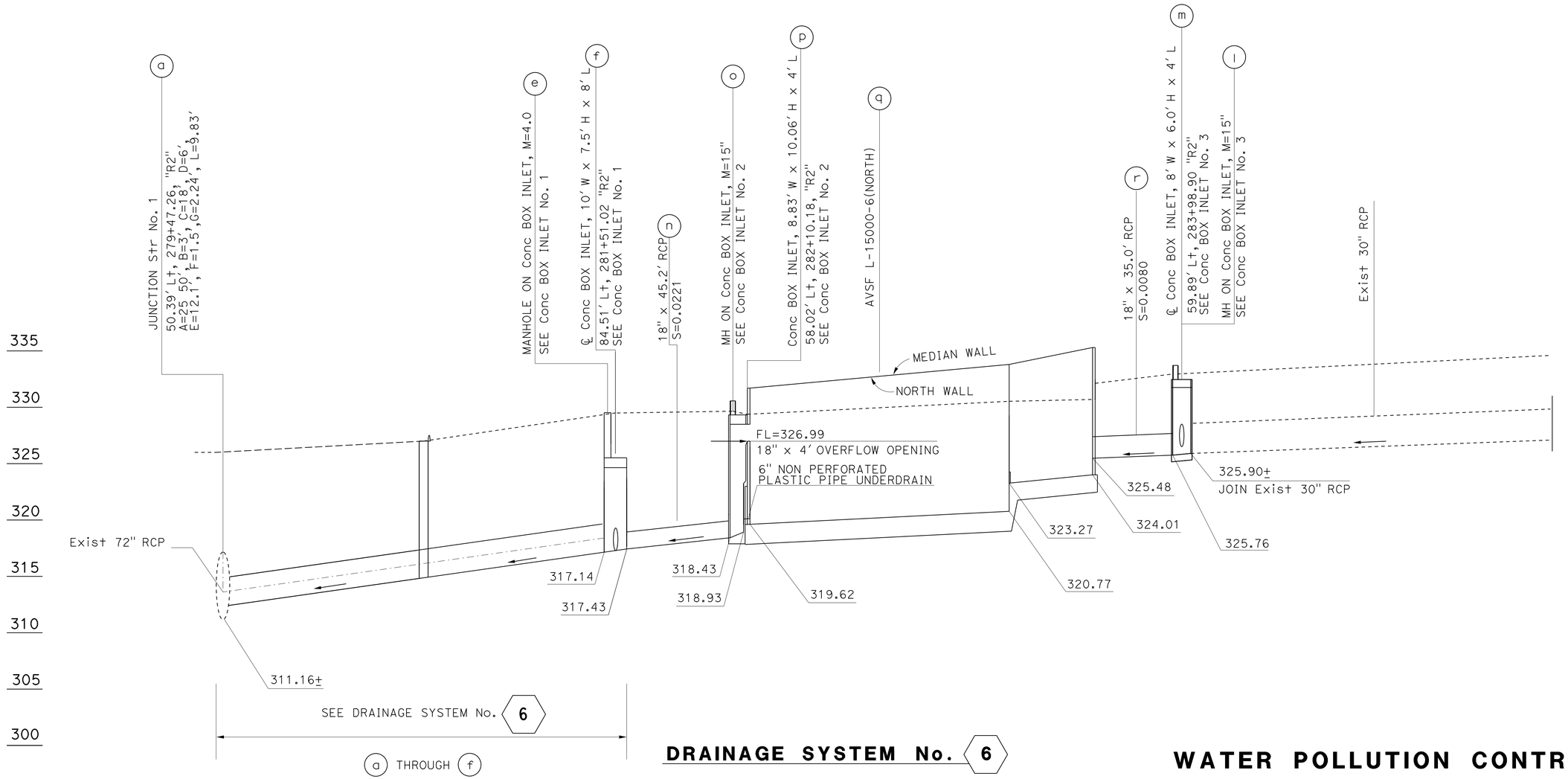

DRAINAGE SYSTEM No. 6

WATER POLLUTION CONTROL PROFILE

SCALE: Horiz 1" = 25′
Vert 1" = 5′

WP-6

STATE OF CALIFORNIA - DEPARTMENT OF TRANSPORTATION
Caltrans
HYDRAULICS

FUNCTIONAL SUPERVISOR: DAVE BHALLA
CALCULATED-DESIGNED BY: FUSUNG CHANG
CHECKED BY: DAVE BHALLA
REVISED BY
DATE REVISED

LAST REVISION 00-00-00
DATE PLOTTED => 12-SEP-2014
TIME PLOTTED => 06:18

Dist	COUNTY	ROUTE	POST MILES TOTAL PROJECT	SHEET No.	TOTAL SHEETS
07	LA	5,10,91, 110,134	Var	53	291

Fusung Chang 2-10-14
REGISTERED CIVIL ENGINEER DATE

6-2-14
PLANS APPROVAL DATE

REGISTERED PROFESSIONAL ENGINEER F.S. CHANG No. 54884 Exp. 6-30-14 CIVIL STATE OF CALIFORNIA

THE STATE OF CALIFORNIA OR ITS OFFICERS OR AGENTS SHALL NOT BE RESPONSIBLE FOR THE ACCURACY OR COMPLETENESS OF SCANNED COPIES OF THIS PLAN SHEET.

NOTE:

1. FOR FINISHED GRADE AROUND AVSF WALL, SEE CONTOUR GRADING PLANS.

WALL DESIGN TABLE

DESIGN BASIN WALL	DESIGN WALL H	TOP OF WALL ELEVATION						TOP OF FOOTING ELEVATION						FOOTING THICKNESS	
		WE1	WE2	WE3	WE4	WE5	WE6	FE0	FE1	FE2	FE3	FE4	FE5	SEDIMENT BASIN	FILTRATION BASIN
Sed	10′	329.77	329.5	328.6	328.6	329.0	329.0	321.49	321.45	321.03	318.53	317.90	317.88	1′-6"	1′-8"
Fil	12′														

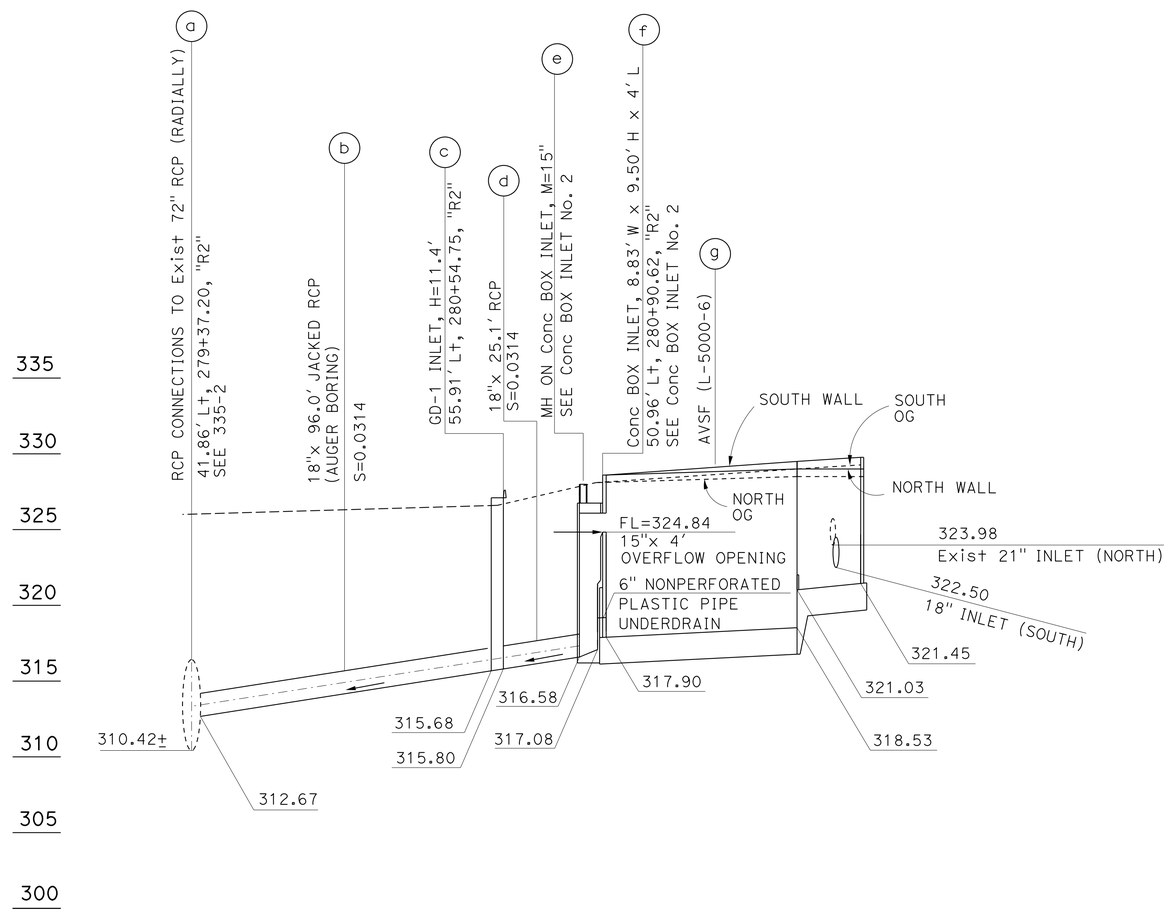

DRAINAGE SYSTEM No. 7

WATER POLLUTION CONTROL PROFILE

SCALE: Horiz 1" = 25′
Vert 1" = 5′

WP-7

STATE OF CALIFORNIA - DEPARTMENT OF TRANSPORTATION
Caltrans
HYDRAULICS

FUNCTIONAL SUPERVISOR: DAVE BHALLA
CALCULATED-DESIGNED BY: FUSUNG CHANG
CHECKED BY: DAVE BHALLA
REVISED BY
DATE REVISED

LAST REVISION 00-00-00
DATE PLOTTED => 12-SEP-2014
TIME PLOTTED => 06:18

Dist	COUNTY	ROUTE	POST MILES TOTAL PROJECT	SHEET No.	TOTAL SHEETS
07	LA	5,10,91, 110,134	Var	54	291

REGISTERED CIVIL ENGINEER 2-10-14 DATE

6-2-14
PLANS APPROVAL DATE

REGISTERED PROFESSIONAL ENGINEER F.S. CHANG No. 54884 Exp. 06-30-14 CIVIL STATE OF CALIFORNIA

THE STATE OF CALIFORNIA OR ITS OFFICERS OR AGENTS SHALL NOT BE RESPONSIBLE FOR THE ACCURACY OR COMPLETENESS OF SCANNED COPIES OF THIS PLAN SHEET.

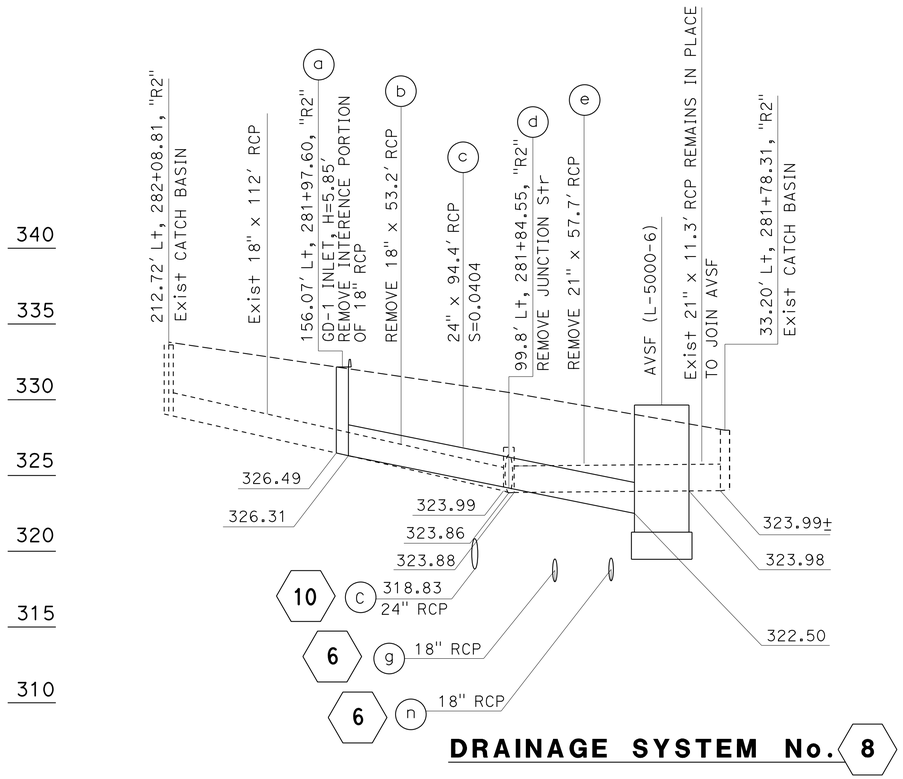

DRAINAGE SYSTEM No. 8

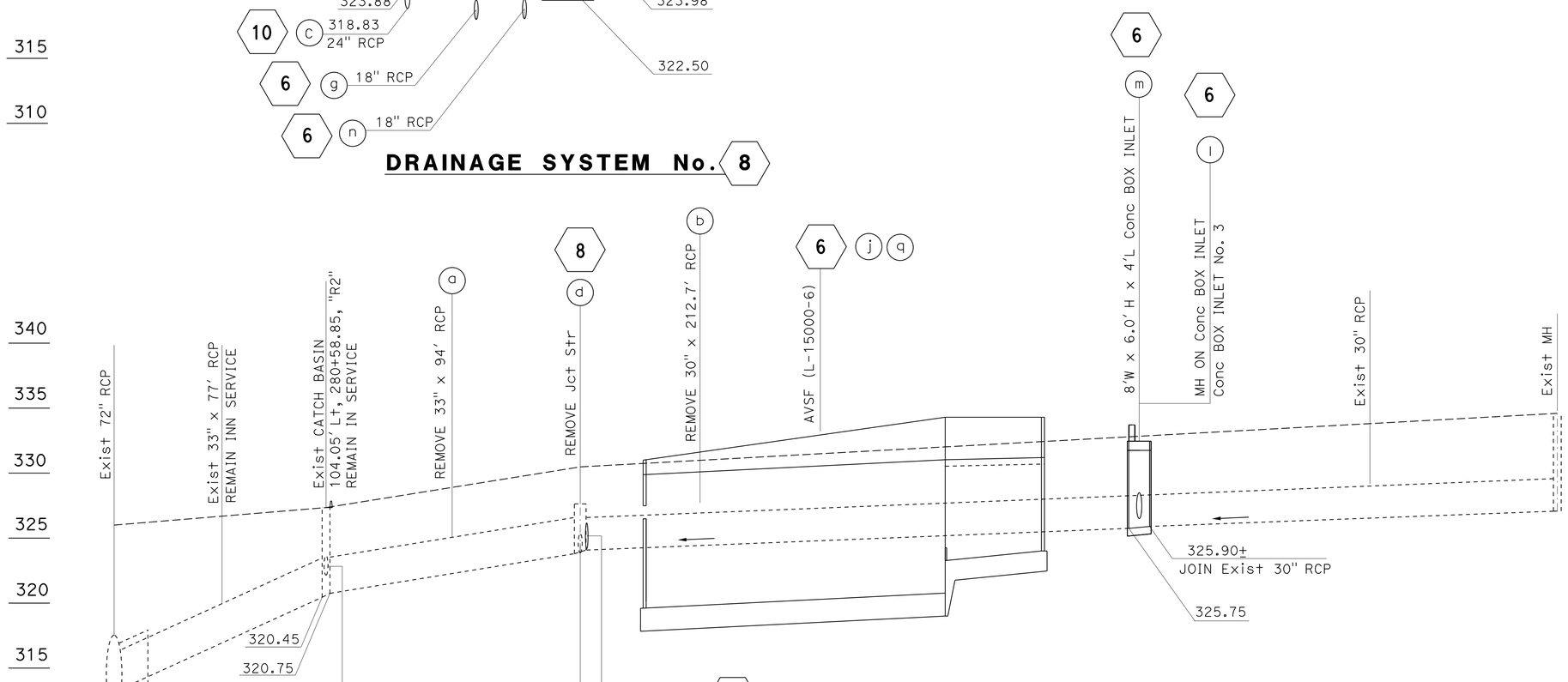

DRAINAGE SYSTEM No. 9

WATER POLLUTION CONTROL PROFILE

SCALE: Horiz 1" = 25'
Vert 1" = 5'

WP-8

STATE OF CALIFORNIA - DEPARTMENT OF TRANSPORTATION
Caltrans
HYDRAULICS

FUNCTIONAL SUPERVISOR: DAVE BHALLA
CALCULATED-DESIGNED BY: FUSUNG CHANG
CHECKED BY: DAVE BHALLA
REVISED BY
DATE REVISED

LAST REVISION 00-00-00
DATE PLOTTED => 12-SEP-2014
TIME PLOTTED => 06:18

Dist	COUNTY	ROUTE	POST MILES TOTAL PROJECT	SHEET No.	TOTAL SHEETS
07	LA	5,10,91, 110,134	Var	55	291

REGISTERED CIVIL ENGINEER 2-10-14 DATE

6-2-14
PLANS APPROVAL DATE

REGISTERED PROFESSIONAL ENGINEER F.S. CHANG No. 54884 Exp. 6-30-14 CIVIL STATE OF CALIFORNIA

THE STATE OF CALIFORNIA OR ITS OFFICERS OR AGENTS SHALL NOT BE RESPONSIBLE FOR THE ACCURACY OR COMPLETENESS OF SCANNED COPIES OF THIS PLAN SHEET.

NOTE:

1. ALL MH No. 1 INFORMATION REFERS TO WD SHEET, EXCEPT Reinf STEEL IN WALLS MUST BE #4 @ 18" c-c BOTH WAYS WHEN H+M < 20' AND #5 @ 12" c-c BOTH WAYS WHEN H+M > 20'. ALL PLACED 1-1/2" CLEAR TO INSIDE OF BOX.

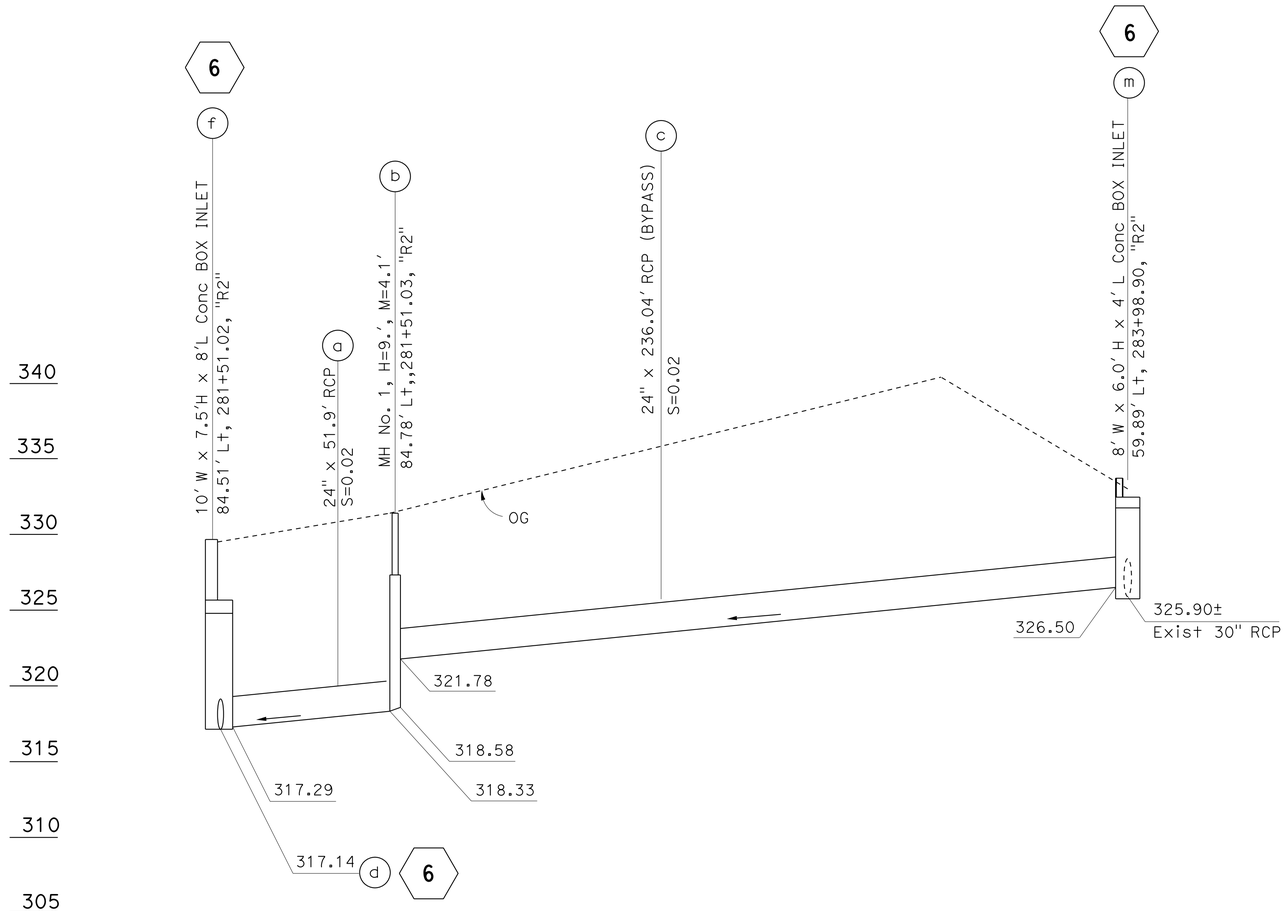

DRAINAGE SYSTEM No. 10

WATER POLLUTION CONTROL PROFILE

SCALE: Horiz 1" = 25'
Vert 1" = 5'

WP-9

STATE OF CALIFORNIA - DEPARTMENT OF TRANSPORTATION
Caltrans
HYDRAULICS

FUNCTIONAL SUPERVISOR: DAVE BHALLA
CALCULATED-DESIGNED BY: FUSUNG CHANG
CHECKED BY: DAVE BHALLA
REVISED BY
DATE REVISED

LAST REVISION 00-00-00
DATE PLOTTED => 12-SEP-2014
TIME PLOTTED => 06:18

Dist	COUNTY	ROUTE	POST MILES TOTAL PROJECT	SHEET No.	TOTAL SHEETS
07	LA	5,10,91, 110,134	Var	56	291

REGISTERED CIVIL ENGINEER 2-10-14 DATE

6-2-14
PLANS APPROVAL DATE

REGISTERED PROFESSIONAL ENGINEER PRAKASH YADAV No. C 68479 Exp. 9-30-15 CIVIL STATE OF CALIFORNIA

THE STATE OF CALIFORNIA OR ITS OFFICERS OR AGENTS SHALL NOT BE RESPONSIBLE FOR THE ACCURACY OR COMPLETENESS OF SCANNED COPIES OF THIS PLAN SHEET.

NOTE:

1. ALL MH No. 1 INFORMATION REFERS TO WD SHEET EXCEPT Reinf STEEL IN WALLS MUST BE #4 @ 18" c-c WHEN (H+M) < 20'. ALL PLACED 1-1/2" CLEAR TO INSIDE OF BOX.

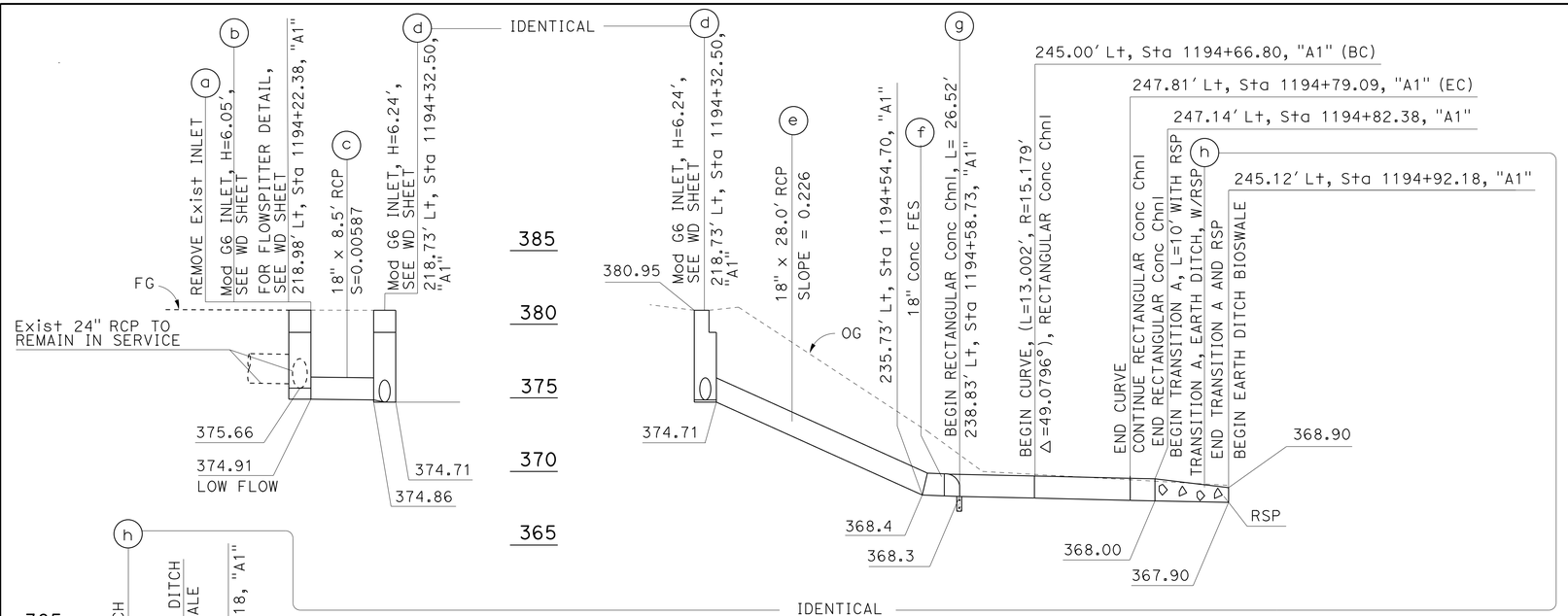

DRAINAGE SYSTEM No. 11

SCALE: Horiz: 1" = 10'
Vert: 1" = 5'

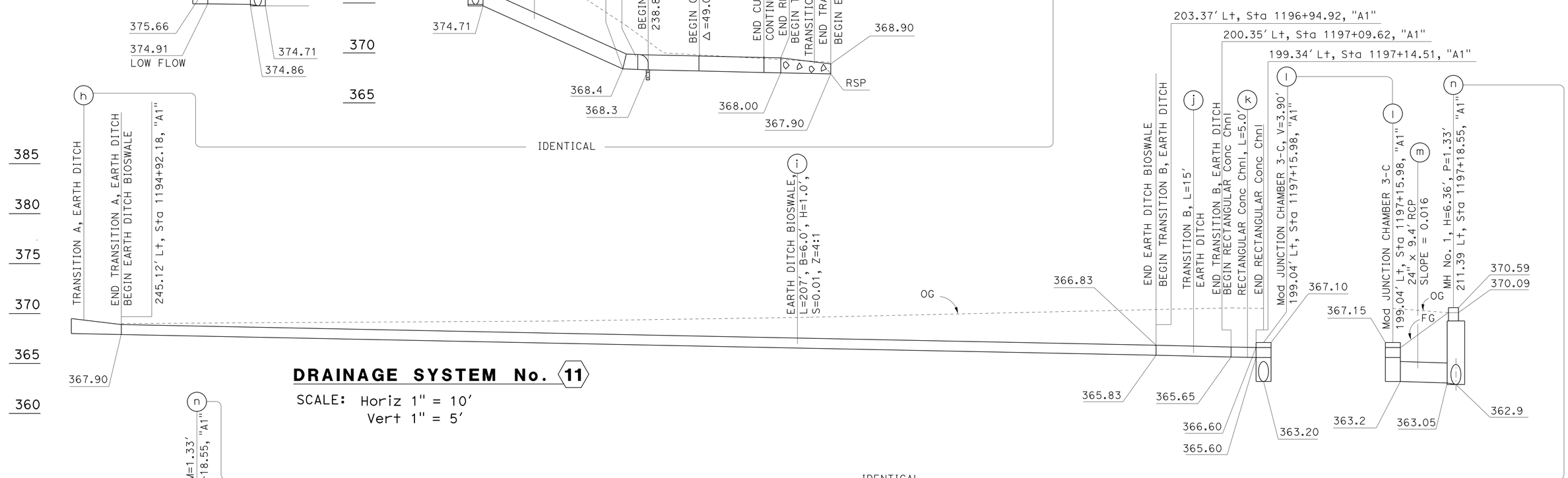

DRAINAGE SYSTEM No. 11

SCALE: Horiz 1" = 10'
Vert 1" = 5'

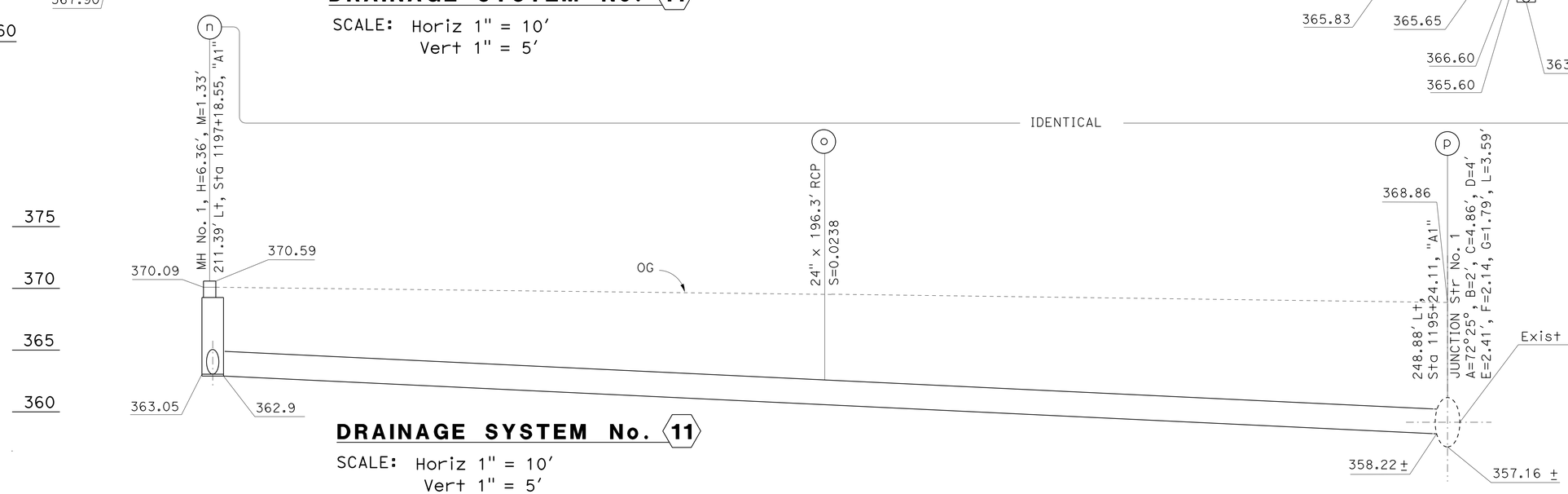

DRAINAGE SYSTEM No. 11

SCALE: Horiz 1" = 10'
Vert 1" = 5'

WATER POLLUTION CONTROL PROFILE

WP-10

STATE OF CALIFORNIA - DEPARTMENT OF TRANSPORTATION
Caltrans HYDRAULICS

FUNCTIONAL SUPERVISOR: DAVE BHALLA
CALCULATED-DESIGNED BY: PRAKASH YADAV
CHECKED BY: DAVE BHALLA
REVISED BY
DATE REVISED

LAST REVISION 00-00-00
DATE PLOTTED => 12-SEP-2014
TIME PLOTTED => 06:19

NOTES:

1. ALL MH No. 1 INFORMATION REFERS TO WD SHEET EXCEPT Reinf STEEL IN WALLS MUST BE #4 @18" c-c WHEN (H+M) < 20'. ALL PLACED 1-1/2" CLEAR TO INSIDE OF BOX.
2. FOR FINISHED GRADE AROUND AVSF WALL, SEE CONTOUR GRADING PLANS.

12 (b) REMOVE Exist INLET
86.34' Rt, Sta 1367+36.11, "A1"

AVSF (L-5000-4.5)

Loc	STATION
WE1	148.73' Rt, Sta 1364+90.96, "A1"
WE3	153.81' Rt, Sta 1364+07.00, "A1"
WE4	135.85' Rt, Sta 1364+05.99, "A1"
WE6	130.77' Rt, Sta 1364+89.84, "A1"

Dist	COUNTY	ROUTE	POST MILES TOTAL PROJECT	SHEET No.	TOTAL SHEETS
07	LA	5,10,91, 110,134	Var	57	291

REGISTERED CIVIL ENGINEER 1-13-14 DATE

6-2-14
PLANS APPROVAL DATE

REGISTERED PROFESSIONAL ENGINEER PRAKASH YADAV No. C 68479 Exp. 9-30-15 CIVIL STATE OF CALIFORNIA

THE STATE OF CALIFORNIA OR ITS OFFICERS OR AGENTS SHALL NOT BE RESPONSIBLE FOR THE ACCURACY OR COMPLETENESS OF SCANNED COPIES OF THIS PLAN SHEET.

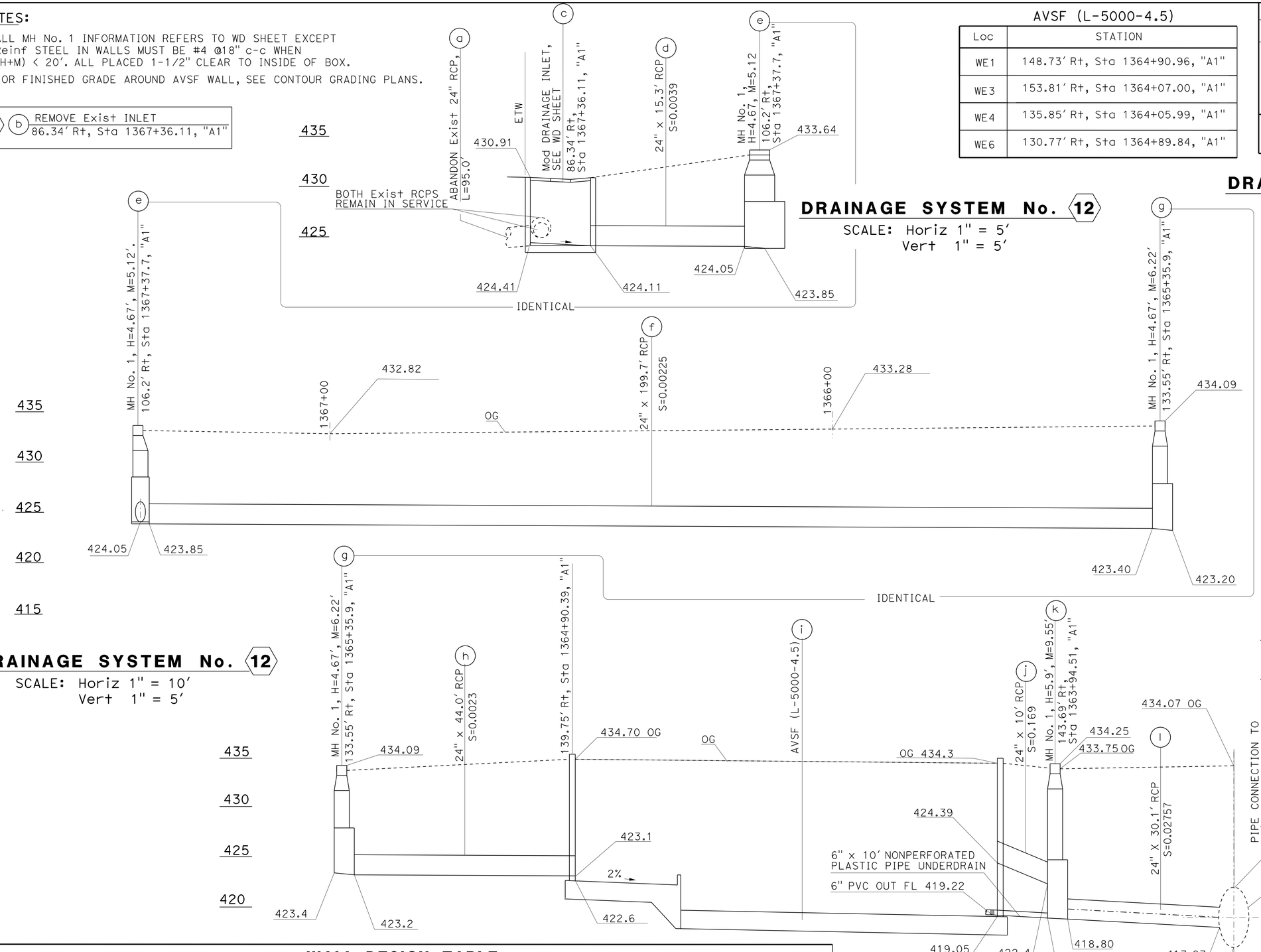

WALL DESIGN TABLE

Design Basin wall	Design Wall H	Top of Wall Elevation						Top of Footing Elevation						FOOTING THICKNESS	
		WE1	WE2	WE3	WE4	WE5	WE6	FE0	FE1	FE2	FE3	FE4	FE5	SEDIMENT BASIN	FILTRATION BASIN
Sed	14'	435.20	435.10	434.80	434.80	435.10	435.20	422.65	422.60	422.18	419.66	419.05	419.03	F-Inch	F-Inch
Filt	16'													1'-10"	1'-10"

WATER POLLUTION CONTROL PROFILE

WP-11

STATE OF CALIFORNIA - DEPARTMENT OF TRANSPORTATION
Caltrans
HYDRAULICS

FUNCTIONAL SUPERVISOR: DAVE BHALLA
CALCULATED-DESIGNED BY: PRAKASH YADAV
CHECKED BY: DAVE BHALLA
REVISED BY
DATE REVISED

LAST REVISION 00-00-00
DATE PLOTTED => 12-SEP-2014
TIME PLOTTED => 06:19

Dist	COUNTY	ROUTE	POST MILES TOTAL PROJECT	SHEET No.	TOTAL SHEETS
07	LA	5,10,91, 110,134	Var	58	291

REGISTERED CIVIL ENGINEER 2-10-14 DATE

6-2-14
PLANS APPROVAL DATE

REGISTERED PROFESSIONAL ENGINEER F.S CHANG No. 54884 Exp. 6-30-14 CIVIL STATE OF CALIFORNIA

THE STATE OF CALIFORNIA OR ITS OFFICERS OR AGENTS SHALL NOT BE RESPONSIBLE FOR THE ACCURACY OR COMPLETENESS OF SCANNED COPIES OF THIS PLAN SHEET.

NOTES:

1. ALL MH No. 1 INFORMATION REFERS TO WD SHEETS, EXCEPT Reinf STEEL IN WALLS MUST BE #4 @ 18" c-c BOTH WAYS WHEN H+M < 20' AND #5 @ 12" c-c BOTH WAYS WHEN H+M > 20'. ALL PLACED 1-1/2" CLEAR TO INSIDE OF BOX.
2. FOR FINISHED GRADE AROUND AVSF WALL, SEE CONTOUR GRADING PLANS.

WALL DESIGN TABLE

DESIGN BASIN WALL	DESIGN WALL H	TOP OF WALL ELEVATION						TOP OF FOOTING ELEVATION						FOOTING THICKNESS	
		WE1	WE2	WE3	WE4	WE5	WE6	FE0	FE1	FE2	FE3	FE4	FE5	SEDIMENT BASIN	FILTRATION BASIN
Sed	12'	409.3	408.7	407.1	405.37	406.70	407.20	397.93	397.89	397.39	394.89	394.13	394.11	1'-8"	1'-10"
Fil	16'														

AVSF (S-15000-4.5)

Loc	STATION
WE1	149.65' Lt, Sta 1111+35.53, "B1"
WE3	151.79' Lt, Sta 1112+28.85, "B1"
WE4	107.03' Lt, Sta 1112+31.25, "B1"
WE6	104.65' Lt, Sta 1111+35.65, "B1"

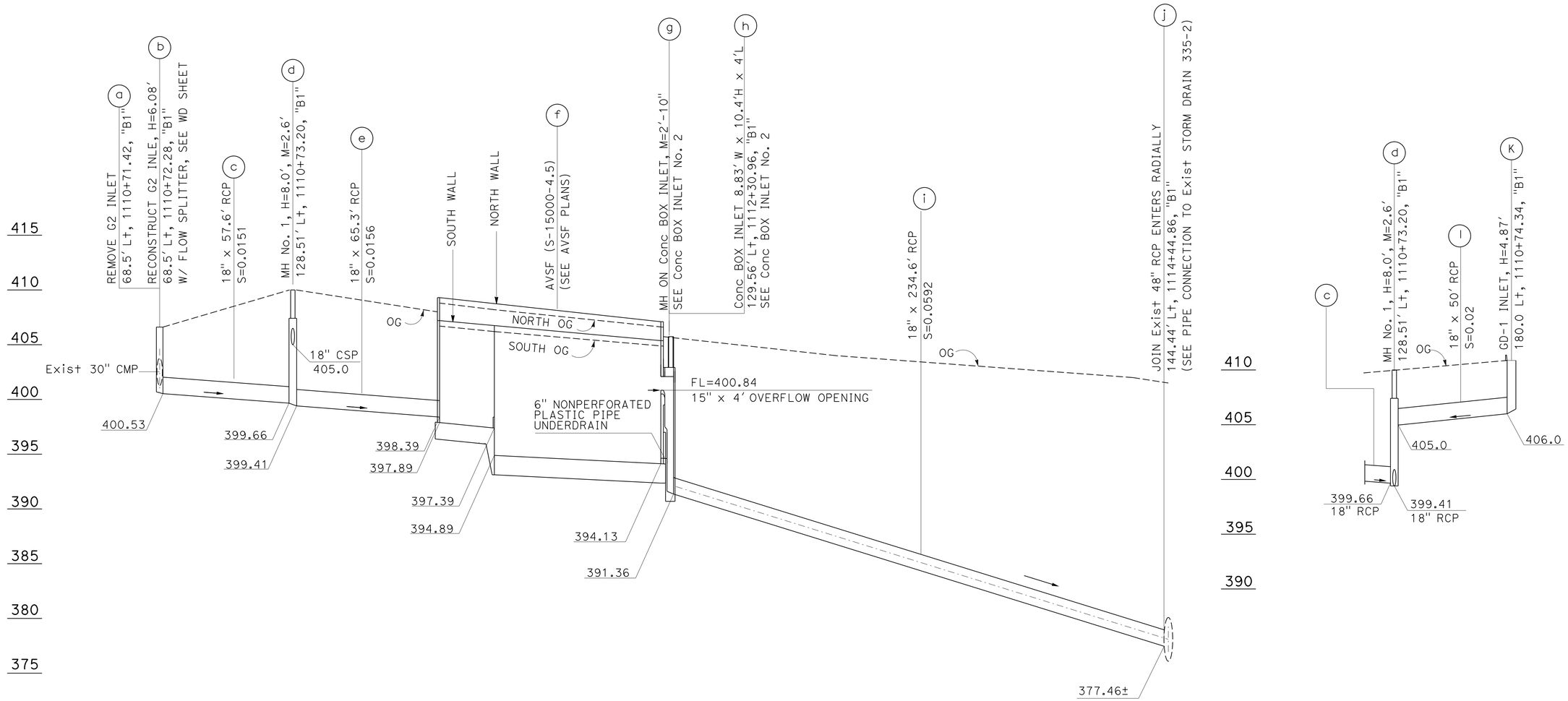

DRAINAGE SYSTEM No. 13

WATER POLLUTION CONTROL PROFILE

SCALE: Horiz 1" = 25
Vert 1" = 5'

WP-12

STATE OF CALIFORNIA - DEPARTMENT OF TRANSPORTATION
Caltrans
HYDRAULICS

FUNCTIONAL SUPERVISOR: DAVE BHALLA
CALCULATED-DESIGNED BY: FUSUNG CHANG
CHECKED BY: DAVE BHALLA
REVISED BY
DATE REVISED

LAST REVISION 00-00-00
DATE PLOTTED => 12-SEP-2014
TIME PLOTTED => 06:19

Dist	COUNTY	ROUTE	POST MILES TOTAL PROJECT	SHEET No.	TOTAL SHEETS
07	LA	5,10,91, 110,134	Var	59	291

REGISTERED CIVIL ENGINEER 2-10-14 DATE

6-2-14
PLANS APPROVAL DATE

REGISTERED PROFESSIONAL ENGINEER PRAKASH YADAV No. C 68479 Exp. 9-30-15 CIVIL STATE OF CALIFORNIA

THE STATE OF CALIFORNIA OR ITS OFFICERS OR AGENTS SHALL NOT BE RESPONSIBLE FOR THE ACCURACY OR COMPLETENESS OF SCANNED COPIES OF THIS PLAN SHEET.

NOTES:

1. ALL MH No. 1 INFORMATION REFERS TO WD SHEET, EXCEPT Reinf STEEL IN WALLS MUST BE #4 @ 18" c-c WHEN (H+M) < 20'. ALL PLACED 1-1/2" CLEAR TO INSIDE OF BOX.
2. FOR FINISHED GRADE AROUND AVSF WALL, SEE CONTOUR GRADING PLANS.

AVSF (S-3500-4.5)

Loc	STATION
WE1	114.99' Lt, Sta 189+44.14, "C1"
WE3	120.53' Lt, Sta 188+92.42, "C1"
WE4	141.48' Lt, Sta 188+94.00, "C1"
WE6	135.94' Lt, Sta 189+45.74, "C1"

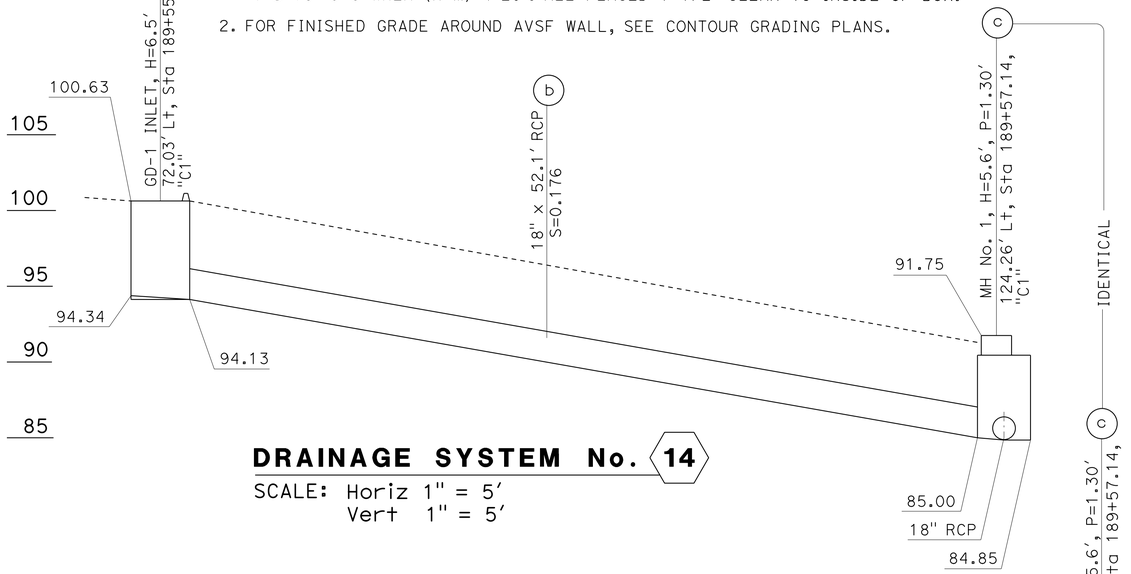

DRAINAGE SYSTEM No. 14

SCALE: Horiz 1" = 5'
Vert 1" = 5'

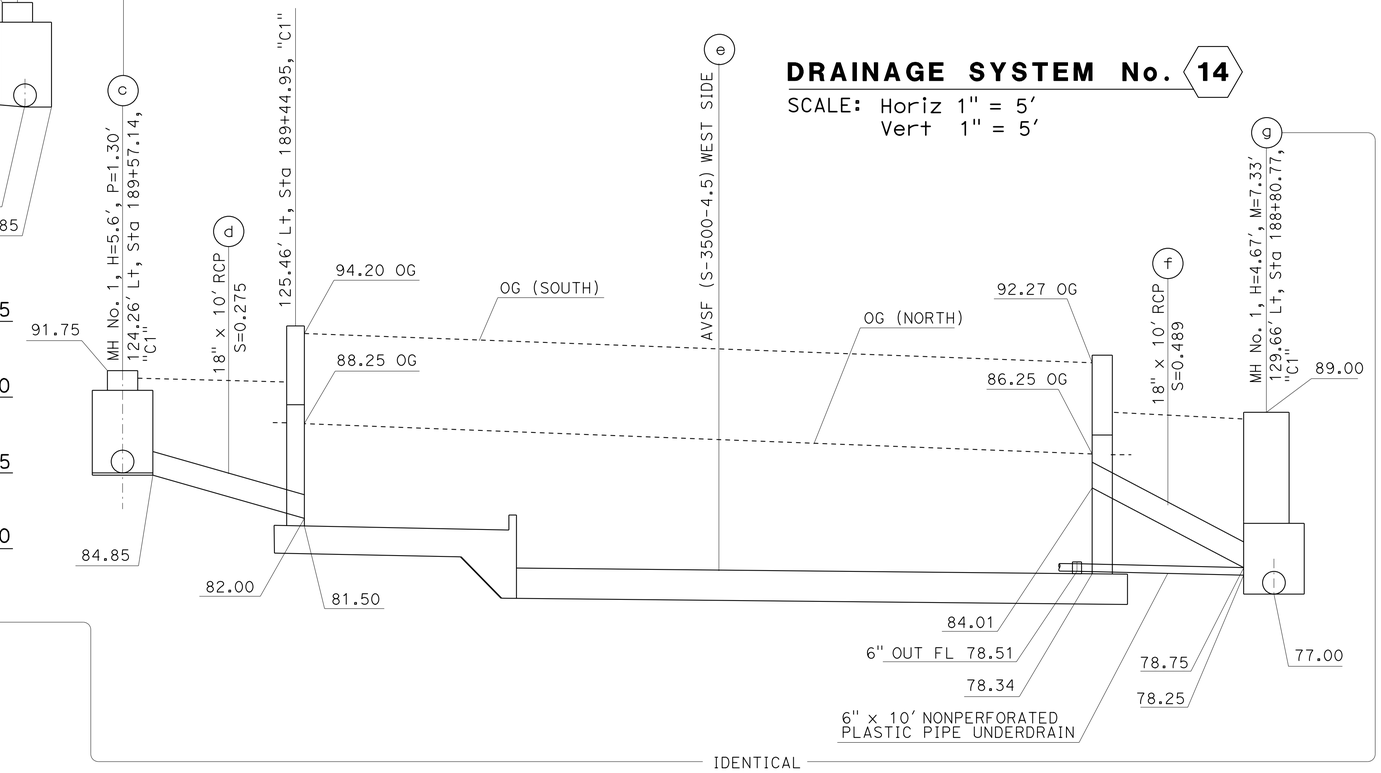

DRAINAGE SYSTEM No. 14

SCALE: Horiz 1" = 5'
Vert 1" = 5'

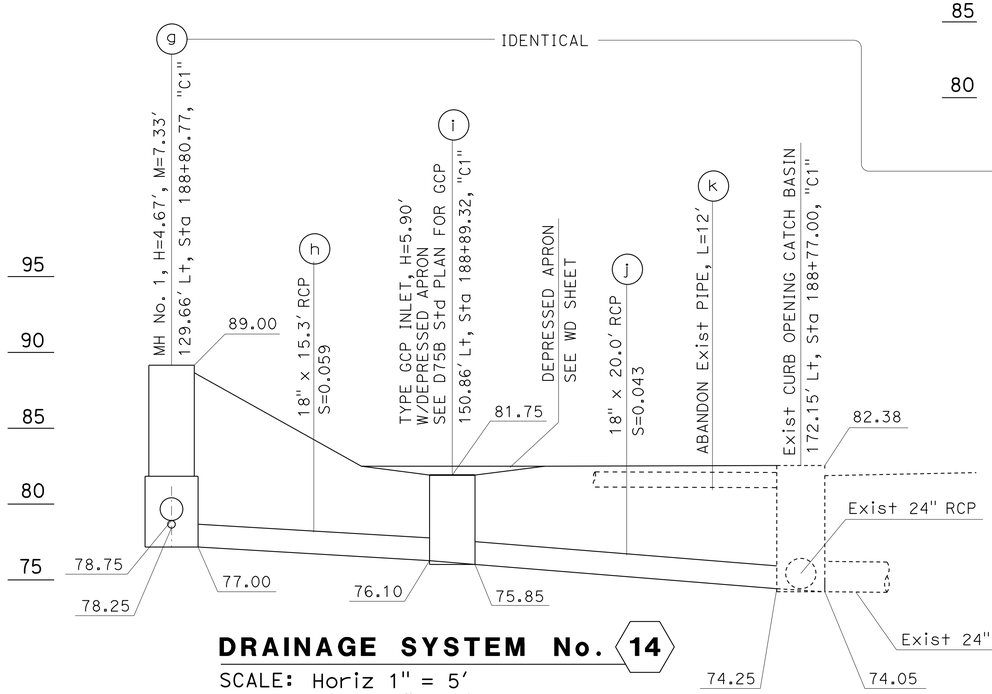

DRAINAGE SYSTEM No. 14

SCALE: Horiz 1" = 5'
Vert 1" = 5'

WALL DESIGN TABLE

DESIGN BASIN WALL	DESIGN WALL H	TOP OF WALL ELEVATION						TOP OF FOOTING ELEVATION						FOOTING THICKNESS	
		WE1	WE2	WE3	WE4	WE5	WE6	FE0	FE1	FE2	FE3	FE4	FE5	SEDIMENT BASIN	FILTRATION BASIN
Sed	14'	94.70	94.18	92.77	87.50	88.96	89.50	81.55	81.50	81.22	78.72	78.34	78.32	in F-Inch	in F-Inch
Filt	16'													1'-10"	2'-0"

WATER POLLUTION CONTROL PROFILE

WP-13

STATE OF CALIFORNIA - DEPARTMENT OF TRANSPORTATION
Caltrans
HYDRAULICS

FUNCTIONAL SUPERVISOR: DAVE BHALLA
CALCULATED-DESIGNED BY: PRAKASH YADAV
CHECKED BY: DAVE BHALLA
REVISED BY
DATE REVISED

LAST REVISION 00-00-00
DATE PLOTTED => 12-SEP-2014
TIME PLOTTED => 06:19

Dist	COUNTY	ROUTE	POST MILES TOTAL PROJECT	SHEET No.	TOTAL SHEETS
07	LA	5,10,91, 110,134	Var	60	291

Prakashyadav 2-10-14
REGISTERED CIVIL ENGINEER DATE

6-2-14
PLANS APPROVAL DATE

REGISTERED PROFESSIONAL ENGINEER PRAKASH YADAV No. C 68479 Exp. 9-30-15 CIVIL STATE OF CALIFORNIA

THE STATE OF CALIFORNIA OR ITS OFFICERS OR AGENTS SHALL NOT BE RESPONSIBLE FOR THE ACCURACY OR COMPLETENESS OF SCANNED COPIES OF THIS PLAN SHEET.

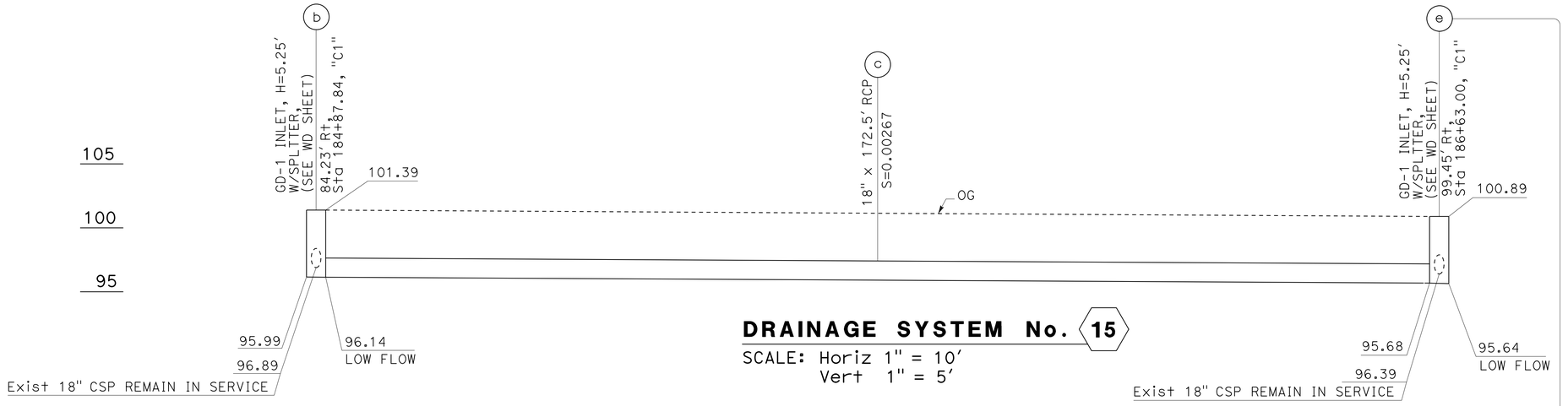

DRAINAGE SYSTEM No. 15

SCALE: Horiz 1" = 10′
Vert 1" = 5′

NOTE:

ALL MH No.1 INFORMATION REFERS TO WD SHEET, EXCEPT Reinf STEEL IN WALLS MUST BE #4 @ 18" c-c WHEN (H+M) < 20′ AND #5 @ 12" c-c WHEN (H+M) > 20′ ALL PLACED 1-1/2" CLEAR TO INSIDE OF BOX.

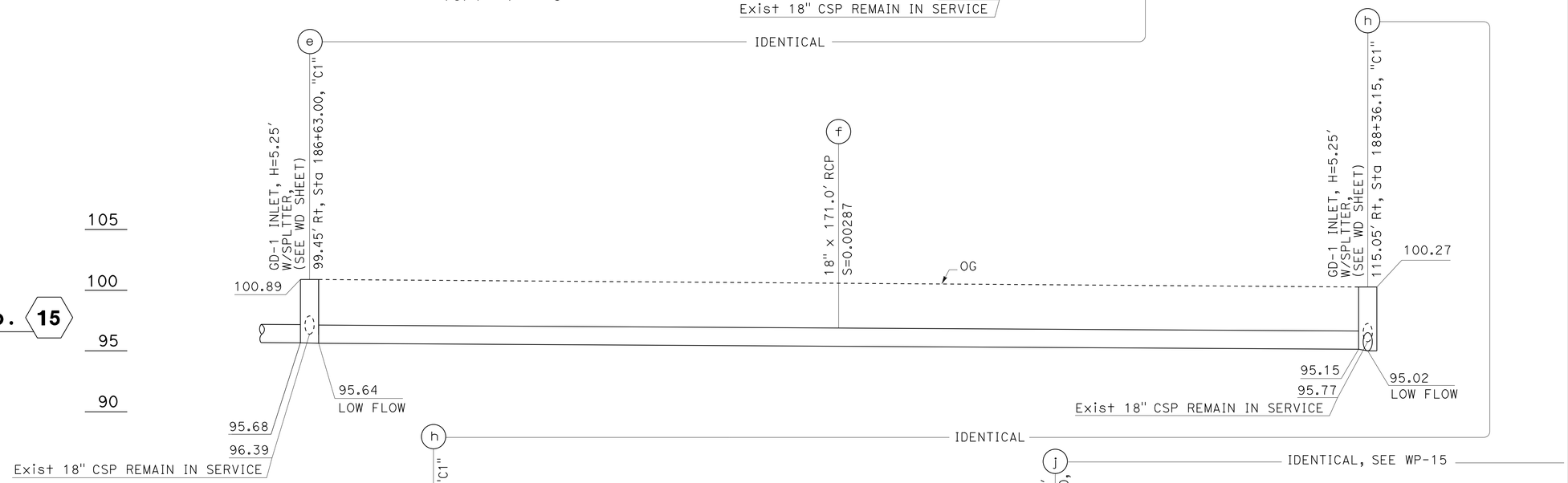

DRAINAGE SYSTEM No. 15

SCALE: Horiz 1" = 10′
Vert 1" = 5′

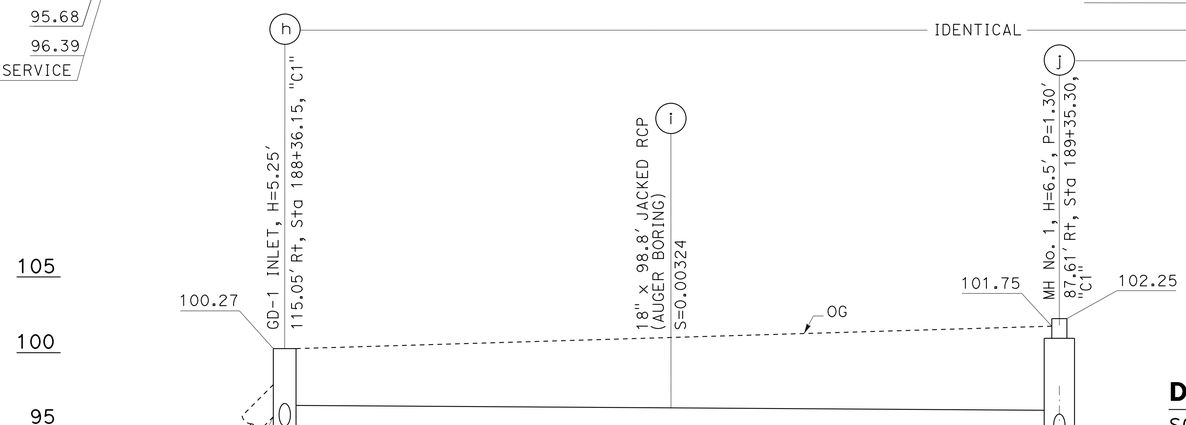

DRAINAGE SYSTEM No. 15

SCALE: Horiz 1" = 10′
Vert 1" = 5′

15		DESCRIPTIONS	STATIONS
	a	REMOVE INLET	84.23′ Rt, Sta 184+87.84, "C1"
	d	REMOVE INLET	99.45′ Rt, Sta 186+63.00, "C1"
	g	REMOVE INLET	115.05′ Rt, Sta 188+36.15, "C1"

WATER POLLUTION CONTROL PROFILE

WP-14

REVISED BY | DATE REVISED
PRAKASH YADAV | DAVE BHALLA
CALCULATED-DESIGNED BY | CHECKED BY
FUNCTIONAL SUPERVISOR: DAVE BHALLA

STATE OF CALIFORNIA - DEPARTMENT OF TRANSPORTATION
Caltrans
HYDRAULICS

LAST REVISION 00-00-00 | DATE PLOTTED => 12-SEP-2014 | TIME PLOTTED => 06:19

Dist	COUNTY	ROUTE	POST MILES TOTAL PROJECT	SHEET No.	TOTAL SHEETS
07	LA	5,10,91, 110,134	Var	61	291

REGISTERED CIVIL ENGINEER 2-10-14 DATE

6-2-14
PLANS APPROVAL DATE

REGISTERED PROFESSIONAL ENGINEER PRAKASH YADAV No. C 68479 Exp. 9-30-15 CIVIL STATE OF CALIFORNIA

THE STATE OF CALIFORNIA OR ITS OFFICERS OR AGENTS SHALL NOT BE RESPONSIBLE FOR THE ACCURACY OR COMPLETENESS OF SCANNED COPIES OF THIS PLAN SHEET.

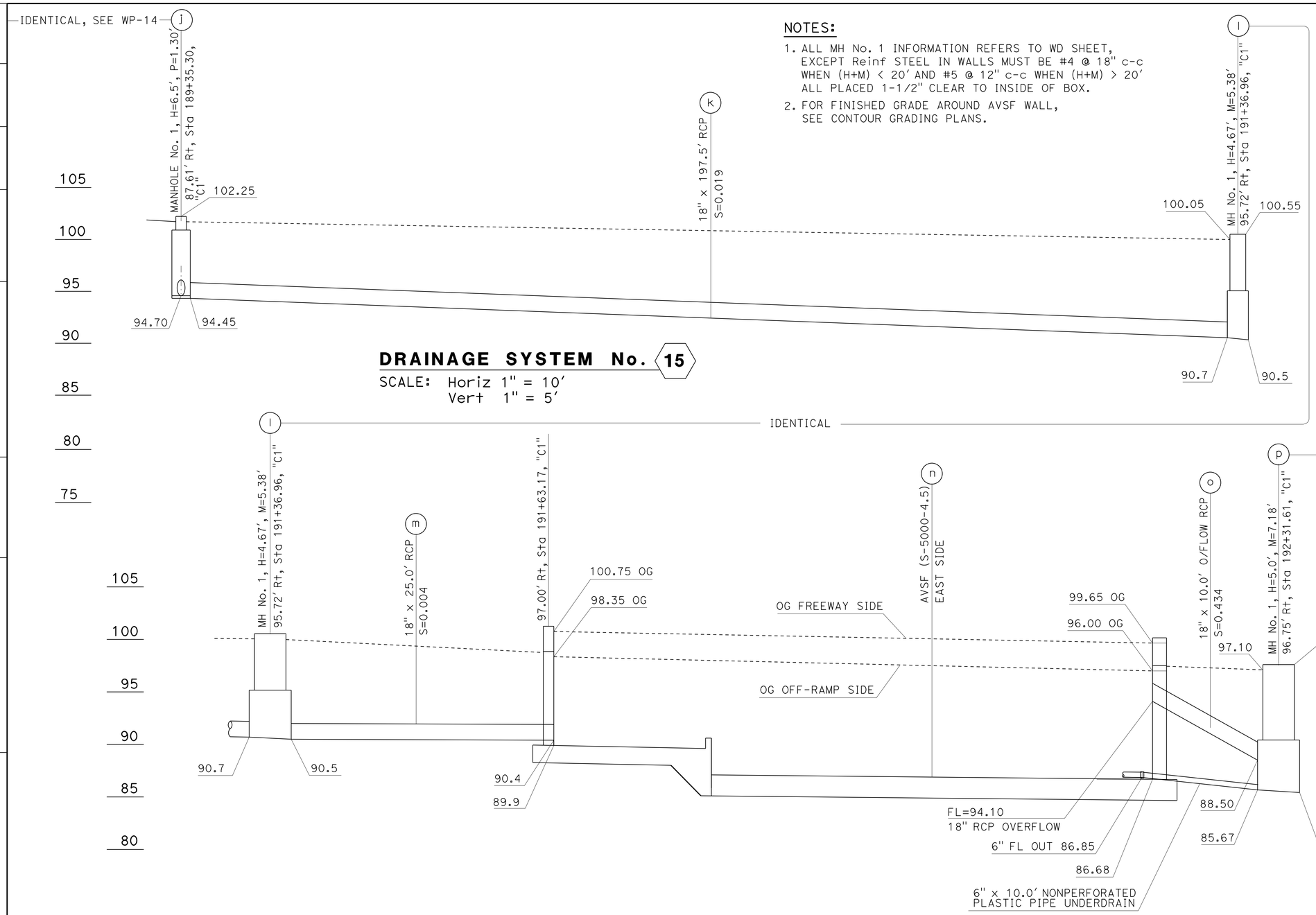

DRAINAGE SYSTEM No. 15
SCALE: Horiz 1" = 10'
Vert 1" = 5'

DRAINAGE SYSTEM No. 15
SCALE: Horiz 1" = 5'
Vert 1" = 5'

AVSF (S-5000-4.5)

Loc	STATION
WE1	83.50' Rt, Sta 191+63.18, "C1"
WE3	83.78' Rt, Sta 192+19.63, "C1"
WE4	110.78' Rt, Sta 192+19.50, "C1"
WE6	110.50' Rt, Sta 191+63.16, "C1"

NOTES:

1. ALL MH No. 1 INFORMATION REFERS TO WD SHEET, EXCEPT Reinf STEEL IN WALLS MUST BE #4 @ 18" c-c WHEN (H+M) < 20' AND #5 @ 12" c-c WHEN (H+M) > 20' ALL PLACED 1-1/2" CLEAR TO INSIDE OF BOX.
2. FOR FINISHED GRADE AROUND AVSF WALL, SEE CONTOUR GRADING PLANS.

WALL DESIGN TABLE

DESIGN BASIN WALL	DESIGN WALL H	TOP OF WALL ELEVATION						TOP OF FOOTING ELEVATION						FOOTING THICKNESS	
		WE1	WE2	WE3	WE4	WE5	WE6	FE0	FE1	FE2	FE3	FE4	FE5	SEDIMENT BASIN	FILTRATION BASIN
Sed	12'	101.25	100.96	100.15	97.50	98.49	98.85	89.94	89.90	89.60	87.10	86.68	86.66	F-INCH	F-INCH
Filt	16'													1'-8"	2'-0"

WATER POLLUTION CONTROL PROFILE

WP-15

STATE OF CALIFORNIA - DEPARTMENT OF TRANSPORTATION
Caltrans HYDRAULICS

FUNCTIONAL SUPERVISOR: DAVE BHALLA
CALCULATED-DESIGNED BY: PRAKASH YADAV
CHECKED BY: DAVE BHALLA
REVISED BY / DATE REVISED

LAST REVISION 00-00-00
DATE PLOTTED => 12-SEP-2014
TIME PLOTTED => 06:19

Dist	COUNTY	ROUTE	POST MILES TOTAL PROJECT	SHEET No.	TOTAL SHEETS
07	LA	5,10,91, 110,134	Var	62	291

REGISTERED CIVIL ENGINEER 2-10-14 DATE

6-2-14
PLANS APPROVAL DATE

REGISTERED PROFESSIONAL ENGINEER PRAKASH YADAV No. C 68479 Exp. 9-30-15 CIVIL STATE OF CALIFORNIA

THE STATE OF CALIFORNIA OR ITS OFFICERS OR AGENTS SHALL NOT BE RESPONSIBLE FOR THE ACCURACY OR COMPLETENESS OF SCANNED COPIES OF THIS PLAN SHEET.

NOTE:

ALL MH No. 1 INFORMATION REFERS TO WD SHEET, EXCEPT Reinf STEEL IN WALLS MUST BE #4 @ 18" c-c WHEN (H+M) < 20' AND #5 @ 12" c-c WHEN (H+M) > 20' ALL PLACED 1-1/2" CLEAR TO INSIDE OF BOX.

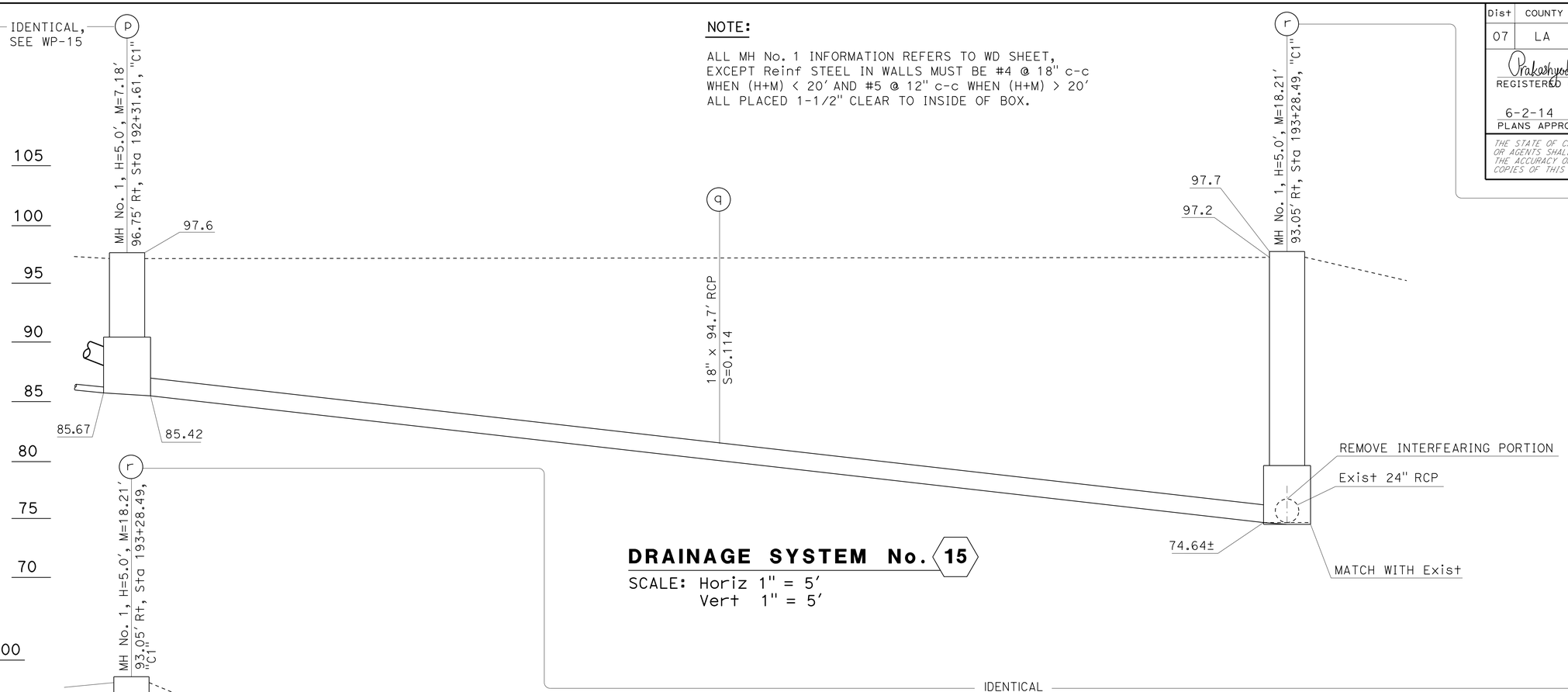

DRAINAGE SYSTEM No. 15

SCALE: Horiz 1" = 5'
Vert 1" = 5'

IDENTICAL

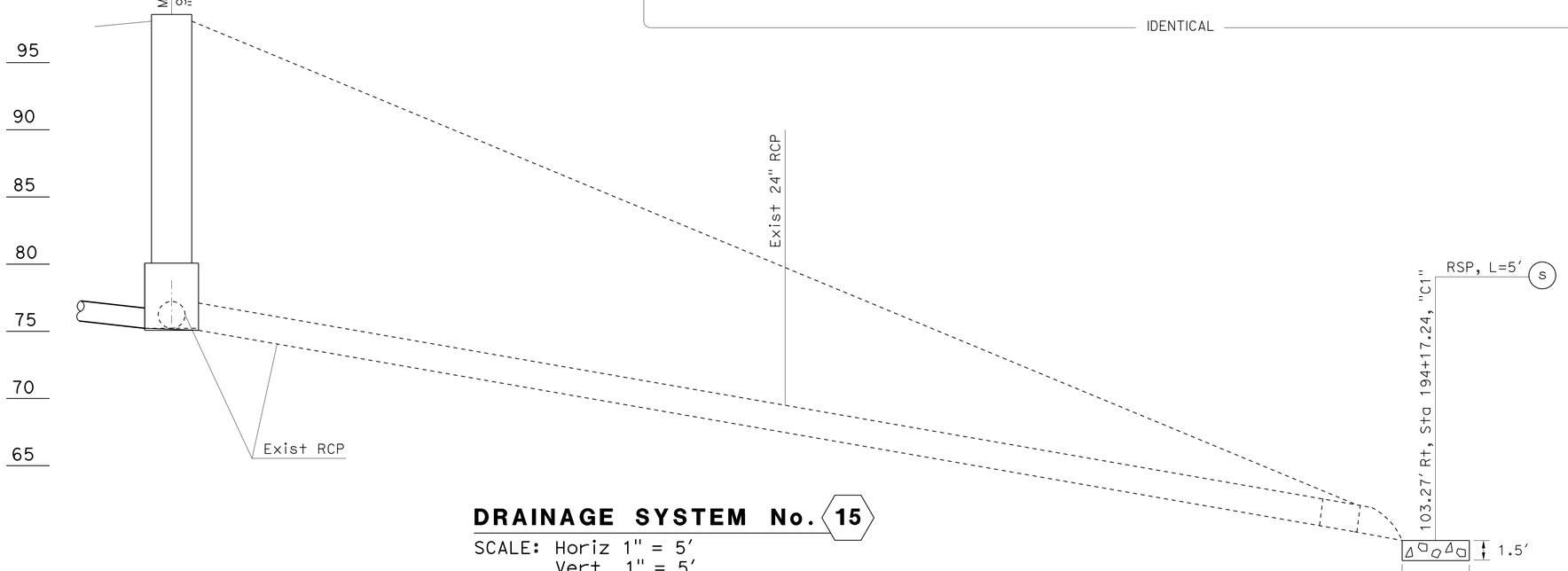

DRAINAGE SYSTEM No. 15

SCALE: Horiz 1" = 5'
Vert 1" = 5'

WATER POLLUTION CONTROL PROFILE

WP-16

STATE OF CALIFORNIA - DEPARTMENT OF TRANSPORTATION
Caltrans
HYDRAULICS

FUNCTIONAL SUPERVISOR: DAVE BHALLA
CALCULATED-DESIGNED BY: PRAKASH YADAV
CHECKED BY: DAVE BHALLA
REVISED BY
DATE REVISED

LAST REVISION 00-00-00
DATE PLOTTED => 12-SEP-2014
TIME PLOTTED => 06:19

Dist	COUNTY	ROUTE	POST MILES TOTAL PROJECT	SHEET No.	TOTAL SHEETS
07	LA	5,10,91, 110,134	Var	63	291

Paul Fong 02-05-14
REGISTERED CIVIL ENGINEER DATE

6-2-14
PLANS APPROVAL DATE

REGISTERED PROFESSIONAL ENGINEER
PAUL FONG
No. C67053
Exp. 9/30/14
CIVIL
STATE OF CALIFORNIA

THE STATE OF CALIFORNIA OR ITS OFFICERS OR AGENTS SHALL NOT BE RESPONSIBLE FOR THE ACCURACY OR COMPLETENESS OF SCANNED COPIES OF THIS PLAN SHEET.

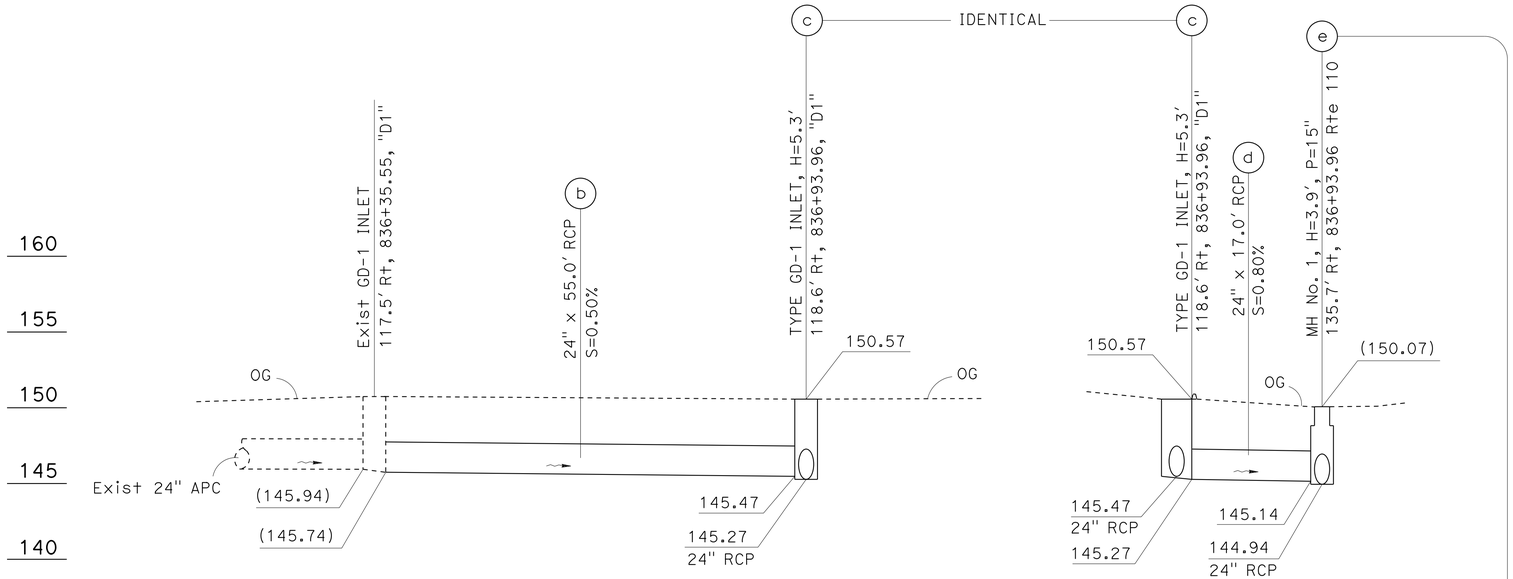

DRAINAGE SYSTEM No. 16

SCALE: Horiz 1" = 10'
Vert 1" = 5'

AVSF (L-5000-3)

Loc	STATION
WE1	152.67' Rt, Sta 837+68.56, "D1"
WE3	199.74' Rt, Sta 838+38.13, "D1"
WE4	214.65' Rt, Sta 838+28.04, "D1"
WE6	167.57' Rt, Sta 837+58.47, "D1"

WALL DESIGN TABLE

TOP OF WALL ELEVATION					
WE1	WE2	WE3	WE4	WE5	WE6
149.43	149.43	149.43	149.43	149.43	149.43
TOP OF FOOTING ELEVATION					
FE0	FE1	FE2	FE3	FE4	FE5
143.89	143.85	143.43	140.93	140.30	140.28

DESIGN BASIN WALL	DESIGN WALL H	FOOTING THICKNESS	
		SEDIMENT BASIN	FILTRATION BASIN
Sed	6'	1'-3"	1'-3"
Fil	10'		

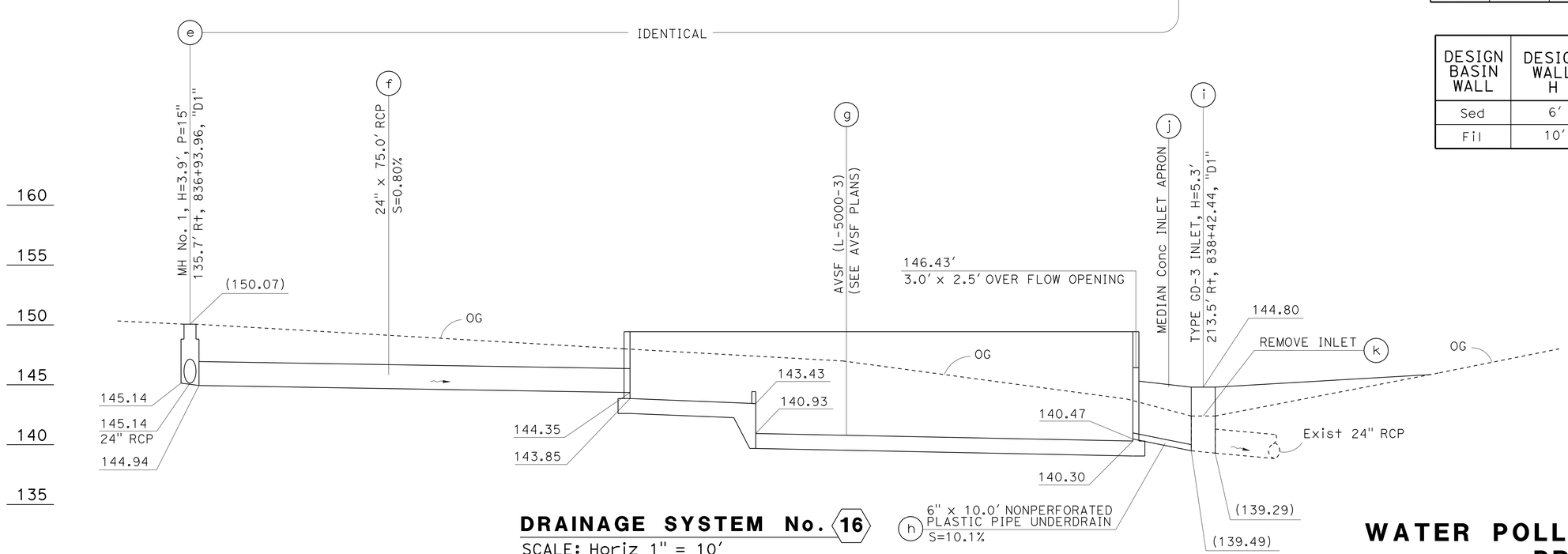

DRAINAGE SYSTEM No. 16

SCALE: Horiz 1" = 10'
Vert 1" = 5'

WATER POLLUTION CONTROL PROFILE

WP-17

STATE OF CALIFORNIA - DEPARTMENT OF TRANSPORTATION
Caltrans
HYDRAULICS

FUNCTIONAL SUPERVISOR: DAVE BHALLA
CALCULATED-DESIGNED BY: PAUL FONG
CHECKED BY: DAVE BHALLA
REVISED BY
DATE REVISED

LAST REVISION
DATE PLOTTED => 12-SEP-2014
TIME PLOTTED => 06:19

Dist	COUNTY	ROUTE	POST MILES TOTAL PROJECT	SHEET No.	TOTAL SHEETS
07	LA	5,10,91, 110,134	Var	64	291

Paul Fong 02-05-14
REGISTERED CIVIL ENGINEER DATE

6-2-14
PLANS APPROVAL DATE

REGISTERED PROFESSIONAL ENGINEER
PAUL FONG
No. C67053
Exp. 9/30/14
CIVIL
STATE OF CALIFORNIA

THE STATE OF CALIFORNIA OR ITS OFFICERS OR AGENTS SHALL NOT BE RESPONSIBLE FOR THE ACCURACY OR COMPLETENESS OF SCANNED COPIES OF THIS PLAN SHEET.

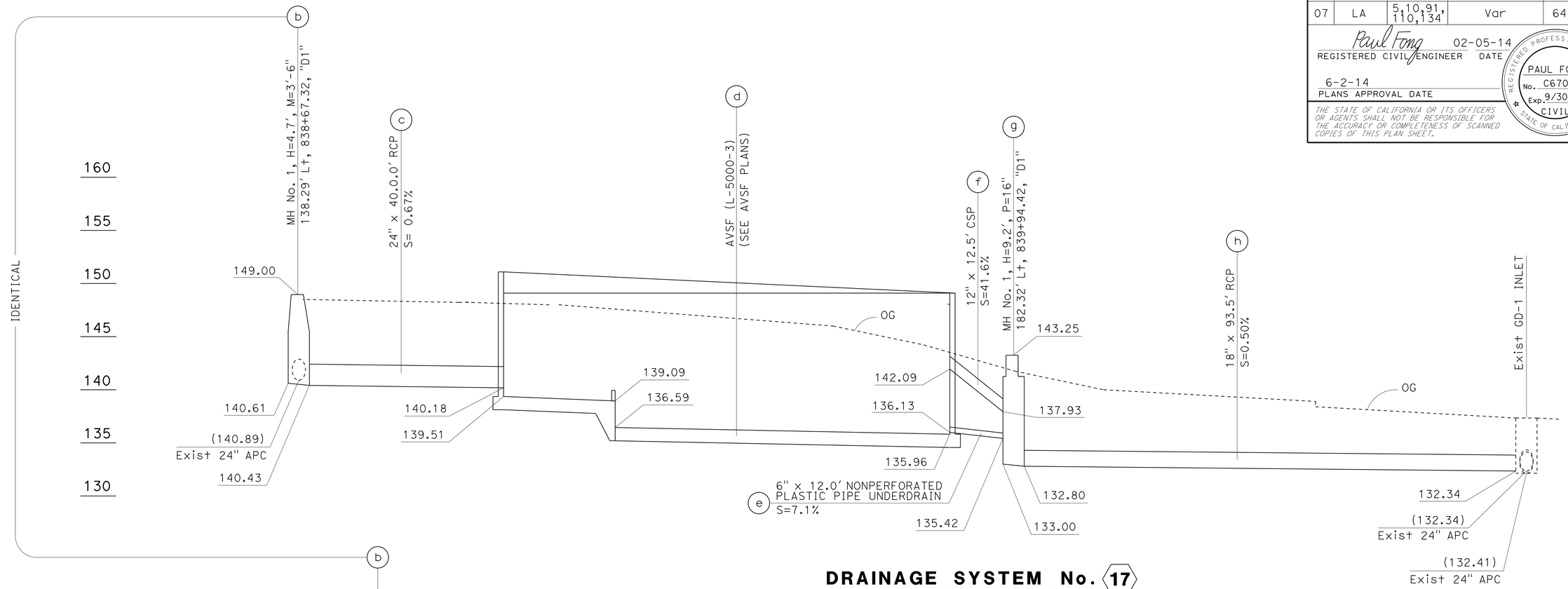

DRAINAGE SYSTEM No. 17

SCALE: Horiz 1" = 10'
Vert 1" = 5'

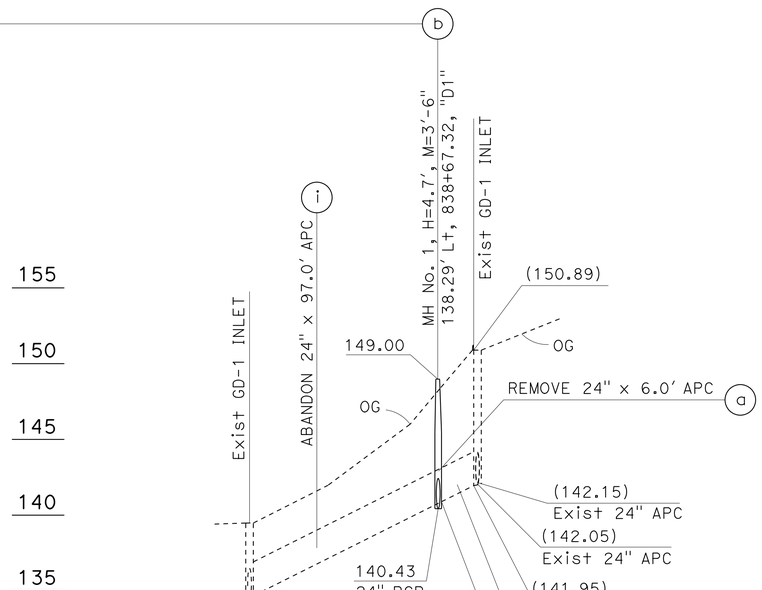

DRAINAGE SYSTEM No. 17

SCALE: Horiz 1" = 40'
Vert 1" = 5'

AVSF (L-5000-3)

Loc	STATION
WE1	153.32' Lt, Sta 839+02.09, "D1"
WE3	180.24' Lt, Sta 839+81.67, "D1"
WE4	163.19' Lt, Sta 839+87.44, "D1"
WE6	136.27' Lt, Sta 839+07.87, "D1"

DESIGN BASIN WALL	DESIGN WALL H	FOOTING THICKNESS	
		SEDIMENT BASIN	FILTRATION BASIN
Sed	12'	1'-6"	1'-9"
Fil	16'		

WALL DESIGN TABLE

TOP OF WALL ELEVATION					
WE1	WE2	WE3	WE4	WE5	WE6
149.10	149.10	149.10	149.10	150.60	151.10
TOP OF FOOTING ELEVATION					
FE0	FE1	FE2	FE3	FE4	FE5
139.55	139.51	139.09	136.59	135.96	135.94

WATER POLLUTION CONTROL PROFILE

WP-18

STATE OF CALIFORNIA - DEPARTMENT OF TRANSPORTATION
Caltrans
HYDRAULICS

FUNCTIONAL SUPERVISOR: DAVE BHALLA
CALCULATED-DESIGNED BY: PAUL FONG
CHECKED BY: DAVE BHALLA
REVISED BY
DATE REVISED

LAST REVISION
DATE PLOTTED => 12-SEP-2014
TIME PLOTTED => 06:19

Dist	COUNTY	ROUTE	POST MILES TOTAL PROJECT	SHEET No.	TOTAL SHEETS
07	LA	5,10,91, 110,134	Var	65	291

Paul Fong 02-05-14
REGISTERED CIVIL ENGINEER DATE

6-2-14
PLANS APPROVAL DATE

REGISTERED PROFESSIONAL ENGINEER PAUL FONG No. C67053 Exp. 9/30/14 CIVIL STATE OF CALIFORNIA

THE STATE OF CALIFORNIA OR ITS OFFICERS OR AGENTS SHALL NOT BE RESPONSIBLE FOR THE ACCURACY OR COMPLETENESS OF SCANNED COPIES OF THIS PLAN SHEET.

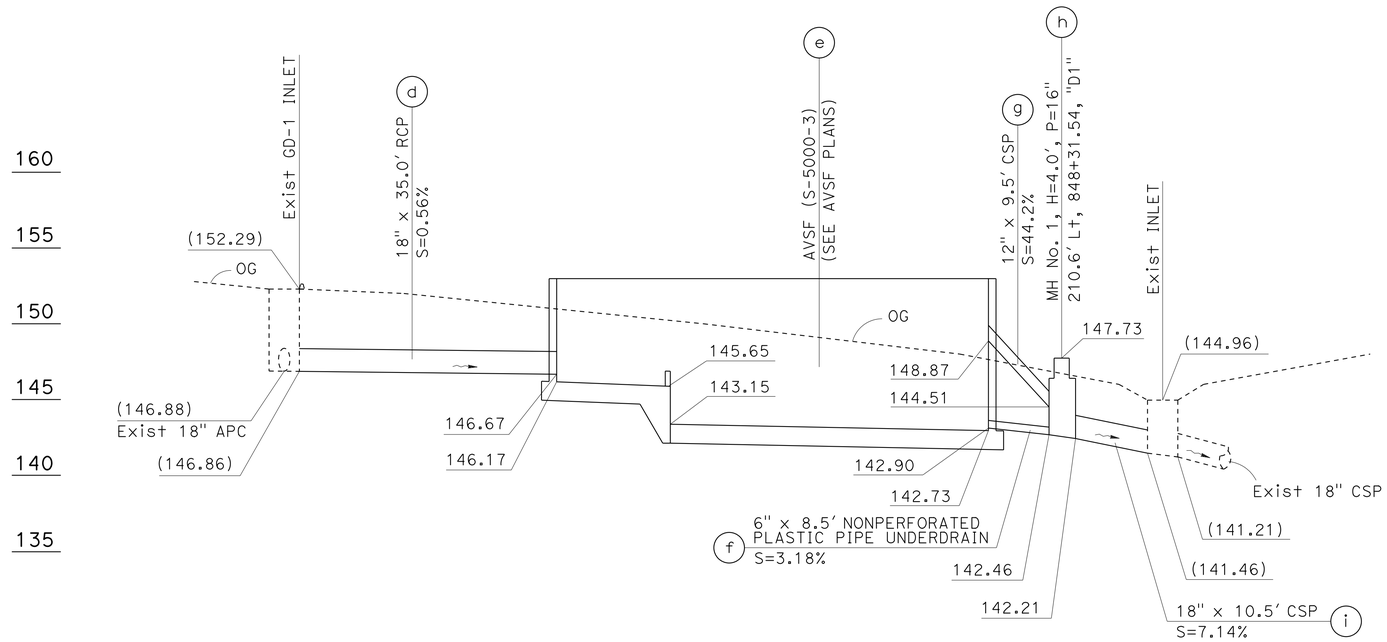

DRAINAGE SYSTEM No. 18

SCALE: Horiz 1" = 10'
Vert 1" = 5'

AVSF (S-5000-3)

Loc	STATION
WE1	156.17' Lt, Sta 847+90.79, "D1"
WE3	207.68' Lt, Sta 848+15.20, "D1"
WE4	196.12' Lt, Sta 848+39.60, "D1"
WE6	144.61' Lt, Sta 848+15.19, "D1"

WALL DESIGN TABLE

TOP OF WALL ELEVATION					
WE1	WE2	WE3	WE4	WE5	WE6
152.98	152.98	152.98	152.98	152.98	152.98
TOP OF FOOTING ELEVATION					
FE0	FE1	FE2	FE3	FE4	FE5
146.21	146.17	145.87	143.37	142.96	142.93

DESIGN BASIN WALL	DESIGN WALL H	FOOTING THICKNESS	
		SEDIMENT BASIN	FILTRATION BASIN
Sed	8'	1'-3"	1'-3"
Fil	10'		

WATER POLLUTION CONTROL PROFILE

WP-19

REVISED BY	DATE REVISED

PAUL FONG — DAVE BHALLA — CALCULATED-DESIGNED BY — CHECKED BY

FUNCTIONAL SUPERVISOR: DAVE BHALLA

STATE OF CALIFORNIA - DEPARTMENT OF TRANSPORTATION
Caltrans
HYDRAULICS

LAST REVISION — DATE PLOTTED => 12-SEP-2014 TIME PLOTTED => 06:19

Dist	COUNTY	ROUTE	POST MILES TOTAL PROJECT	SHEET No.	TOTAL SHEETS
07	LA	5,10,91, 110,134	Var	66	291

Prakash Yadav 2-10-14
REGISTERED CIVIL ENGINEER DATE

6-2-14
PLANS APPROVAL DATE

REGISTERED PROFESSIONAL ENGINEER PRAKASH YADAV No. C 68479 Exp. 9-30-15 CIVIL STATE OF CALIFORNIA

THE STATE OF CALIFORNIA OR ITS OFFICERS OR AGENTS SHALL NOT BE RESPONSIBLE FOR THE ACCURACY OR COMPLETENESS OF SCANNED COPIES OF THIS PLAN SHEET.

NOTES:

1. ALL MH No. 1 INFORMATION REFERS TO WD SHEET, EXCEPT Reinf STEEL IN WALLS MUST BE #4 @ 18" c-c WHEN (H+M) < 20'.ALL PLACED 1-1/2 CLEAR TO INSIDE OF BOX.
2. FOR FINISHED GRADE AROUND AVSF WALL, SEE CONTOUR GRADING PLANS.

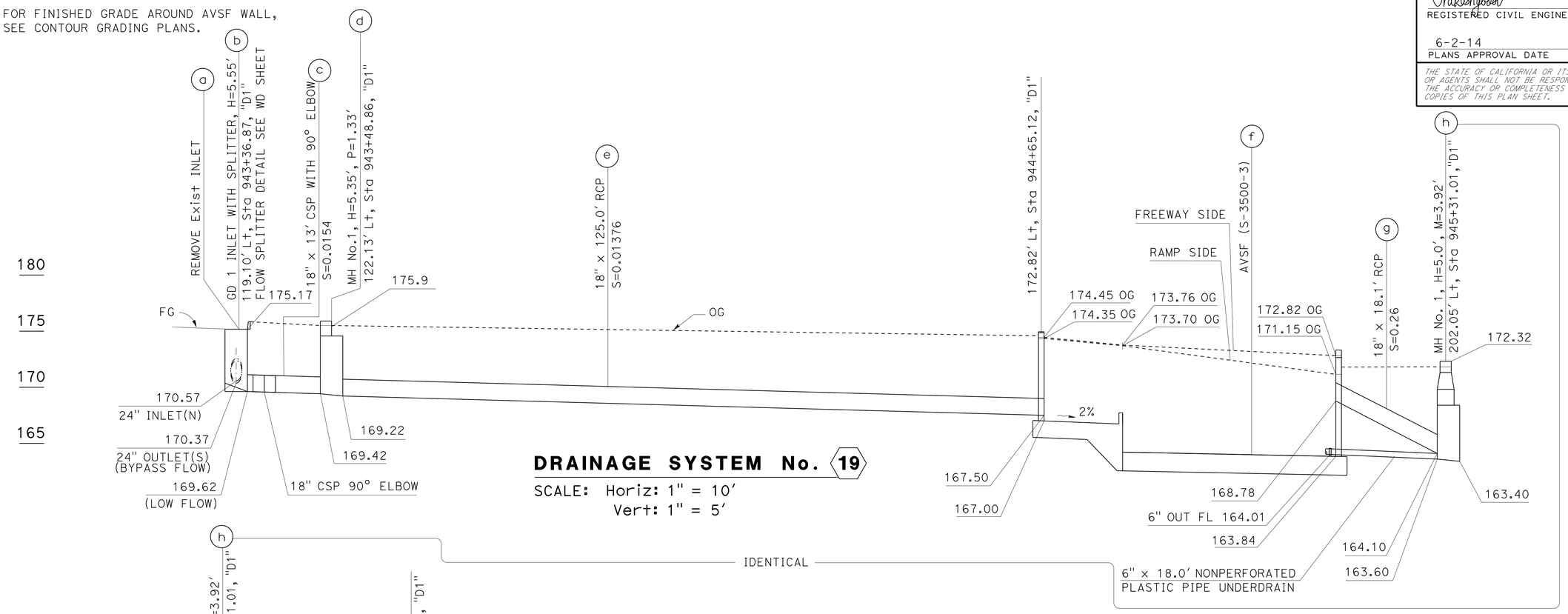

DRAINAGE SYSTEM No. 19

SCALE: Horiz: 1" = 10'
Vert: 1" = 5'

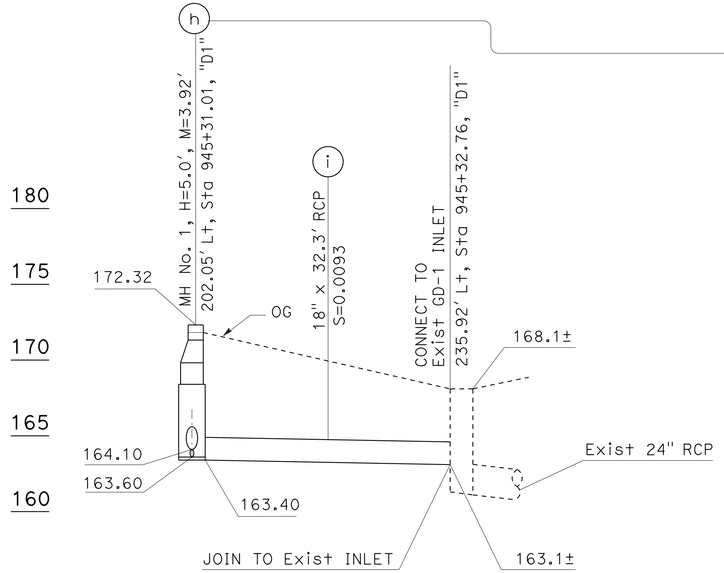

DRAINAGE SYSTEM No. 19

SCALE: Horiz: 1" = 10'
Vert: 1" = 5'

AVSF (S-3500-3)

Loc	STATION
WE1	182.42' Lt, Sta 944+60.86, "D1"
WE3	203.50' Lt, Sta 945+08.40, "D1"
WE4	184.31' Lt, Sta 945+16.91, "D1"
WE6	163.22' Lt, Sta 944+69.38, "D1"

WALL DESIGN TABLE

DESIGN BASIN WALL	DESIGN WALL H	TOP OF WALL ELEVATION						TOP OF FOOTING ELEVATION						FOOTING THICKNESS	
		WE1	WE2	WE3	WE4	WE5	WE6	FE0	FE1	FE2	FE3	FE4	FE5	SEDIMENT BASIN	FILTRATION BASIN
Sed	10'	174.85	174.26	172.65	173.32	174.51	174.95	167.04	167.00	166.72	164.22	163.84	163.82	F-Inch	F-Inch
Filt	12'													1'-6"	1'-8"

WATER POLLUTION CONTROL PROFILE

WP-20

STATE OF CALIFORNIA - DEPARTMENT OF TRANSPORTATION
Caltrans HYDRAULICS

FUNCTIONAL SUPERVISOR: DAVE BHALLA
CALCULATED-DESIGNED BY: PRAKASH YADAV
CHECKED BY: DAVE BHALLA
REVISED BY / DATE REVISED

LAST REVISION 00-00-00 | DATE PLOTTED => 12-SEP-2014 | TIME PLOTTED => 06:19

Dist	COUNTY	ROUTE	POST MILES TOTAL PROJECT	SHEET No.	TOTAL SHEETS
07	LA	5,10,91, 110,134	Var	67	291

Paul Fong 2-05-14
REGISTERED CIVIL ENGINEER DATE

6-2-14
PLANS APPROVAL DATE

REGISTERED PROFESSIONAL ENGINEER PAUL FONG No. C67053 Exp. 9/30/14 CIVIL STATE OF CALIFORNIA

THE STATE OF CALIFORNIA OR ITS OFFICERS OR AGENTS SHALL NOT BE RESPONSIBLE FOR THE ACCURACY OR COMPLETENESS OF SCANNED COPIES OF THIS PLAN SHEET.

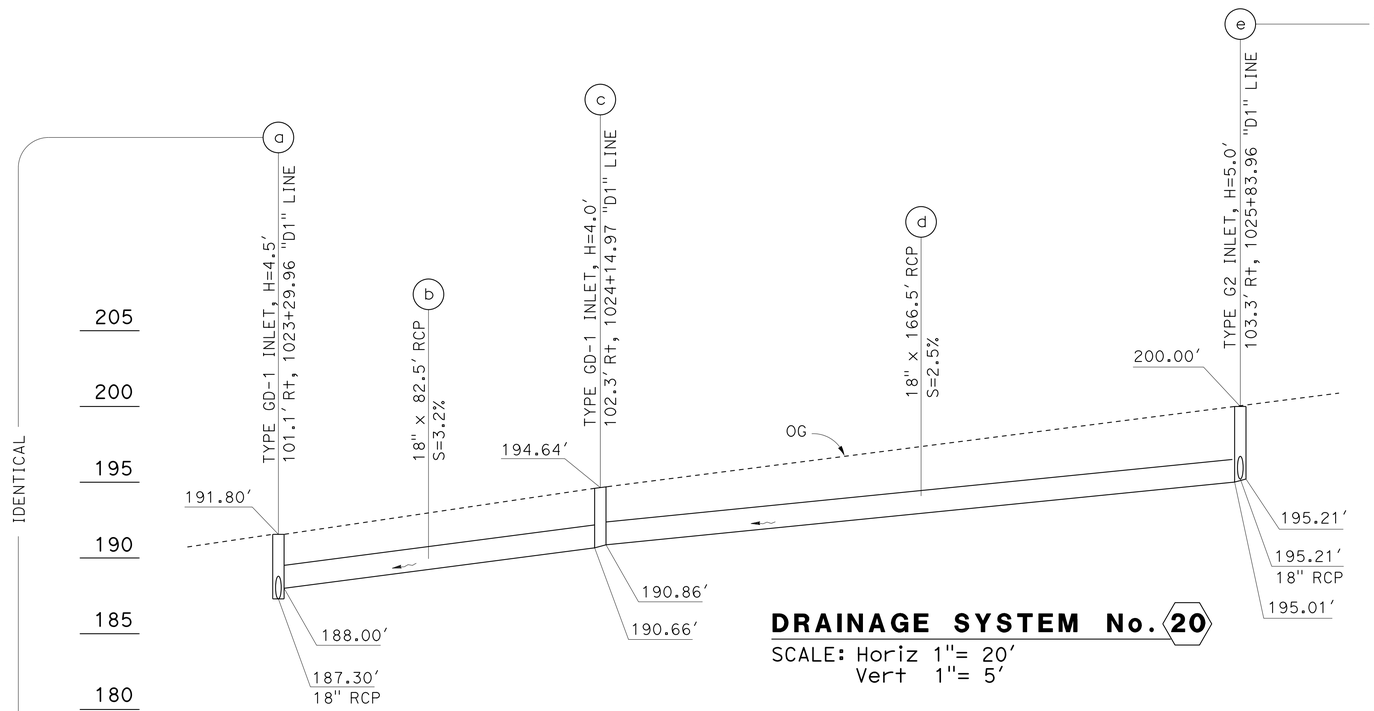

DRAINAGE SYSTEM No. 20

SCALE: Horiz 1"= 20′
Vert 1"= 5′

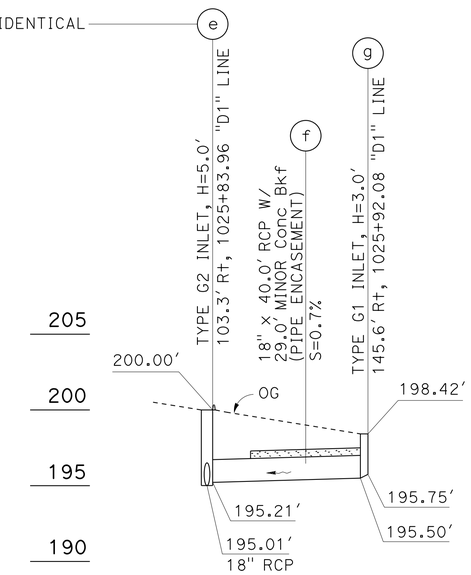

DRAINAGE SYSTEM No. 20

SCALE: Horiz 1"= 20′
Vert 1"= 5′

AVSF (S-3500-3)	
Loc	STATION
WE1	127.0′ Rt, Sta 1023+71.57, "D1"
WE3	146.2′ Rt, Sta 1023+63.09, "D1"
WE4	148.0′ Rt, Sta 1024+19.14, "D1"
WE6	167.2′ Rt, Sta 1024+10.66, "D1"

WALL DESIGN TABLE					
TOP OF WALL ELEVATION					
WE1	WE2	WE3	WE4	WE5	WE6
192.50	192.50	192.50	192.50	192.50	192.50
TOP OF FOOTING ELEVATION					
FE0	FE1	FE2	FE3	FE4	FE5
185.69	185.65	185.29	182.79	182.26	182.24

DESIGN BASIN WALL	DESIGN WALL H	FOOTING THICKNESS	
		SEDIMENT BASIN	FILTRATION BASIN
Sed	8′	1′-3"	1′-6"
Fil	12′		

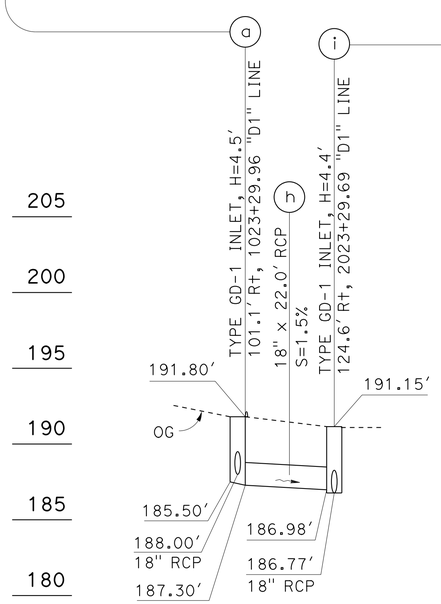

DRAINAGE SYSTEM No. 20

SCALE: Horiz 1"= 20′
Vert 1"= 5′

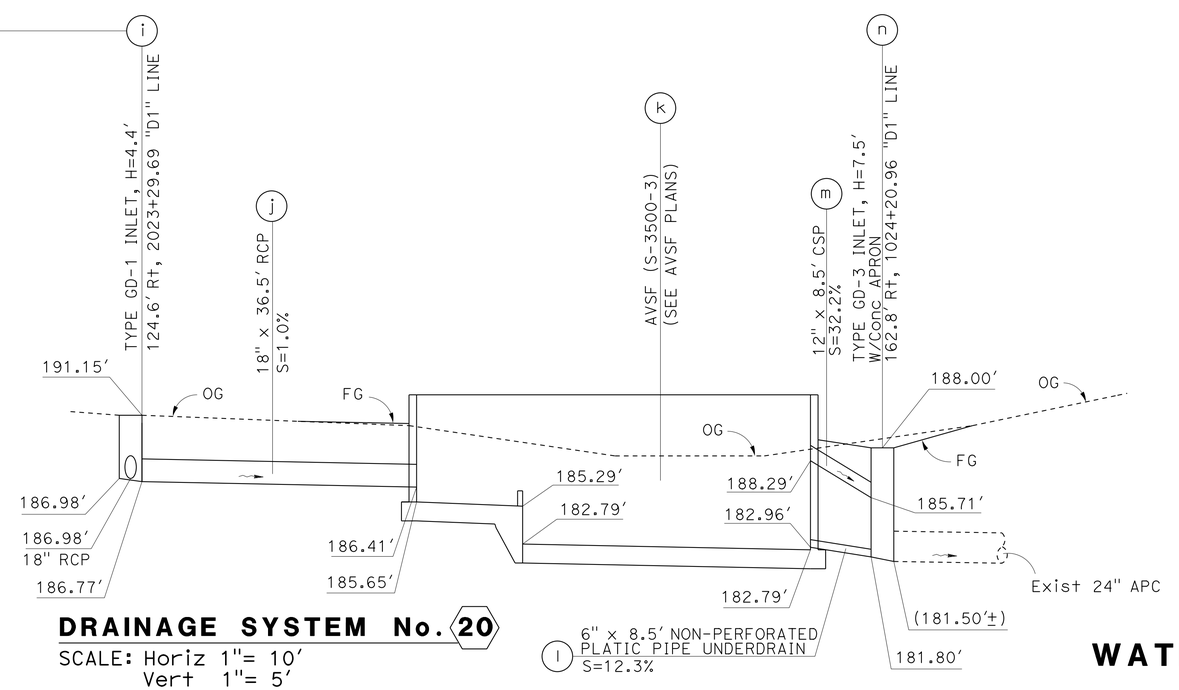

DRAINAGE SYSTEM No. 20

SCALE: Horiz 1"= 10′
Vert 1"= 5′

WATER POLLUTION CONTROL PROFILE

WP-21

REVISED BY	DATE REVISED
PAUL FONG	DAVE BHALLA
CALCULATED-DESIGNED BY	CHECKED BY
DAVE BHALLA	
FUNCTIONAL SUPERVISOR	

STATE OF CALIFORNIA - DEPARTMENT OF TRANSPORTATION
Caltrans
HYDRAULICS

DATE PLOTTED => 12-SEP-2014
TIME PLOTTED => 06:19
LAST REVISION

Dist	COUNTY	ROUTE	POST MILES TOTAL PROJECT	SHEET No.	TOTAL SHEETS
07	LA	5,10,91, 110,134	Var	68	291

Paul Fong 02-05-14
REGISTERED CIVIL ENGINEER DATE

6-2-14
PLANS APPROVAL DATE

REGISTERED PROFESSIONAL ENGINEER PAUL FONG No. C67053 Exp. 9/30/14 CIVIL STATE OF CALIFORNIA

THE STATE OF CALIFORNIA OR ITS OFFICERS OR AGENTS SHALL NOT BE RESPONSIBLE FOR THE ACCURACY OR COMPLETENESS OF SCANNED COPIES OF THIS PLAN SHEET.

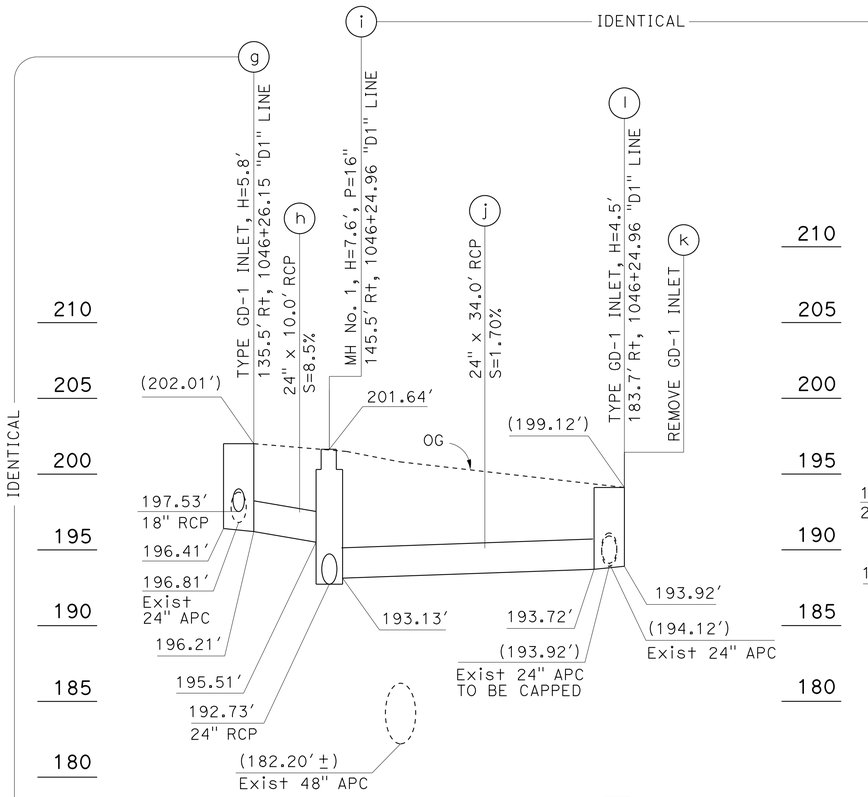

DRAINAGE SYSTEM No. 21
SCALE: Horiz 1"= 10′
Vert 1"= 5′

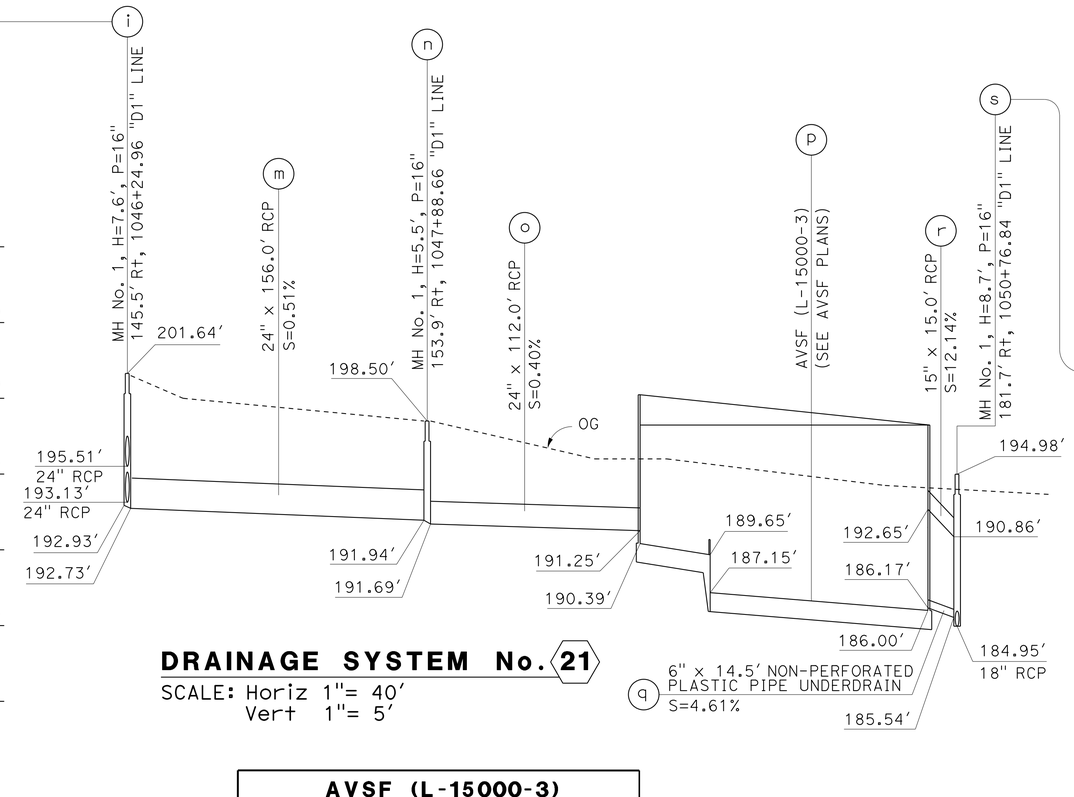

DRAINAGE SYSTEM No. 21
SCALE: Horiz 1"= 40′
Vert 1"= 5′

AVSF (L-15000-3)	
Loc	STATION
WE1	150.75′ Rt, Sta 1049+06.41, "D1"
WE3	163.20′ Rt, Sta 1050+63.79, "D1"
WE4	193.13′ Rt, Sta 1050+61.55, "D1"
WE6	180.62′ Rt, Sta 1049+03.51, "D1"

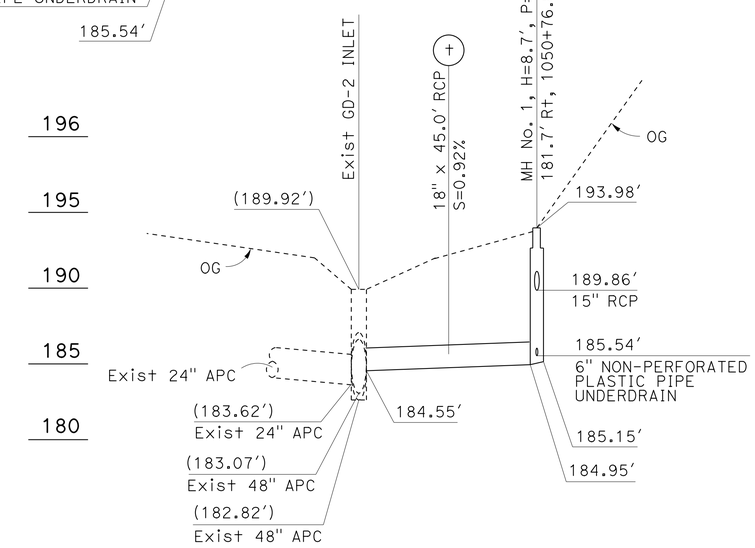

DRAINAGE SYSTEM No. 21
SCALE: Horiz 1"= 20′
Vert 1"= 5′

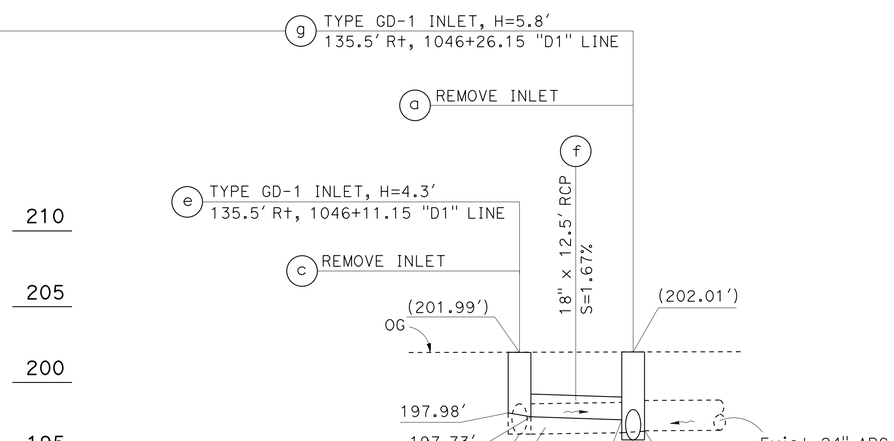

DRAINAGE SYSTEM No. 21
SCALE: Horiz 1"= 10′
Vert 1"= 5′

WALL DESIGN TABLE					
TOP OF WALL ELEVATION					
WE1	WE2	WE3	WE4	WE5	WE6
200.50	199.95	198.24	198.24	198.24	198.24
TOP OF FOOTING ELEVATION					
FE0	FE1	FE2	FE3	FE4	FE5
190.43	190.39	189.65	187.15	186.00	185.98

DESIGN BASIN WALL	DESIGN WALL H	FOOTING THICKNESS	
		SEDIMENT BASIN	FILTRATION BASIN
Sed	12′	1′-6"	1′-9"
Fil	14′		

WATER POLLUTION CONTROL PROFILE

WP-22

STATE OF CALIFORNIA - DEPARTMENT OF TRANSPORTATION
HYDRAULICS
Caltrans

FUNCTIONAL SUPERVISOR: DAVE BHALLA
CALCULATED-DESIGNED BY: PAUL FONG
CHECKED BY: DAVE BHALLA
REVISED BY
DATE REVISED

LAST REVISION
DATE PLOTTED => 12-SEP-2014
TIME PLOTTED => 06:19

Dist	COUNTY	ROUTE	POST MILES TOTAL PROJECT	SHEET No.	TOTAL SHEETS
07	LA	5,10,91, 110,134	Var	69	291

Paul Fong 02-05-14
REGISTERED CIVIL ENGINEER DATE

6-2-14
PLANS APPROVAL DATE

REGISTERED PROFESSIONAL ENGINEER PAUL FONG No. C67053 Exp. 9/30/14 CIVIL STATE OF CALIFORNIA

THE STATE OF CALIFORNIA OR ITS OFFICERS OR AGENTS SHALL NOT BE RESPONSIBLE FOR THE ACCURACY OR COMPLETENESS OF SCANNED COPIES OF THIS PLAN SHEET.

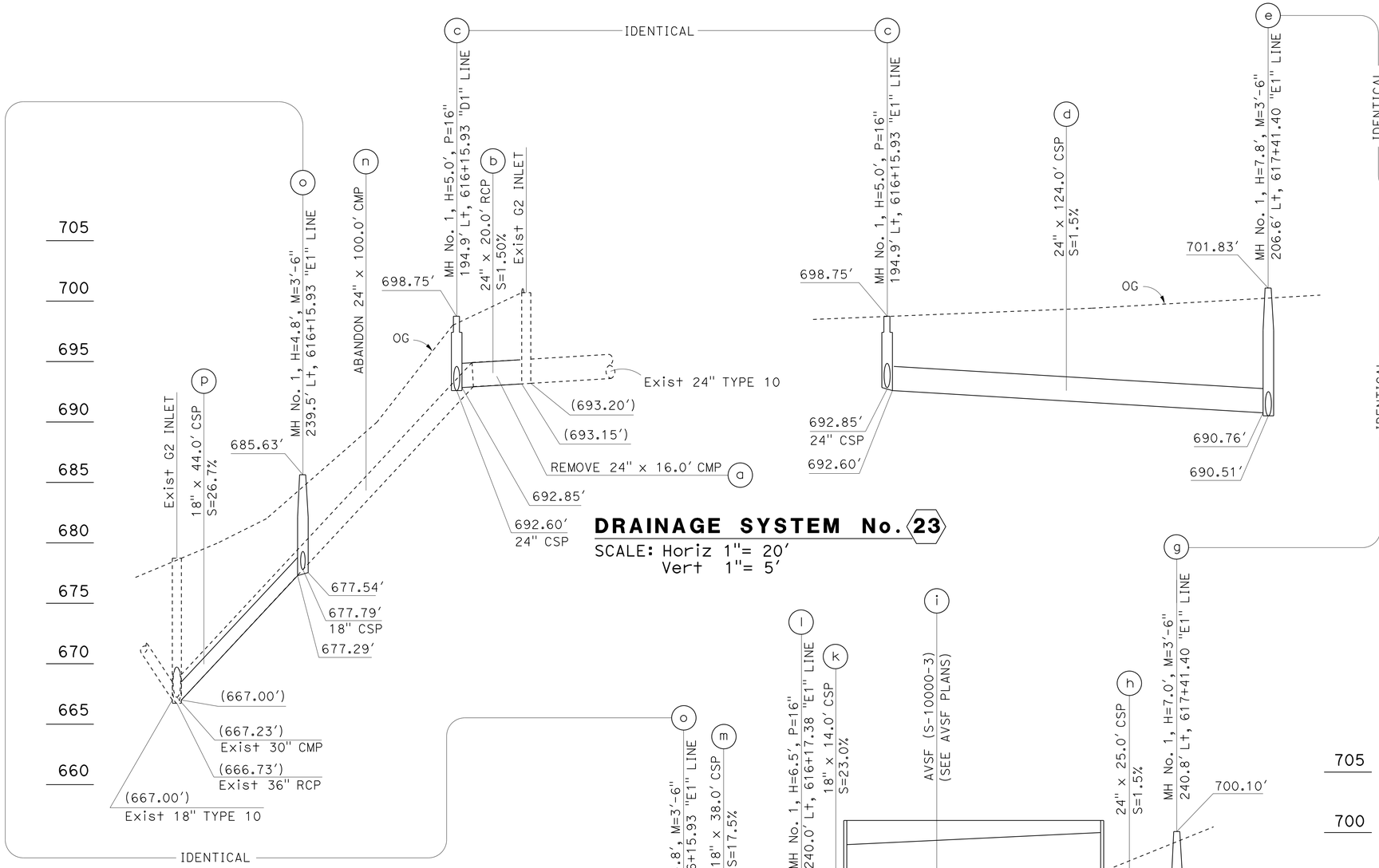

DRAINAGE SYSTEM No. 23

SCALE: Horiz 1"= 20'
Vert 1"= 5'

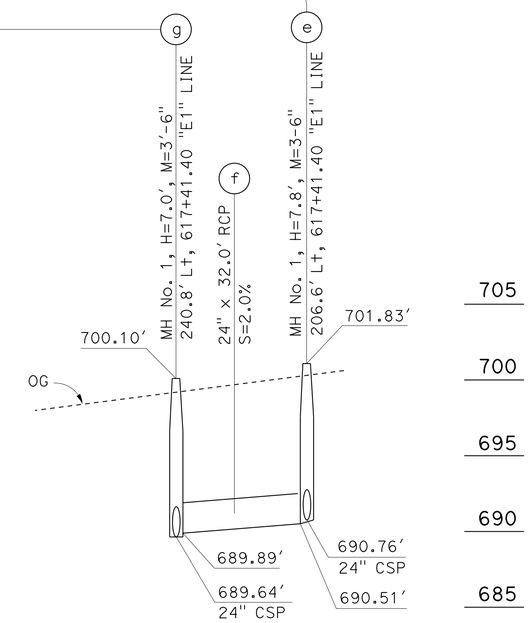

DRAINAGE SYSTEM No. 23

SCALE: Horiz 1"= 20'
Vert 1"= 5'

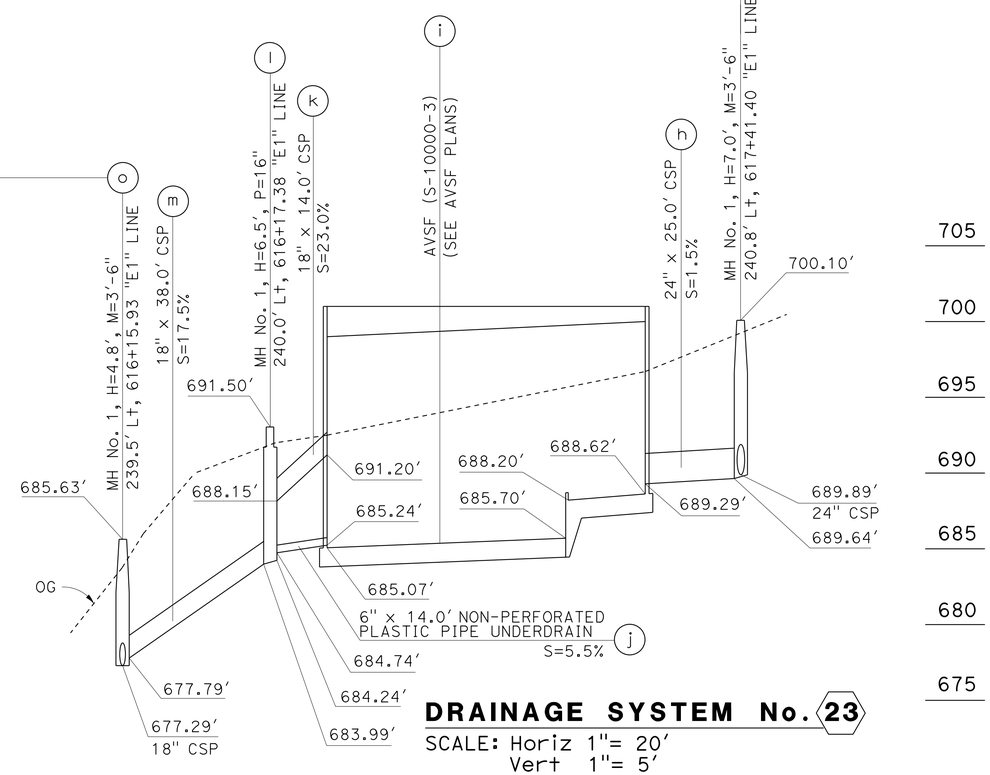

DRAINAGE SYSTEM No. 23

SCALE: Horiz 1"= 20'
Vert 1"= 5'

AVSF (S-10000-3)	
Loc	STATION
WE1	222.45' Lt, Sta 617+16.76, "E1"
WE3	222.14' Lt, Sta 616+29.99, "E1"
WE4	258.13' Lt, Sta 616+29.99, "E1"
WE6	258.45' Lt, Sta 617+16.76, "E1"

WALL DESIGN TABLE					
TOP OF WALL ELEVATION					
WE1	WE2	WE3	WE4	WE5	WE6
701.00	701.00	701.00	699.00	699.75	700.00
TOP OF FOOTING ELEVATION					
FE0	FE1	FE2	FE3	FE4	FE5
688.67	688.62	688.20	685.70	685.07	685.05

DESIGN BASIN WALL	DESIGN WALL H	FOOTING THICKNESS	
		SEDIMENT BASIN	FILTRATION BASIN
Sed	14'	1'-9"	1'-9"
Fil	16'		

WATER POLLUTION CONTROL PROFILE

WP-23

STATE OF CALIFORNIA - DEPARTMENT OF TRANSPORTATION
HYDRAULICS
Caltrans

FUNCTIONAL SUPERVISOR: DAVE BHALLA
CALCULATED-DESIGNED BY: PAUL FONG
CHECKED BY: DAVE BHALLA
REVISED BY
DATE REVISED

LAST REVISION
DATE PLOTTED => 12-SEP-2014
TIME PLOTTED => 06:20

Dist	COUNTY	ROUTE	POST MILES TOTAL PROJECT	SHEET No.	TOTAL SHEETS
07	LA	5,10,91, 110,134	Var	70	291

REGISTERED CIVIL ENGINEER Paul Fong 2-05-14 DATE

6-2-14
PLANS APPROVAL DATE

REGISTERED PROFESSIONAL ENGINEER PAUL FONG No. C67053 Exp. 9/30/14 CIVIL STATE OF CALIFORNIA

THE STATE OF CALIFORNIA OR ITS OFFICERS OR AGENTS SHALL NOT BE RESPONSIBLE FOR THE ACCURACY OR COMPLETENESS OF SCANNED COPIES OF THIS PLAN SHEET.

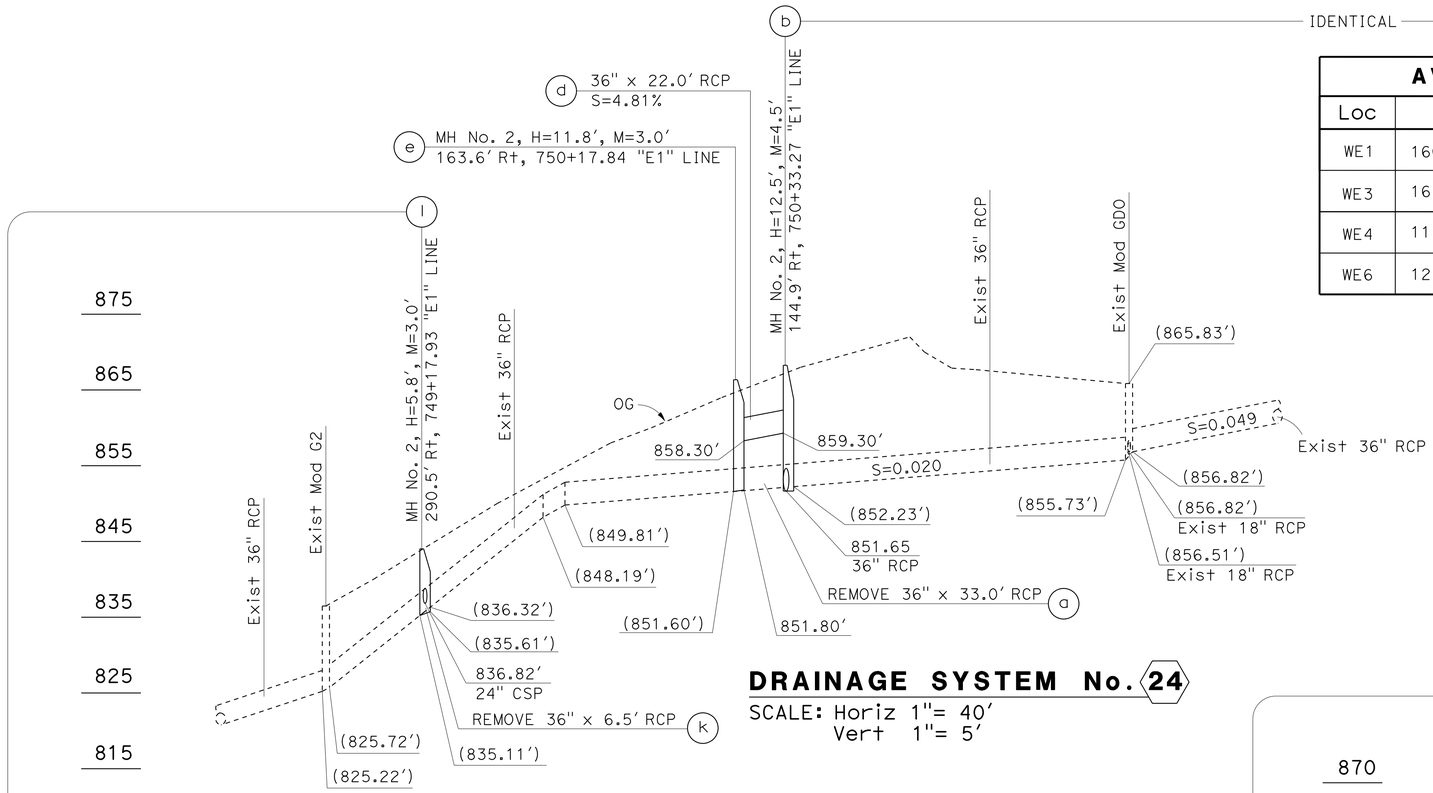

DRAINAGE SYSTEM No. 24

SCALE: Horiz 1"= 40'
Vert 1"= 5'

AVSF (S-15000-6)	
Loc	STATION
WE1	166.07' Rt, Sta 750+02.10, "E1"
WE3	163.40' Rt, Sta 749+05.85, "E1"
WE4	118.40' Rt, Sta 749+06.38, "E1"
WE6	121.07' Rt, Sta 750+04.00, "E1"

WALL DESIGN TABLE					
TOP OF WALL ELEVATION					
WE1	WE2	WE3	WE4	WE5	WE6
864.83	864.83	864.83	869.00	869.00	869.00
TOP OF FOOTING ELEVATION					
FE0	FE1	FE2	FE3	FE4	FE5
848.90	848.86	848.36	845.86	845.10	845.06

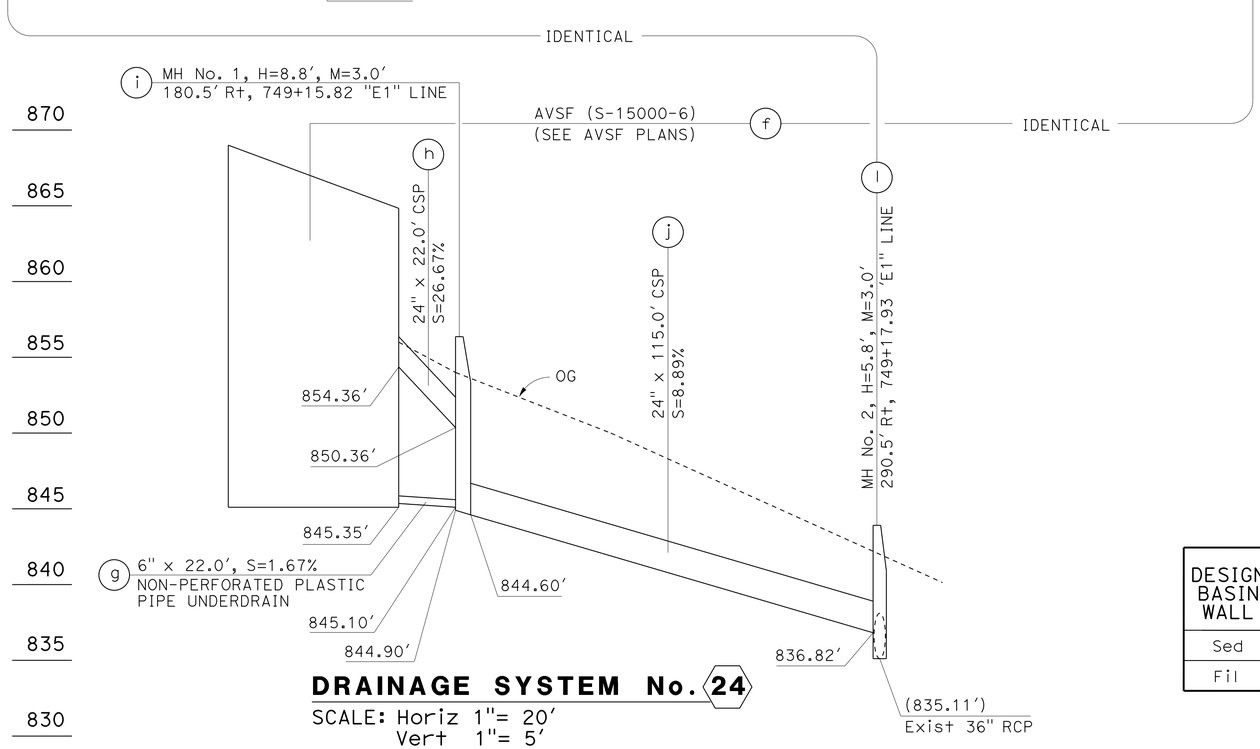

DRAINAGE SYSTEM No. 24

SCALE: Horiz 1"= 20'
Vert 1"= 5'

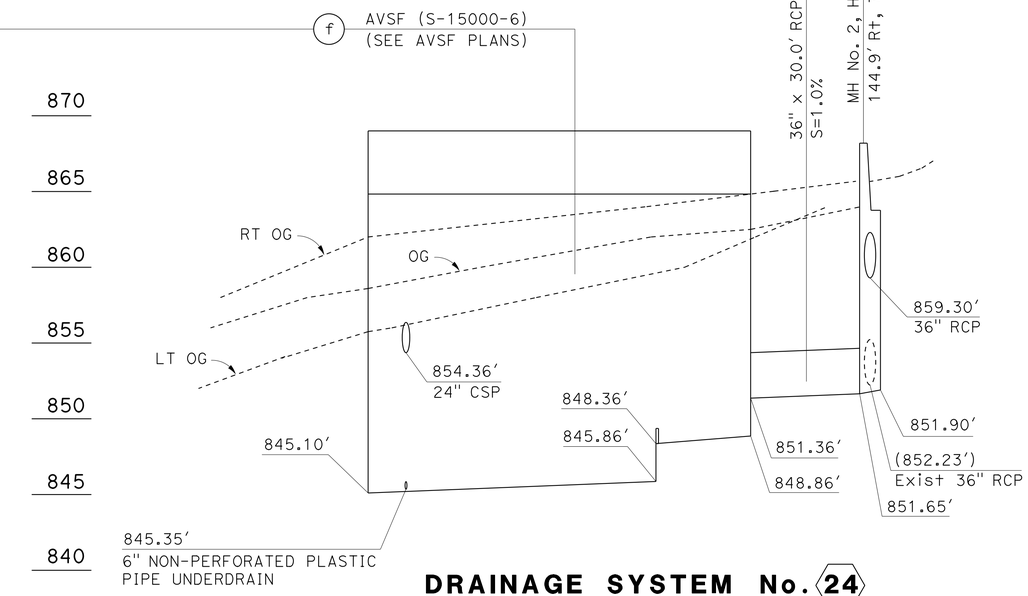

DRAINAGE SYSTEM No. 24

SCALE: Horiz 1"= 20'
Vert 1"= 5'

DESIGN BASIN WALL	DESIGN WALL H	FOOTING THICKNESS	
		SEDIMENT BASIN	FILTRATION BASIN
Sed	22'	2'-6"	2'-6"
Fil	24'		

WATER POLLUTION CONTROL PROFILE

WP-24

REVISED BY | DATE REVISED
PAUL FONG | DAVE BHALLA
CALCULATED-DESIGNED BY | CHECKED BY
FUNCTIONAL SUPERVISOR: DAVE BHALLA

STATE OF CALIFORNIA - DEPARTMENT OF TRANSPORTATION
Caltrans
HYDRAULICS

LAST REVISION | DATE PLOTTED => 12-SEP-2014 | TIME PLOTTED => 06:20

Dist	COUNTY	ROUTE	POST MILES TOTAL PROJECT	SHEET No.	TOTAL SHEETS
07	LA	5,10,91, 110,134	Var	71	291

FuSung Chang 1-13-14
REGISTERED CIVIL ENGINEER DATE

6-2-14
PLANS APPROVAL DATE

REGISTERED PROFESSIONAL ENGINEER F.S. CHANG No. 54884 Exp. 6-30-14 CIVIL STATE OF CALIFORNIA

THE STATE OF CALIFORNIA OR ITS OFFICERS OR AGENTS SHALL NOT BE RESPONSIBLE FOR THE ACCURACY OR COMPLETENESS OF SCANNED COPIES OF THIS PLAN SHEET.

PIPE ℄ DATA

No.	R	Δ	T	L
1	22.50′	95° 38′21″	24.83′	37.56′
BC	153.55′ Lt, 835+39.86 "A1"			
EC	126.15′ Lt, 835+58.86 "A1"			

AVSF (L-5000-4.5)	
Loc	STATION I-5 ("A1" LINE)
WE1	127.28′ Lt, Sta 834+67.15, "A1"
WE3	108.40′ Lt, Sta 835+49.01, "A1"
WE4	125.94′ Lt, Sta 835+53.05, "A1"
WE6	144.82′ Lt, Sta 834+71.02, "A1"

WALL DESIGN TABLE

DESIGN BASIN WALL	DESIGN WALL H	TOP OF WALL ELEVATION						TOP OF FOOTING ELEVATION						FOOTING THICKNESS	
		WE1	WE2	WE3	WE4	WE5	WE6	FE0	FE1	FE2	FE3	FE4	FE5	SEDIMENT BASIN	FILTRATION BASIN
		NORTH WALL			SOUTH WALL										
Sed	12′	238.5	238.0	238.5	236.0	236.5	237.5	227.80	227.76	227.34	224.84	224.21	224.19	1′-8"	1′-10"
Fil	16′														

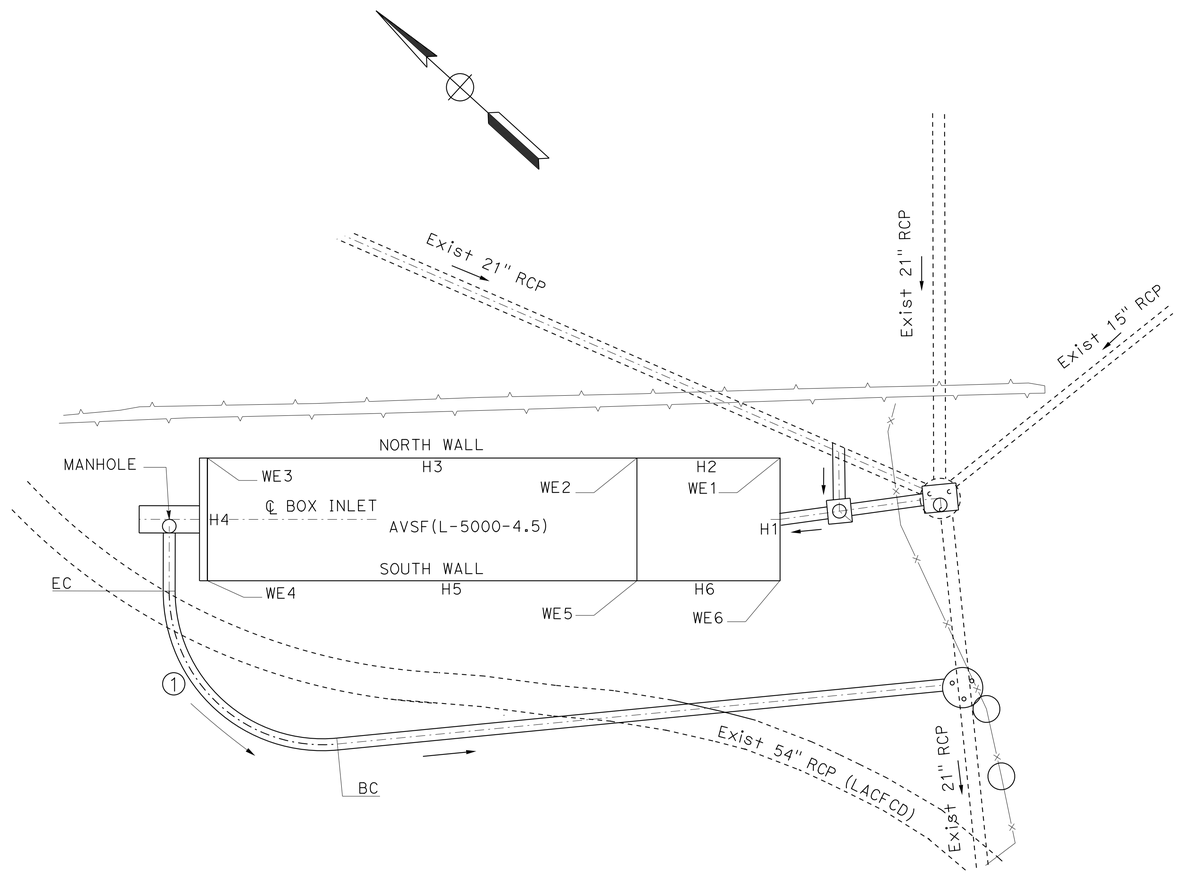

DRAINAGE SYSTEM No. 1

WATER POLLUTION CONTROL DETAILS

NO SCALE

WD-1

STATE OF CALIFORNIA - DEPARTMENT OF TRANSPORTATION
Caltrans
HYDRAULICS

FUNCTIONAL SUPERVISOR: DAVE BHALLA
CALCULATED-DESIGNED BY: FUSUNG CHANG
CHECKED BY: DAVE BHALLA
REVISED BY
DATE REVISED

LAST REVISION 00-00-00
DATE PLOTTED => 12-SEP-2014
TIME PLOTTED => 06:20

Dist	COUNTY	ROUTE	POST MILES TOTAL PROJECT	SHEET No.	TOTAL SHEETS
07	LA	5,10,91, 110,134	Var	72	291

FuSung Chang 1-13-14
REGISTERED CIVIL ENGINEER DATE

6-2-14
PLANS APPROVAL DATE

REGISTERED PROFESSIONAL ENGINEER
F.S. CHANG
No. 54884
Exp. 6-30-14
CIVIL
STATE OF CALIFORNIA

THE STATE OF CALIFORNIA OR ITS OFFICERS OR AGENTS SHALL NOT BE RESPONSIBLE FOR THE ACCURACY OR COMPLETENESS OF SCANNED COPIES OF THIS PLAN SHEET.

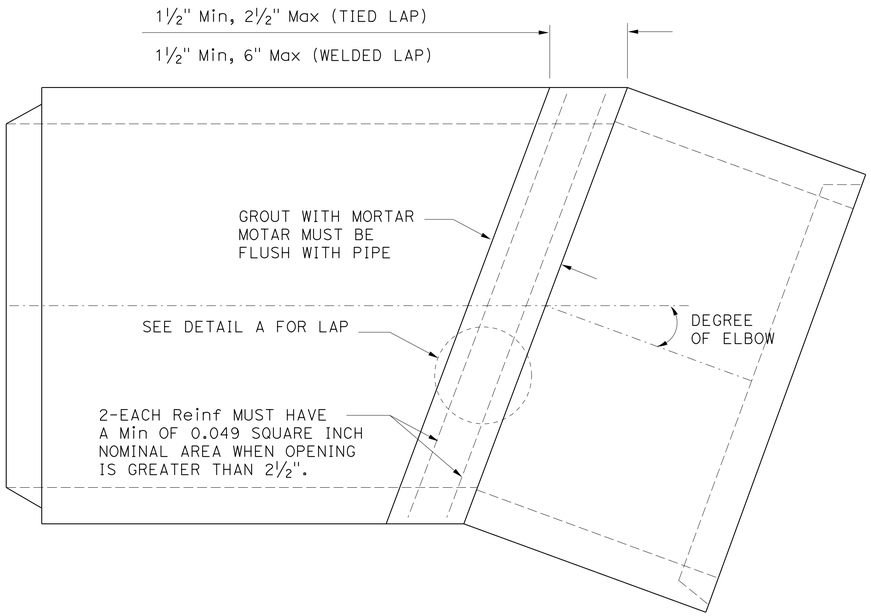

PLAN

REINFORCED CONCRETE PIPE ELBOW

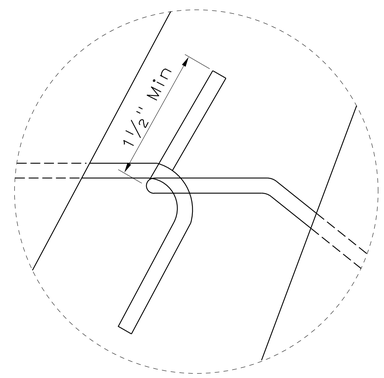

TIED LAP

LONGITUDINAL BAR

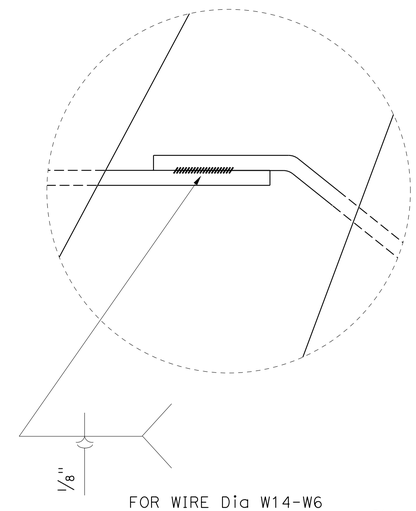

FOR WIRE Dia W14-W6
LENGTH OF WELD MUST BE ¾" Min
FOR WIRE Dia W5.5-W2.9
LENGTH OF WELD MUST BE ⅜" Min
OTHER WIRE Dia MUST BE TIED PER DETAIL.

WELDED LAP

LONGITUDINAL BAR

DETAIL A

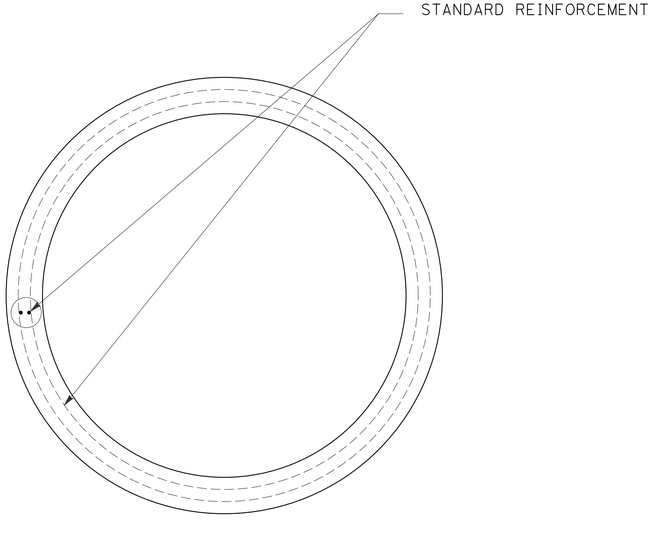

PLAN

TRANSVERSE SECTION

WATER POLLUTION CONTROL DETAILS

SCALE: Horiz 1" = 25'
Vert 1" = 5'

WD-2

STATE OF CALIFORNIA - DEPARTMENT OF TRANSPORTATION
Caltrans
HYDRAULICS
CONSULTANT FUNCTIONAL SUPERVISOR: DAVE BHALLA
CALCULATED-DESIGNED BY: FUSUNG CHANG
CHECKED BY: DAVE BHALLA
REVISED BY
DATE REVISED

LAST REVISION 00-00-00
DATE PLOTTED => 12-SEP-2014
TIME PLOTTED => 06:20

Dist	COUNTY	ROUTE	POST MILES TOTAL PROJECT	SHEET No.	TOTAL SHEETS
07	LA	5,10,91, 110,134	Var	73	291

FuSung Chang 1-13-14
REGISTERED CIVIL ENGINEER DATE

6-2-14
PLANS APPROVAL DATE

REGISTERED PROFESSIONAL ENGINEER F.S. CHANG No. 54884 Exp. 6-30-14 CIVIL STATE OF CALIFORNIA

THE STATE OF CALIFORNIA OR ITS OFFICERS OR AGENTS SHALL NOT BE RESPONSIBLE FOR THE ACCURACY OR COMPLETENESS OF SCANNED COPIES OF THIS PLAN SHEET.

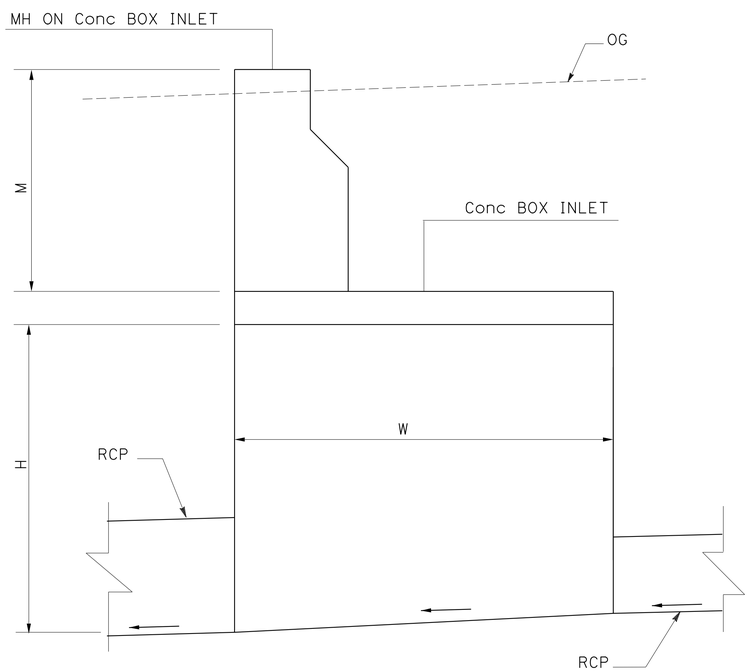

Conc BOX INLET No. 1

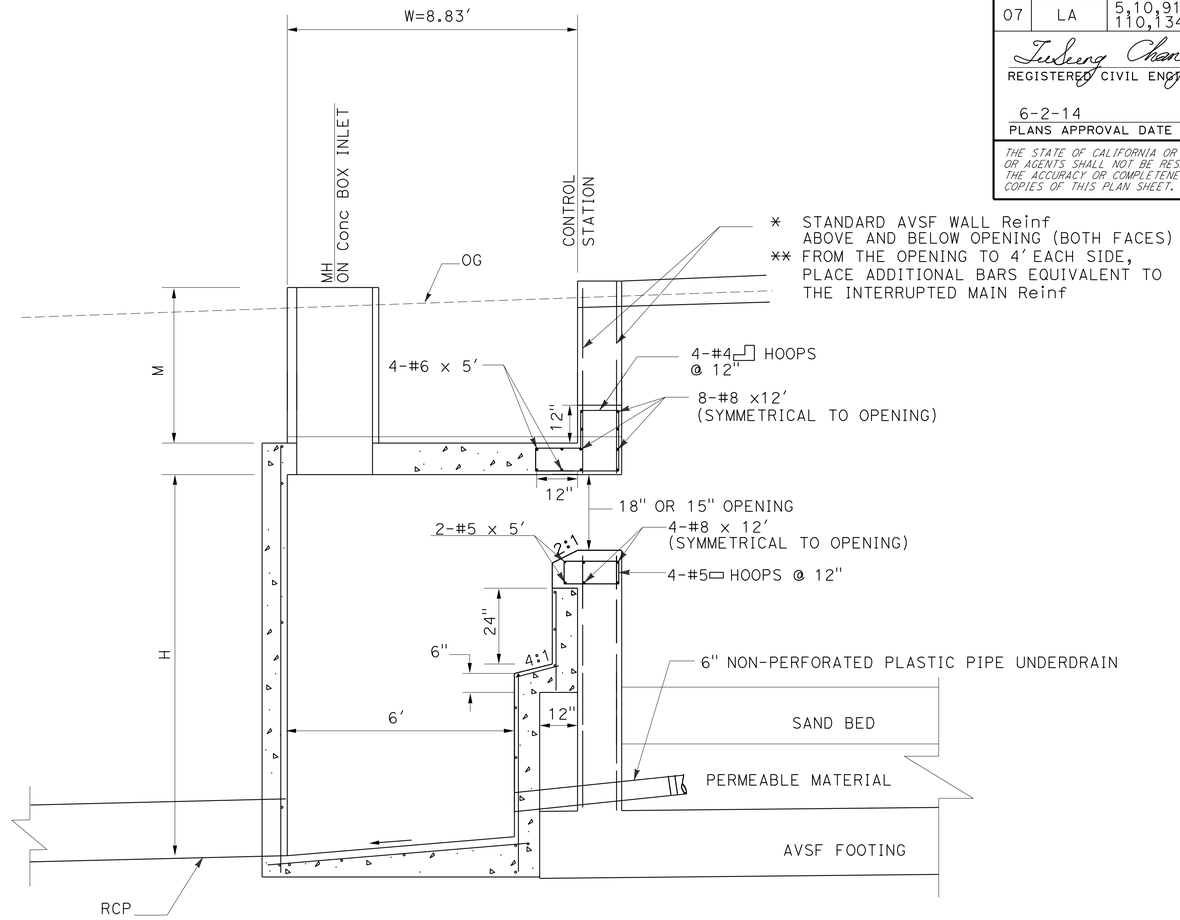

Conc BOX INLET No. 2

W/15"x 4′ OVERFLOW OPENING
W/18"x 4′ OVERFLOW OPENING

NOTES:

1. BOX AND ALL WALLS MUST BE DESIGNED AND Reinf PER CAST-IN-PLACE REINFORCED CONCRETE SINGLE BOX CULVERT, Std PLAN D80
2. FOR Info NOT SHOWN AND Reinf AROUND MH, SEE MH No. 3 DETAIL, WD SHEET.
3. Reinf AROUND PIPE OPENING, SEE PIPE OPENING-WALL DETAILS, WD-10 SHEET, CASE 1 & 2.
4. BOX INLET MUST BE GIVEN TROWEL FINISH. SLOPES FLOOR FROM ALL DIRECTION TO THE OUTLET.

NOTES:

1. Reinf STEEL SHOWN IS TO BE PLACED IN ADDITION TO THE STANDARD Reinf ON AVSF WALL DETAILS PLAN.
2. BOX AND ALL WALLS MUST BE DESIGNED AND Reinf PER CAST-IN-PLACE REINFORCED CONCRETE SINGLE BOX CULVERT, Std PLAN D80
3. Reinf AROUND MH AND Conc RINGS, SEE STEEL AROUND MH ON Conc BOX INLET No. 2 DETAILS.
4. Reinf ROUND PIPE OPENING SEE PIPE OPENING-WALL DETAILS, WD SHEET, CASE 1.
5. BOX INLET MUST BE GIVEN TROWEL FINISH, SLOPES FLOOR FROM ALL DIRECTION TO THE OUTLET.
6. UNLESS OTHERWISE SHOWN, STEPS MUST BE PLACED 12" ON CENTERS. THE LOWEST STEP MUST BE NOT MORE THAN 16" ABOVE THE INVERT. STEP DETAILS PER Std PLAN D72 & D75C.
7. MH AND COVER PER Std PLAN B7-11, DETAILS 'U45'.

WATER POLLUTION CONTROL DETAILS

SCALE: Horiz 1" = 25′
Vert 1" = 5′

WD-3

STATE OF CALIFORNIA - DEPARTMENT OF TRANSPORTATION
Caltrans
HYDRAULICS

FUNCTIONAL SUPERVISOR: DAVE BHALLA
CALCULATED-DESIGNED BY: FUSUNG CHANG
CHECKED BY: DAVE BHALLA
REVISED BY
DATE REVISED

LAST REVISION 00-00-00
DATE PLOTTED => 12-SEP-2014
TIME PLOTTED => 06:20

Dist	COUNTY	ROUTE	POST MILES TOTAL PROJECT	SHEET No.	TOTAL SHEETS
07	LA	5,10,91, 110,134	Var	74	291

REGISTERED CIVIL ENGINEER 1-13-14 DATE

6-2-14
PLANS APPROVAL DATE

REGISTERED PROFESSIONAL ENGINEER F.S. CHANG No. 54884 Exp. 6-30-14 CIVIL STATE OF CALIFORNIA

THE STATE OF CALIFORNIA OR ITS OFFICERS OR AGENTS SHALL NOT BE RESPONSIBLE FOR THE ACCURACY OR COMPLETENESS OF SCANNED COPIES OF THIS PLAN SHEET.

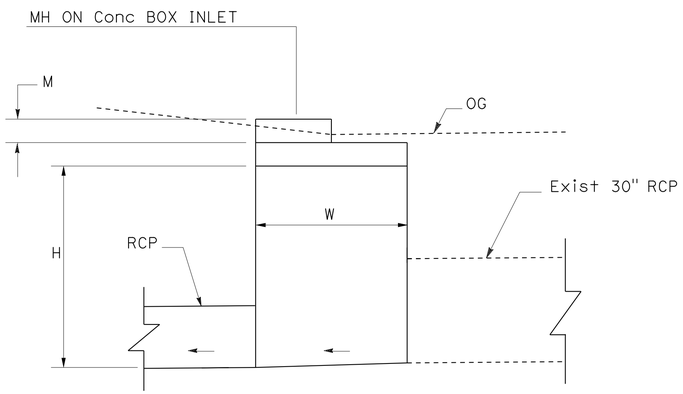

Conc BOX INLET No. 3

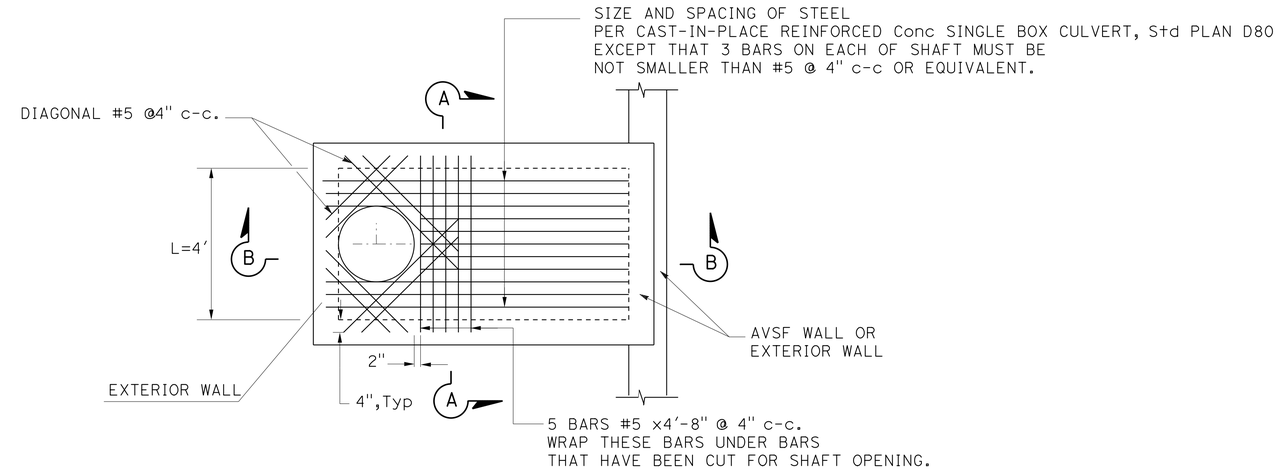

STEEL AROUND MANHOLE ON
Conc BOX INLET No. 2 , No. 3, No. 4
(SHAFT NOT SHOWN)

NOTES:

1. BOX AND ALL WALLS MUST BE DESIGNED AND Reinf PER CAST-IN-PLACE REINFORCED CONCRETE SINGLE BOX CULVERT, Std PLAN D80
2. Reinf AROUND MH AND Conc RINGS, SEE STEEL AROUND MH ON Conc BOX INLET No. 3 DETAILS.
3. Reinf AROUND PIPE OPENING, SEE PIPE OPENING-WALL DETAILS WD-11 SHEET, CASE 3.
4. BOX INLET MUST BE GIVEN TROWEL FINISH, SLOPES FLOOR FROM ALL DIRECTION TO THE OUTLET.
5. UNLESS OTHERWISE SHOWN, STEPS MUST BE PLACED 12" ON CENTERS, THE LOWEST STEP MUST BE, NOT MORE THAN 16" ABOVE THE INVERT. STEP DETAILS PER Std PLAN D72 AND D75C.
6. MH AND COVER PER Std PLAN B7-11, DETAILS 'U45'.

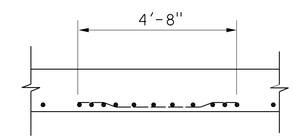

SECTION A-A

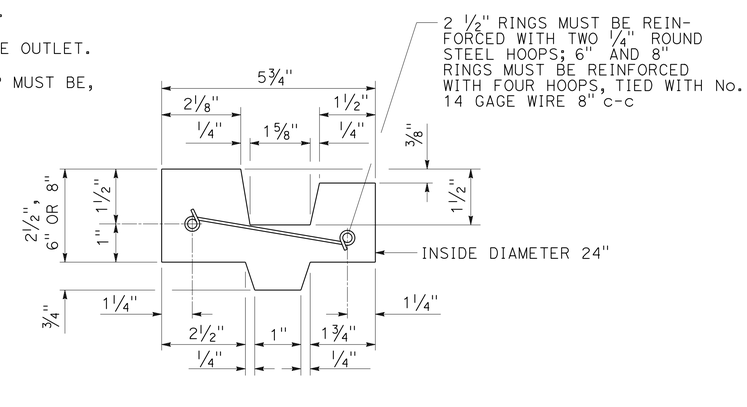

CROSS SECTION OF
REINFORCED CONCRETE RING

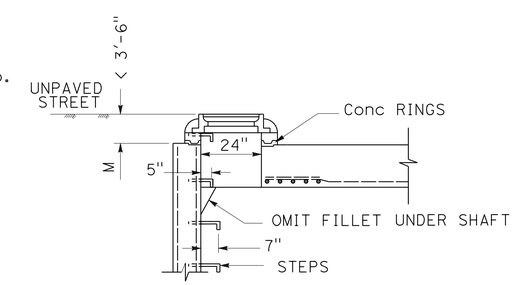

SECTION B-B

WATER POLLUTION CONTROL DETAILS

SCALE: Horiz 1" = 25'
Vert 1" = 5'

WD-4

STATE OF CALIFORNIA - DEPARTMENT OF TRANSPORTATION
Caltrans® HYDRAULICS

FUNCTIONAL SUPERVISOR: DAVE BHALLA
CALCULATED-DESIGNED BY: FUSUNG CHANG
CHECKED BY: DAVE BHALLA
REVISED BY
DATE REVISED

LAST REVISION 00-00-00
DATE PLOTTED => 12-SEP-2014
TIME PLOTTED => 06:20

Dist	COUNTY	ROUTE	POST MILES TOTAL PROJECT	SHEET No.	TOTAL SHEETS
07	LA	5,10,91, 110,134	Var	75	291

REGISTERED CIVIL ENGINEER Fu Seng Chang DATE 1-13-14

PLANS APPROVAL DATE 6-2-14

REGISTERED PROFESSIONAL ENGINEER F.S. CHANG No. 54884 Exp. 6-30-14 CIVIL STATE OF CALIFORNIA

THE STATE OF CALIFORNIA OR ITS OFFICERS OR AGENTS SHALL NOT BE RESPONSIBLE FOR THE ACCURACY OR COMPLETENESS OF SCANNED COPIES OF THIS PLAN SHEET.

NOTES:

1. PLACE ADDITIONAL BARS WITHIN "LIMIT" EQUIVALENT TO THE INTERRUPTED MAIN Reinf
2. "e" BARS REFER TO Std PLAN D80
- a. SEE SHEET WD-24
- b. SEE SHEET WD-24

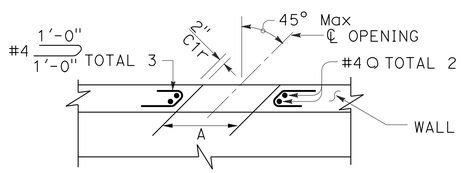

PART PLAN-SECTION

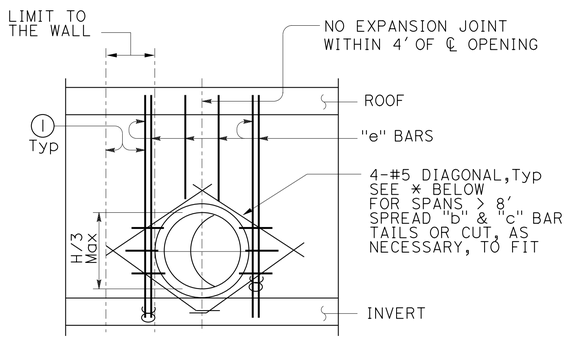

PIPE OPENING-WALL
TYPICAL SECTION
CASE 1

H = HEIGHT OF BOX

* 44" LONG DIAGONAL FOR 30" OPENING
39" LONG DIAGONAL FOR 24" OPENING
35" LONG DIAGONAL FOR 21" OPENING
30" LONG DIAGONAL FOR 18" OPENING

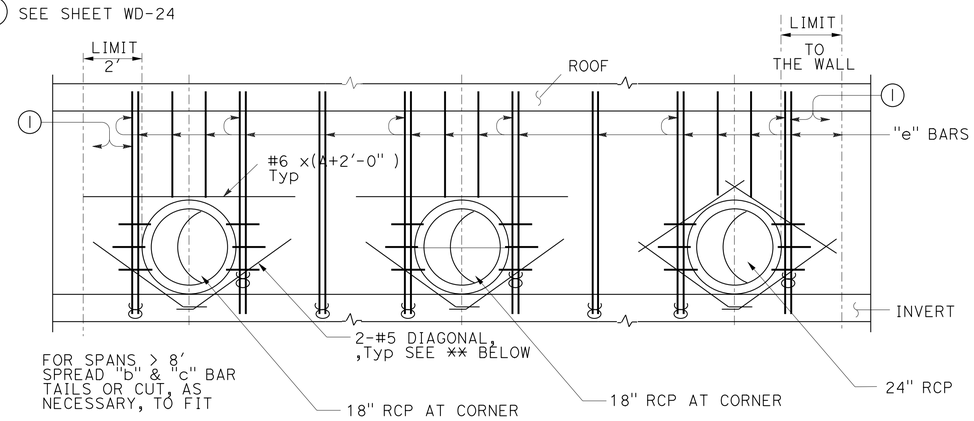

PIPE OPENING-WALL
PROJECTED SECTION
CASE 3

** 30" LONG DIAGONAL FOR 18" OPENING

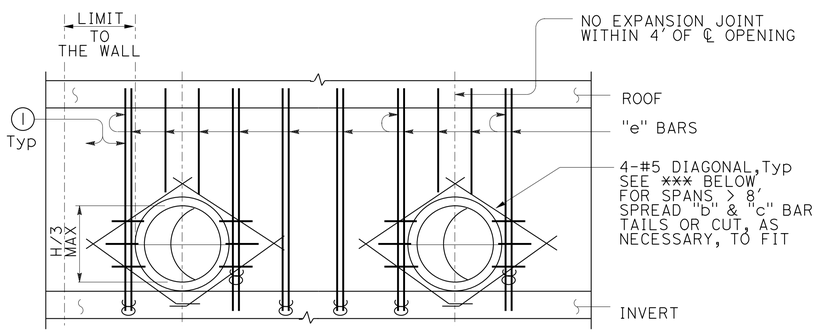

PIPE OPENING-WALL
TYPICAL SECTION
CASE 2

H = HEIGHT OF BOX

*** 30" LONG DIAGONAL FOR 18" OPENING

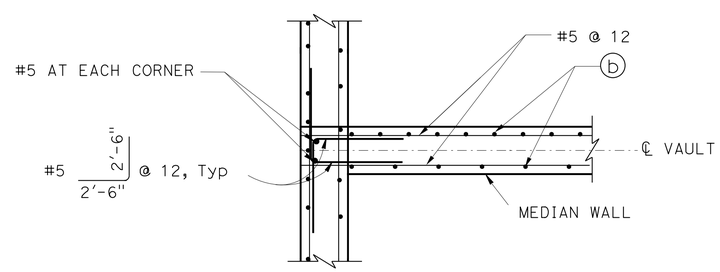

TYPICAL CORNER DETAIL AT MEDIAN WALL
PARTIAL PLAN
6

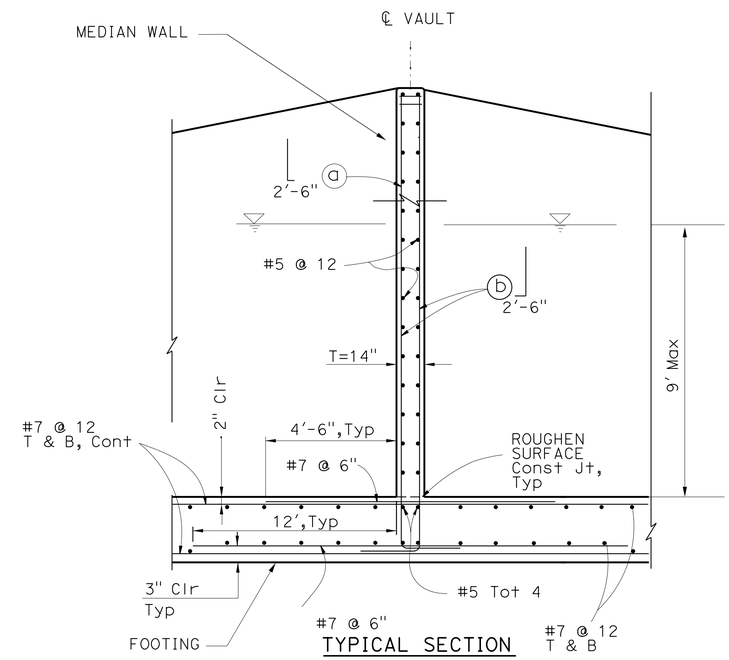

TYPICAL SECTION
NO SCALE

TYPICAL MEDIAN WALL SECTION
PARTIAL PLAN
6

DRAINAGE DETAILS

NO SCALE

WD-5

STATE OF CALIFORNIA - DEPARTMENT OF TRANSPORTATION
Caltrans
HYDRAULICS
FUNCTIONAL SUPERVISOR DAVE BHALLA
CALCULATED-DESIGNED BY FUSUNG CHANG
CHECKED BY DAVE BHALLA
REVISED BY
DATE REVISED

LAST REVISION 00-00-00
DATE PLOTTED => 12-SEP-2014
TIME PLOTTED => 06:20

Dist	COUNTY	ROUTE	POST MILES TOTAL PROJECT	SHEET No.	TOTAL SHEETS
07	LA	5,10,91, 110,134	Var	76	291

REGISTERED CIVIL ENGINEER — DATE: 1-13-14

6-2-14
PLANS APPROVAL DATE

REGISTERED PROFESSIONAL ENGINEER — F.S. CHANG No. 54884 Exp. 6-30-14 CIVIL — STATE OF CALIFORNIA

THE STATE OF CALIFORNIA OR ITS OFFICERS OR AGENTS SHALL NOT BE RESPONSIBLE FOR THE ACCURACY OR COMPLETENESS OF SCANNED COPIES OF THIS PLAN SHEET.

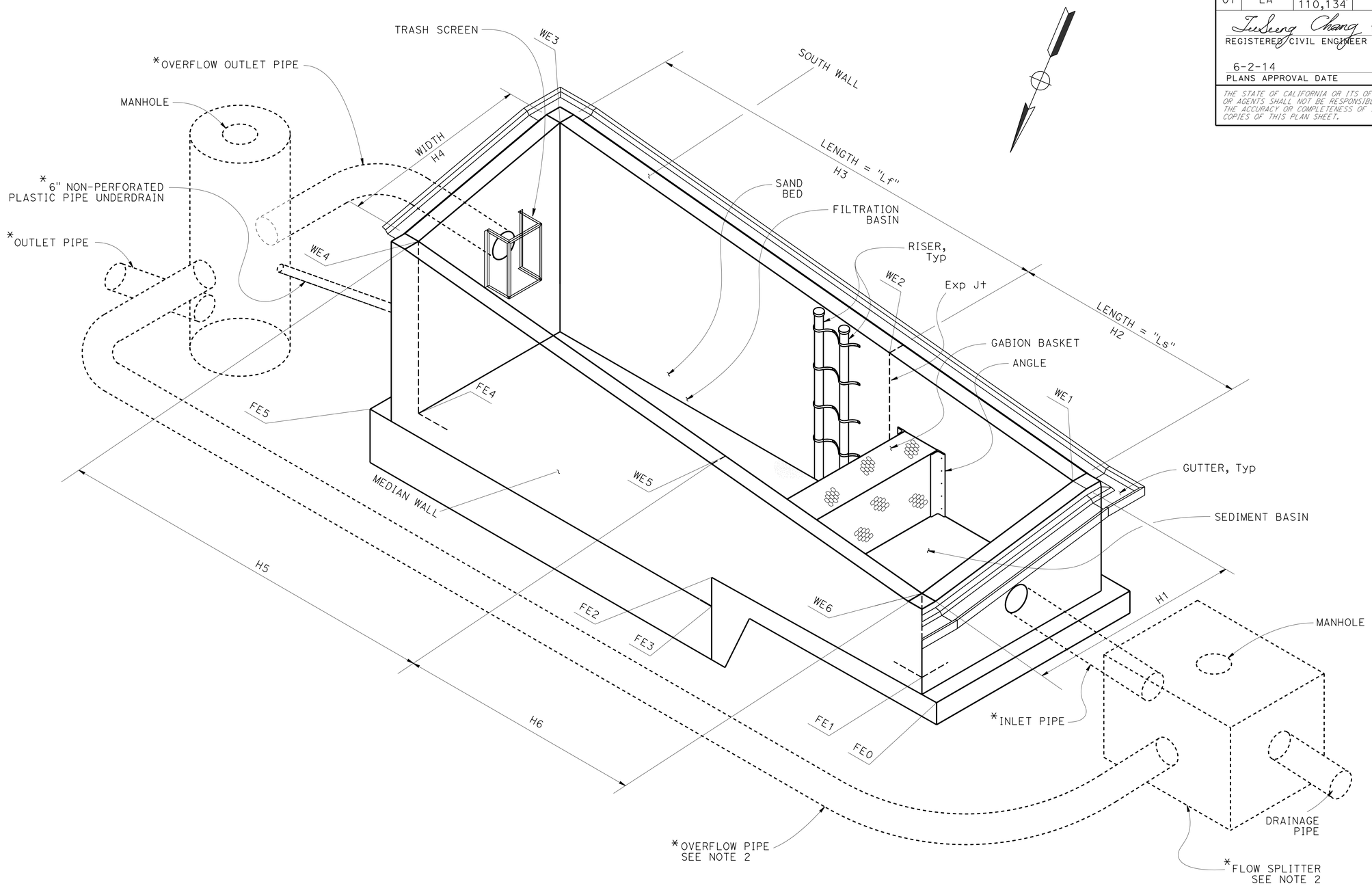

ISOMETRIC VIEW (1/2)

DRAINAGE SYSTEM No. 6 j

NOTES:
1. NO CABLE RAILING CONSTRUCTION IN MEDIAN WALL.
2. NO EXPANSION JOINT ON MEDIAN WALL.

NOTES:

1. * - FOR DETAILS SEE "WATER POLLUTION CONTROL PLANS".
2. OFF-LINE DETAILS OPTIONAL, SEE "WATER POLLUTION CONTROL PLANS".
3. SEE WP-5 WALL DESIGN TABLE(1) FOR DESIGNED WALL HEIGHT.
4. MORE INFORMATION ON AVSF, SEE WD SHEETS FOR AUSTIN VAULT SAND FILTER PLANS.

MODIFIED AUSTIN VAULT SAND FILTER LAYOUT No. 1A

NO SCALE

WD-6

STATE OF CALIFORNIA - DEPARTMENT OF TRANSPORTATION
Caltrans
HYDRAULICS

FUNCTIONAL SUPERVISOR: DAVE BHALLA
CALCULATED-DESIGNED BY: FUSUNG CHANG
CHECKED BY: DAVE BHALLA
REVISED BY
DATE REVISED

LAST REVISION 00-00-00
DATE PLOTTED => 12-SEP-2014
TIME PLOTTED => 06:20

Dist	COUNTY	ROUTE	POST MILES TOTAL PROJECT	SHEET No.	TOTAL SHEETS
07	LA	5,10,91, 110,134	Var	77	291

REGISTERED CIVIL ENGINEER Fusung Chang DATE 1-13-14

6-2-14
PLANS APPROVAL DATE

REGISTERED PROFESSIONAL ENGINEER F.S. CHANG No. 54884 Exp. 6-30-14 CIVIL STATE OF CALIFORNIA

THE STATE OF CALIFORNIA OR ITS OFFICERS OR AGENTS SHALL NOT BE RESPONSIBLE FOR THE ACCURACY OR COMPLETENESS OF SCANNED COPIES OF THIS PLAN SHEET.

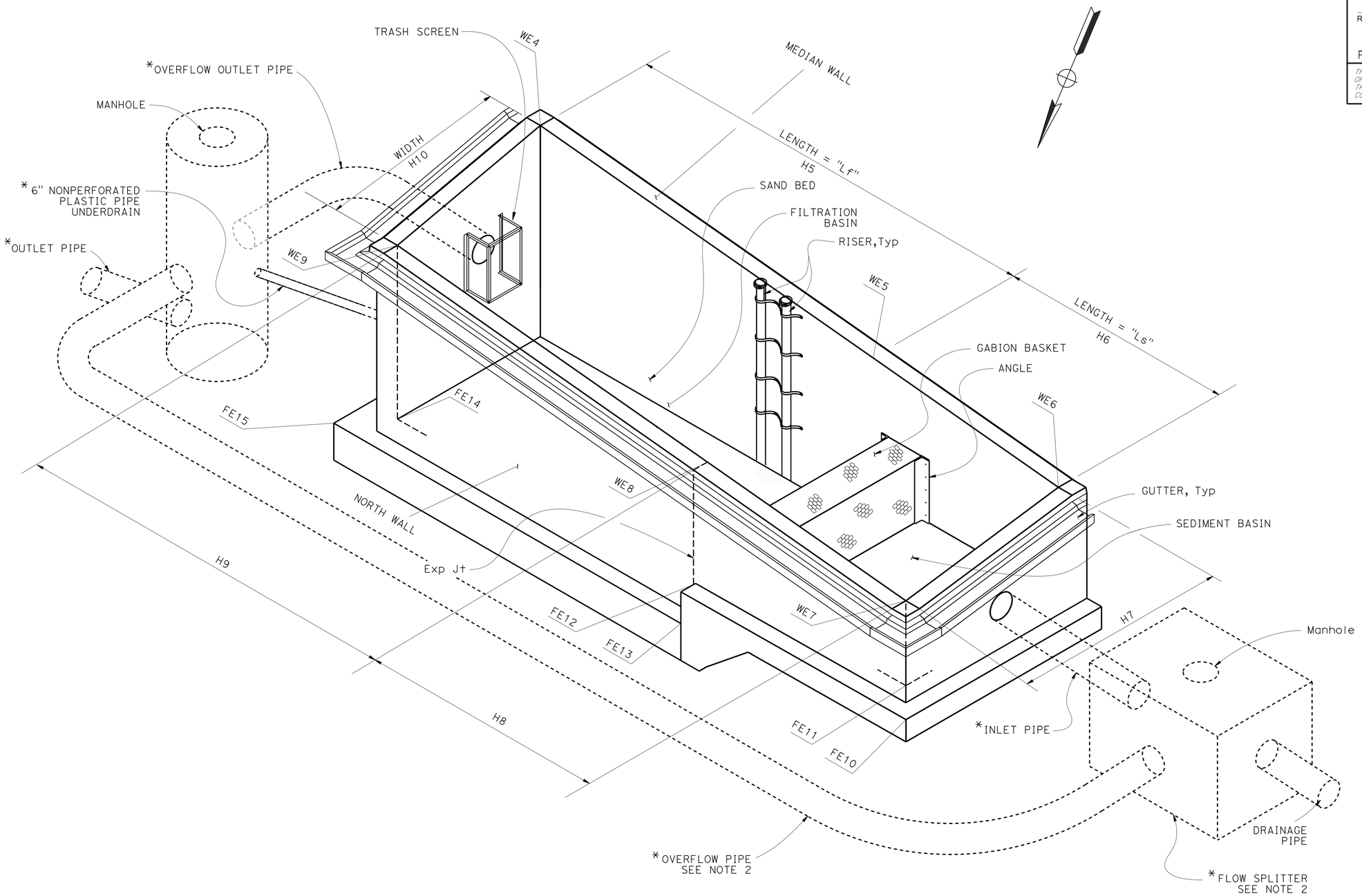

ISOMETRIC VIEW(2/2)

DRAINAGE SYSTEM No. 6 q

NOTES:
1. NO CABLE RAILING CONSTRUCTION IN MEDIAN WALL.
2. NO EXPANSION JOINT ON MEDIAN WALL.

NOTES:
1. * - FOR DETAILS SEE "WATER POLLUTION CONTROL PLANS".
2. OFF-LINE DETAILS OPTIONAL, SEE "WATER POLLUTION CONTROL PLANS".
3. SEE WP-6 WALL DESIGN TABLE (2) FOR WALL HEIGHT.
4. MORE INFROMATION ON AVSF, SEE WD SHEETS FOR AUSTIN VAULT SAND FILTER PLANS.

MODIFIED AUSTIN VAULT SAND FILTER LAYOUT No. 1B

NO SCALE

WD-7

STATE OF CALIFORNIA - DEPARTMENT OF TRANSPORTATION
Caltrans® HYDRAULICS

FUNCTIONAL SUPERVISOR: DAVE BHALLA
CALCULATED-DESIGNED BY: FUSUNG CHANG
CHECKED BY: DAVE BHALLA
REVISED BY
DATE REVISED

LAST REVISION 00-00-00
DATE PLOTTED => 12-SEP-2014
TIME PLOTTED => 06:20

Dist	COUNTY	ROUTE	POST MILES TOTAL PROJECT	SHEET No.	TOTAL SHEETS
07	LA	5,10,91, 110,134	Var	78	291

FuSeong Chang 1-13-14
REGISTERED CIVIL ENGINEER DATE

6-2-14
PLANS APPROVAL DATE

REGISTERED PROFESSIONAL ENGINEER F.S. CHANG No. 54884 Exp. 6-30-14 CIVIL STATE OF CALIFORNIA

THE STATE OF CALIFORNIA OR ITS OFFICERS OR AGENTS SHALL NOT BE RESPONSIBLE FOR THE ACCURACY OR COMPLETENESS OF SCANNED COPIES OF THIS PLAN SHEET.

Conc BOX INLET	
Loc	
1	87.80′ Lt, Sta 281+57.64, "R2"
2	79.88′ Lt, Sta 281+56.31, "R2"
3	81.14′ Lt, Sta 281+44.49, "R2"
4	89.09′ Lt, Sta 281+45.59, "R2"
5	61.12′ Lt, Sta 284+02.92, "R2"
6	57.18′ Lt, Sta 284+02.23, "R2"
7	58.67′ Lt, Sta 283+94.59, "R2"
8	62.60′ Lt, Sta 283+95.34, "R2"

2-AVSF(L-15000-6)	
Loc	
WE1	104.17′ Lt, Sta 283+61.52, "R2"
WE3	104.17′ Lt, Sta 282+09.52, "R2"
WE7	43.0′ Lt, Sta 283+61.52, "R2"
WE9	43.0′ Lt, Sta 282+09.52, "R2"

AVSF(L-5000-6)	
Loc	
WE1	62.07′ Lt, Sta 281+86.34, "R2"
WE3	60.02′ Lt, Sta 280+90.55, "R2"
WE4	42.14′ Lt, Sta 280+92.90, "R2"
WE6	41.12′ Lt, Sta 281+84.94, "R2"

PIPE ℄ DATA

No.	R	Δ	T	L
③	22.50′	80° 27′05"	19.03′	31.59′
BC	97.75′ Lt, Sta 280+90.55, "R2"			
EC	116.76′ Lt, Sta 281+79.45, "R2"			
No.	R	Δ	T	L
④	22.50′	55° 39′45"	11.88′	21.86′
BC	89.17′ Lt, Sta 283+65.31, "R2"			
EC	79.36′ Lt, Sta 283+83.89, "R2"			
No.	R	Δ	T	L
⑤	22.50′	79° 5′44"	18.58′	31.06′
BC	107.24′ Lt, Sta 283+75.42, "R2"			
EC	87.90′ Lt, Sta 283+96.56, "R2"

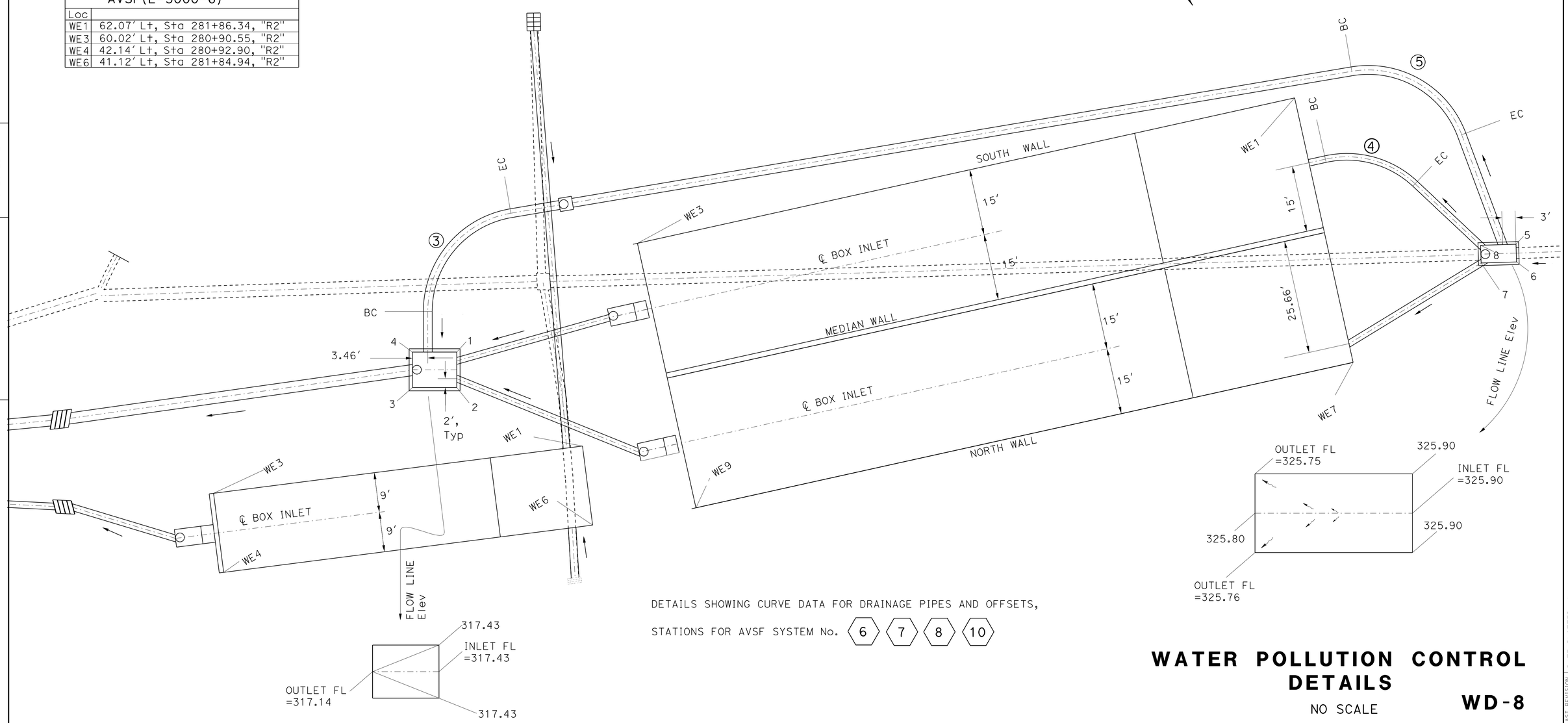

DETAILS SHOWING CURVE DATA FOR DRAINAGE PIPES AND OFFSETS,

STATIONS FOR AVSF SYSTEM No. 6 7 8 10

WATER POLLUTION CONTROL DETAILS

NO SCALE

WD-8

STATE OF CALIFORNIA - DEPARTMENT OF TRANSPORTATION
Caltrans
HYDRAULICS

FUNCTIONAL SUPERVISOR: DAVE BHALLA
CALCULATED-DESIGNED BY: FUSUNG CHANG
CHECKED BY: DAVE BHALLA
REVISED BY
DATE REVISED

LAST REVISION 3-7-14
DATE PLOTTED => 12-SEP-2014
TIME PLOTTED => 06:20

Dist	COUNTY	ROUTE	POST MILES TOTAL PROJECT	SHEET No.	TOTAL SHEETS
07	LA	5,10,91, 110,134	Var	79	291

REGISTERED CIVIL ENGINEER 1-13-14 DATE

6-2-14
PLANS APPROVAL DATE

REGISTERED PROFESSIONAL ENGINEER F.S. CHANG No. 54884 Exp. 6-30-14 CIVIL STATE OF CALIFORNIA

THE STATE OF CALIFORNIA OR ITS OFFICERS OR AGENTS SHALL NOT BE RESPONSIBLE FOR THE ACCURACY OR COMPLETENESS OF SCANNED COPIES OF THIS PLAN SHEET.

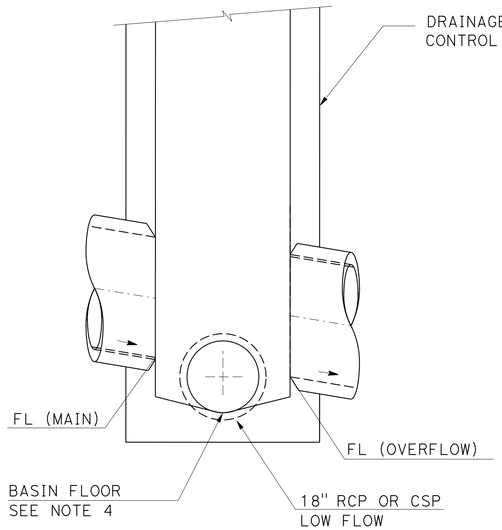

SECTION A-A

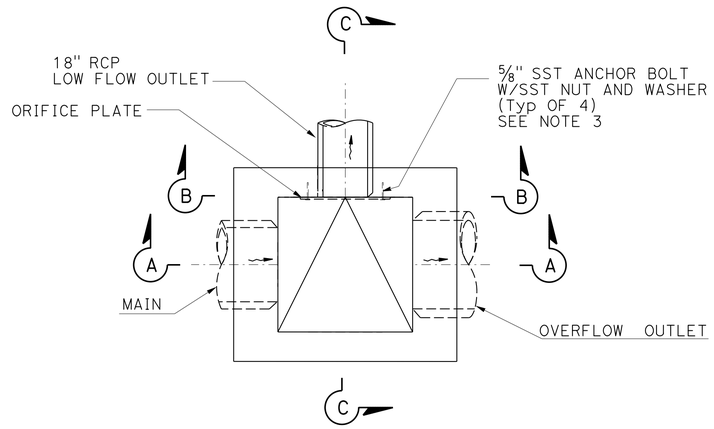

PLAN

FLOW SPLITTER NOTES:

1. DRAINAGE INLET DESIGN REFERS TO WATER POLLUTION CONTROL PLANS
2. STEPS MUST BE PROVIDED FOR ACCESS BASED ON RSP D73.
3. SST ANCHOR BOLTS MUST BE EMBEDDED 4". ANTI-SIEZE COMPOUND MUST BE USED FOR SST ANCHOR BOLTS.
4. BASIN FLOORS MUST HAVE WOOD TROWEL AND SLOPE FROM ALL DIRECTIONS TOWARD OUTLET SLOPE.

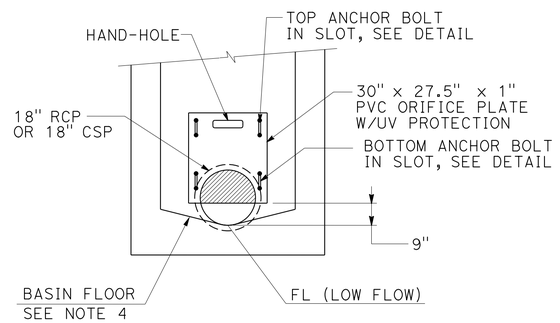

SECTION B-B

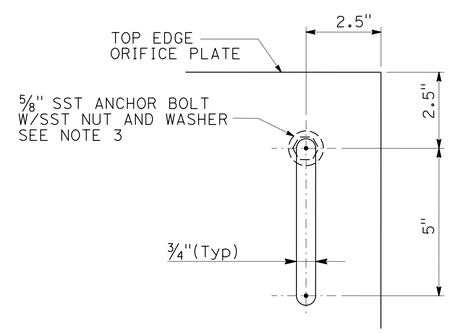

TOP
ANCHOR BOLT SLOT

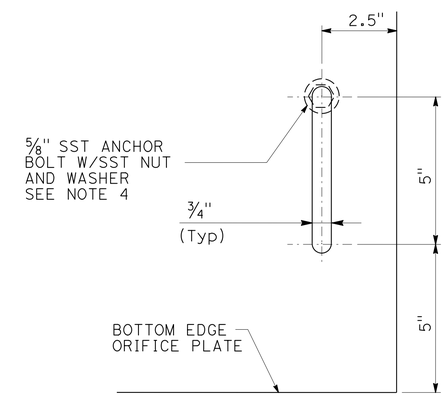

BOTTOM
ANCHOR BOLT SLOT

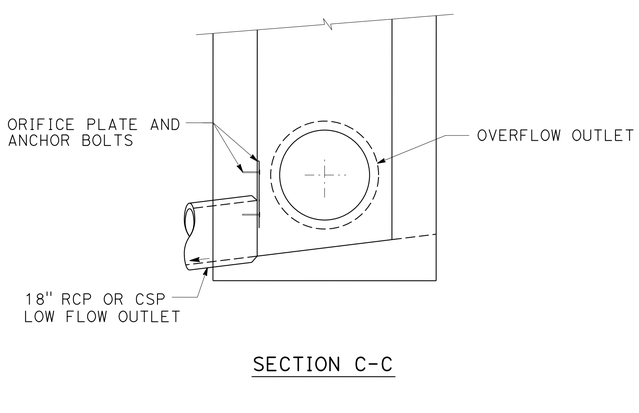

SECTION C-C

FLOW SPLITTER
WATER POLLUTION CONTROL DETAILS

NO SCALE

WD-9

STATE OF CALIFORNIA - DEPARTMENT OF TRANSPORTATION
Caltrans
HYDRAULICS

FUNCTIONAL SUPERVISOR: JAI P. THAKUR
CALCULATED-DESIGNED BY: FUSUNG CHANG
CHECKED BY: DAVE BHALLA
REVISED BY
DATE REVISED

LAST REVISION 00-00-00
DATE PLOTTED => 12-SEP-2014
TIME PLOTTED => 06:20

Dist	COUNTY	ROUTE	POST MILES TOTAL PROJECT	SHEET No.	TOTAL SHEETS
07	LA	5,10,91, 110,134	Var	80	291

REGISTERED CIVIL ENGINEER — DATE: 1-13-14

PLANS APPROVAL DATE: 6-2-14

REGISTERED PROFESSIONAL ENGINEER — F.S. CHANG No. 54884 Exp. 6-30-14 CIVIL — STATE OF CALIFORNIA

THE STATE OF CALIFORNIA OR ITS OFFICERS OR AGENTS SHALL NOT BE RESPONSIBLE FOR THE ACCURACY OR COMPLETENESS OF SCANNED COPIES OF THIS PLAN SHEET.

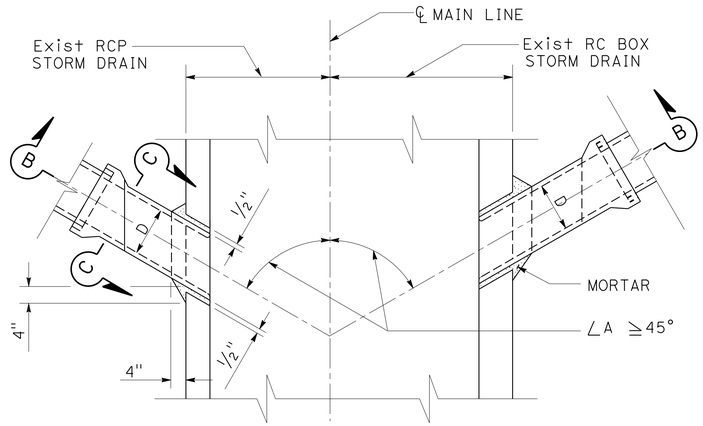

PLAN

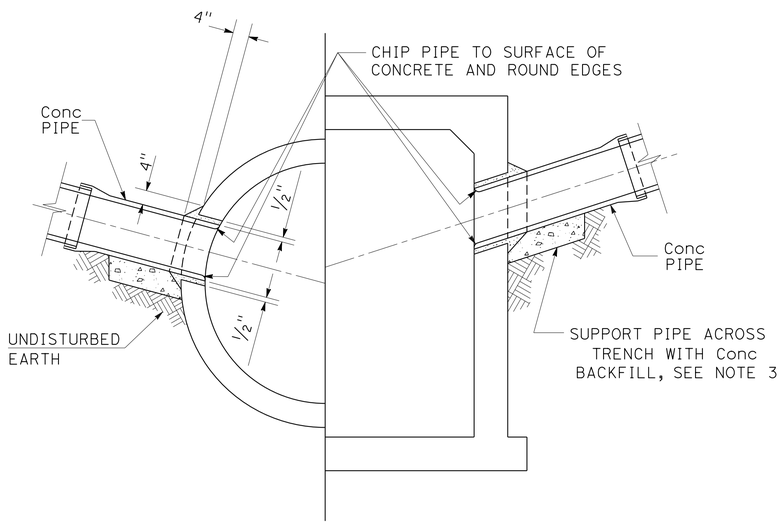

SECTION B-B

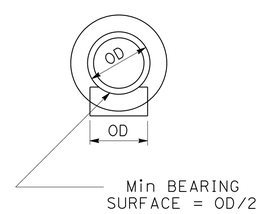

SECTION C-C

CASE 1

PLAIN CONCRETE PIPE
D = 24" Max

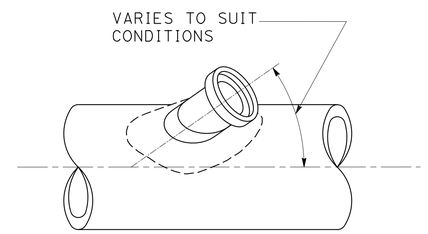

SADDLE
PLAN

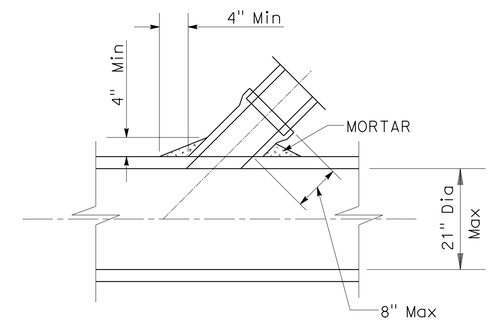

SADDLE
SECTION

CASE 2

SADDLE CONNECTION

PIPE CONNECTIONS TO EXISTING STORM DRAINS (335-2)

SHEET 1 OF 3

WATER POLLUTION CONTROL DETAILS

NO SCALE

WD-10

REVISED BY	DATE REVISED

CALCULATED-DESIGNED BY: FUSUNG CHANG
CHECKED BY: DAVE BHALLA
FUNCTIONAL SUPERVISOR: DAVE BHALLA

STATE OF CALIFORNIA - DEPARTMENT OF TRANSPORTATION
Caltrans
HYDRAULICS

LAST REVISION 00-00-00 | DATE PLOTTED => 12-SEP-2014 | TIME PLOTTED => 06:20

Dist	COUNTY	ROUTE	POST MILES TOTAL PROJECT	SHEET No.	TOTAL SHEETS
07	LA	5,10,91, 110,134	Var	81	291

FuSeng Chang 1-13-14
REGISTERED CIVIL ENGINEER DATE

6-2-14
PLANS APPROVAL DATE

REGISTERED PROFESSIONAL ENGINEER F.S. CHANG No. 54884 Exp. 6-30-14 CIVIL STATE OF CALIFORNIA

THE STATE OF CALIFORNIA OR ITS OFFICERS OR AGENTS SHALL NOT BE RESPONSIBLE FOR THE ACCURACY OR COMPLETENESS OF SCANNED COPIES OF THIS PLAN SHEET.

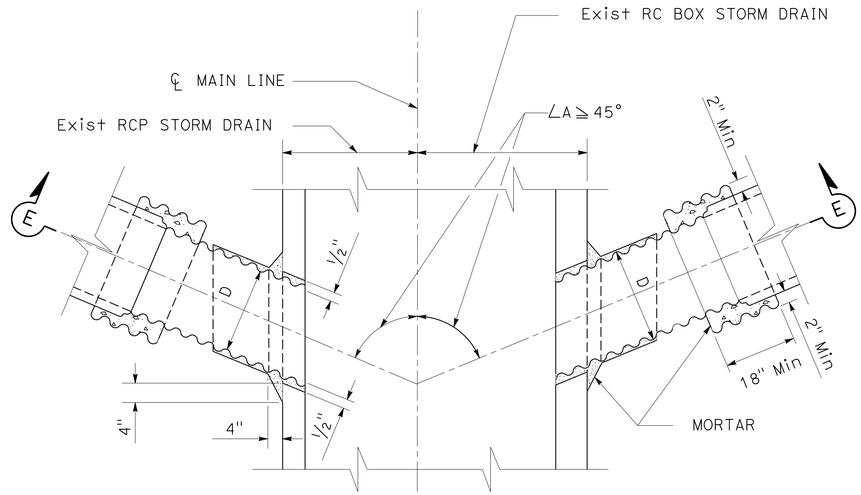

PLAN

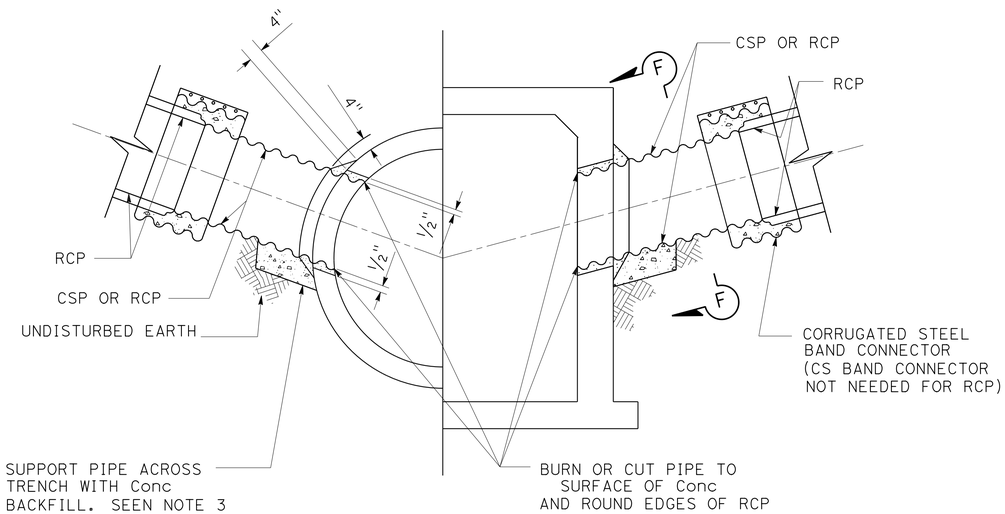

SECTION E-E

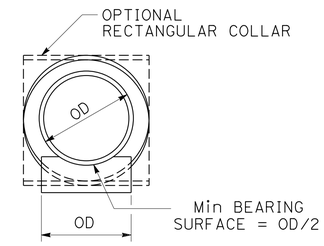

SECTION F-F

DIAMETER OF CSP	Min GAGE
15" - 21"	16
24"	14

CASE 3

RCP OR CSP

D = 24" Max

PIPE CONNECTIONS TO EXISTING STORM DRAINS (335-2)

SHEET 2 OF 3

WATER POLLUTION CONTROL DETAILS

NO SCALE

WD-11

STATE OF CALIFORNIA - DEPARTMENT OF TRANSPORTATION
Caltrans
HYDRAULICS

FUNCTIONAL SUPERVISOR: DAVE BHALLA
CALCULATED-DESIGNED BY: FUSUNG CHANG
CHECKED BY: DAVE BHALLA
REVISED BY
DATE REVISED

LAST REVISION 00-00-00
DATE PLOTTED => 12-SEP-2014
TIME PLOTTED => 06:20

Dist	COUNTY	ROUTE	POST MILES TOTAL PROJECT	SHEET No.	TOTAL SHEETS
07	LA	5,10,91, 110,134	Var	82	291

FuSeng Chang 1-13-14
REGISTERED CIVIL ENGINEER DATE

6-2-14
PLANS APPROVAL DATE

REGISTERED PROFESSIONAL ENGINEER
F.S. CHANG
No. 54884
Exp. 6-30-14
CIVIL
STATE OF CALIFORNIA

THE STATE OF CALIFORNIA OR ITS OFFICERS OR AGENTS SHALL NOT BE RESPONSIBLE FOR THE ACCURACY OR COMPLETENESS OF SCANNED COPIES OF THIS PLAN SHEET.

NOTES:

CASE 1 AND 3:

1. OUTSIDE Dia OF THE CONNECTOR PIPE SHALL NOT BE GREATER THAN 1/2 THE INSIDE Dia OF THE RCP MAIN LINE.
2. INSIDE Dia D OF THE CONNECTOR PIPE SHALL NOT BE GREATER THAN 24".
3. THE Min OPENING INTO THE Exist STORM DRAIN SHALL BE THE OUTSIDE Dia OF THE CONNECTING PIPE PLUS 1". THE CONCRETE BACKFILL SUPPORTING THE CONNECTING PIPE MAY BE OMITTED IF THE PIPE IS LAID ON UNDISTURBED EARTH TO STORM DRAIN WALL.
4. ALL CSP AND FITTINGS SHALL BE GALVANIZED. BAND CONNECTORS MAY BE 2 GAGES LIGHTER THAN THE PIPE, BUT WITH A Min GAGE OF 16. THEY SHALL BE CONNECTED AT THE ENDS BY ANGLES HAVING Min DIMENSIONS OF 2" x 2" x 13/16" AND 5 1/2" BOLTS.
5. WHEN JOINING A RCP CONNECTOR PIPE TO A CSP CONNECTOR PIPE, THE INSIDE Dia D OF THE CSP SHALL BE AT LEAST EQUAL TO BUT NOT MORE THAN 3" GREATER THAN THAT OF THE RCP.
6. CONNECTOR PIPES SHALL BE NOT MORE THAN 5' ABOVE THE INVERT.
7. CONNECTOR PIPES SHALL ENTER MAIN LINE RCP RADIALLY.

CASE 2:

8. SADDLE CONNECTIONS SHALL BE USED WHEN CONNECTING TO PIPES 21" OR LESS IN Dia WITHOUT THE USE OF Jct Str OR PRECAST Y BRANCHES.
9. TRIM OR CUT SADDLE TO FIT SNUGLY OVER THE OUTSIDE OF THE MAIN PIPE SO ITS AXIS WILL BE ON THE LINE AND GRADE OF THE CONNECTING PIPE.
10. THE OPENING INTO THE PIPE SHALL BE CUT AND TRIMMED TO FIT THE SADDLE SO THAT NO PART WILL PROJECT WITHIN THE BORE OF THE SADDLE PIPE.
11. THE CONNECTOR PIPE SHALL BE SUPPORTED AS SHOWN IN CASE 1 AND CASE 3.

PIPE CONNECTIONS TO EXISTING STORM DRAINS (335-2)

SHEET 3 OF 3

WATER POLLUTION CONTROL DETAILS

WD-12

STATE OF CALIFORNIA - DEPARTMENT OF TRANSPORTATION
Caltrans
HYDRAULICS

FUNCTIONAL SUPERVISOR: DAVE BHALLA
CALCULATED-DESIGNED BY: FUSUNG CHANG
CHECKED BY: DAVE BHALLA
REVISED BY
DATE REVISED

LAST REVISION 00-00-00
DATE PLOTTED => 12-SEP-2014
TIME PLOTTED => 06:21

Dist	COUNTY	ROUTE	POST MILES TOTAL PROJECT	SHEET No.	TOTAL SHEETS
07	LA	5,10,91, 110,134	Var	83	291

Prakashyadav 1-13-14
REGISTERED CIVIL ENGINEER DATE

6-2-14
PLANS APPROVAL DATE

REGISTERED PROFESSIONAL ENGINEER PRAKASH YADAV No. 68479 Exp. 9-30-15 CIVIL STATE OF CALIFORNIA

THE STATE OF CALIFORNIA OR ITS OFFICERS OR AGENTS SHALL NOT BE RESPONSIBLE FOR THE ACCURACY OR COMPLETENESS OF SCANNED COPIES OF THIS PLAN SHEET.

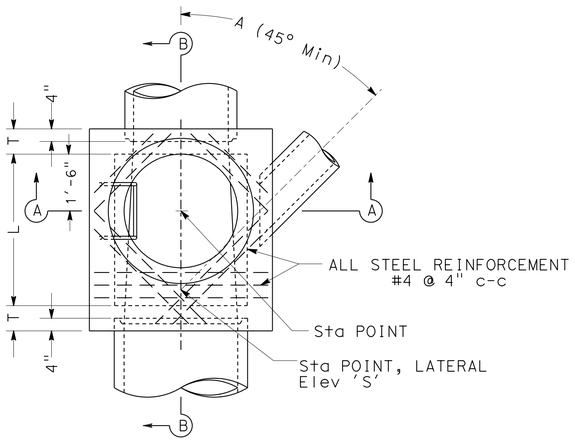

PLAN
(SHAFT NOT SHOWN)

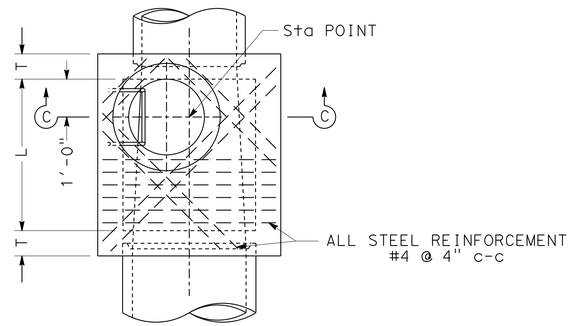

PLAN
DETAIL N
(SHAFT NOT SHOWN)

NOTES:

1. HEIGHT 'H' (IN Sec A-A AND Sec B-B) MUST BE NOT LESS THAN 4'-8", BUT MAY BE INCREASED PROVIDED THAT THE VALUE OF 'M' MUST BE NOT LESS THAN THE Min SPECIFIED AND THAT THE REDUCER MUST BE USED. FOR 'H' (IN Sec C-C) SEE NOTE 4.
2. LENGTH 'L' MUST BE 4' UNLESS OTHERWISE SHOWN ON WATER POLLUTION CONTROL PLAN.
3. SHAFT MUST BE CONSTRUCTED AS PER Sec C-C AND DETAIL N WHEN DEPTH 'M' FROM STREET GRADE TO TOP OF BOX IS LESS THAN 2'-10½" FOR PAVED STREETS OR 3'-6" FOR UNPAVED STREETS.
4. DEPTH 'P' MAY BE REDUCED TO AN ABSOLUTE LIMIT OF 6" WHEN LARGER VALUES OF 'P' WOULD REDUCE 'H' (IN Sec C-C) TO 3'-6" OR LESS.
5. 'T' MUST BE 8" FOR VALUES OF 'H' UP TO AND INCLUDING 8'. 'T' MUST BE 10" FOR VALUES OF 'H' OVER 8'.
6. LOWEST STEP MUST BE NOT MORE THAN 16" ABOVE THE LEDGE AT THE SIDE OF MH FLOOR.
7. BODY OF MH MUST BE POURED IN ONE CONTINUOUS OPERATION, EXCEPT YOU HAVE THE OPTION OF PLACING AT THE SPRING LINE A Const Jt WITH A LONGITUDINAL KEYWAY.
8. REINFORCING STEEL MUST BE 1½" CLEAR FROM FACE OF Conc
9. FLOOR OF MH MUST BE STEEL-TROWELED TO SPRING LINE.
10. RINGS, REDUCER, AND PIPE FOR ACCESS SHAFT MUST BE SEATED IN 1:2 CEMENT MORTAR AND NEATLY POINTED OR WIPED INSIDE SHAFT.
11. MH FRAME AND COVER PER Std PLAN B7-11 DETAIL 'U45'.
12. STEP DETAIL PER Std PLANS D74C AND D75C.

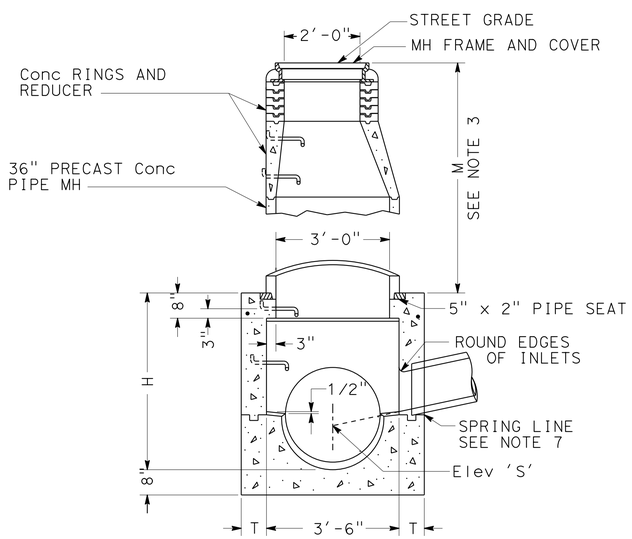

SECTION A-A

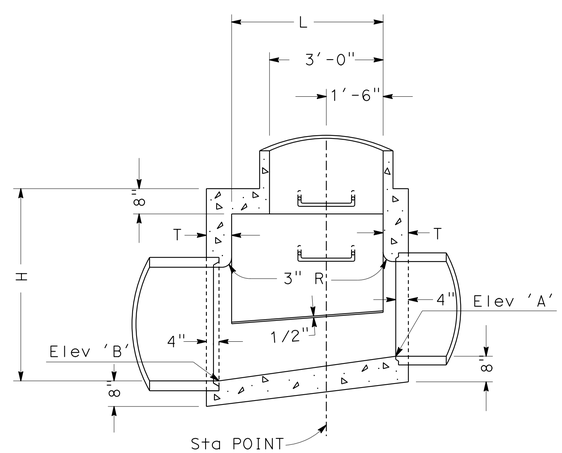

SECTION B-B

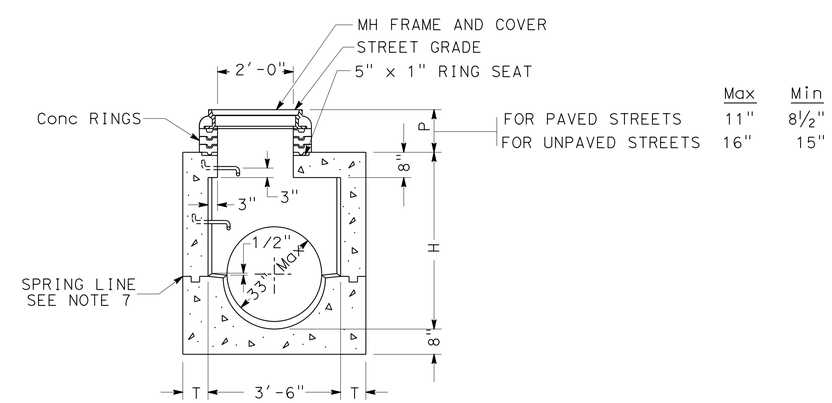

	Max	Min
FOR PAVED STREETS	11"	8½"
FOR UNPAVED STREETS	16"	15"

SECTION C-C

MANHOLE No. 1 (MH No. 1)

WATER POLLUTION CONTROL DETAILS

NO SCALE

WD-13

STATE OF CALIFORNIA - DEPARTMENT OF TRANSPORTATION
Caltrans HYDRAULICS
FUNCTIONAL SUPERVISOR: DAVE BHALLA
CALCULATED-DESIGNED BY: PRAKASH YADAV
CHECKED BY: DAVE BHALLA
REVISED BY / DATE REVISED

LAST REVISION 00-00-00 | DATE PLOTTED => 12-SEP-2014 | TIME PLOTTED => 06:21

Dist	COUNTY	ROUTE	POST MILES TOTAL PROJECT	SHEET No.	TOTAL SHEETS
07	LA	5,10,91, 110,134	Var	84	291

REGISTERED CIVIL ENGINEER 1-13-14 DATE

6-2-14
PLANS APPROVAL DATE

REGISTERED PROFESSIONAL ENGINEER F.S. CHANG No. 54884 Exp. 6-30-14 CIVIL STATE OF CALIFORNIA

THE STATE OF CALIFORNIA OR ITS OFFICERS OR AGENTS SHALL NOT BE RESPONSIBLE FOR THE ACCURACY OR COMPLETENESS OF SCANNED COPIES OF THIS PLAN SHEET.

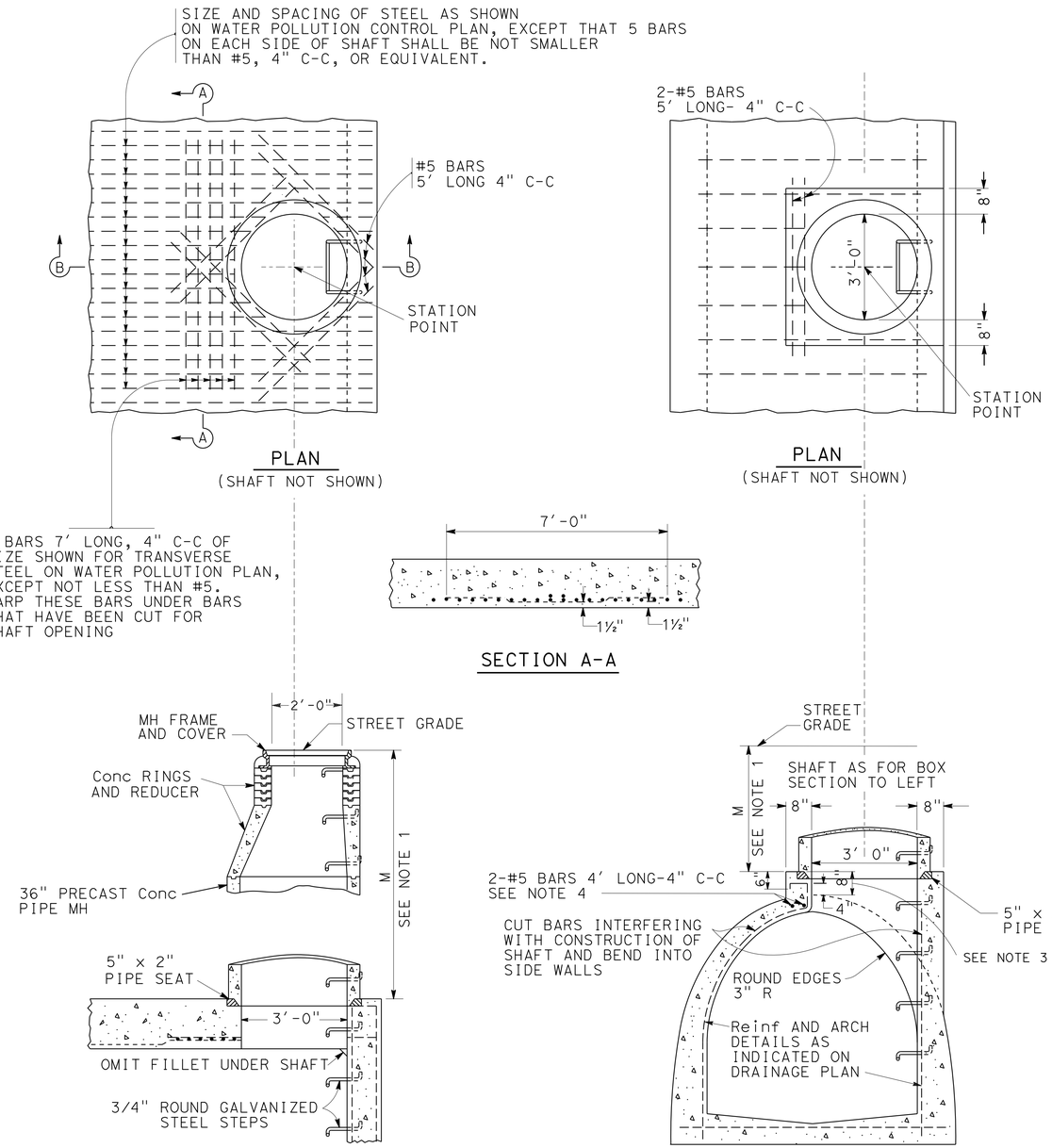

MANHOLE FOR BOX SECTION STORM DRAIN

MANHOLE FOR ARCH SECTION STORM DRAIN

NOTES:

1. DEPTH 'M': WHEN DEPTH 'M' FROM STREET GRADE TO TOP OF PIPE SEAT IS LESS THAN 2'-10½" IN PAVED STREETS OR 3'-6" IN UNPAVED STREETS, Const 2' Dia SHAFT, USING Conc RINGS; OTHERWISE Const 3' SHAFT AS SHOWN ON THIS PLAN.
2. OPTIONAL Const: DIMENSION FROM OUTSIDE TOP OF ARCH STORM DRAIN TO TOP OF PIPE SEAT SHOWN 8 INCHES ON THIS PLAN, MAY BE INCREASED AT YOUR OPTION, EXCEPT THAT IN SO DOING 'M' MUST NOT BE REDUCED TO LESS THAN 2'-10½" FOR PAVED STREETS OR 3'-6" FOR UNPAVED STREETS AND THAT REDUCER MUST BE USED.
3. UNLESS OTHERWISE SHOWN, STEPS MUST BE PLACED 12" ON CENTERS. THE LOWEST STEP MUST BE NOT MORE THAN 16" ABOVE THE LEDGE AT SIDE OF MH FLOOR.
4. RINGS, REDUCER, AND PIPE FOR ACCESS SHAFT MUST BE SEATED IN 1:2 CEMENT MORTAR AND NEATLY POINTED OR WIPED INSIDE SHAFT.
5. MH FRAME AND COVER PER Std PLAN B7-11 DETAIL 'U45'.
6. STEP DETAIL PER Std PLANS D74C AND D75C.

MANHOLE No. 3 (MH No. 3)

WATER POLLUTION CONTROL DETAILS

NO SCALE

WD-14

STATE OF CALIFORNIA - DEPARTMENT OF TRANSPORTATION
Caltrans® HYDRAULICS

FUNCTIONAL SUPERVISOR: DAVE BHALLA
FUSUNG CHANG | DAVE BHALLA
CALCULATED-DESIGNED BY | CHECKED BY
REVISED BY | DATE REVISED

LAST REVISION 00-00-00 | DATE PLOTTED => 12-SEP-2014 | TIME PLOTTED => 06:21

Dist	COUNTY	ROUTE	POST MILES TOTAL PROJECT	SHEET No.	TOTAL SHEETS
07	LA	5,10,91, 110,134	Var	85	291

REGISTERED CIVIL ENGINEER — DATE 1-13-14

6-2-14
PLANS APPROVAL DATE

REGISTERED PROFESSIONAL ENGINEER — PRAKASH YADAV — No. C68479 — Exp 9-30-15 — CIVIL — STATE OF CALIFORNIA

THE STATE OF CALIFORNIA OR ITS OFFICERS OR AGENTS SHALL NOT BE RESPONSIBLE FOR THE ACCURACY OR COMPLETENESS OF SCANNED COPIES OF THIS PLAN SHEET.

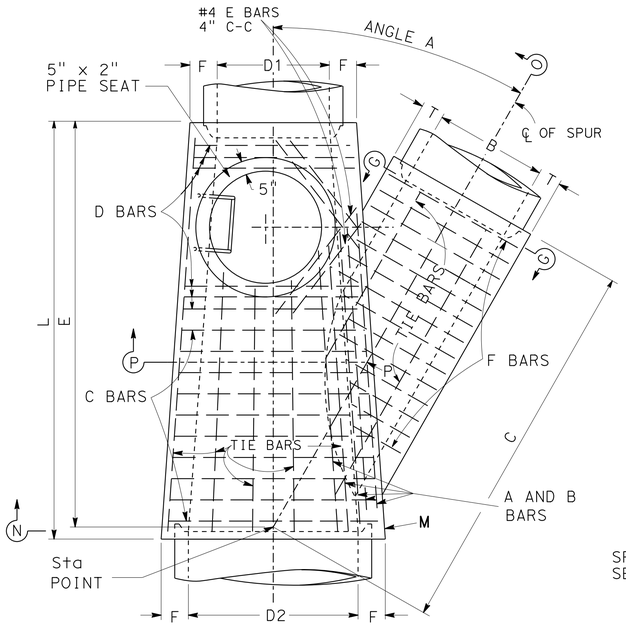

PLAN
(SHAFT NOT SHOWN)

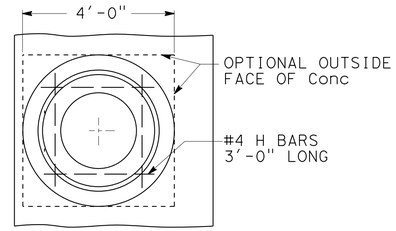

PLAN
(RINGS AND COVER NOT SHOWN)

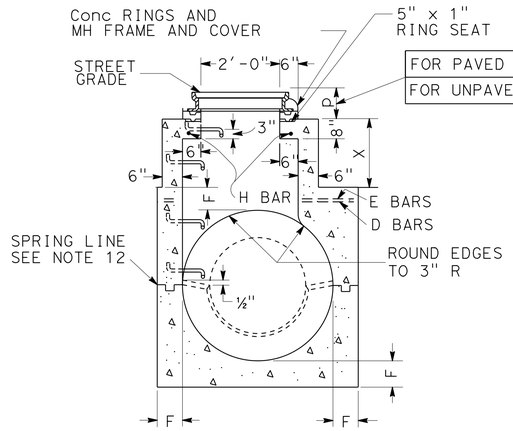

DETAIL 'M'
(SEE NOTE 5)

	Max	Min
FOR PAVED STREETS	11"	8½"
FOR UNPAVED STREETS	16"	15"

TABLE OF VALUES FOR F AND T

D2	F	B	T
12"	4"	12"	4"
15"	4¼"	15"	4¼"
18"	4½"	18"	4½"
21"	5"	21"	5"
24"	5¼"	24"	5¼"
27"	5½"	27"	5½"
30"	6"	30"	6"
33"	6¼"	33"	6¼"
36"	6½"	36"	6½"
39"	7"	39"	7"
42"	7½"	42"	7½"
45"	7¾"	45"	7¾"
48"	8"	48"	8"
51"	8½"	51"	8½"
54"	9"	54"	9"
57"	9¼"	57"	9¼"
60"	9½"	60"	9½"
63"	10"	63"	10"
66"	10¼"	66"	10½"
69"	10¾"	69"	10¾"
72"	11"	72"	11"
78"	11¾"	90"	13¼"
84"	12½"	96"	14"
90"	13¼"	102"	15½"
96"	14"	108"	16"
108"	16"	114"	16½"
114"	16½"	120"	17"
120"	17"	126"	17"
126"	17"	132"	17½"
132"	17½"	138"	17½"
138"	17½"	144"	18"
144"	18"		

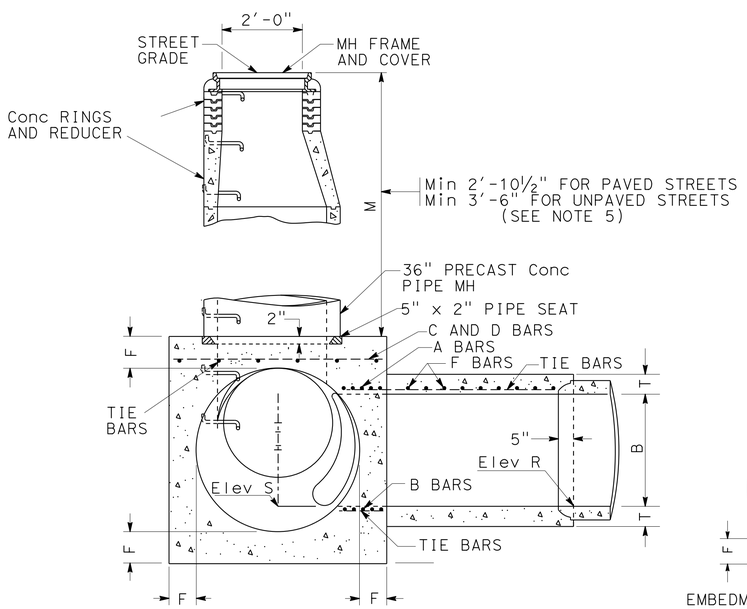

SECTION N-M-P-O
PROJECTED ON P-P-O

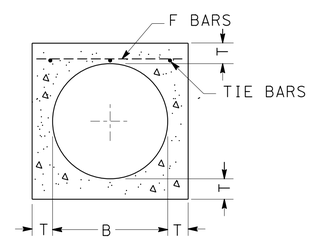

SECTION G-G

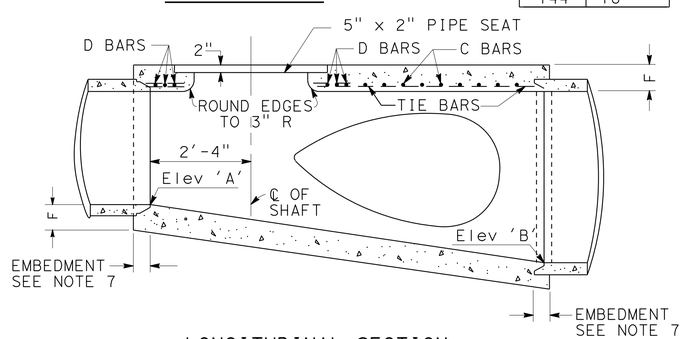

LONGITUDINAL SECTION

MANHOLE No. 4 (MH No. 4)

NOTES:

1. VALUES FOR 'A', 'B', 'C', 'D1', 'D2', 'E', 'L', 'M', OR 'P' AND 'X', Elev 'R', Elev 'S', Elev 'A', AND Elev 'B' ARE SHOWN ON WATER POLLUTION CONTROL PLAN.
2. LATERALS: IF LATERALS ENTER ON BOTH SIDES OF MH, ACCESS SHAFT MUST BE LOCATED ON SIDE RECEIVING THE SMALLER LATERAL LATERALS MUST BE DESIGNATED ON WATER POLLUTION CONTROL PLAN AS RIGHT OR LEFT, FACING IN THE DIRECTION OF StaING.
3. CENTER OF MH SHAFT MUST BE LOCATED OVER CENTERLINE OF MAIN STORM DRAIN WHEN 'D1' IS 48" OR LESS, IN WHICH CASE PLACE 4E BARS SYMMETRICALLY AROUND SHAFT AT 45° WITH CENTER LINE.
4. LENGTH L SHOWN ON WATER POLLUTION CONTROL PLAN.
5. DETAIL 'M': WHEN DEPTH OF MH FROM STREET GRADE TO TOP OF BOX IS LESS THAN 2'-10½" FOR PAVED STREETS OR 3'-6" FOR UNPAVED STREETS, Const MONOLITHIC SHAFT AS PER DETAIL 'M'. WHEN Dia 'D1' IS 48" OR LESS, CENTER OF SHAFT MUST BE LOCATED AS PER NOTE 3.
6. Reinf STEEL MUST BE ROUND, DEFORMED, STRAIGHT BARS 1½" CLEAR FROM FACE OF Conc UNLESS SHOWN OTHERWISE. TIE BARS MUST BE #3 AND SPACED 18" ON CENTERS OR CLOSER. STEEL SCHEDULE DETAILED BELOW.
7. EMBEDMENT MUST BE 5" FOR 'D2'= 96" OR LESS AND 8" FOR 'D2' OVER96".
8. UNLESS OTHERWISE SHOWN, STEPS MUST BE PLACED 12" ON CENTERS. THE LOWEST STEP MUST BE NOT MORE THAN 16" ABOVE THE LEDGE AT THE SIDE OF MH FLOOR.
9. RINGS, REDUCER, AND PIPE FOR ACCESS SHAFT MUST BE SEATED IN 1:2 CEMENT MORTAR AND NEATLY POINTED OR WIPED INSIDE SHAFT.
10. STATIONS OF MH SHOWN ON WATER POLLUTION CONTROL PLAN APPLY AT INTERSECTION OF CENTER LINES OF MAIN LINE AND SPUR.
11. FLOOR OF MH MUST BE STEEL TROWELED TO SPRING LINE.
12. BODY OF MH, INCLUDING SPUR, MUST BE POURED IN ONE CONTINUOUS OPERATION, EXCEPT THAT YOU HAVE THE OPTION OF PLACING AT THE SPRING LINE A Const Jt WITH LONGITUDINAL KEYWAY.
13. Elev 'S' APPLIES AT CENTER OF MAIN LINE ON PROLONGATION INVERT OF SPUR.
14. MH FRAME AND COVER PER Std PLAN B7-11 DETAIL 'U45'.
15. STEP DETAIL PER Std PLANS D74C AND D75C.

STEEL SCHEDULE

Dia B or D2	A & B bars	C & F bars	D bars
12" to 39"	#5 @ 3"	#4 @ 6"	#4 @ 3"
42" to 84"	#6 @ 3"	#5 @ 6"	#5 @ 3"
90" to 144"	#7 @ 3"	#6 @ 6"	#6 @ 3"

WATER POLLUTION CONTROL DETAILS

NO SCALE

WD-15

STATE OF CALIFORNIA - DEPARTMENT OF TRANSPORTATION
Caltrans® HYDRAULICS
FUNCTIONAL SUPERVISOR: DAVE BHALLA
CALCULATED-DESIGNED BY: PRAKASH YADAV
CHECKED BY: DAVE BHALLA
REVISED BY / DATE REVISED

LAST REVISION 00-00-00 | DATE PLOTTED => 12-SEP-2014 | TIME PLOTTED => 06:21

Dist	COUNTY	ROUTE	POST MILES TOTAL PROJECT	SHEET No.	TOTAL SHEETS
07	LA	5,10,91, 110,134	Var	86	291

REGISTERED CIVIL ENGINEER Fusung Chang DATE 1-13-14

6-2-14
PLANS APPROVAL DATE

REGISTERED PROFESSIONAL ENGINEER F.S. CHANG No. 54884 Exp. 6-30-14 CIVIL STATE OF CALIFORNIA

THE STATE OF CALIFORNIA OR ITS OFFICERS OR AGENTS SHALL NOT BE RESPONSIBLE FOR THE ACCURACY OR COMPLETENESS OF SCANNED COPIES OF THIS PLAN SHEET.

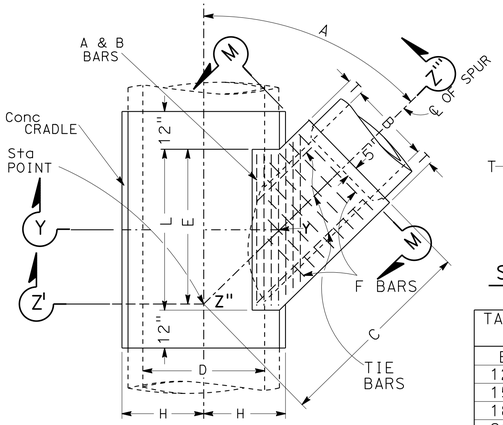

PLAN

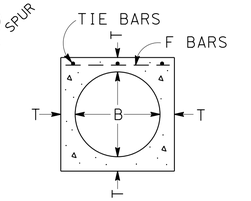

SECTION M-M

TABLE OF VALUES FOR T	
B	T
12"	4"
15"	4¼"
18"	4½"
21"	5"
24"	5¼"
27"	5½"
30"	6"
33"	6¼"
36"	6½"
39"	7"

MINIMUM DEPTH OF TOP AND BOTTOM SLABS MUST BE $\frac{D}{12}$ + 2"

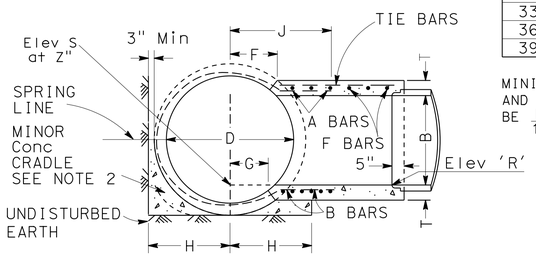

SECTION Z'-Z"-Z'''
PROJECTED ON Y-Y-Z"

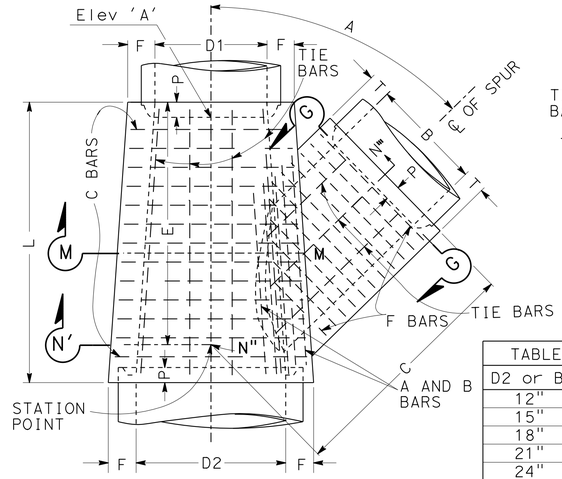

PLAN

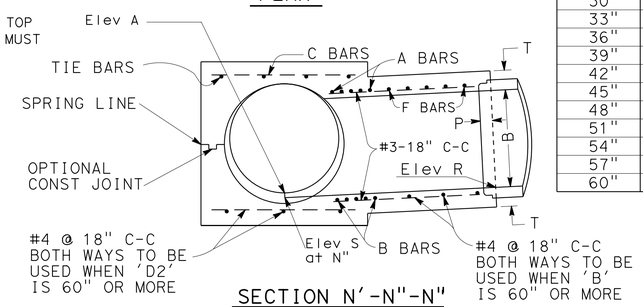

SECTION N'-N"-N"
PROJECTED ON M-M-N"

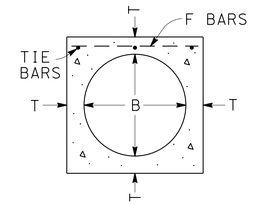

SECTION G-G

TABLE OF VALUES FOR F AND T			
D2 or B	F or T	D2 or B	F or T
12"	4"	63"	10"
15"	4¼"	66"	10¼"
18"	4½"	69"	10¾"
21"	5"	72"	11"
24"	5¼"	78"	11¾"
27"	5½"	84"	12½"
30"	6"	90"	13¼"
33"	6¼"	96"	14"
36"	6½"	102"	15½"
39"	7"	108"	16"
42"	7½"	114"	16½"
45"	7¾"	120"	17"
48"	8"	126"	17"
51"	8½"	132"	17½"
54"	9"	138"	17½"
57"	9¼"	144"	18"
60"	9½"		

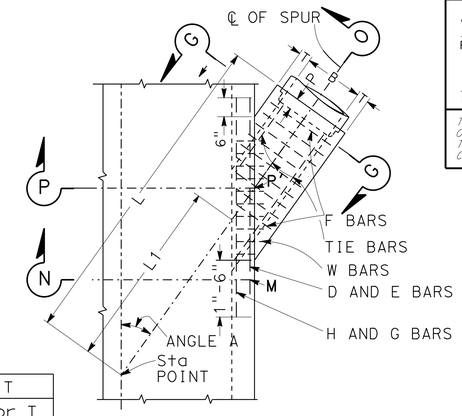

PLAN

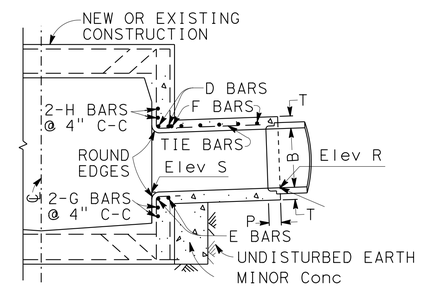

SECTION N-M-P'-O
PROJECTED ON P-P'-O

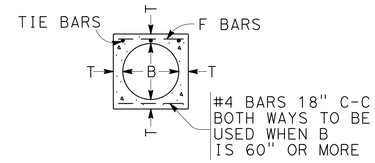

SECTION G-G

TABLE OF VALUES FOR T			
B	T	B	T
12"	4"	63"	10"
15"	4¼"	66"	10¼"
18"	4½"	69"	10¾"
21"	5"	72"	11"
24"	5¼"	78"	11¾"
27"	5½"	84"	12½"
30"	6"	90"	13¼"
33"	6¼"	96"	14"
36"	6½"	102"	15½"
39"	7"	108"	16"
42"	7½"	114"	16½"
45"	7¾"	120"	17"
48"	8"	126"	17"
51"	8½"	132"	17½"
54"	9"	138"	17½"
57"	9¼"	144"	18"
60"	9½"		

NOTES:

1. VALUES FOR 'A', 'B', 'C', 'D', 'E', 'F', 'G', 'L', Elev 'R' AND Elev 'S' SHOWN ON WATER POLLUTION CONTROL PLANS.
2. PIPE MUST BE CRADLED IN Conc EXTENDING LONGITUDINALLY TO 1' BEYOND LIMITS OF 'L'. H=½ OUTSIDE Dia OF PIPE PLUS 3" AS A MINIMUM. CRADLE MAY BE OMITTED ON SIDE OPPOSITE LATERAL INLET WHEN CONSTRUCTED IN CONNECTION WITH EXISTING PIPE STORM DRAIN.
3. RECTANGULAR OPENING IN MAIN LINE PIPE MUST BE CUT WITHIN LIMITS OF 'F', 'G', AND 'L' NORMAL TO PIPE SURFACE WITHOUT DAMAGING STEEL.
4. TRANSVERSE Reinf IN PIPE MUST BE CUT IN CENTER OF OPENING AND BENT TO UNIFORM DISTANCE FROM TOP AND BOTTOM OF Jct Str.
5. OPTIONAL Const: WHEN Jct Str #1 IS SPECIFIED ON WATER POLLUTION CONTROL PLAN, YOU HAVE THE OPTION OF CONSTRUCTING Jct Str #2, IN WHICH CASE CONSTRUCTION DATA WILL BE FURNISHED BY THE ENGINEER.
6. Reinf STEEL MUST BE 1½" CLEAR FROM FACE OF Conc UNLESS OTHERWISE SHOWN.
7. STEEL SCHEDULE: A AND B BARS - #5 @ 3" C-C
   F BARS - #4 @ 6" C-C
   TIE BARS - #3 @ 18" C-C
8. MONOLITHIC ARCH: WHEN Jct Str #1 IS SPECIFIED WITH Reinf MONOLITHIC ARCH STORM DRAIN, VALUE 'D' MUST REFER TO THE CLEAR SPAN OF ARCH. Reinf STEEL MUST BE CUT AND BENT INTO Jct Str THE SAME AS FOR PIPE. Conc CRADLE UNDER Reinf MONOLITHIC ARCH IS NOT REQUIRED.
9. FLOOR OF Str MUST BE STEEL-TROWELED TO SPRING LINE.
10. Elev 'S' APPLIES AT CENTER OF MAIN LINE ON PROLONGATION OF INVERT SPUR.

JUNCTION STRUCTURE No. 1 (Jct Str 1)

NOTES:

1. VALUES FOR 'A', 'B', 'C', 'D1', 'D2', 'E', 'L', Elev 'A', Elev 'B', Elev 'R' AND Elev 'S' ARE SHOWN ON WATER POLLUTION CONTROL PLANS.
2. EMBEDMENT 'P' MUST BE 5" FOR PIPE Dia 12" TO 96" AND 8" FOR PIPE Dia 102" TO 144".
3. FLOOR OF Str MUST BE STEEL TROWELED TO SPRING LINE.
4. Reinf STEEL MUST BE 1½" CLEAR FROM FACE OF Conc UNLESS OTHERWISE SHOWN. A AND B BARS NEED NOT BE LONGER THAN THE OUTSIDE DIAGONAL WIDTH OF THE LATERAL SPUR.
5. STEEL SCHEDULE:

Dia B or D2	A or B BARS	C or F BARS
12" to 39"	#5 @ 3"	#4 @ 6"
42" to 84"	#6 @ 3"	#5 @ 6"
90" to 144"	#7 @ 3"	#6 @ 6"
TIE BARS - #3 @ 18" C-C		

6. Elev 'S' APPLIES AT CENTER OF MAIN LINE ON PROLONGATION OF INVERT OF SPUR.
7. Jct Str MUST BE POURED IN ONE CONTINUOUS OPERATION, EXCEPT THAT YOU HAVE THE OPTION OF PLACING AT THE SPRING LINE A Const JOINT WITH A LONGITUDINAL KEYWAY.
8. LATERALS - WHERE LATERALS ENTER BOTH SIDES OF Str, THEY MUST BE DESIGNATED ON THE WATER POLLUTION CONTROL PLAN AS A RIGHT OR LEFT, FACING IN THE DIRECTION OF STATIONING.

JUNCTION STRUCTURE No. 2 (Jct Str 2)

NOTES:

1. VALUES FOR 'A', 'B', 'L', 'L1', Elev 'R' AND Elev 'S' ARE SHOWN ON WATER POLLUTION CONTROL PLANS.
2. STATIONS SPECIFIED IN WATER POLLUTION CONTROL PLAN APPLY AT INTERSECTION OF CENTER LINES OF MAIN LINE AND LATERAL.
3. EMBEDMENT 'P' MUST BE 5" FOR PIPE Dia 12" TO 96" AND 8" FOR PIPE Dia 102" TO 144".
4. Reinf STEEL MUST BE 1½" CLEAR FROM FACE OF Conc UNLESS OTHERWISE SHOWN. W BARS ARE OF SIZE AND SPACING SPECIFIED FOR WALL STEEL ON WATER POLLUTION CONTROL PLAN, AND MUST BE CUT IN CENTER OF OPENING AND BENT INTO TOP AND BOTTOM OF Jct Str. OMIT H BARS WHEN SOFFIT OF SPUR IS 1' OR LESS BELOW SOFFIT OF MAIN LINE, AND OMIT G BARS WHEN INVERT OF SPUR IS 1' OR LESS ABOVE FLOOR OF MAIN LINE.
5. STEEL SCHEDULE:

Dia B	D,E,H,G BARS	F BARS
12" TO 39"	#5	#4 @ 6" C-C
42" TO 84"	#6	#5 @ 6" C-C
90" TO 144"	#7	#6 @ 6" C-C
TIE BARS - #3 @ 18" C-C		

6. Jct Str MUST BE POURED MONOLITHIC WITH MAIN LINE STORM DRAIN OR MH.
7. FLOOR OF Str MUST BE STEEL-TROWELED.

JUNCTION STRUCTURE No. 3 (Jct Str 3)

WATER POLLUTION CONTROL DETAILS

NO SCALE

WD-16

STATE OF CALIFORNIA - DEPARTMENT OF TRANSPORTATION
Caltrans HYDRAULICS

FUNCTIONAL SUPERVISOR: DAVE BHALLA
CALCULATED-DESIGNED BY: FUSUNG CHANG
CHECKED BY: DAVE BHALLA
REVISED BY / DATE REVISED

LAST REVISION 00-00-00 | DATE PLOTTED => 12-SEP-2014 | TIME PLOTTED => 06:21

Dist	COUNTY	ROUTE	POST MILES TOTAL PROJECT	SHEET No.	TOTAL SHEETS
07	LA	5,10,91, 110,134	Var	87	291

REGISTERED CIVIL ENGINEER — DATE 1-13-14

6-2-14
PLANS APPROVAL DATE

REGISTERED PROFESSIONAL ENGINEER — PRAKASH YADAV — No. C68479 — Exp. 9-30-15 — CIVIL — STATE OF CALIFORNIA

THE STATE OF CALIFORNIA OR ITS OFFICERS OR AGENTS SHALL NOT BE RESPONSIBLE FOR THE ACCURACY OR COMPLETENESS OF SCANNED COPIES OF THIS PLAN SHEET.

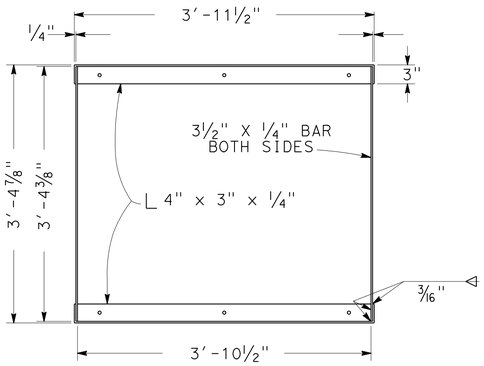

GRATE FRAME DETAIL

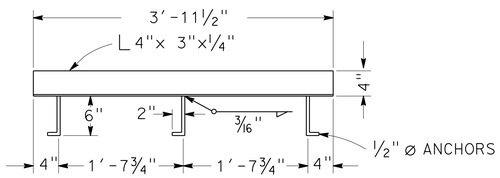

ANCHOR PLACEMENT DETAIL

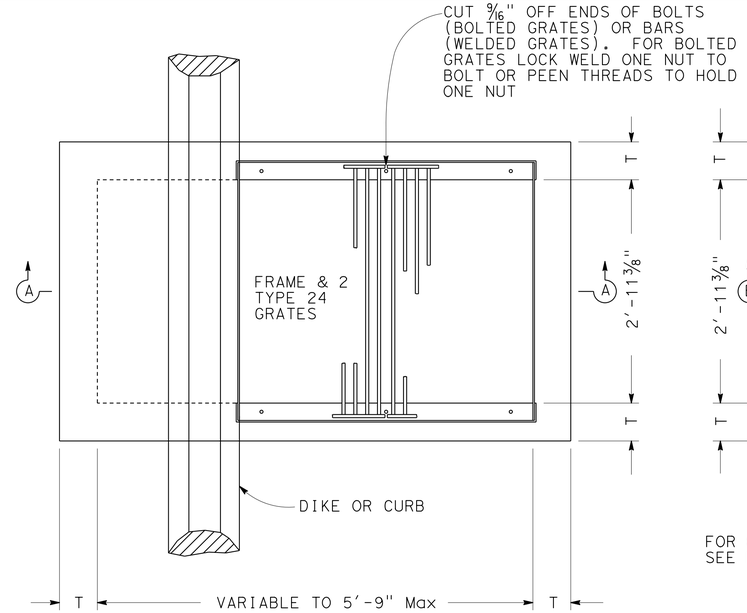

PLAN

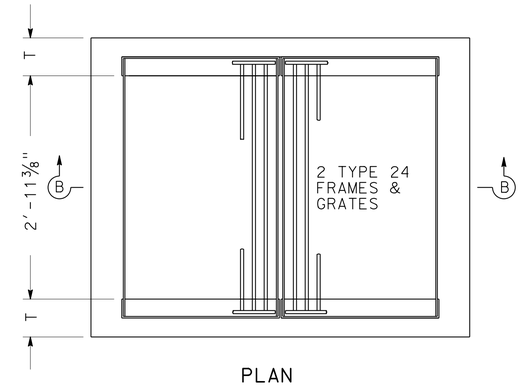

PLAN

FOR GRATE, FRAME AND ANCHOR PLACEMENT DETAILS SEE RSP D77A AND D77B

NOTES:

1. 'H' IS THE DIFFERENCE IN Elev BETWEEN THE OUTLET PIPE FLOW LINE AND THE FLOW LINE OF THE GRATES.
2. STEPS - NONE REQUIRED WHEN 'H' IS 3'-6" OR LESS. INSTALL ONE STEP 16"± ABOVE FLOOR WHEN 'H' IS MORE THAN 3'-6" AND LESS THAN 5'-0". WHERE 'H' IS MORE THAN 5'-0" STEPS SHALL BE EVENLY SPACED @ 12"± INTERVALS FROM 16"± ABOVE FLOOR TO WITHIN 12"± OF THE TOP OF THE BOX. PLACE STEPS IN WALL WITHOUT PIPE OPENINGS. SEE Std PLAN D74C FOR STEP DETAIL.
3. PIPE(S) CAN BE PLACED IN ANY WALL.
4. Reinf STEEL NOT REQUIRED IN WALLS WHEN H=6' OR LESS.
5. Reinf STEEL IN WALLS MUST BE #4 BARS @ 18"± CENTERS PLACED 1½" CLEAR TO INSIDE OF BOX.

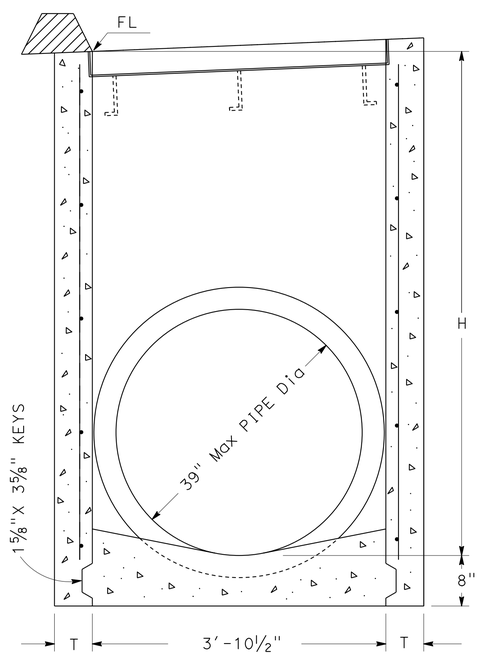

SECTION A-A
(FOR PIPE DIAMETERS 39" OR LESS)

GD-1

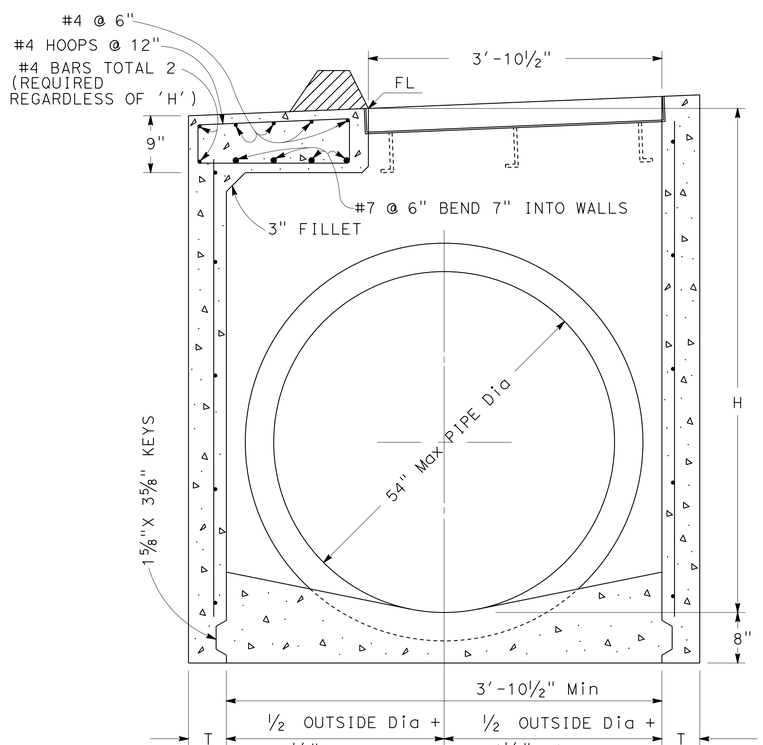

SECTION A-A

GD-2

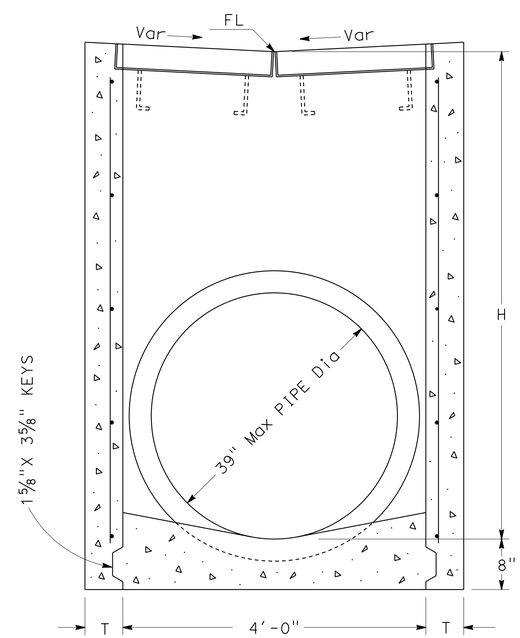

SECTION B-B
(FOR PIPE DIAMETERS 39" OR LESS)

GD-3

DRAINAGE INLETS

MISCELLANEOUS IRON AND STEEL

INLET TYPE	GRATE TYPE	WEIGHT
GD-1 & GD-2	24 - 12	580
	24 - 10C	379
	24 - 10S	433
	24 - 12X	453
	24 - 13	351
GD-3	24 - 12	652

H	T
8'-0" OR LESS	6"
8'1" TO 20'- 0"	8"

WATER POLLUTION CONTROL DETAILS

NO SCALE

WD-17

STATE OF CALIFORNIA - DEPARTMENT OF TRANSPORTATION
Caltrans
HYDRAULICS

FUNCTIONAL SUPERVISOR: DAVE BHALLA
CALCULATED-DESIGNED BY: PRAKASH YADAV
CHECKED BY: DAVE BHALLA
REVISED BY
DATE REVISED

LAST REVISION 00-00-00
DATE PLOTTED => 12-SEP-2014
TIME PLOTTED => 06:21

Dist	COUNTY	ROUTE	POST MILES TOTAL PROJECT	SHEET No.	TOTAL SHEETS
07	LA	5,10,91, 110,134	Var	88	291

Prakashyadav 1-13-14
REGISTERED CIVIL ENGINEER DATE

6-2-14
PLANS APPROVAL DATE

REGISTERED PROFESSIONAL ENGINEER PRAKASH YADAV No. C68479 Exp. 9-30-15 CIVIL STATE OF CALIFORNIA

THE STATE OF CALIFORNIA OR ITS OFFICERS OR AGENTS SHALL NOT BE RESPONSIBLE FOR THE ACCURACY OR COMPLETENESS OF SCANNED COPIES OF THIS PLAN SHEET.

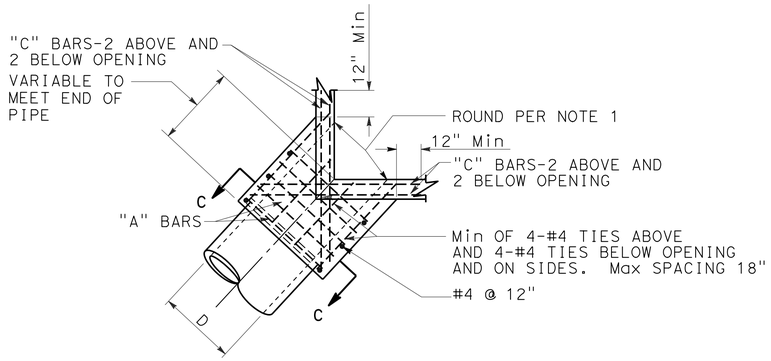

PLAN
CORNER CONNECTION

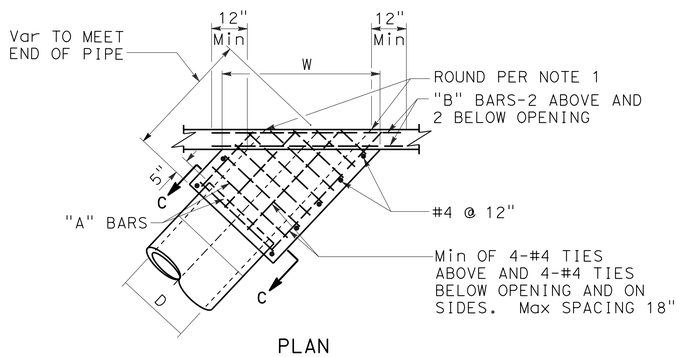

PLAN
SIDE CONNECTION

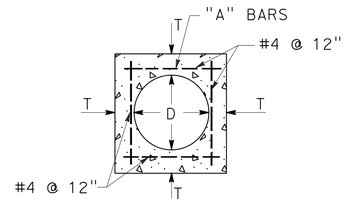

SECTION C-C

D	T	"A"	"B"-"C"
12"	4-½"	#4 @ 6"	#5
15"	4-½"		
18"	5"		
21"	5-½"		
24"	6"		
27"	6-½"		
30"	7"		
33"	7"		
36"	7-½"		
39"	8"		
42"	8"		
45"	8"	#5 @ 6"	#6
48"	8"		
51"	8"		
54"	8"		
57"	10"		
60"	10"		
63"	10"		
66"	11"		
69"	11"		
72"	11"		

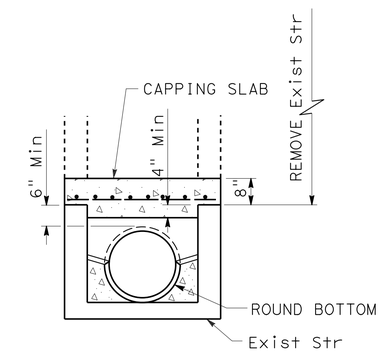

SECTION A-A

NOTES:

1. ROUND EDGE OF OUTLET TO 3" RADIUS.
2. Reinf MUST BE 1½" CLEAR FROM THE FACE OF CONCRETE.
3. IN CONNECTING TO AN EXISTING Str BREAK OUT PORTIONS OF THE EXISTING Str SIX INCHES OUTSIDE ITS INTERSECTION WITH THE NEW CONNECTION. BEND ENDS OF #4 BARS OVER CONNECTION OPENING AS REQUIRED.

MONOLITHIC CONNECTION
FOR PIPES 12" TO 72" INCLUSIVE

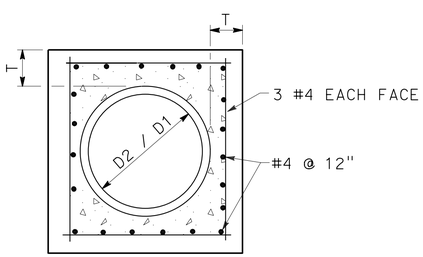

SECTION B-B

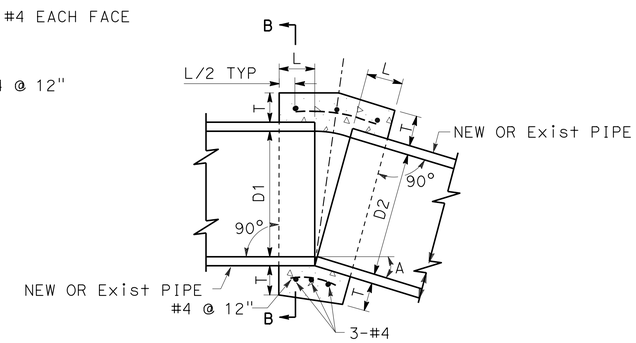

CONCRETE COLLAR

D	L	T
12"	1.0'	4"
18"	1.0'	5"
24"	1.0'	6"
36"	1.5'	8"
48"	1.5'	10"
54"	1.5'	10"
60"	1.75'	11"
66"	1.75'	11"
72"	2.0'	12"

NOTES:

1. WHERE PIPES OF DIFFERENT DIAMETERS ARE JOINED WITH A CONCRETE COLLAR, 'L' AND 'T' MUST BE THOSE OF THE LARGER PIPE. D=D1 OR D2, WHICHEVER IS GREATER.
2. FOR PIPE SIZE NOT LISTED USE NEXT SIZE LARGER.
3. OMIT Reinf ON PIPES 24" AND LESS IN Dia AND ON ALL PIPES WHERE ANGLE A IS LESS THAN 10°.
4. JOIN PIPES AT INVERTS.
5. Reinf MUST BE PLACED 1½" CLEAR FROM OUTSIDE Dia OF PIPE.

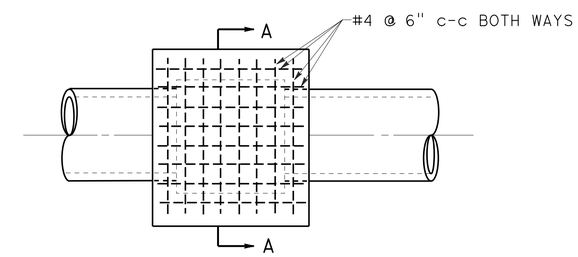

PLAN
CAP INLET DETAIL

WATER POLLUTION CONTROL DETAILS

NO SCALE

WD-18

STATE OF CALIFORNIA - DEPARTMENT OF TRANSPORTATION
Caltrans
HYDRAULICS

FUNCTIONAL SUPERVISOR: DAVE BHALLA
CALCULATED-DESIGNED BY: PRAKASH YADAV
CHECKED BY: DAVE BHALLA
REVISED BY
DATE REVISED

LAST REVISION 00-00-00
DATE PLOTTED => 12-SEP-2014
TIME PLOTTED => 06:21

Dist	COUNTY	ROUTE	POST MILES TOTAL PROJECT	SHEET No.	TOTAL SHEETS
07	LA	5,10,91, 110,134	Var	89	291

REGISTERED CIVIL ENGINEER 1-13-14 DATE

6-2-14
PLANS APPROVAL DATE

REGISTERED PROFESSIONAL ENGINEER PRAKASH YADAV No. C 68479 Exp. 9-30-15 CIVIL STATE OF CALIFORNIA

THE STATE OF CALIFORNIA OR ITS OFFICERS OR AGENTS SHALL NOT BE RESPONSIBLE FOR THE ACCURACY OR COMPLETENESS OF SCANNED COPIES OF THIS PLAN SHEET.

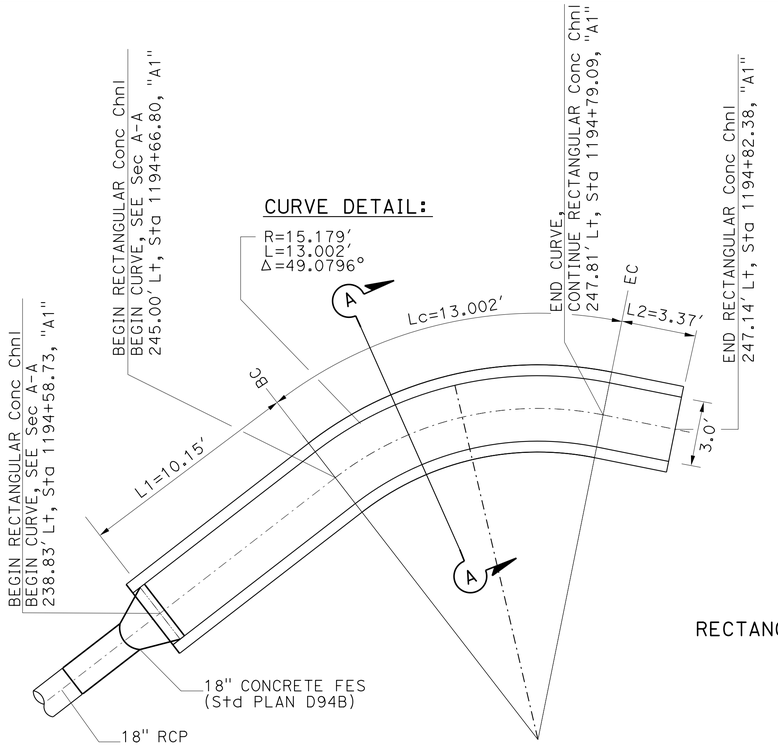

11 g

PLAN

RECTANGULAR Conc CHANNEL

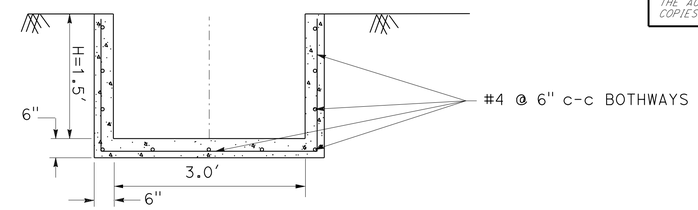

11 g

SECTION A-A

RECTANGULAR Conc CHANNEL

DRAINAGE SYSTEM No. 11

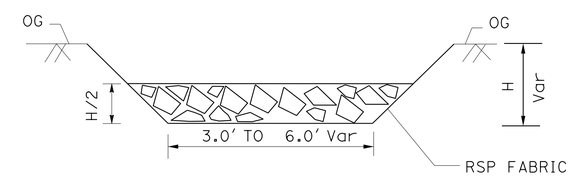

SECTION B1-B1

ROCK SLOPE PROTECTION DETAIL

FOR TRANSITION A

(RSP FACING METHOD B)

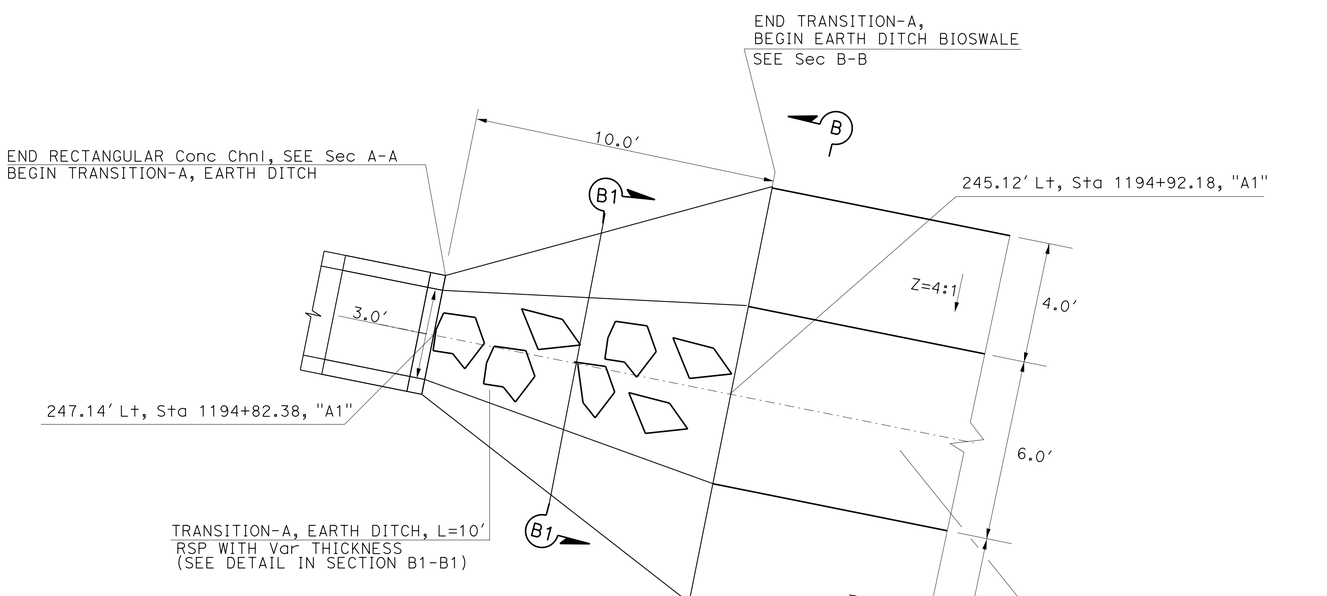

11 h

PLAN

TRANSITION-A

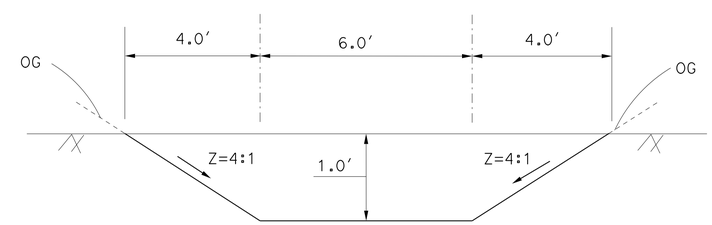

11 i

SECTION B-B & C-C

EARTHDITCH BIOSWALE

WATER POLLUTION CONTROL PROFILE

NO SCALE

WD-19

REVISED BY	DATE REVISED

PRAKASH YADAV — DAVE BHALLA — CALCULATED-DESIGNED BY
DAVE BHALLA — CHECKED BY
FUNCTIONAL SUPERVISOR

STATE OF CALIFORNIA - DEPARTMENT OF TRANSPORTATION
Caltrans
HYDRAULICS

LAST REVISION 00-00-00
DATE PLOTTED => 12-SEP-2014
TIME PLOTTED => 06:21

Dist	COUNTY	ROUTE	POST MILES TOTAL PROJECT	SHEET No.	TOTAL SHEETS
07	LA	5,10,91, 110,134	Var	90	291

Prakashyadav
REGISTERED CIVIL ENGINEER — 1-13-14 DATE

6-2-14
PLANS APPROVAL DATE

REGISTERED PROFESSIONAL ENGINEER — PRAKASH YADAV — No. C68479 — Exp. 9-30-15 — CIVIL — STATE OF CALIFORNIA

THE STATE OF CALIFORNIA OR ITS OFFICERS OR AGENTS SHALL NOT BE RESPONSIBLE FOR THE ACCURACY OR COMPLETENESS OF SCANNED COPIES OF THIS PLAN SHEET.

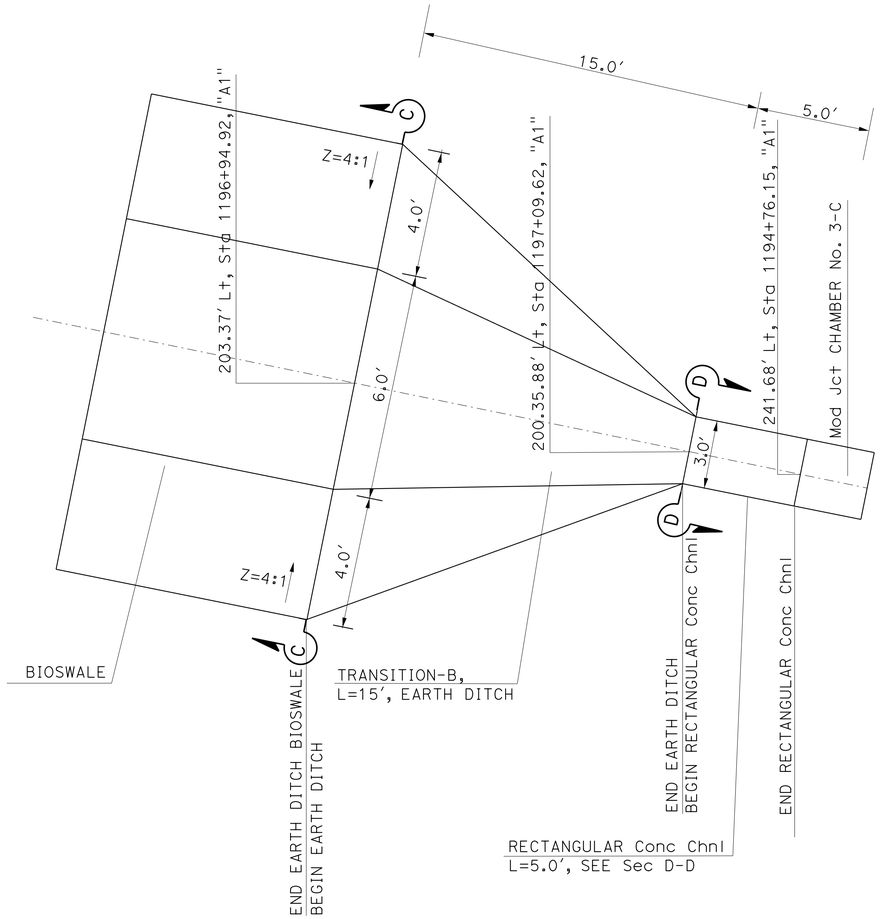

PLAN (11)(j)

NOTE-1:
FOR SECTION C-C, SEE WD-19

TRANSITION-B

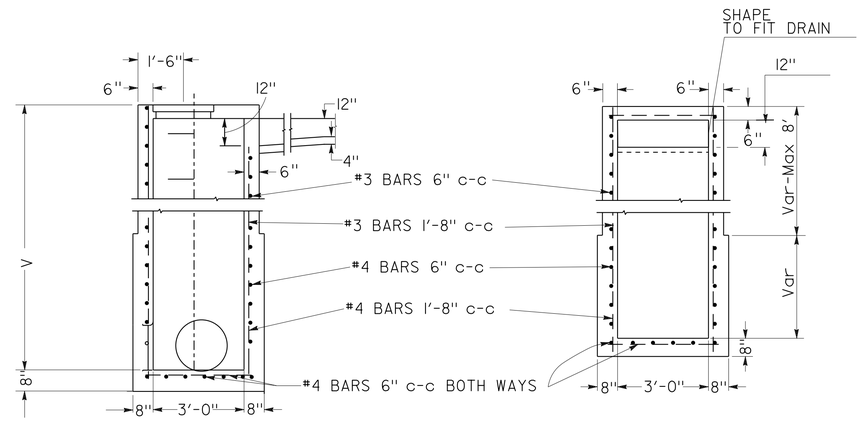

SECTION A1-A1

SECTION B1-B1

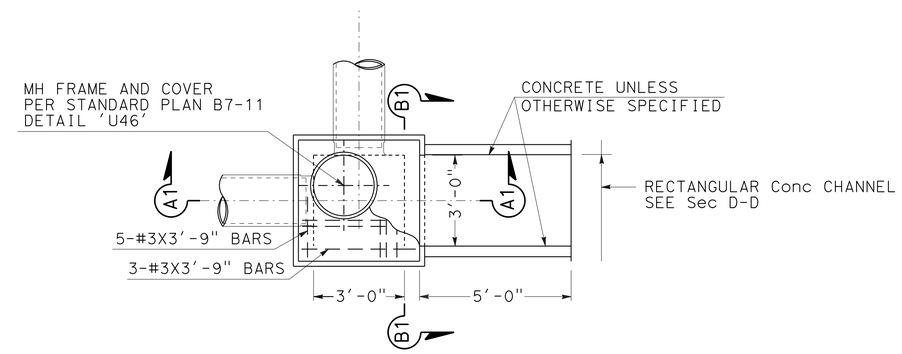

PLAN

NOTES:

1. CONNECTION PIPES MAY BE PLACED IN ANY POSITION AROUND THE WALLS PROVIDED THEY POINT IN THE PROPER DIRECTION AND THE POSITION IS OTHERWISE CONSISTENT WITH THE WATER POLLUTION CONTROL PLAN.
2. DIMENSIONS: D=18" UNLESS OTHERWISE SPECIFIED. V=3'-6" UNLESS OTHERWISE SPECIFIED.
3. EXPOSED SURFACE OF THE Jct CHAMBER MUST CONFORM IN SLOPE, GRADE, COLOR, FINISH AND SCORING TO Exist SIDEWALK ADJACENT TO THE Jct CHAMBER. WHERE NO SIDEWALK EXISTS, THE TOP MUST BE FINISHED TO CONFORM TO STANDARD SIDEWALK SLOPE AND FINISH, AND SCORING LINES MUST CONFORM AS NEARLY AS POSSIBLE TO 20" SQUARES.
4. FLOOR OF CHAMBER MUST BE GIVEN A STEEL-TROWELED FINISH AND MUST SLOPE FROM ALL DIRECTIONS TO OUTLET.
5. MH MUST BE PLACED IN CORNER NEAREST OUTLET.
6. OUTLET PIPE MUST BE CONNECTED TO Jct CHAMBER WITH MONOLITHIC CONNECTION.
7. Reinf STEEL NOT REQUIRED IN WALLS WHEN V=6' OR LESS. Reinf STEEL IN WALLS MUST BE #4 BARS @ 18"± CENTERS PLACED 1½" CLEAR TO INSIDE OF BOX FOR V > 6.0'
8. STEPS: NONE REQUIRED WHERE V=3'-6" OR LESS. INSTALL ONE STEP 16"± ABOVE FLOOR WHEN V IS MORE THAN 3'-6" AND LESS THAN 5'-0". WHERE V IS MORE THAN 5'-0" STEPS MUST BE EVENLY SPACED AT 12"± INTERVALS FROM 16"± ABOVE FLOOR TO WITHIN 12"± OF THE TOP OF THE BOX. SEE STEP DETAIL PER Std PLAN D74C AND D75C.

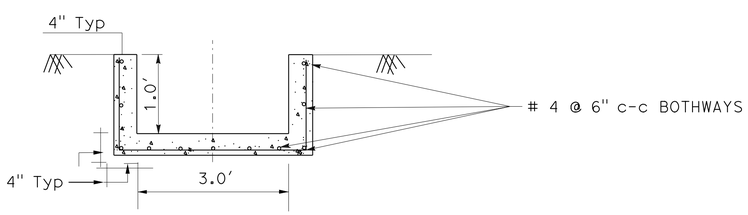

SECTION D-D (11)(k)
Conc CHANNEL

Mod JUNCTION CHAMBER No. 3-C (JC 3-C)

DRAINAGE SYSTEM No. (11)

WATER POLLUTION CONTROL PROFILE

NO SCALE

WD-20

STATE OF CALIFORNIA - DEPARTMENT OF TRANSPORTATION
Caltrans® HYDRAULICS

FUNCTIONAL SUPERVISOR: DAVE BHALLA
CALCULATED-DESIGNED BY: PRAKASH YADAV
CHECKED BY: DAVE BHALLA
REVISED BY / DATE REVISED

LAST REVISION 00-00-00 | DATE PLOTTED => 12-SEP-2014 | TIME PLOTTED => 06:21

Dist	COUNTY	ROUTE	POST MILES TOTAL PROJECT	SHEET No.	TOTAL SHEETS
07	LA	5,10,91, 110,134	Var	91	291

Prakashyadav 1-13-14
REGISTERED CIVIL ENGINEER DATE

6-2-14
PLANS APPROVAL DATE

REGISTERED PROFESSIONAL ENGINEER PRAKASH YADAV No. C68479 Exp. 9-30-15 CIVIL STATE OF CALIFORNIA

THE STATE OF CALIFORNIA OR ITS OFFICERS OR AGENTS SHALL NOT BE RESPONSIBLE FOR THE ACCURACY OR COMPLETENESS OF SCANNED COPIES OF THIS PLAN SHEET.

NOTES:

1. Reinf STEEL NOT REQUIRED IN WALLS WHEN H=6′ OR LESS.
   Reinf STEEL IN WALLS MUST BE #4 BARS @18"± CENTERS PLACED 1½" CLEAR TO INSIDE OF BOX FOR H> 6.0′
2. FLOOR OF CHAMBER MUST BE GIVEN A STEEL-TROWELED FINISH AND MUST SLOPE FROM ALL DIRECTIONS TO OUTLET.
3. STEPS: NONE REQUIRED WHERE H=3′-6" OR LESS.
   INSTALL ONE STEP 16"± ABOVE FLOOR WHEN H IS MORE THAN 3′-6" AND LESS THAN 5′-0".
   WHERE V IS MORE THAN 5′-0" STEPS MUST BE EVENLY SPACED AT 12"± INTERVALS FROM 16"±
   ABOVE FLOOR TO WITHIN 12"± OF THE TOP OF THE BOX.
   SEE STEP DETAIL PER STANDARD PLAN D74C AND D75C.
4. FOR INFORMATION NOT SHOWN, SEE TYPE G6 INLET, RSP D73.

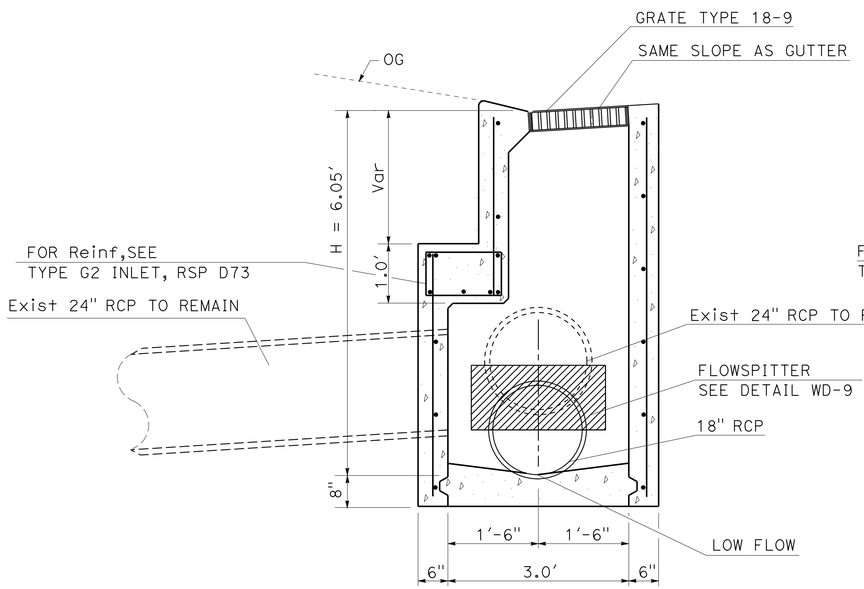

MODIFY TYPE G6 INLET

DRAINAGE SYSTEM No. 11 (b)

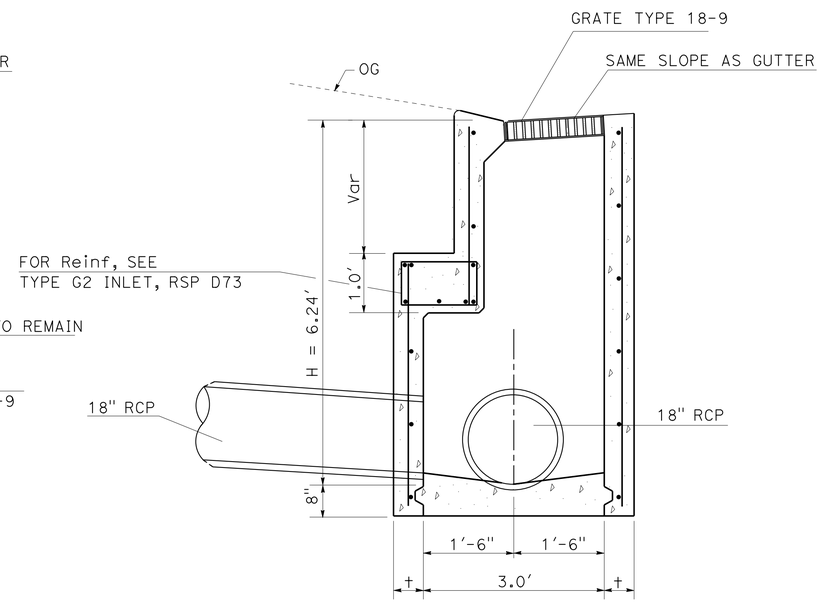

MODIFY TYPE G6 INLET

DRAINAGE SYSTEM No. 11 (d)

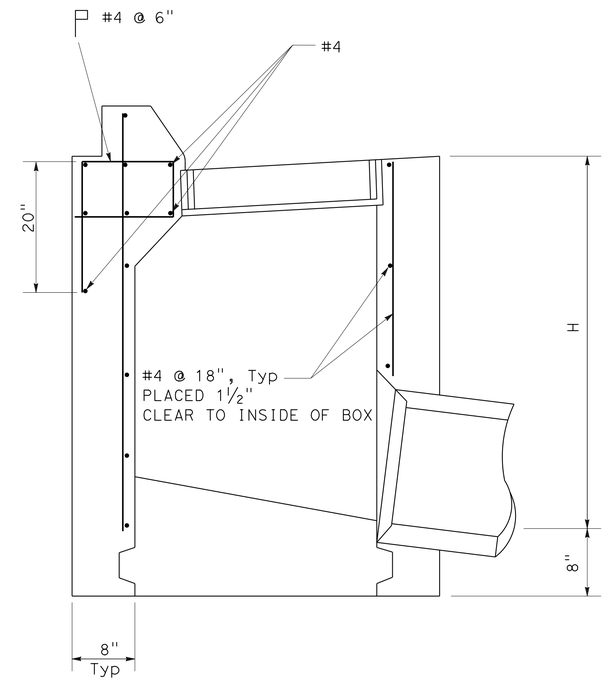

MODIFY TYPE G5 INLET

NOTE:
FOR INFORMATION NOT SHOWN, SEE TYPE G5 INLET, RSP D73.

WATER POLLUTION CONTROL DETAILS

NO SCALE

WD-21

STATE OF CALIFORNIA - DEPARTMENT OF TRANSPORTATION
Caltrans
HYDRAULICS

FUNCTIONAL SUPERVISOR: DAVE BHALLA
CALCULATED-DESIGNED BY: PRAKASH YADAV
CHECKED BY: DAVE BHALLA
REVISED BY
DATE REVISED

LAST REVISION 00-00-00
DATE PLOTTED => 12-SEP-2014
TIME PLOTTED => 06:21

Dist	COUNTY	ROUTE	POST MILES TOTAL PROJECT	SHEET No.	TOTAL SHEETS
07	LA	5,10,91, 110,134	Var	92	291

REGISTERED CIVIL ENGINEER — DATE 1-13-14

6-2-14
PLANS APPROVAL DATE

REGISTERED PROFESSIONAL ENGINEER PRAKASH YADAV No. C 68479 Exp. 9-30-15 CIVIL STATE OF CALIFORNIA

THE STATE OF CALIFORNIA OR ITS OFFICERS OR AGENTS SHALL NOT BE RESPONSIBLE FOR THE ACCURACY OR COMPLETENESS OF SCANNED COPIES OF THIS PLAN SHEET.

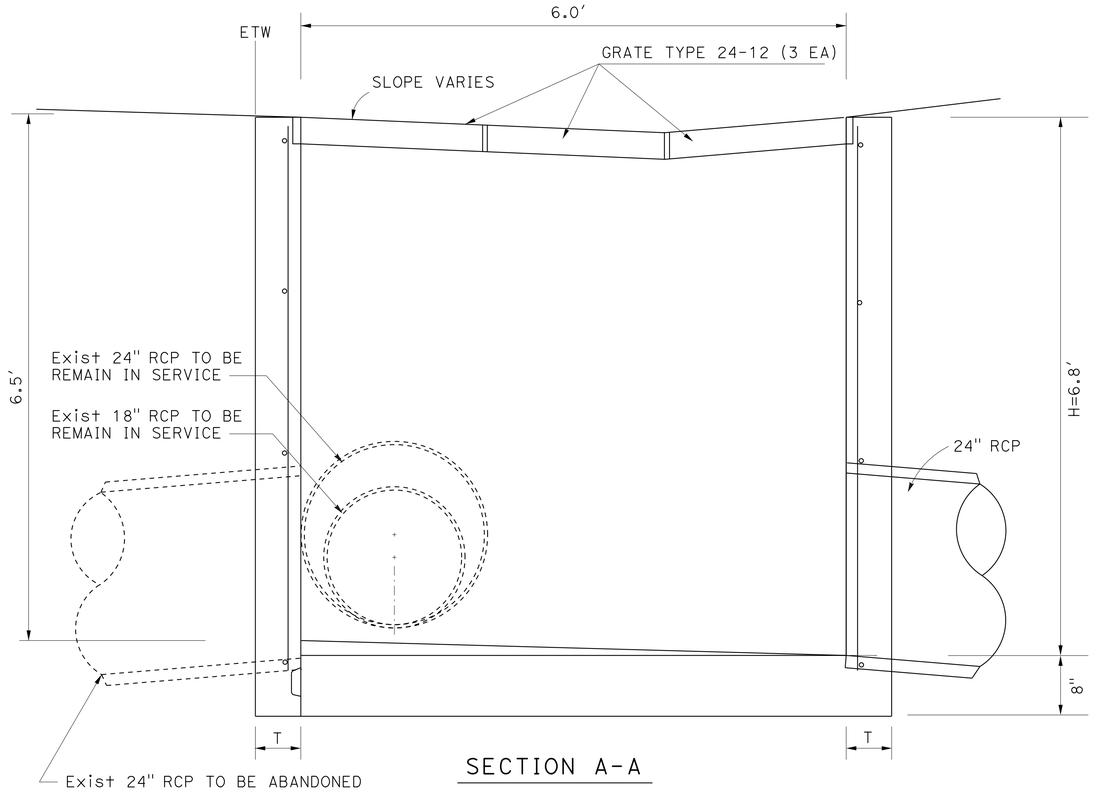

SECTION A-A

GENERAL NOTES

1. STEP-NONE REQUIRED WHEN "H" IS 3'-6" OR LESS.
   INSTALL ONE STEP 16" ± ABOVE FLOOR WHEN "H" IS MORE THAN 3'-6" AND LESS THAN 5'-0".
   WHERE "H" IS MORE THAN 5'-0" STEPS MUST BE EVENLY SPACED @12"± INTERVALS FROM 16"± FLOOR TO WITHIN 12" ± OF THE TOP OF THE BOX. PLACE STEPS Std PLAN D74 FOR STEP DETAIL.
2. PIPE(S) CAN BE PLACED IN ANY WALL.
3. Reinf STEEL IN WALLS MUST BE #4 BARS @18"+_CENTERS PLACED 1½" CLEAR TO INSIDE OF BOX.

H	T
8'-0" OR LESS	6"
8'-1" TO 20'-0"	8"

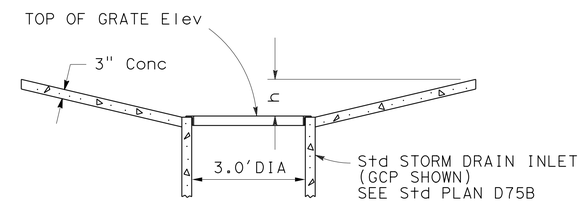

SECTION B-B

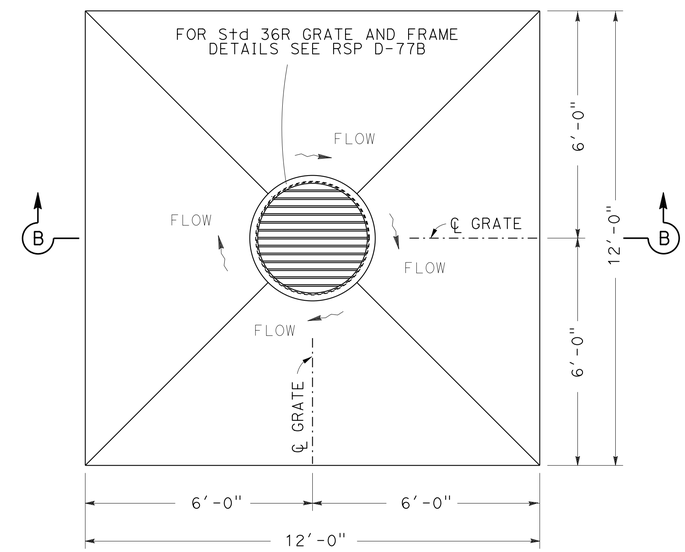

PLAN

DEPRESSED APRON DETAIL

DRAINAGE SYSTEM No. 14 (i)

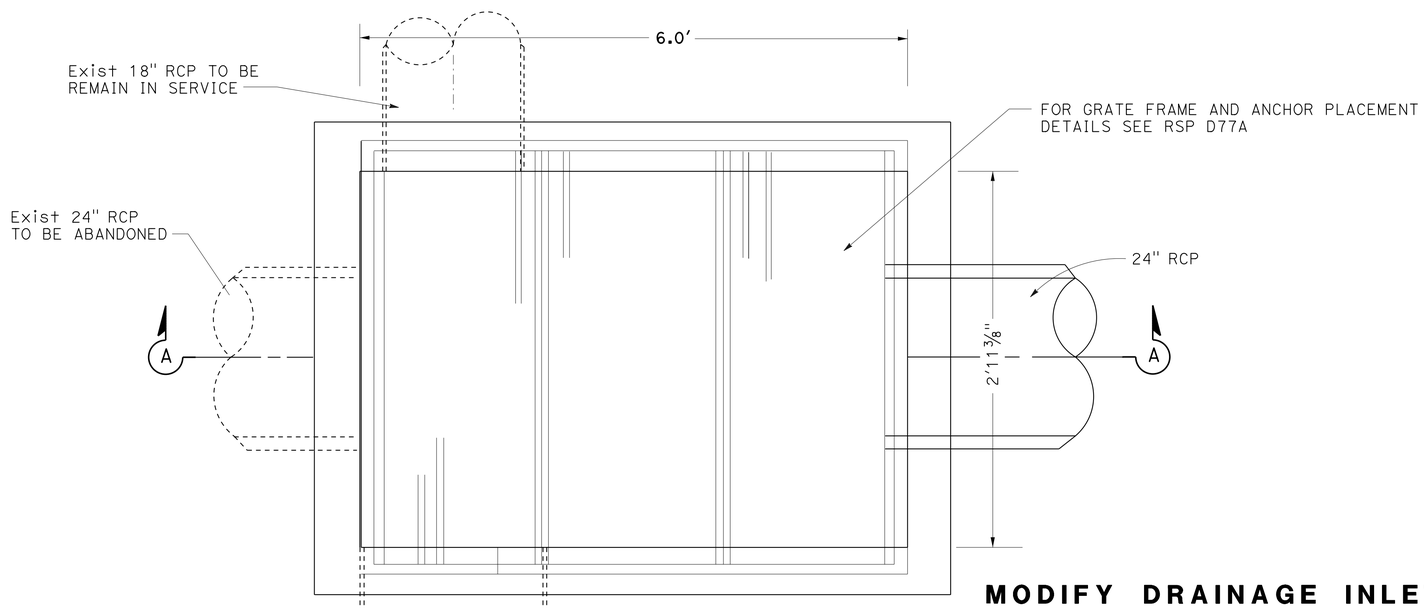

PLAN

MODIFY DRAINAGE INLET

DRAINAGE SYSTEM No. 12 (c)

WATER POLLUTION CONTROL DETAILS

NO SCALE

WD-22

STATE OF CALIFORNIA - DEPARTMENT OF TRANSPORTATION
Caltrans
HYDRAULICS

FUNCTIONAL SUPERVISOR: DAVE BHALLA
CALCULATED-DESIGNED BY: PRAKASH YADAV
CHECKED BY: DAVE BHALLA
REVISED BY
DATE REVISED

LAST REVISION 00-00-00
DATE PLOTTED => 12-SEP-2014
TIME PLOTTED => 06:21

Dist	COUNTY	ROUTE	POST MILES TOTAL PROJECT	SHEET No.	TOTAL SHEETS
07	LA	5,10,91, 110,134	Var	93	291

REGISTERED CIVIL ENGINEER 1-13-14 DATE

6-2-14
PLANS APPROVAL DATE

REGISTERED PROFESSIONAL ENGINEER DOUGLAS DUNRUD No. 47240 Exp. 12/31/15 CIVIL STATE OF CALIFORNIA

THE STATE OF CALIFORNIA OR ITS OFFICERS OR AGENTS SHALL NOT BE RESPONSIBLE FOR THE ACCURACY OR COMPLETENESS OF SCANNED COPIES OF THIS PLAN SHEET.

GENERAL NOTES

DESIGNATION:
PARTIAL AUSTIN VAULT SAND FILTERS (AVSFS) ARE OPEN AIR REINFORCED CONCRETE VAULTS UTILIZING BOTH SEDIMENTATION AND SAND FILTRATION BASINS. TYPE DESIGNATION IS BASED ON LENGTH CONFIGURATION, WATER QUALITY VOLUME TO BE DRAINED IN A 24 HOUR PERIOD, AND AVERAGE DEPTH OF WATER.

Std CONFIGURATIONS ARE NOTED FOR THE FOLLOWING DESIGN WATER QUALITY VOLUMES (WQV): 5,000, 10,000, AND 15,000 CF. LENGTH CONFIGURATIONS ARE EITHER SHORT (S) OR LONG (L). THE AVERAGE WATER DEPTH CAN BE EITHER 3 Ft, 4.5 Ft, OR 6 Ft AS DESIGNED IN DESIGN WATER QUALITY VOLUMES (WQV) TABLE.

SPECIAL Reinf COVERAGE:
AVSF Std DETAILS ARE NOT TO BE USED IN A CORROSIVE ENVIRONMENT OR WHERE THERE IS A SEVERE ABRASIVE FLOW CONDITION OR IN FREEZE-THAW LOCATIONS.

SPECIAL DESIGN:
REQUIRED FOR THE FOLLOWING CONDITIONS:
GROUND WATER CONDITIONS ABOVE BOTTOM OF AVSF, SURCHARGE LOADS EXCEEDING HS20 TRUCK LOAD, DESIGN BEARING PRESSURES OR SIZES GREATER THAN THOSE ON THIS PLAN, INLET VELOCITIES WHICH EXCEED 8.0 ft/Sec AT GABION WALL, AND SETTLEMENT DUE TO LIQUEFACTION.

DESIGN NOTES

DESIGN: AASHTO LRFD BRIDGE DESIGN SPECIFICATIONS, 4th EDITION WITH CALIFORNIA AMENDMENTS

LS: SURCHARGE ON LEVEL GROUND SURFACE

SEISMIC: $k_h = 0.2$, $k_v = 0.0$

SOIL: $\phi = 34°$, $\gamma = 120$ pcf

REINFORCED CONCRETE: $f'c = 4{,}000$ psi
$fy = 60{,}000$ psi

LOAD COMBINATIONS AND LIMIT STATES:

SERVICE I	$Q = 1.00DC+1.00EV+1.00EH+1.00LS$
STRENGTH I	$Q = \alpha DC+\beta EV+\eta EH+1.75LS$
EXTREME I	$Q = 1.00DC+1.00EV+1.00EH+1.00EQD+1.00EQE$
EXTREME II	$Q = 1.00DC+1.00EV+1.00EH+1.00CT$

Where:

Q:	FORCE EFFECTS
α:	1.25 OR 0.90, WHICHEVER CONTROLS DESIGN
β:	1.35 OR 1.00, WHICHEVER CONTROLS DESIGN
η:	1.50 OR 0.90, WHICHEVER CONTROLS DESIGN
DC:	DEAD LOAD OF STRUCTURE COMPONENTS
EH:	HORIZONTAL EARTH FILL PRESSURE
EV:	VERTICAL EARTH PRESSURE FROM EARTH FILL WEIGHT
LS:	LIVE LOAD SURCHARGE
EQE:	SEISMIC EARTH PRESSURE
EQD:	SOIL AND STRUCTURAL AND NONSTRUCTURAL COMPONENTS INERTIA
CT:	VEHICULAR COLLISION FORCE

ABBREVIATIONS

AVSF	-	AUSTIN VAULT SAND FILTER
EWT&B	-	EACH WAY TOP AND BOTTOM
H_W	-	GABION WALL HEIGHT (TYPICALLY SET AT DESIGN WATER DEPTH)
L_f	-	LENGTH OF FILTRATION BASIN
L_s	-	LENGTH OF SEDIMENT BASIN
T	-	WALL THICKNESS
W	-	WIDTH OF AVSF
WQV	-	WATER QUALITY VOLUME

LEGEND

DESIGN WATER DEPTH

STANDARD PLAN SHEET No.

DETAIL No.

NOTES

Exp JOINTS:
INVERTS AND SIDEWALLS - PLACE 1/2" EXPANSION JOINT FILLER AND WATERSTOP WHERE INDICATED. SEE "AUSTIN VAULT SAND FILTER DETAILS No. 2" SHEET FOR SPECIFIC WALL AND INVERT DETAILS.

CONSTRUCTION JOINTS:
MUST BE PLACED WHERE INDICATED ON PLANS.

BACKFILL:
SEE Std SPECIFICATIONS, EXCEPT THE DIFFERENCE IN BACKFILL MUST NOT EXCEED 8'-0" BETWEEN SIDE WALLS AND INLET AND OUTLET WALLS. BACKFILL AND COMPACT AROUND AVSF BEFORE PUTTING UNIT IN OPERATION.

EARTHWORK:
LIMITS OF PAYMENT FOR Exc AND BACKFILL.

DESIGN WATER QUALITY VOLUMES (WQV)

AVSF TYPE*	WQV (ft^3)	W(ft)	L_s(ft)	L_f(ft)	H_W(ft)
S-3500-3	3,500	21	14	38	3
L-3500-3	3,500	15	18	53	3
S-3500-4.5	4,380	21	14	38	4.5
L-3500-4.5	4,380	15	18	53	4.5
S-3500-6	5,260	21	14	38	6
L-3500-6	5,260	15	18	53	6
S-5000-3	5,000	27	15	42	3
L-5000-3	5,000	18	21	63	3
S-5000-4.5	6,250	27	15	42	4.5
L-5000-4.5	6,250	18	21	63	4.5
S-5000-6	7,500	27	15	42	6
L-5000-6	7,500	18	21	63	6
S-10000-3	10,000	36	21	63	3
L-10000-3	10,000	24	30	94	3
S-10000-4.5	12,500	36	21	63	4.5
L-10000-4.5	12,500	24	30	94	4.5
S-10000-6	15,000	36	21	63	6
L-10000-6	15,000	24	30	94	6
S-15000-3	15,000	45	25	76	3
L-15000-3	15,000	30	37	115	3
S-15000-4.5	18,750	45	25	76	4.5
L-15000-4.5	18,750	30	37	115	4.5
S-15000-6	22,500	45	25	76	6
L-15000-6	22,500	30	37	115	6

* AVSF TYPE = LENGTH CONFIGURATION (S OR L) - WATER QUALITY VOLUME (CF) - DESIGN WATER DEPTH (H_W ELEVATION)

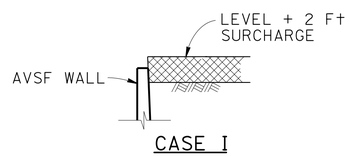

CASE I

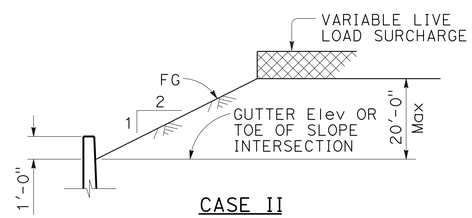

CASE II

DETAIL OF DESIGN LOADING CASE

CASE I LEVEL + 2 Ft SURCHARGE, AVSF EMPTY
CASE II 2:1 SLOPE (Max 20 Ft) + 2 Ft SURCHARGE, AVSF EMPTY

UNIT STRESSES:
$f'c = 4{,}000$ psi
$fy = 60{,}000$ psi

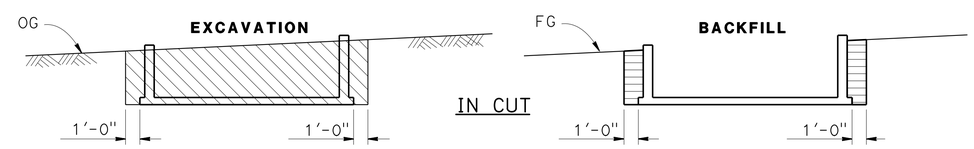

LEGEND:
STRUCTURE Exc
STRUCTURE BACKFILL

NOTES:
1. SLOPE OR SHORE EXCAVATION SIDES AS NECESSARY.
2. DIMENSIONS SHOWN ARE Min
3. 95% COMPACTION 1'-0" BELOW FLOOR SLABS.

AUSTIN VAULT SAND FILTER

WATER POLLUTION CONTROL DETAILS
AUSTIN VAULT SAND FILTER
LEGEND
NO SCALE

WD-23

STATE OF CALIFORNIA - DEPARTMENT OF TRANSPORTATION
Caltrans HYDRAULICS
FUNCTIONAL SUPERVISOR: TIMOTHY B. SOBELMAN
CALCULATED-DESIGNED BY: D. WANG
CHECKED BY: L. HE
REVISED BY
DATE REVISED

LAST REVISION 04-12-13
DATE PLOTTED => 12-SEP-2014
TIME PLOTTED => 06:21

Dist	COUNTY	ROUTE	POST MILES TOTAL PROJECT	SHEET No.	TOTAL SHEETS
07	LA	5,10,91, 110,134	Var	94	291

REGISTERED CIVIL ENGINEER 1-13-14 DATE

6-2-14
PLANS APPROVAL DATE

REGISTERED PROFESSIONAL ENGINEER DOUGLAS DUNRUD No. 47240 Exp. 12/31/15 CIVIL STATE OF CALIFORNIA

THE STATE OF CALIFORNIA OR ITS OFFICERS OR AGENTS SHALL NOT BE RESPONSIBLE FOR THE ACCURACY OR COMPLETENESS OF SCANNED COPIES OF THIS PLAN SHEET.

REINFORCING STEEL AND DATA FOR WALLS (CASE I)

DESIGN "H"	6′	8′	10′	12′	14′	16′	18′	20′	22′	24′
"T"	12"	12"	12"	12"	14"	14"	16"	16"	18"	18"
"F"	1′-6"	1′-6"	1′-6"	1′-8"	1′-10"	1′-10"	1′-10"	2′-1"	2′-1"	2′-4"
ⓐ BARS ⌊	#6 @ 12	#6 @ 12	#6 @ 8	#7 @ 8	#8 @ 8	#8 @ 6	#8 @ 6	#9 @ 6	#9 @ 6	#10 @ 6
ⓑ BARS ⌋	#6 @ 12	#6 @ 12	#6 @ 8	#7 @ 8	#8 @ 8	#8 @ 6	#8 @ 6	#9 @ 6	#9 @ 6	#10 @ 6
ⓒ BARS	#6 @ 12	#6 @ 12	#6 @ 8	#6 @ 8	#7 @ 8	#7 @ 6	#7 @ 6	#8 @ 6	#8 @ 6	#9 @ 6
ⓓ BARS ⌣	#6 @ 12	#6 @ 12	#6 @ 8	#6 @ 8	#7 @ 8	#7 @ 6	#7 @ 6	#8 @ 6	#8 @ 6	#9 @ 6

REINFORCING STEEL AND DATA FOR WALLS (CASE II)

DESIGN "H"	6′	8′	10′	12′	14′	16′	18′	20′	22′	24′
"T"	12"	12"	12"	12"	14"	16"	21"	22"	24"	26"
"F"	1′-6"	1′-6"	1′-6"	1′-8"	1′-10"	2′-0"	2′-4"	2′-4"	2′-6"	2′-8"
ⓐ BARS ⌊	#6 @ 12	#6 @ 12	#6 @ 8	#7 @ 8	#8 @ 6	#8 @ 6	#8 @ 6	#9 @ 6	#10 @ 6	#11 @ 6
ⓑ BARS ⌋	#6 @ 12	#6 @ 12	#6 @ 8	#7 @ 8	#8 @ 6	#8 @ 6	#8 @ 6	#9 @ 6	#10 @ 6	#11 @ 6
ⓒ BARS	#6 @ 12	#6 @ 12	#6 @ 8	#7 @ 8	#7 @ 6	#8 @ 6	#8 @ 6	#9 @ 6	#10 @ 6	#11 @ 6
ⓓ BARS ⌣	#6 @ 12	#6 @ 12	#6 @ 8	#7 @ 8	#7 @ 6	#8 @ 6	#8 @ 6	#9 @ 6	#10 @ 6	#11 @ 6

NOTES (THIS SHEET ONLY):

1. FOR DIMENSIONS "W", "Ls", "Lf" AND "Hw", SEE DESIGN WQV TABLE ON "AUSTIN VAULT SAND FILTER LEGEND" SHEET.
2. FOR FOOTING DETAILS NOT SHOWN, SEE "AUSTIN WALL SAND FILTER DETAILS No. 1 AND No. 2" SHEETS.
3. YOU HAVE THE OPTION OF MATCHING THE SEDIMENTATION BASIN WALL THICKNESS WITH THE FILTRATION BASIN WALL THICKNESS. THICKER DESIGN WALL MUST BE USED AT NO ADDITIONAL COST TO THE DEPARTMENT.
4. FOR ADDITIONAL CORNER REINFORCEMENT NOT SHOWN SEE TYPICAL CORNER DETAIL ON "AUSTIN WALL SAND FILTER DETAILS No. 1" SHEET.
5. * - FOR DETAILS SEE "WATER POLLUTION CONTROL PLANS".
6. FOR PROJECT SPECIFIC AVFS ELEVATIONS, SEE WALL DESIGN ELEVATION TABLE ON THE WATER POLLUTION CONTROL PROFILE SHEETS.

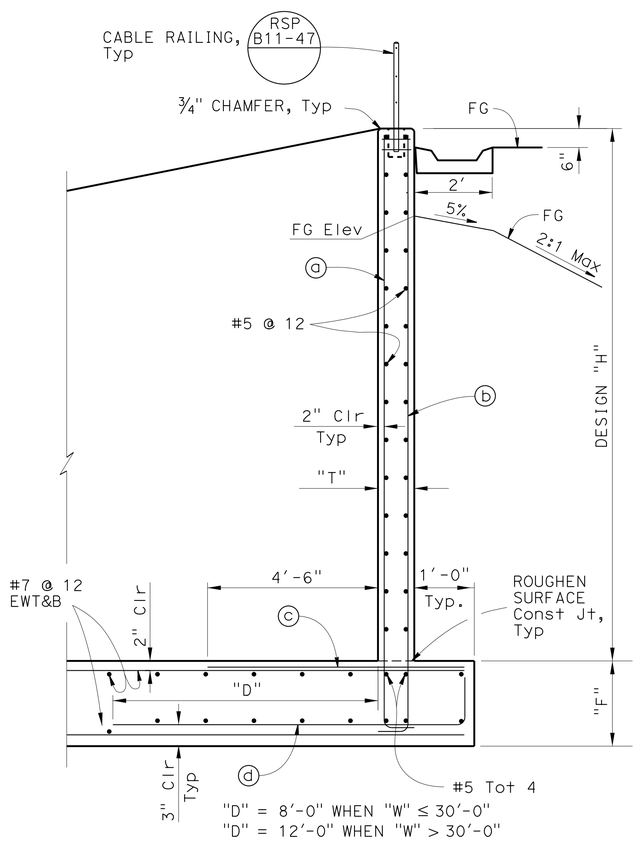

TYPICAL SECTION

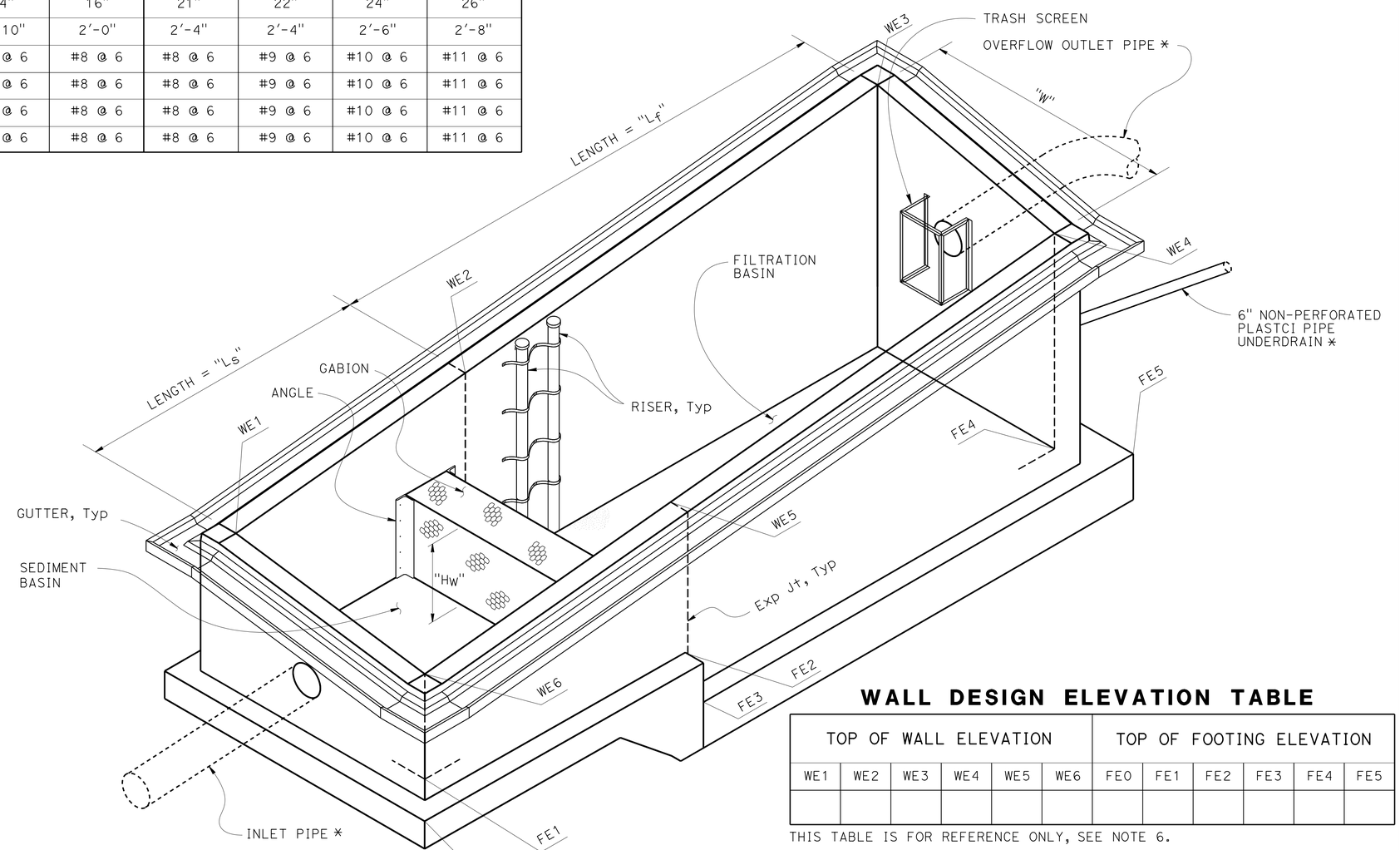

AUSTIN VAULT SAND FILTER DRAINAGE SYSTEM

NOTE: STEEL LADDERS AND CABLE RAILINGS NOT SHOWN FOR CLARITY.

WALL DESIGN ELEVATION TABLE

TOP OF WALL ELEVATION						TOP OF FOOTING ELEVATION					
WE1	WE2	WE3	WE4	WE5	WE6	FE0	FE1	FE2	FE3	FE4	FE5

THIS TABLE IS FOR REFERENCE ONLY, SEE NOTE 6.

WATER POLLUTION CONTROL DETAILS
AUSTIN VAULT SAND FILTER
LAYOUT No. 1

NO SCALE

WD-24

STATE OF CALIFORNIA - DEPARTMENT OF TRANSPORTATION
Caltrans
HYDRAULICS

FUNCTIONAL SUPERVISOR: TIMOTHY B. SOBELMAN
CALCULATED-DESIGNED BY: D. WANG
CHECKED BY: L. HE
REVISED BY
DATE REVISED

LAST REVISION 04-12-13
DATE PLOTTED => 12-SEP-2014
TIME PLOTTED => 06:22

Dist	COUNTY	ROUTE	POST MILES TOTAL PROJECT	SHEET No.	TOTAL SHEETS
07	LA	5,10,91, 110,134	Var	95	291

REGISTERED CIVIL ENGINEER 1-13-14 DATE

6-2-14
PLANS APPROVAL DATE

REGISTERED PROFESSIONAL ENGINEER DOUGLAS DUNRUD No. 47240 Exp. 12/31/15 CIVIL STATE OF CALIFORNIA

THE STATE OF CALIFORNIA OR ITS OFFICERS OR AGENTS SHALL NOT BE RESPONSIBLE FOR THE ACCURACY OR COMPLETENESS OF SCANNED COPIES OF THIS PLAN SHEET.

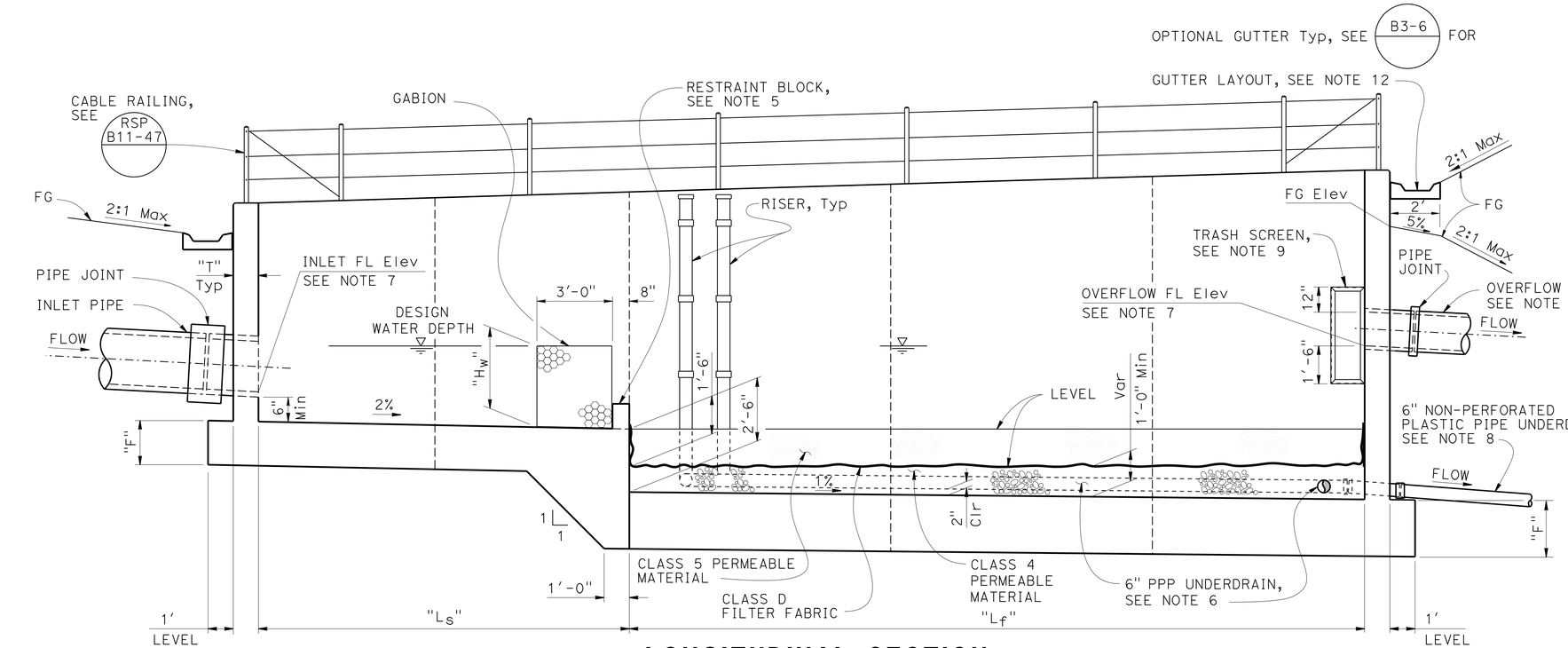

LONGITUDINAL SECTION

NOTE: LADDER NOT SHOWN FOR CLARITY.

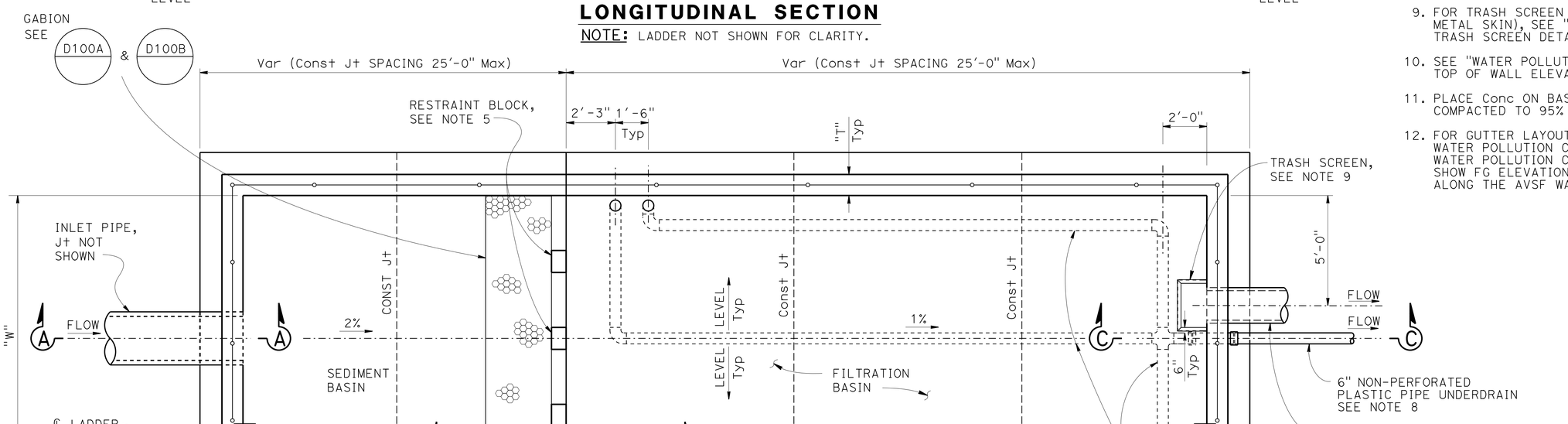

PLAN

NOTE: GUTTER NOT SHOWN FOR CLARITY.

NOTES (THIS SHEET ONLY)

1. FOR DIMENSIONS "W", "Ls", "Lf" AND "Hw", SEE DESIGN WQV TABLE ON "AUSTIN VAULT SAND FILTER LEGEND" SHEET.
2. FOR DIMENSIONS "T" AND "F", SEE "AUSTIN VAULT SAND FILTER LAYOUT No. 1" SHEET.
3. FOR TYPICAL SECTION, SEE "AUSTIN VAULT SAND FILTER LAYOUT No. 1" SHEET.
4. FOR SECTION A-A, B-B AND C-C, SEE "AUSTIN VAULT SAND FILTER DETAILS No. 1" SHEET.
5. FOR RESTRAINT BLOCK DETAILS, SEE "AUSTIN VAULT SAND FILTER DETAILS No. 1" AND "DETAILS No. 2" SHEETS.
6. FOR DETAILS OF PPP UNDERDRAIN SYSTEM, SEE "AUSTIN VAULT SAND FILTER UNDERDRAIN DETAILS" SHEET.
7. FOR LAYOUT AND FL Elev OF INLET AND OVERFLOW PIPE, SEE "WATER POLLUTION CONTROL PLANS AND WATER POLLUTION CONTROL PROFILES" SHEETS.
8. FOR SLOPE OF NON-PERFORATED PLASTIC PIPE UNDERDRAIN, SEE "WATER POLLUTION CONTROL PROFILES".
9. FOR TRASH SCREEN DETAILS (FRAME AND PERFORATED METAL SKIN), SEE "AUSTIN VAULT SAND FILTER TRASH SCREEN DETAILS" SHEET.
10. SEE "WATER POLLUTION CONTROL PROFILES" FOR TOP OF WALL ELEVATIONS.
11. PLACE Conc ON BASE OR NATIVE MATERIAL COMPACTED TO 95% RELATIVE COMPACTION.
12. FOR GUTTER LAYOUT AND FL Elev, SEE WATER POLLUTION CONTROL PLANS AND WATER POLLUTION CONTROL PROFILES. SHOW FG ELEVATIONS AT ALL GRADE BREAKS ALONG THE AVSF WALLS.

WATER POLLUTION CONTROL DETAILS
AUSTIN VAULT SAND FILTER
LAYOUT No. 2

NO SCALE

WD-25

STATE OF CALIFORNIA - DEPARTMENT OF TRANSPORTATION
Caltrans®
HYDRAULICS

FUNCTIONAL SUPERVISOR: TIMOTHY B. SOBELMAN
CALCULATED-DESIGNED BY: D. WANG
CHECKED BY: L. HE
REVISED BY
DATE REVISED

LAST REVISION 04-12-13
DATE PLOTTED => 12-SEP-2014
TIME PLOTTED => 06:22

Dist	COUNTY	ROUTE	POST MILES TOTAL PROJECT	SHEET No.	TOTAL SHEETS
07	LA	5,10,91, 110,134	Var	96	291

Timothy B. Sobelman 11-16-12
REGISTERED CIVIL ENGINEER DATE

6-2-14
PLANS APPROVAL DATE

REGISTERED PROFESSIONAL ENGINEER TIMOTHY B. SOBELMAN No. 59249 Exp. 6-30-15 CIVIL STATE OF CALIFORNIA

THE STATE OF CALIFORNIA OR ITS OFFICERS OR AGENTS SHALL NOT BE RESPONSIBLE FOR THE ACCURACY OR COMPLETENESS OF SCANNED COPIES OF THIS PLAN SHEET.

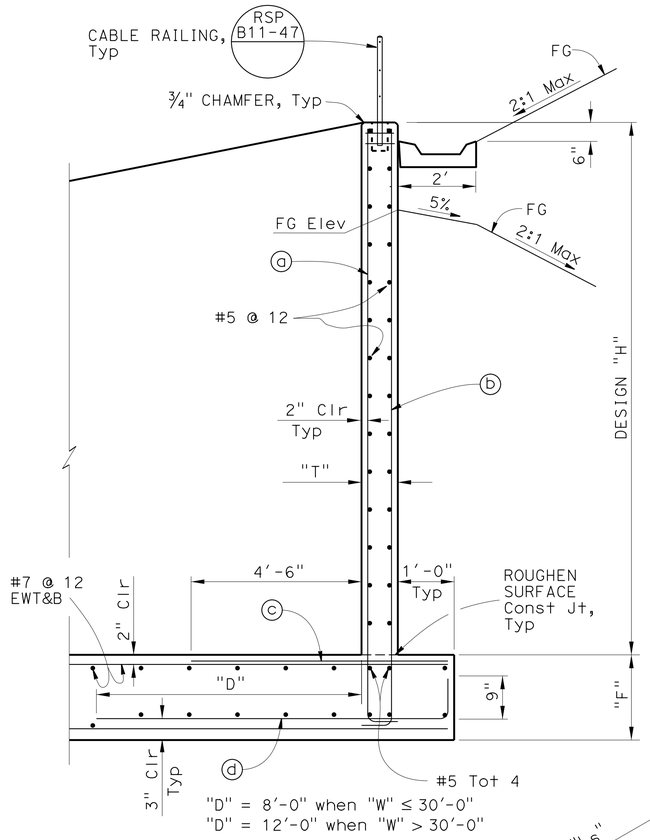

TYPICAL SECTION

REINFORCING STEEL AND DATA FOR WALLS

Design "H"	6'	8'	10'	12'	14'	16'
"T"	12"	12"	12"	12"	14"	14"
"F"	1'-3"	1'-3"	1'-3"	1'-6"	1'-9"	1'-9"
ⓐ bars ⌊	#6 @ 12	#6 @ 12	#6 @ 8	#7 @ 8	#8 @ 8	#9 @ 6
ⓑ bars ⌋	#6 @ 12	#6 @ 12	#6 @ 8	#7 @ 8	#8 @ 8	#8 @ 6
ⓒ bars	#6 @ 12	#6 @ 12	#6 @ 8	#6 @ 8	#7 @ 8	#7 @ 6
ⓓ bars ⌣	#6 @ 12	#6 @ 12	#6 @ 8	#6 @ 8	#7 @ 8	#7 @ 6

NOTES (THIS SHEET ONLY):

1. For dimensions "W", "Ls", "Lf" and "Hw", see Design WQV table on "Austin Vault Sand Filter Legend" sheet.
2. For footing details not shown, see "Austin Wall Sand Filter Details No. 1 and No. 2" sheets.
3. The contractor has the option of matching the Sedimentation Basin wall thickness with the Filtration Basin wall thickness. Thicker design wall must be used at no additional cost to the Department.
4. For additional corner reinforcement not shown see Typical Corner Detail on "Austin Wall Sand Filter Details No. 1" sheet.
5. * - For details see "Water Pollution Control Plans".
6. For project specific AVFS elevations, see Wall Design Elevation Table on the drainage profile sheets.

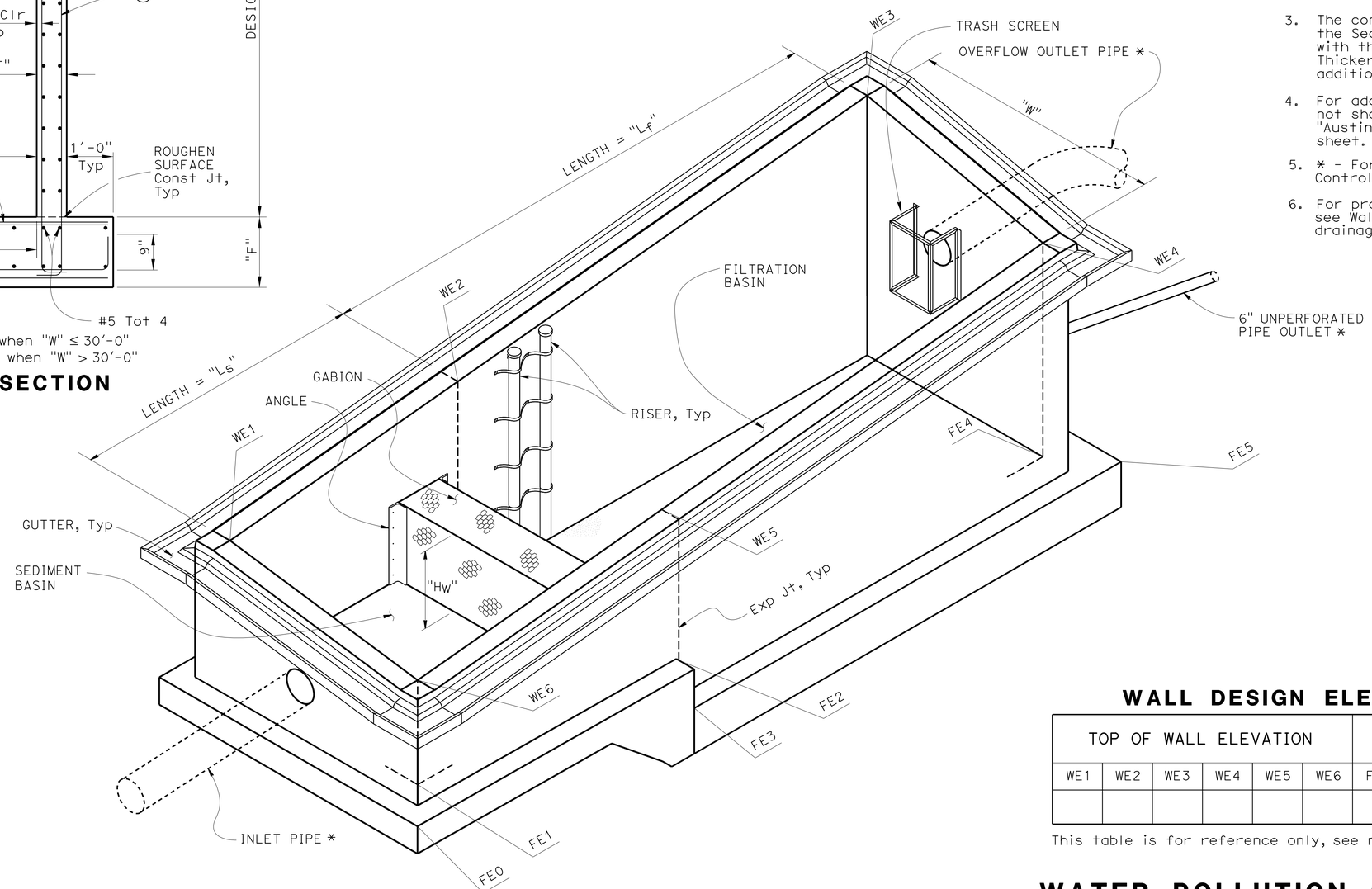

AUSTIN VAULT SAND FILTER DRAINAGE SYSTEM

NOTE: Steel ladders and cable railings not shown for clarity.

WALL DESIGN ELEVATION TABLE

TOP OF WALL ELEVATION						TOP OF FOOTING ELEVATION					
WE1	WE2	WE3	WE4	WE5	WE6	FE0	FE1	FE2	FE3	FE4	FE5

This table is for reference only, see note 6.

WATER POLLUTION CONTROL DETAILS
AUSTIN VAULT SAND FILTER
LAYOUT No. 3

NO SCALE

WD-26

STATE OF CALIFORNIA - DEPARTMENT OF TRANSPORTATION
Caltrans
DIVISION OF DESIGN
OFFICE OF STORM WATER MANAGEMENT

FUNCTIONAL SUPERVISOR: TIMOTHY B. SOBELMAN
CALCULATED-DESIGNED BY: D. WANG
CHECKED BY: L. HE
REVISED BY
DATE REVISED

LAST REVISION 04-12-13
DATE PLOTTED => 12-SEP-2014
TIME PLOTTED => 06:22

Dist	COUNTY	ROUTE	POST MILES TOTAL PROJECT	SHEET No.	TOTAL SHEETS
07	LA	5,10,91, 110,134	Var	97	291

REGISTERED CIVIL ENGINEER 1-13-14 DATE

6-2-14
PLANS APPROVAL DATE

REGISTERED PROFESSIONAL ENGINEER DOUGLAS DUNRUD No. 47240 Exp. 12/31/15 CIVIL STATE OF CALIFORNIA

THE STATE OF CALIFORNIA OR ITS OFFICERS OR AGENTS SHALL NOT BE RESPONSIBLE FOR THE ACCURACY OR COMPLETENESS OF SCANNED COPIES OF THIS PLAN SHEET.

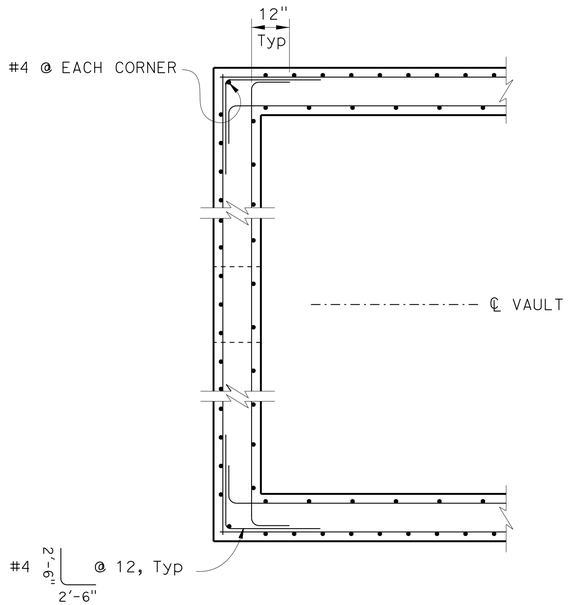

TYPICAL CORNER DETAIL

INLET WALL SHOWN, OUTLET WALL SIMILAR.

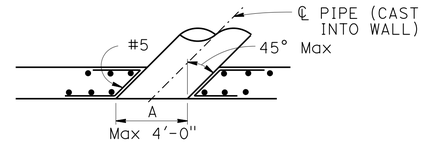

SECTION D-D

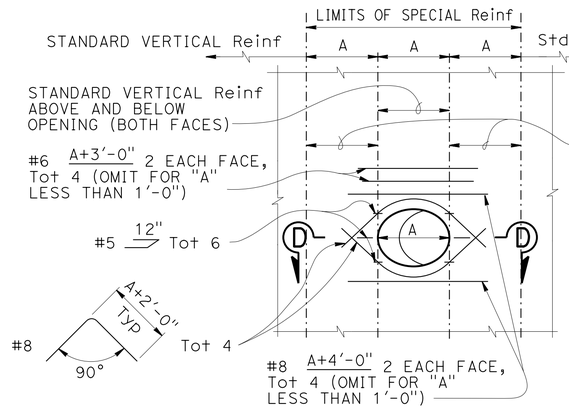

Std VERTICAL REINFORCEMENT PLUS ADDITIONAL VERTICAL BARS CORRESPONDING IN SIZE AND NUMBER TO BARS CUT BY THE OPENING. PLACE HALF ON EACH SIDE. EXTEND THE ADDITIONAL BARS INTO THE FOOTING THE SAME AS OTHER VERTICAL WALL Reinf AND TO A Min OF 60 BAR Dia ABOVE THE TOP OF UTILITY OPENING IF WALL HEIGHT PERMITS. BUNDLE BARS AS REQUIRED

HORIZONTAL Reinf TO BE Std EXCEPT AS SHOWN.

ALL Reinf TO CLEAR OPENING BY 2" Min.

EXPANSION Jt MUST NOT BE LOCATED WITHIN THE LIMITS OF SPECIAL REINFORCING.

THE REBAR LENGTHS SHOWN ARE Max AND MUST BE ADJUSTED DUE TO THE LIMITATIONS OF SPACE.

WALL OPENING DETAIL

TO BE USED AT INLET, OUTLET AND OVERFLOW PIPE LOCATIONS.

NOTES (THIS SHEET ONLY):

1. FOR LOCATIONS OF SECTION A-A, B-B, AND C-C, SEE "AUSTIN VAULT SAND FILTER LAYOUT No. 2" SHEET.
2. FOR WALL AND FOOTING Reinf DETAILS, SEE TYPICAL SECTION ON "AUSTIN VAULT SAND FILTER LAYOUT No. 1" SHEET.

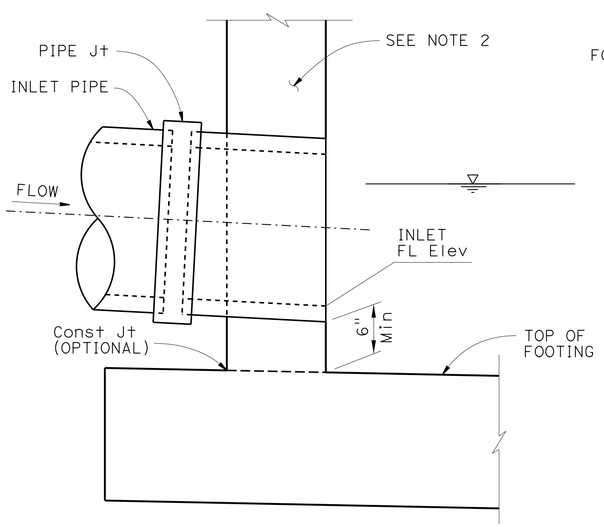

SECTION A-A

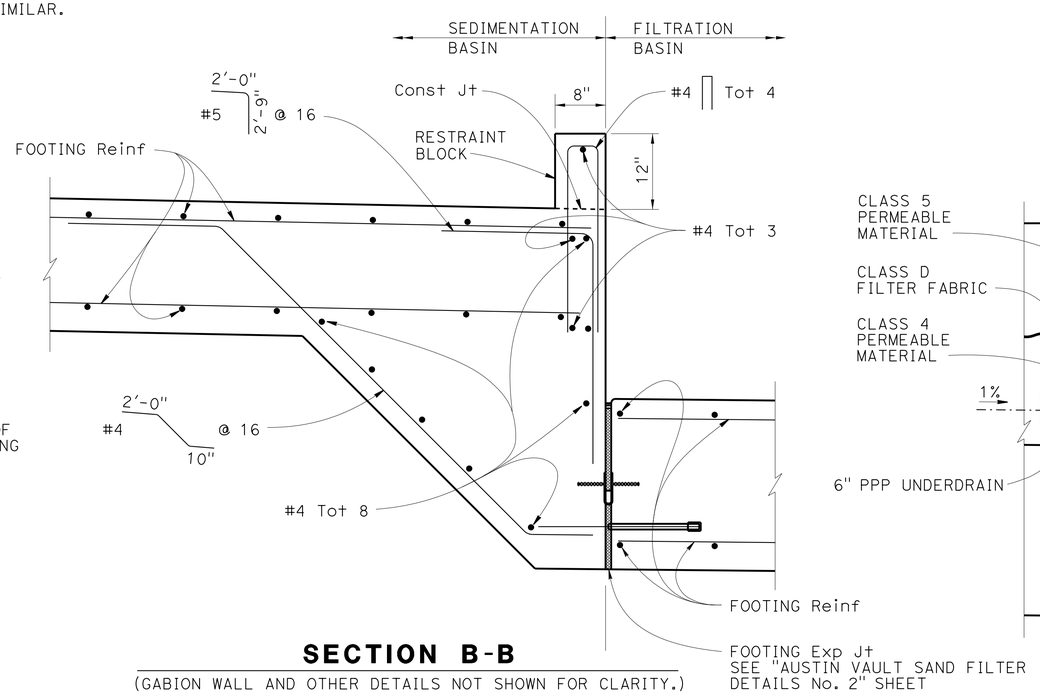

SECTION B-B

(GABION WALL AND OTHER DETAILS NOT SHOWN FOR CLARITY.)

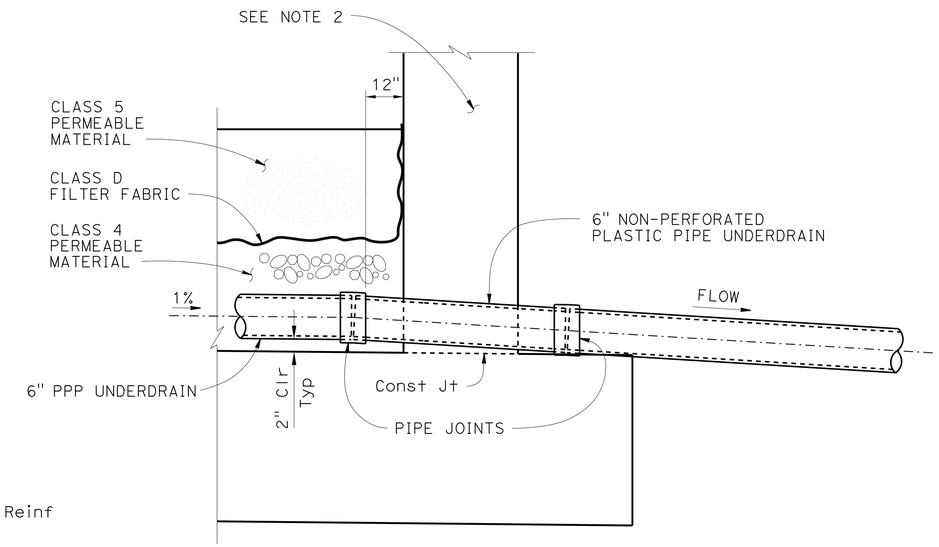

SECTION C-C

WATER POLLUTION CONTROL DETAILS
AUSTIN VAULT SAND FILTER
DETAILS No. 1

NO SCALE

WD-27

STATE OF CALIFORNIA - DEPARTMENT OF TRANSPORTATION
Caltrans
HYDRAULICS

FUNCTIONAL SUPERVISOR: TIMOTHY B. SOBELMAN
CALCULATED-DESIGNED BY: D. WANG
CHECKED BY: L. HE
REVISED BY
DATE REVISED

LAST REVISION 04-12-13
DATE PLOTTED => 12-SEP-2014
TIME PLOTTED => 06:22

Dist	COUNTY	ROUTE	POST MILES TOTAL PROJECT	SHEET No.	TOTAL SHEETS
07	LA	5,10,91, 110,134	Var	98	291

REGISTERED CIVIL ENGINEER 1-13-14 DATE

6-2-14
PLANS APPROVAL DATE

REGISTERED PROFESSIONAL ENGINEER DOUGLAS DUNRUD No. 47240 Exp.12/31/15 CIVIL STATE OF CALIFORNIA

THE STATE OF CALIFORNIA OR ITS OFFICERS OR AGENTS SHALL NOT BE RESPONSIBLE FOR THE ACCURACY OR COMPLETENESS OF SCANNED COPIES OF THIS PLAN SHEET.

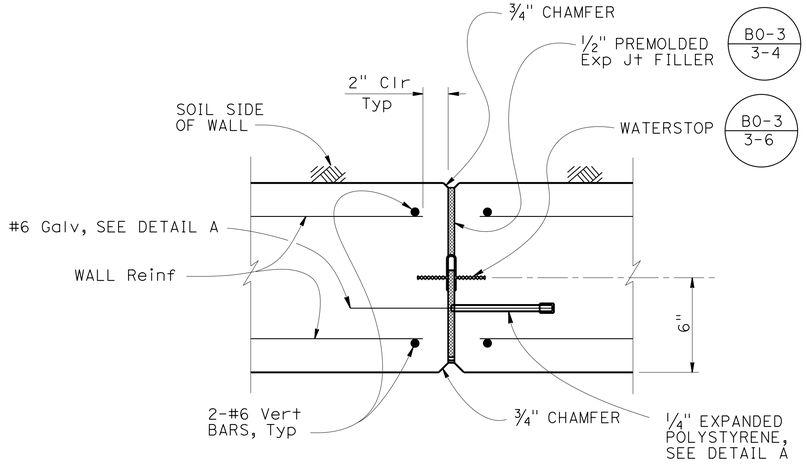

WALL EXPANSION JOINT DETAIL - PLAN SECTION

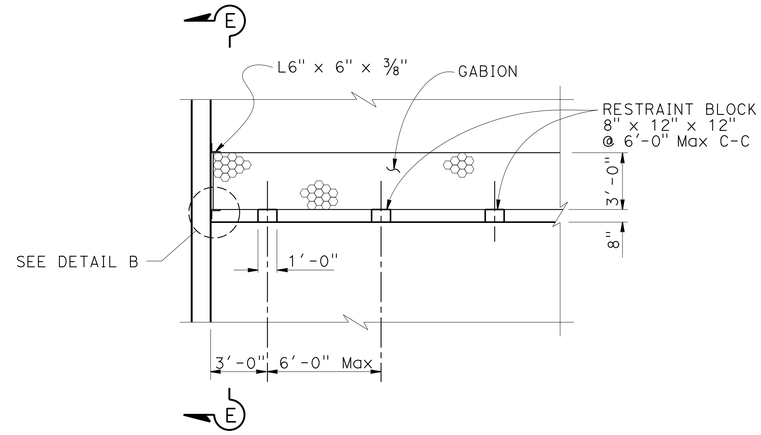

RESTRAINT BLOCK DETAIL

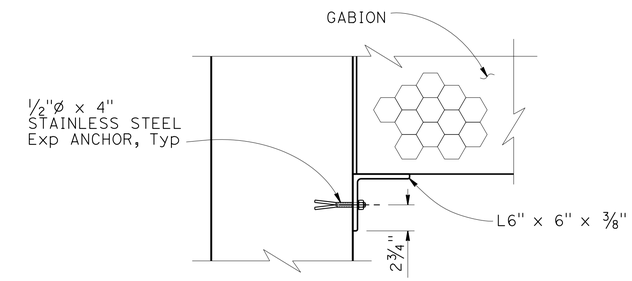

DETAIL B

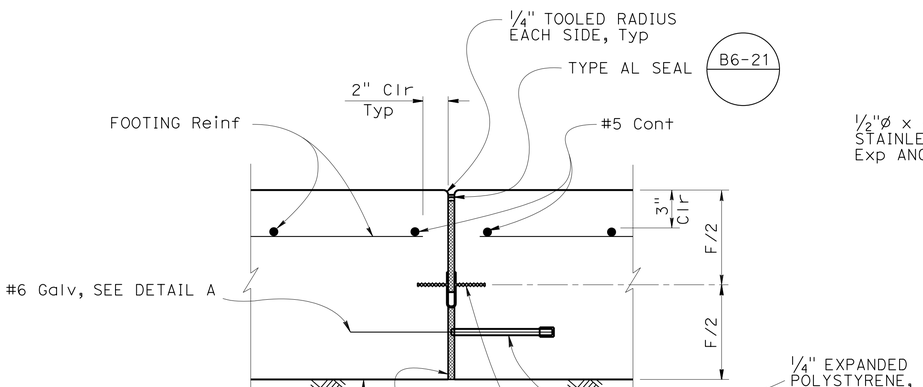

FOOTING EXPANSION JOINT DETAIL

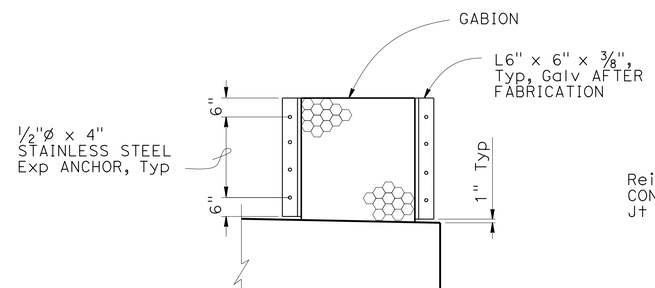

SECTION E-E

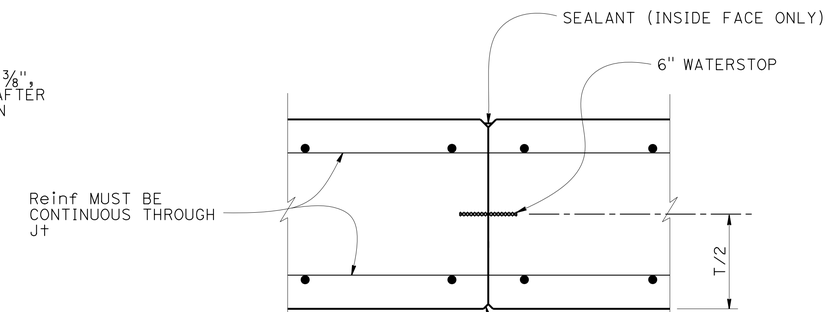

WALL CONSTRUCTION JOINT DETAIL

FOOTING CONSTRUCTION JOINT DETAIL

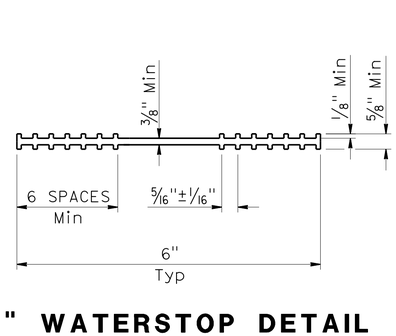

6" WATERSTOP DETAIL

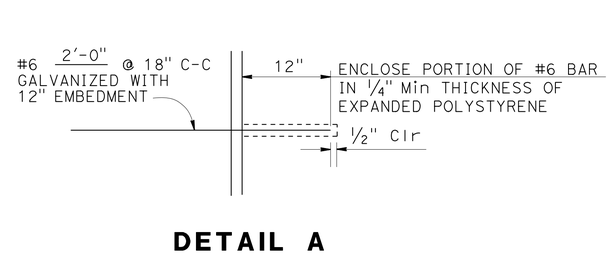

DETAIL A

WATER POLLUTION CONTROL DETAILS
AUSTIN VAULT SAND FILTER
DETAILS No. 2

NO SCALE

WD-28

STATE OF CALIFORNIA - DEPARTMENT OF TRANSPORTATION
Caltrans
HYDRAULICS

FUNCTIONAL SUPERVISOR: TIMOTHY B. SOBELMAN
CALCULATED-DESIGNED BY: D. WANG
CHECKED BY: L. HE
REVISED BY
DATE REVISED

LAST REVISION 04-12-13
DATE PLOTTED => 12-SEP-2014
TIME PLOTTED => 06:22

Dist	COUNTY	ROUTE	POST MILES TOTAL PROJECT	SHEET No.	TOTAL SHEETS
07	LA	5,10,91, 110,134	Var	99	291

REGISTERED CIVIL ENGINEER 1-13-14 DATE

6-2-14
PLANS APPROVAL DATE

REGISTERED PROFESSIONAL ENGINEER
DOUGLAS DUNRUD
No. 47240
Exp. 12/31/15
CIVIL
STATE OF CALIFORNIA

THE STATE OF CALIFORNIA OR ITS OFFICERS OR AGENTS SHALL NOT BE RESPONSIBLE FOR THE ACCURACY OR COMPLETENESS OF SCANNED COPIES OF THIS PLAN SHEET.

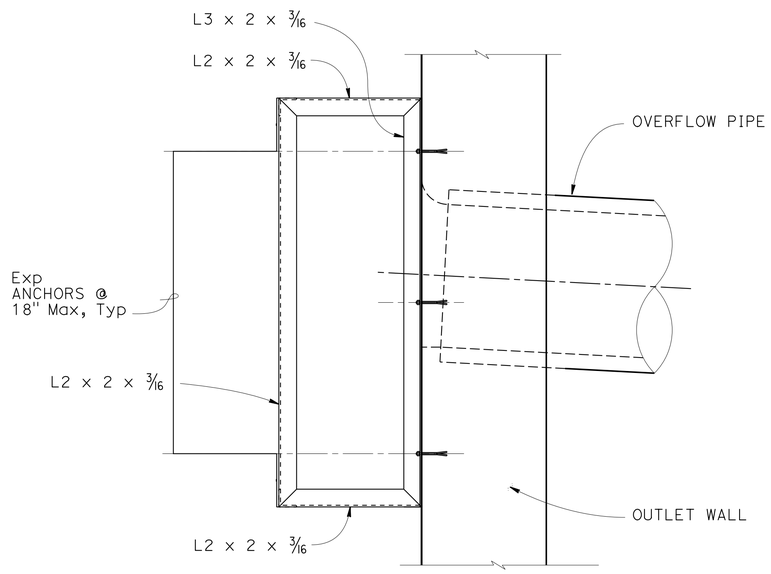

TRASH SCREEN - SIDE ELEVATION
NO SCALE

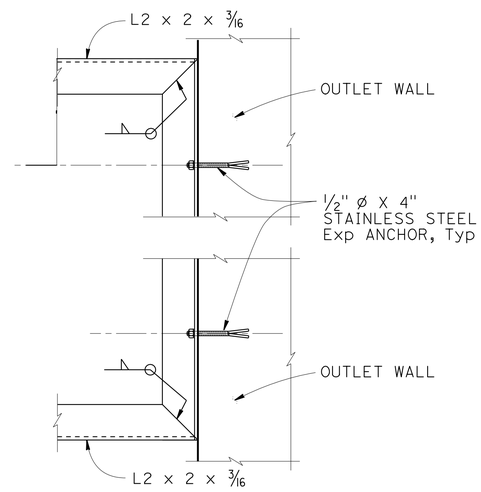

SECTION F - F
NO SCALE

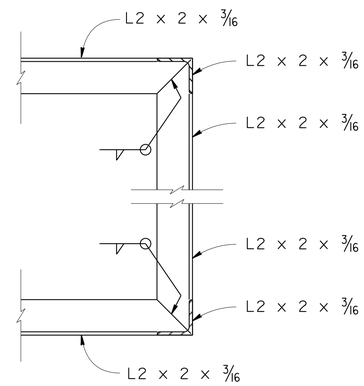

SECTION E - E
NO SCALE

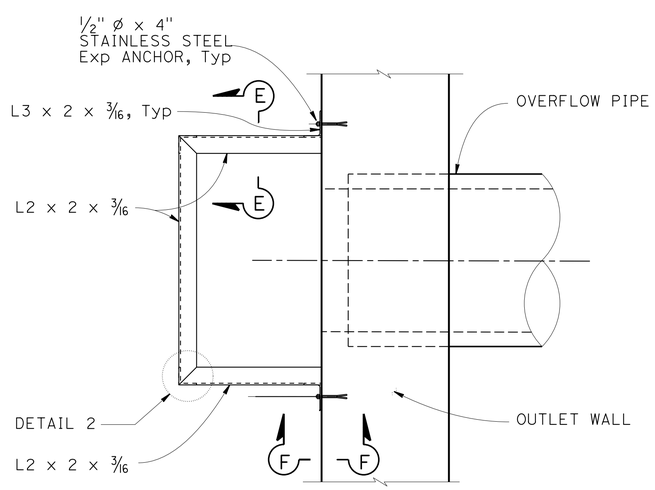

TRASH SCREEN - PLAN
NO SCALE

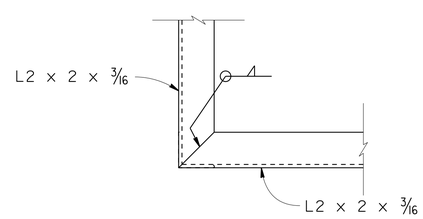

DETAIL 2
NO SCALE

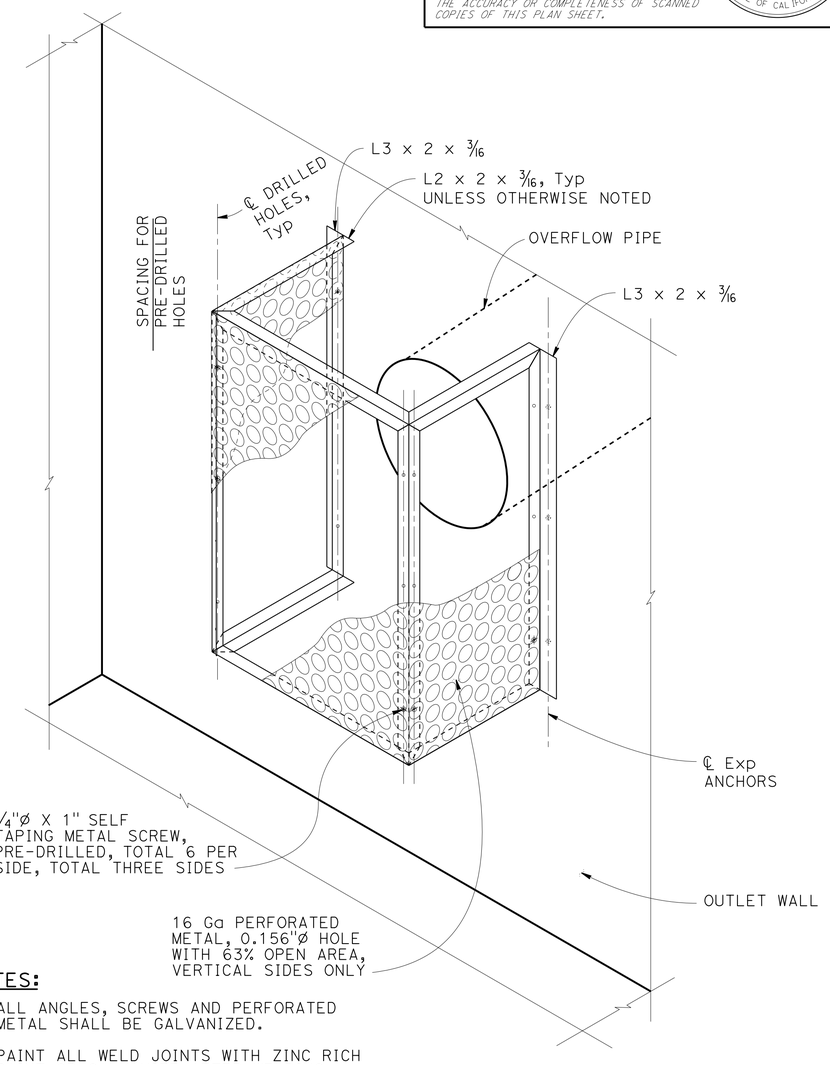

NOTES:

1. ALL ANGLES, SCREWS AND PERFORATED METAL SHALL BE GALVANIZED.
2. PAINT ALL WELD JOINTS WITH ZINC RICH PAINT OR GALVANIZE AFTER WELDING.

ISOMETRIC VIEW - TRASH SCREEN
NO SCALE

NOTE: METAL HOLE Ø EXAGGERATED FOR EMPHASIS.

WATER POLLUTION CONTROL DETAILS
AUSTIN VAULT SAND FILTER
TRASH SCREEN DETAILS

WD-29

STATE OF CALIFORNIA - DEPARTMENT OF TRANSPORTATION
Caltrans
HYDRAULICS
FUNCTIONAL SUPERVISOR: TIMOTHY B. SOBELMAN
CALCULATED-DESIGNED BY: D. WANG
CHECKED BY: L. HE
REVISED BY
DATE REVISED

LAST REVISION 00-00-00
DATE PLOTTED => 12-SEP-2014
TIME PLOTTED => 06:22

Dist	COUNTY	ROUTE	POST MILES TOTAL PROJECT	SHEET No.	TOTAL SHEETS
07	LA	5,10,91, 110,134	Var	100	291

REGISTERED CIVIL ENGINEER — DATE 1-13-14

6-2-14
PLANS APPROVAL DATE

REGISTERED PROFESSIONAL ENGINEER — DOUGLAS DUNRUD No. 47240 Exp. 12/31/15 CIVIL — STATE OF CALIFORNIA

THE STATE OF CALIFORNIA OR ITS OFFICERS OR AGENTS SHALL NOT BE RESPONSIBLE FOR THE ACCURACY OR COMPLETENESS OF SCANNED COPIES OF THIS PLAN SHEET.

NOTE (THIS SHEET ONLY):

1. FOR TYPICAL COVER AND DEPTH OF PERMEABLE MATERIAL, SEE "AUSTIN VAULT SAND FILTER LAYOUT No. 2" SHEET.

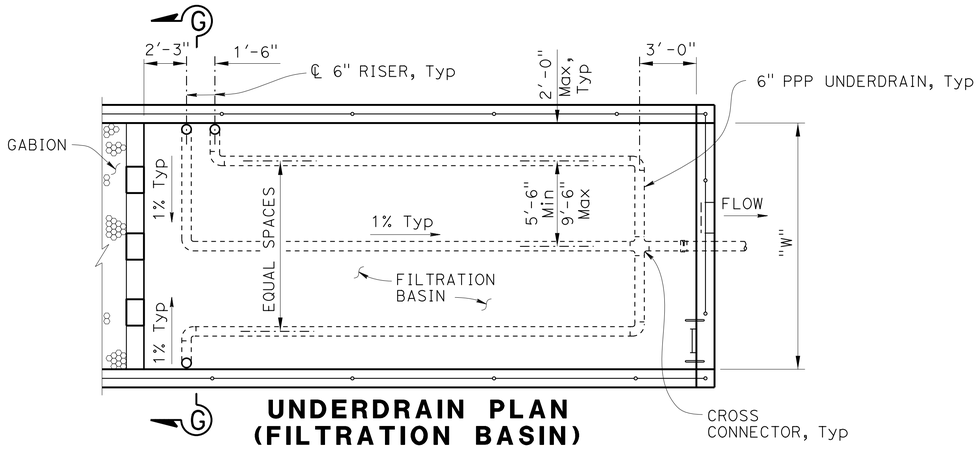

UNDERDRAIN PLAN (FILTRATION BASIN)

"W" = 15' or 21'
AVSF Type = (S or L 3,500)

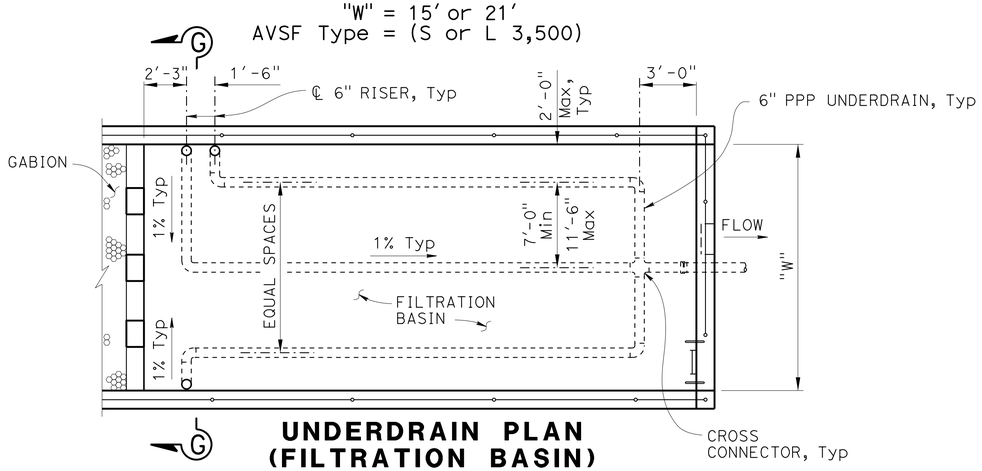

UNDERDRAIN PLAN (FILTRATION BASIN)

"W" = 18', 24' or 27'
AVSF Type = (S or L 5,000, L 10,000)

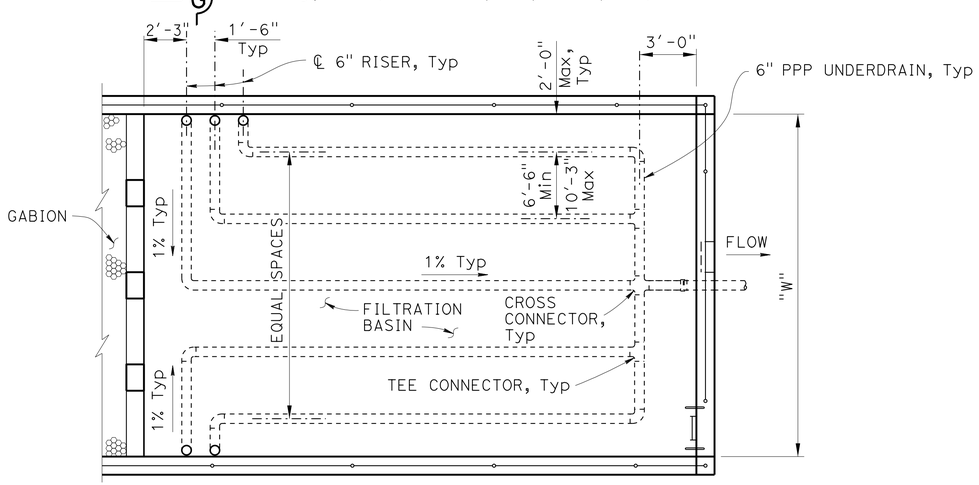

UNDERDRAIN PLAN (FILTRATION BASIN)

"W" = 30', 36' or 45'
AVSF Type = (S 10,000, S or L 15,000)

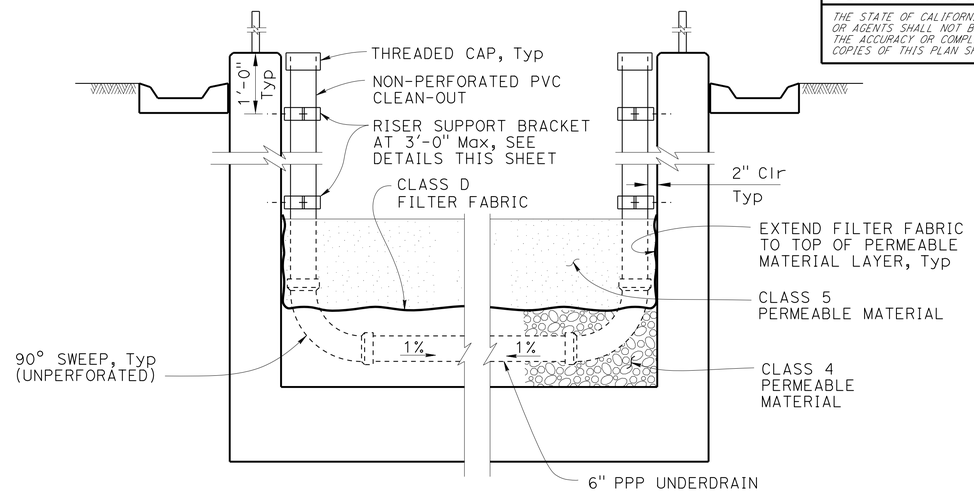

SECTION G-G

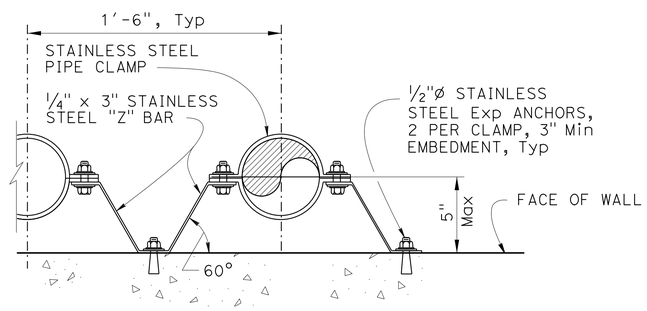

RISER SUPPORT BRACKET DETAIL

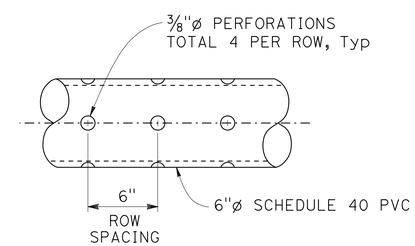

PERFORATED UNDERDRAIN PIPE

NO SCALE

WATER POLLUTION CONTROL DETAILS
AUSTIN VAULT SAND FILTER UNDERDRAIN DETAILS

NO SCALE

WD-30

STATE OF CALIFORNIA - DEPARTMENT OF TRANSPORTATION
Caltrans®
HYDRAULICS

FUNCTIONAL SUPERVISOR: TIMOTHY B. SOBELMAN
CALCULATED-DESIGNED BY: D. WANG
CHECKED BY: L. HE
REVISED BY
DATE REVISED

LAST REVISION 04-12-13
DATE PLOTTED => 12-SEP-2014
TIME PLOTTED => 06:22