ACIM-210-1(812)E

Dist	COUNTY	ROUTE	POST MILES TOTAL PROJECT	SHEET No.	TOTAL SHEETS
07	LA	210	R15.0/R36.0	1	209

STATE OF CALIFORNIA

DEPARTMENT OF TRANSPORTATION

PROJECT PLANS FOR CONSTRUCTION ON

STATE HIGHWAY

IN LOS ANGELES COUNTY AT VARIOUS LOCATIONS

FROM 0.1 MILE WEST OF LOWELL AVENUE UNDERCROSSING TO 0.1 MILE EAST OF BUENA VISTA STREET UNDERCROSSING

INDEX OF PLANS

SHEET No.	DESCRIPTION
1	TITLE AND LOCATION MAP
2	LOCATIONS OF CONSTRUCTION
3	TYPICAL CROSS SECTIONS
4-20	LAYOUTS
21-33	CONSTRUCTION DETAILS
34	CONTOUR GRADING
35-83	DRAINAGE PLANS, PROFILES, DETAILS AND QUANTITIES
84-100	UTILITY PLANS
101-113	CONSTRUCTION AREA SIGNS
114-136	TRAFFIC HANDLING PLANS, DETAILS AND QUANTITIES
137-140	SUMMARY OF QUANTITIES
141-176	HIGHWAY PLANTING PLANS
177-178	ELECTRICAL PLANS
179-209	REVISED AND NEW STANDARD PLANS

THE STANDARD PLANS LIST APPLICABLE TO THIS CONTRACT IS INCLUDED IN THE NOTICE TO BIDDERS AND SPECIAL PROVISIONS BOOK.

TO BE SUPPLEMENTED BY STANDARD PLANS DATED MAY 2006

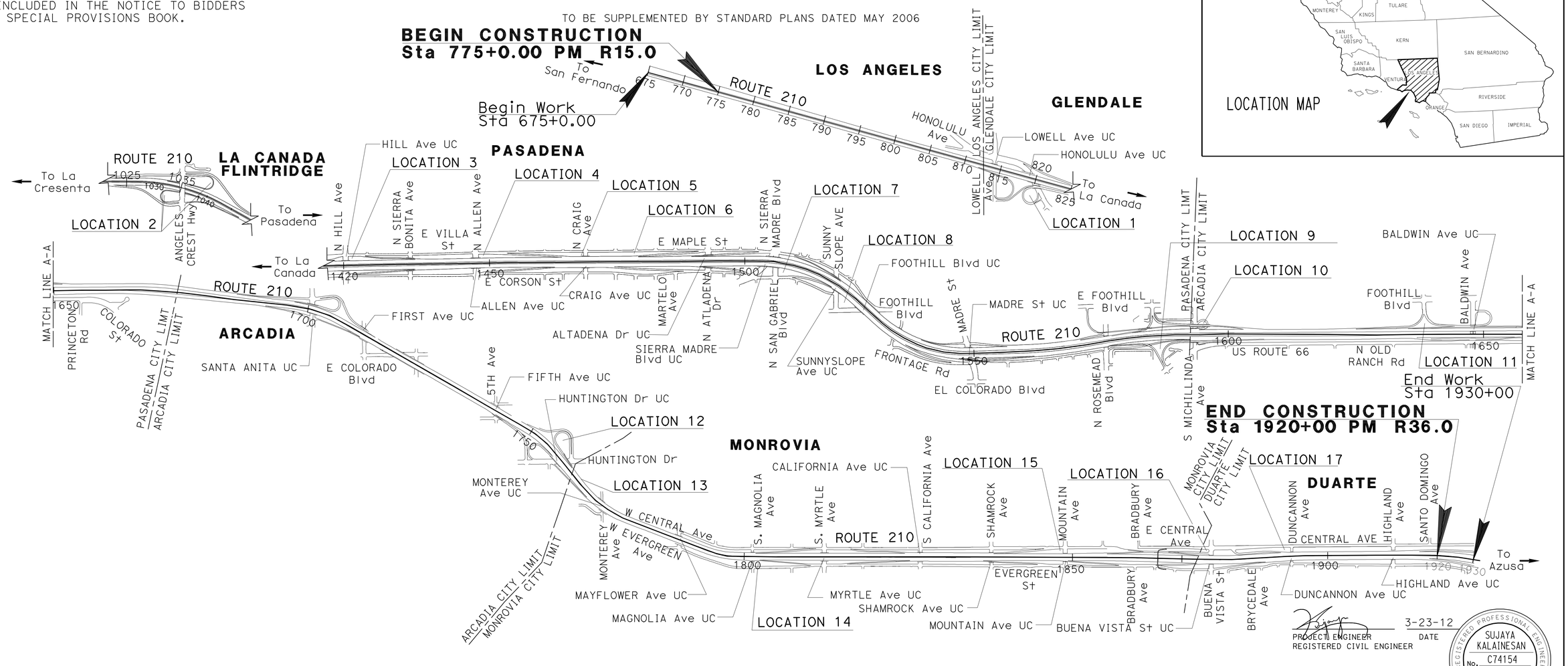

LOCATION MAP

NO SCALE

THE CONTRACTOR SHALL POSSESS THE CLASS (OR CLASSES) OF LICENSE AS SPECIFIED IN THE "NOTICE TO BIDDERS."

PROJECT ENGINEER
REGISTERED CIVIL ENGINEER

3-23-12
DATE

REGISTERED PROFESSIONAL ENGINEER
SUJAYA KALAINESAN
No. C74154
Exp. 06/30/13
CIVIL
STATE OF CALIFORNIA

June 25, 2012
PLANS APPROVAL DATE

THE STATE OF CALIFORNIA OR ITS OFFICERS OR AGENTS SHALL NOT BE RESPONSIBLE FOR THE ACCURACY OR COMPLETENESS OF SCANNED COPIES OF THIS PLAN SHEET.

CONTRACT No.	07-258934
PROJECT ID	0700000481

PROJECT MANAGER: OJAS SHETH
DESIGN ENGINEER: SUJAYA KALAINESAN

LAST REVISION 00-00-00
DATE PLOTTED => 10-JUL-2012
TIME PLOTTED => 16:10

Dist	COUNTY	ROUTE	POST MILES TOTAL PROJECT	SHEET No.	TOTAL SHEETS
07	LA	210	R15.0/R36.0	2	209

REGISTERED CIVIL ENGINEER 3-23-12 DATE

6-25-12
PLANS APPROVAL DATE

REGISTERED PROFESSIONAL ENGINEER SUJAYA KALAINESAN No. C74154 Exp. 06/30/13 CIVIL STATE OF CALIFORNIA

THE STATE OF CALIFORNIA OR ITS OFFICERS OR AGENTS SHALL NOT BE RESPONSIBLE FOR THE ACCURACY OR COMPLETENESS OF SCANNED COPIES OF THIS PLAN SHEET.

LOCATIONS OF CONSTRUCTION

LOCATION No.	ROUTE	DIR/PM	LOCAL STREET	DEVICE TYPE
1	210	EB/R15.90	HONOLULU Ave	INFILTRATION BASIN
2	210	EB/WB R19.75	ANGELES CREST Hwy	BIOFILTRATION SWALES
3	210	WB/R27.00	HILL Ave	AUSTIN VAULT SAND FILTER
4	210	WB/R27.49	ALLEN Ave	AUSTIN VAULT SAND FILTER
5	210	WB/R27.73	CRAIG Ave	AUSTIN VAULT SAND FILTER
6	210	WB/R27.94	MARTELO Ave	AUSTIN VAULT SAND FILTER
7	210	EB/R28.53	SAN GABRIEL Ave	AUSTIN VAULT SAND FILTER
8	210	EB/R28.79	SUNNY SLOPE Ave	AUSTIN VAULT SAND FILTER
9	210	EB/R29.69	MICHILLINDA Ave	AUSTIN VAULT SAND FILTER
10	210	WB/R29.83	MICHILLINDA Ave	BIOFILTRATION STRIP
11	210	WB/R30.64	BALDWIN Ave	BIOFILTRATION SWALE
12	210	WB/R32.83	HUNTINGTON Ave	BIOFILTRATION SWALE
13	210	WB/R33.01	HUNTINGTON Ave	BIOFILTRATION SWALE
14	210	EB/R33.73	MAGNOLIA Ave	AUSTIN VAULT SAND FILTER
15	210	WB/R34.66	MOUNTAIN Ave	AUSTIN VAULT SAND FILTER
16	210	WB/R35.05	BUENA VISTA St	INFILTRATION TRENCH
17	210	WB/R35.29	BRYCEDALE Ave	AUSTIN VAULT SAND FILTER

LOCATIONS OF CONSTRUCTION

LC-1

STATE OF CALIFORNIA - DEPARTMENT OF TRANSPORTATION
Caltrans DESIGN

FUNCTIONAL SUPERVISOR: NADER GOBRAN
CALCULATED-DESIGNED BY: ROBERT PHAM
CHECKED BY: SUJAYA KALAINESAN
REVISED BY
DATE REVISED

LAST REVISION 12-27-11
DATE PLOTTED => 28-JUN-2012
TIME PLOTTED => 10:50

Dist	COUNTY	ROUTE	POST MILES TOTAL PROJECT	SHEET No.	TOTAL SHEETS
07	LA	210	R15.0/R36.0	3	209

REGISTERED CIVIL ENGINEER 3-23-12 DATE

6-25-12
PLANS APPROVAL DATE

REGISTERED PROFESSIONAL ENGINEER SUJAYA KALAINESAN No. C74154 Exp. 06/30/13 CIVIL STATE OF CALIFORNIA

THE STATE OF CALIFORNIA OR ITS OFFICERS OR AGENTS SHALL NOT BE RESPONSIBLE FOR THE ACCURACY OR COMPLETENESS OF SCANNED COPIES OF THIS PLAN SHEET.

NOTES:

1. DIMENSIONS OF THE STRUCTURAL SECTIONS ARE SUBJECT TO TOLERANCES SPECIFIED IN THE STANDARD SPECIFICATIONS
2. SUPERELEVATION AS SHOWN OR AS DIRECTED BY THE ENGINEER

PAVEMENT STRUCTURAL SECTIONS

1 — 0.35′ HMA-(TYPE A)
0.35′ LEAN CONCRETE BASE
0.80′ CLASS 3 AB

ACCESS RAMP FOR LOCATION 1 ONLY

2 — 0.70′ JPCP
0.35′ LEAN CONCRETE BASE
0.50′ CLASS 3 AB

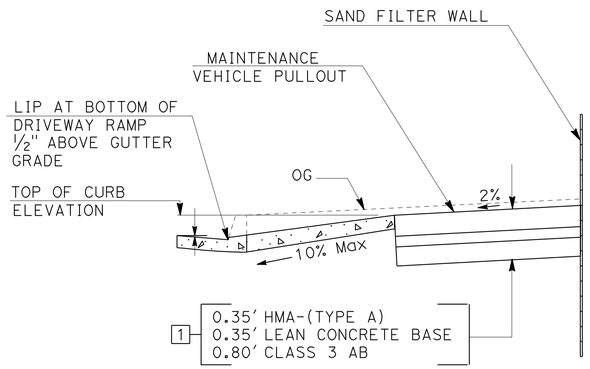

SEE LAYOUT SHEETS

SECTION

LOCATION 3, 4, 5, 6, 7, 14, 15, 17

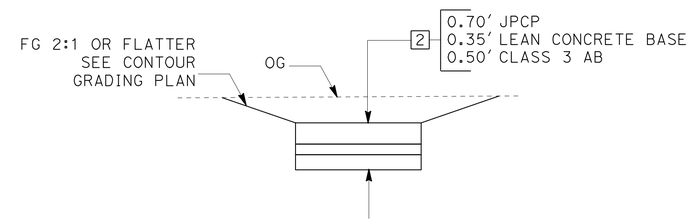

ACCESS RAMP, LOCATION 1

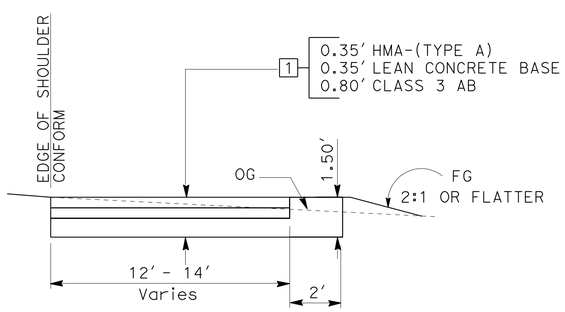

SECTION

MAINTENANCE VEHICLE PULLOUT

LOCATION 2, 10, 11, 12, 13, 16

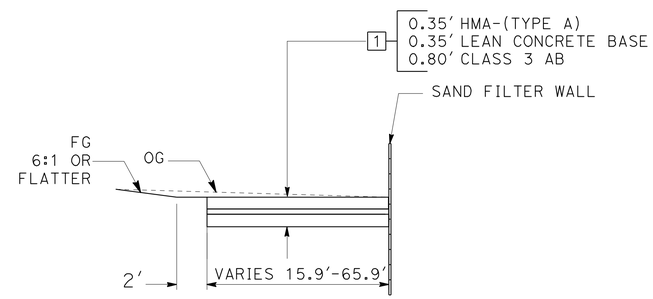

SECTION

LOCATION 9

TYPICAL CROSS SECTIONS

NO SCALE

X-1

STATE OF CALIFORNIA - DEPARTMENT OF TRANSPORTATION
Caltrans® DESIGN
FUNCTIONAL SUPERVISOR: NADER GOBRAN
CALCULATED-DESIGNED BY: ROBERT PHAM
CHECKED BY: SUJAYA KALAINESAN
REVISED BY
DATE REVISED

LAST REVISION 00-00-00
DATE PLOTTED => 28-JUN-2012
TIME PLOTTED => 12:38

Dist	COUNTY	ROUTE	POST MILES TOTAL PROJECT	SHEET No.	TOTAL SHEETS
07	LA	210	R15.0/R36.0	4	209

REGISTERED CIVIL ENGINEER 3-23-12 DATE

6-25-12
PLANS APPROVAL DATE

REGISTERED PROFESSIONAL ENGINEER SUJAYA KALAINESAN No. C74154 Exp 06/30/13 CIVIL STATE OF CALIFORNIA

THE STATE OF CALIFORNIA OR ITS OFFICERS OR AGENTS SHALL NOT BE RESPONSIBLE FOR THE ACCURACY OR COMPLETENESS OF SCANNED COPIES OF THIS PLAN SHEET.

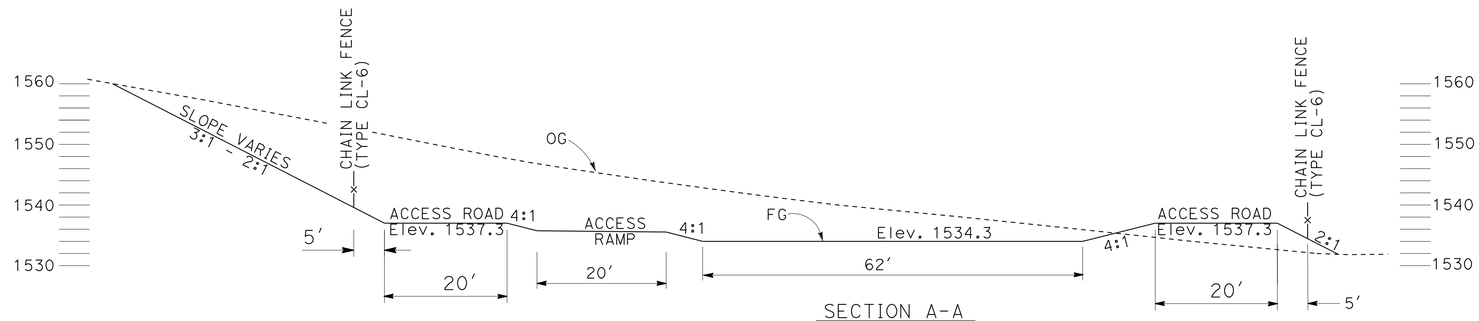

SECTION A-A
SCALE: 1" = 12.5'

NOTES:

1. FOR ACCURATE RIGHT OF WAY DATA, CONTACT RIGHT OF WAY ENGINEERING AT THE DISTRICT OFFICE.
2. SEE CONTOUR GRADING PLAN FOR GRADING DETAILS (SHEET G-1)
3. DRIVEWAY THICKNESS SHALL BE 6"
4. SEE STANDARD PLANS FOR DRIVEWAY (CASE A)

ABBREVIATIONS:

AVSF	AUSTIN VAULT SAND FILTER
MVP	MAINTENANCE VEHICLE PULLOUT

LEGEND:

- HAZARDOUS WASTE SOIL TYPE Z-2
- ASPHALT BASE CLASS 3
- STRUCTURAL SECTION TYPE 1
- STRUCTURAL SECTION TYPE 2
- ROLLING CHAIN LINK GATE (TYPE CL-6)
- CHAIN LINK GATE (TYPE CL-6)

CURVE DATA

No. ⊗	R	Δ	T	L
1	212.00'	39°43'15"	76.58'	146.97'
2	338.00'	51°52'26"	164.39'	306.02'
3	150.00'	282°46'22"	119.80'	740.31'
4	500.00'	26°9'58"	116.20'	228.34'

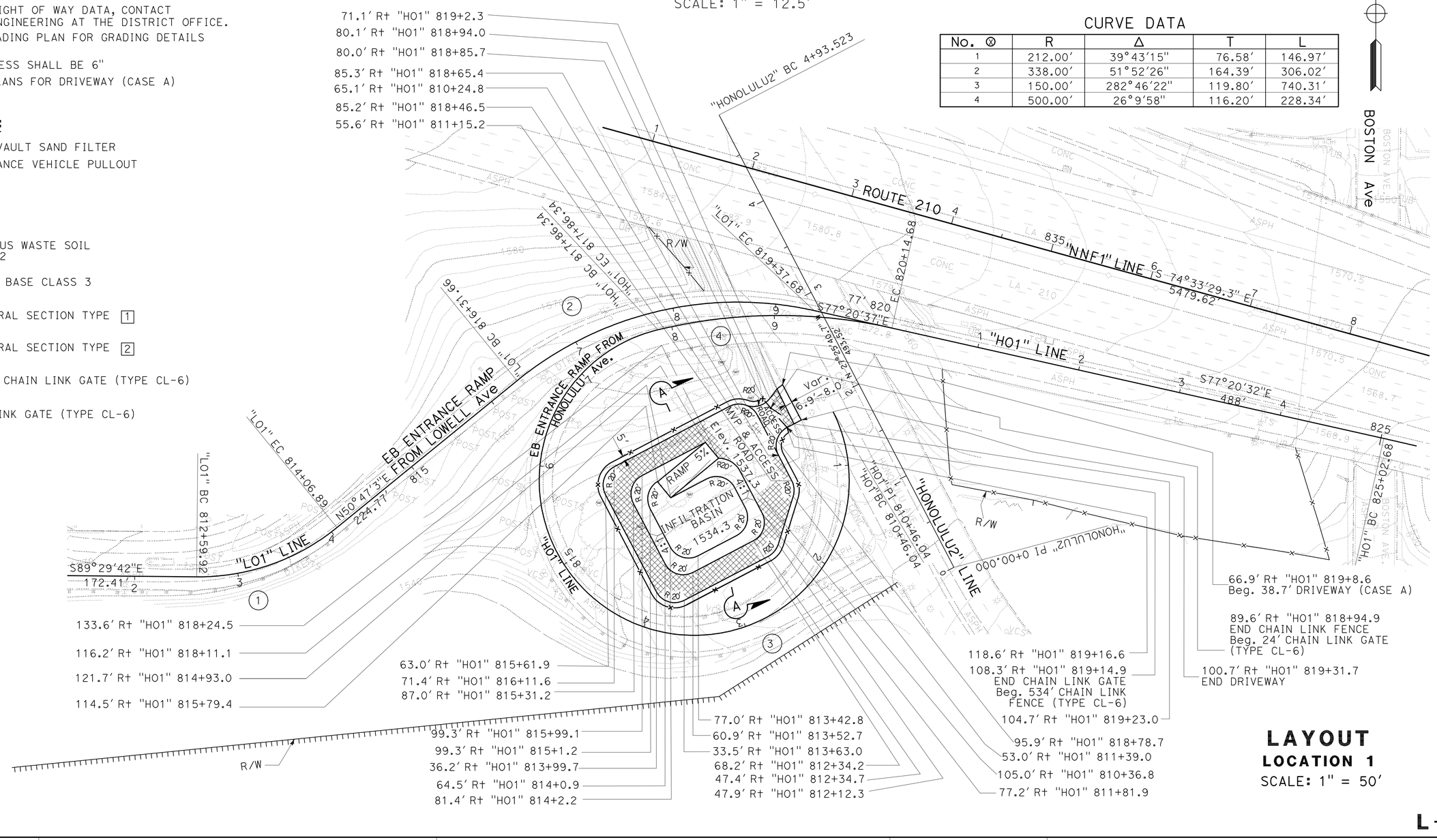

LAYOUT
LOCATION 1
SCALE: 1" = 50'

L-1

REVISED BY	DATE REVISED

SUJAYA KALAINESAN — NADER GOBRAN

CALCULATED-DESIGNED BY — CHECKED BY

FUNCTIONAL SUPERVISOR: NADER GOBRAN

STATE OF CALIFORNIA - DEPARTMENT OF TRANSPORTATION
Caltrans®
DESIGN

LAST REVISION 00-00-00 | DATE PLOTTED => 28-JUN-2012 | TIME PLOTTED => 12:39

Dist	COUNTY	ROUTE	POST MILES TOTAL PROJECT	SHEET No.	TOTAL SHEETS
07	LA	210	R15.0/R36.0	5	209

REGISTERED CIVIL ENGINEER DATE 3-23-12

6-25-12
PLANS APPROVAL DATE

REGISTERED PROFESSIONAL ENGINEER SUJAYA KALAINESAN No. C74154 Exp 06/30/13 CIVIL STATE OF CALIFORNIA

THE STATE OF CALIFORNIA OR ITS OFFICERS OR AGENTS SHALL NOT BE RESPONSIBLE FOR THE ACCURACY OR COMPLETENESS OF SCANNED COPIES OF THIS PLAN SHEET.

CURVE DATA

No. O	R	Δ	T	L
5	3250.00′	28°29′58"	825.38′	1616.58′
6	115.00′	186°54′47"	1903.94′	375.16′
7	2400.00′	18°13′03"	384.79′	763.09′
8	125.00′	191°30′03"	1241.38′	417.79′
9	3250.00′	4°17′08"	121.60′	243.09′
10	5000.00′	5°24′23"	236.07′	471.80′
11	62.55′	152°3′29"	251.41′	166.00′
12	18.81′	103°32′23"	23.88′	34.00′
13	8.81′	107°39′50"	12.06′	16.56′
14	72.55′	151°53′04"	289.73′	192.32′
15	22.39′	51°1′41"	10.69′	19.94′
16	20.00′	22°4′28"	3.90′	7.71′
17	72.54′	144°49′54"	228.90′	183.37′
18	82.54′	25°2′23"	18.33′	36.07′
19	20.00′	27°43′27"	4.94′	9.68′
10	35.84′	52°31′06"	17.68′	32.85′
21	25.84′	34°22′04"	7.99′	15.50′
22	20.00′	44°15′25"	8.13′	15.45′
23	92.54′	23°25′19"	19.18′	37.83′
24	82.54′	141°48′51"	238.46′	204.30′
25	20.00′	7°15′20"	1.27′	2.53′
26	12.39′	56°4′36"	6.60′	12.13′

NOTE:

1. FOR ACCURATE RIGHT OF WAY DATA, CONTACT RIGHT OF WAY ENGINEERING AT THE DISTRICT OFFICE.

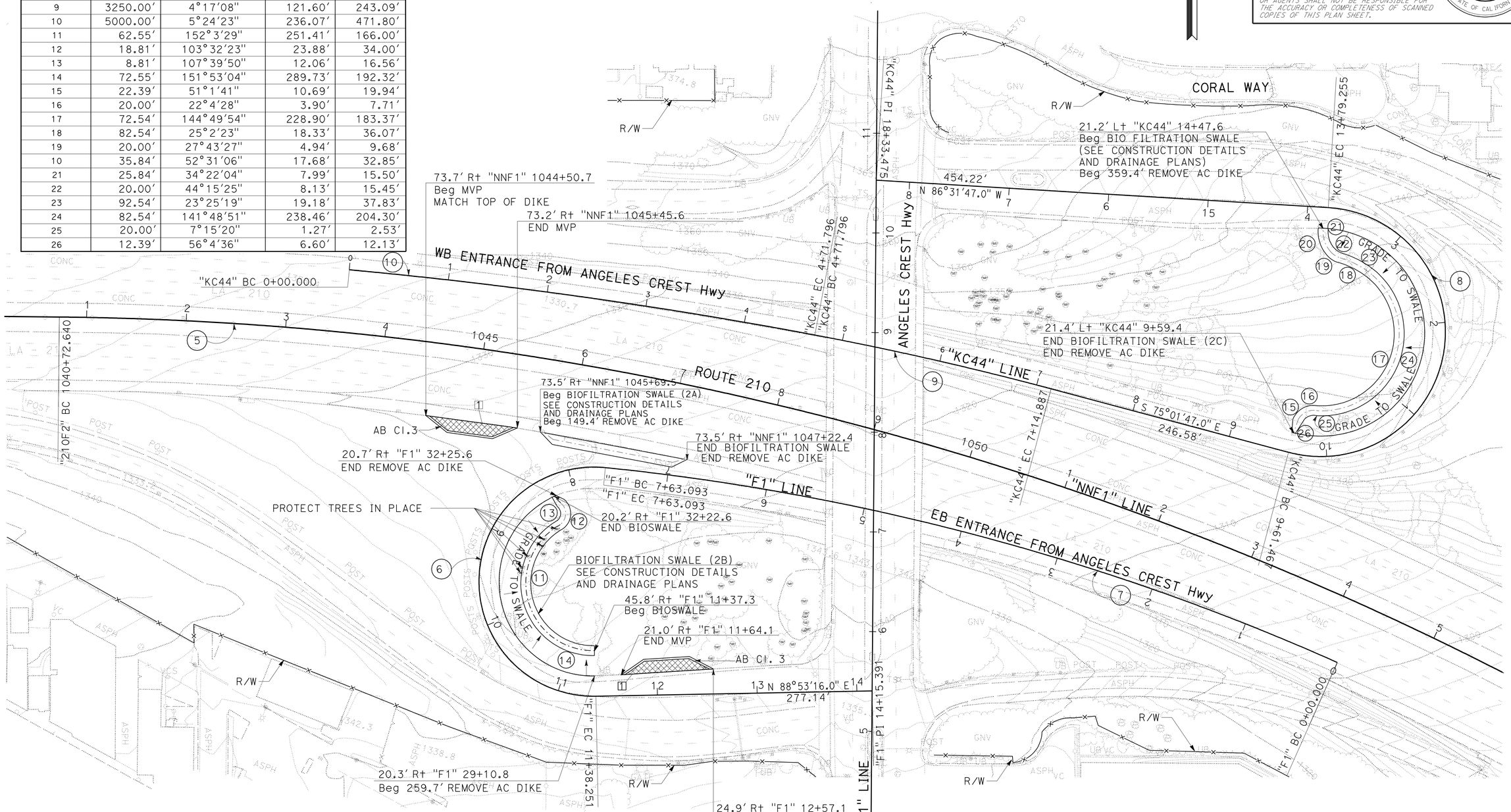

LAYOUT
LOCATION 2
SCALE: 1" = 50′

L-2

STATE OF CALIFORNIA - DEPARTMENT OF TRANSPORTATION
Caltrans
DESIGN

FUNCTIONAL SUPERVISOR: NADER GOBRAN
CALCULATED-DESIGNED BY: SUJAYA KALAINESAN
CHECKED BY: NADER GOBRAN
REVISED BY
DATE REVISED

LAST REVISION 00-00-00
DATE PLOTTED => 28-JUN-2012
TIME PLOTTED => 15:02

Dist	COUNTY	ROUTE	POST MILES TOTAL PROJECT	SHEET No.	TOTAL SHEETS
07	LA	210	R15.0/R36.0	6	209

REGISTERED CIVIL ENGINEER 3-23-12 DATE

6-25-12
PLANS APPROVAL DATE

REGISTERED PROFESSIONAL ENGINEER SUJAYA KALAINESAN No. C74154 Exp 06/30/13 CIVIL STATE OF CALIFORNIA

THE STATE OF CALIFORNIA OR ITS OFFICERS OR AGENTS SHALL NOT BE RESPONSIBLE FOR THE ACCURACY OR COMPLETENESS OF SCANNED COPIES OF THIS PLAN SHEET.

NOTES:

1. FOR ACCURATE RIGHT OF WAY DATA, CONTACT RIGHT OF WAY ENGINEERING AT THE DISTRICT OFFICE.
2. FOR CASE B DRIVEWAY, SEE Std PLAN RSP A87A
3. RAMP THICKNESS OF THE DRIVEWAYS SHALL BE 6"
4. CURB SHALL MATCH EXISTING CURB TYPE
5. CONTRACTOR SHALL VERIFY SITE CONDITIONS PRIOR TO CONSTRUCTION

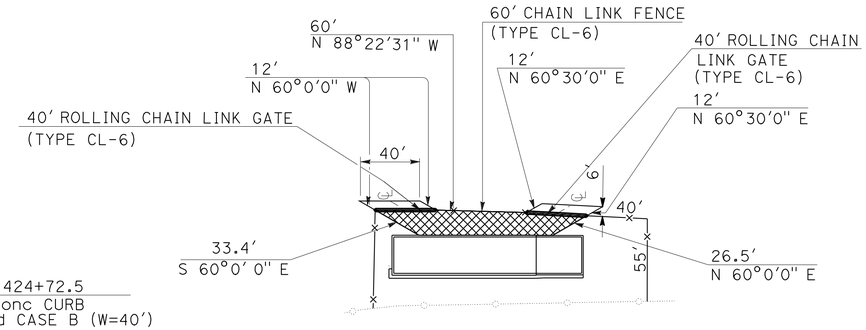

DETAIL A
NO SCALE

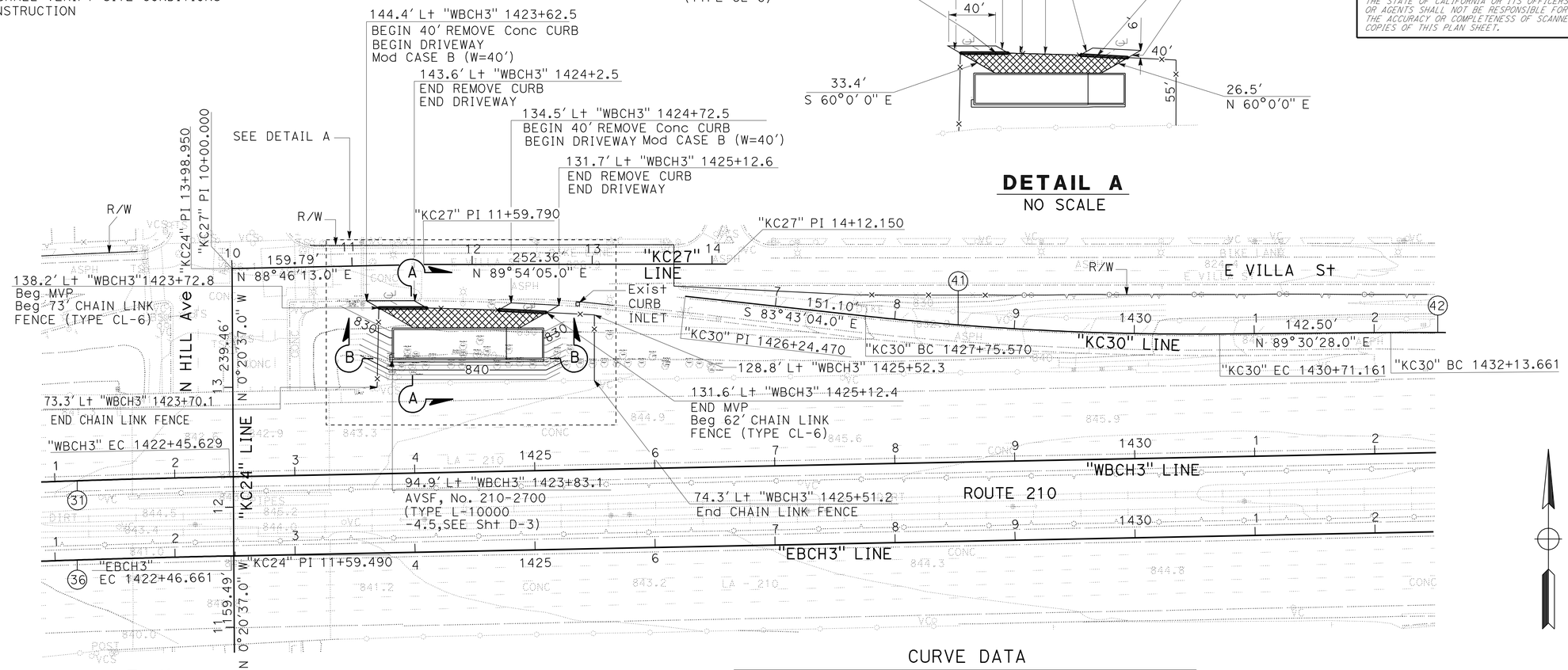

CURVE DATA

No. ⊗	R	Δ	T	L
31	10033.00'	5°01'31.2"	440.27'	879.98'
36	9967.00'	5°01'31.2"	437.38'	874.19'
41	2500.00'	6°46'28"	147.97'	295.59'
42	2500.00'	4°13'01"	92.04'	184.00'

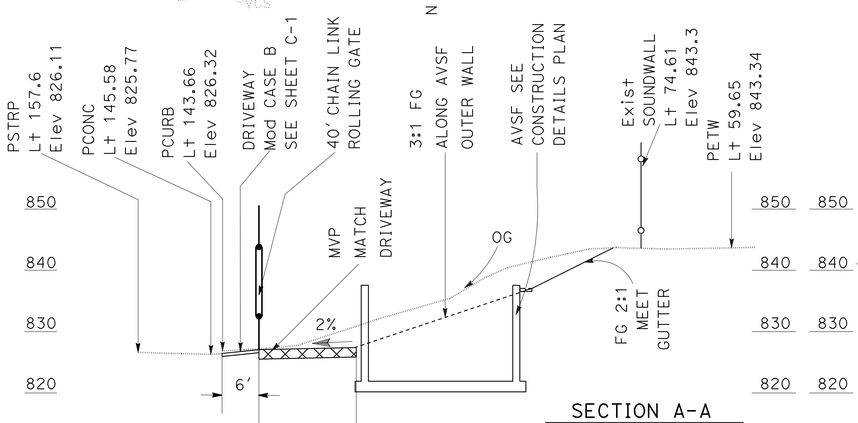

SECTION A-A
SCALE: 1" = 12.5'

"WBCH3" Sta 1424+00

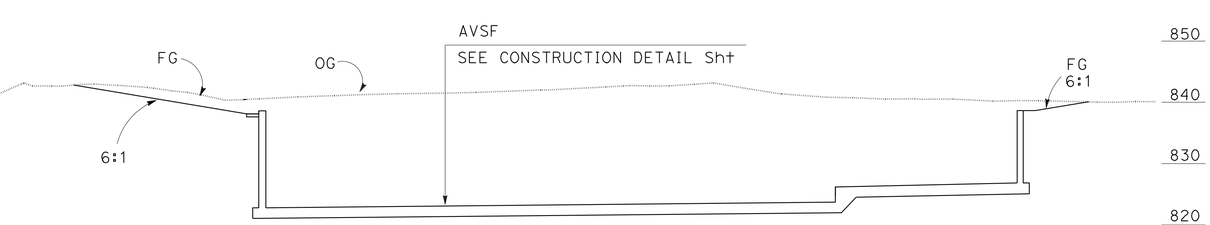

SECTION B-B
SCALE: 1" = 12.5'

"KC24" Sta 13+20.00

LAYOUT
LOCATION 3
SCALE: 1" = 50'

L-3

STATE OF CALIFORNIA - DEPARTMENT OF TRANSPORTATION
Caltrans DESIGN

FUNCTIONAL SUPERVISOR: NADER GOBRAN
CALCULATED-DESIGNED BY: SUJAYA KALAINESAN
CHECKED BY: NADER GOBRAN
REVISED BY
DATE REVISED

LAST REVISION 00-00-00 | DATE PLOTTED => 28-JUN-2012 | TIME PLOTTED => 12:39

Dist	COUNTY	ROUTE	POST MILES TOTAL PROJECT	SHEET No.	TOTAL SHEETS
07	LA	210	R15.0/R36.0	7	209

REGISTERED CIVIL ENGINEER 3-23-12 DATE

6-25-12
PLANS APPROVAL DATE

REGISTERED PROFESSIONAL ENGINEER SUJAYA KALAINESAN No. C74154 Exp. 06/30/13 CIVIL STATE OF CALIFORNIA

THE STATE OF CALIFORNIA OR ITS OFFICERS OR AGENTS SHALL NOT BE RESPONSIBLE FOR THE ACCURACY OR COMPLETENESS OF SCANNED COPIES OF THIS PLAN SHEET.

NOTES:

1. FOR ACCURATE RIGHT OF WAY DATA, CONTACT RIGHT OF WAY ENGINEERING AT THE DISTRICT OFFICE.
2. FOR CASE B DRIVEWAY, SEE Std PLAN RSP A87A
3. RAMP THICKNESS OF THE DRIVEWAYS SHALL BE 6"
4. CURB SHALL MATCH EXISTING CURB TYPE
5. CONTRACTOR SHALL VERIFY SITE CONDITIONS PRIOR TO CONSTRUCTION

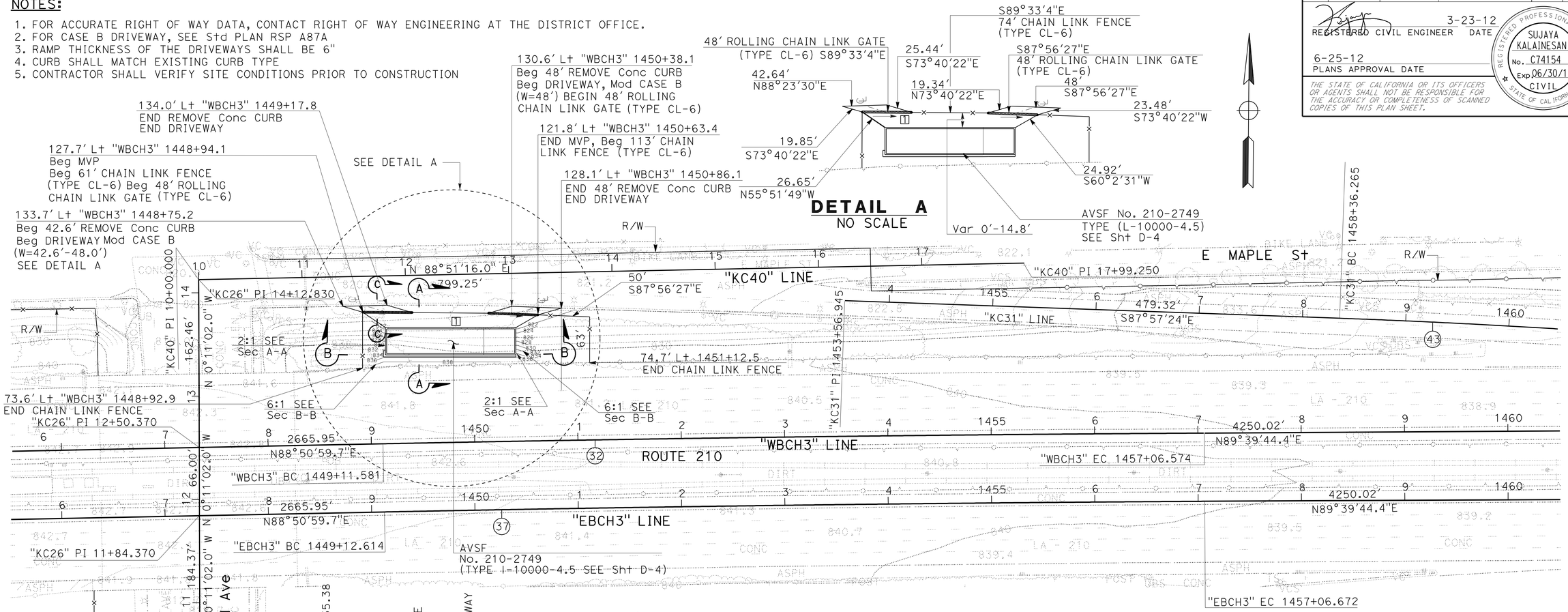

CURVE DATA

No. ⊗	R	Δ	T	L
32	56066.00'	0°48'44.7"	397.50'	794.99'
37	56000.00'	0°48'44.8"	397.04'	794.06'
43	8000.00'	2°29'37"	174.11'	348.17'

LAYOUT
LOCATION 4
SCALE: 1" = 50'

L-4

STATE OF CALIFORNIA - DEPARTMENT OF TRANSPORTATION
DESIGN
FUNCTIONAL SUPERVISOR: NADER GOBRAN
CALCULATED-DESIGNED BY: SUJAYA KALAINESAN
CHECKED BY: NADER GOBRAN
REVISED BY / DATE REVISED

LAST REVISION 00-00-00 | DATE PLOTTED => 28-JUN-2012 | TIME PLOTTED => 12:39

Dist	COUNTY	ROUTE	POST MILES TOTAL PROJECT	SHEET No.	TOTAL SHEETS
07	LA	210	R15.0/R36.0	8	209

REGISTERED CIVIL ENGINEER 3-23-12 DATE

6-25-12
PLANS APPROVAL DATE

REGISTERED PROFESSIONAL ENGINEER SUJAYA KALAINESAN No. C74154 Exp. 06/30/13 CIVIL STATE OF CALIFORNIA

THE STATE OF CALIFORNIA OR ITS OFFICERS OR AGENTS SHALL NOT BE RESPONSIBLE FOR THE ACCURACY OR COMPLETENESS OF SCANNED COPIES OF THIS PLAN SHEET.

NOTES:

1. FOR ACCURATE RIGHT OF WAY DATA, CONTACT RIGHT OF WAY ENGINEERING AT THE DISTRICT OFFICE.
2. FOR CASE B DRIVEWAY, SEE Std PLAN RSP A87A
3. RAMP THICKNESS OF THE DRIVEWAYS SHALL BE 6"
4. CURB SHALL MATCH EXISTING CURB TYPE
5. CONTRACTOR SHALL VERIFY SITE CONDITIONS PRIOR TO CONSTRUCTION

CURVE DATA

No. ⊗	R	Δ	T	L
32	56066.00′	0°48′44.7″	397.50′	794.99′
37	56000.00′	0°48′44.8″	397.04′	794.06′
43	8000.00′	2°29′37″	174.11′	348.17′

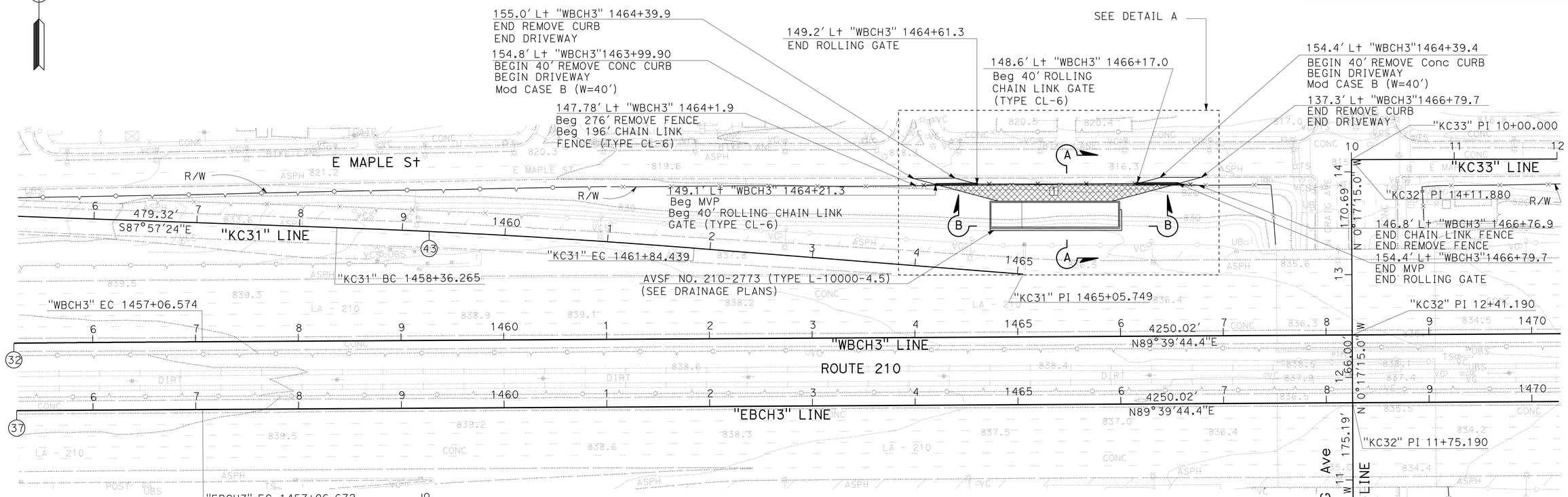

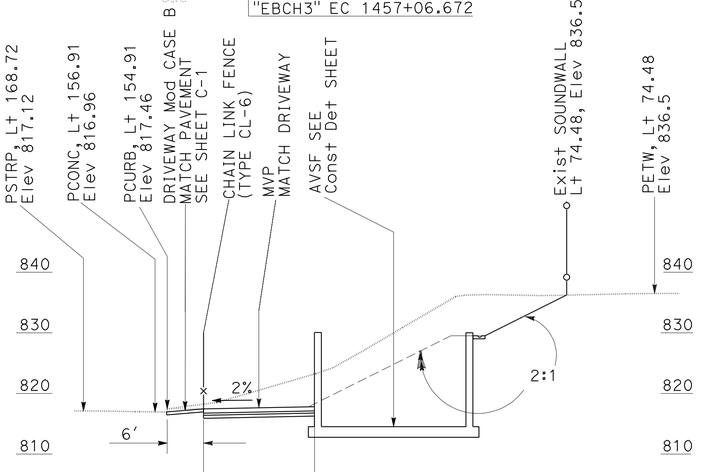

SECTION A-A
SCALE: 1" = 12.5′

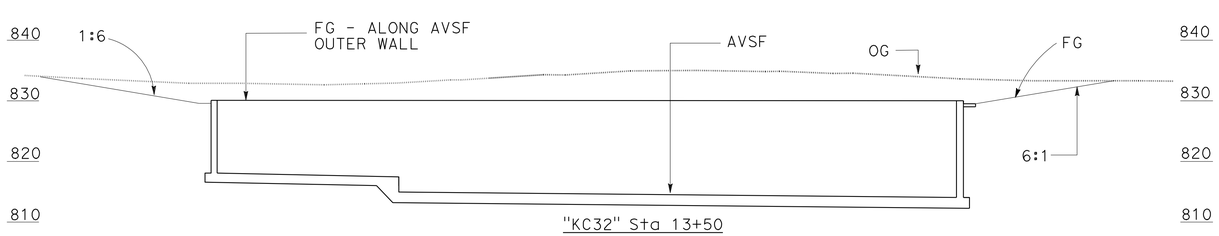

SECTION B-B
SCALE: 1" = 12.5′

LAYOUT
LOCATION 5
SCALE: 1" = 50′

L-5

STATE OF CALIFORNIA - DEPARTMENT OF TRANSPORTATION
Caltrans DESIGN
FUNCTIONAL SUPERVISOR NADER GOBRAN
CALCULATED-DESIGNED BY SUJAYA KALAINESAN
CHECKED BY NADER GOBRAN
REVISED BY
DATE REVISED

LAST REVISION 00-00-00
DATE PLOTTED => 28-JUN-2012
TIME PLOTTED => 13:30

Dist	COUNTY	ROUTE	POST MILES TOTAL PROJECT	SHEET No.	TOTAL SHEETS
07	LA	210	R15.0/R36.0	9	209

REGISTERED CIVIL ENGINEER 3-23-12 DATE

6-25-12
PLANS APPROVAL DATE

REGISTERED PROFESSIONAL ENGINEER SUJAYA KALAINESAN No. C74154 Exp. 06/30/13 CIVIL STATE OF CALIFORNIA

THE STATE OF CALIFORNIA OR ITS OFFICERS OR AGENTS SHALL NOT BE RESPONSIBLE FOR THE ACCURACY OR COMPLETENESS OF SCANNED COPIES OF THIS PLAN SHEET.

NOTES:

1. FOR ACCURATE RIGHT OF WAY DATA, CONTACT RIGHT OF WAY ENGINEERING AT THE DISTRICT OFFICE.
2. FOR CASE B DRIVEWAY, SEE Std PLAN RSP A87A
3. RAMP THICKNESS OF THE DRIVEWAYS SHALL BE 6"
4. CURB SHALL MATCH EXISTING CURB TYPE
5. CONTRACTOR SHALL VERIFY SITE CONDITIONS PRIOR TO CONSTRUCTION

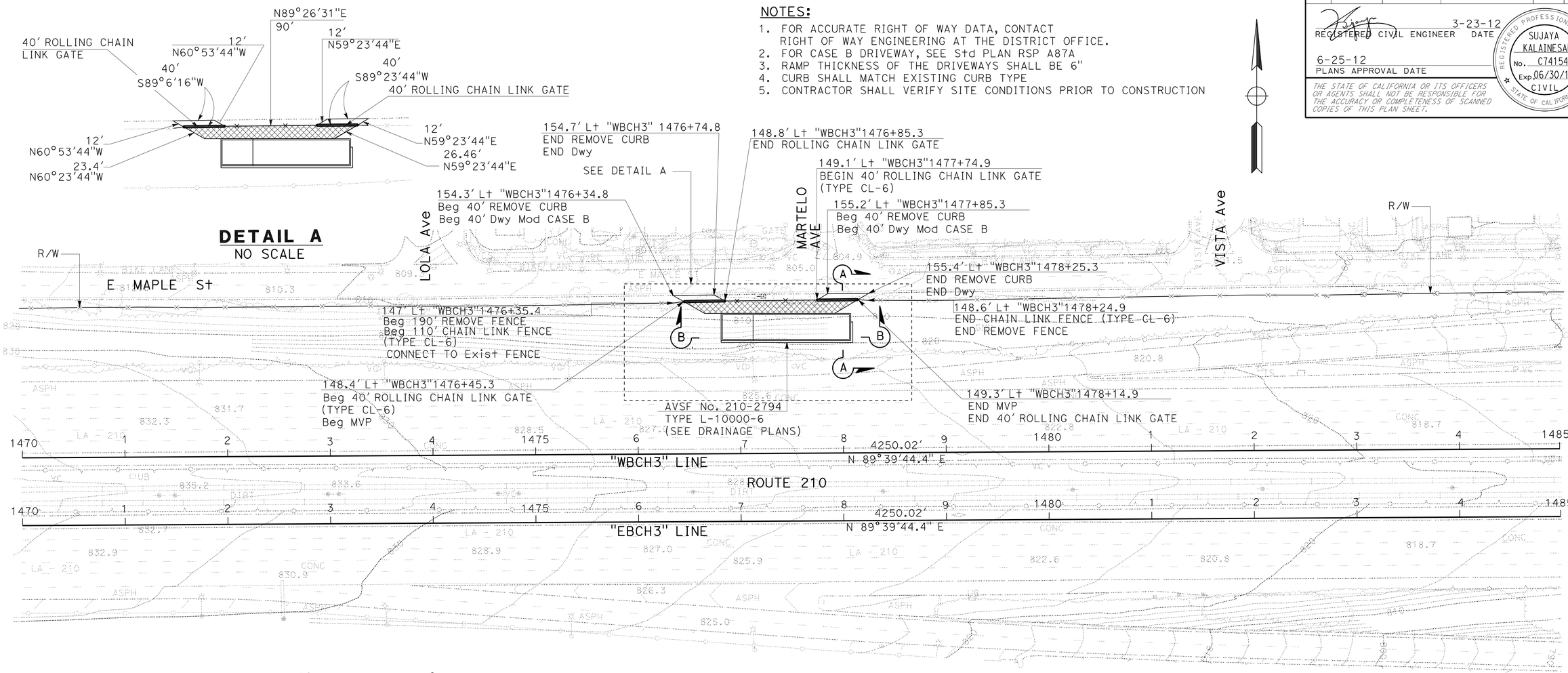

DETAIL A
NO SCALE

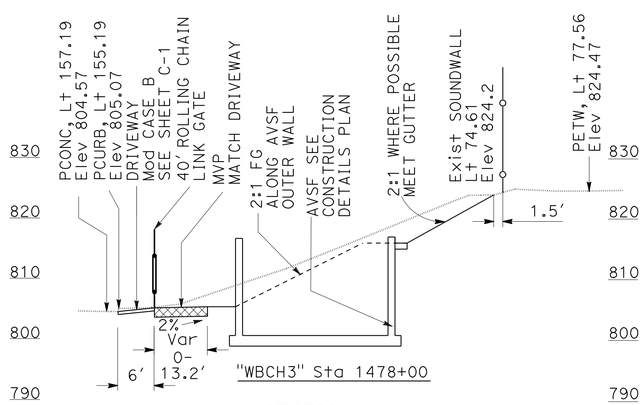

SECTION A-A
SCALE: 1" = 12.5'

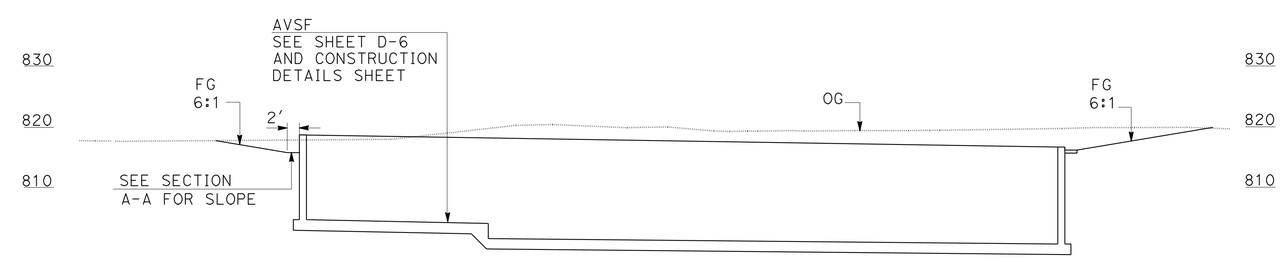

SECTION B-B
SCALE: 1"= 12.5'

LAYOUT
LOCATION 6
SCALE: 1" = 50'

L-6

STATE OF CALIFORNIA - DEPARTMENT OF TRANSPORTATION
Caltrans® DESIGN

FUNCTIONAL SUPERVISOR: NADER GOBRAN
CALCULATED-DESIGNED BY: SUJAYA KALAINESAN
CHECKED BY: NADER GOBRAN
REVISED BY / DATE REVISED

LAST REVISION 00-00-00
DATE PLOTTED => 28-JUN-2012
TIME PLOTTED => 12:39

Dist	COUNTY	ROUTE	POST MILES TOTAL PROJECT	SHEET No.	TOTAL SHEETS
07	LA	210	R15.0/R36.0	10	209

REGISTERED CIVIL ENGINEER 3-23-12 DATE

6-25-12
PLANS APPROVAL DATE

REGISTERED PROFESSIONAL ENGINEER SUJAYA KALAINESAN No. C74154 Exp. 06/30/13 CIVIL STATE OF CALIFORNIA

THE STATE OF CALIFORNIA OR ITS OFFICERS OR AGENTS SHALL NOT BE RESPONSIBLE FOR THE ACCURACY OR COMPLETENESS OF SCANNED COPIES OF THIS PLAN SHEET.

NOTES:

1. FOR ACCURATE RIGHT OF WAY DATA, CONTACT RIGHT OF WAY ENGINEERING AT THE DISTRICT OFFICE.
2. FOR CASE B DRIVEWAY, SEE Std PLAN RSP A87A
3. RAMP THICKNESS OF THE DRIVEWAYS SHALL BE 6"
4. CURB SHALL MATCH EXISTING CURB TYPE
5. CONTRACTOR SHALL VERIFY SITE CONDITIONS PRIOR TO CONSTRUCTION

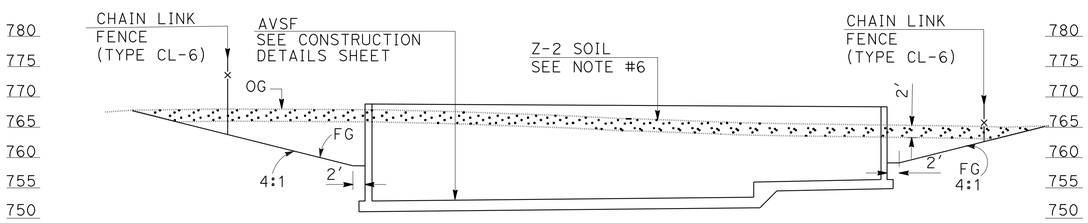

"KC38" Sta 17+15.00
SECTION B-B
SCALE: 1" = 12.5'

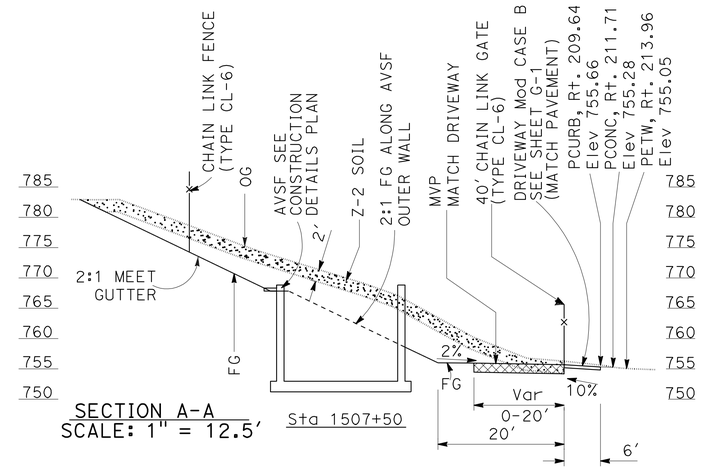

SECTION A-A
SCALE: 1" = 12.5'
Sta 1507+50

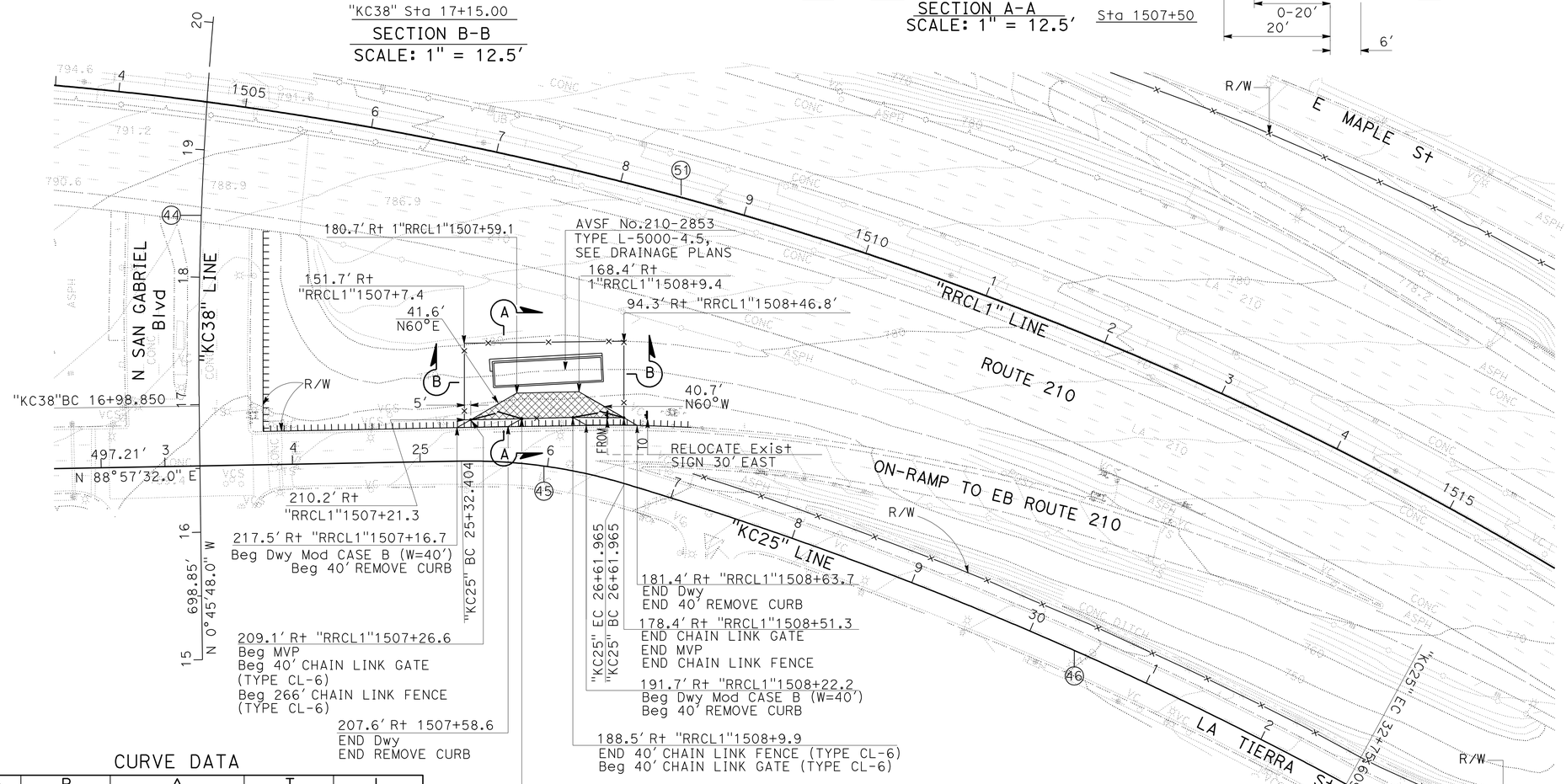

CURVE DATA

No. O	R	Δ	T	L
44	3048.00'	11°29'46"	306.81'	611.57'
45	417.00'	17°48'06"	65.31'	129.56'
46	3000.00'	11°43'10"	307.90'	613.64'
51	2773.51'	37°28'11"	940.67'	1813.80'

LAYOUT
LOCATION 7
SCALE: 1" = 50'

L-7

STATE OF CALIFORNIA - DEPARTMENT OF TRANSPORTATION
Caltrans DESIGN

FUNCTIONAL SUPERVISOR: NADER GOBRAN
CALCULATED-DESIGNED BY: SUJAYA KALAINESAN
CHECKED BY: NADER GOBRAN
REVISED BY / DATE REVISED

LAST REVISION 00-00-00
DATE PLOTTED => 28-JUN-2012
TIME PLOTTED => 12:39

Dist	COUNTY	ROUTE	POST MILES TOTAL PROJECT	SHEET No.	TOTAL SHEETS
07	LA	210	R15.0/R36.0	11	209

REGISTERED CIVIL ENGINEER 3-23-12 DATE

6-25-12
PLANS APPROVAL DATE

REGISTERED PROFESSIONAL ENGINEER SUJAYA KALAINESAN No. C74154 Exp. 06/30/13 CIVIL STATE OF CALIFORNIA

THE STATE OF CALIFORNIA OR ITS OFFICERS OR AGENTS SHALL NOT BE RESPONSIBLE FOR THE ACCURACY OR COMPLETENESS OF SCANNED COPIES OF THIS PLAN SHEET.

NOTES:

1. FOR ACCURATE RIGHT OF WAY DATA, CONTACT RIGHT OF WAY ENGINEERING AT THE DISTRICT OFFICE.
2. FOR CASE B DRIVEWAY, SEE Std PLAN RSP A87.
3. RAMP THCIKNESS OF THE DRIVEWAYS SHALL BE 6".
4. CURB SHALL MATCH EXISTING CURB TYPE.
5. CONTRACTOR SHALL VERIFY SITE CONDITIONS PRIOR TO CONSTRUCTION.

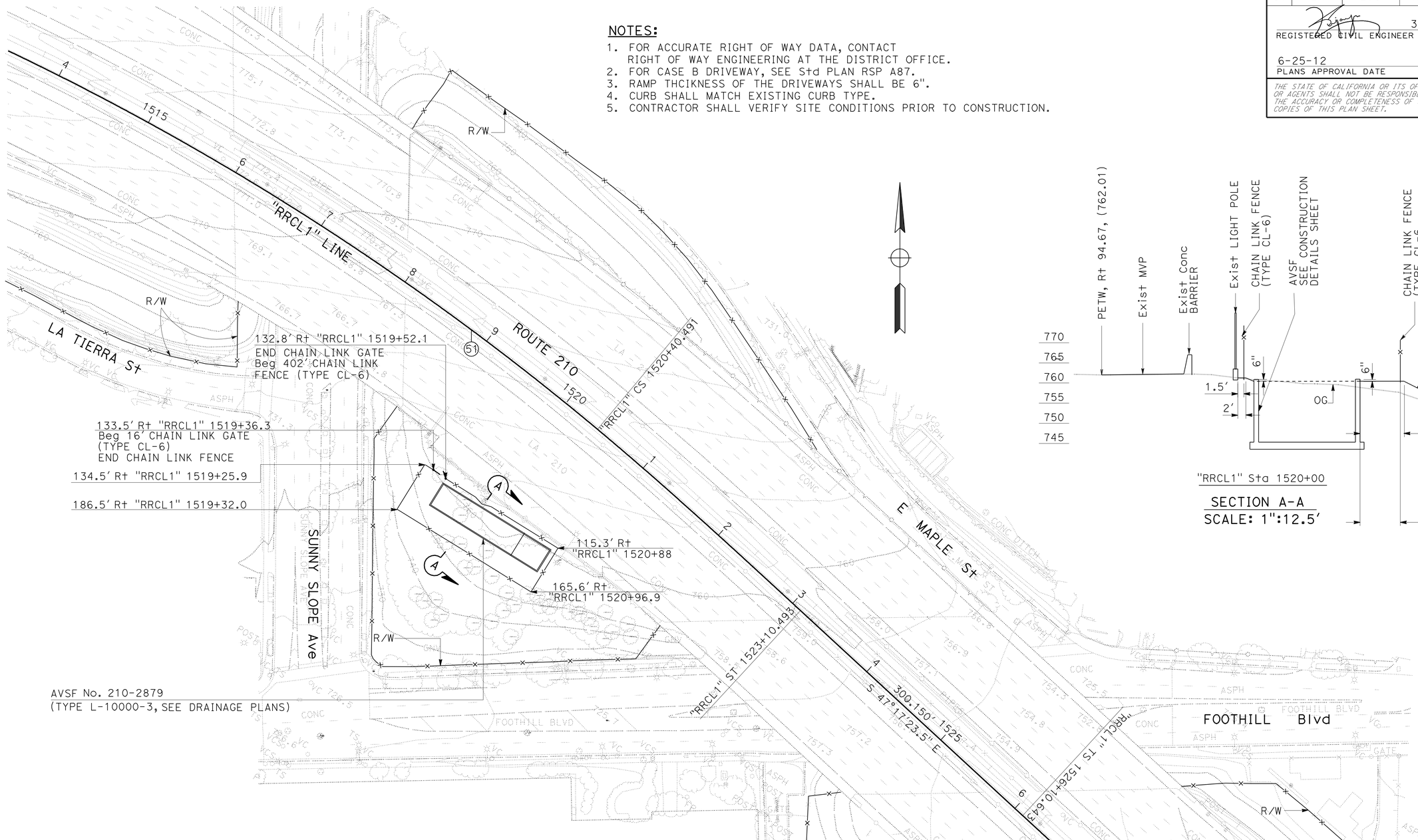

CURVE DATA

No. ⊗	R	Δ	T	L
51	2773.51'	37°28'11"	940.67'	1813.80'

LAYOUT
LOCATION 8
SCALE: 1" = 50'

L-8

STATE OF CALIFORNIA - DEPARTMENT OF TRANSPORTATION
Caltrans DESIGN

FUNCTIONAL SUPERVISOR: NADER GOBRAN
CALCULATED-DESIGNED BY: SUJAYA KALAINESAN
CHECKED BY: NADER GOBRAN
REVISED BY
DATE REVISED

LAST REVISION 00-00-00 | DATE PLOTTED => 28-JUN-2012 | TIME PLOTTED => 12:07

Dist	COUNTY	ROUTE	POST MILES TOTAL PROJECT	SHEET No.	TOTAL SHEETS
07	LA	210	R15.0/R36.0	12	209

REGISTERED CIVIL ENGINEER 3-23-12 DATE

6-25-12
PLANS APPROVAL DATE

REGISTERED PROFESSIONAL ENGINEER SUJAYA KALAINESAN No. C74154 Exp. 06/30/13 CIVIL STATE OF CALIFORNIA

THE STATE OF CALIFORNIA OR ITS OFFICERS OR AGENTS SHALL NOT BE RESPONSIBLE FOR THE ACCURACY OR COMPLETENESS OF SCANNED COPIES OF THIS PLAN SHEET.

NOTE:

1. FOR ACCURATE RIGHT OF WAY DATA, CONTACT RIGHT OF WAY ENGINEERING AT THE DISTRICT OFFICE.

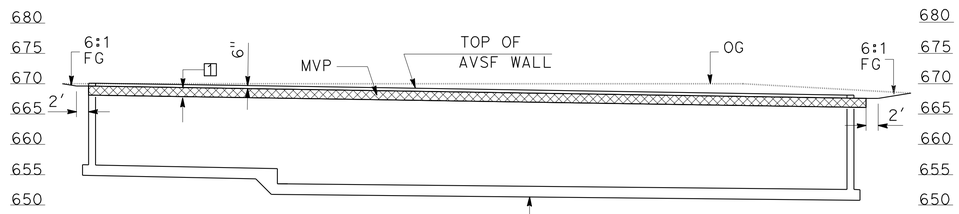

SECTION A-A
SCALE: 1" = 12.5'

AVSF
SEE SHEET D-6 AND CONSTRUCTION DETAILS Sht

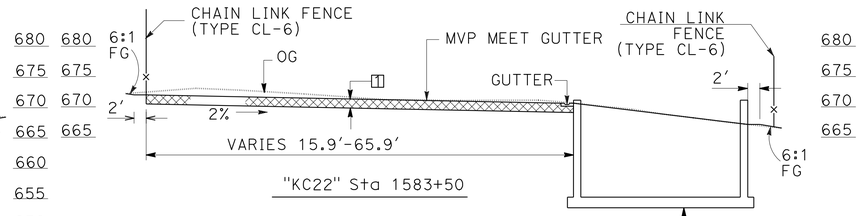

"KC22" Sta 1583+50

SECTION B-B
SCALE: 1" = 12.5'

AVSF
SEE DRAINAGE PLANS AND CONSTRUCTION DETAILS Sht

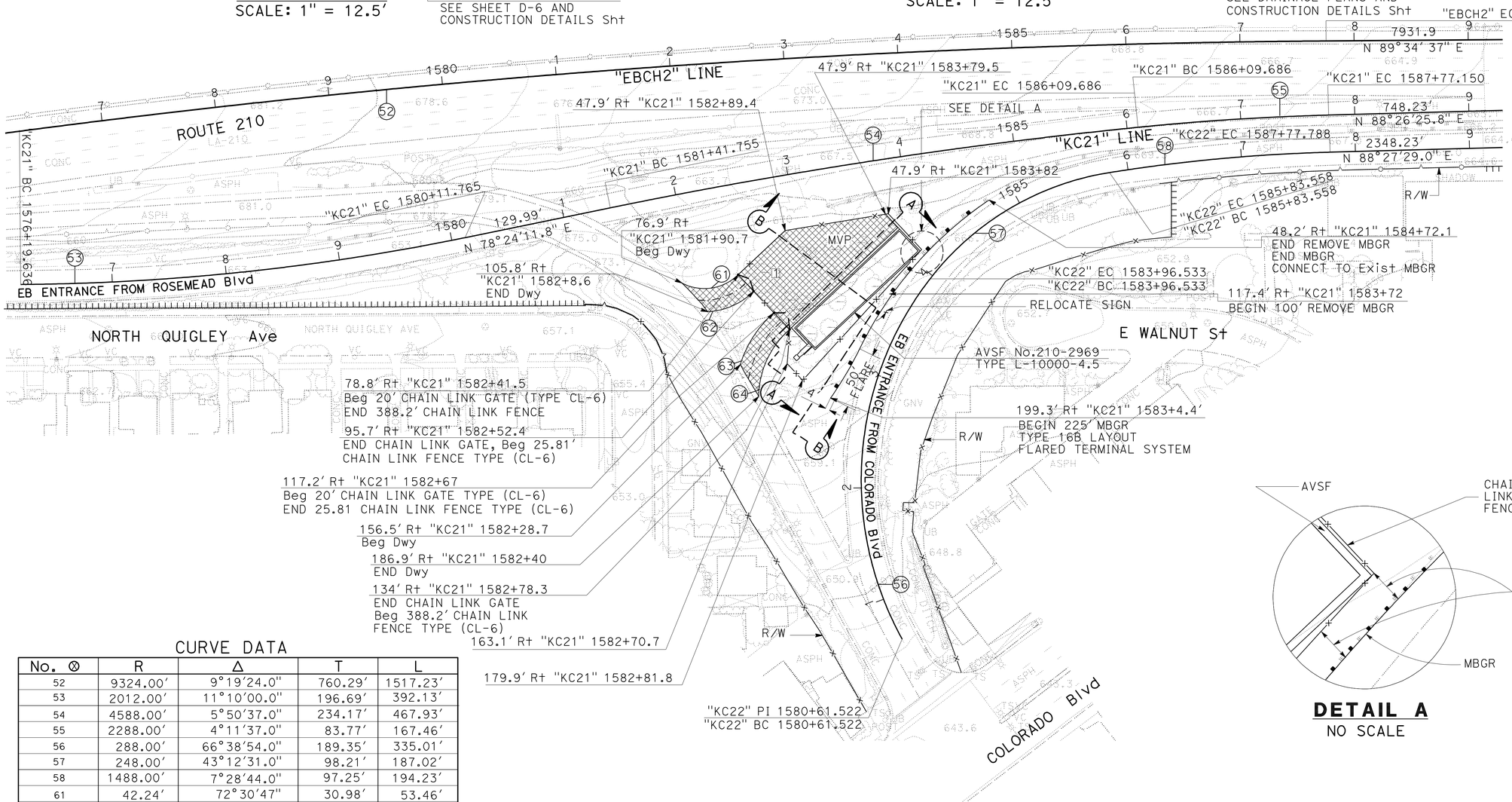

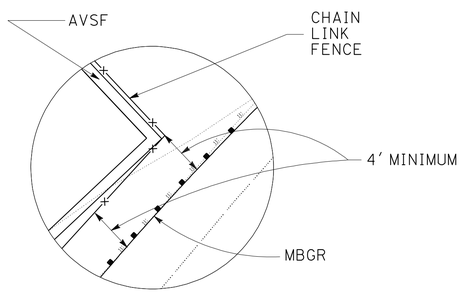

DETAIL A
NO SCALE

CURVE DATA

No. ⊗	R	Δ	T	L
52	9324.00'	9°19'24.0"	760.29'	1517.23'
53	2012.00'	11°10'00.0"	196.69'	392.13'
54	4588.00'	5°50'37.0"	234.17'	467.93'
55	2288.00'	4°11'37.0"	83.77'	167.46'
56	288.00'	66°38'54.0"	189.35'	335.01'
57	248.00'	43°12'31.0"	98.21'	187.02'
58	1488.00'	7°28'44.0"	97.25'	194.23'
61	42.24'	72°30'47"	30.98'	53.46'
62	62.24'	41°27'07"	23.55'	45.03'
63	98.42'	31°54'04"	28.13'	54.80'
64	78.42'	48°39'20"	35.45'	66.59'

LAYOUT
LOCATION 9
SCALE: 1" = 50'

L-9

STATE OF CALIFORNIA - DEPARTMENT OF TRANSPORTATION
Caltrans
DESIGN

FUNCTIONAL SUPERVISOR: NADER GOBRAN
CALCULATED-DESIGNED BY: SUJAYA KALAINESAN
CHECKED BY: NADER GOBRAN
REVISED BY
DATE REVISED

LAST REVISION 00-00-00
DATE PLOTTED => 28-JUN-2012
TIME PLOTTED => 12:07

Dist	COUNTY	ROUTE	POST MILES TOTAL PROJECT	SHEET No.	TOTAL SHEETS
07	LA	210	R15.0/R36.0	13	209

REGISTERED CIVIL ENGINEER 3-23-12 DATE

6-25-12
PLANS APPROVAL DATE

REGISTERED PROFESSIONAL ENGINEER SUJAYA KALAINESAN No. C74154 Exp. 06/30/13 CIVIL STATE OF CALIFORNIA

THE STATE OF CALIFORNIA OR ITS OFFICERS OR AGENTS SHALL NOT BE RESPONSIBLE FOR THE ACCURACY OR COMPLETENESS OF SCANNED COPIES OF THIS PLAN SHEET.

NOTE:

FOR ACCURATE RIGHT OF WAY DATA, CONTACT RIGHT OF WAY ENGINEERING AT THE DISTRICT OFFICE.

CURVE DATA

No. O	R	Δ	T	L
66	9400.00′	9°19′24″	766.49′	1529.60′
71	9560.00′	3°56′24″	328.83′	657.40′
72	3000.00′	3°11′39″	83.64′	167.25′
73	80.00′	187°32′04″	1214.97′	261.85′
74	150.00′	53°44′29″	76.00′	140.69′

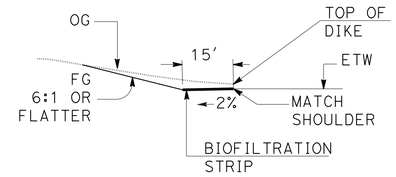

SECTION A-A
BIOFILTRATION STRIP
NO SCALE

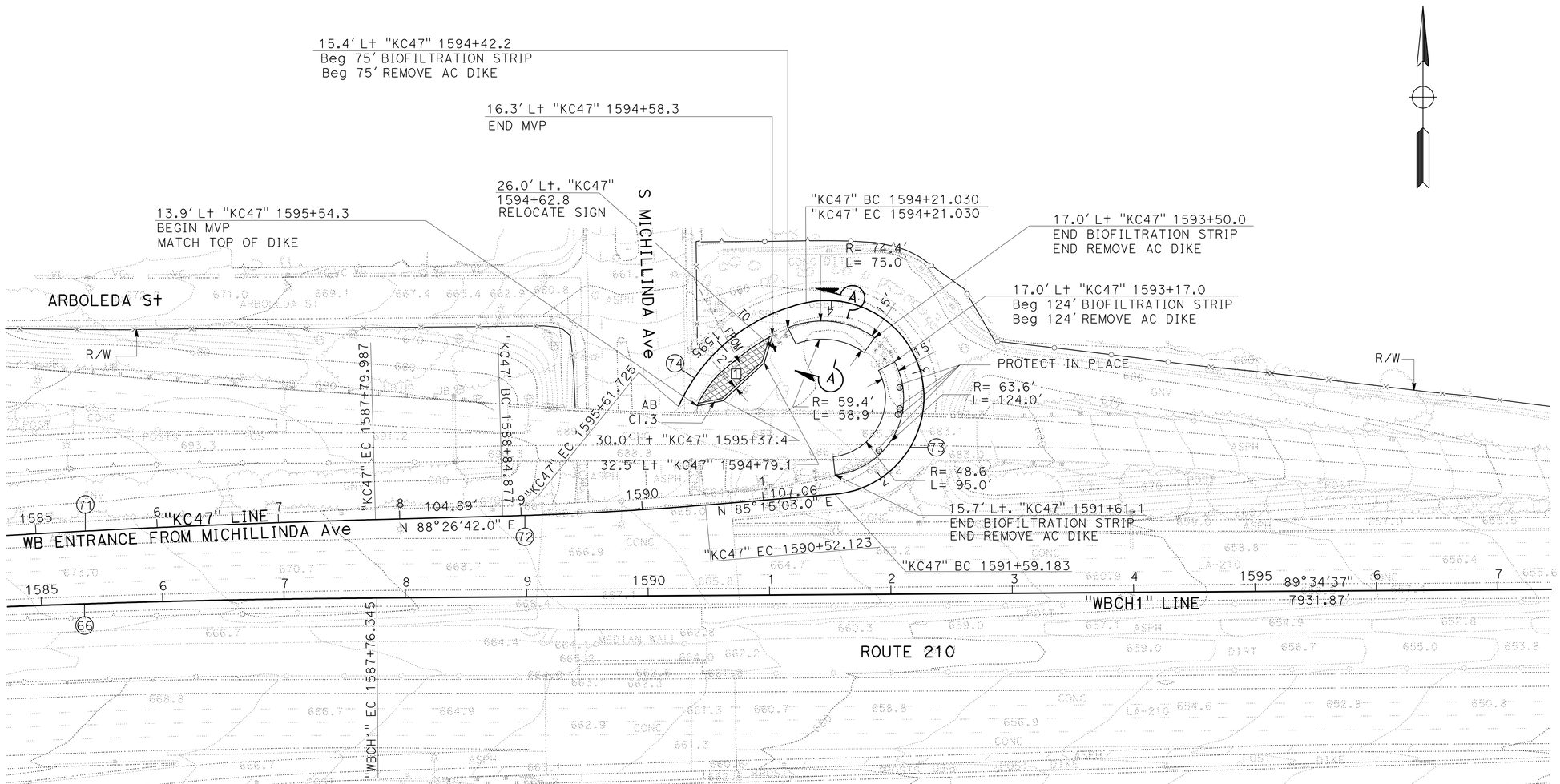

LAYOUT
LOCATION 10
SCALE: 1" = 50′

L-10

STATE OF CALIFORNIA - DEPARTMENT OF TRANSPORTATION
Caltrans
DESIGN

FUNCTIONAL SUPERVISOR: NADER GOBRAN
CALCULATED-DESIGNED BY: SUJAYA KALAINESAN
CHECKED BY: NADER GOBRAN
REVISED BY
DATE REVISED

LAST REVISION 00-00-00
DATE PLOTTED => 28-JUN-2012
TIME PLOTTED => 12:08

BORDER LAST REVISED 7/2/2010
USERNAME => s128843
DGN FILE => 725893ea010.dgn
RELATIVE BORDER SCALE IS IN INCHES 0 1 2 3
UNIT 1820
PROJECT NUMBER & PHASE 07000004811

Dist	COUNTY	ROUTE	POST MILES TOTAL PROJECT	SHEET No.	TOTAL SHEETS
07	LA	210	R15.0/R36.0	14	209

REGISTERED CIVIL ENGINEER 3-23-12 DATE

6-25-12
PLANS APPROVAL DATE

REGISTERED PROFESSIONAL ENGINEER SUJAYA KALAINESAN No. C74154 Exp. 06/30/13 CIVIL STATE OF CALIFORNIA

THE STATE OF CALIFORNIA OR ITS OFFICERS OR AGENTS SHALL NOT BE RESPONSIBLE FOR THE ACCURACY OR COMPLETENESS OF SCANNED COPIES OF THIS PLAN SHEET.

NOTE:

FOR ACCURATE RIGHT OF WAY DATA, CONTACT RIGHT OF WAY ENGINEERING AT THE DISTRICT OFFICE.

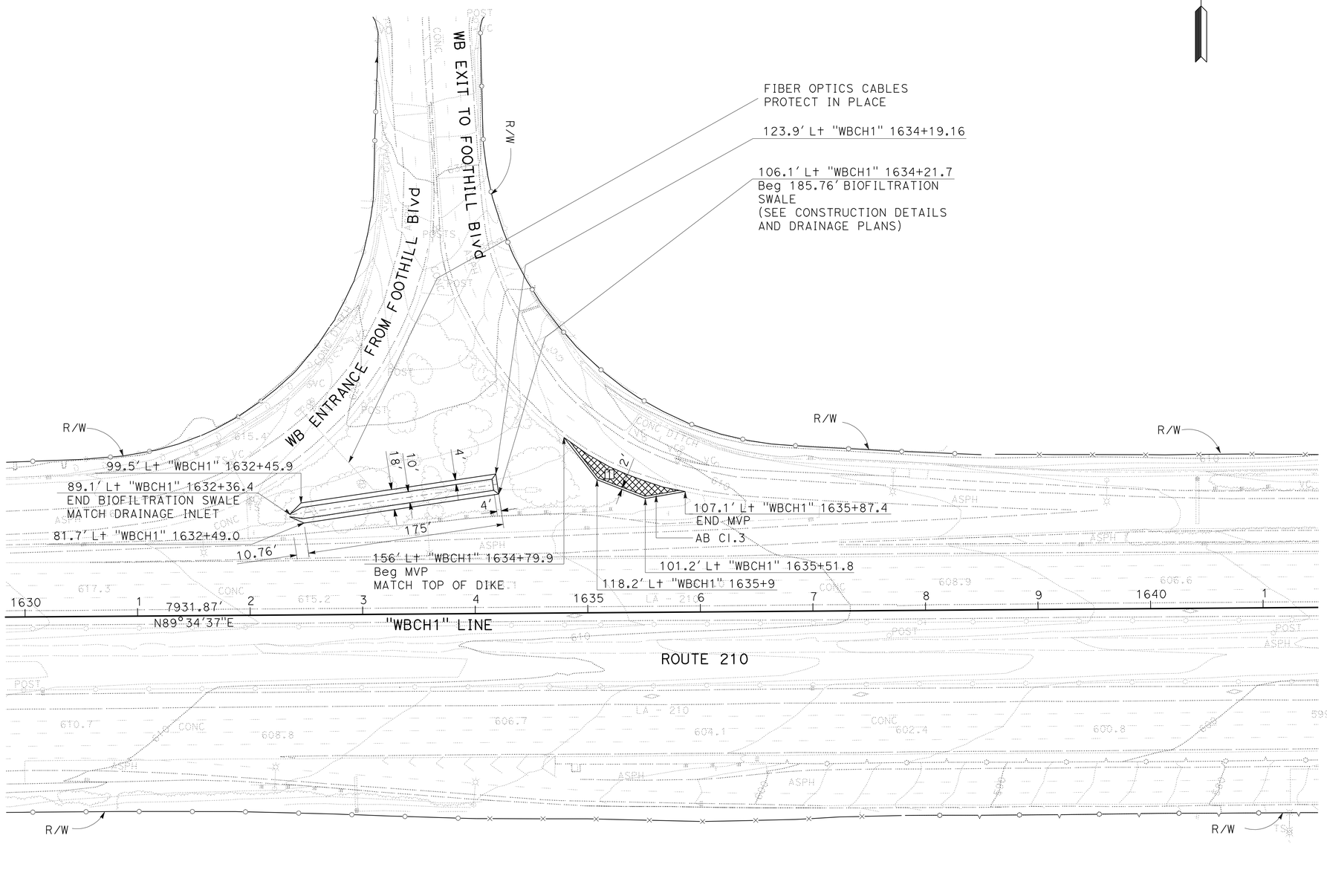

LAYOUT
LOCATION 11
SCALE: 1" = 50'

L-11

STATE OF CALIFORNIA - DEPARTMENT OF TRANSPORTATION
Caltrans
DESIGN

FUNCTIONAL SUPERVISOR: NADER GOBRAN
CALCULATED-DESIGNED BY: SUJAYA KALAINESAN
CHECKED BY: NADER GOBRAN
REVISED BY
DATE REVISED

LAST REVISION 00-00-00
DATE PLOTTED => 28-JUN-2012
TIME PLOTTED => 12:08

Dist	COUNTY	ROUTE	POST MILES TOTAL PROJECT	SHEET No.	TOTAL SHEETS
07	LA	210	R15.0/R36.0	15	209

REGISTERED CIVIL ENGINEER 3-23-12 DATE

6-25-12
PLANS APPROVAL DATE

REGISTERED PROFESSIONAL ENGINEER SUJAYA KALAINESAN No. C74154 Exp. 06/30/13 CIVIL STATE OF CALIFORNIA

THE STATE OF CALIFORNIA OR ITS OFFICERS OR AGENTS SHALL NOT BE RESPONSIBLE FOR THE ACCURACY OR COMPLETENESS OF SCANNED COPIES OF THIS PLAN SHEET.

NOTE:

FOR ACCURATE RIGHT OF WAY DATA, CONTACT RIGHT OF WAY ENGINEERING AT THE DISTRICT OFFICE.

CURVE DATA

No. ⊗	R	Δ	T	L
76	2000.00′	20°37′46.3"	363.99′	720.11′
81	150.00′	213°43′07.9"	494.97′	559.51′

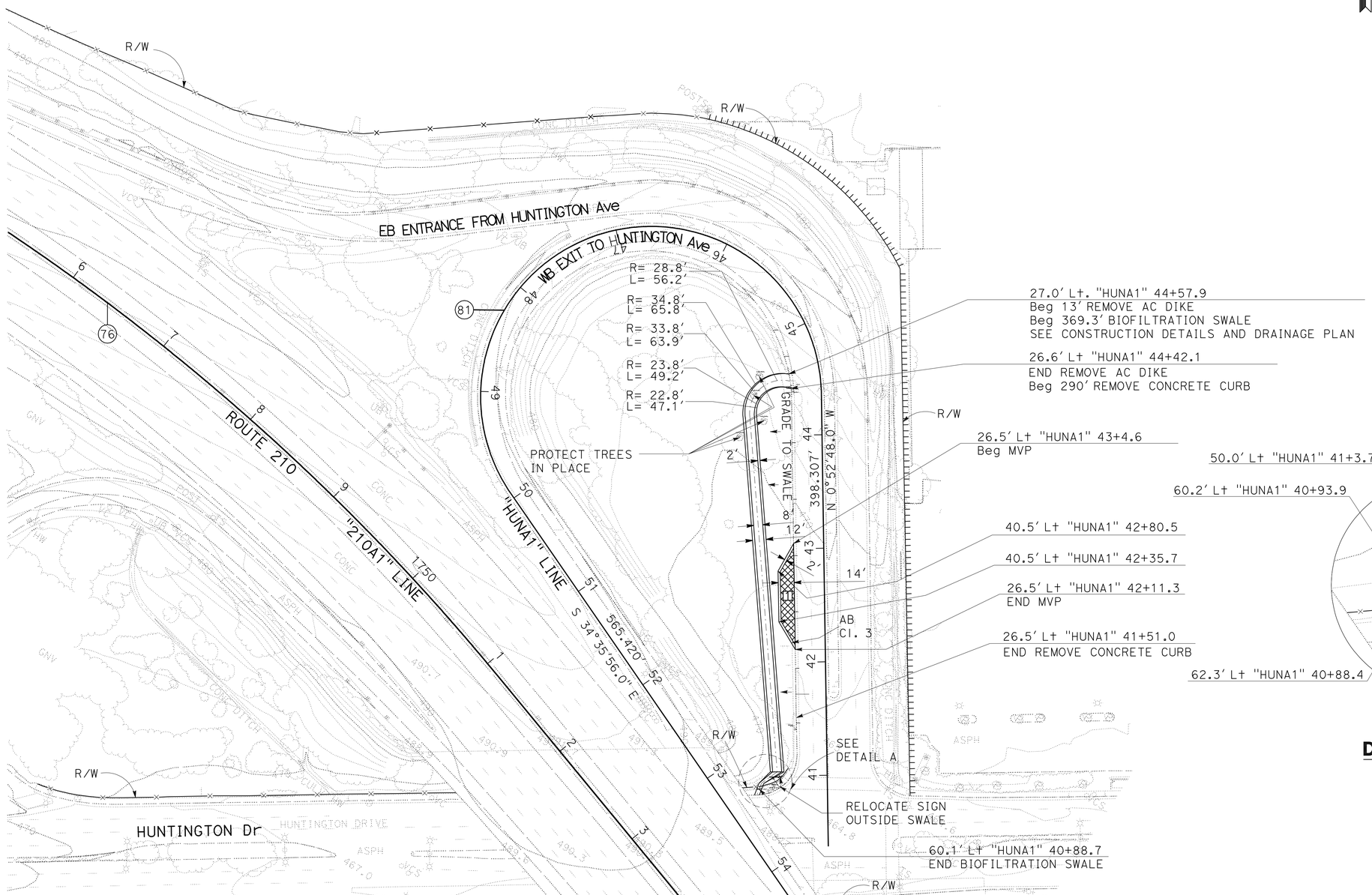

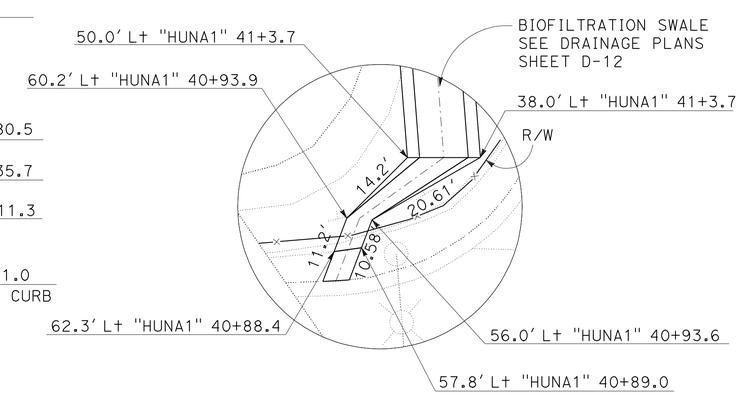

DETAIL A
NO SCALE

LAYOUT
LOCATION 12
SCALE: 1" = 50′

L-12

STATE OF CALIFORNIA - DEPARTMENT OF TRANSPORTATION
Caltrans
DESIGN
FUNCTIONAL SUPERVISOR: NADER GOBRAN
CALCULATED-DESIGNED BY: SUJAYA KALAINESAN
CHECKED BY: NADER GOBRAN
REVISED BY
DATE REVISED

LAST REVISION 00-00-00
DATE PLOTTED => 28-JUN-2012
TIME PLOTTED => 12:08

Dist	COUNTY	ROUTE	POST MILES TOTAL PROJECT	SHEET No.	TOTAL SHEETS
07	LA	210	R15.0/R36.0	16	209

REGISTERED CIVIL ENGINEER 3-23-12 DATE

6-25-12
PLANS APPROVAL DATE

REGISTERED PROFESSIONAL ENGINEER SUJAYA KALAINESAN No. C74154 Exp. 06/30/13 CIVIL STATE OF CALIFORNIA

THE STATE OF CALIFORNIA OR ITS OFFICERS OR AGENTS SHALL NOT BE RESPONSIBLE FOR THE ACCURACY OR COMPLETENESS OF SCANNED COPIES OF THIS PLAN SHEET.

NOTE:

FOR ACCURATE RIGHT OF WAY DATA, CONTACT RIGHT OF WAY ENGINEERING AT THE DISTRICT OFFICE.

CURVE DATA

No. ⊗	R	Δ	T	L
77	2000.00′	29°25′2.9″	525.02′	1026.86′

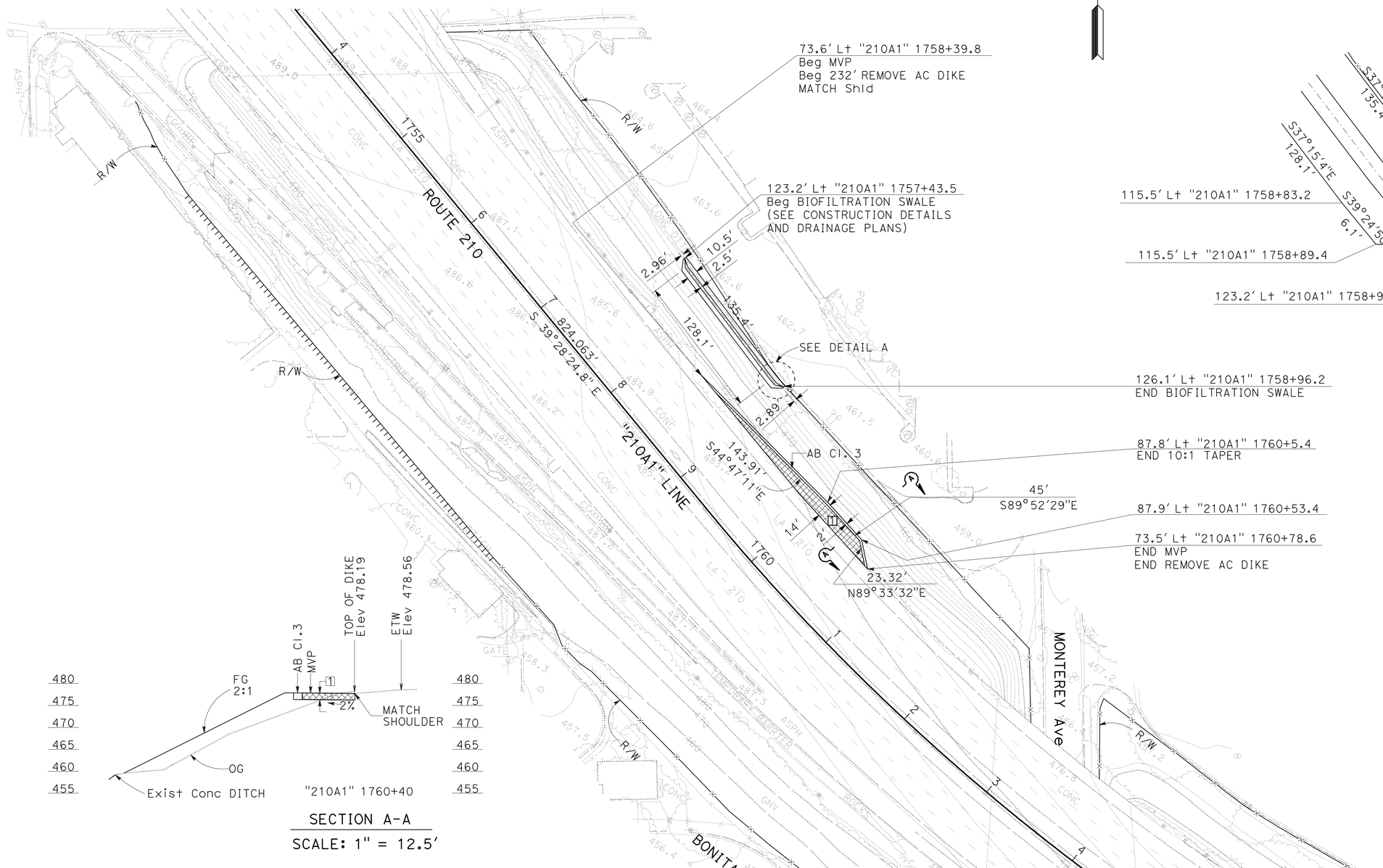

DETAIL A
NO SCALE

SECTION A-A
SCALE: 1" = 12.5′

LAYOUT
LOCATION 13
SCALE: 1" = 50′

L-13

STATE OF CALIFORNIA - DEPARTMENT OF TRANSPORTATION
Caltrans
DESIGN

FUNCTIONAL SUPERVISOR: NADER GOBRAN
CALCULATED-DESIGNED BY: SUJAYA KALAINESAN
CHECKED BY: NADER GOBRAN
REVISED BY
DATE REVISED

LAST REVISION 00-00-00
DATE PLOTTED => 28-JUN-2012
TIME PLOTTED => 12:08

Dist	COUNTY	ROUTE	POST MILES TOTAL PROJECT	SHEET No.	TOTAL SHEETS
07	LA	210	R15.0/R36.0	17	209

REGISTERED CIVIL ENGINEER 3-23-12 DATE

6-25-12
PLANS APPROVAL DATE

REGISTERED PROFESSIONAL ENGINEER SUJAYA KALAINESAN No. C74154 Exp. 06/30/13 CIVIL STATE OF CALIFORNIA

THE STATE OF CALIFORNIA OR ITS OFFICERS OR AGENTS SHALL NOT BE RESPONSIBLE FOR THE ACCURACY OR COMPLETENESS OF SCANNED COPIES OF THIS PLAN SHEET.

NOTES:

1. FOR ACCURATE RIGHT OF WAY DATA, CONTACT RIGHT OF WAY ENGINEERING AT THE DISTRICT OFFICE.
2. FOR CASE B DRIVEWAY, SEE Std PLAN RSP A87.
3. RAMP THICKNESS OF THE DRIVEWAYS SHALL BE 6".
4. CURB SHALL MATCH EXISTING CURB TYPE.
5. CONTRACTOR SHALL VERIFY SITE CONDITIONS PRIOR TO CONSTRUCTION.

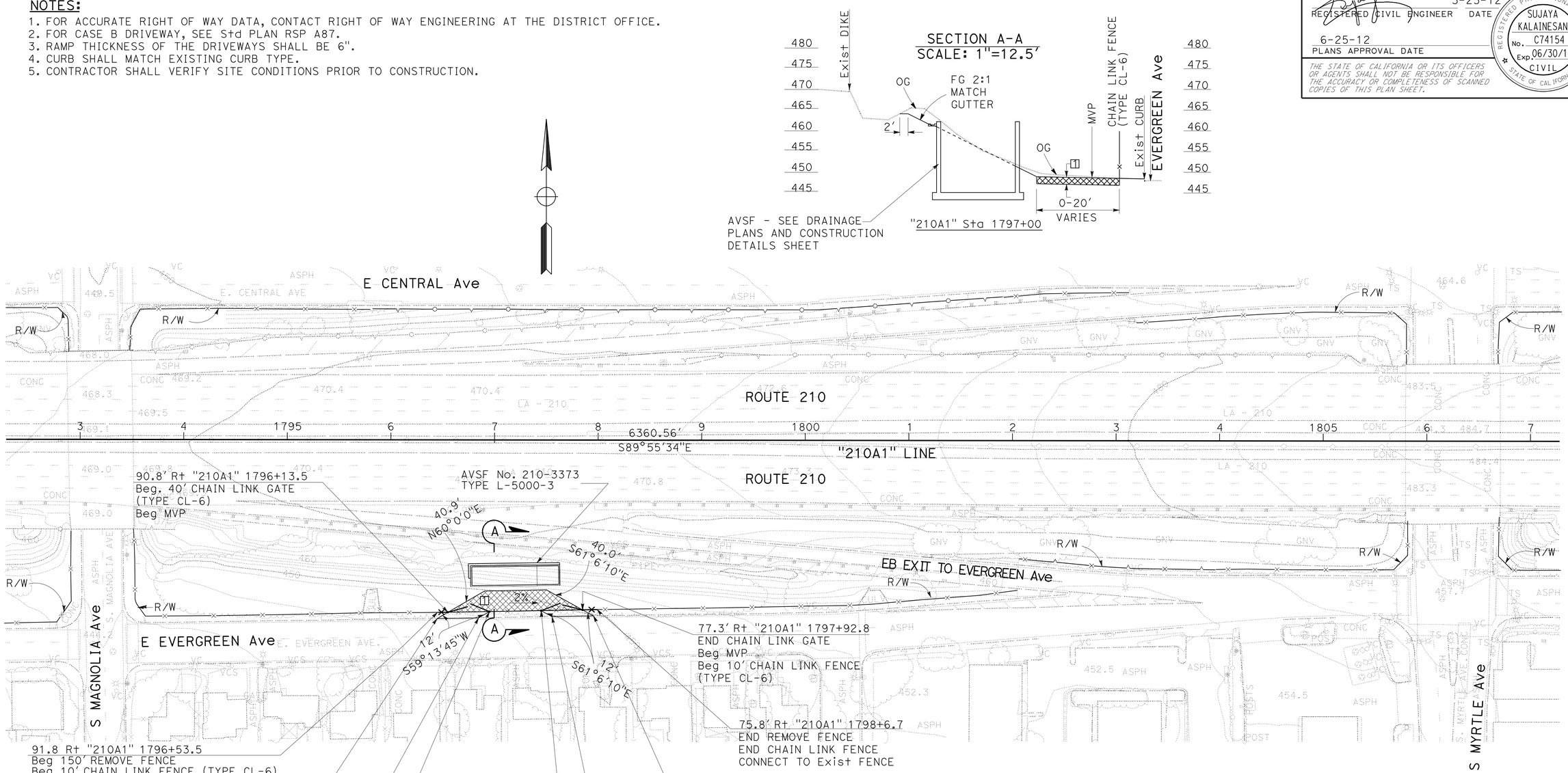

LAYOUT
LOCATION 14
SCALE: 1' = 50'

L-14

REVISED BY	DATE REVISED

SUJAYA KALAINESAN — CALCULATED-DESIGNED BY
NADER GOBRAN — CHECKED BY
NADER GOBRAN — FUNCTIONAL SUPERVISOR

STATE OF CALIFORNIA - DEPARTMENT OF TRANSPORTATION
Caltrans
DESIGN

LAST REVISION 00-00-00 | DATE PLOTTED => 28-JUN-2012 | TIME PLOTTED => 12:08

Dist	COUNTY	ROUTE	POST MILES TOTAL PROJECT	SHEET No.	TOTAL SHEETS
07	LA	210	R15.0/R36.0	18	209

REGISTERED CIVIL ENGINEER 3-23-12 DATE

6-25-12
PLANS APPROVAL DATE

REGISTERED PROFESSIONAL ENGINEER SUJAYA KALAINESAN No. C74154 Exp. 06/30/13 CIVIL STATE OF CALIFORNIA

THE STATE OF CALIFORNIA OR ITS OFFICERS OR AGENTS SHALL NOT BE RESPONSIBLE FOR THE ACCURACY OR COMPLETENESS OF SCANNED COPIES OF THIS PLAN SHEET.

NOTES:

1. FOR ACCURATE RIGHT OF WAY DATA, CONTACT RIGHT OF WAY ENGINEERING AT THE DISTRICT OFFICE.
2. FOR CASE B DRIVEWAY, SEE Std PLAN RSP A87.
3. RAMP THICKNESS OF THE DRIVEWAYS SHALL BE 6".
4. CURB SHALL MATCH EXISTING CURB TYPE.
5. CONTRACTOR SHALL VERIFY SITE CONDITIONS PRIOR TO CONSTRUCTION.

CURVE DATA

No. ⊗	R	Δ	T	L
82	3000.00′	4°16′38"	112.03′	223.96′
83	1000.00′	5°3′19"	44.14′	88.23′

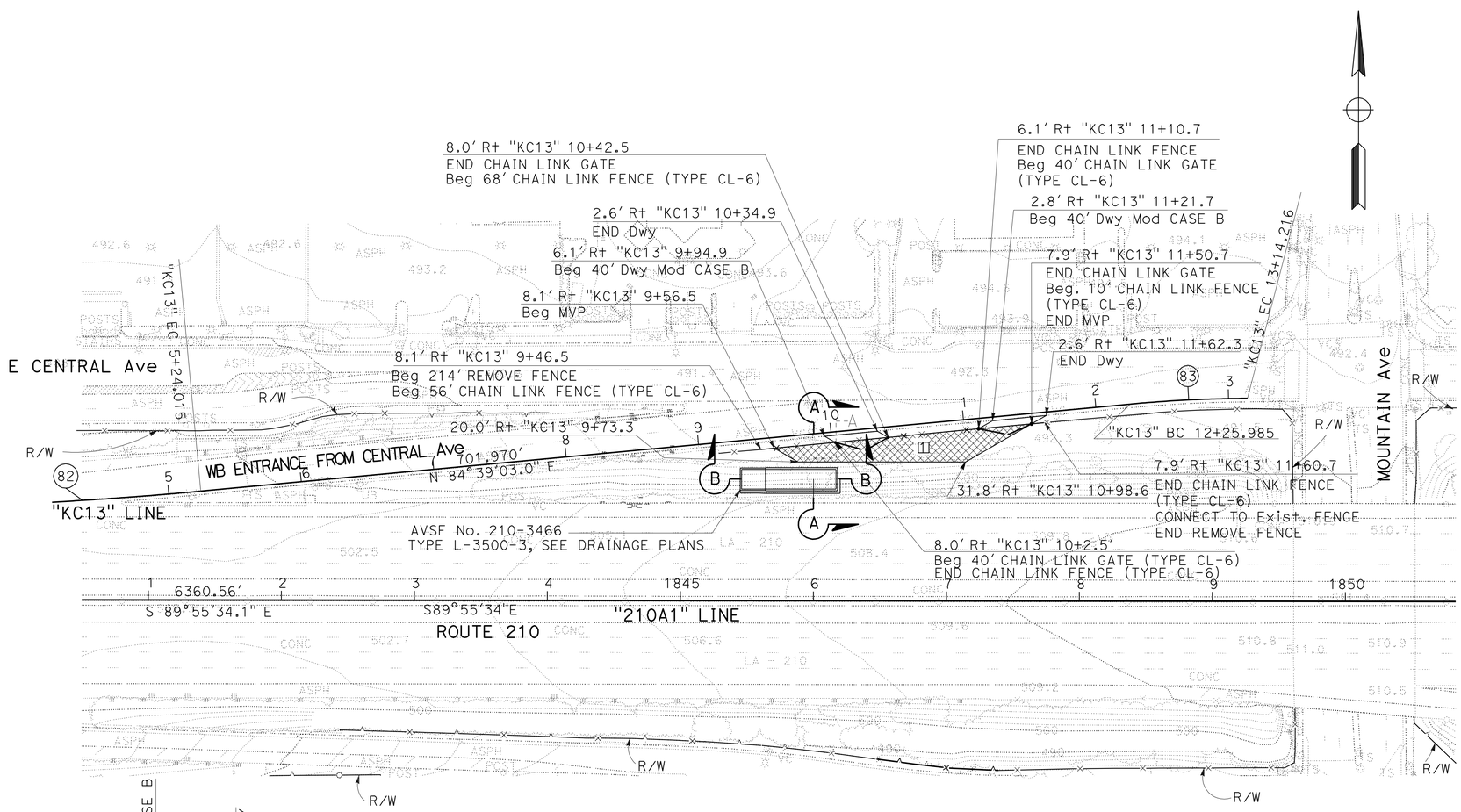

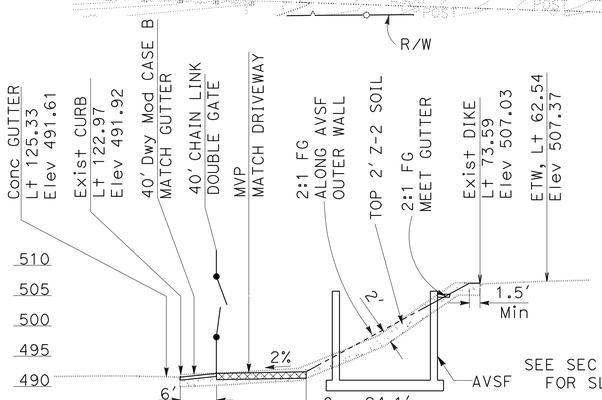

SECTION A-A
SCALE: 1" = 12.5′

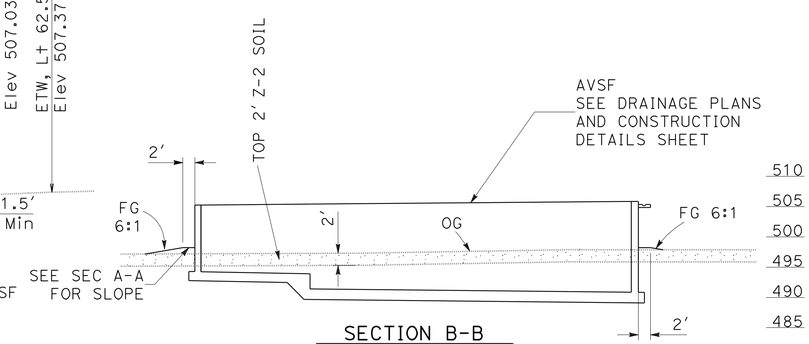

SECTION B-B
SCALE: 1" = 12.5′

LAYOUT

LOCATION 15

SCALE: 1" = 50′

L-15

STATE OF CALIFORNIA - DEPARTMENT OF TRANSPORTATION
Caltrans
DESIGN

FUNCTIONAL SUPERVISOR: NADER GOBRAN
CALCULATED-DESIGNED BY: SUJAYA KALAINESAN
CHECKED BY: NADER GOBRAN
REVISED BY
DATE REVISED

LAST REVISION 00-00-00
DATE PLOTTED => 28-JUN-2012
TIME PLOTTED => 12:08

Dist	COUNTY	ROUTE	POST MILES TOTAL PROJECT	SHEET No.	TOTAL SHEETS
07	LA	210	R15.0/R36.0	19	209

REGISTERED CIVIL ENGINEER 3-23-12 DATE

6-25-12
PLANS APPROVAL DATE

REGISTERED PROFESSIONAL ENGINEER SUJAYA KALAINESAN No. C74154 Exp. 06/30/13 CIVIL STATE OF CALIFORNIA

THE STATE OF CALIFORNIA OR ITS OFFICERS OR AGENTS SHALL NOT BE RESPONSIBLE FOR THE ACCURACY OR COMPLETENESS OF SCANNED COPIES OF THIS PLAN SHEET.

NOTES:

1. FOR ACCURATE RIGHT OF WAY DATA, CONTACT RIGHT OF WAY ENGINEERING AT THE DISTRICT OFFICE.
2. CONTRACTOR SHALL VERIFY SITE CONDITIONS PRIOR TO CONSTRUCTION.

CURVE DATA

No. ⊗	R	Δ	T	L
77	7500.00′	4°54′33″	321.50′	642.61′
84	1000.00′	3°7′01″	27.21′	54.40′

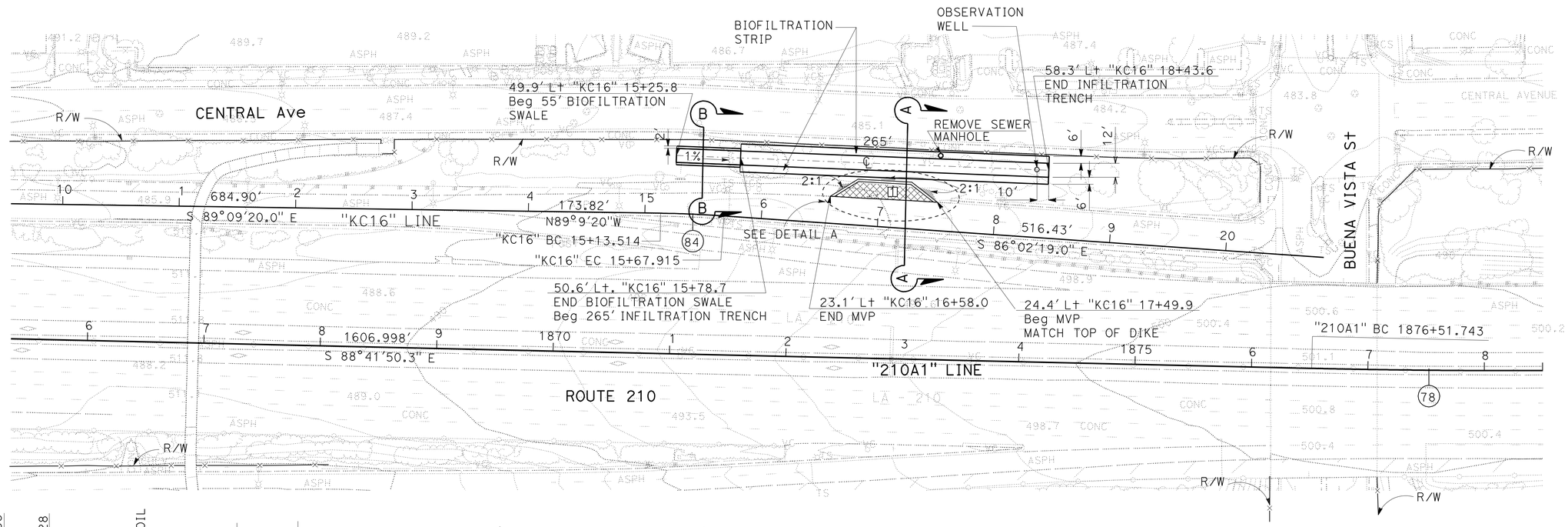

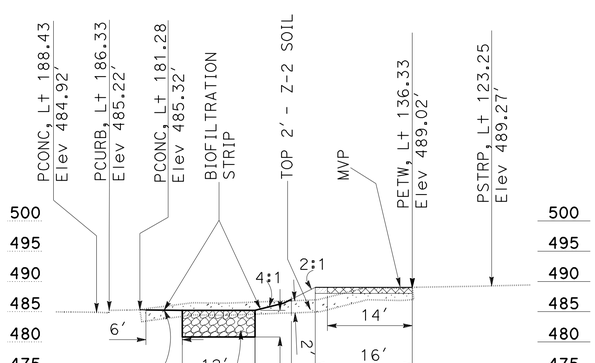

SECTION A-A
SCALE: 1" = 12.5′

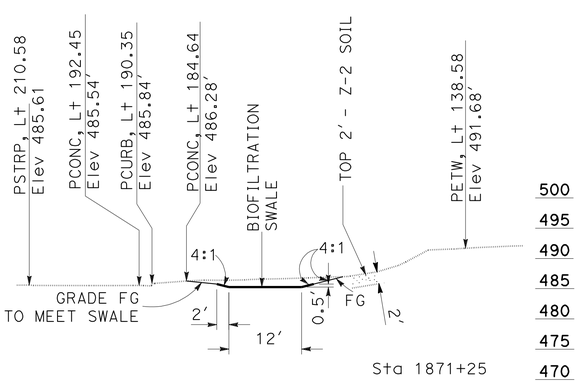

SECTION B-B
SCALE: 1"=12.5′

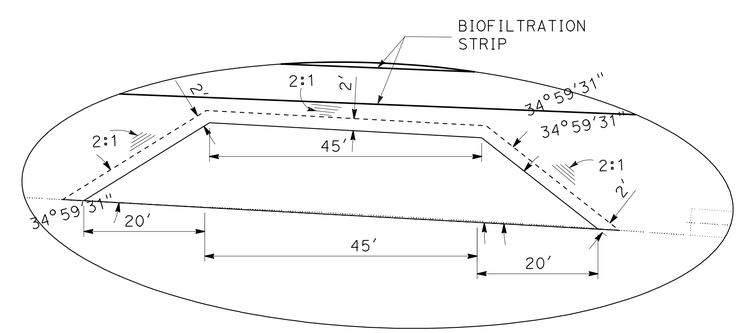

DETAIL A
NO SCALE

LAYOUT
LOCATION 16
SCALE: 1" = 50′

L-16

STATE OF CALIFORNIA - DEPARTMENT OF TRANSPORTATION
Caltrans® DESIGN

FUNCTIONAL SUPERVISOR: NADER GOBRAN
CALCULATED-DESIGNED BY: SUJAYA KALAINESAN
CHECKED BY: NADER GOBRAN
REVISED BY
DATE REVISED

LAST REVISION 00-00-00 | DATE PLOTTED => 28-JUN-2012 | TIME PLOTTED => 12:08

Dist	COUNTY	ROUTE	POST MILES TOTAL PROJECT	SHEET No.	TOTAL SHEETS
07	LA	210	R15.0/R36.0	20	209

REGISTERED CIVIL ENGINEER 3-23-12 DATE

6-25-12
PLANS APPROVAL DATE

REGISTERED PROFESSIONAL ENGINEER SUJAYA KALAINESAN No. C74154 Exp. 06/30/13 CIVIL STATE OF CALIFORNIA

THE STATE OF CALIFORNIA OR ITS OFFICERS OR AGENTS SHALL NOT BE RESPONSIBLE FOR THE ACCURACY OR COMPLETENESS OF SCANNED COPIES OF THIS PLAN SHEET.

NOTES:

1. FOR ACCURATE RIGHT OF WAY DATA, CONTACT RIGHT OF WAY ENGINEERING AT THE DISTRICT OFFICE.
2. CONTRACTOR SHALL VERIFY SITE CONDITIONS PRIOR TO CONSTRUCTION.

CURVE DATA

No. ⊗	R	Δ	T	L
78	7500.00′	4°54′33"	321.50′	642.61′
79	10000.00′	3°11′19.5"	278.34′	556.54′
85	150.00′	49°26′25"	69.06′	129.43′
86	1000.00′	6°48′47"	59.53′	118.91′

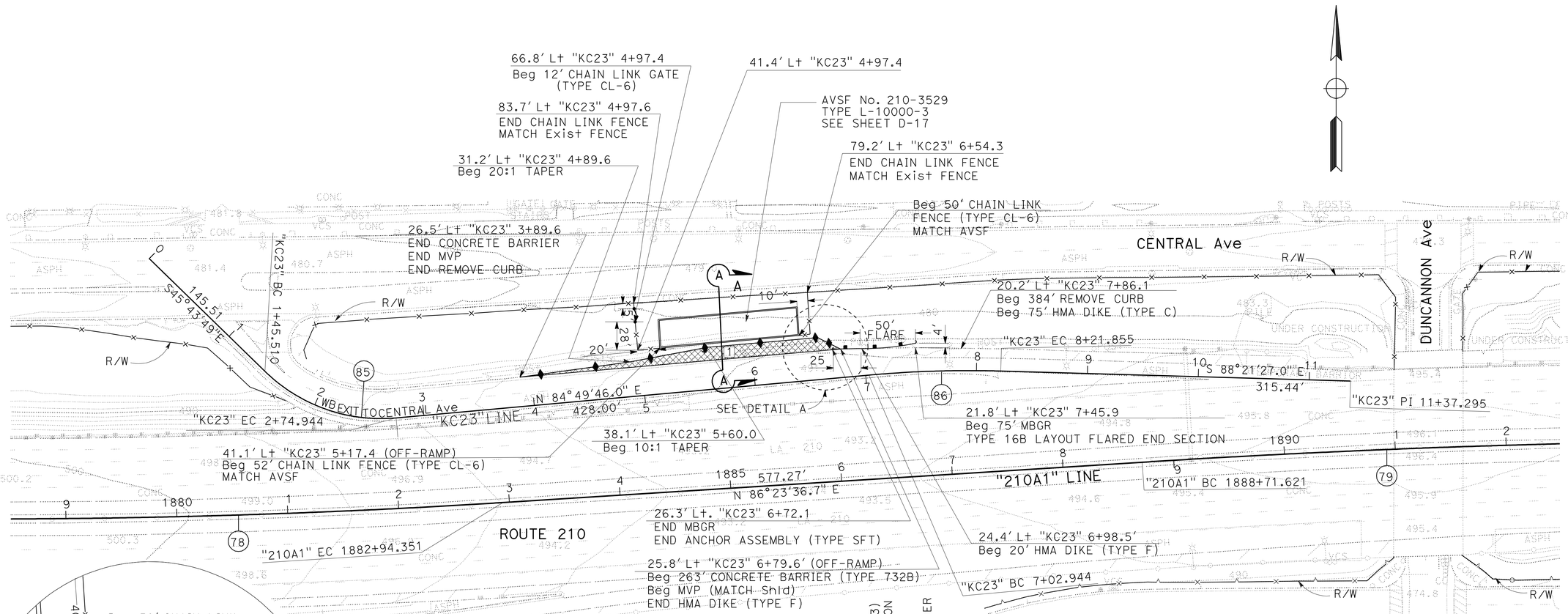

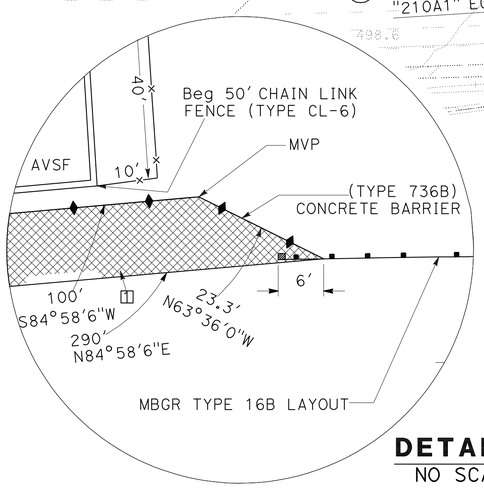

DETAIL A
NO SCALE

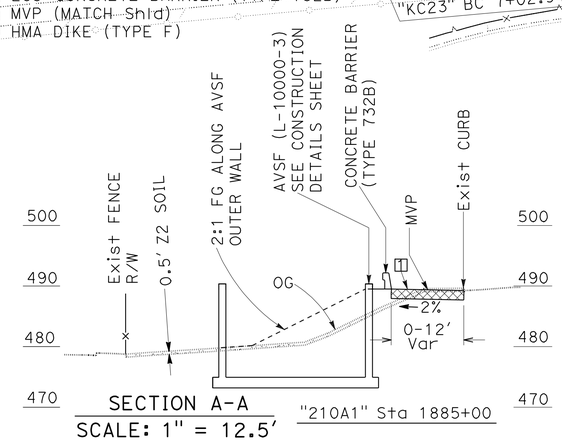

SECTION A-A
SCALE: 1" = 12.5′

LAYOUT
LOCATION 17
SCALE: 1"=50′

L-17

STATE OF CALIFORNIA - DEPARTMENT OF TRANSPORTATION
Caltrans
DESIGN
FUNCTIONAL SUPERVISOR NADER GOBRAN
CALCULATED-DESIGNED BY SUJAYA KALAINESAN
CHECKED BY NADER GOBRAN
REVISED BY
DATE REVISED

LAST REVISION 00-00-00
DATE PLOTTED => 28-JUN-2012
TIME PLOTTED => 12:08

Dist	COUNTY	ROUTE	POST MILES TOTAL PROJECT	SHEET No.	TOTAL SHEETS
07	LA	210	R15.0/R36.0	21	209

REGISTERED CIVIL ENGINEER 3-23-12 DATE

6-25-12
PLANS APPROVAL DATE

REGISTERED PROFESSIONAL ENGINEER
SUJAYA KALAINESAN
No. C74154
Exp. 6/30/13
CIVIL
STATE OF CALIFORNIA

THE STATE OF CALIFORNIA OR ITS OFFICERS OR AGENTS SHALL NOT BE RESPONSIBLE FOR THE ACCURACY OR COMPLETENESS OF SCANNED COPIES OF THIS PLAN SHEET.

NOTES:

1. DIMENSIONS OF THE STRUCTURAL SECTIONS ARE SUBJECT TO TOLERENCES SPECIFIED IN THE STANDARD SPECIFICATION.
2. MODIFICATIONS TO REMAINING EXISTING FENCE WILL BE NECESSARY.
3. SEE STANDARD PLANS FOR DRIVEWAY CASE A AND CASE B.
4. DRIVEWAY THICKNESS SHALL BE 6".

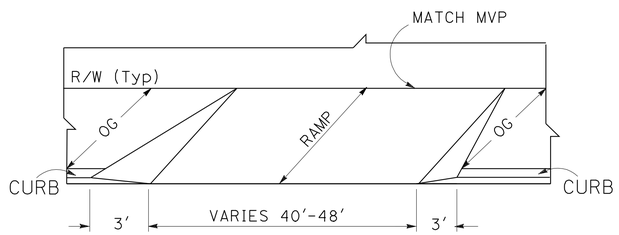

PLAN

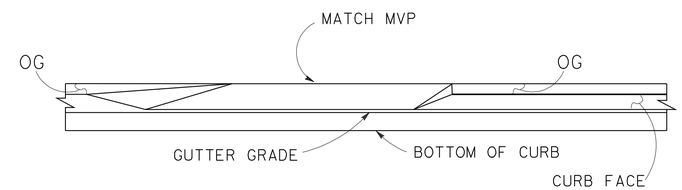

ELEVATION

DRIVEWAY (CASE B Mod)
LOCATIONS 3, 4, 5, 6, 7, 14, 15

CONSTRUCTION DETAILS

NO SCALE

C-1

REVISED BY | DATE REVISED
ROBERT PHAM | SUJAYA KALAINESAN
CALCULATED-DESIGNED BY | CHECKED BY
FUNCTIONAL SUPERVISOR
NADER GOBRAN

STATE OF CALIFORNIA - DEPARTMENT OF TRANSPORTATION
Caltrans
DESIGN

LAST REVISION 03-26-12 | DATE PLOTTED => 28-JUN-2012 | TIME PLOTTED => 12:09

Dist	COUNTY	ROUTE	POST MILES TOTAL PROJECT	SHEET No.	TOTAL SHEETS
07	LA	210	R15.0/R36.0	22	209

REGISTERED CIVIL ENGINEER 3-23-12 DATE

6-25-12
PLANS APPROVAL DATE

REGISTERED PROFESSIONAL ENGINEER SUJAYA KALAINESAN No. C74154 Exp. 6/30/13 CIVIL STATE OF CALIFORNIA

THE STATE OF CALIFORNIA OR ITS OFFICERS OR AGENTS SHALL NOT BE RESPONSIBLE FOR THE ACCURACY OR COMPLETENESS OF SCANNED COPIES OF THIS PLAN SHEET.

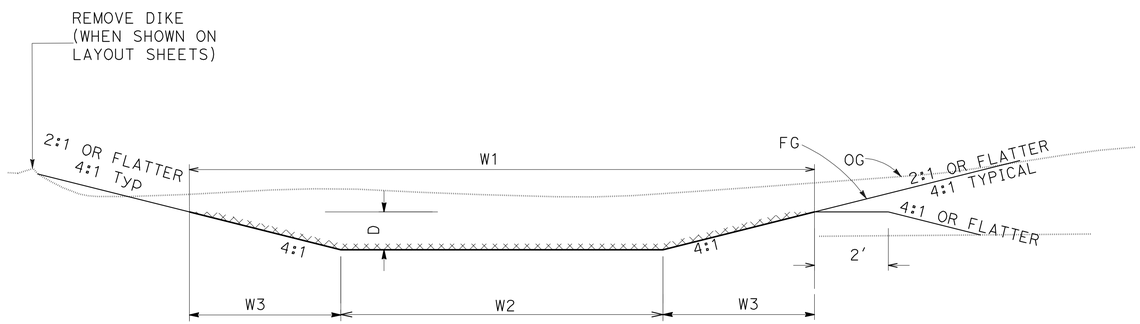

BIOFILTRATION SWALE
TYPICAL SECTION

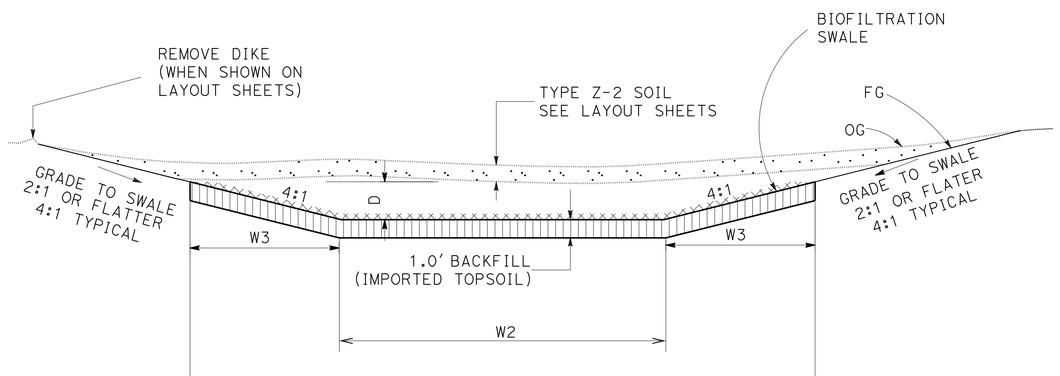

LOCATIONS (2, 16)

BIOFILTRATION SWALE
TYPICAL SECTION

BIOFILTRATION SWALE DETAILS

LOCATION	W1	W2	W3	D
LOCATION 2A	10'	4'	3'	0.75'
LOCATION 2B	10'	6'	2'	0.5'
LOCATION 2C	10'	6'	2'	0.5'
LOCATION 11	18'	10'	4'	1'
LOCATION 12	12'	8'	2'	0.5'
LOCATION 13	16'	10'	3'	0.75'
LOCATION 16	16'	12	2'	0.5'

LEGEND:

TYPE Z-2 ADL SOIL

BACKFILL (IMPORTED TOPSOIL)

CONSTRUCTION DETAILS

NO SCALE

C-2

REVISED BY | DATE REVISED
ROBERT PHAM | SUJAYA KALAINESAN
CALCULATED-DESIGNED BY | CHECKED BY
FUNCTIONAL SUPERVISOR | NADER GOBRAN
STATE OF CALIFORNIA - DEPARTMENT OF TRANSPORTATION
Caltrans
DESIGN

LAST REVISION 03-26-12 | DATE PLOTTED => 28-JUN-2012 | TIME PLOTTED => 12:09

Dist	COUNTY	ROUTE	POST MILES TOTAL PROJECT	SHEET No.	TOTAL SHEETS
07	LA	210	R15.0/R36.0	23	209

Timothy B Sobelman 6-3-09
REGISTERED CIVIL ENGINEER DATE

6-25-12
PLANS APPROVAL DATE

REGISTERED PROFESSIONAL ENGINEER TIMOTHY B. SOBELMAN No. 59249 Exp. 6-30-09 CIVIL STATE OF CALIFORNIA

THE STATE OF CALIFORNIA OR ITS OFFICERS OR AGENTS SHALL NOT BE RESPONSIBLE FOR THE ACCURACY OR COMPLETENESS OF SCANNED COPIES OF THIS PLAN SHEET.

GENERAL NOTES

Designation:
Partial Austin Vault Sand Filters (AVSFs) are open air reinforced concrete vaults utilizing both sedimentation and sand filtration basins. Type designation is based on length configuration, water quality volume to be drained in a 24 hour period, and average depth of water.

Standard configurations are noted for the following design water quality volumes (WQV): 5,000, 10,000, and 15,000 cubic feet. Length configurations are either short (S) or long (L). The average water depth can be either 3 ft, 4.5 ft, or 6 ft as designed in Design Water Quality Volumes (WQV) table.

Special Reinforcement Coverage:
AVSF Standard Details are not to be used in a corrosive environment or where there is a severe abrasive flow condition or in freeze-thaw locations.

Special Design:
Required for the following conditions:
ground water conditions above bottom of AVSF, surcharge loads exceeding HS20 truck load, design bearing pressures or sizes greater than those on this plan, inlet velocities which exceed 8.0 ft/sec at gabion wall, and settlement due to liquefaction.

DESIGN WATER QUALITY VOLUMES (WQV)

AVSF Type*	WQV (ft^3)	W(ft)	Ls(ft)	Lf(ft)	Hw(ft)
S-3500-3	3,500	21	14	38	3
L-3500-3	3,500	15	18	53	3
S-3500-4.5	4,380	21	14	38	4.5
L-3500-4.5	4,380	15	18	53	4.5
S-3500-6	5,260	21	14	38	6
L-3500-6	5,260	15	18	53	6
S-5000-3	5,000	27	15	42	3
L-5000-3	5,000	18	21	63	3
S-5000-4.5	6,250	27	15	42	4.5
L-5000-4.5	6,250	18	21	63	4.5
S-5000-6	7,500	27	15	42	6
L-5000-6	7,500	18	21	63	6
S-10000-3	10,000	36	21	63	3
L-10000-3	10,000	24	30	94	3
S-10000-4.5	12,500	36	21	63	4.5
L-10000-4.5	12,500	24	30	94	4.5
S-10000-6	15,000	36	21	63	6
L-10000-6	15,000	24	30	94	6
S-15000-3	15,000	45	25	76	3
L-15000-3	15,000	30	37	115	3
S-15000-4.5	18,750	45	25	76	4.5
L-15000-4.5	18,750	30	37	115	4.5
S-15000-6	22,500	45	25	76	6
L-15000-6	22,500	30	37	115	6

* AVSF Type = Length configuration (S or L) - water quality volume (CF) - design water depth (Hw elevation)

DESIGN NOTES

Specifications:
Design:
Bridge Design Specification April 2000 (LFD)
(1996 AASHTO) with interims and revisions by Caltrans

Wall & Footing (LFD): 1.5 D + 1.5 E + 1.5 W + 1.5 SC
Where D = Dead Load
E = Earth Load
W = Water Load
SC = Surcharge

Capacity reduction factor is included.

Earth Load:
125 lb/ft^3 vertical,

Water Load:
62.4 lb/ft^3 horizontal/vertical,

Earth pressure for 2:1 unlimited slope determined from Rankine's formula with ø = 33°42′ (Case II).

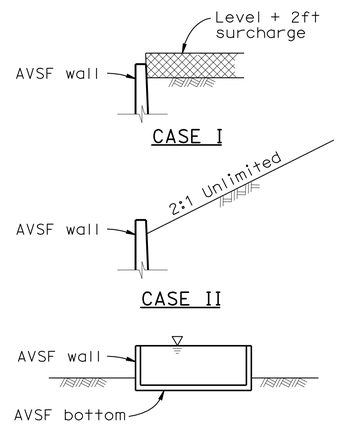

DETAIL OF DESIGN LOADING CASES

CASE I Level + 2ft surcharge, AVSF empty
CASE II 2:1 Unlimited slope, AVSF empty
CASE III AVSF full of water, no soil pressure

Unit Stresses:
f'_c = 4,000 psi
fy = 60,000 psi

INDEX TO PLAN

SHEET No.	TITLE
1	GENERAL NOTES
2	LAYOUT No. 1
3	LAYOUT No. 2
4	WALL DETAILS
5	DETAILS No. 1
6	DETAILS No. 2
7	DETAILS No. 3
8	DETAILS No. 4
9	MISCELLANEOUS DETAILS No. 1

CONSTRUCTION NOTES

Expansion joints:
Inverts and sidewalls - Place ½" expansion joint filler and waterstop where indicated. see "Details No. 2" sheet for specific wall & invert details.

Construction Joints:
Shall be placed where indicated on plans.

Backfill:
See Standard Specifications, except the difference in backfill shall not exceed 8′-0" between side walls and inlet and outlet walls.

Earthwork:
Limits of payment for excavation and backfill.

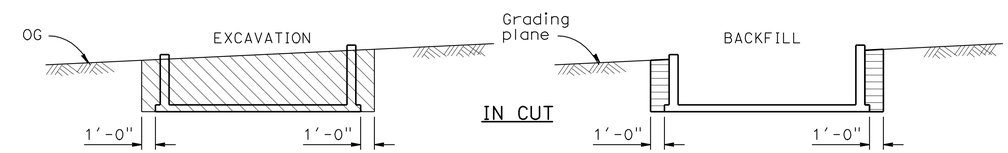

LEGEND:
Structure excavation (AVSF)
Structure backfill (AVSF)
Original ground, OG

NOTES:
1. Slope or shore excavation sides as necessary.
2. Dimensions shown are minimum.
3. 95% compaction 1′-0" below floor slabs.

STANDARD PLANS DATED MAY 2006

B0-3	BRIDGE DETAILS
B3-9	RETAINING WALL DETAILS No. 2
RSP B6-21	JOINT SEALS (MAXIMUM MOVEMENT RATING = 2")
RSP B11-47	CABLE RAILING
D100A	GABION BASKET DETAILS No. 1
D100B	GABION BASKET DETAILS No. 2

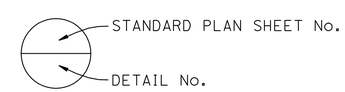

CONSTRUCTION DETAILS
AUSTIN VAULT SAND FILTER
GENERAL NOTES

C-3

STATE OF CALIFORNIA - DEPARTMENT OF TRANSPORTATION
Caltrans DESIGN
FUNCTIONAL SUPERVISOR TIMOTHY B. SOBELMAN
CALCULATED-DESIGNED BY D. WANG
CHECKED BY L. HE
REVISED BY
DATE REVISED

LAST REVISION 00-00-00
DATE PLOTTED => 28-JUN-2012
TIME PLOTTED => 12:09

Dist	COUNTY	ROUTE	POST MILES TOTAL PROJECT	SHEET No.	TOTAL SHEETS
07	LA	210	R15.0/R36.0	24	209

Timothy B Sobelman 6-3-09
REGISTERED CIVIL ENGINEER DATE

6-25-12
PLANS APPROVAL DATE

REGISTERED PROFESSIONAL ENGINEER TIMOTHY B. SOBELMAN No. 59249 Exp. 6-30-09 CIVIL STATE OF CALIFORNIA

THE STATE OF CALIFORNIA OR ITS OFFICERS OR AGENTS SHALL NOT BE RESPONSIBLE FOR THE ACCURACY OR COMPLETENESS OF SCANNED COPIES OF THIS PLAN SHEET.

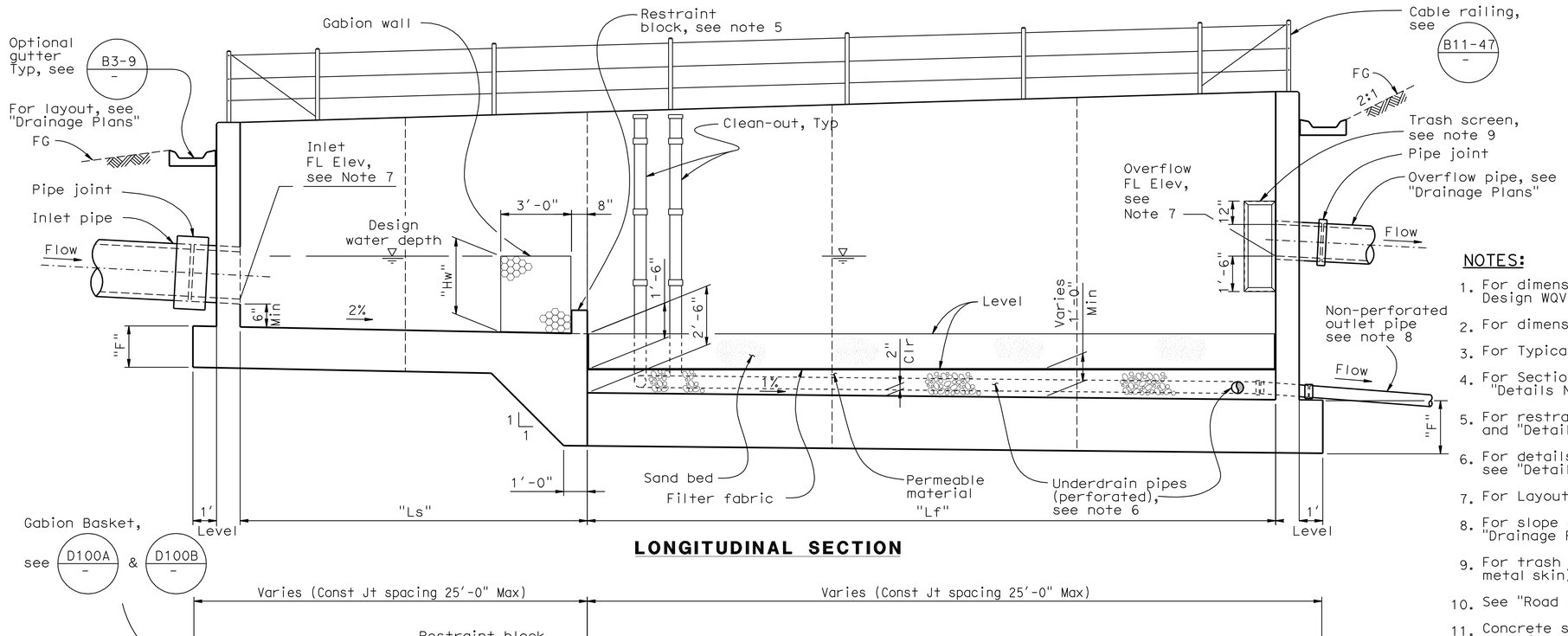

LONGITUDINAL SECTION

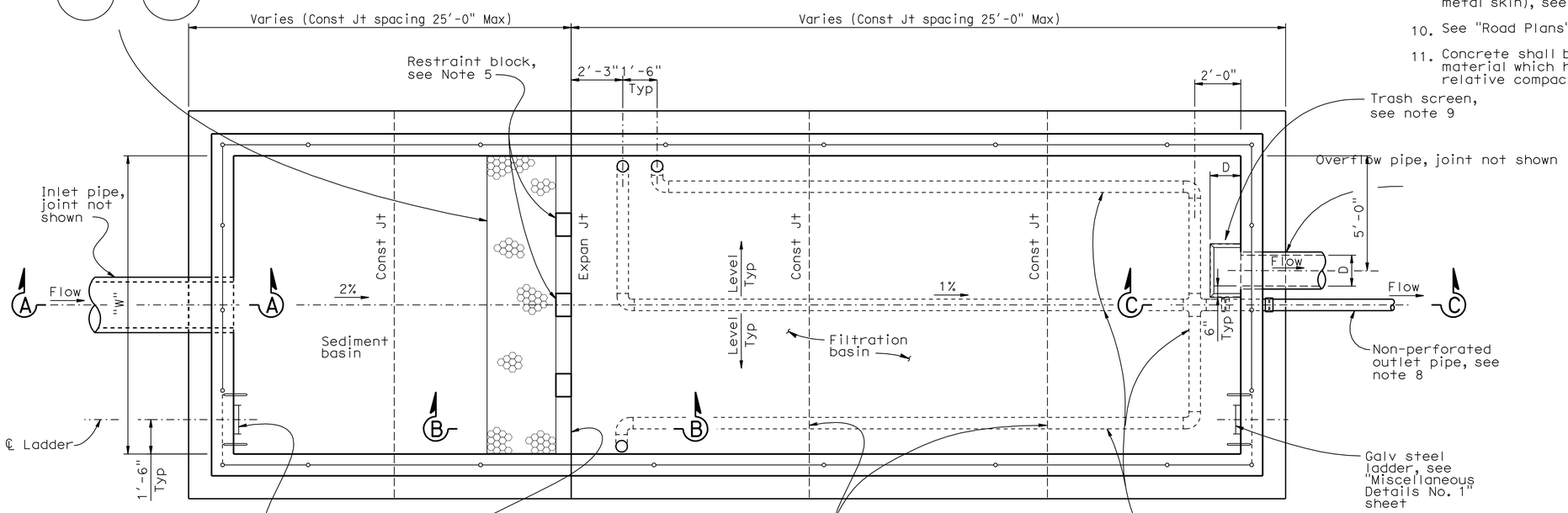

PLAN

Note: Gutter not shown for clarity.

NOTES:

1. For dimensions "W", "Ls", "Lf" and "Hw", see Design WQV table on "General Notes" sheet.
2. For dimensions "C" and "F", see "Wall Details" sheet.
3. For Typical Section, see "Wall Details" sheet.
4. For Section A - A, B - B and C - C, see "Details No. 1" sheet.
5. For restraint block details, see "Details No. 1" and "Details No. 2" sheets.
6. For details of underdrain (sand filter), see "Details No. 4" sheet.
7. For Layout and FL elevation, see "Drainage Plans".
8. For slope of non-perforated outlet pipe, see "Drainage Plans".
9. For trash screen details (frame and perforated metal skin), see "Details No 3" sheet.
10. See "Road Plans" for top of wall elevations.
11. Concrete shall be placed on base or native material which has been compacted to 95% relative compaction.

CONSTRUCTION DETAILS

AUSTIN VAULT SAND FILTER

LAYOUT No. 1

NO SCALE

C-4

STATE OF CALIFORNIA - DEPARTMENT OF TRANSPORTATION
Caltrans
DESIGN

FUNCTIONAL SUPERVISOR: TIMOTHY B. SOBELMAN
CALCULATED-DESIGNED BY: D. WANG
CHECKED BY: L. HE
REVISED BY
DATE REVISED

LAST REVISION 00-00-00
DATE PLOTTED => 28-JUN-2012
TIME PLOTTED => 12:09

Dist	COUNTY	ROUTE	POST MILES TOTAL PROJECT	SHEET No.	TOTAL SHEETS
07	LA	210	R15.0/R36.0	25	209

Timothy B Sobelman 10-23-08
REGISTERED CIVIL ENGINEER DATE

6-25-12
PLANS APPROVAL DATE

REGISTERED PROFESSIONAL ENGINEER TIMOTHY B. SOBELMAN No. 59249 Exp. 6-30-09 CIVIL STATE OF CALIFORNIA

THE STATE OF CALIFORNIA OR ITS OFFICERS OR AGENTS SHALL NOT BE RESPONSIBLE FOR THE ACCURACY OR COMPLETENESS OF SCANNED COPIES OF THIS PLAN SHEET.

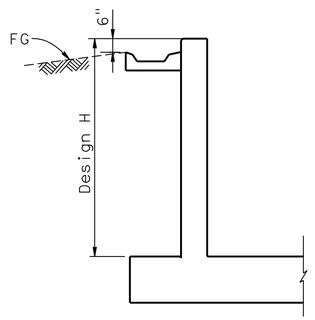

TYPICAL WALL SECTION
(INLET, OUTLET, AND SIDEWALL)

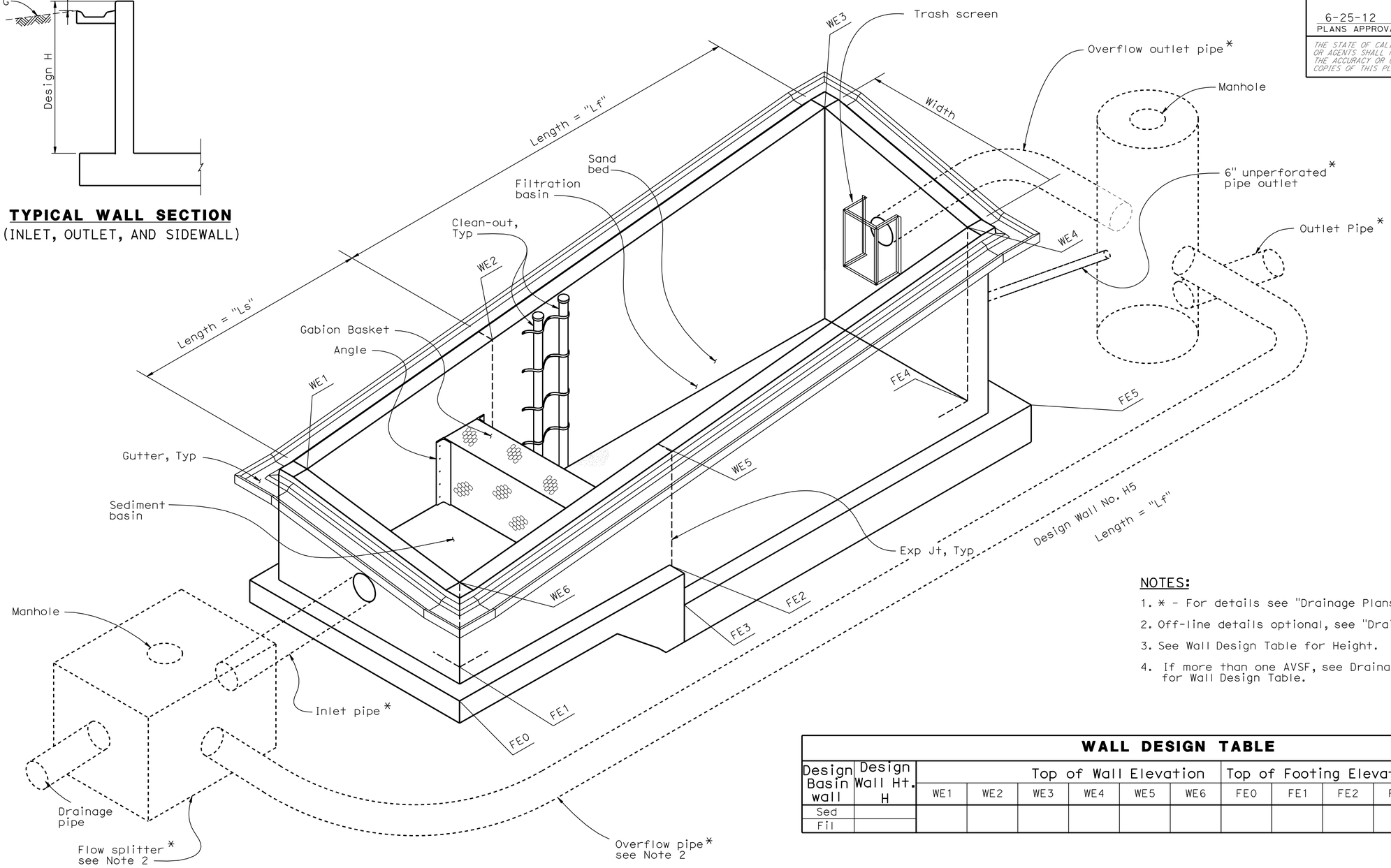

ISOMETRIC VIEW - AUSTIN VAULT SAND FILTER DRAINAGE SYSTEM

NOTE: Steel ladders and cable railings not shown for clarity.

NOTES:

1. * - For details see "Drainage Plans".
2. Off-line details optional, see "Drainage Plans".
3. See Wall Design Table for Height.
4. If more than one AVSF, see Drainage/Layout Plans for Wall Design Table.

WALL DESIGN TABLE

Design Basin wall	Design Wall Ht. H	Top of Wall Elevation						Top of Footing Elevation					
		WE1	WE2	WE3	WE4	WE5	WE6	FE0	FE1	FE2	FE3	FE4	FE5
Sed													
Fil													

CONSTRUCTION DETAILS
AUSTIN VAULT SAND FILTER
LAYOUT No. 2
NO SCALE

C-5

STATE OF CALIFORNIA - DEPARTMENT OF TRANSPORTATION
Caltrans
DESIGN
FUNCTIONAL SUPERVISOR: TIMOTHY B. SOBELMAN
CALCULATED-DESIGNED BY: D. WANG
CHECKED BY: L. HE
REVISED BY
DATE REVISED

LAST REVISION 00-00-00
DATE PLOTTED => 28-JUN-2012
TIME PLOTTED => 12:09

Dist	COUNTY	ROUTE	POST MILES TOTAL PROJECT	SHEET No.	TOTAL SHEETS
07	LA	210	R15.0/R36.0	26	209

REGISTERED CIVIL ENGINEER 3-23-12 DATE

6-25-12
PLANS APPROVAL DATE

REGISTERED PROFESSIONAL ENGINEER SUJAYA KALAINESAN No. C74154 Exp. 06/30/13 CIVIL STATE OF CALIFORNIA

THE STATE OF CALIFORNIA OR ITS OFFICERS OR AGENTS SHALL NOT BE RESPONSIBLE FOR THE ACCURACY OR COMPLETENESS OF SCANNED COPIES OF THIS PLAN SHEET.

NOTES:

1. For width dimension "W", see "General Notes" sheet.
2. For footing details not shown, see "Footing Details" sheet.
3. The contractor shall have the option of matching the Sedimentation Basin wall thickness with the Filtration Basin wall thickness. This shall be at no additional cost to the State.
4. Reinforcement notation "EWT&B" is acronym for "Each Way Top & Bottom".
5. Width "W" is the inside width between walls, see "Layout No. 1" sheet and the Design WQV table on "General Notes" sheet.
6. For additional corner reinforcement not indicated see "Typical Corner Detail" on "Details No. 1" sheet.

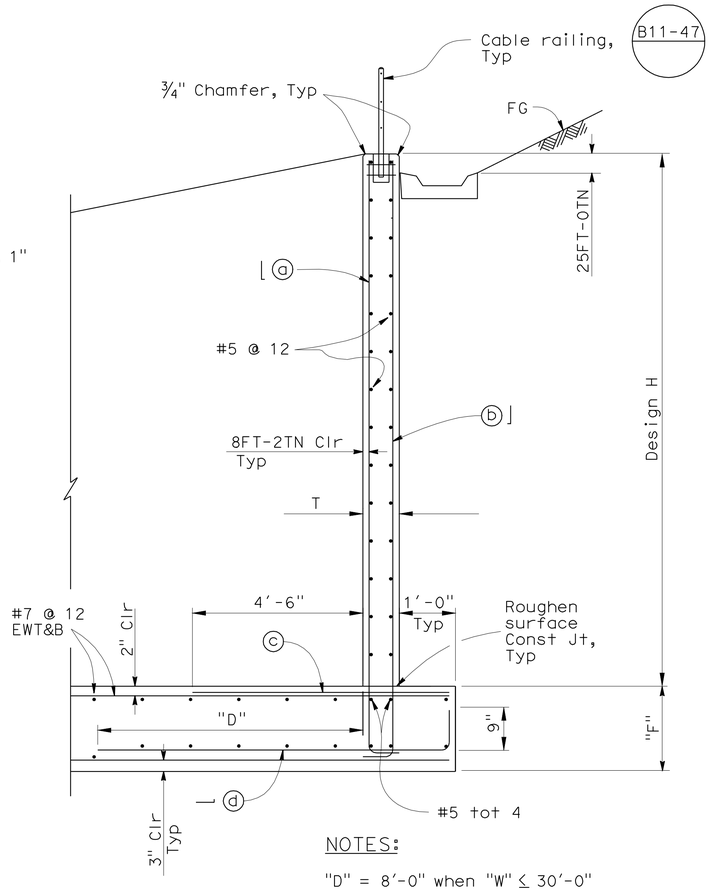

NOTES:

"D" = 8'-0" when "W" ≤ 30'-0"

"D" = 12'-0" when "W" > 30'-0"

TYPICAL SECTION

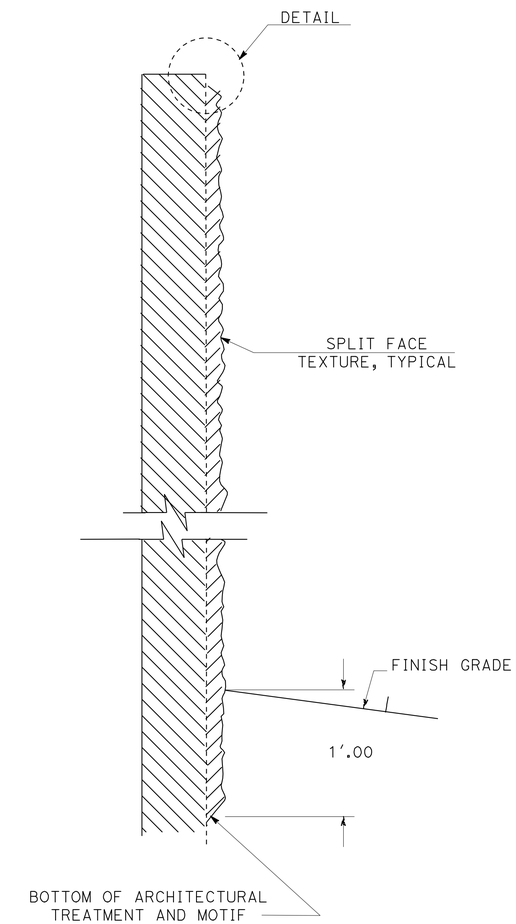

ARCHITECTURAL TREATMENT DETAIL

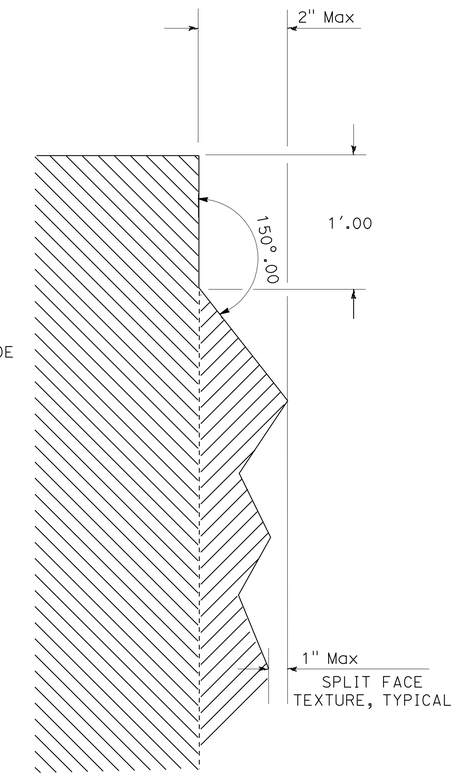

DETAIL

TABLE OF REINFORCING STEEL DIMENSIONS AND DATA FOR WALL

Design H	6'	8'	10'	12'	14'	16'
T	12"	12"	12"	12"	14"	14"
F	1'-3"	1'-3"	1'-3"	1'-6"	1'-9"	1'-9"
⌋ ⓐ bars # @ "	6 @ 12	6 @ 12	6 @ 8	7 @ 8	8 @ 8	9 @ 6
⌊ ⓑ bars # @ "	6 @ 12	6 @ 12	6 @ 8	7 @ 8	8 @ 8	8 @ 6
ⓒ bars # @ "	6 @ 12	6 @ 12	6 @ 8	6 @ 8	7 @ 8	7 @ 6
— ⓓ bars # @ "	6 @ 12	6 @ 12	6 @ 8	6 @ 8	7 @ 8	7 @ 6

CONSTRUCTION DETAILS

AUSTIN VAULT SAND FILTER

WALL DETAILS

NO SCALE

C-6

STATE OF CALIFORNIA - DEPARTMENT OF TRANSPORTATION
Caltrans®
DESIGN
FUNCTIONAL SUPERVISOR: NADER GOBRAN
CALCULATED-DESIGNED BY: ROBERT PHAM
CHECKED BY: SUJAYA KALAINESAN
REVISED BY
DATE REVISED

LAST REVISION 00-00-00
DATE PLOTTED => 28-JUN-2012
TIME PLOTTED => 12:09

Dist	COUNTY	ROUTE	POST MILES TOTAL PROJECT	SHEET No.	TOTAL SHEETS
07	LA	210	R15.0/R36.0	27	209

Timothy B Sobelman 6-3-09
REGISTERED CIVIL ENGINEER DATE

6-25-12
PLANS APPROVAL DATE

REGISTERED PROFESSIONAL ENGINEER TIMOTHY B. SOBELMAN No. 59249 Exp. 6-30-09 CIVIL STATE OF CALIFORNIA

THE STATE OF CALIFORNIA OR ITS OFFICERS OR AGENTS SHALL NOT BE RESPONSIBLE FOR THE ACCURACY OR COMPLETENESS OF SCANNED COPIES OF THIS PLAN SHEET.

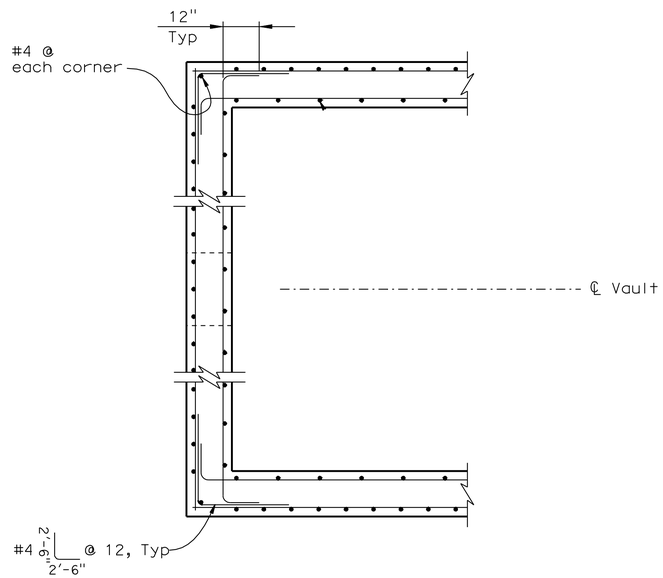

TYPICAL CORNER DETAIL

NOTE: Inlet wall shown, outlet wall similar.

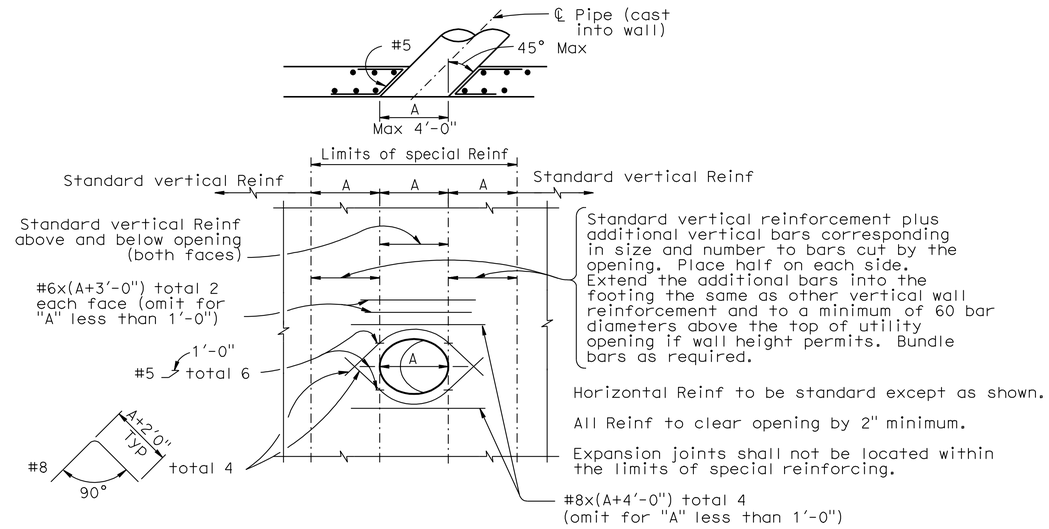

WALL OPENING DETAIL

To be used at inlet, outlet and overflow pipe locations

NOTE: The rebar lengths shown are maximum and shall be adjusted due to the limitations of space.

NOTES:

1. For section locations, see "Layout No. 1 " sheet.
2. For wall and footing reinforcement details, see Typical Section on "Wall Details" sheet.

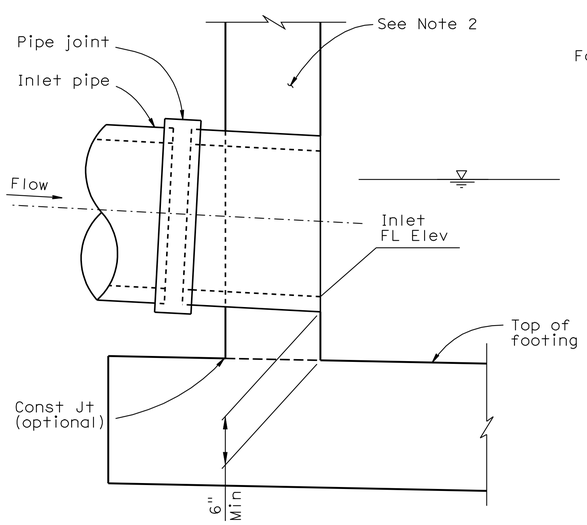

SECTION A - A

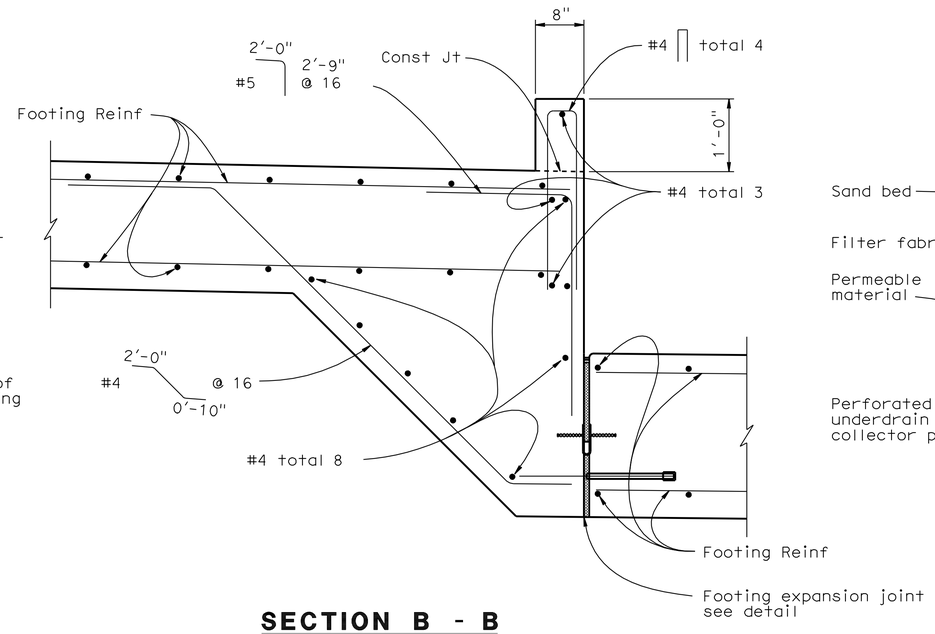

SECTION B - B

(Gabion wall and other details not shown for clarity)

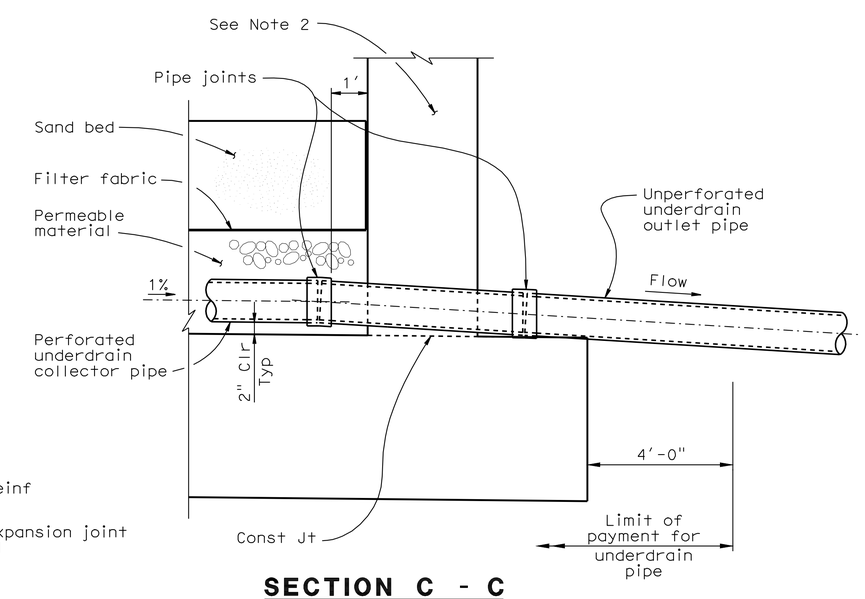

SECTION C - C

CONSTUCTION DETAILS

AUSTIN VAULT SAND FILTER

DETAILS No. 1

NO SCALE

C-7

STATE OF CALIFORNIA - DEPARTMENT OF TRANSPORTATION
Caltrans®
DESIGN
FUNCTIONAL SUPERVISOR: TIMOTHY B. SOBELMAN
CALCULATED-DESIGNED BY: D. WANG
CHECKED BY: L. HE
REVISED BY
DATE REVISED

LAST REVISION 00-00-00
DATE PLOTTED => 28-JUN-2012
TIME PLOTTED => 12:09

Dist	COUNTY	ROUTE	POST MILES TOTAL PROJECT	SHEET No.	TOTAL SHEETS
07	LA	210	R15.0/R36.0	28	209

REGISTERED CIVIL ENGINEER 6-3-09 DATE

6-25-12
PLANS APPROVAL DATE

REGISTERED PROFESSIONAL ENGINEER TIMOTHY B. SOBELMAN No. 59249 Exp. 6-30-09 CIVIL STATE OF CALIFORNIA

THE STATE OF CALIFORNIA OR ITS OFFICERS OR AGENTS SHALL NOT BE RESPONSIBLE FOR THE ACCURACY OR COMPLETENESS OF SCANNED COPIES OF THIS PLAN SHEET.

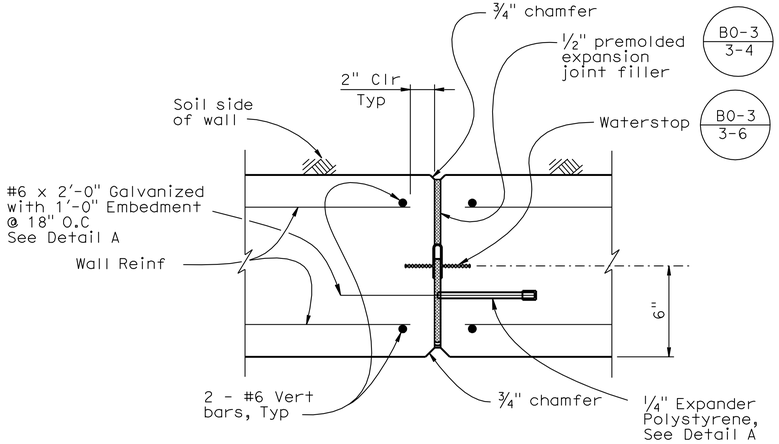

WALL EXPANSION JOINT DETAIL - PLAN SECTION

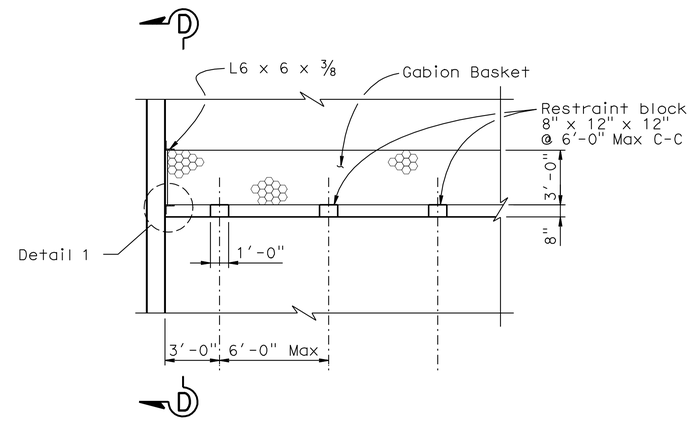

RESTRAINT BLOCK DETAIL

Notes:

1. Stagger splices unless noted otherwise.

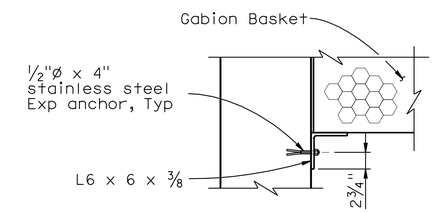

DETAIL 1

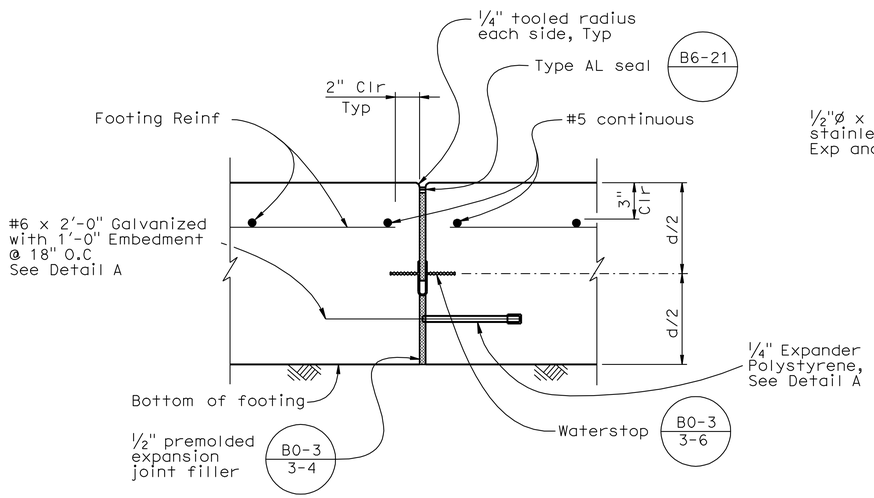

FOOTING EXPANSION JOINT DETAIL

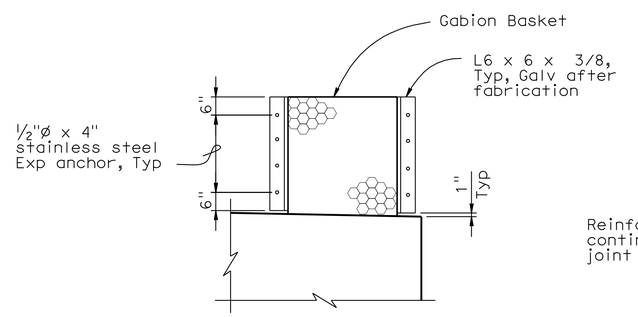

SECTION D - D

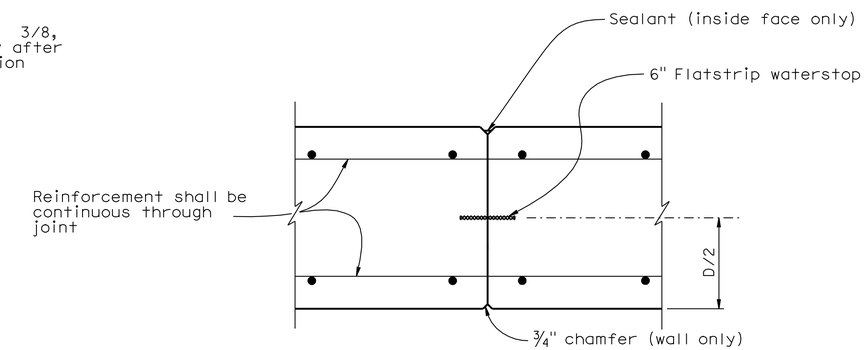

WALL CONSTRUCTION JOINT DETAIL

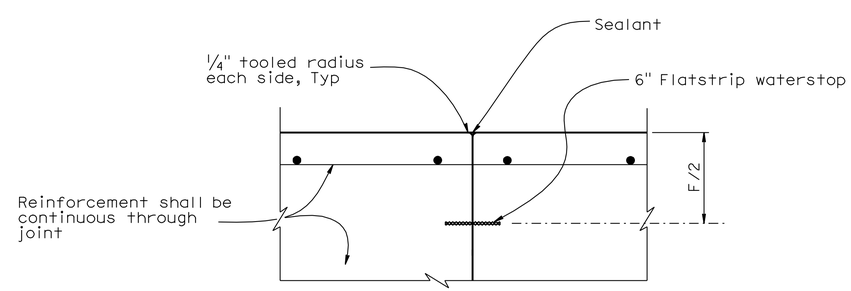

FOOTING CONSTRUCTION JOINT DETAIL

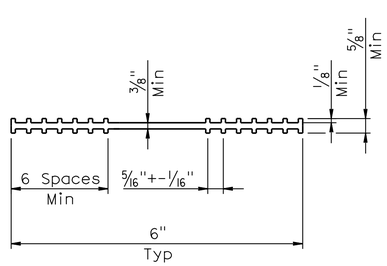

6" FLATSTRIP WATER STOP DETAIL

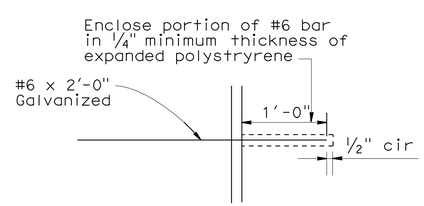

DETAIL A

CONSTRUCTION DETAILS

AUSTIN VAULT SAND FILTER

DETAILS No. 2

NO SCALE

C-8

STATE OF CALIFORNIA - DEPARTMENT OF TRANSPORTATION
DESIGN
Caltrans

FUNCTIONAL SUPERVISOR: TIMOTHY B. SOBELMAN
CALCULATED-DESIGNED BY: D. WANG
CHECKED BY: L. HE
REVISED BY
DATE REVISED

LAST REVISION 00-00-00
DATE PLOTTED => 28-JUN-2012
TIME PLOTTED => 12:09

Dist	COUNTY	ROUTE	POST MILES TOTAL PROJECT	SHEET No.	TOTAL SHEETS
07	LA	210	R15.0/R36.0	29	209

Timothy G Sobelman 6-3-09
REGISTERED CIVIL ENGINEER DATE

6-25-12
PLANS APPROVAL DATE

REGISTERED PROFESSIONAL ENGINEER
TIMOTHY B. SOBELMAN
No. 59249
Exp. 6-30-09
CIVIL
STATE OF CALIFORNIA

THE STATE OF CALIFORNIA OR ITS OFFICERS OR AGENTS SHALL NOT BE RESPONSIBLE FOR THE ACCURACY OR COMPLETENESS OF SCANNED COPIES OF THIS PLAN SHEET.

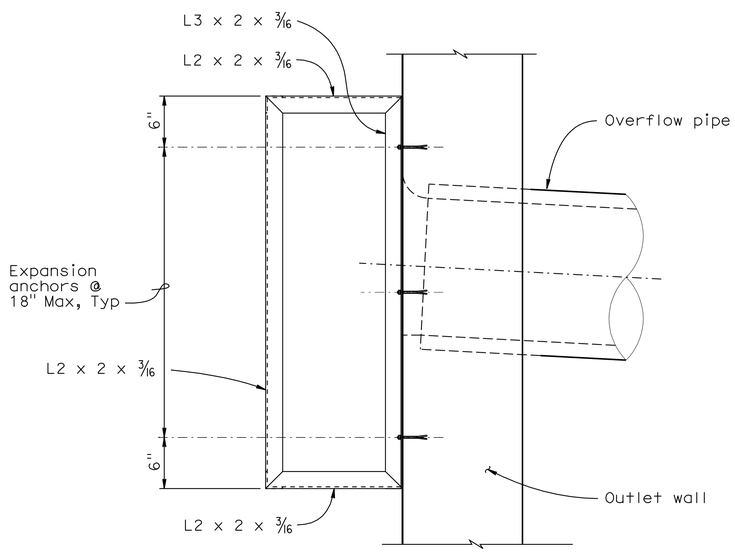

TRASH SCREEN - SIDE ELEVATION

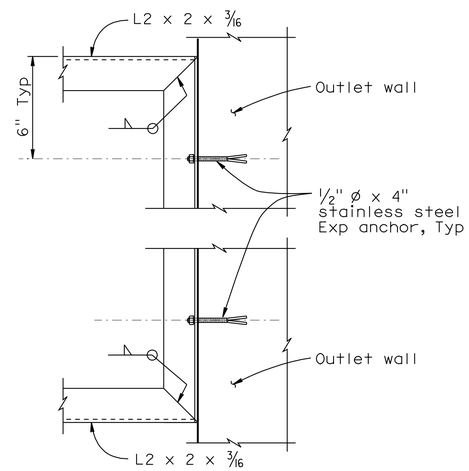

SECTION F - F

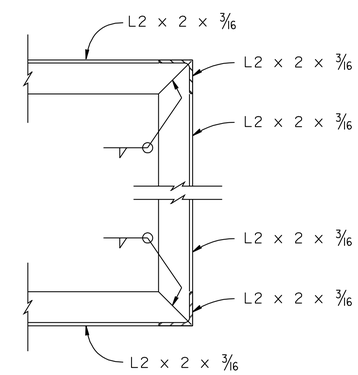

SECTION E - E

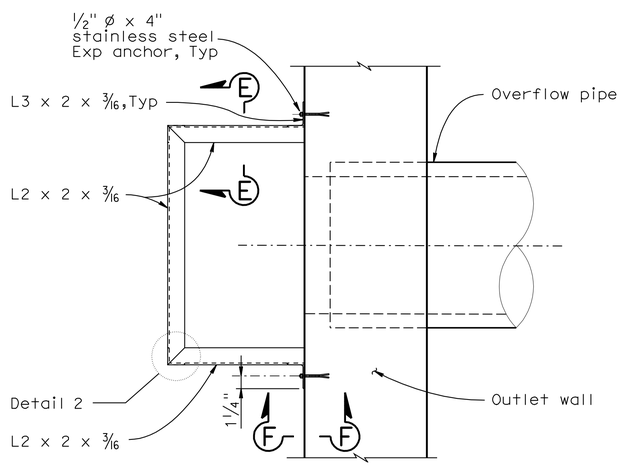

TRASH SCREEN - PLAN

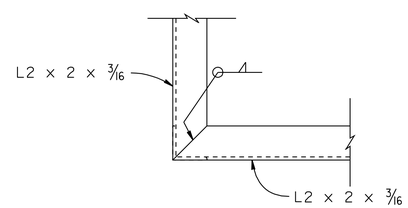

DETAIL 2

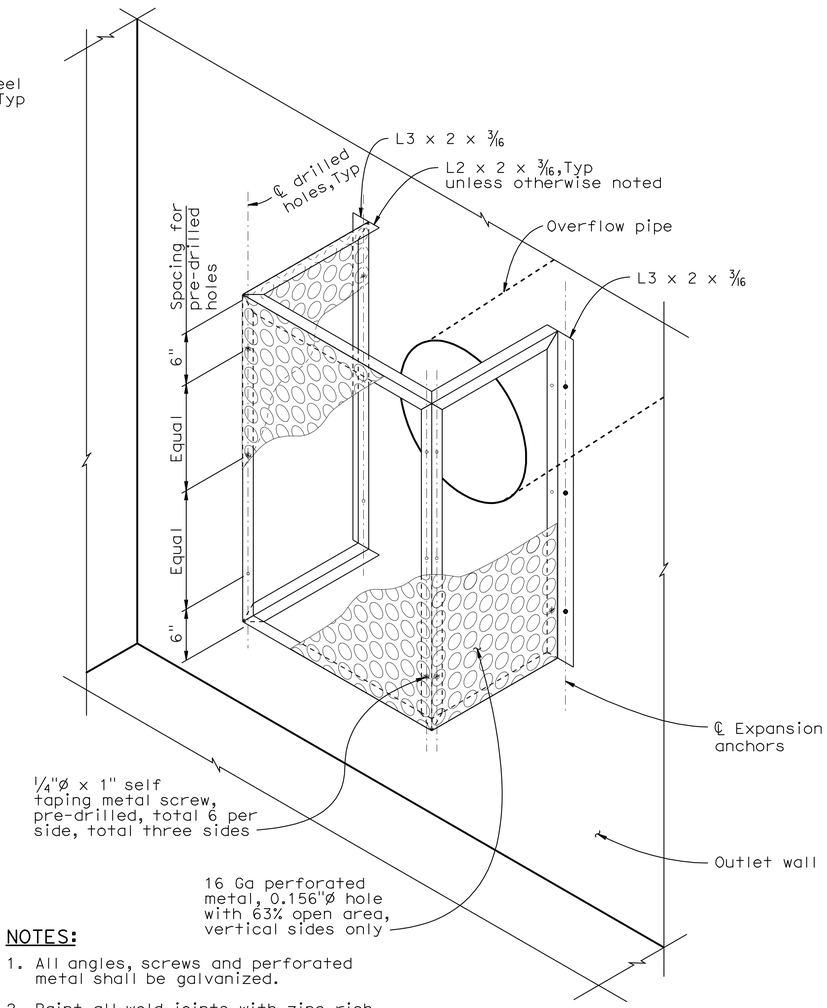

NOTES:

1. All angles, screws and perforated metal shall be galvanized.
2. Paint all weld joints with zinc rich paint or galvanize after welding.

ISOMETRIC VIEW - TRASH SCREEN

NOTE: Metal hole ø exaggerated for emphasis.

CONSTRUCTION DETAILS

AUSTIN VAULT SAND FILTER

DETAILS No. 3

NO SCALE

C-9

STATE OF CALIFORNIA - DEPARTMENT OF TRANSPORTATION
Caltrans
DESIGN

FUNCTIONAL SUPERVISOR: TIMOTHY B. SOBELMAN
CALCULATED-DESIGNED BY: D. WANG
CHECKED BY: L. HE
REVISED BY
DATE REVISED

LAST REVISION 00-00-00
DATE PLOTTED => 28-JUN-2012
TIME PLOTTED => 12:10

Dist	COUNTY	ROUTE	POST MILES TOTAL PROJECT	SHEET No.	TOTAL SHEETS
07	LA	210	R15.0/R36.0	30	209

Timothy G Sobelman 6-3-09
REGISTERED CIVIL ENGINEER DATE

6-25-12
PLANS APPROVAL DATE

REGISTERED PROFESSIONAL ENGINEER TIMOTHY B. SOBELMAN No. 59249 Exp. 6-30-09 CIVIL STATE OF CALIFORNIA

THE STATE OF CALIFORNIA OR ITS OFFICERS OR AGENTS SHALL NOT BE RESPONSIBLE FOR THE ACCURACY OR COMPLETENESS OF SCANNED COPIES OF THIS PLAN SHEET.

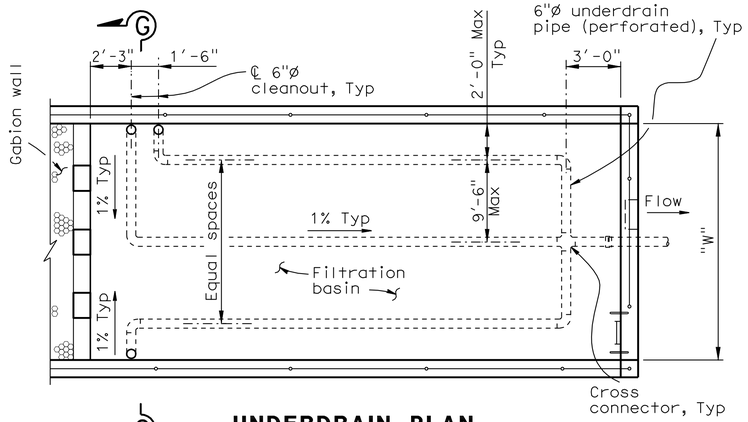

UNDERDRAIN PLAN (FILTRATION BASIN)

"W" = 15' - 21'
AVSF Type = (S or L 3500)

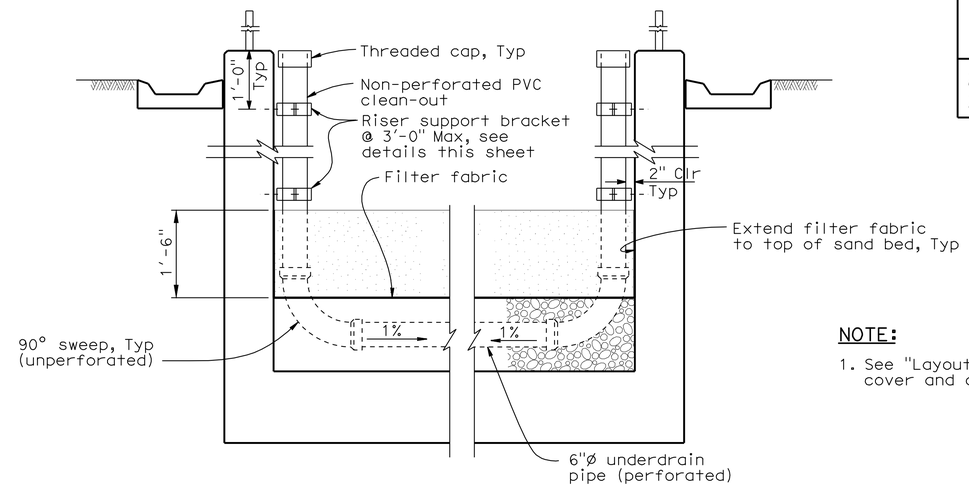

SECTION G - G

NOTE:

1. See "Layout No. 1" sheet for Typical cover and depth of sand bed.

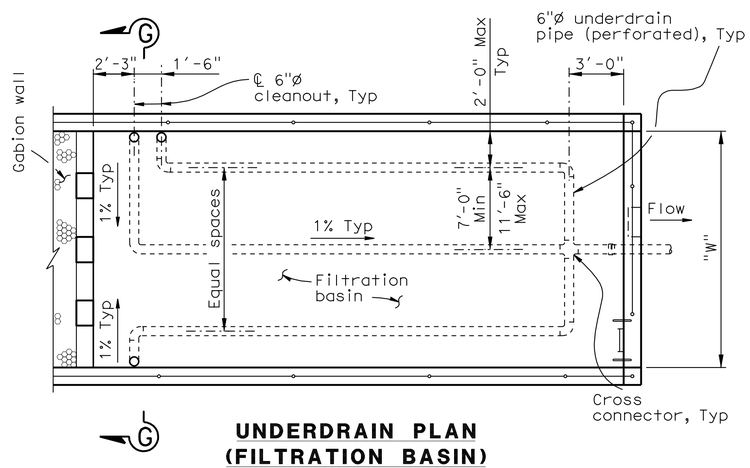

UNDERDRAIN PLAN (FILTRATION BASIN)

"W" = 18' - 24' - 27'

AVSF Type = (S or L 5000) L 10000)

No Scale

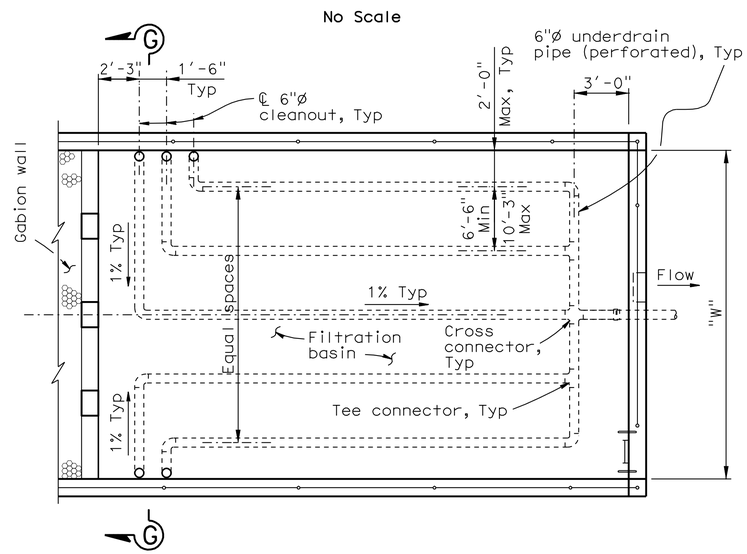

UNDERDRAIN PLAN (FILTRATION BASIN)

"W" = 30' - 36' - 45'

AVSF Type = (S 10000, S or L 15000)

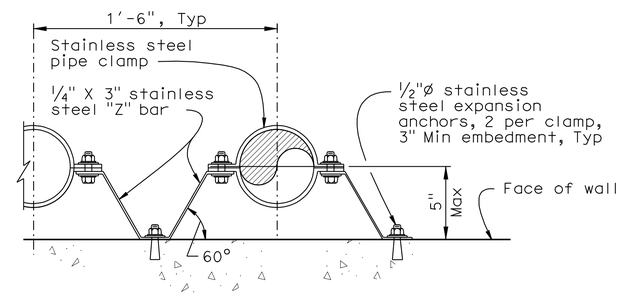

RISER SUPPORT BRACKET DETAIL

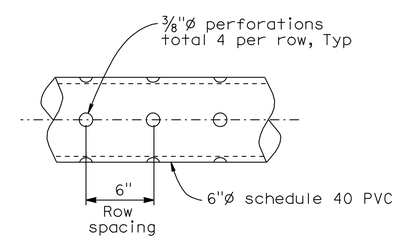

PERFORATED UNDERDRAIN PIPE

CONSTRUCTION DETAILS
AUSTIN VAULT SAND FILTER
DETAILS No. 4

NO SCALE

C-10

STATE OF CALIFORNIA - DEPARTMENT OF TRANSPORTATION
Caltrans
DESIGN
FUNCTIONAL SUPERVISOR: TIMOTHY B. SOBELMAN
CALCULATED-DESIGNED BY: D. WANG
CHECKED BY: L. HE
REVISED BY
DATE REVISED

LAST REVISION 00-00-00 | DATE PLOTTED => 28-JUN-2012 | TIME PLOTTED => 12:10

Dist	COUNTY	ROUTE	POST MILES TOTAL PROJECT	SHEET No.	TOTAL SHEETS
07	LA	210	R15.0/R36.0	31	209

Timothy B Sobelman 6-3-09
REGISTERED CIVIL ENGINEER DATE

6-25-12
PLANS APPROVAL DATE

REGISTERED PROFESSIONAL ENGINEER TIMOTHY B. SOBELMAN No. 59249 Exp. 6-30-09 CIVIL STATE OF CALIFORNIA

THE STATE OF CALIFORNIA OR ITS OFFICERS OR AGENTS SHALL NOT BE RESPONSIBLE FOR THE ACCURACY OR COMPLETENESS OF SCANNED COPIES OF THIS PLAN SHEET.

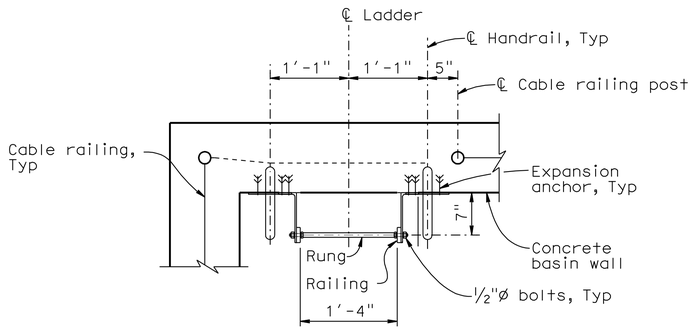

PLAN

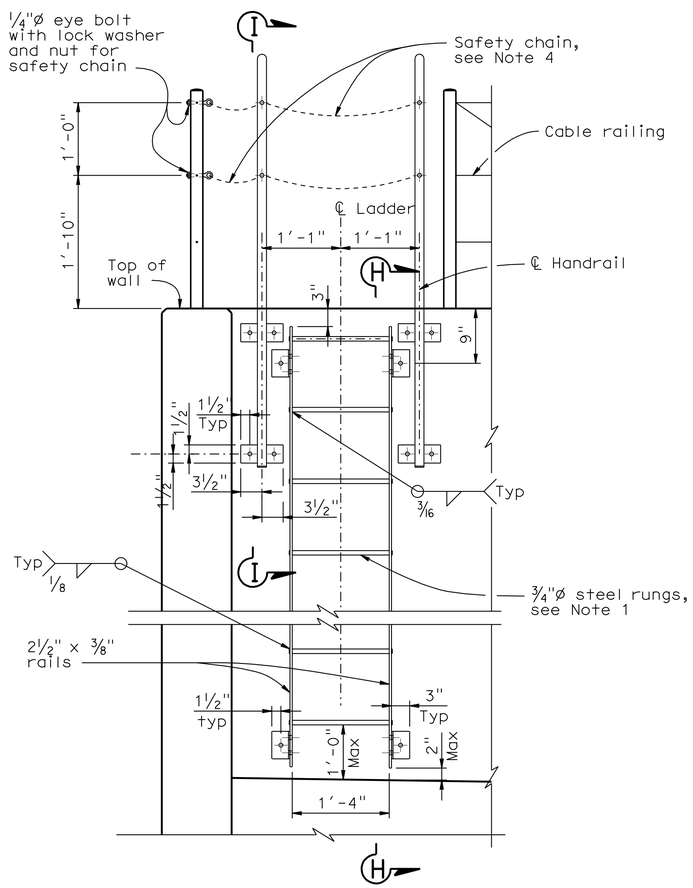

ELEVATION

LADDER

NOTE: Cable railing not shown for clarity.

NOTES:

1. The distance between rungs shall not exceed 1'-0" and shall be uniform throughout the length of wall.
2. Hardware shall be galvanized after fabrication.
3. Grind exposed corners to 3/16" radius.
4. Safety chain shall be 1/4" galvanized steel coil chain, approximately 12 links per foot. Length shall be minimum which allows lock-up of safety railing. Minimum of two safety chains per safety railing. Material shall be grade 43 high test chain ASTM A413.

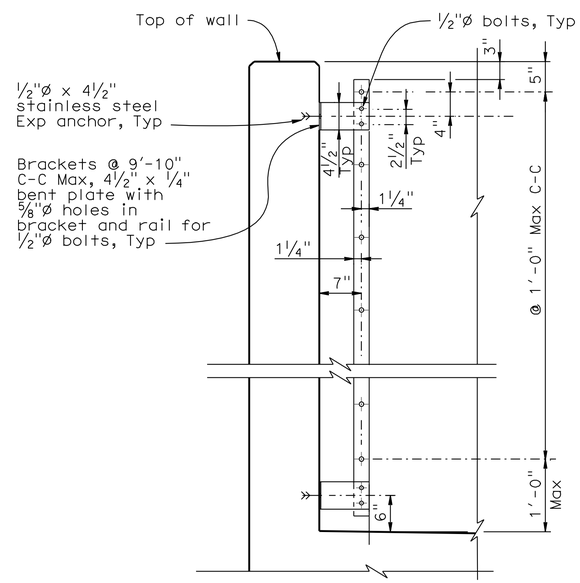

SECTION H - H

NOTE: Handrail and cable railing not shown for clarity.

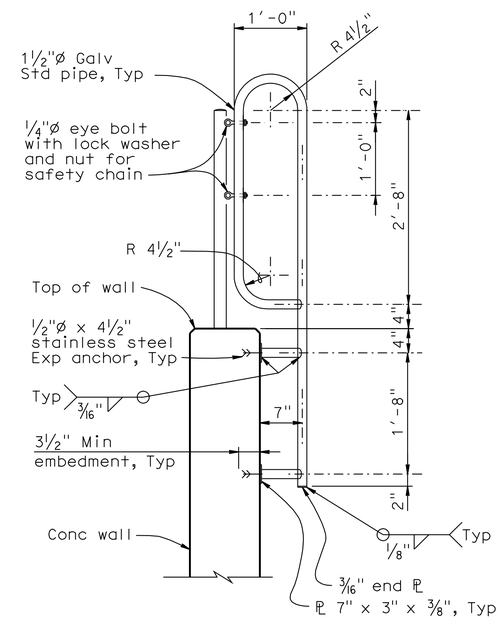

SECTION I - I

CONSTRUCTION DETAILS

AUSTIN VAULT SAND FILTER

MISCELLANEOUS DETAILS No. 1

NO SCALE

C-11

STATE OF CALIFORNIA - DEPARTMENT OF TRANSPORTATION
Caltrans
DESIGN
FUNCTIONAL SUPERVISOR: TIMOTHY B. SOBELMAN
CALCULATED-DESIGNED BY: D. WANG
CHECKED BY: L. HE
REVISED BY
DATE REVISED

LAST REVISION 00-00-00 | DATE PLOTTED => 28-JUN-2012 | TIME PLOTTED => 12:10

Dist	COUNTY	ROUTE	POST MILES TOTAL PROJECT	SHEET No.	TOTAL SHEETS
07	LA	210	R15.0/R36.0	32	209

Timothy B. Sobelman 11-17-08
REGISTERED CIVIL ENGINEER DATE

6-25-12
PLANS APPROVAL DATE

REGISTERED PROFESSIONAL ENGINEER
TIMOTHY B. SOBELMAN
No. 59249
Exp. 6-30-09
CIVIL
STATE OF CALIFORNIA

THE STATE OF CALIFORNIA OR ITS OFFICERS OR AGENTS SHALL NOT BE RESPONSIBLE FOR THE ACCURACY OR COMPLETENESS OF SCANNED COPIES OF THIS PLAN SHEET.

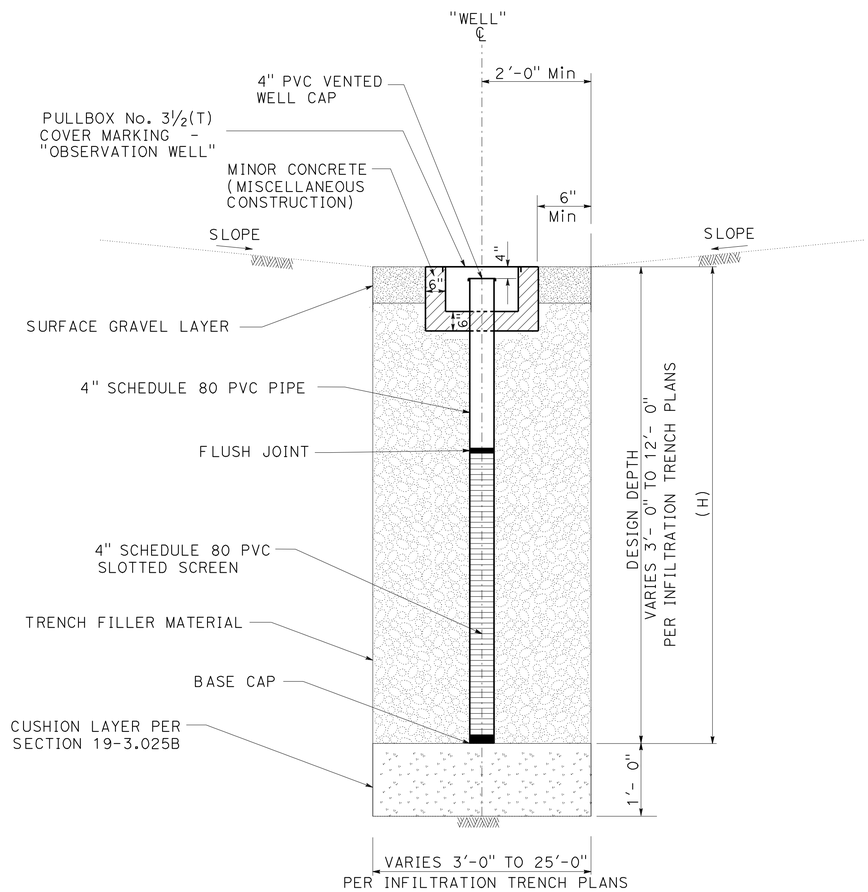

SECTION VIEW

OBSERVATION WELL

NOTES:

1. CENTERLINE OF OBSERVATION WELL TO BE PLACED A MINIMUM DISTANCE OF 1'-6" FROM EDGE OF TRENCH.
2. THE PLASTIC PROTECTIVE WELL COVER SHALL BE FLUSH WITH TOP OF THE SURFACE GRAVEL LAYER.

CONSTRUCTION DETAILS

OBSERVATION WELL

NO SCALE

C-12

REVISED BY | DATE REVISED
CALCULATED-DESIGNED BY | CHECKED BY
FUNCTIONAL SUPERVISOR: TIMOTHY B. SOBELMAN
STATE OF CALIFORNIA - DEPARTMENT OF TRANSPORTATION
Caltrans
DESIGN

LAST REVISION 00-00-00 | DATE PLOTTED => 28-JUN-2012 | TIME PLOTTED => 12:10

Dist	COUNTY	ROUTE	POST MILES TOTAL PROJECT	SHEET No.	TOTAL SHEETS
07	LA	210	R15.0/R36.0	33	209

REGISTERED CIVIL ENGINEER 3-23-12 DATE

6-25-12
PLANS APPROVAL DATE

REGISTERED PROFESSIONAL ENGINEER
SUJAYA KALAINESAN
No. C74154
Exp. 06/30/13
CIVIL
STATE OF CALIFORNIA

THE STATE OF CALIFORNIA OR ITS OFFICERS OR AGENTS SHALL NOT BE RESPONSIBLE FOR THE ACCURACY OR COMPLETENESS OF SCANNED COPIES OF THIS PLAN SHEET.

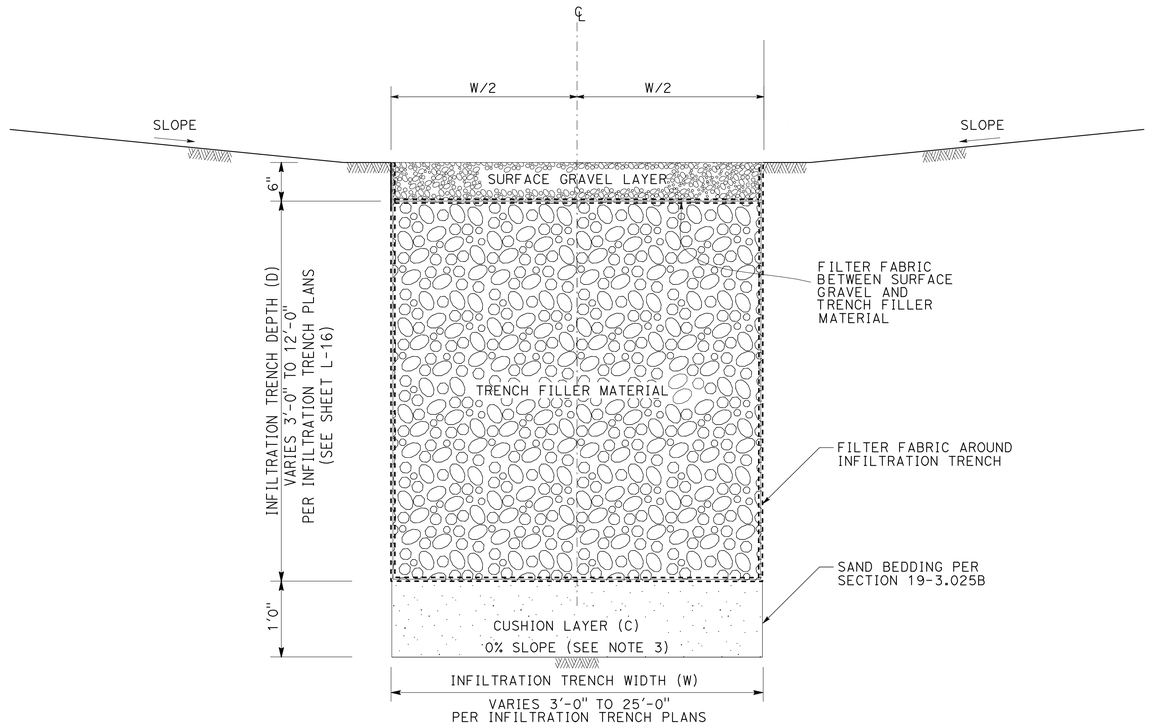

SECTION VIEW

INFILTRATION TRENCH

PARAMETER	Min VALUE	Max VALUE
D	3'- 0"	12'- 0"
W	3'- 0"	25'- 0"

NOTES:

1. FILTER FABRIC SHALL BE PLACED IN TWO PHASES:
   1) AROUND THE PERIMETER OF INFILTRATION TRENCH
   2) BETWEEN TRENCH FILLER MATERIAL AND SURFACE GRAVEL LAYER
2. THE LOCATIONS AND WIDTHS OF CURB OPENINGS SHALL BE DETERMINED BY THE DESIGN ENGINEER BASED ON RUNOFF FROM UPSTREAM AREAS AND DOWNSTREAM CONVEYANCE REQUIREMENTS.
3. THE BOTTOM OF THE TRENCH SHALL HAVE A 0% SLOPE IN LONGITUDINAL AND TRANSVERSE DIRECTIONS.

CONSTRUCTION DETAILS

INFILTRATION TRENCH

NO SCALE

C-13

REVISED BY | DATE REVISED
SUJAYA KALAINESAN | NADER GOBRAN
CALCULATED-DESIGNED BY | CHECKED BY
FUNCTIONAL SUPERVISOR: NADER GOBRAN
STATE OF CALIFORNIA - DEPARTMENT OF TRANSPORTATION
Caltrans
DESIGN

LAST REVISION 00-00-00 | DATE PLOTTED => 29-JUN-2012 | TIME PLOTTED => 11:01

Dist	COUNTY	ROUTE	POST MILES TOTAL PROJECT	SHEET No.	TOTAL SHEETS
07	LA	210	R15.0/R36.0	34	209

REGISTERED CIVIL ENGINEER 3-23-12 DATE

6-25-12
PLANS APPROVAL DATE

REGISTERED PROFESSIONAL ENGINEER
SUJAYA KALAINESAN
No. C74154
Exp 06/30/13
CIVIL
STATE OF CALIFORNIA

THE STATE OF CALIFORNIA OR ITS OFFICERS OR AGENTS SHALL NOT BE RESPONSIBLE FOR THE ACCURACY OR COMPLETENESS OF SCANNED COPIES OF THIS PLAN SHEET.

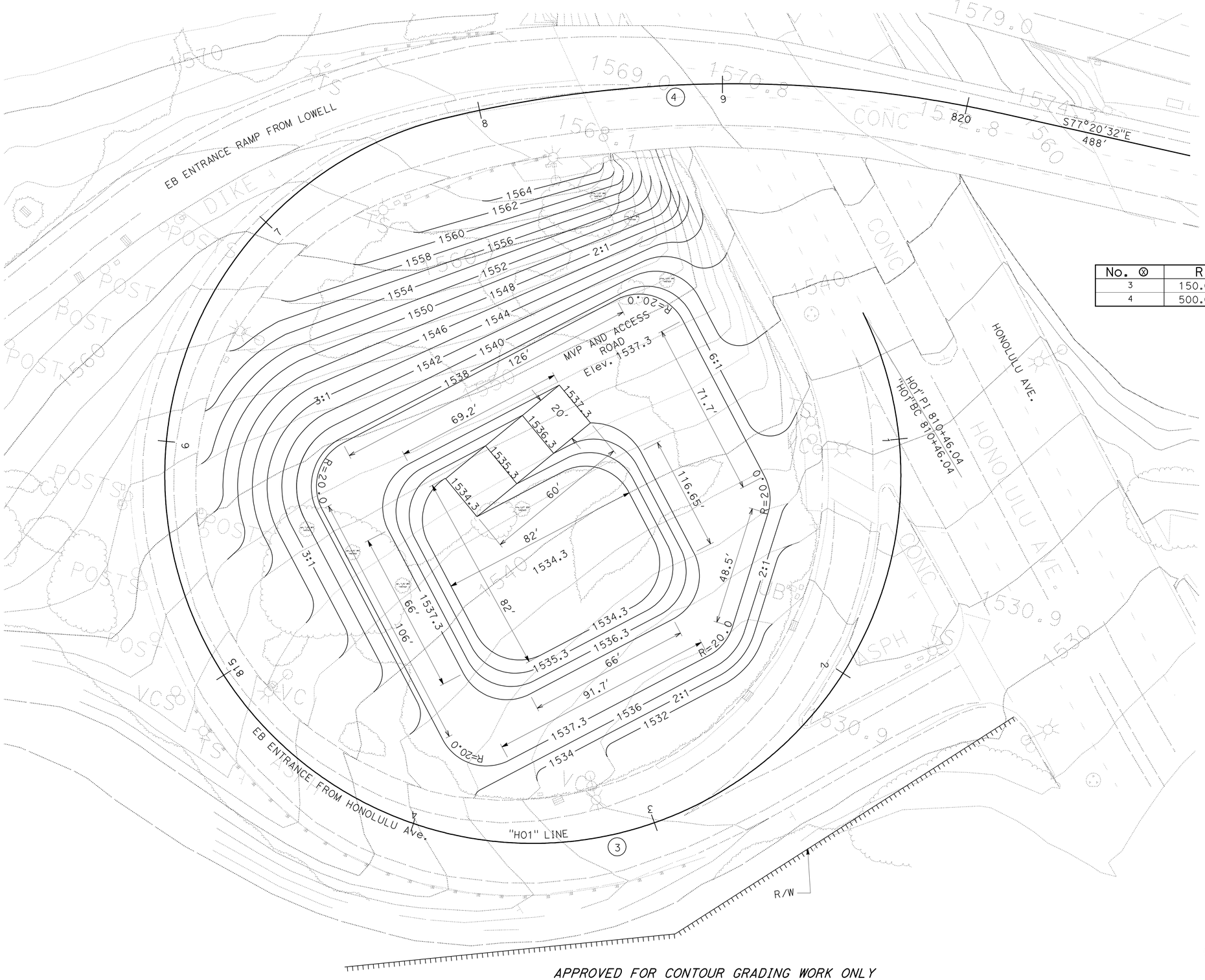

CURVE DATA

No. ⊗	R	Δ	T	L
3	150.00'	282°46'22"	119.80'	740.31'
4	500.00'	26°9'58"	116.20'	228.34'

NOTES:

1. FOR ACCURATE RIGHT OF WAY DATA, CONTACT RIGHT OF WAY ENGINEERING AT THE DISTRICT OFFICE.
2. FOR INFILTRATION BASIN DIMENSIONS SEE LAYOUT PLAN

APPROVED FOR CONTOUR GRADING WORK ONLY

LOCATION 1 CONTOUR GRADING

SCALE: 1" = 20'

G-1

STATE OF CALIFORNIA - DEPARTMENT OF TRANSPORTATION
Caltrans®
DESIGN

FUNCTIONAL SUPERVISOR: NADER GOBRAN
CALCULATED-DESIGNED BY: SUJAYA KALAINESAN
CHECKED BY: NADER GOBRAN
REVISED BY
DATE REVISED

LAST REVISION 00-00-00
DATE PLOTTED => 28-JUN-2012
TIME PLOTTED => 11:49

Dist	COUNTY	ROUTE	POST MILES TOTAL PROJECT	SHEET No.	TOTAL SHEETS
07	LA	210	R15.0/R36.0	35	209

REGISTERED CIVIL ENGINEER 3-23-12 DATE

6-25-12
PLANS APPROVAL DATE

REGISTERED PROFESSIONAL ENGINEER
SUNNY LIEM
No. C61380
Exp. 6/30/13
CIVIL
STATE OF CALIFORNIA

THE STATE OF CALIFORNIA OR ITS OFFICERS OR AGENTS SHALL NOT BE RESPONSIBLE FOR THE ACCURACY OR COMPLETENESS OF SCANNED COPIES OF THIS PLAN SHEET.

NOTES:

1. FOR ACCURATE RIGHT OF WAY AND ACCESS DATA, CONTACT RIGHT OF WAY ENGINEERING AT THE DISTRICT OFFICE.
2. THE CONTRACTOR SHALL VERIFY LOCATIONS AND ELEVATIONS OF EXISTING DRAINAGE SYSTEMS BEFORE COMMENCEMENT OF WORK.

LEGEND:

No. DRAINAGE SYSTEM NUMBER

XX DRAINAGE UNIT

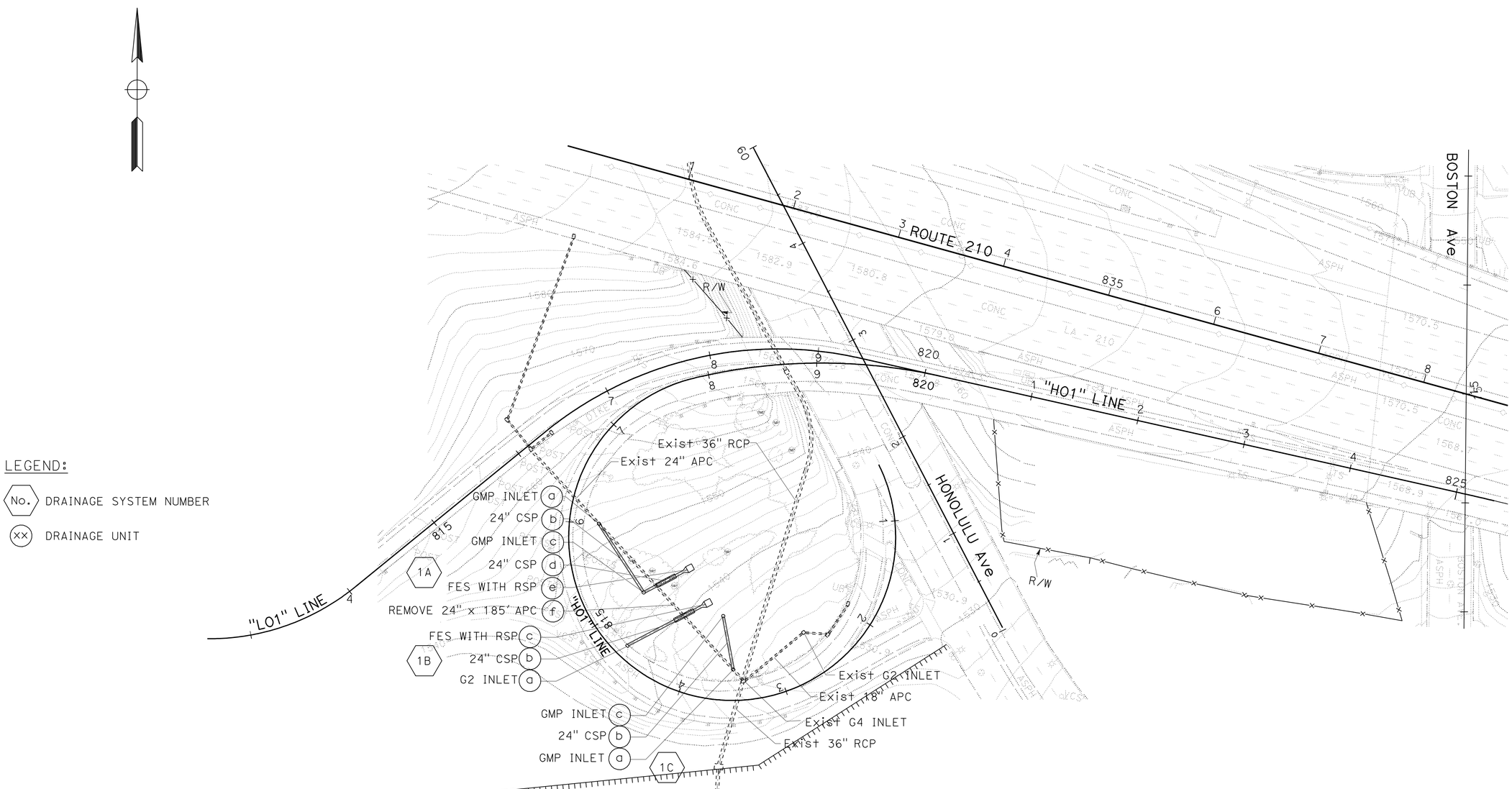

APPROVED FOR DRAINAGE WORK ONLY

DRAINAGE PLAN (WATER POLLUTION CONTROL) LOCATION 1

SCALE: 1" = 50'

D-1

STATE OF CALIFORNIA - DEPARTMENT OF TRANSPORTATION
Caltrans
HYDRAULICS

FUNCTIONAL SUPERVISOR: TIMOTHY TIEU
CALCULATED-DESIGNED BY: ELTON Q. LEE
CHECKED BY: SUNNY LIEM
REVISED BY
DATE REVISED

LAST REVISION 03-28-12
DATE PLOTTED => 28-JUN-2012
TIME PLOTTED => 11:49

Dist	COUNTY	ROUTE	POST MILES TOTAL PROJECT	SHEET No.	TOTAL SHEETS
07	LA	210	R15.0/R36.0	36	209

REGISTERED CIVIL ENGINEER 3-23-12 DATE

6-25-12
PLANS APPROVAL DATE

REGISTERED PROFESSIONAL ENGINEER SUNNY LIEM No. C61380 Exp. 6/30/13 CIVIL STATE OF CALIFORNIA

THE STATE OF CALIFORNIA OR ITS OFFICERS OR AGENTS SHALL NOT BE RESPONSIBLE FOR THE ACCURACY OR COMPLETENESS OF SCANNED COPIES OF THIS PLAN SHEET.

NOTES:
1. FOR ACCURATE RIGHT OF WAY AND ACCESS DATA, CONTACT RIGHT OF WAY ENGINEERING AT THE DISTRICT OFFICE.
2. THE CONTRACTOR SHALL VERIFY LOCATIONS AND ELEVATIONS OF EXISTING DRAINAGE SYSTEMS BEFORE COMMENCEMENT OF WORK.
3. SEE ALSO ROADWAY PLAN FOR BIOSWALES.

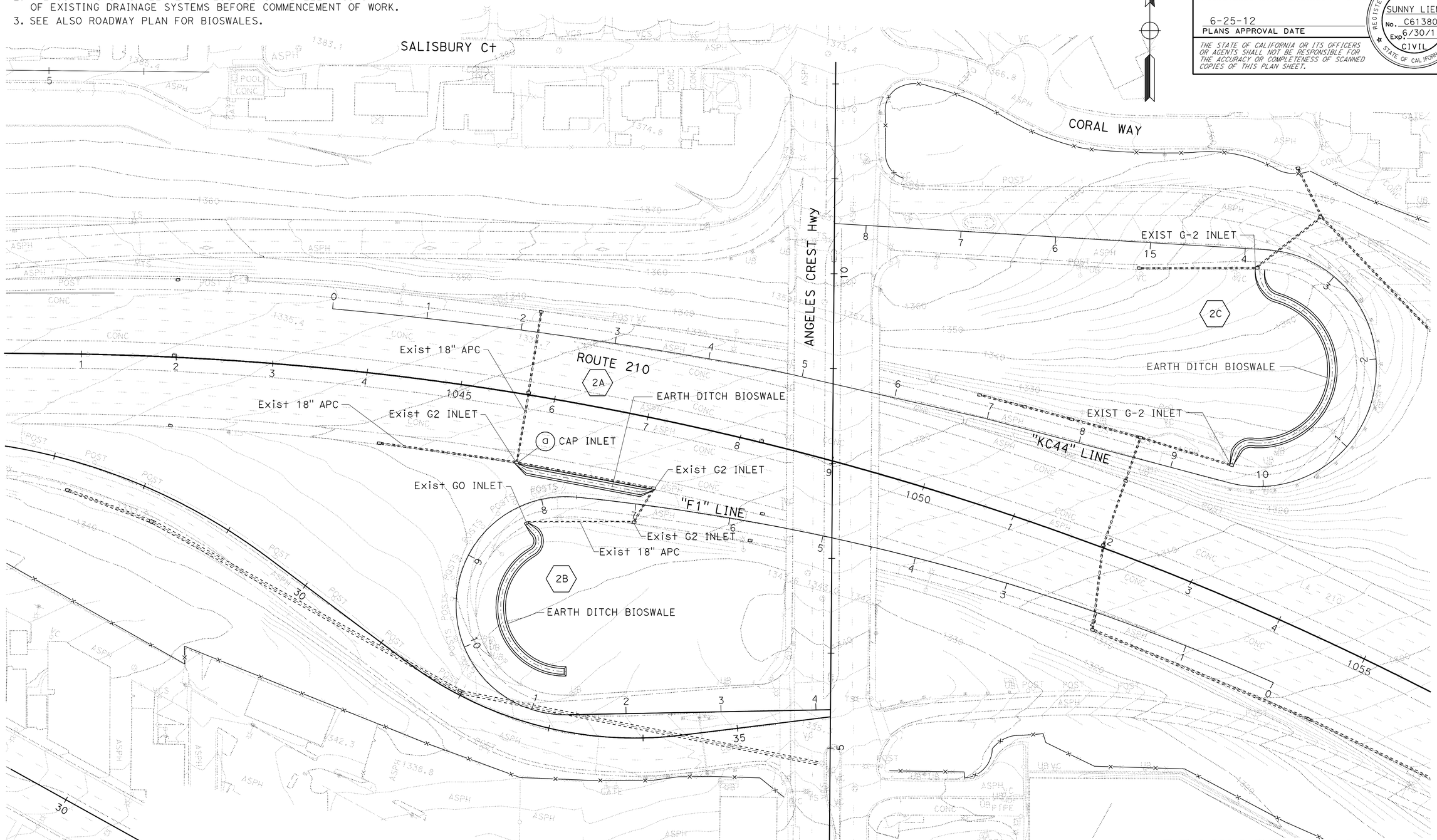

DRAINAGE PLAN (WATER POLLUTION CONTROL) LOCATION 2

SCALE: 1" = 50'

D-2

APPROVED FOR DRAINAGE WORK ONLY

STATE OF CALIFORNIA - DEPARTMENT OF TRANSPORTATION
Caltrans HYDRAULICS

FUNCTIONAL SUPERVISOR: TIMOTHY TIEU
CALCULATED-DESIGNED BY: SUNNY LIEM
CHECKED BY:
REVISED BY: ELTON Q. LEE
DATE REVISED:

LAST REVISION 03-28-12
DATE PLOTTED => 28-JUN-2012
TIME PLOTTED => 11:49

BORDER LAST REVISED 7/2/2010
USERNAME => s124496
DGN FILE => 725893ia002.dgn
RELATIVE BORDER SCALE IS IN INCHES 0 1 2 3
UNIT 1830
PROJECT NUMBER & PHASE 07000004811

Dist	COUNTY	ROUTE	POST MILES TOTAL PROJECT	SHEET No.	TOTAL SHEETS
07	LA	210	R15.0/R36.0	37	209

REGISTERED CIVIL ENGINEER 3-23-12 DATE

6-25-12
PLANS APPROVAL DATE

REGISTERED PROFESSIONAL ENGINEER
SUNNY LIEM
No. C61380
Exp. 6/30/13
CIVIL
STATE OF CALIFORNIA

THE STATE OF CALIFORNIA OR ITS OFFICERS OR AGENTS SHALL NOT BE RESPONSIBLE FOR THE ACCURACY OR COMPLETENESS OF SCANNED COPIES OF THIS PLAN SHEET.

NOTES:

1. FOR ACCURATE RIGHT OF WAY AND ACCESS DATA, CONTACT RIGHT OF WAY ENGINEERING AT THE DISTRICT OFFICE.
2. THE CONTRACTOR SHALL VERIFY LOCATIONS AND ELEVATIONS OF EXISTING DRAINAGE SYSTEMS BEFORE COMMENCEMENT OF WORK.

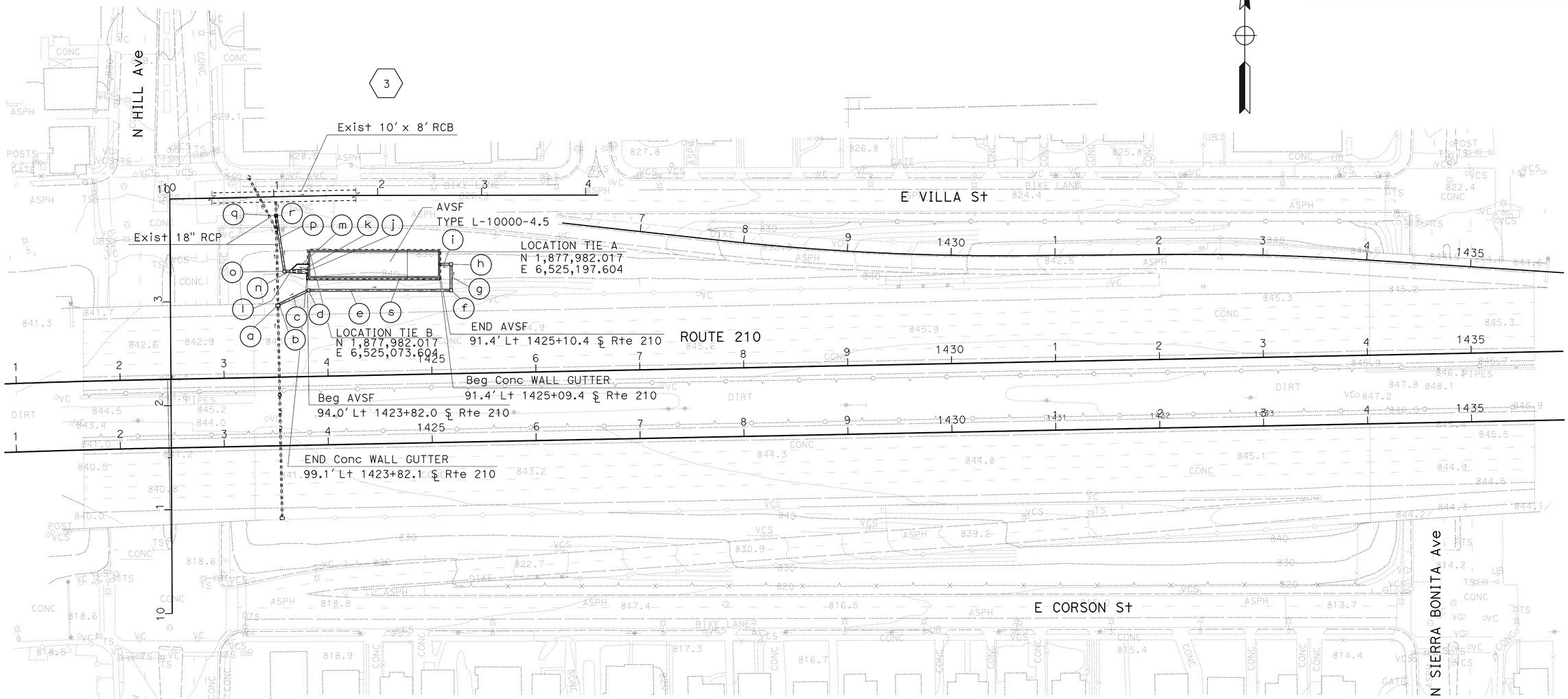

3

- (a) REMOVE Exist INLET
- (b) TYPE G-2 INLET
- (c) 24" CSP
- (d) Jct CHAMBER No. 3
- (e) 24" CSP
- (f) Jct CHAMBER No. 3
- (g) 24" CSP
- (h) Jct CHAMBER No. 3
- (i) 24" CSP
- (j) 24" CSP
- (k) TYPE B DRAIN (MODIFIED)
- (l) Jct CHAMBER No. 3-C
- (m) 6" NON-PERFORATED PLASTIC PIPE
- (n) 24" CSP
- (o) Jct CHAMBER No. 3
- (p) 24" CSP
- (q) REMOVE Exist Conc COLLAR
- (r) Jct CHAMBER No. 3
- (s) Conc WALL GUTTER

APPROVED FOR DRAINAGE WORK ONLY

DRAINAGE PLAN (WATER POLLUTION CONTROL) LOCATION 3

SCALE: 1" = 50'

D-3

STATE OF CALIFORNIA - DEPARTMENT OF TRANSPORTATION
Caltrans
HYDRAULICS

FUNCTIONAL SUPERVISOR: TIMOTHY TIEU
CALCULATED-DESIGNED BY: ELTON Q. LEE
CHECKED BY: SUNNY LIEM
REVISED BY
DATE REVISED

LAST REVISION 03-28-12
DATE PLOTTED => 28-JUN-2012
TIME PLOTTED => 12:08

Dist	COUNTY	ROUTE	POST MILES TOTAL PROJECT	SHEET No.	TOTAL SHEETS
07	LA	210	R15.0/R36.0	38	209

REGISTERED CIVIL ENGINEER 3-23-12 DATE

6-25-12
PLANS APPROVAL DATE

REGISTERED PROFESSIONAL ENGINEER SUNNY LIEM No. C61380 Exp. 6/30/13 CIVIL STATE OF CALIFORNIA

THE STATE OF CALIFORNIA OR ITS OFFICERS OR AGENTS SHALL NOT BE RESPONSIBLE FOR THE ACCURACY OR COMPLETENESS OF SCANNED COPIES OF THIS PLAN SHEET.

NOTES:

1. FOR ACCURATE RIGHT OF WAY AND ACCESS DATA, CONTACT RIGHT OF WAY ENGINEERING AT THE DISTRICT OFFICE.
2. THE CONTRACTOR SHALL VERIFY LOCATIONS AND ELEVATIONS OF EXISTING DRAINAGE SYSTEMS BEFORE COMMENCEMENT OF WORK.

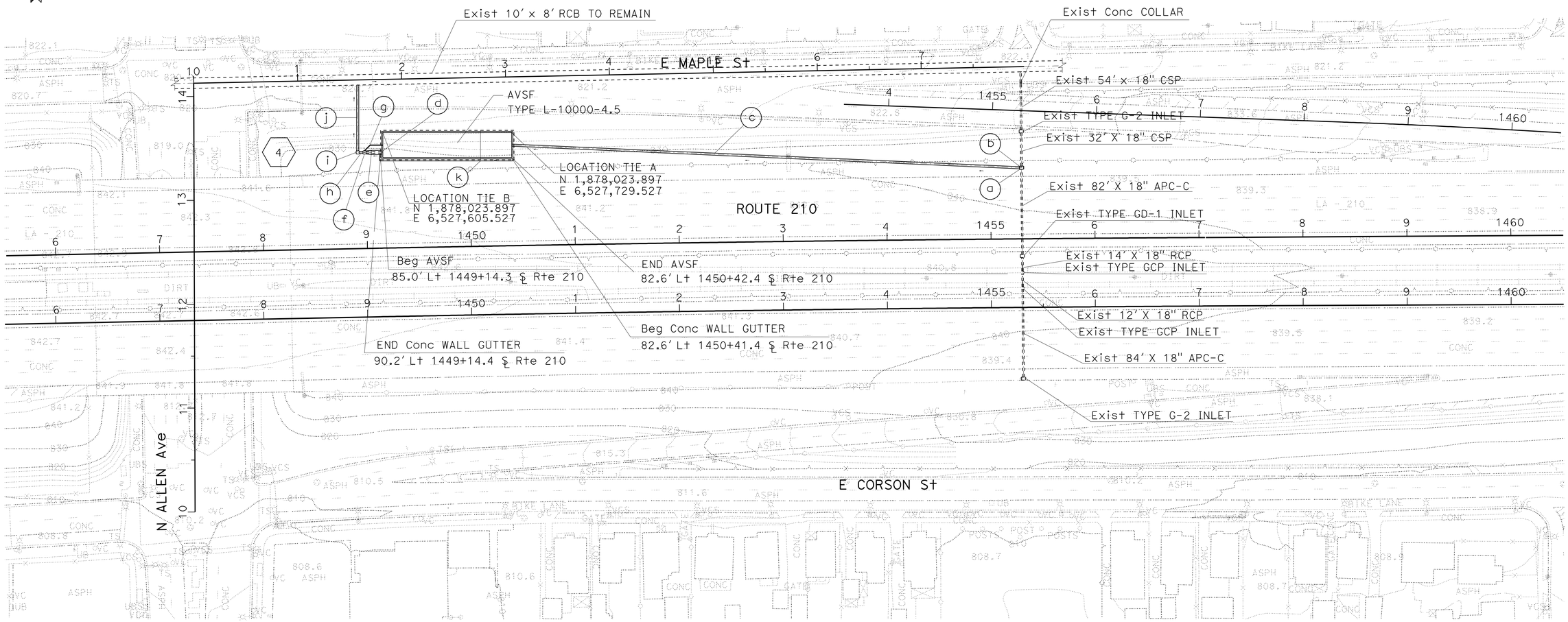

4

- (a) REMOVE Exist INLET
- (b) TYPE G-2 INLET
- (c) 24" CSP
- (d) 24" CSP
- (e) TYPE B DRAIN (MODIFIED)
- (f) Jct CHAMBER No. 3-C
- (g) 6" NON-PERFORATED PLASTIC PIPE
- (h) 24" CSP
- (i) Jct CHAMBER No. 3
- (j) 24" CSP
- (k) Conc WALL GUTTER

DRAINAGE PLAN (WATER POLLUTION CONTROL) LOCATION 4

SCALE: 1" = 50'

D-4

APPROVED FOR DRAINAGE WORK ONLY

REVISED BY | DATE REVISED
ELTON Q. LEE | SUNNY LIEM
CALCULATED-DESIGNED BY | CHECKED BY
FUNCTIONAL SUPERVISOR: TIMOTHY TIEU
STATE OF CALIFORNIA - DEPARTMENT OF TRANSPORTATION
Caltrans
HYDRAULICS

LAST REVISION 03-26-12 | DATE PLOTTED => 26-JUN-2012 | TIME PLOTTED => 11:50

Dist	COUNTY	ROUTE	POST MILES TOTAL PROJECT	SHEET No.	TOTAL SHEETS
07	LA	210	R15.0/R36.0	39	209

REGISTERED CIVIL ENGINEER 3-23-12 DATE

6-25-12
PLANS APPROVAL DATE

REGISTERED PROFESSIONAL ENGINEER SUNNY LIEM No. C61380 Exp. 6/30/13 CIVIL STATE OF CALIFORNIA

THE STATE OF CALIFORNIA OR ITS OFFICERS OR AGENTS SHALL NOT BE RESPONSIBLE FOR THE ACCURACY OR COMPLETENESS OF SCANNED COPIES OF THIS PLAN SHEET.

NOTES:

1. FOR ACCURATE RIGHT OF WAY AND ACCESS DATA, CONTACT RIGHT OF WAY ENGINEERING AT THE DISTRICT OFFICE.
2. THE CONTRACTOR SHALL VERIFY LOCATIONS AND ELEVATIONS OF EXISTING DRAINAGE SYSTEMS BEFORE COMMENCEMENT OF WORK.

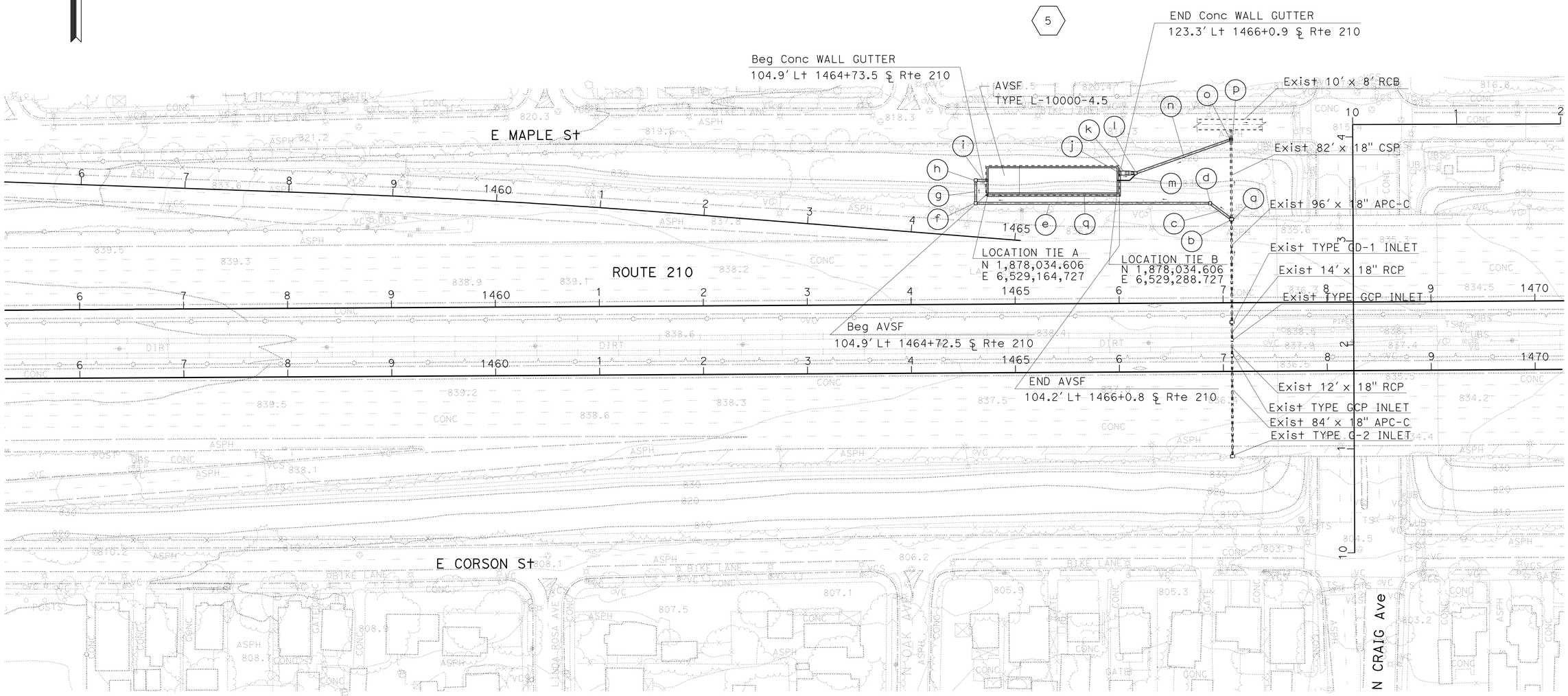

5

- (a) REMOVE Exist INLET
- (b) TYPE G-2 INLET
- (c) 24" CSP
- (d) Jct CHAMBER No. 3
- (e) 24" CSP
- (f) Jct CHAMBER No. 3
- (g) 24" CSP
- (h) Jct CHAMBER No. 3
- (i) 24" CSP
- (j) 24" CSP
- (k) TYPE B DRAIN (MODIFIED)
- (l) Jct CHAMBER No. 3-C
- (m) 6" NON-PERFORATED PLASTIC PIPE
- (n) 24" CSP
- (o) REMOVE Exist Conc COLLAR
- (p) Jct CHAMBER No. 3
- (q) Conc WALL GUTTER

APPROVED FOR DRAINAGE WORK ONLY

DRAINAGE PLAN (WATER POLLUTION CONTROL) LOCATION 5

SCALE: 1" = 50'

D-5

STATE OF CALIFORNIA - DEPARTMENT OF TRANSPORTATION
Caltrans
HYDRAULICS

FUNCTIONAL SUPERVISOR: TIMOTHY TIEU
CALCULATED-DESIGNED BY: ELTON Q. LEE
CHECKED BY: SUNNY LIEM
REVISED BY
DATE REVISED

LAST REVISION 03-26-12
DATE PLOTTED => 26-JUN-2012
TIME PLOTTED => 11:50

Dist	COUNTY	ROUTE	POST MILES TOTAL PROJECT	SHEET No.	TOTAL SHEETS
07	LA	210	R15.0/R36.0	40	209

REGISTERED CIVIL ENGINEER 3-23-12 DATE

6-25-12
PLANS APPROVAL DATE

REGISTERED PROFESSIONAL ENGINEER SUNNY LIEM No. C61380 Exp. 6/30/13 CIVIL STATE OF CALIFORNIA

THE STATE OF CALIFORNIA OR ITS OFFICERS OR AGENTS SHALL NOT BE RESPONSIBLE FOR THE ACCURACY OR COMPLETENESS OF SCANNED COPIES OF THIS PLAN SHEET.

NOTES:

1. FOR ACCURATE RIGHT OF WAY AND ACCESS DATA, CONTACT RIGHT OF WAY ENGINEERING AT THE DISTRICT OFFICE.
2. THE CONTRACTOR SHALL VERIFY LOCATIONS AND ELEVATIONS OF EXISTING DRAINAGE SYSTEMS BEFORE COMMENCEMENT OF WORK.

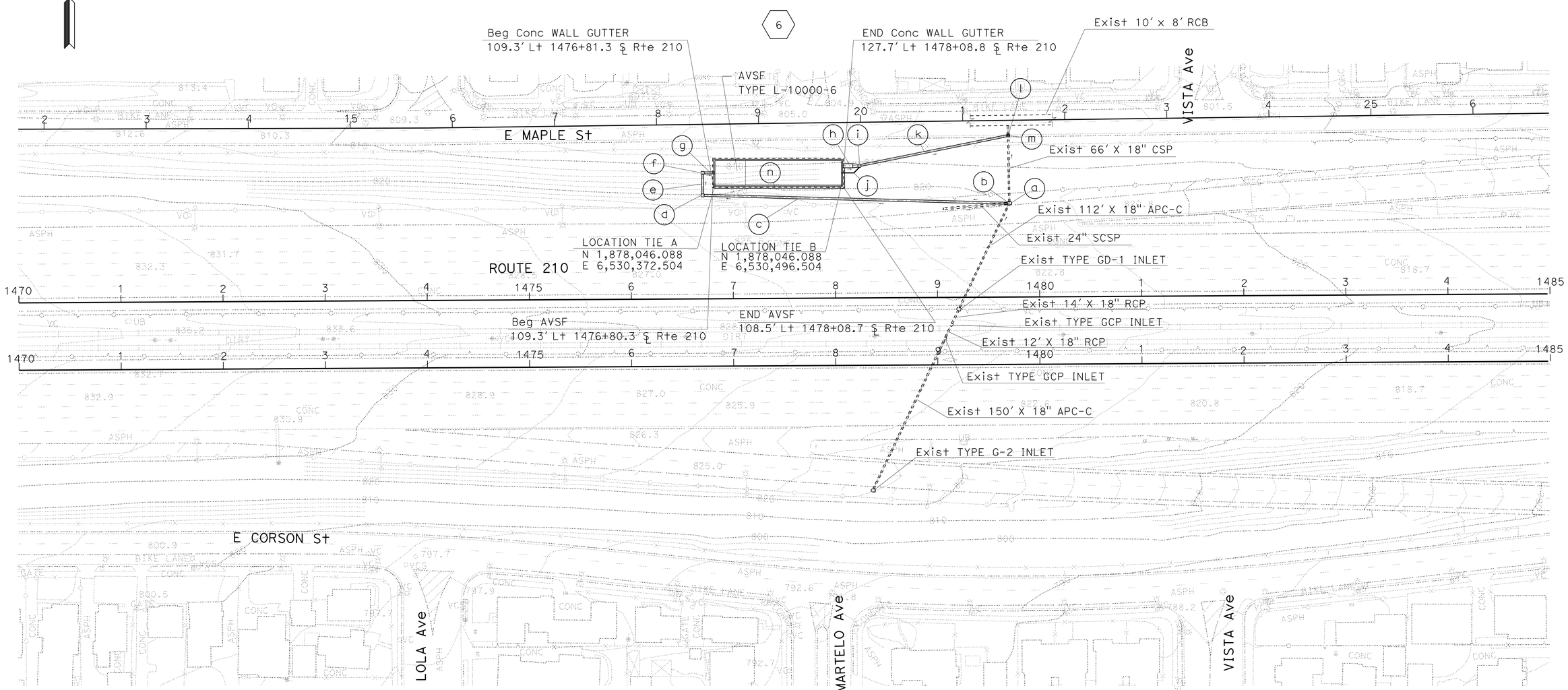

6

- (a) REMOVE Exist INLET
- (b) TYPE G-2 INLET
- (c) 24" CSP
- (d) Jct CHAMBER No. 3
- (e) 24" CSP
- (f) Jct CHAMBER No. 3
- (g) 24" CSP
- (h) TYPE B DRAIN (MODIFIED)
- (i) Jct CHAMBER No. 3-C
- (j) 6" NON-PERFORATED PLASTIC PIPE
- (k) 24" CSP
- (l) REMOVE Exist Conc COLLAR
- (m) Jct CHAMBER No. 3
- (n) Conc WALL GUTTER

APPROVED FOR DRAINAGE WORK ONLY

DRAINAGE PLAN (WATER POLLUTION CONTROL) LOCATION 6

SCALE: 1" = 50'

D-6

STATE OF CALIFORNIA - DEPARTMENT OF TRANSPORTATION
Caltrans® HYDRAULICS

FUNCTIONAL SUPERVISOR: TIMOTHY TIEU
CALCULATED-DESIGNED BY: ELTON Q. LEE
CHECKED BY: SUNNY LIEM
REVISED BY
DATE REVISED

LAST REVISION 03-26-12
DATE PLOTTED => 28-JUN-2012
TIME PLOTTED => 11:50

Dist	COUNTY	ROUTE	POST MILES TOTAL PROJECT	SHEET No.	TOTAL SHEETS
07	LA	210	R15.0/R36.0	41	209

REGISTERED CIVIL ENGINEER 3-23-12 DATE

6-25-12
PLANS APPROVAL DATE

REGISTERED PROFESSIONAL ENGINEER SUNNY LIEM No. C61380 Exp. 6/30/13 CIVIL STATE OF CALIFORNIA

THE STATE OF CALIFORNIA OR ITS OFFICERS OR AGENTS SHALL NOT BE RESPONSIBLE FOR THE ACCURACY OR COMPLETENESS OF SCANNED COPIES OF THIS PLAN SHEET.

NOTES:

1. FOR ACCURATE RIGHT OF WAY AND ACCESS DATA, CONTACT RIGHT OF WAY ENGINEERING AT THE DISTRICT OFFICE.
2. THE CONTRACTOR SHALL VERIFY LOCATIONS AND ELEVATIONS OF EXISTING DRAINAGE SYSTEMS BEFORE COMMENCEMENT OF WORK.

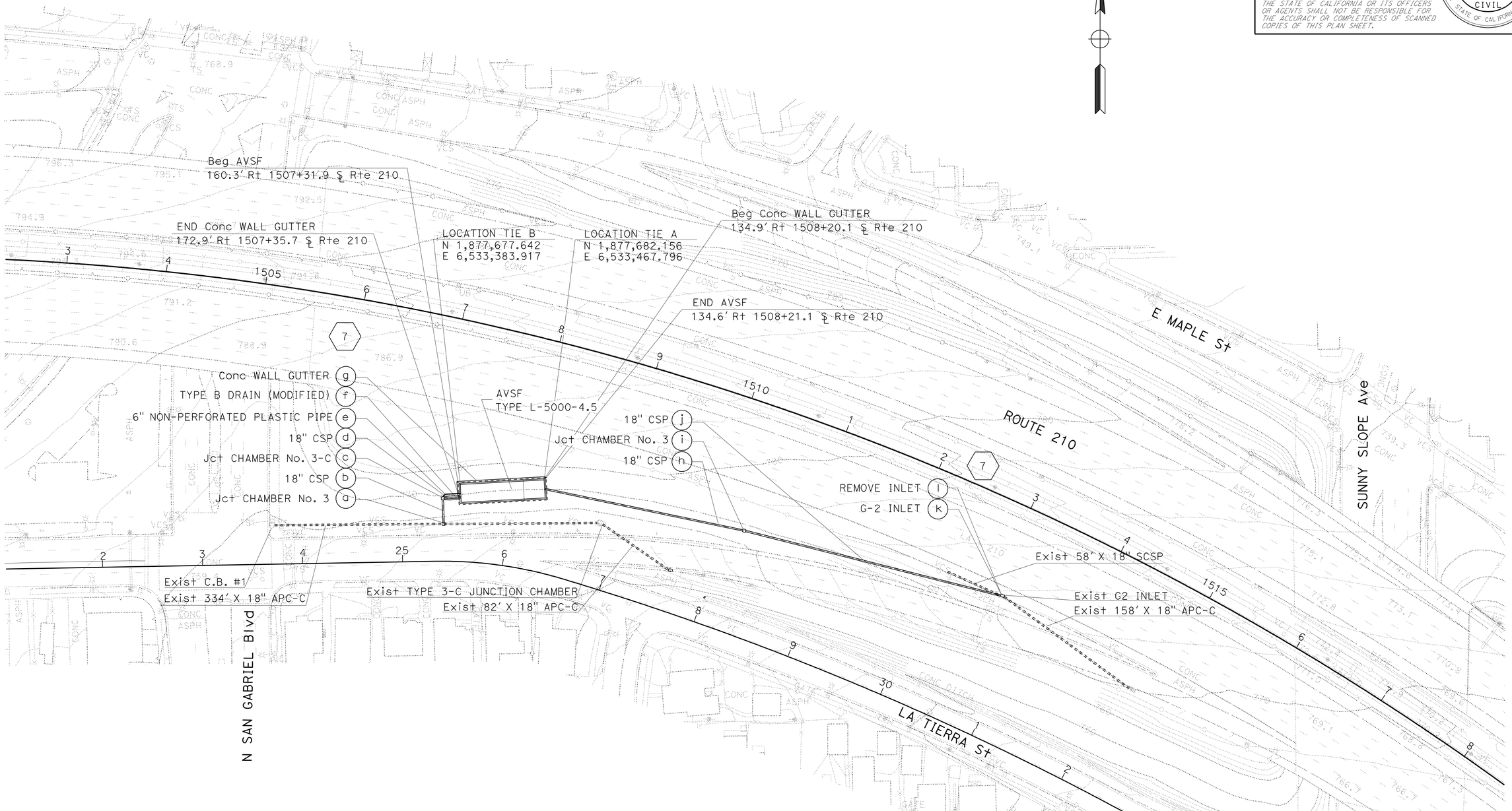

DRAINAGE PLAN (WATER POLLUTION CONTROL) LOCATION 7

SCALE: 1" = 50'

D-7

APPROVED FOR DRAINAGE WORK ONLY

STATE OF CALIFORNIA - DEPARTMENT OF TRANSPORTATION
Caltrans
HYDRAULICS

FUNCTIONAL SUPERVISOR: TIMOTHY TIEU
CALCULATED-DESIGNED BY: ELTON Q. LEE
CHECKED BY: SUNNY LIEM
REVISED BY
DATE REVISED

LAST REVISION 03-28-12
DATE PLOTTED => 28-JUN-2012
TIME PLOTTED => 11:50

Dist	COUNTY	ROUTE	POST MILES TOTAL PROJECT	SHEET No.	TOTAL SHEETS
07	LA	210	R15.0/R36.0	42	209

REGISTERED CIVIL ENGINEER 3-23-12 DATE

6-25-12
PLANS APPROVAL DATE

REGISTERED PROFESSIONAL ENGINEER SUNNY LIEM No. C61380 Exp. 6/30/13 CIVIL STATE OF CALIFORNIA

THE STATE OF CALIFORNIA OR ITS OFFICERS OR AGENTS SHALL NOT BE RESPONSIBLE FOR THE ACCURACY OR COMPLETENESS OF SCANNED COPIES OF THIS PLAN SHEET.

NOTES:

1. FOR ACCURATE RIGHT OF WAY AND ACCESS DATA, CONTACT RIGHT OF WAY ENGINEERING AT THE DISTRICT OFFICE.
2. THE CONTRACTOR SHALL VERIFY LOCATIONS AND ELEVATIONS OF EXISTING DRAINAGE SYSTEMS BEFORE COMMENCEMENT OF WORK.

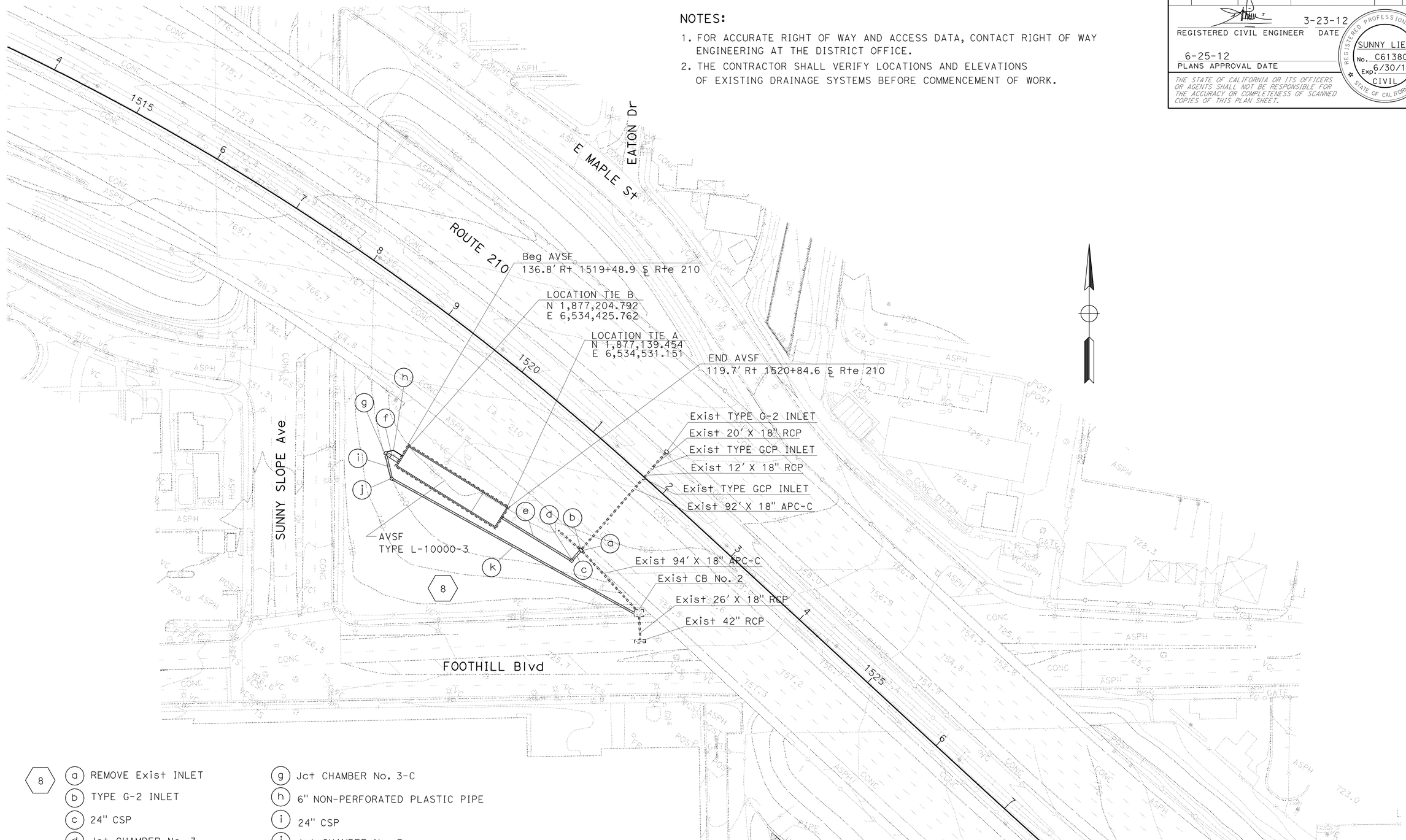

8

- (a) REMOVE Exist INLET
- (b) TYPE G-2 INLET
- (c) 24" CSP
- (d) Jct CHAMBER No. 3
- (e) 24" CSP
- (f) TYPE B DRAIN (MODIFIED)
- (g) Jct CHAMBER No. 3-C
- (h) 6" NON-PERFORATED PLASTIC PIPE
- (i) 24" CSP
- (j) Jct CHAMBER No. 3
- (k) 24" CSP

DRAINAGE PLAN (WATER POLLUTION CONTROL) LOCATION 8

SCALE: 1" = 50'

D-8

APPROVED FOR DRAINAGE WORK ONLY

STATE OF CALIFORNIA - DEPARTMENT OF TRANSPORTATION
Caltrans
HYDRAULICS

FUNCTIONAL SUPERVISOR: TIMOTHY TIEU
CALCULATED-DESIGNED BY: ELTON Q. LEE
CHECKED BY: SUNNY LIEM
REVISED BY
DATE REVISED

LAST REVISION 03-26-12
DATE PLOTTED => 28-JUN-2012
TIME PLOTTED => 11:51

BORDER LAST REVISED 7/2/2010
USERNAME => s124496
DGN FILE => 725893ia008.dgn
RELATIVE BORDER SCALE IS IN INCHES 0 1 2 3
UNIT 1836
PROJECT NUMBER & PHASE 07000004811

Dist	COUNTY	ROUTE	POST MILES TOTAL PROJECT	SHEET No.	TOTAL SHEETS
07	LA	210	R15.0/R36.0	43	209

REGISTERED CIVIL ENGINEER 3-23-12 DATE

6-25-12
PLANS APPROVAL DATE

REGISTERED PROFESSIONAL ENGINEER SUNNY LIEM No. C61380 Exp. 6/30/13 CIVIL STATE OF CALIFORNIA

THE STATE OF CALIFORNIA OR ITS OFFICERS OR AGENTS SHALL NOT BE RESPONSIBLE FOR THE ACCURACY OR COMPLETENESS OF SCANNED COPIES OF THIS PLAN SHEET.

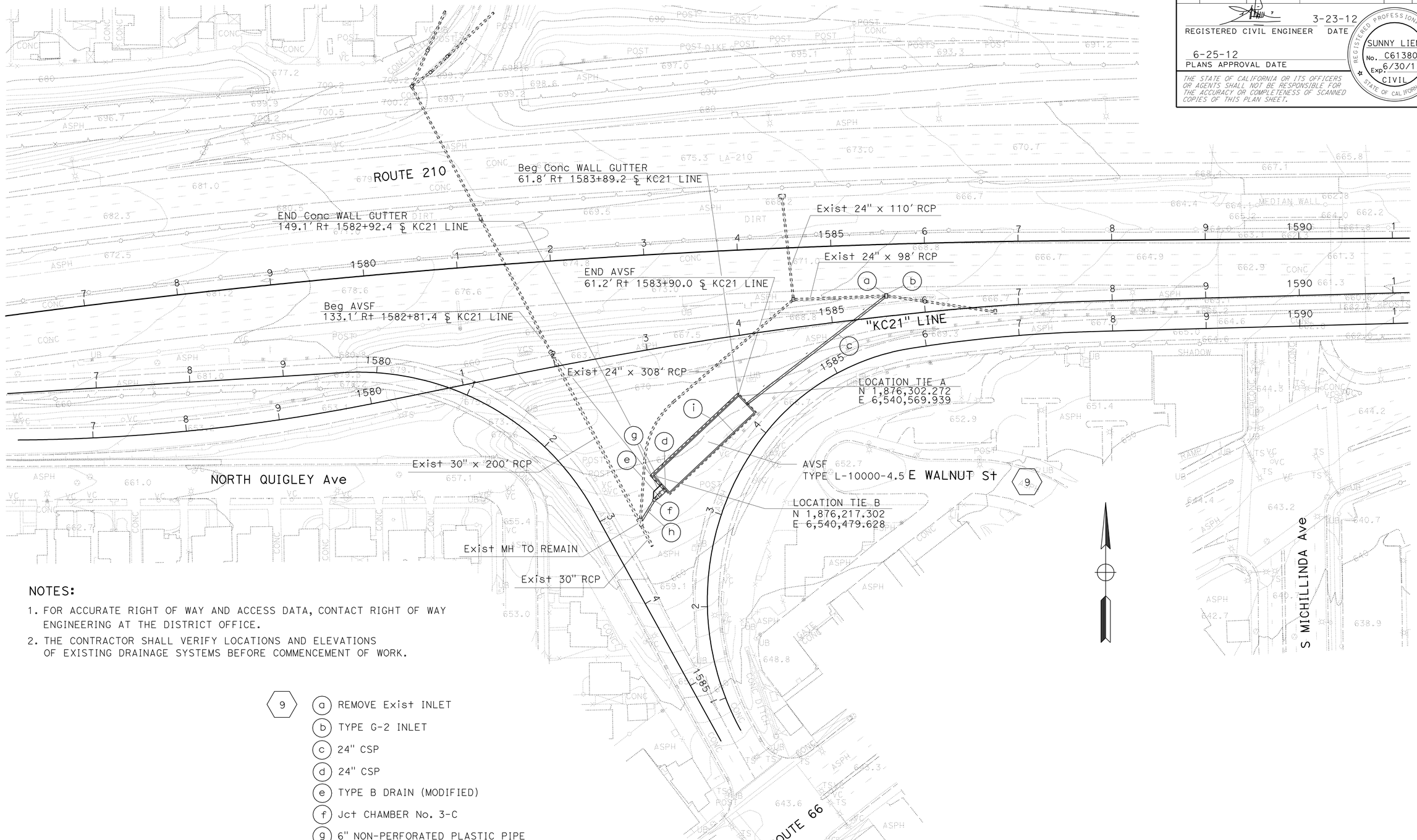

NOTES:

1. FOR ACCURATE RIGHT OF WAY AND ACCESS DATA, CONTACT RIGHT OF WAY ENGINEERING AT THE DISTRICT OFFICE.
2. THE CONTRACTOR SHALL VERIFY LOCATIONS AND ELEVATIONS OF EXISTING DRAINAGE SYSTEMS BEFORE COMMENCEMENT OF WORK.

9
- (a) REMOVE Exist INLET
- (b) TYPE G-2 INLET
- (c) 24" CSP
- (d) 24" CSP
- (e) TYPE B DRAIN (MODIFIED)
- (f) Jct CHAMBER No. 3-C
- (g) 6" NON-PERFORATED PLASTIC PIPE
- (h) 24" CSP
- (i) Conc WALL GUTTER

DRAINAGE PLAN (WATER POLLUTION CONTROL) LOCATION 9

SCALE: 1" = 50'

D-9

APPROVED FOR DRAINAGE WORK ONLY

STATE OF CALIFORNIA - DEPARTMENT OF TRANSPORTATION
Caltrans HYDRAULICS

FUNCTIONAL SUPERVISOR: TIMOTHY TIEU
CALCULATED-DESIGNED BY: ELTON Q. LEE
CHECKED BY: SUNNY LIEM
REVISED BY
DATE REVISED

LAST REVISION 03-26-12 | DATE PLOTTED => 28-JUN-2012 | TIME PLOTTED => 11:51

Dist	COUNTY	ROUTE	POST MILES TOTAL PROJECT	SHEET No.	TOTAL SHEETS
07	LA	210	R15.0/R36.0	44	209

REGISTERED CIVIL ENGINEER 3-23-12 DATE

6-25-12
PLANS APPROVAL DATE

REGISTERED PROFESSIONAL ENGINEER
SUNNY LIEM
No. C61380
Exp. 6/30/13
CIVIL
STATE OF CALIFORNIA

THE STATE OF CALIFORNIA OR ITS OFFICERS OR AGENTS SHALL NOT BE RESPONSIBLE FOR THE ACCURACY OR COMPLETENESS OF SCANNED COPIES OF THIS PLAN SHEET.

NOTES:

1. FOR ACCURATE RIGHT OF WAY AND ACCESS DATA, CONTACT RIGHT OF WAY ENGINEERING AT THE DISTRICT OFFICE.
2. THE CONTRACTOR SHALL VERIFY LOCATIONS AND ELEVATIONS OF EXISTING DRAINAGE SYSTEMS BEFORE COMMENCEMENT OF WORK.
3. SEE ALSO ROADWAY PLAN FOR BIOSTRIP.

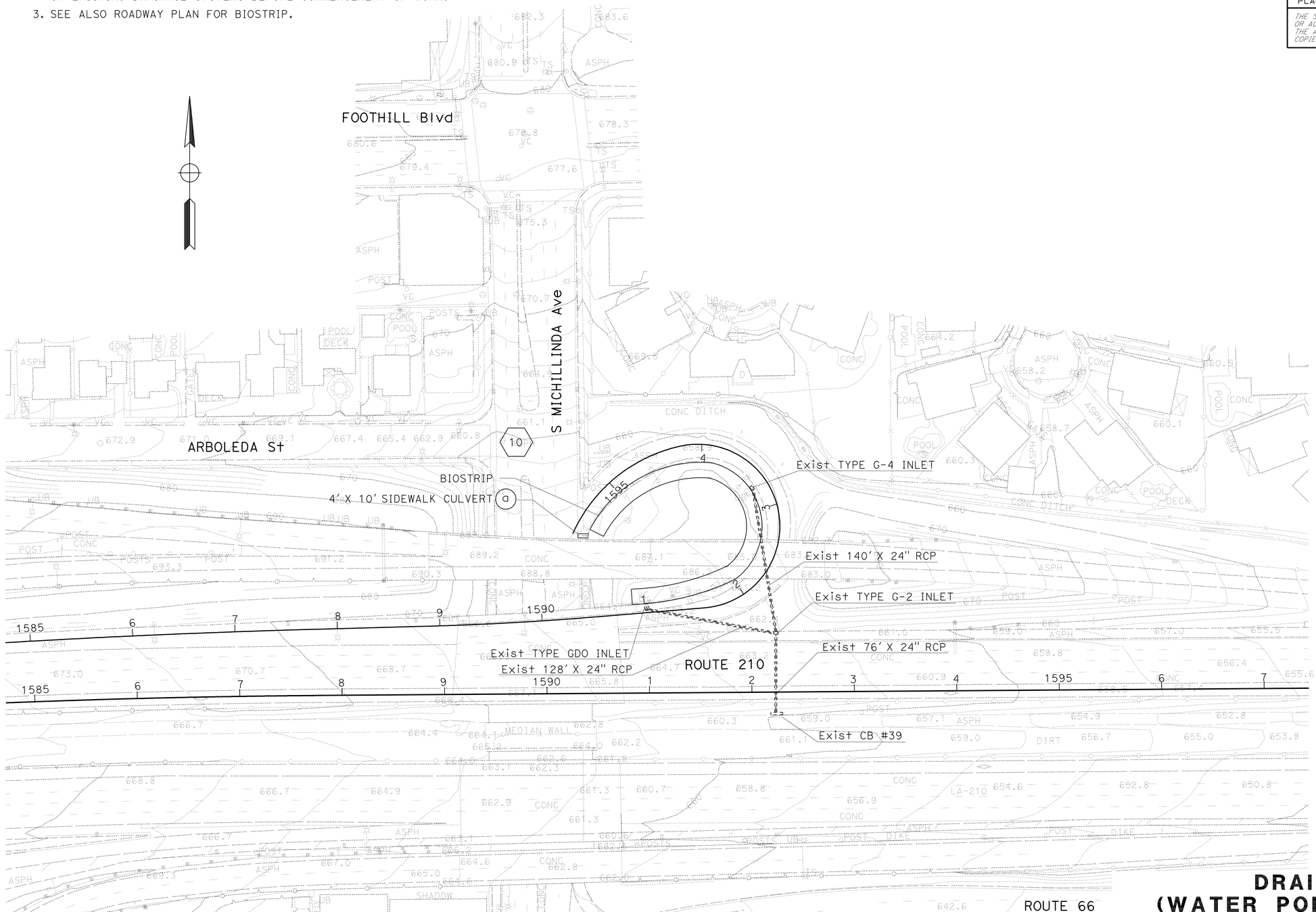

DRAINAGE PLAN (WATER POLLUTION CONTROL) LOCATION 10

SCALE: 1" = 50'

D-10

APPROVED FOR DRAINAGE WORK ONLY

STATE OF CALIFORNIA - DEPARTMENT OF TRANSPORTATION
Caltrans
HYDRAULICS

FUNCTIONAL SUPERVISOR: TIMOTHY TIEU
CALCULATED-DESIGNED BY: ELTON Q. LEE
CHECKED BY: SUNNY LIEM
REVISED BY
DATE REVISED

LAST REVISION 03-26-12
DATE PLOTTED => 28-JUN-2012
TIME PLOTTED => 11:51

BORDER LAST REVISED 7/2/2010
USERNAME => s124496
DGN FILE => 725893ia010.dgn
RELATIVE BORDER SCALE IS IN INCHES 0 1 2 3
UNIT 1836
PROJECT NUMBER & PHASE 07000004811

Dist	COUNTY	ROUTE	POST MILES TOTAL PROJECT	SHEET No.	TOTAL SHEETS
07	LA	210	R15.0/R36.0	45	209

REGISTERED CIVIL ENGINEER 3-23-12 DATE

6-25-12
PLANS APPROVAL DATE

REGISTERED PROFESSIONAL ENGINEER
SUNNY LIEM
No. C61380
Exp. 6/30/13
CIVIL
STATE OF CALIFORNIA

THE STATE OF CALIFORNIA OR ITS OFFICERS OR AGENTS SHALL NOT BE RESPONSIBLE FOR THE ACCURACY OR COMPLETENESS OF SCANNED COPIES OF THIS PLAN SHEET.

NOTES:

1. FOR ACCURATE RIGHT OF WAY AND ACCESS DATA, CONTACT RIGHT OF WAY ENGINEERING AT THE DISTRICT OFFICE.
2. THE CONTRACTOR SHALL VERIFY LOCATIONS AND ELEVATIONS OF EXISTING DRAINAGE SYSTEMS BEFORE COMMENCEMENT OF WORK.
3. SEE ALSO ROADWAY PLAN FOR BIOSWALE.

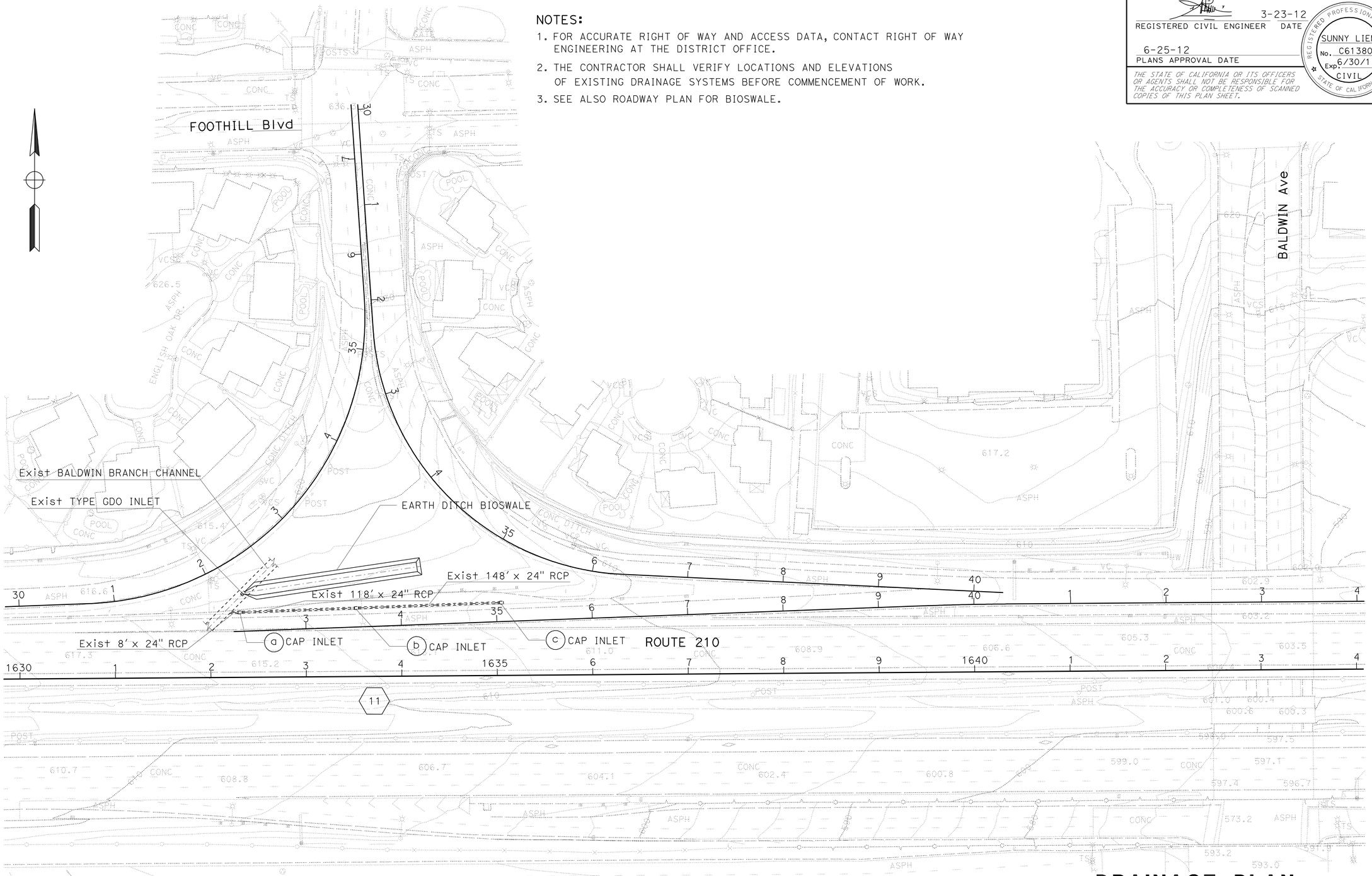

DRAINAGE PLAN (WATER POLLUTION CONTROL) LOCATION 11

SCALE: 1" = 50'

D-11

APPROVED FOR DRAINAGE WORK ONLY

STATE OF CALIFORNIA - DEPARTMENT OF TRANSPORTATION
Caltrans
HYDRAULICS

FUNCTIONAL SUPERVISOR: TIMOTHY TIEU
CALCULATED-DESIGNED BY: ELTON Q. LEE
CHECKED BY: SUNNY LIEM
REVISED BY
DATE REVISED

LAST REVISION 03-26-12
DATE PLOTTED => 28-JUN-2012
TIME PLOTTED => 11:51

Dist	COUNTY	ROUTE	POST MILES TOTAL PROJECT	SHEET No.	TOTAL SHEETS
07	LA	210	R15.0/R36.0	46	209

REGISTERED CIVIL ENGINEER 3-23-12 DATE

6-25-12
PLANS APPROVAL DATE

REGISTERED PROFESSIONAL ENGINEER
SUNNY LIEM
No. C61380
Exp. 6/30/13
CIVIL
STATE OF CALIFORNIA

THE STATE OF CALIFORNIA OR ITS OFFICERS OR AGENTS SHALL NOT BE RESPONSIBLE FOR THE ACCURACY OR COMPLETENESS OF SCANNED COPIES OF THIS PLAN SHEET.

NOTES:

1. FOR ACCURATE RIGHT OF WAY AND ACCESS DATA, CONTACT RIGHT OF WAY ENGINEERING AT THE DISTRICT OFFICE.
2. THE CONTRACTOR SHALL VERIFY LOCATIONS AND ELEVATIONS OF EXISTING DRAINAGE SYSTEMS BEFORE COMMENCEMENT OF WORK.
3. SEE ALSO ROADWAY PLAN FOR BIOSWALE.

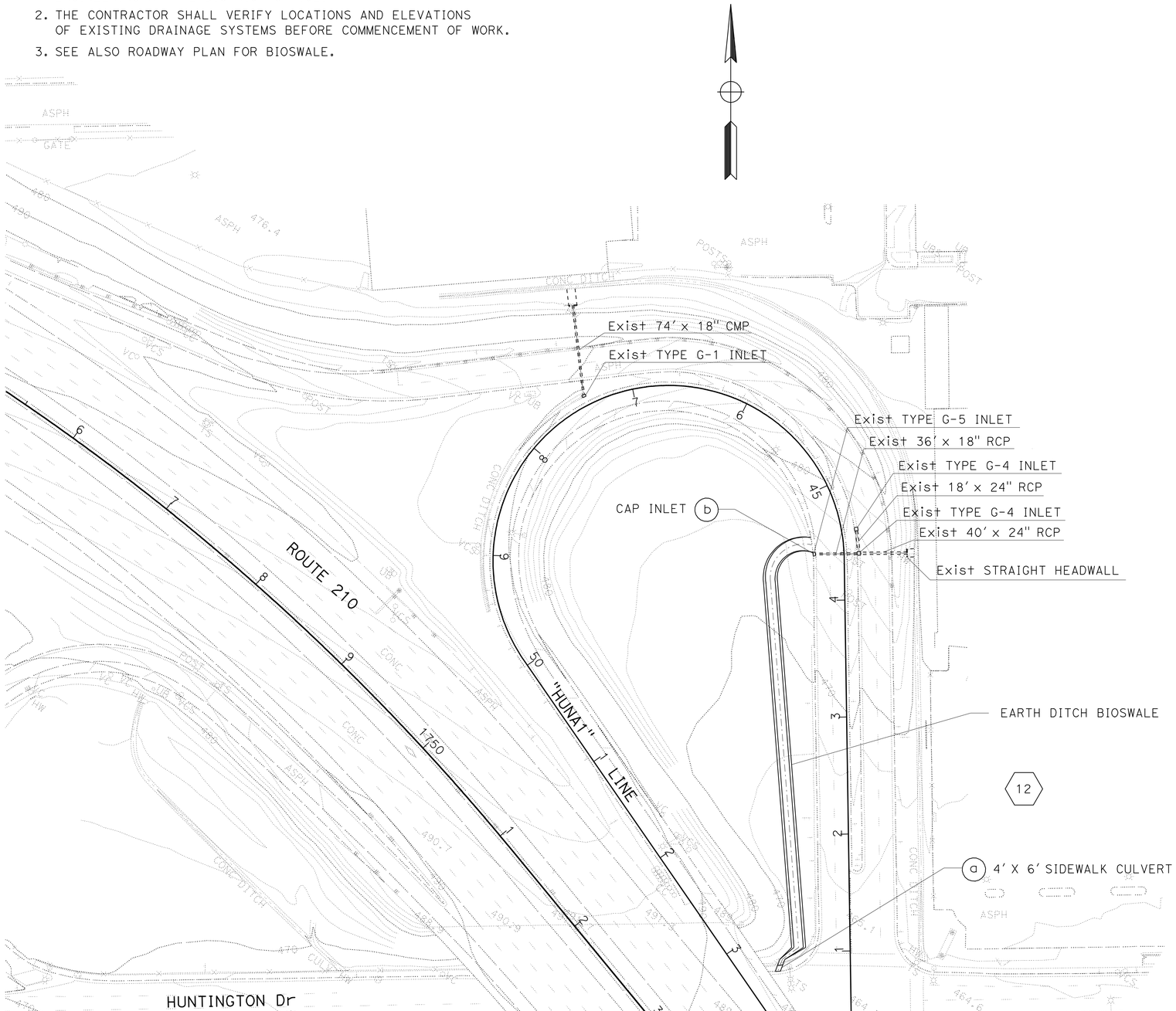

APPROVED FOR DRAINAGE WORK ONLY

DRAINAGE PLAN (WATER POLLUTION CONTROL) LOCATION 12

SCALE: 1" = 50'

D-12

STATE OF CALIFORNIA - DEPARTMENT OF TRANSPORTATION
Caltrans HYDRAULICS

FUNCTIONAL SUPERVISOR: TIMOTHY TIEU

CALCULATED-DESIGNED BY: ELTON Q. LEE
CHECKED BY: SUNNY LIEM

REVISED BY
DATE REVISED

LAST REVISION 03-28-12
DATE PLOTTED => 28-JUN-2012
TIME PLOTTED => 11:51

Dist	COUNTY	ROUTE	POST MILES TOTAL PROJECT	SHEET No.	TOTAL SHEETS
07	LA	210	R15.0/R36.0	47	209

REGISTERED CIVIL ENGINEER 3-23-12 DATE

6-25-12
PLANS APPROVAL DATE

REGISTERED PROFESSIONAL ENGINEER
SUNNY LIEM
No. C61380
Exp. 6/30/13
CIVIL
STATE OF CALIFORNIA

THE STATE OF CALIFORNIA OR ITS OFFICERS OR AGENTS SHALL NOT BE RESPONSIBLE FOR THE ACCURACY OR COMPLETENESS OF SCANNED COPIES OF THIS PLAN SHEET.

NOTES:

1. FOR ACCURATE RIGHT OF WAY AND ACCESS DATA, CONTACT RIGHT OF WAY ENGINEERING AT THE DISTRICT OFFICE.
2. THE CONTRACTOR SHALL VERIFY LOCATIONS AND ELEVATIONS OF EXISTING DRAINAGE SYSTEMS BEFORE COMMENCEMENT OF WORK.
3. SEE ALSO ROADWAY PLAN FOR BIOSWALE.

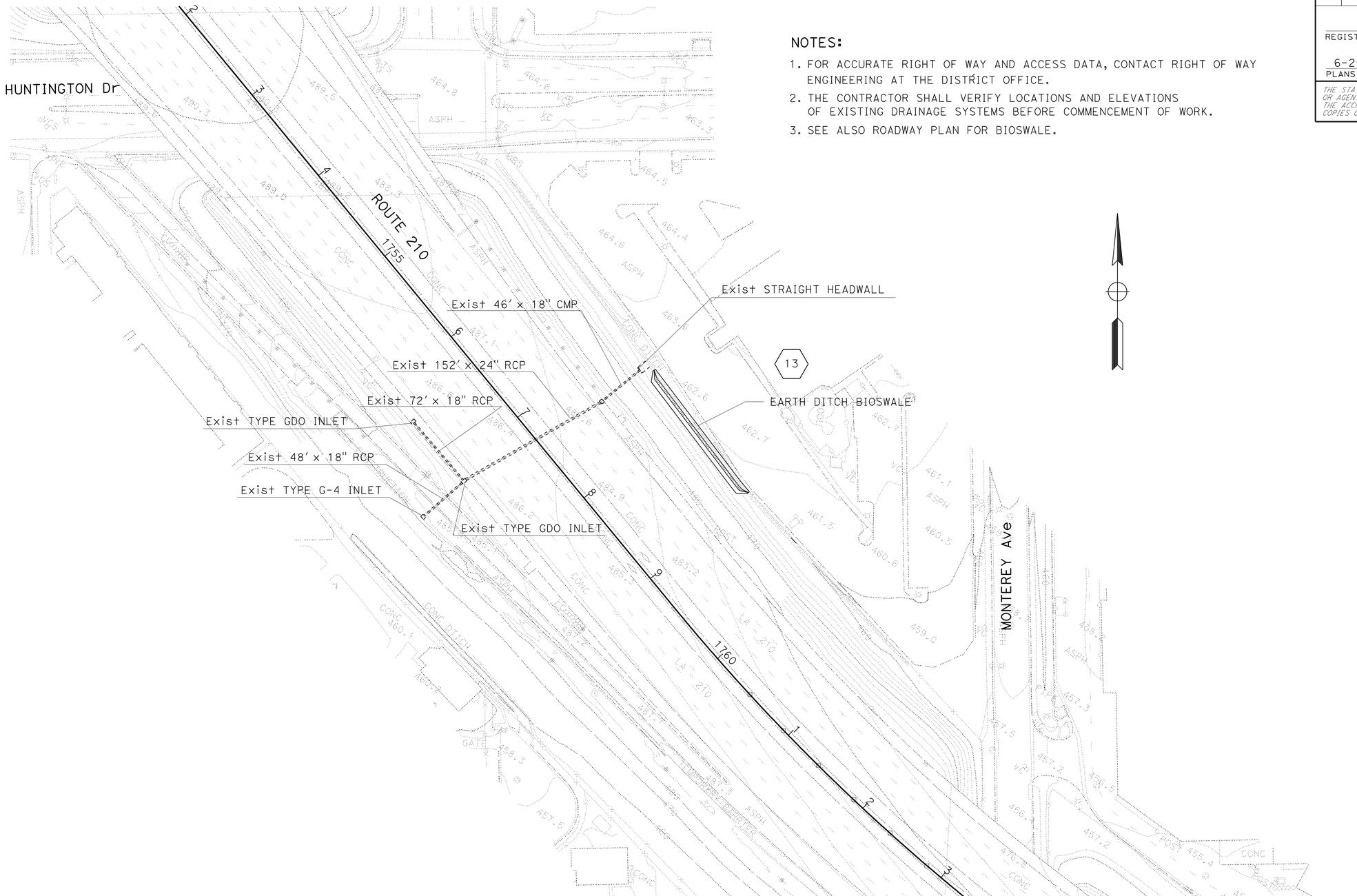

APPROVED FOR DRAINAGE WORK ONLY

DRAINAGE PLAN (WATER POLLUTION CONTROL) LOCATION 13

SCALE: 1" = 50'

D-13

STATE OF CALIFORNIA - DEPARTMENT OF TRANSPORTATION
Caltrans
HYDRAULICS

FUNCTIONAL SUPERVISOR: TIMOTHY TIEU
CALCULATED-DESIGNED BY: ELTON Q. LEE
CHECKED BY: SUNNY LIEM
REVISED BY
DATE REVISED

LAST REVISION 03-28-12 | DATE PLOTTED => 28-JUN-2012 | TIME PLOTTED => 11:51

Dist	COUNTY	ROUTE	POST MILES TOTAL PROJECT	SHEET No.	TOTAL SHEETS
07	LA	210	R15.0/R36.0	48	209

REGISTERED CIVIL ENGINEER 3-23-12 DATE

6-25-12
PLANS APPROVAL DATE

REGISTERED PROFESSIONAL ENGINEER SUNNY LIEM No. C61380 Exp. 6/30/13 CIVIL STATE OF CALIFORNIA

THE STATE OF CALIFORNIA OR ITS OFFICERS OR AGENTS SHALL NOT BE RESPONSIBLE FOR THE ACCURACY OR COMPLETENESS OF SCANNED COPIES OF THIS PLAN SHEET.

NOTES:

1. FOR ACCURATE RIGHT OF WAY AND ACCESS DATA, CONTACT RIGHT OF WAY ENGINEERING AT THE DISTRICT OFFICE.
2. THE CONTRACTOR SHALL VERIFY LOCATIONS AND ELEVATIONS OF EXISTING DRAINAGE SYSTEMS BEFORE COMMENCEMENT OF WORK.

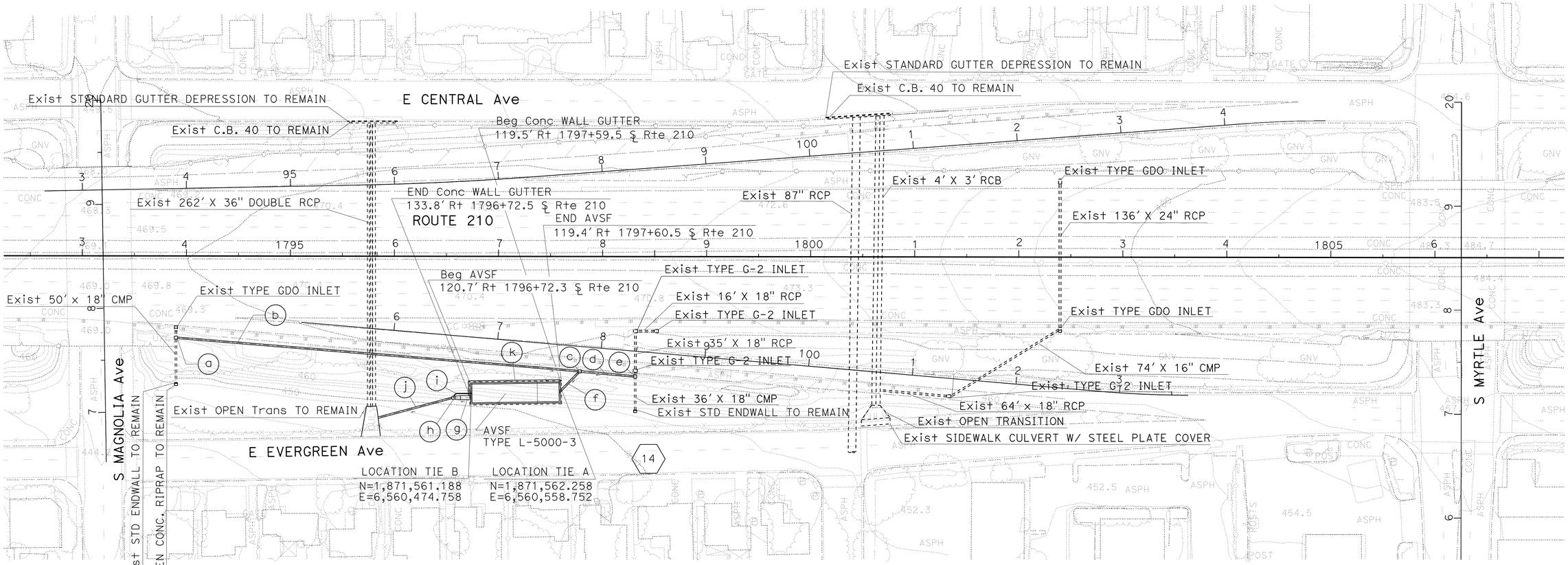

14

- (a) Jct CHAMBER No. 3
- (b) 18" CSP
- (c) Jct CHAMBER No. 3
- (d) 18" CSP
- (e) Jct CHAMBER No. 3
- (f) 18" CSP
- (g) TYPE B DRAIN (MODIFIED)
- (h) Jct CHAMBER No. 3-C
- (i) 6" NON-PERFORATED PLASTIC PIPE
- (j) 18" CSP
- (k) Conc WALL GUTTER

DRAINAGE PLAN (WATER POLLUTION CONTROL) LOCATION 14

SCALE: 1" = 50'

D-14

APPROVED FOR DRAINAGE WORK ONLY

STATE OF CALIFORNIA - DEPARTMENT OF TRANSPORTATION
Caltrans
HYDRAULICS

FUNCTIONAL SUPERVISOR: TIMOTHY TIEU
CALCULATED-DESIGNED BY: ELTON Q. LEE
CHECKED BY: SUNNY LIEM
REVISED BY
DATE REVISED

LAST REVISION 03-26-12
DATE PLOTTED => 28-JUN-2012
TIME PLOTTED => 11:51

Dist	COUNTY	ROUTE	POST MILES TOTAL PROJECT	SHEET No.	TOTAL SHEETS
07	LA	210	R15.0/R36.0	49	209

REGISTERED CIVIL ENGINEER 3-23-12 DATE

6-25-12
PLANS APPROVAL DATE

REGISTERED PROFESSIONAL ENGINEER SUNNY LIEM No. C61380 Exp. 6/30/13 CIVIL STATE OF CALIFORNIA

THE STATE OF CALIFORNIA OR ITS OFFICERS OR AGENTS SHALL NOT BE RESPONSIBLE FOR THE ACCURACY OR COMPLETENESS OF SCANNED COPIES OF THIS PLAN SHEET.

NOTES:

1. FOR ACCURATE RIGHT OF WAY AND ACCESS DATA, CONTACT RIGHT OF WAY ENGINEERING AT THE DISTRICT OFFICE.
2. THE CONTRACTOR SHALL VERIFY LOCATIONS AND ELEVATIONS OF EXISTING DRAINAGE SYSTEMS BEFORE COMMENCEMENT OF WORK.

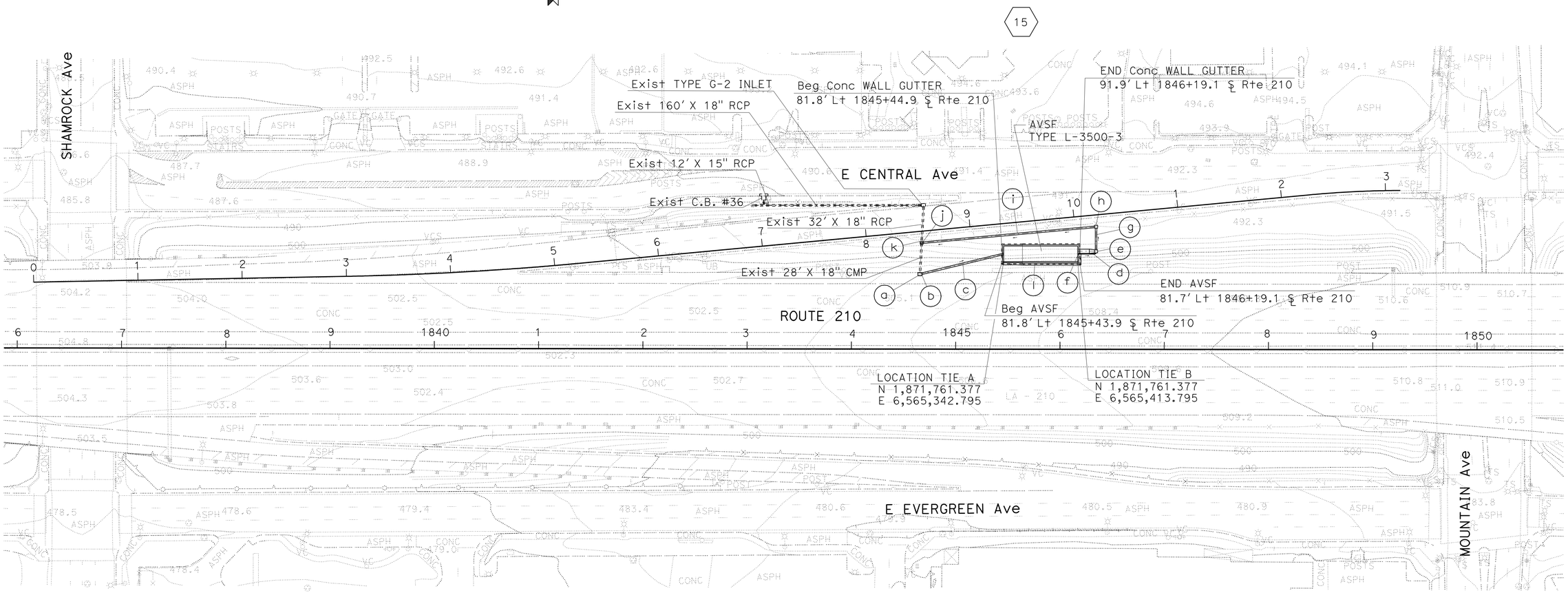

15

- (a) REMOVE Exist INLET
- (b) TYPE G-2 INLET
- (c) 18" CSP
- (d) TYPE B DRAIN (MODIFIED)
- (e) Jct CHAMBER No. 3-C
- (f) 6" NON-PERFORATED PLASTIC PIPE
- (g) 18" CSP
- (h) Jct CHAMBER No. 3
- (i) 18" CSP
- (j) REMOVE Exist Conc COLLAR
- (k) Jct CHAMBER No. 3
- (l) Conc WALL GUTTER

DRAINAGE PLAN (WATER POLLUTION CONTROL) LOCATION 15

SCALE: 1" = 50'

D-15

APPROVED FOR DRAINAGE WORK ONLY

STATE OF CALIFORNIA - DEPARTMENT OF TRANSPORTATION
Caltrans
HYDRAULICS

FUNCTIONAL SUPERVISOR: TIMOTHY TIEU
CALCULATED-DESIGNED BY: ELTON Q. LEE
CHECKED BY: SUNNY LIEM
REVISED BY
DATE REVISED

LAST REVISION 03-26-12
DATE PLOTTED => 28-JUN-2012
TIME PLOTTED => 11:51

Dist	COUNTY	ROUTE	POST MILES TOTAL PROJECT	SHEET No.	TOTAL SHEETS
07	LA	210	R15.0/R36.0	50	209

REGISTERED CIVIL ENGINEER 3-23-12 DATE

6-25-12
PLANS APPROVAL DATE

REGISTERED PROFESSIONAL ENGINEER SUNNY LIEM No. C61380 Exp. 6/30/13 CIVIL STATE OF CALIFORNIA

THE STATE OF CALIFORNIA OR ITS OFFICERS OR AGENTS SHALL NOT BE RESPONSIBLE FOR THE ACCURACY OR COMPLETENESS OF SCANNED COPIES OF THIS PLAN SHEET.

NOTES:

1. FOR ACCURATE RIGHT OF WAY AND ACCESS DATA, CONTACT RIGHT OF WAY ENGINEERING AT THE DISTRICT OFFICE.
2. THE CONTRACTOR SHALL VERIFY LOCATIONS AND ELEVATIONS OF EXISTING DRAINAGE SYSTEMS BEFORE COMMENCEMENT OF WORK.
3. SEE ALSO ROADWAY PLAN FOR INFILTRATION TRENCH.

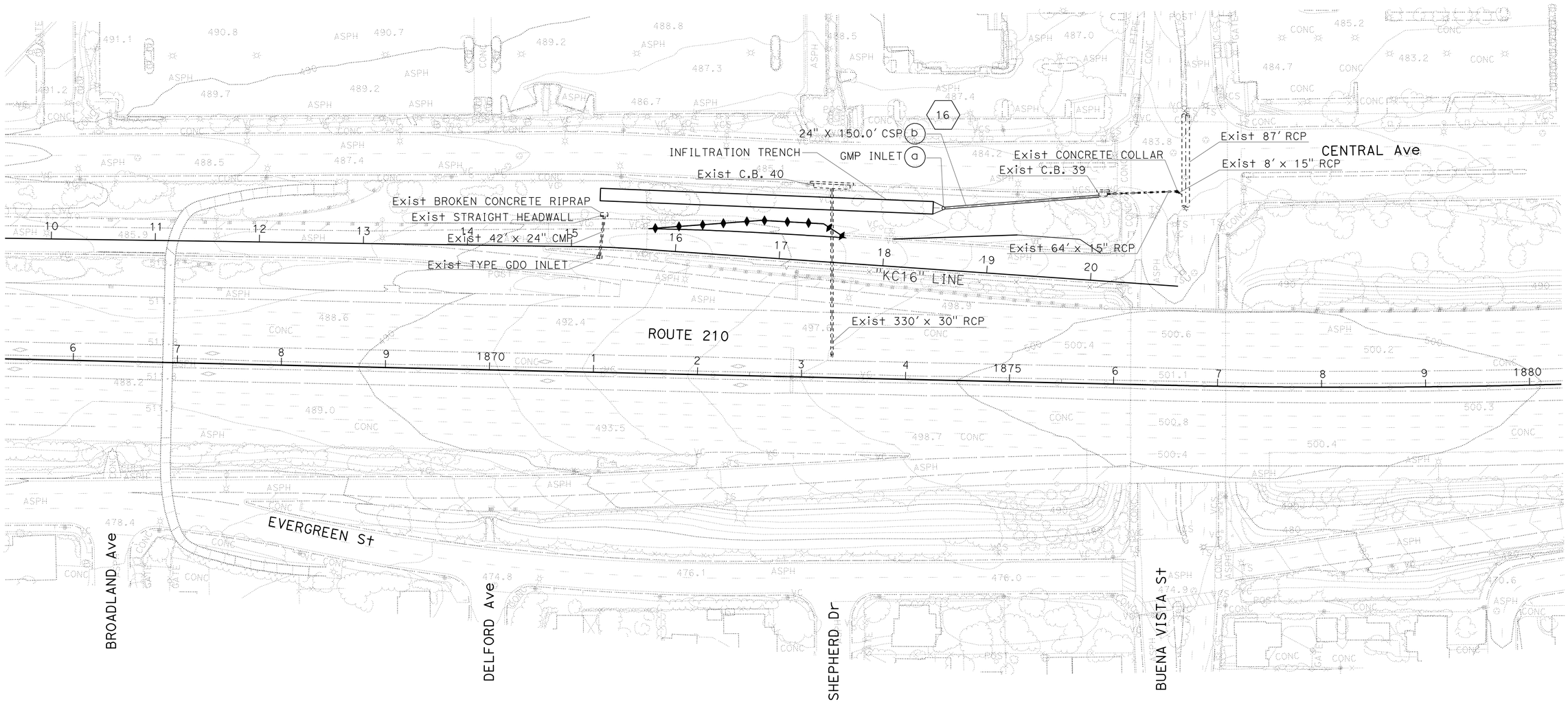

DRAINAGE PLAN (WATER POLLUTION CONTROL) LOCATION 16

SCALE: 1" = 50'

D-16

APPROVED FOR DRAINAGE WORK ONLY

STATE OF CALIFORNIA - DEPARTMENT OF TRANSPORTATION
Caltrans
HYDRAULICS

FUNCTIONAL SUPERVISOR: TIMOTHY TIEU

CALCULATED-DESIGNED BY: ELTON Q. LEE
CHECKED BY: SUNNY LIEM

REVISED BY
DATE REVISED

LAST REVISION 03-28-12
DATE PLOTTED => 28-JUN-2012
TIME PLOTTED => 10:58

Dist	COUNTY	ROUTE	POST MILES TOTAL PROJECT	SHEET No.	TOTAL SHEETS
07	LA	210	R15.0/R36.0	51	209

REGISTERED CIVIL ENGINEER 3-23-12 DATE

6-25-12
PLANS APPROVAL DATE

REGISTERED PROFESSIONAL ENGINEER SUNNY LIEM No. C61380 Exp. 6/30/13 CIVIL STATE OF CALIFORNIA

THE STATE OF CALIFORNIA OR ITS OFFICERS OR AGENTS SHALL NOT BE RESPONSIBLE FOR THE ACCURACY OR COMPLETENESS OF SCANNED COPIES OF THIS PLAN SHEET.

NOTES:

1. FOR ACCURATE RIGHT OF WAY AND ACCESS DATA, CONTACT RIGHT OF WAY ENGINEERING AT THE DISTRICT OFFICE.
2. THE CONTRACTOR SHALL VERIFY LOCATIONS AND ELEVATIONS OF EXISTING DRAINAGE SYSTEMS BEFORE COMMENCEMENT OF WORK.

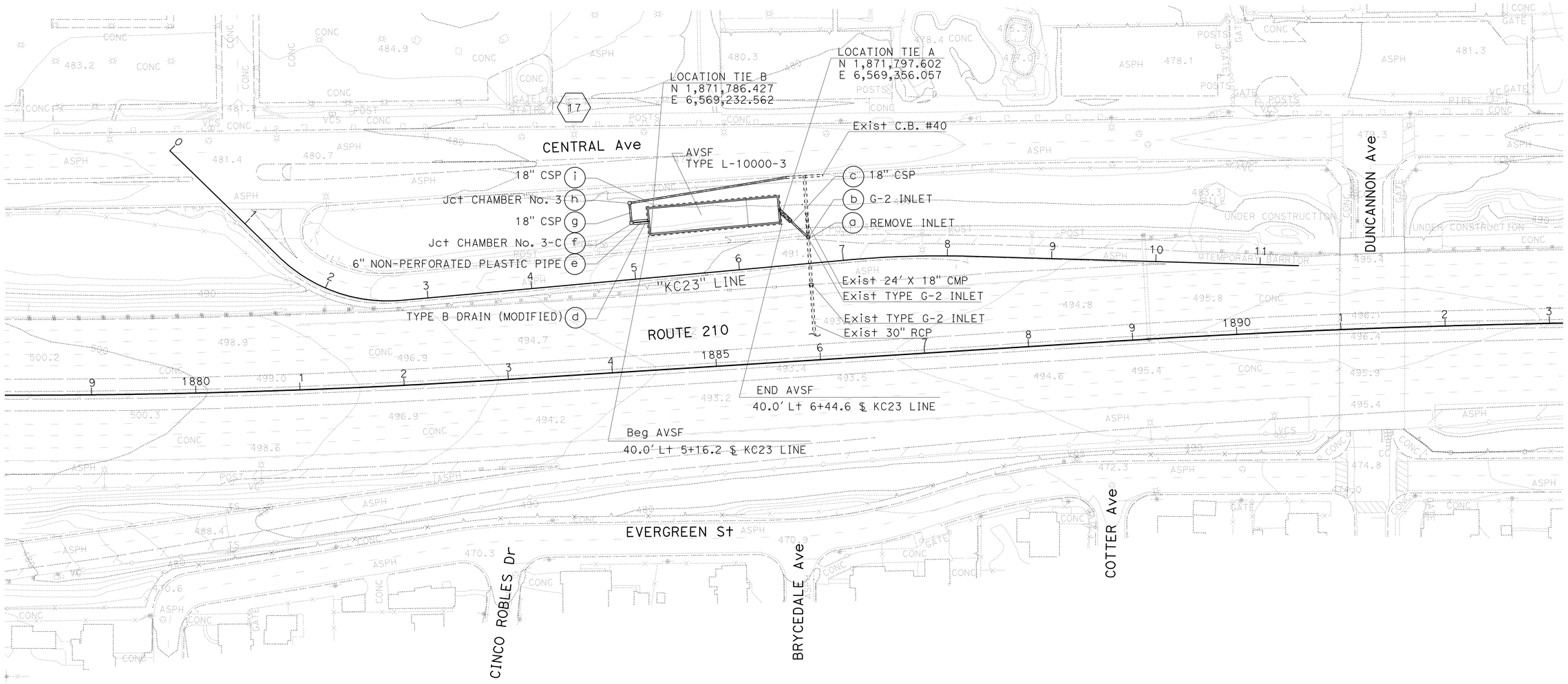

DRAINAGE PLAN (WATER POLLUTION CONTROL) LOCATION 17

SCALE: 1" = 50'

D-17

APPROVED FOR DRAINAGE WORK ONLY

STATE OF CALIFORNIA - DEPARTMENT OF TRANSPORTATION
Caltrans
HYDRAULICS

FUNCTIONAL SUPERVISOR: TIMOTHY TIEU
CALCULATED-DESIGNED BY: ELTON Q. LEE
CHECKED BY: SUNNY LIEM
REVISED BY
DATE REVISED

LAST REVISION 03-28-12
DATE PLOTTED => 28-JUN-2012
TIME PLOTTED => 10:58

Dist	COUNTY	ROUTE	POST MILES TOTAL PROJECT	SHEET No.	TOTAL SHEETS
07	LA	210	R15.0/R36.0	52	209

REGISTERED CIVIL ENGINEER 3-23-12 DATE

6-25-12
PLANS APPROVAL DATE

REGISTERED PROFESSIONAL ENGINEER SUNNY LIEM No. C61380 Exp. 6/30/13 CIVIL STATE OF CALIFORNIA

THE STATE OF CALIFORNIA OR ITS OFFICERS OR AGENTS SHALL NOT BE RESPONSIBLE FOR THE ACCURACY OR COMPLETENESS OF SCANNED COPIES OF THIS PLAN SHEET.

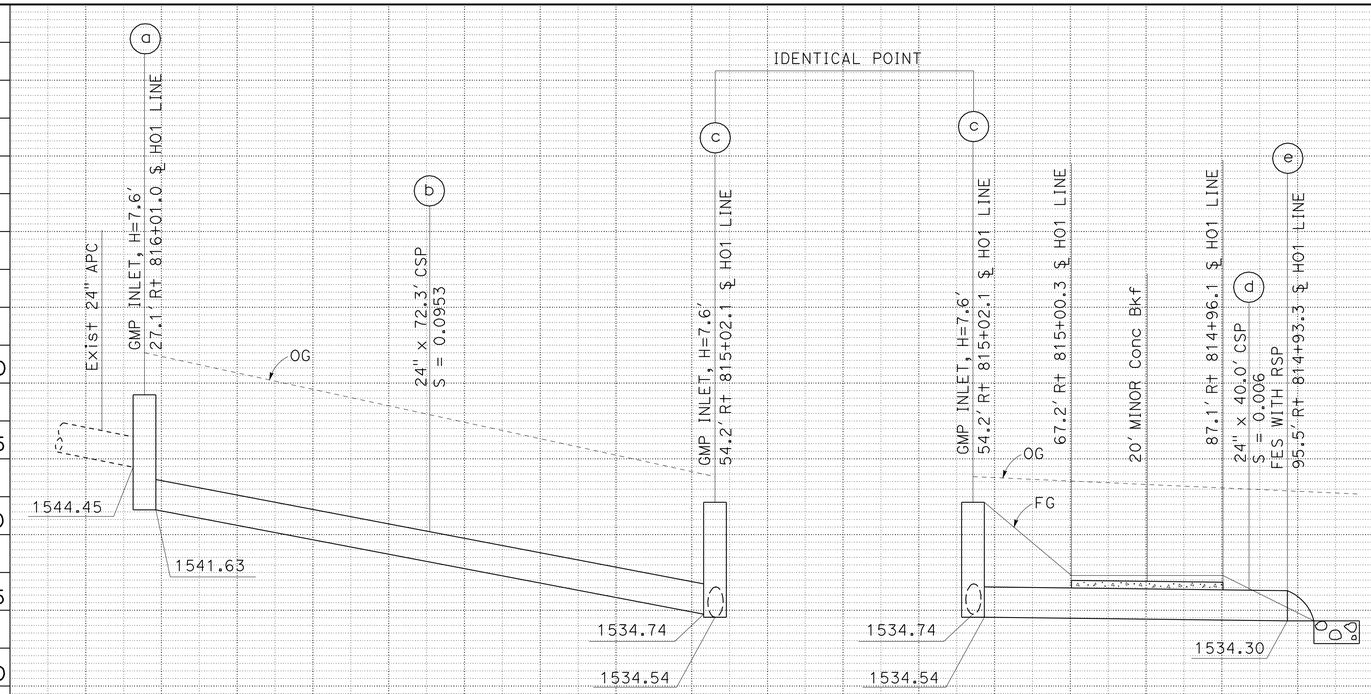

DRAINAGE SYSTEM No. 1A
SCALE: Horiz 1" = 10'
Vert 1" = 5'

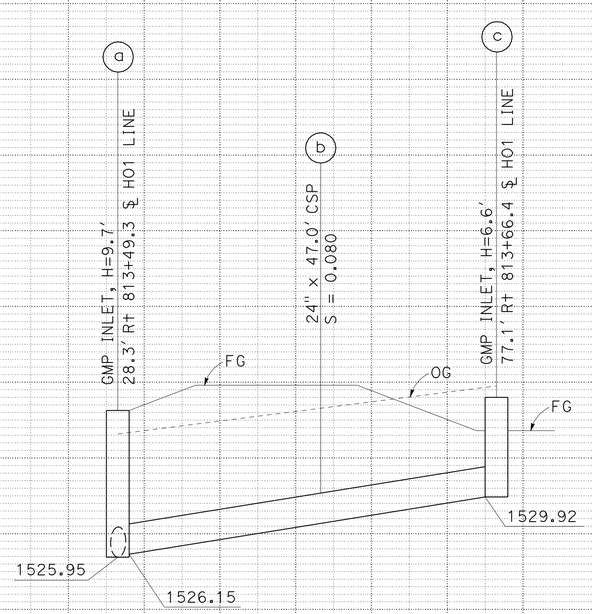

DRAINAGE SYSTEM No. 1C
SCALE: Horiz 1" = 10'
Vert 1" = 5'

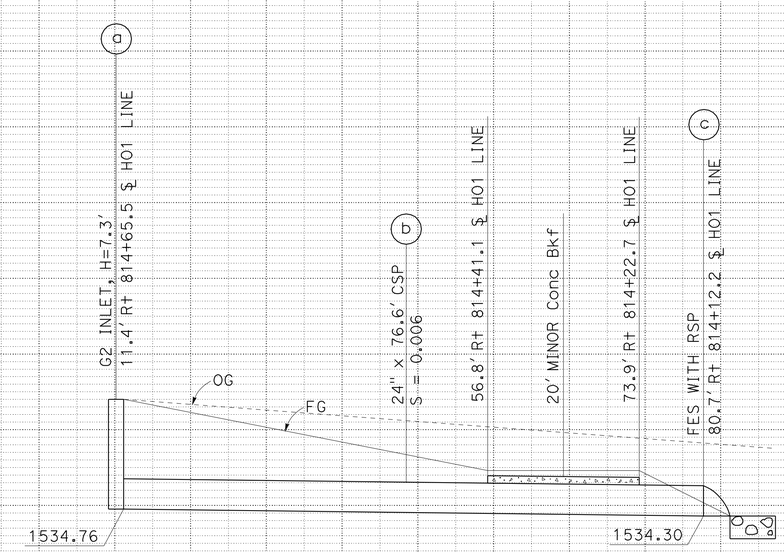

DRAINAGE SYSTEM No. 1B
SCALE: Horiz 1" = 10'
Vert 1" = 5'

NOTES:

1. THE CONTRACTOR SHALL VERIFY LOCATIONS AND ELEVATIONS OF EXISTING DRAINAGE SYSTEMS BEFORE COMMENCEMENT OF WORK.
2. FOR INFORMATION AND DETAILS NOT SHOWN, SEE Std PLANS AND DRAINAGE DETAILS SHEETS.

DRAINAGE PROFILES

SCALE AS SHOWN

DP-1

REVISED BY | DATE REVISED
ELTON Q. LEE | SUNNY LIEM
CALCULATED-DESIGNED BY | CHECKED BY
FUNCTIONAL SUPERVISOR: TIMOTHY TIEU
STATE OF CALIFORNIA - DEPARTMENT OF TRANSPORTATION
Caltrans
HYDRAULICS

LAST REVISION 00-00-00 | DATE PLOTTED => 26-JUN-2012 | TIME PLOTTED => 10:58

Dist	COUNTY	ROUTE	POST MILES TOTAL PROJECT	SHEET No.	TOTAL SHEETS
07	LA	210	R15.0/R36.0	53	209

REGISTERED CIVIL ENGINEER DATE 3-23-12

6-25-12
PLANS APPROVAL DATE

REGISTERED PROFESSIONAL ENGINEER SUNNY LIEM No. C61380 Exp. 6/30/13 CIVIL STATE OF CALIFORNIA

THE STATE OF CALIFORNIA OR ITS OFFICERS OR AGENTS SHALL NOT BE RESPONSIBLE FOR THE ACCURACY OR COMPLETENESS OF SCANNED COPIES OF THIS PLAN SHEET.

DRAINAGE SYSTEM No. 2A

SCALE: Horiz 1" = 10'
Vert 1" = 5'

NOTES:

1. THE CONTRACTOR SHALL VERIFY LOCATIONS AND ELEVATIONS OF EXISTING DRAINAGE SYSTEMS BEFORE COMMENCEMENT OF WORK.
2. FOR INFORMATION AND DETAILS NOT SHOWN, SEE Std PLANS AND DRAINAGE DETAILS SHEETS.

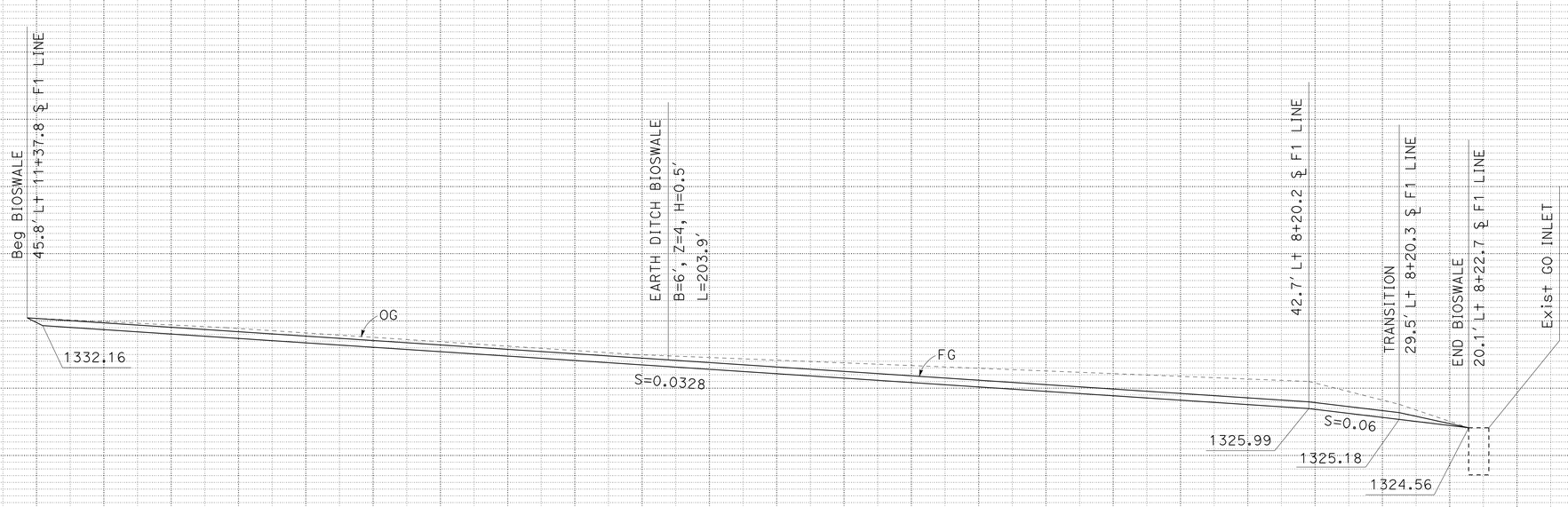

DRAINAGE SYSTEM No. 2B

SCALE: Horiz 1" = 10'
Vert 1" = 5'

DRAINAGE PROFILES

SCALE AS SHOWN

DP-2

STATE OF CALIFORNIA - DEPARTMENT OF TRANSPORTATION
HYDRAULICS
Caltrans

FUNCTIONAL SUPERVISOR: TIMOTHY TIEU
CALCULATED-DESIGNED BY: ELTON Q. LEE
CHECKED BY: SUNNY LIEM
REVISED BY
DATE REVISED

LAST REVISION 00-00-00
DATE PLOTTED => 28-JUN-2012
TIME PLOTTED => 10:58

Dist	COUNTY	ROUTE	POST MILES TOTAL PROJECT	SHEET No.	TOTAL SHEETS
07	LA	210	R15.0/R36.0	54	209

REGISTERED CIVIL ENGINEER 3-23-12 DATE

6-25-12
PLANS APPROVAL DATE

REGISTERED PROFESSIONAL ENGINEER SUNNY LIEM No. C61380 Exp. 6/30/13 CIVIL STATE OF CALIFORNIA

THE STATE OF CALIFORNIA OR ITS OFFICERS OR AGENTS SHALL NOT BE RESPONSIBLE FOR THE ACCURACY OR COMPLETENESS OF SCANNED COPIES OF THIS PLAN SHEET.

NOTES:

1. THE CONTRACTOR SHALL VERIFY LOCATIONS AND ELEVATIONS OF EXISTING DRAINAGE SYSTEMS BEFORE COMMENCEMENT OF WORK.
2. FOR INFORMATION AND DETAILS NOT SHOWN, SEE Std PLANS AND DRAINAGE DETAILS SHEETS.

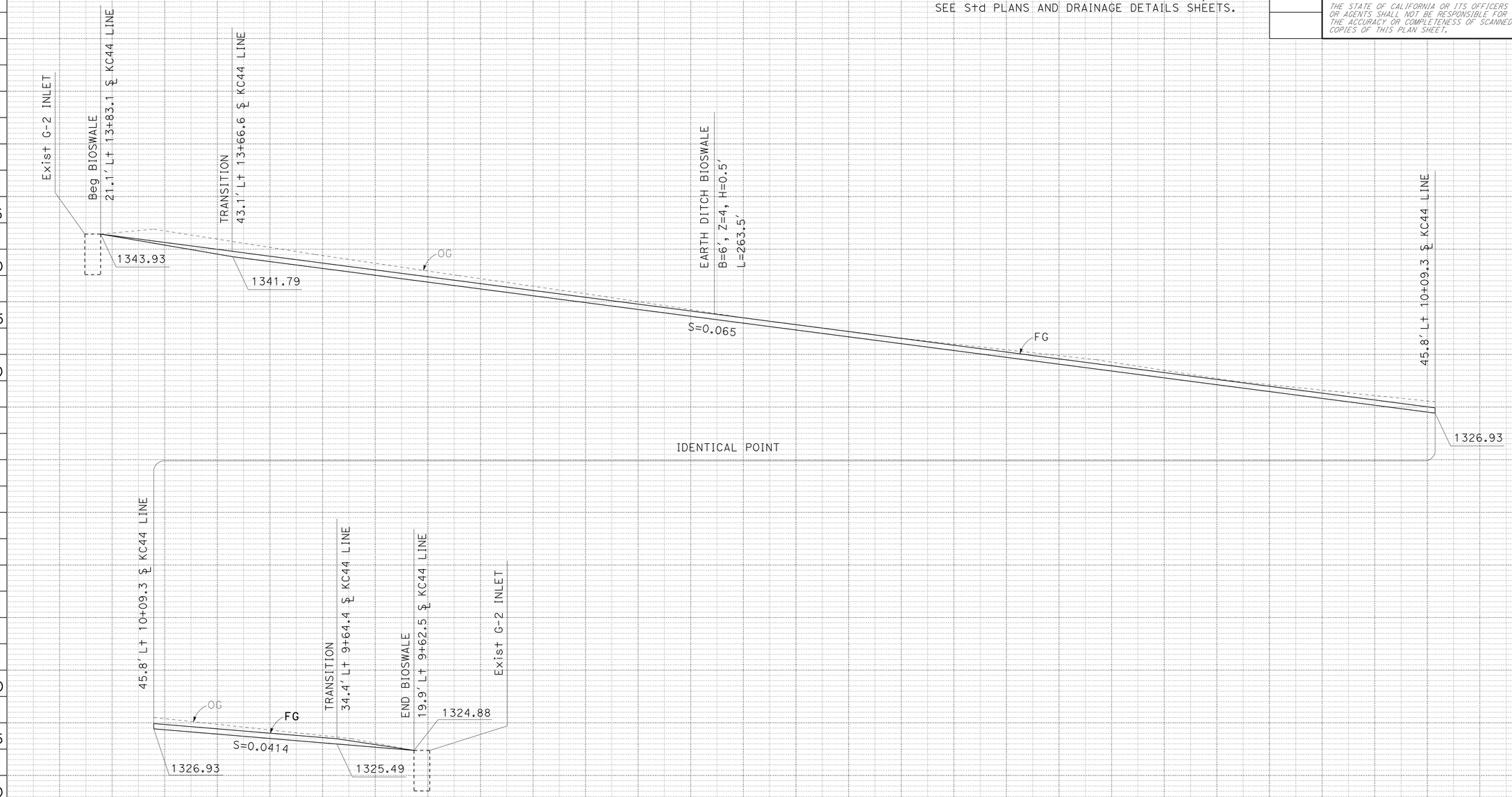

DRAINAGE SYSTEM No. 2C
SCALE: Horiz 1" = 10'
Vert 1" = 5'

DRAINAGE PROFILES

SCALE AS SHOWN

DP-3

STATE OF CALIFORNIA - DEPARTMENT OF TRANSPORTATION
Caltrans
HYDRAULICS
FUNCTIONAL SUPERVISOR: TIMOTHY TIEU
CALCULATED-DESIGNED BY: ELTON Q. LEE
CHECKED BY: SUNNY LIEM
REVISED BY
DATE REVISED

LAST REVISION 00-00-00
DATE PLOTTED => 26-JUN-2012
TIME PLOTTED => 10:58

Dist	COUNTY	ROUTE	POST MILES TOTAL PROJECT	SHEET No.	TOTAL SHEETS
07	LA	210	R15.0/R36.0	55	209

REGISTERED CIVIL ENGINEER 3-23-12 DATE

6-25-12
PLANS APPROVAL DATE

REGISTERED PROFESSIONAL ENGINEER SUNNY LIEM No. C61380 Exp. 6/30/13 CIVIL STATE OF CALIFORNIA

THE STATE OF CALIFORNIA OR ITS OFFICERS OR AGENTS SHALL NOT BE RESPONSIBLE FOR THE ACCURACY OR COMPLETENESS OF SCANNED COPIES OF THIS PLAN SHEET.

NOTES:

1. THE CONTRACTOR SHALL VERIFY LOCATIONS AND ELEVATIONS OF EXISTING DRAINAGE SYSTEMS BEFORE COMMENCEMENT OF WORK.
2. FOR INFORMATION AND DETAILS NOT SHOWN, SEE Std PLANS AND DRAINAGE DETAILS SHEETS.

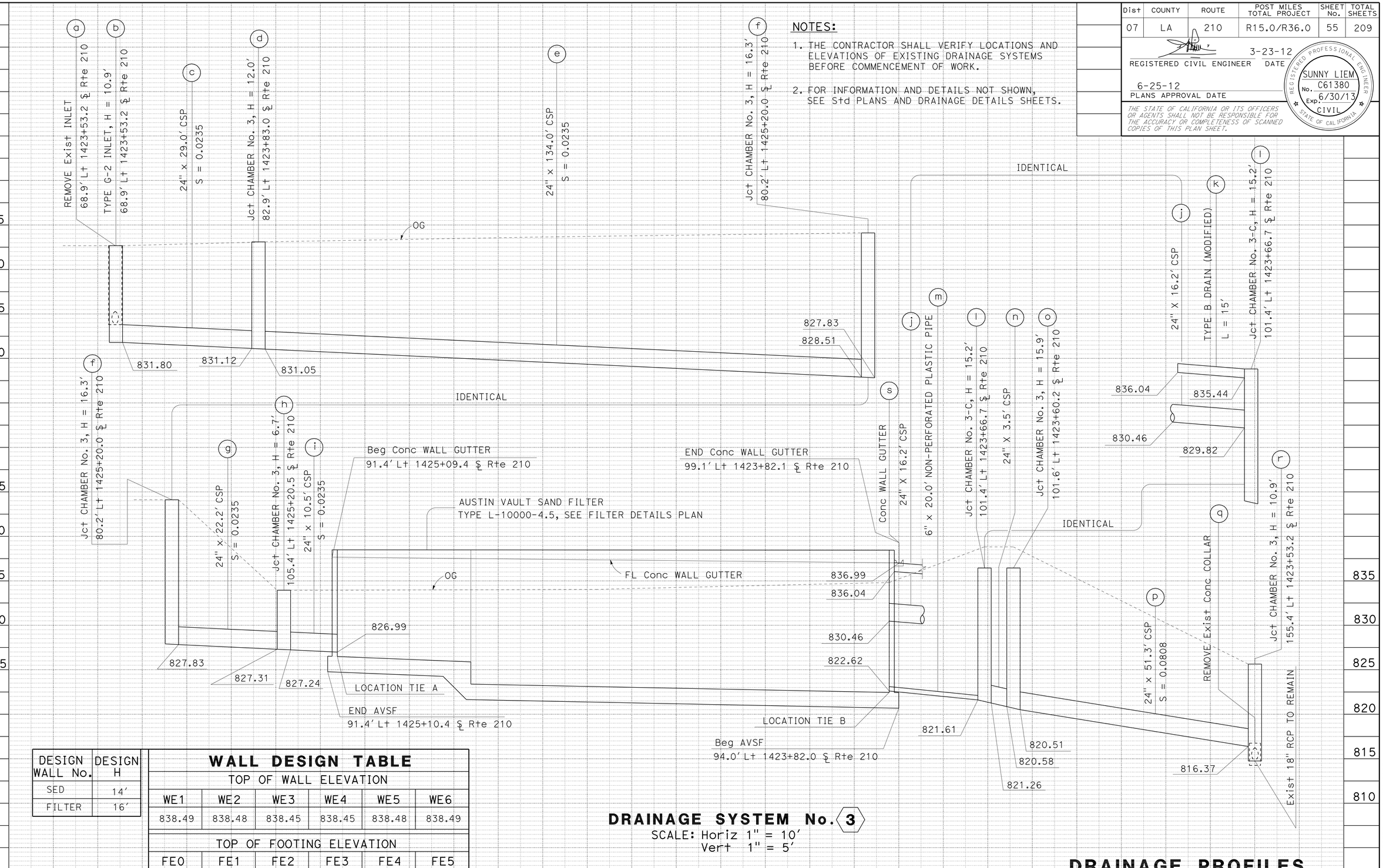

DESIGN WALL No.	DESIGN H
SED	14'
FILTER	16'

WALL DESIGN TABLE

TOP OF WALL ELEVATION					
WE1	WE2	WE3	WE4	WE5	WE6
838.49	838.48	838.45	838.45	838.48	838.49
TOP OF FOOTING ELEVATION					
FE0	FE1	FE2	FE3	FE4	FE5
826.53	826.49	825.89	823.39	822.45	822.43

DRAINAGE SYSTEM No. 3

SCALE: Horiz 1" = 10'
Vert 1" = 5'

DRAINAGE PROFILES

SCALE AS SHOWN

DP-4

REVISED BY | DATE REVISED
ELTON Q. LEE | SUNNY LIEM
CALCULATED-DESIGNED BY | CHECKED BY
FUNCTIONAL SUPERVISOR: TIMOTHY TIEU

STATE OF CALIFORNIA - DEPARTMENT OF TRANSPORTATION
Caltrans
HYDRAULICS

LAST REVISION 00-00-00 | DATE PLOTTED => 26-JUN-2012 | TIME PLOTTED => 10:58

Dist	COUNTY	ROUTE	POST MILES TOTAL PROJECT	SHEET No.	TOTAL SHEETS
07	LA	210	R15.0/R36.0	56	209

REGISTERED CIVIL ENGINEER 3-23-12 DATE

6-25-12
PLANS APPROVAL DATE

REGISTERED PROFESSIONAL ENGINEER SUNNY LIEM No. C61380 Exp. 6/30/13 CIVIL STATE OF CALIFORNIA

THE STATE OF CALIFORNIA OR ITS OFFICERS OR AGENTS SHALL NOT BE RESPONSIBLE FOR THE ACCURACY OR COMPLETENESS OF SCANNED COPIES OF THIS PLAN SHEET.

NOTES:

1. THE CONTRACTOR SHALL VERIFY LOCATIONS AND ELEVATIONS OF EXISTING DRAINAGE SYSTEMS BEFORE COMMENCEMENT OF WORK.
2. FOR INFORMATION AND DETAILS NOT SHOWN, SEE Std PLANS AND DRAINAGE DETAILS SHEETS.

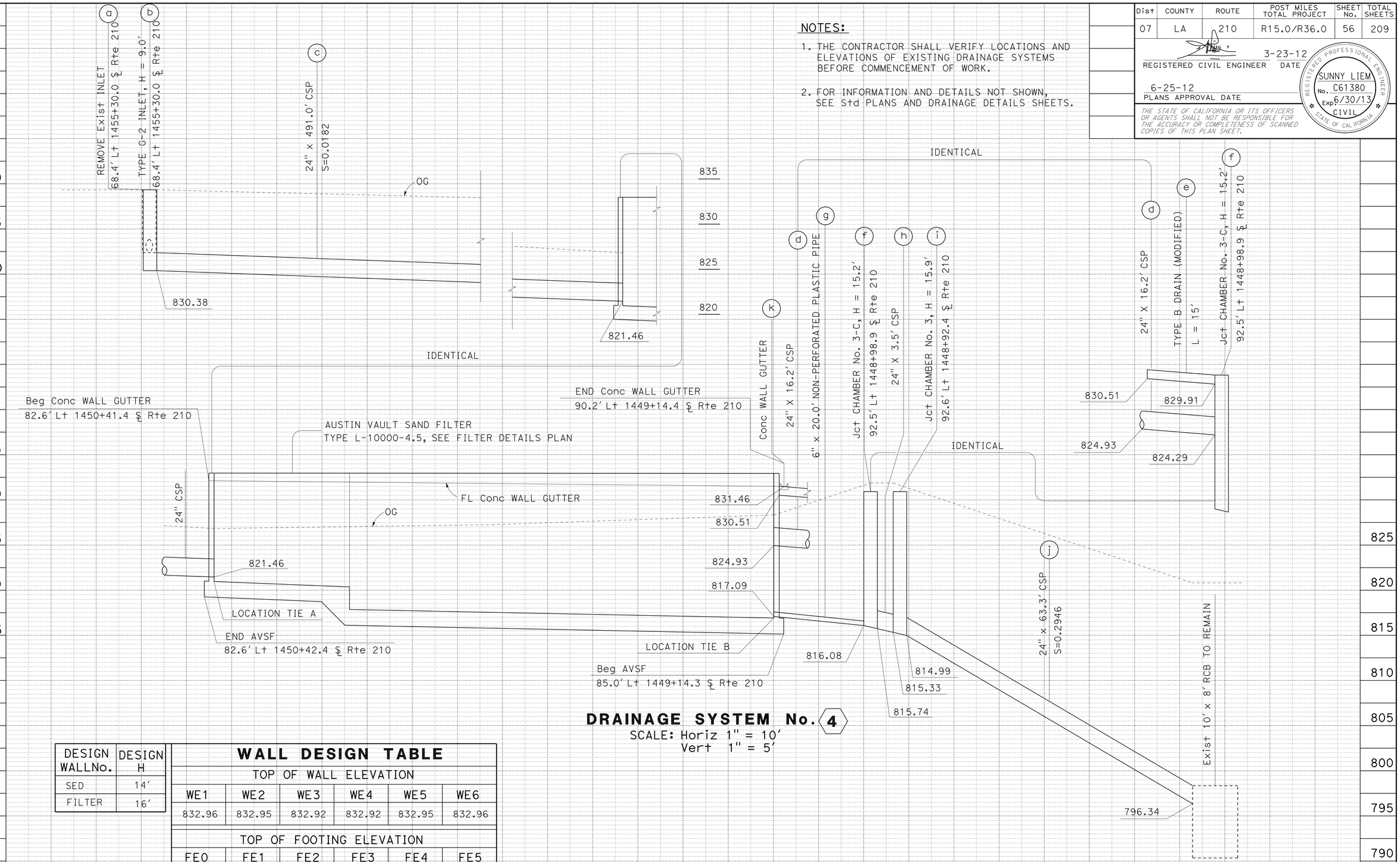

DRAINAGE SYSTEM No. 4

SCALE: Horiz 1" = 10'
Vert 1" = 5'

DESIGN WALLNo.	DESIGN H
SED	14'
FILTER	16'

WALL DESIGN TABLE

TOP OF WALL ELEVATION					
WE1	WE2	WE3	WE4	WE5	WE6
832.96	832.95	832.92	832.92	832.95	832.96

TOP OF FOOTING ELEVATION					
FE0	FE1	FE2	FE3	FE4	FE5
821.00	820.96	820.36	817.86	816.92	816.90

DRAINAGE PROFILES

SCALE AS SHOWN

DP-5

REVISED BY | DATE REVISED
ELTON Q. LEE | SUNNY LIEM
CALCULATED-DESIGNED BY | CHECKED BY
FUNCTIONAL SUPERVISOR: TIMOTHY TIEU
STATE OF CALIFORNIA - DEPARTMENT OF TRANSPORTATION
HYDRAULICS
Caltrans

LAST REVISION 00-00-00 | DATE PLOTTED => 28-JUN-2012 | TIME PLOTTED => 10:58

Dist	COUNTY	ROUTE	POST MILES TOTAL PROJECT	SHEET No.	TOTAL SHEETS
07	LA	210	R15.0/R36.0	57	209

REGISTERED CIVIL ENGINEER 3-23-12 DATE

6-25-12
PLANS APPROVAL DATE

REGISTERED PROFESSIONAL ENGINEER SUNNY LIEM No. C61380 Exp 6/30/13 CIVIL STATE OF CALIFORNIA

THE STATE OF CALIFORNIA OR ITS OFFICERS OR AGENTS SHALL NOT BE RESPONSIBLE FOR THE ACCURACY OR COMPLETENESS OF SCANNED COPIES OF THIS PLAN SHEET.

NOTES:

1. THE CONTRACTOR SHALL VERIFY LOCATIONS AND ELEVATIONS OF EXISTING DRAINAGE SYSTEMS BEFORE COMMENCEMENT OF WORK.
2. FOR INFORMATION AND DETAILS NOT SHOWN, SEE Std PLANS AND DRAINAGE DETAILS SHEETS.

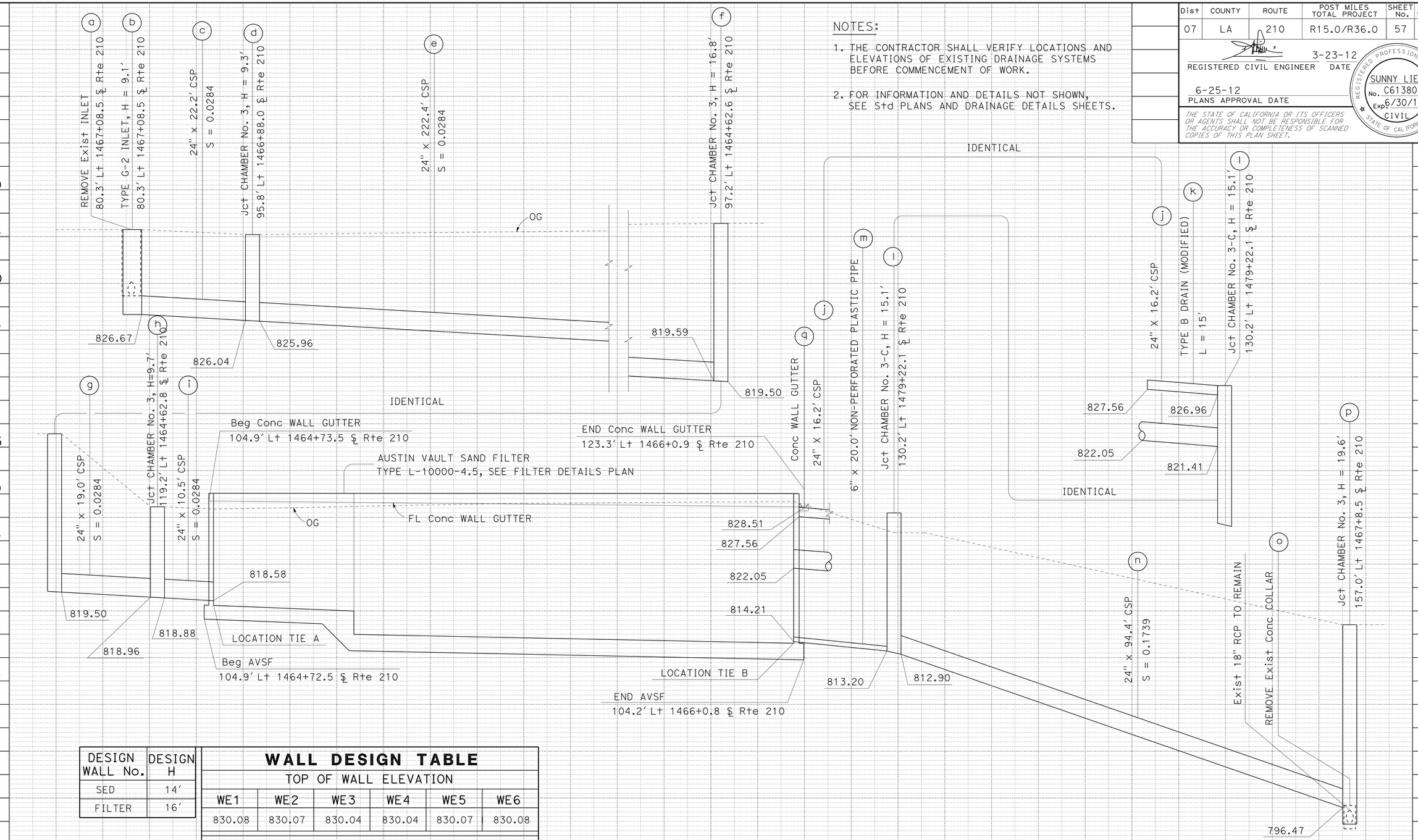

DESIGN WALL No.	DESIGN H
SED	14'
FILTER	16'

WALL DESIGN TABLE

TOP OF WALL ELEVATION					
WE1	WE2	WE3	WE4	WE5	WE6
830.08	830.07	830.04	830.04	830.07	830.08

TOP OF FOOTING ELEVATION					
FE0	FE1	FE2	FE3	FE4	FE5
818.12	818.08	817.48	814.98	814.04	814.02

DRAINAGE SYSTEM No. 5

SCALE: Horiz 1" = 10'
Vert 1" = 5'

DRAINAGE PROFILES

SCALE AS SHOWN

DP-6

STATE OF CALIFORNIA - DEPARTMENT OF TRANSPORTATION
Caltrans HYDRAULICS

FUNCTIONAL SUPERVISOR: TIMOTHY TIEU
CALCULATED-DESIGNED BY: ELTON Q. LEE
CHECKED BY: SUNNY LIEM
REVISED BY
DATE REVISED

LAST REVISION 00-00-00 | DATE PLOTTED => 28-JUN-2012 | TIME PLOTTED => 10:58

Dist	COUNTY	ROUTE	POST MILES TOTAL PROJECT	SHEET No.	TOTAL SHEETS
07	LA	210	R15.0/R36.0	58	209

REGISTERED CIVIL ENGINEER 3-23-12 DATE

6-25-12
PLANS APPROVAL DATE

REGISTERED PROFESSIONAL ENGINEER SUNNY LIEM No. C61380 Exp. 6/30/13 CIVIL STATE OF CALIFORNIA

THE STATE OF CALIFORNIA OR ITS OFFICERS OR AGENTS SHALL NOT BE RESPONSIBLE FOR THE ACCURACY OR COMPLETENESS OF SCANNED COPIES OF THIS PLAN SHEET.

NOTES:

1. THE CONTRACTOR SHALL VERIFY LOCATIONS AND ELEVATIONS OF EXISTING DRAINAGE SYSTEMS BEFORE COMMENCEMENT OF WORK.
2. FOR INFORMATION AND DETAILS NOT SHOWN, SEE Std PLANS AND DRAINAGE DETAILS SHEETS.

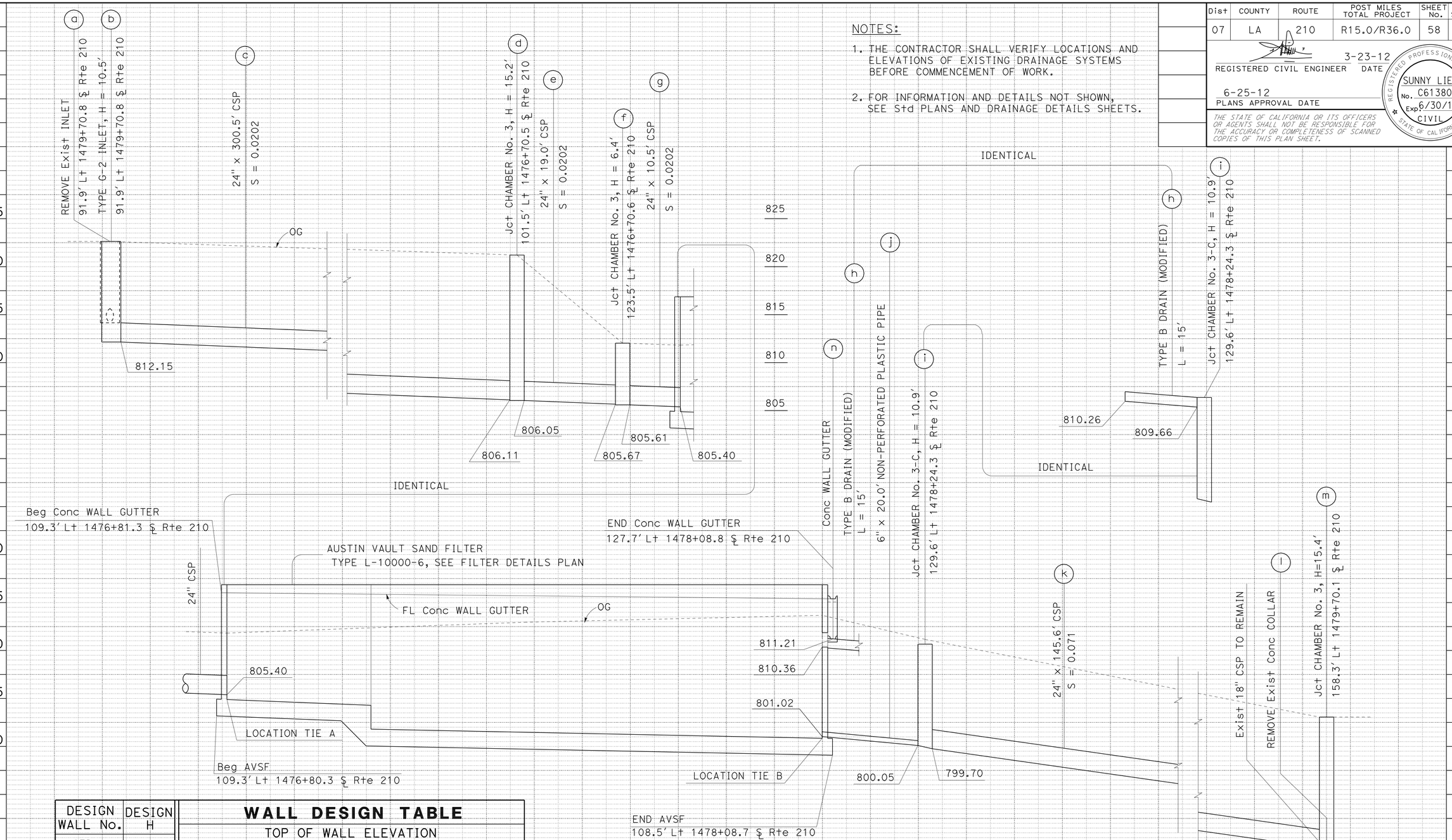

DESIGN WALL No.	DESIGN H
SED	14'
FILTER	16'

WALL DESIGN TABLE

TOP OF WALL ELEVATION					
WE1	WE2	WE3	WE4	WE5	WE6
816.86	816.86	816.86	816.86	816.86	816.86

TOP OF FOOTING ELEVATION					
FE0	FE1	FE2	FE3	FE4	FE5
804.94	804.89	804.29	801.79	800.85	800.83

DRAINAGE SYSTEM No. 6

SCALE: Horiz 1" = 10'
Vert 1" = 5'

DRAINAGE PROFILES

SCALE AS SHOWN

DP-7

STATE OF CALIFORNIA - DEPARTMENT OF TRANSPORTATION
Caltrans® HYDRAULICS

FUNCTIONAL SUPERVISOR: TIMOTHY TIEU
CALCULATED-DESIGNED BY: ELTON Q. LEE
CHECKED BY: SUNNY LIEM
REVISED BY / DATE REVISED

LAST REVISION 00-00-00
DATE PLOTTED => 26-JUN-2012
TIME PLOTTED => 10:59

Dist	COUNTY	ROUTE	POST MILES TOTAL PROJECT	SHEET No.	TOTAL SHEETS
07	LA	210	R15.0/R36.0	59	209

REGISTERED CIVIL ENGINEER 3-23-12 DATE

6-25-12
PLANS APPROVAL DATE

REGISTERED PROFESSIONAL ENGINEER SUNNY LIEM No. C61380 Exp 6/30/13 CIVIL STATE OF CALIFORNIA

THE STATE OF CALIFORNIA OR ITS OFFICERS OR AGENTS SHALL NOT BE RESPONSIBLE FOR THE ACCURACY OR COMPLETENESS OF SCANNED COPIES OF THIS PLAN SHEET.

NOTES:

1. THE CONTRACTOR SHALL VERIFY LOCATIONS AND ELEVATIONS OF EXISTING DRAINAGE SYSTEMS BEFORE COMMENCEMENT OF WORK.
2. FOR INFORMATION AND DETAILS NOT SHOWN, SEE Std PLANS AND DRAINAGE DETAILS SHEETS.

DESIGN WALL No.	DESIGN H
SED	14′
FILTER	16′

WALL DESIGN TABLE

TOP OF WALL ELEVATION					
WE1	WE2	WE3	WE4	WE5	WE6
768.50	768.50	768.50	768.50	768.50	768.50

TOP OF FOOTING ELEVATION					
FE0	FE1	FE2	FE3	FE4	FE5
756.38	756.34	755.92	753.42	752.79	752.77

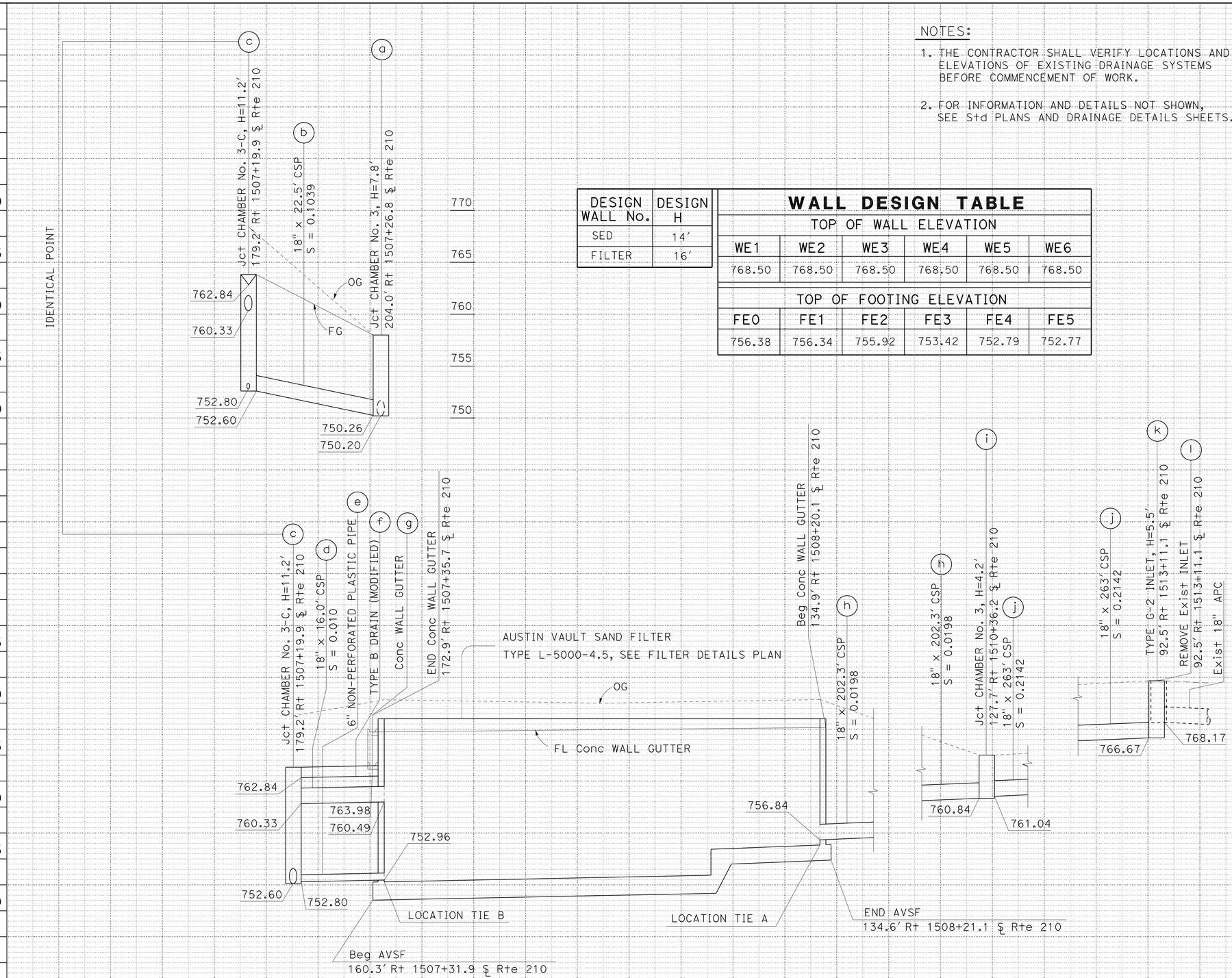

DRAINAGE SYSTEM No. 7

SCALE: Horiz 1″ = 10′
Vert 1″ = 5′

DRAINAGE PROFILES

SCALE AS SHOWN

DP-8

ELTON Q. LEE — REVISED BY — DATE REVISED
SUNNY LIEM — CALCULATED-DESIGNED BY — CHECKED BY
FUNCTIONAL SUPERVISOR: TIMOTHY TIEU
STATE OF CALIFORNIA - DEPARTMENT OF TRANSPORTATION — Caltrans — HYDRAULICS

LAST REVISION 00-00-00 — DATE PLOTTED => 28-JUN-2012 — TIME PLOTTED => 10:59

Dist	COUNTY	ROUTE	POST MILES TOTAL PROJECT	SHEET No.	TOTAL SHEETS
07	LA	210	R15.0/R36.0	60	209

REGISTERED CIVIL ENGINEER 3-23-12 DATE

6-25-12
PLANS APPROVAL DATE

REGISTERED PROFESSIONAL ENGINEER SUNNY LIEM No. C61380 Exp. 6/30/13 CIVIL STATE OF CALIFORNIA

THE STATE OF CALIFORNIA OR ITS OFFICERS OR AGENTS SHALL NOT BE RESPONSIBLE FOR THE ACCURACY OR COMPLETENESS OF SCANNED COPIES OF THIS PLAN SHEET.

NOTES:

1. THE CONTRACTOR SHALL VERIFY LOCATIONS AND ELEVATIONS OF EXISTING DRAINAGE SYSTEMS BEFORE COMMENCEMENT OF WORK.
2. FOR INFORMATION AND DETAILS NOT SHOWN, SEE Std PLANS AND DRAINAGE DETAILS SHEETS.

DESIGN WALL No.	DESIGN H
SED	14'
FILTER	16'

WALL DESIGN TABLE

TOP OF WALL ELEVATION					
WE1	WE2	WE3	WE4	WE5	WE6
760.95	760.94	760.91	760.91	760.94	760.95

TOP OF FOOTING ELEVATION					
FE0	FE1	FE2	FE3	FE4	FE5
748.99	748.95	748.35	745.85	744.91	744.89

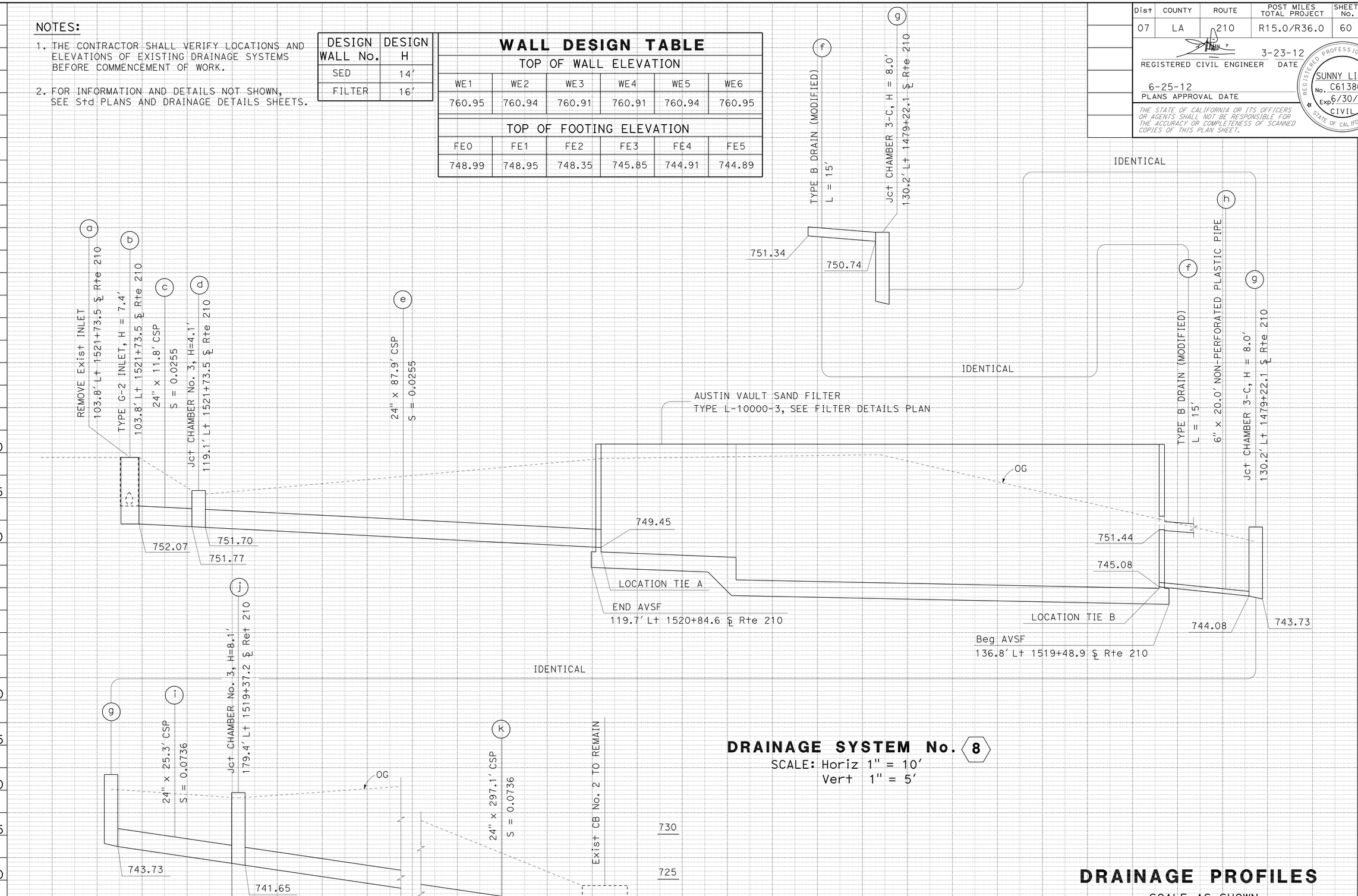

DRAINAGE SYSTEM No. 8
SCALE: Horiz 1" = 10'
Vert 1" = 5'

DRAINAGE PROFILES
SCALE AS SHOWN

DP-9

STATE OF CALIFORNIA - DEPARTMENT OF TRANSPORTATION
Caltrans HYDRAULICS
FUNCTIONAL SUPERVISOR TIMOTHY TIEU
CALCULATED-DESIGNED BY ELTON Q. LEE
CHECKED BY SUNNY LIEM
REVISED BY
DATE REVISED

LAST REVISION 00-00-00 DATE PLOTTED => 28-JUN-2012 TIME PLOTTED => 10:59

Dist	COUNTY	ROUTE	POST MILES TOTAL PROJECT	SHEET No.	TOTAL SHEETS
07	LA	210	R15.0/R36.0	61	209

REGISTERED CIVIL ENGINEER 3-23-12 DATE

6-25-12
PLANS APPROVAL DATE

REGISTERED PROFESSIONAL ENGINEER SUNNY LIEM No. C61380 Exp. 6/30/13 CIVIL STATE OF CALIFORNIA

THE STATE OF CALIFORNIA OR ITS OFFICERS OR AGENTS SHALL NOT BE RESPONSIBLE FOR THE ACCURACY OR COMPLETENESS OF SCANNED COPIES OF THIS PLAN SHEET.

NOTES:

1. THE CONTRACTOR SHALL VERIFY LOCATIONS AND ELEVATIONS OF EXISTING DRAINAGE SYSTEMS BEFORE COMMENCEMENT OF WORK.
2. FOR INFORMATION AND DETAILS NOT SHOWN, SEE Std PLANS AND DRAINAGE DETAILS SHEETS.

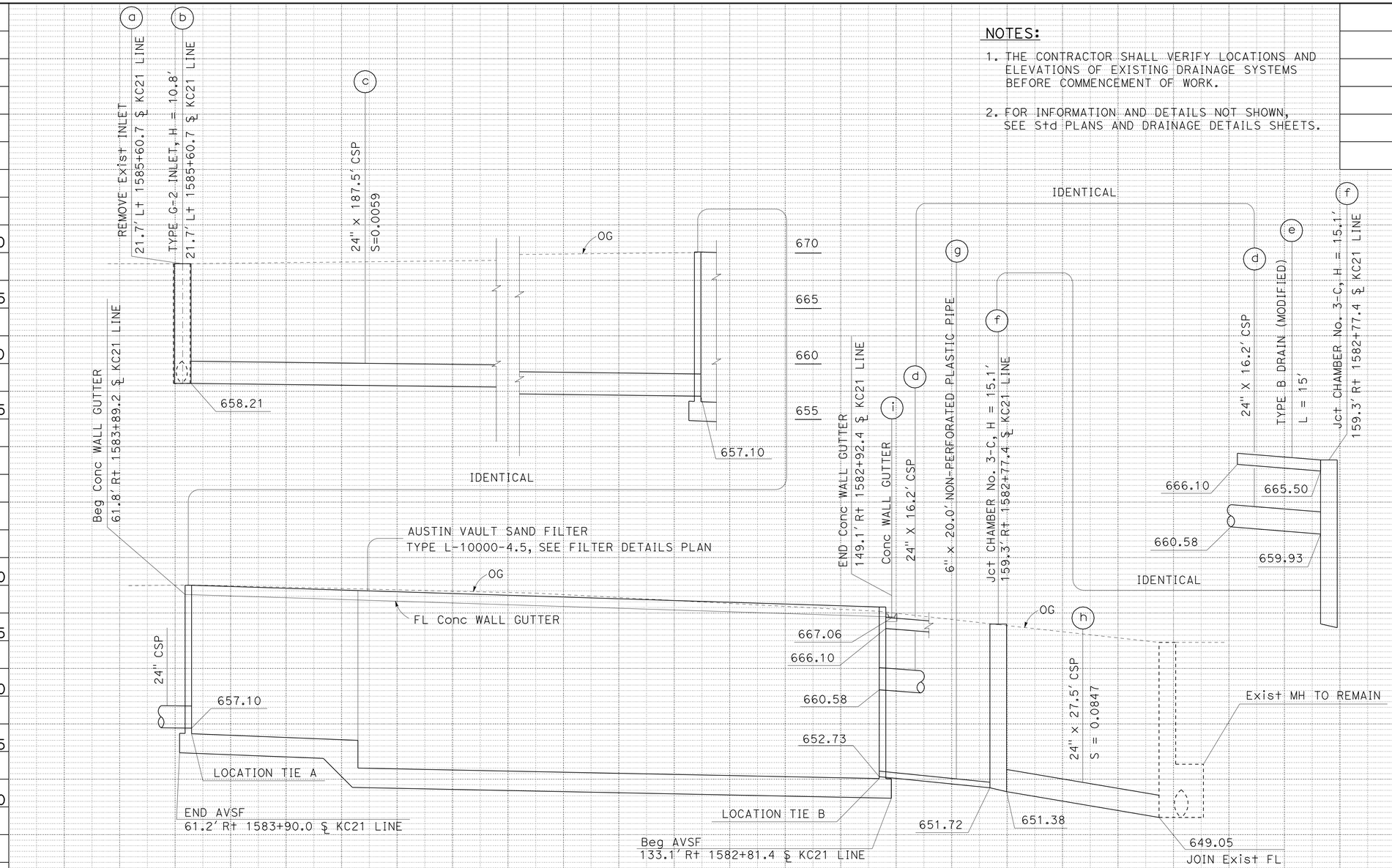

DESIGN WALL No.	DESIGN H
SED	14'
FILTER	16'

WALL DESIGN TABLE

TOP OF WALL ELEVATION					
WE1	WE2	WE3	WE4	WE5	WE6
670.00	669.53	668.04	668.04	669.53	670.00

TOP OF FOOTING ELEVATION					
FE0	FE1	FE2	FE3	FE4	FE5
656.65	656.60	656.00	653.50	652.56	652.54

DRAINAGE SYSTEM No. 9

SCALE: Horiz 1" = 10'
Vert 1" = 5'

DRAINAGE PROFILES

SCALE AS SHOWN

DP-10

STATE OF CALIFORNIA - DEPARTMENT OF TRANSPORTATION
Caltrans
HYDRAULICS

FUNCTIONAL SUPERVISOR: TIMOTHY TIEU
CALCULATED-DESIGNED BY: ELTON Q. LEE
CHECKED BY: SUNNY LIEM
REVISED BY
DATE REVISED

LAST REVISION 00-00-00
DATE PLOTTED => 28-JUN-2012
TIME PLOTTED => 10:59

Dist	COUNTY	ROUTE	POST MILES TOTAL PROJECT	SHEET No.	TOTAL SHEETS
07	LA	210	R15.0/R36.0	62	209

REGISTERED CIVIL ENGINEER 3-23-12 DATE

6-25-12
PLANS APPROVAL DATE

REGISTERED PROFESSIONAL ENGINEER
SUNNY LIEM
No. C61380
Exp. 6/30/13
CIVIL
STATE OF CALIFORNIA

THE STATE OF CALIFORNIA OR ITS OFFICERS OR AGENTS SHALL NOT BE RESPONSIBLE FOR THE ACCURACY OR COMPLETENESS OF SCANNED COPIES OF THIS PLAN SHEET.

NOTES:

1. THE CONTRACTOR SHALL VERIFY LOCATIONS AND ELEVATIONS OF EXISTING DRAINAGE SYSTEMS BEFORE COMMENCEMENT OF WORK.
2. FOR INFORMATION AND DETAILS NOT SHOWN, SEE STD PLANS AND DRAINAGE DETAILS SHEETS.

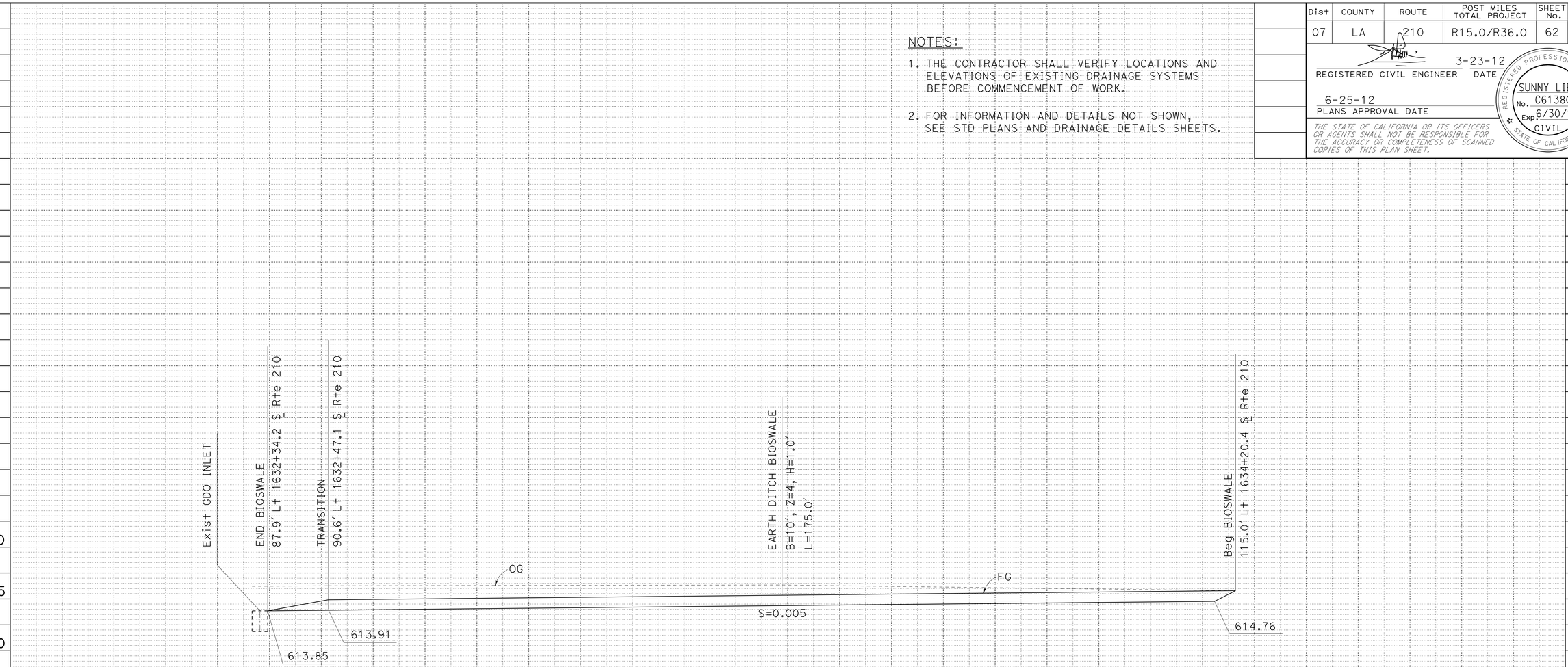

DRAINAGE SYSTEM No. 11

SCALE: Horiz 1" = 10'
Vert 1" = 5'

DRAINAGE PROFILES

SCALE AS SHOWN

DP-11

STATE OF CALIFORNIA - DEPARTMENT OF TRANSPORTATION
Caltrans
HYDRAULICS

FUNCTIONAL SUPERVISOR: TIMOTHY TIEU

CALCULATED-DESIGNED BY: ELTON Q. LEE
CHECKED BY: SUNNY LIEM

REVISED BY
DATE REVISED

LAST REVISION 00-00-00
DATE PLOTTED => 26-JUN-2012
TIME PLOTTED => 10:59

Dist	COUNTY	ROUTE	POST MILES TOTAL PROJECT	SHEET No.	TOTAL SHEETS
07	LA	210	R15.0/R36.0	63	209

REGISTERED CIVIL ENGINEER 3-23-12 DATE

6-25-12
PLANS APPROVAL DATE

REGISTERED PROFESSIONAL ENGINEER SUNNY LIEM No. C61380 Exp. 6/30/13 CIVIL STATE OF CALIFORNIA

THE STATE OF CALIFORNIA OR ITS OFFICERS OR AGENTS SHALL NOT BE RESPONSIBLE FOR THE ACCURACY OR COMPLETENESS OF SCANNED COPIES OF THIS PLAN SHEET.

NOTES:

1. THE CONTRACTOR SHALL VERIFY LOCATIONS AND ELEVATIONS OF EXISTING DRAINAGE SYSTEMS BEFORE COMMENCEMENT OF WORK.
2. FOR INFORMATION AND DETAILS NOT SHOWN, SEE STD PLANS AND DRAINAGE DETAILS SHEETS.

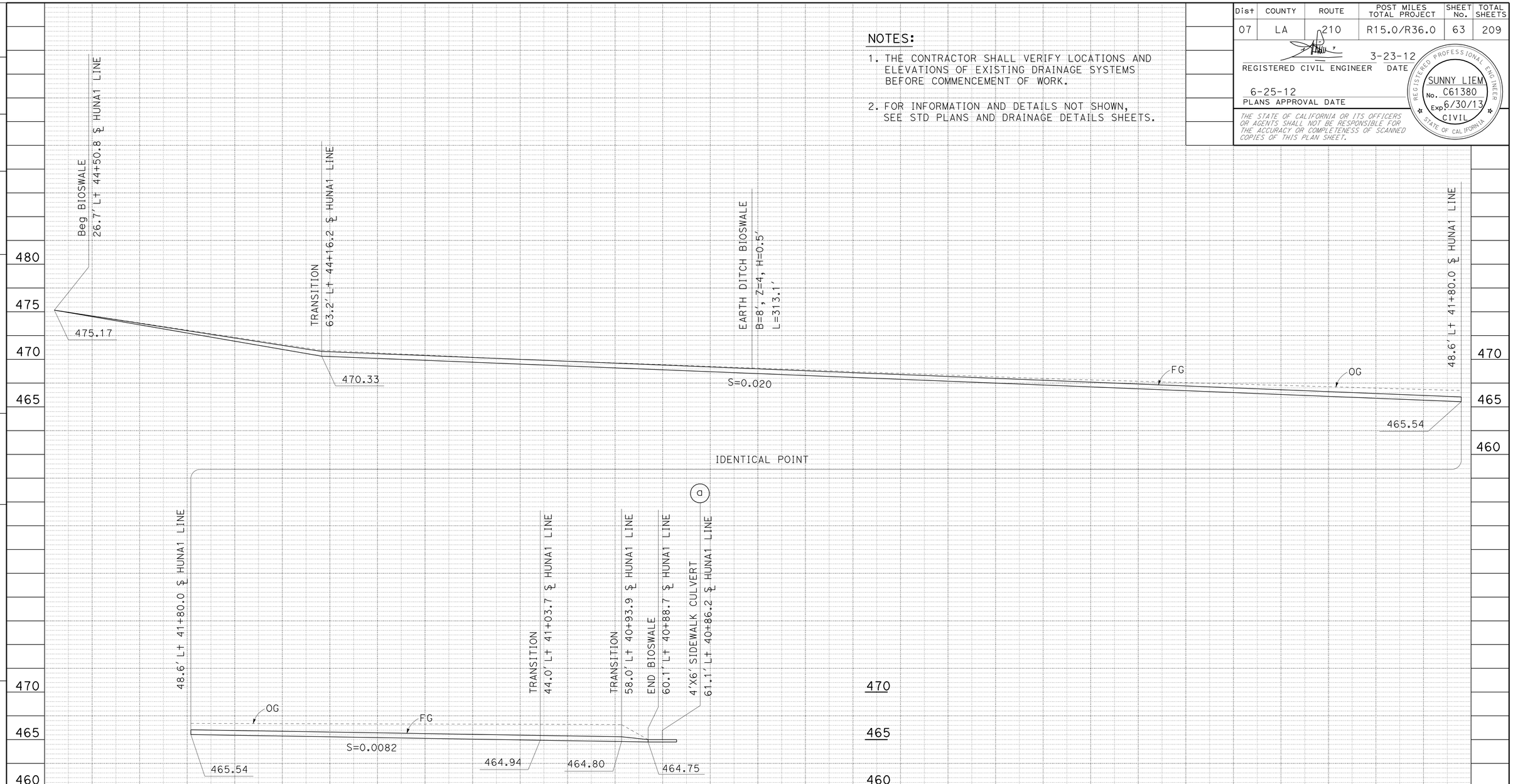

DRAINAGE SYSTEM No. 12

SCALE: Horiz 1" = 10'
Vert 1" = 5'

DRAINAGE PROFILES

SCALE AS SHOWN

DP-12

STATE OF CALIFORNIA - DEPARTMENT OF TRANSPORTATION
Caltrans
HYDRAULICS
FUNCTIONAL SUPERVISOR: TIMOTHY TIEU
CALCULATED-DESIGNED BY: ELTON Q. LEE
CHECKED BY: SUNNY LIEM
REVISED BY
DATE REVISED

LAST REVISION 00-00-00
DATE PLOTTED => 28-JUN-2012
TIME PLOTTED => 10:59

Dist	COUNTY	ROUTE	POST MILES TOTAL PROJECT	SHEET No.	TOTAL SHEETS
07	LA	210	R15.0/R36.0	64	209

REGISTERED CIVIL ENGINEER 3-23-12 DATE

6-25-12
PLANS APPROVAL DATE

REGISTERED PROFESSIONAL ENGINEER
SUNNY LIEM
No. C61380
Exp. 6/30/13
CIVIL
STATE OF CALIFORNIA

THE STATE OF CALIFORNIA OR ITS OFFICERS OR AGENTS SHALL NOT BE RESPONSIBLE FOR THE ACCURACY OR COMPLETENESS OF SCANNED COPIES OF THIS PLAN SHEET.

NOTES:

1. THE CONTRACTOR SHALL VERIFY LOCATIONS AND ELEVATIONS OF EXISTING DRAINAGE SYSTEMS BEFORE COMMENCEMENT OF WORK.
2. FOR INFORMATION AND DETAILS NOT SHOWN, SEE STD PLANS AND DRAINAGE DETAILS SHEETS.

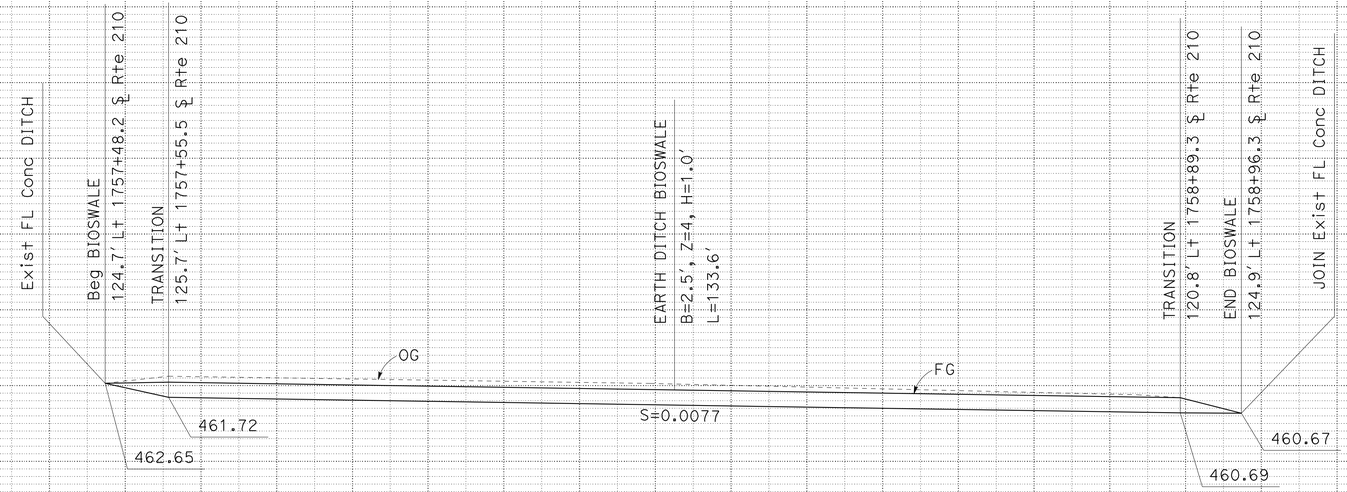

DRAINAGE SYSTEM No. 13

SCALE: Horiz 1" = 10'
Vert 1" = 5'

DRAINAGE PROFILES

SCALE AS SHOWN

DP-13

STATE OF CALIFORNIA - DEPARTMENT OF TRANSPORTATION
Caltrans
HYDRAULICS
FUNCTIONAL SUPERVISOR: TIMOTHY TIEU
CALCULATED-DESIGNED BY: ELTON Q. LEE
CHECKED BY: SUNNY LIEM
REVISED BY
DATE REVISED

LAST REVISION 00-00-00
DATE PLOTTED => 28-JUN-2012
TIME PLOTTED => 10:59

Dist	COUNTY	ROUTE	POST MILES TOTAL PROJECT	SHEET No.	TOTAL SHEETS
07	LA	210	R15.0/R36.0	65	209

REGISTERED CIVIL ENGINEER 3-23-12 DATE

6-25-12
PLANS APPROVAL DATE

REGISTERED PROFESSIONAL ENGINEER SUNNY LIEM No. C61380 Exp. 6/30/13 CIVIL STATE OF CALIFORNIA

THE STATE OF CALIFORNIA OR ITS OFFICERS OR AGENTS SHALL NOT BE RESPONSIBLE FOR THE ACCURACY OR COMPLETENESS OF SCANNED COPIES OF THIS PLAN SHEET.

NOTES:

1. THE CONTRACTOR SHALL VERIFY LOCATIONS AND ELEVATIONS OF EXISTING DRAINAGE SYSTEMS BEFORE COMMENCEMENT OF WORK.
2. FOR INFORMATION AND DETAILS NOT SHOWN, SEE STD PLANS AND DRAINAGE DETAILS SHEETS.

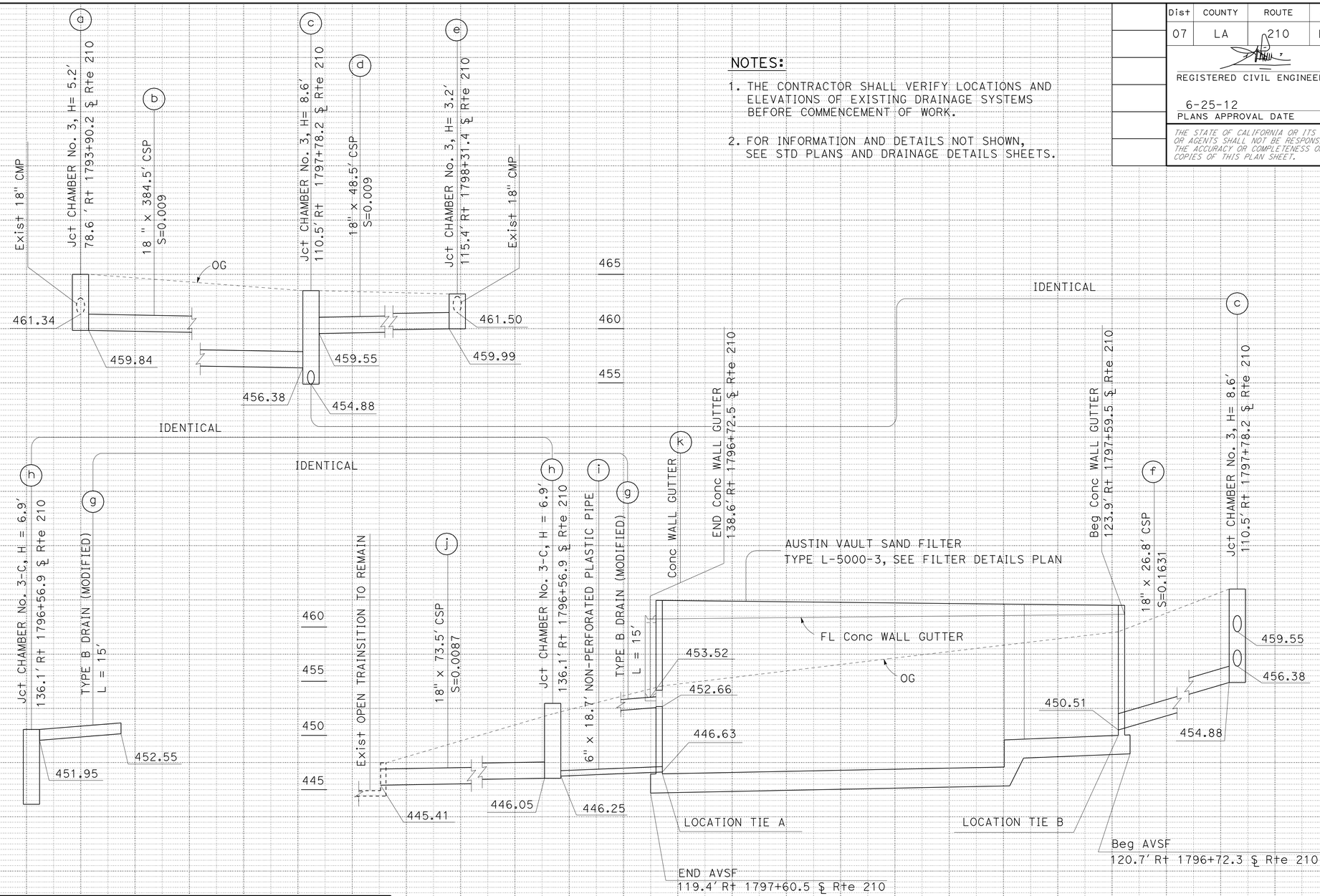

DESIGN WALL No.	DESIGN H
SED	14'
FILTER	16'

WALL DESIGN TABLE

TOP OF WALL ELEVATION					
WE1	WE2	WE3	WE4	WE5	WE6
462.00	462.11	462.45	462.45	462.11	462.00
TOP OF FOOTING ELEVATION					
FE0	FE1	FE2	FE3	FE4	FE5
450.04	450.01	449.59	447.09	446.46	446.44

DRAINAGE SYSTEM No. 14

SCALE: Horiz 1" = 10'
Vert 1" = 5'

DRAINAGE PROFILES

SCALE AS SHOWN

DP-14

REVISED BY | DATE REVISED
ELTON Q. LEE | SUNNY LIEM
CALCULATED-DESIGNED BY | CHECKED BY
FUNCTIONAL SUPERVISOR: TIMOTHY TIEU
STATE OF CALIFORNIA - DEPARTMENT OF TRANSPORTATION
Caltrans® HYDRAULICS

LAST REVISION 00-00-00 | DATE PLOTTED => 28-JUN-2012 | TIME PLOTTED => 10:59

Dist	COUNTY	ROUTE	POST MILES TOTAL PROJECT	SHEET No.	TOTAL SHEETS
07	LA	210	R15.0/R36.0	66	209

REGISTERED CIVIL ENGINEER DATE 3-23-12

6-25-12
PLANS APPROVAL DATE

REGISTERED PROFESSIONAL ENGINEER SUNNY LIEM No. C61380 Exp 6/30/13 CIVIL STATE OF CALIFORNIA

THE STATE OF CALIFORNIA OR ITS OFFICERS OR AGENTS SHALL NOT BE RESPONSIBLE FOR THE ACCURACY OR COMPLETENESS OF SCANNED COPIES OF THIS PLAN SHEET.

DESIGN WALL No.	DESIGN H
SED	12′
FILTER	16′

WALL DESIGN TABLE

TOP OF WALL ELEVATION					
WE1	WE2	WE3	WE4	WE5	WE6
505.24	505.40	505.85	505.85	505.40	505.24

TOP OF FOOTING ELEVATION					
FE0	FE1	FE2	FE3	FE4	FE5
494.28	494.24	493.88	491.38	490.85	490.83

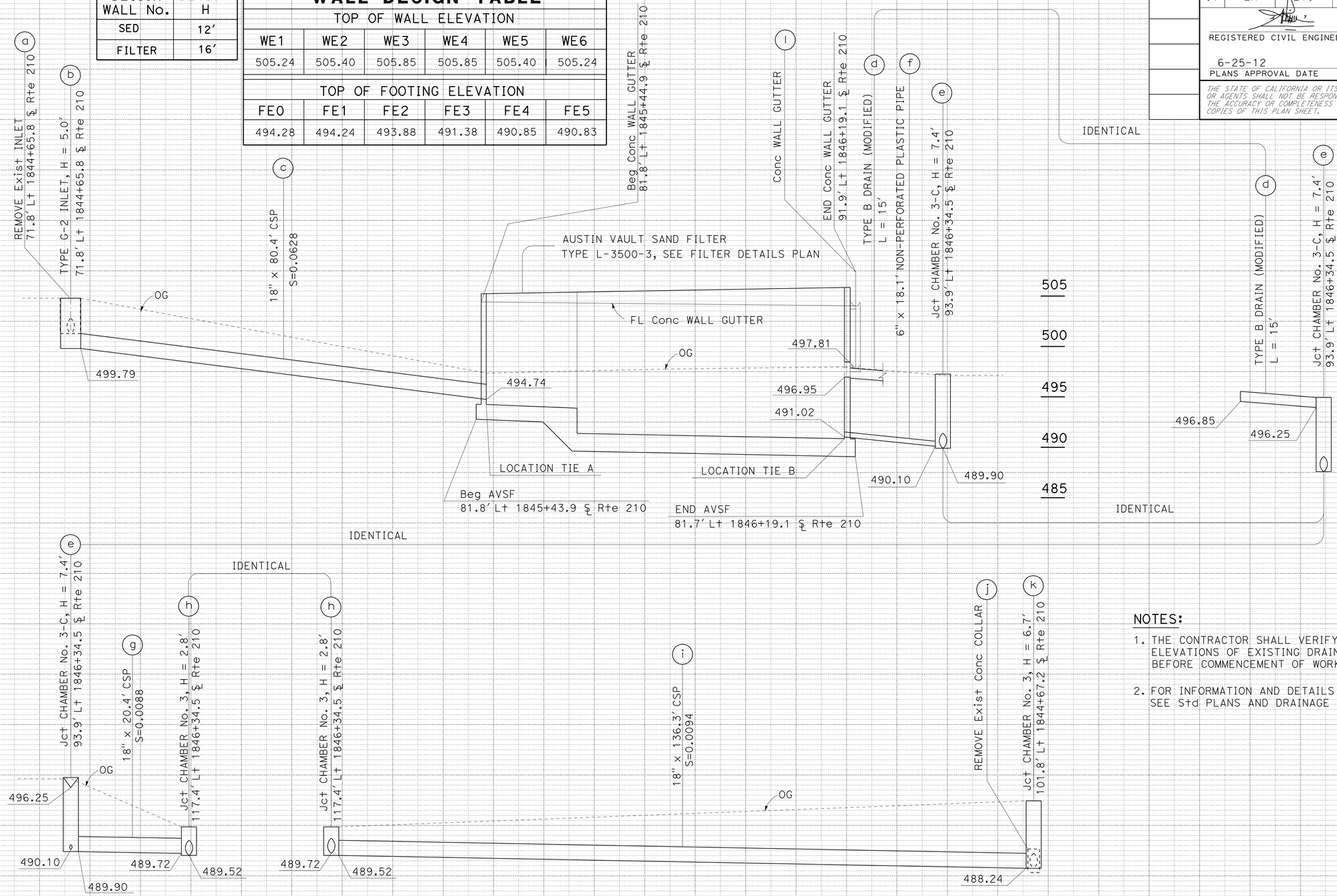

DRAINAGE SYSTEM No. 15

SCALE: Horiz 1" = 0′
Vert 1" = 5′

NOTES:

1. THE CONTRACTOR SHALL VERIFY LOCATIONS AND ELEVATIONS OF EXISTING DRAINAGE SYSTEMS BEFORE COMMENCEMENT OF WORK.
2. FOR INFORMATION AND DETAILS NOT SHOWN, SEE Std PLANS AND DRAINAGE DETAILS SHEETS.

DRAINAGE PROFILES

SCALE AS SHOWN

DP-15

STATE OF CALIFORNIA - DEPARTMENT OF TRANSPORTATION
HYDRAULICS
FUNCTIONAL SUPERVISOR: TIMOTHY TIEU
CALCULATED-DESIGNED BY: ELTON Q. LEE
CHECKED BY: SUNNY LIEM
REVISED BY / DATE REVISED

LAST REVISION 00-00-00
DATE PLOTTED => 26-JUN-2012
TIME PLOTTED => 10:59

Dist	COUNTY	ROUTE	POST MILES TOTAL PROJECT	SHEET No.	TOTAL SHEETS
07	LA	210	R15.0/R36.0	67	209

REGISTERED CIVIL ENGINEER 3-23-12 DATE

6-25-12
PLANS APPROVAL DATE

REGISTERED PROFESSIONAL ENGINEER SUNNY LIEM No. C61380 Exp. 6/30/13 CIVIL STATE OF CALIFORNIA

THE STATE OF CALIFORNIA OR ITS OFFICERS OR AGENTS SHALL NOT BE RESPONSIBLE FOR THE ACCURACY OR COMPLETENESS OF SCANNED COPIES OF THIS PLAN SHEET.

NOTES:

1. THE CONTRACTOR SHALL VERIFY LOCATIONS AND ELEVATIONS OF EXISTING DRAINAGE SYSTEMS BEFORE COMMENCEMENT OF WORK.
2. FOR INFORMATION AND DETAILS NOT SHOWN, SEE STD PLANS AND DRAINAGE DETAILS SHEETS.

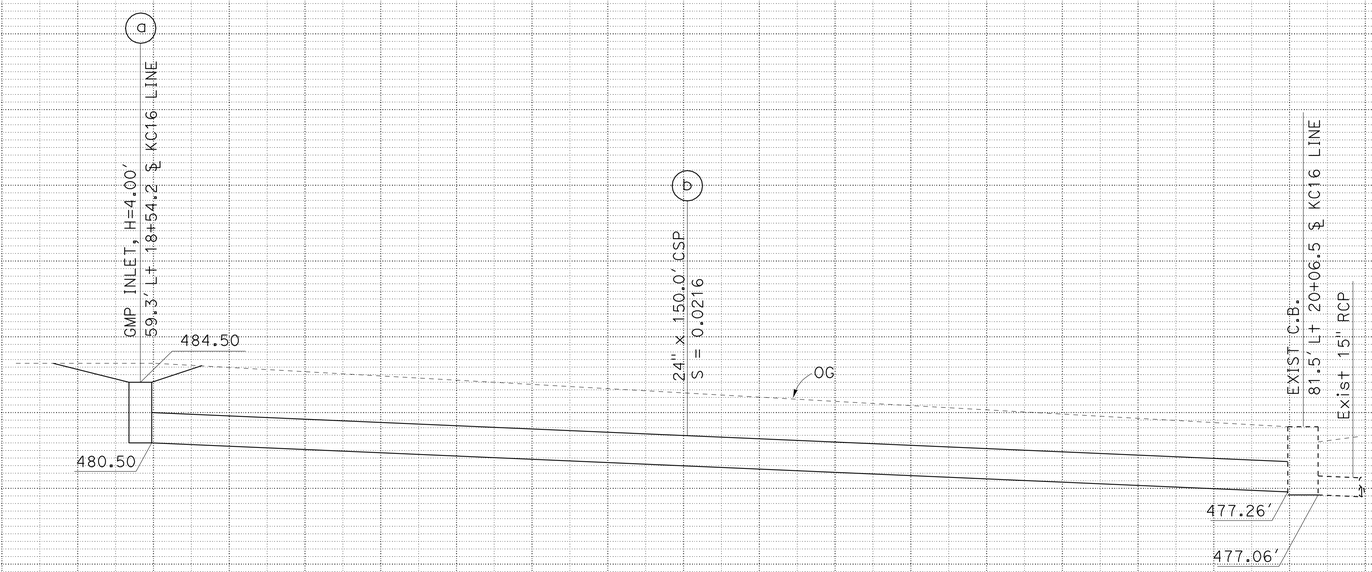

DRAINAGE SYSTEM No. 16

SCALE: Horiz 1" = 10'
Vert 1" = 5'

DRAINAGE PROFILES

SCALE AS SHOWN

DP-16

STATE OF CALIFORNIA - DEPARTMENT OF TRANSPORTATION
Caltrans
HYDRAULICS

FUNCTIONAL SUPERVISOR: TIMOTHY TIEU
CALCULATED-DESIGNED BY: ELTON Q. LEE
CHECKED BY: SUNNY LIEM
REVISED BY
DATE REVISED

LAST REVISION 00-00-00
DATE PLOTTED => 26-JUN-2012
TIME PLOTTED => 10:59

Dist	COUNTY	ROUTE	POST MILES TOTAL PROJECT	SHEET No.	TOTAL SHEETS
07	LA	210	R15.0/R36.0	68	209

REGISTERED CIVIL ENGINEER 3-23-12 DATE

6-25-12
PLANS APPROVAL DATE

REGISTERED PROFESSIONAL ENGINEER SUNNY LIEM No. C61380 Exp. 6/30/13 CIVIL STATE OF CALIFORNIA

THE STATE OF CALIFORNIA OR ITS OFFICERS OR AGENTS SHALL NOT BE RESPONSIBLE FOR THE ACCURACY OR COMPLETENESS OF SCANNED COPIES OF THIS PLAN SHEET.

DESIGN WALL No.	DESIGN H
SED	14′
FILTER	16′

WALL DESIGN TABLE

TOP OF WALL ELEVATION					
WE1	WE2	WE3	WE4	WE5	WE6
490.35	490.35	490.35	490.35	490.35	490.35

TOP OF FOOTING ELEVATION					
FE0	FE1	FE2	FE3	FE4	FE5
478.59	478.55	477.95	475.45	474.51	474.49

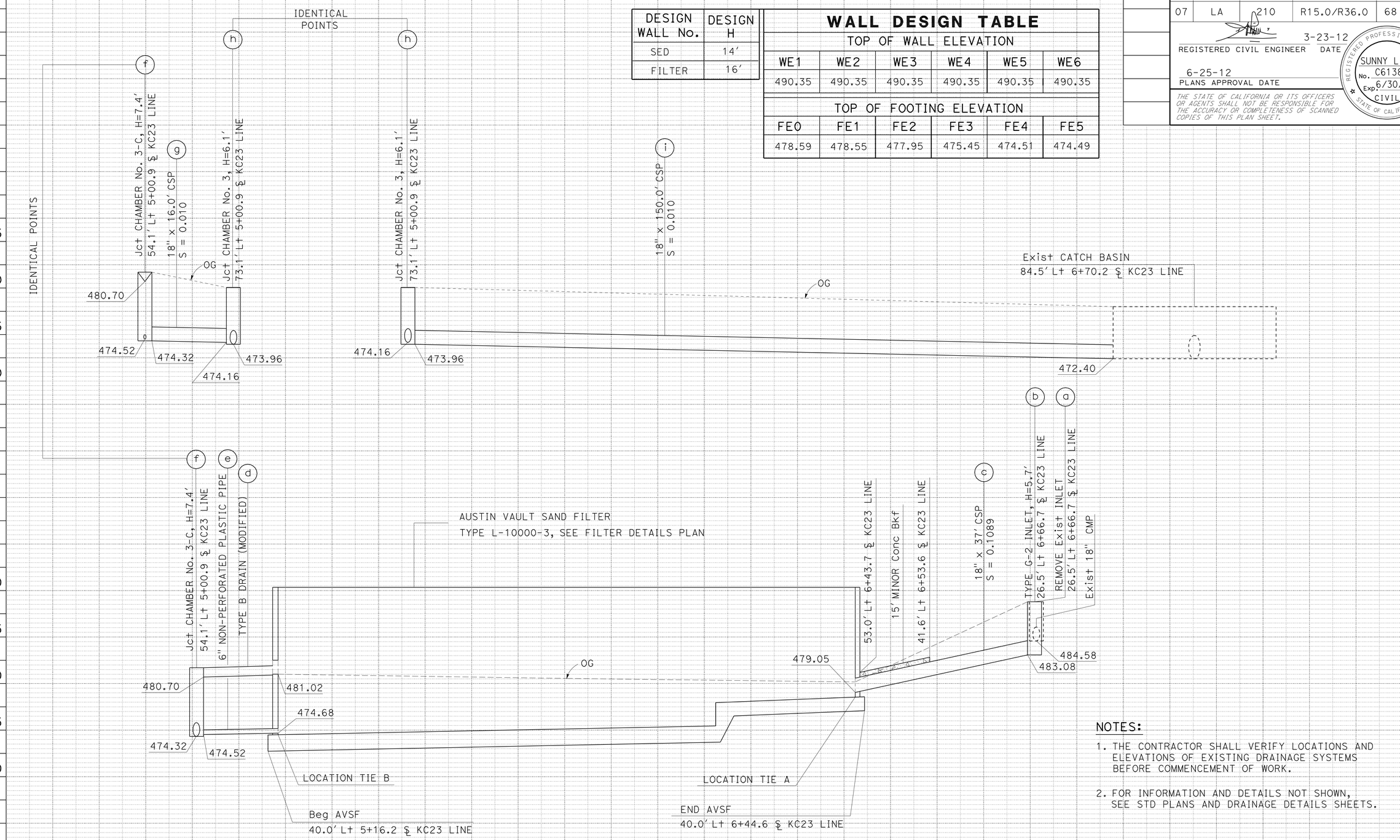

NOTES:

1. THE CONTRACTOR SHALL VERIFY LOCATIONS AND ELEVATIONS OF EXISTING DRAINAGE SYSTEMS BEFORE COMMENCEMENT OF WORK.
2. FOR INFORMATION AND DETAILS NOT SHOWN, SEE STD PLANS AND DRAINAGE DETAILS SHEETS.

DRAINAGE SYSTEM No. 17
SCALE: Horiz 1" = 10′
Vert 1" = 5′

DRAINAGE PROFILES
SCALE AS SHOWN

DP-17

STATE OF CALIFORNIA - DEPARTMENT OF TRANSPORTATION
Caltrans
HYDRAULICS
FUNCTIONAL SUPERVISOR: TIMOTHY TIEU
CALCULATED-DESIGNED BY: ELTON Q. LEE
CHECKED BY: SUNNY LIEM
REVISED BY
DATE REVISED

LAST REVISION 00-00-00
DATE PLOTTED => 28-JUN-2012
TIME PLOTTED => 10:59

Dist	COUNTY	ROUTE	POST MILES TOTAL PROJECT	SHEET No.	TOTAL SHEETS
07	LA	210	R15.0/R36.0	69	209

REGISTERED CIVIL ENGINEER 3-23-12 DATE

6-25-12
PLANS APPROVAL DATE

REGISTERED PROFESSIONAL ENGINEER SUNNY LIEM No. C61380 Exp. 6/30/13 CIVIL STATE OF CALIFORNIA

THE STATE OF CALIFORNIA OR ITS OFFICERS OR AGENTS SHALL NOT BE RESPONSIBLE FOR THE ACCURACY OR COMPLETENESS OF SCANNED COPIES OF THIS PLAN SHEET.

ABBREVIATION:

AVSF - AUSTIN VAULT SAND FILTER
DS - DRAINAGE SYSTEM
DU - DRAINAGE UNIT

TRANSITION DETAILS

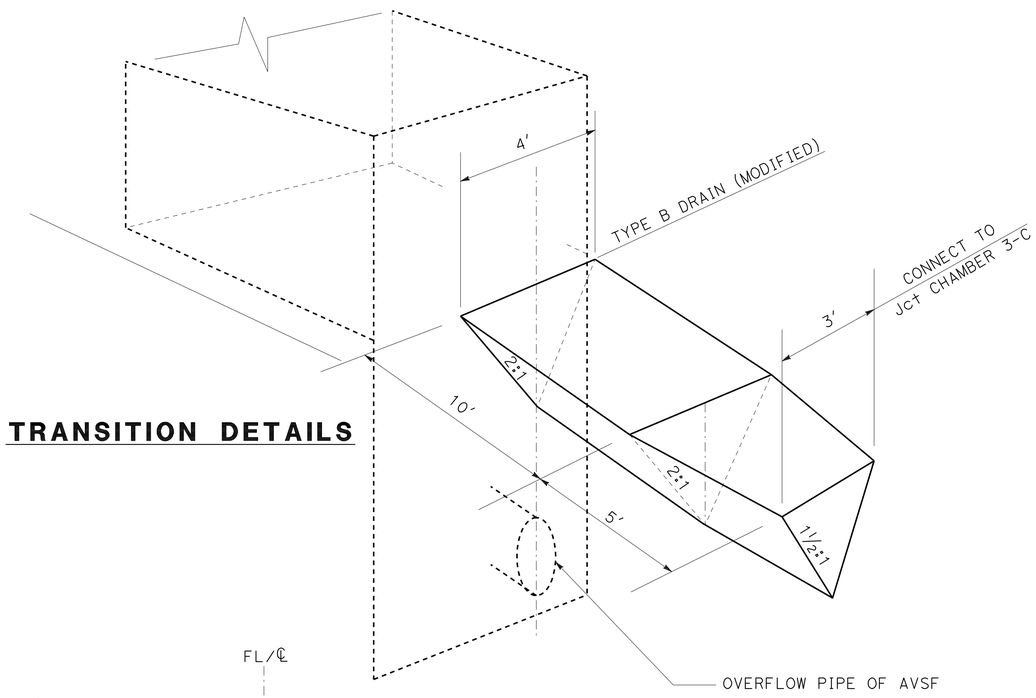

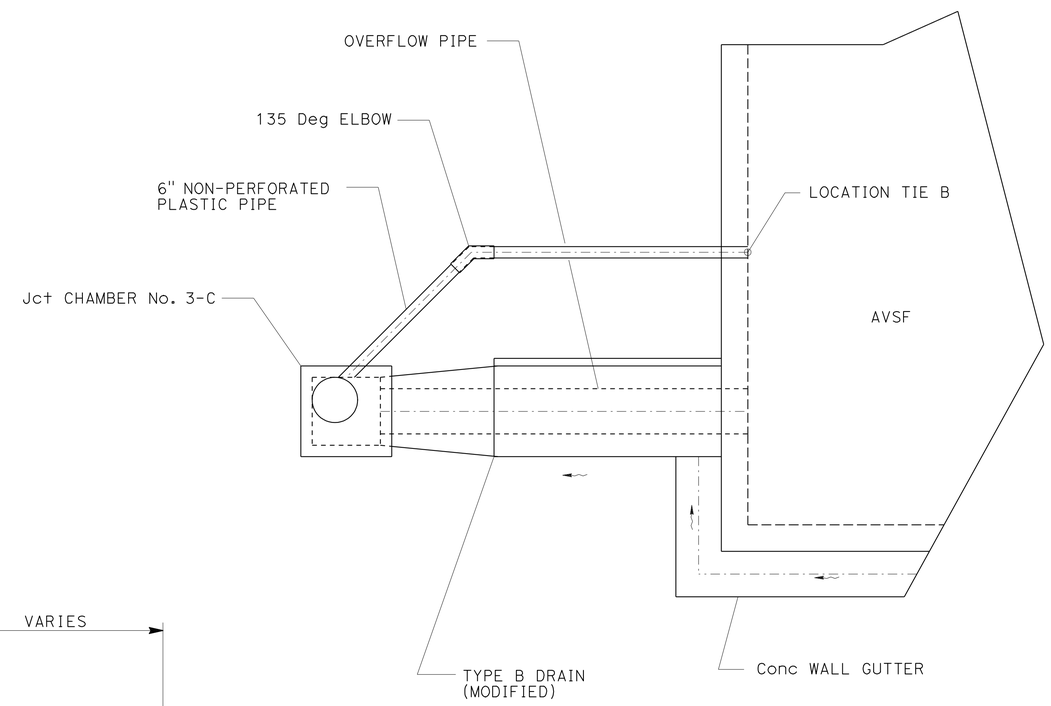

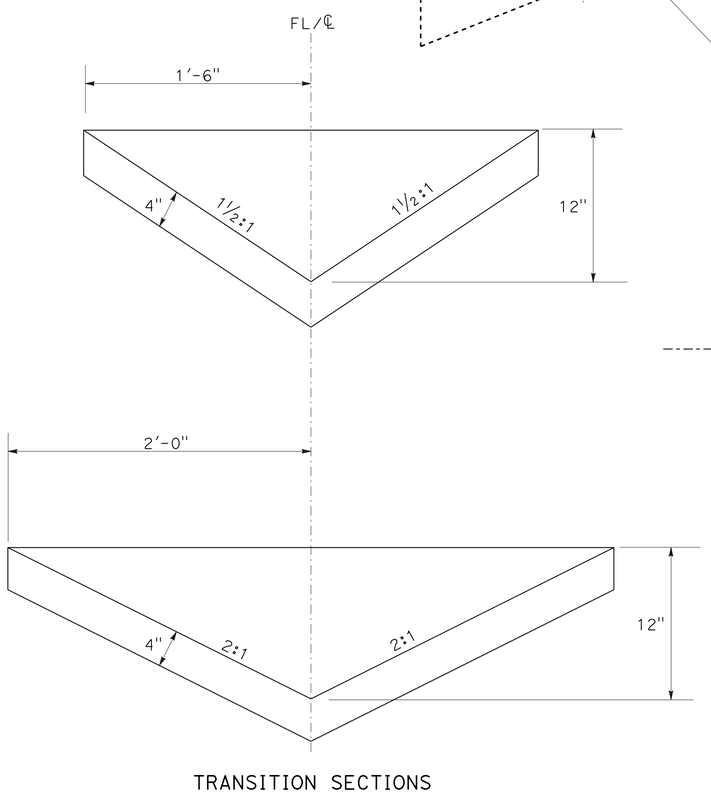

TRANSITION SECTIONS

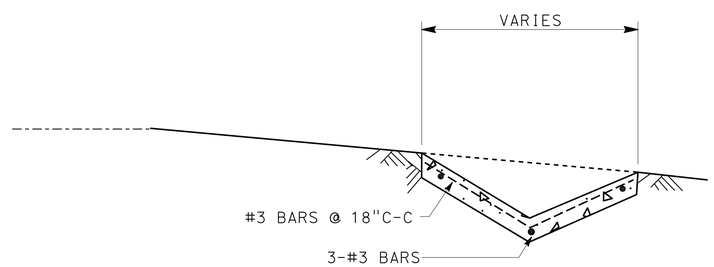

TYPICAL SECTION

NOTE:
THE DRAINAGE DETAILS ARE FOR DS No. 3, 4, 5, 7, AND 9.

TYPE B DRAIN (MODIFIED)

DRAINAGE DETAILS

NO SCALE

DD-1

STATE OF CALIFORNIA - DEPARTMENT OF TRANSPORTATION
Caltrans
HYDRAULICS

FUNCTIONAL SUPERVISOR: TIMOTHY TIEU
CALCULATED-DESIGNED BY: ELTON Q. LEE
CHECKED BY: SUNNY LIEM
REVISED BY
DATE REVISED

LAST REVISION 00-00-00
DATE PLOTTED => 28-JUN-2012
TIME PLOTTED => 13:14

Dist	COUNTY	ROUTE	POST MILES TOTAL PROJECT	SHEET No.	TOTAL SHEETS
07	LA	210	R15.0/R36.0	70	209

REGISTERED CIVIL ENGINEER 3-23-12 DATE

6-25-12
PLANS APPROVAL DATE

REGISTERED PROFESSIONAL ENGINEER SUNNY LIEM No. C61380 Exp. 6/30/13 CIVIL STATE OF CALIFORNIA

THE STATE OF CALIFORNIA OR ITS OFFICERS OR AGENTS SHALL NOT BE RESPONSIBLE FOR THE ACCURACY OR COMPLETENESS OF SCANNED COPIES OF THIS PLAN SHEET.

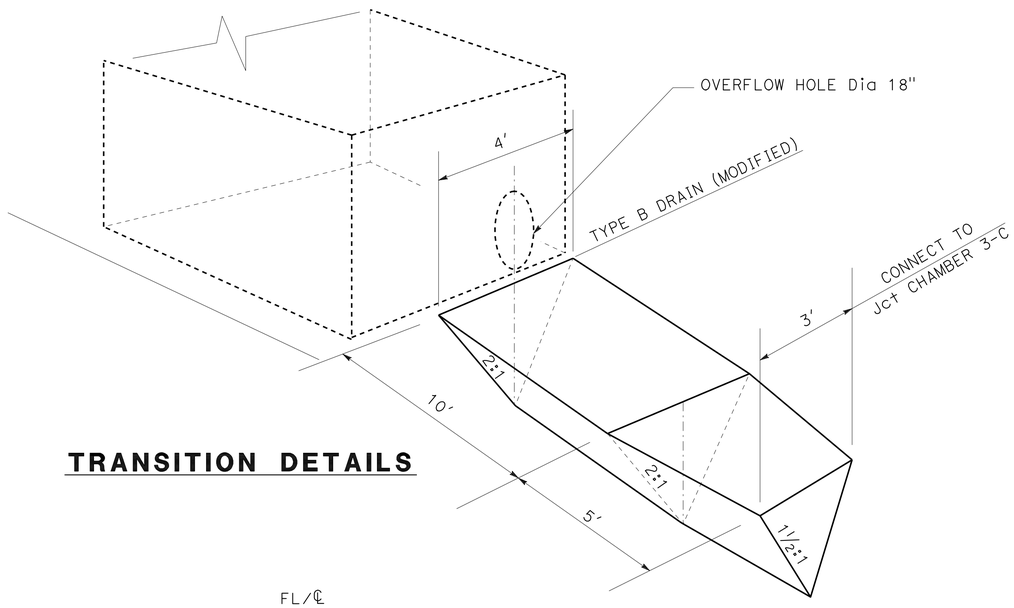

TRANSITION DETAILS

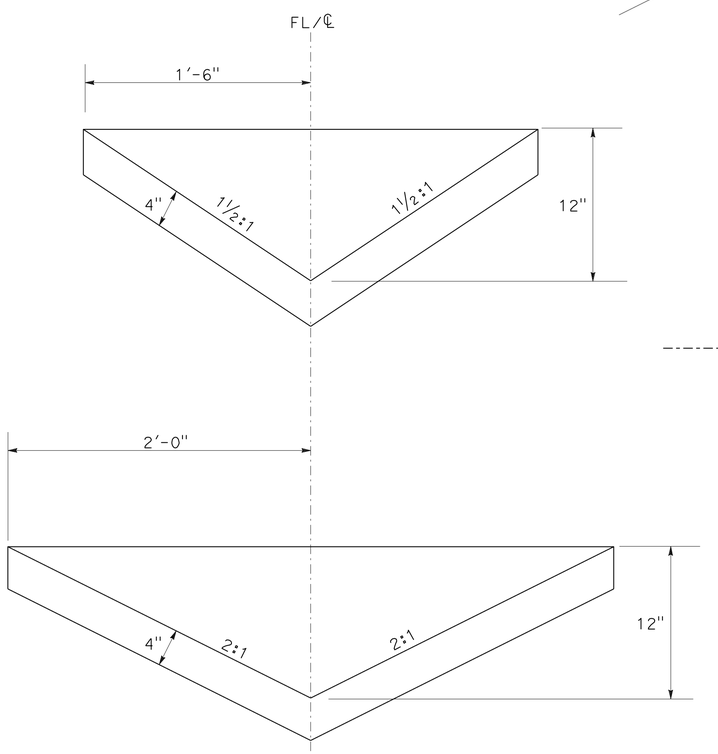

TRANSITION SECTIONS

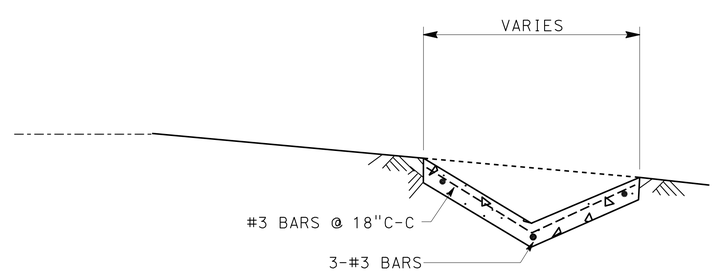

TYPICAL SECTION

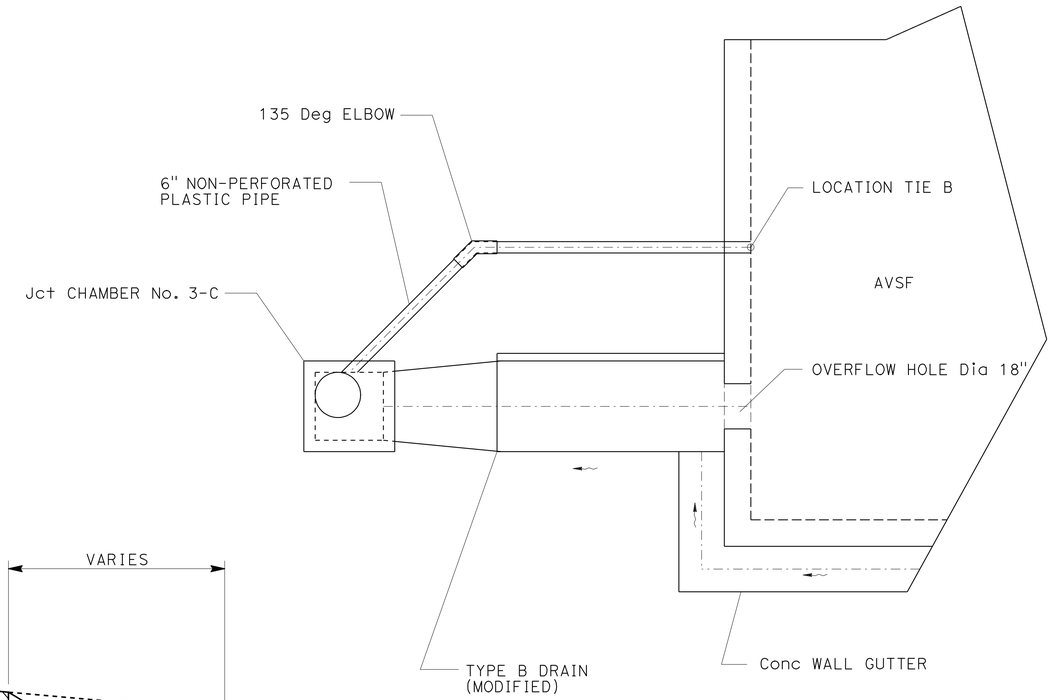

NOTE:
THE DRAINAGE DETAILS ARE FOR DS No. 6, 8, 14, 15, AND 17.

TYPE B DRAIN (MODIFIED)

DRAINAGE DETAILS

NO SCALE

DD-2

STATE OF CALIFORNIA - DEPARTMENT OF TRANSPORTATION
Caltrans
HYDRAULICS

FUNCTIONAL SUPERVISOR: TIMOTHY TIEU
CALCULATED-DESIGNED BY: ELTON Q. LEE
CHECKED BY: SUNNY LIEM
REVISED BY
DATE REVISED

LAST REVISION 00-00-00
DATE PLOTTED => 28-JUN-2012
TIME PLOTTED => 13:15

Dist	COUNTY	ROUTE	POST MILES TOTAL PROJECT	SHEET No.	TOTAL SHEETS
07	LA	210	R15.0/R36.0	71	209

REGISTERED CIVIL ENGINEER 3-23-12 DATE

6-25-12
PLANS APPROVAL DATE

REGISTERED PROFESSIONAL ENGINEER SUNNY LIEM No. C61380 Exp. 6/30/13 CIVIL STATE OF CALIFORNIA

THE STATE OF CALIFORNIA OR ITS OFFICERS OR AGENTS SHALL NOT BE RESPONSIBLE FOR THE ACCURACY OR COMPLETENESS OF SCANNED COPIES OF THIS PLAN SHEET.

NOTES:

1. FOR WALL GUTTER DETAILS NOT SHOWN, SEE STANDARD PLANS.
2. SEE DRAINAGE PLANS FOR LOCATION OF WALL GUTTER.

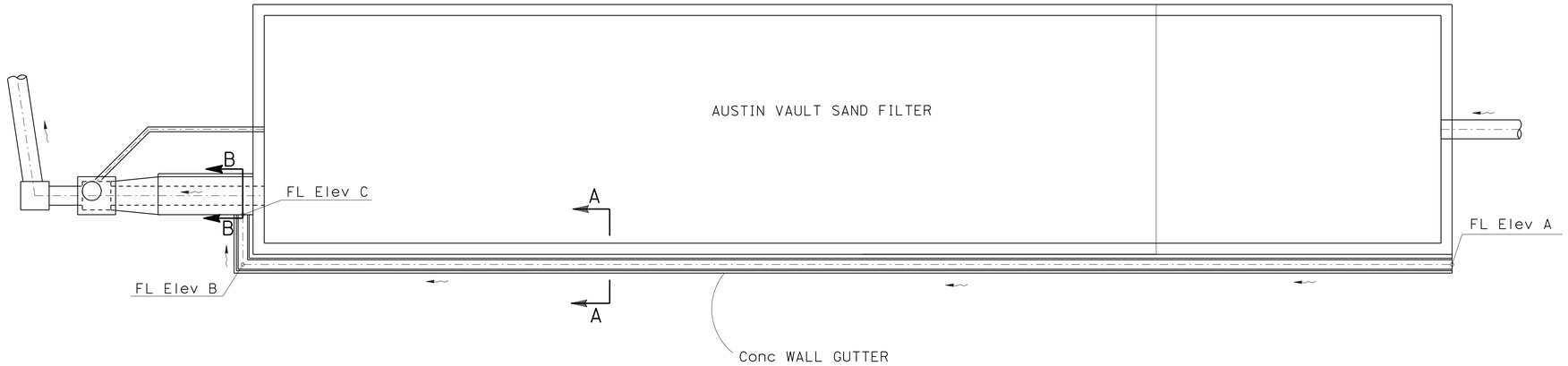

TYPICAL PLAN

DS No.	DU	AVSF TYPE	FL ELEVATION		
			A	B	C
3	s	L-10000-4.5	837.66	837.02	836.99
4	k	L-10000-4.5	832.13	831.49	831.46
5	q	L-10000-4.5	829.25	828.61	828.51
6	n	L-15000-4.5	816.02	815.39	811.21
7	g	L-5000-4.5	767.67	767.23	763.98
9	i	L-10000-4.5	669.17	667.15	667.06
14	k	L-5000-3	461.17	460.73	453.52
15	m	L-3500-3	504.41	504.04	497.81

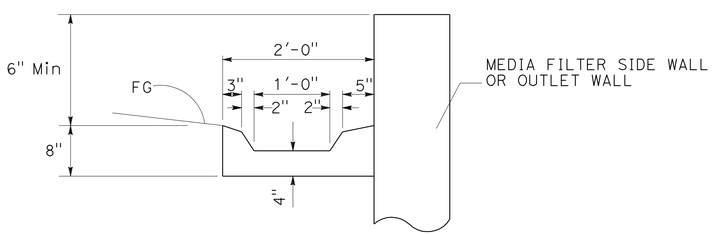

SECTION A-A
WALL GUTTER

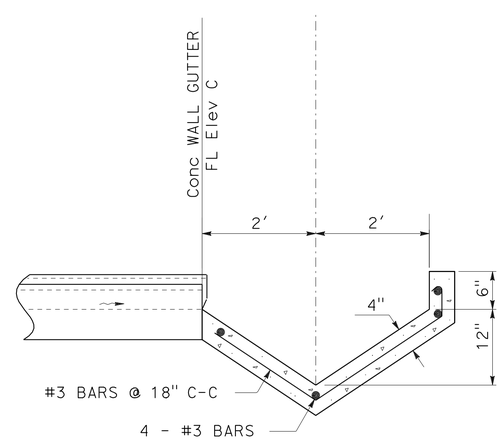

SECTION B-B
TYPE B DRAIN

CONCRETE WALL GUTTER

DRAINAGE DETAILS
NO SCALE
DD-3

STATE OF CALIFORNIA - DEPARTMENT OF TRANSPORTATION
Caltrans
HYDRAULICS

FUNCTIONAL SUPERVISOR: TIMOTHY TIEU
CALCULATED-DESIGNED BY: ELTON Q. LEE
CHECKED BY: SUNNY LIEM
REVISED BY
DATE REVISED

LAST REVISION 00-00-00
DATE PLOTTED => 28-JUN-2012
TIME PLOTTED => 13:15

Dist	COUNTY	ROUTE	POST MILES TOTAL PROJECT	SHEET No.	TOTAL SHEETS
07	LA	210	R15.0/R36.0	72	209

REGISTERED CIVIL ENGINEER 3-23-12 DATE

6-25-12
PLANS APPROVAL DATE

REGISTERED PROFESSIONAL ENGINEER SUNNY LIEM No. C61380 Exp. 6/30/13 CIVIL STATE OF CALIFORNIA

THE STATE OF CALIFORNIA OR ITS OFFICERS OR AGENTS SHALL NOT BE RESPONSIBLE FOR THE ACCURACY OR COMPLETENESS OF SCANNED COPIES OF THIS PLAN SHEET.

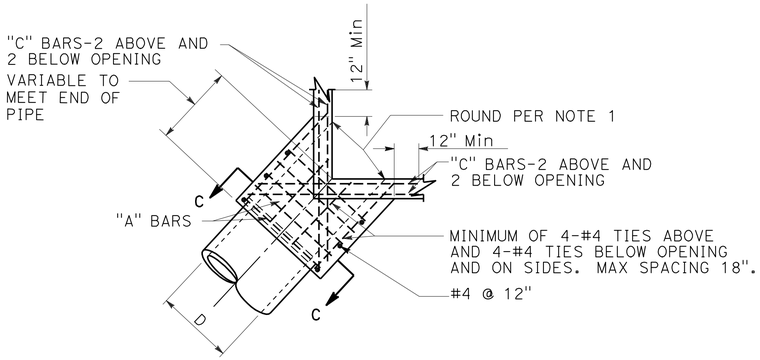

PLAN
CORNER CONNECTION

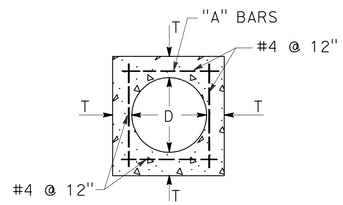

SECTION C-C

D	T	"A"	"B"-"C"
12"	4-½"	#4 @ 6"	#5
15"	4-½"		
18"	5"		
21"	5-½"		
24"	6"		
27"	6-½"		
30"	7"		
33"	7"		
36"	7-½"		
39"	8"		
42"	8"		
45"	8"	#5 @ 6"	#6
48"	8"		
51"	8"		
54"	8"		
57"	10"		
60"	10"		
63"	10"		
66"	11"		
69"	11"		
72"	11"		

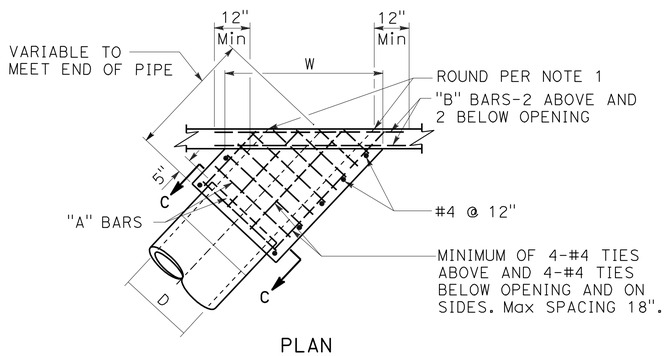

PLAN
SIDE CONNECTION

MONOLITHIC CONNECTION
FOR PIPES 12" TO 72" INCLUSIVE

NOTES:

1. ROUND EDGE OF OUTLET TO 3" RADIUS.
2. REINFORCEMENT SHALL BE 1½" CLEAR FROM THE FACE OF CONCRETE.
3. IN CONNECTING TO AN EXISTING STRUCTURE BREAK OUT PORTIONS OF THE EXISTING STRUCTURE SIX INCHES OUTSIDE ITS INTERSECTION WITH THE NEW CONNECTION. BEND ENDS OF #4 BARS OVER CONNECTION OPENING AS REQUIRED.

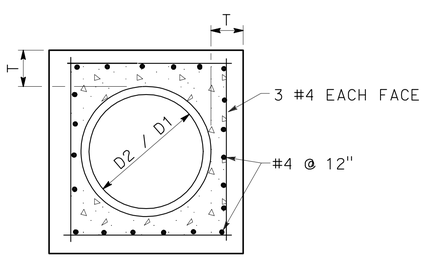

SECTION B-B

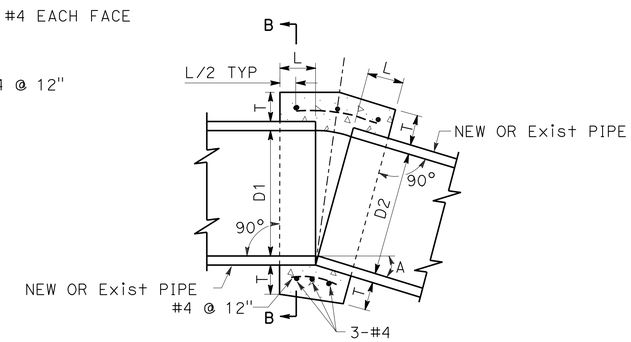

CONCRETE COLLAR

D	L	T
12"	1.0'	4"
18"	1.0'	5"
24"	1.0'	6"
36"	1.5'	8"
48"	1.5'	10"
54"	1.5'	10"
60"	1.75'	11"
66"	1.75'	11"
72"	2.0'	12"

NOTES:

1. WHERE PIPES OF DIFFERENT DIAMETERS ARE JOINED WITH A CONCRETE COLLAR, 'L' AND 'T' SHALL BE THOSE OF THE LARGER PIPE. D=D1 OR D2, WHICH EVER IS GREATER.
2. FOR PIPE SIZE NOT LISTED USE NEXT SIZE LARGER.
3. OMIT REINFORCING ON PIPES 24" AND LESS IN DIAMETER AND ON ALL PIPES WHERE ANGLE A IS LESS THAN 10°.
4. JOIN PIPES AT INVERTS.
5. REINFORCEMENT SHALL BE PLACED 1½" CLEAR FROM OUTSIDE DIAMETER OF PIPE.

DRAINAGE DETAILS

NO SCALE

DD-4

STATE OF CALIFORNIA - DEPARTMENT OF TRANSPORTATION
Caltrans
HYDRAULICS

FUNCTIONAL SUPERVISOR: TIMOTHY TIEU
CALCULATED-DESIGNED BY: ELTON Q. LEE
CHECKED BY: SUNNY LIEM
REVISED BY
DATE REVISED

LAST REVISION 00-00-00
DATE PLOTTED => 28-JUN-2012
TIME PLOTTED => 15:12

Dist	COUNTY	ROUTE	POST MILES TOTAL PROJECT	SHEET No.	TOTAL SHEETS
07	LA	210	R15.0/R36.0	73	209

REGISTERED CIVIL ENGINEER 3-23-12 DATE

6-25-12
PLANS APPROVAL DATE

REGISTERED PROFESSIONAL ENGINEER SUNNY LIEM No. C61380 Exp 6/30/13 CIVIL STATE OF CALIFORNIA

THE STATE OF CALIFORNIA OR ITS OFFICERS OR AGENTS SHALL NOT BE RESPONSIBLE FOR THE ACCURACY OR COMPLETENESS OF SCANNED COPIES OF THIS PLAN SHEET.

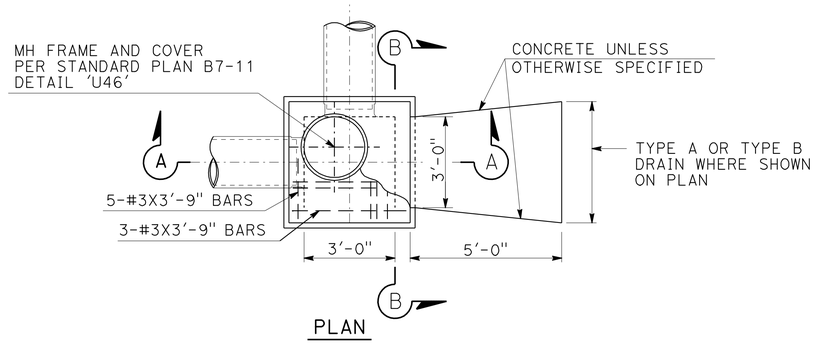

PLAN

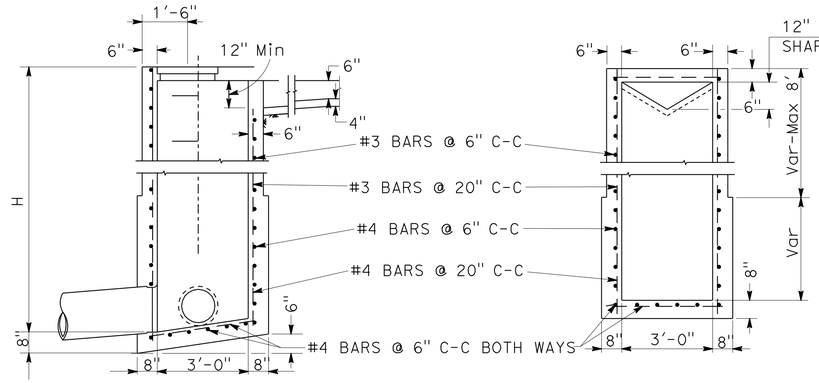

SECTION A-A

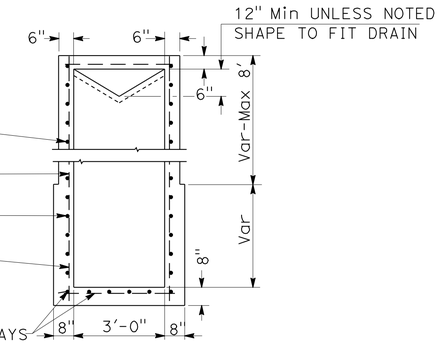

SECTION B-B

JUNCTION CHAMBER NO. 3-C (JC 3-C)

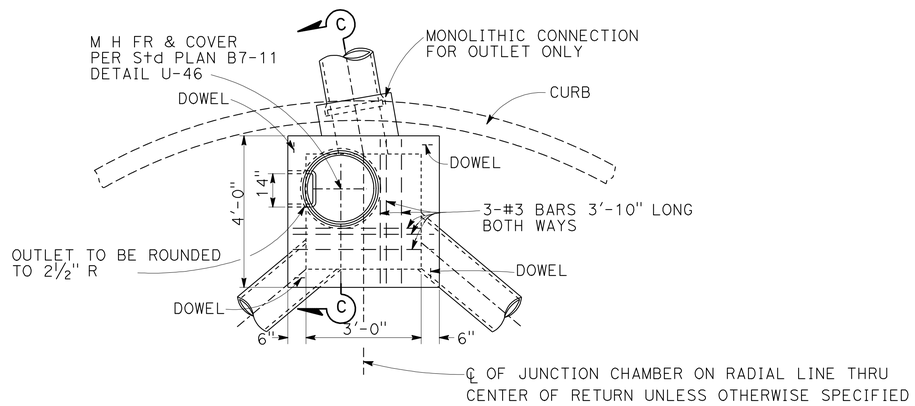

PLAN

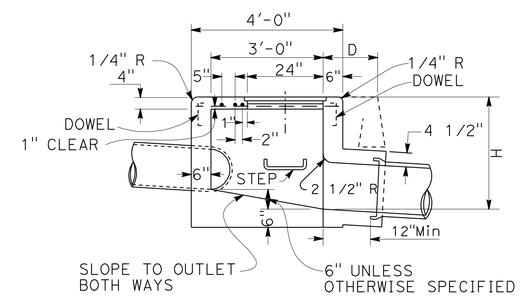

SECTION C-C

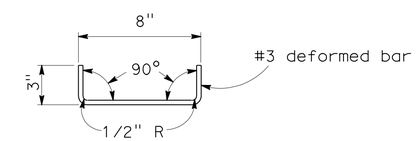

DETAIL OF DOWEL

One at each corner to be used when top is poured separate

JUNCTION CHAMBER NO. 3 (JC 3)

NOTES:

1. CONNECTION PIPES MAY BE PLACED IN ANY POSITION AROUND THE WALLS PROVIDED THEY POINT IN THE PROPER DIRECTION AND THE POSITION IS OTHERWISE CONSISTENT WITH THE WATER POLLUTION CONTROL PLAN.
2. DIMENSIONS: D=18" UNLESS OTHERWISE SPECIFIED.
   H=3'-6" UNLESS OTHERWISE SPECIFIED.
3. EXPOSED SUFRACE OF THE JUNCTION CHAMBER SHALL CONFORM IN SLOPE, GRADE, COLOR, FINISH AND SCORING TO EXISTING SIDEWALK ADJACENT TO THE JUNCTION CHAMBER. WHERE NO SIDEWALK EXISTS, THE TOP SHALL BE FINISHED TO CONFORM TO STANDARD SIDEWALK SLOPE AND FINISH, AND SCORING LINES SHALL CONFORM AS NEARLY AS POSSIBLE TO 20" SQUARES.
4. FLOOR OF CHAMBER SHALL BE GIVEN A STEEL-TROWELED FINISH AND SHALL SLOPE FROM ALL DIRECTIONS TO OUTLET.
5. MANHOLE SHALL BE PLACED IN CORNER NEAREST OUTLET.
6. OUTLET PIPE SHALL BE CONNECTED TO JUNCTION CHAMBER WITH MONOLITHIC CONNECTION.
7. REINFORCING STEEL NOT REQUIRED IN WALLS WHEN H=6' OR LESS.
8. STEPS: NONE REQUIRED WHERE H=3'-6" OR LESS.
   INSTALL ONE STEP 16"± ABOVE FLOOR WHEN H IS MORE THAN 3'-6" AND LESS THAN 5'-0".
   WHERE H IS MORE THAN 5'-0" STEPS SHALL BE EVENLY SPACED AT 12"± INTERVALS FROM 16"± ABOVE FLOOR TO WITHIN 12"± OF THE TOP OF THE BOX.

DRAINAGE DETAILS

NO SCALE

DD-5

STATE OF CALIFORNIA - DEPARTMENT OF TRANSPORTATION
Caltrans
HYDRAULICS
FUNCTIONAL SUPERVISOR: TIMOTHY TIEU
CALCULATED-DESIGNED BY: ELTON Q. LEE
CHECKED BY: SUNNY LIEM
REVISED BY
DATE REVISED

LAST REVISION 00-00-00
DATE PLOTTED => 28-JUN-2012
TIME PLOTTED => 15:12

Dist	COUNTY	ROUTE	POST MILES TOTAL PROJECT	SHEET No.	TOTAL SHEETS
07	LA	210	R15.0/R36.0	74	209

REGISTERED CIVIL ENGINEER 3-23-12 DATE

6-25-12
PLANS APPROVAL DATE

REGISTERED PROFESSIONAL ENGINEER SUNNY LIEM No. C61380 Exp. 6/30/13 CIVIL STATE OF CALIFORNIA

THE STATE OF CALIFORNIA OR ITS OFFICERS OR AGENTS SHALL NOT BE RESPONSIBLE FOR THE ACCURACY OR COMPLETENESS OF SCANNED COPIES OF THIS PLAN SHEET.

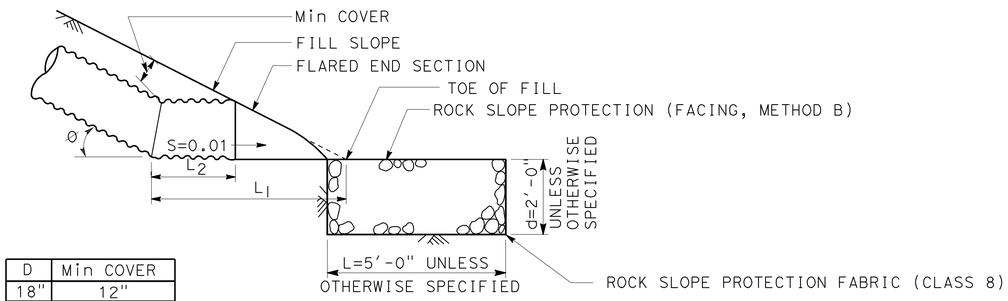

D	Min COVER
18"	12"
24"	12"

PROFILE

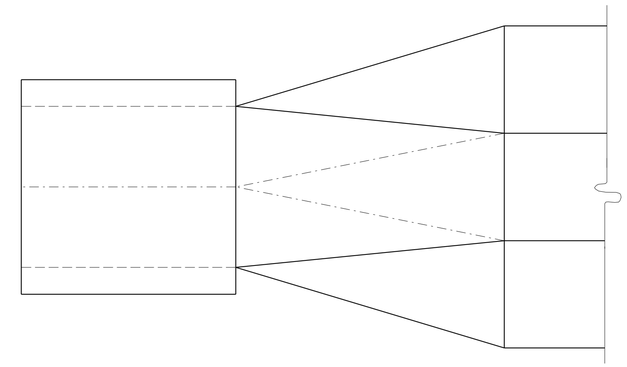

PLAN

PIPE SLOPE S - %	Ø	D=18"		D=24"	
		L_1	L_2	L_1	L_2
10-15	6°-9°	5'-6"	2'-4"	6'-6"	2'-5"
15-20	9°-11°	5'-6"	2'-5"	6'-7"	2'-5"
20-25	11°-14°	5'-7"	2'-5"	6'-7"	2'-6"
25-30	14°-17°	5'-7"	2'-5"	6'-8"	2'-6"
30-35	17°-19°	5'-7"	2'-6"	6'-9"	2'-7"
35-40	19°-22°	5'-8"	2'-6"	6'-9"	2'-7"
40-45	22°-24°	5'-8"	2'-7"	6'-10"	2'-8"
45-50	24°-26°	5'-8"	2'-7"	6'-10"	2'-8"

OUTLET DETAIL FOR CSP @ TOE OF SLOPE

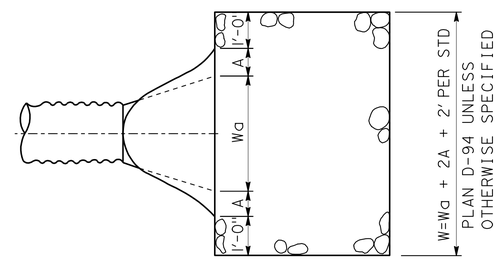

PLAN

ROCK SLOPE PROTECTION DETAIL

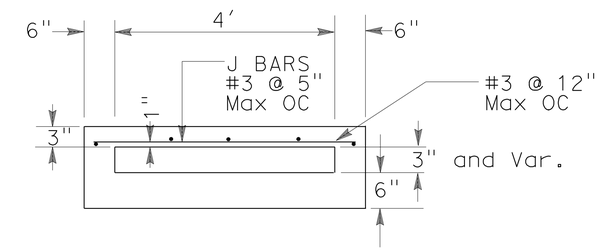

SIDEWALK CULVERT

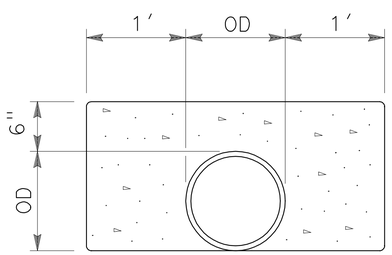

CONCRETE BACKFILL

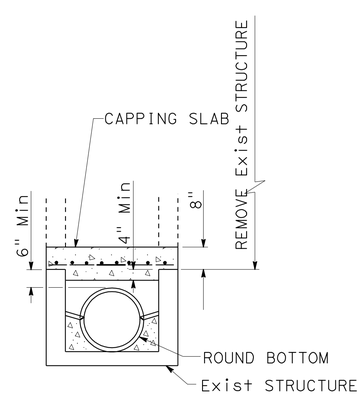

SECTION A-A

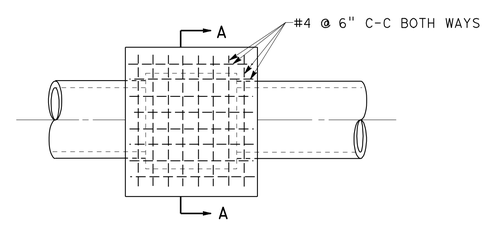

PLAN

CAP INLET DETAIL

DRAINAGE DETAILS

NO SCALE

DD-6

STATE OF CALIFORNIA - DEPARTMENT OF TRANSPORTATION
Caltrans
HYDRAULICS

FUNCTIONAL SUPERVISOR: TIMOTHY TIEU
CALCULATED-DESIGNED BY: ELTON Q. LEE
CHECKED BY: SUNNY LIEM
REVISED BY
DATE REVISED

LAST REVISION 00-00-00
DATE PLOTTED => 28-JUN-2012
TIME PLOTTED => 13:15

Dist	COUNTY	ROUTE	POST MILES TOTAL PROJECT	SHEET No.	TOTAL SHEETS
07	LA	210	R15.0/R36.0	75	209

REGISTERED CIVIL ENGINEER 3-23-12 DATE

6-25-12
PLANS APPROVAL DATE

REGISTERED PROFESSIONAL ENGINEER
SUNNY LIEM
No. C61380
Exp. 6/30/13
CIVIL
STATE OF CALIFORNIA

THE STATE OF CALIFORNIA OR ITS OFFICERS OR AGENTS SHALL NOT BE RESPONSIBLE FOR THE ACCURACY OR COMPLETENESS OF SCANNED COPIES OF THIS PLAN SHEET.

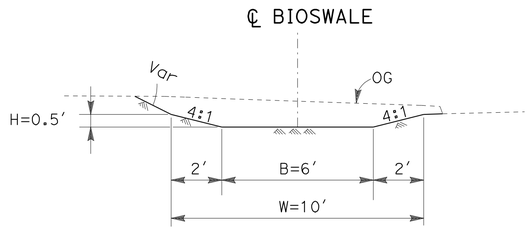

TYPICAL SECTION OF DS No. 2A

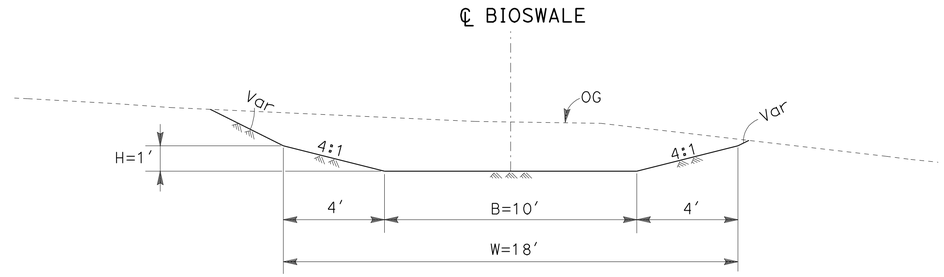

TYPICAL SECTION OF DS No. 11

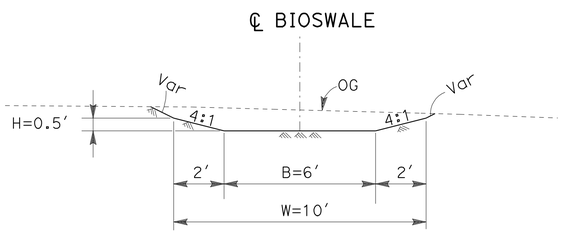

TYPICAL SECTION OF DS No. 2B

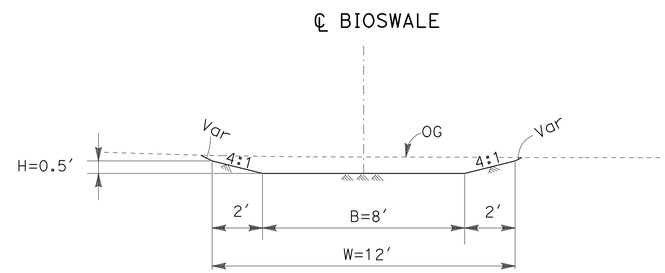

TYPICAL SECTION OF DS No. 12

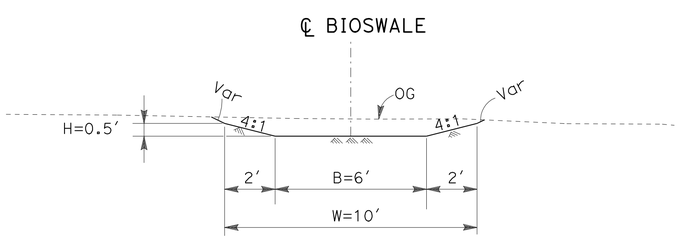

TYPICAL SECTION OF DS No. 2C

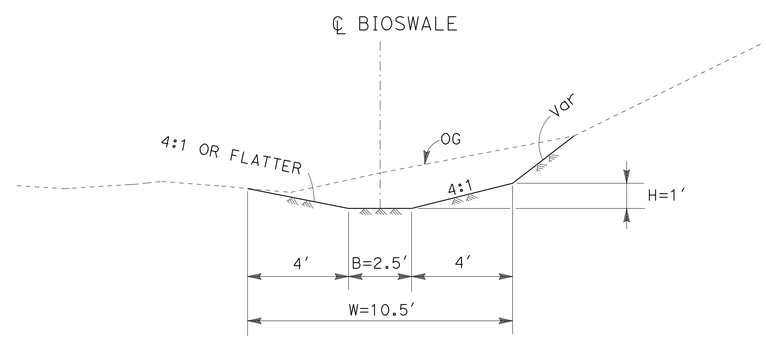

TYPICAL SECTION OF DS No. 13

DRAINAGE DETAILS

NO SCALE

DD-7

STATE OF CALIFORNIA - DEPARTMENT OF TRANSPORTATION
Caltrans
HYDRAULICS

FUNCTIONAL SUPERVISOR: TIMOTHY TIEU
CALCULATED-DESIGNED BY: ELTON Q. LEE
CHECKED BY: SUNNY LIEM
REVISED BY
DATE REVISED

LAST REVISION 00-00-00
DATE PLOTTED => 28-JUN-2012
TIME PLOTTED => 13:15

Dist	COUNTY	ROUTE	POST MILES TOTAL PROJECT	SHEET No.	TOTAL SHEETS
07	LA	210	R15.0/R36.0	76	209

REGISTERED CIVIL ENGINEER 3-23-12 DATE

6-25-12
PLANS APPROVAL DATE

REGISTERED PROFESSIONAL ENGINEER SUNNY LIEM No. C61380 Exp 6/30/13 CIVIL STATE OF CALIFORNIA

THE STATE OF CALIFORNIA OR ITS OFFICERS OR AGENTS SHALL NOT BE RESPONSIBLE FOR THE ACCURACY OR COMPLETENESS OF SCANNED COPIES OF THIS PLAN SHEET.

NOTE:
JOINTS ARE STANDARD JOINT TYPE.

SUMMARY OF DRAINAGE QUANTITIES

DRAINAGE SYSTEM No.	DRAINAGE UNIT	"H" OR "V" FT	MINOR CONCRETE (MINOR STRUCTURE) CY	MINOR CONCRETE (DITCH LINING) CY	MINOR CONCRETE (GUTTER) CY	MINOR CONCRETE (BACKFILL) CY	MISCELLANEOUS IRON AND STEEL LB	6" NON-PERFORATED PLASTIC PIPE UNDERDRAIN LF	18" CORRUGATED STEEL PIPE (.079" THICK) LF	24" CORRUGATED STEEL PIPE (.079" THICK) LF	24" STEEL FLARED END SECTION EA	36" CORRUGATED STEEL PIPE INLET (.079" THICK) LF	REMOVE CONCRETE (MISCELLANEOUS) CY	REMOVE INLET EA	REMOVE PIPE LF	ROCK SLOPE PROTECTION (FACING, METHOD B) CY	ROCK SLOPE PROTECTION FABRIC (CLASS 8) SQYD	CAP INLET EA	MAXIMUM COVER LF	DESCRIPTION	STATION	DRAINAGE PLAN SHEET No.	DRAINAGE SYSTEM No.	DRAINAGE UNIT
1A	a	7.6					236					8.1								GMP INLET	27.1' Rt 816+01.0 ℄ HO1 LINE	D-1	1A	a
	b									72.3									8.4	24" CSP				b
	c	7.6					236					8.1								GMP INLET	54.2' Rt 815+02.1 ℄ HO1 LINE			c
	d					5.11				40.0									7.3	24" CSP				d
	e										1					2.84	10			FES WITH RSP	96.5' Rt 814+93.3 ℄ HO1 LINE			e
	f														185					REMOVE 24" APC				f
1B	a	7.3	2.41				263													G2 INLET	11.4' Rt 814+65.5 ℄ HO1 LINE		1B	a
	b					5.11				76.6									5.3	24" CSP				b
	c										1					2.84	10			FES WITH RSP	80.7' Rt 814+12.2 ℄ HO1 LINE			c
1C	a	9.7					236					10.2								GMP INLET	28.3' Rt 813+49.3 ℄ HO1 LINE		1C	a
	b									47.0									7.5	24" CSP				b
	c	6.6					236					7.1								GMP INLET	77.1' Rt 813+66.4 ℄ HO1 LINE			c
2A	a																	1		CAP INLET		D-2	2A	a
3	a													1						REMOVE INLET	68.9' Lt 1423+53.2 ℄ Rte 210	D-3	3	a
	b	10.9	4.52				263													G2 INLET	68.9' Lt 1423+53.2 ℄ Rte 210			b
	c									29.0									10.0	24" CSP				c
	d	12.0	5.16				243													Jct CHAMBER No. 3	82.9' Lt 1423+83.0 ℄ Rte 210			d
	e									134.0									14.2	24" CSP				e
	f	16.3	6.72				243													Jct CHAMBER No. 3	80.2' Lt 1425+20.0 ℄ Rte 210			f
	g									22.2									14.3	24" CSP				g
SHEET TOTAL			18.81			10.22	1956			421.1	2	33.5		1	185	5.68	20	1						

(N) NOT A SEPARATE PAY ITEM, FOR INFORMATION ONLY

DRAINAGE QUANTITIES
DQ-1

STATE OF CALIFORNIA - DEPARTMENT OF TRANSPORTATION
Caltrans
HYDRAULICS

FUNCTIONAL SUPERVISOR: TIMOTHY TIEU
CALCULATED-DESIGNED BY: SUNNY LIEM
CHECKED BY
REVISED BY: M TRAN
DATE REVISED

LAST REVISION 03-30-12
DATE PLOTTED => 28-JUN-2012
TIME PLOTTED => 13:15

Dist	COUNTY	ROUTE	POST MILES TOTAL PROJECT	SHEET No.	TOTAL SHEETS
07	LA	210	R15.0/R36.0	77	209

REGISTERED CIVIL ENGINEER 3-23-12 DATE

6-25-12
PLANS APPROVAL DATE

REGISTERED PROFESSIONAL ENGINEER SUNNY LIEM No. C61380 Exp 6/30/13 CIVIL STATE OF CALIFORNIA

THE STATE OF CALIFORNIA OR ITS OFFICERS OR AGENTS SHALL NOT BE RESPONSIBLE FOR THE ACCURACY OR COMPLETENESS OF SCANNED COPIES OF THIS PLAN SHEET.

NOTE:

JOINTS ARE STANDARD JOINT TYPE.

SUMMARY OF DRAINAGE QUANTITIES

DRAINAGE SYSTEM No.	DRAINAGE UNIT	"H" OR "V"	MINOR CONCRETE (MINOR STRUCTURE)	MINOR CONCRETE (DITCH LINING)	MINOR CONCRETE (GUTTER)	MINOR CONCRETE (BACKFILL)	MISCELLANEOUS IRON AND STEEL	6" NON-PERFORATED PLASTIC PIPE UNDERDRAIN	18" CORRUGATED STEEL PIPE (.079" THICK)	24" CORRUGATED STEEL PIPE (.079" THICK)	24" STEEL FLARED END SECTION	36" CORRUGATED STEEL PIPE INLET (.079" THICK)	REMOVE CONCRETE (MISCELLANEOUS)	REMOVE INLET	REMOVE PIPE	ROCK SLOPE PROTECTION (FACING, METHOD B)	ROCK SLOPE PROTECTION FABRIC (CLASS 8)	CAP INLET	MAXIMUM COVER	DESCRIPTION	STATION	DRAINAGE PLAN SHEET No.	DRAINAGE SYSTEM No.	DRAINAGE UNIT
		FT	CY	CY	CY	CY	LB	LF	LF	LF	EA	LF	CY	EA	LF	CY	SQYD	EA	LF					
3	h	6.7	2.33				243													Jct CHAMBER No. 3	105.4' Lt 1425+20.5 ℄ Rte 210	D-3	3	h
	i									10.5									5.0	24" CSP				i
	j									16.2									4.6	24" CSP				j
	k			0.87																TYPE B DRAIN (MODIFIED)				k
	l	15.2	5.94				243													Jct CHAMBER No. 3-C	101.4' Lt 1423+66.7 ℄ Rte 210			l
	m							20.0											14.3	6" NON-PERFORATED PLASTIC PIPE				m
	n									3.5									13.6	24" CSP				n
	o	15.9	6.31				243													Jct CHAMBER No. 3	101.6' Lt 1423+60.2 ℄ Rte 210			o
	p									51.3									13.9	24" CSP				p
	q												0.3							REMOVE Conc COLLAR				q
	r	10.9	4.64				243													Jct CHAMBER No. 3	155.4' Lt 1423+53.2 ℄ Rte 210			r
	s				4.48															Conc WALL GUTTER				s
4	a													1						REMOVE INLET	68.4' Lt 1455+30.0 ℄ Rte 210	D-4	4	a
	b	9.0	3.85				263													G2 INLET	68.4' Lt 1455+30.0 ℄ Rte 210			b
	c									491.0									7.0	24" CSP				c
	d									16.2									4.6	24" CSP				d
	e			0.87																TYPE B DRAIN (MODIFIED)				e
	f	15.2	5.94				243													Jct CHAMBER No. 3-C	92.5' Lt 1448+98.9 ℄ Rte 210			f
	g							20.0											14.3	6" NON-PERFORATED PLASTIC PIPE				g
	h									3.5									13.6	24" CSP				h
	i	15.9	6.31				243													Jct CHAMBER No. 3	92.6' Lt 1448+92.4 ℄ Rte 210			i
SHEET TOTAL			35.32	1.74	4.48		1721	40.0		592.2			0.3	1										

(N) NOT A SEPARATE PAY ITEM, FOR INFORMATION ONLY

DRAINAGE QUANTITIES

DQ-2

STATE OF CALIFORNIA - DEPARTMENT OF TRANSPORTATION
Caltrans
HYDRAULICS

FUNCTIONAL SUPERVISOR: TIMOTHY TIEU

CALCULATED-DESIGNED BY: M TRAN
CHECKED BY: SUNNY LIEM
REVISED BY
DATE REVISED

LAST REVISION 03-30-12
DATE PLOTTED => 28-JUN-2012
TIME PLOTTED => 13:15

Dist	COUNTY	ROUTE	POST MILES TOTAL PROJECT	SHEET No.	TOTAL SHEETS
07	LA	210	R15.0/R36.0	78	209

REGISTERED CIVIL ENGINEER 3-23-12 DATE

6-25-12
PLANS APPROVAL DATE

REGISTERED PROFESSIONAL ENGINEER SUNNY LIEM No. C61380 Exp 6/30/13 CIVIL STATE OF CALIFORNIA

THE STATE OF CALIFORNIA OR ITS OFFICERS OR AGENTS SHALL NOT BE RESPONSIBLE FOR THE ACCURACY OR COMPLETENESS OF SCANNED COPIES OF THIS PLAN SHEET.

NOTE:
JOINTS ARE STANDARD JOINT TYPE.

SUMMARY OF DRAINAGE QUANTITIES

DRAINAGE SYSTEM No.	DRAINAGE UNIT	"H" OR "V"	MINOR CONCRETE (MINOR STRUCTURE)	MINOR CONCRETE (DITCH LINING)	MINOR CONCRETE (GUTTER)	MINOR CONCRETE (BACKFILL)	MISCELLANEOUS IRON AND STEEL	6" NON-PERFORATED PLASTIC PIPE UNDERDRAIN	18" CORRUGATED STEEL PIPE (.079" THICK)	24" CORRUGATED STEEL PIPE (.079" THICK)	24" STEEL FLARED END SECTION	36" CORRUGATED STEEL PIPE INLET (.079" THICK)	REMOVE CONCRETE (MISCELLANEOUS)	REMOVE INLET	REMOVE PIPE	ROCK SLOPE PROTECTION (FACING, METHOD B)	ROCK SLOPE PROTECTION FABRIC (CLASS 8)	CAP INLET	MAXIMUM COVER	DESCRIPTION	STATION	DRAINAGE PLAN SHEET No.	DRAINAGE SYSTEM No.	DRAINAGE UNIT
		FT	CY	CY	CY	CY	LB	LF	LF	LF	EA	LF	CY	EA	LF	CY	SQYD	EA	LF					
4	j									63.3									22.5	24" CSP		D-4	4	j
	k				4.48															Conc WALL GUTTER		D-4		k
5	a													1						REMOVE INLET	80.3' Lt 1467+08.5 ℄ Rte 210	D-5	5	a
	b	9.1	3.89				263													G2 INLET	80.3' Lt 1467+08.5 ℄ Rte 210			b
	c									22.2									7.2	24" CSP				c
	d	9.3	4.18				243													Jct CHAMBER No. 3	95.8' Lt 1466+88.0 ℄ Rte 210			d
	e									222.4									14.8	24" CSP				e
	f	16.8	6.90				243													Jct CHAMBER No. 3	97.2' Lt 1464+62.6 ℄ Rte 210			f
	g									19.0									14.9	24" CSP				g
	h	9.7	4.33				243													Jct CHAMBER No. 3	119.2' Lt 1464+62.8 ℄ Rte 210			h
	i									10.5									8.0	24" CSP				i
	j									16.2									4.5	24" CSP				j
	k			0.87																TYPE B DRAIN (MODIFIED)				k
	l	15.1	5.91				243													Jct CHAMBER No. 3-C	130.2' Lt 1479+22.1 ℄ Rte 210			l
	m							20.0											14.3	6" NON-PERFORATED PLASTIC PIPE				m
	n									94.4									17.6	24" CSP				n
	o												0.3							REMOVE Conc COLLAR				o
	p	19.6	7.79				243													Jct CHAMBER No. 3	157.0' Lt 1467+8.5 ℄ Rte 210			p
	q				4.96															Conc WALL GUTTER				q
SHEET TOTAL			33.00	0.87	9.44		1478	20.0		448.0			0.3	1										

(N) NOT A SEPARATE PAY ITEM, FOR INFORMATION ONLY

DRAINAGE QUANTITIES

DQ-3

STATE OF CALIFORNIA - DEPARTMENT OF TRANSPORTATION
Caltrans
HYDRAULICS

FUNCTIONAL SUPERVISOR: TIMOTHY TIEU
CALCULATED-DESIGNED BY: M TRAN
CHECKED BY: SUNNY LIEM
REVISED BY
DATE REVISED

LAST REVISION 03-30-12
DATE PLOTTED => 28-JUN-2012
TIME PLOTTED => 13:15

Dist	COUNTY	ROUTE	POST MILES TOTAL PROJECT	SHEET No.	TOTAL SHEETS
07	LA	210	R15.0/R36.0	79	209

REGISTERED CIVIL ENGINEER 3-23-12 DATE

6-25-12
PLANS APPROVAL DATE

REGISTERED PROFESSIONAL ENGINEER SUNNY LIEM No. C61380 Exp 6/30/13 CIVIL STATE OF CALIFORNIA

THE STATE OF CALIFORNIA OR ITS OFFICERS OR AGENTS SHALL NOT BE RESPONSIBLE FOR THE ACCURACY OR COMPLETENESS OF SCANNED COPIES OF THIS PLAN SHEET.

NOTE:
JOINTS ARE STANDARD JOINT TYPE.

SUMMARY OF DRAINAGE QUANTITIES

DRAINAGE SYSTEM No.	DRAINAGE UNIT	"H" OR "V" FT	MINOR CONCRETE (MINOR STRUCTURE) CY	MINOR CONCRETE (DITCH LINING) CY	MINOR CONCRETE (GUTTER) CY	MINOR CONCRETE (BACKFILL) CY	MISCELLANEOUS IRON AND STEEL LB	6" NON-PERFORATED PLASTIC PIPE UNDERDRAIN LF	18" CORRUGATED STEEL PIPE (.079" THICK) LF	24" CORRUGATED STEEL PIPE (.079" THICK) LF	24" STEEL FLARED END SECTION EA	36" CORRUGATED STEEL PIPE INLET (.079" THICK) LF	REMOVE CONCRETE (MISCELLANEOUS) CY	REMOVE INLET EA	REMOVE PIPE LF	ROCK SLOPE PROTECTION (FACING, METHOD B) CY	ROCK SLOPE PROTECTION FABRIC (CLASS 8) SQYD	CAP INLET EA	MAXIMUM COVER LF	DESCRIPTION	STATION	DRAINAGE PLAN SHEET No.	DRAINAGE SYSTEM No.	DRAINAGE UNIT
6	a													1						REMOVE INLET	91.9' Lt 1479+70.8 ℄ Rte 210	D-6	6	a
	b	10.5	4.38				263													G2 INLET	91.9' Lt 1479+70.8 ℄ Rte 210			b
	c									300.5									13.1	24" CSP				c
	d	15.2	6.06				243													Jct CHAMBER No. 3	101.5 Lt 1476+70.5 ℄ Rte 210			d
	e									19									13.2	24" CSP				e
	f	6.4	2.18				243													Jct CHAMBER No. 3	123.5' Lt 1476+70.6 ℄ Rte 210			f
	g									10.5									4.6	24" CSP				g
	h			0.87																TYPE B DRAIN (MODIFIED)				h
	i	10.9	4.39				243													Jct CHAMBER No. 3-C	129.6' Lt 1478+24.3 ℄ Rte 210			i
	j							20.0											10.1	6" NON-PERFORATED PLASTIC PIPE				j
	k									145.6									11.7	24" CSP				k
	l												0.3							REMOVE Conc COLLAR				l
	m	15.4	6.27				243													Jct CHAMBER No. 3	158.3' Lt 1479+70.1 ℄ Rte 210			m
	n				6.11															Conc WALL GUTTER				n
7	a	7.8	3.22				243													Jct CHAMBER No. 3	204.0' Rt 1507+26.8 ℄ Rte 210	D-7	7	a
	b								22.5										9.7	18" CSP				b
	c	11.2	4.61				243													Jct CHAMBER No. 3-C	179.2' Rt 1507+19.9 ℄ Rte 210			c
	d								16.0										2.0	18" CSP				d
	e							19.2											10.4	6" NON-PERFORATED PLASTIC PIPE				e
	f			0.87																TYPE B DRAIN (MODIFIED)				f
SHEET TOTAL			31.11	1.74	6.11		1721	39.2	38.5	475.6			0.3	1										

(N) NOT A SEPARATE PAY ITEM, FOR INFORMATION ONLY

DRAINAGE QUANTITIES

DQ-4

STATE OF CALIFORNIA - DEPARTMENT OF TRANSPORTATION
Caltrans
HYDRAULICS

FUNCTIONAL SUPERVISOR: TIMOTHY TIEU
CALCULATED-DESIGNED BY: SUNNY LIEM
CHECKED BY
REVISED BY
DATE REVISED

LAST REVISION 03-30-12 | DATE PLOTTED => 28-JUN-2012 | TIME PLOTTED => 13:15

Dist	COUNTY	ROUTE	POST MILES TOTAL PROJECT	SHEET No.	TOTAL SHEETS
07	LA	210	R15.0/R36.0	80	209

REGISTERED CIVIL ENGINEER 3-23-12 DATE

6-25-12
PLANS APPROVAL DATE

REGISTERED PROFESSIONAL ENGINEER SUNNY LIEM No. C61380 Exp 6/30/13 CIVIL STATE OF CALIFORNIA

THE STATE OF CALIFORNIA OR ITS OFFICERS OR AGENTS SHALL NOT BE RESPONSIBLE FOR THE ACCURACY OR COMPLETENESS OF SCANNED COPIES OF THIS PLAN SHEET.

NOTE:
JOINTS ARE STANDARD JOINT TYPE.

SUMMARY OF DRAINAGE QUANTITIES

DRAINAGE SYSTEM No.	DRAINAGE UNIT	"H" OR "V"	MINOR CONCRETE (MINOR STRUCTURE)	MINOR CONCRETE (DITCH LINING)	MINOR CONCRETE (GUTTER)	MINOR CONCRETE (BACKFILL)	MISCELLANEOUS IRON AND STEEL	6" NON-PERFORATED PLASTIC PIPE UNDERDRAIN	18" CORRUGATED STEEL PIPE (.079" THICK)	24" CORRUGATED STEEL PIPE (.079" THICK)	24" STEEL FLARED END SECTION	36" CORRUGATED STEEL PIPE INLET (.079" THICK)	REMOVE CONCRETE (MISCELLANEOUS)	REMOVE INLET	REMOVE PIPE	ROCK SLOPE PROTECTION (FACING, METHOD B)	ROCK SLOPE PROTECTION FABRIC (CLASS 8)	CAP INLET	MAXIMUM COVER	DESCRIPTION	STATION	DRAINAGE PLAN SHEET No.	DRAINAGE SYSTEM No.	DRAINAGE UNIT
		FT	CY	CY	CY	CY	LB	LF	LF	LF	EA	LF	CY	EA	LF	CY	SQYD	EA	LF					
7	g				3.23															Conc WALL GUTTER		D-7	7	g
	h								202.3										12.0	18" CSP				h
	i	4.2	1.61				243													Jct CHAMBER No. 3	127.7' Rt 1510+36.2 ℄ Rte 210			i
	j								263.0										4.0	18" CSP				j
	k	5.5	1.95				263													G2 INLET	92.5' Rt 1513+11.1 ℄ Rte 210			k
	l													1						REMOVE INLET	92.5' Rt 1513+11.1 ℄ Rte 210			l
8	a													1						REMOVE INLET	103.8' Lt 1521+73.5 ℄ Rte 210	D-8	8	a
	b	7.4	2.44				263													G2 INLET	103.8' Lt 1521+73.5 ℄ Rte 210			b
	c									11.8									5.4	24" CSP				c
	d	4.1	1.65				243													Jct CHAMBER No. 3	119.1' Lt 1521+73.5 ℄ Rte 210			d
	e									87.9									7.9	24" CSP				e
	f			0.87																TYPE B DRAIN (MODIFIED)				f
	g	8.0	2.46				243													Jct CHAMBER No. 3	130.2' Lt 1479+22.1 ℄ Rte 210			g
	h							20.0											7.2	6" NON-PERFORATED PLASTIC PIPE				h
	i									25.3									5.9	24" CSP				i
	j	8.1	3.48				243													Jct CHAMBER No. 3-C	179.4' Lt 1519+37.2 ℄ Rte 210			j
	k									297.1									6.1	24" CSP				k
SHEET TOTAL			13.59	0.87	3.23		1498	20.0	465.3	422.1				2										

(N) NOT A SEPARATE PAY ITEM, FOR INFORMATION ONLY.

DRAINAGE QUANTITIES

DQ-5

STATE OF CALIFORNIA - DEPARTMENT OF TRANSPORTATION
Caltrans
HYDRAULICS
FUNCTIONAL SUPERVISOR: TIMOTHY TIEU
CALCULATED-DESIGNED BY: M TRAN
CHECKED BY: SUNNY LIEM
REVISED BY
DATE REVISED

LAST REVISION 03-30-12
DATE PLOTTED => 28-JUN-2012
TIME PLOTTED => 11:34

Dist	COUNTY	ROUTE	POST MILES TOTAL PROJECT	SHEET No.	TOTAL SHEETS
07	LA	210	R15.0/R36.0	81	209

REGISTERED CIVIL ENGINEER 3-23-12 DATE

6-25-12
PLANS APPROVAL DATE

REGISTERED PROFESSIONAL ENGINEER SUNNY LIEM No. C61380 Exp 6/30/13 CIVIL STATE OF CALIFORNIA

THE STATE OF CALIFORNIA OR ITS OFFICERS OR AGENTS SHALL NOT BE RESPONSIBLE FOR THE ACCURACY OR COMPLETENESS OF SCANNED COPIES OF THIS PLAN SHEET.

NOTE:
JOINTS ARE STANDARD JOINT TYPE.

SUMMARY OF DRAINAGE QUANTITIES

DRAINAGE SYSTEM No.	DRAINAGE UNIT	"H" OR "V" FT	MINOR CONCRETE (MINOR STRUCTURE) CY	MINOR CONCRETE (DITCH LINING) CY	MINOR CONCRETE (GUTTER) CY	MINOR CONCRETE (BACKFILL) CY	MISCELLANEOUS IRON AND STEEL LB	6" NON-PERFORATED PLASTIC PIPE UNDERDRAIN LF	18" CORRUGATED STEEL PIPE (.079" THICK) LF	24" CORRUGATED STEEL PIPE (.079" THICK) LF	24" STEEL FLARED END SECTION EA	36" CORRUGATED STEEL PIPE INLET (.079" THICK) LF	REMOVE CONCRETE (MISCELLANEOUS) CY	REMOVE INLET EA	REMOVE PIPE LF	ROCK SLOPE PROTECTION (FACING, METHOD B) CY	ROCK SLOPE PROTECTION FABRIC (CLASS 8) SQYD	CAP INLET EA	MAXIMUM COVER LF	DESCRIPTION	STATION	DRAINAGE PLAN SHEET No.	DRAINAGE SYSTEM No.	DRAINAGE UNIT
9	a													1						REMOVE INLET		D-9	9	a
	b	10.8	4.47				263													G2 INLET	21.7′ L+ 1585+60.7 ℄ KC21 LINE			b
	c									187.5									10.8	24" CSP				c
	d									16.2									5.7	24" CSP				d
	e			0.87																TYPE B DRAIN (MODIFIED)				e
	f	15.1	5.91				243													Jct CHAMBER No. 3-C	159.3′ Rt 1582+77.4 ℄ KC21 LINE			f
	g							20.0											14.3	6" NON-PERFORATED PLASTIC PIPE				g
	h									27.5									14.2	24" CSP				h
	i				4.96															Conc WALL GUTTER				i
10	a		0.85																	SIDEWALK CULVERT		D-10	10	a
11	a																	1		CAP INLET		D-11	11	a
	b																	1		CAP INLET				b
	c																	1		CAP INLET				c
12	a		0.51																	SIDEWALK CULVERT		D-12	12	a
	b																	1		CAP INLET				b
14	a	5.2	1.86																	Jct CHAMBER No. 3	78.6′ Rt 1793+90.2 ℄ Rte 210	D-14	14	a
	b								384.5										5.6	18" CSP				b
	c	8.6	3.84																	Jct CHAMBER No. 3	110.5′ Rt 1797+78.2 ℄ Rte 210			c
	d								48.5										2.5	18" CSP				d
SHEET TOTAL			17.44	0.87	4.96		506	20.0	433.0	231.2				1				4						

(N) NOT A SEPARATE PAY ITEM, FOR INFORMATION ONLY

DRAINAGE QUANTITIES

DQ-6

STATE OF CALIFORNIA - DEPARTMENT OF TRANSPORTATION
Caltrans HYDRAULICS

FUNCTIONAL SUPERVISOR: TIMOTHY TIEU
CALCULATED-DESIGNED BY: M TRAN
CHECKED BY: SUNNY LIEM
REVISED BY
DATE REVISED

LAST REVISION 03-30-12
DATE PLOTTED => 28-JUN-2012
TIME PLOTTED => 11:34

Dist	COUNTY	ROUTE	POST MILES TOTAL PROJECT	SHEET No.	TOTAL SHEETS
07	LA	210	R15.0/R36.0	82	209

REGISTERED CIVIL ENGINEER 3-23-12 DATE

6-25-12
PLANS APPROVAL DATE

REGISTERED PROFESSIONAL ENGINEER SUNNY LIEM No. C61380 Exp 6/30/13 CIVIL STATE OF CALIFORNIA

THE STATE OF CALIFORNIA OR ITS OFFICERS OR AGENTS SHALL NOT BE RESPONSIBLE FOR THE ACCURACY OR COMPLETENESS OF SCANNED COPIES OF THIS PLAN SHEET.

NOTE:
JOINTS ARE STANDARD JOINT TYPE.

SUMMARY OF DRAINAGE QUANTITIES

DRAINAGE SYSTEM No.	DRAINAGE UNIT	"H" OR "V"	MINOR CONCRETE (MINOR STRUCTURE)	MINOR CONCRETE (DITCH LINING)	MINOR CONCRETE (GUTTER)	MINOR CONCRETE (BACKFILL)	MISCELLANEOUS IRON AND STEEL	6" NON-PERFORATED PLASTIC PIPE UNDERDRAIN	18" CORRUGATED STEEL PIPE (.079" THICK)	24" CORRUGATED STEEL PIPE (.079" THICK)	24" STEEL FLARED END SECTION	36" CORRUGATED STEEL PIPE INLET (.079" THICK)	REMOVE CONCRETE (MISCELLANEOUS)	REMOVE INLET	REMOVE PIPE	ROCK SLOPE PROTECTION (FACING, METHOD B)	ROCK SLOPE PROTECTION FABRIC (CLASS 8)	CAP INLET	MAXIMUM COVER	DESCRIPTION	STATION	DRAINAGE PLAN SHEET No.	DRAINAGE SYSTEM No.	DRAINAGE UNIT
		FT	CY	CY	CY	CY	LB	LF	LF	LF	EA	LF	CY	EA	LF	CY	SQYD	EA	LF					
14	e	3.2	1.34																	Jct CHAMBER No. 3	115.4′ Rt 1798+31.4 ℄ Rte 210	D-14	14	e
	f								26.8										7.1	18" CSP				f
	g			0.87																TYPE B DRAIN (MODIFIED)				g
	h	6.9	2.20																	Jct CHAMBER No. 3-C	136.1′ Rt 1796+56.9 ℄ Rte 210			h
	i							18.7											6.2	6" NON-PERFORATED PLASTIC PIPE				i
	j								73.5										5.4	18" CSP				j
	k				3.39															Conc WALL GUTTER				k
15	a													1						REMOVE INLET	71.8′ Lt 1844+65.8 ℄ Rte 210	D-15	15	a
	b	5.0	1.82				263													G2 INLET	71.8′ Lt 1844+65.8 ℄ Rte 210			b
	c								80.4										3.5	18" CSP				c
	d			0.87																TYPE B DRAIN (MODIFIED)				d
	e	7.4	3.15				243													Jct CHAMBER No. 3-C	93.9′ Lt 1846+34.5 ℄ Rte 210			e
	f							18.1											6.7	6" NON-PERFORATED PLASTIC PIPE				f
	g								20.4										5.9	18" CSP				g
	h	2.8	2.71				243													Jct CHAMBER No. 3	117.4′ Lt 1846+34.5 ℄ Rte 210			h
	i								136.3										5.2	18" CSP				i
	j												0.3							REMOVE Conc COLLAR				j
	k	6.7	4.53				243													Jct CHAMBER No. 3	101.8 Lt 1844+67.2 ℄ Rte 210			k
	l				2.86															Conc WALL GUTTER				l
SHEET TOTAL			15.75	1.74	6.25		992	36.8	337.4				0.3	1										

(N) NOT A SEPARATE PAY ITEM, FOR INFORMATION ONLY.

DRAINAGE QUANTITIES

DQ-7

STATE OF CALIFORNIA - DEPARTMENT OF TRANSPORTATION
Caltrans
HYDRAULICS

FUNCTIONAL SUPERVISOR: TIMOTHY TIEU
CALCULATED-DESIGNED BY: SUNNY LIEM
CHECKED BY
REVISED BY
DATE REVISED

LAST REVISION 03-30-12
DATE PLOTTED => 28-JUN-2012
TIME PLOTTED => 11:34

Dist	COUNTY	ROUTE	POST MILES TOTAL PROJECT	SHEET No.	TOTAL SHEETS
07	LA	210	R15.0/R36.0	83	209

REGISTERED CIVIL ENGINEER 3-23-12 DATE

6-25-12
PLANS APPROVAL DATE

REGISTERED PROFESSIONAL ENGINEER SUNNY LIEM No. C61380 Exp 6/30/13 CIVIL STATE OF CALIFORNIA

THE STATE OF CALIFORNIA OR ITS OFFICERS OR AGENTS SHALL NOT BE RESPONSIBLE FOR THE ACCURACY OR COMPLETENESS OF SCANNED COPIES OF THIS PLAN SHEET.

NOTE:
JOINTS ARE STANDARD JOINT TYPE.

SUMMARY OF DRAINAGE QUANTITIES

DRAINAGE SYSTEM No.	DRAINAGE UNIT	"H" OR "V"	MINOR CONCRETE (MINOR STRUCTURE)	MINOR CONCRETE (DITCH LINING)	MINOR CONCRETE (GUTTER)	MINOR CONCRETE (BACKFILL)	MISCELLANEOUS IRON AND STEEL	18" CORRUGATED STEEL PIPE (.079" THICK)	24" CORRUGATED STEEL PIPE (.079" THICK)	24" STEEL FLARED END SECTION	36" CORRUGATED STEEL PIPE INLET (.079" THICK)	REMOVE CONCRETE (MISCELLANEOUS)	REMOVE INLET	REMOVE PIPE	ROCK SLOPE PROTECTION (FACING, METHOD B)	ROCK SLOPE PROTECTION FABRIC (CLASS 8)	CAP INLET	MAXIMUM COVER	DESCRIPTION	STATION	DRAINAGE PLAN SHEET No.	DRAINAGE SYSTEM No.	DRAINAGE UNIT
		FT	CY	CY	CY	CY	LB	LF	LF	EA	LF	CY	EA	LF	CY	SQYD	EA	LF					
16	a	4.0					236				4.50								GMP INLET	59.3' Lt 18+54.2 ℄ KC16 LINE	D-16	16	a
	b								150.0									3.3	24" CSP		D-16		b
17	a												1						REMOVE INLET		D-17	17	a
	b	5.7	2.08				263												G2 INLET	26.5' Lt 6+66.7 ℄ KC23 LINE			b
	c					2.93		37.0										8.8	18" CSP				c
	d			0.87															TYPE B DRAIN (MODIFIED)				d
	e																	6.7	6" NON-PERFORATED PLASTIC PIPE				e
	f	7.4	3.15				243												Jct CHAMBER No. 3-C	54.1' Lt 5+00.9 ℄ KC23 LINE			f
	g							16.0										6.0	18" CSP				g
	h	6.1	2.19				243												Jct CHAMBER No. 3	73.1' Lt 5+00.9 ℄ KC23 LINE			h
	i							150.0										4.6	18" CSP				i
SHEET TOTAL			7.42	0.87		2.93	985	203.0	150.0		4.50		1										
GRAND TOTAL			172.44	8.70	34.47	13.15	10857	1477.2	2740.2	2	38.0	1.2	9	185	5.68	20	5						

(N) NOT A SEPARATE PAY ITEM, FOR INFORMATION ONLY.

DRAINAGE QUANTITIES

DQ-8

STATE OF CALIFORNIA - DEPARTMENT OF TRANSPORTATION
Caltrans
HYDRAULICS

FUNCTIONAL SUPERVISOR: TIMOTHY TIEU
CALCULATED-DESIGNED BY: SUNNY LIEM
CHECKED BY:
REVISED BY: M TRAN
DATE REVISED:

LAST REVISION 03-30-12 DATE PLOTTED => 28-JUN-2012 TIME PLOTTED => 11:34

Dist	COUNTY	ROUTE	POST MILES TOTAL PROJECT	SHEET No.	TOTAL SHEETS
07	LA	210	R15.0/R36.0	84	209

Zewdie Burka 4-4-12
REGISTERED CIVIL ENGINEER DATE

6-25-12
PLANS APPROVAL DATE

REGISTERED PROFESSIONAL ENGINEER ZEWDIE BURKA No. 63554 Exp. 9/30/12 CIVIL STATE OF CALIFORNIA

THE STATE OF CALIFORNIA OR ITS OFFICERS OR AGENTS SHALL NOT BE RESPONSIBLE FOR THE ACCURACY OR COMPLETENESS OF SCANNED COPIES OF THIS PLAN SHEET.

NOTES:

1. FOR ACCURATE RIGHT OF WAY DATA, CONTACT RIGHT OF WAY ENGINEERING AT THE DISTRICT OFFICE.
2. LOCATION OF UTILITY FACILITIES SHOWN ON THESE PLANS ARE APPROXIMATE AND SHALL BE VARIFIED BY THE CONTRACTOR PRIOR TO CONSTRUCTION.

LEGEND:

PROPOSED WORK

ABBREVIATIONS:

CV	CRESCENT VALLEY
Csg	CASING
Du	DUCT
Bu	BURIED
WI	WROUGHT IRON
Wtr	WATER
Pwr	POWER
CPD	CORROSION PROTECTION DUCT
LACFCD	LOS ANGELES COUNTY FLOOD CONTROL DISTRICT
ABS	ACRYLONITRILE BUTADIENE STYRENE
St	STEEL
BSW	BURIED SERVICE WIRE
CP	CEMENT PIPE
San	SANITARY

ABBREVIATIONS:

Tr	TRANSIT
Ca	CABLE
Pas	PASADENA
M	MEDIUM PRESSURE
L	LOW PRESSURE
MCD+2C	MULTIPLE CONCRETE DUCT
Comn	COMMUNICATION
Cem	CEMENT
CL&W	CEMENT LINED WATER
Mnro	MONROVIA
HPM	HIGH PRESSURE MAIN
Mun	MUNICIPAL

ABBREVIATIONS:

Cal AM	CALIFORNIA AMERICAN WATER
CPC	CONCRETE PIPE CONDUIT
PEM	PLASTIC ENCASED
GIP	GALVANIZED IRON PIPE
MTD	MULTIPLE TILE DUCT
MPD	MULTIPLE PLASTIC DUCT
PMP	PASADENA MUNICIPAL POWER
PMW	PASADENA MUNICIPAL WATER
PMS	PASADENA MUNICIPAL SEWER
MMS	MONROVIA MUNICIPAL SEWER
MMW	MONROVIA MUNICIPAL WATER
GMW	GLENDALE MUNICIPAL WATER
GMS	GLENDALE MUNICIPAL SEWER
DMS	DUARTE MUNICIPAL WATER

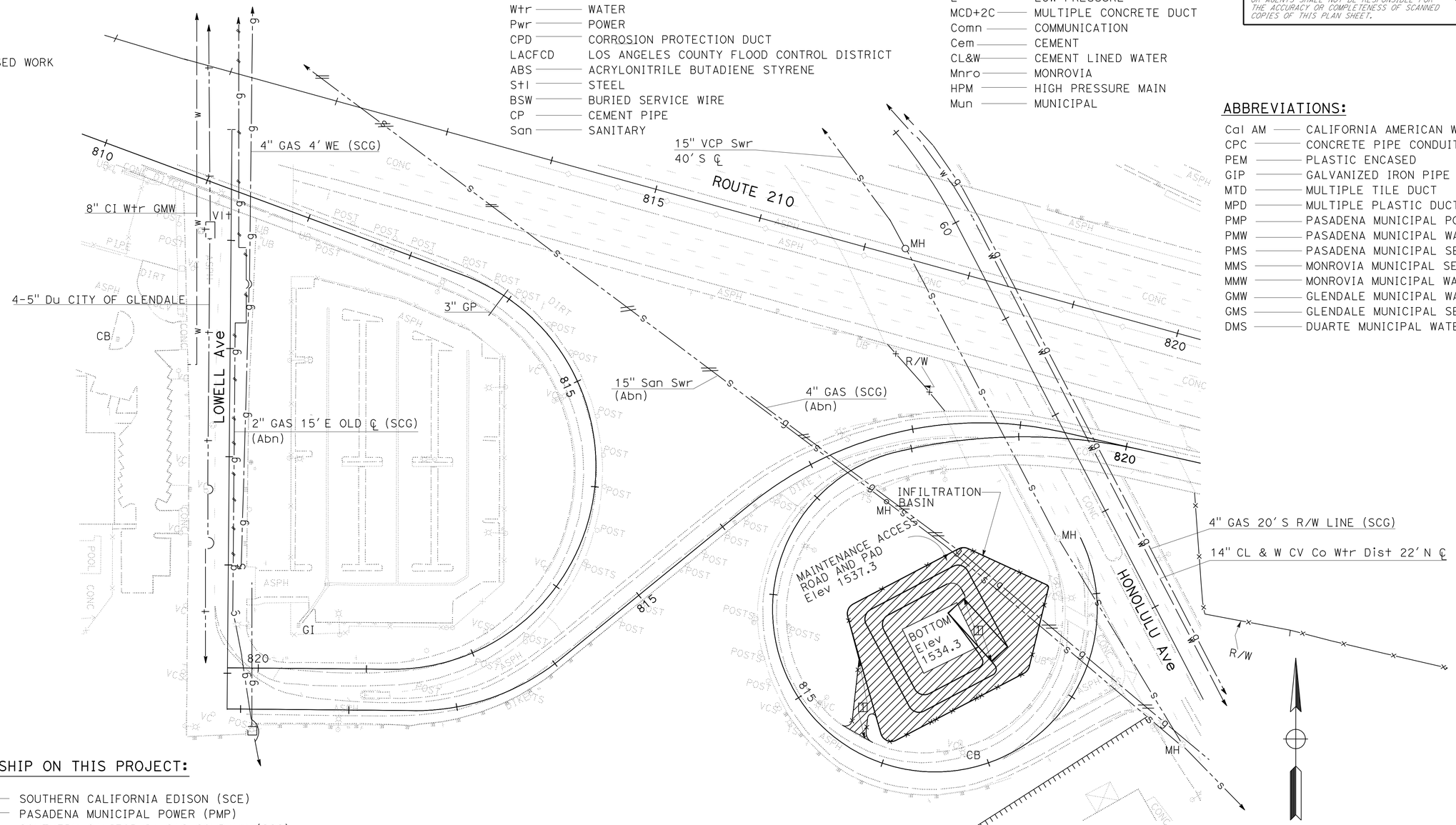

UTILITY OWNERSHIP ON THIS PROJECT:

ELECTRICAL	SOUTHERN CALIFORNIA EDISON (SCE)
	PASADENA MUNICIPAL POWER (PMP)
GAS	SOUTHERN CALIFORNIA GAS COMPANY (SCG)
SEWER	MONROVIA MUNICIPAL SEWER (MMS)
	PASADENA MUNICIPAL SEWER (PMS)
TELEPHONE	PACIFIC TELEPHONE & TELEGRAPH (PT&T)
	AT&T (ATT)
	VERIZON
WATER	GLENDALE MUNICIPAL WATER (GMW)
	CRESCENT VALLEY WATER DISTRICT (CVWD)
	PASADENA MUNICIPAL WATER (PMW)
	MONROVIA MUNICIPAL WATER (MMW)

UTILITY PLAN

SCALE: 1" = 50'

U-1

APPROVED FOR UTILITY INFORMATION ONLY.

STATE OF CALIFORNIA - DEPARTMENT OF TRANSPORTATION
Caltrans
UTILITIES

FUNCTIONAL SUPERVISOR: CELINA AVILES
CALCULATED-DESIGNED BY: SUJAYA KALAINESAN
CHECKED BY: ZEWDIE BURKA
REVISED BY
DATE REVISED

LAST REVISION 03-31-12
DATE PLOTTED => 28-JUN-2012
TIME PLOTTED => 11:34

Dist	COUNTY	ROUTE	POST MILES TOTAL PROJECT	SHEET No.	TOTAL SHEETS
07	LA	210	R15.0/R36.0	85	209

Zewdie Burka 4-4-12
REGISTERED CIVIL ENGINEER DATE

6-25-12
PLANS APPROVAL DATE

REGISTERED PROFESSIONAL ENGINEER ZEWDIE BURKA No. 63554 Exp. 9/30/12 CIVIL STATE OF CALIFORNIA

THE STATE OF CALIFORNIA OR ITS OFFICERS OR AGENTS SHALL NOT BE RESPONSIBLE FOR THE ACCURACY OR COMPLETENESS OF SCANNED COPIES OF THIS PLAN SHEET.

NOTES:

1. FOR ACCURATE RIGHT OF WAY DATA, CONTACT RIGHT OF WAY ENGINEERING AT THE DISTRICT OFFICE.
2. LOCATION OF UTILITY FACILITIES SHOWN ON THESE PLANS ARE APPROXIMATE AND SHALL BE VARIFIED BY THE CONTRACTOR PRIOR TO CONSTRUCTION.

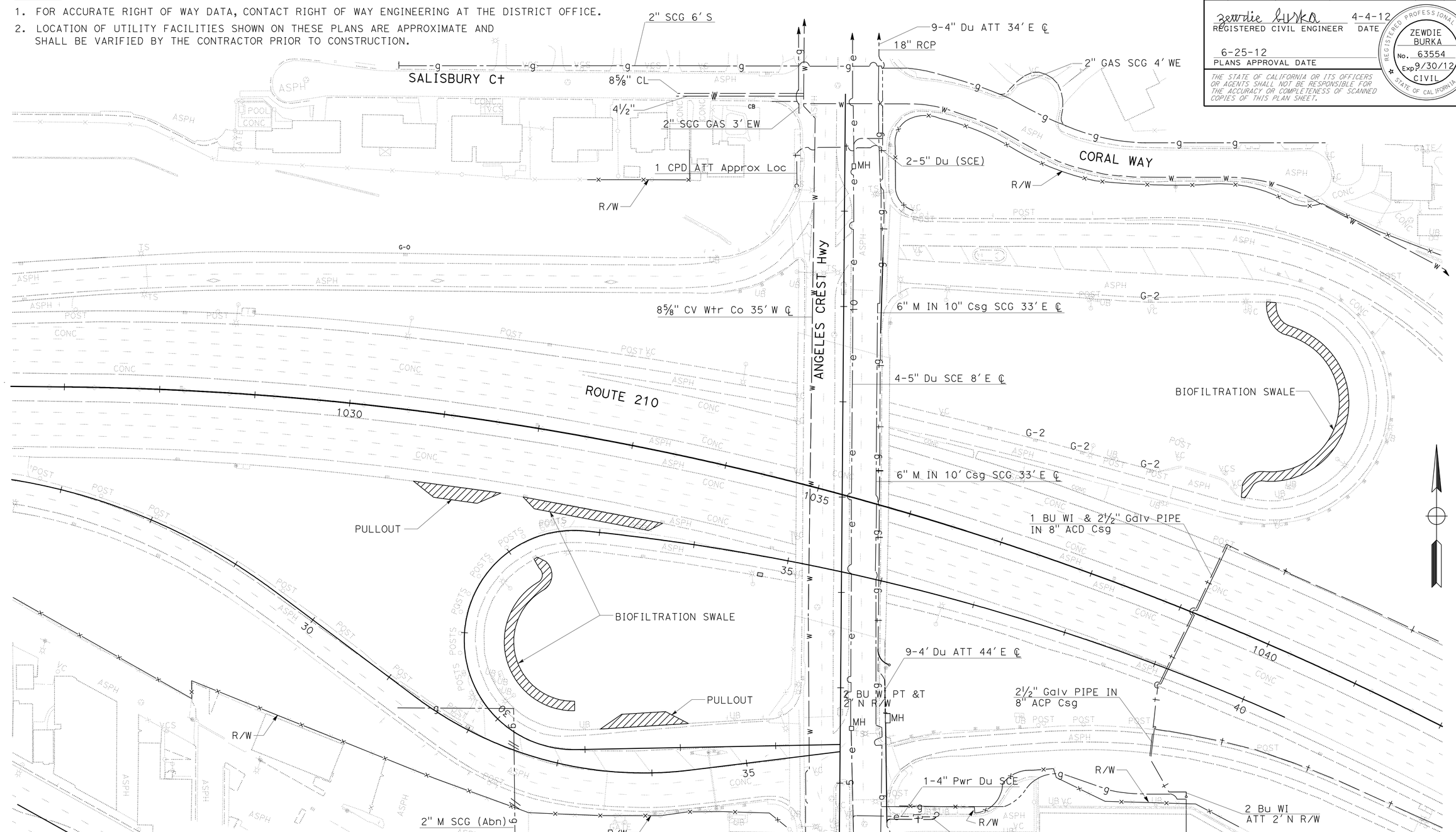

UTILITY PLAN

SCALE: 1' = 50'

U-2

APPROVED FOR UTILITY INFORMATION ONLY.

STATE OF CALIFORNIA - DEPARTMENT OF TRANSPORTATION
Caltrans
UTILITIES

FUNCTIONAL SUPERVISOR: CELINA AVILES
CALCULATED-DESIGNED BY: SUJAYA KALAINESAN
CHECKED BY: ZEWDIE BURKA
REVISED BY
DATE REVISED

LAST REVISION 04-02-12 | DATE PLOTTED => 28-JUN-2012 | TIME PLOTTED => 11:34

Dist	COUNTY	ROUTE	POST MILES TOTAL PROJECT	SHEET No.	TOTAL SHEETS
07	LA	210	R15.0/R36.0	86	209

Zewdie Burka 4-4-12
REGISTERED CIVIL ENGINEER DATE

6-25-12
PLANS APPROVAL DATE

REGISTERED PROFESSIONAL ENGINEER ZEWDIE BURKA No. 63554 Exp. 9/30/12 CIVIL STATE OF CALIFORNIA

THE STATE OF CALIFORNIA OR ITS OFFICERS OR AGENTS SHALL NOT BE RESPONSIBLE FOR THE ACCURACY OR COMPLETENESS OF SCANNED COPIES OF THIS PLAN SHEET.

NOTES:

1. FOR ACCURATE RIGHT OF WAY DATA, CONTACT RIGHT OF WAY ENGINEERING AT THE DISTRICT OFFICE.
2. LOCATION OF UTILITY FACILITIES SHOWN ON THESE PLANS ARE APPROXIMATE AND SHALL BE VARIFIED BY THE CONTRACTOR PRIOR TO CONSTRUCTION.

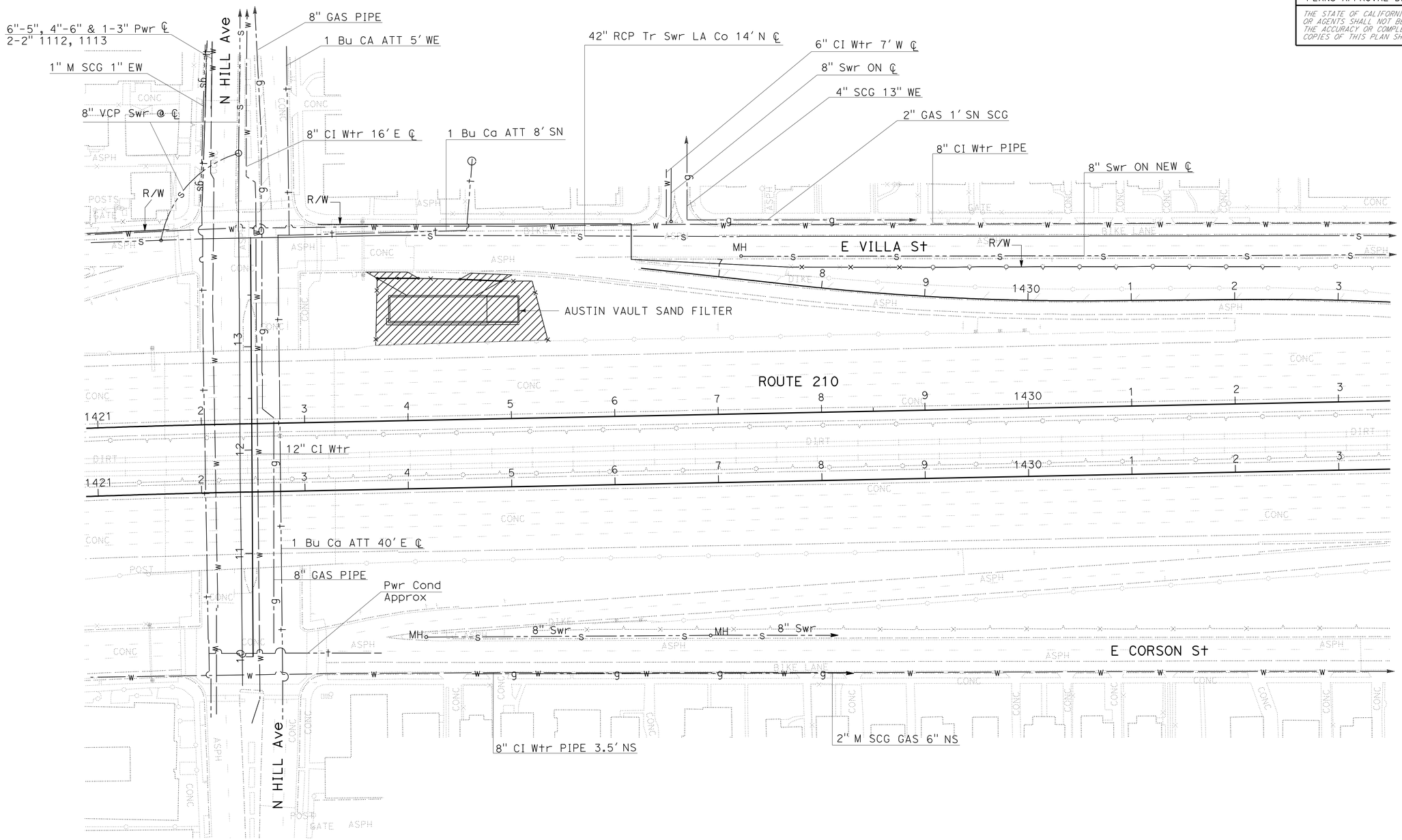

APPROVED FOR UTILITY INFORMATION ONLY.

UTILITY PLAN

SCALE: 1' = 50'

U-3

STATE OF CALIFORNIA - DEPARTMENT OF TRANSPORTATION
Caltrans
UTILITIES

FUNCTIONAL SUPERVISOR: CELINA AVILES
CALCULATED-DESIGNED BY: SUJAYA KALAINESAN
CHECKED BY: ZEWDIE BURKA
REVISED BY
DATE REVISED

LAST REVISION 04-02-12
DATE PLOTTED => 28-JUN-2012
TIME PLOTTED => 11:34

Dist	COUNTY	ROUTE	POST MILES TOTAL PROJECT	SHEET No.	TOTAL SHEETS
07	LA	210	R15.0/R36.0	87	209

Zewdie Burka 4-4-12
REGISTERED CIVIL ENGINEER DATE

6-25-12
PLANS APPROVAL DATE

REGISTERED PROFESSIONAL ENGINEER ZEWDIE BURKA No. 63554 Exp. 9/30/12 CIVIL STATE OF CALIFORNIA

THE STATE OF CALIFORNIA OR ITS OFFICERS OR AGENTS SHALL NOT BE RESPONSIBLE FOR THE ACCURACY OR COMPLETENESS OF SCANNED COPIES OF THIS PLAN SHEET.

NOTES:

1. FOR ACCURATE RIGHT OF WAY DATA, CONTACT RIGHT OF WAY ENGINEERING AT THE DISTRICT OFFICE.
2. LOCATION OF UTILITY FACILITIES SHOWN ON THESE PLANS ARE APPROXIMATE AND SHALL BE VARIFIED BY THE CONTRACTOR PRIOR TO CONSTRUCTION.

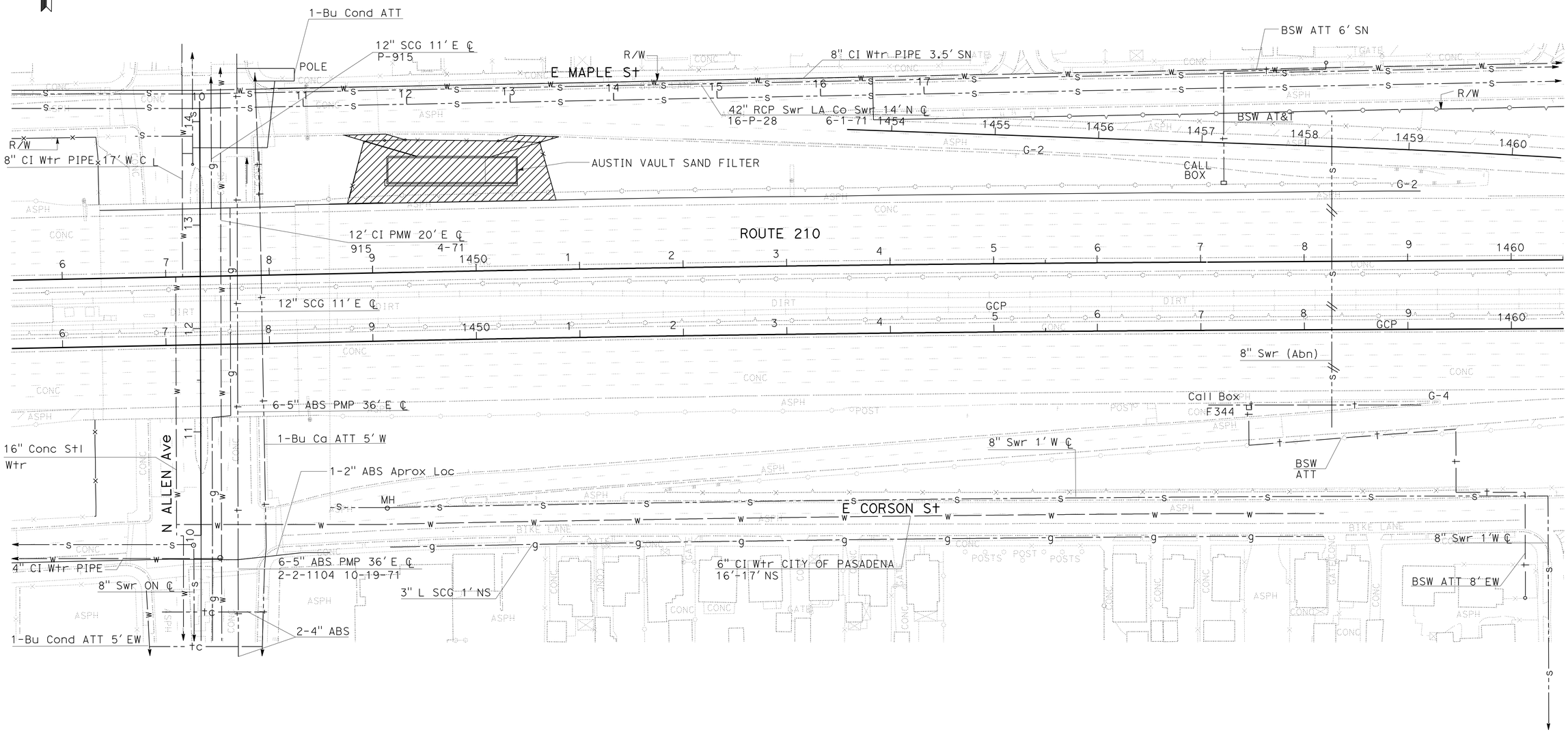

APPROVED FOR UTILITY INFORMATION ONLY.

UTILITY PLAN

SCALE: 1' = 50'

U-4

STATE OF CALIFORNIA - DEPARTMENT OF TRANSPORTATION
Caltrans
UTILITIES

FUNCTIONAL SUPERVISOR: CELINA AVILES
CALCULATED-DESIGNED BY: SUJAYA KALAINESAN
CHECKED BY: ZEWDIE BURKA
REVISED BY
DATE REVISED

LAST REVISION 04-02-12
DATE PLOTTED => 28-JUN-2012
TIME PLOTTED => 11:34

Dist	COUNTY	ROUTE	POST MILES TOTAL PROJECT	SHEET No.	TOTAL SHEETS
07	LA	210	R15.0/R36.0	88	209

Zewdie Burka 4-4-12
REGISTERED CIVIL ENGINEER DATE

6-25-12
PLANS APPROVAL DATE

REGISTERED PROFESSIONAL ENGINEER ZEWDIE BURKA No. 63554 Exp 9/30/12 CIVIL STATE OF CALIFORNIA

THE STATE OF CALIFORNIA OR ITS OFFICERS OR AGENTS SHALL NOT BE RESPONSIBLE FOR THE ACCURACY OR COMPLETENESS OF SCANNED COPIES OF THIS PLAN SHEET.

NOTES:

1. FOR ACCURATE RIGHT OF WAY DATA, CONTACT RIGHT OF WAY ENGINEERING AT THE DISTRICT OFFICE.
2. LOCATION OF UTILITY FACILITIES SHOWN ON THESE PLANS ARE APPROXIMATE AND SHALL BE VARIFIED BY THE CONTRACTOR PRIOR TO CONSTRUCTION.

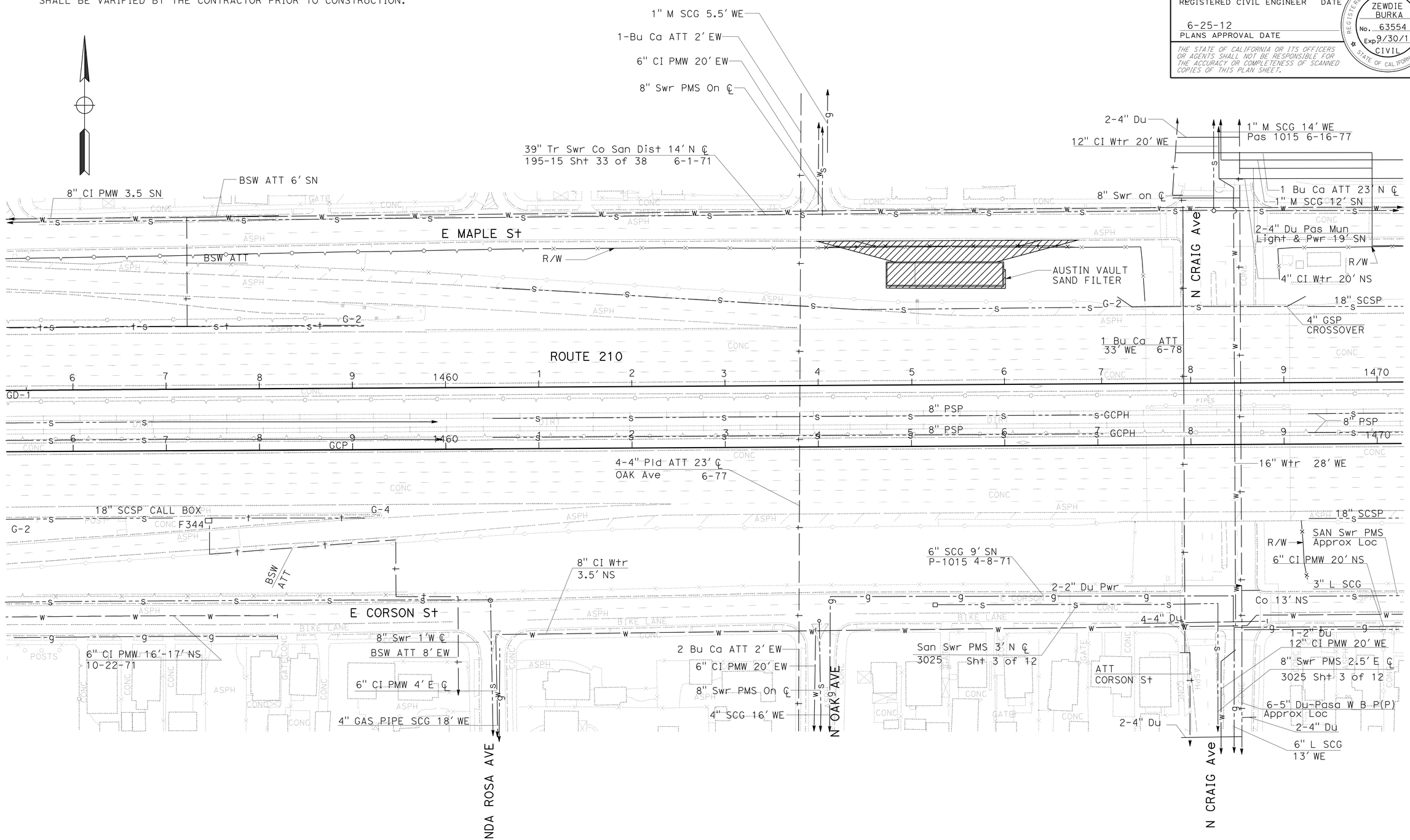

UTILITY PLAN

SCALE: 1" = 50'

APPROVED FOR UTILITY INFORMATION ONLY.

U-5

STATE OF CALIFORNIA - DEPARTMENT OF TRANSPORTATION
Caltrans
UTILITIES

FUNCTIONAL SUPERVISOR: CELINA AVILES
CALCULATED-DESIGNED BY: SUJAYA KALAINESAN
CHECKED BY: ZEWDIE BURKA
REVISED BY
DATE REVISED

LAST REVISION 04-02-12
DATE PLOTTED => 28-JUN-2012
TIME PLOTTED => 11:34

Dist	COUNTY	ROUTE	POST MILES TOTAL PROJECT	SHEET No.	TOTAL SHEETS
07	LA	210	R15.0/R36.0	89	209

Zewdie Burka 4-4-12
REGISTERED CIVIL ENGINEER DATE

6-25-12
PLANS APPROVAL DATE

REGISTERED PROFESSIONAL ENGINEER ZEWDIE BURKA No. 63554 Exp. 9/30/12 CIVIL STATE OF CALIFORNIA

THE STATE OF CALIFORNIA OR ITS OFFICERS OR AGENTS SHALL NOT BE RESPONSIBLE FOR THE ACCURACY OR COMPLETENESS OF SCANNED COPIES OF THIS PLAN SHEET.

NOTES:

1. FOR ACCURATE RIGHT OF WAY DATA, CONTACT RIGHT OF WAY ENGINEERING AT THE DISTRICT OFFICE
2. LOCATION OF UTILITY FACILITIES SHOWN ON THESE PLANS ARE APPROXIMATE AND SHALL BE VARIFIED BY THE CONTRACTOR PRIOR TO CONSTRUCTION.

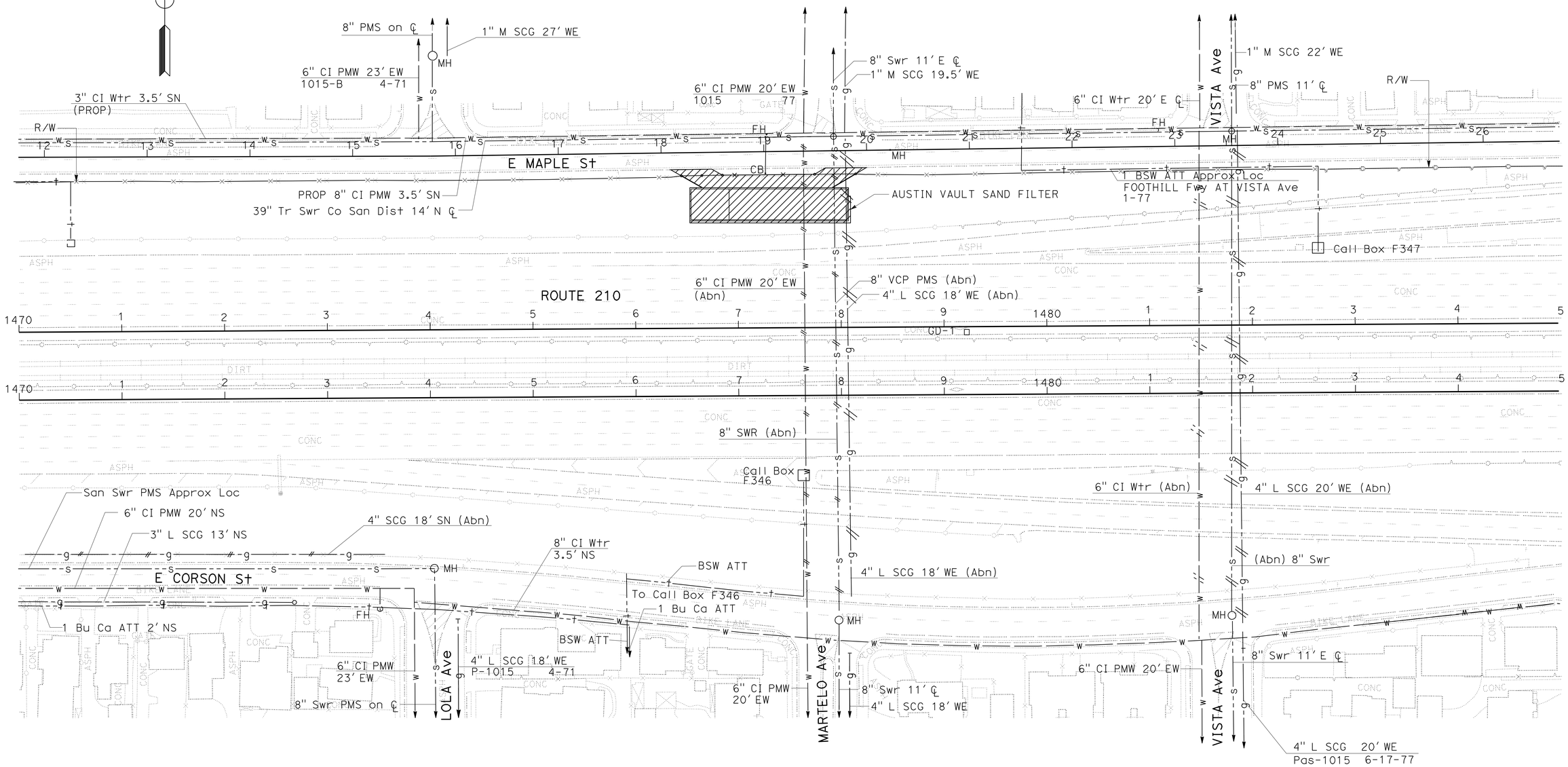

UTILITY PLAN

SCALE: 1" = 50'

U-6

APPROVED FOR UTILITY INFORMATION ONLY.

STATE OF CALIFORNIA - DEPARTMENT OF TRANSPORTATION
Caltrans
UTILITIES

FUNCTIONAL SUPERVISOR: CELINA AVILES
CALCULATED-DESIGNED BY: SUJAYA KALAINESAN
CHECKED BY: ZEWDIE BURKA
REVISED BY
DATE REVISED

LAST REVISION 04-02-12
DATE PLOTTED => 28-JUN-2012
TIME PLOTTED => 11:35

Dist	COUNTY	ROUTE	POST MILES TOTAL PROJECT	SHEET No.	TOTAL SHEETS
07	LA	210	R15.0/R36.0	90	209

Zewdie Burka 4-4-12
REGISTERED CIVIL ENGINEER DATE

6-25-12
PLANS APPROVAL DATE

REGISTERED PROFESSIONAL ENGINEER ZEWDIE BURKA No. 63554 Exp. 9/30/12 CIVIL STATE OF CALIFORNIA

THE STATE OF CALIFORNIA OR ITS OFFICERS OR AGENTS SHALL NOT BE RESPONSIBLE FOR THE ACCURACY OR COMPLETENESS OF SCANNED COPIES OF THIS PLAN SHEET.

NOTES:

1. FOR ACCURATE RIGHT OF WAY DATA, CONTACT RIGHT OF WAY ENGINEERING AT THE DISTRICT OFFICE.
2. LOCATION OF UTILITY FACILITIES SHOWN ON THESE PLANS ARE APPROXIMATE AND SHALL BE VARIFIED BY THE CONTRACTOR PRIOR TO CONSTRUCTION.

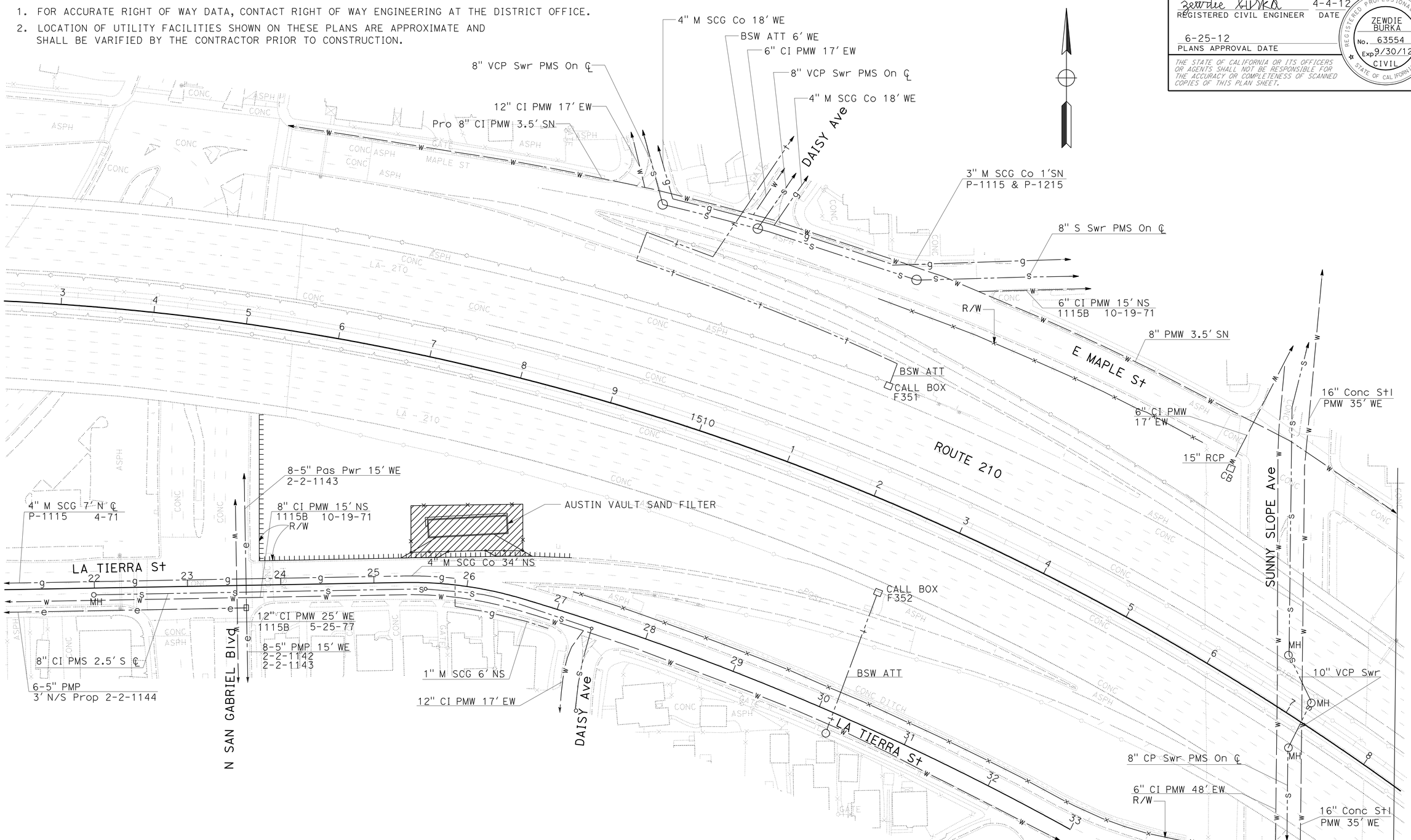

UTILITY PLAN

SCALE: 1" = 50'

U-7

APPROVED FOR UTILITY INFORMATION ONLY.

STATE OF CALIFORNIA - DEPARTMENT OF TRANSPORTATION
Caltrans
UTILITIES

FUNCTIONAL SUPERVISOR: CELINA AVILES
CALCULATED-DESIGNED BY: SUJAYA KALAINESAN
CHECKED BY: ZEWDIE BURKA
REVISED BY
DATE REVISED

LAST REVISION 04-02-12
DATE PLOTTED => 28-JUN-2012
TIME PLOTTED => 11:35

Dist	COUNTY	ROUTE	POST MILES TOTAL PROJECT	SHEET No.	TOTAL SHEETS
07	LA	210	R15.0/R36.0	91	209

Zewdie Burka 4-4-12
REGISTERED CIVIL ENGINEER DATE

6-25-12
PLANS APPROVAL DATE

REGISTERED PROFESSIONAL ENGINEER ZEWDIE BURKA No. 63554 Exp. 9/30/12 CIVIL STATE OF CALIFORNIA

THE STATE OF CALIFORNIA OR ITS OFFICERS OR AGENTS SHALL NOT BE RESPONSIBLE FOR THE ACCURACY OR COMPLETENESS OF SCANNED COPIES OF THIS PLAN SHEET.

NOTES:

1. FOR ACCURATE RIGHT OF WAY DATA, CONTACT RIGHT OF WAY ENGINEERING AT THE DISTRICT OFFICE
2. LOCATION OF UTILITY FACILITIES SHOWN ON THESE PLANS ARE APPROXIMATE AND SHALL BE VARIFIED BY THE CONTRACTOR PRIOR TO CONSTRUCTION.

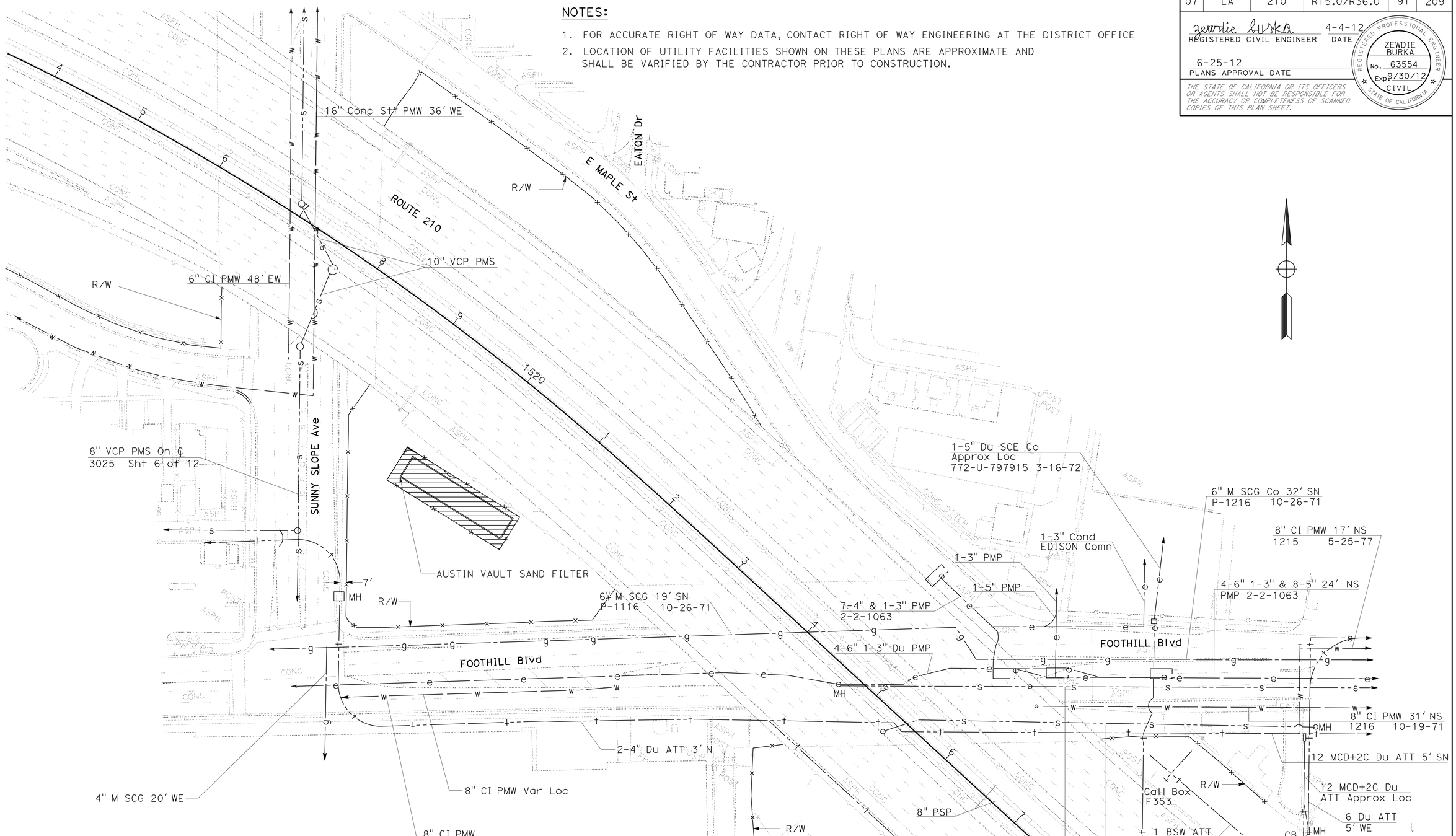

APPROVED FOR UTILITY INFORMATION ONLY.

UTILITY PLAN

SCALE: 1" = 50'

U-8

STATE OF CALIFORNIA - DEPARTMENT OF TRANSPORTATION
Caltrans
UTILITIES

FUNCTIONAL SUPERVISOR: CELINA AVILES
CALCULATED-DESIGNED BY: SUJAYA KALAINESAN
CHECKED BY: ZEWDIE BURKA
REVISED BY
DATE REVISED

LAST REVISION 04-02-12
DATE PLOTTED => 28-JUN-2012
TIME PLOTTED => 14:40

Dist	COUNTY	ROUTE	POST MILES TOTAL PROJECT	SHEET No.	TOTAL SHEETS
07	LA	210	R15.0/R36.0	92	209

Zewdie Burka 4-4-12
REGISTERED CIVIL ENGINEER DATE

6-25-12
PLANS APPROVAL DATE

REGISTERED PROFESSIONAL ENGINEER ZEWDIE BURKA No. 63554 Exp 9/30/12 CIVIL STATE OF CALIFORNIA

THE STATE OF CALIFORNIA OR ITS OFFICERS OR AGENTS SHALL NOT BE RESPONSIBLE FOR THE ACCURACY OR COMPLETENESS OF SCANNED COPIES OF THIS PLAN SHEET.

NOTES:

1. FOR ACCURATE RIGHT OF WAY DATA, CONTACT RIGHT OF WAY ENGINEERING AT THE DISTRICT OFFICE
2. LOCATION OF UTILITY FACILITIES SHOWN ON THESE PLANS ARE APPROXIMATE AND SHALL BE VARIFIED BY THE CONTRACTOR PRIOR TO CONSTRUCTION.

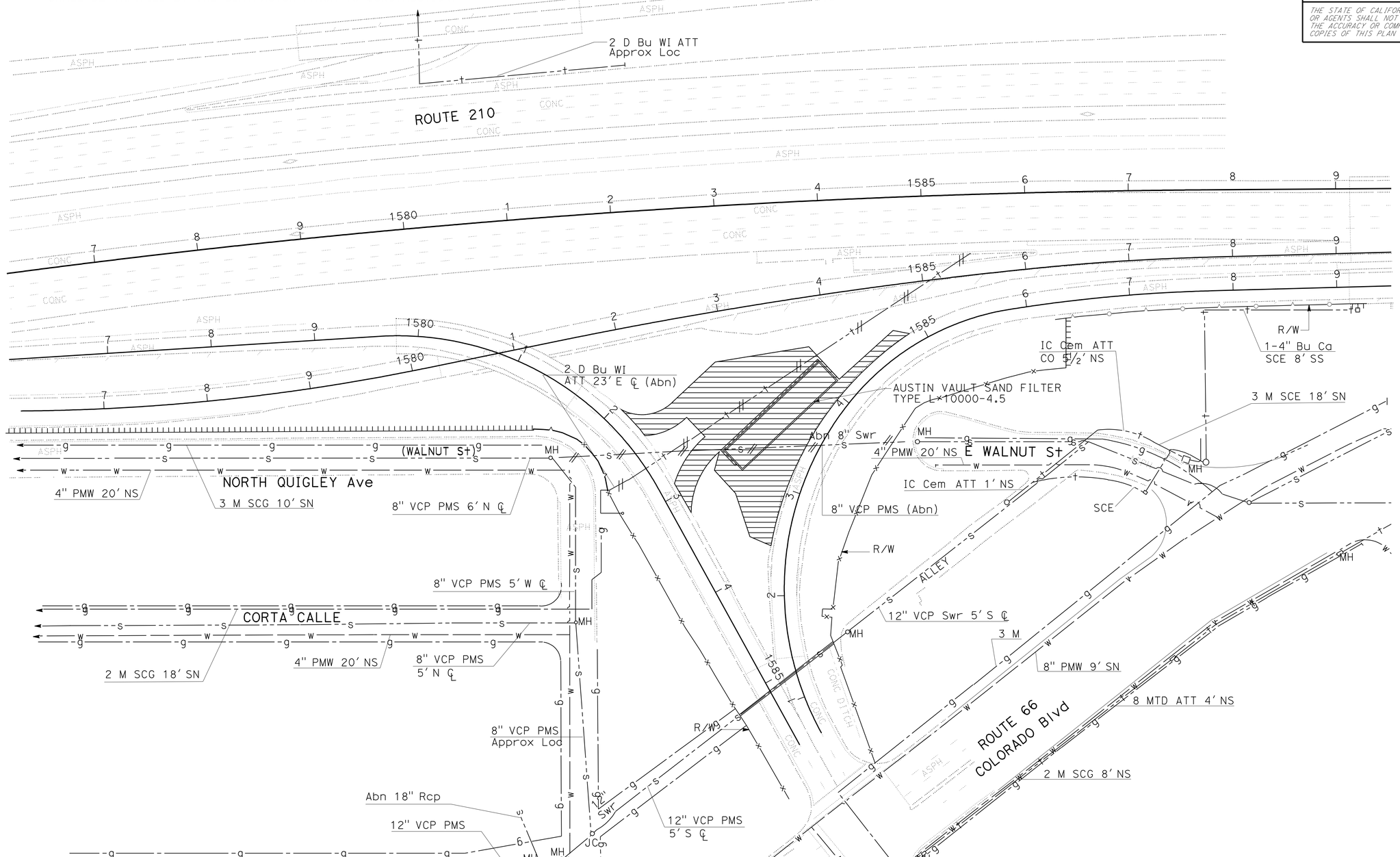

APPROVED FOR UTILITY INFORMATION ONLY.

UTILITY PLAN

SCALE: 1" = 50'

U-9

STATE OF CALIFORNIA - DEPARTMENT OF TRANSPORTATION
Caltrans
UTILITIES

FUNCTIONAL SUPERVISOR: CELINA AVILES
CALCULATED-DESIGNED BY: SUJAYA KALAINESAN
CHECKED BY: ZEWDIE BURKA
REVISED BY
DATE REVISED

LAST REVISION 04-02-12
DATE PLOTTED => 29-JUN-2012
TIME PLOTTED => 11:02

Dist	COUNTY	ROUTE	POST MILES TOTAL PROJECT	SHEET No.	TOTAL SHEETS
07	LA	210	R15.0/R36.0	93	209

Zewdie Burka 4-4-12
REGISTERED CIVIL ENGINEER DATE

6-25-12
PLANS APPROVAL DATE

REGISTERED PROFESSIONAL ENGINEER ZEWDIE BURKA No. 63554 Exp. 9/30/12 CIVIL STATE OF CALIFORNIA

THE STATE OF CALIFORNIA OR ITS OFFICERS OR AGENTS SHALL NOT BE RESPONSIBLE FOR THE ACCURACY OR COMPLETENESS OF SCANNED COPIES OF THIS PLAN SHEET.

NOTES:

1. FOR ACCURATE RIGHT OF WAY DATA, CONTACT RIGHT OF WAY ENGINEERING AT THE DISTRICT OFFICE
2. LOCATION OF UTILITY FACILITIES SHOWN ON THESE PLANS ARE APPROXIMATE AND SHALL BE VARIFIED BY THE CONTRACTOR PRIOR TO CONSTRUCTION.

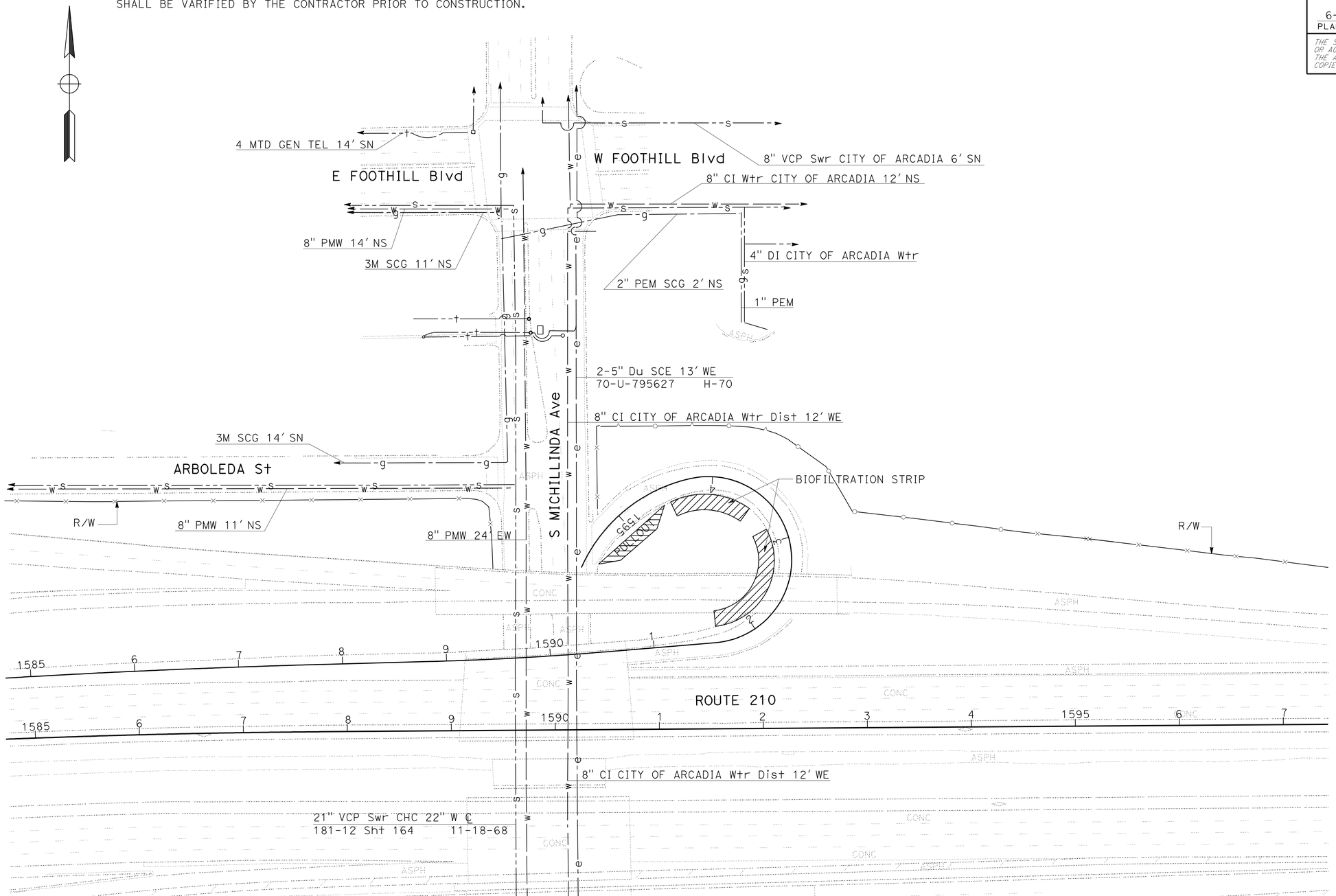

APPROVED FOR UTILITY INFORMATION ONLY.

UTILITY PLAN

SCALE: 1" = 50'

U-10

STATE OF CALIFORNIA - DEPARTMENT OF TRANSPORTATION
Caltrans
UTILITIES

FUNCTIONAL SUPERVISOR: CELINA AVILES
CALCULATED-DESIGNED BY: SUJAYA KALAINESAN
CHECKED BY: ZEWDIE BURKA
REVISED BY
DATE REVISED

LAST REVISION 04-02-12 | DATE PLOTTED => 29-JUN-2012 | TIME PLOTTED => 11:01

Dist	COUNTY	ROUTE	POST MILES TOTAL PROJECT	SHEET No.	TOTAL SHEETS
07	LA	210	R15.0/R36.0	94	209

Zewdie Burka 4-4-12
REGISTERED CIVIL ENGINEER DATE

6-25-12
PLANS APPROVAL DATE

REGISTERED PROFESSIONAL ENGINEER ZEWDIE BURKA No. 63554 Exp 9/30/12 CIVIL STATE OF CALIFORNIA

THE STATE OF CALIFORNIA OR ITS OFFICERS OR AGENTS SHALL NOT BE RESPONSIBLE FOR THE ACCURACY OR COMPLETENESS OF SCANNED COPIES OF THIS PLAN SHEET.

NOTES:

1. FOR ACCURATE RIGHT OF WAY DATA, CONTACT RIGHT OF WAY ENGINEERING AT THE DISTRICT OFFICE
2. LOCATION OF UTILITY FACILITIES SHOWN ON THESE PLANS ARE APPROXIMATE AND SHALL BE VARIFIED BY THE CONTRACTOR PRIOR TO CONSTRUCTION.

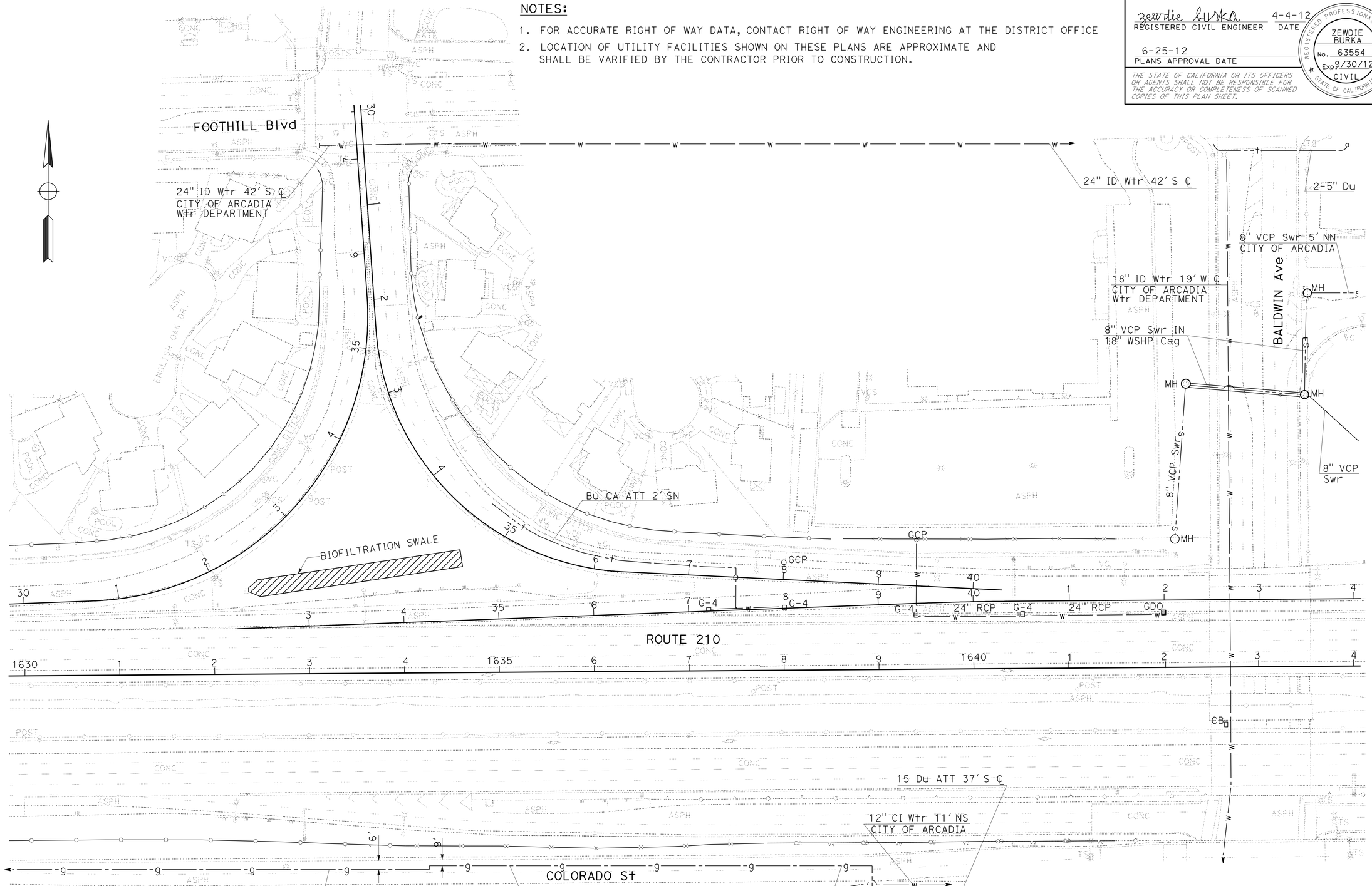

APPROVED FOR UTILITY INFORMATION ONLY.

UTILITY PLAN

SCALE: 1" = 50'

U-11

REVISED BY	DATE REVISED

SUJAYA KALAINESAN — ZEWDIE BURKA — CALCULATED-DESIGNED BY / CHECKED BY

FUNCTIONAL SUPERVISOR: CELINA AVILES

STATE OF CALIFORNIA - DEPARTMENT OF TRANSPORTATION — UTILITIES — Caltrans

LAST REVISION 04-02-12 — DATE PLOTTED => 29-JUN-2012 — TIME PLOTTED => 11:01

Dist	COUNTY	ROUTE	POST MILES TOTAL PROJECT	SHEET No.	TOTAL SHEETS
07	LA	210	R15.0/R36.0	95	209

Zewdie Burka 4-4-12
REGISTERED CIVIL ENGINEER DATE

6-25-12
PLANS APPROVAL DATE

REGISTERED PROFESSIONAL ENGINEER
ZEWDIE BURKA
No. 63554
Exp. 9/30/12
CIVIL
STATE OF CALIFORNIA

THE STATE OF CALIFORNIA OR ITS OFFICERS OR AGENTS SHALL NOT BE RESPONSIBLE FOR THE ACCURACY OR COMPLETENESS OF SCANNED COPIES OF THIS PLAN SHEET.

NOTES:

1. FOR ACCURATE RIGHT OF WAY DATA, CONTACT RIGHT OF WAY ENGINEERING AT THE DISTRICT OFFICE
2. LOCATION OF UTILITY FACILITIES SHOWN ON THESE PLANS ARE APPROXIMATE AND SHALL BE VARIFIED BY THE CONTRACTOR PRIOR TO CONSTRUCTION.

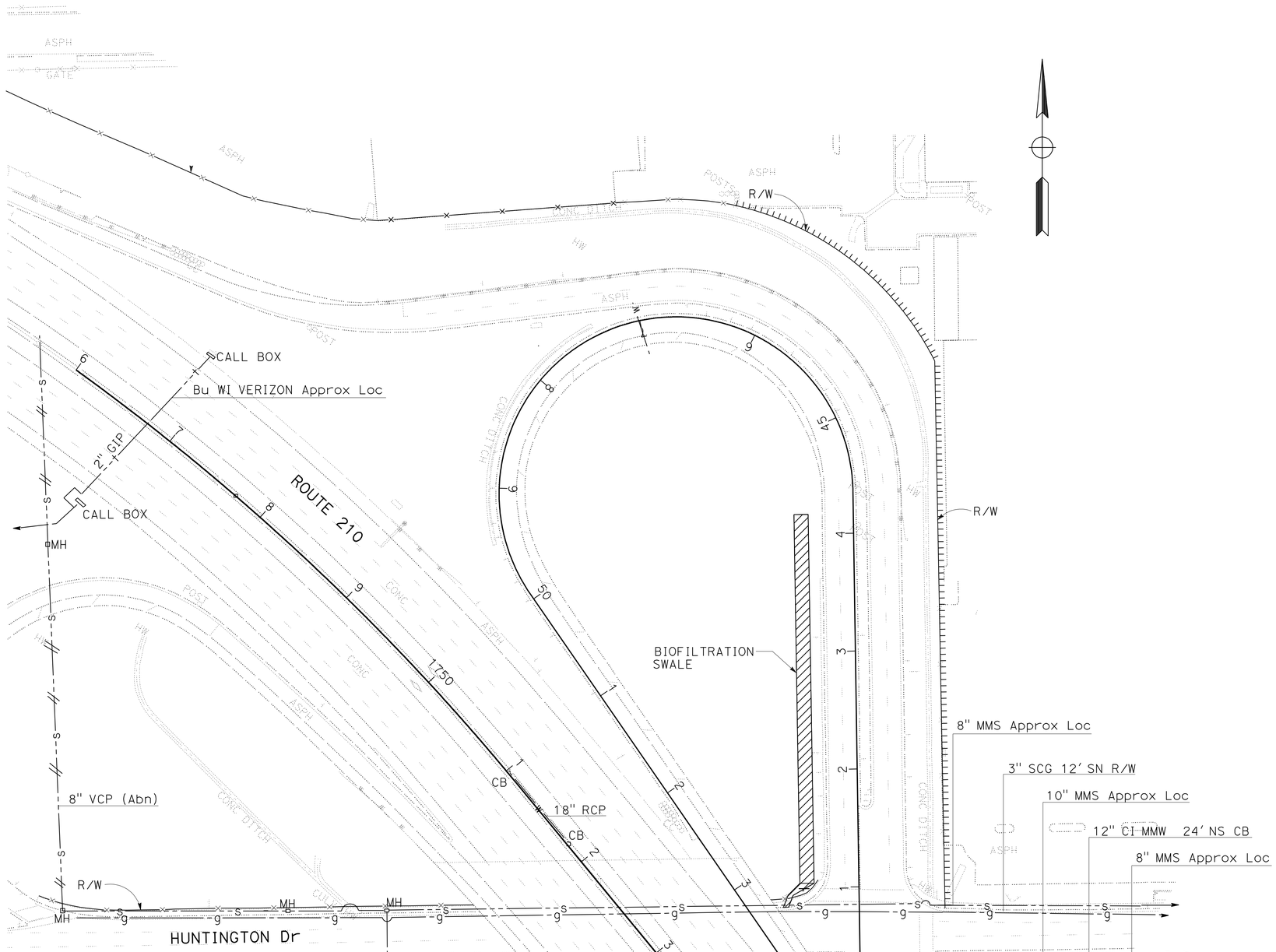

APPROVED FOR UTILITY INFORMATION ONLY.

UTILITY PLAN

SCALE: 1" = 50'

U-12

STATE OF CALIFORNIA - DEPARTMENT OF TRANSPORTATION
Caltrans
UTILITIES

FUNCTIONAL SUPERVISOR: CELINA AVILES
CALCULATED-DESIGNED BY: SUJAYA KALAINESAN
CHECKED BY: ZEWDIE BURKA
REVISED BY
DATE REVISED

LAST REVISION 04-02-12
DATE PLOTTED => 29-JUN-2012
TIME PLOTTED => 11:00

Dist	COUNTY	ROUTE	POST MILES TOTAL PROJECT	SHEET No.	TOTAL SHEETS
07	LA	210	R15.0/R36.0	96	209

Zewdie Burka 4-4-12
REGISTERED CIVIL ENGINEER DATE

6-25-12
PLANS APPROVAL DATE

REGISTERED PROFESSIONAL ENGINEER ZEWDIE BURKA No. 63554 Exp. 9/30/12 CIVIL STATE OF CALIFORNIA

THE STATE OF CALIFORNIA OR ITS OFFICERS OR AGENTS SHALL NOT BE RESPONSIBLE FOR THE ACCURACY OR COMPLETENESS OF SCANNED COPIES OF THIS PLAN SHEET.

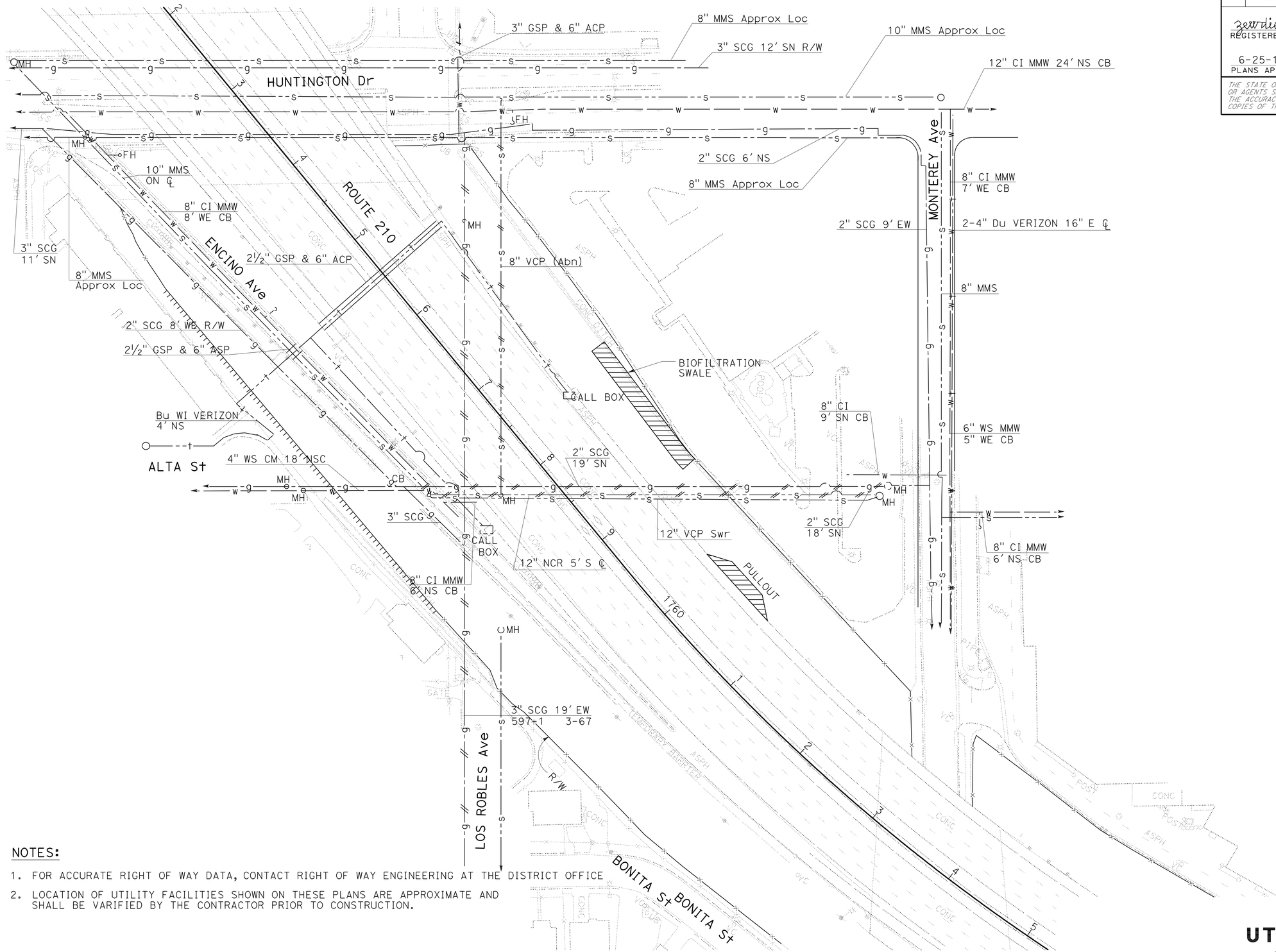

NOTES:

1. FOR ACCURATE RIGHT OF WAY DATA, CONTACT RIGHT OF WAY ENGINEERING AT THE DISTRICT OFFICE
2. LOCATION OF UTILITY FACILITIES SHOWN ON THESE PLANS ARE APPROXIMATE AND SHALL BE VARIFIED BY THE CONTRACTOR PRIOR TO CONSTRUCTION.

APPROVED FOR UTILITY INFORMATION ONLY.

UTILITY PLAN

SCALE: 1" = 50'

U-13

STATE OF CALIFORNIA - DEPARTMENT OF TRANSPORTATION
Caltrans
UTILITIES

FUNCTIONAL SUPERVISOR: CELINA AVILES
CALCULATED-DESIGNED BY: SUJAYA KALAINESAN
CHECKED BY: ZEWDIE BURKA
REVISED BY
DATE REVISED

LAST REVISION 04-02-12
DATE PLOTTED => 28-JUN-2012
TIME PLOTTED => 14:40

Dist	COUNTY	ROUTE	POST MILES TOTAL PROJECT	SHEET No.	TOTAL SHEETS
07	LA	210	R15.0/R36.0	97	209

Zewdie Burka 4-4-12
REGISTERED CIVIL ENGINEER DATE

6-25-12
PLANS APPROVAL DATE

REGISTERED PROFESSIONAL ENGINEER ZEWDIE BURKA No. 63554 Exp. 9/30/12 CIVIL STATE OF CALIFORNIA

THE STATE OF CALIFORNIA OR ITS OFFICERS OR AGENTS SHALL NOT BE RESPONSIBLE FOR THE ACCURACY OR COMPLETENESS OF SCANNED COPIES OF THIS PLAN SHEET.

NOTES:

1. FOR ACCURATE RIGHT OF WAY DATA, CONTACT RIGHT OF WAY ENGINEERING AT THE DISTRICT OFFICE
2. LOCATION OF UTILITY FACILITIES SHOWN ON THESE PLANS ARE APPROXIMATE AND SHALL BE VARIFIED BY THE CONTRACTOR PRIOR TO CONSTRUCTION.

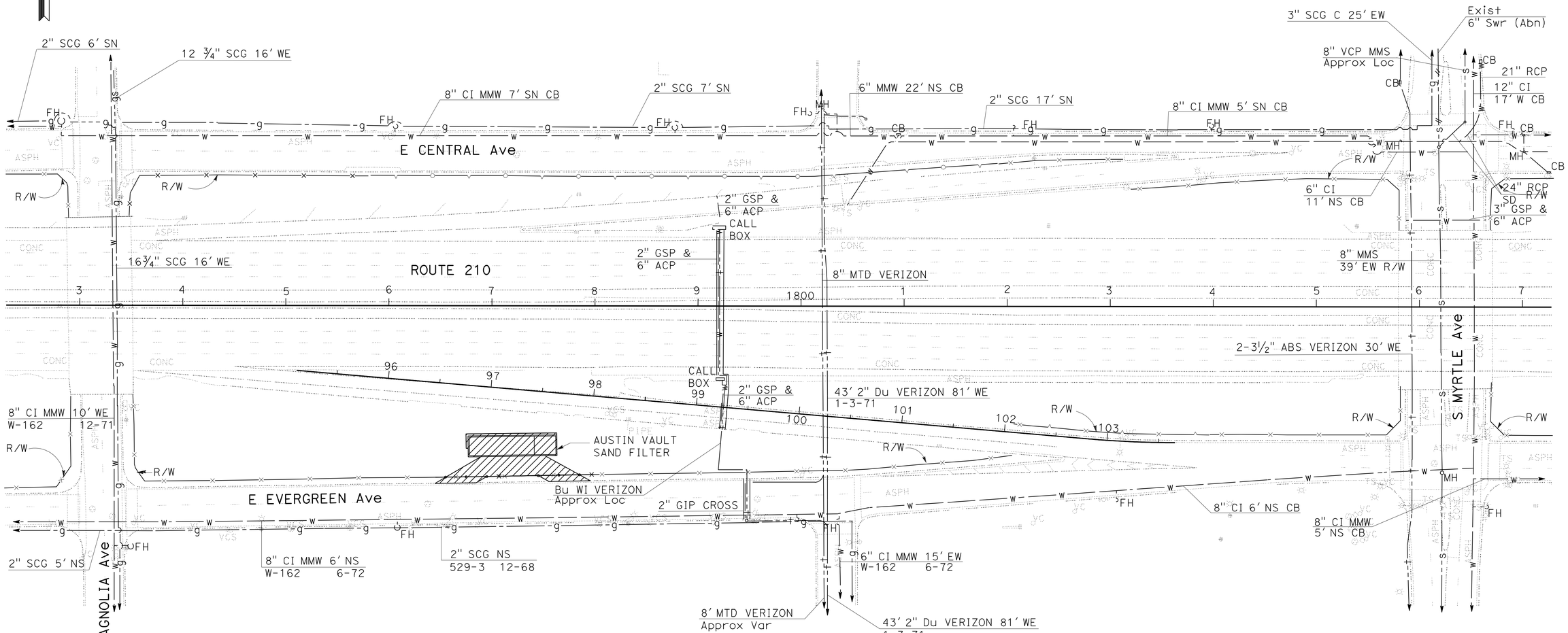

UTILITY PLAN

SCALE: 1" = 50'

U-14

APPROVED FOR UTILITY INFORMATION ONLY.

STATE OF CALIFORNIA - DEPARTMENT OF TRANSPORTATION
Caltrans
UTILITIES

FUNCTIONAL SUPERVISOR: CELINA AVILES
CALCULATED-DESIGNED BY: SUJAYA KALAINESAN
CHECKED BY: ZEWDIE BURKA
REVISED BY
DATE REVISED

LAST REVISION 04-02-12
DATE PLOTTED => 28-JUN-2012
TIME PLOTTED => 14:40

Dist	COUNTY	ROUTE	POST MILES TOTAL PROJECT	SHEET No.	TOTAL SHEETS
07	LA	210	R15.0/R36.0	98	209

Zewdie Burka 4-4-12
REGISTERED CIVIL ENGINEER DATE

6-25-12
PLANS APPROVAL DATE

REGISTERED PROFESSIONAL ENGINEER ZEWDIE BURKA No. 63554 Exp. 9/30/12 CIVIL STATE OF CALIFORNIA

THE STATE OF CALIFORNIA OR ITS OFFICERS OR AGENTS SHALL NOT BE RESPONSIBLE FOR THE ACCURACY OR COMPLETENESS OF SCANNED COPIES OF THIS PLAN SHEET.

NOTES:

1. FOR ACCURATE RIGHT OF WAY DATA, CONTACT RIGHT OF WAY ENGINEERING AT THE DISTRICT OFFICE
2. LOCATION OF UTILITY FACILITIES SHOWN ON THESE PLANS ARE APPROXIMATE AND SHALL BE VARIFIED BY THE CONTRACTOR PRIOR TO CONSTRUCTION.

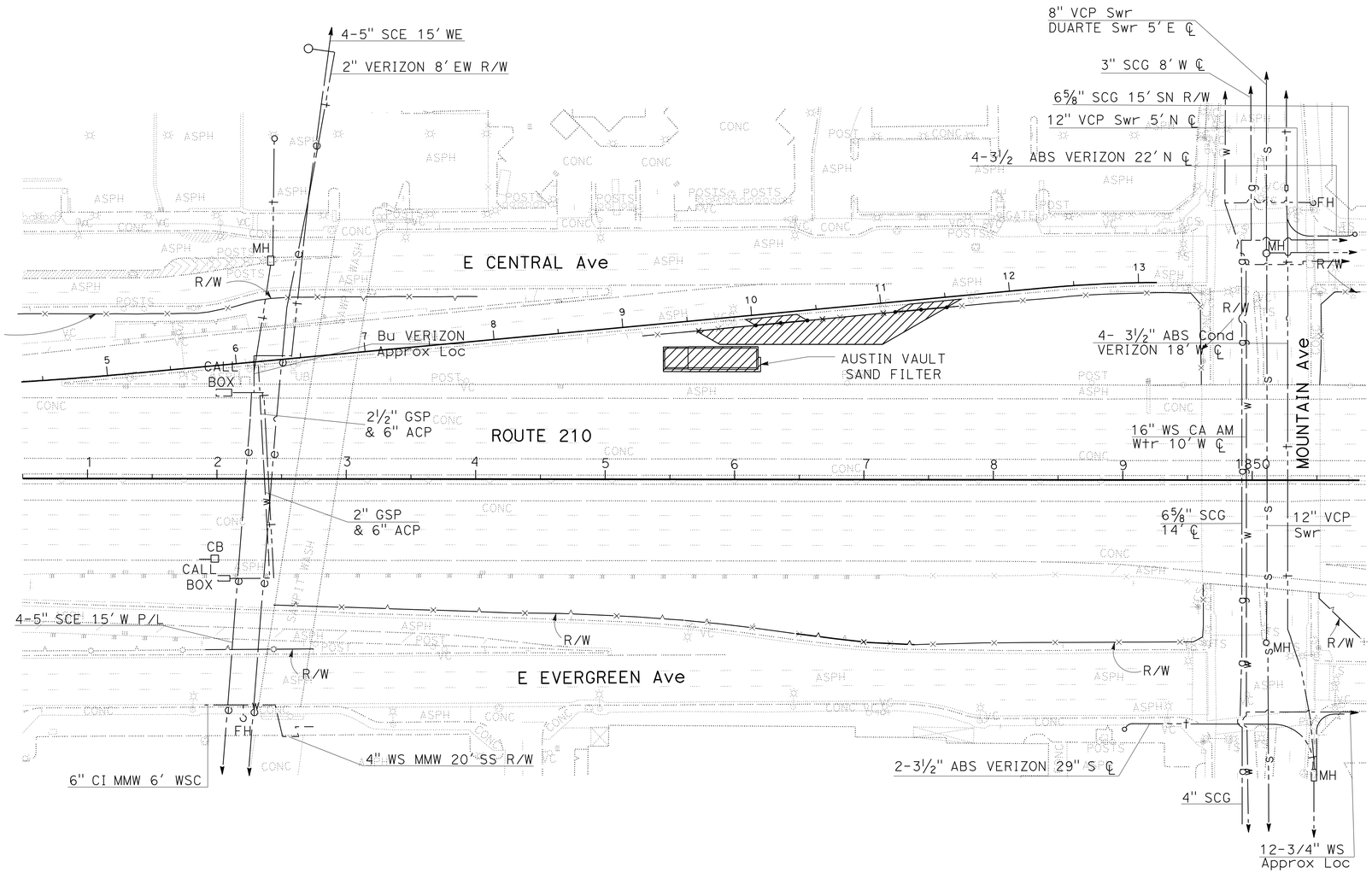

UTILITY PLAN

SCALE: 1" = 50'

U-15

APPROVED FOR UTILITY INFORMATION ONLY.

STATE OF CALIFORNIA - DEPARTMENT OF TRANSPORTATION
Caltrans
UTILITIES

FUNCTIONAL SUPERVISOR: CELINA AVILES
CALCULATED-DESIGNED BY: SUJAYA KALAINESAN
CHECKED BY: ZEWDIE BURKA
REVISED BY
DATE REVISED

LAST REVISION 04-02-12
DATE PLOTTED => 28-JUN-2012
TIME PLOTTED => 14:40

Dist	COUNTY	ROUTE	POST MILES TOTAL PROJECT	SHEET No.	TOTAL SHEETS
07	LA	210	R15.0/R36.0	99	209

Zewdie Burka 4-4-12
REGISTERED CIVIL ENGINEER DATE

6-25-12
PLANS APPROVAL DATE

REGISTERED PROFESSIONAL ENGINEER ZEWDIE BURKA No. 63554 Exp 9/30/12 CIVIL STATE OF CALIFORNIA

THE STATE OF CALIFORNIA OR ITS OFFICERS OR AGENTS SHALL NOT BE RESPONSIBLE FOR THE ACCURACY OR COMPLETENESS OF SCANNED COPIES OF THIS PLAN SHEET.

NOTES:

1. FOR ACCURATE RIGHT OF WAY DATA, CONTACT RIGHT OF WAY ENGINEERING AT THE DISTRICT OFFICE
2. LOCATION OF UTILITY FACILITIES SHOWN ON THESE PLANS ARE APPROXIMATE AND SHALL BE VARIFIED BY THE CONTRACTOR PRIOR TO CONSTRUCTION.

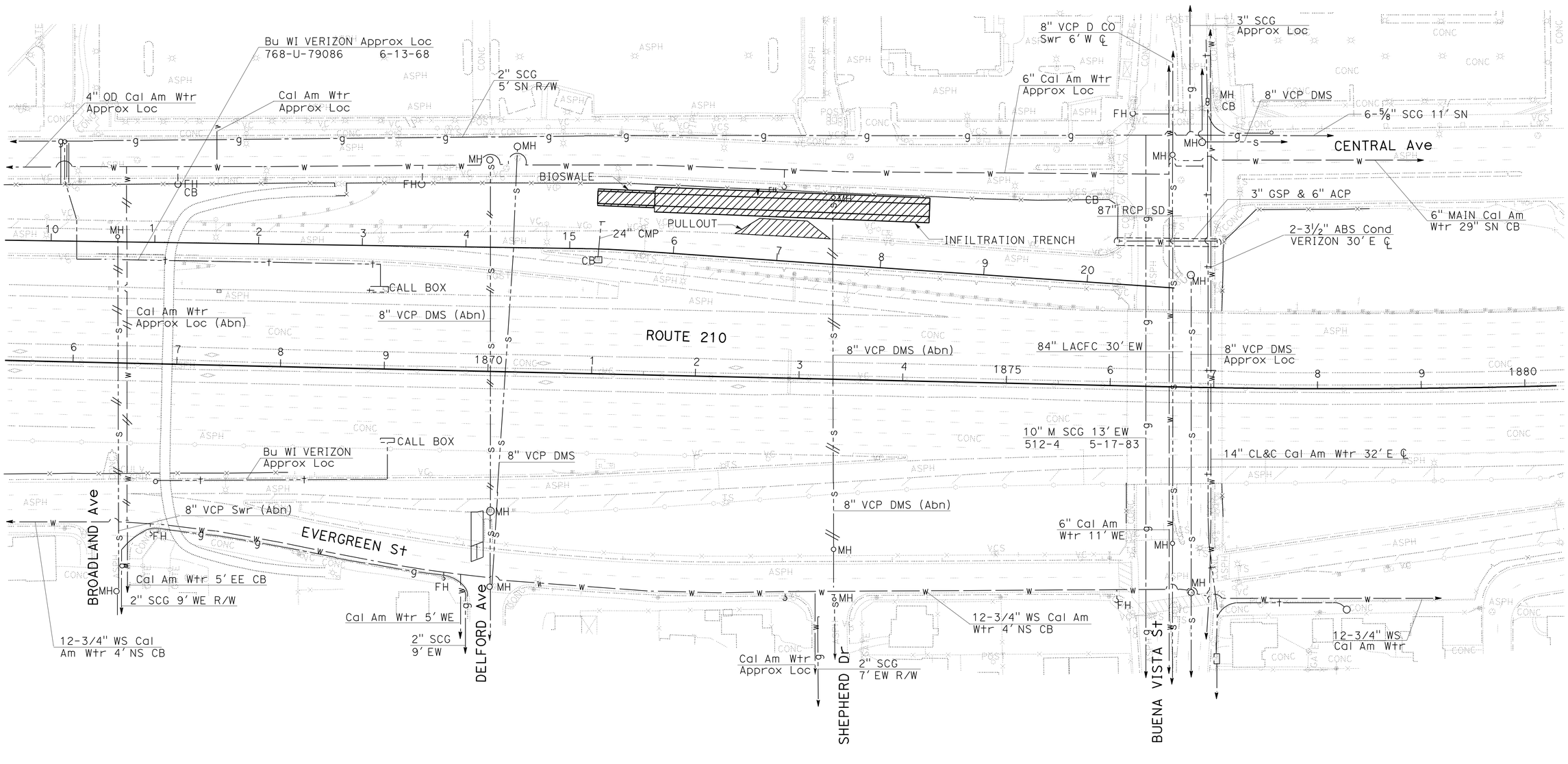

UTILITY PLAN

SCALE: 1" = 50'

U-16

APPROVED FOR UTILITY INFORMATION ONLY.

STATE OF CALIFORNIA - DEPARTMENT OF TRANSPORTATION
Caltrans
UTILITIES

FUNCTIONAL SUPERVISOR: CELINA AVILES
CALCULATED-DESIGNED BY: SUJAYA KALAINESAN
CHECKED BY: ZEWDIE BURKA
REVISED BY
DATE REVISED

LAST REVISION 04-02-12
DATE PLOTTED => 29-JUN-2012
TIME PLOTTED => 11:00

Dist	COUNTY	ROUTE	POST MILES TOTAL PROJECT	SHEET No.	TOTAL SHEETS
07	LA	210	R15.0/R36.0	100	209

Zewdie Burka 4-4-12
REGISTERED CIVIL ENGINEER DATE

6-25-12
PLANS APPROVAL DATE

REGISTERED PROFESSIONAL ENGINEER
ZEWDIE BURKA
No. 63554
Exp. 9/30/12
CIVIL
STATE OF CALIFORNIA

THE STATE OF CALIFORNIA OR ITS OFFICERS OR AGENTS SHALL NOT BE RESPONSIBLE FOR THE ACCURACY OR COMPLETENESS OF SCANNED COPIES OF THIS PLAN SHEET.

NOTES:

1. FOR ACCURATE RIGHT OF WAY DATA, CONTACT RIGHT OF WAY ENGINEERING AT THE DISTRICT OFFICE
2. LOCATION OF UTILITY FACILITIES SHOWN ON THESE PLANS ARE APPROXIMATE AND SHALL BE VARIFIED BY THE CONTRACTOR PRIOR TO CONSTRUCTION.

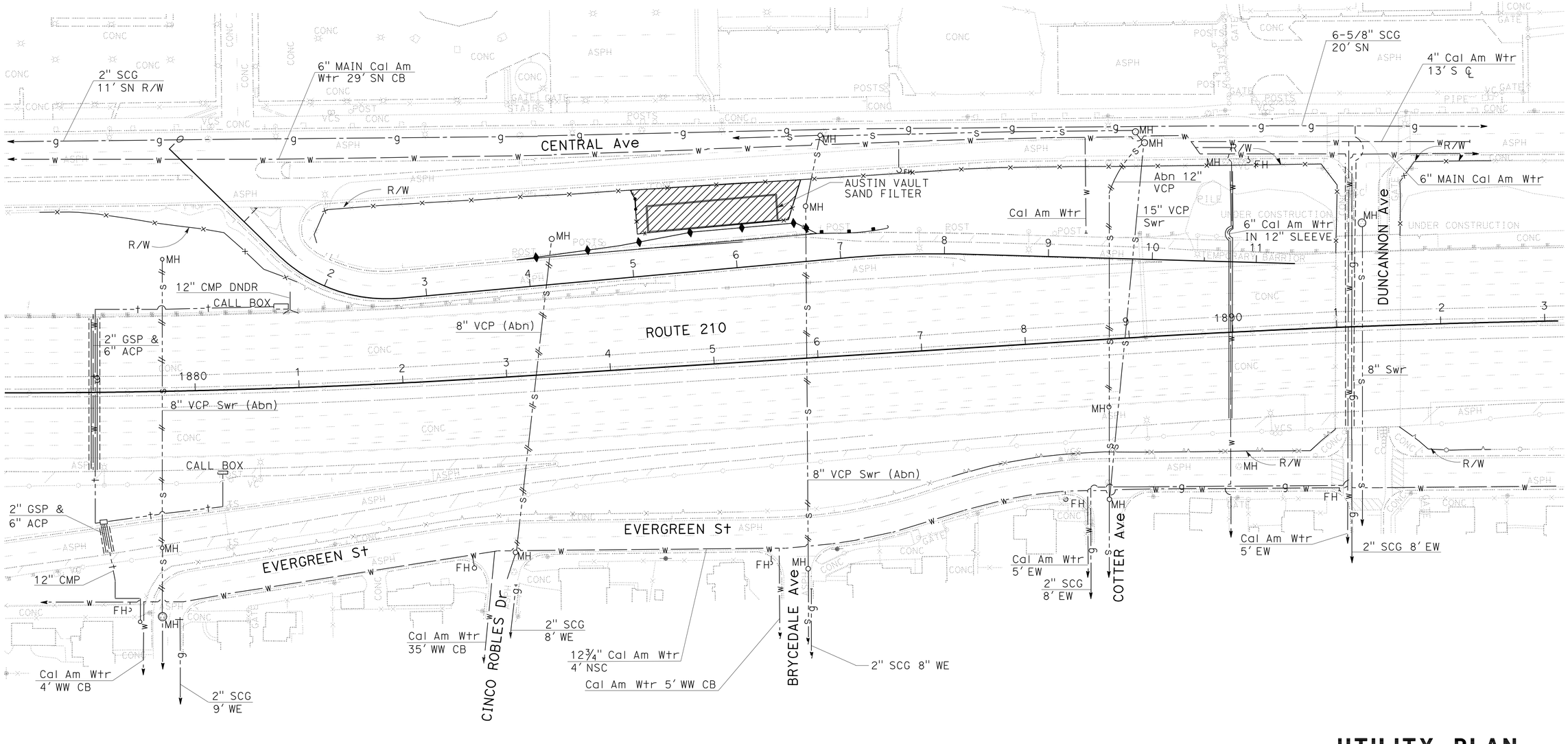

UTILITY PLAN

SCALE: 1" = 50'

APPROVED FOR UTILITY INFORMATION ONLY.

U-17

STATE OF CALIFORNIA - DEPARTMENT OF TRANSPORTATION
Caltrans
UTILITIES

FUNCTIONAL SUPERVISOR: CELINA AVILES
CALCULATED-DESIGNED BY: SUJAYA KALAINESAN
CHECKED BY: ZEWDIE BURKA
REVISED BY
DATE REVISED

LAST REVISION 04-02-12
DATE PLOTTED => 28-JUN-2012
TIME PLOTTED => 14:41