Dist	COUNTY	ROUTE	POST MILES TOTAL PROJECT	SHEET No.	TOTAL SHEETS
07	LA	405	0.0/29.2, 39.0/48.6	301	323

Jacqueline C Tan 6/16/16
REGISTERED ELECTRICAL ENGINEER DATE

6-27-16
PLANS APPROVAL DATE

REGISTERED PROFESSIONAL ENGINEER JACQUELINE C. TAN No. E15611 Exp. 12/31/17 ELECTRICAL STATE OF CALIFORNIA

THE STATE OF CALIFORNIA OR ITS OFFICERS OR AGENTS SHALL NOT BE RESPONSIBLE FOR THE ACCURACY OR COMPLETENESS OF SCANNED COPIES OF THIS PLAN SHEET.

NOTE: (SHEETS E-178 TO E-184)

1. FIBER NUMBERS MAY BE RE-ASSIGNED BY THE ENGINEER DURING CONSTRUCTION.
2. SPLICE WITH ADJACENT TRUNK, DISTRIBUTION OR SPARE FO CABLES WITH ON GOING PROJECTS.

LEGEND: (THIS SHEET ONLY)

X - TERMINATED ACTIVE ON FDU

- TERMINATED ACTIVE ON FDU BETWEEN CABLE NODES

TRUNK FIBER OPTIC CABLE (72SMFO) ASSIGNMENT TABLE (PM 0.0 to PM 28.0, 39.0 TO 48.6)

		R+e 405/R+e 605 INTERCHANGE CABLE NODE SD001	R+e 405 SB CCTV/IP NODE SD001	R+e 405 NB IP NODE SD034	R+e 405 SB IP NODE SD074	R+e 405 NB IP NODE SD116	R+e 405 NB IP NODE SD166	R+e 405 NB CCTV/IP NODE SD207	R+e 405 SB CCTV/IP NODE SD270	R+e 405 SB CABLE NODE SD391	R+e 405 SB CABLE NODE SD431	R+e 405 SB CABLE NODE SD468	R+e 405 SB/R+e 5 CABLE NODE SD486	R+e 405 SB IP NODE SD486	
	PM	00.1	00.1	03.4	07.4	11.6	16.6	20.7	27.0	39.0	43.1	46.8	48.6	48.2	
FIBER	USE														FIBER
1	IP NODES LINK 1 - Tx	##	X		X		X		X	##		##	##	X	1
2	IP NODES LINK 1 - Rx	##	X		X		X		X	##		##	##	X	2
3	IP NODES LINK 2 - Tx	##		X		X		X		##	X	##	##		3
4	IP NODES LINK 2 - Rx	##		X		X		X		##	X	##	##		4
5		##								##		##	##		5
6		##								##		##	##		6
7		##								##		##	##		7
8		##								##		##	##		8
9		##								##		##	##		9
10		##								##		##	##		10
11		##								##		##	##		11
12		##								##		##	##		12
•		##								##		##	##		•
•		##								##		##	##		•
•		##								##		##	##		•
71		##								##		##	##		71
72		##								##		##	##		72

MODIFYING EXISTING ELECTRICAL SYSTEM

(FIBER ASSIGNMENT TABLE) (TRUNK)

E-292

STATE OF CALIFORNIA - DEPARTMENT OF TRANSPORTATION
Caltrans® OFFICE OF ITS

FUNCTIONAL SUPERVISOR: JACQUELINE C. TAN
CALCULATED-DESIGNED BY: HOSAKERE ANANTH
CHECKED BY: JACQUELINE C. TAN
REVISED BY
DATE REVISED

LAST REVISION 00-00-00
DATE PLOTTED => 23-AUG-2016
TIME PLOTTED => 10:48

Dist	COUNTY	ROUTE	POST MILES TOTAL PROJECT	SHEET No.	TOTAL SHEETS
07	LA	405	0.0/29.2, 39.0/48.6	302	323

REGISTERED ELECTRICAL ENGINEER — DATE: 6/16/16

PLANS APPROVAL DATE: 6-27-16

REGISTERED PROFESSIONAL ENGINEER — JACQUELINE C. TAN — No. E15611 — Exp. 12/31/17 — ELECTRICAL — STATE OF CALIFORNIA

THE STATE OF CALIFORNIA OR ITS OFFICERS OR AGENTS SHALL NOT BE RESPONSIBLE FOR THE ACCURACY OR COMPLETENESS OF SCANNED COPIES OF THIS PLAN SHEET.

NOTES: (THIS SHEET ONLY)

1. VIDEO ENCODER TO BE COMPATIBLE WITH EXISTING DECODER MODULE IN EXISTING DECODER RACK AT THE LARTMC.
2. FOR ABBREVIATIONS AND NOTES SEE SHEET E-1.

LEGEND: (THIS SHEET ONLY)

1 SEE PLANS FOR INSTALLATION OF ETHERNET SWITCH TYPE 1 OR 2.

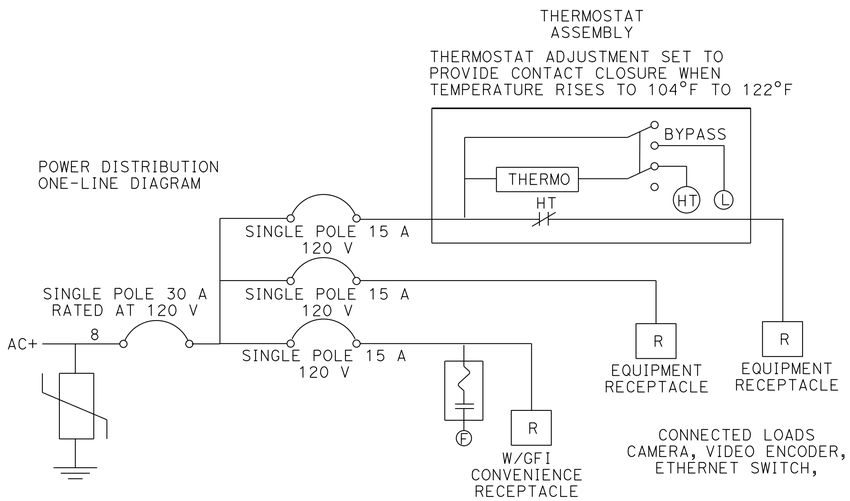

Exist POWER DISTRIBUTION ASSEMBLY

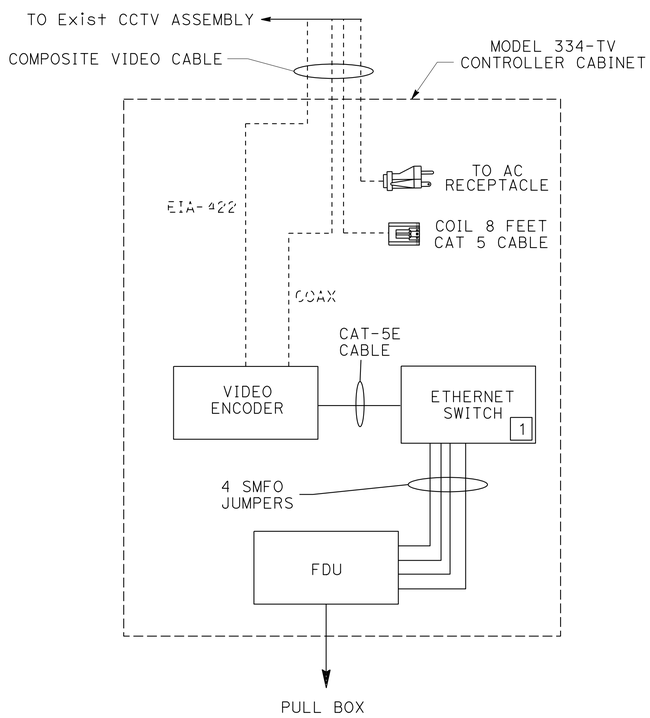

Exist MODEL 334-TV CONTROLLER CABINET WIRING DETAIL

MODEL 334-TV CONTROLLER CABINET

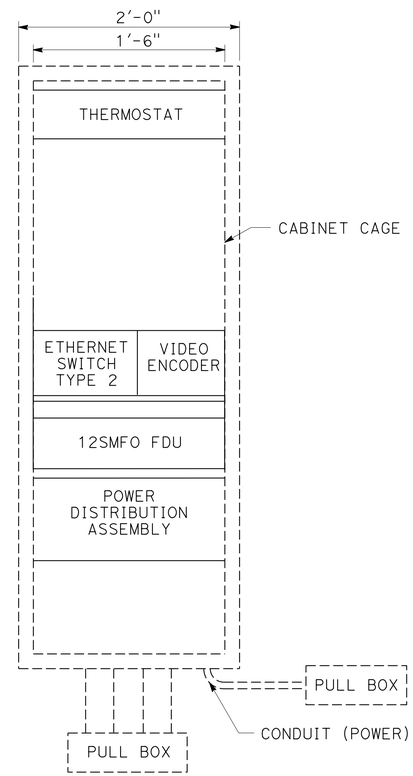

Exist MODEL 334-TV CONTROLLER (CCTV/IP NODE) CABINET EQUIPMENT LAYOUT

MODEL 334-TV CONTROLLER CABINET

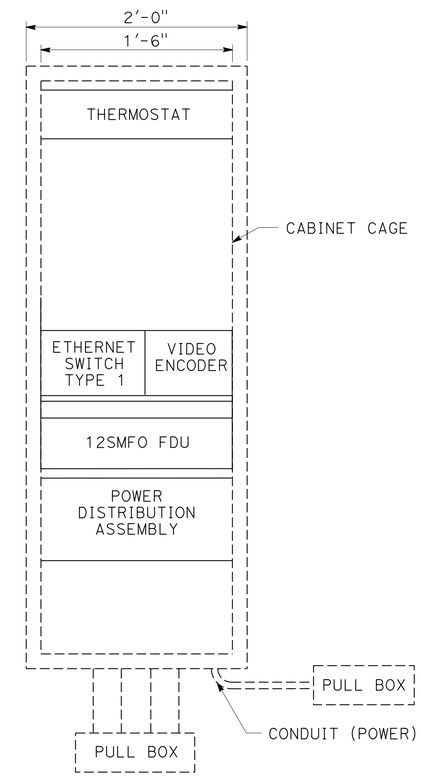

Exist MODEL 334-TV CONTROLLER (CCTV) CABINET EQUIPMENT LAYOUT

(TYPICAL MODEL 334-TV CONTROLLER CABINET DETAILS)

ELECTRICAL DETAILS

NO SCALE

E-293

STATE OF CALIFORNIA - DEPARTMENT OF TRANSPORTATION — OFFICE OF ITS — Caltrans

FUNCTIONAL SUPERVISOR: JACQUELINE C. TAN

CALCULATED-DESIGNED BY: HOSAKERE ANANTH — CHECKED BY: JACQUELINE C. TAN

REVISED BY — DATE REVISED

LAST REVISION 00-00-00 — DATE PLOTTED => 22-JUL-2016 — TIME PLOTTED => 09:46

Dist	COUNTY	ROUTE	POST MILES TOTAL PROJECT	SHEET No.	TOTAL SHEETS
07	LA	405	0.0/29.2, 39.0/48.6	303	323

REGISTERED ELECTRICAL ENGINEER DATE 6/16/16

6-27-16
PLANS APPROVAL DATE

REGISTERED PROFESSIONAL ENGINEER JACQUELINE C. TAN No. E15611 Exp. 12/31/17 ELECTRICAL STATE OF CALIFORNIA

THE STATE OF CALIFORNIA OR ITS OFFICERS OR AGENTS SHALL NOT BE RESPONSIBLE FOR THE ACCURACY OR COMPLETENESS OF SCANNED COPIES OF THIS PLAN SHEET.

NOTES: (THIS SHEET ONLY)

1. VIDEO ENCODER TO BE COMPATIBLE WITH EXISTING DECODER MODULE IN EXISTING DECODER RACK AT THE LARTMC.
2. FOR ABBREVIATIONS AND NOTES SEE SHEET E-1.

MODEL 334-L CONTROLLER CABINET

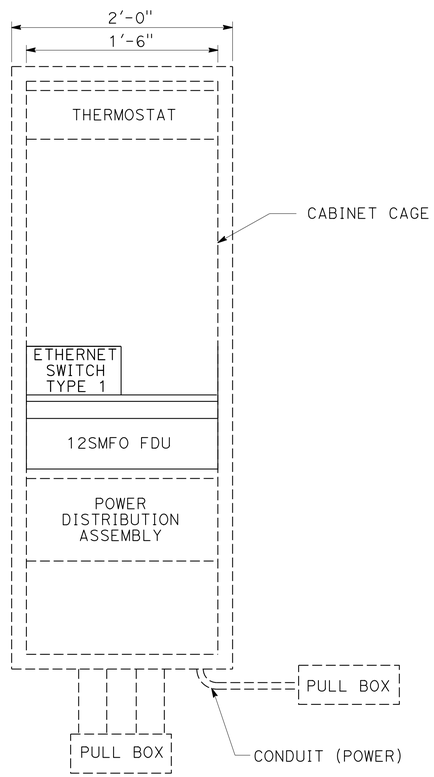

Exist MODEL 334L - CONTROLLER (HAR) CABINET EQUIPMENT LAYOUT

MODEL 334-L CONTROLLER CABINET

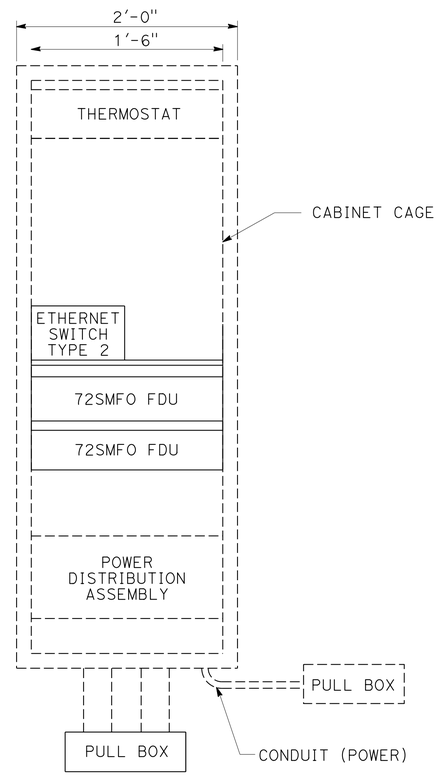

Exist MODEL 334L - CONTROLLER (IP NODE NATIONAL Blvd) CABINET EQUIPMENT LAYOUT

MODEL 334-L CONTROLLER CABINET

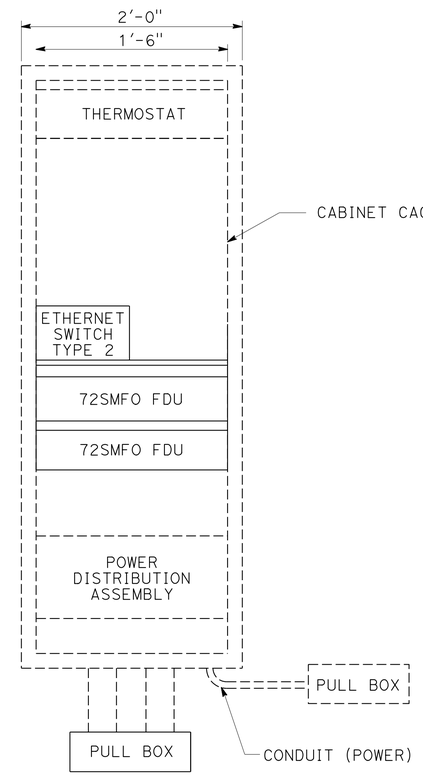

MODEL 334L - CONTROLLER (IP NODE CENTURY Blvd) CABINET EQUIPMENT LAYOUT

(TYPICAL MODEL 334-L CONTROLLER CABINET DETAILS)

ELECTRICAL DETAILS
NO SCALE
E-294

STATE OF CALIFORNIA - DEPARTMENT OF TRANSPORTATION
Caltrans
OFFICE OF ITS

FUNCTIONAL SUPERVISOR: JACQUELINE C. TAN
CALCULATED-DESIGNED BY: HOSAKERE ANANTH
CHECKED BY: JACQUELINE C. TAN
REVISED BY
DATE REVISED

LAST REVISION 00-00-00
DATE PLOTTED => 22-JUL-2016
TIME PLOTTED => 09:46

Dist	COUNTY	ROUTE	POST MILES TOTAL PROJECT	SHEET No.	TOTAL SHEETS
07	LA	405	0.0/29.2, 39.0/48.6	304	323

Jacqueline C Tan 6/16/16
REGISTERED ELECTRICAL ENGINEER DATE

6-27-16
PLANS APPROVAL DATE

REGISTERED PROFESSIONAL ENGINEER JACQUELINE C. TAN No. E15611 Exp. 12/31/17 ELECTRICAL STATE OF CALIFORNIA

THE STATE OF CALIFORNIA OR ITS OFFICERS OR AGENTS SHALL NOT BE RESPONSIBLE FOR THE ACCURACY OR COMPLETENESS OF SCANNED COPIES OF THIS PLAN SHEET.

NOTES: (THIS SHEET ONLY)

1. VIDEO ENCODER TO BE COMPATIBLE WITH EXISTING DECODER MODULE IN EXISTING DECODER RACK AT THE LARTMC.
2. FOR ABBREVIATIONS AND NOTES SEE SHEET E-1.

MODEL 334-L CONTROLLER CABINET

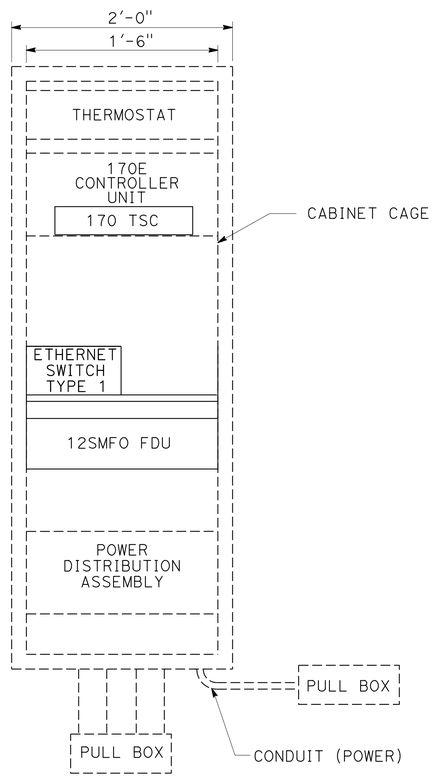

Exist MODEL 334L - CONTROLLER (CMS) CABINET EQUIPMENT LAYOUT

MODEL 334-L CONTROLLER CABINET

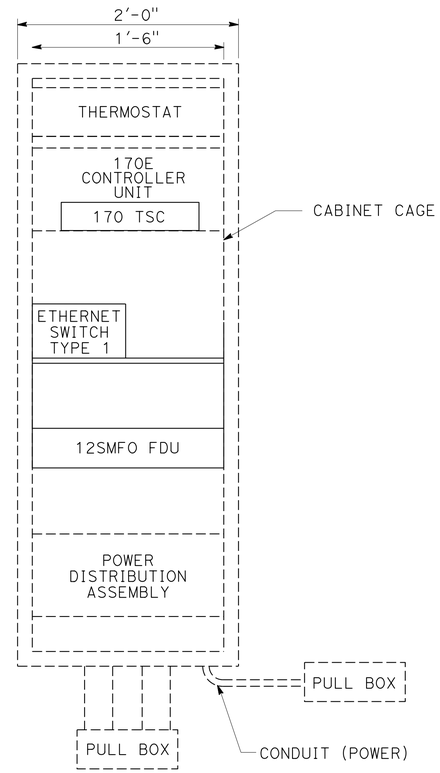

MODEL 334L/WIM - CONTROLLER (WIM) CABINET EQUIPMENT LAYOUT

MODEL 334-L CONTROLLER CABINET

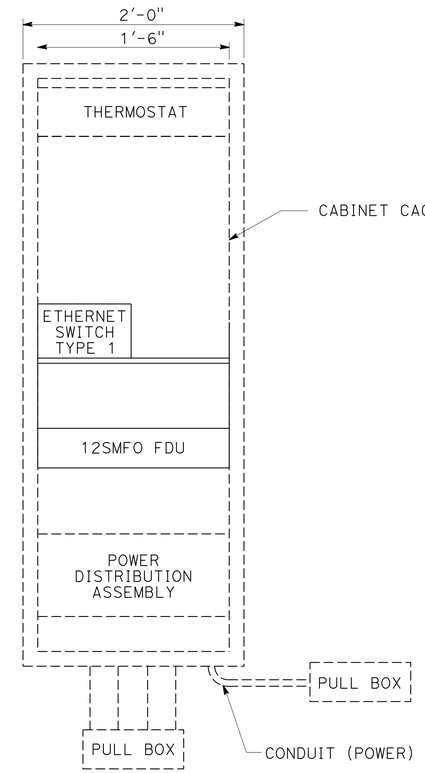

Exist MODEL 334L - CONTROLLER (RMS/TMS/CS) CABINET EQUIPMENT LAYOUT

ELECTRICAL DETAILS

NO SCALE

(TYPICAL MODEL 334-L CONTROLLER CABINET DETAILS)

E-295

STATE OF CALIFORNIA - DEPARTMENT OF TRANSPORTATION
Caltrans
OFFICE OF ITS

FUNCTIONAL SUPERVISOR: JACQUELINE C. TAN
CALCULATED-DESIGNED BY: HOSAKERE ANANTH
CHECKED BY: JACQUELINE C. TAN
REVISED BY
DATE REVISED

LAST REVISION 00-00-00
DATE PLOTTED => 22-JUL-2016
TIME PLOTTED => 09:46

Dist	COUNTY	ROUTE	POST MILES TOTAL PROJECT	SHEET No.	TOTAL SHEETS
07	LA	405	0.0/29.2, 39.0/48.6	305	323

REGISTERED ELECTRICAL ENGINEER — DATE

6-27-16
PLANS APPROVAL DATE

REGISTERED PROFESSIONAL ENGINEER JACQUELINE C. TAN No. E15611 Exp. 12/31/17 ELECTRICAL STATE OF CALIFORNIA

THE STATE OF CALIFORNIA OR ITS OFFICERS OR AGENTS SHALL NOT BE RESPONSIBLE FOR THE ACCURACY OR COMPLETENESS OF SCANNED COPIES OF THIS PLAN SHEET.

LEGEND: (THIS SHEET ONLY)

- ● SPLICE THRU 72SMFO (DISTRIBUTION)
- × SPLICE 12SMFO WITH 72SMFO (DISTRIBUTION)

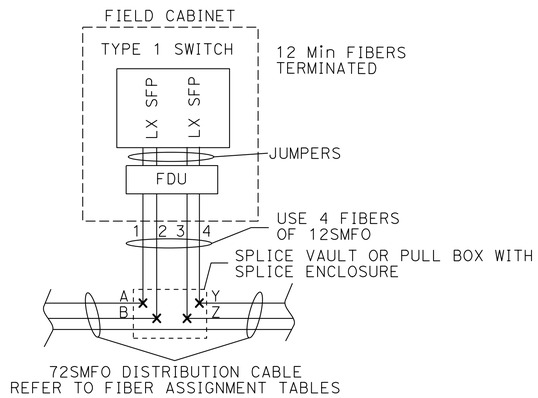

NEW 12SMFO SPLICED WITH 72SMFO (DISTRIBUTION)

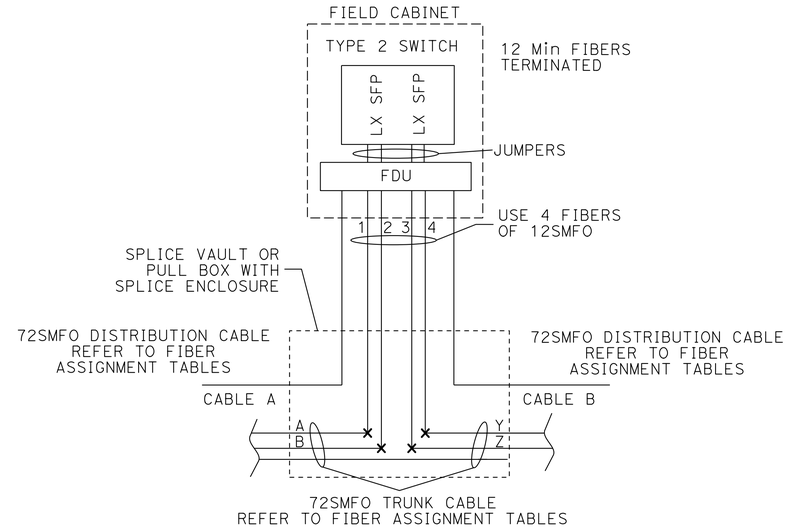

IP NODE
NEW 12SMFO SPLICED WITH 72SMFO (TRUNK)

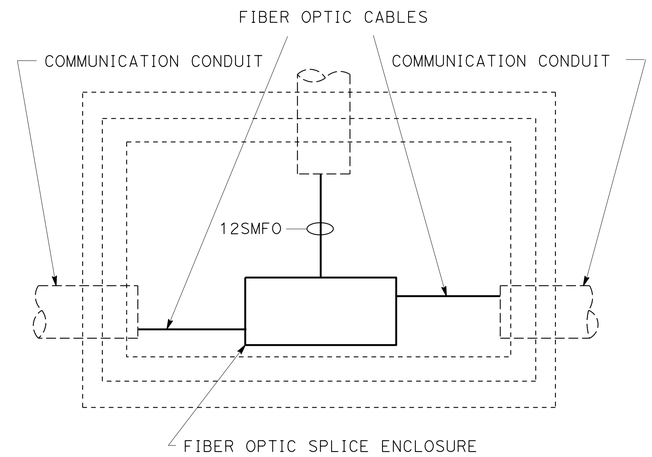

COMMUNICATION PULL BOX (72SMFO DISTRIBUTION OR TRUNK) WITH SPLICE

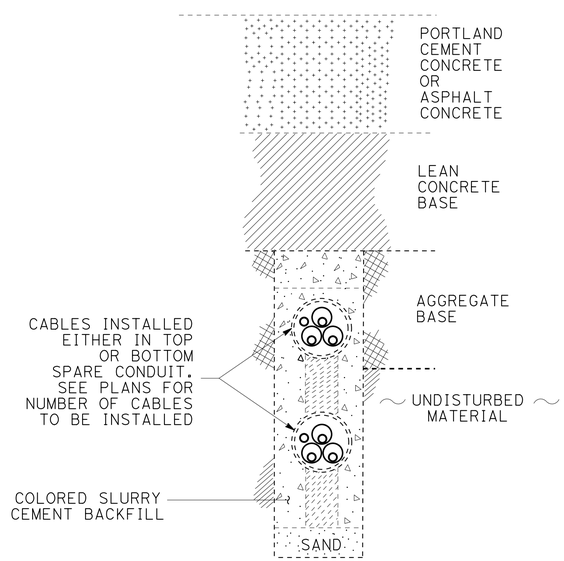

Exist PAVEMENT (PCC or ASPHALT) WITH TYPE 3 COMMUNICATION CONDUIT(S)

(* PAVEMENT THICKNESS, SEE TYPICAL CROSS SECTION PLANS)

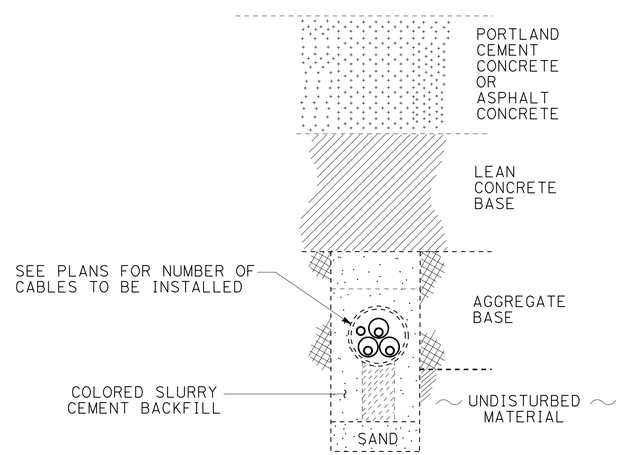

Exist PAVEMENT (PCC or ASPHALT) WITH TYPE 3 COMMUNICATION CONDUIT

(* PAVEMENT THICKNESS, SEE TYPICAL CROSS SECTION PLANS)

ELECTRICAL DETAILS

NO SCALE

(TYPICAL INNERDUCT INSTALLATION AND SPLICING DETAILS)

E-296

STATE OF CALIFORNIA - DEPARTMENT OF TRANSPORTATION
OFFICE OF ITS
Caltrans

FUNCTIONAL SUPERVISOR: JACQUELINE C. TAN
CALCULATED-DESIGNED BY: HOSAKERE ANANATH
CHECKED BY: JACQUELINE C. TAN
REVISED BY
DATE REVISED

LAST REVISION 00-00-00
DATE PLOTTED => 22-JUL-2016
TIME PLOTTED => 09:46

Dist	COUNTY	ROUTE	POST MILES TOTAL PROJECT	SHEET No.	TOTAL SHEETS
07	LA	405	0.0/29.2, 39.0/48.6	306	323

Jacqueline C Tan 6/16/16
REGISTERED ELECTRICAL ENGINEER DATE

6-27-16
PLANS APPROVAL DATE

REGISTERED PROFESSIONAL ENGINEER JACQUELINE C. TAN No. E15611 Exp. 12/31/17 ELECTRICAL STATE OF CALIFORNIA

THE STATE OF CALIFORNIA OR ITS OFFICERS OR AGENTS SHALL NOT BE RESPONSIBLE FOR THE ACCURACY OR COMPLETENESS OF SCANNED COPIES OF THIS PLAN SHEET.

NOTE: (THIS SHEET ONLY)

1. ITEMS SHOWN IN THIS TABLE ARE NOT A SEPARATE PAY ITEM, FOR INFORMATION ONLY.

MODIFY EXISTING ELECTRICAL SYSTEM

SHEET No.	MODIFYING EXISTING ELECTRICAL SYSTEM	72SMFO (DISTRIBUTION)	1" INNERDUCT	48SMFO (SPARE)	72SMFO (TRUNK)	12SMFO	FDU	TYPE 1 SWITCH	TYPE 2 SWITCH	LX RUGGED SFP MODULE	ZX RUGGED SFP MODULE	CAT 5E CABLE	VIDEO ENCODER	MODEL 170 TERMINAL SERVER CARD
		LF	LF	LF	LF	LF	EA	EA	EA	EA	EA	EA	EA	EA
E-2	MODIFYING FIBER OPTIC CABLE ASSEMBLY	800	2400	800	800	300								
E-3	MODIFYING CCTV CAMERA SYSTEM/IP NODE						1		1	18	2	1	1	
E-4	MODIFYING TRAFFIC MONITORING STATION						1	1		2		1		
E-5	MODIFYING HIGHWAY ADVISORY RADIO													
E-6	MODIFYING ACCESS NODE						2							
E-7	MODIFYING CABLE NODE						1	1		2		1		
E-8	MODIFYING FIBER OPTIC CABLE ASSEMBLY	1300	3900	1300	1300									
E-9	MODIFYING FIBER OPTIC CABLE ASSEMBLY	1400	4200	1400	1400	350								
E-10	MODIFYING RAMP METERING SYSTEM						1	1		2		1		
E-11	MODIFYING TRAFFIC MONITORING STATION						1	1		2		1		
E-12	MODIFYING FIBER OPTIC CABLE ASSEMBLY	1400	4200	1400	1400									
E-13	MODIFYING FIBER OPTIC CABLE ASSEMBLY	1400	4200	1400	1400	600								
E-14	MODIFYING RAMP METERING SYSTEM						2	2		4		2		
E-15	MODIFYING CCTV CAMERA SYSTEM						1	1		2		1	1	
E-16	MODIFYING FIBER OPTIC CABLE ASSEMBLY	1300	3900	1300	1300									
E-17	MODIFYING FIBER OPTIC CABLE ASSEMBLY	1500	4500	1500	1500	600								
E-18	MODIFYING RAMP METERING SYSTEM						1	1		2		1		
E-19	MODIFYING FIBER OPTIC CABLE ASSEMBLY	1400	4200	1400	1400	700								
E-20	MODIFYING RAMP METERING SYSTEM						1	1		2		1		
E-21	MODIFYING FIBER OPTIC CABLE ASSEMBLY	1300	3900	1300	1300									
E-22	MODIFYING FIBER OPTIC CABLE ASSEMBLY	1700	5100	1700	1700	1200								
E-23	MODIFYING RAMP METERING SYSTEM						4	4		8		4		
E-24	MODIFYING FIBER OPTIC CABLE ASSEMBLY	1400	4200	1400	1400	200								
E-25	MODIFYING CCTV CAMERA SYSTEM						1	1		2		1	1	
E-26	MODIFYING RAMP METERING SYSTEM						1	1		2		1		
E-27	MODIFYING FIBER OPTIC CABLE ASSEMBLY	1300	3900	1300	1300	100								
E-28	MODIFYING TRAFFIC MONITORING STATION						1	1		2		1		
E-29	MODIFYING FIBER OPTIC CABLE ASSEMBLY	1400	4200	1400	1400	100								
E-30	MODIFYING RAMP METERING SYSTEM						1	1		2		1		
E-31	MODIFYING FIBER OPTIC CABLE ASSEMBLY	1200	3600	1200	1200									
E-32	MODIFYING FIBER OPTIC CABLE ASSEMBLY	1400	4200	1400	1400	400								
E-33	MODIFYING CCTV CAMERA SYSTEM/IP NODE						1		1	18	2	1	1	
E-34	MODIFYING ACCESS NODE						1							
E-35	MODIFYING RAMP METERING SYSTEM						3	3		6		3		
E-36	MODIFYING FIBER OPTIC CABLE ASSEMBLY	1350	4050	1350	1350	400								
E-37	MODIFYING CMS SYSTEM						1	1		2		1		1
E-38	MODIFYING FIBER OPTIC CABLE ASSEMBLY	1300	3900	1300	1300	600								

ELECTRICAL QUANTITIES

E-297

STATE OF CALIFORNIA - DEPARTMENT OF TRANSPORTATION
Caltrans® OFFICE OF ITS

FUNCTIONAL SUPERVISOR: JACQUELINE C. TAN
CALCULATED-DESIGNED BY: HOSAKERE ANANTH
CHECKED BY: JACQUELINE C. TAN
REVISED BY
DATE REVISED

LAST REVISION 00-00-00 | DATE PLOTTED => 22-JUL-2016 | TIME PLOTTED => 09:46

Dist	COUNTY	ROUTE	POST MILES TOTAL PROJECT	SHEET No.	TOTAL SHEETS
07	LA	405	0.0/29.2, 39.0/48.6	307	323

Jacqueline C Tan 6/16/16
REGISTERED ELECTRICAL ENGINEER DATE

6-27-16
PLANS APPROVAL DATE

REGISTERED PROFESSIONAL ENGINEER JACQUELINE C. TAN No. E15611 Exp. 12/31/17 ELECTRICAL STATE OF CALIFORNIA

THE STATE OF CALIFORNIA OR ITS OFFICERS OR AGENTS SHALL NOT BE RESPONSIBLE FOR THE ACCURACY OR COMPLETENESS OF SCANNED COPIES OF THIS PLAN SHEET.

NOTE: (THIS SHEET ONLY)

1. ITEMS SHOWN IN THIS TABLE ARE NOT A SEPARATE PAY ITEM, FOR INFORMATION ONLY.

MODIFY EXISTING ELECTRICAL SYSTEM

SHEET No.	MODIFYING EXISTING ELECTRICAL SYSTEM	72SMFO (DISTRIBUTION)	1" INNERDUCT	48SMFO (SPARE)	72SMFO (TRUNK)	12SMFO	FDU	TYPE 1 SWITCH	TYPE 2 SWITCH	LX RUGGED SFP MODULE	ZX RUGGED SFP MODULE	CAT 5E CABLE	VIDEO ENCODER
		LF	LF	LF	LF	LF	EA	EA	EA	EA	EA	EA	EA
E-39	MODIFYING TRAFFIC MONITORING STATION						1	1		2		1	
E-40	MODIFYING FIBER OPTIC CABLE ASSEMBLY	1300	3900	1300	1300	600							
E-41	MODIFYING TRAFFIC MONITORING STATION						1	1		2		1	
E-42	MODIFYING FIBER OPTIC CABLE ASSEMBLY	1400	4200	1400	1400	600							
E-43	MODIFYING RAMP METERING SYSTEM						2	2		4		2	
E-44	MODIFYING FIBER OPTIC CABLE ASSEMBLY	1400	4200	1400	1400	100							
E-45	MODIFYING CCTV CAMERA SYSTEM						1	1		2		1	1
E-46	MODIFYING FIBER OPTIC CABLE ASSEMBLY	1800	5400	1800	1800	1000							
E-47	MODIFYING RAMP METERING SYSTEM						3	3		6		3	
E-48	MODIFYING FIBER OPTIC CABLE ASSEMBLY	1300	3900	1300	1300	150							
E-49	MODIFYING RAMP METERING SYSTEM						1	1		2		1	
E-50	MODIFYING FIBER OPTIC CABLE ASSEMBLY	1400	4200	1400	1400	600							
E-51	MODIFYING RAMP METERING SYSTEM						1	1		2		1	
E-52	MODIFYING CCTV CAMERA SYSTEM						1	1		2		1	1
E-53	MODIFYING FIBER OPTIC CABLE ASSEMBLY	1300	3900	1300	1300								
E-54	MODIFYING FIBER OPTIC CABLE ASSEMBLY	1600	4800	1600	1600	1400							
E-55	MODIFYING CCTV CAMERA SYSTEM						1	1		2		1	1
E-56	MODIFYING RAMP METERING SYSTEM						2	2		4		2	
E-57	MODIFYING FIBER OPTIC CABLE ASSEMBLY	1400	4200	1400	1400	400							
E-58	MODIFYING TRAFFIC MONITORING STATION						1	1		2		1	
E-59	MODIFYING RAMP METERING SYSTEM						1	1		2		1	
E-60	MODIFYING FIBER OPTIC CABLE ASSEMBLY	1300	3900	1300	1300	100							
E-61	MODIFYING RAMP METERING SYSTEM						1	1		2		1	
E-62	MODIFYING FIBER OPTIC CABLE ASSEMBLY	1350	4050	1350	1350	500							
E-63	MODIFYING TRAFFIC MONITORING STATION						2	2		4		2	
E-64	MODIFYING FIBER OPTIC CABLE ASSEMBLY	1400	4200	1400	1400	200							
E-65	MODIFYING RAMP METERING SYSTEM						2	2		4		2	
E-66	MODIFYING FIBER OPTIC CABLE ASSEMBLY	1300	3900	1300	1300	1400							
E-67	MODIFYING ACCESS NODE						1						
E-68	MODIFYING CCTV CAMERA SYSTEM								1	18	2	1	1
E-69	MODIFYING FIBER OPTIC CABLE ASSEMBLY	750	2250	750	750								
E-70	MODIFYING CABLE NODE SYSTEM								1	2	4		
E-71	MODIFYING FIBER OPTIC CABLE ASSEMBLY	1300	3900	1300	1300	100							
E-72	MODIFYING TRAFFIC MONITORING STATION						1	1		2		1	
E-73	MODIFYING FIBER OPTIC CABLE ASSEMBLY	1300	3900	1300	1300	400							

ELECTRICAL QUANTITIES

E-298

STATE OF CALIFORNIA - DEPARTMENT OF TRANSPORTATION
Caltrans® OFFICE OF ITS

FUNCTIONAL SUPERVISOR: JACQUELINE C. TAN
CALCULATED-DESIGNED BY: HOSAKERE ANANTH
CHECKED BY: JACQUELINE C. TAN
REVISED BY
DATE REVISED

LAST REVISION 00-00-00 | DATE PLOTTED => 22-JUL-2016 | TIME PLOTTED => 09:46

Dist	COUNTY	ROUTE	POST MILES TOTAL PROJECT	SHEET No.	TOTAL SHEETS
07	LA	405	0.0/29.2, 39.0/48.6	308	323

Jacqueline C Tan 6/16/16
REGISTERED ELECTRICAL ENGINEER DATE

6-27-16
PLANS APPROVAL DATE

REGISTERED PROFESSIONAL ENGINEER JACQUELINE C. TAN No. E15611 Exp. 12/31/17 ELECTRICAL STATE OF CALIFORNIA

THE STATE OF CALIFORNIA OR ITS OFFICERS OR AGENTS SHALL NOT BE RESPONSIBLE FOR THE ACCURACY OR COMPLETENESS OF SCANNED COPIES OF THIS PLAN SHEET.

NOTE: (THIS SHEET ONLY)

1. ITEMS SHOWN IN THIS TABLE ARE NOT A SEPARATE PAY ITEM, FOR INFORMATION ONLY.

MODIFY EXISTING ELECTRICAL SYSTEM

SHEET No.	MODIFYING EXISTING ELECTRICAL SYSTEM	72SMFO (DISTRIBUTION)	1" INNERDUCT	48SMFO (SPARE)	72SMFO (TRUNK)	12SMFO	FDU	TYPE 1 SWITCH	LX RUGGED SFP MODULE	CAT 5E CABLE	VIDEO ENCODER	MODEL 170 TERMINAL SERVER CARD
		LF	LF	LF	LF	LF	EA	EA	EA	EA	EA	EA
E-74	MODIFYING CCTV CAMERA SYSTEM						1	1	2	1		
E-75	MODIFYING RAMP METERING SYSTEM						1	1	2	1		
E-76	MODIFYING FIBER OPTIC CABLE ASSEMBLY	1300	3900	1300	1300	200						
E-77	MODIFYING RAMP METERING SYSTEM						1	1	2	1		
E-78	MODIFYING TRAFFIC MONITORING STATION						1	1	2	1		
E-79	MODIFYING FIBER OPTIC CABLE ASSEMBLY	1300	3900	1300	1300	100						
E-80	MODIFYING RAMP METERING SYSTEM						1	1	2	1		
E-81	MODIFYING FIBER OPTIC CABLE ASSEMBLY	1400	4200	1400	1400	350						
E-82	MODIFYING CCTV CAMERA SYSTEM						1	1	2	1		
E-83	MODIFYING RAMP METERING SYSTEM						1	1	2	1		
E-84	MODIFYING FIBER OPTIC CABLE ASSEMBLY	1300	3900	1300	1300	150						
E-85	MODIFYING TRAFFIC MONITORING STATION						1	1	2	1		
E-86	MODIFYING FIBER OPTIC CABLE ASSEMBLY	1300	3900	1300	1300							
E-87	MODIFYING FIBER OPTIC CABLE ASSEMBLY	1400	4200	1400	1400	600						
E-88	MODIFYING RAMP METERING SYSTEM						2	2	4	2		
E-89	MODIFYING CMS SYSTEM						1	1	2	1		1
E-90	MODIFYING FIBER OPTIC CABLE ASSEMBLY	1300	3900	1300	1300	150						
E-91	MODIFYING CCTV CAMERA SYSTEM						1	1	2	1	1	
E-92	MODIFYING FIBER OPTIC CABLE ASSEMBLY	1300	3900	1300	1300	100						
E-93	MODIFYING TRAFFIC MONITORING STATION						1	1	2	1		
E-94	MODIFYING FIBER OPTIC CABLE ASSEMBLY	1300	3900	1300	1300							
E-95	MODIFYING FIBER OPTIC CABLE ASSEMBLY	1300	3900	1300	1300	400						
E-96	MODIFYING CCTV CAMERA SYSTEM						1	1	2	1	1	
E-97	MODIFYING RAMP METERING SYSTEM						1	1	2	1		
E-98	MODIFYING FIBER OPTIC CABLE ASSEMBLY	1300	3900	1300	1300	100						
E-99	MODIFYING RAMP METERING SYSTEM						1	1	2	1		
E-100	MODIFYING FIBER OPTIC CABLE ASSEMBLY	1300	3900	1300	1300	400						
E-101	MODIFYING CCTV CAMERA SYSTEM						1	1	2	1	1	
E-102	MODIFYING TRAFFIC MONITORING STATION						1	1	2	1		
E-103	MODIFYING FIBER OPTIC CABLE ASSEMBLY	1400	4200	1400	1400	600						
E-104	MODIFYING CMS SYSTEM						1	1	2	1		1
E-105	MODIFYING RAMP METERING SYSTEM						2	2	4	2		
E-106	MODIFYING FIBER OPTIC CABLE ASSEMBLY	1300	3900	1300	1300	150						
E-107	MODIFYING CCTV CAMERA SYSTEM						1	1	2	1	1	

ELECTRICAL QUANTITIES

E-299

REVISED BY | DATE REVISED
HOSAKERE ANANTH | JACQUELINE C. TAN
CALCULATED-DESIGNED BY | CHECKED BY
FUNCTIONAL SUPERVISOR | JACQUELINE C. TAN
STATE OF CALIFORNIA - DEPARTMENT OF TRANSPORTATION
Caltrans
OFFICE OF ITS

LAST REVISION 00-00-00 | DATE PLOTTED => 22-JUL-2016 | TIME PLOTTED => 09:46

Dist	COUNTY	ROUTE	POST MILES TOTAL PROJECT	SHEET No.	TOTAL SHEETS
07	LA	405	0.0/29.2, 39.0/48.6	309	323

Jacqueline C Tan 6/16/16
REGISTERED ELECTRICAL ENGINEER DATE

6-27-16
PLANS APPROVAL DATE

REGISTERED PROFESSIONAL ENGINEER JACQUELINE C. TAN No. E15611 Exp. 12/31/17 ELECTRICAL STATE OF CALIFORNIA

THE STATE OF CALIFORNIA OR ITS OFFICERS OR AGENTS SHALL NOT BE RESPONSIBLE FOR THE ACCURACY OR COMPLETENESS OF SCANNED COPIES OF THIS PLAN SHEET.

NOTE: (THIS SHEET ONLY)

1. ITEMS SHOWN IN THIS TABLE ARE NOT A SEPARATE PAY ITEM, FOR INFORMATION ONLY.

MODIFY EXISTING ELECTRICAL SYSTEM

SHEET No.	MODIFYING EXISTING ELECTRICAL SYSTEM	72SMFO (DISTRIBUTION)	1" INNERDUCT	48SMFO (SPARE)	72SMFO (TRUNK)	12SMFO	FDU	TYPE 1 SWITCH	TYPE 2 SWITCH	LX RUGGED SFP MODULE	ZX RUGGED SFP MODULE	FIBER OPTIC SPLICE ENCLOSURE	CAT 5E CABLE	VIDEO ENCODER	MODEL 170 TERMINAL SERVER CARD
		LF	LF	LF	LF	LF	EA	EA	EA	EA	EA	EA	EA	EA	EA
E-108	MODIFYING FIBER OPTIC CABLE ASSEMBLY	1300	3900	1300	1300	200									
E-109	MODIFYING IP NODE						1		1	18	4				
E-110	MODIFYING TRAFFIC MONITORING STATION						1	1		2			1		
E-111	MODIFYING FIBER OPTIC CABLE ASSEMBLY	1300	3900	1300	1300	100									
E-112	MODIFYING TRAFFIC MONITORING STATION						1	1		2			1		
E-113	MODIFYING FIBER OPTIC CABLE ASSEMBLY	1350	4050	1350	1350	150									
E-114	MODIFYING FIBER OPTIC CABLE ASSEMBLY	1300	3900	1300	1300	150									
E-115	MODIFYING CCTV CAMERA SYSTEM						1	1		2			1	1	
E-116	MODIFYING RAMP METERING SYSTEM						1	1		2					
E-117	MODIFYING FIBER OPTIC CABLE ASSEMBLY	1500	4500	1500	1500	600									
E-118	MODIFYING TRAFFIC MONITORING STATION						1	1		2			1		
E-119	MODIFYING FIBER OPTIC CABLE ASSEMBLY	600	1800	600	600	200									
E-120	MODIFYING TRAFFIC MONITORING STATION						1	1		2			1		
E-121	MODIFYING FIBER OPTIC CABLE ASSEMBLY	750	2250	750	750							2			
E-122	MODIFYING CABLE NODE						1								
E-123	MODIFYING FIBER OPTIC CABLE ASSEMBLY	2000	6000	2000	2000	1500									
E-124	MODIFYING LOS ANGELES AIRPORT HUB						1								
E-125	MODIFYING RAMP METERING SYSTEM						3	3		6			3		
E-126	MODIFYING FIBER OPTIC CABLE ASSEMBLY	1300	3900	1300	1300	1500									
E-127	MODIFYING CCTV CAMERA SYSTEM						1		1	2			1	1	
E-128	MODIFYING FIBER OPTIC CABLE ASSEMBLY	1400	4200	1400	1400	250									
E-129	MODIFYING RAMP METERING SYSTEM						1	1		2			1		
E-130	MODIFYING FIBER OPTIC CABLE ASSEMBLY	1300	3900	1300	1300										
E-131	MODIFYING FIBER OPTIC CABLE ASSEMBLY	1400	4200	1400	1400	400									
E-132	MODIFYING RAMP METERING SYSTEM						3	3		6			3		
E-133	MODIFYING FIBER OPTIC CABLE ASSEMBLY	1400	4200	1400	1400	250						3			
E-134	MODIFYING CCTV CAMERA SYSTEM						1	1		2			1	1	
E-135	MODIFYING RAMP METERING SYSTEM						1	1		2			1		
E-136	MODIFYING FIBER OPTIC CABLE ASSEMBLY	1400	4200	1400	1400	250									
E-137	MODIFYING TRAFFIC MONITORING STATION						1	1		2			1		
E-138	MODIFYING RAMP METERING SYSTEM						1	1		2			1		
E-139	MODIFYING FIBER OPTIC CABLE ASSEMBLY	1400	4200	1400	1400										
E-140	MODIFYING FIBER OPTIC CABLE ASSEMBLY	1400	4200	1400	1400	300									
E-141	MODIFYING FIBER OPTIC CABLE ASSEMBLY	1400	4200	1400	1400	400									
E-142	MODIFYING CMS SYSTEM						1	1		2			1		1
E-143	MODIFYING CCTV CAMERA SYSTEM						1	1		2			1	1	

ELECTRICAL QUANTITIES

E-300

STATE OF CALIFORNIA - DEPARTMENT OF TRANSPORTATION
Caltrans®
OFFICE OF ITS

FUNCTIONAL SUPERVISOR: JACQUELINE C. TAN
CALCULATED-DESIGNED BY: HOSAKERE ANANTH
CHECKED BY: JACQUELINE C. TAN
REVISED BY
DATE REVISED

LAST REVISION 00-00-00
DATE PLOTTED => 22-JUL-2016
TIME PLOTTED => 09:46

Dist	COUNTY	ROUTE	POST MILES TOTAL PROJECT	SHEET No.	TOTAL SHEETS
07	LA	405	0.0/29.2, 39.0/48.6	310	323

Jacqueline C Tan 6/16/16
REGISTERED ELECTRICAL ENGINEER DATE

6-27-16
PLANS APPROVAL DATE

REGISTERED PROFESSIONAL ENGINEER JACQUELINE C. TAN No. E15611 Exp. 12/31/17 ELECTRICAL STATE OF CALIFORNIA

THE STATE OF CALIFORNIA OR ITS OFFICERS OR AGENTS SHALL NOT BE RESPONSIBLE FOR THE ACCURACY OR COMPLETENESS OF SCANNED COPIES OF THIS PLAN SHEET.

NOTE: (THIS SHEET ONLY)

1. ITEMS SHOWN IN THIS TABLE ARE NOT A SEPARATE PAY ITEM, FOR INFORMATION ONLY.

MODIFY EXISTING ELECTRICAL SYSTEM

SHEET No.	MODIFYING EXISTING ELECTRICAL SYSTEM	72SMFO (DISTRIBUTION)	1" INNERDUCT	48SMFO (SPARE)	72SMFO (TRUNK)	12SMFO	FDU	TYPE 1 SWITCH	TYPE 2 SWITCH	LX RUGGED SFP MODULE	ZX RUGGED SFP MODULE	CAT 5E CABLE	VIDEO ENCODER
		LF	LF	LF	LF	LF	EA	EA	EA	EA	EA	EA	EA
E-144	MODIFYING RAMP METERING SYSTEM						1	1		2		1	
E-145	MODIFYING FIBER OPTIC CABLE ASSEMBLY	1400	4200	1400	1400	250							
E-146	MODIFYING RAMP METERING SYSTEM						1	1		2		1	
E-147	MODIFYING FIBER OPTIC CABLE ASSEMBLY	1300	3900	1300	1300	400							
E-148	MODIFYING CCTV CAMERA SYSTEM						1	1		2		1	1
E-149	MODIFYING FIBER OPTIC CABLE ASSEMBLY	1400	4200	1400	1400	150							
E-150	MODIFYING RAMP METERING SYSTEM						1	1		2		1	
E-151	MODIFYING FIBER OPTIC CABLE ASSEMBLY	1300	3900	1300	1300								
E-152	MODIFYING FIBER OPTIC CABLE ASSEMBLY	1300	3900	1300	1300	150							
E-153	MODIFYING RAMP METERING SYSTEM						1	1		2		1	
E-154	MODIFYING FIBER OPTIC CABLE ASSEMBLY	1400	4200	1400	1400	250							
E-155	MODIFYING RAMP METERING SYSTEM						1	1		2		1	
E-156	MODIFYING FIBER OPTIC CABLE ASSEMBLY	1400	4200	1400	1400								
E-157	MODIFYING IP NODE						1		1	18	4		
E-158	MODIFYING CCTV CAMERA SYSTEM						1	1		2		1	1
E-159	MODIFYING FIBER OPTIC CABLE ASSEMBLY	1300	3900	1300	1300	400							
E-160	MODIFYING TRAFFIC MONITORING STATION						1	1		2		1	
E-161	MODIFYING CCTV CAMERA SYSTEM						1	1		2		1	1
E-162	MODIFYING FIBER OPTIC CABLE ASSEMBLY	1400	4200	1400	1400								
E-163	MODIFYING FIBER OPTIC CABLE ASSEMBLY	200	600	200	200								
E-164	MODIFYING FIBER OPTIC CABLE ASSEMBLY	800	2400	800	800	50							
E-165	MODIFYING RAMP METERING SYSTEM						1	1		2		1	
E-166	MODIFYING FIBER OPTIC CABLE ASSEMBLY	1300	3900	1300	1300	100							
E-167	MODIFYING RAMP METERING SYSTEM						1	1		2		1	
E-168	MODIFYING FIBER OPTIC CABLE ASSEMBLY	1300	3900	1300	1300								
E-169	MODIFYING FIBER OPTIC CABLE ASSEMBLY	1300	3900	1300	1300								
E-170	MODIFYING FIBER OPTIC CABLE ASSEMBLY	1300	3900	1300	1300	150							
E-171	MODIFYING CCTV CAMERA SYSTEM/IP NODE						1		1	18	4	1	
E-172	MODIFYING RAMP METERING SYSTEM						1	1		2		1	
E-173	MODIFYING FIBER OPTIC CABLE ASSEMBLY	1300	3900	1300	1300	150							
E-174	MODIFYING RAMP METERING SYSTEM						1	1		2		1	
E-175	MODIFYING FIBER OPTIC CABLE ASSEMBLY	1300	3900	1300	1300								
E-176	MODIFYING FIBER OPTIC CABLE ASSEMBLY	1300	3900	1300	1300	250							
E-177	MODIFYING FIBER OPTIC CABLE ASSEMBLY	1400	4200	1400	1400								

ELECTRICAL QUANTITIES

E-301

STATE OF CALIFORNIA - DEPARTMENT OF TRANSPORTATION
Caltrans
OFFICE OF ITS

FUNCTIONAL SUPERVISOR: JACQUELINE C. TAN
CALCULATED-DESIGNED BY: HOSAKERE ANANTH
CHECKED BY: JACQUELINE C. TAN
REVISED BY
DATE REVISED

LAST REVISION 00-00-00
DATE PLOTTED => 22-JUL-2016
TIME PLOTTED => 09:46

Dist	COUNTY	ROUTE	POST MILES TOTAL PROJECT	SHEET No.	TOTAL SHEETS
07	LA	405	0.0/29.2, 39.0/48.6	311	323

REGISTERED ELECTRICAL ENGINEER 6/16/16 DATE

6-27-16
PLANS APPROVAL DATE

REGISTERED PROFESSIONAL ENGINEER JACQUELINE C. TAN No. E15611 Exp. 12/31/17 ELECTRICAL STATE OF CALIFORNIA

THE STATE OF CALIFORNIA OR ITS OFFICERS OR AGENTS SHALL NOT BE RESPONSIBLE FOR THE ACCURACY OR COMPLETENESS OF SCANNED COPIES OF THIS PLAN SHEET.

NOTE: (THIS SHEET ONLY)

1. ITEMS SHOWN IN THIS TABLE ARE NOT A SEPARATE PAY ITEM, FOR INFORMATION ONLY.

MODIFY EXISTING ELECTRICAL SYSTEM

SHEET No.	MODIFYING EXISTING ELECTRICAL SYSTEM	72SMFO (DISTRIBUTION)	1" INNERDUCT	48SMFO (SPARE)	72SMFO (TRUNK)	12SMFO	FDU	TYPE 1 SWITCH	TYPE 2 SWITCH	LX RUGGED SFP MODULE	ZX RUGGED SFP MODULE	CAT 5E CABLE	VIDEO ENCODER	MODEL 170 TERMINAL SERVER CARD
		LF	LF	LF	LF	LF	EA	EA	EA	EA	EA	EA	EA	EA
E-178	MODIFYING CMS SYSTEM						1	1		2		1		1
E-179	MODIFYING CCTV CAMERA SYSTEM						1	1		2		1	1	
E-180	MODIFYING FIBER OPTIC CABLE ASSEMBLY	1350	4050	1350	1350	250								
E-181	MODIFYING CMS SYSTEM						1	1		2		1		1
E-182	MODIFYING FIBER OPTIC CABLE ASSEMBLY	1300	3900	1300	1300	300								
E-183	MODIFYING CCTV CAMERA SYSTEM						1	1		2		1	1	
E-184	MODIFYING TRAFFIC MONITORING STATION						2	2		4		2		
E-185	MODIFYING FIBER OPTIC CABLE ASSEMBLY	1300	3900	1300	1300									
E-186	MODIFYING FIBER OPTIC CABLE ASSEMBLY	1400	4200	1400	1400	100								
E-187	MODIFYING FIBER OPTIC CABLE ASSEMBLY	1000	3000	1000	1000									
E-188	MODIFYING RAMP METERING SYSTEM						1	1		2		1		
E-189	MODIFYING FIBER OPTIC CABLE ASSEMBLY	1100	3300	1100	1100	300								
E-190	MODIFYING CCTV CAMERA SYSTEM						1	1		2		1	1	
E-191	MODIFYING IP NODE						1		1	18	2			
E-192	MODIFYING RAMP METERING SYSTEM						1	1		2		1		
E-193	MODIFYING ACCESS NODE						2							
E-194	MODIFYING FIBER OPTIC CABLE ASSEMBLY	1400	4200	1400	1400	200								
E-195	MODIFYING CABLE NODE						1							
E-196	MODIFYING TRAFFIC MONITORING STATION						1	1		2		1		
E-197	MODIFYING FIBER OPTIC CABLE ASSEMBLY	1400	4200	1400	1400	150								
E-198	MODIFYING FIBER OPTIC CABLE ASSEMBLY	1400	4200	1400	1400	200								
E-199	MODIFYING TRAFFIC MONITORING STATION						1	1		2		1		
E-200	MODIFYING CCTV CAMERA SYSTEM						1	1		2		1	1	
E-201	MODIFYING FIBER OPTIC CABLE ASSEMBLY	1200	3600	1200	1200	100								
E-202	MODIFYING RAMP METERING SYSTEM						1	1		2		1		
E-203	MODIFYING FIBER OPTIC CABLE ASSEMBLY	1200	3600	1200	1200	150								
E-204	MODIFYING RAMP METERING SYSTEM						1	1		2		1		
E-205	MODIFYING FIBER OPTIC CABLE ASSEMBLY	1300	3900	1300	1300	800								
E-206	MODIFYING CCTV CAMERA SYSTEM						1	1		2		1	1	
E-207	MODIFYING FIBER OPTIC CABLE ASSEMBLY	1200	3600	1200	1200	100								
E-208	MODIFYING TRAFFIC MONITORING STATION						1	1		2		1		
E-209	MODIFYING FIBER OPTIC CABLE ASSEMBLY	1200	3600	1200	1200									
E-210	MODIFYING FIBER OPTIC CABLE ASSEMBLY	1300	3900	1300	1300	1000								
E-211	MODIFYING RAMP METERING SYSTEM						2	2		4		2		

ELECTRICAL QUANTITIES

E-302

REVISED BY | DATE REVISED

HOSAKERE ANANTH | JACQUELINE C. TAN

CALCULATED-DESIGNED BY | CHECKED BY

FUNCTIONAL SUPERVISOR: JACQUELINE C. TAN

STATE OF CALIFORNIA - DEPARTMENT OF TRANSPORTATION
Caltrans® OFFICE OF ITS

LAST REVISION 00-00-00 | DATE PLOTTED => 22-JUL-2016 | TIME PLOTTED => 09:46

Dist	COUNTY	ROUTE	POST MILES TOTAL PROJECT	SHEET No.	TOTAL SHEETS
07	LA	405	0.0/29.2, 39.0/48.6	312	323

REGISTERED ELECTRICAL ENGINEER 6/16/16 DATE

6-27-16
PLANS APPROVAL DATE

REGISTERED PROFESSIONAL ENGINEER JACQUELINE C. TAN No. E15611 Exp. 12/31/17 ELECTRICAL STATE OF CALIFORNIA

THE STATE OF CALIFORNIA OR ITS OFFICERS OR AGENTS SHALL NOT BE RESPONSIBLE FOR THE ACCURACY OR COMPLETENESS OF SCANNED COPIES OF THIS PLAN SHEET.

NOTE: (THIS SHEET ONLY)

1. ITEMS SHOWN IN THIS TABLE ARE NOT A SEPARATE PAY ITEM, FOR INFORMATION ONLY.

MODIFY EXISTING ELECTRICAL SYSTEM

SHEET No.	MODIFYING EXISTING ELECTRICAL SYSTEM	72SMFO (DISTRIBUTION)	1" INNERDUCT	48SMFO (SPARE)	72SMFO (TRUNK)	12SMFO	FDU	TYPE 1 SWITCH	TYPE 2 SWITCH	LX RUGGED SFP MODULE	ZX RUGGED SFP MODULE	CAT 5E CABLE	VIDEO ENCODER	MODEL 170 TERMINAL SERVER CARD
		LF	LF	LF	LF	LF	EA	EA	EA	EA	EA	EA	EA	EA
E-212	MODIFYING FIBER OPTIC CABLE ASSEMBLY	1200	3600	1200	1200	100								
E-213	MODIFYING RAMP METERING SYSTEM						1	1		2		1		
E-214	MODIFYING FIBER OPTIC CABLE ASSEMBLY	1400	4200	1400	1400	400								
E-215	MODIFYING TRAFFIC MONITORING STATION						1	1		2		1		
E-216	MODIFYING CCTV CAMERA SYSTEM						1	1		2		1	1	
E-217	MODIFYING CMS SYSTEM						1	1		2		1		1
E-218	MODIFYING FIBER OPTIC CABLE ASSEMBLY	1300	3900	1300	1300	50								
E-219	MODIFYING FIBER OPTIC CABLE ASSEMBLY	1300	3900	1300	1300	400								
E-220	MODIFYING RAMP METERING SYSTEM						3	3		6		3		
E-221	MODIFYING FIBER OPTIC CABLE ASSEMBLY	1300	3900	1300	1300									
E-222	MODIFYING FIBER OPTIC CABLE ASSEMBLY	1300	3900	1300	1300	200								
E-223	MODIFYING WEIGH IN MOTION SYSTEM						2	2		4		2		
E-224	MODIFYING FIBER OPTIC CABLE ASSEMBLY	1400	4200	1400	1400	250								
E-225	MODIFYING TRAFFIC MONITORING STATION						1	1		2		1		
E-226	MODIFYING CCTV CAMERA SYSTEM						1	1		2		1	1	
E-227	MODIFYING IP NODE						1		1	18	2			
E-228	MODIFYING FIBER OPTIC CABLE ASSEMBLY	1300	3900	1300	1300									
E-229	MODIFYING FIBER OPTIC CABLE ASSEMBLY	1400	4200	1400	1400	200								
E-230	MODIFYING RAMP METERING SYSTEM						1	1		2		1		
E-231	MODIFYING FIBER OPTIC CABLE ASSEMBLY	1400	4200	1400	1400	200								
E-232	MODIFYING RAMP METERING SYSTEM						1	1		2		1		
E-233	MODIFYING FIBER OPTIC CABLE ASSEMBLY	1400	4200	1400	1400	150								
E-234	MODIFYING TRAFFIC MONITORING STATION						1	1		2		1		
E-235	MODIFYING FIBER OPTIC CABLE ASSEMBLY	1300	3900	1300	1300	150								
E-236	MODIFYING CCTV CAMERA SYSTEM						1	1		2		1	1	
E-237	MODIFYING FIBER OPTIC CABLE ASSEMBLY	1400	4200	1400	1400	200								
E-238	MODIFYING RAMP METERING SYSTEM						1	1		2		1		
E-239	MODIFYING FIBER OPTIC CABLE ASSEMBLY	1300	3900	1300	1300	150								
E-240	MODIFYING CMS SYSTEM						1	1		2		1		1
E-241	MODIFYING RAMP METERING SYSTEM						1	1		2		1		
E-242	MODIFYING FIBER OPTIC CABLE ASSEMBLY	1300	3900	1300	1300									
E-243	MODIFYING FIBER OPTIC CABLE ASSEMBLY	1300	3900	1300	1300									
E-244	MODIFYING FIBER OPTIC CABLE ASSEMBLY	1400	4200	1400	1400	200								
E-245	MODIFYING TRAFFIC MONITORING STATION						1	1		2		1		

ELECTRICAL QUANTITIES

E-303

STATE OF CALIFORNIA - DEPARTMENT OF TRANSPORTATION
Caltrans® OFFICE OF ITS

FUNCTIONAL SUPERVISOR: JACQUELINE C. TAN
CALCULATED-DESIGNED BY: HOSAKERE ANANTH
CHECKED BY: JACQUELINE C. TAN
REVISED BY
DATE REVISED

LAST REVISION 00-00-00
DATE PLOTTED => 22-JUL-2016
TIME PLOTTED => 09:46

Dist	COUNTY	ROUTE	POST MILES TOTAL PROJECT	SHEET No.	TOTAL SHEETS
07	LA	405	0.0/29.2, 39.0/48.6	313	323

REGISTERED ELECTRICAL ENGINEER — DATE

6-27-16
PLANS APPROVAL DATE

REGISTERED PROFESSIONAL ENGINEER — JACQUELINE C. TAN — No. E15611 — Exp. 12/31/17 — ELECTRICAL — STATE OF CALIFORNIA

THE STATE OF CALIFORNIA OR ITS OFFICERS OR AGENTS SHALL NOT BE RESPONSIBLE FOR THE ACCURACY OR COMPLETENESS OF SCANNED COPIES OF THIS PLAN SHEET.

NOTE: (THIS SHEET ONLY)

1. ITEMS SHOWN IN THIS TABLE ARE NOT A SEPARATE PAY ITEM, FOR INFORMATION ONLY.

MODIFY EXISTING ELECTRICAL SYSTEM

SHEET No.	MODIFYING EXISTING ELECTRICAL SYSTEM	72SMFO (DISTRIBUTION)	1" INNERDUCT	48SMFO (SPARE)	72SMFO (TRUNK)	12SMFO	FDU	TYPE 1 SWITCH	TYPE 2 SWITCH	LX RUGGED SFP MODULE	ZX RUGGED SFP MODULE	CAT 5E CABLE	VIDEO ENCODER	ETHERNET SWITCH TYPE 3 COPPER RJ45 MODULE	ETHERNET SWITCH TYPE 3 FIBER MODULE	LX SFP MODULE	ZX SFP MODULE
		LF	LF	LF	LF	LF	EA	EA	EA	EA	EA	EA	EA	EA	EA	EA	EA
E-246	MODIFYING CCTV CAMERA SYSTEM						1	1		2		1	1				
E-247	MODIFYING FIBER OPTIC CABLE ASSEMBLY	1300	3900	1300	1300												
E-248	MODIFYING FIBER OPTIC CABLE ASSEMBLY	1400	4200	1400	1400	400											
E-249	MODIFYING RAMP METERING SYSTEM						3	3		6		3					
E-250	MODIFYING FIBER OPTIC CABLE ASSEMBLY	1400	4200	1400	1400	150											
E-251	MODIFYING RAMP METERING SYSTEM						1	1		2		1					
E-252	MODIFYING FIBER OPTIC CABLE ASSEMBLY	750	2250	750	750												
E-253	MODIFYING FIBER OPTIC CABLE ASSEMBLY	800	2400	800	800	200											
E-254	MODIFYING CABLE NODE						1										
E-255	MODIFYING ACCESS NODE						1										
E-256	MODIFYING CCTV CAMERA SYSTEM/IP NODE						1		1	18	4	1	1				
E-257	MODIFYING FIBER OPTIC CABLE ASSEMBLY	1300	3900	1300	1300												
E-258	MODIFYING FIBER OPTIC CABLE ASSEMBLY	1400	4200	1400	1400	350											
E-259	MODIFYING RAMP METERING SYSTEM						1	1		2		1					
E-260	MODIFYING TRAFFIC MONITORING STATION						1	1		2		1					
E-261	MODIFYING FIBER OPTIC CABLE ASSEMBLY	1300	3900	1300	1300												
E-262	MODIFYING FIBER OPTIC CABLE ASSEMBLY	1300	3900	1300	1300	900											
E-263	MODIFYING RAMP METERING SYSTEM						2	2		4		2					
E-264	MODIFYING FIBER OPTIC CABLE ASSEMBLY	1300	3900	1300	1300												
E-265	MODIFYING FIBER OPTIC CABLE ASSEMBLY	1400	4200	1400	1400	150											
E-266	MODIFYING TRAFFIC MONITORING STATION						1	1		2		1					
E-267	MODIFYING FIBER OPTIC CABLE ASSEMBLY	900	2700	900	900	150											
E-268	MODIFYING CCTV CAMERA/IP NODE SYSTEM						1		1	18	4	1	1				
E-269	MODIFYING CABLE NODE						1										
E-270	MODIFYING LOS ANGELES AIRPORT HUB													1	2	2	4
E-271	MODIFYING NORTH HOLLYWOOD HUB													1	2	2	4
E-272	MODIFYING NORWALK HUB													1	2	2	4
E-273	MODIFYING LARTMC													3	1	1	4

ELECTRICAL QUANTITIES

E-304

REVISED BY	DATE REVISED
HOSAKERE ANANTH	JACQUELINE C. TAN

CALCULATED-DESIGNED BY	CHECKED BY

FUNCTIONAL SUPERVISOR: JACQUELINE C. TAN

STATE OF CALIFORNIA - DEPARTMENT OF TRANSPORTATION
Caltrans®
OFFICE OF ITS

LAST REVISION 00-00-00 | DATE PLOTTED => 22-JUL-2016 | TIME PLOTTED => 09:46

M

Maint	MAINTENANCE
Max	MAXIMUM
MB	METAL BEAM
MBB	METAL BEAM BARRIER
MBGR	METAL BEAM GUARD RAILING
Med	MEDIAN
MGS	MIDWEST GUARDRAIL SYSTEM
MH	MANHOLE
Min	MINIMUM
Misc	MISCELLANEOUS
Misc I & S	MISCELLANEOUS IRON AND STEEL
Mkr	MARKER
Mod	MODIFIED,
	MODIFY
Mon	MONUMENT
MP	METAL PLATE
MPGR	METAL PLATE GUARD RAILING
MR	MOVEMENT RATING
MSE	MECHANICALLY STABILIZED EMBANKMENT
Mt	MOUNTAIN, MOUNT
Mtl	MATERIAL
MVP	MAINTENANCE VEHICLE PULLOUT

N

N	NORTH
NB	NORTHBOUND
No.	NUMBER (MUST HAVE PERIOD)
Nos.	NUMBERS (MUST HAVE PERIOD)
NPS	NOMINAL PIPE SIZE
NS	NEAR SIDE
NSP	NEW STANDARD PLAN
NTS	NOT TO SCALE

O

Oblr	OBLITERATE
OC	OVERCROSSING
OD	OUTSIDE DIAMETER
OF	OUTSIDE FACE
OG	ORIGINAL GROUND
OGAC	OPEN GRADED ASPHALT CONCRETE
OGFC	OPEN GRADED FRICTION COURSE
OH	OVERHEAD
OHWM	ORDINARY HIGH WATER MARK
O-O	OUT TO OUT
Opp	OPPOSITE
OSD	OVERSIDE DRAIN

P

P	PAGE
PAP	PERFORATED ALUMINUM PIPE
PB	PULL BOX
PC	POINT OF CURVATURE,
	PRECAST
PCC	POINT OF COMPOUND CURVE,
	PORTLAND CEMENT CONCRETE
PCMS	PORTABLE CHANGEABLE MESSAGE SIGN
PCP	PERFORATED CONCRETE PIPE,
	PRESTRESSED CONCRETE PIPE
PCVC	POINT OF COMPOUND VERTICAL CURVE
PEC	PERMIT TO ENTER AND CONSTRUCT
Ped	PEDESTRIAN
Ped OC	PEDESTRIAN OVERCROSSING
Ped UC	PEDESTRIAN UNDERCROSSING
Perm Mtl	PERMEABLE MATERIAL

P continued

PG	PROFILE GRADE
PI	POINT OF INTERSECTION
PJP	PARTIAL JOINT PENETRATION
Pkwy	PARKWAY
ℙ,PL	PLATE
P/L	PROPERTY LINE
PM	POST MILE,
	TIME FROM NOON TO MIDNIGHT
PN	PAVING NOTCH
POC	POINT OF HORIZONTAL CURVE
POT	POINT OF TANGENT
POVC	POINT OF VERTICAL CURVE
PP	PIPE PILE,
	PLASTIC PIPE,
	POWER POLE
PPL	PREFORMED PERMEABLE LINER
PPP	PERFORATED PLASTIC PIPE
PRC	POINT OF REVERSE CURVE
PRF	PAVEMENT REINFORCING FABRIC
PRVC	POINT OF REVERSE VERTICAL CURVE
PS&E	PLANS, SPECIFICATIONS AND ESTIMATES
PS, P/S	PRESTRESSED
PSP	PERFORATED STEEL PIPE
PT	POINT OF TANGENCY
PVC	POLYVINYL CHLORIDE
Pvmt	PAVEMENT

Q

Qty	QUANTITY

R

R	RADIUS
R & D	REMOVE AND DISPOSE
R & S	REMOVE AND SALVAGE
R/C	RATE OF CHANGE
RCA	REINFORCED CONCRETE ARCH
RCB	REINFORCED CONCRETE BOX
RCP	REINFORCED CONCRETE PIPE
RCPA	REINFORCED CONCRETE PIPE ARCH
Rd	ROAD
Reinf	REINFORCED,
	REINFORCEMENT,
	REINFORCING
Rel	RELOCATE
Repl	REPLACEMENT
Ret	RETAINING
Rev	REVISED, REVISION
Rdwy	ROADWAY
RHMA	RUBBERIZED HOT MIX ASPHALT
Riv	RIVER
RM	ROAD-MIXED
RP	RADIUS POINT,
	REFERENCE POINT
RR	RAILROAD
RSP	ROCK SLOPE PROTECTION,
	REVISED STANDARD PLAN
Rt	RIGHT
Rte	ROUTE
RW	REDWOOD,
	RETAINING WALL
R/W	RIGHT OF WAY
Rwy	RAILWAY

S

S	SOUTH,
	SUPPLEMENT
SAE	STRUCTURE APPROACH EMBANKMENT
Salv	SALVAGE
SAPP	STRUCTURAL ALUMINUM PLATE PIPE
SB	SOUTHBOUND
SC	SAND CUSHION
SCSP	SLOTTED CORRUGATED STEEL PIPE
SD	STORM DRAIN
Sec	SECOND,
	SECTION
Sep	SEPARATION
SG	SUBGRADE
Shld	SHOULDER
Sht	SHEET
Sim	SIMILAR
℄	STATION LINE
SM	SELECTED MATERIAL
Spec	SPECIAL,
	SPECIFICATIONS
SPP	SLOTTED PLASTIC PIPE
SS	SLOPE STAKE
SSBM	STRAP AND SADDLE BRACKET METHOD
SSD	STRUCTURAL SECTION DRAIN
SSPA	STRUCTURAL STEEL PLATE ARCH
SSPP	STRUCTURAL STEEL PLATE PIPE
SSPPA	STRUCTURAL STEEL PLATE PIPE ARCH
SSRP	STEEL SPIRAL RIB PIPE
St	STREET
Sta	STATION
STBB	SINGLE THRIE BEAM BARRIER
Std	STANDARD
Str	STRUCTURE
Surf	SURFACING
SW	SIDEWALK,
	SOUND WALL
Swr	SEWER
Sym	SYMMETRICAL
S4S	SURFACE 4 SIDES

T

T	SEMI-TANGENT
Tan	TANGENT
TBB	THRIE BEAM BARRIER
Tbr	TIMBER
TC	TOP OF CURB
TCB	TRAFFIC CONTROL BOX
TCE	TEMPORARY CONSTRUCTION EASEMENT
Tel	TELEPHONE
Temp	TEMPORARY
TG	TOP OF GRADE
Tot	TOTAL
TP	TELEPHONE POLE
TPB	TREATED PERMEABLE BASE
TPM	TREATED PERMEABLE MATERIAL
Trans	TRANSITION

T continued

TS	TRANSVERSE,
	TRAFFIC SIGNAL,
	TUBULAR STEEL
Typ	TYPICAL

U

UC	UNDERCROSSING
UD	UNDERDRAIN
UG	UNDERGROUND
UON	UNLESS OTHERWISE NOTED
UP	UNDERPASS

V

V	VALVE,
	DESIGN SPEED
Var	VARIABLE,
	VARIES
VC	VERTICAL CURVE
VCP	VITRIFIED CLAY PIPE
Vert	VERTICAL
Via	VIADUCT
Vol	VOLUME

W

W	WEST,
	WIDTH
WB	WESTBOUND
WH	WEEP HOLE
WM	WIRE MESH
WS	WATER SURFACE
WSP	WELDED STEEL PIPE
Wt	WEIGHT
WV	WATER VALVE
WW	WINGWALL
WWLOL	WINGWALL LAYOUT LINE

X

X Sec	CROSS SECTION
Xing	CROSSING

Y

Yr	YEAR
Yrs	YEARS

Dist	COUNTY	ROUTE	POST MILES TOTAL PROJECT	SHEET No.	TOTAL SHEETS
07	LA	405	0.0/29.2 39.0/48.6	314	323

Grace M. Tsushima
REGISTERED CIVIL ENGINEER

July 19, 2013
PLANS APPROVAL DATE

REGISTERED PROFESSIONAL ENGINEER
Grace M. Tsushima
No. C49814
Exp. 9-30-14
CIVIL
STATE OF CALIFORNIA

THE STATE OF CALIFORNIA OR ITS OFFICERS OR AGENTS SHALL NOT BE RESPONSIBLE FOR THE ACCURACY OR COMPLETENESS OF SCANNED COPIES OF THIS PLAN SHEET.

TO ACCOMPANY PLANS DATED 6-27-16

UNIT OF MEASUREMENT SYMBOLS:

Some of the symbols used in the project plan quantity tables and in the Bid Item List are:

TABLE A

SYMBOL USED	DEFINITIONS
ACRE	ACRE
CF	CUBIC FOOT
CY	CUBIC YARD
EA	EACH
GAL	GALLON
LB	POUND
LF	LINEAR FOOT
SQFT	SQUARE FOOT
SQYD	SQUARE YARD
STA	100 FEET
TAB	TABLET
TON	2,000 POUNDS

Some of the symbols used in the plans other than in the project plan quantity tables are:

TABLE B

SYMBOL USED	DEFINITIONS
ksi	KIPS PER SQUARE INCH
ksf	KIPS PER SQUARE FOOT
psi	POUNDS PER SQUARE INCH
psf	POUNDS PER SQUARE FOOT
lb/ft^3, pcf	POUNDS PER CUBIC FOOT
tsf	TONS PER SQUARE FOOT
mph, MPH *	MILES PER HOUR
ø	NOMINAL DIAMETER
oz	OUNCE
lb	POUND
kip	1,000 POUNDS
cal	CALORIE
ft	FOOT OR FEET
gal	GALLON

* For use on a sign panel only

STATE OF CALIFORNIA
DEPARTMENT OF TRANSPORTATION

ABBREVIATIONS (SHEET 2 OF 2)

NO SCALE

RSP A10B DATED JULY 19, 2013 SUPERSEDES STANDARD PLAN A10B DATED MAY 20, 2011 - PAGE 2 OF THE STANDARD PLANS BOOK DATED 2010.

REVISED STANDARD PLAN RSP A10B

2010 REVISED STANDARD PLAN RSP A10B

6-7-13

Dist	COUNTY	ROUTE	POST MILES TOTAL PROJECT	SHEET No.	TOTAL SHEETS
07	LA	405	0.0/29.2 39.0/48.6	315	323

Theresa Gabriel
REGISTERED ELECTRICAL ENGINEER

October 30, 2015
PLANS APPROVAL DATE

REGISTERED PROFESSIONAL ENGINEER Theresa Aziz Gabriel No. E15129 Exp. 6-30-16 ELECTRICAL STATE OF CALIFORNIA

THE STATE OF CALIFORNIA OR ITS OFFICERS OR AGENTS SHALL NOT BE RESPONSIBLE FOR THE ACCURACY OR COMPLETENESS OF SCANNED COPIES OF THIS PLAN SHEET.

TO ACCOMPANY PLANS DATED 6-27-16

2010 REVISED STANDARD PLAN RSP ES-1A

LEGEND:

AB	ABANDON. IF APPLIED TO CONDUIT, REMOVE CONDUCTORS
BC	INSTALL PULL BOX IN EXISTING CONDUIT RUN
BP	PEDESTRIAN BARRICADE, TYPE AS INDICATED ON PLAN
CB	INSTALL CONDUIT INTO EXISTING PULL BOX
CC	CONNECT NEW AND EXISTING CONDUIT. REMOVE EXISTING CONDUCTORS AND INSTALL CONDUCTORS AS INDICATED
CF	CONDUIT TO REMAIN FOR FUTURE USE. REMOVE CONDUCTORS. INSTALL PULL TAPE
DH	DETECTOR HANDHOLE
FA	FOUNDATION TO BE ABANDONED
IS	INSTALL SIGN ON SIGNAL MAST ARM
NS	NO SLIP BASE ON STANDARD
PEC	PHOTOELECTRIC CONTROL
PEU	PHOTOELECTRIC UNIT
RC	EQUIPMENT OR MATERIAL TO BE REMOVED AND BECOME THE PROPERTY OF THE CONTRACTOR
RE	REMOVE ELECTROLIER, FUSES AND BALLAST. TAPE ENDS OF CONDUCTORS
RL	RELOCATE EQUIPMENT
RR	REMOVE AND REUSE EQUIPMENT
RS	REMOVE AND SALVAGE EQUIPMENT
SC	SPLICE NEW TO EXISTING CONDUCTORS
SD	SERVICE DISCONNECT
TSP	TELEPHONE SERVICE POINT

ABBREVIATIONS

AC+	UNDERGROUNDED CONDUCTOR
APS	ACCESSIBLE PEDESTRIAN SIGNAL
Batt	BATTERY
BBS	BATTERY BACKUP SYSTEM
BC	BOLT CIRCLE
Blk	BLACK
BP	BYPASS
BPB	BICYCLE PUSH BUTTON
C	CONDUIT
CB	CIRCUIT BREAKER
CCTV	CLOSED CIRCUIT TELEVISION
Ckt	CIRCUIT
CMS	CHANGEABLE MESSAGE SIGN
Ctid	CALTRANS IDENTIFICATION
Comm	COMMUNICATION
Cntl	CONTROL
DF	DEPARTMENT-FURNISHED
DLC	LOOP DETECTOR LEAD-IN CABLE
EMS	EXTINGUISHABLE MESSAGE SIGN
EVUC	EMERGENCY VEHICLE UNIT CABLE
EVUD	EMERGENCY VEHICLE UNIT DETECTOR
FB	FLASHING BEACON
FBCA	FLASHING BEACON CONTROL ASSEMBLY
FBS	FLASHING BEACON WITH SLIP BASE
FO	FIBER OPTIC
G	EQUIPMENT GROUNDING CONDUCTOR
GB	GROUND BUS
GFCI	GROUND FAULT CIRCUIT INTERRUPTER
Grn	GREEN
HAR	HIGHWAY ADVISORY RADIO
Hex	HEXAGONAL
HPS	HIGH PRESSURE SODIUM
IISNS	INTERNALLY ILLUMINATED STREET NAME SIGN
ISL	INDUCTION SIGN LIGHTING
LED	LIGHT EMITTING DIODE
LMA	LUMINAIRE MAST ARM
LPS	LOW PRESSURE SODIUM
Ltg	LIGHTING
Lum	LUMINAIRE
M	METERED
MAT	MAST ARM MOUNTING TOP ATTACHMENT
MAS	MAST ARM MOUNTING SIDE ATTACHMENT
MBPS	MANUAL BYPASS SWITCH
M/M	MULTIPLE TO MULTIPLE TRANSFORMER
Mtg	MOUNTING
MV	MERCURY VAPOR LIGHTING FIXTURE
MVDS	MICROWAVE VEHICLE DETECTION SYSTEM
N	NEUTRAL (GROUNDED CONDUCTOR)
NB	NEUTRAL BUS
NC	NORMALLY CLOSE
NO	NORMALLY OPEN
P	CIRCUIT BREAKER'S POLE
PB	PULL BOX
PBA	PUSH BUTTON ASSEMBLY
PEC	PHOTOELECTRIC CONTROL
Ped	PEDESTRIAN
PEU	PHOTOELECTRIC UNIT
PT	CONDUIT WITH PULL TAPE
PTR	POWER TRANSFER RELAY
RE	RELOCATED EQUIPMENT
RM	RAMP METERING
RWIS	ROADSIDE WEATHER INFORMATION SYSTEM
SB	SLIP BASE
SIC	SIGNAL INTERCONNECT CABLE
Sig	SIGNAL
SMA	SIGNAL MAST ARM
SNS	STREET NAME SIGN
SP	SERVICE POINT
TB	TERMINAL BOARD
TDC	TELEPHONE DEMARCATION CABINET
Temp	TEMPERATURE
TMS	TRAFFIC MONITORING STATION
TOS	TRAFFIC OPERATIONS SYSTEM
UPS	UNINTERRUPTABLE POWER SUPPLY
UPSC	UNINTERRUPTABLE POWER SUPPLY CONTROLLER
Veh	VEHICLE
VIVDS	VIDEO IMAGE VEHICLE DETECTION SYSTEM
Wht	WHITE
WIM	WEIGH-IN-MOTION
Xfmr	TRANSFORMER

SOFFIT AND WALL-MOUNTED LUMINAIRES

PENDANT SOFFIT LUMINAIRE, 70 W HPS UNLESS OTHERWISE SPECIFIED

FLUSH-MOUNTED SOFFIT LUMINAIRE, 70 W HPS UNLESS OTHERWISE SPECIFIED

WALL-MOUNTED LUMINAIRE, 70 W HPS UNLESS OTHERWISE SPECIFIED

EXISTING SOFFIT OR WALL-MOUNTED LUMINAIRE TO REMAIN UNMODIFIED

EXISTING SOFFIT OR WALL-MOUNTED LUMINAIRE TO BE MODIFIED AS SPECIFIED

NOTE:
Arrow indicates "street side" of luminaire.

COMMONLY USED SYMBOLS FOR UNITED STATES CUSTOMARY UNITS OF MEASUREMENT:

SYMBOL	DEFINITIONS
Ω	OHMS
min	MINUTE
s	SECOND
bps	BITS PER SECOND
Bps	BYTES PER SECOND
A	AMPERE
V	VOLT
V(dc)	VOLT (DIRECT CURRENT)
V(ac)	VOLT (ALTERNATING CURRENT)
FC	FOOT - CANDLE
W	WATTS
VA	VOLT-AMPERE
M	MEGA
k	KILO
m	MILLI
μ	MICRO
P	PICO
Hz	HERTZ

MISCELLANEOUS ELECTROLIERS

NEW	EXISTING	
		LUMINAIRE ON WOOD POLE
		NON-STANDARD ELECTROLIER (SEE PROJECT LEGEND)
		CITY ELECTROLIER
		ELECTROLIER FOUNDATION (FUTURE INSTALLATION)

NOTES:

1. LED luminaires shall be 235 W when installed on Type 21, 21D, 30, 31 and 32 Standards, unless otherwise specified. LED luminaires shall be 165 W when installed on other type standards or poles, unless otherwise specified.
2. Luminaires shall be the cutoff type, ANSI Type III medium cutoff lighting distribution, unless otherwise specified.

STANDARD ELECTROLIER

NEW	EXISTING	STANDARD TYPE
		15
		15D
		15 STRUCTURE
		15D STRUCTURE
		21
		21D
		21 STRUCTURE
		21D STRUCTURE
		30
		31
		32

STATE OF CALIFORNIA
DEPARTMENT OF TRANSPORTATION

ELECTRICAL SYSTEMS (LEGEND AND ABBREVIATIONS)

NO SCALE

RSP ES-1A DATED OCTOBER 30, 2015 SUPERSEDES RSP ES-1A DATED JULY 19, 2013 AND STANDARD PLAN ES-1A DATED MAY 20, 2011 - PAGE 425 OF THE STANDARD PLANS BOOK DATED 2010.

REVISED STANDARD PLAN RSP ES-1A

9-29-15

Dist	COUNTY	ROUTE	POST MILES TOTAL PROJECT	SHEET No.	TOTAL SHEETS
07	LA	405	0.0/29.2 39.0/48.6	316	323

Theresa Gabriel
REGISTERED ELECTRICAL ENGINEER

October 30, 2015
PLANS APPROVAL DATE

REGISTERED PROFESSIONAL ENGINEER
Theresa Aziz Gabriel
No. E15129
Exp. 6-30-16
ELECTRICAL
STATE OF CALIFORNIA

THE STATE OF CALIFORNIA OR ITS OFFICERS OR AGENTS SHALL NOT BE RESPONSIBLE FOR THE ACCURACY OR COMPLETENESS OF SCANNED COPIES OF THIS PLAN SHEET.

TO ACCOMPANY PLANS DATED 6-27-16

CONDUIT

NEW	EXISTING	
		LIGHTING CONDUIT, UNLESS OTHERWISE INDICATED OR NOTED
		TRAFFIC SIGNAL CONDUIT
C	c	COMMUNICATION CONDUIT
T	t	TELEPHONE CONDUIT
F	f	FIRE ALARM CONDUIT
FO	fo	FIBER OPTIC CONDUIT
		CONDUIT TERMINATION
R	r	CONDUIT RISER ATTACHED TO THE STRUCTURE OR SERVICE POLE

SERVICE EQUIPMENT

NEW	EXISTING	
OH	oh	OVERHEAD LINES
U	U	WOOD POLE, "U" INDICATES UTILITY OWNED
		POLE GUY WITH ANCHOR
		UTILITY TRANSFORMER - GROUND MOUNTED
III	III	SERVICE EQUIPMENT ENCLOSURE TYPE. DOOR INDICATES FRONT OF ENCLOSURE
T	t	TELEPHONE DEMARCATION CABINET

POLE-MOUNTED SERVICE DESIGNATION

TYPE H SERVICE, 28'-10" — TYPE OF INSTALLATION AND POLE HEIGHT ABOVE GRADE

FLASHING BEACON

NEW	EXISTING	
R	R	FLASHING BEACON (ONE VEHICLE SIGNAL HEAD WITH BACKPLATE AND VISOR) "R" INDICATES RED INDICATION, "Y" INDICATES YELLOW INDICATION
Y Y	Y Y	FLASHING BEACON WITH TYPE 15-FBS STANDARD AND A SIGN.
R R	R R	FLASHING BEACON WITH TYPES 9, 9A OR 9B SIGN UNLESS OTHERWISE SPECIFIED OR INDICATED

SIGNAL EQUIPMENT

NEW	EXISTING	
		PEDESTRIAN SIGNAL HEAD
		PUSH BUTTON ASSEMBLY POST
		PEDESTRIAN BARRICADE
		VEHICLE SIGNAL HEAD (WITH BACKPLATE AND 3-SECTIONS: RED, YELLOW AND GREEN)
		VEHICLE SIGNAL HEAD WITH ANGLE VISOR
PV	PV	MODIFICATIONS OF BASIC SYMBOL: "L" INDICATES ALL NON-ARROW SECTIONS LOUVERED "LG" INDICATES LOUVERED GREEN SECTION ONLY "PV" INDICATES ALL 12" SECTIONS PROGRAMMED VISIBILITY "8" INDICATES ALL 8" SECTIONS (ONLY WHEN SPECIFIED)
		VEHICLE SIGNAL HEAD CONSISTING OF RED, YELLOW AND GREEN LEFT ARROW SECTIONS
		VEHICLE SIGNAL HEAD CONSISTING OF RED AND YELLOW SECTIONS WITH AN UP GREEN ARROW SECTION
		VEHICLE SIGNAL HEAD (5 SECTION) CONSISTING OF RED, YELLOW AND GREEN SECTIONS WITH YELLOW AND GREEN RIGHT ARROW SECTIONS
		TYPE 15TS STANDARD WITH VEHICLE SIGNAL HEAD AND LUMINAIRE
		TYPE 21TS STANDARD WITH VEHICLE SIGNAL HEAD AND LUMINAIRE
		STANDARD WITH LUMINAIRE AND SIGNAL MAST ARMS AND ATTACHED VEHICLE SIGNAL HEADS
		TYPE 1 STANDARD WITH ATTACHED VEHICLE SIGNAL HEADS
		STANDARD WITH A SIGNAL MAST ARM, ATTACHED VEHICLE SIGNAL HEADS AND INTERNALLY ILLUMINATED STREET NAME SIGN
		CONTROLLER ASSEMBLY. DOOR INDICATES FRONT OF CABINET

SIGNAL EQUIPMENT Cont

NEW	EXISTING	
		GUARD POST
		TYPE 1 STANDARD WITH RAMP METERING SIGN
		OPTICAL DETECTOR FOR THE EMERGENCY VEHICLE DETECTION

NOTES:

1. All signal sections shall be 12" unless shown otherwise.
2. Signal heads shall be provided with backplates unless shown otherwise.

ILLUMINATED OVERHEAD SIGN

NEW	EXISTING	
		SINGLE POST, SINGLE ILLUMINATED SIGN, BALANCED BUTTERFLY
		SINGLE POST, DOUBLE ILLUMINATED SIGN, BALANCED BUTTERFLY
		SINGLE POST, SINGLE ILLUMINATED SIGN, FULL CANTILEVER
		DOUBLE POST, SINGLE ILLUMINATED SIGN
		SINGLE ILLUMINATED SIGN MOUNTED ON STRUCTURE
		DOUBLE POST, SINGLE ILLUMINATED SIGN WITH ELECTROLIER

STATE OF CALIFORNIA
DEPARTMENT OF TRANSPORTATION

ELECTRICAL SYSTEMS (LEGEND AND ABBREVIATIONS)

NO SCALE

RSP ES-1B DATED OCTOBER 30, 2015 SUPERSEDES RSP ES-1B DATED JULY 19, 2013 AND STANDARD PLAN ES-1B DATED MAY 20, 2011 - PAGE 426 OF THE STANDARD PLANS BOOK DATED 2010.

REVISED STANDARD PLAN RSP ES-1B

2010 REVISED STANDARD PLAN RSP ES-1B

8-19-15

Dist	COUNTY	ROUTE	POST MILES TOTAL PROJECT	SHEET No.	TOTAL SHEETS
07	LA	405	0.0/29.2 39.0/48.6	317	323

Theresa Gabriel
REGISTERED ELECTRICAL ENGINEER

April 15, 2016
PLANS APPROVAL DATE

REGISTERED PROFESSIONAL ENGINEER
Theresa Aziz Gabriel
No. E15129
Exp. 6-30-16
ELECTRICAL
STATE OF CALIFORNIA

THE STATE OF CALIFORNIA OR ITS OFFICERS OR AGENTS SHALL NOT BE RESPONSIBLE FOR THE ACCURACY OR COMPLETENESS OF SCANNED COPIES OF THIS PLAN SHEET.

TO ACCOMPANY PLANS DATED 6-27-16

EQUIPMENT IDENTIFICATION

ILLUMINATED SIGN IDENTIFICATION:

SIGN No. 12345
10 ISL SCI 1.0

- SIGN EQUIPMENT IDENTIFICATION CHARACTERS - PLACE ON POST OR STRUCTURE
- TRANSFORMER RATING (kVA)
- LIGHTING CONTROL TYPE
- NUMBER AND TYPE OF FIXTURES

} DO NOT PLACE ON STANDARD OR STRUCTURE

ELECTROLIER OR EQUIPMENT IDENTIFICATION:

L2745 - 15'-0"

- MAST ARM LENGTH, IF SHOWN. DO NOT PLACE ON STANDARD OR STRUCTURE
- EQUIPMENT IDENTIFICATION CHARACTERS - PLACE ON STANDARD OR STRUCTURE. EXISTING EQUIPMENT IDENTIFICATION CHARACTERS ARE SHOWN IN PARENTHESIS

CONDUIT AND CONDUCTOR IDENTIFICATION:

1½"C, 2#10, 15#14, 2 DLC, 12P#18 (PAIR)

- NUMBER AND SIZE OF CONDUCTORS AND CABLES
- SIZE OF CONDUIT IN INCHES

ø1, ø2, ø2P, etc.	TRAFFIC PHASE IDENTIFICATION FOR SIGNALS, DETECTORS AND PHASE DIAGRAMS
1 2 3	LEGEND NUMBERS
A B C	EQUIPMENT, SIGNAL POLES, INSTALLATION OR ITEMS
1 2 3	CONDUIT RUN NUMBERS

SIGNAL AND LIGHTING STANDARD (TYPICAL DESIGNATION):

19A - 3 - 100

- WIND VELOCITY = 100 mph
- CASE 3 ARM LOADING
- STANDARD TYPE
- STANDARD PLAN SHEET NUMBER
- DETAIL, NUMBER, SECTION, TYPE OR ELEVATION

MISCELLANEOUS EQUIPMENT

NEW	EXISTING	
CMS	cms	CHANGEABLE MESSAGE SIGN
		CLOSED CIRCUIT TELEVISION CAMERA
		HIGHWAY ADVISORY RADIO POLE AND ANTENNA
EMS	ems	LED EXTINGUISHABLE MESSAGE SIGN
M V	m v	DETECTION DEVICE M = MICROWAVE SENSOR V = VIDEO IMAGE SENSOR

WIRING DIAGRAM LEGEND

- EXTERNAL CONDUCTOR
- CONDUCTOR OR BUS
- TIE POINT
- CONTACTOR COIL
- CONTACTOR, NO CONTACT
- TERMINAL BLOCKS
- CONTACTOR, NC CONTACT
- ENCLOSURE BOND
- GROUNDING ELECTRODE
- CIRCUIT BREAKER
- RECEPTACLE

PULL BOXES

NEW	EXISTING	
		PULL BOX, No. 5 UNLESS OTHERWISE INDICATED OR NOTED
3	9A(21)	PULL BOX, ADDITIONAL DESIGNATIONS OR DESCRIPTIONS

3 No. 3½ PULL BOX
5 No. 5 PULL BOX
6 No. 6 PULL BOX
7 No. 7 PULL BOX (CEILING)
8 No. 8 PULL BOX
9 No. 9 PULL BOX (STRUCTURE)
9A No. 9A PULL BOX (STRUCTURE)

(C) COMMUNICATIONS PULL BOX
(E) PULL BOX WITH EXTENSION
(S) SPRINKLER CONTROL PULL BOX
(21) ANCHOR BOLTS AND CONDUIT FOR FUTURE INSTALLATION OF TYPE 21 STANDARD
(T) TRAFFIC PULL BOX

VEHICLE DETECTORS

5 J 9 U

- VEHICLE DETECTOR DESIGNATION
- U = UPPER
  L = LOWER
- SLOT NUMBER IN INPUT FILE
- INPUT FILE (I OR J)
- PHASE

NEW	EXISTING	
		TYPE A LOOP DETECTOR. OUTLINE OF SAW CUT SHOWN
		TYPE B LOOP DETECTOR. OUTLINE OF SAW CUT SHOWN
		TYPE C LOOP DETECTOR. OUTLINE OF SAW CUT SHOWN
		TYPE D LOOP DETECTOR. OUTLINE OF SAW CUT SHOWN
		TYPE E LOOP DETECTOR. OUTLINE OF SAW CUT SHOWN
		TYPE Q LOOP DETECTOR. OUTLINE OF SAW CUT SHOWN
DH	dh	DETECTOR HANDHOLE
		MICROWAVE OR VIDEO DETECTION ZONE

STATE OF CALIFORNIA
DEPARTMENT OF TRANSPORTATION

ELECTRICAL SYSTEMS (LEGEND AND ABBREVIATIONS)

NO SCALE

RSP ES-1C DATED APRIL 15, 2016 SUPERSEDES RSP ES-1C DATED OCTOBER 30, 2015 AND RSP ES-1C DATED JULY 19, 2013 AND STANDARD PLAN ES-1C DATED MAY 20, 2011 - PAGE 427 OF THE STANDARD PLANS BOOK DATED 2010.

REVISED STANDARD PLAN RSP ES-1C

2010 REVISED STANDARD PLAN RSP ES-1C

1-22-16

Dist	COUNTY	ROUTE	POST MILES TOTAL PROJECT	SHEET No.	TOTAL SHEETS
07	LA	405	0.0/29.2 39.0/48.6	318	323

Theresa Gabriel
REGISTERED ELECTRICAL ENGINEER

April 15, 2016
PLANS APPROVAL DATE

REGISTERED PROFESSIONAL ENGINEER
Theresa Aziz Gabriel
No. E15129
Exp. 6-30-16
ELECTRICAL
STATE OF CALIFORNIA

THE STATE OF CALIFORNIA OR ITS OFFICERS OR AGENTS SHALL NOT BE RESPONSIBLE FOR THE ACCURACY OR COMPLETENESS OF SCANNED COPIES OF THIS PLAN SHEET.

TO ACCOMPANY PLANS DATED 6-27-16

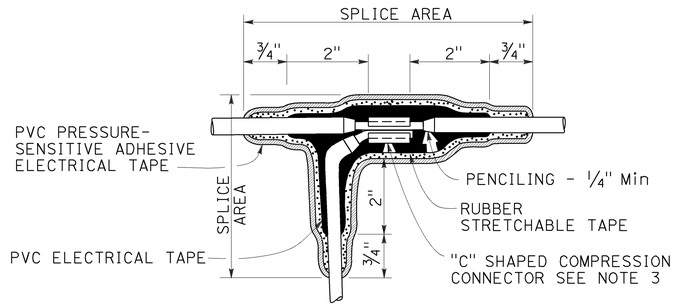

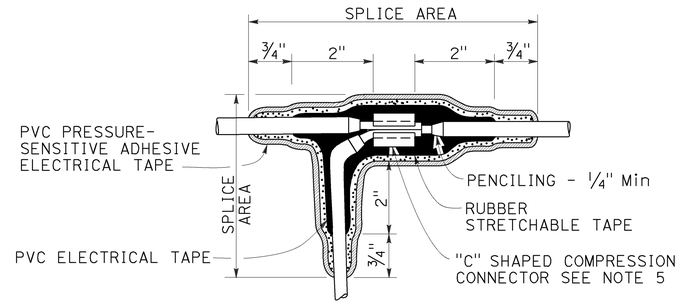

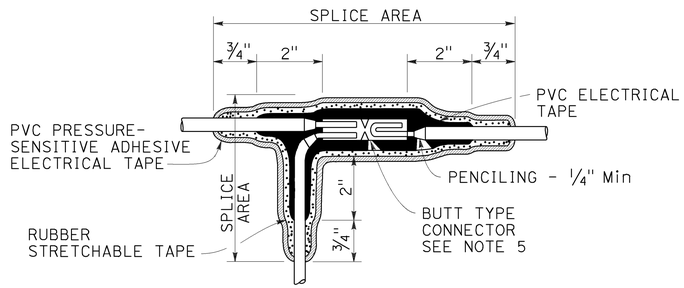

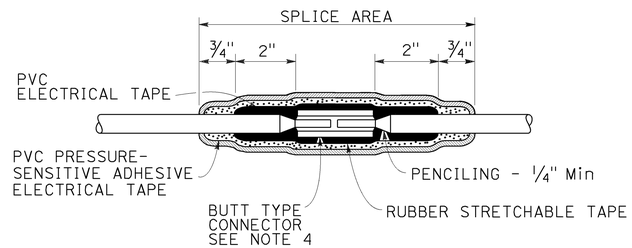

TYPICAL SPLICE INSULATION METHOD B

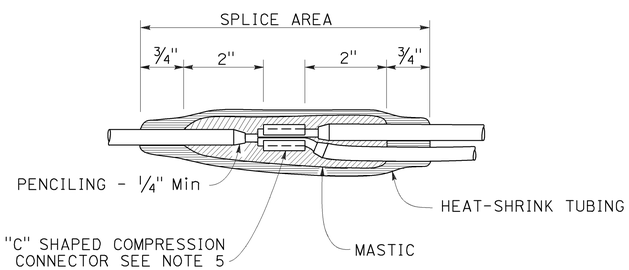

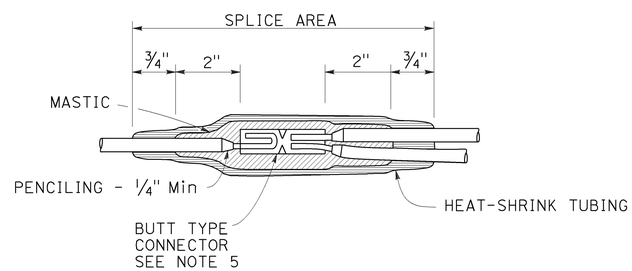

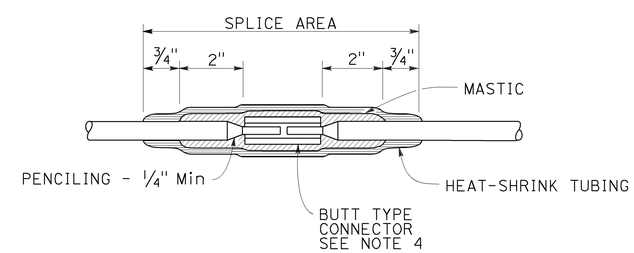

TYPICAL SPLICE INSULATION HEAT-SHRINK TUBING

NOTES:

1. Dimensions are minimum.
2. Rubber tapes shall be rolled after application.
3. Between 1 free-end and 1 through conductor.
4. Between 2 free-end conductors.
5. Between 3 free-end conductors.

STATE OF CALIFORNIA
DEPARTMENT OF TRANSPORTATION

ELECTRICAL SYSTEMS (SPLICE INSULATION METHODS DETAILS)

NO SCALE

RSP ES-13A DATED APRIL 15, 2016 SUPERSEDES RSP ES-13A DATED OCTOBER 30, 2015 AND STANDARD PLAN ES-13A DATED MAY 20, 2011 - PAGE 491 OF THE STANDARD PLANS BOOK DATED 2010.

REVISED STANDARD PLAN RSP ES-13A

2010 REVISED STANDARD PLAN RSP ES-13A

1-22-16

Dist	COUNTY	ROUTE	POST MILES TOTAL PROJECT	SHEET No.	TOTAL SHEETS
07	LA	405	0.0/29.2 39.0/48.6	319	323

Theresa Gabriel
REGISTERED ELECTRICAL ENGINEER

April 15, 2016
PLANS APPROVAL DATE

REGISTERED PROFESSIONAL ENGINEER
Theresa Aziz Gabriel
No. E15129
Exp. 6-30-16
ELECTRICAL
STATE OF CALIFORNIA

THE STATE OF CALIFORNIA OR ITS OFFICERS OR AGENTS SHALL NOT BE RESPONSIBLE FOR THE ACCURACY OR COMPLETENESS OF SCANNED COPIES OF THIS PLAN SHEET.

TO ACCOMPANY PLANS DATED 6-27-16

CIRCUIT VOLTAGE	FUSE VOLTAGE RATING	FUSE CURRENT RATING						
		HPS LAMP BALLAST		LOW PRESSURE SODIUM BALLAST	INDUCTION SIGN LIGHTING	SINGLE PHASE (TWO WIRE) TRANSFORMERS (PRIMARY SIDE)		
		70 W	100 W	180 W	85 W	1 kVA	2 kVA	3 kVA
120 V	250 V	5 A	5 A	5 A	5 A	10 A	20 A	30 A
240 V	250 V	5 A	5 A	5 A	5 A	6 A	10 A	20 A
480 V	500-600 V	5 A	5 A	3 A	1 A (SEE NOTE 2)	3 A	6 A	10 A

NOTES:

1. Primary lines of multiple ballasts shall be provided with fused connectors. Fuse ratings shall be as noted above.
2. See Revised Standard Plan RSP ES-15D, Type SC3 control.

FUSE RATINGS FOR FUSED CONNECTORS

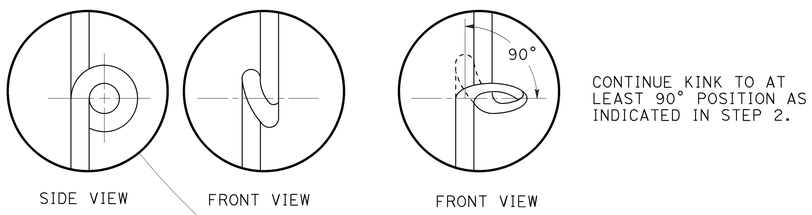

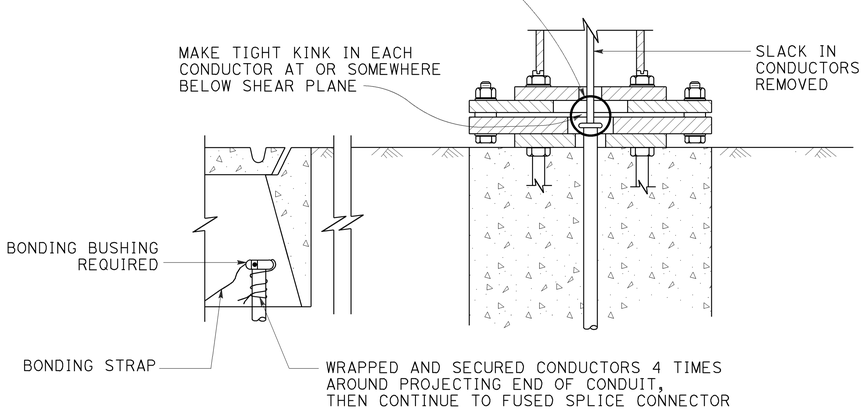

KINKING DETAIL FOR SLIP BASE STANDARDS

DETAIL A

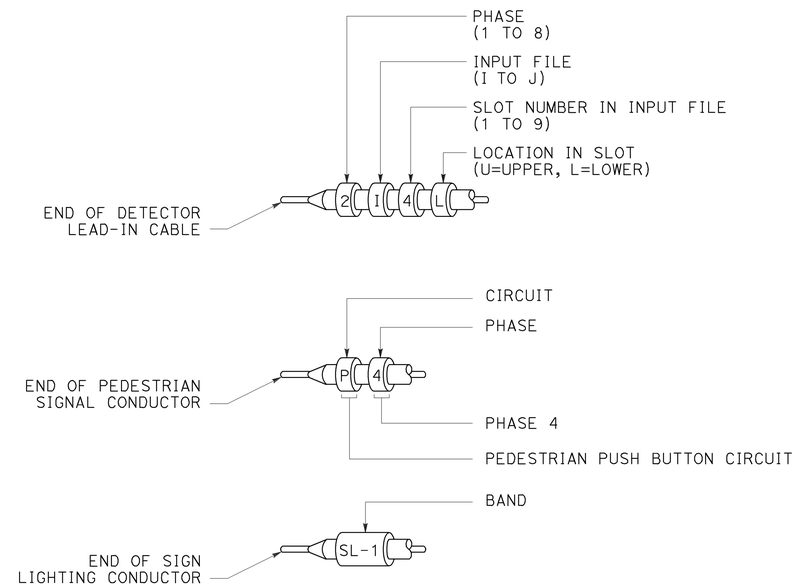

TYPICAL BANDING DETAILS

DETAIL B

STATE OF CALIFORNIA
DEPARTMENT OF TRANSPORTATION

ELECTRICAL SYSTEMS (FUSE RATING, KINKING AND BANDING DETAIL)

NO SCALE

RSP ES-13B DATED APRIL 15, 2016 SUPERSEDES STANDARD PLAN ES-13B DATED MAY 20, 2011 - PAGE 492 OF THE STANDARD PLANS BOOK DATED 2010.

REVISED STANDARD PLAN RSP ES-13B

2010 REVISED STANDARD PLAN RSP ES-13B

1-12-16

Dist	COUNTY	ROUTE	POST MILES TOTAL PROJECT	SHEET No.	TOTAL SHEETS
07	LA	405	0.0/29.2 39.0/48.6	320	323

REGISTERED CIVIL ENGINEER

July 19, 2013
PLANS APPROVAL DATE

REGISTERED PROFESSIONAL ENGINEER
Gurinderpal Bhullar
No. C48815
Exp. 9-30-14
CIVIL
STATE OF CALIFORNIA

THE STATE OF CALIFORNIA OR ITS OFFICERS OR AGENTS SHALL NOT BE RESPONSIBLE FOR THE ACCURACY OR COMPLETENESS OF SCANNED COPIES OF THIS PLAN SHEET.

TO ACCOMPANY PLANS DATED 6-27-16

TABLE 1

TAPER LENGTH CRITERIA AND CHANNELIZING DEVICE SPACING

SPEED (S)	MINIMUM TAPER LENGTH * FOR WIDTH OF OFFSET 12 FEET (W)				MAXIMUM CHANNELIZING DEVICE SPACING		
					X	Y	Z **
	TANGENT 2L	MERGING L	SHIFTING L/2	SHOULDER L/3	TAPER	TANGENT	CONFLICT
mph	ft	ft	ft	ft	ft	ft	ft
20	160	80	40	27	20	40	10
25	250	125	63	42	25	50	12
30	360	180	90	60	30	60	15
35	490	245	123	82	35	70	17
40	640	320	160	107	40	80	20
45	1080	540	270	180	45	90	22
50	1200	600	300	200	50	100	25
55	1320	660	330	220	55	110	27
60	1440	720	360	240	60	120	30
65	1560	780	390	260	65	130	32
70	1680	840	420	280	70	140	35

* - For other offsets, use the following merging taper length formula for L:
For speed of 40 mph or less, $L = WS^2/60$
For speed of 45 mph or more, $L = WS$

Where: L = Taper length in feet
W = Width of offset in feet
S = Posted speed limit, off-peak 85th-percentile speed prior to work starting, or the anticipated operating speed in mph

** - Use for taper and tangent sections where there are no pavement markings or where there is a conflict between existing pavement markings and channelizers (CA).

TABLE 2

LONGITUDINAL BUFFER SPACE AND FLAGGER STATION SPACING

SPEED *	Min D **	DOWNGRADE Min D ***		
		-3%	-6%	-9%
mph	ft	ft	ft	ft
20	115	116	120	126
25	155	158	165	173
30	200	205	215	227
35	250	257	271	287
40	305	315	333	354
45	360	378	400	427
50	425	446	474	507
55	495	520	553	593
60	570	598	638	686
65	645	682	728	785
70	730	771	825	891

* - Speed is posted speed limit, off-peak 85th-percentile speed prior to work starting, or the anticipated operating speed in mph

** - Longitudinal buffer space or flagger station spacing

*** - Use on sustained downgrade steeper than -3 percent and longer than 1 mile.

TABLE 3

ADVANCE WARNING SIGN SPACING

ROAD TYPE	DISTANCE BETWEEN SIGNS *		
	A	B	C
	ft	ft	ft
URBAN - 25 mph OR LESS	100	100	100
URBAN - MORE THAN 25 mph TO 40 mph	250	250	250
URBAN - MORE THAN 40 mph	350	350	350
RURAL	500	500	500
EXPRESSWAY / FREEWAY	1000	1500	2640

* - The distances are approximate, are intended for guidance purposes only, and should be applied with engineering judgment. These distances should be adjusted by the Engineer for field conditions, if necessary, by increasing or decreasing the recommmended distances.

STATE OF CALIFORNIA
DEPARTMENT OF TRANSPORTATION

TRAFFIC CONTROL SYSTEM TABLES FOR LANE AND RAMP CLOSURES

NO SCALE

RSP T9 DATED JULY 19, 2013 SUPERSEDES RSP T9 DATED APRIL 19, 2013 THAT SUPPLEMENTS THE STANDARD PLANS BOOK DATED 2010.

REVISED STANDARD PLAN RSP T9

2010 REVISED STANDARD PLAN RSP T9

4-30-13

TO ACCOMPANY PLANS DATED 6-27-16

Dist	COUNTY	ROUTE	POST MILES TOTAL PROJECT	SHEET No.	TOTAL SHEETS
07	LA	405	0.0/29.2 39.0/48.6	321	323

REGISTERED CIVIL ENGINEER

April 19, 2013
PLANS APPROVAL DATE

REGISTERED PROFESSIONAL ENGINEER Gurinderpal Bhullar No. C48815 Exp. 9-30-14 CIVIL STATE OF CALIFORNIA

THE STATE OF CALIFORNIA OR ITS OFFICERS OR AGENTS SHALL NOT BE RESPONSIBLE FOR THE ACCURACY OR COMPLETENESS OF SCANNED COPIES OF THIS PLAN SHEET.

NOTES:

See Revised Standard Plan RSP T9 for tables.

Use cone spacing X for taper segment, Y for tangent segment or Z for conflict situations, as approriate, per Table 1, unless X, Y, or Z cone spacing is shown on this sheet.

Unless otherwise specified in the special provisions, all temporary warning signs shall have black legend on fluorescent orange background.

California codes are designated by (CA). Otherwise, Federal (MUTCD) codes are shown.

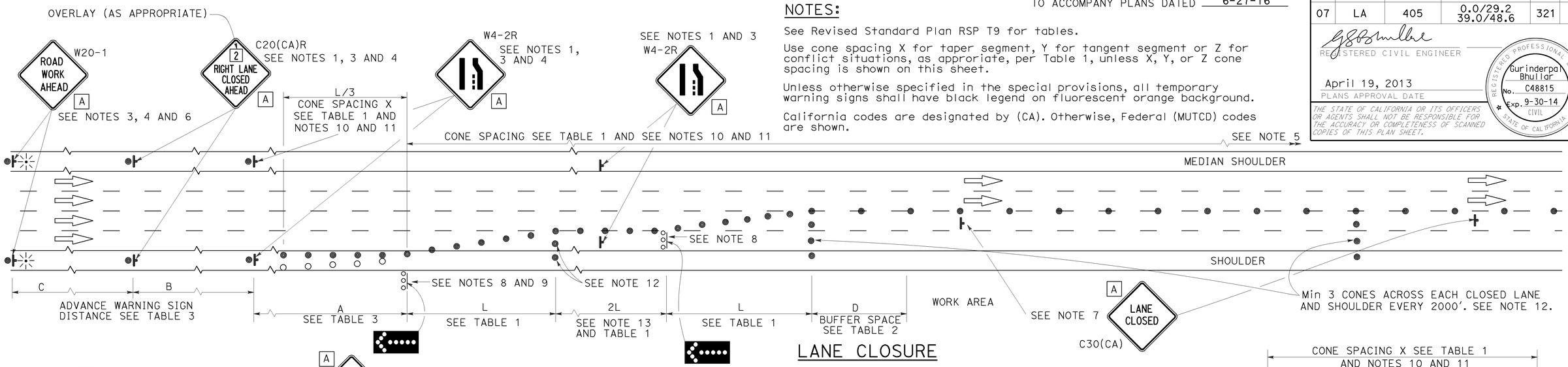

LANE CLOSURE

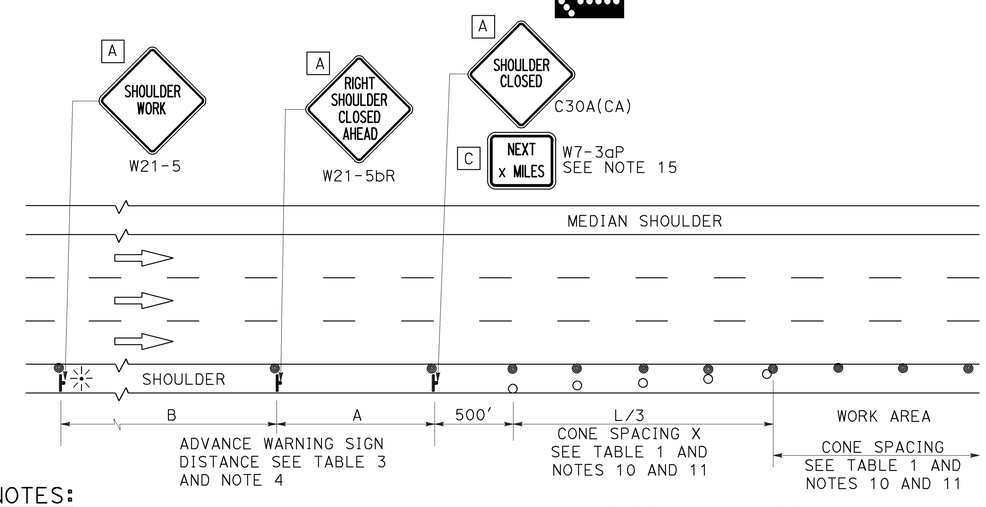

SHOULDER CLOSURE

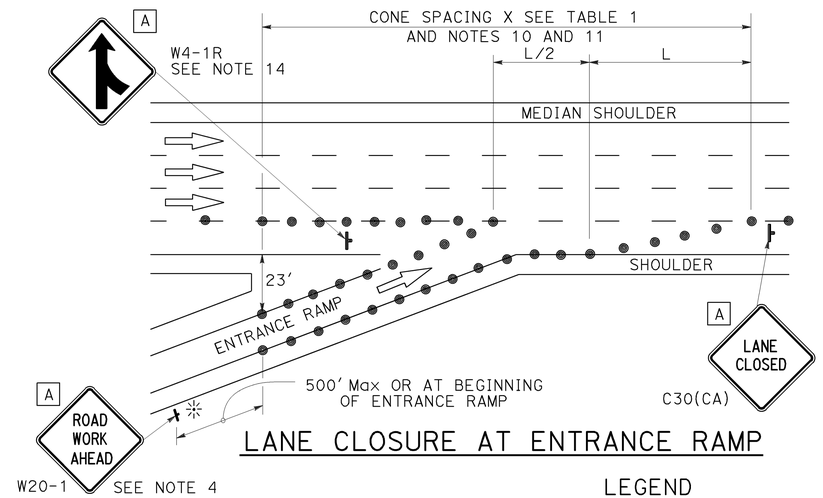

LANE CLOSURE AT ENTRANCE RAMP

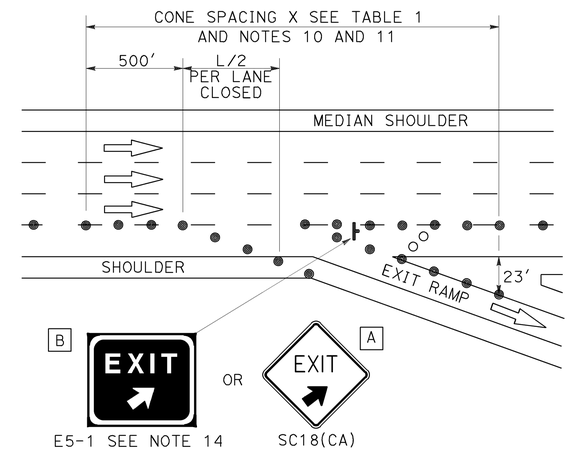

LANE CLOSURE AT EXIT RAMP

NOTES:

1. Median lane closures shall conform to the details as shown except that C20(CA)L and W4-2L signs shall be used.
2. At least one person shall be assigned to provide full time maintenance of traffic control devices for lane closures.
3. Duplicate sign installations are not required:
   a) On opposite shoulder if at least one-half of the available lanes remain open to traffic.
   b) In the median if the width of the median shoulder is less than 8' and the outside lanes are to be closed.
4. Each advance warning sign on each side of the roadway shall be equipped with at least two flags for daytime closure. Each flag shall be at least 16" x 16" in size and shall be orange or fluorescent red-orange in color. Flashing beacons shall be placed at the locations indicated for lane closure during hours of darkness.
5. A G20-2 "END ROAD WORK" sign, with minimum size of 48" x 24" as appropriate, shall be placed at the end of the lane closure unless the end of work area is obvious or ends within a larger project's limits.
6. If the W20-1 sign would follow within 2000' of a stationary W20-1 or G20-1 "ROAD WORK NEXT _____ MILES", use a C20(CA) sign for the first advance warning sign.
7. Place a C30(CA) sign every 2000' throughout length of lane closure.
8. One flashing arrow sign for each lane closed. The flashing arrow signs shall be Type I.
9. A minimum 1500' of sight distance shall be provided where possible for vehicles approaching the first flashing arrow sign. Lane closures shall not begin at top of crest vertical curve or on a horizontal curve.
10. All cones used for lane closures during the hours of darkness shall be fitted with retroreflective bands (or sleeves) as specified in the specifications.
11. Portable delineators, placed at one-half the spacing indicated for traffic cones may be used instead of cones for daytime closures only.
12. Unless otherwise specified in the special provisions, a minimum of 3 cones shall be placed transversely across each closed lane and shoulder at each location where a taper across a traffic lane ends and every 2000' as shown on the "Lane Closure" detail. Two Type II barricades may be used instead of the 3 cones. The transverse alignment of the cones or barricades on the closed shoulder may be shifted from the transverse alignment to provide access to the work.
13. Unless otherwise specified in the special provisions, the 2L tangent shown along lane lines shall be used between the L tapers required for each closed traffic lane.
14. Unless otherwise specified in the special provisions, the E5-1 or SC18(CA) and W4-1 signs shall be used as shown.
15. A W7-3aP "NEXT____ MILES" plaque must be used if theshoulder closure extends beyond the distance that can be perceived by road users.

LEGEND

- TRAFFIC CONE
- TRAFFIC CONE (OPTIONAL TAPER)
- TEMPORARY TRAFFIC CONTROL SIGN
- FLASHING ARROW SIGN (FAS)
- FAS SUPPORT OR TRAILER
- PORTABLE FLASHING BEACON

SIGN PANEL SIZE (Min)

A	48" x 48"
B	72" x 60"
C	36" x 30"

STATE OF CALIFORNIA
DEPARTMENT OF TRANSPORTATION

TRAFFIC CONTROL SYSTEM FOR LANE CLOSURE ON FREEWAYS AND EXPRESSWAYS

NO SCALE

RSP T10 DATED APRIL 19, 2013 SUPERSEDES STANDARD PLAN T10 DATED MAY 20, 2011 - PAGE 237 OF THE STANDARD PLANS BOOK DATED 2010.

REVISED STANDARD PLAN RSP T10

2010 REVISED STANDARD PLAN RSP T10

12-18-12

Dist	COUNTY	ROUTE	POST MILES TOTAL PROJECT	SHEET No.	TOTAL SHEETS
07	LA	405	0.0/29.2 39.0/48.6	322	323

REGISTERED CIVIL ENGINEER

April 19, 2013
PLANS APPROVAL DATE

REGISTERED PROFESSIONAL ENGINEER
Gurinderpal Bhullar
No. C48815
Exp. 9-30-14
CIVIL
STATE OF CALIFORNIA

THE STATE OF CALIFORNIA OR ITS OFFICERS OR AGENTS SHALL NOT BE RESPONSIBLE FOR THE ACCURACY OR COMPLETENESS OF SCANNED COPIES OF THIS PLAN SHEET.

TO ACCOMPANY PLANS DATED 6-27-16

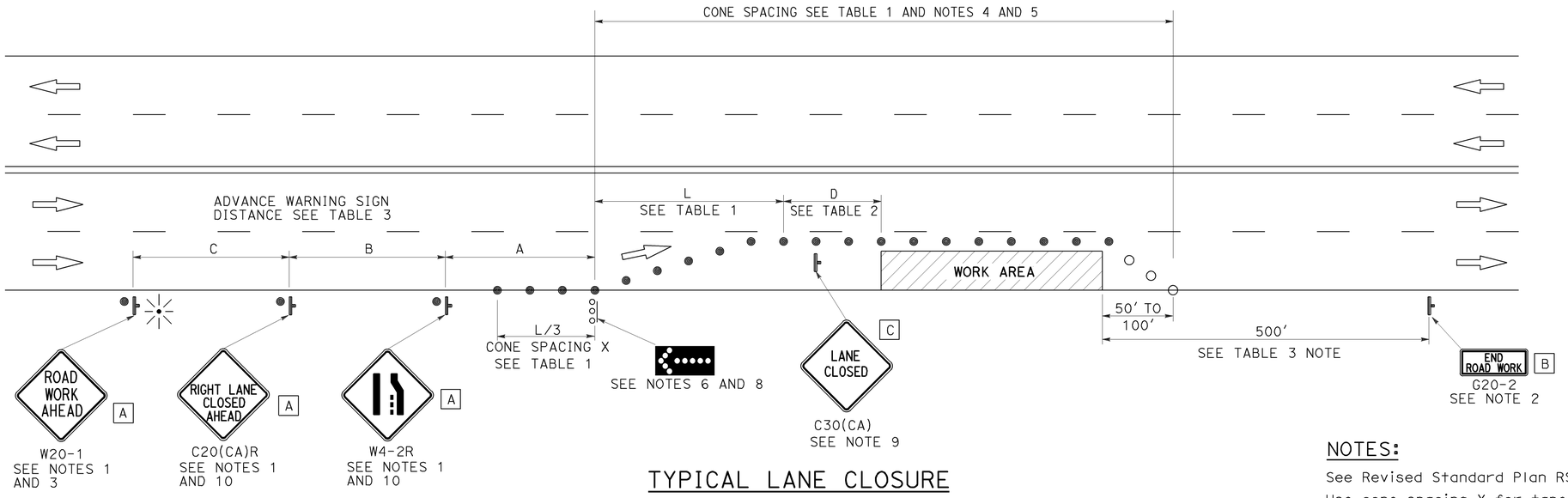

TYPICAL LANE CLOSURE

NOTES:

See Revised Standard Plan RSP T9 for tables.

Use cone spacing X for taper segment, Y for tangent segment or Z for conflict situations, as approriate, per Table 1, unless X, Y, or Z cone spacing is shown on this sheet.

Unless otherwise specified in the special provisions, all temporary warning signs shall have black legend on fluorescent orange background.

California codes are designated by (CA). Otherwise, Federal (MUTCD) codes are shown.

NOTES:

1. Each advance warning sign shall be equipped with at least two flags for daytime closure. Each flag shall be at least 16" x 16" in size and shall be orange or fluorescent red-orange in color. Flashing beacons shall be placed at the locations indicated for lane closure during hours of darkness.
2. A G20-2 "END ROAD WORK" sign, as appropriate, shall be placed at the end of the lane closure unless the end of work area is obvious, or ends within a larger project's limits.
3. If the W20-1 sign would follow within 2000' of a stationary W20-1 or G20-1 "ROAD WORK NEXT _____ MILES", use a C20(CA) sign for the first advance warning sign.
4. All cones used for lane closures during the hours of darkness shall be fitted with retroreflective bands (or sleeves) as specified in the specifications.
5. Portable delineators, placed at one-half the spacing indicated for traffic cones, may be used instead of cones for daytime closures only.
6. Flashing arrow sign shall be either Type I or Type II.
7. For approach speeds over 50 mph, use the "Traffic Control System for Lane Closure On Freeways And Expressways" plan for lane closure details and requirements.
8. A minimum 1500' of sight distance shall be provided where possible for vehicles approaching the first flashing arrow sign. Lane closures shall not begin at the top of crest vertical curve or on a horizontal curve.
9. Place a C30(CA) sign every 2000' throughout length of lane closure.
10. Median lane closures shall conform to the details as shown except that C20(CA)L and W4-2L signs shall be used.
11. At least one person shall be assigned to provide full time maintenance of traffic control devices for lane closure unless, otherwise directed by the Engineer.

LEGEND

- TRAFFIC CONE
- TRAFFIC CONE (OPTIONAL TAPER)
- TEMPORARY TRAFFIC CONTROL SIGN
- FLASHING ARROW SIGN (FAS)
- FAS SUPPORT OR TRAILER
- PORTABLE FLASHING BEACON

SIGN PANEL SIZE (Min)

A	48" x 48"
B	36" x 18"
C	30" x 30"

STATE OF CALIFORNIA
DEPARTMENT OF TRANSPORTATION

TRAFFIC CONTROL SYSTEM FOR LANE CLOSURE ON MULTILANE CONVENTIONAL HIGHWAYS

NO SCALE

RSP T11 DATED APRIL 19, 2013 SUPERSEDES STANDARD PLAN T11
DATED MAY 20, 2011 - PAGE 239 OF THE STANDARD PLANS BOOK DATED 2010.

REVISED STANDARD PLAN RSP T11

2010 REVISED STANDARD PLAN RSP T11

4-2-13

Dist	COUNTY	ROUTE	POST MILES TOTAL PROJECT	SHEET No.	TOTAL SHEETS
07	LA	405	0.0/29.2 39.0/48.6	323	323

REGISTERED CIVIL ENGINEER

April 19, 2013
PLANS APPROVAL DATE

REGISTERED PROFESSIONAL ENGINEER Gurinderpal Bhullar No. C48815 Exp. 9-30-14 CIVIL STATE OF CALIFORNIA

THE STATE OF CALIFORNIA OR ITS OFFICERS OR AGENTS SHALL NOT BE RESPONSIBLE FOR THE ACCURACY OR COMPLETENESS OF SCANNED COPIES OF THIS PLAN SHEET.

TO ACCOMPANY PLANS DATED 6-27-16

TYPICAL RAMP CLOSURES

SIGN PANEL SIZE (Min)

- A 48" × 48"
- B 48" × 30"
- C 36" × 36"
- D 48" × 36"

LEGEND

- TRAFFIC CONE
- TEMPORARY TRAFFIC CONTROL SIGN
- BARRICADES
- PORTABLE FLASHING BEACON

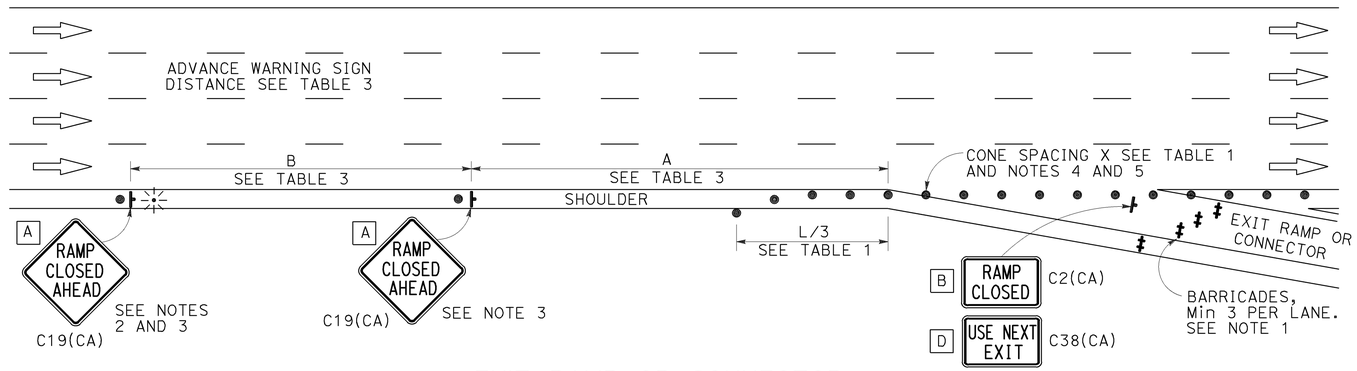

EXIT RAMP OR CONNECTOR

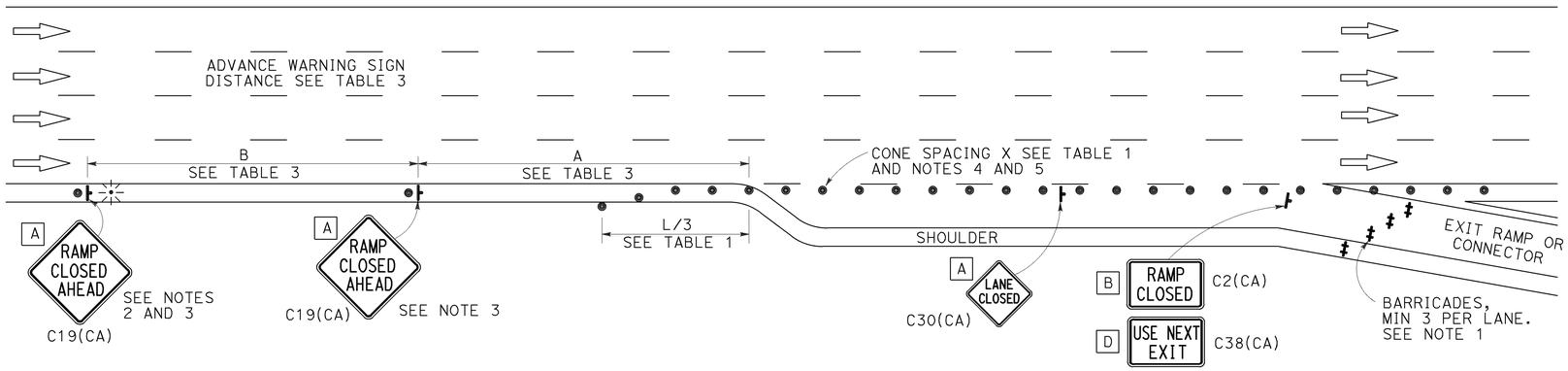

EXIT RAMP OR CONNECTOR WITH ADDITIONAL LANE

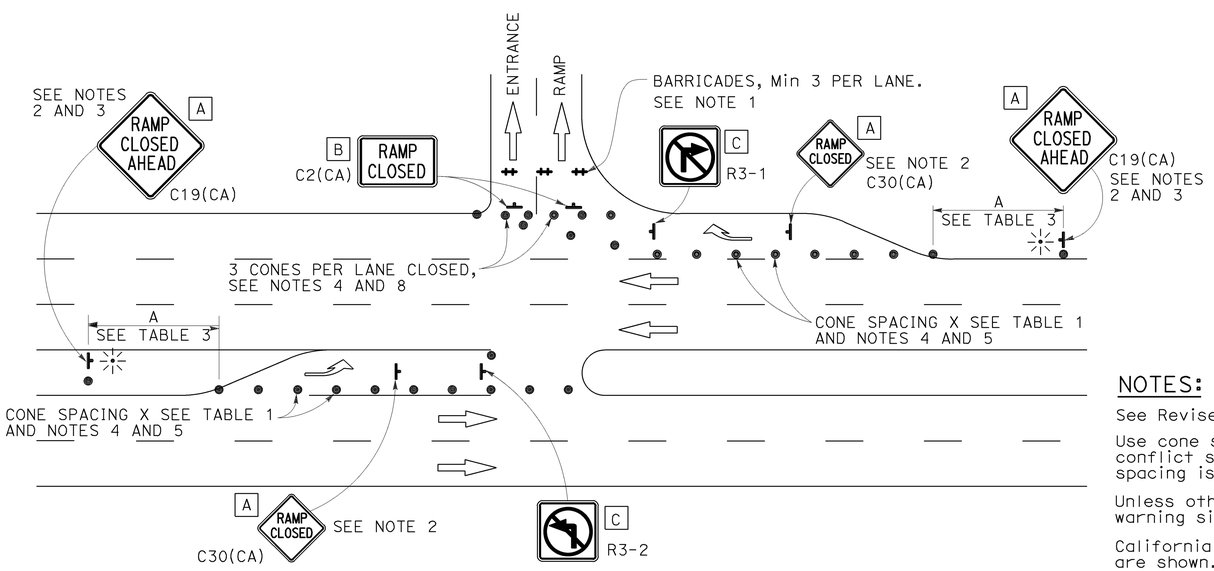

ENTRANCE RAMP WITH TURNING POCKETS

NOTES:

See Revised Standard Plan RSP T9 for tables.

Use cone spacing X for taper segment, Y for tangent segment or Z for conflict situations, as approriate, per Table 1, unless X, Y, or Z cone spacing is shown on this sheet.

Unless otherwise specified in the special provisions, all temporary warning signs shall have black legend on fluorescent orange background.

California codes are designated by (CA). Otherwise, Federal (MUTCD) codes are shown.

NOTES:

1. Barricades shall be Type I, II, or III for closures lasting one week or less and Type III for closures lasting longer than one week.
2. In addition to placing the C19(CA) "RAMP CLOSED AHEAD" and C30(CA) "RAMP CLOSED" signs, black on orange overlay plates with the word "CLOSED" may be mounted, as directed by the Engineer, on all guide signs that refer to the closed ramp. The letter size on the overlay shall be the same as the guide sign.
3. Each advance C19(CA) "RAMP CLOSED AHEAD" sign shall be equipped with at least two flags for daytime closure. Each flag shall be at least 16" × 16" in size and shall be orange or fluorescent red-orange in color. A flashing beacon shall be placed on top of the first C19(CA) sign during hours of darkness.
4. All cones used for ramp closures during the hours of darkness shall be fitted with retroreflective bands (or sleeves) as specified in the specifications.
5. Portable delineators, placed at one-half the spacing indicated for traffic cones, may be used instead of cones for daytime ramp closures only.
6. At least one person shall be assigned to provide full time maintenance of traffic control devices, unless otherwise directed by the Engineer.
7. The existing "EXIT" signs shall be covered during ramp closures.
8. A minimum of 3 cones shall be placed transversely across each closed lane and shoulder.

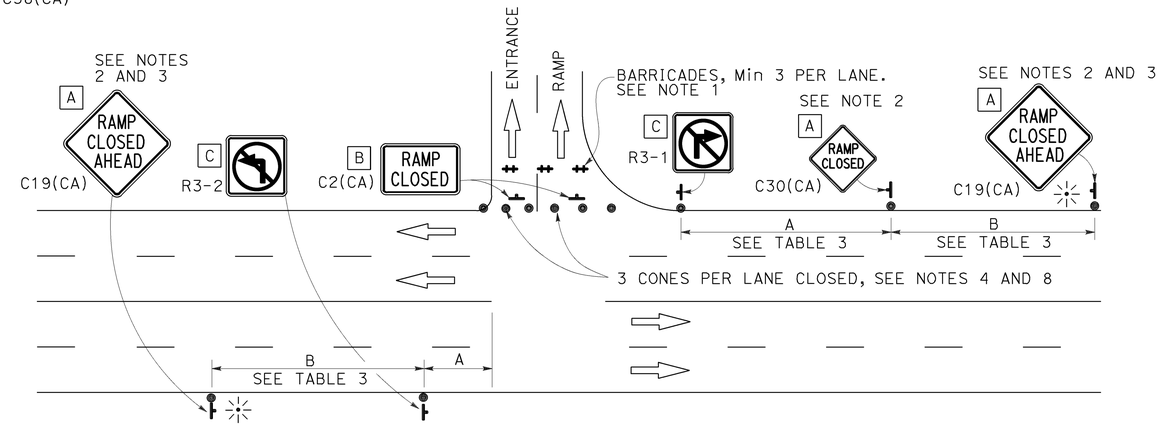

ENTRANCE RAMP WITHOUT TURNING POCKETS

STATE OF CALIFORNIA
DEPARTMENT OF TRANSPORTATION

TRAFFIC CONTROL SYSTEM FOR RAMP CLOSURE

NO SCALE

RSP T14 DATED APRIL 19, 2013 SUPERSEDES STANDARD PLAN T14
DATED MAY 20, 2011 - PAGE 242 OF THE STANDARD PLANS BOOK DATED 2010.

REVISED STANDARD PLAN RSP T14

2010 REVISED STANDARD PLAN RSP T14

12-18-12