Dist	COUNTY	ROUTE	POST MILES TOTAL PROJECT	SHEET No.	TOTAL SHEETS
07	LA	110	R1.3/21.3	1	111

STATE OF CALIFORNIA

HSIMG-110-1(799)E

DEPARTMENT OF TRANSPORTATION

PROJECT PLANS FOR CONSTRUCTION ON

STATE HIGHWAY

IN LOS ANGELES COUNTY AT VARIOUS LOCATIONS

FROM 0.1 MILE NORTH OF CHANNEL STREET OVERHEAD TO 0.1 MILE SOUTH OF ROUTE 110/10 SEPARATION

TO BE SUPPLEMENTED BY STANDARD PLANS DATED MAY 2006

INDEX OF PLANS

SHEET No.	DESCRIPTION
1	TITLE SHEET
2	LOCATION OF CONSTRUCTION
3-40	CONSTRUCTION DETAILS
41-42	CONSTRUCTION AREA SIGNS
43	TRAFFIC HANDLING PLANS
44-66	TRAFFIC HANDLING DETAILS
67-71	SUMMARY OF QUANTITIES
72-74	IRRIGATION PLANS AND IRRIGATION SCHEDULE
75-88	COMMUNICATION AND LIGHTING PLANS
89-111	REVISED AND NEW STANDARD PLANS

THE STANDARD PLANS LIST APPLICABLE TO THIS CONTRACT IS INCLUDED IN THE NOTICE TO BIDDERS AND SPECIAL PROVISIONS BOOK.

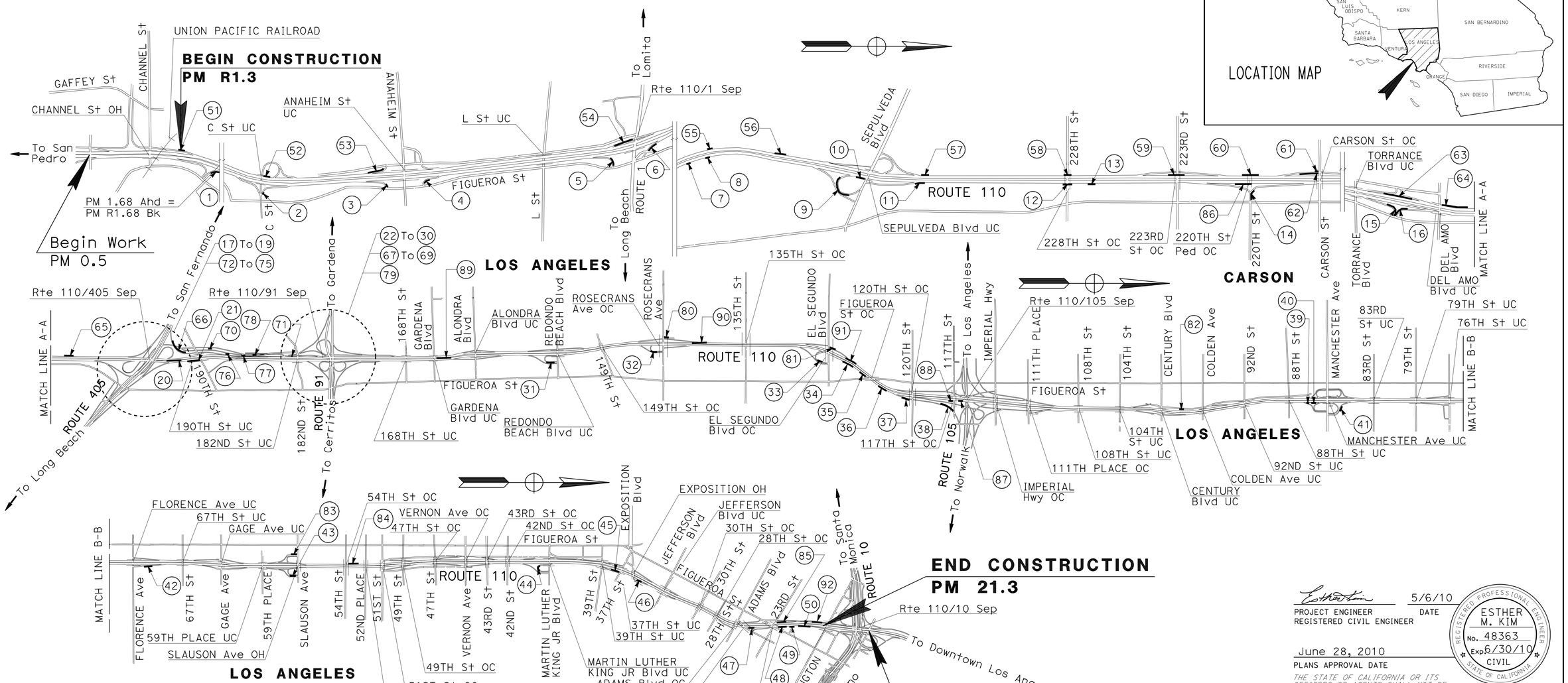

THE BIDDER SHALL POSSESS THE CLASS (OR CLASSES) OF LICENSE AS SPECIFIED IN THE "NOTICE TO BIDDERS."

NO SCALE

PROJECT MANAGER: JOHN VASSILIADES

DESIGN ENGINEER: ESTHER M. KIM

PROJECT ENGINEER REGISTERED CIVIL ENGINEER — DATE 5/6/10

June 28, 2010
PLANS APPROVAL DATE

REGISTERED PROFESSIONAL ENGINEER — ESTHER M. KIM — No. 48363 — Exp. 6/30/10 — CIVIL — STATE OF CALIFORNIA

THE STATE OF CALIFORNIA OR ITS OFFICERS OR AGENTS SHALL NOT BE RESPONSIBLE FOR THE ACCURACY OR COMPLETENESS OF SCANNED COPIES OF THIS PLAN SHEET.

CONTRACT No.	07-256104
PROJECT ID	0700000468

LAST REVISION 00-00-00 — DATE PLOTTED => 21-JUL-2010 — TIME PLOTTED => 14:43

Dist	COUNTY	ROUTE	POST MILES TOTAL PROJECT	SHEET No.	TOTAL SHEETS
07	LA	110	R1.3/21.3	2	111

REGISTERED CIVIL ENGINEER 5/6/10 DATE

6/28/10
PLANS APPROVAL DATE

REGISTERED PROFESSIONAL ENGINEER ESTHER M. KIM No. 48363 Exp. 6/30/10 CIVIL STATE OF CALIFORNIA

THE STATE OF CALIFORNIA OR ITS OFFICERS OR AGENTS SHALL NOT BE RESPONSIBLE FOR THE ACCURACY OR COMPLETENESS OF SCANNED COPIES OF THIS PLAN SHEET.

No.	PM	DIRECTION	DESCRIPTION
1	R1.61	NORTHBOUND	JOHN S GIBSON Blvd ON-RAMP
2	2.87	NORTHBOUND	C St ON-RAMP
3	3.11	NORTHBOUND	ANAHEIM St OFF-RAMP
4	3.44	NORTHBOUND	ANAHEIM St ON-RAMP
5	3.93	NORTHBOUND	NB OFF-RAMP TO Rte 1
6	4.20	NORTHBOUND	NB ON-RAMP FROM Rte 1
7	4.88	NORTHBOUND	OIL WELL UC (Br No. 53-1527)
8	4.96	NORTHBOUND	WEST WATSON OH (Br No. 53-967)
9	5.28	NORTHBOUND	EB SEPULVEDA Blvd ON-RAMP
10	5.38	NORTHBOUND	SEPULVEDA Blvd UC (Br No. 53-966)
11	5.60	NORTHBOUND	WB SEPULVEDA Blvd ON-RAMP
12	6.10	NORTHBOUND	228TH St OC (Br No. 53-965)
13	6.29	NORTHBOUND	NEXT TO CMS
14	6.87	NORTHBOUND	220th St ON-RAMP
15	7.79	NORTHBOUND	TORRANCE Blvd OFF-RAMP
16	8.01	NORTHBOUND	TORRANCE Blvd ON-RAMP
17	8.37	NORTHBOUND	TO SB 405 NEXT TO G24 SIGN
18	8.75	NORTHBOUND	FIGUEROA St UC @ Lt Shld (Br No. 53-1139G)
19	8.75	NORTHBOUND	FIGUEROA St UC @ Rt Shld (Br No. 53-1139G)
20	8.84	NORTHBOUND	NEXT TO COLUMN FROM NB 405 TO NB 110 Conn
21	9.00	NORTHBOUND	190TH St UC (Br No. 53-960)
22	9.68	NORTHBOUND	ACCESS ROAD UC (N-E Conn) @ Lt Shld (Br No. 53-2668G)
23	9.92	NORTHBOUND	Rte 110/91 Sep NEXT TO Abut (TO WB 91) (Br No. 53-958)
24	9.92	NORTHBOUND	WB 91 Conn LOOP @ Lt Shld
25	9.92	NORTHBOUND	ACCESS ROAD UC (N-W Conn) @ Lt Shld (Br No. 53-2669G)
26	9.92	NORTHBOUND	ACCESS ROAD UC (N-W Conn) @ Rt Shld (Br No. 53-2669G)
27	10.15	NORTHBOUND	Rte 110/91 Sep Abut TO EB 91 (Br No. 53-958)
28	10.15	NORTHBOUND	EB 91 ON-RAMP TO NB 110
29	10.15	NORTHBOUND	EAST Conn OC @ Lt Shld (Br No. 53-2665G)
30	10.15	NORTHBOUND	EAST Conn OC @ Rt Shld (Br No. 53-2665G)
31	11.27	NORTHBOUND	REDONDO BEACH Blvd ON-RAMP
32	11.70	NORTHBOUND	ROSECRANS Ave OFF-RAMP
33	12.85	NORTHBOUND	EL SEGUNDO Blvd ON-RAMP
34	12.97	NORTHBOUND	NEXT TO 110/105 G24 SIGN

No.	PM	DIRECTION	DESCRIPTION
35	13.09	NORTHBOUND	NEXT TO CMS
36	13.29	NORTHBOUND	WB / EB 105 G24 SIGN
37	13.38	NORTHBOUND	NEXT TO 120TH St OC (Br No. 53-944)
38	13.43	NORTHBOUND	N&S110-E105 Conn @ Lt Shld (Br No. 53-2408H)
39	15.81	NORTHBOUND	MANCHESTER Ave OFF-RAMP
40	15.87	NORTHBOUND	NEXT TO FLORENCE/GAGE/SLAUSON Ave G23 SIGN
41	16.14	NORTHBOUND	MANCHESTER Ave ON-RAMP
42	17.15	NORTHBOUND	FLORENCE Ave ON-RAMP
43	17.85	NORTHBOUND	SLAUSON Ave OFF-RAMP
44	19.44	NORTHBOUND	MARTIN L KING Blvd ON-RAMP
45	19.90	NORTHBOUND	37TH St UC (Br No. 53-899)
46	20.14	NORTHBOUND	37TH St ON-RAMP
47	20.80	NORTHBOUND	CLOSE TO FLOWER St UC (Br No. 53-1010)
48	20.96	NORTHBOUND	NEXT TO CMS
49	21.01	NORTHBOUND	21ST St Ped OC (Br No. 53-856)
50	21.12	NORTHBOUND	NEXT TO G24 SIGN
51	R1.39	SOUTHBOUND	CHANNEL St OFF-RAMP
52	2.70	SOUTHBOUND	C St UC (Br No. 53-976)
53	3.13	SOUTHBOUND	ANAHEIM St ON-RAMP
54	3.92	SOUTHBOUND	SB ON-RAMP FROM Rte 1
55	5.06	SOUTHBOUND	WEST WATSON OH (Br No. 53-967)
56	5.18	SOUTHBOUND	NEXT TO SB ON-RAMP FROM Rte 1
57	5.64	SOUTHBOUND	SEPULVEDA Blvd G85 SIGN
58	6.07	SOUTHBOUND	228TH St OC (Br No. 53-965)
59	6.44	SOUTHBOUND	223RD St OC (Br No. 53-964)
60	6.68	SOUTHBOUND	220TH St Ped OC (Br No. 53-1525)
61	6.88	SOUTHBOUND	CARSON St ON-RAMP @ Rt Shld
62	6.88	SOUTHBOUND	CARSON St ON-RAMP @ Lt Shld
63	7.90	SOUTHBOUND	NEXT TO HAMILTON Ave OFF-RAMP
64	8.03	SOUTHBOUND	DEL AMO Blvd UC (Br No. 53-961)
65	8.20	SOUTHBOUND	CHP PULLOUT (NEXT TO CABINET)
66	9.06	SOUTHBOUND	BETWEEN 190TH St UC Conn (Br No. 53-960H) & S110-N405 Conn Sep (Br No. 53-2671H)
67	9.39	SOUTHBOUND	FROM EB 91 TO SB 110 NEXT TO G24 SIGN
68	9.39	SOUTHBOUND	NEXT TO HOV VIADUCT Br COLUMN (Br No. 53-2733)

No.	PM	DIRECTION	DESCRIPTION
69	9.39	SOUTHBOUND	SOUTH EAST Conn OC (Br No. 53-2549H)
70	9.43	SOUTHBOUND	190TH St OFF-RAMP @ Lt Shld
71	9.47	SOUTHBOUND	NEXT TO Br Abut (Br No. 53-2549H)
72	9.65	SOUTHBOUND	SB 110-SB 405/Rte 110 Conn Sep @ Rt Shld (Br No. 53-1137F)
73	9.65	SOUTHBOUND	SB 110-SB 405/Rte 110 Conn Sep @ Lt Shld (Br No. 53-1137F)
74	9.65	SOUTHBOUND	WEST Conn UC Br Abut @ Lt Shld (Br No. 53-1142)
75	9.65	SOUTHBOUND	WEST Conn UC Br Abut @ Rt Shld (Br No. 53-1142)
76	9.65	SOUTHBOUND	190TH St OFF-RAMP @ Rt Shld (NEXT TO CONTROLLER)
77	9.65	SOUTHBOUND	190TH St OFF-RAMP G85 SIGN POST @ Rt Shld
78	9.65	SOUTHBOUND	190TH St OFF-RAMP G85 SIGN POST Lt Shld
79	10.18	SOUTHBOUND	TO WB 91 Conn @ Lt Shld
80	12.09	SOUTHBOUND	ROSECRANS Ave OFF-RAMP
81	13.00	SOUTHBOUND	EL SEGUNDO Blvd OFF-RAMP
82	15.01	SOUTHBOUND	NEXT TO CENTURY Blvd OFF-RAMP
83	17.87	SOUTHBOUND	SLAUSON Ave ON-RAMP
84	18.28	SOUTHBOUND	CONNECT TO Conc BARRIER NEAR 54TH St OC (Br No. 53-910)
85	20.94	SOUTHBOUND	FIGUEROA St OC (Br No. 53-891)
86	6.75	NORTHBOUND	GORE AREA BETWEEN BUS Ln & 220TH St OFF-RAMP
87	13.72	NORTHBOUND	GORE AREA BETWEEN MAINLINE & IMPERIAL Hwy OFF-RAMP
88	13.75	NORTHBOUND	GORE AREA BETWEEN E Rte 105 Conn & IMPERIAL Hwy OFF-RAMP
89	10.50	SOUTHBOUND	GORE AREA BETWEEN MAINLINE & ARTESIA Blvd TRANSIT STATION
90	12.03	SOUTHBOUND	OFF-RAMP TO ROSECRANS Ave
91	12.93	SOUTHBOUND	OFF-RAMP TO EL SEGUNDO Blvd
92	21.35	SOUTHBOUND	ISLAND BETWEEN MAINLINE & ADAMS Blvd OFF-RAMP

CMS = CHANGEABLE MESSAGE SIGN

LOCATIONS OF CONSTRUCTION

LC-1

REVISED BY | DATE REVISED
RICHARD KHAW | ESTHER M. KIM
CALCULATED-DESIGNED BY | CHECKED BY
FUNCTIONAL SUPERVISOR: MOHAMMED CHOWDHURY

STATE OF CALIFORNIA - DEPARTMENT OF TRANSPORTATION
Caltrans® TRAFFIC DESIGN

LAST REVISION 00-00-00 | DATE PLOTTED => 21-JUL-2010 | TIME PLOTTED => 14:44

Dist	COUNTY	ROUTE	POST MILES TOTAL PROJECT	SHEET No.	TOTAL SHEETS
07	LA	110	R1.3/21.3	3	111

REGISTERED CIVIL ENGINEER 5/6/10 DATE

6/28/10
PLANS APPROVAL DATE

REGISTERED PROFESSIONAL ENGINEER ESTHER M. KIM No. 48363 Exp. 6/30/10 CIVIL STATE OF CALIFORNIA

THE STATE OF CALIFORNIA OR ITS OFFICERS OR AGENTS SHALL NOT BE RESPONSIBLE FOR THE ACCURACY OR COMPLETENESS OF SCANNED COPIES OF THIS PLAN SHEET.

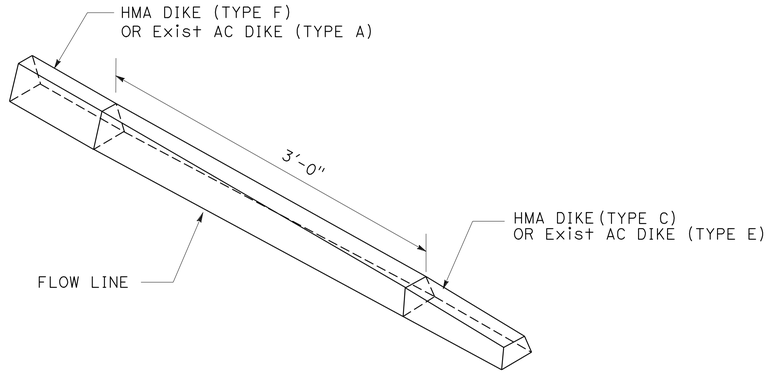

DETAIL D - HMA DIKE TRANSITION

Exist TYPE A TO TYPE F OR C
TYPE C TO TYPE F
Exist TYPE E TO TYPE F OR C

LEGEND:

SHEET NO. OR Std PLAN No.

DETAIL No.

DIRECTION OF TRAVEL

BPA	BEGIN PARABOLA
BRTR	TRANSITION RAILING (TYPE BR)
CAB	Conc ANCHOR BLOCK
EAA	END ANCHOR ASSEMBLY
EPA	END PARABOLA
MTR	MBGR TRANSITION RAILING (TYPE WB)
RRSCP	REINFORCED RAPID STRENGTH Conc PAD
SR	STRENGTHENED RAILING
SPTR	TRANSITION RAILING (TYPE SP)
STBB	SINGLE THRIE BEAM BARRIER
STR	STBB TRANSITION RAILING (TYPE STB)
TS	TERMINAL SYSTEM
WCM (FIBER)	WEED CONTROL MAT (FIBER)

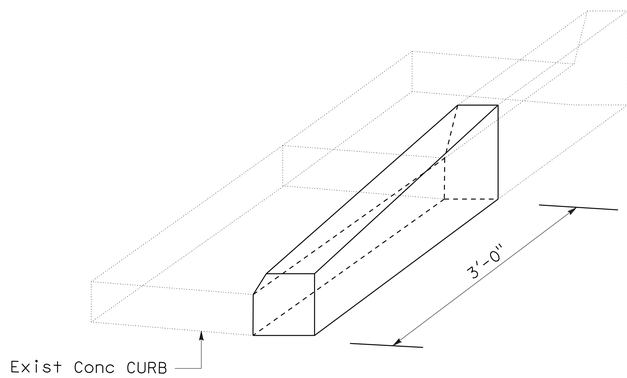

DETAIL E

CONCRETE CURB TRANSITION

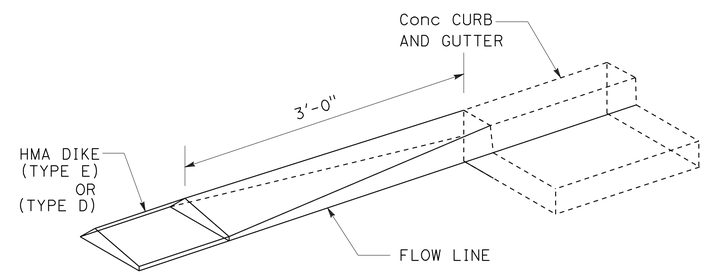

DETAIL C - HMA DIKE TRANSITION

TYPE E OR D TO Conc CURB AND GUTTER

NOTES:

1. SLOTTED HOLE FOR BOLTED CONNECTION OF RAIL ELEMENT TO BLOCK AND POST, SEE "SECTION THRU RAIL ELEMENT".
2. SLOTTED HOLES FOR SPLICE BOLTS TO OVERLAP ENDS OF RAIL ELEMENT, SEE "SECTION THRU RAIL ELEMENT".

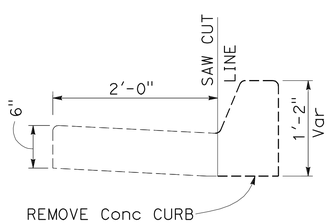

Exist Conc CURB (TYPE A2)

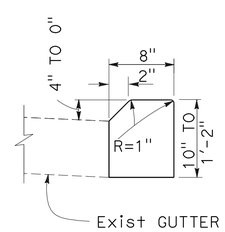

MINOR Conc (CURB)

CONSTRUCTION DETAILS

NO SCALE

C-1

STATE OF CALIFORNIA - DEPARTMENT OF TRANSPORTATION
Caltrans® TRAFFIC DESIGN

FUNCTIONAL SUPERVISOR: MOHAMMED CHOWDHURY
CALCULATED-DESIGNED BY: FRANCISCO MARTINEZ
CHECKED BY: ESTHER M. KIM
REVISED BY
DATE REVISED

LAST REVISION 00-00-00
DATE PLOTTED => 21-JUL-2010
TIME PLOTTED => 14:45

Dist	COUNTY	ROUTE	POST MILES TOTAL PROJECT	SHEET No.	TOTAL SHEETS
07	LA	110	R1.3/21.3	4	111

REGISTERED CIVIL ENGINEER 5/6/10 DATE

6/28/10
PLANS APPROVAL DATE

REGISTERED PROFESSIONAL ENGINEER ESTHER M. KIM No. 48363 Exp 6/30/10 CIVIL STATE OF CALIFORNIA

THE STATE OF CALIFORNIA OR ITS OFFICERS OR AGENTS SHALL NOT BE RESPONSIBLE FOR THE ACCURACY OR COMPLETENESS OF SCANNED COPIES OF THIS PLAN SHEET.

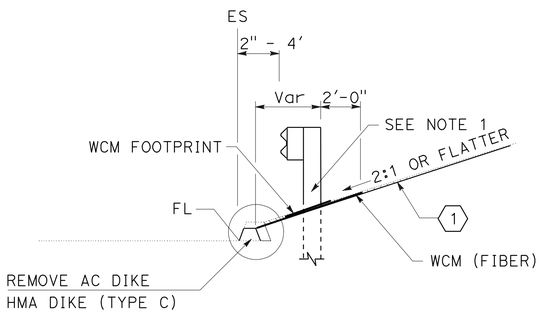

SECTION H-H

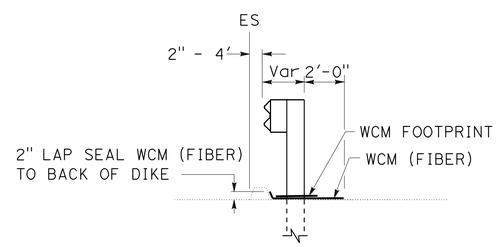

SECTION L-L

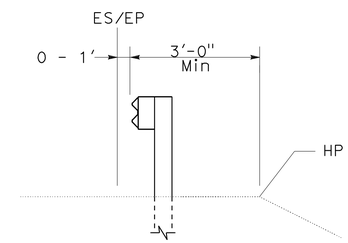

SECTION Q-Q

LEGEND

1 ROADWAY EXCAVATION

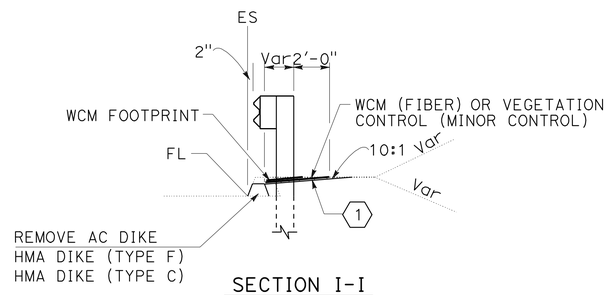

SECTION I-I

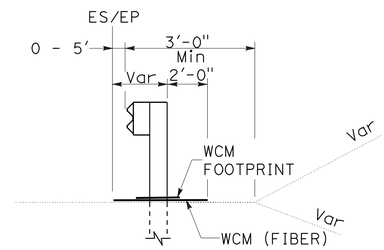

SECTION M-M

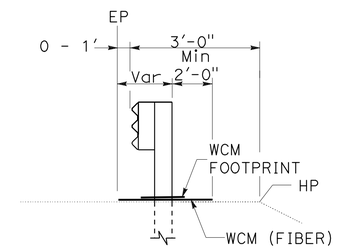

SECTION R-R

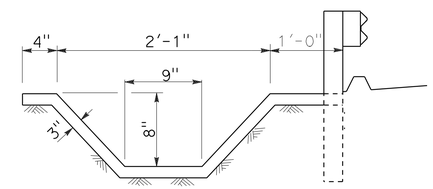

SECTION U-U

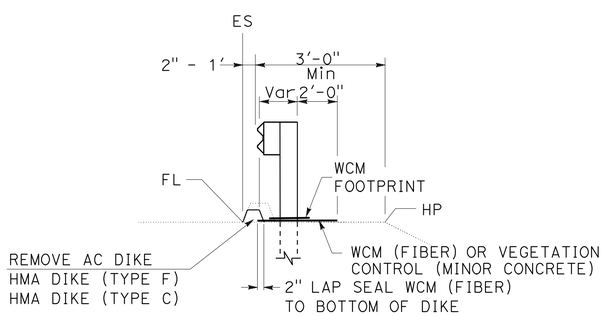

SECTION J-J

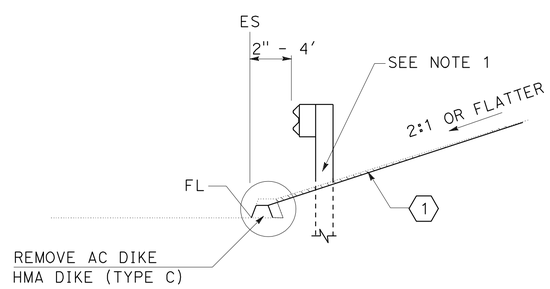

SECTION N-N

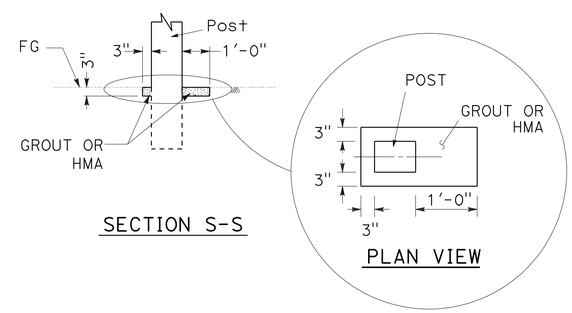

SECTION S-S

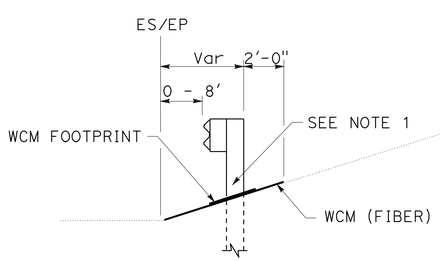

SECTION K-K

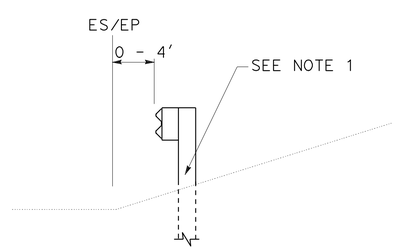

SECTION P-P

NOTES:

1. HOLES IN WEAK POSTS OF TERMINAL SYSTEM (PER MANUFACTURER'S SPECIFICATIONS) SHALL BE CONSTRUCTED ABOVE FINISHED GRADE.
2. FOR SECTION LOCATIONS, SEE SHEETS C-14 THRU C-27.

CONSTRUCTION DETAILS

NO SCALE

C-2

STATE OF CALIFORNIA - DEPARTMENT OF TRANSPORTATION
Caltrans TRAFFIC DESIGN

FUNCTIONAL SUPERVISOR: MOHAMMED CHOWDHURY
CALCULATED-DESIGNED BY: FRANCISCO MARTINEZ
CHECKED BY: ESTHER M. KIM
REVISED BY
DATE REVISED

LAST REVISION 00-00-00
DATE PLOTTED => 21-JUL-2010
TIME PLOTTED => 14:45

Dist	COUNTY	ROUTE	POST MILES TOTAL PROJECT	SHEET No.	TOTAL SHEETS
07	LA	110	R1.3/21.3	5	111

REGISTERED CIVIL ENGINEER 5/6/10 DATE

6/28/10
PLANS APPROVAL DATE

REGISTERED PROFESSIONAL ENGINEER ESTHER M.KIM No. 48363 EXP. 6/30/10 CIVIL STATE OF CALIFORNIA

THE STATE OF CALIFORNIA OR ITS OFFICERS OR AGENTS SHALL NOT BE RESPONSIBLE FOR THE ACCURACY OR COMPLETENESS OF ELECTRONIC COPIES OF THIS PLAN SHEET.

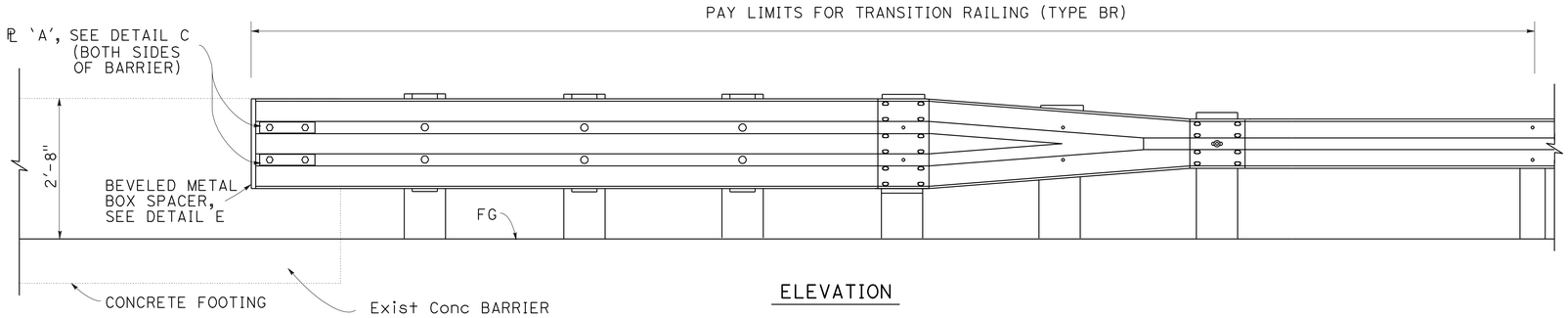

ELEVATION

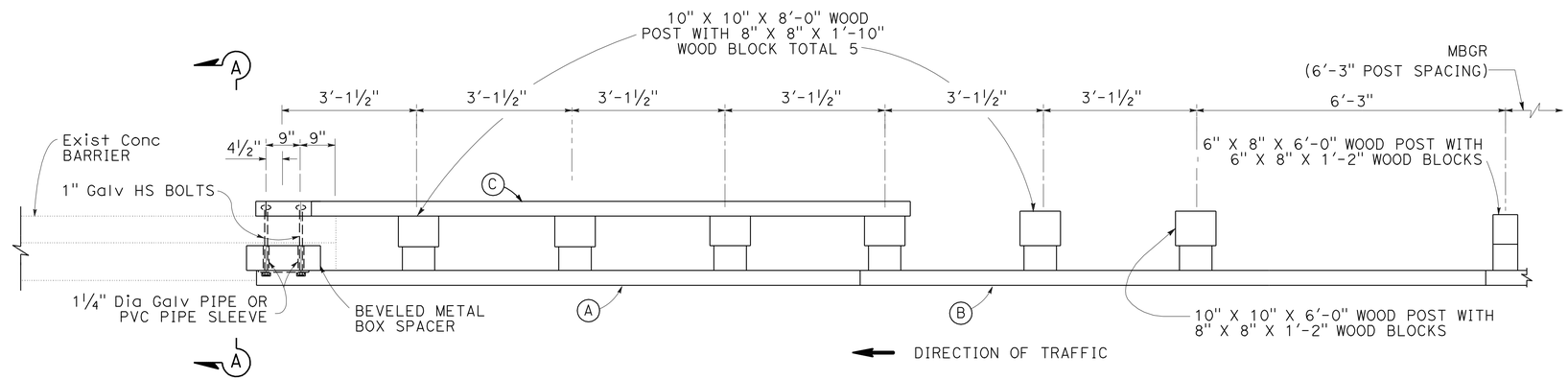

PLAN

LOCATION 22 25 26

LEGEND

(A) NESTED THRIE BEAM ELEMENTS (ONE 12 GAGE ELEMENT NESTED OVER ONE 10 GAGE ELEMENT).

(B) ONE 10 GAGE THRIE BEAM ELEMENT.

(C) ONE 12 GAGE THRIE BEAM ELEMENT.

10 GAGE = 0.135" THICK

12 GAGE = 0.108" THICK

NOTES:

1. FOR DETAILS NOT SHOWN, SEE STANDARD PLANS.
2. FOR ADDITIONAL DETAILS OF TRANSITION RAILING CONNECTION, SEE REVISED STANDARD PLAN A77J4 AND A78J.
3. PLATES AND BOLTS ARE GALVANIZED.
4. DIMENSIONS SHALL BE VERIFIED IN THE FIELD BEFORE FABRICATING END CONNECTIONS TO CONFORM WITH EXISTING PAVED CONDITIONS.
5. R/W NOT SHOWN ON THESE PLANS.
6. EXISTING UTILITY FACILITIES ARE NOT SHOWN ON THESE PLANS.
7. EXISTING DRAINAGE INLETS ARE NOT SHOWN ON THESE PLANS.

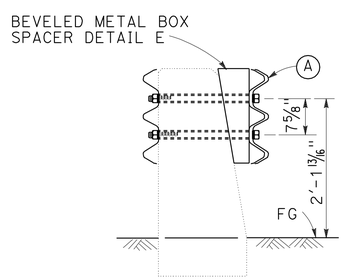

SINGLE SLOPE SHAPE

SECTION A-A

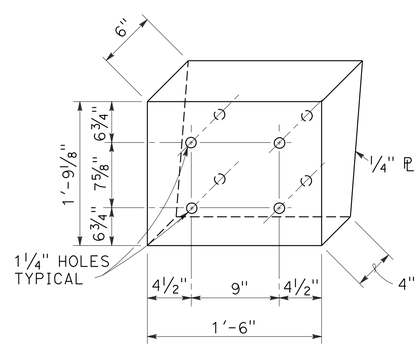

DETAIL E

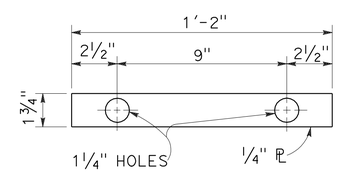

DETAIL C

PLATE 'A'

CONSTRUCTION DETAILS

TRANSITION RAILING (TYPE BR)

NO SCALE

C-3

STATE OF CALIFORNIA - DEPARTMENT OF TRANSPORTATION
Caltrans TRAFFIC DESIGN

SUPERVISING ENGINEER: MOHAMMED CHOWDHURY
CALCULATED-DESIGNED BY: RICHARD KHAW
CHECKED BY: ESTHER M. KIM
REVISED BY / DATE REVISED

S:\projects\2301\07-256101\Y256610ga003.dgn

LAST REVISION 00-00-00 | DATE PLOTTED => 21-JUL-2010 | TIME PLOTTED => 14:45

BORDER LAST REVISED 11/1/2006 | RELATIVE BORDER SCALE IS IN INCHES 0 2 3 | USERNAME => s115484 | DGN FILE => Y256610ga003.dgn | CU 07870 | EA 256101

Dist	COUNTY	ROUTE	POST MILES TOTAL PROJECT	SHEET No.	TOTAL SHEETS
07	LA	110	R1.3/21.3	6	111

REGISTERED CIVIL ENGINEER 5/6/10 DATE

6/28/10
PLANS APPROVAL DATE

REGISTERED PROFESSIONAL ENGINEER ESTHER M. KIM No. 48363 Exp 6/30/10 CIVIL STATE OF CALIFORNIA

THE STATE OF CALIFORNIA OR ITS OFFICERS OR AGENTS SHALL NOT BE RESPONSIBLE FOR THE ACCURACY OR COMPLETENESS OF ELECTRONIC COPIES OF THIS PLAN SHEET.

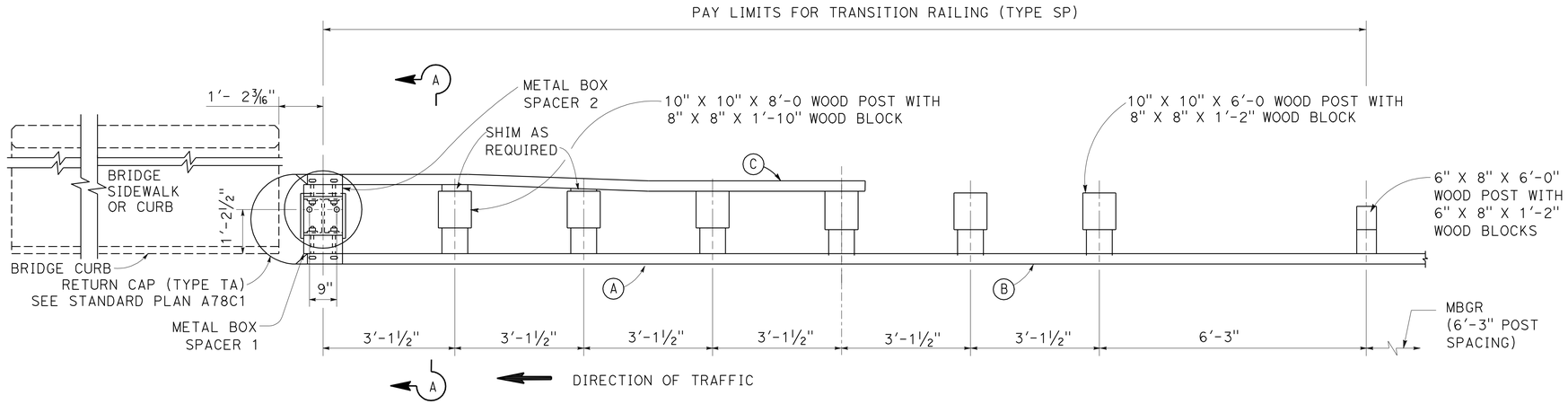

PLAN

LOCATION (10)

NOTES:

1. FOR NOTES, SEE SHEET C-3.
2. ANCHOR POST ASSEMBLY SHALL BE GALVANIZED AFTER FABRICATION.

LEGEND

(A) NESTED THRIE BEAM ELEMENTS (ONE 12 GAGE ELEMENT NESTED OVER ONE 10 GAGE ELEMENT).

(B) ONE 10 GAGE THRIE BEAM ELEMENT.

(C) ONE 12 GAGE THRIE BEAM ELEMENT.
10 GAGE = 0.135" THICK
12 GAGE = 0.108" THICK

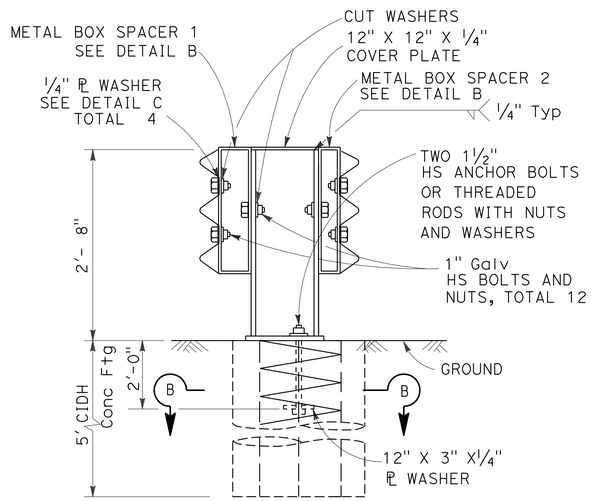

SECTION A-A

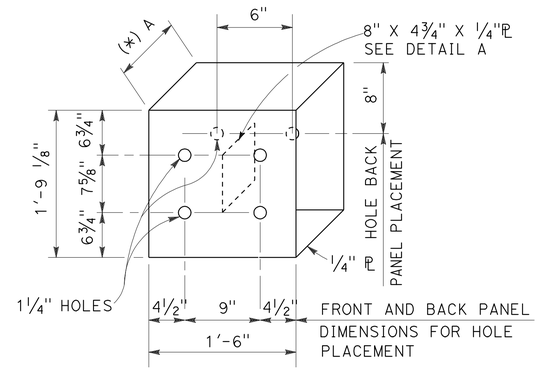

DETAIL B

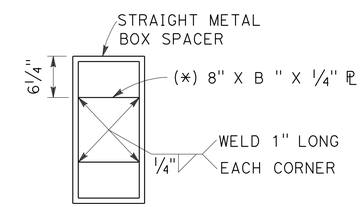

DETAIL A

STRAIGHT METAL BOX SPACER

(*) METAL BOX SPACER 1: A=6"; B=5 1/2"
METAL BOX SPACER 2: A=3"; B=2 1/2"

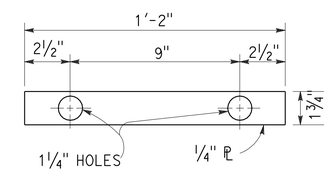

DETAIL C

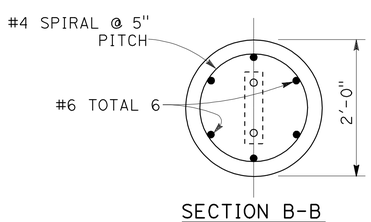

SECTION B-B

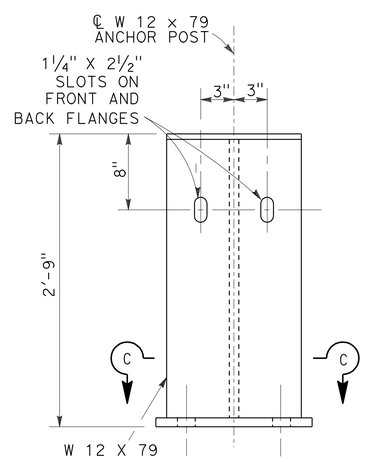

ANCHOR POST ASSEMBLY

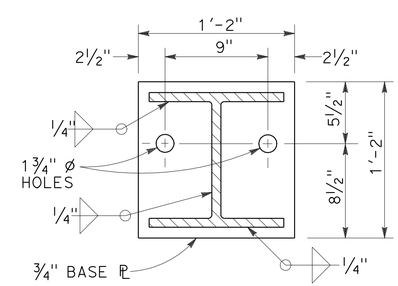

SECTION C-C

CONSTRUCTION DETAILS
TRANSITION RAILING (TYPE SP)

NO SCALE

C-4

STATE OF CALIFORNIA - DEPARTMENT OF TRANSPORTATION
Caltrans TRAFFIC DESIGN

SUPERVISING ENGINEER MOHAMMED CHOWDHURY
CALCULATED-DESIGNED BY RICHARD KHAW
CHECKED BY ESTHER M. KIM
REVISED BY
DATE REVISED

S:\projects\25101\07-256101\725610ga004.dgn

LAST REVISION 00-00-00
DATE PLOTTED => 21-JUL-2010
TIME PLOTTED => 14:45

Dist	COUNTY	ROUTE	POST MILES TOTAL PROJECT	SHEET No.	TOTAL SHEETS
07	LA	110	R1.3/21.3	7	111

REGISTERED CIVIL ENGINEER 5/6/10 DATE

6/28/10
PLANS APPROVAL DATE

REGISTERED PROFESSIONAL ENGINEER ESTHER M. KIM No. 48363 Exp 6/30/10 CIVIL STATE OF CALIFORNIA

THE STATE OF CALIFORNIA OR ITS OFFICERS OR AGENTS SHALL NOT BE RESPONSIBLE FOR THE ACCURACY OR COMPLETENESS OF ELECTRONIC COPIES OF THIS PLAN SHEET.

NOTES:

1. FOR NOTES, SEE SHEET C-3.

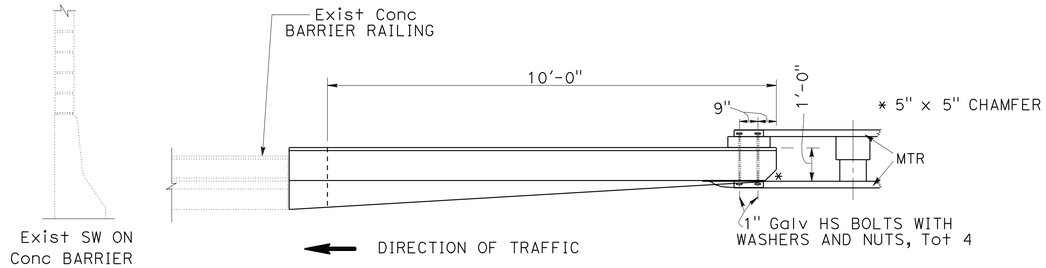

PLAN

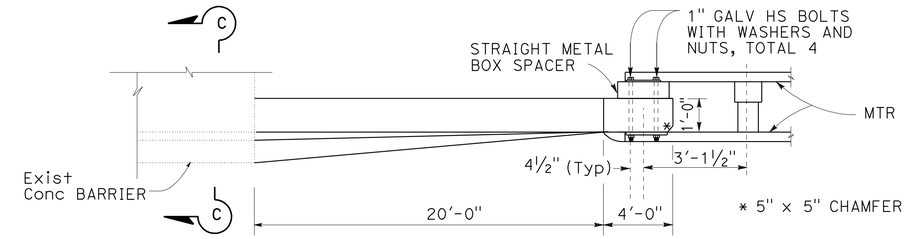

PLAN

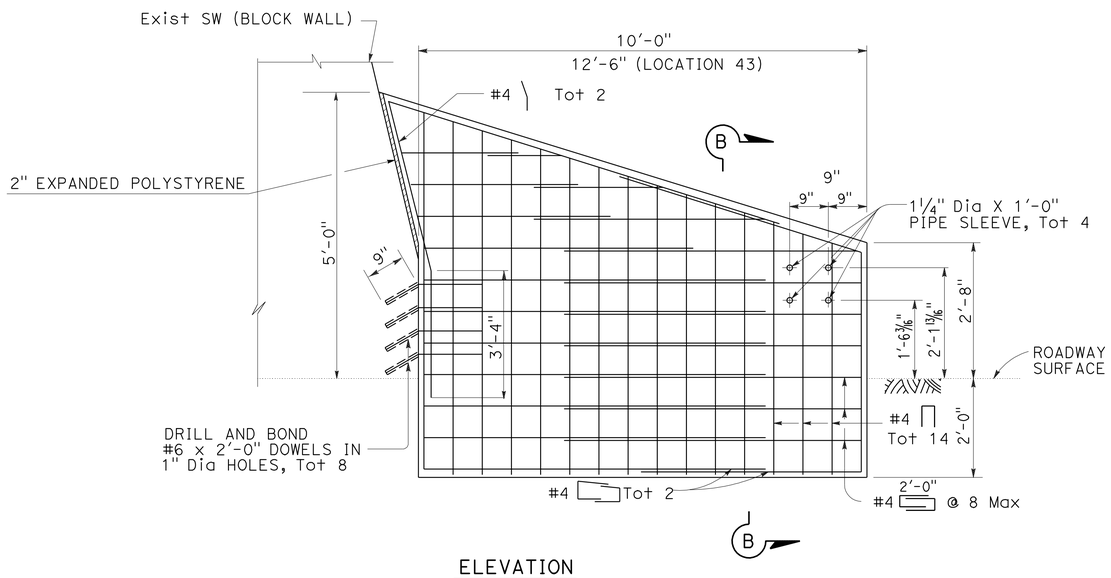

ELEVATION

LOCATION 4 11 41 43 53 82

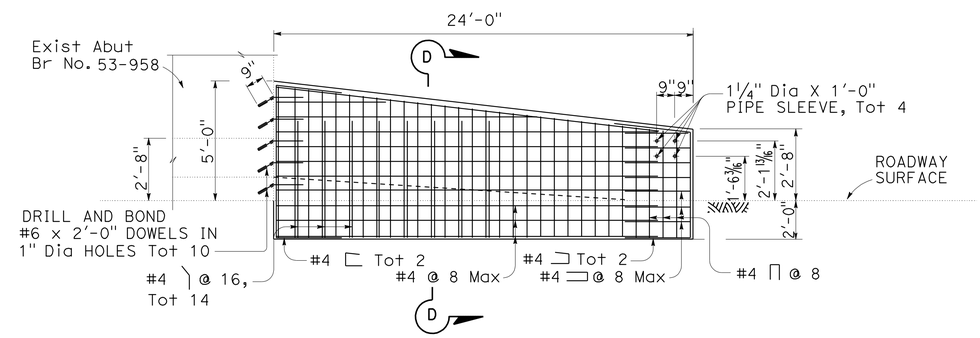

ELEVATION

LOCATION 27

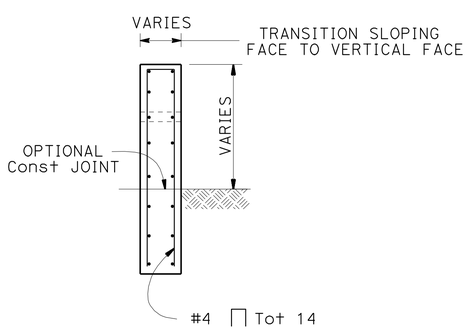

SECTION B-B

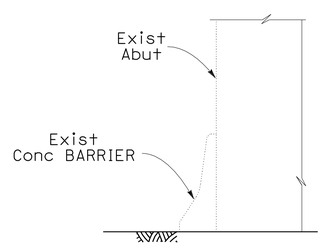

SECTION C-C

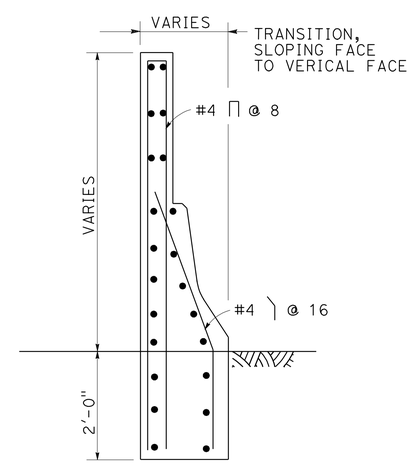

SECTION D-D

CONSTRUCTION DETAILS

NO SCALE

C-5

STATE OF CALIFORNIA - DEPARTMENT OF TRANSPORTATION
Caltrans TRAFFIC DESIGN

SUPERVISING ENGINEER MOHAMMED CHOWDHURY
CALCULATED-DESIGNED BY RICHARD KHAW
CHECKED BY ESTHER M. KIM
REVISED BY
DATE REVISED

S:\projects\2-8\101\07-256101\725610ga005.dgn

LAST REVISION 00-00-00
DATE PLOTTED => 21-JUL-2010
TIME PLOTTED => 14:45

Dist	COUNTY	ROUTE	POST MILES TOTAL PROJECT	SHEET No.	TOTAL SHEETS
07	LA	110	R1.3/21.3	8	111

REGISTERED CIVIL ENGINEER 5/6/10 DATE

6/28/10
PLANS APPROVAL DATE

REGISTERED PROFESSIONAL ENGINEER ESTHER M. KIM No. 48363 Exp 6/30/10 CIVIL STATE OF CALIFORNIA

THE STATE OF CALIFORNIA OR ITS OFFICERS OR AGENTS SHALL NOT BE RESPONSIBLE FOR THE ACCURACY OR COMPLETENESS OF SCANNED COPIES OF THIS PLAN SHEET.

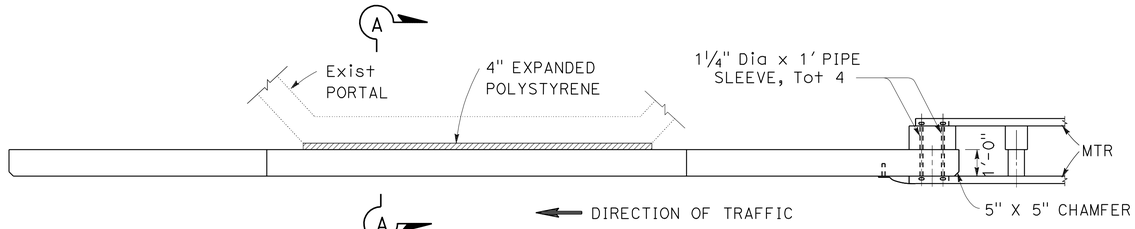

PLAN

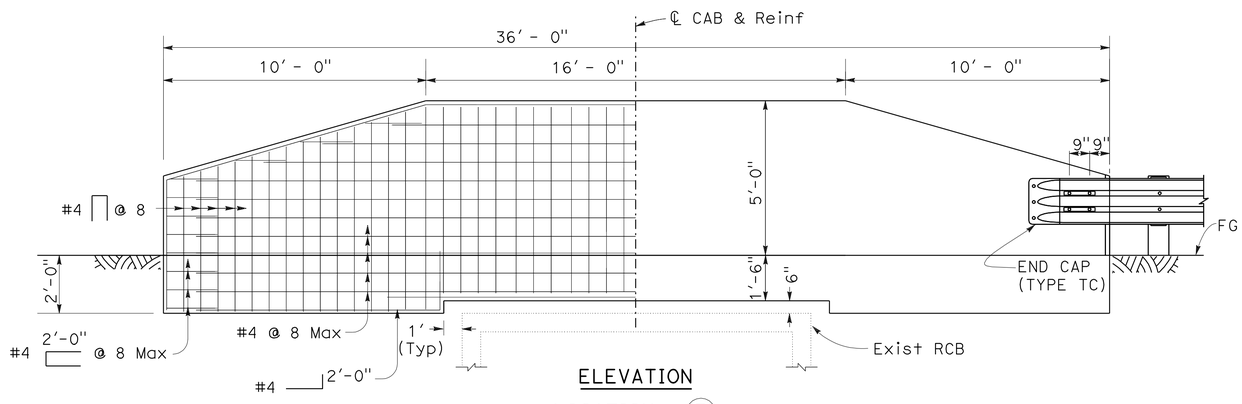

ELEVATION

LOCATION 7

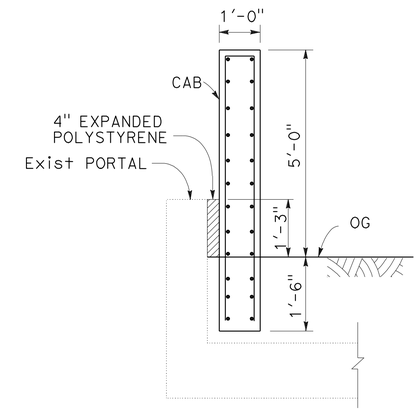

SECTION A-A

NOTES:

1. FOR NOTES, SEE SHEET C-3.

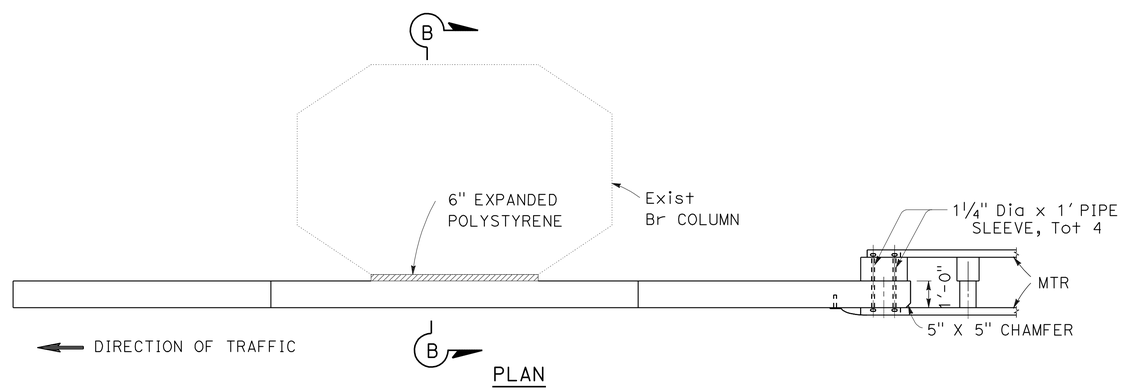

PLAN

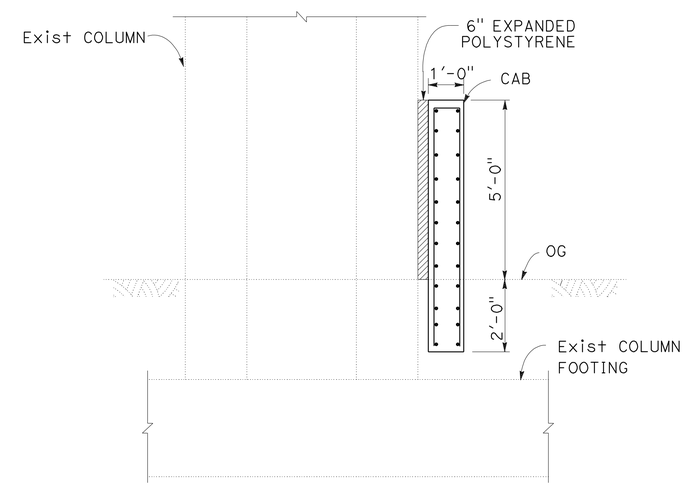

SECTION B-B

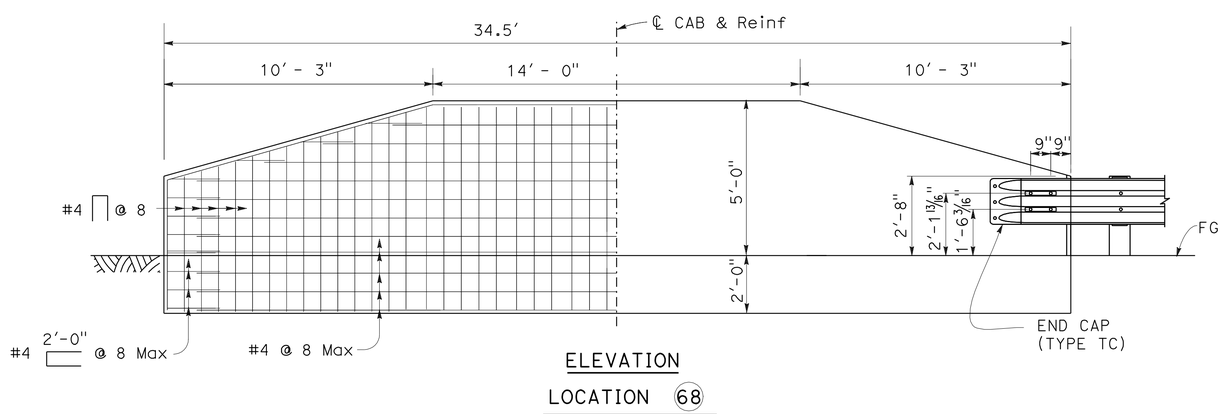

ELEVATION

LOCATION 68

CONSTRUCTION DETAILS

NO SCALE

C-6

STATE OF CALIFORNIA - DEPARTMENT OF TRANSPORTATION
Caltrans® TRAFFIC DESIGN

FUNCTIONAL SUPERVISOR: MOHAMMED CHOWDHURY
CALCULATED-DESIGNED BY: RICHARD KHAW
CHECKED BY: ESTHER M. KIM
REVISED BY
DATE REVISED

LAST REVISION 00-00-00
DATE PLOTTED => 21-JUL-2010
TIME PLOTTED => 14:46

Dist	COUNTY	ROUTE	POST MILES TOTAL PROJECT	SHEET No.	TOTAL SHEETS
07	LA	110	R1.3/21.3	9	111

REGISTERED CIVIL ENGINEER 5/6/10 DATE

6/28/10
PLANS APPROVAL DATE

REGISTERED PROFESSIONAL ENGINEER ESTHER M. KIM No. 48363 Exp. 6/30/10 CIVIL STATE OF CALIFORNIA

THE STATE OF CALIFORNIA OR ITS OFFICERS OR AGENTS SHALL NOT BE RESPONSIBLE FOR THE ACCURACY OR COMPLETENESS OF SCANNED COPIES OF THIS PLAN SHEET.

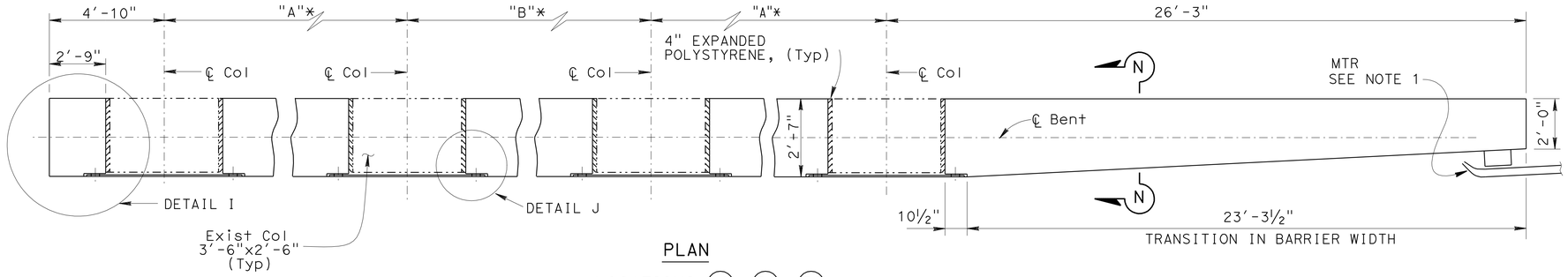

PLAN

LOCATIONS 12 58 59

* DIMENSIONS

LOCATION	"A"	"B"
12	19'-6"	-
58	19'-6"	-
59	28'-6"	17'-0"

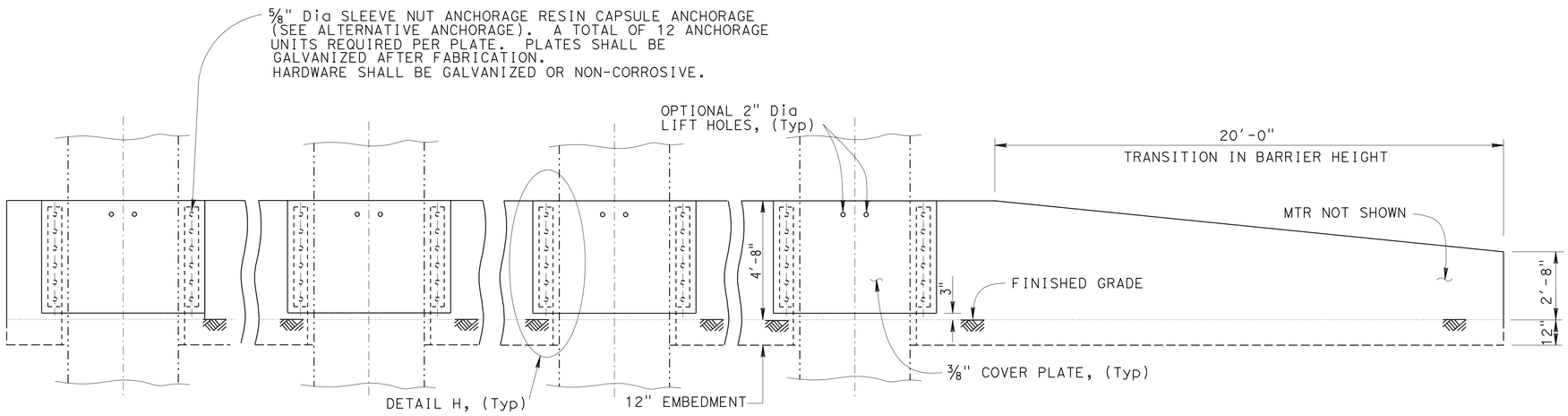

ELEVATION

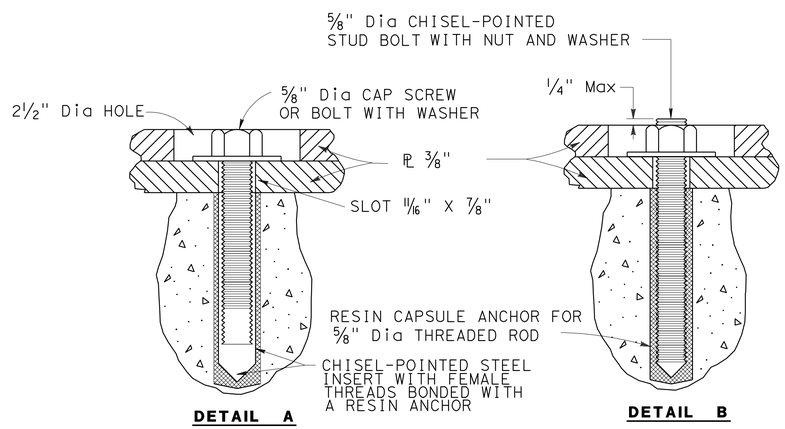

ALTERNATIVE ANCHORAGE

SEE NOTES 2 AND 3

NOTES:

1. FOR ADDITIONAL DETAILS OF TRANSITION RAILING CONNECTION SEE REVISED STANDARD PLAN A77J4.
2. RESIN CAPSULE ANCHORAGE IS SUBJECT TO APPROVAL OF THE ENGINEER. INSTALLATION PROCEDURES SHALL COMPLY WITH MANUFACTURER'S INSTRUCTIONS.
3. DETAIL B SIMILAR TO DETAIL A EXCEPT FOR ANCHORAGE DEVICES.
4. FOR DETAIL I, DETAIL J, DETAIL H AND SECTION N-N, SEE SHEET C-8.
5. THE CONTRACTOR SHALL VERIFY CONTROLLED FIELD DIMENSIONS BEFORE ORDERING OR FABRICATING MATERIALS.

CONSTRUCTION DETAILS

NO SCALE

C-7

REVISED BY | DATE REVISED

FRANCISCO MARTINEZ | ESTHER M. KIM

CALCULATED-DESIGNED BY | CHECKED BY

FUNCTIONAL SUPERVISOR: MOHAMMED CHOWDHURY

STATE OF CALIFORNIA - DEPARTMENT OF TRANSPORTATION

Caltrans® TRAFFIC DESIGN

LAST REVISION 00-00-00 | DATE PLOTTED => 21-JUL-2010 | TIME PLOTTED => 14:46

Dist	COUNTY	ROUTE	POST MILES TOTAL PROJECT	SHEET No.	TOTAL SHEETS
07	LA	110	R1.3/21.3	10	111

REGISTERED CIVIL ENGINEER 5/6/10 DATE

6/28/10
PLANS APPROVAL DATE

REGISTERED PROFESSIONAL ENGINEER ESTHER M. KIM No. 48363 Exp. 6/30/10 CIVIL STATE OF CALIFORNIA

THE STATE OF CALIFORNIA OR ITS OFFICERS OR AGENTS SHALL NOT BE RESPONSIBLE FOR THE ACCURACY OR COMPLETENESS OF SCANNED COPIES OF THIS PLAN SHEET.

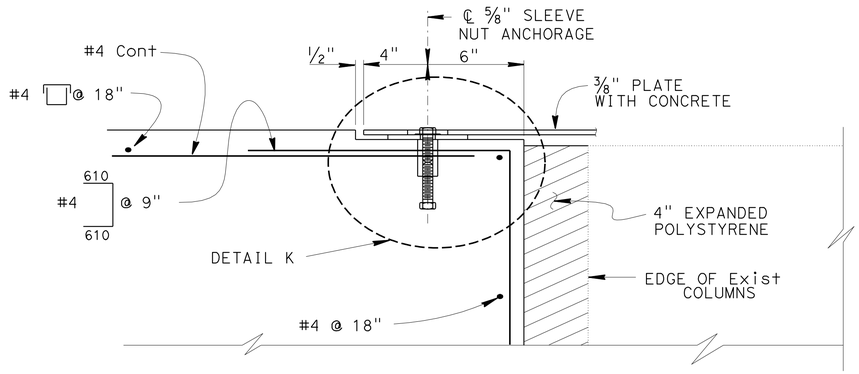

DETAIL J

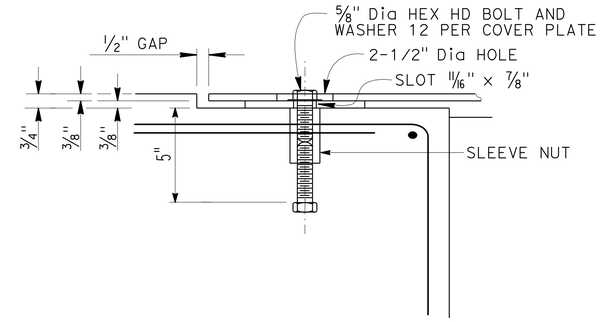

DETAIL K

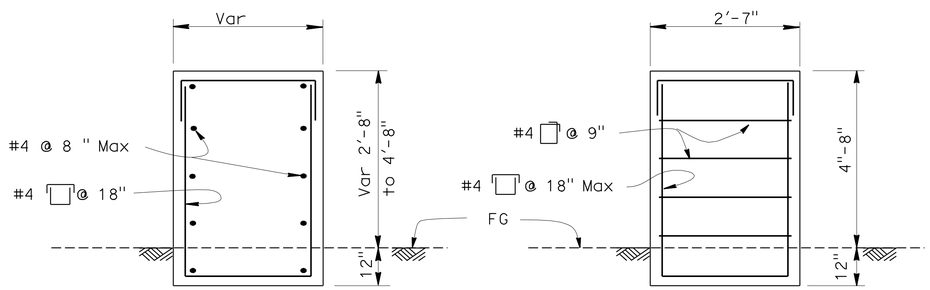

SECTION N-N

SECTION P-P

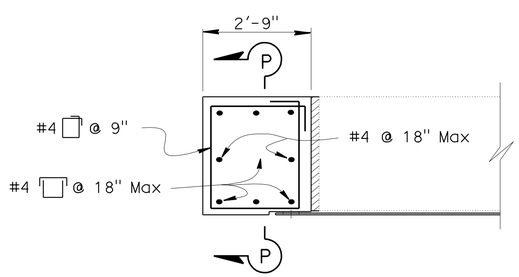

DETAIL I

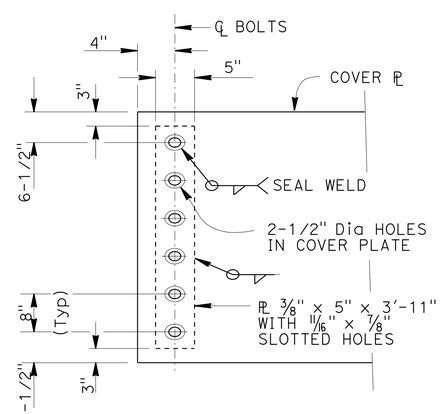

DETAIL H

CONSTRUCTION DETAILS

NO SCALE

C-8

STATE OF CALIFORNIA - DEPARTMENT OF TRANSPORTATION
Caltrans® TRAFFIC DESIGN

FUNCTIONAL SUPERVISOR: MOHAMMED CHOWDHURY
CALCULATED-DESIGNED BY: FRANCISCO MARTINEZ
CHECKED BY: ESTHER M. KIM
REVISED BY
DATE REVISED

LAST REVISION 00-00-00
DATE PLOTTED => 21-JUL-2010
TIME PLOTTED => 14:46

Dist	COUNTY	ROUTE	POST MILES TOTAL PROJECT	SHEET No.	TOTAL SHEETS
07	LA	110	R1.3/21.3	11	111

REGISTERED CIVIL ENGINEER 5/6/10 DATE

6/28/10
PLANS APPROVAL DATE

REGISTERED PROFESSIONAL ENGINEER ESTHER M. KIM No. 48363 Exp. 6/30/10 CIVIL STATE OF CALIFORNIA

THE STATE OF CALIFORNIA OR ITS OFFICERS OR AGENTS SHALL NOT BE RESPONSIBLE FOR THE ACCURACY OR COMPLETENESS OF SCANNED COPIES OF THIS PLAN SHEET.

NOTES:

1. FOR NOTES, SEE SHEET C-3.

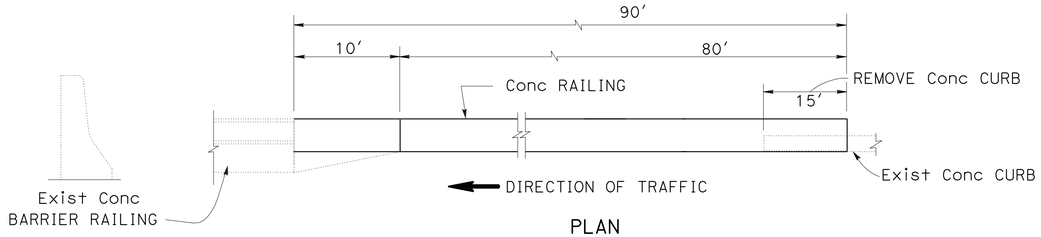

PLAN

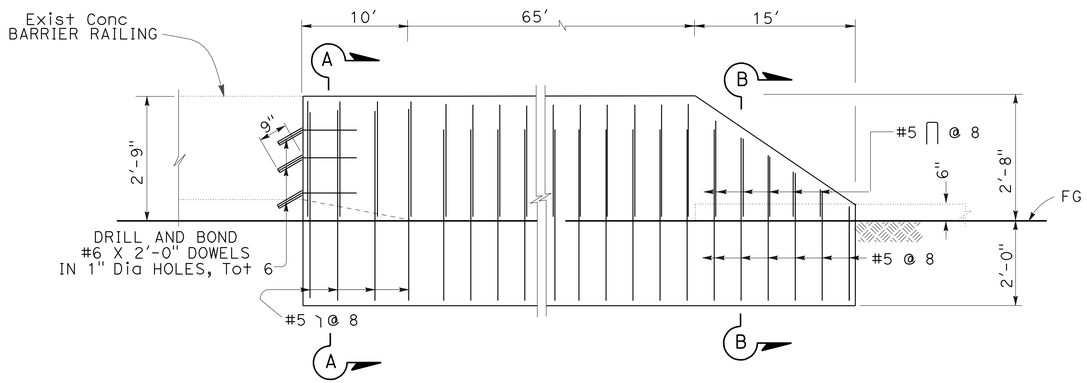

ELEVATION

LOCATION 31

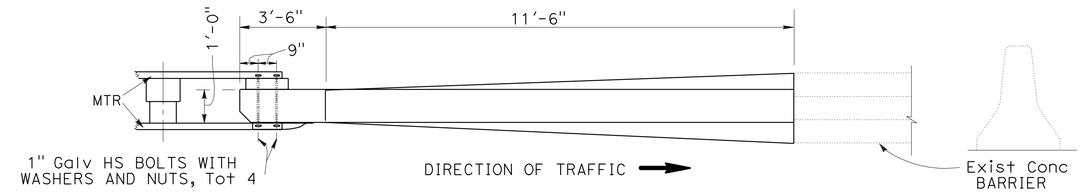

PLAN

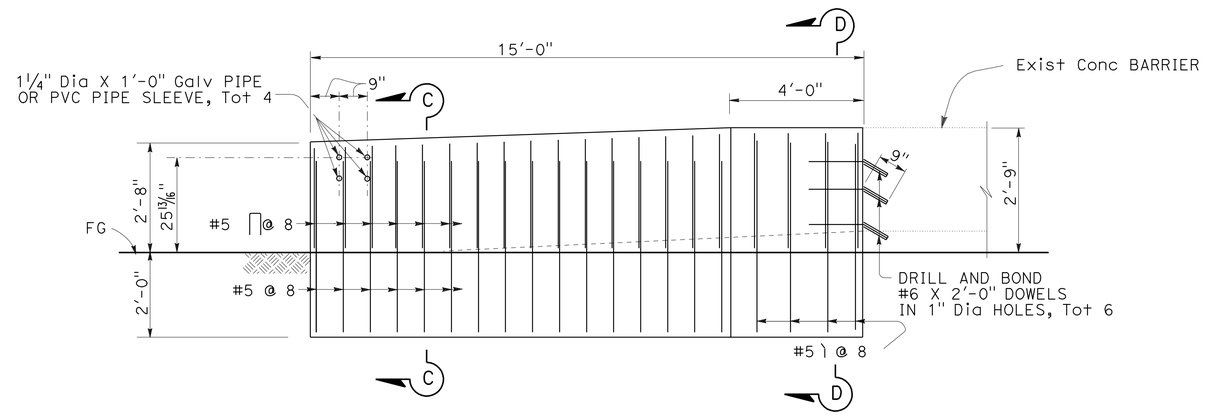

ELEVATION

LOCATION 32

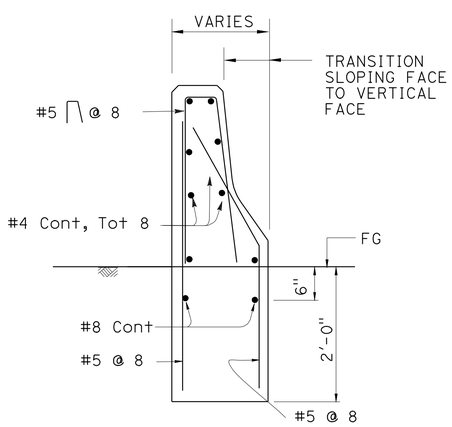

SECTION A-A

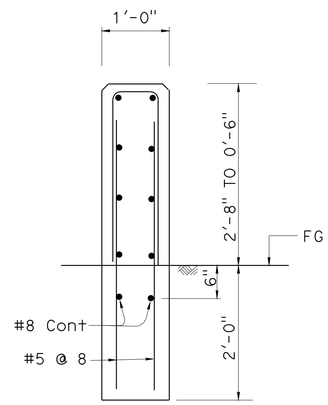

SECTION B-B

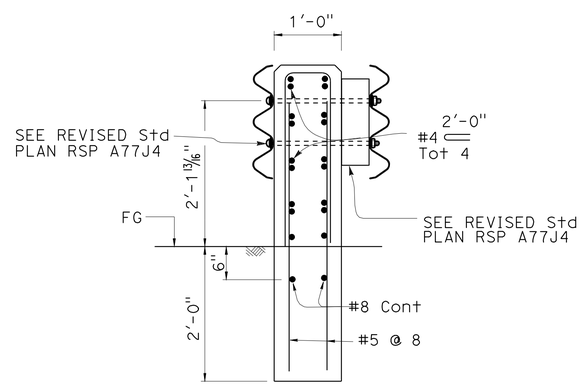

SECTION C-C

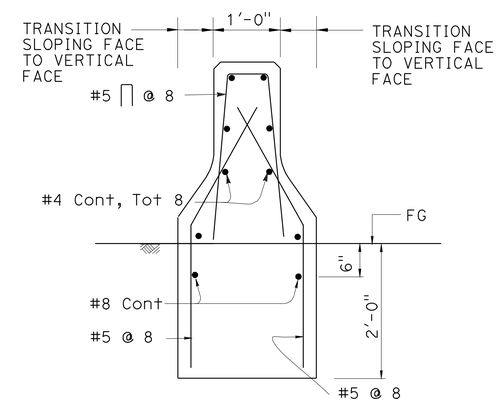

SECTION D-D

CONSTRUCTION DETAILS

NO SCALE

C-9

STATE OF CALIFORNIA - DEPARTMENT OF TRANSPORTATION
Caltrans TRAFFIC DESIGN

FUNCTIONAL SUPERVISOR: MOHAMMED CHOWDHURY
CALCULATED-DESIGNED BY: FRANCISCO MARTINEZ
CHECKED BY: ESTHER M. KIM
REVISED BY
DATE REVISED

LAST REVISION 00-00-00
DATE PLOTTED => 21-JUL-2010
TIME PLOTTED => 14:46

Dist	COUNTY	ROUTE	POST MILES TOTAL PROJECT	SHEET No.	TOTAL SHEETS
07	LA	110	R1.3/21.3	12	111

REGISTERED CIVIL ENGINEER 5/6/10 DATE

6/28/10
PLANS APPROVAL DATE

REGISTERED PROFESSIONAL ENGINEER ESTHER M. KIM No. 48363 Exp 6/30/10 CIVIL STATE OF CALIFORNIA

THE STATE OF CALIFORNIA OR ITS OFFICERS OR AGENTS SHALL NOT BE RESPONSIBLE FOR THE ACCURACY OR COMPLETENESS OF SCANNED COPIES OF THIS PLAN SHEET.

NOTES:

1. FOR NOTES, SEE SHEET C-3.

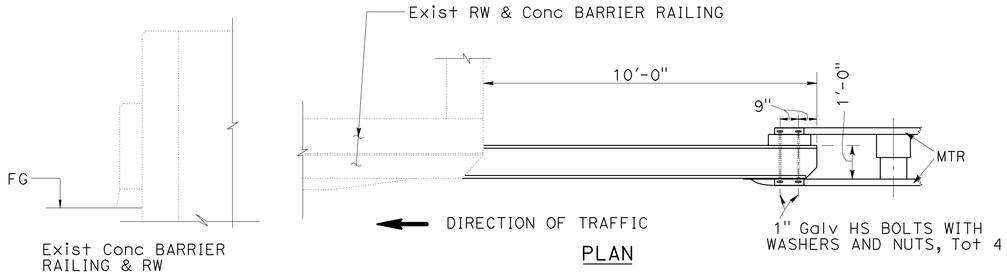

PLAN

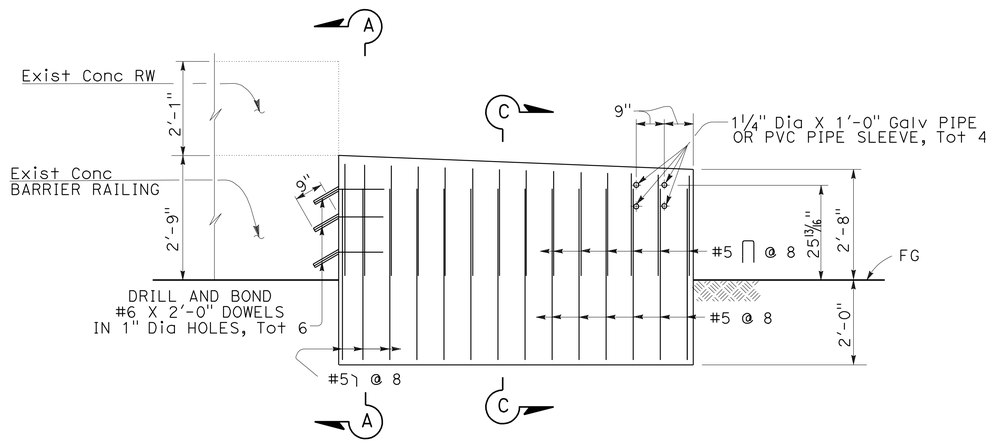

ELEVATION

LOCATION 33

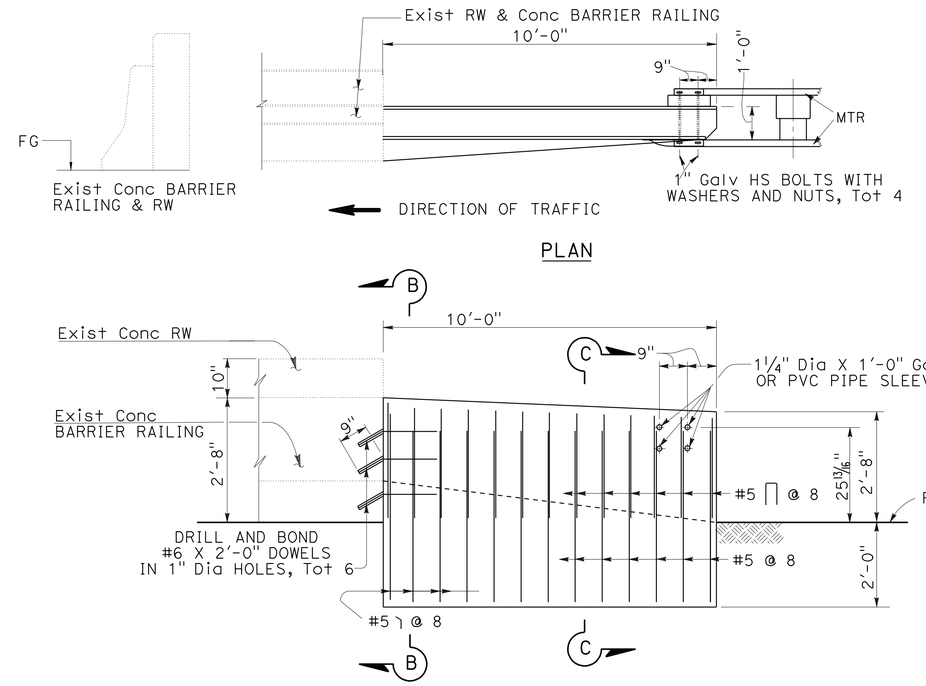

ELEVATION

LOCATION 61

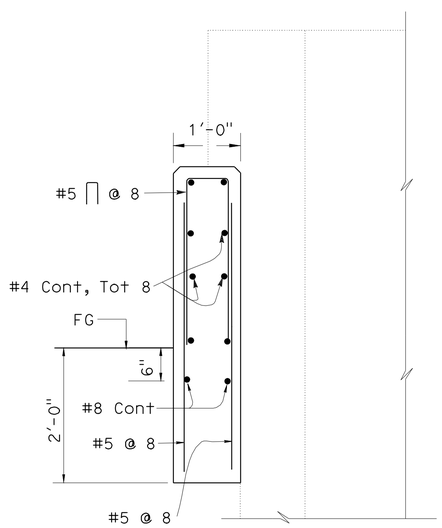

SECTION A-A

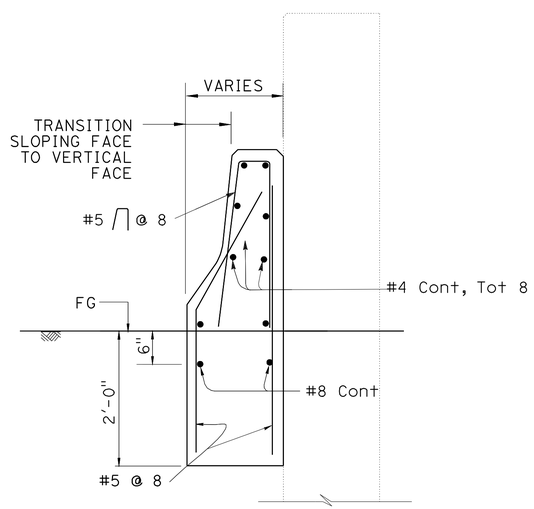

SECTION B-B

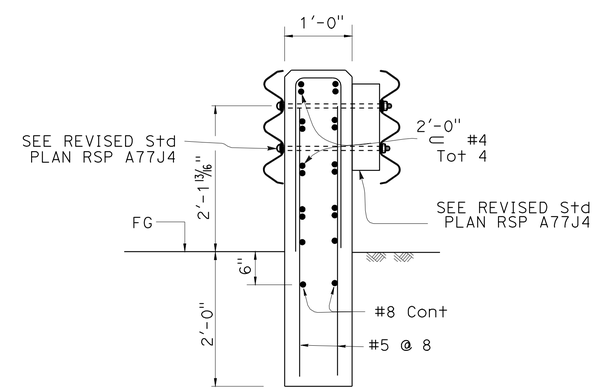

SECTION C-C

CONSTRUCTION DETAILS

NO SCALE

C-10

STATE OF CALIFORNIA - DEPARTMENT OF TRANSPORTATION
Caltrans® TRAFFIC DESIGN

FUNCTIONAL SUPERVISOR: MOHAMMED CHOWDHURY
CALCULATED-DESIGNED BY: FRANCISCO MARTINEZ
CHECKED BY: ESTHER M. KIM
REVISED BY
DATE REVISED

LAST REVISION 00-00-00
DATE PLOTTED => 21-JUL-2010
TIME PLOTTED => 14:46

Dist	COUNTY	ROUTE	POST MILES TOTAL PROJECT	SHEET No.	TOTAL SHEETS
07	LA	110	R1.3/21.3	13	111

REGISTERED CIVIL ENGINEER 5/6/10 DATE

6/28/10
PLANS APPROVAL DATE

REGISTERED PROFESSIONAL ENGINEER ESTHER M. KIM No. 48363 Exp 6/30/10 CIVIL STATE OF CALIFORNIA

THE STATE OF CALIFORNIA OR ITS OFFICERS OR AGENTS SHALL NOT BE RESPONSIBLE FOR THE ACCURACY OR COMPLETENESS OF SCANNED COPIES OF THIS PLAN SHEET.

NOTES:

1. FOR NOTES, SEE SHEET C-3.

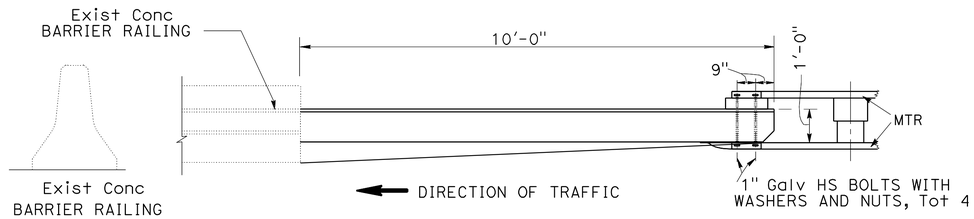

PLAN

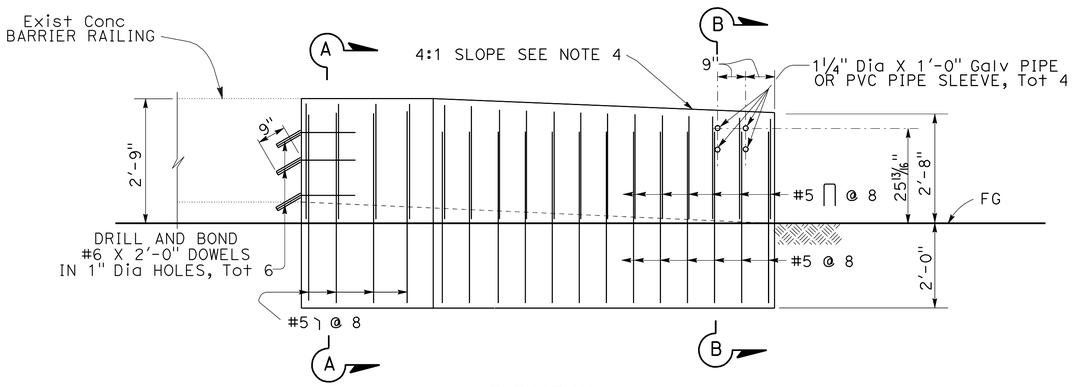

ELEVATION

LOCATION 70 80

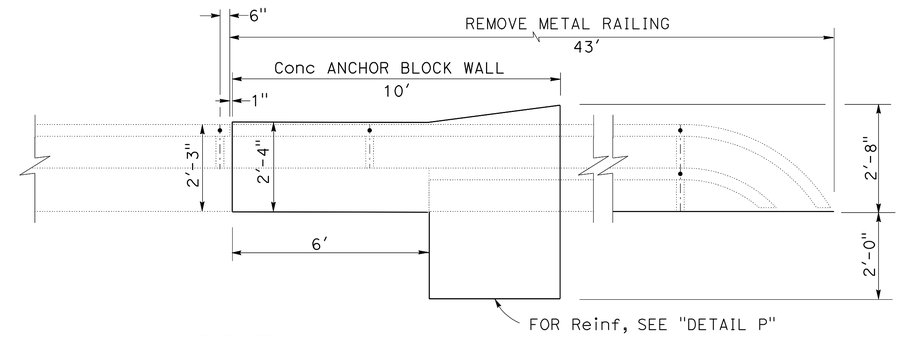

ELEVATION

LOCATION 51

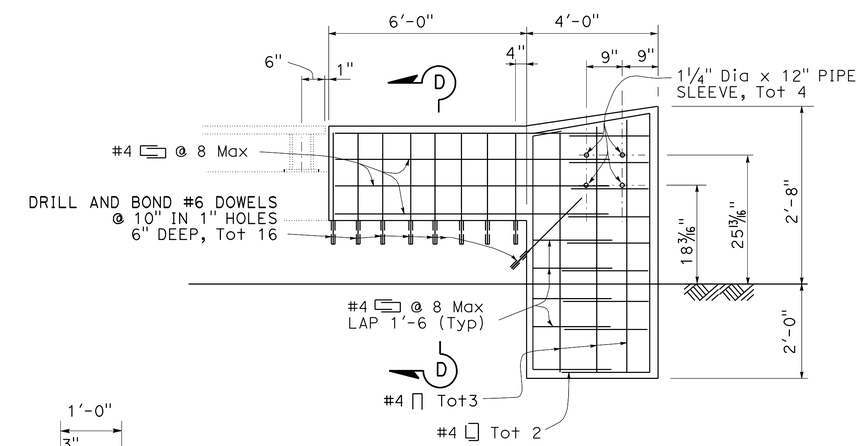

DETAIL P

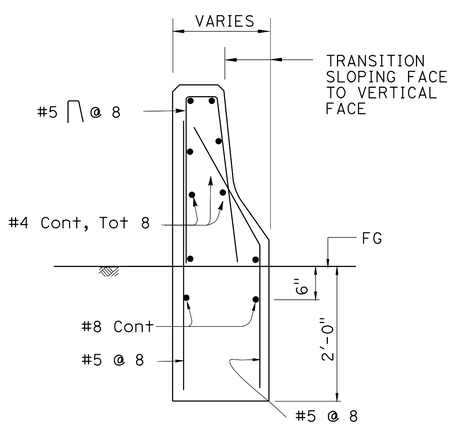

SECTION A-A

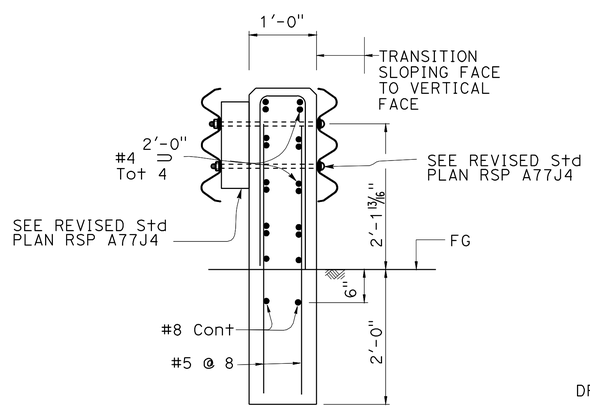

SECTION B-B

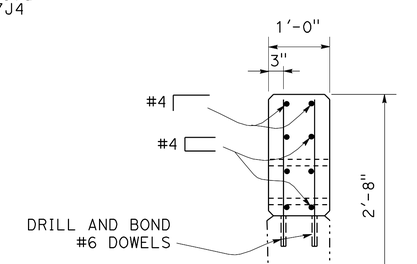

SECTION D-D

CONSTRUCTION DETAILS

NO SCALE

C-11

STATE OF CALIFORNIA - DEPARTMENT OF TRANSPORTATION
Caltrans TRAFFIC DESIGN

FUNCTIONAL SUPERVISOR: MOHAMMED CHOWDHURY
CALCULATED-DESIGNED BY: FRANCISCO MARTINEZ
CHECKED BY: ESTHER M. KIM
REVISED BY
DATE REVISED

LAST REVISION 00-00-00
DATE PLOTTED => 21-JUL-2010
TIME PLOTTED => 14:47

Dist	COUNTY	ROUTE	POST MILES TOTAL PROJECT	SHEET No.	TOTAL SHEETS
07	LA	110	R1.3/21.3	14	111

REGISTERED CIVIL ENGINEER 5/6/10 DATE

6/28/10
PLANS APPROVAL DATE

REGISTERED PROFESSIONAL ENGINEER ESTHER M. KIM No. 48363 Exp 6/30/10 CIVIL STATE OF CALIFORNIA

THE STATE OF CALIFORNIA OR ITS OFFICERS OR AGENTS SHALL NOT BE RESPONSIBLE FOR THE ACCURACY OR COMPLETENESS OF SCANNED COPIES OF THIS PLAN SHEET.

NOTES:

1. FOR NOTES, SEE SHEET C-3.
2. FOR SECTION B-B, SEE SHEET C-13.

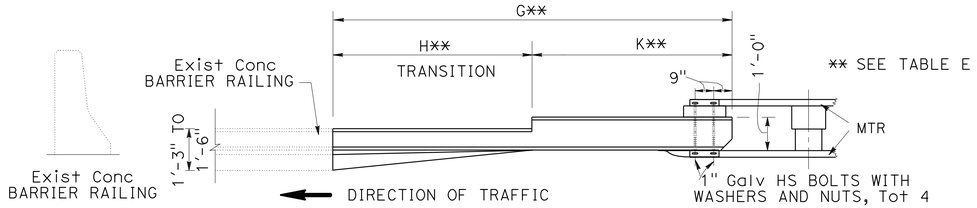

PLAN

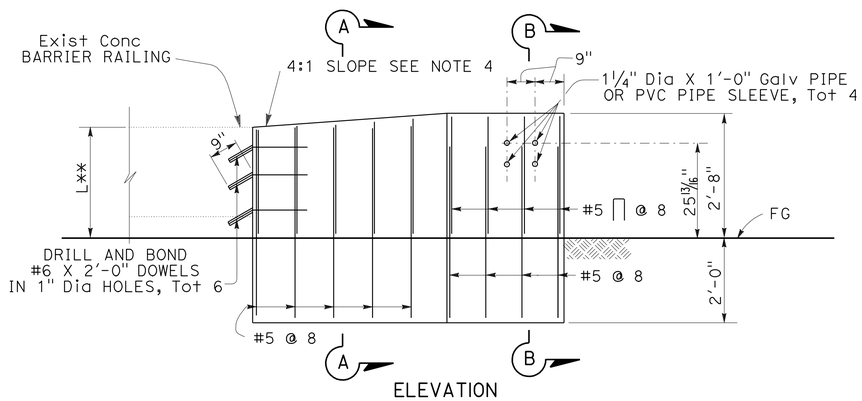

ELEVATION

LOCATION 20

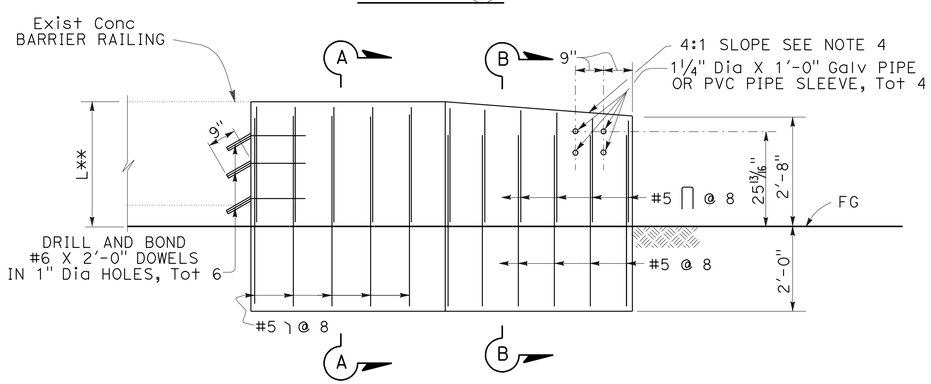

ELEVATION

LOCATION 2 14 42 44 52 54 83 84

TABLE E

LOCATION	G	H	K	L
2	20'-0"	16'-6"	3'-6"	2'-9"
14 83	8'-0"	5'-0"	3'-0"	2'-9"
20	6'-0"	3'-0"	3'-0"	2'-6"
42 44 54	10'-0"	7'-0"	3'-0"	2'-9"
52	17'-0"	14'-0"	3'-0"	2'-9"
84	6'-0"	3'-0"	3'-0"	2'-9"

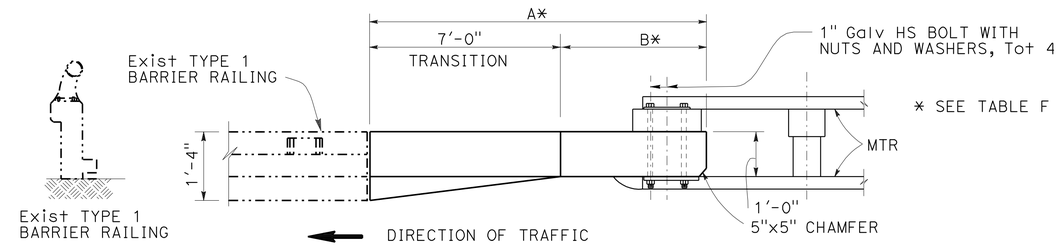

PLAN

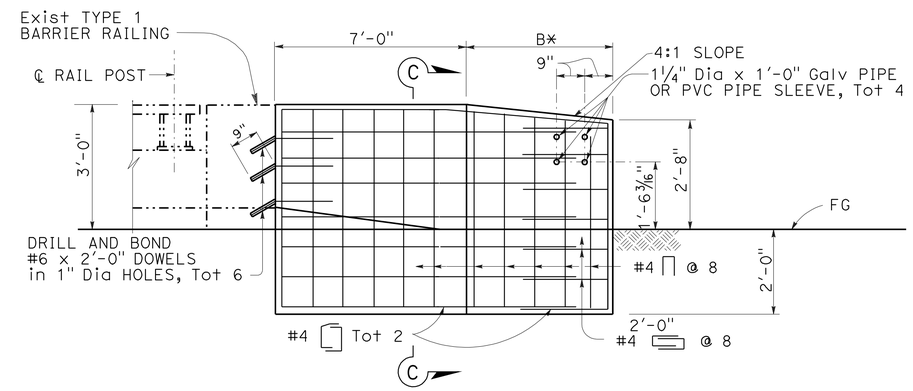

ELEVATION

LOCATION 8 55 64 72

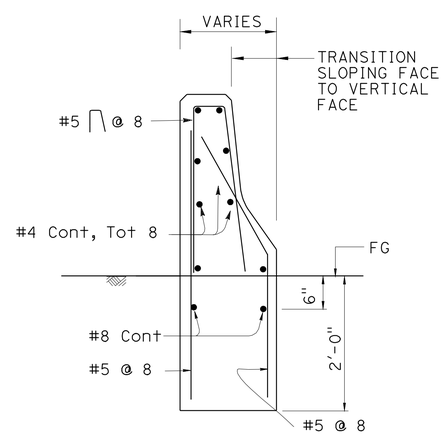

SECTION A-A

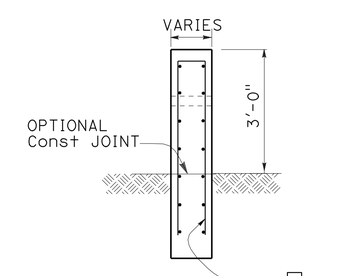

SECTION C-C

TABLE F

LOCATION	A	B
8	11'-0"	4'-0"
55	11'-0"	4'-0"
64	12'-6"	5'-6"
72	11'-0"	4'-0"

CONSTRUCTION DETAILS

NO SCALE

C-12

STATE OF CALIFORNIA - DEPARTMENT OF TRANSPORTATION
Caltrans TRAFFIC DESIGN
FUNCTIONAL SUPERVISOR: MOHAMMED CHOWDHURY
CALCULATED-DESIGNED BY: FRANCISCO MARTINEZ
CHECKED BY: ESTHER M. KIM
REVISED BY / DATE REVISED

LAST REVISION 00-00-00
DATE PLOTTED => 21-JUL-2010
TIME PLOTTED => 14:47

Dist	COUNTY	ROUTE	POST MILES TOTAL PROJECT	SHEET No.	TOTAL SHEETS
07	LA	110	R1.3/21.3	15	111

REGISTERED CIVIL ENGINEER 5/6/10 DATE

6/28/10
PLANS APPROVAL DATE

REGISTERED PROFESSIONAL ENGINEER ESTHER M. KIM No. 48363 Exp 6/30/10 CIVIL STATE OF CALIFORNIA

THE STATE OF CALIFORNIA OR ITS OFFICERS OR AGENTS SHALL NOT BE RESPONSIBLE FOR THE ACCURACY OR COMPLETENESS OF SCANNED COPIES OF THIS PLAN SHEET.

NOTES:

1. FOR NOTES, SEE SHEET C-3.
2. FOR SECTION A-A, SEE SHEET C-12.

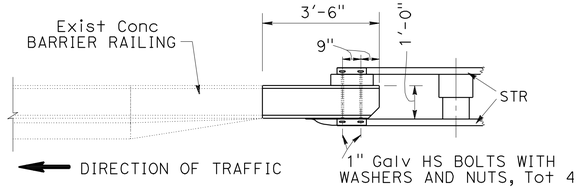

PLAN (DETAIL 1)

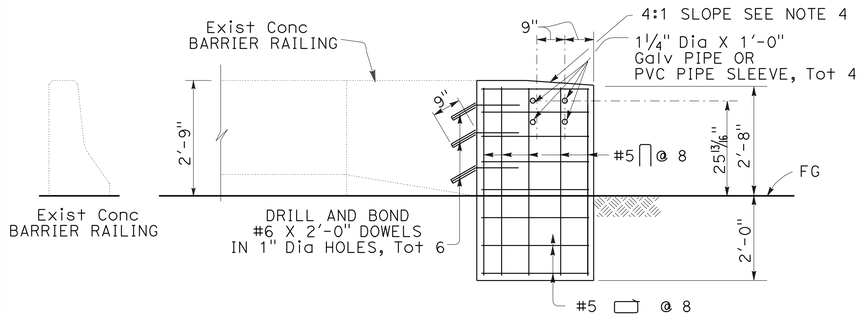

ELEVATION

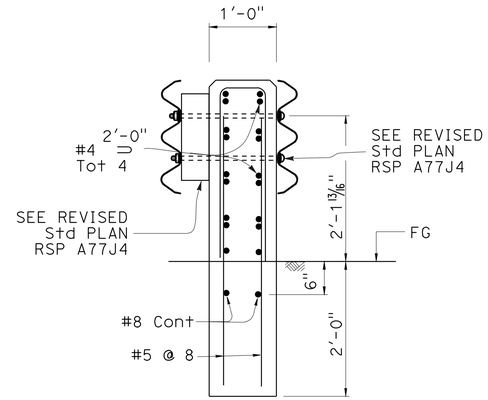

SECTION B-B

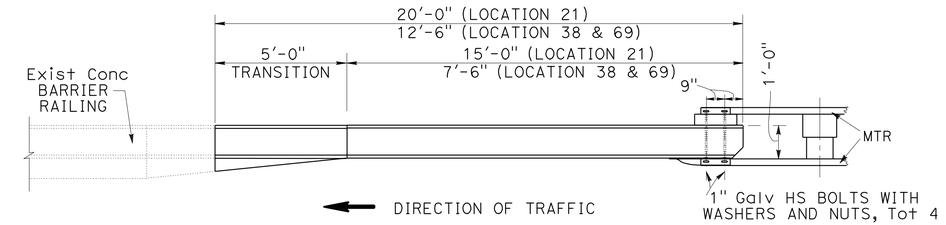

PLAN

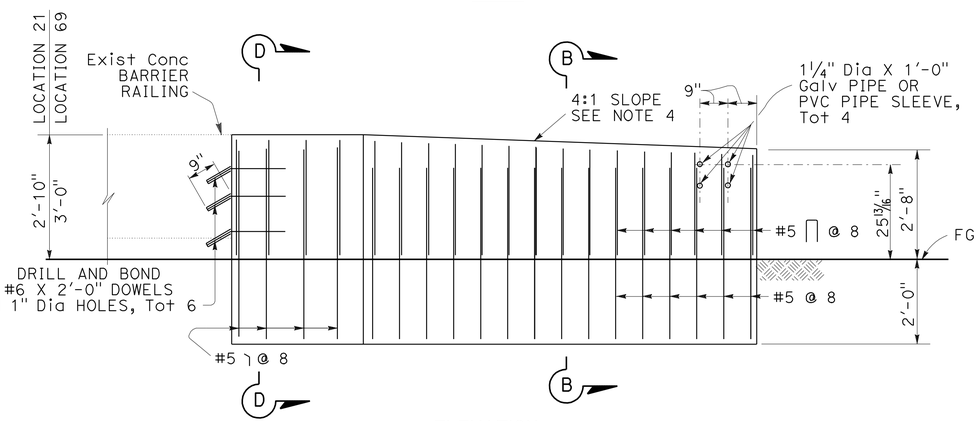

ELEVATION

LOCATION 21 69

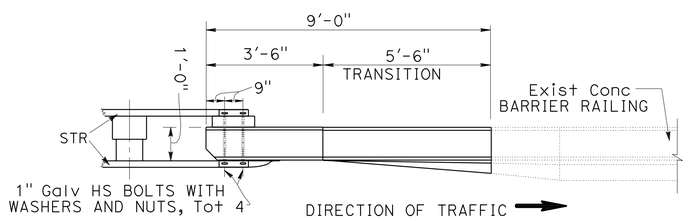

PLAN (DETAIL 2)

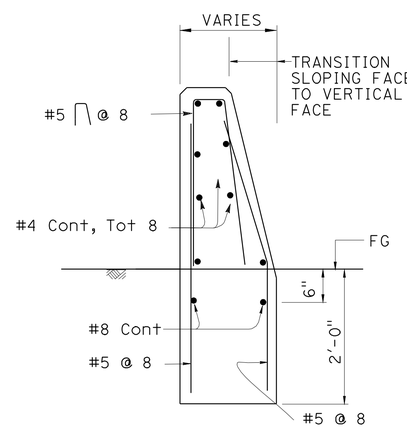

SECTION D-D

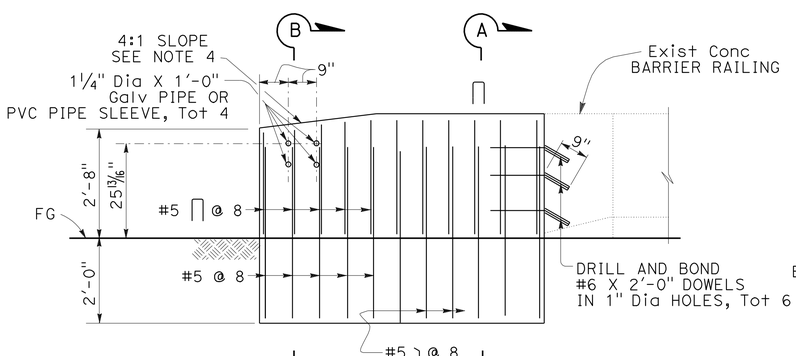

ELEVATION

LOCATION 66

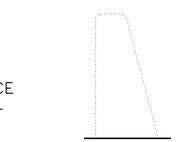

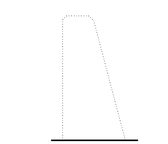

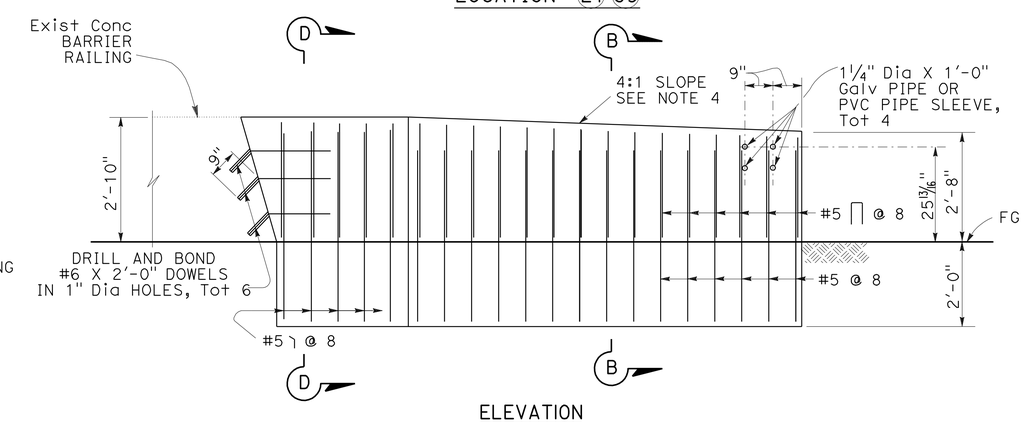

ELEVATION

LOCATION 38

CONSTRUCTION DETAILS

NO SCALE

C-13

STATE OF CALIFORNIA - DEPARTMENT OF TRANSPORTATION
Caltrans® TRAFFIC DESIGN

FUNCTIONAL SUPERVISOR: MOHAMMED CHOWDHURY
CALCULATED-DESIGNED BY: FRANCISCO MARTINEZ
CHECKED BY: ESTHER M. KIM
REVISED BY
DATE REVISED

LAST REVISION 00-00-00
DATE PLOTTED => 21-JUL-2010
TIME PLOTTED => 14:47

Dist	COUNTY	ROUTE	POST MILES TOTAL PROJECT	SHEET No.	TOTAL SHEETS
07	LA	110	R1.3/21.3	16	111

REGISTERED CIVIL ENGINEER 5/6/10 DATE

6/28/10
PLANS APPROVAL DATE

REGISTERED PROFESSIONAL ENGINEER ESTHER M. KIM No. 48363 Exp 6/30/10 CIVIL STATE OF CALIFORNIA

THE STATE OF CALIFORNIA OR ITS OFFICERS OR AGENTS SHALL NOT BE RESPONSIBLE FOR THE ACCURACY OR COMPLETENESS OF SCANNED COPIES OF THIS PLAN SHEET.

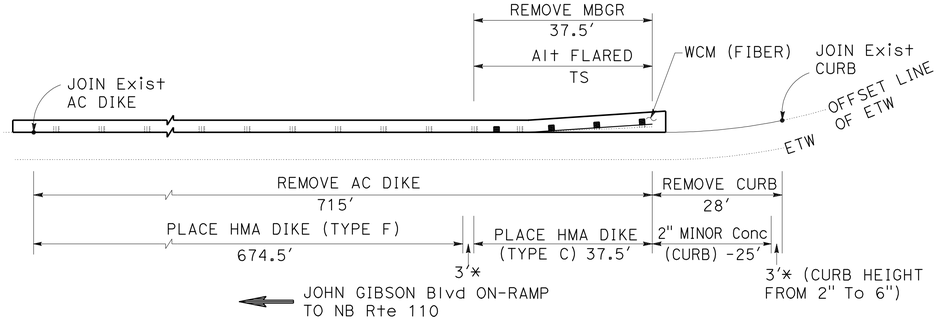

1 PM R1.61

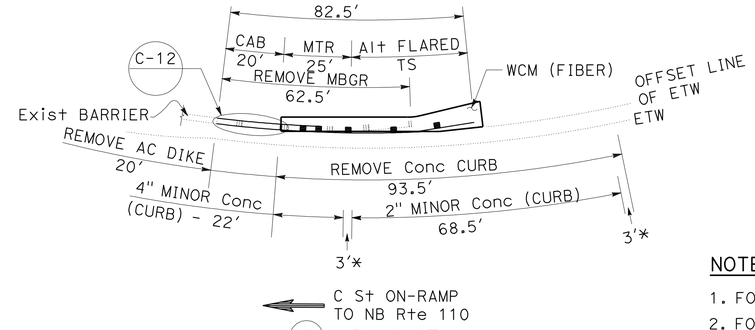

2 PM 2.87

NOTES:

1. FOR WEED CONTROL MAT (FIBER) DETAILS, SEE SHEETS C-36 AND C-37.
2. FOR SECTIONS, SEE SHEET C-2.
3. PLACE GUARD RAILING DELINEATOR AT THE BEGIN AND END OF MBGR AT EACH LOCATION.
4. FOR BURIED END ANCHOR DETAILS, SEE STANDARD PLANS A77I2.
5. R/W NOT SHOWN ON THESE PLANS.
6. EXISTING UTILITY FACILITIES ARE NOT SHOWN ON THESE PLANS.
7. EXISTING DRAINAGE INLETS ARE NOT SHOWN ON THESE PLANS.
8. * HMA DIKE TRANSITION AND CONCRETE CURB TRANSITION, SEE SHEET C-1.

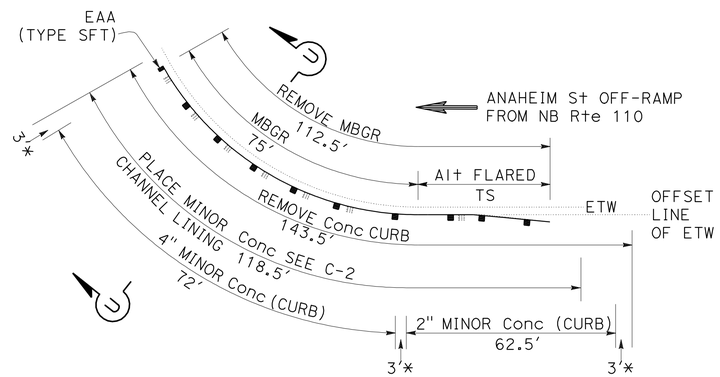

3 PM 3.11

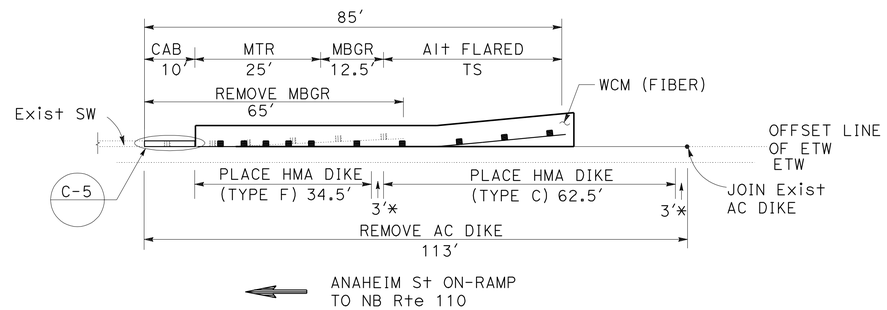

4 PM 3.44

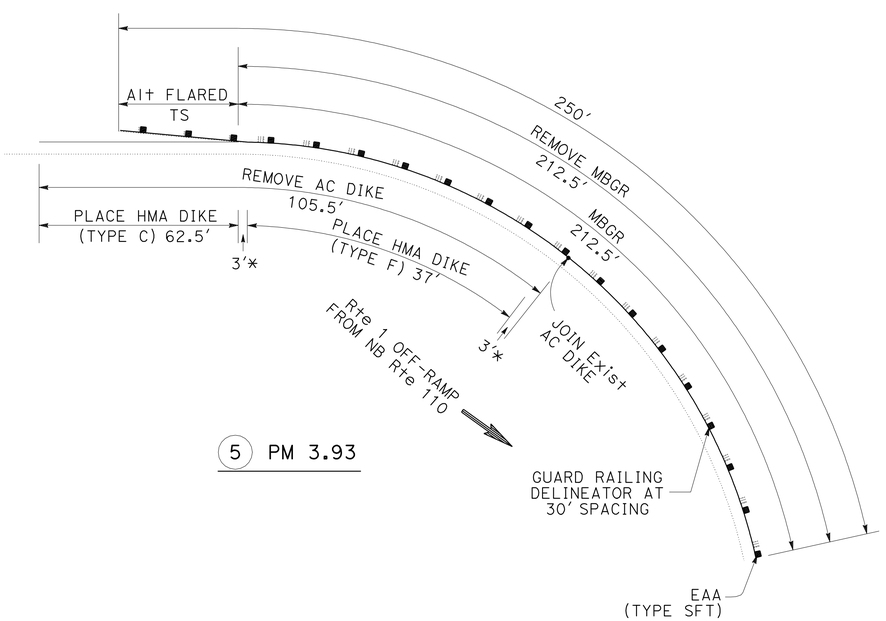

5 PM 3.93

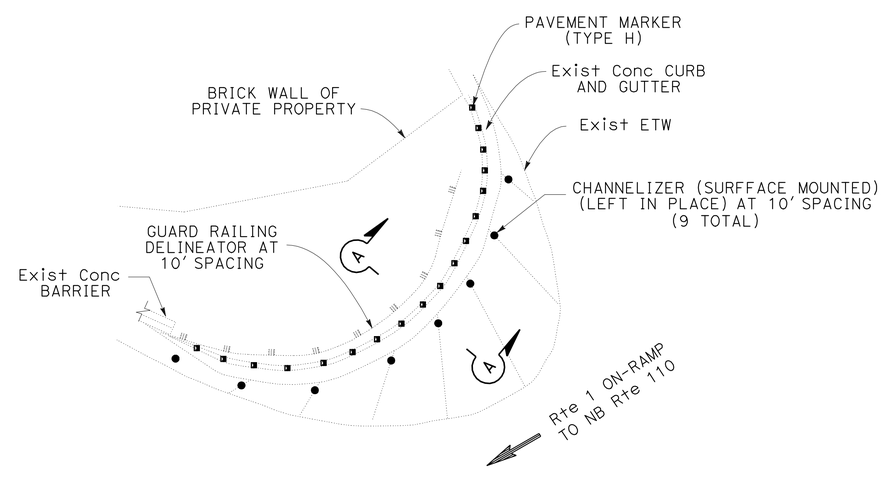

6 PM 4.20

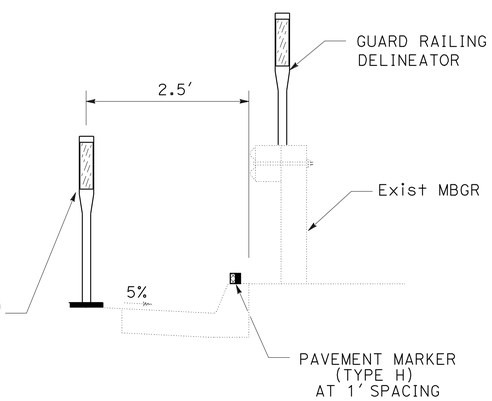

SECTION A-A

CONSTRUCTION DETAILS

NO SCALE

C-14

STATE OF CALIFORNIA - DEPARTMENT OF TRANSPORTATION
Caltrans® TRAFFIC DESIGN

FUNCTIONAL SUPERVISOR: MOHAMMED CHOWDHURY
CALCULATED-DESIGNED BY: RICHARD KHAW
CHECKED BY: ESTHER M. KIM
REVISED BY
DATE REVISED

LAST REVISION 00-00-00
DATE PLOTTED => 21-JUL-2010
TIME PLOTTED => 14:47

Dist	COUNTY	ROUTE	POST MILES TOTAL PROJECT	SHEET No.	TOTAL SHEETS
07	LA	110	0.8/21.3	17	111

REGISTERED CIVIL ENGINEER 5/6/10 DATE

6/28/10
PLANS APPROVAL DATE

REGISTERED PROFESSIONAL ENGINEER ESTHER M. KIM No. 48363 Exp. 6/30/10 CIVIL STATE OF CALIFORNIA

THE STATE OF CALIFORNIA OR ITS OFFICERS OR AGENTS SHALL NOT BE RESPONSIBLE FOR THE ACCURACY OR COMPLETENESS OF SCANNED COPIES OF THIS PLAN SHEET.

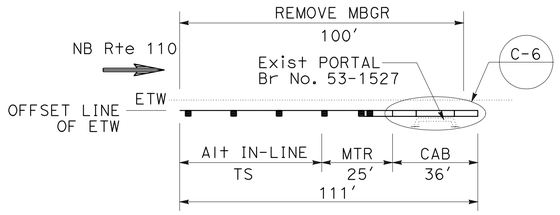

7 PM 4.88

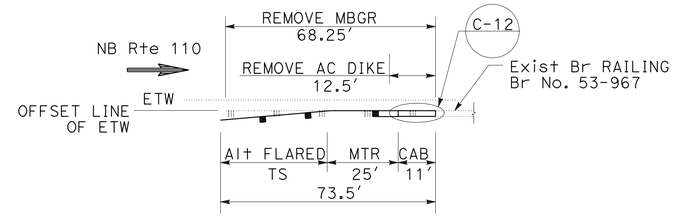

8 PM 4.96

NOTE:

1. FOR NOTES, SEE SHEET C-14.

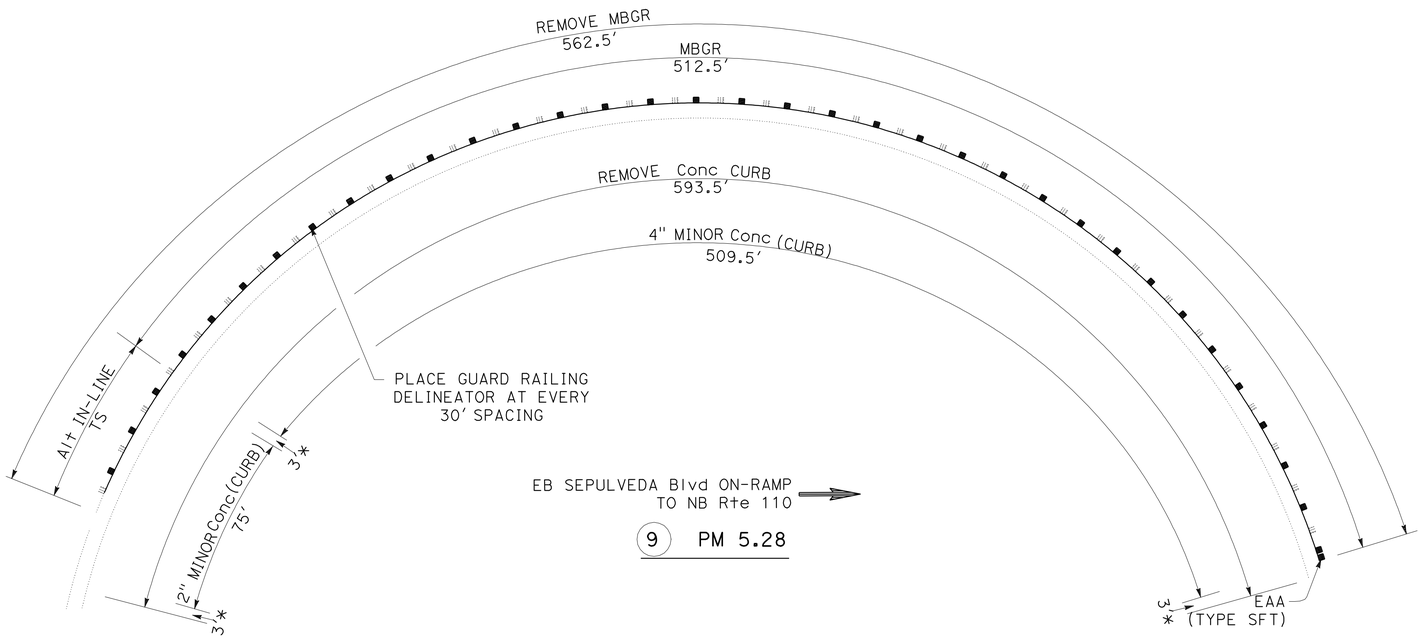

9 PM 5.28

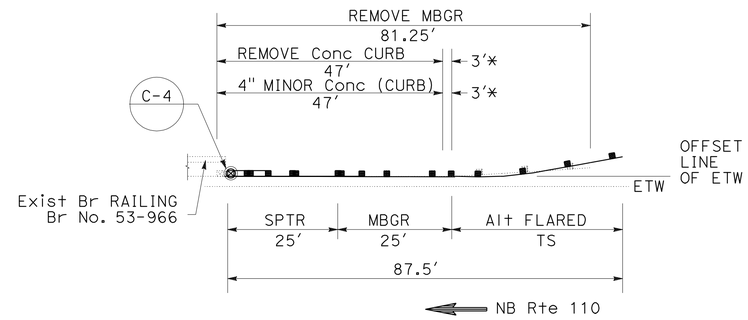

10 PM 5.38

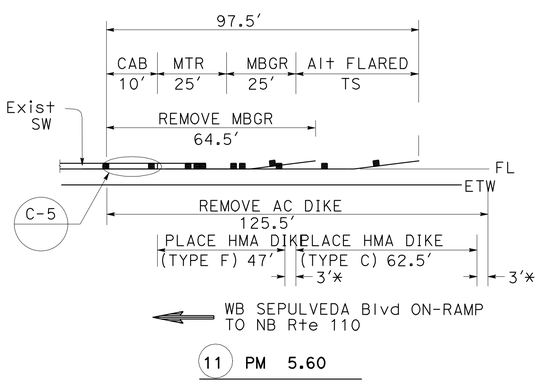

11 PM 5.60

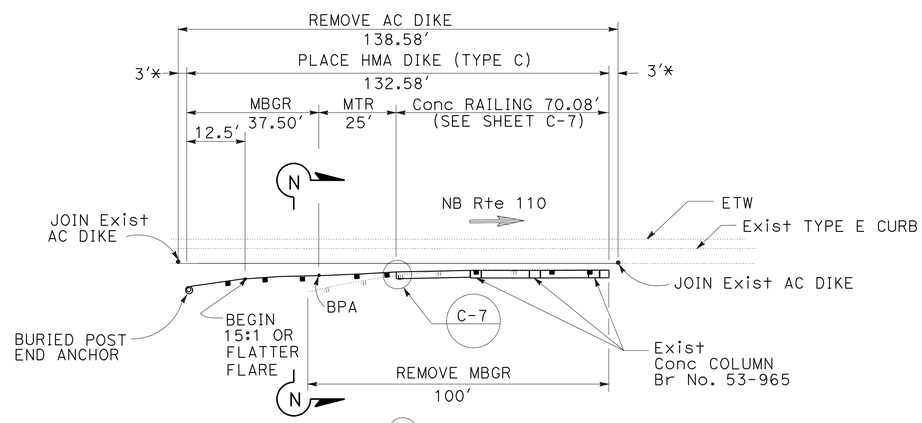

12 PM 6.10

CONSTRUCTION DETAILS

NO SCALE

C-15

STATE OF CALIFORNIA - DEPARTMENT OF TRANSPORTATION
Caltrans® TRAFFIC DESIGN

FUNCTIONAL SUPERVISOR: MOHAMMED CHOWDHURY
CALCULATED-DESIGNED BY: RICHARD KHAW
CHECKED BY: ESTHER M. KIM
REVISED BY
DATE REVISED

LAST REVISION 00-00-00
DATE PLOTTED => 21-JUL-2010
TIME PLOTTED => 14:48

Dist	COUNTY	ROUTE	POST MILES TOTAL PROJECT	SHEET No.	TOTAL SHEETS
07	LA	110	R1.3/21.3	18	111

REGISTERED CIVIL ENGINEER 5/6/10 DATE

6/28/10
PLANS APPROVAL DATE

REGISTERED PROFESSIONAL ENGINEER ESTHER M. KIM No. 48363 Exp 6/30/10 CIVIL STATE OF CALIFORNIA

THE STATE OF CALIFORNIA OR ITS OFFICERS OR AGENTS SHALL NOT BE RESPONSIBLE FOR THE ACCURACY OR COMPLETENESS OF SCANNED COPIES OF THIS PLAN SHEET.

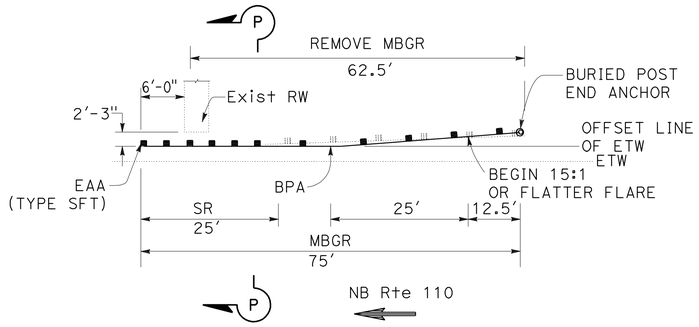

13 PM 6.29

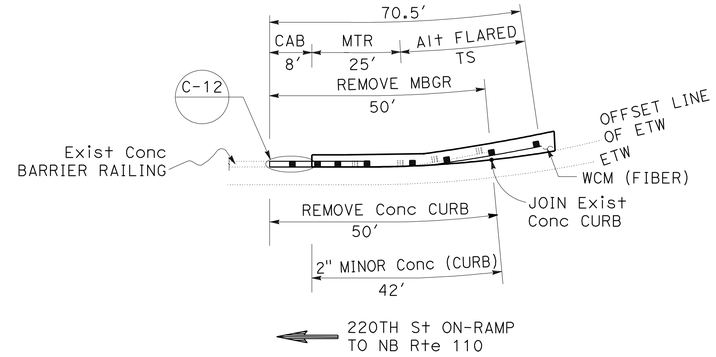

14 PM 6.87

NOTE:

1. FOR NOTES, SEE SHEET C-14.

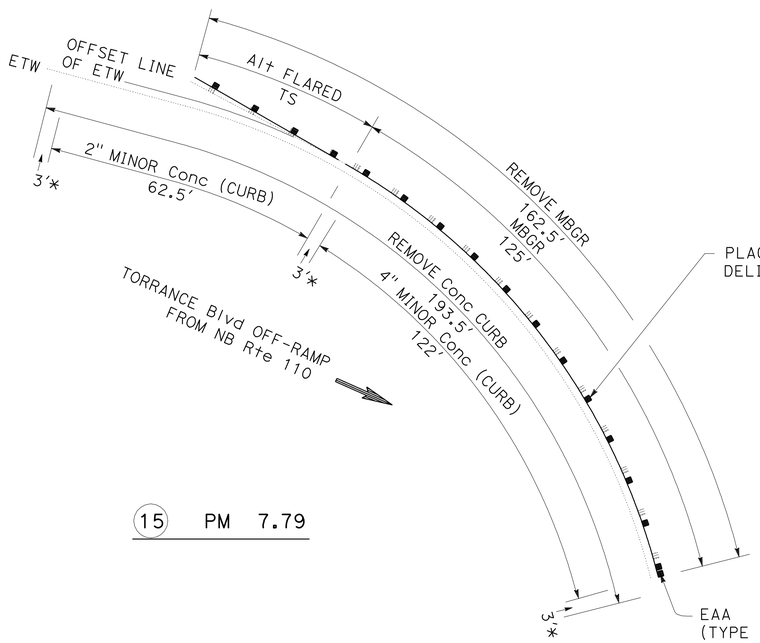

15 PM 7.79

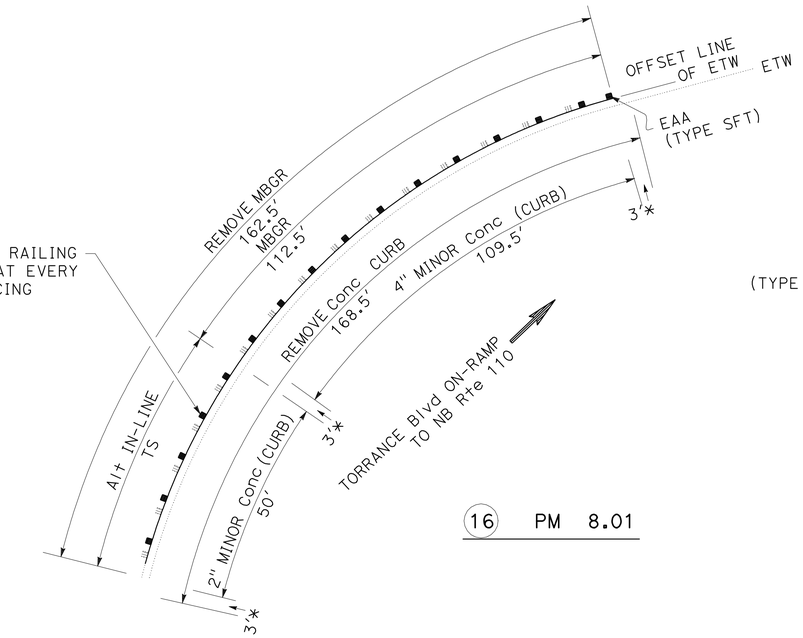

16 PM 8.01

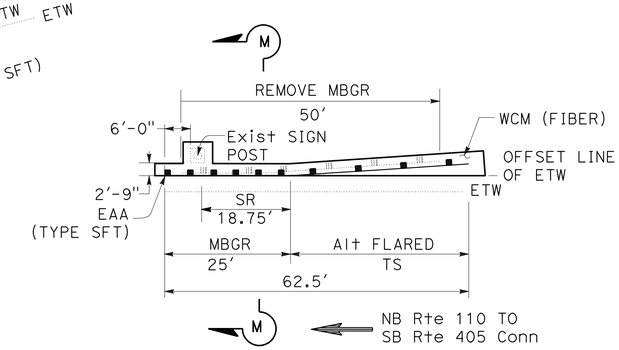

17 PM 8.37

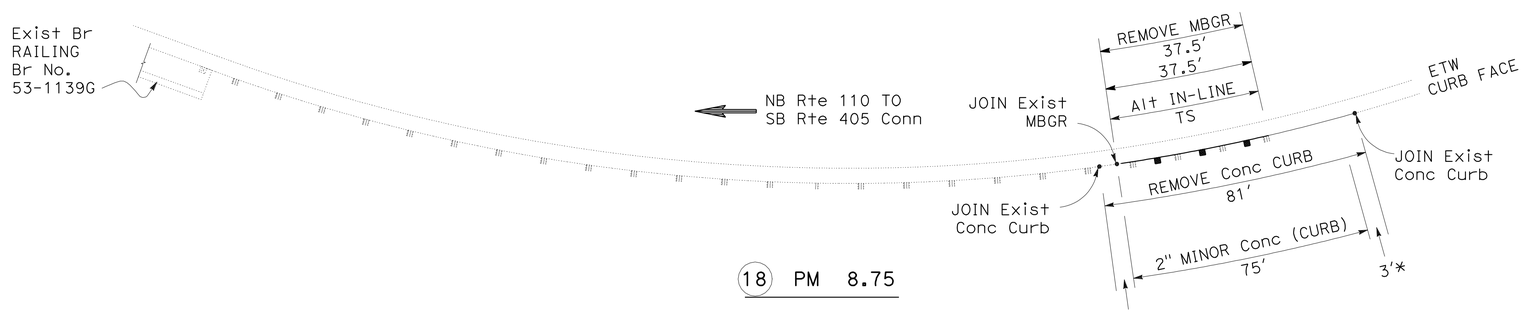

18 PM 8.75

CONSTRUCTION DETAILS

NO SCALE

C-16

STATE OF CALIFORNIA - DEPARTMENT OF TRANSPORTATION
Caltrans TRAFFIC DESIGN

FUNCTIONAL SUPERVISOR: MOHAMMED CHOWDHURY
CALCULATED-DESIGNED BY: RICHARD KHAW
CHECKED BY: ESTHER M. KIM
REVISED BY
DATE REVISED

LAST REVISION 00-00-00
DATE PLOTTED => 21-JUL-2010
TIME PLOTTED => 14:48

Dist	COUNTY	ROUTE	POST MILES TOTAL PROJECT	SHEET No.	TOTAL SHEETS
07	LA	110	R1.3/21.3	19	111

REGISTERED CIVIL ENGINEER 5/6/10 DATE

6/28/10
PLANS APPROVAL DATE

REGISTERED PROFESSIONAL ENGINEER ESTHER M. KIM No. 48363 Exp 6/30/10 CIVIL STATE OF CALIFORNIA

THE STATE OF CALIFORNIA OR ITS OFFICERS OR AGENTS SHALL NOT BE RESPONSIBLE FOR THE ACCURACY OR COMPLETENESS OF SCANNED COPIES OF THIS PLAN SHEET.

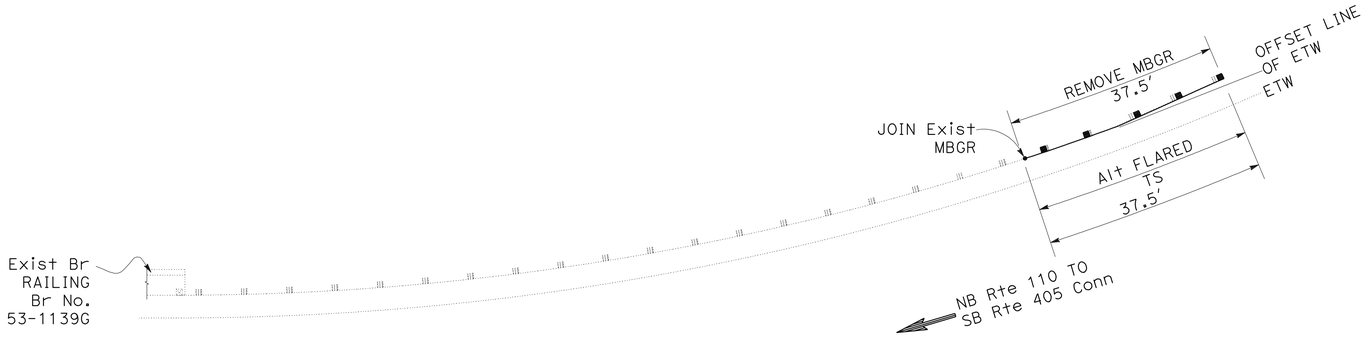

NOTE:

1. FOR NOTES, SEE SHEET C-14.

19 PM 8.75

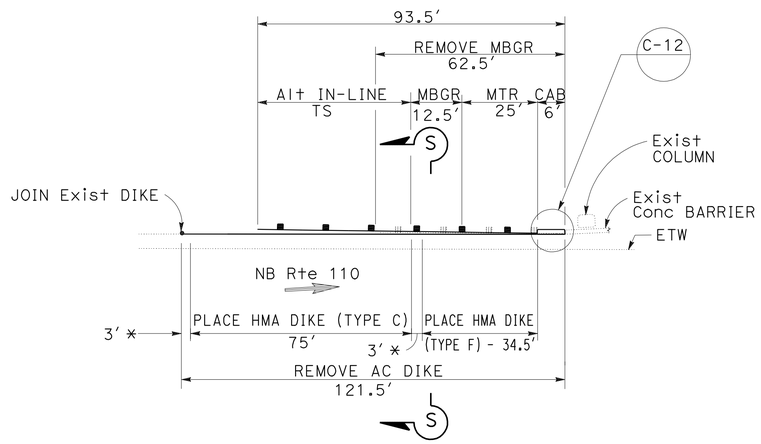

20 PM 8.84

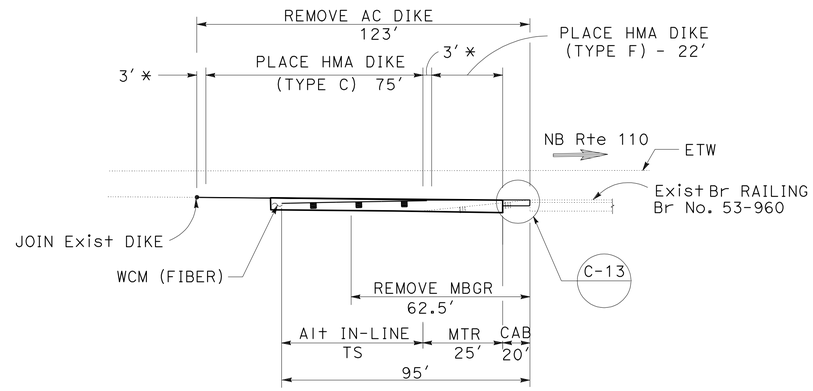

21 PM 9.00

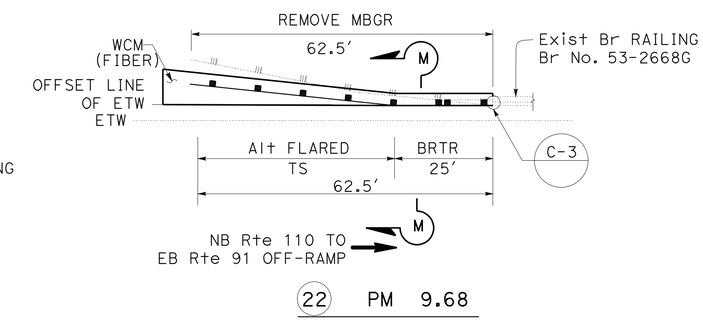

22 PM 9.68

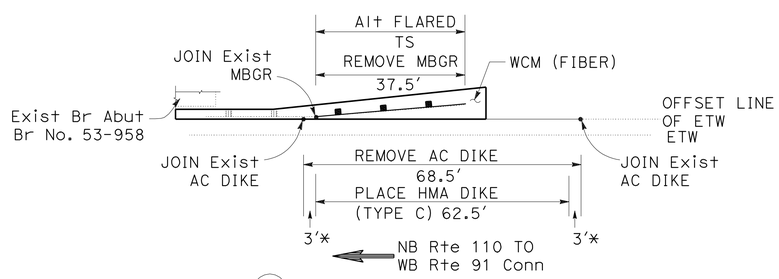

23 PM 9.92

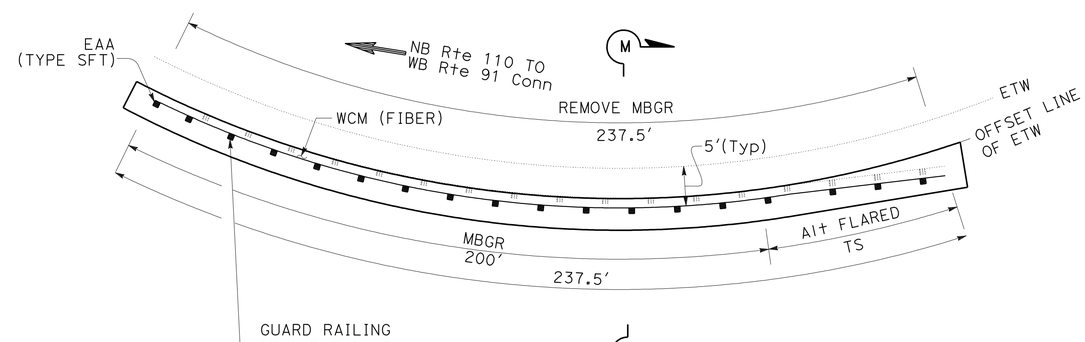

24 PM 9.92

CONSTRUCTION DETAILS

NO SCALE

C-17

STATE OF CALIFORNIA - DEPARTMENT OF TRANSPORTATION
Caltrans TRAFFIC DESIGN

FUNCTIONAL SUPERVISOR: MOHAMMED CHOWDHURY
CALCULATED-DESIGNED BY: ESTHER M. KIM
CHECKED BY: RICHARD KHAW
REVISED BY
DATE REVISED

LAST REVISION 00-00-00
DATE PLOTTED => 21-JUL-2010
TIME PLOTTED => 14:48

Dist	COUNTY	ROUTE	POST MILES TOTAL PROJECT	SHEET No.	TOTAL SHEETS
07	LA	110	R1.3/21.3	20	111

REGISTERED CIVIL ENGINEER 5/6/10 DATE

6/28/10
PLANS APPROVAL DATE

REGISTERED PROFESSIONAL ENGINEER ESTHER M. KIM No. 48363 Exp 6/30/10 CIVIL STATE OF CALIFORNIA

THE STATE OF CALIFORNIA OR ITS OFFICERS OR AGENTS SHALL NOT BE RESPONSIBLE FOR THE ACCURACY OR COMPLETENESS OF SCANNED COPIES OF THIS PLAN SHEET.

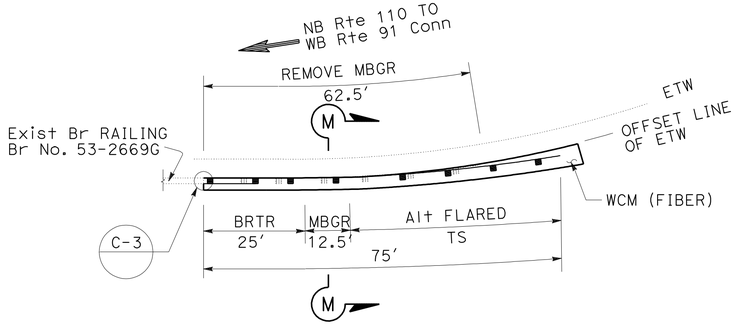

25 PM 9.92

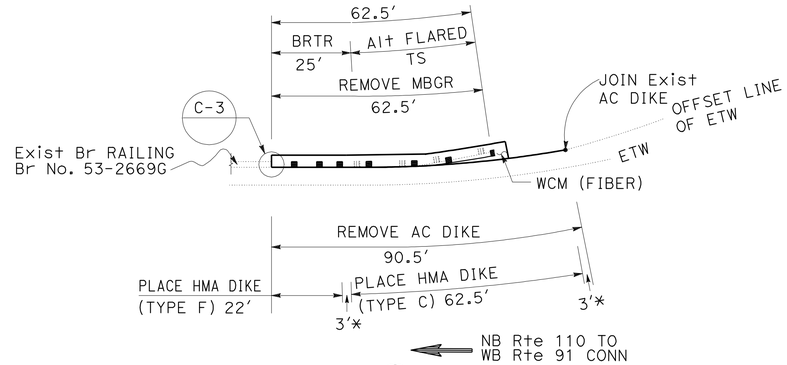

26 PM 9.92

NOTE:

1. FOR NOTES, SEE SHEET C-14.

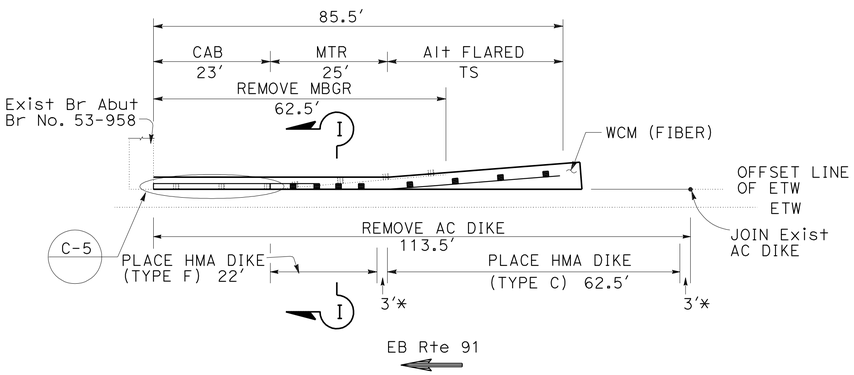

27 PM 10.15

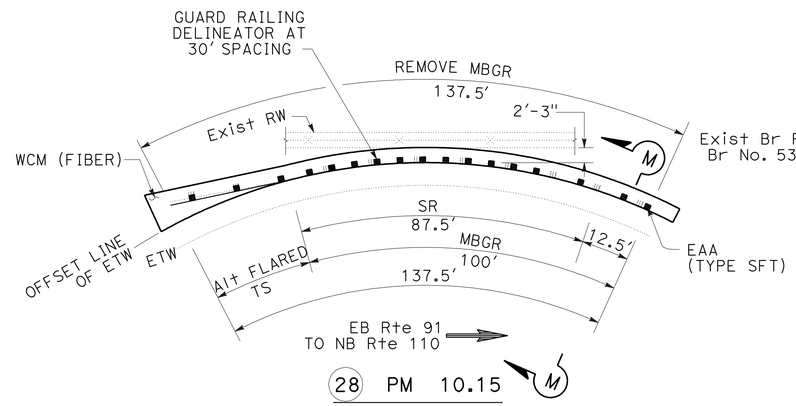

28 PM 10.15

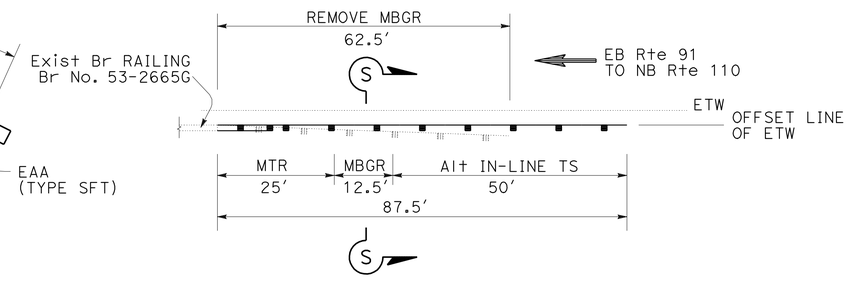

29 PM 10.15

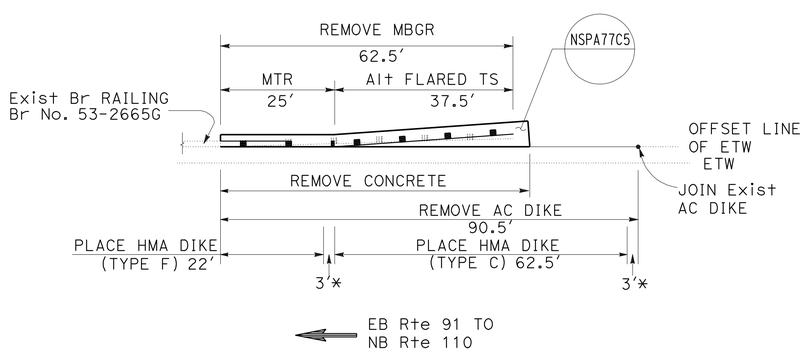

30 PM 10.15

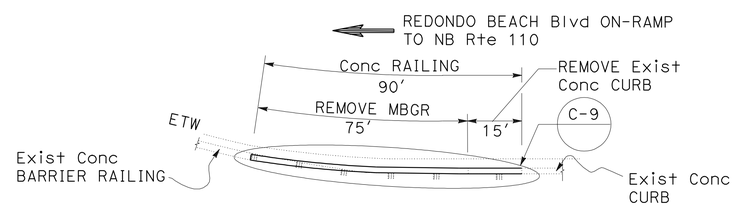

31 PM 11.27

CONSTRUCTION DETAILS

NO SCALE

C-18

RICHARD KHAW | ESTHER M. KIM | REVISED BY | DATE REVISED | CALCULATED-DESIGNED BY | CHECKED BY | FUNCTIONAL SUPERVISOR | MOHAMMED CHOWDHURY

STATE OF CALIFORNIA - DEPARTMENT OF TRANSPORTATION
Caltrans TRAFFIC DESIGN

LAST REVISION 00-00-00 | DATE PLOTTED => 21-JUL-2010 | TIME PLOTTED => 14:48

Dist	COUNTY	ROUTE	POST MILES TOTAL PROJECT	SHEET No.	TOTAL SHEETS
07	LA	110	R1.3/21.3	21	111

REGISTERED CIVIL ENGINEER 5/6/10 DATE

6/28/10
PLANS APPROVAL DATE

REGISTERED PROFESSIONAL ENGINEER ESTHER M. KIM No. 48363 Exp 6/30/10 CIVIL STATE OF CALIFORNIA

THE STATE OF CALIFORNIA OR ITS OFFICERS OR AGENTS SHALL NOT BE RESPONSIBLE FOR THE ACCURACY OR COMPLETENESS OF SCANNED COPIES OF THIS PLAN SHEET.

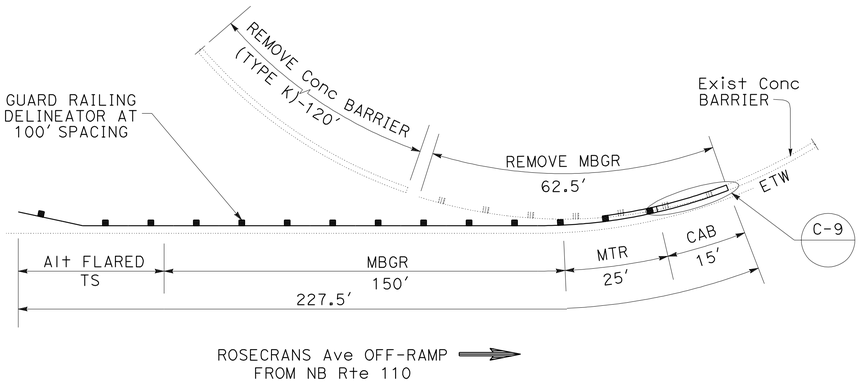

32 PM 11.70

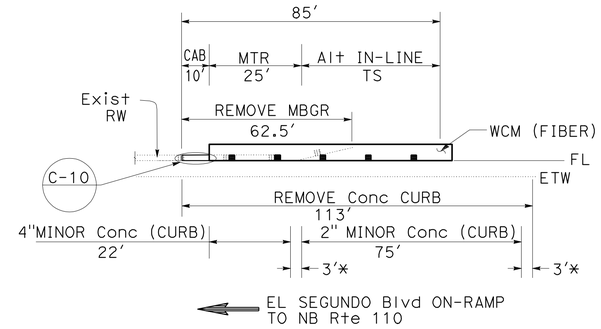

33 PM 12.85

NOTE:

1. FOR NOTES, SEE SHEET C-14.

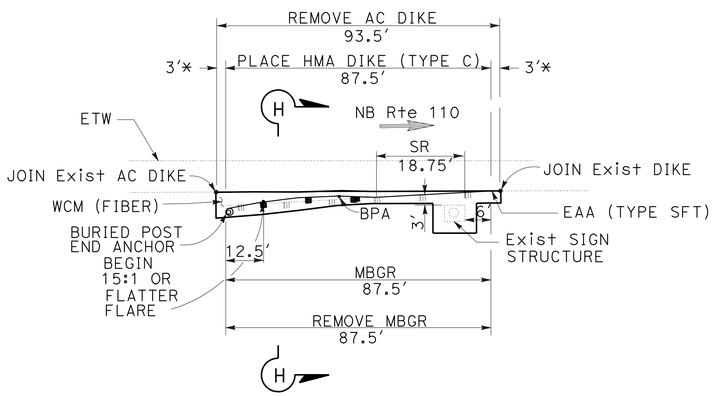

34 PM 12.97

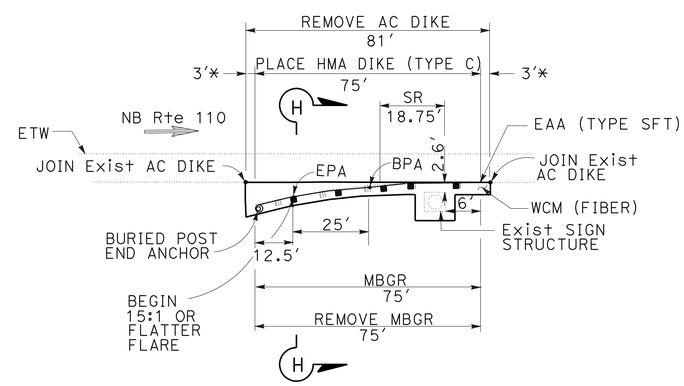

35 PM 13.09

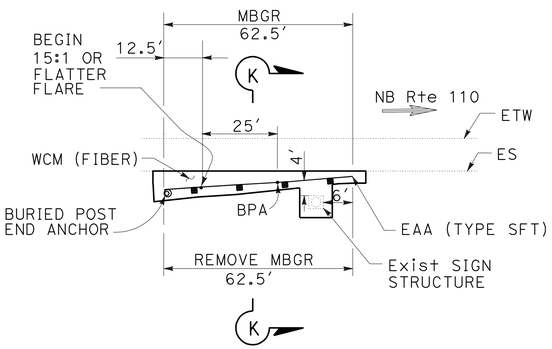

36 PM 13.29

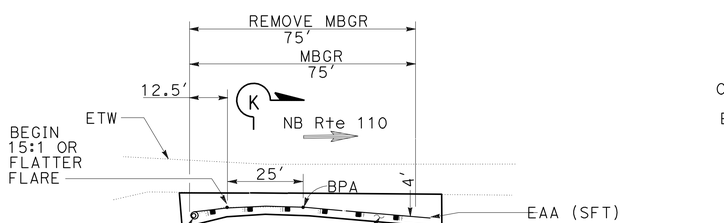

37 PM 13.38

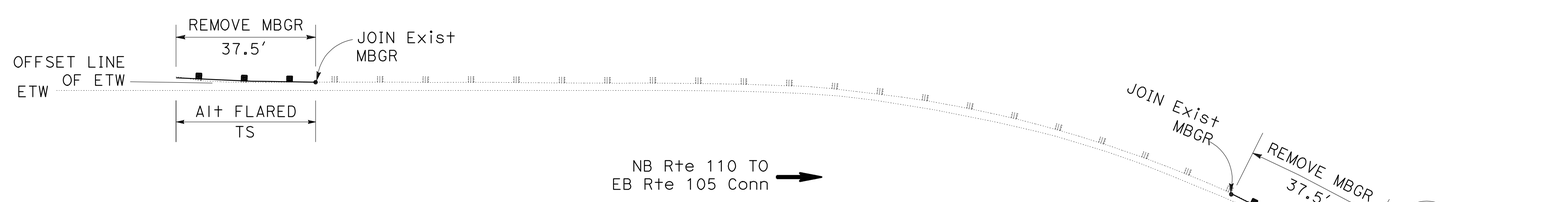

38 PM 13.43

CONSTRUCTION DETAILS

NO SCALE

C-19

STATE OF CALIFORNIA - DEPARTMENT OF TRANSPORTATION
Caltrans TRAFFIC DESIGN

FUNCTIONAL SUPERVISOR: MOHAMMED CHOWDHURY
CALCULATED-DESIGNED BY: RICHARD KHAW
CHECKED BY: ESTHER M. KIM
REVISED BY / DATE REVISED

LAST REVISION DATE PLOTTED => 21-JUL-2010
00-00-00 TIME PLOTTED => 14:49

Dist	COUNTY	ROUTE	POST MILES TOTAL PROJECT	SHEET No.	TOTAL SHEETS
07	LA	110	R1.3/21.3	22	111

REGISTERED CIVIL ENGINEER 5/6/10 DATE

6/28/10
PLANS APPROVAL DATE

REGISTERED PROFESSIONAL ENGINEER ESTHER M. KIM No. 48363 Exp 6/30/10 CIVIL STATE OF CALIFORNIA

THE STATE OF CALIFORNIA OR ITS OFFICERS OR AGENTS SHALL NOT BE RESPONSIBLE FOR THE ACCURACY OR COMPLETENESS OF SCANNED COPIES OF THIS PLAN SHEET.

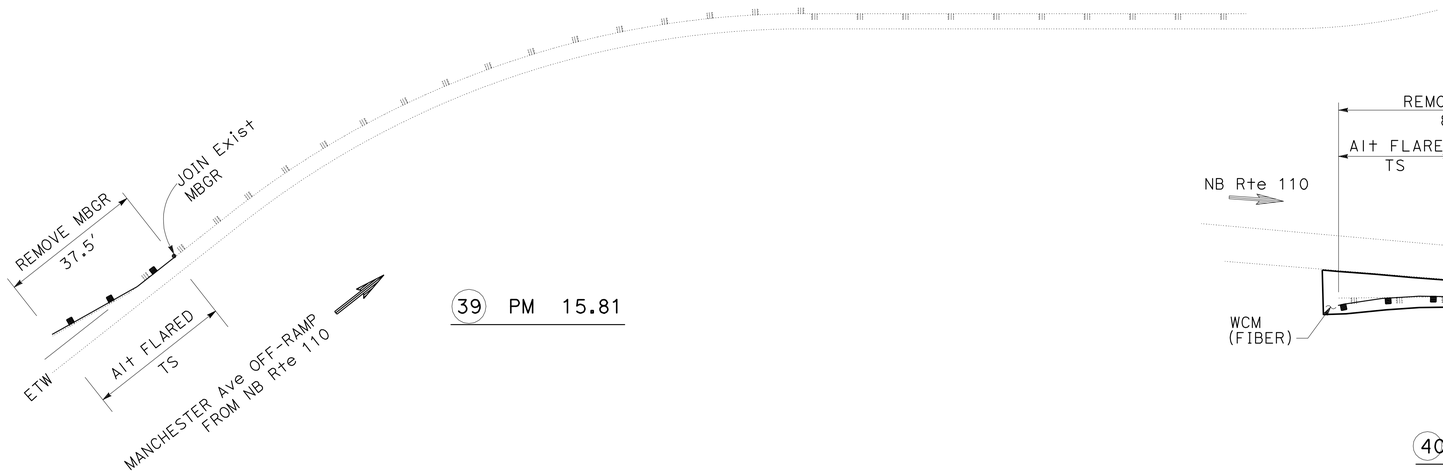

39 PM 15.81

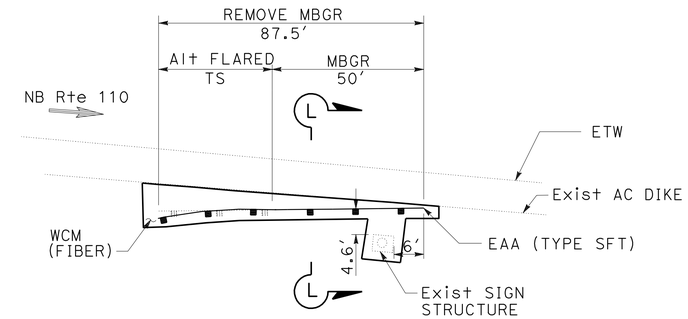

40 PM 15.87

NOTE:

1. FOR NOTES, SEE SHEET C-14.

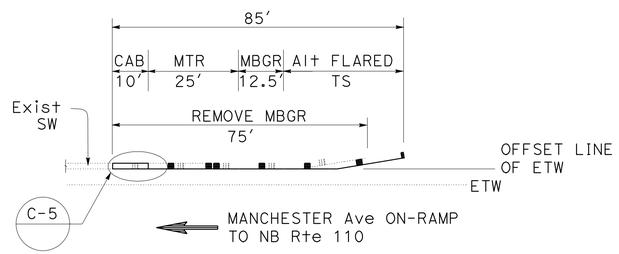

41 PM 16.14

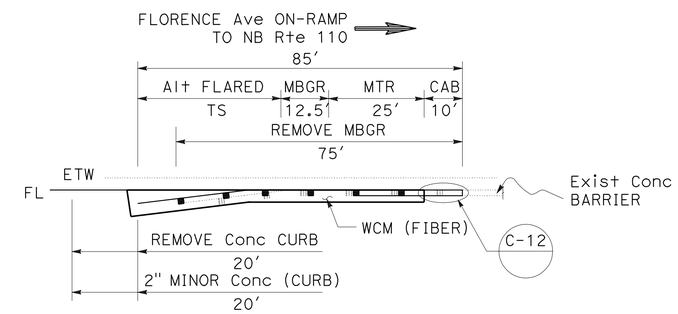

42 PM 17.15

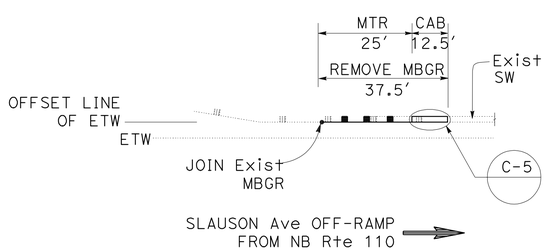

43 PM 17.85

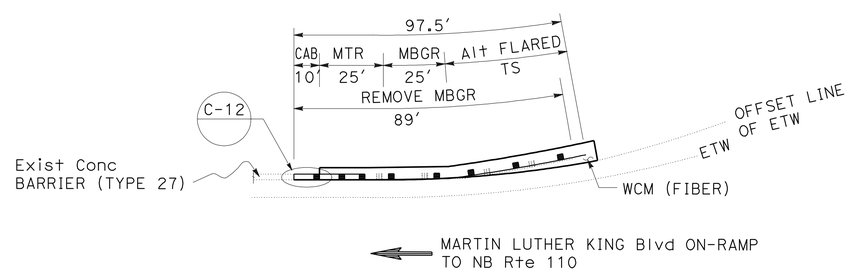

44 PM 19.44

CONSTRUCTION DETAILS

NO SCALE

C-20

STATE OF CALIFORNIA - DEPARTMENT OF TRANSPORTATION
Caltrans® TRAFFIC DESIGN

FUNCTIONAL SUPERVISOR: MOHAMMED CHOWDHURY
CALCULATED-DESIGNED BY: RICHARD KHAW
CHECKED BY: ESTHER M. KIM
REVISED BY
DATE REVISED

LAST REVISION 00-00-00
DATE PLOTTED => 21-JUL-2010
TIME PLOTTED => 14:49

Dist	COUNTY	ROUTE	POST MILES TOTAL PROJECT	SHEET No.	TOTAL SHEETS
07	LA	110	R1.3/21.3	23	111

REGISTERED CIVIL ENGINEER 5/6/10 DATE

6/28/10
PLANS APPROVAL DATE

REGISTERED PROFESSIONAL ENGINEER ESTHER M. KIM No. 48363 Exp. 6/30/10 CIVIL STATE OF CALIFORNIA

THE STATE OF CALIFORNIA OR ITS OFFICERS OR AGENTS SHALL NOT BE RESPONSIBLE FOR THE ACCURACY OR COMPLETENESS OF SCANNED COPIES OF THIS PLAN SHEET.

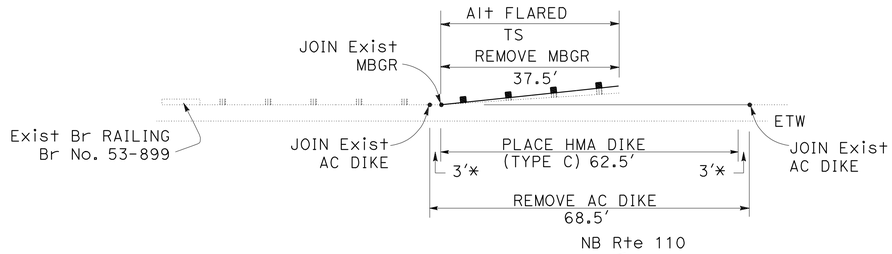

45 PM 19.90

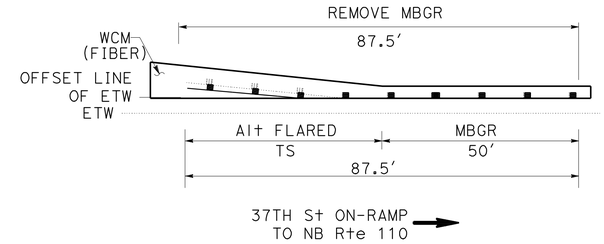

46 PM 20.14

NOTE:

1. FOR NOTES, SEE SHEET C-14.

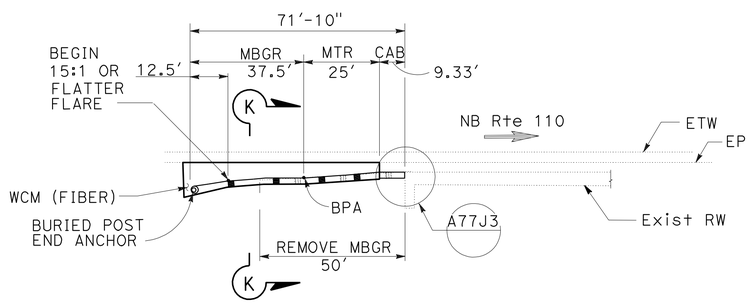

47 PM 20.80

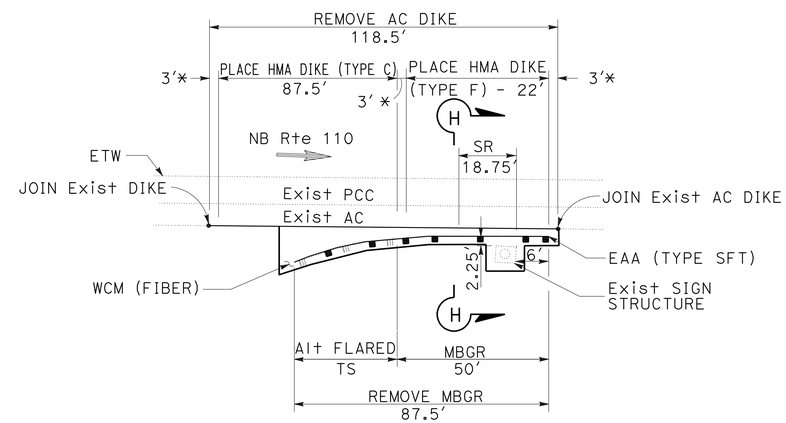

48 PM 20.96

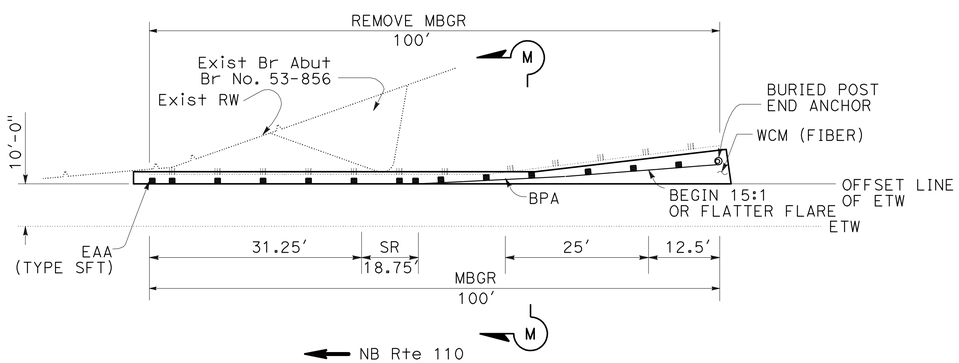

49 PM 21.01

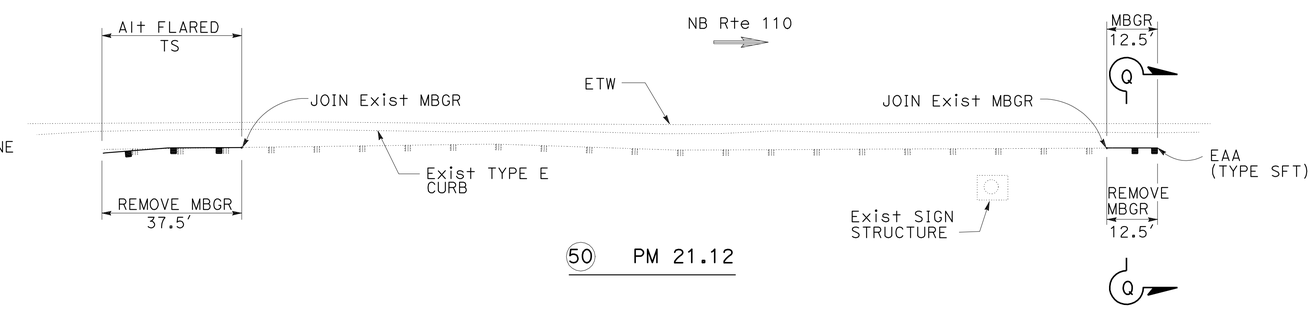

50 PM 21.12

CONSTRUCTION DETAILS

NO SCALE

C-21

STATE OF CALIFORNIA - DEPARTMENT OF TRANSPORTATION
Caltrans TRAFFIC DESIGN

FUNCTIONAL SUPERVISOR: MOHAMMED CHOWDHURY
CALCULATED-DESIGNED BY: RICHARD KHAW
CHECKED BY: ESTHER M. KIM
REVISED BY
DATE REVISED

LAST REVISION 00-00-00
DATE PLOTTED => 21-JUL-2010
TIME PLOTTED => 14:49

Dist	COUNTY	ROUTE	POST MILES TOTAL PROJECT	SHEET No.	TOTAL SHEETS
07	LA	110	R1.3/21.3	24	111

REGISTERED CIVIL ENGINEER 5/6/10 DATE

6/28/10
PLANS APPROVAL DATE

REGISTERED PROFESSIONAL ENGINEER ESTHER M. KIM No. 48363 Exp 6/30/10 CIVIL STATE OF CALIFORNIA

THE STATE OF CALIFORNIA OR ITS OFFICERS OR AGENTS SHALL NOT BE RESPONSIBLE FOR THE ACCURACY OR COMPLETENESS OF SCANNED COPIES OF THIS PLAN SHEET.

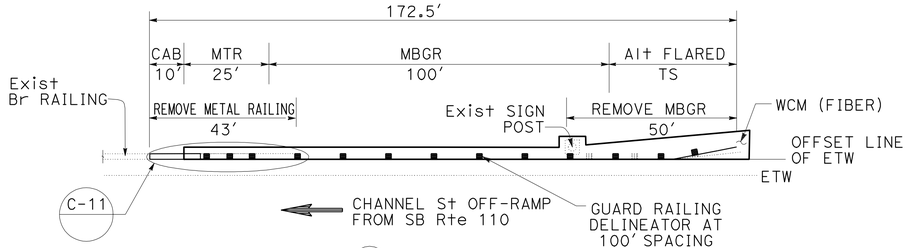

51 PM R1.39

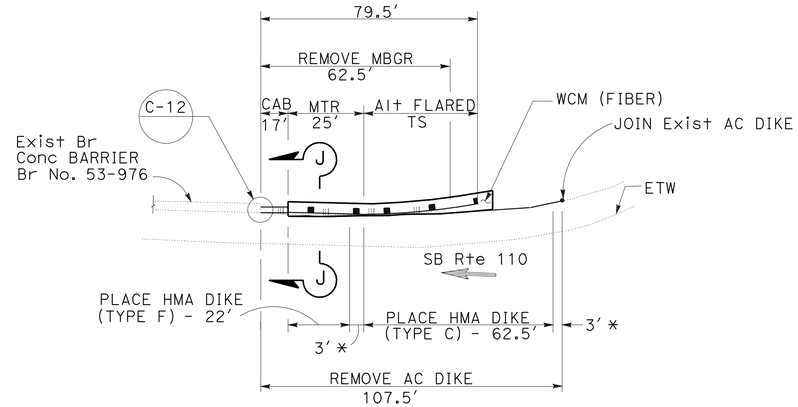

52 PM 2.70

NOTE:

1. FOR NOTES, SEE SHEET C-14.

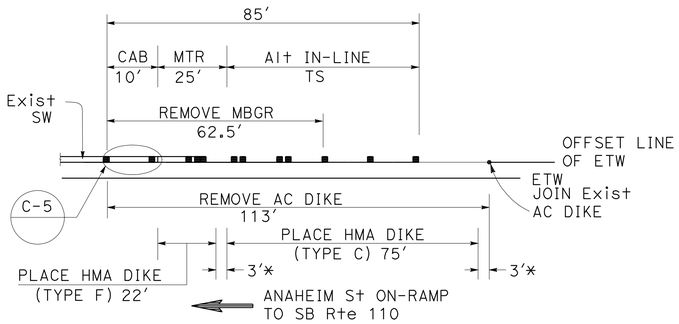

53 PM 3.13

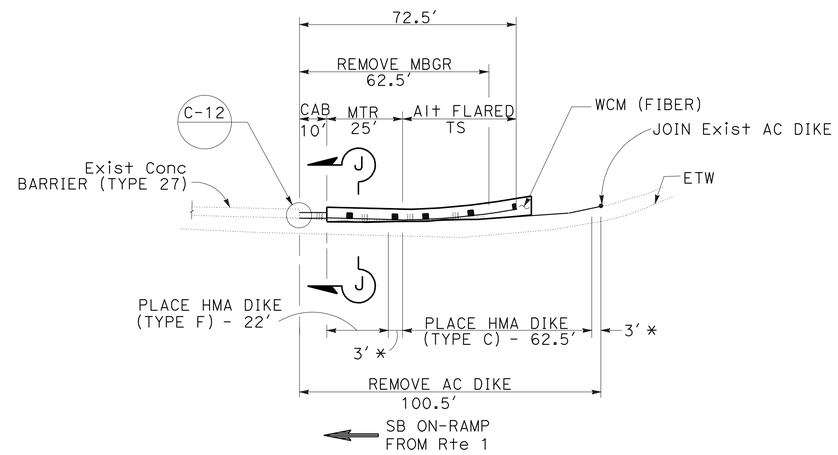

54 PM 3.92

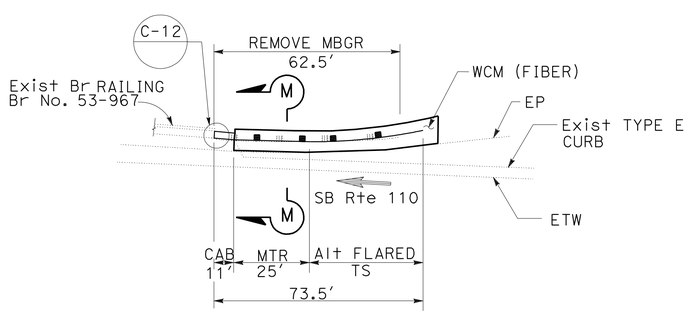

55 PM 5.06

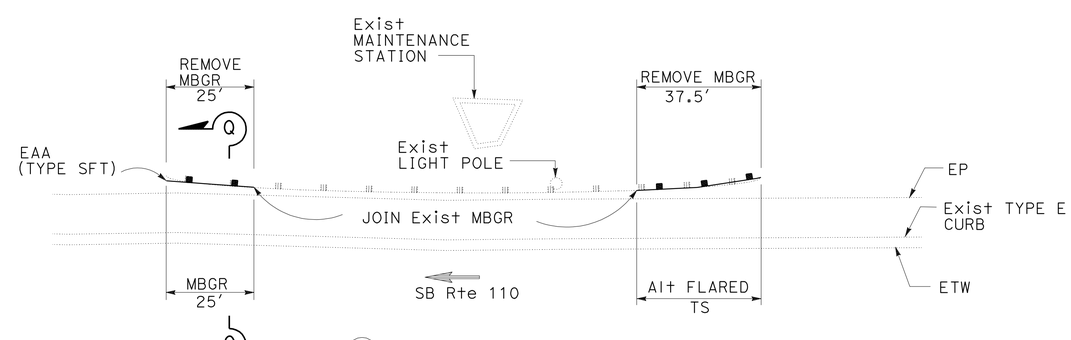

56 PM 5.18

CONSTRUCTION DETAILS

NO SCALE

C-22

STATE OF CALIFORNIA - DEPARTMENT OF TRANSPORTATION
Caltrans® TRAFFIC DESIGN

FUNCTIONAL SUPERVISOR: MOHAMMED CHOWDHURY
CALCULATED-DESIGNED BY: RICHARD KHAW
CHECKED BY: ESTHER M. KIM
REVISED BY
DATE REVISED

LAST REVISION 00-00-00
DATE PLOTTED => 21-JUL-2010
TIME PLOTTED => 14:49

Dist	COUNTY	ROUTE	POST MILES TOTAL PROJECT	SHEET No.	TOTAL SHEETS
07	LA	110	R1.3/21.3	25	111

REGISTERED CIVIL ENGINEER 5/6/10 DATE

6/28/10
PLANS APPROVAL DATE

REGISTERED PROFESSIONAL ENGINEER ESTHER M. KIM No. 48363 Exp. 6/30/10 CIVIL STATE OF CALIFORNIA

THE STATE OF CALIFORNIA OR ITS OFFICERS OR AGENTS SHALL NOT BE RESPONSIBLE FOR THE ACCURACY OR COMPLETENESS OF SCANNED COPIES OF THIS PLAN SHEET.

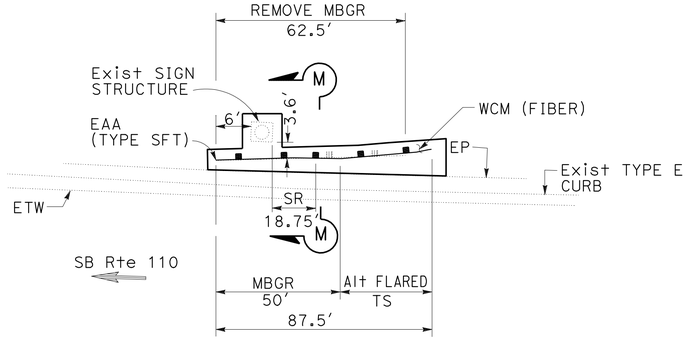

57 PM 5.64

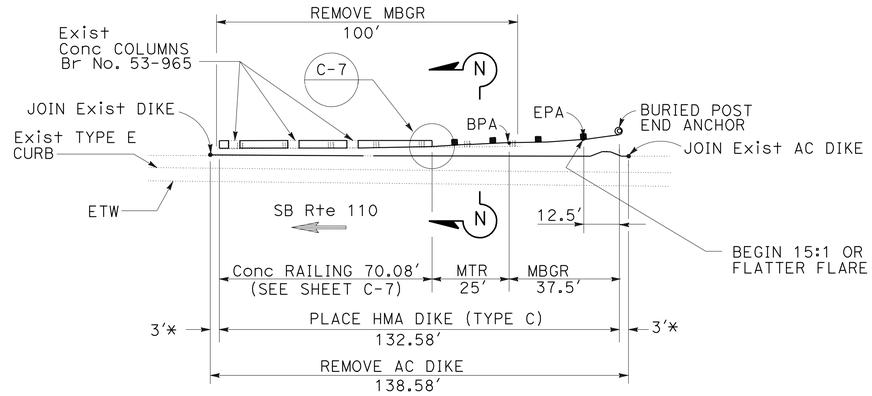

58 PM 6.07

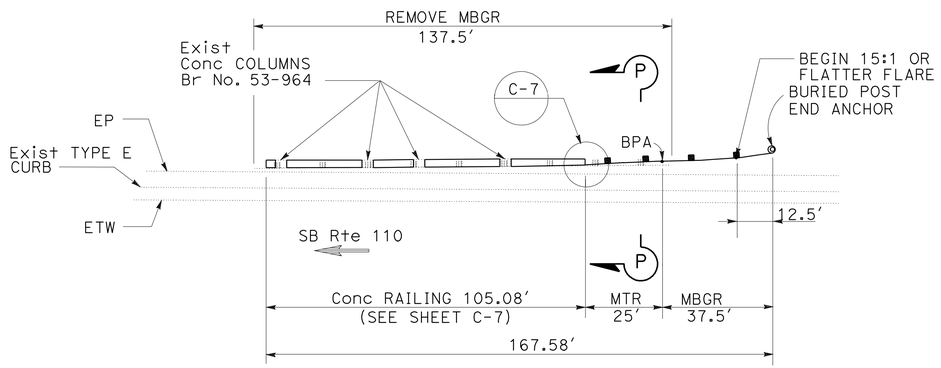

59 PM 6.44

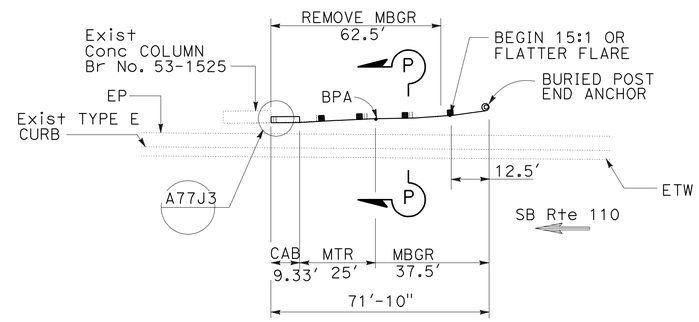

60 PM 6.68

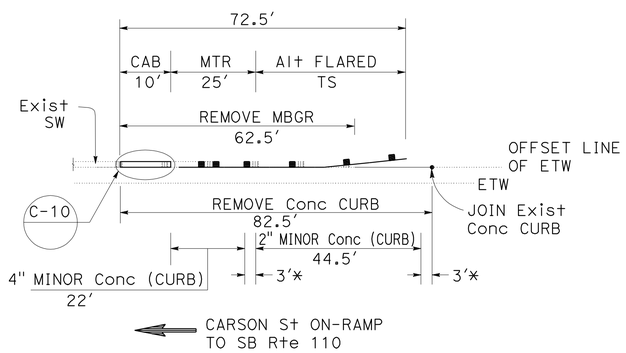

61 PM 6.88

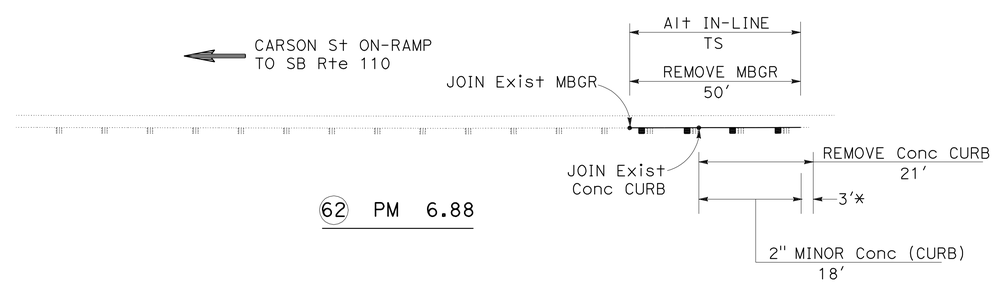

62 PM 6.88

NOTE:

1. FOR NOTES, SEE SHEET C-14.

CONSTRUCTION DETAILS

NO SCALE

C-23

STATE OF CALIFORNIA - DEPARTMENT OF TRANSPORTATION
Caltrans TRAFFIC DESIGN

FUNCTIONAL SUPERVISOR: MOHAMMED CHOWDHURY
CALCULATED-DESIGNED BY: RICHARD KHAW
CHECKED BY: ESTHER M. KIM
REVISED BY
DATE REVISED

LAST REVISION 00-00-00
DATE PLOTTED => 21-JUL-2010
TIME PLOTTED => 14:49

Dist	COUNTY	ROUTE	POST MILES TOTAL PROJECT	SHEET No.	TOTAL SHEETS
07	LA	110	R1.3/21.3	26	111

REGISTERED CIVIL ENGINEER 5/6/10 DATE

6/28/10
PLANS APPROVAL DATE

REGISTERED PROFESSIONAL ENGINEER ESTHER M. KIM No. 48363 Exp 6/30/10 CIVIL STATE OF CALIFORNIA

THE STATE OF CALIFORNIA OR ITS OFFICERS OR AGENTS SHALL NOT BE RESPONSIBLE FOR THE ACCURACY OR COMPLETENESS OF SCANNED COPIES OF THIS PLAN SHEET.

NOTE:

1. FOR NOTES, SEE SHEET C-14.

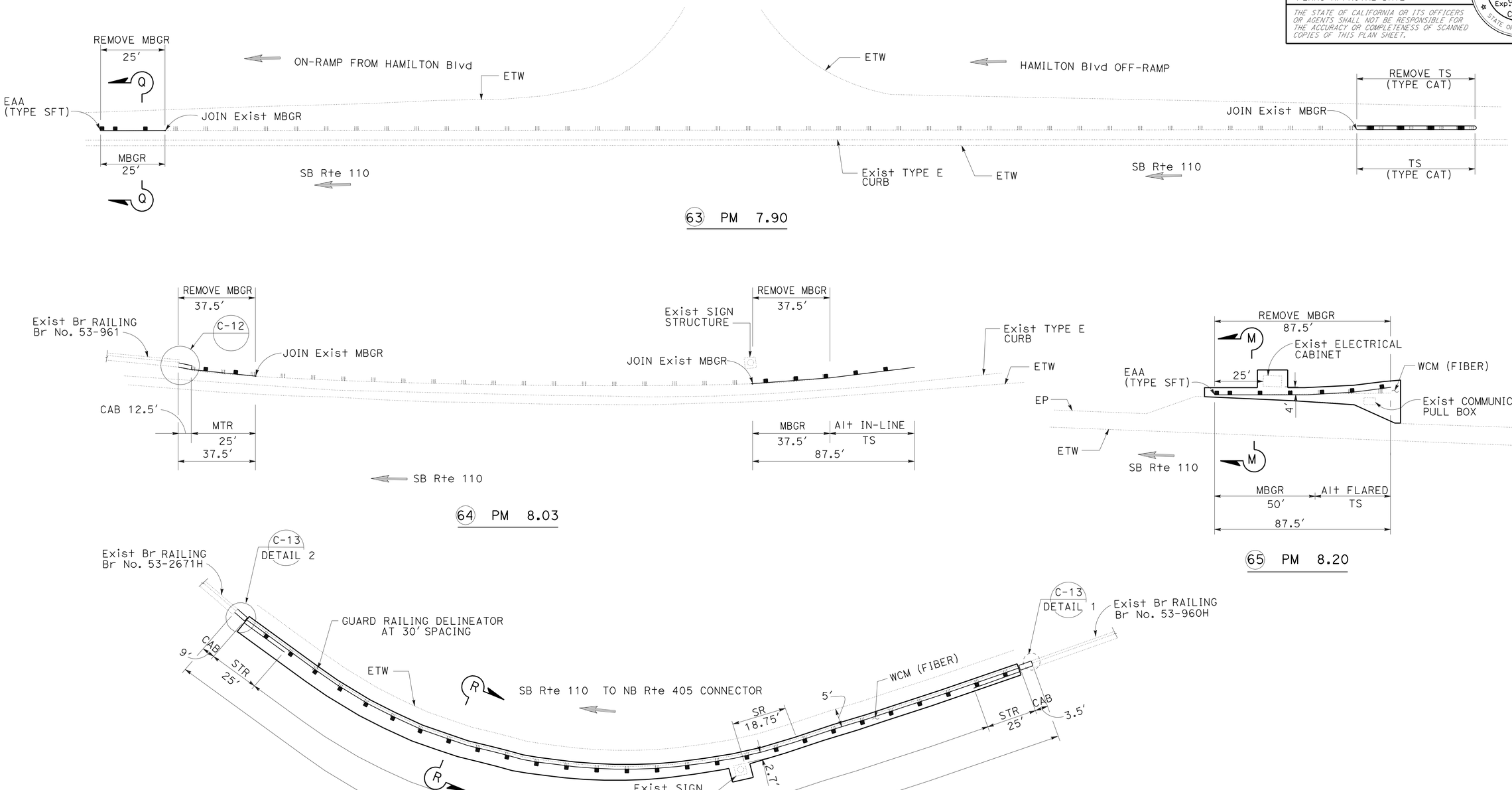

CONSTRUCTION DETAILS

NO SCALE

C-24

STATE OF CALIFORNIA - DEPARTMENT OF TRANSPORTATION
Caltrans® TRAFFIC DESIGN

FUNCTIONAL SUPERVISOR: MOHAMMED CHOWDHURY
CALCULATED-DESIGNED BY: RICHARD KHAW
CHECKED BY: ESTHER M. KIM
REVISED BY / DATE REVISED

LAST REVISION 00-00-00
DATE PLOTTED => 21-JUL-2010
TIME PLOTTED => 14:49

Dist	COUNTY	ROUTE	POST MILES TOTAL PROJECT	SHEET No.	TOTAL SHEETS
07	LA	110	R1.3/21.3	27	111

REGISTERED CIVIL ENGINEER 5/6/10 DATE

6/28/10
PLANS APPROVAL DATE

REGISTERED PROFESSIONAL ENGINEER ESTHER M. KIM No. 48363 Exp 6/30/10 CIVIL STATE OF CALIFORNIA

THE STATE OF CALIFORNIA OR ITS OFFICERS OR AGENTS SHALL NOT BE RESPONSIBLE FOR THE ACCURACY OR COMPLETENESS OF SCANNED COPIES OF THIS PLAN SHEET.

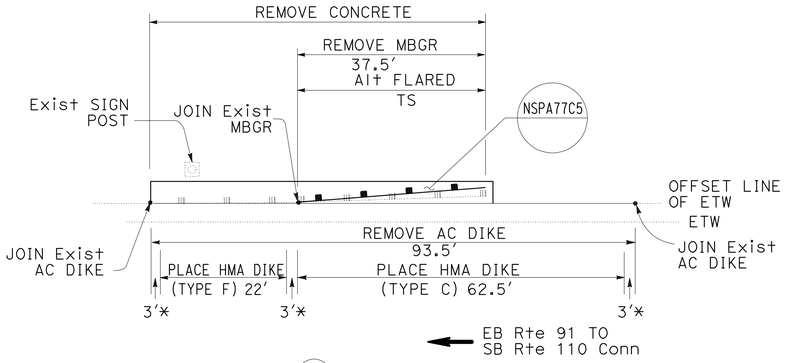

67 PM 9.39

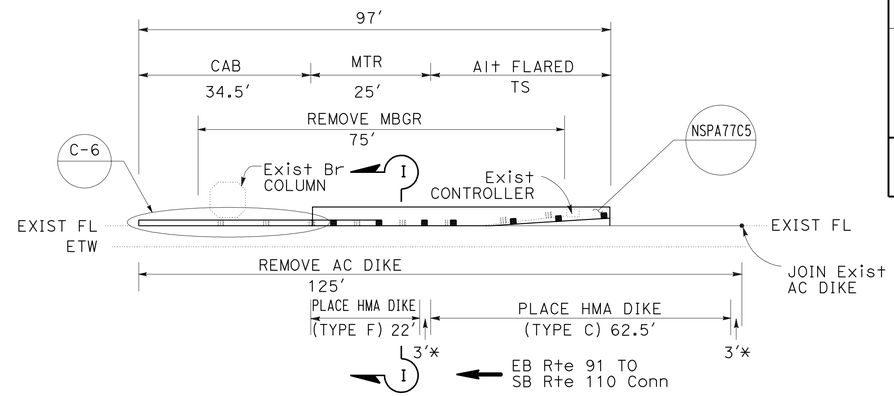

68 PM 9.39

NOTE:

1. FOR NOTES, SEE SHEET C-14.

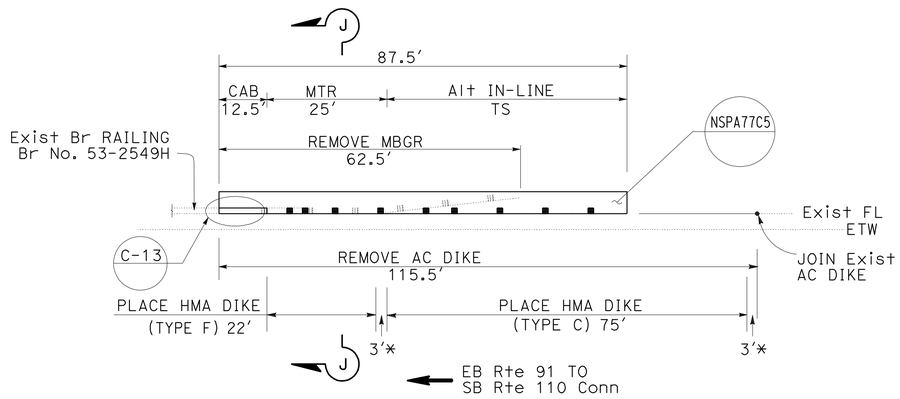

69 PM 9.39

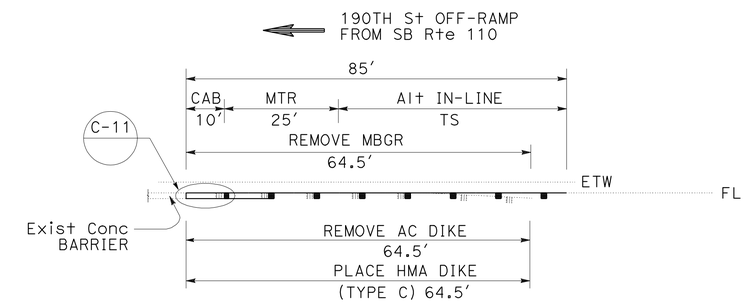

70 PM 9.43

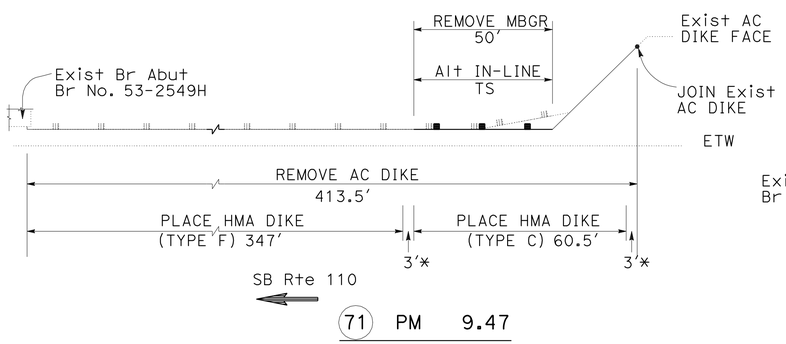

71 PM 9.47

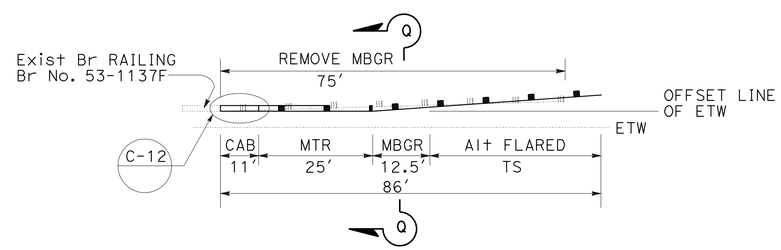

72 PM 9.65

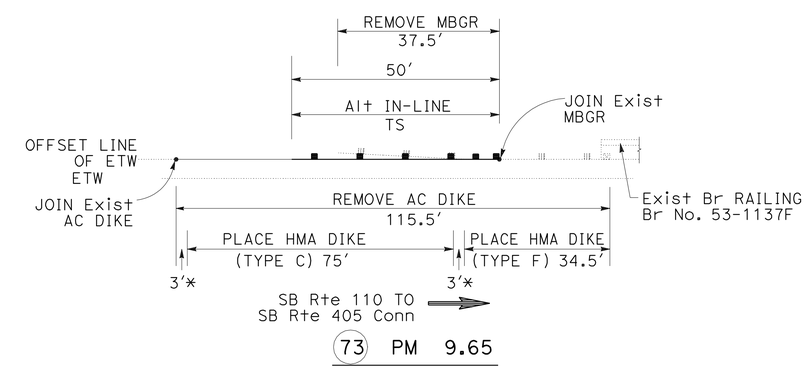

73 PM 9.65

CONSTRUCTION DETAILS

NO SCALE

C-25

STATE OF CALIFORNIA - DEPARTMENT OF TRANSPORTATION
Caltrans® TRAFFIC DESIGN

FUNCTIONAL SUPERVISOR: MOHAMMED CHOWDHURY
CALCULATED-DESIGNED BY: RICHARD KHAW
CHECKED BY: ESTHER M. KIM
REVISED BY
DATE REVISED

LAST REVISION 00-00-00
DATE PLOTTED => 21-JUL-2010
TIME PLOTTED => 14:50

Dist	COUNTY	ROUTE	POST MILES TOTAL PROJECT	SHEET No.	TOTAL SHEETS
07	LA	110	R1.3/21.3	28	111

REGISTERED CIVIL ENGINEER 5/6/10 DATE

6/28/10
PLANS APPROVAL DATE

REGISTERED PROFESSIONAL ENGINEER ESTHER M. KIM No. 48363 Exp 6/30/10 CIVIL STATE OF CALIFORNIA

THE STATE OF CALIFORNIA OR ITS OFFICERS OR AGENTS SHALL NOT BE RESPONSIBLE FOR THE ACCURACY OR COMPLETENESS OF SCANNED COPIES OF THIS PLAN SHEET.

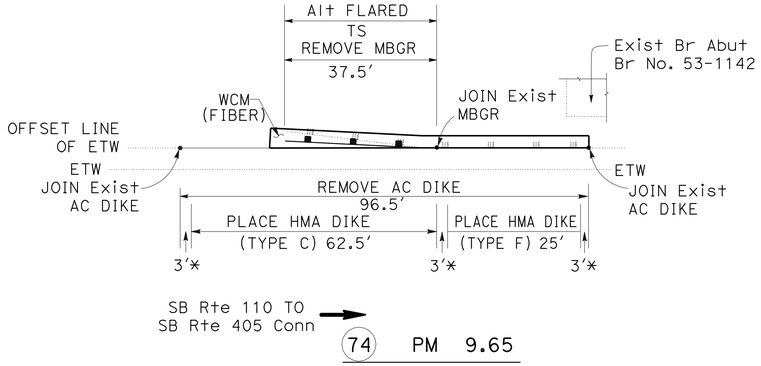

74 PM 9.65

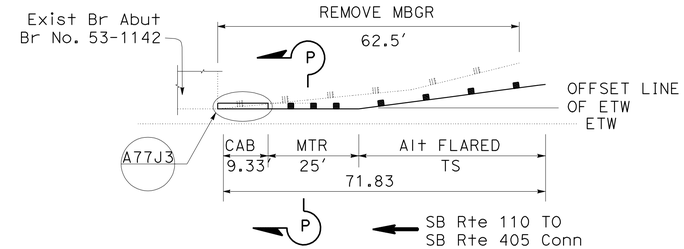

75 PM 9.65

NOTE:

1. FOR NOTES, SEE SHEET C-14.

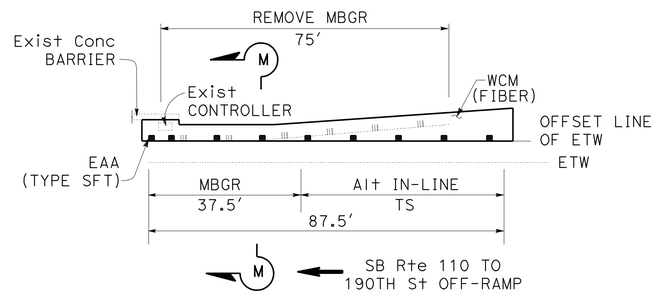

76 PM 9.65

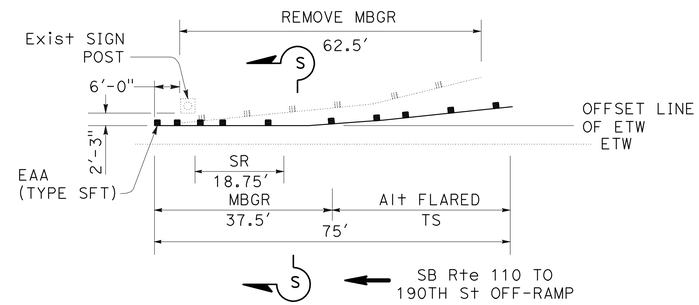

77 PM 9.65

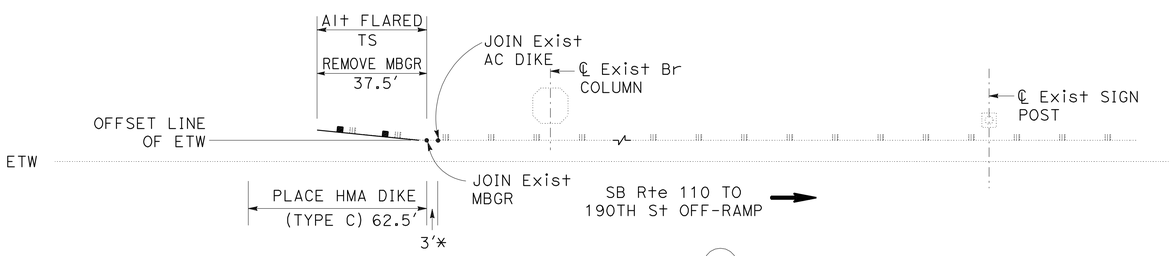

78 PM 9.65

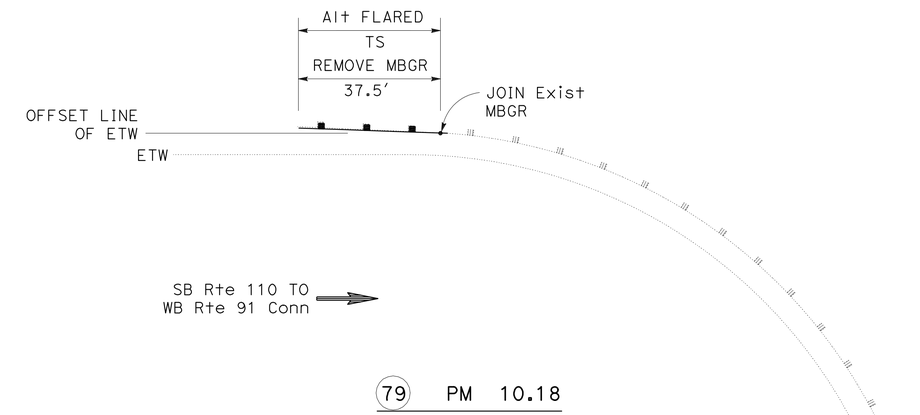

79 PM 10.18

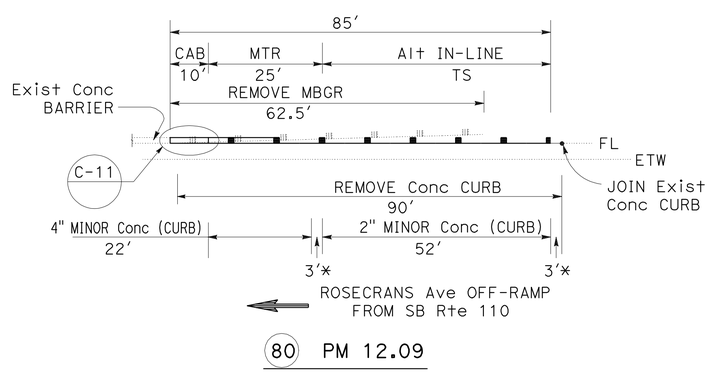

80 PM 12.09

CONSTRUCTION DETAILS

NO SCALE

C-26

STATE OF CALIFORNIA - DEPARTMENT OF TRANSPORTATION
Caltrans® TRAFFIC DESIGN

FUNCTIONAL SUPERVISOR: MOHAMMED CHOWDHURY
CALCULATED-DESIGNED BY: RICHARD KHAW
CHECKED BY: ESTHER M. KIM
REVISED BY
DATE REVISED

LAST REVISION 00-00-00
DATE PLOTTED => 21-JUL-2010
TIME PLOTTED => 14:50

Dist	COUNTY	ROUTE	POST MILES TOTAL PROJECT	SHEET No.	TOTAL SHEETS
07	LA	110	R1.3/21.3	29	111

REGISTERED CIVIL ENGINEER 5/6/10 DATE

6/28/10
PLANS APPROVAL DATE

REGISTERED PROFESSIONAL ENGINEER ESTHER M. KIM No. 48363 Exp 6/30/10 CIVIL STATE OF CALIFORNIA

THE STATE OF CALIFORNIA OR ITS OFFICERS OR AGENTS SHALL NOT BE RESPONSIBLE FOR THE ACCURACY OR COMPLETENESS OF SCANNED COPIES OF THIS PLAN SHEET.

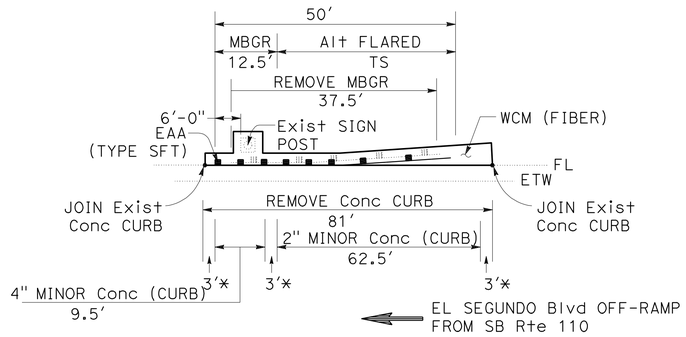

81 PM 13.00

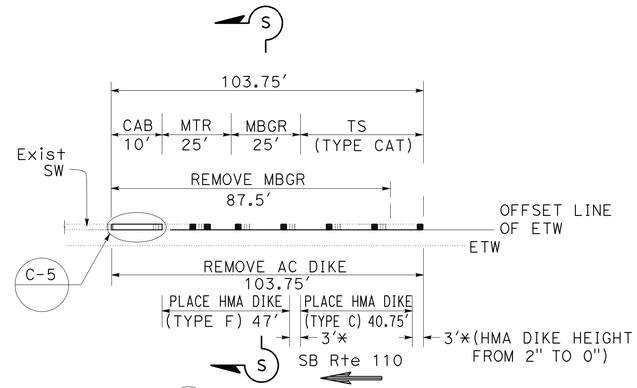

82 PM 15.01

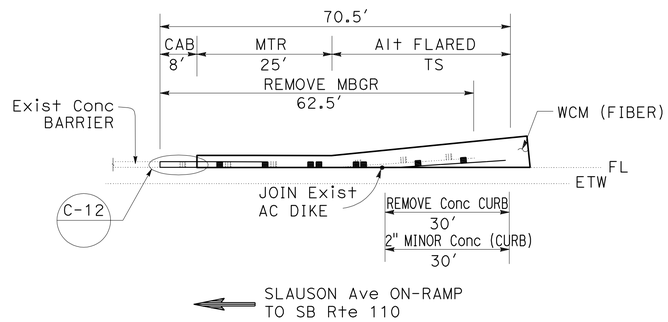

83 PM 17.87

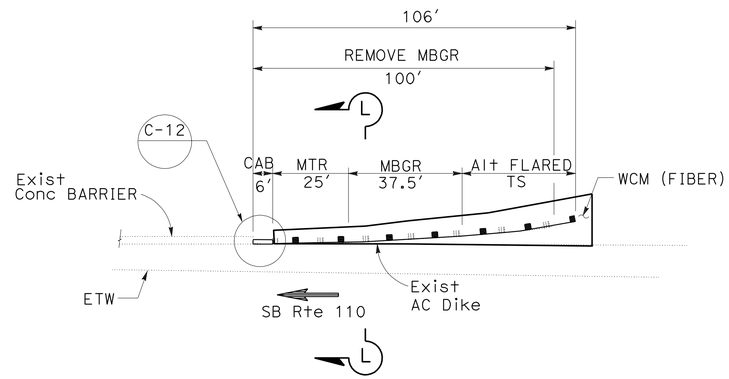

84 PM 18.28

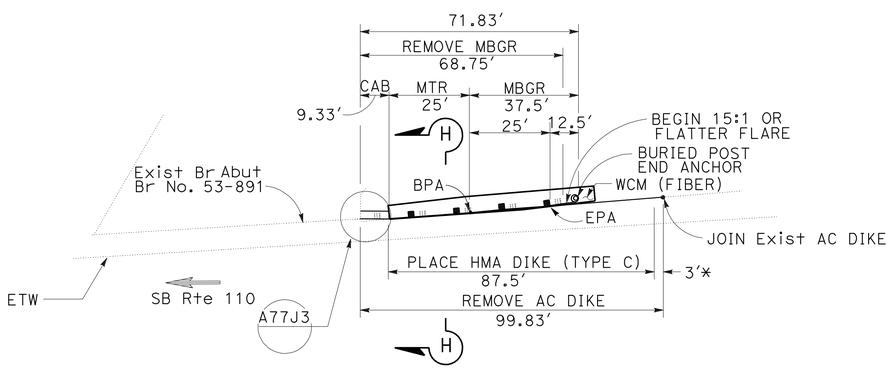

85 PM 20.94

NOTE:

1. FOR NOTES, SEE SHEET C-14.

CONSTRUCTION DETAILS

NO SCALE

C-27

STATE OF CALIFORNIA - DEPARTMENT OF TRANSPORTATION
Caltrans TRAFFIC DESIGN

FUNCTIONAL SUPERVISOR: MOHAMMED CHOWDHURY
CALCULATED-DESIGNED BY: RICHARD KHAW
CHECKED BY: ESTHER M. KIM
REVISED BY / DATE REVISED

LAST REVISION 00-00-00 | DATE PLOTTED => 21-JUL-2010 | TIME PLOTTED => 14:50

Dist	COUNTY	ROUTE	POST MILES TOTAL PROJECT	SHEET No.	TOTAL SHEETS
07	LA	110	R1.3/21.3	30	111

REGISTERED CIVIL ENGINEER 5/6/10 DATE

6/28/10
PLANS APPROVAL DATE

REGISTERED PROFESSIONAL ENGINEER ESTHER M. KIM No. 48363 Exp 6/30/10 CIVIL STATE OF CALIFORNIA

THE STATE OF CALIFORNIA OR ITS OFFICERS OR AGENTS SHALL NOT BE RESPONSIBLE FOR THE ACCURACY OR COMPLETENESS OF SCANNED COPIES OF THIS PLAN SHEET.

LEGEND:

RRSCP

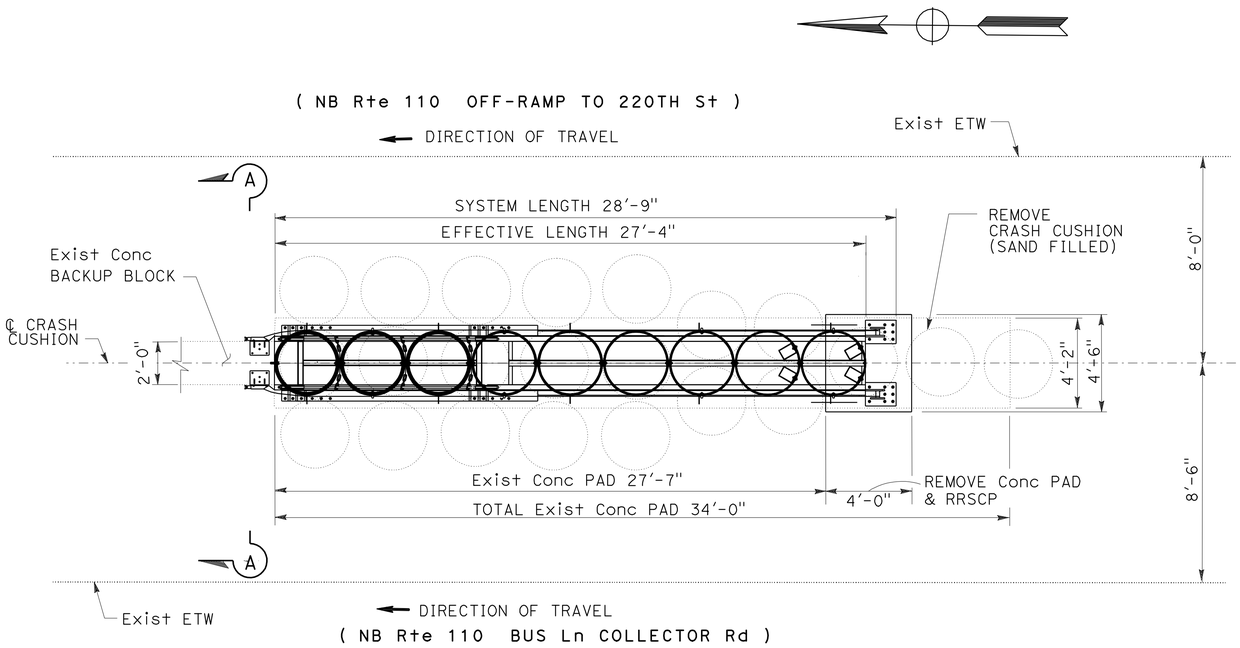

PLAN

NOTES:

1. R/W NOT SHOWN ON THIS PLAN.
2. EXISTING UTILITY FACILITIES ARE NOT SHOWN ON THESE PLANS.
3. EXISTING DRAINAGE INLETS ARE NOT SHOWN ON THESE PLANS.
4. FOR QUADGUARD LMC, AND REACT 350 DETAILS NOT SHOWN, REFER TO MANUFACTURER'S INSTRUCTIONS AND DETAILS.
5. TIE BAR (DRILL AND BOND) (Qty 3) #6 X 18" LONG AT APPROXIMATELY 4" CLEAR OF TOP FACE. REBAR SHALL BE GRADE 60 EPOXY COATED. BIND WITH SAME EPOXY USED FOR SURFACE OF COLD JOINT.
6. PROVISION SHALL BE MADE FOR REAR FENDER PANELS TO SLICE REARWARD UPON IMPACT 25" MINIMUM.
7. IF END OF EXISTING PCC PAD IS LESS THAN 4" FROM ANCHOR BOLT, CHISEL EXISTING FOOTING TO MOVE JOINT TO PROPER LOCATION. BOND COLD JOINT WITH EPOXY (SIDAKUR 32 OR BURKLE HI-VIS OR EQUAL)
8. A MINIMUM OF 0.67' OF CONCRETE MUST BE BELOW GRADE.
9. USE RRSCP LEVELING PAD WHERE CROSS SLOPE EXCEEDS 8% OR WHERE CROSS SLOPE VARIES MORE THAN 2% FROM FRONT TO BACK OF SYSTEM. LONGER ANCHORS MAY BE REQUIRED TO ACHIEVE MINIMUM EMBEDMENT OF 5" INTO PARENT CONCRETE.
10. REINFORCEMENT BAR SHALL BE 2" MINIMUM CLEAR OF TOP FACE.

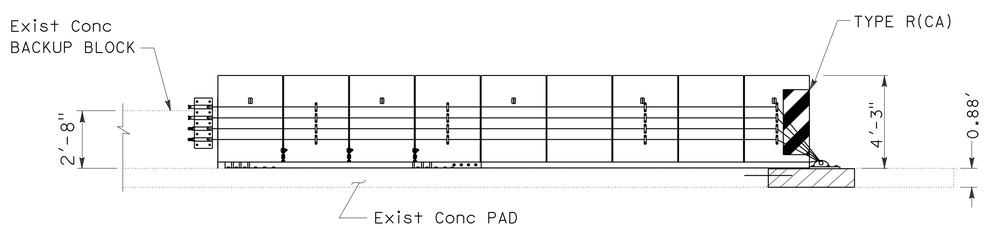

ELEVATION

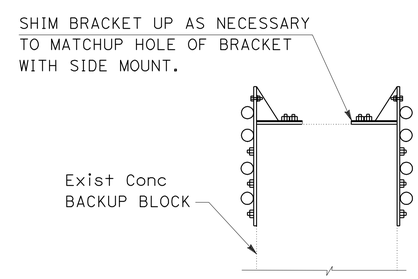

SECTION A-A

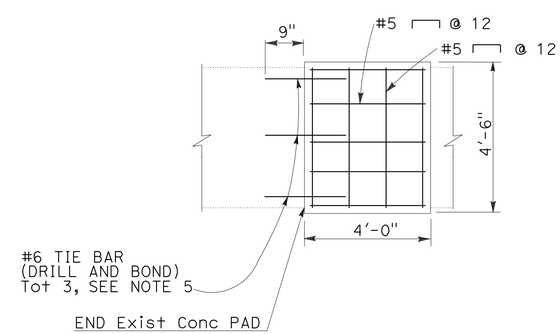

RRSCP PLAN

CRASH CUSHION (REACT 350 MODEL 62C036)
LOCATION 86

CONSTRUCTION DETAILS
NO SCALE

C-28

STATE OF CALIFORNIA - DEPARTMENT OF TRANSPORTATION
Caltrans TRAFFIC DESIGN

FUNCTIONAL SUPERVISOR: MOHAMMED CHOWDHURY
CALCULATED-DESIGNED BY: FRANCISCO MARTINEZ
CHECKED BY: ESTHER M. KIM
REVISED BY
DATE REVISED

LAST REVISION 00-00-00
DATE PLOTTED => 21-JUL-2010
TIME PLOTTED => 14:50

Dist	COUNTY	ROUTE	POST MILES TOTAL PROJECT	SHEET No.	TOTAL SHEETS
07	LA	110	R1.3/21.3	31	111

REGISTERED CIVIL ENGINEER 5/6/10 DATE

6/28/10
PLANS APPROVAL DATE

REGISTERED PROFESSIONAL ENGINEER ESTHER M. KIM No. 48363 Exp. 6/30/10 CIVIL STATE OF CALIFORNIA

THE STATE OF CALIFORNIA OR ITS OFFICERS OR AGENTS SHALL NOT BE RESPONSIBLE FOR THE ACCURACY OR COMPLETENESS OF SCANNED COPIES OF THIS PLAN SHEET.

(NB Rte 110 OFF-RAMP TO IMPERIAL Hwy)

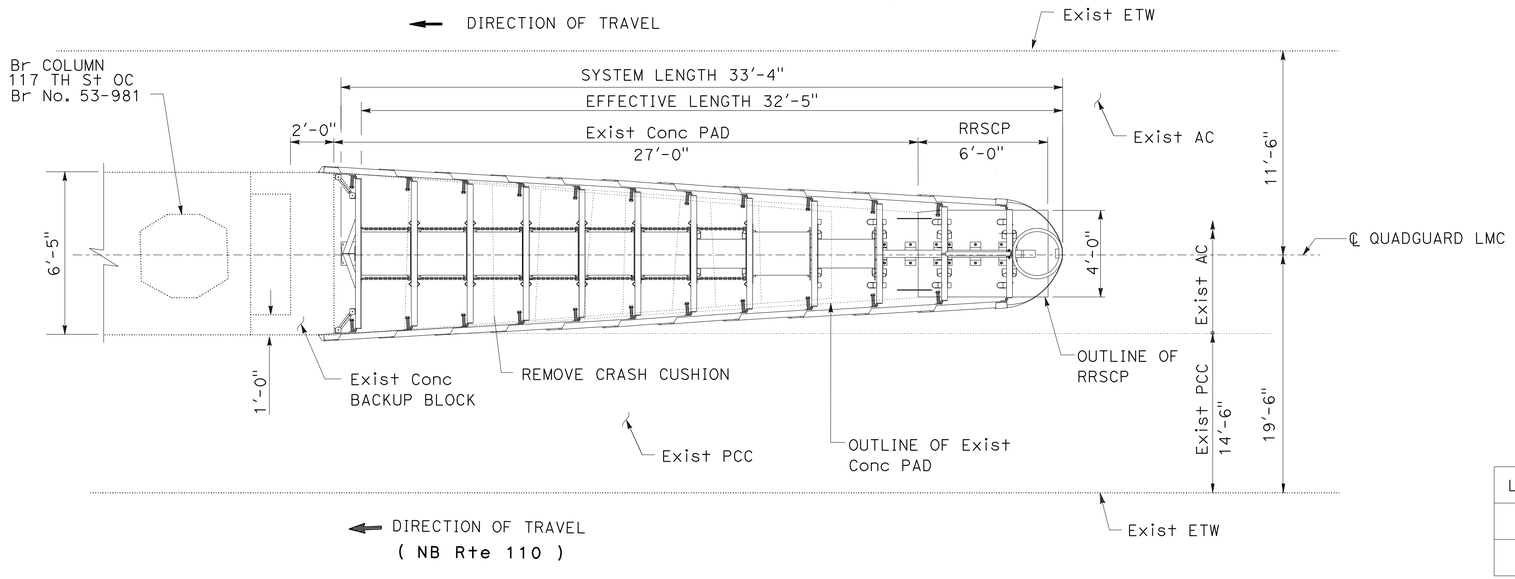

PLAN

NOTE:

1. FOR NOTES, SEE SHEET C-28.

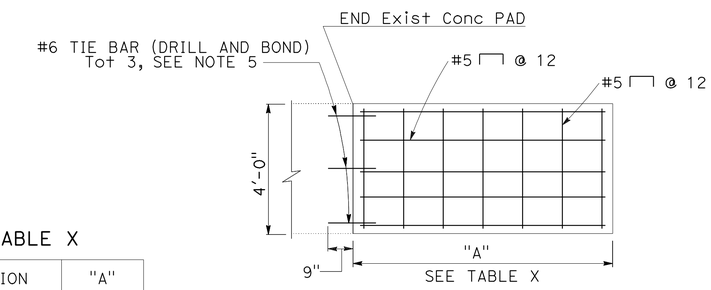

RRSCP PLAN

TABLE X

LOCATION	"A"
87	6'-0"
88	9'-0"

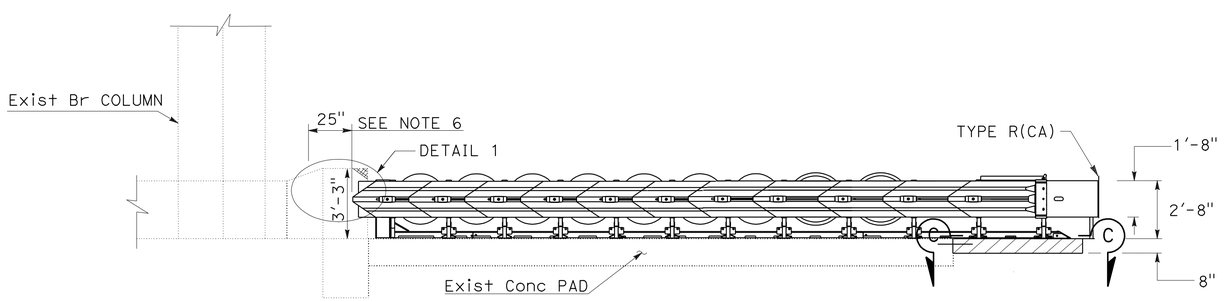

ELEVATION

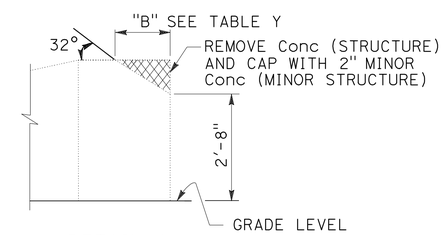

DETAIL 1

TABLE Y

LOCATION	"B"
87	11"
88	5"

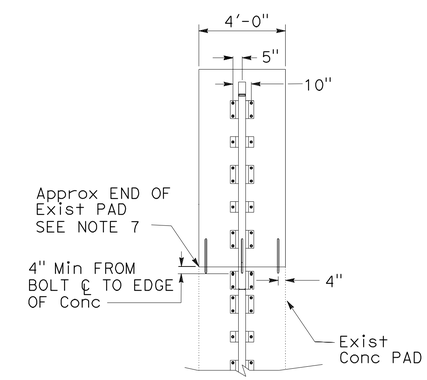

VIEW C-C

CRASH CUSHION (QUADGUARD LMC MODEL QS9011LY)
LOCATION 87

CONSTRUCTION DETAILS

NO SCALE

C-29

STATE OF CALIFORNIA - DEPARTMENT OF TRANSPORTATION
Caltrans TRAFFIC DESIGN
FUNCTIONAL SUPERVISOR: MOHAMMED CHOWDHURY
CALCULATED-DESIGNED BY: FRANCISCO MARTINEZ
CHECKED BY: ESTHER M. KIM
REVISED BY / DATE REVISED

LAST REVISION 00-00-00 | DATE PLOTTED => 21-JUL-2010 | TIME PLOTTED => 14:50

Dist	COUNTY	ROUTE	POST MILES TOTAL PROJECT	SHEET No.	TOTAL SHEETS
07	LA	110	R1.3/21.3	32	111

REGISTERED CIVIL ENGINEER 5/6/10 DATE

6/28/10
PLANS APPROVAL DATE

REGISTERED PROFESSIONAL ENGINEER ESTHER M. KIM No. 48363 Exp. 6/30/10 CIVIL STATE OF CALIFORNIA

THE STATE OF CALIFORNIA OR ITS OFFICERS OR AGENTS SHALL NOT BE RESPONSIBLE FOR THE ACCURACY OR COMPLETENESS OF SCANNED COPIES OF THIS PLAN SHEET.

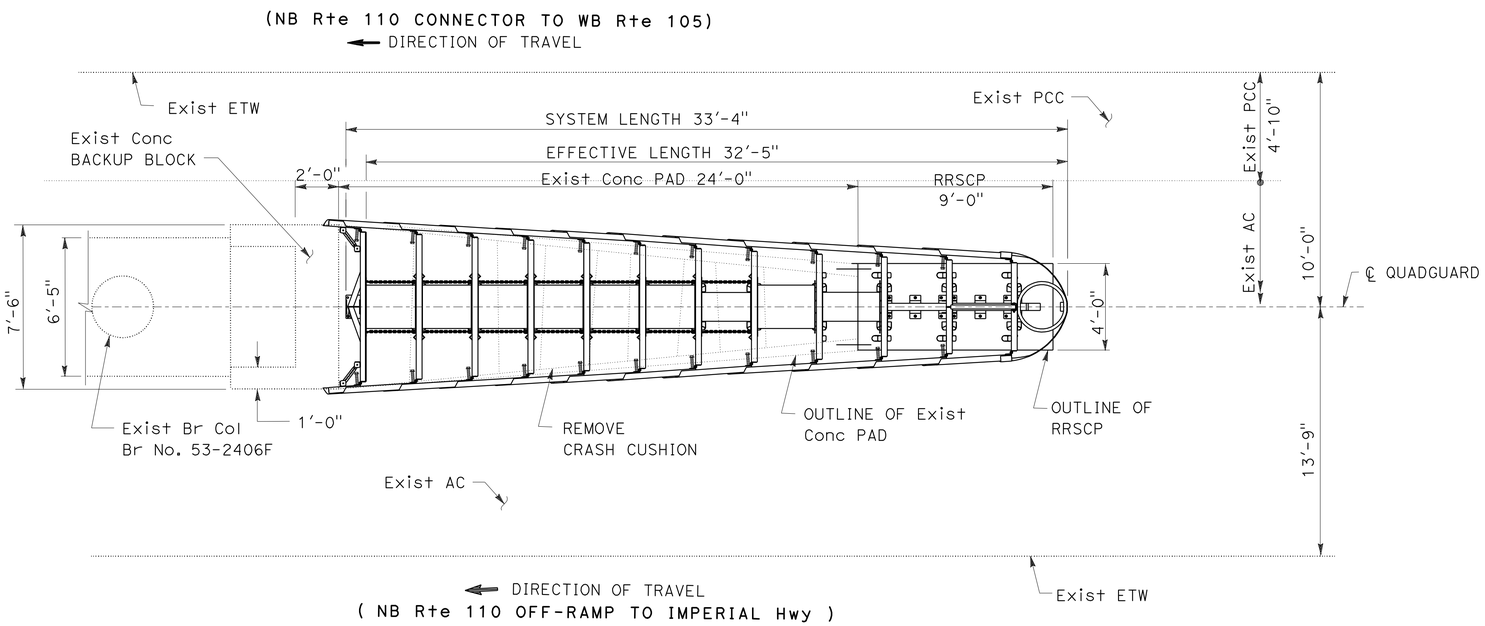

PLAN

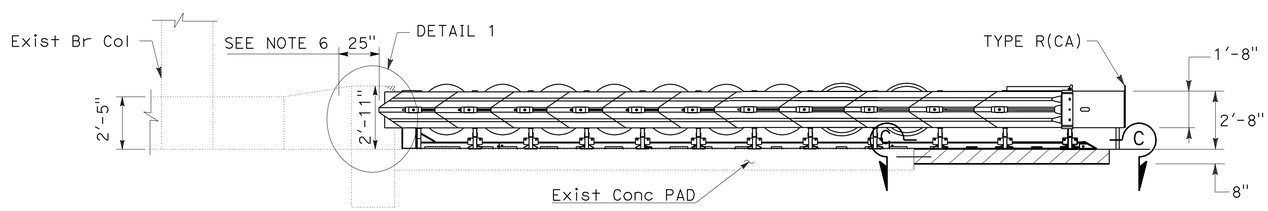

ELEVATION

CRASH CUSHION (QUADGUARD LMC MODEL QS9011LY)
LOCATION 88

NOTES:

1. FOR RRSCP PLAN, DETAIL 1 AND VIEW C-C SEE SHEET C-29.
2. FOR NOTES, SEE SHEET C-28.

CONSTRUCTION DETAILS

NO SCALE

C-30

STATE OF CALIFORNIA - DEPARTMENT OF TRANSPORTATION
Caltrans® TRAFFIC DESIGN

FUNCTIONAL SUPERVISOR: MOHAMMED CHOWDHURY
CALCULATED-DESIGNED BY: FRANCISCO MARTINEZ
CHECKED BY: ESTHER M. KIM
REVISED BY
DATE REVISED

LAST REVISION 00-00-00
DATE PLOTTED => 21-JUL-2010
TIME PLOTTED => 14:51

Dist	COUNTY	ROUTE	POST MILES TOTAL PROJECT	SHEET No.	TOTAL SHEETS
07	LA	110	R1.3/21.3	33	111

REGISTERED CIVIL ENGINEER 5/6/10 DATE

6/28/10
PLANS APPROVAL DATE

REGISTERED PROFESSIONAL ENGINEER ESTHER M. KIM No. 48363 Exp. 6/30/10 CIVIL STATE OF CALIFORNIA

THE STATE OF CALIFORNIA OR ITS OFFICERS OR AGENTS SHALL NOT BE RESPONSIBLE FOR THE ACCURACY OR COMPLETENESS OF SCANNED COPIES OF THIS PLAN SHEET.

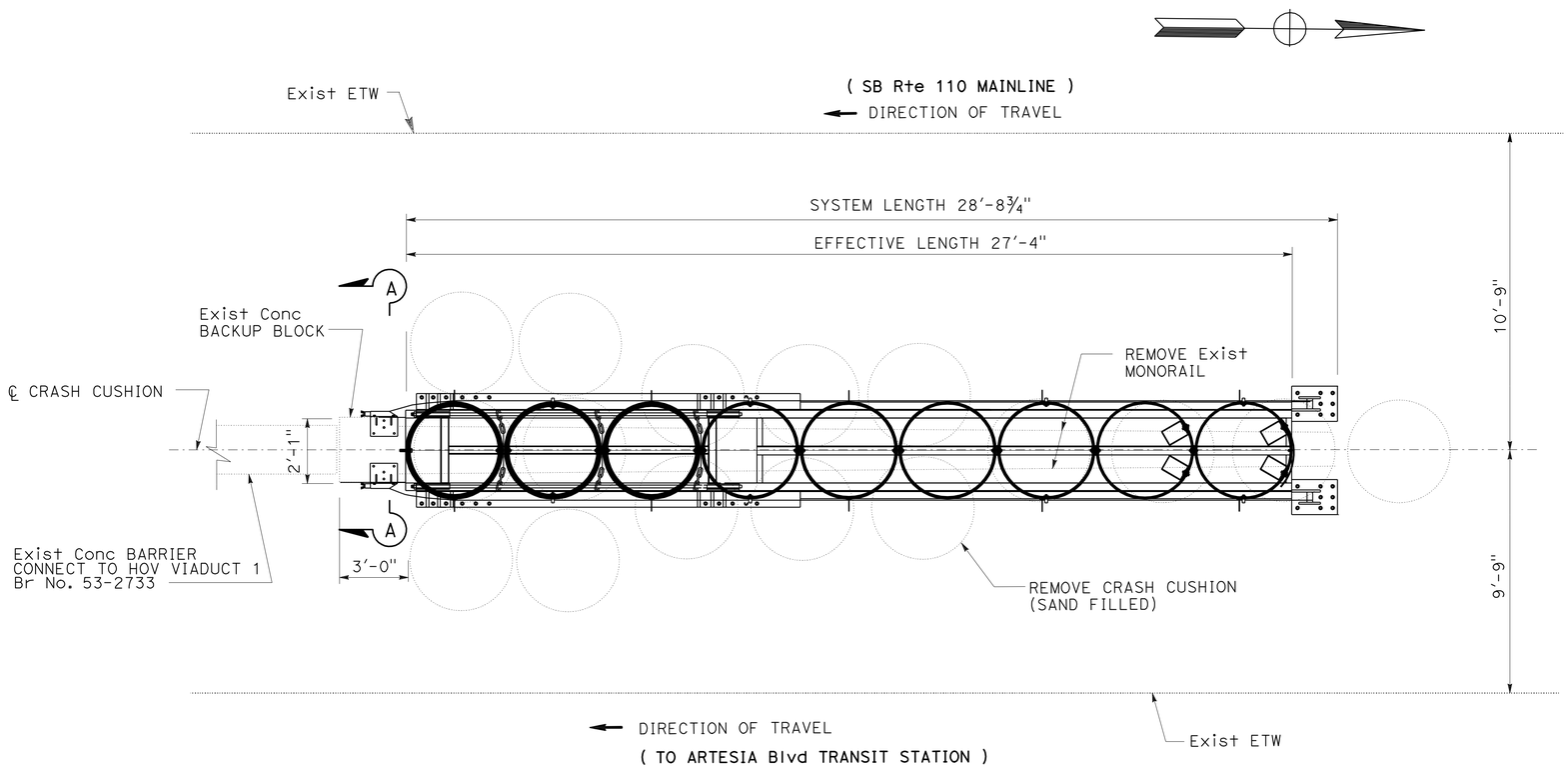

PLAN

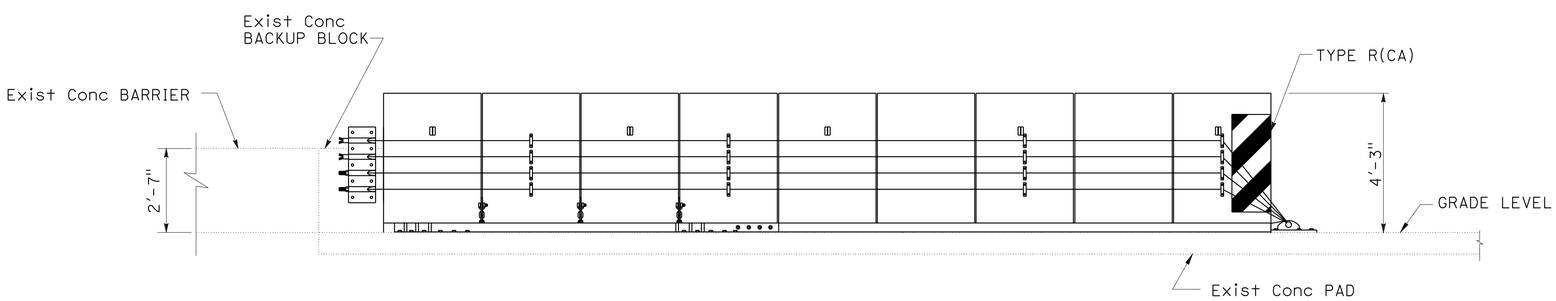

ELEVATION

CRASH CUSHION (REACT 350 MODEL 62C036)

LOCATION 89

NOTE:

1. FOR SECTION A-A AND NOTES, SEE SHEET C-28.

CONSTRUCTION DETAILS

NO SCALE

C-31

STATE OF CALIFORNIA - DEPARTMENT OF TRANSPORTATION
Caltrans TRAFFIC DESIGN

FUNCTIONAL SUPERVISOR: MOHAMMED CHOWDHURY
CALCULATED-DESIGNED BY: FRANCISCO MARTINEZ
CHECKED BY: ESTHER M. KIM
REVISED BY
DATE REVISED

LAST REVISION 00-00-00
DATE PLOTTED => 21-JUL-2010
TIME PLOTTED => 14:51

Dist	COUNTY	ROUTE	POST MILES TOTAL PROJECT	SHEET No.	TOTAL SHEETS
07	LA	110	R1.3/21.3	34	111

REGISTERED CIVIL ENGINEER 5/6/10 DATE

6/28/10
PLANS APPROVAL DATE

REGISTERED PROFESSIONAL ENGINEER ESTHER M. KIM No. 48363 Exp. 6/30/10 CIVIL STATE OF CALIFORNIA

THE STATE OF CALIFORNIA OR ITS OFFICERS OR AGENTS SHALL NOT BE RESPONSIBLE FOR THE ACCURACY OR COMPLETENESS OF SCANNED COPIES OF THIS PLAN SHEET.

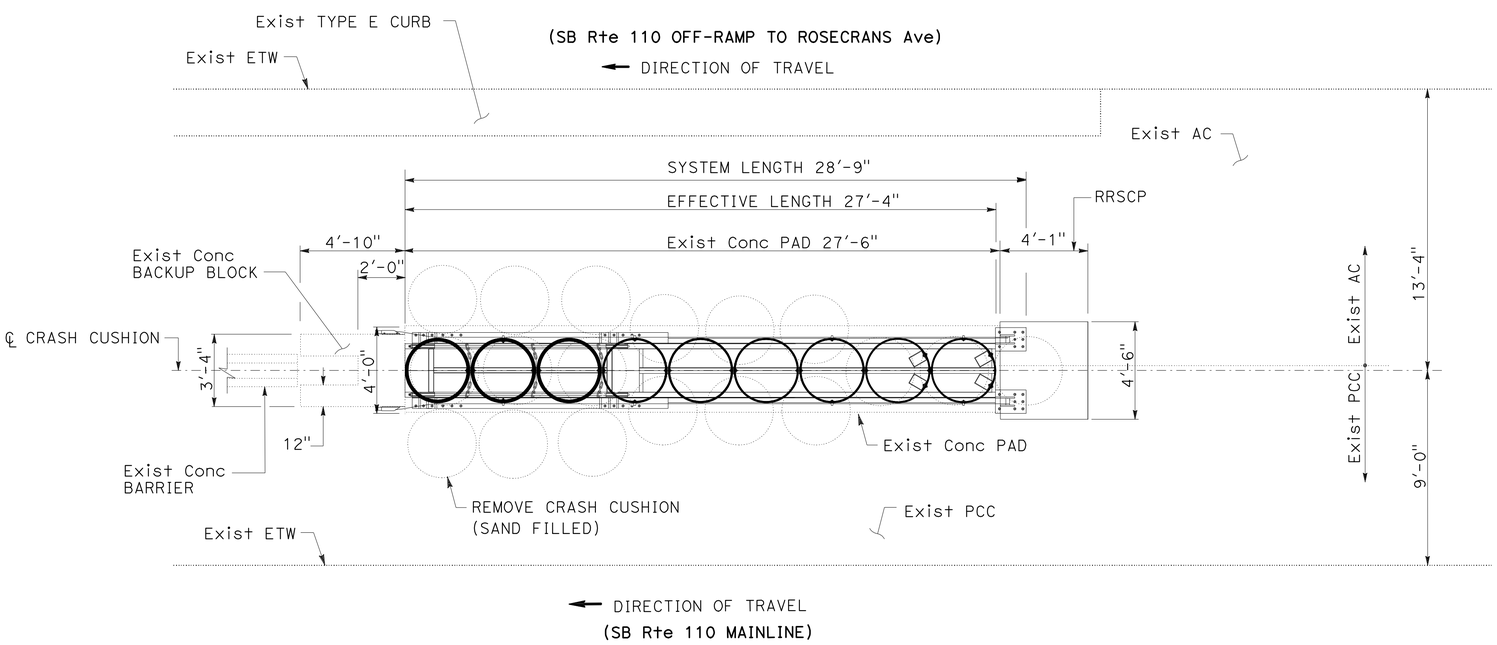

PLAN

NOTE:

1. FOR NOTES, SEE SHEET C-28.

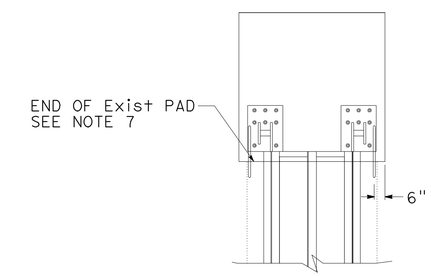

VIEW C-C

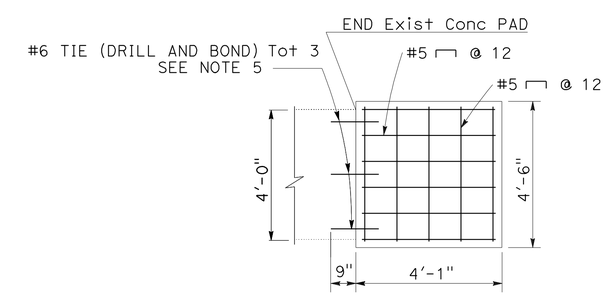

RRSCP PLAN

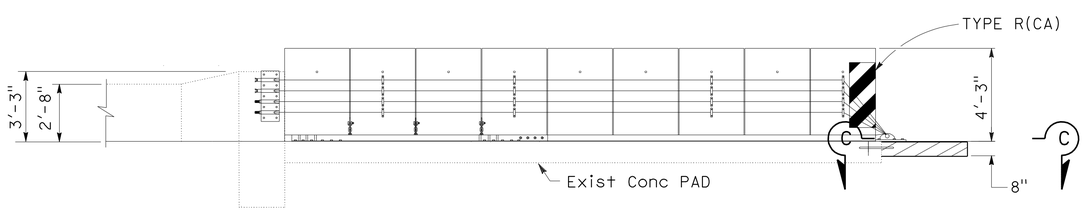

ELEVATION

CRASH CUSHION (REACT 350 MODEL 62C036)

LOCATION 90

CONSTRUCTION DETAILS

NO SCALE

C-32

STATE OF CALIFORNIA - DEPARTMENT OF TRANSPORTATION

Caltrans® **TRAFFIC DESIGN**

FUNCTIONAL SUPERVISOR: MOHAMMED CHOWDHURY

CALCULATED-DESIGNED BY: FRANCISCO MARTINEZ

CHECKED BY: ESTHER M. KIM

REVISED BY | DATE REVISED

LAST REVISION 00-00-00 | DATE PLOTTED => 21-JUL-2010 | TIME PLOTTED => 14:51

Dist	COUNTY	ROUTE	POST MILES TOTAL PROJECT	SHEET No.	TOTAL SHEETS
07	LA	110	R1.3/21.3	35	111

REGISTERED CIVIL ENGINEER 5/6/10 DATE

6/28/10
PLANS APPROVAL DATE

REGISTERED PROFESSIONAL ENGINEER ESTHER M. KIM No. 48363 Exp. 6/30/10 CIVIL STATE OF CALIFORNIA

THE STATE OF CALIFORNIA OR ITS OFFICERS OR AGENTS SHALL NOT BE RESPONSIBLE FOR THE ACCURACY OR COMPLETENESS OF SCANNED COPIES OF THIS PLAN SHEET.

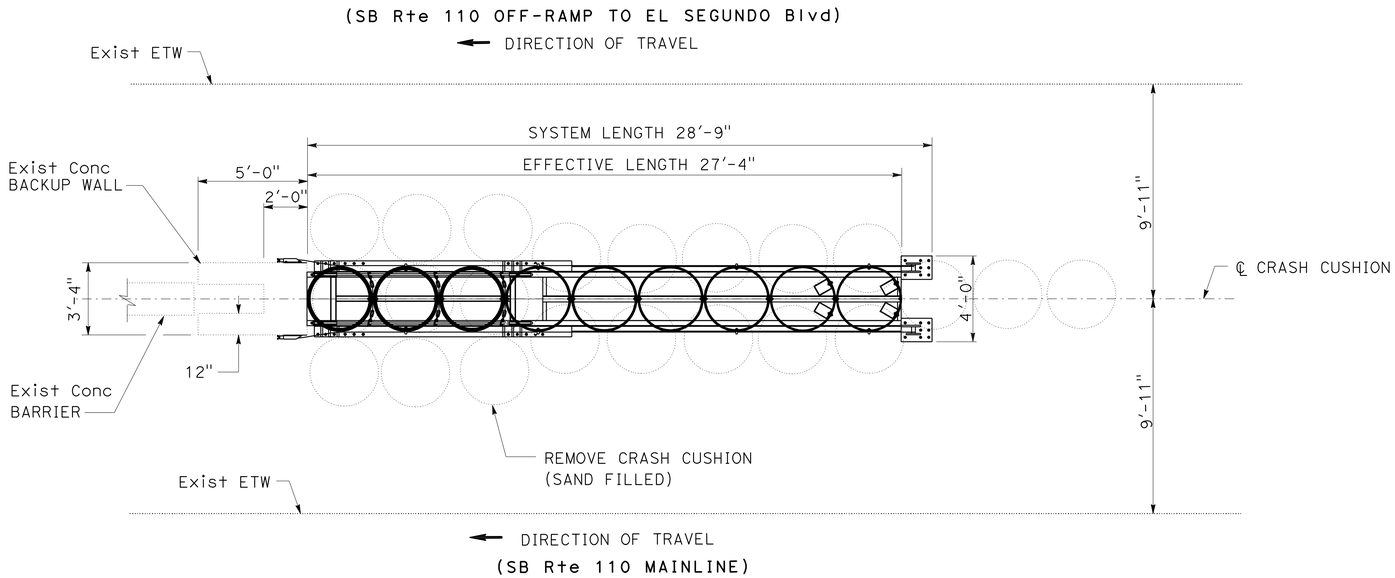

PLAN

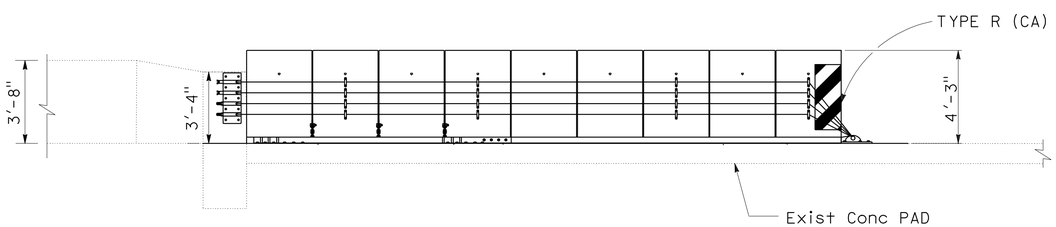

ELEVATION

CRASH CUSHION (REACT 350 MODEL 62C036)
LOCATION 91

NOTE:

1. FOR NOTES, SEE SHEET C-28.

CONSTRUCTION DETAILS

NO SCALE

C-33

STATE OF CALIFORNIA - DEPARTMENT OF TRANSPORTATION
Caltrans® TRAFFIC DESIGN

FUNCTIONAL SUPERVISOR: MOHAMMED CHOWDHURY
CALCULATED-DESIGNED BY: FRANCISCO MARTINEZ
CHECKED BY: ESTHER M. KIM
REVISED BY
DATE REVISED

LAST REVISION 00-00-00
DATE PLOTTED => 21-JUL-2010
TIME PLOTTED => 14:51

Dist	COUNTY	ROUTE	POST MILES TOTAL PROJECT	SHEET No.	TOTAL SHEETS
07	LA	110	R1.3/21.3	36	111

REGISTERED CIVIL ENGINEER 5/6/10 DATE

6/28/10
PLANS APPROVAL DATE

REGISTERED PROFESSIONAL ENGINEER ESTHER M. KIM No. 48363 Exp. 6/30/10 CIVIL STATE OF CALIFORNIA

THE STATE OF CALIFORNIA OR ITS OFFICERS OR AGENTS SHALL NOT BE RESPONSIBLE FOR THE ACCURACY OR COMPLETENESS OF SCANNED COPIES OF THIS PLAN SHEET.

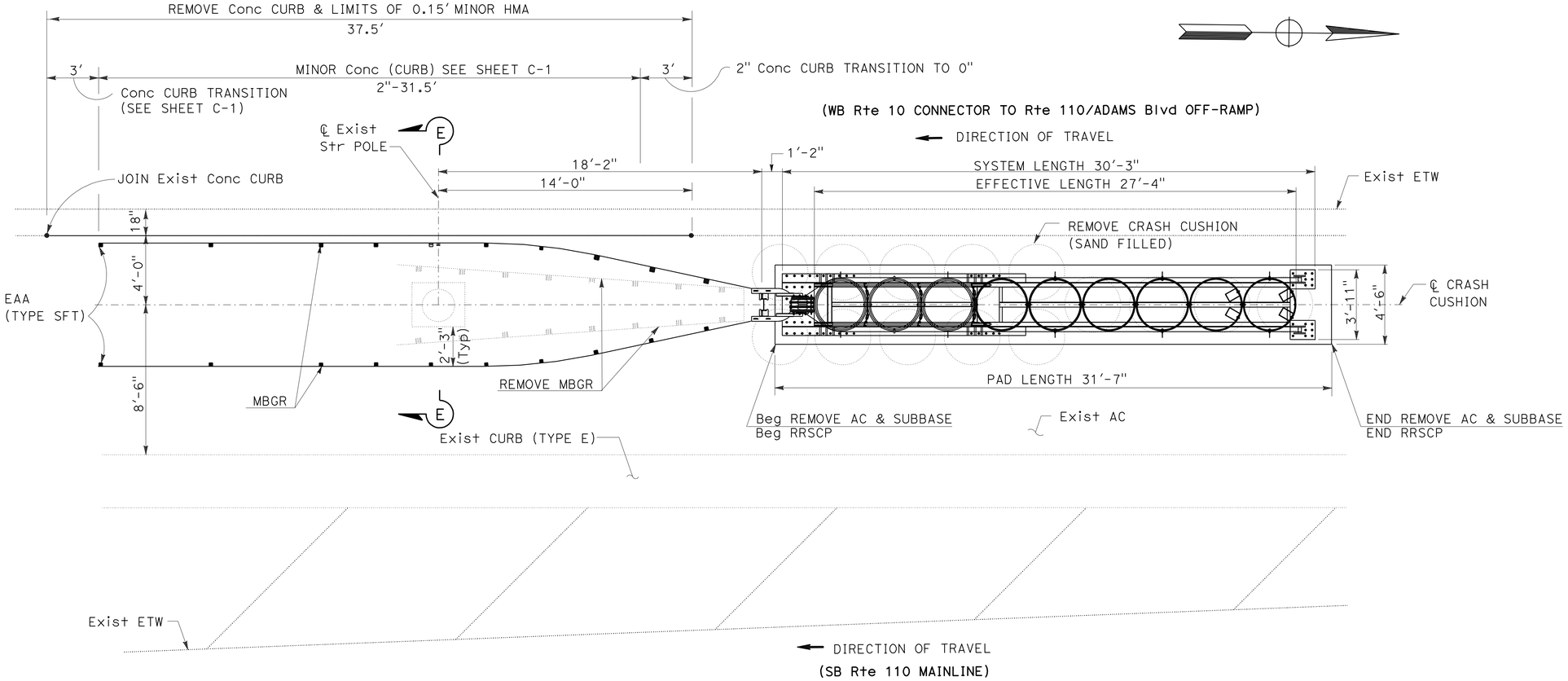

PLAN

NOTE:

1. FOR NOTES, SEE SHEET C-28.
1. FOR SECTION E-E, SEE SHEET C-35.

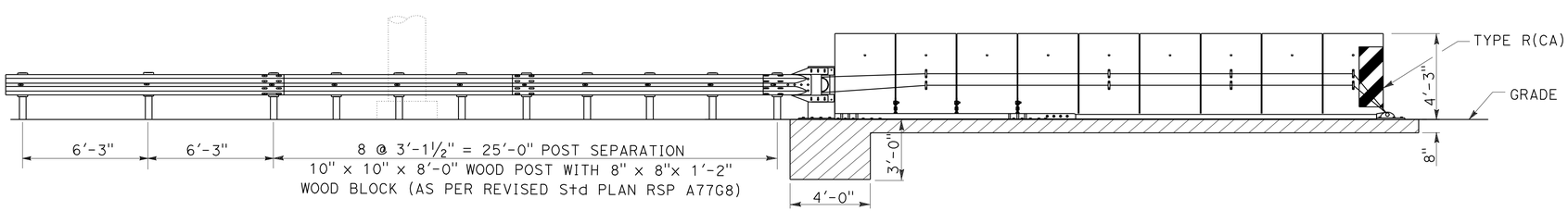

ELEVATION

CRASH CUSHION (REACT 350 MODEL 62B036)

LOCATION 92

CONSTRUCTION DETAILS

NO SCALE

C-34

STATE OF CALIFORNIA - DEPARTMENT OF TRANSPORTATION
Caltrans TRAFFIC DESIGN

FUNCTIONAL SUPERVISOR: MOHAMMED CHOWDHURY
CALCULATED-DESIGNED BY: FRANCISCO MARTINEZ
CHECKED BY: ESTHER M. KIM
REVISED BY / DATE REVISED

LAST REVISION 00-00-00 | DATE PLOTTED => 21-JUL-2010 | TIME PLOTTED => 14:52

Dist	COUNTY	ROUTE	POST MILES TOTAL PROJECT	SHEET No.	TOTAL SHEETS
07	LA	110	R1.3/21.3	37	111

REGISTERED CIVIL ENGINEER 5/6/10 DATE

6/28/10
PLANS APPROVAL DATE

REGISTERED PROFESSIONAL ENGINEER ESTHER M. KIM No. 48363 Exp. 6/30/10 CIVIL STATE OF CALIFORNIA

THE STATE OF CALIFORNIA OR ITS OFFICERS OR AGENTS SHALL NOT BE RESPONSIBLE FOR THE ACCURACY OR COMPLETENESS OF SCANNED COPIES OF THIS PLAN SHEET.

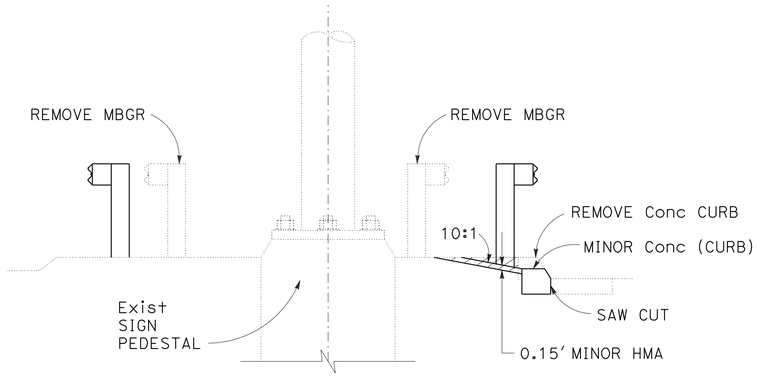

SECTION E-E

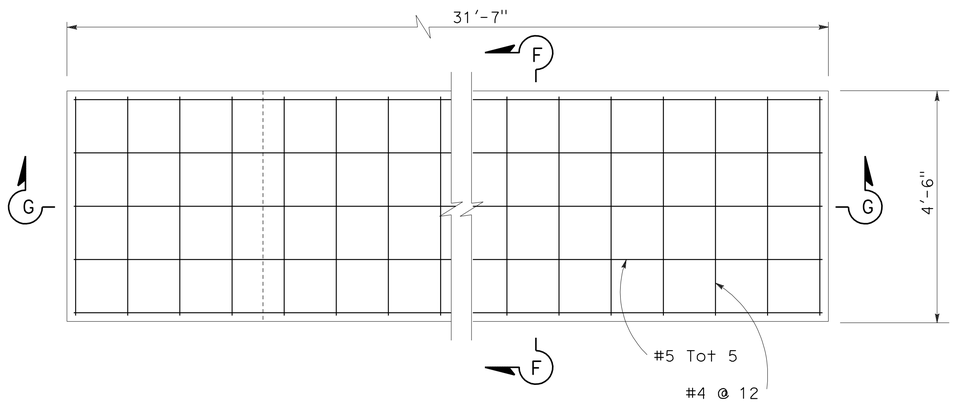

RRSCP PLAN

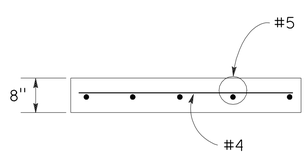

SECTION F-F

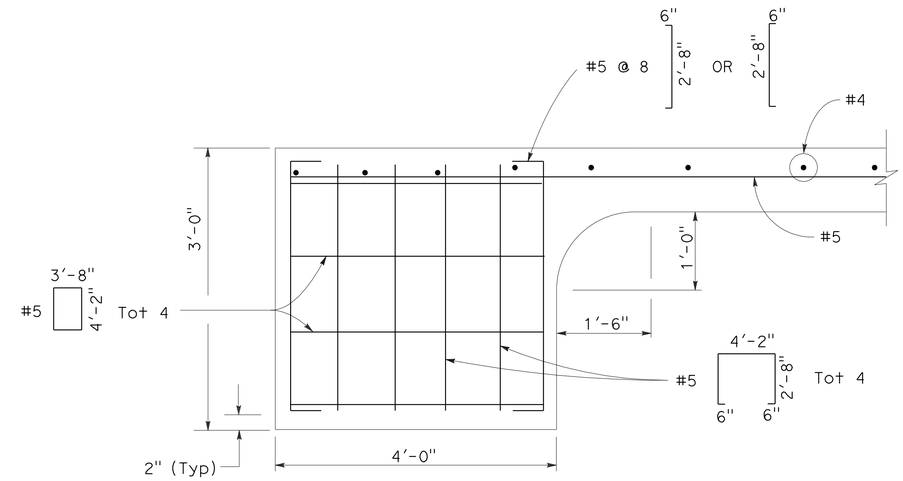

SECTION G-G

CONSTRUCTION DETAILS

NO SCALE

C-35

STATE OF CALIFORNIA - DEPARTMENT OF TRANSPORTATION
Caltrans TRAFFIC DESIGN

FUNCTIONAL SUPERVISOR: MOHAMMED CHOWDHURY
CALCULATED-DESIGNED BY: FRANCISCO MARTINEZ
CHECKED BY: ESTHER M. KIM
REVISED BY
DATE REVISED

LAST REVISION 00-00-00 | DATE PLOTTED => 21-JUL-2010 | TIME PLOTTED => 14:52

Dist	COUNTY	ROUTE	POST MILES TOTAL PROJECT	SHEET No.	TOTAL SHEETS
07	LA	110	R1.3/21.3	38	111

REGISTERED CIVIL ENGINEER 5/6/10 DATE

6/28/10
PLANS APPROVAL DATE

REGISTERED PROFESSIONAL ENGINEER ESTHER M. KIM No. 48363 Exp 6/30/10 CIVIL STATE OF CALIFORNIA

THE STATE OF CALIFORNIA OR ITS OFFICERS OR AGENTS SHALL NOT BE RESPONSIBLE FOR THE ACCURACY OR COMPLETENESS OF SCANNED COPIES OF THIS PLAN SHEET.

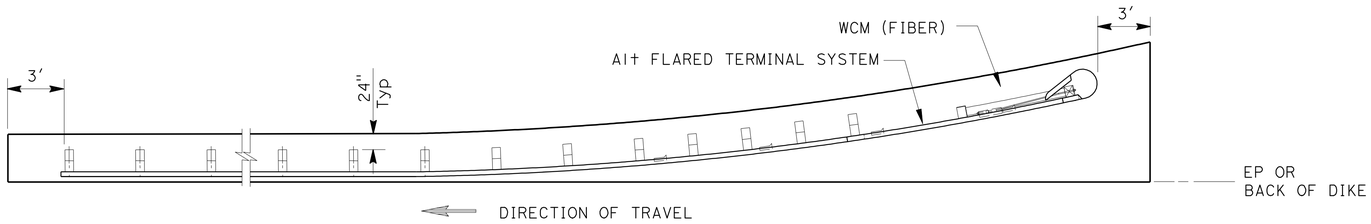

GUARD RAILING WEED CONTROL MAT AT TERMINAL SECTION

PLAN

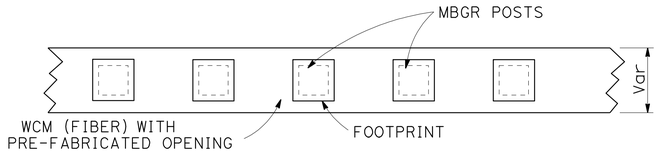

WEED CONTROL MAT (FIBER) UNDER MBGR

PLAN

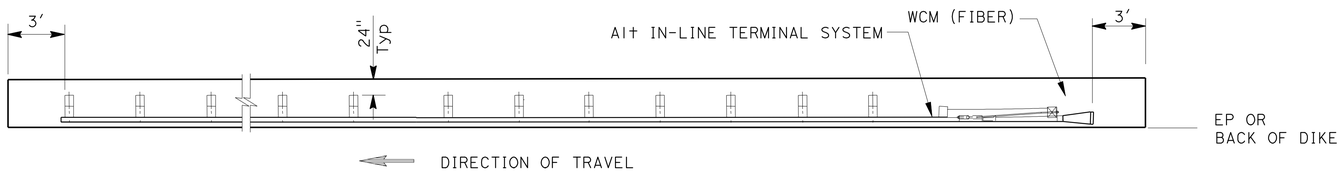

GUARD RAILING WEED CONTROL MAT AT TERMINAL SECTION

PLAN

NOTES:

1. WHERE THE DISTANCE BETWEEN BACK OF POST AND HINGE POINT IS LESS THAN 24", WEED CONTROL MAT (FIBER) SHALL BE CONSTRUCTED FLUSH WITH THE BACK EDGE OF THE POST.
2. WHERE DIKE IS CONSTRUCTED UNDER RAILING, PLACE WEED CONTROL MAT (FIBER) TO BACK EDGE OF DIKE. WHERE PAVED SHOULDER IS CONSTRUCTED WITHIN 24" IN FRONT OF THE POST, PLACE WEED CONTROL MAT (FIBER) TO THE EDGE OF PAVED SHOULDER.
3. END WEED CONTROL MAT (FIBER) AT END OF BACK SIDE RAIL ELEMENT.
4. POST SPACING & OTHER DIMENSIONS SHALL BE VERIFIED IN THE FIELD BY THE CONTRACTOR.
5. FOR SECTION, SEE SHEET C-2.

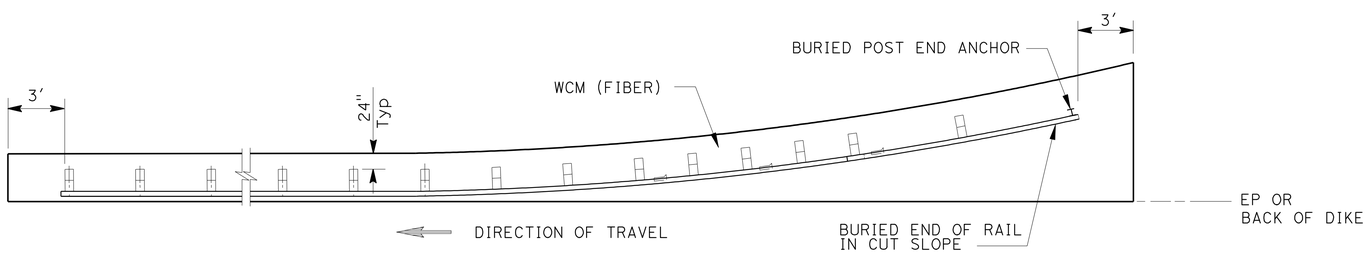

GUARD RAILING WEED CONTROL MAT AT BURIED END ANCHOR TREATMENT

PLAN

CONSTRUCTION DETAILS

NO SCALE

C-36

STATE OF CALIFORNIA - DEPARTMENT OF TRANSPORTATION
Caltrans TRAFFIC DESIGN

FUNCTIONAL SUPERVISOR: MOHAMMED CHOWDHURY
CALCULATED-DESIGNED BY: FRANCISCO MARTINEZ
CHECKED BY: ESTHER M. KIM
REVISED BY / DATE REVISED

LAST REVISION 00-00-00 | DATE PLOTTED => 21-JUL-2010 | TIME PLOTTED => 14:52

Dist	COUNTY	ROUTE	POST MILES TOTAL PROJECT	SHEET No.	TOTAL SHEETS
07	LA	110	R1.3/21.3	39	111

REGISTERED CIVIL ENGINEER 5/6/10 DATE

6/28/10
PLANS APPROVAL DATE

REGISTERED PROFESSIONAL ENGINEER ESTHER M. KIM No. 48363 Exp. 6/30/10 CIVIL STATE OF CALIFORNIA

THE STATE OF CALIFORNIA OR ITS OFFICERS OR AGENTS SHALL NOT BE RESPONSIBLE FOR THE ACCURACY OR COMPLETENESS OF SCANNED COPIES OF THIS PLAN SHEET.

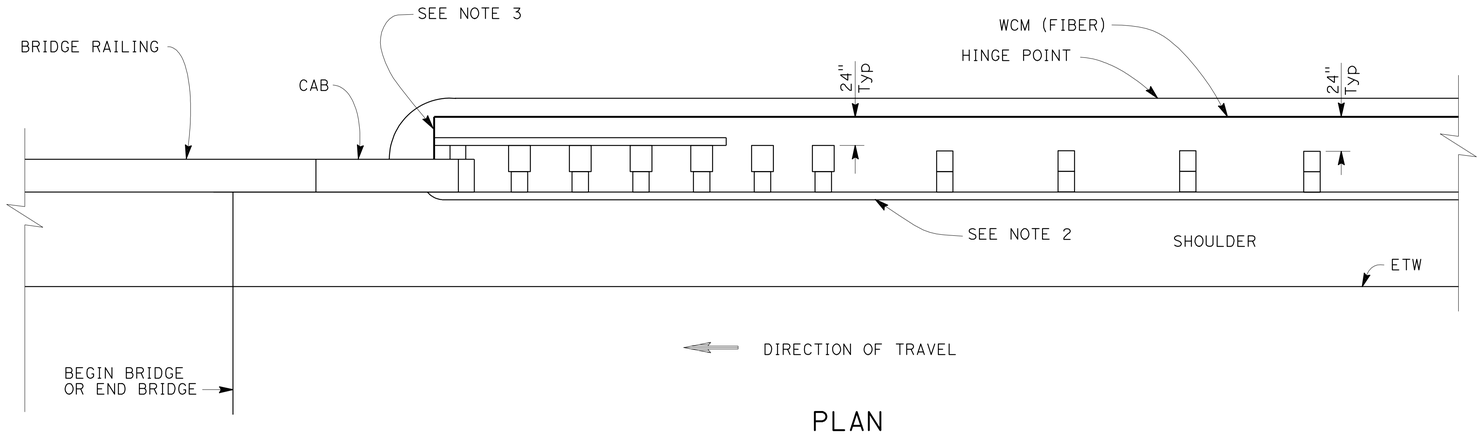

PLAN

STRUCTURE APPROACH AND DEPARTURE

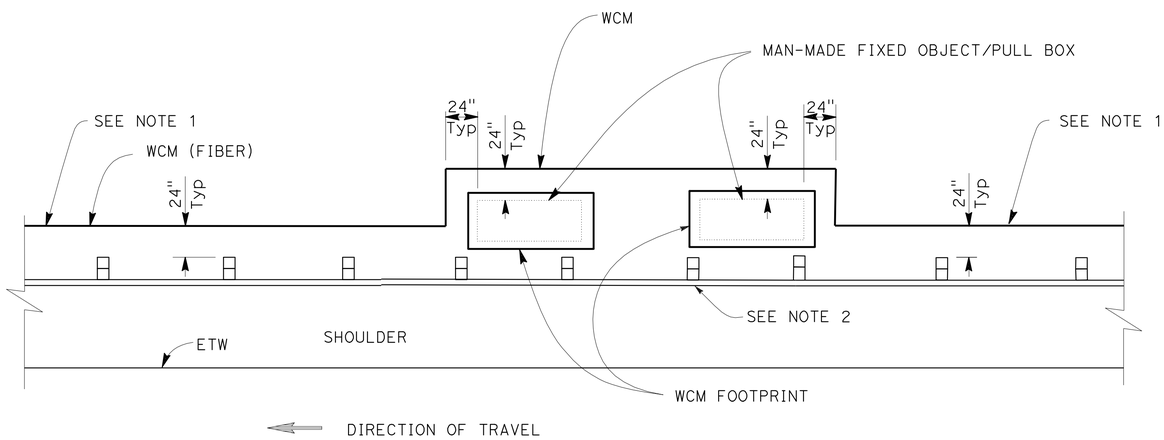

PLAN

FIXED OBJECT(S) ON SHOULDER

NOTE:

1. FOR NOTES, SEE SHEET C-36.

CONSTRUCTION DETAILS

NO SCALE

C-37

STATE OF CALIFORNIA - DEPARTMENT OF TRANSPORTATION
Caltrans TRAFFIC DESIGN

FUNCTIONAL SUPERVISOR: MOHAMMED CHOWDHURY
CALCULATED-DESIGNED BY: FRANCISCO MARTINEZ
CHECKED BY: ESTHER M. KIM
REVISED BY
DATE REVISED

LAST REVISION 00-00-00
DATE PLOTTED => 21-JUL-2010
TIME PLOTTED => 14:52

Dist	COUNTY	ROUTE	POST MILES TOTAL PROJECT	SHEET No.	TOTAL SHEETS
07	LA	110	R1.3/21.3	40	111

Peter Lin 5/6/10
REGISTERED CIVIL ENGINEER DATE

6/28/10
PLANS APPROVAL DATE

REGISTERED PROFESSIONAL ENGINEER
PETER LIN
No. 652507
Exp. 12/31/10
CIVIL
STATE OF CALIFORNIA

THE STATE OF CALIFORNIA OR ITS OFFICERS OR AGENTS SHALL NOT BE RESPONSIBLE FOR THE ACCURACY OR COMPLETENESS OF SCANNED COPIES OF THIS PLAN SHEET.

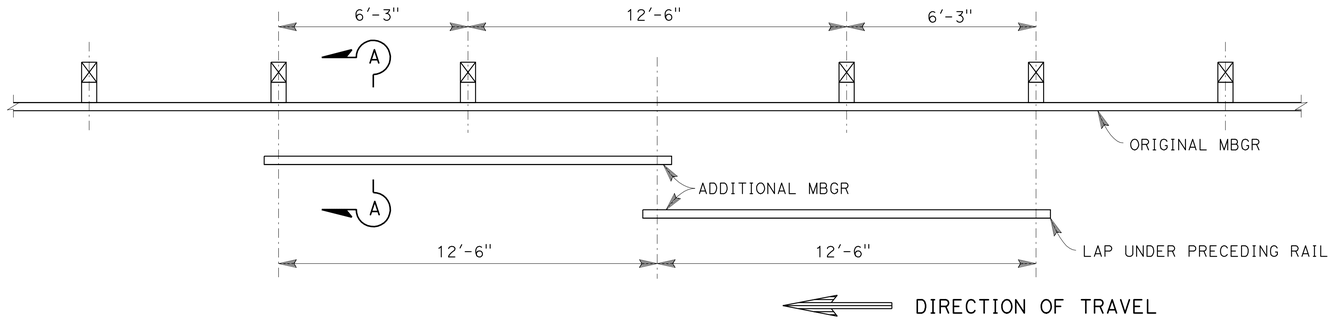

CASE 1

ONE POST OMITTED (SPLICE IN CENTER)

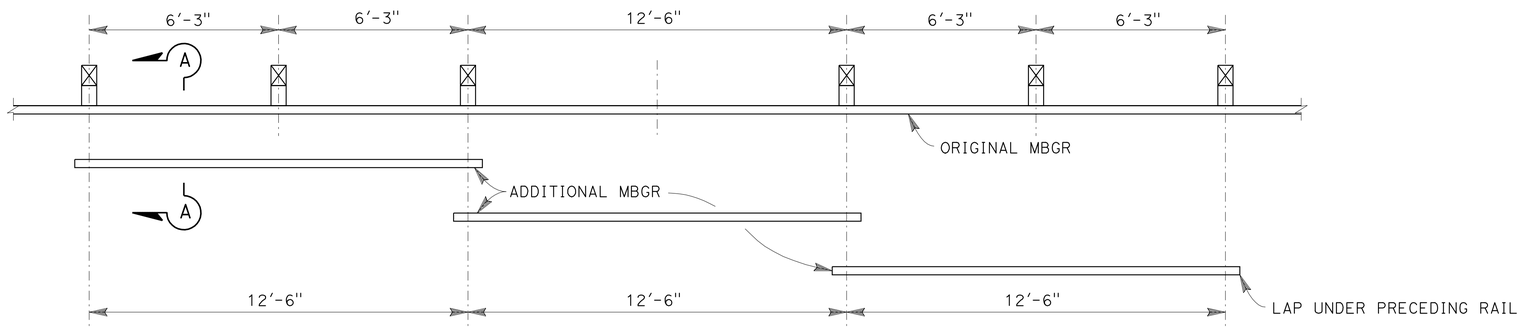

CASE 2

ONE POST OMITTED (SPLICE IN AT POSTS)

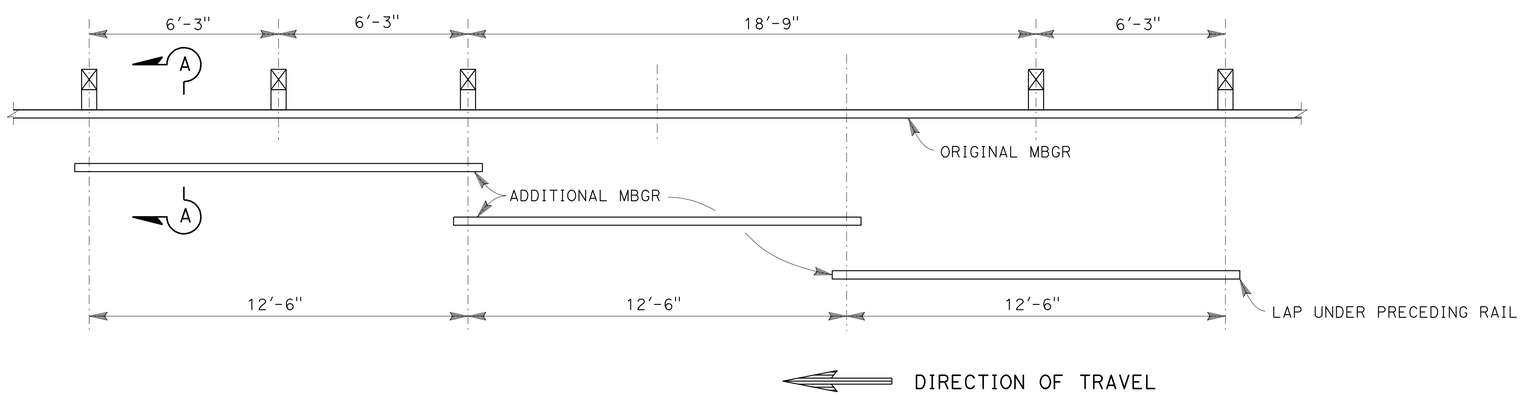

CASE 3

TWO POSTS OMITTED

NOTES (FOR THIS SHEET ONLY):

1. USE CASE 1 AND 2 WHEN ONE POST IS OMITTED.
2. USE CASE 3 WHEN TWO POSTS ARE OMITTED.
3. FOR OTHER DETAILS, SEE STANDARD PLANS A77A1 AND A77A2.

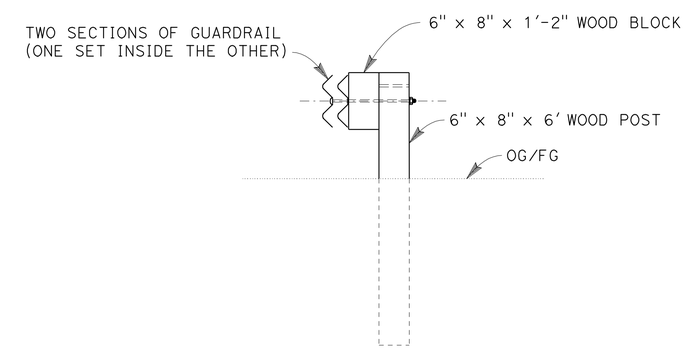

SECTION A-A

LONG SPAN NESTED GUARDRAIL DETAILS

NO SCALE

C-38

REVISED BY	DATE REVISED

CALCULATED-DESIGNED BY	CHECKED BY
VUONG TRAN	PETER LIN

FUNCTIONAL SUPERVISOR: PETER LIN

STATE OF CALIFORNIA - DEPARTMENT OF TRANSPORTATION
Caltrans
OFFICE OF ITS

LAST REVISION 02-02-10
DATE PLOTTED => 21-JUL-2010
TIME PLOTTED => 14:52

Dist	COUNTY	ROUTE	POST MILES TOTAL PROJECT	SHEET No.	TOTAL SHEETS
07	LA	110	R1.3/21.3	41	111

REGISTERED CIVIL ENGINEER 5/6/10 DATE

6/28/10
PLANS APPROVAL DATE

REGISTERED PROFESSIONAL ENGINEER ESTHER M. KIM No. 48363 Exp. 6/30/10 CIVIL STATE OF CALIFORNIA

THE STATE OF CALIFORNIA OR ITS OFFICERS OR AGENTS SHALL NOT BE RESPONSIBLE FOR THE ACCURACY OR COMPLETENESS OF SCANNED COPIES OF THIS PLAN SHEET.

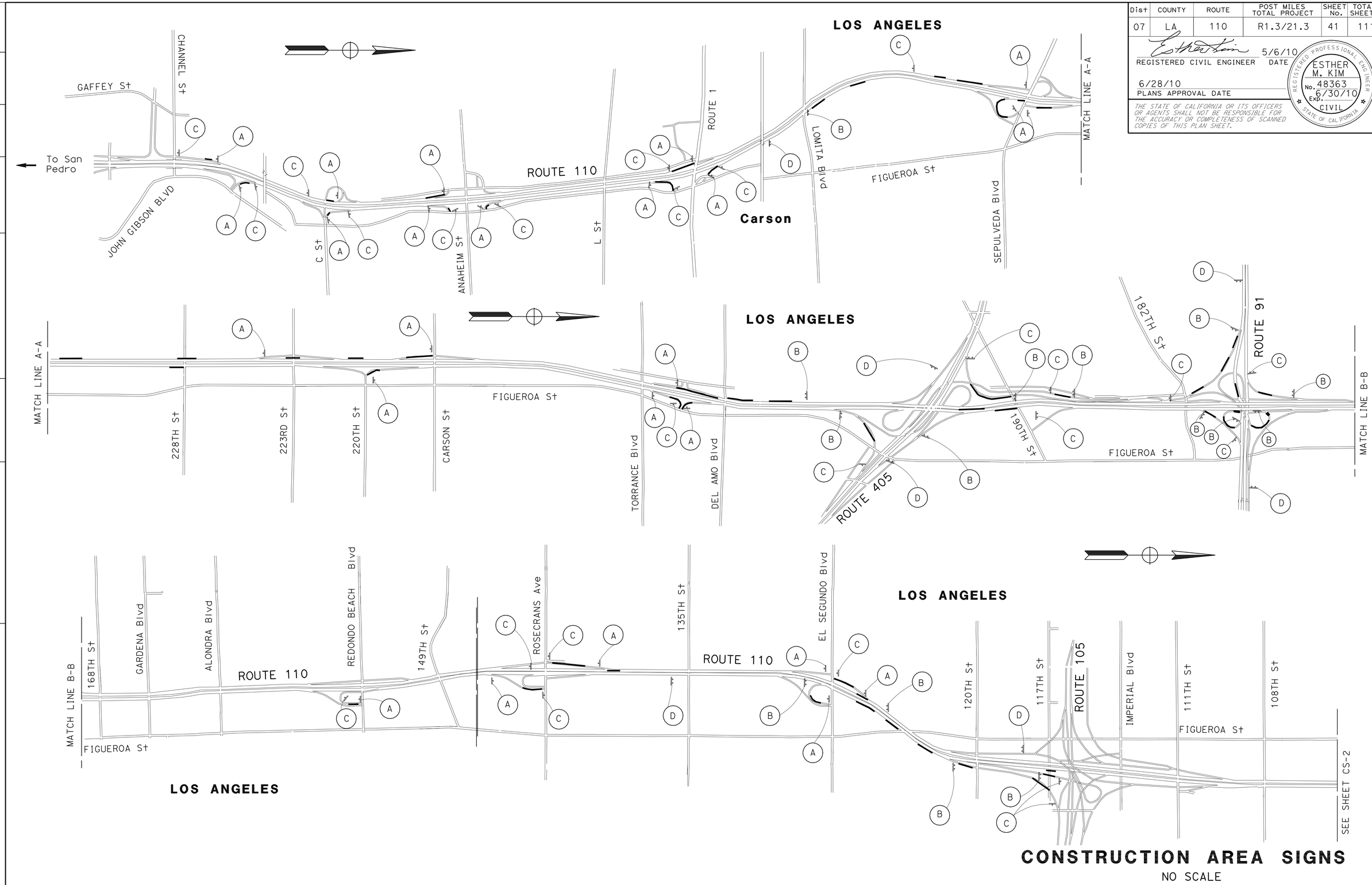

CONSTRUCTION AREA SIGNS

NO SCALE

THIS PLAN ACCURATE FOR CONSTRUCTION AREA SIGNS ONLY

CS-1

STATE OF CALIFORNIA - DEPARTMENT OF TRANSPORTATION

Caltrans®

TRAFFIC DESIGN

FUNCTIONAL SUPERVISOR: MOHAMMED CHOWDHURY

CALCULATED-DESIGNED BY: FRANCISCO MARTINEZ

CHECKED BY: ESTHER M. KIM

REVISED BY

DATE REVISED

LAST REVISION 00-00-00

DATE PLOTTED => 21-JUL-2010

TIME PLOTTED => 14:52

Dist	COUNTY	ROUTE	POST MILES TOTAL PROJECT	SHEET No.	TOTAL SHEETS
07	LA	110	R1.3/21.3	42	111

REGISTERED CIVIL ENGINEER 5/6/10 DATE

6/28/10
PLANS APPROVAL DATE

REGISTERED PROFESSIONAL ENGINEER
ESTHER M. KIM
No. 48363
Exp. 6/30/10
CIVIL
STATE OF CALIFORNIA

THE STATE OF CALIFORNIA OR ITS OFFICERS OR AGENTS SHALL NOT BE RESPONSIBLE FOR THE ACCURACY OR COMPLETENESS OF SCANNED COPIES OF THIS PLAN SHEET.

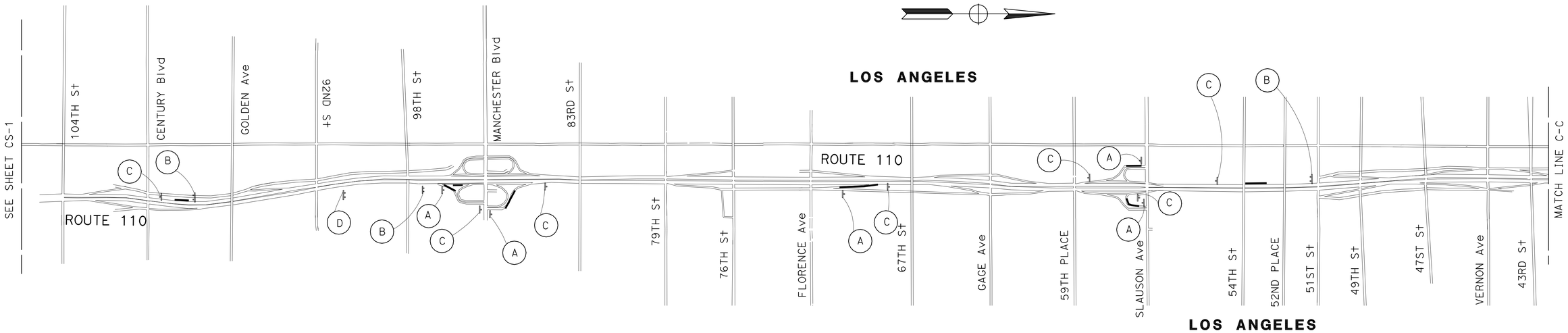

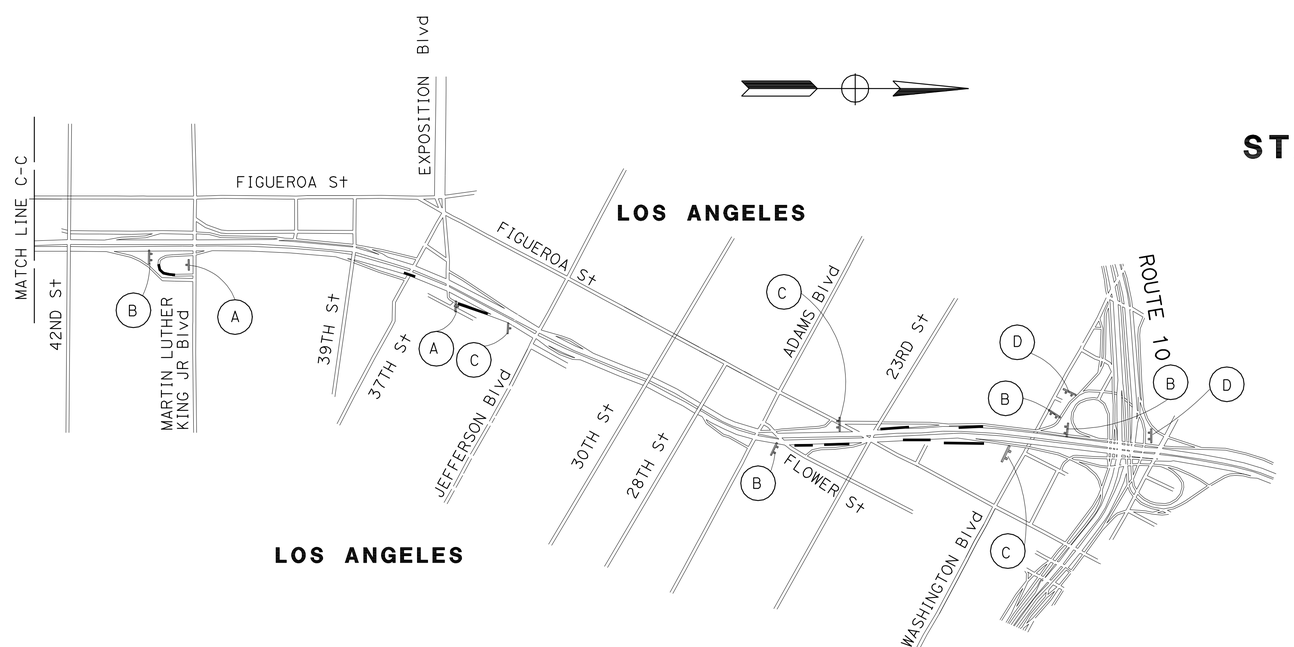

STATIONARY MOUNTED CONSTRUCTION AREA SIGNS

SIGN No.	SIGN CODE	DESCRIPTION	PANEL SIZE	No. OF POSTS AND SIZE	No. OF SIGNS
A	W20-1	ROAD WORK AHEAD	36" x 36"	1 - 4" x 6"	31
B	W20-1	ROAD WORK AHEAD	60" x 60"	2 - 6" x 6"	22
C	G20-2	END ROAD WORK	48" x 24"	1 - 4" x 6"	34
D	C40(CA)	TRAFFIC FINES DOUBLED IN CONSTRUCTION ZONE	144" x 60"	2 - 6" x 8"	10

NOTES:
1. LOCATION OF CONSTRUCTION AREA SIGNS SHOWN ARE APPROXIMATE.
2. EXACT LOCATIONS WILL BE DETERMINED BY THE ENGINEER.
3. FOR ADDITIONAL CONSTRUCTION AREA SIGNS SEE TRAFFIC HANDLING PLANS.

CONSTRUCTION AREA SIGNS

NO SCALE

THIS PLAN ACCURATE FOR CONSTRUCTION AREA SIGNS ONLY

CS-2

STATE OF CALIFORNIA - DEPARTMENT OF TRANSPORTATION
Caltrans® **TRAFFIC DESIGN**

FUNCTIONAL SUPERVISOR: MOHAMMED CHOWDHURY
CALCULATED-DESIGNED BY: FRANCISCO MARTINEZ
CHECKED BY: ESTHER M. KIM
REVISED BY
DATE REVISED

LAST REVISION 00-00-00
DATE PLOTTED => 21-JUL-2010
TIME PLOTTED => 14:53

Dist	COUNTY	ROUTE	POST MILES TOTAL PROJECT	SHEET No.	TOTAL SHEETS
07	LA	110	R1.3/21.3	43	111

REGISTERED CIVIL ENGINEER 5/6/10 DATE

6/28/10
PLANS APPROVAL DATE

REGISTERED PROFESSIONAL ENGINEER ESTHER M. KIM No. 48363 Exp. 6/30/10 CIVIL STATE OF CALIFORNIA

THE STATE OF CALIFORNIA OR ITS OFFICERS OR AGENTS SHALL NOT BE RESPONSIBLE FOR THE ACCURACY OR COMPLETENESS OF SCANNED COPIES OF THIS PLAN SHEET.

LEGEND:

- DIRECTION OF TRAVEL
- CHANNELIZER (SURFACE MOUNTED)
- TEMPORARY CRASH CUSHION MODULE
- WORK AREA
- TEMPORARY RAILING (TYPE K)
- CONSTRUCTION AREA SIGN

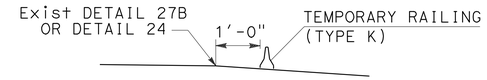

SECTION A-A

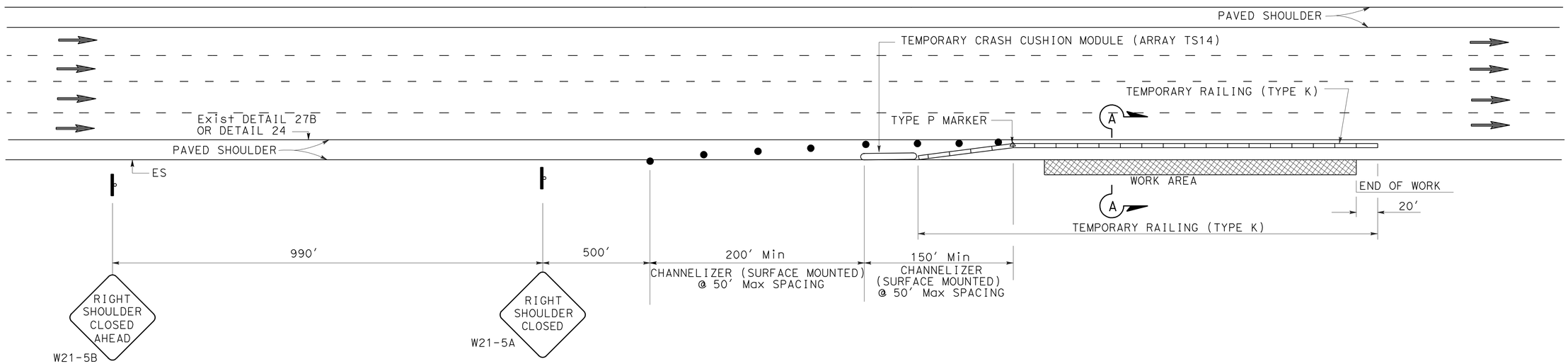

TRAFFIC HANDLING QUANTITIES

No.	PM	CHANNELIZER (SURFACE MOUNTED)	Temp CRASH CUSHION MODULE	Temp RAILING (TYPE K)	CONSTRUCTION AREA SIGNS 48" X 48"	
					W21-5A	W21-5B
		EA	EA	LF	EA	EA
7	4.88	8	14	180	1	1
8	4.96	8	14	160	1	1
10	5.38	8	14	160	1	1
12	6.10	8	14	220	1	1
20	8.84	8	14	160	1	1
21	9.00	8	14	160	1	1
27	10.15	8	14	180	1	1
38	13.43	8	14	160	1	1
47	20.80	8	14	160	1	1
52	2.70	8	14	160	1	1
55	5.06	8	14	160	1	1
58	6.07	8	14	220	1	1
59	6.44	8	14	240	1	1

No.	PM	CHANNELIZER (SURFACE MOUNTED)	Temp CRASH CUSHION MODULE	Temp RAILING (TYPE K)	CONSTRUCTION AREA SIGNS 48" X 48"	
					W21-5A	W21-5B
		EA	EA	LF	EA	EA
60	6.68	8	14	160	1	1
64	8.03	8	14	160	1	1
66	9.06	8	14	320	1	1
68	9.39	8	14	180	1	1
69	9.39	8	14	160	1	1
72	9.65	8	14	160	1	1
75	9.65	8	14	160	1	1
82	15.01	8	14	160	1	1
84	18.28	8	14	160	1	1
85	20.94	8	14	160	1	1
TOTAL		184	322	4100	23	23

TRAFFIC HANDLING PLAN

NO SCALE

TH-1

REVISED BY | DATE REVISED

FRANCISCO MARTINEZ | ESTHER M. KIM

CALCULATED-DESIGNED BY | CHECKED BY

FUNCTIONAL SUPERVISOR

MOHAMMED CHOWDHURY

STATE OF CALIFORNIA - DEPARTMENT OF TRANSPORTATION

Caltrans® TRAFFIC DESIGN

LAST REVISION 00-00-00 | DATE PLOTTED => 21-JUL-2010 | TIME PLOTTED => 14:53

Dist	COUNTY	ROUTE	POST MILES TOTAL PROJECT	SHEET No.	TOTAL SHEETS
07	LA	110	R1.3/21.3	44	111

REGISTERED CIVIL ENGINEER 4-24-10 DATE

6/28/10
PLANS APPROVAL DATE

REGISTERED PROFESSIONAL ENGINEER ALBERT K. YU No. C43220 Exp. 3-31-12 CIVIL STATE OF CALIFORNIA

THE STATE OF CALIFORNIA OR ITS OFFICERS OR AGENTS SHALL NOT BE RESPONSIBLE FOR THE ACCURACY OR COMPLETENESS OF SCANNED COPIES OF THIS PLAN SHEET.

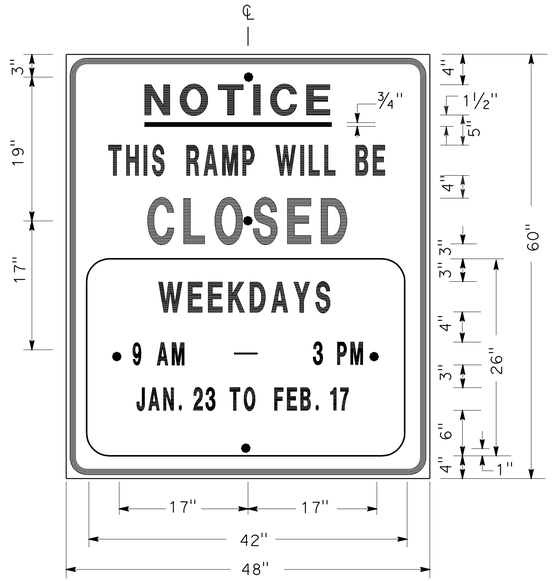

SIGN SP-1

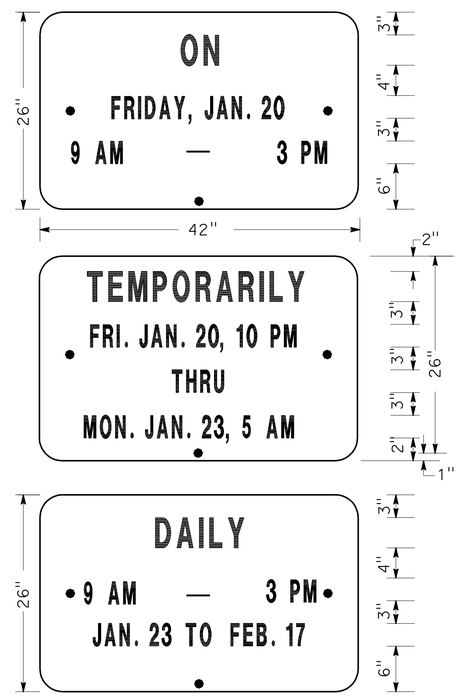

ALTERNATE OVERLAY PANELS (TYPICAL)

SPECIAL ADVANCE NOTICE PUBLICITY SIGN

NOTES: (SIGN SP-1)

1. SIGNS SHALL HAVE ORANGE RETROREFLECTORIZED BACKGROUND WITH BLACK BORDER AND LETTERS.
2. BOLT HOLES SHALL BE 3/8" DIAMETERS.
3. BASE MATERIAL SHALL BE ALUMINUM (MINIMUM 0.06").
4. SIGNS SHALL BE MOUNTED WITH BOTTOMS OF SIGNS A MINIMUM OF 6' ABOVE GROUND.

SIZE	BORDER WIDTH	MARGIN WIDTH	LETTER SIZE					CORNER RADIUS
			LINE 1	LINE 2*	LINE 3	LINE 4	LINE 5,6 & 7*	
48"x60"	1 1/4"	3/4"	4E	4D	6E	4D		3"
42"x26"	OVERLAY						3D	1 1/2"
* CONDENSED SPACING IF NECESSARY								

SIGN SP-4

NOTES: (SIGN SP-4)

1. LETTERS - 6" SERIES C.
2. LETTERS AND BORDERS - BLACK ON RETROREFLECTORIZED WHITE BACKGROUND.
3. BASE MATERIAL SHALL BE ALUMINUM (MINIMUM 0.06").
4. SIGNS SHALL BE PLACED AT RAMP ENTRANCES IN ADDITION TO SIGNS POSTED IN ACCORDANCE WITH STANDARD PLAN T14.

SPECIAL SIGN FOR ENTRANCE RAMP CLOSURES

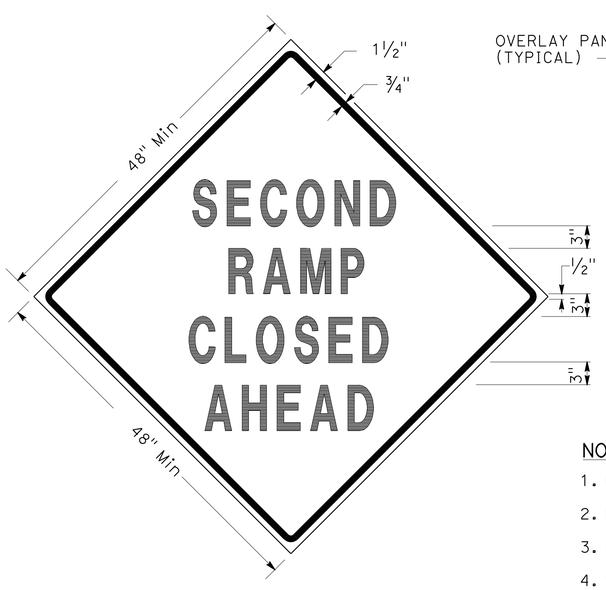

SIGN SP-3

SIGN SP-5

NOTES: (SIGNS SP-3 & SP-5)

1. LETTERS - 6" SERIES D.
2. LETTERS AND BORDERS - BLACK ON RETROREFLECTORIZED ORANGE BACKGROUND.
3. BASE MATERIAL SHALL BE ALUMINUM (MINIMUM 0.06").
4. SIGNS SHALL BE MOUNTED WITH BOTTOMS OF SIGNS A MINIMUM OF 6' ABOVE GROUND.

SPECIAL SIGN FOR EXIT RAMP CLOSURES

TRAFFIC HANDLING DETAILS
TRAFFIC CONTROL SYSTEM FOR RAMP CLOSURES, DETOUR SIGNS AND MISCELLANEOUS DETAILS
SHEET 1 OF 2

NO SCALE

THD-1

STATE OF CALIFORNIA - DEPARTMENT OF TRANSPORTATION
Caltrans DTM

FUNCTIONAL SUPERVISOR: JOHN YANG
CALCULATED-DESIGNED BY: ALBERT K YU
CHECKED BY: JOCELYN C CHIANG
REVISED BY: JC
DATE REVISED: 7/08

LAST REVISION 00-00-00
DATE PLOTTED => 21-JUL-2010
TIME PLOTTED => 14:53

Dist	COUNTY	ROUTE	POST MILES TOTAL PROJECT	SHEET No.	TOTAL SHEETS
07	LA	110	R1.8/21.3	45	111

REGISTERED CIVIL ENGINEER 4-24-10 DATE

6/28/10
PLANS APPROVAL DATE

REGISTERED PROFESSIONAL ENGINEER ALBERT K. YU No. C43220 Exp. 3-31-12 CIVIL STATE OF CALIFORNIA

THE STATE OF CALIFORNIA OR ITS OFFICERS OR AGENTS SHALL NOT BE RESPONSIBLE FOR THE ACCURACY OR COMPLETENESS OF SCANNED COPIES OF THIS PLAN SHEET.

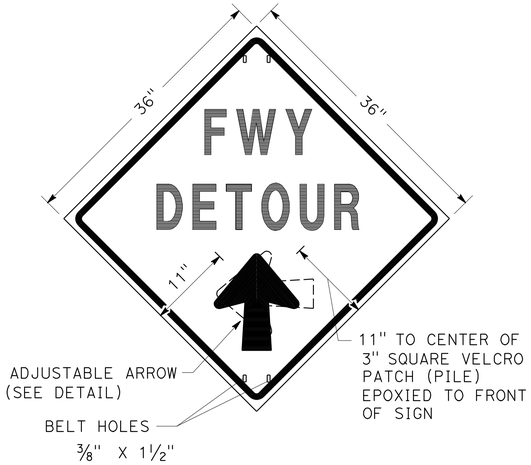

SIGN SP-2

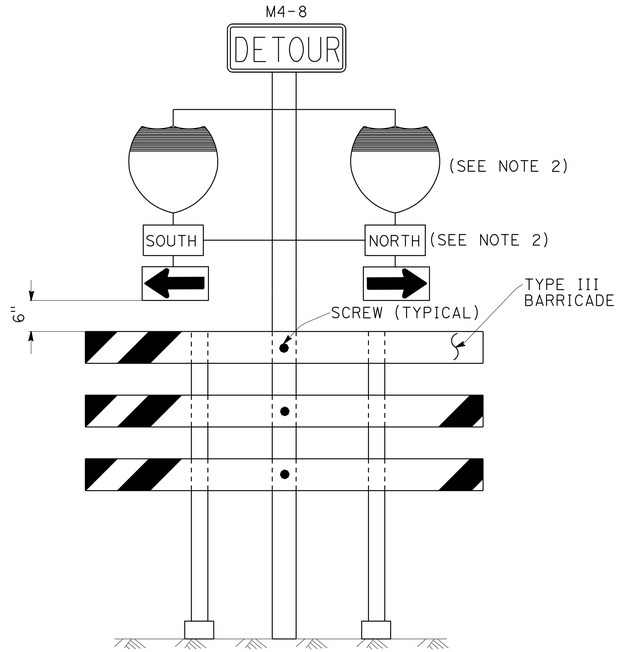

SIGN SP-6 (SEE NOTE 1)

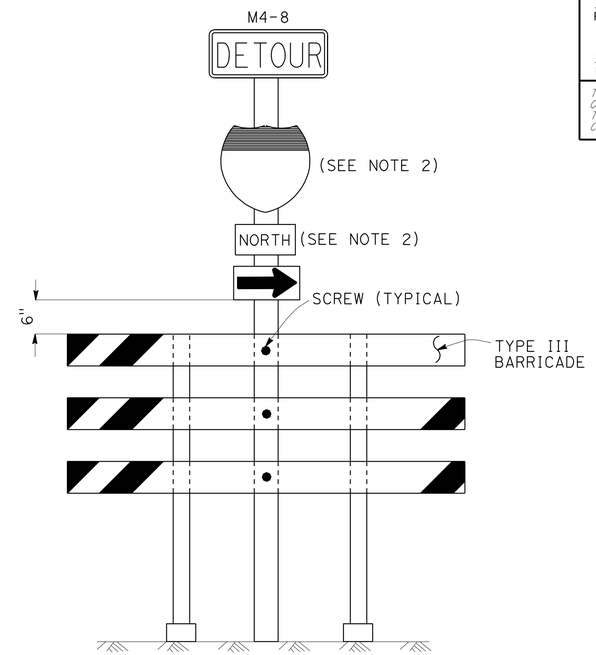

SIGN SP-7 (SEE NOTE 1)

NOTES: (SIGN SP-2)

1. LETTERS -6" SERIES E.
2. LETTERS, BORDER AND ARROW - BLACK ON RETROREFLECTORIZED ORANGE BACKGROUND.
3. BASE MATERIAL FOR SIGNS AND ARROWS SHALL BE ALUMINUM (MINIMUM 0.06").
4. BELTS (LUGGAGE STRAPS) SHALL BE 1" WIDE BY 48" LONG, MADE OF COTTON OR POLYPROPYLENE WEB MATERIAL.
5. SIGNS SHALL BE MOUNTED WITH BOTTOMS OF SIGNS A MINIMUM OF 6' ABOVE GROUND EXCEPT AS OTHERWISE SHOWN ON OTHER TRAFFIC HANDLING DETAILS PLANS.

ABBREVIATION

(CA) CALIFORNIA CODE

NOTES: (SIGNS SP-6 & SP-7)

1. IN LIEU OF PLACING SIGNS ON TYPE III BARRICADES, SIGNS, INCLUDING POSTS, MAY BE PLACED INTO THE GROUND OR FASTENED ONTO ELECTROLIERS.
2. USE APPROPRIATE ROUTE SHIELD [G26-2(CA), G27-2(CA), G28-2(CA)] AND CARDINAL DIRECTION [NORTH (M3-1), SOUTH (M3-3), EAST (M3-2), WEST (M3-4)]

SPECIAL PORTABLE FREEWAY DETOUR SIGNS

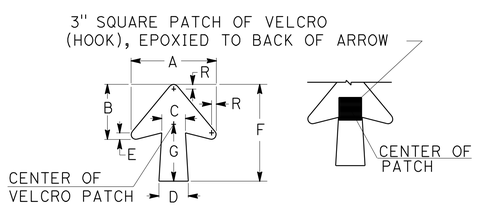

DIMENSIONS							
A	B	C	D	E	F	G	R
11 1/4"	7 1/4"	3 1/8"	4"	7/8"	13"	7 1/2"	5/8"

SPECIAL PORTABLE FREEWAY DETOUR SIGN

ADJUSTABLE ARROW DETAIL

TRAFFIC HANDLING DETAILS

TRAFFIC CONTROL SYSTEM FOR RAMP CLOSURES, DETOUR SIGNS AND MISCELLANEOUS DETAILS

SHEET 2 OF 2

NO SCALE

THD-2

CALCULATED-DESIGNED BY	JC	REVISED BY	ALBERT K YU
CHECKED BY	7/08	DATE REVISED	JOCELYN C CHIANG
FUNCTIONAL SUPERVISOR	JOHN YANG		

STATE OF CALIFORNIA - DEPARTMENT OF TRANSPORTATION

Caltrans DTM

LAST REVISION 00-00-00 | DATE PLOTTED => 21-JUL-2010 | TIME PLOTTED => 14:54

Dist	COUNTY	ROUTE	POST MILES TOTAL PROJECT	SHEET No.	TOTAL SHEETS
07	LA	110	R1.3/21.3	46	111

REGISTERED CIVIL ENGINEER 4-24-10 DATE

6/28/10
PLANS APPROVAL DATE

REGISTERED PROFESSIONAL ENGINEER ALBERT K. YU No. 43220 Exp. 3-31-12 CIVIL STATE OF CALIFORNIA

THE STATE OF CALIFORNIA OR ITS OFFICERS OR AGENTS SHALL NOT BE RESPONSIBLE FOR THE ACCURACY OR COMPLETENESS OF SCANNED COPIES OF THIS PLAN SHEET.

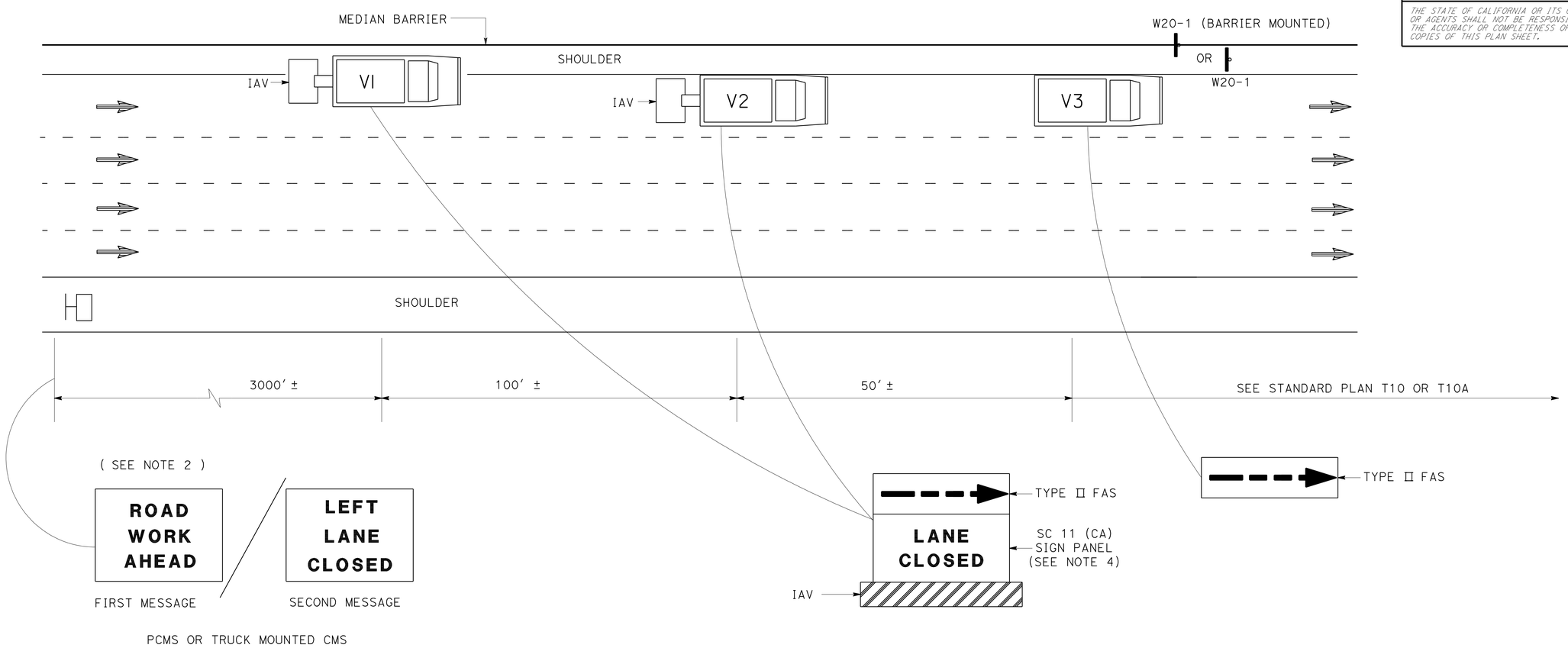

NOTES:

1. LANE CLOSURES SHALL NOT BE PLACED ON CREST VERTICAL CURVES OR ON HORIZONTAL CURVES.
2. PCMS SHALL BE ACTIVATED PRIOR TO TRAFFIC CONTROL ACTIVITIES ON THE LANE.
3. A MINIMUM SIGHT DISTANCE OF 1500′ SHALL BE PROVIDED IN ADVANCE OF PCMS.
4. VEHICLE-MOUNTED SIGN PANELS SHALL BE TYPE III OR IV RETROREFLECTORIZED SHEETING, BLACK ON WHITE OR BLACK ON ORANGE WITH 8" MINIMUM SERIES D LETTERS PER CALTRANS SIGN SPECIFICATIONS.

LEGEND

V1, V2	SHADOW VEHICLE
V3	WORK/APPLICATION VEHICLE
	PORTABLE CHANGEABLE MESSAGE SIGN (PCMS)
	DIRECTION OF TRAVEL
	CONSTRUCTION AREA SIGN

ABBREVIATIONS

FAS	FLASHING ARROW SIGN
IAV	IMPACT ATTENUATOR VEHICLE
CMS	CHANGEABLE MESSAGE SIGN
PCMS	PORTABLE CHANGEABLE MESSAGE SIGN
(CA)	CALIFORNIA CODE

TRAFFIC HANDLING DETAILS
TRAFFIC CONTROL SYSTEM
FOR MEDIAN SHOULDERS LESS THAN 8 FEET

NO SCALE

THD-3

CALCULATED-DESIGNED BY	JOCELYN C CHIANG	REVISED BY	JC
CHECKED BY	ALBERT K YU	DATE REVISED	7/08
FUNCTIONAL SUPERVISOR	JOHN YANG		

STATE OF CALIFORNIA - DEPARTMENT OF TRANSPORTATION
Caltrans DTM

LAST REVISION 00-00-00 | DATE PLOTTED => 21-JUL-2010 | TIME PLOTTED => 14:54

Dist	COUNTY	ROUTE	POST MILES TOTAL PROJECT	SHEET No.	TOTAL SHEETS
07	LA	110	R1.8/21.3	47	111

REGISTERED CIVIL ENGINEER 4-24-10 DATE

6/28/10
PLANS APPROVAL DATE

REGISTERED PROFESSIONAL ENGINEER ALBERT K. YU No. 43220 Exp. 3-31-12 CIVIL STATE OF CALIFORNIA

THE STATE OF CALIFORNIA OR ITS OFFICERS OR AGENTS SHALL NOT BE RESPONSIBLE FOR THE ACCURACY OR COMPLETENESS OF SCANNED COPIES OF THIS PLAN SHEET.

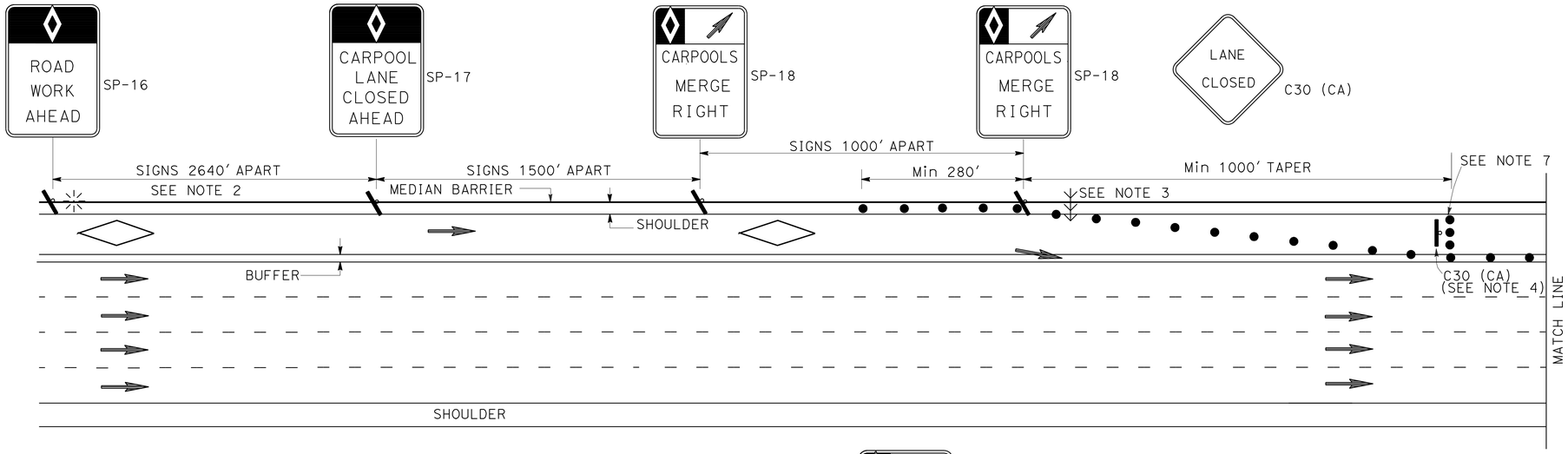

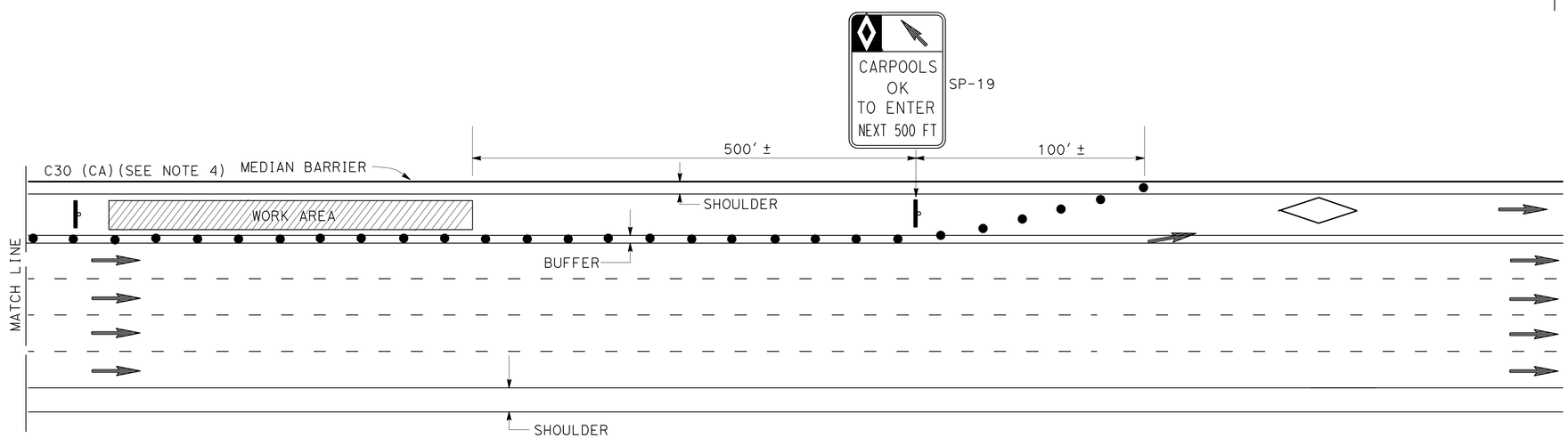

ABBREVIATIONS

(CA) CALIFORNIA CODE

HOV HIGH OCCUPANCY VEHICLE

NOTES: FOR CASE I AND CASE II

1. AT LEAST ONE PERSON SHALL BE ASSIGNED TO FULL TIME MAINTENANCE OF TRAFFIC CONTROL DEVICES ON NIGHT LANE CLOSURES OR DAY-TIME CLOSURES EXCEEDING 1 MILE LENGTH, INCLUDING TAPERS.
2. ADVANCE WARNING SIGN INSTALLATIONS SHALL BE EQUIPPED WITH FLAGS FOR DAYTIME CLOSURES. TYPE B HIGH INTENSITY FLASHING WARNING LIGHTS SHALL BE USED ON SP-16 SIGNS DURING NIGHT LANE CLOSURES. FLAGS AND WARNING LIGHTS SHALL BE ATTACHED TO SIGNS AS APPROVED BY THE ENGINEER.
3. THE FLASHING ARROW SIGN SHALL BE TYPE I.
4. PLACE C30 (CA) SIGNS EVERY 2000' THROUGHOUT THE LENGTH OF LANE CLOSURE.
5. A MINIMUM 1500' OF SIGHT DISTANCE SHALL BE PROVIDED WHERE POSSIBLE FOR VEHICLES APPROACHING THE FLASHING ARROW SIGN. LANE CLOSURES SHALL NOT BE PLACED ON CREST VERTICAL CURVES OR ON HORIZONTAL CURVES.
6. PORTABLE DELINEATORS PLACED AT ONE-HALF THE SPACING INDICATED FOR TRAFFIC CONES MAY BE USED INSTEAD OF CONES FOR DAYTIME CLOSURES.
7. A MINIMUM OF 3 CONES SHALL BE PLACED TRANSVERSELY ACROSS CLOSED LANES WHERE TAPERS END AND EVERY 2000'. TWO TYPE II BARRICADES MAY BE USED INSTEAD OF 3 CONES. THE ALIGNMENT OF CONES OR BARRICADES MAY BE SHIFTED FROM THE TRANSVERSE ALIGNMENT TO PROVIDE ACCESS TO WORK.
8. IF AN INGRESS/EGRESS AREA IS WITHIN 5250' UPSTREAM OR DOWNSTREAM OF THE WORK AREA, LANE CLOSURES SHALL BE EXTENDED TO THAT AREA AS SHOWN IN CASE II.
9. SIGNS SP-16, 17, 18, AND 19 MAY BE OVERLAID ON EXISTING CARPOOL SIGNS IN MEDIANS AS APPROVED BY THE ENGINEER.
10. SIGNS SP-16, 17, 18, AND C30 (CA) SHALL BE BLACK ON ORANGE BACKGROUND. SIGN SP-19 SHALL BE BLACK ON WHITE BACKGROUND. DIAMONDS ON SIGNS SHALL BE WHITE.
11. FOR CLOSURE OF LANE(S) ADJACENT TO HOV LANES, SEE CASE II.
12. THE MAXIMUM SPACING BETWEEN CONES SHALL BE APPROXIMATELY 50' IN TAPERS AND 100' ON TANGENTS.

LEGEND

- CONE
- FLASHING BEACON
- HOV LANE
- FLASHING ARROW SIGN
- PORTABLE SIGN
- DIRECTION OF TRAVEL

SIGN PANEL

SIZE (MIN)

SP-16 36" X 54"
SP-17 36" X 54"
SP-18 36" X 48"
SP-19 36" X 60"
C30 (CA) 30" X 30"
G20-2 48" X 24"

TRAFFIC HANDLING DETAILS
TRAFFIC CONTROL SYSTEM FOR HIGH OCCUPANCY VEHICLE LANES AT NON-INGRESS/EGRESS AREAS
CASE I
NO SCALE

THD-4

FUNCTIONAL SUPERVISOR	CALCULATED-DESIGNED BY	CHECKED BY	REVISED BY	DATE REVISED
JOHN YANG	JOCELYN C CHIANG	ALBERT K YU	JC	7/08

STATE OF CALIFORNIA - DEPARTMENT OF TRANSPORTATION
Caltrans DTM

LAST REVISION 00-00-00 | DATE PLOTTED => 21-JUL-2010 | TIME PLOTTED => 14:54

Dist	COUNTY	ROUTE	POST MILES TOTAL PROJECT	SHEET No.	TOTAL SHEETS
07	LA	110	0.8/21.3	48	111

REGISTERED CIVIL ENGINEER 4-24-10 DATE

6/28/10
PLANS APPROVAL DATE

REGISTERED PROFESSIONAL ENGINEER ALBERT K. YU No. 43220 Exp. 3-31-12 CIVIL STATE OF CALIFORNIA

THE STATE OF CALIFORNIA OR ITS OFFICERS OR AGENTS SHALL NOT BE RESPONSIBLE FOR THE ACCURACY OR COMPLETENESS OF SCANNED COPIES OF THIS PLAN SHEET.

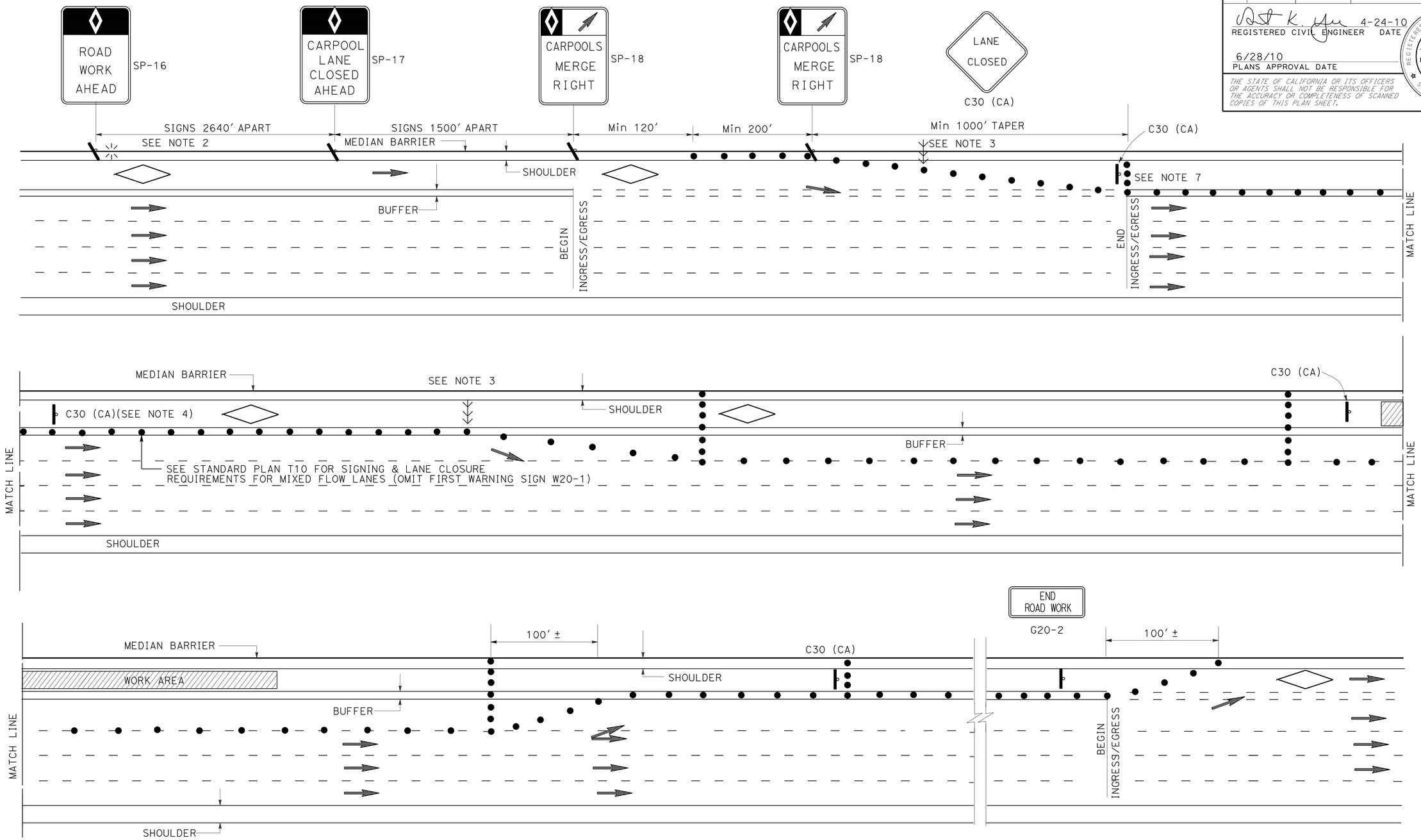

NOTES:

1. SEE CASE I FOR NOTES, LEGENDS AND ABBREVIATIONS FOR THIS SHEET.
2. CLOSURES OF ONE MIXED FLOW TRAFFIC LANE ADJACENT TO HOV LANE SHOWN. MULTIPLE MIXED FLOW LANE CLOSURES ARE SIMILAR.

TRAFFIC HANDLING DETAILS
TRAFFIC CONTROL SYSTEM FOR HIGH OCCUPANCY VEHICLE LANES AND ADJACENT FREEWAY LANES BETWEEN INGRESS/EGRESS AREAS
CASE II

NO SCALE

THD-5

REVISED BY	JC
DATE REVISED	7/08
CALCULATED-DESIGNED BY	JOCELYN C CHIANG
CHECKED BY	ALBERT K YU
FUNCTIONAL SUPERVISOR	JOHN YANG

STATE OF CALIFORNIA - DEPARTMENT OF TRANSPORTATION
Caltrans
DTM

LAST REVISION 00-00-00
DATE PLOTTED => 21-JUL-2010
TIME PLOTTED => 14:54

Dist	COUNTY	ROUTE	POST MILES TOTAL PROJECT	SHEET No.	TOTAL SHEETS
07	LA	110	R1.8/21.3	49	111

REGISTERED CIVIL ENGINEER 4-24-10 DATE

6/28/10
PLANS APPROVAL DATE

REGISTERED PROFESSIONAL ENGINEER ALBERT K. YU No. 43220 Exp. 3-31-12 CIVIL STATE OF CALIFORNIA

THE STATE OF CALIFORNIA OR ITS OFFICERS OR AGENTS SHALL NOT BE RESPONSIBLE FOR THE ACCURACY OR COMPLETENESS OF SCANNED COPIES OF THIS PLAN SHEET.

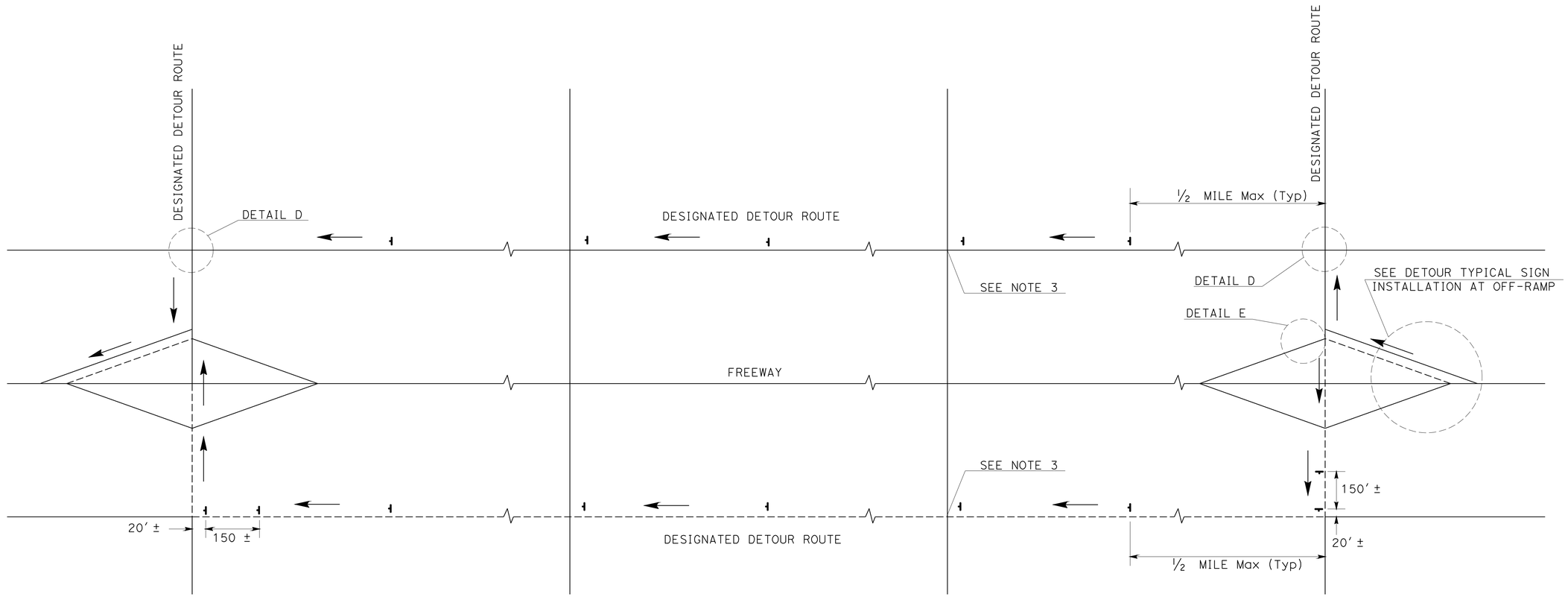

TYPICAL DETOUR SIGN INSTALLATION ALONG DESIGNATED DETOUR ROUTE

LEGEND

- SIGN SP-2
- AND/OR DESIGNATED DETOUR ROUTE
- DIRECTION OF TRAVEL

NOTES:

1. SP-2 SIGNS SHALL NOT BE INSTALLED ON BARRICADES EXCEPT AS OTHERWISE SHOWN.
2. SIGN LOCATIONS ARE APPROXIMATE. EXACT LOCATIONS WILL BE DETERMINED BY THE ENGINEER.
3. SP-2 SIGNS SHALL BE POSTED AT SIGNALIZED INTERSECTIONS ALONG THE DESIGNATED DETOUR ROUTE OR ½ MILE MAXIMUM APART.

TRAFFIC HANDLING DETAILS
TRAFFIC CONTROL SYSTEM FOR DETOUR SIGN INSTALLATION ALONG DESIGNATED DETOUR ROUTE
SHEET 1 OF 2
NO SCALE

THD-6

STATE OF CALIFORNIA - DEPARTMENT OF TRANSPORTATION
Caltrans DTM

FUNCTIONAL SUPERVISOR: JOHN YANG
CALCULATED-DESIGNED BY: JOCELYN C CHIANG
CHECKED BY: ALBERT K YU
REVISED BY: JC
DATE REVISED: 7/08

LAST REVISION 00-00-00
DATE PLOTTED => 21-JUL-2010
TIME PLOTTED => 14:55

Dist	COUNTY	ROUTE	POST MILES TOTAL PROJECT	SHEET No.	TOTAL SHEETS
07	LA	110	R1.8/21.3	50	111

REGISTERED CIVIL ENGINEER 4-24-10 DATE

6/28/10
PLANS APPROVAL DATE

REGISTERED PROFESSIONAL ENGINEER ALBERT K. YU No. 43220 Exp. 3-31-12 CIVIL STATE OF CALIFORNIA

THE STATE OF CALIFORNIA OR ITS OFFICERS OR AGENTS SHALL NOT BE RESPONSIBLE FOR THE ACCURACY OR COMPLETENESS OF SCANNED COPIES OF THIS PLAN SHEET.

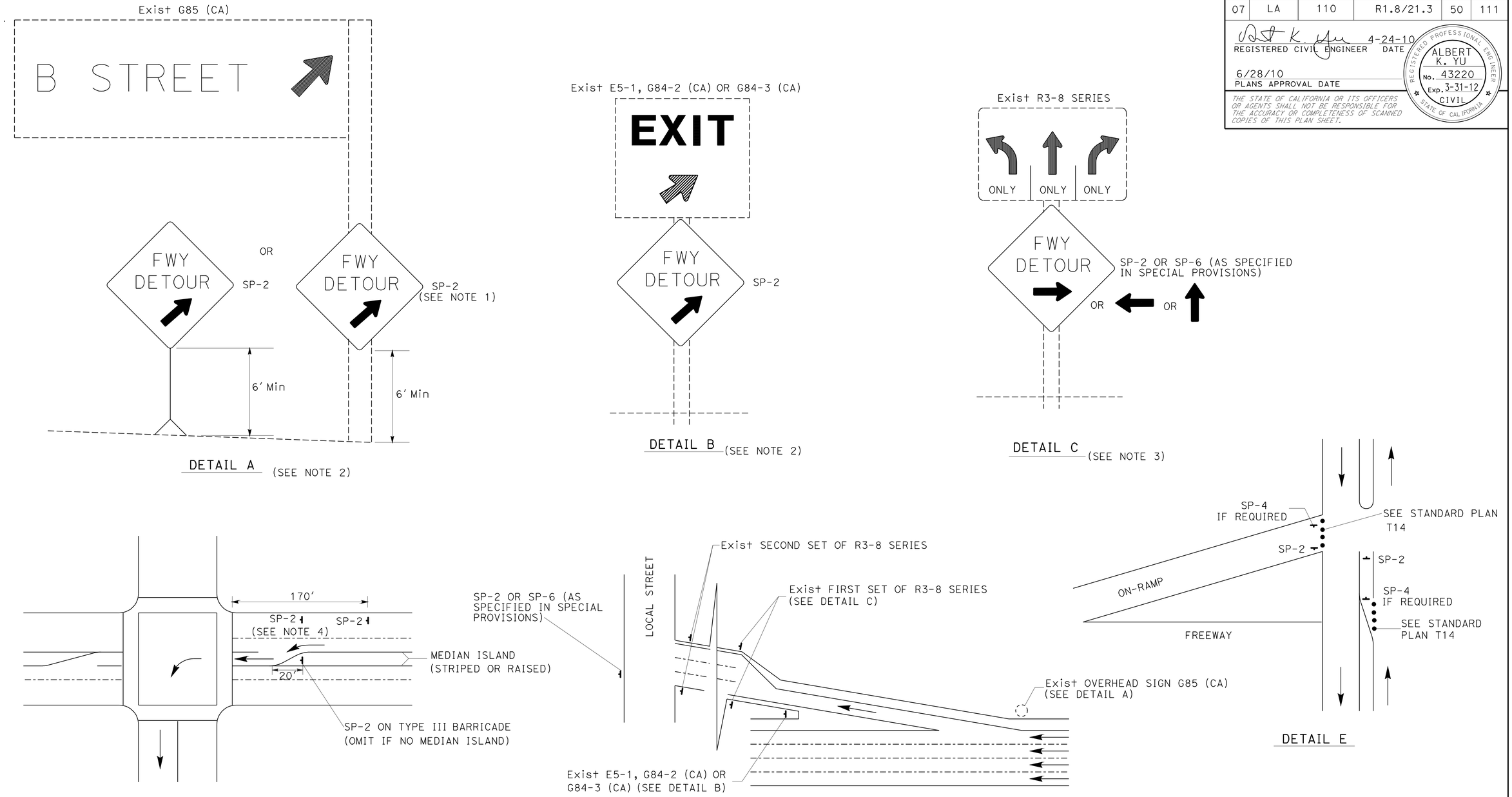

TYPICAL DETOUR SIGN INSTALLATION AT OFF-RAMP

NOTES:

1. SP-2 MAY BE STRAPPED ON EXISTING ELECTROLIER SIGNAL POSTS OR SIGN POSTS.
2. OMIT DETAIL A AND DETAIL B FOR FULL FREEWAY CLOSURES.
3. SEE TRAFFIC HANDLING DETAILS PLAN-TRAFFIC CONTROL SYSTEM FOR RAMP CLOSURES, DETOUR SIGNS AND MISCELLANEOUS DETAILS SHEET 2 OF 2 FOR SP-6.
4. OMIT IF MEDIAN ISLAND EXIST.

ABBREVIATIONS

(CA) CALIFORNIA CODE

LEGENDS

- CONE
- PORTABLE SIGN
- DIRECTION OF TRAVEL
- EXISTING OVERHEAD SIGN

TRAFFIC HANDLING DETAILS
TRAFFIC CONTROL SYSTEM FOR DETOUR SIGN INSTALLATION ALONG DESIGNATED DETOUR ROUTE
SHEET 2 OF 2
NO SCALE

THD-7

STATE OF CALIFORNIA - DEPARTMENT OF TRANSPORTATION
Caltrans® DTM

FUNCTIONAL SUPERVISOR: JOHN YANG
CALCULATED-DESIGNED BY: JOCELYN C CHIANG
CHECKED BY: ALBERT K YU
REVISED BY: JC
DATE REVISED: 7/08

LAST REVISION: 00-00-00
DATE PLOTTED => 21-JUL-2010
TIME PLOTTED => 14:55

Dist	COUNTY	ROUTE	POST MILES TOTAL PROJECT	SHEET No.	TOTAL SHEETS
07	LA	110	R1.3/21.3	51	111

REGISTERED CIVIL ENGINEER 4-26-10 DATE

6/28/10
PLANS APPROVAL DATE

REGISTERED PROFESSIONAL ENGINEER ALBERT K. YU No. 43220 Exp. 3/31/12 CIVIL STATE OF CALIFORNIA

THE STATE OF CALIFORNIA OR ITS OFFICERS OR AGENTS SHALL NOT BE RESPONSIBLE FOR THE ACCURACY OR COMPLETENESS OF SCANNED COPIES OF THIS PLAN SHEET.

LEGENDS

- SIGN SP-2
- DIRECTION OF TRAVEL
- SIGNALIZED INTERSECTION
- CLOSURE LIMIT
- EXISTING Fwy GUIDE SIGN
- PORTABLE CHANGEABLE MESSAGE SIGN (PCMS)

PCMS	LOCATION	MESSAGE	
1	INSIDE THE CONNECTOR CLOSURE	1ST FLASH	N110/EXIT/CLOSED
		2ND FLASH	DETOUR/USE/MAIN ST

	QUANTITY
SP-2	5

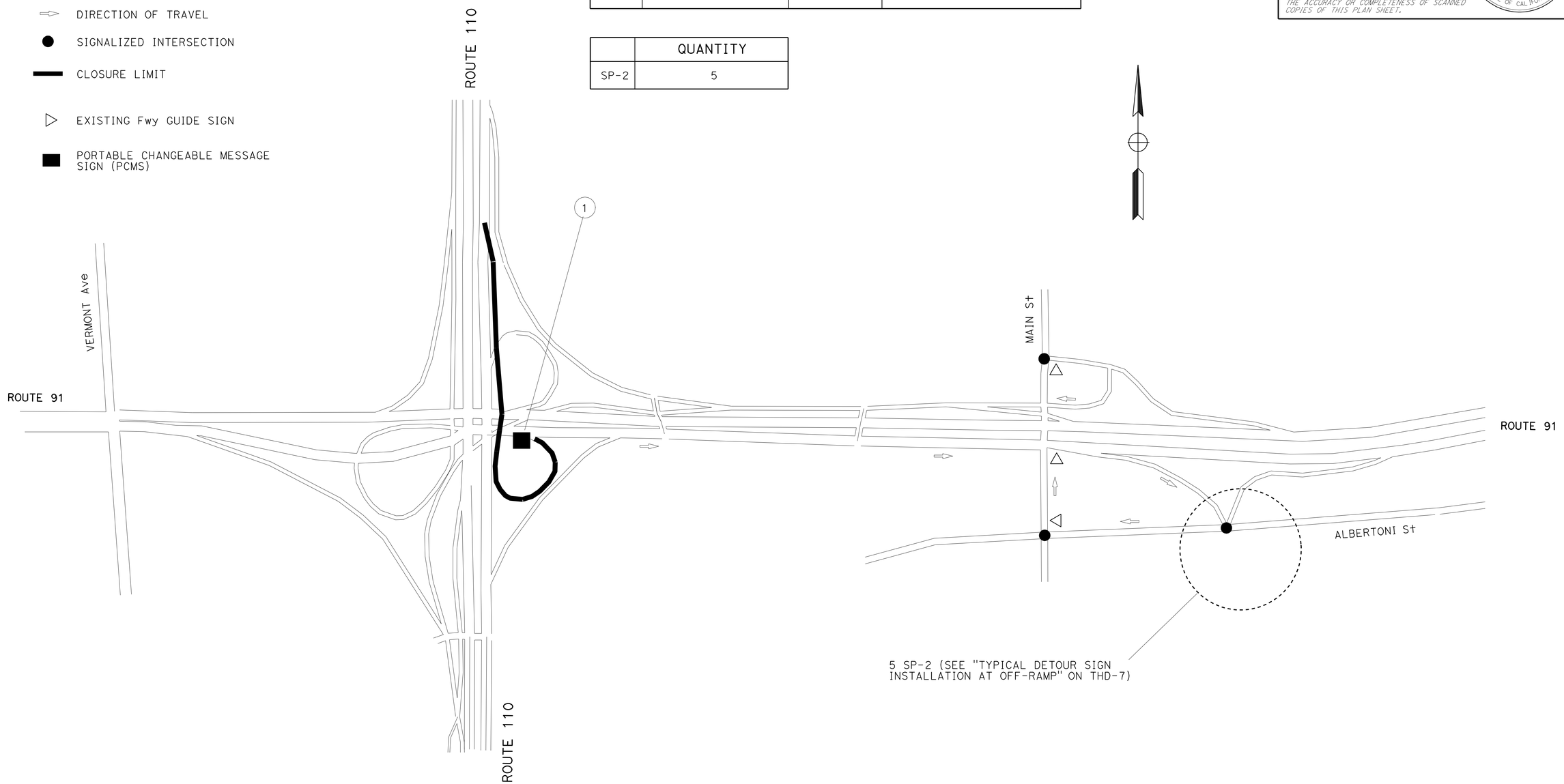

NOTES:

1. SIGN LOCATIONS ARE APPROXIMATE. EXACT LOCATIONS WILL BE DETERMINED BY THE ENGINEER.
2. SEE THD-2 FOR SIGN SP-2 DETAILS.

TRAFFIC HANDLING DETAILS
CONNECTOR DETOUR PLAN
FOR WORK SHIFT CLOSURES
EB Rte 91 TO NB Rte 110
(CHART 13)

NO SCALE

THD-8

STATE OF CALIFORNIA - DEPARTMENT OF TRANSPORTATION
Caltrans DTM

FUNCTIONAL SUPERVISOR: JOHN YANG
CALCULATED-DESIGNED BY: KIT LIU
CHECKED BY: ALBERT YU
REVISED BY
DATE REVISED

LAST REVISION 00-00-00
DATE PLOTTED => 21-JUL-2010
TIME PLOTTED => 14:55

Dist	COUNTY	ROUTE	POST MILES TOTAL PROJECT	SHEET No.	TOTAL SHEETS
07	LA	110	R1.3/21.3	52	111

REGISTERED CIVIL ENGINEER 4-24-10 DATE

6/28/10
PLANS APPROVAL DATE

REGISTERED PROFESSIONAL ENGINEER ALBERT K. YU No. 43220 Exp. 3/31/12 CIVIL STATE OF CALIFORNIA

THE STATE OF CALIFORNIA OR ITS OFFICERS OR AGENTS SHALL NOT BE RESPONSIBLE FOR THE ACCURACY OR COMPLETENESS OF SCANNED COPIES OF THIS PLAN SHEET.

LEGENDS

- SIGN SP-2
- DIRECTION OF TRAVEL
- SIGNALIZED INTERSECTION
- CLOSURE LIMIT
- EXISTING Fwy GUIDE SIGN
- PORTABLE CHANGEABLE MESSAGE SIGN (PCMS)

PCMS	LOCATION	MESSAGE	
1	INSIDE THE CONNECTOR CLOSURE	1ST FLASH	S110/EXIT/CLOSED
		2ND FLASH	DETOUR/USE/MAIN ST

	QUANTITY
SP-2	5

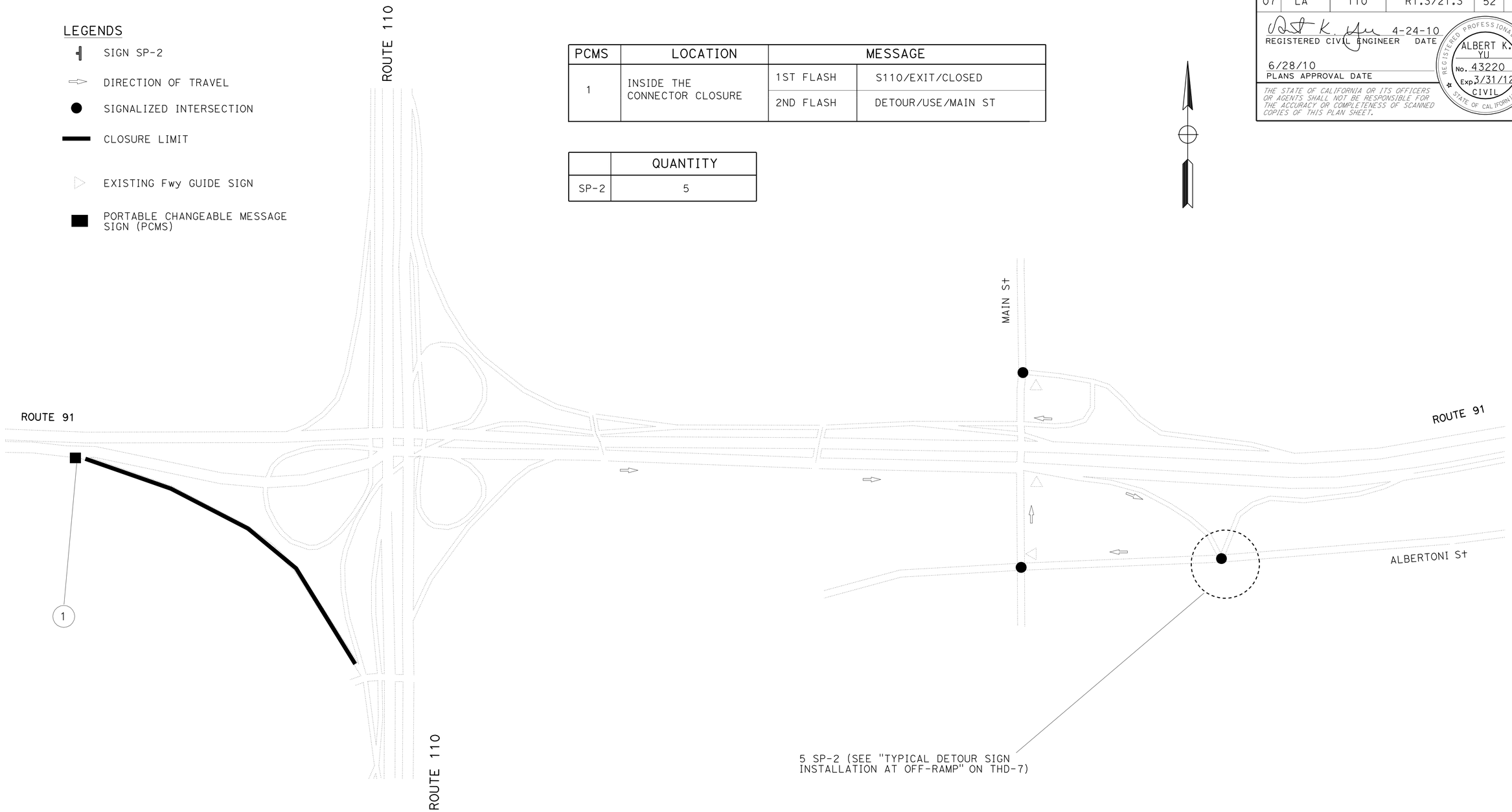

NOTES:

1. SIGN LOCATIONS ARE APPROXIMATE. EXACT LOCATIONS WILL BE DETERMINED BY THE ENGINEER.
2. SEE THD-2 FOR SIGN SP-2 DETAILS.

TRAFFIC HANDLING DETAILS
CONNECTOR DETOUR PLAN FOR WORK SHIFT CLOSURES
EB Rte 91 TO SB Rte 110
(CHART 14)

NO SCALE

THD-9

STATE OF CALIFORNIA - DEPARTMENT OF TRANSPORTATION
Caltrans® DTM

FUNCTIONAL SUPERVISOR: JOHN YANG
CALCULATED-DESIGNED BY: KIT LIU
CHECKED BY: ALBERT YU
REVISED BY / DATE REVISED

LAST REVISION 00-00-00
DATE PLOTTED => 21-JUL-2010
TIME PLOTTED => 14:55

Dist	COUNTY	ROUTE	POST MILES TOTAL PROJECT	SHEET No.	TOTAL SHEETS
07	LA	110	R1.1/21.3	53	111

REGISTERED CIVIL ENGINEER 4-24-10 DATE

6/28/10
PLANS APPROVAL DATE

REGISTERED PROFESSIONAL ENGINEER ALBERT K. YU No. 43220 Exp. 3/31/12 CIVIL STATE OF CALIFORNIA

THE STATE OF CALIFORNIA OR ITS OFFICERS OR AGENTS SHALL NOT BE RESPONSIBLE FOR THE ACCURACY OR COMPLETENESS OF SCANNED COPIES OF THIS PLAN SHEET.

LEGENDS

- SIGN SP-2
- DIRECTION OF TRAVEL
- SIGNALIZED INTERSECTION
- CLOSURE LIMIT
- EXISTING Fwy GUIDE SIGN
- PORTABLE CHANGEABLE MESSAGE SIGN (PCMS)

PCMS	LOCATION	MESSAGE	
1	MAINTENANCE PULL OUT BY AVALON Blvd ON-RAMP	1ST FLASH	S 110/EXIT/CLOSED
		2ND FLASH	USE N110/REDONDO/BEACH BL

	QUANTITY
SP-2	5

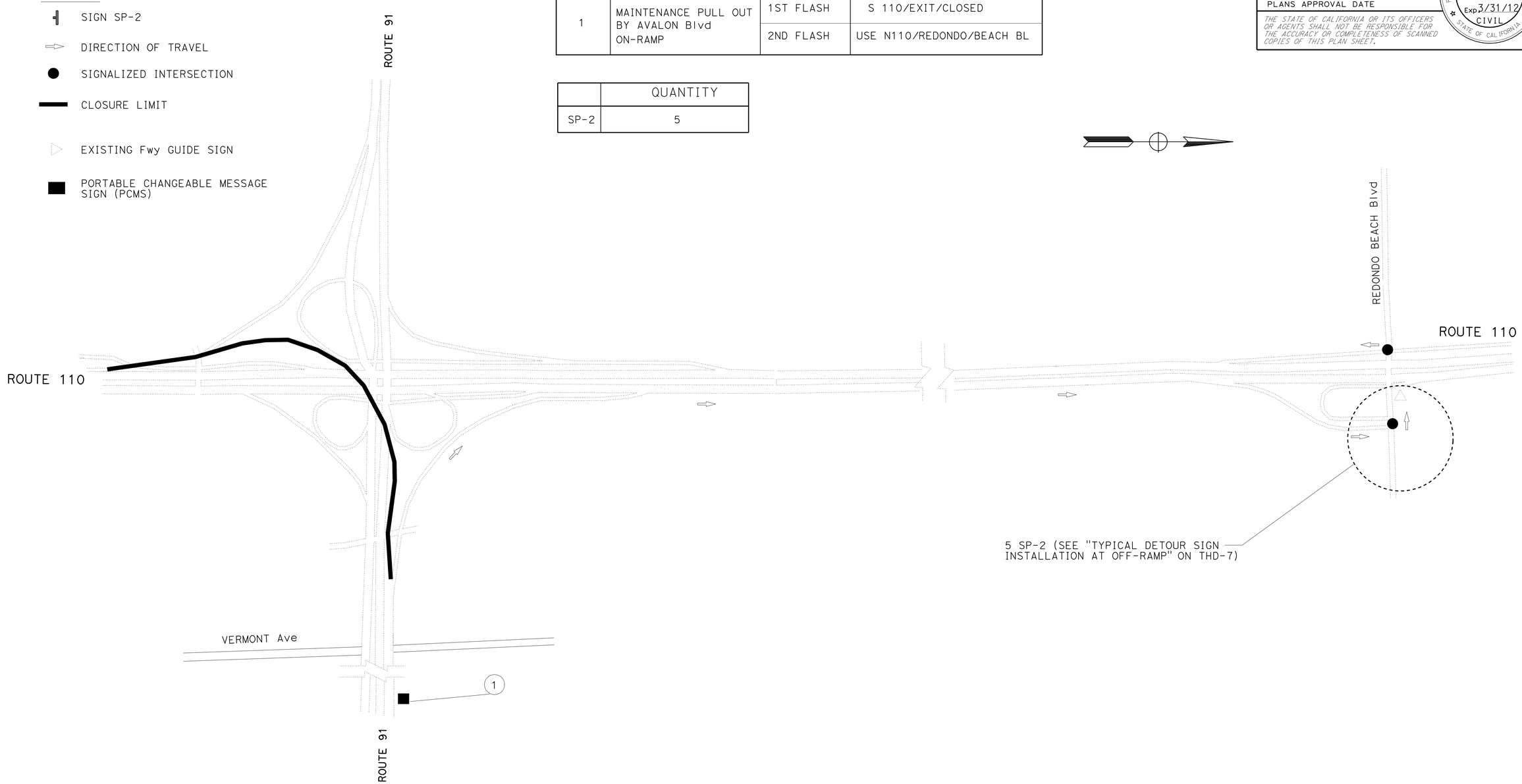

NOTES:

1. SIGN LOCATIONS ARE APPROXIMATE. EXACT LOCATIONS WILL BE DETERMINED BY THE ENGINEER.
2. SEE THD-2 FOR SIGN SP-2 DETAILS.

TRAFFIC HANDLING DETAILS
CONNECTOR DETOUR PLAN
FOR WORK SHIFT CLOSURES
WB Rte 91 TO SB Rte 110
(CHART 15)

NO SCALE

THD-10

STATE OF CALIFORNIA - DEPARTMENT OF TRANSPORTATION
Caltrans DTM

FUNCTIONAL SUPERVISOR: JOHN YANG
CALCULATED-DESIGNED BY: KIT LIU
CHECKED BY: ALBERT YU
REVISED BY
DATE REVISED

LAST REVISION 00-00-00
DATE PLOTTED => 21-JUL-2010
TIME PLOTTED => 14:56

Dist	COUNTY	ROUTE	POST MILES TOTAL PROJECT	SHEET No.	TOTAL SHEETS
07	LA	110	R1.3/21.3	54	111

REGISTERED CIVIL ENGINEER 4/26/10 DATE

6/28/10
PLANS APPROVAL DATE

REGISTERED PROFESSIONAL ENGINEER ALBERT K. YU No. 43220 Exp. 3/31/12 CIVIL STATE OF CALIFORNIA

THE STATE OF CALIFORNIA OR ITS OFFICERS OR AGENTS SHALL NOT BE RESPONSIBLE FOR THE ACCURACY OR COMPLETENESS OF SCANNED COPIES OF THIS PLAN SHEET.

LEGENDS

- SIGN SP-2
- DIRECTION OF TRAVEL
- SIGNALIZED INTERSECTION
- CLOSURE LIMIT
- EXISTING Fwy GUIDE SIGN
- PORTABLE CHANGEABLE MESSAGE SIGN (PCMS)

PCMS	LOCATION	MESSAGE	
1	INSIDE THE CONNECTOR CLOSURE	1ST FLASH	EAST 91/EXIT/CLOSED
		2ND FLASH	DETOUR/REDONDO/BEACH BL

	QUANTITY
SP-2	6

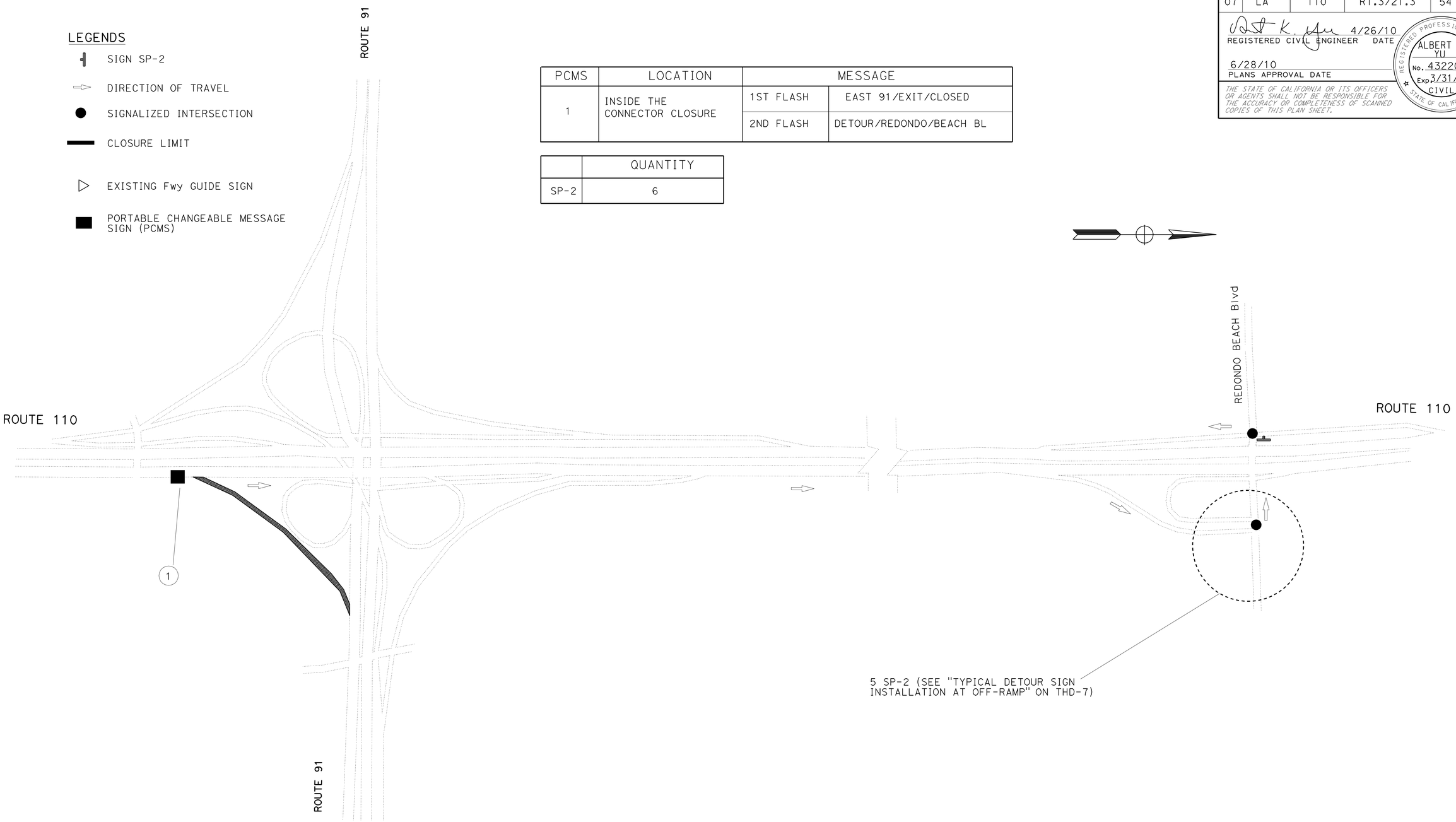

NOTES:

1. SIGN LOCATIONS ARE APPROXIMATE. EXACT LOCATIONS WILL BE DETERMINED BY THE ENGINEER.
2. SEE THD-2 FOR SIGN SP-2 DETAILS.

TRAFFIC HANDLING DETAILS
CONNECTOR DETOUR PLAN FOR WORK SHIFT CLOSURES NB Rte 110 TO EB Rte 91 (CHART 16)

NO SCALE

THD-11

STATE OF CALIFORNIA - DEPARTMENT OF TRANSPORTATION
DTM
Caltrans

FUNCTIONAL SUPERVISOR: JOHN YANG
CALCULATED-DESIGNED BY: KIT LIU
CHECKED BY: ALBERT YU
REVISED BY
DATE REVISED

LAST REVISION 00-00-00
DATE PLOTTED => 21-JUL-2010
TIME PLOTTED => 14:56

Dist	COUNTY	ROUTE	POST MILES TOTAL PROJECT	SHEET No.	TOTAL SHEETS
07	LA	110	R1.3/21.3	55	111

REGISTERED CIVIL ENGINEER 4/26/10 DATE

6/28/10
PLANS APPROVAL DATE

REGISTERED PROFESSIONAL ENGINEER ALBERT K. YU No. 43220 Exp. 3/31/12 CIVIL STATE OF CALIFORNIA

THE STATE OF CALIFORNIA OR ITS OFFICERS OR AGENTS SHALL NOT BE RESPONSIBLE FOR THE ACCURACY OR COMPLETENESS OF SCANNED COPIES OF THIS PLAN SHEET.

LEGENDS

- SIGN SP-2
- DIRECTION OF TRAVEL
- SIGNALIZED INTERSECTION
- CLOSURE LIMIT
- EXISTING Fwy GUIDE SIGN
- PORTABLE CHANGEABLE MESSAGE SIGN (PCMS)

PCMS	LOCATION	MESSAGE	
1	INSIDE THE CONNECTOR CLOSURE	1ST FLASH	WEST 91/EXIT/CLOSED
		2ND FLASH	DETOUR/REDONDO/BEACH BL

	QUANTITY
SP-2	6

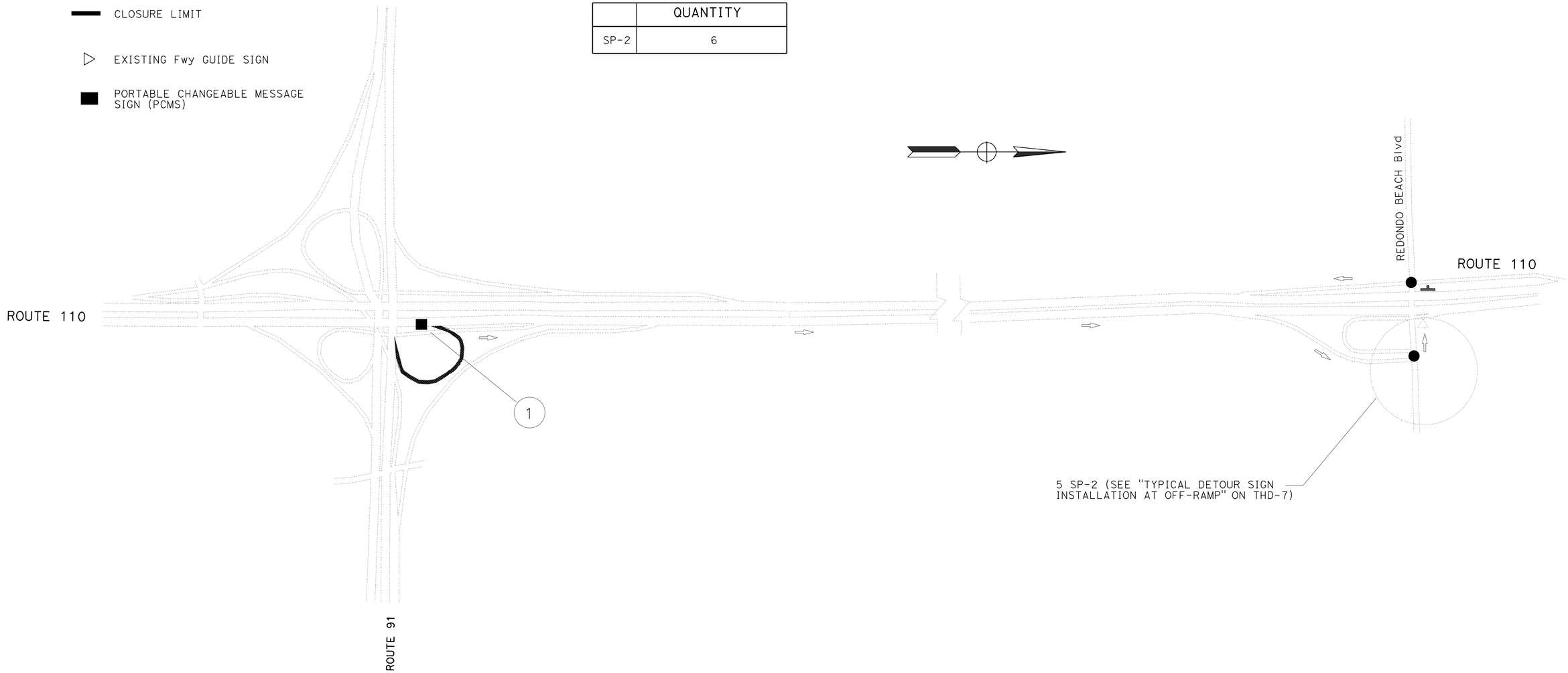

NOTES:

1. SIGN LOCATIONS ARE APPROXIMATE. EXACT LOCATIONS WILL BE DETERMINED BY THE ENGINEER.
2. SEE THD-2 FOR SIGN SP-2 DETAILS.

TRAFFIC HANDLING DETAILS
CONNECTOR DETOUR PLAN FOR WORK SHIFT CLOSURES
NB Rte 110 TO WB Rte 91
(CHART 17)

NO SCALE

THD-12

STATE OF CALIFORNIA - DEPARTMENT OF TRANSPORTATION
Caltrans DTM

FUNCTIONAL SUPERVISOR: JOHN YANG
CALCULATED-DESIGNED BY: KIT LIU
CHECKED BY: ALBERT YU
REVISED BY
DATE REVISED

LAST REVISION 00-00-00
DATE PLOTTED => 21-JUL-2010
TIME PLOTTED => 14:56

Dist	COUNTY	ROUTE	POST MILES TOTAL PROJECT	SHEET No.	TOTAL SHEETS
07	LA	110	R1.3/21.3	56	111

REGISTERED CIVIL ENGINEER 4/26/10 DATE

6/28/10
PLANS APPROVAL DATE

REGISTERED PROFESSIONAL ENGINEER ALBERT K. YU No. 43220 Exp. 3/31/12 CIVIL STATE OF CALIFORNIA

THE STATE OF CALIFORNIA OR ITS OFFICERS OR AGENTS SHALL NOT BE RESPONSIBLE FOR THE ACCURACY OR COMPLETENESS OF SCANNED COPIES OF THIS PLAN SHEET.

LEGENDS

- SIGN SP-2
- DIRECTION OF TRAVEL
- SIGNALIZED INTERSECTION
- CLOSURE LIMIT
- EXISTING Fwy GUIDE SIGN
- PORTABLE CHANGEABLE MESSAGE SIGN (PCMS)

PCMS	LOCATION	MESSAGE	
1	ALONDRA Blvd UC	1ST FLASH	WEST 91/EXIT/CLOSED
		2ND FLASH	DETOUR/USE/190 ST

	QUANTITY
SP-2	6

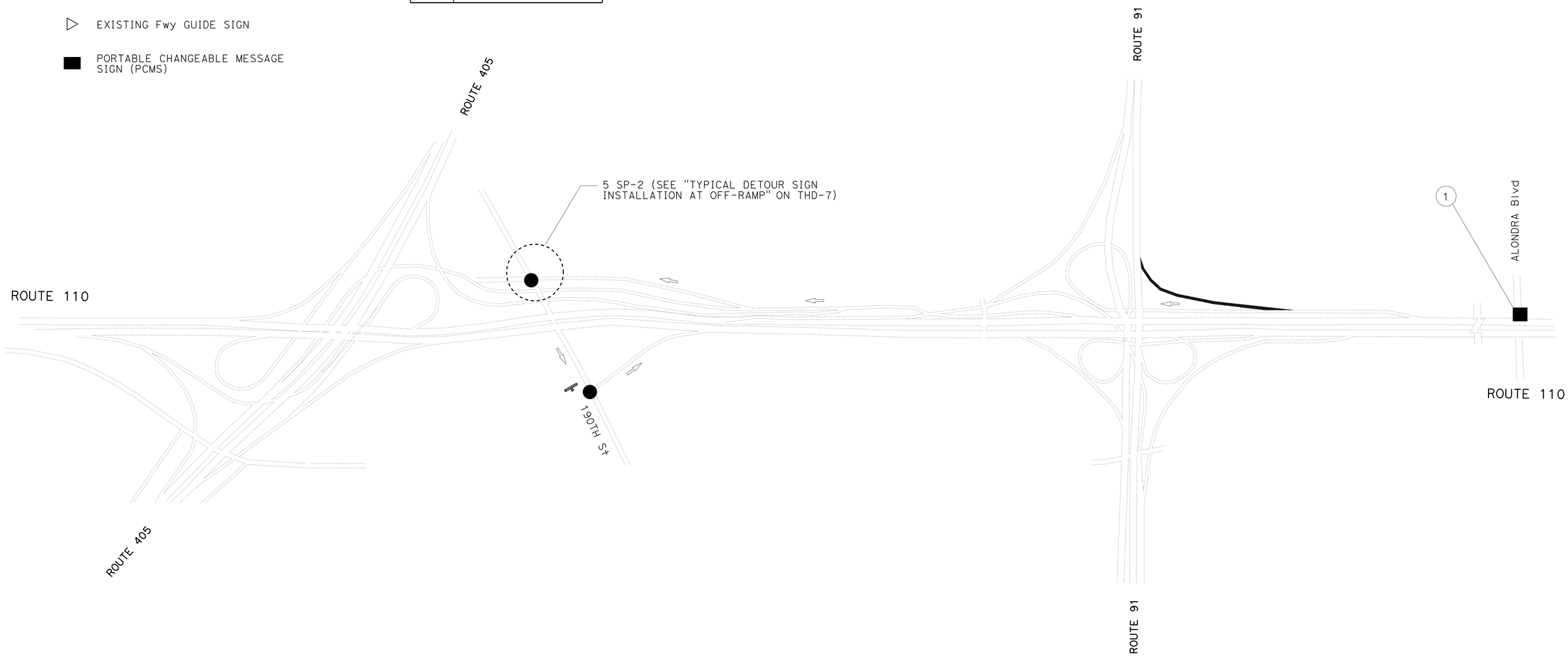

NOTES:

1. SIGN LOCATIONS ARE APPROXIMATE. EXACT LOCATIONS WILL BE DETERMINED BY THE ENGINEER.
2. SEE THD-2 FOR SIGN SP-2 DETAILS.
3. PORTABLE CHANGEABLE MESSAGE SIGN SHALL BE PLACED ON THE RIGHT SHOULDER.

TRAFFIC HANDLING DETAILS
CONNECTOR DETOUR PLAN FOR WORK SHIFT CLOSURES
SB Rte 110 TO Rte 405
(CHART 18)

NO SCALE

THD-13

STATE OF CALIFORNIA - DEPARTMENT OF TRANSPORTATION
Caltrans DTM

FUNCTIONAL SUPERVISOR: JOHN YANG
CALCULATED-DESIGNED BY: KIT LIU
CHECKED BY: ALBERT YU
REVISED BY
DATE REVISED

LAST REVISION 00-00-00
DATE PLOTTED => 21-JUL-2010
TIME PLOTTED => 14:56

Dist	COUNTY	ROUTE	POST MILES TOTAL PROJECT	SHEET No.	TOTAL SHEETS
07	LA	110	R1.3/21.3	57	111

REGISTERED CIVIL ENGINEER 4/26/10 DATE

6/28/10
PLANS APPROVAL DATE

REGISTERED PROFESSIONAL ENGINEER ALBERT K. YU No. 43220 Exp. 3/31/12 CIVIL STATE OF CALIFORNIA

THE STATE OF CALIFORNIA OR ITS OFFICERS OR AGENTS SHALL NOT BE RESPONSIBLE FOR THE ACCURACY OR COMPLETENESS OF SCANNED COPIES OF THIS PLAN SHEET.

LEGENDS

- SIGN SP-2
- DIRECTION OF TRAVEL
- SIGNALIZED INTERSECTION
- CLOSURE LIMIT
- EXISTING Fwy GUIDE SIGN
- PORTABLE CHANGEABLE MESSAGE SIGN (PCMS)

PCMS	LOCATION	MESSAGE	
1	INSIDE THE CONNECTOR CLOSURE	1ST FLASH	S405/EXIT/CLOSED
		2ND FLASH	DETOUR/N405 TO/NORMANDIE

	QUANTITY
SP-2	5

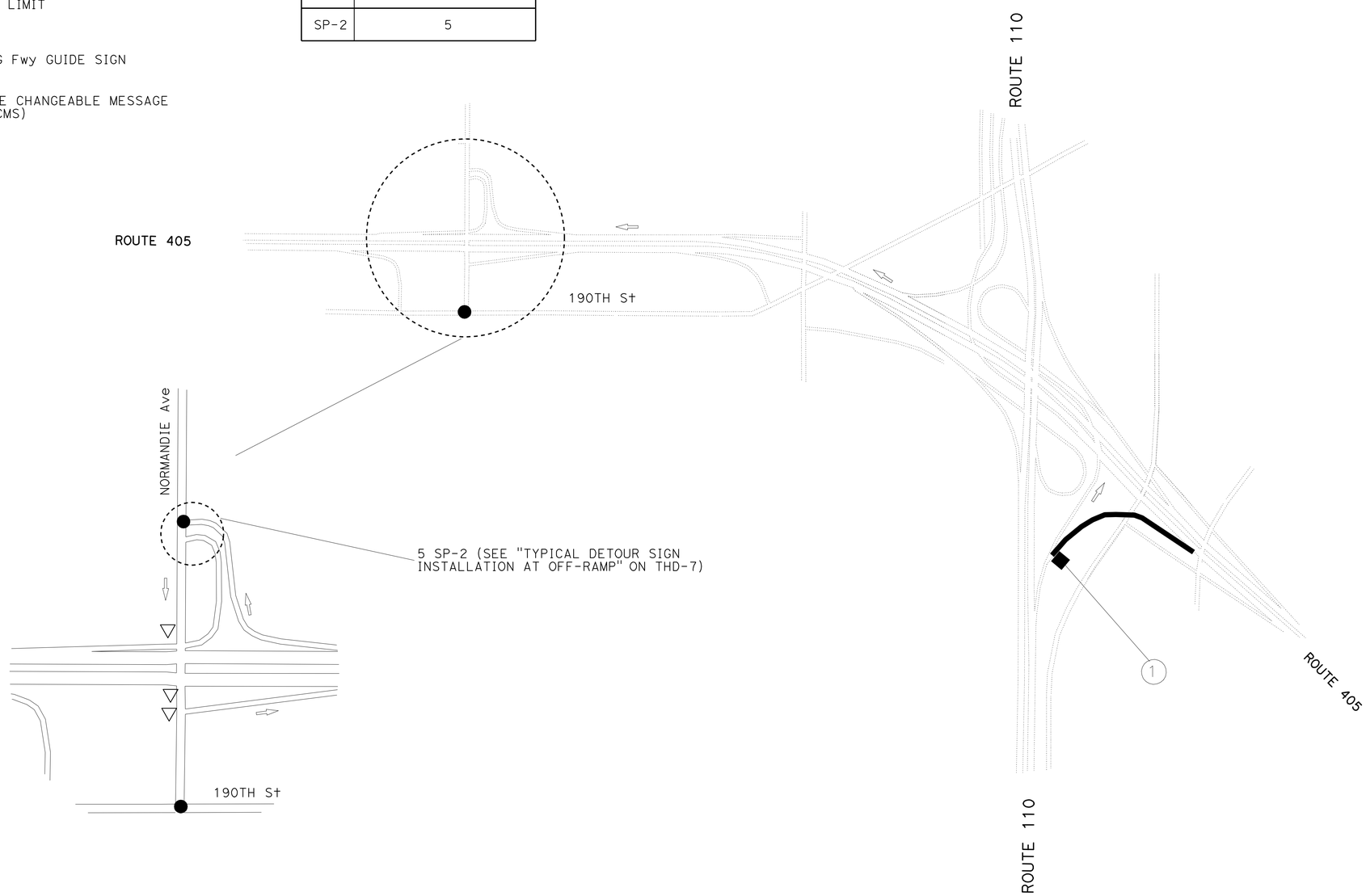

NOTES:

1. SIGN LOCATIONS ARE APPROXIMATE. EXACT LOCATIONS WILL BE DETERMINED BY THE ENGINEER.
2. SEE THD-2 FOR SIGN SP-2 DETAILS.

TRAFFIC HANDLING DETAILS
CONNECTOR DETOUR PLAN FOR WORK SHIFT CLOSURES
NB Rte 110 TO SB Rte 405
(CHART 19)

NO SCALE

THD-14

STATE OF CALIFORNIA - DEPARTMENT OF TRANSPORTATION
Caltrans DTM

FUNCTIONAL SUPERVISOR: JOHN YANG
CALCULATED-DESIGNED BY: KIT LIU
CHECKED BY: ALBERT YU
REVISED BY / DATE REVISED

LAST REVISION 00-00-00 | DATE PLOTTED => 21-JUL-2010 | TIME PLOTTED => 14:56

Dist	COUNTY	ROUTE	POST MILES TOTAL PROJECT	SHEET No.	TOTAL SHEETS
07	LA	110	R1.3/21.3	58	111

REGISTERED CIVIL ENGINEER 4/26/10 DATE

6/28/10
PLANS APPROVAL DATE

REGISTERED PROFESSIONAL ENGINEER ALBERT K. YU No. 43220 Exp. 3/31/12 CIVIL STATE OF CALIFORNIA

THE STATE OF CALIFORNIA OR ITS OFFICERS OR AGENTS SHALL NOT BE RESPONSIBLE FOR THE ACCURACY OR COMPLETENESS OF SCANNED COPIES OF THIS PLAN SHEET.

LEGENDS

- SIGN SP-2
- DIRECTION OF TRAVEL
- SIGNALIZED INTERSECTION
- CLOSURE LIMIT
- EXISTING Fwy GUIDE SIGN
- PORTABLE CHANGEABLE MESSAGE SIGN (PCMS)

PCMS	LOCATION	MESSAGE	
1	UNDER THE HOV STRUCTURE	1ST FLASH	N 405/EXIT/CLOSED
		2ND FLASH	DETOUR/USE/190 ST

	QUANTITY
SP-2	5

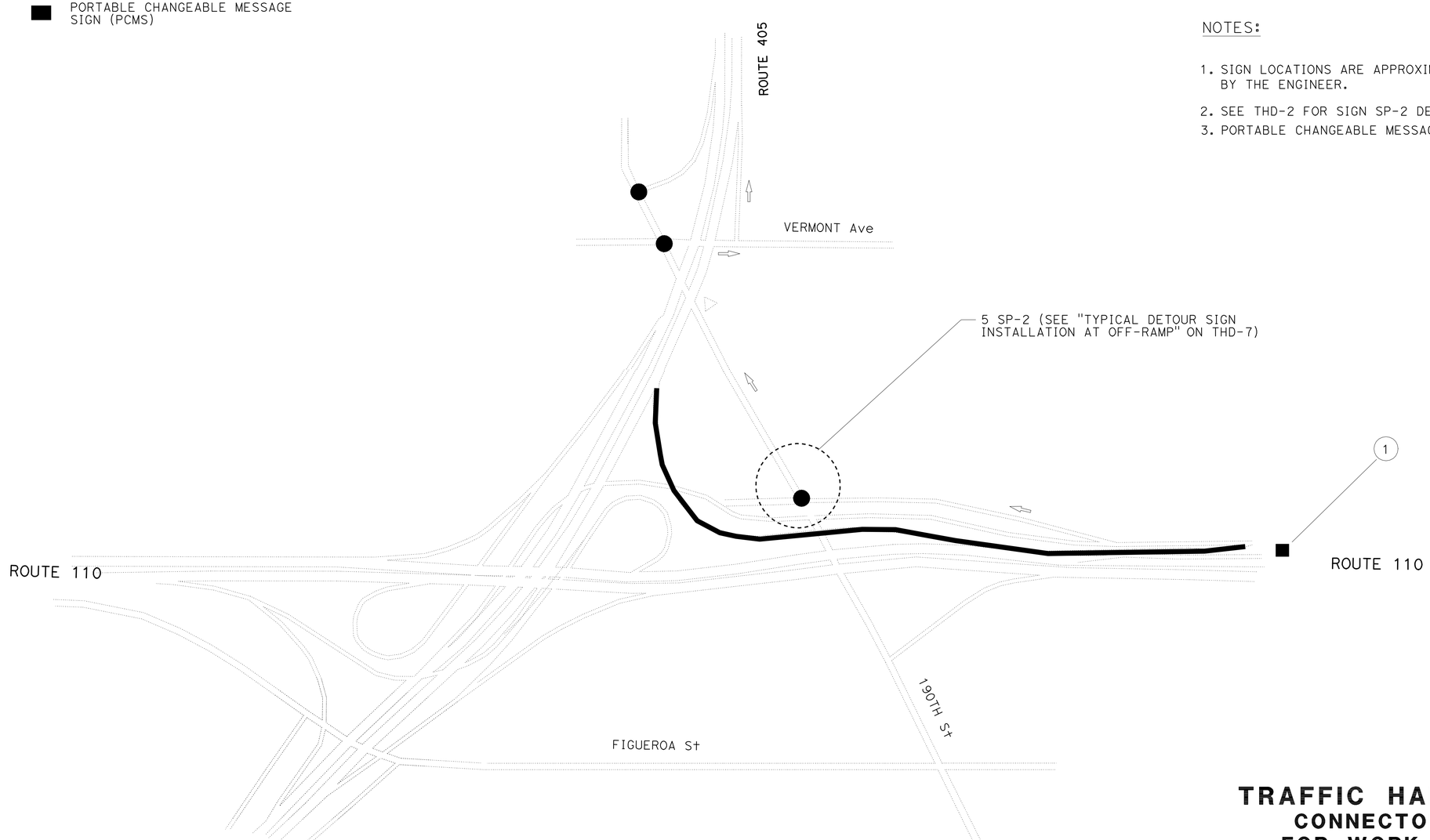

NOTES:

1. SIGN LOCATIONS ARE APPROXIMATE. EXACT LOCATIONS WILL BE DETERMINED BY THE ENGINEER.
2. SEE THD-2 FOR SIGN SP-2 DETAILS.
3. PORTABLE CHANGEABLE MESSAGE SIGN SHALL BE PLACED ON THE RIGHT SHOULDER.

TRAFFIC HANDLING DETAILS
CONNECTOR DETOUR PLAN
FOR WORK SHIFT CLOSURES
SB Rte 110 TO NB Rte 405
(CHART 20)

NO SCALE

THD-15

STATE OF CALIFORNIA - DEPARTMENT OF TRANSPORTATION
Caltrans DTM

FUNCTIONAL SUPERVISOR: JOHN YANG
CALCULATED-DESIGNED BY: KIT LIU
CHECKED BY: ALBERT YU
REVISED BY / DATE REVISED

LAST REVISION 00-00-00 | DATE PLOTTED => 21-JUL-2010 | TIME PLOTTED => 14:57

Dist	COUNTY	ROUTE	POST MILES TOTAL PROJECT	SHEET No.	TOTAL SHEETS
07	LA	110	R1.3/21.3	59	111

REGISTERED CIVIL ENGINEER 4/26/10 DATE

6/28/10
PLANS APPROVAL DATE

REGISTERED PROFESSIONAL ENGINEER ALBERT K. YU No. 43220 Exp. 3/31/12 CIVIL STATE OF CALIFORNIA

THE STATE OF CALIFORNIA OR ITS OFFICERS OR AGENTS SHALL NOT BE RESPONSIBLE FOR THE ACCURACY OR COMPLETENESS OF SCANNED COPIES OF THIS PLAN SHEET.

LEGENDS

- SIGN SP-2
- DIRECTION OF TRAVEL
- SIGNALIZED INTERSECTION
- CLOSURE LIMIT
- EXISTING Fwy GUIDE SIGN
- PORTABLE CHANGEABLE MESSAGE SIGN (PCMS)

PCMS	LOCATION	MESSAGE	
1	INSIDE THE CONNECTOR CLOSURE	1ST FLASH	S405/EXIT/CLOSED
		2ND FLASH	DETOUR/N405 TO/NORMANDIE

	QUANTITY
SP-2	5

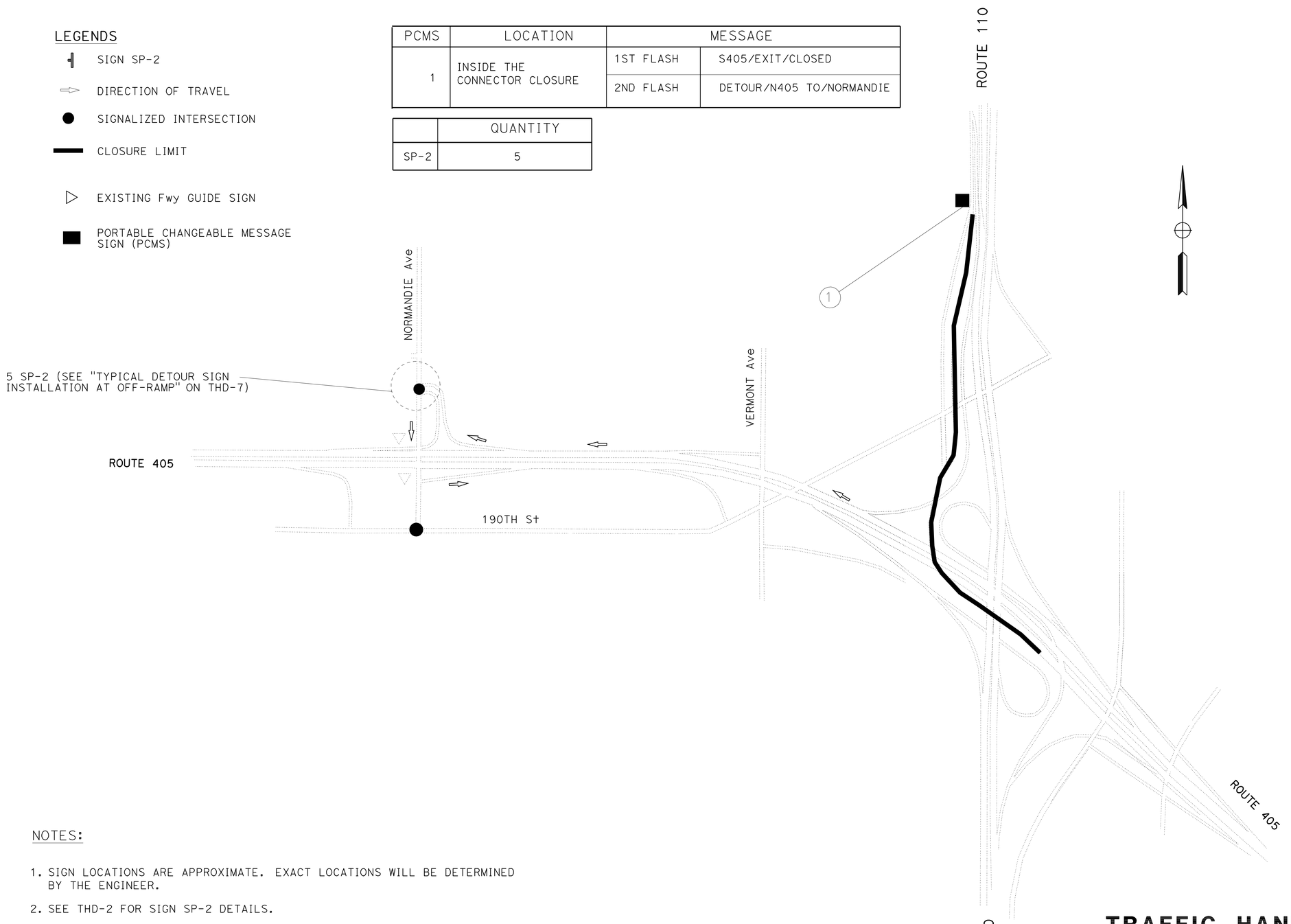

NOTES:

1. SIGN LOCATIONS ARE APPROXIMATE. EXACT LOCATIONS WILL BE DETERMINED BY THE ENGINEER.
2. SEE THD-2 FOR SIGN SP-2 DETAILS.

TRAFFIC HANDLING DETAILS
CONNECTOR DETOUR PLAN FOR WORK SHIFT CLOSURES SB Rte 110 TO SB Rte 405 (CHART 21)

NO SCALE

THD-16

STATE OF CALIFORNIA - DEPARTMENT OF TRANSPORTATION
Caltrans DTM

FUNCTIONAL SUPERVISOR: JOHN YANG
CALCULATED-DESIGNED BY: KIT LIU
CHECKED BY: ALBERT YU
REVISED BY
DATE REVISED

LAST REVISION 00-00-00
DATE PLOTTED => 21-JUL-2010
TIME PLOTTED => 14:57

Dist	COUNTY	ROUTE	POST MILES TOTAL PROJECT	SHEET No.	TOTAL SHEETS
07	LA	110	R1.3/21.3	60	111

REGISTERED CIVIL ENGINEER 4/26/10 DATE

6/28/10
PLANS APPROVAL DATE

REGISTERED PROFESSIONAL ENGINEER ALBERT K. YU No. 43220 Exp. 3/31/12 CIVIL STATE OF CALIFORNIA

THE STATE OF CALIFORNIA OR ITS OFFICERS OR AGENTS SHALL NOT BE RESPONSIBLE FOR THE ACCURACY OR COMPLETENESS OF SCANNED COPIES OF THIS PLAN SHEET.

LEGENDS

- SIGN SP-2
- DIRECTION OF TRAVEL
- SINGNALIZED INTERSECTION
- CLOSURE LIMIT
- EXISTING Fwy GUIDE SIGN
- PORTABLE CHANGEABLE MESSAGE SIGN (PCMS)

PCMS	LOCATION	MESSAGE	
1	INSIDE THE CONNECTOR CLOSURE	1ST FLASH	405 FWY/EXITS/CLOSED
		2ND FLASH	DETOUR/USE/TORRANCE

	QUANTITY
SP-2	12
SP-6	3

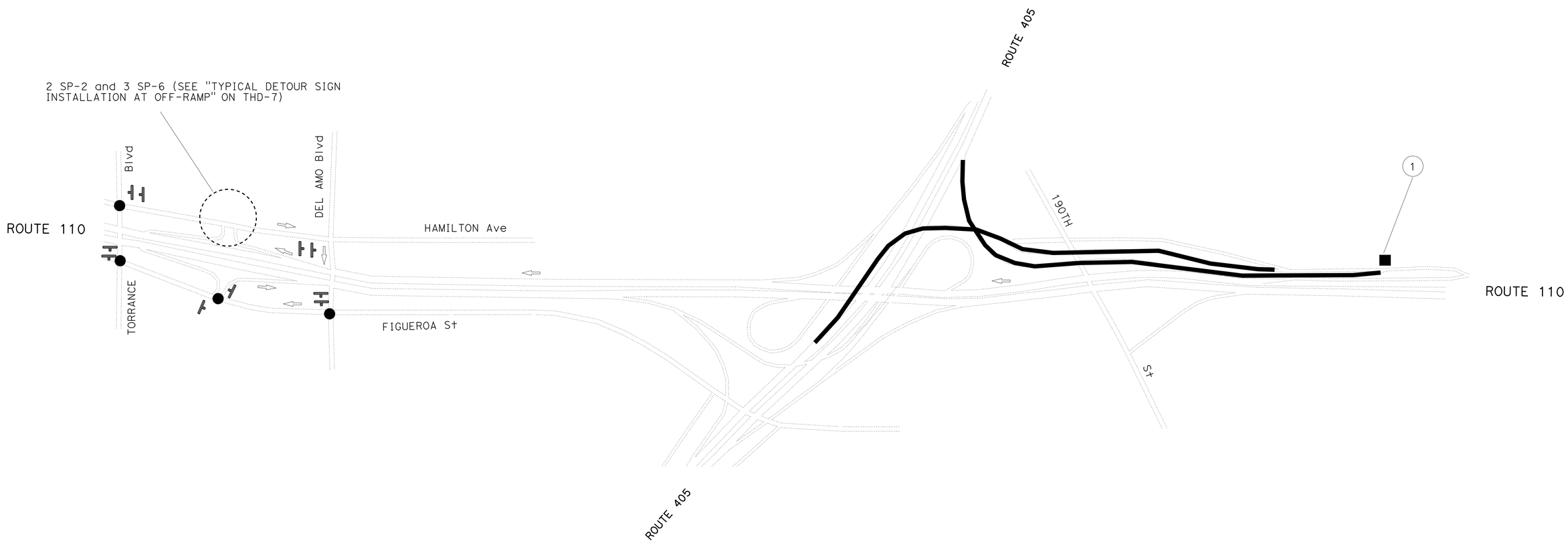

NOTES:

1. SIGN LOCATIONS ARE APPROXIMATE. EXACT LOCATIONS WILL BE DETERMINED BY THE ENGINEER.
2. SEE THD-2 FOR SIGN SP-2 DETAILS.

TRAFFIC HANDLING DETAILS
CONNECTOR DETOUR PLAN
FOR WORK SHIFT CLOSURES
SB Rte 110 TO Rte 405
(CHART 22)

NO SCALE

THD-17

STATE OF CALIFORNIA - DEPARTMENT OF TRANSPORTATION
Caltrans DTM

FUNCTIONAL SUPERVISOR: JOHN YANG
CALCULATED-DESIGNED BY: KIT LIU
CHECKED BY: ALBERT YU
REVISED BY
DATE REVISED

LAST REVISION 00-00-00 | DATE PLOTTED => 21-JUL-2010 | TIME PLOTTED => 14:57

Dist	COUNTY	ROUTE	POST MILES TOTAL PROJECT	SHEET No.	TOTAL SHEETS
07	LA	110	R1.3/21.3	61	111

REGISTERED CIVIL ENGINEER 4/26/10 DATE

6/28/10
PLANS APPROVAL DATE

REGISTERED PROFESSIONAL ENGINEER ALBERT K. YU No. 43220 Exp. 3/31/12 CIVIL STATE OF CALIFORNIA

THE STATE OF CALIFORNIA OR ITS OFFICERS OR AGENTS SHALL NOT BE RESPONSIBLE FOR THE ACCURACY OR COMPLETENESS OF SCANNED COPIES OF THIS PLAN SHEET.

LEGENDS

- DIRECTION OF TRAVEL
- SINGNALIZED INTERSECTION
- CLOSURE LIMIT
- EXISTING Fwy GUIDE SIGN
- PORTABLE CHANGEABLE MESSAGE SIGN (PCMS)

PCMS	LOCATION	MESSAGE	
1	MAIN St OFF-RAMP GORE	1ST FLASH	N110/TRUCK LN/CLOSED
		2ND FLASH	DETOUR/USE AUTO/LANE

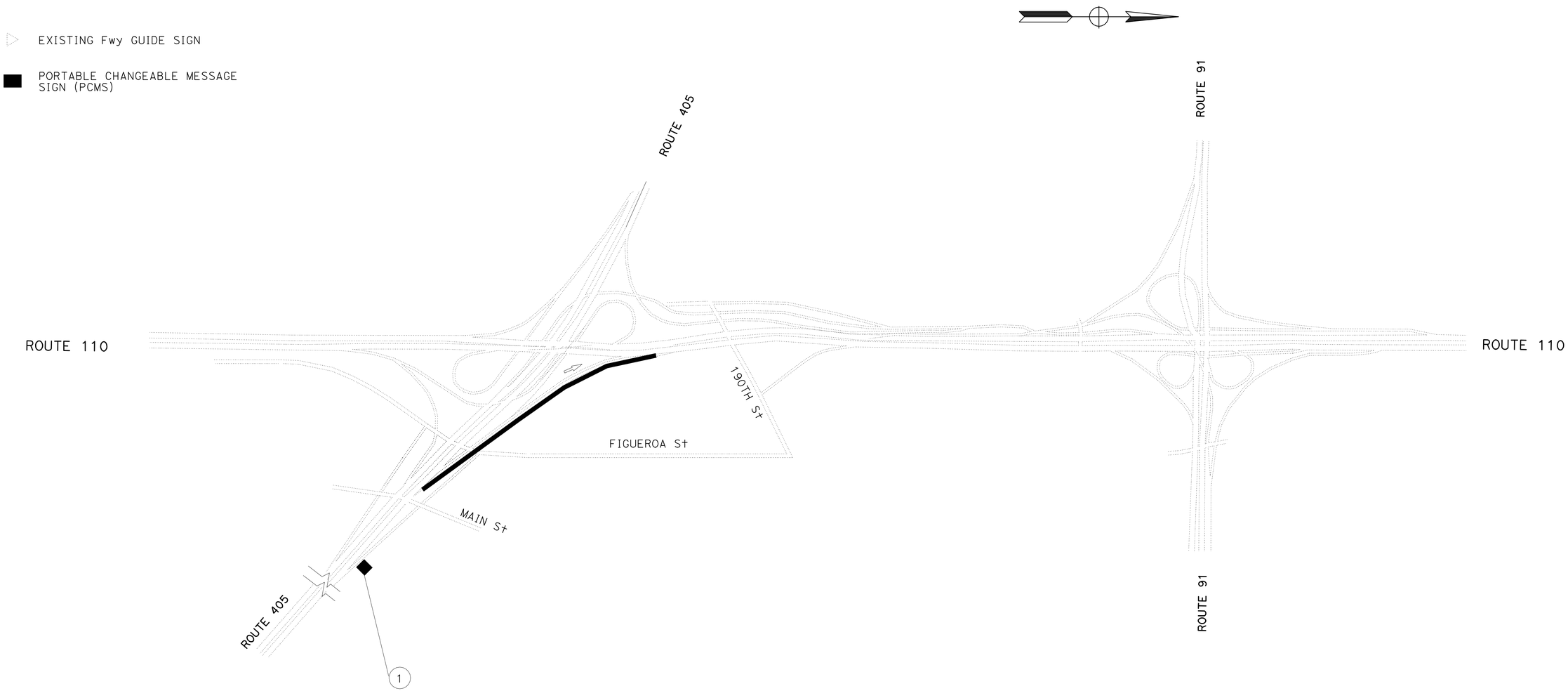

NOTES:

1. SIGN LOCATIONS ARE APPROXIMATE. EXACT LOCATIONS WILL BE DETERMINED BY THE ENGINEER.
2. SEE THD-2 FOR SIGN SP-2 DETAILS.
3. PORTABLE CHANGEABLE MESSAGE SIGN SHALL BE PLACED ON THE RIGHT SHOULDER.

TRAFFIC HANDLING DETAILS
CONNECTOR DETOUR PLAN
FOR WORK SHIFT CLOSURES
NB Rte 405 TO NB Rte 110 (TRUCK)
(CHART 23)

NO SCALE

THD-18

STATE OF CALIFORNIA - DEPARTMENT OF TRANSPORTATION
Caltrans DTM

FUNCTIONAL SUPERVISOR: JOHN YANG
CALCULATED-DESIGNED BY: KIT LIU
CHECKED BY: ALBERT YU
REVISED BY
DATE REVISED

LAST REVISION 00-00-00
DATE PLOTTED => 21-JUL-2010
TIME PLOTTED => 14:57

Dist	COUNTY	ROUTE	POST MILES TOTAL PROJECT	SHEET No.	TOTAL SHEETS
07	LA	110	R1.3/21.3	62	111

REGISTERED CIVIL ENGINEER 4/26/10 DATE

6/28/10
PLANS APPROVAL DATE

REGISTERED PROFESSIONAL ENGINEER ALBERT K. YU No. 43220 Exp. 3/31/12 CIVIL STATE OF CALIFORNIA

THE STATE OF CALIFORNIA OR ITS OFFICERS OR AGENTS SHALL NOT BE RESPONSIBLE FOR THE ACCURACY OR COMPLETENESS OF SCANNED COPIES OF THIS PLAN SHEET.

PCMS	LOCATION	MESSAGE	
1	BY CALL BOX #132/ FIGUEROA St OC	1ST FLASH	EAST 105/EXIT/CLOSED
		2ND FLASH	DETOUR/USE/IMPERIAL

	QUANTITY
SP-2	10

LEGENDS

- SIGN SP-2
- DIRECTION OF TRAVEL
- SIGNALIZED INTERSECTION
- CLOSURE LIMIT
- EXISTING Fwy GUIDE SIGN
- PORTABLE CHANGEABLE MESSAGE SIGN (PCMS)

NOTES:

1. SIGN LOCATIONS ARE APPROXIMATE. EXACT LOCATIONS WILL BE DETERMINED BY THE ENGINEER.
2. SEE THD-2 FOR SIGN SP-2 DETAILS.
3. PORTABLE CHANGEABLE MESSAGE SIGN SHALL BE PLACED ON THE RIGHT SHOULDER.

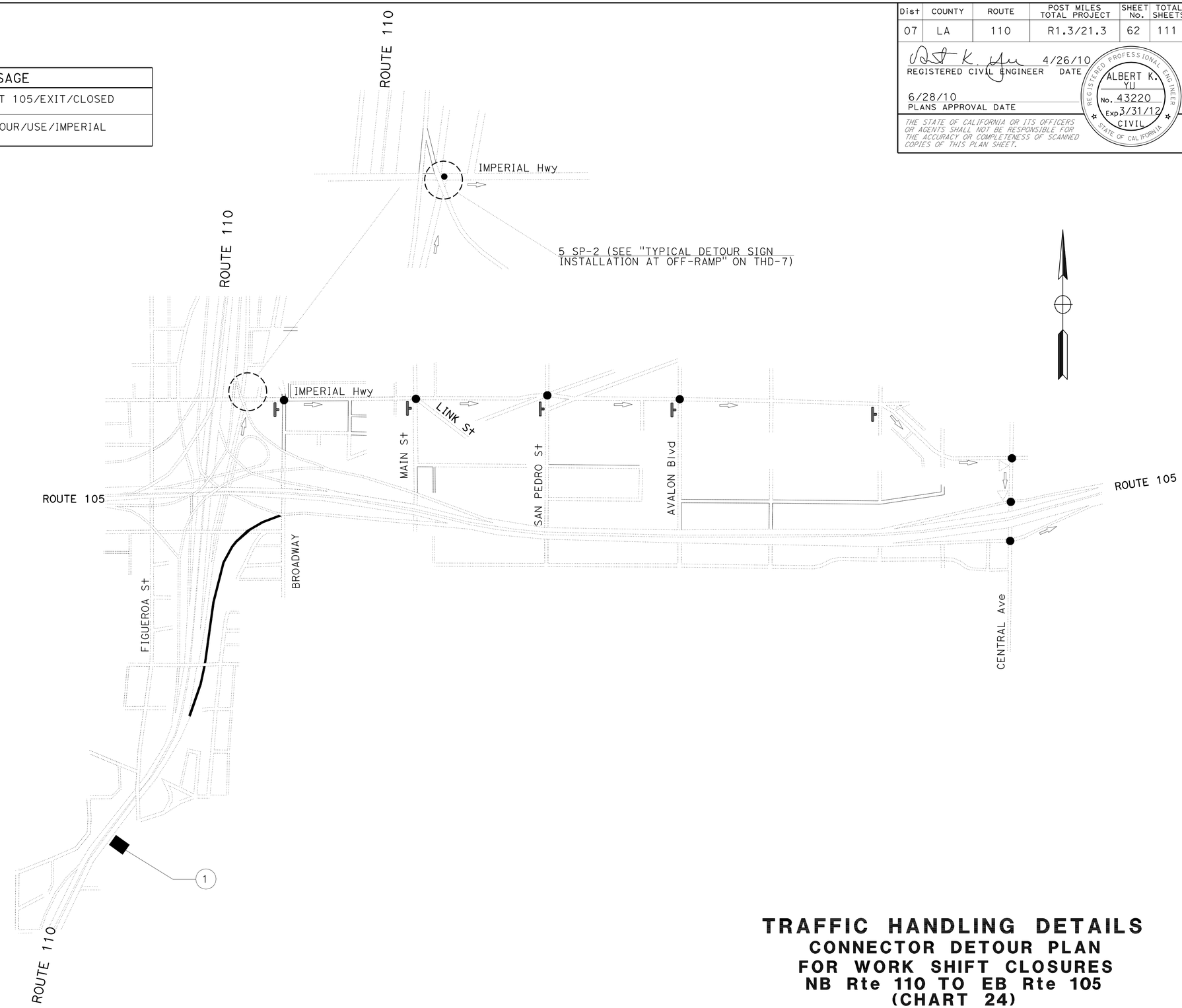

TRAFFIC HANDLING DETAILS
CONNECTOR DETOUR PLAN
FOR WORK SHIFT CLOSURES
NB Rte 110 TO EB Rte 105
(CHART 24)

NO SCALE

THD-19

STATE OF CALIFORNIA - DEPARTMENT OF TRANSPORTATION
Caltrans® DTM

FUNCTIONAL SUPERVISOR: JOHN YANG
CALCULATED-DESIGNED BY: ALBERT YU
CHECKED BY
REVISED BY
DATE REVISED

LAST REVISION 00-00-00
DATE PLOTTED => 21-JUL-2010
TIME PLOTTED => 14:57

Dist	COUNTY	ROUTE	POST MILES TOTAL PROJECT	SHEET No.	TOTAL SHEETS
07	LA	110	R1.3/21.3	63	111

REGISTERED CIVIL ENGINEER 4/26/10 DATE

6/28/10
PLANS APPROVAL DATE

REGISTERED PROFESSIONAL ENGINEER ALBERT K. YU No. 43220 Exp. 3/31/12 CIVIL STATE OF CALIFORNIA

THE STATE OF CALIFORNIA OR ITS OFFICERS OR AGENTS SHALL NOT BE RESPONSIBLE FOR THE ACCURACY OR COMPLETENESS OF SCANNED COPIES OF THIS PLAN SHEET.

PCMS	LOCATION	MESSAGE	
1	INSIDE THE CONNECTOR CLOSURE	1ST FLASH	WEST 105/EXIT/CLOSED
		2ND FLASH	DETOUR/USE/IMPERIAL

	QUANTITY
SP-2	11

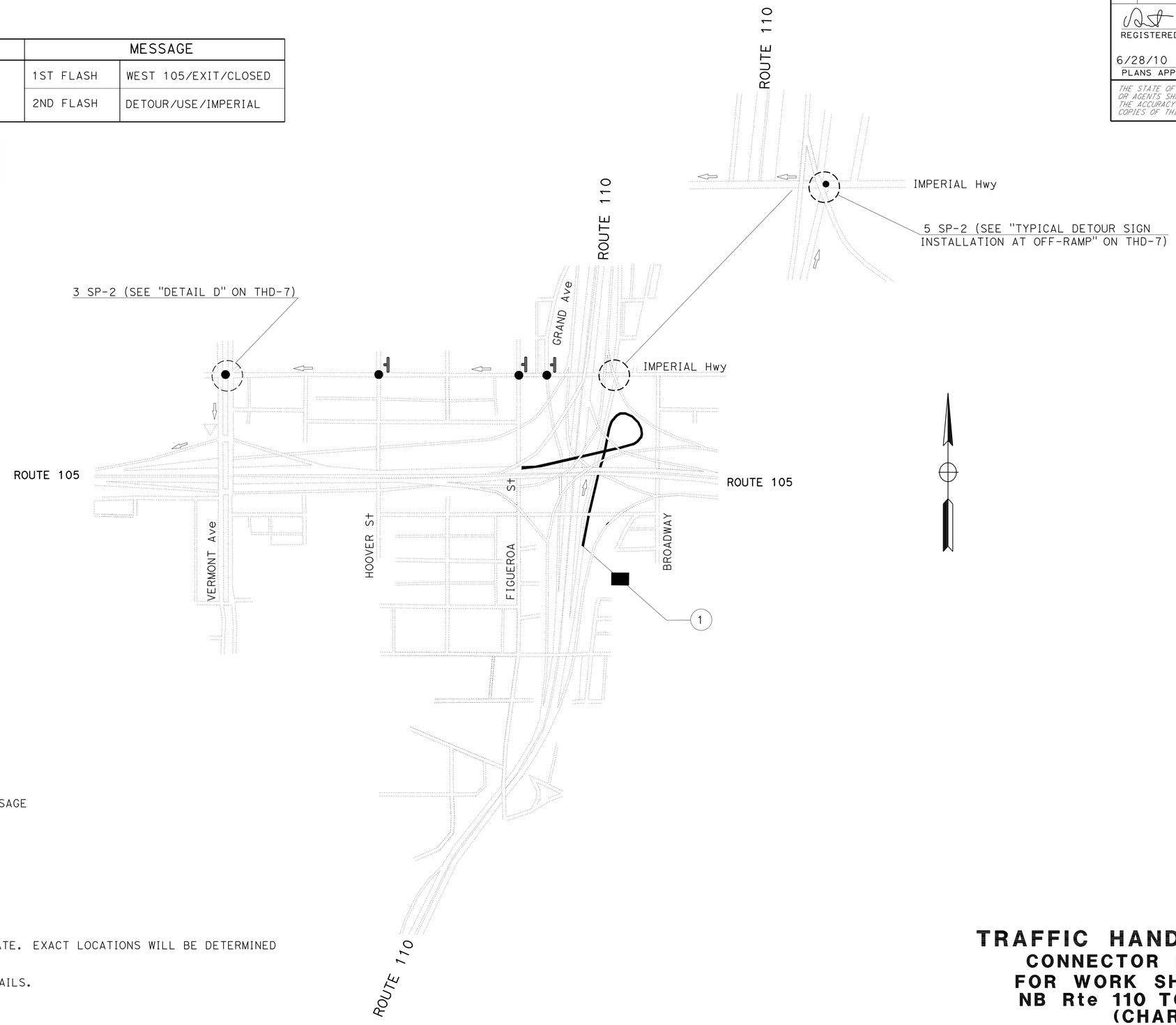

LEGENDS

- SIGN SP-2
- DIRECTION OF TRAVEL
- SIGNALIZED INTERSECTION
- CLOSURE LIMIT
- EXISTING Fwy GUIDE SIGN
- PORTABLE CHANGEABLE MESSAGE SIGN (PCMS)

NOTES:

1. SIGN LOCATIONS ARE APPROXIMATE. EXACT LOCATIONS WILL BE DETERMINED BY THE ENGINEER.
2. SEE THD-2 FOR SIGN SP-2 DETAILS.

TRAFFIC HANDLING DETAILS
CONNECTOR DETOUR PLAN
FOR WORK SHIFT CLOSURES
NB Rte 110 TO WB Rte 105
(CHART 25)

NO SCALE

THD-20

STATE OF CALIFORNIA - DEPARTMENT OF TRANSPORTATION
Caltrans® DTM

FUNCTIONAL SUPERVISOR: JOHN YANG
CALCULATED-DESIGNED BY: SAMSON TESHOME
CHECKED BY: ALBERT YU
REVISED BY
DATE REVISED

LAST REVISION 00-00-00
DATE PLOTTED => 21-JUL-2010
TIME PLOTTED => 14:58

Dist	COUNTY	ROUTE	POST MILES TOTAL PROJECT	SHEET No.	TOTAL SHEETS
07	LA	110	R1.3/21.3	64	111

REGISTERED CIVIL ENGINEER 4/26/10 DATE

6/28/10
PLANS APPROVAL DATE

REGISTERED PROFESSIONAL ENGINEER ALBERT K. YU No. 43220 Exp. 3/31/12 CIVIL STATE OF CALIFORNIA

THE STATE OF CALIFORNIA OR ITS OFFICERS OR AGENTS SHALL NOT BE RESPONSIBLE FOR THE ACCURACY OR COMPLETENESS OF SCANNED COPIES OF THIS PLAN SHEET.

LEGENDS

- SIGN SP-2
- DIRECTION OF TRAVEL
- SIGNALIZED INTERSECTION
- CLOSURE LIMIT
- EXISTING Fwy GUIDE SIGN
- PORTABLE CHANGEABLE MESSAGE SIGN (PCMS)

PCMS	LOCATION	MESSAGE	
1	AT VERMONT Ave UC	1ST FLASH	S110/EXIT/CLOSED
		2ND FLASH	DETOUR/N110 TO/9 ST

	QUANTITY
SP-2	5

NOTES:

1. SIGN LOCATIONS ARE APPROXIMATE. EXACT LOCATIONS WILL BE DETERMINED BY THE ENGINEER.
2. SEE THD-2 FOR SIGN SP-2 DETAILS.
3. EXCEPT WHEN PLACED INSIDE THE CONNECTOR CLOSURE, PORTABLE CHANGEABLE MESSAGE SIGN SHALL BE PLACED ON THE RIGHT SHOULDER.

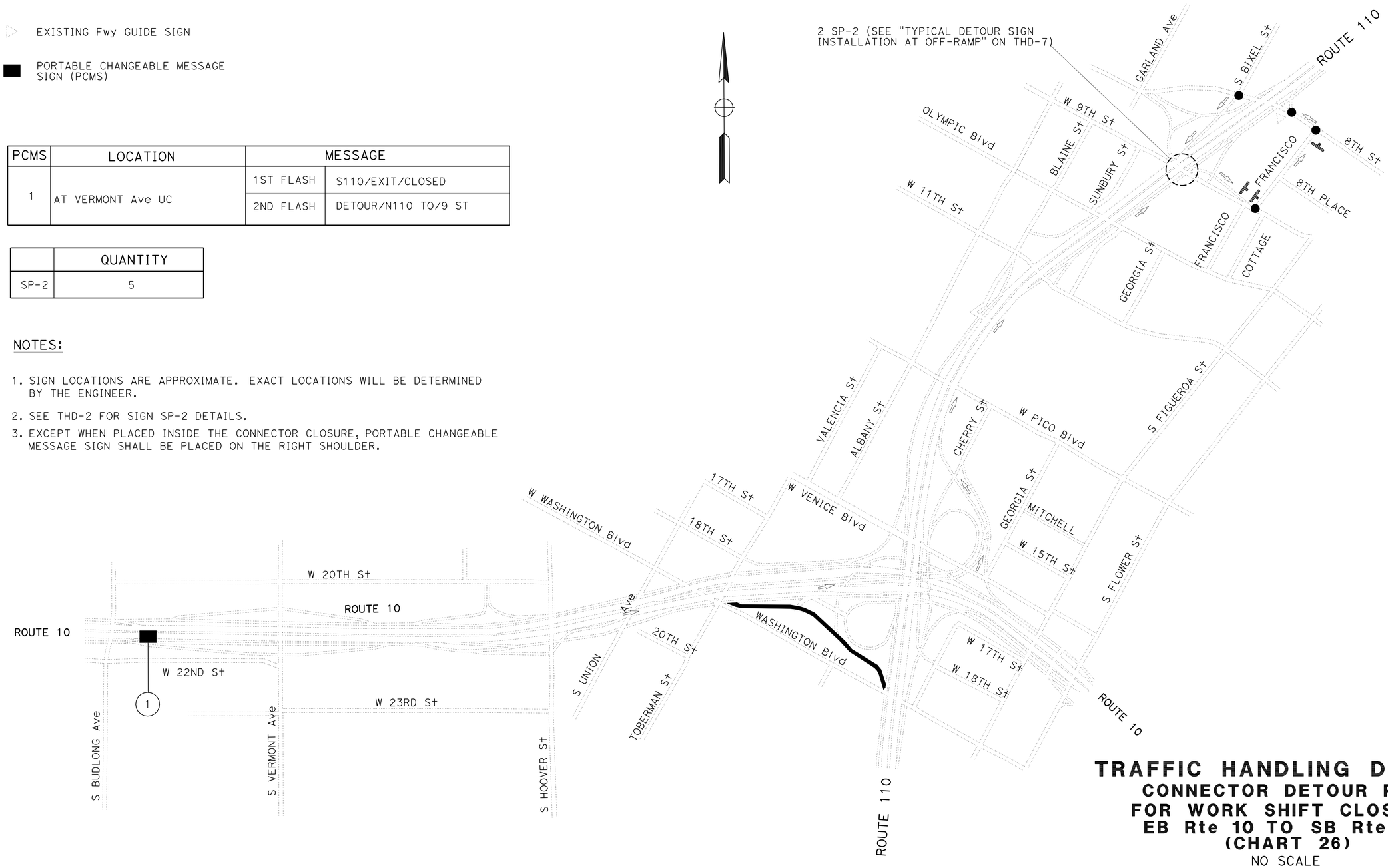

TRAFFIC HANDLING DETAILS
CONNECTOR DETOUR PLAN
FOR WORK SHIFT CLOSURES
EB Rte 10 TO SB Rte 110
(CHART 26)

NO SCALE

THD-21

STATE OF CALIFORNIA - DEPARTMENT OF TRANSPORTATION
Caltrans DTM

FUNCTIONAL SUPERVISOR: JOHN YANG
CALCULATED-DESIGNED BY: SAMSON TESHOME
CHECKED BY: ALBERT YU
REVISED BY
DATE REVISED 01/06/2010

LAST REVISION 00-00-00 | DATE PLOTTED => 21-JUL-2010 | TIME PLOTTED => 14:58

Dist	COUNTY	ROUTE	POST MILES TOTAL PROJECT	SHEET No.	TOTAL SHEETS
07	LA	110	R1.3/21.3	65	111

REGISTERED CIVIL ENGINEER 4/26/10 DATE

6/28/10
PLANS APPROVAL DATE

REGISTERED PROFESSIONAL ENGINEER ALBERT K. YU No. 43220 Exp. 3/31/12 CIVIL STATE OF CALIFORNIA

THE STATE OF CALIFORNIA OR ITS OFFICERS OR AGENTS SHALL NOT BE RESPONSIBLE FOR THE ACCURACY OR COMPLETENESS OF SCANNED COPIES OF THIS PLAN SHEET.

LEGENDS

- SIGN SP-2
- DIRECTION OF TRAVEL
- SIGNALIZED INTERSECTION
- CLOSURE LIMIT
- EXISTING Fwy GUIDE SIGN
- PORTABLE CHANGEABLE MESSAGE SIGN (PCMS)

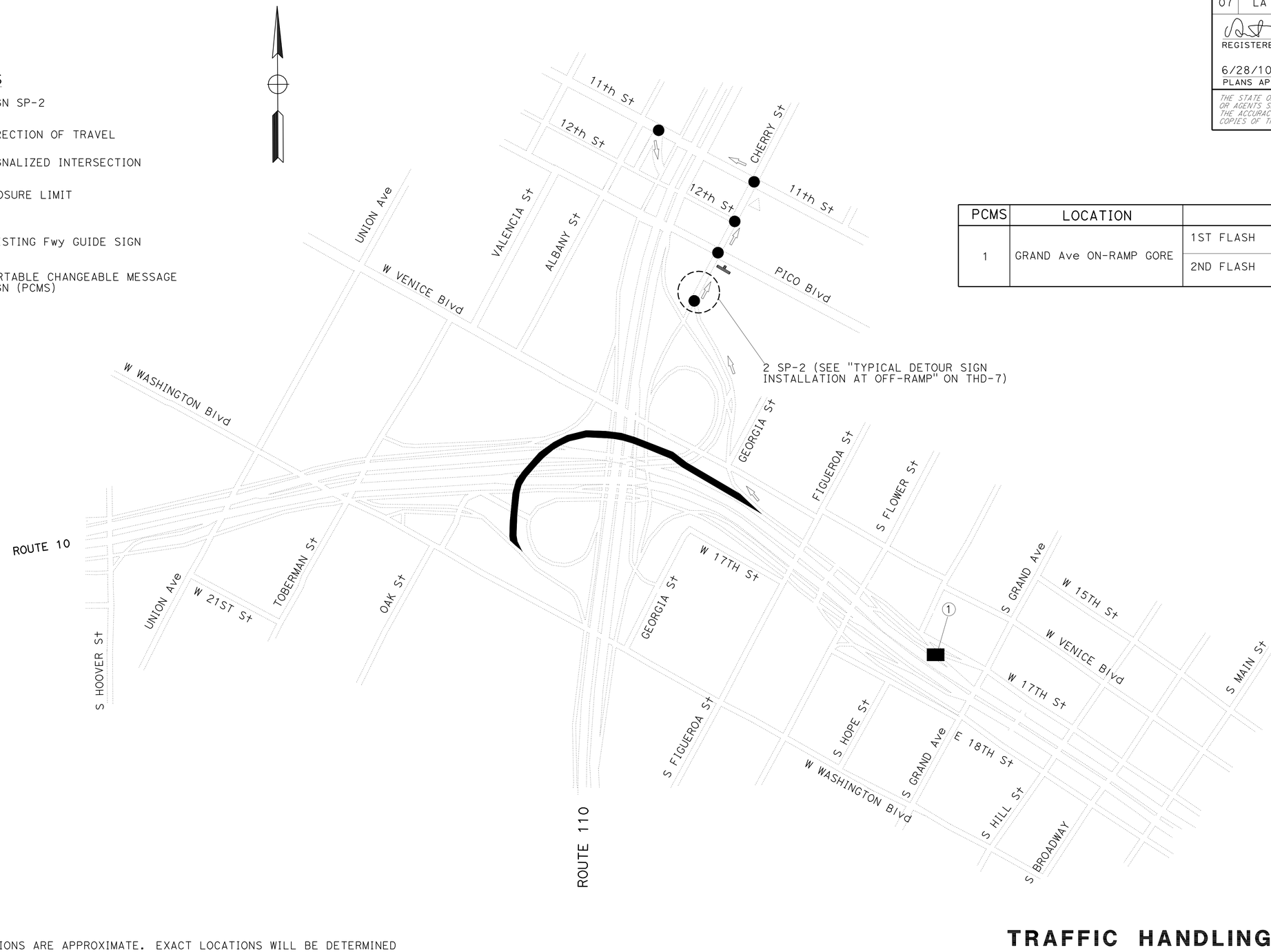

PCMS	LOCATION	MESSAGE	
1	GRAND Ave ON-RAMP GORE	1ST FLASH	S110/EXIT/CLOSED
		2ND FLASH	DETOUR/USE/PICO BL

	QUANTITY
SP-2	3

NOTES:

1. SIGN LOCATIONS ARE APPROXIMATE. EXACT LOCATIONS WILL BE DETERMINED BY THE ENGINEER.
2. SEE THD-2 FOR SIGN SP-2 DETAILS.

TRAFFIC HANDLING DETAILS
CONNECTOR DETOUR PLAN
FOR WORK SHIFT CLOSURES
WB Rte 10 TO SB Rte 110
(CHART 27)

NO SCALE

THD-22

STATE OF CALIFORNIA - DEPARTMENT OF TRANSPORTATION
Caltrans DTM

FUNCTIONAL SUPERVISOR: JOHN YANG
CALCULATED-DESIGNED BY: SAMSON TESHOME
CHECKED BY: ALBERT YU
REVISED BY
DATE REVISED: 01/06/2010

LAST REVISION: 00-00-00
DATE PLOTTED => 21-JUL-2010
TIME PLOTTED => 14:58

Dist	COUNTY	ROUTE	POST MILES TOTAL PROJECT	SHEET No.	TOTAL SHEETS
07	LA	110	R1.3/21.3	66	111

REGISTERED CIVIL ENGINEER 4/26/10 DATE

6/28/10
PLANS APPROVAL DATE

REGISTERED PROFESSIONAL ENGINEER ALBERT K. YU No. 43220 Exp. 3/31/12 CIVIL STATE OF CALIFORNIA

THE STATE OF CALIFORNIA OR ITS OFFICERS OR AGENTS SHALL NOT BE RESPONSIBLE FOR THE ACCURACY OR COMPLETENESS OF SCANNED COPIES OF THIS PLAN SHEET.

LEGENDS

- SIGN SP-2
- DIRECTION OF TRAVEL
- SIGNALIZED INTERSECTION
- CLOSURE LIMIT
- EXISTING Fwy GUIDE SIGN
- PORTABLE CHANGEABLE MESSAGE SIGN (PCMS)

PCMS	LOCATION	MESSAGE	
1	INSIDE THE CONNECTOR CLOSURE	1ST FLASH	RTE 10/EXITS/CLOSED
		2ND FLASH	DETOUR/USE/9 ST

	QUANTITY
SP-2	6

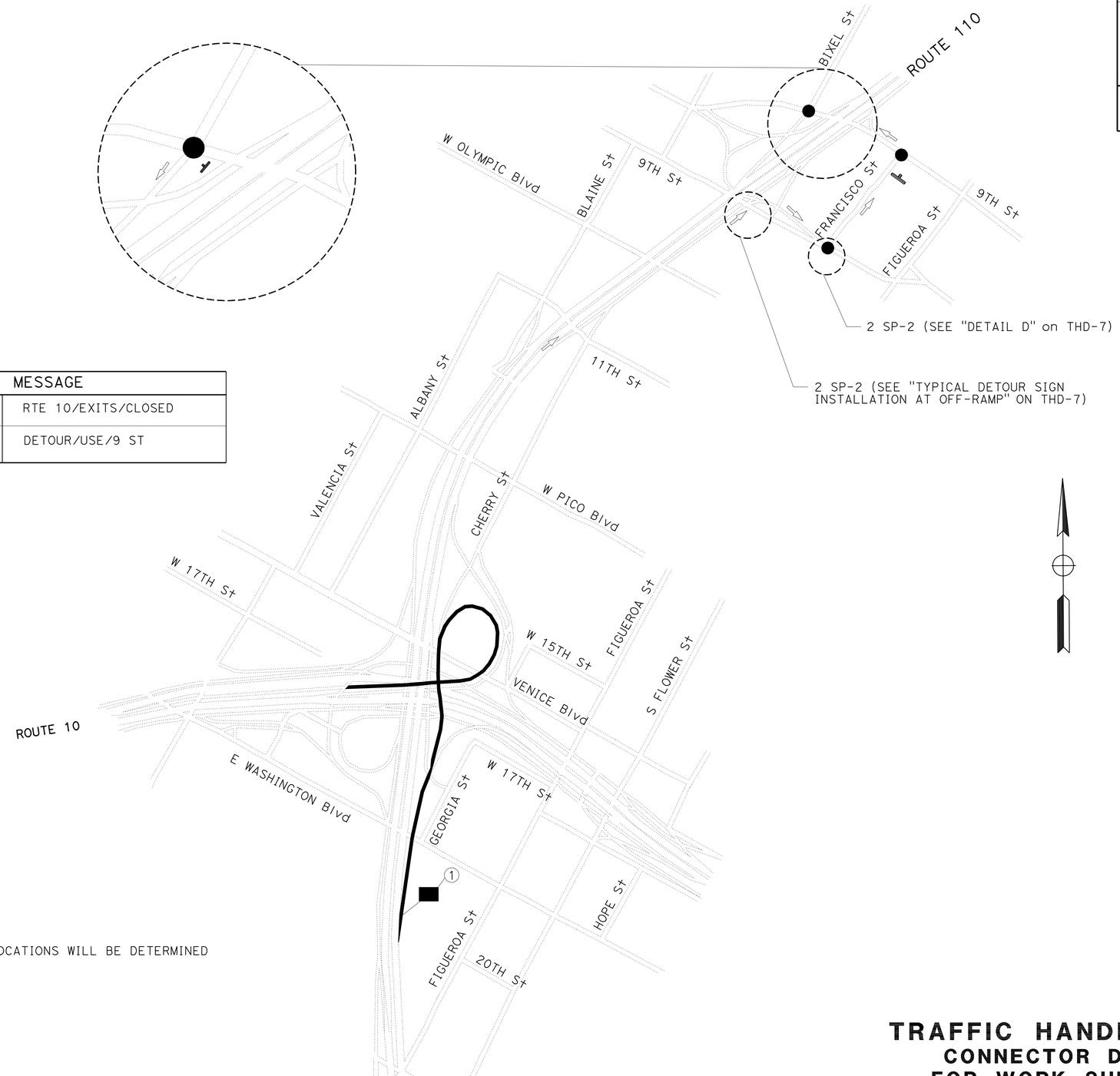

NOTES:

1. SIGN LOCATIONS ARE APPROXIMATE. EXACT LOCATIONS WILL BE DETERMINED BY THE ENGINEER.
2. SEE THD-2 FOR SIGN SP-2 DETAILS.

TRAFFIC HANDLING DETAILS
CONNECTOR DETOUR PLAN
FOR WORK SHIFT CLOSURES
NB Rte 110 TO Rte 10
(CHART 28)

NO SCALE

THD-23

STATE OF CALIFORNIA - DEPARTMENT OF TRANSPORTATION
Caltrans DTM

FUNCTIONAL SUPERVISOR: JOHN YANG
CALCULATED-DESIGNED BY: SAMSON TESHOME
CHECKED BY: ALBERT YU
REVISED BY
DATE REVISED 01/06/2010

LAST REVISION 00-00-00
DATE PLOTTED => 21-JUL-2010
TIME PLOTTED => 14:58

Dist	COUNTY	ROUTE	POST MILES TOTAL PROJECT	SHEET No.	TOTAL SHEETS
07	LA	110	R1.3/21.3	67	111

REGISTERED CIVIL ENGINEER 5/6/10 DATE

6/28/10
PLANS APPROVAL DATE

REGISTERED PROFESSIONAL ENGINEER ESTHER M. KIM No. 48363 Exp. 6/30/10 CIVIL STATE OF CALIFORNIA

THE STATE OF CALIFORNIA OR ITS OFFICERS OR AGENTS SHALL NOT BE RESPONSIBLE FOR THE ACCURACY OR COMPLETENESS OF SCANNED COPIES OF THIS PLAN SHEET.

ROADWAY QUANTITIES

LOCATION ROUTE 110	LOCATION DETAILS INDEX	ROADWAY EXCAVATION	PLACE HMA DIKE (TYPE C)	PLACE HMA DIKE (TYPE F)	REINFORCED RAPID STRENGTH CONCRETE PAD	MINOR CONCRETE (MINOR STRUCTURE)	MINOR CONCRETE (CURB)	MINOR HOT MIX ASPHALT	GUARD RAILING DELINEATOR	METAL BEAM GUARD RAILING (WOOD POST)	SINGLE THRIE BEAM BARRIER (WOOD POST)	BURIED POST END ANCHOR (N)	TERMINAL SYSTEM (TYPE CAT)	TRANSITION RAILING (TYPE WB)	TRANSITION RAILING (TYPE STB)	TRANSITION RAILING (TYPE BR)	TRANSITION RAILING (TYPE SP)	ALTERNATIVE FLARED TERMINAL SYSTEM	ALTERNATIVE IN - LINE TERMINAL SYSTEM	END ANCHOR ASSEMBLY (TYPE SFT)	CRASH CUSHION (REACT 350 MODEL 62B036)	CRASH CUSHION (REACT 350 MODEL 62C036)	CRASH CUSHION (QUADGUARD LMC MODEL QS9011LY)	VEGETATION CONTROL (MINOR CONCRETE)	WEED CONTROL MAT (FIBER)	REMOVE METAL BEAM GUARD RAILING	REMOVE ASPHALT CONCRETE DIKE	REMOVE CONCRETE CURB	REMOVE CONCRETE	REMOVE CONCRETE (STRUCTURE)	REMOVE METAL RAILING	REMOVE CONCRETE BARRIER (TYPE K)	REMOVE CRASH CUSHION (SAND FILLED)	REMOVE CRASH CUSHION	TEMPORARY DRAINAGE INLET PROTECTION	TIE BAR (DRILL AND BOND)	CHANNELIZER (SURFACE MOUNTED) (LEFT IN PLACE)	MINOR CONCRETE (CHANNEL LINING)	PAVEMENT MARKER (RETROREFLECTIVE) (TYPE H)
No.	Sheet	CY	LF	LF	CY	CY	CY	TON	EA	LF	LF	EA	EA	EA	EA	EA	EA	EA	EA	EA	EA	EA	EA	SQYD	SQYD	LF	LF	LF	CY	CY	LF	LF	EA	EA	EA	EA	EA	CY	EA
1 PM R1.61	C-14	0.7	37.5	677.5			0.7	9.2	2									1						320	37.5	715	28							2				
2 PM 2.87	C-14	2.4				3.5	2.2		2					1				1						29.5	62.5	20	93.5							1				
3 PM 3.11	C-14	18.3					3.6		2	75								1		1					112.5		143.5							1			4.4	
4 PM 3.44	C-14		62.5	40.5		2.2		1	2	12.5				1				1						35.1	65	113								1				
5 PM 3.93	C-14		62.5	43				1	9	212.5								1		1					212.5	105.5								1				
6 PM 4.20	C-14								7																									1		9		90
7 PM 4.88	C-15					8.5			2					1					1							100								1				
8 PM 4.96	C-15					2.5			2					1				1								68.25	12.5							1				
9 PM 5.28	C-15	14.5					16.2		18	512.5									1	1						562.5		593.5						1				
10 PM 5.38	C-15	1.3					1.3		2	25							1	1								81.25		50						1				
11 PM 5.60	C-15		62.5	53		2.2		1.2	2	25				1				1								64.5	125.5							1				
12 PM 6.10	C-15		133	6		29		1.11	2	37.5		1		1												100	139							2				
13 PM 6.29	C-16								2	75		1								1						62.5								1				
14 PM 6.87	C-16	1.3				0.9	1.3		2					1				1							29.1	50		50						1				
15 PM 7.79	C-16	5.0					5.0		6	125								1		1						162.5		193.5						1				
16 PM 8.01	C-16	4.3					4.2		6	112.5									1	1						162.5		168.5						1				
17 PM 8.37	C-16								2	25								1		1					26	50								1				
18 PM 8.75	C-16	2.0					2.0		2										1							37.5		81						1				
19 PM 8.75	C-17								2									1								37.5								1				
SHEET TOTAL		49.8	358	820		48.8	36.5	13.5	74	1237.5		2		7			1	12	4	7				439.7	2029	1230.5	1401.5							21		9	4.4	90

(N) NOT A SEPARATE PAY ITEM, FOR INFORMATION ONLY.

SUMMARY OF QUANTITIES

Q-1

STATE OF CALIFORNIA - DEPARTMENT OF TRANSPORTATION
Caltrans TRAFFIC DESIGN

FUNCTIONAL SUPERVISOR: MOHAMMED CHOWDHURY
CALCULATED-DESIGNED BY: SAMIA SOUEIDAN
CHECKED BY: ESTHER M. KIM
REVISED BY
DATE REVISED

LAST REVISION 00-00-00
DATE PLOTTED => 21-JUL-2010
TIME PLOTTED => 14:59

Dist	COUNTY	ROUTE	POST MILES TOTAL PROJECT	SHEET No.	TOTAL SHEETS
07	LA	110	R1.3/21.3	68	111

REGISTERED CIVIL ENGINEER 5/6/10 DATE

6/28/10
PLANS APPROVAL DATE

REGISTERED PROFESSIONAL ENGINEER ESTHER M. KIM No. 48363 Exp. 6/30/10 CIVIL STATE OF CALIFORNIA

THE STATE OF CALIFORNIA OR ITS OFFICERS OR AGENTS SHALL NOT BE RESPONSIBLE FOR THE ACCURACY OR COMPLETENESS OF SCANNED COPIES OF THIS PLAN SHEET.

ROADWAY QUANTITIES

LOCATION ROUTE 110	LOCATION DETAILS INDEX	ROADWAY EXCAVATION	PLACE HMA DIKE (TYPE C)	PLACE HMA DIKE (TYPE F)	REINFORCED RAPID STRENGTH CONCRETE PAD	MINOR CONCRETE (MINOR STRUCTURE)	MINOR CONCRETE (CURB)	MINOR HOT MIX ASPHALT	GUARD RAILING DELINEATOR	METAL BEAM GUARD RAILING (WOOD POST)	SINGLE THRIE BEAM BARRIER (WOOD POST)	BURIED POST END ANCHOR (N)	TERMINAL SYSTEM (TYPE CAT)	TRANSITION RAILING (TYPE WB)	TRANSITION RAILING (TYPE STB)	TRANSITION RAILING (TYPE BR)	TRANSITION RAILING (TYPE SP)	ALTERNATIVE FLARED TERMINAL SYSTEM	ALTERNATIVE IN - LINE TERMINAL SYSTEM	END ANCHOR ASSEMBLY (TYPE SFT)	CRASH CUSHION (REACT 350 MODEL 62B036)	CRASH CUSHION (REACT 350 MODEL 62C036)	CRASH CUSHION (QUADGUARD LMC MODEL QS9011LY)	VEGETATION CONTROL (MINOR CONCRETE)	WEED CONTROL MAT (FIBER)	REMOVE METAL BEAM GUARD RAILING	REMOVE ASPHALT CONCRETE DIKE	REMOVE CONCRETE CURB	REMOVE CONCRETE	REMOVE CONCRETE (STRUCTURE)	REMOVE METAL RAILING	REMOVE CONCRETE BARRIER (TYPE K)	REMOVE CRASH CUSHION (SAND FILLED)	REMOVE CRASH CUSHION	TEMPORARY DRAINAGE INLET PROTECTION	TIE BAR (DRILL AND BOND)	CHANNELIZER (SURFACE MOUNTED) (LEFT IN PLACE)	MINOR CONCRETE (CHANNEL LINING)	PAVEMENT MARKER (RETROREFLECTIVE) (TYPE H)
No.	Sheet	CY	LF	LF	CY	CY	CY	TON	EA	LF	LF	EA	EA	EA	EA	EA	EA	EA	EA	EA	EA	EA	EA	SQYD	SQYD	LF	LF	LF	CY	CY	LF	LF	EA	EA	EA	EA	EA	CY	EA
(20) PM 8.84	C-17		75	41		0.76		1.14	2	12.5				1					1							62.5	122								2				
(21) PM 9.00	C-17		75	28		2.6		0.94	2					1					1						35	62.5	123								1				
(22) PM 9.68	C-17								2							1		1							30	62.5									1				
(23) PM 9.92	C-17		62.5	6				0.55	2									1							36	37.5	68.5								1				
(24) PM 9.92	C-17								9	200								1		1					109	237.5									1				
(25) PM 9.92	C-18								2	12.5						1		1							36	62.5									1				
(26) PM 9.92	C-18		62.5	28				0.87	2							1		1							40	62.5	90.5								1				
(27) PM 10.15	C-18		62.5	28		6.2		0.87	2					1				1							40	62.5	113.5								1				
(28) PM 10.15	C-18								6	100								1		1					64	137.5									1				
(29) PM 10.15	C-18								2	12.5				1					1							62.5									1				
(30) PM 10.15	C-18		62.5	28				0.87	2					1				1						34		62.5	90.5		34						1				
(31) PM 11.27	C-18	0.4				15.2			2																	75		15							1				
(32) PM 11.70	C-19					2.6			3	150				1				1								62.5						120			1				
(33) PM 12.85	C-19	2.9				2.2	2.3		2					1					1						47.1	62.5		113							1				
(34) PM 12.97	C-19		87.5	6				0.77	2	87.5		1								1					53	87.5	93.5								1				
(35) PM 13.09	C-19		75	6				0.67	2	75		1								1					46	75	81								1				
(36) PM 13.29	C-19								2	62.5		1								1					39	62.5									1				
(37) PM 13.38	C-19								2	75		1								1					44	75									1				
(38) PM 13.43	C-19					2.6			2					1				1								75									1				
SHEET TOTAL		3.3	562.5	171		32.2		6.7	50	787.5		4		8		3		10	4	6				34	619.1	1487.5	782.5	128	34			120			20				

(N) NOT A SEPARATE PAY ITEM, FOR INFORMATION ONLY.

SUMMARY OF QUANTITIES

Q-2

STATE OF CALIFORNIA - DEPARTMENT OF TRANSPORTATION
Caltrans TRAFFIC DESIGN

FUNCTIONAL SUPERVISOR: MOHAMMED CHOWDHURY
CALCULATED-DESIGNED BY: SAMIA SOUEIDAN
CHECKED BY: ESTHER M. KIM
REVISED BY
DATE REVISED

LAST REVISION 00-00-00
DATE PLOTTED => 21-JUL-2010
TIME PLOTTED => 14:59

Dist	COUNTY	ROUTE	POST MILES TOTAL PROJECT	SHEET No.	TOTAL SHEETS
07	LA	110	R1.3/21.3	69	111

REGISTERED CIVIL ENGINEER 5/6/10 DATE

6/28/10
PLANS APPROVAL DATE

REGISTERED PROFESSIONAL ENGINEER ESTHER M. KIM No. 48363 Exp. 6/30/10 CIVIL STATE OF CALIFORNIA

THE STATE OF CALIFORNIA OR ITS OFFICERS OR AGENTS SHALL NOT BE RESPONSIBLE FOR THE ACCURACY OR COMPLETENESS OF SCANNED COPIES OF THIS PLAN SHEET.

ROADWAY QUANTITIES

LOCATION ROUTE 110	LOCATION DETAILS INDEX	ROADWAY EXCAVATION	PLACE HMA DIKE (TYPE C)	PLACE HMA DIKE (TYPE F)	REINFORCED RAPID STRENGTH CONCRETE PAD	MINOR CONCRETE (MINOR STRUCTURE)	MINOR CONCRETE (CURB)	MINOR HOT MIX ASPHALT	GUARD RAILING DELINEATOR	METAL BEAM GUARD RAILING (WOOD POST)	SINGLE THRIE BEAM BARRIER (WOOD POST)	BURIED POST END ANCHOR (N)	TERMINAL SYSTEM (TYPE CAT)	TRANSITION RAILING (TYPE WB)	TRANSITION RAILING (TYPE STB)	TRANSITION RAILING (TYPE BR)	TRANSITION RAILING (TYPE SP)	ALTERNATIVE FLARED TERMINAL SYSTEM	ALTERNATIVE IN - LINE TERMINAL SYSTEM	END ANCHOR ASSEMBLY (TYPE SFT)	CRASH CUSHION (REACT 350 MODEL 62B036)	CRASH CUSHION (REACT 350 MODEL 62C036)	CRASH CUSHION (QUADGUARD LMC MODEL QS9011LY)	VEGETATION CONTROL (MINOR CONCRETE)	WEED CONTROL MAT (FIBER)	REMOVE METAL BEAM GUARD RAILING	REMOVE ASPHALT CONCRETE DIKE	REMOVE CONCRETE CURB	REMOVE CONCRETE	REMOVE CONCRETE (STRUCTURE)	REMOVE METAL RAILING	REMOVE CONCRETE BARRIER (TYPE K)	REMOVE CRASH CUSHION (SAND FILLED)	REMOVE CRASH CUSHION	TEMPORARY DRAINAGE INLET PROTECTION	TIE BAR (DRILL AND BOND)	CHANNELIZER (SURFACE MOUNTED) (LEFT IN PLACE)	MINOR CONCRETE (CHANNEL LINING)	PAVEMENT MARKER (RETROREFLECTIVE) (TYPE H)
No.	Sheet	CY	LF	LF	CY	CY	CY	TON	EA	LF	LF	EA	EA	EA	EA	EA	EA	EA	EA	EA	EA	EA	EA	SQYD	SQYD	LF	LF	LF	CY	CY	LF	LF	EA	EA	EA	EA	EA	CY	EA
39 PM 15.81	C-20								2									1								37.5									1				
40 PM 15.87	C-20								2	50								1		1					71	87.5									1				
41 PM 16.14	C-20					2.2			2	12.5				1				1								75									1				
42 PM 17.15	C-20	0.6				1.7	0.5		2	12.5				1				1							34.7	75		20							1				
43 PM 17.85	C-20					2.2			2					1												37.5									2				
44 PM 19.44	C-20					1.8			2	25				1				1							40.2	89									1				
45 PM 19.90	C-21		62.5	6				0.55	2									1								37.5	68.5								1				
46 PM 20.14	C-21								2	50								1							41.6	87.5									1				
47 PM 20.80	C-21					2			2	37.5		1		1											35	50									1				
48 PM 20.96	C-21		87.5	31				1.11	2	50								1		1					53	87.5	118.5								1				
49 PM 21.01	C-21								2	100		1								1					48	100									1				
50 PM 21.12	C-21								2	12.5								1		1						50									2				
51 PM R1.39	C-22					1.2			3	100				1				1							74.9	50					43				1				
52 PM 2.70	C-22		62.5	28		2.6		0.87	2					1				1							29	62.5	107.5								1				
53 PM 3.13	C-22		75	28		2.2		0.9	2					1					1						45.8	62.5	113								1				
54 PM 3.92	C-22		62.5	28		1.8		0.8	2					1				1							29.1	62.5	100.5								1				
55 PM 5.06	C-22					2.2			2					1				1							28	62.5									1				
56 PM 5.18	C-22								2	25								1		1						62.5									2				
57 PM 5.64	C-23								2	50								1		1					33	62.5									1				
SHEET TOTAL		0.6	350	121		19.9	0.5	4.3	39	525		2		10				15	1	6					563.3	1239	508	20			43				22				

(N) NOT A SEPARATE PAY ITEM, FOR INFORMATION ONLY.

SUMMARY OF QUANTITIES

Q-3

STATE OF CALIFORNIA - DEPARTMENT OF TRANSPORTATION
Caltrans TRAFFIC DESIGN

FUNCTIONAL SUPERVISOR: MOHAMMED CHOWDHURY
CALCULATED-DESIGNED BY: SAMIA SOUEIDAN
CHECKED BY: ESTHER M. KIM
REVISED BY
DATE REVISED

LAST REVISION 00-00-00
DATE PLOTTED => 21-JUL-2010
TIME PLOTTED => 14:59

Dist	COUNTY	ROUTE	POST MILES TOTAL PROJECT	SHEET No.	TOTAL SHEETS
07	LA	110	R1.3/21.3	70	111

REGISTERED CIVIL ENGINEER 5/6/10 DATE

6/28/10
PLANS APPROVAL DATE

REGISTERED PROFESSIONAL ENGINEER ESTHER M. KIM No. 48363 Exp. 6/30/10 CIVIL STATE OF CALIFORNIA

THE STATE OF CALIFORNIA OR ITS OFFICERS OR AGENTS SHALL NOT BE RESPONSIBLE FOR THE ACCURACY OR COMPLETENESS OF SCANNED COPIES OF THIS PLAN SHEET.

ROADWAY QUANTITIES

LOCATION ROUTE 110	LOCATION DETAILS INDEX	ROADWAY EXCAVATION	PLACE HMA DIKE (TYPE C)	PLACE HMA DIKE (TYPE F)	REINFORCED RAPID STRENGTH CONCRETE PAD	MINOR CONCRETE (MINOR STRUCTURE)	MINOR CONCRETE (CURB)	MINOR HOT MIX ASPHALT	GUARD RAILING DELINEATOR	METAL BEAM GUARD RAILING (WOOD POST)	SINGLE THRIE BEAM BARRIER (WOOD POST)	(N) BURIED POST END ANCHOR	TERMINAL SYSTEM (TYPE CAT)	TRANSITION RAILING (TYPE WB)	TRANSITION RAILING (TYPE STB)	TRANSITION RAILING (TYPE BR)	TRANSITION RAILING (TYPE SP)	ALTERNATIVE FLARED TERMINAL SYSTEM	ALTERNATIVE IN - LINE TERMINAL SYSTEM	END ANCHOR ASSEMBLY (TYPE SFT)	CRASH CUSHION (REACT 350 MODEL 62B036)	CRASH CUSHION (REACT 350 MODEL 62C036)	CRASH CUSHION (QUADGUARD LMC MODEL QS9011LY)	VEGETATION CONTROL (MINOR CONCRETE)	WEED CONTROL MAT (FIBER)	REMOVE METAL BEAM GUARD RAILING	REMOVE ASPHALT CONCRETE DIKE	REMOVE CONCRETE CURB	REMOVE CONCRETE	REMOVE CONCRETE (STRUCTURE)	REMOVE METAL RAILING	REMOVE CONCRETE BARRIER (TYPE K)	REMOVE CRASH CUSHION (SAND FILLED)	REMOVE CRASH CUSHION	TEMPORARY DRAINAGE INLET PROTECTION	TIE BAR (DRILL AND BOND)	CHANNELIZER (SURFACE MOUNTED) (LEFT IN PLACE)	MINOR CONCRETE (CHANNEL LINING)	PAVEMENT MARKER (RETROREFLECTIVE) (TYPE H)
No.	Sheet	CY	LF	LF	CY	CY	CY	TON	EA	LF	LF	EA	EA	EA	EA	EA	EA	EA	EA	EA	EA	EA	EA	SQYD	SQYD	LF	LF	LF	CY	CY	LF	LF	EA	EA	EA	EA	EA	CY	EA
58 PM 6.07	C-23		133	6		29		1.11	2	37.5		1		1												100	139								2				
59 PM 6.44	C-23					46			2	37.5		1		1												137.5									1				
60 PM 6.68	C-23					2			2	37.5		1		1												62.5									1				
61 PM 6.88	C-23	1.6				1.8	1.7		2					1				1								62.5		82.5							1				
62 PM 6.88	C-23	0.5					0.4		2										1							50		21							1				
63 PM 7.90	C-24								2	25			1							1						70									2				
64 PM 8.03	C-24					3			3	37.5				1					1							75									2				
65 PM 8.20	C-24								2	50								1		1					48	87.5									2				
66 PM 9.06	C-24					2.3			27		775				2										367	837.5									2				
67 PM 9.39	C-25		62.5	31				0.92	2									1						34		37.5	93.5		34						1				
68 PM 9.39	C-25		62.5	28		8.1		0.87	2					1				1						44		75	125								1				
69 PM 9.39	C-25		75	28		2.6		0.96	2					1					1					33		62.5	115.5								1				
70 PM 9.43	C-25		64.5			1.8		0.5	2					1					1							64.5	64.5								1				
71 PM 9.47	C-25		60.5	353				5.14	2										1							50	413.5								1				
72 PM 9.65	C-25					2.5			2	12.5				1				1								75									1				
73 PM 9.65	C-25		75	40.5				1.13	2										1							37.5	115.5								1				
74 PM 9.65	C-26		62.5	43.5				1.09	2									1							36	37.5	96.5								1				
75 PM 9.65	C-26					2			2					1				1								62.5									1				
76 PM 9.65	C-26								2	37.5									1	1					42	75									1				
SHEET TOTAL		2.1	595.5	530		101.1	2.1	11.7	64	275	775	3	1	10	2			7	7	3				111	493	2059.5	1163	103.5	34						24				

(N) NOT A SEPARATE PAY ITEM, FOR INFORMATION ONLY.

SUMMARY OF QUANTITIES

Q-4

STATE OF CALIFORNIA - DEPARTMENT OF TRANSPORTATION
Caltrans TRAFFIC DESIGN

FUNCTIONAL SUPERVISOR: MOHAMMED CHOWDHURY
CALCULATED-DESIGNED BY: SAMIA SOUEIDAN
CHECKED BY: ESTHER M. KIM
REVISED BY
DATE REVISED

LAST REVISION 00-00-00
DATE PLOTTED => 21-JUL-2010
TIME PLOTTED => 14:59

Dist	COUNTY	ROUTE	POST MILES TOTAL PROJECT	SHEET No.	TOTAL SHEETS
07	LA	110	R1.3/21.3	71	111

REGISTERED CIVIL ENGINEER 5/6/10 DATE

6/28/10
PLANS APPROVAL DATE

REGISTERED PROFESSIONAL ENGINEER ESTHER M. KIM No. 48363 Exp. 6/30/10 CIVIL STATE OF CALIFORNIA

THE STATE OF CALIFORNIA OR ITS OFFICERS OR AGENTS SHALL NOT BE RESPONSIBLE FOR THE ACCURACY OR COMPLETENESS OF SCANNED COPIES OF THIS PLAN SHEET.

ROADWAY QUANTITIES

LOCATION ROUTE 110	LOCATION DETAILS INDEX	ROADWAY EXCAVATION	PLACE HMA DIKE (TYPE C)	PLACE HMA DIKE (TYPE F)	REINFORCED RAPID STRENGTH CONCRETE PAD	MINOR CONCRETE (MINOR STRUCTURE)	MINOR CONCRETE (CURB)	MINOR HOT MIX ASPHALT	GUARD RAILING DELINEATOR	METAL BEAM GUARD RAILING (WOOD POST)	SINGLE THRIE BEAM BARRIER (WOOD POST)	BURIED POST END ANCHOR (N)	TERMINAL SYSTEM (TYPE CAT)	TRANSITION RAILING (TYPE WB)	TRANSITION RAILING (TYPE STB)	TRANSITION RAILING (TYPE BR)	TRANSITION RAILING (TYPE SP)	ALTERNATIVE FLARED TERMINAL SYSTEM	ALTERNATIVE IN - LINE TERMINAL SYSTEM	END ANCHOR ASSEMBLY (TYPE SFT)	CRASH CUSHION (REACT 350 MODEL 62B036)	CRASH CUSHION (REACT 350 MODEL 62C036)	CRASH CUSHION (QUADGUARD LMC MODEL QS9011LY)	VEGETATION CONTROL (MINOR CONCRETE)	WEED CONTROL MAT (FIBER)	REMOVE METAL BEAM GUARD RAILING	REMOVE ASPHALT CONCRETE DIKE	REMOVE CONCRETE CURB	REMOVE CONCRETE	REMOVE CONCRETE (STRUCTURE)	REMOVE METAL RAILING	REMOVE CONCRETE BARRIER (TYPE K)	REMOVE CRASH CUSHION (SAND FILLED)	REMOVE CRASH CUSHION	TEMPORARY DRAINAGE INLET PROTECTION	TIE BAR (DRILL AND BOND)	CHANNELIZER (SURFACE MOUNTED) (LEFT IN PLACE)	MINOR CONCRETE (CHANNEL LINING)	PAVEMENT MARKER (RETROREFLECTIVE) (TYPE H)
No.	Sheet	CY	LF	LF	CY	CY	CY	TON	EA	LF	LF	EA	EA	EA	EA	EA	EA	EA	EA	EA	EA	EA	EA	SQYD	SQYD	LF	LF	LF	CY	CY	LF	LF	EA	EA	EA	EA	EA	CY	EA
(77) PM 9.65	C-26								2	37.5								1		1						62.5									1				
(78) PM 9.65	C-26		62.5	3				0.52	2									1								37.5									3				
(79) PM 10.18	C-26								2									1								37.5									1				
(80) PM 12.09	C-26	2.3				2.2	1.8		2					1					1							62.5		90							1				
(81) PM 13.00	C-27	2.3					2		2	12.5								1							29	37.5		81							1				
(82) PM 15.01	C-27		40.75	53		2.7		1.03	2	25			1	1												87.5	104								2				
(83) PM 17.87	C-27	0.8				0.9	0.6		2					1				1							29	62.5	30								1				
(84) PM 18.28	C-27					1			2	37.5				1				1							52	100									3				
(85) PM 20.94	C-27		87.5	3		2		0.72	2	37.5		1		1											32	69	100								1				
(86) PM 6.75	C-28	0.6			0.6																	1							0.6				1		1	3			
(87) PM 13.72	C-29	0.6			0.6	0.1																	1							0.13				1	1	3			
(88) PM 13.75	C-30	0.9			0.9	0.1																	1							0.03				1	1	3			
(89) PM 10.50	C-31																					1											1		1				
(90) PM 12.03	C-32	0.8			0.8																	1											1		1	3			
(91) PM 12.93	C-33																					1											1		1				
(92) PM 21.35	C-35	5.1			5.1		0.9	1.64		75										2	1					40		38					1		1				
SHEET TOTAL		13.4	190.8	56	8.0	9.0	5.3	3.9	18	225		1	1	5				6	1	3	1	4	2		142	596.5	234	209	0.6	0.16			5	2	21	12			
GRAND TOTAL		69.2	2056.8	1698	8.0	211.0	44.4	40.1	245	3050	775	12	2	40	2	3	1	50	17	25	1	4	2	145	2257.1	7411.5	3918	1862	68.6	0.16	43	120	5	2	108	12	9	4.4	90

(N) NOT A SEPARATE PAY ITEM, FOR INFORMATION ONLY.

SUMMARY OF QUANTITIES

Q-5

STATE OF CALIFORNIA - DEPARTMENT OF TRANSPORTATION
Caltrans TRAFFIC DESIGN

FUNCTIONAL SUPERVISOR: MOHAMMED CHOWDHURY
CALCULATED-DESIGNED BY: SAMIA SOUEIDAN
CHECKED BY: ESTHER M. KIM
REVISED BY
DATE REVISED

LAST REVISION 00-00-00
DATE PLOTTED => 21-JUL-2010
TIME PLOTTED => 15:00

DIST	COUNTY	ROUTE	POST MILES TOTAL PROJECT	SHEET No.	TOTAL SHEETS
07	LA	110	R1.3/21.3	72	111

George Olguin 5/24/10
LICENSED LANDSCAPE ARCHITECT

6/28/10
PLANS APPROVAL DATE

LICENSED LANDSCAPE ARCHITECT
GEORGE OLGUIN
NO. 4333
George Olguin
Signature
08-31-10
Renewal Date
06-09-10
Date
STATE OF CALIFORNIA

THE STATE OF CALIFORNIA OR ITS OFFICERS OR AGENTS SHALL NOT BE RESPONSIBLE FOR THE ACCURACY OR COMPLETENESS OF SCANNED COPIES OF THIS PLAN SHEET.

IRRIGATION SYSTEM WORK

LOCATION No.	DIRECTION	POST MILE		QUANTITIES LF: PLASTIC PIPE SUPPLY LINE (MAIN SUPPLY SIDE) ②④ (N)	QUANTITIES LF: PLASTIC PIPE SUPPLY LINE (LATERAL SUPPLY SIDE) ②④ (N)	QUANTITIES (EACH) (N): RCV ①		GV	BV ①	FAU ①	SPRINKLERS ①		REMARKS
1	NB	R1.61	N/A										AS-BUILT IS NOT AVAILABLE
2	NB	2.875	N/A										AS-BUILT IS NOT AVAILABLE
3	NB	3.111	N/A										AS-BUILT IS NOT AVAILABLE
4	NB	3.448	N/A										AS-BUILT IS NOT AVAILABLE
5	NB	3.941	N/A										AS-BUILT IS NOT AVAILABLE
6	NB	4.205	N/A										AS-BUILT IS NOT AVAILABLE
7	NB	4.880			120						8		WM ON LOMITA Blvd
8	NB	4.960		100	850	2			1	1	12		WM ON LOMITA Blvd
9	NB	5.280		200	300	2			1	1	3		WM ON SEPULVEDA Blvd
10	NB	5.380		100	100	4			1	1	4		WM ON SEPULVEDA Blvd
11	NB	5.607		130	130						4		WM ON SEPULVEDA Blvd
12	NB	6.100			140						4		WM ON 228TH Blvd
13	NB	6.290		100	100						3		WM ON 228TH Blvd
14	NB	6.873											
15	NB	7.793		10	200						5		WM ON DEL AMO Blvd
16	NB	8.012		10	200						4		WM ON DEL AMO Blvd
17	NB	8.371			70						8		WM ON DEL AMO Blvd
18	NB	8.752			50						3		WM ON FIGUEROA St
19	NB	8.752			50						2		WM ON FIGUEROA St
20	NB	8.840	N/A										
21	NB	9.000	N/A										
22	NB	9.680			70						4		WM ON FIGUEROA St
23	NB	9.920			80						3		WM ON FIGUEROA St
24	NB	9.920			240						7		WM ON FIGUEROA St
25	NB	9.920			80						2		WM ON FIGUEROA St
26	NB	9.920			80						3		WM ON FIGUEROA St
27	NB	10.150			95						4		WM ON 182ND St
28	NB	10.150		150	150						4		WM ON FIGUEROA St
29	NB	10.150	N/A										
30	NB	10.150	N/A										
31	NB	11.276	N/A										
32	NB	11.707		200									WM ON 146TH St
33	NB	12.850		50	100						14		WM ON EL SEGUNDO Blvd
34	NB	12.970			150						20		WM ON FIGUEROA St
35	NB	13.090			400						30		WM ON FIGUEROA St
36	NB	13.290		75	75						3		WM ON FIGUEROA St

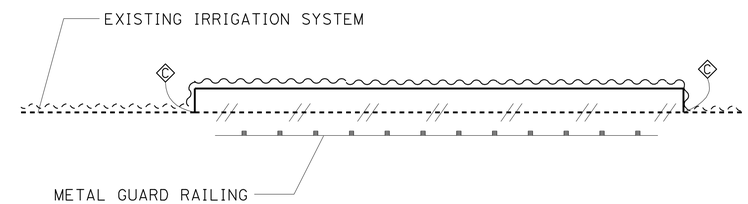

PLAN
METAL BEAM GUARD RAILING
IRRIGATION INTERFACE

APPLICABLE WHEN CIRCLED BELOW:

① - RELOCATE AND RECONSTRUCT.
② - ABANDON AND RECONSTRUCT.

3 - No. OF SPRINKLERS TO RELOCATE
④ - MAIN SUPPLY LINE OR LATERAL SUPPLY LINE LENGTH IN FEET.

ABBREVIATIONS

F	full circle	Ft	feet/foot
P	part circle	GPM	gallons per minute
F/P	full/part circle	GPH	gallons per hour
Q	quarter circle	Adj	adjustable
T	third circle	PL	plastic
H	half circle	B/B	brass/bronze
TT	two third circle	B/PL	brass/plastic
TQ	three quarter circle	B/B/PL	brass/bronze/plaStic
CST	center Strip	NPT	national pipe thread
SST	side Strip	IPS	iron pipe size
EST	end Strip	PSI	pounds per square inch

(N) — NOT A SEPARATE PAY ITEM, FOR INFORMATION ONLY.

IRRIGATION PLAN AND IRRIGATION SCHEDULE

NO SCALE

IP-1

STATE OF CALIFORNIA - DEPARTMENT OF TRANSPORTATION
Caltrans
LANDSCAPE ARCHITECTURE
SENIOR LANDSCAPE ARCHITECT: JENNIFER TAIRA
CALCULATED-DESIGNED BY: YI SU
CHECKED BY: GEORGE OLGUIN
REVISED BY
DATE REVISED

LAST REVISION 00-00-00
DATE PLOTTED => 21-JUL-2010
TIME PLOTTED => 15:00

DIST	COUNTY	ROUTE	POST MILES TOTAL PROJECT	SHEET No.	TOTAL SHEETS
07	LA	110	R1.3/21.3	73	111

George Olguin 5/24/10
LICENSED LANDSCAPE ARCHITECT

6/28/10
PLANS APPROVAL DATE

LICENSED LANDSCAPE ARCHITECT GEORGE OLGUIN NO. 4333 George Olguin Signature 08-31-10 Renewal Date 06-09-10 Date STATE OF CALIFORNIA

THE STATE OF CALIFORNIA OR ITS OFFICERS OR AGENTS SHALL NOT BE RESPONSIBLE FOR THE ACCURACY OR COMPLETENESS OF SCANNED COPIES OF THIS PLAN SHEET.

IRRIGATION SYSTEM WORK

LOCATION: LOCATION No.	LOCATION: DIRECTION	LOCATION: POST MILE		QUANTITIES LF ② ④ (N): PLASTIC PIPE SUPPLY LINE (MAIN SUPPLY SIDE)	QUANTITIES LF ② ④ (N): PLASTIC PIPE SUPPLY LINE (LATERAL SUPPLY SIDE)	QUANTITIES (EACH) (N): RCV ①		GV ①	BV	FAU ①	SPRINKLERS ①		REMARKS
37	NB	13.380			85						4		WM ON FIGUEROA St
38	NB	13.430		10	90						5		WM ON BROADWAY
39	NB	15.819		10	50						10		WM ON 88TH PLACE
40	NB	15.870		100	100	3				1	10		WM ON 88TH PLACE
41	NB	16.149			90						10		WM ON GRAND Ave
42	NB	17.154			90						10		WM BETWEEN 81TH & 80TH St
43	NB	17.857			50						10		WM ON GAGE Ave
44	NB	19.443		100									WM ON 43RD St
45	NB	19.900			100						10		WM ON 37TH St
46	NB	20.148			100						10		WM ON 33TH St
47	NB	20.800			85						3		WM ON FLOWER St
48	NB	20.960			100						10		WM ON 21TH St
49	NB	21.010			110						10		WM ON 21TH St
50	NB	21.120			50						5		WM ON 21TH St
51	SB	R1.39		160									WM ON NB ONRAMP & CHANNEL St
52	SB	2.700		118		2		1		1			WM ON NW CORNER OF 110 & E St
53	SB	3.133		123		1							WM ON NW CORNER OF 110 & E St
54	SB	3.925	N/A										
55	SB	5.060	N/A										
56	SB	5.180	N/A										
57	SB	5.640	N/A										
58	SB	6.070		150							4		WM ON 228TH St
59	SB	6.440			100						4		WM ON 228TH St
60	SB	6.680		82	82						17		WM ON 228TH St
61	SB	6.886		30	50						10		WM ON 228TH St
62	SB	6.886		60	60	2		1		1	12		WM ON 228TH St
63	SB	7.900	N/A										
64	SB	8.030		225	160	4		1		1	7		WM ON SE CORNER OF DEL MAR & 110
65	SB	8.200			100						10		
66	SB	9.060		300	500						12		WM ON SE CORNER OF 405 & 190TH St
67	SB	9.391			100						4		
68	SB	9.391	N/A										
69	SB	9.391		120	120								WM ON 182ND ST & 110 ON RAMP
70	SB	9.433	N/A										
71	SB	9.470			400						8		WM ON NW CORNER OF 182ND St & 110
72	SB	9.655		100	100	2					3		WM ON HAMILTON Ave

APPLICABLE WHEN CIRCLED BELOW:

① - RELOCATE AND RECONSTRUCT.
② - ABANDON AND RECONSTRUCT.

3 - No. OF SPRINKLERS TO RELOCATE
④ - MAIN SUPPLY LINE OR LATERAL SUPPLY LINE LENGTH IN FEET.

ABBREVIATIONS

F	full circle	Ft	feet/foot
P	part circle	GPM	gallons per minute
F/P	full/part circle	GPH	gallons per hour
Q	quarter circle	Adj	adjustable
T	third circle	PL	plastic
H	half circle	B/B	brass/bronze
TT	two third circle	B/PL	brass/plastic
TQ	three quarter circle	B/B/PL	brass/bronze/plastic
CST	center Strip	NPT	national pipe thread
SST	side Strip	IPS	iron pipe size
EST	end Strip	PSI	pounds per square inch

(N) —— NOT A SEPARATE PAY ITEM, FOR INFORMATION ONLY.

IRRIGATION PLAN AND IRRIGATION SCHEDULE

NO SCALE

IP-2

STATE OF CALIFORNIA - DEPARTMENT OF TRANSPORTATION
Caltrans
LANDSCAPE ARCHITECTURE

SENIOR LANDSCAPE ARCHITECT: JENNIFER TAIRA
CALCULATED-DESIGNED BY: YI SU
CHECKED BY: GEORGE OLGUIN
REVISED BY
DATE REVISED

LAST REVISION 00-00-00
DATE PLOTTED => 21-JUL-2010
TIME PLOTTED => 15:00

DIST	COUNTY	ROUTE	POST MILES TOTAL PROJECT	SHEET No.	TOTAL SHEETS
07	LA	110	R1.3/21.3	74	111

George Olguin 5/24/10
LICENSED LANDSCAPE ARCHITECT

6/28/10
PLANS APPROVAL DATE

LICENSED LANDSCAPE ARCHITECT GEORGE OLGUIN NO. 4333 George Olguin Registered 08-31-10 Renewal Date 06-09-10 Date STATE OF CALIFORNIA

THE STATE OF CALIFORNIA OR ITS OFFICERS OR AGENTS SHALL NOT BE RESPONSIBLE FOR THE ACCURACY OR COMPLETENESS OF SCANNED COPIES OF THIS PLAN SHEET.

IRRIGATION SYSTEM WORK

LOCATION: LOCATION No.	LOCATION: DIRECTION	LOCATION: POST MILE		UNIT QUANTITIES LF: PLASTIC PIPE SUPPLY LINE (MAIN SUPPLY SIDE) ② ④ (N)	UNIT QUANTITIES LF: PLASTIC PIPE SUPPLY LINE (LATERAL SUPPLY SIDE) ② ④ (N)	QUANTITIES (EACH) (N): RCV ①		GV	BV	FAU	SPRINKLERS ①		REMARKS
73	SB	9.655		120	120	2					4		WM ON HAMILTON Ave
74	SB	9.655			100						3		WM ON 190TH St
75	SB	9.655		80	80						3		WM ON 190TH St
76	SB	9.655	N/A										
77	SB	9.655	N/A										
78	SB	9.655			750								WM ON NW CORNER OF 182ND St & 110
79	SB	10.187		200	100						3		WM ON SE CORNER OF 168TH St & 110
80	SB	12.099	N/A										
81	SB	13.008			100						17		WM ON FIGUEROA St
82	SB	15.010	N/A										
83	SB	17.877	N/A										
84	SB	18.280			100						12		WM ON SE CORNER OF 54TH St & 110
85	SB	20.940	N/A										NO AS-BUILT AVAILABLE
86	NB	6.750	N/A										CRASH CUSHION ONLY
87	NB	13.720	N/A										CRASH CUSHION ONLY
88	NB	13.750	N/A										CRASH CUSHION ONLY
89	SB	10.500	N/A										CRASH CUSHION ONLY
90	SB	12.030	N/A										CRASH CUSHION ONLY
91	SB	12.930	N/A										CRASH CUSHION ONLY
92	SB	21.350	N/A										CRASH CUSHION ONLY
TOTAL				3213	8052	24		3	3	7	207		

APPLICABLE WHEN CIRCLED BELOW:

① - RELOCATE AND RECONSRUCT.
② - ABANDON AND RECONSTRUCT.

3 - No. OF SPRINKLERS TO RELOCATE
④ - MAIN SUPPLY LINE OR LATERAL SUPPLY LINE LENGTH IN FEET.

ABBREVIATIONS

F	full circle	Ft	feet/foot
P	part circle	GPM	gallons per minute
F/P	full/part circle	GPH	gallons per hour
Q	quarter circle	Adj	adjustable
T	third circle	PL	plastic
H	half circle	B/B	brass/bronze
TT	two third circle	B/PL	brass/plastic
TQ	three quarter circle	B/B/PL	brass/bronze/plastic
CST	center Strip	NPT	national pipe thread
SST	side Strip	IPS	iron pipe size
EST	end Strip	PSI	pounds per square inch

(N) —— NOT A SEPARATE PAY ITEM. FOR INFORMATION ONLY.

IRRIGATION PLAN AND IRRIGATION SCHEDULE

NO SCALE

IP-3

STATE OF CALIFORNIA - DEPARTMENT OF TRANSPORTATION
Caltrans
LANDSCAPE ARCHITECTURE

SENIOR LANDSCAPE ARCHITECT: JENNIFER TAIRA
CALCULATED-DESIGNED BY: YI SU
CHECKED BY: GEORGE OLGUIN
REVISED BY
DATE REVISED

LAST REVISION 00-00-00
DATE PLOTTED => 21-JUL-2010
TIME PLOTTED => 15:00

Dist	COUNTY	ROUTE	POST MILES TOTAL PROJECT	SHEET No.	TOTAL SHEETS
07	LA	110	R1.3/21.3	75	111

REGISTERED ELECTRICAL ENGINEER 5/24/10 DATE

6/28/10
PLANS APPROVAL DATE

REGISTERED PROFESSIONAL ENGINEER JACQUELINE C. TAN No. E015611 Exp. 12/31/11 ELECTRICAL STATE OF CALIFORNIA

THE STATE OF CALIFORNIA OR ITS OFFICERS OR AGENTS SHALL NOT BE RESPONSIBLE FOR THE ACCURACY OR COMPLETENESS OF SCANNED COPIES OF THIS PLAN SHEET.

GENERAL NOTES (FOR SHEETS E-1 TO E-3):

1. NEW MBGR LOCATION SHOWN IS APPROXIMATE AND IS FOR INFORMATION ONLY. REFER TO CONSTRUCTION DETAILS FOR EXACT LOCATION AND DESIGN OF MBGR.
2. BEFORE COMMENCING THE WORK, ALL LOCATIONS, INCLUDING THE ONES NOT BEING SHOWN, SHALL BE VERIFIED BY THE CONTRACTOR IN THE FIELD TO BE CERTAIN IF THEY ARE OR ARE NOT IN CONFLICT WITH EXISTING COMMUNICATION CONDUITS. POT HOLING MAY BE NEEDED.
3. HAND DIGGING SHALL BE DONE FOR ANY EXCAVATION AT OR NEAR THE EXISTING COMMUNICATION CONDUITS.

PROJECT NOTES (FOR SHEETS E-1 TO E-3):

1. PROTECT AND MAINTAIN EXISTING COMMUNICATION CONDUITS IN PLACE BY USING LONG SPAN NESTED GUARDRAIL AS SHOWN IN DETAIL ON SHEET C-38. ENGINEER SHALL BE NOTIFIED BY THE CONTRACTOR PRIOR TO THE WORK WHEN ACTUAL FIELD CONDITION VERIFIES THAT THE DETAIL IS TO BE USED. WHEN THERE IS MORE THAN ONE OPTION SHOWN, THE DETAIL SHALL BE CONSIDERED FIRST AND CONCURRED BY THE ENGINEER IF NOT USED.
2. PROTECT AND MAINTAIN EXISTING COMMUNICATION CONDUITS BY RELOCATING AS SHOWN ON SHEET E-3.
3. PROTECT AND MAINTAIN EXISTING TMS CABLES AND PULL BOXES IN PLACE. HAND DIGGING SHALL BE DONE TO EXPOSE THE ELEMENTS. IF THIS OPTION IS NOT WORKABLE, OPTION No. 1 ABOVE SHALL BE APPLIED.

ABBREVIATION (FOR SHEETS E-1 TO E-3):

ITS: INTELLIGENT TRANSPORTATION SYSTEM

LEGEND (FOR SHEETS E-1 TO E-3):

- DIRECTION OF TRAFFIC
- EXISTING COMMUNICATION PULL BOX
- EXISTING COMMUNICATION SPLICE VAULT
- —c— EXISTING COMMUNICATION CONDUITS/FIBER OPTIC CABLES

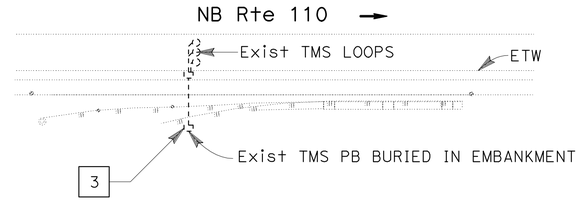

LOCATION No. 12

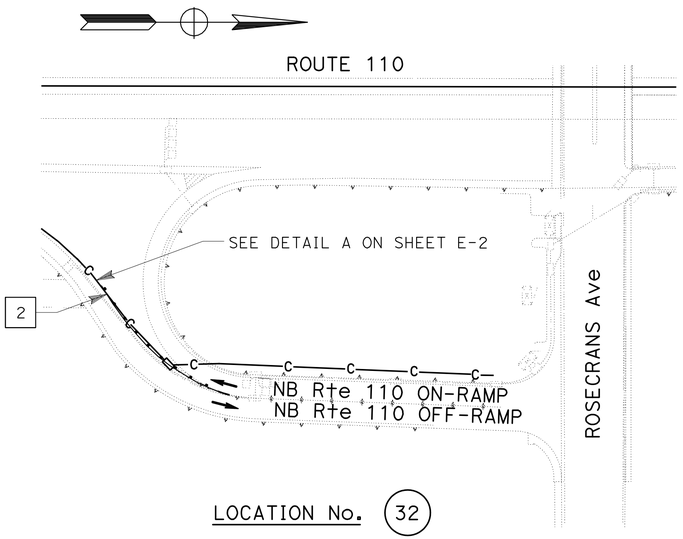

LOCATION No. 32

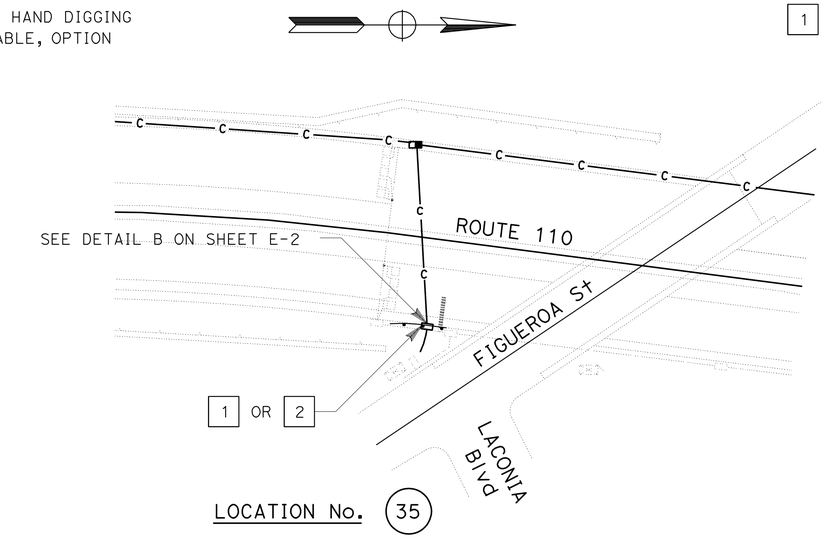

LOCATION No. 35

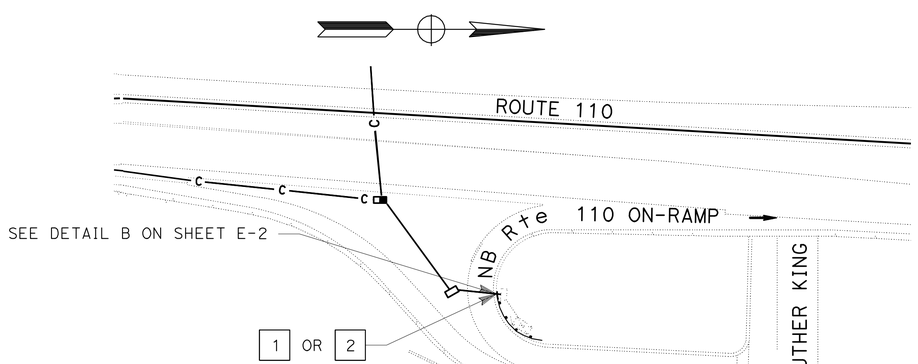

LOCATION No. 44

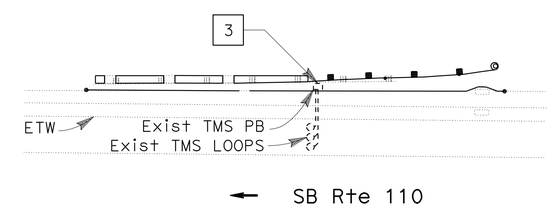

LOCATION No. 58

RELOCATE EXISTING COMMUNICATION SYSTEM

NO SCALE

THIS PLAN IS ACCURATE FOR ITS WORK ONLY.

E-1

STATE OF CALIFORNIA - DEPARTMENT OF TRANSPORTATION
Caltrans® OFFICE OF ITS

FUNCTIONAL SUPERVISOR: JACKIE TAN
CALCULATED-DESIGNED BY: VUONG TRAN
CHECKED BY: HOSAKERE ANANTH
REVISED BY
DATE REVISED

LAST REVISION 05-11-10
DATE PLOTTED => 21-JUL-2010
TIME PLOTTED => 15:01

Dist	COUNTY	ROUTE	POST MILES TOTAL PROJECT	SHEET No.	TOTAL SHEETS
07	LA	110	R1.3/21.3	76	111

REGISTERED ELECTRICAL ENGINEER 5/24/10 DATE

6/28/10
PLANS APPROVAL DATE

REGISTERED PROFESSIONAL ENGINEER JACQUELINE C.TAN No. E015611 Exp. 12/31/11 ELECTRICAL STATE OF CALIFORNIA

THE STATE OF CALIFORNIA OR ITS OFFICERS OR AGENTS SHALL NOT BE RESPONSIBLE FOR THE ACCURACY OR COMPLETENESS OF SCANNED COPIES OF THIS PLAN SHEET.

NOTE (FOR THIS SHEET ONLY):

1. EXISTING DIMENSIONS SHOWN ARE APPROXIMATE. ACTUAL FIELD MEASUREMENTS MAY DIFFER.

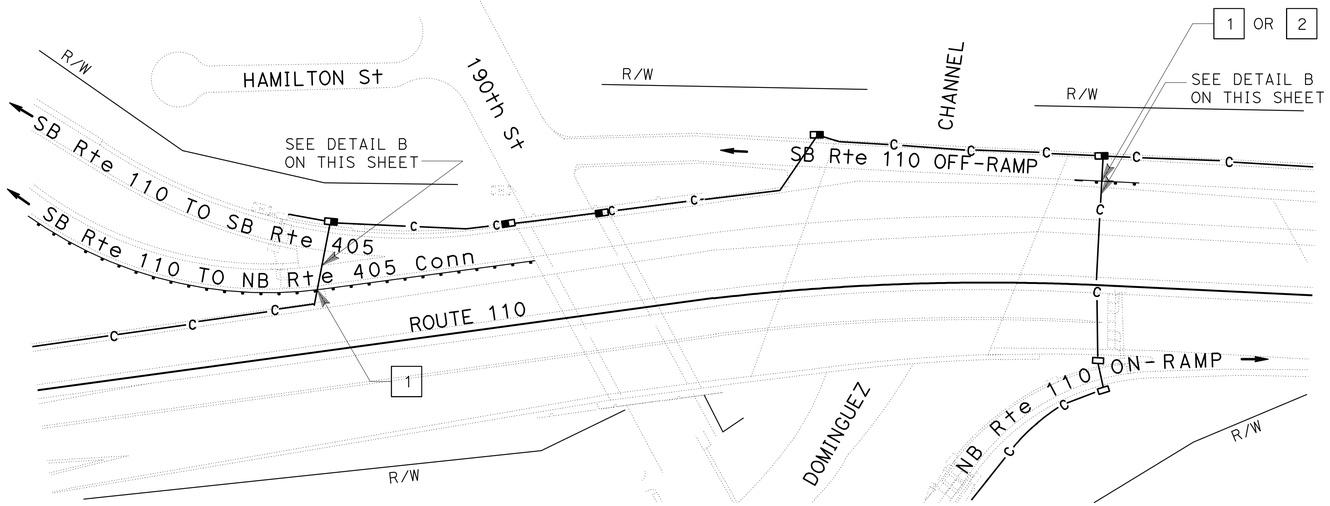

LOCATION No. 66

LOCATION No. 70

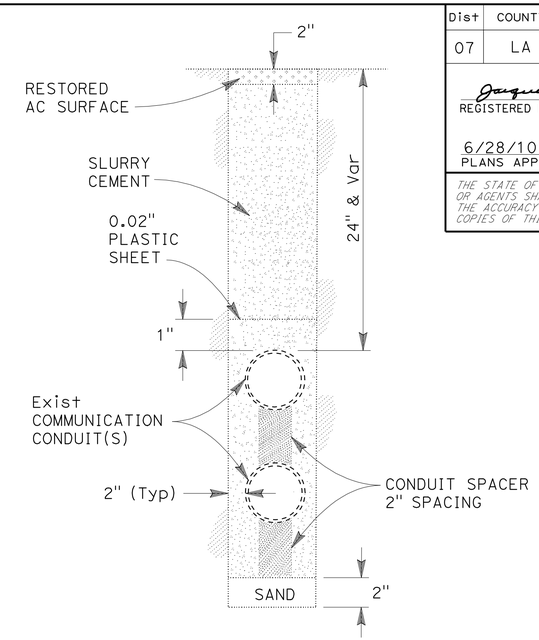

DETAIL A

EXISTING COMMUNICATION CONDUITS AND TRENCH IN ASPHALT

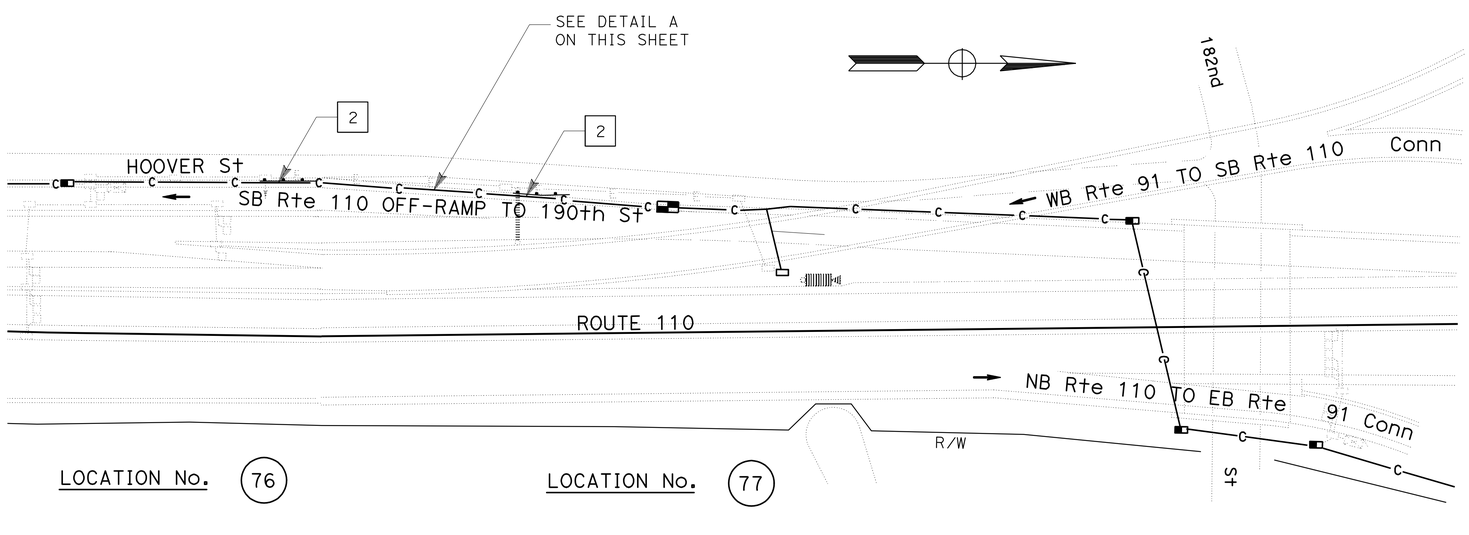

LOCATION No. 76

LOCATION No. 77

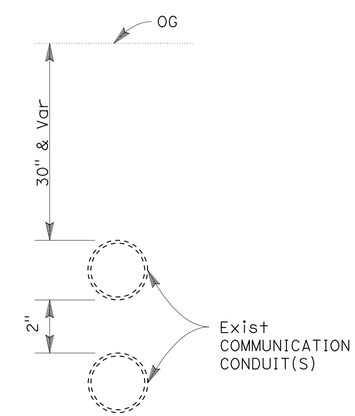

DETAIL B

EXISTING COMMUNICATION CONDUIT(S) IN SOIL

RELOCATE EXISTING COMMUNICATION SYSTEM

NO SCALE

THIS PLAN IS ACCURATE FOR ITS WORK ONLY.

E-2

STATE OF CALIFORNIA - DEPARTMENT OF TRANSPORTATION
Caltrans
OFFICE OF ITS

FUNCTIONAL SUPERVISOR: JACKIE TAN
CALCULATED-DESIGNED BY: VUONG TRAN
CHECKED BY: HOSAKERE ANANTH
REVISED BY
DATE REVISED

LAST REVISION 05-11-10
DATE PLOTTED => 21-JUL-2010
TIME PLOTTED => 15:01

Dist	COUNTY	ROUTE	POST MILES TOTAL PROJECT	SHEET No.	TOTAL SHEETS
07	LA	110	R1.3/21.3	77	111

REGISTERED ELECTRICAL ENGINEER 5/24/10 DATE

6/28/10
PLANS APPROVAL DATE

REGISTERED PROFESSIONAL ENGINEER JACQUELINE C.TAN No. E015611 Exp. 12/31/11 ELECTRICAL STATE OF CALIFORNIA

THE STATE OF CALIFORNIA OR ITS OFFICERS OR AGENTS SHALL NOT BE RESPONSIBLE FOR THE ACCURACY OR COMPLETENESS OF SCANNED COPIES OF THIS PLAN SHEET.

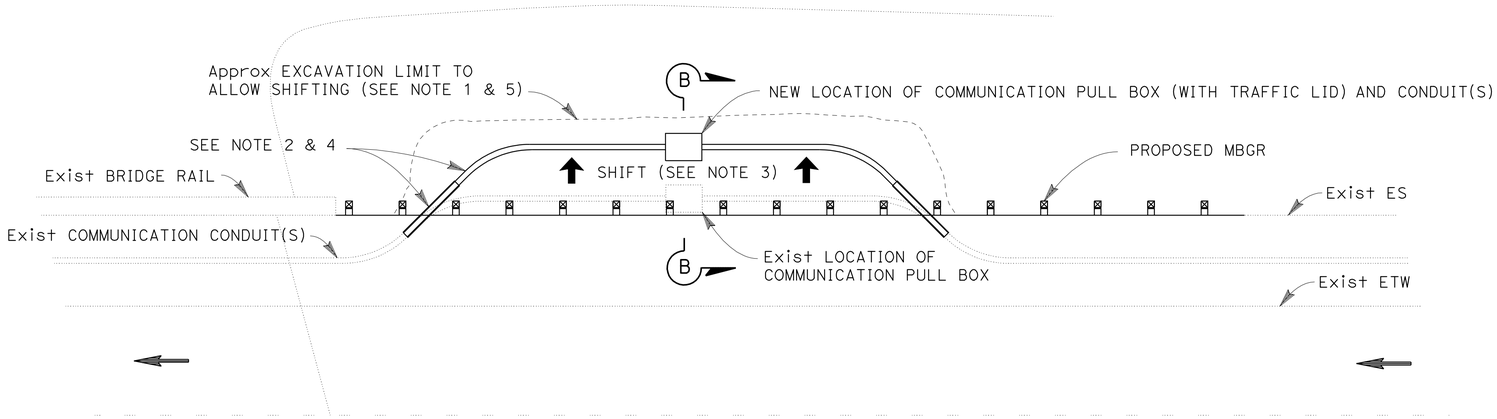

LATERAL SHIFTING - TYPICAL PLAN

NOTES (FOR THIS SHEET ONLY):

1. FIRST STEP IS TO VERIFY THE EXACT LOCATION OF THE EXISTING COMMUNICATION CONDUIT(S) AND DETERMINE THE NEEDED LENGTH THAT WILL BE RELOCATED. EXCAVATE BY HAND A MINIMUM AREA AT A MINIMUM DEPTH TO ALLOW RELOCATING.
2. CUT AND REMOVE A PORTION OF THE EXISTING PVC/STEEL CONDUIT(S) (NOT THE INNERDUCTS) AT THE DETERMINED LOCATION THAT WILL ALLOW THE DESIRED SHIFTING. THIS SHALL BE PERFORMED WITH SPECIAL CARE TO AVOID DAMAGING THE EXISTING COMMUNICATION CABLES AND ASSOCIATED INNERDUCTS. THIS APPLIES ON BOTH ENDS.
3. RELOCATE THE EXISTING COMMUNICATION PULL BOX (IF ANY) AND THE COMMUNICATION CONDUIT(S) AWAY FROM THE PROPOSED MBGR TO THE DESIRED LOCATION, MIMINUM 4 FEET.
4. RECONNECT THE CUT PORTION OF THE EXISTING PVC/STEEL CONDUIT(S) WITH SPLIT COUPLINGS AND/OR SPLIT CONDUITS. SEAL AND DUCT TAPE ALL SPLIT CONDUIT(S) AND COUPLINGS. THIS APPLIES ON BOTH ENDS.
5. FINALLY, BACKFILL AND COMPACT THE EXCAVATED AREA PER STANDARD SPECIFICATIONS AND AS DIRECTED BY THE ENGINEER.

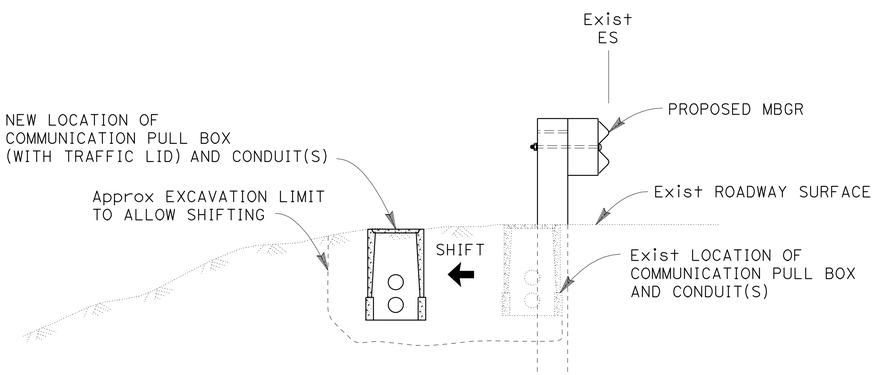

SECTION B-B

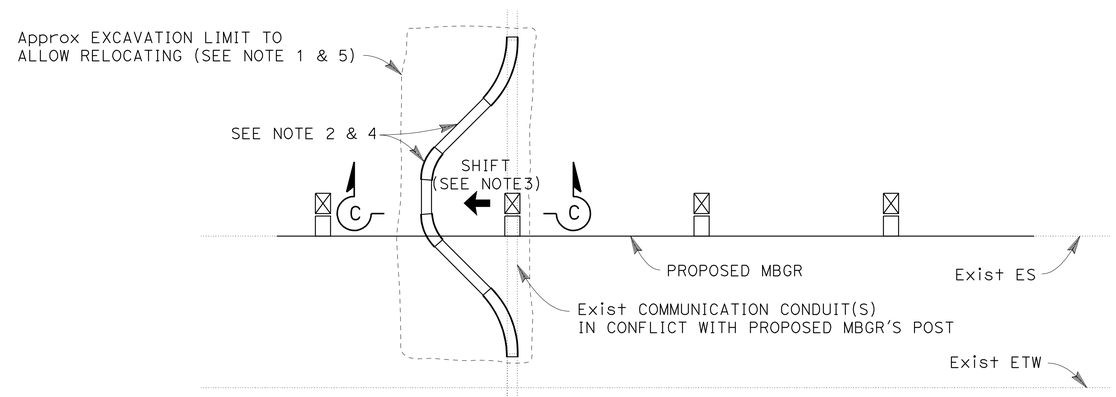

CROSSING CONDUITS - TYPICAL PLAN

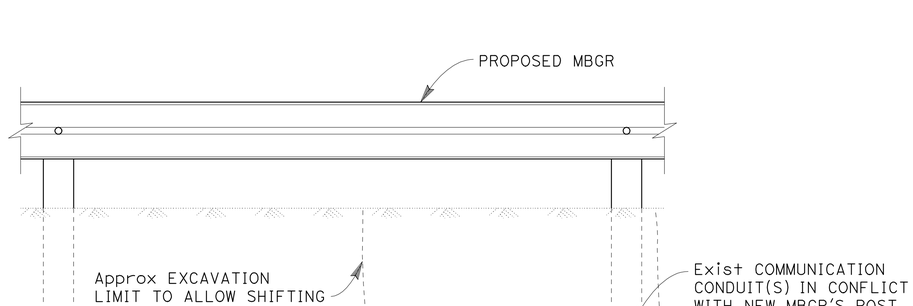

SECTION C-C

RELOCATE EXISTING COMMUNICATION SYSTEM

NO SCALE

E-3

THIS PLAN IS ACCURATE FOR ITS WORK ONLY.

STATE OF CALIFORNIA - DEPARTMENT OF TRANSPORTATION
Caltrans OFFICE OF ITS

FUNCTIONAL SUPERVISOR: JACKIE TAN
CALCULATED-DESIGNED BY: VUONG TRAN
CHECKED BY: HOSAKERE ANANTH
REVISED BY / DATE REVISED

LAST REVISION 05-11-10 | DATE PLOTTED => 21-JUL-2010 | TIME PLOTTED => 15:01

Dist	COUNTY	ROUTE	POST MILES TOTAL PROJECT	SHEET No.	TOTAL SHEETS
07	LA	110	R1.3/21.3	78	111

REGISTERED ELECTRICAL ENGINEER 5/24/10 DATE

6/28/10
PLANS APPROVAL DATE

REGISTERED PROFESSIONAL ENGINEER CESAR HERNANDEZ No. E15805 Exp. 12/31/10 ELECTRICAL STATE OF CALIFORNIA

THE STATE OF CALIFORNIA OR ITS OFFICERS OR AGENTS SHALL NOT BE RESPONSIBLE FOR THE ACCURACY OR COMPLETENESS OF SCANNED COPIES OF THIS PLAN SHEET.

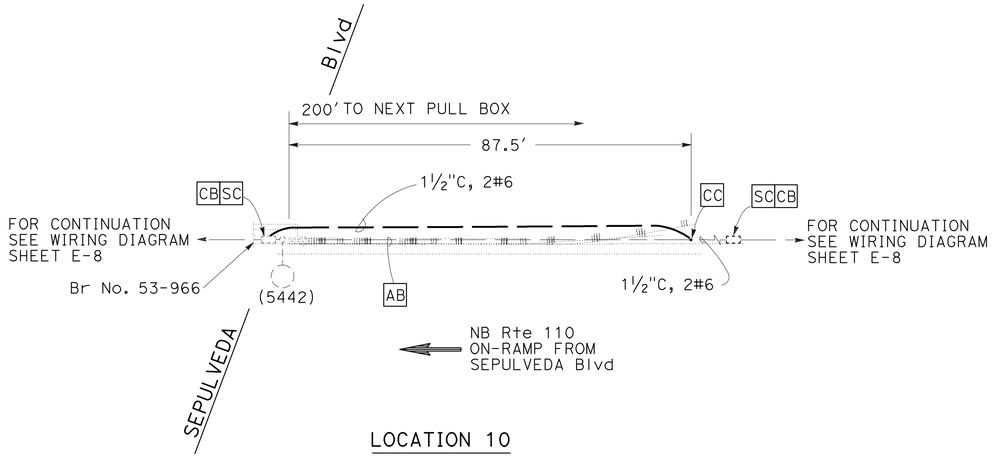

LOCATION 10
PM 5.38

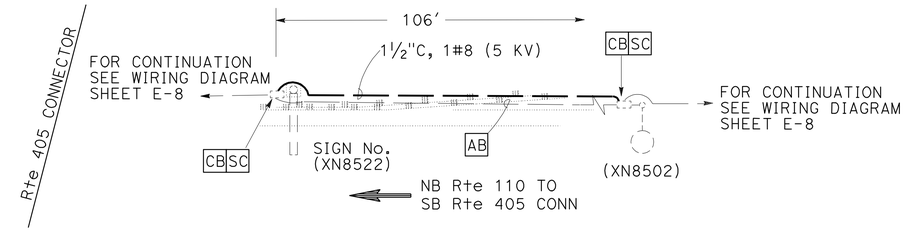

LOCATION 17
PM 8.37

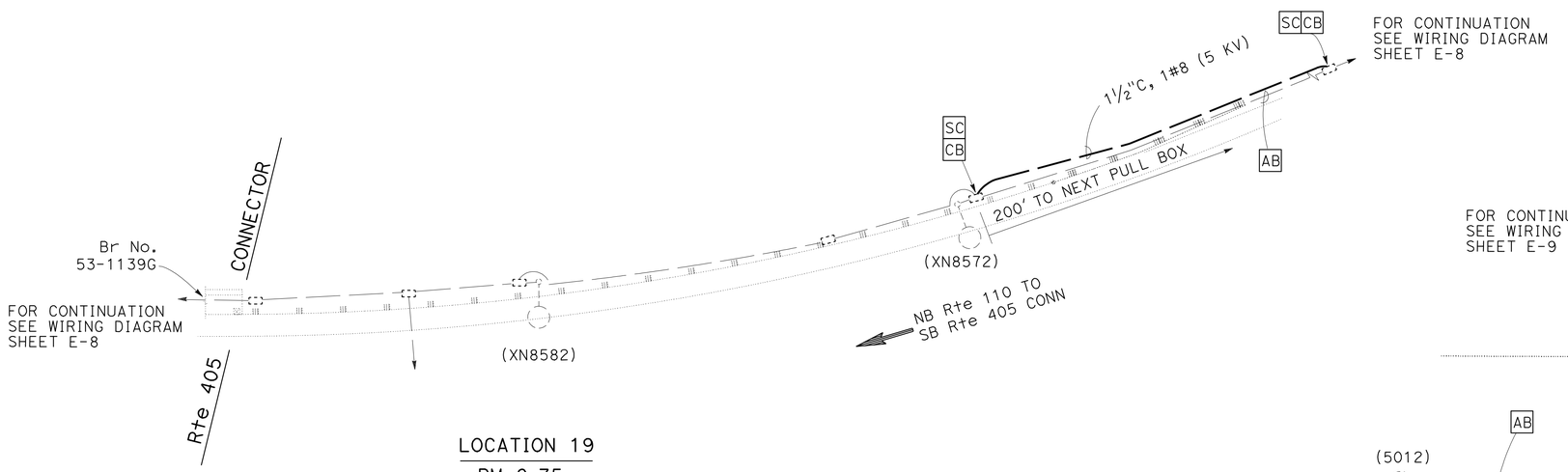

LOCATION 19
PM 8.75

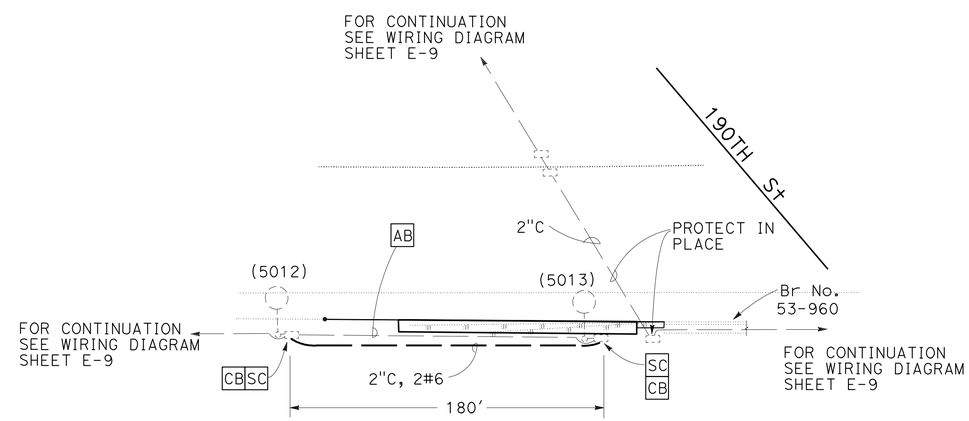

LOCATION 21
PM 9.00

WARNING

BEFORE STARTING WORK ON EXISTING SERIES LIGHTING CIRCUITS THE CONTRACTOR SHALL OBTAIN DAILY SAFETY CIRCUIT CLEARANCE FROM SERVING COMPANIES, DISCONNECT CIRCUITS, AND PLACE "MEN AT WORK" SIGNS NEAR OPEN SWITCHES.

THIS PLAN IS ACCURATE FOR ELECTRICAL WORK ONLY.

MODIFY LIGHTING

NO SCALE

E-4

REVISED BY	DATE REVISED
CH	XN

CALCULATED-DESIGNED BY
CHECKED BY

FUNCTIONAL SUPERVISOR: HASSAN MANNAA

STATE OF CALIFORNIA - DEPARTMENT OF TRANSPORTATION
Caltrans
TRAFFIC DESIGN

LAST REVISION 00-00-00 | DATE PLOTTED => 21-JUL-2010 | TIME PLOTTED => 15:01

Dist	COUNTY	ROUTE	POST MILES TOTAL PROJECT	SHEET No.	TOTAL SHEETS
07	LA	110	R1.3/21.3	79	111

REGISTERED ELECTRICAL ENGINEER 5/24/10 DATE

6/28/10
PLANS APPROVAL DATE

REGISTERED PROFESSIONAL ENGINEER
CESAR HERNANDEZ
No. E15805
Exp. 12/31/10
ELECTRICAL
STATE OF CALIFORNIA

THE STATE OF CALIFORNIA OR ITS OFFICERS OR AGENTS SHALL NOT BE RESPONSIBLE FOR THE ACCURACY OR COMPLETENESS OF SCANNED COPIES OF THIS PLAN SHEET.

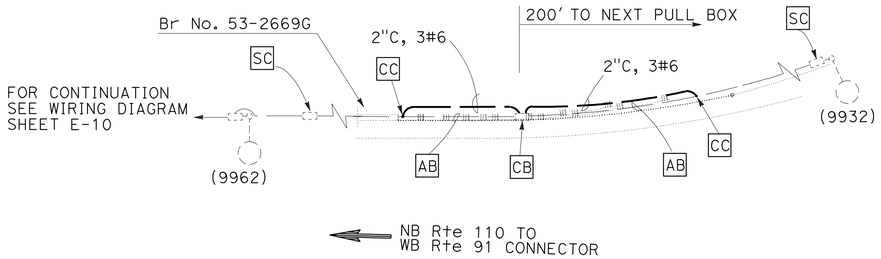

LOCATION 26
PM 9.92

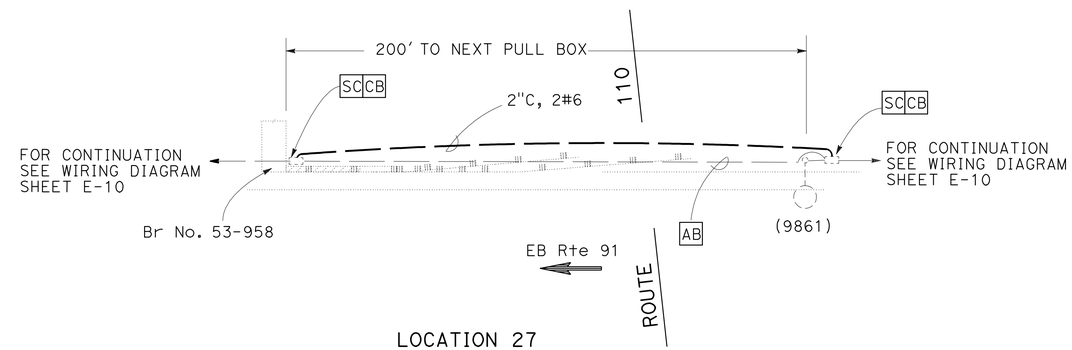

LOCATION 27
PM 10.15

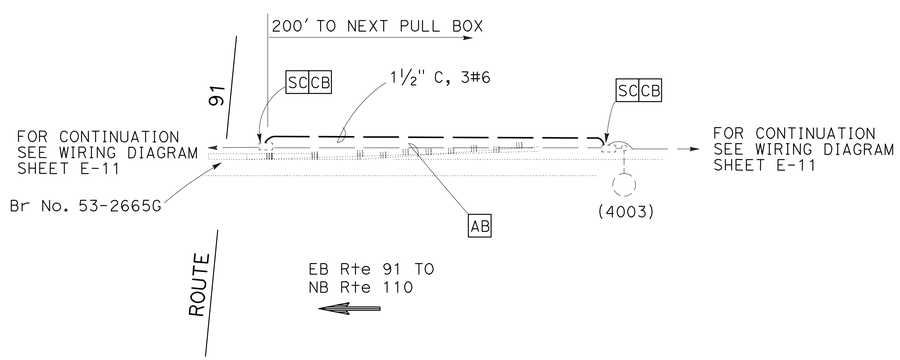

LOCATION 30
PM 10.15

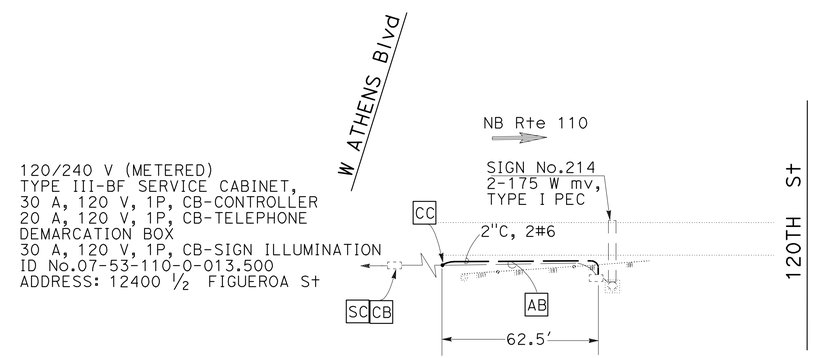

LOCATION 36
PM 13.29

MODIFY LIGHTING
NO SCALE

THIS PLAN IS ACCURATE FOR ELECTRICAL WORK ONLY.

E-5

REVISED BY	DATE REVISED

CALCULATED-DESIGNED BY	CHECKED BY
CH	XN

FUNCTIONAL SUPERVISOR: HASSAN MANNAA

STATE OF CALIFORNIA - DEPARTMENT OF TRANSPORTATION
Caltrans
TRAFFIC DESIGN

LAST REVISION 00-00-00
DATE PLOTTED => 21-JUL-2010
TIME PLOTTED => 15:01

Dist	COUNTY	ROUTE	POST MILES TOTAL PROJECT	SHEET No.	TOTAL SHEETS
07	LA	110	R1.3/21.3	80	111

REGISTERED ELECTRICAL ENGINEER 5/24/10 DATE

6/28/10
PLANS APPROVAL DATE

REGISTERED PROFESSIONAL ENGINEER
CESAR HERNANDEZ
No. E15805
Exp. 12/31/10
ELECTRICAL
STATE OF CALIFORNIA

THE STATE OF CALIFORNIA OR ITS OFFICERS OR AGENTS SHALL NOT BE RESPONSIBLE FOR THE ACCURACY OR COMPLETENESS OF SCANNED COPIES OF THIS PLAN SHEET.

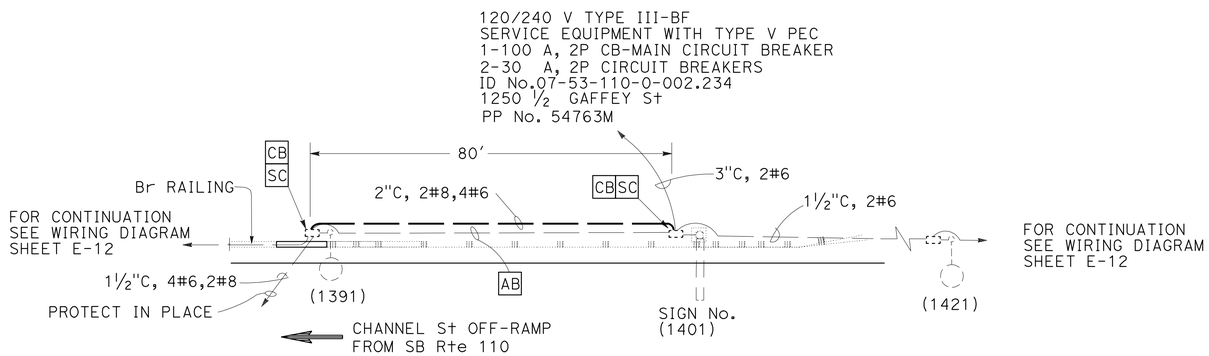

LOCATION 51
PM R1.39

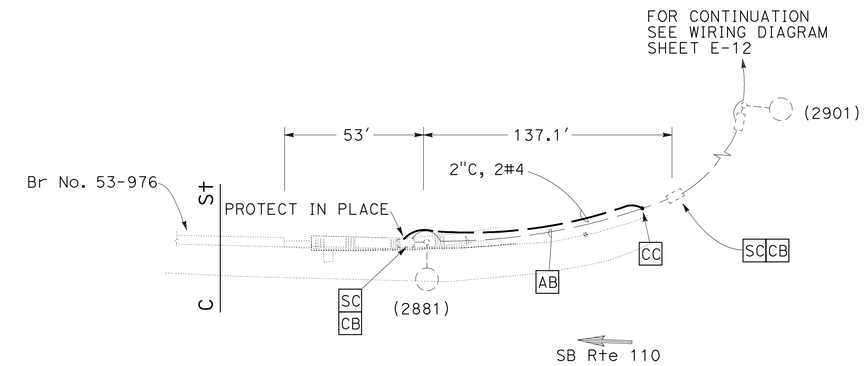

LOCATION 52
PM 2.70

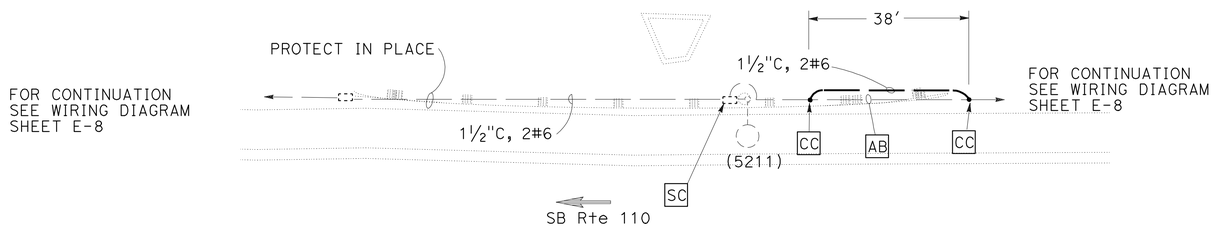

LOCATION 56
PM 5.18

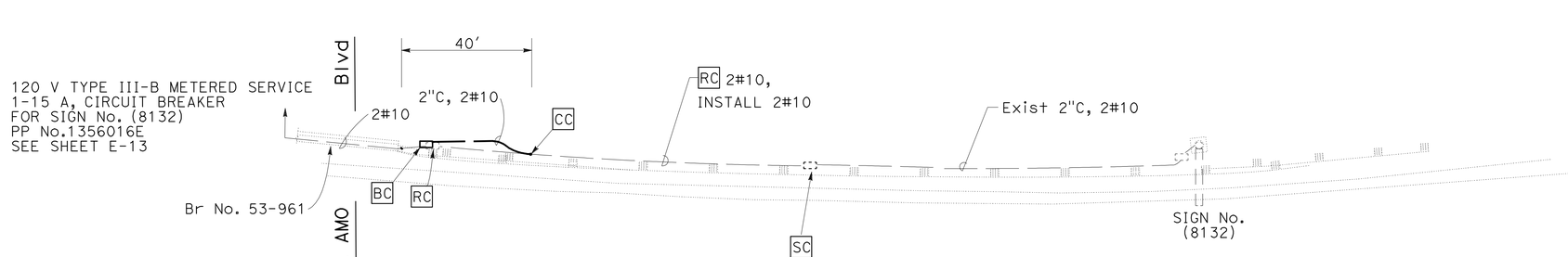

LOCATION 64
PM 8.03

MODIFY LIGHTING

NO SCALE

THIS PLAN IS ACCURATE FOR ELECTRICAL WORK ONLY.

E-6

STATE OF CALIFORNIA - DEPARTMENT OF TRANSPORTATION
Caltrans
TRAFFIC DESIGN

FUNCTIONAL SUPERVISOR: HASSAN MANNAA

REVISED BY	DATE REVISED
CH	XN

CALCULATED-DESIGNED BY
CHECKED BY

LAST REVISION 00-00-00 | DATE PLOTTED => 21-JUL-2010 | TIME PLOTTED => 15:02

Dist	COUNTY	ROUTE	POST MILES TOTAL PROJECT	SHEET No.	TOTAL SHEETS
07	LA	110	R1.3/21.3	81	111

REGISTERED ELECTRICAL ENGINEER 5/24/10 DATE

6/28/10
PLANS APPROVAL DATE

REGISTERED PROFESSIONAL ENGINEER
CESAR HERNANDEZ
No. E15805
Exp. 12/31/10
ELECTRICAL
STATE OF CALIFORNIA

THE STATE OF CALIFORNIA OR ITS OFFICERS OR AGENTS SHALL NOT BE RESPONSIBLE FOR THE ACCURACY OR COMPLETENESS OF SCANNED COPIES OF THIS PLAN SHEET.

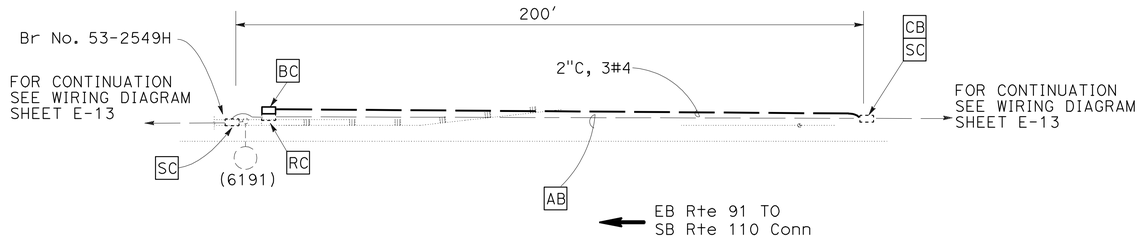

LOCATION 69
PM 9.39

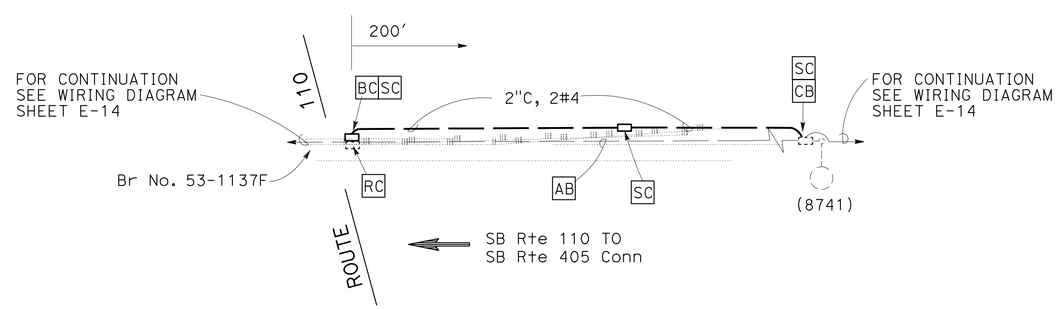

LOCATION 72
PM 9.65

THIS PLAN IS ACCURATE FOR ELECTRICAL WORK ONLY.

MODIFY LIGHTING

NO SCALE

E-7

STATE OF CALIFORNIA - DEPARTMENT OF TRANSPORTATION
Caltrans
TRAFFIC DESIGN

FUNCTIONAL SUPERVISOR: HASSAN MANNAA

CALCULATED-DESIGNED BY: CH
CHECKED BY: XN

REVISED BY | DATE REVISED

LAST REVISION 00-00-00
DATE PLOTTED => 21-JUL-2010
TIME PLOTTED => 15:02

Dist	COUNTY	ROUTE	POST MILES TOTAL PROJECT	SHEET No.	TOTAL SHEETS
07	LA	110	R1.3/21.3	82	111

REGISTERED ELECTRICAL ENGINEER 5/24/10 DATE

6/28/10
PLANS APPROVAL DATE

REGISTERED PROFESSIONAL ENGINEER CESAR HERNANDEZ No. E15805 Exp. 12/31/10 ELECTRICAL STATE OF CALIFORNIA

THE STATE OF CALIFORNIA OR ITS OFFICERS OR AGENTS SHALL NOT BE RESPONSIBLE FOR THE ACCURACY OR COMPLETENESS OF SCANNED COPIES OF THIS PLAN SHEET.

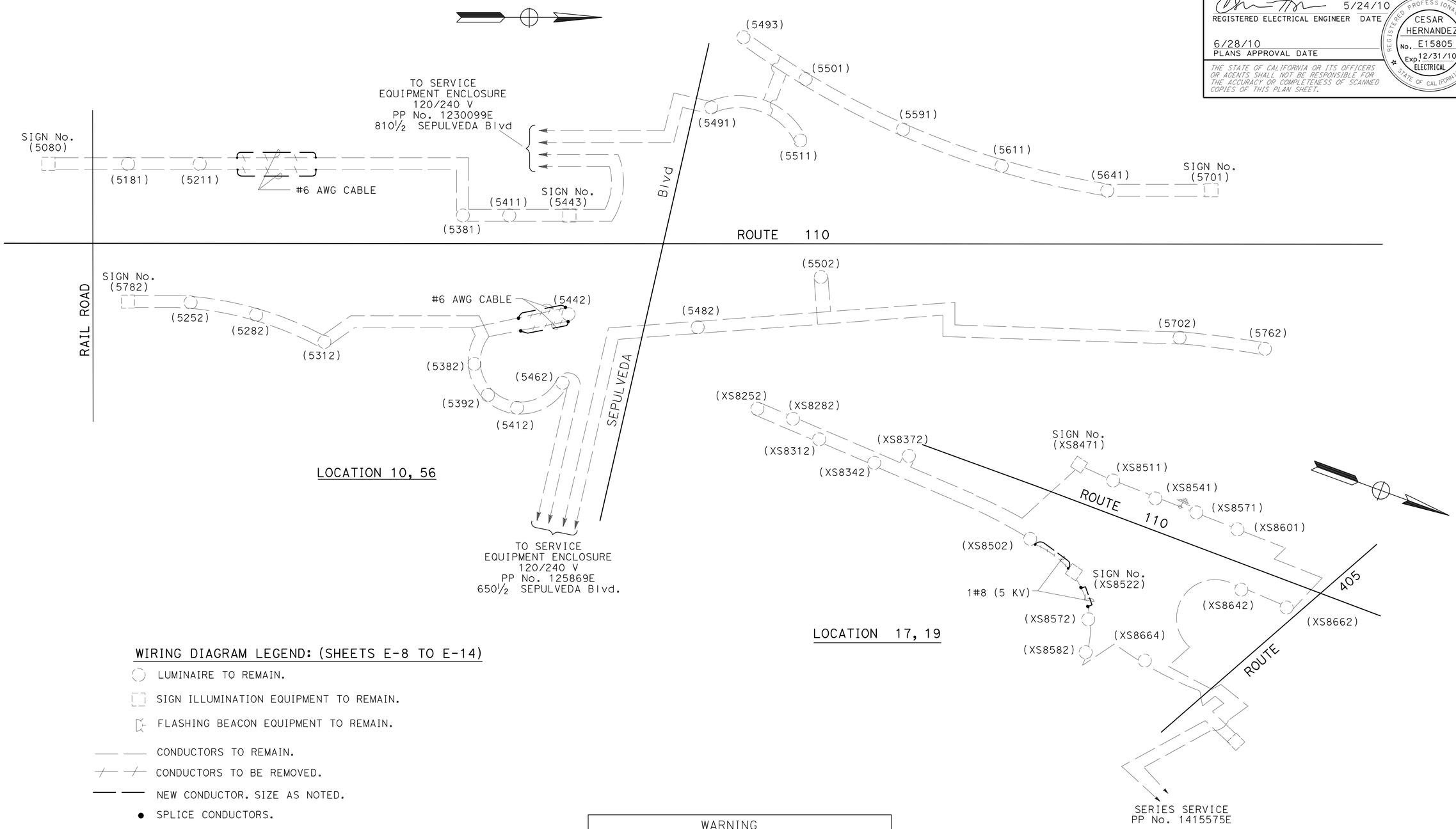

WIRING DIAGRAM LEGEND: (SHEETS E-8 TO E-14)

- LUMINAIRE TO REMAIN.
- SIGN ILLUMINATION EQUIPMENT TO REMAIN.
- FLASHING BEACON EQUIPMENT TO REMAIN.
- CONDUCTORS TO REMAIN.
- CONDUCTORS TO BE REMOVED.
- NEW CONDUCTOR. SIZE AS NOTED.
- SPLICE CONDUCTORS.

WARNING

BEFORE STARTING WORK ON EXISTING SERIES LIGHTING CIRCUITS THE CONTRACTOR SHALL OBTAIN DAILY SAFETY CIRCUIT CLEARANCE FROM SERVING COMPANIES, DISCONNECT CIRCUITS, AND PLACE "MEN AT WORK" SIGNS NEAR OPEN SWITCHES.

MODIFY LIGHTING
(WIRING DIAGRAM)

NO SCALE

THIS PLAN IS ACCURATE FOR ELECTRICAL WORK ONLY.

E-8

REVISED BY	DATE REVISED
CH	XN

CALCULATED-DESIGNED BY
CHECKED BY

FUNCTIONAL SUPERVISOR: HASSAN MANNAA

STATE OF CALIFORNIA - DEPARTMENT OF TRANSPORTATION
Caltrans
TRAFFIC DESIGN

LAST REVISION 00-00-00 | DATE PLOTTED => 21-JUL-2010 | TIME PLOTTED => 15:02

Dist	COUNTY	ROUTE	POST MILES TOTAL PROJECT	SHEET No.	TOTAL SHEETS
07	LA	110	R1.3/21.3	83	111

REGISTERED ELECTRICAL ENGINEER 5/24/10 DATE

6/28/10
PLANS APPROVAL DATE

REGISTERED PROFESSIONAL ENGINEER
CESAR HERNANDEZ
No. E15805
Exp. 12/31/10
ELECTRICAL
STATE OF CALIFORNIA

THE STATE OF CALIFORNIA OR ITS OFFICERS OR AGENTS SHALL NOT BE RESPONSIBLE FOR THE ACCURACY OR COMPLETENESS OF SCANNED COPIES OF THIS PLAN SHEET.

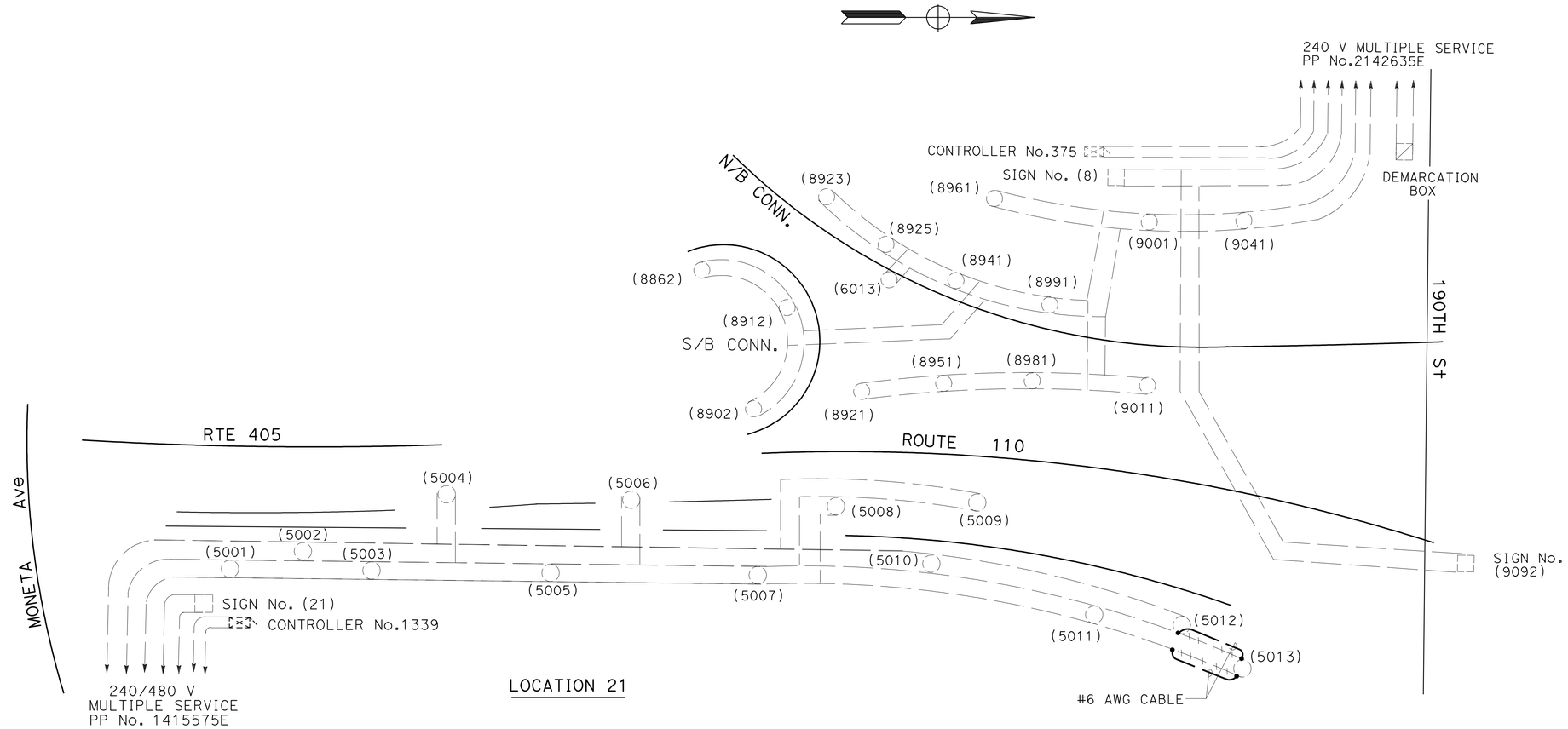

LOCATION 21

FOR WIRING DIAGRAM LEGEND SEE SHEET E-8
THIS PLAN IS ACCURATE FOR ELECTRICAL WORK ONLY.

MODIFY LIGHTING
(WIRING DIAGRAM)
NO SCALE

E-9

REVISED BY	DATE REVISED
CH	XX

CALCULATED-DESIGNED BY
CHECKED BY

FUNCTIONAL SUPERVISOR
HASSAN MANNAA

STATE OF CALIFORNIA - DEPARTMENT OF TRANSPORTATION
Caltrans
TRAFFIC DESIGN

LAST REVISION 00-00-00
DATE PLOTTED => 21-JUL-2010
TIME PLOTTED => 15:02

Dist	COUNTY	ROUTE	POST MILES TOTAL PROJECT	SHEET No.	TOTAL SHEETS
07	LA	110	R1.3/21.3	84	111

REGISTERED ELECTRICAL ENGINEER 5/24/10 DATE

6/28/10
PLANS APPROVAL DATE

REGISTERED PROFESSIONAL ENGINEER
CESAR HERNANDEZ
No. E15805
Exp. 12/31/10
ELECTRICAL
STATE OF CALIFORNIA

THE STATE OF CALIFORNIA OR ITS OFFICERS OR AGENTS SHALL NOT BE RESPONSIBLE FOR THE ACCURACY OR COMPLETENESS OF SCANNED COPIES OF THIS PLAN SHEET.

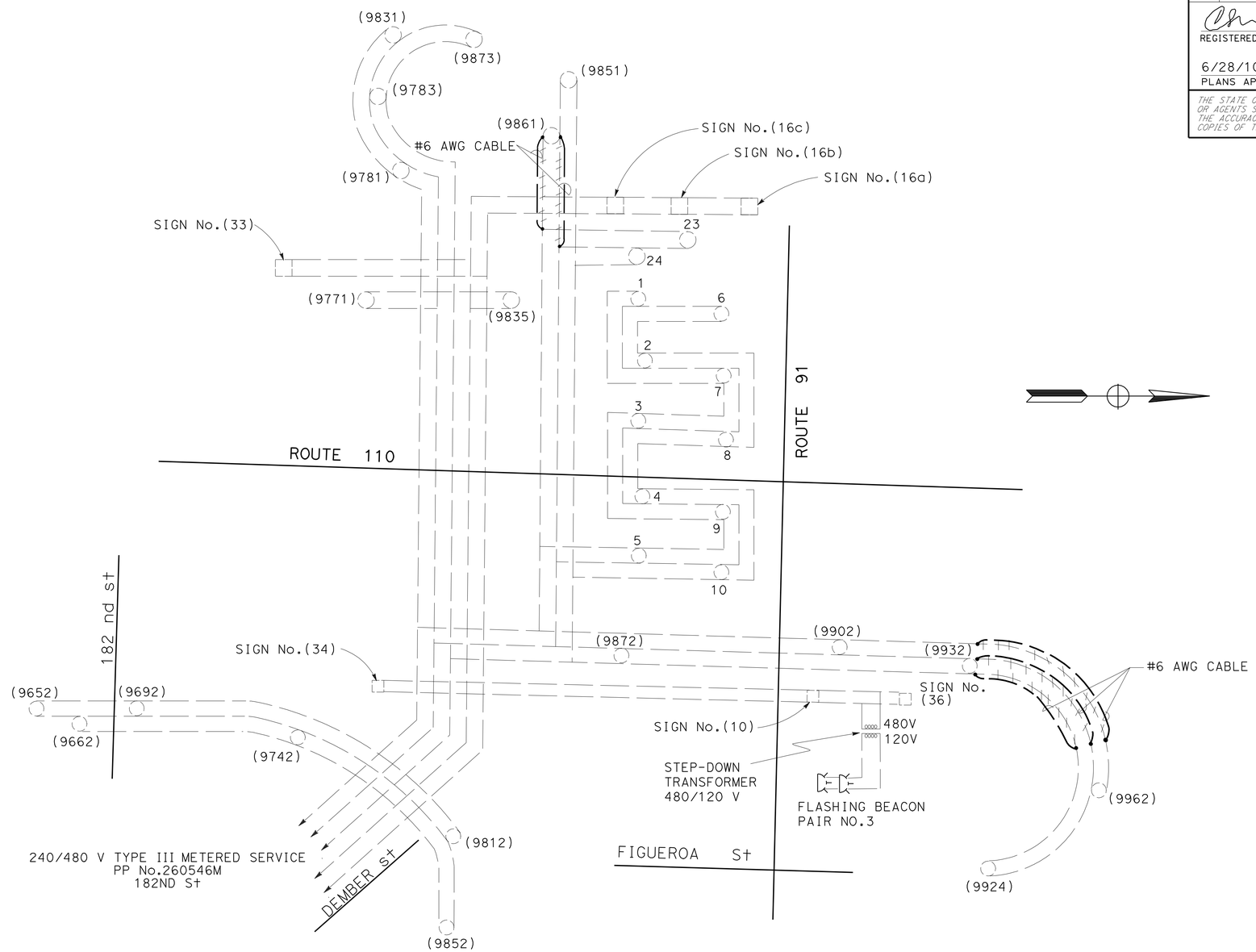

LOCATION 26,27

MODIFY LIGHTING
(WIRING DIAGRAM)

NO SCALE

FOR WIRING DIAGRAM LEGEND SEE SHEET E-8
THIS PLAN IS ACCURATE FOR ELECTRICAL WORK ONLY.

E-10

STATE OF CALIFORNIA - DEPARTMENT OF TRANSPORTATION
Caltrans
TRAFFIC DESIGN

FUNCTIONAL SUPERVISOR: HASSAN MANNAA
CALCULATED-DESIGNED BY: XN
CHECKED BY: CH
REVISED BY
DATE REVISED

LAST REVISION 00-00-00
DATE PLOTTED => 21-JUL-2010
TIME PLOTTED => 15:03

Dist	COUNTY	ROUTE	POST MILES TOTAL PROJECT	SHEET No.	TOTAL SHEETS
07	LA	110	R1.3/21.3	85	111

REGISTERED ELECTRICAL ENGINEER 5/24/10 DATE

6/28/10
PLANS APPROVAL DATE

REGISTERED PROFESSIONAL ENGINEER
CESAR HERNANDEZ
No. E15805
Exp. 12/31/10
ELECTRICAL
STATE OF CALIFORNIA

THE STATE OF CALIFORNIA OR ITS OFFICERS OR AGENTS SHALL NOT BE RESPONSIBLE FOR THE ACCURACY OR COMPLETENESS OF SCANNED COPIES OF THIS PLAN SHEET.

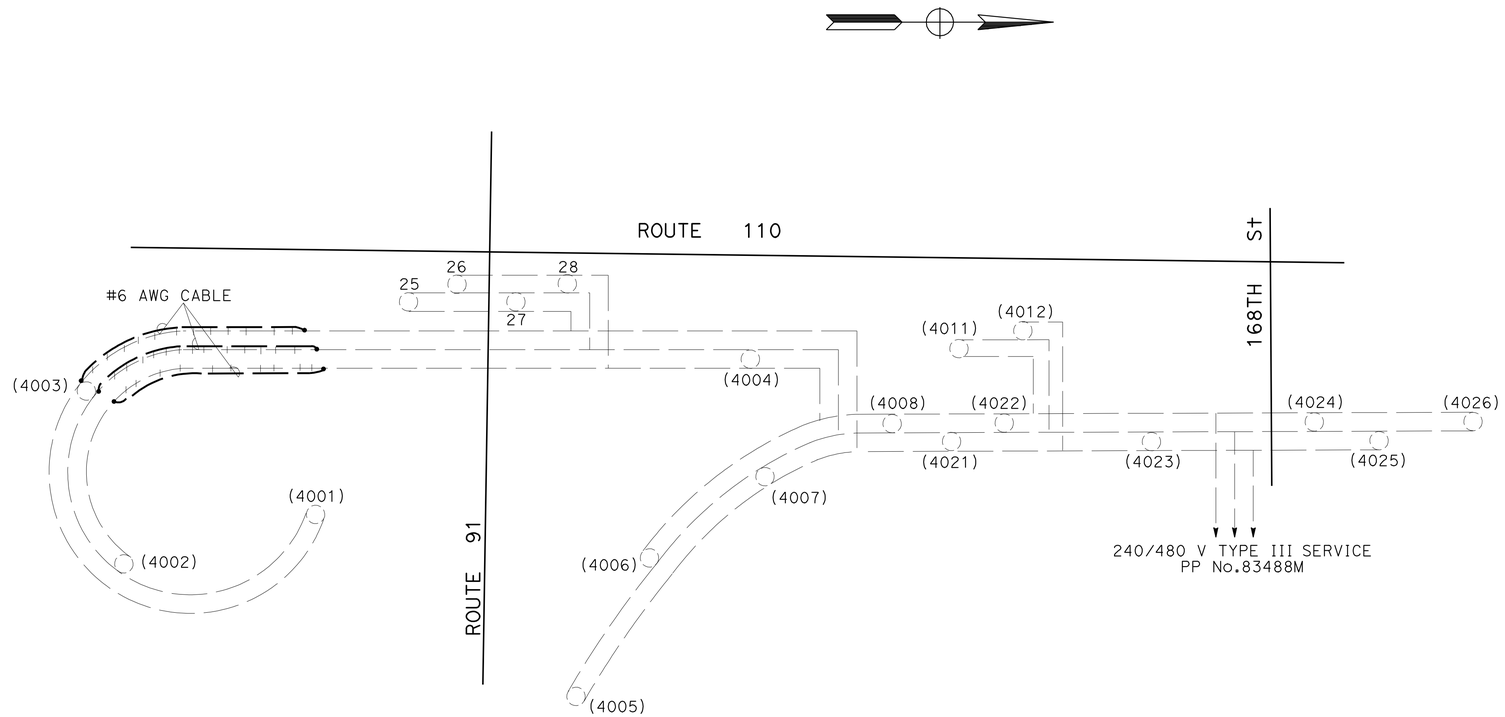

LOCATION 30

FOR WIRING DIAGRAM LEGEND SEE SHEET E-8
THIS PLAN IS ACCURATE FOR ELECTRICAL WORK ONLY.

MODIFY LIGHTING
(WIRING DIAGRAM)

NO SCALE

E-11

REVISED BY	DATE REVISED
CH	XN

CALCULATED-DESIGNED BY
CHECKED BY

FUNCTIONAL SUPERVISOR
HASSAN MANNAA

STATE OF CALIFORNIA - DEPARTMENT OF TRANSPORTATION
Caltrans
TRAFFIC DESIGN

LAST REVISION 00-00-00
DATE PLOTTED => 21-JUL-2010
TIME PLOTTED => 15:04

Dist	COUNTY	ROUTE	POST MILES TOTAL PROJECT	SHEET No.	TOTAL SHEETS
07	LA	110	R1.3/21.3	86	111

REGISTERED ELECTRICAL ENGINEER 5/24/10 DATE

6/28/10
PLANS APPROVAL DATE

REGISTERED PROFESSIONAL ENGINEER
CESAR HERNANDEZ
No. E15805
Exp. 12/31/10
ELECTRICAL
STATE OF CALIFORNIA

THE STATE OF CALIFORNIA OR ITS OFFICERS OR AGENTS SHALL NOT BE RESPONSIBLE FOR THE ACCURACY OR COMPLETENESS OF SCANNED COPIES OF THIS PLAN SHEET.

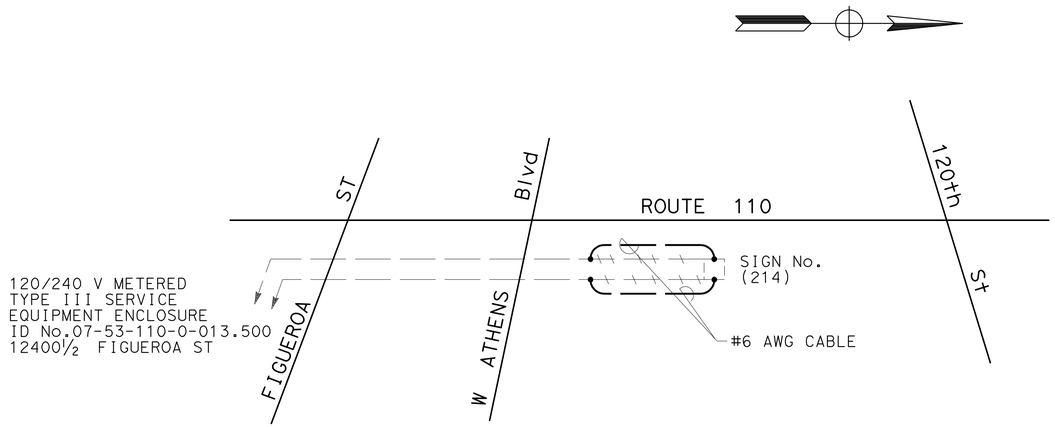

LOCATION 36

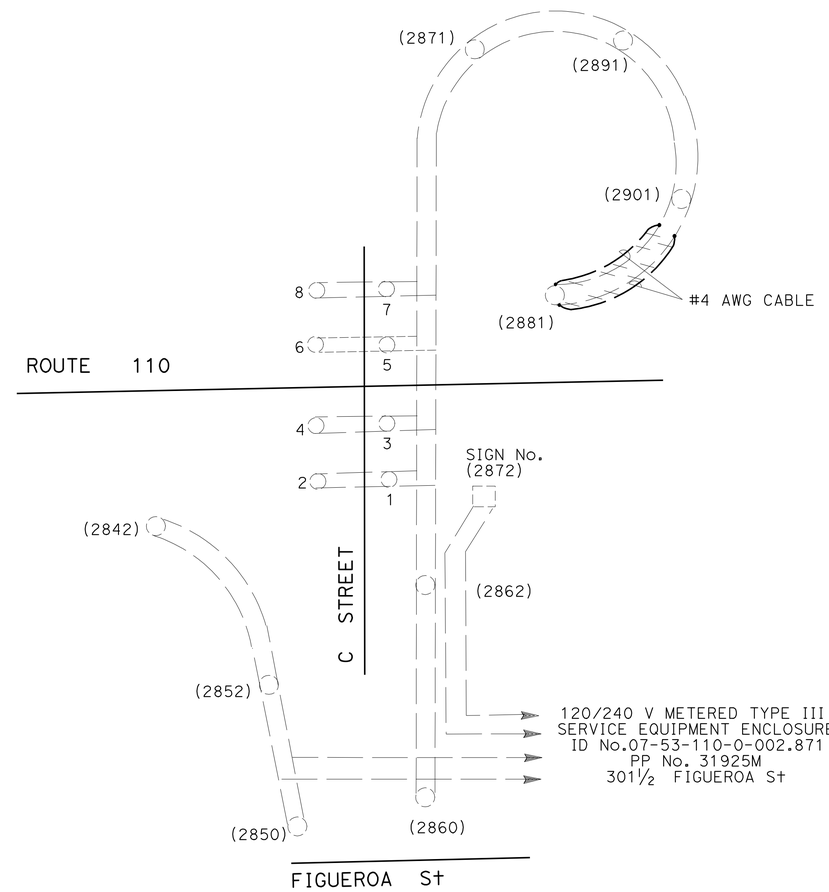

LOCATION 52

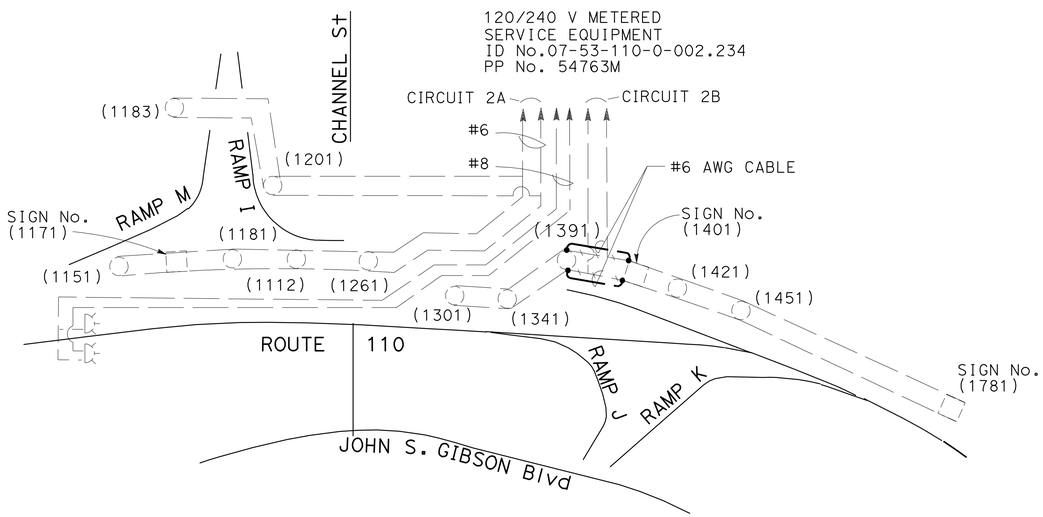

LOCATION 51

FOR WIRING DIAGRAM LEGEND SEE SHEET E-8
THIS PLAN IS ACCURATE FOR ELECTRICAL WORK ONLY.

MODIFY LIGHTING
(WIRING DIAGRAM)
NO SCALE

E-12

STATE OF CALIFORNIA - DEPARTMENT OF TRANSPORTATION
Caltrans
TRAFFIC DESIGN

FUNCTIONAL SUPERVISOR: HASSAN MANNAA
CALCULATED-DESIGNED BY: CH
CHECKED BY: XN
REVISED BY
DATE REVISED

LAST REVISION 00-00-00
DATE PLOTTED => 21-JUL-2010
TIME PLOTTED => 15:04

Dist	COUNTY	ROUTE	POST MILES TOTAL PROJECT	SHEET No.	TOTAL SHEETS
07	LA	110	R1.3/21.3	87	111

REGISTERED ELECTRICAL ENGINEER DATE 5/24/10

6/28/10
PLANS APPROVAL DATE

REGISTERED PROFESSIONAL ENGINEER CESAR HERNANDEZ No. E15805 Exp. 12/31/10 ELECTRICAL STATE OF CALIFORNIA

THE STATE OF CALIFORNIA OR ITS OFFICERS OR AGENTS SHALL NOT BE RESPONSIBLE FOR THE ACCURACY OR COMPLETENESS OF SCANNED COPIES OF THIS PLAN SHEET.

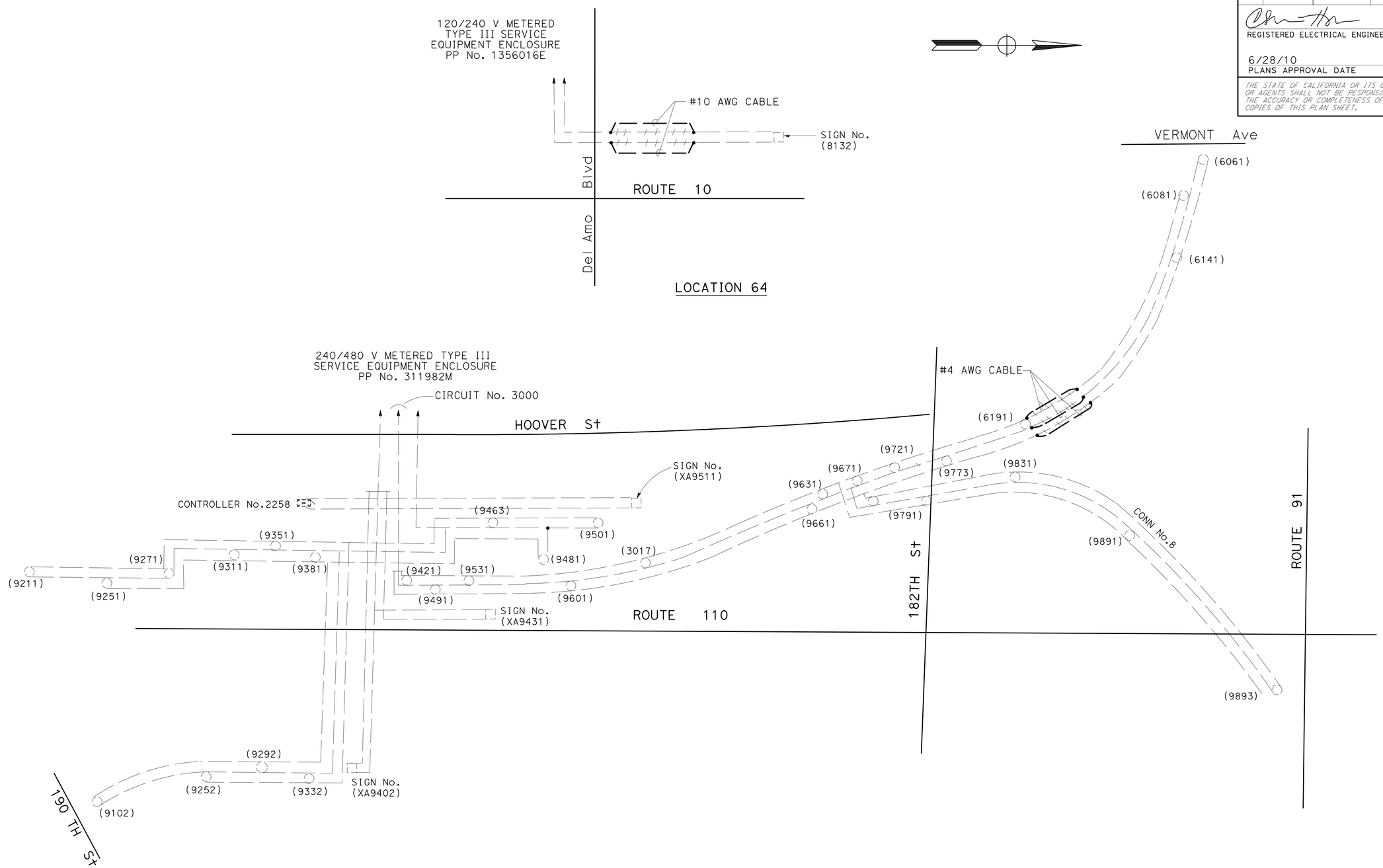

FOR WIRING DIAGRAM LEGEND SEE SHEET E-8
THIS PLAN IS ACCURATE FOR ELECTRICAL WORK ONLY.

MODIFY LIGHTING
(WIRING DIAGRAM)

NO SCALE

E-13

REVISED BY	DATE REVISED
CH	XN

CALCULATED-DESIGNED BY
CHECKED BY

FUNCTIONAL SUPERVISOR
HASSAN MANNAA

STATE OF CALIFORNIA - DEPARTMENT OF TRANSPORTATION
Caltrans®
TRAFFIC DESIGN

LAST REVISION 00-00-00
DATE PLOTTED => 21-JUL-2010
TIME PLOTTED => 15:04

Dist	COUNTY	ROUTE	POST MILES TOTAL PROJECT	SHEET No.	TOTAL SHEETS
07	LA	110	R1.3/21.3	88	111

REGISTERED ELECTRICAL ENGINEER 5/24/10 DATE

6/28/10
PLANS APPROVAL DATE

REGISTERED PROFESSIONAL ENGINEER
CESAR HERNANDEZ
No. E15805
Exp. 12/31/10
ELECTRICAL
STATE OF CALIFORNIA

THE STATE OF CALIFORNIA OR ITS OFFICERS OR AGENTS SHALL NOT BE RESPONSIBLE FOR THE ACCURACY OR COMPLETENESS OF SCANNED COPIES OF THIS PLAN SHEET.

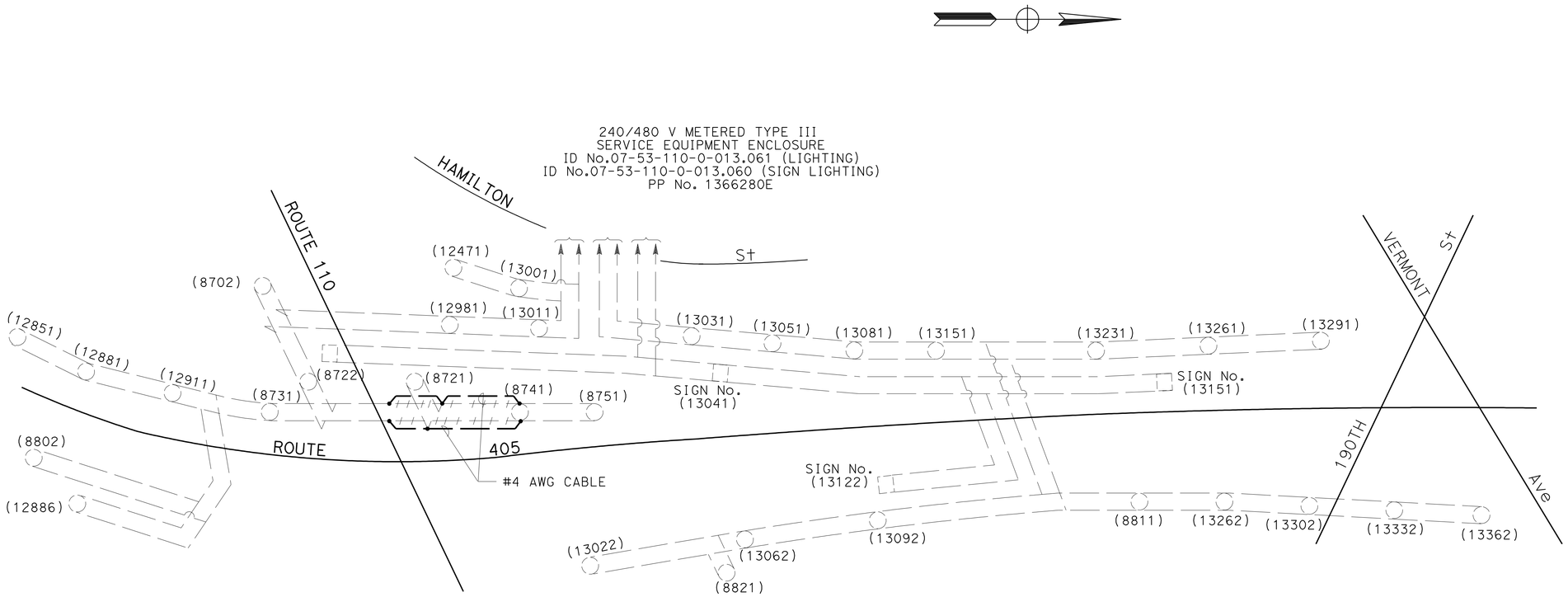

LOCATION 72

FOR WIRING DIAGRAM LEGEND SEE SHEET E-8
THIS PLAN IS ACCURATE FOR ELECTRICAL WORK ONLY.

MODIFY LIGHTING
(WIRING DIAGRAM)
NO SCALE

E-14

STATE OF CALIFORNIA - DEPARTMENT OF TRANSPORTATION
Caltrans
TRAFFIC DESIGN

FUNCTIONAL SUPERVISOR: HASSAN MANNAA
CALCULATED-DESIGNED BY: CH
CHECKED BY: XN
REVISED BY
DATE REVISED

LAST REVISION 00-00-00
DATE PLOTTED => 21-JUL-2010
TIME PLOTTED => 15:04

DIST	COUNTY	ROUTE	POST MILES TOTAL PROJECT	SHEET NO.	TOTAL SHEETS
07	LA	110	R1.3/21.3	89	111

Randell D. Hiatt
REGISTERED CIVIL ENGINEER

June 6, 2008
PLANS APPROVAL DATE

REGISTERED PROFESSIONAL ENGINEER
Randell D. Hiatt
No. C50200
Exp. 6-30-09
CIVIL
STATE OF CALIFORNIA

The State of California or its officers or agents shall not be responsible for the accuracy or completeness of electronic copies of this plan sheet.

To accompany plans dated 6-28-10

NOTES:

1. When necessary to place dike in front of face of guard railing, only Type C dike may be used. For dike details, see Standard Plan A87B.
2. For standard railing post embedment, see Standard Plans A77C3.
3. Guard railing delineation to be used where shown on the Project Plans.
4. When dike or curb is placed under guard railing, the maximum height of the dike or curb shall be 4". Mountable dike should not be used. For dike and curb details, see Revised Standard Plans RSP A87A and Standard Plan A87B.
5. For details of typical distance between the face of rail and hinge point, see Standard Plan A77C3.

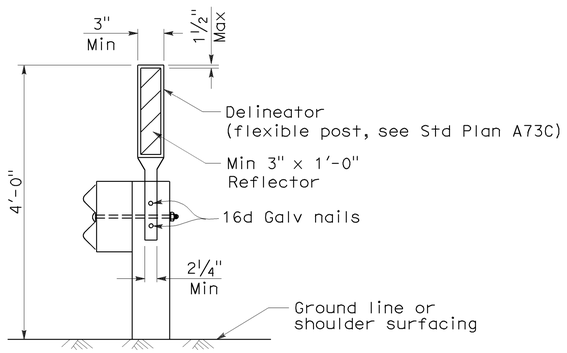

GUARD RAILING DELINEATION

See Note 3

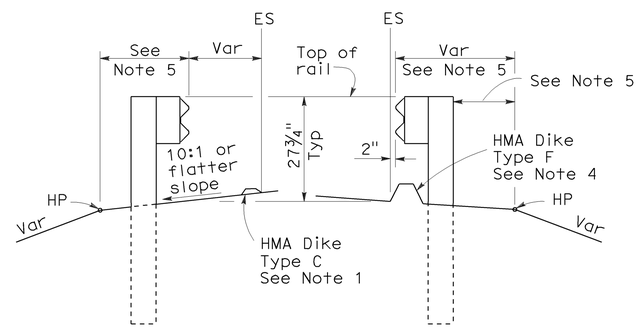

DIKE POSITIONING

See Note 1

STATE OF CALIFORNIA
DEPARTMENT OF TRANSPORTATION

METAL BEAM GUARD RAILING TYPICAL RAILING DELINEATION AND DIKE POSITIONING DETAILS

NO SCALE

RSP A77C4 DATED JUNE 6, 2008 SUPERSEDES STANDARD PLAN A77C4
DATED MAY 1, 2006 - PAGE 47 OF THE STANDARD PLANS BOOK DATED MAY 2006.

REVISED STANDARD PLAN RSP A77C4

2006 REVISED STANDARD PLAN RSP A77C4

12-10-07

DIST	COUNTY	ROUTE	POST MILES TOTAL PROJECT	SHEET NO.	TOTAL SHEETS
07	LA	110	R1.3/21.3	90	111

Randell D. Hiatt
REGISTERED CIVIL ENGINEER

October 20, 2006
PLANS APPROVAL DATE

REGISTERED PROFESSIONAL ENGINEER
Randell D. Hiatt
No. C50200
Exp. 6-30-07
CIVIL
STATE OF CALIFORNIA

The State of California or its officers or agents shall not be responsible for the accuracy or completeness of electronic copies of this plan sheet.

To accompany plans dated 6-28-10

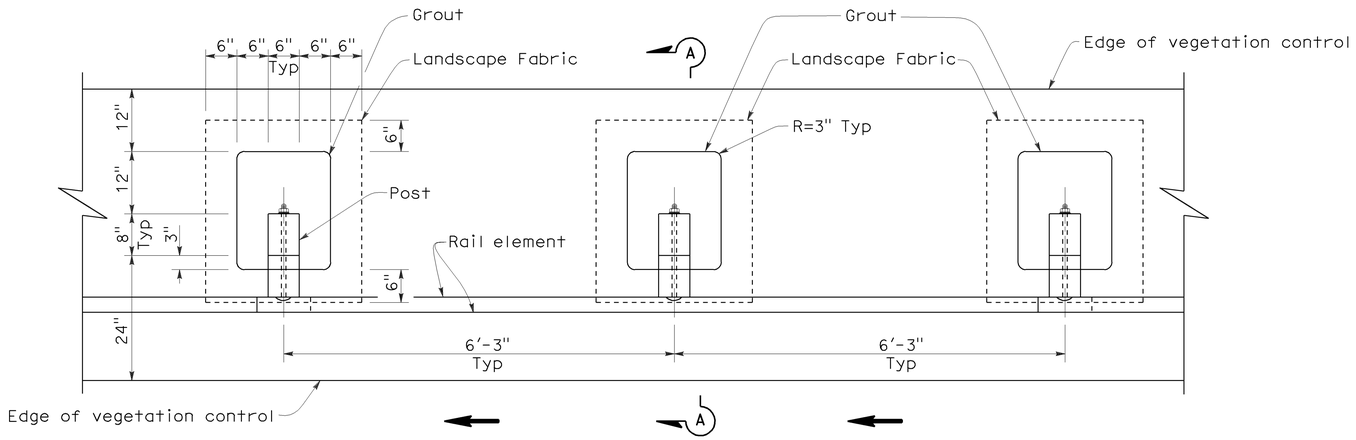

PLAN

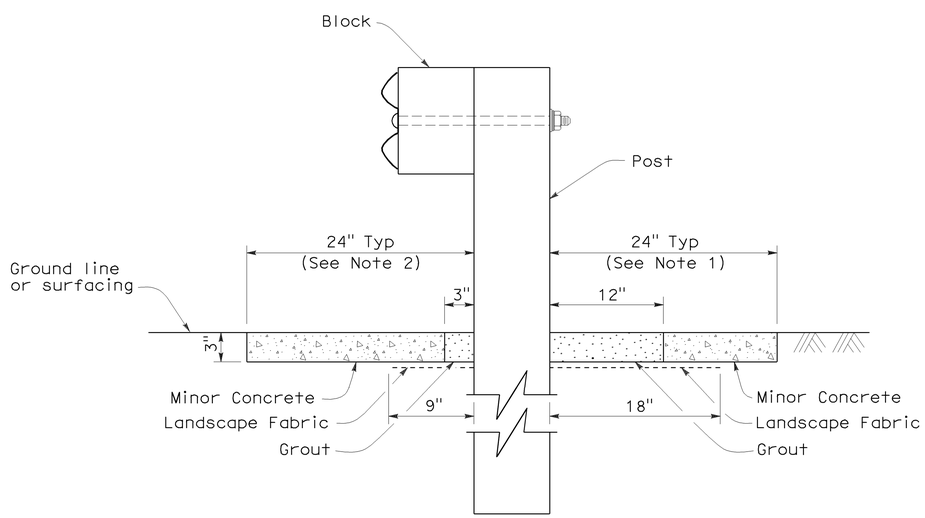

SECTION A-A

NOTES:

1. Where the distance between back of post and hinge point is less than 24", vegetation control to be constructed flush with the back edge of the post.
2. Where dike is constructed under railing, construct vegetation control to back edge of dike. Where paved shoulder is constructed within 24" in front of the post, construct vegetation control to the edge of paved shoulder.
3. Direction of adjacent traffic indicated by ← .

STATE OF CALIFORNIA
DEPARTMENT OF TRANSPORTATION

METAL BEAM GUARD RAILING TYPICAL VEGETATION CONTROL STANDARD RAILING SECTION

NO SCALE

NSP A77C5 DATED OCTOBER 20, 2006 SUPPLEMENTS THE STANDARD PLANS BOOK DATED MAY 2006.

NEW STANDARD PLAN NSP A77C5

2006 NEW STANDARD PLAN NSP A77C5

7-17-06

DIST	COUNTY	ROUTE	POST MILES TOTAL PROJECT	SHEET NO.	TOTAL SHEETS
07	LA	110	R1.3/21.3	91	111

Randell D. Hiatt
REGISTERED CIVIL ENGINEER

October 20, 2006
PLANS APPROVAL DATE

REGISTERED PROFESSIONAL ENGINEER
Randell D. Hiatt
No. C50200
Exp. 6-30-07
CIVIL
STATE OF CALIFORNIA

The State of California or its officers or agents shall not be responsible for the accuracy or completeness of electronic copies of this plan sheet.

To accompany plans dated 6-28-10

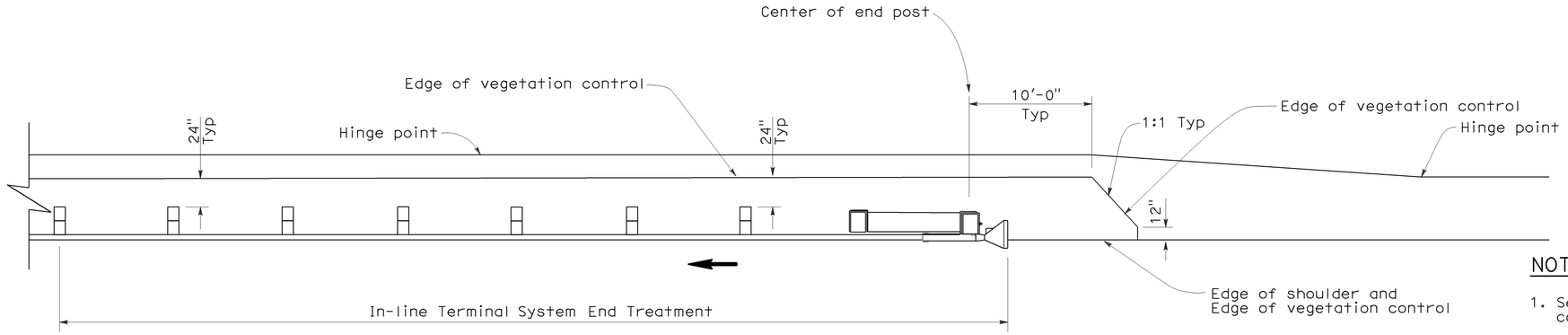

PLAN

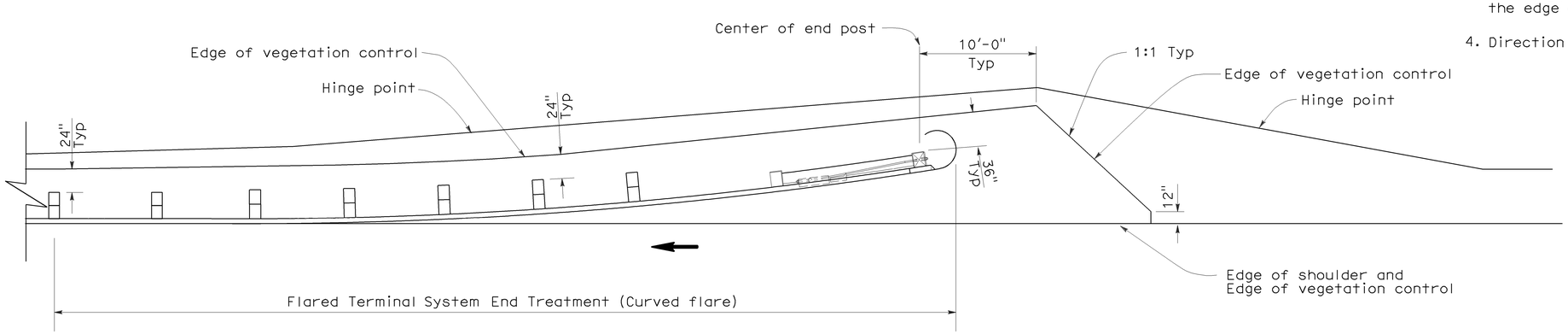

PLAN

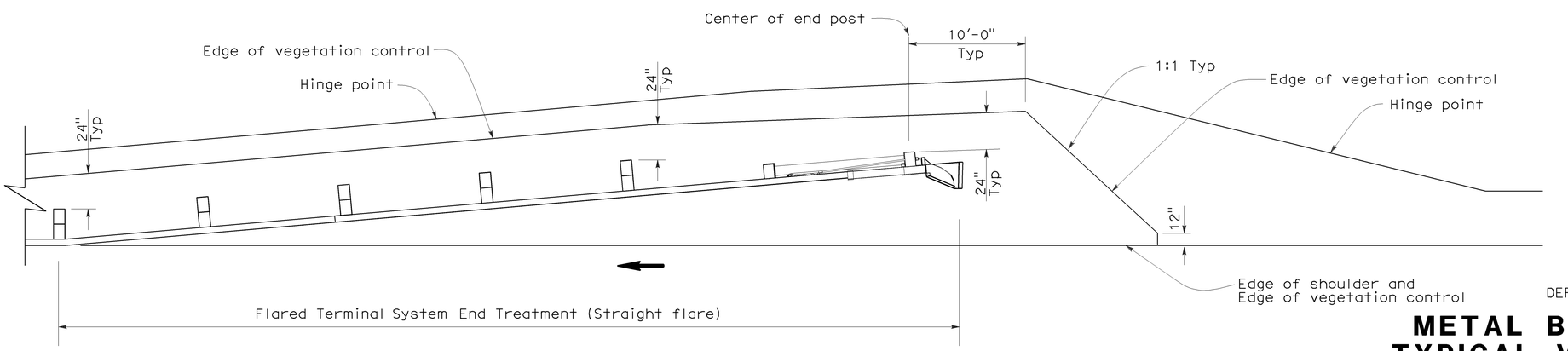

PLAN

NOTES:

1. See New Standard Plan NSP A77C5 for additional vegetation control details.
2. Where the distance between back of post and hinge point is less than 24", vegetation control to be constructed flush with the back edge of the post.
3. Where dike is constructed under railing, construct vegetation control to back edge of dike. Where paved shoulder is constructed within 24" in front of the post, construct vegetation control to the edge of paved shoulder.
4. Direction of adjacent traffic indicated by ←.

STATE OF CALIFORNIA
DEPARTMENT OF TRANSPORTATION

METAL BEAM GUARD RAILING TYPICAL VEGETATION CONTROL FOR TERMINAL SYSTEM END TREATMENTS

NO SCALE

NSP A77C6 DATED OCTOBER 20, 2006 SUPPLEMENTS THE STANDARD PLANS BOOK DATED MAY 2006.

NEW STANDARD PLAN NSP A77C6

2006 NEW STANDARD PLAN NSP A77C6

7-17-06

DIST	COUNTY	ROUTE	POST MILES TOTAL PROJECT	SHEET NO.	TOTAL SHEETS
07	LA	110	R1.3/21.3	92	111

Randell D. Hiatt
REGISTERED CIVIL ENGINEER

June 6, 2008
PLANS APPROVAL DATE

REGISTERED PROFESSIONAL ENGINEER
Randell D. Hiatt
No. C50200
Exp. 6-30-09
CIVIL
STATE OF CALIFORNIA

The State of California or its officers or agents shall not be responsible for the accuracy or completeness of electronic copies of this plan sheet.

To accompany plans dated 6-28-10

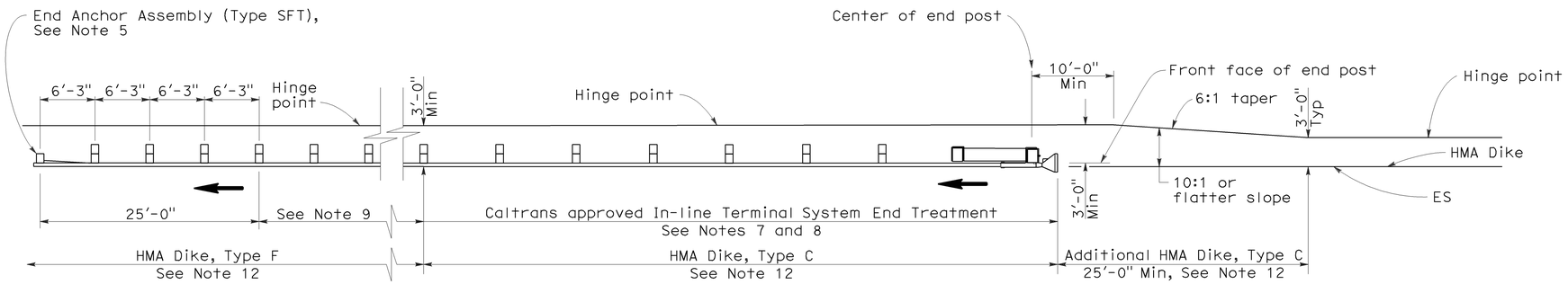

TYPE 11A LAYOUT

(EMBANKMENT GUARD INSTALLATION WITH IN-LINE END TREATMENT AT TRAFFIC APPROACH END OF RAILING)
See Note 6

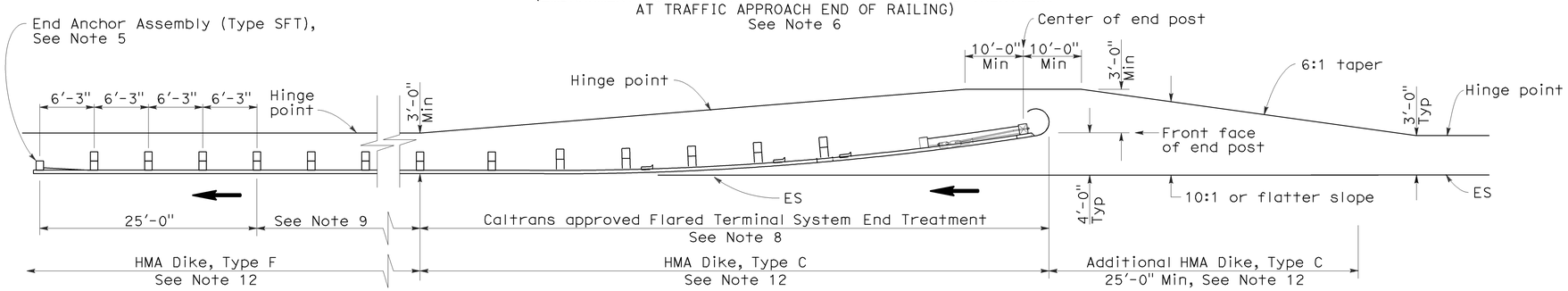

TYPE 11B LAYOUT

(EMBANKMENT GUARD RAILING INSTALLATION WITH FLARED END TREATMENT AT TRAFFIC APPROACH END OF RAILING)
See Note 6

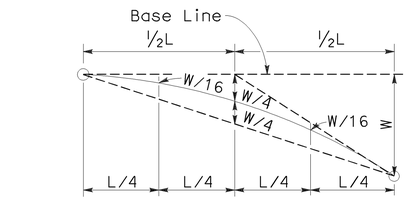

TYPICAL PARABOLIC LAYOUT

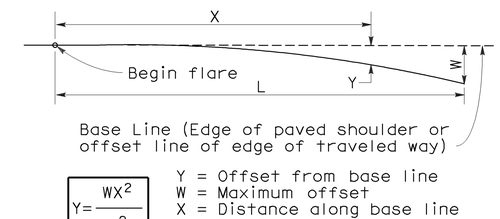

$$Y = \frac{WX^2}{L^2}$$

Y = Offset from base line
W = Maximum offset
X = Distance along base line
L = Length of flare

PARABOLIC FLARE OFFSETS

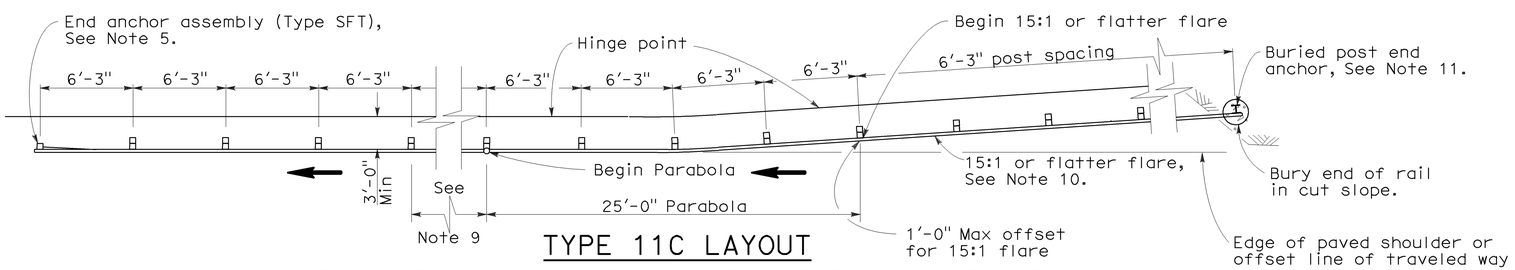

TYPE 11C LAYOUT

(EMBANKMENT GUARD RAILING INSTALLATION WITH BURIED END ANCHOR TREATMENT AT TRAFFIC APPROACH END OF RAILING)
See Notes 6 and 12

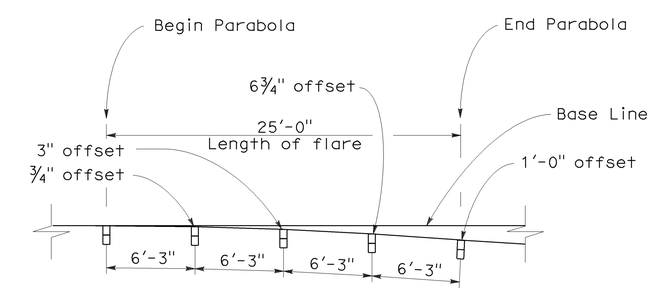

TYPICAL FLARE OFFSETS FOR 1 FOOT MAX END OFFSET

NOTES:

1. Line post, blocks and hardware to be used are shown on Standard Plans A77A1, A77A2, A77B1, A77C1, and A77C2.
2. Guard rail post spacing to be 6'-3" center to center, except as otherwise noted.
3. Except as noted, line posts are 6" x 8" x 6'-0" wood with 6" x 8" x 1'-2" wood blocks. W6 x 9 steel posts, 6'-0" in length, with 6" x 8" x 1'-2" notched wood blocks or recycled plastic blocks may be used for 6" x 8" x 6'-0" wood post with 6" x 8" x 1'-2" wood blocks where applicable and when specified.
4. Direction of adjacent traffic indicated by ➡.
5. For End Anchor Assembly (Type SFT) details, see Standard Plan A77H1.
6. Layout Types 11A, 11B or 11C are typically used where guard railing is recommended to shield embankment slopes and a crashworthy end treatment is required for only one direction of traffic.
7. In-line Terminal System End Treatments are used where site conditions will not accommodate a flared end treatment.
8. The type of terminal system end treatment to be used will be shown on the Project Plans.
9. Dependent on site conditions (embankment height and side slope), construction of additional guard railing (length equal to multiples of 12'-6" with 6'-3" post spacing) may be advisable.
10. The 15:1 or flatter flare used with buried end anchors is based on the edge of the paved shoulder or offset line of edge of the traveled way. The length of guard railing within the 15:1 or flatter flare is based on site conditions and should be a length equal to multiples of 12'-6".
11. For details of the buried post end anchor used with Type 11C Layout, see Standard Plan A77I2.
12. Where placement of dike is required with guard railing installations, see Revised Standard Plan RSP A77C4 for dike positioning details.

STATE OF CALIFORNIA
DEPARTMENT OF TRANSPORTATION

METAL BEAM GUARD RAILING TYPICAL LAYOUTS FOR EMBANKMENTS

NO SCALE

RSP A77E1 DATED JUNE 6, 2008 SUPERSEDES STANDARD PLAN A77E1 DATED MAY 1, 2006 - PAGE 48 OF THE STANDARD PLANS BOOK DATED MAY 2006.

REVISED STANDARD PLAN RSP A77E1

2006 REVISED STANDARD PLAN RSP A77E1

12-10-07

DIST	COUNTY	ROUTE	POST MILES TOTAL PROJECT	SHEET NO.	TOTAL SHEETS
07	LA	110	R1.3/21.3	93	111

Randell D. Hiatt
REGISTERED CIVIL ENGINEER

June 6, 2008
PLANS APPROVAL DATE

REGISTERED PROFESSIONAL ENGINEER
Randell D. Hiatt
No. C50200
Exp. 6-30-09
CIVIL
STATE OF CALIFORNIA

The State of California or its officers or agents shall not be responsible for the accuracy or completeness of electronic copies of this plan sheet.

To accompany plans dated 6-28-10

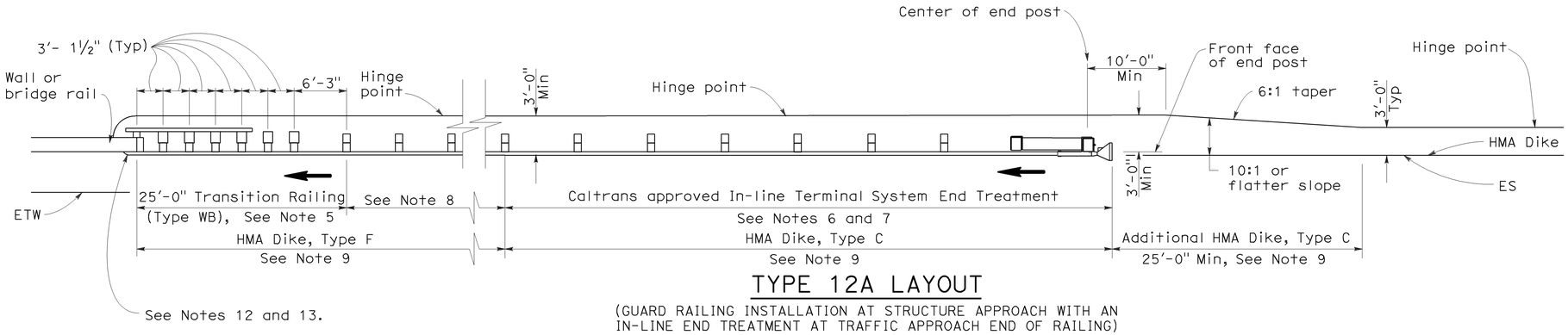

TYPE 12A LAYOUT

(GUARD RAILING INSTALLATION AT STRUCTURE APPROACH WITH AN IN-LINE END TREATMENT AT TRAFFIC APPROACH END OF RAILING)
See Notes 10

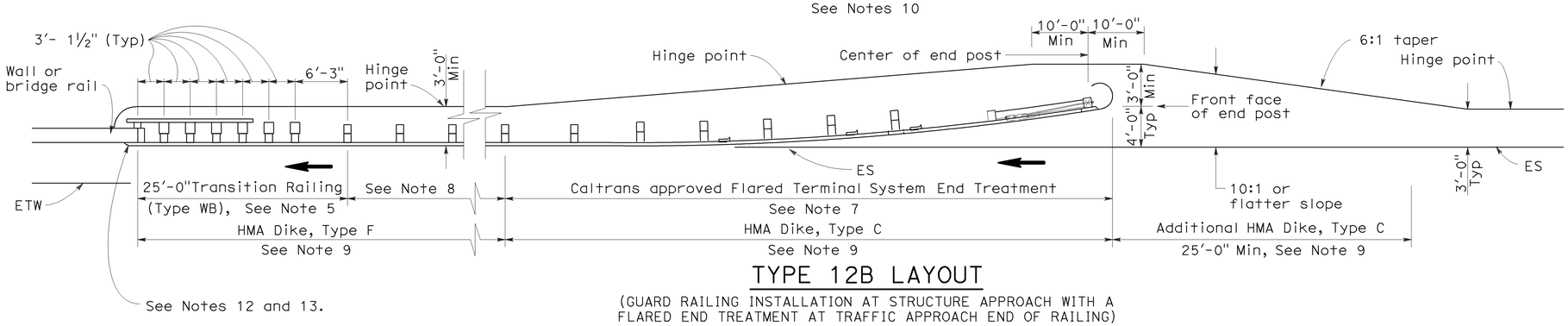

TYPE 12B LAYOUT

(GUARD RAILING INSTALLATION AT STRUCTURE APPROACH WITH A FLARED END TREATMENT AT TRAFFIC APPROACH END OF RAILING)
See Notes 10

NOTES:

1. Line post, blocks and hardware to be used are shown on Standard Plans A77A1, A77A2, A77B1, A77C1 and A77C2.
2. Guard rail post spacing to be 6'-3" center to center, except as otherwise noted.
3. Except as noted, line posts are 6" x 8" x 6'-0" wood with 6" x 8" x 1'-2" wood blocks. W6 x 9 steel posts, 6'-0" in length, with 6" x 8" x 1'-2" notched wood blocks or plastic blocks may be used for 6" x 8" x 6'-0" wood posts with 6" x 8" x 1'-2" wood blocks where applicable and when specified.
4. Direction of adjacent traffic indicated by ➡.
5. For Transition Railing (Type WB) details for Types 12A and 12B Layouts, see Standard Plan A77J4.
6. In-line Terminal System End Treatments are used where site conditions will not accommodate a flared end treatment.
7. The type of terminal system end treatment to be used will be shown on the Project Plans.
8. Dependent on site conditions (embankment height, side slopes, or other fixed objects), it may be advisable to construct additional guard railing (a length equal to multiples of 12'-6" with 6'-3" post spacing) between the transition railing and end treatment.
9. Where placement of dike is required with guard railing installations, see Revised Standard Plan RSP A77C4 for dike positioning details.
10. Type 12A or Type 12B Layouts are typically used:
    a. To the right of approaching traffic, at the end of a structure, on two-lane conventional highway where the roadbed width across the structure is less than 40 feet.
    b. To the left of approaching traffic, at the end of a structure, on two-lane conventional highway where the roadbed width across the structure is less than 40 feet.
    c. To the right of approaching traffic at the end of each structure on multilane freeways or expressways with separate adjacent or parallel bridges.
    d. To the right of approaching traffic at the end of the structure on multilane freeways or expressways with decked median on the bridge.
11. See Revised Standard Plan RSP A77F3 for typical layout used left of approaching traffic at the ends of each structure on multilane freeways or expressways with separate adjacent or parallel bridges.
12. For additional details of typical connections to bridge rail, see Connection Detail AA on Revised Standard Plans RSP A77J1 and RSP A77J2 and Connection Detail FF on Standard Plans A77K1 and A77K2.
13. For additional details of a typical connection to walls or abutments, see Standard Plan A77J3.

STATE OF CALIFORNIA
DEPARTMENT OF TRANSPORTATION

METAL BEAM GUARD RAILING TYPICAL LAYOUTS FOR STRUCTURE APPROACH

NO SCALE

RSP A77F1 DATED JUNE 6, 2008 SUPERSEDES STANDARD PLAN A77F1
DATED MAY 1, 2006 - PAGE 54 OF THE STANDARD PLANS BOOK DATED MAY 2006.

REVISED STANDARD PLAN RSP A77F1

2006 REVISED STANDARD PLAN RSP A77F1

DIST	COUNTY	ROUTE	POST MILES TOTAL PROJECT	SHEET NO.	TOTAL SHEETS
07	LA	110	R1.3/21.3	94	111

Randell D. Hiatt
REGISTERED CIVIL ENGINEER

June 6, 2008
PLANS APPROVAL DATE

REGISTERED PROFESSIONAL ENGINEER
Randell D. Hiatt
No. C50200
Exp. 6-30-09
CIVIL
STATE OF CALIFORNIA

The State of California or its officers or agents shall not be responsible for the accuracy or completeness of electronic copies of this plan sheet.

To accompany plans dated 6-28-10

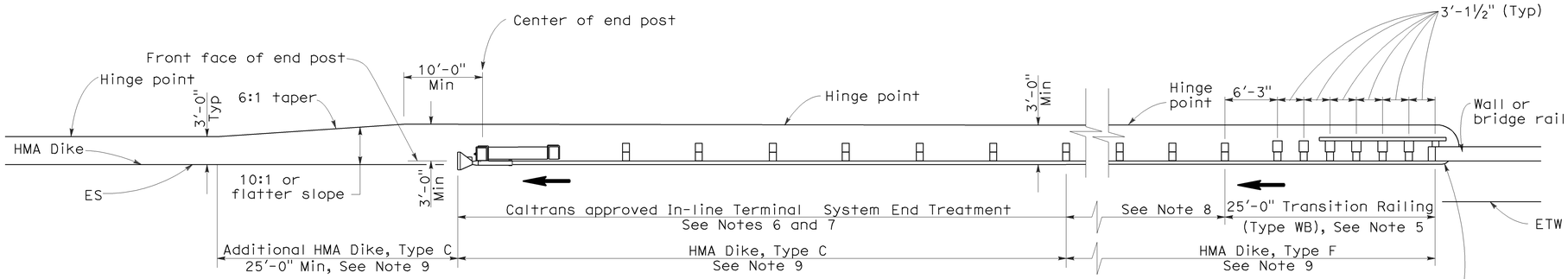

TYPE 12AA LAYOUT

(GUARD RAILING INSTALLATION AT STRUCTURE DEPARTURE WITH AN IN-LINE END TREATMENT AT TRAILING END OF RAILING)
See Notes 9 and 10

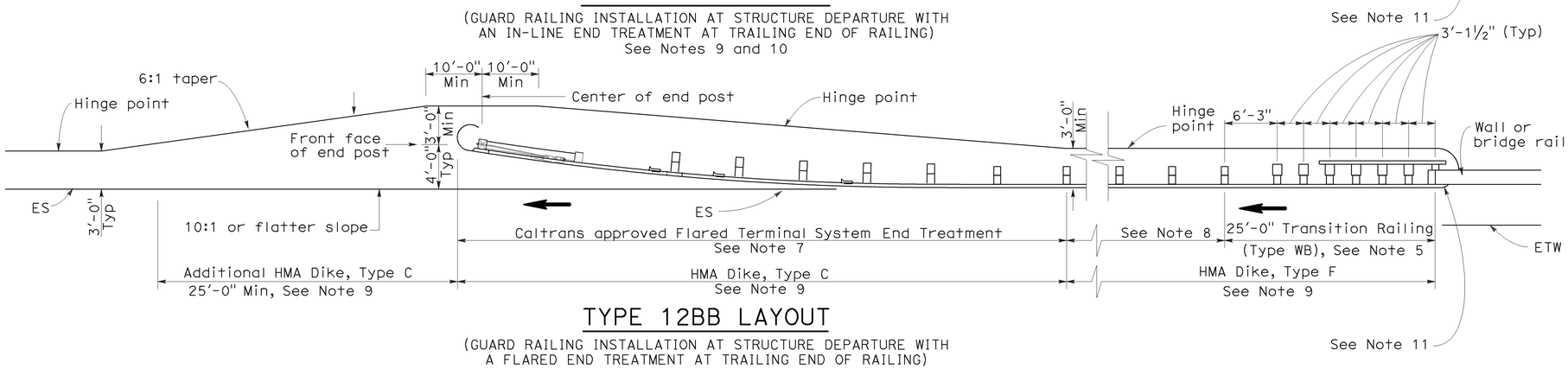

TYPE 12BB LAYOUT

(GUARD RAILING INSTALLATION AT STRUCTURE DEPARTURE WITH A FLARED END TREATMENT AT TRAILING END OF RAILING)
See Notes 9 and 10

NOTES:

1. Line post, blocks and hardware to be used are shown on Standard Plans A77A1, A77A2, A77B1, A77C1 and A77C2.
2. Guard rail post spacing to be 6'-3" center to center, except as otherwise noted.
3. Except as noted, line posts are 6" x 8" x 6'-0" wood with 6" x 8" x 1'-2" wood blocks. W6 x 9 steel posts, 6'-0" in length, with 6" x 8" x 1-2" notched wood blocks or notched recycled plastic blocks may be used for 6" x 8" x 6'-0" wood posts with 6" x 8" x 1'-2" wood blocks where applicable and when specified.
4. Direction of adjacent traffic indicated by ➡.
5. For Transition Railing (Type WB) details for Types 12AA and 12BB Layouts, see Standard Plan A77J4.
6. In-line Terminal System Treatments are used where site conditions will not accommodate a flared end treatment.
7. The type of terminal system to be used will be shown on the Project Plans.
8. Dependent on site conditions (embankment height, side slopes, other fixed objects), it may be advisable to construct additional guard railing (a length equal to multiples of 12'-6" with 6'-3" post spacing) between the transition railing and end treatments.
9. Where placement of dike is required with guard railing installations, see Revised Standard Plan RSP A77C4 for dike positioning details.
10. Type 12AA or Type 12BB Layouts are typically used to the right of traffic departing a structure on two-way conventional highways where the roadbed width across the structure is less than 40 feet.
11. For additional details of typical connections to bridge rail, see Connection Detail CC on Revised Standard Plan RSP A77J2 and Connection Detail HH on Standard Plans A77k2.

STATE OF CALIFORNIA
DEPARTMENT OF TRANSPORTATION

METAL BEAM GUARD RAILING TYPICAL LAYOUTS FOR STRUCTURE DEPARTURE

NO SCALE

RSP A77F4 DATED JUNE 6, 2008 SUPERSEDES STANDARD PLAN A77F4
DATED MAY 1, 2006 - PAGE 57 OF THE STANDARD PLANS BOOK DATED MAY 2006.

REVISED STANDARD PLAN RSP A77F4

2006 REVISED STANDARD PLAN RSP A77F4

12-10-07

DIST	COUNTY	ROUTE	POST MILES TOTAL PROJECT	SHEET NO.	TOTAL SHEETS
07	LA	110	R1.3/21.3	95	111

Randell D. Hiatt
REGISTERED CIVIL ENGINEER

June 6, 2008
PLANS APPROVAL DATE

REGISTERED PROFESSIONAL ENGINEER Randell D. Hiatt No. C50200 Exp. 6-30-09 CIVIL STATE OF CALIFORNIA

The State of California or its officers or agents shall not be responsible for the accuracy or completeness of electronic copies of this plan sheet.

To accompany plans dated 6-28-10

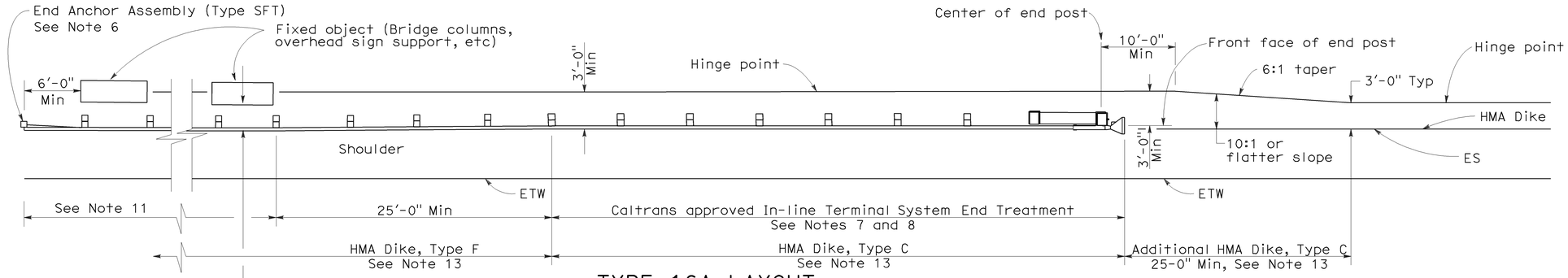

TYPE 16A LAYOUT

(GUARD RAILING INSTALLATION AT ROADSIDE FIXED OBJECT OR OBJECTS WITH AN IN-LINE END TREATMENT AT TRAFFIC APPROACH END OF RAILING)
See Notes 12 and 13

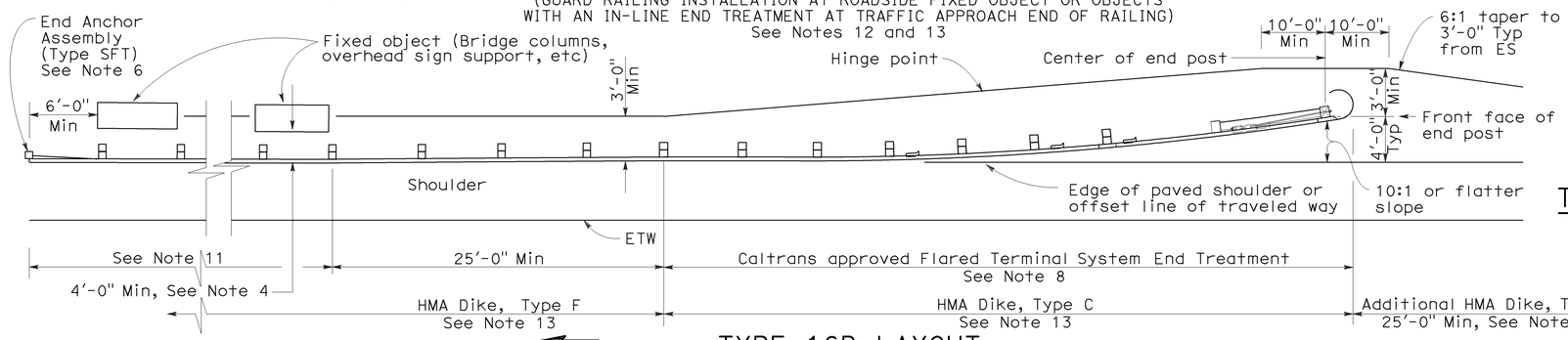

TYPE 16B LAYOUT

(GUARD RAILING INSTALLATION AT ROADSIDE FIXED OBJECT OR OBJECTS WITH A FLARED END TREATMENT AT TRAFFIC APPROACH END OF RAILING)
See Notes 12 and 13

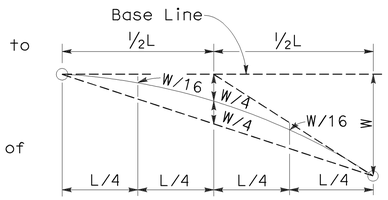

TYPICAL PARABOLIC LAYOUT

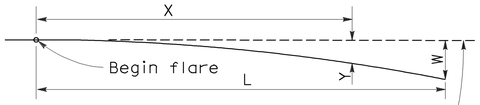

Base Line (Edge of paved shoulder or offset line of edge of traveled way)

$$Y = \frac{WX^2}{L^2}$$

Y = Offset from base line
W = Maximum offset
X = Distance along base line
L = Length of flare

PARABOLIC FLARE OFFSETS

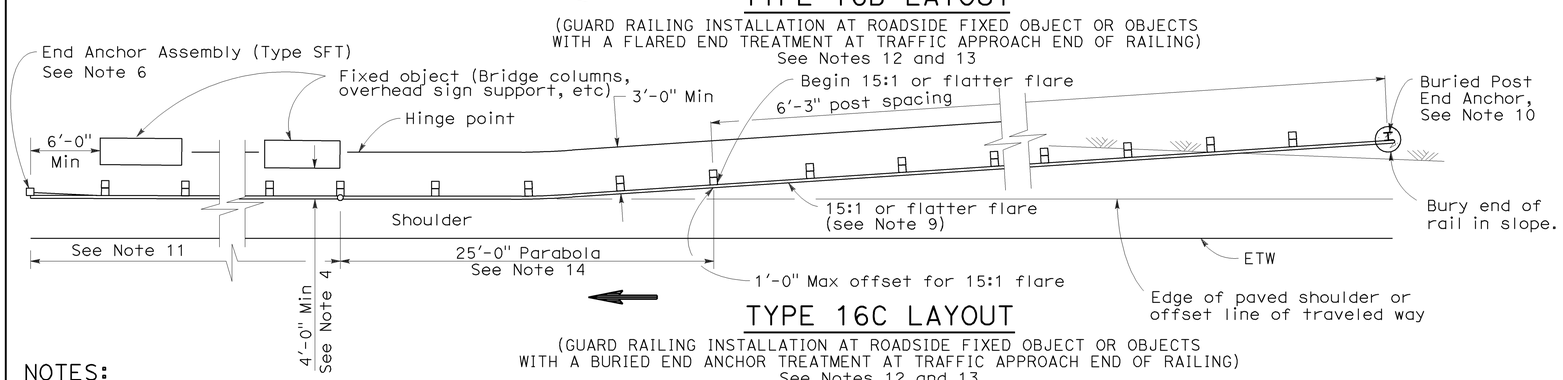

TYPE 16C LAYOUT

(GUARD RAILING INSTALLATION AT ROADSIDE FIXED OBJECT OR OBJECTS WITH A BURIED END ANCHOR TREATMENT AT TRAFFIC APPROACH END OF RAILING)
See Notes 12 and 13

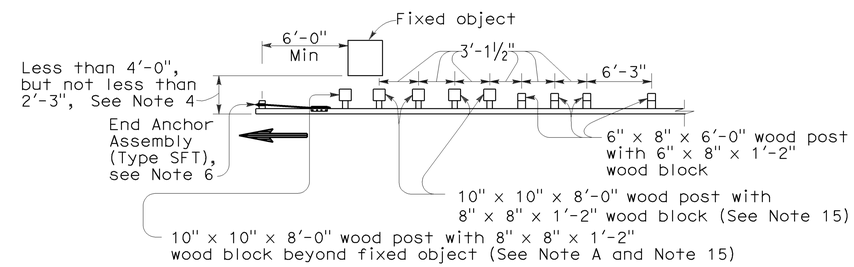

NOTE A: For a series of fixed objects (bridge columns, overhead sign supports, etc.) additional 10" x 10" x 8'-0" wood post with 8" x 8" x 1'-2" wood blocks at 3'-1½" center to center spacing are to be used between fixed objects.

STRENGTHENED RAILING SECTIONS FOR FIXED OBJECT

Use strengthened railing sections with Types 16A, 16B or 16C Layouts where minimum clearance between the face of the guard railing and fixed object(s) is less than 4'-0", but not less than 2'-3". See Note 4

NOTES:

1. Line post, blocks and hardware to be used are shown on Revised Standard Plans A77A1, A77A2, A77B1, A77C1 and A77C2.
2. Guard railing post spacing to be 6'-3" center to center, except as otherwise noted.
3. Except as noted, line posts are 6" x 8" x 6'-0" wood with 6" x 8" x 1'-2" wood blocks. W6 x 9 steel posts, 6'-0" in length, with 6" x 8" x 1'-2" notched wood blocks or notched recycled plastic blocks may be used for 6" x 8" x 6'-0" wood line posts with 6" x 8" x 1'-2" wood blocks where applicable and when specified.
4. A 4'-0" minimum clearance is required between the face of the railing and the face of a fixed object located directly behind standard guard railing sections with post spacing of 6'-3". Construct guard railing as shown in the detail "Strengthened Railing Sections for Fixed Objects" on this plan, where the clearance between the face of the railing and the face of a fixed object is less than 4'-0", but not less than 2'-3". Where the clearance is less than 2'-3", a concrete wall or barrier should be constructed to shield the fixed object(s).
5. Direction of adjacent traffic indicated by ⟶.
6. For End Anchor Assembly (Type SFT) details, see Standard Plan A77H1.
7. In-line Terminal System End Treatments are used where site conditions will not accommodate a flared end treatment.
8. The type of terminal system to be used will be shown on the Project Plans.
9. The 15:1 or flatter flare used with Type 16C Layout is based on the edge of the paved shoulder or offset line of edge of the traveled way. The length of guard railing within the 15:1 or flatter flare is based on site conditions and should be a length equal to multiples of 12'-6".
10. For details of the Buried Post End Anchor used with Type 16C Layout, see Standard Plan A77I2.
11. As site conditions dictate, construct additional guard railing to shield fixed object(s). Additional guard railing length equal to multiples of 12'-6". Post spacing at 6'-3" except as specified in Note 4.
12. Layout Types 16A, 16B or 16C are typically used where guard railing is recommended to shield roadside fixed object(s) and a crashworthy end treatment is required for only one direction of traffic.
13. Where placement of dike is required with guard railing, see Revised Standard Plan RSP A77C4 for dike positioning details.
14. For typical flare offsets for 25'-0" length parabola with maximum offset of 1'-0", see Revised Standard Plan RSP A77E1.
15. W6 x 15 steel post, 8'-0" in length, with 8" x 8" x 1'-2" notched wood block or notched recycled plastic blocks may be used in place of the 10" x 10" x 8'-0" wood post with 8" x 8" x 1'-2" wood block shown in the "Strengthened Railing Sections Detail".

STATE OF CALIFORNIA
DEPARTMENT OF TRANSPORTATION

METAL BEAM GUARD RAILING TYPICAL LAYOUTS FOR ROADSIDE FIXED OBJECTS

NO SCALE

RSP A77G3 DATED JUNE 6, 2008 SUPERSEDES STANDARD PLAN A77G3
DATED MAY 1, 2006 - PAGE 61 OF THE STANDARD PLANS BOOK DATED MAY 2006.

REVISED STANDARD PLAN RSP A77G3

2006 REVISED STANDARD PLAN RSP A77G3

12-10-07

DIST	COUNTY	ROUTE	POST MILES TOTAL PROJECT	SHEET NO.	TOTAL SHEETS
07	LA	110	R1.3/21.3	96	111

Randell D. Hiatt
REGISTERED CIVIL ENGINEER

June 6, 2008
PLANS APPROVAL DATE

REGISTERED PROFESSIONAL ENGINEER — Randell D. Hiatt, No. C50200, Exp. 6-30-09, CIVIL, STATE OF CALIFORNIA

The State of California or its officers or agents shall not be responsible for the accuracy or completeness of electronic copies of this plan sheet.

To accompany plans dated 6-28-10

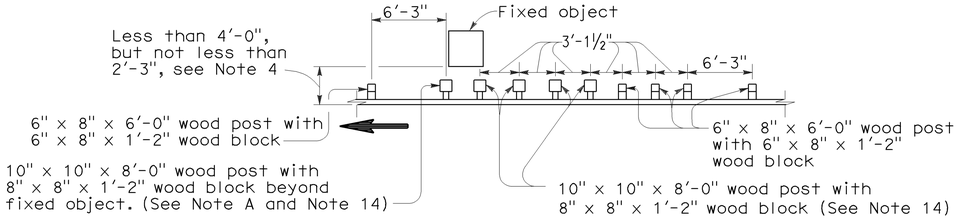

Note A. For a series of fixed objects (bridge columns, overhead sign supports, etc.) additional 10" x 10" x 8'-0" wood post with 8" x 8" x 1'-2" wood blocks at 3'-1½" center to center spacing are to be used between fixed object(s).

STRENGTHENED RAILING SECTIONS FOR FIXED OBJECT

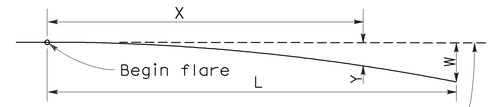

Base Line (Edge of paved shoulder or offset line of edge of traveled way)

$$Y = \frac{WX^2}{L^2}$$

Y = Offset from base line
W = Maximum offset
X = Distance along base line
L = Length of flare

PARABOLIC FLARE OFFSETS

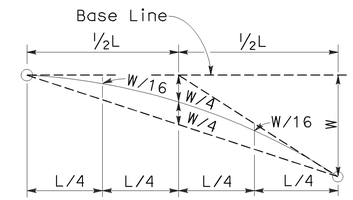

TYPICAL PARABOLIC LAYOUT

Use strengthened railing sections with Layout Types 16K or 16L Layouts where minimum clearance between the face of the guard railing and fixed object(s) is less than 4'-0", but not less than 2'-3". See Note 4.

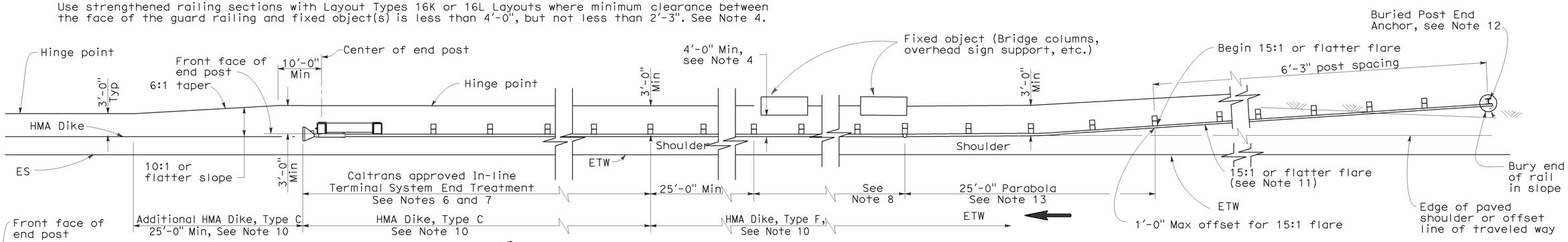

TYPE 16K LAYOUT

(GUARD RAILING INSTALLATION AT ROADSIDE FIXED OBJECT OR OBJECTS WITH A BURIED END ANCHOR TREATMENT AND AN IN-LINE END TREATMENT AT THE ENDS OF RAILING)
See Note 9

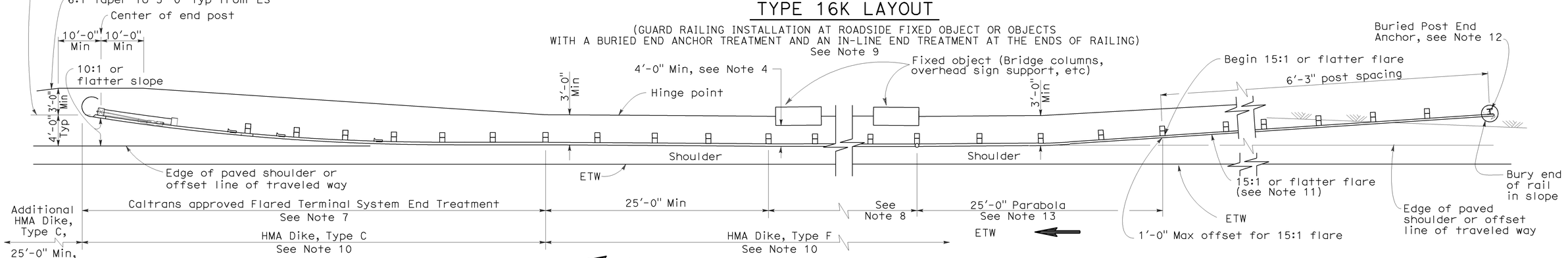

TYPE 16L LAYOUT

(GUARD RAILING INSTALLATION AT ROADSIDE FIXED OBJECT OR OBJECTS WITH A BURIED END ANCHOR TREATMENT AND A FLARED END TREATMENT AT THE ENDS OF RAILING)
See Note 9

NOTES:

1. Line post, blocks and hardware to be used are shown on Standard Plans A77A1, A77A2, A77B1, A77C1 and A77C2.
2. Guard railing post spacing to be 6'-3" center to center, except as otherwise noted.
3. Except as noted, line posts are 6" x 8" x 6'-0" wood with 6" x 8" x 1'-2" wood blocks. W6 x 9 steel posts, 6'-0" in length, with 6" x 8" x 1'-2" notched wood blocks or notched recycled plastic blocks may be used for 6" x 8" x 6'-0" wood posts with 6" x 8" x 1'-2" wood blocks where applicable and when specified.
4. A 4'-0" minimum clearance is required between the face of the railing and the face of a fixed object located directly behind standard guard railing sections with post spacing at 6'-3". Construct guard railing as shown in the detail "Strengthened Railing Sections for Fixed Objects" on this plan, where the clearance between the face of the railing and the face of a fixed object is less than 4'-0", but not less than 2'-3". Where the clearance is less than 2'-3", a concrete wall or barrier should be constructed to shield the fixed object(s).
5. Direction of adjacent traffic indicated by ⟶.
6. In-line Terminal System End Treatments are used where site conditions will not accommodate a flared end treatment.
7. The type of terminal system to be used will be shown on the Project Plans.
8. As site conditions dictate, construct additional guard railing to shield fixed object(s). Additional guard railing length equal to multiples of 12'-6". Post spacing at 6'-3", except as specified in Note 4.
9. Layout Types 16D through 16L, shown on the A77G Series of Revised Standard Plans are typically used where guard railing is recommended to shield roadside fixed object(s) and a crashworthy end treatment is required for both directions of traffic.
10. Where placement of dike is required with guard railing, see Revised Standard Plan RSP A77C4 for dike positioning details.
11. The 15:1 or flatter flare for the buried post anchor is based on the edge of the paved shoulder or offset line of edge of the traveled way. The length of guard railing within the 15:1 or flatter flare is based on site conditions and should be a length equal to multiples of 12'-6".
12. For details of Buried Post End Anchor details, see Standard Plan A77I2.
13. For typical flare offsets for 25'-0" length parabola with maximum offset of 1'-0", see Revised Standard RSP Plan A77E1.
14. W6 x 15 steel post, 8'-0" in length, with 8" x 8" x 1'-2" notched wood block or notched recycled plastic blocks may be used in place of the 10" x 10" x 8'-0" wood post with 8" x 8" x 1'-2" wood block shown in the "Strengthened Railing Sections Detail".

STATE OF CALIFORNIA
DEPARTMENT OF TRANSPORTATION

METAL BEAM GUARD RAILING TYPICAL LAYOUTS FOR ROADSIDE FIXED OBJECTS

NO SCALE

RSP A77G8 DATED JUNE 6, 2008 SUPERSEDES STANDARD PLAN A77G8 DATED MAY 1, 2006 - PAGE 66 OF THE STANDARD PLANS BOOK DATED MAY 2006.

REVISED STANDARD PLAN RSP A77G8

2006 REVISED STANDARD PLAN RSP A77G8

12-10-07

DIST	COUNTY	ROUTE	POST MILES TOTAL PROJECT	SHEET NO.	TOTAL SHEETS
07	LA	110	R1.3/21.3	97	111

Randell D. Hiatt
REGISTERED CIVIL ENGINEER

June 6, 2008
PLANS APPROVAL DATE

REGISTERED PROFESSIONAL ENGINEER
Randell D. Hiatt
No. C50200
Exp. 6-30-09
CIVIL
STATE OF CALIFORNIA

The State of California or its officers or agents shall not be responsible for the accuracy or completeness of electronic copies of this plan sheet.

To accompany plans dated 6-28-10

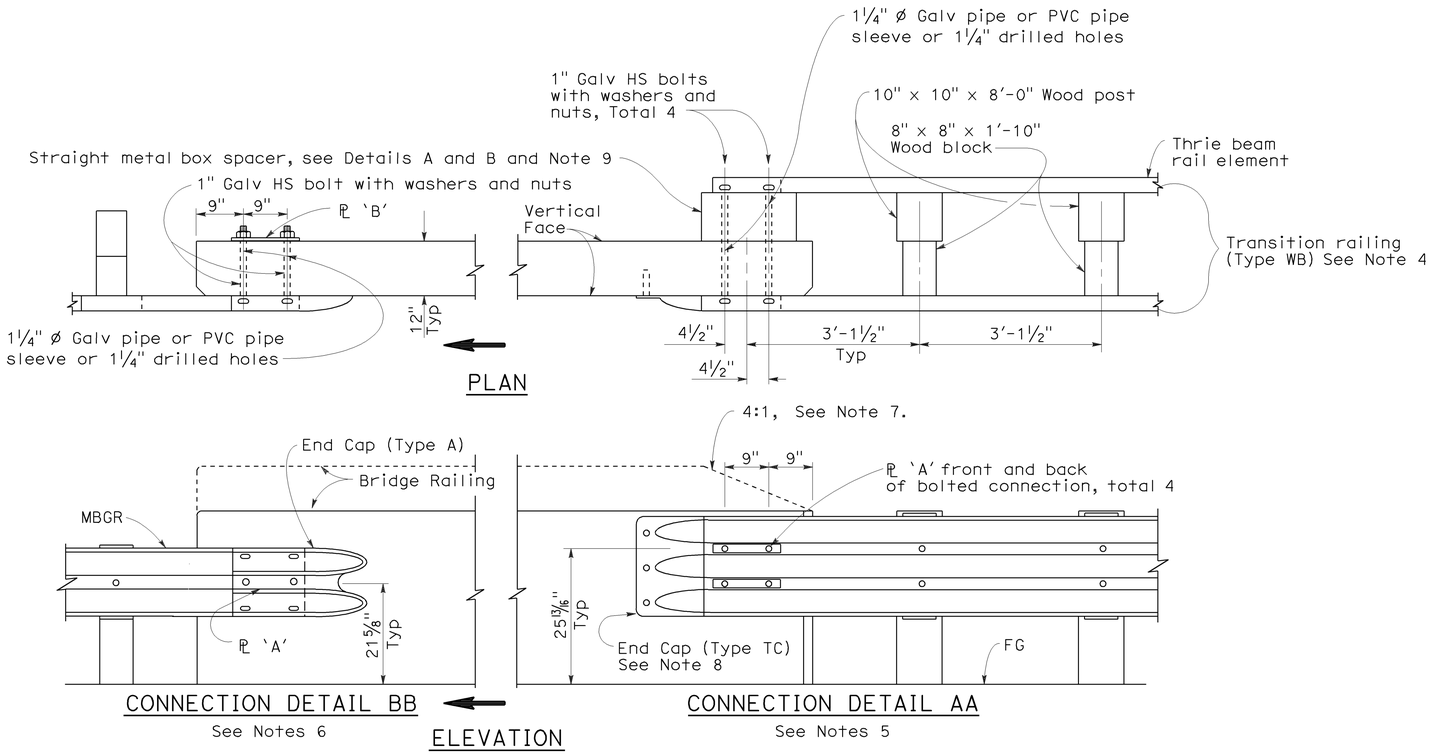

GUARD RAILING CONNECTION TO BRIDGE RAILING WITHOUT SIDEWALK

NOTES:

1. See Revised Standard Plan RSP A77J2 for additional connection details to bridges without sidewalks.
2. Additional details of posts, blocks and hardware are shown on Standard Plan A77B1, A77C1 and A77C2.
3. Direction of adjacent traffic indicated by ➡.
4. For additional details of Transition Railing (Type WB), see Standard Plan A77J4. Transition Railing (Type WB) transitions the 12 gage w-beam standard railing section of guard railing to a heavier gage nested thrie beam railing section which is connected to the concrete bridge railing.
5. For typical use of Connection Detail AA, see Layout Types 12A and 12B on Revised Standard Plan RSP A77F1, Layout Types 12C and 12D on Standard Plan A77F2, and Layout Type 12E on Revised Standard Plan RSP A77F3.
6. For typical use of Connection Detail BB, see Layout Type 12D (structure departure railing connection) on Standard Plan A77F2 and Layout Type 12DD on Standard Plan A77F5.
7. Where the height of the bridge railing exceeds the height of the thrie beam railing by more than 1" at Connection Detail AA, taper the top of the end of the bridge railing at 4:1 to match the top elevation of the thrie beam rail.
8. For details of End Cap (Type TC), see Standard Plan A77J4.
9. See Standard Plan A77J4 for additional details regarding depth dimension for straight metal box spacer.

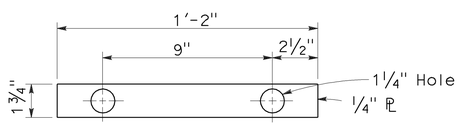

PLATE 'A'

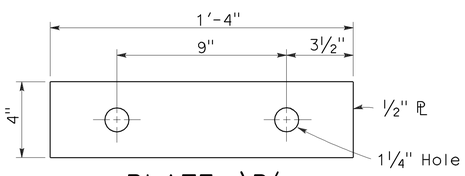

PLATE 'B'
(For backside of connection BB)

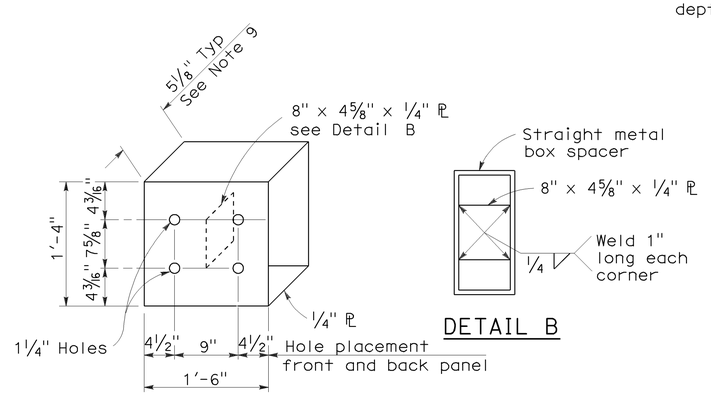

DETAIL B

DETAIL A

STRAIGHT METAL BOX SPACER

STATE OF CALIFORNIA
DEPARTMENT OF TRANSPORTATION

METAL BEAM GUARD RAILING CONNECTIONS TO BRIDGE RAILINGS WITHOUT SIDEWALKS DETAILS No.1

NO SCALE

RSP A77J1 DATED JUNE 6, 2008 SUPERSEDES STANDARD PLAN A77J1
DATED MAY 1, 2006 - PAGE 72 OF THE STANDARD PLANS BOOK DATED MAY 2006.

REVISED STANDARD PLAN RSP A77J1

2006 REVISED STANDARD PLAN RSP A77J1

12-10-07

DIST	COUNTY	ROUTE	POST MILES TOTAL PROJECT	SHEET NO.	TOTAL SHEETS
07	LA	110	R1.3/21.3	98	111

Randell D. Hiatt
REGISTERED CIVIL ENGINEER

June 6, 2008
PLANS APPROVAL DATE

REGISTERED PROFESSIONAL ENGINEER
Randell D. Hiatt
No. C50200
Exp. 6-30-09
CIVIL
STATE OF CALIFORNIA

The State of California or its officers or agents shall not be responsible for the accuracy or completeness of electronic copies of this plan sheet.

To accompany plans dated 6-28-10

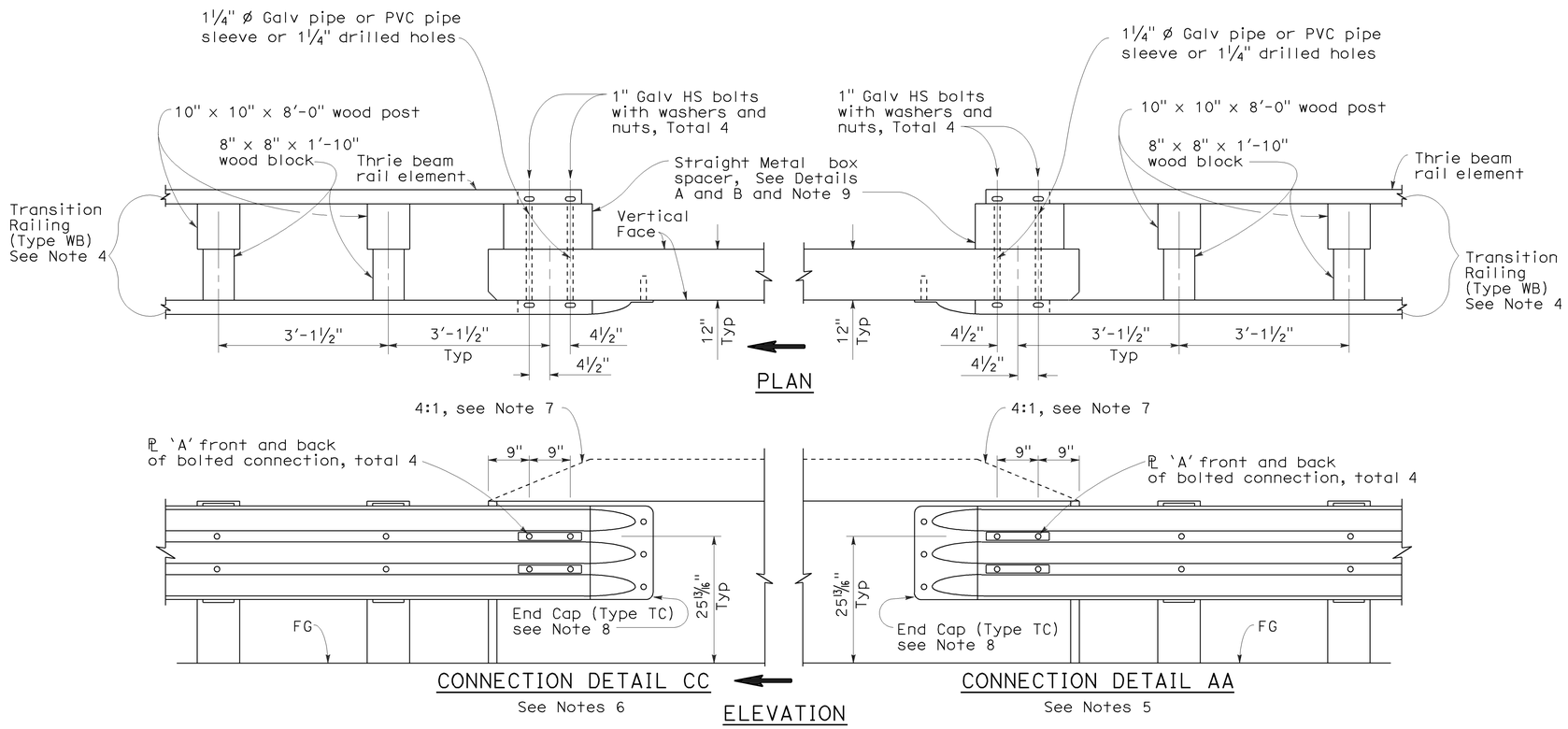

GUARD RAILING CONNECTION TO BRIDGE RAILING WITHOUT SIDEWALK

NOTES:

1. See Revised Standard Plan RSP A77J1 for additional connection details to bridges without sidewalks.
2. Additional details of posts, blocks and hardware are shown on Standard Plan A77B1, A77C1 and A77C2.
3. Direction of adjacent traffic indicated by ⟹.
4. For additional details of Transition Railing (Type WB), see Standard Plan A77J4. Transition Railing (Type WB) transitions the 12 gage w-beam standard railing section of guard railing to a heavier gage nested thrie beam railing section which is connected to the concrete bridge railing.
5. For typical use of Connection Detail AA, see Layout Types 12A and 12B on Revised Standard Plan RSP A77F1, Layout Types 12C and 12D on Standard Plan A77F2, and Layout Type 12E on Revised Standard Plan RSP A77F3.
6. For typical use of Connection Detail CC, see Layout Types 12AA and 12BB on Standard Plan A77F4 and Layout Type 12CC on Standard Plan A77F5.
7. Where the height of the bridge railing exceeds the height of the thrie beam railing by more than 1" at Connection Detail AA and connection Detail CC, taper the top of the end of the bridge railing at 4:1 to match the top elevation of the thrie beam railing.
8. For details of End Cap (Type TC), see Standard Plans A77J4.
9. See Standard Plans A77J4 for additional details regarding depth dimension for straight metal box spacer.

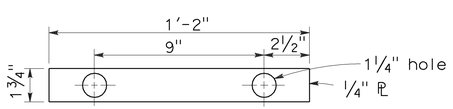

PLATE 'A'

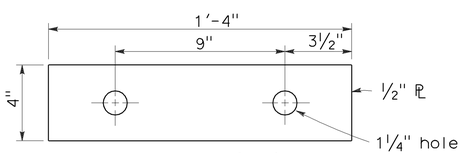

PLATE 'B'
(For backside of connection BB)

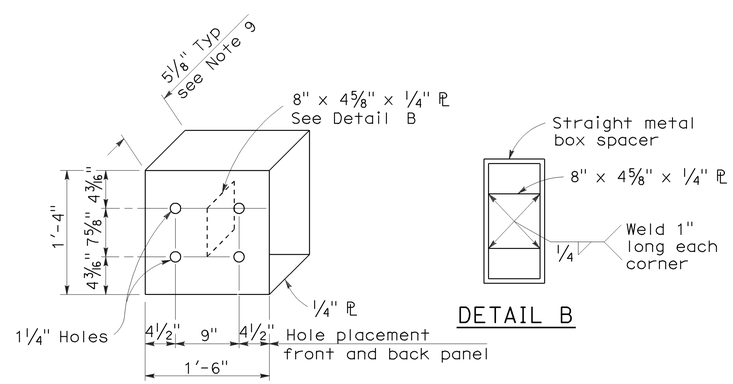

DETAIL A

DETAIL B

STRAIGHT METAL BOX SPACER

STATE OF CALIFORNIA
DEPARTMENT OF TRANSPORTATION

METAL BEAM GUARD RAILING CONNECTIONS TO BRIDGE RAILINGS WITHOUT SIDEWALKS DETAILS No.2

NO SCALE

RSP A77J2 DATED JUNE 6, 2008 SUPERSEDES STANDARD PLAN A77J2 DATED MAY 1, 2006 - PAGE 73 OF THE STANDARD PLANS BOOK DATED MAY 2006.

REVISED STANDARD PLAN RSP A77J2

2006 REVISED STANDARD PLAN RSP A77J2

12-10-07

DIST	COUNTY	ROUTE	POST MILES TOTAL PROJECT	SHEET NO.	TOTAL SHEETS
07	LA	110	R1.3/21.3	99	111

Randell D. Hiatt
REGISTERED CIVIL ENGINEER

June 5, 2009
PLANS APPROVAL DATE

REGISTERED PROFESSIONAL ENGINEER
Randell D. Hiatt
No. C50200
Exp. 6-30-09
CIVIL
STATE OF CALIFORNIA

The State of California or its officers or agents shall not be responsible for the accuracy or completeness of electronic copies of this plan sheet.

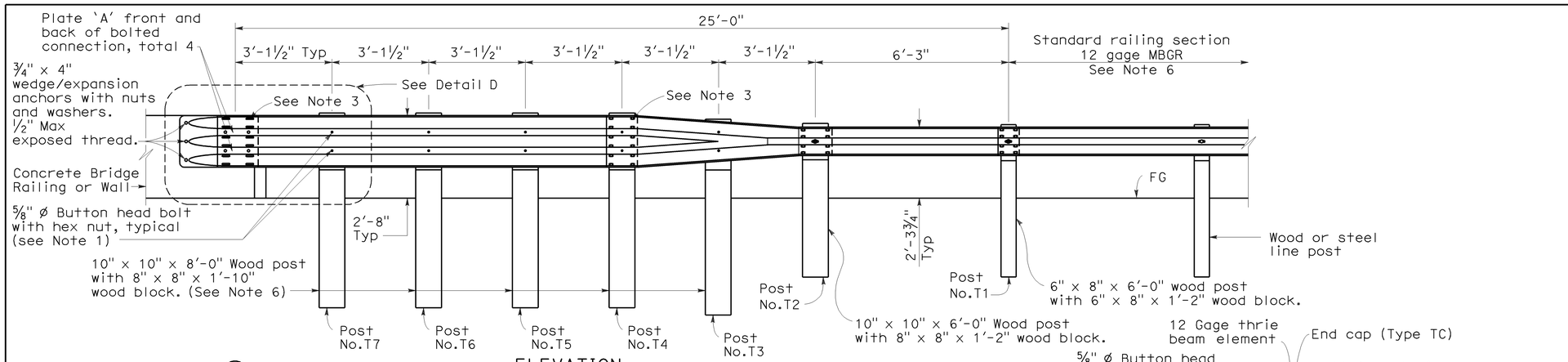

ELEVATION

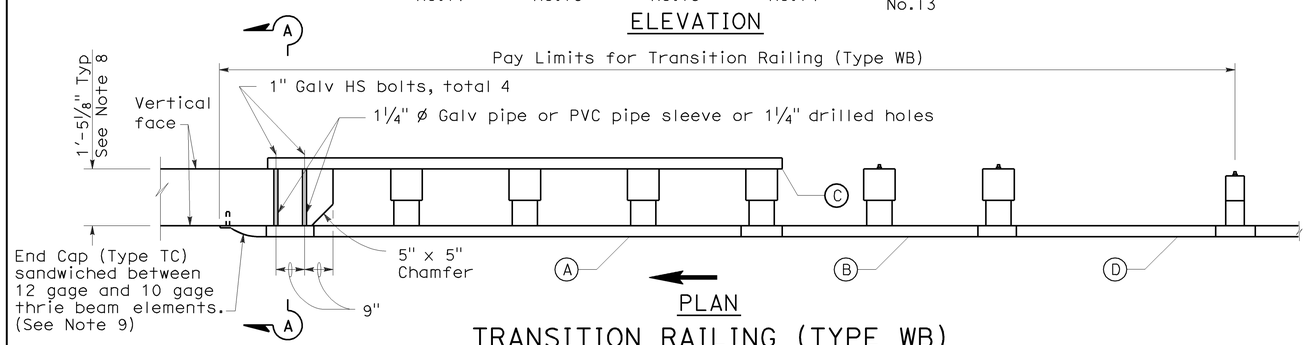

PLAN

TRANSITION RAILING (TYPE WB)

(No Blockout Attachment)

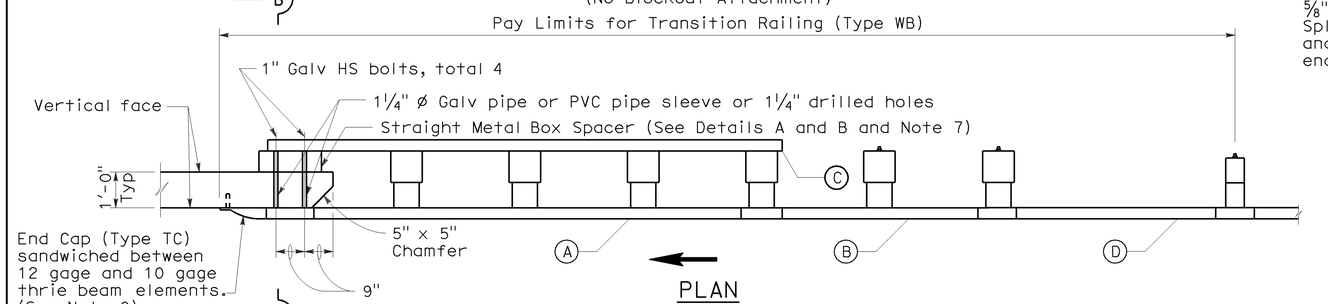

PLAN

TRANSITION RAILING (TYPE WB)

(Blockout Attachment)

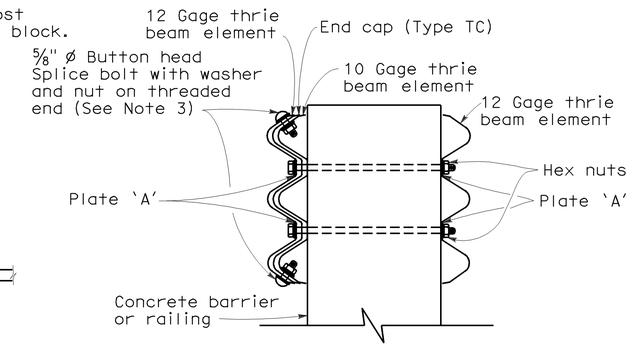

SECTION A-A

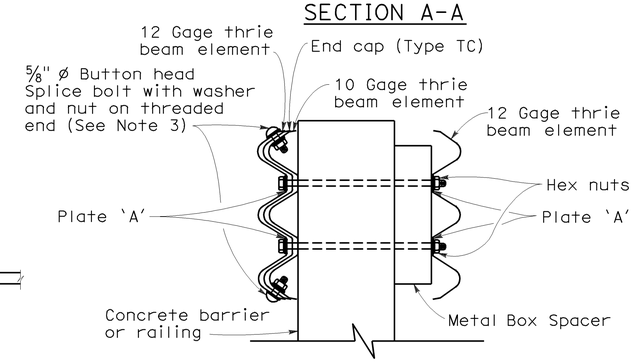

SECTION B-B

LEGEND

(A) Nested thrie beam elements (one 12 gage element nested over one 10 gage element).

(B) One 10 gage "W" beam to thrie beam element.

(C) One 12 gage thrie beam element.

(D) One 10 gage "W" beam rail element (7'-3½" length)

10 gage = 0.135" thick

12 gage = 0.108" thick

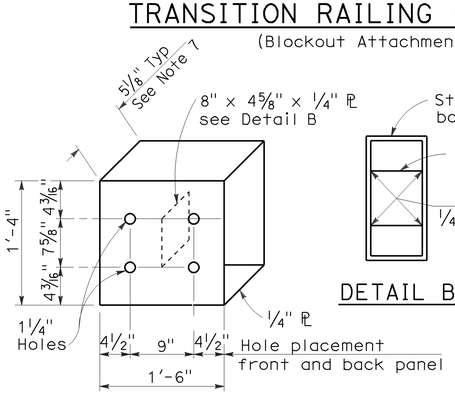

DETAIL A

STRAIGHT METAL BOX SPACER

DETAIL B

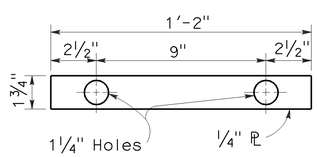

DETAIL C

PLATE 'A'

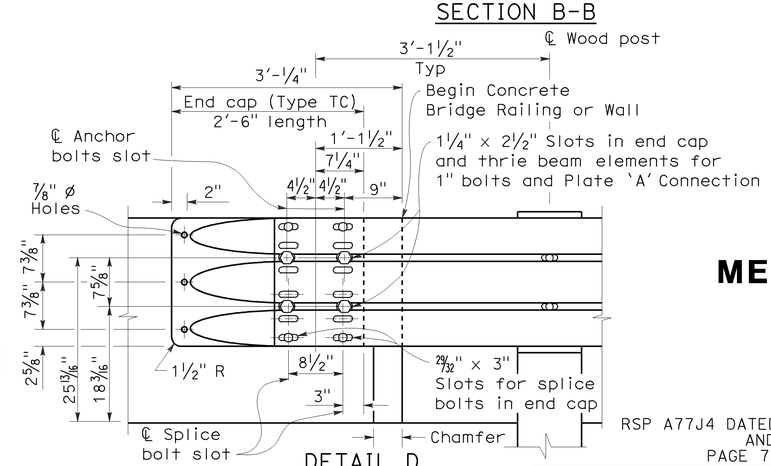

DETAIL D

NOTES:

To accompany plans dated 6-28-10

1. Use 5/8 " ø Button head bolts and hex nuts for connections to posts. No washer on rail face for bolted connections to post.
2. The nested rail elements, end cap, and 'W' beam to thrie beam element may be spliced together prior to bolting the elements to the wood post and concrete barrier or railing.
3. Exterior splice bolt holes for rail element splices at Post No.T4 and the connection to the concrete barrier or railing shall be the standard 29/32 " x 1 1/8 " slot size. Interior splice bolt holes at these locations may be increased up to 1 1/4 " ø. Only the top 2 and the bottom 2 splice bolts with washers and nuts are required for rail splices at Post No.T4 and the connection to the concrete barrier or railing.
4. Direction of adjacent traffic indicated by ⟶.
5. The top elevation of Post Nos.T2 through T7 shall not project more than 1" above the top elevation of the rail element.
6. Typically, the railing connected to Transition Railing (Type WB) will be either standard railing section of metal beam guard railing or an approved Caltrans end treatment attached to Post No.T1.
7. The depth of the metal box spacer varies from the 5 1/8 " to 1 1/2 " and is dependent on the width of the concrete railing or wall. The combined dimension for the depth of the metal box spacer plus the width of railing or wall is typically 17 1/8 ". Where the space between the backside of the concrete railing or wall and the rear thrie beam element is less than 1 1/2 ", metal plates similar to Plate 'A' are to be used as spacers.
8. Where the width of the concrete railing or wall is greater than 17 1/8 ", wood blocks are to be used to fill the space created between the backside of Posts No.4 through No.7 and the rear thrie beam element. These wood blocks shall be 8" in width and 1'-2" in length. The dimension between the front thrie beam element and the rear thrie beam element is to match the width of the concrete railing or wall.
9. End cap may be installed over 12 gage and 10 gage thrie beam elements where transition railing is installed on the departure end of bridge railing.

STATE OF CALIFORNIA
DEPARTMENT OF TRANSPORTATION

METAL BEAM GUARD RAILING TRANSITION RAILING (TYPE WB)

NO SCALE

RSP A77J4 DATED JUNE 5, 2009 SUPERSEDES RSP A77J4 DATED JUNE 6, 2008 AND STANDARD PLAN A77J4 DATED MAY 1, 2006 - PAGE 75 OF THE STANDARD PLANS BOOK DATED MAY 2006.

REVISED STANDARD PLAN RSP A77J4

2006 REVISED STANDARD PLAN RSP A77J4

5-14-09

DIST	COUNTY	ROUTE	POST MILES TOTAL PROJECT	SHEET No.	TOTAL SHEETS
07	LA	110	R1.3/21.3	100	111

Randell D. Hiatt
REGISTERED CIVIL ENGINEER

June 6, 2008
PLANS APPROVAL DATE

REGISTERED PROFESSIONAL ENGINEER
Randell D. Hiatt
No. C50200
Exp. 6-30-09
CIVIL
STATE OF CALIFORNIA

The State of California or its officers or agents shall not be responsible for the accuracy or completeness of electronic copies of this plan sheet.

To accompany plans dated 6-28-10

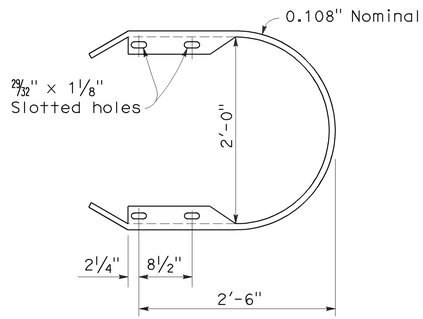

RETURN CAP
(TYPE TA)

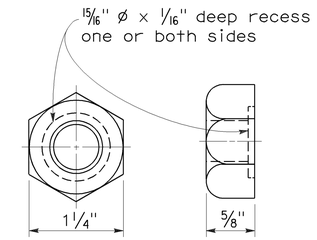

5/8" ø RECESS NUT

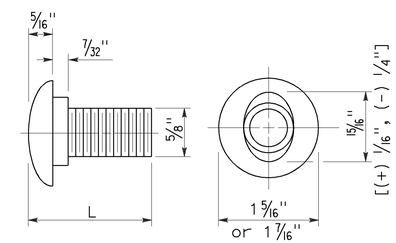

5/8" ø BUTTON HEAD BOLT

L	THREAD LENGTH
1 1/4"	full thread length
2"	full thread length
9 1/2"	4" Min thread length
18"	4" Min thread length

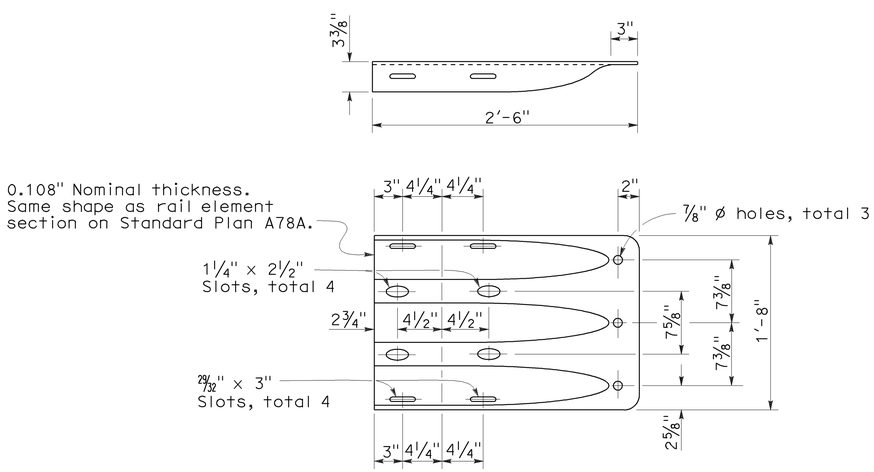

END CAP
(TYPE TC)

STATE OF CALIFORNIA
DEPARTMENT OF TRANSPORTATION

THRIE BEAM BARRIER STANDARD HARDWARE DETAILS

NO SCALE

RSP A78C1 DATED JUNE 6, 2008 SUPERSEDES STANDARD PLAN A78C1
DATED MAY 1, 2006 - PAGE 85 OF THE STANDARD PLANS BOOK DATED MAY 2006.

REVISED STANDARD PLAN RSP A78C1

2006 REVISED STANDARD PLAN RSP A78C1

4-21-08