STP-S057(055)E

Dist	COUNTY	ROUTE	POST MILES TOTAL PROJECT	SHEET No.	TOTAL SHEETS
07	LA	57	R7.7/R12.2	1	38

STATE OF CALIFORNIA
DEPARTMENT OF TRANSPORTATION

PROJECT PLANS FOR CONSTRUCTION ON
STATE HIGHWAY

IN LOS ANGELES COUNTY
IN SAN DIMAS AND GLENDORA
FROM ROUTE 57/10/71 SEPARATION
TO ROUTE 57/210 SEPARATION

TO BE SUPPLEMENTED BY STANDARD PLANS DATED MAY 2006

INDEX OF PLANS

SHEET No.	DESCRIPTION
1	Title and Location Map
2	Locations of Construction
3-5	Typical Cross Sections
6-8	Construction Details
9	Construction Area Signs
10-15	Traffic Handling Details
16-17	Pavement Delineation Details
18-20	Pavement Delineatiion Quantities
21-23	Summary of Quantities
24-25	Inductive Loop Detector
26-38	Revised Standard Plans

THE STANDARD PLANS LIST APPLICABLE TO THIS CONTRACT IS INCLUDED IN THE NOTICE TO BIDDERS AND SPECIAL PROVISIONS BOOK.

LOCATION MAP

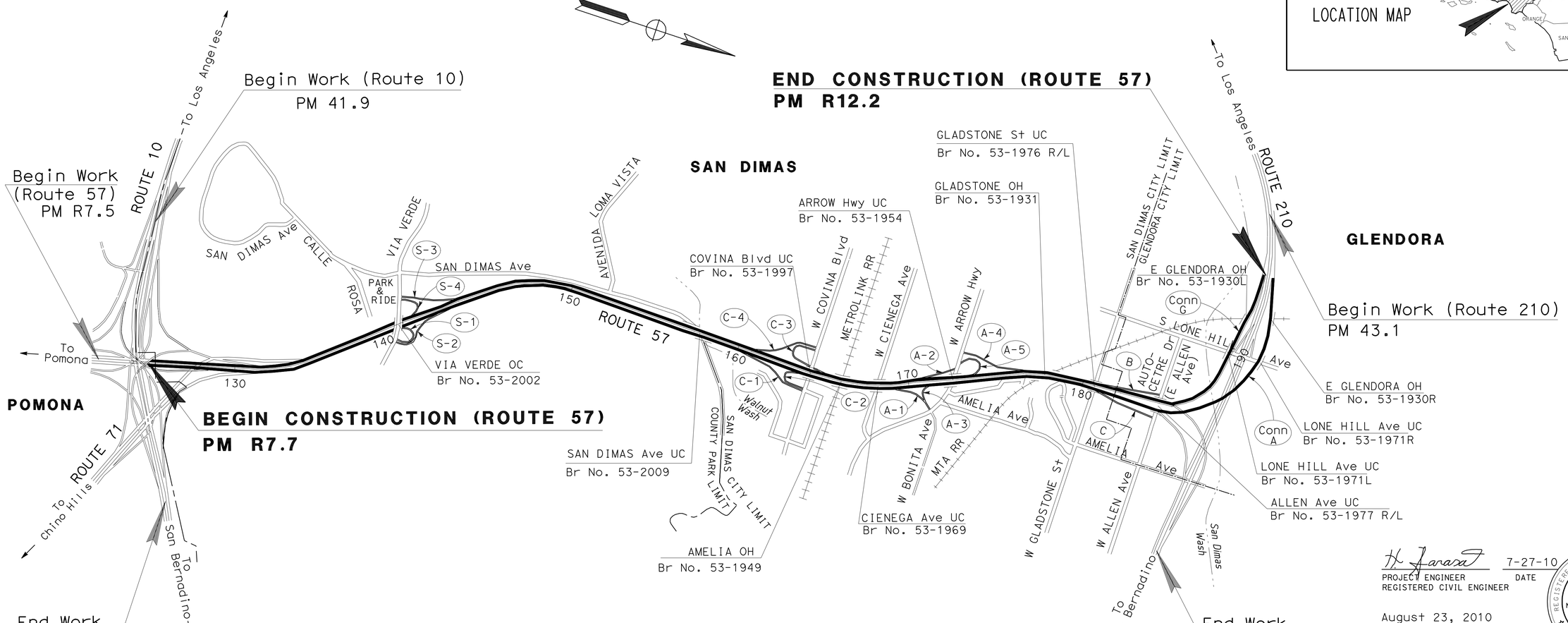

NO SCALE

THE CONTRACTOR SHALL POSSESS THE CLASS (OR CLASSES) OF LICENSE AS SPECIFIED IN THE "NOTICE TO BIDDERS."

PROJECT MANAGER: JOHN LEE
DESIGN ENGINEER: HOSS FARASAT

PROJECT ENGINEER REGISTERED CIVIL ENGINEER — DATE 7-27-10

REGISTERED PROFESSIONAL ENGINEER HOSS FARASAT No. C45672 Exp. 12-31-10 CIVIL STATE OF CALIFORNIA

August 23, 2010
PLANS APPROVAL DATE

THE STATE OF CALIFORNIA OR ITS OFFICERS OR AGENTS SHALL NOT BE RESPONSIBLE FOR THE ACCURACY OR COMPLETENESS OF SCANNED COPIES OF THIS PLAN SHEET.

CONTRACT No.	07-252304
PROJECT ID	0700020103

LAST REVISION 00-00-00 | DATE PLOTTED => 19-AUG-2010 | TIME PLOTTED => 11:26

Dist	COUNTY	ROUTE	POST MILES TOTAL PROJECT	SHEET No.	TOTAL SHEETS
07	LA	57	R7.7/R12.2	2	38

REGISTERED CIVIL ENGINEER 7-27-10 DATE

8-23-10
PLANS APPROVAL DATE

REGISTERED PROFESSIONAL ENGINEER HOSS FARASAT No. C45672 Exp. 12-31-10 CIVIL STATE OF CALIFORNIA

THE STATE OF CALIFORNIA OR ITS OFFICERS OR AGENTS SHALL NOT BE RESPONSIBLE FOR THE ACCURACY OR COMPLETENESS OF SCANNED COPIES OF THIS PLAN SHEET.

RAMP AND CONNECTOR LOCATIONS

LOCATION No.	NAME	PM	RAMP AND CONNECTOR DESCRIPTION
1	S-1	R8.672	NB OFF RAMP TO "VIA VERDE Ave"
2	S-4	R8.777	SB ON RAMP FROM "VIA VERDE Ave"
3	S-2	R8.825	NB ON RAMP FROM "VIA VERDAAVE"
4	S-3	R8.929	SB OFF RAMP TO "VIA VERDE Ave"
5	C-1	R10.077	NB OFF RAMP TO "WEST COVINA Blvd"
6	C-4	R10.078	SB ON RAMP FROM "WEST COVINA Blvd"
7	C-2	R10.256	NB ON RAMP FROM "WEST COVINA Blvd"
8	C-3	R10.285	SB OFF RAMP TO "WEST COVINA Blvd"
9	A-1	R10.514	NB OFF RAMP TO "WEST ARROW HIGHWAY"
10	A-2	R10.700	SB ON RAMP FROM EB "WEST ARROW HIGHWAY"
11	A-3	R10.737	NB ON RAMP FROM "WEST ARROW HIGHWAY"
12	A-5	R10.898	SB ON RAMP FROM WB "WEST ARROW HIGHWAY"
13	A-4	R11.058	SB OFF RAMP TO "WEST ARROW HIGHWAY"
14	C	R11.372	NB OFF RAMP TO "AUTO CENTRE DRIVE"
15	B	R11.409	SB ON RAMP FROM "AUTO CENTRE DRIVE"
16	Conn G	R12.2	EAST LA-210 TO SOUTH LA-57 CONNECTOR
17	Conn A	R12.2	NORTH LA-57 TO WEST LA-210 CONNECTOR

LOCATION OF CONSTRUCTION
(RAMPS)

LC-1

STATE OF CALIFORNIA - DEPARTMENT OF TRANSPORTATION
Caltrans® OFFICE OF DESIGN B

FUNCTIONAL SUPERVISOR: MANSOOR KHAN
CALCULATED-DESIGNED BY: HOSS FARASAT
CHECKED BY: MANSOOR KHAN
REVISED BY
DATE REVISED

LAST REVISION 00-00-00
DATE PLOTTED => 19-AUG-2010
TIME PLOTTED => 11:27

Dist	COUNTY	ROUTE	POST MILES TOTAL PROJECT	SHEET No.	TOTAL SHEETS
07	LA	57	R7.7/R12.2	3	38

REGISTERED CIVIL ENGINEER 7-27-10 DATE

8-23-10
PLANS APPROVAL DATE

REGISTERED PROFESSIONAL ENGINEER HOSS FARASAT No. C45672 Exp. 12-31-10 CIVIL STATE OF CALIFORNIA

THE STATE OF CALIFORNIA OR ITS OFFICERS OR AGENTS SHALL NOT BE RESPONSIBLE FOR THE ACCURACY OR COMPLETENESS OF SCANNED COPIES OF THIS PLAN SHEET.

NOTES:

1. DIMENSIONS OF STRUCTURAL SECTIONS ARE SUBJECT TO TOLERANCES SPECIFIED IN THE STANDARD SPECIFICATION.
2. SUPERELEVATION AS SHOWN OR AS DIRECTED BY THE ENGINEER.
3. FOR ACCURATE RIGHT OF WAY DATA, CONTACT RIGHT OF WAY ENGINEERING AT THE DISTRICT OFFICE.
4. FOR APPROXIMATE LOCATIONS OF REPLACED SLABS, SEE SHEET Q-1 AND AS DIRECTED BY THE ENGINEER.
5. REMOVE THE BULGED-UP AREAS DURING COLD PLANE, DIG OUT AND REPLACE WITH Min 0.15′ HMA AS DETAIL B Sht C-1.
6. EXISTING UTILITY FACILITIES AND DRAINAGE INLETS HAVE NOT BEEN PLOTTED ON THESE PLANS.
7. SEE QUANTITY SHEETS FOR LIMITS OF GRIND Exist Conc PAVEMENT. EXACT LOCATIONS WILL BE DETERMINED BY THE ENGINEER. DEPARTURE AND APPROACH SLABS AND BRIDGE DECKS ARE EXCLUDED FROM GRINDING.
8. FOR DETAILS SEE SHEETS C-1 TO C-3.
9. FOR BRIDGE JOINT SEALS AND SPALL REPAIR SEE SHEETS Q-2.
10. BRIDGE STRUCTURES ARE EXCLUDED FROM COLD PLANE AND OVERLAY.
11. WHERE UNDERLYING CTB IS IN POOR CONDITION OR DAMAGED, IT SHALL BE REPAIRED OR REMOVED AND REPLACED WITH LCBRS.
12. INSTALL DOWEL BARS IN NEW SLABS AT THE TRANSVERSE JOINTS. ISOLATION JOINTS SHALL BE USED WHEN TRANSVERSE JOINTS IN NEW SLABS DO NOT MATCH THE EXISTING.
13. INSTALL TIE BARS AT THE LONGITUDINAL JOINTS WHEN USING THE SAME JOINT SPACING AS THE EXISTING, AND IN NEW ADJACENT SLABS.
14. IF FEASIBLE, INCLUDE DOWEL BAR RETROFIT AT THE EXISTING TRANSVERSE JOINTS TO IMPROVE LOAD TRANSFER IN ACCORDANCE WITH THE STANDARD PLAN P7.
15. TRANSVERSE CONTRACTION JOINTS MUST BE TYPE A1 AND LONGITUDINAL CONTRCTION JOINTS MUST BE TYPE A2. USE PREFORMED COMPRESSION JOINT SEAL FOR ISOLATION JOINTS, AND FOR TRANSVERSE AND LONGITUDINAL CONTRACTION JOINTS.
16. REPAIR SPALLED JOINT WITH POLYESTER GROUT.

LEGEND:

RSC: RAPID SETTING CONCRETE
RHMA-G: RUBBERIZED HOT MIX ASPHALT, TYPE G
LCBRS: LEAN CONCRETE BASE RAPID SETTING

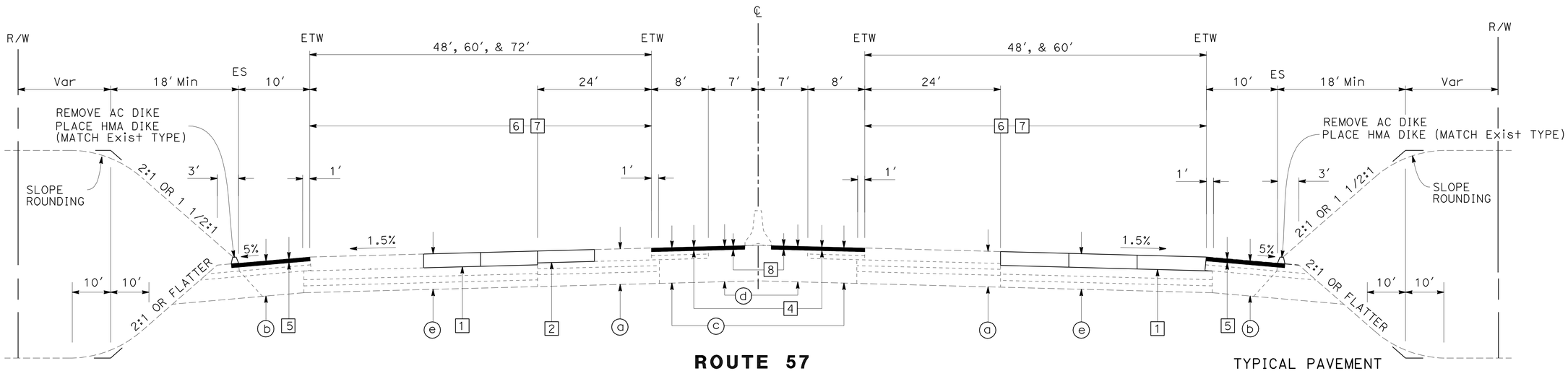

ROUTE 57
PM R8.3 TO PM R8.71

TYPICAL PAVEMENT STRUCTURE SECTIONS

1 — 0.75′ REPLACE CONCRETE PAVEMENT (RSC)
MATCH EXISTING THICKNESS

2 — 0.65′ REPLACE CONCRETE PAVEMENT (RSC)
MATCH EXISTING THICKNESS

3 — 0.90′ REPLACE CONCRETE PAVEMENT (RSC)
BOND BREAKER
0.50′ LCBRS
0.70′ CLASS 3 AB

4 — 0.15′ COLD PLANE Exist AC PAVEMENT
TACK COAT
0.15′ RHMA-G

5 — 0.20′ COLD PLANE Exist AC PAVEMENT
TACK COAT
0.20′ RHMA-G

6 — GRIND CONCRETE PAVEMENT

7 — SEAL JOINT (Exist Conc PAVEMENT)

8 — 0.17′ COLD PLANE Exist AC
TACK COAT
0.17′ RHMA-G

Exist STRUCTURE SECTIONS

a — Exist
0.67′ PCC
0.35′ CLASS B CTB
0.35′ CLASS 3 AB
0.63′ CLASS 4 AS

b — Exist
0.40′ AC (TYPE B)
0.35′ CLASS 2 AB
Var CLASS 4 AS

c — Exist
0.30′ AC (TYPE B)
0.35′ CLASS 3 AB
1.35′ CLASS 4 AS

d — Exist
0.17′ AC (TYPE B)
1.83′ CLASS 4 AS

e — Exist
0.75′ PCC
0.50′ CLASS A CTB
0.35′ CLASS 3 AB
0.40′ CLASS 4 AS

f — Exist
0.35′ AC (TYPE B)
0.65′ CLASS B CTB
0.35′ CLASS 3 AB
0.65′ CLASS 4 AS

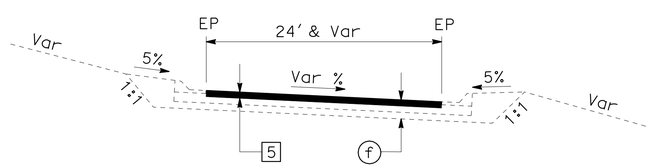

RAMPS

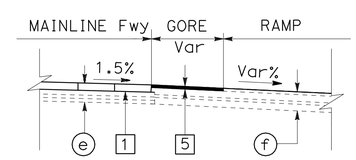

GORE AREA

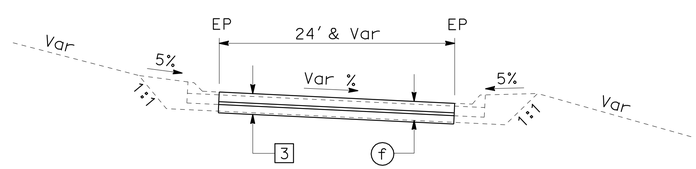

OFF-RAMP TERMINI

TYPICAL CROSS SECTIONS

NO SCALE

X-1

STATE OF CALIFORNIA - DEPARTMENT OF TRANSPORTATION
Caltrans® OFFICE OF DESIGN B

FUNCTIONAL SUPERVISOR: MANSOOR KHAN
CALCULATED-DESIGNED BY: HOSS FARASAT
CHECKED BY: MANSOOR KHAN
REVISED BY
DATE REVISED

LAST REVISION 00-00-00
DATE PLOTTED => 19-AUG-2010
TIME PLOTTED => 11:27

Dist	COUNTY	ROUTE	POST MILES TOTAL PROJECT	SHEET No.	TOTAL SHEETS
07	LA	57	R7.7/R12.2	4	38

REGISTERED CIVIL ENGINEER 7-27-10 DATE

8-23-10
PLANS APPROVAL DATE

REGISTERED PROFESSIONAL ENGINEER
HOSS FARASAT
No. C45672
Exp. 12-31-10
CIVIL
STATE OF CALIFORNIA

THE STATE OF CALIFORNIA OR ITS OFFICERS OR AGENTS SHALL NOT BE RESPONSIBLE FOR THE ACCURACY OR COMPLETENESS OF SCANNED COPIES OF THIS PLAN SHEET.

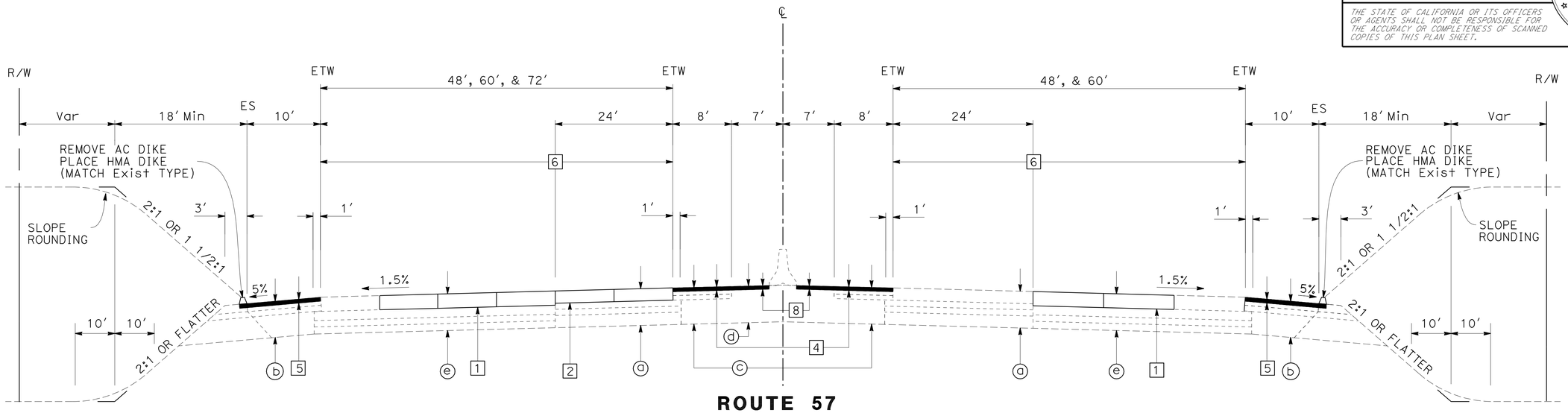

ROUTE 57
PM R10.7 TO PM R11.3

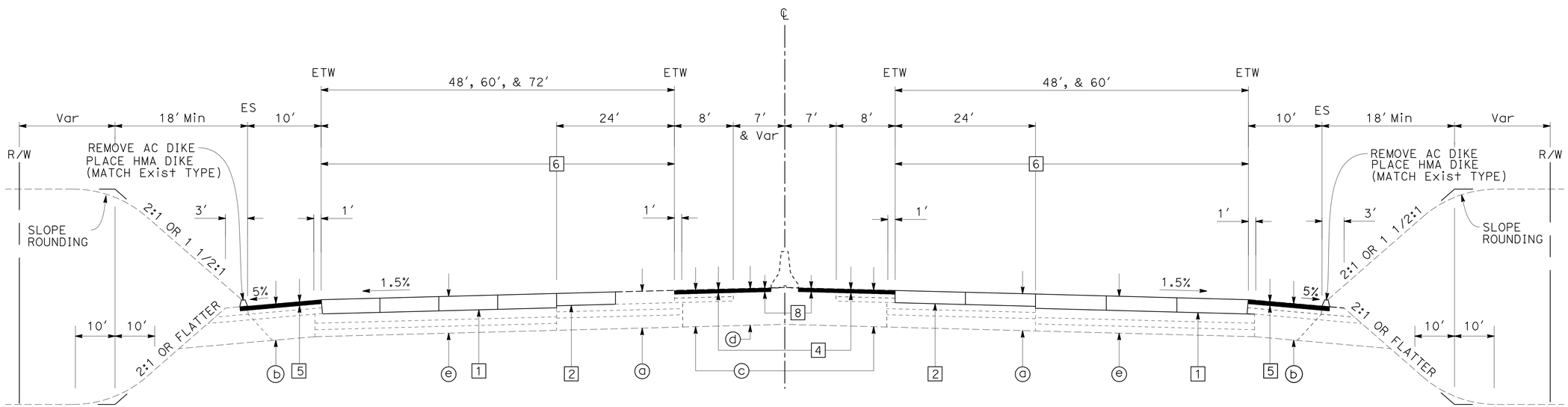

ROUTE 57
PM R8.71 TO PM R10.74

TYPICAL CROSS SECTIONS
NO SCALE

X-2

STATE OF CALIFORNIA - DEPARTMENT OF TRANSPORTATION
Caltrans® OFFICE OF DESIGN B

FUNCTIONAL SUPERVISOR: MANSOOR KHAN
CALCULATED-DESIGNED BY: HOSS FARASAT
CHECKED BY: MANSOOR KHAN
REVISED BY
DATE REVISED

LAST REVISION 00-00-00
DATE PLOTTED => 19-AUG-2010
TIME PLOTTED => 11:27

Dist	COUNTY	ROUTE	POST MILES TOTAL PROJECT	SHEET No.	TOTAL SHEETS
07	LA	57	R7.7/R12.2	5	38

REGISTERED CIVIL ENGINEER 7-27-10 DATE

8-23-10
PLANS APPROVAL DATE

REGISTERED PROFESSIONAL ENGINEER
HOSS FARASAT
No. C45672
Exp. 12-31-10
CIVIL
STATE OF CALIFORNIA

THE STATE OF CALIFORNIA OR ITS OFFICERS OR AGENTS SHALL NOT BE RESPONSIBLE FOR THE ACCURACY OR COMPLETENESS OF SCANNED COPIES OF THIS PLAN SHEET.

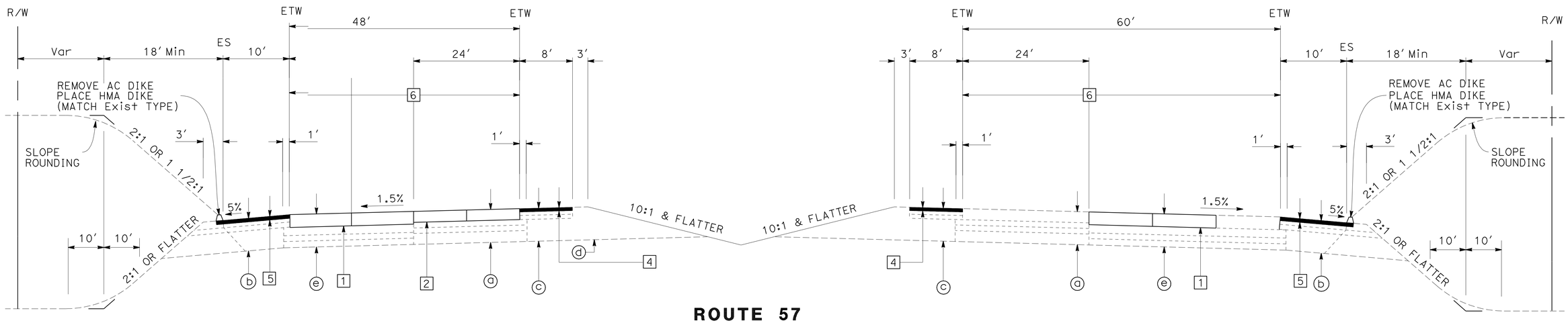

ROUTE 57
PM R11.3 TO PM R11.6

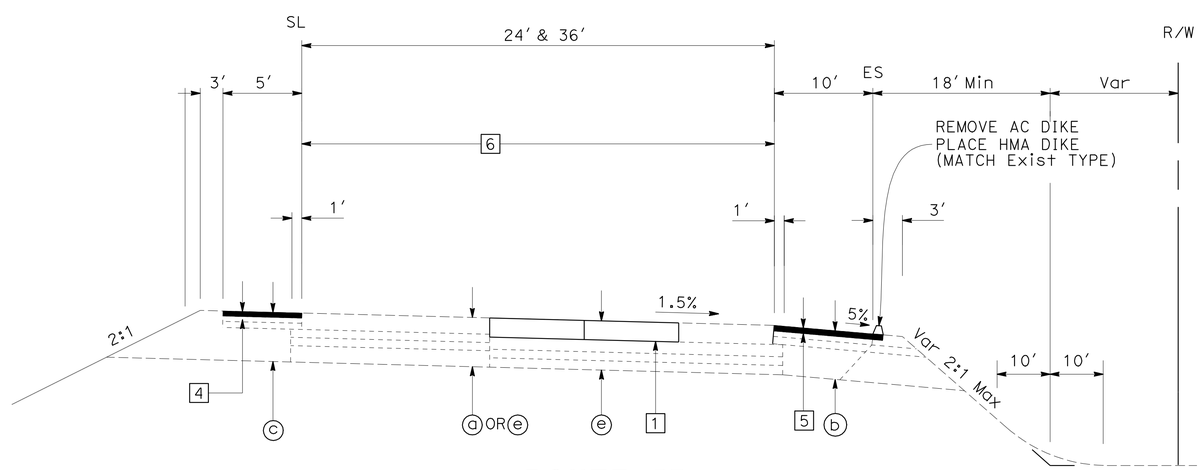

ROUTE 57
BRANCH CONNETIONS

TYPICAL CROSS SECTIONS
NO SCALE

X-3

STATE OF CALIFORNIA - DEPARTMENT OF TRANSPORTATION
Caltrans® OFFICE OF DESIGN B

FUNCTIONAL SUPERVISOR: MANSOOR KHAN

CALCULATED-DESIGNED BY: HOSS FARASAT
CHECKED BY: MANSOOR KHAN

REVISED BY | DATE REVISED

LAST REVISION 00-00-00 | DATE PLOTTED => 19-AUG-2010 | TIME PLOTTED => 11:27

Dist	COUNTY	ROUTE	POST MILES TOTAL PROJECT	SHEET No.	TOTAL SHEETS
07	LA	57	R7.7/R12.2	6	38

REGISTERED CIVIL ENGINEER 7-27-10 DATE

8-23-10
PLANS APPROVAL DATE

REGISTERED PROFESSIONAL ENGINEER HOSS FARASAT No. C45672 Exp. 12-31-10 CIVIL STATE OF CALIFORNIA

THE STATE OF CALIFORNIA OR ITS OFFICERS OR AGENTS SHALL NOT BE RESPONSIBLE FOR THE ACCURACY OR COMPLETENESS OF SCANNED COPIES OF THIS PLAN SHEET.

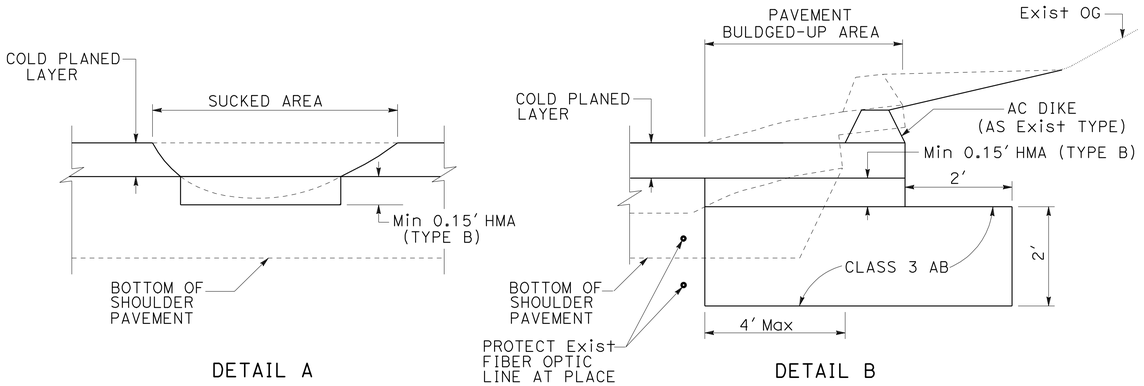

SHOULDER LOCALLY FAILED AREA DETAILS

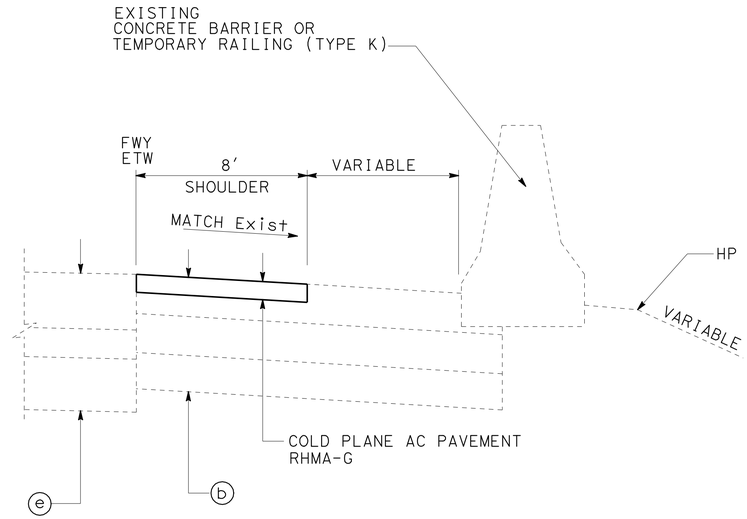

TYPICAL AT CONCRETE BARRIER, CONCRETE BARRIER (TYPE K), OR RETAINING WALL

LEGEND:

RSC: RAPID STRENGTH CONCRETE

LCBRS: LEAN CONCRETE BASE RAPID SETTING

RHMA-G: RUBBERIZED HOT MIX ASPHALT, TYPE G

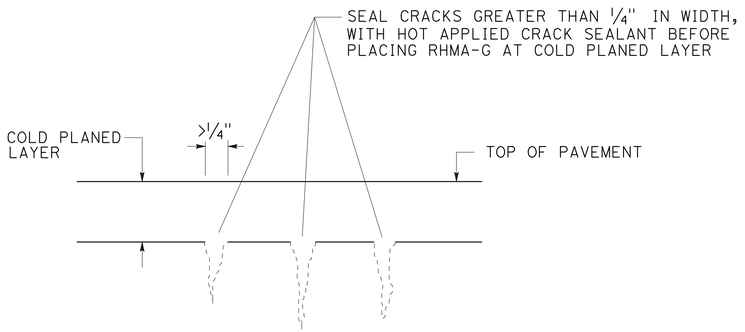

DETAIL C

TYPICAL DETAIL FOR CRACK SEAL

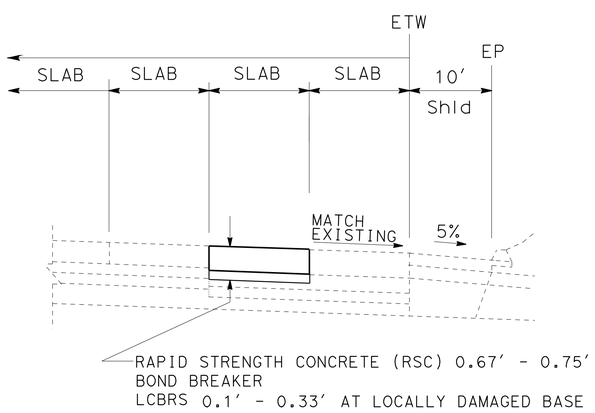

TYPICAL DETAIL FOR REPLACE CONCRETE PAVEMENT (RSC) WITH DAMAGED BASE

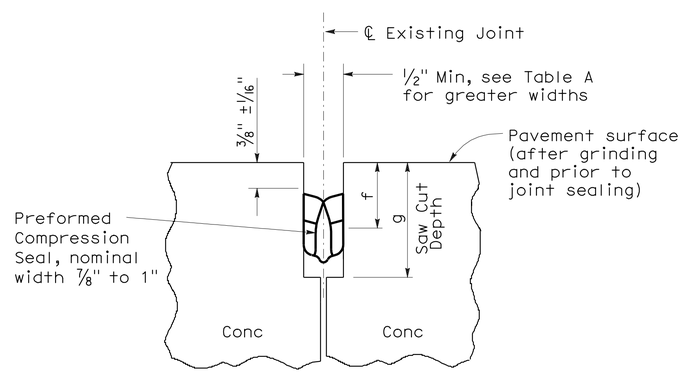

COMPRESSION SEAL

TYPE R (MOD)

Retrofit Transverse and Longitudinal Joints (Typical)
For Information not shown see RSP P-20

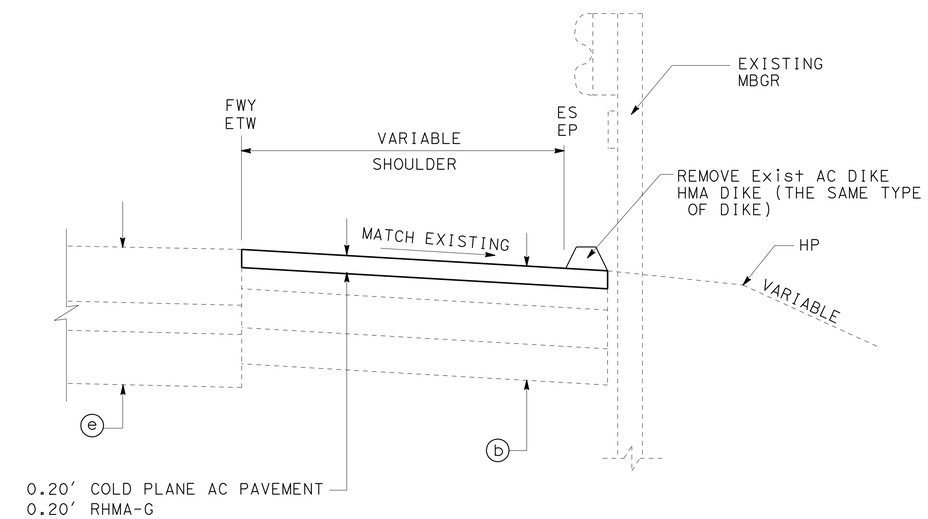

TYPICAL AT METAL BEAM GUARD RAILING

CONSTRUCTION DETAILS

NO SCALE

C-1

STATE OF CALIFORNIA - DEPARTMENT OF TRANSPORTATION
Caltrans® OFFICE OF DESIGN B

FUNCTIONAL SUPERVISOR: MANSOOR KHAN
CALCULATED-DESIGNED BY: HOSS FARASAT
CHECKED BY: MANSOOR KHAN
REVISED BY
DATE REVISED

LAST REVISION 00-00-00 | DATE PLOTTED => 19-AUG-2010 | TIME PLOTTED => 11:27

Dist	COUNTY	ROUTE	POST MILES TOTAL PROJECT	SHEET No.	TOTAL SHEETS
07	LA	57	R7.7/R12.2	7	38

REGISTERED CIVIL ENGINEER 7-27-10 DATE

8-23-10
PLANS APPROVAL DATE

REGISTERED PROFESSIONAL ENGINEER HOSS FARASAT No. C45672 Exp. 12-31-10 CIVIL STATE OF CALIFORNIA

THE STATE OF CALIFORNIA OR ITS OFFICERS OR AGENTS SHALL NOT BE RESPONSIBLE FOR THE ACCURACY OR COMPLETENESS OF SCANNED COPIES OF THIS PLAN SHEET.

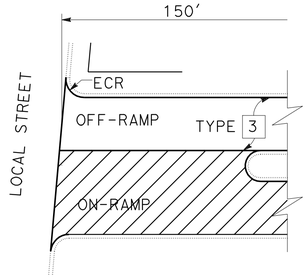

ON AND OFF-RAMP LOCATIONS

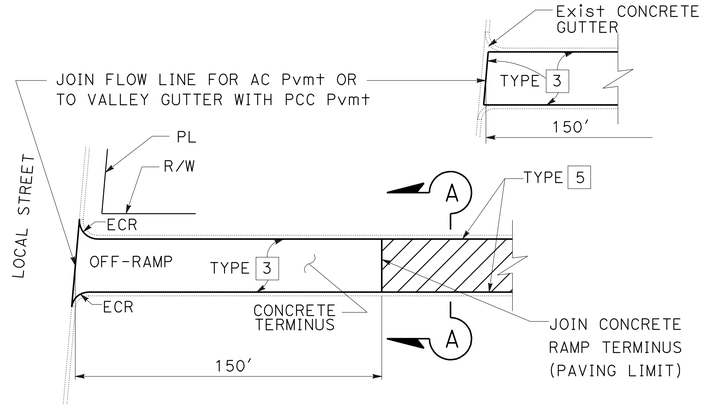

CONCRETE RAMP TERMINUS AT OFF-RAMPS
SEE DETAIL FOR both LOCATIONS WITH BOTH ON & OFF-RAMP

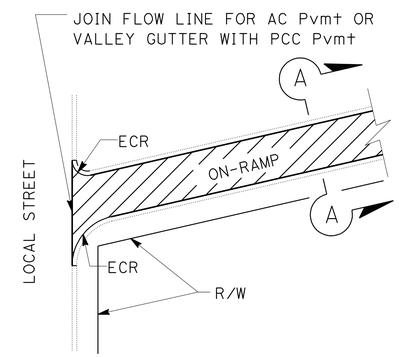

ON-RAMP

NOTES:

1. FOR ACCURATE RIGHT OF WAY DATA, CONTACT RIGHT OF WAY ENGINEERING AT THE DISTRICT OFFICE.
2. EXISTING UTILITY FACILITIES AND DRAINAGE INLETS HAVE NOT BEEN PLOTTED ON THESE PLANS.
3. EXACT PAVING LIMITS WILL BE DETERMINED BY THE ENGINEER.
4. OMIT COLD PLANING AND AC ON BRIDGE DECKS, PCC RAMP TERMINI AND PCC PAVEMENT.

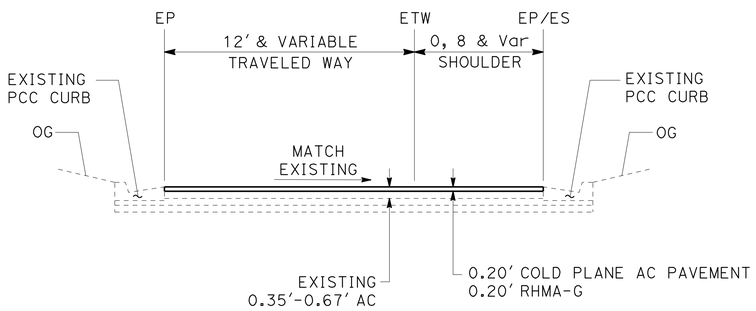

SECTION A-A

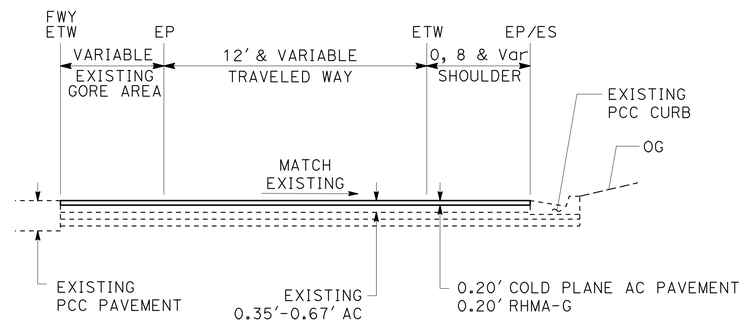

SECTION B-B

ABBREVIATION:

RHMA-G - RUBBERIZED HOT MIX ASPHALT (GAP GRADED)

LEGEND:

0.20' COLD PLANE AC PAVEMENT
0.20' RHMA-G

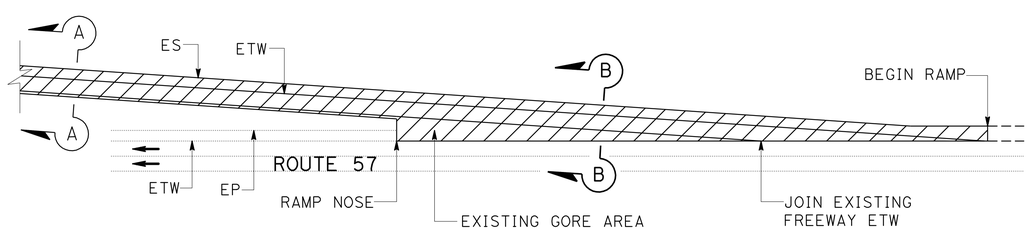

OFF-RAMP

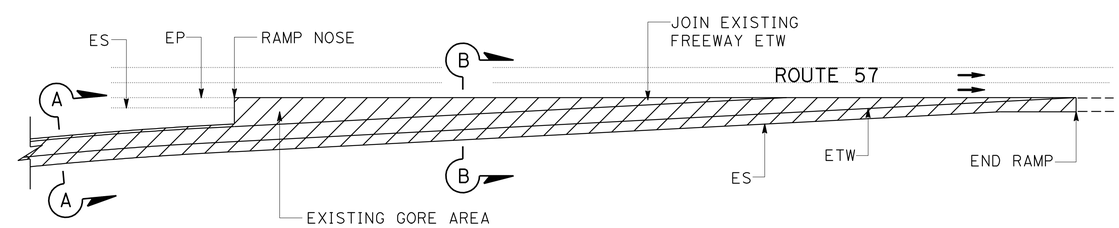

ON-RAMP

TYPICAL RAMP PAVING DETAILS

CONSTRUCTION DETAILS
NO SCALE

C-2

STATE OF CALIFORNIA - DEPARTMENT OF TRANSPORTATION
Caltrans® OFFICE OF DESIGN B

FUNCTIONAL SUPERVISOR: MANSOOR KHAN
CALCULATED-DESIGNED BY: HOSS FARASAT
CHECKED BY: MANSOOR KHAN
REVISED BY
DATE REVISED

LAST REVISION 00-00-00 | DATE PLOTTED => 19-AUG-2010 | TIME PLOTTED => 11:28

Dist	COUNTY	ROUTE	POST MILES TOTAL PROJECT	SHEET No.	TOTAL SHEETS
07	LA	57	R7.7/R12.2	8	38

REGISTERED CIVIL ENGINEER 7-27-10 DATE

8-23-10
PLANS APPROVAL DATE

REGISTERED PROFESSIONAL ENGINEER HOSS FARASAT No. C45672 Exp. 12-31-10 CIVIL STATE OF CALIFORNIA

THE STATE OF CALIFORNIA OR ITS OFFICERS OR AGENTS SHALL NOT BE RESPONSIBLE FOR THE ACCURACY OR COMPLETENESS OF SCANNED COPIES OF THIS PLAN SHEET.

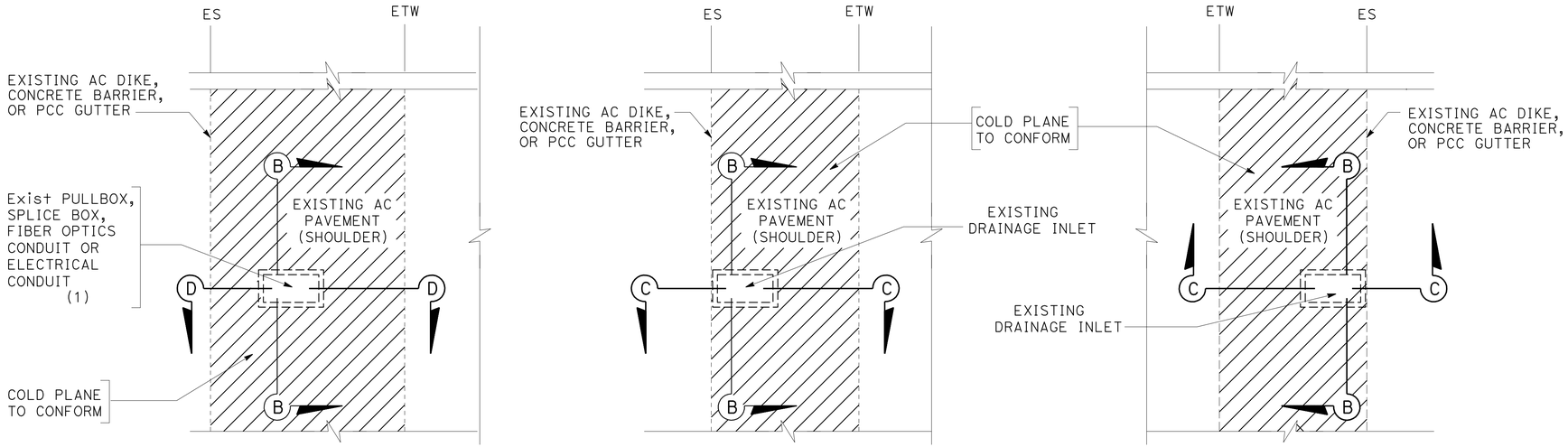

(1): ALL THE LINES SHALL BE PROTECTED INPLACE.

LEGEND:

0.20' COLD PLANE AC PAVEMENT
0.20' RHMA (GAP GRADED)

FIBER OPTIC PULLBOX, DRAINAGE INLET OR SPLICEBOX (VARIOUS LOCATIONS)

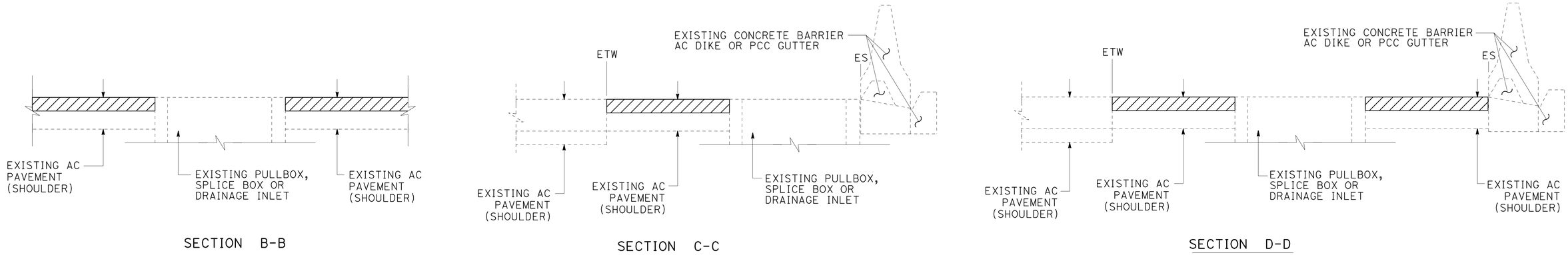

TYPICAL FIBER OPTIC PULLBOX, SPLICE BOX OR DRAINAGE INLET

CONSTRUCTION DETAILS

NO SCALE

C-3

STATE OF CALIFORNIA - DEPARTMENT OF TRANSPORTATION
Caltrans® OFFICE OF DESIGN B

FUNCTIONAL SUPERVISOR: MANSOOR KHAN
CALCULATED-DESIGNED BY: HOSS FARASAT
CHECKED BY: MANSOOR KHAN
REVISED BY
DATE REVISED

LAST REVISION 00-00-00
DATE PLOTTED => 19-AUG-2010
TIME PLOTTED => 11:28

Dist	COUNTY	ROUTE	POST MILES TOTAL PROJECT	SHEET No.	TOTAL SHEETS
07	LA	57	R7.7/R12.2	9	38

H. Farasat 7-27-10
REGISTERED CIVIL ENGINEER DATE

8-23-10
PLANS APPROVAL DATE

REGISTERED PROFESSIONAL ENGINEER HOSS FARASAT No. C45672 Exp. 12-31-10 CIVIL STATE OF CALIFORNIA

THE STATE OF CALIFORNIA OR ITS OFFICERS OR AGENTS SHALL NOT BE RESPONSIBLE FOR THE ACCURACY OR COMPLETENESS OF SCANNED COPIES OF THIS PLAN SHEET.

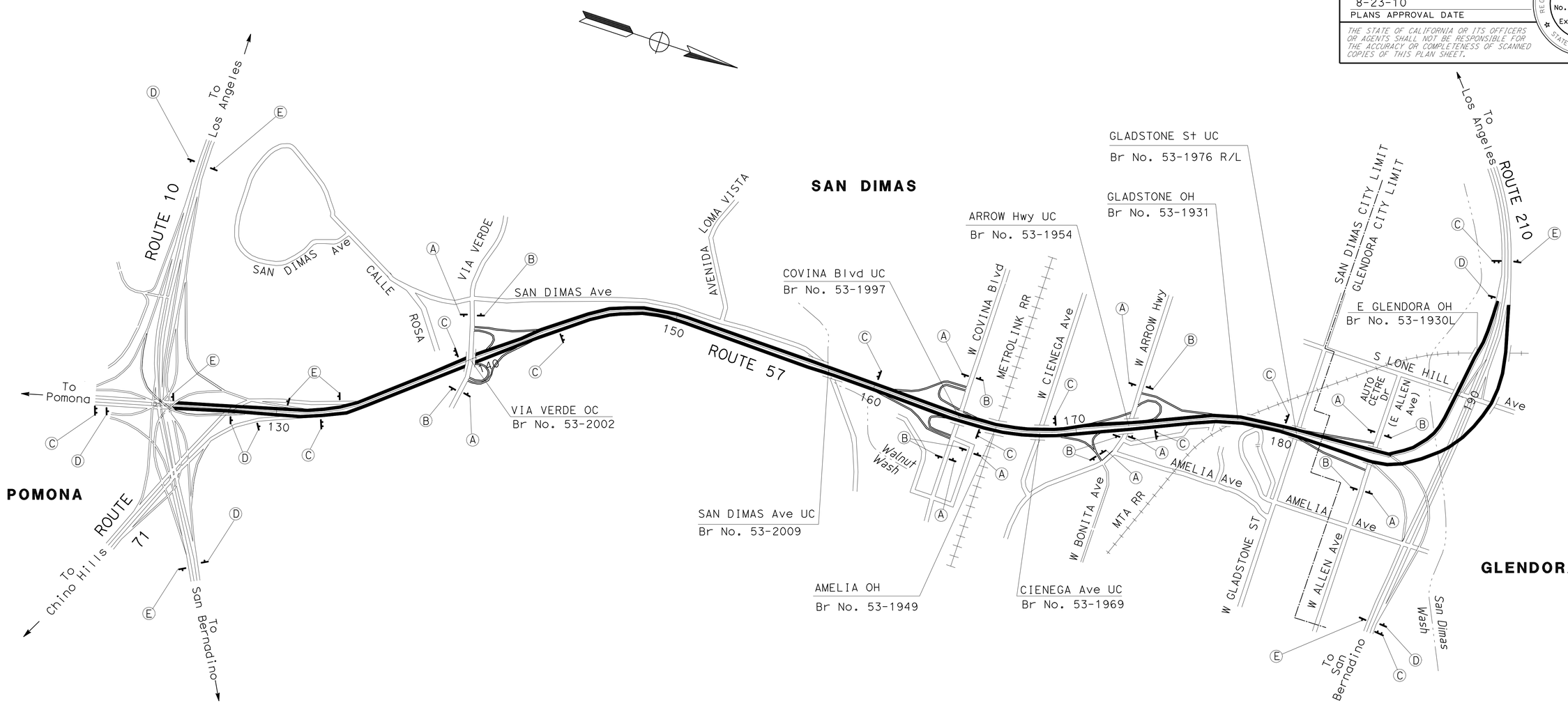

CONSTRUCTION AREA SIGNS

SIGN No.	SIGN CODE	PANEL SIZE	SIGN MESSAGE	MOUNTING TYPE	No. OF POSTS & SIZE	No. OF SIGNS
A	W20-1	30"X30"	ROAD WORK AHEAD	STATIONARY	1-4"X6"	10
B	G20-2	36"X18"	END ROAD WORK	STATIONARY	1-4"X4"	10
C	C40(CA)	108"X42"	TRAFFIC FINES DOUBLED IN WORK ZONES	STATIONARY	2-6"X6"	11
D	W20-1	48"X48"	ROAD WORK AHEAD	STATIONARY	1-6"X6"	7
E	G20-2	48"X24"	END ROAD WORK	STATIONARY	1-4"X6"	7
					TOTAL	45

NOTE: SIGN LOCATIONS SHOWN ARE APPROXIMATE. EXACT LOCATIONS TO BE DETERMINED BY THE ENGINEER.

THIS PLAN ACCURATE FOR CONSTRUCTION AREA SIGN WORK ONLY

CONSTRUCTION AREA SIGNS

NO SCALE

CS-1

REVISED BY | DATE REVISED
HOSS FARASAT | MANSOOR KHAN
CALCULATED-DESIGNED BY | CHECKED BY
FUNCTIONAL SUPERVISOR | MANSOOR KHAN
STATE OF CALIFORNIA - DEPARTMENT OF TRANSPORTATION
Caltrans OFFICE OF DESIGN B

LAST REVISION 00-00-00 | DATE PLOTTED => 19-AUG-2010 | TIME PLOTTED => 11:28

BORDER LAST REVISED 7/1/2010 | USERNAME => s125624 | DGN FILE => 7252301a001.dgn | RELATIVE BORDER SCALE IS IN INCHES 0 1 2 3 | UNIT 1806 | PROJECT NUMBER & PHASE 07000201031

Dist	COUNTY	ROUTE	POST MILES TOTAL PROJECT	SHEET No.	TOTAL SHEETS
07	LA	57	R7.7/R12.2	10	38

REGISTERED CIVIL ENGINEER 7-27-10 DATE

8-23-10
PLANS APPROVAL DATE

REGISTERED PROFESSIONAL ENGINEER MARTIN OREGEL No. C56816 Exp. 6-30-11 CIVIL STATE OF CALIFORNIA

THE STATE OF CALIFORNIA OR ITS OFFICERS OR AGENTS SHALL NOT BE RESPONSIBLE FOR THE ACCURACY OR COMPLETENESS OF SCANNED COPIES OF THIS PLAN SHEET.

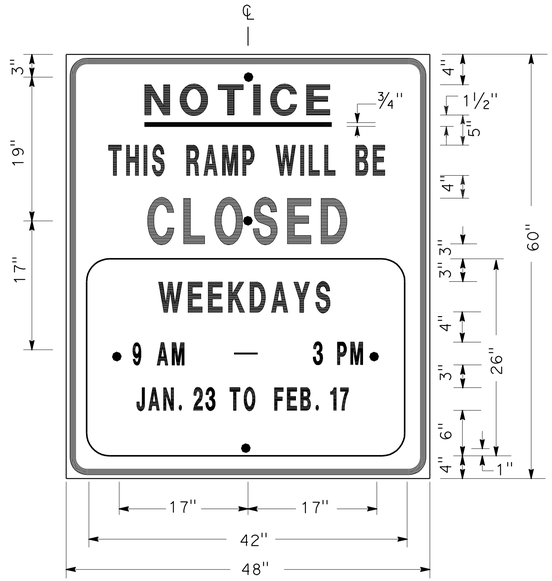

SIGN SP-1

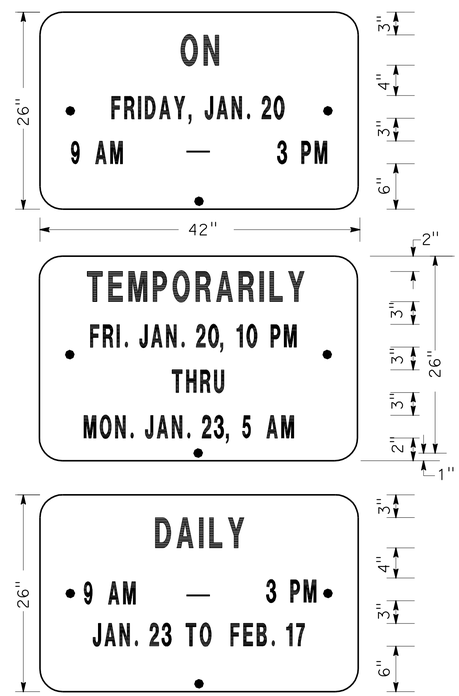

ALTERNATE OVERLAY PANELS (TYPICAL)

SPECIAL ADVANCE NOTICE PUBLICITY SIGN

NOTES: (SIGN SP-1)

1. SIGNS SHALL HAVE ORANGE RETROREFLECTORIZED BACKGROUND WITH BLACK BORDER AND LETTERS.
2. BOLT HOLES SHALL BE 3/8" DIAMETER.
3. BASE MATERIAL SHALL BE ALUMINUM (MINIMUM 0.06").
4. SIGNS SHALL BE MOUNTED WITH BOTTOMS OF SIGNS A MINIMUM OF 6' ABOVE GROUND.

SIZE	BORDER WIDTH	MARGIN WIDTH	LETTER SIZE					CORNER RADIUS
			LINE 1	LINE 2*	LINE 3	LINE 4	LINE 5,6 & 7*	
48"x60"	1 1/4"	3/4"	4E	4D	6E	4D		3"
42"x26"	OVERLAY						3D	1 1/2"
* CONDENSED SPACING IF NECESSARY								

SIGN SP-4

NOTES: (SIGN SP-4)

1. LETTERS - 6" SERIES C.
2. LETTERS AND BORDERS - BLACK ON RETROREFLECTORIZED WHITE BACKGROUND.
3. BASE MATERIAL SHALL BE ALUMINUM (MINIMUM 0.06").
4. SIGNS SHALL BE PLACED AT RAMP ENTRANCES IN ADDITION TO SIGNS POSTED IN ACCORDANCE WITH STANDARD PLAN T14.

SPECIAL SIGN FOR ENTRANCE RAMP CLOSURES

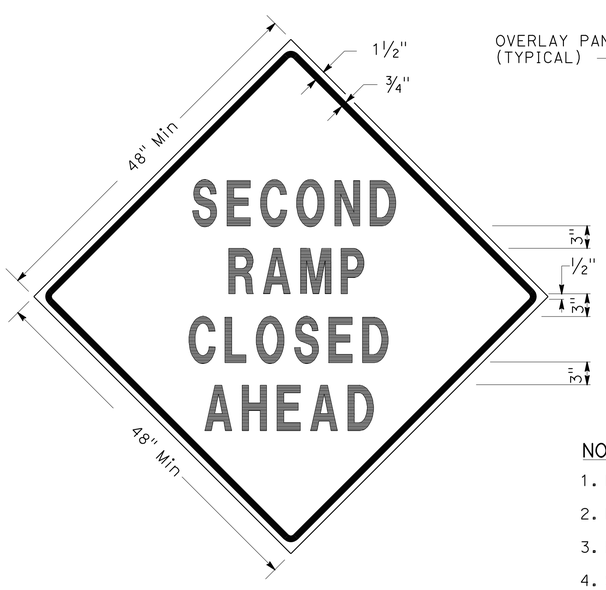

SIGN SP-3

SIGN SP-5

NOTES: (SIGNS SP-3 & SP-5)

1. LETTERS - 6" SERIES D.
2. LETTERS AND BORDERS - BLACK ON RETROREFLECTORIZED ORANGE BACKGROUND.
3. BASE MATERIAL SHALL BE ALUMINUM (MINIMUM 0.06").
4. SIGNS SHALL BE MOUNTED WITH BOTTOMS OF SIGNS A MINIMUM OF 6' ABOVE GROUND.

SPECIAL SIGN FOR EXIT RAMP CLOSURES

TRAFFIC HANDLING DETAILS
TRAFFIC CONTROL SYSTEM FOR RAMP CLOSURES, DETOUR SIGNS AND MISCELLANEOUS DETAILS
SHEET 1 OF 2
NO SCALE
THD-1

STATE OF CALIFORNIA - DEPARTMENT OF TRANSPORTATION
Caltrans DTM
FUNCTIONAL SUPERVISOR: JOHN YANG
CALCULATED-DESIGNED BY: JOCELYN C CHIANG
CHECKED BY: ALBERT K YU
REVISED BY
DATE REVISED

LAST REVISION 00-00-00
DATE PLOTTED => 19-AUG-2010
TIME PLOTTED => 11:28

Dist	COUNTY	ROUTE	POST MILES TOTAL PROJECT	SHEET No.	TOTAL SHEETS
07	LA	57	R7.7/R12.2	11	38

REGISTERED CIVIL ENGINEER 7-27-10 DATE

8-23-10
PLANS APPROVAL DATE

REGISTERED PROFESSIONAL ENGINEER MARTIN OREGEL No. C56816 Exp. 6-30-11 CIVIL STATE OF CALIFORNIA

THE STATE OF CALIFORNIA OR ITS OFFICERS OR AGENTS SHALL NOT BE RESPONSIBLE FOR THE ACCURACY OR COMPLETENESS OF SCANNED COPIES OF THIS PLAN SHEET.

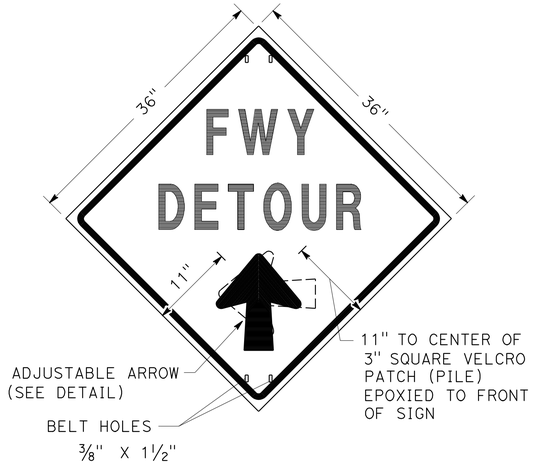

SIGN SP-2

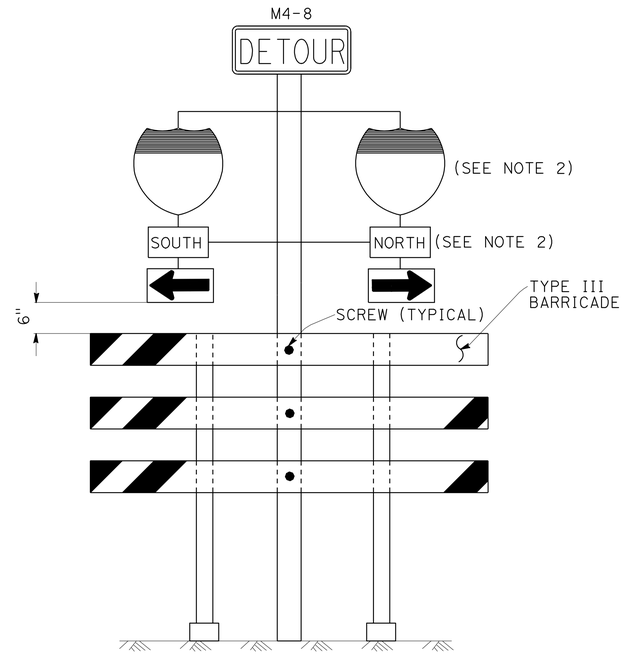

SIGN SP-6 (SEE NOTE 1)

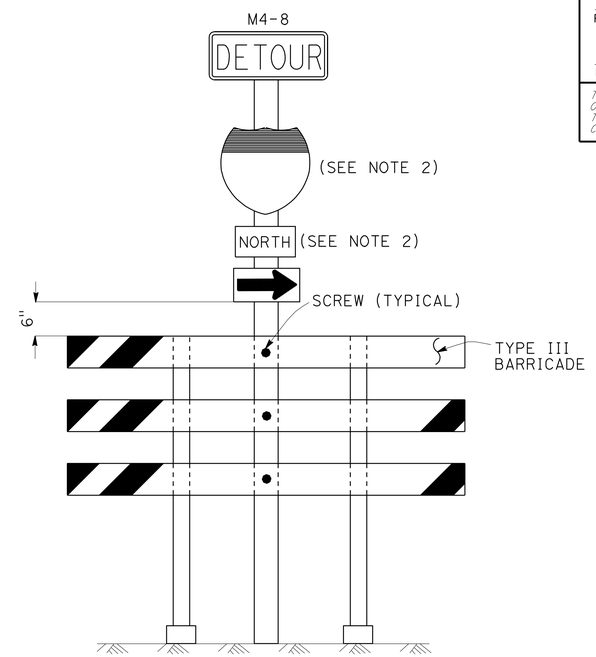

SIGN SP-7 (SEE NOTE 1)

NOTES: (SIGN SP-2)

1. LETTERS -6" SERIES E.
2. LETTERS, BORDER AND ARROW - BLACK ON RETROREFLECTORIZED ORANGE BACKGROUND.
3. BASE MATERIAL FOR SIGNS AND ARROWS SHALL BE ALUMINUM (MINIMUM 0.06").
4. BELTS (LUGGAGE STRAPS) SHALL BE 1" WIDE BY 48" LONG, MADE OF COTTON OR POLYPROPYLENE WEB MATERIAL.
5. SIGNS SHALL BE MOUNTED WITH BOTTOMS OF SIGNS A MINIMUM OF 6' ABOVE GROUND EXCEPT AS OTHERWISE SHOWN ON OTHER TRAFFIC HANDLING DETAILS PLANS.

ABBREVIATION

(CA) CALIFORNIA CODE

NOTES: (SIGNS SP-6 & SP-7)

1. IN LIEU OF PLACING SIGNS ON TYPE III BARRICADES, SIGNS, INCLUDING POSTS, MAY BE PLACED INTO THE GROUND OR FASTENED ONTO ELECTROLIERS.
2. USE APPROPRIATE ROUTE SHIELD [G26-2(CA), G27-2(CA), G28-2(CA)] AND CARDINAL DIRECTION [NORTH (M3-1), SOUTH (M3-3), EAST (M3-2), WEST (M3-4)]

SPECIAL PORTABLE FREEWAY DETOUR SIGNS

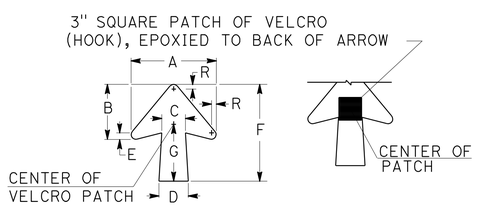

DIMENSIONS							
A	B	C	D	E	F	G	R
11 1/4"	7 1/4"	3 1/8"	4"	7/8"	13"	7 1/2"	5/8"

SPECIAL PORTABLE FREEWAY DETOUR SIGN

ADJUSTABLE ARROW DETAIL

TRAFFIC HANDLING DETAILS

TRAFFIC CONTROL SYSTEM FOR RAMP CLOSURES, DETOUR SIGNS AND MISCELLANEOUS DETAILS

SHEET 2 OF 2

NO SCALE

THD-2

STATE OF CALIFORNIA - DEPARTMENT OF TRANSPORTATION
Caltrans DTM

FUNCTIONAL SUPERVISOR: JOHN YANG
CALCULATED-DESIGNED BY: ALBERT K YU
CHECKED BY: JOCELYN C CHIANG
REVISED BY
DATE REVISED

LAST REVISION 00-00-00
DATE PLOTTED => 19-AUG-2010
TIME PLOTTED => 11:28

Dist	COUNTY	ROUTE	POST MILES TOTAL PROJECT	SHEET No.	TOTAL SHEETS
07	LA	57	R7.7/R12.2	12	38

REGISTERED CIVIL ENGINEER 7-27-10 DATE

8-23-10
PLANS APPROVAL DATE

REGISTERED PROFESSIONAL ENGINEER MARTIN OREGEL No. C56816 Exp. 6-30-11 CIVIL STATE OF CALIFORNIA

THE STATE OF CALIFORNIA OR ITS OFFICERS OR AGENTS SHALL NOT BE RESPONSIBLE FOR THE ACCURACY OR COMPLETENESS OF SCANNED COPIES OF THIS PLAN SHEET.

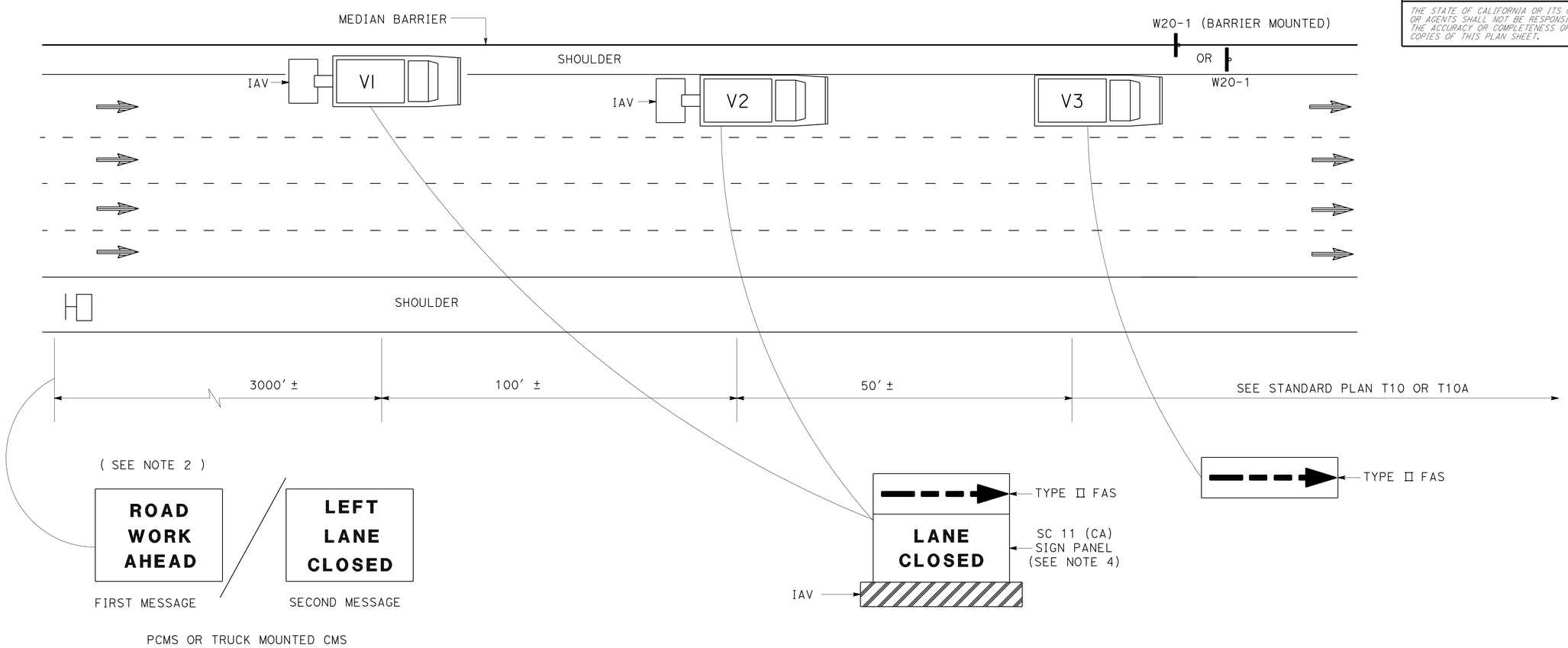

NOTES:

1. LANE CLOSURES SHALL NOT BE PLACED ON CREST VERTICAL CURVES OR ON HORIZONTAL CURVES.
2. PCMS SHALL BE ACTIVATED PRIOR TO TRAFFIC CONTROL ACTIVITIES ON THE LANE.
3. A MINIMUM SIGHT DISTANCE OF 1500′ SHALL BE PROVIDED IN ADVANCE OF PCMS.
4. VEHICLE-MOUNTED SIGN PANELS SHALL BE TYPE III OR IV RETROREFLECTORIZED SHEETING, BLACK ON WHITE OR BLACK ON ORANGE WITH 8" MINIMUM SERIES D LETTERS PER CALTRANS SIGN SPECIFICATIONS.

LEGEND

V1, V2	SHADOW VEHICLE
V3	WORK/APPLICATION VEHICLE
	PORTABLE CHANGEABLE MESSAGE SIGN (PCMS)
	DIRECTION OF TRAVEL
	CONSTRUCTION AREA SIGN

ABBREVIATIONS

FAS	FLASHING ARROW SIGN
IAV	IMPACT ATTENUATOR VEHICLE
CMS	CHANGEABLE MESSAGE SIGN
PCMS	PORTABLE CHANGEABLE MESSAGE SIGN
(CA)	CALIFORNIA CODE

TRAFFIC HANDLING DETAILS
TRAFFIC CONTROL SYSTEM
FOR MEDIAN SHOULDERS LESS THAN 8 FEET

NO SCALE

THD-3

STATE OF CALIFORNIA - DEPARTMENT OF TRANSPORTATION
Caltrans DTM

FUNCTIONAL SUPERVISOR: JOHN YANG
CALCULATED-DESIGNED BY: ALBERT K YU
CHECKED BY: JOCELYN C CHIANG
REVISED BY / DATE REVISED

LAST REVISION 00-00-00
DATE PLOTTED => 19-AUG-2010
TIME PLOTTED => 11:29

Dist	COUNTY	ROUTE	POST MILES TOTAL PROJECT	SHEET No.	TOTAL SHEETS
07	LA	57	R7.7/R12.2	13	38

REGISTERED CIVIL ENGINEER 7-27-10 DATE

8-23-10
PLANS APPROVAL DATE

REGISTERED PROFESSIONAL ENGINEER MARTIN OREGEL No. C56816 Exp. 6-30-11 CIVIL STATE OF CALIFORNIA

THE STATE OF CALIFORNIA OR ITS OFFICERS OR AGENTS SHALL NOT BE RESPONSIBLE FOR THE ACCURACY OR COMPLETENESS OF SCANNED COPIES OF THIS PLAN SHEET.

NOTES:

1. WORDING DISPLAYED ON PCMS WILL BE APPROVED BY THE ENGINEER.
2. EXACT LOCATIONS OF PCMS WILL BE DETERMINED BY THE ENGINEER.
3. CHANGE PCMS MESSAGE AT THE BEGINNING OF CURE PERIOD TO REFLECT NUMBER OF CLOSED LANES.

ABBREVIATIONS

PCMS PORTABLE CHANGEABLE MESSAGE SIGN

(CA) CALIFORNIA CODE

LEGEND

- CONE
- PORTABLE SIGN
- DIRECTION OF TRAVEL
- PORTABLE CHANGEABLE MESSAGE SIGN (PCMS)
- (CA) CALIFORNIA CODE

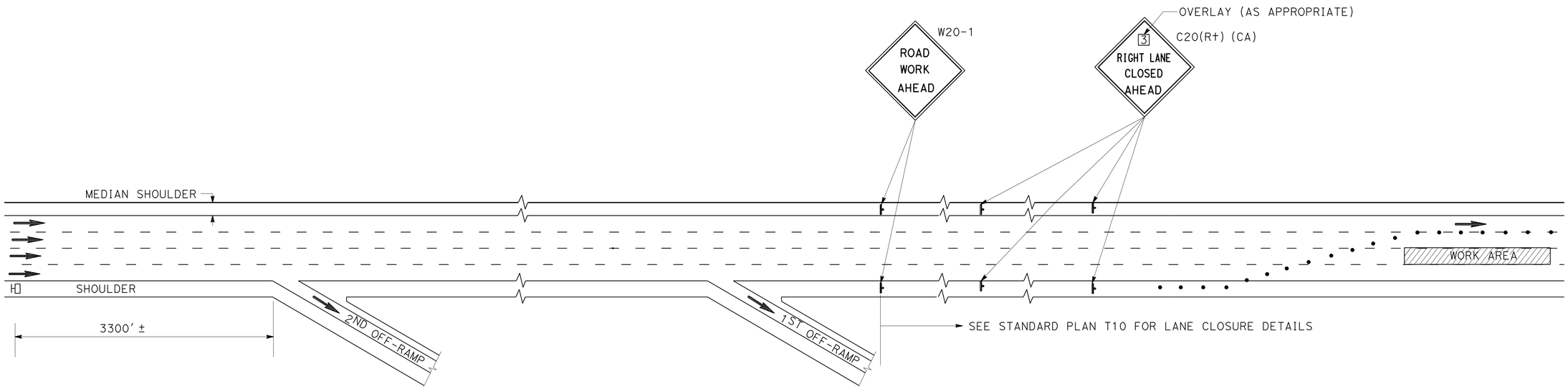

FIRST FLASH MESSAGE	X (NO OF LANES)RIGHT/LEFT	1ST LINE (TYPICAL)
	LANES	2ND LINE (TYPICAL)
	CLOSED	3RD LINE (TYPICAL)
SECOND FLASH MESSAGE	A ST	LIMIT OF CLOSURE (TYPICAL)
	TO	
	B DR	LIMIT OF CLOSURE (TYPICAL)

WORDING FOR PORTABLE CHANGEABLE MESSAGE SIGN

TRAFFIC HANDLING DETAILS
TRAFFIC CONTROL SYSTEM FOR CONCRETE PAVEMENT AND APPROACH SLAB REPLACEMENT
NO SCALE

THD-4

STATE OF CALIFORNIA - DEPARTMENT OF TRANSPORTATION
DTM
FUNCTIONAL SUPERVISOR: JOHN YANG
CALCULATED-DESIGNED BY: JOCELYN C CHIANG
CHECKED BY: ALBERT K YU
REVISED BY
DATE REVISED

LAST REVISION 00-00-00
DATE PLOTTED => 19-AUG-2010
TIME PLOTTED => 11:29

Dist	COUNTY	ROUTE	POST MILES TOTAL PROJECT	SHEET No.	TOTAL SHEETS
07	LA	57	R7.7/R12.2	14	38

REGISTERED CIVIL ENGINEER 7-27-10 DATE

8-23-10
PLANS APPROVAL DATE

REGISTERED PROFESSIONAL ENGINEER MARTIN OREGEL No. C56816 Exp. 6-30-11 CIVIL STATE OF CALIFORNIA

THE STATE OF CALIFORNIA OR ITS OFFICERS OR AGENTS SHALL NOT BE RESPONSIBLE FOR THE ACCURACY OR COMPLETENESS OF SCANNED COPIES OF THIS PLAN SHEET.

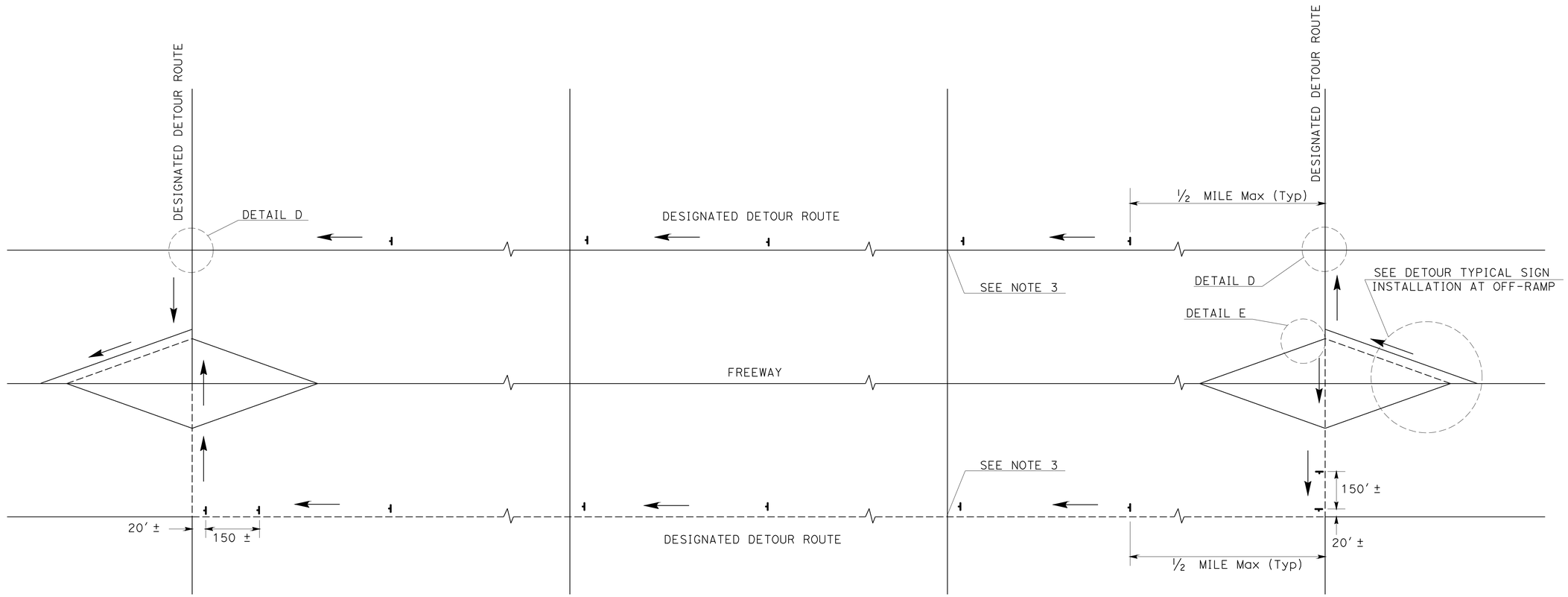

TYPICAL DETOUR SIGN INSTALLATION ALONG DESIGNATED DETOUR ROUTE

LEGEND

SIGN SP-2

AND/OR DESIGNATED DETOUR ROUTE

DIRECTION OF TRAVEL

NOTES:

1. SP-2 SIGNS SHALL NOT BE INSTALLED ON BARRICADES EXCEPT AS OTHERWISE SHOWN.
2. SIGN LOCATIONS ARE APPROXIMATE. EXACT LOCATIONS WILL BE DETERMINED BY THE ENGINEER.
3. SP-2 SIGNS SHALL BE POSTED AT SIGNALIZED INTERSECTIONS ALONG THE DESIGNATED DETOUR ROUTE OR ½ MILE MAXIMUM APART.

TRAFFIC HANDLING DETAILS
TRAFFIC CONTROL SYSTEM FOR DETOUR SIGN INSTALLATION ALONG DESIGNATED DETOUR ROUTE
SHEET 1 OF 2
NO SCALE

THD-5

STATE OF CALIFORNIA - DEPARTMENT OF TRANSPORTATION
Caltrans DTM

FUNCTIONAL SUPERVISOR: JOHN YANG
CALCULATED-DESIGNED BY: ALBERT K YU
CHECKED BY: JOCELYN C CHIANG
REVISED BY
DATE REVISED

LAST REVISION 00-00-00
DATE PLOTTED => 19-AUG-2010
TIME PLOTTED => 11:29

Dist	COUNTY	ROUTE	POST MILES TOTAL PROJECT	SHEET No.	TOTAL SHEETS
07	LA	57	R7.7/R12.2	15	38

REGISTERED CIVIL ENGINEER 7-27-10 DATE

8-23-10
PLANS APPROVAL DATE

REGISTERED PROFESSIONAL ENGINEER MARTIN OREGEL No. C56816 Exp. 6-30-11 CIVIL STATE OF CALIFORNIA

THE STATE OF CALIFORNIA OR ITS OFFICERS OR AGENTS SHALL NOT BE RESPONSIBLE FOR THE ACCURACY OR COMPLETENESS OF SCANNED COPIES OF THIS PLAN SHEET.

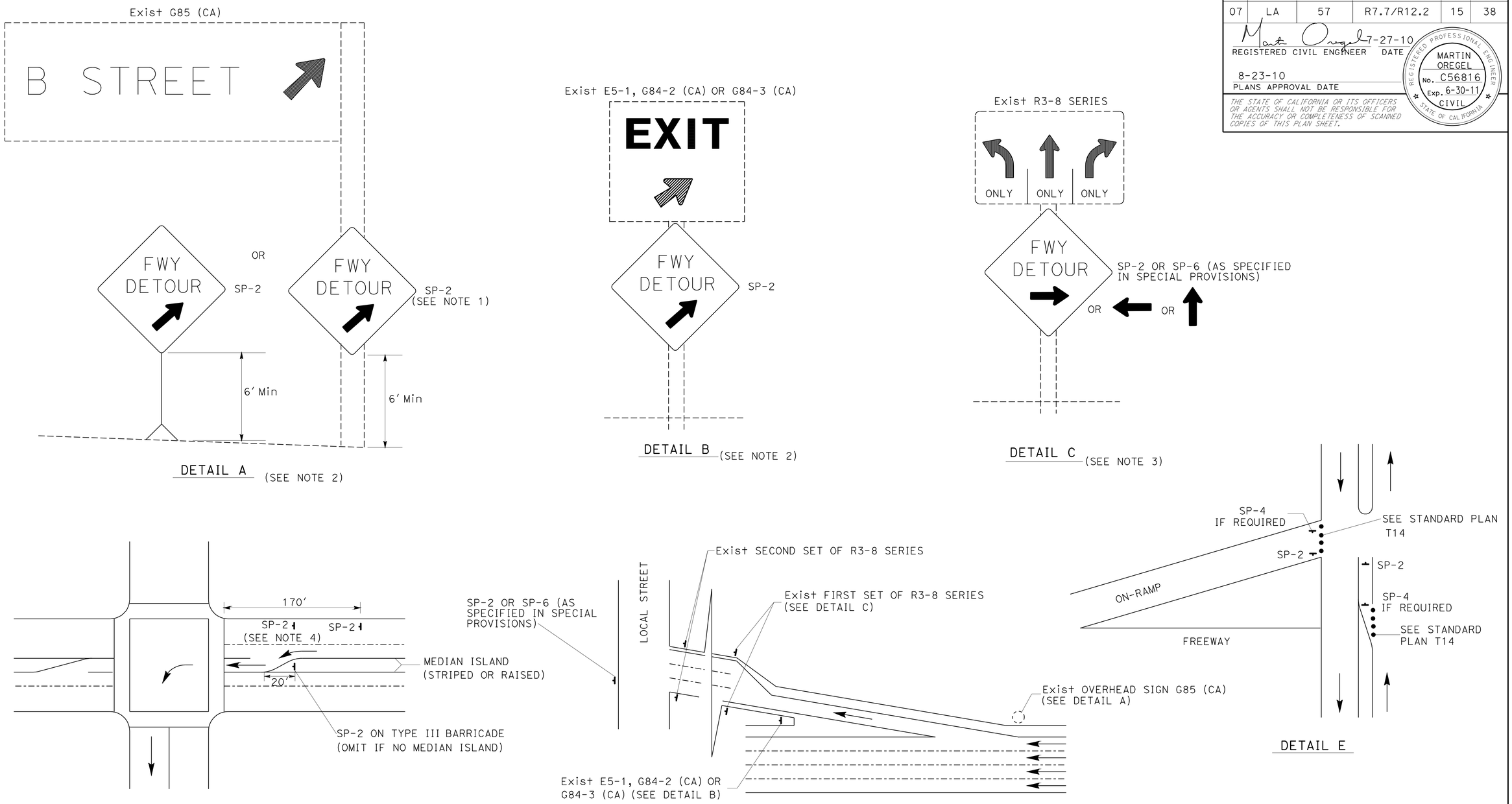

TYPICAL DETOUR SIGN INSTALLATION AT OFF-RAMP

NOTES:

1. SP-2 MAY BE STRAPPED ON EXISTING ELECTROLIER SIGNAL POSTS OR SIGN POSTS.
2. OMIT DETAIL A AND DETAIL B FOR FULL FREEWAY CLOSURES.
3. SEE TRAFFIC HANDLING DETAILS PLAN-TRAFFIC CONTROL SYSTEM FOR RAMP CLOSURES, DETOUR SIGNS AND MISCELLANEOUS DETAILS SHEET 2 OF 2 FOR SP-6.
4. OMIT IF MEDIAN ISLAND EXIST.

ABBREVIATIONS

(CA) CALIFORNIA CODE

LEGENDS

- CONE
- PORTABLE SIGN
- DIRECTION OF TRAVEL
- EXISTING OVERHEAD SIGN

TRAFFIC HANDLING DETAILS

TRAFFIC CONTROL SYSTEM FOR DETOUR SIGN INSTALLATION ALONG DESIGNATED DETOUR ROUTE

SHEET 2 OF 2

NO SCALE

THD-6

STATE OF CALIFORNIA - DEPARTMENT OF TRANSPORTATION

DTM

Caltrans

FUNCTIONAL SUPERVISOR: JOHN YANG

CALCULATED-DESIGNED BY: ALBERT K YU

CHECKED BY: JOCELYN C CHIANG

REVISED BY

DATE REVISED

LAST REVISION 00-00-00

DATE PLOTTED => 19-AUG-2010

TIME PLOTTED => 11:29

Dist	COUNTY	ROUTE	POST MILES TOTAL PROJECT	SHEET No.	TOTAL SHEETS
07	LA	57	R7.7/R12.2	16	38

REGISTERED CIVIL ENGINEER 7-27-10 DATE

8-23-10
PLANS APPROVAL DATE

REGISTERED PROFESSIONAL ENGINEER HOSS FARASAT No. C45672 Exp. 12-31-10 CIVIL STATE OF CALIFORNIA

THE STATE OF CALIFORNIA OR ITS OFFICERS OR AGENTS SHALL NOT BE RESPONSIBLE FOR THE ACCURACY OR COMPLETENESS OF SCANNED COPIES OF THIS PLAN SHEET.

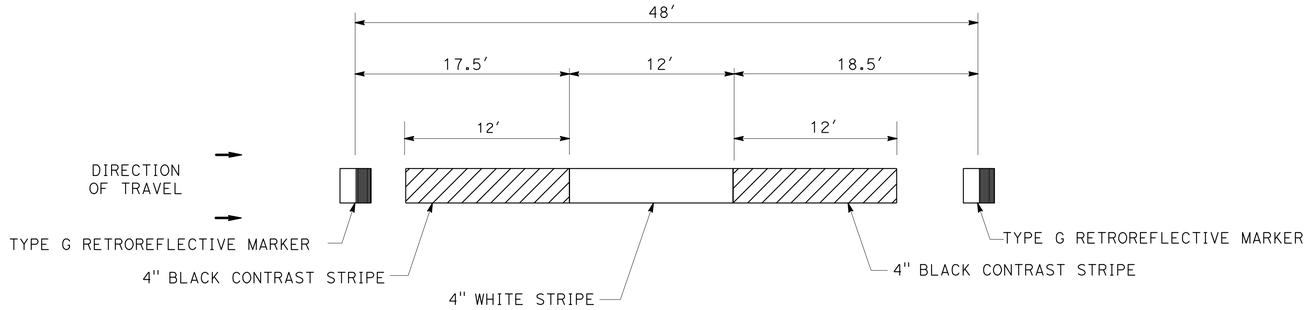

TEMPORARY LANE LINE PAVEMENT DELINEATION

LEGEND:

- PAINTED WHITE STRIPE
- PAINTED BLACK CONTRAST STRIPE
- TYPE G ONE-WAY CLEAR RETROREFLECTIVE MARKERS
- DIRECTION OF TRAVEL

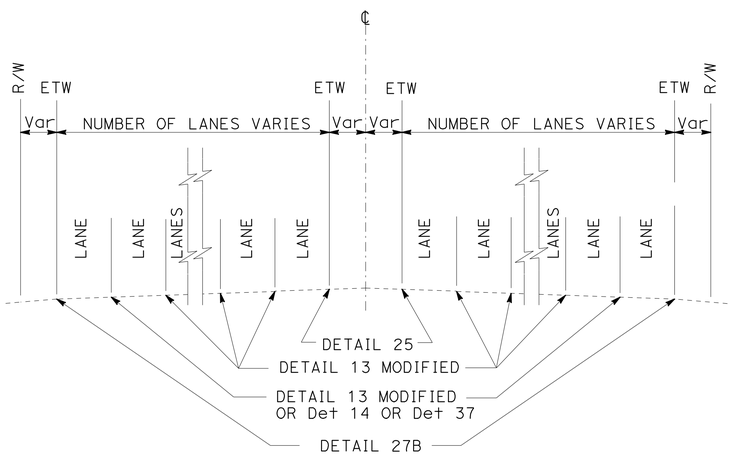

TYPICAL FREEWAY DELINATION

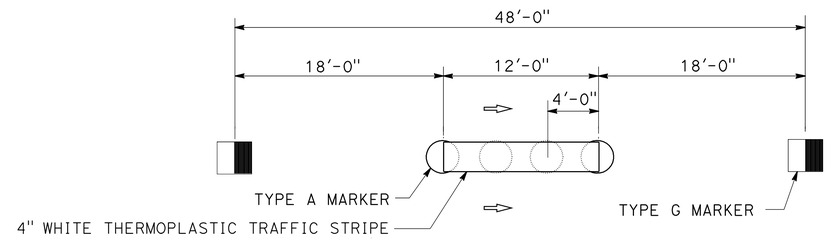

DETAIL 13 (MODIFIED)

NOTE:
THE ADDITION OF A 4" WIDE THERMOPLASTIC STRIPE 12' LONG ON TOP OF TYPE A MARKERS

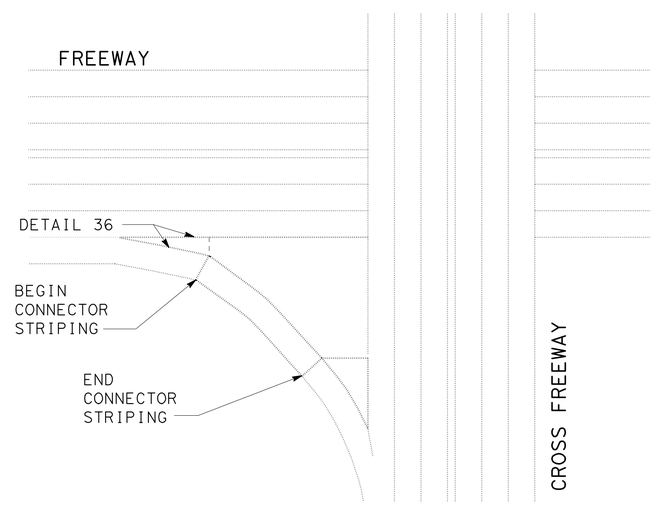

ON CROSS FREEWAY

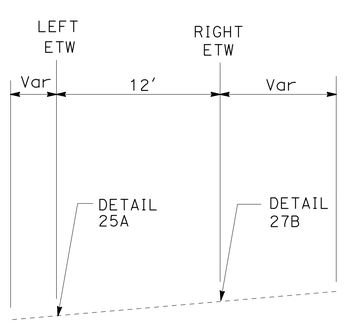

ONE-LANE CONNECTOR

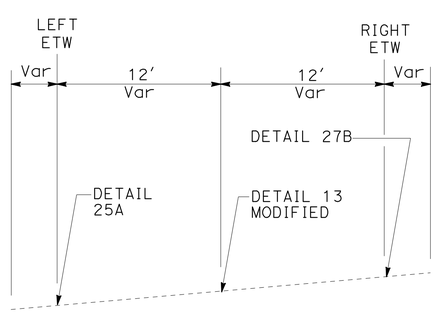

TWO-LANE CONNECTOR

PAVEMENT DELINEATION DETAILS

NO SCALE

PDD-1

REVISED BY | DATE REVISED
HOSS FARASAT | MANSOOR KHAN
CALCULATED-DESIGNED BY | CHECKED BY
FUNCTIONAL SUPERVISOR | MANSOOR KHAN

STATE OF CALIFORNIA - DEPARTMENT OF TRANSPORTATION
Caltrans® OFFICE OF DESIGN B

LAST REVISION 00-00-00 | DATE PLOTTED => 19-AUG-2010 | TIME PLOTTED => 11:29

Dist	COUNTY	ROUTE	POST MILES TOTAL PROJECT	SHEET No.	TOTAL SHEETS
07	LA	57	R7.7/R12.2	17	38

H. Farasat 7-27-10
REGISTERED CIVIL ENGINEER DATE

8-23-10
PLANS APPROVAL DATE

REGISTERED PROFESSIONAL ENGINEER HOSS FARASAT No. C45672 Exp. 12-31-10 CIVIL STATE OF CALIFORNIA

THE STATE OF CALIFORNIA OR ITS OFFICERS OR AGENTS SHALL NOT BE RESPONSIBLE FOR THE ACCURACY OR COMPLETENESS OF SCANNED COPIES OF THIS PLAN SHEET.

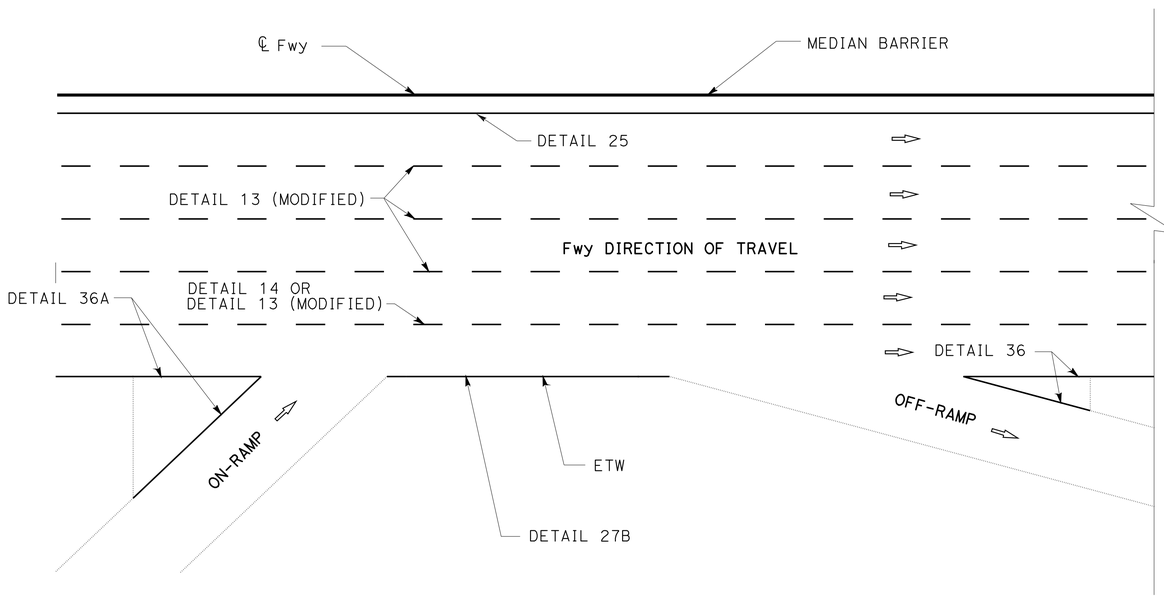

RAMPS

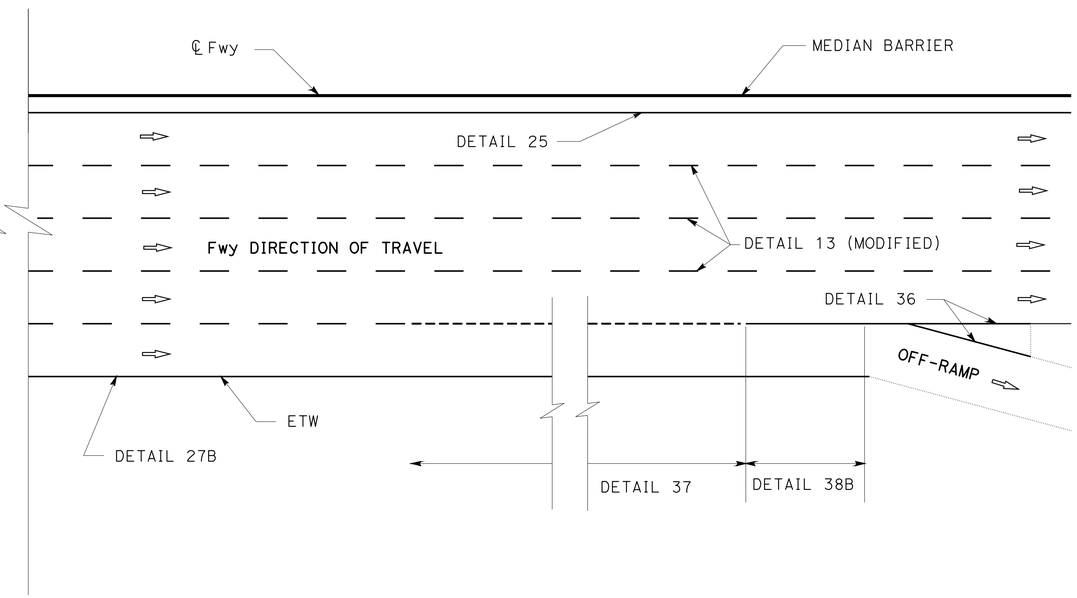

MAINLINE LANE DROP TO A ONE LANE EXIT

PAVEMENT DELINEATION DETAILS

NO SCALE

PDD-2

STATE OF CALIFORNIA - DEPARTMENT OF TRANSPORTATION
Caltrans® OFFICE OF DESIGN B

FUNCTIONAL SUPERVISOR: MANSOOR KHAN
CALCULATED-DESIGNED BY: HOSS FARASAT
CHECKED BY: MANSOOR KHAN
REVISED BY
DATE REVISED

LAST REVISION 00-00-00
DATE PLOTTED => 19-AUG-2010
TIME PLOTTED => 11:29

Dist	COUNTY	ROUTE	POST MILES TOTAL PROJECT	SHEET No.	TOTAL SHEETS
07	LA	57	R7.7/R12.2	18	38

REGISTERED CIVIL ENGINEER 7-27-10 DATE

8-23-10
PLANS APPROVAL DATE

REGISTERED PROFESSIONAL ENGINEER HOSS FARASAT No. C45672 Exp. 12-31-10 CIVIL STATE OF CALIFORNIA

THE STATE OF CALIFORNIA OR ITS OFFICERS OR AGENTS SHALL NOT BE RESPONSIBLE FOR THE ACCURACY OR COMPLETENESS OF SCANNED COPIES OF THIS PLAN SHEET.

MAINLINE PAVEMENT DELINEATION QUANTITIES

LOCATION	DIRECTION		THERMOPLASTIC TRAFFIC STRIPE			PAVEMENT MARKER (RETROREFLECTIVE)		PAVEMENT MARKER (NON-REFLECTIVE)	REMOVE THERMOPLASTIC TRAFFIC STRIPE (N)	REMOVE PAVEMENT MARKER		
			DETAIL 13(Mod)	DETAIL 25	DETAIL 27B	TYPE G	TYPE H	TYPE A	DETAIL 25	TYPE G	TYPE H	TYPE A
	NB	SB	LF	LF	LF	EA	EA	EA	LF	EA	EA	EA
57/10 SEPARATION TO VIA VERDE OC PM R7.66-R8.71	X		16,650	5,550	5,550	347	116	1,388	5,550	347	116	1,388
		X	13,875	5,550	5,550	290	116	1,160	5,550	290	116	1,160
VIA VERDE OC TO SAN DIMAS Ave UC PM R8.71-R9.82	X		23,340	5,835	5,835	487	122	1,948	5,835	487	122	1,948
		X	17,505	5,835	5,835	365	122	1,460	5,835	365	122	1,460
SAN DIMAS Ave UC TO COVINA Blvd UC PM R9.82-R10.27	X		7,224	2,408	2,408	151	51	604	2,408	151	51	604
		X	7,224	2,408	2,408	151	51	604	2,408	151	51	604
COVINA Blvd UC TO AMELIA OH PM R10.27-R10.40	X		2,061	687	687	43	15	172	687	43	15	172
		X	2,061	687	687	43	15	172	687	43	15	172
AMELIA OH TO CIENEGA Ave UC PM R10.40-R10.53	X		1,965	655	655	41	14	164	655	41	14	164
		X	1,965	655	655	41	14	164	655	41	14	164
CIENEGA Ave UC TO ARROW Hwy UC PM R10.53-R10.79	X		4,248	1,416	1,416	89	30	356	1,416	89	30	356
		X	4,248	1,416	1,416	89	30	356	1,416	89	30	356
ARROW Hwy UC TO GLADSTONE OH PM R10.79-R11.15	X		7,564	1,891	1,891	158	40	632	1,891	158	40	632
		X	5,673	1,891	1,891	119	40	476	1,891	119	40	476
GLADSTONE OH TO GLADSTONE St UC R/L PM R11.15-R11.32	X		3,612	903	903	76	19	304	903	76	19	304
		X	2,258	903	903	48	19	192	903	48	19	192
GLADSTONE St UC R/L TO ALLEN Ave UC R/L PM R11.32-R11.57	X		5,260	1,315	1,315	110	28	440	1,315	110	28	440
		X	3,978	1,326	1,326	83	28	332	1,326	83	28	332
ALLEN Ave UC R/L TO S Conn UC R PM R11.57-R11.65	X		836	418	418	18	9	72	418	18	9	72
SUBTOTAL MAINLINE SHEET Q-1			131,547	41,749	41,749	2,749	879	10,996	41,749	2,749	879	10,996

NOTE: (N): NOT A SEPARATE PAY ITEM, FOR INFORMATION ONLY.

PAVEMENT DELINEATION QUANTITIES

PDQ-1

REVISED BY | DATE REVISED
HOSS FARASAT | MANSOOR KHAN
CALCULATED-DESIGNED BY | CHECKED BY
FUNCTIONAL SUPERVISOR | MANSOOR KHAN
STATE OF CALIFORNIA - DEPARTMENT OF TRANSPORTATION
Caltrans® OFFICE OF DESIGN B

LAST REVISION 00-00-00 | DATE PLOTTED => 19-AUG-2010 | TIME PLOTTED => 11:30

Dist	COUNTY	ROUTE	POST MILES TOTAL PROJECT	SHEET No.	TOTAL SHEETS
07	LA	57	R7.7/R12.2	19	38

REGISTERED CIVIL ENGINEER 7-27-10 DATE

8-23-10
PLANS APPROVAL DATE

REGISTERED PROFESSIONAL ENGINEER HOSS FARASAT No. C45672 Exp. 12-31-10 CIVIL STATE OF CALIFORNIA

THE STATE OF CALIFORNIA OR ITS OFFICERS OR AGENTS SHALL NOT BE RESPONSIBLE FOR THE ACCURACY OR COMPLETENESS OF SCANNED COPIES OF THIS PLAN SHEET.

PAVEMENT DELINEATION QUANTITIES

LOCATION	DIRECTION		THERMOPLASTIC TRAFFIC STRIPE			PAVEMENT MARKER (RETROREFLECTIVE)		PAVEMENT MARKER (NON-REFLECTIVE)	REMOVE THERMOPLASTIC TRAFFIC STRIPE (N)	REMOVE PAVEMENT MARKER		
			DETAIL 13(Mod)	DETAIL 25	DETAIL 27B	TYPE G	TYPE H	TYPE A	DETAIL 25	TYPE G	TYPE H	TYPE A
	NB	SB	LF	LF	LF	EA	EA	EA	LF	EA	EA	EA
S Conn R TO S† 210 SEPERATION R PM R11.65-R11.79	X		740	740	740	16	16	64	740	16	16	64
S† 210 SEPERATION R TO LONE HILL Ave UC R PM R11.79-R12.00	X		1,104	1,104	1,104	23	23	92	1,104	23	23	92
LONE HILL Ave UC R TO EAST GLENDORA OH R PM R12.00-R12.18	X		951	951	951	20	20	80	951	20	20	80
EAST GLENDORA OH R TO END INDEPENDENT ALIGN R† LANE PM R12.18-R12.30	X		650	650	650	14	14	56	650	14	14	56
ALLEN Ave UC L SAN DIMAS CHANNEL BRIDGE PM R11.57-R11.82												
		X	1,315	1,315	1,315	28	28	112	1,315	28	28	112
SAN DIMAS CHANNEL BRIDGE TO EAST GLENDORA OH L PM R11.82-R12.06												
		X	1,262	1,262	1,262	27	27	108	1,262	27	27	108
EAST GLENDORA OH L TO END INDEPENDENT ALIGN L† LANE PM R12.06-R12.21												
		X	793	793	793	17	17	68	793	17	17	68
SUBTOTAL MAINLINE SHEET Q-2			6,815	6,815	6,815	145	145	580	6,815	145	145	580
SUBTOTAL MAINLINE SHEET Q-1			131,547	41,749	41,749	2,749	879	10,996	131,547	2,749	879	10,996
TOTAL MAINLINE			235,490			3,918		11,576	138,362	15,494		

NOTE: (N): NOT A SEPARATE PAY ITEM, FOR INFORMATION ONLY.

REVISED BY | DATE REVISED
HOSS FARASAT | MANSOOR KHAN
CALCULATED-DESIGNED BY | CHECKED BY
FUNCTIONAL SUPERVISOR | MANSOOR KHAN

STATE OF CALIFORNIA - DEPARTMENT OF TRANSPORTATION
Caltrans® OFFICE OF DESIGN B

PAVEMENT DELINEATION QUANTITIES

PDQ-2

LAST REVISION 00-00-00 | DATE PLOTTED => 19-AUG-2010 | TIME PLOTTED => 11:30

Dist	COUNTY	ROUTE	POST MILES TOTAL PROJECT	SHEET No.	TOTAL SHEETS
07	LA	57	R7.7/R12.2	20	38

H. Farasat 7-27-10
REGISTERED CIVIL ENGINEER DATE

8-23-10
PLANS APPROVAL DATE

REGISTERED PROFESSIONAL ENGINEER HOSS FARASAT No. C45672 Exp. 12-31-10 CIVIL STATE OF CALIFORNIA

THE STATE OF CALIFORNIA OR ITS OFFICERS OR AGENTS SHALL NOT BE RESPONSIBLE FOR THE ACCURACY OR COMPLETENESS OF SCANNED COPIES OF THIS PLAN SHEET.

RAMP PAVEMENT DELINEATION QUANTITIES

LOCATION			PAVEMENT MARKER (RETROREFLECTIVE)		THERMOPLASTIC TRAFFIC STRIPE & MARKING								REMOVE PAVEMENT MARKERS	REMOVEYELLOW THERMOPLASTIC TRAFFIC STRIPE	REMOVE 4" WHITE THERMOPLASTIC TRAFFIC STRIPE
					4" (BROKEN 17-7)	4" SOLID YELLOW	4" SOLID WHITE	8" SOLID WHITE	8" SOLID WHITE	12" CROSSWALK AND LIMIT LINES	PAVEMENT MARKING				
											WORDS AND SYMBOLS	ARROWS			
No.	MARK	PM	TYPE G	TYPE H	DETAIL 9	DETAIL 25	DETAIL 27B	DETAIL 36	DETAIL 36A					(N)	(N)
			EA	EA	LF	LF	LF	LF	LF	SQFT	SQFT	SQFT	EA	LF	LF
1	S-1	R8.672	18	41	559	971	1,284	454	-	75	150	201	59	971	2,976
2	S-4	R8.777	8	33	449	758	1,025	-	167	75	-	62	41	758	2,033
3	S-2	R8.825	40	46	300	1,085	1,352	80	167	75	108	62	86	1,085	2,371
4	S-3	R8.929	39	48	-	1,128	1,217	850	-	75	63	207	75	1,128	3,142
5	C-1	R10.077	18	57	763	1,338	1,522	390	-	75	126	139	87	1,338	3,290
6	C-4	R10.078	50	57	248	1,353	2,546	50	219	-	183	62	107	1,353	3,332
7	C-2	R10.256	14	44	160	1,028	1,292	170	304	65	-	31	58	1,028	2,595
8	C-3	R10.285	12	51	688	1,192	1,262	370	-	-	126	146	63	1,192	2,690
9	A-1	R10.514	22	43	525	996	1,286	533	-	95	126	174	65	996	3,162
10	A-2	R10.700	9	26	200	593	993	-	200	95	86	62	35	593	1,878
11	A-3	R10.737	17	31	100	715	978	80	200	60	103	62	48	715	1,818
12	A-5	R10.898	30	34	267	781	1,738	200	-	70	195	33	64	781	2,615
13	A-4	R11.058	12	48	485	1,119	1,390	370	-	90	126	324	60	1,119	2,885
14	C	R11.372	12	46	772	1,091	1,342	370	-	90	126	150	58	1,091	3,124
15	B	R11.409	33	37	218	872	1,852	80	167	-	172	66	70	872	2,564
SUBTOTAL			334	642	5,734	15,020	21,079	3,997	1,424	940	1,690	1,781	976	15,020	40,475
TOTAL			976		5,734	15,020	21,079	5,421		940	3,471		976	15,020	40,475

NOTE: (N): NOT A SEPARATE PAY ITEM, FOR INFORMATION ONLY.

PAVEMENT DELINEATION QUANTITIES

PDQ-3

STATE OF CALIFORNIA - DEPARTMENT OF TRANSPORTATION
Caltrans® OFFICE OF DESIGN B

FUNCTIONAL SUPERVISOR: MANSOOR KHAN
CALCULATED-DESIGNED BY: HOSS FARASAT
CHECKED BY: MANSOOR KHAN
REVISED BY
DATE REVISED

LAST REVISION 00-00-00
DATE PLOTTED => 19-AUG-2010
TIME PLOTTED => 11:30

Dist	COUNTY	ROUTE	POST MILES TOTAL PROJECT	SHEET No.	TOTAL SHEETS
07	LA	57	R7.7/R12.2	21	38

REGISTERED CIVIL ENGINEER 7-27-10 DATE

8-23-10
PLANS APPROVAL DATE

REGISTERED PROFESSIONAL ENGINEER HOSS FARASAT No. C45672 Exp. 12-31-10 CIVIL STATE OF CALIFORNIA

THE STATE OF CALIFORNIA OR ITS OFFICERS OR AGENTS SHALL NOT BE RESPONSIBLE FOR THE ACCURACY OR COMPLETENESS OF SCANNED COPIES OF THIS PLAN SHEET.

SUMMARY OF QUANTITIES FOR MAINLINE FREEWAY

TRAVELED WAY GRINDING, JOINTS AND SHOULDER WORK

LOCATION	DIRECTION NB	DIRECTION SB	COLD PLANE ASPHALT-CONCRETE PAVEMENT	RUBBERIZED HOT MIX ASPHALT (GAP GRADED)	GRIND EXISTING CONCRETE PAVEMENT	REMOVE AC DIKE	PLACE HMA DIKE (TYPE A)	SHOULDERS AT LOCALLY FAILED AREAS: ROAD EXCAVATION	SHOULDERS AT LOCALLY FAILED AREAS: HOT MIX ASPHALT (TYPE B)	SHOULDERS AT LOCALLY FAILED AREAS: CLASS 3 AGGREGATE BASE	REPAIR SPALLED JOINTS (POLYESTER GROUT)	SEAL JOINT (Exist Conc PAVEMENT)	PREFORMED COMPRESSION JOINT SEAL
	NB	SB	SQYD	TON		LF	LF	CY	TON	CY	SQYD	LF	LF
57/10 SEPARATION TO VIA VERDE OC PM R7.66-R8.71	X		13,067	1,734.56	24,500	4,900	4,900						
		X	13,067	1,734.56	29,400	4,900	4,900	205	37	167			
VIA VERDE OC TO SAN DIMAS Ave UC PM R8.71-R9.82	X		15,560	2,065.55	26,258	5,824	5,824	175	32	143			
		X	15,560	2,065.55	24,799	5,824	5,824	175	32	143			
SAN DIMAS Ave UC TO COVINA Blvd UC PM R9.82-R10.27	X		5,549	736.60	8,324	2,081	2,081						
		X	5,549	736.60	8,324	2,081	2,081						
COVINA Blvd UC TO AMELIA OH PM R10.27-R10.40	X		1,352	179.47	2,535	507	507						
		X	1,352	179.47	2,028	507	507						
AMELIA OH TO CIENEGA Ave UC PM R10.40-R10.53	X		1,424	188.98	2,670	534	534						
		X	1,424	188.98	2,136	534	534						
CIENEGA Ave UC TO ARROW Hwy UC PM R10.53-R10.79	X		3,352	444.94	5,028	1,257	1,257						
		X	3,352	444.94	5,028	1,257	1,257						
ARROW Hwy UC TO GLADSTONE OH PM R10.79-R11.15	X		4,576	607.45	8,580	1,716	1,716				370	462,000	27,500
		X	4,576	607.45	6,864	1,716	1,716						
GLADSTONE OH TO GLADSTONE St UC R/L PM R11.15-R11.32	X		1,789	237.50	3,355	671	671						
		X	1,789	237.50	3,355	671	671						
GLADSTONE St UC R/L TO ALLEN Ave UC R/L PM R11.32-R11.57	X		2,376	329.66	5,940	1,188	1,188						
		X	2,388	331.32	4,776	1,194	1,194						
ALLEN Ave UC R/L TO S Conn UC R PM R11.57-R11.65	X		550	76.31	825	275	275						
S Conn R TO ROUTE 210 SEPERATION R PM R11.65-R11.79	X		1,174	162.89	1,174	587	587						
ROUTE 210 SEPERATION R TO LONE HILL Ave UC R PM R11.79-R12.00	X		836	115.99	836	418	418						
LONE HILL Ave UC R TO EAST GLENDORA OH R PM R12.00-R12.18	X		1,554	215.61	1,554	777	777						
EAST GLENDORA OH R TO END INDEPENDENT ALIGN R+ LANE PM R12.18-R12.30	X		1,216	168.71	1,216								
ALLEN Ave UC L SAN DIMAS CHANNEL BRIDGE PM R11.57-R11.82													
		X	2,376	329.66	2,376	1,188	1,188						
SAN DIMAS CHANNEL BRIDGE TO EAST GLENDORA OH L PM R11.82-R12.06													
		X	1,174	162.89	1,174	587	587						
EAST GLENDORA OH L TO END INDEPENDENT ALIGN L+ LANE PM R12.06-R12.21						608	608						
		X	1,300	180.37	1,950	650	650						
TOTAL MAINLINE			108,282	14,464	185,005	42,452	42,452	555	101	453	370	462,000	27,500

CONCRETE SLAB REPLACEMENT

BOUND DIRECTION	APPROXIMATE LOCATION FROM PM	TO PM	NUMBER OF SLABS (N): No. 1 LANE	No. 2 LANE	No. 3 LANE	No. 4 LANE	No. 5 LANE	SUB TOTAL	REPLACE Conc PAVEMENT (RAPID STRENGTH Conc)	LEAN CONCRETE BASE (RAPID SETTING) (APPROXIMATE VOLUME)	DOWEL BAR	TIE BAR
			EA	EA	EA	EA	EA	EA	CY	CY	EA	EA
NORTH BOUND	R7.7	R8.71			4	4	32	40	200	20	1,008	576
	R8.71	R9.40			32	32	38	102	510	51	2,520	1,440
	R9.4	R9.88			25	25		50	250	25	1,288	736
	R9.88	R10.27	4	4	6	13		27	131	14	700	400
	R10.27	R10.74	13		6	7		26	123	13	644	368
	R10.74	R12.2			19	19		38	190	19	952	544
SOUTH BOUND	R7.7	R8.71		19	25	25		69	335	35	1,764	1,008
	R8.71	R10.4	7	7	13	19		46	223	23	1,120	640
	R10.4	R10.74			7	13		20	100	10	476	272
	R10.74	R11.15		4	10	10		24	118	12	616	352
	R11.15	R12.2	19	19				38	190	19	952	544
TOTAL			43	53	147	167	70		2370	241	12,040	6,880
			480									

NOTES:

1. WEAKEND PLANE JOINT TO WEAKENED PLANE JOINT, CONSTITUTES ONE SLAB.
2. SEE SHEET X-1 FOR NOTES, LEGEND AND DETAILS
3. LOCATIONS AND NUMBER OF SLABS ARE APPROXIMATE, EXACT LOCATION AND NUMBER OF REPLACING SLABS, TO BE DETERMINED BY THE ENGINEER.

SUMMARY OF QUANTITIES

Q-1

STATE OF CALIFORNIA - DEPARTMENT OF TRANSPORTATION
Caltrans OFFICE OF DESIGN B

FUNCTIONAL SUPERVISOR: MANSOOR KHAN
CALCULATED-DESIGNED BY: HOSS FARASAT
CHECKED BY: MANSOOR KHAN
REVISED BY
DATE REVISED

LAST REVISION 00-00-00
DATE PLOTTED => 19-AUG-2010
TIME PLOTTED => 11:30

Dist	COUNTY	ROUTE	POST MILES TOTAL PROJECT	SHEET No.	TOTAL SHEETS
07	LA	57	R7.7/R12.2	22	38

REGISTERED CIVIL ENGINEER 7-27-10 DATE

8-23-10
PLANS APPROVAL DATE

REGISTERED PROFESSIONAL ENGINEER HOSS FARASAT No. C45672 Exp. 12-31-10 CIVIL STATE OF CALIFORNIA

THE STATE OF CALIFORNIA OR ITS OFFICERS OR AGENTS SHALL NOT BE RESPONSIBLE FOR THE ACCURACY OR COMPLETENESS OF SCANNED COPIES OF THIS PLAN SHEET.

LEGEND:

(1): PRIOR TO PLACEMENT OF NEW JOINTS, EXISTING JOINT SPALLS SHALL BE REPAIRED BY REMOVING UNSOUND CONCRETE AND PLACING RAPID SETTING CONCRETE (PATCH)

BRIDGE QUANTITIES

BRIDGE JOINT SEALS QUANTITIES

BRIDGE NAME	BRIDGE No.	JOINT SEALS LENGTH: CLEAN EXPASION JOINT (LF)	JOINT SEALS LENGTH: POURABLE TYPE A (LF)	JOINT SEALS LENGTH: TYPE B (LF)	WORK DECRIPTION	MINIMUM "MR": B	MINIMUM "MR": A	EXISTING WATERSTOP	Approx DEPTH TO CLEAN Exp JOINT (INCHES)	Approx DEPTH OF JOINT SPALLS (INCHES) (1)	Approx WIDTH OF JOINT SPALLS (INCHES) (1)	Approx LENGTH OF JOINT SPALLS (LF) (1)	OTHER BRIDGE-QUANTITIES: REMOVE UNSOUND CONCRETE (CF)	OTHER BRIDGE-QUANTITIES: RAPID SETTING CONCRETE (PATCH) (CF)
COVINA Blvd UC	53-1997	548	180	368	CLEAN JOINTS AND REPLACE JOINT SEALS ON THE BRIDGE	2	½	NO	6	3	6	5	6.00	6.00
AMELIA OH	53-1949	214	NO	214	CLEAN JOINTS AND REPLACE TYPE B JOINT SEALS	2		NO	6	3	6	5		
CIENEGA Ave UC	53-1969	203	NO	203	CLEAN JOINTS AND REPLACE TYPE B JOINT SEALS AT BOTH ABUTMENT JOINTS	2		NO	6	3	6	5		
ARROW Hwy UC	53-1954	210	NO	210	CLEAN JOINTS AND REPLACE TYPE B JOINT SEALS	2		NO	6	3	6	5		
GLADSTONE St OH	53-1931	414	NO	414	CLEAN JOINTS AND REPLACE JOINT SEALS	2		NO	6	3	6	5		
GLADSTONE St UC	53-1976L	128	NO	128	CLEAN JOINTS AND REPLACE TYPE B JOINT SEALS AT BOTH APPROACH AND DEPARTURE SLABS	2		NO	6	3	6	5		
GLADSTONE St UC	53-1976R	158	NO	158	CLEAN JOINTS AND REPLACE ALL TYPE B JOINT SEALS	2		NO	6	3	6	5		
ALLEN Ave UC	53-1977L	292	154	138	CLEAN JOINTS AND REPLACE JOINT SEALS ON THE BRIDGE	2	½	NO	6	3	6	5		
ALLEN Ave UC	53-1977R	NO	NO	NO	NO JOINT SEAL WORK									
SANDIMAS Ave UC	53-2009	NO	NO	NO	NO JOINT SEAL WORK									
LONE HILL Ave UC	53-1971	NO	NO	NO	NO JOINT SEAL WORK									
EAST GLENDORA OH	53-1930	341	341	NO	CLEAN JOINTS AND REPLACE JOINT SEALS		½	NO	6	3	6	5		
TOTAL		2508	675	1833									6	6

NOTES:

I- ALL WORK SHALL BE DONE FROM TOP OF THE DECK.

II- THE FOLLOWING NOTES APPLY TO **JOINT SEAL TYPE A**:

a) INSTALL JOINT SEAL (MR=½") OR SILICONE JOINT SEAL 3" UP INTO CURB OR BARRIER RAIL ON THE LOW SIDE OF THE DECK WHERE DECK JOINT ALIGNS WITH CURB OR BARRIER RAIL JOINT.

b) FOR DETAILS NOT SHOWN SEE RSP B6-21.

III- THE FOLLOWING NOTES APPLY TO **JOINT SEAL TYPE B**:

1) SEAL MUST SATISFY BOTH MINIMUM MOVEMENT RATING (MR) AND MINIMUM W1 REQUIREMENTS.

2) MINIMUM W1 IS THE CALCULATED MAXIMUM WIDTH OF THE JOINT BASED ON FIELD MEASUREMENTS. AFTER THE JOINTS HAVE BEEN CLEANED, MINIMUM W1 WILL BE RECALCULATE BY THE ENGINEER.

3) W1 SHALL BE THE SMALLER OF THE VALUES DETEMINED AS FOLLOWS:
A) 0.85 TIMES THE MANUFACTURER'S DESIGNED MINIMUM UNCOMPRESSED WIDTH OF THE SEAL.
B) THE WIDTH OF THE SEAL ON THE THIRD SUCCESSIVE TEST CYCLE OF THE PRESSURE DEFLECTION, TEST, WHEN COMPRESSED TO AN AVERAGE PRESSURE OF 3.0 PSI.

4) BEND TYPE B JOINT SEAL 6 INCHES UP INTO CURB OR RAIL ON THE LOW SIDE OF THE DECK WHERE DECK JOINT MATCHES CURB OR RAIL JOINT.

5) FOR DETAILS NOT SHOWN SEE RSP B6-21.

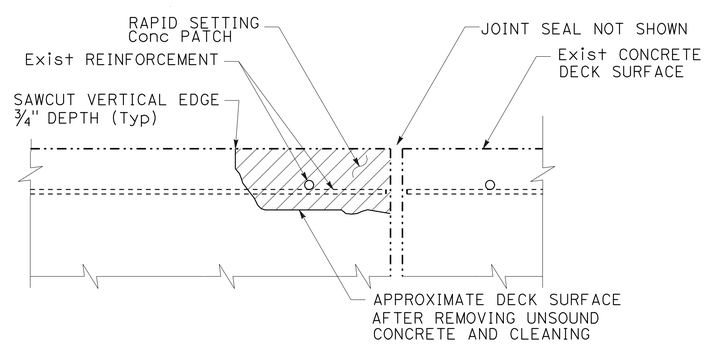

JOINT SPALL REPAIR DETAIL (NTS)

NOTE: REINFORCEMENT MAY BE ENCOUNTERED DURING DECK CONCRETE REMOVAL. CONTRACTOR SHALL NOT DAMAGE OR REMOVE THESE REINFORCEMENTS

SUMMARY OF QUANTITIES

Q-2

STATE OF CALIFORNIA - DEPARTMENT OF TRANSPORTATION
Caltrans OFFICE OF DESIGN B

FUNCTIONAL SUPERVISOR: MANSOOR KHAN
CALCULATED-DESIGNED BY: HOSS FARASAT
CHECKED BY: MANSOOR KHAN
REVISED BY
DATE REVISED

LAST REVISION 00-00-00
DATE PLOTTED => 19-AUG-2010
TIME PLOTTED => 11:30

Dist	COUNTY	ROUTE	POST MILES TOTAL PROJECT	SHEET No.	TOTAL SHEETS
07	LA	57	R7.7/R12.2	23	38

H. Farasat 7-27-10
REGISTERED CIVIL ENGINEER DATE

8-23-10
PLANS APPROVAL DATE

REGISTERED PROFESSIONAL ENGINEER HOSS FARASAT No. C45672 Exp. 12-31-10 CIVIL STATE OF CALIFORNIA

THE STATE OF CALIFORNIA OR ITS OFFICERS OR AGENTS SHALL NOT BE RESPONSIBLE FOR THE ACCURACY OR COMPLETENESS OF SCANNED COPIES OF THIS PLAN SHEET.

RAMP SUMMARY OF QUANTITIES

LOCATION			DIRECTION		RAMP TERMINI						GORE AREA	
No.	NAME	PM	NB	SB	REPLACE Conc PAVEMENT (RAPID STRENGTH Conc) CY	LEAN CONCRETE BASE (RAPID SETTING) CY	CLASS 3 AGGREGATE BASE CY	ROADWAY EXCAVATION CY	COLD PLANE ASPHALT CONCRETE PAVEMENT SQYD	RUBBERIZED HOT MIX ASPHALT (GAP GRADED) TON	RUBBERIZED HOT MIX ASPHALT (GAP GRADED) TON	COLD PLANE SQYD
1	S-1	R8.672	X		143	80	112	192	4,090	552	62	540
2	S-4	R8.777		X	-	-	-	-	2,835	383	11	96
3	S-2	R8.825	X		-	-	-	-	4,537	613	11	96
4	S-3	R8.929		X	143	80	112	192	3,775	510	37	322
5	C-1	R10.077	X		143	80	112	192	4,360	589	111	967
6	C-4	R10.078		X	-	-	-	-	5,302	716	96	837
7	C-2	R10.256	X		-	-	-	-	3,893	526	33	288
8	C-3	R10.285		X	143	80	112	192	3,551	479	28	244
9	A-1	R10.514	X		143	80	112	192	3,183	430	5	44
10	A-2	R10.700		X	-	-	-	-	2,698	364	36	314
11	A-3	R10.737	X		-	-	-	-	3,058	413	44	383
12	A-5	R10.898		X	-	-	-	-	1,436	194	31	270
13	A-4	R11.058		X	120	67	93	160	6,050	817	27	235
14	C	R11.372	X		120	67	93	160	3,692	498	62	540
15	B	R11.409		X	-	-	-	-	3,451	466	64	558
TOTAL					955	534	746	1280	55,911	7,550	658	5734
										8,208		

SUMMARY OF QUANTITIES

Q-3

STATE OF CALIFORNIA - DEPARTMENT OF TRANSPORTATION
Caltrans® OFFICE OF DESIGN B

FUNCTIONAL SUPERVISOR: MANSOOR KHAN
CALCULATED-DESIGNED BY: HOSS FARASAT
CHECKED BY: MANSOOR KHAN
REVISED BY
DATE REVISED

LAST REVISION 00-00-00
DATE PLOTTED => 19-AUG-2010
TIME PLOTTED => 11:30

Dist	COUNTY	ROUTE	POST MILES TOTAL PROJECT	SHEET No.	TOTAL SHEETS
07	LA	57	R7.7/R12.2	24	38

REGISTERED ELECTRICAL ENGINEER 7/30/10 DATE

8-23-10
PLANS APPROVAL DATE

REGISTERED PROFESSIONAL ENGINEER JESSE RUELAS No. E015604 Exp. 12-31-11 ELECTRICAL STATE OF CALIFORNIA

THE STATE OF CALIFORNIA OR ITS OFFICERS OR AGENTS SHALL NOT BE RESPONSIBLE FOR THE ACCURACY OR COMPLETENESS OF SCANNED COPIES OF THIS PLAN SHEET.

GENERAL NOTES: (SHEET E-1 AND E-2)

1. PRIOR TO CONSTRUCTION, CONTRACTOR SHALL LOCATE ALL EXISTING INDUCTIVE LOOP DETECTORS.
2. ABANDON EXISTING SHOULDER TERMINATION CONDUIT (STUBOUT). INSTALL 2"C SHOULDER TERMINATION CONDUIT. RC EXISTING PULL BOX IN THE RIGHT SHOULDER. INSTALL NEW (T) PULL BOX AT SAME LOCATION.
3. ABANDON EXISTING INDUCTIVE LOOP DETECTORS. INSTALL NEW TYPE E INDUCTIVE LOOP DETECTORS AT SAME LOCATION AND PER DETAILS ON THIS SHEET. SEE ES-5A AND ES-5B FOR DETAILS.
4. AT PAVEMENT JOINT, PLACE LOOP WIRE IN ¾"C. SEE ES-5D FOR DETAILS.
5. SPLICE NEW LOOP WIRES TO EXISTING dlc's
6. TAG EXISTING dlc's IN ADJACENT PULL BOXES AND AT CONTROLLER CABINETS.

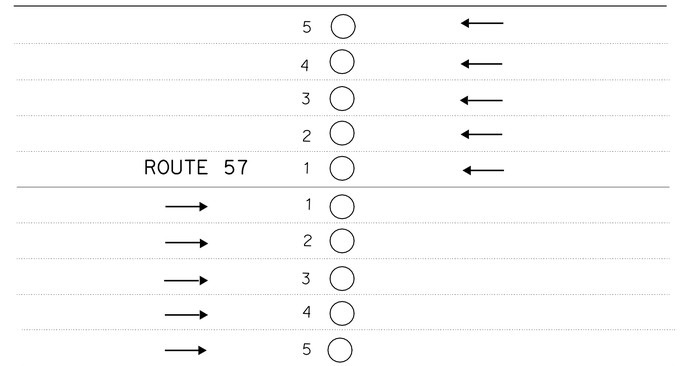

DETAIL A

TYPICAL LOCATION OF MAINLINE INDUCTIVE LOOP DETECTORS.

LOCATIONS FOR MAINLINE LOOPS DETECTION, STUB OUTS AND PULL BOXES REPLACEMENT

NORTHBOUND LANES

MAINLINE LOOPS APPROXIMATE LOCATION FROM	TO	NUMBER OF LOOPS No. 1 LANE	No. 2 LANE	No. 3 LANE	No. 4 LANE	No. 5 LANE		STUBOUT FOR EACH LINE	(T) PULL BOX AT RIGHT SHOULDER
PM	PM	EA	EA	EA	EA	EA		EA	EA
R7.7	R8.71	1	1	1				1	1
R8.71	R9.40	1	1	1	1	1		2	1
R9.4	R9.88	2	2	2	2			4	2
R9.88	R10.27	1	1	1	1			2	1
R10.27	R10.74	1	1	1	1			2	1
R10.74	R12.2	1	1	1	1			2	1
SUB TOTAL		7	7	7	6	1		13	7

SOUTHBOUND LANES

MAINLINE LOOPS APPROXIMATE LOCATION FROM	TO	NUMBER OF LOOPS No. 1 LANE	No. 2 LANE	No. 3 LANE	No. 4 LANE	No. 5 LANE		STUBOUT FOR EACH LINE	(T) PULL BOX AT RIGHT SHOULDER
PM	PM	EA	EA	EA	EA	EA		EA	EA
R7.7	R8.71	1	1	1				1	1
R8.71	R10.4	4	4	4	4	1		8	4
R10.4	R10.74	2	2	2	2			4	2
R10.74	R11.15							1	1
R11.15	R12.2	2	2	2	2	1		4	2
SUB TOTAL		9	9	9	8	2		18	10

GRAND TOTAL NUMBER OF LOOPS DETECTION: 65 EA
GRAND TOTAL NUMBER OF STUBOUTS: 31 EA
GRAND TOTAL NUMBER OF PULL BOXES: 17 EA

INDUCTIVE LOOP DETECTOR
(REPLACEMENT)

NO SCALE

E-1

THIS PLAN ACCURATE FOR ELECTRICAL WORK ONLY.

STATE OF CALIFORNIA - DEPARTMENT OF TRANSPORTATION
Caltrans® TRAFFIC DESIGN

FUNCTIONAL SUPERVISOR: YI TSAU
CALCULATED-DESIGNED BY: LIEN VO
CHECKED BY: JESSE RUELAS
REVISED BY
DATE REVISED

LAST REVISION 00-00-00
DATE PLOTTED => 19-AUG-2010
TIME PLOTTED => 11:31

Dist	COUNTY	ROUTE	POST MILES TOTAL PROJECT	SHEET No.	TOTAL SHEETS
07	LA	57	R7.7/R12.2	25	38

REGISTERED ELECTRICAL ENGINEER 7/30/10 DATE

8-23-10
PLANS APPROVAL DATE

REGISTERED PROFESSIONAL ENGINEER JESSE RUELAS No. E015604 Exp. 12-31-11 ELECTRICAL STATE OF CALIFORNIA

THE STATE OF CALIFORNIA OR ITS OFFICERS OR AGENTS SHALL NOT BE RESPONSIBLE FOR THE ACCURACY OR COMPLETENESS OF SCANNED COPIES OF THIS PLAN SHEET.

RAMPS AND LOCATIONS
INDUCTIVE LOOP DETECTOR (REPLACEMENT) (ROUTE 57)

LOCATION No.	DETAILS	PM	RAMP DESCRIPTION	TYPICAL LOCATION OF LOOP DETECTORS															No. OF STUBOUTS (REPLACE)
				1	2	3	4	5	6	OFF 7	OFF 8	ON 9	HOV 10	P1 11	D1 12	D2 13	Q1 14	Q2 15	
1	A	8.672	NB OFF TO "VIA VERDE AVE"							1	1								1
2	B	8.777	SB ON FROM "VIA VERDE AVE"									1		1	1	1	1	1	3
3	B	8.825	NB ON FROM "VIA VERDE AVE"									1	1	1	1	1	1	1	4
4	A	8.929	SB OFF TO "VIA VERDE AVE"	1	1	1	1			1									3
5	A	10.077	NB OFF TO "WEST COVINA BLVD'	1	1	1	1			1	1								3
6	B	10.078	SB ON FROM "WEST COVINA BLVD"									1	1	1	1	1	1		3
7	B	10.256	NB ON FROM "WEST COVINA BLVD"									1		1	1		1	1	3
8	A	10.285	SB OFF TO "WEST COVINA BLVD"	1	1	1	1	1	1	1	1								3
9	A	10.514	NB OFF TO "WEST ARROW HIGHWAY"	1	1	1	1			1	1								3
10	B	10.700	SB ON FROM EB "WEST ARROW HIGHWAY"									1		1	1	1	1		3
11	B	10.737	NB ON FROM "WEST ARROW HIGHWAY"									1	1	1	1	1	1		3
12	B	10.898	SB ON FROM WB "WEST ARROW HIGHWAY"									1	1	1	1	1	1		3
13	A	11.058	SB OFF TO "WEST ARROW HIGHWAY"	1	1	1	1	1	1	1	1								4
14	A	11.372	NB OFF TO "AUTO CENTRE DRIVE"		1		1			1									2
15	B	11.409	SB ON FROM "AUTO CENTRE DRIVE"									1	1	1	1	1	1		3
16	A	12.2	EAST LA-210 TO SOUTH LA-57 CONNECTOR							1	1	2							2
17	B	12.2	NORTH LA-57 TO WEST LA-210 CONNECTOR									2		2	3	3	2		4
			SUB TOTAL	5	6	5	6	2	2	8	6	12	5	10	11	10	10	3	50
TOTAL				101															50

GRAND TOTAL NUMBER OF LOOPS DETECTION: 101 EA
GRAND TOTAL NUMBER OF STUBOUTS: 50 EA

ABREVIATIONS: (THIS SHEET)

OFF = OFF RAMP COUNT DETECTOR
ON = ON RAMP COUNT DETECTOR
HOV = HOV COUNT DETECTOR
P = PASSAGE DETECTOR
D = DEMAND DETECTOR
Q = QUEUE DETECTOR

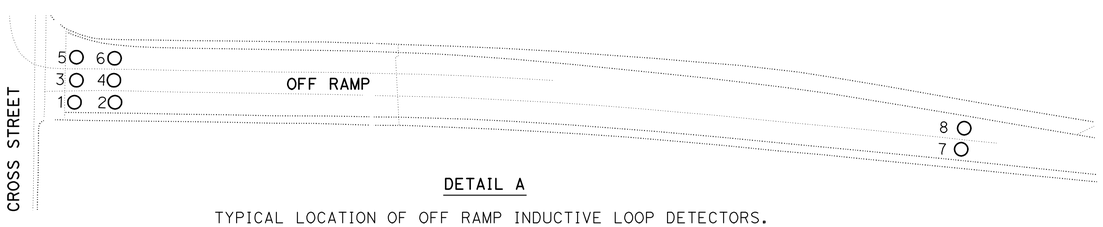

DETAIL A

TYPICAL LOCATION OF OFF RAMP INDUCTIVE LOOP DETECTORS.

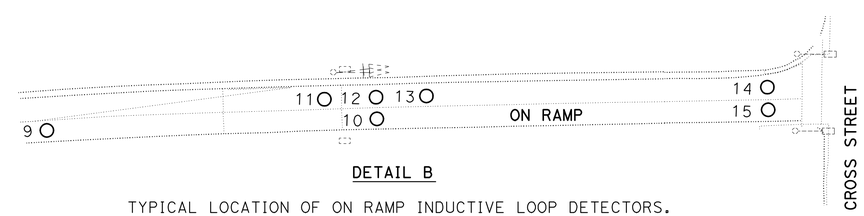

DETAIL B

TYPICAL LOCATION OF ON RAMP INDUCTIVE LOOP DETECTORS.

SEE SHEET E-3 FOR GENERAL NOTES AND DETAILS.
THIS PLAN ACCURATE FOR ELECTRICAL WORK ONLY.

INDUCTIVE LOOP DETECTOR (REPLACEMENT)

NO SCALE

E-2

STATE OF CALIFORNIA - DEPARTMENT OF TRANSPORTATION
Caltrans TRAFFIC DESIGN

FUNCTIONAL SUPERVISOR: YI TSAU
CALCULATED-DESIGNED BY: LIEN VO
CHECKED BY: JESSE RUELAS
REVISED BY
DATE REVISED

LAST REVISION 00-00-00 | DATE PLOTTED => 19-AUG-2010 | TIME PLOTTED => 11:31

DIST	COUNTY	ROUTE	POST MILES TOTAL PROJECT	SHEET NO.	TOTAL SHEETS
07	LA	57	R7.7/R12.2	26	38

REGISTERED CIVIL ENGINEER

October 5, 2007
PLANS APPROVAL DATE

REGISTERED PROFESSIONAL ENGINEER Efthymios Delis No. C51434 Exp. 6-30-08 CIVIL STATE OF CALIFORNIA

The State of California or its officers or agents shall not be responsible for the accuracy or completeness of electronic copies of this plan sheet.

To accompany plans dated 8-23-10

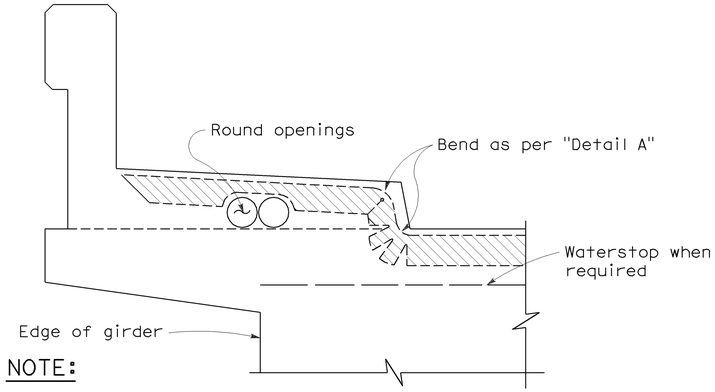

NOTE:

Type "B" seal shown. Type "A" seals to comform to the general path of seal shown, cuts for bending not required. Bend Type "A" seals 3" up into curb or barrier rail on only the low end of the seal.

CONCRETE BARRIER AND SIDEWALK

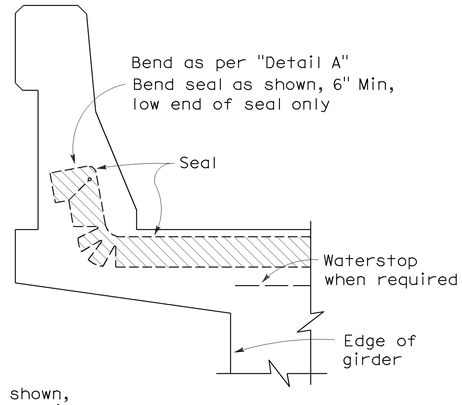

CONCRETE BARRIER

JOINT SEALS DETAILS

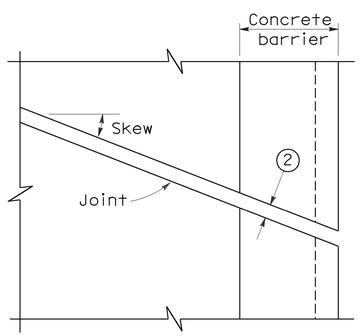

PLAN OF JOINT (SKEW ≤ 20°)

Min ℄ radius to be 4 times uncompressed width of seal or as recommended by the manufacturer, whichever is greater

In lieu of saw cutting, this area may be blocked out and reconstructed to match saw cutting on both sides.

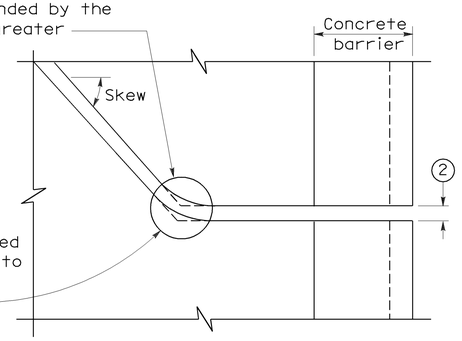

PLAN OF JOINT (SKEW > 20°)

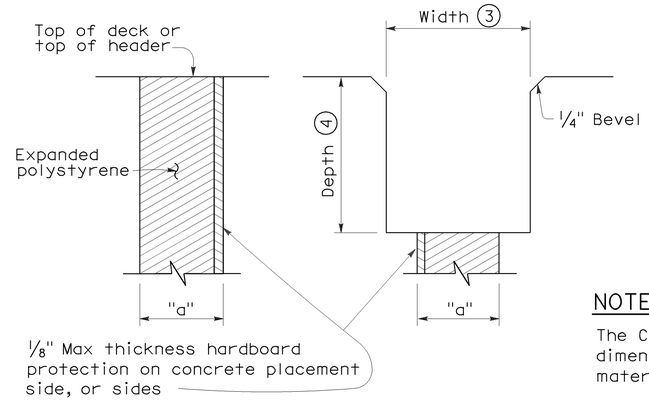

FORMING DETAIL SAWCUT DETAIL

NOTE:

The Contractor shall verify all controlling field dimensions before ordering or fabricatiing any material.

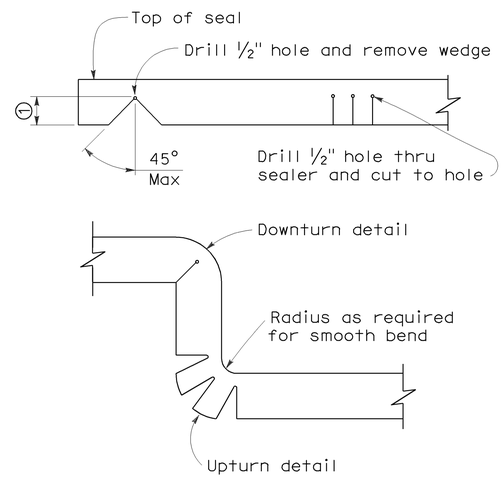

DETAIL A

NOTES:

1. Make smooth cuts from the bottom of seal to 1½" clear of top leaving at least one complete cell between the top of the cut and top of the seal. When necessary cut back of seal to clear conduit and round openings.
2. Opening in barrier to match width of sawn deck joint.
3. Sawcut groove widths shall be as ordered by the Engineer.
4. Depth of sawcut: Type A - Depth to be 2" minimum.
   Type B - Depth to be equal to or greater than the depth of seal measured along the contact surface, when compressed to minimum width position (W_2) plus dimensions shown.
5. MR (movement rating) as shown on other plan sheets.
6. Other depths must be approved by the Engineer.

DIMENSIONS "a" OF JOINT REQUIRED

Movement Rating (MR) 5	Bridge Type	"a" Dimension Deck Concrete Placed		
		Winter	Fall-Spring	Summer
2"	All except CIP/PS	1½"	1¼"	¾"
	CIP/PS	1¼"	1"	½"
1½"	All except CIP/PS	1¼"	1"	½"
	CIP/PS	1"	¾"	½"
1"	All except CIP/PS	1"	¾"	½"
	CIP/PS	¾"	½"	½"
½"	All except CIP/PS	¾"	¾"	½"
	CIP/PS	½"	½"	½"

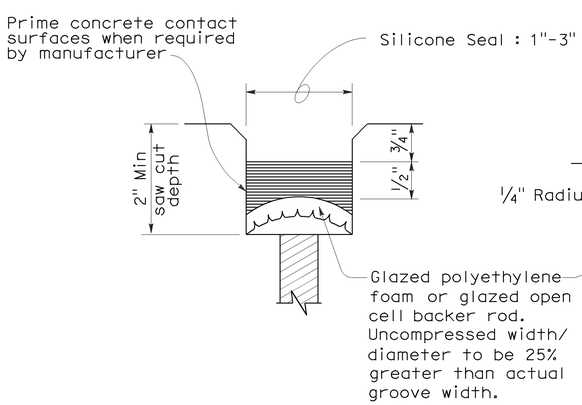

TYPE A SEAL

Movement rating : Silicone = 1" Max

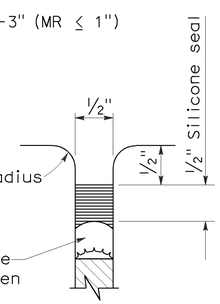

TYPE AL SEAL

Longitudinal joints only

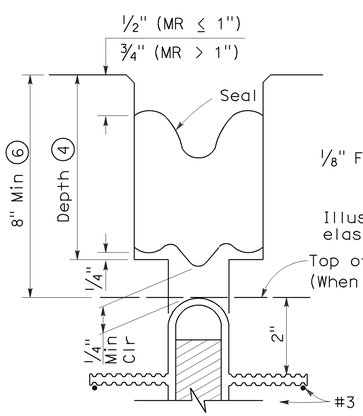

TYPE B JOINT SEAL
IN MINIMUM WIDTH POSITION (W_2)

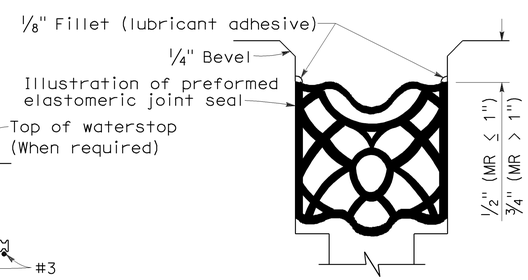

TYPE B SEAL

Movement Rating ≤ 2"

STATE OF CALIFORNIA
DEPARTMENT OF TRANSPORTATION

JOINT SEALS (MAXIMUM MOVEMENT RATING = 2")

NO SCALE

RSP B6-21 DATED OCTOBER 5, 2007 SUPERSEDES STANDARD PLAN B6-21 DATED MAY 1, 2006 - PAGE 258 OF THE STANDARD PLANS BOOK DATED MAY 2006.

REVISED STANDARD PLAN RSP B6-21

2006 REVISED STANDARD PLAN RSP B6-21

5-8-07

DIST	COUNTY	ROUTE	POST MILES TOTAL PROJECT	SHEET NO.	TOTAL SHEETS
07	LA	57	R7.7/R12.2	27	38

REGISTERED ELECTRICAL ENGINEER

October 5, 2007
PLANS APPROVAL DATE

REGISTERED PROFESSIONAL ENGINEER Jeffery G. McRae No. E14512 Exp. 6-30-08 ELECTRICAL STATE OF CALIFORNIA

The State of California or its officers or agents shall not be responsible for the accuracy or completeness of electronic copies of this plan sheet.

To accompany plans dated 8-23-10

ELECTROLIERS

STANDARD TYPES
15, 15D
15 STRUCTURE
21, 21D STRUCTURE
30
31
32
35
36-20A

High mast light pole

Double Arm lighting standard

Existing electrolier

Electrolier foundation (Future installation)

NOTES:

1. Luminaires shall be 310 W HPS when installed on Type 21, 21D, 30, 31, 32, 35 and 36-20A Standards, unless otherwise specified. Luminaires shall be 200 W HPS when installed on other type standards or poles, unless otherwise specified.
2. Luminaires shall be the cutoff type, ANSI Type Ⅲ medium cutoff lighting distribution, unless otherwise specified.
3. Variations noted adjacent to symbol on project plans.

Electrolier (see project notes or project plans)

Luminaire on wood pole

STANDARD NOTES:

- AB — Abandon. If applied to conduit, remove conductors.
- BC — Install pull box in existing conduit run.
- BP — Pedestrian barricade, type as indicated on plan.
- CB — Install conduit into existing pull box.
- CC — Connect new and existing conduit. Remove existing conductors and install conductors as indicated.
- CF — Conduit to remain for future use. Remove conductors. Install pull wire or rope.
- DH — Detector handhole.
- FA — Foundation to be abandoned.
- IS — Install sign on signal mast arm.
- NS — No slip base on standard.
- PEC — Photoelectric control.
- PEU — Photoelectric unit.
- RC — Equipment or material to be removed and become the property of the Contractor.
- RE — Remove electrolier, fuses and ballast. Tape ends of conductors.
- RL — Relocate equipment.
- RR — Remove and reuse equipment.
- RS — Remove and salvage equipment.
- SC — Splice new to existing conductors.
- SD — Service disconnect.
- SF — Standard to remain for future use. Remove luminaire, pole conductors, fuses and ballast.
- TSP — Telephone service point.

ABBREVIATIONS AND EQUIPMENT DESIGNATIONS

PROPOSED	EXISTING	
BBS	bbs	Battery backup system
BC	bc	Bolt circle
C	C	Conduit
CCTV	cctv	Closed circuit television
CKT	ckt	Circuit
CMS	cms	Changeable message sign
DLC	dlc	Loop detector lead-in cable
EMS	ems	Extinguishable message sign
EVC	evc	Emergency vehicle cable
EVD	evd	Emergency vehicle detector
FB	fb	Flashing beacon
FBCA	fbca	Flashing beacon control assembly
FBS	fbs	Flashing beacon with slip base
FO	fo	Fiber optic
G	G	Ground (Equipment Grounding Conductor)
GFCI	GFCI	Ground fault circuit interrupt
HAR	har	Highway advisory radio
HEX	hex	Hexagonal
HPS	hps	High pressure sodium
IISNS	iisns	Internally illuminated street name sign
ISL	isl	Induction sign lighting
LED	led	Light emitting diode
LMA	lma	Luminaire mast arm
LPS	lps	Low pressure sodium
LTG	ltg	Lighting
LUM	lum	Luminaire
MAT	mat	Mast arm mounting vehicle signal faces, top attachment
MAS	mas	Mast arm mounting vehicle signal faces, side attachment
MAS-4A	mas-4A	Mast arm mounting vehicle signal faces, side attachment - 4 signal section
MAS-4B	mas-4B	
MAS-4C	mas-4C	
MAS-5A	mas-5A	Mast arm mounting vehicle signal faces, side attachment - 5 signal section
MAS-5B	mas-5B	
MC	mc	Mercury contactor
M/M	m/m	Multiple to multiple transformer
MT	mt	Conduit with pull wire or rope only
MTG	mtg	Mounting
	mv	Mercury vapor lighting fixture
N	N	Neutral (Grounded Conductor)
NC	NC	Normally closed
NO	NO	Normally open
PB	pb	Pull box
PEC	pec	Photoelectric control (Type Ⅰ, Ⅱ, Ⅲ, Ⅳ or Ⅴ as shown)
PED	ped	Pedestrian
PEU	peu	Photoelectric unit
PPB	ppb	Pedestrian push button
RL		Relocated equipment
RM	rm	Ramp metering
SB	sb	Slip base
SIC	sic	Signal interconnect cable
SIG	sig	Signal
SMA	sma	Signal mast arm
SNS	sns	Street name sign
SP	sp	Service point
TDC	tdc	Telephone demarcation cabinet
TMS	tms	Traffic monitoring station
TOS	tos	Traffic Operations System
VEH	veh	Vehicle
XFMR	xfmr	Transformer
COMM	comm	Communication
RWIS	rwis	Roadway weather information system

SOFFIT AND WALL MOUNTED LUMINAIRES

Pendant, 70 W HPS unless otherwise specified.

Flush, 70 W HPS unless otherwise specified.

Wall surface, 70 W HPS unless otherwise specified.

Existing soffit or wall luminaire to remain unmodified.

Existing soffit or wall luminaire to be modified as specified.

NOTE:

Arrow indicates "street side" of luminaire.

STATE OF CALIFORNIA
DEPARTMENT OF TRANSPORTATION

ELECTRICAL SYSTEMS (SYMBOLS AND ABBREVIATIONS)

NO SCALE

RSP ES-1A DATED OCTOBER 5, 2007 SUPERSEDES STANDARD PLAN ES-1A DATED MAY 1, 2006 - PAGE 400 OF THE STANDARD PLANS BOOK DATED MAY 2006.

REVISED STANDARD PLAN RSP ES-1A

2006 REVISED STANDARD PLAN RSP ES-1A

DIST	COUNTY	ROUTE	POST MILES TOTAL PROJECT	SHEET NO.	TOTAL SHEETS
07	LA	57	R7.7/R12.2	28	38

REGISTERED ELECTRICAL ENGINEER

October 5, 2007
PLANS APPROVAL DATE

REGISTERED PROFESSIONAL ENGINEER Jeffery G. McRae No. E14512 Exp. 6-30-08 ELECTRICAL STATE OF CALIFORNIA

The State of California or its officers or agents shall not be responsible for the accuracy or completeness of electronic copies of this plan sheet.

To accompany plans dated 8-23-10

CONDUIT

PROPOSED	EXISTING	
		Lighting Conduit, unless otherwise indicated or noted
		Traffic signal conduit
C	c	Communication conduit
T	t	Telephone conduit
F	f	Fire alarm conduit
FO	fo	Fiber optic conduit
		Conduit termination (RSP ES-9A C)
R	r	Conduit riser in/on structure or service pole

SERVICE EQUIPMENT

PROPOSED	EXISTING	
OH	oh	Overhead lines
U	U	Wood pole "U" indicates utility owned
		Pole guy with anchor
		Utility transformer - ground mounted
III		Service equipment enclosure type
		Service equipment enclosure door indicates front of enclosure
T	t	Telephone demarcation cabinet

POLE-MOUNTED SERVICE DESIGNATION

Type of installation

TYPE H SERVICE - 28'-10" ← Pole height above grade

ILLUMINATED OVERHEAD SIGN

PROPOSED	EXISTING	
		Overhead sign - Single post
		Overhead sign - Two post
		Overhead sign - Mounted on structure
		Overhead sign with electrolier

SIGNAL EQUIPMENT

PROPOSED	EXISTING	
		Pedestrian signal face
		Pedestrian push button post
		Pedestrian barricade
		Vehicle signal face (with backplate, 3-Section: red, yellow and green)
		Vehicle signal face with angle visors
PV	PV	Modifications of basic symbols: "L" indicates all non-arrow sections louvered "LG" indicates louvered green section only "PV" indicates 12" programmed visibility sections "8" indicates all 8" sections (only when specified)
		Type 15TS and Vehicle signal face
		Vehicle signal face with red, yellow and green left arrow sections
		Vehicle signal face with red and yellow sections and up green arrow
		Vehicle signal face (5 Section) with red, yellow and green sections and yellow and green right arrows
		Type 1 Standard and attached vehicle signal faces
		Standard with signal mast arm only and attached vehicle signal faces and internally illuminated street name sign
		Type 33 Standard, Left-turn vehicle signal face and sign
		Standard with luminaire and signal mast arms and attached vehicle signal faces
		Cantilever flashing beacon Type 9 Frame, with a sign unless otherwise specified or indicated
		Type 15-FBS Standard with two vehicle signal face sections with lens, backplate and visor with a sign
R	Y	Flashing beacon. One vehicle signal face section with lens, backplate and visor. "R" indicates red indication, "Y" indicates yellow indication
		Controller assembly. Door indicates front of cabinet

SIGNAL EQUIPMENT Cont

PROPOSED	EXISTING	
		Guard post
		Type 1 Standard with "Meter On" sign
		Emergency Vehicle detector

NOTES:

1. All signal sections shall be 12" unless shown otherwise.
2. Signal heads shall be provided with backplates unless shown otherwise.
3. Signal indication shall be LED.

STATE OF CALIFORNIA
DEPARTMENT OF TRANSPORTATION

ELECTRICAL SYSTEMS (SYMBOLS AND ABBREVIATIONS)

NO SCALE

RSP ES-1B DATED OCTOBER 5, 2007 SUPERCEDES STANDARD PLAN ES-1B DATED MAY 1, 2006 - PAGE 401 OF THE STANDARD PLANS BOOK DATED MAY 2006.

REVISED STANDARD PLAN RSP ES-1B

2006 REVISED STANDARD PLAN RSP ES-1B

7-10-07

DIST	COUNTY	ROUTE	POST MILES TOTAL PROJECT	SHEET NO.	TOTAL SHEETS
07	LA	57	R7.7/R12.2	29	38

REGISTERED ELECTRICAL ENGINEER

October 5, 2007
PLANS APPROVAL DATE

REGISTERED PROFESSIONAL ENGINEER Jeffery G. McRae No. E14512 Exp. 6-30-08 ELECTRICAL STATE OF CALIFORNIA

The State of California or its officers or agents shall not be responsible for the accuracy or completeness of electronic copies of this plan sheet.

To accompany plans dated 8-23-10

EQUIPMENT IDENTIFICATION

ILLUMINATED SIGN IDENTIFICATION NUMBER:

Sign No. 12345 — Sign number - Place on post or structure

10 ISL SCI 1.0

- 1.0 — Transformer rating (kVA)
- SCI — Lighting control type
- ISL — Number and type of fixtures

Do NOT place on standard or structure

ELECTROLIER OR EQUIPMENT IDENTIFICATION NUMBER:

12345 - 15'-0"

- 15'-0" — Mast arm length, if shown. Do not place on standard or structure.
- 12345 — Equipment number - Place on standard or structure. Existing equipment numbers are shown in parenthesis

CONDUIT AND CONDUCTOR IDENTIFICATION:

1½"C, 2#10, 15#14, 2 DLC

- 2#10, 15#14, 2 DLC — Number and size of conductors and cables
- 1½"C — Size of conduit in inches

Ø1, Ø2, Ø2P, etc.	Traffic phase identification for signal faces, detectors and phase diagrams
1 2 3	Project note numbers
A B C	Equipment description, installation or item numbers
1 2 3	Conduit run numbers

SIGNAL AND LIGHTING STANDARD (TYPICAL DESIGNATION):

19A - 3 - 100

- 100 — Wind velocity = 100 mph
- 3 — Case 3 arm loading
- 19A — Standard type
- Standard Plan sheet number
- Detail number or letter

MISCELLANEOUS EQUIPMENT

PROPOSED	EXISTING	
CMS	cms	Changeable message sign
		Closed circuit television camera
		Highway advisory radio pole and antenna
EMS	ems	Extinguishable message sign
M V	m v	Detection device M = Microwave sensor V = Video image sensor

WIRING DIAGRAM LEGEND

P	Pole
CB	Circuit breaker
A	Ampere
V	Volt
M	Metered
UM	Unmetered
NB	Neutral bus
GB	Ground bus
G	Equipment grounding conductor
N	Grounded conductor (Neutral)

External conductor
Conductor or bus
Tie point
Contactor coil
Contactor, Contact NO
Terminal blocks
Contactor, Contact NC
Enclosure bond
Grounding electrode
Circuit breaker
Receptacle

PULL BOXES

PROPOSED EXISTING

Pull box-No. 5 unless otherwise indicated or noted.

3 — 9A(21)

Pull box-Additional designations or descriptions

- 3 = No. 3½ pull box
- 5 = No. 5 pull box
- 6 = No. 6 pull box
- 7 = No. 7 (Ceiling pull box)
- 8 = No. 8 (Pendant soffit pull box)
- 9 = No. 9 pull box
- 9A = No. 9A pull box

- (C) = Communications pull box
- (E) = Pull box with extension
- (S) = Sprinkler control pull box
- (21) = Anchor bolts and conduit for future installation of Type 21 Standard
- (T) = Traffic pull box

VEHICLE DETECTORS

5 J 9 U

- U = Upper
- L = Lower
- Slot number in input file
- Input file (I or J)
- Phase

PROPOSED	EXISTING	
		Type A detector loop. Outline of sawcut shown.
		Type B detector loop. Outline of sawcut shown.
		Type C detector loop. Outline of sawcut shown.
		Type D detector loop. Outline of sawcut shown.
		Type E detector loop. Outline of sawcut shown.
		Type Q detector loop. Outline of sawcut shown.
		Magnetic detector
DH	dh	Detector handhole
		Microwave or video detection zone

STATE OF CALIFORNIA
DEPARTMENT OF TRANSPORTATION

ELECTRICAL SYSTEMS (SYMBOLS AND ABBREVIATIONS)

NO SCALE

RSP ES-1C DATED OCTOBER 5, 2007 SUPERCEDES STANDARD PLAN ES-1C DATED MAY 1, 2006 - PAGE 402 OF THE STANDARD PLANS BOOK DATED MAY 2006.

REVISED STANDARD PLAN RSP ES-1C

2006 REVISED STANDARD PLAN RSP ES-1C

DIST	COUNTY	ROUTE	POST MILES TOTAL PROJECT	SHEET NO.	TOTAL SHEETS
07	LA	57	R7.7/R12.2	30	38

REGISTERED ELECTRICAL ENGINEER

October 5, 2007
PLANS APPROVAL DATE

REGISTERED PROFESSIONAL ENGINEER Jeffery G. McRae No. E14512 Exp. 6-30-08 ELECTRICAL STATE OF CALIFORNIA

The State of California or its officers or agents shall not be responsible for the accuracy or completeness of electronic copies of this plan sheet.

To accompany plans dated 8-23-10

2006 REVISED STANDARD PLAN RSP ES-5A

LOOP INSTALLATION PROCEDURE

1. Loops shall be centered in lanes.
2. Saw slots in pavement for loop conductors as shown in details.
3. Distance between side of loop and a lead-in saw cut from adjacent detectors shall be 2'-0" minimum. Distance between lead-in saw cuts shall be 6" minimum.
4. Bottom of saw slot shall be smooth with no sharp edges.
5. Slots shall be washed until clean, blown out and thoroughly dried before installing loop conductors.
6. Adjacent loops on the same sensor unit channel shall be wound in opposite directions.
7. Identify and tag loop circuit pairs in the pull box with loop number, start (S) and finish (F) of conductor. Identify and tag lead-in-cable with sensor number and phase.
8. Install loop conductor in slot using a 3/16" to 1/4" thick wood paddle. Hold loop conductors with wood paddles (at the bottom of the sawed slot) during sealant placement.
9. No more than 2 twisted pairs shall be installed in one sawed slot.
10. Allow additional 5'-0" of slack length of conductor for the lead-in run to pull box.
11. The additional length of each conductor for each loop shall be twisted together into a pair (6 turns per 3'-4" minimum) before being placed in the slot and conduit leading to pull box.
12. Test each loop circuit for continuity, circuit resistance and insulation resistance at the pull box before filling slots.
13. Fill slots as shown in details.
14. Splice loop conductors to lead-in-cable. Splices shall be soldered.
15. End of lead-in-cable and Type 2 loop conductor shall be waterproofed prior to installing in conduit to prevent moisture from entering the cable.
16. Lead-in-cable shall not be spliced between the pull box and the controller cabinet terminals.
17. Test each loop circuit for continuity, circuit resistance and insulation resistance at the controller cabinet location.
18. Where loop conductors are not to be spliced to a lead-in-cable, the ends of the conductors shall be taped and waterproofed with electrical insulating coating.

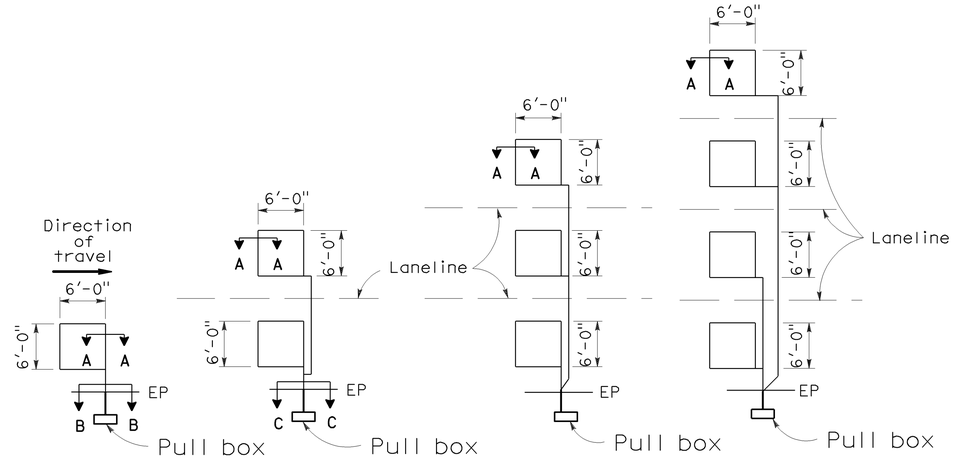

TYPE 1A INSTALLATION | TYPE 2A INSTALLATION | TYPE 3A INSTALLATION | TYPE 4A INSTALLATION

SAWCUT DETAILS

(Type A loop detector configurations illustrated)

1. 1A thru 4A = 1 Type A loop configuration in each lane.
2. 1B thru 4B = 1 Type B loop configuration in each lane.
3. 1C = 1 Type C loop configuration entering lanes as required.
4. 1D thru 4D = 1 Type D loop configuration in each lane.
5. 1E thru 4E = 1 Type E loop configuration in each lane.
6. 1Q thru 4Q = 1 Type Q loop configuration in each lane. (Use Type A, B, C, D, E or Q loop detector configurations only when specified or shown on plans)

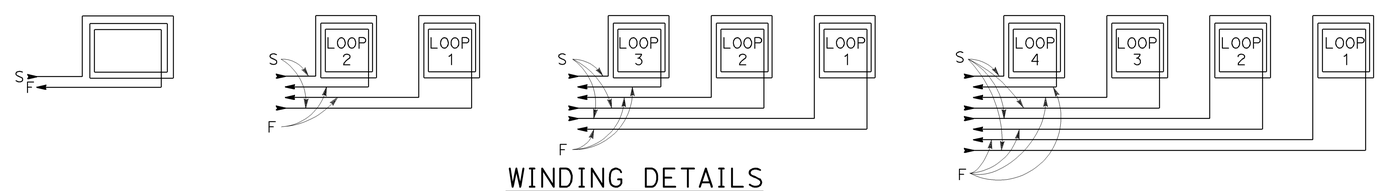

WINDING DETAILS

See Notes 6 and 7

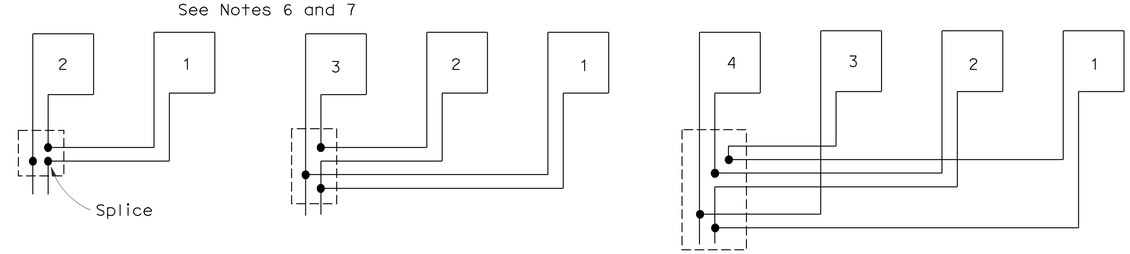

TYPICAL LOOP CONNECTIONS

(Dashed lines represent the pull box)

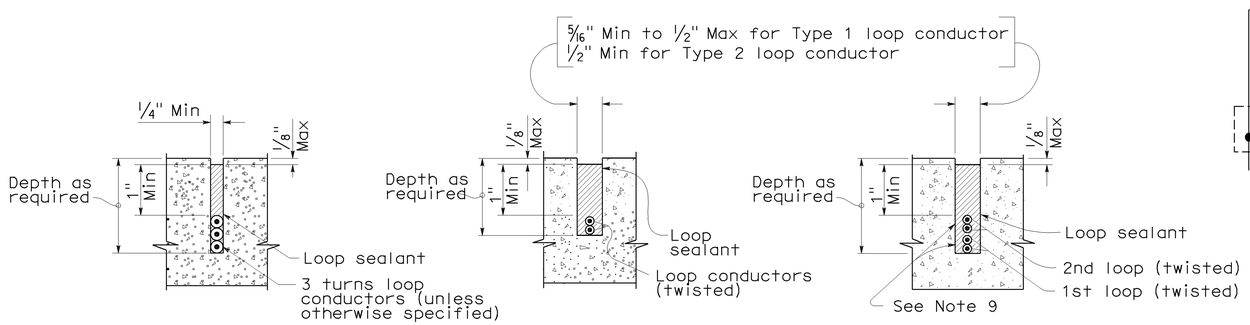

SECTION A-A | SECTION B-B | SECTION C-C

SLOT DETAILS - TYPE 1 AND TYPE 2 LOOP CONDUCTOR

STATE OF CALIFORNIA
DEPARTMENT OF TRANSPORTATION

ELECTRICAL SYSTEMS (DETECTORS)

NO SCALE

RSP ES-5A DATED OCTOBER 5, 2007 SUPERCEDES STANDARD PLAN ES-5A DATED MAY 1, 2006 - PAGE 423 OF THE STANDARD PLANS BOOK DATED MAY 2006.

REVISED STANDARD PLAN RSP ES-5A

DIST	COUNTY	ROUTE	POST MILES TOTAL PROJECT	SHEET NO.	TOTAL SHEETS
07	LA	57	R7.7/R12.2	31	38

William K. Farnbach
REGISTERED CIVIL ENGINEER

May 15, 2009
PLANS APPROVAL DATE

REGISTERED PROFESSIONAL ENGINEER William K. Farnbach No. C49042 Exp. 9-30-10 CIVIL STATE OF CALIFORNIA

The State of California or its officers or agents shall not be responsible for the accuracy or completeness of electronic copies of this plan sheet.

To accompany plans dated 8-23-10

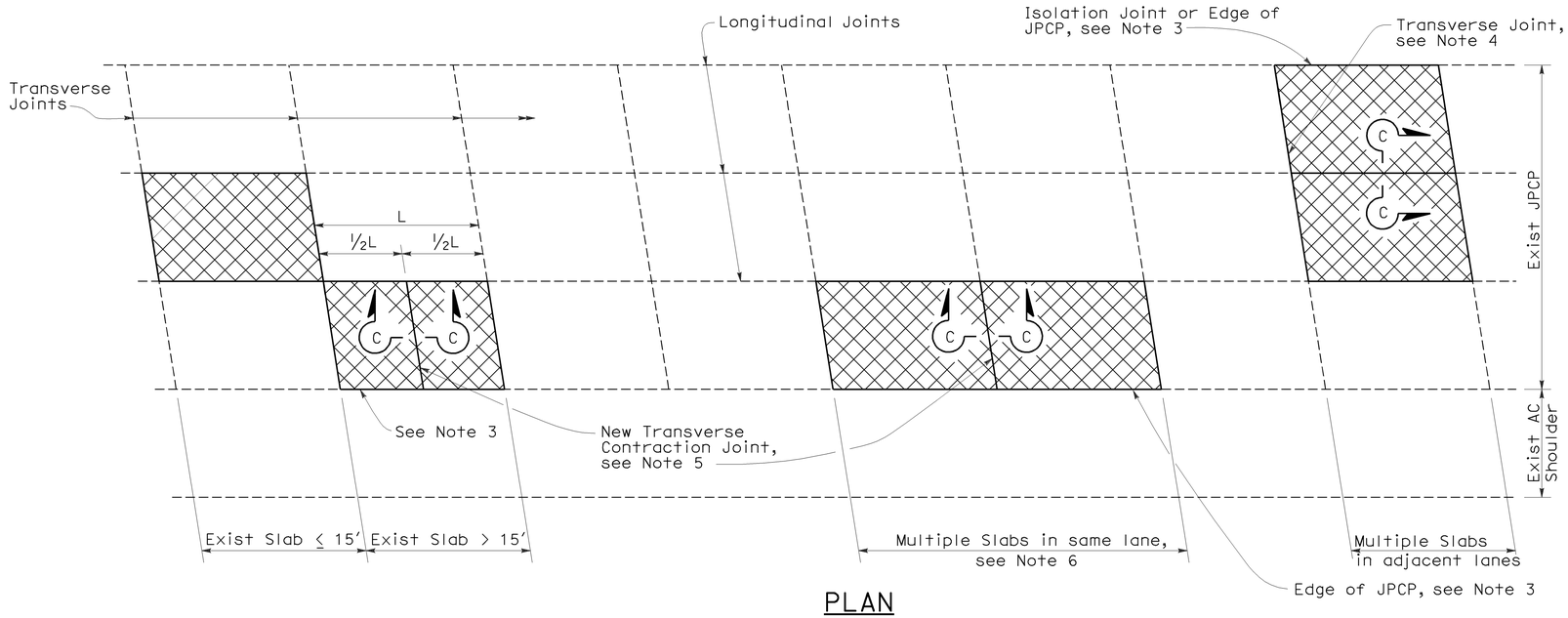

PLAN

NOTES:

1. For details not shown, see Revised Standard Plan RSP P10.
2. Where the existing outer shoulder pavement is asphalt concrete pavement, the "a" dimension shall be 1′-0" and the "b" dimension shall be 2′-0".
3. Side forms shall be used where edge of pavement is adjacent to asphalt concrete.
4. For detail, see Transverse Construction Joint for existing concrete pavement detail on Revised Standard Plan RSP P10.
5. Transverse joint to match skew of existing joint. Omit dowel bars.
6. This Standard Plan only applicable when replacing multiple slabs in the same lane is less than 100′.

LEGEND

Replace Concrete Pavement (See Slab Layout Detail)

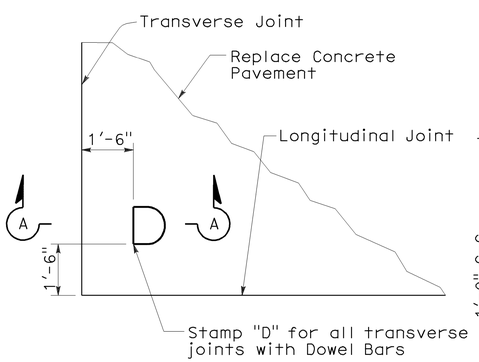

DOWEL STAMP DETAIL

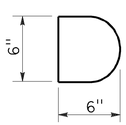

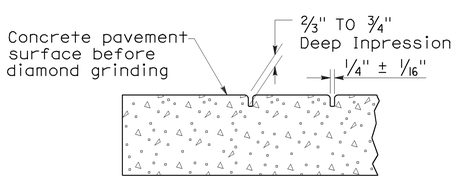

SECTION A-A

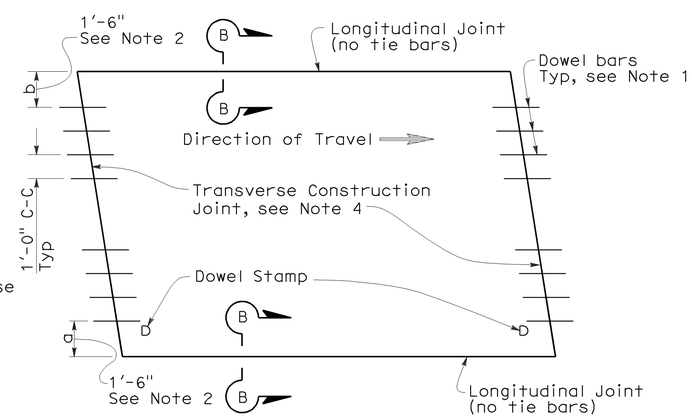

TYPE I
(traffic lane lines match longitudinal joints)

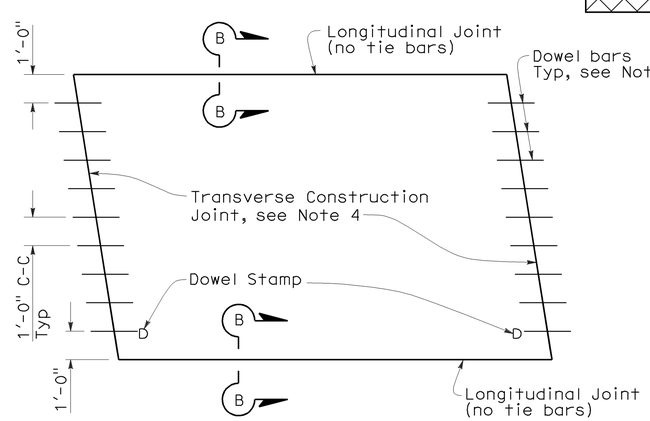

TYPE II
(traffic lane lines do not match longitudinal joints)

SLAB LAYOUT

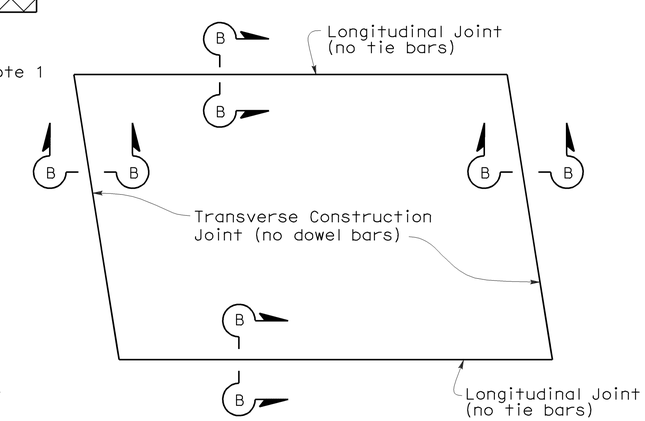

TYPE III
(for short term repairs < 5 yrs design life or for slab replacements with a cracking and seating operation)

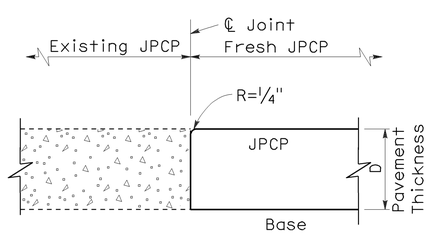

SECTION B-B

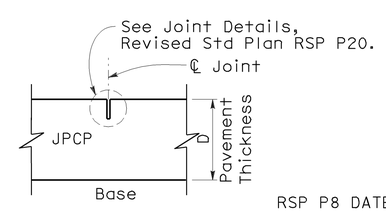

SECTION C-C

STATE OF CALIFORNIA
DEPARTMENT OF TRANSPORTATION

JOINTED PLAIN CONCRETE PAVEMENT-INDIVIDUAL SLAB REPLACEMENT

NO SCALE

RSP P8 DATED MAY 15, 2009 SUPERSEDES RSP P8 DATED SEPTEMBER 1, 2006 AND STANDARD PLAN P8 DATED MAY 1, 2006 - PAGE 123 OF THE STANDARD PLANS BOOK DATED MAY 2006.

REVISED STANDARD PLAN RSP P8

2006 REVISED STANDARD PLAN RSP P8

5-8-09

DIST	COUNTY	ROUTE	POST MILES TOTAL PROJECT	SHEET NO.	TOTAL SHEETS
07	LA	57	R7.7/R12.2	32	38

William K. Farnbach
REGISTERED CIVIL ENGINEER

May 15, 2009
PLANS APPROVAL DATE

REGISTERED PROFESSIONAL ENGINEER William K. Farnbach No. C49042 Exp. 9-30-10 CIVIL STATE OF CALIFORNIA

The State of California or its officers or agents shall not be responsible for the accuracy or completeness of electronic copies of this plan sheet.

To accompany plans dated 8-23-10

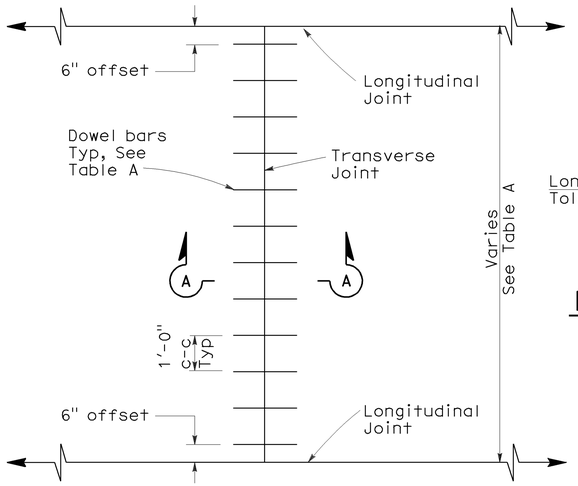

TRANSVERSE JOINT DOWEL BAR LAYOUT

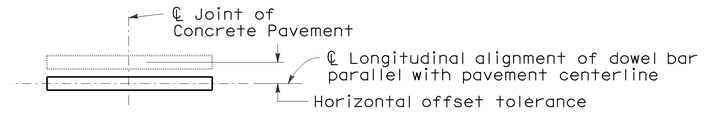

PLAN

HORIZONTAL OFFSET TOLERANCE

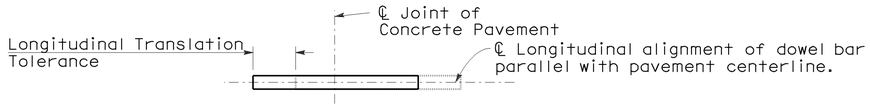

PLAN

LONGITUDINAL TRANSLATION TOLERANCE

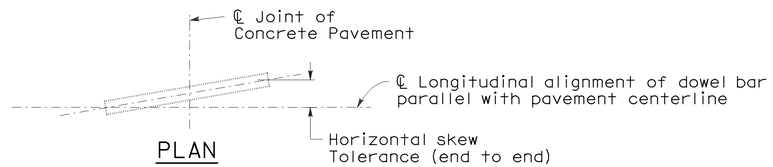

PLAN

HORIZONTAL SKEW TOLERANCE

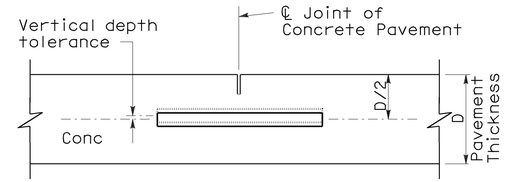

ELEVATION

VERTICAL DEPTH TOLERANCE

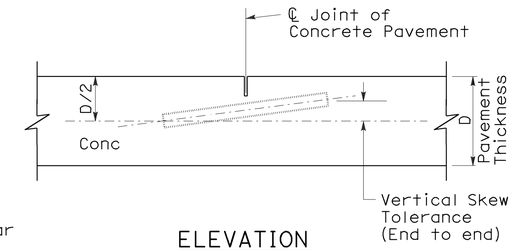

ELEVATION

VERTICAL SKEW TOLERANCE

NOTES:

1. See Revised Standard Plan RSP P1 for typical dowel bar placement and locations.
2. 1½" Dia smooth dowel bars are to be used with a pavement thickness, D, equal to or greater than 0.70 feet. For pavement thickness, D, less than 0.70 feet, use 1¼" Dia smooth dowel bars.
3. For widths not shown, see Project Plans.
4. If fresh concrete pavement is placed adjacent to existing concrete pavement, the top corner of the existing concrete pavement does not need to be rounded to the ¼" radius, as shown.

TABLE A (See Note 3)

Dowel Bar Transverse Spacing Table	
Width between Longitudinal Joints	Number of Dowels between Longitudinal Joints
14'-0"	14
13'-0"	13
12'-0"	12
11'-0"	11
10'-0"	10
8'-0"	8
5'-0"	5
4'-0"	4

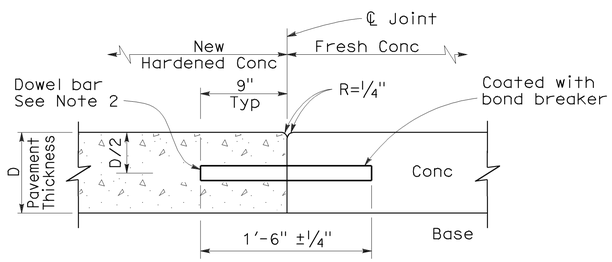

SECTION A-A

TRANSVERSE CONSTRUCTION JOINT DETAIL

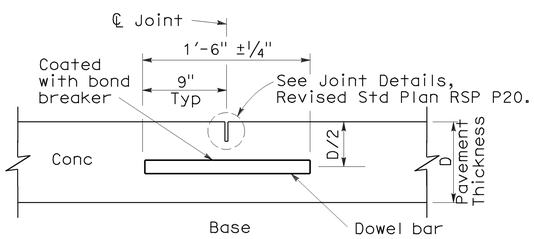

TRANSVERSE CONTRACTION JOINT

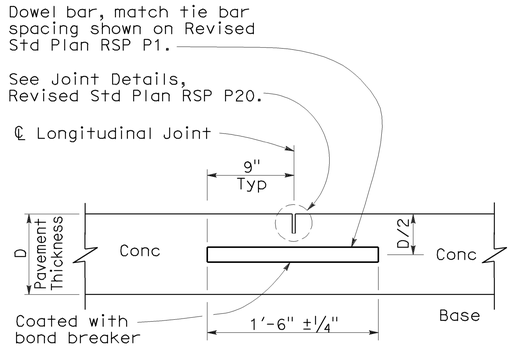

LONGITUDINAL CONTRACTION JOINT WITH DOWEL BARS

(See Revised Std Plan RSP P18)

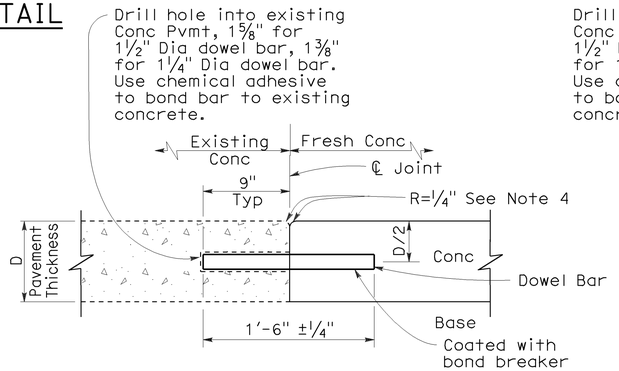

TRANSVERSE CONSTRUCTION JOINT FOR EXISTING CONCRETE PAVEMENT

(Drill and bond locations)

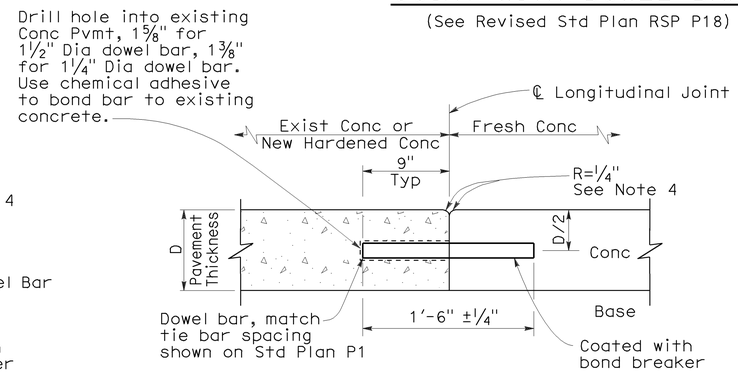

LONGITUDINAL CONSTRUCTION JOINT WITH DOWEL BARS

(See Revised Std Plan RSP P18)

STATE OF CALIFORNIA
DEPARTMENT OF TRANSPORTATION

CONCRETE PAVEMENT-DOWEL BAR DETAILS

NO SCALE

RSP P10 DATED MAY 15, 2009 SUPERSEDES STANDARD PLAN P10 DATED MAY 1, 2006 - PAGE 124 OF THE STANDARD PLANS BOOK DATED MAY 2006.

REVISED STANDARD PLAN RSP P10

2006 REVISED STANDARD PLAN RSP P10

5-8-09

DIST	COUNTY	ROUTE	POST MILES TOTAL PROJECT	SHEET NO.	TOTAL SHEETS
07	LA	57	R7.7/R12.2	33	38

William K. Farnbach
REGISTERED CIVIL ENGINEER

June 5, 2009
PLANS APPROVAL DATE

REGISTERED PROFESSIONAL ENGINEER William K. Farnbach No. C49042 Exp. 9-30-10 CIVIL STATE OF CALIFORNIA

The State of California or its officers or agents shall not be responsible for the accuracy or completeness of electronic copies of this plan sheet.

To accompany plans dated 8-23-10

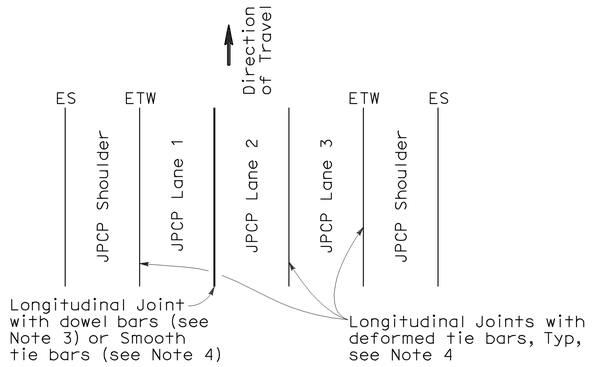

3 LANES WITH TIED CONCRETE SHOULDERS
PLAN

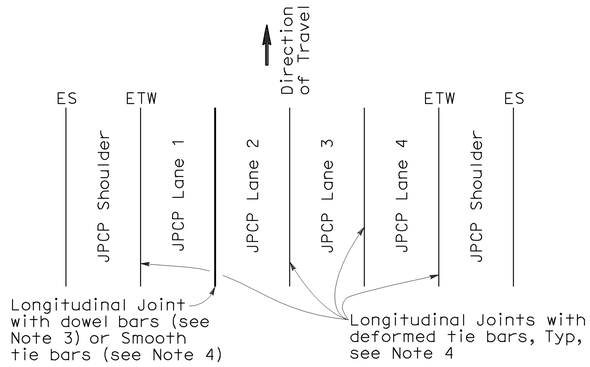

4 LANES WITH TIED CONCRETE SHOULDERS
PLAN

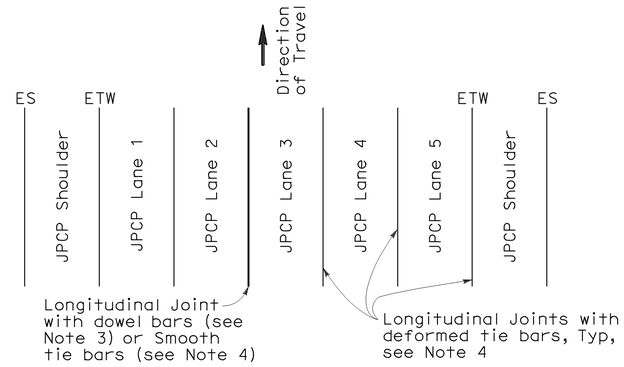

5 LANES WITH TIED CONCRETE SHOULDERS
PLAN

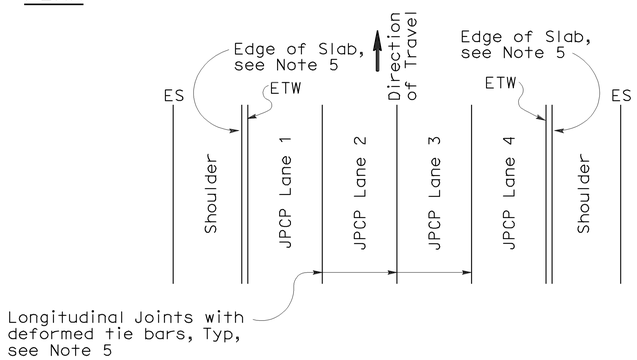

4 LANES OR LESS WITH WIDENED SLAB
PLAN

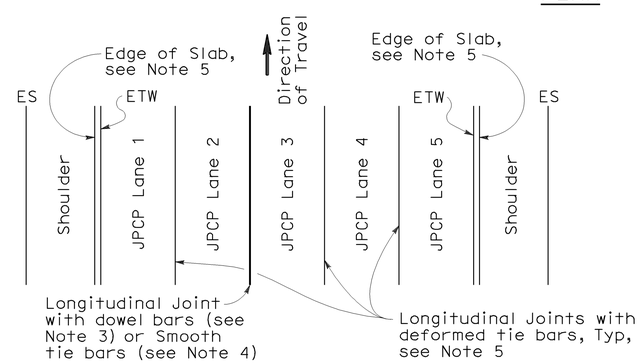

5 LANES WITH WIDENED SLAB
PLAN

NEW CONSTRUCTION

Location of Longitudinal Joints
(For JPCP)

NOTES:

1. Where Lean Concrete Base is not used as base material, the joint filler material used for the longitudinal isolation joint shall only extend to the bottom of the new concrete slab. See Detail A.
2. Use 5/8" ±1/16" dimension for silicone sealant.
3. See Revised Standard Plan RSP P10 for longitudinal joint with dowel bars.
4. See Revised Standard Plan RSP P1.
5. See Revised Standard Plan RSP P2.

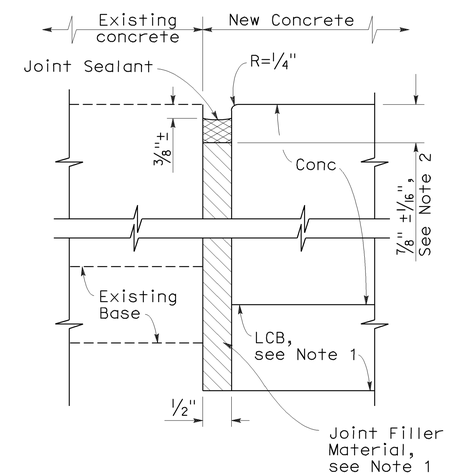

DETAIL A

ISOLATION JOINT

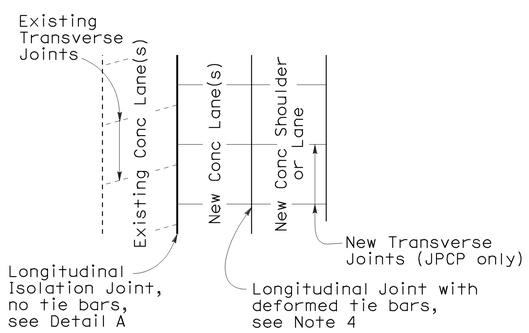

CASE 1
PLAN

Transverse Joints do not align between new and existing

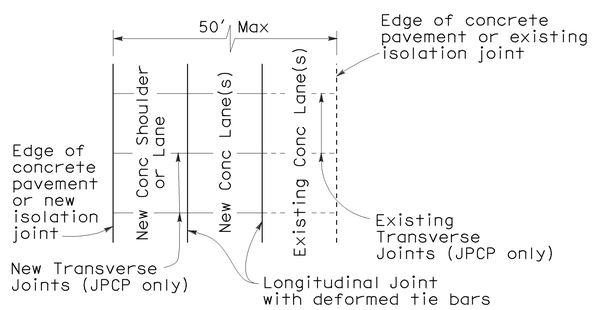

CASE 2
PLAN

Transverse Joints align between new and existing

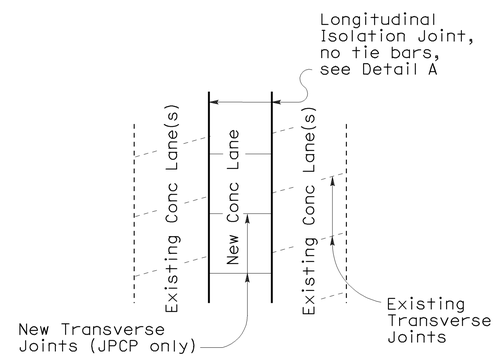

CASE 3 (INTERIOR LANE REPLACEMENT)
PLAN

Transverse Joints do not align between new and existing

LANE/SHOULDER ADDITION OR RECONSTRUCTION

(For JPCP and CRCP)

STATE OF CALIFORNIA
DEPARTMENT OF TRANSPORTATION

CONCRETE PAVEMENT-LANE SCHEMATICS AND ISOLATION JOINT DETAIL

NO SCALE

RSP P18 DATED JUNE 5, 2009 SUPERSEDES RSP P18 DATED MAY 15, 2009, RSP P18 DATED NOVEMBER 17, 2006 AND STANDARD PLAN P18 DATED MAY 1, 2006 - PAGE 127 OF THE STANDARD PLANS BOOK DATED MAY 2006.

REVISED STANDARD PLAN RSP P18

2006 REVISED STANDARD PLAN RSP P18

5-14-09

DIST	COUNTY	ROUTE	POST MILES TOTAL PROJECT	SHEET NO.	TOTAL SHEETS
07	LA	57	R7.7/R12.2	34	38

William K. Farnbach
REGISTERED CIVIL ENGINEER

May 15, 2009
PLANS APPROVAL DATE

REGISTERED PROFESSIONAL ENGINEER
William K. Farnbach
No. C49042
Exp. 9-30-10
CIVIL
STATE OF CALIFORNIA

The State of California or its officers or agents shall not be responsible for the accuracy or completeness of electronic copies of this plan sheet.

To accompany plans dated 8-23-10

NOTE:

1. Tie bars, dowel bars, and reinforcement are not shown in joint seal details, see Revised Standard Plans RSP P1, RSP P3, RSP P10, RSP P35, RSP P45, or RSP P46 as applicable.

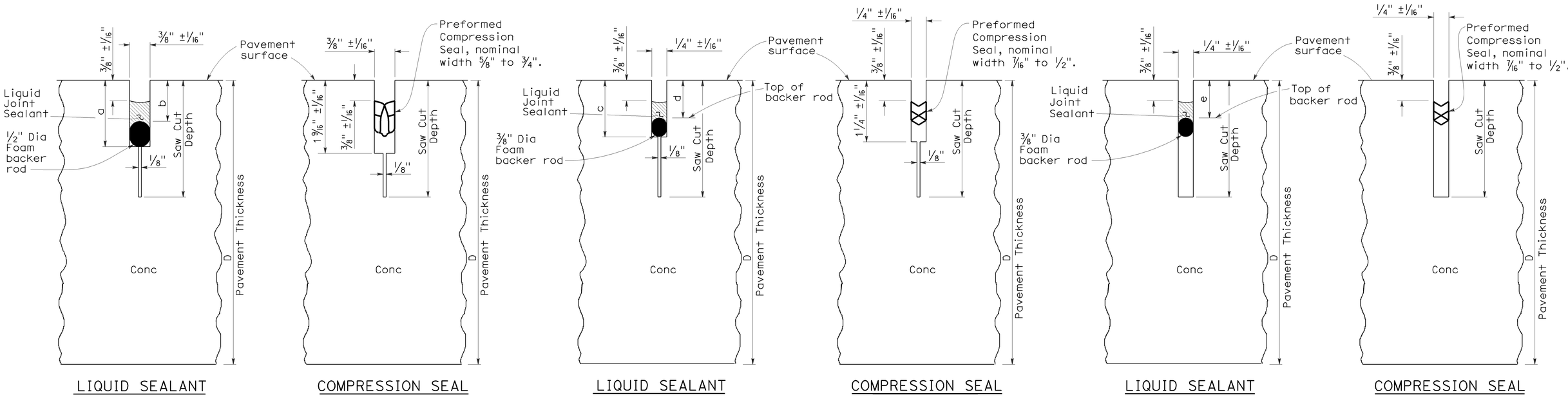

TYPE A1
Transverse Contraction Joints

TYPE A2
Longitudinal Contraction Joints

TYPE B
Longitudinal or Transverse Contraction Joint

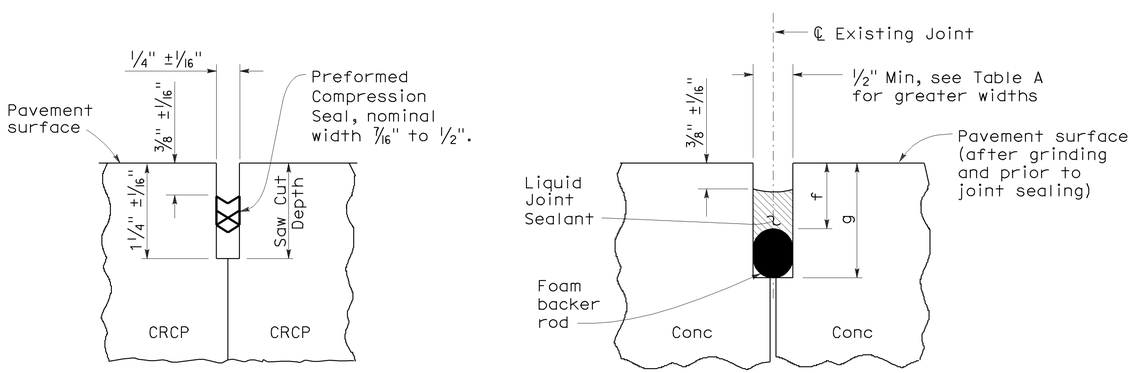

TYPE C
Transverse and Longitudinal Construction Joints (For CRCP)

TYPE R
Retrofit Transverse and Longitudinal Joints

LIQUID SEALANT RESERVOIR DEPTH

LIQUID SEALANT MATERIAL	3/8" Joint Width Type A1		1/4" Joint Width Type A2		1/4" Joint Width Type B
	DIMENSION		DIMENSION		DIMENSION
	a	b	c	d	e
SILCONE	1" ±1/16"	5/8" ±1/16"	15/16" ±1/16"	9/16" ±1/16"	9/16" ±1/16"
ASPHALT RUBBER	1 3/16" ±1/16"	3/4" ±1/16"	1 1/16" ±1/16"	11/16" ±1/16"	11/16" ±1/16"

TABLE A (TYPE R JOINT)

Sawn Joint Width	Backer Rod Diameter ± 1/16"	DIMENSION "f"	DIMENSION "g"
1"	1 5/16"	7/8"	2 1/4"
7/8"	1 3/16"	13/16"	2"
3/4"	1"	3/4"	1 3/4"
5/8"	7/8"	11/16"	1 1/2"
1/2"	11/16"	5/8"	1 1/4"

STATE OF CALIFORNIA
DEPARTMENT OF TRANSPORTATION

CONCRETE PAVEMENT-JOINT DETAILS

NO SCALE

RSP P20 DATED MAY 15, 2009 SUPERSEDES STANDARD PLAN P20
DATED MAY 1, 2006 - PAGE 128 OF THE STANDARD PLANS BOOK DATED MAY 2006.

REVISED STANDARD PLAN RSP P20

2006 REVISED STANDARD PLAN RSP P20

5-8-09

DIST	COUNTY	ROUTE	POST MILES TOTAL PROJECT	SHEET NO.	TOTAL SHEETS
07	LA	57	R7.7/R12.2	35	38

Randell D. Hiatt
REGISTERED CIVIL ENGINEER

June 6, 2008
PLANS APPROVAL DATE

REGISTERED PROFESSIONAL ENGINEER
Randell D. Hiatt
No. C50200
Exp. 6-30-09
CIVIL
STATE OF CALIFORNIA

The State of California or its officers or agents shall not be responsible for the accuracy or completeness of electronic copies of this plan sheet.

To accompany plans dated 8-23-10

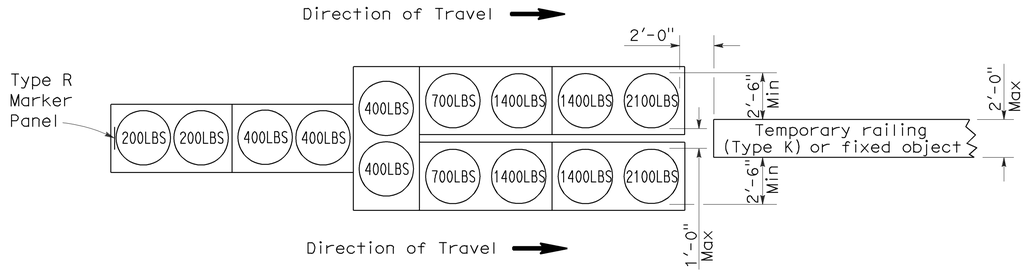

ARRAY 'TU14'

Approach speed 45 mph or more

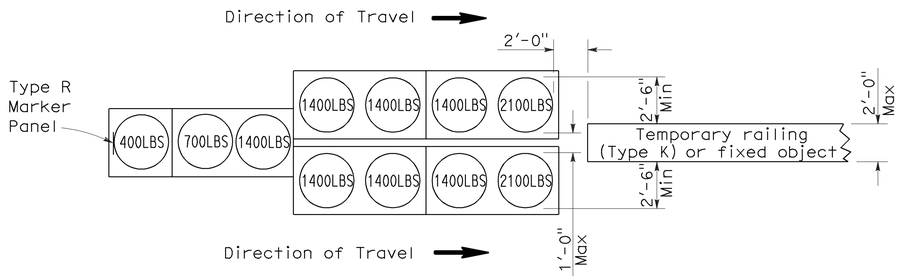

ARRAY 'TU11'

Approach speed less than 45 mph

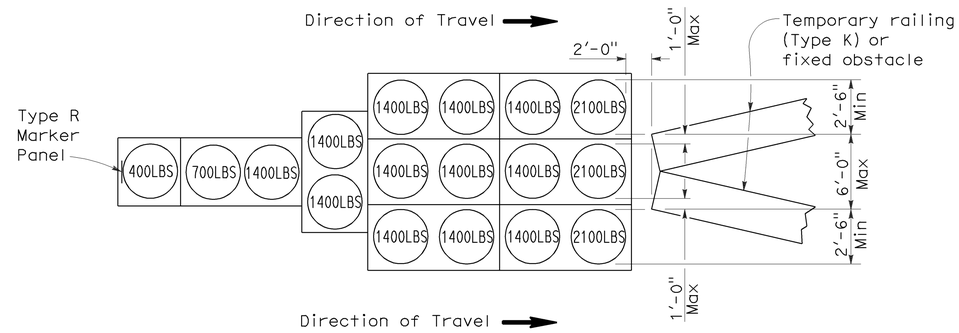

ARRAY 'TU17'

Approach speed less than 45 mph

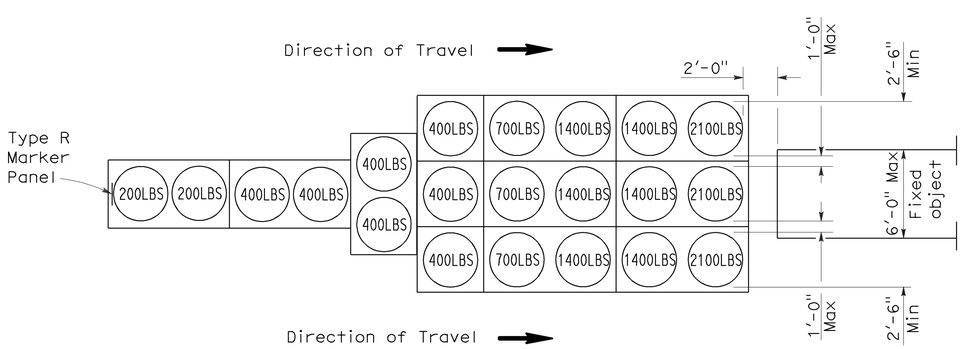

ARRAY 'TU21'

Approach speed 45 mph or more

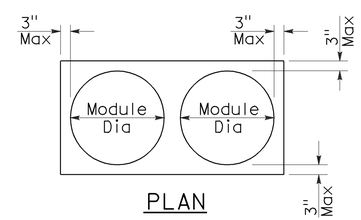

PLAN

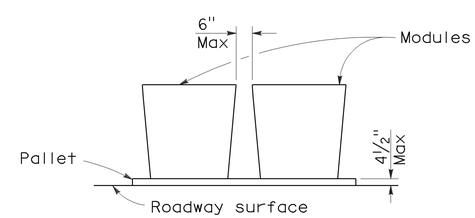

ELEVATION

CRASH CUSHION PALLET DETAIL

See Note 7

NOTES:

1. (XXX) Indicates sand filled module location and weight of sand in pounds for each module. Module spacing is based on the greater diameter of the module.
2. All sand weights are nominal.
3. Temporary crash cushion arrays shall not encroach on the traveled way.
4. Place the top of Type R marker panel 1" below the module lid.
5. Refer to Standard Plan A73B for marker details.
6. Approach speeds indicated conform to NCHRP 350 Report criteria.
7. Use of pallets is optional.

STATE OF CALIFORNIA
DEPARTMENT OF TRANSPORTATION

TEMPORARY CRASH CUSHION, SAND FILLED (UNIDIRECTIONAL)

NO SCALE

RSP T1A DATED JUNE 6, 2008 SUPERSEDES STANDARD PLAN T1A
DATED MAY 1, 2006 - PAGE 211 OF THE STANDARD PLANS BOOK DATED MAY 2006.

REVISED STANDARD PLAN RSP T1A

2006 REVISED STANDARD PLAN RSP T1A

DIST	COUNTY	ROUTE	POST MILES TOTAL PROJECT	SHEET NO.	TOTAL SHEETS
07	LA	57	R7.7/R12.2	36	38

Randell D. Hiatt
REGISTERED CIVIL ENGINEER

June 6, 2008
PLANS APPROVAL DATE

REGISTERED PROFESSIONAL ENGINEER
Randell D. Hiatt
No. C50200
Exp. 6-30-09
CIVIL
STATE OF CALIFORNIA

The State of California or its officers or agents shall not be responsible for the accuracy or completeness of electronic copies of this plan sheet.

To accompany plans dated 8-23-10

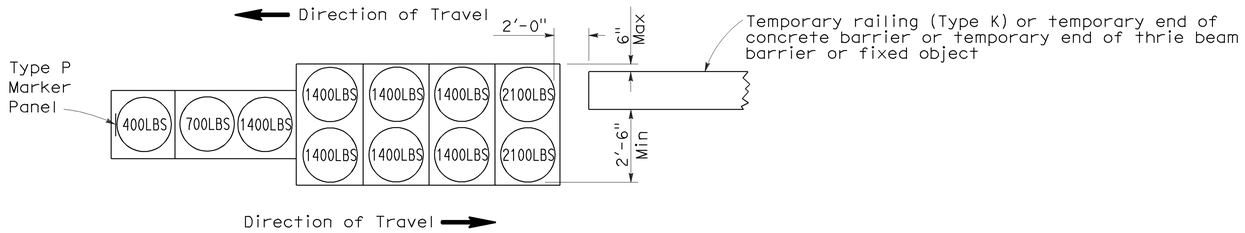

ARRAY 'TB11'

Approach speed less than 45 mph

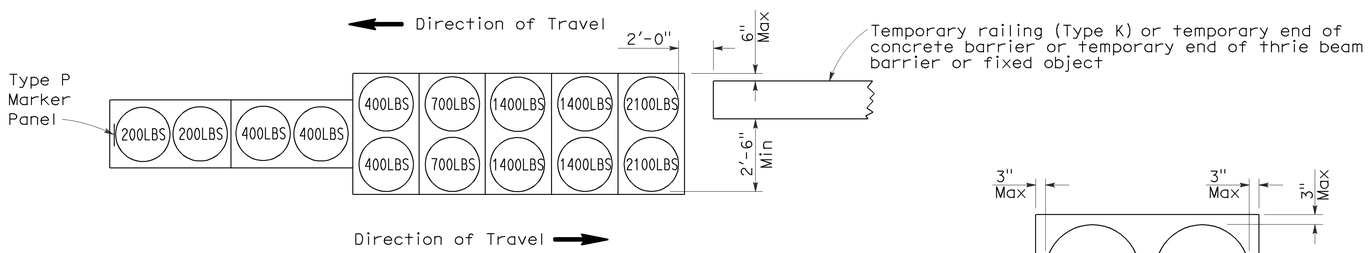

ARRAY 'TB14'

Approach speed 45 mph or more

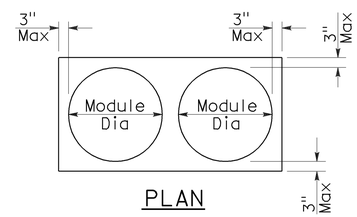

PLAN

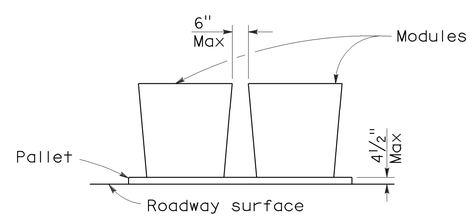

ELEVATION

CRASH CUSHION PALLET DETAIL

See Note 7

NOTES:

1. (XXX) Indicates sand filled module location and weight of sand in pounds for each module. Module spacing is based on the greater diameter of the module.
2. All sand weights are nominal.
3. Temporary crash cushion arrays shall not encroach on the traveled way.
4. Place the Type P marker panel so that the bottom of the panel rests upon the pallet.
5. Refer to Standard Plan A73B for marker details.
6. Approach speeds indicated conform to NCHRP 350 Report criteria.
7. Use of pallets is optional.

STATE OF CALIFORNIA
DEPARTMENT OF TRANSPORTATION

TEMPORARY CRASH CUSHION, SAND FILLED (BIDIRECTIONAL)

NO SCALE

RSP T1B DATED JUNE 6, 2008 SUPERSEDES STANDARD PLAN T1B
DATED MAY 1, 2006 - PAGE 212 OF THE STANDARD PLANS BOOK DATED MAY 2006.

REVISED STANDARD PLAN RSP T1B

2006 REVISED STANDARD PLAN RSP T1B

5-15-08

DIST	COUNTY	ROUTE	POST MILES TOTAL PROJECT	SHEET NO.	TOTAL SHEETS
07	LA	57	R7.7/R12.2	37	38

Randell D. Hiatt
REGISTERED CIVIL ENGINEER

June 6, 2008
PLANS APPROVAL DATE

REGISTERED PROFESSIONAL ENGINEER
Randell D. Hiatt
No. C50200
Exp. 6-30-09
CIVIL
STATE OF CALIFORNIA

The State of California or its officers or agents shall not be responsible for the accuracy or completeness of electronic copies of this plan sheet.

To accompany plans dated 8-23-10

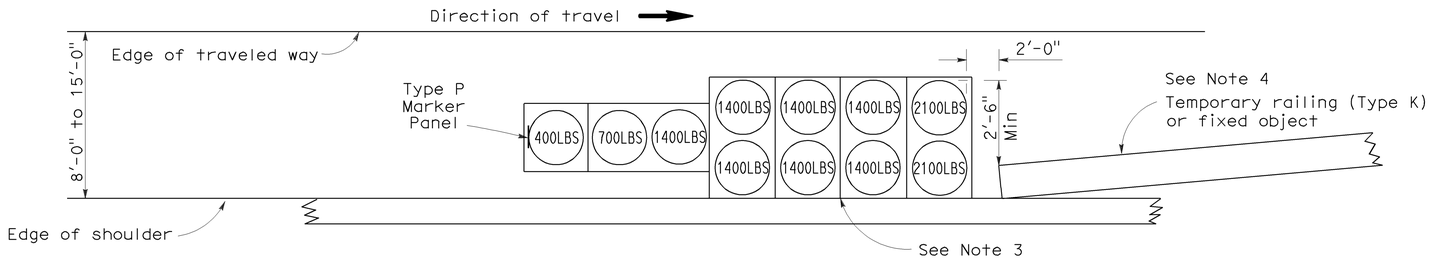

ARRAY 'TS11'

Approach speed less than 45 mph
See Note 9

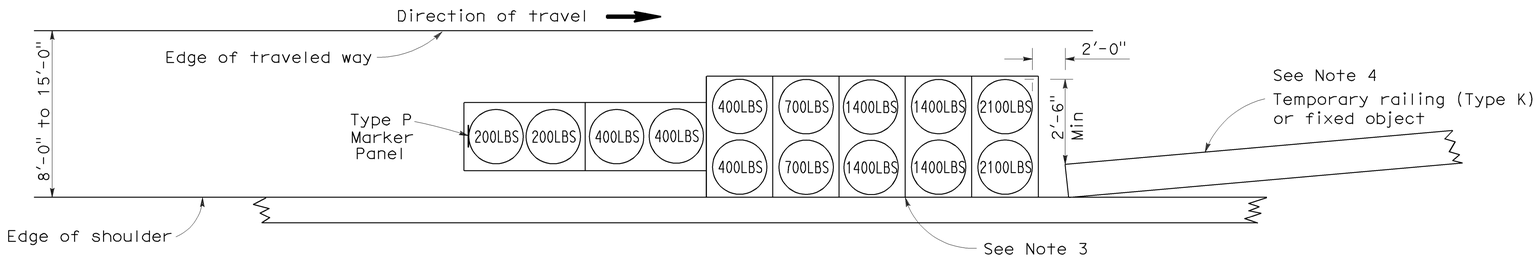

ARRAY 'TS14'

Approach speed 45 mph or more
See Note 9

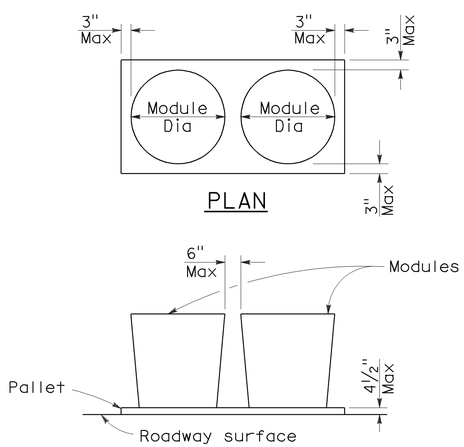

PLAN

ELEVATION

CRASH CUSHION PALLET DETAIL

See Note 11

NOTES:

1. (XXX) Indicates sand filled module location and weight of sand in pounds for each module. Module spacing is based on the greater diameter of the module.
2. All sand weights are nominal.
3. The temporary crash cushion arrays shown on this plan shall be used only in locations where there will be traffic on one side of the temporary crash cushion array.
4. If the fixed object or approach end of the temporary railing is less than 15'-0" from the edge of traveled way, a temporary crash cushion is required in a construction or work zone.
5. Temporary crash cushion arrays shall not encroach on the traveled way.
6. Arrays for median shoulders shall conform to details shown on this plan for outside shoulders.
7. Place the Type P marker panel so that the bottom of the panel rests upon the pallet and faces traffic.
8. Refer to Standard Plan A73B for marker details.
9. For shoulder widths less than 8'-0", appropriate approved crash cushion protection, other than sand filled modules, shall be provided at fixed objects and at approach ends of temporary railing. The specific type of crash cushion shall be as shown on the project plans or as specified in the Special Provisions, or if not shown on the project plans or specified in the Special Provisions, shall be as approved by the Engineer.
10. Approach speeds indicated conform to NCHRP 350 Report criteria.
11. Use of pallets is optional.

STATE OF CALIFORNIA
DEPARTMENT OF TRANSPORTATION

TEMPORARY CRASH CUSHION, SAND FILLED (SHOULDER INSTALLATIONS)

NO SCALE

RSP T2 DATED JUNE 6, 2008 SUPERSEDES STANDARD PLAN T2
DATED MAY 1, 2006 - PAGE 213 OF THE STANDARD PLANS BOOK DATED MAY 2006.

REVISED STANDARD PLAN RSP T2

2006 REVISED STANDARD PLAN RSP T2

5-15-08

DIST	COUNTY	ROUTE	POST MILES TOTAL PROJECT	SHEET NO.	TOTAL SHEETS
07	LA	57	R7.7/R12.2	38	38

REGISTERED CIVIL ENGINEER

November 17, 2006
PLANS APPROVAL DATE

REGISTERED PROFESSIONAL ENGINEER — Greg W. Edwards — No. C36386 — Exp. 6-30-08 — CIVIL — STATE OF CALIFORNIA

The State of California or its officers or agents shall not be responsible for the accuracy or completeness of electronic copies of this plan sheet.

To accompany plans dated 8-23-10

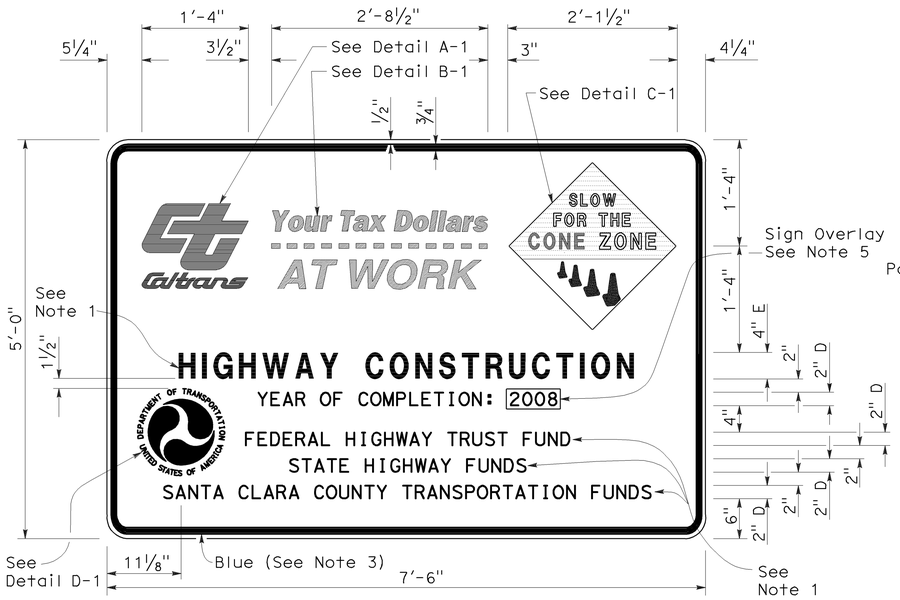

TYPE 1

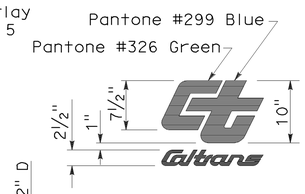

DETAIL A-1

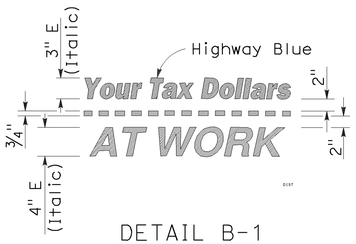

DETAIL B-1
(See Note 3)

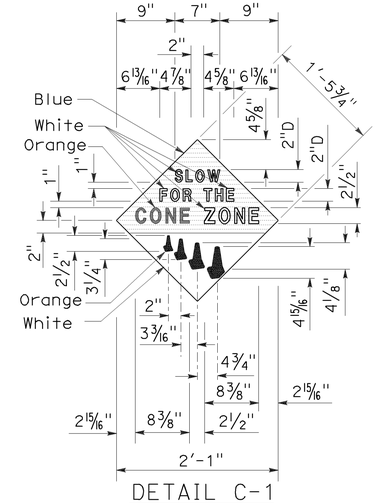

DETAIL C-1
(See Note 4)

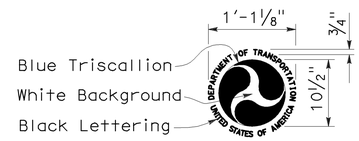

DETAIL D-1
(See Note 6)

NOTES:

1. The sign messages shown for type of project and fund types are examples only. See the Special Provisions for the applicable type of project and fund type messages to be used.
2. Except as otherwise shown, the legend of sign shall be black on a white background (non-reflective).
3. The border of the signs and details "B-1" and "B-2" shall be blue (non-reflective).
4. The diamond in details "C-1" and "C-2" shall be blue for the background of message, " SLOW FOR THE CONE ZONE", and white background for the orange cones. The color and type of font for the "SLOW FOR THE CONE ZONE" message shall be: "SLOW" white D; "FOR THE" white D; "CONE" orange Arial font; "ZONE" white Arial font.
5. Year of completion of project construction shown on the overlay is an example only. See the Special Provisions.
6. Use when the Project involves Federal Highway Trust Fund.

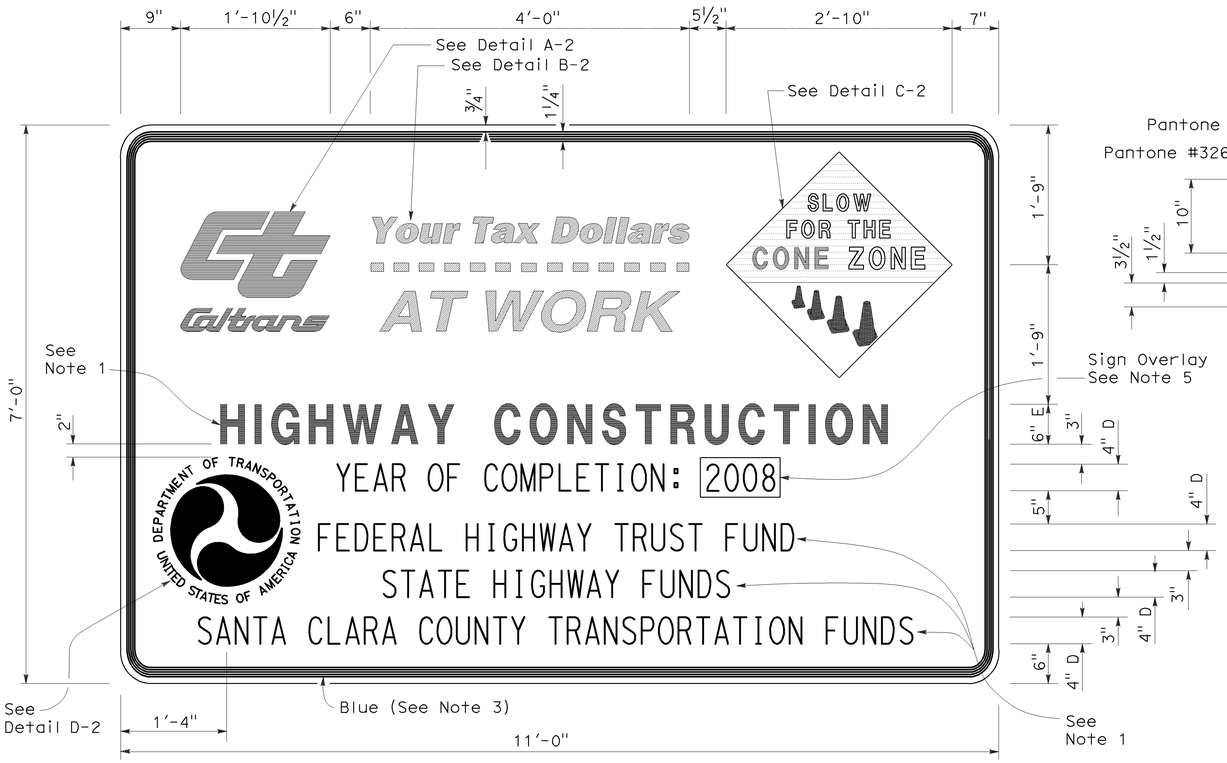

TYPE 2

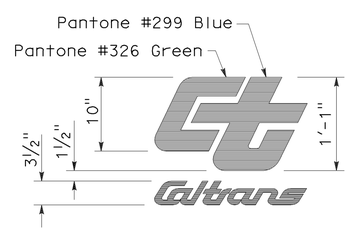

DETAIL A-2

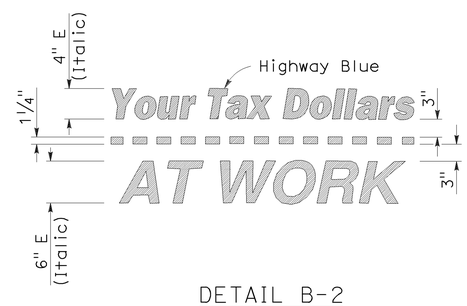

DETAIL B-2
(See Note 3)

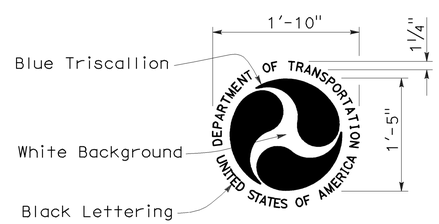

DETAIL D-2
(See Note 6)

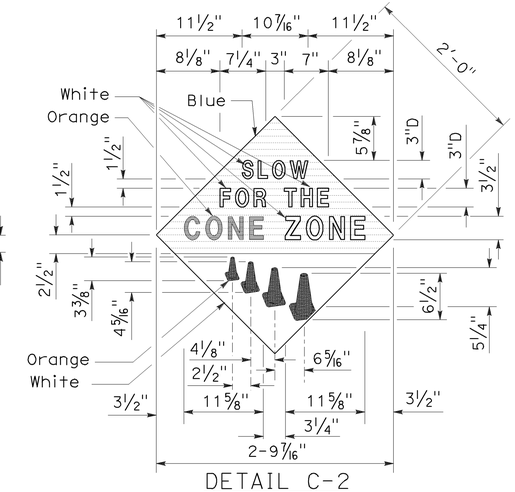

DETAIL C-2
(See Note 4)

STATE OF CALIFORNIA
DEPARTMENT OF TRANSPORTATION

CONSTRUCTION PROJECT FUNDING IDENTIFICATION SIGNS

NO SCALE

RSP T7 DATED NOVEMBER 17, 2006 SUPERSEDES STANDARD PLAN T7
DATED MAY 1, 2006 - PAGE 217 OF THE STANDARD PLANS BOOK DATED MAY 2006.

REVISED STANDARD PLAN RSP T7

2006 REVISED STANDARD PLAN RSP T7

9-7-06