DIST	COUNTY	ROUTE	KILOMETER POST TOTAL PROJECT	SHEET No	TOTAL SHEETS
07	LA	405	39.7/41.5	401	439

Leon Valla 5-11-09
REGISTERED CIVIL ENGINEER DATE

6-7-10
PLANS APPROVAL DATE

REGISTERED PROFESSIONAL ENGINEER
LEON VALLA
No. 45351
Exp. 09-30-10
CIVIL
STATE OF CALIFORNIA

The State of California or its officers or agents shall not be responsible for the accuracy or completeness of electronic copies of this plan sheet.

Notes:

1. For Architectural Treatment see "Architectural Treatment Details" sheet.

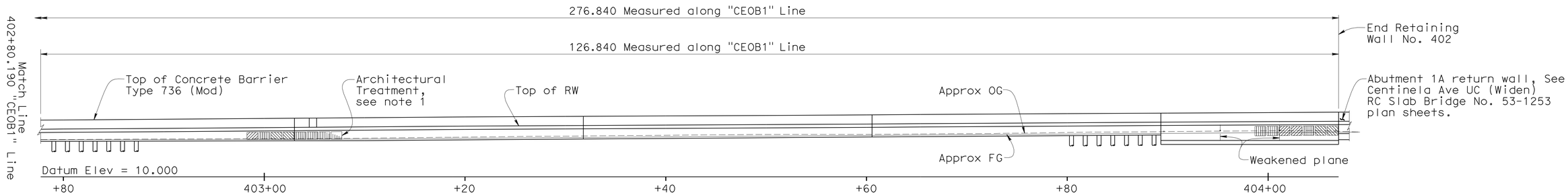

Not all piles shown for clarity

DEVELOPED ELEVATION

1:200

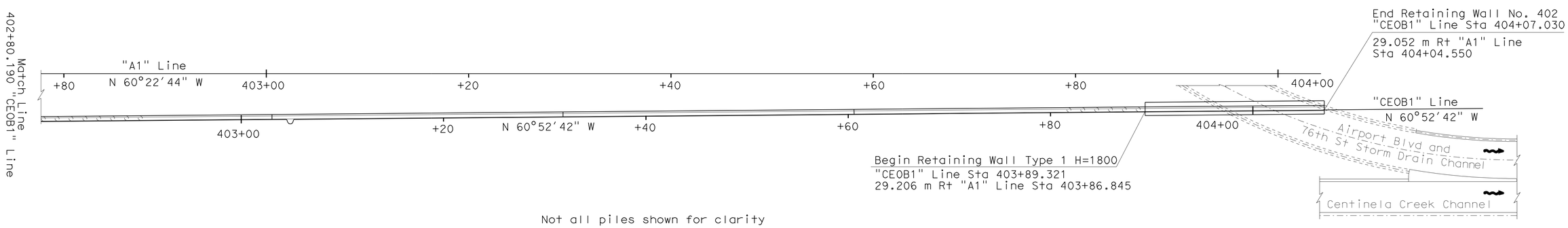

Not all piles shown for clarity

PLAN

1:200

Caltrans Metric	Matt Holm DESIGN ENGINEER	DESIGN	BY Fitsum Habtu	CHECKED Sebastian Mofor	LOAD & RESISTANCE FACTOR DESIGN — LIVE LOADING: HL93 W/"LOW-BOY"; PERMIT DESIGN VEHICLE
		DETAILS	BY Various	CHECKED Leon Valla	LAYOUT — BY Fitsum Habtu — CHECKED Leon Valla
		QUANTITIES	BY Leon Valla	CHECKED Fayek Tannous	SPECIFICATIONS — BY Theresa Nedwick — PLANS AND SPECS COMPARED Theresa Nedwick

ALL DIMENSIONS ARE IN METERS UNLESS OTHERWISE SHOWN

ORIGINAL SCALE IN MILLIMETERS FOR REDUCED PLANS 0 10 20 30 40 50 60 70 80 90 100

STATE OF CALIFORNIA
DEPARTMENT OF TRANSPORTATION

DIVISION OF ENGINEERING SERVICES
STRUCTURE DESIGN
DESIGN BRANCH 12

CU 07
EA 241301

BRIDGE NO. 53E0113
KILOMETER POST 40.27

RETAINING WALL NO. 402
GENERAL PLAN NO. 2

DISREGARD PRINTS BEARING EARLIER REVISION DATES
REVISION DATES: 08-12-08 08-14-08 09-22-08

SHEET 2 OF 19

FILE => 53-e0113-a-gp02.dgn

STRUCTURES DESIGN GENERAL PLAN SHEET (METRIC) (REV.07-24-06)

USERNAME => tfleonard DATE PLOTTED => 08-JUN-2010 TIME PLOTTED => 05:35

DIST	COUNTY	ROUTE	KILOMETER POST TOTAL PROJECT	SHEET No	TOTAL SHEETS
07	LA	405	39.7/41.5	402	439

Leon Valla 5-11-09
REGISTERED CIVIL ENGINEER DATE

6-7-10
PLANS APPROVAL DATE

REGISTERED PROFESSIONAL ENGINEER LEON VALLA No. 45351 Exp. 09-30-10 CIVIL STATE OF CALIFORNIA

The State of California or its officers or agents shall not be responsible for the accuracy or completeness of electronic copies of this plan sheet.

QUANTITIES

BRIDGE REMOVAL (PORTION), LOCATION C	LUMP SUM	
STRUCTURE EXCAVATION (RETAINING WALL)	4	m^3
STRUCTURE EXCAVATION (TYPE Z-2) (AERIALLY DEPOSITED LEAD)	198	m^3
STRUCTURE BACKFILL (RETAINING WALL)	137	m^3
PERVIOUS BACKFILL MATERIAL	43	m^3
400 MM CAST-IN-DRILLED-HOLE CONCRETE PILING	1 026	m
STRUCTURAL CONCRETE, RETAINING WALL	186	m^3
STRUCTURAL CONCRETE, BARRIER SLAB	92	m^3
ARCHITECTURAL TREATMENT	264	m^2
BAR REINFORCING STEEL (RETAINING WALL)	11 522	kg
CONCRETE BARRIER (TYPE 25A MODIFIED)	2	m
CONCRETE BARRIER (TYPE 736 MODIFIED)	325	m

GENERAL NOTES
LOAD FACTOR DESIGN

DESIGN: BRIDGE DESIGN SPECIFICATIONS (1996 AASHTO with Interims and Revisions by Caltrans)

REINFORCED CONCRETE: f_y = 420 Mpa
f'_c = 25 Mpa @ 28 days

SPREAD FOOTING DATA TABLE

Support Location	Allowable Bearing Capacity q_{all}	Nominal Bearing Resistance q_n
RW 402 H = 1.8 m	150 kPa	N/A

INDEX TO PLANS

SHEET NO.	TITLE
1	GENERAL PLAN NO. 1
2	GENERAL PLAN NO. 2
3	INDEX TO PLANS
4	FOUNDATION PLAN NO. 1
5	FOUNDATION PLAN NO. 2
6	RETAINING WALL LAYOUT NO. 1
7	RETAINING WALL LAYOUT NO. 2
8	RETAINING WALL LAYOUT NO. 3
9	RETAINING WALL LAYOUT NO. 4
10	RETAINING WALL LAYOUT NO. 5
11	RETAINING WALL LAYOUT NO. 6
12	RETAINING WALL DETAILS NO. 1
13	RETAINING WALL DETAILS NO. 2
14	EXISTING RETAINING WALL TYPE 5 LAYOUT
15	EXISTING RETAINING WALL TYPE 5 DETAILS
16	ARCHITECTURAL TREATMENT DETAILS
17	LOG OF TEST BORINGS 1 OF 3
18	LOG OF TEST BORINGS 2 OF 3
19	LOG OF TEST BORINGS 3 OF 3

STANDARD PLANS
(Dated JULY 2004)

A10A ACRONYMS AND ABBREVIATIONS (A-L)
A10B ACRONYMS AND ABBREVIATIONS (M-Z)
A10C SYMBOLS (SHEET 1 OF 2)
A10D SYMBOLS (SHEET 2 OF 2)
A62B LIMITS OF PAYMENT FOR EXCAVATION AND BACKFILL - BRIDGE SURCHARGE AND WALL
A62C LIMITS OF PAYMENT FOR EXCAVATION AND BACKFILL - BRIDGE
B0-3 BRIDGE DETAILS
B0-13 BRIDGE DETAILS
B3-1 RETAINING WALL TYPE 1 (H = 1200 mm THROUGH 9100 mm)
B3-8 RETAINING WALL DETAILS NO. 1
B11-56 CONCRETE BARRIER TYPE 736
B14-3 COMMUNICATION AND SPRINKLER CONTROL CONDUITS (CONDUIT LESS THAN SIZE 103 mm)
RSP ES-6A ELECTRICAL SYSTEMS (LIGHTING STANDARDS TYPES 15 AND 21)
ES-6B ELECTRICAL SYSTEMS (LIGHTING STANDARDS TYPES 15 AND 21, BARRIER RAIL MOUNTED DETAILS)
RSP ES-9A ELECTRICAL SYSTEMS (ELECTRICAL DETAILS STRUCTURE INSTALLATIONS)
RSP ES-9B ELECTRICAL SYSTEMS (ELECTRICAL DETAILS STRUCTURE INSTALLATIONS)

Caltrans Metric

ALL DIMENSIONS ARE IN MILLIMETERS UNLESS OTHERWISE SHOWN

ORIGINAL SCALE IN MILLIMETERS FOR REDUCED PLANS 0 10 20 30 40 50 60 70 80 90 100

	BY	CHECKED
DESIGN	Fitsum Habtu	Sebastian Mofor
DETAILS	F. Mendoza	Leon Valla
QUANTITIES	Leon Valla	Fayek Tannous

STATE OF CALIFORNIA
DEPARTMENT OF TRANSPORTATION

DIVISION OF ENGINEERING SERVICES
STRUCTURE DESIGN
DESIGN BRANCH 12

CU 07
EA 241301

BRIDGE NO. 53E0113
KILOMETER POST 40.27

RETAINING WALL NO. 402
INDEX TO PLANS

DISREGARD PRINTS BEARING EARLIER REVISION DATES

REVISION DATES: 09-28-08, 1-13-09, 2-24-09, 5-6-09, 5-12-09, 8-12-09, 11-4-09

SHEET 3 OF 19

FILE => 53-e0113-a-itp.dgn

STRUCTURES DESIGN DETAIL SHEET (METRIC) (REV.03-17-04)

USERNAME => trienard DATE PLOTTED => 08-JUN-2010 TIME PLOTTED => 05:35

DIST	COUNTY	ROUTE	KILOMETER POST TOTAL PROJECT	SHEET No	TOTAL SHEETS
07	LA	405	39.7/41.5	403	439

Caltrans Metric

Leon Valla 5-11-09
REGISTERED CIVIL ENGINEER

6-7-10
PLANS APPROVAL DATE

REGISTERED PROFESSIONAL ENGINEER LEON VALLA No. 45351 Exp. 09-30-10 CIVIL STATE OF CALIFORNIA

The State of California or its officers or agents shall not be responsible for the accuracy or completeness of electronic copies of this plan sheet.

HYDROLOGIC SUMMARY

DRAINAGE AREA: _____ SQUARE KILOMETERS

	DESIGN FLOOD	BASE FLOOD	OVERTOPPING FLOOD
FREQUENCY (YEARS)			
DISCHARGE (CUBIC METERS PER SECOND)			
WATER SURFACE ELEV. AT BRIDGE (METERS)			

FLOOD PLAIN DATA ARE BASED UPON INFORMATION AVAILABLE WHEN THE PLANS WERE PREPARED AND ARE SHOWN TO MEET FEDERAL REQUIREMENTS. THE ACCURACY OF SAID INFORMATION IS NOT WARRANTED BY THE STATE AND INTERESTED OR AFFECTED PARTIES SHOULD MAKE THEIR OWN INVESTIGATIONS.

(1) 401+30.190 BEGIN RW NO. 402 = 33.48 m RT "A1" 401+30.191

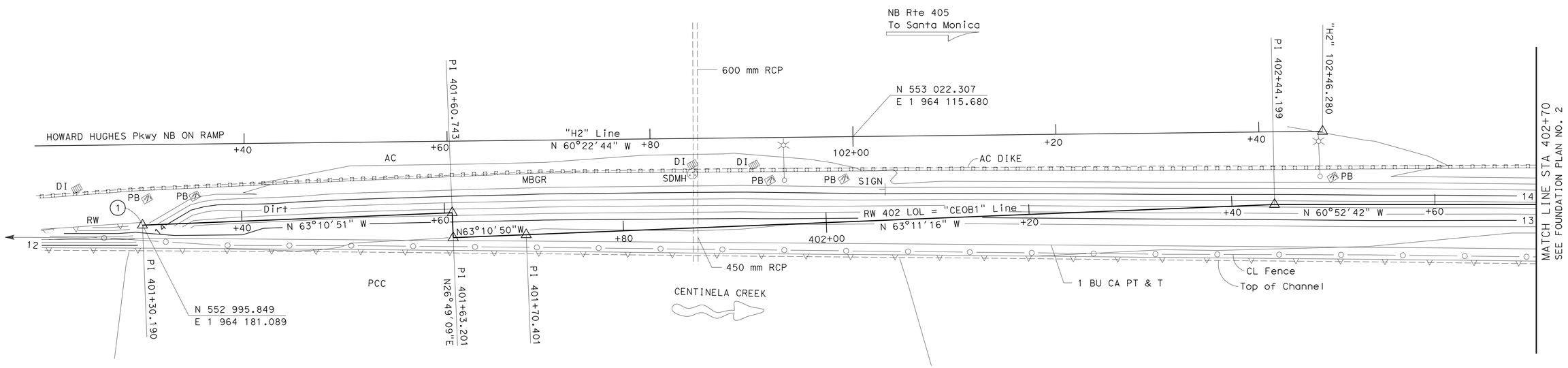

SURVEY CONTROL

PT-PMHV902 (NOT SHOWN)
FD SPK in Shldr of Centinela Ave,
E/O NB 405 Fwy
66.706 M Rt. ℄ Rte 405
Sta. 403+12.501
N 553 114.843
E 1 964 039.026
Elev. = 14.557

PT-PMHV97 (NOT SHOWN)
FD SPK @ 2 m left of stop sign
@ Centinela Ave
68.914 M Rt. ℄ Rte 405
Sta. 404+20.810
N 553 170.296
E 1 963 945.963
Elev. = 11.346

NOTES:

Underground utilities as shown are approximate

ALL DIMENSIONS ARE IN METERS UNLESS OTHERWISE SHOWN

PRELIMINARY INVESTIGATION SECTION

SCALE 1:200	VERT.DATUM NAVD 88	PHOTOGRAMMETRY AS OF:			
HORZ.DATUM NAD 83		SURVEYED	BY COAST SURVEY 02-07	DRAFTED	BY L. ZHANG 02-07
ALIGNMENT TIES Dist. Trav. Sheets		FIELD CHECKED	BY L. ZHOU 02-07	CHECKED	BY L. ZHOU 02-07

DESIGN	BY Fitsum Habtu	CHECKED Sebastian Mofor/LV
DETAILS	BY Various	CHECKED Leon Valla
QUANTITIES	BY Leon Valla	CHECKED Fayek Tannous

STATE OF CALIFORNIA DEPARTMENT OF TRANSPORTATION

DIVISION OF STRUCTURES
STRUCTURE DESIGN 12

CU 07
EA 241301

BRIDGE NO. 53E0113
KILOMETER POST 40.27

RETAINING WALL NO. 402
FOUNDATION PLAN NO. 1

STRUCTURES FOUNDATION PLAN SHEET (METRIC) (REV. 4/20/00)

ORIGINAL SCALE IN MILLIMETERS FOR REDUCED PLANS 0 10 20 30 40 50 60 70 80 90 100

DISREGARD PRINTS BEARING EARLIER REVISION DATES

REVISION DATES (PRELIMINARY STAGE ONLY) 2/21/07

SHEET 4 OF 19

FILE => 53-e0113-e-fp01.dgn

USERNAME => friehard DATE PLOTTED => 08-JUN-2010 TIME PLOTTED => 05:35

DIST	COUNTY	ROUTE	KILOMETER POST TOTAL PROJECT	SHEET No	TOTAL SHEETS
07	LA	405	39.7/41.5	404	439

Caltrans Metric

Leon Valla 5-11-09
REGISTERED CIVIL ENGINEER

6-7-10
PLANS APPROVAL DATE

REGISTERED PROFESSIONAL ENGINEER LEON VALLA No. 45351 Exp. 09-30-10 CIVIL STATE OF CALIFORNIA

The State of California or its officers or agents shall not be responsible for the accuracy or completeness of electronic copies of this plan sheet.

HYDROLOGIC SUMMARY

DRAINAGE AREA: _____ SQUARE KILOMETERS

	DESIGN FLOOD	BASE FLOOD	OVERTOPPING FLOOD
FREQUENCY (YEARS)			
DISCHARGE (CUBIC METERS PER SECOND)			
WATER SURFACE ELEV. AT BRIDGE (METERS)			

FLOOD PLAIN DATA ARE BASED UPON INFORMATION AVAILABLE WHEN THE PLANS WERE PREPARED AND ARE SHOWN TO MEET FEDERAL REQUIREMENTS. THE ACCURACY OF SAID INFORMATION IS NOT WARRANTED BY THE STATE AND INTERESTED OR AFFECTED PARTIES SHOULD MAKE THEIR OWN INVESTIGATIONS.

(2) 404+07.030 END RW NO. 402 =
29.052 m Rt "A1" 404+04.550

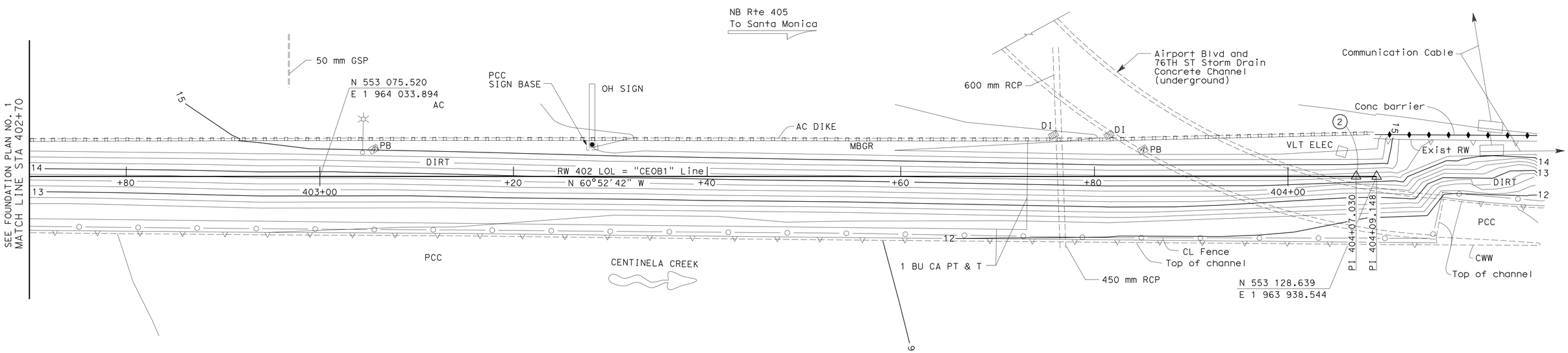

SURVEY CONTROL

PT-PMHV902 (NOT SHOWN)

FD SPK in Shldr of Centinela Ave,
E/O NB 405 Fwy
66.706 M Rt. ℄ Rte 405
Sta. 403+12.501
N 553 114.843
E 1 964 039.026
Elev. = 14.557

PT-PMHV97 (NOT SHOWN)

FD SPK @ 2 m left of stop sign
@ Centinela Ave
68.914 M Rt ℄ Rte 405
Sta. 404+20.810
N 553 170.296
E 1 963 945.963
Elev. = 11.346

NOTES:

1. Underground utilities as shown are approximate
2. Airport Blvd and 76TH ST Storm Drain Concrete Channel (underground) as Shown are approximate

ALL DIMENSIONS ARE IN METERS UNLESS OTHERWISE SHOWN

PRELIMINARY INVESTIGATION SECTION

SCALE 1:200	VERT.DATUM NAVD 88	PHOTOGRAMMETRY AS OF:					
HORZ.DATUM NAD 83		SURVEYED	BY COAST SURVEY 02-07	DRAFTED	BY L. ZHANG	02-07	
ALIGNMENT TIES Dist. Trav. Sheets		FIELD CHECKED	BY L. ZHOU 02-07	CHECKED	BY L. ZHOU	02-07	

DESIGN	BY Fitsum Habtu	CHECKED Sebastian Mofor/LV
DETAILS	BY Various	CHECKED Leon Valla
QUANTITIES	BY Leon Valla	CHECKED Fayek Tannous

STATE OF CALIFORNIA
DEPARTMENT OF TRANSPORTATION

DIVISION OF STRUCTURES
STRUCTURE DESIGN 12

BRIDGE NO. 53E0113
KILOMETER POST 40.27

RETAINING WALL NO. 402
FOUNDATION PLAN NO. 2

STRUCTURES FOUNDATION PLAN SHEET (METRIC) (REV. 4/20/00)

ORIGINAL SCALE IN MILLIMETERS FOR REDUCED PLANS 0 10 20 30 40 50 60 70 80 90 100

CU 07
EA 241301

DISREGARD PRINTS BEARING EARLIER REVISION DATES

REVISION DATES (PRELIMINARY STAGE ONLY) 2/27/07

SHEET 5 OF 19

FILE => 53-e0113-e-fp02.dgn

USERNAME => friehard DATE PLOTTED => 08-JUN-2010 TIME PLOTTED => 05:35

DIST	COUNTY	ROUTE	KILOMETER POST TOTAL PROJECT	SHEET No	TOTAL SHEETS
07	LA	405	39.7/41.5	405	439

REGISTERED CIVIL ENGINEER — DATE 5-11-09

6-7-10
PLANS APPROVAL DATE

REGISTERED PROFESSIONAL ENGINEER — LEON VALLA — No. 45351 — Exp. 09-30-10 — CIVIL — STATE OF CALIFORNIA

The State of California or its officers or agents shall not be responsible for the accuracy or completeness of electronic copies of this plan sheet.

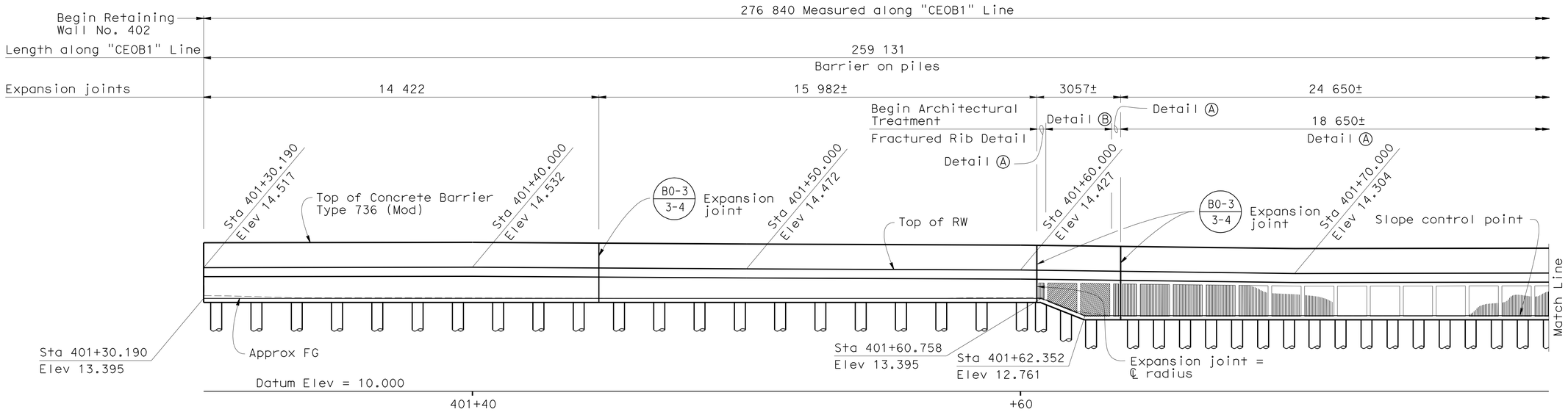

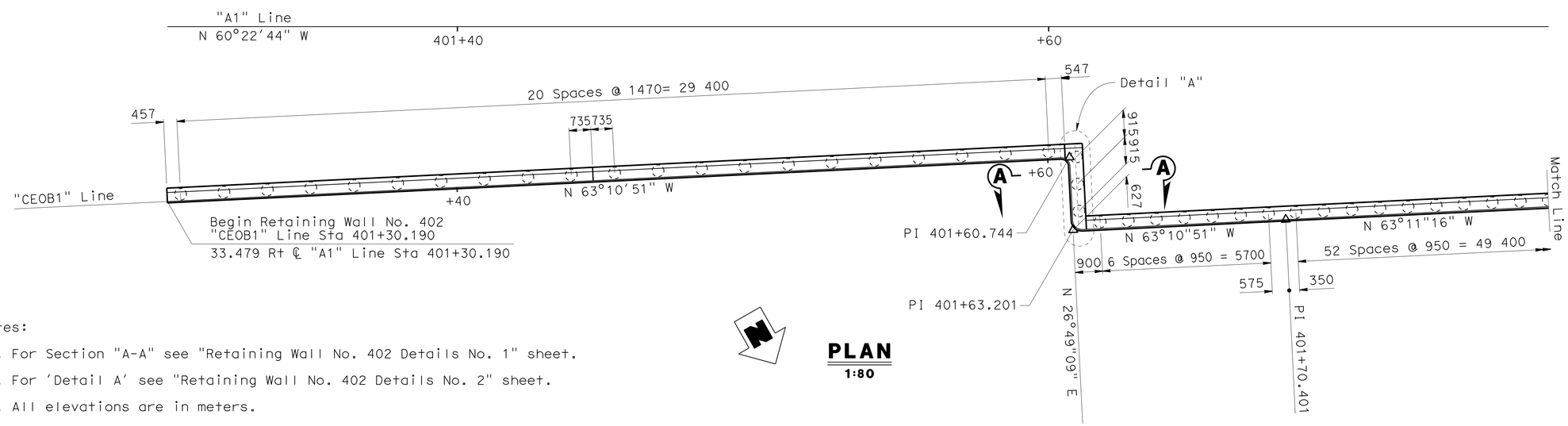

PLAN
1:80

Notes:

1. For Section "A-A" see "Retaining Wall No. 402 Details No. 1" sheet.
2. For 'Detail A' see "Retaining Wall No. 402 Details No. 2" sheet.
3. All elevations are in meters.
4. For Architectural Treatment see "Architectural Treatment Details" sheet.

Caltrans Metric

	BY	CHECKED
DESIGN	Fitsum Habtu	Sebastian Mofor
DETAILS	Various	Leon Valla
QUANTITIES	Leon Valla	Fayek Tannous

STATE OF CALIFORNIA
DEPARTMENT OF TRANSPORTATION

DIVISION OF ENGINEERING SERVICES
STRUCTURE DESIGN
DESIGN BRANCH 12

BRIDGE NO. 53E0113
KILOMETER POST 40.27

RETAINING WALL NO. 402
RETAINING WALL LAYOUT NO. 1

ALL DIMENSIONS ARE IN MILLIMETERS UNLESS OTHERWISE SHOWN

ORIGINAL SCALE IN MILLIMETERS FOR REDUCED PLANS 0 10 20 30 40 50 60 70 80 90 100

CU 07
EA 241301

DISREGARD PRINTS BEARING EARLIER REVISION DATES

REVISION DATES: 1-2-07 | 10-14-07 | 11-20-07 | 1-3-08 | 1-29-08 | 2-21-08 | 09-22-08 | 12-18-08 | 5-20-09

SHEET 6 OF 19

FILE => 53-e0113-g-rwlo01.dgn

STRUCTURES DESIGN DETAIL SHEET (METRIC) (REV.03-17-04)

USERNAME => tflenard DATE PLOTTED => 08-JUN-2010 TIME PLOTTED => 05:35

DIST	COUNTY	ROUTE	KILOMETER POST TOTAL PROJECT	SHEET No	TOTAL SHEETS
07	LA	405	39.7/41.5	406	439

REGISTERED CIVIL ENGINEER — DATE 5-11-09

6-7-10
PLANS APPROVAL DATE

REGISTERED PROFESSIONAL ENGINEER — LEON VALLA — No. 45351 — Exp. 09-30-10 — CIVIL — STATE OF CALIFORNIA

The State of California or its officers or agents shall not be responsible for the accuracy or completeness of electronic copies of this plan sheet.

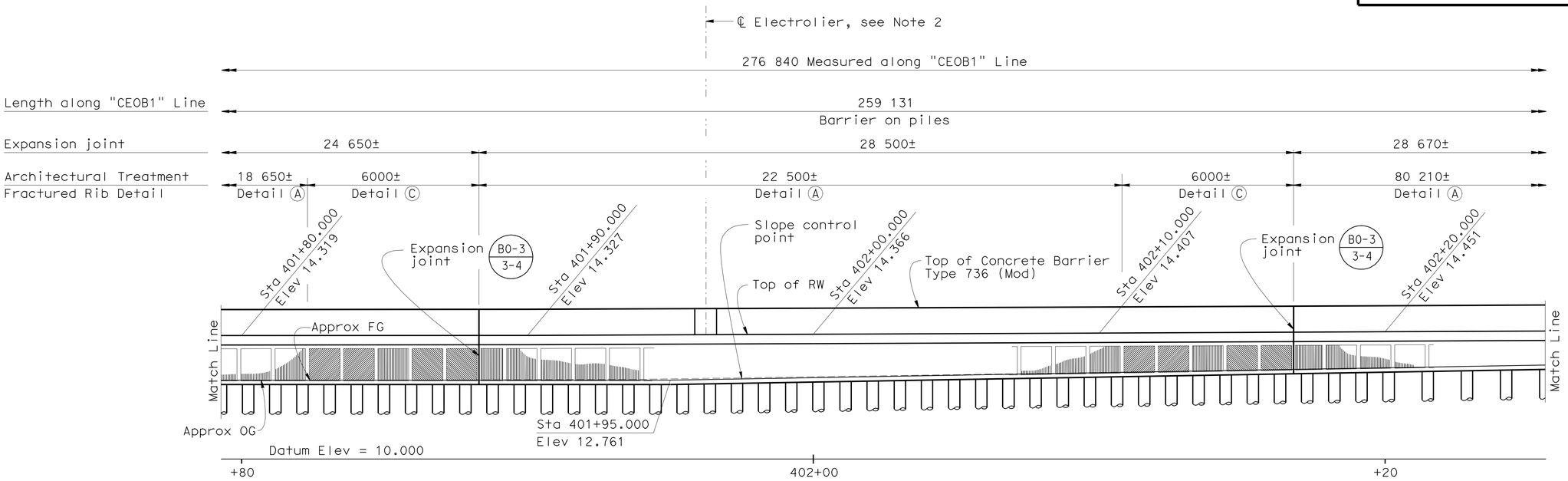

DEVELOPED ELEVATION
1:80

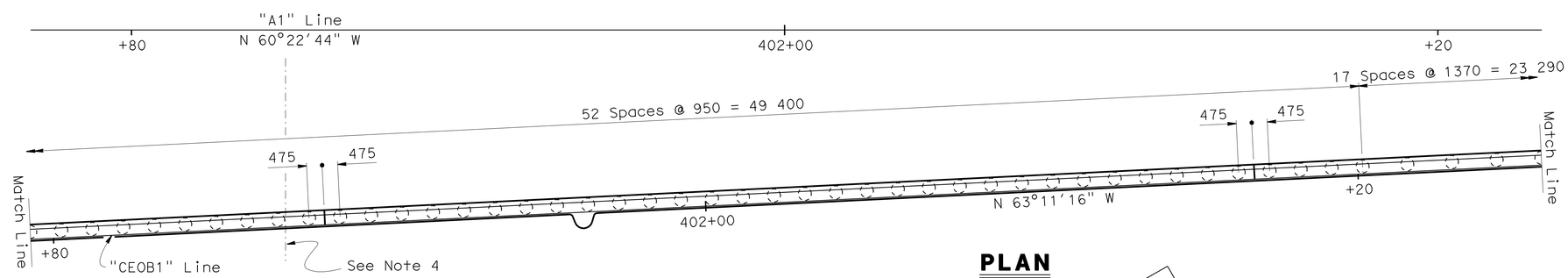

PLAN
1:80

Notes:

1. All elevations are in meters.
2. For location of electrolier see "Road Plans".
3. For Architectural Treatment see "Architectural Treatment Details" sheet.
4. 600 mm RCP at "CEOB1" Line Sta 401+87.118±, locate and adjust pile spacing to miss obstruction. Minimum clearance distance from 600 mm RCP = 25 mm.

Caltrans Metric

ALL DIMENSIONS ARE IN MILLIMETERS UNLESS OTHERWISE SHOWN

ORIGINAL SCALE IN MILLIMETERS FOR REDUCED PLANS 0 10 20 30 40 50 60 70 80 90 100

	BY	CHECKED
DESIGN	Fitsum Habtu	Sebastion Mofor
DETAILS	Various	Leon Valla
QUANTITIES	Leon Valla	Fayek Tannous

STATE OF CALIFORNIA
DEPARTMENT OF TRANSPORTATION

DIVISION OF ENGINEERING SERVICES
STRUCTURE DESIGN
DESIGN BRANCH 12

CU 07
EA 241301

BRIDGE NO. 53E0113
KILOMETER POST 40.27

RETAINING WALL NO. 402
RETAINING WALL LAYOUT NO. 2

DISREGARD PRINTS BEARING EARLIER REVISION DATES

REVISION DATES: 1-2-07, 5-20-09, 10-16-07, 11-21-07, 1-1-08, 1-29-08, 2-21-08, 09-22-08, 5-6-09

SHEET 7 OF 19

FILE => 53-e0113-g-rwlo02.dgn

STRUCTURES DESIGN DETAIL SHEET (METRIC) (REV.03-17-04)

USERNAME => friehard DATE PLOTTED => 08-JUN-2010 TIME PLOTTED => 05:36

DIST	COUNTY	ROUTE	KILOMETER POST TOTAL PROJECT	SHEET No	TOTAL SHEETS
07	LA	405	39.7/41.5	407	439

Leon Valla 5-11-09
REGISTERED CIVIL ENGINEER DATE

6-7-10
PLANS APPROVAL DATE

REGISTERED PROFESSIONAL ENGINEER
LEON VALLA
No. 45351
Exp. 09-30-10
CIVIL
STATE OF CALIFORNIA

The State of California or its officers or agents shall not be responsible for the accuracy or completeness of electronic copies of this plan sheet.

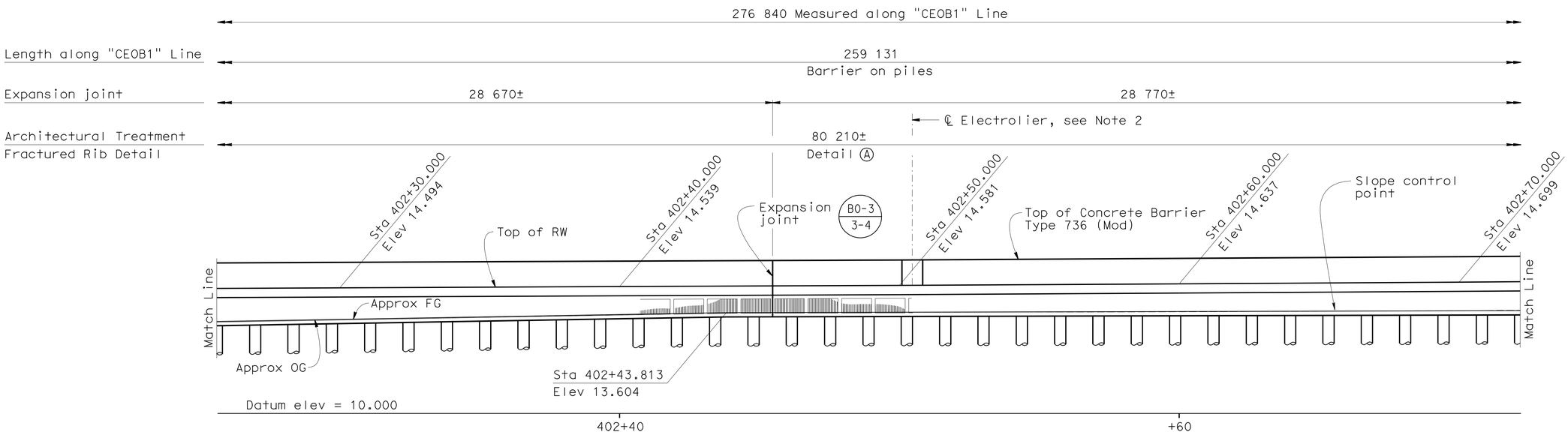

DEVELOPED ELEVATION

1:80

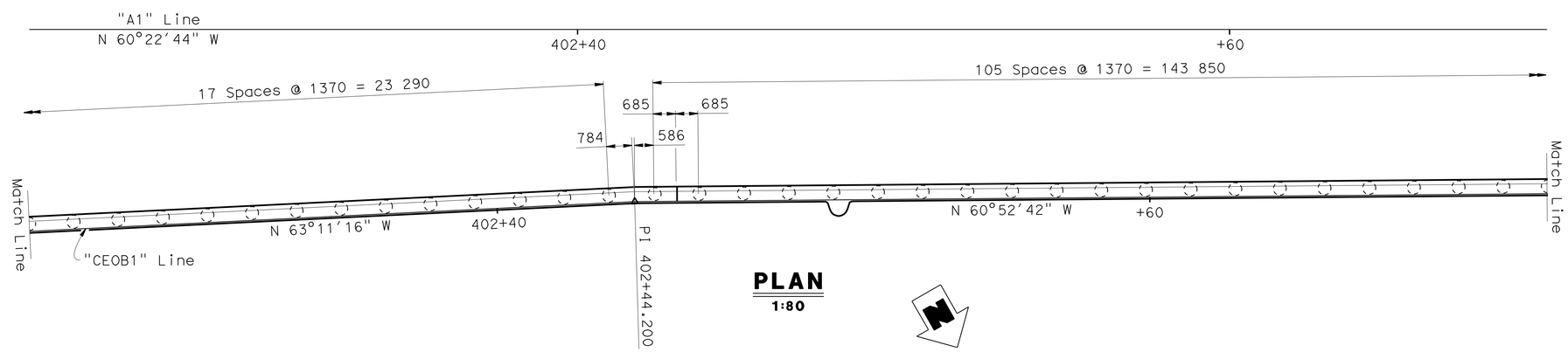

PLAN

1:80

Notes:

1. All elevations are in meters.
2. For location of electrolier see "Road Plans".
3. For Architectural treatment see "Architectural Treatment Details" sheet.

Caltrans Metric

	BY	CHECKED
DESIGN	Fitsum Habtu	Sebastian Mofor
DETAILS	Various	Leon Valla
QUANTITIES	Leon Valla	Fayek Tannous

STATE OF CALIFORNIA
DEPARTMENT OF TRANSPORTATION

DIVISION OF ENGINEERING SERVICES
STRUCTURE DESIGN
DESIGN BRANCH 12

BRIDGE NO. 53E0113
KILOMETER POST 40.27

RETAINING WALL NO. 402
RETAINING WALL LAYOUT NO. 3

ALL DIMENSIONS ARE IN MILLIMETERS UNLESS OTHERWISE SHOWN

ORIGINAL SCALE IN MILLIMETERS FOR REDUCED PLANS 0 10 20 30 40 50 60 70 80 90 100

CU 07
EA 241301

DISREGARD PRINTS BEARING EARLIER REVISION DATES

REVISION DATES: 1-2-07 | 10-16-07 | 11-21-07 | 1-2-08 | 1-29-08 | 2-21-08 | 09-22-08 | 12-18-08 | 5-20-09

SHEET 8 OF 19

FILE => 53-e0113-g-rwlo03.dgn

STRUCTURES DESIGN DETAIL SHEET (METRIC) (REV.03-17-04)

USERNAME => trlenard DATE PLOTTED => 08-JUN-2010 TIME PLOTTED => 05:36

DIST	COUNTY	ROUTE	KILOMETER POST TOTAL PROJECT	SHEET No	TOTAL SHEETS
07	LA	405	39.7/41.5	408	439

REGISTERED CIVIL ENGINEER — DATE 5-11-09

6-7-10
PLANS APPROVAL DATE

REGISTERED PROFESSIONAL ENGINEER — LEON VALLA — No. 45351 — Exp. 09-30-10 — CIVIL — STATE OF CALIFORNIA

The State of California or its officers or agents shall not be responsible for the accuracy or completeness of electronic copies of this plan sheet.

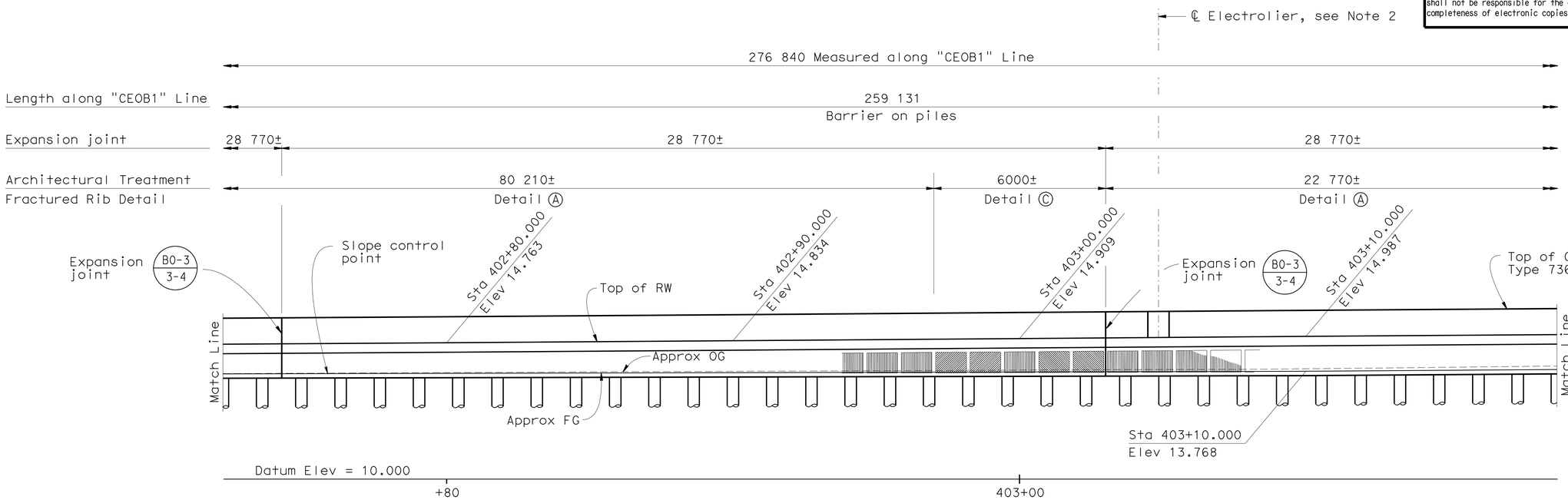

DEVELOPED ELEVATION
1:80

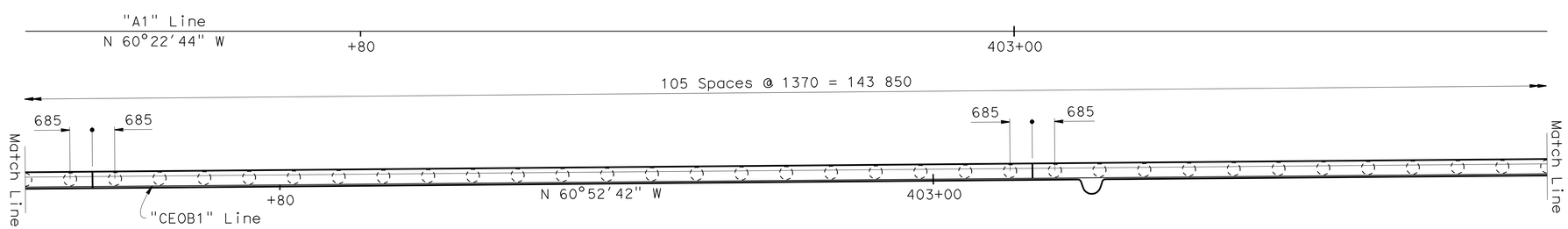

PLAN
1:80

Notes:

1. All elevations are in meters.
2. For location of electrolier see "Road Plans".
3. For Architectural Treatment see "Architectural Treatment Details" sheet.

Caltrans Metric

	BY	CHECKED
DESIGN	Fitsum Habtu	Sebastian Mofor
DETAILS	Various	Leon Valla
QUANTITIES	Leon Valla	Fayek Tannous

STATE OF CALIFORNIA
DEPARTMENT OF TRANSPORTATION

DIVISION OF ENGINEERING SERVICES
STRUCTURE DESIGN
DESIGN BRANCH 12

BRIDGE NO. 53E0113
KILOMETER POST 40.27

RETAINING WALL NO. 402
RETAINING WALL LAYOUT NO. 4

ALL DIMENSIONS ARE IN MILLIMETERS UNLESS OTHERWISE SHOWN

ORIGINAL SCALE IN MILLIMETERS FOR REDUCED PLANS 0 10 20 30 40 50 60 70 80 90 100

CU 07
EA 241301

DISREGARD PRINTS BEARING EARLIER REVISION DATES

REVISION DATES: 1-2-07 | 10-16-07 | 11-21-07 | 1-7-08 | 1-29-08 | 2-21-08 | 09-22-08 | 12-18-08 | 5-20-09

SHEET 9 OF 19

FILE => 53-e0113-g-rwlo04.dgn

STRUCTURES DESIGN DETAIL SHEET (METRIC) (REV.03-17-04)

USERNAME => friehard DATE PLOTTED => 08-JUN-2010 TIME PLOTTED => 05:36

DIST	COUNTY	ROUTE	KILOMETER POST TOTAL PROJECT	SHEET No	TOTAL SHEETS
07	LA	405	39.7/41.5	409	439

Leon Valla 5-11-09
REGISTERED CIVIL ENGINEER DATE

6-7-10
PLANS APPROVAL DATE

REGISTERED PROFESSIONAL ENGINEER
LEON VALLA
No. 45351
Exp. 09-30-10
CIVIL
STATE OF CALIFORNIA

The State of California or its officers or agents shall not be responsible for the accuracy or completeness of electronic copies of this plan sheet.

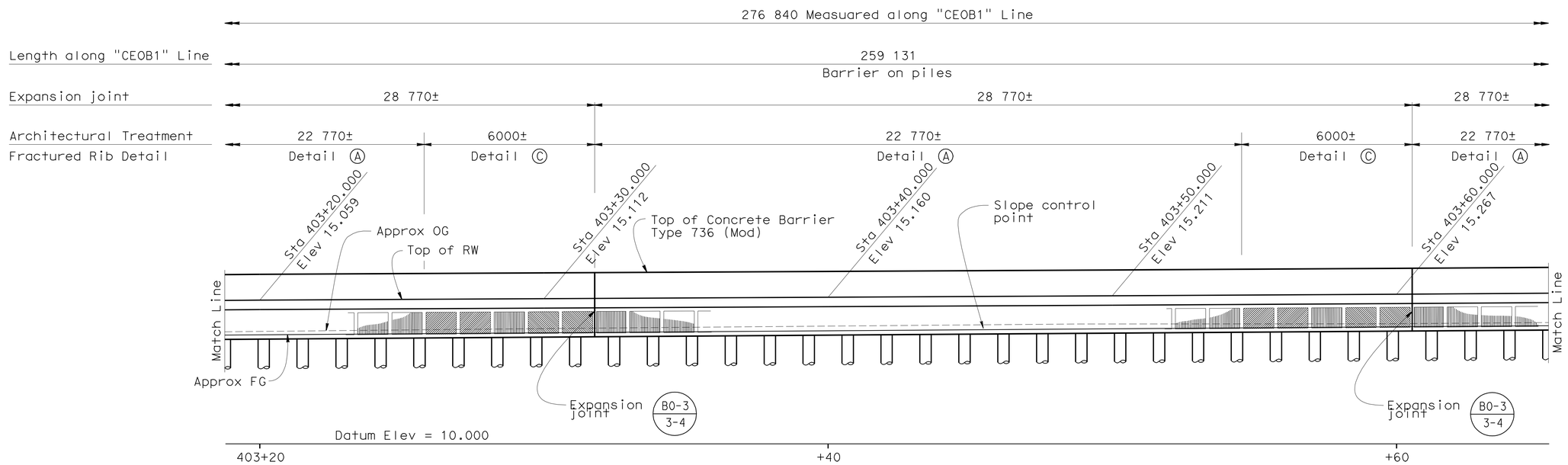

DEVELOPED ELEVATION
1:80

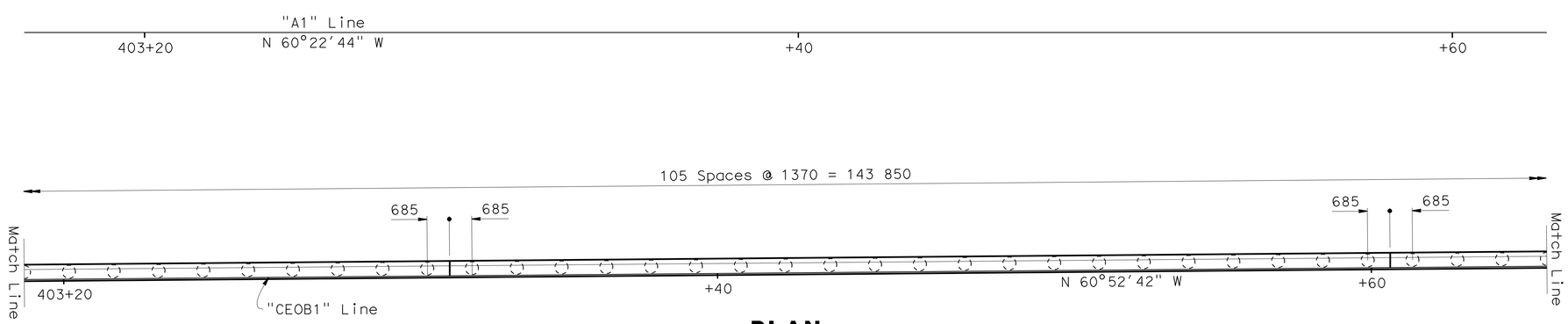

PLAN
1:80

Note:

1. All elevations are in meters.
2. For Architectural Treatment see "Architectural Treatment Details" sheet.

DESIGN	BY Fitsum Habtu	CHECKED Sebastian Mofor	
DETAILS	BY Various	CHECKED Leon Valla	
QUANTITIES	BY Leon Valla	CHECKED Fayek Tannous	

STATE OF CALIFORNIA
DEPARTMENT OF TRANSPORTATION

DIVISION OF ENGINEERING SERVICES
STRUCTURE DESIGN
DESIGN BRANCH 12

BRIDGE NO. 53E0113
KILOMETER POST 40.27

RETAINING WALL NO. 402
RETAINING WALL LAYOUT NO. 5

ALL DIMENSIONS ARE IN MILLIMETERS UNLESS OTHERWISE SHOWN

ORIGINAL SCALE IN MILLIMETERS FOR REDUCED PLANS 0 10 20 30 40 50 60 70 80 90 100

CU 07
EA 241301

DISREGARD PRINTS BEARING EARLIER REVISION DATES

REVISION DATES: 1-2-07 8-2-07 10-15-07 11-26-07 1-3-08 1-29-08 09-22-08 5-20-09 5-26-09

SHEET 10 OF 19

FILE => 53-e0113-g-rwlo05.dgn

STRUCTURES DESIGN DETAIL SHEET (METRIC) (REV.03-17-04)

USERNAME => trlenard DATE PLOTTED => 08-JUN-2010 TIME PLOTTED => 05:36

DIST	COUNTY	ROUTE	KILOMETER POST TOTAL PROJECT	SHEET No	TOTAL SHEETS
07	LA	405	39.7/41.5	410	439

REGISTERED CIVIL ENGINEER — DATE 5-11-09

6-7-10
PLANS APPROVAL DATE

REGISTERED PROFESSIONAL ENGINEER — LEON VALLA — No. 45351 — Exp. 09-30-10 — CIVIL — STATE OF CALIFORNIA

The State of California or its officers or agents shall not be responsible for the accuracy or completeness of electronic copies of this plan sheet.

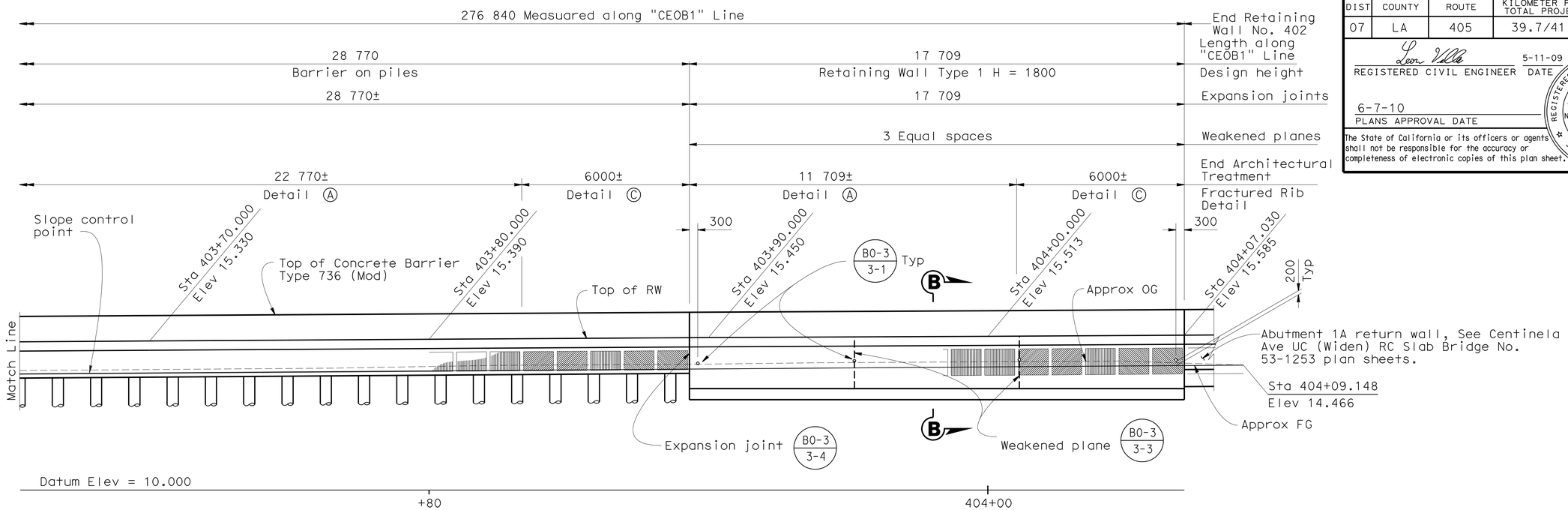

DEVELOPED ELEVATION

1:80

B3-1 / - B3-8 / -

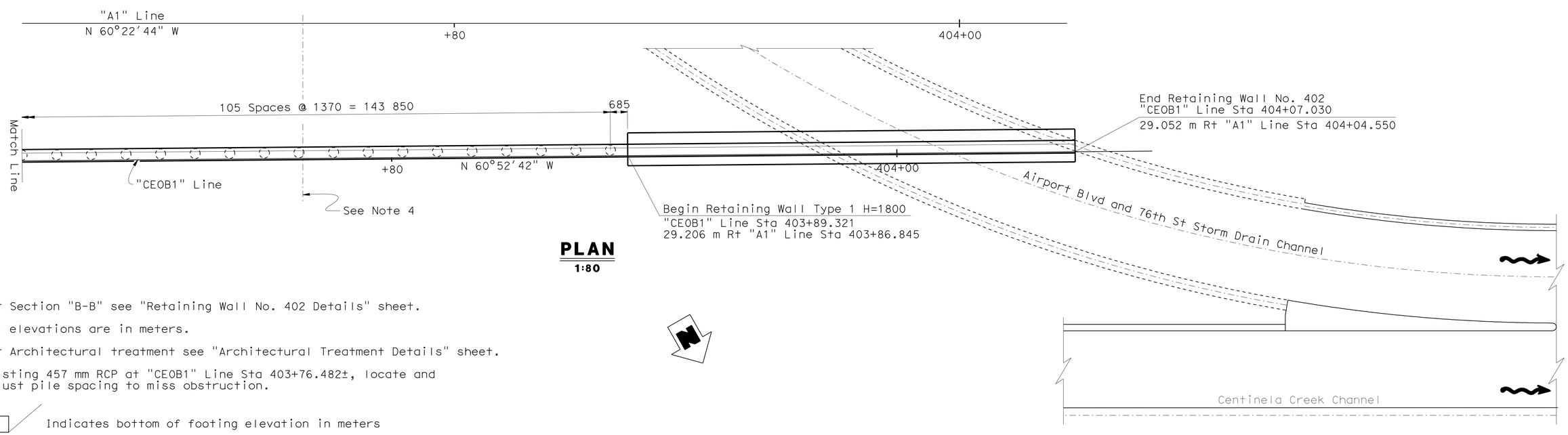

PLAN

1:80

Notes:

1. For Section "B-B" see "Retaining Wall No. 402 Details" sheet.
2. All elevations are in meters.
3. For Architectural treatment see "Architectural Treatment Details" sheet.
4. Existing 457 mm RCP at "CEOB1" Line Sta 403+76.482±, locate and adjust pile spacing to miss obstruction.

Indicates bottom of footing elevation in meters

Caltrans Metric

	BY	CHECKED
DESIGN	F. Habtu/L. Valla	Sebastian Mofor
DETAILS	Various	Leon Valla
QUANTITIES	Leon Valla	Fayek Tannous

STATE OF CALIFORNIA
DEPARTMENT OF TRANSPORTATION

DIVISION OF ENGINEERING SERVICES
STRUCTURE DESIGN
DESIGN BRANCH 12

BRIDGE NO. 53E0113
KILOMETER POST 40.27

RETAINING WALL NO. 402
RETAINING WALL LAYOUT NO. 6

ALL DIMENSIONS ARE IN MILLIMETERS UNLESS OTHERWISE SHOWN

ORIGINAL SCALE IN MILLIMETERS FOR REDUCED PLANS 0 10 20 30 40 50 60 70 80 90 100

CU 07
EA 241301

DISREGARD PRINTS BEARING EARLIER REVISION DATES

REVISION DATES: 4-30-07 09-22-08 5-27-09 10-15-07 11-26-07 1-7-08 1-29-08 2-21-08 08-14-08

SHEET 11 OF 19

FILE => 53-e0113-g-rwlo06.dgn

STRUCTURES DESIGN DETAIL SHEET (METRIC) (REV.03-17-04)

USERNAME => friehard DATE PLOTTED => 08-JUN-2010 TIME PLOTTED => 06:36

DIST	COUNTY	ROUTE	KILOMETER POST TOTAL PROJECT	SHEET No	TOTAL SHEETS
07	LA	405	39.7/41.5	411	439

REGISTERED CIVIL ENGINEER — DATE 5-11-09

6-7-10
PLANS APPROVAL DATE

REGISTERED PROFESSIONAL ENGINEER — LEON VALLA — No. 45351 — Exp. 09-30-10 — CIVIL — STATE OF CALIFORNIA

The State of California or its officers or agents shall not be responsible for the accuracy or completeness of electronic copies of this plan sheet.

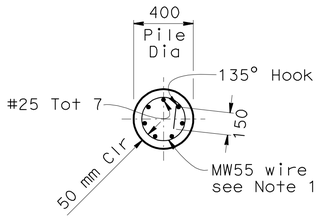

SECTION C-C
1:20

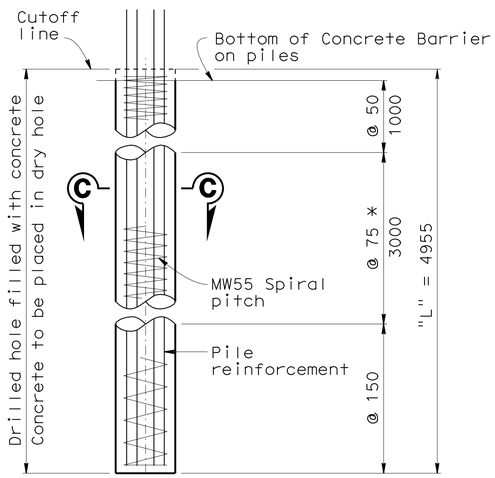

PILE ELEVATION
1:20

* @ 50 at option of Contractor.

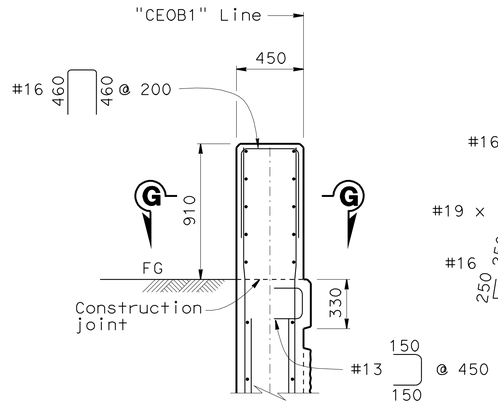

SECTION A-A
1:20
Note 2

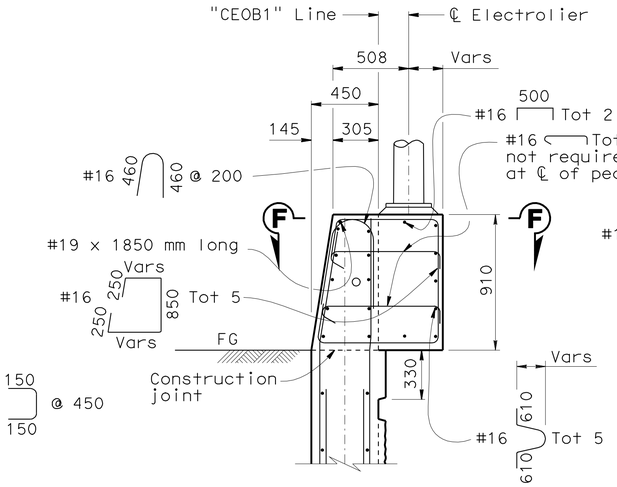

BARRIER SECTION AT PEDESTAL
1:20
Note 2

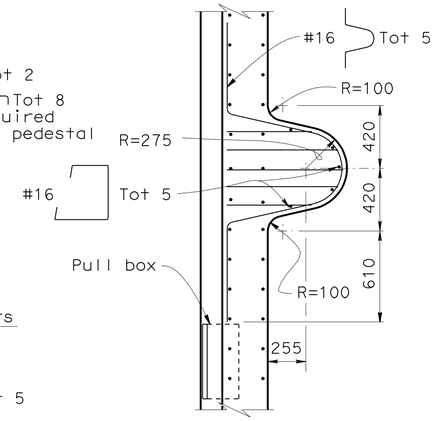

SECTION F-F
1:20

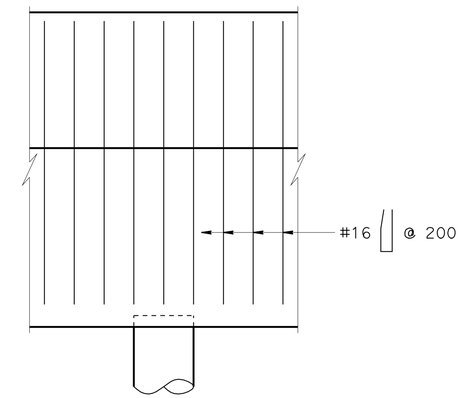

PART ELEVATION DETAIL
1:20

UTILITY OPENINGS			
LOCATION	UTILITY	OWNER	CONDUIT SIZE
A	Electrical Conduit	Caltrans	53 mm Ø

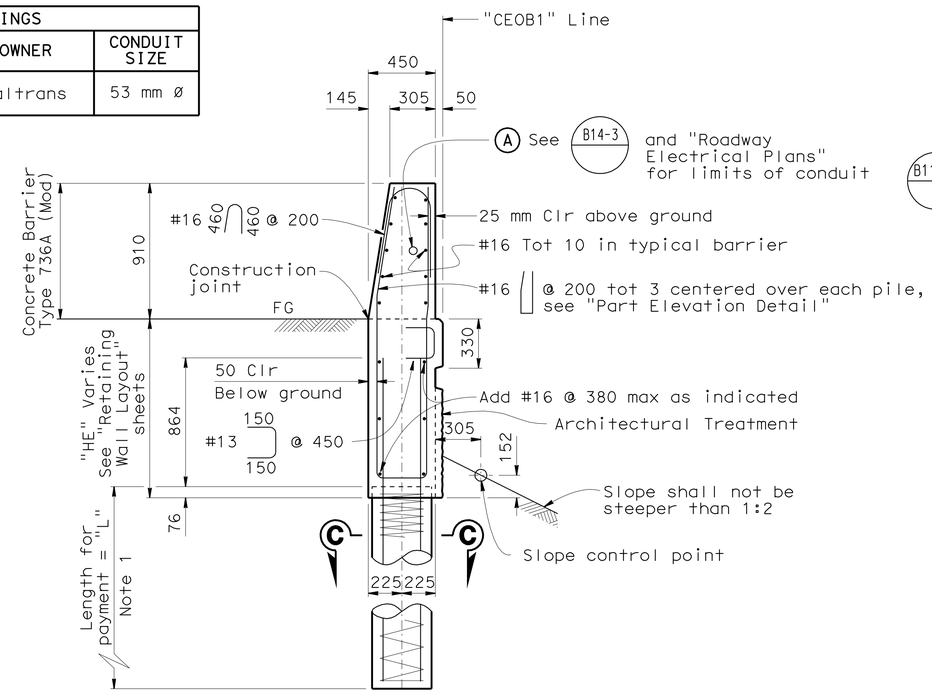

BARRIER RETAINING WALL SECTION
1:20
Typical unless shown otherwise.

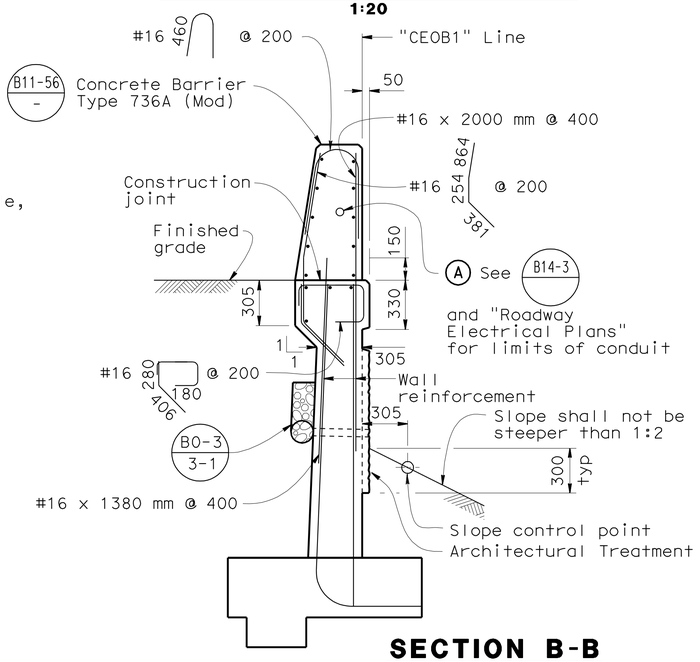

SECTION B-B
1:20

Notes:

1. Lapped splices in spiral reinforcement shall be lapped at least 80 wire diameters. Spiral reinforcement at splices and at ends shall be terminated with a 35° hook with a 150 mm tail hooked around a longitudinal bar.
2. For details not shown see "Barrier Retaining Wall Section".
3. For "Section G-G" see "Retaining Wall No. 402 Details No. 2" sheet.
4. For Architectural Treatment see "Architectural Treatment Details" sheet.

Caltrans Metric

	BY	CHECKED
DESIGN	Fitsum Habtu	Sebastian Mofor
DETAILS	Various	Leon Valla
QUANTITIES	Leon Valla	Fayek Tannous

STATE OF CALIFORNIA
DEPARTMENT OF TRANSPORTATION

DIVISION OF ENGINEERING SERVICES
STRUCTURE DESIGN
DESIGN BRANCH 12

CU 07
EA 241301

BRIDGE NO. 53E0113
KILOMETER POST 40.27

RETAINING WALL NO. 402
RETAINING WALL DETAILS NO. 1

ALL DIMENSIONS ARE IN MILLIMETERS UNLESS OTHERWISE SHOWN

ORIGINAL SCALE IN MILLIMETERS FOR REDUCED PLANS 0 10 20 30 40 50 60 70 80 90 100

DISREGARD PRINTS BEARING EARLIER REVISION DATES

REVISION DATES: 8-14-07 10-26-07 11-26-07 1-8-08 1-30-08 2-26-08 7-11-08 8-4-08 09-22-08

SHEET 12 OF 19

STRUCTURES DESIGN DETAIL SHEET (METRIC) (REV.03-17-04)

FILE => 53-e0113-h-rwdet01.dgn

USERNAME => ttrrene DATE PLOTTED => 08-JUN-2010 TIME PLOTTED => 06:24

DIST	COUNTY	ROUTE	KILOMETER POST TOTAL PROJECT	SHEET No	TOTAL SHEETS
07	LA	405	39.7/41.5	412	439

Leon Valla 5-11-09
REGISTERED CIVIL ENGINEER DATE

6-7-10
PLANS APPROVAL DATE

REGISTERED PROFESSIONAL ENGINEER
LEON VALLA
No. 45351
Exp. 09-30-10
CIVIL
STATE OF CALIFORNIA

The State of California or its officers or agents shall not be responsible for the accuracy or completeness of electronic copies of this plan sheet.

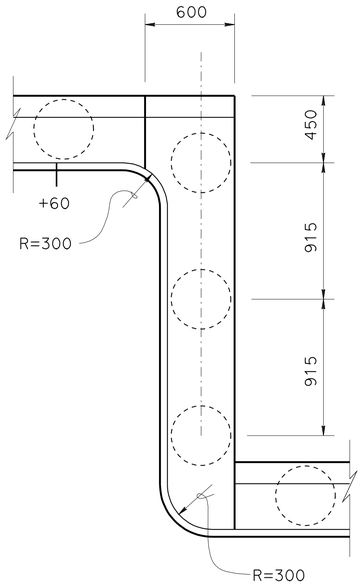

DETAIL "A"
1:20

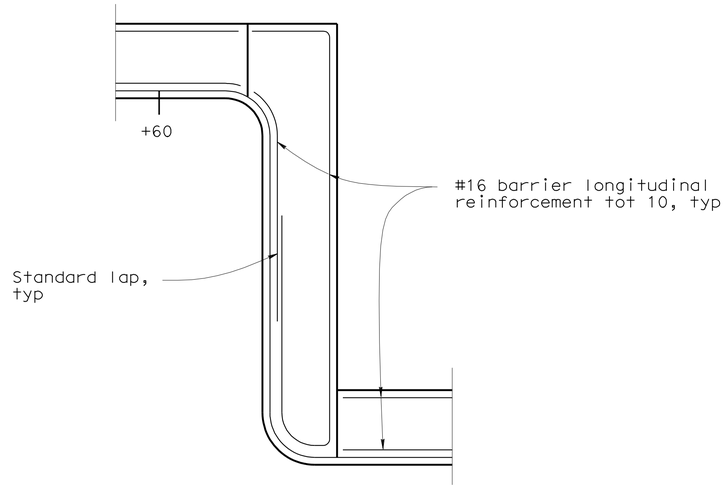

SECTION G-G
1:20

Legend

Structure Excavation (Type Y-1) Aerially Deposited Lead

Structure Excavation (retaining wall)

Structure Backfill (retaining wall)

Note:
Any excess Type (Y-1) material that cannot be reused on site or along the corridor shall be classified as Type (Z-2)

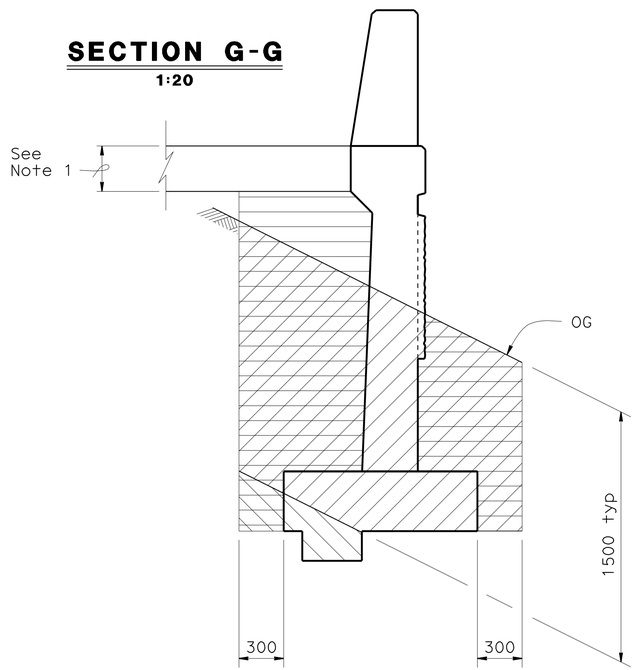

PAY LIMITS FOR STRUCTURE EXCAVATION AND BACKFILL FOR RETAINING WALL TYPE 1
1:20

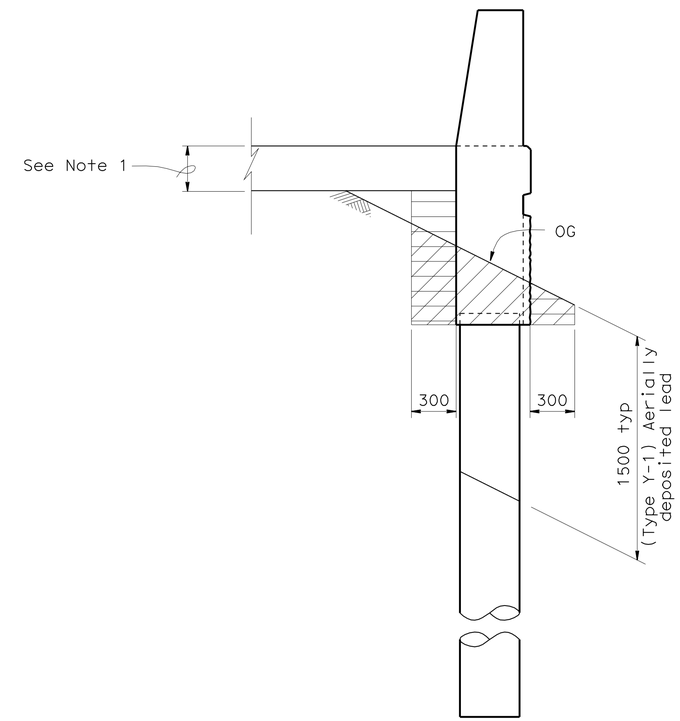

PAY LIMITS FOR STRUCTURE EXCAVATION AND BACKFILL FOR BARRIER RETAINING WALL
1:20
Typical unless otherwise noted.

Notes:

1. 0.300 m Structure Approach Slab N(9D) thickness or roadway thickness. For roadway thickness see "Road Plans".

Caltrans Metric

	BY	CHECKED
DESIGN	Fitsum Habtu	Sebastian Mofor
DETAILS	Marvin Lane	Leon Valla
QUANTITIES	Leon Valla	Fayek Tannous

STATE OF CALIFORNIA
DEPARTMENT OF TRANSPORTATION

DIVISION OF ENGINEERING SERVICES
STRUCTURE DESIGN
DESIGN BRANCH 12

BRIDGE NO. 53E0113
KILOMETER POST 40.27

RETAINING WALL NO. 402
RETAINING WALL DETAILS NO. 2

ALL DIMENSIONS ARE IN MILLIMETERS UNLESS OTHERWISE SHOWN

ORIGINAL SCALE IN MILLIMETERS FOR REDUCED PLANS 0 10 20 30 40 50 60 70 80 90 100

CU 07
EA 241301

DISREGARD PRINTS BEARING EARLIER REVISION DATES

REVISION DATES: 10-17-07 | 1-8-08 | 1-28-08 | 2-25-08 | 03-22-08 | 12-18-08 | 5-6-09 | 5-7-09

SHEET 13 OF 19

FILE => 53-e0113-h-rwdet02.gdn

STRUCTURES DESIGN DETAIL SHEET (METRIC) (REV.03-17-04)

USERNAME => trrene DATE PLOTTED => 08-JUN-2010 TIME PLOTTED => 06:25

DIST	COUNTY	ROUTE	KILOMETER POST TOTAL PROJECT	SHEET No	TOTAL SHEETS
07	LA	405	39.7/41.5	413	439

Leon Valla 5-11-09
REGISTERED CIVIL ENGINEER DATE

6-7-10
PLANS APPROVAL DATE

REGISTERED PROFESSIONAL ENGINEER
LEON VALLA
No. 45351
Exp. 09-30-10
CIVIL
STATE OF CALIFORNIA

The State of California or its officers or agents shall not be responsible for the accuracy or completeness of electronic copies of this plan sheet.

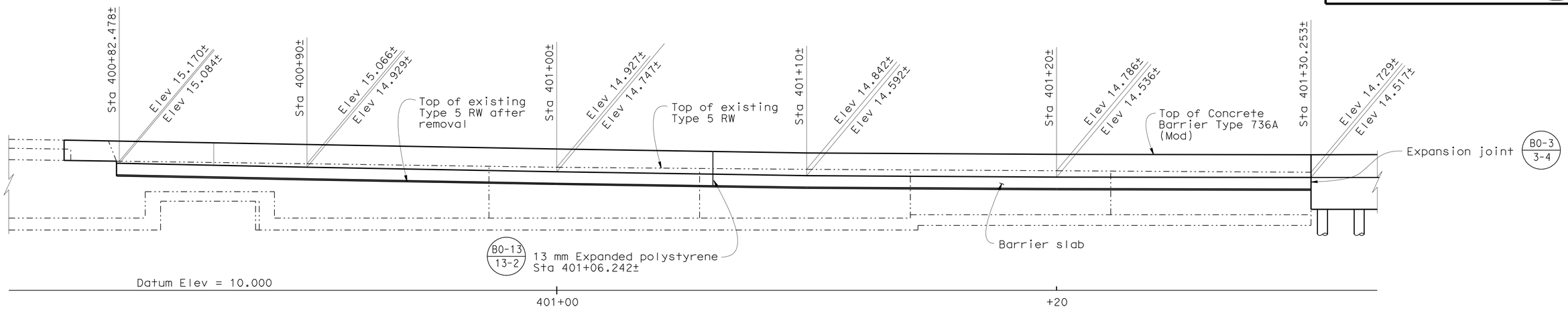

ELEVATION
No scale

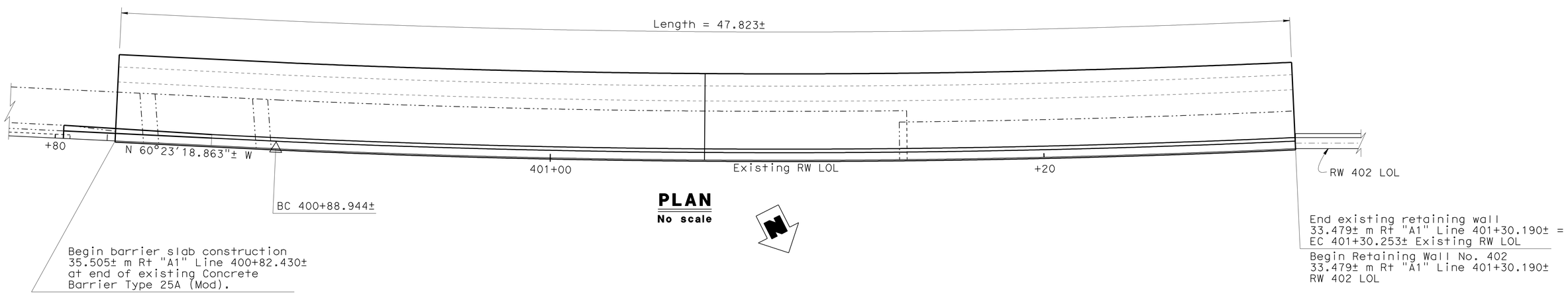

PLAN
No scale

	BY	CHECKED
DESIGN	Fitsum Habtu	Leon Valla
DETAILS	Various	Leon Valla
QUANTITIES	Leon Valla	Fayek Tannous

STATE OF CALIFORNIA
DEPARTMENT OF TRANSPORTATION

DIVISION OF ENGINEERING SERVICES
STRUCTURE DESIGN
DESIGN BRANCH 12

BRIDGE NO. 53E0113
KILOMETER POST 40.27

RETAINING WALL NO. 402
EXISTING RETAINING WALL TYPE 5 LAYOUT

ALL DIMENSIONS ARE IN MILLIMETERS UNLESS OTHERWISE SHOWN

ORIGINAL SCALE IN MILLIMETERS FOR REDUCED PLANS 0 10 20 30 40 50 60 70 80 90 100

CU 07
EA 241301

DISREGARD PRINTS BEARING EARLIER REVISION DATES

REVISION DATES: 1-2-07 2-28-07 3-6-07 8-13-07 10-11-07 11-15-07 1-29-08 09-22-08

SHEET 14 OF 19

FILE => 53-e0113-i-rwmisc01.dgn

STRUCTURES DESIGN DETAIL SHEET (METRIC) (REV.03-17-04)

USERNAME => ttrene DATE PLOTTED => 08-JUN-2010 TIME PLOTTED => 06:43

DIST	COUNTY	ROUTE	KILOMETER POST TOTAL PROJECT	SHEET No	TOTAL SHEETS
07	LA	405	39.7/41.5	414	439

Leon Valla 5-11-09
REGISTERED CIVIL ENGINEER DATE

6-7-10
PLANS APPROVAL DATE

REGISTERED PROFESSIONAL ENGINEER LEON VALLA No. 45351 Exp. 09-30-10 CIVIL STATE OF CALIFORNIA

The State of California or its officers or agents shall not be responsible for the accuracy or completeness of electronic copies of this plan sheet.

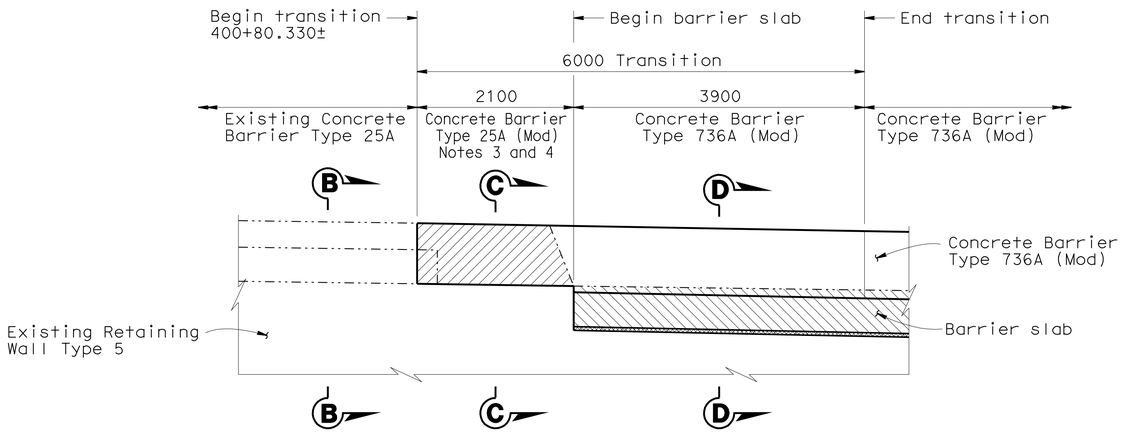

ELEVATION

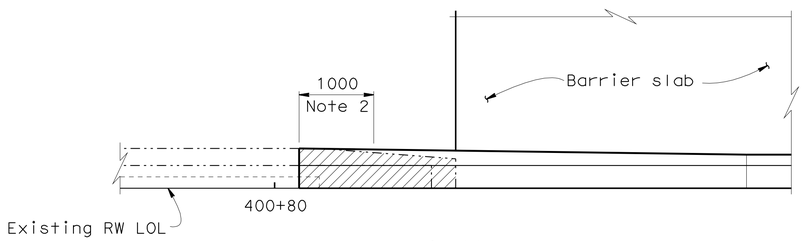

PLAN

CONCRETE BARRIER TRANSITION

No scale

Notes:

1. All existing Concrete Barrier Type 25A (Mod) dowels to remain exposed and undamaged.
2. Limits of existing Concrete Barrier Type 25A #13 longitudinal reinforcement to remain and lap with new portion of Concrete Barrier Type 25A (Mod).
3. All Concrete Barrier Type 25A (Mod) longitudinal reinforcement to be #16 and extend with Concrete Barrier Type 736A (Mod).
4. Remove and replace Concrete Barrier Type 25A (Mod) to transition with Concrete Barrier Type 736A (Mod) as shown.
5. For all details not shown see B11-56

Limits of existing Concrete Barrier Type 25 removal portion

Limits of existing Retaining Wall Type 5 removal portion

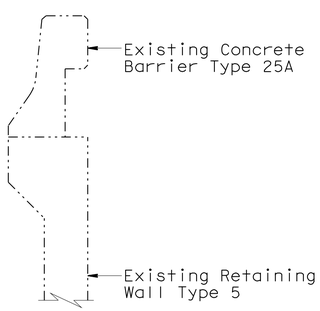

SECTION B-B

1:20

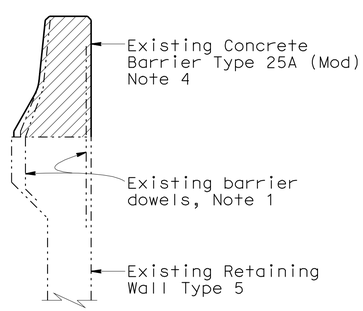

SECTION C-C

1:20

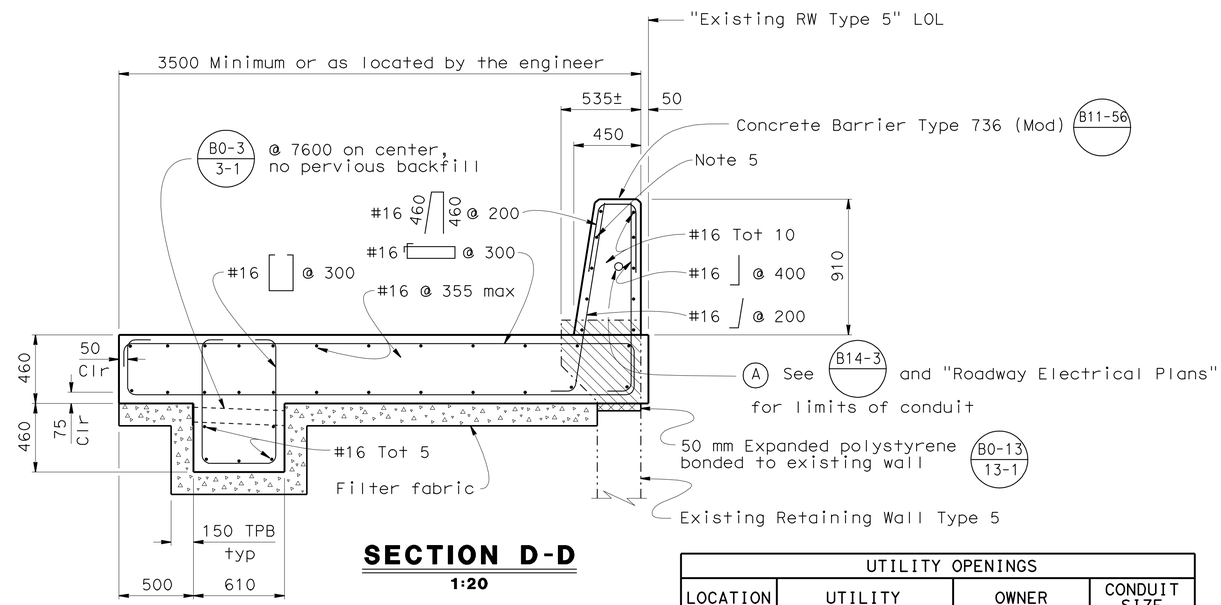

SECTION D-D

1:20

UTILITY OPENINGS			
LOCATION	UTILITY	OWNER	CONDUIT SIZE
A	Electrical Conduit	Caltrans	53 mm Ø

DESIGN	BY Fitsum Habtu	CHECKED Leon Valla
DETAILS	BY Various	CHECKED Leon Valla
QUANTITIES	BY Leon Valla	CHECKED Fayek Tannous

STATE OF CALIFORNIA DEPARTMENT OF TRANSPORTATION

DIVISION OF ENGINEERING SERVICES STRUCTURE DESIGN
DESIGN BRANCH 12

BRIDGE NO. 53E0113
KILOMETER POST 40.27

RETAINING WALL NO. 402

EXISTING RETAINING WALL TYPE 5 DETAILS

ALL DIMENSIONS ARE IN MILLIMETERS UNLESS OTHERWISE SHOWN

ORIGINAL SCALE IN MILLIMETERS FOR REDUCED PLANS 0 10 20 30 40 50 60 70 80 90 100

CU 07
EA 241301

DISREGARD PRINTS BEARING EARLIER REVISION DATES

REVISION DATES: 1-2-07 2-25-09 3-6-07 8-13-07 10-11-07 11-16-07 1-28-08 2-24-08 09-22-08

SHEET 15 OF 19

FILE => 53-e0113-i-rwmisc02.dgn

STRUCTURES DESIGN DETAIL SHEET (METRIC) (REV.03-17-04)

USERNAME => trrene DATE PLOTTED => 08-JUN-2010 TIME PLOTTED => 06:43

DIST	COUNTY	ROUTE	KILOMETER POST TOTAL PROJECT	SHEET No	TOTAL SHEETS
07	LA	405	39.7/41.5	415	439

Caltrans Metric

Leon Valla 5-11-09
REGISTERED CIVIL ENGINEER DATE

6-7-10
PLANS APPROVAL DATE

REGISTERED PROFESSIONAL ENGINEER LEON VALLA No. 45351 Exp. 09-30-10 CIVIL STATE OF CALIFORNIA

The State of California or its officers or agents shall not be responsible for the accuracy or completeness of electronic copies of this plan sheet.

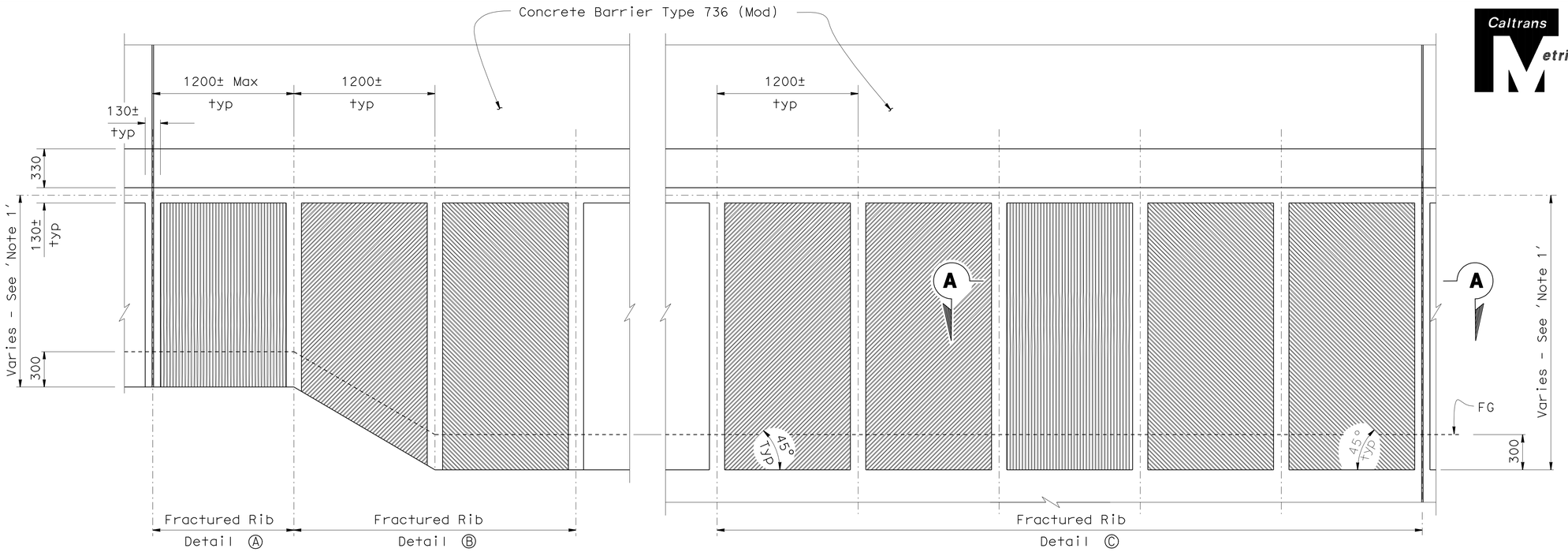

ELEVATION
1:20

Notes:

1. For all details not shown see "Retaining Wall Layout No.s 1-6" sheets and "Retaining Wall Details No.s 1-2" sheets.

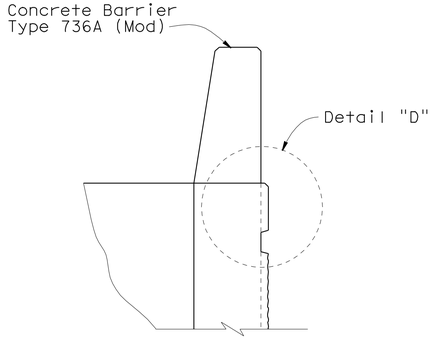

BARRIER/RETAINING WALL ELEVATION
1:20

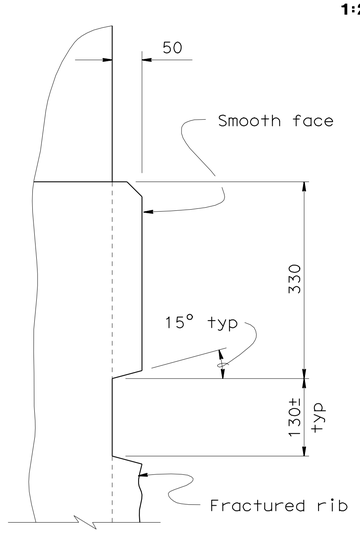

DETAIL "D"
1:5

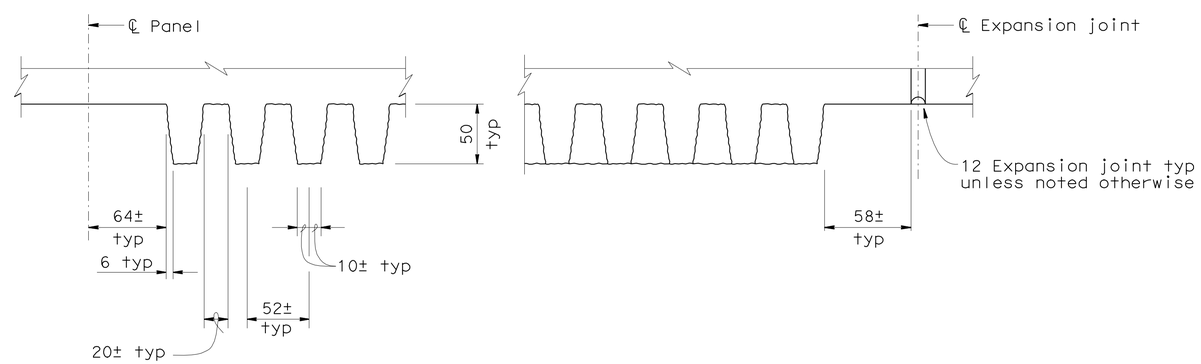

PARTIAL SECTION A-A
1:2.5

ALL DIMENSIONS ARE IN MILLIMETERS UNLESS OTHERWISE SHOWN

DESIGN	BY Leon Valla	CHECKED Fayek Tannous	
DETAILS	BY Marvin Lane	CHECKED Leon Valla	
QUANTITIES	BY Leon Valla	CHECKED Fayek Tannous	

STATE OF CALIFORNIA
DEPARTMENT OF TRANSPORTATION

DIVISION OF STRUCTURES
STRUCTURE DESIGN 12

BRIDGE NO. 53E0113
KILOMETER POST 40.27

RETAINING WALL NO. 402
ARCHITECTURAL TREATMENT DETAILS

STRUCTURES DESIGN DETAIL SHEET (METRIC) (REV.12-1-01)

ORIGINAL SCALE IN MILLIMETERS FOR REDUCED PLANS 0 10 20 30 40 50 60 70 80 90 100

CU 07
EA 241301

DISREGARD PRINTS BEARING EARLIER REVISION DATES

REVISION DATES (PRELIMINARY STAGE ONLY): 2-1-07 5-21-09 5-26-09 10-16-07 12-4-07 1-28-08 09-22-08 12-18-08 5-12-09

SHEET 16 OF 19

FILE => 53-e0113-u-arc.dgn

USERNAME => trrene DATE PLOTTED => 08-JUN-2010 TIME PLOTTED => 06:25

DIST	COUNTY	ROUTE	KILOMETER POST TOTAL PROJECT	SHEET No	TOTAL SHEETS
07	LA	405	39.7/41.5	416	439

REGISTERED CIVIL ENGINEER 5-11-09

6-7-10
PLANS APPROVAL DATE

REGISTERED PROFESSIONAL ENGINEER Haitao Liu No. C66398 Exp. 6-30-10 CIVIL STATE OF CALIFORNIA

The State of California or its officers or agents shall not be responsible for the accuracy or completeness of electronic copies of this plan sheet.

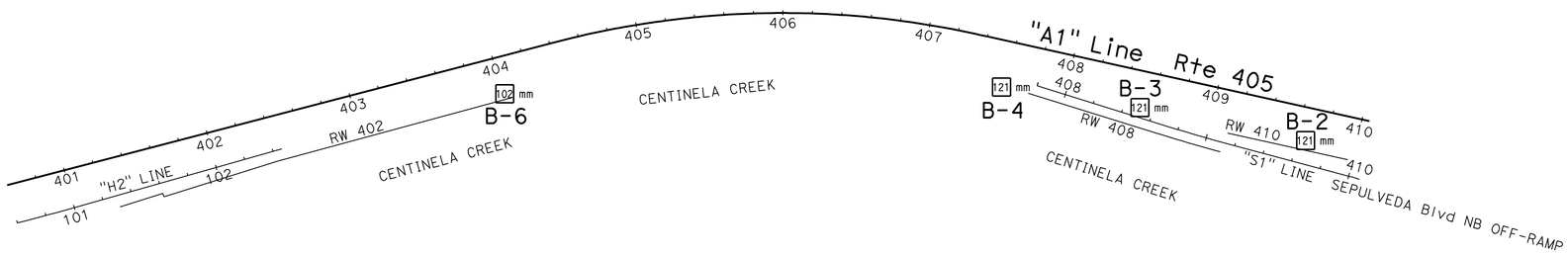

PLAN
1:2000

BENCH MARK
N 553,633.100
E 1,963,544.617
EL= 11.143
FD BRASS DISK IN
C/L MEDIAN ISLAND
AT SEPULVEDA BLVD
N/O 405 FWY

NOTES:

Borehole Number	Equipment	Exploration Method	Hammer Type	Average Hammer Efficiency
B-2	CME 85	Mud Rotary	Automatic	87%
B-3	CME 85	Mud Rotary	Automatic	87%
B-4	CME 85	Mud Rotary	Automatic	87%
B-6	Acker AD2	Mud Rotary	Automatic	80%

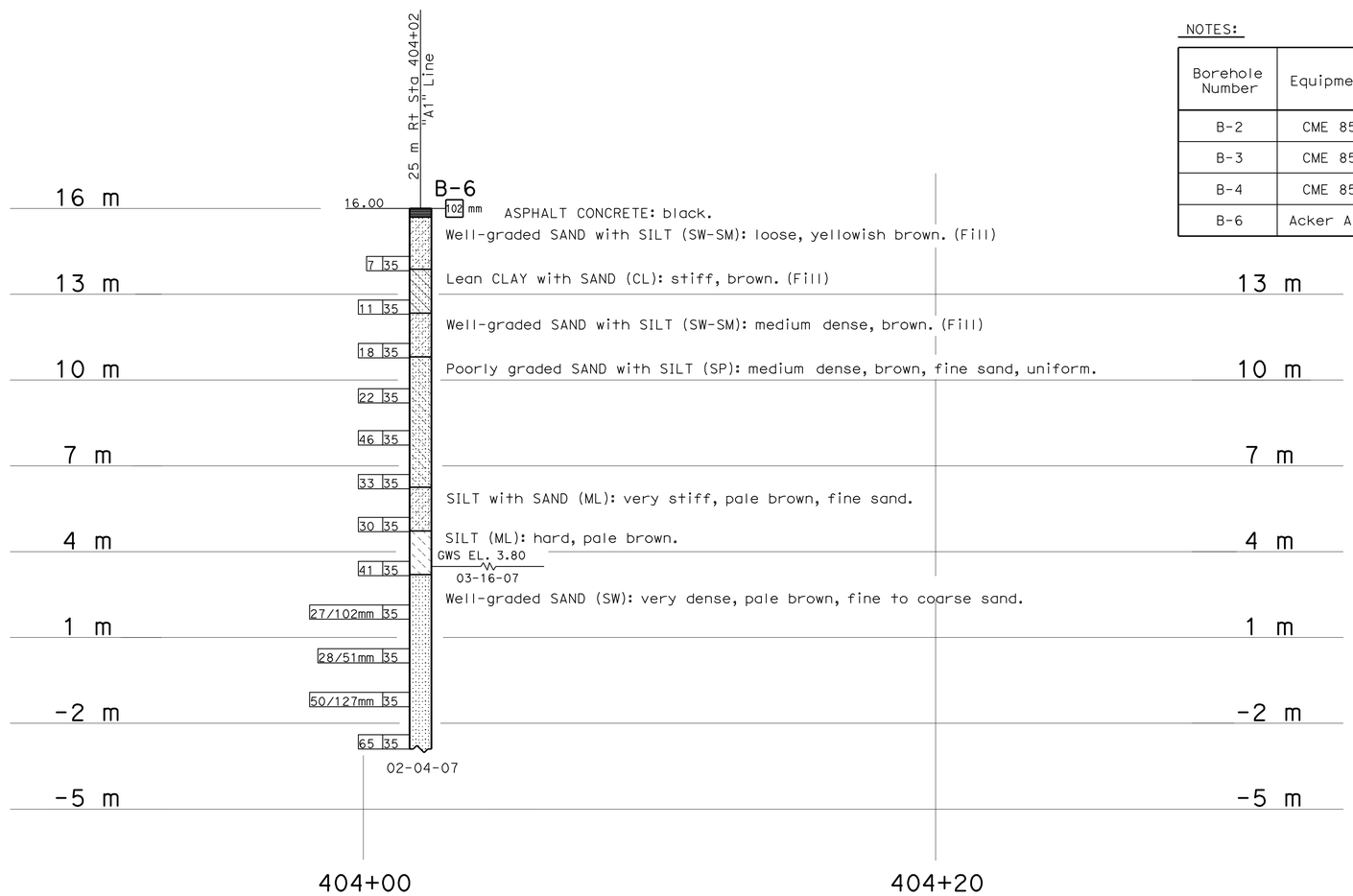

PROFILE
HOR. 1:100
VER. 1:100

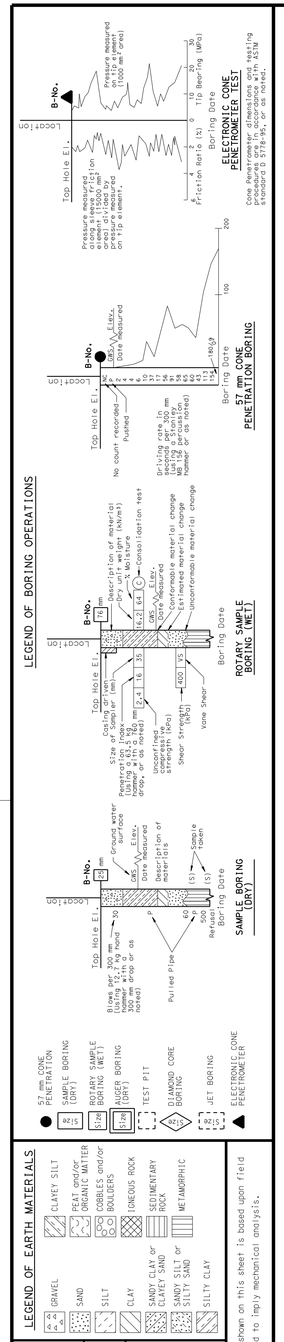

OGS CIVIL LOG OF TEST BORINGS SHEET (METRIC) (REV. 4/04)

Caltrans Metric

ENGINEERING SERVICES	GEOTECHNICAL SERVICES
DRAWN BY	W. Tang 01/08
CHECKED BY	H. Liu

FIELD INVESTIGATION BY: H. Liu/ V. Khotan

STATE OF CALIFORNIA DEPARTMENT OF TRANSPORTATION

DIVISION OF ENGINEERING SERVICES STRUCTURE DESIGN DESIGN BRANCH 12

BRIDGE NO. 53E0113
KILOMETER POST 39.3/41.4

RW402, RW408, RW410 AND OVERHEAD SIGN 4A
LOG OF TEST BORINGS 1 OF 3

ALL DIMENSIONS ARE IN METERS UNLESS OTHERWISE SHOWN

ORIGINAL SCALE IN MILLIMETERS FOR REDUCED PLANS 0 10 20 30 40 50 60 70 80 90 100

CU 07
EA 241301

DISREGARD PRINTS BEARING EARLIER REVISION DATES 01-28-08 04-30-08

REVISION DATES (PRELIMINARY STAGE ONLY)

SHEET 17 OF 19

FILE => 53-e0113-z-ltb01.dgn

USERNAME => trrene DATE PLOTTED => 08-JUN-2010 TIME PLOTTED => 06:25

DIST	COUNTY	ROUTE	KILOMETER POST TOTAL PROJECT	SHEET No	TOTAL SHEETS
07	LA	405	39.7/41.5	417	439

REGISTERED CIVIL ENGINEER 5-11-09

6-7-10
PLANS APPROVAL DATE

REGISTERED PROFESSIONAL ENGINEER Haitao Liu No. C66398 Exp. 6-30-10 CIVIL STATE OF CALIFORNIA

The State of California or its officers or agents shall not be responsible for the accuracy or completeness of electronic copies of this plan sheet.

FOR PLAN VIEW, SEE
"LOG OF TEST BORINGS" 1 OF 3

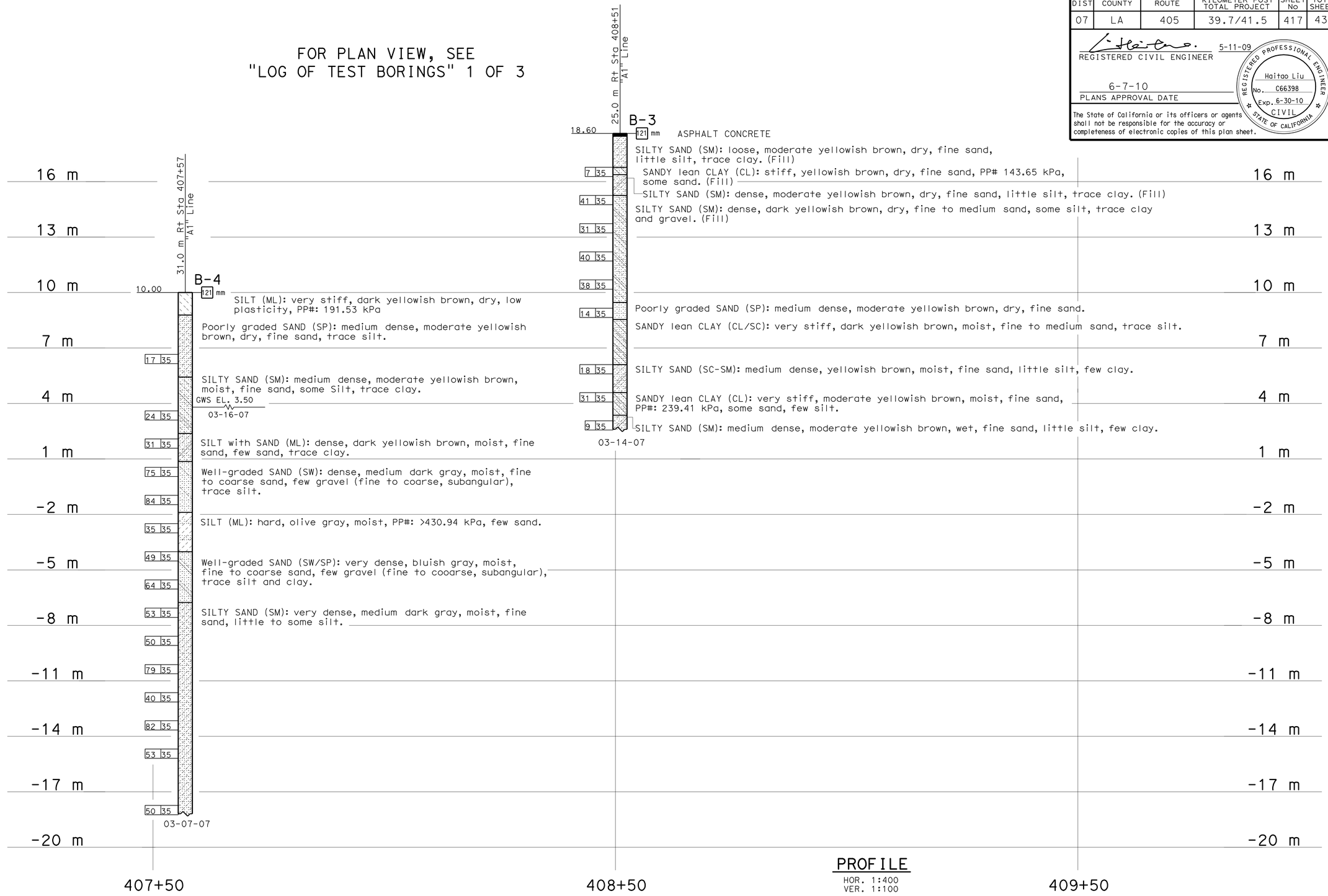

PROFILE
HOR. 1:400
VER. 1:100

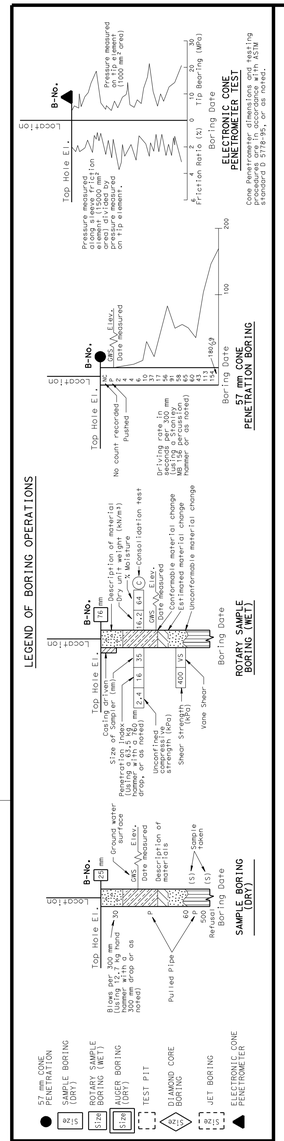

LEGEND OF EARTH MATERIALS

GRAVEL, SAND, SILT, CLAY, SANDY CLAY or CLAYEY SAND, SANDY SILT or SILTY SAND, SILTY CLAY, CLAYEY SILT, PEAT and/or ORGANIC MATTER, COBBLES and/or BOULDERS, IGNEOUS ROCK, SEDIMENTARY ROCK, METAMORPHIC

CONSISTENCY CLASSIFICATION FOR SOILS

According to the Standard Penetration Test

SPT N-Value (Blows/ 0.3m)	Granular	SPT N-Value (Blows/ 0.3m)	Cohesive
0-4	Very Loose	<2	Very Soft
5-10	Loose	2-4	Soft
11-30	Medium Dense	5-8	Firm
31-50	Dense	9-15	Stiff
>50	Very Dense	16-30	Very stiff
		>30	Hard

NOTE: Classification of earth material as shown on this sheet is based upon field inspection and is not to be construed to imply mechanical analysis.

OGS CIVIL LOG OF TEST BORINGS SHEET (METRIC) (REV. 4/04)

Caltrans Metric

ENGINEERING SERVICES	GEOTECHNICAL SERVICES
DRAWN BY	W. Tang 01/08
CHECKED BY	H. Liu

FIELD INVESTIGATION BY: H. Liu

STATE OF CALIFORNIA DEPARTMENT OF TRANSPORTATION

DIVISION OF ENGINEERING SERVICES STRUCTURE DESIGN
DESIGN BRANCH 12

BRIDGE NO. 53E0113
KILOMETER POST 39.3/41.4

RW402, RW408, RW410 AND OVERHEAD SIGN 4A
LOG OF TEST BORINGS 2 OF 3

ALL DIMENSIONS ARE IN METERS UNLESS OTHERWISE SHOWN

ORIGINAL SCALE IN MILLIMETERS FOR REDUCED PLANS 0 10 20 30 40 50 60 70 80 90 100

CU 07
EA 241301

DISREGARD PRINTS BEARING EARLIER REVISION DATES 01-28-08 04-30-08

REVISION DATES (PRELIMINARY STAGE ONLY)

SHEET 18 OF 19

FILE => 53-e0113-z-ltb02.dgn

USERNAME => frrene DATE PLOTTED => 08-JUN-2010 TIME PLOTTED => 06:25

DIST	COUNTY	ROUTE	KILOMETER POST TOTAL PROJECT	SHEET No	TOTAL SHEETS
07	LA	405	39.7/41.5	418	439

REGISTERED CIVIL ENGINEER 5-11-09

6-7-10
PLANS APPROVAL DATE

REGISTERED PROFESSIONAL ENGINEER Haitao Liu No. C66398 Exp. 6-30-10 CIVIL STATE OF CALIFORNIA

The State of California or its officers or agents shall not be responsible for the accuracy or completeness of electronic copies of this plan sheet.

FOR PLAN VIEW, SEE
"LOG OF TEST BORINGS" 1 OF 3

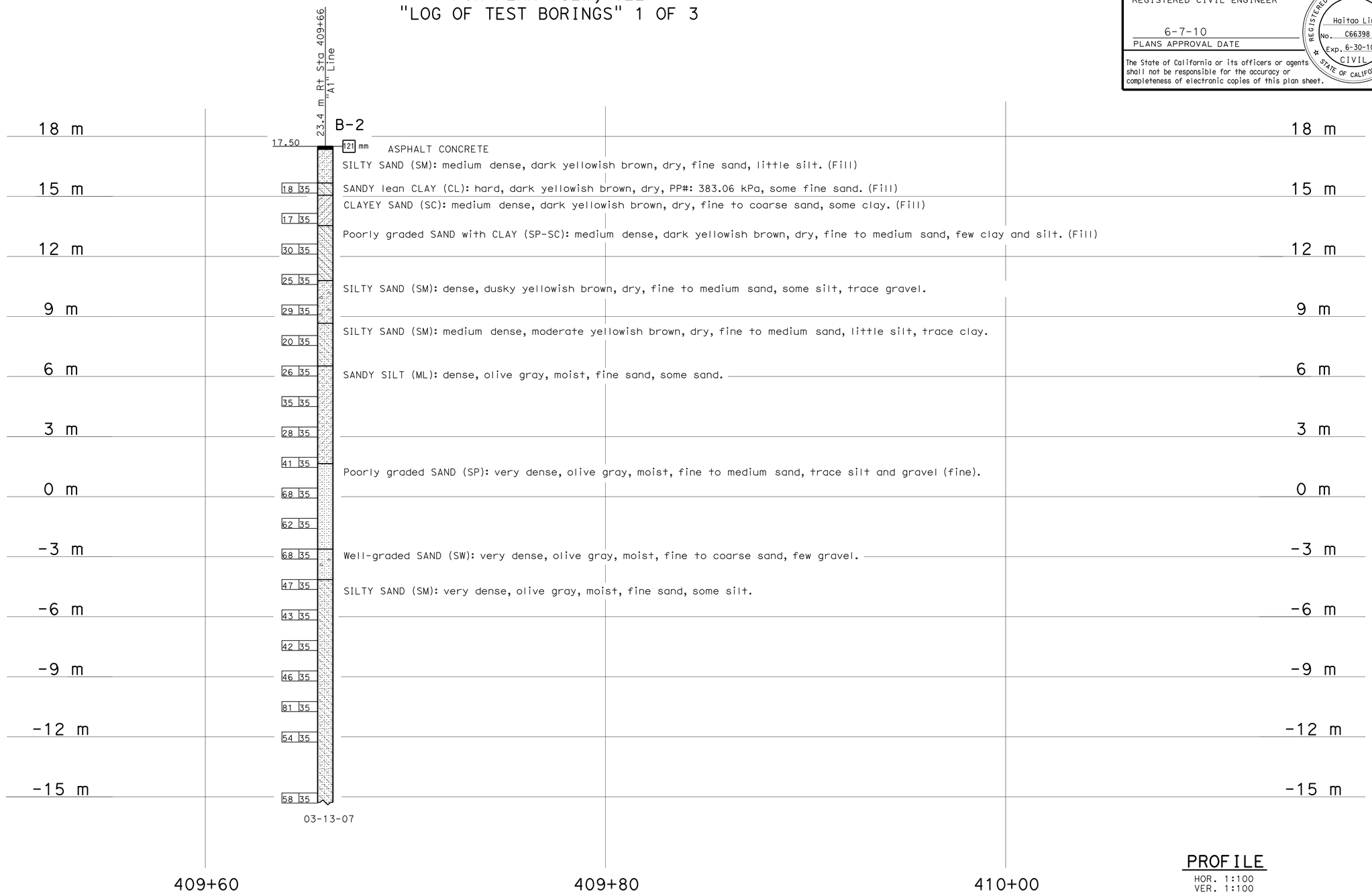

PROFILE
HOR. 1:100
VER. 1:100

LEGEND OF BORING OPERATIONS

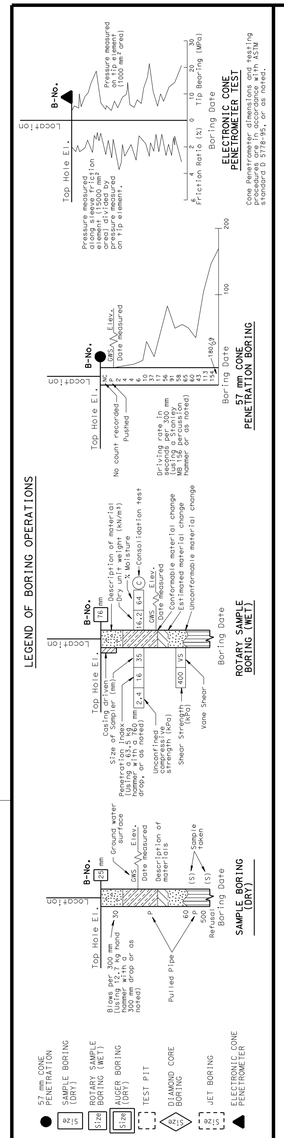

LEGEND OF EARTH MATERIALS

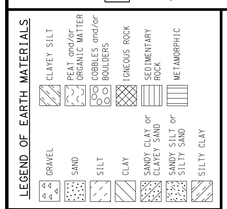

CONSISTENCY CLASSIFICATION FOR SOILS

According to the Standard Penetration Test

SPT N-Value (Blows/ 0.3m)	Granular	SPT N-Value (Blows/ 0.3m)	Cohesive
0-4	Very Loose	<2	Very Soft
5-10	Loose	2-4	Soft
11-30	Medium Dense	5-8	Firm
31-50	Dense	9-15	Stiff
>50	Very Dense	16-30	Very stiff
		>30	Hard

NOTE: Classification of earth material as shown on this sheet is based upon field inspection and is not to be construed to imply mechanical analysis.

OGS CIVIL LOG OF TEST BORINGS SHEET (METRIC) (REV. 4/04)

Caltrans Metric

ENGINEERING SERVICES	GEOTECHNICAL SERVICES
DRAWN BY	W. Tang 01/08
CHECKED BY	H. Liu

ALL DIMENSIONS ARE IN METERS UNLESS OTHERWISE SHOWN

FIELD INVESTIGATION BY: H. Liu

ORIGINAL SCALE IN MILLIMETERS FOR REDUCED PLANS 0 10 20 30 40 50 60 70 80 90 100

STATE OF CALIFORNIA DEPARTMENT OF TRANSPORTATION

DIVISION OF ENGINEERING SERVICES STRUCTURE DESIGN
DESIGN BRANCH 12

CU 07
EA 241301

BRIDGE NO. 53E0113
KILOMETER POST 39.3/41.4

RW402, RW408, RW410 AND OVERHEAD SIGN 4A

LOG OF TEST BORINGS 3 OF 3

DISREGARD PRINTS BEARING EARLIER REVISION DATES

REVISION DATES (PRELIMINARY STAGE ONLY) 01-28-08 04-30-08

SHEET 19 OF 19

FILE => 53-e0113-z-ltb03.dgn

USERNAME => trrene DATE PLOTTED => 08-JUN-2010 TIME PLOTTED => 06:26

DIST	COUNTY	ROUTE	KILOMETER POST TOTAL PROJECT	SHEET No	TOTAL SHEETS
07	LA	405	39.7/41.5	419	439

Leon Valla 5-11-09
REGISTERED CIVIL ENGINEER DATE

6-7-10
PLANS APPROVAL DATE

REGISTERED PROFESSIONAL ENGINEER
LEON VALLA
No. 45351
Exp. 09-30-10
CIVIL
STATE OF CALIFORNIA

The State of California or its officers or agents shall not be responsible for the accuracy or completeness of electronic copies of this plan sheet.

Notes:

1. For Architectural Treatment see "Architectural Treatment Details" sheet.
2. For Quantities and "Overhead Sign Foundation 4A Pile Data Table see "Index To Plans" sheet.

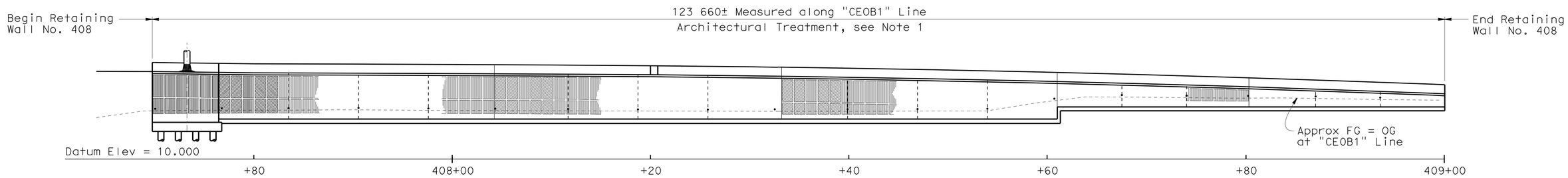

ELEVATION
1:200

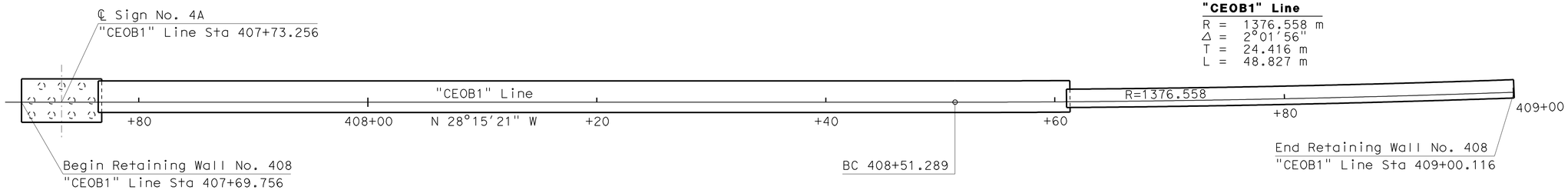

"CEOB1" Line
R = 1376.558 m
Δ = 2°01'56"
T = 24.416 m
L = 48.827 m

PLAN
1:200

Caltrans Metric

Matt Holm
DESIGN ENGINEER

	BY	CHECKED
DESIGN	J. Klieby/L. Valla	S. Mofar
DETAILS	Various	L. Valla
QUANTITIES	L. Valla	F. Tannous

LOAD FACTOR DESIGN	LIVE LOADING: HS20-44 AND ALTERNATIVE AND PERMIT DESIGN LOAD		
LAYOUT	BY J. Klieby	CHECKED L. Valla	
SPECIFICATIONS	BY T. Nedwick	PLANS AND SPECS COMPARED T. Nedwick	

ALL DIMENSIONS ARE IN METERS UNLESS OTHERWISE SHOWN

ORIGINAL SCALE IN MILLIMETERS FOR REDUCED PLANS 0 10 20 30 40 50 60 70 80 90 100

STATE OF CALIFORNIA
DEPARTMENT OF TRANSPORTATION

DIVISION OF ENGINEERING SERVICES
STRUCTURE DESIGN
DESIGN BRANCH 12

CU 07
EA 241301

BRIDGE NO. 53E0114
KILOMETER POST 40.84

RETAINING WALL NO. 408
GENERAL PLAN

DISREGARD PRINTS BEARING EARLIER REVISION DATES → 8-12-08 09-26-08 1-13-09 5-26-09

REVISION DATES

SHEET 1 OF 11

FILE => 53-e0114-a-gp.dgn

STRUCTURES DESIGN GENERAL PLAN SHEET (METRIC) (REV.03-17-04)

USERNAME => trrlene DATE PLOTTED => 08-JUN-2010 TIME PLOTTED => 06:26

DIST	COUNTY	ROUTE	KILOMETER POST TOTAL PROJECT	SHEET No	TOTAL SHEETS
07	LA	405	39.7/41.5	420	439

Leon Valla 5-11-09
REGISTERED CIVIL ENGINEER DATE

6-7-10
PLANS APPROVAL DATE

REGISTERED PROFESSIONAL ENGINEER
LEON VALLA
No. 45351
Exp. 09-30-10
CIVIL
STATE OF CALIFORNIA

The State of California or its officers or agents shall not be responsible for the accuracy or completeness of electronic copies of this plan sheet.

GENERAL NOTES
LOAD FACTOR DESIGN

DESIGN: BRIDGE DESIGN SPECIFICATIONS
(1996 AASHTO with Interims and Revisions by Caltrans)

REINFORCED CONCRETE: f_y = 420 Mpa
f'_c = 25 Mpa @ 28 days unless otherwise noted per Standard Plans

INDEX TO PLANS

SHEET NO.	TITLE
1	GENERAL PLAN
2	INDEX TO PLANS
3	FOUNDATION PLAN
4	RETAINING WALL LAYOUT NO. 1
5	RETAINING WALL LAYOUT NO. 2
6	RETAINING WALL DETAILS NO. 1
7	RETAINING WALL DETAILS NO. 2
8	ARCHITECTURAL TREATMENT DETAILS
9	LOG OF TEST BORINGS 1 OF 3
10	LOG OF TEST BORINGS 2 OF 3
11	LOG OF TEST BORINGS 3 OF 3

STANDARD PLANS
(Dated JULY 2004)

A10A ACRONYMS AND ABBREVIATIONS (A-L)
A10B ACRONYMS AND ABBREVIATIONS (M-Z)
A10C SYMBOLS (SHEET 1 OF 2)
A10D SYMBOLS (SHEET 2 OF 2)
A62B LIMITS OF PAYMENT FOR EXCAVATION AND BACKFILL - BRIDGE SURCHARGE AND WALL
A62C LIMITS OF PAYMENT FOR EXCAVATION AND BACKFILL - BRIDGE
BO-3 BRIDGE DETAILS
B2-3 400 mm AND 600 mm CAST-IN-DRILLED-HOLE CONCRETE PILE
B3-1 RETAINING WALL TYPE 1 (H = 1200 mm THROUGH 9100 mm)
B3-8 RETAINING WALL DETAILS NO. 1
B11-56 CONCRETE BARRIER TYPE 736
B14-3 COMMUNICATION AND SPRINKLER CONTROL CONDUITS (CONDUIT LESS THAN SIZE 103 mm)
RSP S2 OVERHEAD SIGNS-TRUSS, SINGLE POST TYPE-POST TYPE II THRU IX
RSP S3 OVERHEAD SIGNS-TRUSS, SINGLE POST TYPE-BASE PLATE AND ANCHORAGE DETAILS
RSP S7 OVERHEAD SIGNS-TRUSS, SINGLE POST TYPE-SQUARE PEDESTAL FOUNDATION
RSP ES-6A ELECTRICAL SYSTEMS (LIGHTING STANDARDS TYPES 15 AND 21)
ES-6B ELECTRICAL SYSTEMS (LIGHTING STANDARDS TYPES 15 AND 21, BARRIER RAIL MOUNTED DETAILS)
RSP ES-9A ELECTRICAL SYSTEMS (ELECTRICAL DETAILS STRUCTURE INSTALLATIONS)
RSP ES-9B ELECTRICAL SYSTEMS (ELECTRICAL DETAILS STRUCTURE INSTALLATIONS)

OVERHEAD SIGN FOUNDATION 4A PILE DATA TABLE

CIDH Pile Diameter	Design Load	Nominal Resistance		Approximate Finished Grade (m) ±	Cut-Off Elevation (m)	Design Tip Elevation (m)	Specified Tip Elevation (m)
		Compression	Tension				
600 mm	750 kN	1500 kN	300 kN	14.38	N/A	-1.20 (1)	-1.20

Note: Design tip elevations are controlled by the following demands: (1) Compression; (2) Lateral loads.

SPREAD FOOTING DATA TABLE

Support Location	Allowable Bearing Capacity q_{all}	Nominal Bearing Resistance q_n
RW 408 H = 4.8 m	250 kPa	N/A
RW 408 H = 2.4 m	200 kPa	N/A

QUANTITIES

STRUCTURE EXCAVATION (RETAINING WALL)	599	m^3
STRUCTURE EXCAVATION (TYPE Z-2) (AERIALLY DEPOSITED LEAD)	121	m^3
STRUCTURE BACKFILL (RETAINING WALL)	855	m^3
PERVIOUS BACKFILL MATERIAL	74	m^3
600 MM CAST-IN-DRILLED-HOLE CONCRETE PILING	154	m
STRUCTURAL CONCRETE, RETAINING WALL	392	m^3
ARCHITECTURAL TREATMENT	357	m^2
BAR REINFORCING STEEL (RETAINING WALL)	36 692	kg
CONCRETE BARRIER (TYPE 736 MODIFIED)	131	m

Caltrans Metric

	BY	CHECKED
DESIGN	Fitsum Habtu	Sebastian Mofor
DETAILS	F. Mendoza	Leon Valla
QUANTITIES	Leon Valla	Fayek Tannous

STATE OF CALIFORNIA
DEPARTMENT OF TRANSPORTATION

DIVISION OF ENGINEERING SERVICES
STRUCTURE DESIGN
DESIGN BRANCH 12

BRIDGE NO. 53E0114
KILOMETER POST 40.84

RETAINING WALL NO. 408
INDEX TO PLANS

ALL DIMENSIONS ARE IN MILLIMETERS UNLESS OTHERWISE SHOWN

ORIGINAL SCALE IN MILLIMETERS FOR REDUCED PLANS 0 10 20 30 40 50 60 70 80 90 100

CU 07
EA 241301

DISREGARD PRINTS BEARING EARLIER REVISION DATES

REVISION DATES: 09-26-08 | 1-13-09 | 2-24-09 | 5-5-09 | 5-12-09 | 11-4-09

SHEET 2 OF 11

FILE => 53-e0114-a-itp.dgn

STRUCTURES DESIGN DETAIL SHEET (METRIC) (REV.03-17-04)

USERNAME => trrene DATE PLOTTED => 08-JUN-2010 TIME PLOTTED => 06:44

DIST	COUNTY	ROUTE	KILOMETER POST TOTAL PROJECT	SHEET No	TOTAL
07	LA	405	39.7/41.5	421	439

Caltrans Metric

REGISTERED CIVIL ENGINEER 5-11-09

6-7-10
PLANS APPROVAL DATE

REGISTERED PROFESSIONAL ENGINEER LEON VALLA No. 45351 Exp. 09-30-10 CIVIL STATE OF CALIFORNIA

The State of California or its officers or agents shall not be responsible for the accuracy or completeness of electronic copies of this plan sheet.

HYDROLOGIC SUMMARY

DRAINAGE AREA: _____ SQUARE KILOMETERS

	DESIGN FLOOD	BASE FLOOD	OVERTOPPING FLOOD
FREQUENCY (YEARS)			
DISCHARGE (CUBIC METERS PER SECOND)			
WATER SURFACE ELEV. AT BRIDGE (METERS)			

FLOOD PLAIN DATA ARE BASED UPON INFORMATION AVAILABLE WHEN THE PLANS WERE PREPARED AND ARE SHOWN TO MEET FEDERAL REQUIREMENTS. THE ACCURACY OF SAID INFORMATION IS NOT WARRANTED BY THE STATE AND INTERESTED OR AFFECTED PARTIES SHOULD MAKE THEIR OWN INVESTIGATIONS.

No.	R	Δ	T	L
1	1370.001	02°23'46"	28.650	57.291
2	1376.559	02°01'56"	24.416	48.827

(A) BEGIN RW NO 408 = "CEOB1" Line 407+69.756
6.550 Rt. 407+81.430 "S1" LINE

(B) END RW NO 408 = "CEOB1" Line 409+00.116
6.550 Rt. 409+11.558 "S1" LINE

[ ] Denotes bottom of footing elevation

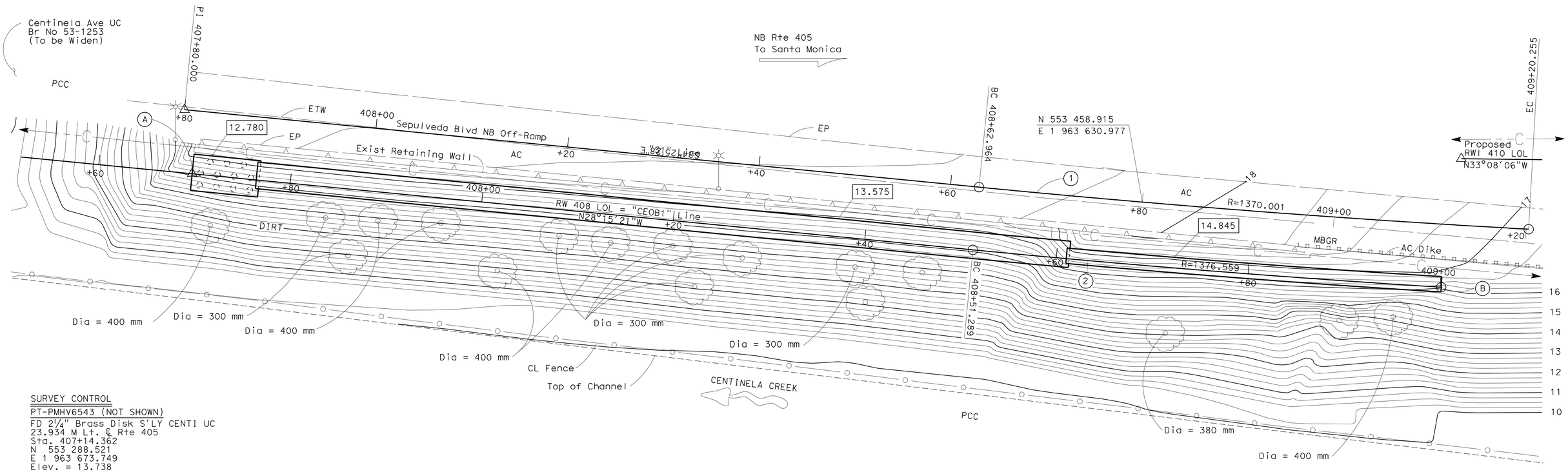

SURVEY CONTROL

PT-PMHV6543 (NOT SHOWN)
FD 2¼" Brass Disk S'LY CENTI UC
23.934 M Lt. ℄ Rte 405
Sta. 407+14.362
N 553 288.521
E 1 963 673.749
Elev. = 13.738

PT-PMHV96 (NOT SHOWN)
FD PK Nail @ CL AC Median
48.914 M Rt ℄ Rte 405
Sta. 406+55.190
N 553 287.328
E 1 963 766.752
Elev. = 10.662

NOTES:

Underground utilities as shown are approximate

ALL DIMENSIONS ARE IN METERS UNLESS OTHERWISE SHOWN

PRELIMINARY INVESTIGATION SECTION

SCALE	VERT.DATUM NAVD 88	PHOTOGRAMMETRY AS OF:					
1:200	HORZ.DATUM NAD 83	SURVEYED	BY COAST SURVEY 10-06	DRAFTED	BY L. ZHANG 10-06		
ALIGNMENT TIES	DIST TRAVERSE SHEET	FIELD CHECKED	BY L. ZHOU 9-06	CHECKED	BY L. ZHOU 10-06		

	BY	CHECKED
DESIGN	JK/LV	SM/RS
DETAILS	Various	LV/RS
QUANTITIES	L. Valla	F. Tannous

STATE OF CALIFORNIA
DEPARTMENT OF TRANSPORTATION

DIVISION OF STRUCTURES
STRUCTURE DESIGN

BRIDGE NO. 53E0114
KILOMETER POST 40.84

RETAINING WALL NO. 408
FOUNDATION PLAN

STRUCTURES FOUNDATION PLAN SHEET (METRIC) (REV. 4/20/00)

ORIGINAL SCALE IN MILLIMETERS FOR REDUCED PLANS 0 10 20 30 40 50 60 70 80 90 100

CU 07
EA 241301

DISREGARD PRINTS BEARING EARLIER REVISION DATES

REVISION DATES (PRELIMINARY STAGE ONLY): 11/20/06

SHEET 3 OF 11

FILE => 53-e0114-e-fp.dgn

USERNAME => frrene DATE PLOTTED => 08-JUN-2010 TIME PLOTTED => 06:26

DIST	COUNTY	ROUTE	KILOMETER POST TOTAL PROJECT	SHEET No	TOTAL SHEETS
07	LA	405	39.7/41.5	422	439

REGISTERED CIVIL ENGINEER — DATE 5-11-09

6-7-10
PLANS APPROVAL DATE

REGISTERED PROFESSIONAL ENGINEER — LEON VALLA — No. 45351 — Exp. 09-30-10 — CIVIL — STATE OF CALIFORNIA

The State of California or its officers or agents shall not be responsible for the accuracy or completeness of electronic copies of this plan sheet.

Notes:

1. All elevations are in meters unless otherwise noted.
2. For location of electroliers see "Road Plans".
3. For Section "C-C" and Section "D-D" see "Retaining Wall No. 408 Details No. 2" sheet.
4. For Architectural Treatment see "Architectural Treatment Details" sheet.

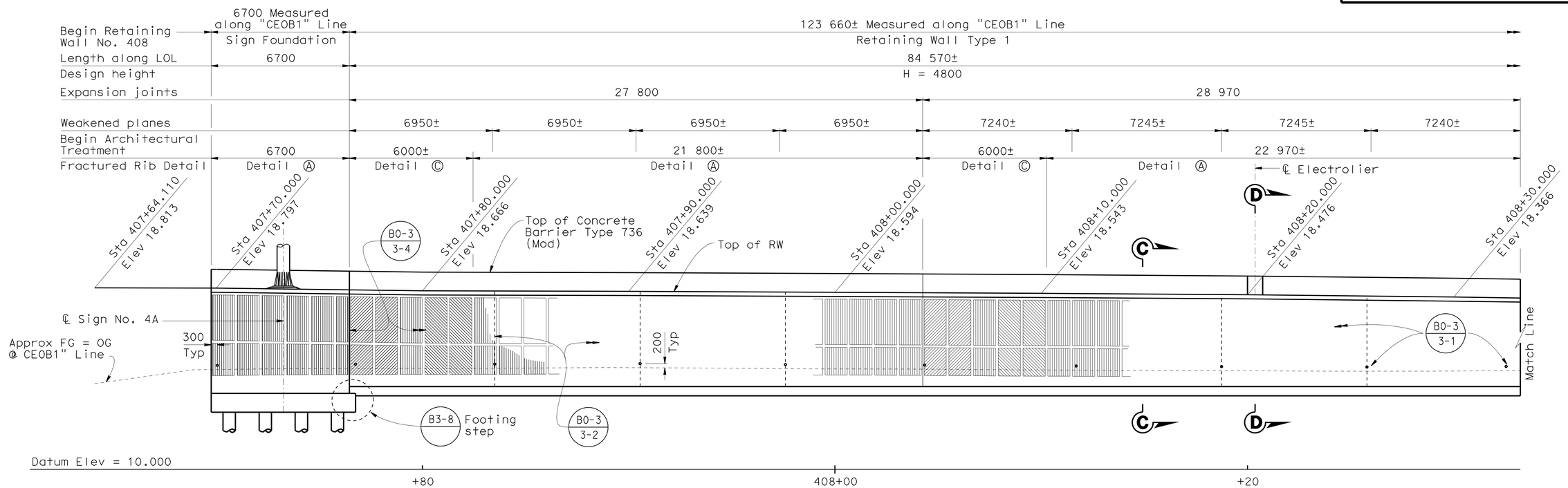

ELEVATION
1:100

B3-1 -
B3-8 -

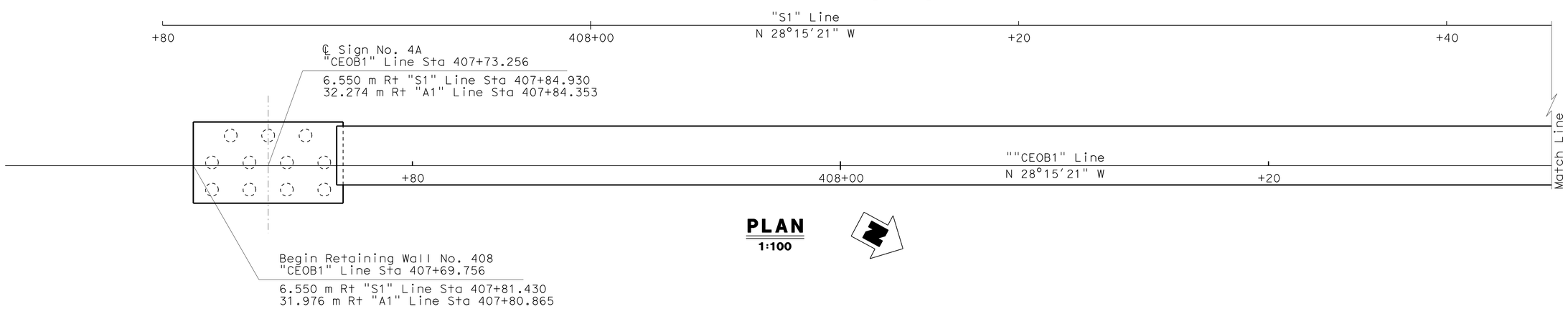

PLAN
1:100

DESIGN	BY Jeff Klieby/Leon Valla	CHECKED Sebastion Mofar	
DETAILS	BY Various	CHECKED Leon Valla	
QUANTITIES	BY Leon Valla	CHECKED Fayek Tannous	

STATE OF CALIFORNIA
DEPARTMENT OF TRANSPORTATION

DIVISION OF ENGINEERING SERVICES
STRUCTURE DESIGN
DESIGN BRANCH 12

BRIDGE NO. 53E0114
KILOMETER POST 40.84

RETAINING WALL NO. 408
RETAINING WALL LAYOUT NO. 1

Caltrans Metric

ALL DIMENSIONS ARE IN MILLIMETERS UNLESS OTHERWISE SHOWN

ORIGINAL SCALE IN MILLIMETERS FOR REDUCED PLANS 0 10 20 30 40 50 60 70 80 90 100

CU 07
EA 241301

DISREGARD PRINTS BEARING EARLIER REVISION DATES

REVISION DATES: 3-1-07 | 9-26-08 | 12-18-08 | 6-1-09 | 12-2-07 | 1-8-08 | 1-28-08 | 2-26-08 | 7-16-08

SHEET 4 OF 11

FILE => 53-e0114-g-lo01.dgn

STRUCTURES DESIGN DETAIL SHEET (METRIC) (REV.03-17-04)

USERNAME => trrene DATE PLOTTED => 08-JUN-2010 TIME PLOTTED => 06:26

DIST	COUNTY	ROUTE	KILOMETER POST TOTAL PROJECT	SHEET No	TOTAL SHEETS
07	LA	405	39.7/41.5	423	439

Leon Valla 5-11-09
REGISTERED CIVIL ENGINEER DATE

6-7-10
PLANS APPROVAL DATE

REGISTERED PROFESSIONAL ENGINEER
LEON VALLA
No. 45351
Exp. 09-30-10
CIVIL
STATE OF CALIFORNIA

The State of California or its officers or agents shall not be responsible for the accuracy or completeness of electronic copies of this plan sheet.

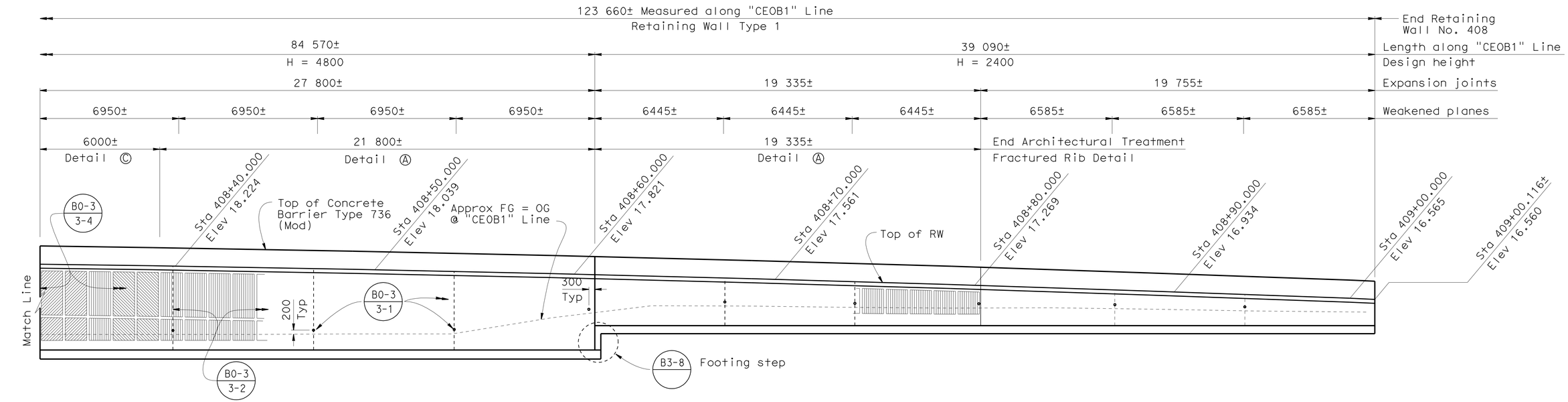

ELEVATION
1:100

B3-1 -
B3-8 -

"S1" LINE
R = 1370.000 m
Δ = 2°23'46"
T = 28.650 m
L = 57.293 m

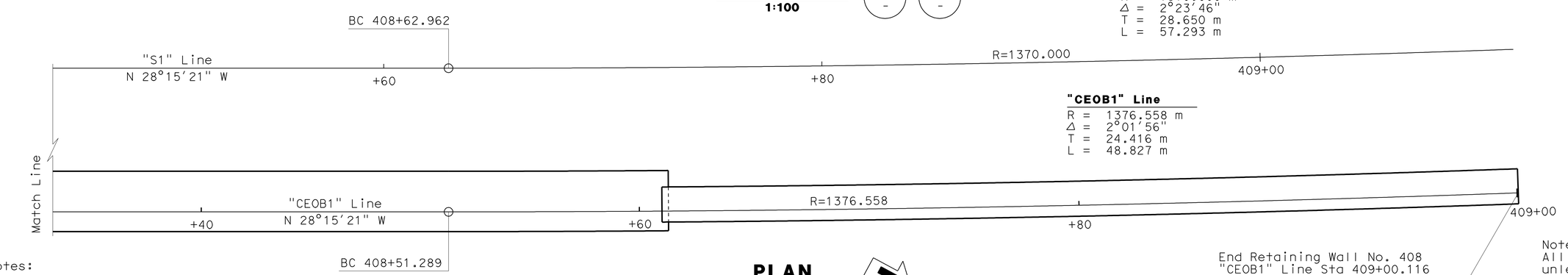

PLAN
1:100

End Retaining Wall No. 408
"CEOB1" Line Sta 409+00.116

6.550 m Rt "S1" Line Sta 409+11.558
42.200 m Rt "A1" Line Sta 409+10.817

Note:
All elevations are in meters unless otherwise noted.

Notes:
1. All elevations are in meters unless otherwise noted.
2. For Architectural treatment see "Architectural Treatment Details" sheet.

Caltrans Metric

	BY	CHECKED
DESIGN	Jeff Klieby/Leon Valla	Sebastion Mofar/RS
DETAILS	Various	Leon Valla/R. Schendel
QUANTITIES	Leon Valla	Fayek Tannous

STATE OF CALIFORNIA
DEPARTMENT OF TRANSPORTATION

DIVISION OF ENGINEERING SERVICES
STRUCTURE DESIGN
DESIGN BRANCH 12

BRIDGE NO. 53E0114
KILOMETER POST 40.84

RETAINING WALL NO. 408
RETAINING WALL LAYOUT NO. 2

ALL DIMENSIONS ARE IN MILLIMETERS UNLESS OTHERWISE SHOWN

ORIGINAL SCALE IN MILLIMETERS FOR REDUCED PLANS 0 10 20 30 40 50 60 70 80 90 100

CU 07
EA 241301

DISREGARD PRINTS BEARING EARLIER REVISION DATES

REVISION DATES: 3-1-07 | 9-28-08 | 6-1-09 | 10-15-07 | 12-3-07 | 1-8-08 | 1-28-08 | 2-28-08 | 7-16-08

SHEET 5 OF 11

FILE => 53-e0114-g-lo02.dgn

STRUCTURES DESIGN DETAIL SHEET (METRIC) (REV.03-17-04)

USERNAME => trrene DATE PLOTTED => 08-JUN-2010 TIME PLOTTED => 06:27

DIST	COUNTY	ROUTE	KILOMETER POST TOTAL PROJECT	SHEET No	TOTAL SHEETS
07	LA	405	39.7/41.5	424	439

Caltrans Metric

REGISTERED CIVIL ENGINEER — DATE 5-11-09

6-7-10
PLANS APPROVAL DATE

REGISTERED PROFESSIONAL ENGINEER — LEON VALLA No. 45351 Exp. 09-30-10 CIVIL — STATE OF CALIFORNIA

The State of California or its officers or agents shall not be responsible for the accuracy or completeness of electronic copies of this plan sheet.

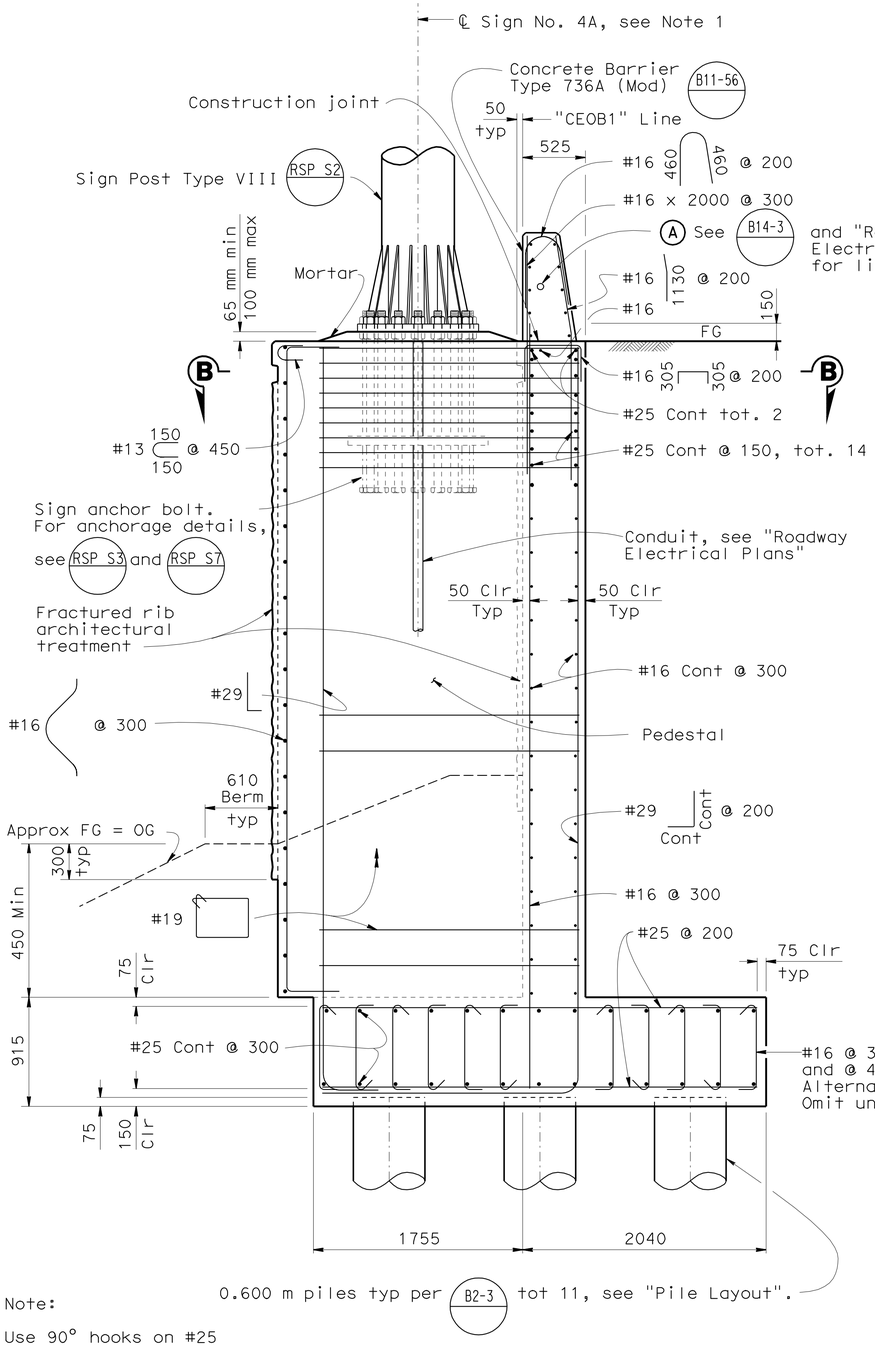

Note:

Use 90° hooks on #25 longitudinal pile reinforcement extended into footing.

SECTION A-A - SIGN FOUNDATION

1:25

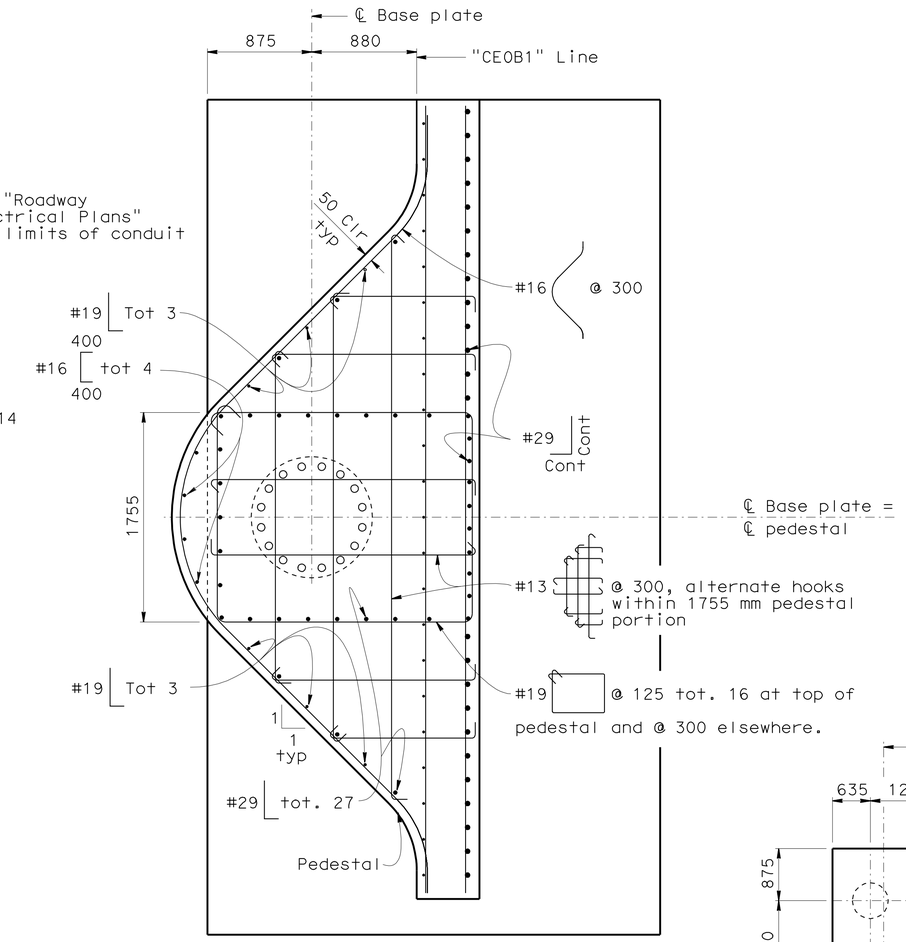

SECTION B-B

1:25

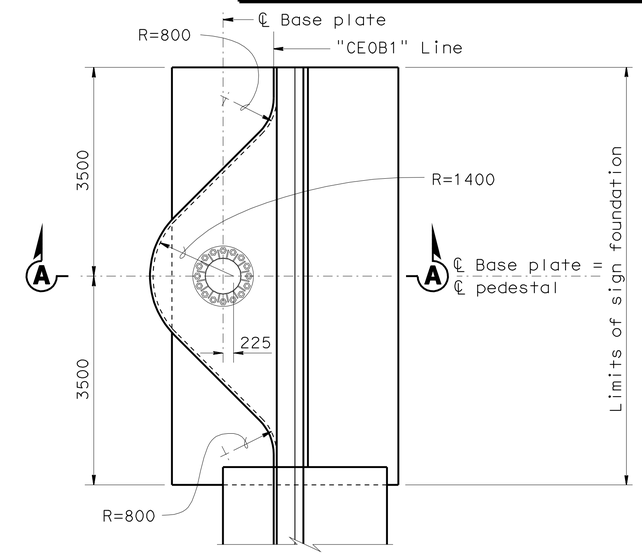

PLAN

1:50

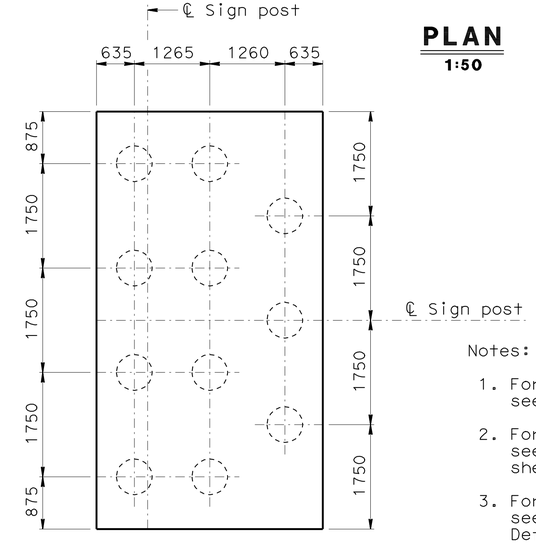

PILE LAYOUT

1:50

Notes:

1. For sign 4A details see "Road Plans".
2. For pile data table see "Pile Data Table No. 3" sheet.
3. For Architectural Treatment see "Architectural Treatment Details" sheet.

ALL DIMENSIONS ARE IN MILLIMETERS UNLESS OTHERWISE SHOWN

UTILITY OPENINGS			
LOCATION	UTILITY	OWNER	CONDUIT SIZE
A	Electrical Conduit	Caltrans	53 mm Ø

	BY	CHECKED
DESIGN	Jeff Klieby/Leon Valla	Sebastian Mofor/RS
DETAILS	Various	Leon Valla/RS
QUANTITIES	Leon Valla	Fayek Tannous

STATE OF CALIFORNIA
DEPARTMENT OF TRANSPORTATION

DIVISION OF STRUCTURES
STRUCTURE DESIGN 12

BRIDGE NO. 53E0114
KILOMETER POST 40.84

RETAINING WALL NO. 408

RETAINING WALL DETAILS NO. 1

STRUCTURES DESIGN DETAIL SHEET (METRIC) (REV.12-1-01)

ORIGINAL SCALE IN MILLIMETERS FOR REDUCED PLANS 0 10 20 30 40 50 60 70 80 90 100

CU 07
EA 241301

DISREGARD PRINTS BEARING EARLIER REVISION DATES

REVISION DATES (PRELIMINARY STAGE ONLY): 2-1-07 12-22-08 8-3-07 10-16-07 12-4-07 1-3-08 1-28-08 2-25-08 9-26-08

SHEET 6 OF 11

FILE => 53-e0114-g-rw01.dgn

USERNAME => trrene DATE PLOTTED => 08-JUN-2010 TIME PLOTTED => 06:27

DIST	COUNTY	ROUTE	KILOMETER POST TOTAL PROJECT	SHEET No	TOTAL SHEETS
07	LA	405	39.7/41.5	425	439

Caltrans Metric

Leon Valla 5-11-09
REGISTERED CIVIL ENGINEER DATE

6-7-10
PLANS APPROVAL DATE

REGISTERED PROFESSIONAL ENGINEER LEON VALLA No. 45351 Exp. 09-30-10 CIVIL STATE OF CALIFORNIA

The State of California or its officers or agents shall not be responsible for the accuracy or completeness of electronic copies of this plan sheet.

LEGEND

- Structure Excavation (Type Y-2) Aerially Deposited Lead
- Structure Excavation (retaining wall)
- Structure Backfill (retaining wall)

Note:
Any excess Type (Y-2) material that cannot be reused on site or along the corridor shall be classified as Type (Z-2)

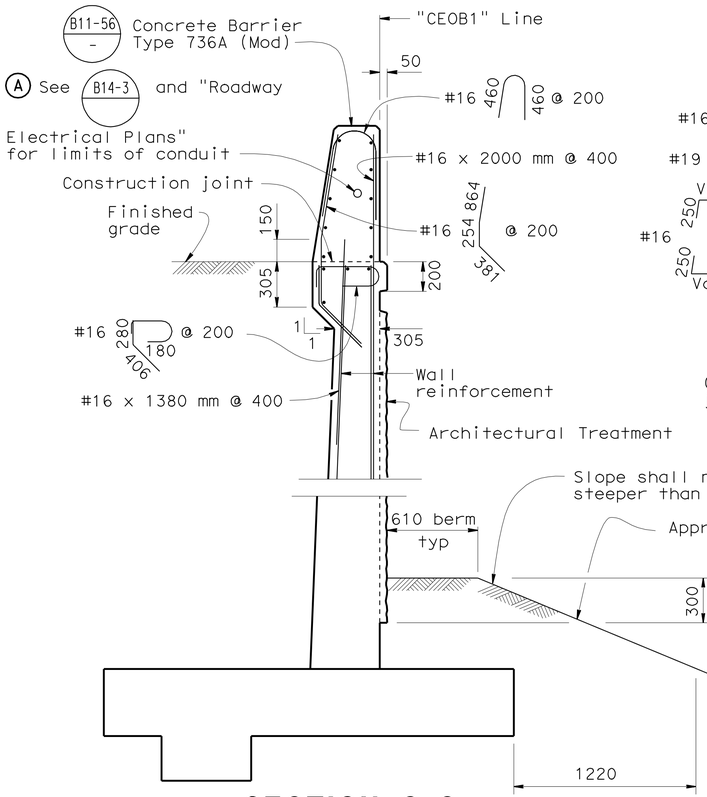

SECTION C-C
1:20
Typical unless otherwise noted.

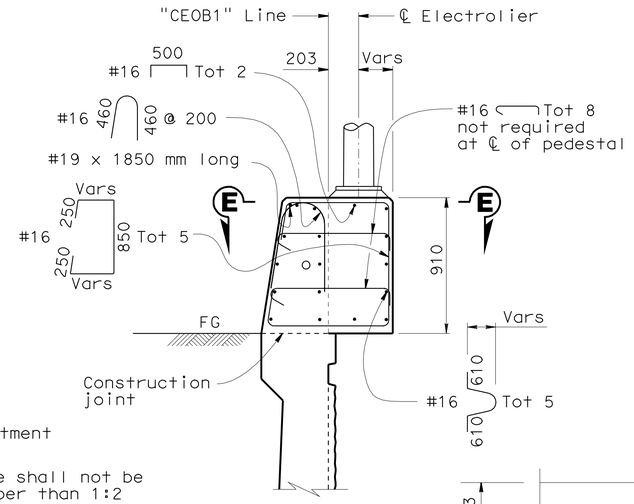

SECTION D-D
1:20
Note 1

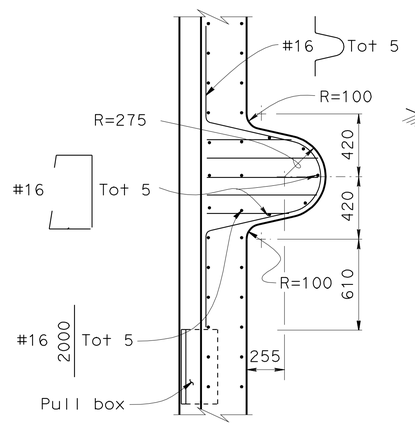

SECTION E-E
1:20

UTILITY OPENINGS			
LOCATION	UTILITY	OWNER	CONDUIT SIZE
A	Electrical Conduit	Caltrans	53 mm Ø

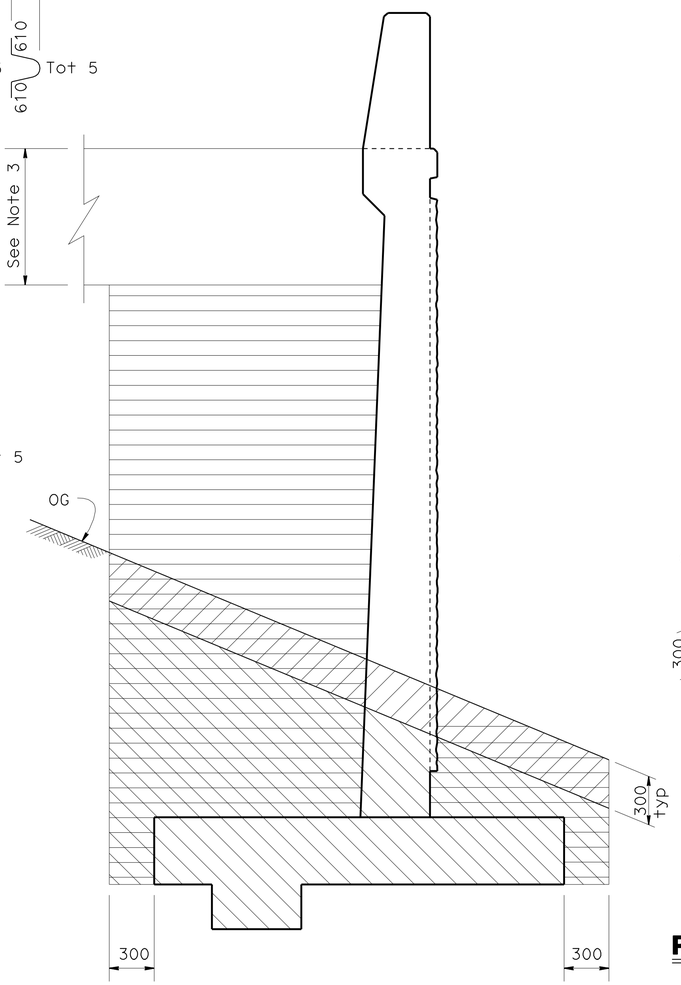

PAY LIMITS FOR STRUCTURE EXCAVATION AND BACKFILL FOR RETAINING WALL TYPE 1
1:20

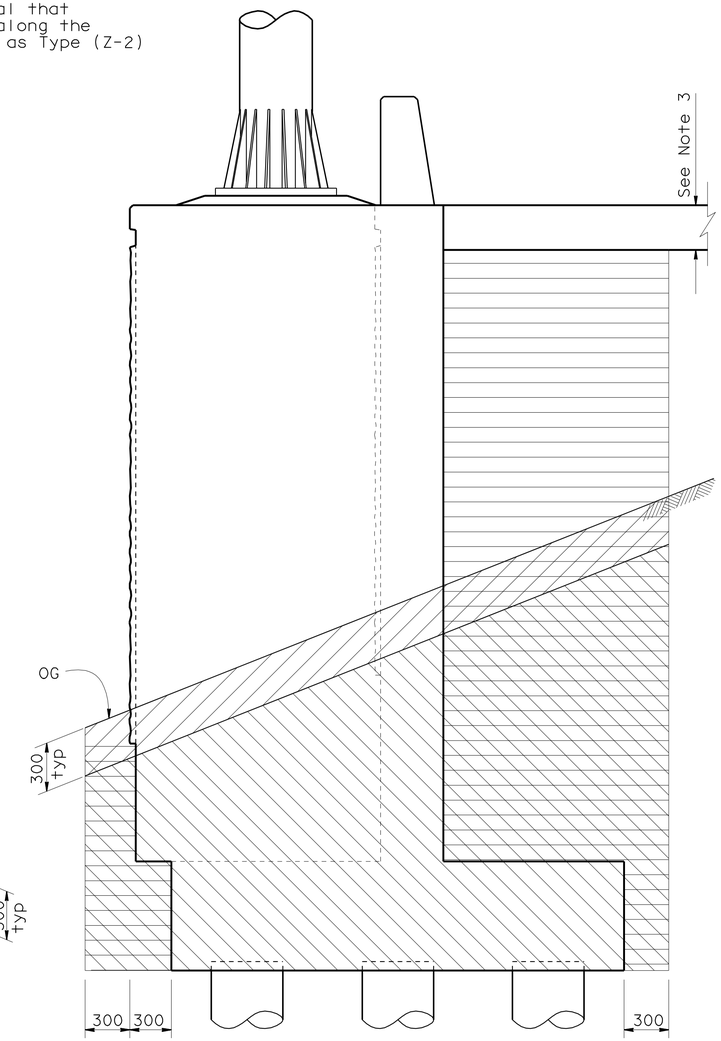

PAY LIMITS FOR STRUCTURE EXCAVATION AND BACKFILL FOR SIGN FOUNDATION
1:20

ALL DIMENSIONS ARE IN MILLIMETERS UNLESS OTHERWISE SHOWN

Notes:

1. For all details not shown see "Section C-C" and B11-56 - .
2. For Architectural treatment see "Architectural Treatment Details" sheet.
3. 0.225 m Structure Approach Slab EQ (3) thickness or roadway thickness. For roadway thickness see "Road Plans".

	BY	CHECKED
DESIGN	Jeff Klieby	Sebastion Mofor
DETAILS	Various	Leon Valla
QUANTITIES	Leon Valla	Fayek Tannous

STATE OF CALIFORNIA
DEPARTMENT OF TRANSPORTATION

DIVISION OF STRUCTURES
STRUCTURE DESIGN 12

BRIDGE NO. 53E0114
KILOMETER POST 40.84

RETAINING WALL NO. 408
RETAINING WALL DETAILS NO. 2

STRUCTURES DESIGN DETAIL SHEET (METRIC) (REV.12-1-01)

ORIGINAL SCALE IN MILLIMETERS FOR REDUCED PLANS 0 10 20 30 40 50 60 70 80 90 100

CU 07
EA 241301

DISREGARD PRINTS BEARING EARLIER REVISION DATES

REVISION DATES (PRELIMINARY STAGE ONLY): ~~2-1-07~~ ~~9-26-08~~ ~~12-18-08~~ 5-6-09 ~~12-4-07~~ ~~1-9-08~~ ~~1-28-08~~ ~~2-26-08~~ ~~7-28-08~~

SHEET 7 OF 11

FILE => 53-e0114-g-rw02.dgn

USERNAME => ttrrene DATE PLOTTED => 08-JUN-2010 TIME PLOTTED => 06:27

DIST	COUNTY	ROUTE	KILOMETER POST TOTAL PROJECT	SHEET No	TOTAL SHEETS
07	LA	405	39.7/41.5	426	439

Caltrans Metric

REGISTERED CIVIL ENGINEER — DATE 5-11-09

6-7-10
PLANS APPROVAL DATE

REGISTERED PROFESSIONAL ENGINEER — LEON VALLA No. 45351 Exp. 09-30-10 CIVIL — STATE OF CALIFORNIA

The State of California or its officers or agents shall not be responsible for the accuracy or completeness of electronic copies of this plan sheet.

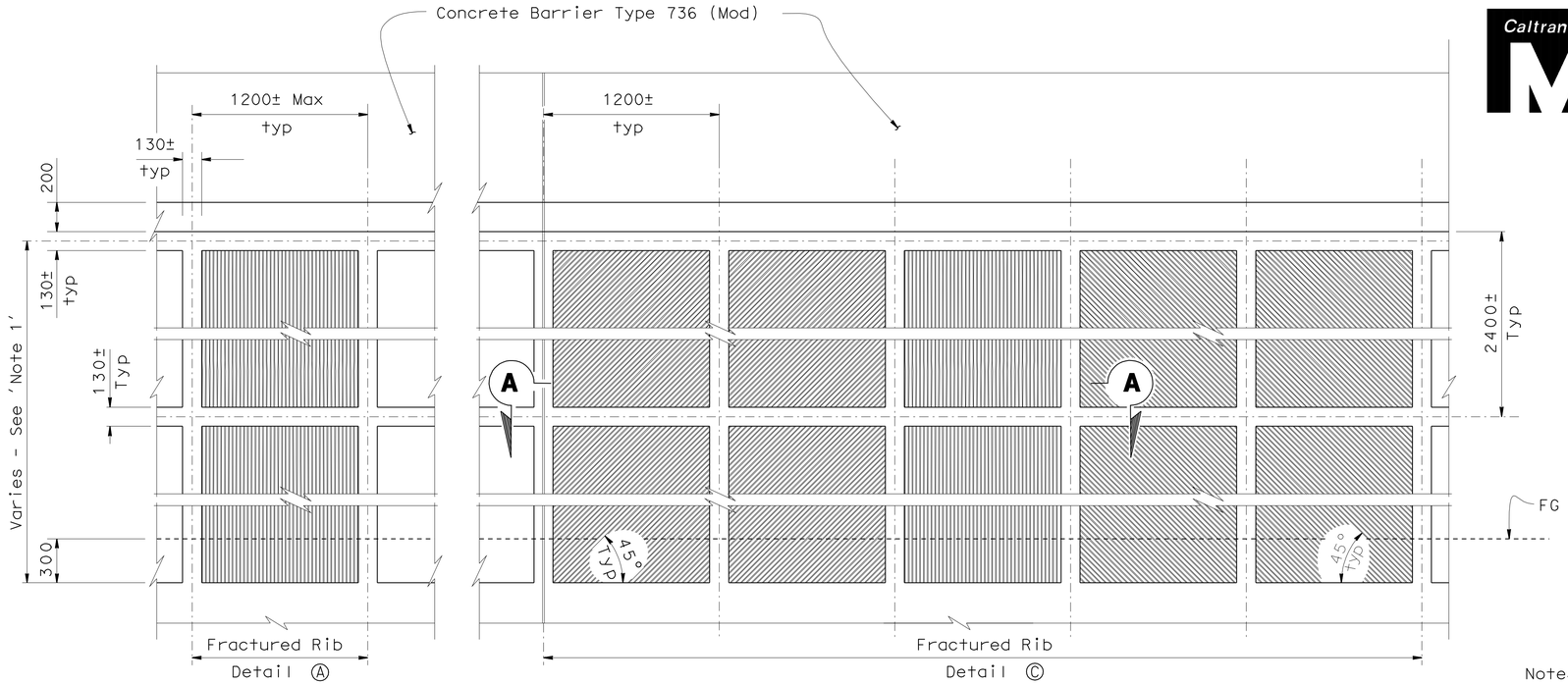

ELEVATION
1:20

Notes:

1. For all details not shown see "Retaining Wall Layout No's 1-2" sheets and "Retaining Wall Details No's 1-2" sheets.

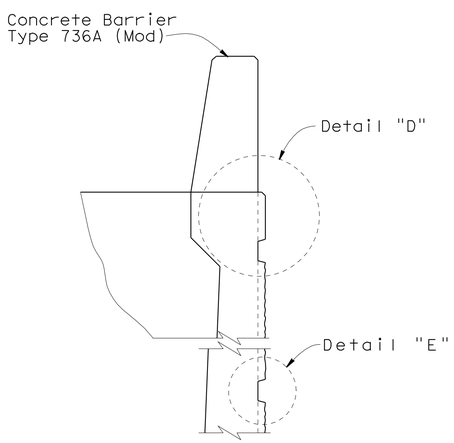

BARRIER/RETAINING WALL TYPICAL ELEVATION
1:20

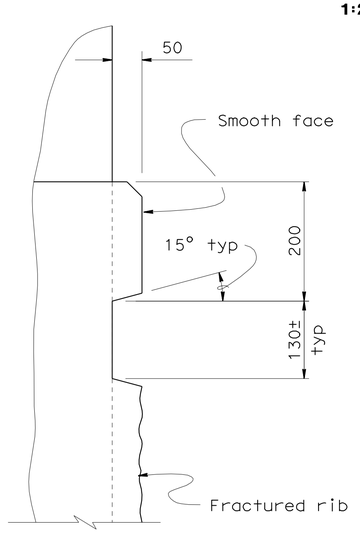

DETAIL "D"
1:5

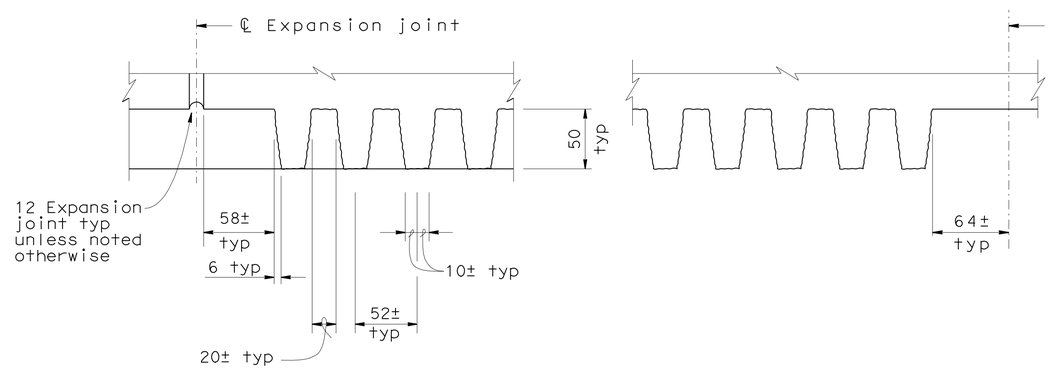

PARTIAL SECTION A-A
1:2.5

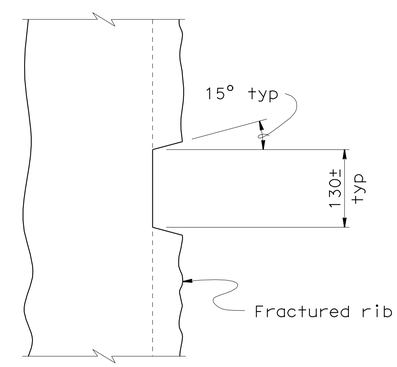

DETAIL "E"
1:5

ALL DIMENSIONS ARE IN MILLIMETERS UNLESS OTHERWISE SHOWN

	BY	CHECKED
DESIGN	Leon Valla	Fayek Tannous
DETAILS	Marvin Lane	Leon Valla
QUANTITIES	Leon Valla	Fayek Tannous

STATE OF CALIFORNIA
DEPARTMENT OF TRANSPORTATION

DIVISION OF STRUCTURES
STRUCTURE DESIGN 12

BRIDGE NO. 53E0114
KILOMETER POST 40.84

RETAINING WALL NO. 408
ARCHITECTURAL TREATMENT DETAILS

STRUCTURES DESIGN DETAIL SHEET (METRIC) (REV.12-1-01)

ORIGINAL SCALE IN MILLIMETERS FOR REDUCED PLANS 0 10 20 30 40 50 60 70 80 90 100

CU 07
EA 241301

DISREGARD PRINTS BEARING EARLIER REVISION DATES

REVISION DATES (PRELIMINARY STAGE ONLY): 2-1-07 5-28-09 8-14-07 10-16-07 12-4-07 1-28-08 9-25-08 12-22-08 5-12-09

SHEET 8 OF 11

FILE => 53-e0114-u-arc.dgn

USERNAME => ttrene DATE PLOTTED => 08-JUN-2010 TIME PLOTTED => 06:27

DIST	COUNTY	ROUTE	KILOMETER POST TOTAL PROJECT	SHEET No	TOTAL SHEETS
07	LA	405	39.7/41.5	427	439

REGISTERED CIVIL ENGINEER 5-11-09

6-7-10
PLANS APPROVAL DATE

REGISTERED PROFESSIONAL ENGINEER
Haitao Liu
No. C66398
Exp. 6-30-10
CIVIL
STATE OF CALIFORNIA

The State of California or its officers or agents shall not be responsible for the accuracy or completeness of electronic copies of this plan sheet.

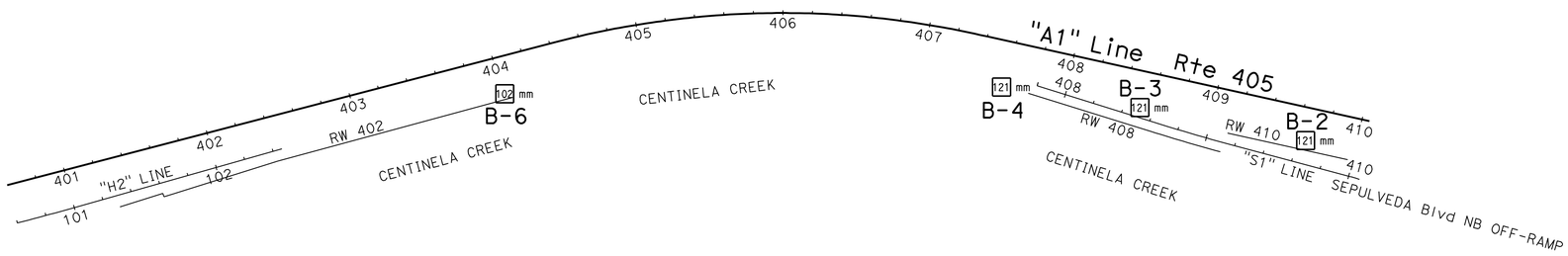

PLAN
1:2000

BENCH MARK
N 553,633.100
E 1,963,544.617
EL= 11.143
FD BRASS DISK IN
C/L MEDIAN ISLAND
AT SEPULVEDA BLVD
N/O 405 FWY

NOTES:

Borehole Number	Equipment	Exploration Method	Hammer Type	Average Hammer Efficiency
B-2	CME 85	Mud Rotary	Automatic	87%
B-3	CME 85	Mud Rotary	Automatic	87%
B-4	CME 85	Mud Rotary	Automatic	87%
B-6	Acker AD2	Mud Rotary	Automatic	80%

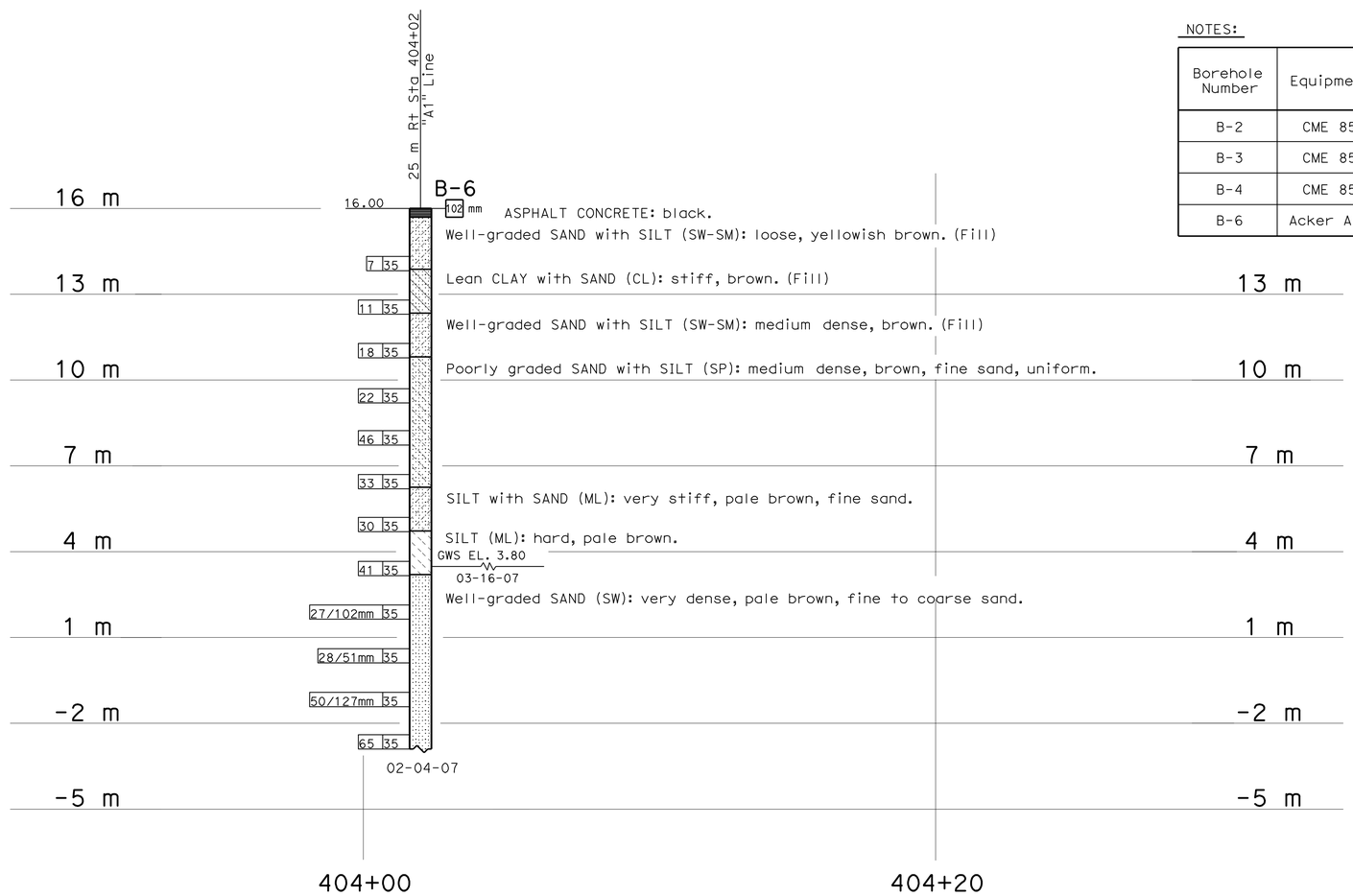

PROFILE
HOR. 1:100
VER. 1:100

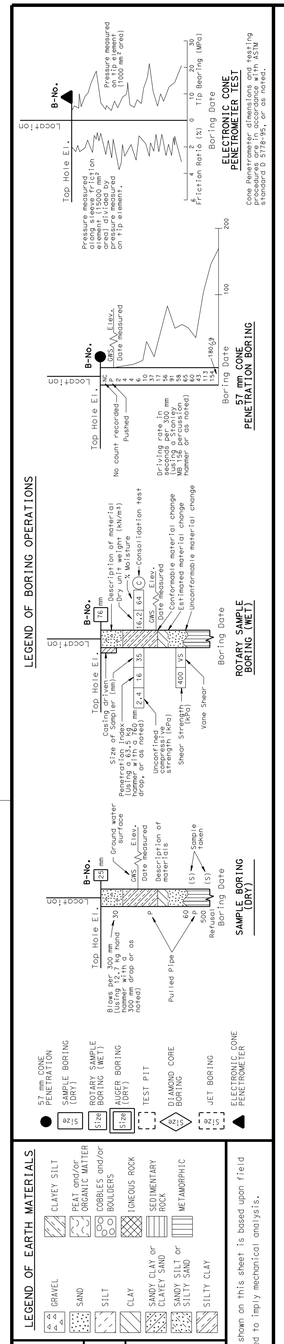

ENGINEERING SERVICES	GEOTECHNICAL SERVICES
DRAWN BY	W. Tang 01/08
CHECKED BY	H. Liu

FIELD INVESTIGATION BY: H. Liu/ V. Khotan

STATE OF CALIFORNIA DEPARTMENT OF TRANSPORTATION

DIVISION OF ENGINEERING SERVICES STRUCTURE DESIGN
DESIGN BRANCH 12

BRIDGE NO. 53E0114
KILOMETER POST 39.3/41.4

RW402, RW408, RW410 AND OVERHEAD SIGN 4A
LOG OF TEST BORINGS 1 OF 3

Caltrans Metric

ALL DIMENSIONS ARE IN METERS UNLESS OTHERWISE SHOWN

ORIGINAL SCALE IN MILLIMETERS FOR REDUCED PLANS 0 10 20 30 40 50 60 70 80 90 100

CU 07
EA 241301

DISREGARD PRINTS BEARING EARLIER REVISION DATES

REVISION DATES (PRELIMINARY STAGE ONLY) 01-28-08 04-30-08

SHEET 9 OF 11

FILE => 53-e0114-z-ltb01.dgn

USERNAME => trrene DATE PLOTTED => 08-JUN-2010 TIME PLOTTED => 06:27

DIST	COUNTY	ROUTE	KILOMETER POST TOTAL PROJECT	SHEET No	TOTAL SHEETS
07	LA	405	39.7/41.5	428	439

REGISTERED CIVIL ENGINEER 5-11-09

6-7-10
PLANS APPROVAL DATE

REGISTERED PROFESSIONAL ENGINEER
Haitao Liu
No. C66398
Exp. 6-30-10
CIVIL
STATE OF CALIFORNIA

The State of California or its officers or agents shall not be responsible for the accuracy or completeness of electronic copies of this plan sheet.

FOR PLAN VIEW, SEE
"LOG OF TEST BORINGS" 1 OF 3

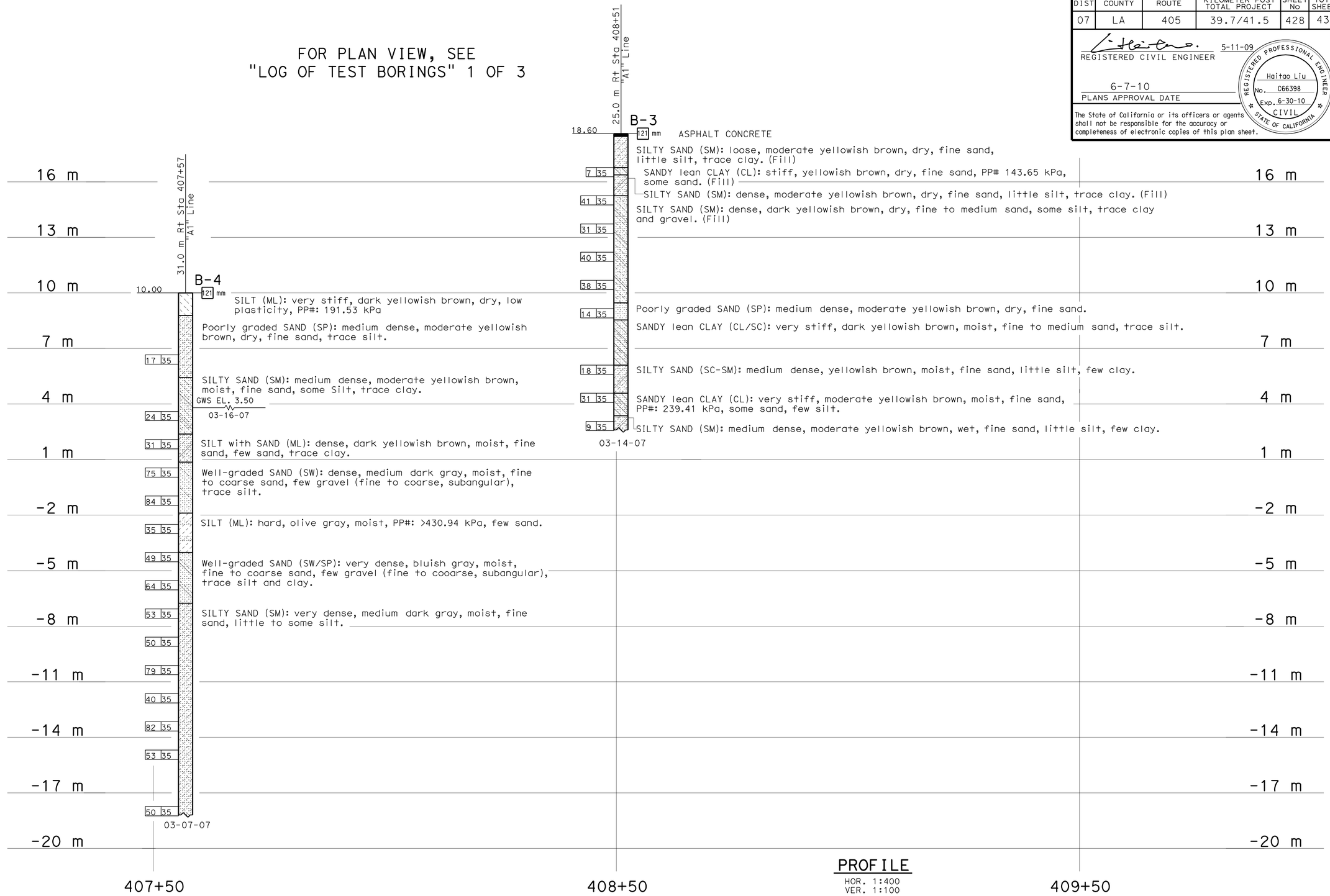

PROFILE
HOR. 1:400
VER. 1:100

LEGEND OF BORING OPERATIONS

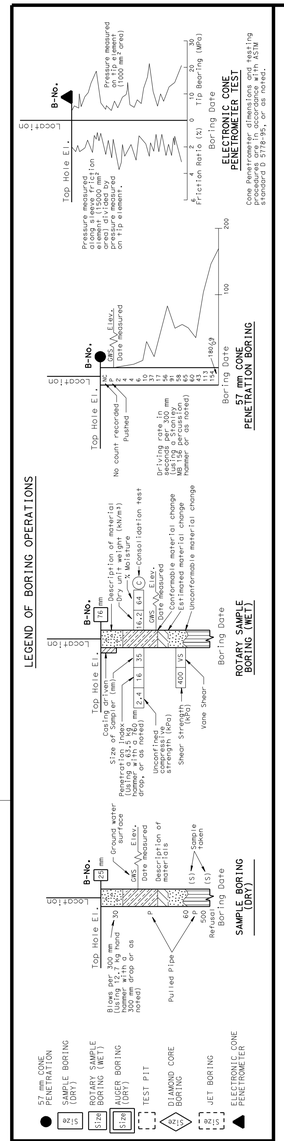

LEGEND OF EARTH MATERIALS

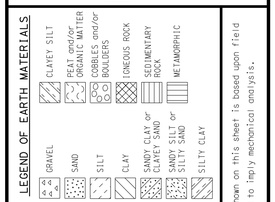

CONSISTENCY CLASSIFICATION FOR SOILS

According to the Standard Penetration Test

SPT N-Value (Blows/ 0.3m)	Granular	SPT N-Value (Blows/ 0.3m)	Cohesive
0-4	Very Loose	<2	Very Soft
5-10	Loose	2-4	Soft
11-30	Medium Dense	5-8	Firm
31-50	Dense	9-15	Stiff
>50	Very Dense	16-30	Very stiff
		>30	Hard

NOTE: Classification of earth material as shown on this sheet is based upon field inspection and is not to be construed to imply mechanical analysis.

OGS CIVIL LOG OF TEST BORINGS SHEET (METRIC) (REV. 4/04)

Caltrans Metric

ENGINEERING SERVICES	GEOTECHNICAL SERVICES
DRAWN BY	W. Tang 01/08
CHECKED BY	H. Liu

FIELD INVESTIGATION BY: H. Liu

STATE OF CALIFORNIA
DEPARTMENT OF TRANSPORTATION

DIVISION OF ENGINEERING SERVICES
STRUCTURE DESIGN
DESIGN BRANCH 12

BRIDGE NO. 53E0114
KILOMETER POST 39.3/41.4

RW402, RW408, RW410 AND OVERHEAD SIGN 4A
LOG OF TEST BORINGS 2 OF 3

ALL DIMENSIONS ARE IN METERS UNLESS OTHERWISE SHOWN

ORIGINAL SCALE IN MILLIMETERS FOR REDUCED PLANS 0 10 20 30 40 50 60 70 80 90 100

CU 07
EA 241301

DISREGARD PRINTS BEARING EARLIER REVISION DATES

REVISION DATES (PRELIMINARY STAGE ONLY) 01-28-08 04-30-08

SHEET 10 OF 11

FILE => 53-e0114-z-ltb02.dgn

USERNAME => ?rrene DATE PLOTTED => 08-JUN-2010 TIME PLOTTED => 06:28

DIST	COUNTY	ROUTE	KILOMETER POST TOTAL PROJECT	SHEET No	TOTAL SHEETS
07	LA	405	39.7/41.5	429	439

REGISTERED CIVIL ENGINEER 5-11-09

6-7-10
PLANS APPROVAL DATE

REGISTERED PROFESSIONAL ENGINEER Haitao Liu No. C66398 Exp. 6-30-10 CIVIL STATE OF CALIFORNIA

The State of California or its officers or agents shall not be responsible for the accuracy or completeness of electronic copies of this plan sheet.

FOR PLAN VIEW, SEE
"LOG OF TEST BORINGS" 1 OF 3

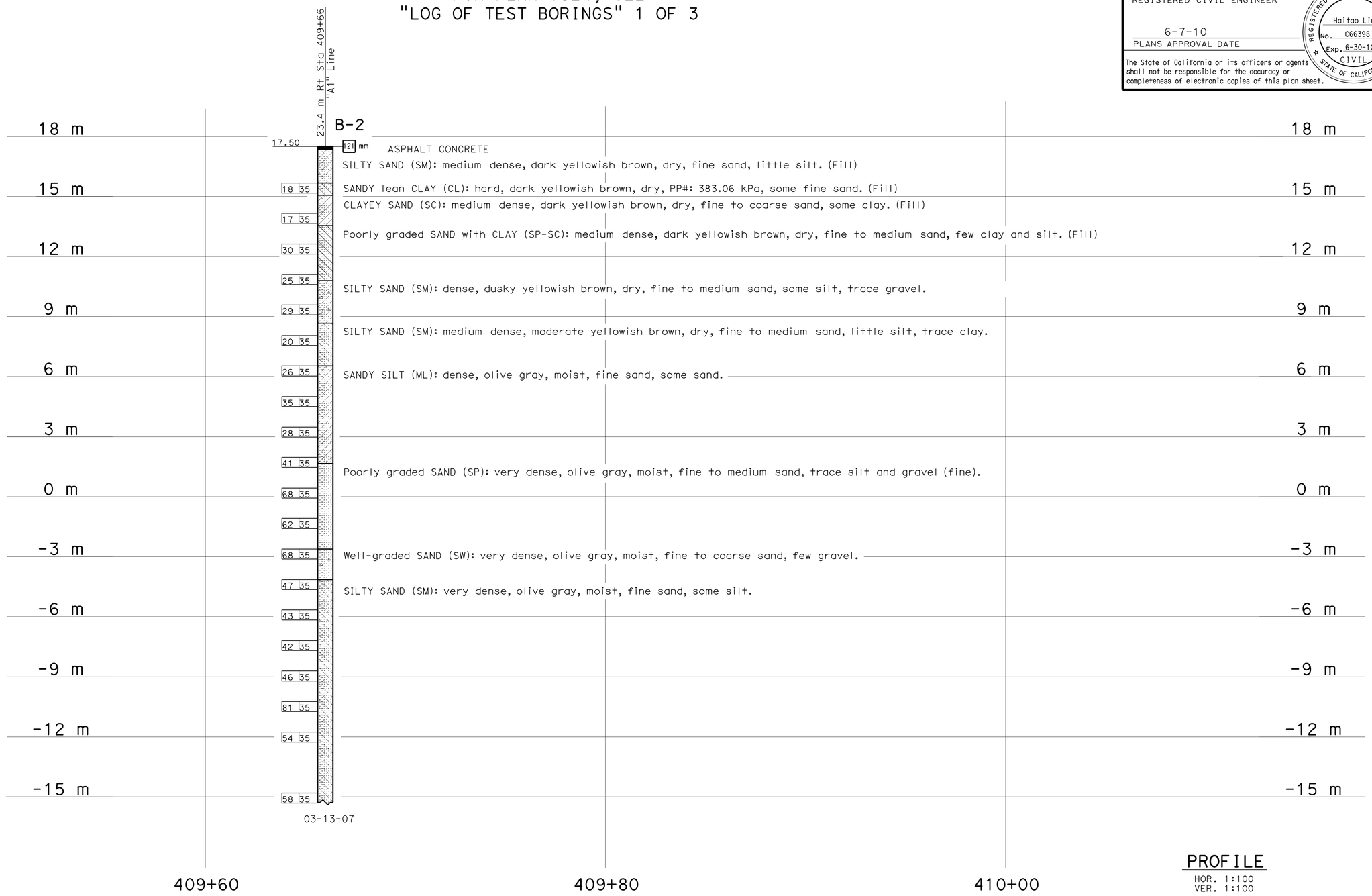

PROFILE
HOR. 1:100
VER. 1:100

LEGEND OF BORING OPERATIONS

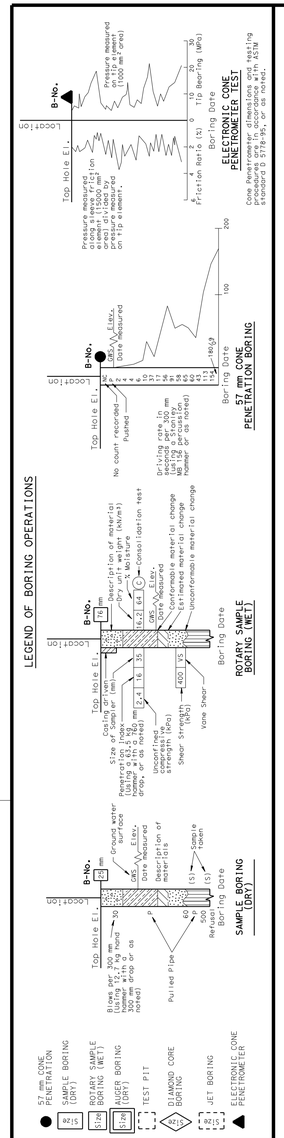

LEGEND OF EARTH MATERIALS

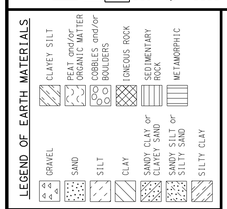

CONSISTENCY CLASSIFICATION FOR SOILS

According to the Standard Penetration Test

SPT N-Value (Blows/ 0.3m)	Granular	SPT N-Value (Blows/ 0.3m)	Cohesive
0-4	Very Loose	<2	Very Soft
5-10	Loose	2-4	Soft
11-30	Medium Dense	5-8	Firm
31-50	Dense	9-15	Stiff
>50	Very Dense	16-30	Very stiff
		>30	Hard

NOTE: Classification of earth material as shown on this sheet is based upon field inspection and is not to be construed to imply mechanical analysis.

OGS CIVIL LOG OF TEST BORINGS SHEET (METRIC) (REV. 4/04)

Caltrans Metric

ENGINEERING SERVICES	GEOTECHNICAL SERVICES
DRAWN BY	W. Tang 01/08
CHECKED BY	H. Liu

ALL DIMENSIONS ARE IN METERS UNLESS OTHERWISE SHOWN

FIELD INVESTIGATION BY: H. Liu

ORIGINAL SCALE IN MILLIMETERS FOR REDUCED PLANS 0 10 20 30 40 50 60 70 80 90 100

STATE OF CALIFORNIA DEPARTMENT OF TRANSPORTATION

DIVISION OF ENGINEERING SERVICES STRUCTURE DESIGN
DESIGN BRANCH 12

CU 07
EA 241301

BRIDGE NO. 53E0114
KILOMETER POST 39.3/41.4

RW402, RW408, RW410 AND OVERHEAD SIGN 4A

LOG OF TEST BORINGS 3 OF 3

DISREGARD PRINTS BEARING EARLIER REVISION DATES

REVISION DATES (PRELIMINARY STAGE ONLY) 01-28-08 04-30-08

SHEET 11 OF 11

FILE => 53-e0114-z-ltb03.dgn

USERNAME => trrene DATE PLOTTED => 08-JUN-2010 TIME PLOTTED => 06:28

DIST	COUNTY	ROUTE	KILOMETER POST TOTAL PROJECT	SHEET No	TOTAL SHEETS
07	LA	405	39.7/41.5	430	439

Leon Valla 5-11-09
REGISTERED CIVIL ENGINEER DATE

6-7-10
PLANS APPROVAL DATE

REGISTERED PROFESSIONAL ENGINEER
LEON VALLA
No. 45351
Exp. 09-30-10
CIVIL
STATE OF CALIFORNIA

The State of California or its officers or agents shall not be responsible for the accuracy or completeness of electronic copies of this plan sheet.

Notes:

1. For crash cushion see "Road Plans".
2. For Architectural Treatment see "Architectural Treatment Details" sheet.
3. For Quantities see "Index To Plans" sheet.

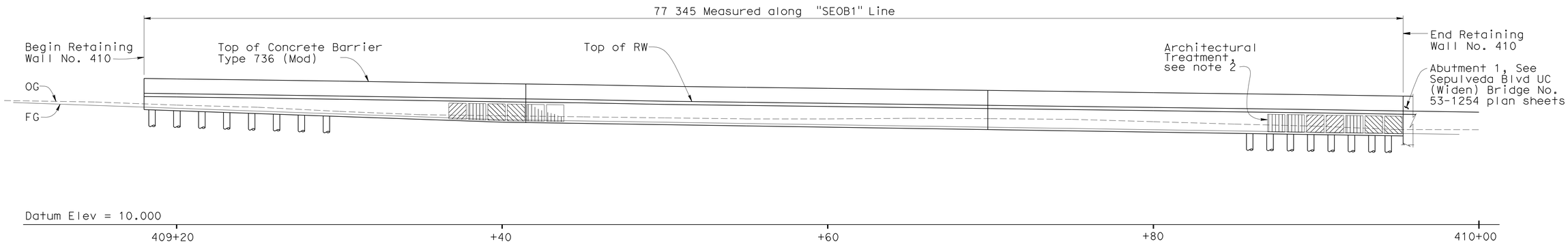

Not all piles shown for clarity

ELEVATION
1:125

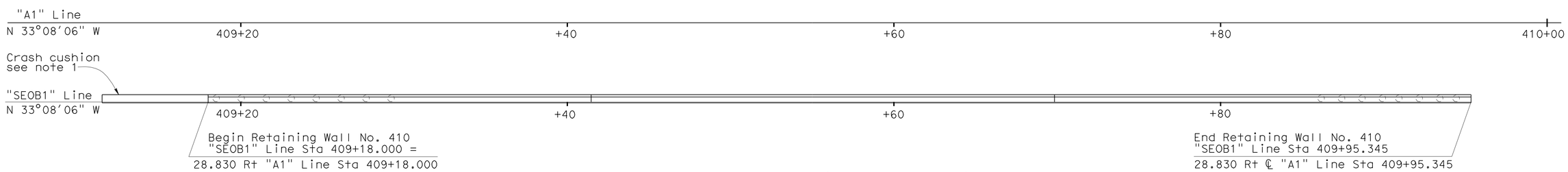

Not all piles shown for clarity

PLAN
1:125

Caltrans Metric

Matt Holm
DESIGN ENGINEER

	BY	CHECKED
DESIGN	Fitsum Habtu	Sebastian Mofor
DETAILS	Various	Leon Valla
QUANTITIES	Leon Valla	Fayek Tannous

LOAD & RESISTANCE FACTOR DESIGN — LIVE LOADING: HL93 W/"LOW-BOY"; PERMIT DESIGN VEHICLE

	BY	CHECKED
LAYOUT	Fitsum Habtu	Leon Valla
SPECIFICATIONS	Theresa Nedwick	PLANS AND SPECS COMPARED: Theresa Nedwick

STATE OF CALIFORNIA
DEPARTMENT OF TRANSPORTATION

DIVISION OF ENGINEERING SERVICES
STRUCTURE DESIGN
DESIGN BRANCH 12

BRIDGE NO. 53E0115
KILOMETER POST 40.96

RETAINING WALL NO. 410
GENERAL PLAN

ALL DIMENSIONS ARE IN METERS UNLESS OTHERWISE SHOWN

ORIGINAL SCALE IN MILLIMETERS FOR REDUCED PLANS 0 10 20 30 40 50 60 70 80 90 100

CU 07
EA 241301

DISREGARD PRINTS BEARING EARLIER REVISION DATES → 08-14-08 09-25-08

REVISION DATES

SHEET 1 OF 10

FILE => 53-e0115-a-gp.dgn

STRUCTURES DESIGN GENERAL PLAN SHEET (METRIC) (REV.07-24-06)

USERNAME => trlenard DATE PLOTTED => 08-JUN-2010 TIME PLOTTED => 05:46

DIST	COUNTY	ROUTE	KILOMETER POST TOTAL PROJECT	SHEET No	TOTAL SHEETS
07	LA	405	39.7/41.5	431	439

Leon Valla 5-11-09
REGISTERED CIVIL ENGINEER DATE

6-7-10
PLANS APPROVAL DATE

REGISTERED PROFESSIONAL ENGINEER
LEON VALLA
No. 45351
Exp. 09-30-10
CIVIL
STATE OF CALIFORNIA

The State of California or its officers or agents shall not be responsible for the accuracy or completeness of electronic copies of this plan sheet.

GENERAL NOTES
LOAD FACTOR DESIGN

DESIGN: BRIDGE DESIGN SPECIFICATIONS
(1996 AASHTO with Interims and Revisions by Caltrans)

REINFORCED CONCRETE: f_y = 420 Mpa
f'_c = 25 Mpa @ 28 days

INDEX TO PLANS

SHEET NO.	TITLE
1	GENERAL PLAN
2	INDEX TO PLANS
3	FOUNDATION PLAN
4	RETAINING WALL LAYOUT NO. 1
5	RETAINING WALL LAYOUT NO. 2
6	RETAINING WALL DETAILS
7	ARCHITECTURAL TREATMENT DETAILS
8	LOG OF TEST BORINGS 1 OF 3
9	LOG OF TEST BORINGS 2 OF 3
10	LOG OF TEST BORINGS 3 OF 3

STANDARD PLANS
(Dated JULY 2004)

A10A	ACRONYMS AND ABBREVIATIONS (A-L)
A10B	ACRONYMS AND ABBREVIATIONS (M-Z)
A10C	SYMBOLS (SHEET 1 OF 2)
A10D	SYMBOLS (SHEET 2 OF 2)
A62B	LIMITS OF PAYMENT FOR EXCAVATION AND BACKFILL - BRIDGE SURCHARGE AND WALL
A62C	LIMITS OF PAYMENT FOR EXCAVATION AND BACKFILL - BRIDGE
BO-3	BRIDGE DETAILS
B11-56	CONCRETE BARRIER TYPE 736

QUANTITIES

STRUCTURE EXCAVATION (RETAINING WALL)	24	m^3
STRUCTURE EXCAVATION (TYPE Z-2) (AERIALLY DEPOSITED LEAD)	26	m^3
STRUCTURE BACKFILL (RETAINING WALL)	35	m^3
400 MM CAST-IN-DRILLED-HOLE CONCRETE PILING	293	m
STRUCTURAL CONCRETE, RETAINING WALL	50	m^3
ARCHITECTURAL TREATMENT	85	m^2
BAR REINFORCING STEEL (RETAINING WALL)	3 047	kg
CONCRETE BARRIER (TYPE 736 MODIFIED)	77	m

Caltrans Metric

ALL DIMENSIONS ARE IN MILLIMETERS UNLESS OTHERWISE SHOWN

ORIGINAL SCALE IN MILLIMETERS FOR REDUCED PLANS 0 10 20 30 40 50 60 70 80 90 100

	BY	CHECKED
DESIGN	Fitsum Habtu	Sebastian Mofor
DETAILS	F. Mendoza	Leon Valla
QUANTITIES	Leon Valla	Fayek Tannous

STATE OF CALIFORNIA
DEPARTMENT OF TRANSPORTATION

DIVISION OF ENGINEERING SERVICES
STRUCTURE DESIGN
DESIGN BRANCH 12

CU 07
EA 241301

BRIDGE NO. 53E0115
KILOMETER POST 40.96

RETAINING WALL NO. 410
INDEX TO PLANS

DISREGARD PRINTS BEARING EARLIER REVISION DATES → 09-26-08 2-24-09

REVISION DATES

SHEET 2 OF 10

FILE => 53-e0115-a-itp.dgn

STRUCTURES DESIGN DETAIL SHEET (METRIC) (REV.03-17-04)

USERNAME => trienard DATE PLOTTED => 08-JUN-2010 TIME PLOTTED => 05:46

DIST	COUNTY	ROUTE	KILOMETER POST TOTAL PROJECT	SHEET No	TOTAL SHEETS
07	LA	405	39.7/41.5	432	439

Caltrans Metric

Leon Valla 5-11-09
REGISTERED CIVIL ENGINEER

6-7-10
PLANS APPROVAL DATE

REGISTERED PROFESSIONAL ENGINEER
LEON VALLA
No. 45351
Exp. 09-30-10
CIVIL
STATE OF CALIFORNIA

The State of California or its officers or agents shall not be responsible for the accuracy or completeness of electronic copies of this plan sheet.

CURVE DATA				
No.	R	Δ	T	L
1	1370.013	02°23′45"	28.650	57.290
2	80.000	27°27′20"	19.555	38.359

(A) STA. 409+12.743 BEGIN RW NO. 410 = 28.830 Rt. 409+12.743 "A1" LINE

(B) STA. 409+96.350 END RW NO. 410 = 28.830 Rt. 409+96.350 "A1" LINE

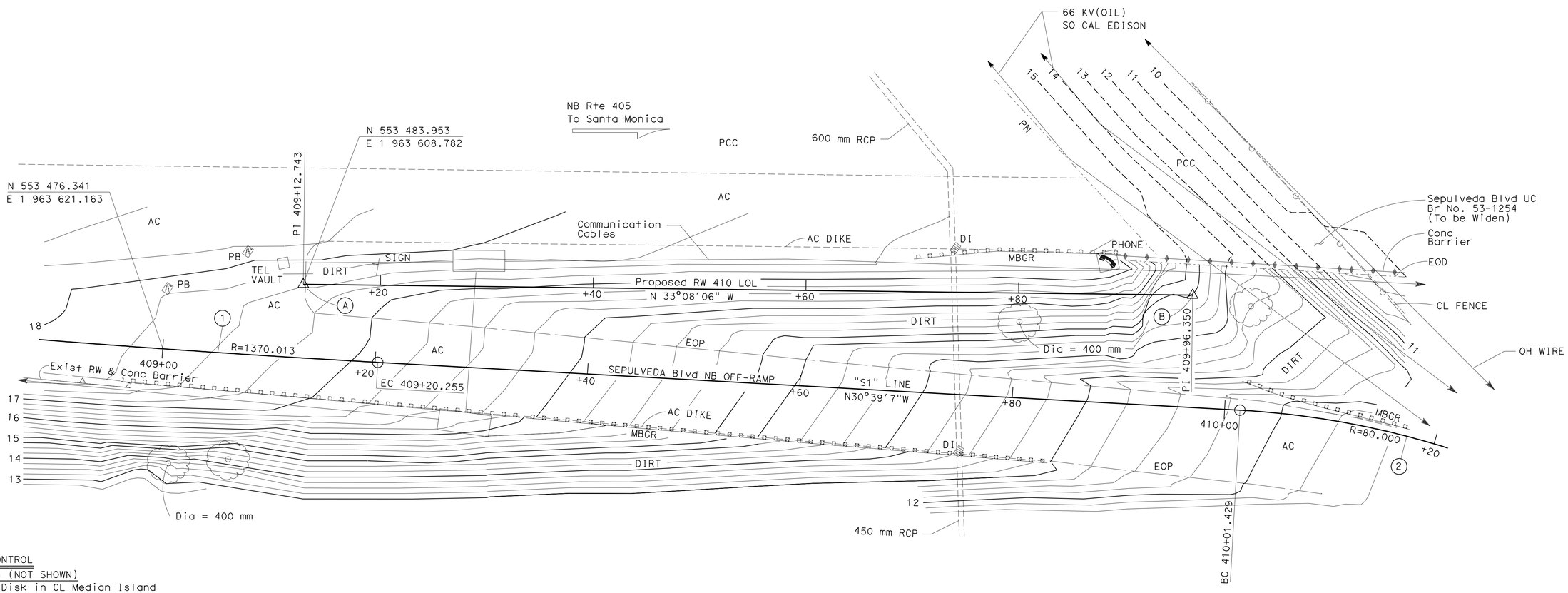

SURVEY CONTROL

PT-PMHV94 (NOT SHOWN)

FD Brass Disk in CL Median Island
@ Sepulveda Blvd N/O 405 FWY
56.625 M Rt ℄ Rte 405
Sta. 410+72.710
N 553 633.100
E 1 963 544.617
Elev. = 11.143

PT-PMHV95 (NOT SHOWN)

FD SPK IN E'LY BANK
OF CENTINELA CREEK
89.263 M Rt ℄ Rte 405
Sta. 409+46.334
N 553 545.115
E 1 963 641.026
Elev. = 10.076

NOTES:

Underground utilities as shown are approximate

ALL DIMENSIONS ARE IN
METERS UNLESS OTHERWISE SHOWN

PRELIMINARY INVESTIGATION SECTION

SCALE	VERT.DATUM NAVD 88	PHOTOGRAMMETRY AS OF:					
1:200	HORZ.DATUM NAD 83	SURVEYED	BY COAST SURVEY 1-07	DRAFTED	BY L. ZHANG 1-07		
ALIGNMENT TIES	DIST TRAVERSE SHEET	FIELD CHECKED	BY L. ZHOU 1-07	CHECKED	BY L. ZHOU 1-07		

DESIGN	BY Fitsum Habtu	CHECKED Sebastian Mofor
DETAILS	BY F. Mendoza	CHECKED Leon Valla
QUANTITIES	BY Leon Valla	CHECKED Fayek Tannous

STATE OF CALIFORNIA
DEPARTMENT OF TRANSPORTATION

DIVISION OF STRUCTURES
STRUCTURE DESIGN 12

BRIDGE NO. 53E0115
KILOMETER POST 40.96

RETAINING WALL NO. 410
FOUNDATION PLAN

STRUCTURES FOUNDATION PLAN SHEET (METRIC) (REV. 4/20/00)

ORIGINAL SCALE IN MILLIMETERS FOR REDUCED PLANS 0 10 20 30 40 50 60 70 80 90 100

CU 07
EA 241301

DISREGARD PRINTS BEARING EARLIER REVISION DATES

REVISION DATES (PRELIMINARY STAGE ONLY) 02/16/07

SHEET 3 OF 10

FILE => 53-e0115-e-fpl.dgn

USERNAME => trienard DATE PLOTTED => 08-JUN-2010 TIME PLOTTED => 05:46

DIST	COUNTY	ROUTE	KILOMETER POST TOTAL PROJECT	SHEET No	TOTAL SHEETS
07	LA	405	39.7/41.5	433	439

REGISTERED CIVIL ENGINEER — DATE 5-11-09

6-7-10
PLANS APPROVAL DATE

The State of California or its officers or agents shall not be responsible for the accuracy or completeness of electronic copies of this plan sheet.

REGISTERED PROFESSIONAL ENGINEER — LEON VALLA — No. 45351 — Exp. 09-30-10 — CIVIL — STATE OF CALIFORNIA

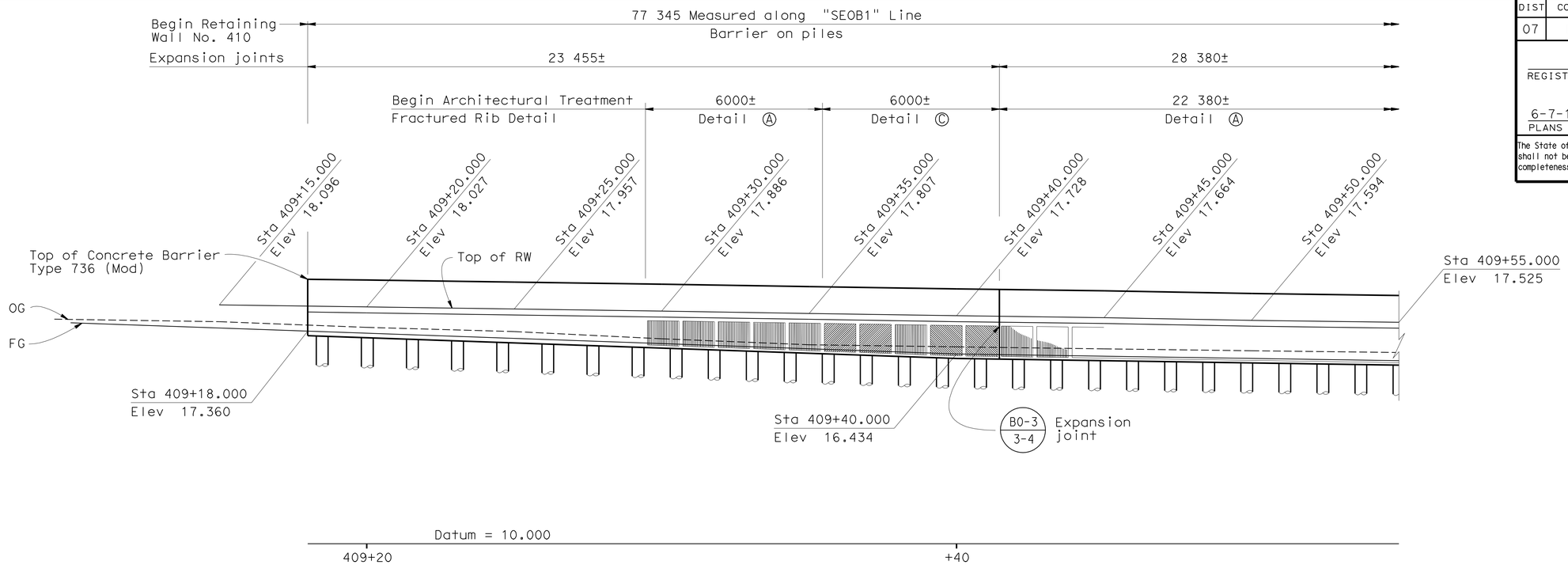

ELEVATION
1:80

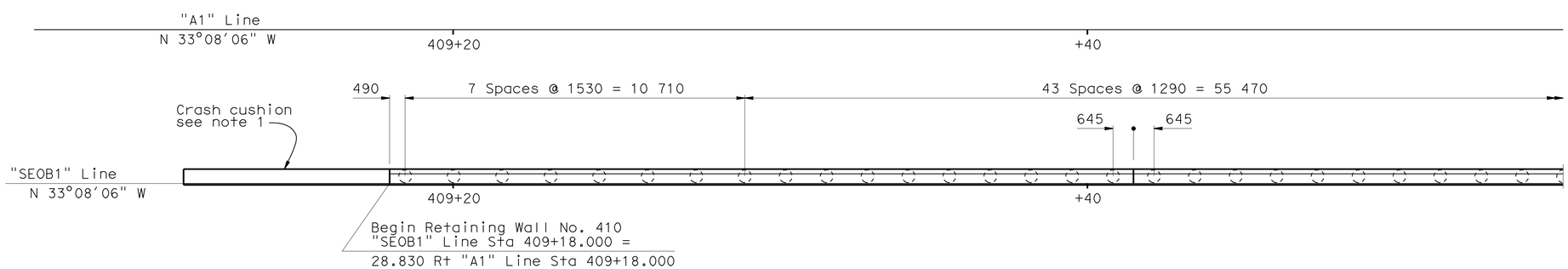

PLAN
1:80

Notes:

1. For crash cushion see "Road Plans".
2. For Architectural Treatment see "Architectural Treatment Details" sheet.

DESIGN	BY Fitsum Habtu	CHECKED Sebastion Mofor	
DETAILS	BY Various	CHECKED Leon Valla	
QUANTITIES	BY Leon Valla	CHECKED Fayek Tannous	

STATE OF CALIFORNIA
DEPARTMENT OF TRANSPORTATION

DIVISION OF ENGINEERING SERVICES
STRUCTURE DESIGN
DESIGN BRANCH 12

BRIDGE NO. 53E0115
KILOMETER POST 40.96

RETAINING WALL NO. 410
RETAINING WALL LAYOUT NO. 1

ALL DIMENSIONS ARE IN MILLIMETERS UNLESS OTHERWISE SHOWN

ORIGINAL SCALE IN MILLIMETERS FOR REDUCED PLANS 0 10 20 30 40 50 60 70 80 90 100

CU 07
EA 241301

DISREGARD PRINTS BEARING EARLIER REVISION DATES

REVISION DATES: 12-12-06 | 8-9-07 | 8-14-07 | 10-15-07 | 11-22-07 | 1-13-08 | 1-28-08 | 09-25-08 | 5-20-09

SHEET 4 OF 10

FILE => 53-e0115-g-rw-lo01.dgn

STRUCTURES DESIGN DETAIL SHEET (METRIC) (REV.03-17-04)

USERNAME => trienard DATE PLOTTED => 08-JUN-2010 TIME PLOTTED => 05:46

DIST	COUNTY	ROUTE	KILOMETER POST TOTAL PROJECT	SHEET No	TOTAL SHEETS
07	LA	405	39.7/41.5	434	439

Leon Valla 5-11-09
REGISTERED CIVIL ENGINEER DATE

6-7-10
PLANS APPROVAL DATE

REGISTERED PROFESSIONAL ENGINEER LEON VALLA No. 45351 Exp. 09-30-10 CIVIL STATE OF CALIFORNIA

The State of California or its officers or agents shall not be responsible for the accuracy or completeness of electronic copies of this plan sheet.

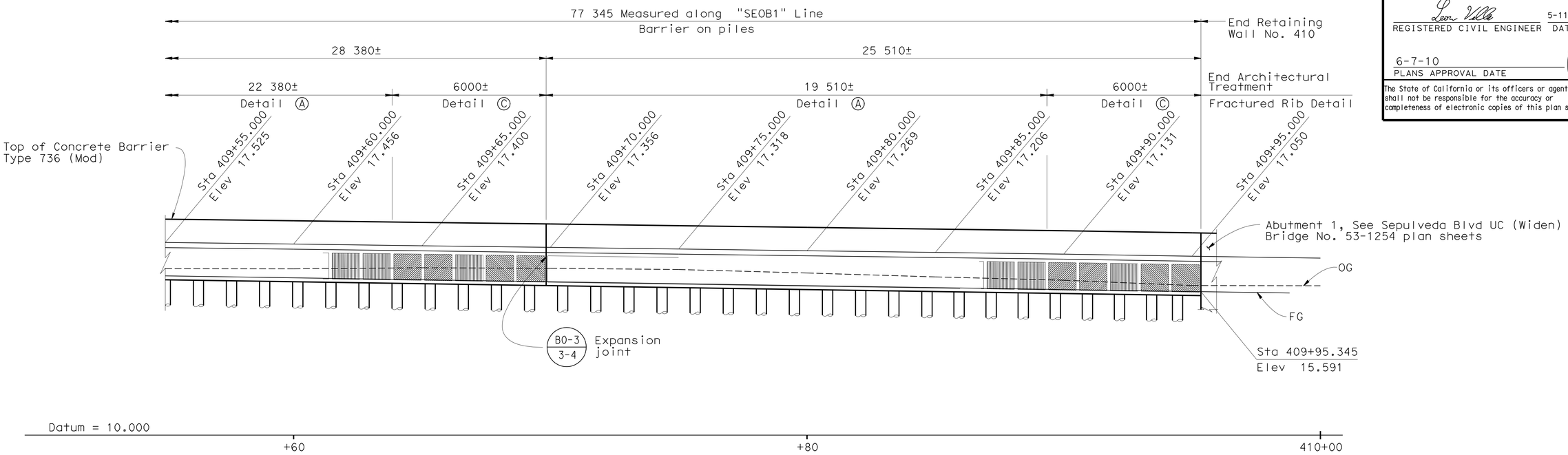

ELEVATION
1:80

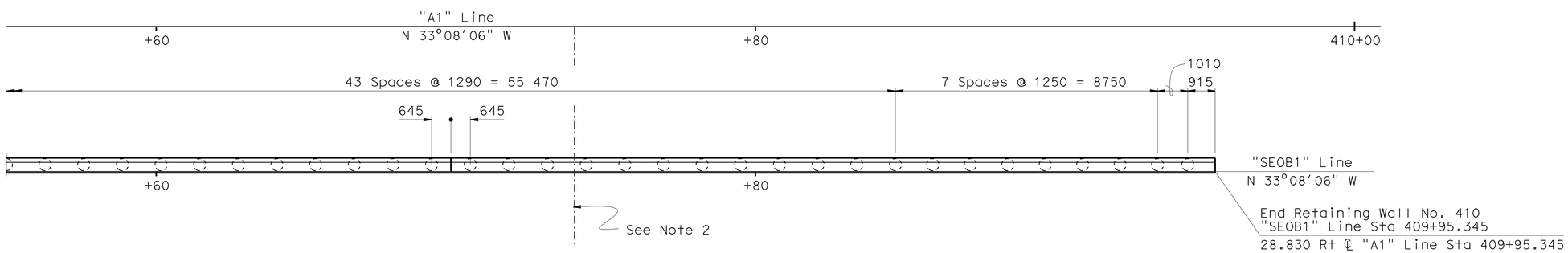

PLAN
1:80

Notes:

1. For Architectural Treatment see "Architectural Treatment Details" sheet.
2. Existing 457 mm RCP at "SEOB1" Line Sta 409+73.956±, locate and adjust pile spacing to miss obstruction. Minimum clear distance from 600 mm RCP = 25 mm.

Caltrans Metric

	BY	CHECKED
DESIGN	Fitsum Habtu	Sebastian Mofor
DETAILS	Various	Leon Valla
QUANTITIES	Leon Valla	Fayek Tannous

STATE OF CALIFORNIA
DEPARTMENT OF TRANSPORTATION

DIVISION OF ENGINEERING SERVICES
STRUCTURE DESIGN
DESIGN BRANCH 12

BRIDGE NO. 53E0115
KILOMETER POST 40.96

RETAINING WALL NO. 410
RETAINING WALL LAYOUT NO. 2

ALL DIMENSIONS ARE IN MILLIMETERS UNLESS OTHERWISE SHOWN

ORIGINAL SCALE IN MILLIMETERS FOR REDUCED PLANS 0 10 20 30 40 50 60 70 80 90 100

CU 07
EA 241301

DISREGARD PRINTS BEARING EARLIER REVISION DATES

REVISION DATES: 12-12-06 5-20-09 8-13-07 8-14-07 11-27-06 1-13-08 1-28-08 09-25-08 5-6-09

SHEET 5 OF 10

FILE => 53-e0115-g-rw-lo02.dgn

STRUCTURES DESIGN DETAIL SHEET (METRIC) (REV.03-17-04)

USERNAME => trienard DATE PLOTTED => 08-JUN-2010 TIME PLOTTED => 05:46

DIST	COUNTY	ROUTE	KILOMETER POST TOTAL PROJECT	SHEET No	TOTAL SHEETS
07	LA	405	39.7/41.5	435	439

Caltrans Metric

Leon Valla 5-11-09
REGISTERED CIVIL ENGINEER DATE

6-7-10
PLANS APPROVAL DATE

REGISTERED PROFESSIONAL ENGINEER LEON VALLA No. 45351 Exp. 09-30-10 CIVIL STATE OF CALIFORNIA

The State of California or its officers or agents shall not be responsible for the accuracy or completeness of electronic copies of this plan sheet.

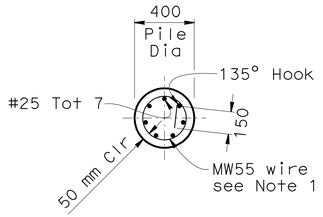

SECTION C-C
1:20

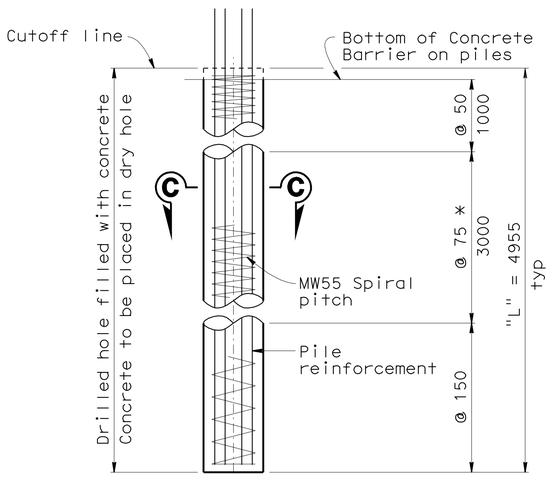

PILE ELEVATION
1:20

* @ 50 at option of Contractor.

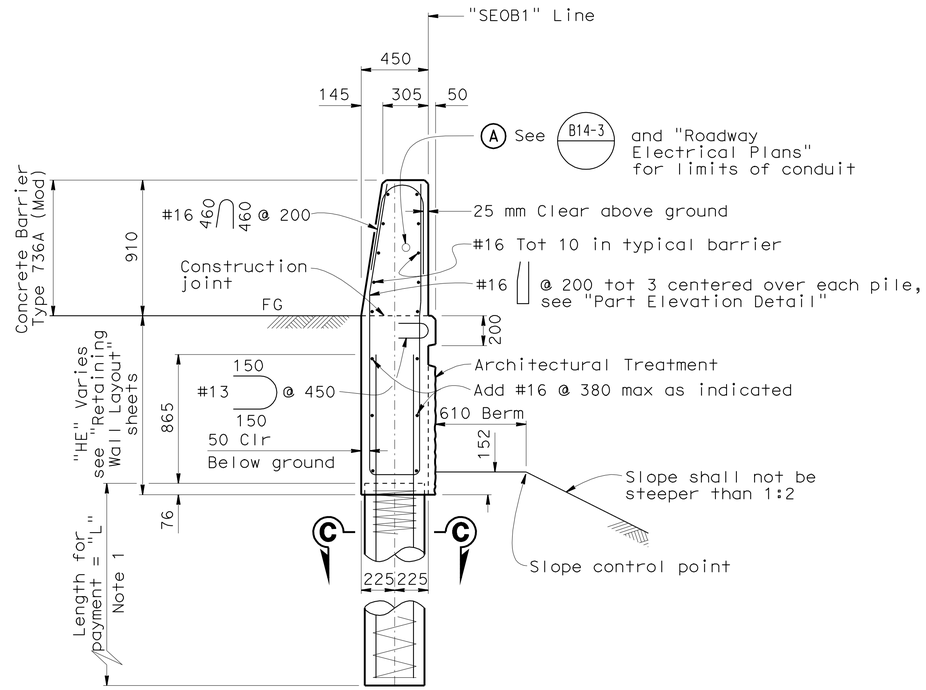

TYPICAL BARRIER RETAINING WALL SECTION
1:20

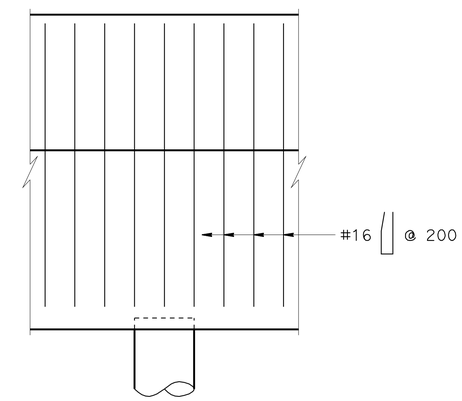

PART ELEVATION DETAIL
1:20

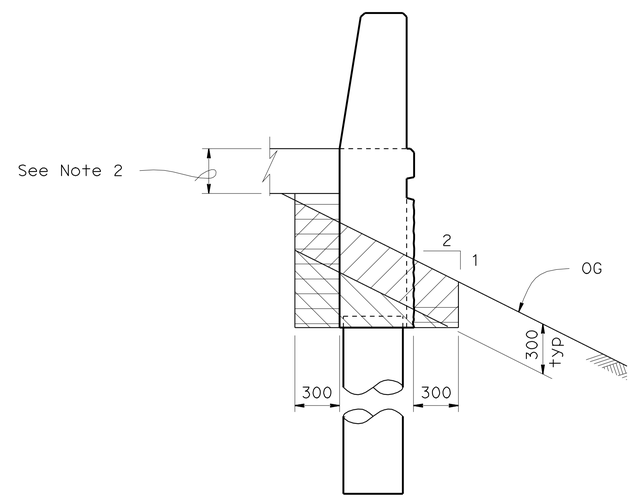

PAY LIMITS FOR STRUCTURE EXCAVATION AND BACKFILL FOR TYPICAL BARRIER RETAINING WALL
1:20

LEGEND

- Structure Excavation (Type Y-2) Aerially Deposited Lead
- Structure Excavation (retaining wall)
- Structure Backfill (retaining wall)

Note:
Any excess Type (Y-2) material that cannot be reused on site or along the corridor shall be classified as Type (Z-2)

Notes:

1. Lapped splices in spiral reinforcement shall be lapped at least 80 wire diameters. Spiral reinforcement at splices and at ends shall be terminated with a 35° hook with a 150 mm tail hooked around a longitudinal bar.
2. 0.300 m Structure Approach Slab N(9D) thickness or roadway thickness. For roadway thickness see "Road Plans".

UTILITY OPENINGS			
LOCATION	UTILITY	OWNER	CONDUIT SIZE
A	Electrical Conduit	Caltrans	53 mm Ø

ALL DIMENSIONS ARE IN MILLIMETERS UNLESS OTHERWISE SHOWN

	BY	CHECKED
DESIGN	Fitsum Habtu	Sebastian Mofar
DETAILS	Various	Leon Valla
QUANTITIES	Leon Valla	Fayek Tannous

STATE OF CALIFORNIA
DEPARTMENT OF TRANSPORTATION

DIVISION OF STRUCTURES
STRUCTURE DESIGN 12

BRIDGE NO. 53E0115
KILOMETER POST 40.96

RETAINING WALL NO. 410
RETAINING WALL DETAILS

STRUCTURES DESIGN DETAIL SHEET (METRIC) (REV.12-1-01)

ORIGINAL SCALE IN MILLIMETERS FOR REDUCED PLANS 0 10 20 30 40 50 60 70 80 90 100

CU 07
EA 241301

DISREGARD PRINTS BEARING EARLIER REVISION DATES

REVISION DATES (PRELIMINARY STAGE ONLY): 8-13-07 8-14-07 10-18-07 1-11-08 1-29-08 2-26-08 09-26-08 12-18-08 5-6-09

SHEET 6 OF 10

FILE => 53-e0115-g-rwdt.dgn

USERNAME => friehard DATE PLOTTED => 08-JUN-2010 TIME PLOTTED => 06:46

DIST	COUNTY	ROUTE	KILOMETER POST TOTAL PROJECT	SHEET No	TOTAL SHEETS
07	LA	405	39.7/41.5	436	439

Caltrans Metric

REGISTERED CIVIL ENGINEER — DATE 5-11-09

6-7-10
PLANS APPROVAL DATE

REGISTERED PROFESSIONAL ENGINEER — LEON VALLA — No. 45351 — Exp. 09-30-10 — CIVIL — STATE OF CALIFORNIA

The State of California or its officers or agents shall not be responsible for the accuracy or completeness of electronic copies of this plan sheet.

Notes:

1. For all details not shown see "Retaining Wall Layout No.s 1-2" sheets and "Retaining Wall Details" sheet.

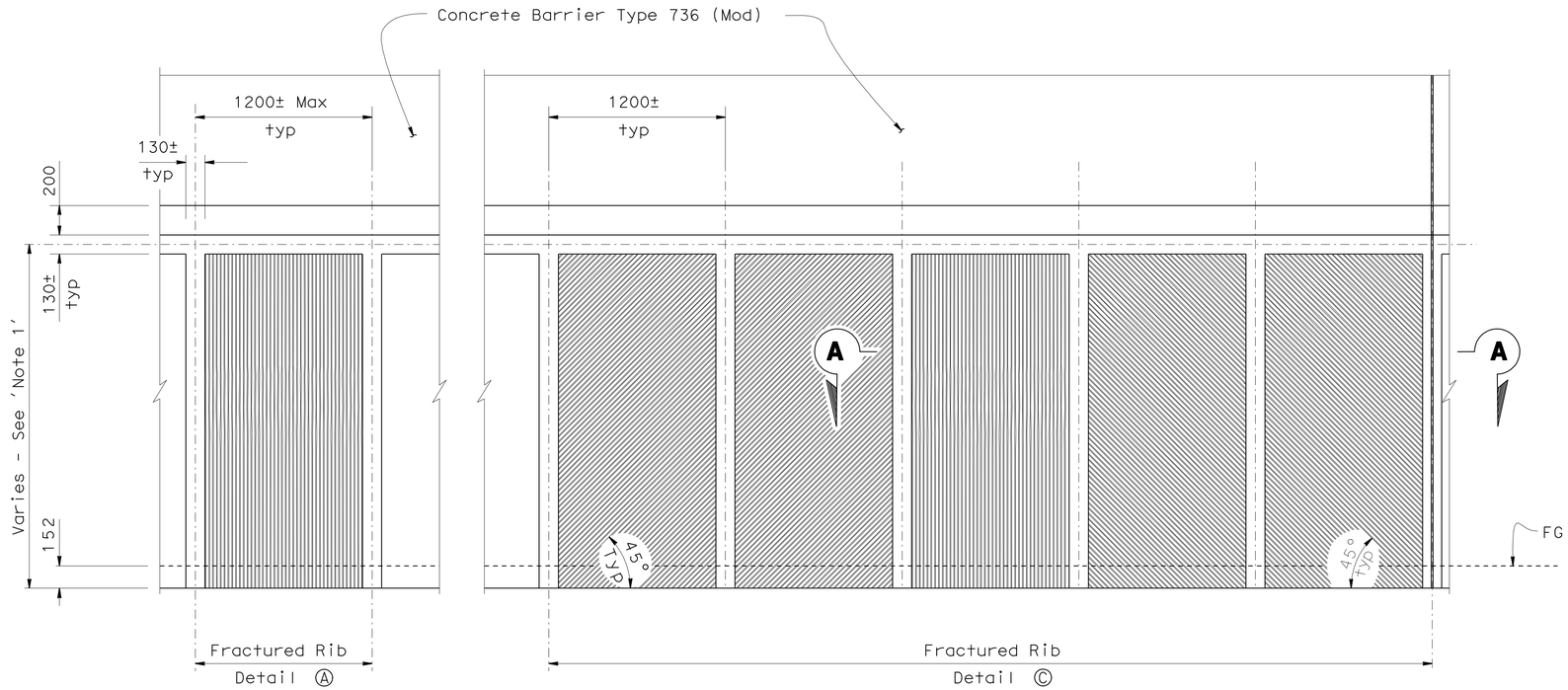

ELEVATION
1:20

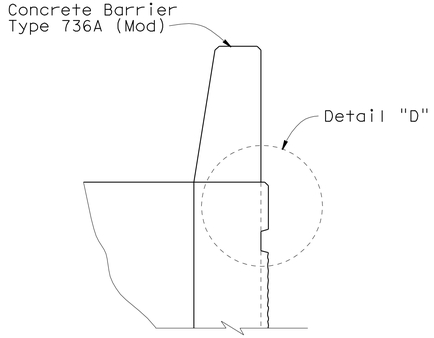

BARRIER/RETAINING WALL ELEVATION
1:20

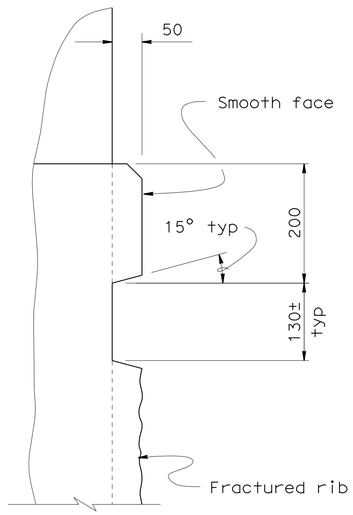

DETAIL "D"
1:5

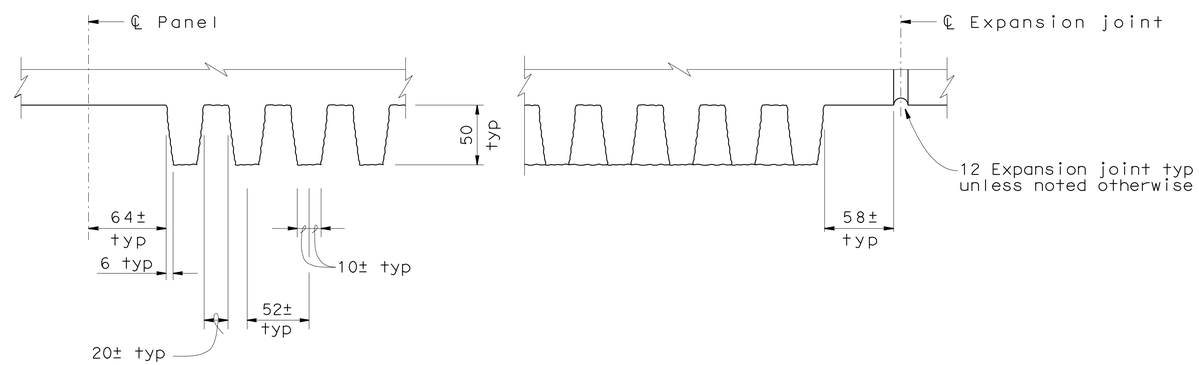

PARTIAL SECTION A-A
1:2.5

ALL DIMENSIONS ARE IN MILLIMETERS UNLESS OTHERWISE SHOWN

	BY	CHECKED
DESIGN	Leon Valla	Fayek Tannous
DETAILS	Marvin Lane	Leon Valla
QUANTITIES	Leon Valla	Fayek Tannous

STATE OF CALIFORNIA
DEPARTMENT OF TRANSPORTATION

DIVISION OF STRUCTURES
STRUCTURE DESIGN 12

BRIDGE NO. 53E0115
KILOMETER POST 40.96

RETAINING WALL NO. 410
ARCHITECTURAL TREATMENT DETAILS

STRUCTURES DESIGN DETAIL SHEET (METRIC) (REV.12-1-01)

ORIGINAL SCALE IN MILLIMETERS FOR REDUCED PLANS 0 10 20 30 40 50 60 70 80 90 100

CU 07
EA 241301

DISREGARD PRINTS BEARING EARLIER REVISION DATES

REVISION DATES (PRELIMINARY STAGE ONLY): 2-1-07 5-27-09 8-14-07 10-16-07 12-4-07 1-28-08 09-25-08 12-18-08 5-12-09

SHEET 7 OF 10

FILE => 53-e0115-u-arc.dgn

USERNAME => friehard DATE PLOTTED => 08-JUN-2010 TIME PLOTTED => 06:47

DIST	COUNTY	ROUTE	KILOMETER POST TOTAL PROJECT	SHEET No	TOTAL SHEETS
07	LA	405	39.7/41.5	437	439

REGISTERED CIVIL ENGINEER 5-11-09

6-7-10
PLANS APPROVAL DATE

REGISTERED PROFESSIONAL ENGINEER Haitao Liu No. C66398 Exp. 6-30-10 CIVIL STATE OF CALIFORNIA

The State of California or its officers or agents shall not be responsible for the accuracy or completeness of electronic copies of this plan sheet.

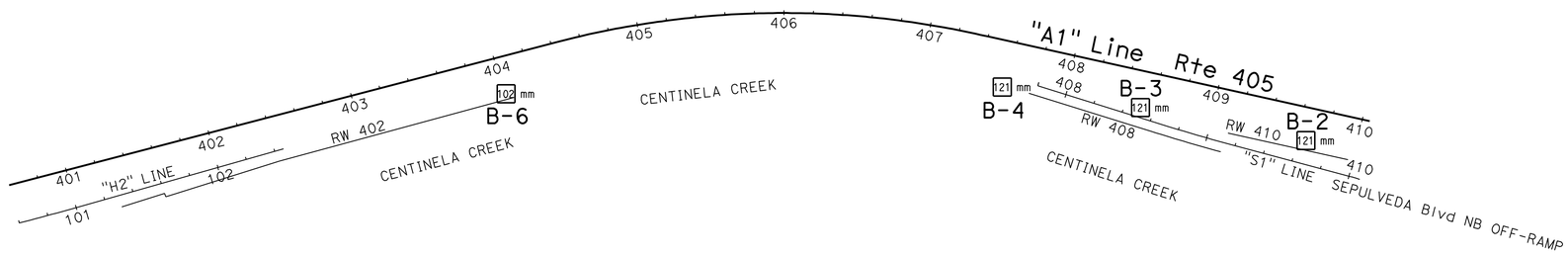

PLAN
1:2000

BENCH MARK
N 553,633.100
E 1,963,544.617
EL= 11.143
FD BRASS DISK IN
C/L MEDIAN ISLAND
AT SEPULVEDA BLVD
N/O 405 FWY

NOTES:

Borehole Number	Equipment	Exploration Method	Hammer Type	Average Hammer Efficiency
B-2	CME 85	Mud Rotary	Automatic	87%
B-3	CME 85	Mud Rotary	Automatic	87%
B-4	CME 85	Mud Rotary	Automatic	87%
B-6	Acker AD2	Mud Rotary	Automatic	80%

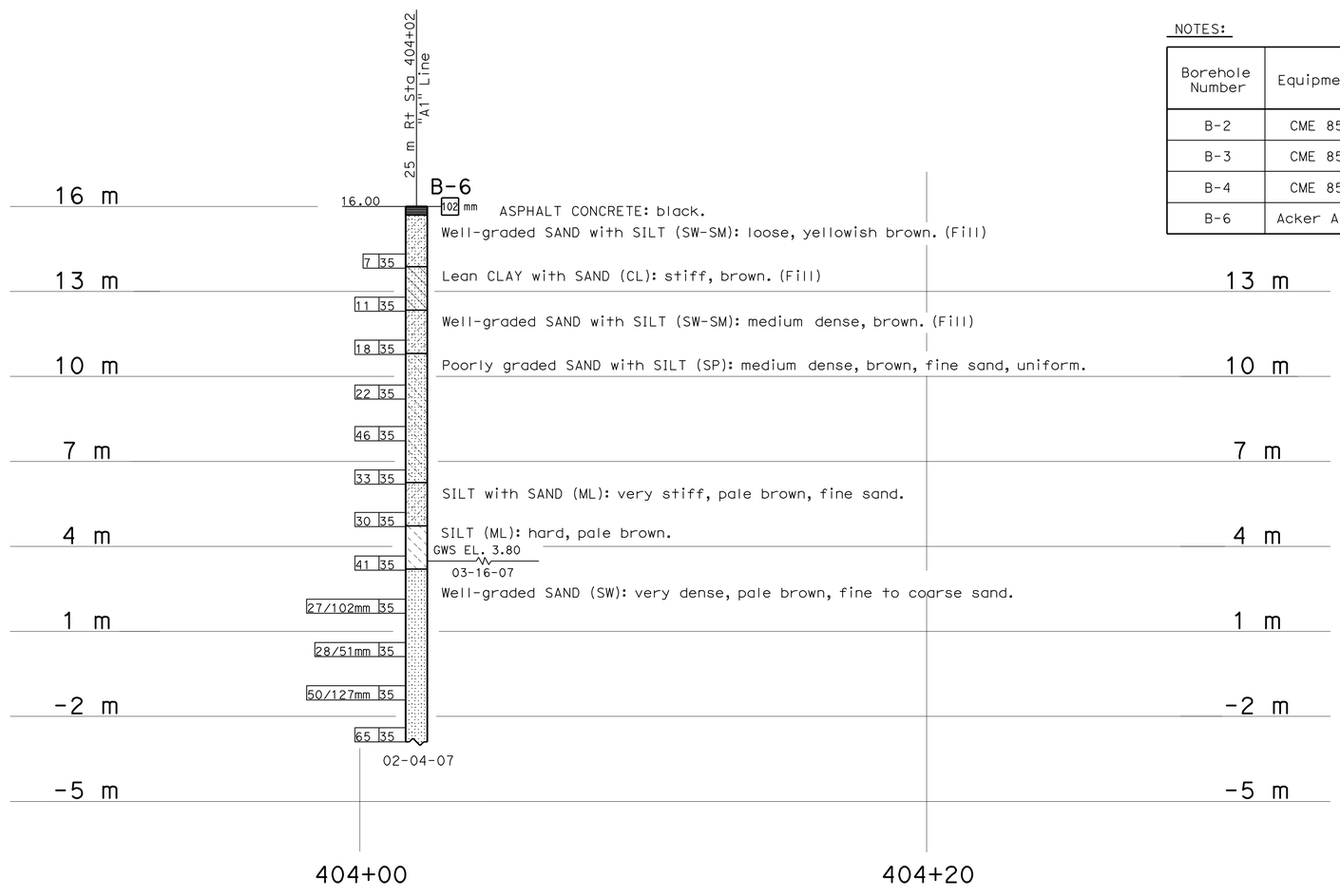

PROFILE
HOR. 1:100
VER. 1:100

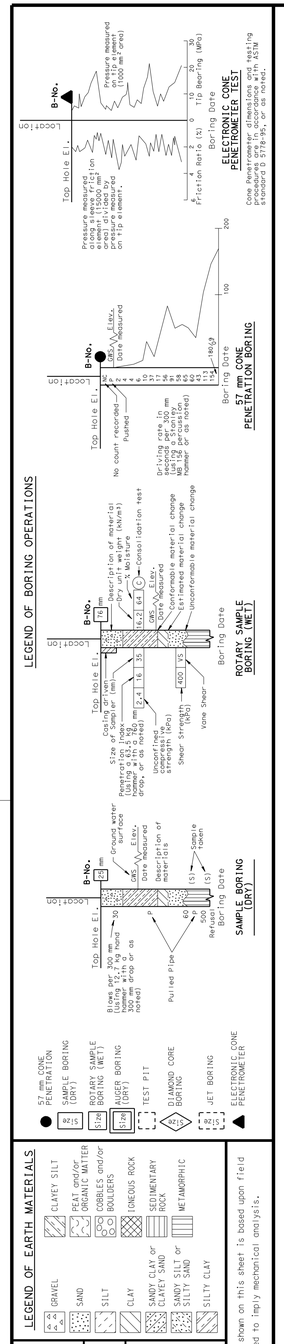

OGS CIVIL LOG OF TEST BORINGS SHEET (METRIC) (REV. 4/04)

Caltrans Metric

ENGINEERING SERVICES	GEOTECHNICAL SERVICES
DRAWN BY	W. Tang 01/08
CHECKED BY	H. Liu

ALL DIMENSIONS ARE IN METERS UNLESS OTHERWISE SHOWN

FIELD INVESTIGATION BY: H. Liu/ V. Khotan

ORIGINAL SCALE IN MILLIMETERS FOR REDUCED PLANS 0 10 20 30 40 50 60 70 80 90 100

STATE OF CALIFORNIA DEPARTMENT OF TRANSPORTATION

DIVISION OF ENGINEERING SERVICES STRUCTURE DESIGN
DESIGN BRANCH 12

CU 07
EA 241301

BRIDGE NO. 53E0115
KILOMETER POST 39.3/41.4

RW402, RW408, RW410 AND OVERHEAD SIGN 4A
LOG OF TEST BORINGS 1 OF 3

DISREGARD PRINTS BEARING EARLIER REVISION DATES → 01-28-08 04-30-08

REVISION DATES (PRELIMINARY STAGE ONLY)

SHEET 8 OF 10

FILE => 53-e0115-z-ltb01.dgn

USERNAME => trlenard DATE PLOTTED => 08-JUN-2010 TIME PLOTTED => 05:47

DIST	COUNTY	ROUTE	KILOMETER POST TOTAL PROJECT	SHEET No	TOTAL SHEETS
07	LA	405	39.7/41.5	438	439

REGISTERED CIVIL ENGINEER 5-11-09

6-7-10
PLANS APPROVAL DATE

REGISTERED PROFESSIONAL ENGINEER Haitao Liu No. C66398 Exp. 6-30-10 CIVIL STATE OF CALIFORNIA

The State of California or its officers or agents shall not be responsible for the accuracy or completeness of electronic copies of this plan sheet.

FOR PLAN VIEW, SEE
"LOG OF TEST BORINGS" 1 OF 3

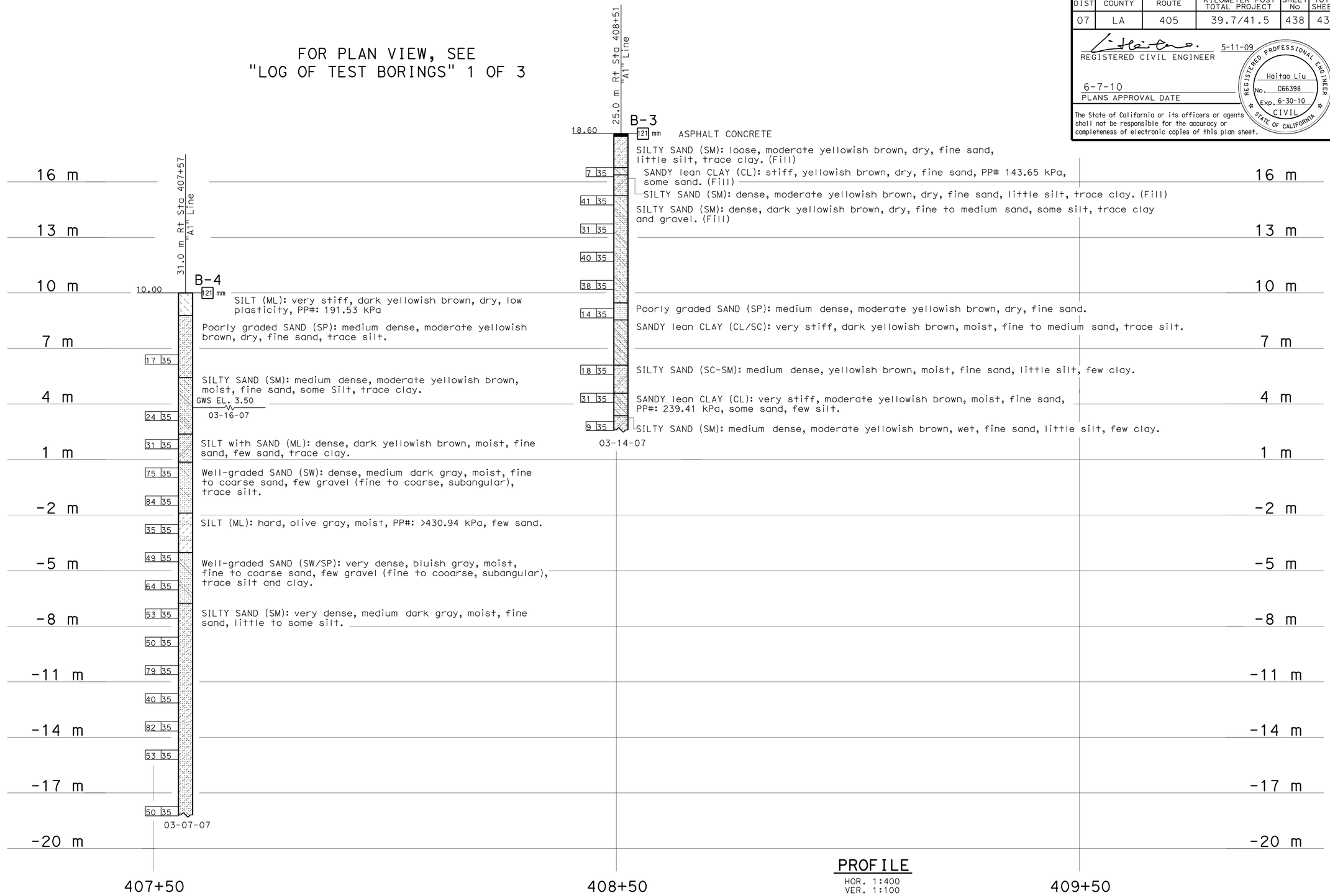

PROFILE
HOR. 1:400
VER. 1:100

LEGEND OF BORING OPERATIONS

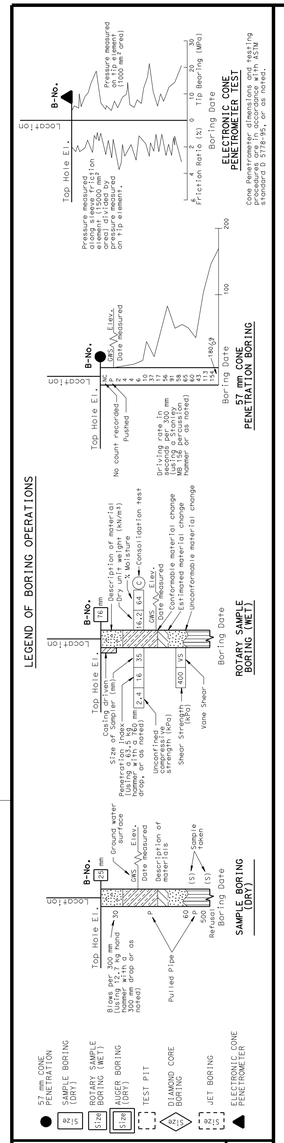

LEGEND OF EARTH MATERIALS

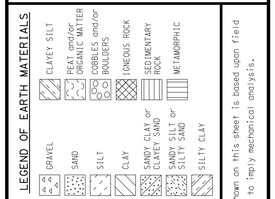

CONSISTENCY CLASSIFICATION FOR SOILS

According to the Standard Penetration Test

SPT N-Value (Blows/ 0.3m)	Granular	SPT N-Value (Blows/ 0.3m)	Cohesive
0-4	Very Loose	<2	Very Soft
5-10	Loose	2-4	Soft
11-30	Medium Dense	5-8	Firm
31-50	Dense	9-15	Stiff
>50	Very Dense	16-30	Very stiff
		>30	Hard

NOTE: Classification of earth material as shown on this sheet is based upon field inspection and is not to be construed to imply mechanical analysis.

OGS CIVIL LOG OF TEST BORINGS SHEET (METRIC) (REV. 4/04)

Caltrans Metric

ENGINEERING SERVICES	GEOTECHNICAL SERVICES
DRAWN BY	W. Tang 01/08
CHECKED BY	H. Liu

FIELD INVESTIGATION BY: H. Liu

STATE OF CALIFORNIA DEPARTMENT OF TRANSPORTATION

DIVISION OF ENGINEERING SERVICES STRUCTURE DESIGN
DESIGN BRANCH 12

BRIDGE NO. 53E0115
KILOMETER POST 39.3/41.4

RW402, RW408, RW410 AND OVERHEAD SIGN 4A
LOG OF TEST BORINGS 2 OF 3

ALL DIMENSIONS ARE IN METERS UNLESS OTHERWISE SHOWN

ORIGINAL SCALE IN MILLIMETERS FOR REDUCED PLANS 0 10 20 30 40 50 60 70 80 90 100

CU 07
EA 241301

DISREGARD PRINTS BEARING EARLIER REVISION DATES

REVISION DATES (PRELIMINARY STAGE ONLY) 01-29-08 04-30-08

SHEET 9 OF 10

FILE => 53-e0115-z-ltb02.dgn

USERNAME => friehard DATE PLOTTED => 08-JUN-2010 TIME PLOTTED => 08:47

DIST	COUNTY	ROUTE	KILOMETER POST TOTAL PROJECT	SHEET No	TOTAL SHEETS
07	LA	405	39.7/41.5	439	439

REGISTERED CIVIL ENGINEER 5-11-09

6-7-10
PLANS APPROVAL DATE

REGISTERED PROFESSIONAL ENGINEER Haitao Liu No. C66398 Exp. 6-30-10 CIVIL STATE OF CALIFORNIA

The State of California or its officers or agents shall not be responsible for the accuracy or completeness of electronic copies of this plan sheet.

FOR PLAN VIEW, SEE
"LOG OF TEST BORINGS" 1 OF 3

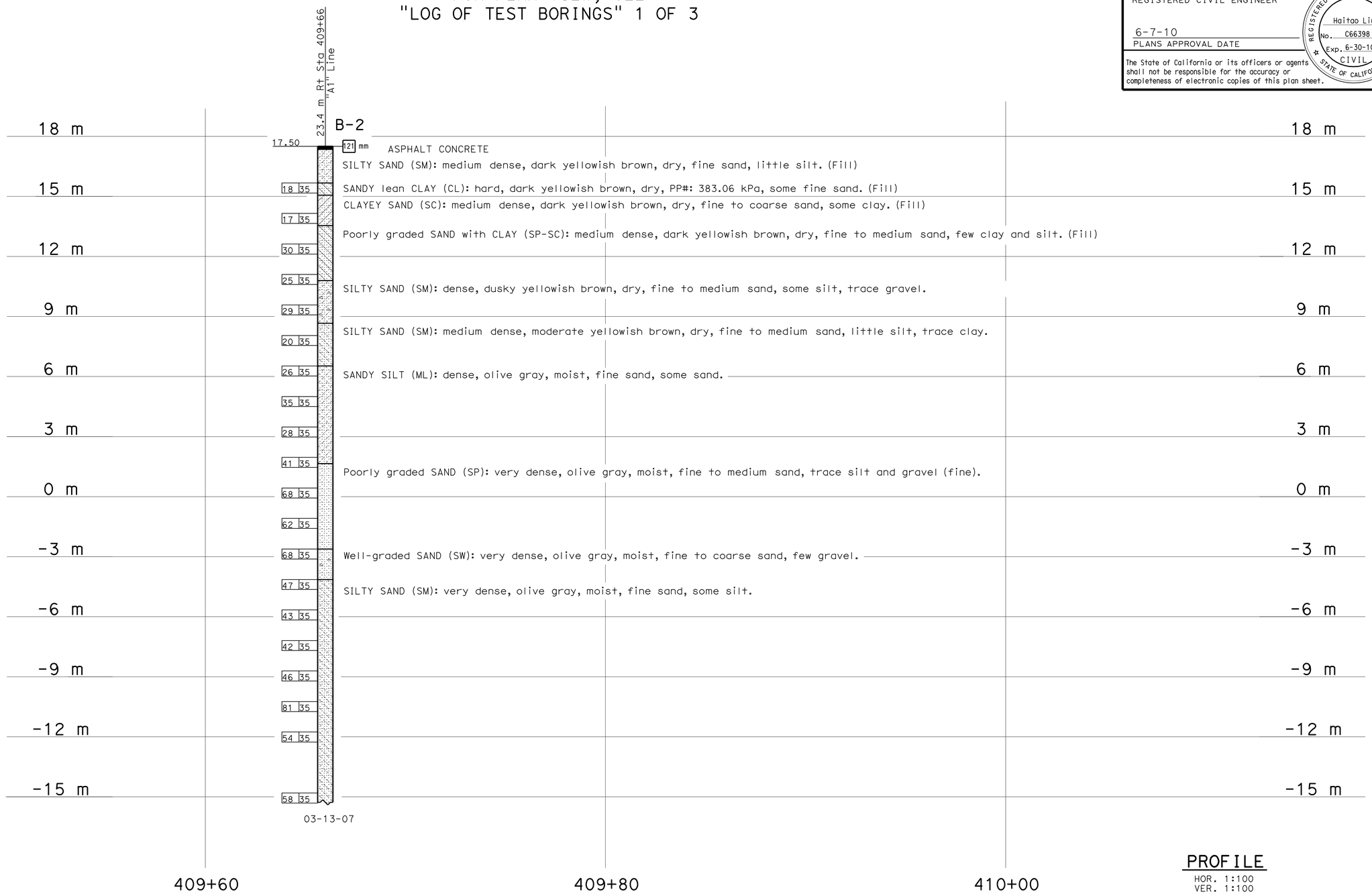

PROFILE
HOR. 1:100
VER. 1:100

LEGEND OF BORING OPERATIONS

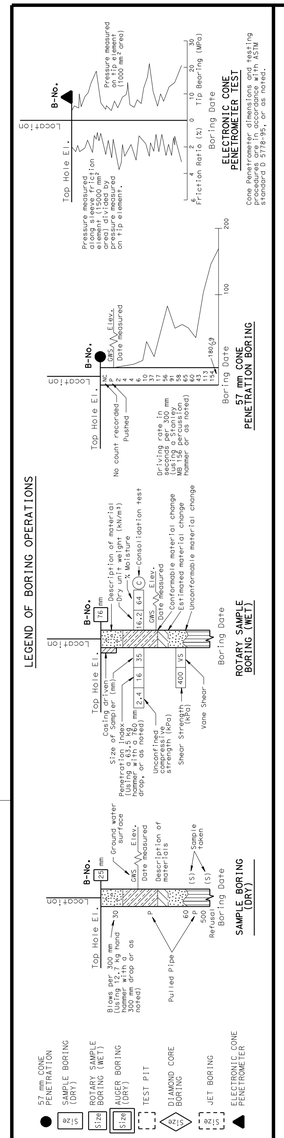

LEGEND OF EARTH MATERIALS

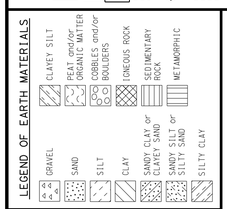

CONSISTENCY CLASSIFICATION FOR SOILS

According to the Standard Penetration Test

SPT N-Value (Blows/ 0.3m)	Granular	SPT N-Value (Blows/ 0.3m)	Cohesive
0-4	Very Loose	<2	Very Soft
5-10	Loose	2-4	Soft
11-30	Medium Dense	5-8	Firm
31-50	Dense	9-15	Stiff
>50	Very Dense	16-30	Very stiff
		>30	Hard

NOTE: Classification of earth material as shown on this sheet is based upon field inspection and is not to be construed to imply mechanical analysis.

OGS CIVIL LOG OF TEST BORINGS SHEET (METRIC) (REV. 4/04)

Caltrans Metric

ENGINEERING SERVICES	GEOTECHNICAL SERVICES
DRAWN BY	W. Tang 01/08
CHECKED BY	H. Liu

ALL DIMENSIONS ARE IN METERS UNLESS OTHERWISE SHOWN

FIELD INVESTIGATION BY: H. Liu

ORIGINAL SCALE IN MILLIMETERS FOR REDUCED PLANS 0 10 20 30 40 50 60 70 80 90 100

STATE OF CALIFORNIA DEPARTMENT OF TRANSPORTATION

DIVISION OF ENGINEERING SERVICES STRUCTURE DESIGN
DESIGN BRANCH 12

CU 07
EA 241301

BRIDGE NO. 53E0115
KILOMETER POST 39.3/41.4

RW402, RW408, RW410 AND OVERHEAD SIGN 4A
LOG OF TEST BORINGS 3 OF 3

DISREGARD PRINTS BEARING EARLIER REVISION DATES

REVISION DATES (PRELIMINARY STAGE ONLY) 01-29-08 04-30-08

SHEET 10 OF 10

FILE => 53-e0115-z-ltb03.dgn

USERNAME => trlenard DATE PLOTTED => 08-JUN-2010 TIME PLOTTED => 05:47