DIST	COUNTY	ROUTE	POST MILES TOTAL PROJECT	SHEET No.	TOTAL SHEETS
07	LA,Ora	5	0.0/1.5, 44.3/44.4	1401	1622

REGISTERED CIVIL ENGINEER 3-18-15 DATE

1-25-16
PLANS APPROVAL DATE

REGISTERED PROFESSIONAL ENGINEER Daryoush Tavatli No. 56183 Exp. 12-31-16 CIVIL STATE OF CALIFORNIA

The State of California or its officers or agents shall not be responsible for the accuracy or completeness of scanned copies of this plan sheet.

NOTE:

Motif may not have been correctly scaled.
Contractor shall verfy the number of motif panels.

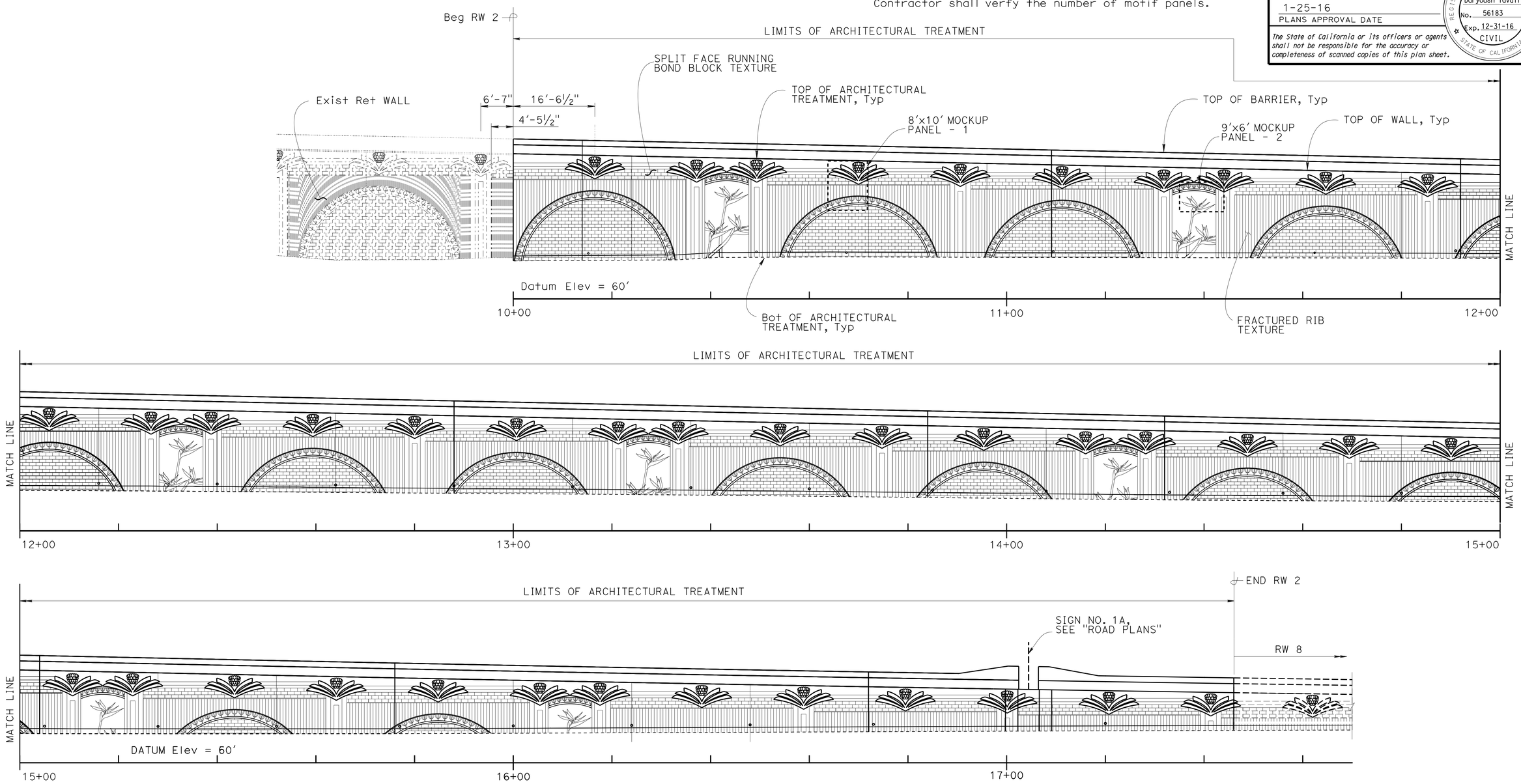

ELEVATION

1" = 10'-0"

DESIGN	BY H. Javier Chavez	CHECKED Isaac Tasabia	
DETAILS	BY T. Bittermann	CHECKED Isaac Tasabia	
QUANTITIES	BY Daryoush Tavatli	CHECKED Yeo Yoon	

STATE OF CALIFORNIA
DEPARTMENT OF TRANSPORTATION

DIVISION OF ENGINEERING SERVICES
STRUCTURE DESIGN
DESIGN BRANCH 11

BRIDGE NO. 53E0251
POST MILE 44.38

RETAINING WALL 2
ARCHITECTURAL LAYOUT

STRUCTURES DESIGN DETAIL SHEET (ENGLISH) (REV. 09-01-10)

ORIGINAL SCALE IN INCHES FOR REDUCED PLANS 0 1 2 3

UNIT: 3587
PROJECT NUMBER & PHASE: 0715000160-1
CONTRACT NO.: 07-2159u4

DISREGARD PRINTS BEARING EARLIER REVISION DATES

REVISION DATES: 11-8-12 3-18-15 9-12-13

SHEET 12 OF 17

FILE => rw2-p-arch1.dgn

USERNAME => s125624 DATE PLOTTED => 28-JAN-2016 TIME PLOTTED => 12:25

DIST	COUNTY	ROUTE	POST MILES TOTAL PROJECT	SHEET No.	TOTAL SHEETS
07	LA,Ora	5	0.0/1.5, 44.3/44.4	1402	1622

REGISTERED CIVIL ENGINEER — DATE 3-18-15

1-25-16
PLANS APPROVAL DATE

REGISTERED PROFESSIONAL ENGINEER — Daryoush Tavatli No. 56183 Exp. 12-31-16 CIVIL — STATE OF CALIFORNIA

The State of California or its officers or agents shall not be responsible for the accuracy or completeness of scanned copies of this plan sheet.

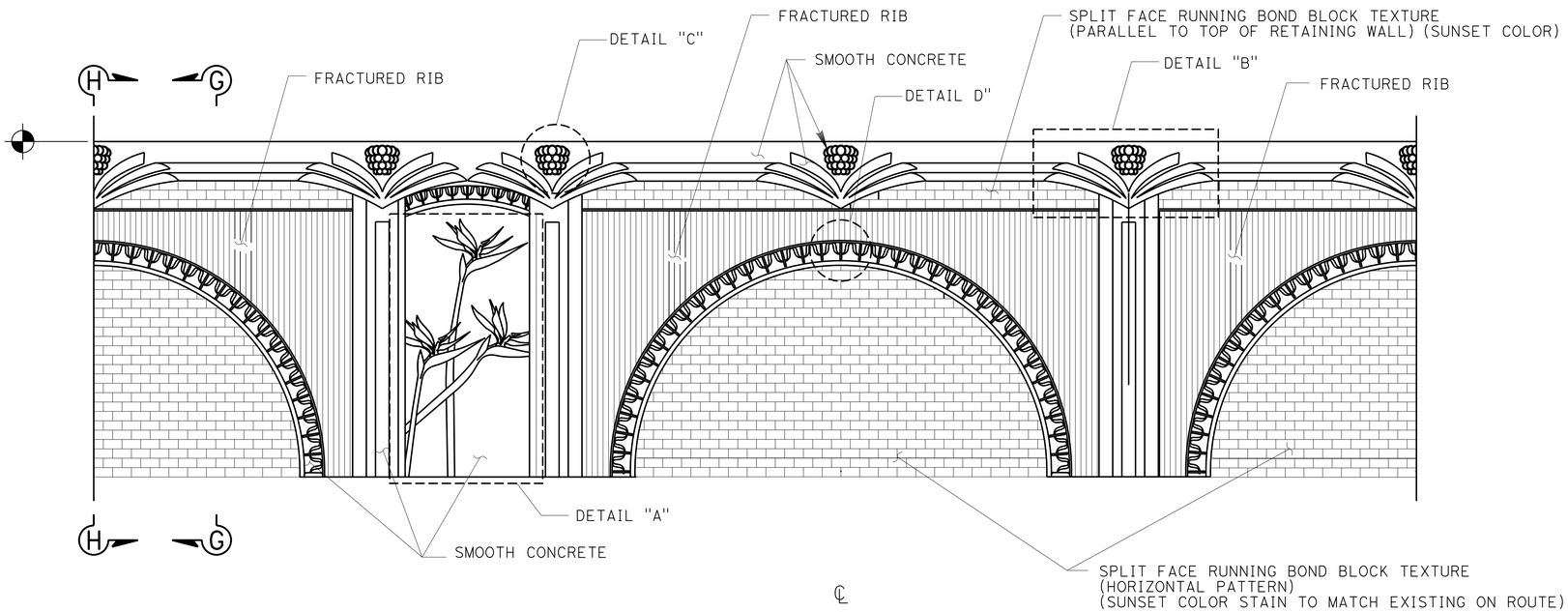

NOTES:

1. For "SECTION J-J" and "SECTION K-K", see "AESTHETIC DETAILS NO. 2" sheet
2. For "SECTION G-G" and "SECTION H-H", see "AESTHETIC DETAILS NO. 3" sheet
3. For details "A", "B", "C" and "D", see "AESTHETIC DETAILS NO. 4" sheet

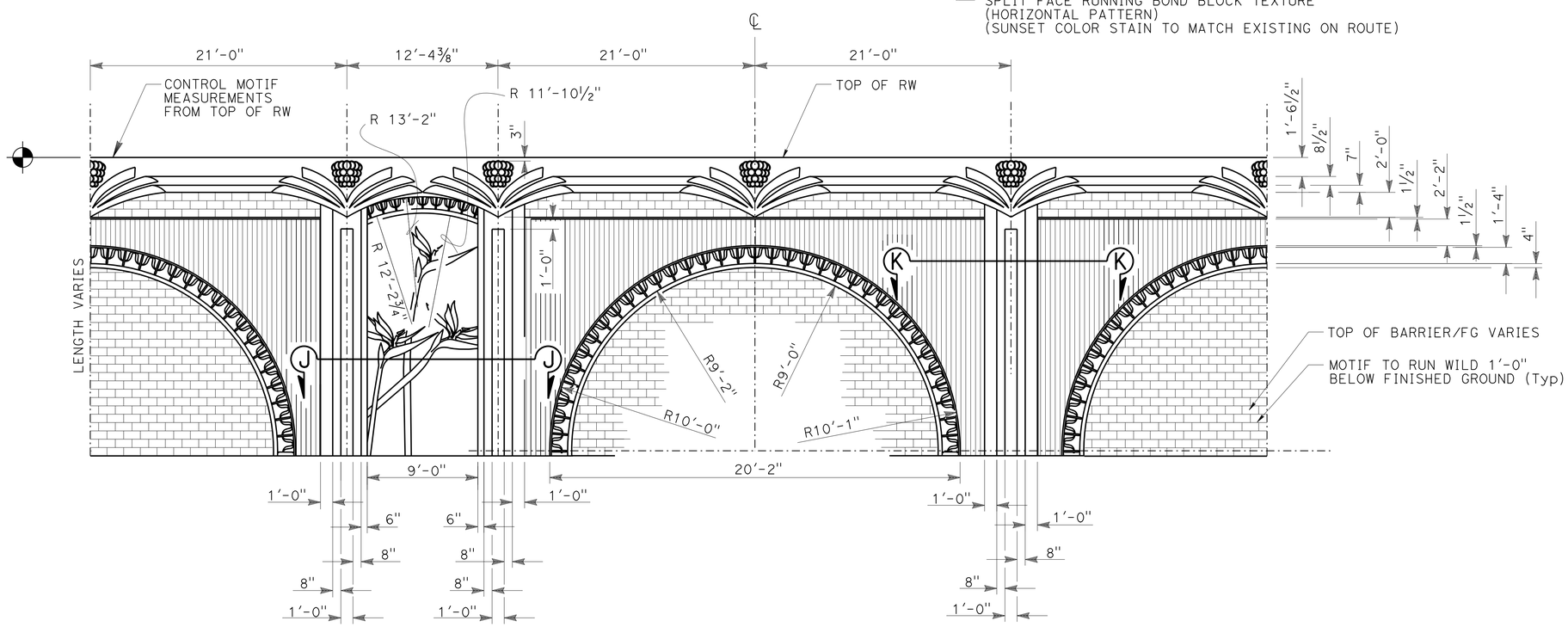

WALL FACE DETAIL

NO SCALE

DESIGN	BY H. Javier Chavez	CHECKED Isaac Tasabia	
DETAILS	BY T. Bittermann	CHECKED Isaac Tasabia	
QUANTITIES	BY Daryoush Tavatli	CHECKED Yeo Yoon	

STATE OF CALIFORNIA
DEPARTMENT OF TRANSPORTATION

DIVISION OF ENGINEERING SERVICES
STRUCTURE DESIGN
DESIGN BRANCH 11

BRIDGE NO. 53E0251
POST MILE 44.31

RETAINING WALL 2
AESTHETIC DETAILS NO. 1

STRUCTURES DESIGN DETAIL SHEET (ENGLISH) (REV. 09-01-10)

ORIGINAL SCALE IN INCHES FOR REDUCED PLANS 0 1 2 3

UNIT: 3587
PROJECT NUMBER & PHASE: 0715000160-1
CONTRACT NO.: 07-2159u4

DISREGARD PRINTS BEARING EARLIER REVISION DATES

REVISION DATES: 11-2-12 5-13-13 5-14-13

SHEET 13 OF 17

FILE => rw2-p-arch2.dgn

USERNAME => s125624 DATE PLOTTED => 28-JAN-2016 TIME PLOTTED => 12:25

DIST	COUNTY	ROUTE	POST MILES TOTAL PROJECT	SHEET No.	TOTAL SHEETS
07	LA,Ora	5	0.0/1.5, 44.3/44.4	1403	1622

REGISTERED CIVIL ENGINEER 3-18-15 DATE

1-25-16
PLANS APPROVAL DATE

REGISTERED PROFESSIONAL ENGINEER Daryoush Tavatli No. 56183 Exp. 12-31-16 CIVIL STATE OF CALIFORNIA

The State of California or its officers or agents shall not be responsible for the accuracy or completeness of scanned copies of this plan sheet.

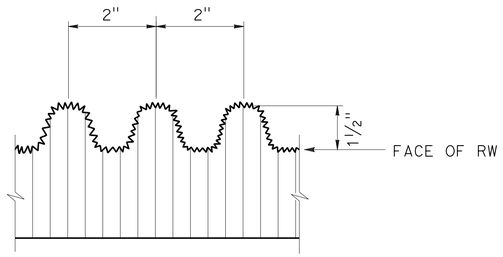

TYPICAL FRACTURED RIB

NO SCALE

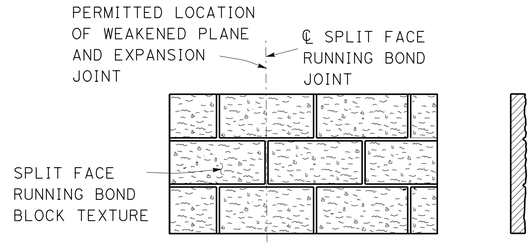

SPLIT FACE RUNNING BOND BLOCK TEXTURE

NO SCALE

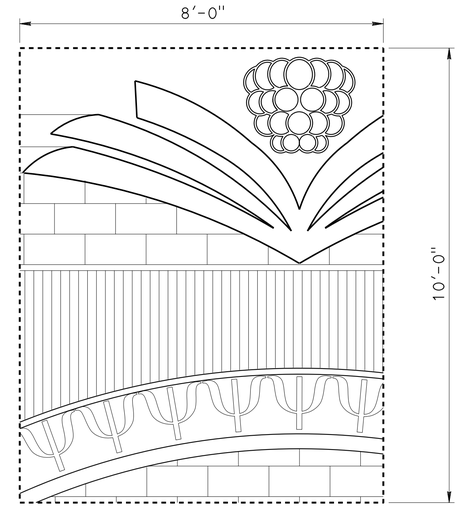

MOCK UP PANEL - 1

NO SCALE

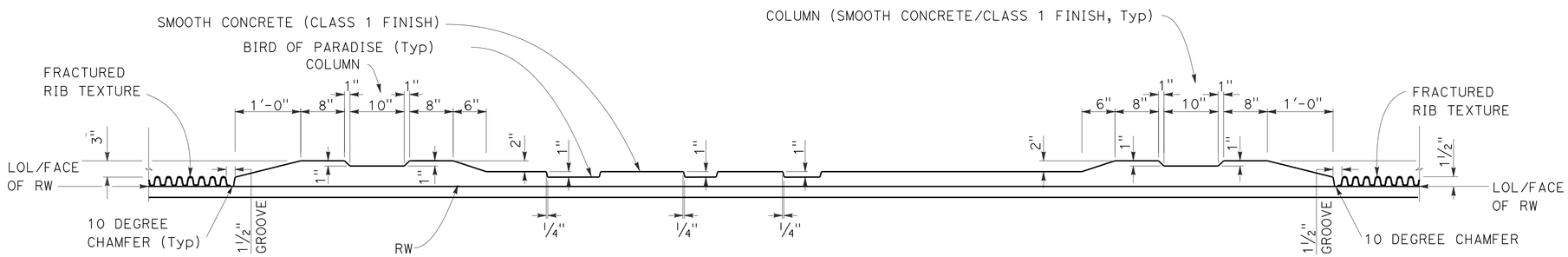

SECTION J-J

NO SCALE

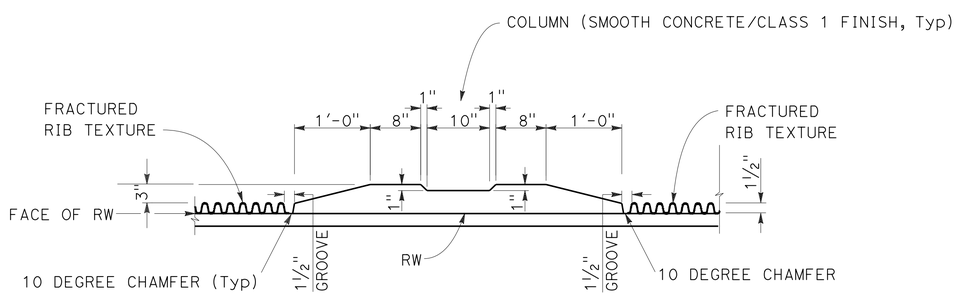

SECTION K-K

NO SCALE

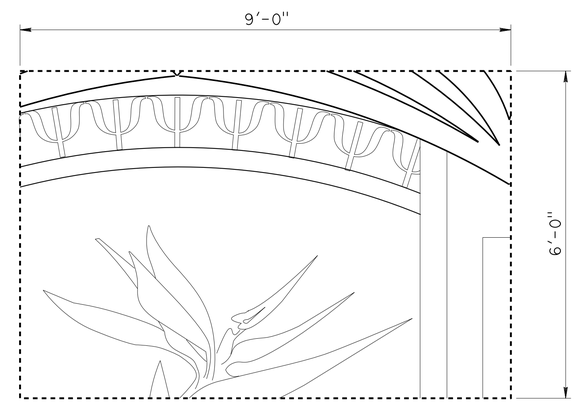

MOCK UP PANEL - 2

NO SCALE

DESIGN	BY H. Javier Chavez	CHECKED Isaac Tasabia	
DETAILS	BY T. Bittermann	CHECKED Isaac Tasabia	
QUANTITIES	BY Daryoush Tavatli	CHECKED Yeo Yoon	

STATE OF CALIFORNIA
DEPARTMENT OF TRANSPORTATION

DIVISION OF ENGINEERING SERVICES
STRUCTURE DESIGN
DESIGN BRANCH 11

BRIDGE NO. 53E0251
POST MILE 44.31

RETAINING WALL 2
AESTHETIC DETAILS NO. 2

STRUCTURES DESIGN DETAIL SHEET (ENGLISH) (REV. 09-01-10)

ORIGINAL SCALE IN INCHES FOR REDUCED PLANS 0 1 2 3

UNIT: 3587
PROJECT NUMBER & PHASE: 0715000160-1
CONTRACT NO.: 07-2159u4

DISREGARD PRINTS BEARING EARLIER REVISION DATES

REVISION DATES 11-5-12 8-22-13 5-15-13 8-26-13

SHEET 14 OF 17

FILE => rw2-p-arch3.dgn

USERNAME => s125624 DATE PLOTTED => 28-JAN-2016 TIME PLOTTED => 12:25

DIST	COUNTY	ROUTE	POST MILES TOTAL PROJECT	SHEET No.	TOTAL SHEETS
07	LA,Ora	5	0.0/1.5, 44.3/44.4	1404	1622

REGISTERED CIVIL ENGINEER — DATE 3-18-15

1-25-16
PLANS APPROVAL DATE

REGISTERED PROFESSIONAL ENGINEER — Daryoush Tavatli — No. 56183 — Exp. 12-31-16 — CIVIL — STATE OF CALIFORNIA

The State of California or its officers or agents shall not be responsible for the accuracy or completeness of scanned copies of this plan sheet.

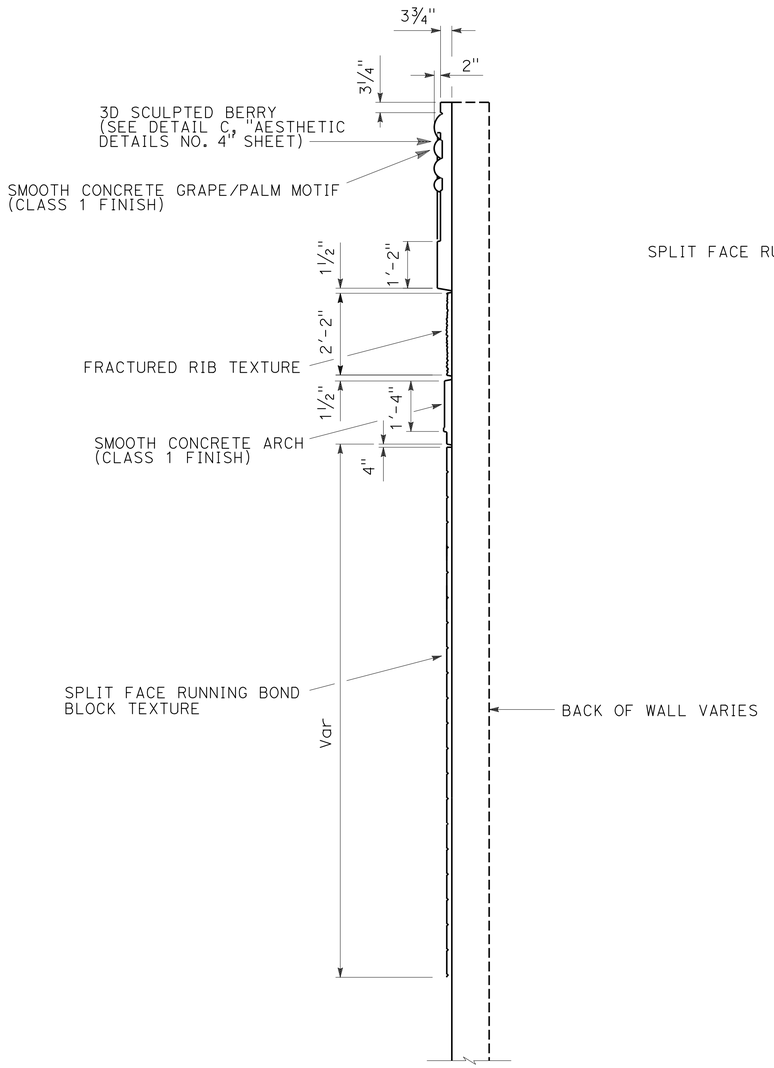

SECTION H-H
TEXTURES, DIMENSIONS AND RELIEF DETAIL

NO SCALE

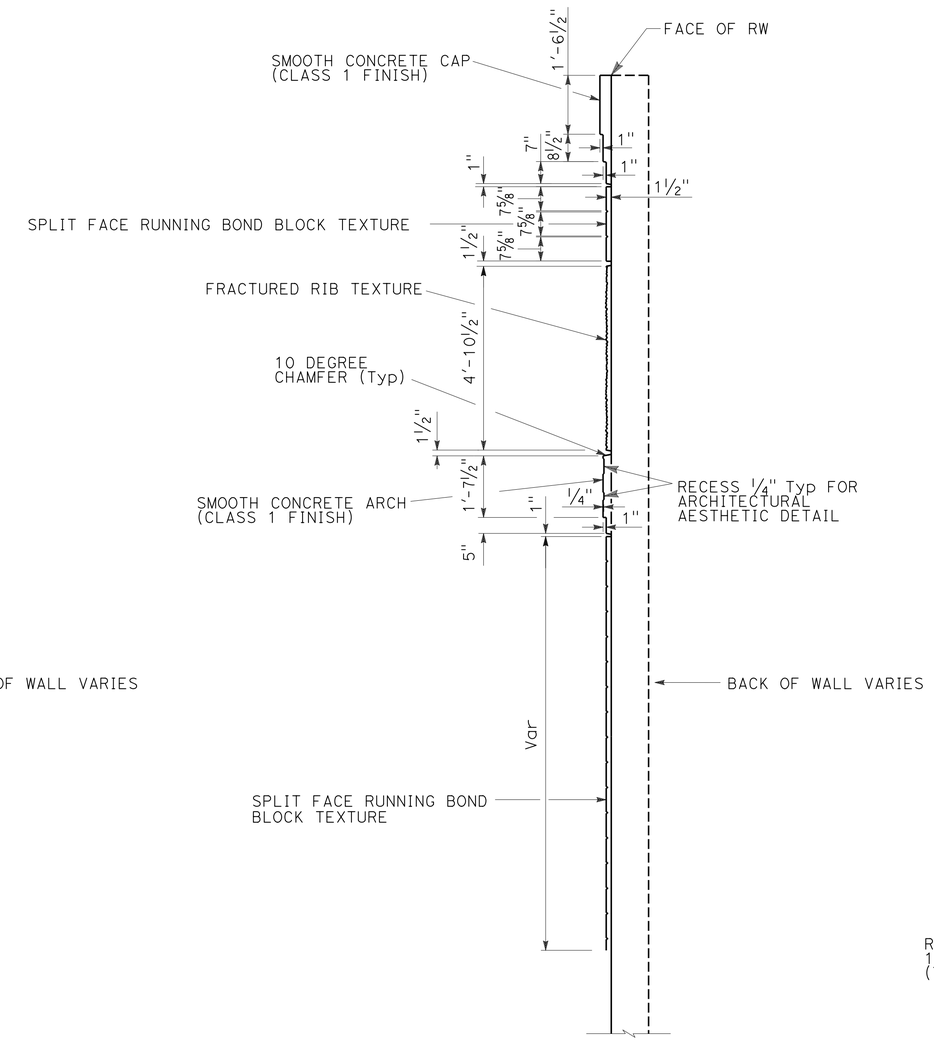

SECTION G-G
TEXTURES, DIMENSIONS AND RELIEF DETAIL

NO SCALE

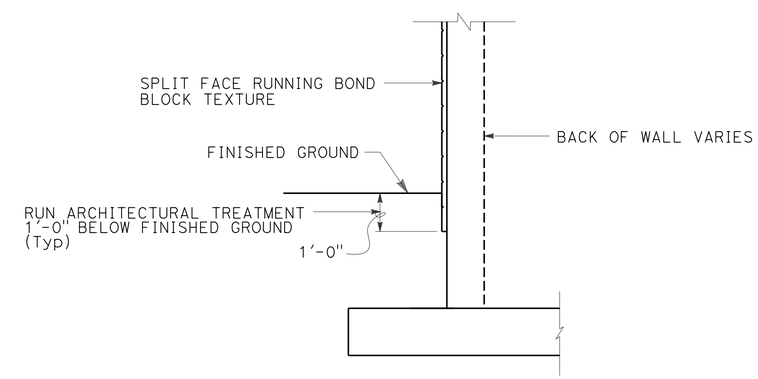

FILL WALL DETAIL

NO SCALE

	BY	CHECKED
DESIGN	H. Javier Chavez	Isaac Tasabia
DETAILS	T. Bitterman	Isaac Tasabia
QUANTITIES	Daryoush Tavatli	Yeo Yoon

STATE OF CALIFORNIA
DEPARTMENT OF TRANSPORTATION

DIVISION OF ENGINEERING SERVICES
STRUCTURE DESIGN
DESIGN BRANCH 11

BRIDGE NO. 53E0251
POST MILE 44.31

RETAINING WALL 2
AESTHETIC DETAILS NO. 3

STRUCTURES DESIGN DETAIL SHEET (ENGLISH) (REV. 09-01-10)

ORIGINAL SCALE IN INCHES FOR REDUCED PLANS 0 1 2 3

UNIT: 3587
PROJECT NUMBER & PHASE: 0715000160-1
CONTRACT NO.: 07-2159u4

DISREGARD PRINTS BEARING EARLIER REVISION DATES

REVISION DATES: 11-8-12 5-19-13 5-15-13 8-08-13

SHEET 15 OF 17

FILE => rw2-p-arch4.dgn

USERNAME => s125624 DATE PLOTTED => 28-JAN-2016 TIME PLOTTED => 12:25

DIST	COUNTY	ROUTE	POST MILES TOTAL PROJECT	SHEET No.	TOTAL SHEETS
07	LA,Ora	5	0.0/1.5, 44.3/44.4	1405	1622

REGISTERED CIVIL ENGINEER 3-18-15 DATE

1-25-16
PLANS APPROVAL DATE

REGISTERED PROFESSIONAL ENGINEER Daryoush Tavatli No. 56183 Exp. 12-31-16 CIVIL STATE OF CALIFORNIA

The State of California or its officers or agents shall not be responsible for the accuracy or completeness of scanned copies of this plan sheet.

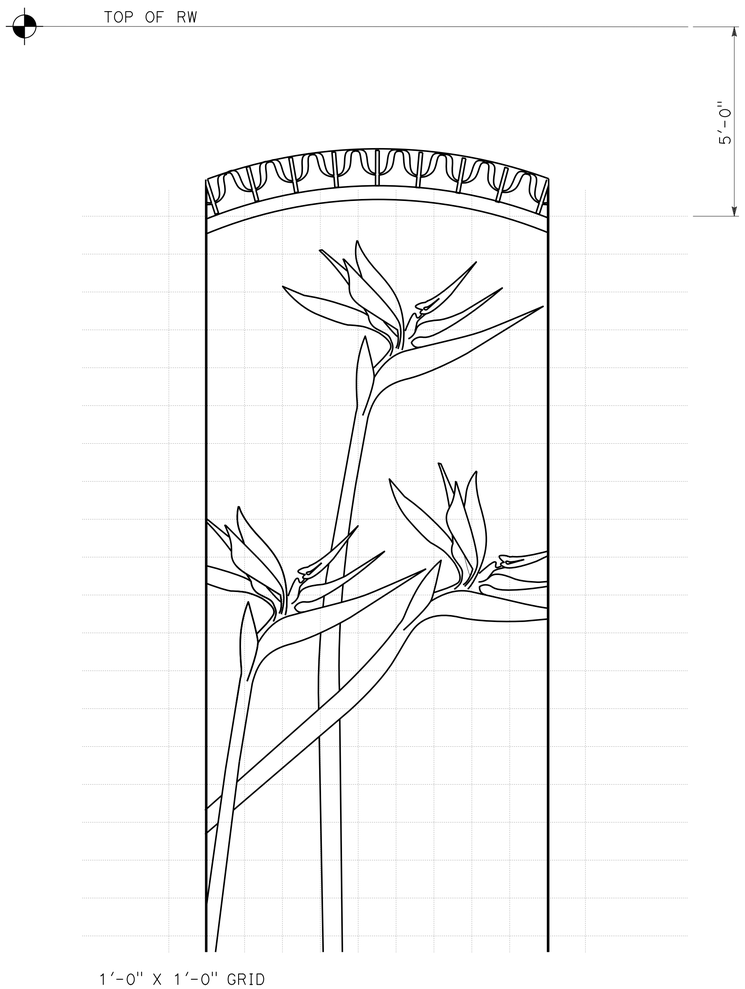

DETAIL A

NO SCALE
BIRD OF PARADISE FLOWER MOTIF

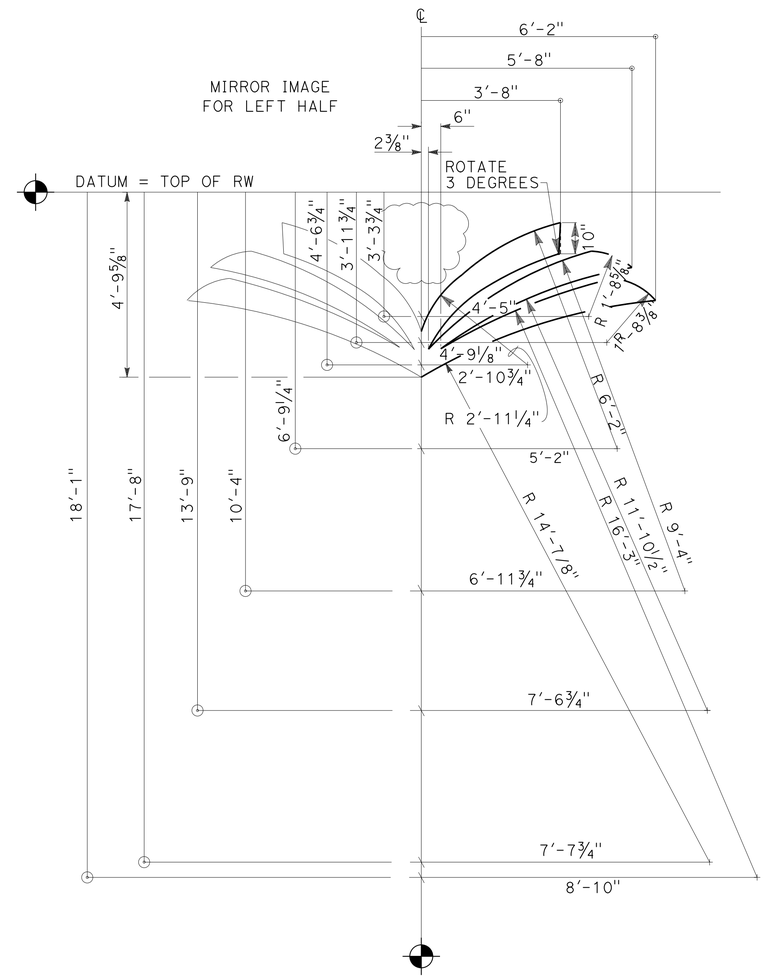

DETAIL B

NO SCALE
ART DECO PALM COLUMN CAPITAL MOTIF

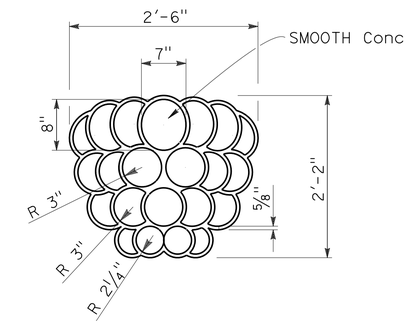

DETAIL C

NO SCALE
3D SCULPTED BERRY

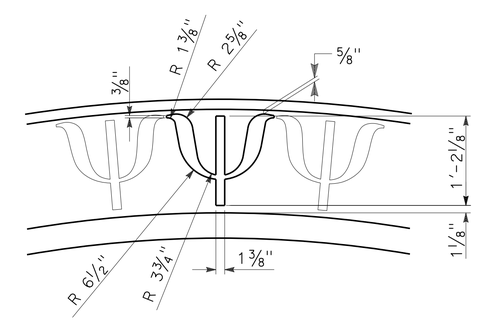

DETAIL D

NO SCALE

DESIGN	BY H. Javier Chavez	CHECKED Isaac Tasabia	
DETAILS	BY T. Bittermann	CHECKED Isaac Tasabia	
QUANTITIES	BY Daryoush Tavatli	CHECKED Yeo Yoon	

STATE OF CALIFORNIA
DEPARTMENT OF TRANSPORTATION

DIVISION OF ENGINEERING SERVICES
STRUCTURE DESIGN
DESIGN BRANCH 11

BRIDGE NO. 53E0251
POST MILE 44.31

RETAINING WALL 2
AESTHETIC DETAILS NO. 4

STRUCTURES DESIGN DETAIL SHEET (ENGLISH) (REV. 09-01-10)

ORIGINAL SCALE IN INCHES FOR REDUCED PLANS 0 1 2 3

UNIT: 3587
PROJECT NUMBER & PHASE: 0715000160-1
CONTRACT NO.: 07-2159u4

DISREGARD PRINTS BEARING EARLIER REVISION DATES

REVISION DATES 9/27/13

SHEET 16 OF 17

FILE => rw2-p-arch5.dgn

USERNAME => s125624 DATE PLOTTED => 28-JAN-2016 TIME PLOTTED => 12:25

BENCH MARK

GPS 0887
ELEVATION 65.915 FT
FD 2-1/2 CADT DISK IN CONC. CURB
FLUSH, STAMPED "LA-5-1.0, 1995"
LOCATED 90' N OF THE SOUTH SIDE
FIRESTONE BLVD 0.2 MI SE OF VALLEY VIEW
NORTHING 542395.636
EASTING 1997613.893
DATUM NAVD88

DIST	COUNTY	ROUTE	POST MILES TOTAL PROJECT	SHEET No.	TOTAL SHEETS
07	LA,Ora	5	0.0/1.5, 44.3/44.4	1406	1622

REGISTERED CIVIL ENGINEER — DATE 05/20/15

1-25-16
PLANS APPROVAL DATE

URS CORPORATION
2020 EAST FIRST STREET, SUITE 400
SANTA ANA, CA 92705

The State of California or its officers or agents shall not be responsible for the accuracy or completeness of electronic copies of this plan sheet.

REGISTERED PROFESSIONAL ENGINEER — MICHAEL G. SMITH No. 2229 Exp. 03/31/16 GEOTECHNICAL — STATE OF CALIFORNIA

1-This LOTB sheet was prepared in accordance with the Caltrans Soil & Rock Logging, Classification, & Presentation Manual (2010 Edition).

2-For protection of underground utility lines, hand-auger was used to remove top 5 to 10 feet of subsurface material for exploratory borings and Cone Penetration Testings.

3-2.5" to 1.4" blow counts conversion factors for fine-grain and coarse-grain soils have been 0.8 and 0.55, respectively.

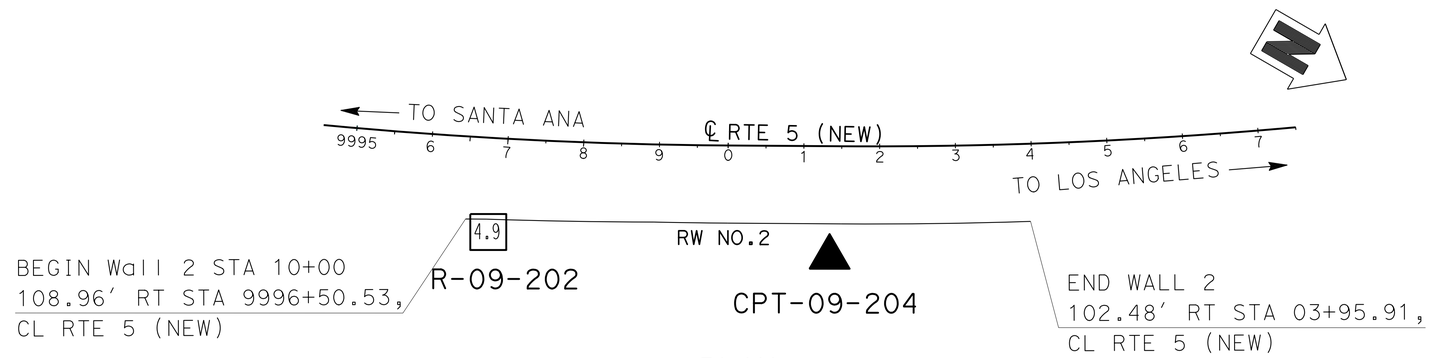

PLAN
SCALE 1"=100'

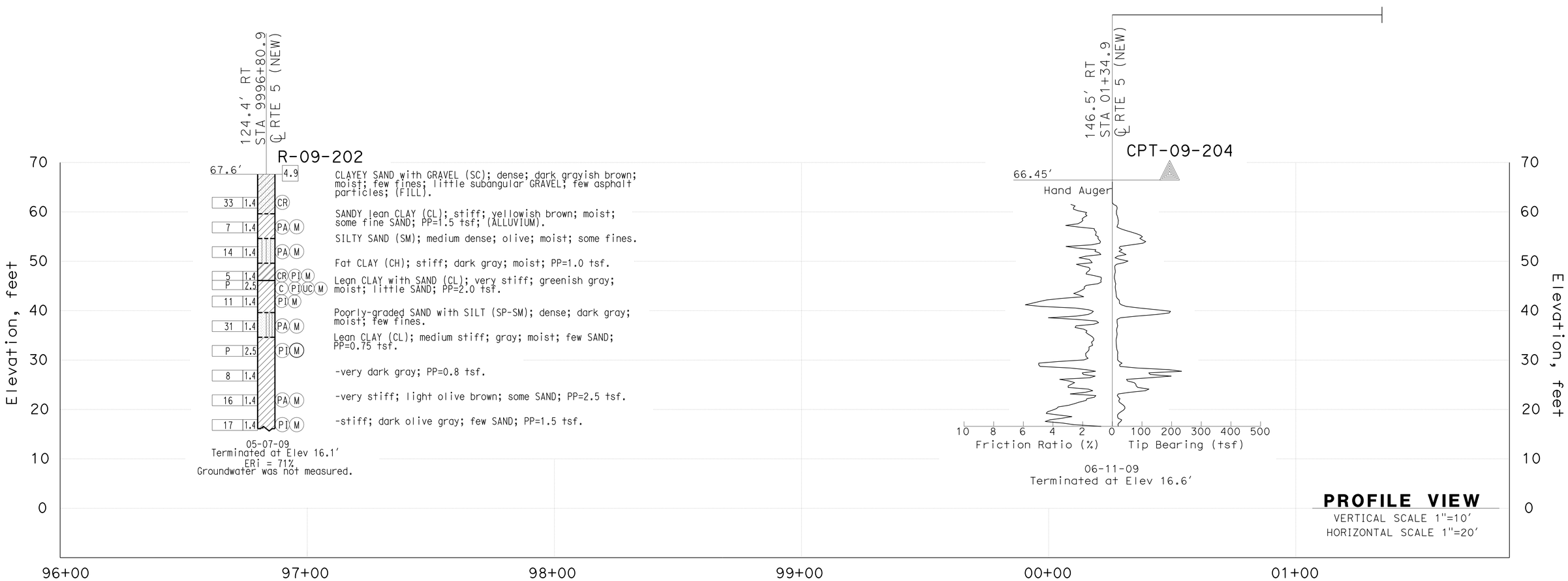

PROFILE VIEW
VERTICAL SCALE 1"=10'
HORIZONTAL SCALE 1"=20'

F.MOTAMED — DESIGN OVERSIGHT	DRAWN BY	T.PANAH	EJ.JEON/P.MCDONALD — FIELD INVESTIGATION BY:
05/20/15 — SIGN OFF DATE	CHECKED BY	A.GHAZINOOR/L.KHALKHALI	DATE: 05/07/09 - 06/11/09

PREPARED FOR THE STATE OF CALIFORNIA DEPARTMENT OF TRANSPORTATION

M.G. SMITH — PROJECT ENGINEER

BRIDGE NO. 53E0251
POST MILES 44.31

RETAINING WALL NO. 2
LOG OF TEST BORINGS SHEET 1 OF1

GS CIVIL LOG OF TEST BORINGS SHEET (ENGLISH) (REV. 03/14/12)

ORIGINAL SCALE IN INCHES FOR REDUCED PLANS 0 1 2 3

UNIT: 3658
PROJECT NUMBER & PHASE: 07150001601 CONTRACT NO.: 07-2159U4

DISREGARD PRINTS BEARING EARLIER REVISION DATES 5/12/15

REVISION DATES | SHEET 17 | OF 17

FILE => rw2-t-lotb.dgn

USERNAME => s125624 DATE PLOTTED => 28-JAN-2016 TIME PLOTTED => 12:25

DIST	COUNTY	ROUTE	POST MILES TOTAL PROJECT	SHEET No.	TOTAL SHEETS
07	LA,Ora	5	0.0/1.5, 44.3/44.4	1407	1622

REGISTERED CIVIL ENGINEER Daryoush Tavatli 3-18-15 DATE

1-25-16
PLANS APPROVAL DATE

REGISTERED PROFESSIONAL ENGINEER Daryoush Tavatli No. 56183 Exp. 12-31-16 CIVIL STATE OF CALIFORNIA

The State of California or its officers or agents shall not be responsible for the accuracy or completeness of electronic copies of this plan sheet.

INDEX TO PLANS

QUANTITIES		
STRUCTURE EXCAVATION (RETAINING WALL)	4,065	CY
STRUCTURE BACKFILL (RETAINING WALL)	3,485	CY
STRUCTURAL CONCRETE, RETAINING WALL	656	CY
ARCHITECTURAL TREATMENT (WALL 8 MOTIF)	930	SQFT
FRACTURED RIB TEXTURE	2,600	SQFT
BAR REINFORCING STEEL (RETAINING WALL)	90,500	LB
CONCRETE BARRIER (TYPE 736A)	865	LF
CONCRETE BARRIER (TYPE 736A MODIFIED)	10	LF

SHEET NO.	TITLE
1	GENERAL PLAN
2	STRUCTURE PLAN NO. 1
3	STRUCTURE PLAN NO. 2
4	STRUCTURE PLAN NO. 3
5	RETAINING WALL DETAILS
6	LIMITS OF EXCAVATION AND BACKFILL
7	ARCHITECTURAL LAYOUT
8	AESTHETIC DETAILS NO. 1
9	AESTHETIC DETAILS NO. 2
10	LOG OF TEST BORINGS SHEET 1 OF 2
11	LOG OF TEST BORINGS SHEET 2 OF 2

STANDARD PLANS DATED MAY 2010

	A10A	ABBREVIATIONS (SHEET 1 OF 2)
RSP	A10B	ABBREVIATIONS (SHEET 2 OF 2)
	A10C	LINES AND SYMBOLS (SHEET 1 OF 3)
	A10D	LINES AND SYMBOLS (SHEET 2 OF 3)
	A10E	LINES AND SYMBOLS (SHEET 3 OF 3)
RSP	A10F	LEGEND - SOIL (SHEET 1 OF 2)
RSP	A10G	LEGEND - SOIL (SHEET 2 OF 2)
	A10H	LEGEND - ROCK
	A62B	LIMITS OF PAYMENT FOR EXCAVATION AND BACKFILL- BRIDGE SURCHARGE AND WALL
	BO-3	BRIDGE DETAILS
RSP	B3-1A	RETAINING WALL TYPE 1 (CASE 1)
RSP	B3-5	RETAINING WALL DETAILS NO. 1
	B3-6	RETAINING WALL DETAILS NO. 2
RSP	B11-56	CONCRETE BARRIER TYPE 736

STANDARD PLAN SHEET No.

DETAIL No.

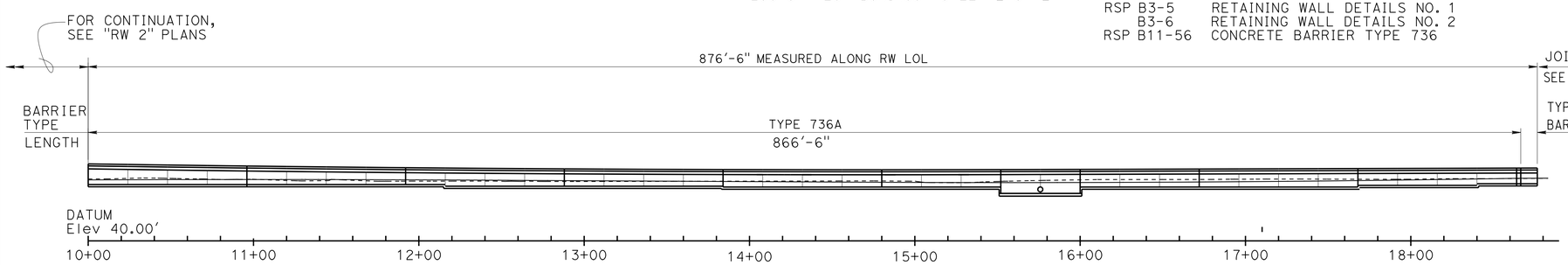

ELEVATION

1" = 40'

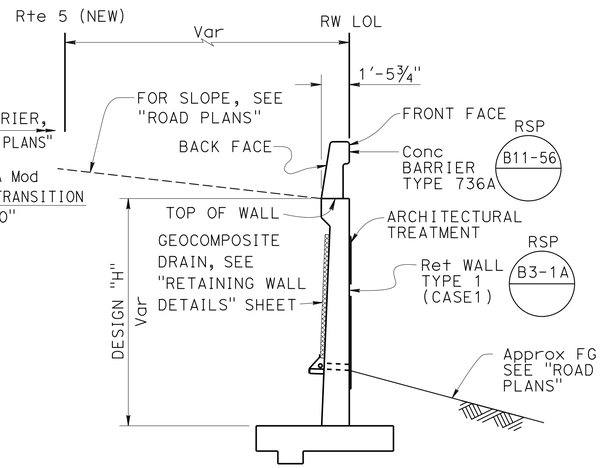

FROM Sta 10+00 TO 18+66.50

TYPICAL SECTION

NO SCALE

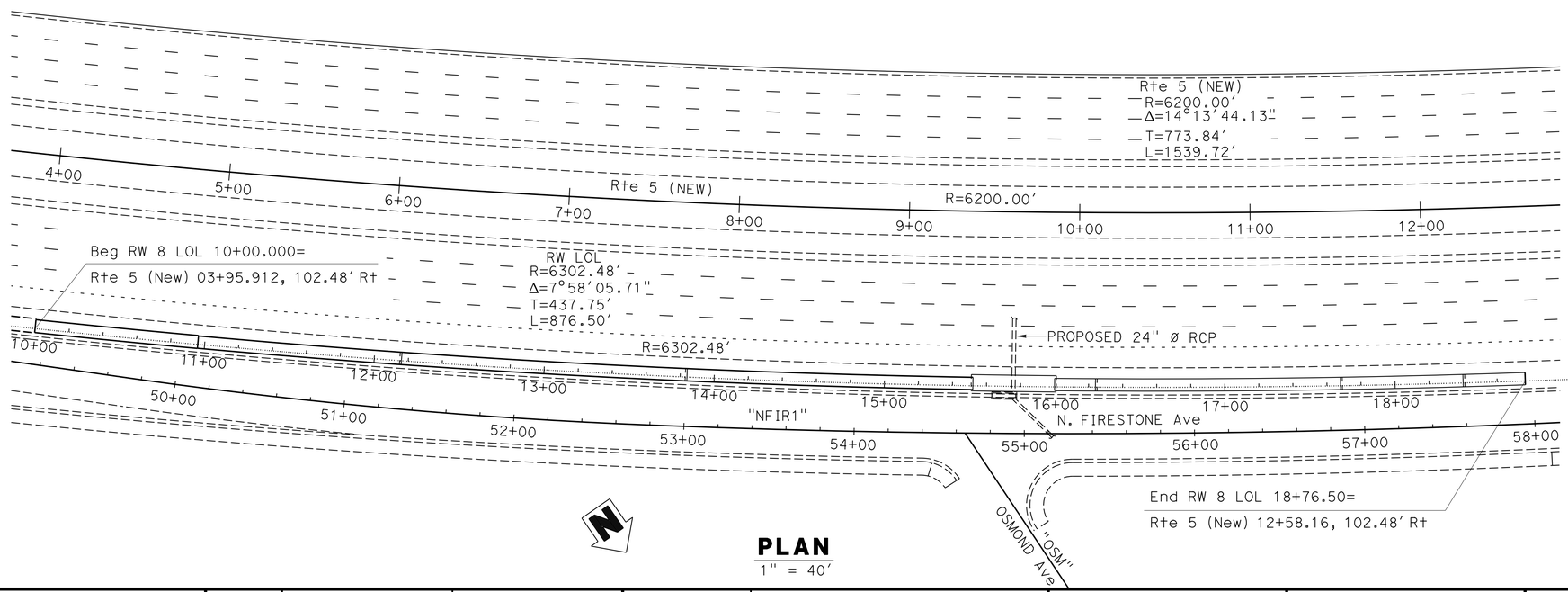

PLAN

1" = 40'

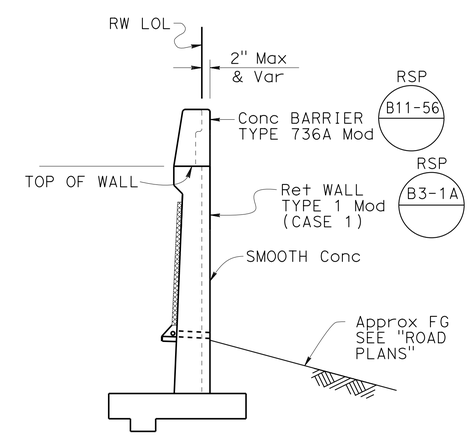

FROM Sta 18+66.50 TO 18+76.50

TRANSITION SECTION

NO SCALE

Ramin Rashedi 3-18-15 DESIGN ENGINEER	DESIGN	BY Y. Yoon	CHECKED D. Tavatli	LOAD & RESISTANCE FACTOR DESIGN	LIVE LOADING: HL93 W/"LOW-BOY": PERMIT DESIGN VEHICLE
	DETAILS	BY T. Bittermann	CHECKED D. Tavatli	LAYOUT BY Y. Yoon	CHECKED D. Tavatli
	QUANTITIES	BY D. Tavatli	CHECKED C. Chan	SPECIFICATIONS BY X. Li	PLANS AND SPECS COMPARED X. Li

ORIGINAL SCALE IN INCHES FOR REDUCED PLANS 0 1 2 3

STATE OF CALIFORNIA DEPARTMENT OF TRANSPORTATION

DIVISION OF ENGINEERING SERVICES STRUCTURE DESIGN DESIGN BRANCH 11

BRIDGE NO. RW 8 POST MILE 0.07

RETAINING WALL 8 GENERAL PLAN

UNIT: 3587
PROJECT NUMBER & PHASE: 0715000160-1 CONTRACT NO.: 07-2159U4

DISREGARD PRINTS BEARING EARLIER REVISION DATES 9/27/13

REVISION DATES | SHEET 1 OF 11

USERNAME => s125624 DATE PLOTTED => 28-JAN-2016 TIME PLOTTED => 12:25

STRUCTURES DESIGN GENERAL PLAN SHEET (ENGLISH) (REV.09-01-10)

FILE => rw8-a-gp.dgn

DIST	COUNTY	ROUTE	POST MILES TOTAL PROJECT	SHEET No.	TOTAL SHEETS
07	LA,Ora	5	0.0/1.5, 44.3/44.4	1408	1622

REGISTERED CIVIL ENGINEER — DATE 3-18-15

1-25-16
PLANS APPROVAL DATE

REGISTERED PROFESSIONAL ENGINEER — Daryoush Tavatli — No. 56183 — Exp. 12-31-16 — CIVIL — STATE OF CALIFORNIA

The State of California or its officers or agents shall not be responsible for the accuracy or completeness of electronic copies of this plan sheet.

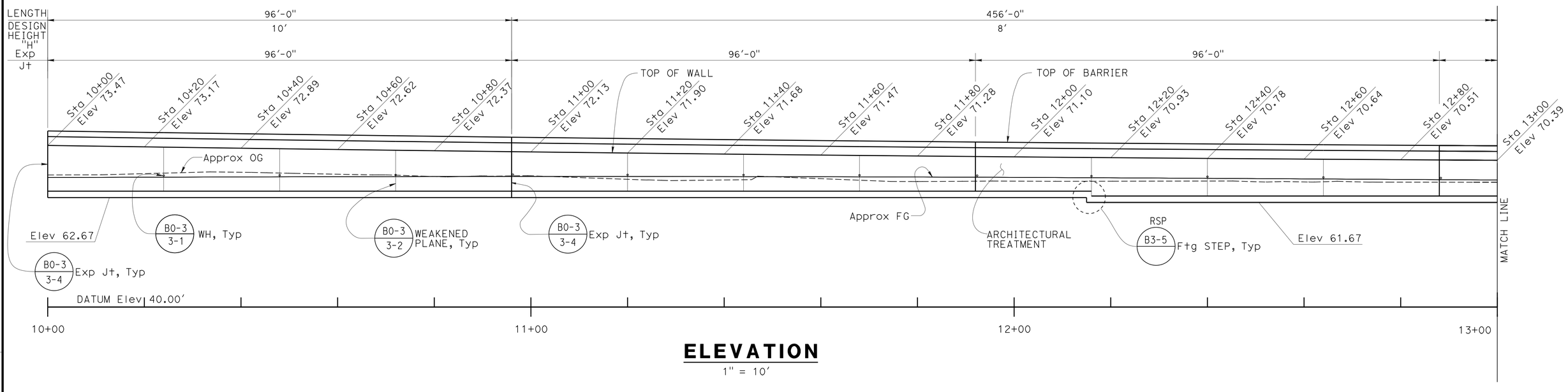

ELEVATION

1" = 10'

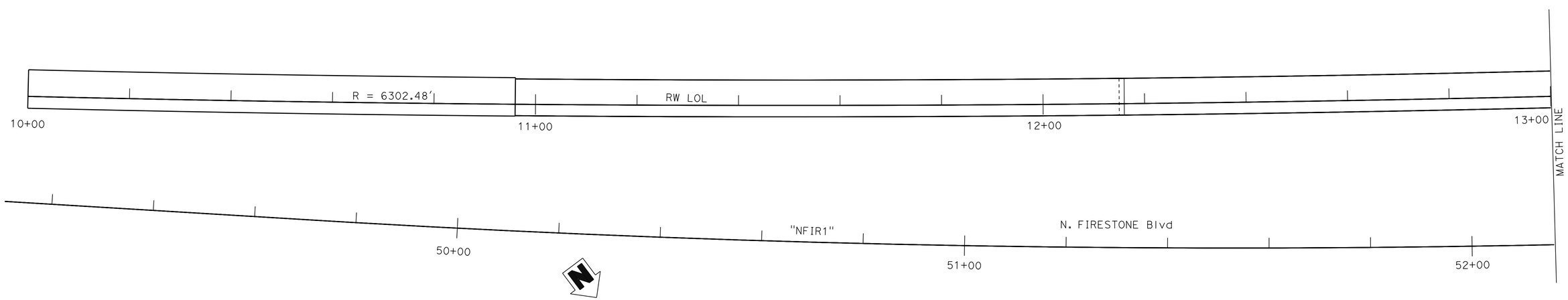

PLAN

1" = 10'

DESIGN	BY Y. Yoon	CHECKED D. Tavatli	
DETAILS	BY T. Bittermann	CHECKED D. Tavatli	
QUANTITIES	BY D. Tavatli	CHECKED C. Chan	

STATE OF CALIFORNIA
DEPARTMENT OF TRANSPORTATION

DIVISION OF ENGINEERING SERVICES
STRUCTURE DESIGN
DESIGN BRANCH 11

BRIDGE NO. RW 8
POST MILE 0.07

RETAINING WALL 8
STRUCTURE PLAN NO. 1

STRUCTURES DESIGN DETAIL SHEET (ENGLISH) (REV. 09-01-10)

ORIGINAL SCALE IN INCHES FOR REDUCED PLANS 0 1 2 3

UNIT: 3587
PROJECT NUMBER & PHASE: 0715000160-1
CONTRACT NO.: 07-2159u4

DISREGARD PRINTS BEARING EARLIER REVISION DATES

REVISION DATES: 9/27/13

SHEET 2 OF 11

FILE => rw8-d-sp1.dgn

USERNAME => s125624 DATE PLOTTED => 28-JAN-2016 TIME PLOTTED => 12:25

DIST	COUNTY	ROUTE	POST MILES TOTAL PROJECT	SHEET No.	TOTAL SHEETS
07	LA,Ora	5	0.0/1.5, 44.3/44.4	1409	1622

REGISTERED CIVIL ENGINEER — DATE 3-18-15

1-25-16
PLANS APPROVAL DATE

REGISTERED PROFESSIONAL ENGINEER — Daryoush Tavatli No. 56183 Exp. 12-31-16 CIVIL — STATE OF CALIFORNIA

The State of California or its officers or agents shall not be responsible for the accuracy or completeness of electronic copies of this plan sheet.

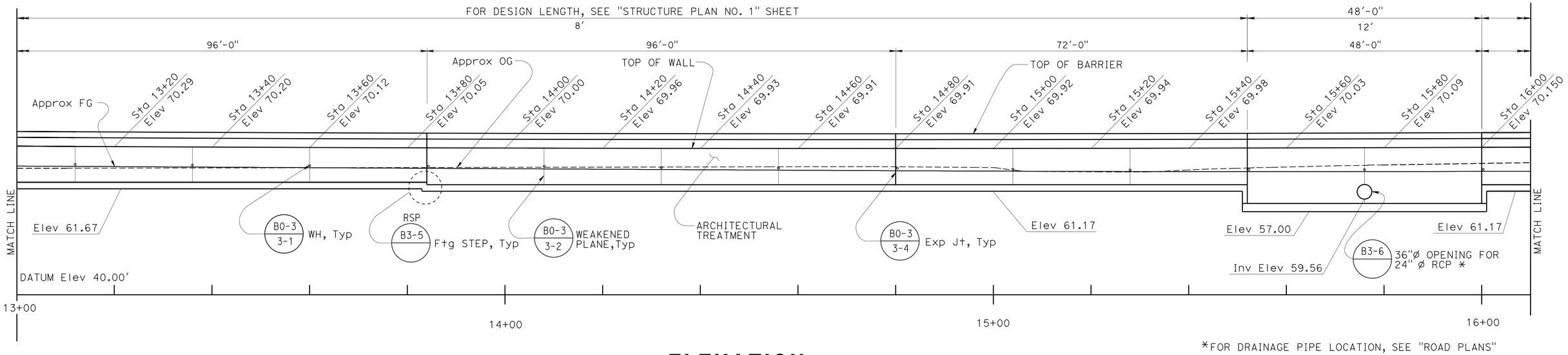

*FOR DRAINAGE PIPE LOCATION, SEE "ROAD PLANS"

ELEVATION

1" = 10'

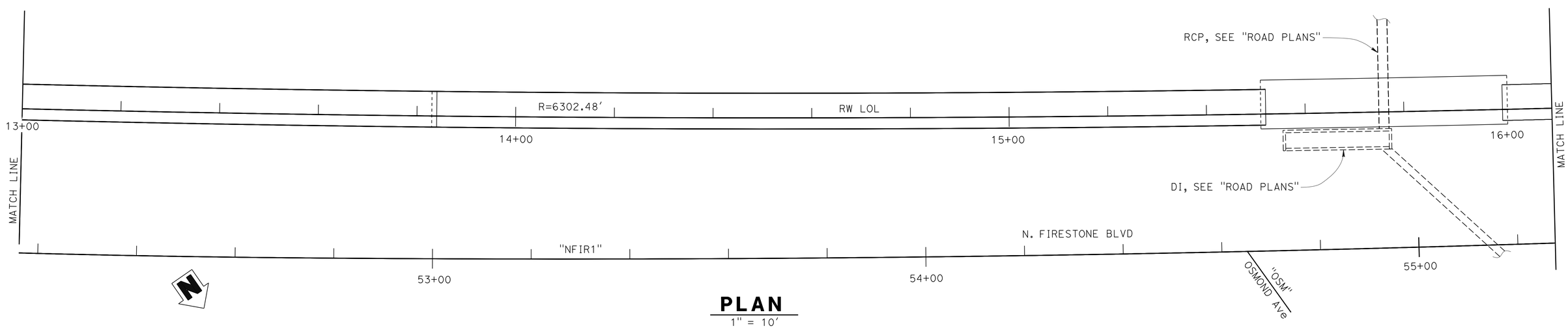

PLAN

1" = 10'

DESIGN	BY Y. Yoon	CHECKED D. Tavatli	
DETAILS	BY T. Bittermann	CHECKED D. Tavatli	
QUANTITIES	BY D. Tavatli	CHECKED C. Chan	

STATE OF CALIFORNIA
DEPARTMENT OF TRANSPORTATION

DIVISION OF ENGINEERING SERVICES
STRUCTURE DESIGN
DESIGN BRANCH 11

BRIDGE NO. RW 8
POST MILE 0.07

RETAINING WALL 8
STRUCTURE PLAN NO. 2

STRUCTURES DESIGN DETAIL SHEET (ENGLISH) (REV. 09-01-10)

ORIGINAL SCALE IN INCHES FOR REDUCED PLANS 0 1 2 3

UNIT: 3587
PROJECT NUMBER & PHASE: 0715000160-1
CONTRACT NO.: 07-2159u4

DISREGARD PRINTS BEARING EARLIER REVISION DATES

REVISION DATES 9/27/13

SHEET 3 OF 11

FILE => rw8-d-sp2.dgn

USERNAME => s125624 DATE PLOTTED => 28-JAN-2016 TIME PLOTTED => 12:25

DIST	COUNTY	ROUTE	POST MILES TOTAL PROJECT	SHEET No.	TOTAL SHEETS
07	LA,Ora	5	0.0/1.5, 44.3/44.4	1410	1622

REGISTERED CIVIL ENGINEER — DATE 3-18-15

1-25-16
PLANS APPROVAL DATE

REGISTERED PROFESSIONAL ENGINEER — Daryoush Tavatli No. 56183 Exp. 12-31-16 CIVIL — STATE OF CALIFORNIA

The State of California or its officers or agents shall not be responsible for the accuracy or completeness of electronic copies of this plan sheet.

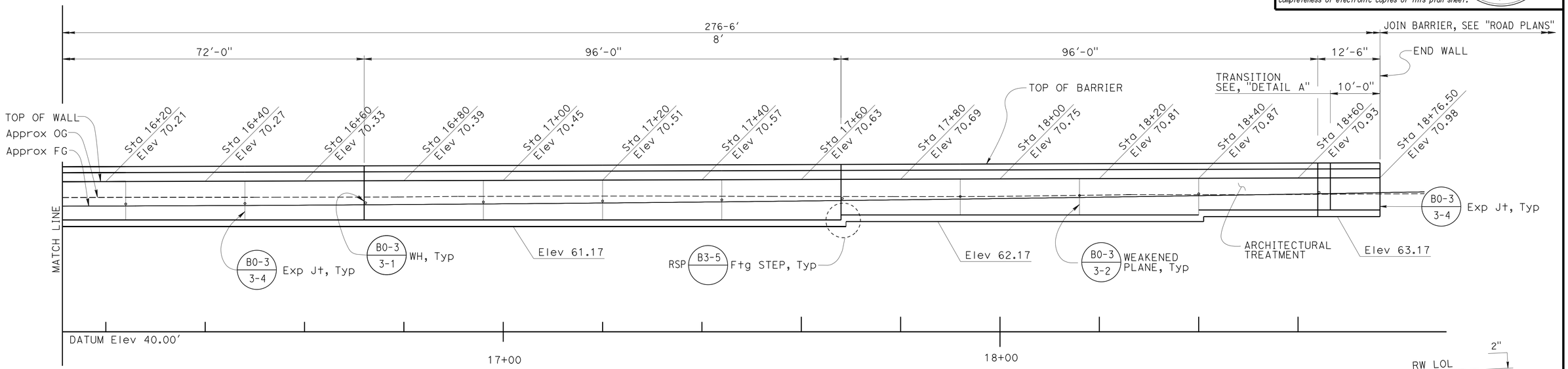

ELEVATION
1" = 10'

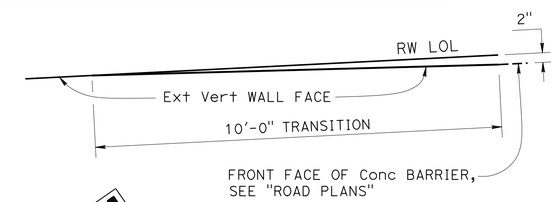

DETAIL A
NO SCALE

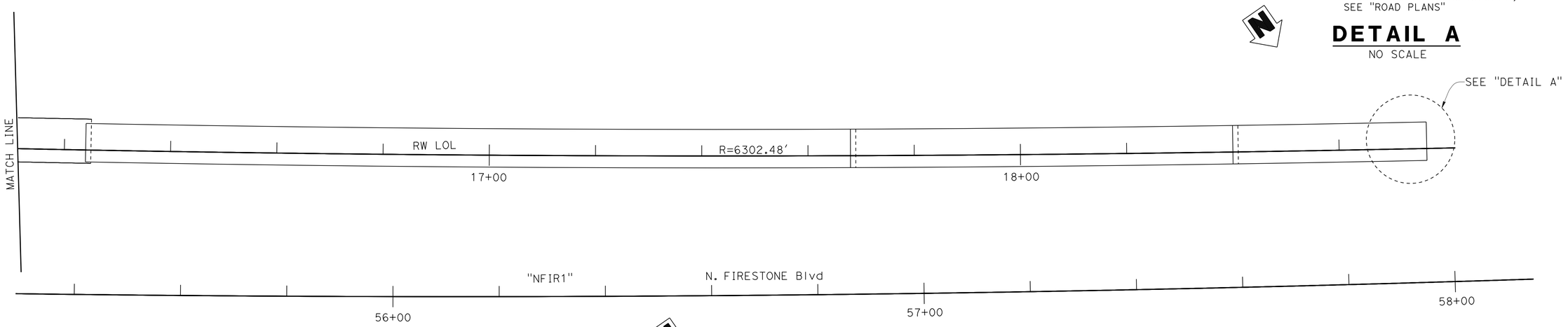

PLAN
1" = 10'

DESIGN	BY Y. Yoon	CHECKED Daryoush Tavatli	
DETAILS	BY T. Bittermann	CHECKED Daryoush Tavatli	
QUANTITIES	BY D. Tavatli	CHECKED C. Chan	

STATE OF CALIFORNIA
DEPARTMENT OF TRANSPORTATION

DIVISION OF ENGINEERING SERVICES
STRUCTURE DESIGN
DESIGN BRANCH 11

BRIDGE NO. RW 8
POST MILE 0.07

RETAINING WALL 8
STRUCTURE PLAN NO. 3

STRUCTURES DESIGN DETAIL SHEET (ENGLISH) (REV. 09-01-10)

ORIGINAL SCALE IN INCHES FOR REDUCED PLANS 0 1 2 3

UNIT: 3587
PROJECT NUMBER & PHASE: 0715000160-1
CONTRACT NO.: 07-2159u4

DISREGARD PRINTS BEARING EARLIER REVISION DATES

REVISION DATES 9/27/13

SHEET 4 OF 11

FILE => rw8-d-sp3.dgn

USERNAME => s125624 DATE PLOTTED => 28-JAN-2016 TIME PLOTTED => 12:25

DIST	COUNTY	ROUTE	POST MILES TOTAL PROJECT	SHEET No.	TOTAL SHEETS
07	LA,Ora	5	0.0/1.5, 44.3/44.4	1411	1622

REGISTERED CIVIL ENGINEER — DATE 3-18-15

1-25-16
PLANS APPROVAL DATE

REGISTERED PROFESSIONAL ENGINEER — Daryoush Tavatli — No. 56183 — Exp. 12-31-16 — CIVIL — STATE OF CALIFORNIA

The State of California or its officers or agents shall not be responsible for the accuracy or completeness of electronic copies of this plan sheet.

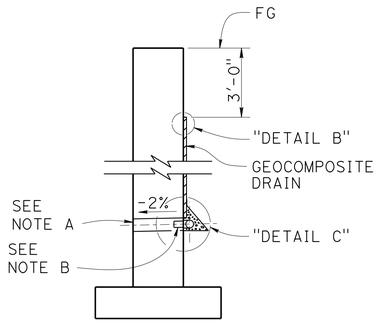

WALL SECTION

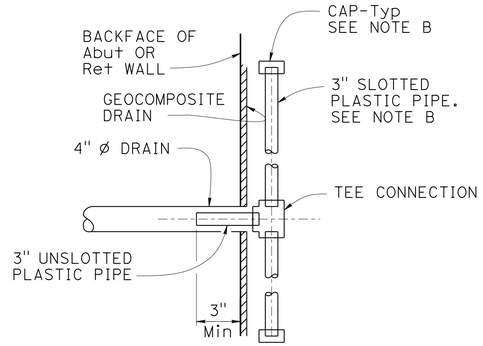

SECTION A-A

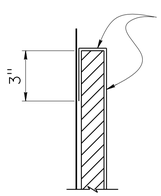

DETAIL B

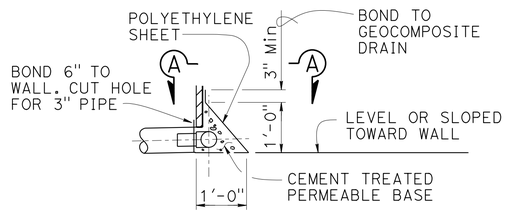

DETAIL C

WEEP HOLE AND GEOCOMPOSITE DRAIN

NO SCALE

NOTES: (GEOCOMPOSITE DRAIN)

A. 4" Ø drains at intermediate sag points and at 25'-0" center to center. For walls adjacent to sidewalks or curbs, provide 4" Ø cast iron or asbestos cement pipe under the sidewalk to discharge through curb face. Exposed wall drains shall be located 3" ± above finished grade.

B. Geocomposite drain, cement treated permeable base, and 3" Ø slotted plastic pipe continuous behind retaining wall or abutment. Cap ends of pipe. Provide "Tee" connection at each 4" Ø drain.

C. Connect the low end of plastic pipe to the main outlet pipe as applicable.

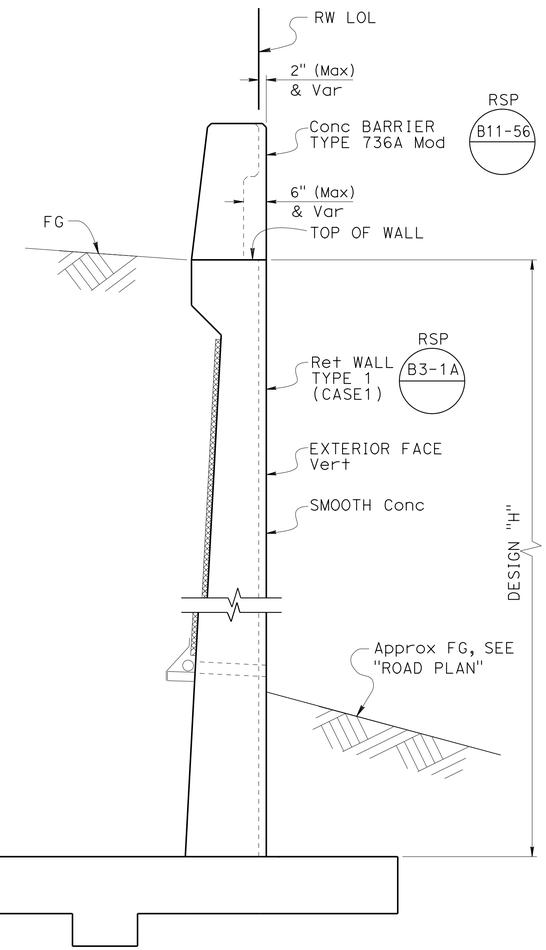

RETAINING WALL TYPE 1 (CASE 1) Mod

NO SCALE

FROM Sta 18+66.50 to Sta 18+76.50

DESIGN	BY Y. Yoon	CHECKED D. Tavatli	
DETAILS	BY T. Bittermann	CHECKED D. Tavatli	
QUANTITIES	BY D. Tavatli	CHECKED C. Chan	

STATE OF CALIFORNIA
DEPARTMENT OF TRANSPORTATION

DIVISION OF ENGINEERING SERVICES
STRUCTURE DESIGN
DESIGN BRANCH 11

BRIDGE NO. RW 8
POST MILE 0.07

RETAINING WALL 8
RETAINING WALL DETAILS

STRUCTURES DESIGN DETAIL SHEET (ENGLISH) (REV. 09-01-10)

ORIGINAL SCALE IN INCHES FOR REDUCED PLANS 0 1 2 3

UNIT: 3587
PROJECT NUMBER & PHASE: 0715000160-1
CONTRACT NO.: 07-2159U4

DISREGARD PRINTS BEARING EARLIER REVISION DATES

REVISION DATES 9/27/13

SHEET 5 OF 11

FILE => rw8-e-retdt.dgn

USERNAME => s125624 DATE PLOTTED => 28-JAN-2016 TIME PLOTTED => 12:25

DIST	COUNTY	ROUTE	POST MILES TOTAL PROJECT	SHEET No.	TOTAL SHEETS
07	LA,Ora	5	0.0/1.5, 44.3/44.4	1412	1622

REGISTERED CIVIL ENGINEER 3-18-15 DATE

1-25-16
PLANS APPROVAL DATE

REGISTERED PROFESSIONAL ENGINEER
Daryoush Tavatli
No. 56183
Exp. 12/31/16
CIVIL
STATE OF CALIFORNIA

The State of California or its officers or agents shall not be responsible for the accuracy or completeness of electronic copies of this plan sheet.

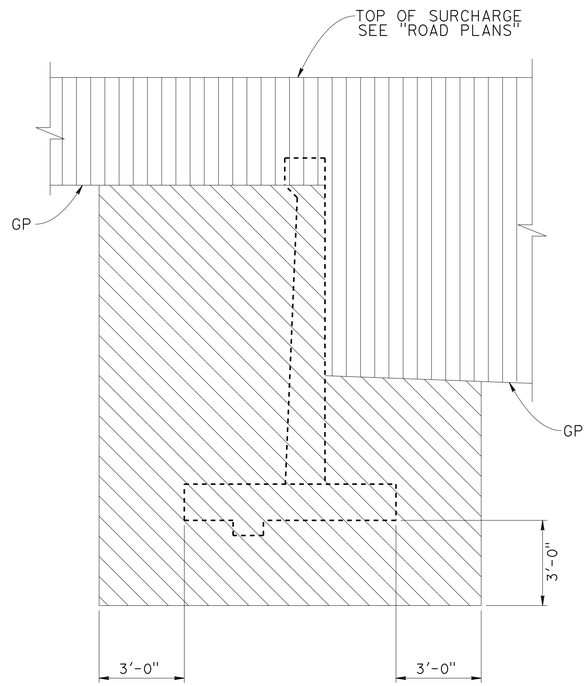

EXCAVATION

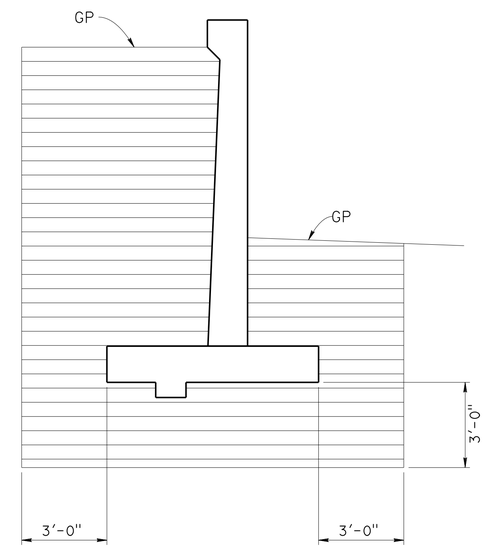

BACKFILL

LEGEND:

STRUCTURE EXCAVATION

ROADWAY EXCAVATION

STRUCTURE BACKFILL

GP - PLANNED GRADING PLANE

LIMITS OF EXCAVATION AND BACKFILL

NO SCALE

DESIGN	BY Y. Yoon	CHECKED B. Kemp	
DETAILS	BY J. Ramirez	CHECKED B. Kemp	
QUANTITIES	BY D. Tavatli	CHECKED C. Chan	

STATE OF CALIFORNIA
DEPARTMENT OF TRANSPORTATION

DIVISION OF ENGINEERING SERVICES
STRUCTURE DESIGN
DESIGN BRANCH 11

BRIDGE NO. RW 8
POST MILE 0.07

RETAINING WALL 8
LIMITS OF EXCAVATION AND BACKFILL

STRUCTURES DESIGN DETAIL SHEET (ENGLISH) (REV. 09-01-10)

ORIGINAL SCALE IN INCHES FOR REDUCED PLANS 0 1 2 3

UNIT: 3587
PROJECT NUMBER & PHASE: 0715000160-1 CONTRACT NO.: 07-2159u4

DISREGARD PRINTS BEARING EARLIER REVISION DATES

REVISION DATES 9/27/13

SHEET 6 OF 11

FILE => rw8-f-excav.dgn

USERNAME => s125624 DATE PLOTTED => 28-JAN-2016 TIME PLOTTED => 12:25

DIST	COUNTY	ROUTE	POST MILES TOTAL PROJECT	SHEET No.	TOTAL SHEETS
07	LA,Ora	5	0.0/1.5, 44.3/44.4	1413	1622

REGISTERED CIVIL ENGINEER 3-18-15 DATE

1-25-16
PLANS APPROVAL DATE

REGISTERED PROFESSIONAL ENGINEER Daryoush Tavatli No. 56183 Exp. 12-31-16 CIVIL STATE OF CALIFORNIA

The State of California or its officers or agents shall not be responsible for the accuracy or completeness of scanned copies of this plan sheet.

NOTES:

1. For 'Section G-G', 'Section H-H', 'Section J-J' and 'Section K-K', see "AESTHETIC DETAILS NO. 2" sheet
2. Motif may not have been correctly scaled. Contractor shall verify the number of motif panels

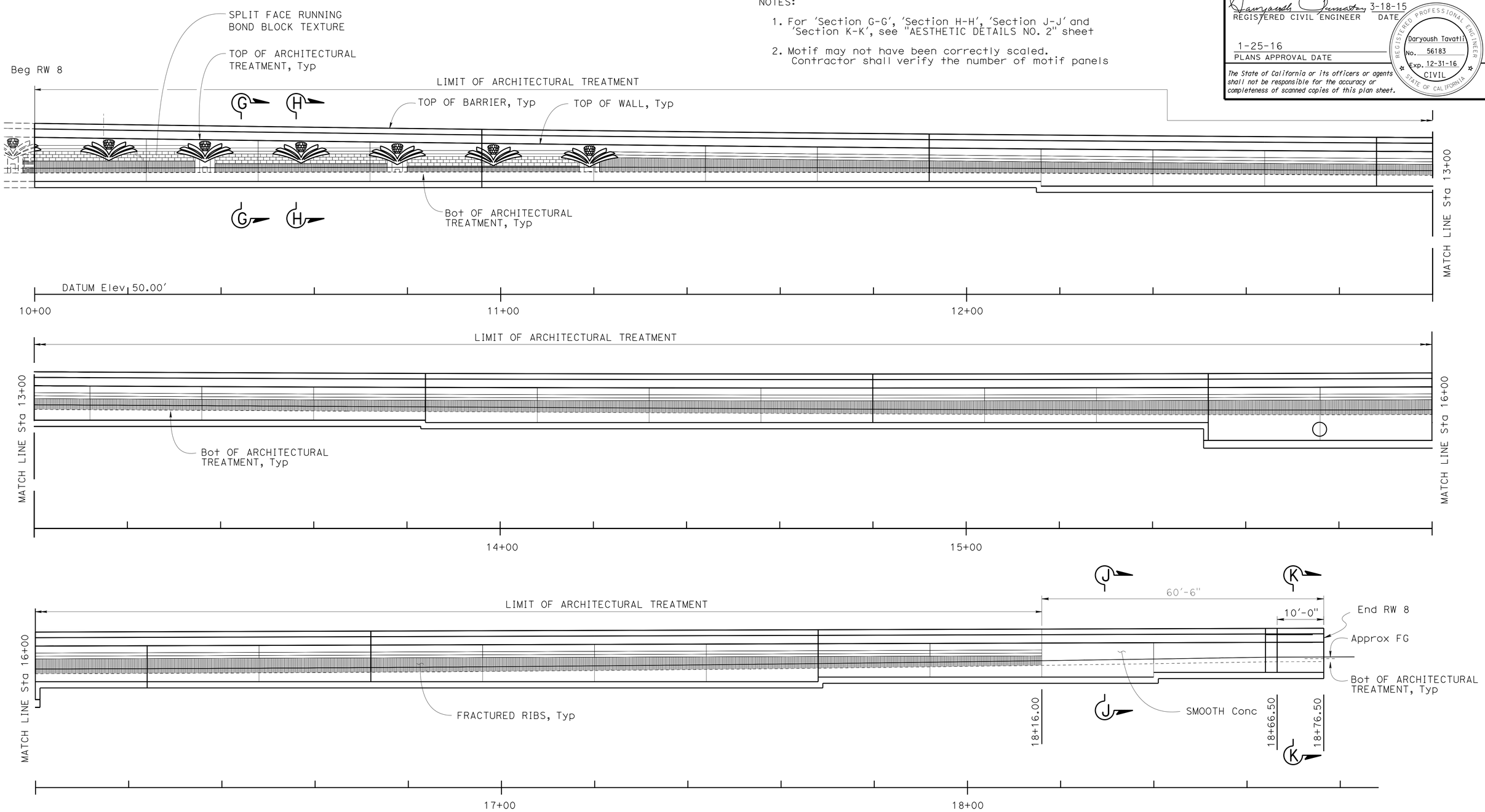

ELEVATION

NO SCALE

DESIGN	BY H. Javier Chavez	CHECKED Isaac Tasabia	
DETAILS	BY L. Goldthwait	CHECKED Isaac Tasabia	
QUANTITIES	BY D. Tavatli	CHECKED C. Chan	

STATE OF CALIFORNIA
DEPARTMENT OF TRANSPORTATION

DIVISION OF ENGINEERING SERVICES
STRUCTURE DESIGN
DESIGN BRANCH 11

BRIDGE NO. RW 8
POST MILE 0.07

RETAINING WALL 8
ARCHITECTURAL LAYOUT

STRUCTURES DESIGN DETAIL SHEET (ENGLISH) (REV. 09-01-10)

ORIGINAL SCALE IN INCHES FOR REDUCED PLANS 0 1 2 3

UNIT: 3587
PROJECT NUMBER & PHASE: 0715000160-1
CONTRACT NO.: 07-2159u4

DISREGARD PRINTS BEARING EARLIER REVISION DATES

REVISION DATES: 1-28-13 6-19-13 8-07-13

SHEET 7 OF 11

FILE => rw8-k-arch1.dgn

USERNAME => s125624 DATE PLOTTED => 28-JAN-2016 TIME PLOTTED => 12:25

DIST	COUNTY	ROUTE	POST MILES TOTAL PROJECT	SHEET No.	TOTAL SHEETS
07	LA,Ora	5	0.0/1.5, 44.3/44.4	1414	1622

REGISTERED CIVIL ENGINEER 3-18-15 DATE

1-25-16
PLANS APPROVAL DATE

REGISTERED PROFESSIONAL ENGINEER Daryoush Tavatli No. 56183 Exp. 12-31-16 CIVIL STATE OF CALIFORNIA

The State of California or its officers or agents shall not be responsible for the accuracy or completeness of scanned copies of this plan sheet.

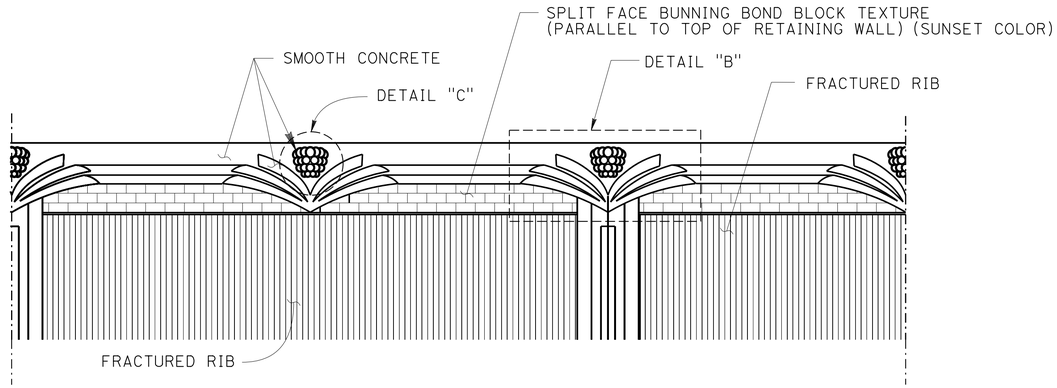

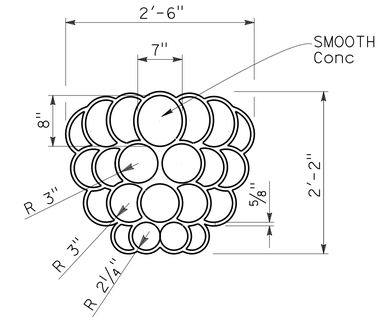

DETAIL C

NO SCALE
3D SCULPTED BERRY

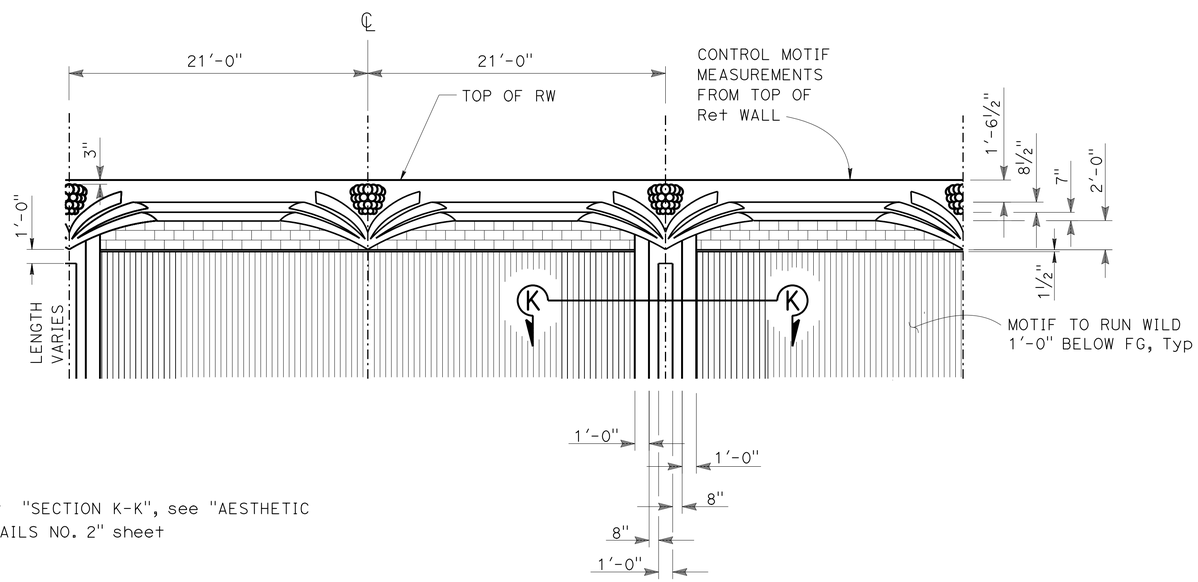

NOTES:

1. For "SECTION K-K", see "AESTHETIC DETAILS NO. 2" sheet

WALL FACE DETAIL

NO SCALE

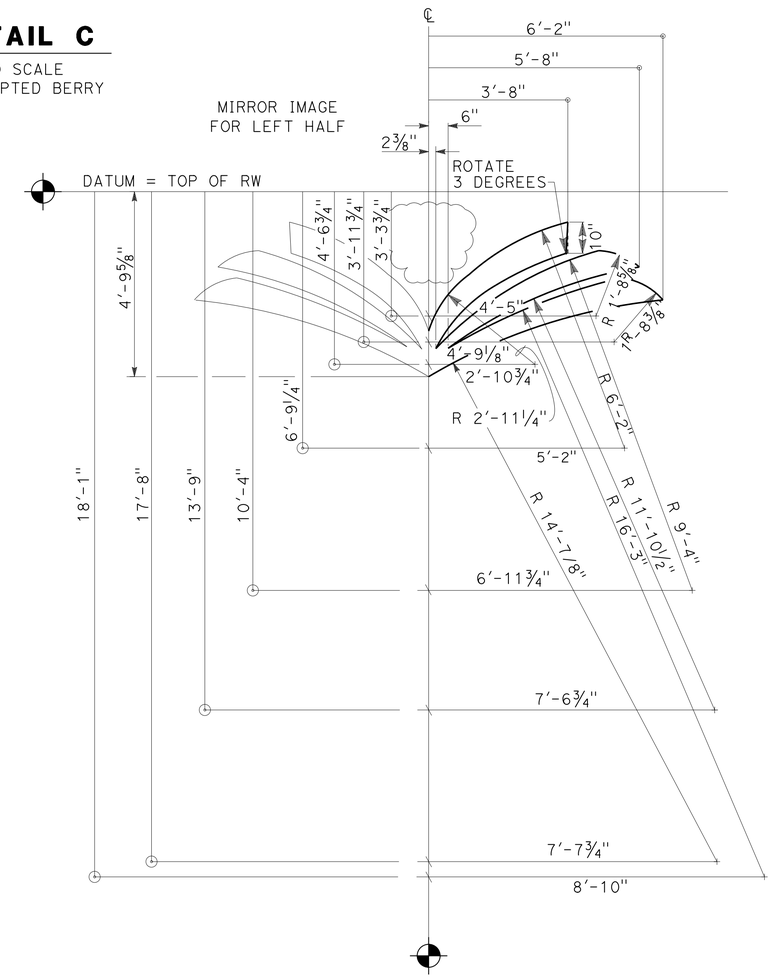

DETAIL B

NO SCALE
ART DECO PALM COLUMN CAPITAL MOTIF

DESIGN	BY H. Javier Chavez	CHECKED Isaac Tasabia	
DETAILS	BY T. Bittermann	CHECKED Isaac Tasabia	
QUANTITIES	BY Daryoush Tavatli	CHECKED C. Chan	

STATE OF CALIFORNIA
DEPARTMENT OF TRANSPORTATION

DIVISION OF ENGINEERING SERVICES
STRUCTURE DESIGN
DESIGN BRANCH 11

BRIDGE NO. RW 8
POST MILE 0.07

RETAINING WALL 8
AESTHETIC DETAILS NO. 1

STRUCTURES DESIGN DETAIL SHEET (ENGLISH) (REV. 09-01-10)

ORIGINAL SCALE IN INCHES FOR REDUCED PLANS 0 1 2 3

UNIT: 3587
PROJECT NUMBER & PHASE: 0715000160-1
CONTRACT NO.: 07-2159u4

DISREGARD PRINTS BEARING EARLIER REVISION DATES

REVISION DATES 9/27/13

SHEET 8 OF 11

FILE => rw8-k-arch2.dgn

USERNAME => s125624 DATE PLOTTED => 28-JAN-2016 TIME PLOTTED => 12:25

DIST	COUNTY	ROUTE	POST MILES TOTAL PROJECT	SHEET No.	TOTAL SHEETS
07	LA,Ora	5	0.0/1.5, 44.3/44.4	1415	1622

REGISTERED CIVIL ENGINEER 3-18-15 DATE

1-25-16
PLANS APPROVAL DATE

REGISTERED PROFESSIONAL ENGINEER Daryoush Tavatli No. 56183 Exp. 12-31-16 CIVIL STATE OF CALIFORNIA

The State of California or its officers or agents shall not be responsible for the accuracy or completeness of scanned copies of this plan sheet.

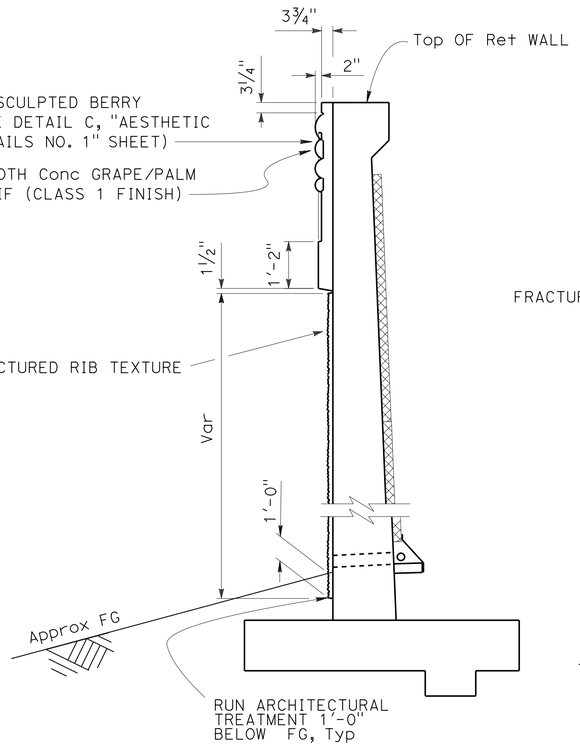

Note: BARRIER NOT SHOWN

SECTION H-H
TEXTURE, DIMENSIONS AND RELIEF DETAIL

NO SCALE

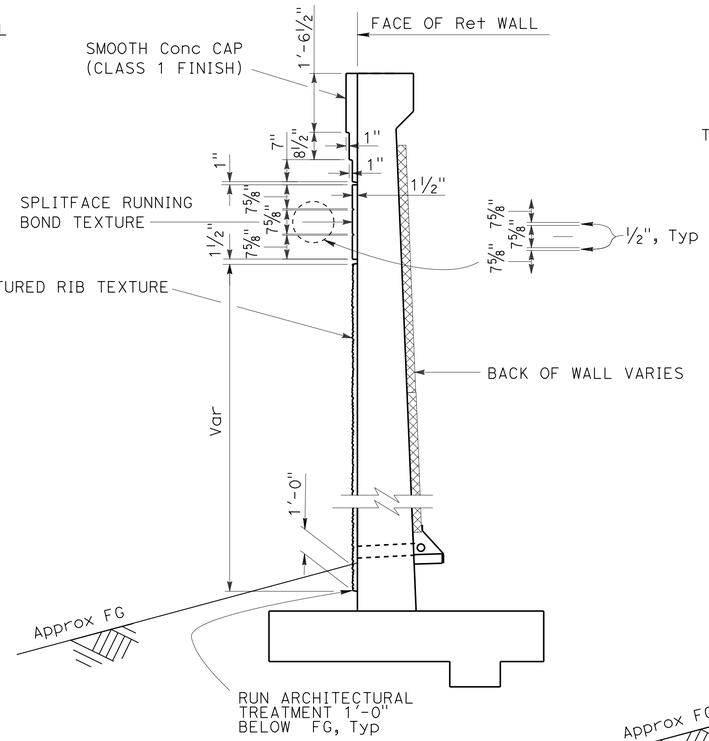

Note: BARRIER NOT SHOWN

SECTION G-G
TEXTURE, DIMENSIONS AND RELIEF DETAIL

NO SCALE

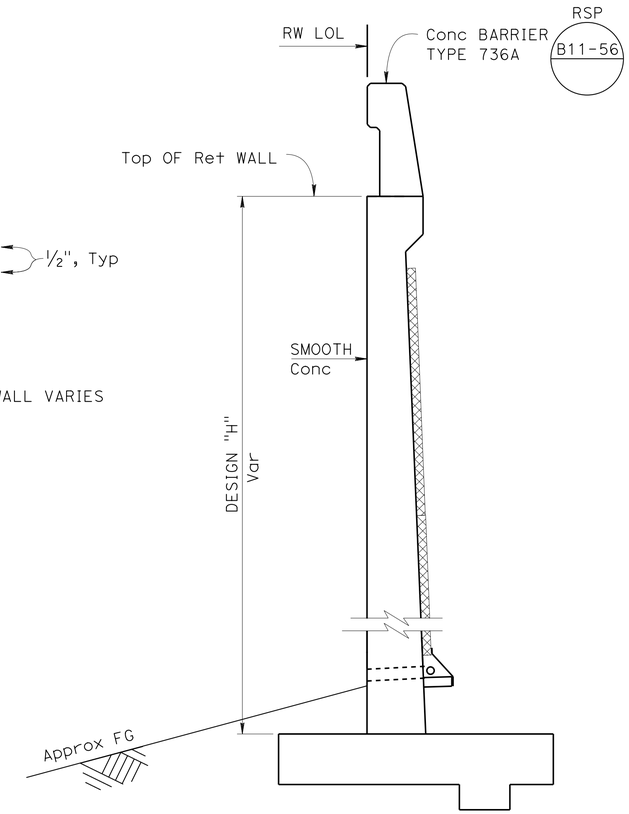

SECTION J-J

NO SCALE
FROM Sta 17+68.00 TO 18+64.00

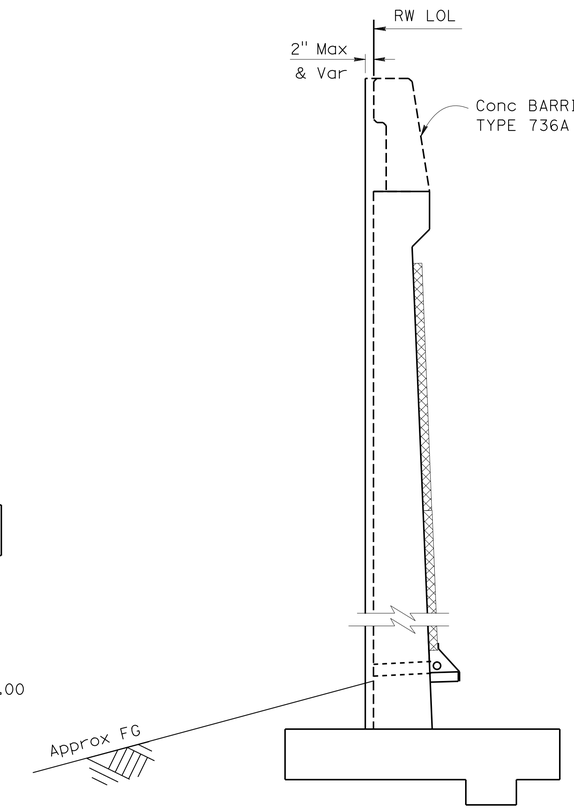

SECTION K-K

NO SCALE
FROM Sta 18+64.00 TO 18+74.10

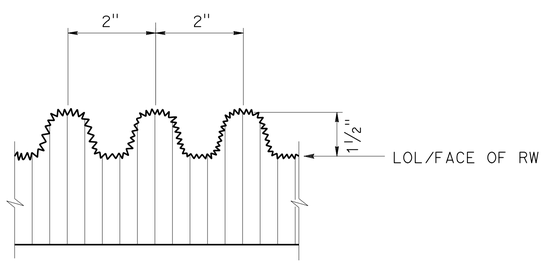

TYPICAL FRACTURED RIB

NO SCALE

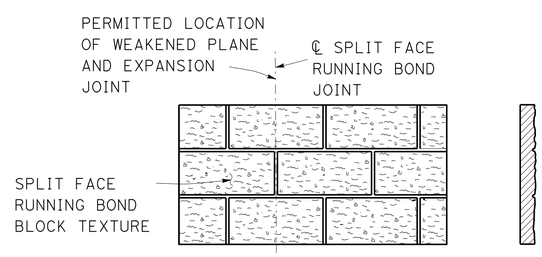

SPLIT FACE RUNNING BOND BLOCK TEXTURE

NO SCALE

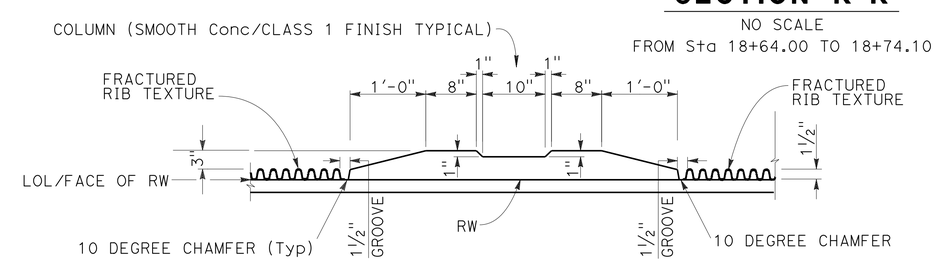

SECTION K-K

NO SCALE

DESIGN	BY H. Javier Chavez	CHECKED Isaac Tasabia	
DETAILS	BY T. Bittermann	CHECKED Isaac Tasabia	
QUANTITIES	BY D. Tavatli	CHECKED C. Chan	

STATE OF CALIFORNIA
DEPARTMENT OF TRANSPORTATION

DIVISION OF ENGINEERING SERVICES
STRUCTURE DESIGN
DESIGN BRANCH 11

BRIDGE NO. RW 8
POST MILE 0.07

RETAINING WALL 8
AESTHETIC DETAILS NO. 2

STRUCTURES DESIGN DETAIL SHEET (ENGLISH) (REV. 09-01-10)

ORIGINAL SCALE IN INCHES FOR REDUCED PLANS 0 1 2 3

UNIT: 3587
PROJECT NUMBER & PHASE: 0715000160-1
CONTRACT NO.: 07-2159u4

DISREGARD PRINTS BEARING EARLIER REVISION DATES 9/27/13

REVISION DATES | SHEET 9 | OF 11

FILE => rw8-k-arch3.dgn

USERNAME => s125624 DATE PLOTTED => 28-JAN-2016 TIME PLOTTED => 12:25

BENCH MARK

GPS 0887
ELEVATION 65.915 FT
FD 2-1/2 CADT DISK IN CONC. CURB
FLUSH, STAMPED "LA-5-1.0, 1995"
LOCATED 90' N OF THE SOUTH SIDE
FIRESTONE BLVD 0.2 MI SE OF VALLEY VIEW
NORTHING 542395.636
EASTING 1997613.893
DATUM NAVD88

DIST	COUNTY	ROUTE	POST MILES TOTAL PROJECT	SHEET No.	TOTAL SHEETS
07	LA,Ora	5	0.0/1.5, 44.3/44.4	1416	1622

REGISTERED CIVIL ENGINEER — DATE 05/20/15

1-25-16
PLANS APPROVAL DATE

URS CORPORATION
2020 EAST FIRST STREET, SUITE 400
SANTA ANA, CA 92705

The State of California or its officers or agents shall not be responsible for the accuracy or completeness of electronic copies of this plan sheet.

REGISTERED PROFESSIONAL ENGINEER — MICHAEL G. SMITH No. 2229 Exp. 03/31/16 GEOTECHNICAL — STATE OF CALIFORNIA

1-This LOTB sheet was prepared in accordance with the Caltrans Soil & Rock Logging, Classification, & Presentation Manual (2010 Edition).

2-For protection of underground utility lines, hand-auger was used to remove top 5 to 10 feet of subsurface material for exploratory borings and Cone Penetration Testings.

3-2.5" to 1.4" blow counts conversion factors for fine-grain and coarse-grain soils have been 0.8 and 0.55, respectively.

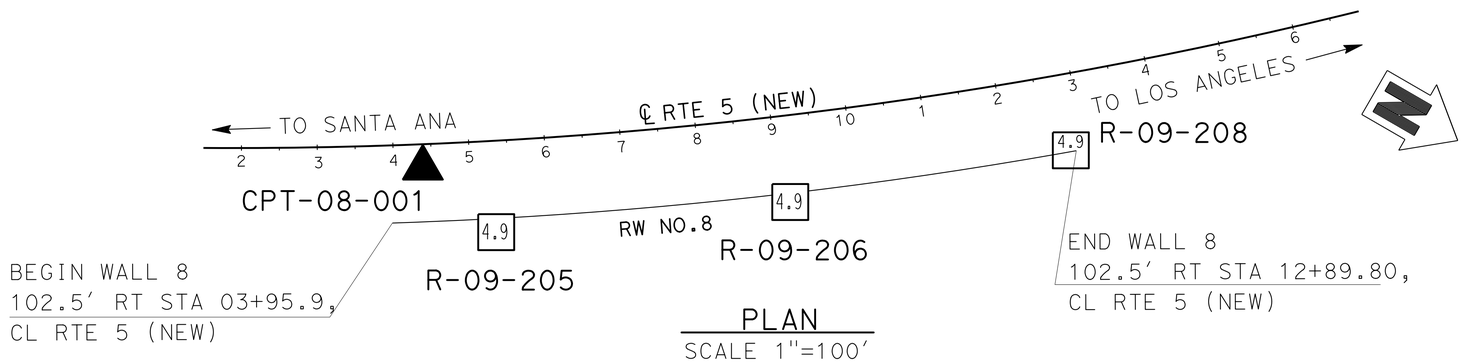

PLAN
SCALE 1"=100'

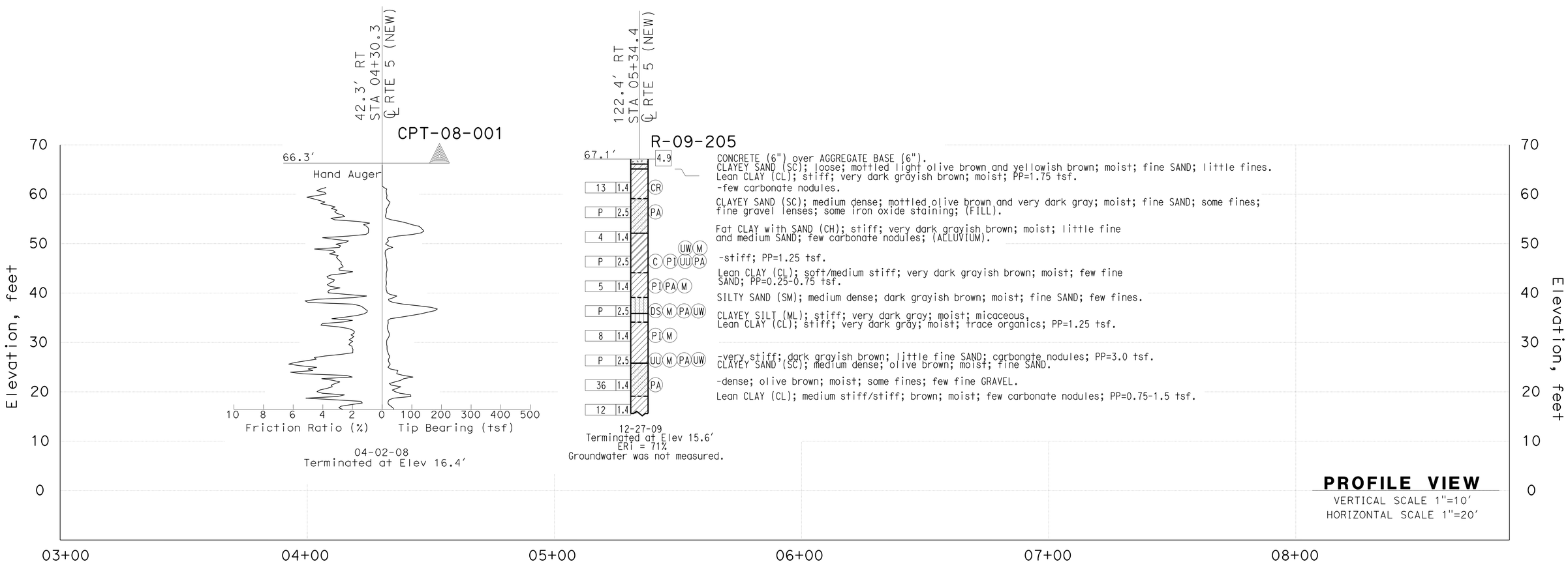

PROFILE VIEW
VERTICAL SCALE 1"=10'
HORIZONTAL SCALE 1"=20'

F.MOTAMED DESIGN OVERSIGHT 05/20/15 SIGN OFF DATE	DRAWN BY	T.PANAH	P.MCDONALD/D.ORRIS FIELD INVESTIGATION BY:	PREPARED FOR THE STATE OF CALIFORNIA DEPARTMENT OF TRANSPORTATION	M.G. SMITH PROJECT ENGINEER	BRIDGE NO. RW8 POST MILES 0.07	RETAINING WALL NO. 8 LOG OF TEST BORINGS SHEET 1 OF 2
	CHECKED BY	A.GHAZINOOR/L.KHALKHALI	DATE: 04/02/08 - 12/27/09				

GS CIVIL LOG OF TEST BORINGS SHEET (ENGLISH) (REV. 03/14/12)

ORIGINAL SCALE IN INCHES FOR REDUCED PLANS 0 1 2 3

UNIT: 3658
PROJECT NUMBER & PHASE: 07150001601 CONTRACT NO.: 07-2159U4

DISREGARD PRINTS BEARING EARLIER REVISION DATES → 5/12/15

REVISION DATES | SHEET 10 | OF 11

FILE => rw8-z-lotb1.dgn

USERNAME => s125624 DATE PLOTTED => 28-JAN-2016 TIME PLOTTED => 12:25

DIST	COUNTY	ROUTE	POST MILES TOTAL PROJECT	SHEET No.	TOTAL SHEETS
07	LA,Ora	5	0.0/1.5, 44.3/44.4	1417	1622

REGISTERED CIVIL ENGINEER 05/20/15 DATE

1-25-16
PLANS APPROVAL DATE

REGISTERED PROFESSIONAL ENGINEER
MICHAEL G. SMITH
No. 2229
Exp. 03/31/16
GEOTECHNICAL
STATE OF CALIFORNIA

URS CORPORATION
2020 EAST FIRST STREET, SUITE 400
SANTA ANA, CA 92705

The State of California or its officers or agents shall not be responsible for the accuracy or completeness of electronic copies of this plan sheet.

1-This LOTB sheet was prepared in accordance with the Caltrans Soil & Rock Logging, Classification, & Presentation Manual (2010 Edition).

2-For protection of underground utility lines, hand-auger was used to remove top 5 to 10 feet of subsurface material for exploratory borings and Cone Penetration Testings.

3-2.5" to 1.4" blow counts conversion factors for fine-grain and coarse-grain soils have been 0.8 and 0.55, respectively.

FOR PLAN VIEW, SEE
"LOG OF TEST BORINGS" 1 OF 2

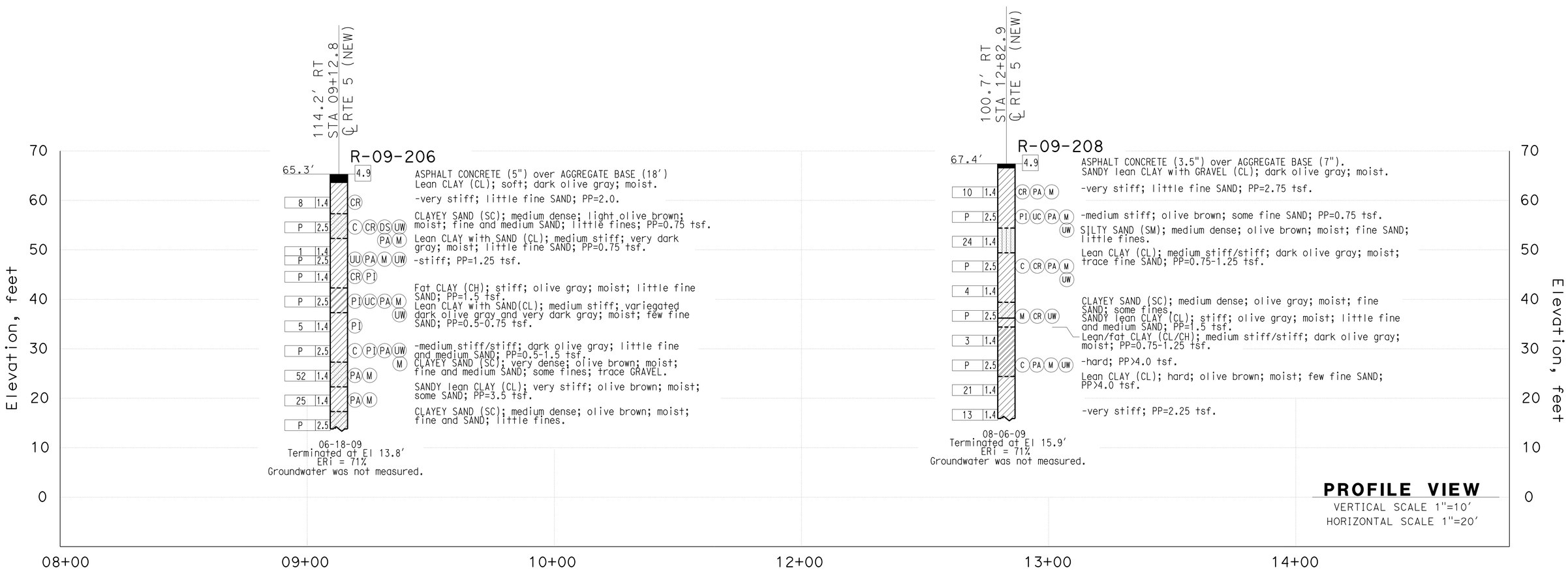

PROFILE VIEW
VERTICAL SCALE 1"=10'
HORIZONTAL SCALE 1"=20'

F.MOTAMED DESIGN OVERSIGHT	DRAWN BY	T.PANAH	EJ.JEON FIELD INVESTIGATION BY:	PREPARED FOR THE STATE OF CALIFORNIA DEPARTMENT OF TRANSPORTATION	M.G. SMITH PROJECT ENGINEER
05/20/15 SIGN OFF DATE	CHECKED BY	A.GHAZINOOR/L.KHALKHALI	DATE: 06/18/09 - 08/06/09		

BRIDGE NO. RW8
POST MILES 0.07

RETAINING WALL NO. 8
LOG OF TEST BORINGS SHEET 2 OF 2

GS CIVIL LOG OF TEST BORINGS SHEET (ENGLISH) (REV. 03/14/12)

ORIGINAL SCALE IN INCHES FOR REDUCED PLANS 0 1 2 3

UNIT: 3658
PROJECT NUMBER & PHASE: 07150001601 CONTRACT NO.: 07-2159U4

DISREGARD PRINTS BEARING EARLIER REVISION DATES → 5/12/15

REVISION DATES | SHEET 11 | OF 11

FILE => rw8-z-lotb2.dgn

USERNAME => s125624 DATE PLOTTED => 28-JAN-2016 TIME PLOTTED => 12:25

DIST	COUNTY	ROUTE	POST MILES TOTAL PROJECT	SHEET No.	TOTAL SHEETS
07	LA,Ora	5	0.0/1.5, 44.3/44.4	1418	1622

REGISTERED CIVIL ENGINEER 3-18-15 DATE

1-25-16
PLANS APPROVAL DATE

REGISTERED PROFESSIONAL ENGINEER William D. Kemp No. 55730 Exp. 12-31-16 CIVIL STATE OF CALIFORNIA

The State of California or its officers or agents shall not be responsible for the accuracy or completeness of electronic copies of this plan sheet.

STANDARD PLANS DATED 2010

	A10A	ABBREVIATIONS (SHEET 1 OF 2)
RSP	A10B	ABBREVIATIONS (SHEET 2 OF 2)
	A10C	LINES AND SYMBOLS (SHEET 1 OF 3)
	A10D	LINES AND SYMBOLS (SHEET 2 OF 3)
	A10E	LINES AND SYMBOLS (SHEET 3 OF 3)
RSP	A10F	LEGEND - SOIL (SHEET 1 OF 2)
RSP	A10G	LEGEND - SOIL (SHEET 2 OF 2)
	A10H	LEGEND - ROCK
	A62B	LIMITS OF PAYMENT FOR EXCAVATION AND BACKFILL- BRIDGE SURCHARGE AND WALL
	BO-3	BRIDGE DETAILS
	B2-5	PILE DETAILS CLASS 90 AND CLASS 140
RSP	B3-1A	RETAINING WALL TYPE 1 (CASE 1)
RSP	B3-5	RETAINING WALL DETAILS NO. 1
RSP	B11-56	CONCRETE BARRIER TYPE 736

INDEX TO PLANS

SHEET No.	TITLE
1	GENERAL PLAN
2	STRUCTURE PLAN NO. 1
3	STRUCTURE PLAN NO. 2
4	RETAINING WALL DETAILS
5	ARCHITECTURAL TREATMENT DETAILS
6	BARRIER MOTIF DETAILS
7	LOG OF TEST BORINGS SHEET 1 OF 2
8	LOG OF TEST BORINGS SHEET 2 OF 2

STANDARD PLAN SHEET No.

DETAIL No.

PILE DATA TABLE

PILE TYPE	NOMINAL RESISTANCE (kips)		DESIGN TIP ELEVATIONS (ft)	SPECIFIED TIP ELEVATION (ft)	NOMINAL DRIVING RESISTANCE (kips)
	COMPRESSION	TENSION			
CLASS 90 PP14x0.375 ALT. W	180	10	+10.0 (a) +50.0 (b) +25.0 (c)	+10	180

Notes: 1. Design tip elevations are controlled by: (a) Compression (b) Tension, (c) Settlement
2. The specified tip elevation for driven piles shall not be raised above the design tip elevations for tension load and tolerable settlement

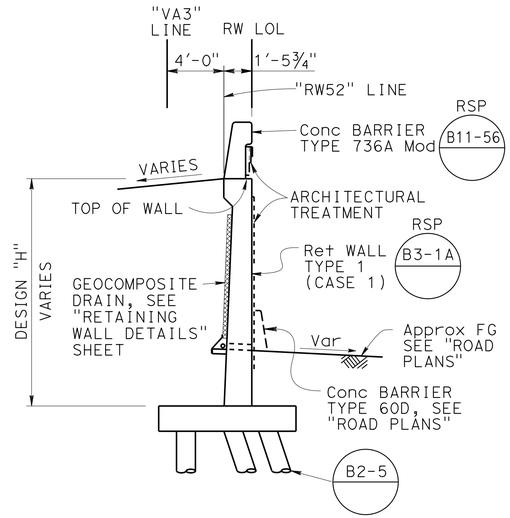

TYPICAL SECTION
NO SCALE

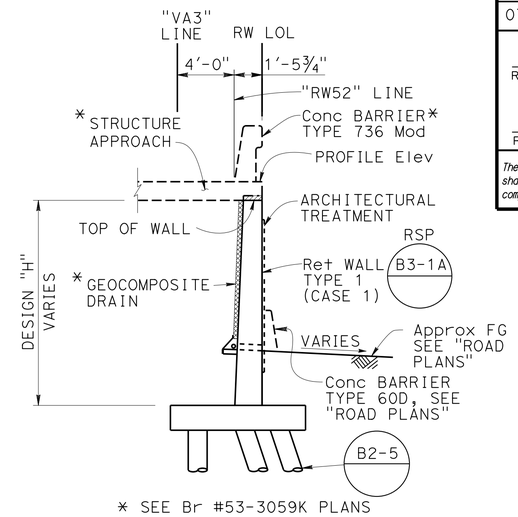

* SEE Br #53-3059K PLANS

TYPICAL SECTION AT STRUCTURE APPROACH
NO SCALE

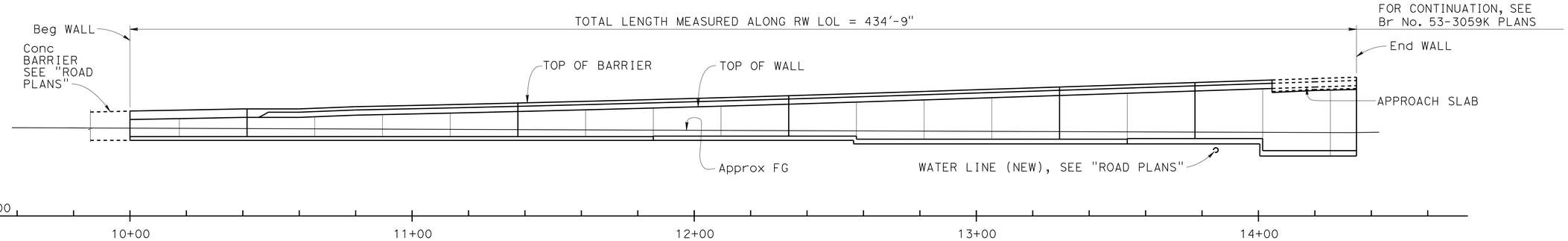

Note: Piles not shown

ELEVATION
1" = 20'-0"

QUANTITIES

STRUCTURE EXCAVATION (RETAINING WALL)	1,660	CY
STRUCTURE BACKFILL (RETAINING WALL)	1,207	CY
FURNISH PILING (CLASS 90) (ALTERNATIVE W)	5,847	CY
DRIVE PILE (CLASS 90) (ALTERNATIVE W)	111	EA
STRUCTURAL CONCRETE, RETAINING WALL	510	CY
ARCHITECTURAL TREATMENT (SPLIT SLATE)	3,910	SQFT
BAR REINFORCING STEEL (RETAINING WALL)	88,110	LB
CONCRETE BARRIER (TYPE 736A MODIFIED)	408	LF

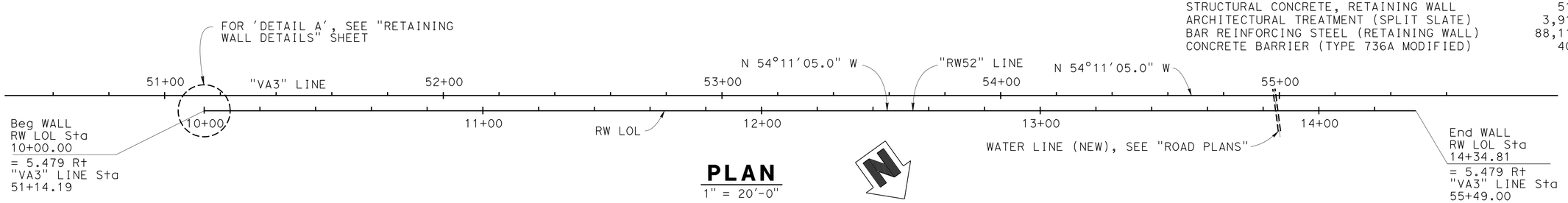

PLAN
1" = 20'-0"

Ramin Rashedi 3-18-15 DESIGN ENGINEER	DESIGN	BY M. Okimura	CHECKED C. Manansala	LOAD & RESISTANCE FACTOR DESIGN	LIVE LOADING: HL93 W/"LOW-BOY"; PERMIT DESIGN VEHICLE	
	DETAILS	BY J. Ramirez	CHECKED C. Manansala	LAYOUT	BY M. Okimura	CHECKED C. Manansala
	QUANTITIES	BY N. Shah	CHECKED J. Posey	SPECIFICATIONS	BY X. Li	PLANS AND SPECS COMPARED X. Li

ORIGINAL SCALE IN INCHES FOR REDUCED PLANS 0 1 2 3

STATE OF CALIFORNIA
DEPARTMENT OF TRANSPORTATION

DIVISION OF ENGINEERING SERVICES
STRUCTURE DESIGN
DESIGN BRANCH 11

BRIDGE NO. 53E0260
POST MILE 0.97

RETAINING WALL 52
GENERAL PLAN

UNIT: 3587
PROJECT NUMBER & PHASE: 0715000160-1
CONTRACT NO.: 07-2159u4

DISREGARD PRINTS BEARING EARLIER REVISION DATES

REVISION DATES 8-24-11 6-12-13 7-17-13 5-28-13

SHEET 1 OF 8

USERNAME => s12562d DATE PLOTTED => 28-JAN-2016 TIME PLOTTED => 12:25

STRUCTURES DESIGN GENERAL PLAN SHEET (ENGLISH) (REV.09-01-10)

FILE => 53e0260-a-gp.dgn

DIST	COUNTY	ROUTE	POST MILES TOTAL PROJECT	SHEET No.	TOTAL SHEETS
07	LA,Ora	5	0.0/1.5, 44.3/44.4	1419	1622

REGISTERED CIVIL ENGINEER — DATE: 3-18-15

1-25-16
PLANS APPROVAL DATE

REGISTERED PROFESSIONAL ENGINEER — William D. Kemp — No. 55730 — Exp. 12-31-16 — CIVIL — STATE OF CALIFORNIA

The State of California or its officers or agents shall not be responsible for the accuracy or completeness of electronic copies of this plan sheet.

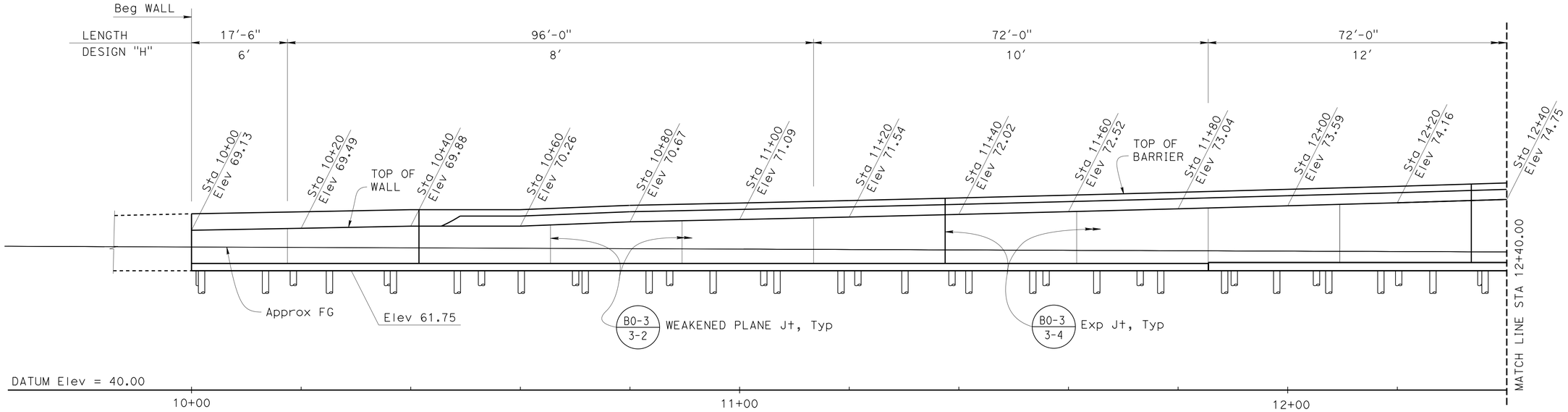

ELEVATION

1" = 10'-0"

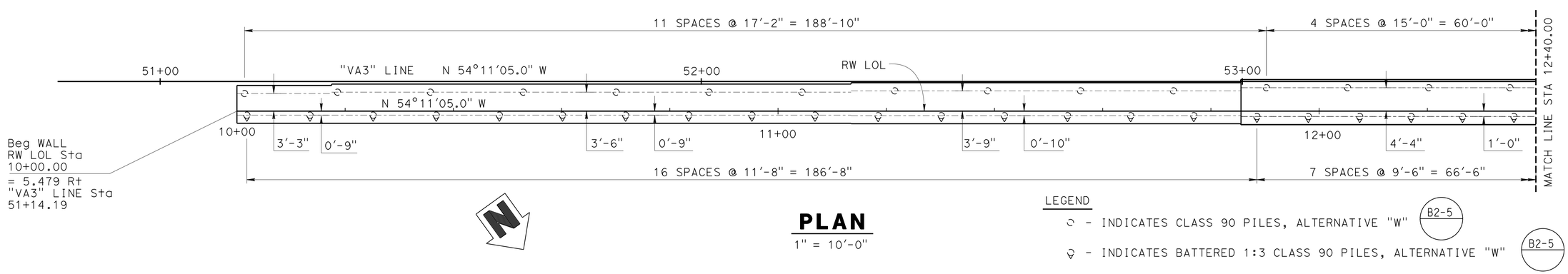

PLAN

1" = 10'-0"

LEGEND

- INDICATES CLASS 90 PILES, ALTERNATIVE "W" (B2-5)
- INDICATES BATTERED 1:3 CLASS 90 PILES, ALTERNATIVE "W" (B2-5)

	BY	CHECKED
DESIGN	M. Okimura	C. Manansala
DETAILS	L. Goldthwait	C. Manansala
QUANTITIES	N. Shah	J. Posey

STATE OF CALIFORNIA
DEPARTMENT OF TRANSPORTATION

DIVISION OF ENGINEERING SERVICES
STRUCTURE DESIGN
DESIGN BRANCH 11

BRIDGE NO. 53E0260
POST MILE 0.97

RETAINING WALL 52
STRUCTURE PLAN NO. 1

STRUCTURES DESIGN DETAIL SHEET (ENGLISH) (REV. 09-01-10)

ORIGINAL SCALE IN INCHES FOR REDUCED PLANS 0 1 2 3

UNIT: 3587
PROJECT NUMBER & PHASE: 0715000160-1
CONTRACT NO.: 07-2159U4

DISREGARD PRINTS BEARING EARLIER REVISION DATES

REVISION DATES: 7-12-12 8-13-12 2-28-13 7-17-13

SHEET 2 OF 8

FILE => 53e0260-b-sp1.dgn

USERNAME => s125624 DATE PLOTTED => 28-JAN-2016 TIME PLOTTED => 12:25

DIST	COUNTY	ROUTE	POST MILES TOTAL PROJECT	SHEET No.	TOTAL SHEETS
07	LA,Ora	5	0.0/1.5, 44.3/44.4	1420	1622

William Kemp 3-18-15
REGISTERED CIVIL ENGINEER DATE

1-25-16
PLANS APPROVAL DATE

REGISTERED PROFESSIONAL ENGINEER
William D. Kemp
No. 55730
Exp. 12-31-16
CIVIL
STATE OF CALIFORNIA

The State of California or its officers or agents shall not be responsible for the accuracy or completeness of electronic copies of this plan sheet.

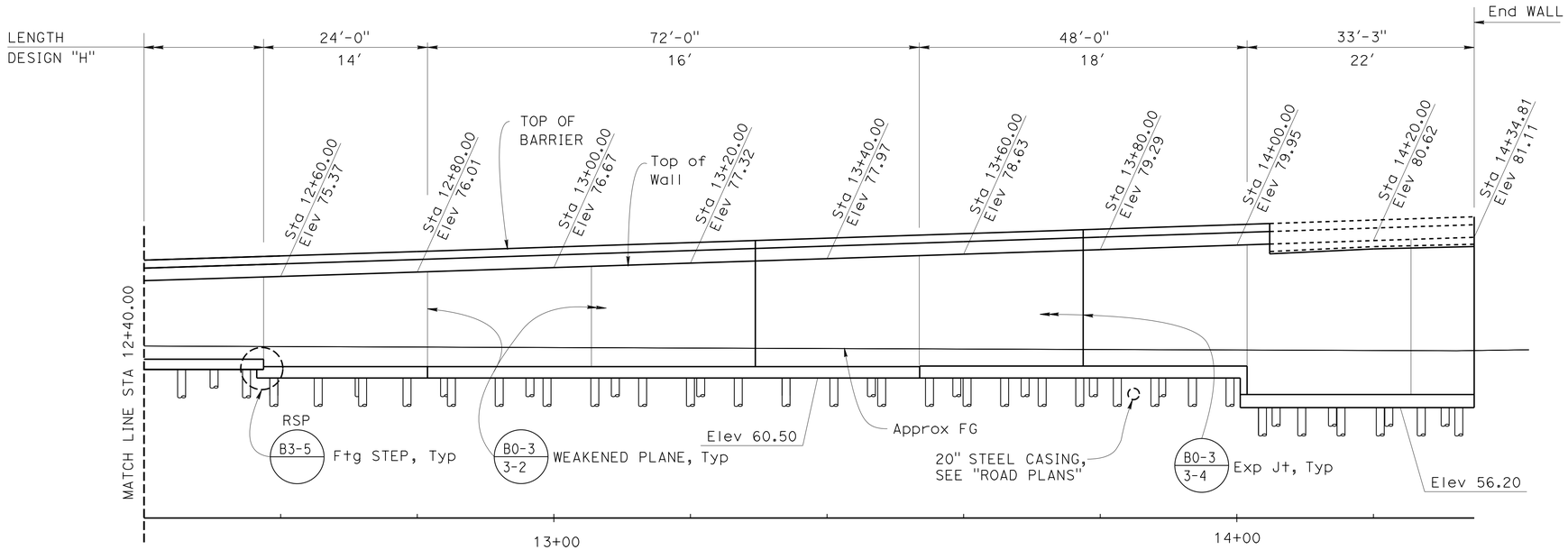

ELEVATION

1" = 10'-0"

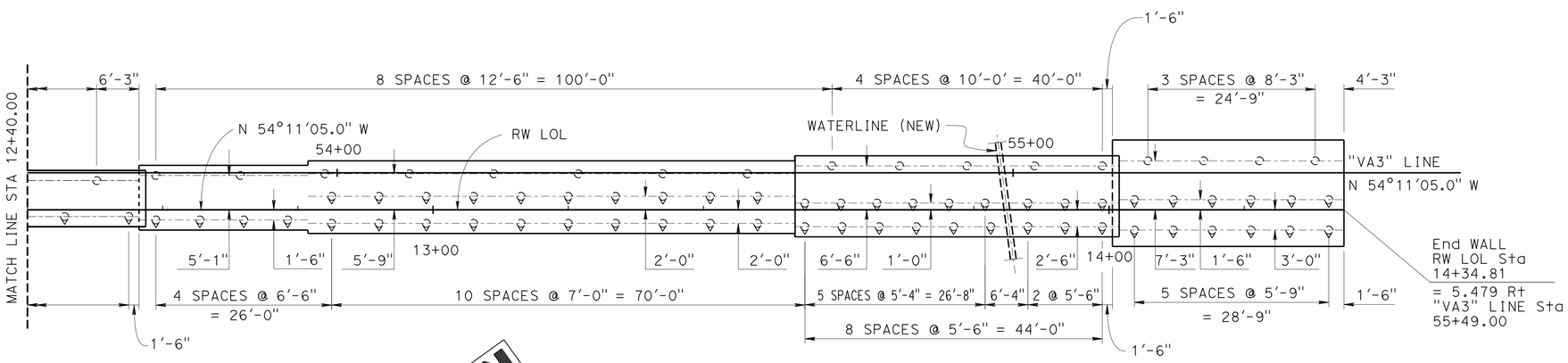

PLAN

1" = 10'-0"

LEGEND

○ - INDICATES CLASS 90 PILES, ALTERNATIVE "W" (B2-5)

○ - INDICATES BATTERED 1:3 CLASS 90 PILES, ALTERNATIVE "W" (B2-5)

	BY	CHECKED
DESIGN	M. Okimura	C. Manansala
DETAILS	L. Goldthwait	C. Manansala
QUANTITIES	N. Shah	J. Posey

STATE OF CALIFORNIA
DEPARTMENT OF TRANSPORTATION

DIVISION OF ENGINEERING SERVICES
STRUCTURE DESIGN
DESIGN BRANCH 11

BRIDGE NO. 53E0260
POST MILE 0.97

RETAINING WALL 52
STRUCTURE PLAN NO. 2

STRUCTURES DESIGN DETAIL SHEET (ENGLISH) (REV. 09-01-10)

ORIGINAL SCALE IN INCHES FOR REDUCED PLANS 0 1 2 3

UNIT: 3587
PROJECT NUMBER & PHASE: 0715000160-1
CONTRACT NO.: 07-2159U4

DISREGARD PRINTS BEARING EARLIER REVISION DATES

REVISION DATES: 7-12-12 7-17-13 8-24-12 2-28-13

SHEET 3 OF 8

FILE => 53e0260-b-sp2.dgn

USERNAME => s125624 DATE PLOTTED => 28-JAN-2016 TIME PLOTTED => 12:25

DIST	COUNTY	ROUTE	POST MILES TOTAL PROJECT	SHEET No.	TOTAL SHEETS
07	LA,Ora	5	0.0/1.5, 44.3/44.4	1421	1622

William Kemp 3-18-15
REGISTERED CIVIL ENGINEER DATE

1-25-16
PLANS APPROVAL DATE

REGISTERED PROFESSIONAL ENGINEER William D. Kemp No. 55730 Exp. 12/31/16 CIVIL STATE OF CALIFORNIA

The State of California or its officers or agents shall not be responsible for the accuracy or completeness of electronic copies of this plan sheet.

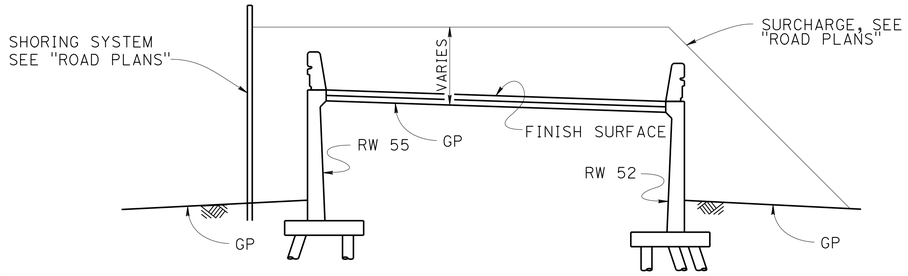

EMBANKMENT SURCHARGE

NO SCALE

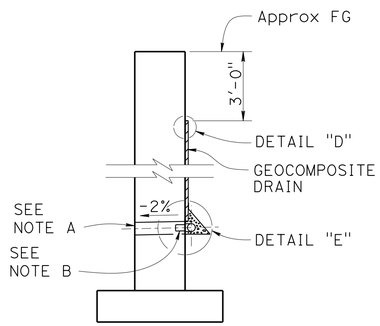

WALL SECTION

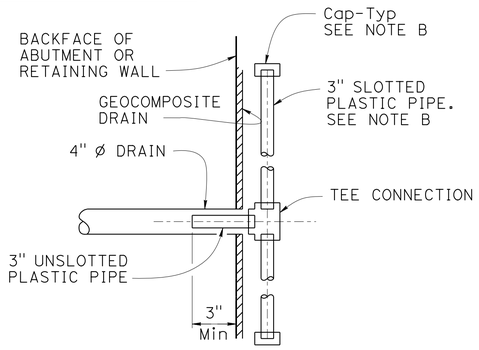

SECTION K-K

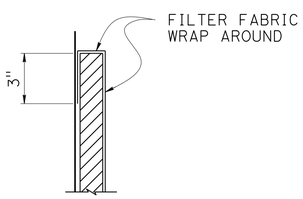

DETAIL "D"

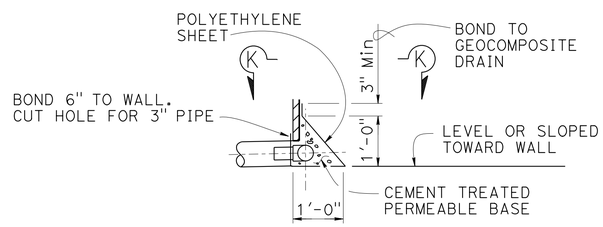

DETAIL "E"

WEEP HOLE AND GEOCOMPOSITE DRAIN

NO SCALE

Notes (GEOCOMPOSITE DRAIN):

A. 4" Ø drains at intermediate sag points and at 25'-0" center to center. For walls adjacent to sidewalks or curbs, provide 4" Ø cast iron or asbestos cement pipe under the sidewalk to discharge through curb face. Exposed wall drains shall be located 3" ± above finished grade.

B. Geocomposite drain, cement treated permeable base, and 3" Ø slotted plastic pipe continuous behind retaining wall or abutment. Cap ends of pipe. Provide "Tee" connection at each 4" Ø drain.

C. Connect the low end of plastic pipe to the main outlet pipe as applicable.

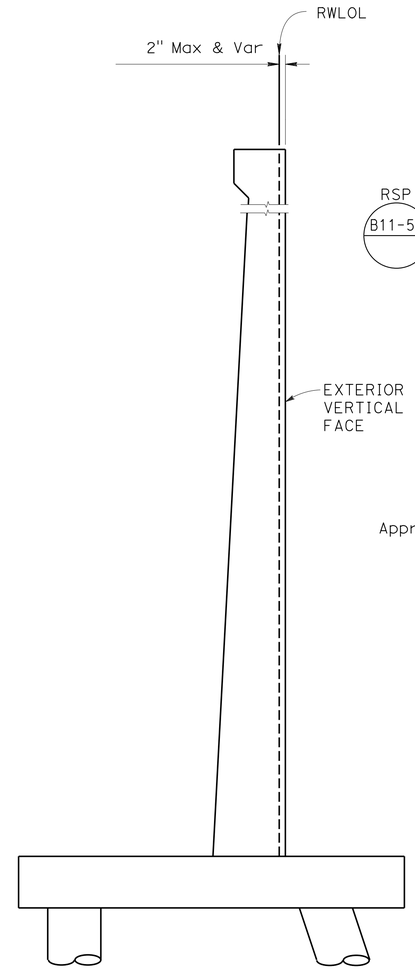

RETAINING WALL TYPE 1 (CASE 1) AT TRANSITION

NO SCALE

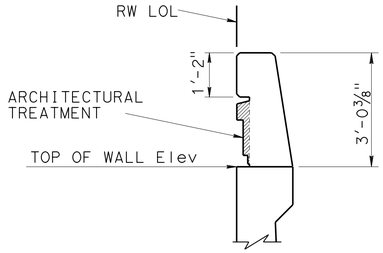

RSP B11-56

BARRIER TYPE 736A Mod

NO SCALE

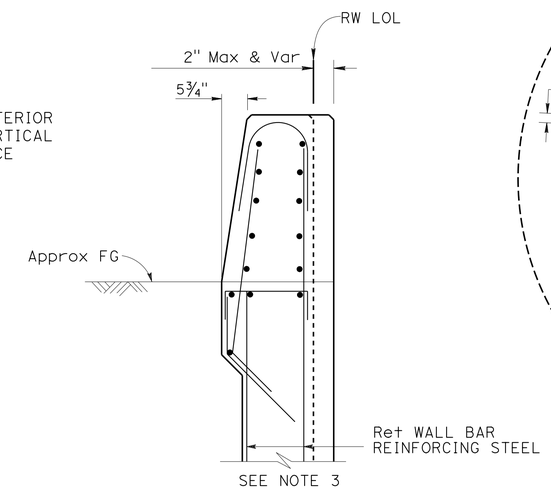

TYPE 736A Mod AT TRANSITION

NO SCALE

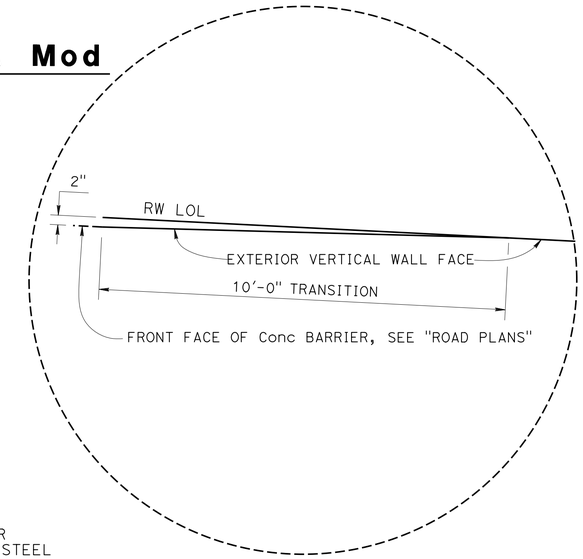

DETAIL 'A'

NO SCALE

Note: For details not shown, see Standard Plan RSP B11-56, Section A-A

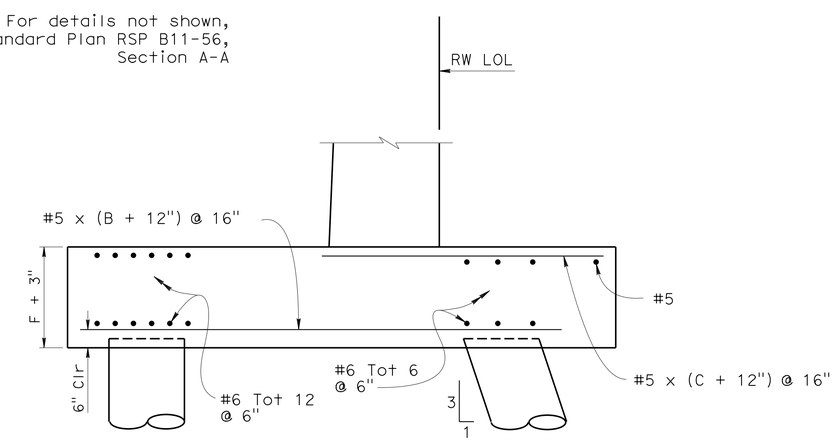

PILE FOOTING SECTION

NO SCALE

Notes:

1. Reinforcement shown is in addition to that shown in RSP B3-1A
2. For "F", "X" and "C" dimensions, see RSP B3-1A
3. For Details not shown, see Standard Plan RSP B11-56, Section A-A

	BY	CHECKED
DESIGN	M. Okimura	C. Manansala
DETAILS	J. Ramirez	C. Manansala
QUANTITIES	N. Shah	J. Posey

STATE OF CALIFORNIA
DEPARTMENT OF TRANSPORTATION

DIVISION OF ENGINEERING SERVICES
STRUCTURE DESIGN
DESIGN BRANCH 11

BRIDGE NO. 53E0260
POST MILE 0.97

RETAINING WALL 52
RETAINING WALL DETAILS

STRUCTURES DESIGN DETAIL SHEET (ENGLISH) (REV. 09-01-10)

ORIGINAL SCALE IN INCHES FOR REDUCED PLANS 0 1 2 3

UNIT: 3587
PROJECT NUMBER & PHASE: 0715000160-1
CONTRACT NO.: 07-2159U4

DISREGARD PRINTS BEARING EARLIER REVISION DATES

REVISION DATES: ~~8-12-11~~ ~~7-13-12~~ 8-24-12 7-17-13

SHEET 4 OF 8

FILE => 53e0260-c-ret.dgn

USERNAME => s125624 DATE PLOTTED => 28-JAN-2016 TIME PLOTTED => 12:25

DIST	COUNTY	ROUTE	POST MILES TOTAL PROJECT	SHEET No.	TOTAL SHEETS
07	LA,Ora	5	0.0/1.5, 44.3/44.4	1422	1622

REGISTERED CIVIL ENGINEER 3-18-15 DATE

1-25-16
PLANS APPROVAL DATE

REGISTERED PROFESSIONAL ENGINEER WILLIAM D. KEMP No. 55730 Exp. 12/31/16 CIVIL STATE OF CALIFORNIA

The State of California or its officers or agents shall not be responsible for the accuracy or completeness of electronic copies of this plan sheet.

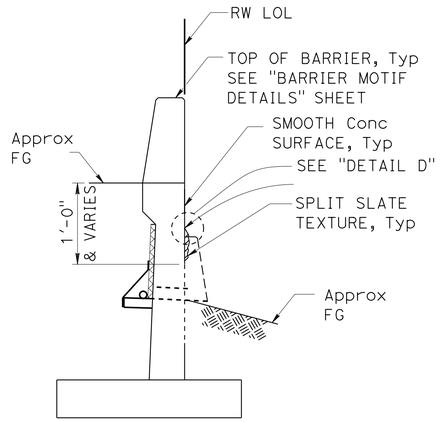

SECTION A-A
3/8" = 1'-0"

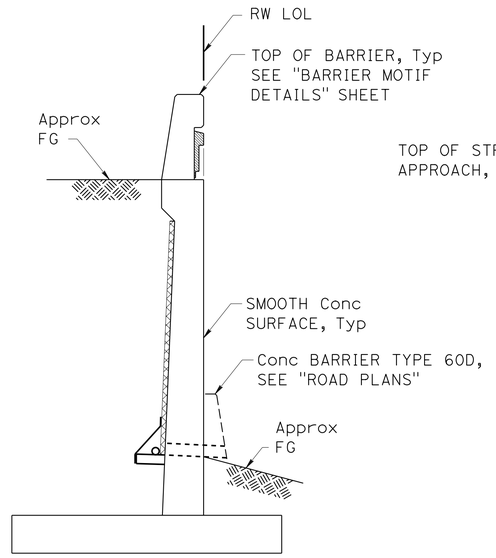

SECTION B-B
3/8" = 1'-0"

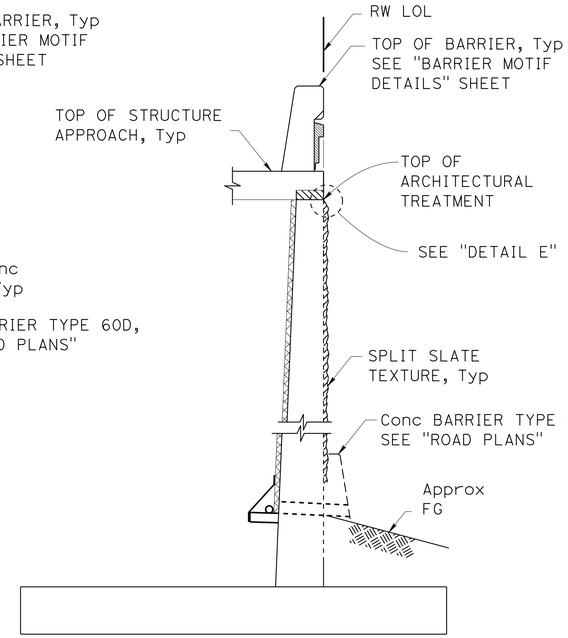

SECTION C-C
3/8" = 1'-0"

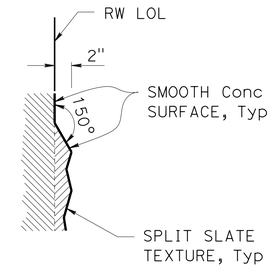

DETAIL D
NO SCALE

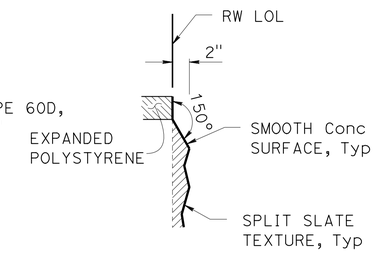

DETAIL E
NO SCALE

Note:
All surface relief and texture shall be measured from RW LOL, Typ

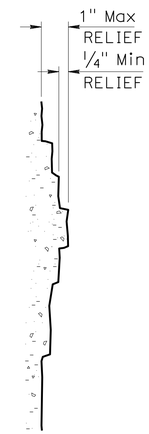

SECTION F-F
NO SCALE

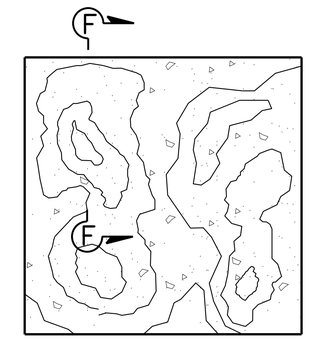

SPLIT SLATE TEXTURE
NO SCALE

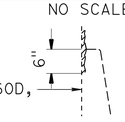

ARCH LIMITS AT BARRIER FACE
NO SCALE

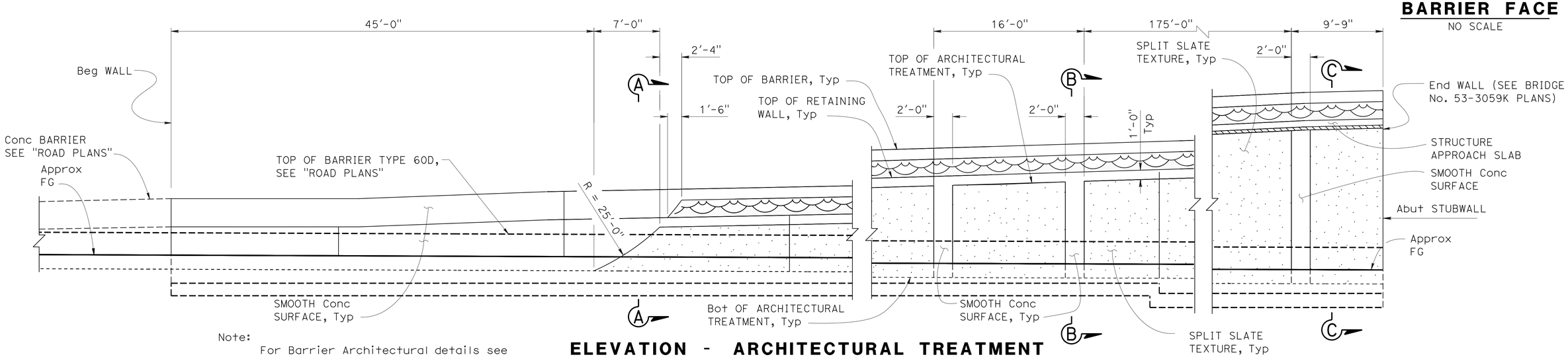

Note:
For Barrier Architectural details see "BARRIER MOTIF DETAILS" sheet.

ELEVATION - ARCHITECTURAL TREATMENT
3/16" = 1'-0"

	BY	CHECKED
DESIGN	I. Tasabia	H. J. Chavez
DETAILS	H. Mauroschadt	H. J. Chavez
QUANTITIES	N. Shah	J. Posey

STATE OF CALIFORNIA
DEPARTMENT OF TRANSPORTATION

DIVISION OF ENGINEERING SERVICES
STRUCTURE DESIGN
DESIGN BRANCH 11

BRIDGE NO. 53E0260
POST MILE 0.97

RETAINING WALL 52
ARCHITECTURAL TREATMENT DETAILS

STRUCTURES DESIGN DETAIL SHEET (ENGLISH) (REV. 09-01-10)

ORIGINAL SCALE IN INCHES FOR REDUCED PLANS 0 1 2 3

UNIT: 3587
PROJECT NUMBER & PHASE: 0715000160-1
CONTRACT NO.: 07-2159u4

DISREGARD PRINTS BEARING EARLIER REVISION DATES

REVISION DATES: 5-24-12 11-05-12 12-6-12 7-17-13

SHEET 5 OF 8

FILE => 53e0260-g-arch1.dgn

USERNAME => s125624 DATE PLOTTED => 28-JAN-2016 TIME PLOTTED => 12:25

DIST	COUNTY	ROUTE	POST MILES TOTAL PROJECT	SHEET No.	TOTAL SHEETS
07	LA,Ora	5	0.0/1.5, 44.3/44.4	1423	1622

REGISTERED CIVIL ENGINEER — DATE: 3-18-15

1-25-16
PLANS APPROVAL DATE

REGISTERED PROFESSIONAL ENGINEER — WILLIAM D. KEMP — No. 55730 — Exp. 12/31/16 — CIVIL — STATE OF CALIFORNIA

The State of California or its officers or agents shall not be responsible for the accuracy or completeness of electronic copies of this plan sheet.

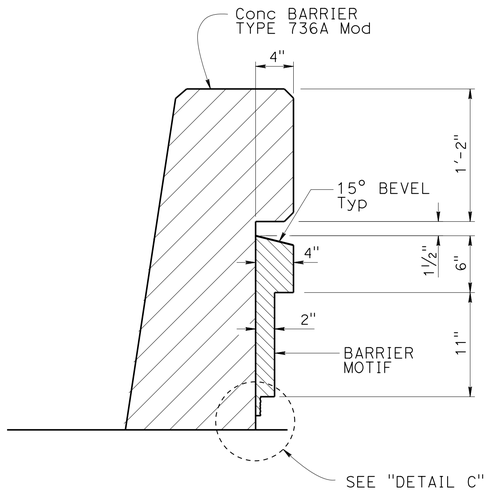

SECTION A-A
1½" = 1'-0"

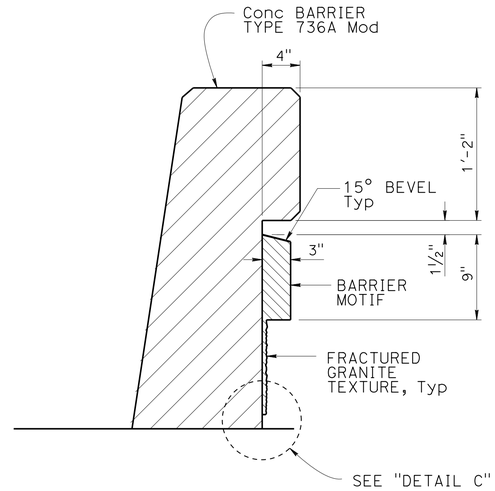

SECTION B-B
1½" = 1'-0"

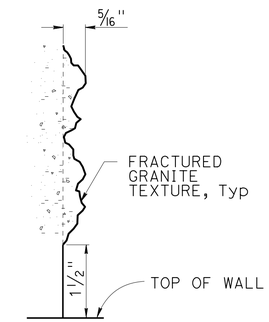

DETAIL C
NO SCALE

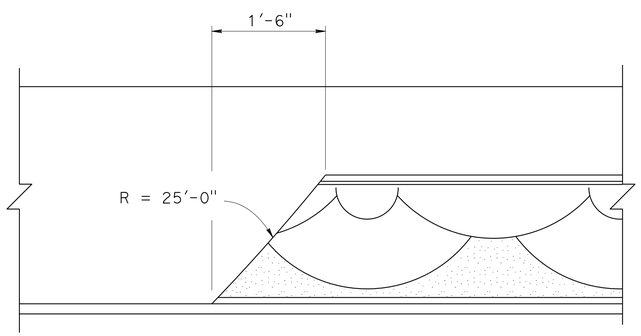

BARRIER END DETAIL
1" = 1'-0"

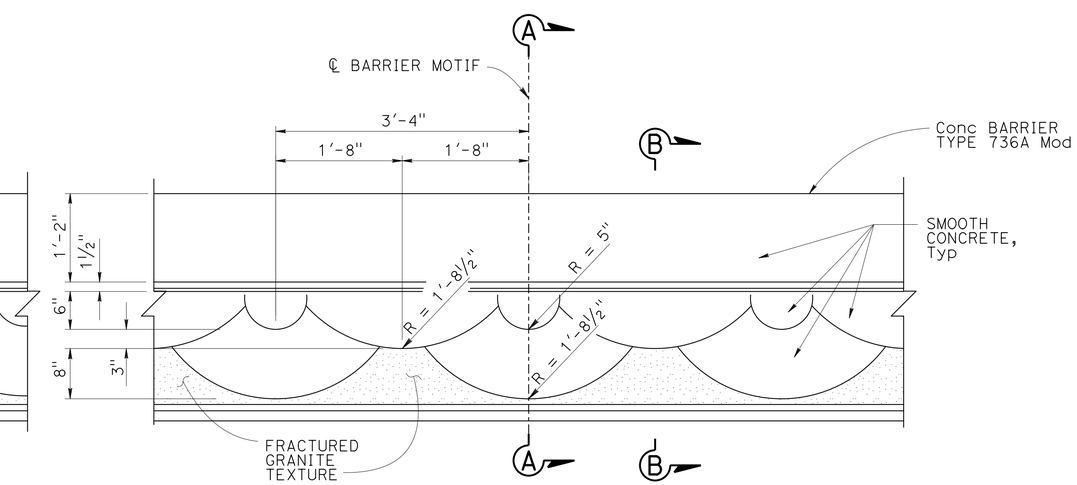

PARTIAL ELEVATION - BARRIER MOTIF
1" = 1'-0"

DESIGN	BY I. Tasabia	CHECKED H. J. Chavez	
DETAILS	BY H. Mauroschadt	CHECKED H. J. Chavez	
QUANTITIES	BY N. Shah	CHECKED J. Posey	

STATE OF CALIFORNIA
DEPARTMENT OF TRANSPORTATION

DIVISION OF ENGINEERING SERVICES
STRUCTURE DESIGN
DESIGN BRANCH 11

BRIDGE NO. 53E0260
POST MILE 0.97

RETAINING WALL 52
BARRIER MOTIF DETAILS

STRUCTURES DESIGN DETAIL SHEET (ENGLISH) (REV. 09-01-10)

ORIGINAL SCALE IN INCHES FOR REDUCED PLANS 0 1 2 3

UNIT: 3587
PROJECT NUMBER & PHASE: 0715000160-1
CONTRACT NO.: 07-2159U4

DISREGARD PRINTS BEARING EARLIER REVISION DATES

REVISION DATES: 5-22-12 11-05-12 2/27/13 7-17-13

SHEET 6 OF 8

FILE => 53e0260-g-arch2.dgn

USERNAME => s125624 DATE PLOTTED => 28-JAN-2016 TIME PLOTTED => 12:25

BENCH MARK

GPS 0887
ELEVATION 65.915 FT
FD 2-1/2 CADT DISK IN CONC. CURB
FLUSH, STAMPED "LA-5-1.0, 1995"
LOCATED 90' N OF THE SOUTH SIDE
FIRESTONE BLVD 0.2 MI SE OF VALLEY VIEW
NORTHING 542395.636
EASTING 1997613.893
DATUM NAVD88

DIST	COUNTY	ROUTE	POST MILES TOTAL PROJECT	SHEET No.	TOTAL SHEETS
07	LA,Ora	5	0.0/1.5, 44.3/44.4	1424	1622

REGISTERED CIVIL ENGINEER 05/20/15 DATE

1-25-16
PLANS APPROVAL DATE

REGISTERED PROFESSIONAL ENGINEER MICHAEL G. SMITH No. 2229 Exp. 03/31/16 GEOTECHNICAL STATE OF CALIFORNIA

URS CORPORATION
2020 EAST FIRST STREET, SUITE 400
SANTA ANA, CA 92705

The State of California or its officers or agents shall not be responsible for the accuracy or completeness of electronic copies of this plan sheet.

1-This LOTB sheet was prepared in accordance with the Caltrans Soil & Rock Logging, Classification, & Presentation Manual (2010 Edition).

2-For protection of underground utility lines, hand-auger was used to remove top 5 to 10 feet of subsurface material for exploratory borings and Cone Penetration Testings.

3-2.5" to 1.4" blow counts conversion factors for fine-grain and coarse-grain soils have been 0.8 and 0.55, respectively.

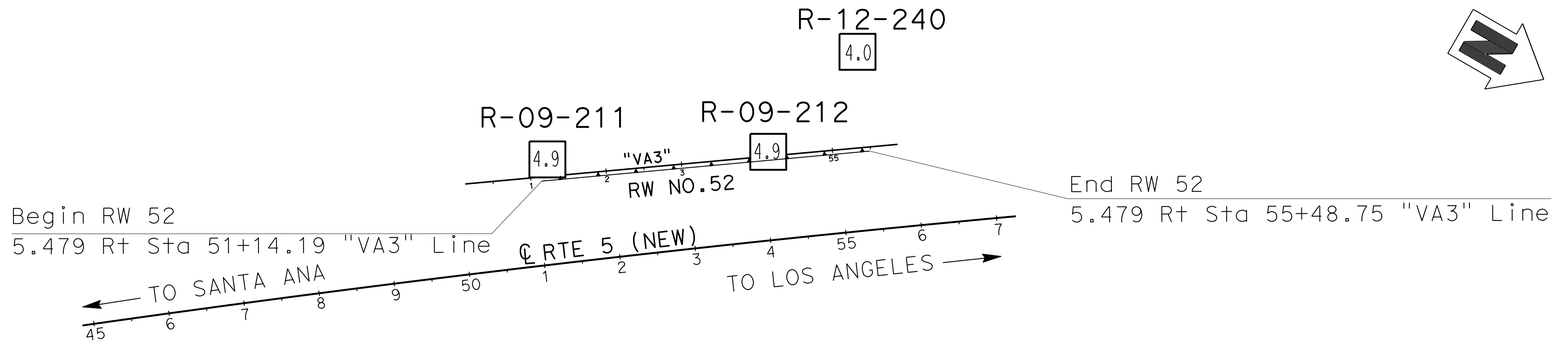

PLAN

SCALE 1"=100'

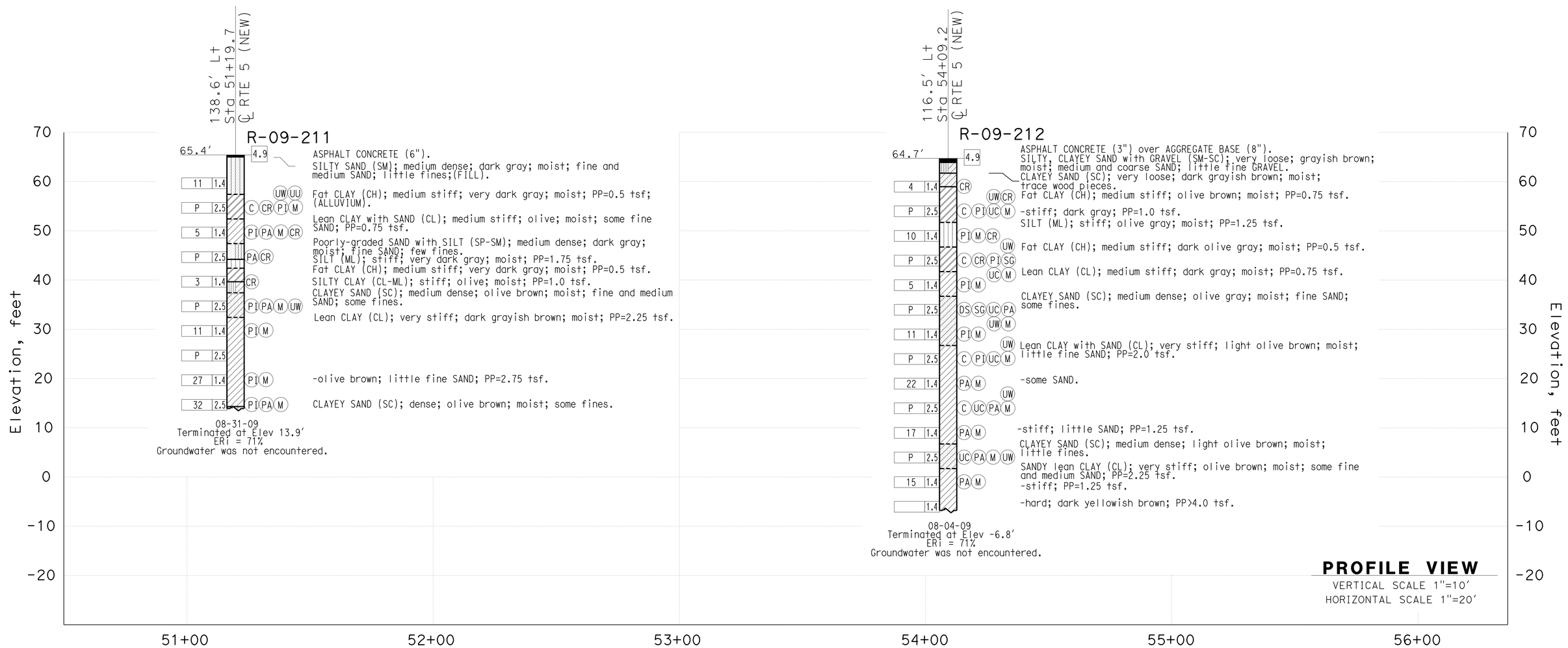

PROFILE VIEW

VERTICAL SCALE 1"=10'
HORIZONTAL SCALE 1"=20'

F.MOTAMED DESIGN OVERSIGHT	DRAWN BY	T.PANAH	EJ.JEON/P.MCDONALD FIELD INVESTIGATION BY:	PREPARED FOR THE STATE OF CALIFORNIA DEPARTMENT OF TRANSPORTATION	M.G. SMITH PROJECT ENGINEER
05/20/15 SIGN OFF DATE	CHECKED BY	A.GHAZINOOR/L.KHALKHALI	DATE: 08/04/09 - 08/31/09		

BRIDGE NO. 53E0260
POST MILES 0.97

RETAINING WALL NO. 52

LOG OF TEST BORINGS SHEET 1 OF 2

GS CIVIL LOG OF TEST BORINGS SHEET (ENGLISH) (REV. 03/14/12)

ORIGINAL SCALE IN INCHES FOR REDUCED PLANS 0 1 2 3

UNIT: 3658
PROJECT NUMBER & PHASE: 07150001601 CONTRACT NO.: 07-2159U4

DISREGARD PRINTS BEARING EARLIER REVISION DATES → 5/12/15

REVISION DATES | SHEET 7 OF 8

FILE => 53e0260-w-lotb1.dgn

USERNAME => s12562d DATE PLOTTED => 28-JAN-2016 TIME PLOTTED => 12:25

DIST	COUNTY	ROUTE	POST MILES TOTAL PROJECT	SHEET No.	TOTAL SHEETS
07	LA,Ora	5	0.0/1.5, 44.3/44.4	1425	1622

REGISTERED CIVIL ENGINEER 05/20/15 DATE

1-25-16
PLANS APPROVAL DATE

REGISTERED PROFESSIONAL ENGINEER MICHAEL G. SMITH No. 2229 Exp. 03/31/16 GEOTECHNICAL STATE OF CALIFORNIA

URS CORPORATION
2020 EAST FIRST STREET, SUITE 400
SANTA ANA, CA 92705

The State of California or its officers or agents shall not be responsible for the accuracy or completeness of electronic copies of this plan sheet.

1-This LOTB sheet was prepared in accordance with the Caltrans Soil & Rock Logging, Classification, & Presentation Manual (2010 Edition).

2-For protection of underground utility lines, hand-auger was used to remove top 5 to 10 feet of subsurface material for exploratory borings and Cone Penetration Testings.

3-2.5" to 1.4" blow counts conversion factors for fine-grain and coarse-grain soils have been 0.8 and 0.55, respectively.

FOR PLAN VIEW, SEE
"LOG OF TEST BORINGS" 1 OF 2

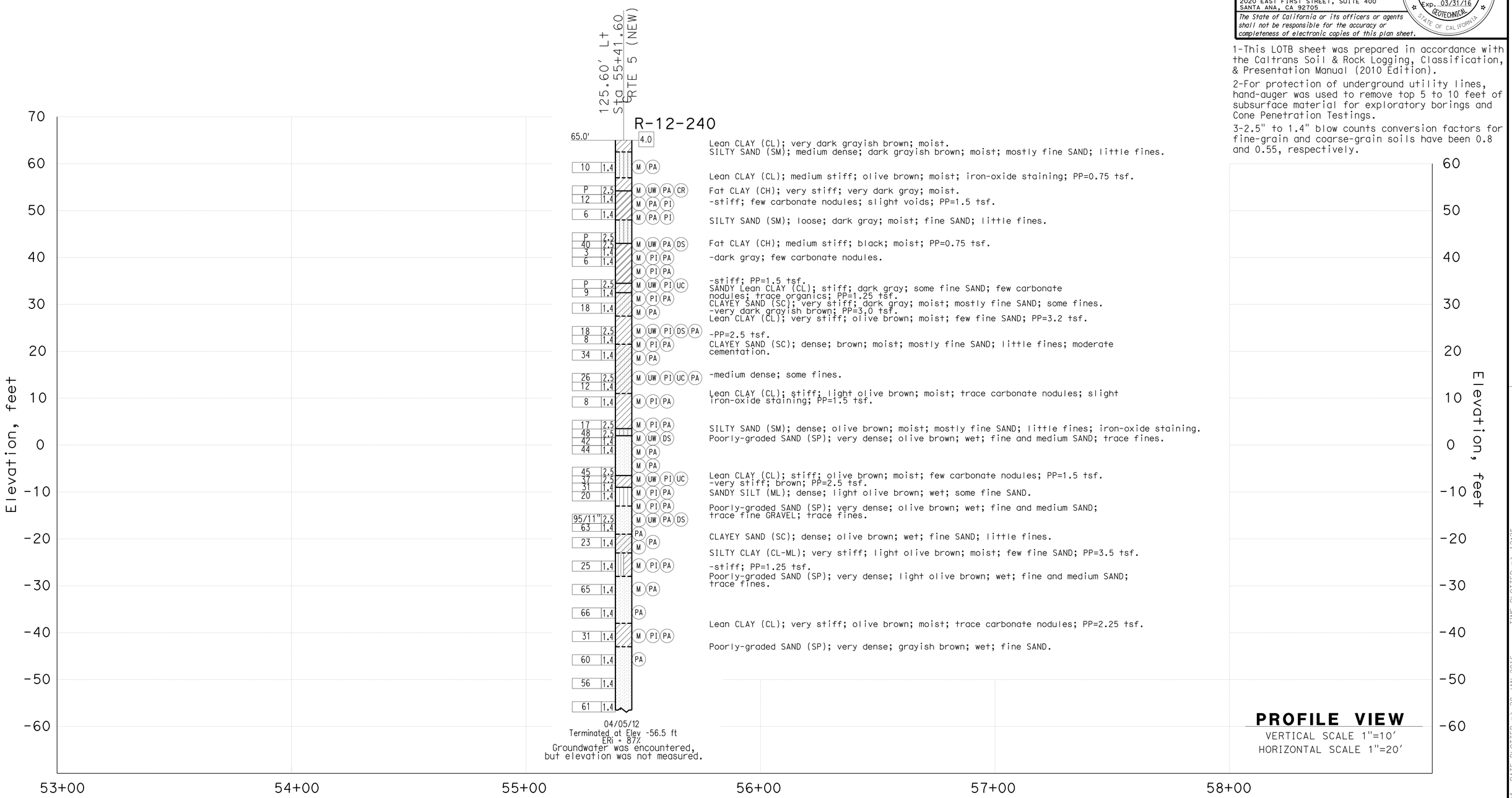

PROFILE VIEW
VERTICAL SCALE 1"=10'
HORIZONTAL SCALE 1"=20'

F.MOTAMED DESIGN OVERSIGHT 05/20/15 SIGN OFF DATE	DRAWN BY CHECKED BY	T.PANAH A.GHAZINOOR/L.KHALKHALI	EJ.JEON/P.MCDONALD FIELD INVESTIGATION BY: DATE: 04/05/12	PREPARED FOR THE STATE OF CALIFORNIA DEPARTMENT OF TRANSPORTATION	M.G. SMITH PROJECT ENGINEER

BRIDGE NO. 53E0260
POST MILES 0.97

RETAINING WALL NO. 52
LOG OF TEST BORINGS SHEET 2 OF 2

GS CIVIL LOG OF TEST BORINGS SHEET (ENGLISH) (REV. 03/14/12)

ORIGINAL SCALE IN INCHES FOR REDUCED PLANS 0 1 2 3

UNIT: 3658
PROJECT NUMBER & PHASE: 07150001601 CONTRACT NO.: 07-2159U4

DISREGARD PRINTS BEARING EARLIER REVISION DATES → 5/12/15

REVISION DATES | SHEET 8 | OF 8

FILE => 53e0260-w-lotb2.dgn

USERNAME => s12562d DATE PLOTTED => 28-JAN-2016 TIME PLOTTED => 12:25

DIST	COUNTY	ROUTE	POST MILES TOTAL PROJECT	SHEET No.	TOTAL SHEETS
07	LA,Ora	5	0.0/1.5, 44.3/44.4	1426	1622

REGISTERED CIVIL ENGINEER 3-18-15 DATE

1-25-16
PLANS APPROVAL DATE

REGISTERED PROFESSIONAL ENGINEER William D. Kemp No. 55730 Exp. 12-31-16 CIVIL STATE OF CALIFORNIA

The State of California or its officers or agents shall not be responsible for the accuracy or completeness of electronic copies of this plan sheet.

STANDARD PLANS DATED 2010

	A10A	ABBREVIATIONS (SHEET 1 OF 2)
RSP	A10B	ABBREVIATIONS (SHEET 2 OF 2)
	A10C	LINES AND SYMBOLS (SHEET 1 OF 3)
	A10D	LINES AND SYMBOLS (SHEET 2 OF 3)
	A10E	LINES AND SYMBOLS (SHEET 3 OF 3)
RSP	A10F	LEGEND - SOIL (SHEET 1 OF 2)
RSP	A10G	LEGEND - SOIL (SHEET 2 OF 2)
	A10H	LEGEND - ROCK
	A62B	LIMITS OF PAYMENT FOR EXCAVATION AND BACKFILL- BRIDGE SURCHARGE AND WALL
	B0-3	BRIDGE DETAILS
	B2-5	PILE DETAILS CLASS 90 AND CLASS 140
RSP	B3-1A	RETAINING WALL TYPE 1 (CASE 1)
RSP	B3-5	RETAINING WALL DETAILS NO. 1
RSP	B11-56	CONCRETE BARRIER TYPE 736

STANDARD PLAN SHEET No.

DETAIL No.

PILE DATA TABLE

PILE TYPE	NOMINAL RESISTANCE (kips)		DESIGN TIP ELEVATIONS (ft)	SPECIFIED TIP ELEVATION (ft)	NOMINAL DRIVING RESISTANCE (kips)
	COMPRESSION	TENSION			
CLASS 90 PP14x0.375 ALT W	180	10	+10.0 (a) +50.0 (b) +25.0 (c)	+10	180

Notes: 1. Design tip elevations are controlled by: (a) Compression (b) Tension, (c) Settlement
2. The specified tip elevation for driven piles shall not be raised above the design tip elevations for tension load and tolerable settlement

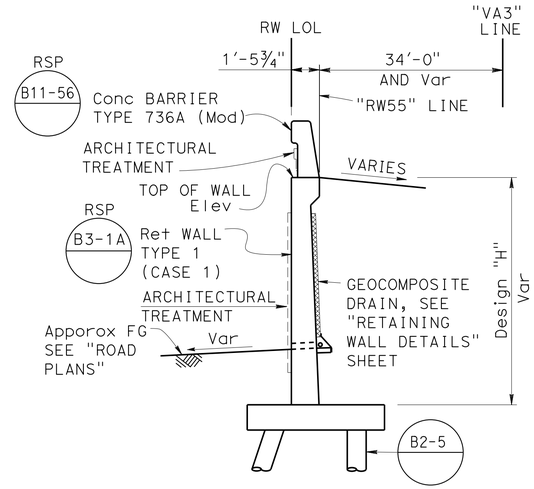

TYPICAL SECTION
NO SCALE

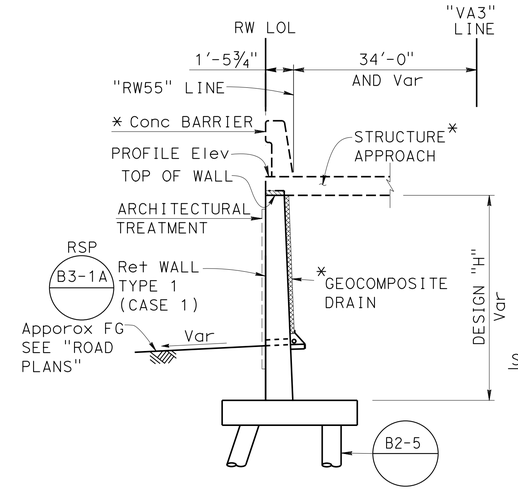

* SEE Br #53-3059K PLANS

TYPICAL SECTION AT STRUCTURE APPROACH
NO SCALE

INDEX TO PLANS

SHEET NO.	TITLE
1	GENERAL PLAN
2	STRUCTURE PLAN NO. 1
3	STRUCTURE PLAN NO. 2
4	STRUCTURE PLAN NO. 3
5	RETAINING WALL DETAILS
6	ARCHITECTURAL TREATMENT DETAILS
7	BARRIER MOTIF DETAILS
8	LOG OF TEST BORINGS SHEET 1 OF 2
9	LOG OF TEST BORINGS SHEET 2 OF 2

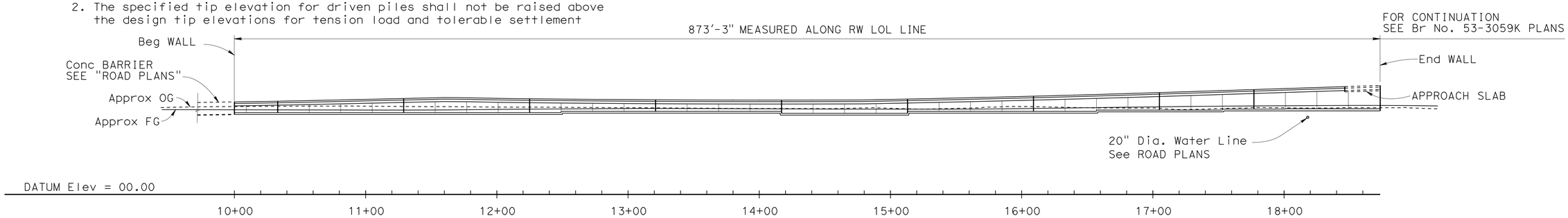

MIRRORED ELEVATION
1" = 40'

QUANTITIES

STRUCTURE EXCAVATION (RETAINING WALL)	1,890	CY
STRUCTURE BACKFILL (RETAINING WALL)	1,270	CY
FURNISH PILING (CLASS 90) (ALTERNATIVE W)	7,362	LF
DRIVE PILE (CLASS 90) (ALTERNATIVE W)	136	EA
STRUCTURAL CONCRETE, RETAINING WALL	726	CY
ARCHITECTURAL TREATMENT (SPLIT SLATE)	5,570	SQFT
BAR REINFORCING STEEL (RETAINING WALL)	118,800	LB
CONCRETE BARRIER (TYPE 736A MODIFIED)	846	LF

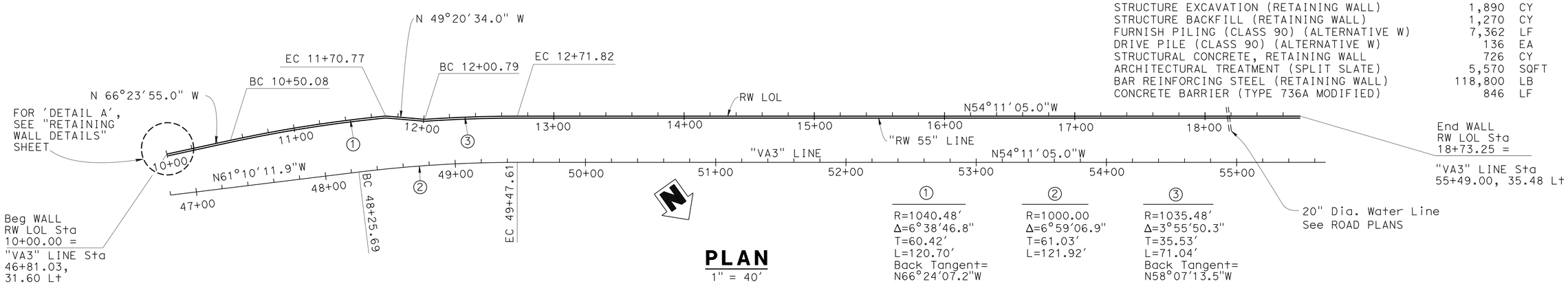

①	②	③
R=1040.48'	R=1000.00	R=1035.48'
Δ=6°38'46.8"	Δ=6°59'06.9"	Δ=3°55'50.3"
T=60.42'	T=61.03'	T=35.53'
L=120.70'	L=121.92'	L=71.04'
Back Tangent= N66°24'07.2"W		Back Tangent= N58°07'13.5"W

PLAN
1" = 40'

Ramin Rashedi 3-18-15
DESIGN ENGINEER

	BY	CHECKED
DESIGN	M. Okimura	C. Manansala
DETAILS	J. Ramirez	C. Manansala
QUANTITIES	R. Melko	J. Posey

LOAD & RESISTANCE FACTOR DESIGN — LIVE LOADING: HL93 W/"LOW-BOY"; PERMIT DESIGN VEHICLE

	BY	CHECKED
LAYOUT	Mark Okimura	C. Manansala
SPECIFICATIONS	X. Li	PLANS AND SPECS COMPARED X. Li

ORIGINAL SCALE IN INCHES FOR REDUCED PLANS 0 1 2 3

STATE OF CALIFORNIA
DEPARTMENT OF TRANSPORTATION

DIVISION OF ENGINEERING SERVICES
STRUCTURE DESIGN
DESIGN BRANCH 11

BRIDGE NO. 53E0261
POST MILE 0.89

RETAINING WALL 55
GENERAL PLAN

UNIT: 3587
PROJECT NUMBER & PHASE: 0715000160-1
CONTRACT NO.: 07-2159u4

DISREGARD PRINTS BEARING EARLIER REVISION DATES

REVISION DATES: 7-12-12 4-26-13 6-18-13 7-22-13

SHEET 1 OF 9

STRUCTURES DESIGN GENERAL PLAN SHEET (ENGLISH) (REV.09-01-10)

FILE => 53e0261-a-gp.dgn

USERNAME => s125624 DATE PLOTTED => 28-JAN-2016 TIME PLOTTED => 12:25

DIST	COUNTY	ROUTE	POST MILES TOTAL PROJECT	SHEET No.	TOTAL SHEETS
07	LA,Ora	5	0.0/1.5, 44.3/44.4	1427	1622

REGISTERED CIVIL ENGINEER — DATE: 3-18-15

1-25-16
PLANS APPROVAL DATE

REGISTERED PROFESSIONAL ENGINEER — William D. Kemp — No. 55730 — Exp. 12-31-16 — CIVIL — STATE OF CALIFORNIA

The State of California or its officers or agents shall not be responsible for the accuracy or completeness of scanned copies of this plan sheet.

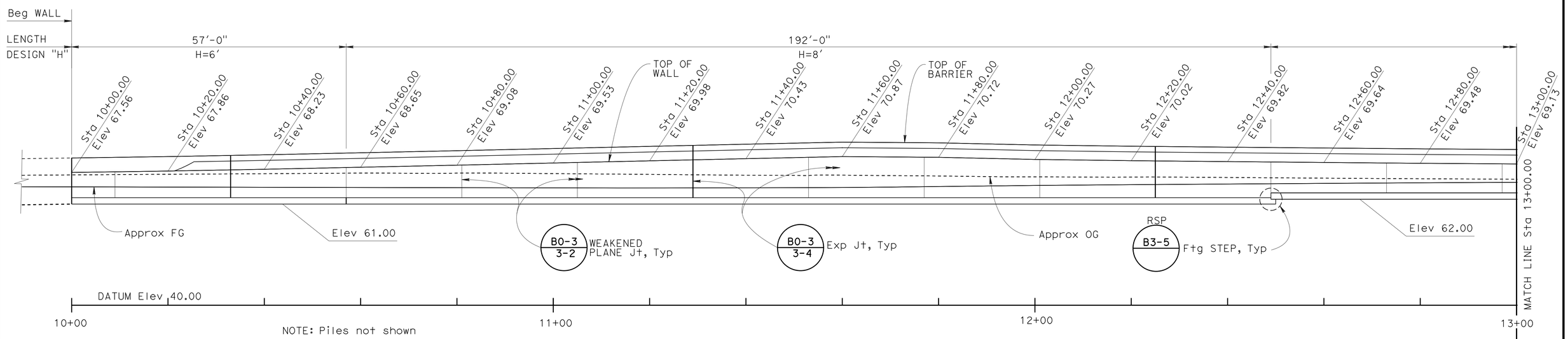

MIRRORED ELEVATION

1" = 10'-0"

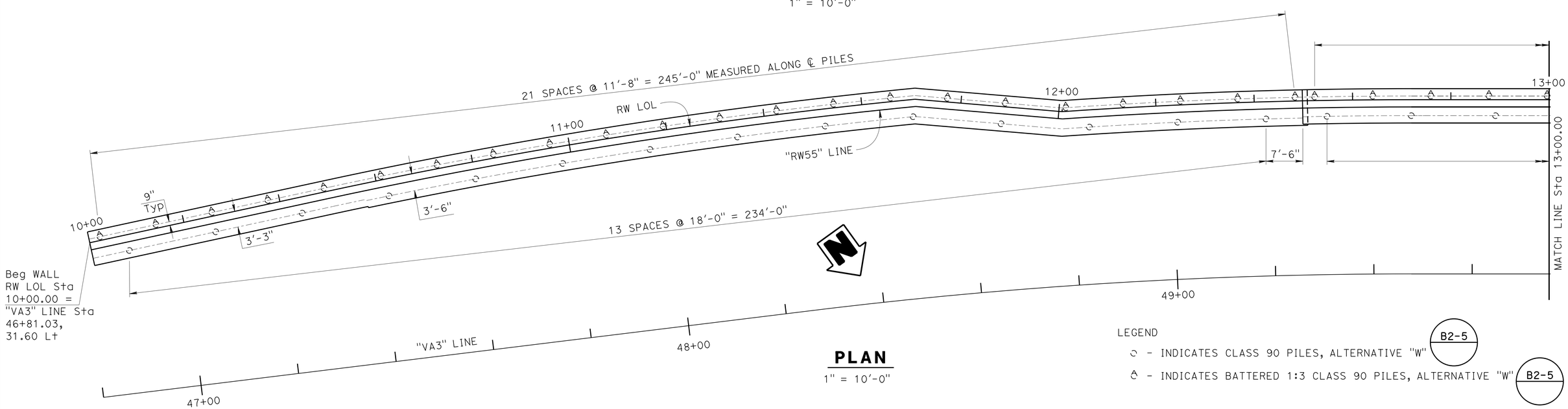

PLAN

1" = 10'-0"

LEGEND

- INDICATES CLASS 90 PILES, ALTERNATIVE "W" (B2-5)
- INDICATES BATTERED 1:3 CLASS 90 PILES, ALTERNATIVE "W" (B2-5)

	BY	CHECKED
DESIGN	M. Okimura	C. Manansala
DETAILS	L. Goldthwait	C. Manasala
QUANTITIES	R. Melko	J. Posey

STATE OF CALIFORNIA
DEPARTMENT OF TRANSPORTATION

DIVISION OF ENGINEERING SERVICES
STRUCTURE DESIGN
DESIGN BRANCH 11

BRIDGE NO. 53E0261
POST MILE 0.89

RETAINING WALL 55
STRUCTURE PLAN NO. 1

STRUCTURES DESIGN DETAIL SHEET (ENGLISH) (REV. 09-01-10)

ORIGINAL SCALE IN INCHES FOR REDUCED PLANS 0 1 2 3

UNIT: 3587
PROJECT NUMBER & PHASE: 0715000160-1
CONTRACT NO.: 07-2159u4

DISREGARD PRINTS BEARING EARLIER REVISION DATES

REVISION DATES: 6-28-13 7-02-13 7-22-13

SHEET 2 OF 9

FILE => 53e0261-b-sp1.dgn

USERNAME => s125624 DATE PLOTTED => 28-JAN-2016 TIME PLOTTED => 12:25

DIST	COUNTY	ROUTE	POST MILES TOTAL PROJECT	SHEET No.	TOTAL SHEETS
07	LA,Ora	5	0.0/1.5, 44.3/44.4	1428	1622

REGISTERED CIVIL ENGINEER — DATE: 3-18-15

1-25-16
PLANS APPROVAL DATE

REGISTERED PROFESSIONAL ENGINEER — William D. Kemp — No. 55730 — Exp. 12-31-16 — CIVIL — STATE OF CALIFORNIA

The State of California or its officers or agents shall not be responsible for the accuracy or completeness of scanned copies of this plan sheet.

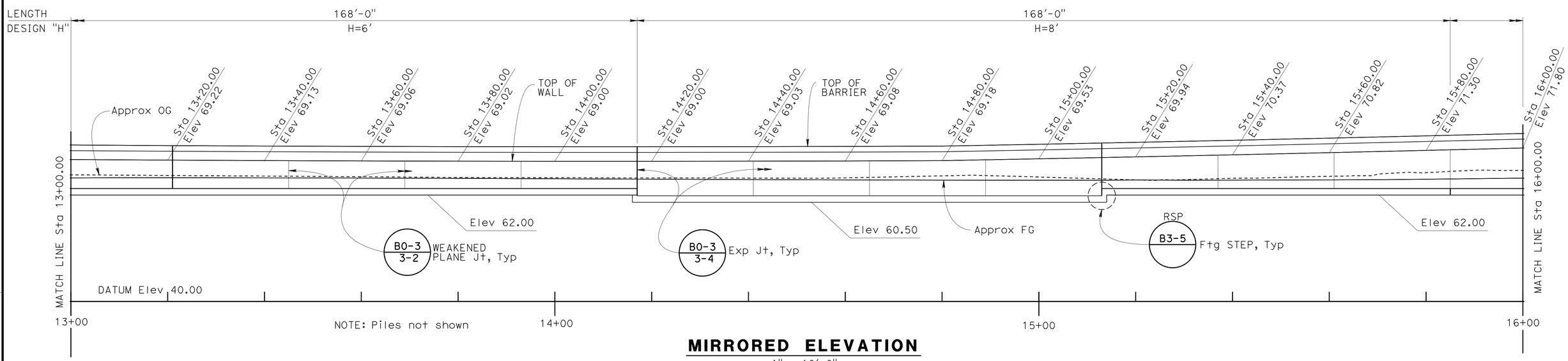

MIRRORED ELEVATION

1" = 10'-0"

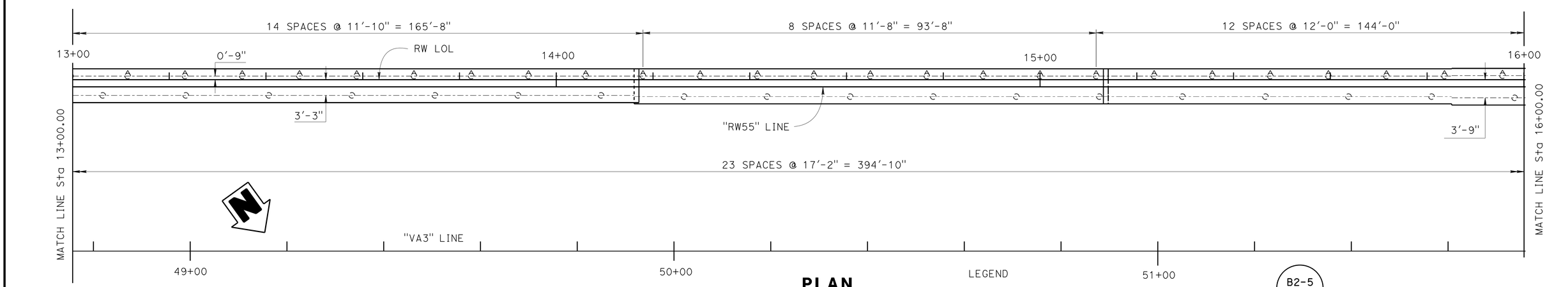

PLAN

1" = 10'-0"

LEGEND

- INDICATES CLASS 90 PILES, ALTERNATIVE "W" (B2-5)
- INDICATES BATTERED 1:3 CLASS 90 PILES, ALTERNATIVE "W" (B2-5)

	BY	CHECKED
DESIGN	M. Okimura	C. Manansala
DETAILS	L. Goldthwait	C. Manansala
QUANTITIES	R. Melko	J. Posey

STATE OF CALIFORNIA
DEPARTMENT OF TRANSPORTATION

DIVISION OF ENGINEERING SERVICES
STRUCTURE DESIGN
DESIGN BRANCH 11

BRIDGE NO. 53E0261
POST MILE 0.89

RETAINING WALL 55
STRUCTURE PLAN NO. 2

STRUCTURES DESIGN DETAIL SHEET (ENGLISH) (REV. 09-01-10)

ORIGINAL SCALE IN INCHES FOR REDUCED PLANS 0 1 2 3

UNIT: 3587
PROJECT NUMBER & PHASE: 0715000160-1
CONTRACT NO.: 07-2159U4

DISREGARD PRINTS BEARING EARLIER REVISION DATES

REVISION DATES: 6-28-13 7-02-13 7-22-13

SHEET 3 OF 9

FILE => 53e0261-b-sp2.dgn

USERNAME => s125624 DATE PLOTTED => 28-JAN-2016 TIME PLOTTED => 12:25

DIST	COUNTY	ROUTE	POST MILES TOTAL PROJECT	SHEET No.	TOTAL SHEETS
07	LA,Ora	5	0.0/1.5, 44.3/44.4	1429	1622

REGISTERED CIVIL ENGINEER — 3-18-15 DATE

1-25-16
PLANS APPROVAL DATE

REGISTERED PROFESSIONAL ENGINEER — William D. Kemp — No. 55730 — Exp. 12-31-16 — CIVIL — STATE OF CALIFORNIA

The State of California or its officers or agents shall not be responsible for the accuracy or completeness of scanned copies of this plan sheet.

LEGEND

- INDICATES CLASS 90 PILES, ALTERNATIVE "W" (B2-5)
- INDICATES BATTERED 1:3 CLASS 90 PILES, ALTERNATIVE "W" (B2-5)

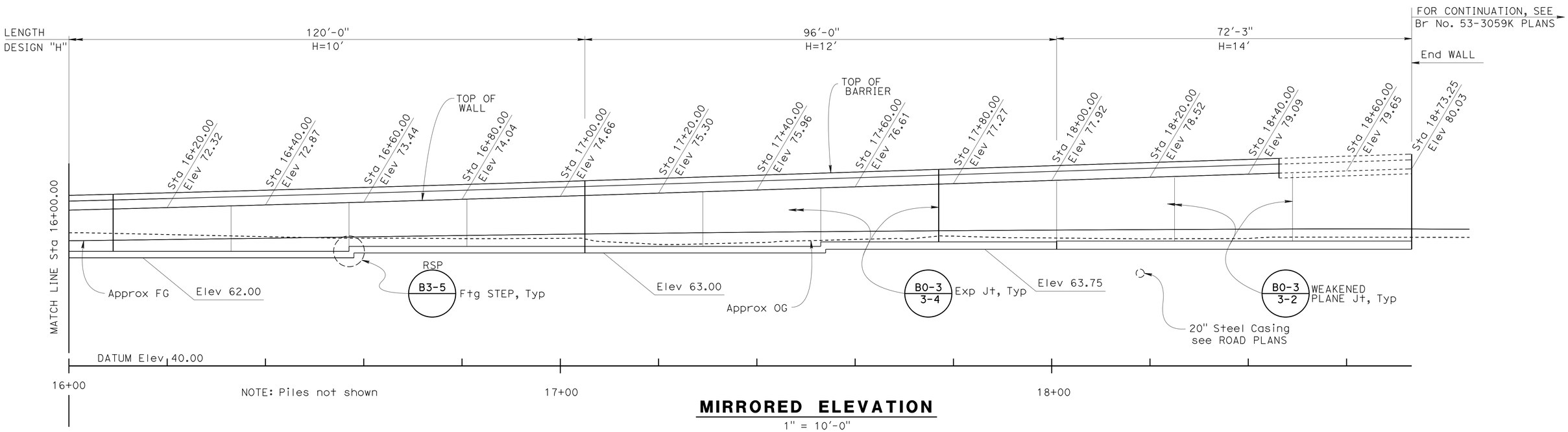

MIRRORED ELEVATION

1" = 10'-0"

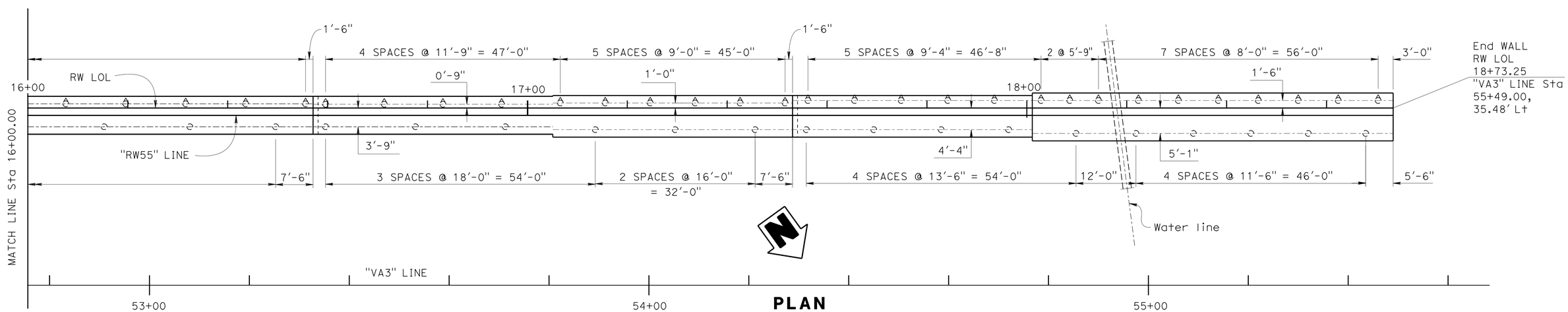

PLAN

1" = 10'-0"

DESIGN	BY M. Okimura	CHECKED C. Manansala	
DETAILS	BY L. Goldthwait	CHECKED C. Manansala	
QUANTITIES	BY R. Melko	CHECKED J. Posey	

STATE OF CALIFORNIA
DEPARTMENT OF TRANSPORTATION

DIVISION OF ENGINEERING SERVICES
STRUCTURE DESIGN
DESIGN BRANCH 11

BRIDGE NO. 53E0261
POST MILE 0.89

RETAINING WALL 55
STRUCTURE PLAN NO. 3

STRUCTURES DESIGN DETAIL SHEET (ENGLISH) (REV. 09-01-10)

ORIGINAL SCALE IN INCHES FOR REDUCED PLANS 0 1 2 3

UNIT: 3587
PROJECT NUMBER & PHASE: 0715000160-1
CONTRACT NO.: 07-2159U4

DISREGARD PRINTS BEARING EARLIER REVISION DATES

REVISION DATES 7-18-12 6-21-13 7-22-13 7-22-13

SHEET 4 OF 9

FILE => 53e0261-b-sp3.dgn

USERNAME => s125624 DATE PLOTTED => 28-JAN-2016 TIME PLOTTED => 12:25

DIST	COUNTY	ROUTE	POST MILES TOTAL PROJECT	SHEET No.	TOTAL SHEETS
07	LA,Ora	5	0.0/1.5, 44.3/44.4	1430	1622

REGISTERED CIVIL ENGINEER 3-18-15 DATE

1-25-16
PLANS APPROVAL DATE

REGISTERED PROFESSIONAL ENGINEER William D. Kemp No. 55730 Exp. 12/31/16 CIVIL STATE OF CALIFORNIA

The State of California or its officers or agents shall not be responsible for the accuracy or completeness of electronic copies of this plan sheet.

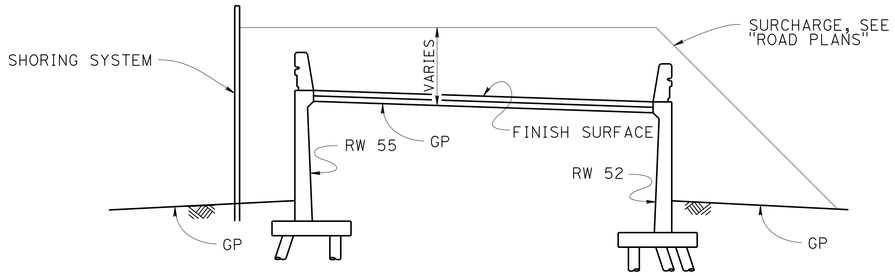

EMBANKMENT SURCHARGE

NO SCALE

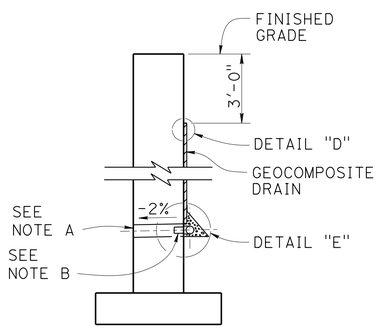

WALL SECTION

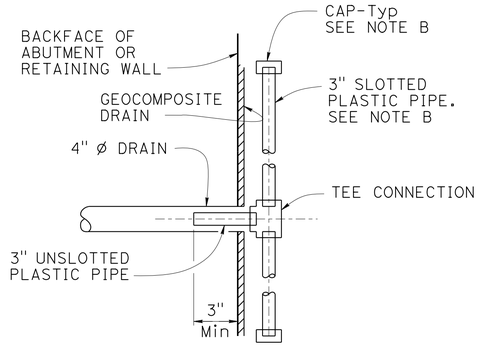

SECTION K-K

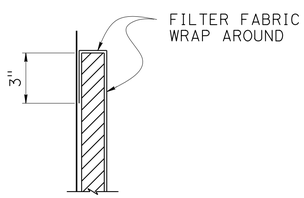

DETAIL "D"

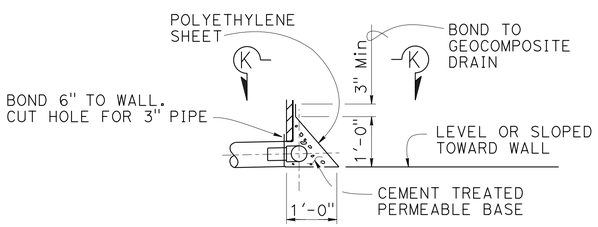

DETAIL "E"

WEEP HOLE AND GEOCOMPOSITE DRAIN

NO SCALE

Notes (GEOCOMPOSITE DRAIN):

A. 4" ø drains at intermediate sag points and at 25'-0" center to center. For walls adjacent to sidewalks or curbs, provide 4" ø cast iron or asbestos cement pipe under the sidewalk to discharge through curb face. Exposed wall drains shall be located 3" ± above finished grade.

B. Geocomposite drain, cement treated permeable base, and 3" ø slotted plastic pipe continuous behind retaining wall or abutment. Cap ends of pipe. Provide "Tee" connection at each 4" ø drain.

C. Connect the low end of plastic pipe to the main outlet pipe as applicable.

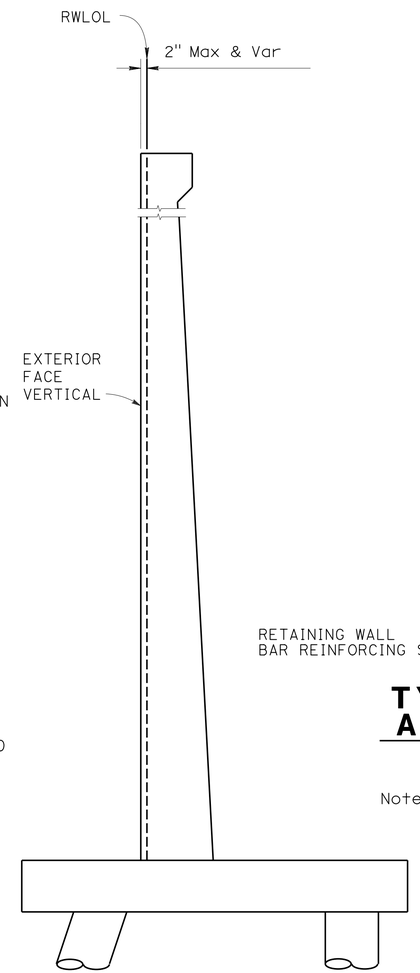

RETAINING WALL TYPE 1 AT TRANSITION

NO SCALE

Notes:

1. Reinforcement shown is in addition to that shown in RSP B3-1A
2. All Piles not shown, see 'STRUCTURE PLAN' sheets
3. For "F", "B" "C" dimensions, see RSP B3-1A

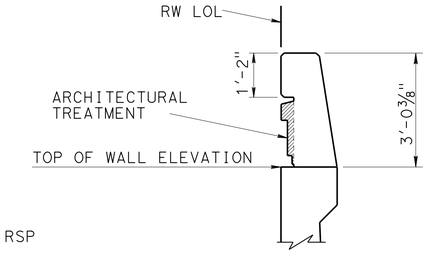

RSP B11-56

BARRIER TYPE 736A (Mod)

NO SCALE

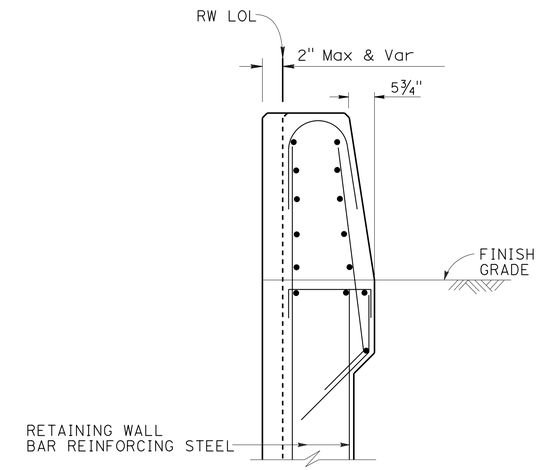

TYPE 736A Mod AT TRANSITION

NO SCALE

Note: For details not shown, see Standard Plan RSP B11-56, Section A-A

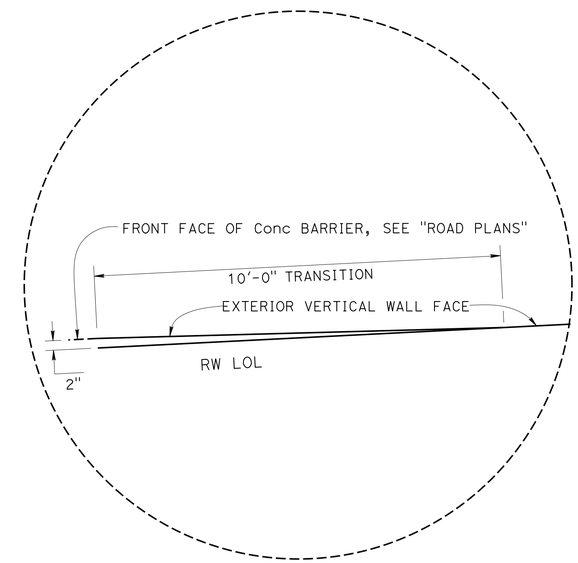

DETAIL 'A'

NO SCALE

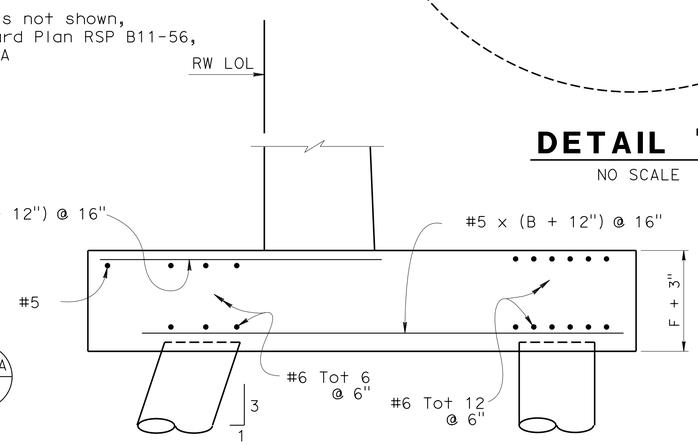

PILE FOOTING SECTION

NO SCALE

DESIGN	BY M. Okimura	CHECKED C. Manansala	
DETAILS	BY J. Ramirez	CHECKED C. Manansala	
QUANTITIES	BY R. Melko	CHECKED J. Posey	

STATE OF CALIFORNIA
DEPARTMENT OF TRANSPORTATION

DIVISION OF ENGINEERING SERVICES
STRUCTURE DESIGN
DESIGN BRANCH 11

BRIDGE NO. 53E0261
POST MILE 0.89

RETAINING WALL 55
RETAINING WALL DETAILS

STRUCTURES DESIGN DETAIL SHEET (ENGLISH) (REV. 09-01-10)

ORIGINAL SCALE IN INCHES FOR REDUCED PLANS 0 1 2 3

UNIT: 3587
PROJECT NUMBER & PHASE: 0715000160-1
CONTRACT NO.: 07-2159u4

DISREGARD PRINTS BEARING EARLIER REVISION DATES

REVISION DATES 9-1-11 7-22-13 7-27-12 3-20-13

SHEET 5 OF 9

FILE => 53e0261-c-ret.dgn

USERNAME => s125624 DATE PLOTTED => 28-JAN-2016 TIME PLOTTED => 12:25

DIST	COUNTY	ROUTE	POST MILES TOTAL PROJECT	SHEET No.	TOTAL SHEETS
07	LA,Ora	5	0.0/1.5, 44.3/44.4	1431	1622

REGISTERED CIVIL ENGINEER — 3-18-15 DATE

1-25-16
PLANS APPROVAL DATE

REGISTERED PROFESSIONAL ENGINEER — WILLIAM D. KEMP No. 55730 Exp. 12/31/16 CIVIL — STATE OF CALIFORNIA

The State of California or its officers or agents shall not be responsible for the accuracy or completeness of electronic copies of this plan sheet.

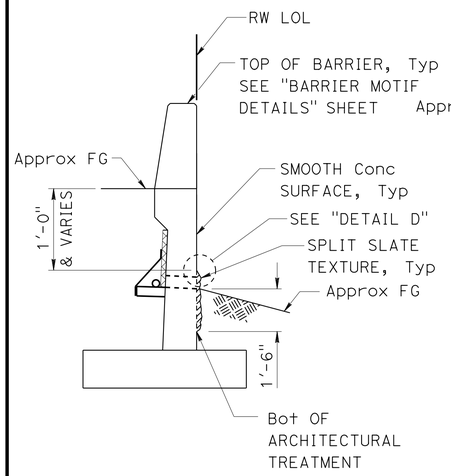

SECTION A-A

3/8" = 1'-0"

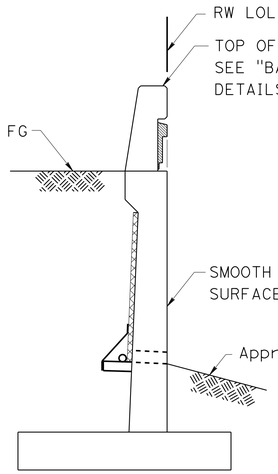

SECTION B-B

3/8" = 1'-0"

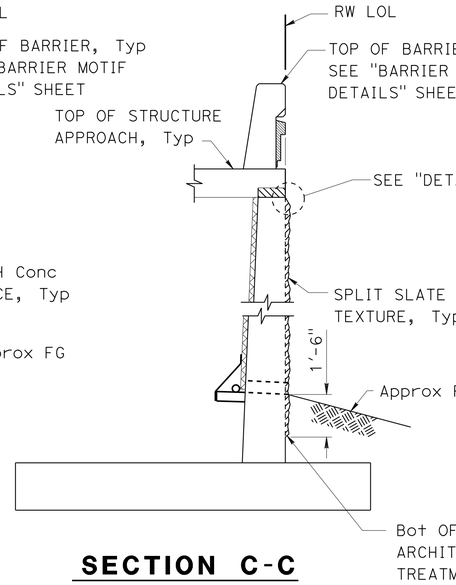

SECTION C-C

3/8" = 1'-0"

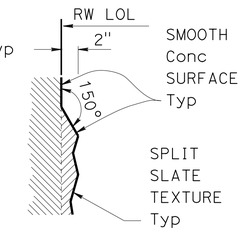

DETAIL D

NO SCALE

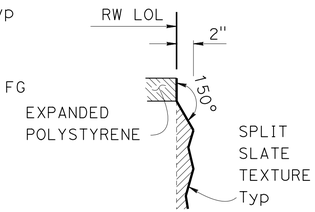

DETAIL E

NO SCALE

NOTE:
All surface relief and texture shall be measured from RW LOL, Typ

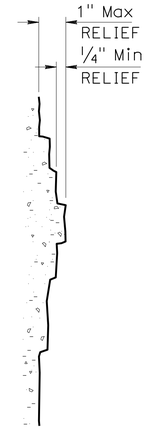

SECTION D-D

NO SCALE

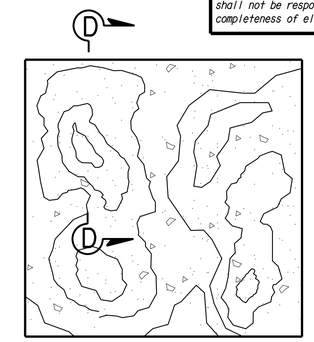

SPLIT SLATE TEXTURE

NO SCALE

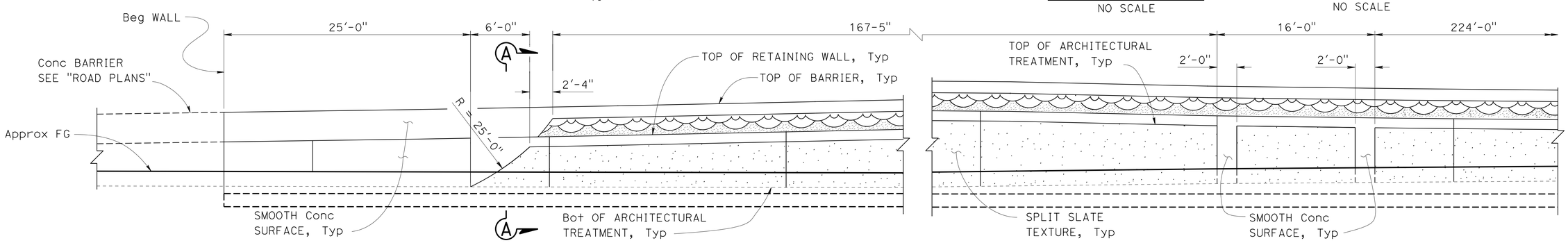

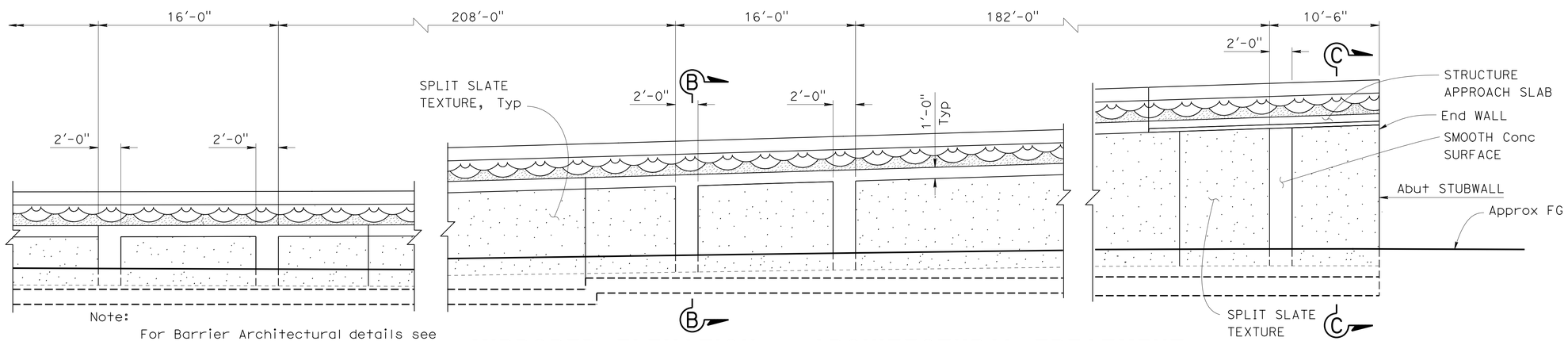

Note:
For Barrier Architectural details see "BARRIER MOTIF DETAILS" sheet.

MIRRORED ELEVATION - ARCHITECTURAL TREATMENT

3/16" = 1'-0"

	BY	CHECKED
DESIGN	I. Tasabia	H. J. Chavez
DETAILS	H. Mauroschadt	H. J. Chavez
QUANTITIES	R. Melko	J. Posey

STATE OF CALIFORNIA
DEPARTMENT OF TRANSPORTATION

DIVISION OF ENGINEERING SERVICES
STRUCTURE DESIGN
DESIGN BRANCH 11

BRIDGE NO. 53E0261
POST MILE 0.89

RETAINING WALL 55
ARCHITECTURAL TREATMENT DETAILS

STRUCTURES DESIGN DETAIL SHEET (ENGLISH) (REV. 09-01-10)

ORIGINAL SCALE IN INCHES FOR REDUCED PLANS 0 1 2 3

UNIT: 3587
PROJECT NUMBER & PHASE: 0715000160-1
CONTRACT NO.: 07-2159U4

DISREGARD PRINTS BEARING EARLIER REVISION DATES

REVISION DATES: 5-24-12 7-19-13 12-6-12 3-1-13

SHEET 6 OF 9

FILE => 53e0261-g-arch1.dgn

USERNAME => s125624 DATE PLOTTED => 28-JAN-2016 TIME PLOTTED => 12:25

DIST	COUNTY	ROUTE	POST MILES TOTAL PROJECT	SHEET No.	TOTAL SHEETS
07	LA,Ora	5	0.0/1.5, 44.3/44.4	1432	1622

REGISTERED CIVIL ENGINEER — DATE: 3-18-15

1-25-16
PLANS APPROVAL DATE

REGISTERED PROFESSIONAL ENGINEER — WILLIAM D. KEMP — No. 55730 — Exp. 12/31/16 — CIVIL — STATE OF CALIFORNIA

The State of California or its officers or agents shall not be responsible for the accuracy or completeness of electronic copies of this plan sheet.

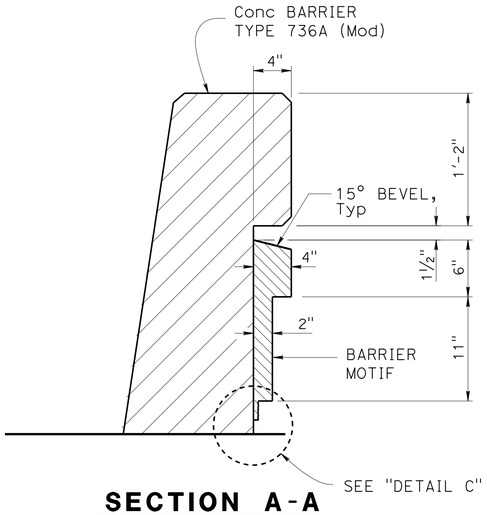

SECTION A-A
1½" = 1'-0"

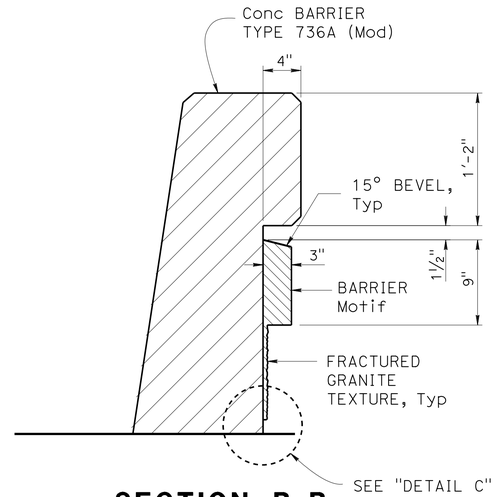

SECTION B-B
1½" = 1'-0"

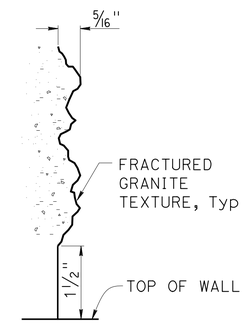

DETAIL C
NO SCALE

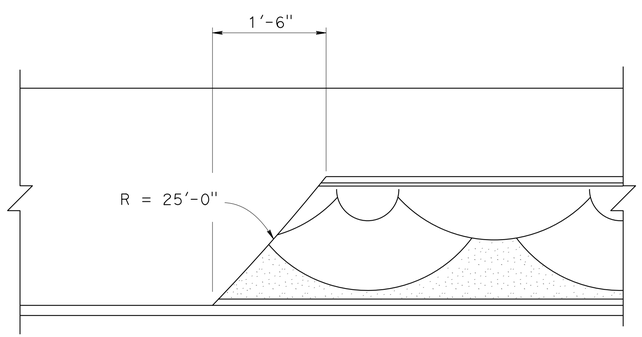

MIRRORED BARRIER END DETAIL
1" = 1'-0"

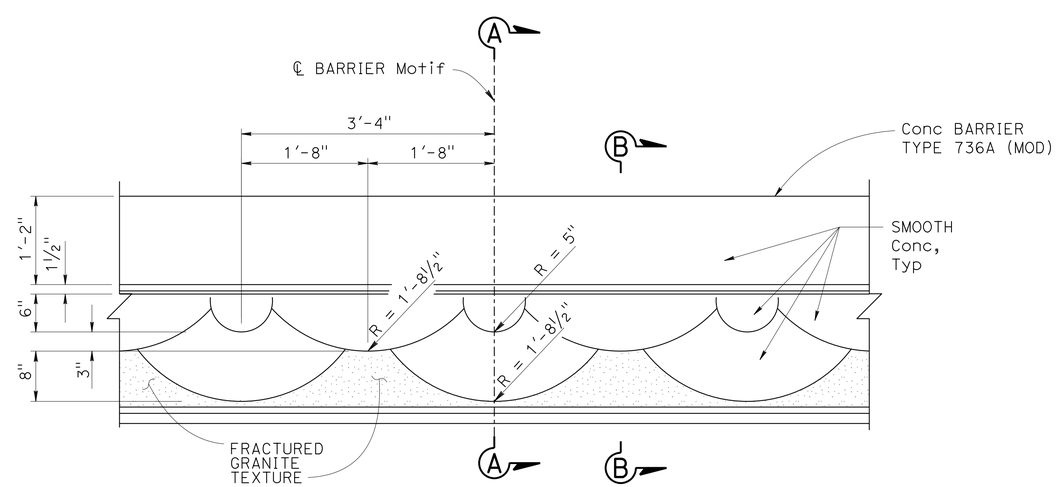

PARTIAL MIRRORED ELEVATION - BARRIER MOTIF
1" = 1'-0"

DESIGN	BY I. Tasabia	CHECKED H. J. Chavez	
DETAILS	BY H. Mauroschadt	CHECKED H. J. Chavez	
QUANTITIES	BY R. Melko	CHECKED J. Posey	

STATE OF CALIFORNIA
DEPARTMENT OF TRANSPORTATION

DIVISION OF ENGINEERING SERVICES
STRUCTURE DESIGN
DESIGN BRANCH 11

BRIDGE NO. 53E0261
POST MILE 0.89

RETAINING WALL 55
BARRIER MOTIF DETAILS

STRUCTURES DESIGN DETAIL SHEET (ENGLISH) (REV. 09-01-10)

ORIGINAL SCALE IN INCHES FOR REDUCED PLANS 0 1 2 3

UNIT: 3587
PROJECT NUMBER & PHASE: 0715000160-1
CONTRACT NO.: 07-2159U4

DISREGARD PRINTS BEARING EARLIER REVISION DATES

REVISION DATES: 5-22-12 6-21-12 3-21-13 7/22/13

SHEET 7 OF 9

FILE => 53e0261-g-arch2.dgn

USERNAME => s125624 DATE PLOTTED => 28-JAN-2016 TIME PLOTTED => 12:25

BENCH MARK

GPS 0887
ELEVATION 65.915 FT
FD 2-1/2 CADT DISK IN CONC. CURB
FLUSH, STAMPED "LA-5-1.0, 1995"
LOCATED 90' N OF THE SOUTH SIDE
FIRESTONE BLVD 0.2 MI SE OF VALLEY VIEW
NORTHING 542395.636
EASTING 1997613.893
DATUM NAVD88

DIST	COUNTY	ROUTE	POST MILES TOTAL PROJECT	SHEET No.	TOTAL SHEETS
07	LA,Ora	5	0.0/1.5, 44.3/44.4	1433	1622

REGISTERED CIVIL ENGINEER 05/20/15 DATE

1-25-16
PLANS APPROVAL DATE

REGISTERED PROFESSIONAL ENGINEER MICHAEL G. SMITH No. 2229 Exp. 03/31/16 GEOTECHNICAL STATE OF CALIFORNIA

URS CORPORATION
2020 EAST FIRST STREET, SUITE 400
SANTA ANA, CA 92705

The State of California or its officers or agents shall not be responsible for the accuracy or completeness of electronic copies of this plan sheet.

1-This LOTB sheet was prepared in accordance with the Caltrans Soil & Rock Logging, Classification, & Presentation Manual (2010 Edition).

2-For protection of underground utility lines, hand-auger was used to remove top 5 to 10 feet of subsurface material for exploratory borings and Cone Penetration Testings.

3-2.5" to 1.4" blow counts conversion factors for fine-grain and coarse-grain soils have been 0.8 and 0.55, respectively.

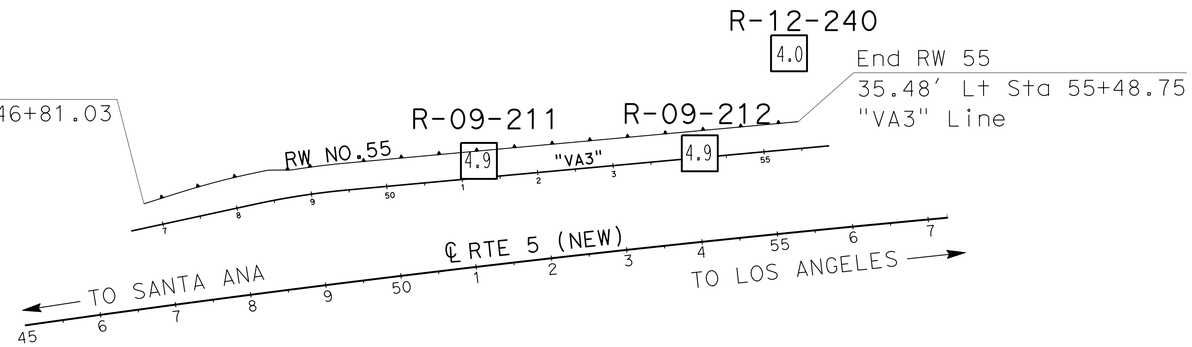

PLAN

SCALE 1"=100'

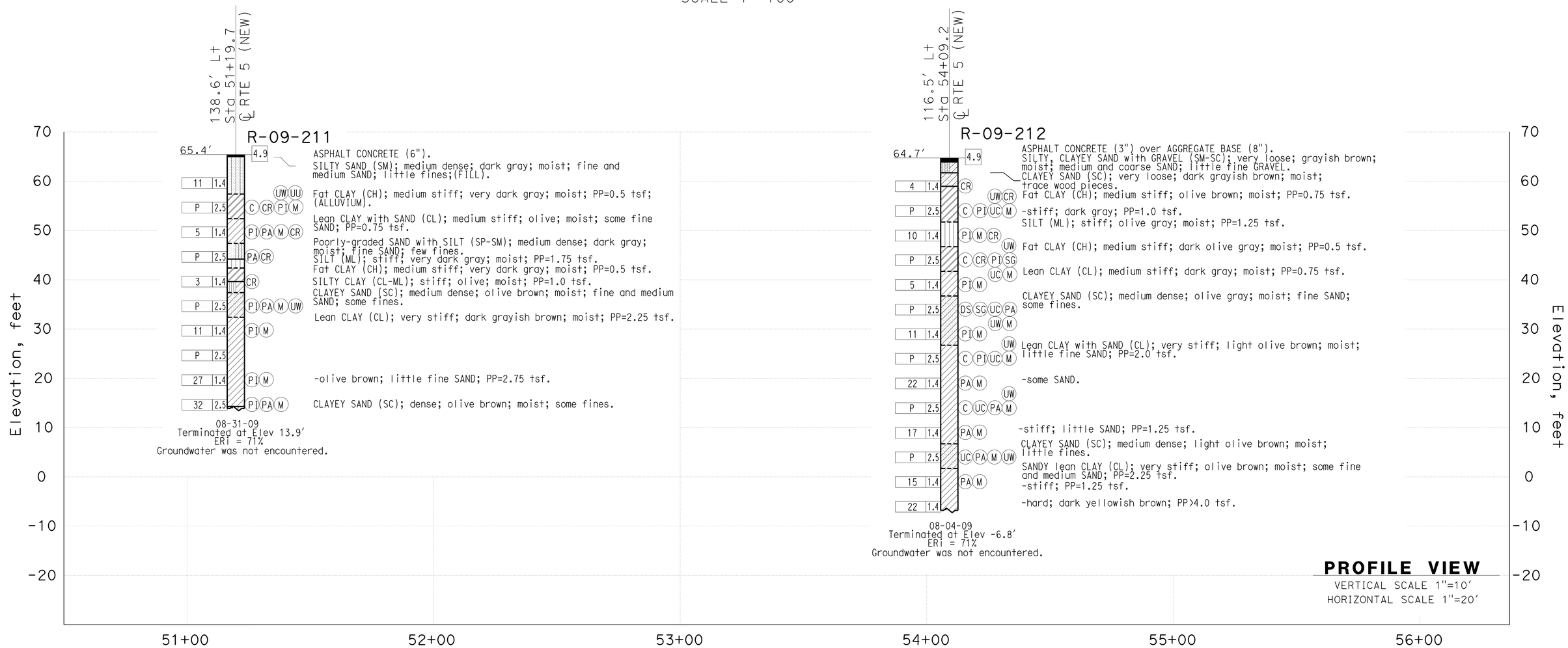

PROFILE VIEW

VERTICAL SCALE 1"=10'
HORIZONTAL SCALE 1"=20'

F.MOTAMED DESIGN OVERSIGHT	DRAWN BY	T.PANAH	P.MCDONALD/EJ.JEON FIELD INVESTIGATION BY:	PREPARED FOR THE STATE OF CALIFORNIA DEPARTMENT OF TRANSPORTATION	M.G. SMITH PROJECT ENGINEER	BRIDGE NO. 53E0261 POST MILES 0.89	RETAINING WALL NO. 55
05/20/15 SIGN OFF DATE	CHECKED BY	A.GHAZINOOR/L.KHALKHALI	DATE: 08/04/09 - 08/31/09				LOG OF TEST BORINGS SHEET 1 OF 2

GS CIVIL LOG OF TEST BORINGS SHEET (ENGLISH) (REV. 03/14/12)

ORIGINAL SCALE IN INCHES FOR REDUCED PLANS 0 1 2 3

UNIT: 3658
PROJECT NUMBER & PHASE: 07150001601 CONTRACT NO.: 07-2159U4

DISREGARD PRINTS BEARING EARLIER REVISION DATES → 5/12/15

REVISION DATES | SHEET 8 | OF 9

FILE => 53e0261-w-lotb1.dgn

USERNAME => s12562d DATE PLOTTED => 28-JAN-2016 TIME PLOTTED => 12:25

DIST	COUNTY	ROUTE	POST MILES TOTAL PROJECT	SHEET No.	TOTAL SHEETS
07	LA,Ora	5	0.0/1.5, 44.3/44.4	1434	1622

REGISTERED CIVIL ENGINEER 05/20/15 DATE

1-25-16
PLANS APPROVAL DATE

REGISTERED PROFESSIONAL ENGINEER MICHAEL G. SMITH No. 2229 Exp. 03/31/16 GEOTECHNICAL STATE OF CALIFORNIA

URS CORPORATION
2020 EAST FIRST STREET, SUITE 400
SANTA ANA, CA 92705

The State of California or its officers or agents shall not be responsible for the accuracy or completeness of electronic copies of this plan sheet.

1-This LOTB sheet was prepared in accordance with the Caltrans Soil & Rock Logging, Classification, & Presentation Manual (2010 Edition).

2-For protection of underground utility lines, hand-auger was used to remove top 5 to 10 feet of subsurface material for exploratory borings and Cone Penetration Testings.

3-2.5" to 1.4" blow counts conversion factors for fine-grain and coarse-grain soils have been 0.8 and 0.55, respectively.

FOR PLAN VIEW, SEE
"LOG OF TEST BORINGS" 1 OF 2

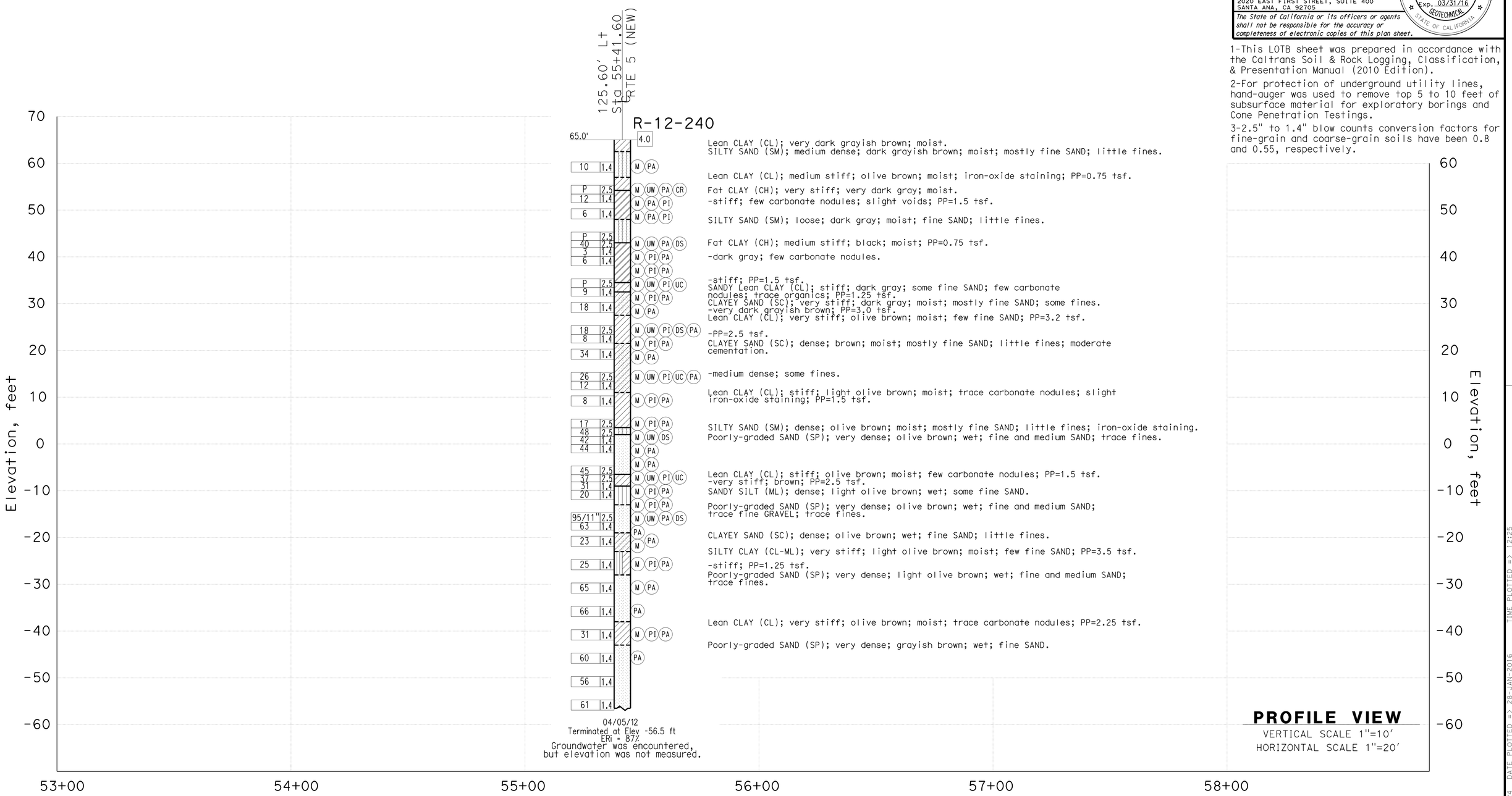

PROFILE VIEW
VERTICAL SCALE 1"=10'
HORIZONTAL SCALE 1"=20'

F.MOTAMED DESIGN OVERSIGHT 05/20/15 SIGN OFF DATE	DRAWN BY CHECKED BY	T.PANAH A.GHAZINOOR/L.KHALKHALI	EJ.JEON/P.MCDONALD FIELD INVESTIGATION BY: DATE: 04/05/12	PREPARED FOR THE STATE OF CALIFORNIA DEPARTMENT OF TRANSPORTATION	M.G. SMITH PROJECT ENGINEER

BRIDGE NO. 53E0261
POST MILES 0.89

RETAINING WALL NO. 55
LOG OF TEST BORINGS SHEET 2 OF 2

GS CIVIL LOG OF TEST BORINGS SHEET (ENGLISH) (REV. 03/14/12)

ORIGINAL SCALE IN INCHES FOR REDUCED PLANS 0 1 2 3

UNIT: 3658
PROJECT NUMBER & PHASE: 07150001601 CONTRACT NO.: 07-2159U4

DISREGARD PRINTS BEARING EARLIER REVISION DATES → 5/12/15

REVISION DATES | SHEET 9 | OF 9

FILE => 53e0261-w-lotb2.dgn

USERNAME => s12562d DATE PLOTTED => 28-JAN-2016 TIME PLOTTED => 12:25

DIST	COUNTY	ROUTE	POST MILES TOTAL PROJECT	SHEET No.	TOTAL SHEETS
07	LA,Ora	5	0.0/1.5, 44.3/44.4	1435	1622

William Kemp 3-18-15
REGISTERED CIVIL ENGINEER DATE

1-25-16
PLANS APPROVAL DATE

REGISTERED PROFESSIONAL ENGINEER William D. Kemp No. 55730 Exp. 12/31/16 CIVIL STATE OF CALIFORNIA

The State of California or its officers or agents shall not be responsible for the accuracy or completeness of electronic copies of this plan sheet.

STANDARD PLANS DATED 2010

	A10A	ABBREVIATIONS (SHEET 1 OF 2)
RSP	A10B	ABBREVIATIONS (SHEET 2 OF 2)
	A10C	LINES AND SYMBOLS (SHEET 1 OF 3)
	A10D	LINES AND SYMBOLS (SHEET 2 OF 3)
	A10E	LINES AND SYMBOLS (SHEET 3 OF 3)
RSP	A10F	LEGEND - SOIL (SHEET 1 OF 2)
RSP	A10G	LEGEND - SOIL (SHEET 2 OF 2)
	A10H	LEGEND - ROCK
	A62B	LIMITS OF PAYMENT FOR EXCAVATION AND BACKFILL- BRIDGE SURCHARGE AND WALL
	B0-3	BRIDGE DETAILS
	B2-5	PILE DETAILS CLASS 90 AND CLASS 140
RSP	B3-1A	RETAINING WALL TYPE 1 (CASE 1)
RSP	B3-5	RETAINING WALL DETAILS NO. 1
RSP	B11-56	CONCRETE BARRIER TYPE 736

STANDARD PLAN SHEET No.

DETAIL No.

PILE DATA TABLE

PILE TYPE	NOMINAL RESISTANCE (kips)		DESIGN TIP ELEVATIONS (ft)	SPECIFIED TIP ELEVATION (ft)	NOMINAL DRIVING RESISTANCE (kips)
	COMPRESSION	TENSION			
CLASS 90 PP14x0.375 ALT W	180	10	+6.0 (a) +48.0 (b) +24.0 (c)	+6	180

Notes: 1. Design tip elevations are controlled by: (a) Compression (b) Tension, (c) Settlement
2. The specified tip elevation for driven piles shall not be raised above the design tip elevations for tension load and tolerable settlement

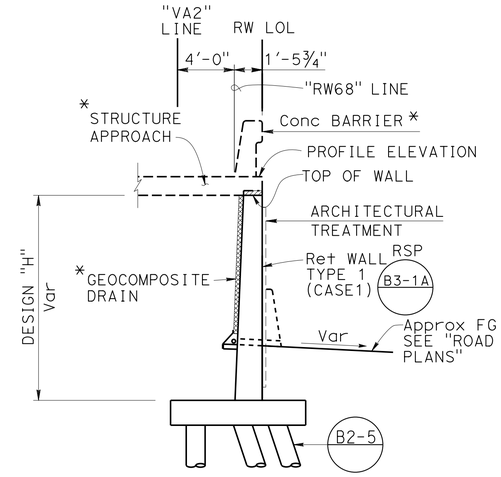

* SEE Br No. 53-3058K PLANS

TYPICAL SECTION AT STRUCTURE APPROACH

NO SCALE

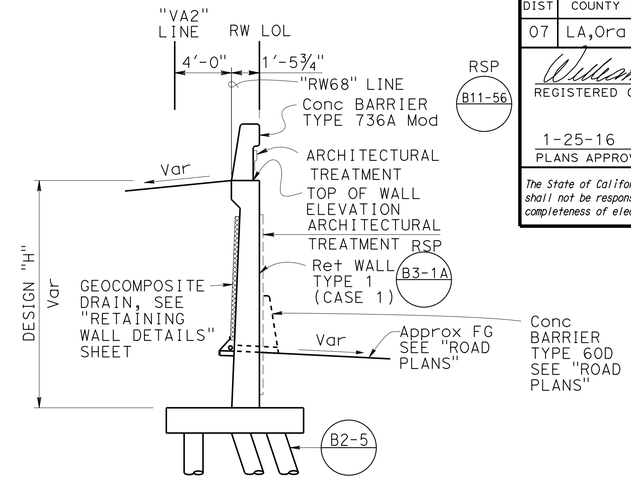

TYPICAL SECTION

NO SCALE

INDEX TO PLANS

SHEET No.	TITLE
1	GENERAL PLAN
2	STRUCTURE PLAN
3	RETAINING WALL DETAILS
4	ARCHITECTURAL TREATMENT DETAILS
5	BARRIER MOTIF DETAILS
6	LOG OF TEST BORINGS SHEET 1 OF 1

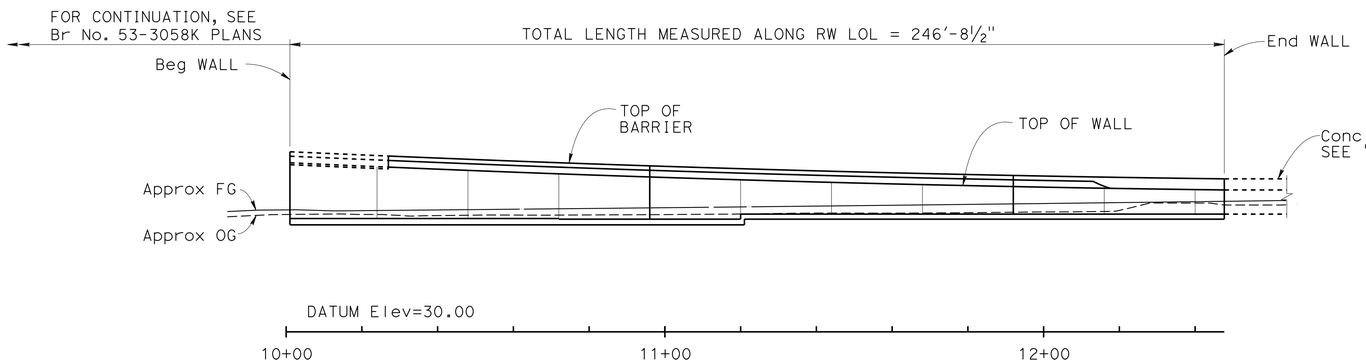

NOTE: Piles not shown

ELEVATION

1" = 20'

QUANTITIES

STRUCTURE EXCAVATION (RETAINING WALL)	705	CY
STRUCTURE BACKFILL (RETAINING WALL)	485	CY
FURNISH PILING (CLASS 90) (ALTERNATIVE W)	2,647	LF
DRIVE PILE (CLASS 90) (ALTERNATIVE W)	48	EA
STRUCTURAL CONCRETE, RETAINING WALL	244	CY
ARCHITECTURAL TREATMENT (SPLIT SLATE)	1,685	SQFT
BAR REINFORCING STEEL (RETAINING WALL)	40,425	LB
CONCRETE BARRIER (TYPE 736A MODIFIED)	221	LF

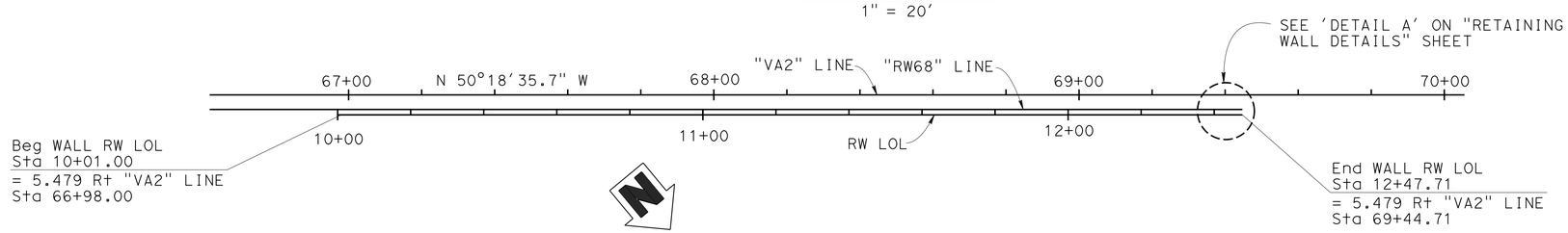

PLAN

1" = 20'

Ramin Rashedi 3-18-15 DESIGN ENGINEER	DESIGN	BY Mark Okimura	CHECKED C. Manansala	LOAD & RESISTANCE FACTOR DESIGN	LIVE LOADING: HL93 W/"LOW-BOY"; PERMIT DESIGN VEHICLE
	DETAILS	BY Jaime Ramirez	CHECKED C. Manansala	LAYOUT BY Mark Okimura	CHECKED C. Manansala
	QUANTITIES	BY G. Reyes-Gutierrez	CHECKED J. Posey	SPECIFICATIONS BY X. Li	PLANS AND SPECS COMPARED X. Li

ORIGINAL SCALE IN INCHES FOR REDUCED PLANS 0 1 2 3

STATE OF CALIFORNIA DEPARTMENT OF TRANSPORTATION

DIVISION OF ENGINEERING SERVICES STRUCTURE DESIGN DESIGN BRANCH 11

BRIDGE NO. 53E0262
POST MILE 1.27

RETAINING WALL 68
GENERAL PLAN

UNIT: 3587
PROJECT NUMBER & PHASE: 0715000160-1 CONTRACT NO.: 07-2159u4

DISREGARD PRINTS BEARING EARLIER REVISION DATES

REVISION DATES 7-20-12 7-18-13 11-15-11 3-20-13

SHEET 1 OF 6

STRUCTURES DESIGN GENERAL PLAN SHEET (ENGLISH) (REV.09-01-10)

FILE => 53e0262-a-gp.dgn

USERNAME => s125624 DATE PLOTTED => 28-JAN-2016 TIME PLOTTED => 12:25

DIST	COUNTY	ROUTE	POST MILES TOTAL PROJECT	SHEET No.	TOTAL SHEETS
07	LA,Ora	5	0.0/1.5, 44.3/44.4	1436	1622

REGISTERED CIVIL ENGINEER — DATE: 3-18-15

1-25-16
PLANS APPROVAL DATE

REGISTERED PROFESSIONAL ENGINEER — William D. Kemp — No. 55730 — Exp. 12/31/16 — CIVIL — STATE OF CALIFORNIA

The State of California or its officers or agents shall not be responsible for the accuracy or completeness of electronic copies of this plan sheet.

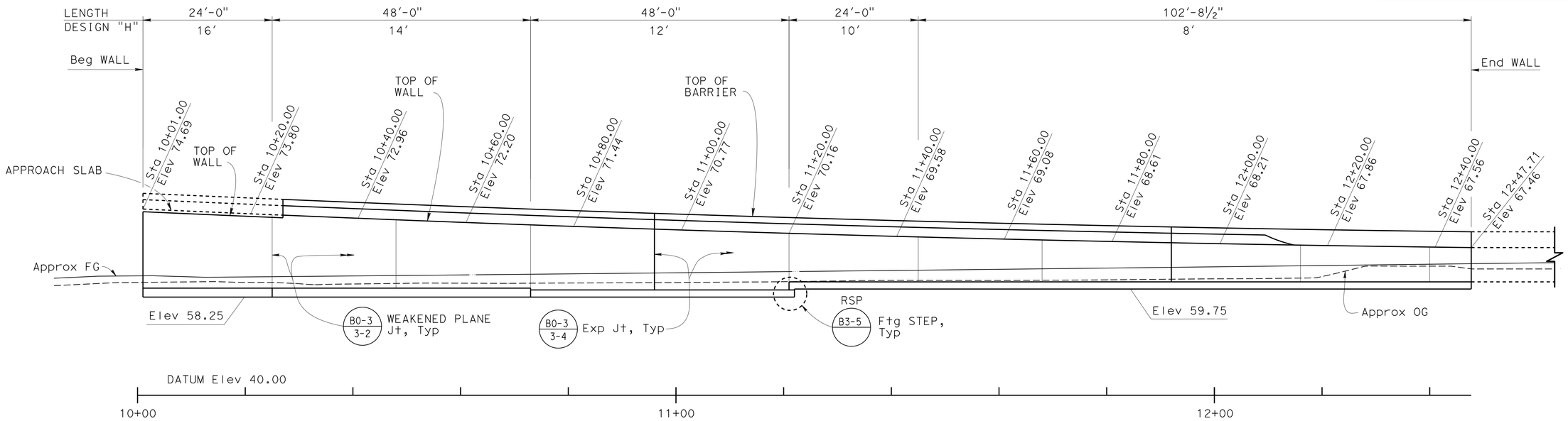

Note: Piles not shown

ELEVATION

1" = 10'

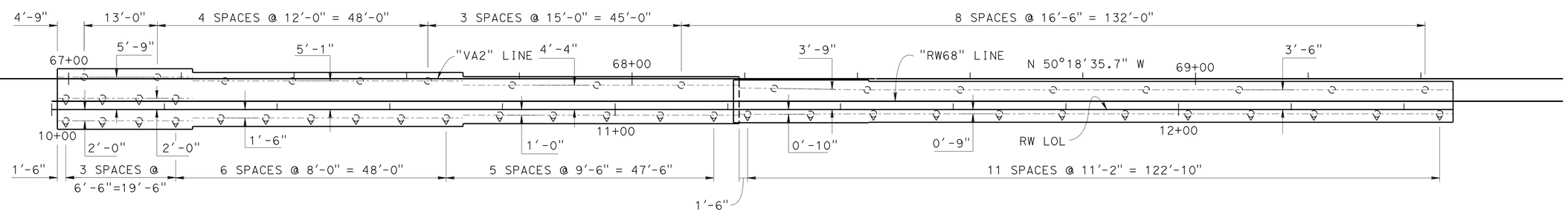

PLAN

1" = 10'

LEGEND

- INDICATES CLASS 90 PILES, ALTERNATIVE "W" (B2-5)
- INDICATES BATTERED 1:3 CLASS 90 PILES, ALTERNATIVE "W" (B2-5)

	BY	CHECKED
DESIGN	M. Okimura	C. Manansala
DETAILS	L. Goldthwait	C. Manansala
QUANTITIES	G. Reyes-Gutierrez	J. Posey

STATE OF CALIFORNIA
DEPARTMENT OF TRANSPORTATION

DIVISION OF ENGINEERING SERVICES
STRUCTURE DESIGN
DESIGN BRANCH 11

BRIDGE NO. 53E0262
POST MILE 1.27

RETAINING WALL 68
STRUCTURE PLAN

STRUCTURES DESIGN DETAIL SHEET (ENGLISH) (REV. 09-01-10)

ORIGINAL SCALE IN INCHES FOR REDUCED PLANS 0 1 2 3

UNIT: 3587
PROJECT NUMBER & PHASE: 0715000160-1
CONTRACT NO.: 07-2159U4

DISREGARD PRINTS BEARING EARLIER REVISION DATES

REVISION DATES: 7-20-12 3-20-13 6-4-13 7-18-13

SHEET 2 OF 6

FILE => 53e0262-a-sp.dgn

USERNAME => s125624 DATE PLOTTED => 28-JAN-2016 TIME PLOTTED => 12:25

DIST	COUNTY	ROUTE	POST MILES TOTAL PROJECT	SHEET No.	TOTAL SHEETS
07	LA,Ora	5	0.0/1.5, 44.3/44.4	1437	1622

REGISTERED CIVIL ENGINEER 3-18-15 DATE

1-25-16
PLANS APPROVAL DATE

REGISTERED PROFESSIONAL ENGINEER William D. Kemp No. 55730 Exp. 12/31/16 CIVIL STATE OF CALIFORNIA

The State of California or its officers or agents shall not be responsible for the accuracy or completeness of electronic copies of this plan sheet.

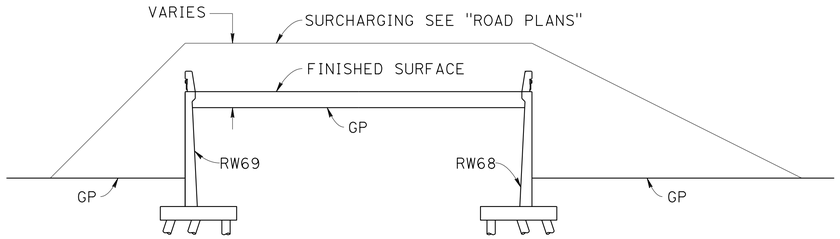

EMBANKMENT SURCHARGE

NO SCALE

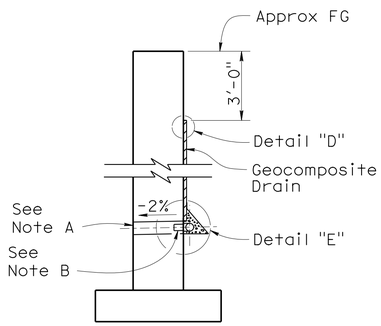

WALL SECTION

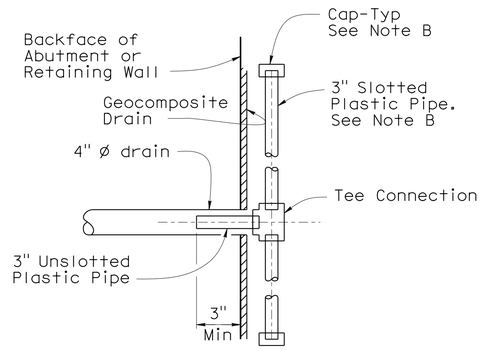

SECTION K-K

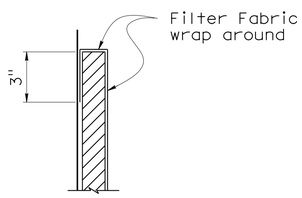

DETAIL "D"

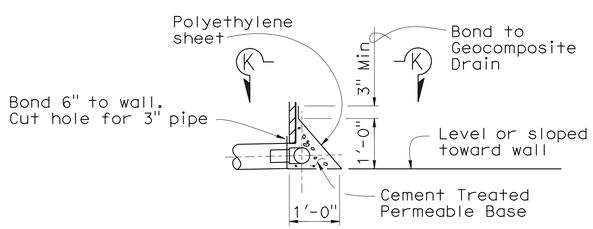

DETAIL "E"

WEEP HOLE AND GEOCOMPOSITE DRAIN

NO SCALE

Notes (FOR GEOCOMPOSITE DRAIN):

A. 4" ø drains at intermediate sag points and at 25'-0" center to center. For walls adjacent to sidewalks or curbs, provide 4" ø cast iron or asbestos cement pipe under the sidewalk to discharge through curb face. Exposed wall drains shall be located 3" ± above finished grade.

B. Geocomposite drain, cement treated permeable base, and 3" ø slotted plastic pipe continuous behind retaining wall or abutment. Cap ends of pipe. Provide "Tee" connection at each 4" ø drain.

C. Connect the low end of plastic pipe to the main outlet pipe as applicable.

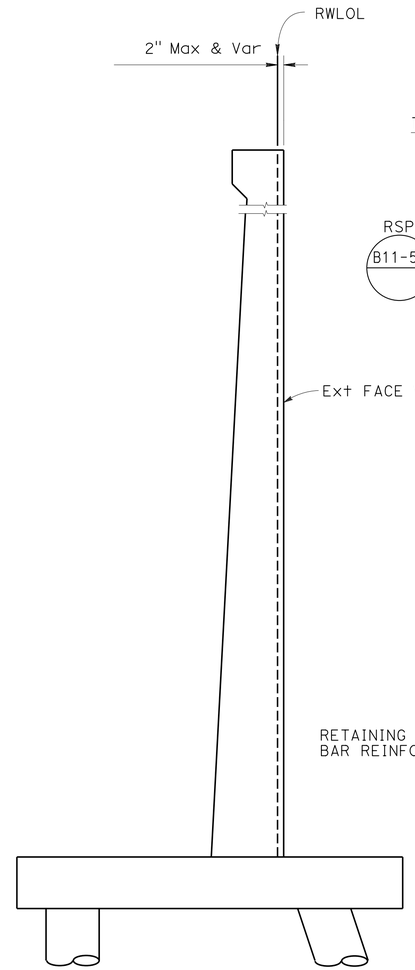

RETAINING WALL TYPE 1 (CASE 1) AT TRANSITION

NO SCALE

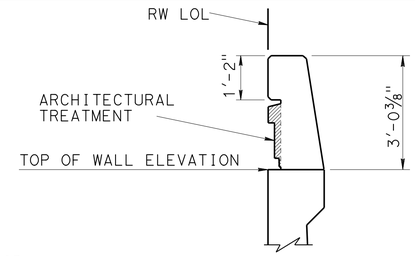

RSP B11-56

BARRIER TYPE 736A Mod

NO SCALE

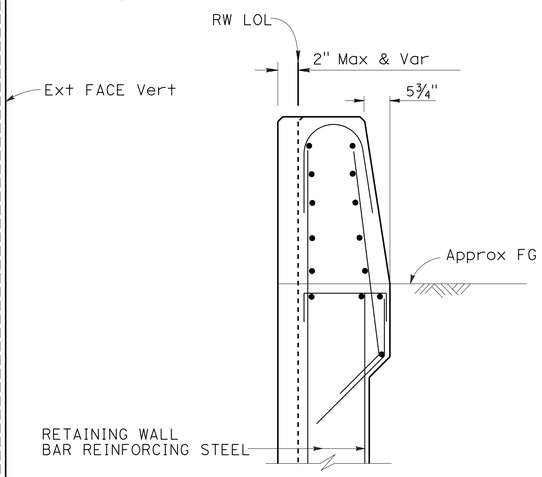

TYPE 736A Mod AT TRANSITION

NO SCALE

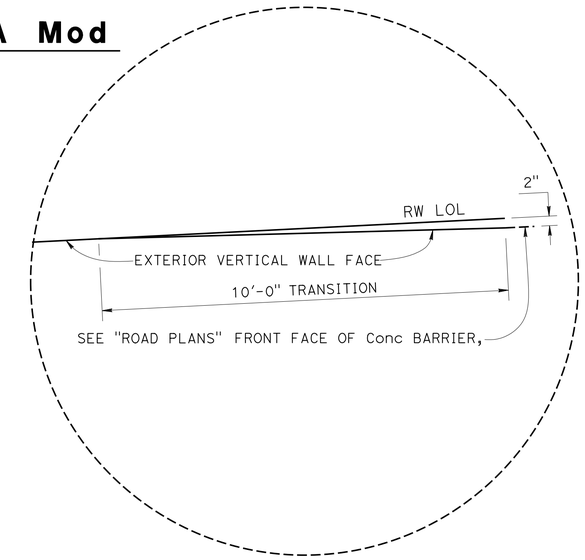

DETAIL 'A'

NO SCALE

Note: For details not shown, see Standard Plan RSP B11-56, Section A-A

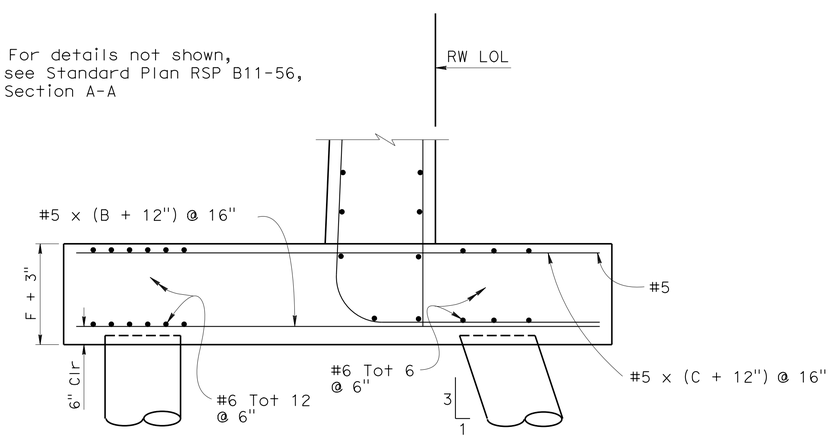

PILE FOOTING SECTION

NO SCALE

Notes:

1. Reinforcement shown is in addition to that shown in RSP B3-1A
2. All Piles not shown see 'STRUCTURE PLAN' sheets
3. For "F", "B" and "C" dimensions, see RSP B3-1A

DESIGN	BY Mark Okimura	CHECKED C. Manansala	
DETAILS	BY Jaime Ramirez	CHECKED C. Manansala	
QUANTITIES	BY G. Reyes-Gutierrez	CHECKED J. Posey	

STATE OF CALIFORNIA
DEPARTMENT OF TRANSPORTATION

DIVISION OF ENGINEERING SERVICES
STRUCTURE DESIGN
DESIGN BRANCH 11

BRIDGE NO. 53E0262
POST MILE 1.27

RETAINING WALL 68
RETAINING WALL DETAILS

STRUCTURES DESIGN DETAIL SHEET (ENGLISH) (REV. 09-01-10)

ORIGINAL SCALE IN INCHES FOR REDUCED PLANS 0 1 2 3

UNIT: 3587
PROJECT NUMBER & PHASE: 0715000160-1
CONTRACT NO.: 07-2159U4

DISREGARD PRINTS BEARING EARLIER REVISION DATES

REVISION DATES				SHEET	OF
8-17-11	4-25-13	7-18-13	3-20-13	3	6

FILE => 53e0262-b-retdt.dgn

USERNAME => s125624 DATE PLOTTED => 28-JAN-2016 TIME PLOTTED => 12:25

DIST	COUNTY	ROUTE	POST MILES TOTAL PROJECT	SHEET No.	TOTAL SHEETS
07	LA,Ora	5	0.0/1.5, 44.3/44.4	1438	1622

REGISTERED CIVIL ENGINEER 3-18-15 DATE

1-25-16
PLANS APPROVAL DATE

REGISTERED PROFESSIONAL ENGINEER WILLIAM D. KEMP No. 55730 Exp. 12/31/16 CIVIL STATE OF CALIFORNIA

The State of California or its officers or agents shall not be responsible for the accuracy or completeness of electronic copies of this plan sheet.

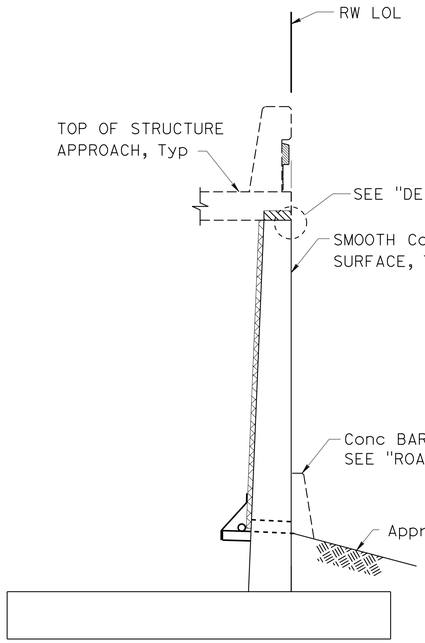

SECTION A-A
3/8" = 1'-0"

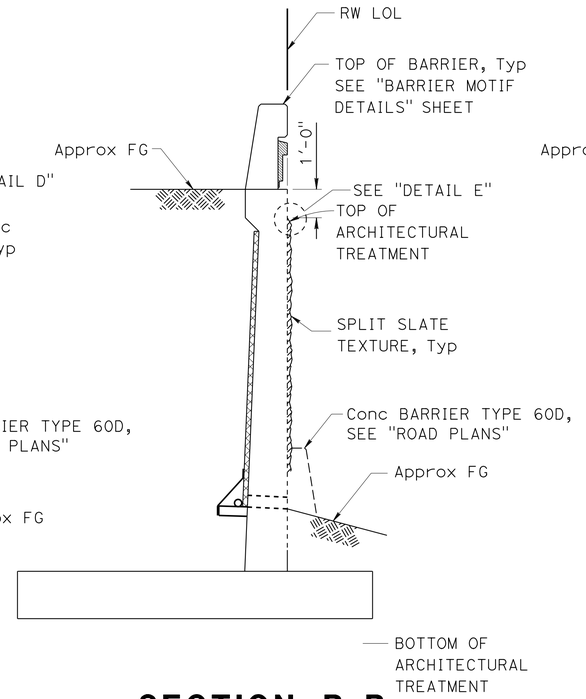

SECTION B-B
3/8" = 1'-0"

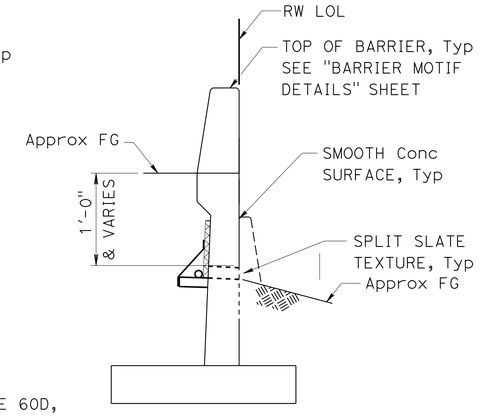

SECTION C-C
3/8" = 1'-0"

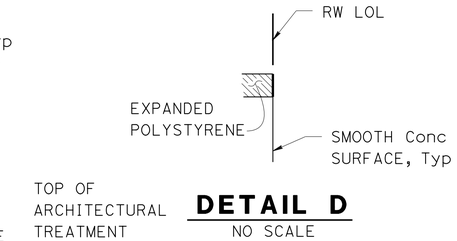

DETAIL D
NO SCALE

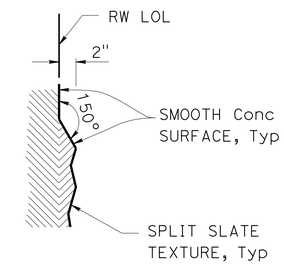

DETAIL E
NO SCALE

Note
All surface relief & texture shall be measured from RW LOL

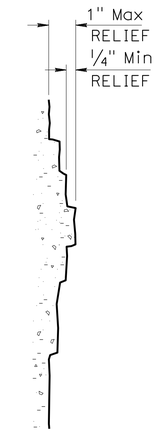

SECTION D-D
NO SCALE

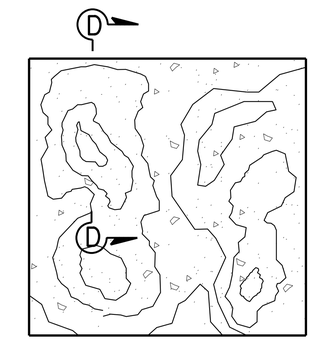

SPLIT SLATE TEXTURE
NO SCALE

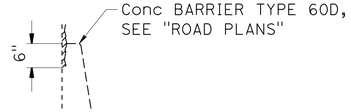

ARCH LIMITS AT BARRIER FACE
NO SCALE

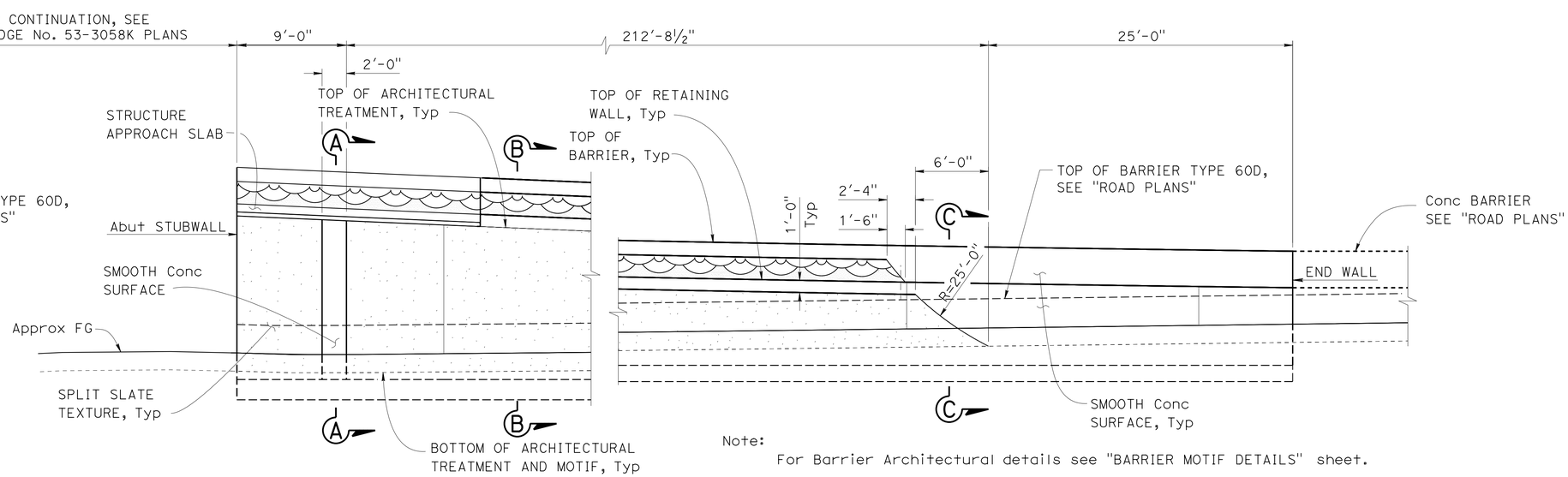

Note:
For Barrier Architectural details see "BARRIER MOTIF DETAILS" sheet.

ELEVATION - ARCHITECTURAL TREATMENT
3/16" = 1'-0"

	BY	CHECKED
DESIGN	I. Tasabia	H. J. Chavez
DETAILS	H. Mauroschadt	H. J. Chavez
QUANTITIES	G. Reyes-Gutierrez	J. Posey

STATE OF CALIFORNIA
DEPARTMENT OF TRANSPORTATION

DIVISION OF ENGINEERING SERVICES
STRUCTURE DESIGN
DESIGN BRANCH 11

BRIDGE NO. 53E0262
POST MILE 1.27

RETAINING WALL 68
ARCHITECTURAL TREATMENT DETAILS

STRUCTURES DESIGN DETAIL SHEET (ENGLISH) (REV. 09-01-10)

ORIGINAL SCALE IN INCHES FOR REDUCED PLANS 0 1 2 3

UNIT: 3587
PROJECT NUMBER & PHASE: 0715000160-1
CONTRACT NO.: 07-2159U4

DISREGARD PRINTS BEARING EARLIER REVISION DATES

REVISION DATES 5-16-12 3-26-13 7-18-13 12-31-13

SHEET 4 OF 6

FILE => 53e0262-e-arch1.dgn

USERNAME => s125624 DATE PLOTTED => 28-JAN-2016 TIME PLOTTED => 12:25

DIST	COUNTY	ROUTE	POST MILES TOTAL PROJECT	SHEET No.	TOTAL SHEETS
07	LA,Ora	5	0.0/1.5, 44.3/44.4	1439	1622

REGISTERED CIVIL ENGINEER — DATE: 3-18-15

1-25-16
PLANS APPROVAL DATE

REGISTERED PROFESSIONAL ENGINEER — WILLIAM D. KEMP — No. 55730 — Exp. 12/31/16 — CIVIL — STATE OF CALIFORNIA

The State of California or its officers or agents shall not be responsible for the accuracy or completeness of electronic copies of this plan sheet.

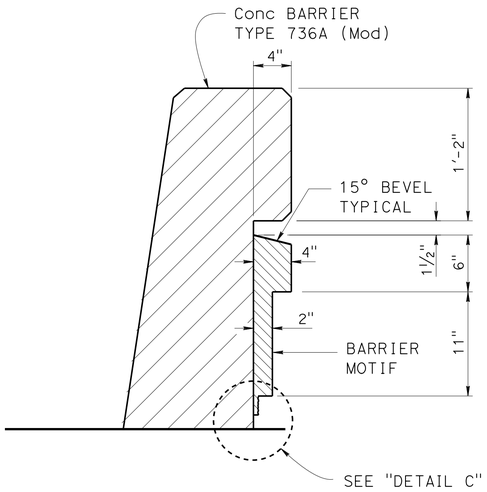

SECTION A-A

1½" = 1'-0"

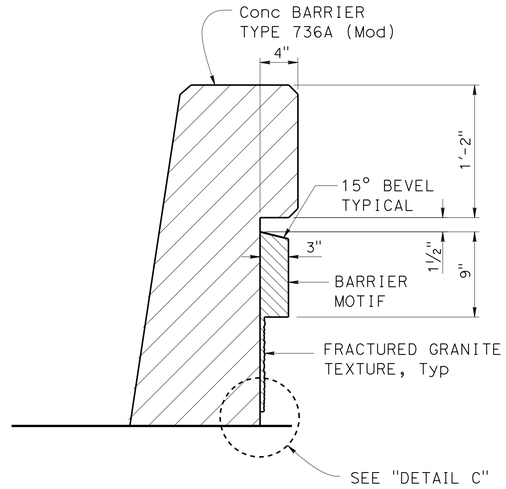

SECTION B-B

1½" = 1'-0"

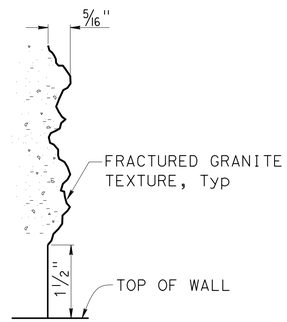

DETAIL C

NO SCALE

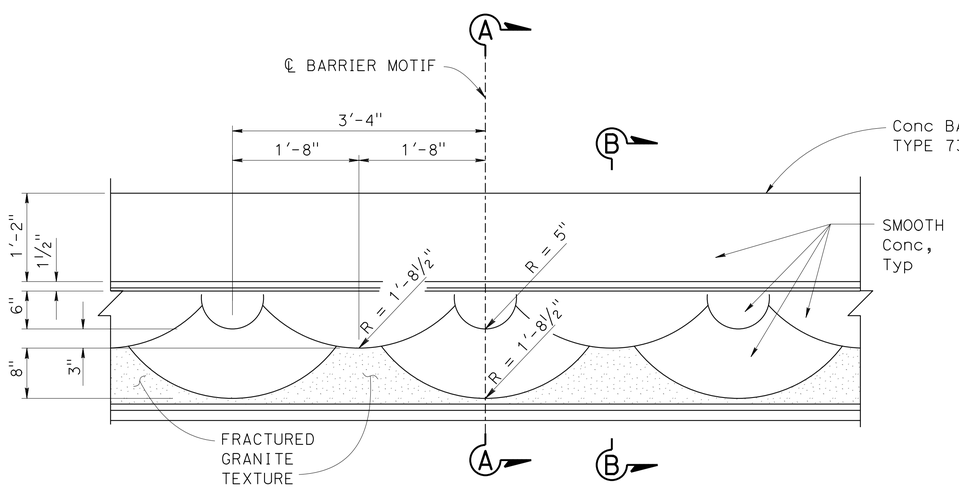

PARTIAL ELEVATION - BARRIER MOTIF

1" = 1'-0"

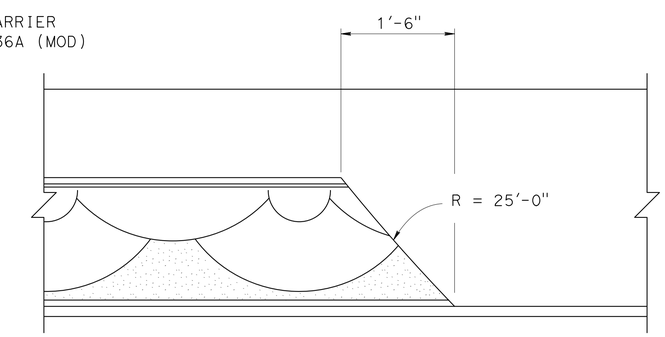

BARRIER END DETAIL

1" = 1'-0"

DESIGN	BY I. Tasabia	CHECKED H. J. Chavez	
DETAILS	BY H. Mauroschadt	CHECKED H. J. Chavez	
QUANTITIES	BY G. Reyes-Gutierrez	CHECKED J. Posey	

STATE OF CALIFORNIA
DEPARTMENT OF TRANSPORTATION

DIVISION OF ENGINEERING SERVICES
STRUCTURE DESIGN
DESIGN BRANCH 11

BRIDGE NO. 53E0262
POST MILE 1.27

RETAINING WALL 68
BARRIER MOTIF DETAILS

STRUCTURES DESIGN DETAIL SHEET (ENGLISH) (REV. 09-01-10)

ORIGINAL SCALE IN INCHES FOR REDUCED PLANS 0 1 2 3

UNIT: 3587
PROJECT NUMBER & PHASE: 0715000160-1
CONTRACT NO.: 07-2159U4

DISREGARD PRINTS BEARING EARLIER REVISION DATES

REVISION DATES: 6-5-12 6-19-12 3-20-13 7-18-13

SHEET 5 OF 6

FILE => 53e0262-f-arch2.dgn

USERNAME => s125624 DATE PLOTTED => 28-JAN-2016 TIME PLOTTED => 12:25

BENCH MARK

GPS 0887
ELEVATION 65.915 FT
FD 2-1/2 CADT DISK IN CONC. CURB
FLUSH, STAMPED "LA-5-1.0, 1995"
LOCATED 90' N OF THE SOUTH SIDE
FIRESTONE BLVD 0.2 MI SE OF VALLEY VIEW
NORTHING 542395.636
EASTING 1997613.893
DATUM NAVD88

DIST	COUNTY	ROUTE	POST MILES TOTAL PROJECT	SHEET No.	TOTAL SHEETS
07	LA,Ora	5	0.0/1.5, 44.3/44.4	1440	1622

REGISTERED CIVIL ENGINEER 05/20/15 DATE

1-25-16
PLANS APPROVAL DATE

URS CORPORATION
2020 EAST FIRST STREET, SUITE 400
SANTA ANA, CA 92705

The State of California or its officers or agents shall not be responsible for the accuracy or completeness of electronic copies of this plan sheet.

REGISTERED PROFESSIONAL ENGINEER
MICHAEL G. SMITH
No. 2229
Exp. 03/31/16
GEOTECHNICAL
STATE OF CALIFORNIA

1-This LOTB sheet was prepared in accordance with the Caltrans Soil & Rock Logging, Classification, & Presentation Manual (2010 Edition).

2-For protection of underground utility lines, hand-auger was used to remove top 5 to 10 feet of subsurface material for exploratory borings and Cone Penetration Testings.

3-2.5" to 1.4" blow counts conversion factors for fine-grain and coarse-grain soils have been 0.8 and 0.55, respectively.

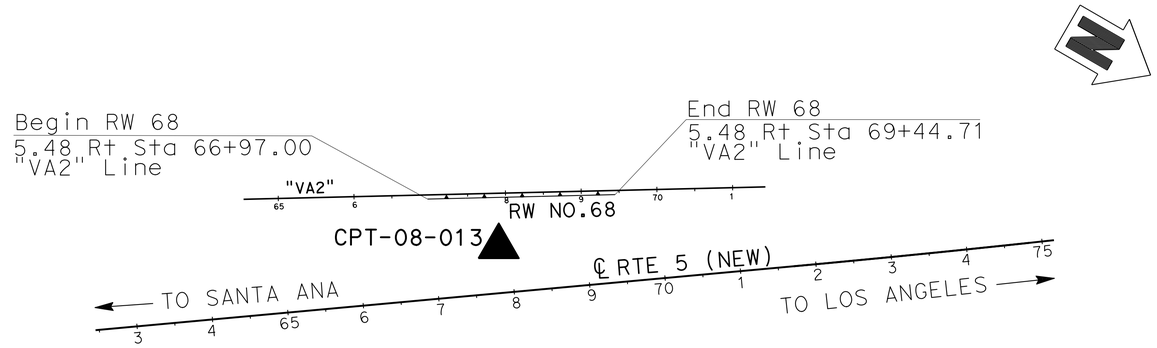

PLAN

SCALE 1"=100'

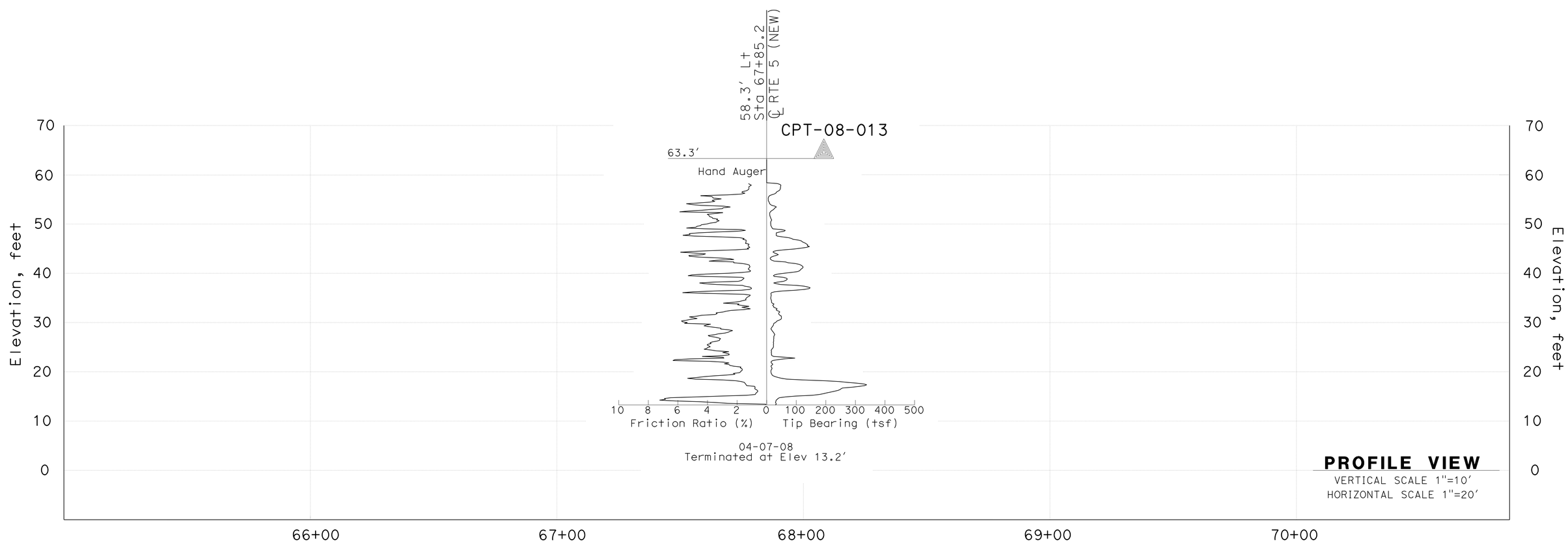

PROFILE VIEW

VERTICAL SCALE 1"=10'
HORIZONTAL SCALE 1"=20'

F.MOTAMED	DRAWN BY	T.PANAH	EJ.JEON
DESIGN OVERSIGHT			FIELD INVESTIGATION BY:
05/20/15	CHECKED BY	A.GHAZINOOR/L.KHALKHALI	DATE: 04/07/08
SIGN OFF DATE			

PREPARED FOR THE STATE OF CALIFORNIA DEPARTMENT OF TRANSPORTATION

M.G. SMITH
PROJECT ENGINEER

BRIDGE NO. 53E0262
POST MILES 1.27

RETAINING WALL NO. 68

LOG OF TEST BORINGS SHEET 1 OF 1

GS CIVIL LOG OF TEST BORINGS SHEET (ENGLISH) (REV. 03/14/12)

ORIGINAL SCALE IN INCHES FOR REDUCED PLANS 0 1 2 3

UNIT: 3658
PROJECT NUMBER & PHASE: 07150001601
CONTRACT NO.: 07-2159U4

DISREGARD PRINTS BEARING EARLIER REVISION DATES

REVISION DATES 5/12/15

SHEET 6 OF 6

FILE => 53e0262-g-lotb.dgn

USERNAME => s125624 DATE PLOTTED => 28-JAN-2016 TIME PLOTTED => 12:25

DIST	COUNTY	ROUTE	POST MILES TOTAL PROJECT	SHEET No.	TOTAL SHEETS
07	LA,Ora	5	0.0/1.5, 44.3/44.4	1441	1622

REGISTERED CIVIL ENGINEER 3-18-15 DATE

1-25-16
PLANS APPROVAL DATE

REGISTERED PROFESSIONAL ENGINEER William D. Kemp No. 55730 Exp. 12/31/16 CIVIL STATE OF CALIFORNIA

The State of California or its officers or agents shall not be responsible for the accuracy or completeness of electronic copies of this plan sheet.

STANDARD PLANS DATED 2010

A10A	ABBREVIATIONS (SHEET 1 OF 2)
RSP A10B	ABBREVIATIONS (SHEET 2 OF 2)
A10C	LINES AND SYMBOLS (SHEET 1 OF 3)
A10D	LINES AND SYMBOLS (SHEET 2 OF 3)
A10E	LINES AND SYMBOLS (SHEET 3 OF 3)
RSP A10F	LEGEND - SOIL (SHEET 1 OF 2)
RSP A10G	LEGEND - SOIL (SHEET 2 OF 2)
A10H	LEGEND - ROCK
A62B	LIMITS OF PAYMENT FOR EXCAVATION AND BACKFILL- BRIDGE SURCHARGE AND WALL
B0-3	BRIDGE DETAILS
B2-5	PILE DETAILS CLASS 90 AND CLASS 140
RSP B3-1A	RETAINING WALL TYPE 1 (CASE 1)
RSP B3-5	RETAINING WALL DETAILS NO. 1
RSP B11-56	CONCRETE BARRIER TYPE 736

INDEX TO PLANS

SHEET No.	TITLE
1	GENERAL PLAN
2	STRUCTURE PLAN
3	RETAINING WALL DETAILS
4	ARCHITECTURAL TREATMENT DETAILS
5	BARRIER MOTIF DETAILS
6	LOG OF TEST BORINGS SHEET 1 OF 1

QUANTITIES

STRUCTURE EXCAVATION (RETAINING WALL)	980	CY
STRUCTURE BACKFILL (RETAINING WALL)	570	CY
FURNISH PILING (CLASS 90) (ALTERNATIVE W)	2,900	LF
DRIVE PILE (CLASS 90) (ALTERNATIVE W)	55	EA
STRUCTURAL CONCRETE, RETAINING WALL	274	CY
ARCHITECTURAL TREATMENT (SPLIT SLATE)	2,360	SQFT
BAR REINFORCING STEEL (RETAINING WALL)	44,720	LB
CONCRETE BARRIER (TYPE 736A MODIFIED)	227	LF

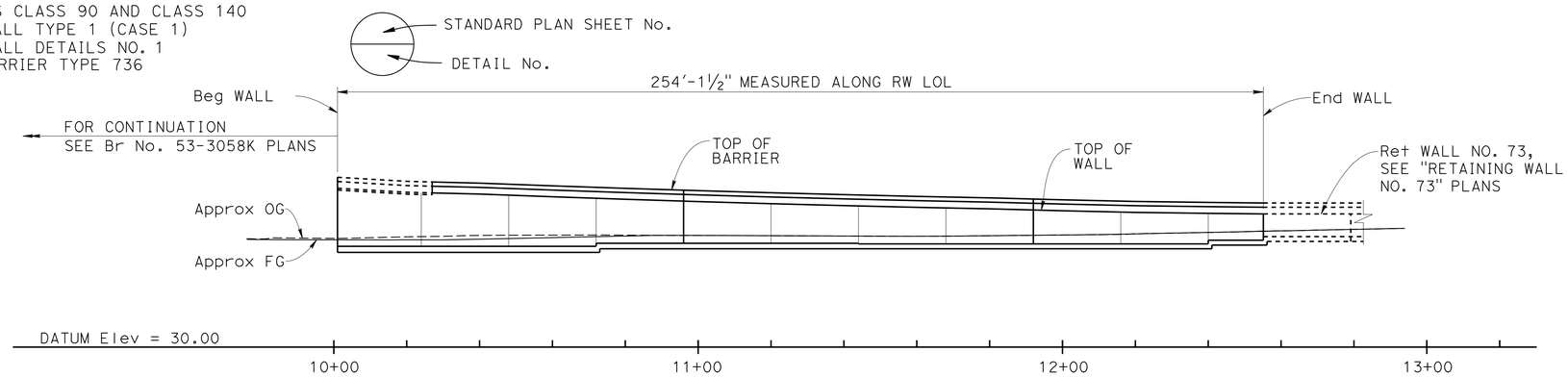

NOTE: Piles not shown

MIRRORED ELEVATION

1" = 20'-0"

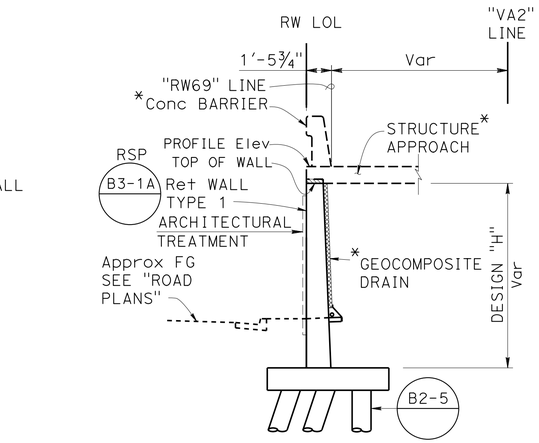

* SEE Br No. 53-3058K PLANS

TYPICAL SECTION AT STRUCTURE APPROACH

NO SCALE

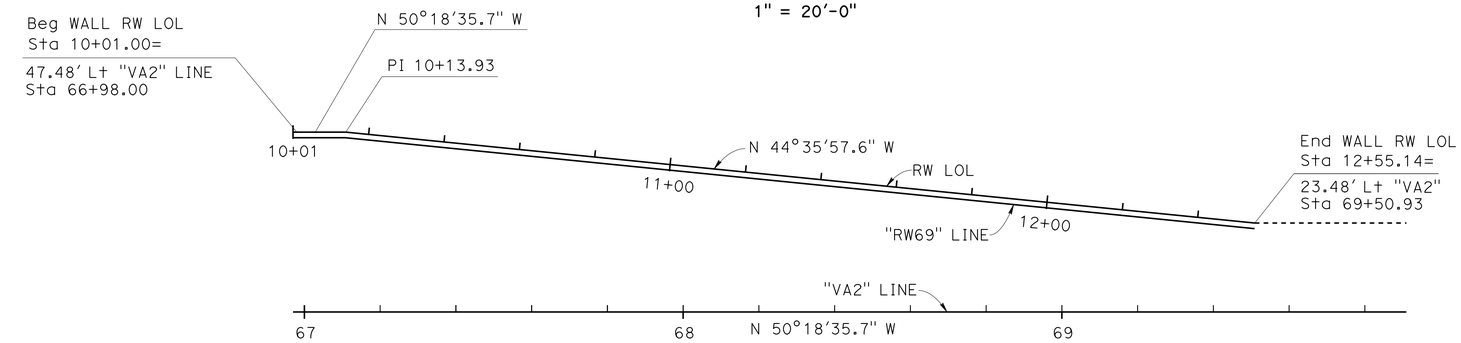

PILE DATA TABLE

PILE TYPE	NOMINAL RESISTANCE (kips)		DESIGN TIP ELEVATIONS (ft)	SPECIFIED TIP ELEVATION (ft)	NOMINAL DRIVING RESISTANCE (kips)
	COMPRESSION	TENSION			
CLASS 90 PP14x0.375 ALT W	180	10	+6.0 (a) +48.0 (b) +24.0 (c)	+6	180

Notes: 1. Design tip elevations are controlled by: (a) Compression (b) Tension, (c) Settlement
2. The specified tip elevation for driven piles shall not be raised above the design tip elevations for tension load and tolerable settlement

PLAN

1" = 20'-0"

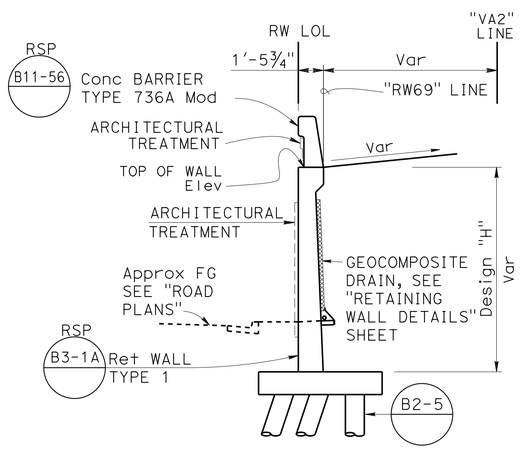

TYPICAL SECTION

NO SCALE

Ramin Rashedi 3-18-15 DESIGN ENGINEER	DESIGN	BY M. Okimura	CHECKED C. Manansala	LOAD & RESISTANCE FACTOR DESIGN	LIVE LOADING: HL93 W//"LOW-BOY"; PERMIT DESIGN VEHICLE
	DETAILS	BY J. Ramirez	CHECKED C. Manansala	LAYOUT BY M. Okimura	CHECKED C. Manansala
	QUANTITIES	BY R. Wilson	CHECKED J. Radu	SPECIFICATIONS BY X. Li	PLANS AND SPECS COMPARED X. Li

ORIGINAL SCALE IN INCHES FOR REDUCED PLANS 0 1 2 3

STATE OF CALIFORNIA DEPARTMENT OF TRANSPORTATION

DIVISION OF ENGINEERING SERVICES STRUCTURE DESIGN DESIGN BRANCH 11

BRIDGE NO. 53E0263 POST MILE 1.27

RETAINING WALL 69
GENERAL PLAN

UNIT: 3587
PROJECT NUMBER & PHASE: 0715000160-1 CONTRACT NO.: 07-2159u4

DISREGARD PRINTS BEARING EARLIER REVISION DATES

REVISION DATES 3-20-13 4/9/13 4/26/13 7-18-13 SHEET 1 OF 6

STRUCTURES DESIGN GENERAL PLAN SHEET (ENGLISH) (REV.09-01-10)

FILE => 53e0263-a-gp.dgn

USERNAME => s125624 DATE PLOTTED => 28-JAN-2016 TIME PLOTTED => 12:25

DIST	COUNTY	ROUTE	POST MILES TOTAL PROJECT	SHEET No.	TOTAL SHEETS
07	LA,Ora	5	0.0/1.5, 44.3/44.4	1442	1622

William Kemp 3-18-15
REGISTERED CIVIL ENGINEER DATE

1-25-16
PLANS APPROVAL DATE

REGISTERED PROFESSIONAL ENGINEER
William D. Kemp
No. 55730
Exp. 12/31/16
CIVIL
STATE OF CALIFORNIA

The State of California or its officers or agents shall not be responsible for the accuracy or completeness of electronic copies of this plan sheet.

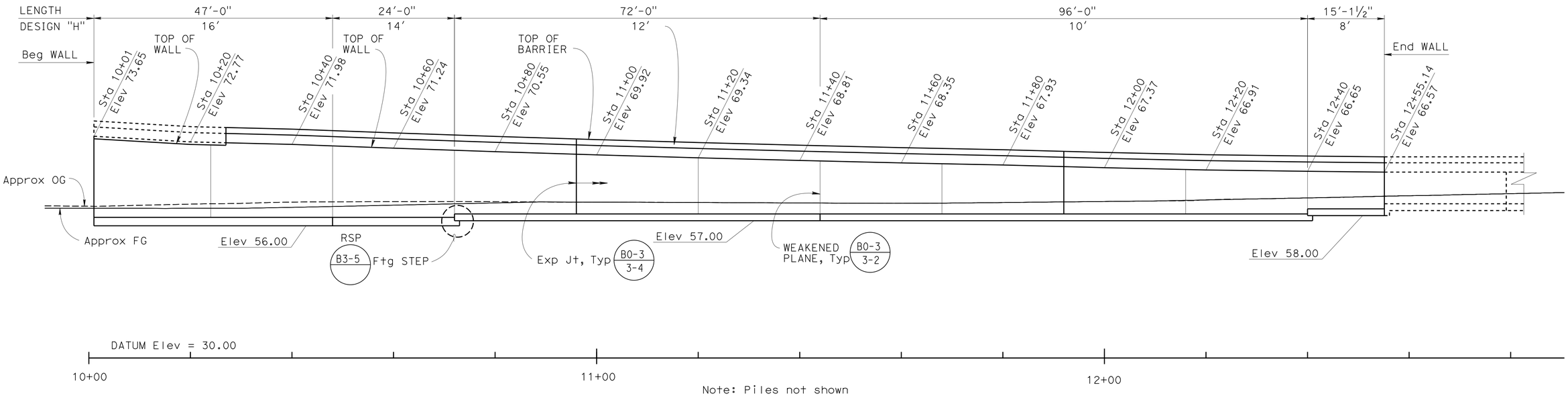

Note: Piles not shown

MIRRORED ELEVATION

1" = 10'-0"

LEGEND

○ - INDICATES CLASS 90 PILES, ALTERNATIVE "W" (B2-5)

○ - INDICATES BATTERED 1:3 CLASS 90 PILES, ALTERNATIVE "W" (B2-5)

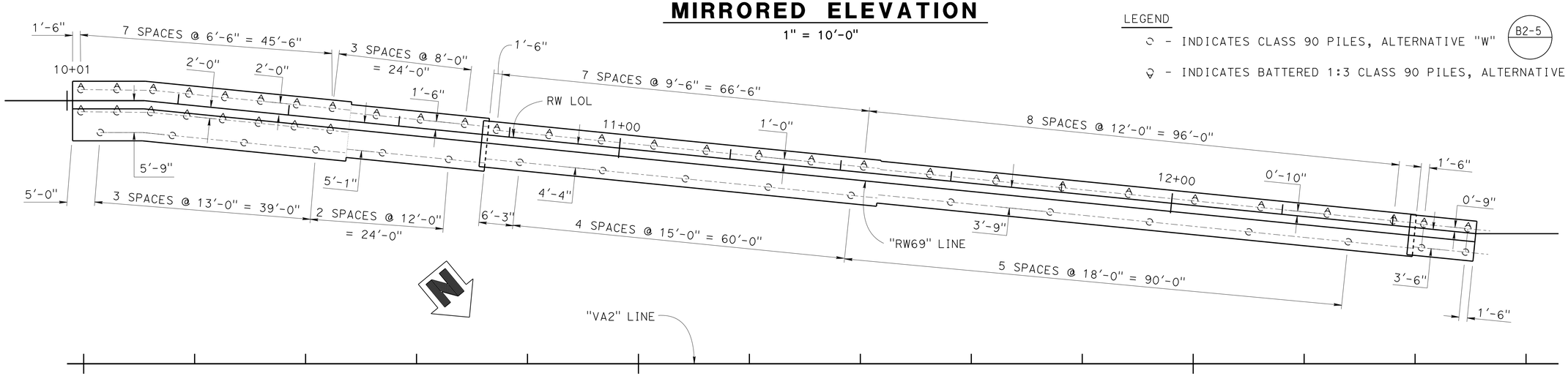

PLAN

1" = 10'-0"

DESIGN	BY M. Okimura	CHECKED C. Manansala	
DETAILS	BY L. Goldthwait	CHECKED C. Manansala	
QUANTITIES	BY R. Wilson	CHECKED J. Radu	

STATE OF CALIFORNIA
DEPARTMENT OF TRANSPORTATION

DIVISION OF ENGINEERING SERVICES
STRUCTURE DESIGN
DESIGN BRANCH 11

BRIDGE NO. 53E0263
POST MILE 1.27

RETAINING WALL 69
STRUCTURE PLAN

STRUCTURES DESIGN DETAIL SHEET (ENGLISH) (REV. 09-01-10)

ORIGINAL SCALE IN INCHES FOR REDUCED PLANS 0 1 2 3

UNIT: 3587
PROJECT NUMBER & PHASE: 0715000160-1
CONTRACT NO.: 07-2159u4

DISREGARD PRINTS BEARING EARLIER REVISION DATES

REVISION DATES: 7-18-12 4-26-13 7-18-13 4-14-15

SHEET 2 OF 6

FILE => 53e0263-b-sp.dgn

USERNAME => s125624 DATE PLOTTED => 28-JAN-2016 TIME PLOTTED => 12:25

DIST	COUNTY	ROUTE	POST MILES TOTAL PROJECT	SHEET No.	TOTAL SHEETS
07	LA,Ora	5	0.0/1.5, 44.3/44.4	1443	1622

William Kemp 3-18-15
REGISTERED CIVIL ENGINEER DATE

1-25-16
PLANS APPROVAL DATE

REGISTERED PROFESSIONAL ENGINEER
William D. Kemp
No. 55730
Exp. 12/31/16
CIVIL
STATE OF CALIFORNIA

The State of California or its officers or agents shall not be responsible for the accuracy or completeness of electronic copies of this plan sheet.

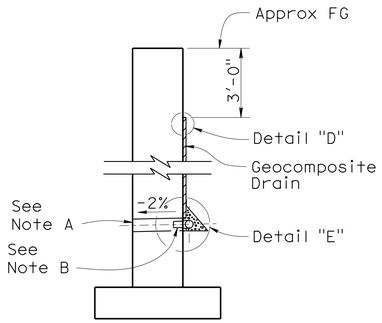

WALL SECTION

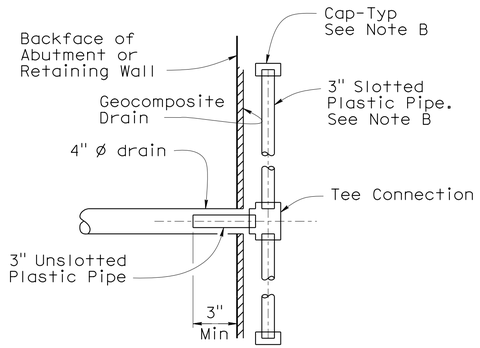

SECTION K-K

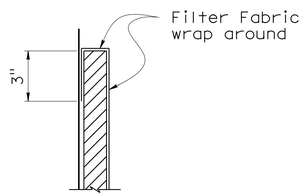

DETAIL "D"

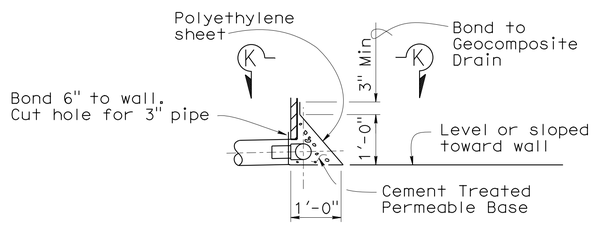

DETAIL "E"

WEEP HOLE AND GEOCOMPOSITE DRAIN

NO SCALE

Notes (GEOCOMPOSITE DRAIN):

A. 4" Ø drains at intermediate sag points and at 25'-0" center to center. For walls adjacent to sidewalks or curbs, provide 4" Ø cast iron or asbestos cement pipe under the sidewalk to discharge through curb face. Exposed wall drains shall be located 3" ± above finished grade.

B. Geocomposite drain, cement treated permeable base, and 3" Ø slotted plastic pipe continuous behind retaining wall or abutment. Cap ends of pipe. Provide "Tee" connection at each 4" Ø drain.

C. Connect the low end of plastic pipe to the main outlet pipe as applicable.

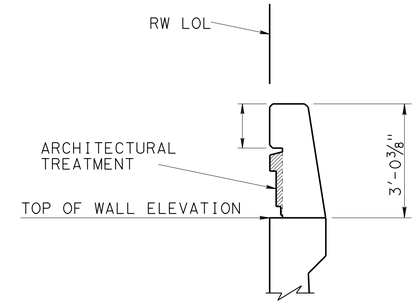

RSP B11-56

BARRIER TYPE 736A Mod

NO SCALE

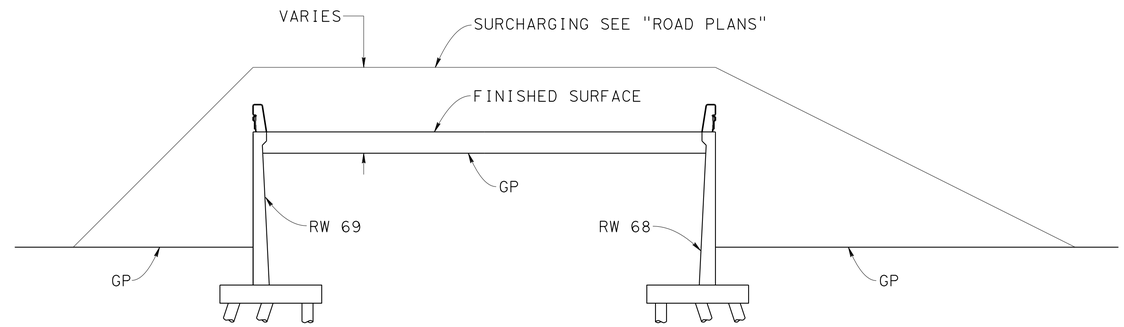

EMBANKMENT SURCHARGE

NO SCALE

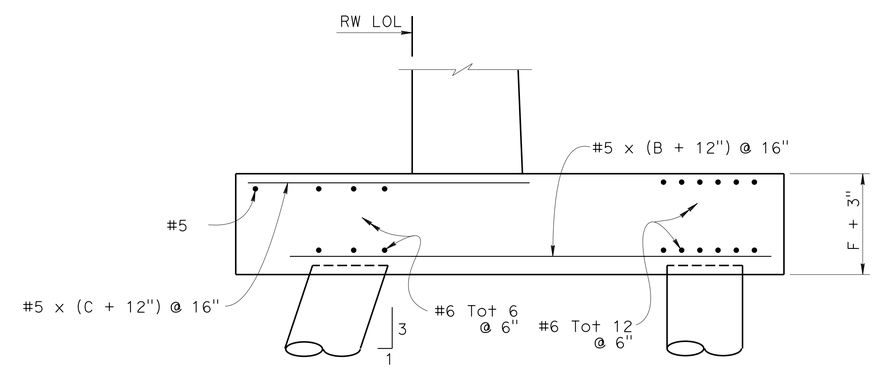

Notes:

1. Reinforcement shown is in addition to that shown in RSP B3-1A
2. All Piles not shown, see 'STRUCTURE PLAN' sheets
3. For "F", "B" and "C" dimensions, see RSP B3-1A

PILE FOOTING SECTION

NO SCALE

DESIGN	BY Mark Okimura	CHECKED Cipriano Manansala	
DETAILS	BY Jaime Ramirez	CHECKED Cipriano Manansala	
QUANTITIES	BY R. Wilson	CHECKED J. Radu	

STATE OF CALIFORNIA
DEPARTMENT OF TRANSPORTATION

DIVISION OF ENGINEERING SERVICES
STRUCTURE DESIGN
DESIGN BRANCH 11

BRIDGE NO. 53E0263
POST MILE 1.27

RETAINING WALL 69
RETAINING WALL DETAILS

STRUCTURES DESIGN DETAIL SHEET (ENGLISH) (REV. 09-01-10)

ORIGINAL SCALE IN INCHES FOR REDUCED PLANS 0 1 2 3

UNIT: 3587
PROJECT NUMBER & PHASE: 0715000160-1
CONTRACT NO.: 07-2159U4

DISREGARD PRINTS BEARING EARLIER REVISION DATES

REVISION DATES: 7-13-11 3-26-13 4-26-13 7-18-13

SHEET 3 OF 6

FILE => 53e0263-e-retdt.dgn

USERNAME => s125624 DATE PLOTTED => 28-JAN-2016 TIME PLOTTED => 12:25

DIST	COUNTY	ROUTE	POST MILES TOTAL PROJECT	SHEET No.	TOTAL SHEETS
07	LA,Ora	5	0.0/1.5, 44.3/44.4	1444	1622

REGISTERED CIVIL ENGINEER — DATE 3-18-15

1-25-16
PLANS APPROVAL DATE

REGISTERED PROFESSIONAL ENGINEER — WILLIAM D. KEMP — No. 55730 — Exp. 12/31/16 — CIVIL — STATE OF CALIFORNIA

The State of California or its officers or agents shall not be responsible for the accuracy or completeness of electronic copies of this plan sheet.

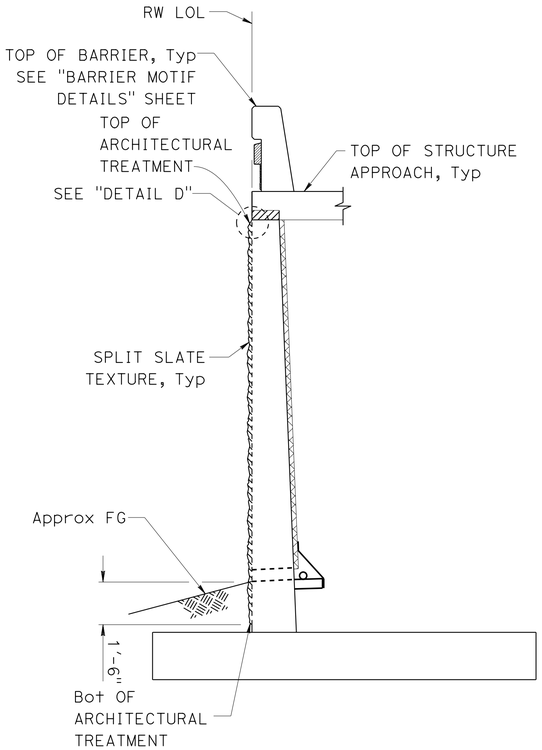

SECTION A-A

3/8" = 1'-0"

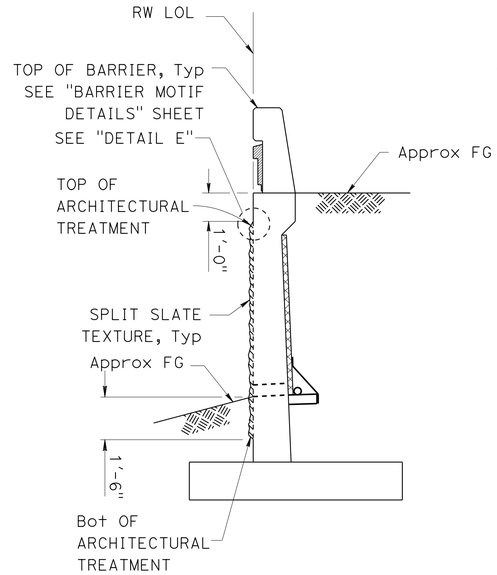

SECTION B-B

3/8" = 1'-0"

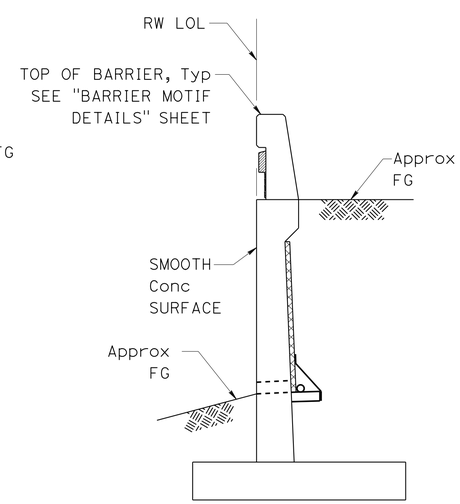

SECTION C-C

3/8" = 1'-0"

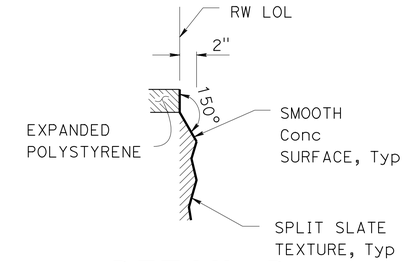

DETAIL D

NO SCALE

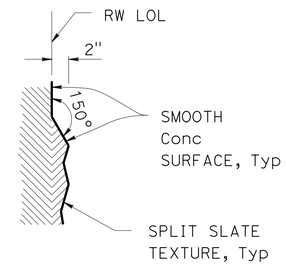

DETAIL E

NO SCALE

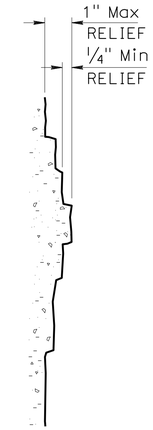

SECTION D-D

NO SCALE

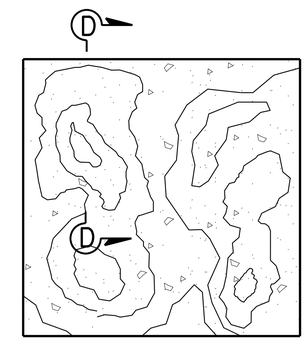

SPLIT SLATE TEXTURE

NO SCALE

Note:
For Barrier Architectural details see "BARRIER MOTIF DETAILS" sheet.

Note:
All surface relief and texture shall be measured from RW LOL

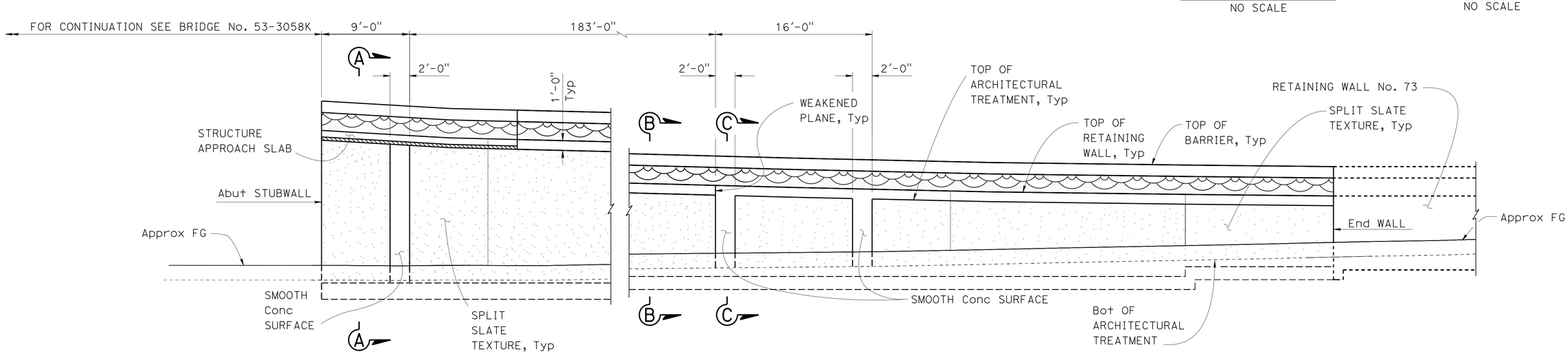

MIRRORED ELEVATION - ARCHITECTURAL TREATMENT

3/16" = 1'-0"

DESIGN	BY I. Tasabia	CHECKED H. J. Chavez
DETAILS	BY H. Mauroschadt	CHECKED H. J. Chavez
QUANTITIES	BY R. Wilson	CHECKED J. Radu

STATE OF CALIFORNIA
DEPARTMENT OF TRANSPORTATION

DIVISION OF ENGINEERING SERVICES
STRUCTURE DESIGN
DESIGN BRANCH 11

BRIDGE NO. 53E0263
POST MILE 1.27

RETAINING WALL 69
ARCHITECTURAL TREATMENT DETAILS

STRUCTURES DESIGN DETAIL SHEET (ENGLISH) (REV. 09-01-10)

ORIGINAL SCALE IN INCHES FOR REDUCED PLANS 0 1 2 3

UNIT: 3587
PROJECT NUMBER & PHASE: 0715000160-1
CONTRACT NO.: 07-2159U4

DISREGARD PRINTS BEARING EARLIER REVISION DATES

REVISION DATES: 5-18-12 12-6-12 3-20-13 11-06-13

SHEET 4 OF 6

FILE => 53e0263-m-arch1.dgn

USERNAME => s125624 DATE PLOTTED => 28-JAN-2016 TIME PLOTTED => 12:25

DIST	COUNTY	ROUTE	POST MILES TOTAL PROJECT	SHEET No.	TOTAL SHEETS
07	LA,Ora	5	0.0/1.5, 44.3/44.4	1445	1622

REGISTERED CIVIL ENGINEER — DATE 3-18-15

1-25-16
PLANS APPROVAL DATE

REGISTERED PROFESSIONAL ENGINEER — WILLIAM D. KEMP — No. 55730 — Exp. 12/31/16 — CIVIL — STATE OF CALIFORNIA

The State of California or its officers or agents shall not be responsible for the accuracy or completeness of electronic copies of this plan sheet.

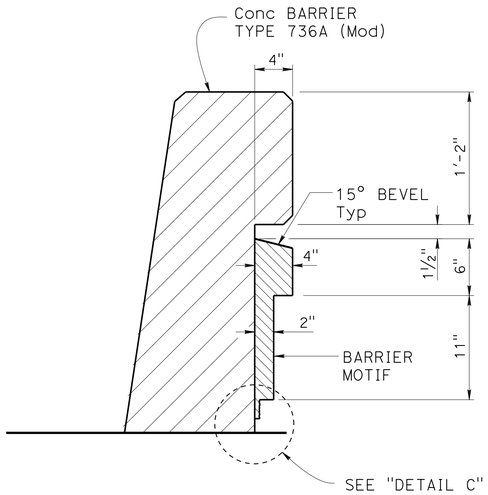

SECTION A-A

1½" = 1'-0"

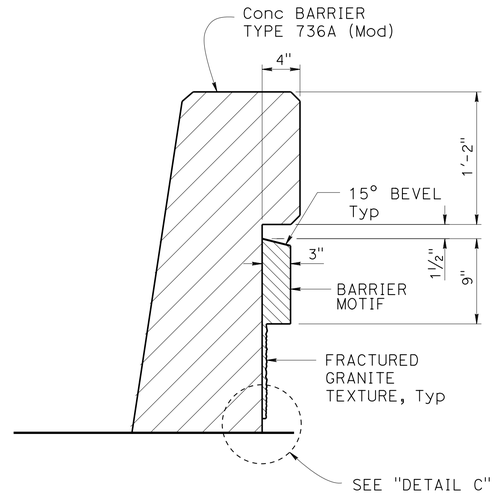

SECTION B-B

1½" = 1'-0"

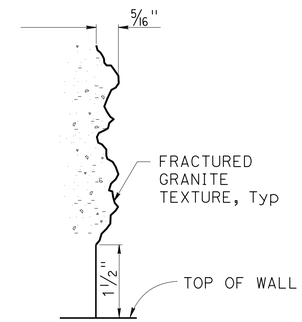

DETAIL C

NO SCALE

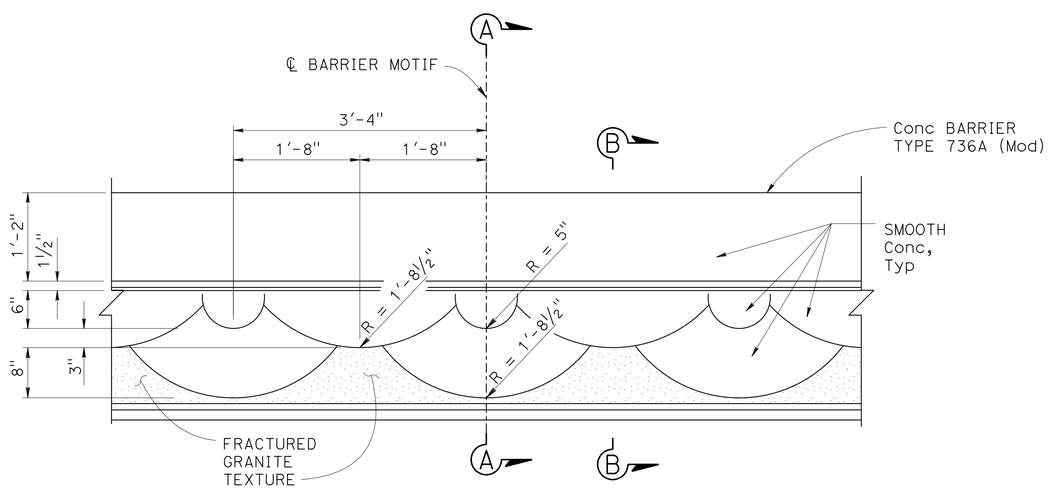

PARTIAL ELEVATION - BARRIER MOTIF

1" = 1'-0"

DESIGN	BY I. Tasabia	CHECKED H. J. Chavez	
DETAILS	BY H. Mauroschadt	CHECKED H. J. Chavez	
QUANTITIES	BY R. Wilson	CHECKED J. Radu	

STATE OF CALIFORNIA
DEPARTMENT OF TRANSPORTATION

DIVISION OF ENGINEERING SERVICES
STRUCTURE DESIGN
DESIGN BRANCH 11

BRIDGE NO. 53E0263
POST MILE 1.27

RETAINING WALL 69
BARRIER MOTIF DETAILS

STRUCTURES DESIGN DETAIL SHEET (ENGLISH) (REV. 09-01-10)

ORIGINAL SCALE IN INCHES FOR REDUCED PLANS 0 1 2 3

UNIT: 3587
PROJECT NUMBER & PHASE: 0715000160-1
CONTRACT NO.: 07-2159U4

DISREGARD PRINTS BEARING EARLIER REVISION DATES

REVISION DATES: 6-6-12 6-21-12 3-28-13 7-18-13

SHEET 5 OF 6

FILE => 53e0263-t-arch2.dgn

USERNAME => s125624 DATE PLOTTED => 28-JAN-2016 TIME PLOTTED => 12:25

BENCH MARK

GPS 0887
ELEVATION 65.915 FT
FD 2-1/2 CADT DISK IN CONC. CURB
FLUSH, STAMPED "LA-5-1.0, 1995"
LOCATED 90' N OF THE SOUTH SIDE
FIRESTONE BLVD 0.2 MI SE OF VALLEY VIEW
NORTHING 542395.636
EASTING 1997613.893
DATUM NAVD88

DIST	COUNTY	ROUTE	POST MILES TOTAL PROJECT	SHEET No.	TOTAL SHEETS
07	LA,Ora	5	0.0/1.5, 44.3/44.4	1446	1622

REGISTERED CIVIL ENGINEER 05/20/15 DATE

1-25-16
PLANS APPROVAL DATE

URS CORPORATION
2020 EAST FIRST STREET, SUITE 400
SANTA ANA, CA 92705

The State of California or its officers or agents shall not be responsible for the accuracy or completeness of electronic copies of this plan sheet.

REGISTERED PROFESSIONAL ENGINEER MICHAEL G. SMITH No. 2229 Exp. 03/31/16 GEOTECHNICAL STATE OF CALIFORNIA

1-This LOTB sheet was prepared in accordance with the Caltrans Soil & Rock Logging, Classification, & Presentation Manual (2010 Edition).

2-For protection of underground utility lines, hand-auger was used to remove top 5 to 10 feet of subsurface material for exploratory borings and Cone Penetration Testings.

3-2.5" to 1.4" blow counts conversion factors for fine-grain and coarse-grain soils have been 0.8 and 0.55, respectively.

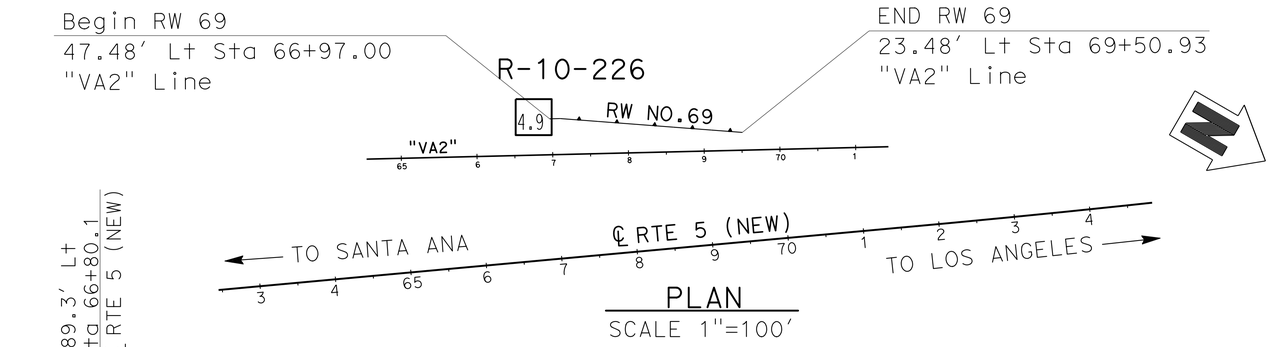

PLAN
SCALE 1"=100'

PROFILE VIEW
VERTICAL SCALE 1"=10'
HORIZONTAL SCALE 1"=20'

F.MOTAMED	DRAWN BY	T.PANAH	EJ.JEON
DESIGN OVERSIGHT			FIELD INVESTIGATION BY:
05/20/15	CHECKED BY	A.GHAZINOOR/L.KHALKHALI	DATE: 03/04/10
SIGN OFF DATE			

PREPARED FOR THE STATE OF CALIFORNIA DEPARTMENT OF TRANSPORTATION

M.G. SMITH
PROJECT ENGINEER

BRIDGE NO. 53E0263
POST MILES 1.27

RETAINING WALL NO. 69

LOG OF TEST BORINGS SHEET 1 OF 1

GS CIVIL LOG OF TEST BORINGS SHEET (ENGLISH) (REV. 03/14/12)

ORIGINAL SCALE IN INCHES FOR REDUCED PLANS 0 1 2 3

UNIT: 3658
PROJECT NUMBER & PHASE: 07150001601 CONTRACT NO.: 07-2159U4

DISREGARD PRINTS BEARING EARLIER REVISION DATES

REVISION DATES 5/12/15

SHEET 6 OF 6

FILE => 53e0263-w-lotb.dgn

USERNAME => s125624 DATE PLOTTED => 28-JAN-2016 TIME PLOTTED => 12:25

DIST	COUNTY	ROUTE	POST MILES TOTAL PROJECT	SHEET No.	TOTAL SHEETS
07	LA,Ora	5	0.0/1.5, 44.3/44.4	1447	1622

REGISTERED CIVIL ENGINEER — DATE 3-18-15

1-25-16
PLANS APPROVAL DATE

REGISTERED PROFESSIONAL ENGINEER — William D. Kemp — No. 55730 — Exp. 12/31/16 — CIVIL — STATE OF CALIFORNIA

The State of California or its officers or agents shall not be responsible for the accuracy or completeness of electronic copies of this plan sheet.

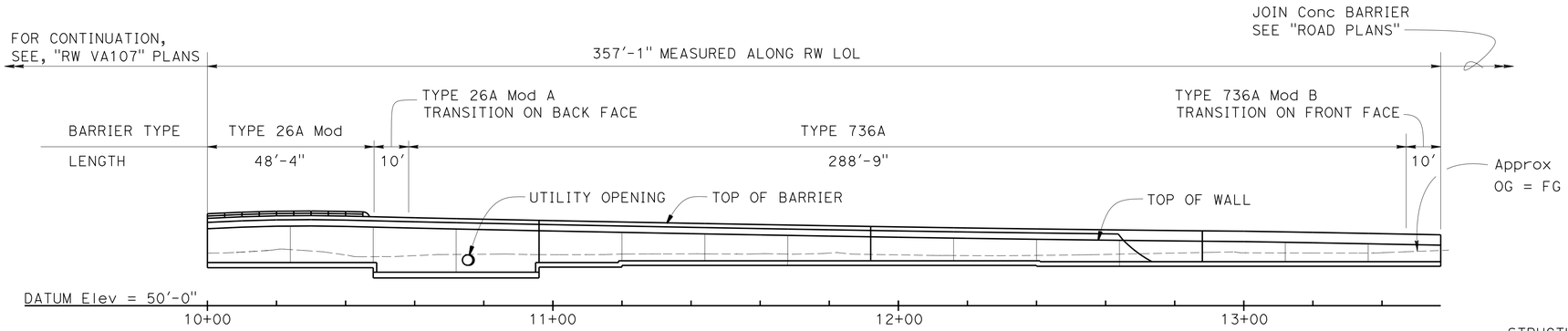

DEVELOPED ELEVATION

1" = 20'

INDEX TO PLANS

SHEET No.	TITLE
1	GENERAL PLAN
2	STRUCTURE PLAN NO. 1
3	STRUCTURE PLAN NO. 2
4	RETAINING WALL DETAILS
5	ARCHITECTURAL TREATMENT DETAILS
6	BARRIER MOTIF DETAILS
7	LIMITS OF EXCAVATION AND BACKFILL
8	LOG OF TEST BORINGS

QUANTITIES

STRUCTURE EXCAVATION (RETAINING WALL)	1,500	CY
STRUCTURE BACKFILL (RETAINING WALL)	1,265	CY
STRUCTURAL CONCRETE, RETAINING WALL	275	CY
ARCHITECTURAL TREATMENT (SPLIT SLATE)	1,610	SQFT
BAR REINFORCING STEEL (RETAINING WALL)	37,830	LB
TUBULAR HANDRAILING (MODIFIED)	49	LF
CONCRETE BARRIER (TYPE 26 MODIFIED)	59	LF
CONCRETE BARRIER (TYPE 736A MODIFIED)	289	LF
CONCRETE BARRIER (TYPE 736A MODIFIED B)	10	LF

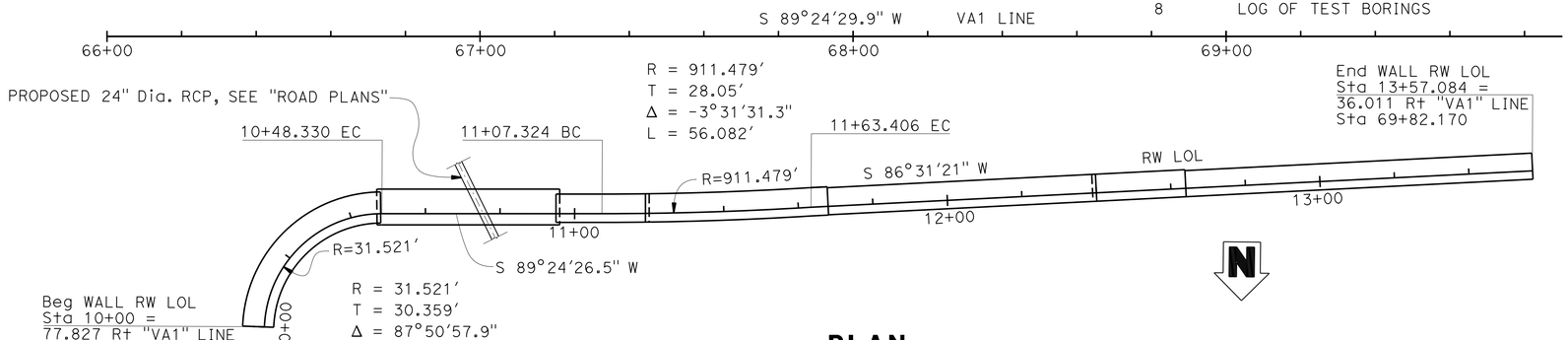

PLAN

1" = 20'

STANDARD PLANS 2010

	A10A	ABBREVIATIONS (SHEET 1 OF 2)
RSP	A10B	ABBREVIATIONS (SHEET 2 OF 2)
	A10C	LINES AND SYMBOLS (SHEET 1 OF 3)
	A10D	LINES AND SYMBOLS (SHEET 2 OF 3)
	A10E	LINES AND SYMBOLS (SHEET 3 OF 3)
RSP	A10F	LEGEND - SOIL (SHEET 1 OF 2)
RSP	A10G	LEGEND - SOIL (SHEET 2 OF 2)
	A10H	LEGEND - ROCK
	A62B	LIMITS OF PAYMENT FOR EXCAVATION AND BACKFILL- BRIDGE SURCHARGE AND WALL
	BO-3	BRIDGE DETAILS
RSP	B3-1A	RETAINING WALL TYPE 1 (CASE 1)
RSP	B3-5	RETAINING WALL DETAILS NO. 1
	B3-6	RETAINING WALL DETAILS NO. 2
	B11-51	TUBULAR HAND RAILING
RSP	B11-54	CONCRETE BARRIER TYPE 26
RSP	B11-56	CONCRETE BARRIER TYPE 736

STANDARD PLAN SHEET No.
DETAIL No.

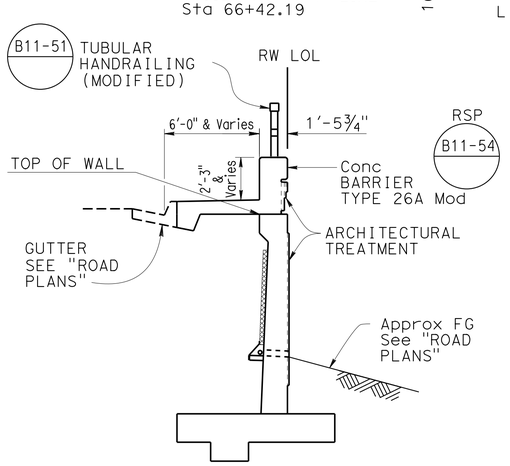

FROM Sta 10+00 TO 10+48.33

TYPICAL SECTION

NO SCALE

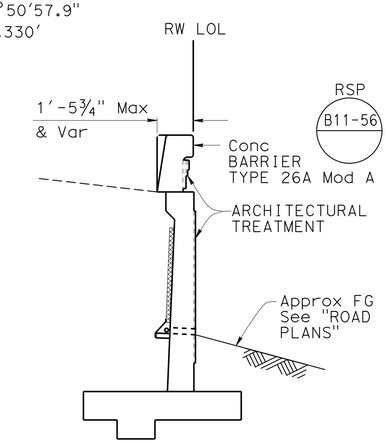

FROM Sta 10+48.33 TO 10+58.33

TRANSITION SECTION

NO SCALE

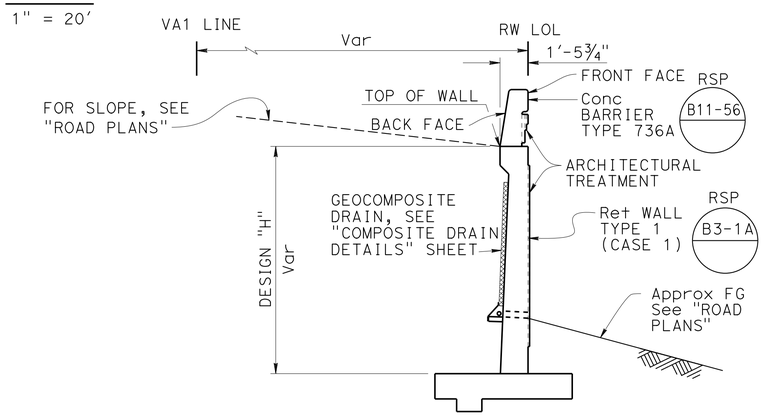

FROM Sta 10+58.33 TO 13+47.087

TYPICAL SECTION

NO SCALE

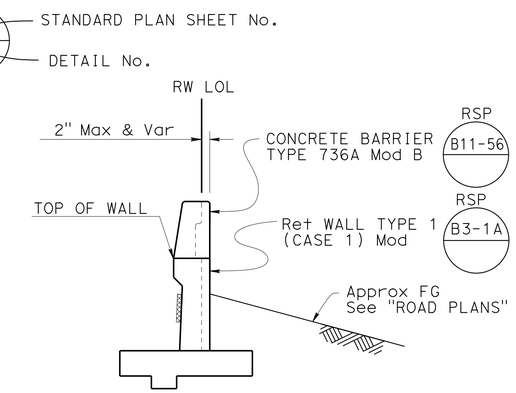

FROM Sta 13+47.087 TO 13+57.087

TRANSITION SECTION

NO SCALE

Ramin Rashedi 3-18-15 DESIGN ENGINEER	DESIGN	BY Yeo Yoon	CHECKED Shervin Pahlavan	LOAD & RESISTANCE FACTOR DESIGN — LIVE LOADING: HL93 W/"LOW-BOY"; PERMIT DESIGN VEHICLE
	DETAILS	BY Anthony Valdez	CHECKED Shervin Pahlavan	LAYOUT: BY Yeo Yoon — CHECKED Shervin Pahlavan
	QUANTITIES	BY G. Reyes-Gutierrez	CHECKED Xiaodong Chen	SPECIFICATIONS: BY X. Li — PLANS AND SPECS COMPARED X. Li

ORIGINAL SCALE IN INCHES FOR REDUCED PLANS 0 1 2 3

STATE OF CALIFORNIA
DEPARTMENT OF TRANSPORTATION

DIVISION OF ENGINEERING SERVICES
STRUCTURE DESIGN
DESIGN BRANCH 11

BRIDGE NO. RW 70
POST MILE 1.29

RETAINING WALL 70
GENERAL PLAN

UNIT: 3587
PROJECT NUMBER & PHASE: 0715000160-1
CONTRACT NO.: 07-2159U4

DISREGARD PRINTS BEARING EARLIER REVISION DATES

REVISION DATES: 1-04-13 6-07-13 8-06-13 8-13-13

SHEET 1 OF 8

USERNAME => s125624 DATE PLOTTED => 28-JAN-2016 TIME PLOTTED => 12:25

STRUCTURES DESIGN GENERAL PLAN SHEET (ENGLISH) (REV.09-01-10)

FILE => rw70-a-gp.dgn

DIST	COUNTY	ROUTE	POST MILES TOTAL PROJECT	SHEET No.	TOTAL SHEETS
07	LA,Ora	5	0.0/1.5, 44.3/44.4	1448	1622

REGISTERED CIVIL ENGINEER — DATE: 3-18-15

1-25-16
PLANS APPROVAL DATE

The State of California or its officers or agents shall not be responsible for the accuracy or completeness of electronic copies of this plan sheet.

REGISTERED PROFESSIONAL ENGINEER — William D. Kemp — No. 55730 — Exp. 12/31/16 — CIVIL — STATE OF CALIFORNIA

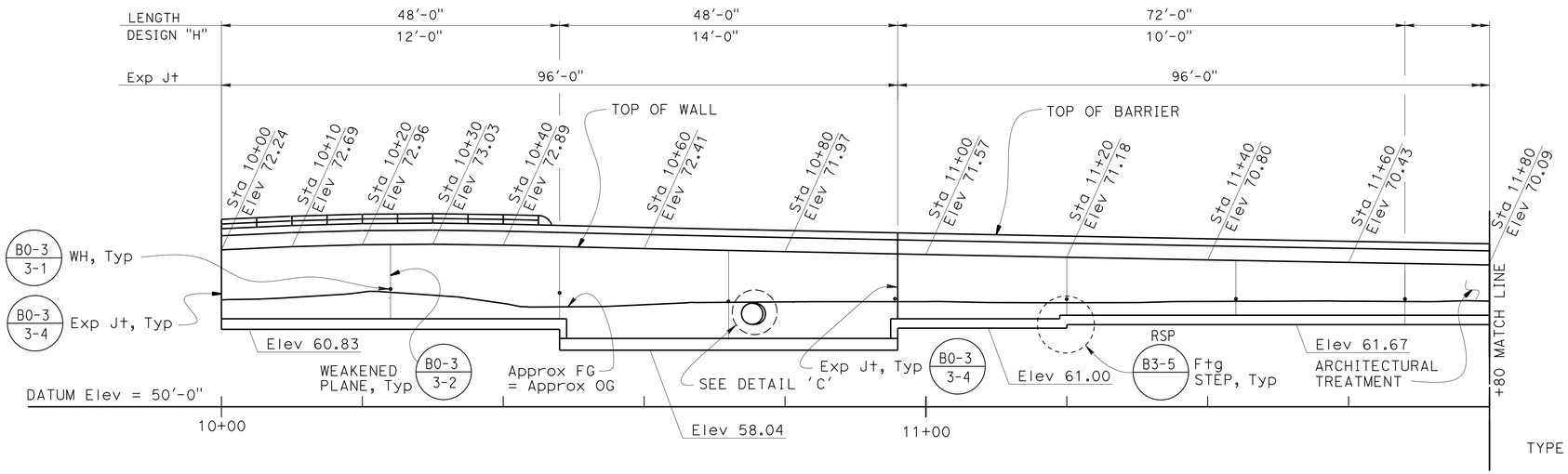

DEVELOPED ELEVATION

1" = 10'

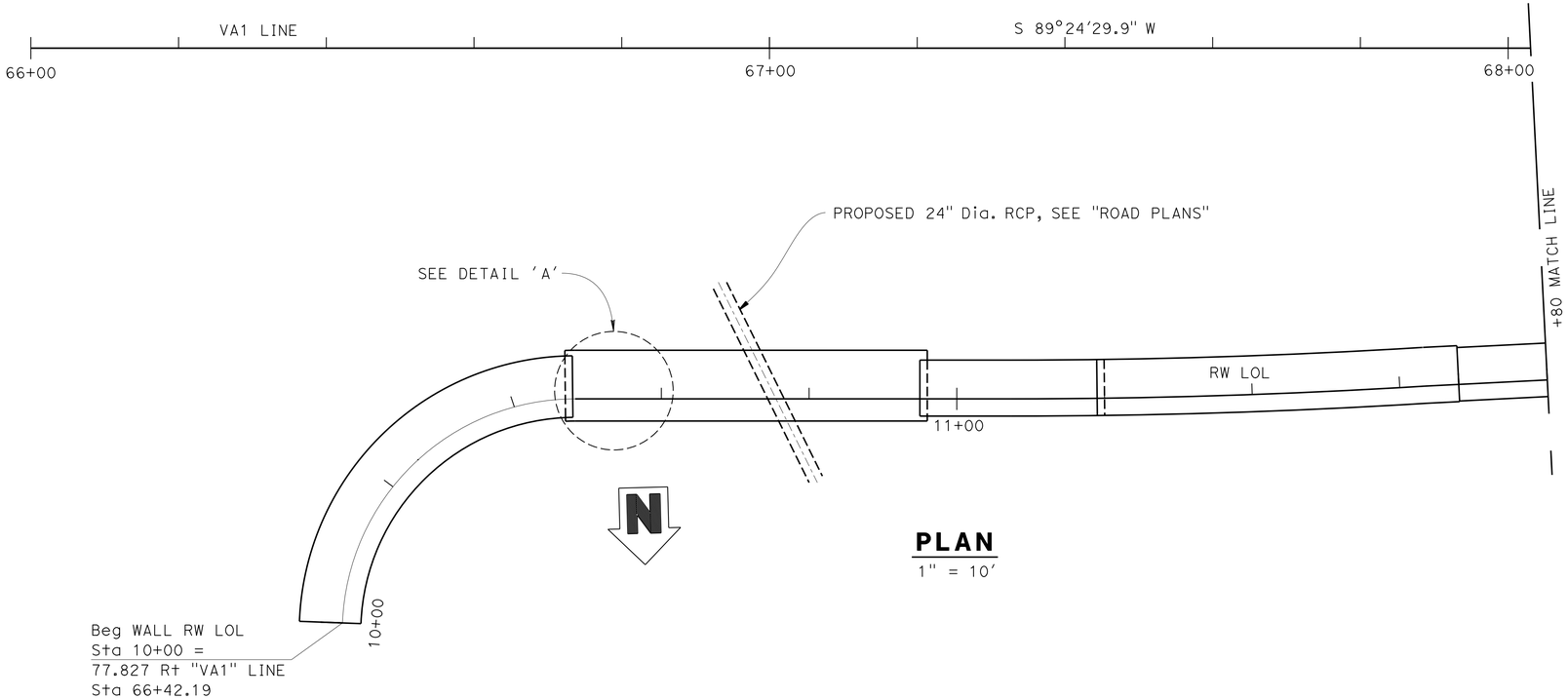

PLAN

1" = 10'

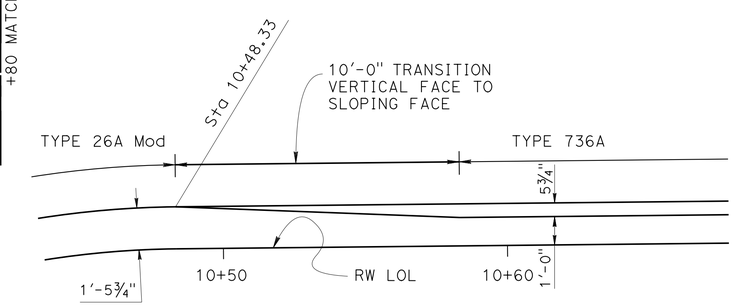

DETAIL 'A' - BARRIER TRANSITION

NO SCALE

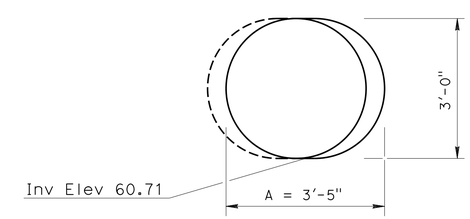

NOTE: CL Opening at RW LOL Sta 10+75.52 and "VA1" Line Sta 67+00.88

DETAIL 'C' - UTILITY OPENING

B3-6

NO SCALE

DESIGN	BY Yeo Yoon	CHECKED Shervin Pahlavan	
DETAILS	BY Anthony Valdez	CHECKED Shervin Pahlavan	
QUANTITIES	BY G. Reyes-Gutierrez	CHECKED Xiaodong Chen	

STATE OF CALIFORNIA
DEPARTMENT OF TRANSPORTATION

DIVISION OF ENGINEERING SERVICES
STRUCTURE DESIGN
DESIGN BRANCH 11

BRIDGE NO. RW 70
POST MILE 1.29

RETAINING WALL 70
STRUCTURE PLAN NO. 1

STRUCTURES DESIGN DETAIL SHEET (ENGLISH) (REV. 09-01-10)

ORIGINAL SCALE IN INCHES FOR REDUCED PLANS 0 1 2 3

UNIT: 3587
PROJECT NUMBER & PHASE: 0715000160-1
CONTRACT NO.: 07-2159U4

DISREGARD PRINTS BEARING EARLIER REVISION DATES

REVISION DATES: 10-26-11 8-13-13 6-09-13 8-09-13

SHEET 2 OF 8

FILE => rw70-c-sp01.dgn

USERNAME => s125624 DATE PLOTTED => 28-JAN-2016 TIME PLOTTED => 12:25

DIST	COUNTY	ROUTE	POST MILES TOTAL PROJECT	SHEET No.	TOTAL SHEETS
07	LA,Ora	5	0.0/1.5, 44.3/44.4	1449	1622

William Kemp 3-18-15
REGISTERED CIVIL ENGINEER DATE

1-25-16
PLANS APPROVAL DATE

REGISTERED PROFESSIONAL ENGINEER
William D. Kemp
No. 55730
Exp. 12/31/16
CIVIL
STATE OF CALIFORNIA

The State of California or its officers or agents shall not be responsible for the accuracy or completeness of electronic copies of this plan sheet.

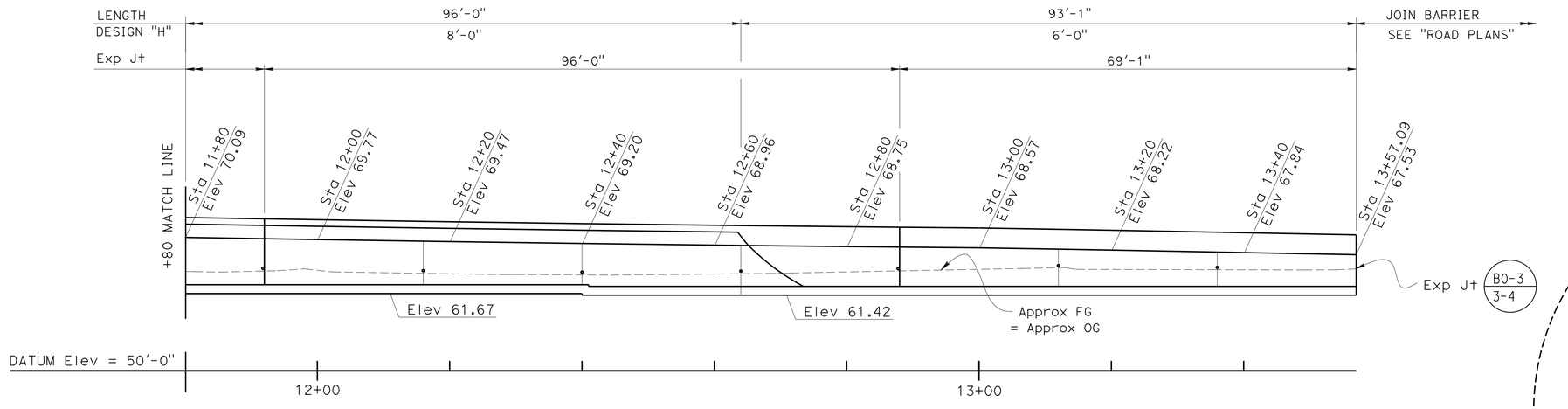

DEVELOPED ELEVATION

1" = 10'

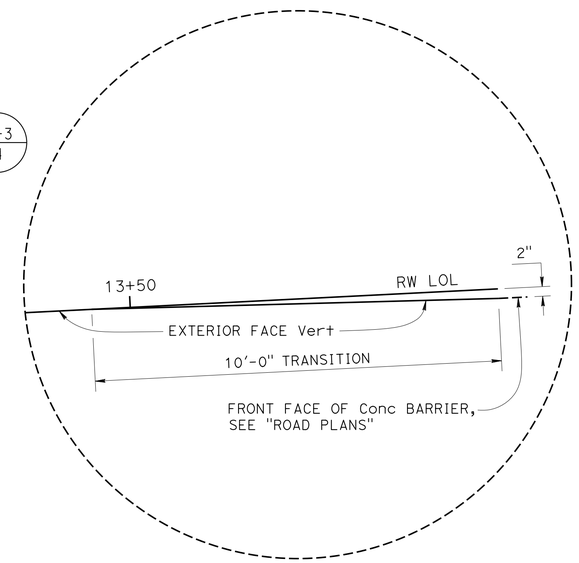

DETAIL 'B'

NO SCALE

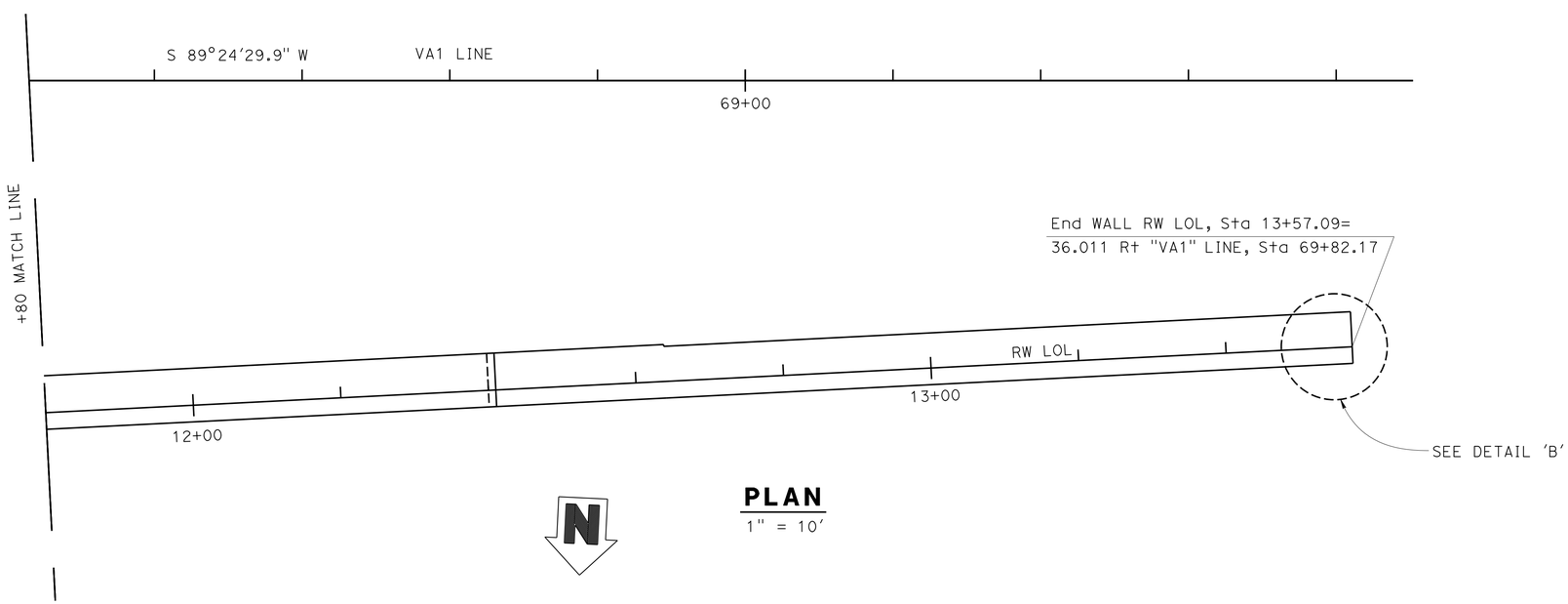

PLAN

1" = 10'

DESIGN	BY Yeo Yoon	CHECKED Shervin Pahlavan	
DETAILS	BY Anthony Valdez	CHECKED Shervin Pahlavan	
QUANTITIES	BY G. Reyes-Gutierrez	CHECKED Xiaodong Chen	

STATE OF CALIFORNIA
DEPARTMENT OF TRANSPORTATION

DIVISION OF ENGINEERING SERVICES
STRUCTURE DESIGN
DESIGN BRANCH 11

BRIDGE NO. RW 70
POST MILE 1.29

RETAINING WALL 70
STRUCTURE PLAN NO. 2

STRUCTURES DESIGN DETAIL SHEET (ENGLISH) (REV. 09-01-10)

ORIGINAL SCALE IN INCHES FOR REDUCED PLANS 0 1 2 3

UNIT: 3587
PROJECT NUMBER & PHASE: 0715000160-1
CONTRACT NO.: 07-2159u4

DISREGARD PRINTS BEARING EARLIER REVISION DATES

REVISION DATES: 10-26-11 7-19-11 6-03-13 3-19-13

SHEET 3 OF 8

FILE => rw70-c-sp02.dgn

USERNAME => s125624 DATE PLOTTED => 28-JAN-2016 TIME PLOTTED => 12:25

DIST	COUNTY	ROUTE	POST MILES TOTAL PROJECT	SHEET No.	TOTAL SHEETS
07	LA,Ora	5	0.0/1.5, 44.3/44.4	1450	1622

REGISTERED CIVIL ENGINEER — DATE 3-18-15

1-25-16
PLANS APPROVAL DATE

REGISTERED PROFESSIONAL ENGINEER — William D. Kemp — No. 55730 — Exp. 12/31/16 — CIVIL — STATE OF CALIFORNIA

The State of California or its officers or agents shall not be responsible for the accuracy or completeness of electronic copies of this plan sheet.

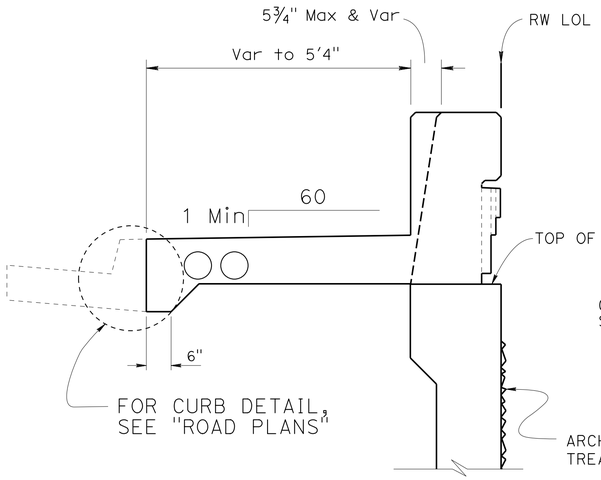

TYPE 26A Mod A

NO SCALE

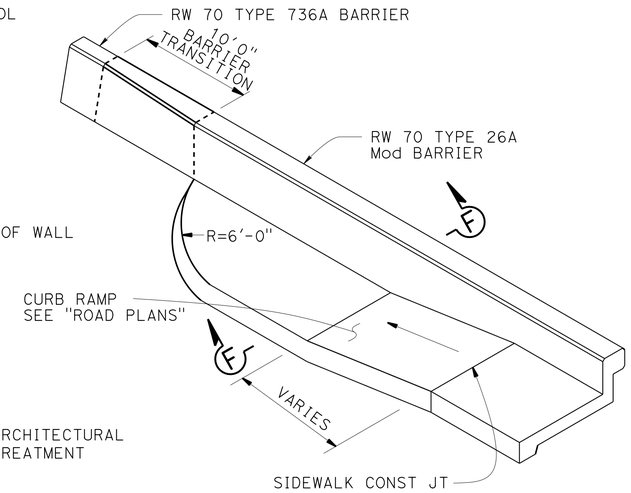

SIDEWALK CURB RAMP DETAIL

NO SCALE

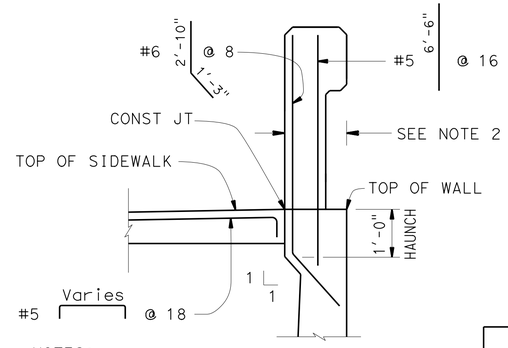

NOTES:
1. APPLY DETAIL FROM CONSTRUCTION JOINT TO END OF SIDEWALK
2. HAUNCH WIDTH MUST MATCH BARRIER RAIL WIDTH

SECTION F-F

NO SCALE

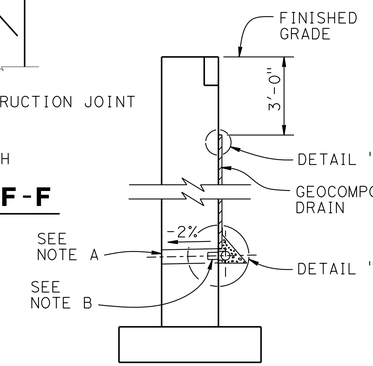

WALL SECTION

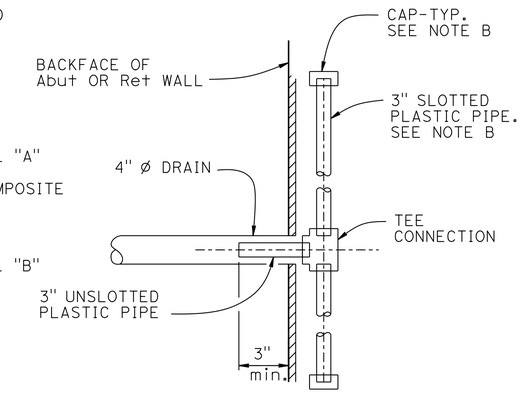

SECTION A-A

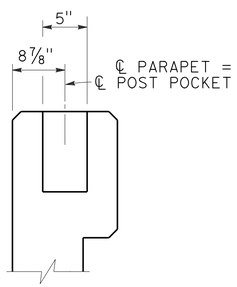

POST ANCHORAGE DETAIL - TYPE 26A Mod

NOTE:

Applies to Chain Link Railing Type 7 and Tubular Hand Railing. See Standard Plans for additional details.

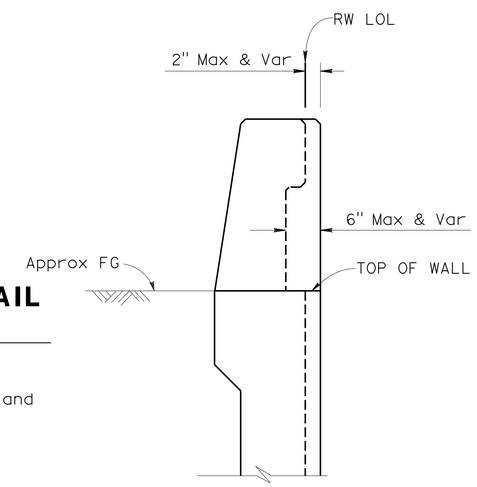

TYPE 736A Mod B

NO SCALE

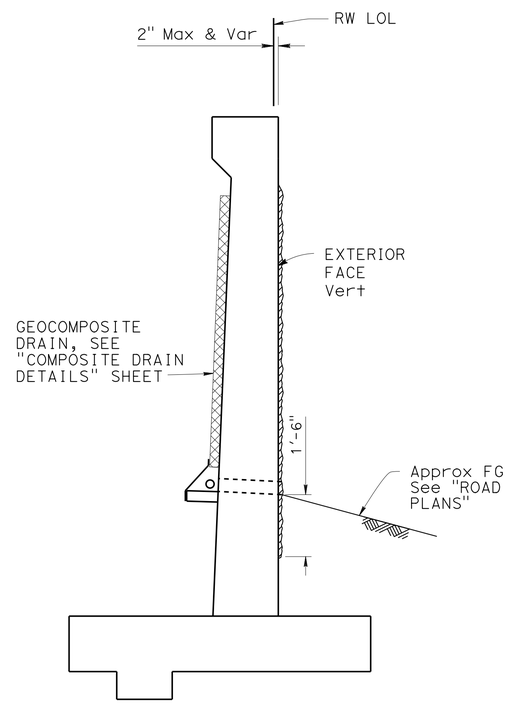

Note:
Barrier not shown.

RETAINING WALL TYPE 1 (CASE 1) Mod

NO SCALE

RSP B3-1A

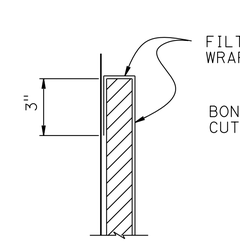

DETAIL "A"

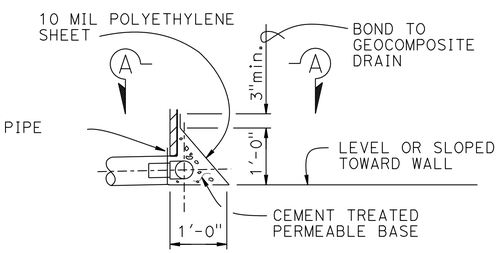

DETAIL "B"

WEEP HOLE AND GEOCOMPOSITE DRAIN

ALTERNATIVE TO BRIDGE DETAIL BO-3 / 3-1

Notes:

A. 4" Ø drains at intermediate sag points and at 25' max center to center (9' c-c for Type 3 and 9'-3" c-c for Type 4 retaining walls).
For walls adjacent to sidewalks or curbs, provide 4" cast iron or asbestos cement pipe under the sidewalk to discharge through curb face.
Exposed wall drains shall be located 3"± above finished grade.

B. Geocomposite drain, cement treated permeable base, and 3"Ø slotted plastic pipe continuous behind retaining wall or abutment. Cap ends of pipe. Provide "Tee" connection at each 4" Ø drain.

C. Connect the low end of plastic pipe to the main outlet pipe as applicable.

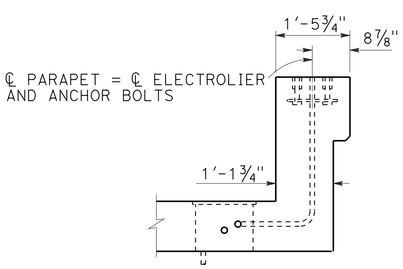

SECTION A-A TYPE 26A Mod

NO SCALE

DESIGN	BY Yeo Yoon	CHECKED Shervin Pahlavan	
DETAILS	BY Loren Goldthwait	CHECKED Shervin Pahlavan	
QUANTITIES	BY G. Reyes-Gutierrez	CHECKED Xiaodong Chen	

STATE OF CALIFORNIA
DEPARTMENT OF TRANSPORTATION

DIVISION OF ENGINEERING SERVICES
STRUCTURE DESIGN
DESIGN BRANCH 11

BRIDGE NO. RW 70
POST MILE 1.29

RETAINING WALL 70
RETAINING WALL DETAILS

STRUCTURES DESIGN DETAIL SHEET (ENGLISH) (REV. 09-01-10)

ORIGINAL SCALE IN INCHES FOR REDUCED PLANS 0 1 2 3

UNIT: 3587
PROJECT NUMBER & PHASE: 0715000160-1
CONTRACT NO.: 07-2159u4

DISREGARD PRINTS BEARING EARLIER REVISION DATES

REVISION DATES: 7-18-11 3-18-13 6-03-13 3-15-13

SHEET 4 OF 8

FILE => rw70-d-retdt.dgn

USERNAME => s125624 DATE PLOTTED => 28-JAN-2016 TIME PLOTTED => 12:25

DIST	COUNTY	ROUTE	POST MILES TOTAL PROJECT	SHEET No.	TOTAL SHEETS
07	LA,Ora	5	0.0/1.5, 44.3/44.4	1451	1622

William Kemp 3-18-15
REGISTERED CIVIL ENGINEER DATE

1-25-16
PLANS APPROVAL DATE

REGISTERED PROFESSIONAL ENGINEER WILLIAM D. KEMP No. 55730 Exp. 12/31/16 CIVIL STATE OF CALIFORNIA

The State of California or its officers or agents shall not be responsible for the accuracy or completeness of electronic copies of this plan sheet.

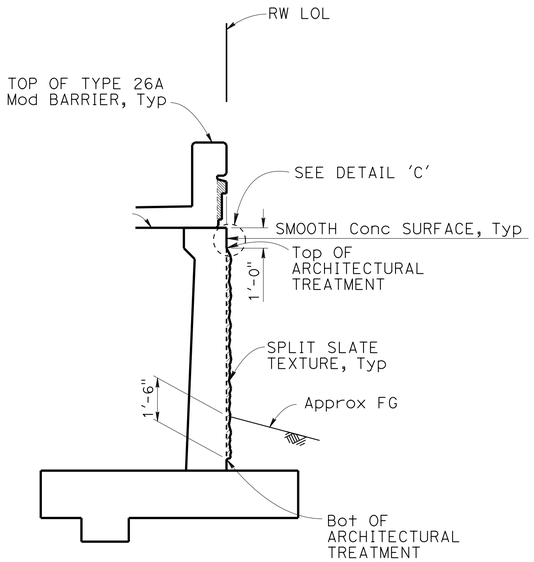

Note:
Tubular Hand Rail not shown.

SECTION A-A
NO SCALE

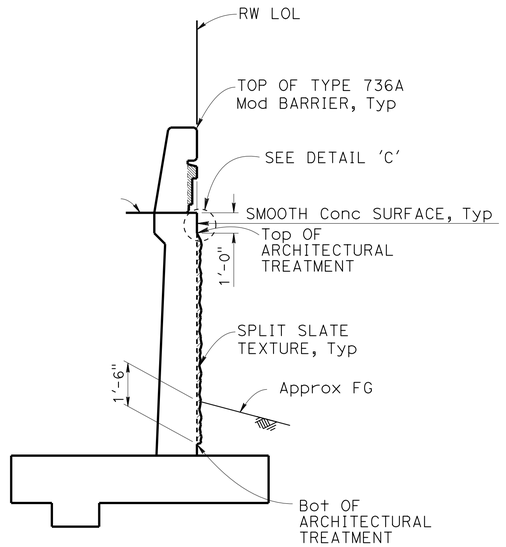

SECTION B-B
NO SCALE

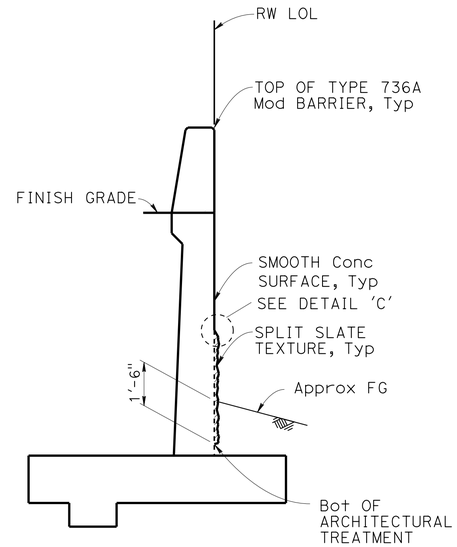

SECTION C-C
NO SCALE

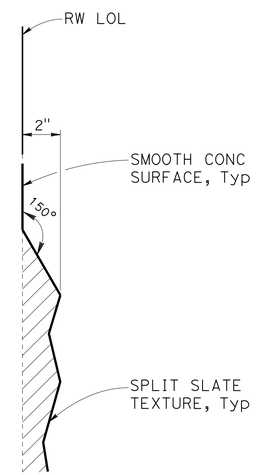

DETAIL C
3" = 1'-0"

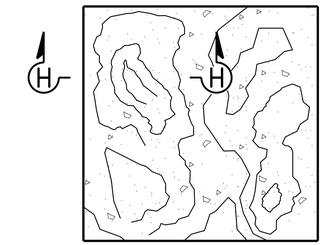

SPLIT SLATE TEXTURE
NO SCALE

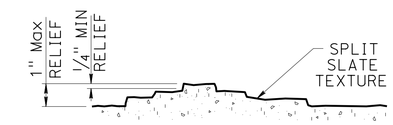

SECTION H-H
NO SCALE

NOTE:
All surface relief and texture shall be measured from RW LOL, Typ

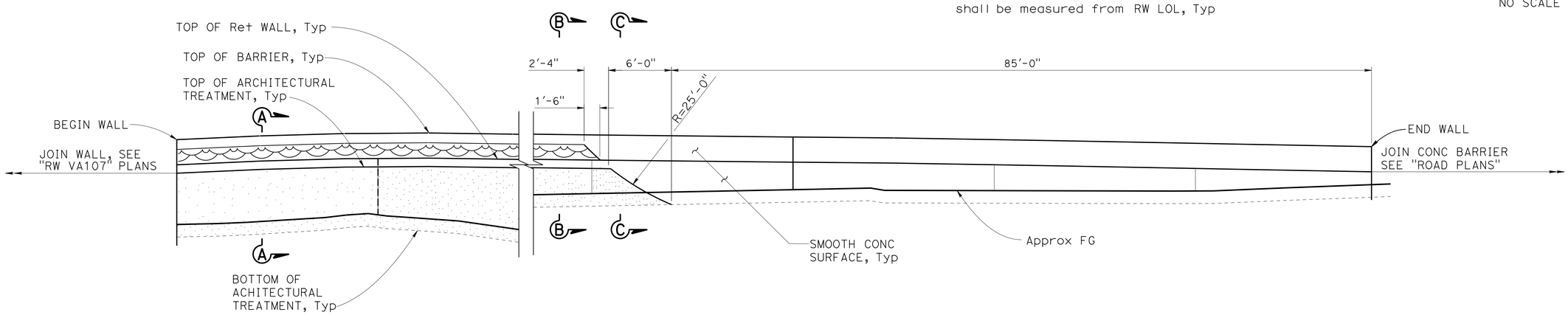

Note:
Tubular Hand Rail not shown.

RETAINING WALL ARCHITECTURAL TREATMENT
3/16" = 1'-0"

DESIGN	BY H. Javier Chavez	CHECKED Issac Tasabia	
DETAILS	BY Jaime Ramirez	CHECKED Issac Tasabia	
QUANTITIES	BY G. Reyes-Gutierrez	CHECKED Xiaodong Chen	

STATE OF CALIFORNIA
DEPARTMENT OF TRANSPORTATION

DIVISION OF ENGINEERING SERVICES
STRUCTURE DESIGN
DESIGN BRANCH 11

BRIDGE NO. RW 70
POST MILE 1.29

RETAINING WALL 70
ARCHITECTURAL TREATMENT DETAILS

STRUCTURES DESIGN DETAIL SHEET (ENGLISH) (REV. 09-01-10)

ORIGINAL SCALE IN INCHES FOR REDUCED PLANS 0 1 2 3

UNIT: 3587
PROJECT NUMBER & PHASE: 0715000160-1
CONTRACT NO.: 07-2159u4

DISREGARD PRINTS BEARING EARLIER REVISION DATES

REVISION DATES: 4-24-12 5-28-13 6-14-13 8-05-13

SHEET 5 OF 8

FILE => rw70-e-arch1.dgn

USERNAME => s125624 DATE PLOTTED => 28-JAN-2016 TIME PLOTTED => 12:26

DIST	COUNTY	ROUTE	POST MILES TOTAL PROJECT	SHEET No.	TOTAL SHEETS
07	LA,Ora	5	0.0/1.5, 44.3/44.4	1452	1622

REGISTERED CIVIL ENGINEER — 3-18-15 DATE

1-25-16
PLANS APPROVAL DATE

REGISTERED PROFESSIONAL ENGINEER — William D. Kemp — No. 55730 — Exp. 12/31/16 — CIVIL — STATE OF CALIFORNIA

The State of California or its officers or agents shall not be responsible for the accuracy or completeness of electronic copies of this plan sheet.

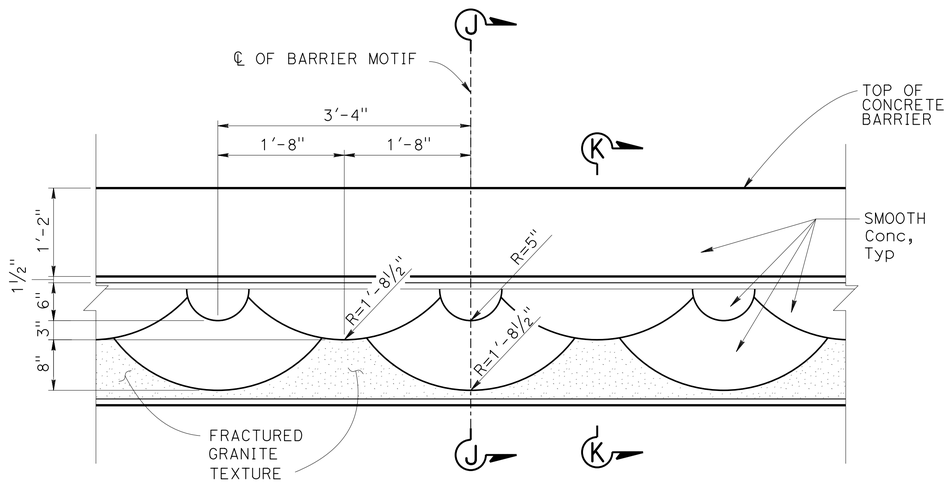

ELEVATION - BARRIER MOTIF
NO SCALE

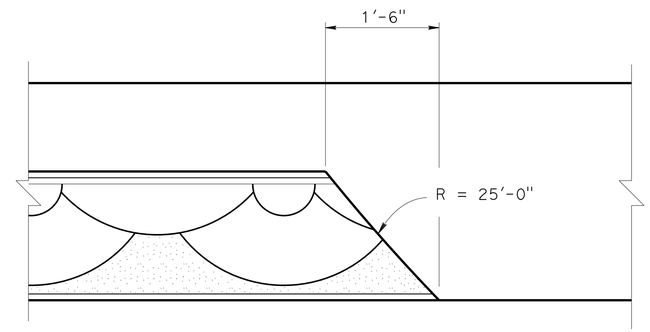

BARRIER END DETAIL
NO SCALE

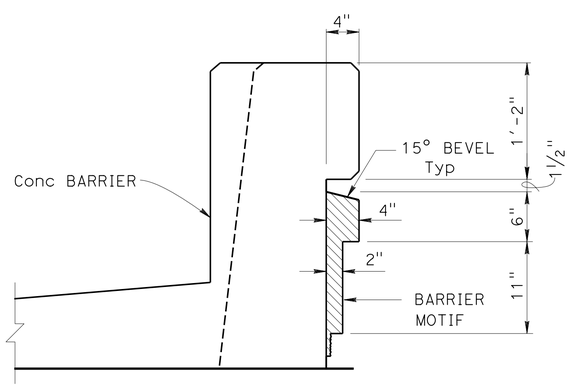

SECTION J-J
NO SCALE

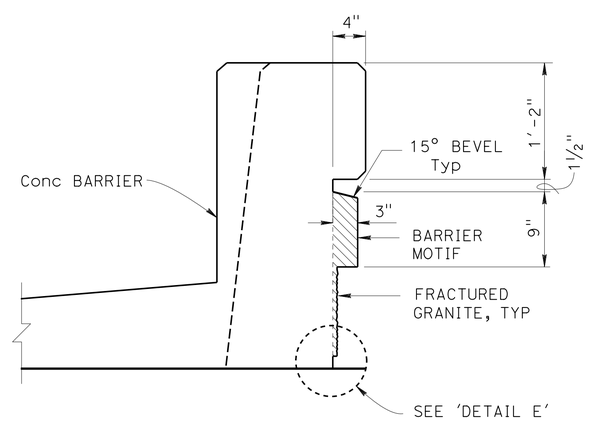

SECTION K-K
NO SCALE

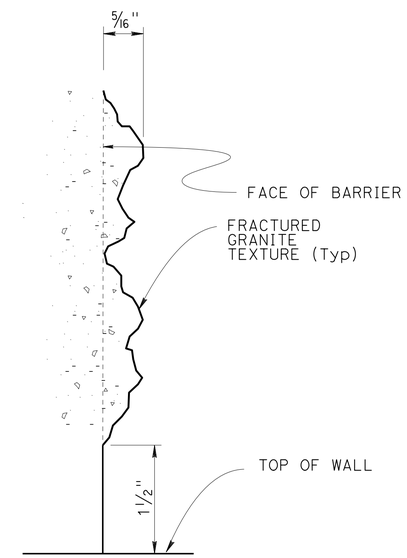

DETAIL E
NO SCALE

DESIGN	BY H. Javier Chavez	CHECKED Issac Tasabia	
DETAILS	BY Anthony Valdez	CHECKED Issac Tasabia	
QUANTITIES	BY G. Reyes-Gutierrez	CHECKED Xiaodong Chen	

STATE OF CALIFORNIA
DEPARTMENT OF TRANSPORTATION

DIVISION OF ENGINEERING SERVICES
STRUCTURE DESIGN
DESIGN BRANCH 11

BRIDGE NO. RW 70
POST MILE 1.29

RETAINING WALL 70
BARRIER MOTIF DETAILS

STRUCTURES DESIGN DETAIL SHEET (ENGLISH) (REV. 09-01-10)

ORIGINAL SCALE IN INCHES FOR REDUCED PLANS 0 1 2 3

UNIT: 3587
PROJECT NUMBER & PHASE: 0715000160-1
CONTRACT NO.: 07-2159u4

DISREGARD PRINTS BEARING EARLIER REVISION DATES

REVISION DATES: 6-24-11 6-03-13 3-18-13 3-18-13

SHEET 6 OF 8

FILE => rw70-f-arch2.dgn

USERNAME => s129624 DATE PLOTTED => 28-JAN-2016 TIME PLOTTED => 12:26

DIST	COUNTY	ROUTE	POST MILES TOTAL PROJECT	SHEET No.	TOTAL SHEETS
07	LA,Ora	5	0.0/1.5, 44.3/44.4	1453	1622

William Kemp 3-18-15
REGISTERED CIVIL ENGINEER DATE

1-25-16
PLANS APPROVAL DATE

REGISTERED PROFESSIONAL ENGINEER
WILLIAM D. KEMP
No. 55730
Exp. 12/31/16
CIVIL
STATE OF CALIFORNIA

The State of California or its officers or agents shall not be responsible for the accuracy or completeness of electronic copies of this plan sheet.

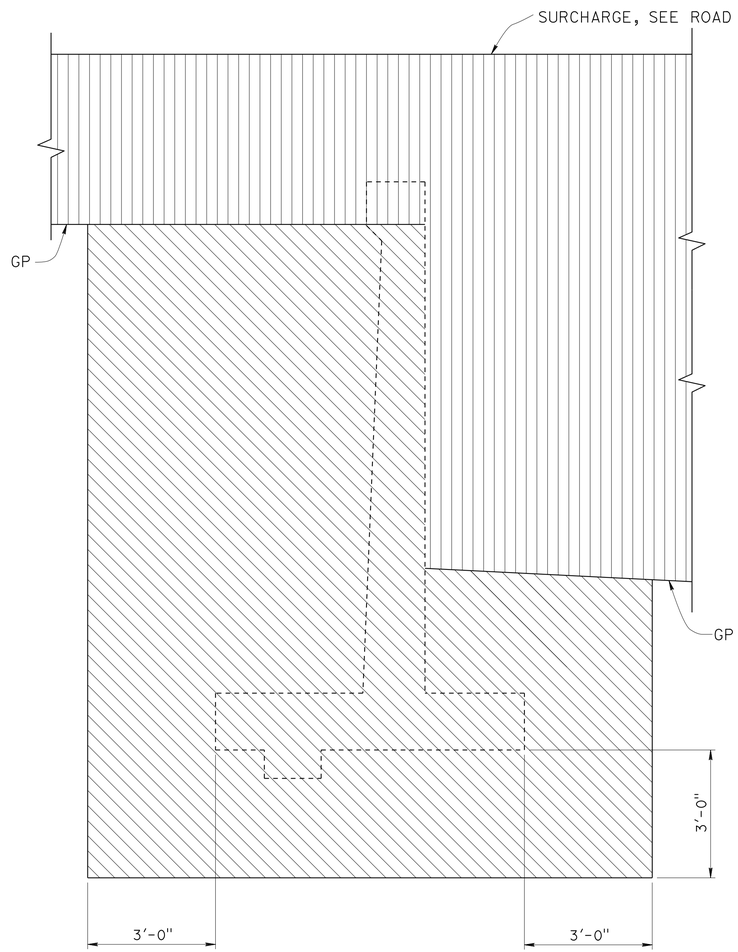

STRUCTURE EXCAVATION
No Scale

LEGEND:
- STRUCTURE EXCAVATION
- ROADWAY EXCAVATION
- STRUCTURE BACKFILL
- GP Planned grading plane

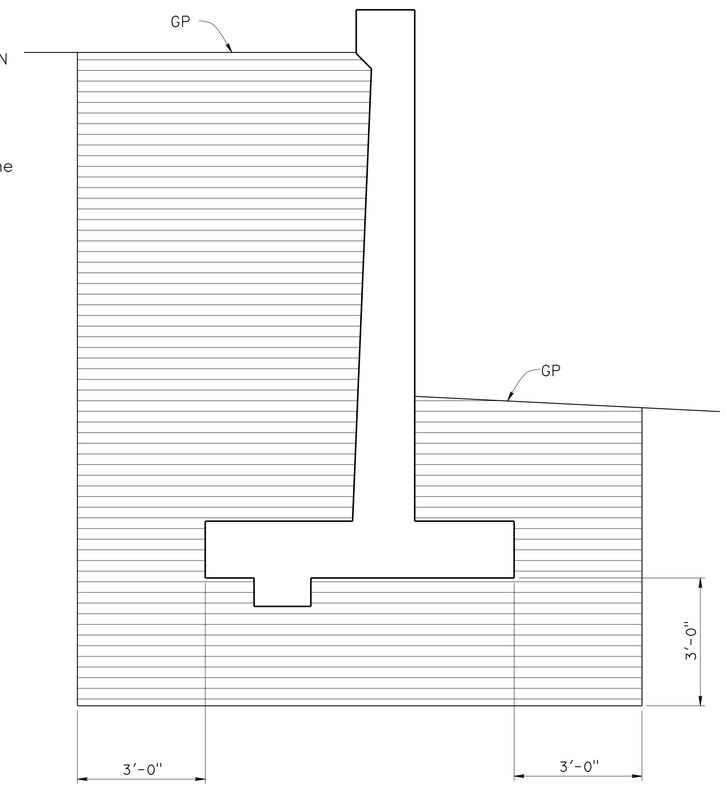

STRUCTURE BACKFILL
No Scale

DESIGN	BY Yeo Yoon	CHECKED Bill Kemp
DETAILS	BY Jaime Ramirez	CHECKED Bill Kemp
QUANTITIES	BY G. Reyes-Gutierrez	CHECKED Xiaodong Chen

STATE OF CALIFORNIA
DEPARTMENT OF TRANSPORTATION

DIVISION OF ENGINEERING SERVICES
STRUCTURE DESIGN
DESIGN BRANCH 11

BRIDGE NO. RW70
POST MILE 1.29

RETAINING WALL 70
LIMITS OF EXCAVATION AND BACKFILL

STRUCTURES DESIGN DETAIL SHEET (ENGLISH) (REV. 09-01-10)

ORIGINAL SCALE IN INCHES FOR REDUCED PLANS 0 1 2 3

UNIT: 3587
PROJECT NUMBER & PHASE: 0715000160-1
CONTRACT NO.: 07-2159u4

DISREGARD PRINTS BEARING EARLIER REVISION DATES

REVISION DATES: 5-20-13 6-04-13 12-4-13

SHEET 7 OF 8

FILE => rw70-f-exc.dgn

USERNAME => s125624 DATE PLOTTED => 28-JAN-2016 TIME PLOTTED => 12:26

BENCH MARK

GPS 0887
ELEVATION 65.915 FT
FD 2-1/2 CADT DISK IN CONC. CURB
FLUSH, STAMPED "LA-5-1.0, 1995"
LOCATED 90' N OF THE SOUTH SIDE
FIRESTONE BLVD 0.2 MI SE OF VALLEY VIEW
NORTHING 542395.636
EASTING 1997613.893
DATUM NAVD88

DIST	COUNTY	ROUTE	POST MILES TOTAL PROJECT	SHEET No.	TOTAL SHEETS
07	LA,Ora	5	0.0/1.5, 44.3/44.4	1454	1622

REGISTERED CIVIL ENGINEER 05/20/15 DATE

1-25-16
PLANS APPROVAL DATE

URS CORPORATION
2020 EAST FIRST STREET, SUITE 400
SANTA ANA, CA 92705

The State of California or its officers or agents shall not be responsible for the accuracy or completeness of electronic copies of this plan sheet.

REGISTERED PROFESSIONAL ENGINEER MICHAEL G. SMITH No. 2229 Exp. 03/31/16 GEOTECHNICAL STATE OF CALIFORNIA

1-This LOTB sheet was prepared in accordance with the Caltrans Soil & Rock Logging, Classification, & Presentation Manual (2010 Edition).

2-For protection of underground utility lines, hand-auger was used to remove top 5 to 10 feet of subsurface material for exploratory borings and Cone Penetration Testings.

3-2.5" to 1.4" blow counts conversion factors for fine-grain and coarse-grain soils have been 0.8 and 0.55, respectively.

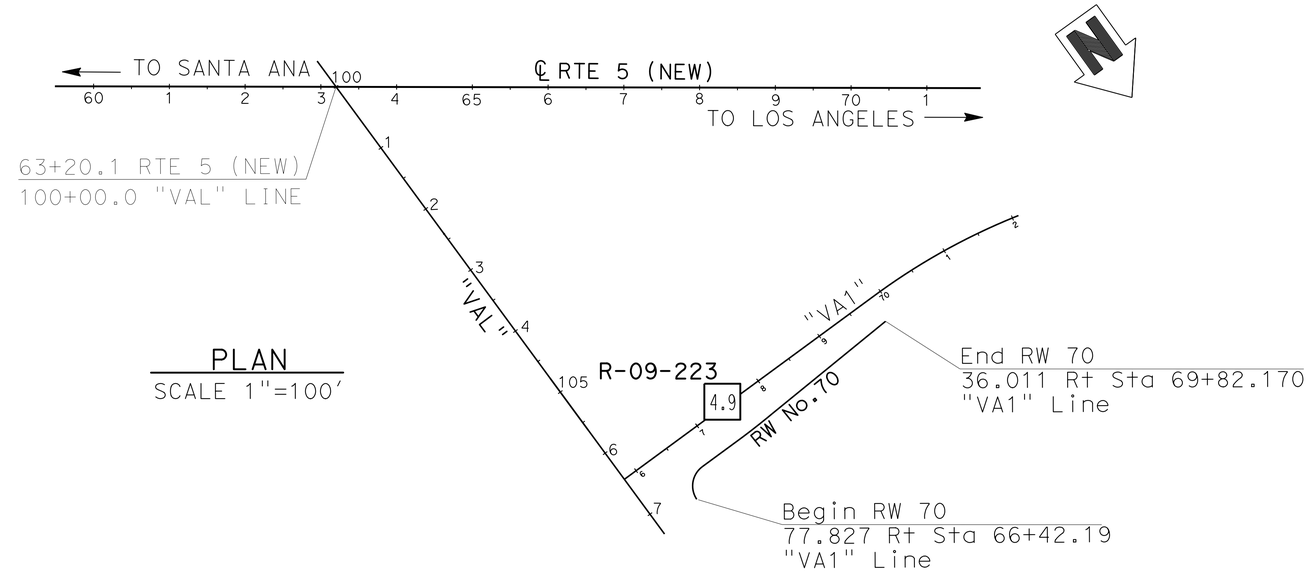

PLAN
SCALE 1"=100'

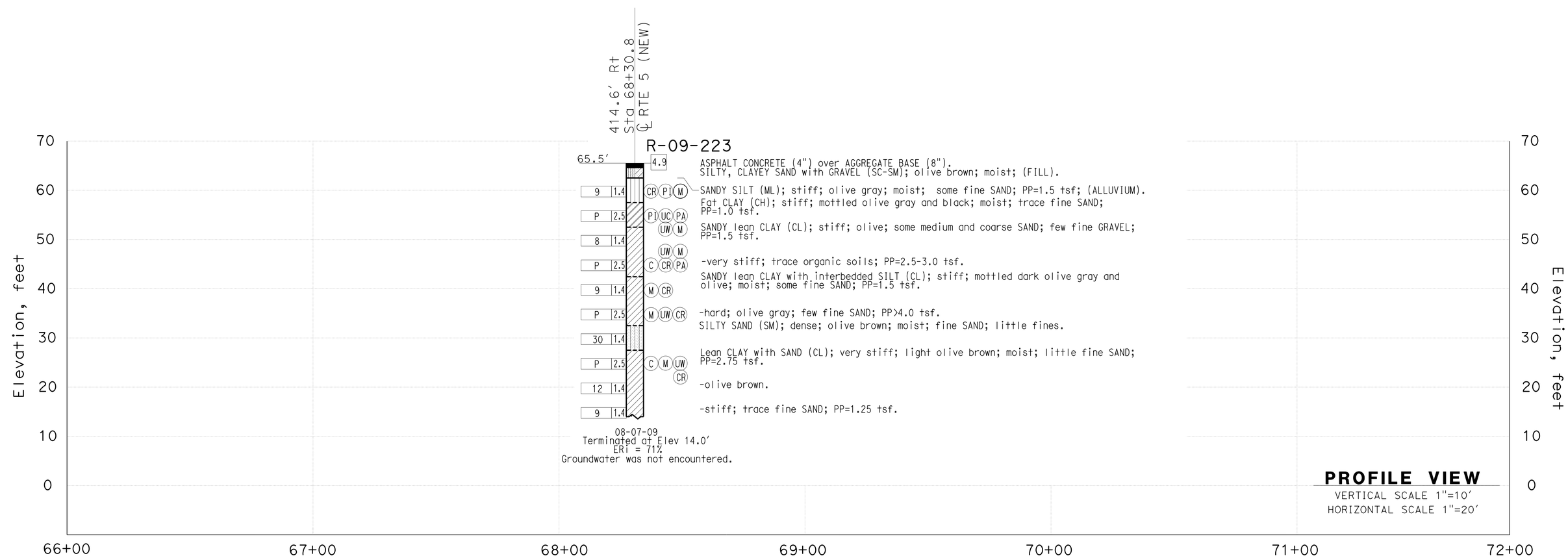

PROFILE VIEW
VERTICAL SCALE 1"=10'
HORIZONTAL SCALE 1"=20'

F.MOTAMED DESIGN OVERSIGHT	DRAWN BY	T.PANAH	EJ.JEON FIELD INVESTIGATION BY:	PREPARED FOR THE STATE OF CALIFORNIA DEPARTMENT OF TRANSPORTATION	M.G. SMITH PROJECT ENGINEER	BRIDGE NO. RW70	RETAINING WALL NO. 70
05/20/15 SIGN OFF DATE	CHECKED BY	A.GHAZINOOR/L.KHALKHALI	DATE: 08/07/09			POST MILES 1.29	LOG OF TEST BORINGS SHEET 1 OF1

GS CIVIL LOG OF TEST BORINGS SHEET (ENGLISH) (REV. 03/14/12)

ORIGINAL SCALE IN INCHES FOR REDUCED PLANS 0 1 2 3

UNIT: 3658
PROJECT NUMBER & PHASE: 07150001601 CONTRACT NO.: 07-2159U4

DISREGARD PRINTS BEARING EARLIER REVISION DATES

REVISION DATES 5/12/15 SHEET 8 OF 8

FILE => rw70-g-lotb.dgn

USERNAME => s125624 DATE PLOTTED => 28-JAN-2016 TIME PLOTTED => 12:26

DIST	COUNTY	ROUTE	POST MILES TOTAL PROJECT	SHEET No.	TOTAL SHEETS
07	LA,Ora	5	0.0/1.5, 44.3/44.4	1455	1622

William Kemp 3-18-15
REGISTERED CIVIL ENGINEER DATE

1-25-16
PLANS APPROVAL DATE

REGISTERED PROFESSIONAL ENGINEER William D. Kemp No. 55730 Exp. 12/31/16 CIVIL STATE OF CALIFORNIA

The State of California or its officers or agents shall not be responsible for the accuracy or completeness of electronic copies of this plan sheet.

STANDARD PLANS DATED 2010

	A10A	ABBREVIATIONS (SHEET 1 OF 2)
RSP	A10B	ABBREVIATIONS (SHEET 2 OF 2)
	A10C	LINES AND SYMBOLS (SHEET 1 OF 3)
	A10D	LINES AND SYMBOLS (SHEET 2 OF 3)
	A10E	LINES AND SYMBOLS (SHEET 3 OF 3)
RSP	A10F	LEGEND - SOIL (SHEET 1 OF 2)
RSP	A10G	LEGEND - SOIL (SHEET 2 OF 2)
	A10H	LEGEND - ROCK
	A62B	LIMITS OF PAYMENT FOR EXCAVATION AND BACKFILL BRIDGE SURCHARGE AND WALL
	BO-1	BRIDGE DETAILS
	BO-3	BRIDGE DETAILS
RSP	B3-1A	RETAINING WALL TYPE 1 (CASE 1)
RSP	B3-4A	RETAINING WALL TYPE 5 (CASE 1)
RSP	B3-5	RETAINING WALL DETAILS NO. 1
	B3-6	RETAINING WALL DETAILS NO. 2
RSP	B11-56	CONCRETE BARRIER TYPE 736

STANDARD PLAN SHEET No.

DETAIL No.

INDEX TO PLANS

SHEET No.	TITLE
1	GENERAL PLAN
2	STRUCTURE PLAN NO. 1
3	STRUCTURE PLAN NO. 2
4	RETAINING WALL DETAILS AT SIGN 8B
5	RETAINING WALL DETAILS
6	CONCRETE REMOVAL DETAILS
7	LIMITS OF EXCAVATION AND BACKFILL
8	ARCHITECTURAL TREATMENT DETAILS
9	BARRIER MOTIF DETAILS
10	LOG OF TEST BORINGS SHEET 1 OF 1

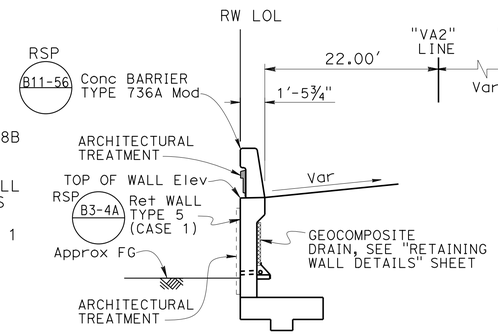

TYPICAL SECTION

NO SCALE

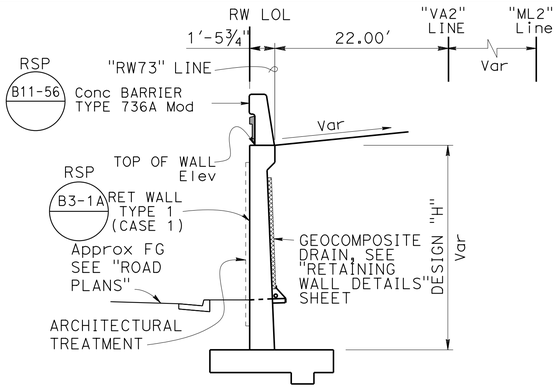

TYPICAL SECTION

NO SCALE

NOTE:

1. See "ROAD PLANS"

EXPEDITE

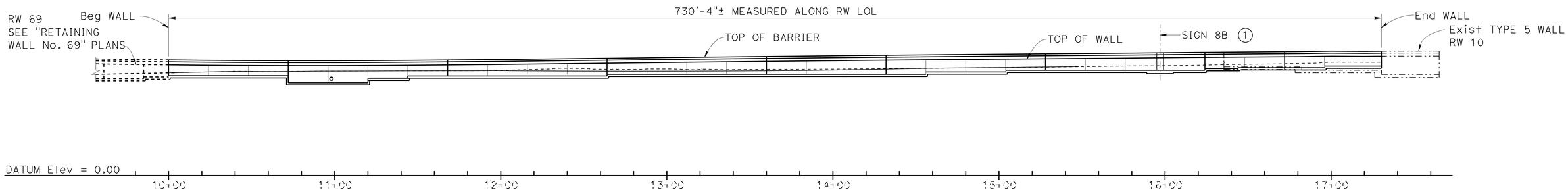

MIRRORED ELEVATION

1" = 30'-0"

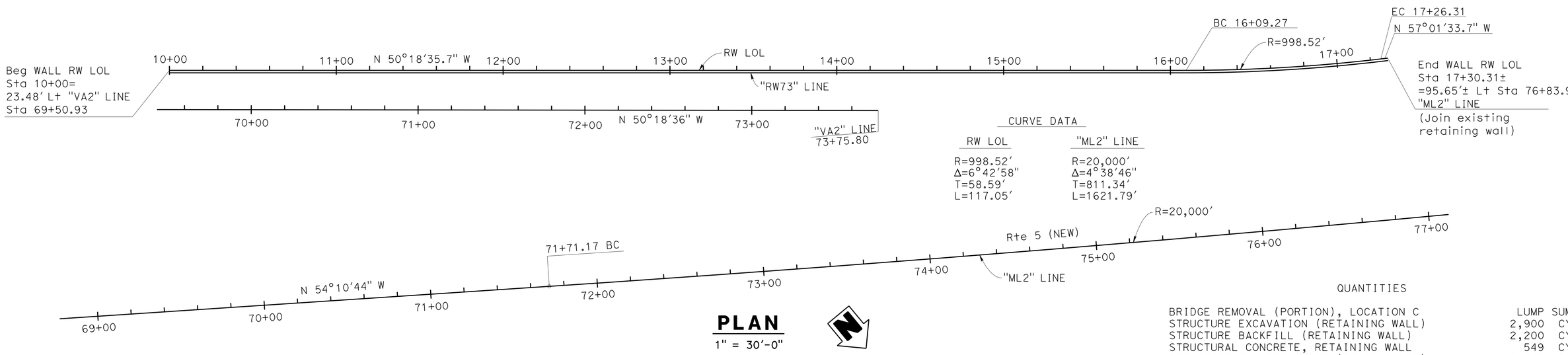

CURVE DATA

RW LOL	"ML2" LINE
R=998.52'	R=20,000'
Δ=6°42'58"	Δ=4°38'46"
T=58.59'	T=811.34'
L=117.05'	L=1621.79'

PLAN

1" = 30'-0"

QUANTITIES

BRIDGE REMOVAL (PORTION), LOCATION C	LUMP	SUM
STRUCTURE EXCAVATION (RETAINING WALL)	2,900	CY
STRUCTURE BACKFILL (RETAINING WALL)	2,200	CY
STRUCTURAL CONCRETE, RETAINING WALL	549	CY
ARCHITECTURAL TREATMENT (SPLIT SLATE)	3,565	SQFT
BAR REINFORCING STEEL (RETAINING WALL)	76,900	LB
CONCRETE BARRIER (TYPE 736A MODIFIED)	730	LF

Ramin Rashedi 3-18-15
DESIGN ENGINEER

	BY	CHECKED
DESIGN	Mark Okimura	Cipriano Manansala
DETAILS	Jaime Ramirez	Cipriano Manansala
QUANTITIES	Hilario T.	Loria R.

LOAD & RESISTANCE FACTOR DESIGN — LIVE LOADING: HL93 W/"LOW-BOY": PERMIT DESIGN VEHICLE

	BY	CHECKED
LAYOUT	Mark Okimura	Cipriano Manansala
SPECIFICATIONS	X. Li	PLANS AND SPECS COMPARED X. Li

ORIGINAL SCALE IN INCHES FOR REDUCED PLANS 0 1 2 3

STATE OF CALIFORNIA
DEPARTMENT OF TRANSPORTATION

DIVISION OF ENGINEERING SERVICES
STRUCTURE DESIGN
DESIGN BRANCH 11

BRIDGE NO. RW73
POST MILE 1.32

RETAINING WALL 73
GENERAL PLAN

UNIT: 3587
PROJECT NUMBER & PHASE: 0715000160-1 CONTRACT NO.: 07-2159U4

DISREGARD PRINTS BEARING EARLIER REVISION DATES

REVISION DATES 11-1-11 7/19/13 3-28-13 4-29-13

SHEET 1 OF 10

USERNAME => s125624 DATE PLOTTED => 28-JAN-2016 TIME PLOTTED => 12:26

STRUCTURES DESIGN GENERAL PLAN SHEET (ENGLISH) (REV.09-01-10)

FILE => rw73-a-gp.dgn

DIST	COUNTY	ROUTE	POST MILES TOTAL PROJECT	SHEET No.	TOTAL SHEETS
07	LA,Ora	5	0.0/1.5, 44.3/44.4	1456	1622

REGISTERED CIVIL ENGINEER 3-18-15 DATE

1-25-16
PLANS APPROVAL DATE

REGISTERED PROFESSIONAL ENGINEER William D. Kemp No. 55730 Exp. 12/31/16 CIVIL STATE OF CALIFORNIA

The State of California or its officers or agents shall not be responsible for the accuracy or completeness of electronic copies of this plan sheet.

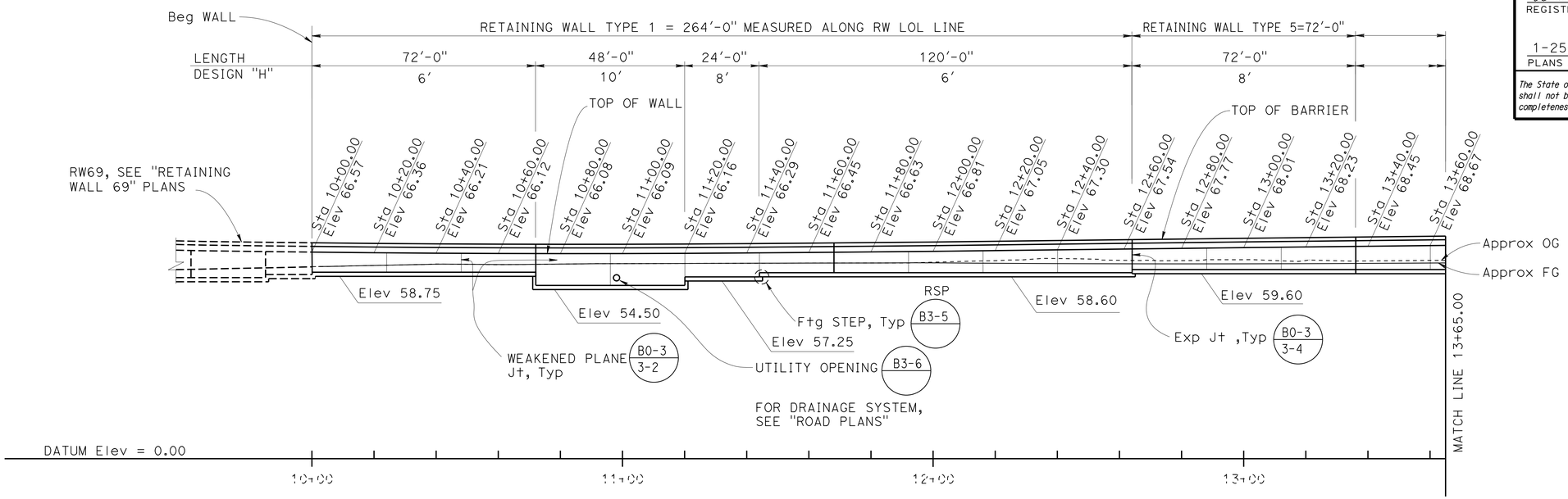

MIRRORED ELEVATION

1" = 20'-0"

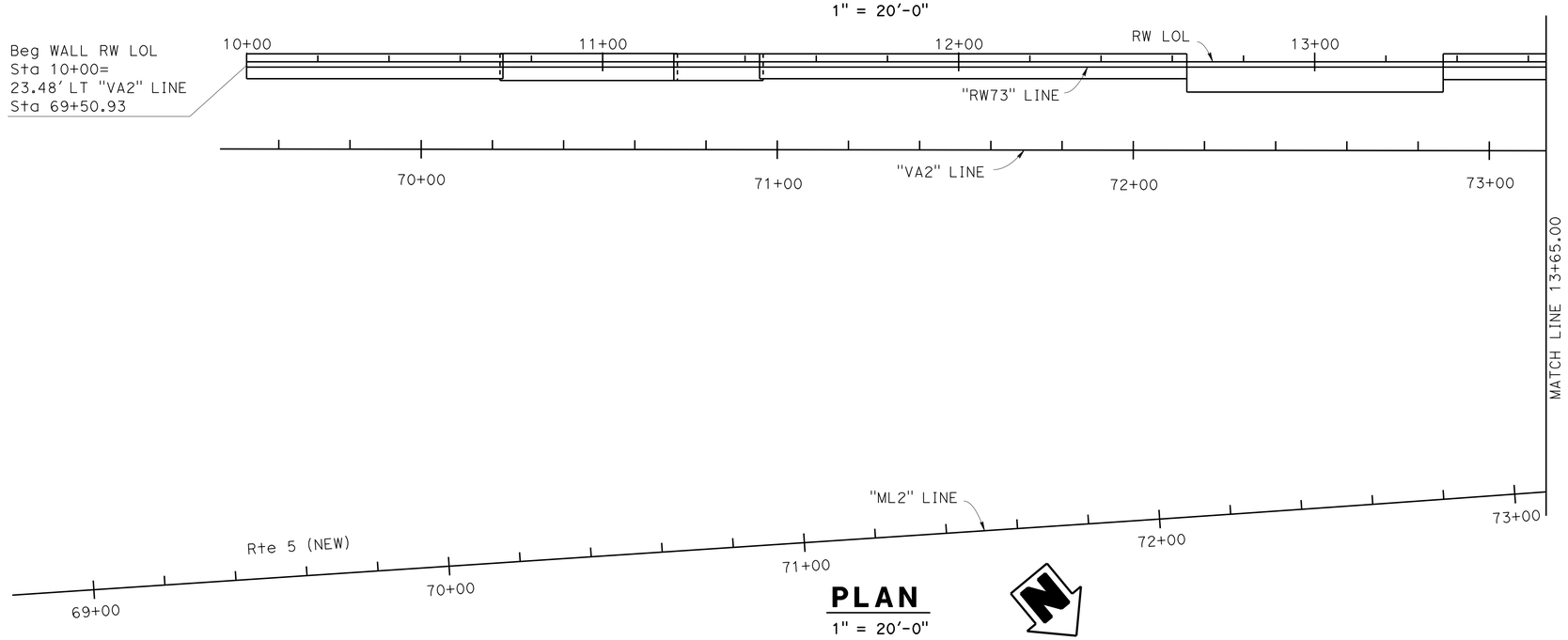

PLAN

1" = 20'-0"

DESIGN	BY Mark Okimura	CHECKED Cipriano Manansala	
DETAILS	BY Jaime Ramirez	CHECKED Cipriano Manansala	
QUANTITIES	BY H. Tuazon	CHECKED G. Reyes-Gutierrez	

STATE OF CALIFORNIA
DEPARTMENT OF TRANSPORTATION

DIVISION OF ENGINEERING SERVICES
STRUCTURE DESIGN
DESIGN BRANCH 11

BRIDGE NO. RW73
POST MILE 1.32

RETAINING WALL 73
STRUCTURE PLAN NO. 1

STRUCTURES DESIGN DETAIL SHEET (ENGLISH) (REV. 09-01-10)

ORIGINAL SCALE IN INCHES FOR REDUCED PLANS 0 1 2 3

UNIT: 3587
PROJECT NUMBER & PHASE: 0715000160-1
CONTRACT NO.: 07-2159u4

DISREGARD PRINTS BEARING EARLIER REVISION DATES

REVISION DATES 11-2-11 3-29-13 7/19/13 3/22/15

SHEET 2 OF 10

FILE => rw73-b-sp1.dgn

USERNAME => s125624 DATE PLOTTED => 28-JAN-2016 TIME PLOTTED => 12:26

DIST	COUNTY	ROUTE	POST MILES TOTAL PROJECT	SHEET No.	TOTAL SHEETS
07	LA,Ora	5	0.0/1.5, 44.3/44.4	1457	1622

REGISTERED CIVIL ENGINEER 3-18-15 DATE

1-25-16
PLANS APPROVAL DATE

REGISTERED PROFESSIONAL ENGINEER William D. Kemp No. 55730 Exp. 12/31/16 CIVIL STATE OF CALIFORNIA

The State of California or its officers or agents shall not be responsible for the accuracy or completeness of electronic copies of this plan sheet.

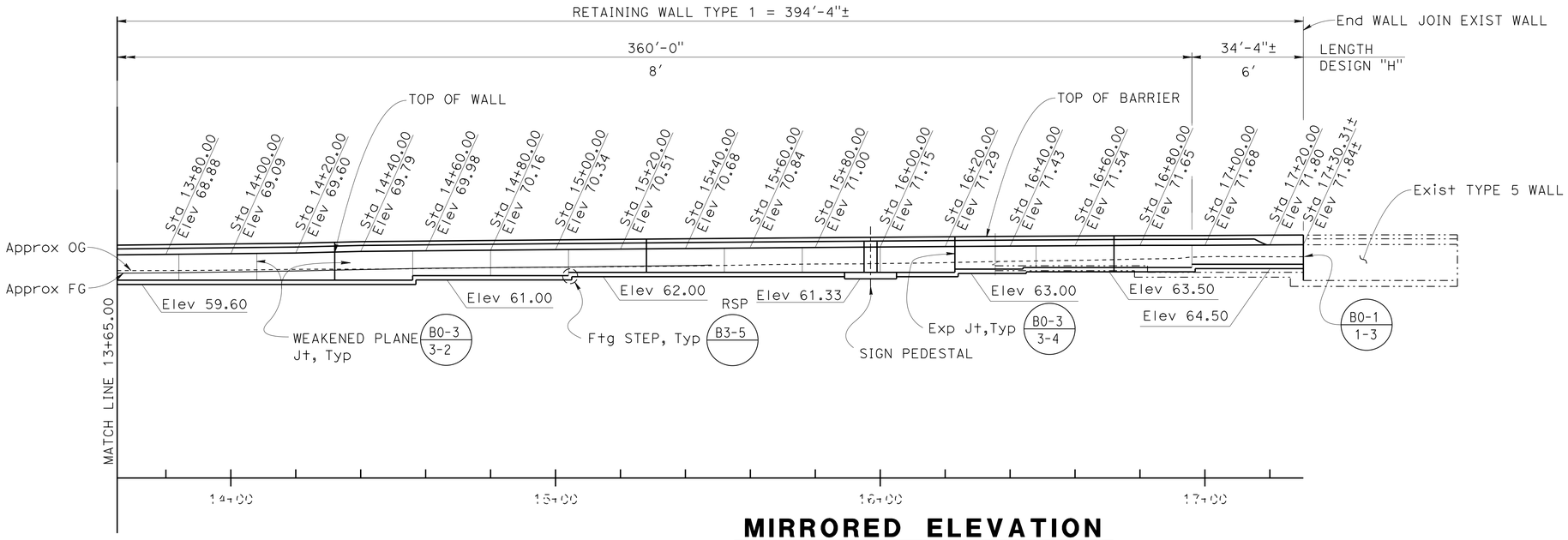

MIRRORED ELEVATION

1" = 20'-0"

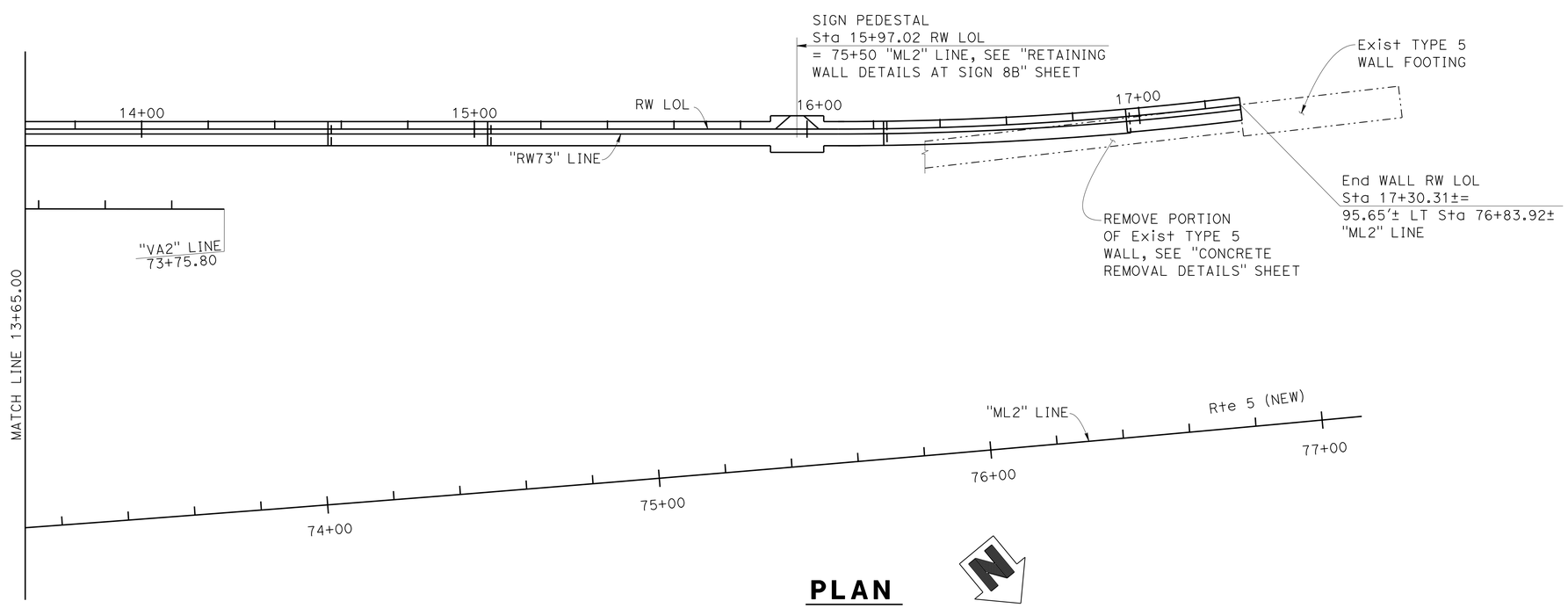

PLAN

1" = 20'-0"

DESIGN	BY Mark Okimura	CHECKED Cipriano Manansala	
DETAILS	BY Jaime Ramirez	CHECKED Cipriano Manansala	
QUANTITIES	BY H. Tuazon	CHECKED G. Reyes-Gutierrez	

STATE OF CALIFORNIA
DEPARTMENT OF TRANSPORTATION

DIVISION OF ENGINEERING SERVICES
STRUCTURE DESIGN
DESIGN BRANCH 11

BRIDGE NO. RW73
POST MILE 1.32

RETAINING WALL 73
STRUCTURE PLAN NO. 2

STRUCTURES DESIGN DETAIL SHEET (ENGLISH) (REV. 09-01-10)

ORIGINAL SCALE IN INCHES FOR REDUCED PLANS 0 1 2 3

UNIT: 3587
PROJECT NUMBER & PHASE: 0715000160-1
CONTRACT NO.: 07-2159u4

DISREGARD PRINTS BEARING EARLIER REVISION DATES

REVISION DATES: 12-04-12 7-19-13 3-21-13 4-25-13

SHEET 3 OF 10

FILE => rw73-b-sp2.dgn

USERNAME => s123624 DATE PLOTTED => 28-JAN-2016 TIME PLOTTED => 12:26

DIST	COUNTY	ROUTE	POST MILES TOTAL PROJECT	SHEET No.	TOTAL SHEETS
07	LA,Ora	5	0.0/1.5, 44.3/44.4	1458	1622

REGISTERED CIVIL ENGINEER 3-18-15 DATE

1-25-16
PLANS APPROVAL DATE

REGISTERED PROFESSIONAL ENGINEER William D. Kemp No. 55730 Exp. 12/31/16 CIVIL STATE OF CALIFORNIA

The State of California or its officers or agents shall not be responsible for the accuracy or completeness of electronic copies of this plan sheet.

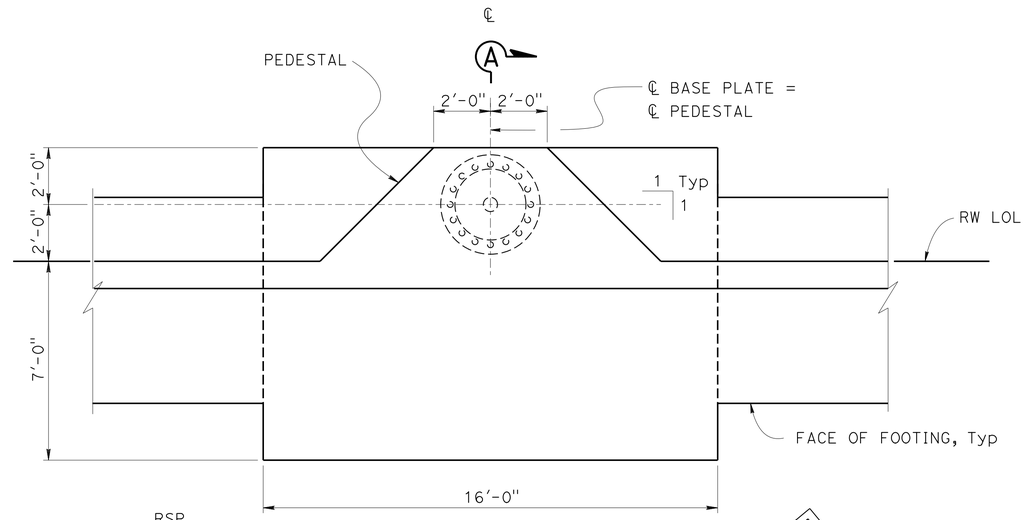

PEDESTAL LAYOUT - PLAN

3/8" = 1'-0"

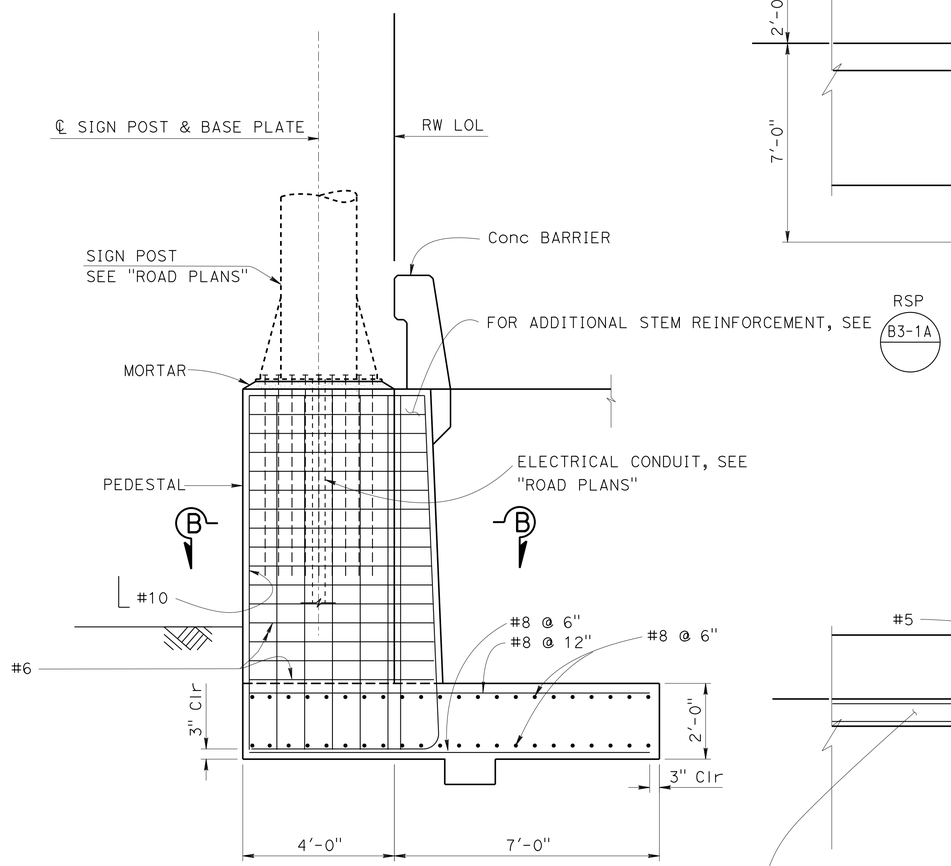

SECTION A-A

1/2" = 1'-0"

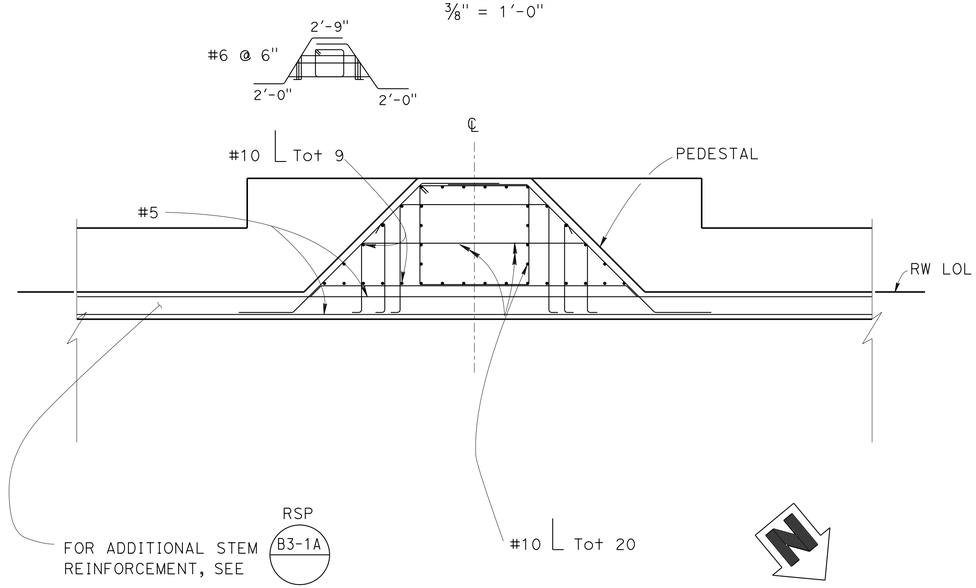

SECTION B-B

3/8" = 1'-0"

NOTES:

1. For location of sign see "STRUCTURE PLAN No 2" sheet.
2. All Vertical Pedestal Reinforcement shall be bent 90° at the bottom and radiate from the center where possible
3. Concrete strength shall be achieved and backfill placed prior to installation of sign

DESIGN	BY Cipriano Manansala	CHECKED Mark Okimura	
DETAILS	BY Loren Goldthwait	CHECKED Mark Okimura	
QUANTITIES	BY H. Tuazon	CHECKED G. Reyes-Gutierrez	

STATE OF CALIFORNIA
DEPARTMENT OF TRANSPORTATION

DIVISION OF ENGINEERING SERVICES
STRUCTURE DESIGN
DESIGN BRANCH 11

BRIDGE NO. RW73
POST MILE 1.32

RETAINING WALL 73
RETAINING WALL DETAILS AT SIGN 8B

STRUCTURES DESIGN DETAIL SHEET (ENGLISH) (REV. 09-01-10)

ORIGINAL SCALE IN INCHES FOR REDUCED PLANS 0 1 2 3

UNIT: 3587
PROJECT NUMBER & PHASE: 0715000160-1
CONTRACT NO.: 07-2159U4

DISREGARD PRINTS BEARING EARLIER REVISION DATES

REVISION DATES: 6-14-12 3-28-13 7-19-13 12-04-13

SHEET 4 OF 10

FILE => rw73-c-sgndt.dgn

USERNAME => s125624 DATE PLOTTED => 28-JAN-2016 TIME PLOTTED => 12:26

DIST	COUNTY	ROUTE	POST MILES TOTAL PROJECT	SHEET No.	TOTAL SHEETS
07	LA,Ora	5	0.0/1.5, 44.3/44.4	1459	1622

William Kemp 3-18-15
REGISTERED CIVIL ENGINEER DATE

1-25-16
PLANS APPROVAL DATE

REGISTERED PROFESSIONAL ENGINEER William D. Kemp No. 55730 Exp. 12-31-16 CIVIL STATE OF CALIFORNIA

The State of California or its officers or agents shall not be responsible for the accuracy or completeness of electronic copies of this plan sheet.

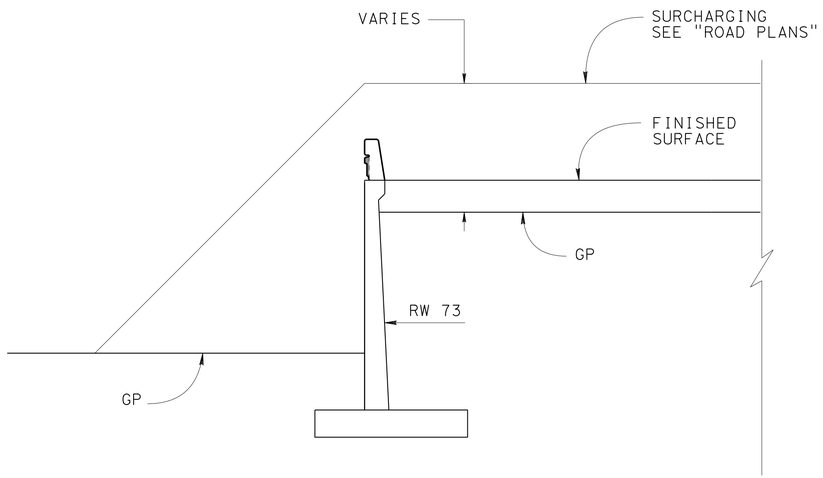

SURCHARGE EMBANKMENT

NO SCALE

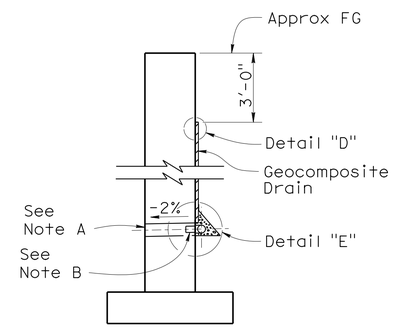

WALL SECTION

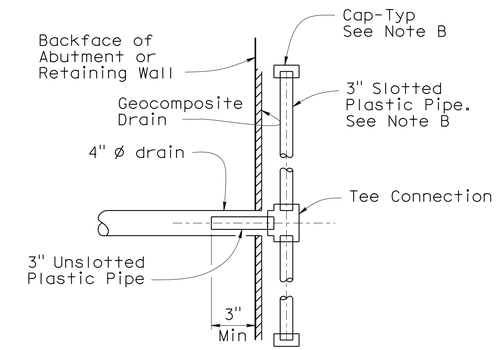

SECTION K-K

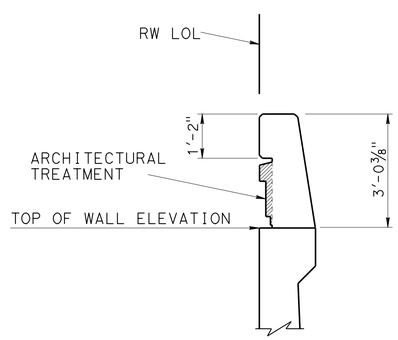

RSP B11-56

BARRIER TYPE 736A Mod

NO SCALE

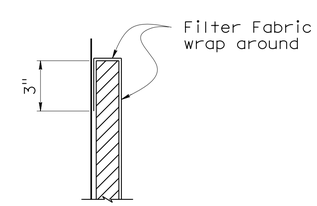

DETAIL "D"

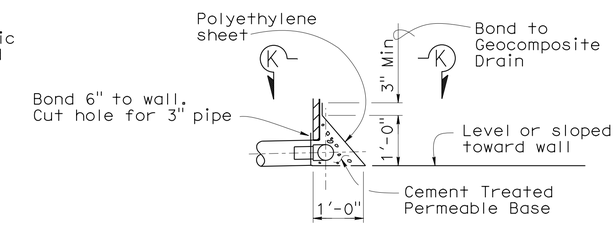

DETAIL "E"

WEEP HOLE AND GEOCOMPOSITE DRAIN

NO SCALE

Notes (GEOCOMPOSITE DRAIN):

A. 4" Ø drains at intermediate sag points and at 25'-0" center to center. For walls adjacent to sidewalks or curbs, provide 4" Ø cast iron or asbestos cement pipe under the sidewalk to discharge through curb face. Exposed wall drains shall be located 3" ± above finished grade.

B. Geocomposite drain, cement treated permeable base, and 3" Ø slotted plastic pipe continuous behind retaining wall or abutment. Cap ends of pipe. Provide "Tee" connection at each 4" Ø drain.

C. Connect the low end of plastic pipe to the main outlet pipe as applicable.

	BY	CHECKED
DESIGN	Mark Okimura	Cipriano Manansala
DETAILS	Jaime Ramirez	Cipriano Manansala
QUANTITIES	H. Tuazon	G. Reyes-Gutierrez

STATE OF CALIFORNIA
DEPARTMENT OF TRANSPORTATION

DIVISION OF ENGINEERING SERVICES
STRUCTURE DESIGN
DESIGN BRANCH 11

BRIDGE NO. RW73
POST MILE 1.32

RETAINING WALL 73
RETAINING WALL DETAILS

STRUCTURES DESIGN DETAIL SHEET (ENGLISH) (REV. 09-01-10)

ORIGINAL SCALE IN INCHES FOR REDUCED PLANS 0 1 2 3

UNIT: 3587
PROJECT NUMBER & PHASE: 0715000160-1
CONTRACT NO.: 07-2159U4

DISREGARD PRINTS BEARING EARLIER REVISION DATES

REVISION DATES 7-13-11 6-05-13 7-18-13 7-19-13

SHEET 5 OF 10

FILE => rw73-d-retdt1.dgn

USERNAME => s125624 DATE PLOTTED => 28-JAN-2016 TIME PLOTTED => 12:26

DIST	COUNTY	ROUTE	POST MILES TOTAL PROJECT	SHEET No.	TOTAL SHEETS
07	LA,Ora	5	0.0/1.5, 44.3/44.4	1460	1622

William Kemp 3-18-15
REGISTERED CIVIL ENGINEER DATE

1-25-16
PLANS APPROVAL DATE

REGISTERED PROFESSIONAL ENGINEER
William D. Kemp
No. 55730
Exp. 12/31/16
CIVIL
STATE OF CALIFORNIA

The State of California or its officers or agents shall not be responsible for the accuracy or completeness of electronic copies of this plan sheet.

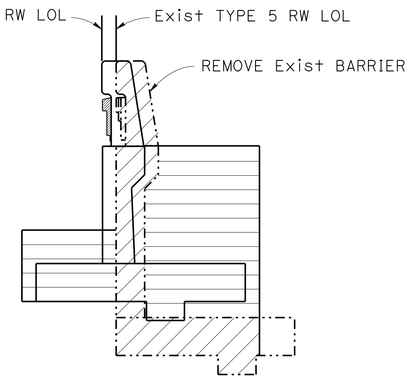

SECTION A-A
NO SCALE

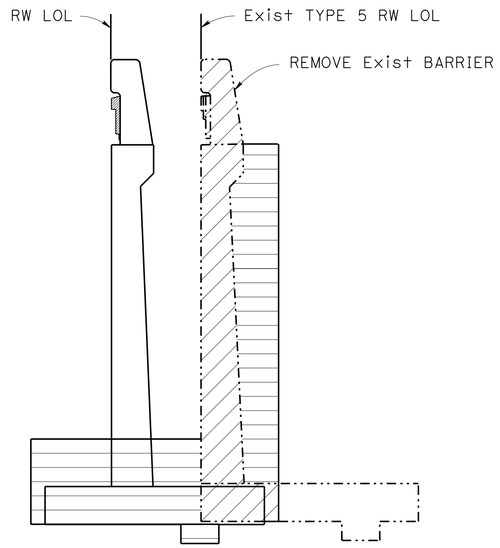

SECTION B-B
NO SCALE

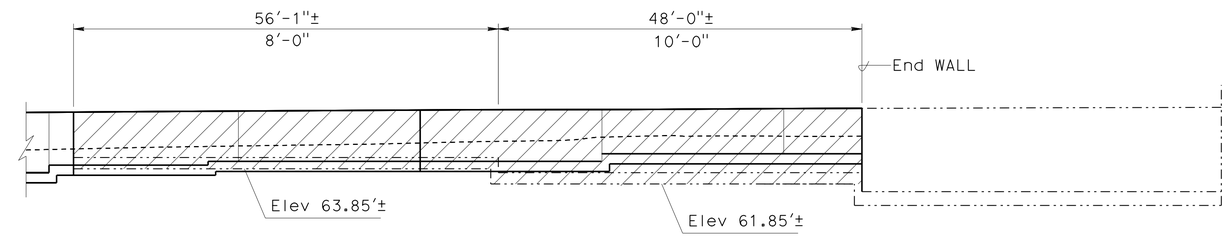

MIRROR ELEVATION
NO SCALE

LEGEND:(THIS SHEET)

Indicates Concrete Removal

Indicates Limits of Payment for Structure Excavation

NOTE:

For details not shown, see A62B

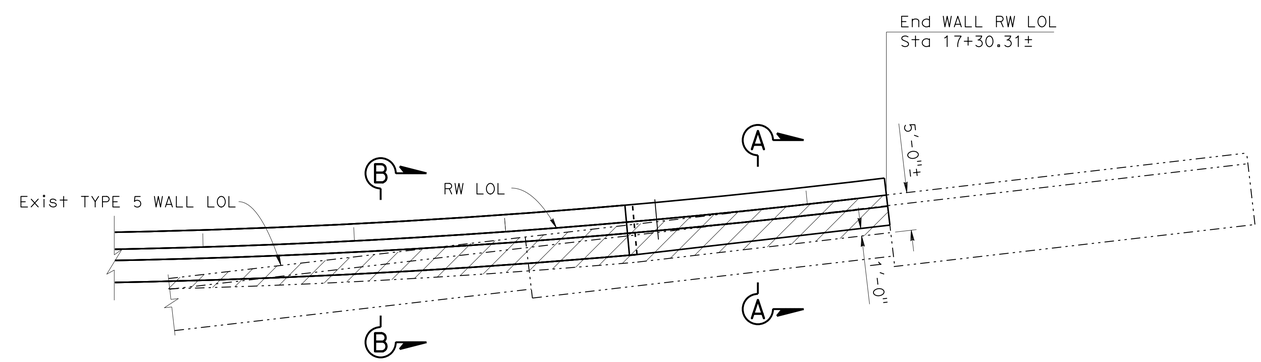

PLAN
NO SCALE

DESIGN	BY Mark Okimura	CHECKED Cipriano Manansala	
DETAILS	BY Jaime Ramirez	CHECKED Cipriano Manansala	
QUANTITIES	BY H. Tuazon	CHECKED G. Reyes-Gutierrez	

STATE OF CALIFORNIA
DEPARTMENT OF TRANSPORTATION

DIVISION OF ENGINEERING SERVICES
STRUCTURE DESIGN
DESIGN BRANCH 11

BRIDGE NO. RW73
POST MILE 1.32

RETAINING WALL 73
CONCRETE REMOVAL DETAILS

STRUCTURES DESIGN DETAIL SHEET (ENGLISH) (REV. 09-01-10)

ORIGINAL SCALE IN INCHES FOR REDUCED PLANS 0 1 2 3

UNIT: 3587
PROJECT NUMBER & PHASE: 0715000160-1
CONTRACT NO.: 07-2159u4

DISREGARD PRINTS BEARING EARLIER REVISION DATES

REVISION DATES: 7-12-12 3-18-15 3-28-13 7-18-13

SHEET 6 OF 10

FILE => rw73-e-rem.dgn

USERNAME => s125624 DATE PLOTTED => 28-JAN-2016 TIME PLOTTED => 12:26

DIST	COUNTY	ROUTE	POST MILES TOTAL PROJECT	SHEET No.	TOTAL SHEETS
07	LA,Ora	5	0.0/1.5, 44.3/44.4	1461	1622

REGISTERED CIVIL ENGINEER — DATE: 3-18-15

1-25-16
PLANS APPROVAL DATE

REGISTERED PROFESSIONAL ENGINEER — WILLIAM D. KEMP — No. 55730 — Exp. 12/31/16 — CIVIL — STATE OF CALIFORNIA

The State of California or its officers or agents shall not be responsible for the accuracy or completeness of electronic copies of this plan sheet.

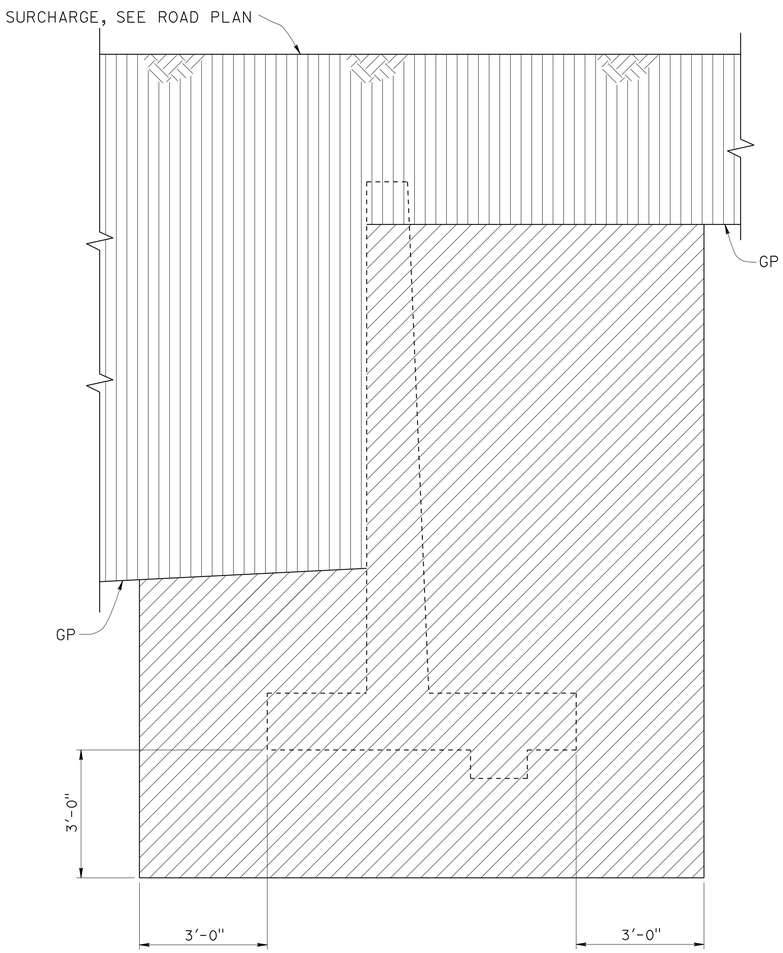

STRUCTURE EXCAVATION

No Scale

NOTE: Type 1 shown,
type 5 wall similar

LEGEND:(THIS SHEET)

- STRUCTURE EXCAVATION
- ROADWAY EXCAVATION
- STRUCTURE BACKFILL

GP Planned grading plane

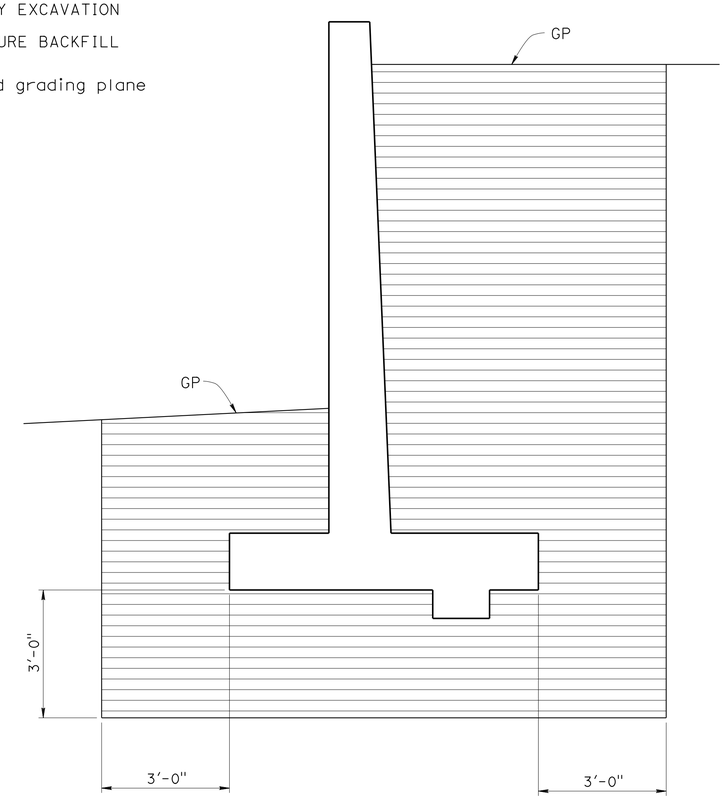

STRUCTURE BACKFILL

No Scale

NOTE: Type 1 shown,
type 5 wall similar

DESIGN	BY Mark Okimura	CHECKED Bill Kemp	
DETAILS	BY Jaime Ramirez	CHECKED Bill Kemp	
QUANTITIES	BY H. Tuazon	CHECKED G. Reyes-Gutierrez	

STATE OF CALIFORNIA
DEPARTMENT OF TRANSPORTATION

DIVISION OF ENGINEERING SERVICES
STRUCTURE DESIGN
DESIGN BRANCH 11

BRIDGE NO. RW73
POST MILE 1.32

RETAINING WALL 73
LIMITS OF EXCAVATION AND BACKFILL

STRUCTURES DESIGN DETAIL SHEET (ENGLISH) (REV. 09-01-10)

ORIGINAL SCALE IN INCHES FOR REDUCED PLANS 0 1 2 3

UNIT: 3587
PROJECT NUMBER & PHASE: 0715000160-1
CONTRACT NO.: 07-2159u4

DISREGARD PRINTS BEARING EARLIER REVISION DATES

REVISION DATES: 4/26/13 6/06/13 7-19-13

SHEET 7 OF 10

FILE => rw73-f-exc.dgn

USERNAME => s125624 DATE PLOTTED => 28-JAN-2016 TIME PLOTTED => 12:26

DIST	COUNTY	ROUTE	POST MILES TOTAL PROJECT	SHEET No.	TOTAL SHEETS
07	LA,Ora	5	0.0/1.5, 44.3/44.4	1462	1622

REGISTERED CIVIL ENGINEER 3-18-15 DATE

1-25-16
PLANS APPROVAL DATE

REGISTERED PROFESSIONAL ENGINEER William D. Kemp No. 55730 Exp 12/31/16 CIVIL STATE OF CALIFORNIA

The State of California or its officers or agents shall not be responsible for the accuracy or completeness of scanned copies of this plan sheet.

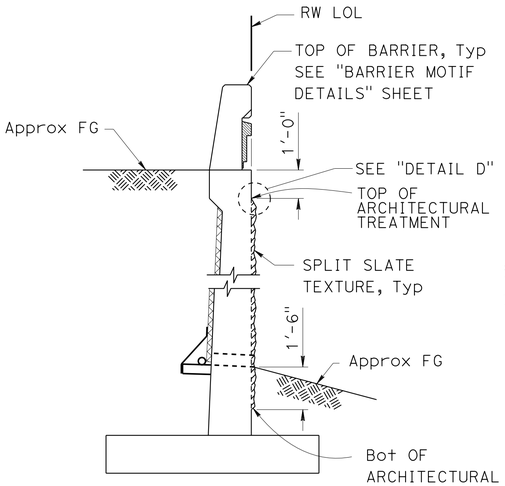

SECTION A-A
3/8" = 1'-0"

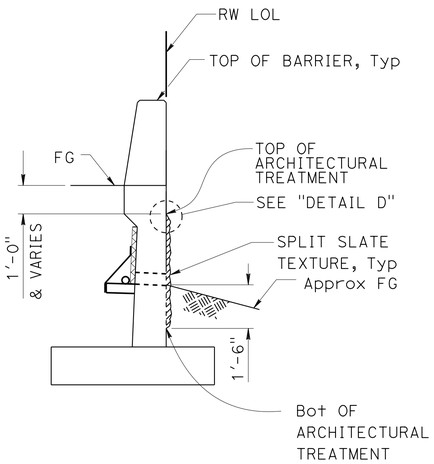

SECTION B-B
3/8" = 1'-0"

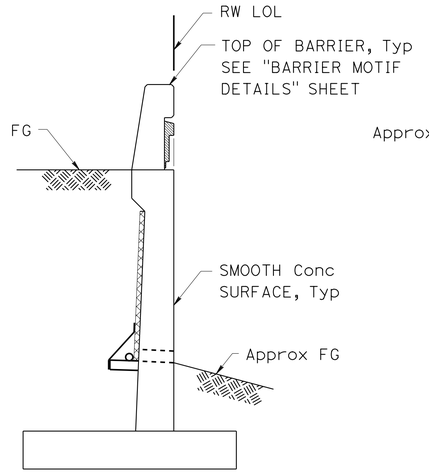

SECTION C-C
3/8" = 1'-0"

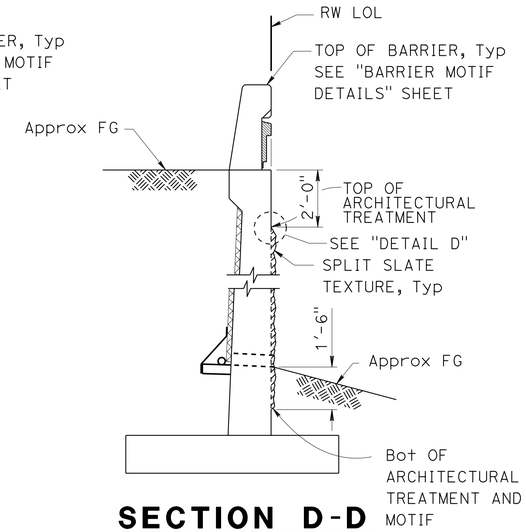

SECTION D-D
3/8" = 1'-0"

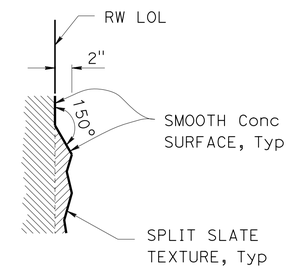

DETAIL D
NO SCALE

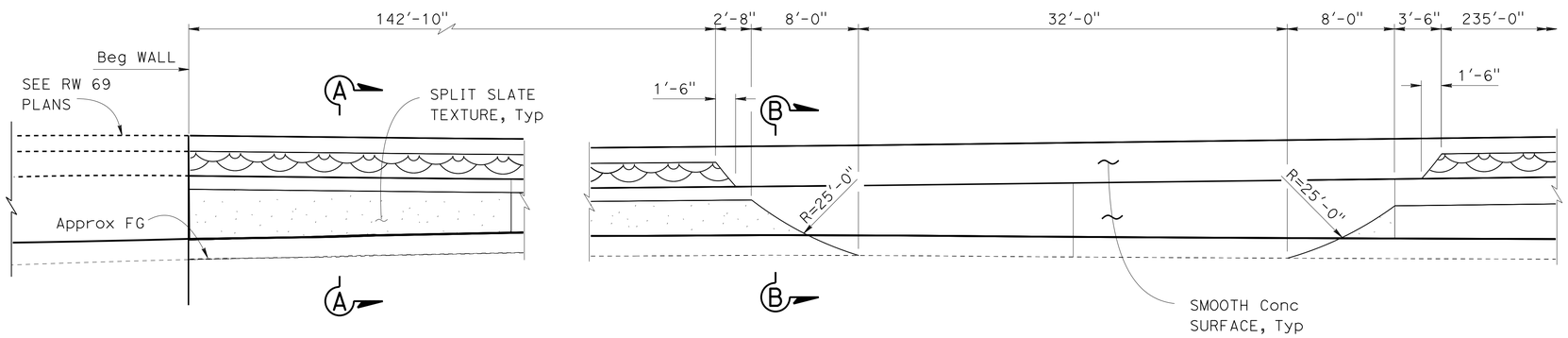

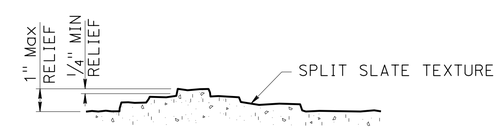

SECTION E-E
NO SCALE

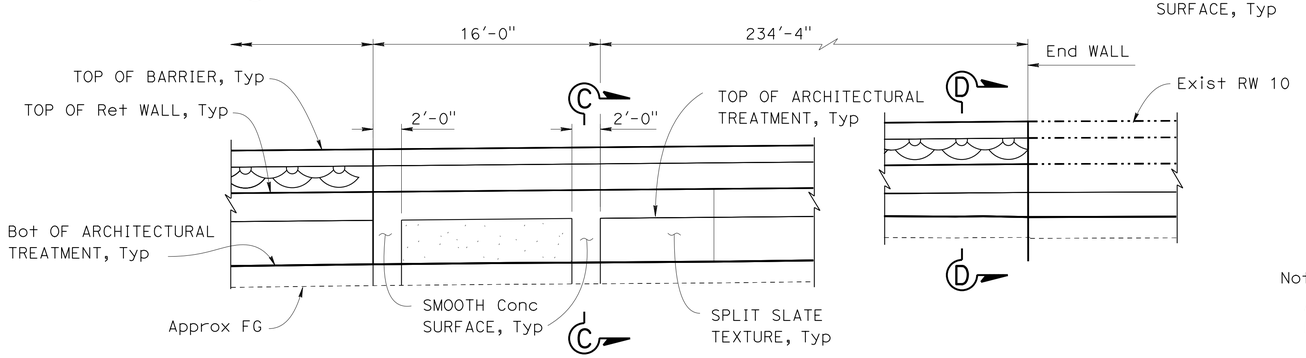

Note:

All surface relief and texture shall be measured from the RW LOL, Typ

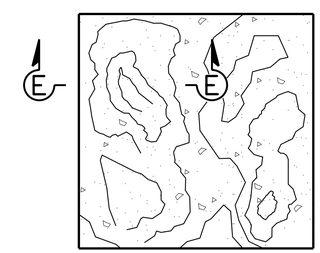

SPLIT SLATE TEXTURE
NO SCALE

MIRRORED ELEVATION - ARCHITECTURAL TREATMENT
3/16" = 1'-0"

	BY	CHECKED
DESIGN	I. Tasabia	H. Javier Chavez
DETAILS	L. Goldthwait	H. Javier Chavez
QUANTITIES	H. Tuazon	G. Reyes-Gutierrez

STATE OF CALIFORNIA
DEPARTMENT OF TRANSPORTATION

DIVISION OF ENGINEERING SERVICES
STRUCTURE DESIGN
DESIGN BRANCH 11

BRIDGE NO. RW73
POST MILE 1.32

RETAINING WALL 73
ARCHITECTURAL TREATMENT DETAILS

STRUCTURES DESIGN DETAIL SHEET (ENGLISH) (REV. 09-01-10)

ORIGINAL SCALE IN INCHES FOR REDUCED PLANS 0 1 2 3

UNIT: 3587
PROJECT NUMBER & PHASE: 0715000160-1
CONTRACT NO.: 07-2159u4

DISREGARD PRINTS BEARING EARLIER REVISION DATES

REVISION DATES: 10-26-12 7-19-13 3-21-13 6-4-13

SHEET 8 OF 10

FILE => rw73-g-arch1.dgn

USERNAME => s125624 DATE PLOTTED => 28-JAN-2016 TIME PLOTTED => 12:26

DIST	COUNTY	ROUTE	POST MILES TOTAL PROJECT	SHEET No.	TOTAL SHEETS
07	LA,Ora	5	0.0/1.5, 44.3/44.4	1463	1622

REGISTERED CIVIL ENGINEER — DATE: 3-18-15

1-25-16
PLANS APPROVAL DATE

REGISTERED PROFESSIONAL ENGINEER — William D. Kemp — No. 55730 — Exp. 12/31/16 — CIVIL — STATE OF CALIFORNIA

The State of California or its officers or agents shall not be responsible for the accuracy or completeness of electronic copies of this plan sheet.

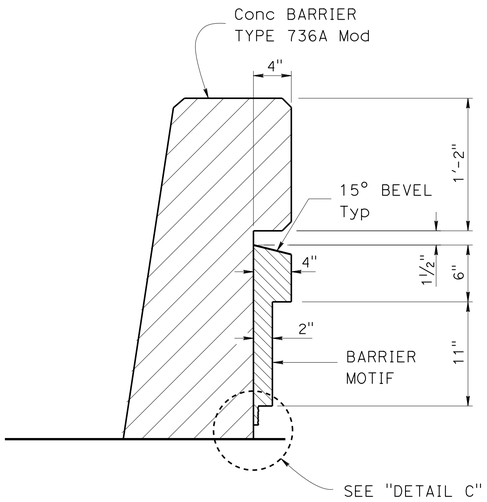

SECTION A-A

1½" = 1'-0"

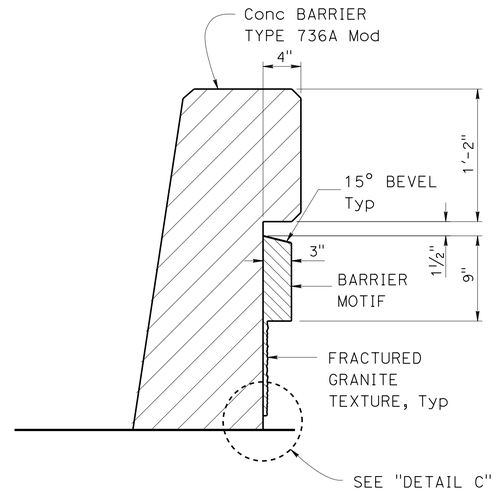

SECTION B-B

1½" = 1'-0"

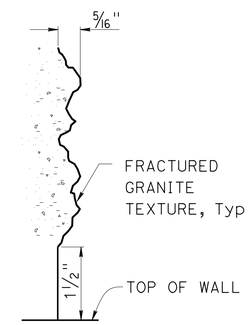

DETAIL C

NO SCALE

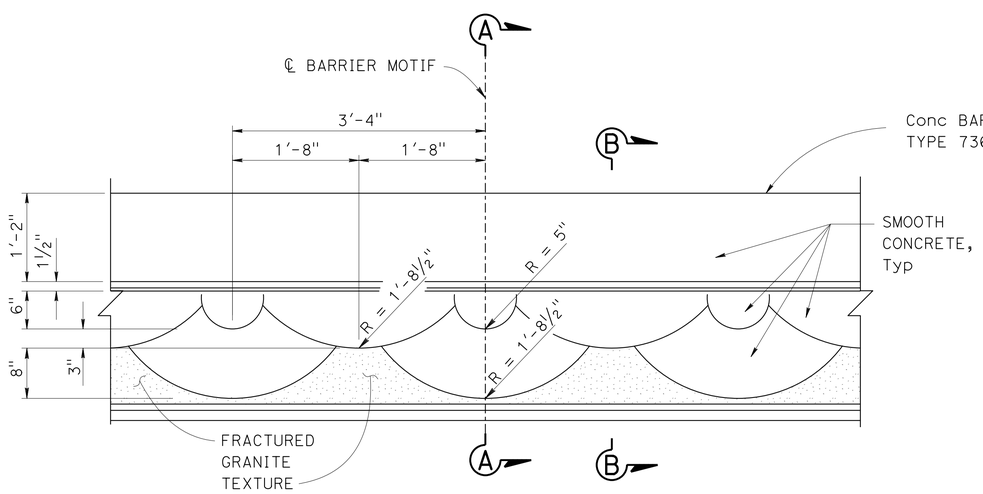

PARTIAL ELEVATION - BARRIER MOTIF

1" = 1'-0"

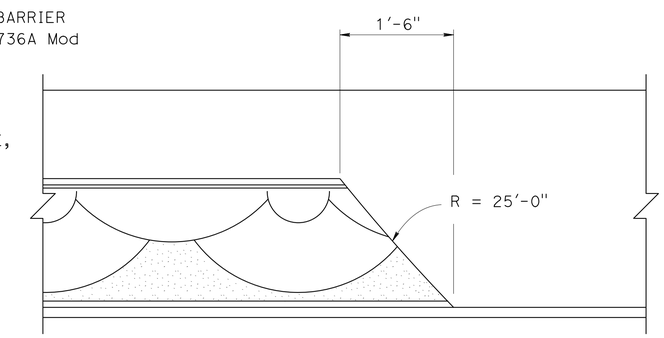

BARRIER END DETAIL

1" = 1'-0"

DESIGN	BY I. Tasabia	CHECKED H. Javier Chavez	
DETAILS	BY H. Mauroschadt	CHECKED H. Javier Chavez	
QUANTITIES	BY H. Tuazon	CHECKED G. Reyes-Gutierrez	

STATE OF CALIFORNIA
DEPARTMENT OF TRANSPORTATION

DIVISION OF ENGINEERING SERVICES
STRUCTURE DESIGN
DESIGN BRANCH 11

BRIDGE NO. RW73
POST MILE 1.32

RETAINING WALL No. 73
BARRIER MOTIF DETAILS

STRUCTURES DESIGN DETAIL SHEET (ENGLISH) (REV. 09-01-10)

ORIGINAL SCALE IN INCHES FOR REDUCED PLANS 0 1 2 3

UNIT: 3587
PROJECT NUMBER & PHASE: 0715000160-1
CONTRACT NO.: 07-2159U4

DISREGARD PRINTS BEARING EARLIER REVISION DATES

REVISION DATES: 6-5-12 3-21-13 7-19-13

SHEET 9 OF 10

FILE => rw73-h-arch2.dgn

USERNAME => s125624 DATE PLOTTED => 28-JAN-2016 TIME PLOTTED => 12:26

DIST	COUNTY	ROUTE	POST MILES TOTAL PROJECT	SHEET No.	TOTAL SHEETS
07	LA,Ora	5	0.0/1.5, 44.3/44.4	1464	1622

REGISTERED CIVIL ENGINEER 05/20/15 DATE

1-25-16
PLANS APPROVAL DATE

URS CORPORATION
2020 EAST FIRST STREET, SUITE 400
SANTA ANA, CA 92705

The State of California or its officers or agents shall not be responsible for the accuracy or completeness of electronic copies of this plan sheet.

REGISTERED PROFESSIONAL ENGINEER MICHAEL G. SMITH No. 2229 Exp. 03/31/16 GEOTECHNICAL STATE OF CALIFORNIA

1-This LOTB sheet was prepared in accordance with the Caltrans Soil & Rock Logging, Classification, & Presentation Manual (2010 Edition).

2-For protection of underground utility lines, hand-auger was used to remove top 5 to 10 feet of subsurface material for exploratory borings and Cone Penetration Testings.

3-2.5" to 1.4" blow counts conversion factors for fine-grain and coarse-grain soils have been 0.8 and 0.55, respectively.

BENCH MARK

GPS 0887
ELEVATION 65.915 FT
FD 2-1/2 CADT DISK IN CONC. CURB
FLUSH, STAMPED "LA-5-1.0, 1995"
LOCATED 90' N OF THE SOUTH SIDE
FIRESTONE BLVD 0.2 MI SE OF VALLEY VIEW
NORTHING 542395.636
EASTING 1997613.893
DATUM NAVD88

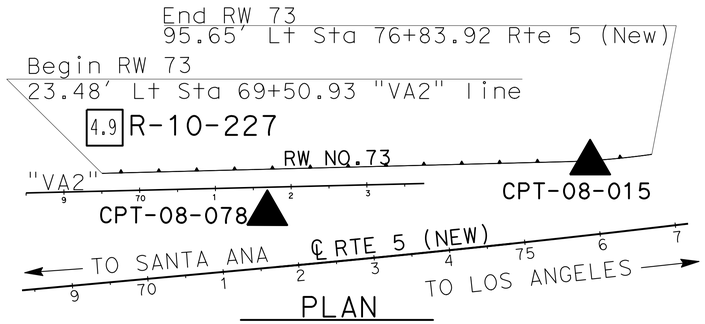

PLAN
SCALE 1"=100'

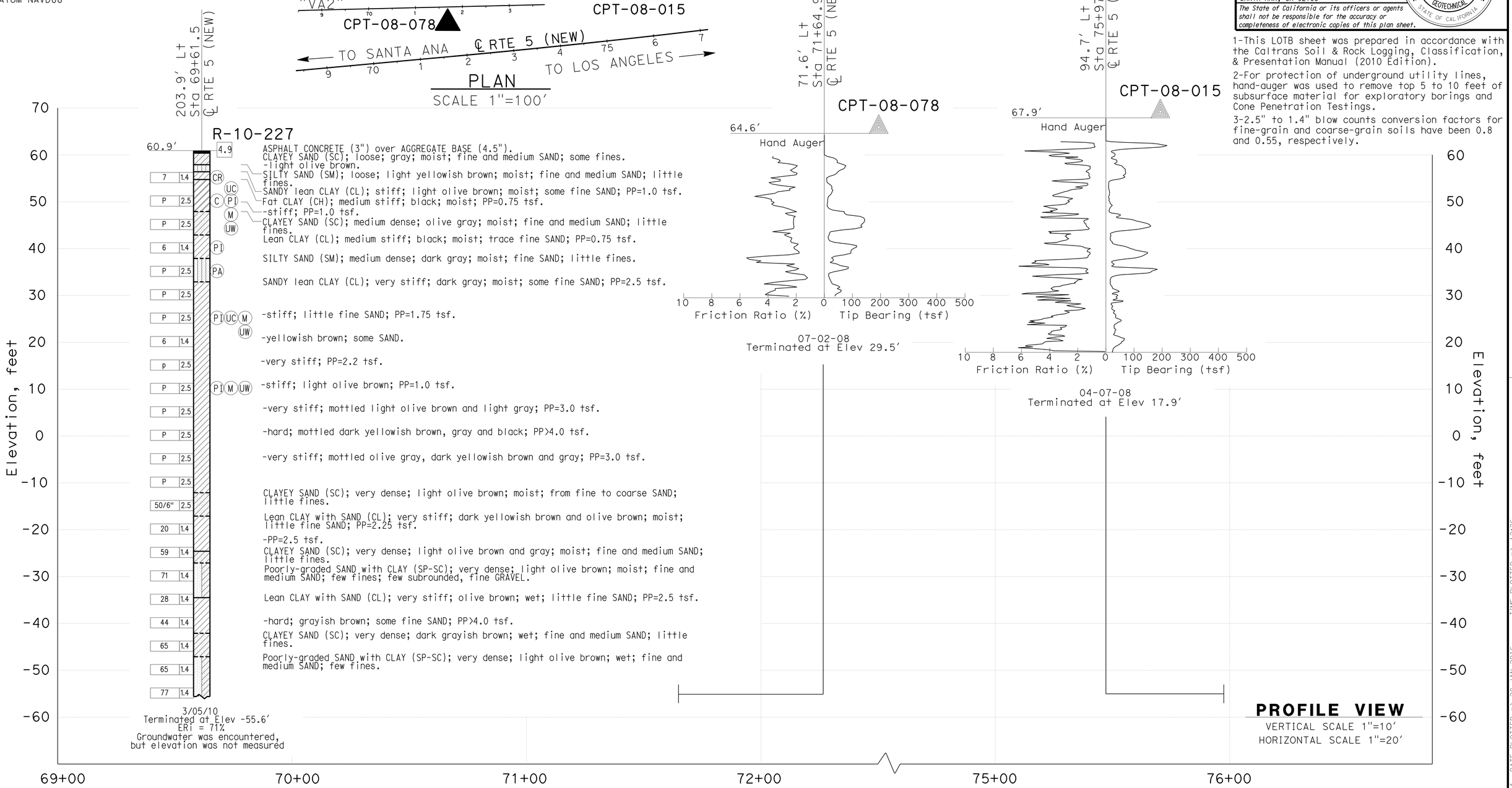

PROFILE VIEW
VERTICAL SCALE 1"=10'
HORIZONTAL SCALE 1"=20'

F.MOTAMED DESIGN OVERSIGHT	DRAWN BY	T.PANAH	EJ.JEON/P.MCDONALD FIELD INVESTIGATION BY:	PREPARED FOR THE STATE OF CALIFORNIA DEPARTMENT OF TRANSPORTATION	M.G. SMITH PROJECT ENGINEER
05/20/15 SIGN OFF DATE	CHECKED BY	A.GHAZINOOR/L.KHALKHALI	DATE: 04/07/08 - 03/05/10		

BRIDGE NO. RW73 | POST MILES 1.32

RETAINING WALL NO. 73
LOG OF TEST BORINGS SHEET 1 OF 1

GS CIVIL LOG OF TEST BORINGS SHEET (ENGLISH) (REV. 03/14/12)

ORIGINAL SCALE IN INCHES FOR REDUCED PLANS 0 1 2 3

UNIT: 3658
PROJECT NUMBER & PHASE: 07150001601 CONTRACT NO.: 07-2159U4

DISREGARD PRINTS BEARING EARLIER REVISION DATES → 5/12/15

REVISION DATES | SHEET 10 | OF 10

FILE => rw73-z-lotb.dgn

USERNAME => s125624 DATE PLOTTED => 28-JAN-2016 TIME PLOTTED => 12:26

DIST	COUNTY	ROUTE	POST MILES TOTAL PROJECT	SHEET No.	TOTAL SHEETS
07	LA,Ora	5	0.0/1.5, 44.3/44.4	1465	1622

William Kemp 3-18-15
REGISTERED CIVIL ENGINEER DATE

1-25-16
PLANS APPROVAL DATE

REGISTERED PROFESSIONAL ENGINEER WILLIAM D. KEMP No. 55730 Exp. 12/31/16 CIVIL STATE OF CALIFORNIA

The State of California or its officers or agents shall not be responsible for the accuracy or completeness of electronic copies of this plan sheet.

STANDARD PLANS 2010

	A10A	ACRONYMS AND ABBREVIATIONS (SHEET 1 OF 2)
RSP	A10B	ACRONYMS AND ABBREVIATIONS (SHEET 2 OF 2)
	A10C	LINES AND SYMBOLS (SHEET 1 OF 3)
	A10D	LINES AND SYMBOLS (SHEET 2 OF 3)
	A10E	LINES AND SYMBOLS (SHEET 3 OF 3)
RSP	A10F	LEGEND - SOIL (SHEET 1 OF 2)
RSP	A10G	LEGEND - SOIL (SHEET 2 OF 2)
	A10H	LEGEND - ROCK
	A62B	LIMITS OF PAYMENT FOR EXCAVATION AND BACKFILL- BRIDGE SURCHARGE AND WALL
	BO-3	BRIDGE DETAILS
RSP	B3-1A	RETAINING WALL TYPE 1 (CASE 1)
RSP	B3-5	RETAINING WALL DETAILS NO. 1
RSP	B11-56	CONCRETE BARRIER TYPE 736

STANDARD PLAN SHEET No.

DETAIL No.

INDEX TO PLANS

SHEET No.	TITLE
1	GENERAL PLAN
2	STRUCTURE PLAN NO. 1
3	STRUCTURE PLAN NO. 2
4	RETAINING WALL DETAILS
5	ARCHITECTURAL TREATMENT
6	LIMITS OF EXCAVATION AND BACKFILL
7	LOG OF TEST BORINGS SHEET 1 OF 1

QUANTITIES

STRUCTURE EXCAVATION (RETAINING WALL)	1,050	CY
STRUCTURE BACKFILL (RETAINING WALL)	880	CY
STRUCTURAL CONCRETE, RETAINING WALL	190	CY
BAR REINFORCING STEEL (RETAINING WALL)	27,370	LB
CONCRETE BARRIER (TYPE 736A)	306	LF
CONCRETE BARRIER (TYPE 736A MODIFIED B)	10	LF

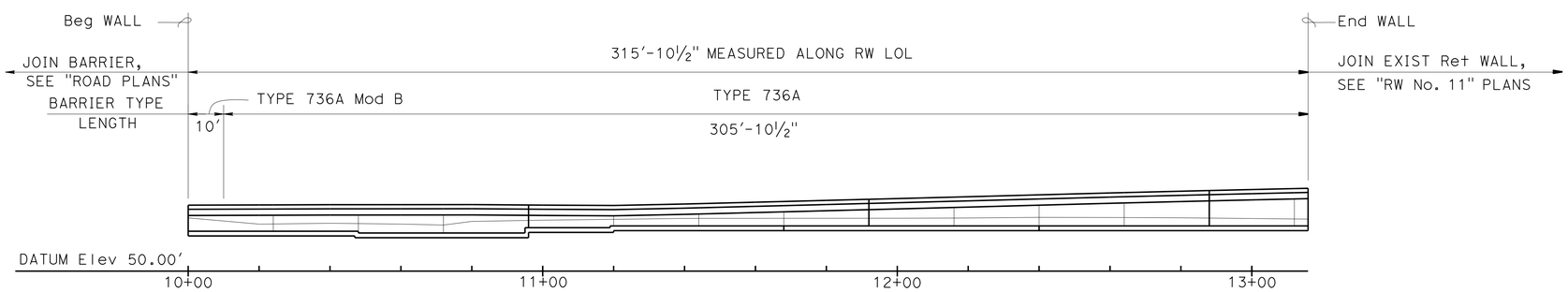

ELEVATION

1" = 20'

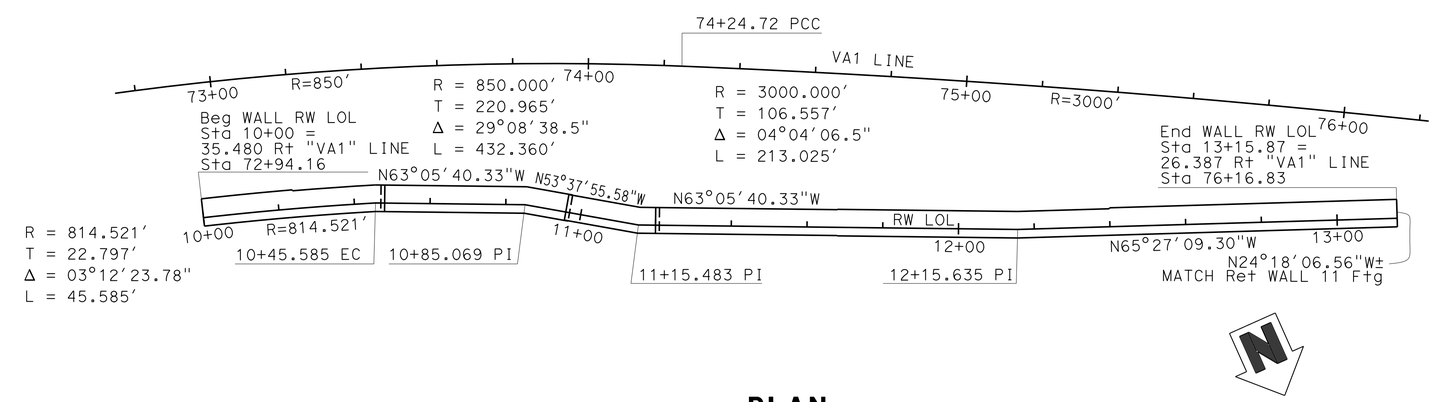

PLAN

1" = 20'

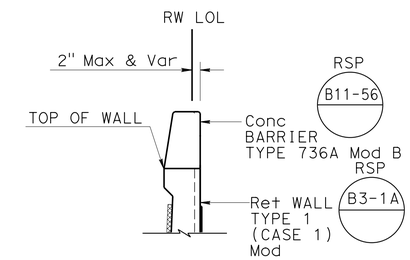

FROM Sta 10+00.00 TO 10+10.00

TRANSITION SECTION

NO SCALE

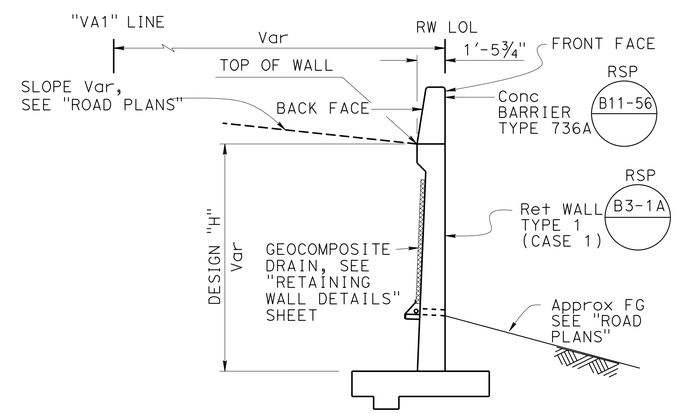

FROM Sta 10+10.00 TO 13+15.87

TYPICAL SECTION

NO SCALE

Ramin Rashedi 3-18-15 DESIGN ENGINEER	DESIGN	BY Yeo Yoon	CHECKED Shervin Pahlavan	LOAD & RESISTANCE FACTOR DESIGN	LIVE LOADING: HL93 W/"LOW-BOY"; PERMIT DESIGN VEHICLE
	DETAILS	BY T. Bittermann	CHECKED Shervin Pahlavan	LAYOUT BY Yeo Yoon	CHECKED Shervin Pahlavan
	QUANTITIES	BY G. Reyes-Gutierrez	CHECKED John Radu	SPECIFICATIONS BY X. Li	PLANS AND SPECS COMPARED X. Li

ORIGINAL SCALE IN INCHES FOR REDUCED PLANS 0 1 2 3

STATE OF CALIFORNIA DEPARTMENT OF TRANSPORTATION

DIVISION OF ENGINEERING SERVICES STRUCTURE DESIGN DESIGN BRANCH 11

BRIDGE NO. RW 80
POST MILE 1.38

RETAINING WALL 80
GENERAL PLAN

UNIT: 3587
PROJECT NUMBER & PHASE: 0715000160-1
CONTRACT NO.: 07-2159u4

DISREGARD PRINTS BEARING EARLIER REVISION DATES

REVISION DATES: 6-24-11 6-08-13 8-05-13 5-30-13

SHEET 1 OF 7

STRUCTURES DESIGN GENERAL PLAN SHEET (ENGLISH) (REV.09-01-10)

FILE => rw80-a-gp.dgn

USERNAME => s125624 DATE PLOTTED => 28-JAN-2016 TIME PLOTTED => 12:26

DIST	COUNTY	ROUTE	POST MILES TOTAL PROJECT	SHEET No.	TOTAL SHEETS
07	LA,Ora	5	0.0/1.5, 44.3/44.4	1466	1622

REGISTERED CIVIL ENGINEER — DATE: 3-18-15

1-25-16
PLANS APPROVAL DATE

REGISTERED PROFESSIONAL ENGINEER — William D. Kemp — No. 55730 — Exp. 12/31/16 — CIVIL — STATE OF CALIFORNIA

The State of California or its officers or agents shall not be responsible for the accuracy or completeness of scanned copies of this plan sheet.

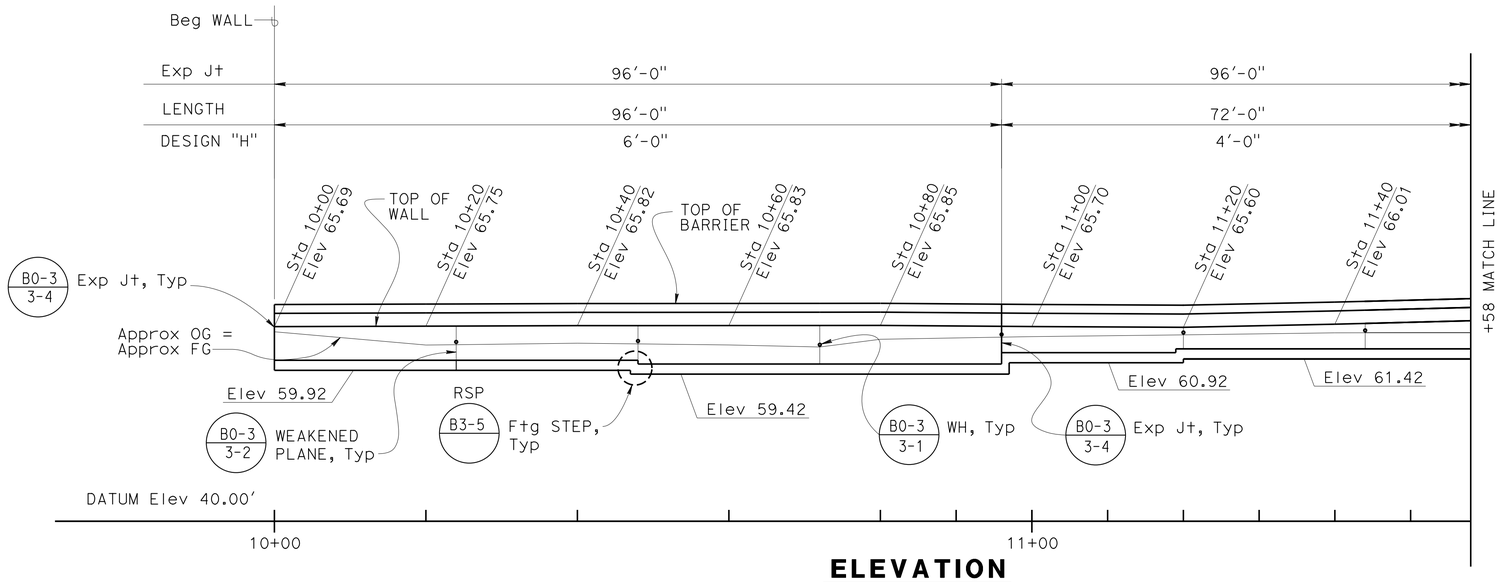

ELEVATION

1" = 10'

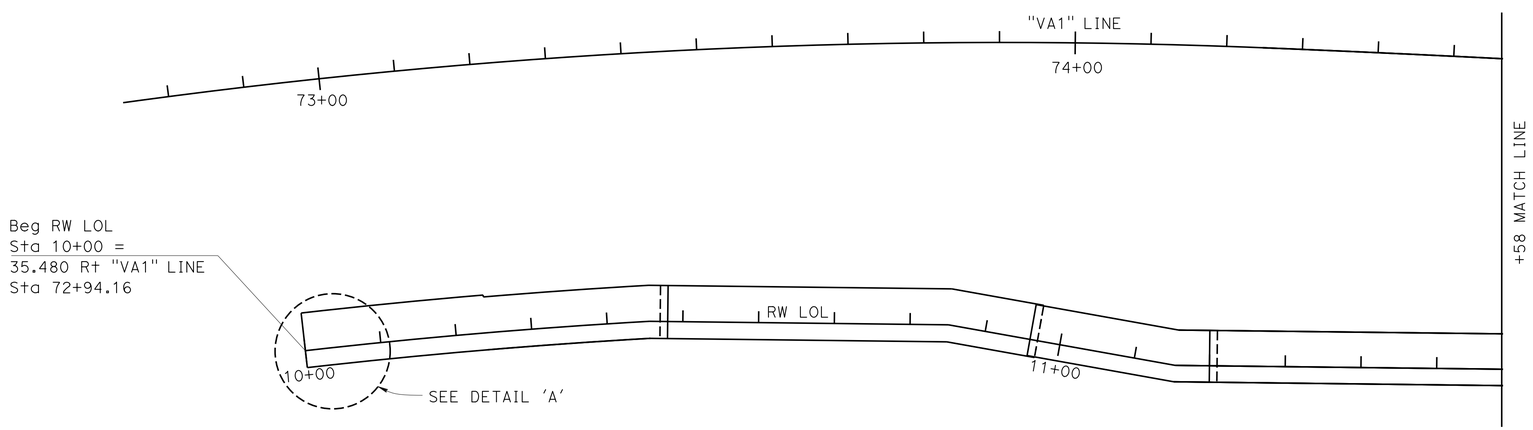

PLAN

1" = 10'

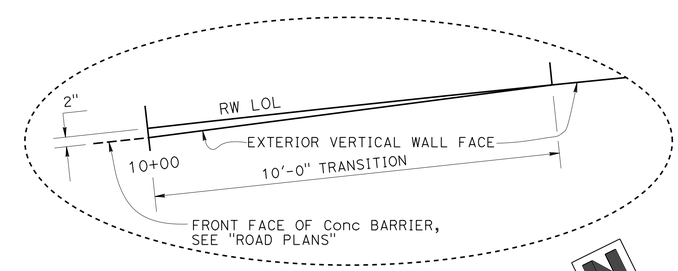

DETAIL 'A'

NO SCALE

DESIGN	BY Yeo Yoon	CHECKED Shervin Pahlaban	
DETAILS	BY T. Bittermann	CHECKED Shervin Pahlaban	
QUANTITIES	BY G. Reyes-Gutierrez	CHECKED John Radu	

STATE OF CALIFORNIA
DEPARTMENT OF TRANSPORTATION

DIVISION OF ENGINEERING SERVICES
STRUCTURE DESIGN
DESIGN BRANCH 11

BRIDGE NO. RW 80
POST MILE 1.38

RETAINING WALL 80
STRUCTURE PLAN NO. 1

STRUCTURES DESIGN DETAIL SHEET (ENGLISH) (REV. 09-01-10)

ORIGINAL SCALE IN INCHES FOR REDUCED PLANS 0 1 2 3

UNIT: 3587
PROJECT NUMBER & PHASE: 0715000160-1
CONTRACT NO.: 07-2159U4

DISREGARD PRINTS BEARING EARLIER REVISION DATES

REVISION DATES: 8-31-11 5-10-13 5-10-13 8-29-12

SHEET 2 OF 7

FILE => rw80-b-sp1.dgn

USERNAME => s125624 DATE PLOTTED => 28-JAN-2016 TIME PLOTTED => 12:26

DIST	COUNTY	ROUTE	POST MILES TOTAL PROJECT	SHEET No.	TOTAL SHEETS
07	LA,Ora	5	0.0/1.5, 44.3/44.4	1467	1622

REGISTERED CIVIL ENGINEER — DATE: 3-18-15

1-25-16
PLANS APPROVAL DATE

REGISTERED PROFESSIONAL ENGINEER — William D. Kemp — No. 55730 — Exp. 12/31/16 — CIVIL — STATE OF CALIFORNIA

The State of California or its officers or agents shall not be responsible for the accuracy or completeness of scanned copies of this plan sheet.

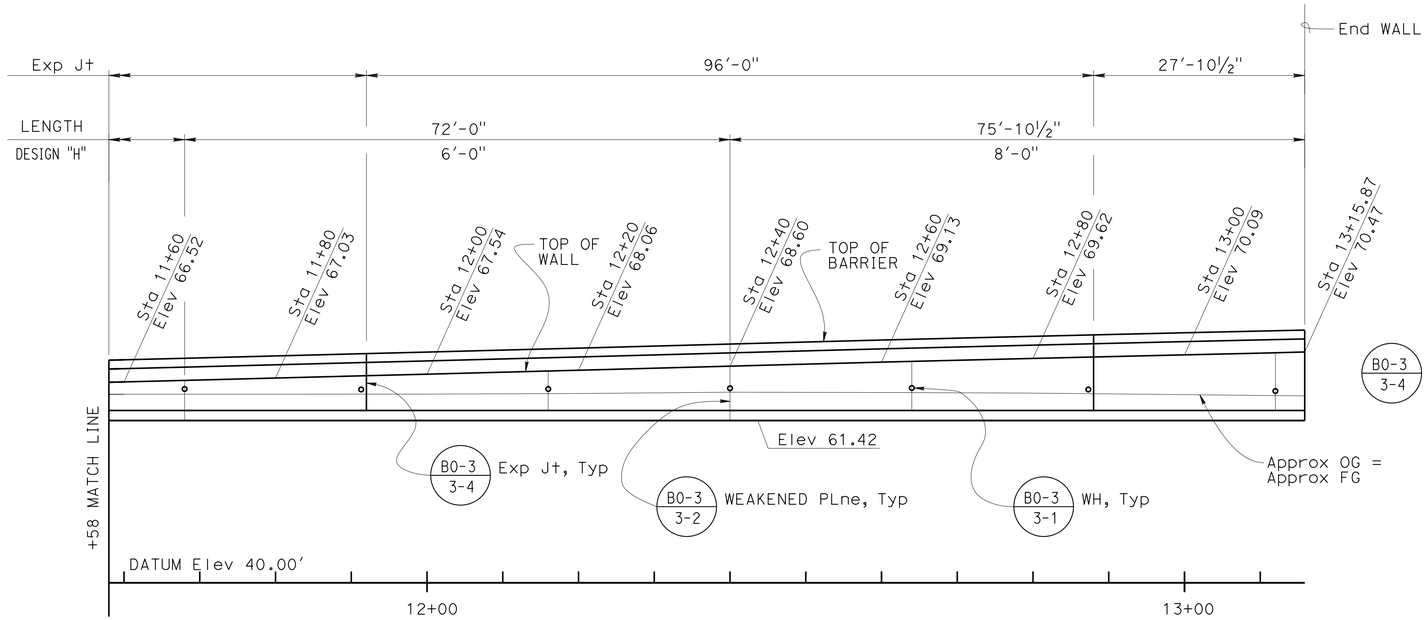

ELEVATION

1" = 10'

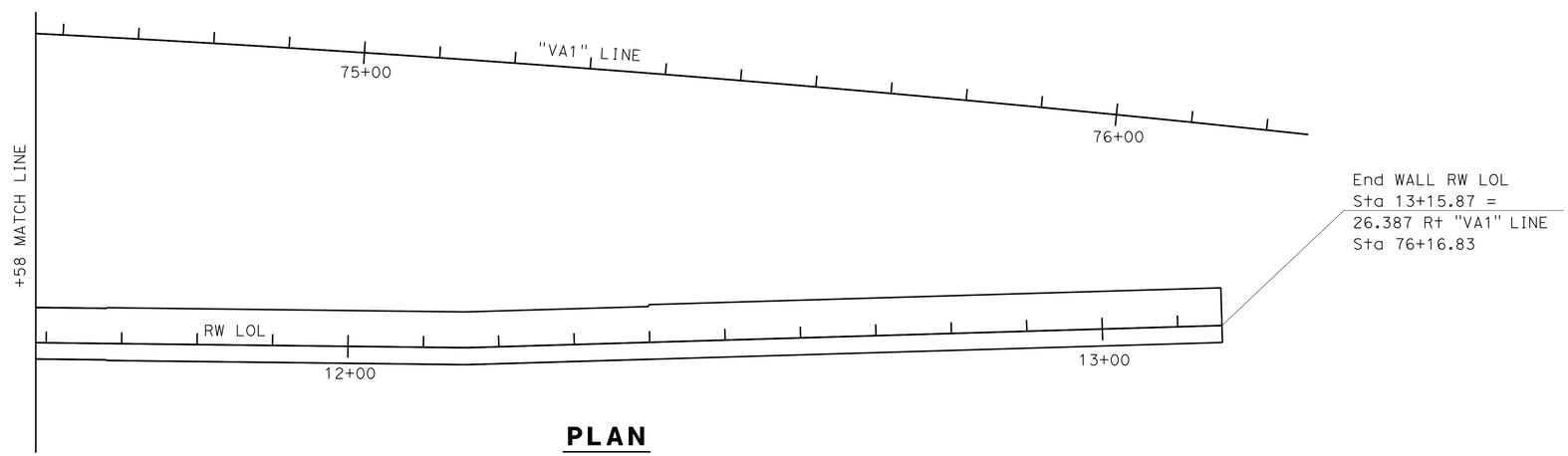

PLAN

1" = 10'

DESIGN	BY Yeo Yoon	CHECKED Shervin Pahlavan	
DETAILS	BY T. Bittermann	CHECKED Shervin Pahlavan	
QUANTITIES	BY G. Reyes-Gutierrez	CHECKED John Radu	

STATE OF CALIFORNIA
DEPARTMENT OF TRANSPORTATION

DIVISION OF ENGINEERING SERVICES
STRUCTURE DESIGN
DESIGN BRANCH 11

BRIDGE NO. RW 80
POST MILE 1.38

RETAINING WALL 80
STRUCTURE PLAN NO. 2

STRUCTURES DESIGN DETAIL SHEET (ENGLISH) (REV. 09-01-10)

ORIGINAL SCALE IN INCHES FOR REDUCED PLANS 0 1 2 3

UNIT: 3587
PROJECT NUMBER & PHASE: 0715000160-1
CONTRACT NO.: 07-2159U4

DISREGARD PRINTS BEARING EARLIER REVISION DATES

REVISION DATES: 8-26-12 3-18-13 5-10-13

SHEET 3 OF 7

FILE => rw80-b-sp2.dgn

USERNAME => s125624 DATE PLOTTED => 28-JAN-2016 TIME PLOTTED => 12:26

DIST	COUNTY	ROUTE	POST MILES TOTAL PROJECT	SHEET No.	TOTAL SHEETS
07	LA,Ora	5	0.0/1.5, 44.3/44.4	1468	1622

William Kemp 3-18-15
REGISTERED CIVIL ENGINEER DATE

1-25-16
PLANS APPROVAL DATE

REGISTERED PROFESSIONAL ENGINEER
WILLIAM D. KEMP
No. 55730
Exp. 12/31/16
CIVIL
STATE OF CALIFORNIA

The State of California or its officers or agents shall not be responsible for the accuracy or completeness of electronic copies of this plan sheet.

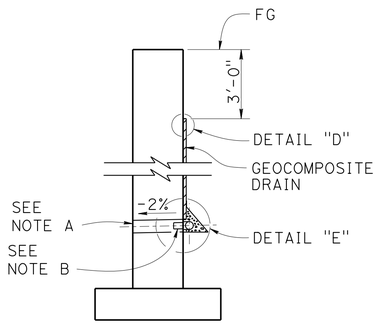

WALL SECTION

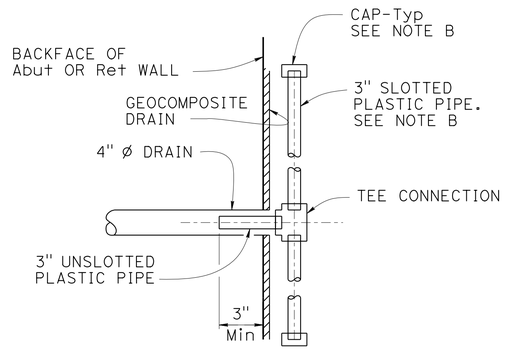

SECTION K-K

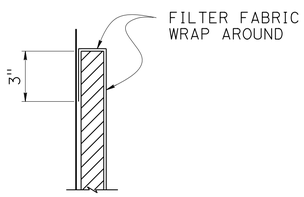

DETAIL "D"

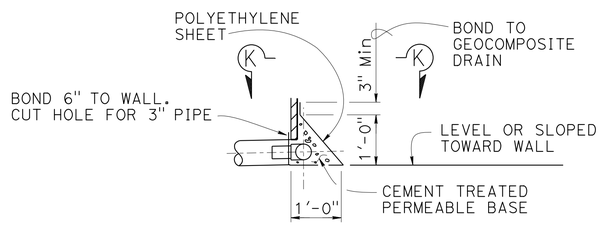

DETAIL "E"

WEEP HOLE AND GEOCOMPOSITE DRAIN

NO SCALE

NOTES:

A. 4" Ø drains at intermediate sag points and at 25'-0" center to center. For walls adjacent to sidewalks or curbs, provide 4" Ø cast iron or asbestos cement pipe under the sidewalk to discharge through curb face. Exposed wall drains shall be located 3" ± above finished grade.

B. Geocomposite drain, cement treated permeable base, and 3" Ø slotted plastic pipe continuous behind retaining wall or abutment. Cap ends of pipe. Provide "Tee" connection at each 4" Ø drain.

C. Connect the low end of plastic pipe to the main outlet pipe as applicable.

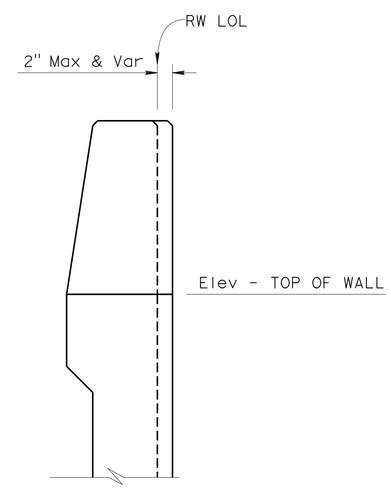

TYPE 736A Mod B

NO SCALE

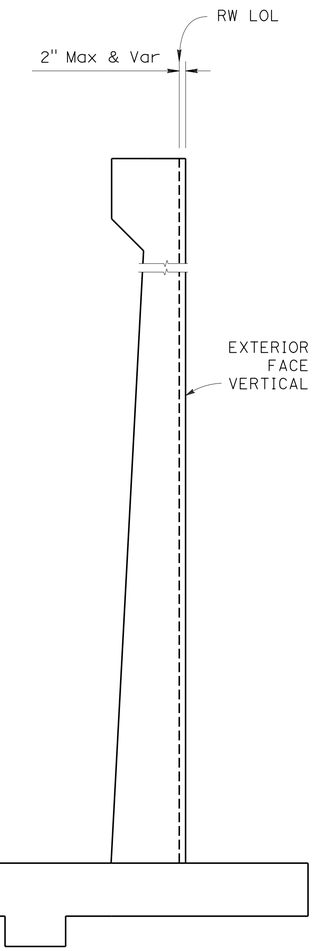

RETAINING WALL TYPE 1 (CASE 1) Mod

NO SCALE

DESIGN	BY Yeo Yoon	CHECKED Shervin Pahlavan	
DETAILS	BY Loren Goldthwait	CHECKED Shervin Pahlavan	
QUANTITIES	BY G. Reyes-Gutierrez	CHECKED John Radu	

STATE OF CALIFORNIA
DEPARTMENT OF TRANSPORTATION

DIVISION OF ENGINEERING SERVICES
STRUCTURE DESIGN
DESIGN BRANCH 11

BRIDGE NO. RW 80
POST MILE 1.38

RETAINING WALL 80
RETAINING WALL DETAILS

STRUCTURES DESIGN DETAIL SHEET (ENGLISH) (REV. 09-01-10)

ORIGINAL SCALE IN INCHES FOR REDUCED PLANS 0 1 2 3

UNIT: 3587
PROJECT NUMBER & PHASE: 0715000160-1
CONTRACT NO.: 07-2159U4

DISREGARD PRINTS BEARING EARLIER REVISION DATES

REVISION DATES: 7-18-11 8-31-11 9-14-11 3-19-13

SHEET 4 OF 7

FILE => rw80-r-retdt.dgn

USERNAME => s125624 DATE PLOTTED => 28-JAN-2016 TIME PLOTTED => 12:26

DIST	COUNTY	ROUTE	POST MILES TOTAL PROJECT	SHEET No.	TOTAL SHEETS
07	LA,Ora	5	0.0/1.5, 44.3/44.4	1469	1622

REGISTERED CIVIL ENGINEER 3-18-15 DATE

1-25-16
PLANS APPROVAL DATE

REGISTERED PROFESSIONAL ENGINEER
WILLIAM D. KEMP
No. 55730
Exp. 12/31/16
CIVIL
STATE OF CALIFORNIA

The State of California or its officers or agents shall not be responsible for the accuracy or completeness of electronic copies of this plan sheet.

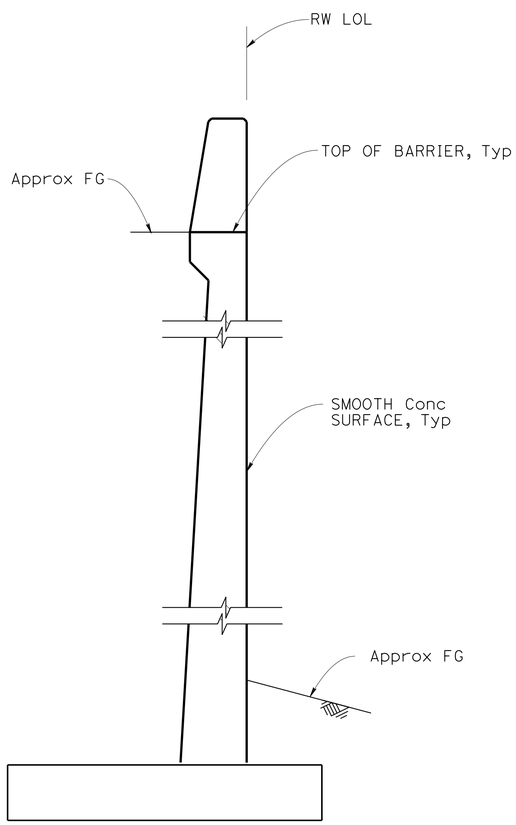

SECTION B-B

NO SCALE

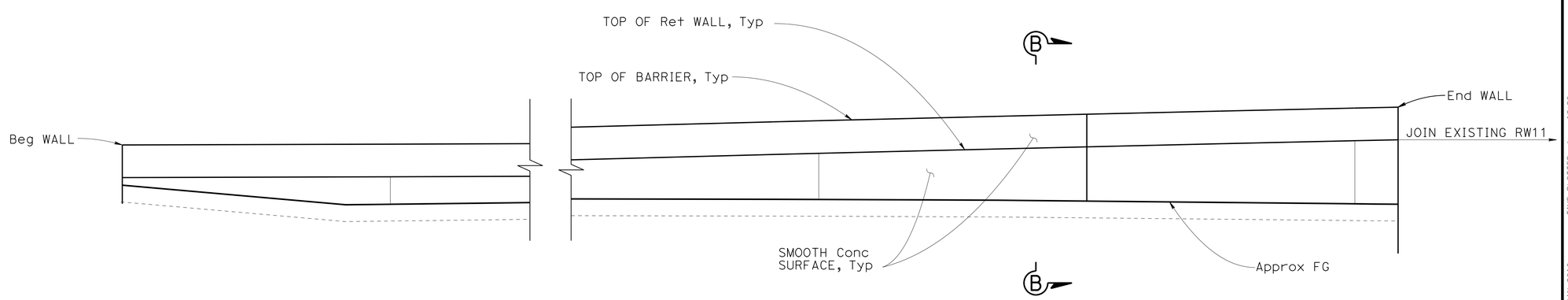

RETAINING WALL ELEVATION

3/16" = 1'-0"

DESIGN	BY Javier Chavez	CHECKED Iassac Tasabia	
DETAILS	BY Isaac Tasabia	CHECKED Iassac Tasabia	
QUANTITIES	BY G. Reyes-Gutierrez	CHECKED John Radu	

STATE OF CALIFORNIA
DEPARTMENT OF TRANSPORTATION

DIVISION OF ENGINEERING SERVICES
STRUCTURE DESIGN
DESIGN BRANCH 11

BRIDGE NO. RW 80
POST MILE 1.38

RETAINING WALL 80
ARCHITECTURAL TREATMENT

STRUCTURES DESIGN DETAIL SHEET (ENGLISH) (REV. 09-01-10)

ORIGINAL SCALE IN INCHES FOR REDUCED PLANS 0 1 2 3

UNIT: 3587
PROJECT NUMBER & PHASE: 0715000160-1
CONTRACT NO.: 07-2159U4

DISREGARD PRINTS BEARING EARLIER REVISION DATES

REVISION DATES: 7-19-11 3-18-13 5-10-13 8-05-13

SHEET 5 OF 7

FILE => rw80-u-arch.dgn

USERNAME => s125624 DATE PLOTTED => 28-JAN-2016 TIME PLOTTED => 12:26

DIST	COUNTY	ROUTE	POST MILES TOTAL PROJECT	SHEET No.	TOTAL SHEETS
07	LA,Ora	5	0.0/1.5, 44.3/44.4	1470	1622

William Kemp 3-18-15
REGISTERED CIVIL ENGINEER DATE

1-25-16
PLANS APPROVAL DATE

REGISTERED PROFESSIONAL ENGINEER
William D. Kemp
No. 55730
Exp. 12/31/16
CIVIL
STATE OF CALIFORNIA

The State of California or its officers or agents shall not be responsible for the accuracy or completeness of electronic copies of this plan sheet.

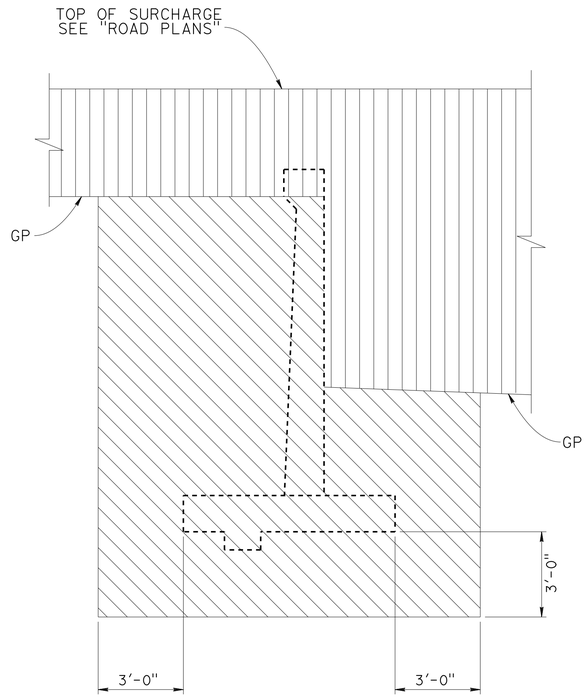

EXCAVATION

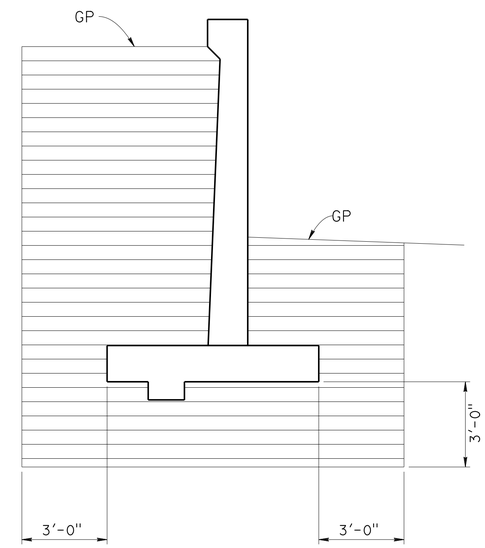

BACKFILL

LEGEND:

STRUCTURE EXCAVATION

ROADWAY EXCAVATION

STRUCTURE BACKFILL

GP - PLANNED GRADING PLANE

LIMITS OF EXCAVATION AND BACKFILL

NO SCALE

	BY	CHECKED
DESIGN	Yeo Yoon	Bill Kemp
DETAILS	Jaime Ramirez	Bill Kemp
QUANTITIES	G. Reyes-Gutierrez	John Radu

STATE OF CALIFORNIA
DEPARTMENT OF TRANSPORTATION

DIVISION OF ENGINEERING SERVICES
STRUCTURE DESIGN
DESIGN BRANCH 11

BRIDGE NO. RW 80
POST MILE 1.37

RETAINING WALL 80
LIMITS OF EXCAVATION AND BACKFILL

STRUCTURES DESIGN DETAIL SHEET (ENGLISH) (REV. 09-01-10)

ORIGINAL SCALE IN INCHES FOR REDUCED PLANS 0 1 2 3

UNIT: 3587
PROJECT NUMBER & PHASE: 0715000160-1
CONTRACT NO.: 07-2159u4

DISREGARD PRINTS BEARING EARLIER REVISION DATES

REVISION DATES: 5-20-13 6-03-13

SHEET 6 OF 7

FILE => rw80-u-exc.dgn

USERNAME => s125624 DATE PLOTTED => 28-JAN-2016 TIME PLOTTED => 12:26

DIST	COUNTY	ROUTE	POST MILES TOTAL PROJECT	SHEET No.	TOTAL SHEETS
07	LA,Ora	5	0.0/1.5, 44.3/44.4	1471	1622

REGISTERED CIVIL ENGINEER 05/20/15 DATE

1-25-16
PLANS APPROVAL DATE

URS CORPORATION
2020 EAST FIRST STREET, SUITE 400
SANTA ANA, CA 92705

The State of California or its officers or agents shall not be responsible for the accuracy or completeness of electronic copies of this plan sheet.

REGISTERED PROFESSIONAL ENGINEER MICHAEL G. SMITH No. 2229 Exp. 03/31/16 GEOTECHNICAL STATE OF CALIFORNIA

1-This LOTB sheet was prepared in accordance with the Caltrans Soil & Rock Logging, Classification, & Presentation Manual (2010 Edition).

2-For protection of underground utility lines, hand-auger was used to remove top 5 to 10 feet of subsurface material for exploratory borings and Cone Penetration Testings.

3-2.5" to 1.4" blow counts conversion factors for fine-grain and coarse-grain soils have been 0.8 and 0.55, respectively.

BENCH MARK

GPS 0887
ELEVATION 65.915 FT
FD 2-1/2 CADT DISK IN CONC. CURB
FLUSH, STAMPED "LA-5-1.0, 1995"
LOCATED 90' N OF THE SOUTH SIDE
FIRESTONE BLVD 0.2 MI SE OF VALLEY VIEW
NORTHING 542395.636
EASTING 1997613.893
DATUM NAVD88

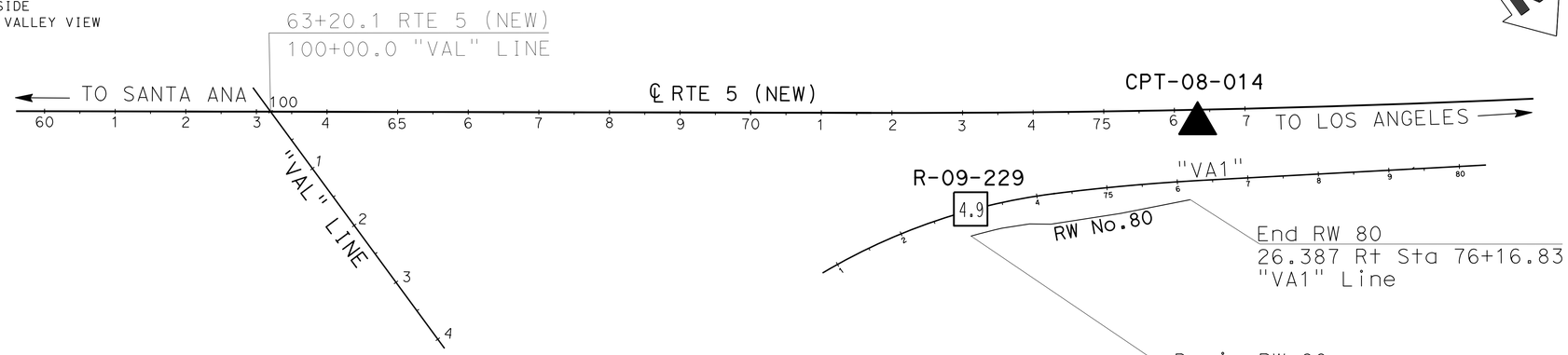

PLAN

SCALE 1"=100'

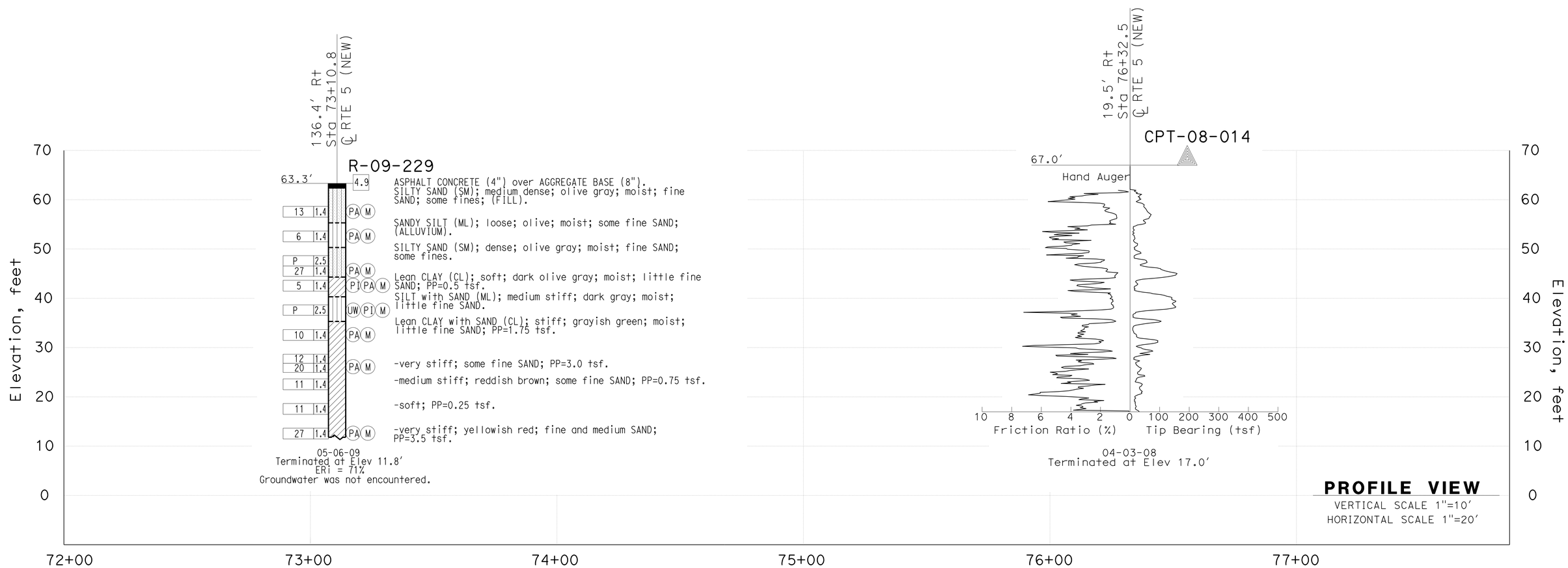

PROFILE VIEW

VERTICAL SCALE 1"=10'
HORIZONTAL SCALE 1"=20'

F.MOTAMED DESIGN OVERSIGHT	DRAWN BY	T.PANAH	EJ.JEON/P.MCDONALD FIELD INVESTIGATION BY:	PREPARED FOR THE STATE OF CALIFORNIA DEPARTMENT OF TRANSPORTATION	M.G. SMITH PROJECT ENGINEER	BRIDGE NO. RW 80 POST MILES 1.37
05/20/15 SIGN OFF DATE	CHECKED BY	A.GHAZINOOR/L.KHALKHALI	DATE: 04/03/08 - 05/06/09			

RETAINING WALL NO. 80

LOG OF TEST BORINGS SHEET 1 OF 1

GS CIVIL LOG OF TEST BORINGS SHEET (ENGLISH) (REV. 03/14/12)

ORIGINAL SCALE IN INCHES FOR REDUCED PLANS 0 1 2 3

UNIT: 3658
PROJECT NUMBER & PHASE: 07150001601 CONTRACT NO.: 07-2159U4

DISREGARD PRINTS BEARING EARLIER REVISION DATES → REVISION DATES 5/12/15 SHEET 7 OF 7

FILE => rw80-v-lotb.dgn

USERNAME => s125624 DATE PLOTTED => 28-JAN-2016 TIME PLOTTED => 12:26

DIST	COUNTY	ROUTE	POST MILES TOTAL PROJECT	SHEET No.	TOTAL SHEETS
07	LA,Ora	5	0.0/1.5, 44.3/44.4	1472	1622

REGISTERED CIVIL ENGINEER — DATE 3-18-15

1-25-16
PLANS APPROVAL DATE

REGISTERED PROFESSIONAL ENGINEER — DARYOUSH TAVATLI — No. 56183 — Exp. 12-31-16 — CIVIL — STATE OF CALIFORNIA

The State of California or its officers or agents shall not be responsible for the accuracy or completeness of electronic copies of this plan sheet.

QUANTITIES

STRUCTURE EXCAVATION (RETAINING WALL)	106	CY
STRUCTURE BACKFILL (RETAINING WALL)	90	CY
STRUCTURAL CONCRETE, RETAINING WALL	15	CY
ARCHITECTURAL TREATMENT (SPLIT SLATE)	76	SQFT
BAR REINFORCING STEEL (RETAINING WALL)	1,850	LB
CONCRETE BARRIER (TYPE 736A MODIFIED)	25	LF

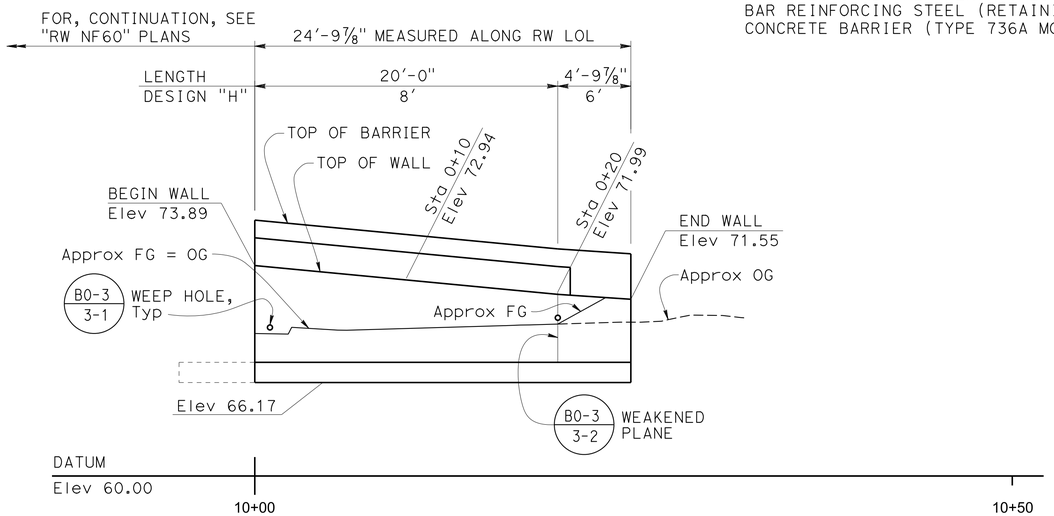

DEVELOPED ELEVATION

1" = 5'-0"

INDEX TO PLANS

SHEET No.	TITLE
1	GENERAL PLAN
2	RETAINING WALL DETAILS
3	LIMITS OF EXCAVATION AND BACKFILL
4	ARCHITECTURAL TREATMENT DETAILS
5	LOG OF TEST BORINGS SHEET 1 OF 1

STANDARD PLANS DATED 2010

A10A	ABBREVIATIONS (SHEET 1 OF 2)
RSP A10B	ABBREVIATIONS (SHEET 2 OF 2)
A10C	LINES AND SYMBOLS (SHEET 1 OF 3)
A10D	LINES AND SYMBOLS (SHEET 2 OF 3)
A10E	LINES AND SYMBOLS (SHEET 3 OF 3)
RSP A10F	LEGEND - SOIL (SHEET 1 OF 2)
RSP A10G	LEGEND - SOIL (SHEET 2 OF 2)
A10H	LEGEND - ROCK
A62B	LIMITS OF PAYMENT FOR EXCAVATION AND BACKFILL- BRIDGE SURCHARGE AND WALL
B0-3	BRIDGE DETAILS
RSP B3-1A	RETAINING WALL TYPE 1 (CASE 1)
RSP B3-5	RETAINING WALL DETAILS NO. 1
RSP B11-56	CONCRETE BARRIER TYPE 736

STANDARD PLAN SHEET No.
DETAIL No.

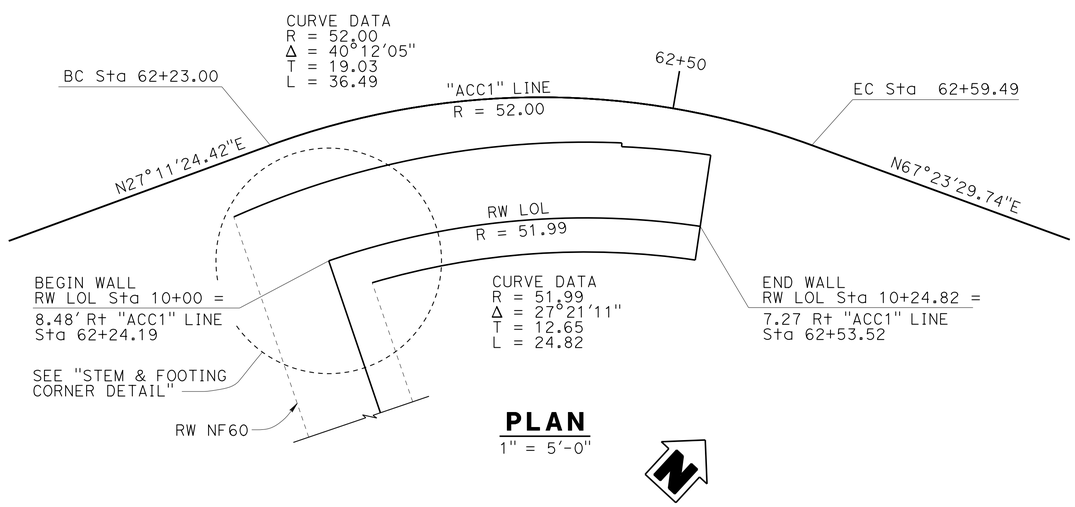

PLAN

1" = 5'-0"

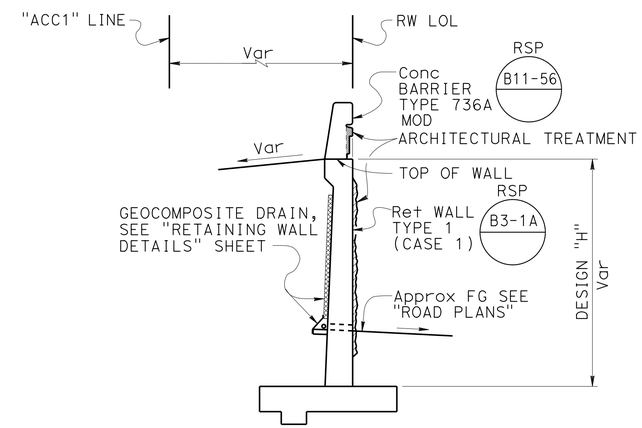

TYPICAL SECTION

NO SCALE

Ramin Rashedi 3-18-15 DESIGN ENGINEER	DESIGN	BY Yeo Yoon	CHECKED Daryoush Tavatli	LOAD & RESISTANCE FACTOR DESIGN	LIVE LOADING: HL93 W/"LOW-BOY"; PERMIT DESIGN VEHICLE
	DETAILS	BY Pauline Tong	CHECKED Daryoush Tavatli	LAYOUT: BY Yeo Yoon	CHECKED Daryoush Tavatli
	QUANTITIES	BY Daryoush Tavatli	CHECKED Christine Chan	SPECIFICATIONS: BY X. Li	PLANS AND SPECS COMPARED X. Li

ORIGINAL SCALE IN INCHES FOR REDUCED PLANS 0 1 2 3

STATE OF CALIFORNIA
DEPARTMENT OF TRANSPORTATION

DIVISION OF ENGINEERING SERVICES
STRUCTURE DESIGN
DESIGN BRANCH 11

BRIDGE NO. RW AC62
POST MILE 0.31

RETAINING WALL AC62
GENERAL PLAN

UNIT: 3587
PROJECT NUMBER & PHASE: 0715000160-1
CONTRACT NO.: 07-2159u4

DISREGARD PRINTS BEARING EARLIER REVISION DATES

REVISION DATES: 10-25-11 | 08-24-12 | 3-24-13 | 8-01-13

SHEET 1 OF 5

STRUCTURES DESIGN GENERAL PLAN SHEET (ENGLISH) (REV.09-01-10)

FILE => rwac62-a-gp.dgn

USERNAME => s125624 DATE PLOTTED => 28-JAN-2016 TIME PLOTTED => 12:26

DIST	COUNTY	ROUTE	POST MILES TOTAL PROJECT	SHEET No.	TOTAL SHEETS
07	LA,Ora	5	0.0/1.5, 44.3/44.4	1473	1622

REGISTERED CIVIL ENGINEER 3-18-15 DATE

1-25-16
PLANS APPROVAL DATE

REGISTERED PROFESSIONAL ENGINEER DARYOUSH TAVATLI No. 56183 Exp. 12-31-16 CIVIL STATE OF CALIFORNIA

The State of California or its officers or agents shall not be responsible for the accuracy or completeness of electronic copies of this plan sheet.

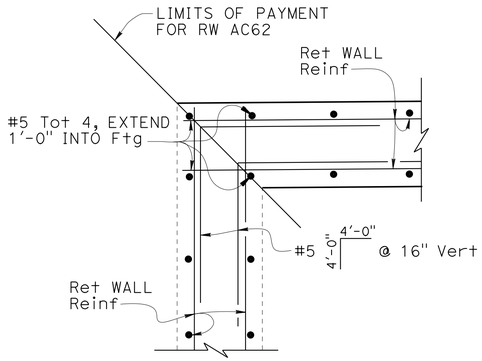

STEM CORNER DETAIL

NO SCALE

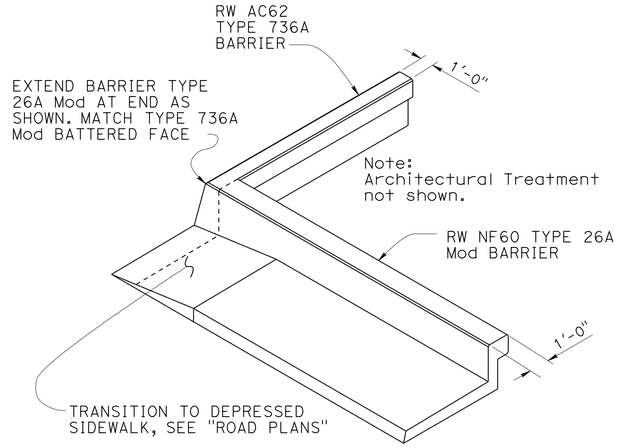

BARRIER TRANSITION DETAIL

NO SCALE

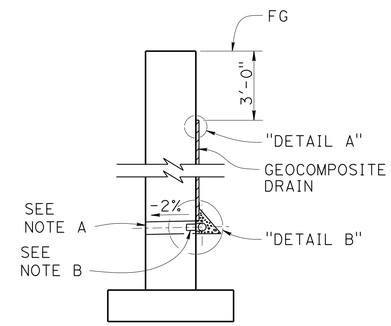

WALL SECTION

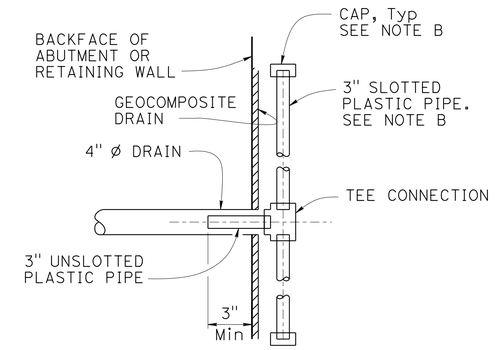

SECTION A-A

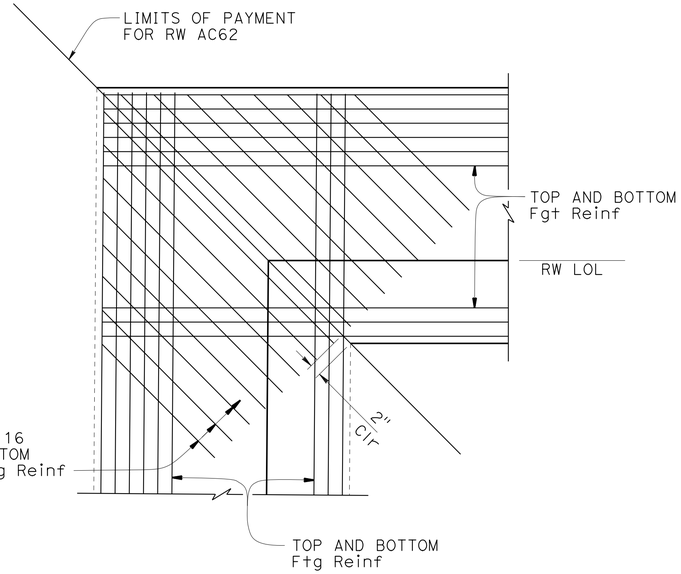

FOOTING CORNER DETAIL

NO SCALE

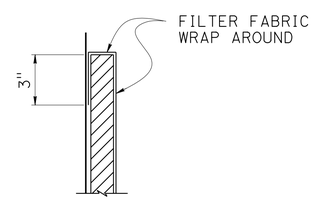

DETAIL A

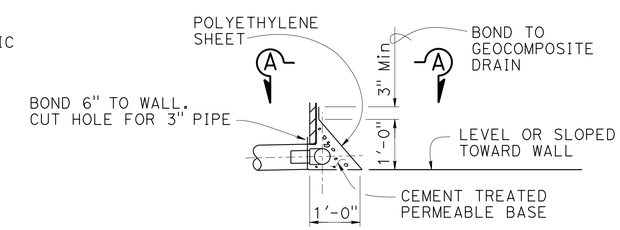

DETAIL B

WEEP HOLE AND GEOCOMPOSITE DRAIN

NO SCALE

NOTES:

A. 4" Ø drains at intermediate sag points and at 25'-0" center to center. For walls adjacent to sidewalks or curbs, provide 4" Ø cast iron or asbestos cement pipe under the sidewalk to discharge through curb face. Exposed wall drains shall be located 3" ± above finished grade.

B. Geocomposite drain, cement treated permeable base, and 3" Ø slotted plastic pipe continuous behind retaining wall or abutment. Cap ends of pipe. Provide "Tee" connection at each 4" Ø drain.

C. Connect the low end of plastic pipe to the main outlet pipe as applicable.

	BY	CHECKED
DESIGN	Yeo Yoon	Daryoush Tavatli
DETAILS	Pauline Tong	Daryoush Tavatli
QUANTITIES	Daryoush Tavatli	Christine Chan

STATE OF CALIFORNIA
DEPARTMENT OF TRANSPORTATION

DIVISION OF ENGINEERING SERVICES
STRUCTURE DESIGN
DESIGN BRANCH 11

BRIDGE NO. RW AC62
POST MILE 0.31

RETAINING WALL AC62
RETAINING WALL DETAILS

STRUCTURES DESIGN DETAIL SHEET (ENGLISH) (REV. 09-01-10)

ORIGINAL SCALE IN INCHES FOR REDUCED PLANS 0 1 2 3

UNIT: 3587
PROJECT NUMBER & PHASE: 0715000160-1
CONTRACT NO.: 07-2159u4

DISREGARD PRINTS BEARING EARLIER REVISION DATES

REVISION DATES 7-14-11 10-04-11 3-21-13 8-01-13

SHEET 2 OF 5

FILE => rwac62-b-retdt.dgn

USERNAME => s125624 DATE PLOTTED => 28-JAN-2016 TIME PLOTTED => 12:26

DIST	COUNTY	ROUTE	POST MILES TOTAL PROJECT	SHEET No.	TOTAL SHEETS
07	LA,Ora	5	0.0/1.5, 44.3/44.4	1474	1622

REGISTERED CIVIL ENGINEER 3-18-15 DATE

1-25-16
PLANS APPROVAL DATE

REGISTERED PROFESSIONAL ENGINEER Daryoush Tavatli No. 56183 Exp. 12/31/16 CIVIL STATE OF CALIFORNIA

The State of California or its officers or agents shall not be responsible for the accuracy or completeness of electronic copies of this plan sheet.

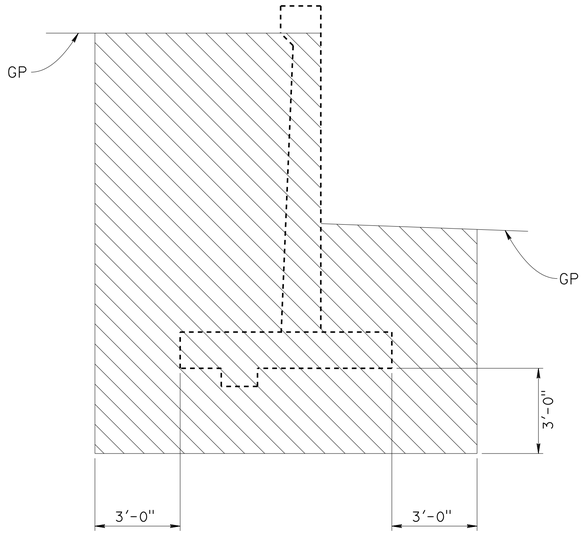

EXCAVATION

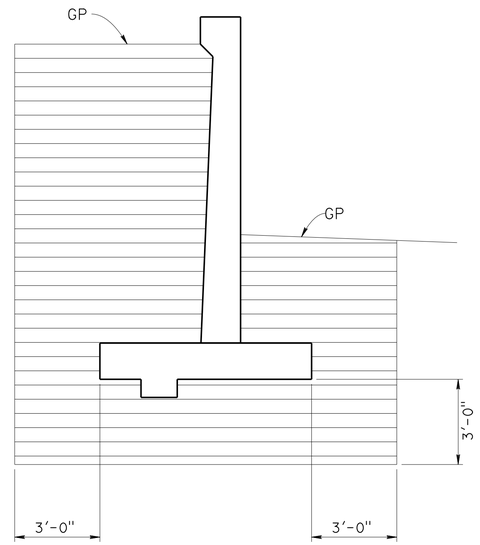

BACKFILL

LEGEND:

STRUCTURE EXCAVATION

STRUCTURE BACKFILL

GP - PLANNED GRADING PLANE

LIMITS OF EXCAVATION AND BACKFILL

NO SCALE

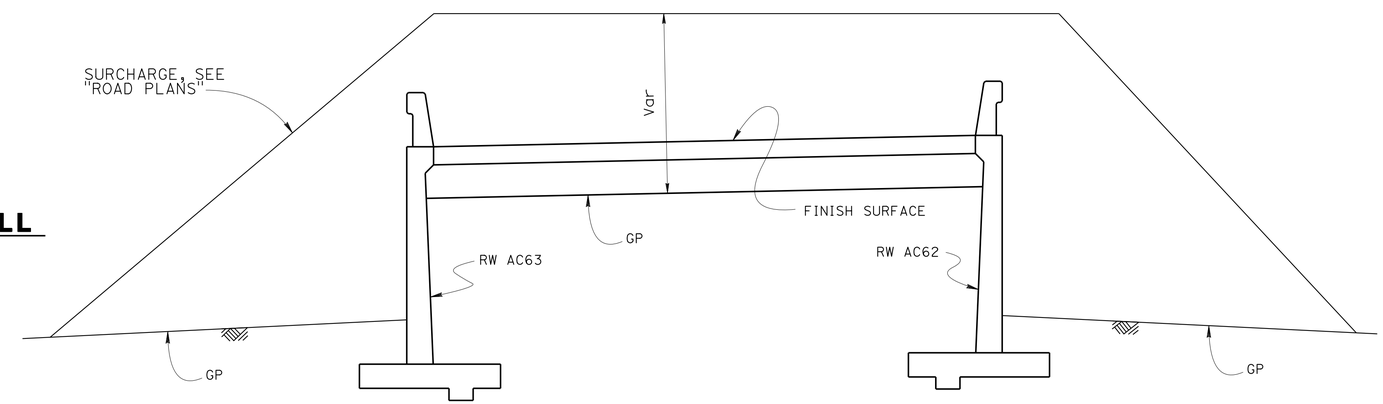

EMBANKMENT SURCHARGE

NO SCALE

DESIGN	BY Yeo Yoon	CHECKED Daryoush Tavatli	
DETAILS	BY Jaime Ramirez	CHECKED Daryoush Tavatli	
QUANTITIES	BY Daryoush Tavatli	CHECKED Christine Chan	

STATE OF CALIFORNIA
DEPARTMENT OF TRANSPORTATION

DIVISION OF ENGINEERING SERVICES
STRUCTURE DESIGN
DESIGN BRANCH 11

BRIDGE NO. RW AC62
POST MILE 0.31

RETAINING WALL AC62
LIMITS OF EXCAVATION AND BACKFILL

STRUCTURES DESIGN DETAIL SHEET (ENGLISH) (REV. 09-01-10)

ORIGINAL SCALE IN INCHES FOR REDUCED PLANS 0 1 2 3

UNIT: 3587
PROJECT NUMBER & PHASE: 0715000160-1
CONTRACT NO.: 07-2159U4

DISREGARD PRINTS BEARING EARLIER REVISION DATES

REVISION DATES: 4-26-13 6-03-13 8-01-13

SHEET 3 OF 5

FILE => rwac62-h-exc.dgn

USERNAME => s125624 DATE PLOTTED => 28-JAN-2016 TIME PLOTTED => 12:26

DIST	COUNTY	ROUTE	POST MILES TOTAL PROJECT	SHEET No.	TOTAL SHEETS
07	LA,Ora	5	0.0/1.5, 44.3/44.4	1475	1622

REGISTERED CIVIL ENGINEER 3-18-15 DATE

1-25-16
PLANS APPROVAL DATE

REGISTERED PROFESSIONAL ENGINEER DARYOUSH TAVATLI No. 56183 Exp. 12-31-16 CIVIL STATE OF CALIFORNIA

The State of California or its officers or agents shall not be responsible for the accuracy or completeness of electronic copies of this plan sheet.

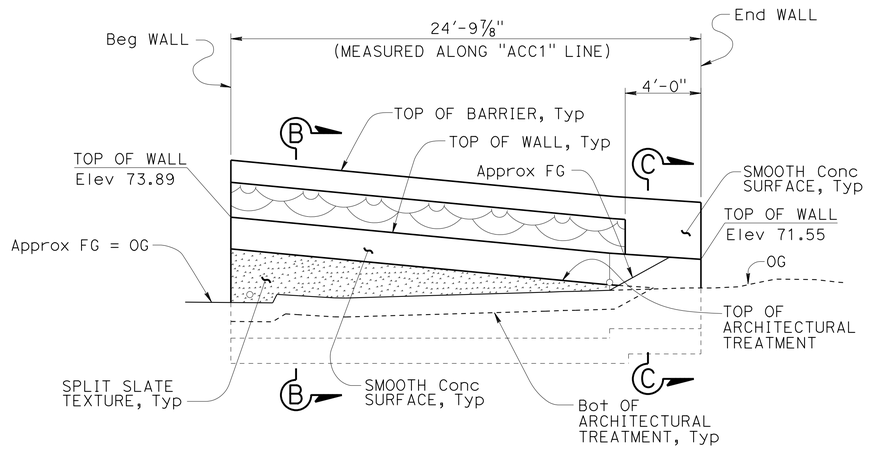

ELEVATION

1/4" = 1'-0"

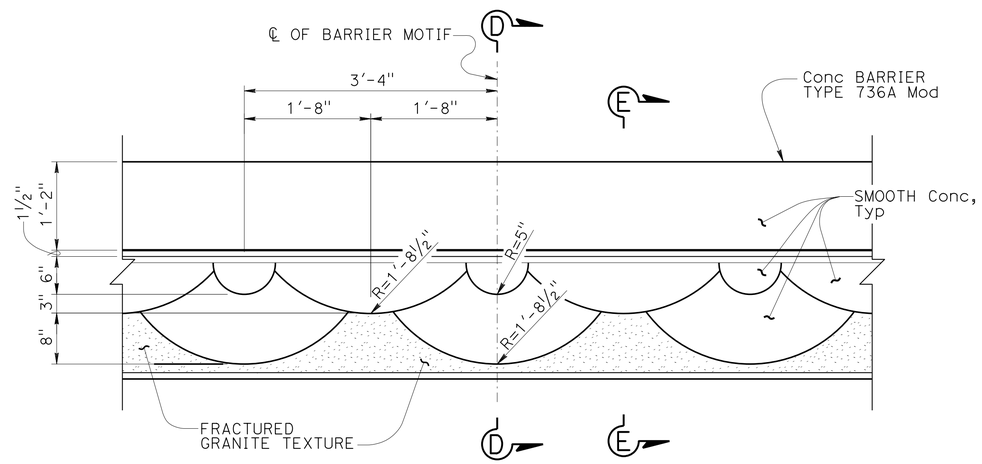

ELEVATION - BARRIER MOTIF

NO SCALE

NOTE:

All surface relief and texture shall be measured from RW LOL, Typ

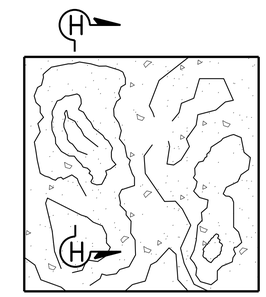

SPLIT SLATE TEXTURE

NO SCALE

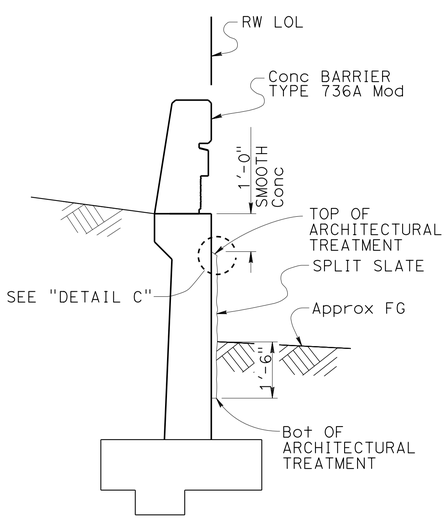

SECTION B-B

NO SCALE

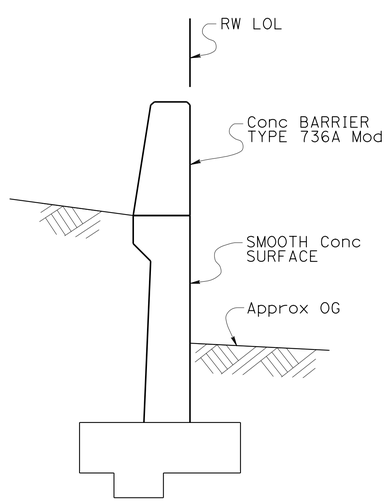

SECTION C-C

NO SCALE

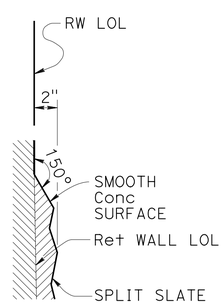

DETAIL C

NO SCALE

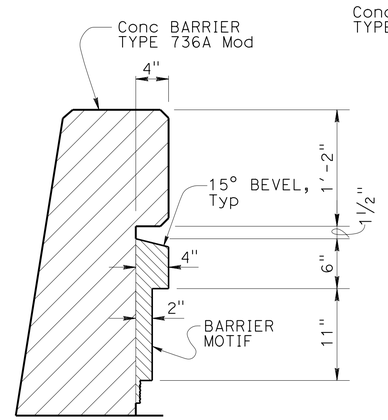

SECTION D-D

1" = 1'-0"

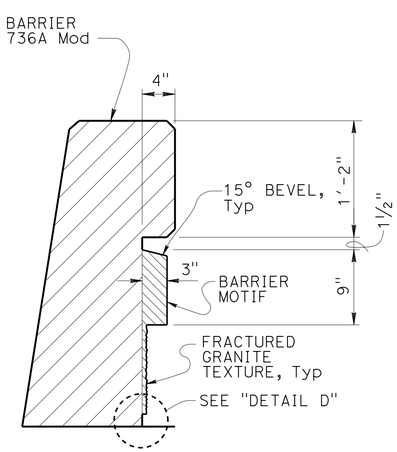

SECTION E-E

1" = 1'-0"

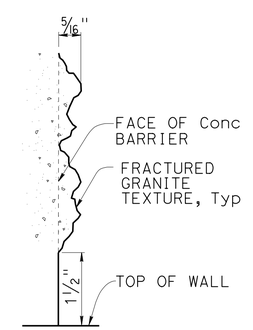

DETAIL D

NO SCALE

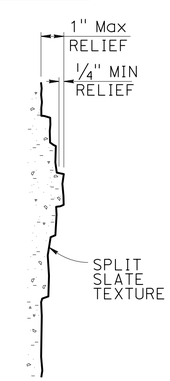

SECTION H-H

NO SCALE

DESIGN	BY H. Javier Chavez	CHECKED Issac Tasabia	
DETAILS	BY Anthony Valdez	CHECKED Daryoush Tavatli	
QUANTITIES	BY Daryoush Tavatli	CHECKED Christine Chan	

STATE OF CALIFORNIA
DEPARTMENT OF TRANSPORTATION

DIVISION OF ENGINEERING SERVICES
STRUCTURE DESIGN
DESIGN BRANCH 11

BRIDGE NO. RW AC62
POST MILE 0.31

RETAINING WALL AC62
ARCHITECTURAL TREATMENT DETAILS

STRUCTURES DESIGN DETAIL SHEET (ENGLISH) (REV. 09-01-10)

ORIGINAL SCALE IN INCHES FOR REDUCED PLANS 0 1 2 3

UNIT: 3587
PROJECT NUMBER & PHASE: 0715000160-1
CONTRACT NO.: 07-2159U4

DISREGARD PRINTS BEARING EARLIER REVISION DATES

REVISION DATES 08-24-12 3-27-13 8-01-13

SHEET 4 OF 5

FILE => rwac62-k-arch.dgn

USERNAME => s125624 DATE PLOTTED => 28-JAN-2016 TIME PLOTTED => 12:26

BENCH MARK

GPS 0887
ELEVATION 65.915 FT
FD 2-1/2 CADT DISK IN CONC. CURB
FLUSH, STAMPED "LA-5-1.0, 1995"
LOCATED 90' N OF THE SOUTH SIDE
FIRESTONE BLVD 0.2 MI SE OF VALLEY VIEW
NORTHING 542395.636
EASTING 1997613.893
DATUM NAVD88

DIST	COUNTY	ROUTE	POST MILES TOTAL PROJECT	SHEET No.	TOTAL SHEETS
07	LA,Ora	5	0.0/1.5, 44.3/44.4	1476	1622

REGISTERED CIVIL ENGINEER — DATE 05/20/15

1-25-16
PLANS APPROVAL DATE

URS CORPORATION
2020 EAST FIRST STREET, SUITE 400
SANTA ANA, CA 92705

The State of California or its officers or agents shall not be responsible for the accuracy or completeness of electronic copies of this plan sheet.

REGISTERED PROFESSIONAL ENGINEER — MICHAEL G. SMITH No. 2229 Exp. 03/31/16 GEOTECHNICAL — STATE OF CALIFORNIA

1-This LOTB sheet was prepared in accordance with the Caltrans Soil & Rock Logging, Classification, & Presentation Manual (2010 Edition).

2-For protection of underground utility lines, hand-auger was used to remove top 5 to 10 feet of subsurface material for exploratory borings and Cone Penetration Testings.

3-2.5" to 1.4" blow counts conversion factors for fine-grain and coarse-grain soils have been 0.8 and 0.55, respectively.

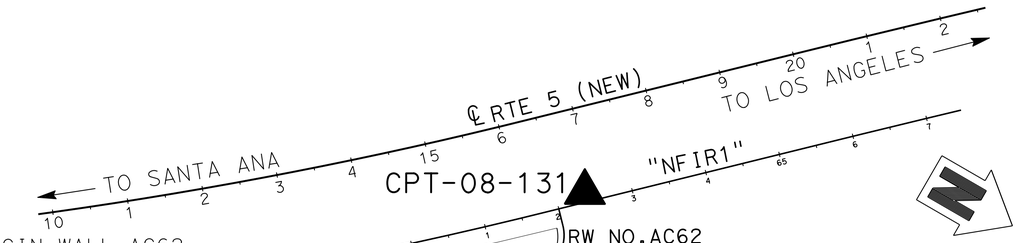

PLAN
SCALE 1"=100'

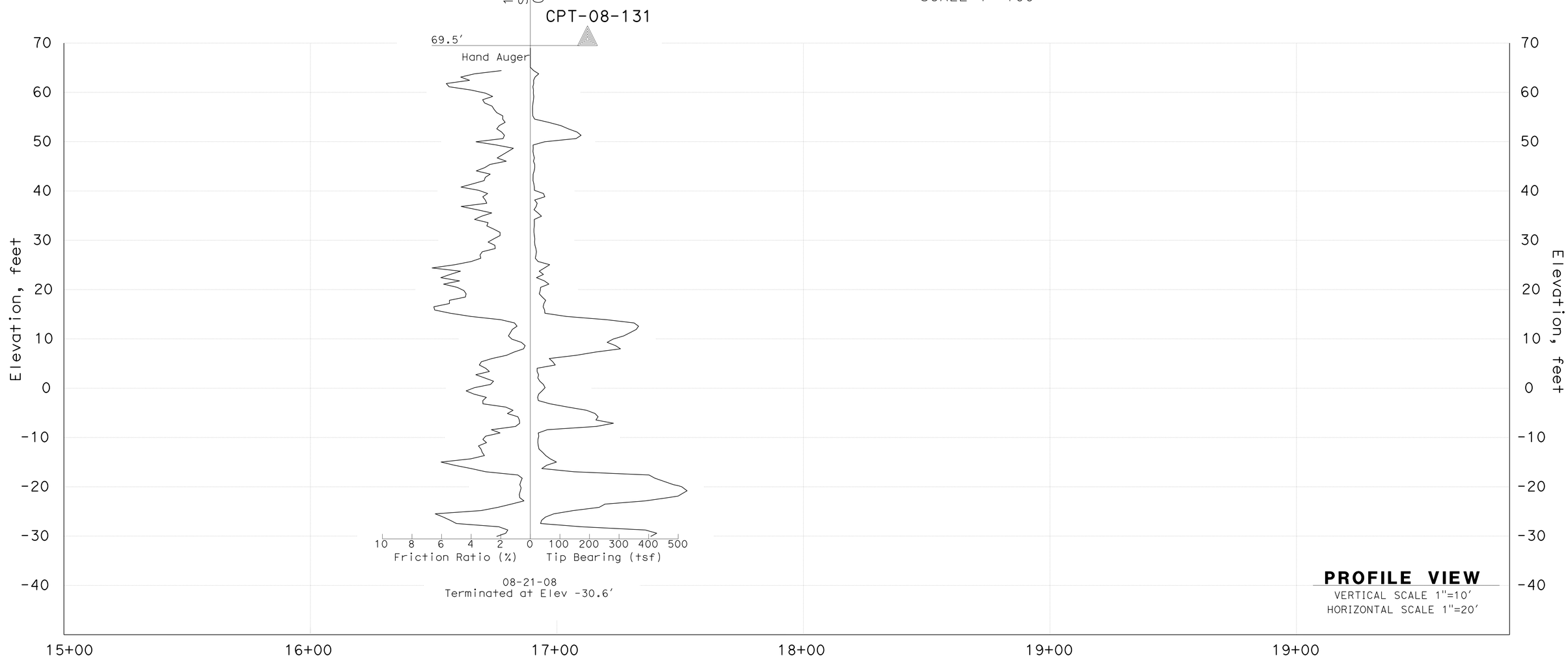

PROFILE VIEW
VERTICAL SCALE 1"=10'
HORIZONTAL SCALE 1"=20'

F.MOTAMED — DESIGN OVERSIGHT	DRAWN BY	T.PANAH	P.MCDONALD — FIELD INVESTIGATION BY:
05/20/15 — SIGN OFF DATE	CHECKED BY	A.GHAZINOOR/L.KHALKHALI	DATE: 08/21/08

PREPARED FOR THE STATE OF CALIFORNIA DEPARTMENT OF TRANSPORTATION

M.G. SMITH — PROJECT ENGINEER

BRIDGE NO. RW AC62
POST MILES 0.31

RETAINING WALL NO. AC62
LOG OF TEST BORINGS SHEET 1 OF 1

GS CIVIL LOG OF TEST BORINGS SHEET (ENGLISH) (REV. 03/14/12)

ORIGINAL SCALE IN INCHES FOR REDUCED PLANS 0 1 2 3

UNIT: 3658
PROJECT NUMBER & PHASE: 07150001601
CONTRACT NO.: 07-2159U4

DISREGARD PRINTS BEARING EARLIER REVISION DATES → 5/12/15

REVISION DATES | SHEET 5 | OF 5

FILE => rwac62-z-lotb.dgn

USERNAME => s12562d DATE PLOTTED => 28-JAN-2016 TIME PLOTTED => 12:26

DIST	COUNTY	ROUTE	POST MILES TOTAL PROJECT	SHEET No.	TOTAL SHEETS
07	LA,Ora	5	0.0/1.5, 44.3/44.4	1477	1622

REGISTERED CIVIL ENGINEER — DATE 3-18-15

1-25-16
PLANS APPROVAL DATE

REGISTERED PROFESSIONAL ENGINEER — Daryoush Tavatli No. 56183 Exp. 12-31-16 CIVIL — STATE OF CALIFORNIA

The State of California or its officers or agents shall not be responsible for the accuracy or completeness of electronic copies of this plan sheet.

QUANTITIES

STRUCTURE EXCAVATION (RETAINING WALL)	132	CY
STRUCTURE BACKFILL (RETAINING WALL)	114	CY
STRUCTURAL CONCRETE, RETAINING WALL	19	CY
ARCHITECTURAL TREATMENT (SPLIT SLATE)	78	SQFT
BAR REINFORCING STEEL (RETAINING WALL)	2,900	LB
CONCRETE BARRIER (TYPE 736A MODIFIED)	34	LF

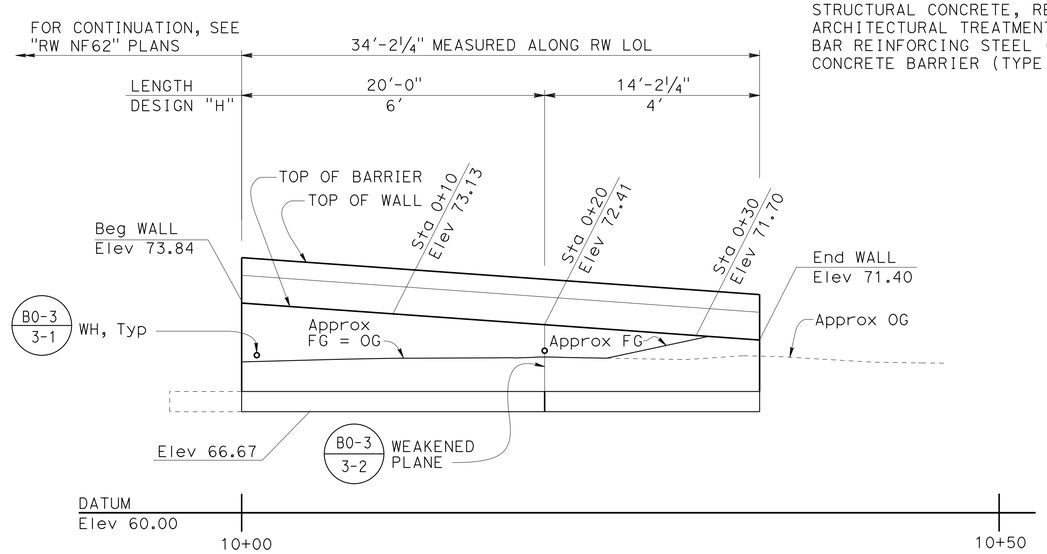

DEVELOPED MIRRORED ELEVATION

1" = 5'-0"

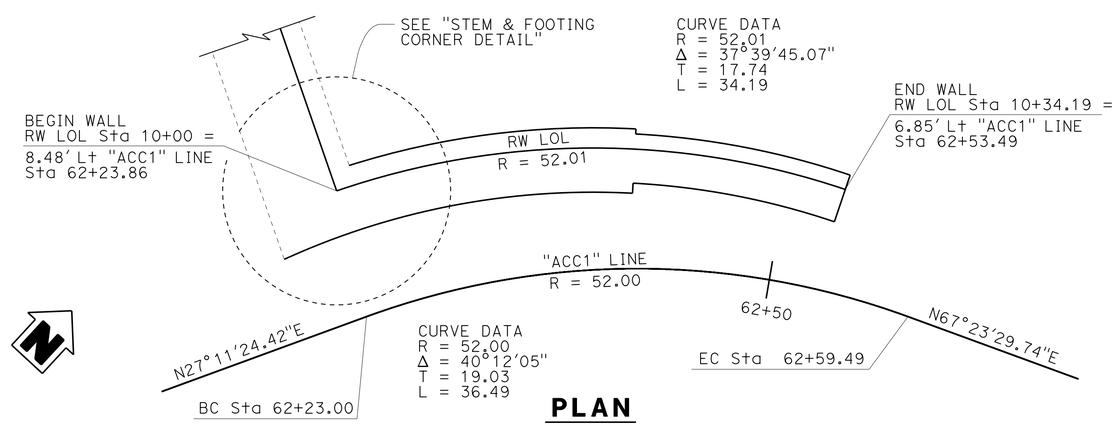

PLAN

1" = 5'-0"

INDEX TO PLANS

SHEET No.	TITLE
1	GENERAL PLAN
2	RETAINING WALL DETAILS
3	LIMITS OF EXCAVATION AND BACKFILL
4	ARCHITECTURAL TREATMENT DETAILS
5	LOG OF TEST BORINGS SHEET 1 OF 1

STANDARD PLANS DATED 2010

	A10A	ABBREVIATIONS (SHEET 1 OF 2)
RSP	A10B	ABBREVIATIONS (SHEET 2 OF 2)
	A10C	LINES AND SYMBOLS (SHEET 1 OF 3)
	A10D	LINES AND SYMBOLS (SHEET 2 OF 3)
	A10E	LINES AND SYMBOLS (SHEET 3 OF 3)
RSP	A10F	LEGEND - SOIL (SHEET 1 OF 2)
RSP	A10G	LEGEND - SOIL (SHEET 2 OF 2)
	A10H	LEGEND - ROCK
	A62B	LIMITS OF PAYMENT FOR EXCAVATION AND BACKFILL- BRIDGE SURCHARGE AND WALL
	B0-3	BRIDGE DETAILS
RSP	B3-1A	RETAINING WALL TYPE 1 (CASE 1)
RSP	B3-5	RETAINING WALL DETAILS NO. 1
RSP	B11-56	CONCRETE BARRIER TYPE 736

STANDARD PLAN SHEET No.

DETAIL No.

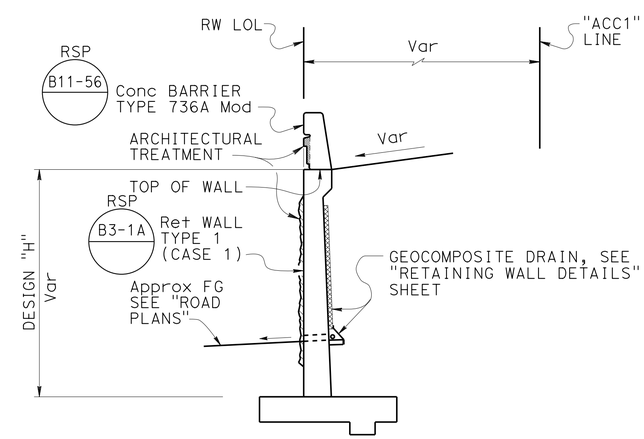

TYPICAL SECTION

No Scale

Ramin Rashedi 3-18-15 DESIGN ENGINEER	DESIGN	BY Yeo Yoon	CHECKED Daryoush Tavatli	LOAD & RESISTANCE FACTOR DESIGN	LIVE LOADING: HL93 W/"LOW-BOY"; PERMIT DESIGN VEHICLE
	DETAILS	BY Pauline Tong	CHECKED Daryoush Tavatli	LAYOUT: BY Yeo Yoon	CHECKED Daryoush Tavatli
	QUANTITIES	BY Daryoush Tavatli	CHECKED Christine Chan	SPECIFICATIONS: BY X. Li	PLANS AND SPECS COMPARED X. Li

STATE OF CALIFORNIA DEPARTMENT OF TRANSPORTATION

DIVISION OF ENGINEERING SERVICES STRUCTURE DESIGN DESIGN BRANCH 11

BRIDGE NO. RW AC63 — POST MILE 0.31

RETAINING WALL AC63
GENERAL PLAN

ORIGINAL SCALE IN INCHES FOR REDUCED PLANS 0 1 2 3

UNIT: 3587
PROJECT NUMBER & PHASE: 0715000160-1 CONTRACT NO.: 07-2159u4

DISREGARD PRINTS BEARING EARLIER REVISION DATES

REVISION DATES: 3-22-11 3-21-13 6-04-13 7-25-13 — SHEET 1 OF 5

STRUCTURES DESIGN GENERAL PLAN SHEET (ENGLISH) (REV.09-01-10)

FILE => rwac63-a-gp.dgn

USERNAME => s125624 DATE PLOTTED => 28-JAN-2016 TIME PLOTTED => 12:26

DIST	COUNTY	ROUTE	POST MILES TOTAL PROJECT	SHEET No.	TOTAL SHEETS
07	LA,Ora	5	0.0/1.5, 44.3/44.4	1478	1622

Daryoush Tavatli 3-18-15
REGISTERED CIVIL ENGINEER DATE

1-25-16
PLANS APPROVAL DATE

REGISTERED PROFESSIONAL ENGINEER
Daryoush Tavatli
No. 56183
Exp. 12/31/16
CIVIL
STATE OF CALIFORNIA

The State of California or its officers or agents shall not be responsible for the accuracy or completeness of electronic copies of this plan sheet.

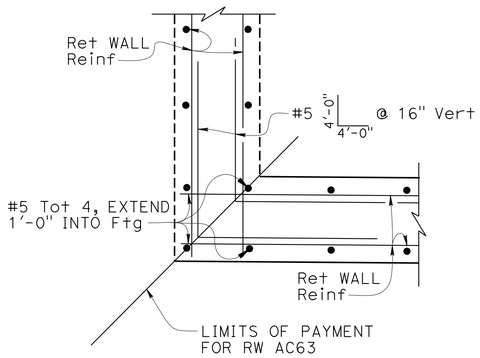

STEM CORNER DETAIL

NO SCALE

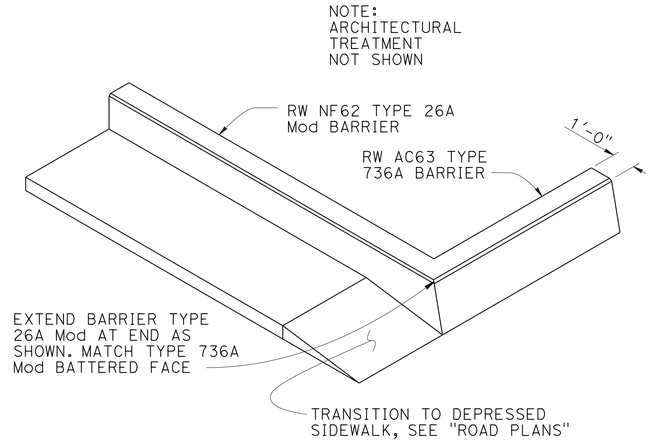

BARRIER TRANSITION DETAIL

NO SCALE

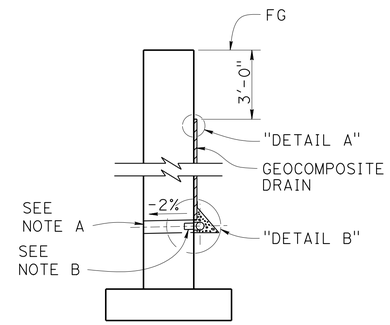

WALL SECTION

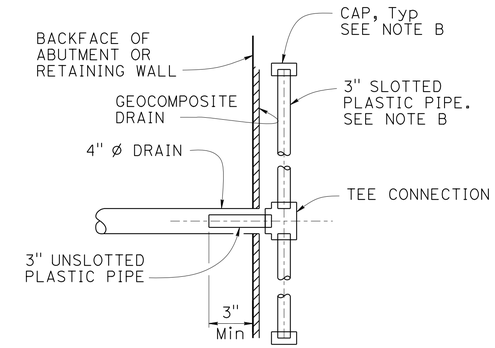

SECTION A-A

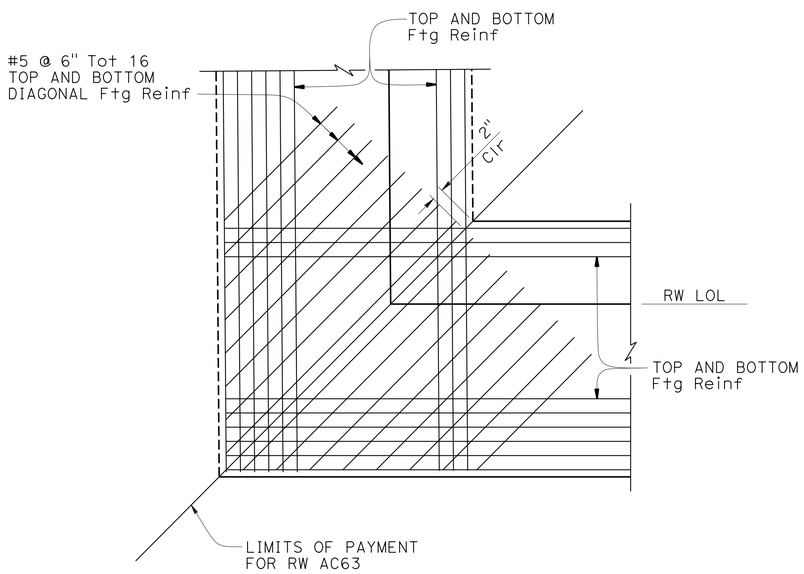

FOOTING CORNER DETAIL

NO SCALE

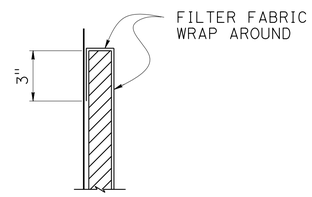

DETAIL A

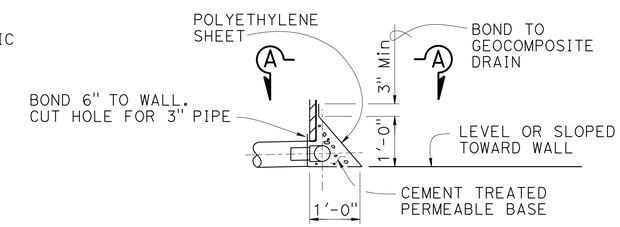

DETAIL B

WEEP HOLE AND GEOCOMPOSITE DRAIN

NO SCALE

NOTES: (GEOCOMPOSITE DRAIN)

A. 4" Ø drains at intermediate sag points and at 25'-0" center to center. For walls adjacent to sidewalks or curbs, provide 4" Ø cast iron or asbestos cement pipe under the sidewalk to discharge through curb face. Exposed wall drains shall be located 3" ± above finished grade.

B. Geocomposite drain, cement treated permeable base, and 3" Ø slotted plastic pipe continuous behind retaining wall or abutment. Cap ends of pipe. Provide "Tee" connection at each 4" Ø drain.

C. Connect the low end of plastic pipe to the main outlet pipe as applicable.

	BY	CHECKED
DESIGN	Yeo Yoon	Daryoush Tavatli
DETAILS	Pauline Tong	Daryoush Tavatli
QUANTITIES	Daryoush Tavatli	Christine Chan

STATE OF CALIFORNIA
DEPARTMENT OF TRANSPORTATION

DIVISION OF ENGINEERING SERVICES
STRUCTURE DESIGN
DESIGN BRANCH 11

BRIDGE NO. RW AC63
POST MILE 0.31

RETAINING WALL AC63
RETAINING WALL DETAILS

STRUCTURES DESIGN DETAIL SHEET (ENGLISH) (REV. 09-01-10)

ORIGINAL SCALE IN INCHES FOR REDUCED PLANS 0 1 2 3

UNIT: 3587
PROJECT NUMBER & PHASE: 0715000160-1
CONTRACT NO.: 07-2159U4

DISREGARD PRINTS BEARING EARLIER REVISION DATES

REVISION DATES: 7-14-11 5-20-13 7-25-13 5-16-13

SHEET 2 OF 5

FILE => rwac63-c-retdt.dgn

USERNAME => s125624 DATE PLOTTED => 28-JAN-2016 TIME PLOTTED => 12:26

DIST	COUNTY	ROUTE	POST MILES TOTAL PROJECT	SHEET No.	TOTAL SHEETS
07	LA,Ora	5	0.0/1.5, 44.3/44.4	1479	1622

REGISTERED CIVIL ENGINEER 3-18-15 DATE

1-25-16
PLANS APPROVAL DATE

REGISTERED PROFESSIONAL ENGINEER
Daryoush Tavatli
No. 56183
Exp. 12/31/16
CIVIL
STATE OF CALIFORNIA

The State of California or its officers or agents shall not be responsible for the accuracy or completeness of electronic copies of this plan sheet.

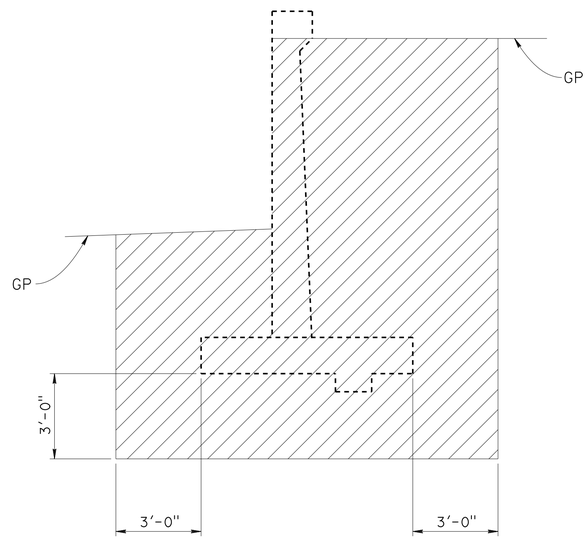

EXCAVATION

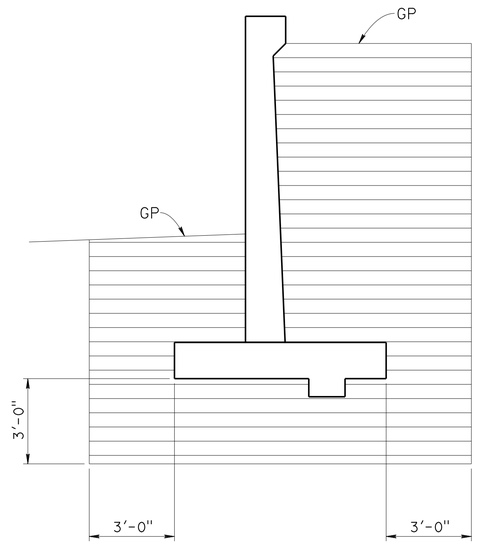

BACKFILL

LEGEND:

STRUCTURE EXCAVATION

STRUCTURE BACKFILL

GP - PLANNED GRADING PLANE

LIMITS OF EXCAVATION AND BACKFILL

NO SCALE

DESIGN	BY Yeo Yoon	CHECKED Daryoush Tavatli
DETAILS	BY Jaime Ramirez	CHECKED Daryoush Tavatli
QUANTITIES	BY Daryoush Tavatli	CHECKED Christine Chan

STATE OF CALIFORNIA
DEPARTMENT OF TRANSPORTATION

DIVISION OF ENGINEERING SERVICES
STRUCTURE DESIGN
DESIGN BRANCH 11

BRIDGE NO. RW AC63
POST MILE 0.31

RETAINING WALL AC63
LIMITS OF EXCAVATION AND BACKFILL

STRUCTURES DESIGN DETAIL SHEET (ENGLISH) (REV. 09-01-10)

ORIGINAL SCALE IN INCHES FOR REDUCED PLANS 0 1 2 3

UNIT: 3587
PROJECT NUMBER & PHASE: 0715000160-1
CONTRACT NO.: 07-2159U4

DISREGARD PRINTS BEARING EARLIER REVISION DATES

REVISION DATES: ~~4-26-13~~ 7-26-13

SHEET 3 OF 5

FILE => rwac63-h-exc.dgn

USERNAME => s125624 DATE PLOTTED => 28-JAN-2016 TIME PLOTTED => 12:26

DIST	COUNTY	ROUTE	POST MILES TOTAL PROJECT	SHEET No.	TOTAL SHEETS
07	LA,Ora	5	0.0/1.5, 44.3/44.4	1480	1622

REGISTERED CIVIL ENGINEER — DATE 3-18-15

1-25-16
PLANS APPROVAL DATE

The State of California or its officers or agents shall not be responsible for the accuracy or completeness of electronic copies of this plan sheet.

REGISTERED PROFESSIONAL ENGINEER — Daryoush Tavatli — No. 56183 — Exp. 12-31-16 — CIVIL — STATE OF CALIFORNIA

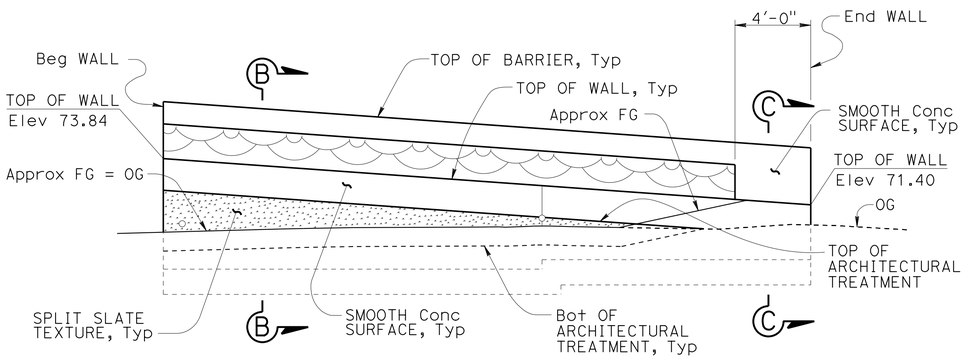

MIRROR ELEVATION

1/4" = 1'-0"

NOTE:

All surface relief and texture shall be measured from RW LOL, Typ

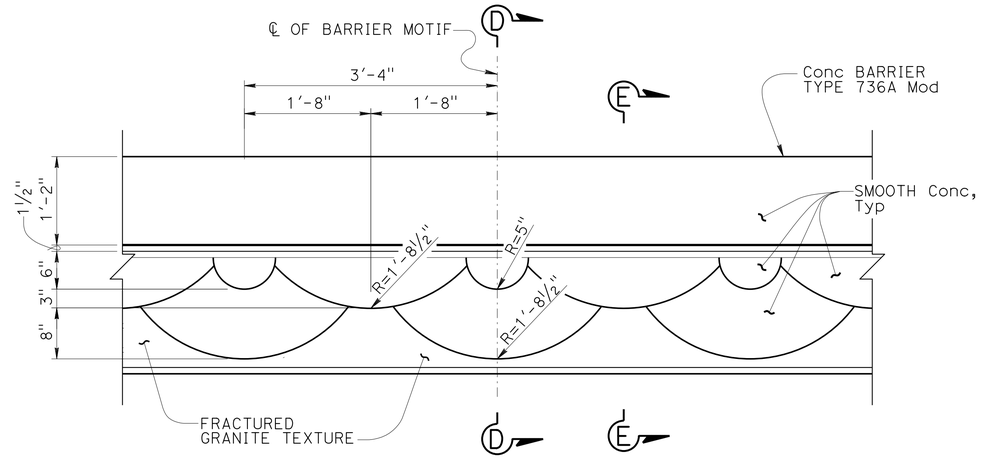

ELEVATION - BARRIER MOTIF

NO SCALE

SECTION H-H

NO SCALE

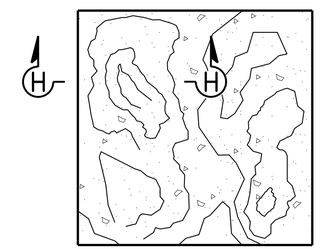

SPLIT SLATE TEXTURE

NO SCALE

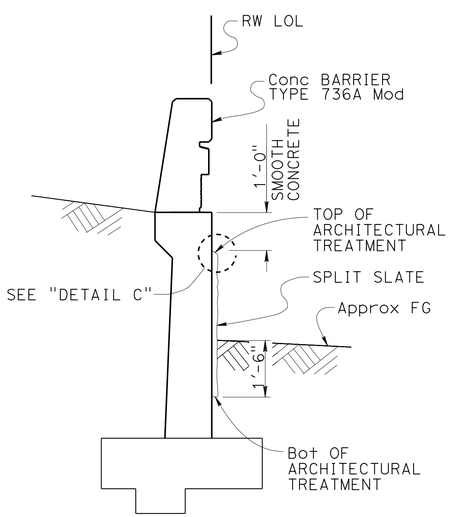

SECTION B-B

NO SCALE

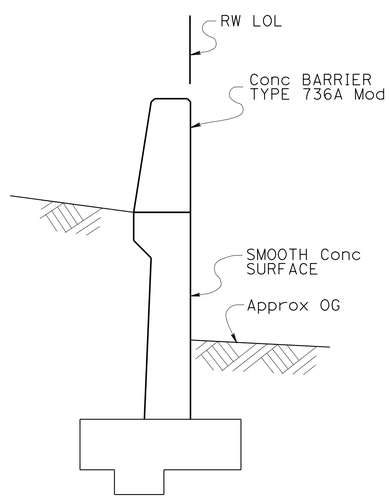

SECTION C-C

NO SCALE

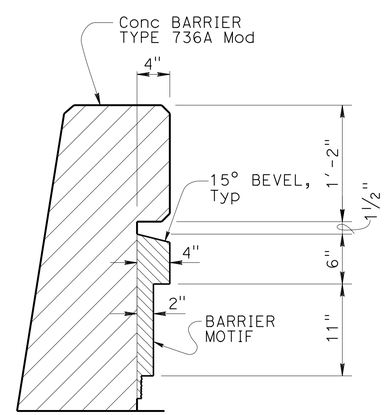

SECTION D-D

1" = 1'-0"

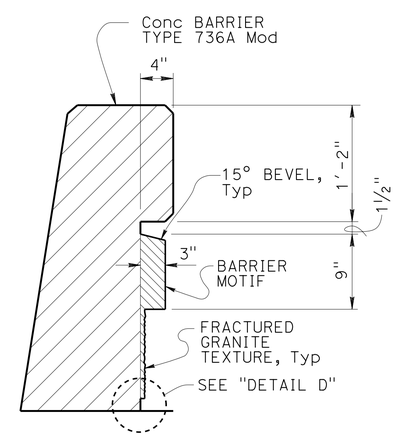

SECTION E-E

1" = 1'-0"

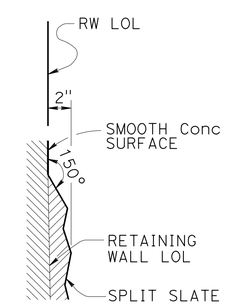

DETAIL C

NO SCALE

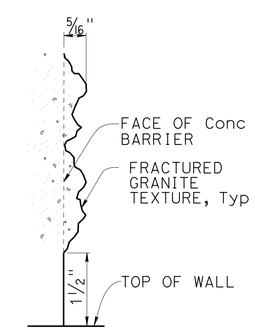

DETAIL D

NO SCALE

	BY	CHECKED
DESIGN	H. Javier Chavez	Issac Tasabia
DETAILS	Anthony Valdez	Issac Tasabia
QUANTITIES	Daryoush Tavatli	Christine Chan

STATE OF CALIFORNIA
DEPARTMENT OF TRANSPORTATION

DIVISION OF ENGINEERING SERVICES
STRUCTURE DESIGN
DESIGN BRANCH 11

BRIDGE NO. RW AC63
POST MILE 0.31

RETAINING WALL AC63
ARCHITECTURAL TREATMENT DETAILS

STRUCTURES DESIGN DETAIL SHEET (ENGLISH) (REV. 09-01-10)

ORIGINAL SCALE IN INCHES FOR REDUCED PLANS 0 1 2 3

UNIT: 3587
PROJECT NUMBER & PHASE: 0715000160-1
CONTRACT NO.: 07-2159U4

DISREGARD PRINTS BEARING EARLIER REVISION DATES

REVISION DATES: 08-24-12 3-29-13 7-26-13

SHEET 4 OF 5

FILE => rwac63-s-arch.dgn

USERNAME => s125624 DATE PLOTTED => 28-JAN-2016 TIME PLOTTED => 12:26

BENCH MARK

GPS 0887
ELEVATION 65.915 FT
FD 2-1/2 CADT DISK IN CONC. CURB
FLUSH, STAMPED "LA-5-1.0, 1995"
LOCATED 90' N OF THE SOUTH SIDE
FIRESTONE BLVD 0.2 MI SE OF VALLEY VIEW
NORTHING 542395.636
EASTING 1997613.893
DATUM NAVD88

DIST	COUNTY	ROUTE	POST MILES TOTAL PROJECT	SHEET No.	TOTAL SHEETS
07	LA,Ora	5	0.0/1.5, 44.3/44.4	1481	1622

REGISTERED CIVIL ENGINEER — DATE 05/20/15

1-25-16
PLANS APPROVAL DATE

URS CORPORATION
2020 EAST FIRST STREET, SUITE 400
SANTA ANA, CA 92705

The State of California or its officers or agents shall not be responsible for the accuracy or completeness of electronic copies of this plan sheet.

REGISTERED PROFESSIONAL ENGINEER — MICHAEL G. SMITH No. 2229 Exp. 03/31/16 GEOTECHNICAL — STATE OF CALIFORNIA

1-This LOTB sheet was prepared in accordance with the Caltrans Soil & Rock Logging, Classification, & Presentation Manual (2010 Edition).

2-For protection of underground utility lines, hand-auger was used to remove top 5 to 10 feet of subsurface material for exploratory borings and Cone Penetration Testings.

3-2.5" to 1.4" blow counts conversion factors for fine-grain and coarse-grain soils have been 0.8 and 0.55, respectively.

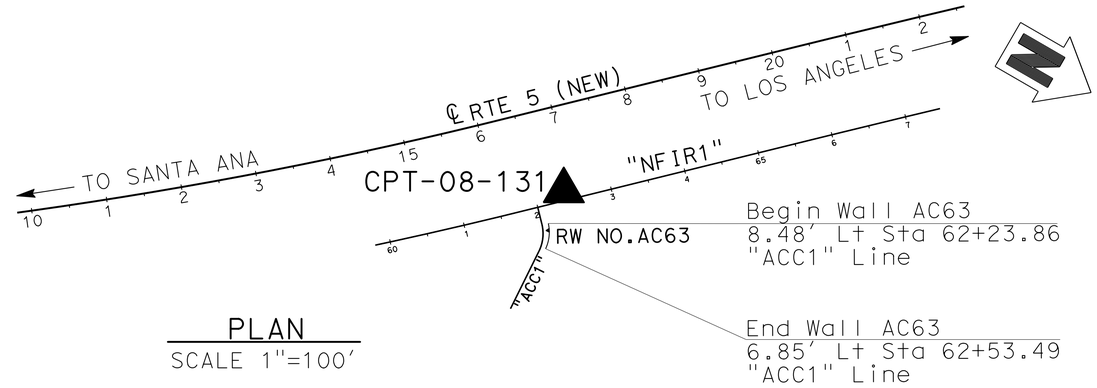

PLAN
SCALE 1"=100'

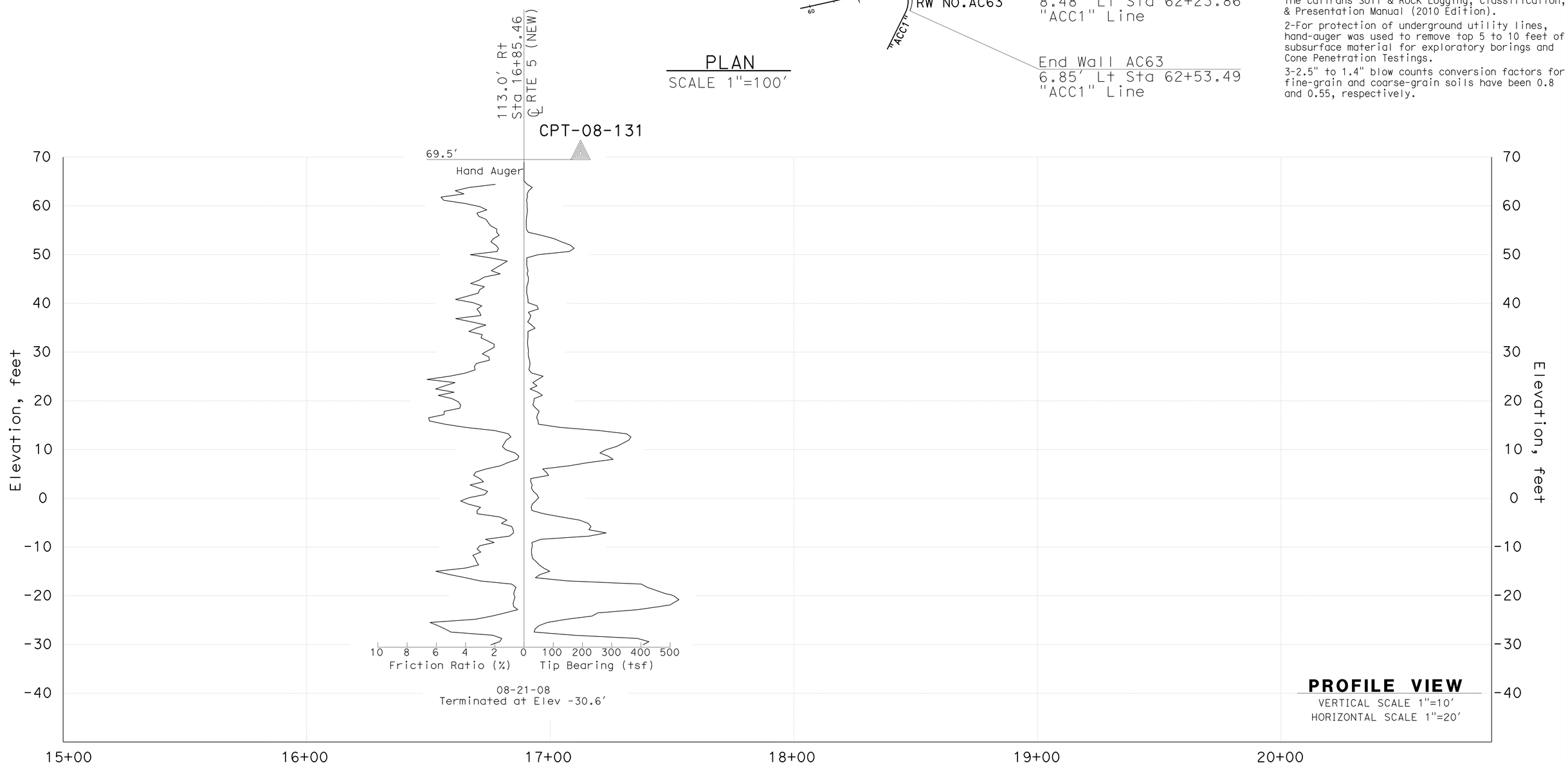

PROFILE VIEW
VERTICAL SCALE 1"=10'
HORIZONTAL SCALE 1"=20'

F.MOTAMED — DESIGN OVERSIGHT	DRAWN BY	T.PANAH	P.MCDONALD — FIELD INVESTIGATION BY:	PREPARED FOR THE STATE OF CALIFORNIA DEPARTMENT OF TRANSPORTATION	M.G. SMITH — PROJECT ENGINEER	BRIDGE NO. RW AC63
05/20/15 — SIGN OFF DATE	CHECKED BY	A.GHAZINOOR/L.KHALKHALI	DATE: 08/21/08			POST MILES 0.31

RETAINING WALL NO. AC63
LOG OF TEST BORINGS SHEET 1 OF 1

GS CIVIL LOG OF TEST BORINGS SHEET (ENGLISH) (REV. 03/14/12)

ORIGINAL SCALE IN INCHES FOR REDUCED PLANS 0 1 2 3

UNIT: 3658
PROJECT NUMBER & PHASE: 07150001601 CONTRACT NO.: 07-2159U4

DISREGARD PRINTS BEARING EARLIER REVISION DATES → 5/12/15

REVISION DATES | SHEET 5 | OF 5

FILE => rwac63-z-lotb.dgn

USERNAME => s12562d DATE PLOTTED => 28-JAN-2016 TIME PLOTTED => 12:26

DIST	COUNTY	ROUTE	POST MILES TOTAL PROJECT	SHEET No.	TOTAL SHEETS
07	LA,Ora	5	0.0/1.5, 44.3/44.4	1482	1622

William Kemp 3-18-15
REGISTERED CIVIL ENGINEER DATE

1-25-16
PLANS APPROVAL DATE

REGISTERED PROFESSIONAL ENGINEER William D. Kemp No. 55730 Exp. 12/31/16 CIVIL STATE OF CALIFORNIA

The State of California or its officers or agents shall not be responsible for the accuracy or completeness of electronic copies of this plan sheet.

INDEX TO PLANS

SHEET No.	TITLE
1	GENERAL PLAN
2	RETAINING WALL DETAILS
3	ARCHITECTURAL TREATMENT DETAILS
4	LIMITS OF EXCAVATION AND BACKFILL
5	LOG OF TEST BORINGS SHEET 1 OF 1

STANDARD PLANS 2010

	A10A	ABBREVIATIONS (SHEET 1 OF 2)
RSP	A10B	ABBREVIATIONS (SHEET 2 OF 2)
	A10C	LINES AND SYMBOLS (SHEET 1 OF 3)
	A10D	LINES AND SYMBOLS (SHEET 2 OF 3)
	A10E	LINES AND SYMBOLS (SHEET 3 OF 3)
RSP	A10F	LEGEND - SOIL (SHEET 1 OF 2)
RSP	A10G	LEGEND - SOIL (SHEET 2 OF 2)
	A10H	LEGEND - ROCK
	A62B	LIMITS OF PAYMENT FOR EXCAVATION AND BACKFILL- BRIDGE SURCHARGE AND WALL
	B0-3	BRIDGE DETAILS
RSP	B3-1A	RETAINING WALL TYPE 1 (CASE 1)
RSP	B3-5	RETAINING WALL DETAILS NO. 1
RSP	B11-56	CONCRETE BARRIER TYPE 736

STANDARD PLAN SHEET No.
DETAIL No.

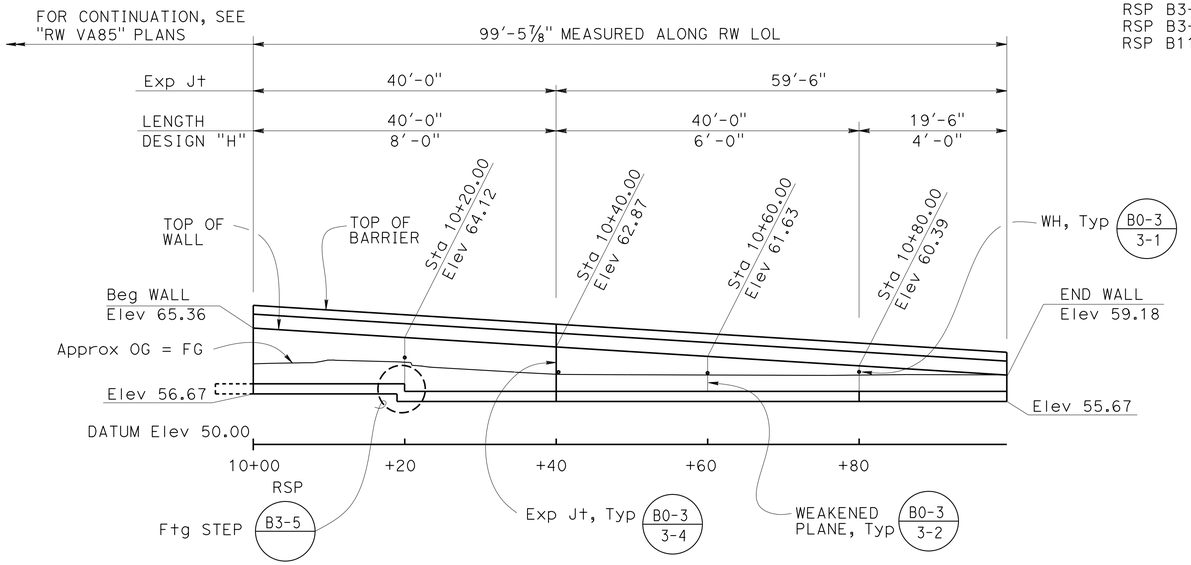

MIRRORED ELEVATION

1" = 10'-0"

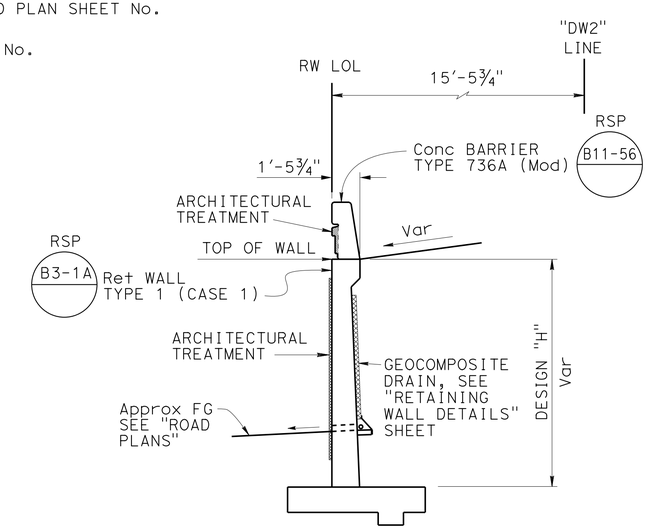

TYPICAL SECTION

¼" = 1'-0"

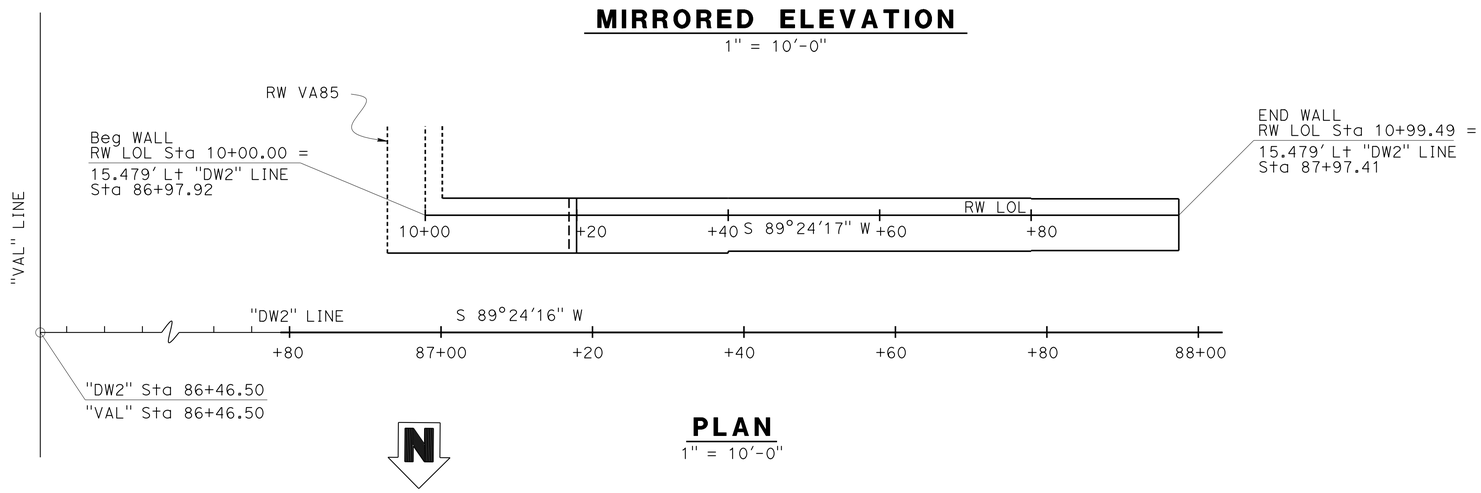

PLAN

1" = 10'-0"

QUANTITIES

STRUCTURE EXCAVATION (RETAINING WALL)	380	CY
STRUCTURE BACKFILL (RETAINING WALL)	318	CY
STRUCTURAL CONCRETE, RETAINING WALL	61	CY
ARCHITECTURAL TREATMENT (SPLIT SLATE)	274	SQFT
BAR REINFORCING STEEL (RETAINING WALL)	9,320	LB
CONCRETE BARRIER (TYPE 736A MODIFIED)	100	LF

Ramin Rashedi 3-18-15
DESIGN ENGINEER

	BY	CHECKED
DESIGN	Yeo Yoon	Cipriano Manansala
DETAILS	Anthony Valdez	Cipriano Manansala
QUANTITIES	G. Reyes-Gutierrez	Tuong Ha

LOAD & RESISTANCE FACTOR DESIGN — LIVE LOADING: HL93 W/"LOW-BOY"; PERMIT DESIGN VEHICLE
LAYOUT — BY Yeo Yoon — CHECKED Cipriano Manansala
SPECIFICATIONS — BY X. Li — PLANS AND SPECS COMPARED X. Li

ORIGINAL SCALE IN INCHES FOR REDUCED PLANS 0 1 2 3

STATE OF CALIFORNIA
DEPARTMENT OF TRANSPORTATION

DIVISION OF ENGINEERING SERVICES
STRUCTURE DESIGN
DESIGN BRANCH 11

BRIDGE NO. RW DW87
POST MILE 1.05

RETAINING WALL DW87
GENERAL PLAN

UNIT: 3587
PROJECT NUMBER & PHASE: 0715000160-1
CONTRACT NO.: 07-2159U4

DISREGARD PRINTS BEARING EARLIER REVISION DATES

REVISION DATES: 1-04-13 4-04-13 5-10-13 6-04-13

SHEET 1 OF 5

STRUCTURES DESIGN GENERAL PLAN SHEET (ENGLISH) (REV.09-01-10)

FILE => rwdw87-a-gp.dgn

USERNAME => s125624 DATE PLOTTED => 28-JAN-2016 TIME PLOTTED => 12:26

DIST	COUNTY	ROUTE	POST MILES TOTAL PROJECT	SHEET No.	TOTAL SHEETS
07	LA,Ora	5	0.0/1.5, 44.3/44.4	1483	1622

REGISTERED CIVIL ENGINEER 3-18-15 DATE

1-25-16
PLANS APPROVAL DATE

REGISTERED PROFESSIONAL ENGINEER William D. Kemp No. 55730 Exp. 12/31/16 CIVIL STATE OF CALIFORNIA

The State of California or its officers or agents shall not be responsible for the accuracy or completeness of electronic copies of this plan sheet.

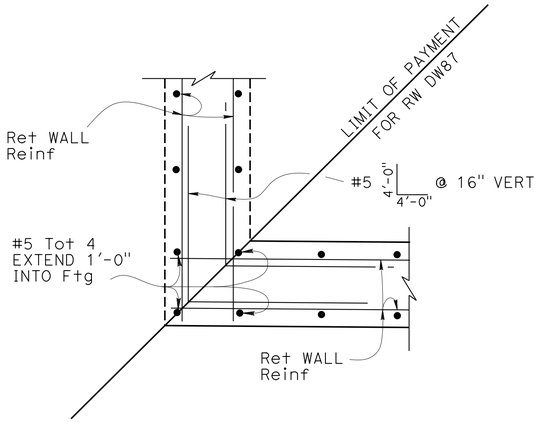

STEM CORNER DETAIL

NO SCALE

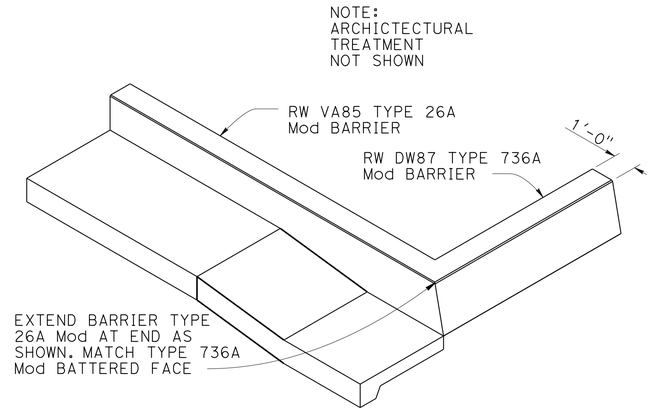

BARRIER TRANSITION DETAIL

NO SCALE

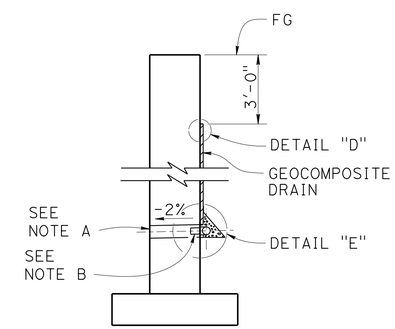

WALL SECTION

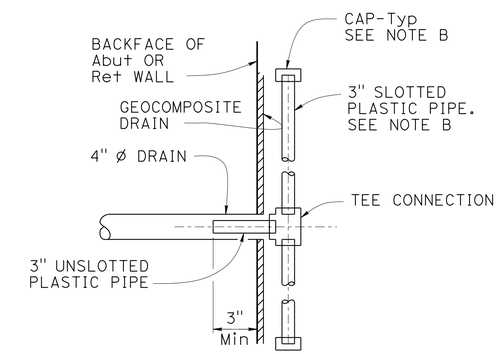

SECTION K-K

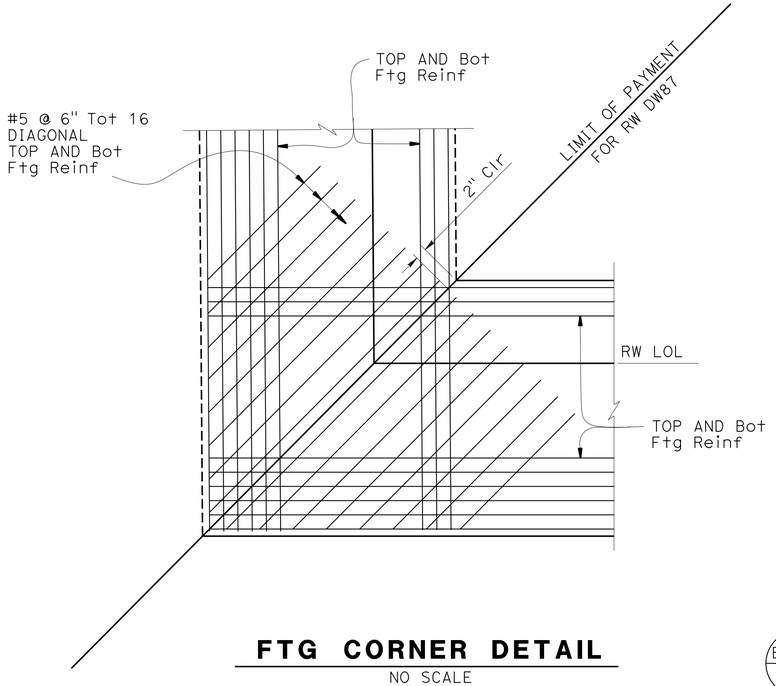

FTG CORNER DETAIL

NO SCALE

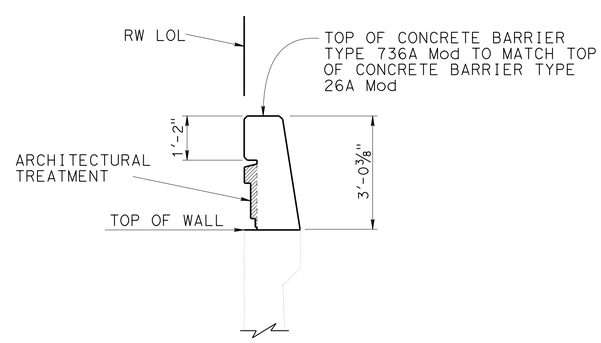

RSP B11-56

BARRIER TYPE 736A Mod

NO SCALE

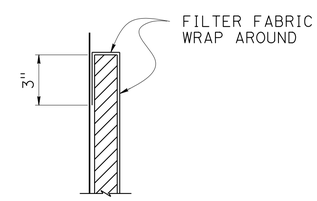

DETAIL "D"

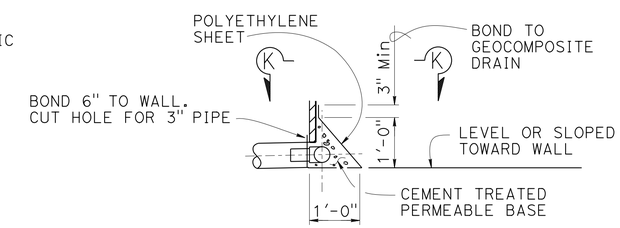

DETAIL "E"

WEEP HOLE AND GEOCOMPOSITE DRAIN

NO SCALE

Notes: (GEOCOMPOSITE DRAIN)

A. 4" Ø drains at intermediate sag points and at 25'-0" center to center (9'-0" c-c for Type 3 and 9'-2" c-c for Type 4 retaining walls). For walls adjacent to sidewalks or curbs, provide 4" Ø cast iron or asbestos cement pipe under the sidewalk to discharge through curb face. Exposed wall drains shall be located 3" ± above finished grade.

B. Geocomposite drain, cement treated permeable base, and 3" Ø slotted plastic pipe continuous behind retaining wall or abutment. Cap ends of pipe. Provide "Tee" connection at each 4" Ø drain.

C. Connect the low end of plastic pipe to the main outlet pipe as applicable.

	BY	CHECKED
DESIGN	Yeo Yoon	Cipriano Manansala
DETAILS	Anthony Valdez	Cipriano Manansala
QUANTITIES	G. Reyes-Gutierrez	Tuong Ha

STATE OF CALIFORNIA DEPARTMENT OF TRANSPORTATION

DIVISION OF ENGINEERING SERVICES STRUCTURE DESIGN DESIGN BRANCH 11

BRIDGE NO. RW DW87 POST MILE 1.05

RETAINING WALL DW87
RETAINING WALL DETAILS

STRUCTURES DESIGN DETAIL SHEET (ENGLISH) (REV. 09-01-10)

ORIGINAL SCALE IN INCHES FOR REDUCED PLANS 0 1 2 3

UNIT: 3587
PROJECT NUMBER & PHASE: 0715000160-1 CONTRACT NO.: 07-2159U4

DISREGARD PRINTS BEARING EARLIER REVISION DATES

REVISION DATES: 3-24-13 5-15-13 5-20-13 9-13-13

SHEET 2 OF 5

FILE => rwdw87-b-retdt.dgn

USERNAME => s125624 DATE PLOTTED => 28-JAN-2016 TIME PLOTTED => 12:26

DIST	COUNTY	ROUTE	POST MILES TOTAL PROJECT	SHEET No.	TOTAL SHEETS
07	LA,Ora	5	0.0/1.5, 44.3/44.4	1484	1622

William Kemp 3-18-15
REGISTERED CIVIL ENGINEER DATE

1-25-16
PLANS APPROVAL DATE

REGISTERED PROFESSIONAL ENGINEER William D. Kemp No. 55730 Exp. 12/31/16 CIVIL STATE OF CALIFORNIA

The State of California or its officers or agents shall not be responsible for the accuracy or completeness of electronic copies of this plan sheet.

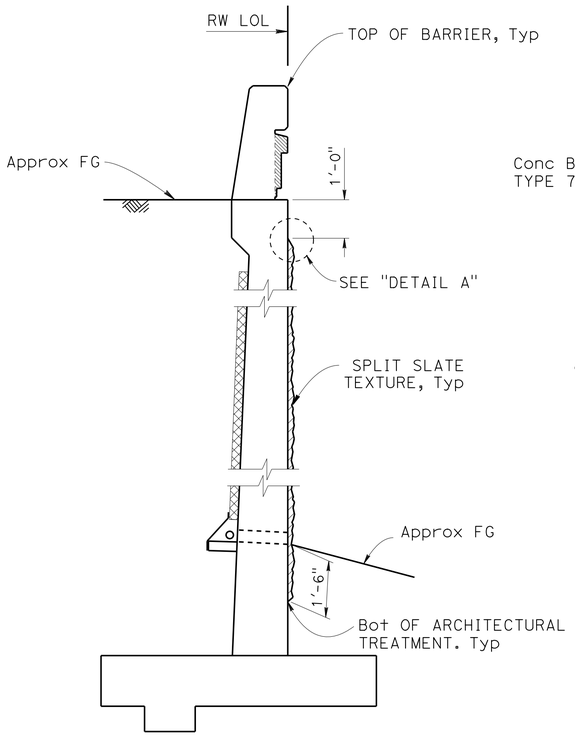

SECTION A-A
NO SCALE

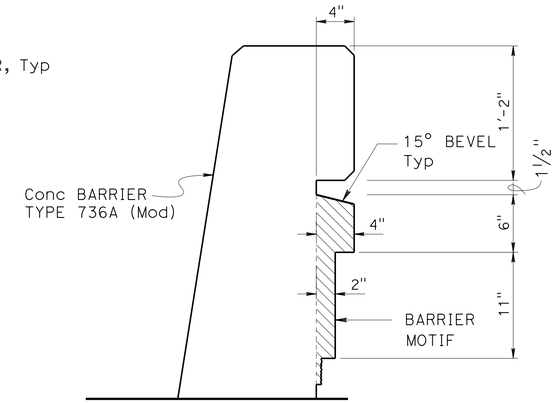

SECTION C-C
1½" = 1'-0"

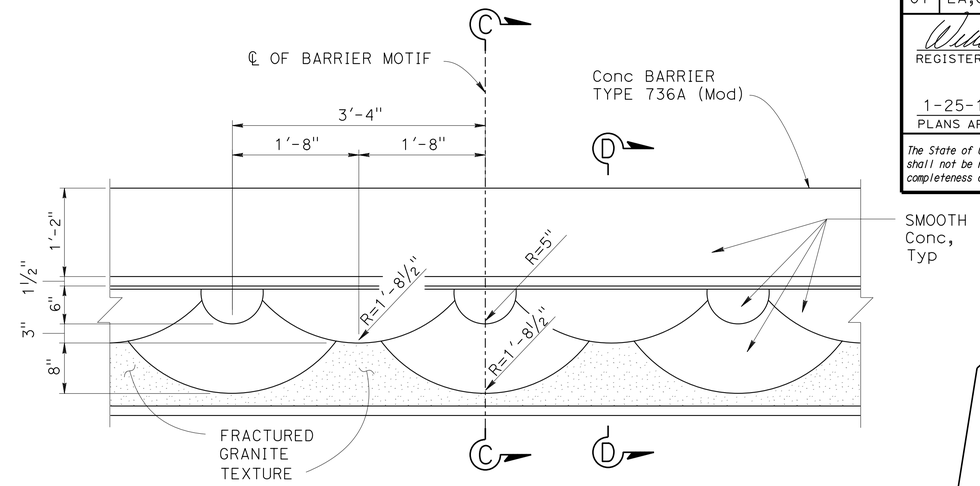

ELEVATION - BARRIER MOTIF
1" = 1'-0"

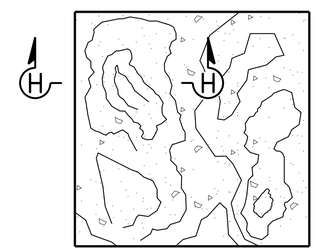

SPLIT SLATE TEXTURE
NO SCALE

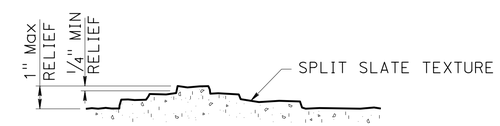

SECTION H-H
NO SCALE

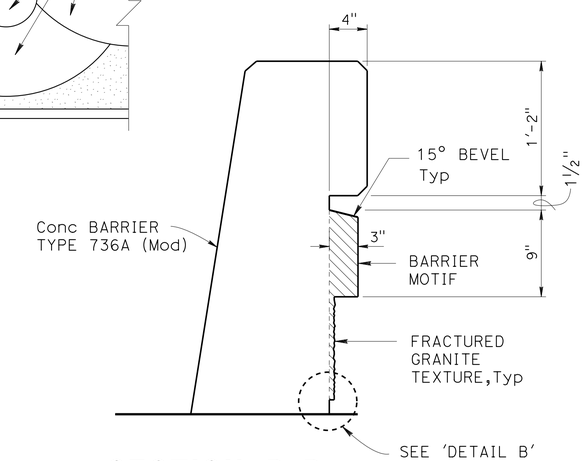

SECTION D-D
1½" = 1'-0"

NOTE:
All surface relief and texture shall be measured from RW LOL, Typ

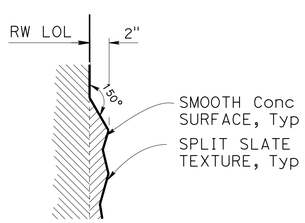

DETAIL A
1½" = 1'-0"

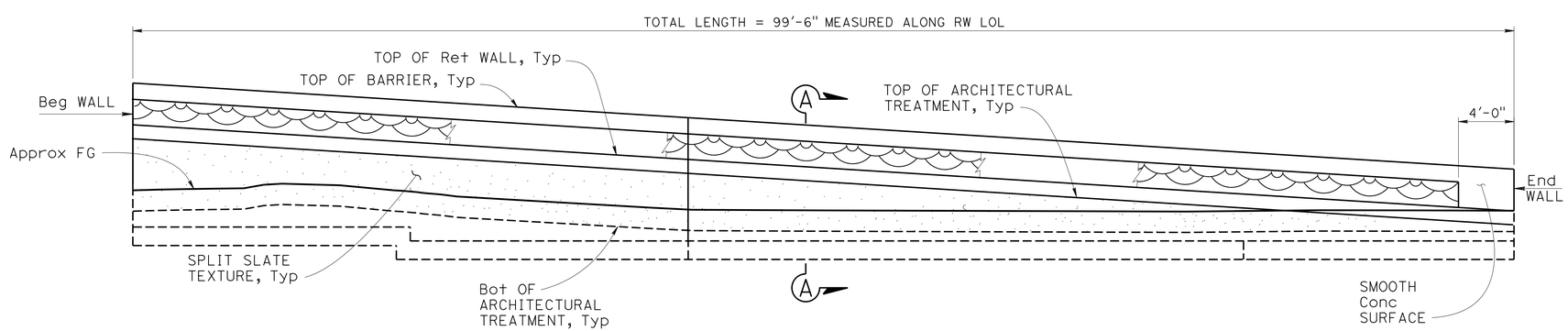

MIRRORED ELEVATION - ARCHITECTURAL TREATMENT
1" = 5'-0"

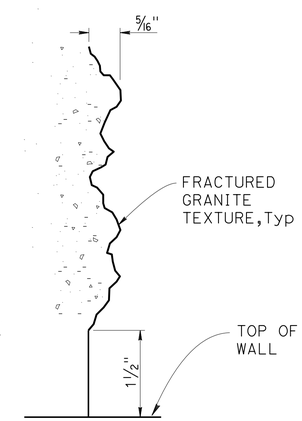

DETAIL B
NO SCALE

DESIGN	BY H. Javier Chavez	CHECKED Issac Tasabia	
DETAILS	BY Anthony Valdez	CHECKED Issac Tasabia	
QUANTITIES	BY G. Reyes-Gutierrez	CHECKED Tuong Ha	

STATE OF CALIFORNIA
DEPARTMENT OF TRANSPORTATION

DIVISION OF ENGINEERING SERVICES
STRUCTURE DESIGN
DESIGN BRANCH 11

BRIDGE NO. DW87
POST MILE 1.05

RETAINING WALL DW87
ARCHITECTURAL TREATMENT DETAILS

STRUCTURES DESIGN DETAIL SHEET (ENGLISH) (REV. 09-01-10)

ORIGINAL SCALE IN INCHES FOR REDUCED PLANS 0 1 2 3

UNIT: 3587
PROJECT NUMBER & PHASE: 0715000160-1
CONTRACT NO.: 07-2159U4

DISREGARD PRINTS BEARING EARLIER REVISION DATES

REVISION DATES: 9-13-12 5-29-13 5-29-13 1-16-13

SHEET 3 OF 5

FILE => rwdw87-d-arch.dgn

USERNAME => s129624 DATE PLOTTED => 28-JAN-2016 TIME PLOTTED => 12:26

DIST	COUNTY	ROUTE	POST MILES TOTAL PROJECT	SHEET No.	TOTAL SHEETS
07	LA,Ora	5	0.0/1.5, 44.3/44.4	1485	1622

William Kemp 3-18-15
REGISTERED CIVIL ENGINEER DATE

1-25-16
PLANS APPROVAL DATE

REGISTERED PROFESSIONAL ENGINEER
William D. Kemp
No. 55730
Exp. 12/31/16
CIVIL
STATE OF CALIFORNIA

The State of California or its officers or agents shall not be responsible for the accuracy or completeness of electronic copies of this plan sheet.

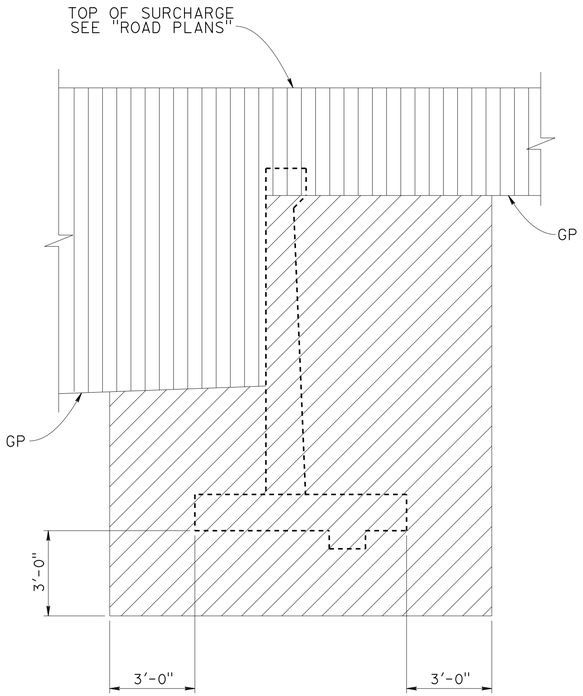

EXCAVATION

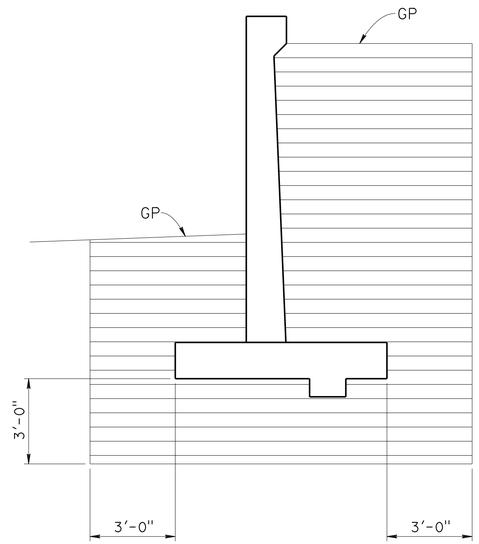

BACKFILL

LEGEND:

- STRUCTURE EXCAVATION
- ROADWAY EXCAVATION
- STRUCTURE BACKFILL

GP - PLANNED GRADING PLANE

LIMITS OF EXCAVATION AND BACKFILL

NO SCALE

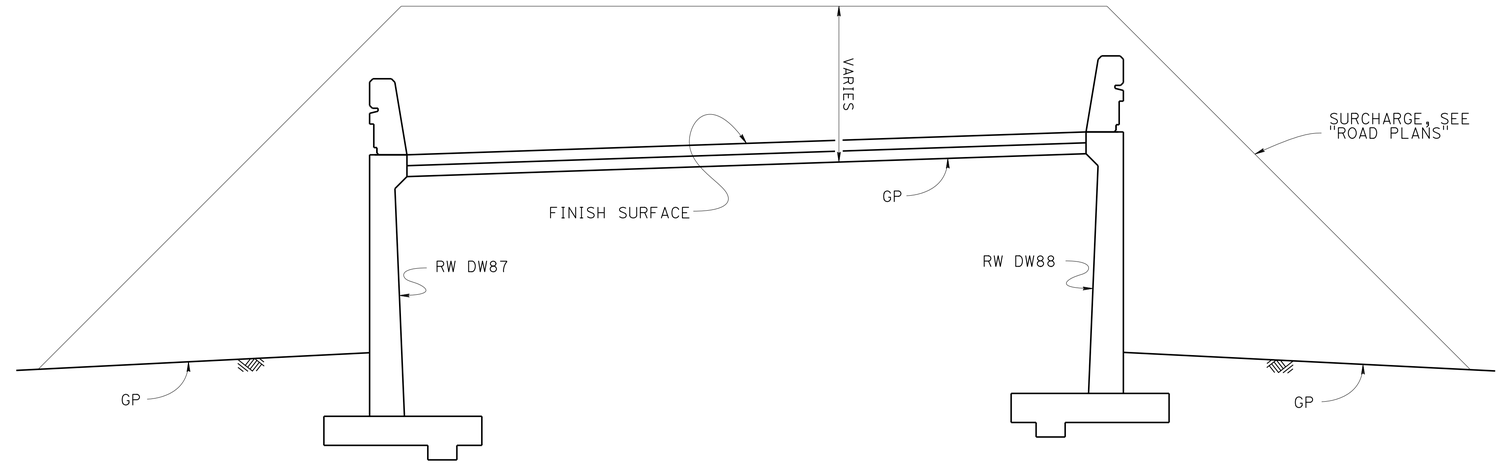

EMBANKMENT SURCHARGE

NO SCALE

DESIGN	BY Yeo Yoon	CHECKED Cipriano Manansala	
DETAILS	BY Jaime Ramirez	CHECKED Cipriano Manansala	
QUANTITIES	BY G. Reyes-Gutierrez	CHECKED Tuong Ha	

STATE OF CALIFORNIA
DEPARTMENT OF TRANSPORTATION

DIVISION OF ENGINEERING SERVICES
STRUCTURE DESIGN
DESIGN BRANCH 11

BRIDGE NO. RW DW87
POST MILE 1.05

RETAINING WALL DW87
LIMITS OF EXCAVATION AND BACKFILL

STRUCTURES DESIGN DETAIL SHEET (ENGLISH) (REV. 09-01-10)

ORIGINAL SCALE IN INCHES FOR REDUCED PLANS 0 1 2 3

UNIT: 3587
PROJECT NUMBER & PHASE: 0715000160-1
CONTRACT NO.: 07-2159U4

DISREGARD PRINTS BEARING EARLIER REVISION DATES

REVISION DATES: 4-26-13 5-29-13

SHEET 4 OF 5

FILE => rwdw87-e-exc.dgn

USERNAME => s125624 DATE PLOTTED => 28-JAN-2016 TIME PLOTTED => 12:26

BENCH MARK

GPS 0887
ELEVATION 65.915 FT
FD 2-1/2 CADT DISK IN CONC. CURB FLUSH, STAMPED "LA-5-1.0, 1995"
LOCATED 90' N OF THE SOUTH SIDE FIRESTONE BLVD 0.2 MI SE OF VALLEY VIEW
NORTHING 542395.636
EASTING 1997613.893
DATUM NAVD88

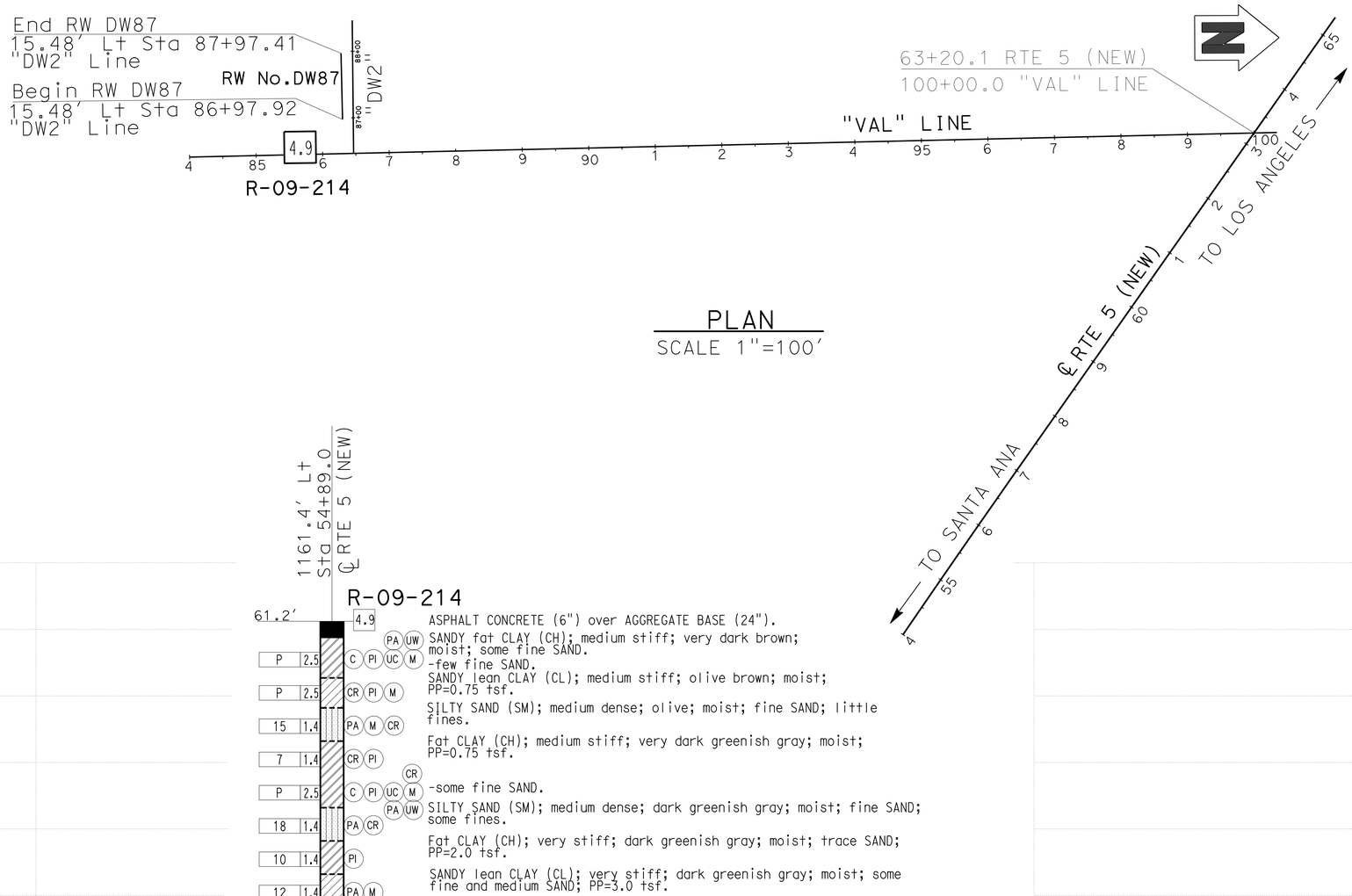

PLAN

SCALE 1"=100'

DIST	COUNTY	ROUTE	POST MILES TOTAL PROJECT	SHEET No.	TOTAL SHEETS
07	LA,Ora	5	0.0/1.5, 44.3/44.4	1486	1622

REGISTERED CIVIL ENGINEER 05/20/15 DATE

1-25-16
PLANS APPROVAL DATE

REGISTERED PROFESSIONAL ENGINEER MICHAEL G. SMITH No. 2229 Exp. 03/31/16 GEOTECHNICAL STATE OF CALIFORNIA

URS CORPORATION
2020 EAST FIRST STREET, SUITE 400
SANTA ANA, CA 92705

The State of California or its officers or agents shall not be responsible for the accuracy or completeness of electronic copies of this plan sheet.

1-This LOTB sheet was prepared in accordance with the Caltrans Soil & Rock Logging, Classification, & Presentation Manual (2010 Edition).

2-For protection of underground utility lines, hand-auger was used to remove top 5 to 10 feet of subsurface material for exploratory borings and Cone Penetration Testings.

3-2.5" to 1.4" blow counts conversion factors for fine-grain and coarse-grain soils have been 0.8 and 0.55, respectively.

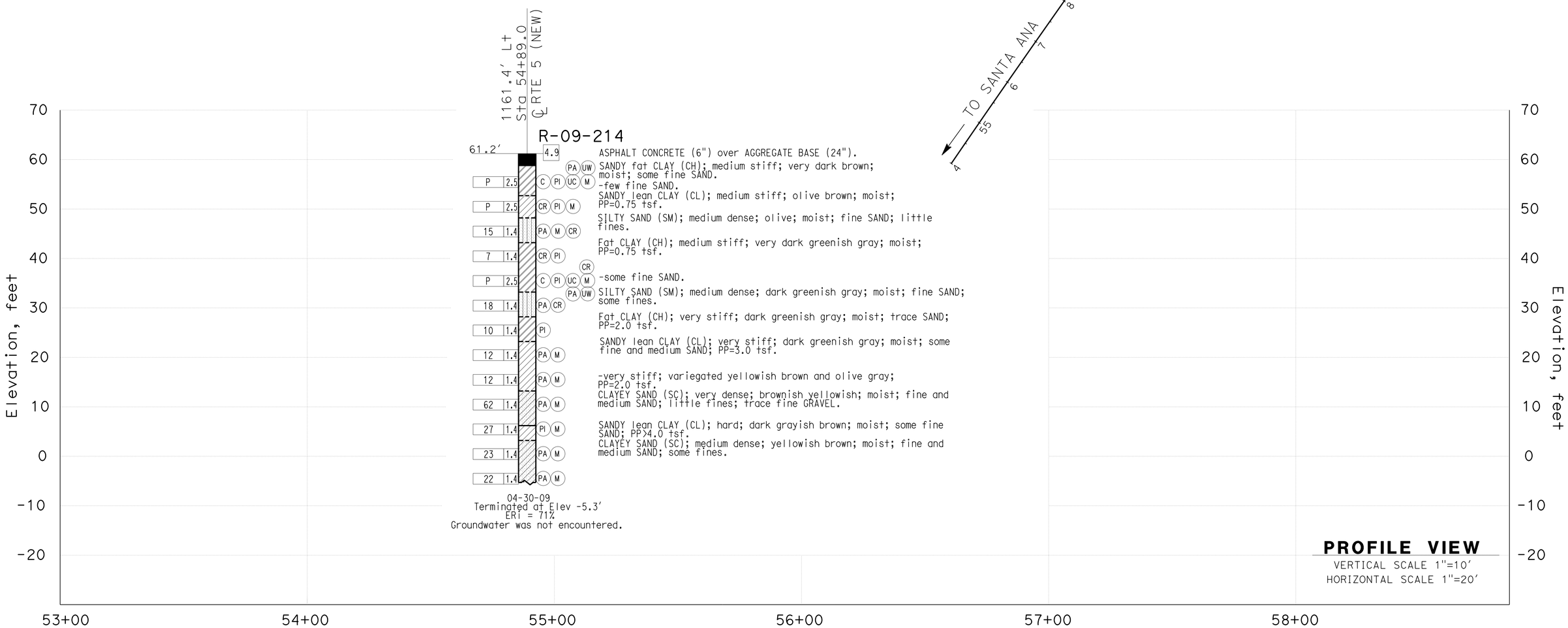

PROFILE VIEW

VERTICAL SCALE 1"=10'
HORIZONTAL SCALE 1"=20'

F.MOTAMED DESIGN OVERSIGHT 05/20/15 SIGN OFF DATE	DRAWN BY	T.PANAH	EJ.JEON/P.MCDONALD FIELD INVESTIGATION BY: DATE: 04/30/09	PREPARED FOR THE STATE OF CALIFORNIA DEPARTMENT OF TRANSPORTATION	M.G. SMITH PROJECT ENGINEER	BRIDGE NO. RW DW87 POST MILES 1.05	RETAINING WALL NO. DW87 LOG OF TEST BORINGS SHEET 1 OF 1
	CHECKED BY	A.GHAZINOOR/L.KHALKHALI					

GS CIVIL LOG OF TEST BORINGS SHEET (ENGLISH) (REV. 03/14/12)

ORIGINAL SCALE IN INCHES FOR REDUCED PLANS 0 1 2 3

UNIT: 3658
PROJECT NUMBER & PHASE: 07150001601 CONTRACT NO.: 07-2159U4

DISREGARD PRINTS BEARING EARLIER REVISION DATES → 5/12/15

REVISION DATES | SHEET 5 | OF 5

FILE => rwdw87-f-lotb.dgn

USERNAME => s125624 DATE PLOTTED => 28-JAN-2016 TIME PLOTTED => 12:26

DIST	COUNTY	ROUTE	POST MILES TOTAL PROJECT	SHEET No.	TOTAL SHEETS
07	LA,Ora	5	0.0/1.5, 44.3/44.4	1487	1622

REGISTERED CIVIL ENGINEER 3-18-15 DATE

1-25-16
PLANS APPROVAL DATE

REGISTERED PROFESSIONAL ENGINEER William D. Kemp No. 55730 Exp. 12/31/16 CIVIL STATE OF CALIFORNIA

The State of California or its officers or agents shall not be responsible for the accuracy or completeness of electronic copies of this plan sheet.

STANDARD PLAN SHEET NO.

DETAIL NO.

INDEX TO PLANS

SHEET NO.	TITLE
1	GENERAL PLAN
2	RETAINING WALL DETAILS
3	ARCHITECTURAL TREATMENT DETAILS
4	LIMITS OF EXCAVATION AND BACKFILL
5	LOG OF TEST BORING

STANDARD PLANS DATED MAY 2010

	A10A	ABBREVIATIONS (SHEET 1 OF 2)
RSP	A10B	ABBREVIATIONS (SHEET 2 OF 2)
	A10C	LINES AND SYMBOLS (SHEET 1 OF 3)
	A10D	LINES AND SYMBOLS (SHEET 2 OF 3)
	A10E	LINES AND SYMBOLS (SHEET 3 OF 3)
RSP	A10F	LEGEND - SOIL (SHEET 1 OF 2)
RSP	A10G	LEGEND - SOIL (SHEET 2 OF 2)
	A10H	LEGEND - ROCK
	A62B	LIMITS OF PAYMENT FOR EXCAVATION AND BACKFILL- BRIDGE SURCHARGE AND WALL
	B0-3	BRIDGE DETAILS
RSP	B3-1A	RETAINING WALL TYPE 1 (CASE 1)
RSP	B3-5	RETAINING WALL DETAILS NO. 1
RSP	B11-56	CONCRETE BARRIER TYPE 736

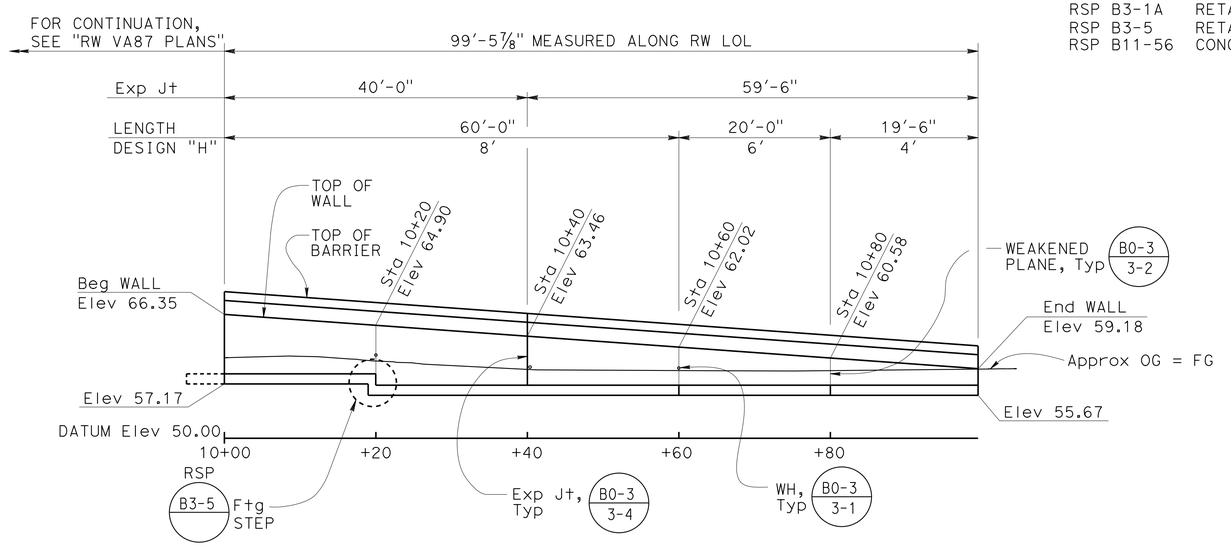

ELEVATION
1" = 10'-0"

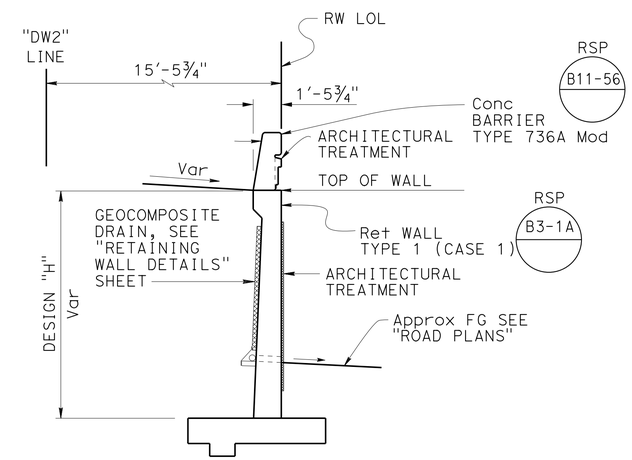

TYPICAL SECTION
1/4" = 1'-0"

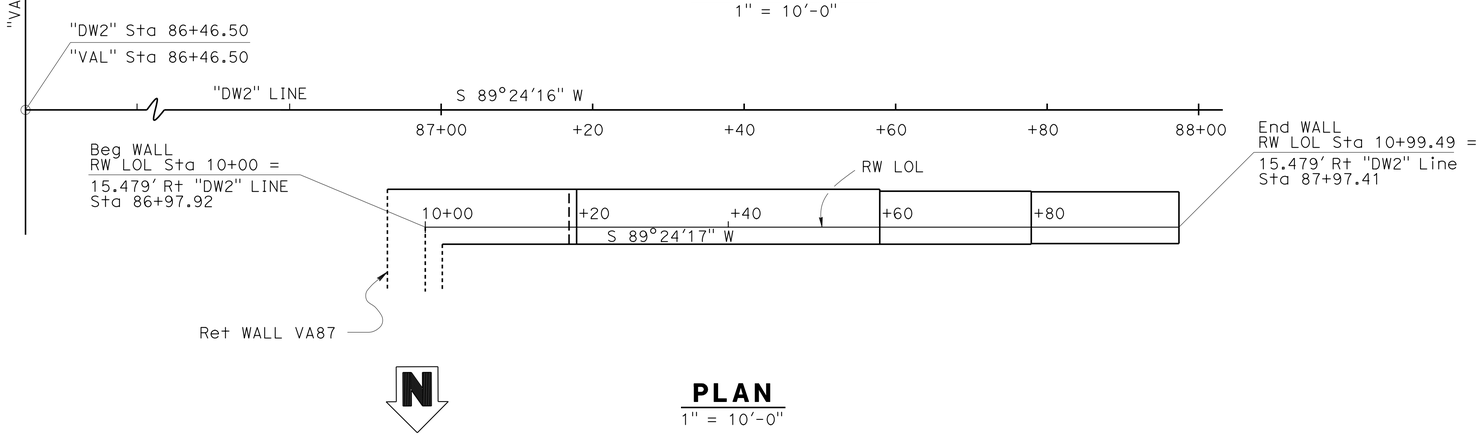

PLAN
1" = 10'-0"

QUANTITIES

STRUCTURE EXCAVATION (RETAINING WALL)	410	CY
STRUCTURE BACKFILL (RETAINING WALL)	350	CY
STRUCTURAL CONCRETE, RETAINING WALL	64	CY
ARCHITECTURAL TREATMENT (SPLIT SLATE)	388	SQFT
BAR REINFORCING STEEL (RETAINING WALL)	9,625	LB
CONCRETE BARRIER (TYPE 736A MODIFIED)	100	LF

Ramin Rashedi 3-18-15
DESIGN ENGINEER

	BY	CHECKED
DESIGN	Daryoush Tavatli	Cipriano Manansala
DETAILS	Anthony Valdez	Cipriano Manansala
QUANTITIES	G. Reyes-Gutierrez	B. Thach

LOAD & RESISTANCE FACTOR DESIGN — LIVE LOADING: HL93 W/"LOW-BOY": PERMIT DESIGN VEHICLE

	BY	CHECKED
LAYOUT	Daryoush Tavatli	Cipriano Manasala
SPECIFICATIONS	Xiahong Li	Xiahong Li

PLANS AND SPECS COMPARED

STATE OF CALIFORNIA
DEPARTMENT OF TRANSPORTATION

ORIGINAL SCALE IN INCHES FOR REDUCED PLANS 0 1 2 3

DIVISION OF ENGINEERING SERVICES
STRUCTURE DESIGN
DESIGN BRANCH 11

BRIDGE NO. RW DW88
POST MILE 1.06

RETAINING WALL DW88
GENERAL PLAN

UNIT: 3587
PROJECT NUMBER & PHASE: 0715000160-1
CONTRACT NO.: 07-2159u4

DISREGARD PRINTS BEARING EARLIER REVISION DATES

REVISION DATES 01-15-13 06-05-13 07-22-13 04-09-13

SHEET 1 OF 5

STRUCTURES DESIGN GENERAL PLAN SHEET (ENGLISH) (REV.09-01-10)

FILE => rwdw88-a-gp.dgn

USERNAME => s125624 DATE PLOTTED => 28-JAN-2016 TIME PLOTTED => 12:26

DIST	COUNTY	ROUTE	POST MILES TOTAL PROJECT	SHEET No.	TOTAL SHEETS
07	LA,Ora	5	0.0/1.5, 44.3/44.4	1488	1622

REGISTERED CIVIL ENGINEER — DATE 3-18-15

1-25-16
PLANS APPROVAL DATE

REGISTERED PROFESSIONAL ENGINEER — William D. Kemp — No. 55730 — Exp. 12/31/16 — CIVIL — STATE OF CALIFORNIA

The State of California or its officers or agents shall not be responsible for the accuracy or completeness of electronic copies of this plan sheet.

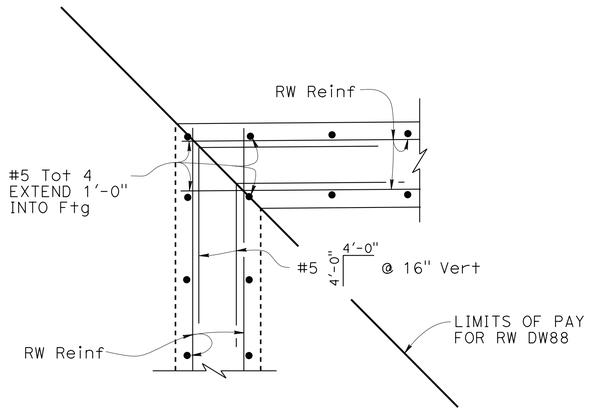

STEM CORNER DETAIL

NO SCALE

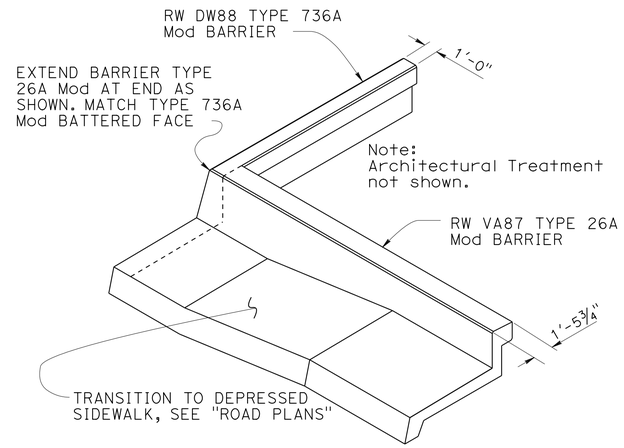

BARRIER TRANSITION DETAIL

NO SCALE

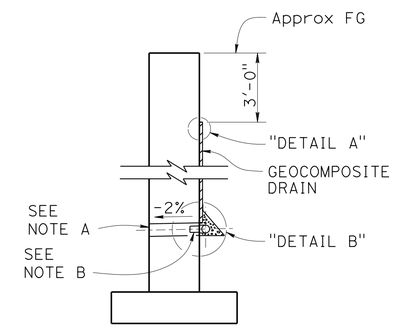

WALL SECTION

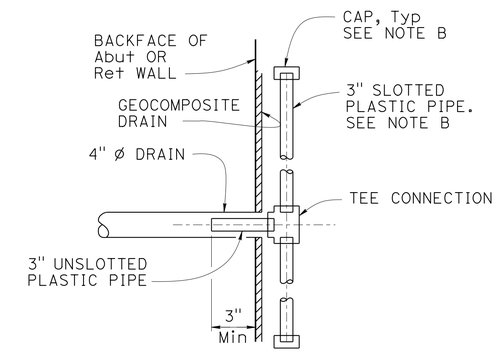

SECTION A-A

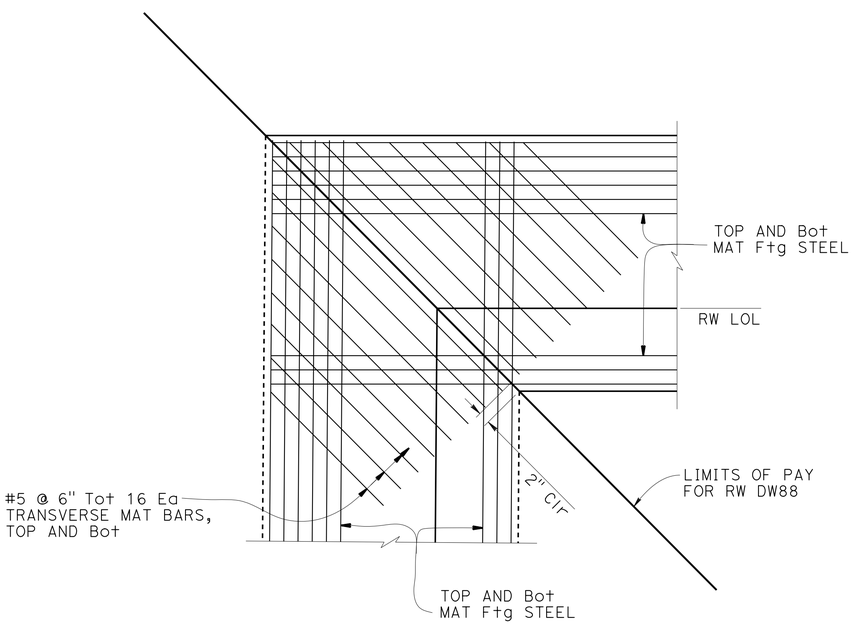

FOOTING CORNER DETAIL

NO SCALE

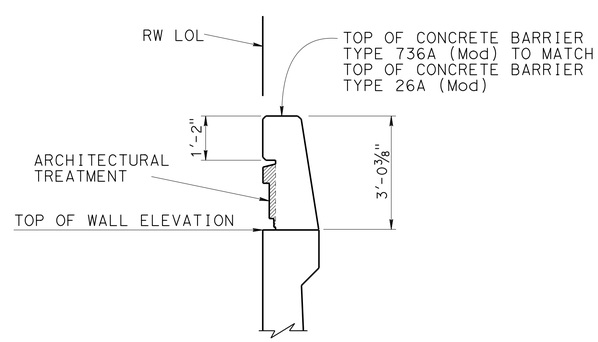

B11-56

BARRIER TYPE 736A Mod

NO SCALE

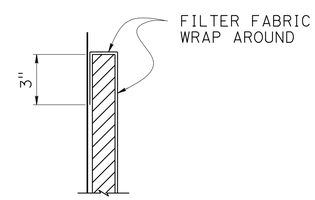

DETAIL A

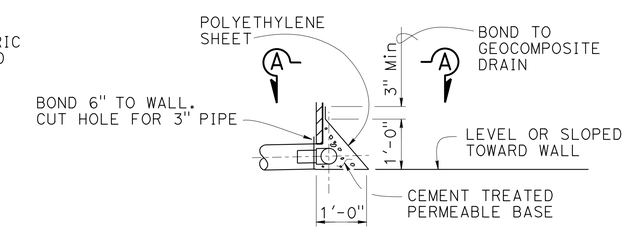

DETAIL B

WEEP HOLE AND GEOCOMPOSITE DRAIN

NO SCALE

Notes: (GEOCOMPOSITE DRAIN)

A. 4" Ø drains at intermediate sag points and at 25'-0" center to center. For walls adjacent to sidewalks or curbs, provide 4" Ø cast iron or asbestos cement pipe under the sidewalk to discharge through curb face. Exposed wall drains shall be located 3" ± above finished grade.

B. Geocomposite drain, cement treated permeable base, and 3" Ø slotted plastic pipe continuous behind retaining wall or abutment. Cap ends of pipe. Provide "Tee" connection at each 4" Ø drain.

C. Connect the low end of plastic pipe to the main outlet pipe as applicable.

	BY	CHECKED
DESIGN	Dauryoush Tavatli	Cipriano Manansala
DETAILS	Anthony Valdez	Cipriano Manansala
QUANTITIES	G. Reyes-Gutierrez	B. Thach

STATE OF CALIFORNIA
DEPARTMENT OF TRANSPORTATION

DIVISION OF ENGINEERING SERVICES
STRUCTURE DESIGN
DESIGN BRANCH 11

BRIDGE NO. RW DW88
POST MILE 1.06

RETAINING WALL DW88
RETAINING WALL DETAILS

STRUCTURES DESIGN DETAIL SHEET (ENGLISH) (REV. 09-01-10)

ORIGINAL SCALE IN INCHES FOR REDUCED PLANS 0 1 2 3

UNIT: 3587
PROJECT NUMBER & PHASE: 0715000160-1
CONTRACT NO.: 07-2159U4

DISREGARD PRINTS BEARING EARLIER REVISION DATES

REVISION DATES: 08-8-11 06-05-13 07-22-13 05-16-13

SHEET 2 OF 5

FILE => rwdw88-b-retdt.dgn

USERNAME => s125624 DATE PLOTTED => 28-JAN-2016 TIME PLOTTED => 12:26

DIST	COUNTY	ROUTE	POST MILES TOTAL PROJECT	SHEET No.	TOTAL SHEETS
07	LA,Ora	5	0.0/1.5, 44.3/44.4	1489	1622

REGISTERED CIVIL ENGINEER — DATE 3-18-15

1-25-16
PLANS APPROVAL DATE

REGISTERED PROFESSIONAL ENGINEER — William D. Kemp — No. 55730 — Exp. 12/31/16 — CIVIL — STATE OF CALIFORNIA

The State of California or its officers or agents shall not be responsible for the accuracy or completeness of electronic copies of this plan sheet.

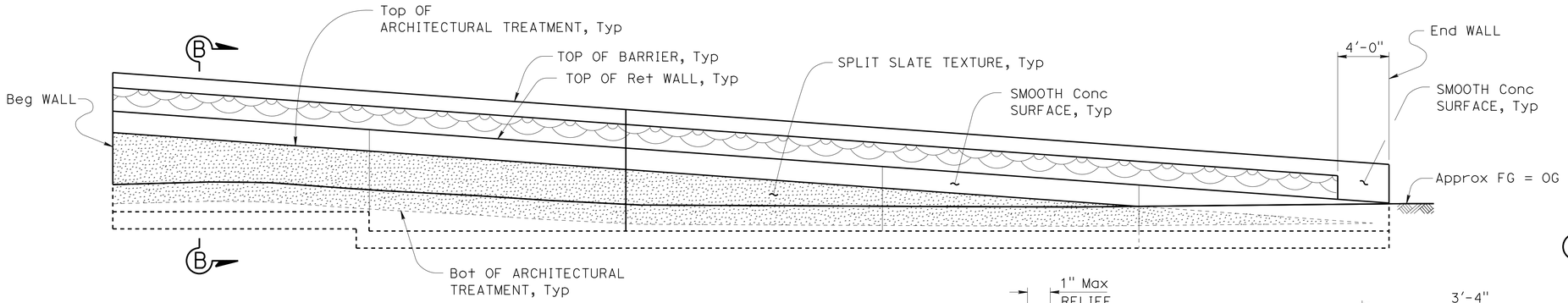

ELEVATION
1" = 5'-0"

NOTE:
All surface relief and texture shall be measured from RW LOL, Typ

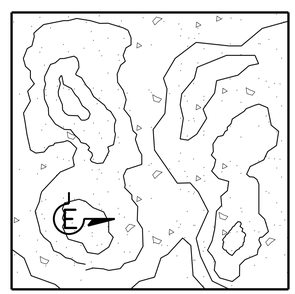

SPLIT SLATE TEXTURE
No Scale

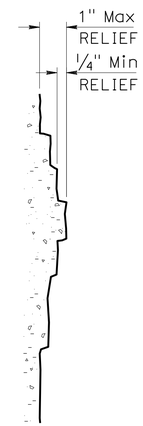

SECTION E-E
No Scale

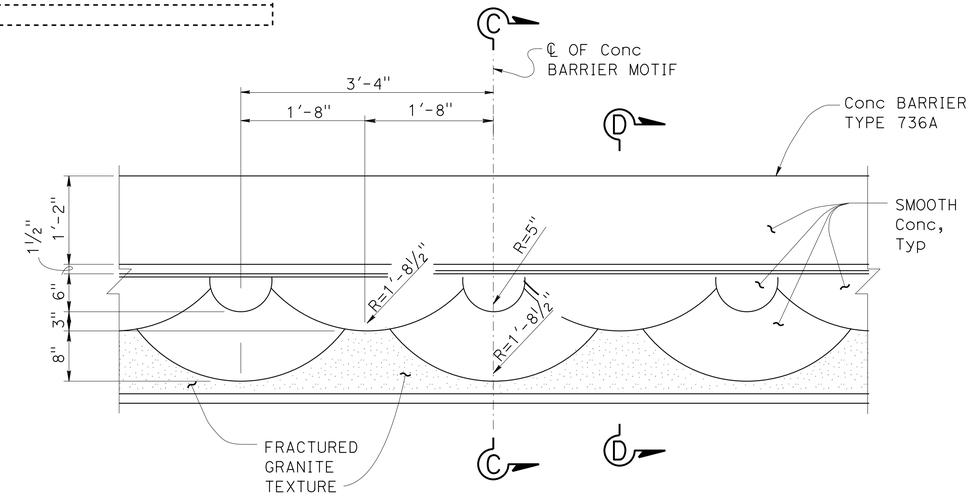

ELEVATION - BARRIER MOTIF
1" = 1'-0"

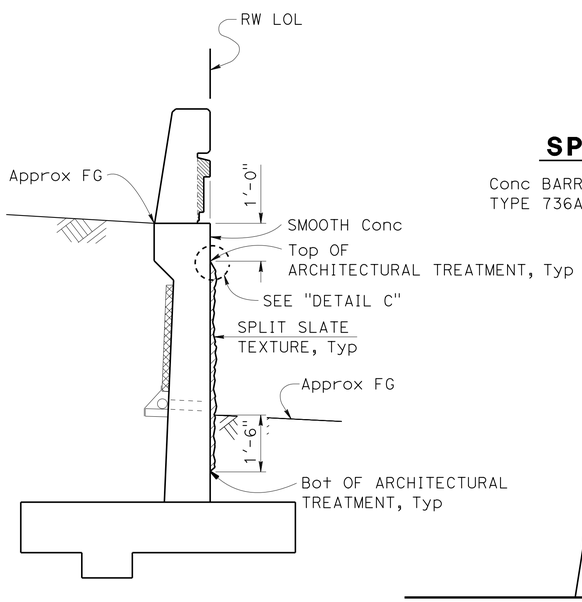

SECTION B-B
1/2" = 1'-0"

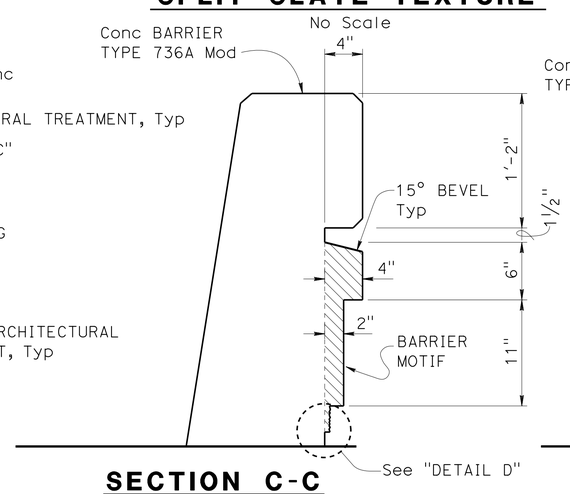

SECTION C-C
1 1/2" = 1'-0"

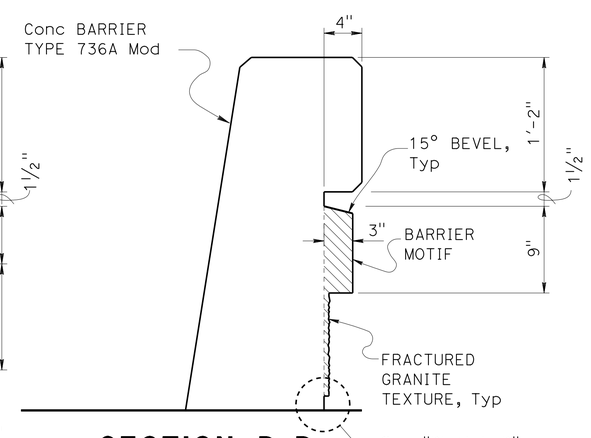

SECTION D-D
1 1/2" = 1'-0"

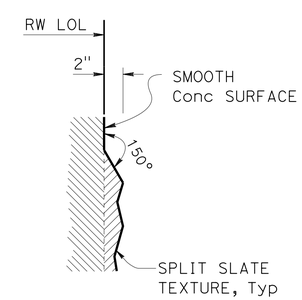

DETAIL C
1 1/2" = 1'-0"

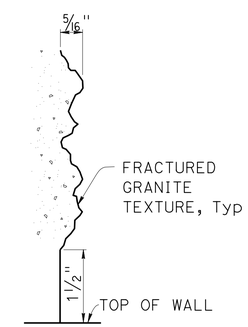

DETAIL D
No Scale

	BY	CHECKED
DESIGN	H. Javier Chavez	Issac Tasabia
DETAILS	Jaime Ramirez	Issac Tasabia
QUANTITIES	Ubong Inyang	B. Thach

STATE OF CALIFORNIA
DEPARTMENT OF TRANSPORTATION

DIVISION OF ENGINEERING SERVICES
STRUCTURE DESIGN
DESIGN BRANCH 11

BRIDGE NO. RW DW88
POST MILE 1.06

RETAINING WALL DW88
ARCHITECTURAL TREATMENT DETAILS

STRUCTURES DESIGN DETAIL SHEET (ENGLISH) (REV. 09-01-10)

ORIGINAL SCALE IN INCHES FOR REDUCED PLANS 0 1 2 3

UNIT: 3587
PROJECT NUMBER & PHASE: 0715000160-1
CONTRACT NO.: 07-2159U4

DISREGARD PRINTS BEARING EARLIER REVISION DATES

REVISION DATES: 12-12-12 07-23-13 05-23-13 01-26-16 — SHEET 3 OF 5

FILE => rwdw88-h-arch.dgn

USERNAME => s129624 DATE PLOTTED => 28-JAN-2016 TIME PLOTTED => 12:26

DIST	COUNTY	ROUTE	POST MILES TOTAL PROJECT	SHEET No.	TOTAL SHEETS
07	LA,Ora	5	0.0/1.5, 44.3/44.4	1490	1622

William Kemp 3-18-15
REGISTERED CIVIL ENGINEER DATE

1-25-16
PLANS APPROVAL DATE

REGISTERED PROFESSIONAL ENGINEER
William D. Kemp
No. 55730
Exp. 12/31/16
CIVIL
STATE OF CALIFORNIA

The State of California or its officers or agents shall not be responsible for the accuracy or completeness of electronic copies of this plan sheet.

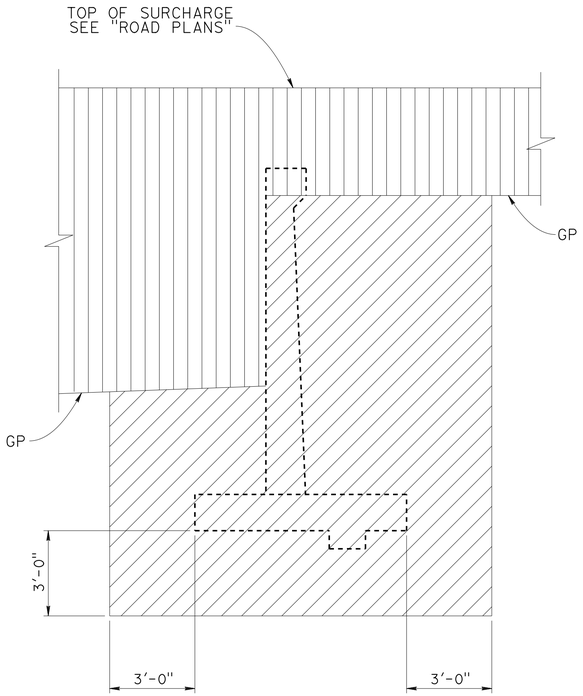

EXCAVATION

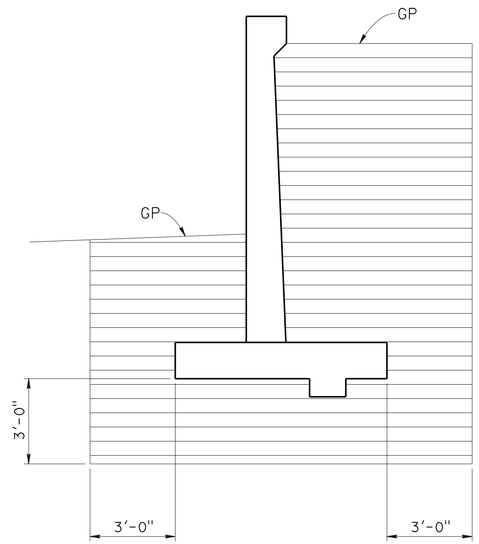

BACKFILL

LEGEND:

STRUCTURE EXCAVATION

ROADWAY EXCAVATION

STRUCTURE BACKFILL

GP - PLANNED GRADING PLANE

LIMITS OF EXCAVATION AND BACKFILL

NO SCALE

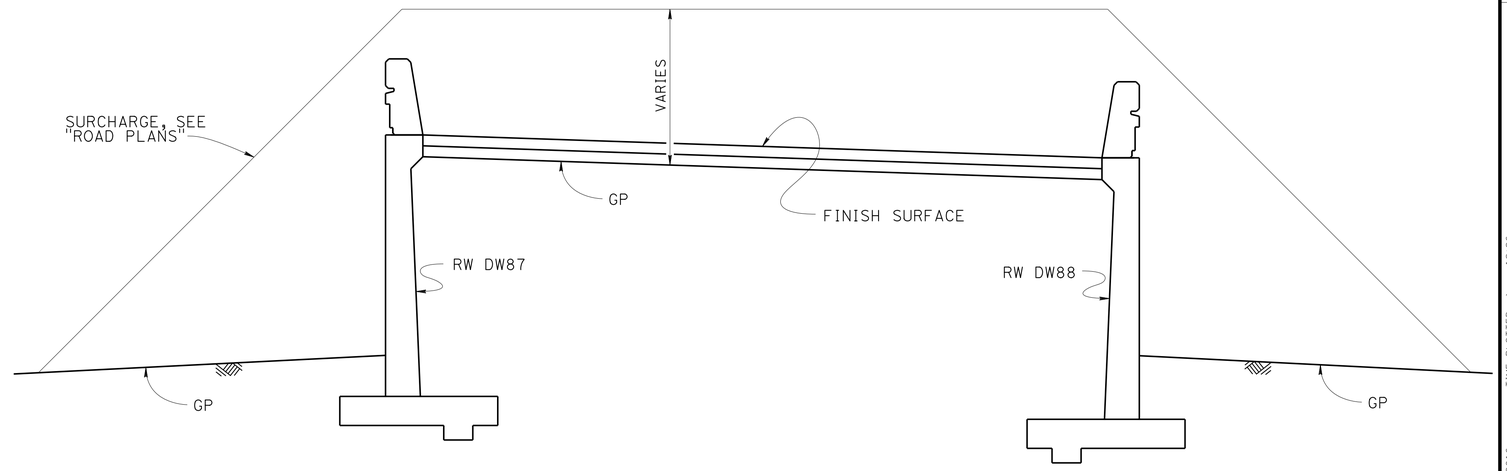

EMBANKMENT SURCHARGE

NO SCALE

DESIGN	BY Daryoush Tavatli	CHECKED Bill Kemp	
DETAILS	BY Jaime Ramirez	CHECKED Bill Kemp	
QUANTITIES	BY G. Reyes-Gutierrez	CHECKED B. Thach	

STATE OF CALIFORNIA
DEPARTMENT OF TRANSPORTATION

DIVISION OF ENGINEERING SERVICES
STRUCTURE DESIGN
DESIGN BRANCH 11

BRIDGE NO. RW DW88
POST MILE 1.06

RETAINING WALL DW88
LIMITS OF EXCAVATION AND BACKFILL

STRUCTURES DESIGN DETAIL SHEET (ENGLISH) (REV. 09-01-10)

ORIGINAL SCALE IN INCHES FOR REDUCED PLANS 0 1 2 3

UNIT: 3587
PROJECT NUMBER & PHASE: 0715000160-1
CONTRACT NO.: 07-2159U4

DISREGARD PRINTS BEARING EARLIER REVISION DATES

REVISION DATES: ~~4-26-13~~ 7-22-13

SHEET 4 OF 5

FILE => rwdw88-h-exc.dgn

USERNAME => s129624 DATE PLOTTED => 28-JAN-2016 TIME PLOTTED => 12:26

BENCH MARK

GPS 0887
ELEVATION 65.915 FT
FD 2-1/2 CADT DISK IN CONC. CURB
FLUSH, STAMPED "LA-5-1.0, 1995"
LOCATED 90' N OF THE SOUTH SIDE
FIRESTONE BLVD 0.2 MI SE OF VALLEY VIEW
NORTHING 542395.636
EASTING 1997613.893
DATUM NAVD88

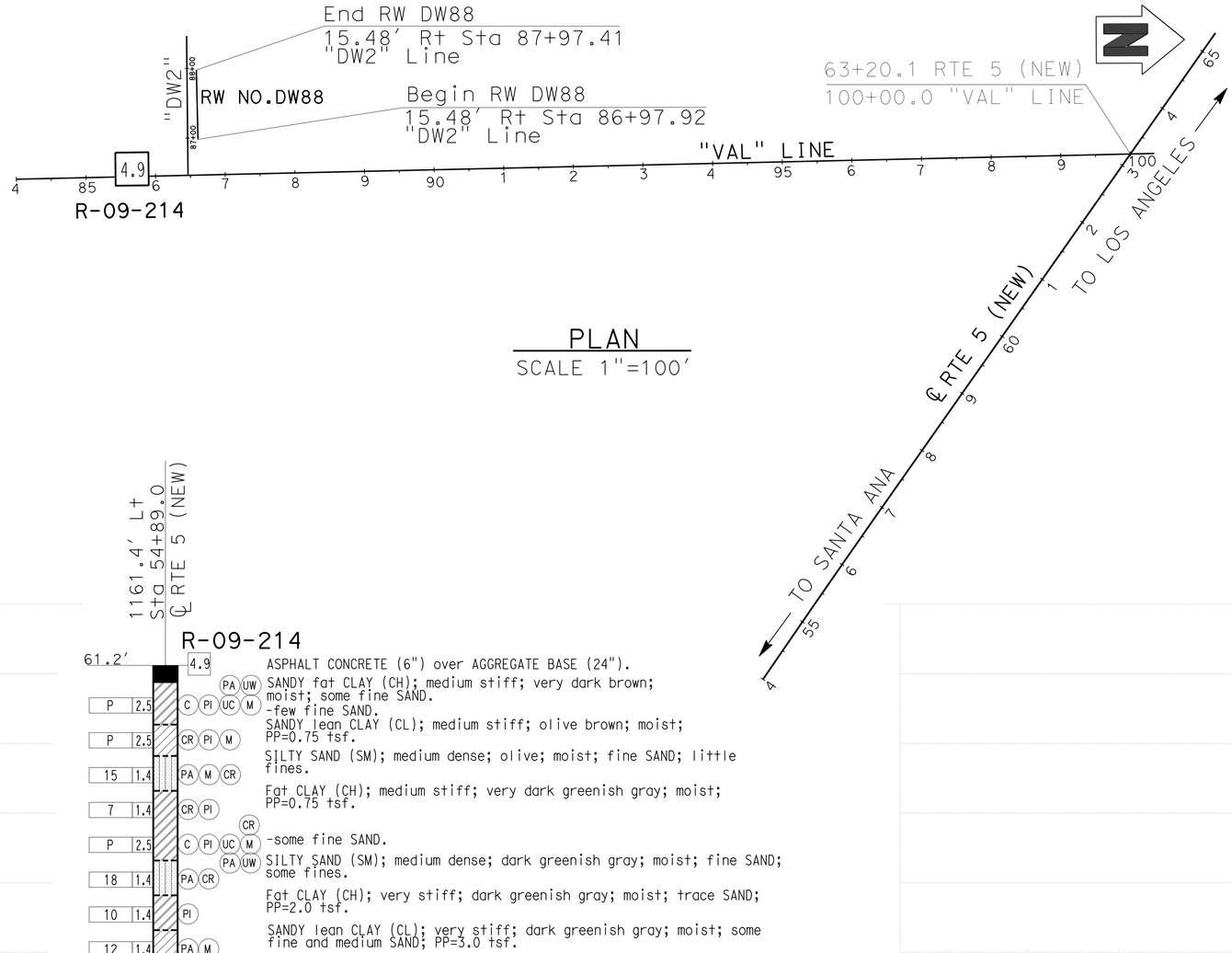

PLAN

SCALE 1"=100'

DIST	COUNTY	ROUTE	POST MILES TOTAL PROJECT	SHEET No.	TOTAL SHEETS
07	LA,Ora	5	0.0/1.5, 44.3/44.4	1491	1622

REGISTERED CIVIL ENGINEER 05/20/15 DATE

1-25-16
PLANS APPROVAL DATE

REGISTERED PROFESSIONAL ENGINEER MICHAEL G. SMITH No. 2229 Exp. 03/31/16 GEOTECHNICAL STATE OF CALIFORNIA

URS CORPORATION
2020 EAST FIRST STREET, SUITE 400
SANTA ANA, CA 92705

The State of California or its officers or agents shall not be responsible for the accuracy or completeness of electronic copies of this plan sheet.

1-This LOTB sheet was prepared in accordance with the Caltrans Soil & Rock Logging, Classification, & Presentation Manual (2010 Edition).

2-For protection of underground utility lines, hand-auger was used to remove top 5 to 10 feet of subsurface material for exploratory borings and Cone Penetration Testings.

3-2.5" to 1.4" blow counts conversion factors for fine-grain and coarse-grain soils have been 0.8 and 0.55, respectively.

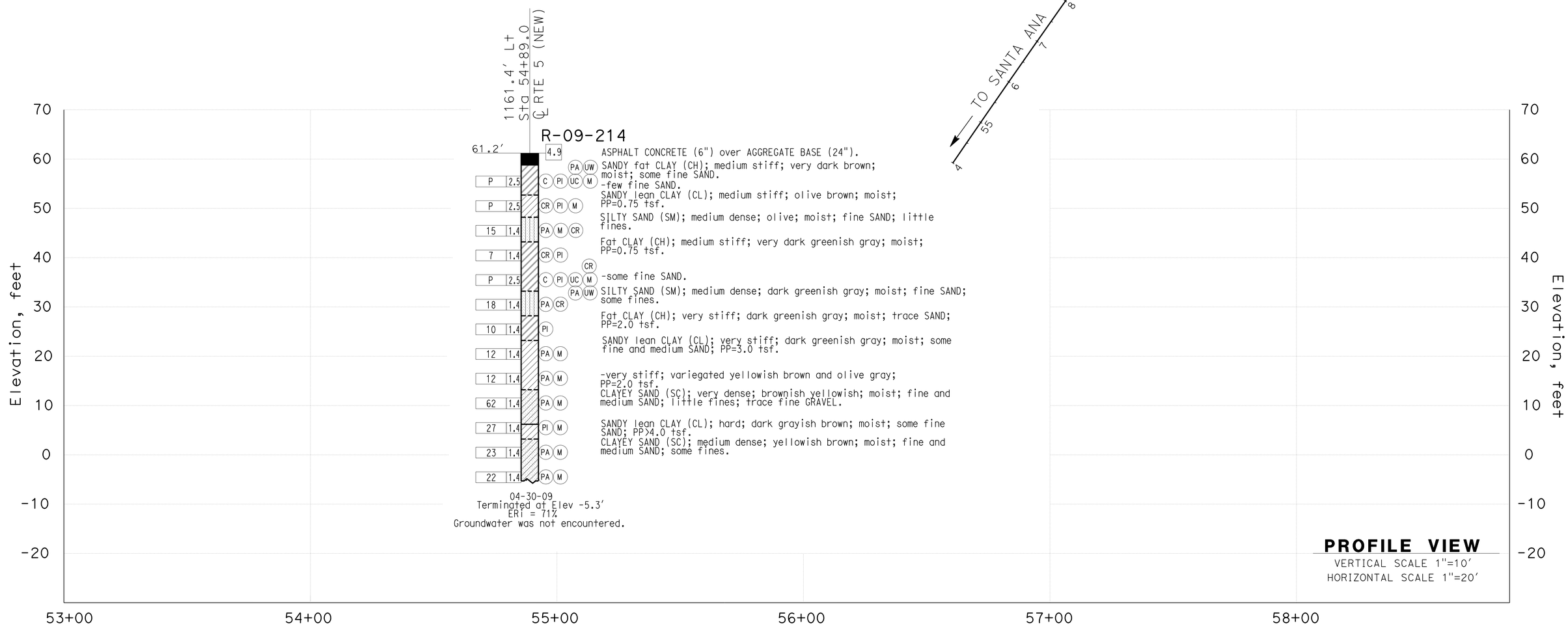

F.MOTAMED DESIGN OVERSIGHT 05/20/15 SIGN OFF DATE	DRAWN BY	T.PANAH	EJ.JEON/P.MCDONALD FIELD INVESTIGATION BY:	PREPARED FOR THE STATE OF CALIFORNIA DEPARTMENT OF TRANSPORTATION	M.G. SMITH PROJECT ENGINEER	BRIDGE NO. RW DW88 POST MILES 1.06	RETAINING WALL NO. DW88 LOG OF TEST BORINGS SHEET 1 OF 1
	CHECKED BY	A.GHAZINOOR/L.KHALKHALI	DATE: 04/30/09				

GS CIVIL LOG OF TEST BORINGS SHEET (ENGLISH) (REV. 03/14/12)

ORIGINAL SCALE IN INCHES FOR REDUCED PLANS 0 1 2 3

UNIT: 3658
PROJECT NUMBER & PHASE: 07150001601 CONTRACT NO.: 07-2159U4

DISREGARD PRINTS BEARING EARLIER REVISION DATES → 5/12/15

REVISION DATES | SHEET 5 | OF 5

FILE => rwdw88-z-lotb.dgn

USERNAME => s125624 DATE PLOTTED => 28-JAN-2016 TIME PLOTTED => 12:26

DIST	COUNTY	ROUTE	POST MILES TOTAL PROJECT	SHEET No.	TOTAL SHEETS
07	LA,Ora	5	0.0/1.5, 44.3/44.4	1492	1622

REGISTERED CIVIL ENGINEER — DATE 3-18-15

1-25-16
PLANS APPROVAL DATE

REGISTERED PROFESSIONAL ENGINEER — William D. Kemp — No. 55730 — Exp. 12/31/16 — CIVIL — STATE OF CALIFORNIA

The State of California or its officers or agents shall not be responsible for the accuracy or completeness of electronic copies of this plan sheet.

INDEX TO PLANS

SHEET No.	TITLE
1	GENERAL PLAN
2	RETAINING WALL DETAILS
3	LIMITS OF EXCAVATION AND BACKFILL
4	ARCHITECTURAL TREATMENT DETAILS

STANDARD PLANS 2010

	A10A	ABBREVIATIONS (SHEET 1 OF 2)
RSP	A10B	ABBREVIATIONS (SHEET 2 OF 2)
	A10C	LINES AND SYMBOLS (SHEET 1 OF 3)
	A10D	LINES AND SYMBOLS (SHEET 2 OF 3)
	A10E	LINES AND SYMBOLS (SHEET 3 OF 3)
RSP	A10F	LEGEND - SOIL (SHEET 1 OF 2)
RSP	A10G	LEGEND - SOIL (SHEET 2 OF 2)
	A10H	LEGEND - ROCK
	A62B	LIMITS OF PAYMENT FOR EXCAVATION AND BACKFILL- BRIDGE SURCHARGE AND WALL
	BO-3	BRIDGE DETAILS
RSP	B3-1A	RETAINING WALL TYPE 1 (CASE 1)
RSP	B3-5	RETAINING WALL DETAILS NO. 1
RSP	B11-56	CONCRETE BARRIER TYPE 736

STANDARD PLAN SHEET No.

DETAIL No.

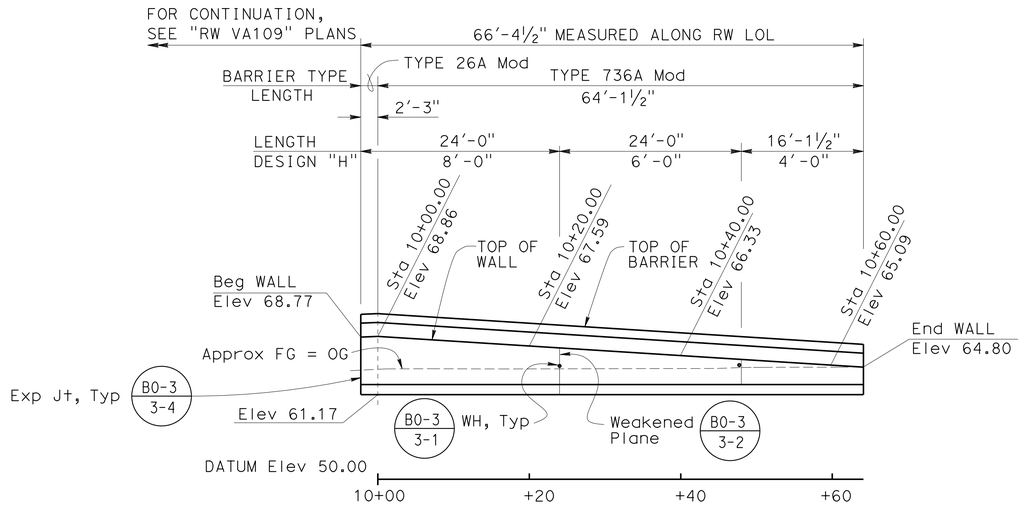

DEVELOPED ELEVATION

1" = 10'-0"

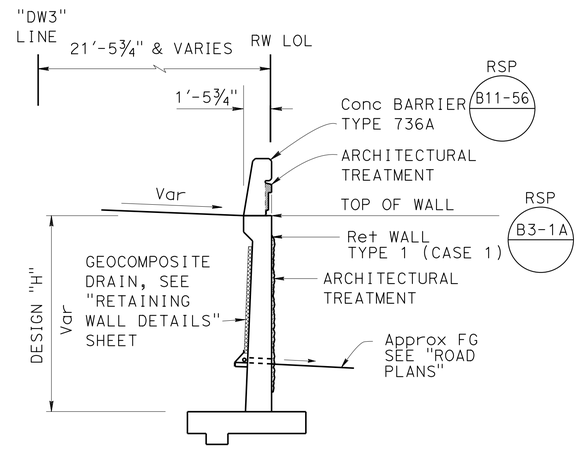

TYPICAL SECTION

NO SCALE

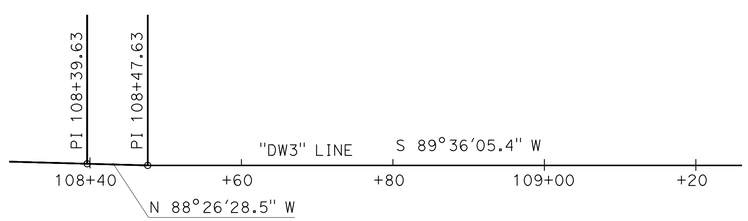

QUANTITIES

STRUCTURE EXCAVATION (RETAINING WALL)	236	CY
STRUCTURE BACKFILL (RETAINING WALL)	205	CY
STRUCTURAL CONCRETE, RETAINING WALL	38	CY
ARCHITECTURAL TREATMENT (SPLIT SLATE)	152	SQFT
BAR REINFORCING STEEL (RETAINING WALL)	6,175	LB
CONCRETE BARRIER (TYPE 736A MODIFIED)	64	LF

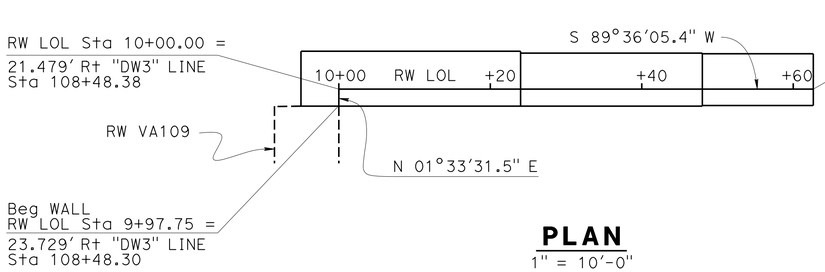

PLAN

1" = 10'-0"

NOTE:

① Transition to depressed sidewalk between Sta 9+97.75 and Sta 10+00.00, see "ROAD PLANS"

Ramin Rashedi 3-18-15
DESIGN ENGINEER

	BY	CHECKED
DESIGN	Yeo Yoon	Cipriano Manansala
DETAILS	Anthony Valdez	Cipriano Manansala
QUANTITIES	G. Reyes-Gutierrez	Phu Nguyen

LOAD & RESISTANCE FACTOR DESIGN — LIVE LOADING: HL93 W/"LOW-BOY"; PERMIT DESIGN VEHICLE

	BY	CHECKED
LAYOUT	Yeo Yoon	Cipriano Manansala
SPECIFICATIONS	Xiahong Li	PLANS AND SPECS COMPARED: Xiahong Li

ORIGINAL SCALE IN INCHES FOR REDUCED PLANS 0 1 2 3

STATE OF CALIFORNIA
DEPARTMENT OF TRANSPORTATION

DIVISION OF ENGINEERING SERVICES
STRUCTURE DESIGN
DESIGN BRANCH 11

BRIDGE NO. RW DW108
POST MILE 1.30

RETAINING WALL DW108
GENERAL PLAN

UNIT: 3587
PROJECT NUMBER & PHASE: 0715000160-1
CONTRACT NO.: 07-2159U4

DISREGARD PRINTS BEARING EARLIER REVISION DATES

REVISION DATES: 9-28-12 6-03-13 8-02-13 5-1-15

SHEET 1 OF 4

STRUCTURES DESIGN GENERAL PLAN SHEET (ENGLISH) (REV.09-01-10)

FILE => rwdw108-a-gp.dgn

USERNAME => s125624 DATE PLOTTED => 28-JAN-2016 TIME PLOTTED =>

DIST	COUNTY	ROUTE	POST MILES TOTAL PROJECT	SHEET No.	TOTAL SHEETS
07	LA,Ora	5	0.0/1.5, 44.3/44.4	1493	1622

William Kemp 3-18-15
REGISTERED CIVIL ENGINEER DATE

1-25-16
PLANS APPROVAL DATE

REGISTERED PROFESSIONAL ENGINEER William D. Kemp No. 55730 Exp. 12/31/16 CIVIL STATE OF CALIFORNIA

The State of California or its officers or agents shall not be responsible for the accuracy or completeness of electronic copies of this plan sheet.

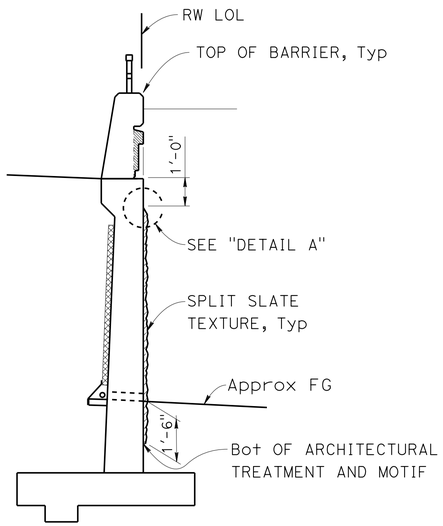

SECTION A-A
NO SCALE

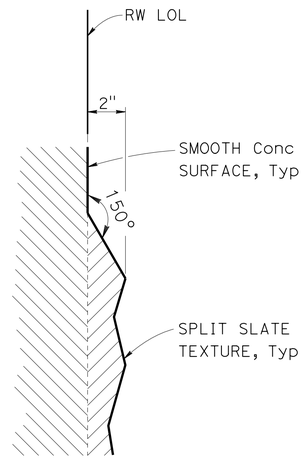

DETAIL A
3" = 1'-0"

NOTE:
All surface relief and texture shall be measured from RW LOL, Typ

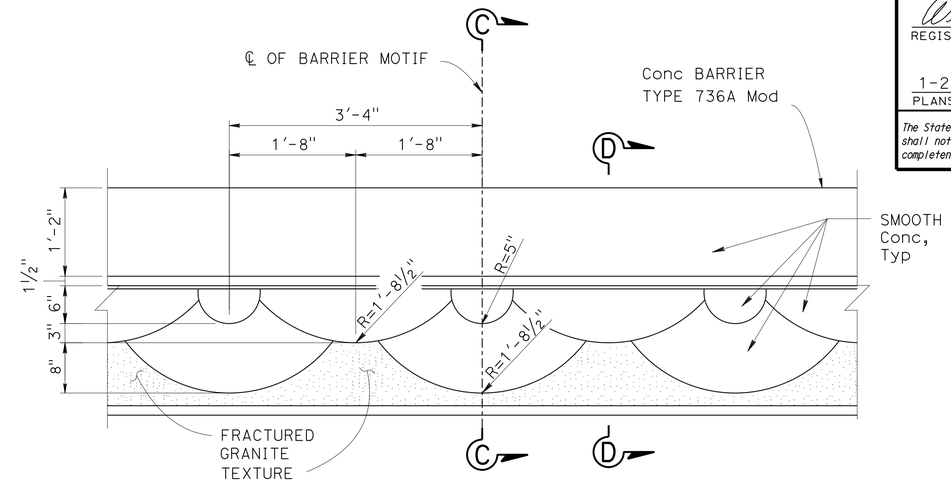

ELEVATION - BARRIER MOTIF
1" = 1'-0"

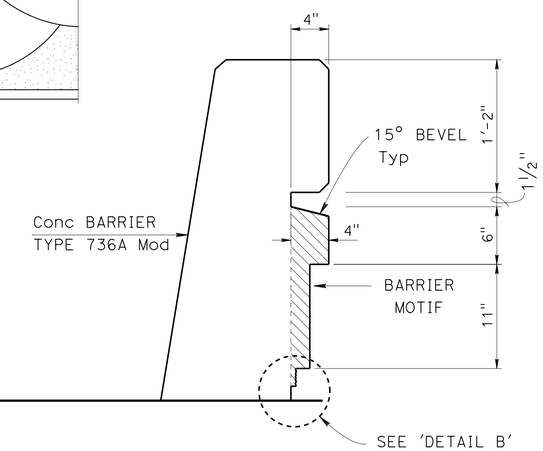

SECTION C-C
1½" = 1'-0"

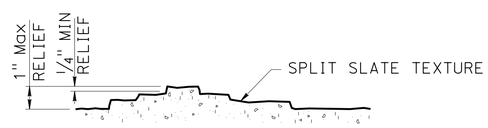

SECTION H-H
NO SCALE

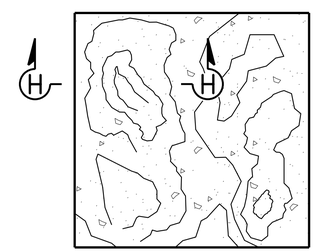

SPLIT SLATE TEXTURE
NO SCALE

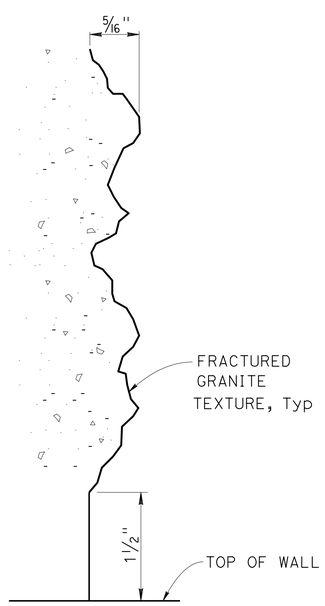

DETAIL B
NO SCALE

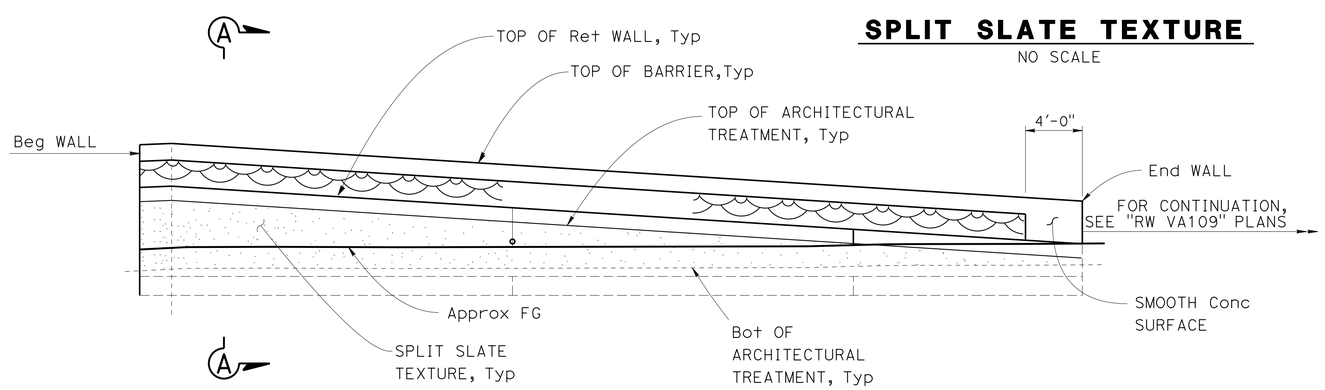

ELEVATION - ARCHITECTURAL TREATMENT
3/16" = 1'-0"

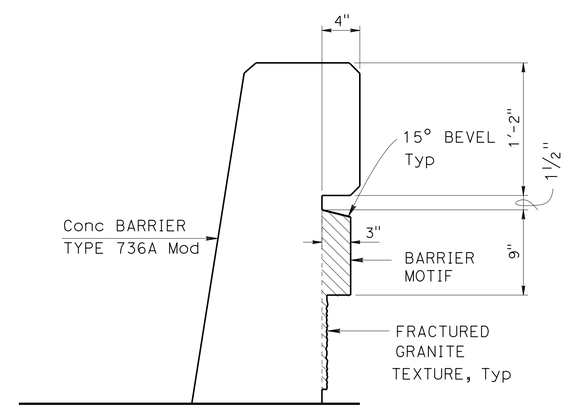

SECTION D-D
1½" = 1'-0"

DESIGN	BY H. Javier Chavez	CHECKED Issac Tasabia	
DETAILS	BY Jaime Ramirez	CHECKED Issac Tasabia	
QUANTITIES	BY G. Reyes-Gutierrez	CHECKED Phu Nguyen	

STATE OF CALIFORNIA
DEPARTMENT OF TRANSPORTATION

DIVISION OF ENGINEERING SERVICES
STRUCTURE DESIGN
DESIGN BRANCH 11

BRIDGE NO. RW DW108
POST MILE 1.30

RETAINING WALL DW108
ARCHITECTURAL TREATMENT DETAILS

STRUCTURES DESIGN DETAIL SHEET (ENGLISH) (REV. 09-01-10)

ORIGINAL SCALE IN INCHES FOR REDUCED PLANS 0 1 2 3

UNIT: 3587
PROJECT NUMBER & PHASE: 0715000160-1
CONTRACT NO.: 07-2159u4

DISREGARD PRINTS BEARING EARLIER REVISION DATES

REVISION DATES 6-26-12 5-1-12 6-03-13 3-26-13

SHEET 2 OF 4

FILE => rwdw108-b-arch.dgn

USERNAME => s125624 DATE PLOTTED => 29-JAN-2016 TIME PLOTTED => 10:25

DIST	COUNTY	ROUTE	POST MILES TOTAL PROJECT	SHEET No.	TOTAL SHEETS
07	LA,Ora	5	0.0/1.5, 44.3/44.4	1494	1622

REGISTERED CIVIL ENGINEER — DATE: 3-18-15

1-25-16
PLANS APPROVAL DATE

REGISTERED PROFESSIONAL ENGINEER — William D. Kemp — No. 55730 — Exp. 12/31/16 — CIVIL — STATE OF CALIFORNIA

The State of California or its officers or agents shall not be responsible for the accuracy or completeness of electronic copies of this plan sheet.

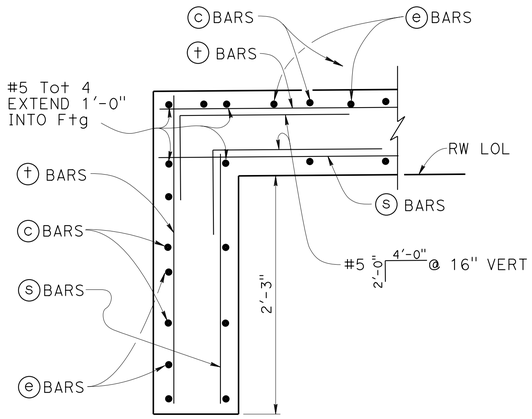

STEM CORNER DETAIL

NO SCALE

RSP B3-1A

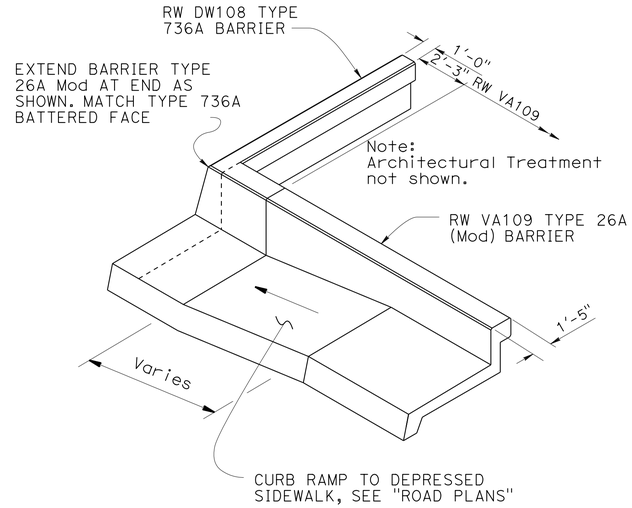

BARRIER TRANSITION DETAIL

NO SCALE

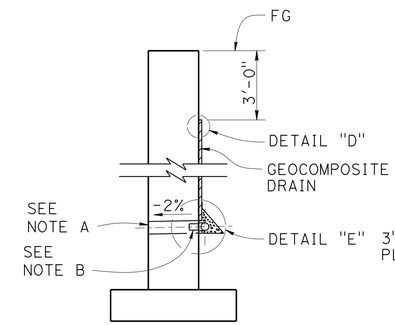

WALL SECTION

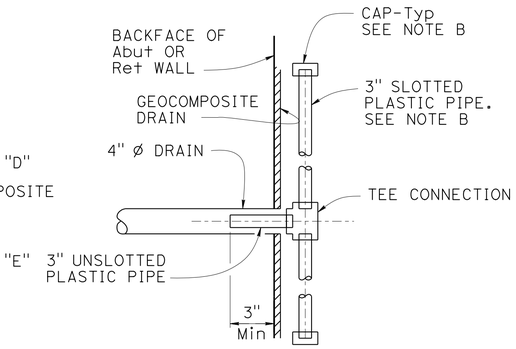

SECTION K-K

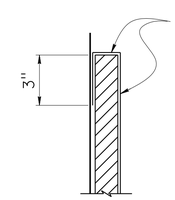

DETAIL "D"

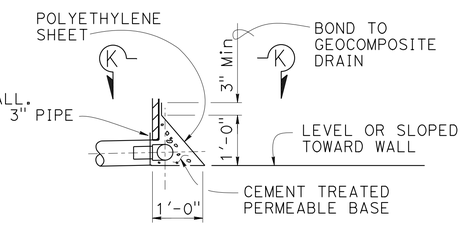

DETAIL "E"

WEEP HOLE AND GEOCOMPOSITE DRAIN

NO SCALE

NOTES: (GEOCOMPOSITE DRAIN)

A. 4" ø drains at intermediate sag points and at 25'-0" center to center (9'-0" c-c for Type 3 and 9'-2" c-c for Type 4 retaining walls). For walls adjacent to sidewalks or curbs, provide 4" ø cast iron or asbestos cement pipe under the sidewalk to discharge through curb face. Exposed wall drains shall be located 3" ± above finished grade.

B. Geocomposite drain, cement treated permeable base, and 3" ø slotted plastic pipe continuous behind retaining wall or abutment. Cap ends of pipe. Provide "Tee" connection at each 4" ø drain.

C. Connect the low end of plastic pipe to the main outlet pipe as applicable.

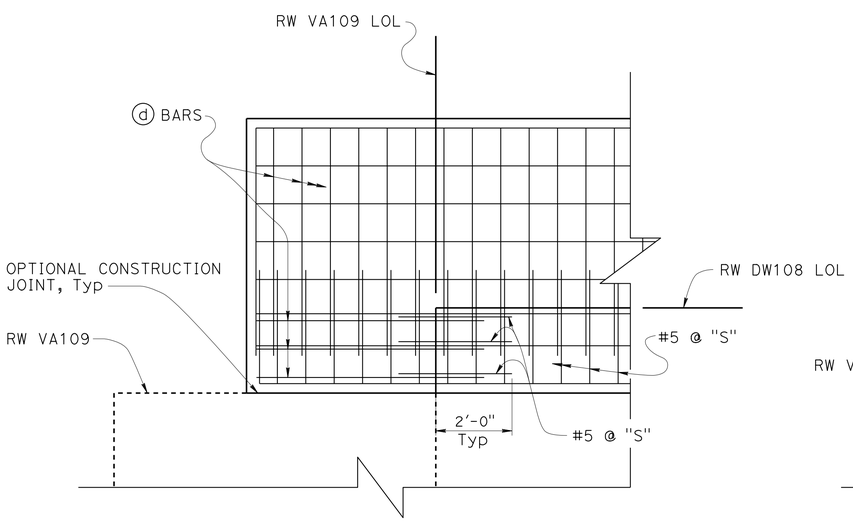

TOP REINFORCEMENT

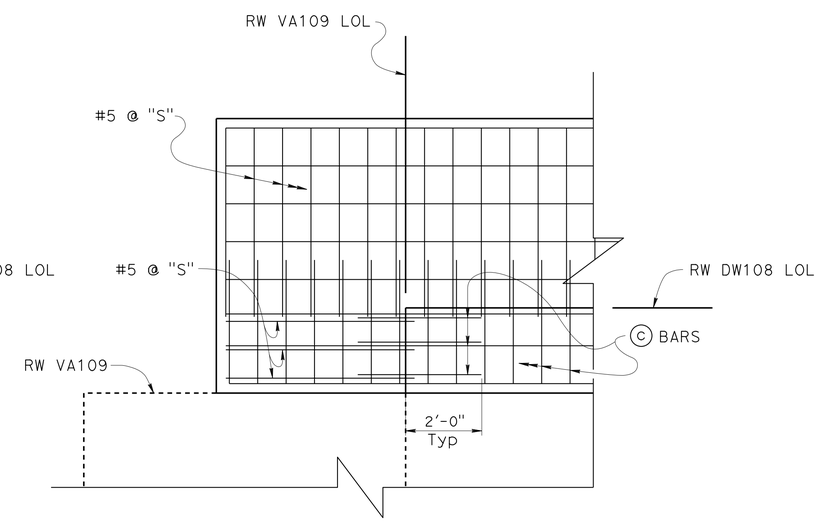

BOTTOM REINFORCEMENT

FOOTING CORNER DETAIL

1/2" = 1'-0"

RSP B3-1A

DESIGN	BY Yeo Yoon	CHECKED Cipriano Manansala	
DETAILS	BY Anthony Valdez	CHECKED Cipriano Manansala	
QUANTITIES	BY G. Reyes-Gutierrez	CHECKED Phu Nguyen	

STATE OF CALIFORNIA
DEPARTMENT OF TRANSPORTATION

DIVISION OF ENGINEERING SERVICES
STRUCTURE DESIGN
DESIGN BRANCH 11

BRIDGE NO. RW DW108
POST MILE 1.30

RETAINING WALL DW108
RETAINING WALL DETAILS

STRUCTURES DESIGN DETAIL SHEET (ENGLISH) (REV. 09-01-10)

ORIGINAL SCALE IN INCHES FOR REDUCED PLANS 0 1 2 3

UNIT: 3587
PROJECT NUMBER & PHASE: 0715000160-1
CONTRACT NO.: 07-2159u4

DISREGARD PRINTS BEARING EARLIER REVISION DATES

REVISION DATES: 8-29-11 5-1-13 6-03-13 4-14-13

SHEET 3 OF 4

FILE => rwdw108-b-retdt.dgn

USERNAME => s125624 DATE PLOTTED => 29-JAN-2016 TIME PLOTTED => 10:25

DIST	COUNTY	ROUTE	POST MILES TOTAL PROJECT	SHEET No.	TOTAL SHEETS
07	LA,Ora	5	0.0/1.5, 44.3/44.4	1495	1622

William Kemp 3-18-15
REGISTERED CIVIL ENGINEER DATE

1-25-16
PLANS APPROVAL DATE

REGISTERED PROFESSIONAL ENGINEER
William D. Kemp
No. 55730
Exp. 12/31/16
CIVIL
STATE OF CALIFORNIA

The State of California or its officers or agents shall not be responsible for the accuracy or completeness of electronic copies of this plan sheet.

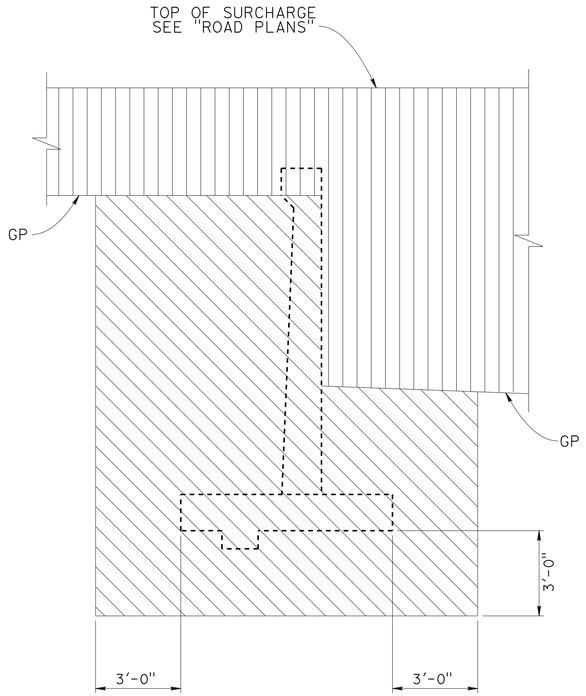

EXCAVATION

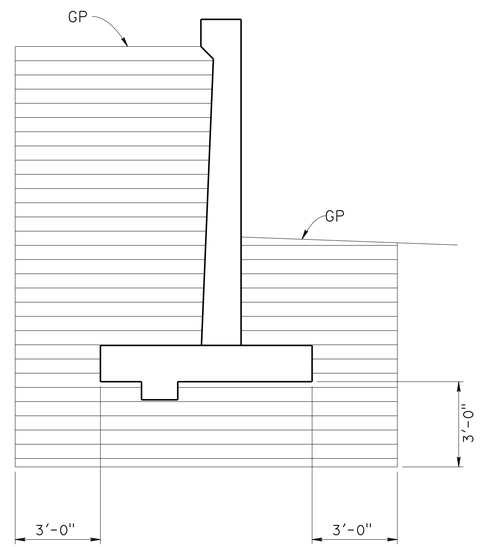

BACKFILL

LEGEND:

STRUCTURE EXCAVATION

ROADWAY EXCAVATION

STRUCTURE BACKFILL

GP - PLANNED GRADING PLANE

LIMITS OF EXCAVATION AND BACKFILL

NO SCALE

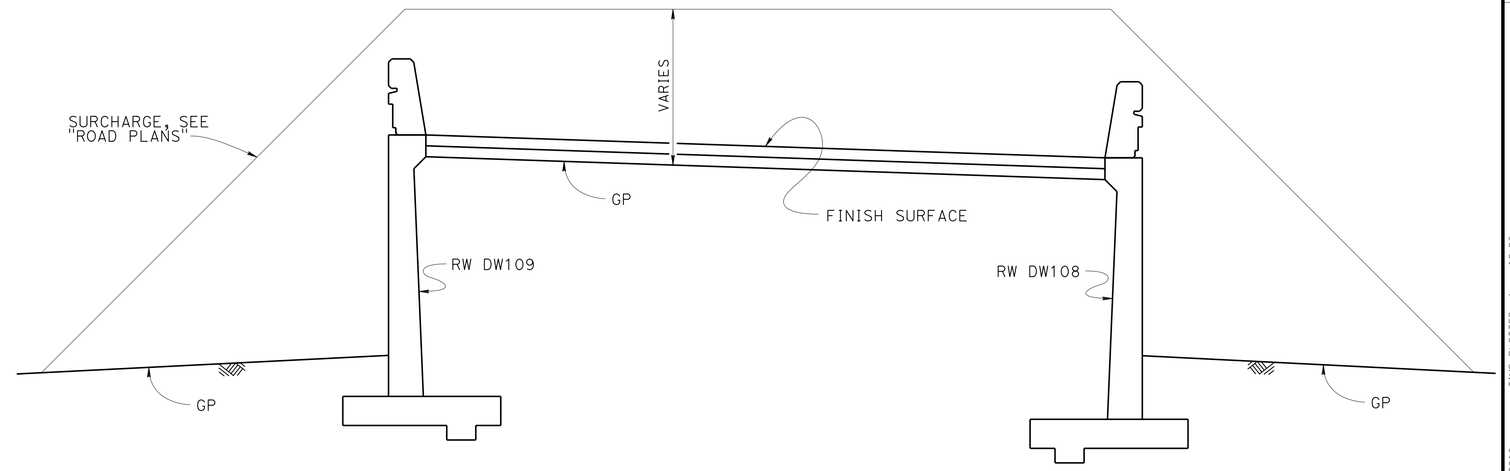

EMBANKMENT SURCHARGE

NO SCALE

DESIGN	BY Yeo Yoon	CHECKED Bill Kemp	
DETAILS	BY Jaime Ramirez	CHECKED Bill Kemp	
QUANTITIES	BY G. Reyes-Gutierrez	CHECKED Phu Nguyen	

STATE OF CALIFORNIA
DEPARTMENT OF TRANSPORTATION

DIVISION OF ENGINEERING SERVICES
STRUCTURE DESIGN
DESIGN BRANCH 11

BRIDGE NO. RW DW108
POST MILE 1.30

RETAINING WALL DW108
LIMITS OF EXCAVATION AND BACKFILL

STRUCTURES DESIGN DETAIL SHEET (ENGLISH) (REV. 09-01-10)

ORIGINAL SCALE IN INCHES FOR REDUCED PLANS 0 1 2 3

UNIT: 3587
PROJECT NUMBER & PHASE: 0715000160-1
CONTRACT NO.: 07-2159u4

DISREGARD PRINTS BEARING EARLIER REVISION DATES

REVISION DATES: 4-26-13 6-11-13

SHEET 4 OF 4

FILE => rwdw108-u-exc.dgn

USERNAME => s125624 DATE PLOTTED => 28-JAN-2016 TIME PLOTTED => 12:26

DIST	COUNTY	ROUTE	POST MILES TOTAL PROJECT	SHEET No.	TOTAL SHEETS
07	LA,Ora	5	0.0/1.5, 44.3/44.4	1496	1622

William Kemp 3-18-15
REGISTERED CIVIL ENGINEER DATE

1-25-16
PLANS APPROVAL DATE

REGISTERED PROFESSIONAL ENGINEER William D. Kemp No. 55730 Exp. 12/31/16 CIVIL STATE OF CALIFORNIA

The State of California or its officers or agents shall not be responsible for the accuracy or completeness of electronic copies of this plan sheet.

STANDARD PLAN SHEET No.

DETAIL No.

INDEX TO PLANS

SHEET No.	TITLE
1	GENERAL PLAN
2	RETAINING WALL DETAILS
3	LIMITS OF EXCAVATION ABD BACKFILL
4	ARCHITECTURAL TREATMENT DETAILS

STANDARD PLANS 2010

	A10A	ABBREVIATIONS (SHEET 1 OF 2)
RSP	A10B	ABBREVIATIONS (SHEET 2 OF 2)
	A10C	LINES AND SYMBOLS (SHEET 1 OF 3)
	A10D	LINES AND SYMBOLS (SHEET 2 OF 3)
	A10E	LINES AND SYMBOLS (SHEET 3 OF 3)
RSP	A10F	LEGEND - SOIL (SHEET 1 OF 2)
RSP	A10G	LEGEND - SOIL (SHEET 2 OF 2)
	A10H	LEGEND - ROCK
	A62B	LIMITS OF PAYMENT FOR EXCAVATION AND BACKFILL- BRIDGE SURCHARGE AND WALL
	BO-3	BRIDGE DETAILS
RSP	B3-1A	RETAINING WALL TYPE 1 (CASE 1)
RSP	B3-5	RETAINING WALL DETAILS NO. 1
RSP	B11-56	CONCRETE BARRIER TYPE 736

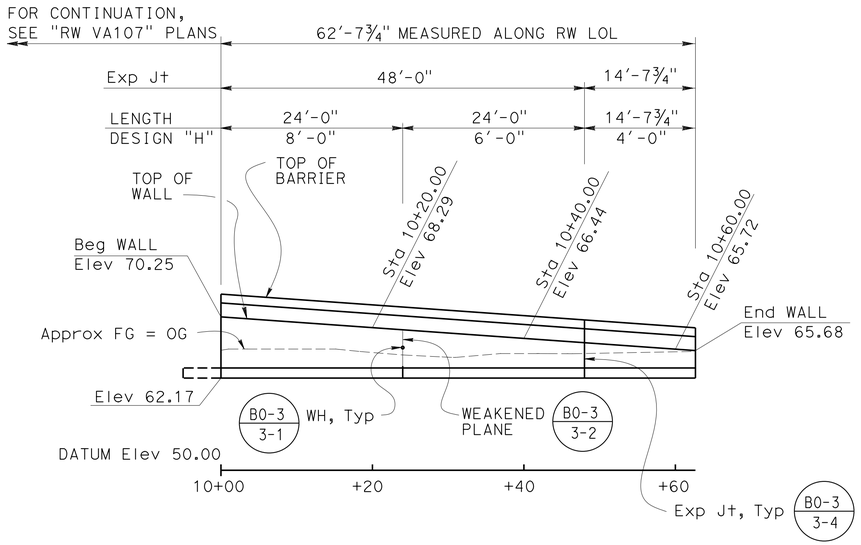

MIRRORED ELEVATION

1" = 10'-0"

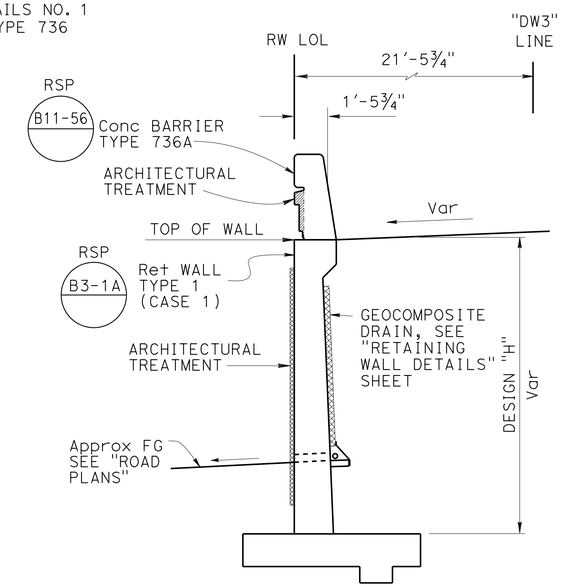

TYPICAL SECTION

NO SCALE

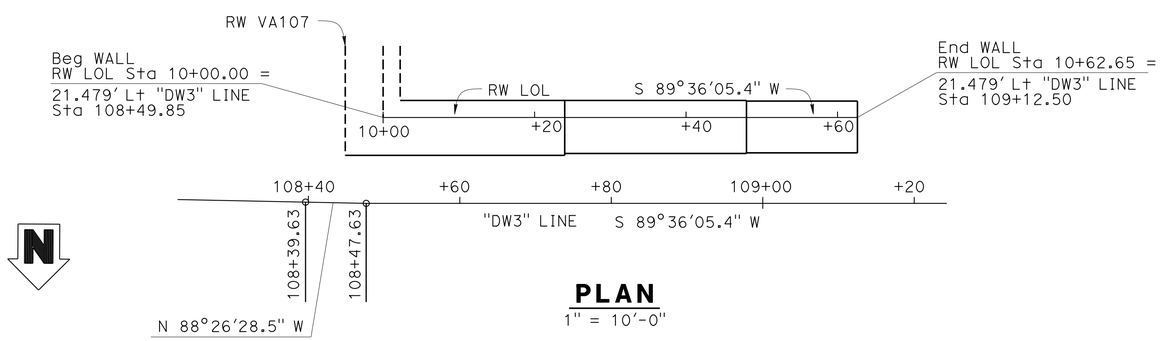

PLAN

1" = 10'-0"

QUANTITIES

STRUCTURE EXCAVATION (RETAINING WALL)	222	CY
STRUCTURE BACKFILL (RETAINING WALL)	190	CY
STRUCTURAL CONCRETE, RETAINING WALL	36	CY
ARCHITECTURAL TREATMENT (SPLIT SLATE)	153	SQFT
BAR REINFORCING STEEL (RETAINING WALL)	5,960	LB
CONCRETE BARRIER (TYPE 736A MODIFIED)	63	LF

Ramin Rashedi 3-18-15
DESIGN ENGINEER

	BY	CHECKED
DESIGN	Yeo Yoon	Cipriano Manansala
DETAILS	Anthony Valdez	Cipriano Manansala
QUANTITIES	G. Reyes-Gutierrez	P. Nguyen

LOAD & RESISTANCE FACTOR DESIGN — LIVE LOADING: HL93 W/"LOW-BOY"; PERMIT DESIGN VEHICLE

	BY	CHECKED
LAYOUT	Yeo Yoon	Cipriano Manansala
SPECIFICATIONS	Xiahong Li	Xiahong Li (PLANS AND SPECS COMPARED)

ORIGINAL SCALE IN INCHES FOR REDUCED PLANS 0 1 2 3

STATE OF CALIFORNIA
DEPARTMENT OF TRANSPORTATION

DIVISION OF ENGINEERING SERVICES
STRUCTURE DESIGN
DESIGN BRANCH 11

BRIDGE NO. RW DW109
POST MILE 1.29

RETAINING WALL DW109
GENERAL PLAN

UNIT: 3587
PROJECT NUMBER & PHASE: 0715000160-1
CONTRACT NO.: 07-2159u4

DISREGARD PRINTS BEARING EARLIER REVISION DATES

REVISION DATES: 9-08-11 5-1-13 3-26-13 4-12-13

SHEET 1 OF 4

USERNAME => s125624 DATE PLOTTED => 28-JAN-2016 TIME PLOTTED =>

STRUCTURES DESIGN GENERAL PLAN SHEET (ENGLISH) (REV.09-01-10)

FILE => rwdw109-a-gp.dgn

DIST	COUNTY	ROUTE	POST MILES TOTAL PROJECT	SHEET No.	TOTAL SHEETS
07	LA,Ora	5	0.0/1.5, 44.3/44.4	1497	1622

REGISTERED CIVIL ENGINEER — DATE: 3-18-15

1-25-16
PLANS APPROVAL DATE

REGISTERED PROFESSIONAL ENGINEER — William D. Kemp — No. 55730 — Exp. 12/31/16 — CIVIL — STATE OF CALIFORNIA

The State of California or its officers or agents shall not be responsible for the accuracy or completeness of electronic copies of this plan sheet.

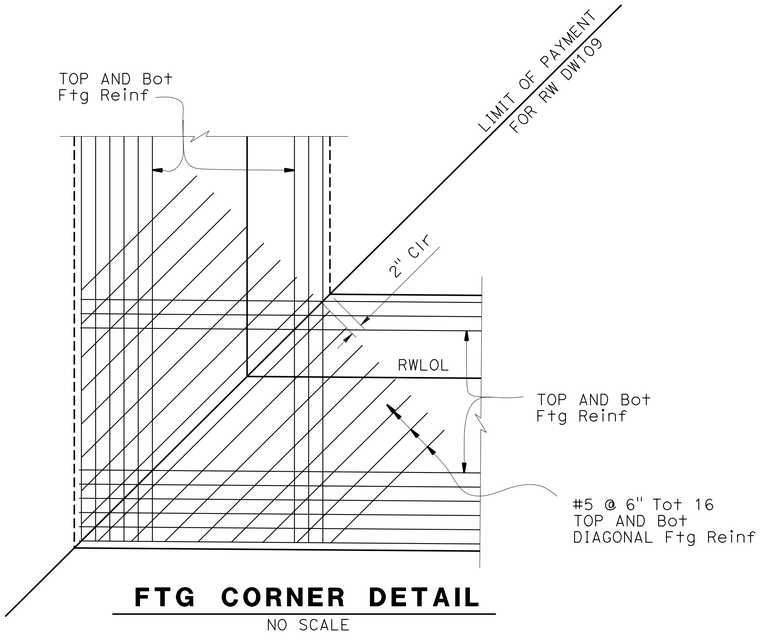

FTG CORNER DETAIL

NO SCALE

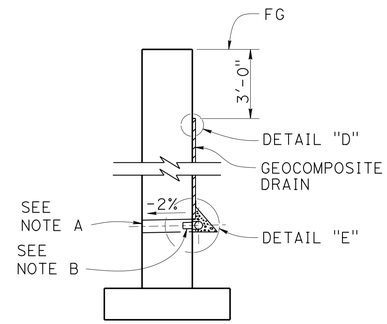

WALL SECTION

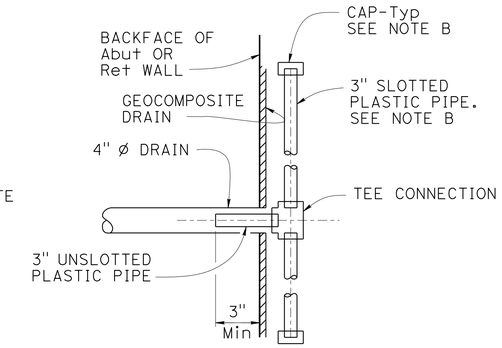

SECTION K-K

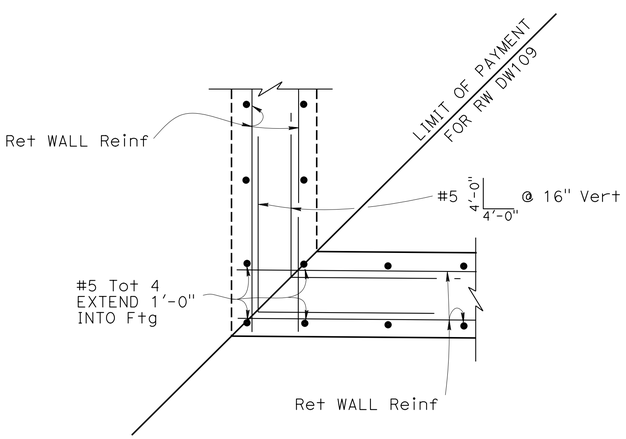

STEM CORNER DETAIL

NO SCALE

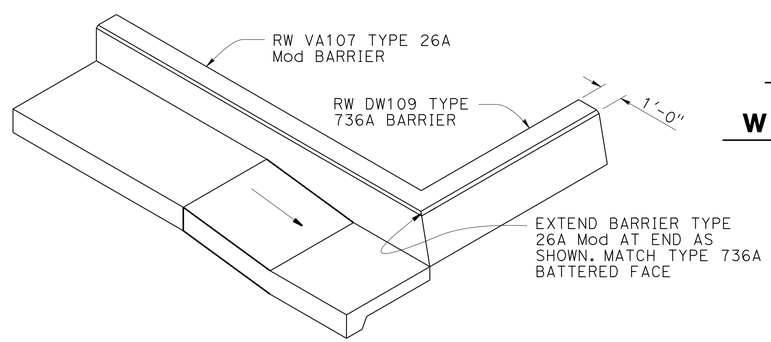

NOTE:
ARCHITECTURAL TREATMENT NOT SHOWN

BARRIER TRANSITION DETAIL

NO SCALE

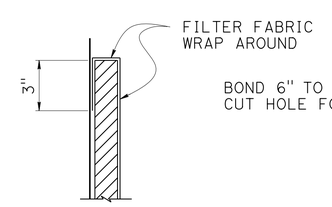

DETAIL "D"

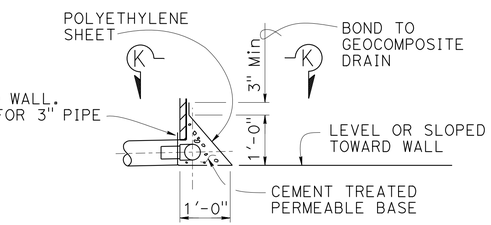

DETAIL "E"

WEEP HOLE AND GEOCOMPOSITE DRAIN

NO SCALE

Notes (GEOCOMPOSITE DRAIN):

A. 4" Ø drains at intermediate sag points and at 25'-0" center to center (9'-0" c-c for Type 3 and 9'-2" c-c for Type 4 retaining walls). For walls adjacent to sidewalks or curbs, provide 4" Ø cast iron or asbestos cement pipe under the sidewalk to discharge through curb face. Exposed wall drains shall be located 3" ± above finished grade.

B. Geocomposite drain, cement treated permeable base, and 3" Ø slotted plastic pipe continuous behind retaining wall or abutment. Cap ends of pipe. Provide "Tee" connection at each 4" Ø drain.

C. Connect the low end of plastic pipe to the main outlet pipe as applicable.

	BY	CHECKED
DESIGN	Yeo Yoon	Cipriano Manansala
DETAILS	Anthony Valdez	Cipriano Manansala
QUANTITIES	G. Reyes-Gutierrez	P. Nguyen

STATE OF CALIFORNIA
DEPARTMENT OF TRANSPORTATION

DIVISION OF ENGINEERING SERVICES
STRUCTURE DESIGN
DESIGN BRANCH 11

BRIDGE NO. RW DW109
POST MILE 1.29

RETAINING WALL DW109
RETAINING WALL DETAILS

STRUCTURES DESIGN DETAIL SHEET (ENGLISH) (REV. 09-01-10)

ORIGINAL SCALE IN INCHES FOR REDUCED PLANS 0 1 2 3

UNIT: 3587
PROJECT NUMBER & PHASE: 0715000160-1
CONTRACT NO.: 07-2159u4

DISREGARD PRINTS BEARING EARLIER REVISION DATES

REVISION DATES: 8-29-11 6-10-13 5-28-13 5-28-13

SHEET 2 OF 4

FILE => rwdw109-b-retdt.dgn

USERNAME => s125624 DATE PLOTTED => 28-JAN-2016 TIME PLOTTED => 12:26

DIST	COUNTY	ROUTE	POST MILES TOTAL PROJECT	SHEET No.	TOTAL SHEETS
07	LA,Ora	5	0.0/1.5, 44.3/44.4	1498	1622

REGISTERED CIVIL ENGINEER — DATE 3-18-15

1-25-16
PLANS APPROVAL DATE

REGISTERED PROFESSIONAL ENGINEER — William D. Kemp — No. 55730 — Exp. 12/31/16 — CIVIL — STATE OF CALIFORNIA

The State of California or its officers or agents shall not be responsible for the accuracy or completeness of electronic copies of this plan sheet.

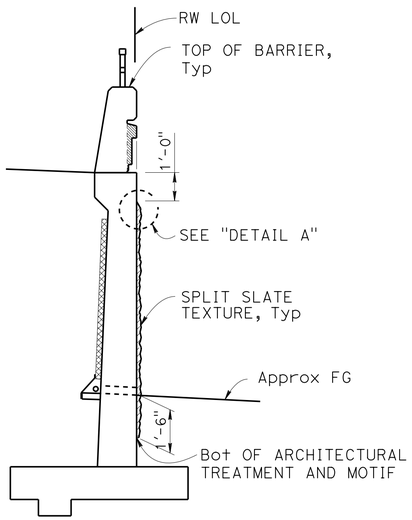

SECTION A-A
3/8" = 1'-0"

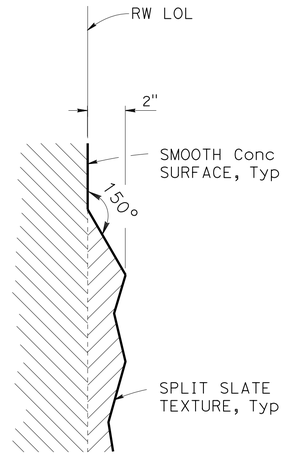

DETAIL A
3" = 1'-0"

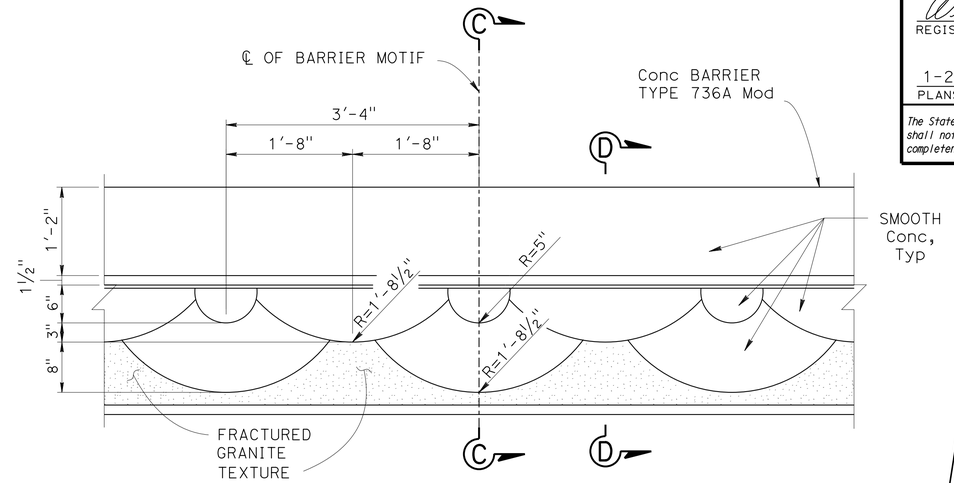

ELEVATION - BARRIER MOTIF
1" = 1'-0"

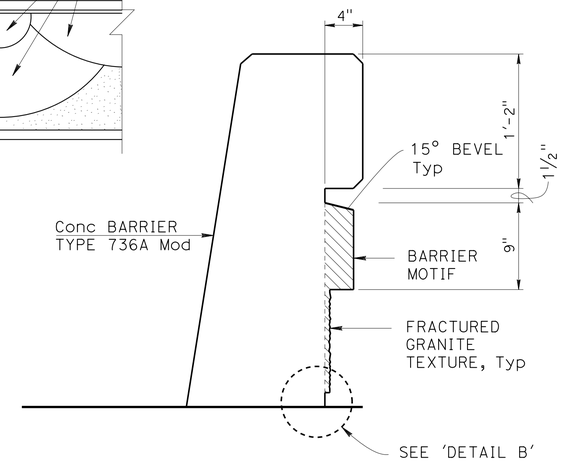

SECTION D-D
1 1/2" = 1'-0"

NOTE:

All surface relief and texture shall be measured from RW LOL, Typ

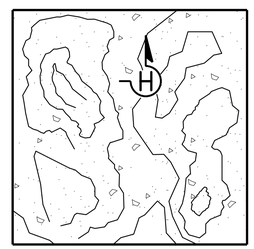

SPLIT SLATE TEXTURE
NO SCALE

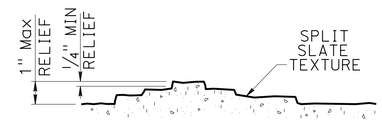

SECTION H-H
NO SCALE

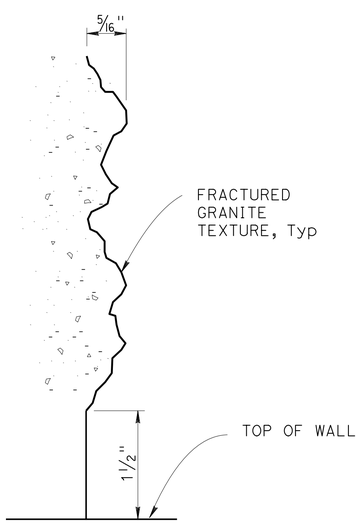

DETAIL B
NO SCALE

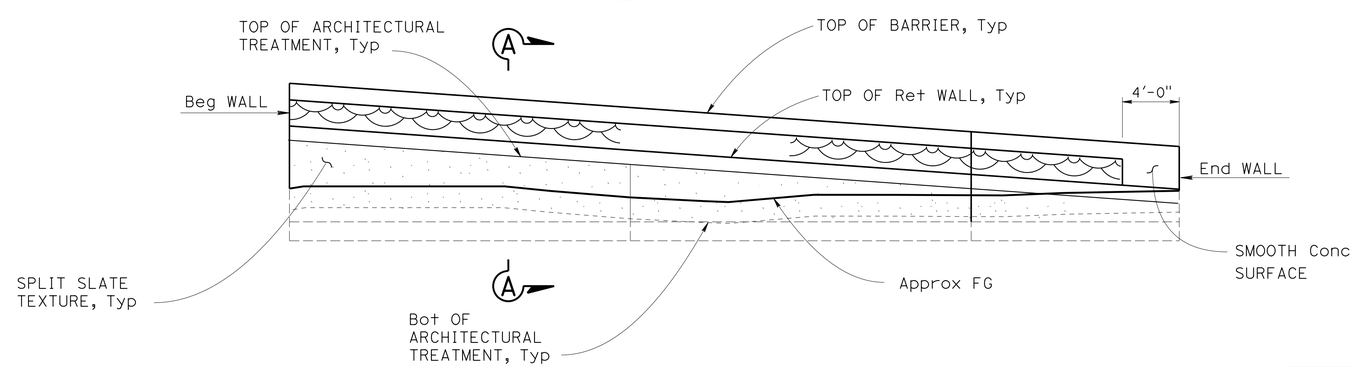

MIRRORED ELEVATION - ARCHITECTURAL TREATMENT
3/16" = 1'-0"

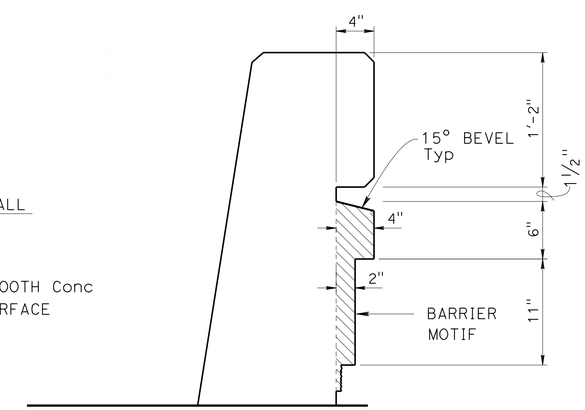

SECTION C-C
1 1/2" = 1'-0"

DESIGN	BY H. Javier Chavez	CHECKED Issac Tasabia	
DETAILS	BY Jaime Ramirez	CHECKED Issac Tasabia	
QUANTITIES	BY G. Reyes-Gutierrez	CHECKED P. Nguyen	

STATE OF CALIFORNIA
DEPARTMENT OF TRANSPORTATION

DIVISION OF ENGINEERING SERVICES
STRUCTURE DESIGN
DESIGN BRANCH 11

BRIDGE NO. RWDW109
POST MILE 1.29

RETAINING WALL DW109
ARCHITECTURAL TREATMENT DETAILS

STRUCTURES DESIGN DETAIL SHEET (ENGLISH) (REV. 09-01-10)

ORIGINAL SCALE IN INCHES FOR REDUCED PLANS 0 1 2 3

UNIT: 3587
PROJECT NUMBER & PHASE: 0715000160-1
CONTRACT NO.: 07-2159u4

DISREGARD PRINTS BEARING EARLIER REVISION DATES

REVISION DATES: 6-8-12 6-11-12 1-14-13 3-26-13

SHEET 3 OF 4

FILE => rwdw109-c-arch.dgn

USERNAME => s129624 DATE PLOTTED => 29-JAN-2016 TIME PLOTTED => 10:02

DIST	COUNTY	ROUTE	POST MILES TOTAL PROJECT	SHEET No.	TOTAL SHEETS
07	LA,Ora	5	0.0/1.5, 44.3/44.4	1499	1622

William Kemp 3-18-15
REGISTERED CIVIL ENGINEER DATE

1-25-16
PLANS APPROVAL DATE

REGISTERED PROFESSIONAL ENGINEER
William D. Kemp
No. 55730
Exp. 12/31/16
CIVIL
STATE OF CALIFORNIA

The State of California or its officers or agents shall not be responsible for the accuracy or completeness of electronic copies of this plan sheet.

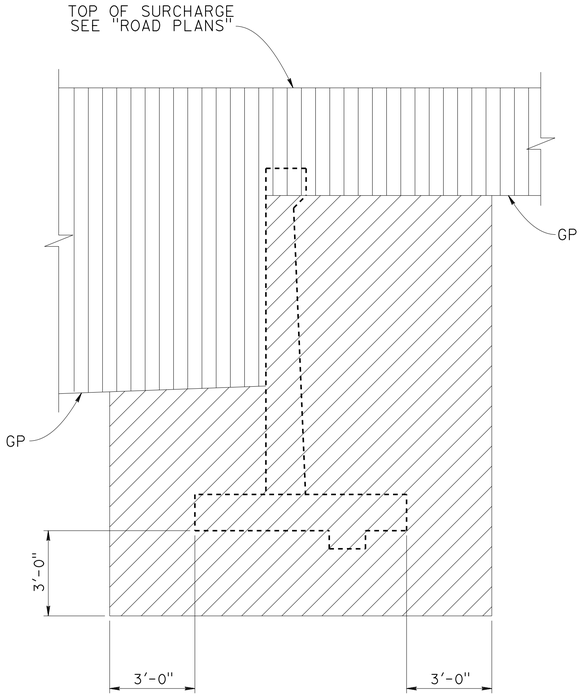

EXCAVATION

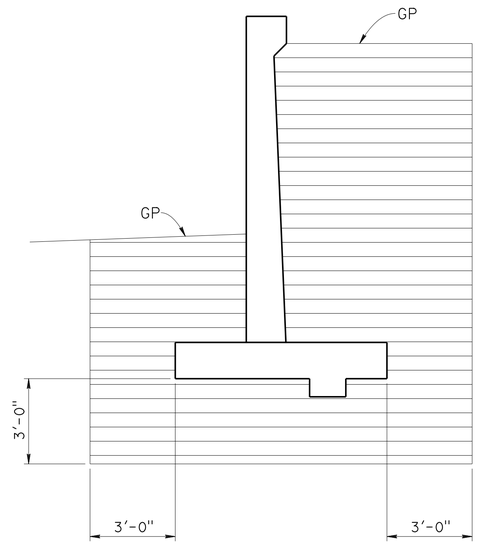

BACKFILL

LEGEND:

STRUCTURE EXCAVATION

ROADWAY EXCAVATION

STRUCTURE BACKFILL

GP - PLANNED GRADING PLANE

LIMITS OF EXCAVATION AND BACKFILL

NO SCALE

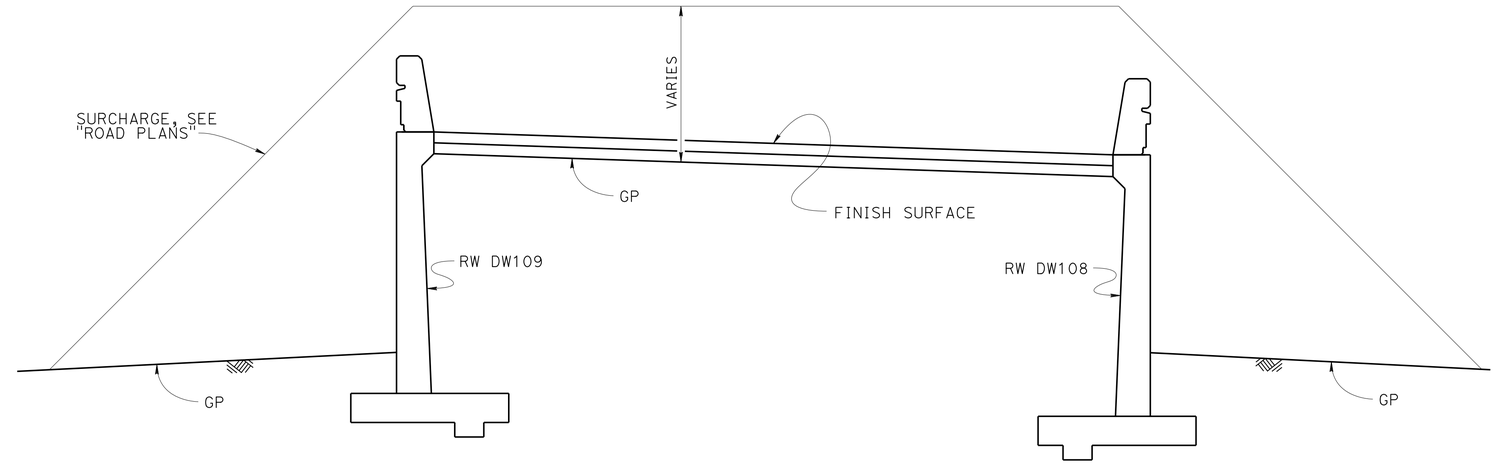

EMBANKMENT SURCHARGE

NO SCALE

DESIGN	BY Yeo Yoon	CHECKED B. Kemp	
DETAILS	BY Jaime Ramirez	CHECKED B. Kemp	
QUANTITIES	BY G. Reyes-Gutierrez	CHECKED P. Nguyen	

STATE OF CALIFORNIA
DEPARTMENT OF TRANSPORTATION

DIVISION OF ENGINEERING SERVICES
STRUCTURE DESIGN
DESIGN BRANCH 11

BRIDGE NO. RW DW109
POST MILE 1.29

RETAINING WALL DW109
LIMITS OF EXCAVATION AND BACKFILL

STRUCTURES DESIGN DETAIL SHEET (ENGLISH) (REV. 09-01-10)

ORIGINAL SCALE IN INCHES FOR REDUCED PLANS 0 1 2 3

UNIT: 3587
PROJECT NUMBER & PHASE: 0715000160-1
CONTRACT NO.: 07-2159U4

DISREGARD PRINTS BEARING EARLIER REVISION DATES

REVISION DATES 4-25-13

SHEET 4 OF 4

FILE => rwdw109-u-exc.dgn

USERNAME => s125624 DATE PLOTTED => 29-JAN-2016 TIME PLOTTED => 10:02

DIST	COUNTY	ROUTE	POST MILES TOTAL PROJECT	SHEET No.	TOTAL SHEETS
07	LA,Ora	5	0.0/1.5, 44.3/44.4	1500	1622

REGISTERED CIVIL ENGINEER 3-18-15 DATE

1-25-16
PLANS APPROVAL DATE

REGISTERED PROFESSIONAL ENGINEER DARYOUSH TAVATLI No. 56183 Exp. 12-31-16 CIVIL STATE OF CALIFORNIA

The State of California or its officers or agents shall not be responsible for the accuracy or completeness of electronic copies of this plan sheet.

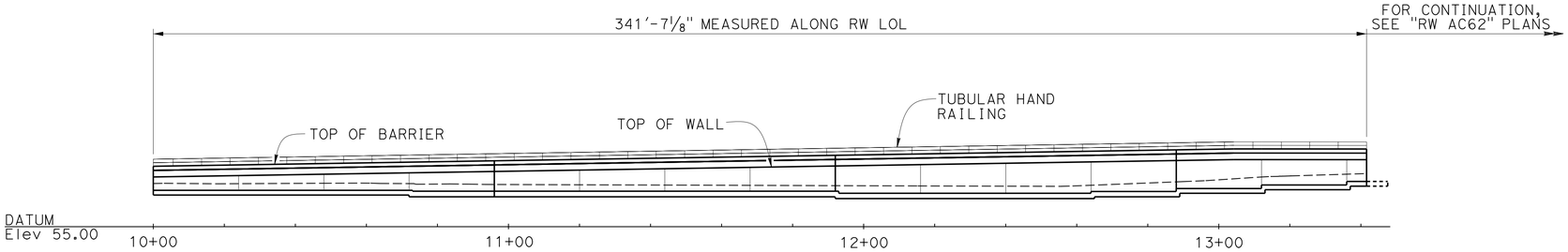

ELEVATION

1" = 20'-0"

INDEX TO PLANS

SHEET No.	TITLE
1	GENERAL PLAN
2	STRUCTURE PLAN NO.1
3	STRUCTURE PLAN NO.2
4	RETAINING WALL DETAILS
5	LIMITS OF EXCAVATION AND BACKFILL
6	ARCHITECTURAL TREATMENT DETAILS
7	BARRIER MOTIF DETAILS
8	LOG OF TEST BORINGS SHEET 1 OF 1

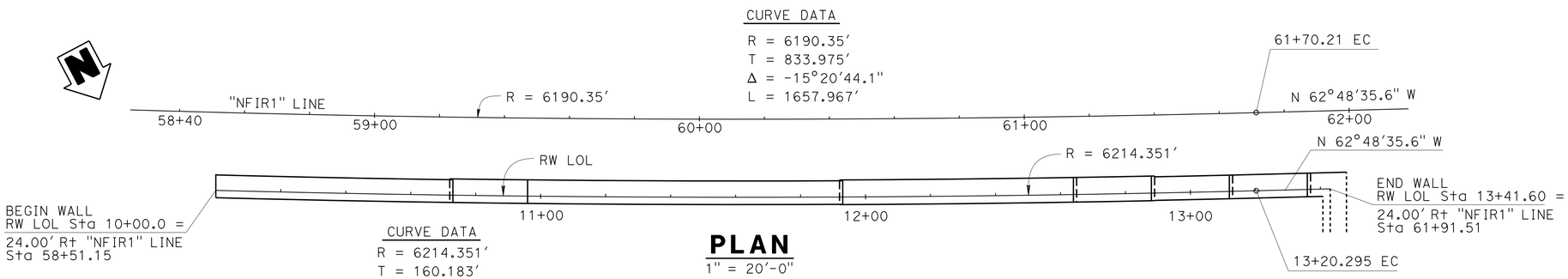

PLAN

1" = 20'-0"

STANDARD PLANS DATED MAY 2010

	A10A	ABBREVIATIONS (SHEET 1 OF 2)
RSP	A10B	ABBREVIATIONS (SHEET 2 OF 2))
	A10C	LINES AND SYMBOLS (SHEET 1 OF 3)
	A10D	LINES AND SYMBOLS (SHEET 2 OF 3)
	A10E	LINES AND SYMBOLS (SHEET 3 OF 3)
RSP	A10F	LEGEND - SOIL (SHEET 1 OF 2)
RSP	A10G	LEGEND - SOIL (SHEET 2 OF 2)
	A10H	LEGEND - ROCK
	A62B	LIMITS OF PAYMENT FOR EXCAVATION AND BACKFILL- BRIDGE SURCHARGE AND WALL
	BO-3	BRIDGE DETAILS
RSP	B3-1A	RETAINING WALL TYPE 1 (CASE 1)
RSP	B3-5	RETAINING WALL DETAILS NO. 1
	B11-51	TUBULAR HAND RAILING
RSP	B11-54	CONCRETE BARRIER TYPE 26

STANDARD PLAN SHEET No.

DETAIL No.

NOTES:

1. Transition to Depressed Sidewalk between Sta 13+35.08 and Sta 13+41.60, see "ROAD PLANS"

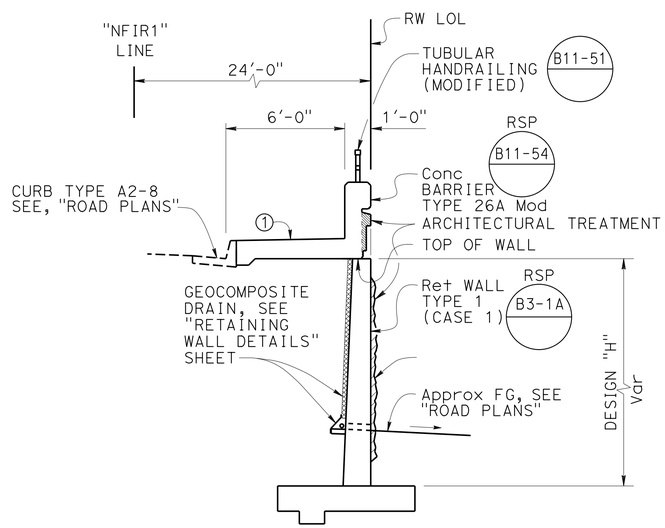

TYPICAL SECTION

NO SCALE

QUANTITIES

STRUCTURE EXCAVATION (RETAINING WALL)	1,575	CY
STRUCTURE BACKFILL (RETAINING WALL)	1,350	CY
STRUCTURAL CONCRETE, RETAINING WALL	245	CY
ARCHITECTURAL TREATMENT (SPLIT SLATE)	1,660	SQFT
BAR REINFORCING STEEL (RETAINING WALL)	33,740	LB
TUBULAR HANDRAILING (MODIFIED)	342	LF
CONCRETE BARRIER (TYPE 26 MODIFIED)	342	LF

Ramin Rashedi 3-18-15
DESIGN ENGINEER

	BY	CHECKED
DESIGN	Yeo Yoon	Daryoush Tavatli
DETAILS	Anthony Valdez	Daryoush Tavatli
QUANTITIES	Fred Fong	Christine Chan

LOAD & RESISTANCE FACTOR DESIGN — LIVE LOADING: HL93 W/"LOW-BOY": PERMIT DESIGN VEHICLE

	BY	CHECKED
LAYOUT	Yeo Yoon	Daryoush Tavatli
SPECIFICATIONS	X. Li	PLANS AND SPECS COMPARED X. Li

ORIGINAL SCALE IN INCHES FOR REDUCED PLANS 0 1 2 3

STATE OF CALIFORNIA
DEPARTMENT OF TRANSPORTATION

DIVISION OF ENGINEERING SERVICES
STRUCTURE DESIGN
DESIGN BRANCH 11

BRIDGE NO. RW NF60
POST MILE 0.25

RETAINING WALL NF60
GENERAL PLAN

UNIT: 3587
PROJECT NUMBER & PHASE: 0715000160-1 CONTRACT NO.: 07-2159u4

DISREGARD PRINTS BEARING EARLIER REVISION DATES

REVISION DATES: 10-05-11 7-26-13 08-06-12 6-03-13

SHEET 1 OF 8

USERNAME => s125624 DATE PLOTTED => 28-JAN-2016 TIME PLOTTED =>

STRUCTURES DESIGN GENERAL PLAN SHEET (ENGLISH) (REV.09-01-10)

FILE => rwnf60-a-gp.dgn