DIST	COUNTY	ROUTE	POST MILES TOTAL PROJECT	SHEET No.	TOTAL SHEETS
07	LA,Ora	5	0.0/1.5, 44.3/44.4	1301	1622

REGISTERED CIVIL ENGINEER — DATE 2-11-15

1-25-16
PLANS APPROVAL DATE

REGISTERED PROFESSIONAL ENGINEER — WILLIAM D. KEMP No. 55730 Exp. 12/31/16 CIVIL — STATE OF CALIFORNIA

The State of California or its officers or agents shall not be responsible for the accuracy or completeness of electronic copies of this plan sheet.

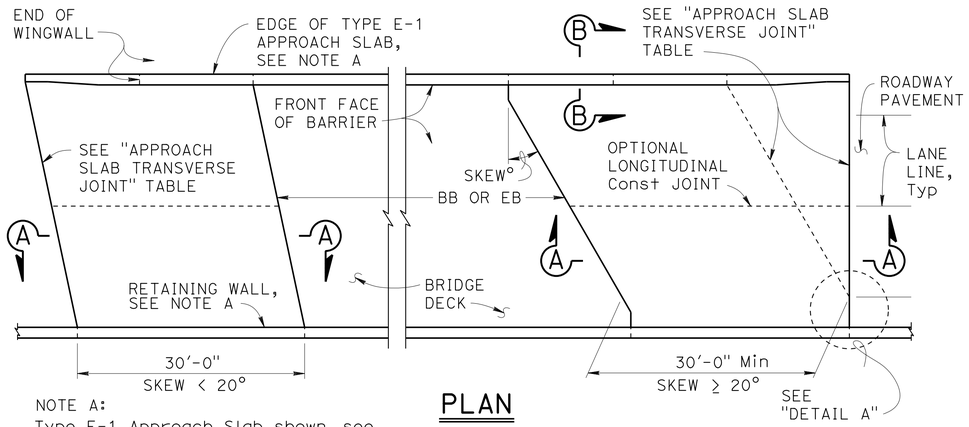

NOTE A:
Type E-1 Approach Slab shown, see "SECTION B-B" for Type E-2 details.

PLAN
1" = 10'

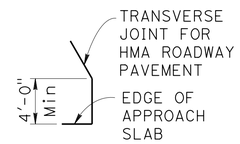

DETAIL A
No Scale

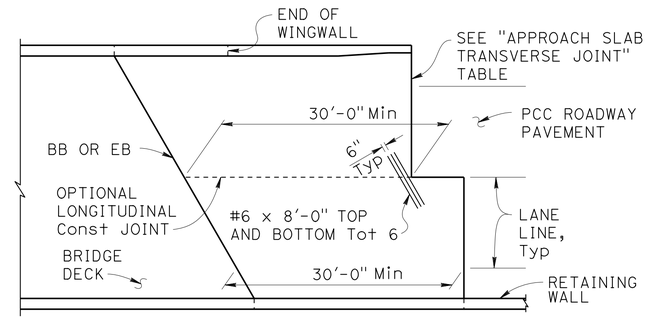

END STAGGER DETAIL
1" = 10'

APPROACH SLAB TRANSVERSE JOINT		
APPROACH SKEW	WITH HMA ROADWAY PAVEMENT	WITH PCC ROADWAY PAVEMENT
< 20°	PARALLEL TO BB OR EB	PARALLEL TO BB OR EB
20° - 45°	PARALLEL TO BB OR EB USE "DETAIL A"	STAGGER AT LANE LINES 24' TO 36' APART, SEE "END STAGGER DETAIL"
> 45°	PARALLEL TO BB OR EB USE "DETAIL A"	STAGGER AT EACH LANE LINE, SEE "END STAGGER DETAIL"

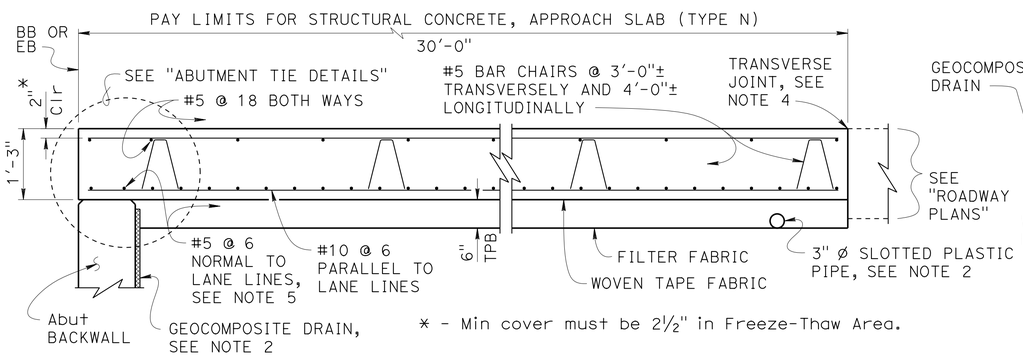

* - Min cover must be 2½" in Freeze-Thaw Area.

SECTION A-A
¾" = 1'-0"

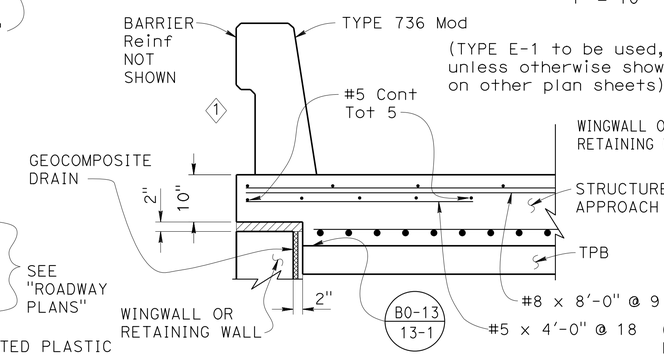

TYPE E-1

Indicates Expanded Polystyrene, remove after concrete is placed.

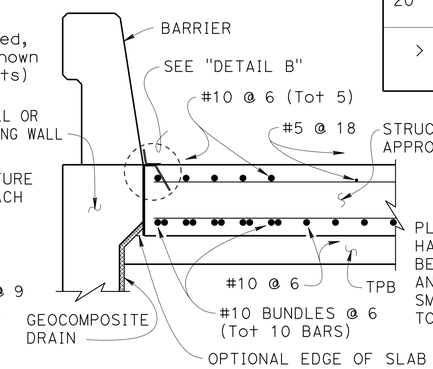

TYPE E-2

SECTION B-B
¾" = 1'-0"

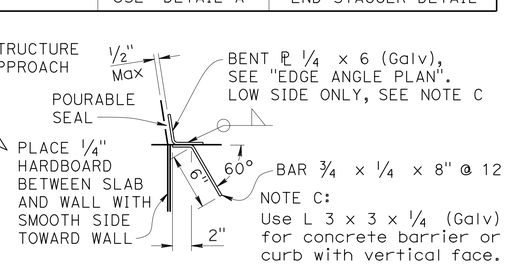

NOTE C:
Use L 3 x 3 x ¼ (Galv) for concrete barrier or curb with vertical face.

DETAIL B
1½" = 1'-0"

DESIGN NOTES

DESIGN: AASHTO LRFD Bridge Design Specifications, 2012 Edition with Caltrans Amendments, preface dated January 2014

LIMIT STATES: Service I, Strength I & II, Extreme II and Fatigue I (γ_{FAT} = 1.0)

DEAD LOAD: Includes 35 psf for future wearing surface

LIVE LOAD: HL93 and permit design load
Equivalent strip width method: W_1 = 12 ft
Slab span: L_1 = 24.5 ft

REINFORCED CONCRETE:
f_y = 60 ksi
f'_c = 3.6 ksi
n = 8

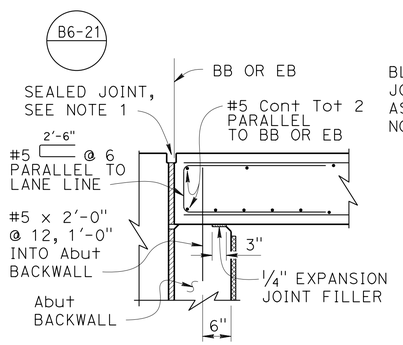

MR ≤ 2"

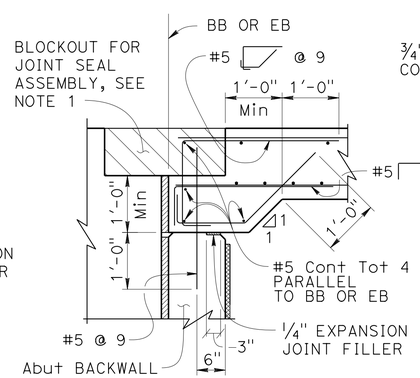

MR > 2"

ABUTMENT TIE DETAILS
¾" = 1'-0"

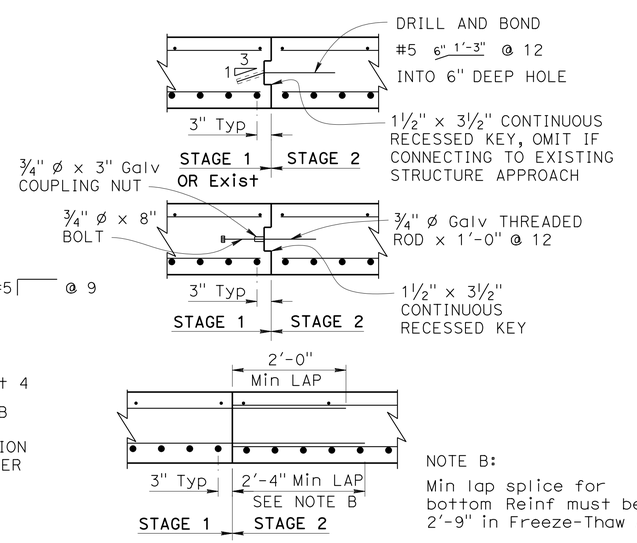

NOTE B:
Min lap splice for bottom Reinf must be 2'-9" in Freeze-Thaw Area.

LONGITUDINAL CONSTRUCTION JOINT ALTERNATIVES
¾" = 1'-0"

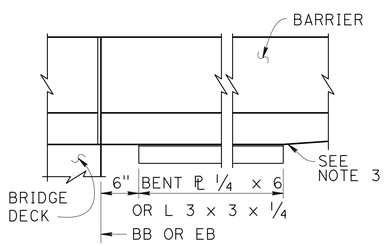

EDGE ANGLE PLAN
1" = 1'-0"

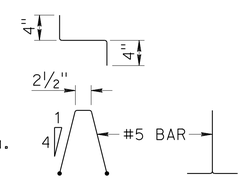

BAR CHAIR DETAIL
1" = 1'-0"

NOTES:

1. For joint protection details, blockout dimensions for joint seal assembly, and other details not shown, see other plan sheets. For MR ≤ 2", adjust reinforcement to clear sawcut for sealed joint. For MR > 2", haunch reinforcement placed for joint seal assembly blockout must be normal to BB or EB and spaced to avoid joint seal assembly anchorage.
2. For drainage details, see "STRUCTURE APPROACH DRAINAGE DETAILS" sheet.
3. End the plate or edge angle at beginning of barrier transition, end of wingwall, or end of structure approach as applicable.
4. (2) Transverse Joint must be a minimum of 5'-0" from an existing or constructed weakened plane joint in approach PCC roadway pavement. Refer to Standard Plans RSP P10 and RSP P14.
5. At the Contractor's option, approach slab transverse reinforcement may be placed parallel to BB or EB. Spacing of transverse reinforcement is measured along ℄ roadway.

STANDARD DRAWING
FILE NO. xs3-120
APPROVAL DATE January 2015

(1) Modified Detail
(2) Modified Note

STATE OF CALIFORNIA
DEPARTMENT OF TRANSPORTATION
DIVISION OF ENGINEERING SERVICES

BRIDGE NO. 53-3059K
POST MILE 1.14

VALLEY VIEW AVE ON RAMP
STRUCTURE APPROACH TYPE N(30S)

DS OSD 2147A (ENGLISH STANDARD DRAWING "XS" BORDER REV. (10-01-14)

ORIGINAL SCALE IN INCHES FOR REDUCED PLANS 0 1 2 3

UNIT: 3587
PROJECT NUMBER & PHASE: 0715000160-1
CONTRACT NO.: 07-2159u4

DISREGARD PRINTS BEARING EARLIER REVISION DATES
REVISION DATES: 4-13-12 7-22-13 9-06-13 2-11-15

SHEET 29 OF 35

FILE => 53-3059k-s-sa.dgn

USERNAME => s125624 DATE PLOTTED => 03-FEB-2016 TIME PLOTTED => 13:52

DIST	COUNTY	ROUTE	POST MILES TOTAL PROJECT	SHEET No.	TOTAL SHEETS
07	LA,Ora	5	0.0/1.5, 44.3/44.4	1302	1622

REGISTERED CIVIL ENGINEER — DATE 2-11-15

1-25-16
PLANS APPROVAL DATE

REGISTERED PROFESSIONAL ENGINEER — WILLIAM D. KEMP No. 55730 Exp. 12/31/16 CIVIL — STATE OF CALIFORNIA

The State of California or its officers or agents shall not be responsible for the accuracy or completeness of electronic copies of this plan sheet.

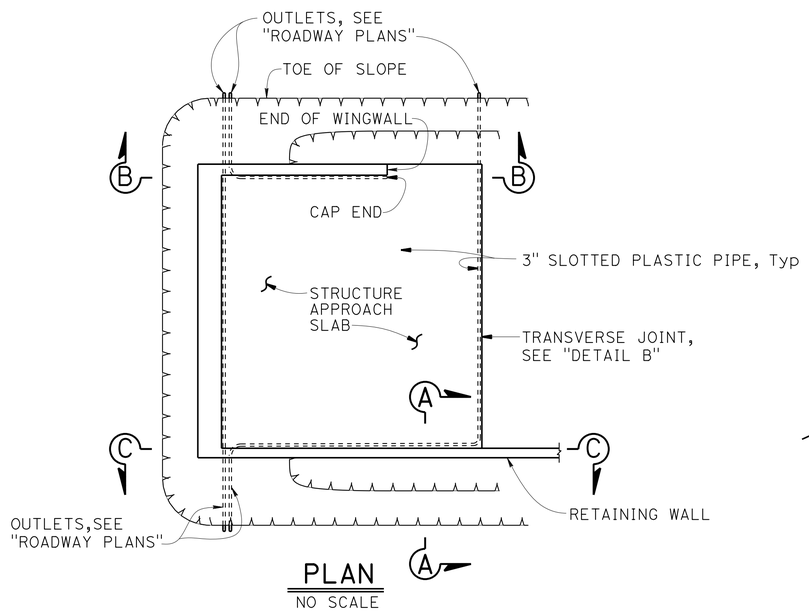

PLAN
NO SCALE

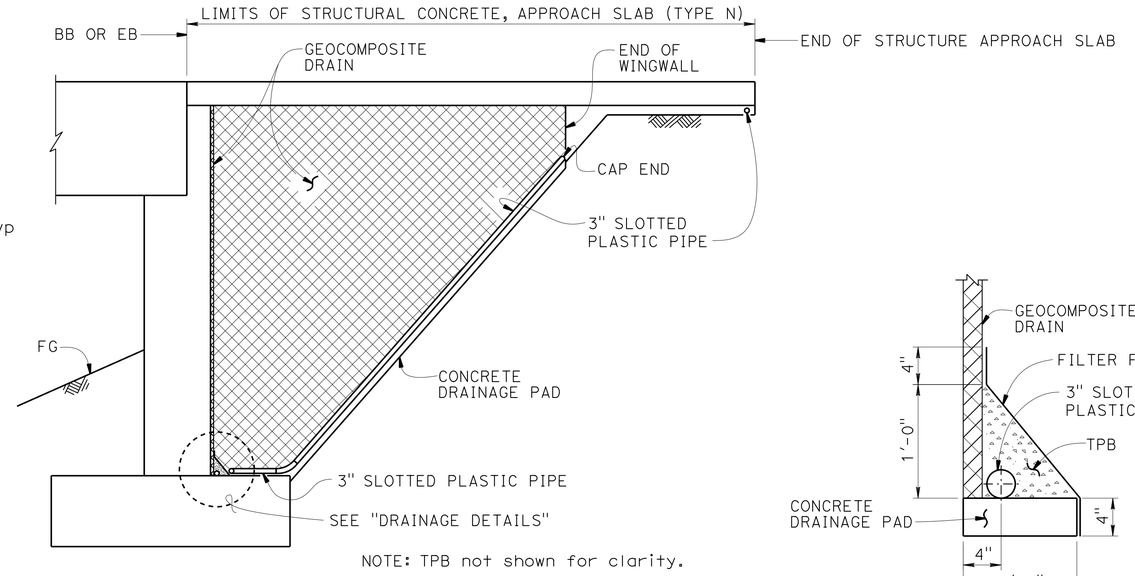

NOTE: TPB not shown for clarity.

SECTION B-B
NO SCALE

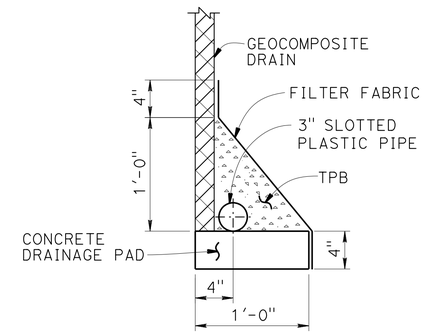

DRAINAGE PAD

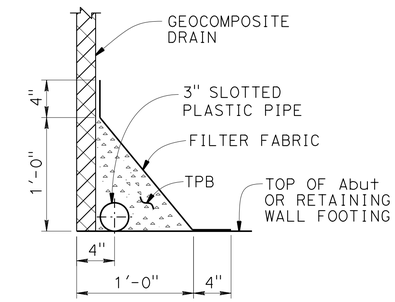

FOOTING

DRAINAGE DETAILS
$1\frac{1}{2}$" = 1'-0"

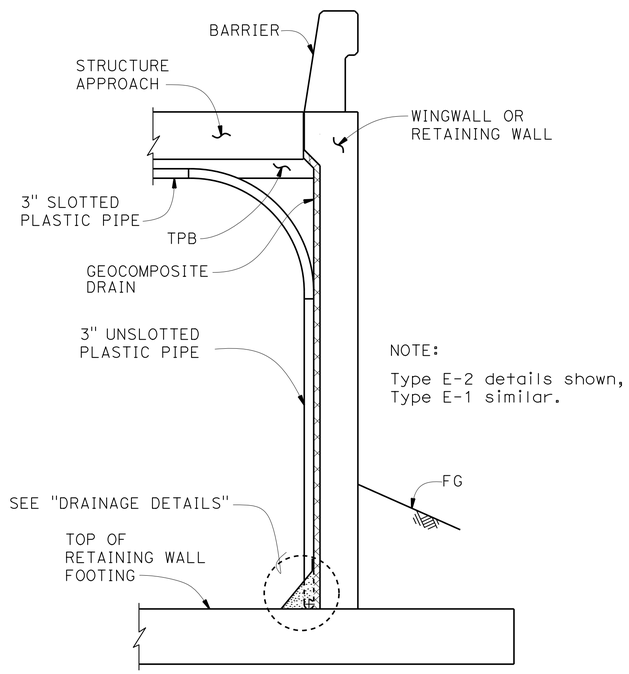

NOTE:

Type E-2 details shown, Type E-1 similar.

SECTION A-A
NO SCALE

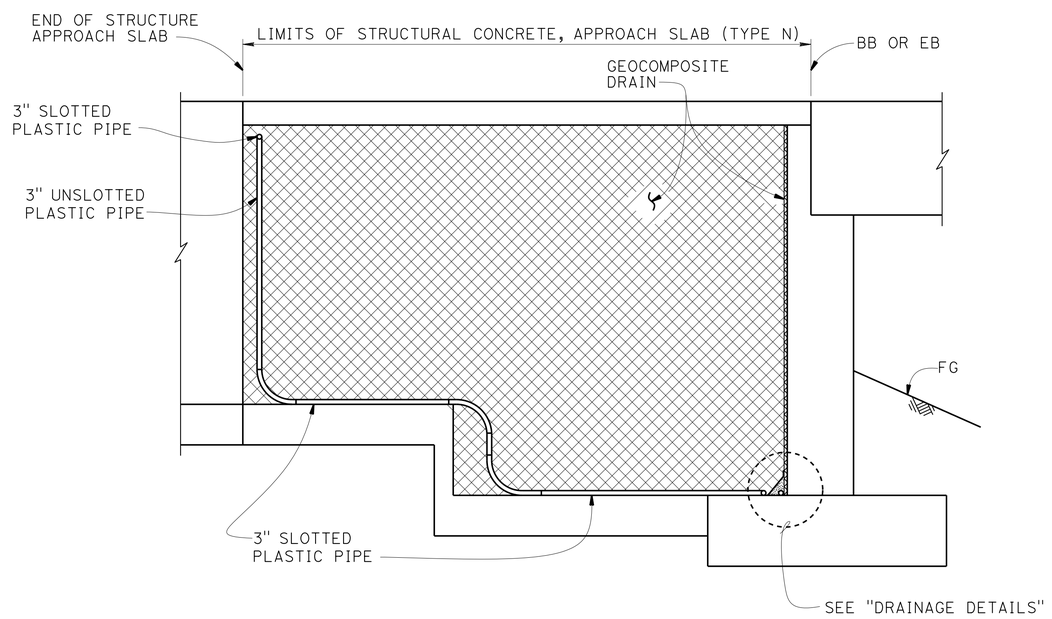

SECTION C-C
NO SCALE

NOTE: TPB not shown for clarity.

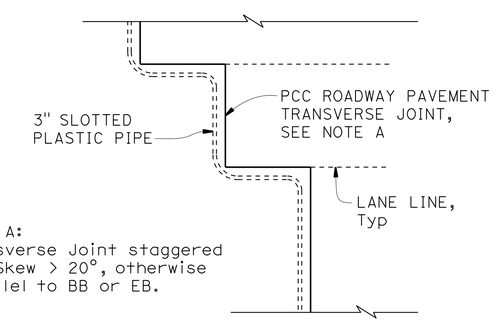

NOTE A:
Transverse Joint staggered for Skew > 20°, otherwise parallel to BB or EB.

DETAIL B
NO SCALE

NOTES:

1. For structural approach and other details not shown, see other plan sheets.
2. All bends in plastic pipe must have 3'-0" minimum radius. Plastic pipe used for bends is not required to be slotted.

STANDARD DRAWING

FILE NO. xs3-110 — APPROVAL DATE January 2015

STATE OF CALIFORNIA — DEPARTMENT OF TRANSPORTATION

DIVISION OF ENGINEERING SERVICES

BRIDGE NO. 53-3059K — POST MILE 1.14

VALLEY VIEW AVE SB ON RAMP
STRUCTURE APPROACH DRAINAGE DETAILS

DS OSD 2147A (ENGLISH STANDARD DRAWING "XS" BORDER REV. (10-01-14)

ORIGINAL SCALE IN INCHES FOR REDUCED PLANS 0 1 2 3

UNIT: 3587
PROJECT NUMBER & PHASE: 0715000160-1 CONTRACT NO.: 07-2159u4

DISREGARD PRINTS BEARING EARLIER REVISION DATES — REVISION DATES 4-12-12 7-22-13 9-06-13 2-11-15 — SHEET 30 OF 35

FILE => 53-3059k-t-sadd.dgn

USERNAME => s126624 DATE PLOTTED => 03-FEB-2016 TIME PLOTTED => 13:52

DIST	COUNTY	ROUTE	POST MILES TOTAL PROJECT	SHEET No.	TOTAL SHEETS
07	LA,Ora	5	0.0/1.5, 44.3/44.4	1303	1622

REGISTERED CIVIL ENGINEER — DATE: 3-18-15

1-25-16
PLANS APPROVAL DATE

REGISTERED PROFESSIONAL ENGINEER — William D. Kemp — No. 55730 — Exp. 12/31/16 — CIVIL — STATE OF CALIFORNIA

The State of California or its officers or agents shall not be responsible for the accuracy or completeness of scanned copies of this plan sheet.

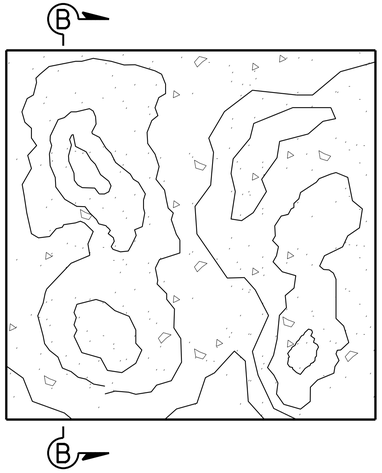

SPLIT SLATE TEXTURE
NO SCALE

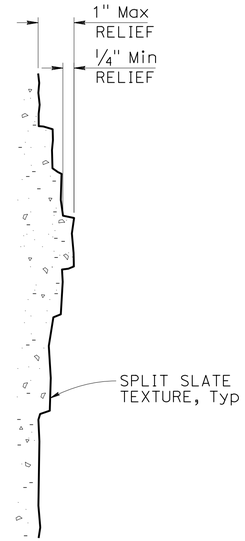

SECTION B-B
NO SCALE

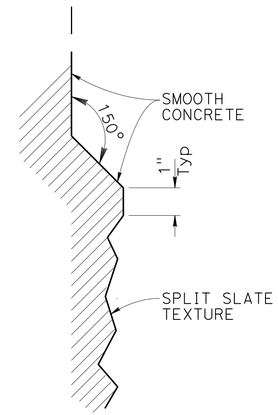

SECTION C-C
NO SCALE

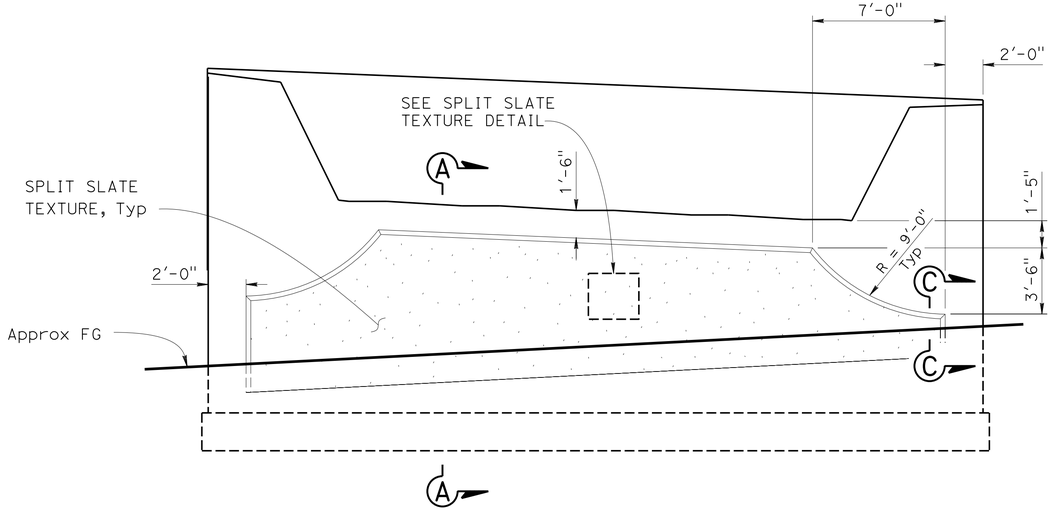

ABUTMENT 1 ELEVATION
1/4" = 1'-0"

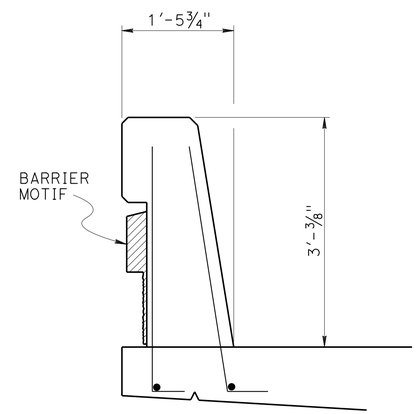

CONCRETE BARRIER TYPE 736 Mod
1" = 1'-0"

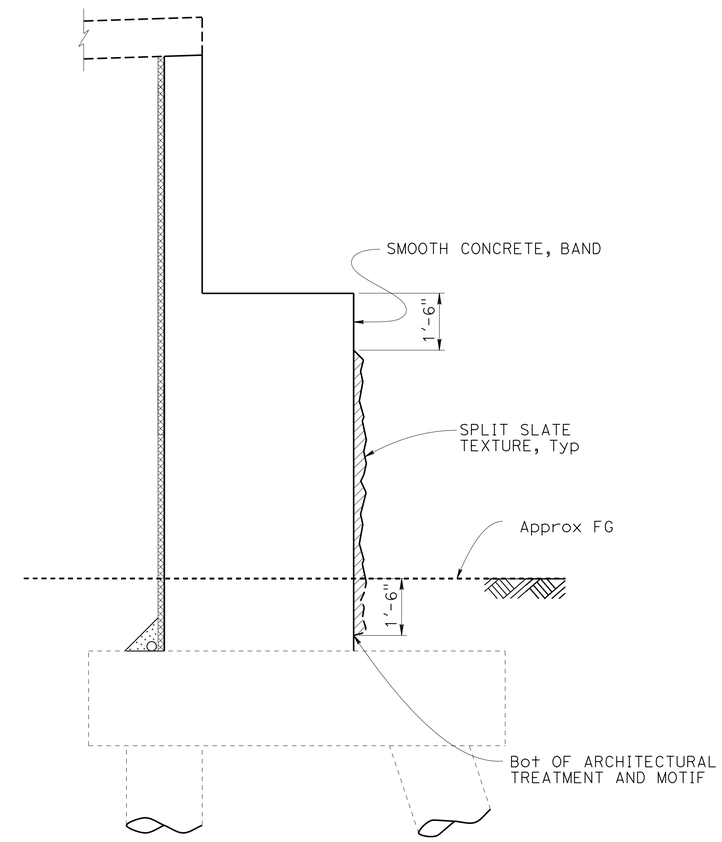

SECTION A-A
1/2" = 1'-0"

Note:

For additional detail see "ARCHITECTURAL DETAILS NO. 2" sheet.

	BY	CHECKED
DESIGN	U. Inyang	J. Radu
DETAILS	H. Mauroschadt	J. Radu
QUANTITIES	U. Inyang	K. Doll

STATE OF CALIFORNIA
DEPARTMENT OF TRANSPORTATION

DIVISION OF ENGINEERING SERVICES
STRUCTURE DESIGN
DESIGN BRANCH 11

BRIDGE NO. 53-3059K
POST MILE 1.14

VALLEY VIEW AVE SB ON RAMP
ARCHITECTURAL DETAILS NO 1

STRUCTURES DESIGN DETAIL SHEET (ENGLISH) (REV. 09-01-10)

ORIGINAL SCALE IN INCHES FOR REDUCED PLANS 0 1 2 3

UNIT: 3587
PROJECT NUMBER & PHASE: 0715000160-1
CONTRACT NO.: 07-2159u4

DISREGARD PRINTS BEARING EARLIER REVISION DATES

REVISION DATES: 3-28-13 7-22-13 9-06-13 9-11-13

SHEET 31 OF 35

FILE => 53-3059k-v-arch1.dgn

USERNAME => s125624 DATE PLOTTED => 03-FEB-2016 TIME PLOTTED => 13:52

DIST	COUNTY	ROUTE	POST MILES TOTAL PROJECT	SHEET No.	TOTAL SHEETS
07	LA,Ora	5	0.0/1.5, 44.3/44.4	1304	1622

REGISTERED CIVIL ENGINEER — DATE: 3-18-15

1-25-16
PLANS APPROVAL DATE

REGISTERED PROFESSIONAL ENGINEER — William D. Kemp — No. 55730 — Exp. 12/31/16 — CIVIL — STATE OF CALIFORNIA

The State of California or its officers or agents shall not be responsible for the accuracy or completeness of scanned copies of this plan sheet.

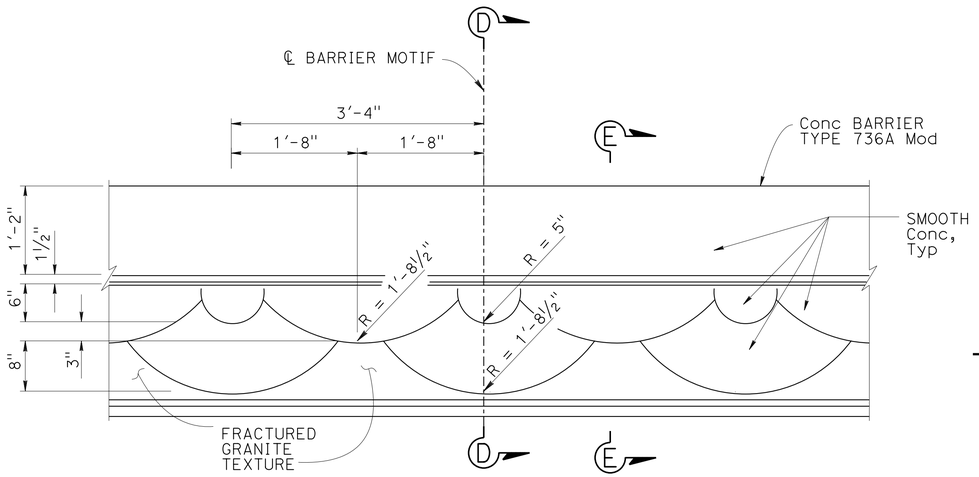

PARTIAL ELEVATION - BARRIER MOTIF

1" = 1'-0"

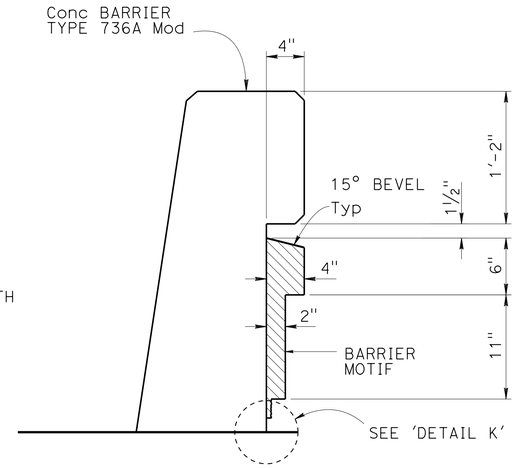

SECTION D-D

1½" = 1'-0"

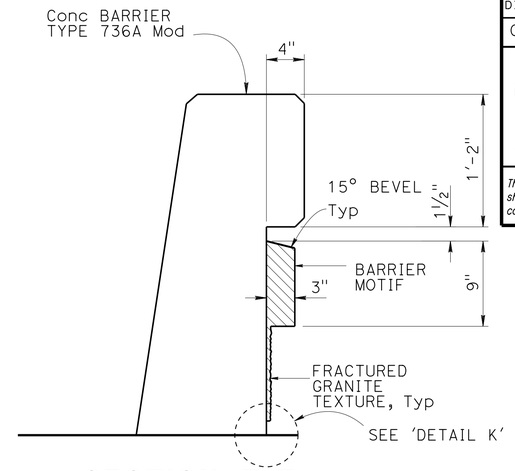

SECTION E-E

1½" = 1'-0"

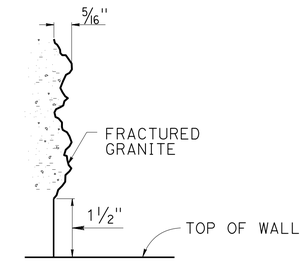

DETAIL K

NO SCALE

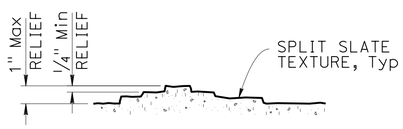

SPLIT SLATE TEXTURE

NO SCALE

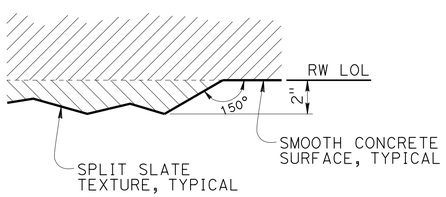

DETAIL J

NO SCALE

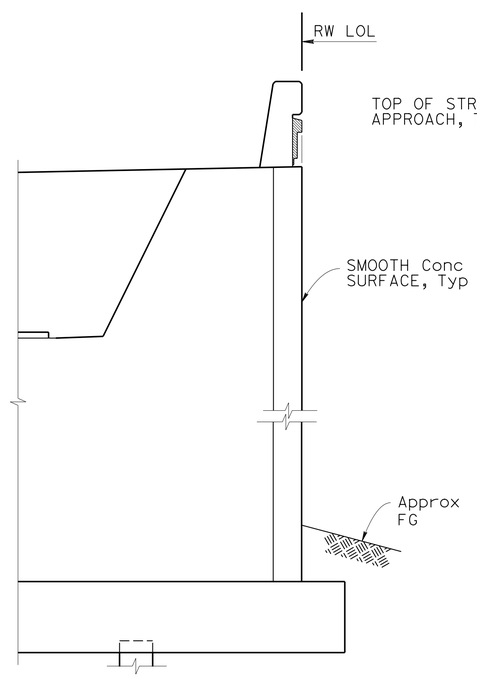

SECTION F-F

NO SCALE

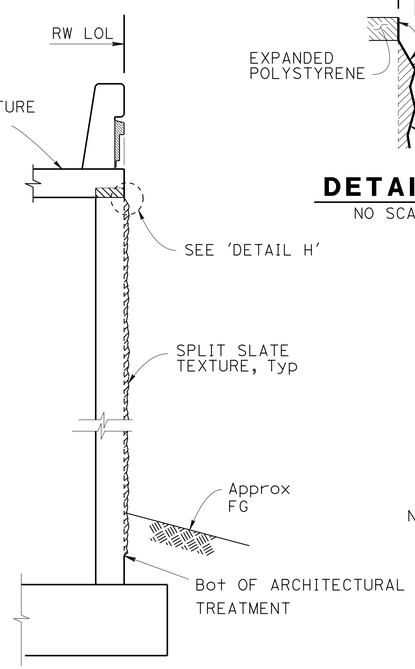

SECTION G-G

NO SCALE

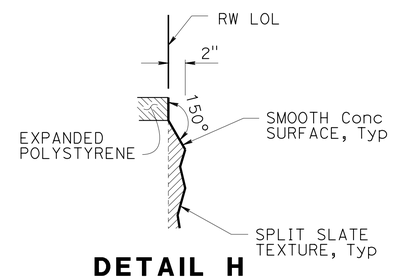

DETAIL H

NO SCALE

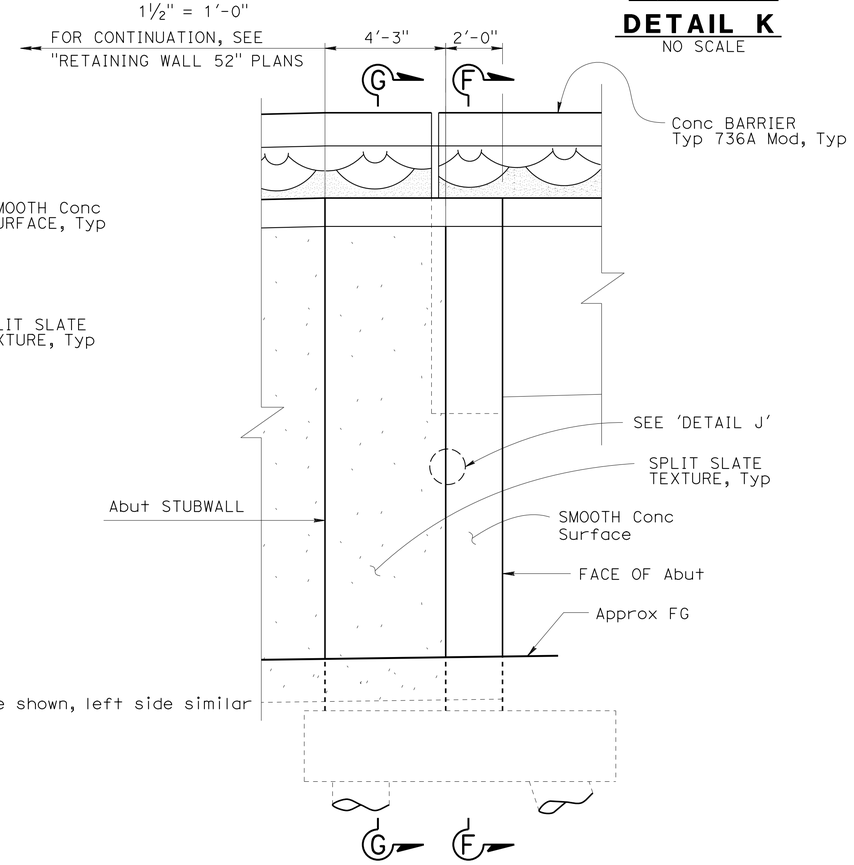

Note:
Right side shown, left side similar

ABUTMENT 1 CORNER ELEVATION ARCHITECTURAL TREATMENT

NO SCALE

DESIGN	BY U. Inyang	CHECKED J.Radu	
DETAILS	BY H. Mauroschadt	CHECKED J. Radu	
QUANTITIES	BY U. Inyang	CHECKED K. Doll	

STATE OF CALIFORNIA
DEPARTMENT OF TRANSPORTATION

DIVISION OF ENGINEERING SERVICES
STRUCTURE DESIGN
DESIGN BRANCH 11

BRIDGE NO. 53-3059K
POST MILE 1.14

VALLEY VIEW AVE SB ON RAMP
ARCHITECTURAL DETAILS NO 2

STRUCTURES DESIGN DETAIL SHEET (ENGLISH) (REV. 09-01-10)

ORIGINAL SCALE IN INCHES FOR REDUCED PLANS 0 1 2 3

UNIT: 3587
PROJECT NUMBER & PHASE: 0715000160-1
CONTRACT NO.: 07-2159U4

DISREGARD PRINTS BEARING EARLIER REVISION DATES

REVISION DATES: 3-28-13 7-22-13 9-06-13 9-11-13

SHEET 32 OF 35

FILE => 53-3059k-v-arch2.dgn

USERNAME => s125624 DATE PLOTTED => 03-FEB-2016 TIME PLOTTED => 13:52

DIST	COUNTY	ROUTE	POST MILES TOTAL PROJECT	SHEET No.	TOTAL SHEETS
07	LA,Ora	5	0.0/1.5, 44.3/44.4	1305	1622

REGISTERED CIVIL ENGINEER 05/20/15 DATE

1-25-16
PLANS APPROVAL DATE

REGISTERED PROFESSIONAL ENGINEER MICHAEL G. SMITH No. 2229 Exp. 03/31/16 GEOTECHNICAL STATE OF CALIFORNIA

URS CORPORATION
2020 EAST FIRST STREET, SUITE 400
SANTA ANA, CA 92705

The State of California or its officers or agents shall not be responsible for the accuracy or completeness of electronic copies of this plan sheet.

1-This LOTB sheet was prepared in accordance with the Caltrans Soil & Rock Logging, Classification, & Presentation Manual (2010 Edition).

2-For protection of underground utility lines, hand-auger was used to remove top 5 to 10 feet of subsurface material for exploratory borings and Cone Penetration Testings.

3-2.5" to 1.4" blow counts conversion factors for fine-grain and coarse-grain soils have been 0.8 and 0.55, respectively.

BENCH MARK

GPS 0888
ELEVATION 63.317 FT
FOUND 2-1/2 INCH CADT DISK IN CONCRETE CURB, FLUSH, STAMPED "LA51.2 1995"
THE MARK IS LOCATED 0.1 MI NORTHERLY OF THE VALLEY VIEW OVERCROSSING OF THE 5 (SANTA ANA) FWY ON THE SOUTHWESTERLY CURB OF FIRESTONE BLVD AT THE FIRST DRIVEWAY CUT NORTH OF THE FWY.
NORTHING 542603.017
EASTING 1997274.832
DATUM NAVD88

PLAN

SCALE 1"=100'

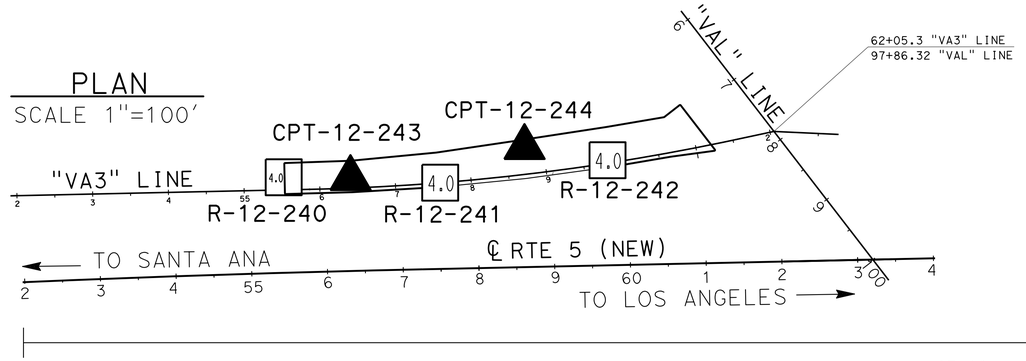

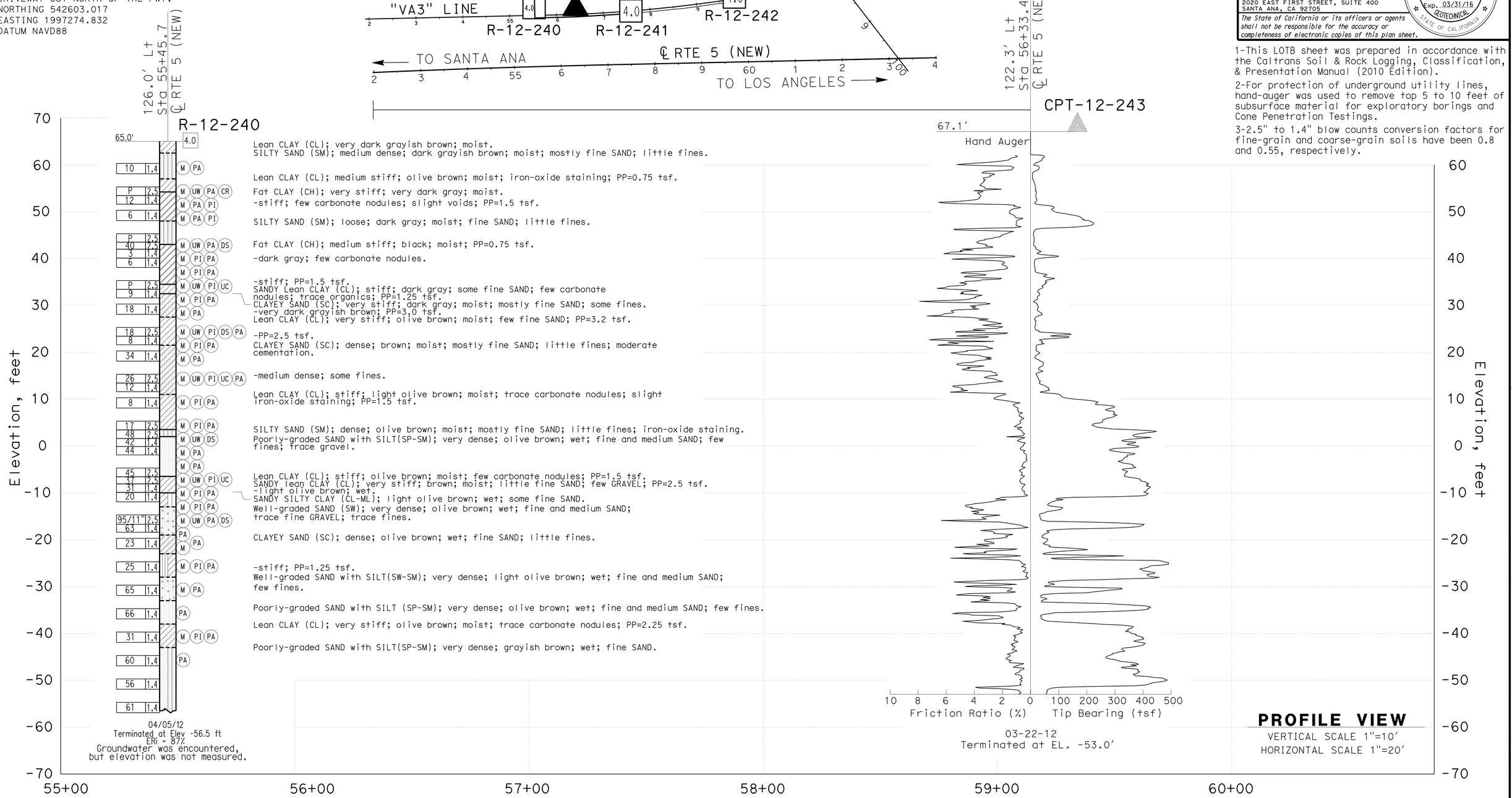

PROFILE VIEW

VERTICAL SCALE 1"=10'
HORIZONTAL SCALE 1"=20'

F. MOTAMED	DRAWN BY	T.PANAH	D.ORRIS	PREPARED FOR THE STATE OF CALIFORNIA DEPARTMENT OF TRANSPORTATION	M.G.SMITH	BRIDGE NO. 53-3059K	VALLEY VIEW AVE SB ON RAMP
DESIGN OVERSIGHT			FIELD INVESTIGATION BY:		PROJECT ENGINEER	POST MILES 1.14	LOG OF TEST BORINGS SHEET 1 OF 3
05/20/15	CHECKED BY	A.GHAZINOOR/L.KHALKHALI	DATE: 03/22/12 - 04/05/12				
SIGN OFF DATE							

GS CIVIL LOG OF TEST BORINGS SHEET (ENGLISH) (REV. 03/14/12)

ORIGINAL SCALE IN INCHES FOR REDUCED PLANS 0 1 2 3

UNIT: 3658
PROJECT NUMBER & PHASE: 07150001601 CONTRACT NO.: 07-2159U4

DISREGARD PRINTS BEARING EARLIER REVISION DATES → 5/12/15

SHEET 33 OF 35

FILE => 53-3059k-z-lotb1.dgn

USERNAME => s125624 DATE PLOTTED => 03-FEB-2016 TIME PLOTTED => 13:52

DIST	COUNTY	ROUTE	POST MILES TOTAL PROJECT	SHEET No.	TOTAL SHEETS
07	LA,Ora	5	0.0/1.5, 44.3/44.4	1306	1622

REGISTERED CIVIL ENGINEER 05/20/15 DATE

1-25-16
PLANS APPROVAL DATE

URS CORPORATION
2020 EAST FIRST STREET, SUITE 400
SANTA ANA, CA 92705

The State of California or its officers or agents shall not be responsible for the accuracy or completeness of electronic copies of this plan sheet.

REGISTERED PROFESSIONAL ENGINEER MICHAEL G. SMITH No. 2229 Exp. 03/31/16 GEOTECHNICAL STATE OF CALIFORNIA

1-This LOTB sheet was prepared in accordance with the Caltrans Soil & Rock Logging, Classification, & Presentation Manual (2010 Edition).

2-For protection of underground utility lines, hand-auger was used to remove top 5 to 10 feet of subsurface material for exploratory borings and Cone Penetration Testings.

3-2.5" to 1.4" blow counts conversion factors for fine-grain and coarse-grain soils have been 0.8 and 0.55, respectively.

FOR PLAN VIEW, SEE
"LOG OF TEST BORINGS" 1 OF 3

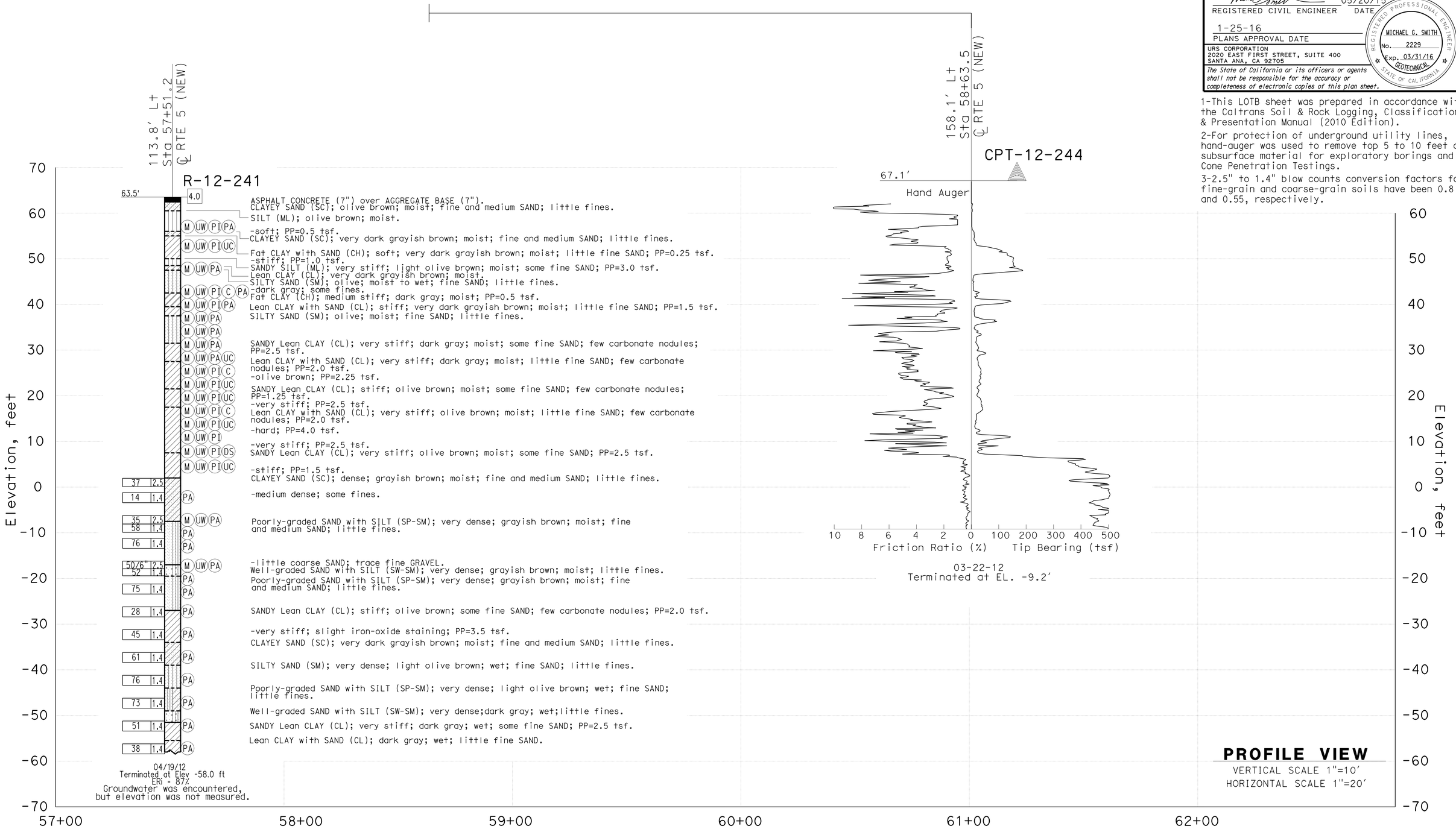

F.MOTAMED DESIGN OVERSIGHT 05/20/15 SIGN OFF DATE	DRAWN BY	T.PANAH	D.ORRIS FIELD INVESTIGATION BY: DATE: 03/22/12 - 04/19/12	PREPARED FOR THE STATE OF CALIFORNIA DEPARTMENT OF TRANSPORTATION	M.G.SMITH PROJECT ENGINEER	BRIDGE NO. 53-3059K POST MILES 1.14	VALLEY VIEW AVE SB ON RAMP LOG OF TEST BORINGS SHEET 2 OF 3
	CHECKED BY	A.GHAZINOOR/L.KHALKHALI					

GS CIVIL LOG OF TEST BORINGS SHEET (ENGLISH) (REV. 03/14/12)

ORIGINAL SCALE IN INCHES FOR REDUCED PLANS 0 1 2 3

UNIT: 3658
PROJECT NUMBER & PHASE: 07150001601 CONTRACT NO.: 07-2159U4

DISREGARD PRINTS BEARING EARLIER REVISION DATES → 5/12/15

REVISION DATES | SHEET 34 | OF 35

FILE => 53-3059k-z-lotb2.dgn

USERNAME => s125624 DATE PLOTTED => 03-FEB-2016 TIME PLOTTED => 13:52

DIST	COUNTY	ROUTE	POST MILES TOTAL PROJECT	SHEET No.	TOTAL SHEETS
07	LA,Ora	5	0.0/1.5, 44.3/44.4	1307	1622

REGISTERED CIVIL ENGINEER 05/20/15 DATE

1-25-16
PLANS APPROVAL DATE

URS CORPORATION
2020 EAST FIRST STREET, SUITE 400
SANTA ANA, CA 92705

The State of California or its officers or agents shall not be responsible for the accuracy or completeness of electronic copies of this plan sheet.

REGISTERED PROFESSIONAL ENGINEER MICHAEL G. SMITH No. 2229 Exp. 03/31/16 GEOTECHNICAL STATE OF CALIFORNIA

1-This LOTB sheet was prepared in accordance with the Caltrans Soil & Rock Logging, Classification, & Presentation Manual (2010 Edition).

2-For protection of underground utility lines, hand-auger was used to remove top 5 to 10 feet of subsurface material for exploratory borings and Cone Penetration Testings.

3-2.5" to 1.4" blow counts conversion factors for fine-grain and coarse-grain soils have been 0.8 and 0.55, respectively.

FOR PLAN VIEW, SEE
"LOG OF TEST BORINGS" 1 OF 3

PROFILE VIEW
VERTICAL SCALE 1"=10'
HORIZONTAL SCALE 1"=20'

F.MOTAMED	DRAWN BY	T.PANAH	D.ORRIS
DESIGN OVERSIGHT			FIELD INVESTIGATION BY:
05/20/15	CHECKED BY	A.GHAZINOOR/L.KHALKHALI	DATE: 04/10/12
SIGN OFF DATE			

PREPARED FOR THE STATE OF CALIFORNIA DEPARTMENT OF TRANSPORTATION

M.G.SMITH
PROJECT ENGINEER

BRIDGE NO. 53-3059K
POST MILES 1.14

VALLEY VIEW AVE SB ON RAMP
LOG OF TEST BORINGS SHEET 3 OF 3

GS CIVIL LOG OF TEST BORINGS SHEET (ENGLISH) (REV. 03/14/12)

ORIGINAL SCALE IN INCHES FOR REDUCED PLANS 0 1 2 3

UNIT: 3658
PROJECT NUMBER & PHASE: 07150001601 CONTRACT NO.: 07-2159U4

DISREGARD PRINTS BEARING EARLIER REVISION DATES

REVISION DATES 5/12/15

SHEET 35 OF 35

FILE => 53-3059k-z-lotb3.dgn

USERNAME => s125624 DATE PLOTTED => 03-FEB-2016 TIME PLOTTED => 13:52

DIST	COUNTY	ROUTE	POST MILES TOTAL PROJECT	SHEET No.	TOTAL SHEETS
07	LA,Ora	5	0.0/1.5, 44.3/44.4	1308	1622

REGISTERED CIVIL ENGINEER 3-18-15 DATE

1-25-16
PLANS APPROVAL DATE

REGISTERED PROFESSIONAL ENGINEER DAURYOUSH TAVATLI No. 56183 Exp. 12-31-16 CIVIL STATE OF CALIFORNIA

The State of California or its officers or agents shall not be responsible for the accuracy or completeness of electronic copies of this plan sheet.

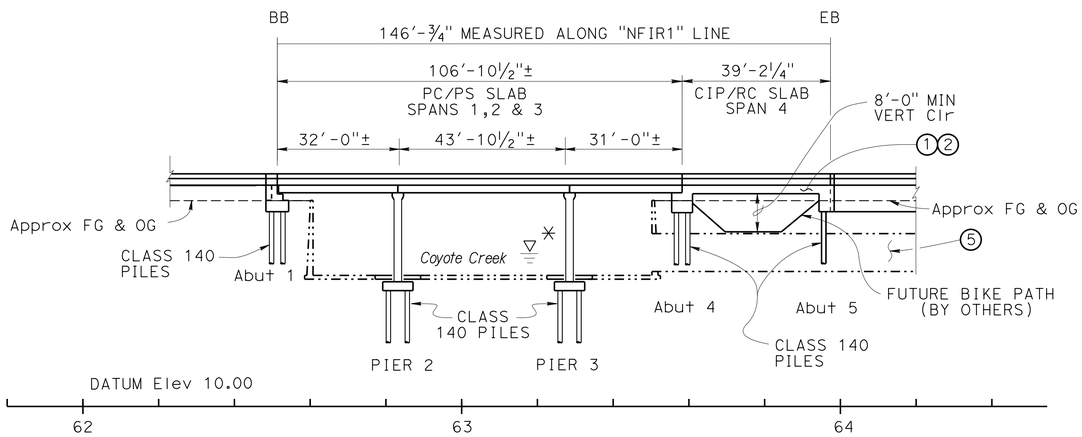

ELEVATION
1" = 20'

NOTE: ELEVATION VIEW PROJECTED VERTICALLY FROM "NFR1" LINE.

✳ See "FOUNDATION PLAN" for Hydrologic Summary

FOR GENERAL NOTES AND INDEX TO PLANS, SEE "INDEX TO PLANS" SHEET

QUANTITIES

BRIDGE REMOVAL (PORTION), LOCATION A	LUMP	SUM
STRUCTURE EXCAVATION (BRIDGE)	202	CY
STRUCTURE EXCAVATION (TYPE D)	200	CY
STRUCTURE BACKFILL (BRIDGE)	205	CY
GEOSYNTHETIC REINFORCE EMBANKMENT	148	CY
FURNISH PILING (CLASS 140) (ALTERNATIVE W)	5,899	LF
DRIVE PILE (CLASS 140) (ALTERNATIVE W)	98	EA
STRUCTURAL CONCRETE, BRIDGE FOOTING	93	CY
STRUCTURAL CONCRETE, BRIDGE	559	CY
DRILL AND BOND DOWEL	44	LF
DRILL AND BOND DOWEL (CHEMICAL ADHESIVE)	462	EA
FURNISH PRECAST PRESTRESSED CONCRETE SLAB	4,703	SQFT
ERECT PRECAST PRESTRESSED CONCRETE DECK UNIT	33	EA
JOINT SEAL (MR 1/2 ")	97	LF
BAR REINFORCING STEEL (BRIDGE)	208,000	LB
BAR REINFORCING STEEL (EPOXY COATED) (BRIDGE)	1,636	LB
CONCRETE BARRIER (TYPE 26 MODIFIED)	295	LF

NOTES:

1. Paint "FIRESTONE BLVD"
2. Paint 53C-2194
3. Relocate exist oil pipelines by others
4. Remove portions of exist channel divider walls, replace with new bridge piers. For concrete removal notes for partial channel wall, see "INDEX TO PLANS" sheet
5. Exist side drain (owned by Los Angeles County Flood Control District - LACFCD) - 90"± ø with approx 7'-6" H x 15' W opening in channel wall to remain undamaged
6. Remove portion of exist handrail and post mortar pad on Lemont Ave Br
7. Conc Barrier Type 26, Mod A and Mod B
8. Curb Ramp, for locations and details, see "ROAD PLANS"

LEGEND:

-·-·-·- INDICATES EXISTING STRUCTURE
——— INDICATES NEW CONSTRUCTION
INDICATES POINT OF MINIMUM VERTICAL CLEARANCE

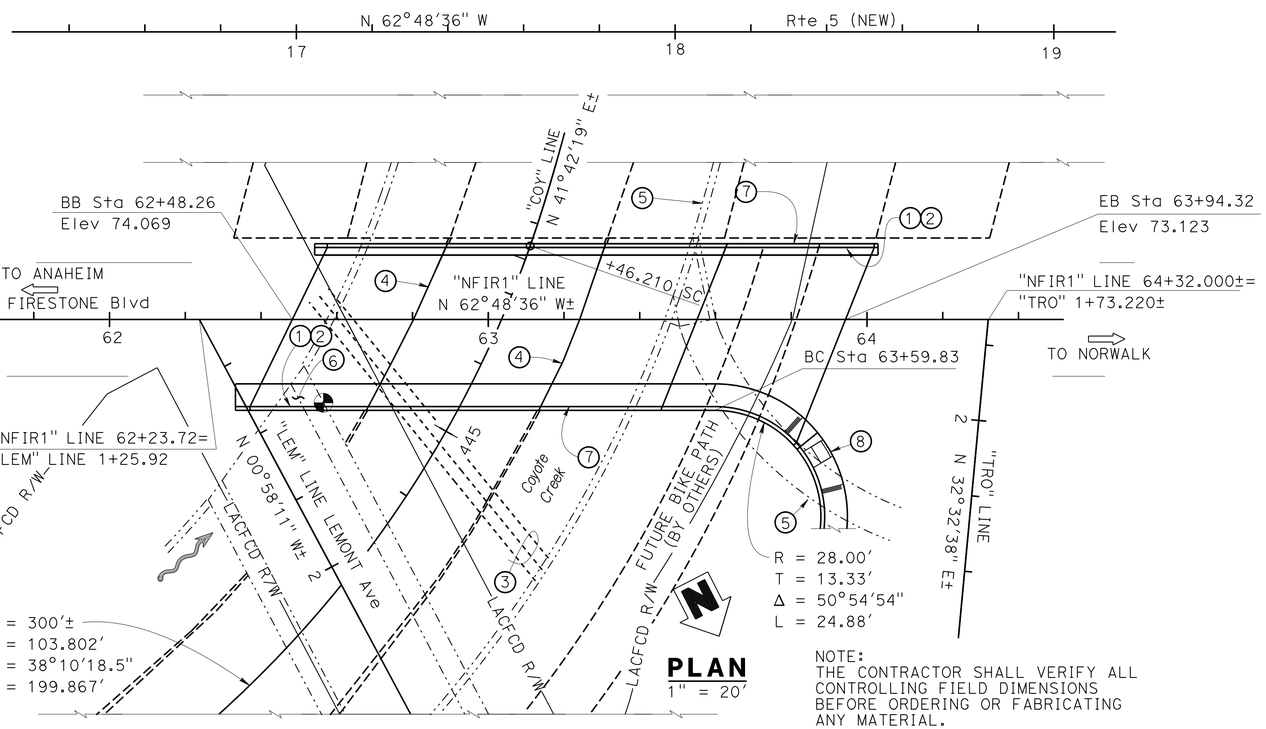

PLAN
1" = 20'

NOTE:
THE CONTRACTOR SHALL VERIFY ALL CONTROLLING FIELD DIMENSIONS BEFORE ORDERING OR FABRICATING ANY MATERIAL.

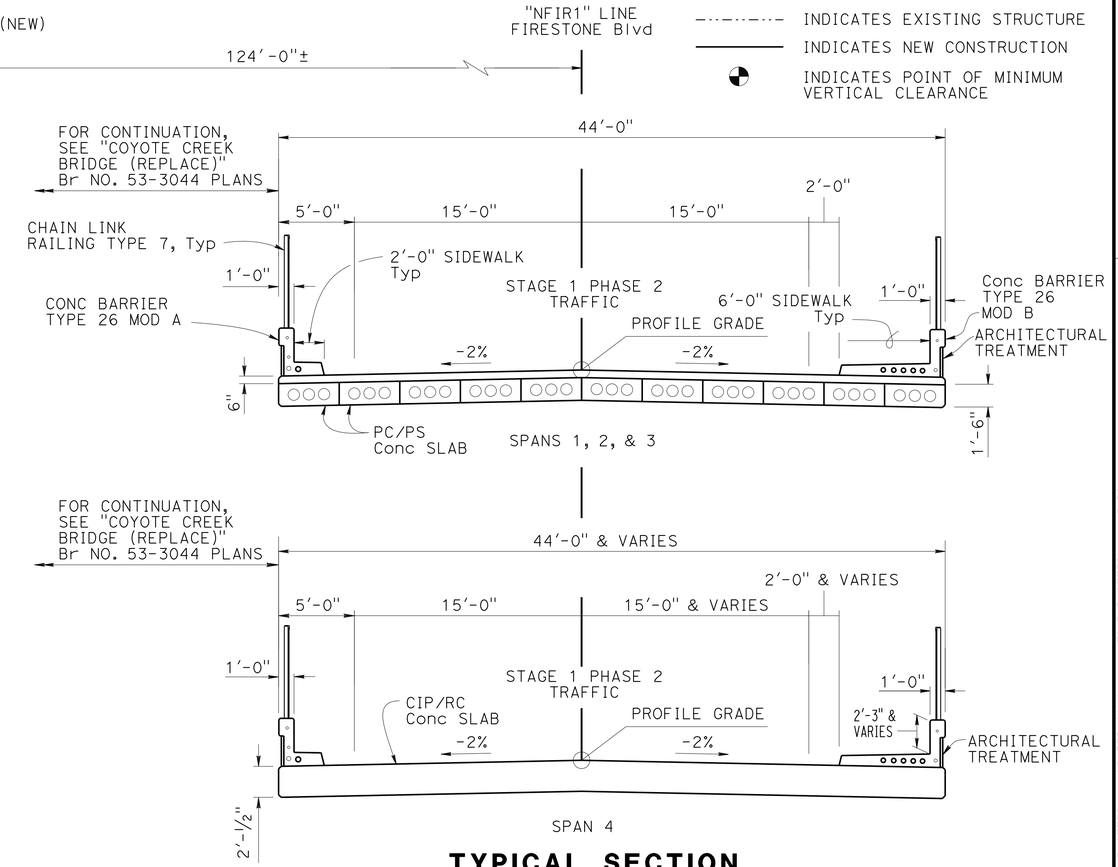

TYPICAL SECTION
1"= 5'

Ramin Rashedi 3-18-15 DESIGN ENGINEER	DESIGN	BY Y. Yoon	CHECKED S. Pahlaban	LOAD & RESISTANCE FACTOR DESIGN	LIVE LOADING: HL93 W/"LOW-BOY": PERMIT DESIGN VEHICLE
	DETAILS	BY T. Bittermann	CHECKED S. Pahlaban	LAYOUT BY Y. Yoon	CHECKED S. Pahlaban
	QUANTITIES	BY D. Tavatli	CHECKED C. Chan	SPECIFICATIONS BY Xiahong Li	PLANS AND SPECS COMPARED Xiahong Li

ORIGINAL SCALE IN INCHES FOR REDUCED PLANS 0 1 2 3

STATE OF CALIFORNIA
DEPARTMENT OF TRANSPORTATION

DIVISION OF ENGINEERING SERVICES
STRUCTURE DESIGN
DESIGN BRANCH 11

BRIDGE NO. 53C2194
POST MILE 0.34

FIRESTONE BLVD BRIDGE
GENERAL PLAN

UNIT: 3587
PROJECT NUMBER & PHASE: 0715000160-1 CONTRACT NO.: 07-2159U4

DISREGARD PRINTS BEARING EARLIER REVISION DATES

REVISION DATES 1-4-13 9-27-13 8-30-13 9-11-12 SHEET 1 OF 23

USERNAME => s125624 DATE PLOTTED => 03-FEB-2016 TIME PLOTTED => 13:52

STRUCTURES DESIGN GENERAL PLAN SHEET (ENGLISH) (REV.09-01-10)

FILE => 53c-2194-a-gp.dgn

DIST	COUNTY	ROUTE	POST MILES TOTAL PROJECT	SHEET No.	TOTAL SHEETS
07	LA,Ora	5	0.0/1.5, 44.3/44.4	1309	1622

REGISTERED CIVIL ENGINEER 3-18-15 DATE

1-25-16
PLANS APPROVAL DATE

REGISTERED PROFESSIONAL ENGINEER Daryoush Tavatli No. 56183 Exp. 12-31-16 CIVIL STATE OF CALIFORNIA

The State of California or its officers or agents shall not be responsible for the accuracy or completeness of electronic copies of this plan sheet.

INDEX TO PLANS

SHEET No.	TITLE
1	GENERAL PLAN
2	INDEX TO PLANS
3	DECK CONTOURS
4	FOUNDATION PLAN
5	ABUTMENT 1 LAYOUT
6	ABUTMENT 4 LAYOUT
7	ABUTMENT 5 LAYOUT
8	ABUTMENT DETAILS NO. 1
9	PIER 2 LAYOUT
10	PIER 3 LAYOUT
11	PIER DETAILS NO. 1
12	PIER DETAILS NO. 2
13	TYPICAL SECTION
14	GIRDER LAYOUT
15	PRESTRESSED CONCRETE SLAB
16	TOP DECK REINFORCEMENT
17	SLAB REINFORCEMENT DETAILS NO. 1
18	SLAB REINFORCEMENT DETAILS NO. 2
19	GEOCOMPOSITE DRAIN DETAILS
20	ARCHITECTURAL TREATMENT DETAILS
21	LOG OF TEST BORING SHEET 1 OF 3
22	LOG OF TEST BORING SHEET 2 OF 3
23	LOG OF TEST BORING SHEET 3 OF 3

STANDARD PLANS DATED 2010

	A10A	ACRONYMS AND ABBREVIATIONS (SHEET 1 OF 2)
RSP	A10B	ACRONYMS AND ABBREVIATIONS (SHEET 2 OF 2)
	A10C	LINES AND SYMBOLS (SHEET 1 OF 3)
	A10D	LINES AND SYMBOLS (SHEET 2 OF 3)
	A10E	LINES AND SYMBOLS (SHEET 3 OF 3)
RSP	A10F	LEGEND - SOIL (SHEET 1 OF 2)
RSP	A10G	LEGEND - SOIL (SHEET 2 OF 2)
	A10H	ROCK
	A62B	LIMITS OF PAYMENT FOR EXCAVATION AND BACKFILL BRIDGE SURCHARGE AND WALL
	A62C	LIMITS OF PAYMENT FOR EXCAVATION AND BACKFILL BRIDGE
	B0-1	BRIDGE DETAILS
	B0-3	BRIDGE DETAILS
	B0-13	BRIDGE DETAILS
	B2-5	PILE DETAILS CLASS 90 AND CLASS 140
	B6-21	JOINT SEALS (MAXIMUM MOVEMENT RATING=2")
RSP	B11-54	CONCRETE BARRIER TYPE 26
	B14-3	COMMUNICATION AND SPRINKLER CONTROL CONDUITS (CONDUIT LESS THAN 4")

STANDARD PLAN SHEET. No.

DETAIL No.

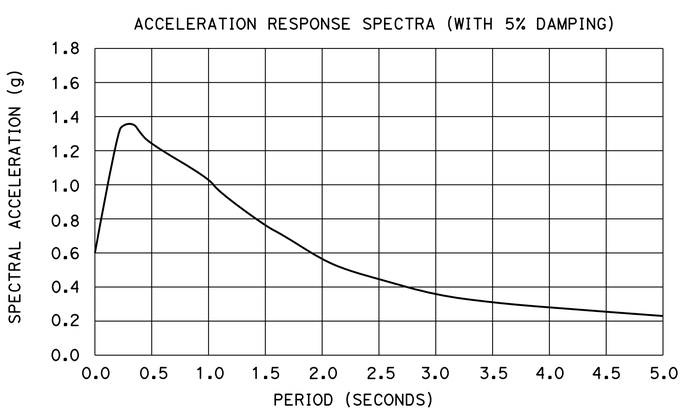

SITE SPECIFIC ARS CURVE

PILE DATA TABLE

LOCATION	PILE TYPE	NOMINAL RESISTANCE (KIPS)		CUT-OFF Elev (FT)	DESIGN TIP Elev (FT)	SPECIFIED TIP Elev (FT)	NORMAL DRIVING RESISTANCE (KIPS)
		COMPRESSION	TENSION				
Abut 1	CLASS 140 Alt 'W'	160	0	66.42	9.0 (a) 14.5 (c) 44.0 (d)	9.0	160
PIER 2	CLASS 140 Alt 'W'	210	110	41.42	-13.0 (a) -4.0 (b) 4.0 (c) 19.0 (d)	-13.0	210
PIER 3	CLASS 140 Alt 'W'	210	110	41.42	-13.0 (a) -4.0 (b) 4.0 (c) 19.0 (d)	-13.0	210
Abut 4	CLASS 140 Alt 'W'	280	0	65.92	-10.0 (a) 12.5 (c) 43.0 (d)	-10.0	280
Abut 5	CLASS 140 Alt 'W'	210	0	64.92	5.0 (a) 16.5 (c) 42.0 (d)	5.0	210

Notes:
1. Design Tip Elevation is controlled by: (a) Compression (b) Tension (c) Settlement, (d) Lateral Load.
2. The specified tip elevation shall not be raised above the design tip elevation for Tension, Settlement, and Lateral Load
3. Piles at Abutment 1 and 4 shall be drilled to Elevation 46.0 ft

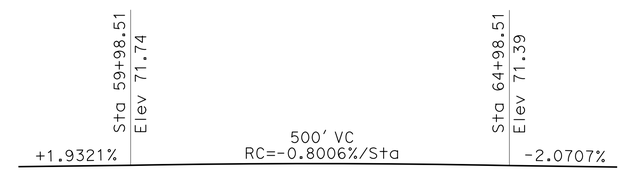

PROFILE GRADE

NO SCALE

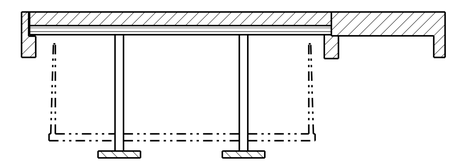

- STRUCTURAL CONCRETE, BRIDGE (4000 PSI @ 28 DAYS)
- STRUCTURAL CONCRETE, BRIDGE (4000 PSI @ 28 DAYS)
- STRUCTURAL CONCRETE, BRIDGE FOOTING (4000 PSI @ 28 DAYS)
- PC/PS CONCRETE SLAB (SEE PRESTRESSING NOTES FOR CONC STRENGTH.)

CONCRETE STRENGTH AND TYPE LIMITS

NO SCALE

CONCRETE REMOVAL NOTES FOR PARTIAL CHANNEL WALL

Where a section of an existing structure is to be separated from a new structure, and the reinforcement is to be cut at the point of separation, the Contractor shall saw cut through the wall with a concrete saw that is approved by the Engineer. Any saw cut or irregularities in the surface of the remaining wall or joint is to be filled with an epoxy grout mixture to obtain a smooth plane. The reinforcing steel exposed by concrete removal shall be burned off 1" below the surface of the remaining concrete and the resulting voids shall be patched with epoxy. Epoxy shall be a commercial quality, two-component mixture, specially manufactured for the intended purpose, and be applied in accordance with the manufacturer's directions.

Where reinforcement is required to extend through the new joint, concrete shall be removed in the following sequence.

A. A sawcut shall be made ¾" deep at the removal limits without cutting the reinforcing steel in the remaining slab. The existing reinforcing steel shall be retained and extended into the new construction as indicated on the plans.

B. Using handheld equipment, the concrete shall be carefully removed for the full depth of the wall or slab and for a minimum distance from the saw cut equal to the longest extension of the existing bars to be extended unless otherwise shown.

C. Existing reinforcement shall be cut to the required bar extension as shown on the plans.

D. The remaining concrete may be removed by any suitable method upon approval of the Engineer.

E. No equipment in excess of H-10 (10,000 lbs) AASHTO truck loading, and no stockpiling of material will be permitted along channel within a distance of one-half wall height.

F. No equipment in excess of H-20 (40,000 lbs) AASHTO truck loading will be permitted to operate on the invert of the channel. Only rubber-tired, legally loaded equipment shall be operated on the exposed channel invert. If steel crawler type equipment is used, wooden matting shall be provided over the invert in the operating area. Loads from track vehicles shall not excess 300 psf on a surface at the bottom of the invert slab.

GENERAL NOTES
LOAD AND RESISTANCE FACTOR DESIGN

DESIGN:
AASHTO LRFD Bridge Design Specification, 4th edition with interms through 2008 and the Caltrans amendment v3.06.01

SEISMIC DESIGN:
Caltrans Seismic Design Criteria (SDC), Version 1.6 dated December 2010

DEAD LOAD:
Includes 35 psf for future wearing surface.

LIVE LOADING:
HL93 and permit design load.

SEISMIC LOADING:
Site Specific Acceleration Response Spectra (ARS) Curve, as shown

CONCRETE:
fy = 60 ksi
f'c = 4 ksi
n = 8
See Prestressing Notes on "PC/PS SLAB DETAILS" sheet

	BY	CHECKED
DESIGN	Y. Yoon	S. Pahlaban
DETAILS	L. Goldthwait	S. Pahlaban
QUANTITIES	D. Tavatli	C. Chan

STATE OF CALIFORNIA
DEPARTMENT OF TRANSPORTATION

DIVISION OF ENGINEERING SERVICES
STRUCTURE DESIGN
DESIGN BRANCH 11

BRIDGE NO. 53C2194
POST MILE 0.34

FIRESTONE BLVD BRIDGE
INDEX TO PLANS

STRUCTURES DESIGN DETAIL SHEET (ENGLISH) (REV. 09-01-10)

ORIGINAL SCALE IN INCHES FOR REDUCED PLANS 0 1 2 3

UNIT: 3587
PROJECT NUMBER & PHASE: 0715000160-1
CONTRACT NO.: 07-2159U4

DISREGARD PRINTS BEARING EARLIER REVISION DATES

REVISION DATES: 5-10-12 9-27-13 9-06-13 9-12-13

SHEET 2 OF 23

FILE => 53c-2194-a-itp.dgn

USERNAME => s125624 DATE PLOTTED => 03-FEB-2016 TIME PLOTTED => 13:52

DIST	COUNTY	ROUTE	POST MILES TOTAL PROJECT	SHEET No.	TOTAL SHEETS
07	LA,Ora	5	0.0/1.5, 44.3/44.4	1310	1622

REGISTERED CIVIL ENGINEER — DATE 3-18-15

1-25-16
PLANS APPROVAL DATE

REGISTERED PROFESSIONAL ENGINEER — Daryoush Tavatli — No. 56183 — Exp. 12-31-16 — CIVIL — STATE OF CALIFORNIA

The State of California or its officers or agents shall not be responsible for the accuracy or completeness of scanned copies of this plan sheet.

NOTES:

1. Contours do not include camber
2. Contour interval = 0.25′

× Indicates 10.0′ intervals along station line

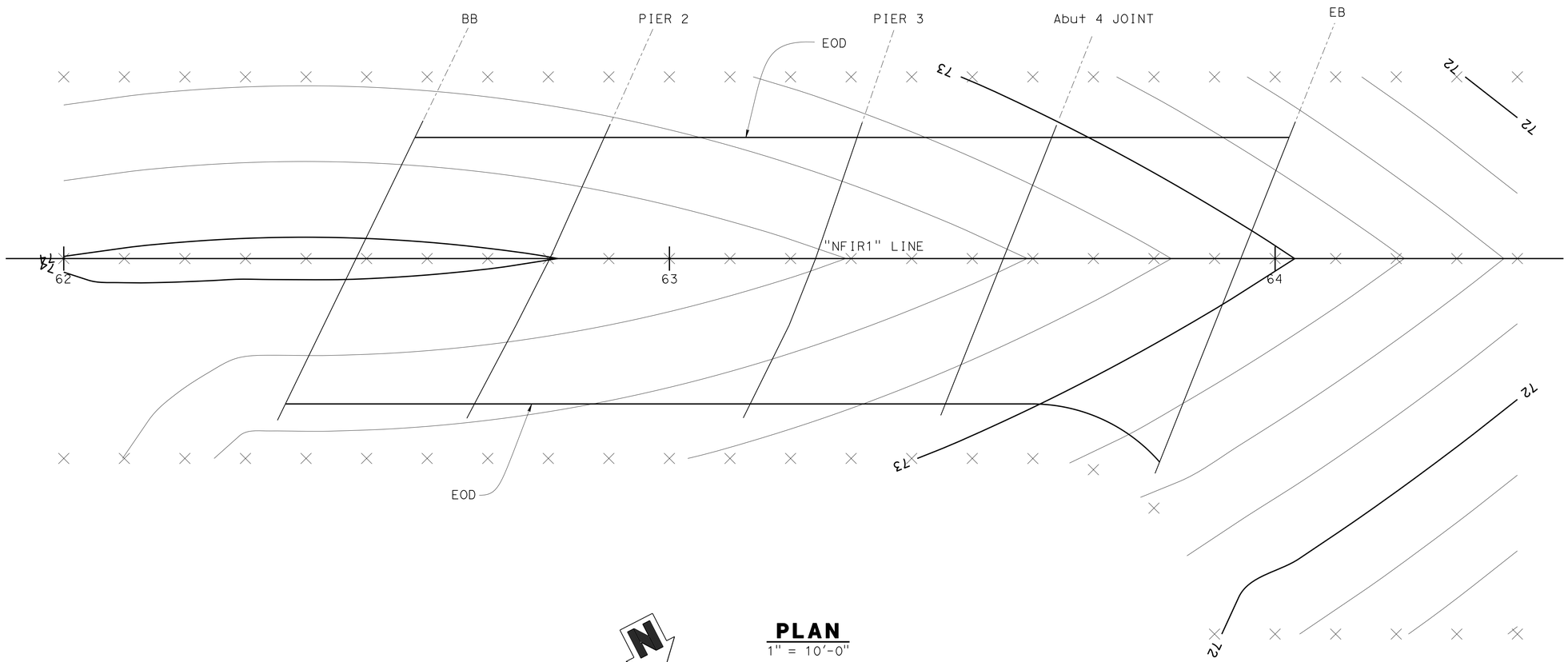

PLAN
1" = 10′-0"

DESIGN	BY Y. Yoon	CHECKED S. Pahlaban	
DETAILS	BY P. Tong	CHECKED S. Pahlaban	
QUANTITIES	BY D. Tavatli	CHECKED C. Chan	

STATE OF CALIFORNIA
DEPARTMENT OF TRANSPORTATION

DIVISION OF ENGINEERING SERVICES
STRUCTURE DESIGN
DESIGN BRANCH 11

BRIDGE NO. 53C2194
POST MILE 0.34

FIRESTONE BLVD BRIDGE
DECK CONTOUR

STRUCTURES DESIGN DETAIL SHEET (ENGLISH) (REV. 09-01-10)

ORIGINAL SCALE IN INCHES FOR REDUCED PLANS 0 1 2 3

UNIT: 3587
PROJECT NUMBER & PHASE: 0715000160-1
CONTRACT NO.: 07-2159u4

DISREGARD PRINTS BEARING EARLIER REVISION DATES

REVISION DATES: 7-12-11 | 8-30-13 | 5-08-12 | 8-19-13

SHEET 3 OF 23

FILE => 53c-2194-b-dc.dgn

USERNAME => s129624 DATE PLOTTED => 03-FEB-2016 TIME PLOTTED => 13:52

DIST	COUNTY	ROUTE	POST MILES TOTAL PROJECT	SHEET No	TOTAL SHEETS
07	LA,Ora	5	0.0/1.5, 44.3/44.4	1311	1622

REGISTERED CIVIL ENGINEER — DATE 3-18-15

1-25-16
PLANS APPROVAL DATE

The State of California or its officers or agents shall not be responsible for the accuracy or completeness of electronic copies of this plan sheet.

REGISTERED PROFESSIONAL ENGINEER — Daryoush Tavatli No. 56183 Exp. 12-31-16 CIVIL — STATE OF CALIFORNIA

(B) STA.443+37.76 "COY" LINE = STA.17+90.24 ℄ ROUTE 5

(C) STA. 444+67.03 "COY" LINE = STA. 63+03.50 "NFIR1" LINE

(D) STA. 445+49.11 "COY" LINE = STA. 2+05.39 "LEM" LINE

(E) STA. 62+23.72 "NFIR1" LINE = STA. 1+25.92 "LEM" LINE

(F) STA. 64+32.00 "NFIR1" LINE = STA. 1+73.22 "TRO" LINE

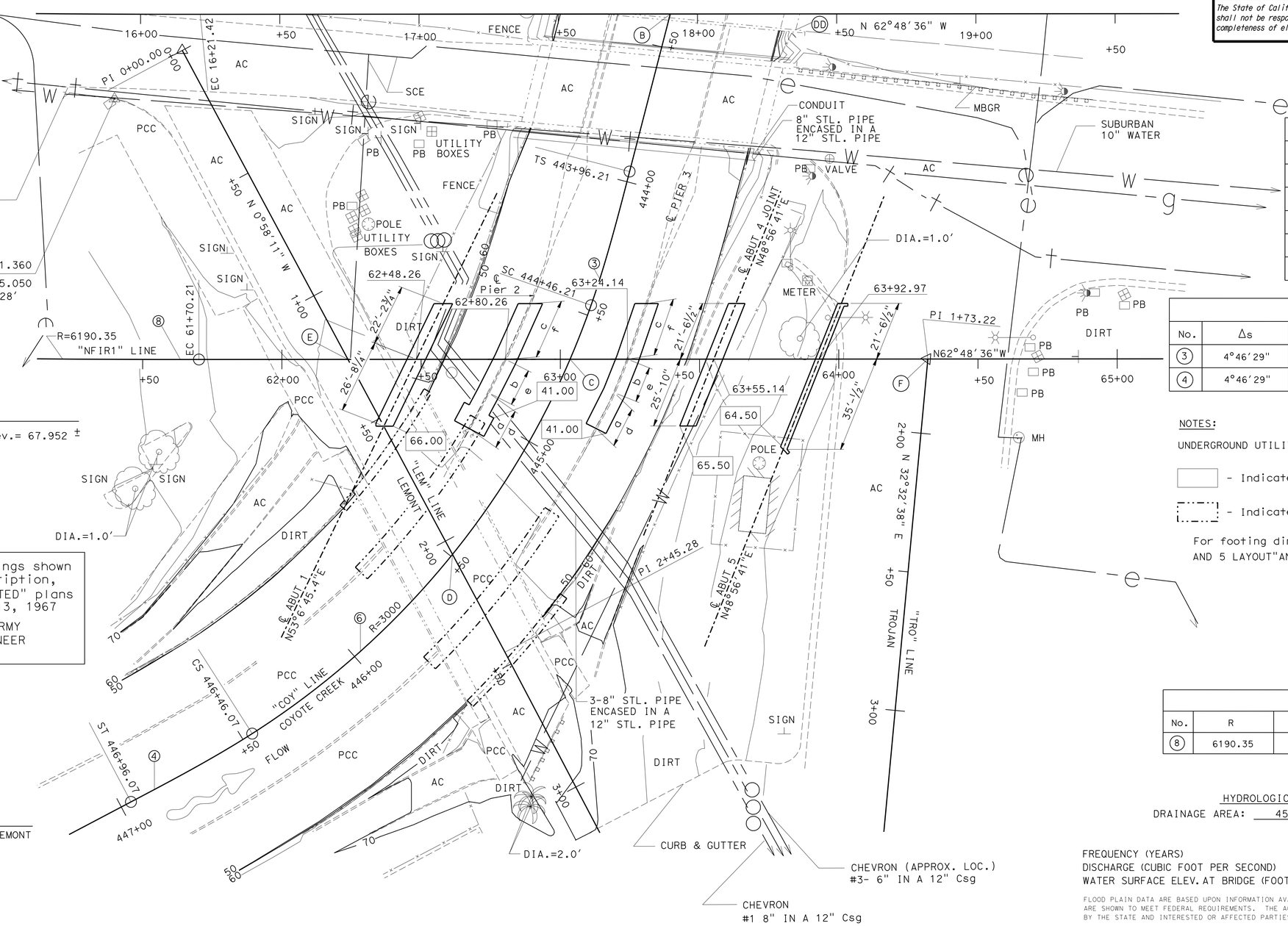

	PIER 2	PIER 3
a	14′-7¼"	14′-5¼"
b	13′-5½"	12′-11"
c	21′-11"	21′-1¾"
d	N55°19′42"E	N53°57′22"E
e	N54°7′36"E	N48°57′39"E
f	N51°21′37"E	N46°6′31"E

SPIRAL CURVE DATA				
No.	Δs	Ls	TL	Ts
3	4°46′29"	50.00	33.345	16.678
4	4°46′29"	50.00	33.345	16.678

Bridge #53-0279 Location

(DD)- 5.71 Rt. ℄ SR 5,Sta.18+35.32, Elev.= 67.952 ±

Exist LEMONT AVENUE BRIDGE footings shown are approx. For accurate description, see "RECORD DRAWING - AS CONSTRUCTED" plans
Contract No. 66-152 June 13, 1967

CORPS OF ENGINEERS, U. S. ARMY
OFFICE OF THE DISTRICT ENGINEER
LOS ANGELES, CALIFORNIA

NOTES:

UNDERGROUND UTILITIES AS SHOWN ARE APPROXIMATE

- Indicates bottom of footing elevation

- Indicates existing footing of Lemont Ave Br.

For footing dimension details,see "ABUTMENT 1, 4 AND 5 LAYOUT"AND " PIER 2 AND 3 LAYOUT" sheets

SURVEY CONTROL

PRHV54(SEE SHEET 1)

"X"ON TC/FIRESTONE @ 1ST. FH.
161.67′ Lt. ℄ Rte 5
Sta. 17+03.71
N 1 777 602.265
E 6 556 736.703
Elev. = 68.06′

PRHV65

Fnd"X"ON TC @ NE COR./FIRESTONE & LEMONT
30.40′ Rt. ℄ Rte 5
Sta. 15+90.75
N 1 777 721.360
E 6 556 925.050
Elev.= 68.28′

CURVE DATA				
No.	R	Δ	T	L
8	6190.35	15°20′44"	833.98	1657.97

HYDROLOGIC SUMMARY

DRAINAGE AREA: 45 SQUARE MILES

	DESIGN FLOOD	BASE FLOOD	CHANNEL CAPACITY
FREQUENCY (YEARS)	50	100	NA
DISCHARGE (CUBIC FOOT PER SECOND)	10000	16000	21500
WATER SURFACE ELEV. AT BRIDGE (FOOT)	57.4	61.9	65.6

FLOOD PLAIN DATA ARE BASED UPON INFORMATION AVAILABLE WHEN THE PLANS WERE PREPARED AND ARE SHOWN TO MEET FEDERAL REQUIREMENTS. THE ACCURACY OF SAID INFORMATION IS NOT WARRANTED BY THE STATE AND INTERESTED OR AFFECTED PARTIES SHOULD MAKE THEIR OWN INVESTIGATIONS.

PRELIMINARY INVESTIGATION SECTION

SCALE	VERT.DATUM NAVD 88	PHOTOGRAMMETRY AS OF: X		
1:20	HORZ.DATUM NAD 83(1991.35)	SURVEYED	BY C. STEWART/T. PHUNG	CHECKED BY C. STEWART 12/09
ALIGNMENT TIES Dist. Trav. Sheets		DRAFTED	BY S. ABASSY 01/2010	CHECKED BY L. MANABO 01/2010

	BY	CHECKED
DESIGN	Y. Yoon	S. Pahlaban
DETAILS	L. Goldthwait	S. Pahlaban
QUANTITIES	D. Tavatli	C. Chan

STATE OF CALIFORNIA
DEPARTMENT OF TRANSPORTATION

DIVISION OF ENGINEERING SERVICES
STRUCTURE DESIGN
DESIGN BRANCH 11

BRIDGE NO. 53C2194
POST MILE 0.34

FIRESTONE BLVD BRIDGE
FOUNDATION PLAN

STRUCTURES FOUNDATION PLAN SHEET (ENGLISH) (REV. 10/25/05)

ORIGINAL SCALE IN INCHES FOR REDUCED PLANS 0 1 2 3

UNIT: 3587
PROJECT NUMBER & PHASE: 0715000160-1
CONTRACT NO.: 07-2159u4

DISREGARD PRINTS BEARING EARLIER REVISION DATES

REVISION DATES: 04/06/12 4-12-12 6-12-12 7-13-12 8-01-13 8-19-11 8/22/13 8-30-13 2-12-12 3-16-12

SHEET 4 OF 23

FILE => 53c-2194-c-fp.dgn

USERNAME => s125624 DATE PLOTTED => 03-FEB-2016 TIME PLOTTED => 13:52

DIST	COUNTY	ROUTE	POST MILES TOTAL PROJECT	SHEET No.	TOTAL SHEETS
07	LA,Ora	5	0.0/1.5, 44.3/44.4	1312	1622

REGISTERED CIVIL ENGINEER 3-18-15 DATE

1-25-16
PLANS APPROVAL DATE

REGISTERED PROFESSIONAL ENGINEER Daryoush Tavatli No. 56183 Exp. 12-31-16 CIVIL STATE OF CALIFORNIA

The State of California or its officers or agents shall not be responsible for the accuracy or completeness of electronic copies of this plan sheet.

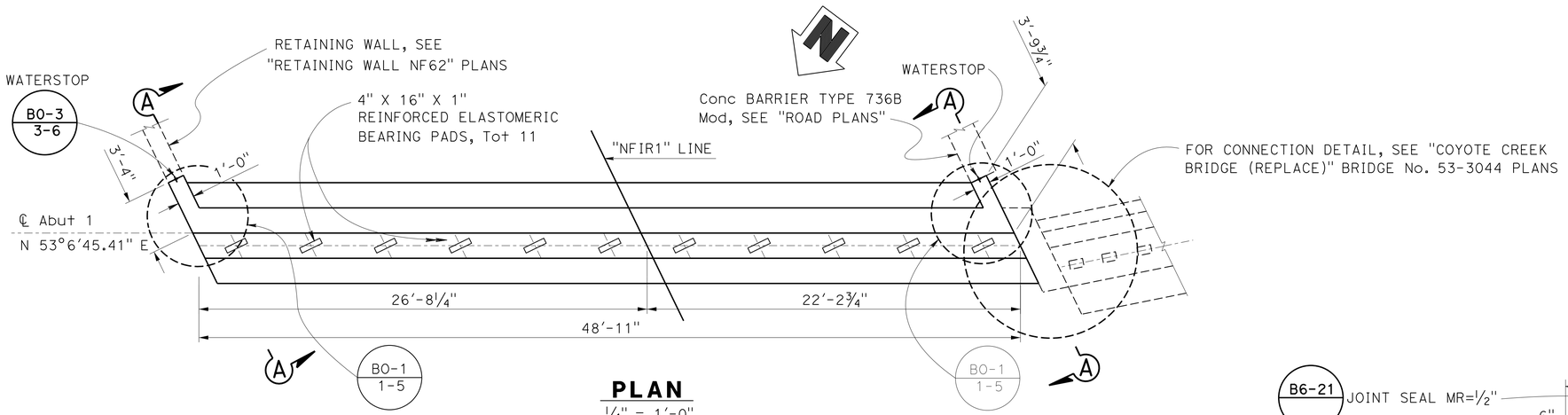

PLAN
¼" = 1'-0"

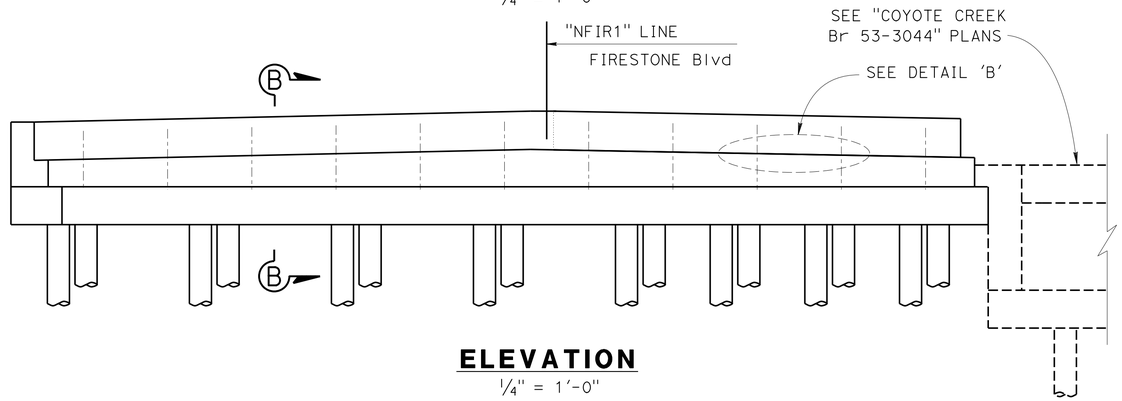

ELEVATION
¼" = 1'-0"

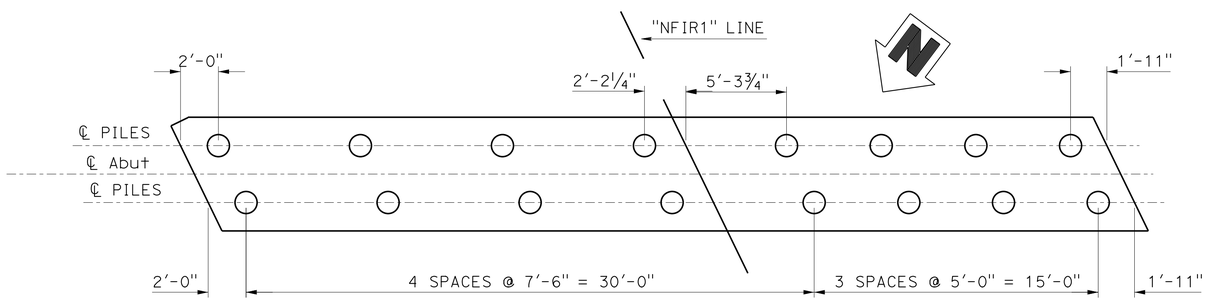

○ - INDICATES TYPICAL PILE

PILE LAYOUT
¼" = 1'-0"

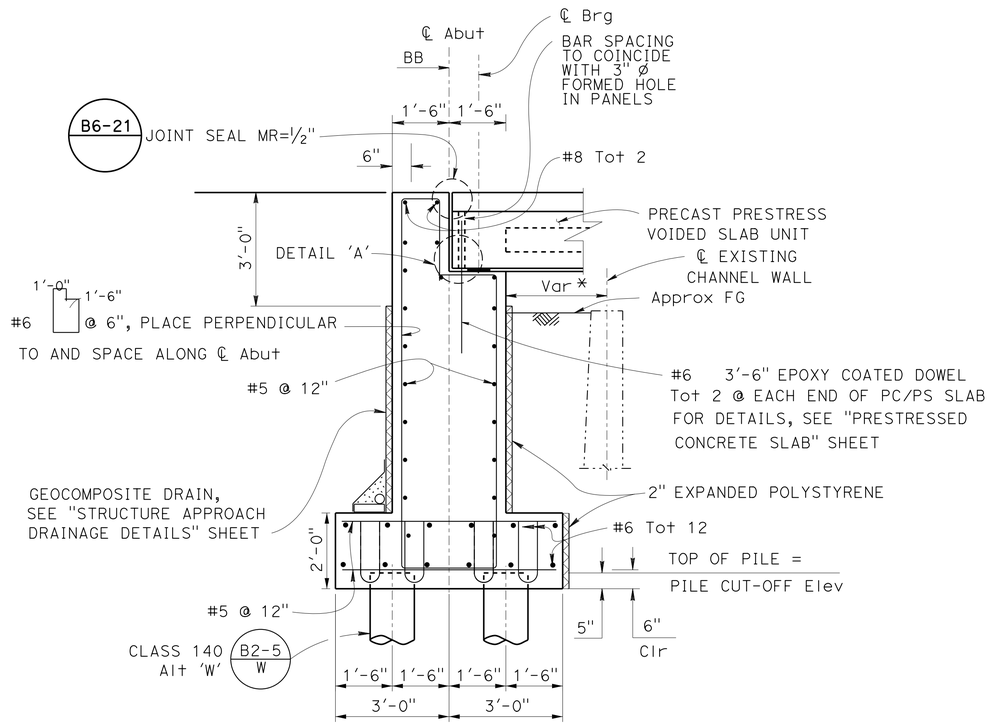

SECTION B-B
½" = 1'-0"

NOTES:

1. For location of 'Detail A' & 'Detail B' see "ABUTMENT 4 LAYOUT" sheet
2. For 'Elevation A-A', see "ABUTMENT DETAILS NO. 1" sheet

* - Contractor to verify channel wall location

	BY	CHECKED
DESIGN	Y. Yoon	S. Pahlaban
DETAILS	L. Goldthwait	S. Pahlaban
QUANTITIES	D. Tavatli	C. Chan

STATE OF CALIFORNIA
DEPARTMENT OF TRANSPORTATION

DIVISION OF ENGINEERING SERVICES
STRUCTURE DESIGN
DESIGN BRANCH 11

BRIDGE NO. 53C-2194
POST MILE 0.34

FIRESTONE BLVD BRIDGE
ABUTMENT 1 LAYOUT

STRUCTURES DESIGN DETAIL SHEET (ENGLISH) (REV. 09-01-10)

ORIGINAL SCALE IN INCHES FOR REDUCED PLANS 0 1 2 3

UNIT: 3587
PROJECT NUMBER & PHASE: 0715000160-1
CONTRACT NO.: 07-2159u4

DISREGARD PRINTS BEARING EARLIER REVISION DATES

REVISION DATES: 2-24-12 9-27-13 9-06-13 9-12-13

SHEET 5 OF 23

FILE => 53c-2194-e-abt1_lo.dgn

USERNAME => s125624 DATE PLOTTED => 03-FEB-2016 TIME PLOTTED => 13:52

DIST	COUNTY	ROUTE	POST MILES TOTAL PROJECT	SHEET No.	TOTAL SHEETS
07	LA,Ora	5	0.0/1.5, 44.3/44.4	1313	1622

REGISTERED CIVIL ENGINEER 8-18-15 DATE

1-25-16
PLANS APPROVAL DATE

REGISTERED PROFESSIONAL ENGINEER Daryoush Tavatli No. 56183 Exp. 12-31-16 CIVIL STATE OF CALIFORNIA

The State of California or its officers or agents shall not be responsible for the accuracy or completeness of electronic copies of this plan sheet.

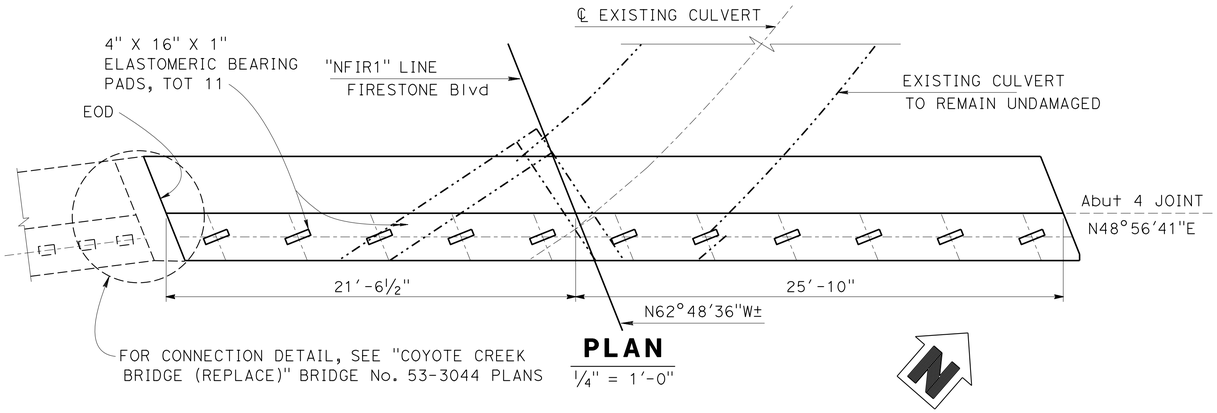

PLAN
¼" = 1'-0"

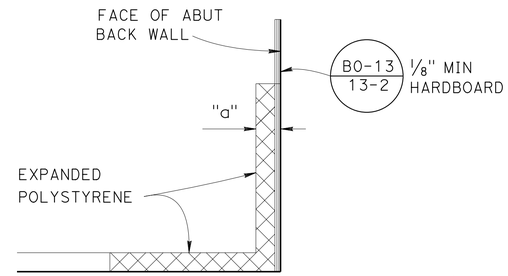

DETAIL 'A'
NO SCALE

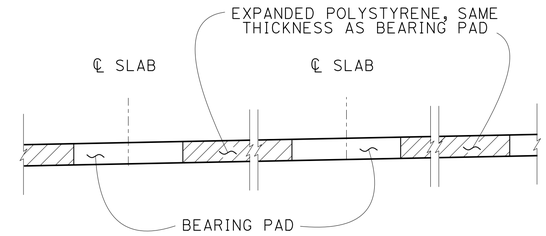

DETAIL 'B'
NO SCALE

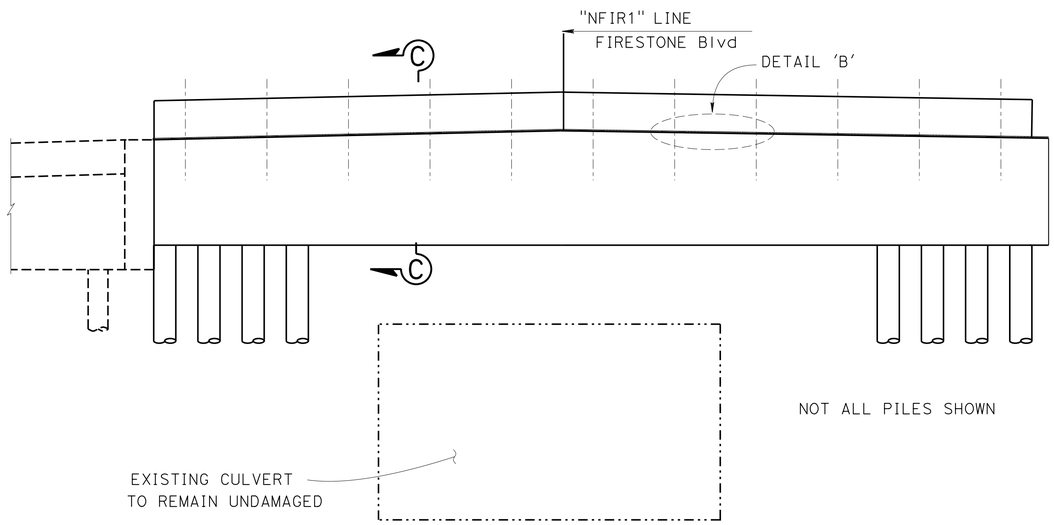

ELEVATION
¼" = 1'-0"

Notes:

1. For additional Dowels, see 'Support Details' on "PRESTRESSED CONCRETE SLAB" sheet
2. Exist culvert location shown is approximate Contractor to verify the existing structure locations prior to construction

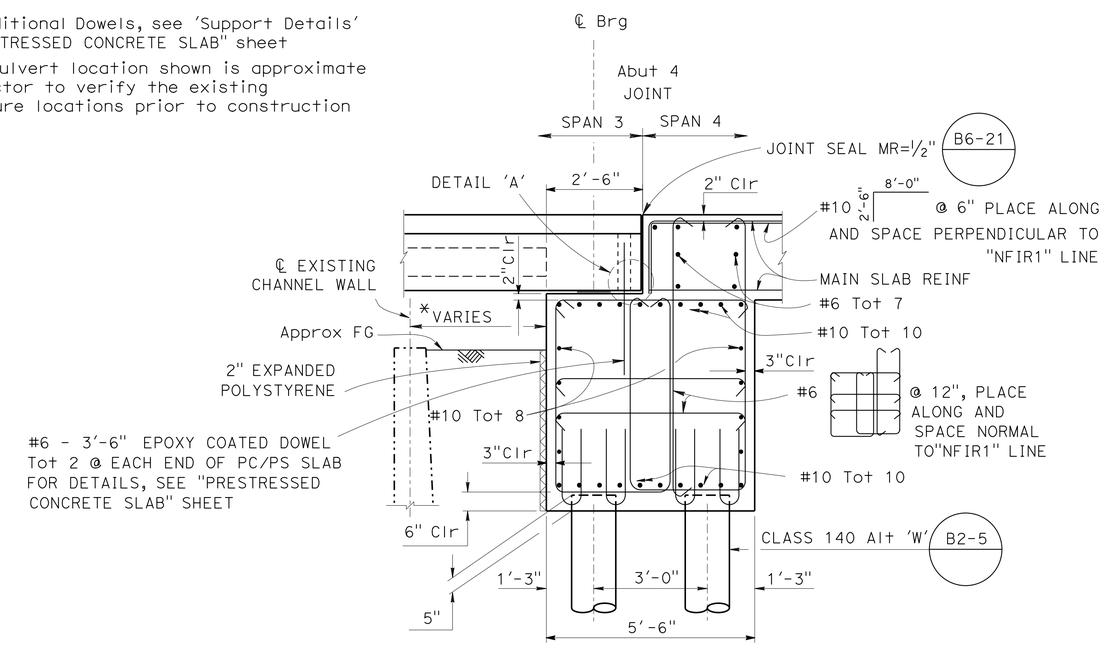

SECTION C-C
½" = 1'-0"

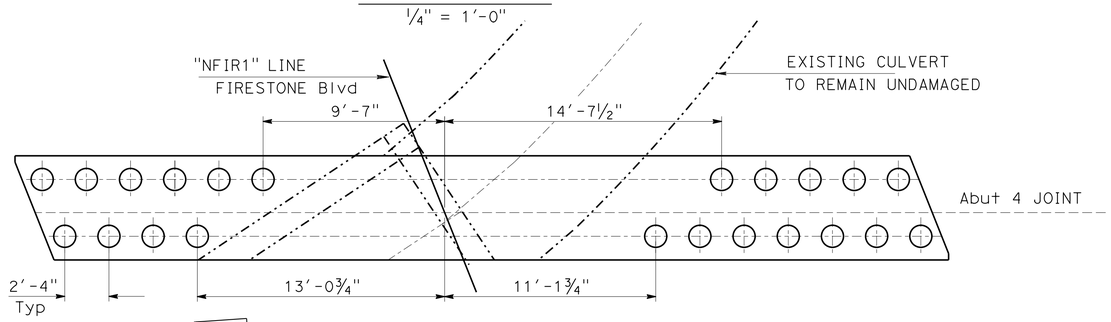

PILE LAYOUT
¼" = 1'-0"

○- INDICATES TYPICAL PILE

DESIGN	BY Y. Yoon	CHECKED S. Pahlaban	
DETAILS	BY L. Goldthwait	CHECKED S. Pahlaban	
QUANTITIES	BY D. Tavatli	CHECKED C. Chan	

STATE OF CALIFORNIA
DEPARTMENT OF TRANSPORTATION

DIVISION OF ENGINEERING SERVICES
STRUCTURE DESIGN
DESIGN BRANCH 11

BRIDGE NO. 53C-2194
POST MILE 0.34

FIRESTONE BLVD BRIDGE
ABUTMENT 4 LAYOUT

STRUCTURES DESIGN DETAIL SHEET (ENGLISH) (REV. 09-01-10)

ORIGINAL SCALE IN INCHES FOR REDUCED PLANS 0 1 2 3

UNIT: 3587
PROJECT NUMBER & PHASE: 0715000160-1
CONTRACT NO.: 07-2159u4

DISREGARD PRINTS BEARING EARLIER REVISION DATES

REVISION DATES 6-06-12 8-22-13 8-30-13 08-01-13

SHEET 6 OF 23

FILE => 53c-2194-f-abt4_lo.dgn

USERNAME => s125624 DATE PLOTTED => 03-FEB-2016 TIME PLOTTED => 13:52

DIST	COUNTY	ROUTE	POST MILES TOTAL PROJECT	SHEET No.	TOTAL SHEETS
07	LA,Ora	5	0.0/1.5, 44.3/44.4	1314	1622

REGISTERED CIVIL ENGINEER — DATE 3-18-15

1-25-16
PLANS APPROVAL DATE

REGISTERED PROFESSIONAL ENGINEER — Daryoush Tavatli No. 56183 Exp. 12-31-16 CIVIL — STATE OF CALIFORNIA

The State of California or its officers or agents shall not be responsible for the accuracy or completeness of electronic copies of this plan sheet.

Notes:

1. For details not shown, see B0-1
2. Right EOD Side Reinf shown, Left EOD Side Reinf similar

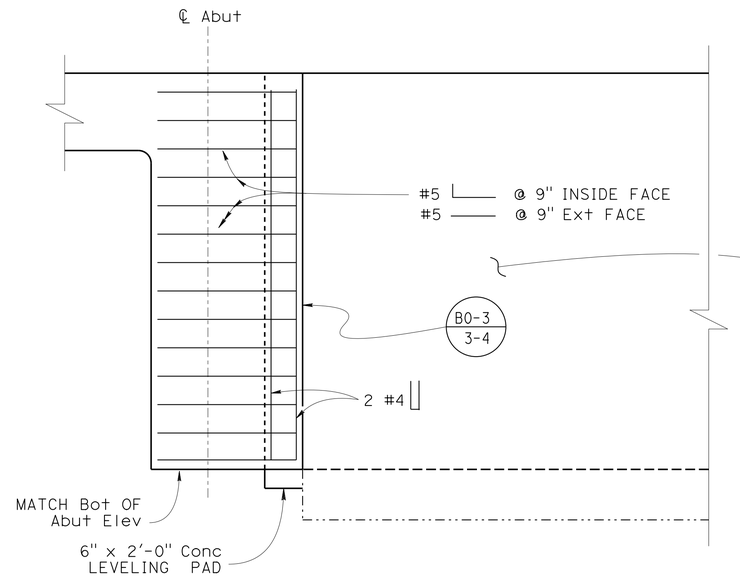

ELEVATION E-E

½" = 1'-0"

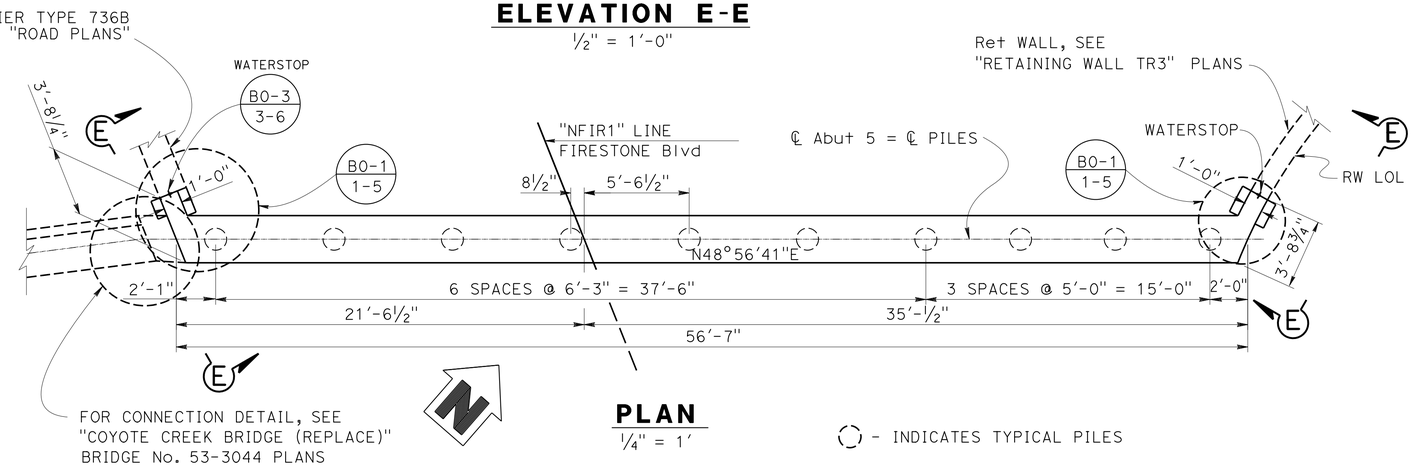

PLAN

¼" = 1'

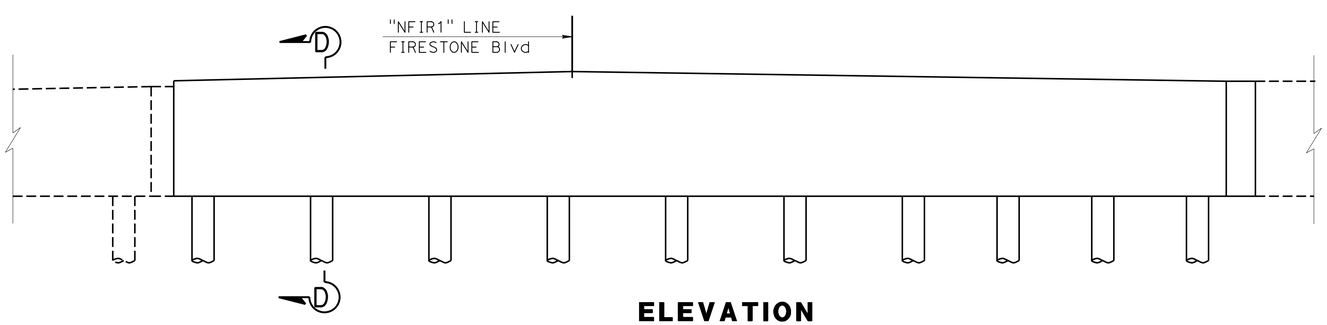

ELEVATION

¼" = 1'

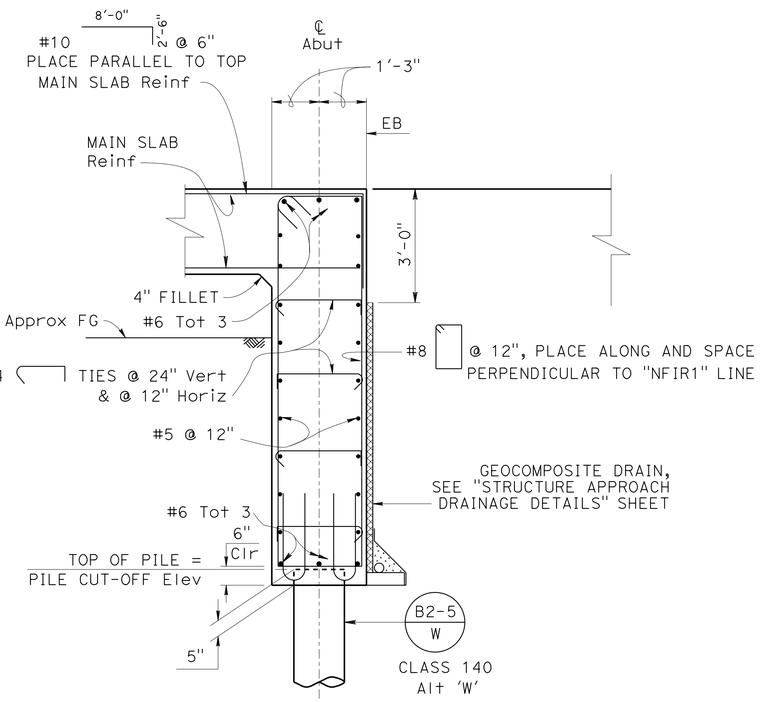

SECTION D-D

½" = 1'-0"

DESIGN	BY Y. Yoon	CHECKED S. Pahlaban	
DETAILS	BY L. Goldthwait - JH	CHECKED S. Pahlaban	
QUANTITIES	BY D. Tavatli	CHECKED C. Chan	

STATE OF CALIFORNIA
DEPARTMENT OF TRANSPORTATION

DIVISION OF ENGINEERING SERVICES
STRUCTURE DESIGN
DESIGN BRANCH 11

BRIDGE NO. 53C-2194
POST MILE 0.34

FIRESTONE BLVD BRIDGE
ABUTMENT 5 LAYOUT

STRUCTURES DESIGN DETAIL SHEET (ENGLISH) (REV. 09-01-10)

ORIGINAL SCALE IN INCHES FOR REDUCED PLANS 0 1 2 3

UNIT: 3587
PROJECT NUMBER & PHASE: 0715000160-1
CONTRACT NO.: 07-2159U4

DISREGARD PRINTS BEARING EARLIER REVISION DATES

REVISION DATES: 4-09-12, 9-27-13, 8-30-13, 9-12-13

SHEET 7 OF 23

FILE => 53c-2194-f-abt5_lo.dgn

USERNAME => s125624 DATE PLOTTED => 03-FEB-2016 TIME PLOTTED => 13:52

DIST	COUNTY	ROUTE	POST MILES TOTAL PROJECT	SHEET No.	TOTAL SHEETS
07	LA,Ora	5	0.0/1.5, 44.3/44.4	1315	1622

REGISTERED CIVIL ENGINEER 3-18-15 DATE

1-25-16
PLANS APPROVAL DATE

REGISTERED PROFESSIONAL ENGINEER Daryoush Tavatli No. 56183 Exp. 12-31-16 CIVIL STATE OF CALIFORNIA

The State of California or its officers or agents shall not be responsible for the accuracy or completeness of electronic copies of this plan sheet.

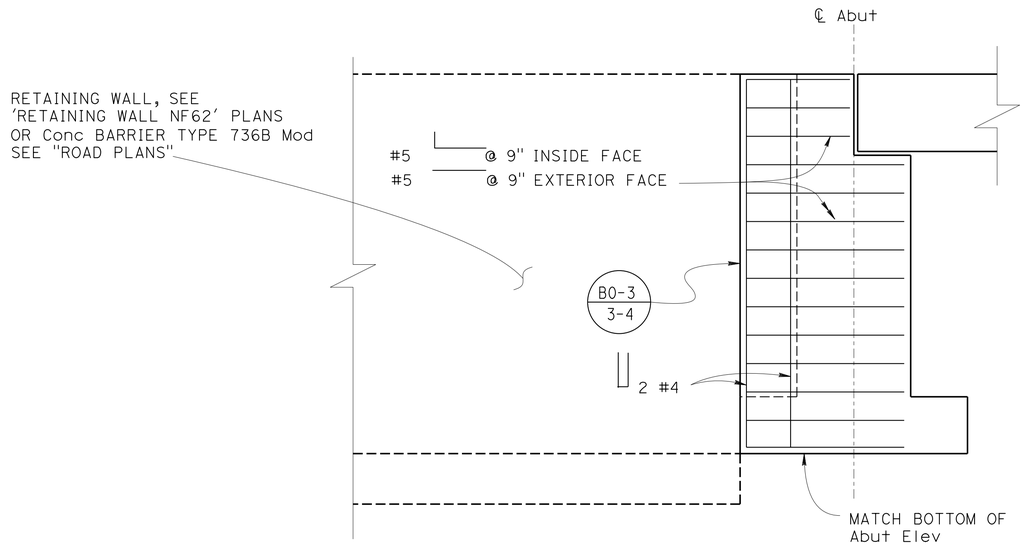

ELEVATION A-A

½" = 1'-0"

Notes:

1. For details not shown, see B0-1
2. Right EOD side reinf shown, Left EOD side reinf similar

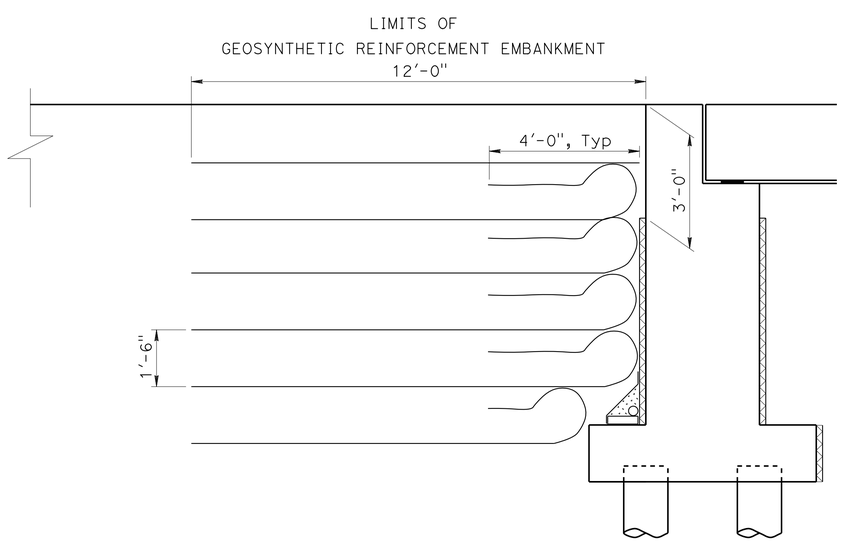

LONG TERM TENSILE STRENGTH REQUIRED FOR GEOSYNTHETIC REINFORCEMENT: 1500 LBS/FT

GEOSYNTHETIC REINFORCEMENT TYPE: GEO TEXTILE OR GEO GRID

ABUTMENT 1 GEOSYNTHETIC REINFORCED EMBANKMENT

½" = 1'-0"

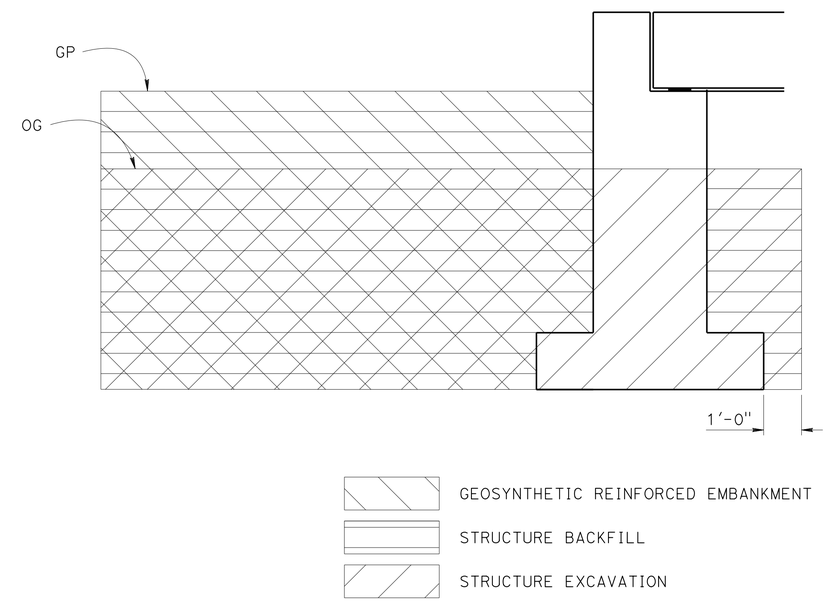

LIMITS OF PAYMENT FOR STRUCTURAL EXCAVATION AND BACKFILL AT ABUTMENT 1

NO SCALE

	BY	CHECKED
DESIGN	Y. Yoon	s. Pahlaban
DETAILS	L. Goldthwait	S. Pahlaban
QUANTITIES	D. Tavatli	C. Chan

STATE OF CALIFORNIA
DEPARTMENT OF TRANSPORTATION

DIVISION OF ENGINEERING SERVICES
STRUCTURE DESIGN
DESIGN BRANCH 11

BRIDGE NO. 53C-2194
POST MILE 0.34

FIRESTONE BLVD BRIDGE
ABUTMENT DETAILS NO. 1

STRUCTURES DESIGN DETAIL SHEET (ENGLISH) (REV. 09-01-10)

ORIGINAL SCALE IN INCHES FOR REDUCED PLANS 0 1 2 3

UNIT: 3587
PROJECT NUMBER & PHASE: 0715000160-1
CONTRACT NO.: 07-2159u4

DISREGARD PRINTS BEARING EARLIER REVISION DATES

REVISION DATES: 1-26-12 9-11-13 9-27-13 8-30-13

SHEET 8 OF 23

FILE => 53c-2194-g-abtdt.dgn

USERNAME => s125624 DATE PLOTTED => 03-FEB-2016 TIME PLOTTED => 13:52

DIST	COUNTY	ROUTE	POST MILES TOTAL PROJECT	SHEET No.	TOTAL SHEETS
07	LA,Ora	5	0.0/1.5, 44.3/44.4	1316	1622

REGISTERED CIVIL ENGINEER — DATE 3-18-15

1-25-16
PLANS APPROVAL DATE

REGISTERED PROFESSIONAL ENGINEER — Daryoush Tavatli No. 56183 Exp. 12-31-16 CIVIL — STATE OF CALIFORNIA

The State of California or its officers or agents shall not be responsible for the accuracy or completeness of electronic copies of this plan sheet.

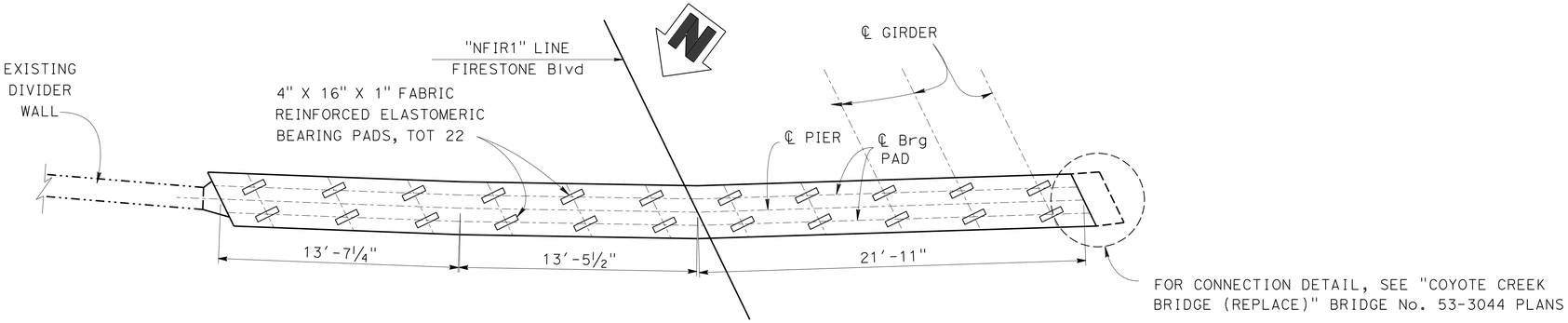

PLAN

¼" = 1'-0"

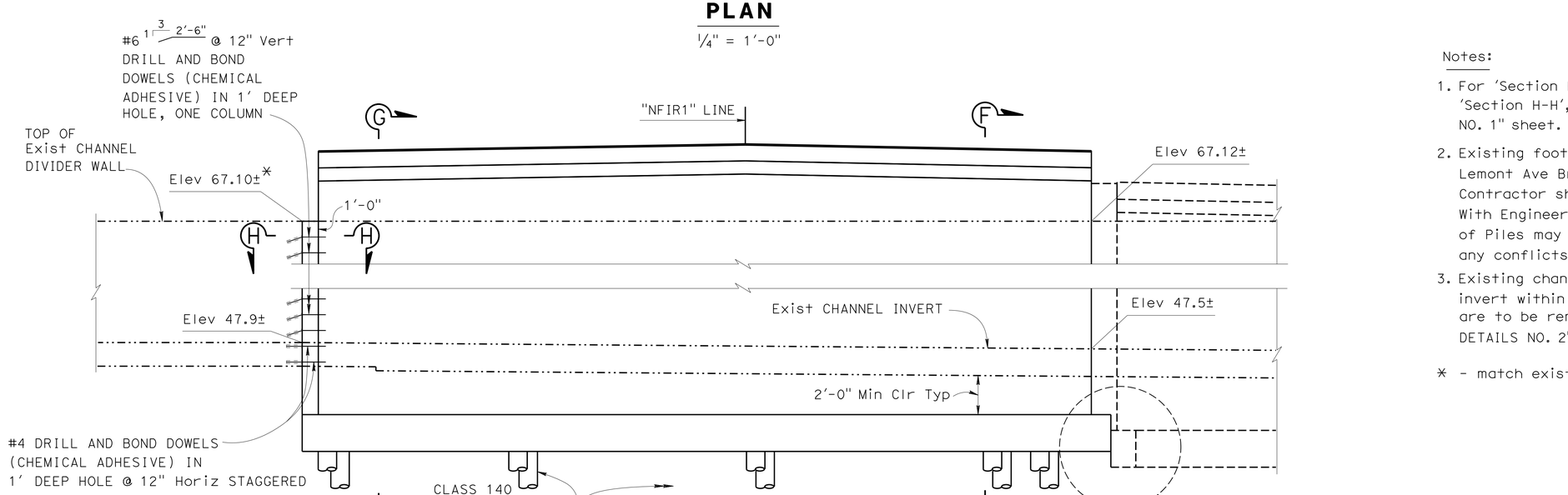

ELEVATION

¼" = 1'-0"

Notes:

1. For 'Section F-F', 'Section G-G' and 'Section H-H', see "PIER DETAILS NO. 1" sheet.
2. Existing footing and battered piles of Lemont Ave Bridge shown are approximate. Contractor shall verify field location. With Engineer's approval, locations of Piles may be adjusted to accomodate any conflicts with existing piles.
3. Existing channel divider wall and channel invert within the limit of footing construction are to be removed. For details, see "PIER DETAILS NO. 2" sheet.

* - match existing divider wall

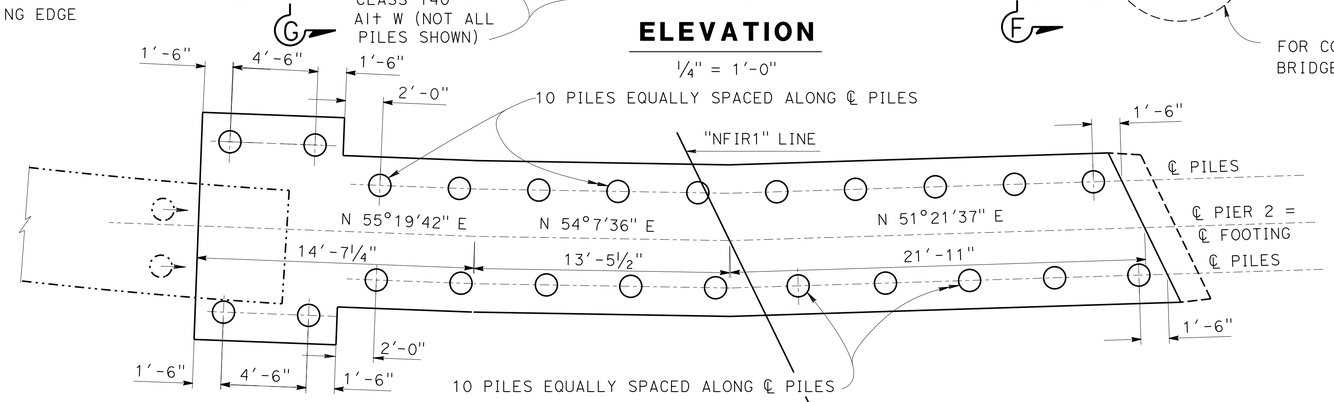

PILE LAYOUT

¼" = 1'-0"

○ - INDICATES TYPICAL PILE
- INDICATES EXISTING BATTERED PILE OF LEMONT AVE BRIDGE
- INDICATES EXISTING FOOTING OF LEMONT AVE BRIDGE

HOOKS OF ADJACENT CROSS-TIES TO FACE EACH OTHER IN ALTERNATE SPACES BETWEEN PAIRS OF MAIN BARS TO PROVIDE SPACE FOR PLACING CONCRETE

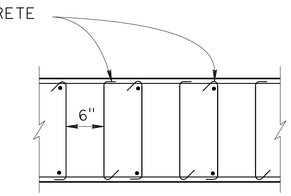

PART SECTION I-I

1" = 1'-0"

	BY	CHECKED
DESIGN	Y. Yoon	S. Pahlaban
DETAILS	L. Goldthwait	S. Pahlaban
QUANTITIES	D. Tavatli	C. Chan

STATE OF CALIFORNIA
DEPARTMENT OF TRANSPORTATION

DIVISION OF ENGINEERING SERVICES
STRUCTURE DESIGN
DESIGN BRANCH 11

BRIDGE NO. 53C-2194
POST MILE 0.34

FIRESTONE BLVD BRIDGE
PIER 2 LAYOUT

STRUCTURES DESIGN DETAIL SHEET (ENGLISH) (REV. 09-01-10)

ORIGINAL SCALE IN INCHES FOR REDUCED PLANS 0 1 2 3

UNIT: 3587
PROJECT NUMBER & PHASE: 0715000160-1
CONTRACT NO.: 07-2159u4

DISREGARD PRINTS BEARING EARLIER REVISION DATES

REVISION DATES: 6-08-12 9-27-13 8-28-13 9-11-13

SHEET 9 OF 23

FILE => 53c-2194-m-pier2_lo.dgn

USERNAME => s125624 DATE PLOTTED => 03-FEB-2016 TIME PLOTTED => 13:52

DIST	COUNTY	ROUTE	POST MILES TOTAL PROJECT	SHEET No.	TOTAL SHEETS
07	LA,Ora	5	0.0/1.5, 44.3/44.4	1317	1622

REGISTERED CIVIL ENGINEER — DATE 3-18-15

1-25-16
PLANS APPROVAL DATE

REGISTERED PROFESSIONAL ENGINEER — Daryoush Tavatli No. 56183 Exp. 12-31-16 CIVIL — STATE OF CALIFORNIA

The State of California or its officers or agents shall not be responsible for the accuracy or completeness of electronic copies of this plan sheet.

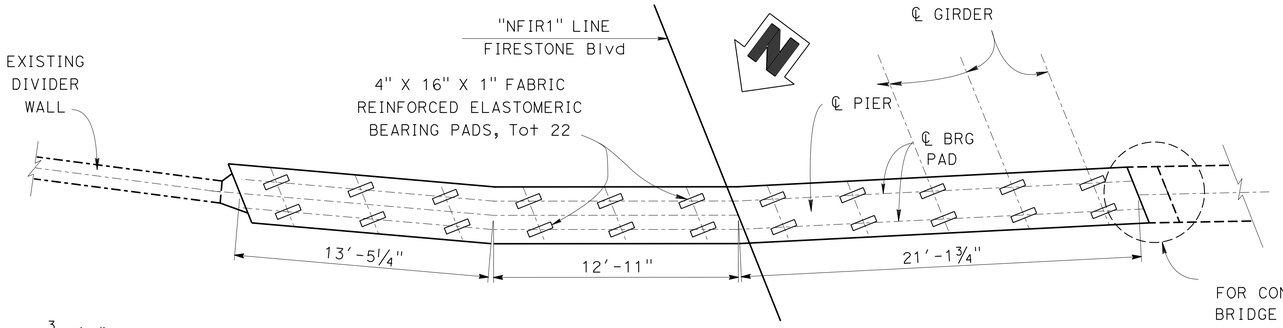

PLAN

¼" = 1'-0"

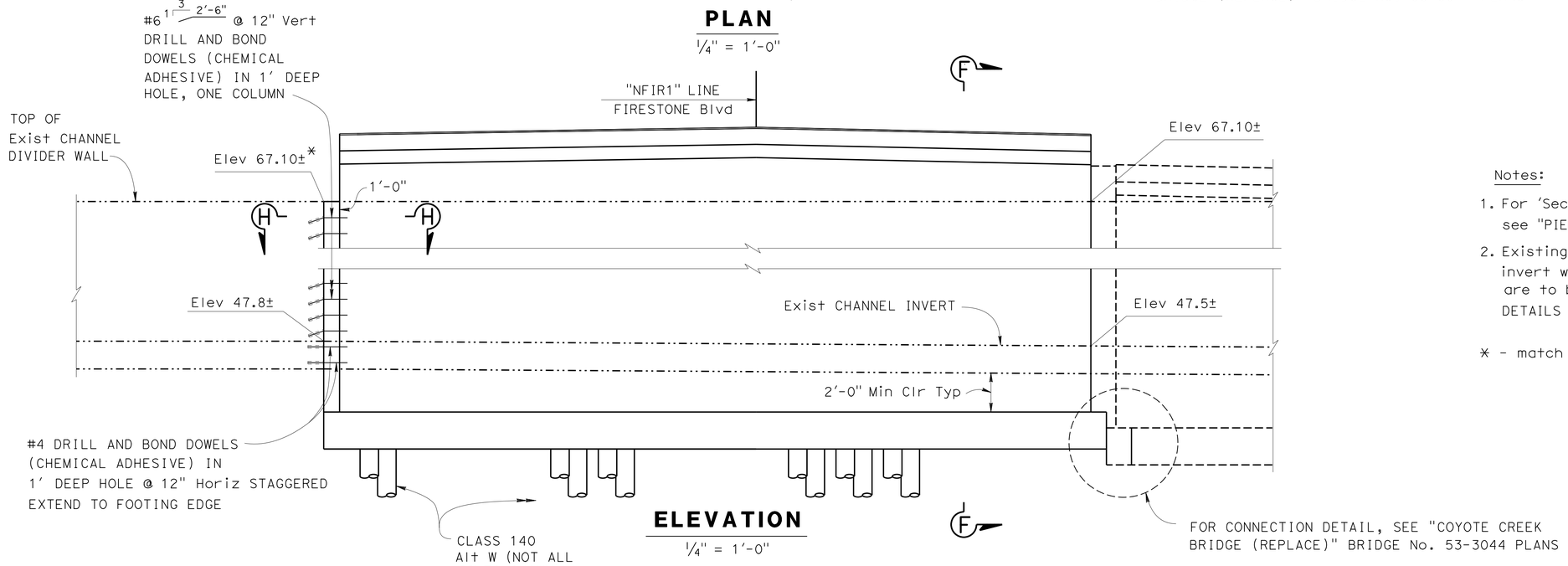

ELEVATION

¼" = 1'-0"

Notes:

1. For 'Section F-F' and 'Section H-H', see "PIER DETAILS NO. 1" sheet
2. Existing channel divider wall and channel invert within the limit of footing construction are to be removed For details, see "PIER DETAILS NO. 2" sheet

* - match existing divider wall

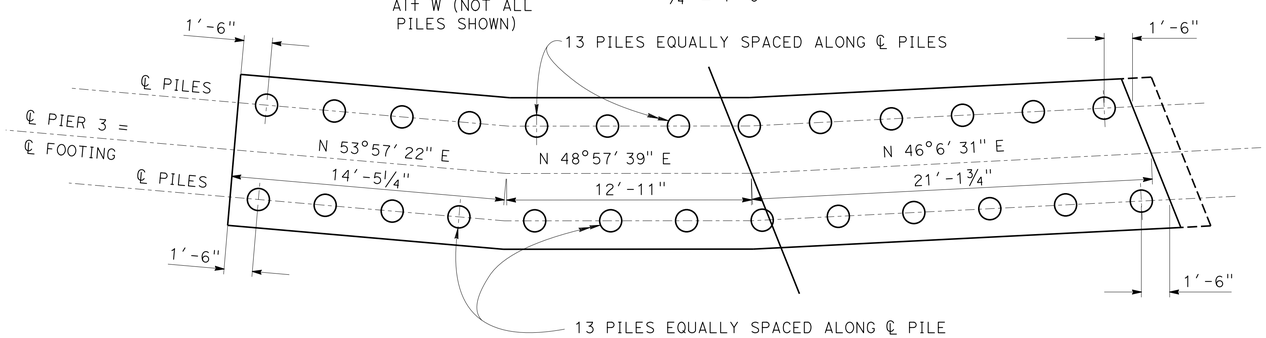

PILE LAYOUT

¼" = 1'-0"

"NFIR1" Line

○ - INDICATES TYPICAL PILE

	BY	CHECKED
DESIGN	Y. Yoon	S. Pahlaban
DETAILS	L. Goldthwait	S. Pahlaban
QUANTITIES	D. Tavatli	C. Chan

STATE OF CALIFORNIA
DEPARTMENT OF TRANSPORTATION

DIVISION OF ENGINEERING SERVICES
STRUCTURE DESIGN
DESIGN BRANCH 11

BRIDGE NO. 53C-2194
POST MILE 0.34

FIRESTONE BLVD BRIDGE
PIER 3 LAYOUT

STRUCTURES DESIGN DETAIL SHEET (ENGLISH) (REV. 09-01-10)

ORIGINAL SCALE IN INCHES FOR REDUCED PLANS 0 1 2 3

UNIT: 3587
PROJECT NUMBER & PHASE: 0715000160-1
CONTRACT NO.: 07-2159u4

DISREGARD PRINTS BEARING EARLIER REVISION DATES

REVISION DATES: 4-09-12 9-27-13 8-22-13 8-30-13

SHEET 10 OF 23

FILE => 53c-2194-m-pier3_10.dgn

USERNAME => s125624 DATE PLOTTED => 03-FEB-2016 TIME PLOTTED => 13:52

DIST	COUNTY	ROUTE	POST MILES TOTAL PROJECT	SHEET No.	TOTAL SHEETS
07	LA,Ora	5	0.0/1.5, 44.3/44.4	1318	1622

REGISTERED CIVIL ENGINEER 3-18-15 DATE

1-25-16
PLANS APPROVAL DATE

REGISTERED PROFESSIONAL ENGINEER
Daryoush Tavatli
No. 56183
Exp. 12-31-16
CIVIL
STATE OF CALIFORNIA

The State of California or its officers or agents shall not be responsible for the accuracy or completeness of electronic copies of this plan sheet.

* FILL DOWEL HOLES WITH MORTAR

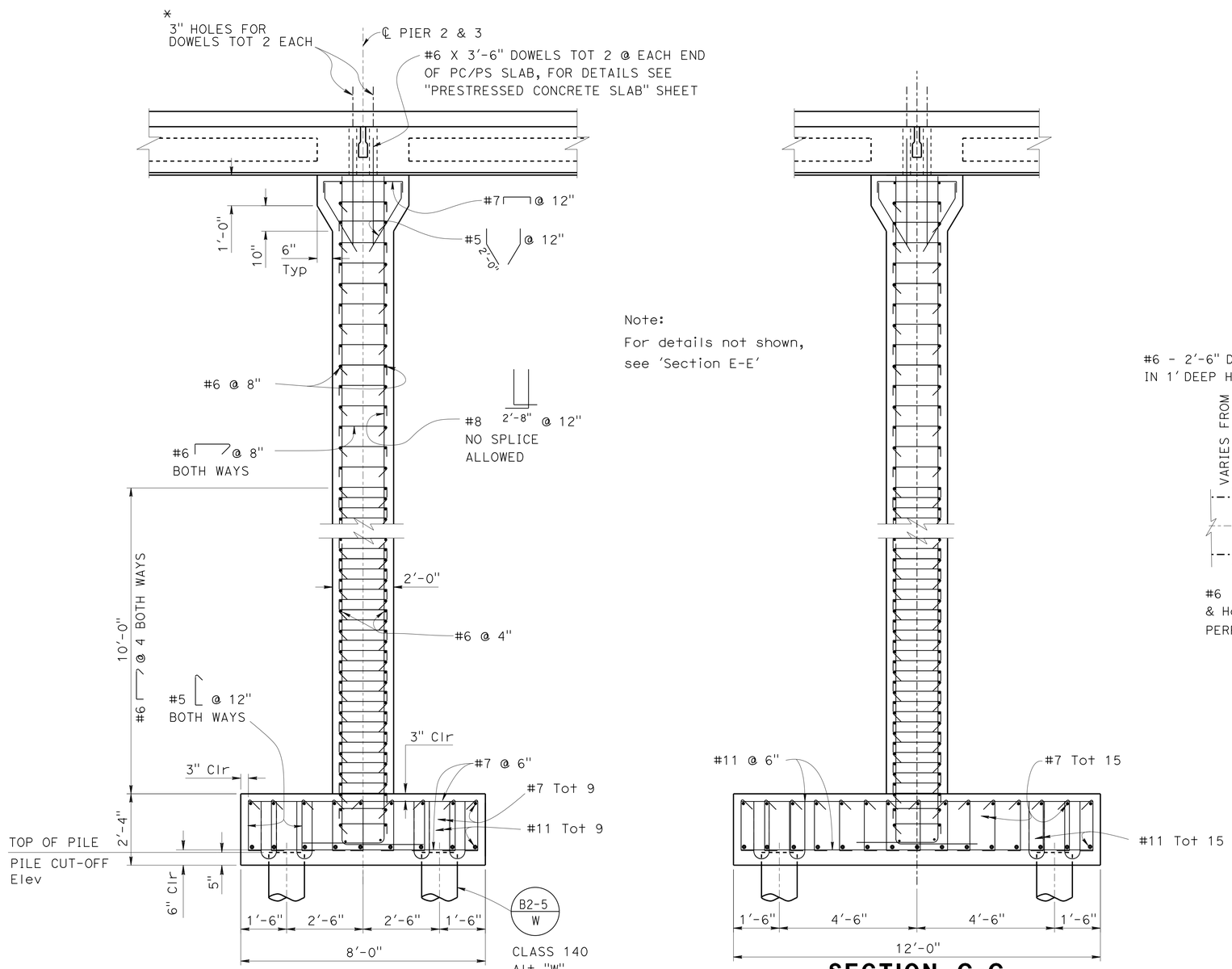

Note:
For details not shown, see 'Section E-E'

SECTION F-F
½" = 1'-0"

SECTION G-G
½" = 1'-0"

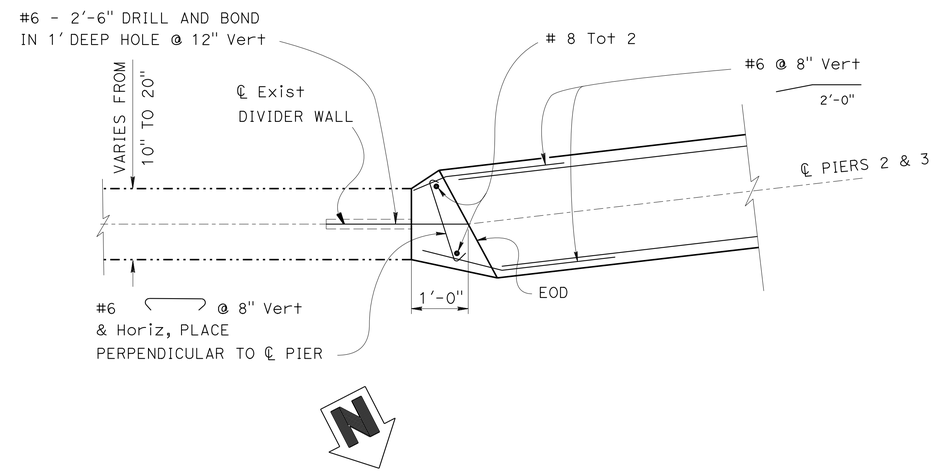

SECTION H-H
¾" = 1'-0"

Note:
1. For 'Section H-H', see "PIER 2 LAYOUT" sheet

DESIGN	BY Y. Yoon	CHECKED S. Pahlaban	
DETAILS	BY L. Goldthwait	CHECKED S. Pahlaban	
QUANTITIES	BY D. Tavatli	CHECKED C. Chan	

STATE OF CALIFORNIA
DEPARTMENT OF TRANSPORTATION

DIVISION OF ENGINEERING SERVICES
STRUCTURE DESIGN
DESIGN BRANCH 11

BRIDGE NO. 53C2194
POST MILE 0.34

FIRESTONE BLVD BRIDGE
PIER DETAILS NO. 1

STRUCTURES DESIGN DETAIL SHEET (ENGLISH) (REV. 09-01-10)

ORIGINAL SCALE IN INCHES FOR REDUCED PLANS 0 1 2 3

UNIT: 3587
PROJECT NUMBER & PHASE: 0715000160-1
CONTRACT NO.: 07-2159U4

DISREGARD PRINTS BEARING EARLIER REVISION DATES

REVISION DATES: 5-09-12 8-30-13 6-14-13 8-14-13

SHEET 11 OF 23

FILE => 53c-2194-p-pierdt1.dgn

USERNAME => s125624 DATE PLOTTED => 03-FEB-2016 TIME PLOTTED => 13:52

DIST	COUNTY	ROUTE	POST MILES TOTAL PROJECT	SHEET No.	TOTAL SHEETS
07	LA,Ora	5	0.0/1.5, 44.3/44.4	1319	1622

REGISTERED CIVIL ENGINEER 3-18-15 DATE

1-25-16
PLANS APPROVAL DATE

REGISTERED PROFESSIONAL ENGINEER Daryoush Tavatli No. 56183 Exp. 12-31-16 CIVIL STATE OF CALIFORNIA

The State of California or its officers or agents shall not be responsible for the accuracy or completeness of electronic copies of this plan sheet.

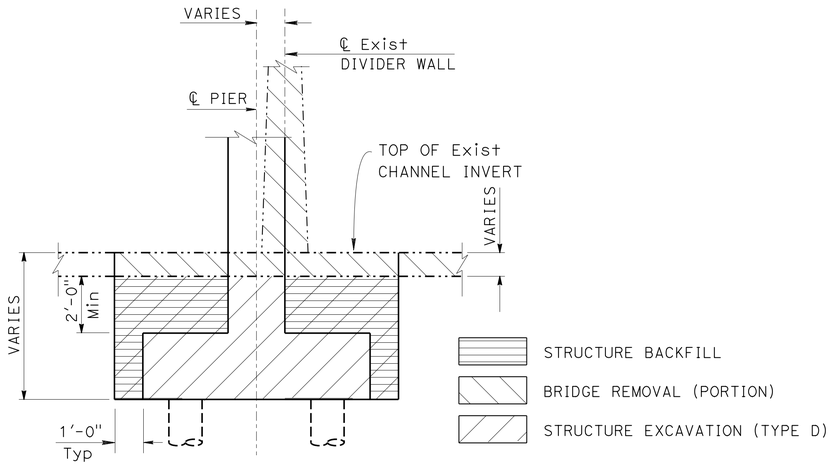

Note:

ALL Reinf IN CHANNEL INVERT SHALL BE PREFABRICATED EPOXY COATED

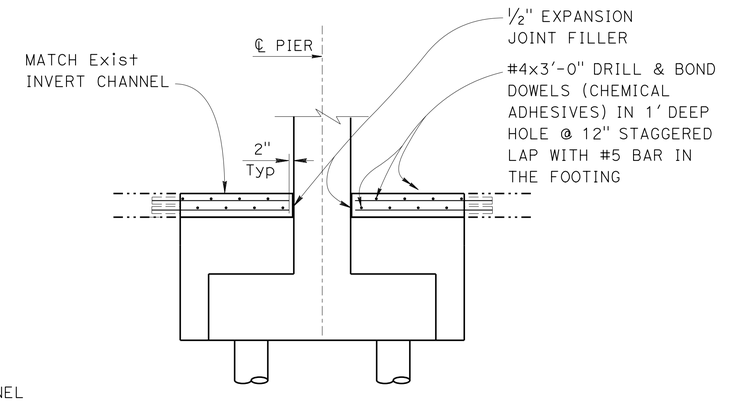

SECTION K-K

NO SCALE

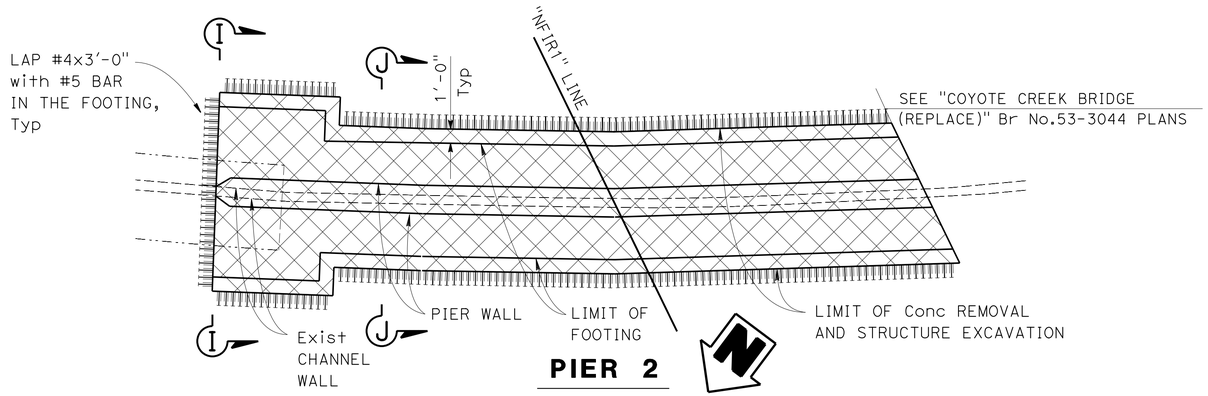

PIER 2

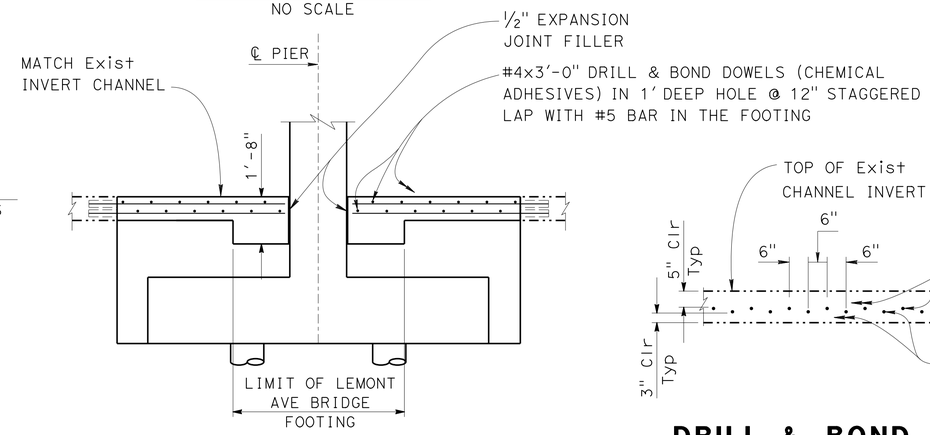

SECTION I-I

NO SCALE

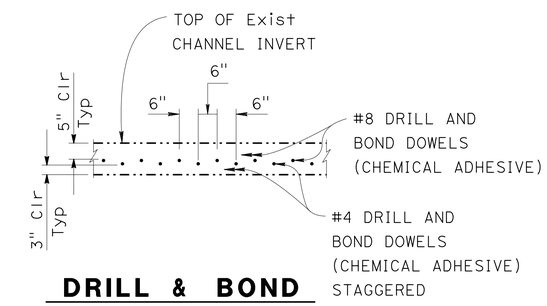

DRILL & BOND PATTERN (TYP)

½" = 1'-0"

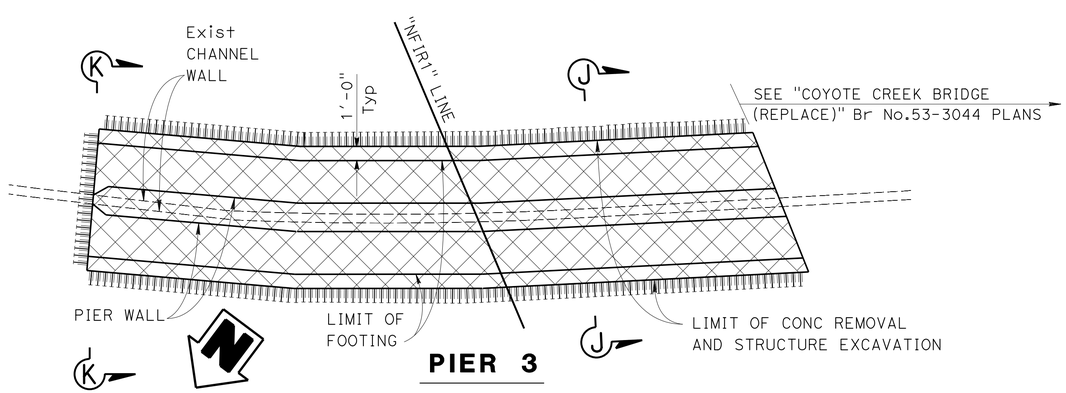

PIER 3

LIMITS OF PAYMENT FOR EXISTING STRUCTURE REMOVAL, EXCAVATION & BACKFILL

NO SCALE

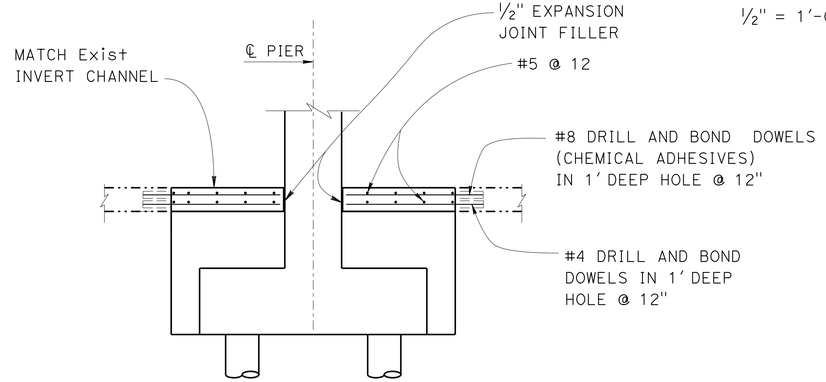

SECTION J-J

NO SCALE

DESIGN	BY Y. Yoon	CHECKED S. Pahlaban	
DETAILS	BY L. Goldthwait	CHECKED S. Pahlaban	
QUANTITIES	BY D. Tavatli	CHECKED C. Chan	

STATE OF CALIFORNIA
DEPARTMENT OF TRANSPORTATION

DIVISION OF ENGINEERING SERVICES
STRUCTURE DESIGN
DESIGN BRANCH 11

BRIDGE NO. 53C-2194
POST MILE 0.34

FIRESTONE BLVD BRIDGE
PIER DETAILS NO. 2

STRUCTURES DESIGN DETAIL SHEET (ENGLISH) (REV. 09-01-10)

ORIGINAL SCALE IN INCHES FOR REDUCED PLANS 0 1 2 3

UNIT: 3587
PROJECT NUMBER & PHASE: 0715000160-1
CONTRACT NO.: 07-2159u4

DISREGARD PRINTS BEARING EARLIER REVISION DATES

REVISION DATES 7-13-12 8-16-13 8-28-13 9-27-13

SHEET 12 OF 23

FILE => 53c-2194-p-pierdt2.dgn

USERNAME => s126824 DATE PLOTTED => 03-FEB-2016 TIME PLOTTED => 13:52

DIST	COUNTY	ROUTE	POST MILES TOTAL PROJECT	SHEET No.	TOTAL SHEETS
07	LA,Ora	5	0.0/1.5, 44.3/44.4	1320	1622

REGISTERED CIVIL ENGINEER 3-18-15 DATE

1-25-16
PLANS APPROVAL DATE

REGISTERED PROFESSIONAL ENGINEER Daryoush Tavatli No. 56183 Exp. 12-31-16 CIVIL STATE OF CALIFORNIA

The State of California or its officers or agents shall not be responsible for the accuracy or completeness of electronic copies of this plan sheet.

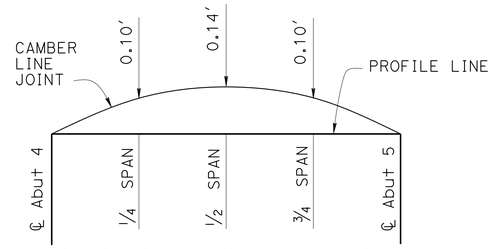

CAMBER DIAGRAM - SPAN 4

NO SCALE

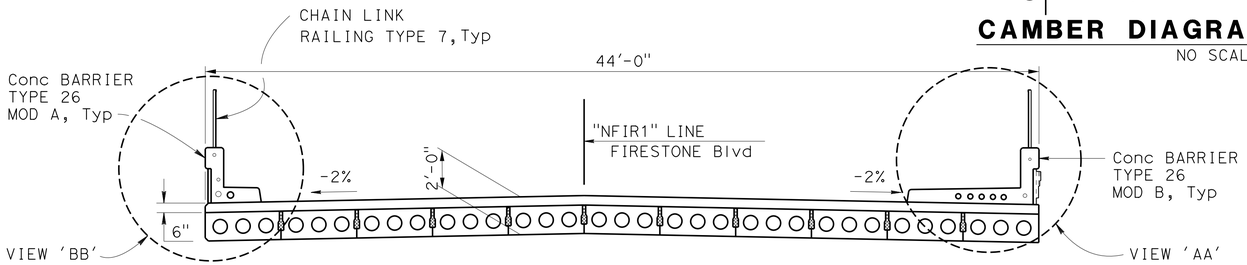

PC/PS SLAB

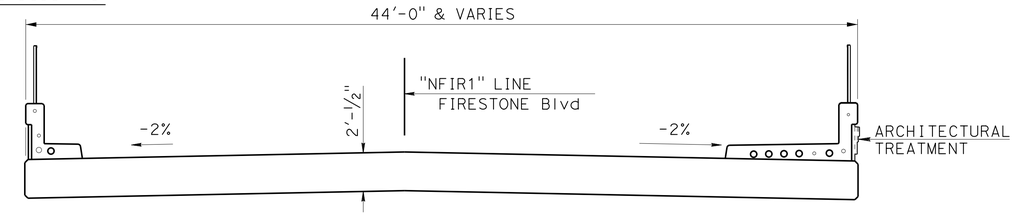

CIP/RC SLAB

TYPICAL SECTION

1/4" = 1'-0"

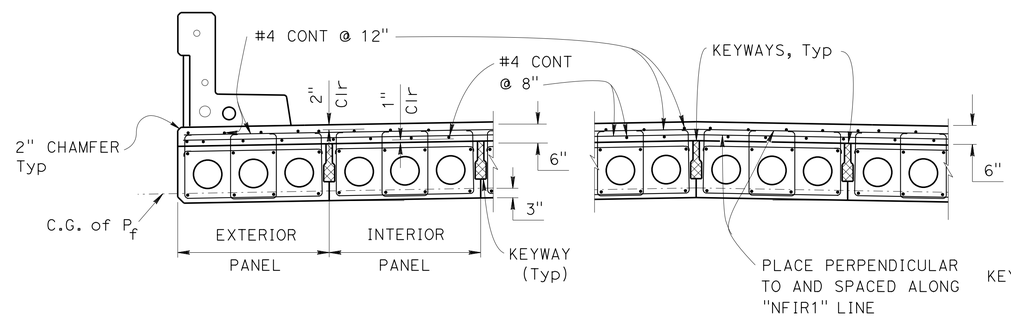

PC/PS SLAB

PART TYPICAL SECTION

1/2" = 1'-0"

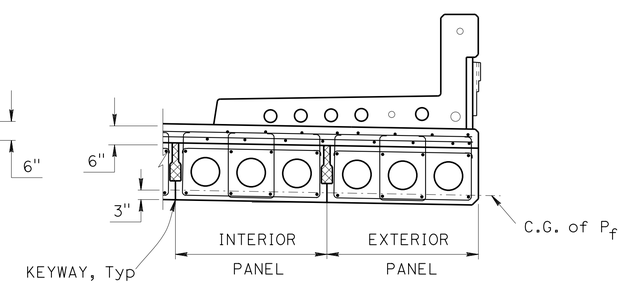

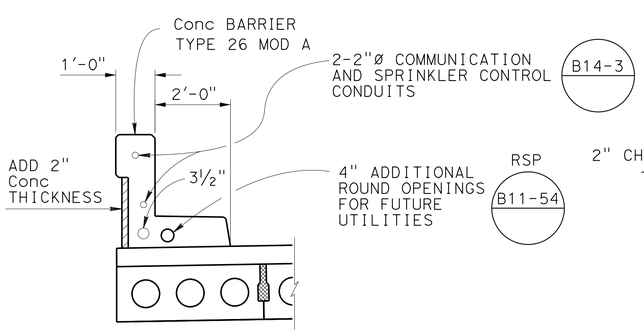

VIEW 'BB'

NO SCALE

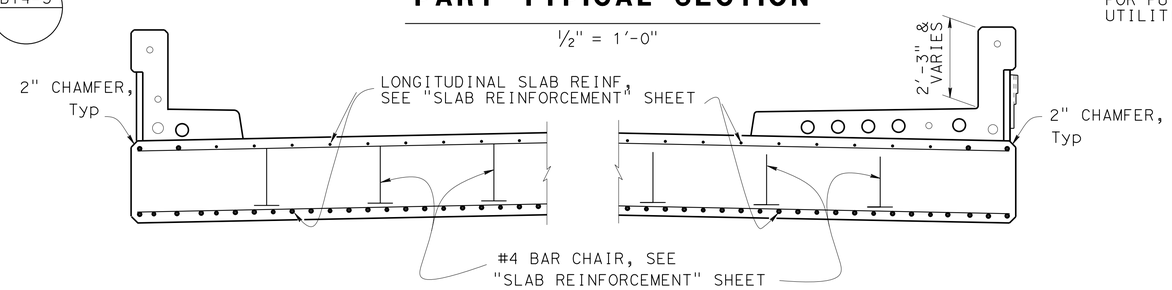

CIP/RC SLAB

PART TYPICAL SECTION

1/2" = 1'-0"

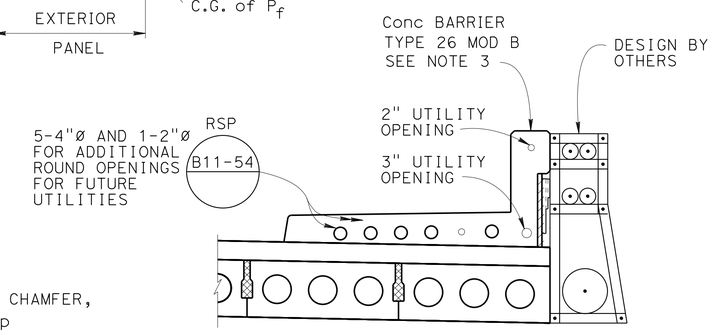

VIEW 'AA'

NO SCALE

Notes:

1. Keyways to be filled with mortar
2. For barrier details and reinforcements not shown, see RSP B11-54
3. For barrier details where curb ramp exists, see "SLAB REINFORCEMENT DETAILS NO. 2" sheet

	BY	CHECKED
DESIGN	Y. Yoon	S. Pahlaban
DETAILS	L. Goldthwait/YY	S. Pahlaban
QUANTITIES	D. Tavatli	C. Chan

STATE OF CALIFORNIA
DEPARTMENT OF TRANSPORTATION

DIVISION OF ENGINEERING SERVICES
STRUCTURE DESIGN
DESIGN BRANCH 11

BRIDGE NO. 53C-2194
POST MILE 0.34

FIRESTONE BLVD BRIDGE

TYPICAL SECTION

STRUCTURES DESIGN DETAIL SHEET (ENGLISH) (REV. 09-01-10)

ORIGINAL SCALE IN INCHES FOR REDUCED PLANS 0 1 2 3

UNIT: 3587
PROJECT NUMBER & PHASE: 0715000160-1
CONTRACT NO.: 07-2159u4

DISREGARD PRINTS BEARING EARLIER REVISION DATES

REVISION DATES: 6-01-12 8-30-13 9/30/13 9-27-13

SHEET 13 OF 23

FILE => 53c-2194-p-ts.dgn

USERNAME => s125624 DATE PLOTTED => 03-FEB-2016 TIME PLOTTED => 13:52

DIST	COUNTY	ROUTE	POST MILES TOTAL PROJECT	SHEET No.	TOTAL SHEETS
07	LA,Ora	5	0.0/1.5, 44.3/44.4	1321	1622

REGISTERED CIVIL ENGINEER 3-18-15 DATE

1-25-16
PLANS APPROVAL DATE

REGISTERED PROFESSIONAL ENGINEER Daryoush Tavatli No. 56183 Exp. 12-31-16 CIVIL STATE OF CALIFORNIA

The State of California or its officers or agents shall not be responsible for the accuracy or completeness of electronic copies of this plan sheet.

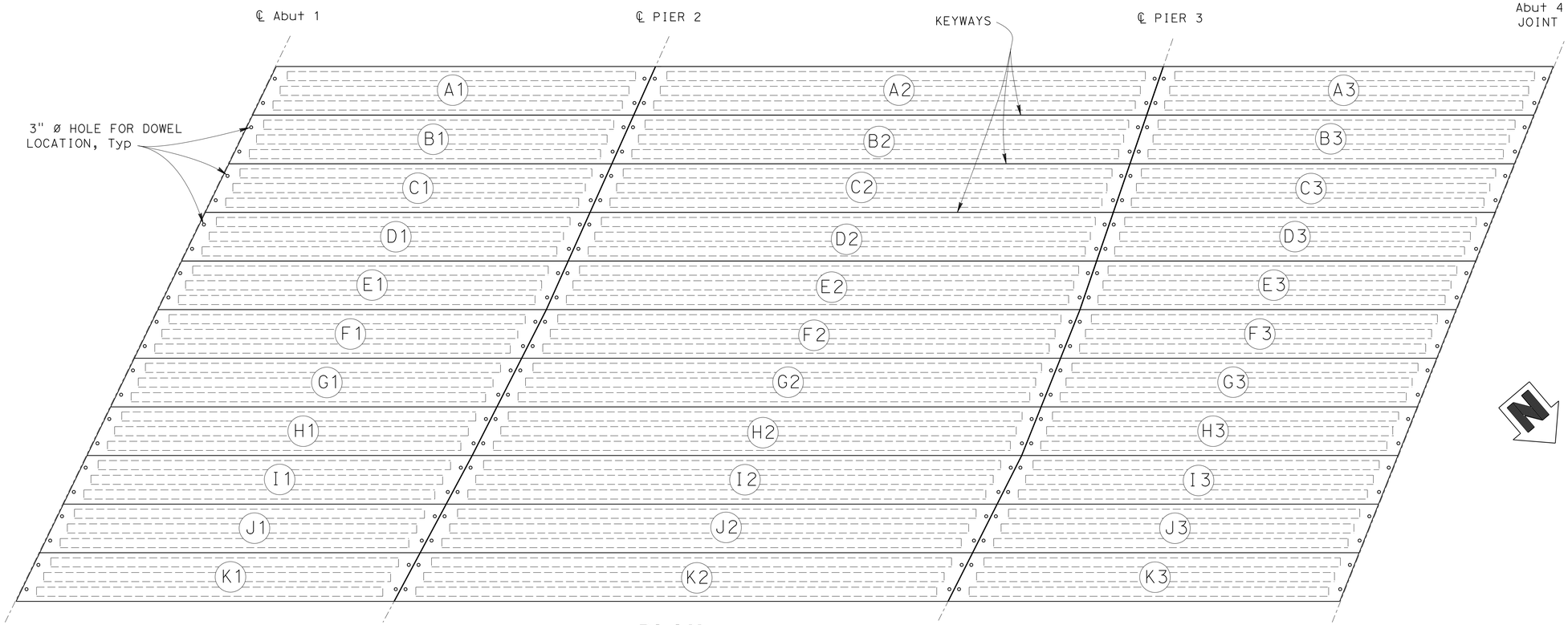

PLAN
1"=5'-0"

Notes

(A3) - Indicates slab type

Legend

A = slab type
3 = span

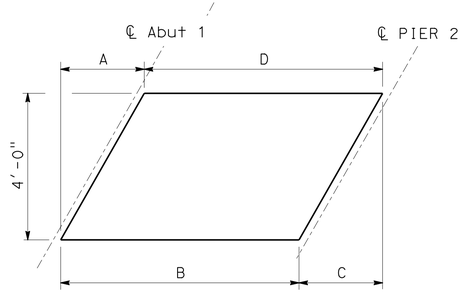

NO SCALE

PANEL	A	B	C	D
A1	1'-11¼"	31'-3¾"	1'-9½"	31'-1⅞"
B1	1'-11¼"	31'-5½"	1'-9½"	31'-3¾"
C1	1'-11¼"	31'-7¼"	1'-9½"	31'-5½"
D1	1'-11¼"	31'-9⅛"	1'-9½"	31'-7¼"
E1	1'-11¼"	31'-10⅞"	1'-9½"	31'-9⅛"
F1	1'-11¼"	31'-9¾"	2'-0⅜"	31'-10⅞"
G1	1'-11¼"	31'-8¾"	2'-0⅜"	31'-9¾"
H1	1'-11¼"	31'-7⅝"	2'-0⅜"	31'-8¾"
I1	1'-11¼"	31'-5⅜"	2'-1⅝"	31'-7⅝"
J1	1'-11¼"	31'-3"	2'-1⅝"	31'-5⅜"
K1	1'-11¼"	31'-⅝"	2'-1⅝"	31'-3"

PANELS A1 TO K1 DIMENSIONS

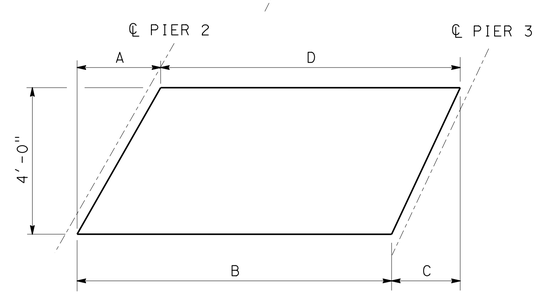

NO SCALE

PANEL	A	B	C	D
A2	1'-9½"	42'-1½"	1'-4⅜"	41'-8½"
B2	1'-9½"	42'-6⅝"	1'-4⅜"	42'-1½"
C2	1'-9½"	42'-11¾"	1'-4⅜"	42'-6⅝"
D2	1'-9½"	43'-4¾"	1'-4⅜"	42'-11¾"
E2	1'-9½"	43'-9⅞"	1'-4⅜"	43'-4¾"
F2	2'-⅜"	44'-3⅛"	1'-7⅛"	43'-9⅞"
G2	2'-⅜"	44'-8⅜"	1'-7⅛"	44'-3⅛"
H2	2'-⅜"	45'-1½"	1'-7⅛"	44'-8⅜"
I2	2'-1⅝"	45'-3"	2'-⅛"	45'-1½"
J2	2'-1⅝"	45'-4½"	2'-⅛"	45'-3"
K2	2'-1⅝"	45'-5⅞"	2'-⅛"	45'-4½"

PANELS A2 TO K2 DIMENSIONS

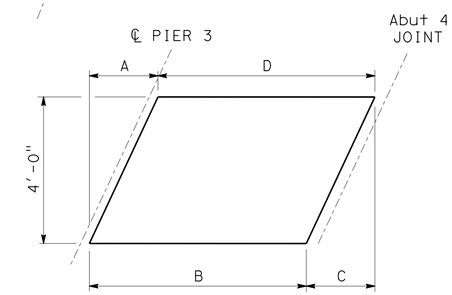

NO SCALE

PANEL	A	B	C	D
A3	1'-4⅜"	31'-9⅝"	1'-7⅛"	32'-⅜"
B3	1'-4⅜"	31'-7"	1'-7⅛"	31'-9⅝"
C3	1'-4⅜"	31'-4¼"	1'-7⅛"	31'-7"
D3	1'-4⅜"	31'-1⅝"	1'-7⅛"	31'-4¼"
E3	1'-4⅜"	30'-10⅞"	1'-7⅛"	31'-1⅝"
F3	1'-7⅛"	30'-10⅞"	1'-7⅛"	30'-10⅞"
G3	1'-7⅛"	30'-10⅞"	1'-7⅛"	30'-10⅞"
H3	1'-7⅛"	30'-10⅞"	1'-7⅛"	30'-10⅞"
I3	2'-⅛"	31'-4"	1'-7⅛"	30'-10⅞"
J3	2'-⅛"	31'-9"	1'-7⅛"	31'-4"
K3	2'-⅛"	32'-2⅛"	1'-7⅛"	31'-9"

PANELS A3 TO K3 DIMENSIONS

	BY	CHECKED
DESIGN	Y. Yoon	S. Pahlaban
DETAILS	L. Goldthwait	S. Pahlaban
QUANTITIES	D. Tavatli	C. Chan

STATE OF CALIFORNIA
DEPARTMENT OF TRANSPORTATION

DIVISION OF ENGINEERING SERVICES
STRUCTURE DESIGN
DESIGN BRANCH 11

BRIDGE NO. 53C-2194
POST MILE 0.34

FIRESTONE BLVD BRIDGE
GIRDER LAYOUT

STRUCTURES DESIGN DETAIL SHEET (ENGLISH) (REV. 09-01-10)

ORIGINAL SCALE IN INCHES FOR REDUCED PLANS 0 1 2 3

UNIT: 3587
PROJECT NUMBER & PHASE: 0715000160-1
CONTRACT NO.: 07-2159u4

DISREGARD PRINTS BEARING EARLIER REVISION DATES

REVISION DATES: 5-03-11 8-26-13 8-30-13 7-14-11

SHEET 14 OF 23

FILE => 53c-2194-q-gr_lo.dgn

USERNAME => s125624 DATE PLOTTED => 03-FEB-2016 TIME PLOTTED => 13:52

DIST	COUNTY	ROUTE	POST MILES TOTAL PROJECT	SHEET No.	TOTAL SHEETS
07	LA,Ora	5	0.0/1.5, 44.3/44.4	1322	1622

REGISTERED CIVIL ENGINEER 3-18-15 DATE

1-25-16
PLANS APPROVAL DATE

REGISTERED PROFESSIONAL ENGINEER Daryoush Tavatli No. 56183 Exp. 12-31-16 CIVIL STATE OF CALIFORNIA

The State of California or its officers or agents shall not be responsible for the accuracy or completeness of electronic copies of this plan sheet.

GENERAL NOTES:

1. P_f is the force required at center of span after all losses.
2. Slabs designed for pretensioning.
3. Concrete strength at time of stressing, f'_c = 4.5 ksi at 28 days, f'_c = 6 ksi
4. Live Loading = HL93 with "LOW-BOY" Permit Design Vehicle (LRFD)
5. Design 35 psf for surfacing.
6. Keyways to be filled with mortar.
7. See other sheets for railing requirements.

LOCATION OR LENGTH	NO. OF STRANDS	P_f = WORKING FORCE IN kips
SPANS 1 & 3	7	280
SPANS 2	9	360

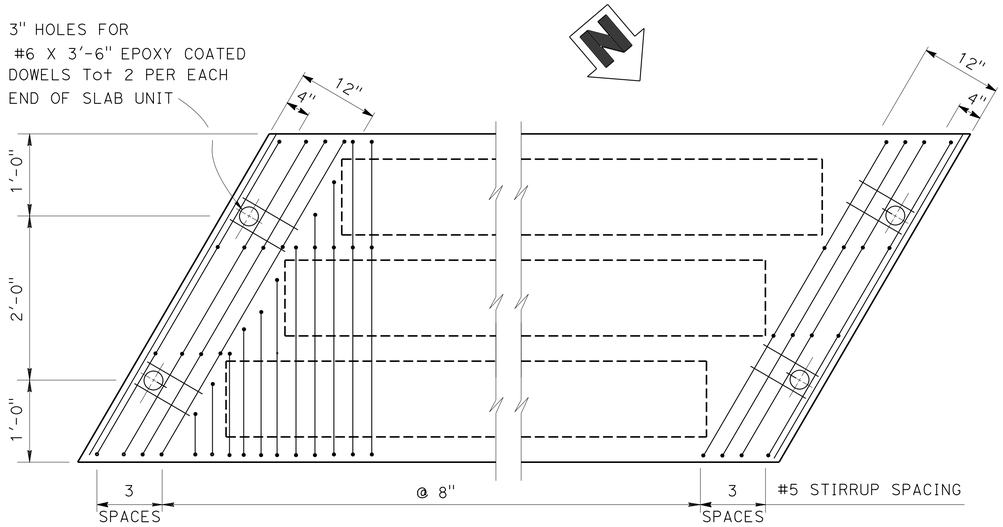

PLAN
NO SCALE

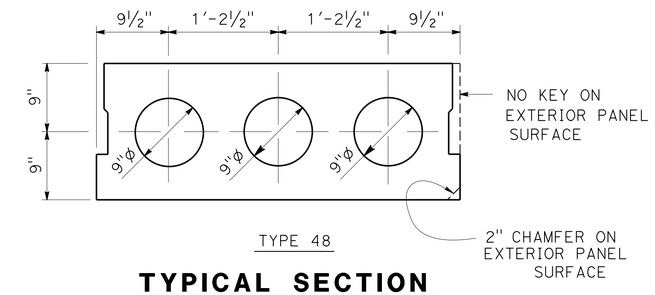

TYPE 48

TYPICAL SECTION
NO SCALE

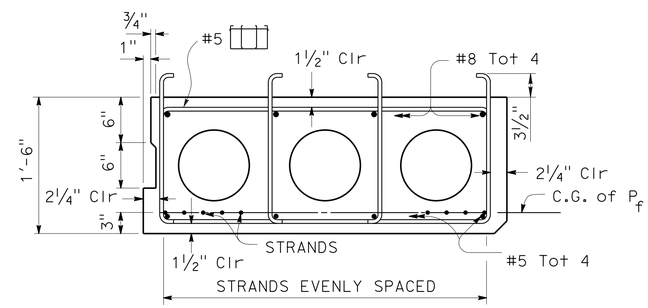

TYPICAL REINFORCEMENT
NO SCALE

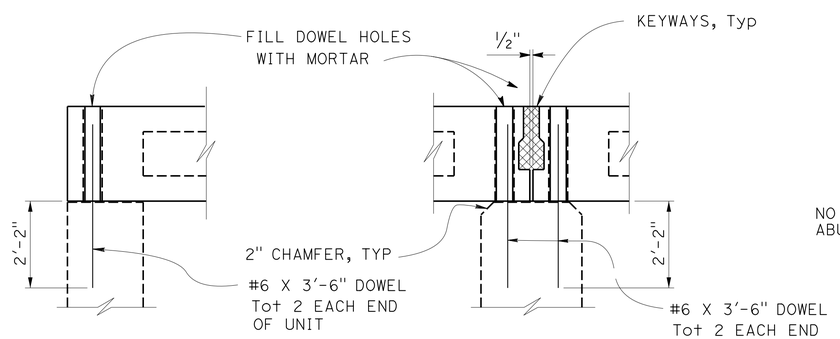

AT ABUTMENT 1 & 4 **AT PIERS 2 & 3**

SUPPORT DETAILS
NO SCALE

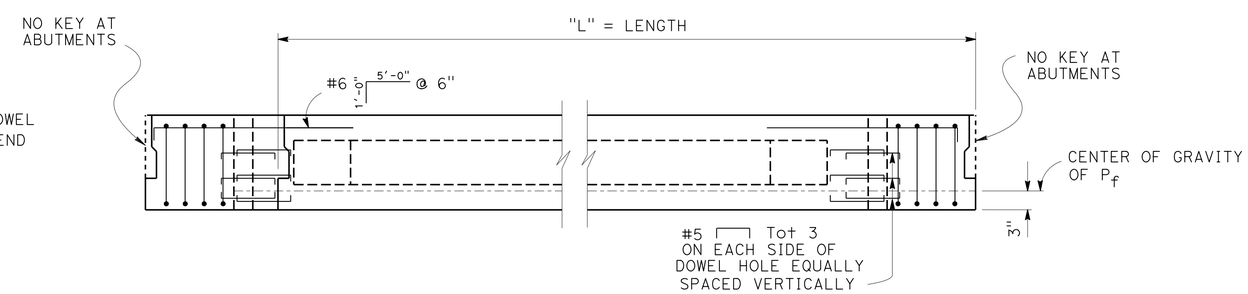

ELEVATION
NO SCALE

	BY	CHECKED
DESIGN	Y. Yoon	S. Pahlaban
DETAILS	L. Goldthwait	S. Pahlaban
QUANTITIES	D. Tavatli	C. Chan

STATE OF CALIFORNIA
DEPARTMENT OF TRANSPORTATION

DIVISION OF ENGINEERING SERVICES
STRUCTURE DESIGN
DESIGN BRANCH 11

BRIDGE NO. 53C-2194
POST MILE 0.34

FIRESTONE BLVD BRIDGE
PRESTRESSED CONCRETE SLAB

STRUCTURES DESIGN DETAIL SHEET (ENGLISH) (REV. 09-01-10)

ORIGINAL SCALE IN INCHES FOR REDUCED PLANS 0 1 2 3

UNIT: 3587
PROJECT NUMBER & PHASE: 0715000160-1
CONTRACT NO.: 07-2159u4

DISREGARD PRINTS BEARING EARLIER REVISION DATES

REVISION DATES: 05-20-11 9-11-13 8-16-13 8-30-13

SHEET 15 OF 23

FILE => 53c-2194-r-preslab.dgn

USERNAME => s125624 DATE PLOTTED => 03-FEB-2016 TIME PLOTTED => 13:52

DIST	COUNTY	ROUTE	POST MILES TOTAL PROJECT	SHEET No.	TOTAL SHEETS
07	LA,Ora	5	0.0/1.5, 44.3/44.4	1323	1622

REGISTERED CIVIL ENGINEER 3-18-15 DATE

1-25-16
PLANS APPROVAL DATE

REGISTERED PROFESSIONAL ENGINEER Daryoush Tavatli No. 56183 Exp. 12-31-16 CIVIL STATE OF CALIFORNIA

The State of California or its officers or agents shall not be responsible for the accuracy or completeness of electronic copies of this plan sheet.

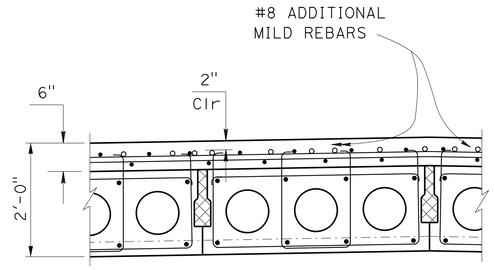

PART TYPICAL SECTION

3/4" = 1'-0"

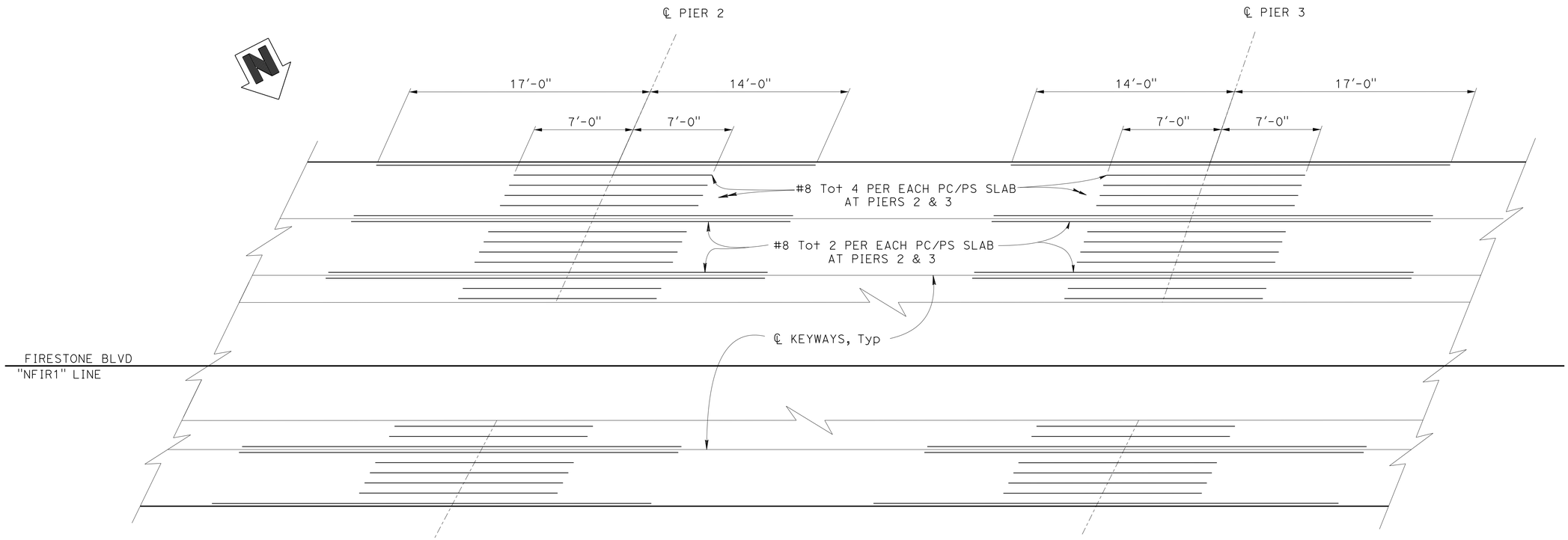

* - Added mild reinforcement in 6" thick Concrete Overlay

PART PLAN - ADDITIONAL MILD REINFORCEMENT LAYOUT*

1/4" = 1'-0"

	BY	CHECKED
DESIGN	Y. Yoon	S. Pahlaban
DETAILS	L. Goldthwait	S. Pahlaban
QUANTITIES	D. Tavatli	C. Chan

STATE OF CALIFORNIA
DEPARTMENT OF TRANSPORTATION

DIVISION OF ENGINEERING SERVICES
STRUCTURE DESIGN
DESIGN BRANCH 11

BRIDGE NO. 53C-2194
POST MILE 0.34

FIRESTONE BLVD BRIDGE
TOP DECK REINFORCEMENT

STRUCTURES DESIGN DETAIL SHEET (ENGLISH) (REV. 09-01-10)

ORIGINAL SCALE IN INCHES FOR REDUCED PLANS 0 1 2 3

UNIT: 3587
PROJECT NUMBER & PHASE: 0715000160-1
CONTRACT NO.: 07-2159u4

DISREGARD PRINTS BEARING EARLIER REVISION DATES

REVISION DATES: 6-24-11 9-27-13 8-16-13 8-30-13

SHEET 16 OF 23

FILE => 53c-2194-s-ovrly.dgn

USERNAME => s125624 DATE PLOTTED => 03-FEB-2016 TIME PLOTTED => 13:52

DIST	COUNTY	ROUTE	POST MILES TOTAL PROJECT	SHEET No.	TOTAL SHEETS
07	LA,Ora	5	0.0/1.5, 44.3/44.4	1324	1622

REGISTERED CIVIL ENGINEER 3-18-15 DATE

1-25-16
PLANS APPROVAL DATE

REGISTERED PROFESSIONAL ENGINEER
Daryoush Tavatli
No. 56183
Exp. 12-31-16
CIVIL
STATE OF CALIFORNIA

The State of California or its officers or agents shall not be responsible for the accuracy or completeness of electronic copies of this plan sheet.

PART PLAN - TOP MAIN SLAB REINFORCEMENT

1/2" = 1'-0"

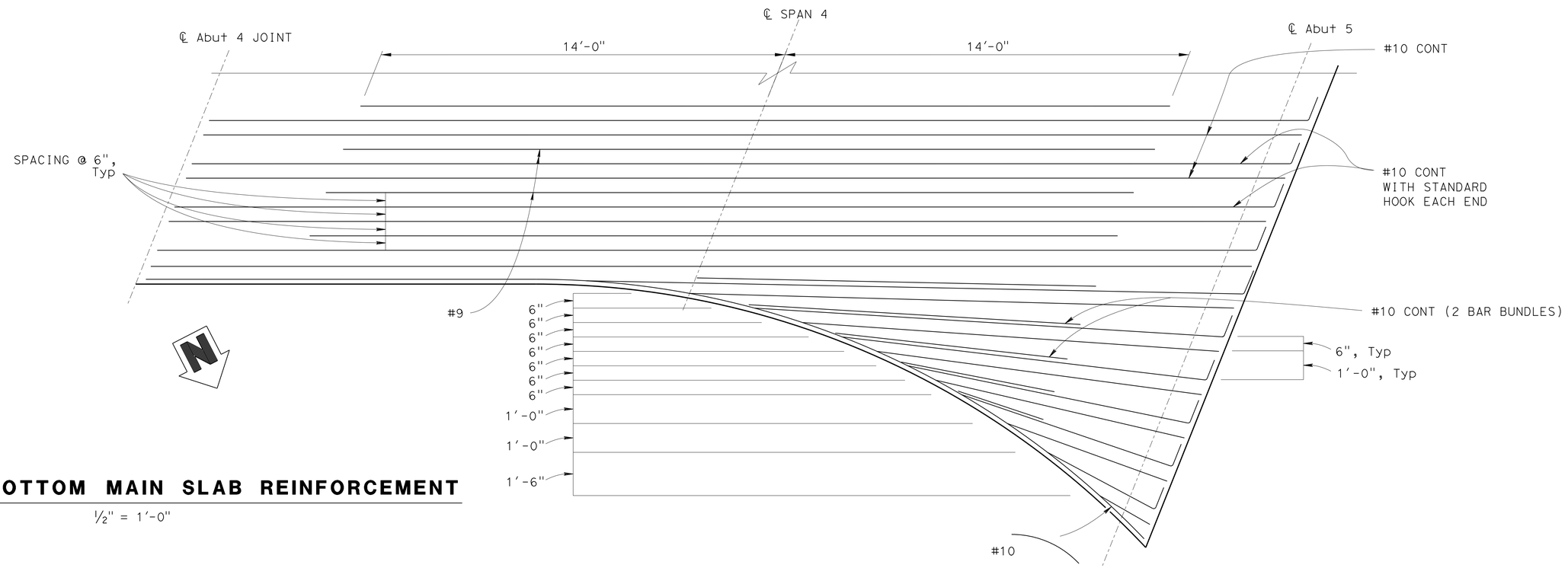

PART PLAN - BOTTOM MAIN SLAB REINFORCEMENT

1/2" = 1'-0"

DESIGN	BY Y. Yoon	CHECKED S. Pahlaban	
DETAILS	BY L. Goldthwait - JH	CHECKED S. Pahlaban	
QUANTITIES	BY D. Tavatli	CHECKED C. Chan	

STATE OF CALIFORNIA
DEPARTMENT OF TRANSPORTATION

DIVISION OF ENGINEERING SERVICES
STRUCTURE DESIGN
DESIGN BRANCH 11

BRIDGE NO. 53C-2194
POST MILE 0.34

FIRESTONE BLVD BRIDGE
SLAB REINFORCEMENT DETAILS NO. 1

STRUCTURES DESIGN DETAIL SHEET (ENGLISH) (REV. 09-01-10)

ORIGINAL SCALE IN INCHES FOR REDUCED PLANS 0 1 2 3

UNIT: 3587
PROJECT NUMBER & PHASE: 0715000160-1
CONTRACT NO.: 07-2159u4

DISREGARD PRINTS BEARING EARLIER REVISION DATES

REVISION DATES: 5-2-11 5-27-11 8-16-13 8-30-13

SHEET 17 OF 23

FILE => 53c-2194-s-slabdt1.dgn

USERNAME => s125624 DATE PLOTTED => 03-FEB-2016 TIME PLOTTED => 13:52

DIST	COUNTY	ROUTE	POST MILES TOTAL PROJECT	SHEET No.	TOTAL SHEETS
07	LA,Ora	5	0.0/1.5, 44.3/44.4	1325	1622

REGISTERED CIVIL ENGINEER — DATE 3-18-15

1-25-16
PLANS APPROVAL DATE

REGISTERED PROFESSIONAL ENGINEER — Daryoush Tavatli No. 56183 Exp. 12-31-16 CIVIL — STATE OF CALIFORNIA

The State of California or its officers or agents shall not be responsible for the accuracy or completeness of electronic copies of this plan sheet.

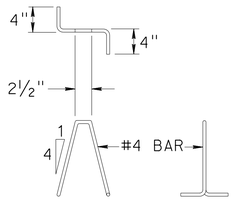

BAR CHAIR DETAIL

NO SCALE

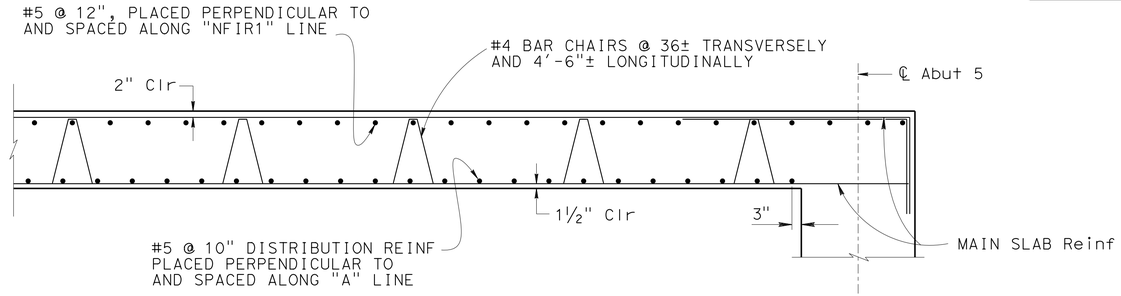

Note: No splice allowed in Slab Reinf

LONGITUDINAL SECTION

½" = 1'-0"

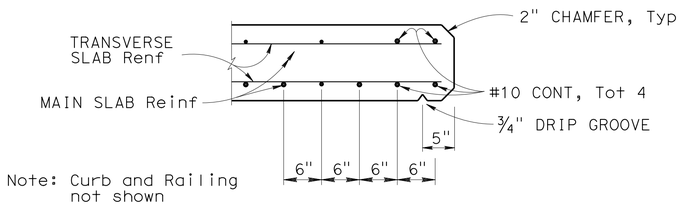

Note: Curb and Railing not shown

EDGE OF SLAB DETAILS

NO SCALE

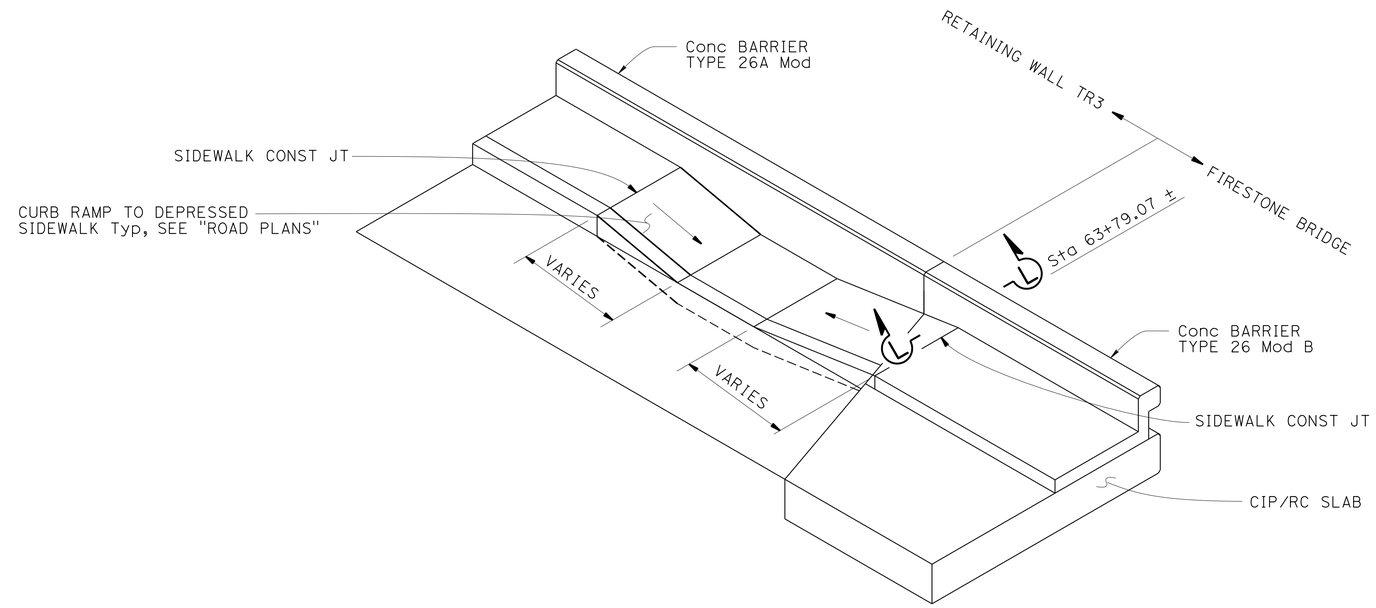

SIDEWALK CURB RAMP DETAIL

NO SCALE

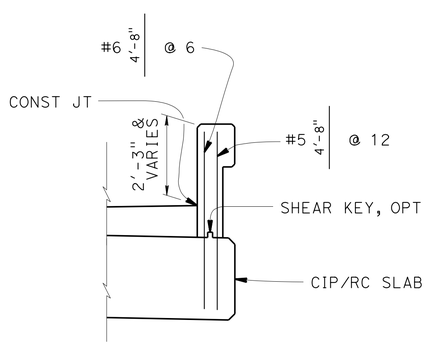

NOTES:

1. APPLY DETAIL FROM SIDEWALK CONSTRUCTION JOINT TO BEGIN WALL
2. ALL HORIZONTAL REINFORCING STEELS MUST BE CONTINIOUS, NO SPLICING ALLOWED WHERE THIS DETAIL APPLIES PLUS A DISTANCE OF 1'-0" BEYOND SIDEWALK CONSTRUCTION JOINT

SECTION L-L

NO SCALE

	BY	CHECKED
DESIGN	Y. Yoon	S. Pahlaban
DETAILS	L. Goldthwait - JH	S. Pahlaban
QUANTITIES	D. Tavatli	C. Chan

STATE OF CALIFORNIA
DEPARTMENT OF TRANSPORTATION

DIVISION OF ENGINEERING SERVICES
STRUCTURE DESIGN
DESIGN BRANCH 11

BRIDGE NO. 53C-2194
POST MILE 0.34

FIRESTONE BLVD BRIDGE
SLAB REINFORCEMENT DETAILS NO. 2

STRUCTURES DESIGN DETAIL SHEET (ENGLISH) (REV. 09-01-10)

ORIGINAL SCALE IN INCHES FOR REDUCED PLANS 0 1 2 3

UNIT: 3587
PROJECT NUMBER & PHASE: 0715000160-1
CONTRACT NO.: 07-2159U4

DISREGARD PRINTS BEARING EARLIER REVISION DATES

REVISION DATES: 5-2-11 8-30-13 6-29-12 8-17-13

SHEET 18 OF 23

FILE => 53c-2194-s-slabdt2.dgn

USERNAME => s129624 DATE PLOTTED => 03-FEB-2016 TIME PLOTTED => 13:52

DIST	COUNTY	ROUTE	POST MILES TOTAL PROJECT	SHEET No.	TOTAL SHEETS
07	LA,Ora	5	0.0/1.5, 44.3/44.4	1326	1622

REGISTERED CIVIL ENGINEER — DATE 3-18-15

1-25-16
PLANS APPROVAL DATE

REGISTERED PROFESSIONAL ENGINEER — Daryoush Tavatli — No. 56183 — Exp. 12-31-16 — CIVIL — STATE OF CALIFORNIA

The State of California or its officers or agents shall not be responsible for the accuracy or completeness of scanned copies of this plan sheet.

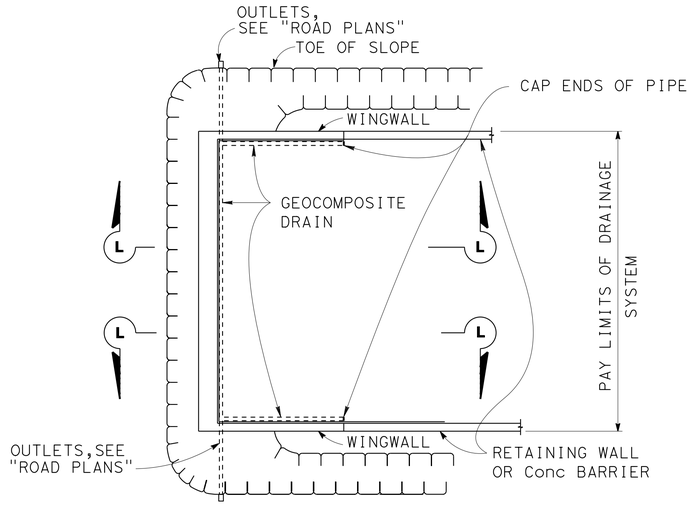

TYPICAL PLAN
NO SCALE

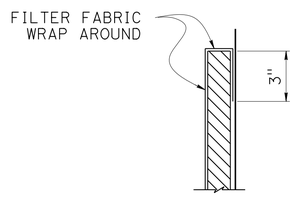

DETAIL 'C'
NO SCALE

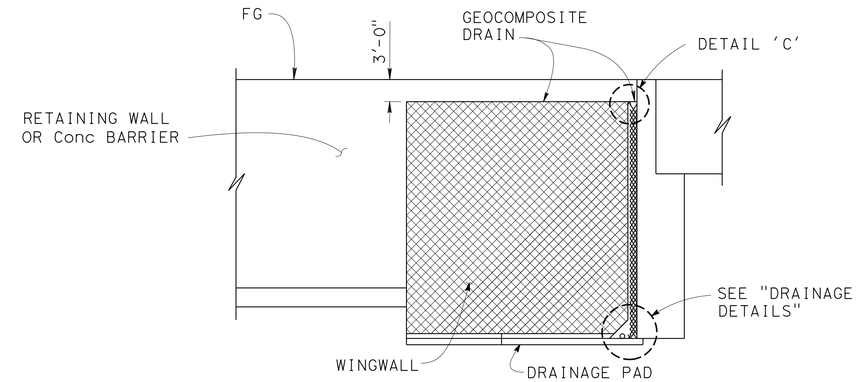

RETAINING WALL WINGWALL
SECTION L-L
NO SCALE

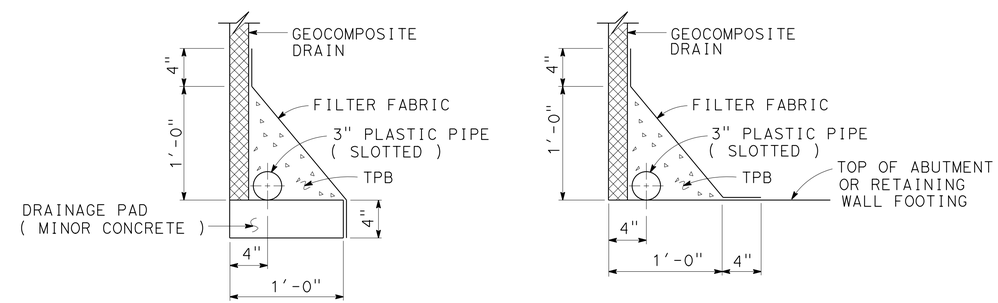

WITHOUT FOOTING **WITH FOOTING**

DRAINAGE DETAILS
1½" = 1'-0"

DESIGN	BY Y. Yoon	CHECKED S. Pahlaban	
DETAILS	BY L. Goldthwait	CHECKED D. Tavatli	
QUANTITIES	BY D. Tavatli	CHECKED C. Chan	

STATE OF CALIFORNIA
DEPARTMENT OF TRANSPORTATION

DIVISION OF ENGINEERING SERVICES
STRUCTURE DESIGN
DESIGN BRANCH 11

BRIDGE NO. 53C-2194
POST MILE 0.34

SPECIAL DETAIL
FIRESTONE BLVD BRIDGE
GEOCOMPOSITE DRAIN DETAILS

STRUCTURES DESIGN DETAIL SHEET (ENGLISH) (REV. 09-01-10)

ORIGINAL SCALE IN INCHES FOR REDUCED PLANS 0 1 2 3

UNIT: 3587
PROJECT NUMBER & PHASE: 0715000160-1
CONTRACT NO.: 07-2159u4

DISREGARD PRINTS BEARING EARLIER REVISION DATES

REVISION DATES: 11-10-09 9-06-13 9-12-13 8-30-13

SHEET 19 OF 23

FILE => 53c-2194-t-sadd.dgn

USERNAME => s125624 DATE PLOTTED => 03-FEB-2016 TIME PLOTTED => 13:52

DIST	COUNTY	ROUTE	POST MILES TOTAL PROJECT	SHEET No.	TOTAL SHEETS
07	LA,Ora	5	0.0/1.5, 44.3/44.4	1327	1622

REGISTERED CIVIL ENGINEER — DATE 3-18-15

1-25-16
PLANS APPROVAL DATE

REGISTERED PROFESSIONAL ENGINEER — Daryoush Tavatli — No. 56183 — Exp. 12-31-16 — CIVIL — STATE OF CALIFORNIA

The State of California or its officers or agents shall not be responsible for the accuracy or completeness of electronic copies of this plan sheet.

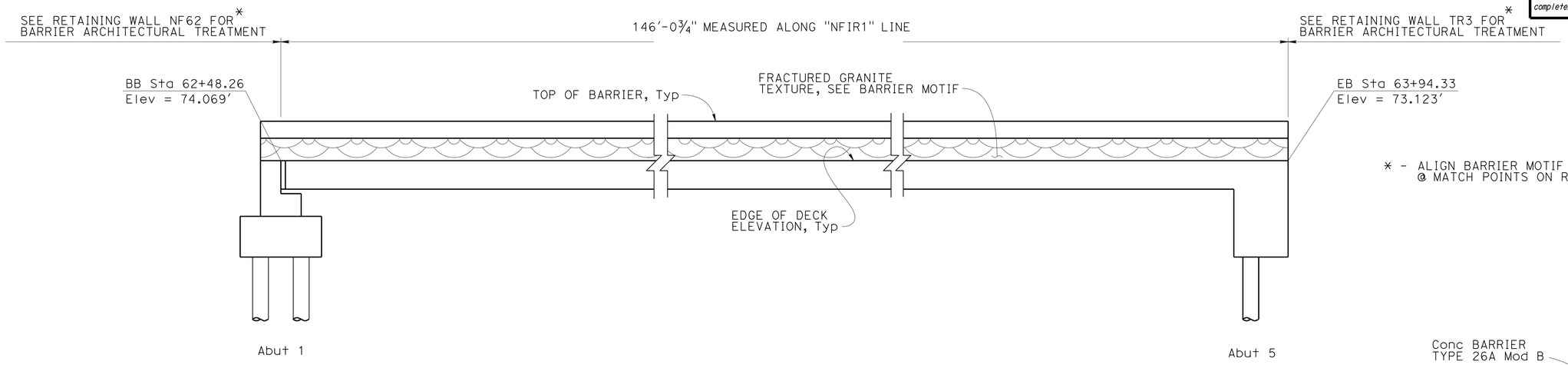

* - ALIGN BARRIER MOTIF @ MATCH POINTS ON RW'S

NOTE:
Pier 2, Pier 3 and Abutment 4 are not shown.

ELEVATION
NO SCALE

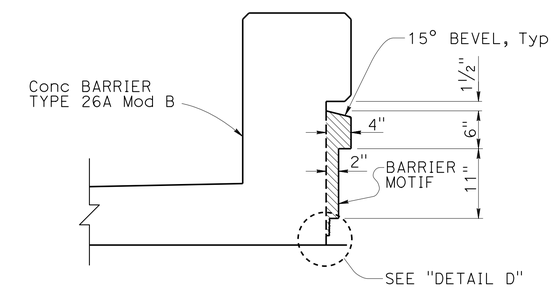

SECTION M-M
1" = 1'-0"

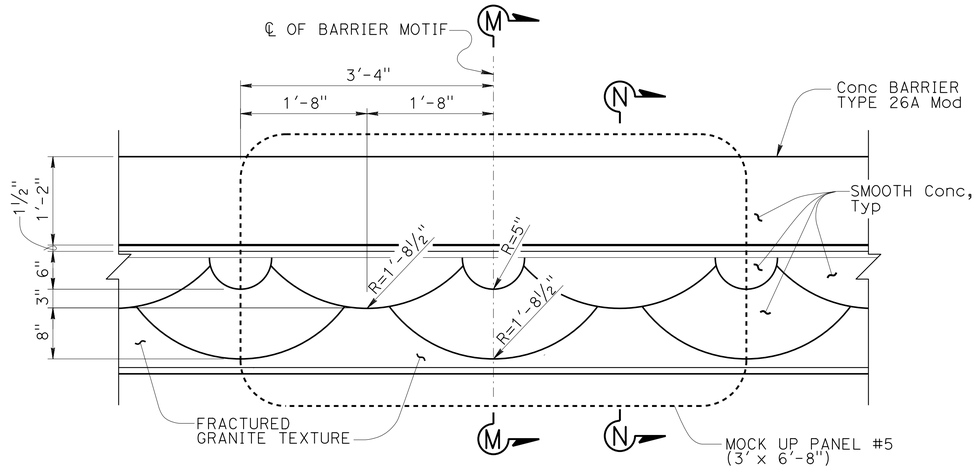

ELEVATION - BARRIER MOTIF
NO SCALE

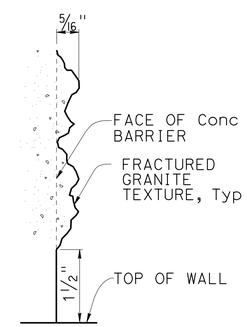

DETAIL D
NO SCALE

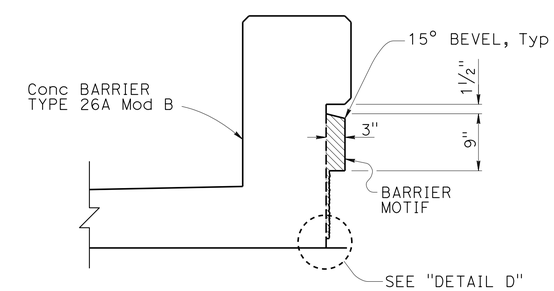

SECTION N-N
1" = 1'-0"

	BY	CHECKED
DESIGN	H. J. Chavez	S. Pahlaban
DETAILS	A. Valdez	S. Pahlaban
QUANTITIES	D. Tavatli	C. Chan

STATE OF CALIFORNIA
DEPARTMENT OF TRANSPORTATION

DIVISION OF ENGINEERING SERVICES
STRUCTURE DESIGN
DESIGN BRANCH 11

BRIDGE NO. 53C2194
POST MILE 0.34

FIRESTONE BLVD BRIDGE
ARCHITECTURAL TREATMENT DETAILS

STRUCTURES DESIGN DETAIL SHEET (ENGLISH) (REV. 09-01-10)

ORIGINAL SCALE IN INCHES FOR REDUCED PLANS 0 1 2 3

UNIT: 3587
PROJECT NUMBER & PHASE: 0715000160-1
CONTRACT NO.: 07-2159U4

DISREGARD PRINTS BEARING EARLIER REVISION DATES

REVISION DATES: 7-02-13 8-16-13 8-30-13 9-27-13

SHEET 20 OF 23

FILE => 53c-2194-v-arch.dgn

USERNAME => s125624 DATE PLOTTED => 03-FEB-2016 TIME PLOTTED => 13:52

BENCH MARK

GPS 0886
Elevation 68.842 ft
FOUND 3-1/2 INCH BRONZE REFERENCE MARK DISK IN HEADWALL, FLUSH, STAMPED "BUENA NO.2 1963". THE MARK IS LOCATED ON THE SOUTHERLY HEADWALL OF THE EAST FORK COYOTE CREEK ALONG FIRESTONE BLVD., 0.2 MI NORTHWESTERLY OF KNOTT AVE.
NORTHING 551827.270
EASTING 1998479.842
DATUM NAVD88

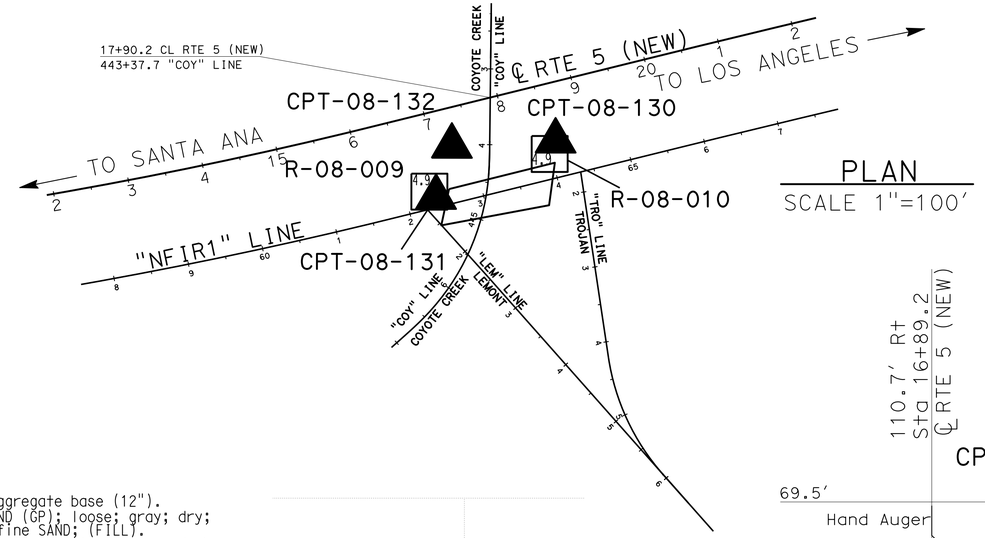

PLAN
SCALE 1"=100'

DIST	COUNTY	ROUTE	POST MILES TOTAL PROJECT	SHEET No.	TOTAL SHEETS
07	LA,Ora	5	0.0/1.5, 44.3/44.4	1328	1622

REGISTERED CIVIL ENGINEER 05/20/15 DATE

1-25-16
PLANS APPROVAL DATE

URS CORPORATION
2020 EAST FIRST STREET, SUITE 400
SANTA ANA, CA 92705

The State of California or its officers or agents shall not be responsible for the accuracy or completeness of electronic copies of this plan sheet.

REGISTERED PROFESSIONAL ENGINEER MICHAEL G. SMITH No. 2229 Exp. 03/31/16 GEOTECHNICAL STATE OF CALIFORNIA

1-This LOTB sheet was prepared in accordance with the Caltrans Soil & Rock Logging, Classification, & Presentation Manual (2010 Edition).

2-For protection of underground utility lines, hand-auger was used to remove top 5 to 10 feet of subsurface material for exploratory borings and Cone Penetration Testings.

3-2.5" to 1.4" blow counts conversion factors for fine-grain and coarse-grain soils have been 0.8 and 0.55, respectively.

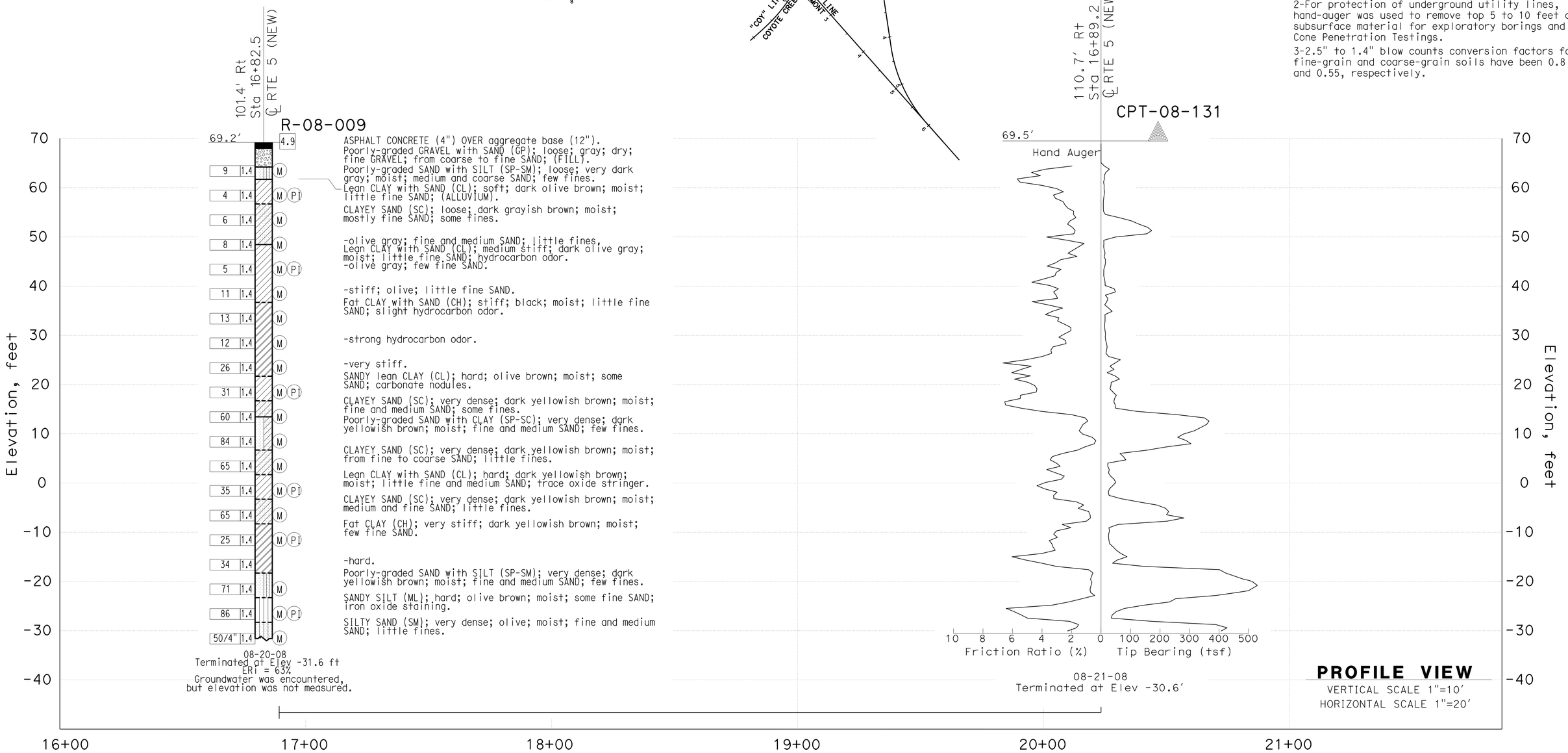

PROFILE VIEW
VERTICAL SCALE 1"=10'
HORIZONTAL SCALE 1"=20'

F.MOTAMED DESIGN OVERSIGHT	DRAWN BY	T.PANAH	D.ORRIS FIELD INVESTIGATION BY:
05/20/15 SIGN OFF DATE	CHECKED BY	A.GHAZINOOR/L.KHALKHALI	DATE: 08/20/08 - 08/21/08

PREPARED FOR THE STATE OF CALIFORNIA DEPARTMENT OF TRANSPORTATION

M.G.SMITH
PROJECT ENGINEER

BRIDGE NO. 53C-2194
POST MILES 0.34

FIRESTONE BLVD BRIDGE (REPLACE)
LOG OF TEST BORINGS SHEET 1 OF 3

GS CIVIL LOG OF TEST BORINGS SHEET (ENGLISH) (REV. 03/14/12)

ORIGINAL SCALE IN INCHES FOR REDUCED PLANS 0 1 2 3

UNIT: 3658
PROJECT NUMBER & PHASE: 07150001601 CONTRACT NO.: 07-2159U4

DISREGARD PRINTS BEARING EARLIER REVISION DATES → 5/12/15

REVISION DATES | SHEET 21 OF 23

FILE => 53c-2194-z-lotb01.dgn

USERNAME => s125624 DATE PLOTTED => 03-FEB-2016 TIME PLOTTED => 13:52

DIST	COUNTY	ROUTE	POST MILES TOTAL PROJECT	SHEET No.	TOTAL SHEETS
07	LA,Ora	5	0.0/1.5, 44.3/44.4	1329	1622

REGISTERED CIVIL ENGINEER 05/20/15 DATE

1-25-16
PLANS APPROVAL DATE

REGISTERED PROFESSIONAL ENGINEER MICHAEL G. SMITH No. 2229 Exp. 03/31/16 GEOTECHNICAL STATE OF CALIFORNIA

URS CORPORATION
2020 EAST FIRST STREET, SUITE 400
SANTA ANA, CA 92705

The State of California or its officers or agents shall not be responsible for the accuracy or completeness of electronic copies of this plan sheet.

1-This LOTB sheet was prepared in accordance with the Caltrans Soil & Rock Logging, Classification, & Presentation Manual (2010 Edition).

2-For protection of underground utility lines, hand-auger was used to remove top 5 to 10 feet of subsurface material for exploratory borings and Cone Penetration Testings.

3-2.5" to 1.4" blow counts conversion factors for fine-grain and coarse-grain soils have been 0.8 and 0.55, respectively.

FOR PLAN VIEW, SEE
"LOG OF TEST BORINGS" 1 OF 3

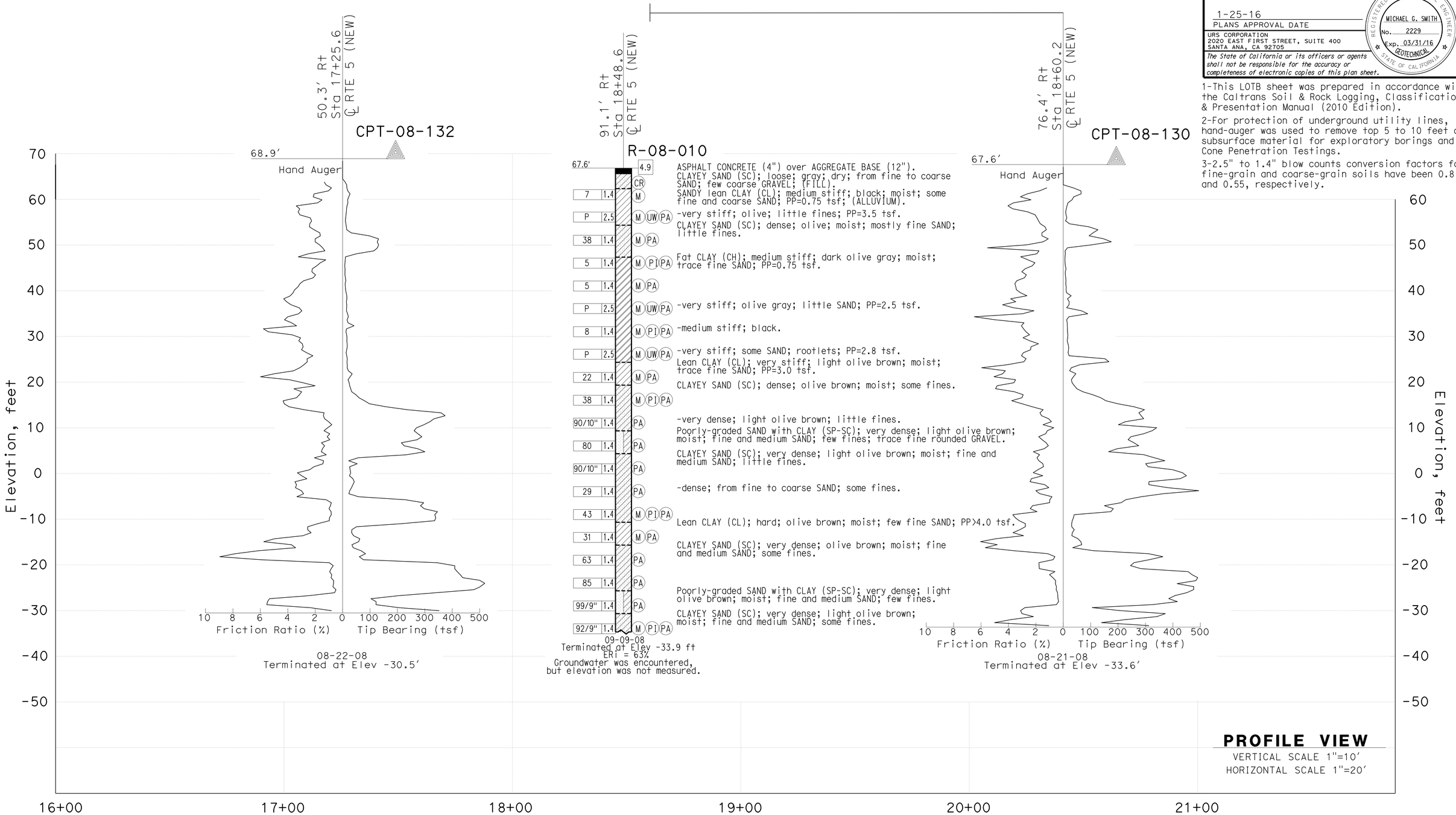

F.MOTAMED DESIGN OVERSIGHT	DRAWN BY	T.PANAH	D.ORRIS FIELD INVESTIGATION BY:	PREPARED FOR THE STATE OF CALIFORNIA DEPARTMENT OF TRANSPORTATION	M.G.SMITH PROJECT ENGINEER	BRIDGE NO. 53C-2194
05/20/15 SIGN OFF DATE	CHECKED BY	A.GHAZINOOR/L.KHALKHALI	DATE: 08/21/08 - 09/09/08			POST MILES 0.34

FIRESTONE BLVD BRIDGE (REPLACE)

LOG OF TEST BORINGS SHEET 2 OF 3

GS CIVIL LOG OF TEST BORINGS SHEET (ENGLISH) (REV. 03/14/12)

ORIGINAL SCALE IN INCHES FOR REDUCED PLANS 0 1 2 3

UNIT: 3658
PROJECT NUMBER & PHASE: 07150001601 CONTRACT NO.: 07-2159U4

DISREGARD PRINTS BEARING EARLIER REVISION DATES → 5/12/15

REVISION DATES | SHEET 22 | OF 23

FILE => 53c-2194-z-lotb02.dgn

USERNAME => s125624 DATE PLOTTED => 03-FEB-2016 TIME PLOTTED => 13:52

BRIDGE DEPARTMENT

DIVISION OF ENGINEERING SERVICES - MATERIALS AND GEOTECHNICAL SERVISES					
As-Built Log of Test Borings sheet is considered an informational document only. As such, the State of California registration seal with signature, license number and registration certificate expiration date confirm that this is a true and accurate copy of the original document. It does not attest to the accuracy or validity of the information contained in the original document. This drawing is available and presented only for the convenience of any bidder, contractor or other interested party.					
DIST.	COUNTY	ROUTE	POST MILE-TOTAL PROJECT	Sheet No.	Total Sheets
07	LA,Ora	5	0.0/1.5,44.3/44.4	1330	1622
REGISTERED CIVIL ENGINEER			05/20/15 DATE		
FIRESTONE BLVD BRIDGE (REPLACE)					
LOG OF TEST BORINGS 3 OF 3					
As-Built Vertical Datum: NGVD29			Datum Conversion: NAVD88=NGVD29+2.350		
NOTE: A COPY OF THIS LOG OF TEST BORINGS IS AVAILABLE AT OFFICE OF STRUCTURE MAINTENANCE AND INVESTIGATIONS, SACRAMENTO, CALIFORNIA			CU: 3658 EA: 07-2159U4	BRIDGE No. 53C-2194	
				23 OF 23	

TO ACCOMPANY PLANS DATED 1-25-16

REGISTERED PROFESSIONAL ENGINEER CHUNGKEUN LEE No. C69450 Exp. 06/30/16 CIVIL STATE OF CALIFORNIA

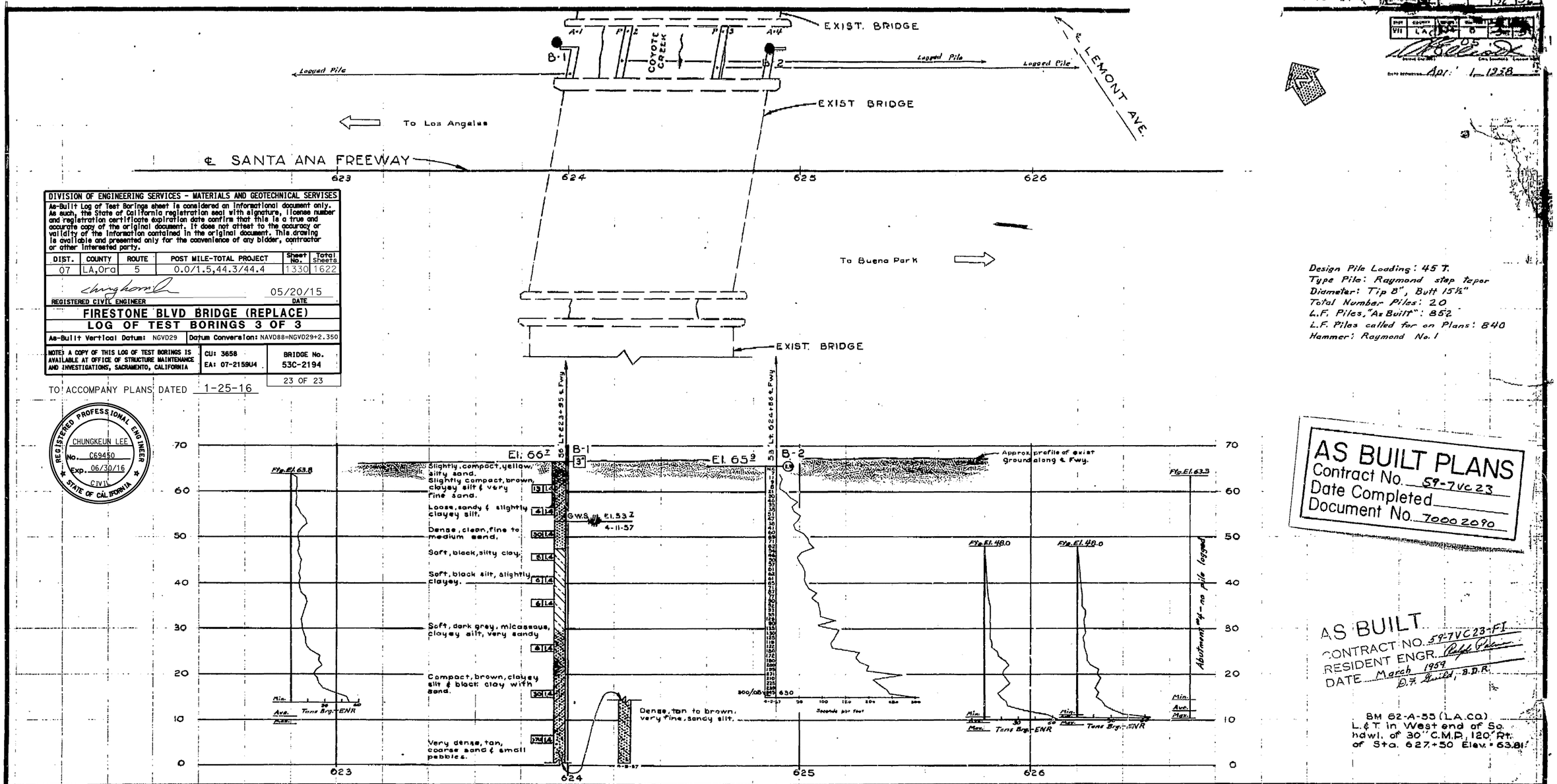

Design Pile Loading: 45 T.
Type Pile: Raymond step taper
Diameter: Tip 8", Butt 15½"
Total Number Piles: 20
L.F. Piles, "As Built": 852
L.F. Piles called for on Plans: 840
Hammer: Raymond No. 1

AS BUILT PLANS
Contract No. 59-7VC23
Date Completed
Document No. 7000 2090

AS BUILT
CONTRACT NO. 59-7VC23-F1
RESIDENT ENGR. Ralph Plum
DATE March 1959
D.F. Smith, B.D.R.

BM 62-A-55 (L.A.CO)
L.&T. in West end of So. hdwl. of 30" C.M.P., 120' Rt. of Sta. 627+50 Elev. = 63.81'

FIELD STUDY: Smiley 4-9-87
DRAWN: Deutscher 4-11-87
CHECKED: Smiley 4-14-87
Approval Recommended by: Chuck Lee

52

CLASSIFICATION OF MATERIAL BASED ON STANDARD GRADE SIZE LIMITS

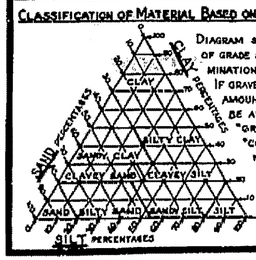

DIAGRAM SHOWING THE BASIS FOR ESTIMATES OF GRADE SIZE DISTRIBUTION USED IN DETERMINATION OF CLASS NAMES.

IF GRAVEL IS PRESENT IN APPRECIABLE AMOUNTS THE TERM "GRAVELLY" MAY BE ADDED TO THE CLASS NAME, VIZ. "GRAVELLY SAND". THE TERMS "COARSE", "MEDIUM" AND "FINE" WHEN USED TO DESCRIBE SAND, SILT AND GRAVEL REFER TO STANDARD GRADE SIZE LIMITS.

LEGEND OF EARTH MATERIALS

- GRAVEL
- SAND
- SILT
- CLAY
- SANDY CLAY OR CLAYEY SAND
- SANDY SILT OR SILTY SAND
- SILTY CLAY OR CLAYEY SILT
- PEAT AND/OR ORGANIC MATTER
- FILL MATERIAL
- IGNEOUS ROCK
- SEDIMENTARY ROCK
- METAMORPHIC ROCK

LEGEND OF BORING OPERATIONS

- PLAN OF ANY BORING
- PENETROMETER
- 2¼" CONE PENETROMETER
- SAMPLER BORING (DRY)
- ROTARY BORING (WET)
- AUGER BORING (DRY)
- JET BORING
- CORE BORING
- TEST PIT

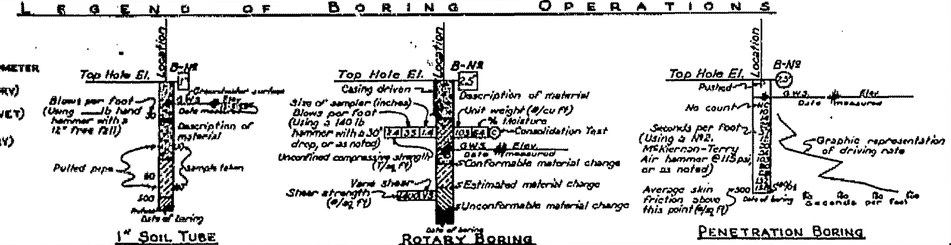

NOTES

The contractor's attention is directed to Section 2, Article (c) of the Standard Specifications and to the Special Provisions accompanying this set of plans.

Classification of earth material as shown on this sheet is based upon field inspection and is not to be construed to imply mechanical analysis.

STATE OF CALIFORNIA
DEPARTMENT OF PUBLIC WORKS
DIVISION OF HIGHWAYS

SANTA ANA FREEWAY
COYOTE CREEK BRIDGE WIDENING

LOG OF TEST BORINGS

SCALE Horiz. 1"=20' Vert. 1"=10' | BRIDGE 53-279 | FILE E-53 | DRAWING C-5614-5

PREL DRAWING NO. P-

BOX T-23

I HEREBY CERTIFY THAT THIS IS A TRUE AND ACCURATE COPY OF THE ABOVE DOCUMENT TAKEN UNDER MY DIRECTION AND CONTROL ON THIS DATE IN SACRAMENTO, CALIFORNIA PURSUANT TO AUTHORIZATION BY THE DIRECTOR OF PUBLIC WORKS.

DATE 8/16/21 SIGNATURE [illegible] TITLE HAO II

53c-2194-z-1otb03.tif

DIST	COUNTY	ROUTE	POST MILES TOTAL PROJECT	SHEET No.	TOTAL SHEETS
07	LA,Ora	5	0.0/1.5, 44.3/44.4	1331	1622

REGISTERED CIVIL ENGINEER 3-18-15 DATE

1-25-16
PLANS APPROVAL DATE

REGISTERED PROFESSIONAL ENGINEER Phu V. Nguyen No. 60358 Exp. 6-30-16 CIVIL STATE OF CALIFORNIA

The State of California or its officers or agents shall not be responsible for the accuracy or completeness of electronic copies of this plan sheet.

QUANTITIES

STRUCTURE EXCAVATION (BRIDGE)	290	CY
STRUCTURE EXCAVATION (CONTAMINATED MATERIALS)	320	CY
STRUCTURE BACKFILL (BRIDGE)	266	CY
FURNISH 24" STEEL PIPE PILING	2,790	LF
DRIVE 24" STEEL PIPE PILE	63	EA
STRUCTURAL CONCRETE, BRIDGE FOOTING	208	CY
STRUCTURAL CONCRETE, BRIDGE	1,324	CY
STRUCTURAL CONCRETE, APPROACH SLAB (TYPE N)	68	CY
ARCHITECTURAL TREATMENT (SPLIT SLATE)	485	SQFT
JOINT SEAL (MR 1½")	48	LF
BAR REINFORCING STEEL (BRIDGE)	521,100	LB
BAR REINFORCING STEEL (GALVANIZED)	813	LB
HEADED BAR REINFORCEMENT	120	EA
MISCELLANEOUS METAL (RESTRAINER - PIPE TYPE)	210	LB
BRIDGE DECK DRAINAGE SYSTEM	6,640	LB
TUBULAR HANDRAILING (MODIFIED)	674	LF
CONCRETE BARRIER (TYPE 26 MODIFIED)	674	LF

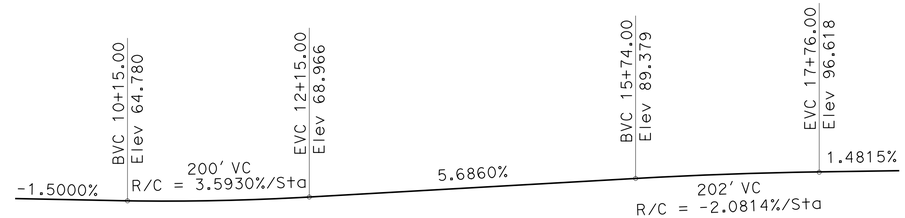

PROFILE GRADE

NO SCALE

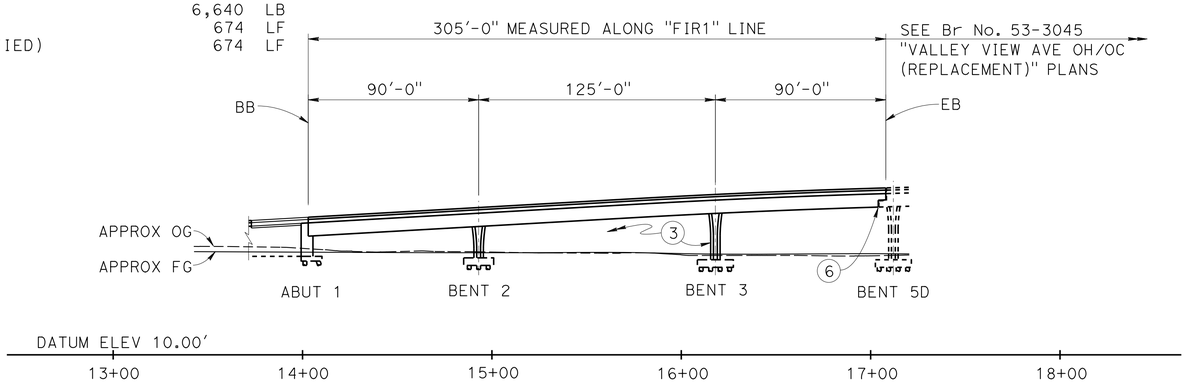

ELEVATION

1"= 40'

NOTES:

1. Paint "Br No 53C2295"
2. Paint "NB VALLEY VIEW AVE/S FIRESTONE BLVD"
3. Paint Bent & Col No. "B_ C_"
4. Structure Approach Type N(30S)
5. Concrete Barrier Type 26 Mod
6. Ramp Hinge
7. Tubular Hand Railing (MODIFIED)
8. Architectural Treatment not shown, see "ARCHITECTURAL TREATMENT DETAILS" sheet
9. Luminaire Corbel. For Decorative Lighting, see Road Plans

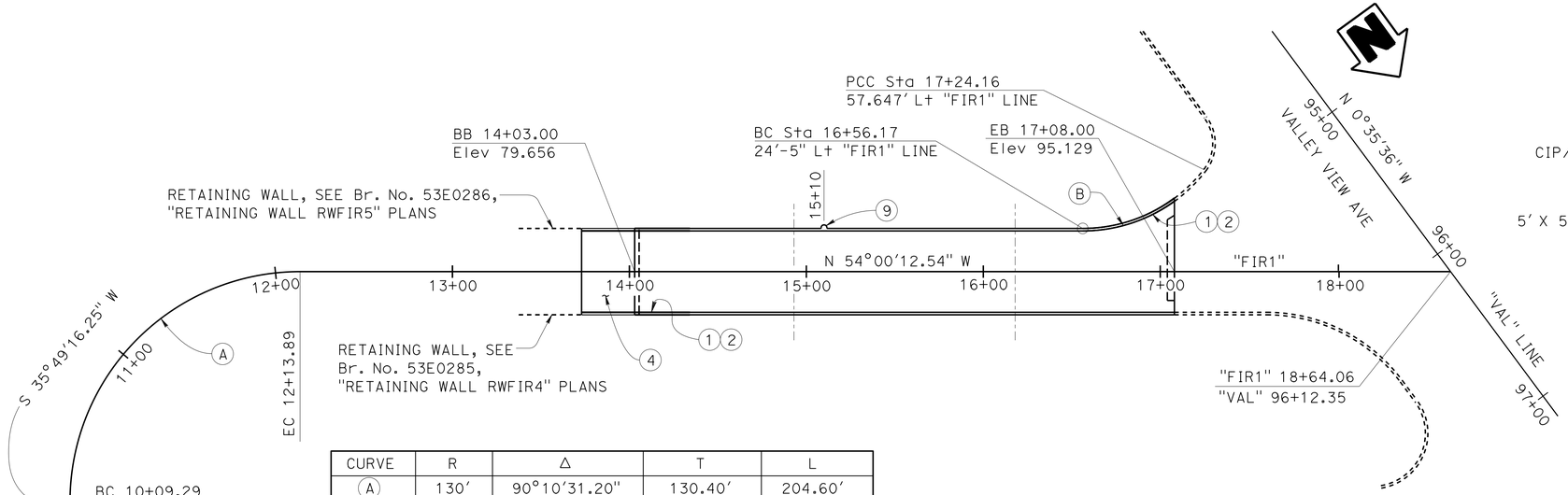

CURVE	R	Δ	T	L
A	130'	90°10'31.20"	130.40'	204.60'
B	86.17'	45°12'5.48"	35.876'	67.99'

PLAN

1" = 40'-0"

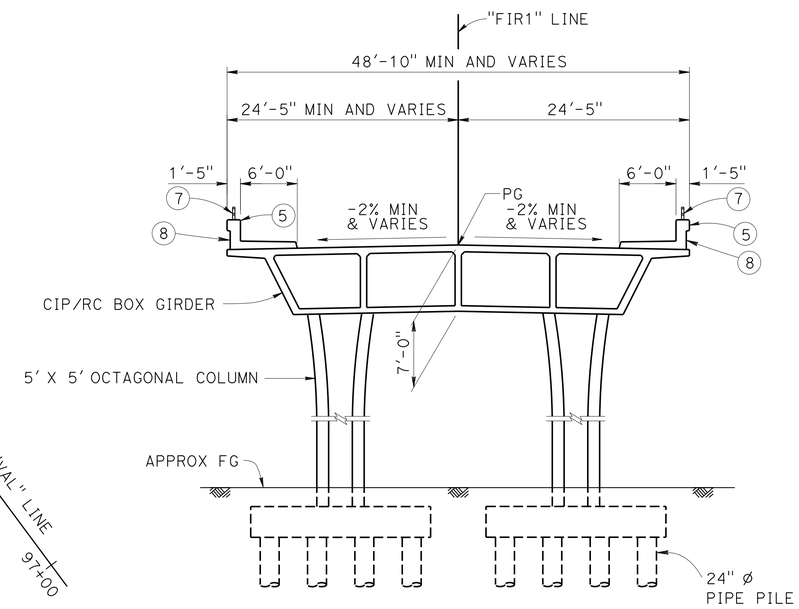

TYPICAL SECTION

⅛" = 1'-0"

Ramin Rashedi 2-11-15 DESIGN ENGINEER	DESIGN	BY Ubong Inyang	CHECKED M. El-Mously	LOAD & RESISTANCE FACTOR DESIGN	LIVE LOADING: HL93 W/"LOW-BOY"; PERMIT DESIGN VEHICLE		
	DETAILS	BY Jaime Ramirez	CHECKED M. El-Mously	LAYOUT	BY Ubong Inyang	CHECKED M. El-Mously	
	QUANTITIES	BY Ubong Inyang	CHECKED Evan Franciliso	SPECIFICATIONS	BY Xiahong Li	PLANS AND SPECS COMPARED Xiahong Li	

STATE OF CALIFORNIA
DEPARTMENT OF TRANSPORTATION

DIVISION OF ENGINEERING SERVICES
STRUCTURE DESIGN
DESIGN BRANCH 11

BRIDGE NO. 53C2295
POST MILE 1.15

NB VALLEY VIEW AVE/S FIRESTONE BLVD
GENERAL PLAN

ORIGINAL SCALE IN INCHES FOR REDUCED PLANS 0 1 2 3

UNIT: 3587
PROJECT NUMBER & PHASE: 0715000160-1
CONTRACT NO.: 07-2159u4

DISREGARD PRINTS BEARING EARLIER REVISION DATES

REVISION DATES 10-15-12 9-22-13 1-26-15 9-23-13

SHEET 1 OF 29

USERNAME => s125624 DATE PLOTTED => 03-FEB-2016 TIME PLOTTED => 13:52

STRUCTURES DESIGN GENERAL PLAN SHEET (ENGLISH) (REV.09-01-10)

FILE => 53c2295-a-gp.dgn

DIST	COUNTY	ROUTE	POST MILES TOTAL PROJECT	SHEET No.	TOTAL SHEETS
07	LA,Ora	5	0.0/1.5, 44.3/44.4	1332	1622

REGISTERED CIVIL ENGINEER 3-18-15 DATE

1-25-16
PLANS APPROVAL DATE

REGISTERED PROFESSIONAL ENGINEER Phu V. Nguyen No. 60358 Exp. 6-30-16 CIVIL STATE OF CALIFORNIA

The State of California or its officers or agents shall not be responsible for the accuracy or completeness of electronic copies of this plan sheet.

GENERAL NOTES
LOAD AND RESISTANCE FACTOR DESIGN

DESIGN: AASHTO LRFD BRIDGE DESIGN SPECIFICATIONS, 4th EDITION WITH CALIFORNIA AMENDMENTS

SEISMIC DESIGN: CALTRANS SEISMIC DESIGN CRITERIA (SDC), Version 1.6, November 2010

DEAD LOAD: Includes 35 Psf for Future Wearing Surface

LIVE LOADING: HL93 with "Low Boy" and Permit Design Vehicle.

SEISMIC LOADING: See Site Specific, Acceleration Response Spectrum

REINFORCED CONCRETE: f_y = 60 ksi

f'_c = 4,000 psi

n = 8

STRUCTURAL STEEL
STEEL PIPE PILE:

fy (minimum yield strength) = 45,000 psi

STANDARD PLANS DATED 2010

	A10A	ABBREVIATIONS (SHEET 1 OF 2)
RSP	A10B	ABBREVIATIONS (SHEET 2 OF 2)
	A10C	LINES AND SYMBOLS (SHEET 1 OF 3)
	A10D	LINES AND SYMBOLS (SHEET 2 OF 3)
	A10E	LINES AND SYMBOLS (SHEET 3 OF 3)
	A62B	LIMITS OF PAYMENT FOR EXCAVATION AND BACKFILL - BRIDGE SURCHARGE AND WALL
	A62C	LIMITS OF PAYMENT FOR EXCAVATION AND BACKFILL - BRIDGE
	B0-1	BRIDGE DETAILS
	B0-3	BRIDGE DETAILS
	B0-5	BRIDGE DETAILS
	B0-13	BRIDGE DETAILS
	B2-8	PILE DETAILS CLASS 200
	B6-21	JOINT SEALS (MAXIMUM MOVEMENT RATING = 2")
	B7-1	BOX GIRDER DETAILS
	B7-6	DECK DRAIN TYPE D-1
	B7-8	DECK DRAINAGE DETAILS
	B7-10	UTILITY OPENING BOX GIRDER
	B11-51	TUBULAR HAND RAILING
RSP	B11-54	CONCRETE BARRIER TYPE 26
	B14-5	WATER SUPPLY LINE (DETAILS) (PIPE SIZES LESS THAN 4")

ACCELERATION RESPONSE SPECTRUM (WITH 5% DAMPING)

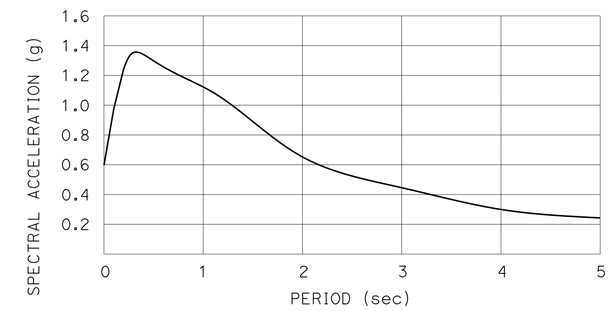

SITE SPECIFIC ARS CURVE

INDEX TO PLANS

SHEET NO.	TITLE
1	GENERAL PLAN
2	INDEX TO PLANS
3	FOUNDATION PLAN
4	DECK CONTOUR
5	ABUTMENT LAYOUT
6	ABUTMENT DETAILS
7	BENT 2 FOOTING DETAILS
8	BENT 3 FOOTING DETAILS
9	BENT 2 DETAILS
10	BENT 3 DETAILS
11	COLUMN DETAILS
12	TYPICAL SECTION NO 1
13	TYPICAL SECTION NO 2
14	GIRDER LAYOUT
15	ADDITIONAL SOFFIT REINF NO 1
16	ADDITIONAL SOFFIT REINF NO 2
17	ADDITIONAL DECK REINFORCEMENT
18	HINGE LAYOUT
19	HINGE DETAILS NO. 1
20	HINGE DETAILS NO. 2
21	DRAINAGE LAYOUT
22	STRUCTURE APPROACH TYPE N(30S)
23	STRUCTURE APPROACH DRAINAGE DETAILS
24	ARCHITECTURAL TREATMENT DETAILS
25	LUMINAIRE CORBEL DETAILS NO. 1
26	LUMINAIRE CORBEL DETAILS NO. 2
27	LOG OF TEST BORINGS SHEET 1 OF 3
28	LOG OF TEST BORINGS SHEET 2 OF 3
29	LOG OF TEST BORINGS SHEET 3 OF 3

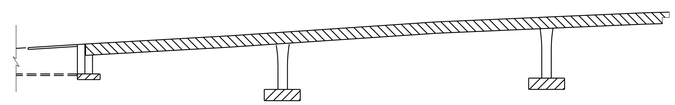

STRUCTURAL CONCRETE, BRIDGE(4000 psi AT 28 DAYS)

STRUCTURAL CONCRETE, BRIDGE FOOTING(4000 psi AT 28 DAYS)

STRUCTURAL CONCRETE, BRIDGE (4000 psi AT 28 DAYS)

CONCRETE STRENGTH AND TYPE LIMITS

NO SCALE

STANDARD PLAN SHEET NO.

DETAIL NO.

PILE DATA

SUPPORT LOCATION	PILE TYPE	NOMINAL RESISTANCE (KIPS)		DESIGN TIP ELEVATION (FT)	SPECIFIED TIP ELEVATION (FT)	NOMINAL DRIVING RESISTANCE (KIPS)
		COMPRESSION	TENSION			
Abut 1	PIPE PILES PP24x0.5	320	0	+14.0 (a) +20.0 (c)	+14.0	320
BENT 2		430	0	+3.0 (a) +15.0 (c) +10.0 (d)	+3.0	430
BENT 3		270	60	+20.0 (a) +41.0 (b) +22.0 (c) +21.0 (d)	+20.0	270

NOTES:

1. Design Tip Elevations for Abutments are controlled by: (a) Compression, (c) Settlement, (d) Lateral Load
2. Design Tip Elevations for Bents are controlled by: (a) Compression, (b) Tension, (c) Settlement, (d) Lateral
3. The specified tip elevation shall not be raised above the design tip elevation for tension load, lateral load and tolerable settlement.
4. The nominal driving resistance is equal to nominal resistance needed for factored load per pile plus driving resistance needed for factored load per support.

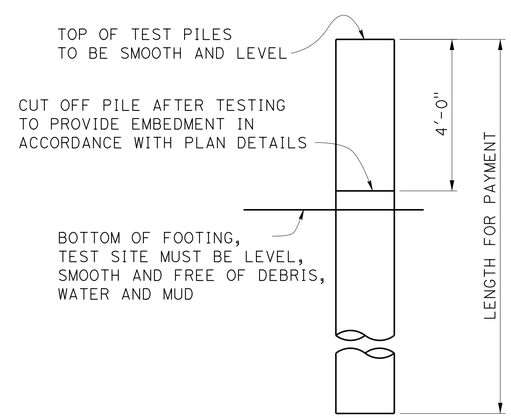

NOTE: One Test Pile is required at each support location from Abut 1 thru Bent 3. Specific pile at each support to be determined by the contractor and apporved by the engineer.

TEST PILE ELEVATION

NO SCALE

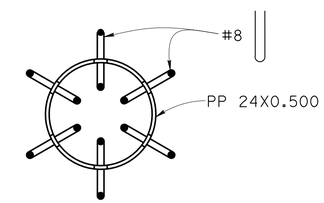

PLAN

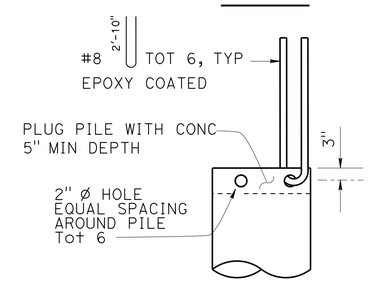

ELEVATION

TYPICAL PIPE PILE ANCHOR

NO SCALE

NOTE: Pile anchor reinforcement into footing shall be hooked as required to provide clearance to top of footing

	BY	CHECKED
DESIGN	U. Inyang	M. El-Mously
DETAILS	J. Hunter	M. El-Mously
QUANTITIES	U. Inyang	E. Franciliso

STATE OF CALIFORNIA
DEPARTMENT OF TRANSPORTATION

DIVISION OF ENGINEERING SERVICES
STRUCTURE DESIGN
DESIGN BRANCH 11

BRIDGE NO. 53C2295
POST MILE 1.15

NB VALLEY VIEW AVE/S FIRESTONE BLVD
INDEX TO PLANS

STRUCTURES DESIGN DETAIL SHEET (ENGLISH) (REV. 09-01-10)

ORIGINAL SCALE IN INCHES FOR REDUCED PLANS 0 1 2 3

UNIT: 3587
PROJECT NUMBER & PHASE: 0715000160-1
CONTRACT NO.: 07-2159u4

DISREGARD PRINTS BEARING EARLIER REVISION DATES

REVISION DATES 3/12/13 9-09-13 7-30-13 9-09-13

SHEET 2 OF 29

FILE => 53c2295-b-itp.dgn

USERNAME => s125624 DATE PLOTTED => 03-FEB-2016 TIME PLOTTED => 13:52

DIST	COUNTY	ROUTE	POST MILES TOTAL PROJECT	SHEET No.	TOTAL SHEETS
07	LA,Ora	5	0.0/1.5, 44.3/44.4	1333	1622

REGISTERED CIVIL ENGINEER 3-18-15 DATE

1-25-16
PLANS APPROVAL DATE

REGISTERED PROFESSIONAL ENGINEER Phu V. Nguyen No. 60358 Exp. 6-30-16 CIVIL STATE OF CALIFORNIA

The State of California or its officers or agents shall not be responsible for the accuracy or completeness of electronic copies of this plan sheet.

CURVE DATA

No.	R	Δ	T	L
1	850.000′	16°52′38"	126.102′	250.377′
2	850.000′	13°00′30"	96.907′	192.981′

(AA) Sta 94+37.60 "VAL1" Line =
Sta 70+49.97 "UNI1" Line

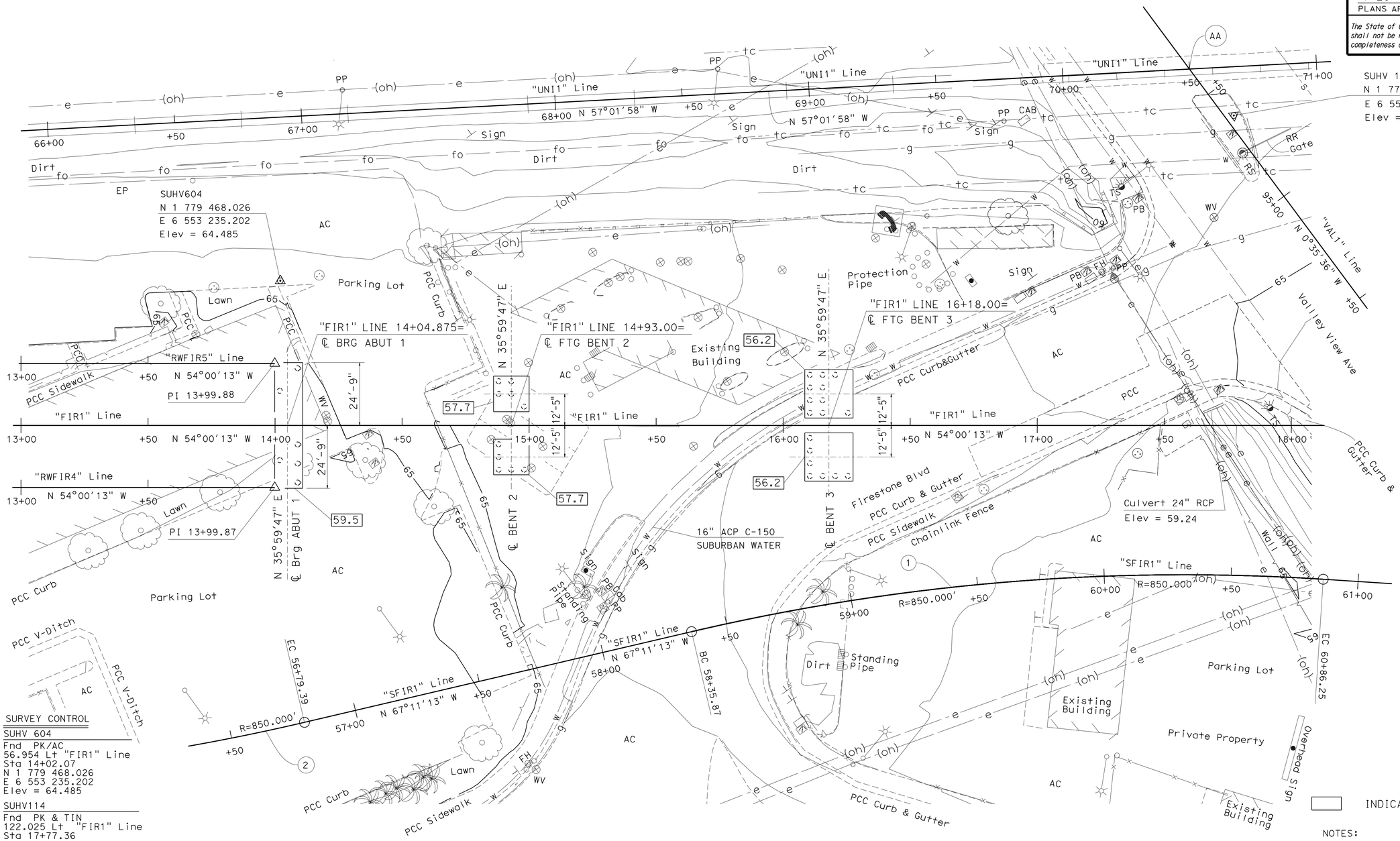

SURVEY CONTROL

SUHV 604
Fnd PK/AC
56.954 Lt "FIR1" Line
Sta 14+02.07
N 1 779 468.026
E 6 553 235.202
Elev = 64.485

SUHV114
Fnd PK & TIN
122.025 Lt "FIR1" Line
Sta 17+77.36
N 1 779 635.952
E 6 552 893.328
Elev = 64.286

INDICATES BOTTOM OF FOOTING ELEVATION

NOTES:

UNDERGROUND UTILITIES AS SHOWN ARE APPROXIMATE, SEE UTILITY PLANS FOR MORE INFORMATION

PRELIMINARY INVESTIGATION SECTION

SCALE 1"=20′	VERT.DATUM NAVD 88	PHOTOGRAMMETRY AS OF: X		
HORZ.DATUM NAD 83		SURVEYED BY C. Stewart	CHECKED BY C. Stewart	
ALIGNMENT TIES Dist. Traverse Sheet		DRAFTED BY M. Sadaghiani 7-13	CHECKED BY E. Viajar 7-13	

DESIGN	BY U. Inyang	CHECKED M. El-Mously
DETAILS	BY T. Bittermann	CHECKED M. El-Mously
QUANTITIES	BY U. Inyang	CHECKED E. Franciliso

STATE OF CALIFORNIA
DEPARTMENT OF TRANSPORTATION

DIVISION OF ENGINEERING SERVICES
STRUCTURE DESIGN
DESIGN BRANCH 11

BRIDGE NO. 53C-2295
POST MILE 1.15

NB VALLEY VIEW AVE/S FIRESTONE BLVD
FOUNDATION PLAN

STRUCTURES FOUNDATION PLAN SHEET (ENGLISH) (REV. 09-01-10)

ORIGINAL SCALE IN INCHES FOR REDUCED PLANS 0 1 2 3

UNIT: 3647
PROJECT NUMBER & PHASE: 0715000160-1
CONTRACT NO.: 07-2159U4

DISREGARD PRINTS BEARING EARLIER REVISION DATES

REVISION DATES: 7-29-13 8-28-13 9-06-13 9-09-13

SHEET 3 OF 29

FILE => 53c2295-d-fp.dgn

DIST	COUNTY	ROUTE	POST MILES TOTAL PROJECT	SHEET No.	TOTAL SHEETS
07	LA,Ora	5	0.0/1.5, 44.3/44.4	1334	1622

REGISTERED CIVIL ENGINEER — DATE 3-18-15

1-25-16
PLANS APPROVAL DATE

REGISTERED PROFESSIONAL ENGINEER — Phu V. Nguyen — No. 60358 — Exp. 6-30-16 — CIVIL — STATE OF CALIFORNIA

The State of California or its officers or agents shall not be responsible for the accuracy or completeness of scanned copies of this plan sheet.

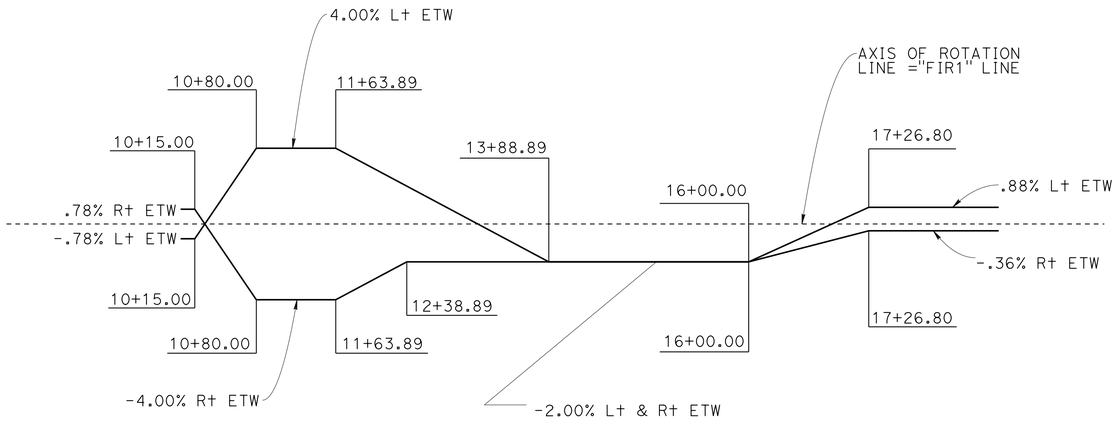

SUPERELEVATION

NO SCALE

CAMBER NOTE:

1. Camber values shown do not include allowances for falsework settlement.

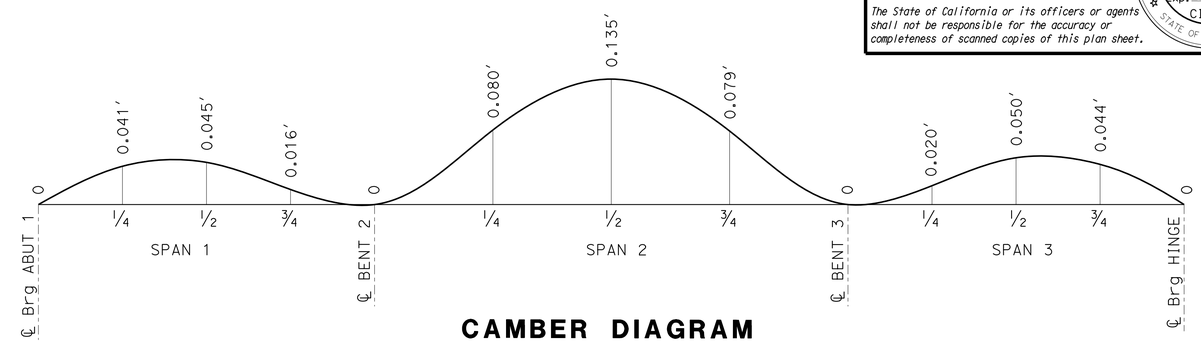

CAMBER DIAGRAM

No Scale

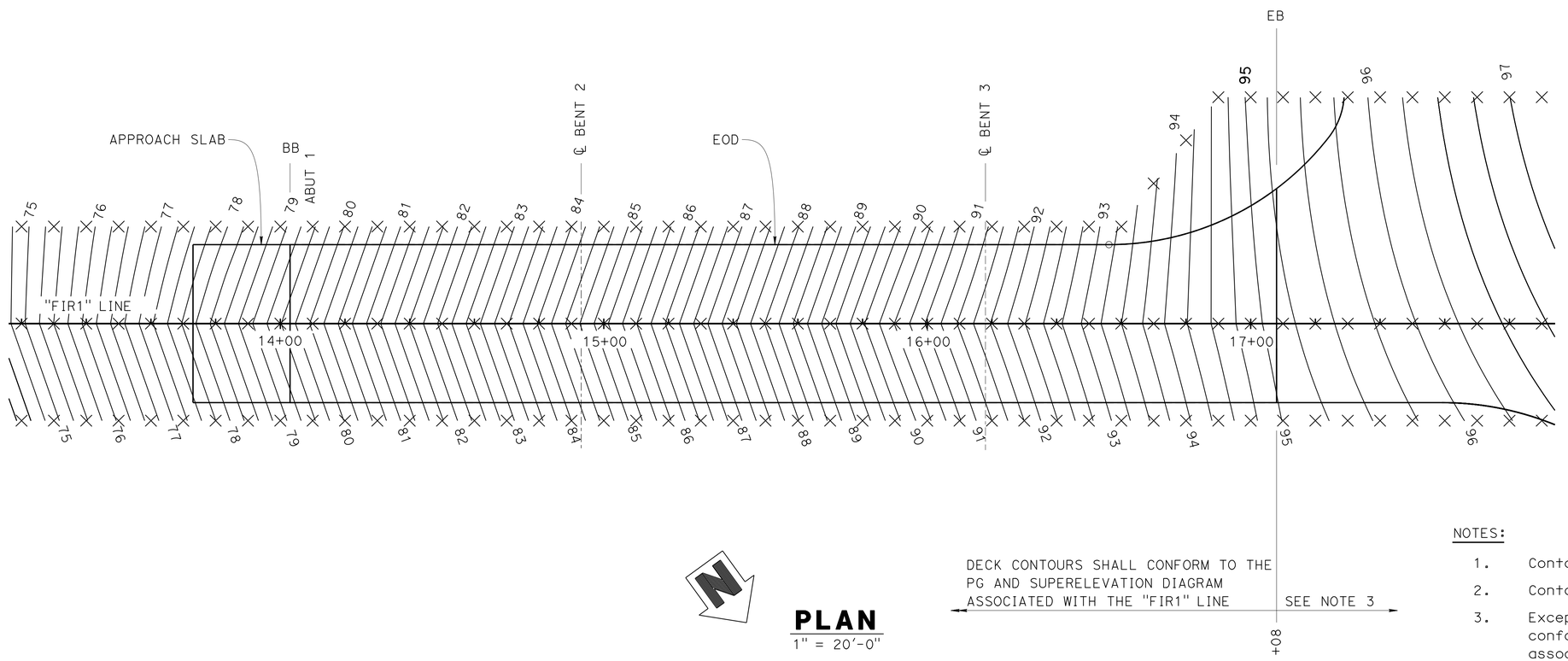

PLAN

1" = 20′-0"

NOTES:

1. Contours do not include camber
2. Contour interval = 0.25′
3. Except where noted, deck contours shall conform to the PG and Superelevation Diagram associated with the "VAL" Line

× Indicates 10.0′ intervals along station line

	BY	CHECKED
DESIGN	U. Inyang	M. El-Mously
DETAILS	T. Bittermann	M. El-Mously
QUANTITIES	U. Inyang	E. Franciliso

STATE OF CALIFORNIA
DEPARTMENT OF TRANSPORTATION

DIVISION OF ENGINEERING SERVICES
STRUCTURE DESIGN
DESIGN BRANCH 11

BRIDGE NO. 53C2295
POST MILE 1.15

NB VALLEY VIEW AVE/S FIRESTONE BLVD
DECK CONTOURS

STRUCTURES DESIGN DETAIL SHEET (ENGLISH) (REV. 09-01-10)

ORIGINAL SCALE IN INCHES FOR REDUCED PLANS 0 1 2 3

UNIT: 3587
PROJECT NUMBER & PHASE: 0715000160-1
CONTRACT NO.: 07-2159u4

DISREGARD PRINTS BEARING EARLIER REVISION DATES

REVISION DATES: 11-20-12 9-09-13 6-9-13 7-30-13

SHEET 4 OF 29

FILE => 53c2295-e-dc.dgn

USERNAME => s125624 DATE PLOTTED => 03-FEB-2016 TIME PLOTTED => 13:52

DIST	COUNTY	ROUTE	POST MILES TOTAL PROJECT	SHEET No.	TOTAL SHEETS
07	LA,Ora	5	0.0/1.5, 44.3/44.4	1335	1622

REGISTERED CIVIL ENGINEER 3-18-15 DATE

1-25-16
PLANS APPROVAL DATE

REGISTERED PROFESSIONAL ENGINEER Phu V. Nguyen No. 60358 Exp. 6-30-16 CIVIL STATE OF CALIFORNIA

The State of California or its officers or agents shall not be responsible for the accuracy or completeness of electronic copies of this plan sheet.

NOTES:

1. Joint Seal (B6-21) MR = 1½"
2. Expanded Polystyrene (B0-13)

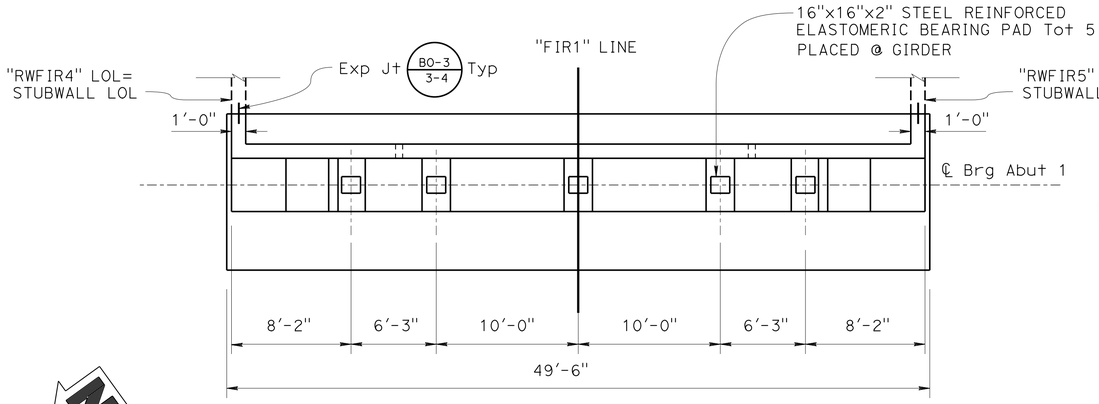

PLAN

3/16" = 1'-0"

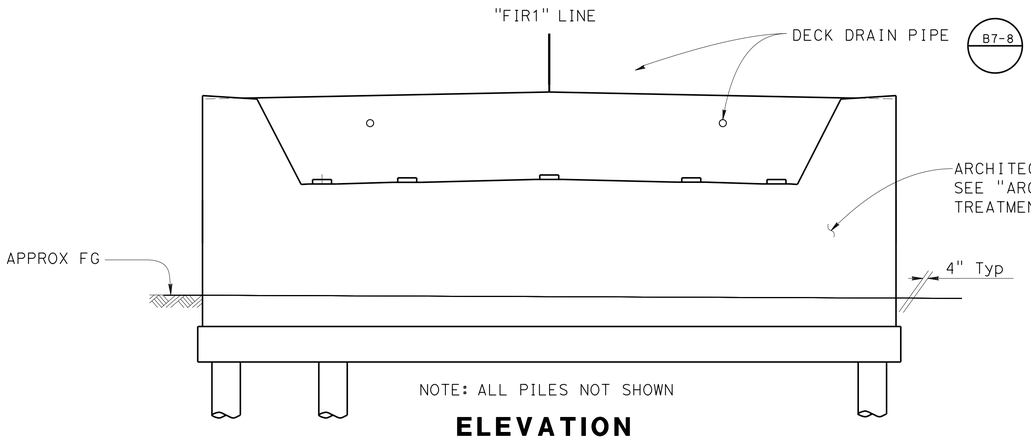

ELEVATION

3/16" = 1'-0"

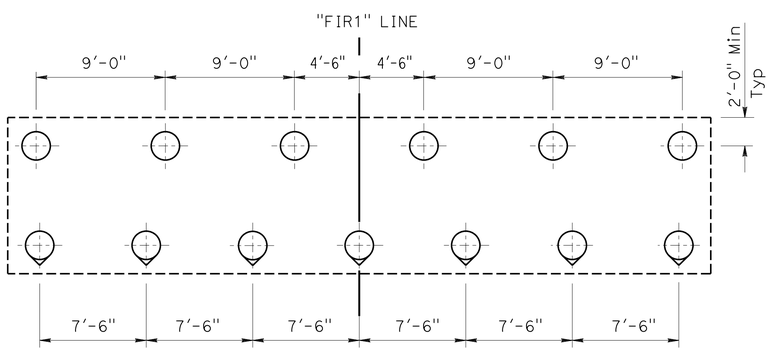

PILE LAYOUT

3/16" = 1'-0"

LEGEND:

- ○ INDICATES VERTICAL PIPE PILES PP24x0.5
- ○ INDICATES BATTERED PIPE PILES PP24x0.5

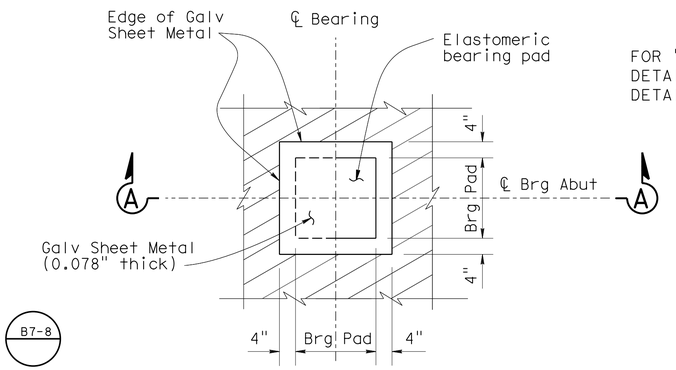

BEARING PAD DETAIL

NO SCALE

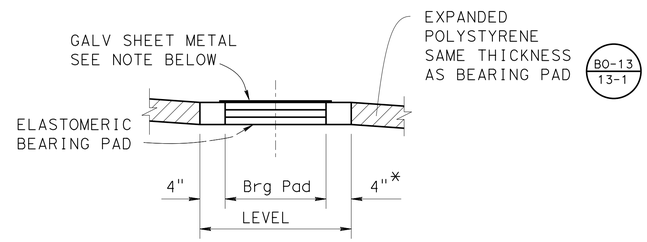

Note: Coat top of Bearing Pad with silicone grease prior to placing galvanized sheet metal

* 3" at side of Shear Key

SECTION A-A

NO SCALE

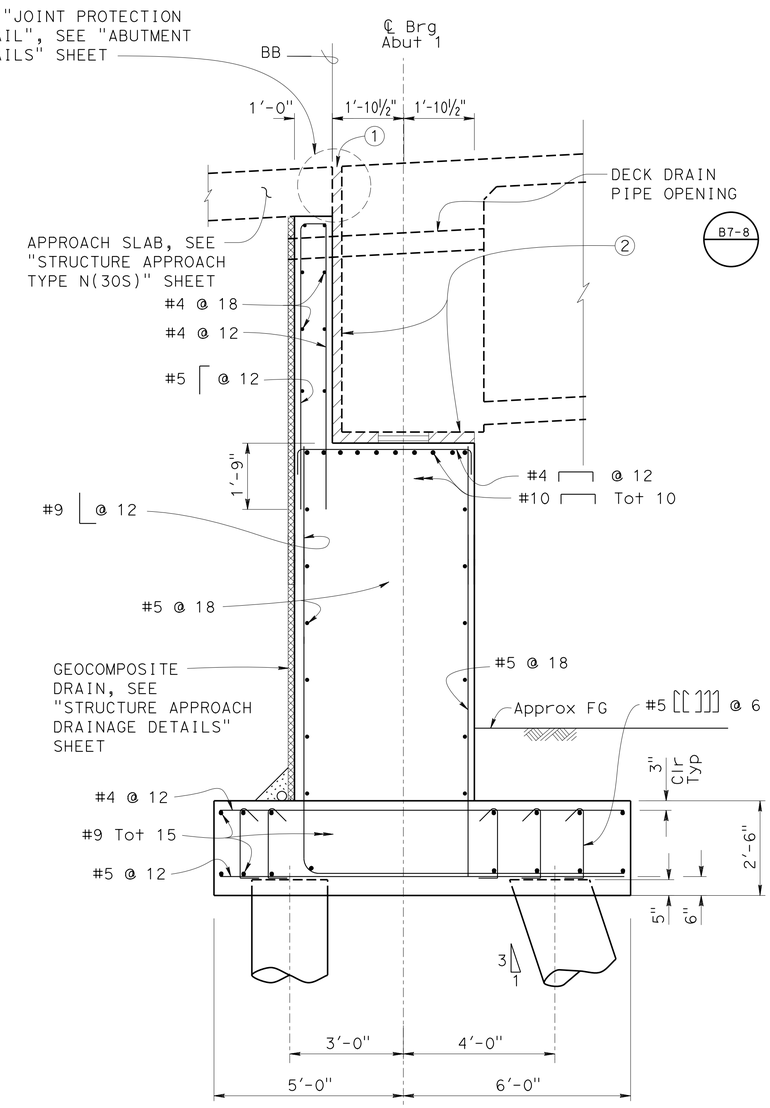

TYPICAL SECTION

½" = 1'-0"

DESIGN	BY U. Inyang	CHECKED M. El-Mously	
DETAILS	BY J. Ramirez	CHECKED M. El-Mously	
QUANTITIES	BY U. Inyang	CHECKED E. Franciliso	

STATE OF CALIFORNIA DEPARTMENT OF TRANSPORTATION

DIVISION OF ENGINEERING SERVICES STRUCTURE DESIGN DESIGN BRANCH 11

BRIDGE NO. 53C2295 POST MILE 1.15

NB VALLEY VIEW AVE/S FIRESTONE BLVD
ABUTMENT LAYOUT

STRUCTURES DESIGN DETAIL SHEET (ENGLISH) (REV. 09-01-10)

ORIGINAL SCALE IN INCHES FOR REDUCED PLANS 0 1 2 3

UNIT: 3587
PROJECT NUMBER & PHASE: 0715000160-1 CONTRACT NO.: 07-2159u4

DISREGARD PRINTS BEARING EARLIER REVISION DATES

REVISION DATES 8-08-12 9-27-13 9-30-13 9-09-15

SHEET 5 OF 29

FILE => 53c2295-f-abt_lo.dgn

USERNAME => s125624 DATE PLOTTED => 03-FEB-2016 TIME PLOTTED => 13:52

DIST	COUNTY	ROUTE	POST MILES TOTAL PROJECT	SHEET No.	TOTAL SHEETS
07	LA,Ora	5	0.0/1.5, 44.3/44.4	1336	1622

REGISTERED CIVIL ENGINEER 3-18-15 DATE

1-25-16
PLANS APPROVAL DATE

REGISTERED PROFESSIONAL ENGINEER Phu V. Nguyen No. 60358 Exp. 6-30-16 CIVIL STATE OF CALIFORNIA

The State of California or its officers or agents shall not be responsible for the accuracy or completeness of electronic copies of this plan sheet.

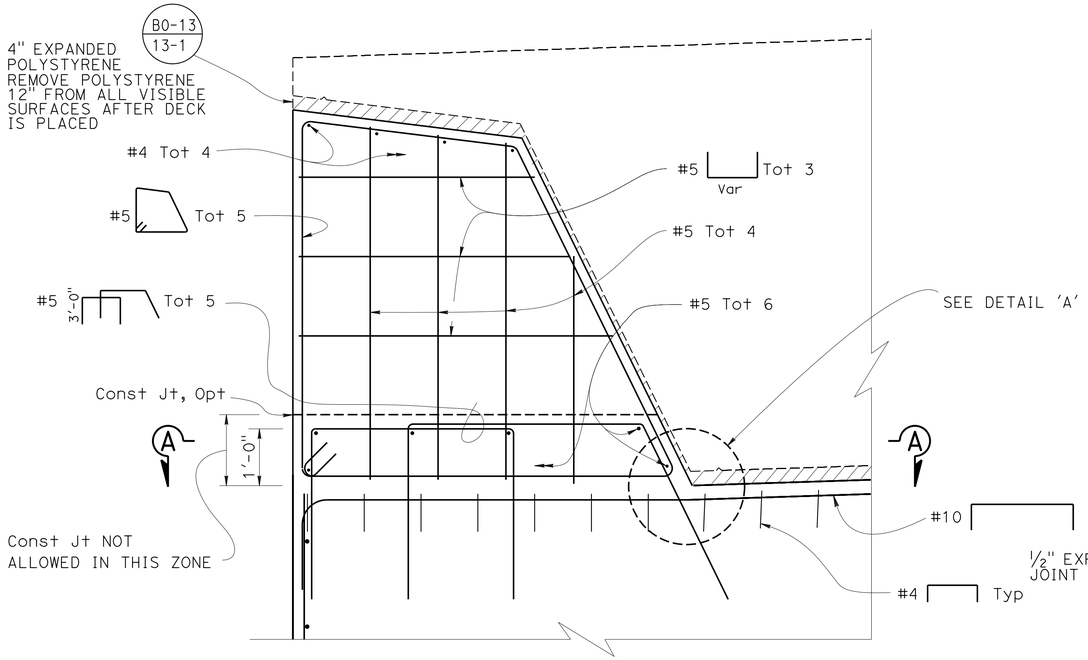

Note: Right shear key Reinf shown, left shear key Reinf similar

ABUTMENT SHEAR KEY DETAIL

3/4" = 1'-0"

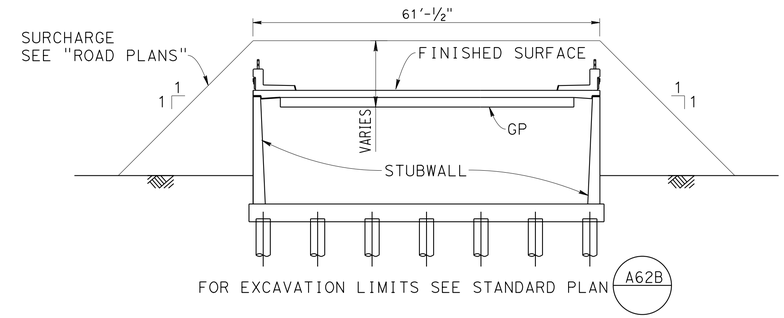

EMBANKMENT SURCHARGE

NO SCALE

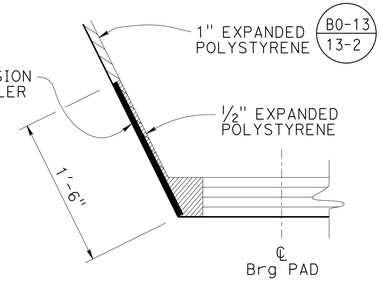

DETAIL A

NO SCALE

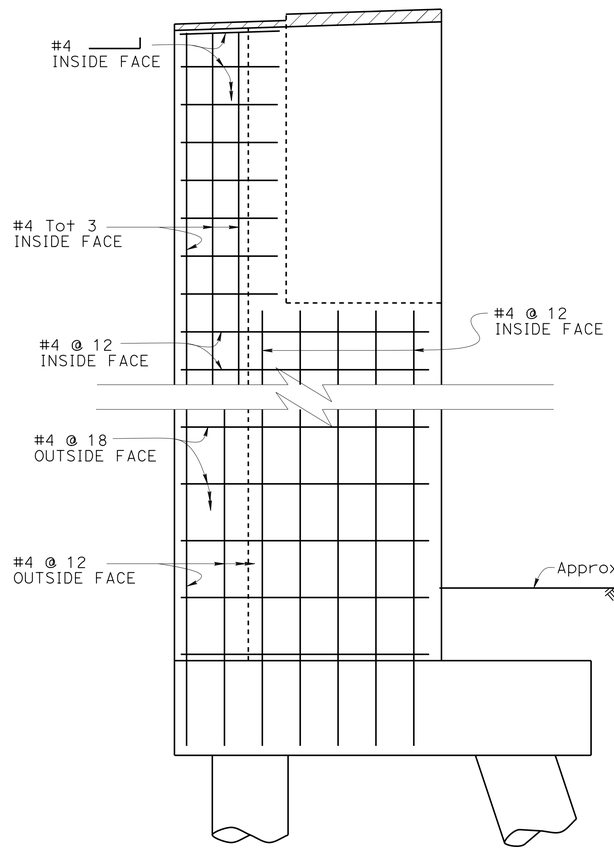

Note: Right side shown, left side opposite hand

STUBWALL ELEVATION

1/2" = 1'-0"

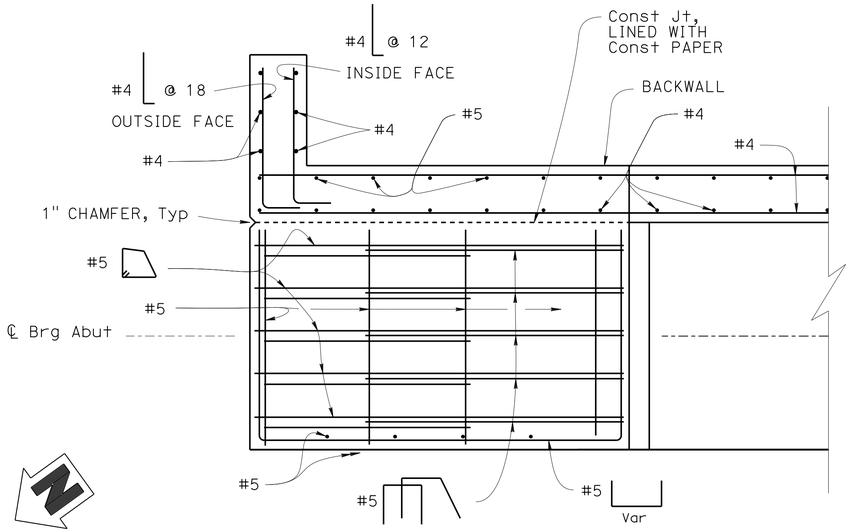

SECTION A-A

3/4" = 1'-0"

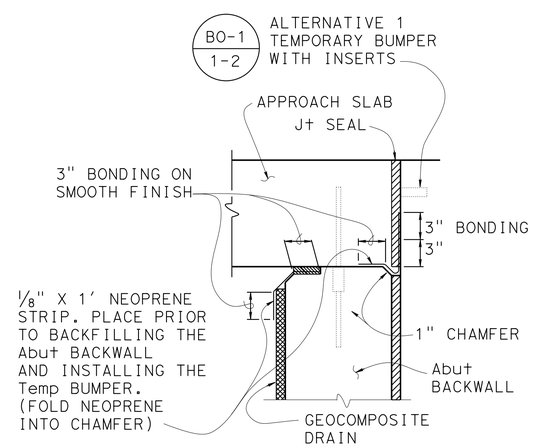

JOINT PROTECTION DETAIL

NO SCALE

DESIGN	BY U. Inyang	CHECKED M. El-Mously	
DETAILS	BY P. Tong	CHECKED M. El-Mously	
QUANTITIES	BY U. Inyang	CHECKED E. Franciliso	

STATE OF CALIFORNIA
DEPARTMENT OF TRANSPORTATION

DIVISION OF ENGINEERING SERVICES
STRUCTURE DESIGN
DESIGN BRANCH 11

BRIDGE NO. 53C2295
POST MILE 1.15

NB VALLEY VIEW AVE/S FIRESTONE BLVD
ABUTMENT DETAILS

STRUCTURES DESIGN DETAIL SHEET (ENGLISH) (REV. 09-01-10)

ORIGINAL SCALE IN INCHES FOR REDUCED PLANS 0 1 2 3

UNIT: 3587
PROJECT NUMBER & PHASE: 0715000160-1
CONTRACT NO.: 07-2159U4

DISREGARD PRINTS BEARING EARLIER REVISION DATES

REVISION DATES 3-12-13 7-30-13 9-12-13 9-27-13

SHEET 6 OF 29

FILE => 53c2295-f-abtdt.dgn

USERNAME => s125624 DATE PLOTTED => 03-FEB-2016 TIME PLOTTED => 13:52

DIST	COUNTY	ROUTE	POST MILES TOTAL PROJECT	SHEET No.	TOTAL SHEETS
07	LA,Ora	5	0.0/1.5, 44.3/44.4	1337	1622

REGISTERED CIVIL ENGINEER 3-18-15 DATE

1-25-16
PLANS APPROVAL DATE

REGISTERED PROFESSIONAL ENGINEER Phu V. Nguyen No. 60358 Exp. 6-30-16 CIVIL STATE OF CALIFORNIA

The State of California or its officers or agents shall not be responsible for the accuracy or completeness of scanned copies of this plan sheet.

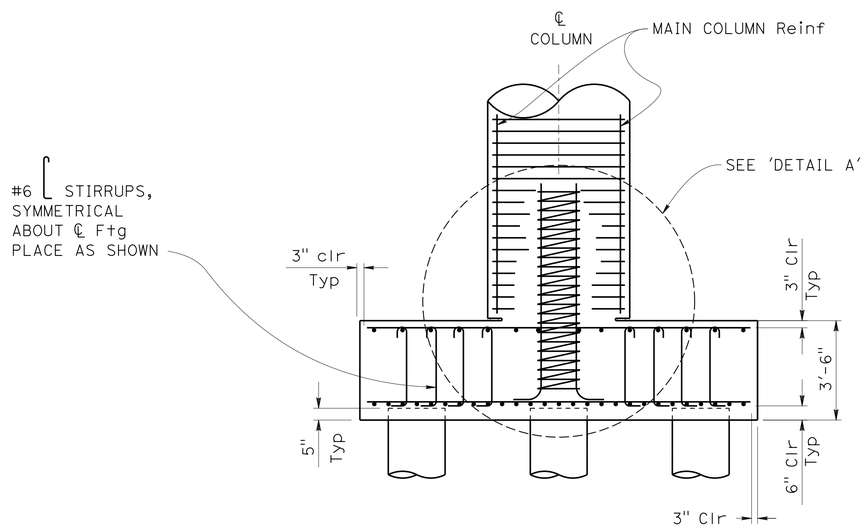

FOOTING SECTION

3/8" = 1'-0"

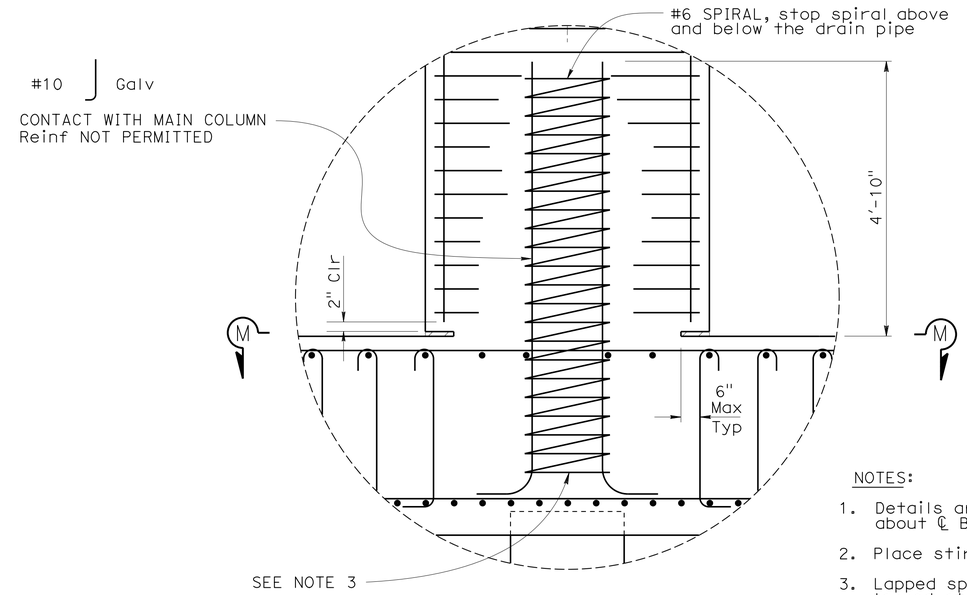

DETAIL A

NO SCALE

NOTES:

1. Details are symmetrical about ℄ Bent and ℄ Footing
2. Place stirrups as shown
3. Lapped splices in spiral reinf shall be lapped at least 80 wire/bar diameters. Spiral reinf at splices and at ends shall be terminated with a 135° hook with a 6" tail hooked around a longitudinal bar.

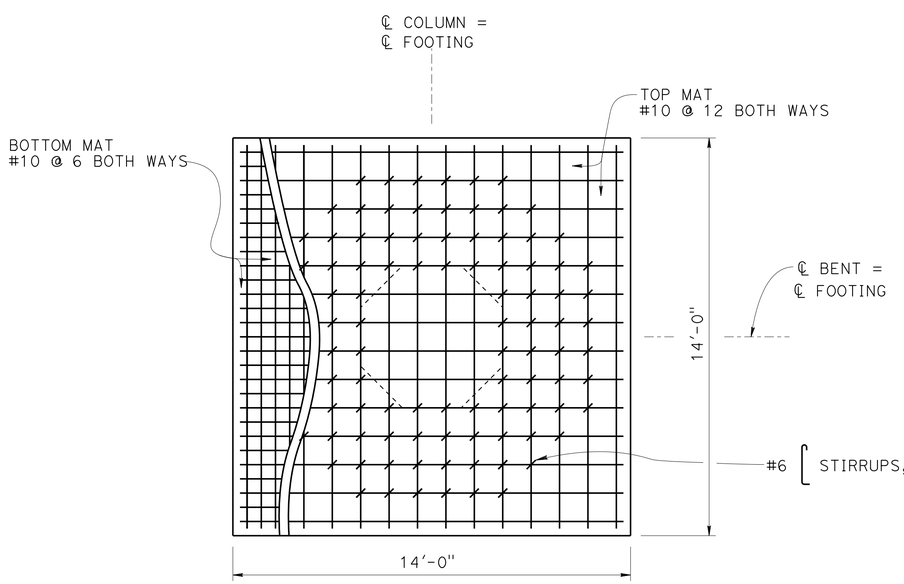

FOOTING PLAN

3/8" = 1'-0"

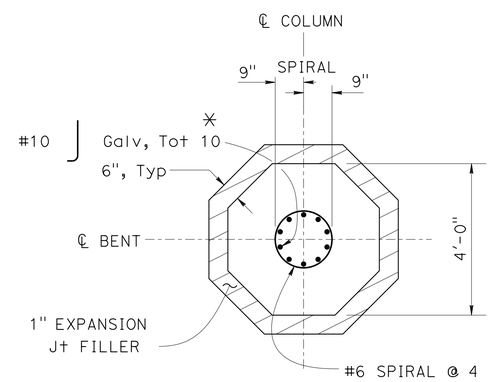

✳ ADJUST Reinf TO CLEAR DRAIN PIPE

SECTION M-M

1/2" = 1'-0"

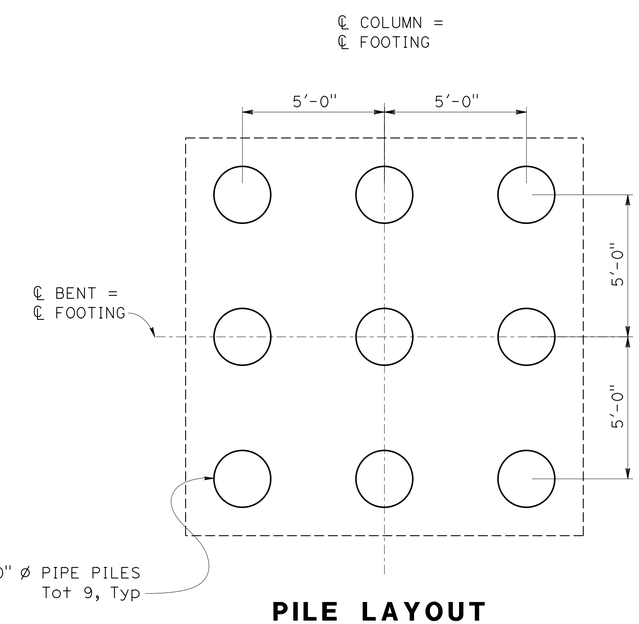

PILE LAYOUT

3/8" = 1'-0"

DESIGN	BY U. Inyang	CHECKED M. El-Mously	
DETAILS	BY T. Bittermann	CHECKED M. El-Mously	
QUANTITIES	BY U. Inyang	CHECKED E. Franciliso	

STATE OF CALIFORNIA DEPARTMENT OF TRANSPORTATION

DIVISION OF ENGINEERING SERVICES STRUCTURE DESIGN DESIGN BRANCH 11

BRIDGE NO. 53C2295
POST MILE 1.15

NB VALLEY VIEW AVE/S FIRESTONE BLVD
BENT 2 FOOTING DETAILS

STRUCTURES DESIGN DETAIL SHEET (ENGLISH) (REV. 09-01-10)

ORIGINAL SCALE IN INCHES FOR REDUCED PLANS 0 1 2 3

UNIT: 3587
PROJECT NUMBER & PHASE: 0715000160-1
CONTRACT NO.: 07-2159u4

DISREGARD PRINTS BEARING EARLIER REVISION DATES

REVISION DATES 12-31-12 9-26-13 9-11-13 9-27-13

SHEET 7 OF 29

FILE => 53c2295-f-bnt2ftg.dgn

USERNAME => s123624 DATE PLOTTED => 03-FEB-2016 TIME PLOTTED => 13:52

DIST	COUNTY	ROUTE	POST MILES TOTAL PROJECT	SHEET No.	TOTAL SHEETS
07	LA,Ora	5	0.0/1.5, 44.3/44.4	1338	1622

REGISTERED CIVIL ENGINEER 3-18-15 DATE

1-25-16
PLANS APPROVAL DATE

REGISTERED PROFESSIONAL ENGINEER Phu V. Nguyen No. 60358 Exp. 6-30-16 CIVIL STATE OF CALIFORNIA

The State of California or its officers or agents shall not be responsible for the accuracy or completeness of scanned copies of this plan sheet.

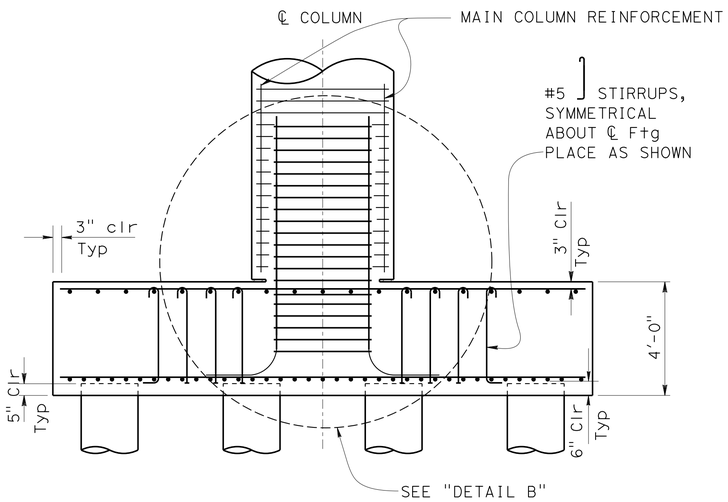

FOOTING SECTION

3/8" = 1'-0"

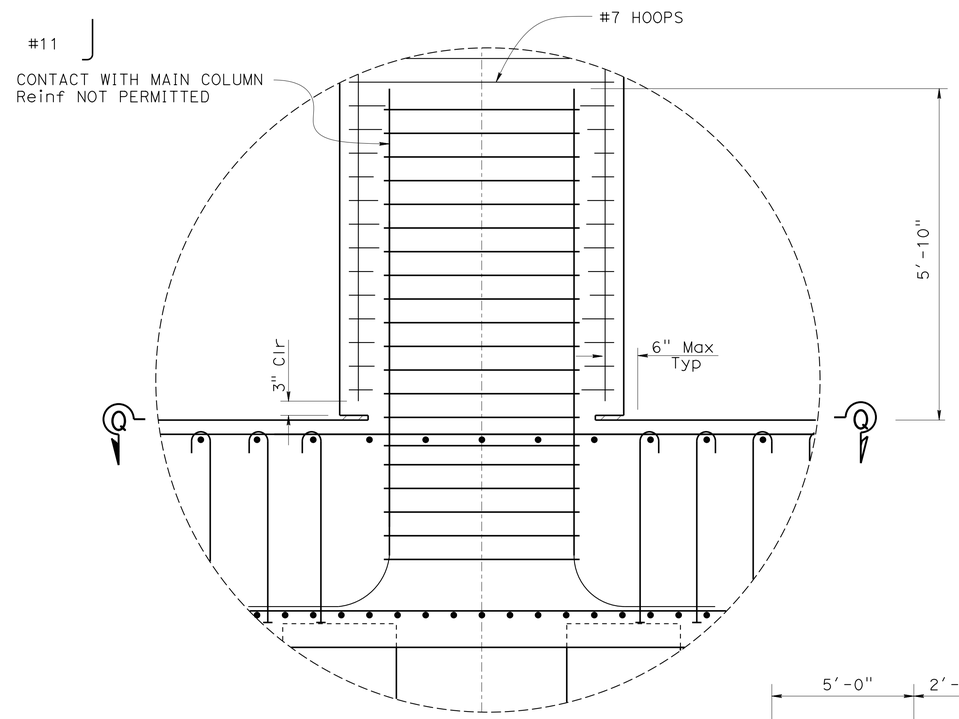

DETAIL B

NO SCALE

NOTES:

1. Details are symmetrical about ℄ Bent and ℄ Footing
2. Place stirrups as shown
3. Adjust spacing to drain pipe at Bent 3 (right) column

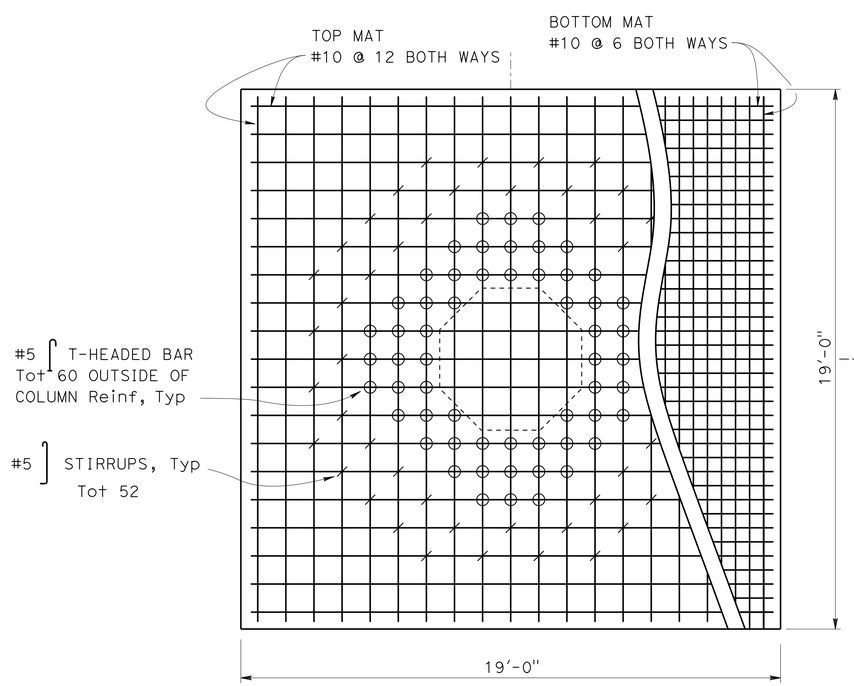

FOOTING PLAN

3/8" = 1'-0"

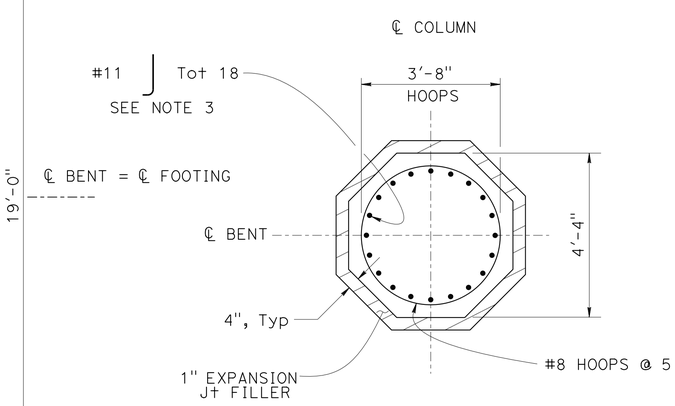

SECTION Q-Q

1/2" = 1'-0"

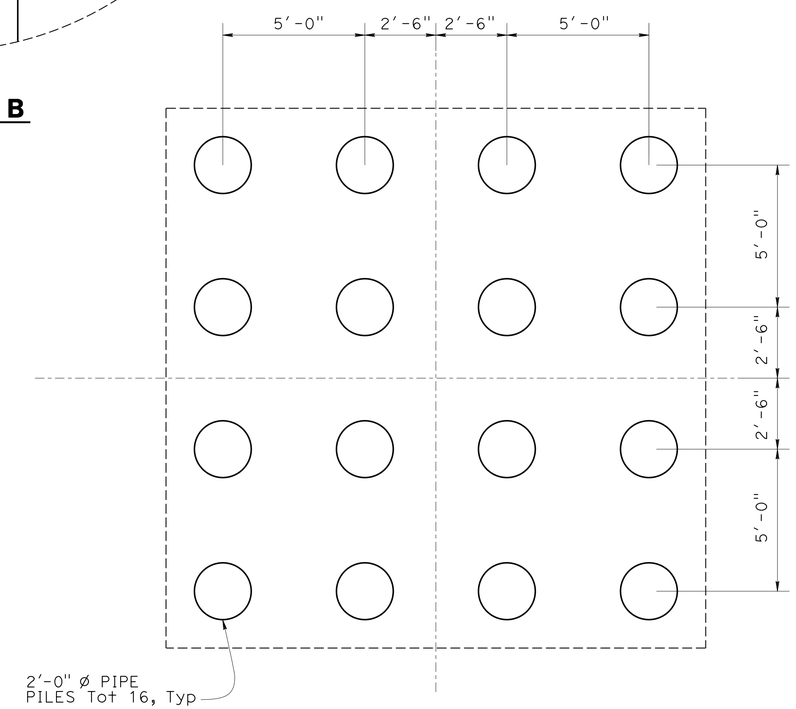

PILE LAYOUT

3/8" = 1'-0"

DESIGN	BY U. Inyang	CHECKED M. El-Mously	
DETAILS	BY T. Bittermann	CHECKED M. El-Mously	
QUANTITIES	BY U. Inyang	CHECKED E. Franciliso	

STATE OF CALIFORNIA
DEPARTMENT OF TRANSPORTATION

DIVISION OF ENGINEERING SERVICES
STRUCTURE DESIGN
DESIGN BRANCH 11

BRIDGE NO. 53C2295
POST MILE 1.15

NB VALLEY VIEW AVE/S FIRESTONE BLVD
BENT 3 FOOTING DETAILS

STRUCTURES DESIGN DETAIL SHEET (ENGLISH) (REV. 09-01-10)

ORIGINAL SCALE IN INCHES FOR REDUCED PLANS 0 1 2 3

UNIT: 3587
PROJECT NUMBER & PHASE: 0715000160-1
CONTRACT NO.: 07-2159u4

DISREGARD PRINTS BEARING EARLIER REVISION DATES

REVISION DATES 12-21-12 8-28-13 9-06-13 7-30-13

SHEET 8 OF 29

FILE => 53c2295-f-bnt3ftg.dgn

USERNAME => s123624 DATE PLOTTED => 03-FEB-2016 TIME PLOTTED => 13:52

DIST	COUNTY	ROUTE	POST MILES TOTAL PROJECT	SHEET No.	TOTAL SHEETS
07	LA,Ora	5	0.0/1.5, 44.3/44.4	1339	1622

REGISTERED CIVIL ENGINEER 3-18-15 DATE

1-25-16
PLANS APPROVAL DATE

REGISTERED PROFESSIONAL ENGINEER Phu V. Nguyen No. 60358 Exp. 6-30-16 CIVIL STATE OF CALIFORNIA

The State of California or its officers or agents shall not be responsible for the accuracy or completeness of scanned copies of this plan sheet.

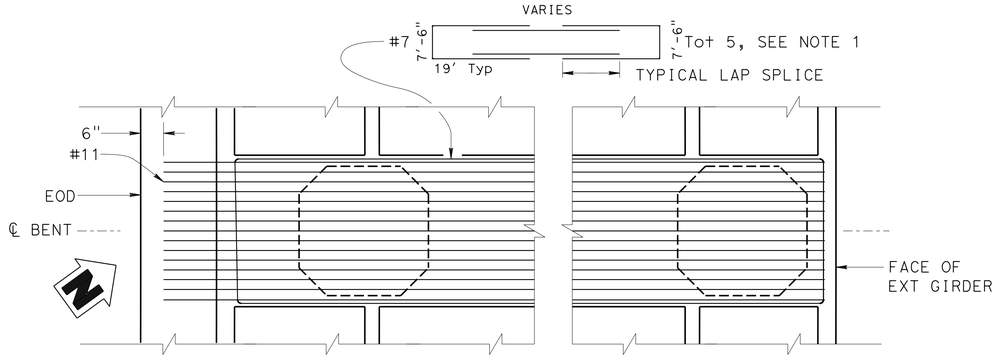

DECK REINFORCEMENT SOFFIT REINFORCEMENT

BENT CAP - PLAN

1/4" = 1'-0"

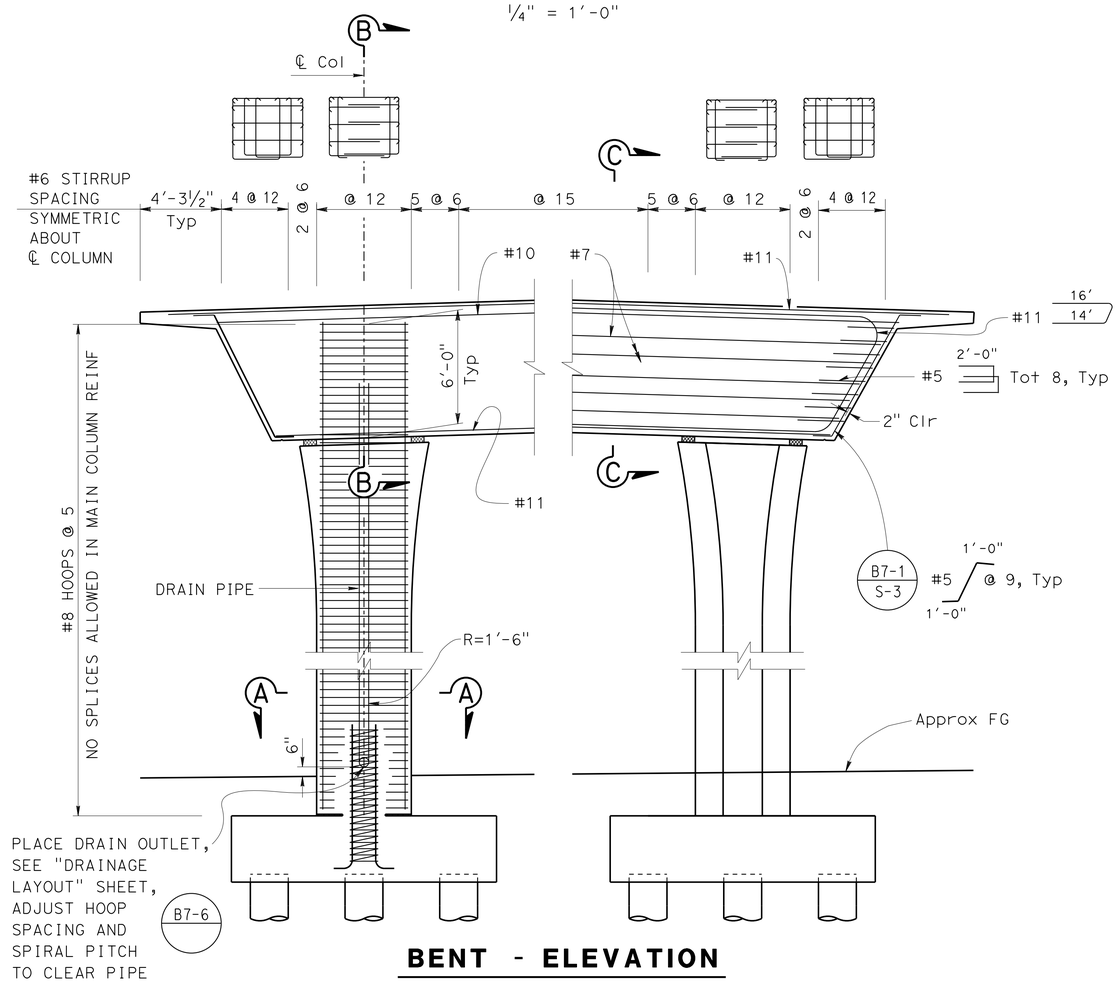

BENT - ELEVATION

1/4" = 1'-0"

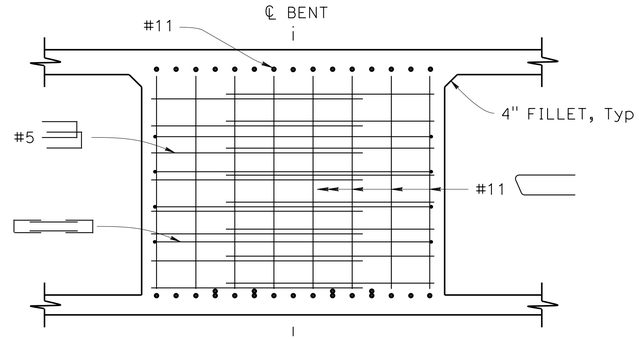

END VIEW

1/2" = 1'-0"

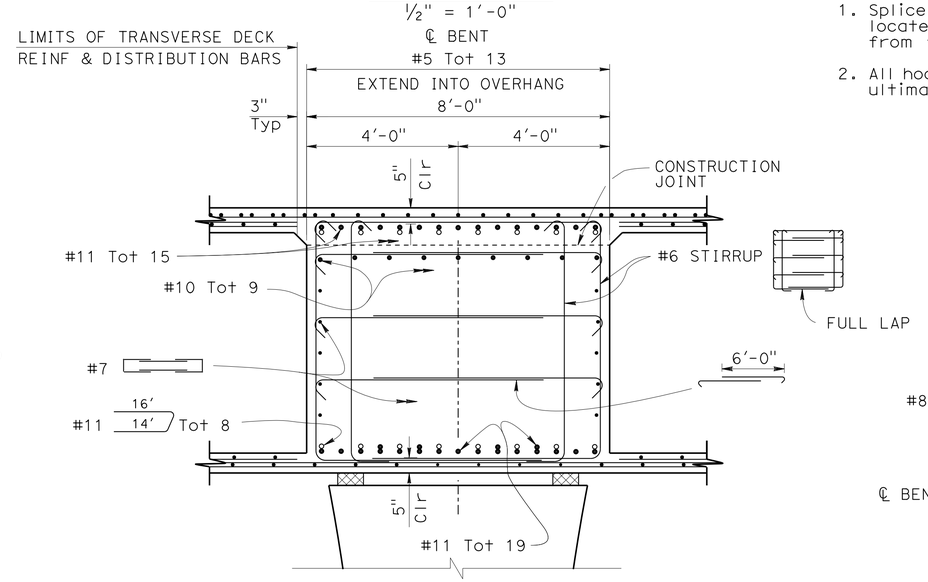

SECTION B-B

1/2" = 1'-0"

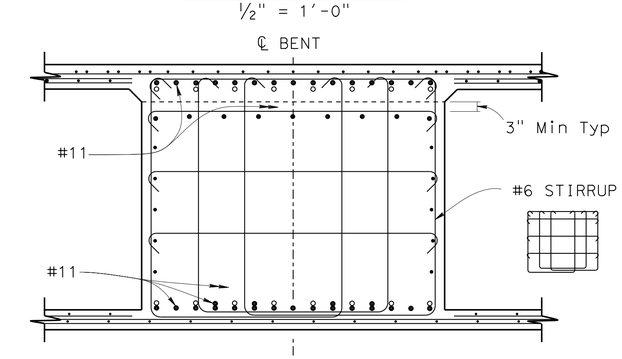

SECTION C-C

1/2" = 1'-0"

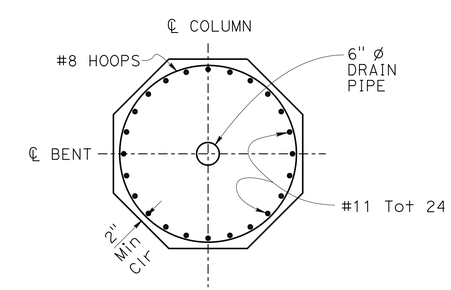

SECTION A-A

1/2" = 1'-0"

NOTES:

1. Splice in 'U' bars shall not be located within a distance of 5' from the exterior face of column
2. All hoops shall be ultimate butt spliced

Reinf similar to 'SECTION B-B' except as shown

	BY	CHECKED
DESIGN	U. Inyang	M.El-Mously
DETAILS	T. Bittermann	M. El-Mously
QUANTITIES	U. Inyang	E. Franciliso

STATE OF CALIFORNIA DEPARTMENT OF TRANSPORTATION

DIVISION OF ENGINEERING SERVICES STRUCTURE DESIGN DESIGN BRANCH 11

BRIDGE NO. 53C2295
POST MILE 1.15

NB VALLEY VIEW AVE/S FIRESTONE BLVD
BENT 2 DETAILS

STRUCTURES DESIGN DETAIL SHEET (ENGLISH) (REV. 09-01-10)

ORIGINAL SCALE IN INCHES FOR REDUCED PLANS 0 1 2 3

UNIT: 3587
PROJECT NUMBER & PHASE: 0715000160-1 CONTRACT NO.: 07-2159U4

DISREGARD PRINTS BEARING EARLIER REVISION DATES

REVISION DATES 12-21-12 9-11-13 9-27-13 9-06-13 SHEET 9 OF 29

FILE => 53c2295-n-bnt2dt.dgn

USERNAME => s129624 DATE PLOTTED => 03-FEB-2016 TIME PLOTTED => 13:52

DIST	COUNTY	ROUTE	POST MILES TOTAL PROJECT	SHEET No.	TOTAL SHEETS
07	LA,Ora	5	0.0/1.5, 44.3/44.4	1340	1622

REGISTERED CIVIL ENGINEER — DATE 3-18-15

1-25-16
PLANS APPROVAL DATE

REGISTERED PROFESSIONAL ENGINEER — Phu V. Nguyen — No. 60358 — Exp. 6-30-16 — CIVIL — STATE OF CALIFORNIA

The State of California or its officers or agents shall not be responsible for the accuracy or completeness of electronic copies of this plan sheet.

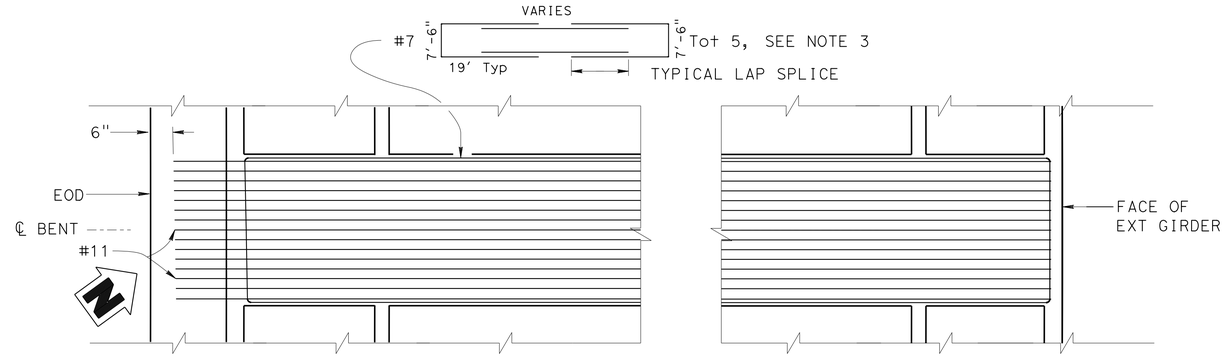

DECK REINFORCEMENT **SOFFIT REINFORCEMENT**

BENT CAP - PLAN

1/4" = 1'-0"

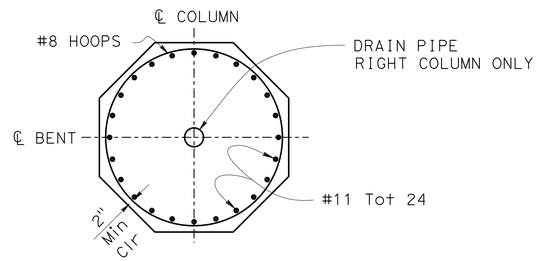

SECTION A-A

1/2" = 1'-0"

NOTES:

1. For Sections B-B & C-C and END VIEW, see "BENT 2 DETAILS" sheet
2. All hoops shall be ultimate butt spliced
3. Splice in 'U' bars shall not be located within a distance of 5' from the exterior face of column

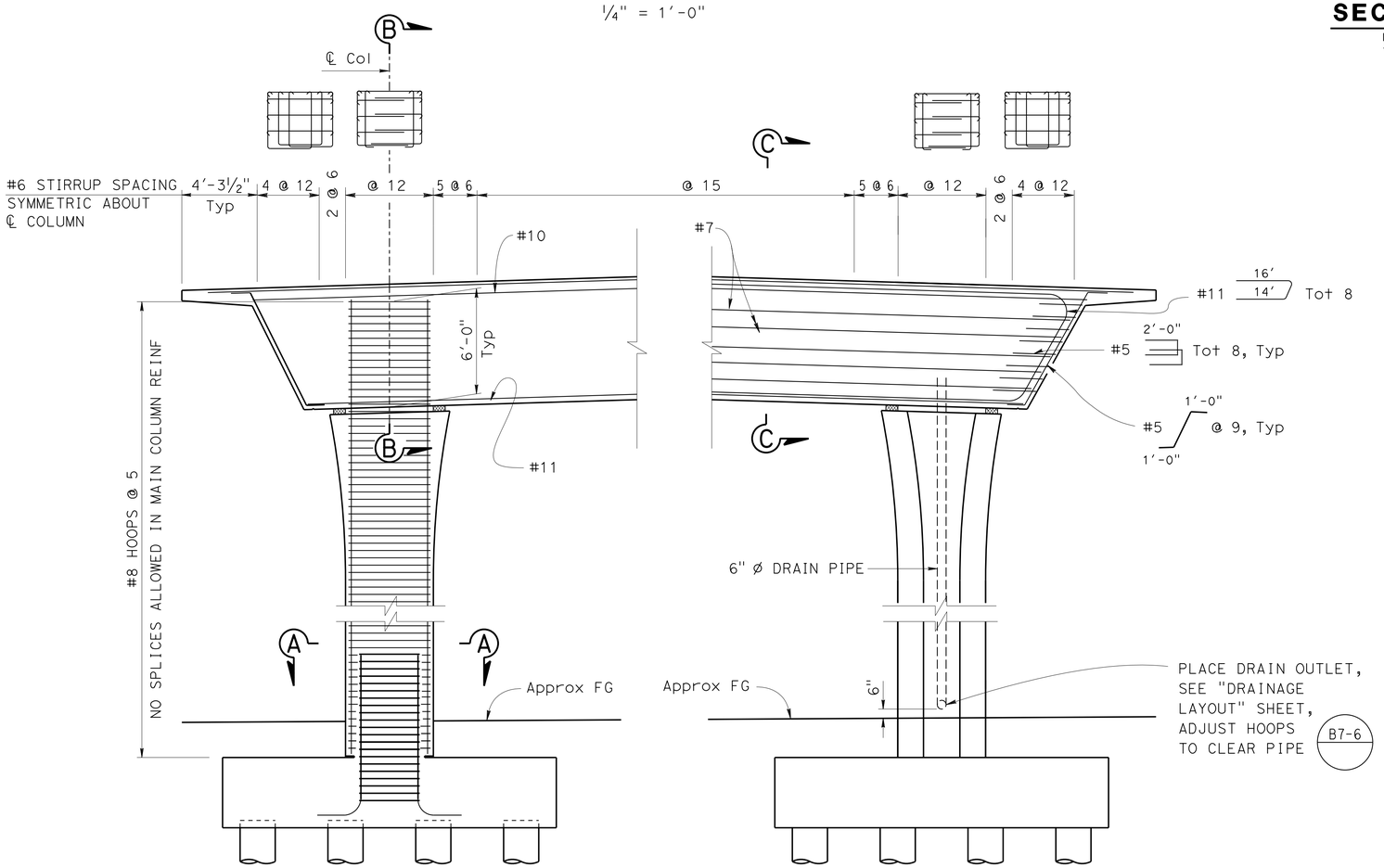

ELEVATION

1/4" = 1'-0"

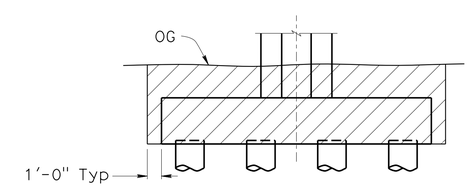

LIMIT OF STRUCTURE EXCAVATION (CONTAMINATED MATERIALS) AT BENTS 2 & 3

CONTAMINATED SOIL STRUCTURE EXCAVATION

NO SCALE

	BY	CHECKED
DESIGN	U. Inyang	M. El-Mously
DETAILS	P. Tong	M. El-Mously
QUANTITIES	U. Inyang	E. Franciliso

STATE OF CALIFORNIA
DEPARTMENT OF TRANSPORTATION

DIVISION OF ENGINEERING SERVICES
STRUCTURE DESIGN
DESIGN BRANCH 11

BRIDGE NO. 53C2295
POST MILE 1.15

NB VALLEY VIEW AVE/S FIRESTONE BLVD
BENT 3 DETAILS

STRUCTURES DESIGN DETAIL SHEET (ENGLISH) (REV. 09-01-10)

ORIGINAL SCALE IN INCHES FOR REDUCED PLANS 0 1 2 3

UNIT: 3587
PROJECT NUMBER & PHASE: 0715000160-1
CONTRACT NO.: 07-2159U4

DISREGARD PRINTS BEARING EARLIER REVISION DATES

REVISION DATES: 12-27-12 9-27-13 9-11-13 9-23-13

SHEET 10 OF 29

FILE => 53c2295-h-bnt3dt.dgn

USERNAME => s123624 DATE PLOTTED => 03-FEB-2016 TIME PLOTTED => 13:52

DIST	COUNTY	ROUTE	POST MILES TOTAL PROJECT	SHEET No.	TOTAL SHEETS
07	LA,Ora	5	0.0/1.5, 44.3/44.4	1341	1622

REGISTERED CIVIL ENGINEER 3-18-15 DATE

1-25-16
PLANS APPROVAL DATE

REGISTERED PROFESSIONAL ENGINEER Phu V. Nguyen No. 60358 Exp. 6-30-16 CIVIL STATE OF CALIFORNIA

The State of California or its officers or agents shall not be responsible for the accuracy or completeness of electronic copies of this plan sheet.

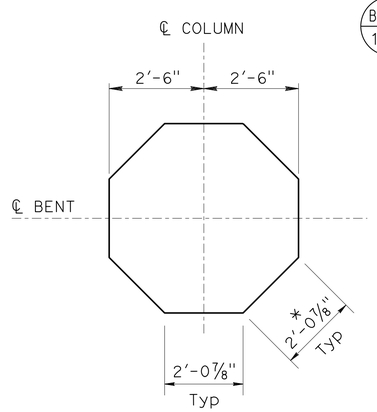

SECTION A-A

½" = 1'-0"

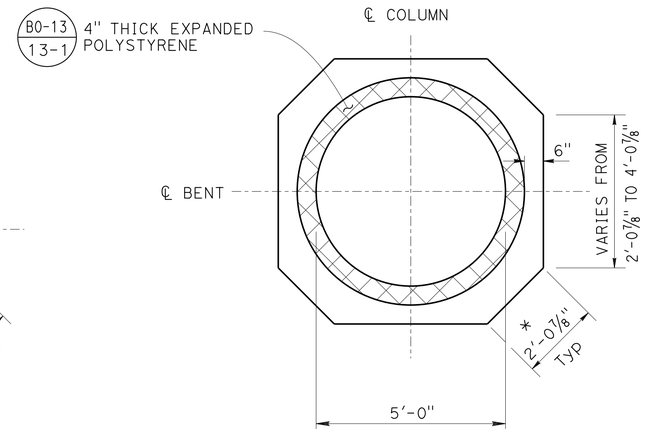

SECTION B-B

½" = 1'-0"

LEGEND:

Ⓐ = #6 ◜ Tot 20

Ⓑ = #8 HOOPS @ 6", STAGGER MECHANICAL COUPLER SERVICE SPLICES

Ⓒ = #6 ◜ Tot 12

Ⓓ = #6 ⊔ 2'-0" 1'-9" @ 6

NOTES:

1. * Constant corner width along column flare, Typ
2. Details are symmetrical about ℄ of Column and ℄ of Bent

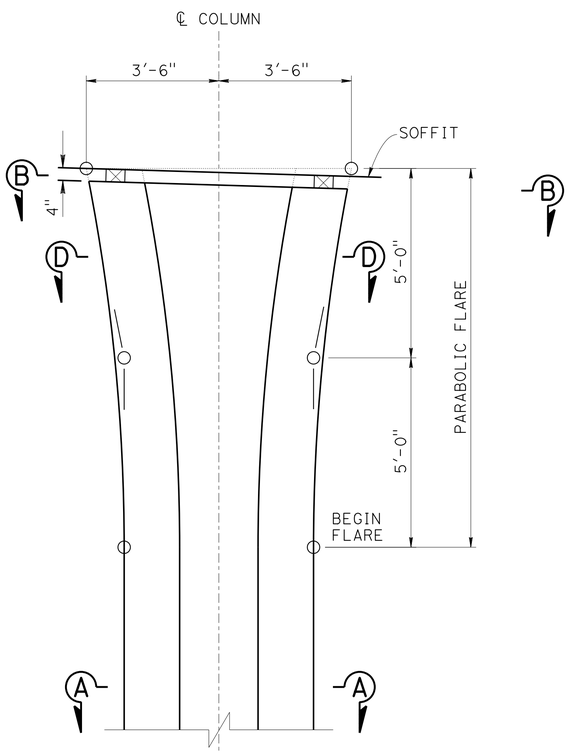

COLUMN GEOMETRY

½" = 1'-0"

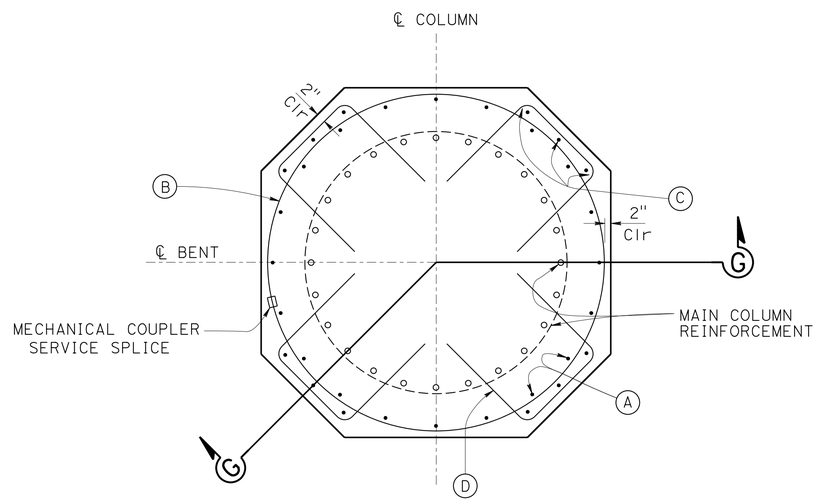

SECTION D-D

¾" = 1'-0"

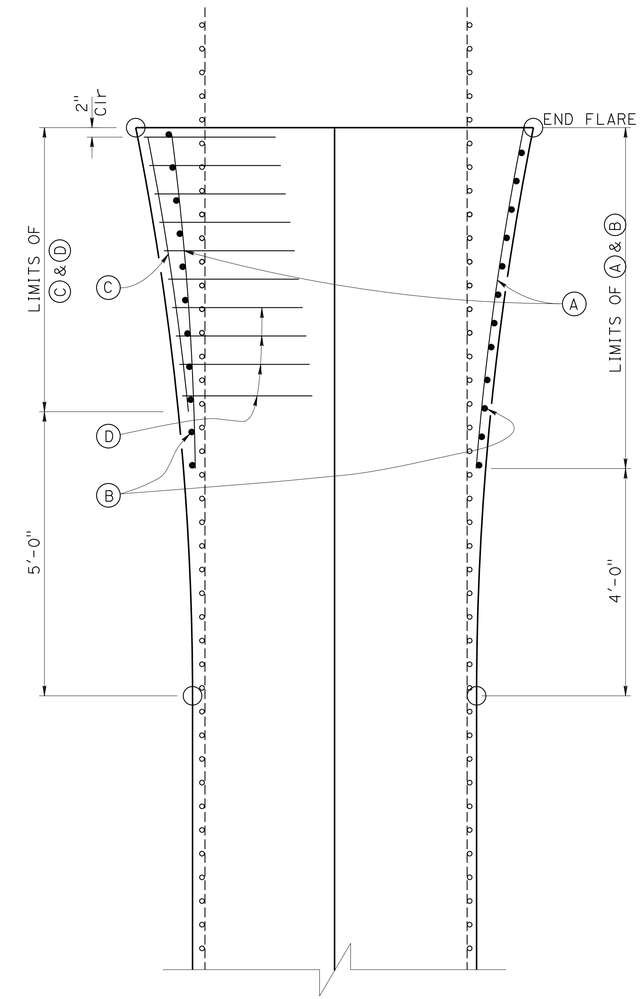

SECTION G-G

¾" = 1'-0"

DESIGN	BY U. Inyang	CHECKED M. El-Mously	
DETAILS	BY T. Bittermann	CHECKED M. El-Mously	
QUANTITIES	BY U. Inyang	CHECKED E. Franciliso	

STATE OF CALIFORNIA
DEPARTMENT OF TRANSPORTATION

DIVISION OF ENGINEERING SERVICES
STRUCTURE DESIGN
DESIGN BRANCH 11

BRIDGE NO. 53C2295
POST MILE 1.15

NB VALLEY VIEW AVE/S FIRESTONE BLVD
COLUMN DETAILS

STRUCTURES DESIGN DETAIL SHEET (ENGLISH) (REV. 09-01-10)

ORIGINAL SCALE IN INCHES FOR REDUCED PLANS 0 1 2 3

UNIT: 3587
PROJECT NUMBER & PHASE: 0715000160-1
CONTRACT NO.: 07-2159u4

DISREGARD PRINTS BEARING EARLIER REVISION DATES

REVISION DATES: 3-12-13 4-18-13 7-26-13 9-06-13

SHEET 11 OF 29

FILE => 53c2295-j-coldet.dgn

USERNAME => s123624 DATE PLOTTED => 03-FEB-2016 TIME PLOTTED => 13:52

DIST	COUNTY	ROUTE	POST MILES TOTAL PROJECT	SHEET No.	TOTAL SHEETS
07	LA,Ora	5	0.0/1.5, 44.3/44.4	1342	1622

REGISTERED CIVIL ENGINEER 3-18-15 DATE

1-25-16
PLANS APPROVAL DATE

REGISTERED PROFESSIONAL ENGINEER Phu V. Nguyen No. 60358 Exp. 6-30-16 CIVIL STATE OF CALIFORNIA

The State of California or its officers or agents shall not be responsible for the accuracy or completeness of scanned copies of this plan sheet.

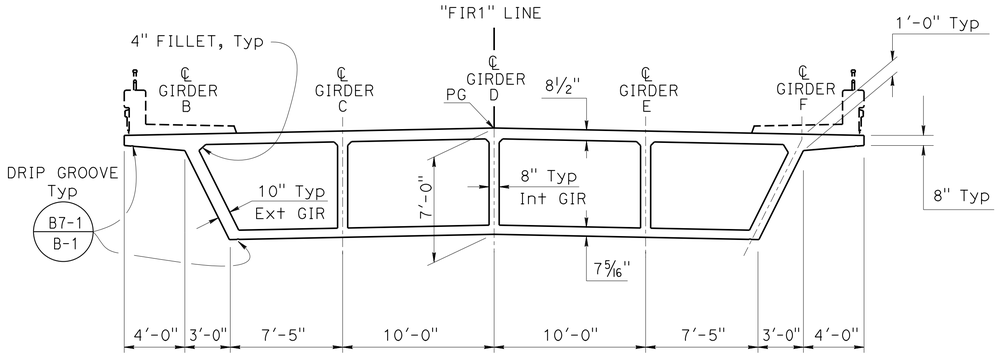

FROM Sta 14+06.75 TO BC Sta 16+56.17

TYPICAL SECTION

1" = 5'-0"

LEGEND:

- o Indicates reinforcement, see ADDITIONAL SOFFIT AND DECK REINFORCEMENT sheets
- • Indicates additional stem reinforcement at Bent Cap
- * PLACE NORMAL TO AND SPACE ALONG "FIR1" LINE, End AT Sta 16+85.00

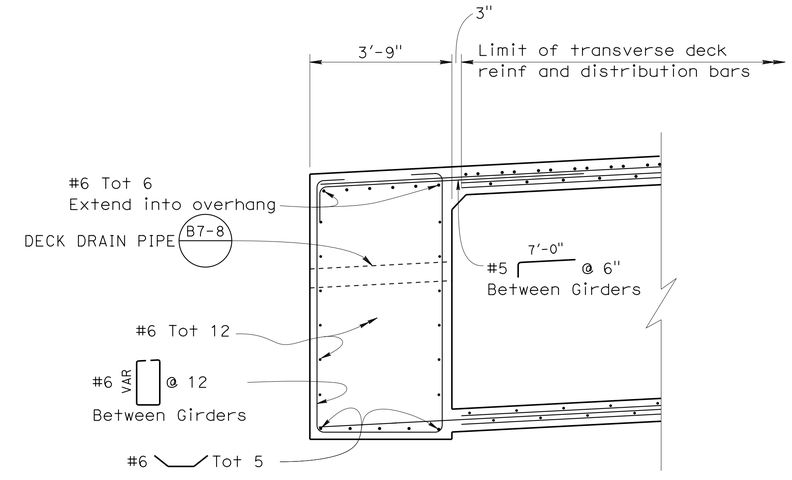

END DIAPHRAGM

½" = 1'-0"

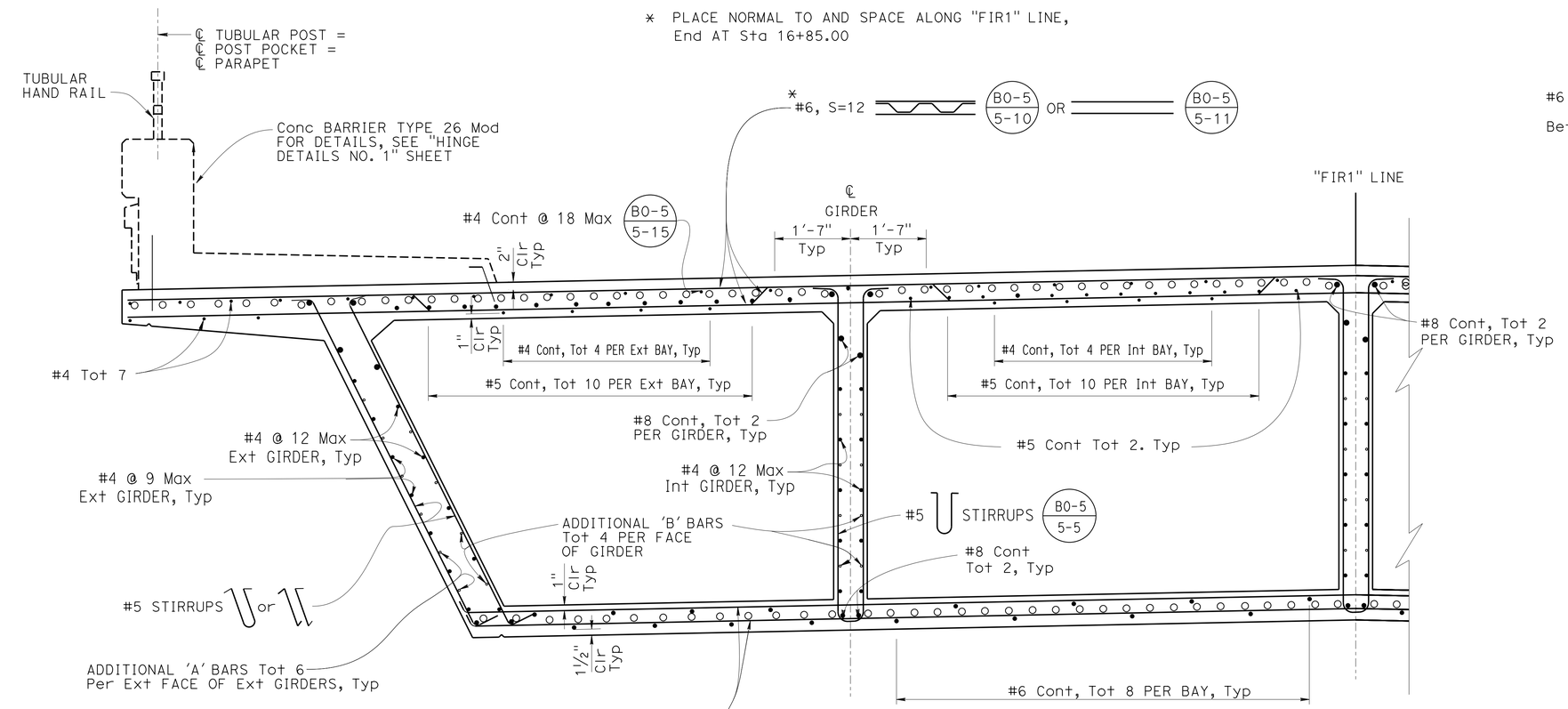

FROM Sta 14+06.75 TO BC Sta 16+56.17

PART SECTION B7-1

¾" = 1'-0"

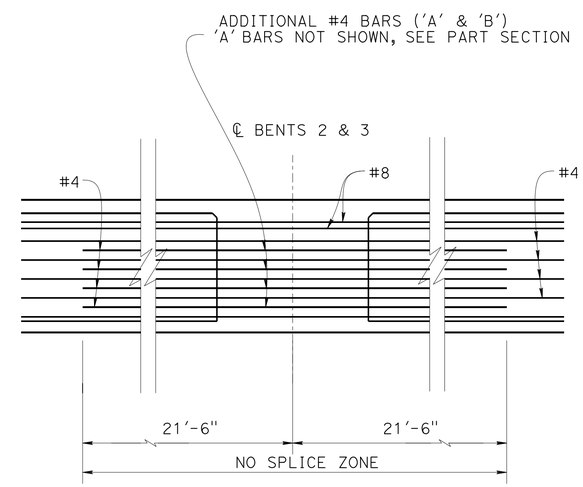

ADDITIONAL STEM REINFORCEMENT

¼" = 1'-0"

DESIGN	BY U. Inyang	CHECKED M. El-Mously	
DETAILS	BY T. Bittermann	CHECKED M. El-Mously	
QUANTITIES	BY U. Inyang	CHECKED E. Franciliso	

STATE OF CALIFORNIA
DEPARTMENT OF TRANSPORTATION

DIVISION OF ENGINEERING SERVICES
STRUCTURE DESIGN
DESIGN BRANCH 11

BRIDGE NO. 53C2295
POST MILE 1.15

NB VALLEY VIEW AVE/S FIRESTONE BLVD
TYPICAL SECTION NO 1

STRUCTURES DESIGN DETAIL SHEET (ENGLISH) (REV. 09-01-10)

ORIGINAL SCALE IN INCHES FOR REDUCED PLANS 0 1 2 3

UNIT: 3587
PROJECT NUMBER & PHASE: 0715000160-1
CONTRACT NO.: 07-2159u4

DISREGARD PRINTS BEARING EARLIER REVISION DATES

REVISION DATES: 12-13-12 9-11-13 7-18-13 9-06-13

SHEET 12 OF 29

FILE => 53c2295-k-ts1.dgn

USERNAME => s125624 DATE PLOTTED => 03-FEB-2016 TIME PLOTTED => 13:52

DIST	COUNTY	ROUTE	POST MILES TOTAL PROJECT	SHEET No.	TOTAL SHEETS
07	LA,Ora	5	0.0/1.5, 44.3/44.4	1343	1622

REGISTERED CIVIL ENGINEER 3-18-15 DATE

1-25-16
PLANS APPROVAL DATE

REGISTERED PROFESSIONAL ENGINEER Phu V. Nguyen No. 60358 Exp. 6-30-16 CIVIL STATE OF CALIFORNIA

The State of California or its officers or agents shall not be responsible for the accuracy or completeness of scanned copies of this plan sheet.

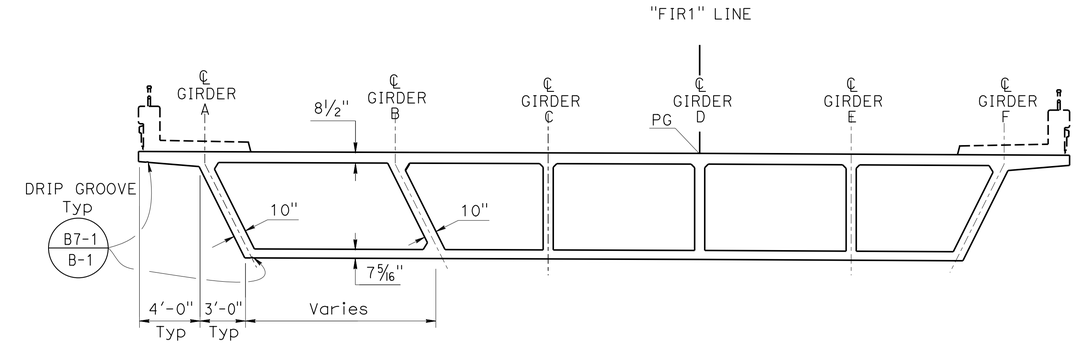

FROM BC Sta 16+56.17 TO Sta 17+02.5

TYPICAL SECTION

1" = 5'-0"

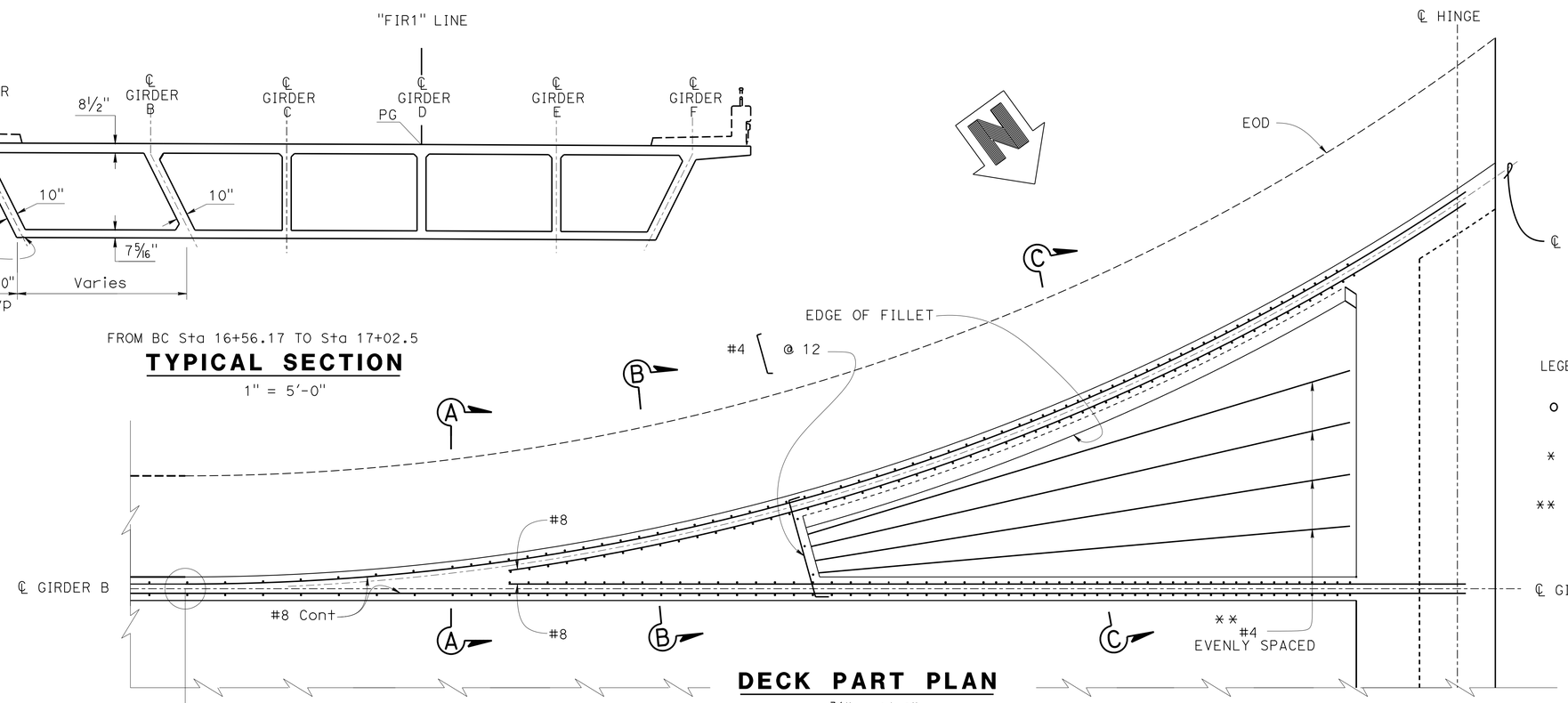

DECK PART PLAN

⅜" = 1'-0"

LEGEND:

- o Indicates reinforcement, see ADDITIONAL SOFFIT AND DECK REINFORCEMENT sheets
- * Begin at Sta AHEAD 16+85.00 THRU ENTIRE CURVE PLACE NORMAL TO AND SPACE ALONG "FIR1" LINE
- ** #4 BARS SHOWN, #5 and #6 (@ SOFFIT) SIMILAR

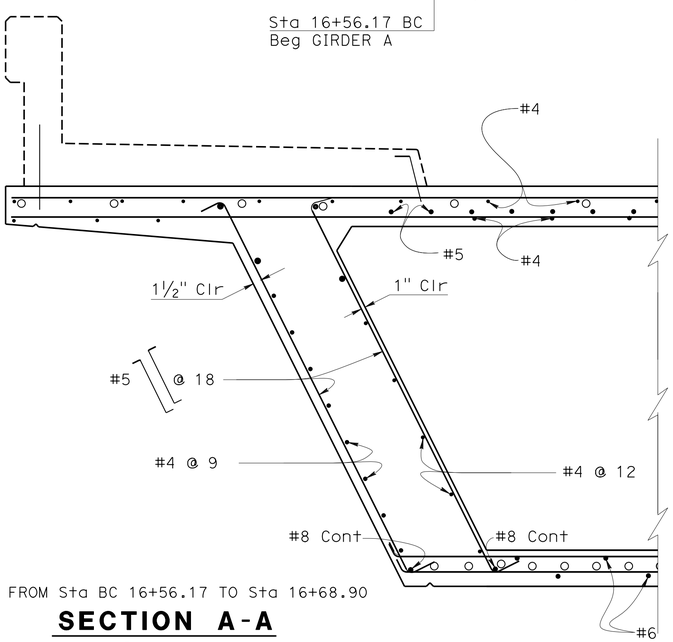

FROM Sta BC 16+56.17 TO Sta 16+68.90

SECTION A-A

¾" = 1'-0"

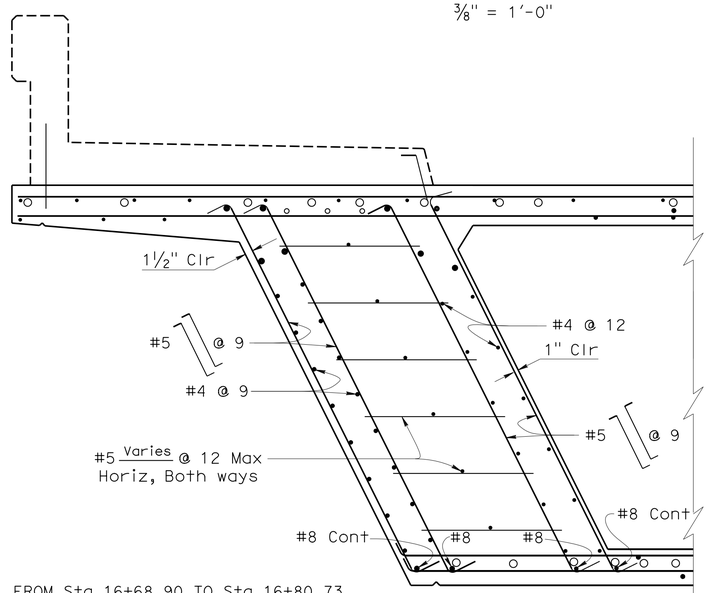

FROM Sta 16+68.90 TO Sta 16+80.73

SECTION B-B

¾" = 1'-0"

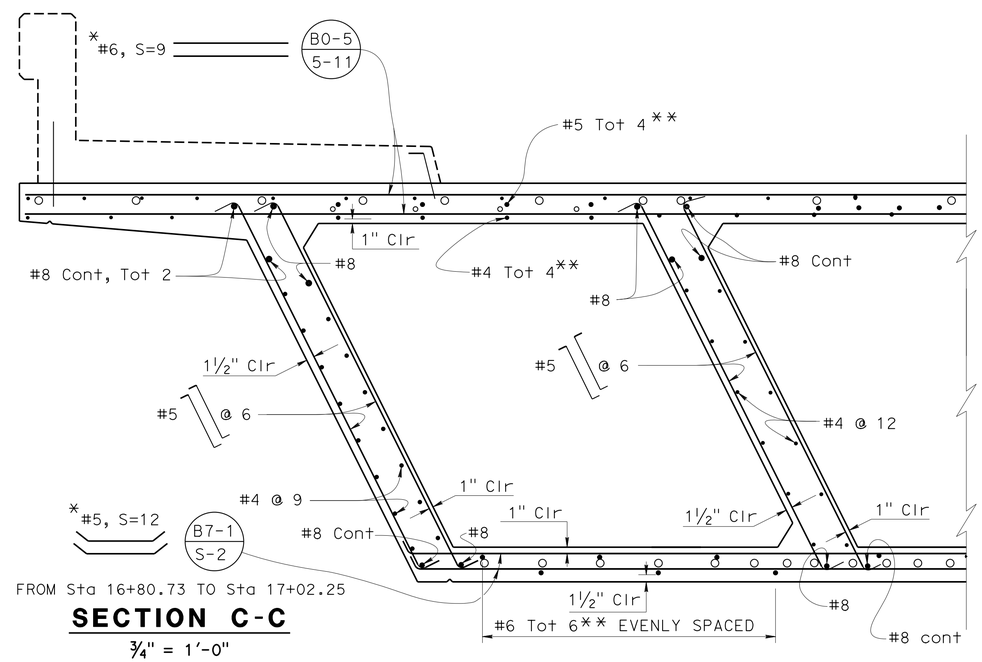

FROM Sta 16+80.73 TO Sta 17+02.25

SECTION C-C

¾" = 1'-0"

DESIGN	BY U. Inyang	CHECKED M. El-Mously	
DETAILS	BY T. Bittermann	CHECKED M. El-Mously	
QUANTITIES	BY U. Inyang	CHECKED E. Franciliso	

STATE OF CALIFORNIA
DEPARTMENT OF TRANSPORTATION

DIVISION OF ENGINEERING SERVICES
STRUCTURE DESIGN
DESIGN BRANCH 11

BRIDGE NO. 53C2295
POST MILE 1.15

NB VALLEY VIEW AVE/S FIRESTONE BLVD
TYPICAL SECTION NO 2

STRUCTURES DESIGN DETAIL SHEET (ENGLISH) (REV. 09-01-10)

ORIGINAL SCALE IN INCHES FOR REDUCED PLANS 0 1 2 3

UNIT: 3587
PROJECT NUMBER & PHASE: 0715000160-1
CONTRACT NO.: 07-2159U4

DISREGARD PRINTS BEARING EARLIER REVISION DATES

REVISION DATES: 12-21-12 5-3-13 7-30-13 9-6-13

SHEET 13 OF 29

FILE => 53c2295-k-ts2.dgn

USERNAME => s125624 DATE PLOTTED => 03-FEB-2016 TIME PLOTTED => 13:53

DIST	COUNTY	ROUTE	POST MILES TOTAL PROJECT	SHEET No.	TOTAL SHEETS
07	LA,Ora	5	0.0/1.5, 44.3/44.4	1344	1622

REGISTERED CIVIL ENGINEER 3-18-15 DATE

1-25-16
PLANS APPROVAL DATE

REGISTERED PROFESSIONAL ENGINEER Phu V. Nguyen No. 60358 Exp. 6-30-16 CIVIL STATE OF CALIFORNIA

The State of California or its officers or agents shall not be responsible for the accuracy or completeness of scanned copies of this plan sheet.

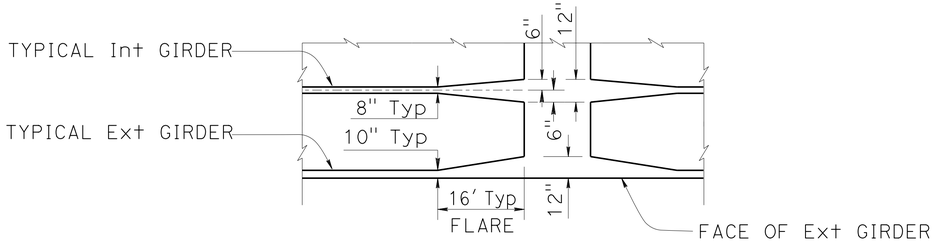

TYPICAL GIRDER FLARES @ BENTS PART PLAN

NO SCALE

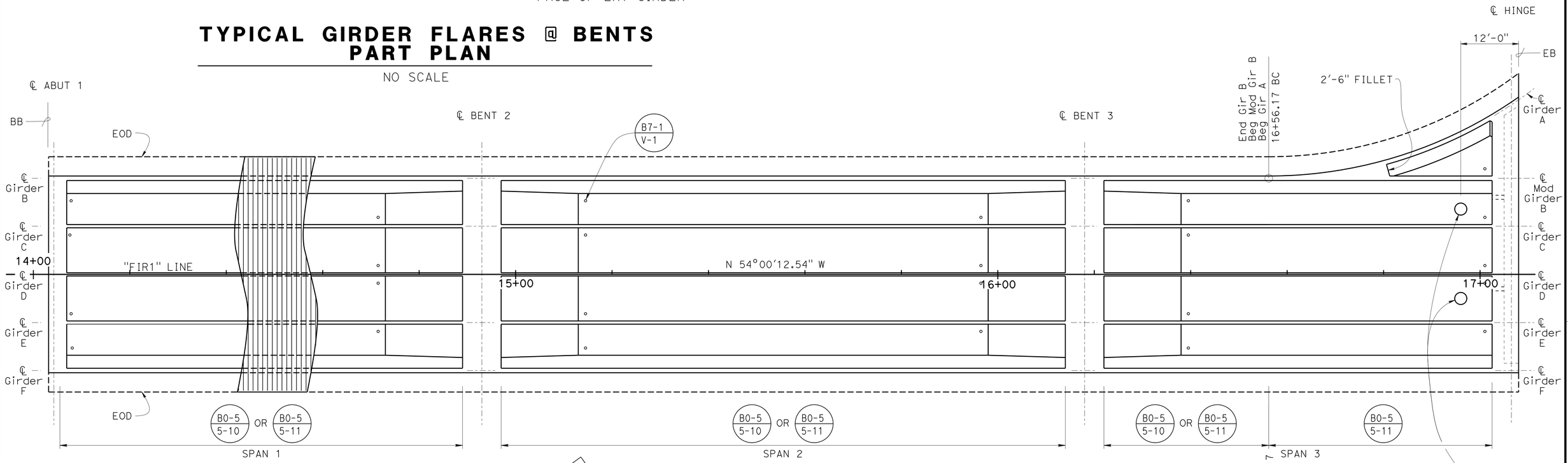

PLAN

1"=10'-0"

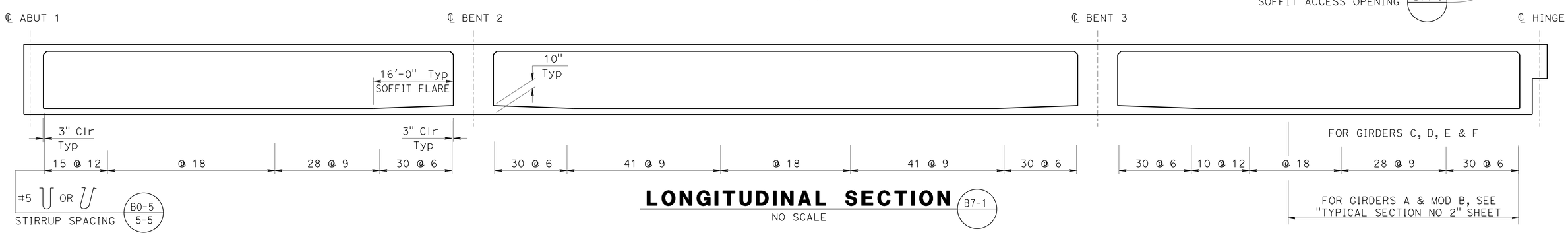

LONGITUDINAL SECTION

NO SCALE

B7-1

	BY	CHECKED
DESIGN	U. Inyang	M. El-Mously
DETAILS	T. Bittermann	M. El-Mously
QUANTITIES	U. Inyang	E. Franciliso

STATE OF CALIFORNIA
DEPARTMENT OF TRANSPORTATION

DIVISION OF ENGINEERING SERVICES
STRUCTURE DESIGN
DESIGN BRANCH 11

BRIDGE NO. 53C2295
POST MILE 1.15

NB VALLEY VIEW AVE/S FIRESTONE BLVD
GIRDER LAYOUT

STRUCTURES DESIGN DETAIL SHEET (ENGLISH) (REV. 09-01-10)

ORIGINAL SCALE IN INCHES FOR REDUCED PLANS 0 1 2 3

UNIT: 3587
PROJECT NUMBER & PHASE: 0715000160-1
CONTRACT NO.: 07-2159u4

DISREGARD PRINTS BEARING EARLIER REVISION DATES

REVISION DATES: 11-30-12 5-2-13 7-30-13 9-06-13

SHEET 14 OF 29

FILE => 53c2295-m-gr_lo.dgn

USERNAME => s123624 DATE PLOTTED=2016 TIME PLOTTED => 13:53

DIST	COUNTY	ROUTE	POST MILES TOTAL PROJECT	SHEET No.	TOTAL SHEETS
07	LA,Ora	5	0.0/1.5, 44.3/44.4	1345	1622

REGISTERED CIVIL ENGINEER 3-18-15 DATE

1-25-16
PLANS APPROVAL DATE

REGISTERED PROFESSIONAL ENGINEER Phu V. Nguyen No. 60358 Exp. 6-30-16 CIVIL STATE OF CALIFORNIA

The State of California or its officers or agents shall not be responsible for the accuracy or completeness of scanned copies of this plan sheet.

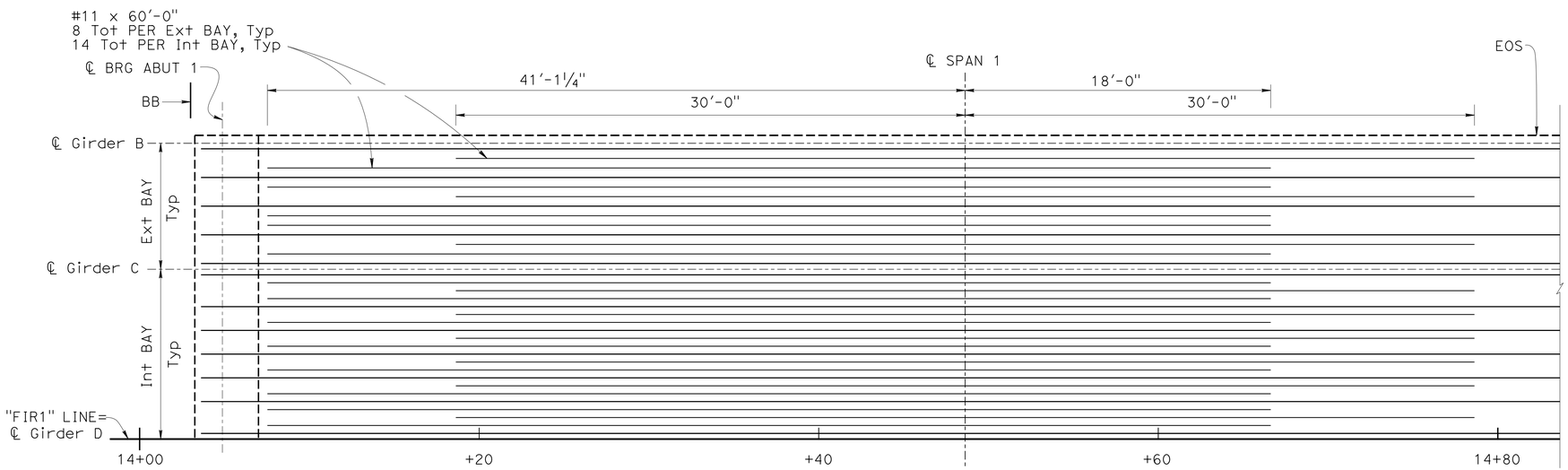

PARTIAL PLAN

¼" = 1'-0"

NOTES:

1. All bars shall be evenly spaced within the limits shown
2. All continuous bars shall be lap spliced with two times the standard lap length
3. No splice allowed at midspan
4. No splice allowed for bars less than 60' long

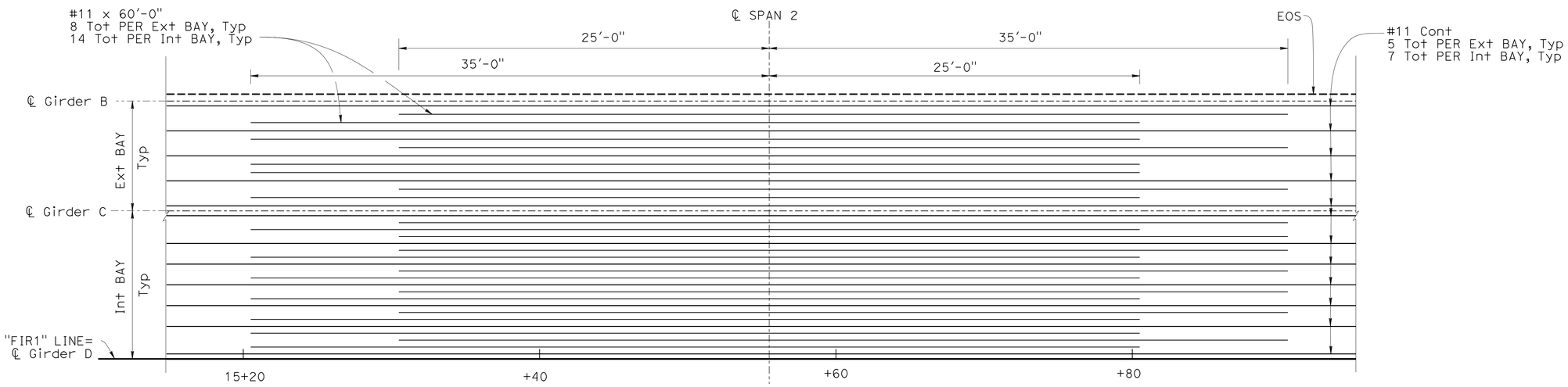

PARTIAL PLAN

¼" = 1'-0"

DESIGN	BY U. Inyang	CHECKED M. El-Mously	
DETAILS	BY T. Bittermann	CHECKED M. El-Mously	
QUANTITIES	BY U. Inyang	CHECKED E. Franciliso	

STATE OF CALIFORNIA
DEPARTMENT OF TRANSPORTATION

DIVISION OF ENGINEERING SERVICES
STRUCTURE DESIGN
DESIGN BRANCH 11

BRIDGE NO. 53C2295
POST MILE 1.15

NB VALLEY VIEW AVE/S FIRESTONE BLVD
ADDITIONAL SOFFIT REINF NO 1

STRUCTURES DESIGN DETAIL SHEET (ENGLISH) (REV. 09-01-10)

ORIGINAL SCALE IN INCHES FOR REDUCED PLANS 0 1 2 3

UNIT: 3587
PROJECT NUMBER & PHASE: 0715000160-1
CONTRACT NO.: 07-2159U4

DISREGARD PRINTS BEARING EARLIER REVISION DATES

REVISION DATES: 11-14-12 9-11-13 7-2-13 9-06-13

SHEET 15 OF 29

FILE => 53c2295-p-grrf1.dgn

USERNAME => s125624 DATE PLOTTED=2016 TIME PLOTTED => 13:53

DIST	COUNTY	ROUTE	POST MILES TOTAL PROJECT	SHEET No.	TOTAL SHEETS
07	LA,Ora	5	0.0/1.5, 44.3/44.4	1346	1622

REGISTERED CIVIL ENGINEER 3-18-15 DATE

1-25-16
PLANS APPROVAL DATE

REGISTERED PROFESSIONAL ENGINEER
Phu V. Nguyen
No. 60358
Exp. 6-30-16
CIVIL
STATE OF CALIFORNIA

The State of California or its officers or agents shall not be responsible for the accuracy or completeness of scanned copies of this plan sheet.

NOTES:

1. All bars shall be evenly spaced within the limits shown
2. All continuous bars shall be lap spliced with two times the standard lap length
3. No splice allowed at midspan
4. No splice allowed for bars less than 60' long

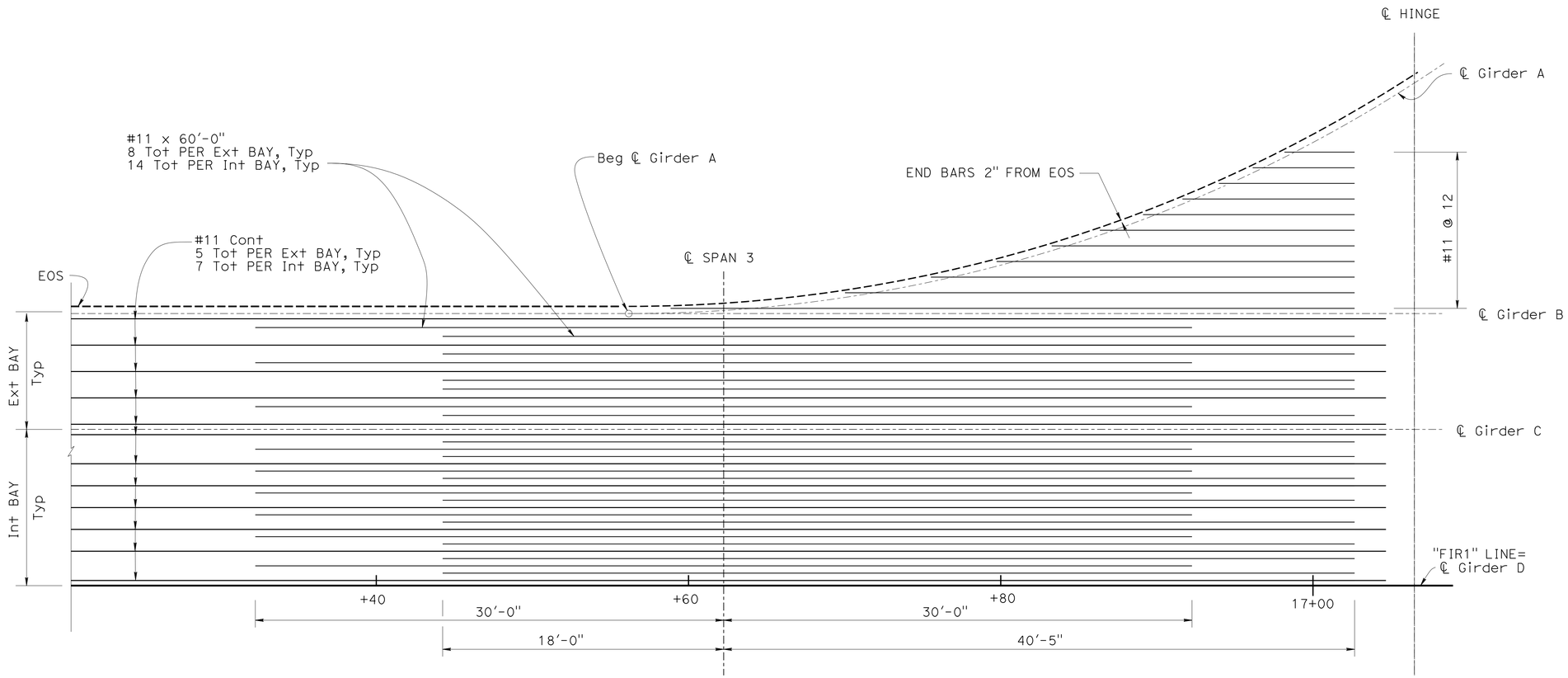

PARTIAL PLAN

1/4" = 1'-0"

DESIGN	BY U. Inyang	CHECKED M. El-Mously	
DETAILS	BY T. Bittermann	CHECKED M. El-Mously	
QUANTITIES	BY U. Inyang	CHECKED E. Franciliso	

STATE OF CALIFORNIA
DEPARTMENT OF TRANSPORTATION

DIVISION OF ENGINEERING SERVICES
STRUCTURE DESIGN
DESIGN BRANCH 11

BRIDGE NO. 53C2295
POST MILE 1.15

NB VALLEY VIEW AVE/S FIRESTONE BLVD
ADDITIONAL SOFFIT REINF NO 2

STRUCTURES DESIGN DETAIL SHEET (ENGLISH) (REV. 09-01-10)

ORIGINAL SCALE IN INCHES FOR REDUCED PLANS 0 1 2 3

UNIT: 3587
PROJECT NUMBER & PHASE: 0715000160-1
CONTRACT NO.: 07-2159U4

DISREGARD PRINTS BEARING EARLIER REVISION DATES

REVISION DATES: 11-18-13 9-06-13 9-11-13 7-30-15

SHEET 16 OF 29

FILE => 53c2295-p-grrf2.dgn

USERNAME => s125624 DATE PLOTTED=3-16 TIME PLOTTED => 13:53

DIST	COUNTY	ROUTE	POST MILES TOTAL PROJECT	SHEET No.	TOTAL SHEETS
07	LA,Ora	5	0.0/1.5, 44.3/44.4	1347	1622

REGISTERED CIVIL ENGINEER 3-18-15 DATE

1-25-16
PLANS APPROVAL DATE

REGISTERED PROFESSIONAL ENGINEER Phu V. Nguyen No. 60358 Exp. 6-30-16 CIVIL STATE OF CALIFORNIA

The State of California or its officers or agents shall not be responsible for the accuracy or completeness of scanned copies of this plan sheet.

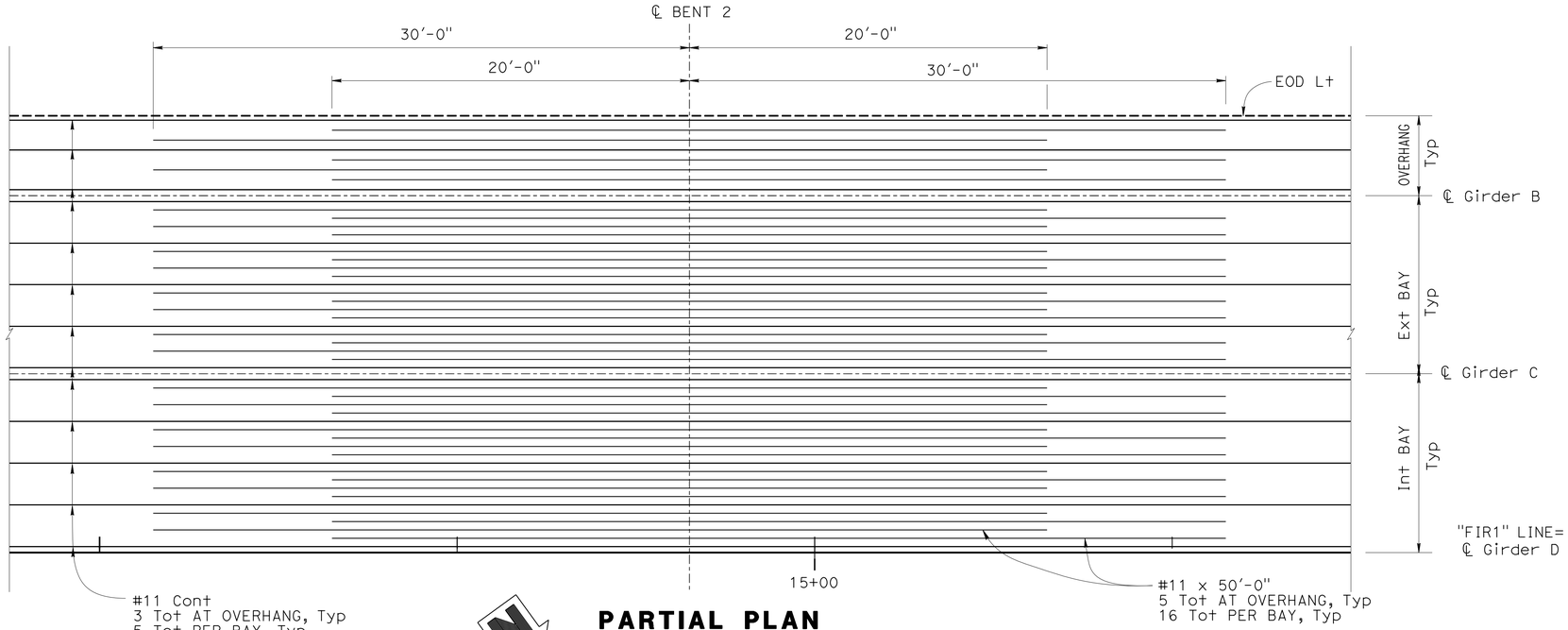

PARTIAL PLAN

1/4" = 1'-0"

NOTES:

1. All bars shall be evenly spaced within the limits shown
2. All continuous bars shall be lap spliced with two times the standard lap length
3. No splice allowed for bars 60' long or less

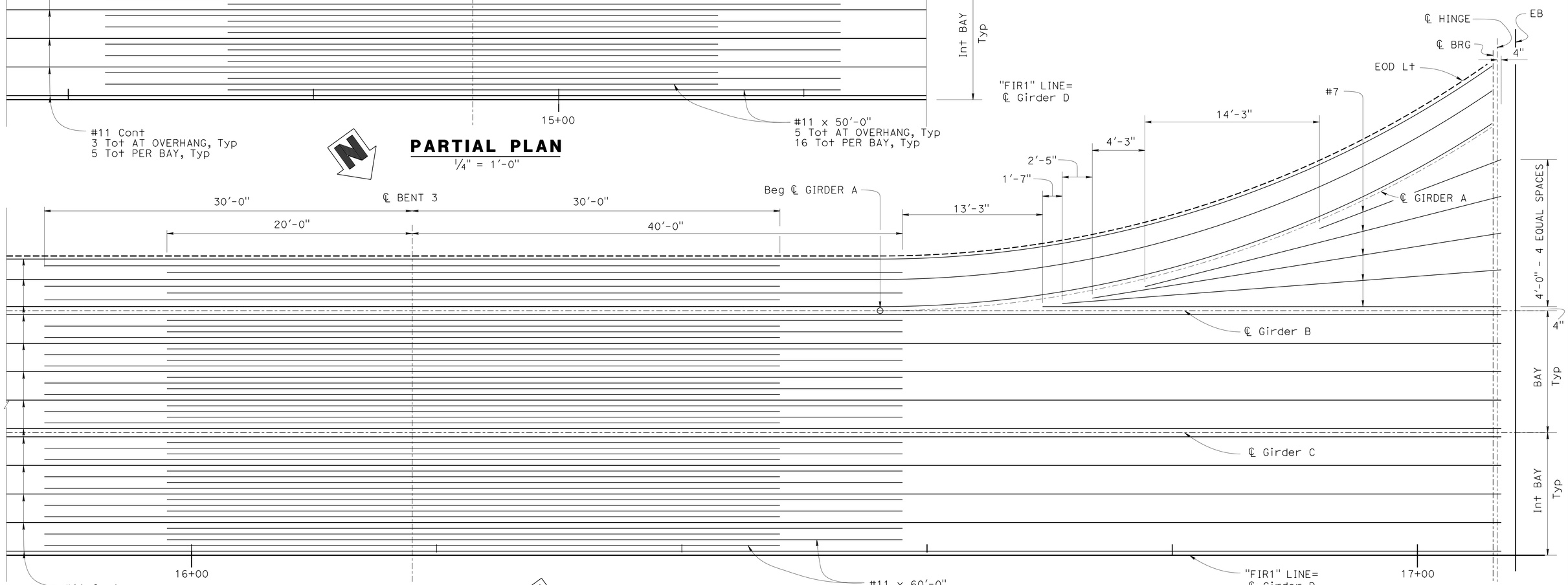

PARTIAL PLAN

1/4" = 1'-0"

DESIGN	BY U. Inyang	CHECKED M. El-Mously	
DETAILS	BY T. Bittermann	CHECKED M. El-Mously	
QUANTITIES	BY U. Inyang	CHECKED E. Franciliso	

STATE OF CALIFORNIA
DEPARTMENT OF TRANSPORTATION

DIVISION OF ENGINEERING SERVICES
STRUCTURE DESIGN
DESIGN BRANCH 11

BRIDGE NO. 53C2295
POST MILE 1.15

NB VALLEY VIEW AVE/S FIRESTONE BLVD
ADDITIONAL DECK REINFORCEMENT

STRUCTURES DESIGN DETAIL SHEET (ENGLISH) (REV. 09-01-10)

ORIGINAL SCALE IN INCHES FOR REDUCED PLANS 0 1 2 3

UNIT: 3587
PROJECT NUMBER & PHASE: 0715000160-1
CONTRACT NO.: 07-2159U4

DISREGARD PRINTS BEARING EARLIER REVISION DATES

REVISION DATES 11-18-13 9-26-13 9-11-13 7-30-13

SHEET 17 OF 29

FILE => 53c2295-p-grrf3.dgn

USERNAME => s125624 DATE PLOTTED=2016 TIME PLOTTED => 13:53

DIST	COUNTY	ROUTE	POST MILES TOTAL PROJECT	SHEET No.	TOTAL SHEETS
07	LA,Ora	5	0.0/1.5, 44.3/44.4	1348	1622

REGISTERED CIVIL ENGINEER 3-18-15 DATE

1-25-16
PLANS APPROVAL DATE

REGISTERED PROFESSIONAL ENGINEER Phu V. Nguyen No. 60358 Exp. 6-30-16 CIVIL STATE OF CALIFORNIA

The State of California or its officers or agents shall not be responsible for the accuracy or completeness of scanned copies of this plan sheet.

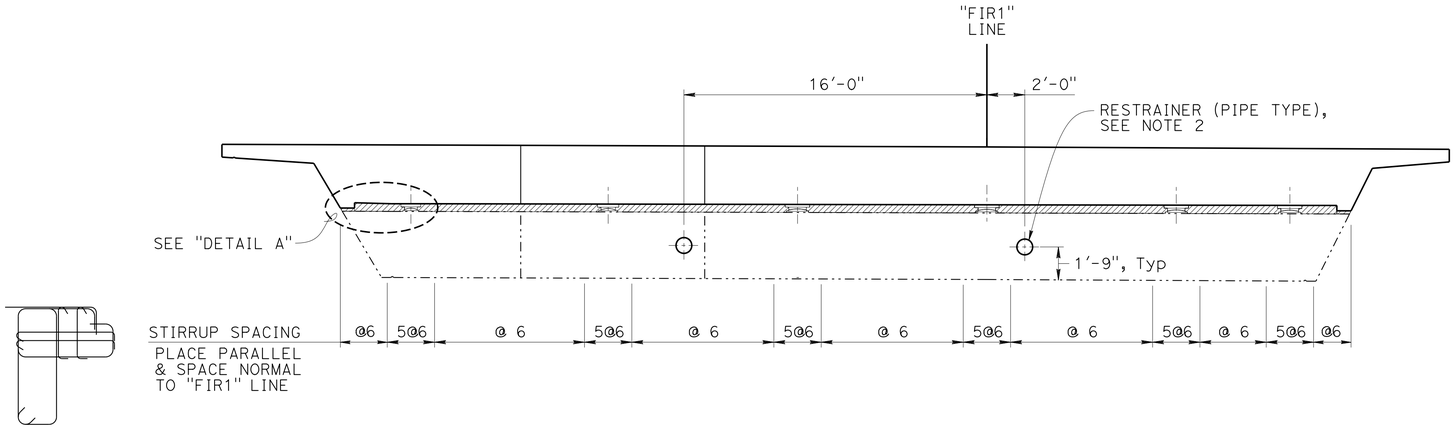

SECTION A-A

1/4" = 1'-0"

NOTES:

1. For PTFE Spherical Bearing Offset, Details and Joint Seal Assembly details, see Br. No. 53-3045, "VALLEY VIEW AVE OH/OC (REPLACEMENT) sheets
2. For additional RESTRAINER (PIPE TYPE) details, see Br. No. 53-3045, "VALLEY VIEW AVE OH/OC (REPLACEMENT)" plans
3. For "SECTION B-B", see "HINGE DETAILS NO. 1" sheet
4. For SECTION Y-Y, see "HINGE DETAILS NO. 2" sheet

LEGEND:

INDICATES EXPANDED POLYSTYRENE

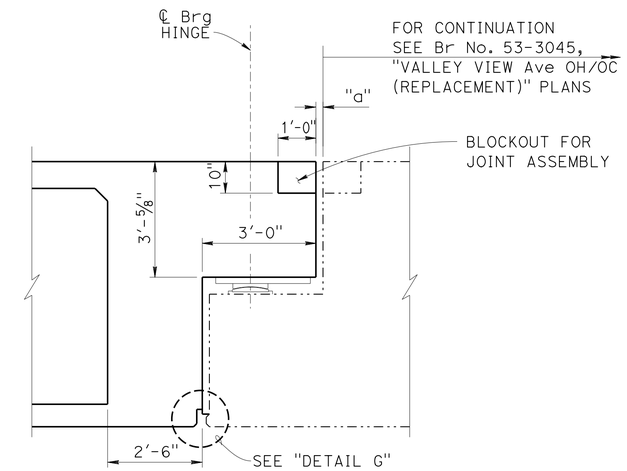

HINGE SECTION

1/2" = 1'-0"

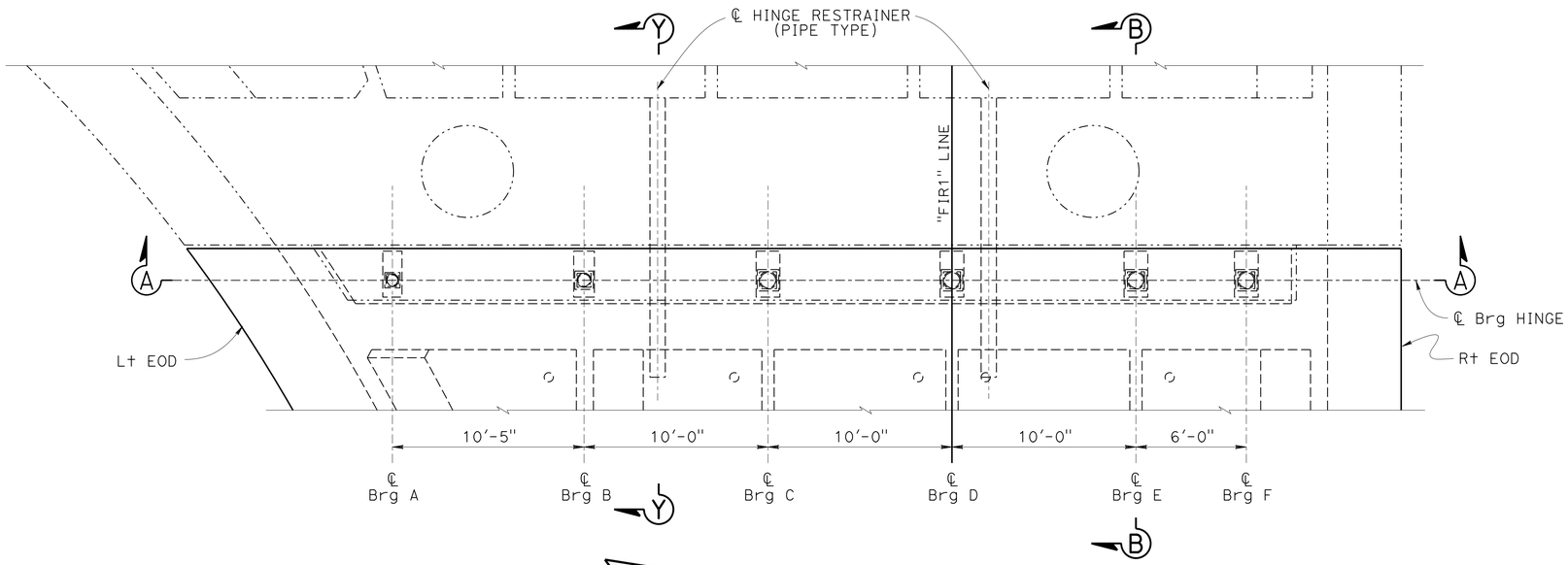

PLAN

1/4" = 1'-0"

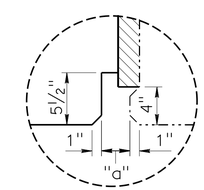

DETAIL G

1 1/2" = 1'-0"

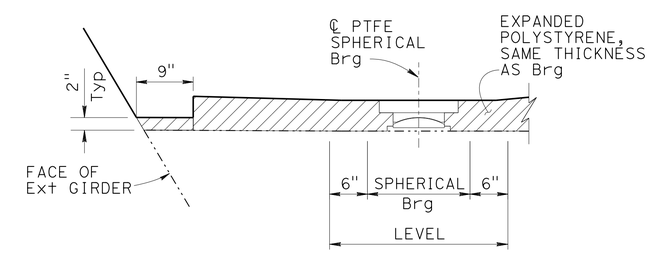

DETAIL A

1" = 1'-0"

	BY	CHECKED
DESIGN	U. Inyang	M. El-Mously
DETAILS	P. Tong	M. El-Mously
QUANTITIES	U. Inyang	E. Franciliso

STATE OF CALIFORNIA DEPARTMENT OF TRANSPORTATION

DIVISION OF ENGINEERING SERVICES STRUCTURE DESIGN DESIGN BRANCH 11

BRIDGE NO. 53C2295 POST MILE 1.15

NB VALLEY VIEW AVE/S FIRESTONE BLVD
HINGE LAYOUT

STRUCTURES DESIGN DETAIL SHEET (ENGLISH) (REV. 09-01-10)

ORIGINAL SCALE IN INCHES FOR REDUCED PLANS 0 1 2 3

UNIT: 3587
PROJECT NUMBER & PHASE: 0715000160-1 CONTRACT NO.: 07-2159u4

DISREGARD PRINTS BEARING EARLIER REVISION DATES

REVISION DATES 5-1-13 9-11-13 8-28-13 9-06-13

SHEET 18 OF 29

FILE => 53c2295-q-hng_lo.dgn

USERNAME => s125624 DATE PLOTTED => 03-FEB-2016 TIME PLOTTED => 13:53

DIST	COUNTY	ROUTE	POST MILES TOTAL PROJECT	SHEET No.	TOTAL SHEETS
07	LA,Ora	5	0.0/1.5, 44.3/44.4	1349	1622

REGISTERED CIVIL ENGINEER 3-18-15 DATE

1-25-16
PLANS APPROVAL DATE

REGISTERED PROFESSIONAL ENGINEER Phu V. Nguyen No. 60358 Exp. 12/31/16 CIVIL STATE OF CALIFORNIA

The State of California or its officers or agents shall not be responsible for the accuracy or completeness of scanned copies of this plan sheet.

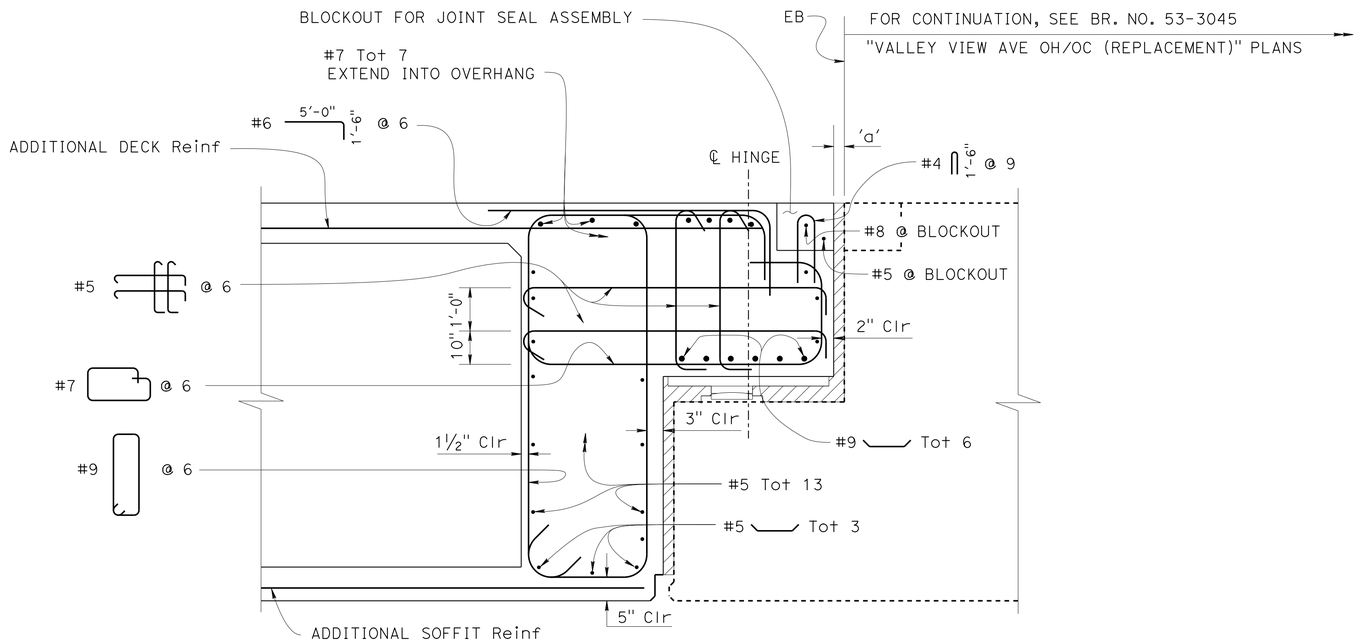

SECTION B-B

¾" = 1'-0"

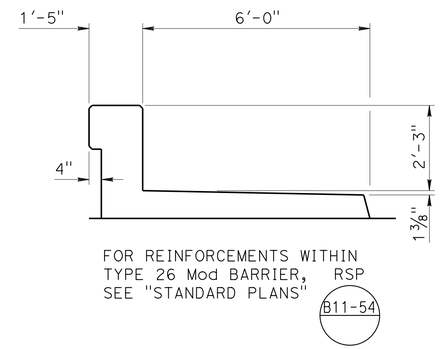

FOR REINFORCEMENTS WITHIN TYPE 26 Mod BARRIER, SEE "STANDARD PLANS" RSP B11-54

CONCRETE BARRIER TYPE 26 MOD

½" = 1'-0"

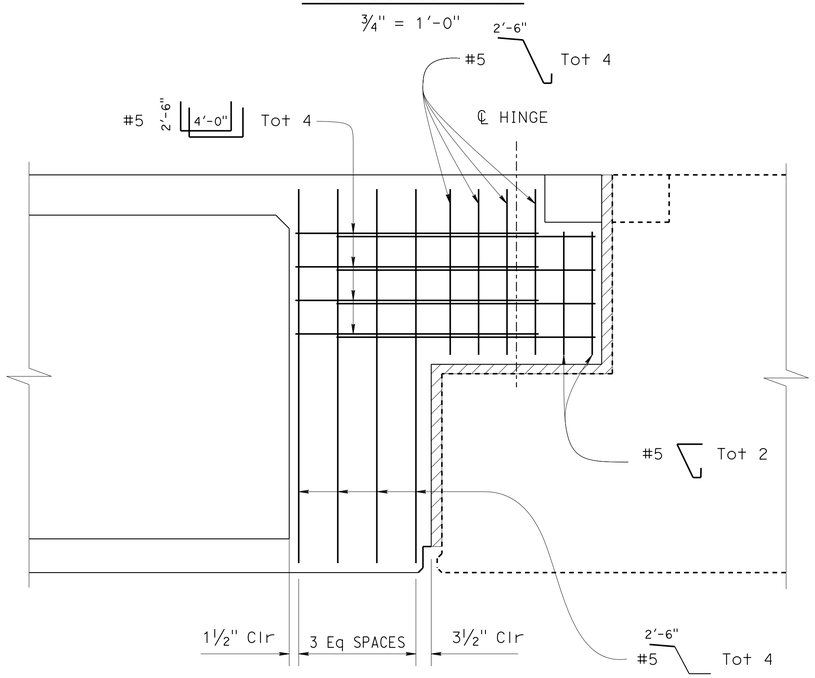

SIDE REINFORCEMENT

¾" = 1'-0"

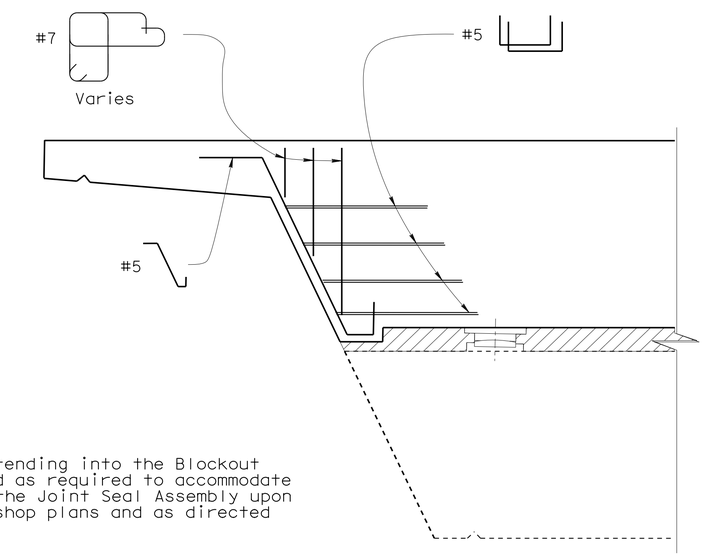

NOTE:

1. Reinforcement extending into the Blockout shall be adjusted as required to accommodate installation of the Joint Seal Assembly upon approval of the shop plans and as directed by the Engineer.

SIDE REINFORCEMENT

¾" = 1'-0"

	BY	CHECKED
DESIGN	U. Inyang	M. El-Mously
DETAILS	T. Bittermann	M. El-Mously
QUANTITIES	U. Inyang	E. Franciliso

STATE OF CALIFORNIA DEPARTMENT OF TRANSPORTATION

DIVISION OF ENGINEERING SERVICES STRUCTURE DESIGN DESIGN BRANCH 11

BRIDGE NO. 53C2295
POST MILE 1.15

NB VALLEY VIEW AVE/S FIRESTONE BLVD
HINGE DETAILS NO 1

STRUCTURES DESIGN DETAIL SHEET (ENGLISH) (REV. 09-01-10)

ORIGINAL SCALE IN INCHES FOR REDUCED PLANS 0 1 2 3

UNIT: 3587
PROJECT NUMBER & PHASE: 0715000160-1 CONTRACT NO.: 07-2159U4

DISREGARD PRINTS BEARING EARLIER REVISION DATES

REVISION DATES 5-2-13 9-06-13 9-27-13 7-30-13 SHEET 19 OF 29

FILE => 53c2295-q-hngdt1.dgn

USERNAME => s129624 DATE PLOTTED => 03-FEB-2016 TIME PLOTTED => 13:53

DIST	COUNTY	ROUTE	POST MILES TOTAL PROJECT	SHEET No.	TOTAL SHEETS
07	LA,Ora	5	0.0/1.5, 44.3/44.4	1350	1622

REGISTERED CIVIL ENGINEER 3-18-15 DATE

1-25-16
PLANS APPROVAL DATE

REGISTERED PROFESSIONAL ENGINEER
Phu V. Nguyen
No. 60358
Exp. 12/31/16
CIVIL
STATE OF CALIFORNIA

The State of California or its officers or agents shall not be responsible for the accuracy or completeness of electronic copies of this plan sheet.

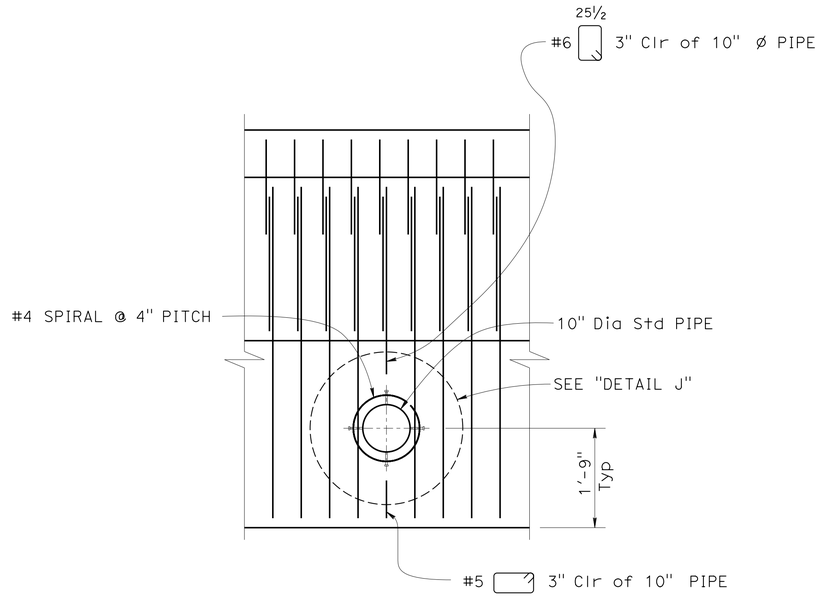

VIEW X-X

¾" = 1'-0"

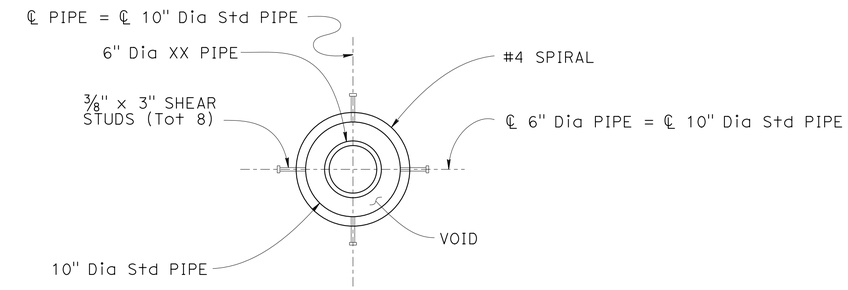

DETAIL J

1½" = 1'-0"

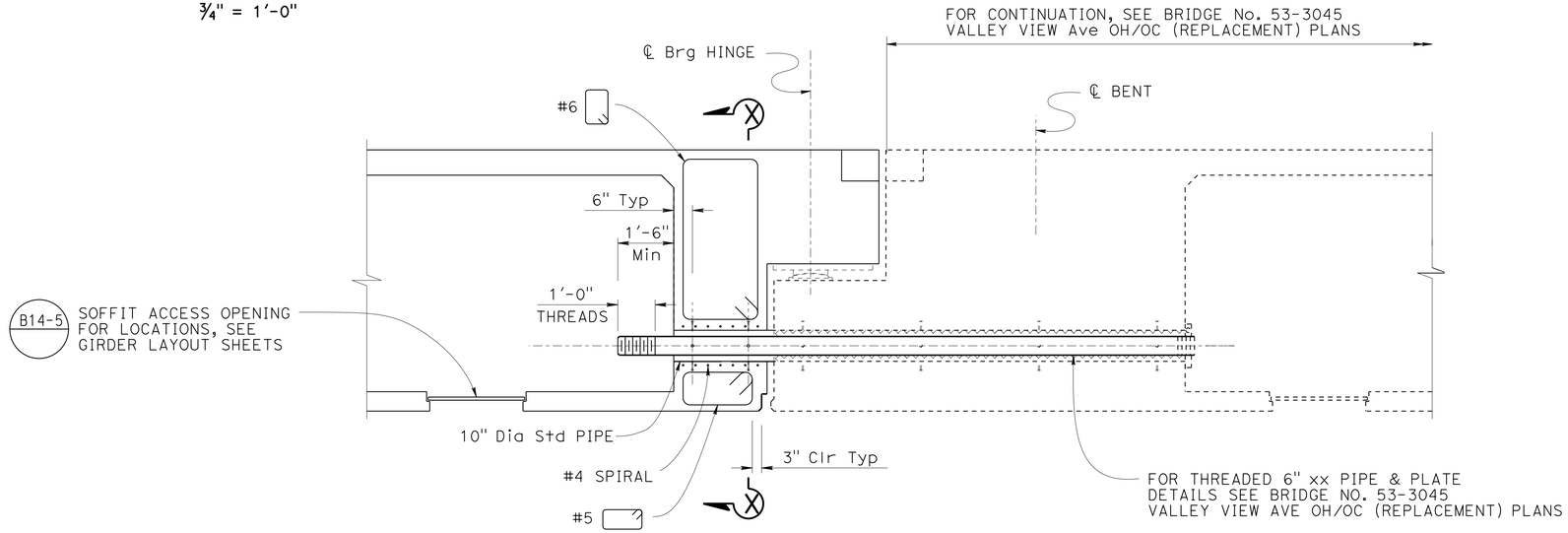

SECTION Y-Y

½" = 1'-0"

DESIGN	BY U. Inyang	CHECKED M. El-Mously	
DETAILS	BY P. Tong	CHECKED M. El-Mously	
QUANTITIES	BY U. Inyang	CHECKED E. Franciliso	

STATE OF CALIFORNIA
DEPARTMENT OF TRANSPORTATION

DIVISION OF ENGINEERING SERVICES
STRUCTURE DESIGN
DESIGN BRANCH 11

BRIDGE NO. 53C2295
POST MILE 1.15

NB VALLEY VIEW AVE/S. FIRESTONE BLVD
HINGE DETAILS NO. 2

STRUCTURES DESIGN DETAIL SHEET (ENGLISH) (REV. 09-01-10)

ORIGINAL SCALE IN INCHES FOR REDUCED PLANS 0 1 2 3

UNIT: 3587
PROJECT NUMBER & PHASE: 0715000160-1
CONTRACT NO.: 07-2159U4

DISREGARD PRINTS BEARING EARLIER REVISION DATES

REVISION DATES 4-23-13 7-15-13 7-30-13 9-06-13

SHEET 20 OF 29

FILE => 53c2295-q-hngdt2.dgn

USERNAME => s125624 DATE PLOTTED => 03-FEB-2016 TIME PLOTTED => 13:53

DIST	COUNTY	ROUTE	POST MILES TOTAL PROJECT	SHEET No.	TOTAL SHEETS
07	LA,Ora	5	0.0/1.5, 44.3/44.4	1351	1622

REGISTERED CIVIL ENGINEER 3-18-15 DATE

1-25-16
PLANS APPROVAL DATE

REGISTERED PROFESSIONAL ENGINEER
Phu V. Nguyen
No. 60358
Exp. 6-30-16
CIVIL
STATE OF CALIFORNIA

The State of California or its officers or agents shall not be responsible for the accuracy or completeness of scanned copies of this plan sheet.

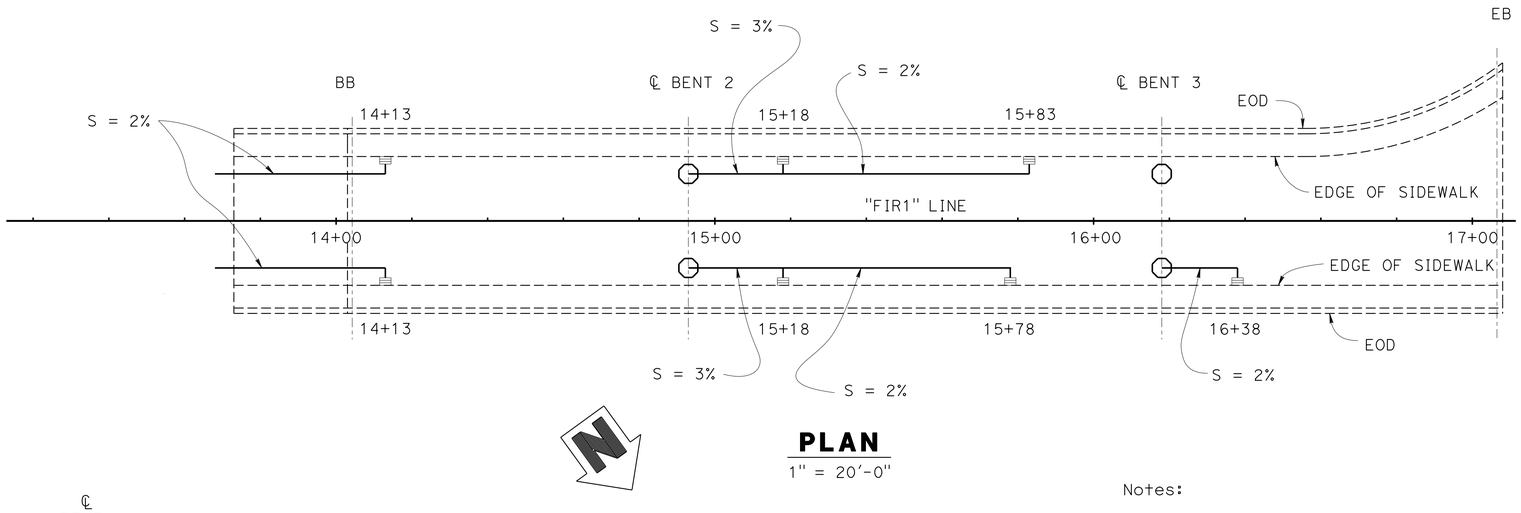

PLAN
1" = 20'-0"

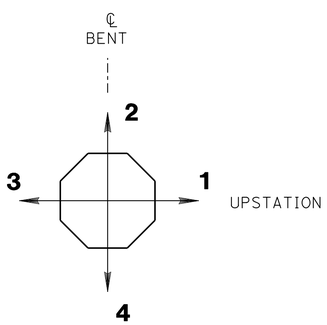

OUTLET DIRECTION
NO SCALE

BENT	OUTLET DIRECTION
2L	1
2R	1
3R	1

Notes:

1. For drain outlet detail at column, see B7-6 and B7-8
2. End drain pipe 5' beyond approach slab
3. For pipe detail at Abutment, see B7-8

Legend:

▤ Indicates deck drain Type D-1 B7-6 / 7-7

—— Indicates NPS 6 x 0.135" Welded Steel Pipe B7-6

S = Minimum Pipe Slope

DESIGN	BY U. Inyang	CHECKED M. El-Mously	
DETAILS	BY T. Bittermann	CHECKED M. El-Mously	
QUANTITIES	BY U. Inyang	CHECKED E. Franciliso	

STATE OF CALIFORNIA
DEPARTMENT OF TRANSPORTATION

DIVISION OF ENGINEERING SERVICES
STRUCTURE DESIGN
DESIGN BRANCH 11

BRIDGE NO. 53C2295
POST MILE 1.15

NB VALLEY VIEW AVE/S FIRESTONE BLVD
DRAINAGE LAYOUT

STRUCTURES DESIGN DETAIL SHEET (ENGLISH) (REV. 09-01-10)

ORIGINAL SCALE IN INCHES FOR REDUCED PLANS 0 1 2 3

UNIT: 3587
PROJECT NUMBER & PHASE: 0715000160-1
CONTRACT NO.: 07-2159u4

DISREGARD PRINTS BEARING EARLIER REVISION DATES

REVISION DATES: 3-13-13 7-26-13 9-06-13 7-16-13

SHEET 21 OF 29

FILE => 53c2295-t-drn_lo.dgn

USERNAME => s125624 DATE PLOTTED=2016 TIME PLOTTED => 13:53

DIST	COUNTY	ROUTE	POST MILES TOTAL PROJECT	SHEET No.	TOTAL SHEETS
07	LA,Ora	5	0.0/1.5, 44.3/44.4	1352	1622

REGISTERED CIVIL ENGINEER 1-26-15 DATE

1-25-16
PLANS APPROVAL DATE

REGISTERED PROFESSIONAL ENGINEER Phu V. Nguyen No. 60358 Exp. 6/30/16 CIVIL STATE OF CALIFORNIA

The State of California or its officers or agents shall not be responsible for the accuracy or completeness of electronic copies of this plan sheet.

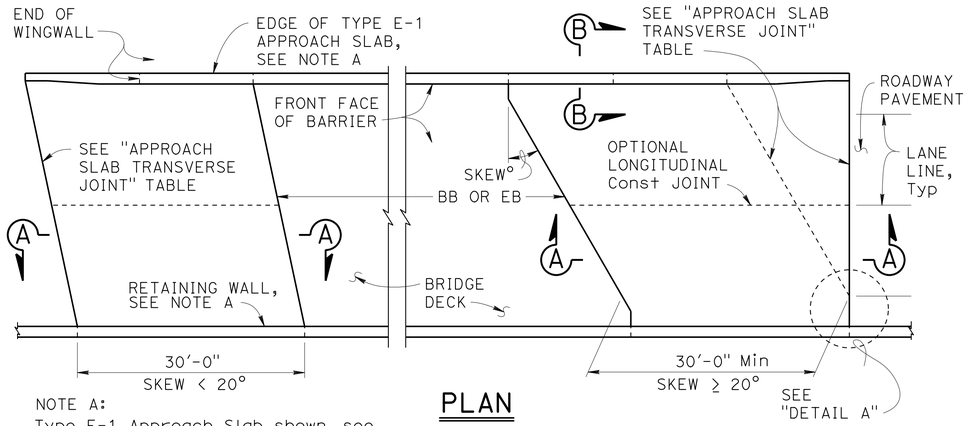

NOTE A:
Type E-1 Approach Slab shown, see "SECTION B-B" for Type E-2 details.

PLAN
1" = 10'

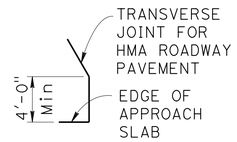

DETAIL A
No Scale

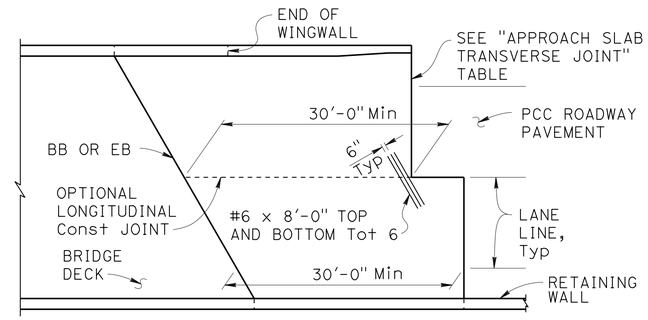

END STAGGER DETAIL
1" = 10'

APPROACH SLAB TRANSVERSE JOINT		
APPROACH SKEW	WITH HMA ROADWAY PAVEMENT	WITH PCC ROADWAY PAVEMENT
< 20°	PARALLEL TO BB OR EB	PARALLEL TO BB OR EB
20° - 45°	PARALLEL TO BB OR EB USE "DETAIL A"	STAGGER AT LANE LINES 24' TO 36' APART, SEE "END STAGGER DETAIL"
> 45°	PARALLEL TO BB OR EB USE "DETAIL A"	STAGGER AT EACH LANE LINE, SEE "END STAGGER DETAIL"

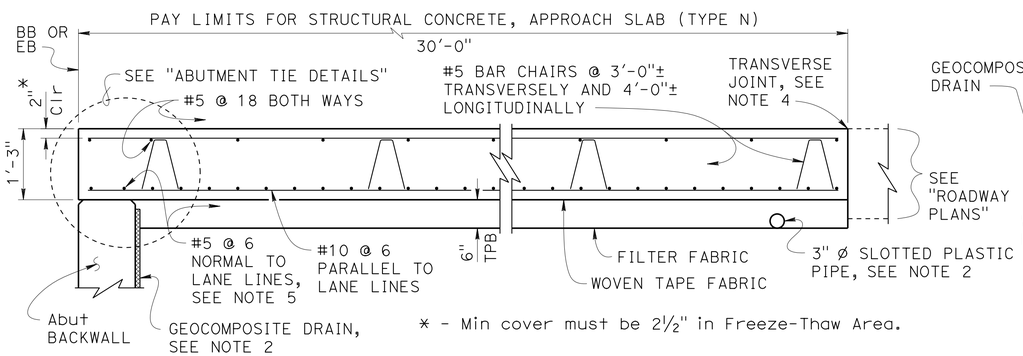

* - Min cover must be 2½" in Freeze-Thaw Area.

SECTION A-A
¾" = 1'-0"

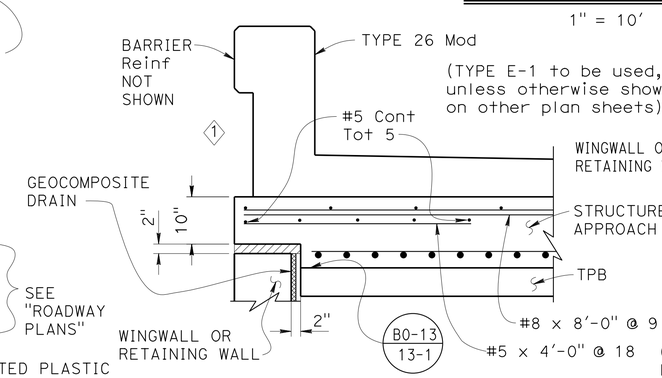

TYPE E-1

Indicates Expanded Polystyrene, remove after concrete is placed.

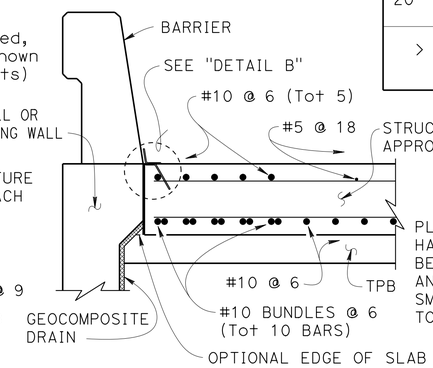

TYPE E-2

SECTION B-B
¾" = 1'-0"

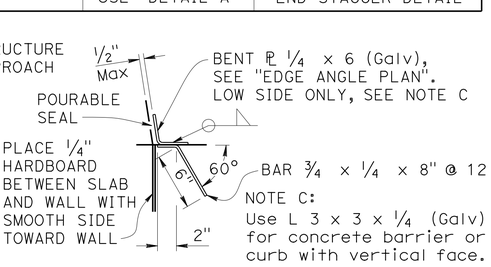

NOTE C:
Use L 3 x 3 x ¼ (Galv) for concrete barrier or curb with vertical face.

DETAIL B
1½" = 1'-0"

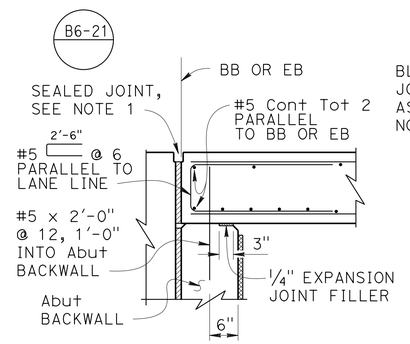

MR ≤ 2"

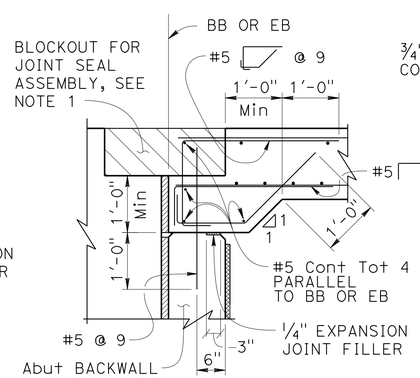

MR > 2"

ABUTMENT TIE DETAILS
¾" = 1'-0"

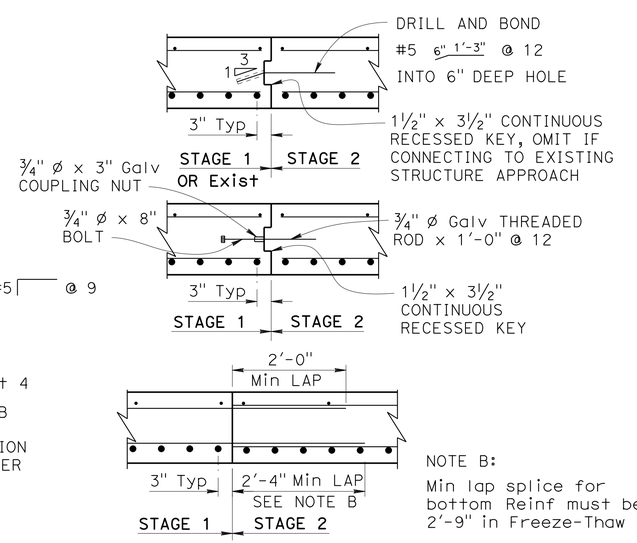

NOTE B:
Min lap splice for bottom Reinf must be 2'-9" in Freeze-Thaw Area.

LONGITUDINAL CONSTRUCTION JOINT ALTERNATIVES
¾" = 1'-0"

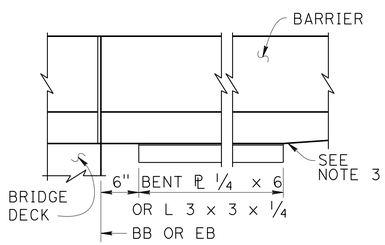

EDGE ANGLE PLAN
1" = 1'-0"

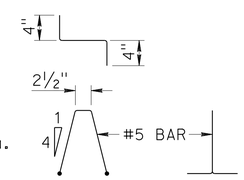

BAR CHAIR DETAIL
1" = 1'-0"

DESIGN NOTES

DESIGN: AASHTO LRFD Bridge Design Specifications, 2012 Edition with Caltrans Amendments, preface dated January 2014

LIMIT STATES: Service I, Strength I & II, Extreme II and Fatigue I (γ_{FAT} = 1.0)

DEAD LOAD: Includes 35 psf for future wearing surface

LIVE LOAD: HL93 and permit design load
Equivalent strip width method: W_1 = 12 ft
Slab span: L_1 = 24.5 ft

REINFORCED CONCRETE:
f_y = 60 ksi
f'_c = 3.6 ksi
n = 8

NOTES:

1. For joint protection details, blockout dimensions for joint seal assembly, and other details not shown, see other plan sheets. For MR ≤ 2", adjust reinforcement to clear sawcut for sealed joint. For MR > 2", haunch reinforcement placed for joint seal assembly blockout must be normal to BB or EB and spaced to avoid joint seal assembly anchorage.
2. For drainage details, see "STRUCTURE APPROACH DRAINAGE DETAILS" sheet.
3. End the plate or edge angle at beginning of barrier transition, end of wingwall, or end of structure approach as applicable.
4. ⟨2⟩ Transverse Joint must be a minimum of 5'-0" from an existing or constructed weakened plane joint in approach PCC roadway pavement. Refer to Standard Plans RSP P10 and RSP P14.
5. At the Contractor's option, approach slab transverse reinforcement may be placed parallel to BB or EB. Spacing of transverse reinforcement is measured along ℄ roadway.

STANDARD DRAWING
FILE NO. xs3-120
APPROVAL DATE January 2015

⟨1⟩ Modified Detail
⟨2⟩ Modified Note

STATE OF CALIFORNIA
DEPARTMENT OF TRANSPORTATION

DIVISION OF ENGINEERING SERVICES

BRIDGE NO. 53C2295
POST MILE 1.15

NB VALLEY VIEW AVE/S FIRESTONE BLVD
STRUCTURE APPROACH TYPE N(30S)

DS OSD 2147A (ENGLISH STANDARD DRAWING "XS" BORDER REV. (10-01-14)

ORIGINAL SCALE IN INCHES FOR REDUCED PLANS 0 1 2 3

UNIT: 3587
PROJECT NUMBER & PHASE: 0715000160-1
CONTRACT NO.: 07-2159u4

DISREGARD PRINTS BEARING EARLIER REVISION DATES

REVISION DATES: 3-19-13 9-06-13 9-22-13 1-26-15

SHEET 22 OF 29

FILE => 53c2295-t-sa.dgn

USERNAME => s125824 DATE PLOTTED => 03-FEB-2016 TIME PLOTTED => 13:53

DIST	COUNTY	ROUTE	POST MILES TOTAL PROJECT	SHEET No.	TOTAL SHEETS
07	LA,Ora	5	0.0/1.5, 44.3/44.4	1353	1622

REGISTERED CIVIL ENGINEER 3-18-15 DATE

1-25-16
PLANS APPROVAL DATE

The State of California or its officers or agents shall not be responsible for the accuracy or completeness of electronic copies of this plan sheet.

REGISTERED PROFESSIONAL ENGINEER Phu V. Nguyen No. 60358 Exp. 6-30-16 CIVIL STATE OF CALIFORNIA

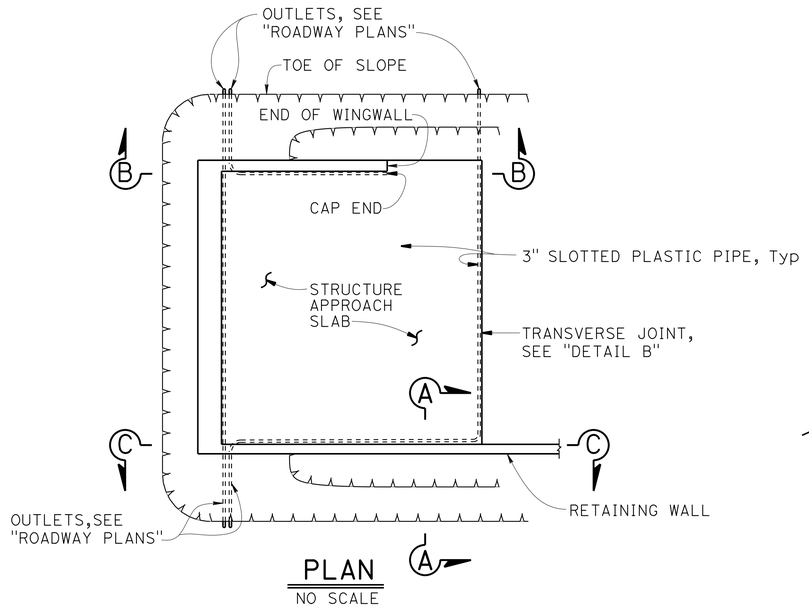

PLAN
NO SCALE

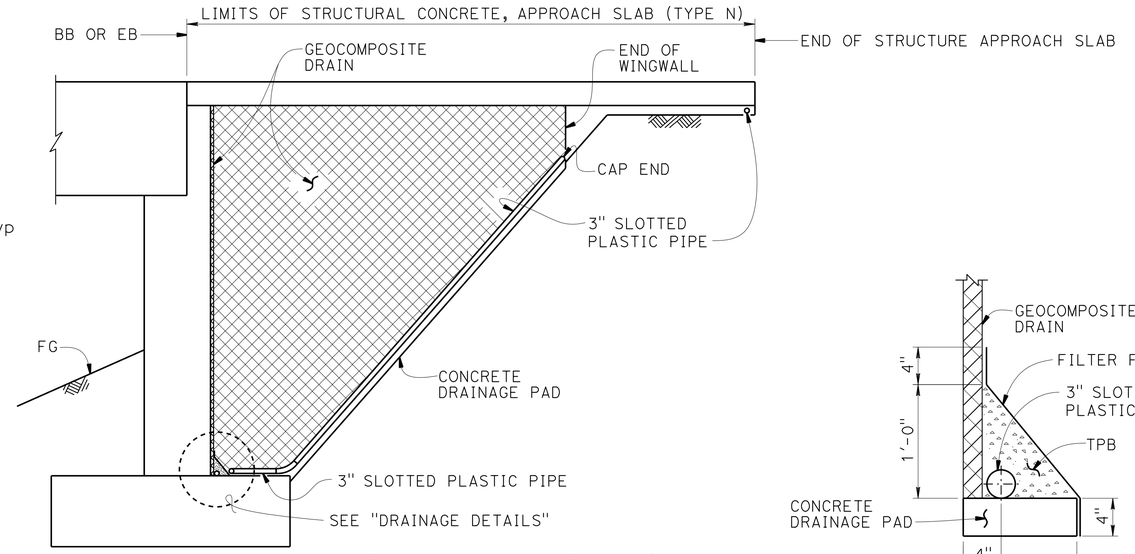

NOTE: TPB not shown for clarity.

SECTION B-B
NO SCALE

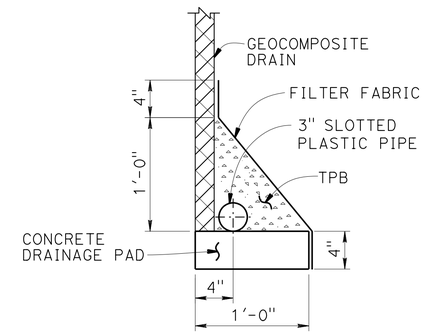

DRAINAGE PAD

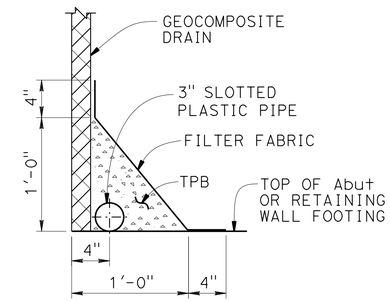

FOOTING

DRAINAGE DETAILS
$1\frac{1}{2}$" = 1'-0"

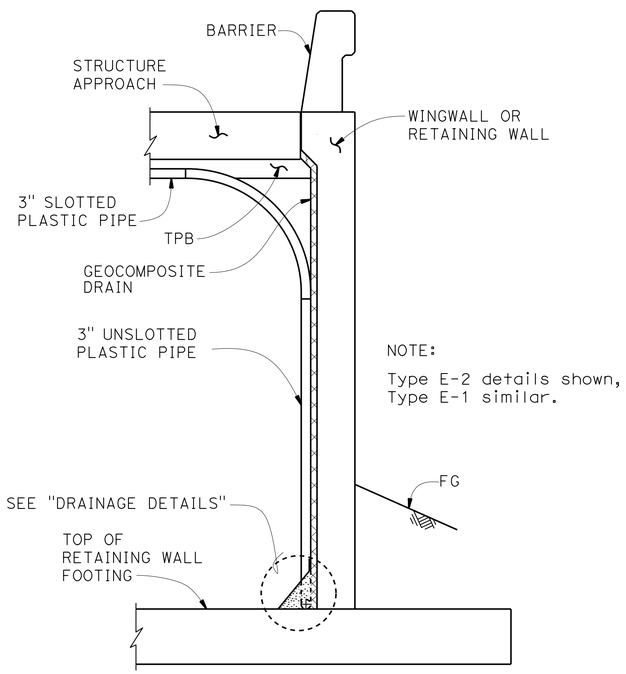

NOTE:
Type E-2 details shown, Type E-1 similar.

SECTION A-A
NO SCALE

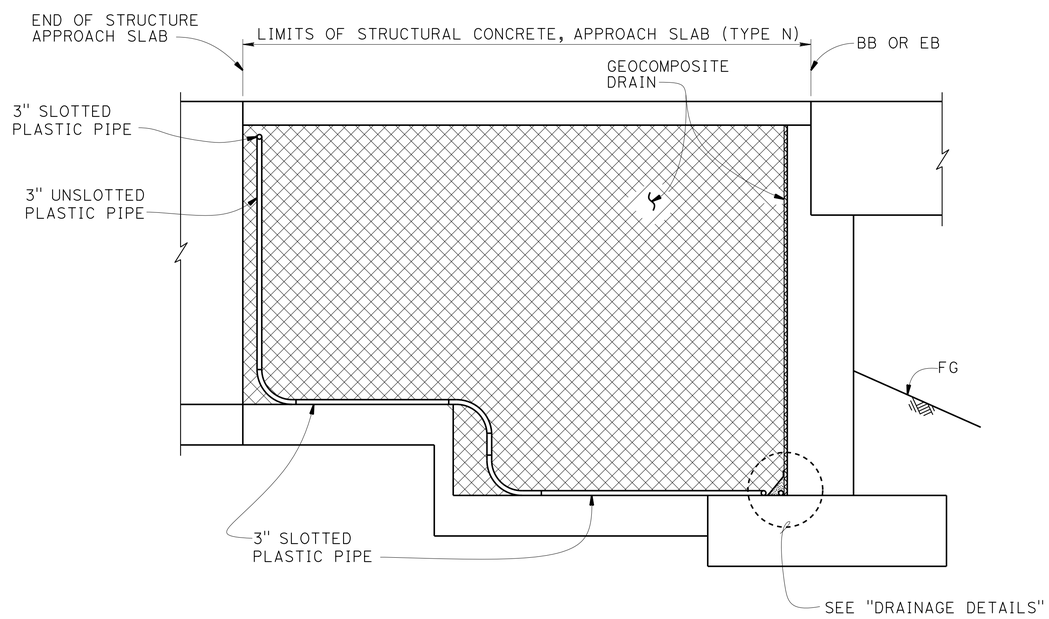

SECTION C-C
NO SCALE

NOTE: TPB not shown for clarity.

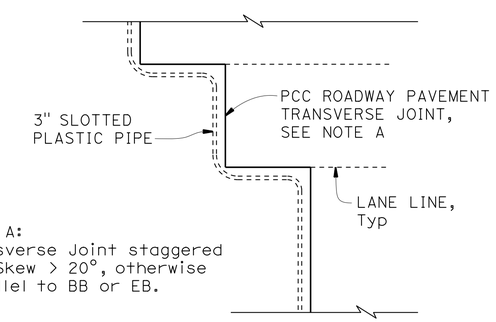

NOTE A:
Transverse Joint staggered for Skew > 20°, otherwise parallel to BB or EB.

DETAIL B
NO SCALE

NOTES:

1. For structural approach and other details not shown, see other plan sheets.
2. All bends in plastic pipe must have 3'-0" minimum radius. Plastic pipe used for bends is not required to be slotted.

STANDARD DRAWING
FILE NO. xs3-110
APPROVAL DATE January 2015

STATE OF CALIFORNIA
DEPARTMENT OF TRANSPORTATION

DIVISION OF ENGINEERING SERVICES

BRIDGE NO. 53C2295
POST MILE 1.15

NB VALLEY VIEW AVE/S FIRESTONE BLVD
STRUCTURE APPROACH DRAINAGE DETAILS

DS OSD 2147A (ENGLISH STANDARD DRAWING "XS" BORDER REV. (02-02-11)

ORIGINAL SCALE IN INCHES FOR REDUCED PLANS 0 1 2 3

UNIT: 3587
PROJECT NUMBER & PHASE: 0715000160-1
CONTRACT NO.: 07-2159u4

DISREGARD PRINTS BEARING EARLIER REVISION DATES

REVISION DATES 6-3-13 9-06-13

SHEET 23 OF 29

FILE => 53c2295-u-sadd.dgn

USERNAME => s128624 DATE PLOTTED => 03-FEB-2016 TIME PLOTTED => 13:53

DIST	COUNTY	ROUTE	POST MILES TOTAL PROJECT	SHEET No.	TOTAL SHEETS
07	LA,Ora	5	0.0/1.5, 44.3/44.4	1354	1622

REGISTERED CIVIL ENGINEER 3-18-15 DATE

1-25-16
PLANS APPROVAL DATE

REGISTERED PROFESSIONAL ENGINEER Phu V. Nguyen No. 60358 Exp. 6/30/16 CIVIL STATE OF CALIFORNIA

The State of California or its officers or agents shall not be responsible for the accuracy or completeness of scanned copies of this plan sheet.

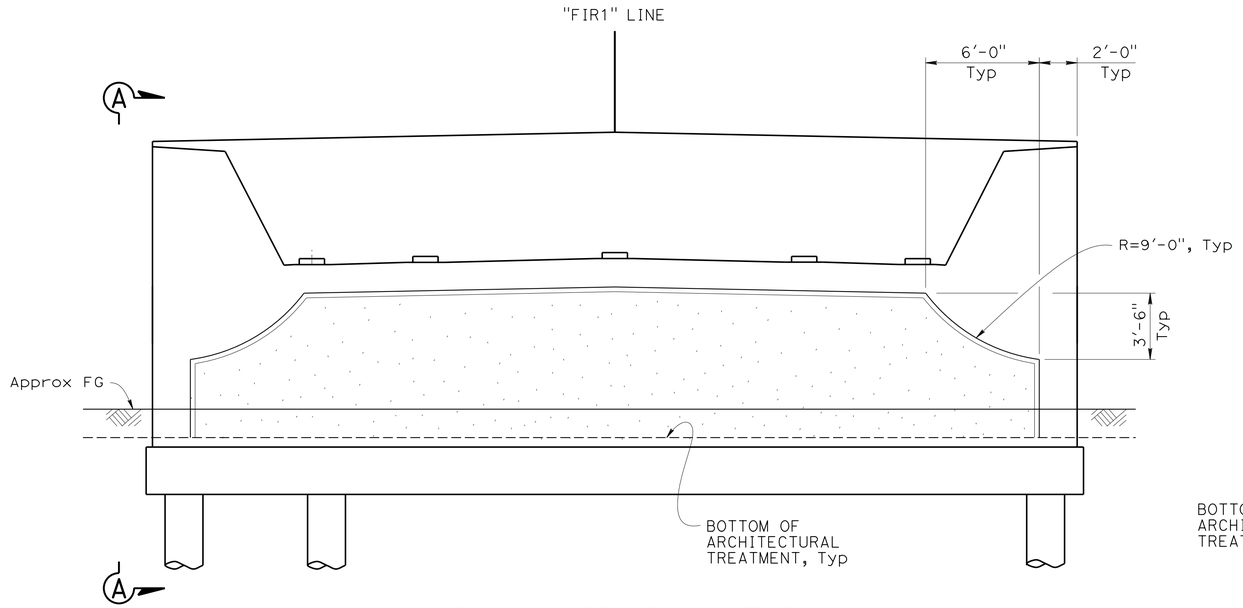

DEVELOPED ELEVATION
1" = 5'-0"

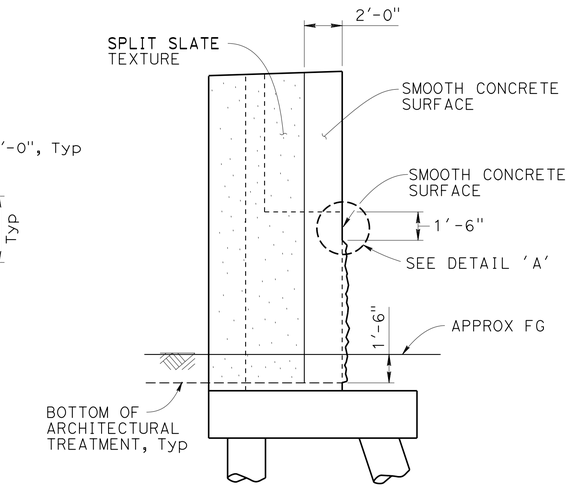

NOTE: Right stubwall shown, left stubwall similar

VIEW A-A
3/8" = 1'-0"

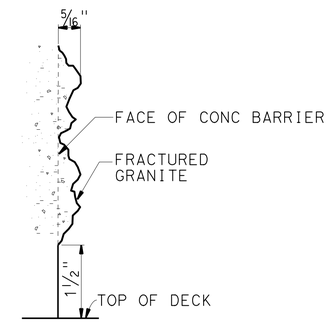

DETAIL B
NO SCALE

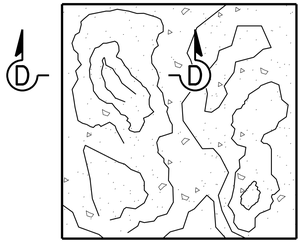

SPLIT SLATE TEXTURE
NO SCALE

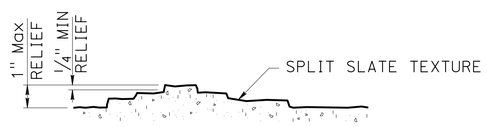

SECTION D-D
NO SCALE

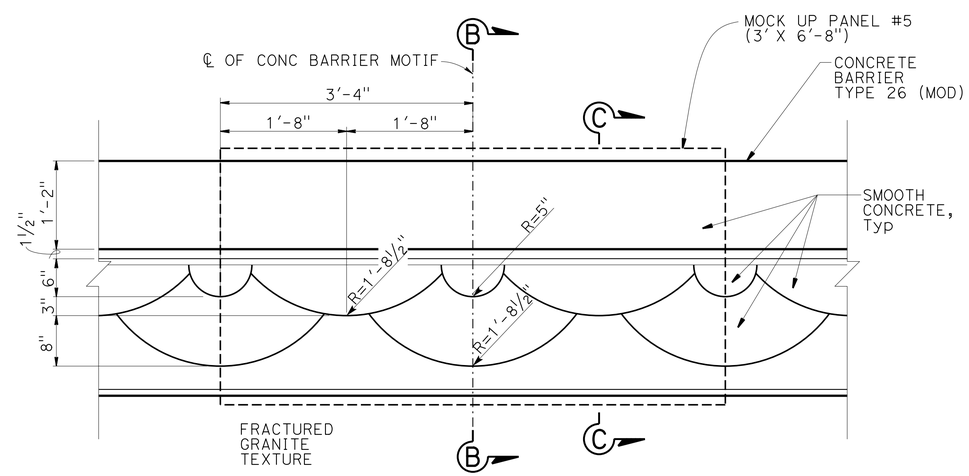

ELEVATION - BARRIER MOTIF
1" = 1'-0"

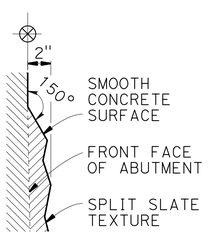

DETAIL A
NO SCALE

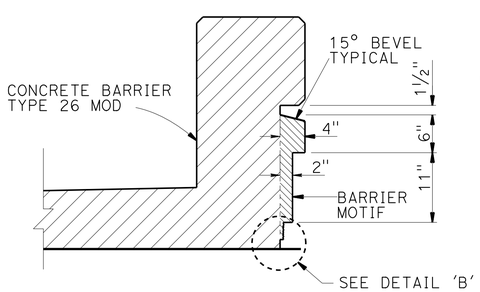

SECTION B-B
1" = 1'-0"

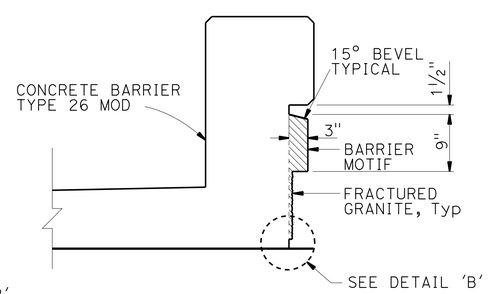

SECTION C-C
1" = 1'-0"

DESIGN	BY U. Inyang	CHECKED M. El-Mously	
DETAILS	BY P. Tong	CHECKED M. El-Mously	
QUANTITIES	BY U. Inyang	CHECKED E. Franciliso	

STATE OF CALIFORNIA
DEPARTMENT OF TRANSPORTATION

DIVISION OF ENGINEERING SERVICES
STRUCTURE DESIGN
DESIGN BRANCH 11

BRIDGE NO. 53C2295
POST MILE 1.15

NB VALLEY VIEW AVE/S FIRESTONE BLVD
ARCHITECTURAL TREATMENT DETAILS

STRUCTURES DESIGN DETAIL SHEET (ENGLISH) (REV. 09-01-10)

ORIGINAL SCALE IN INCHES FOR REDUCED PLANS 0 1 2 3

UNIT: 3587
PROJECT NUMBER & PHASE: 0715000160-1
CONTRACT NO.: 07-2159U4

DISREGARD PRINTS BEARING EARLIER REVISION DATES

REVISION DATES: 5-1-13 7-30-13 9-06-13

SHEET 24 OF 29

FILE => 53c2295-v-arch.dgn

USERNAME => s125624 DATE PLOTTED => 03-FEB-2016 TIME PLOTTED => 13:53

DIST	COUNTY	ROUTE	POST MILES TOTAL PROJECT	SHEET No.	TOTAL SHEETS
07	LA,Ora	5	0.0/1.5, 44.3/44.4	1355	1622

REGISTERED CIVIL ENGINEER 3-18-15 DATE

1-25-16
PLANS APPROVAL DATE

REGISTERED PROFESSIONAL ENGINEER Phu V. Nguyen No. 60358 Exp. 6-30-16 CIVIL STATE OF CALIFORNIA

The State of California or its officers or agents shall not be responsible for the accuracy or completeness of electronic copies of this plan sheet.

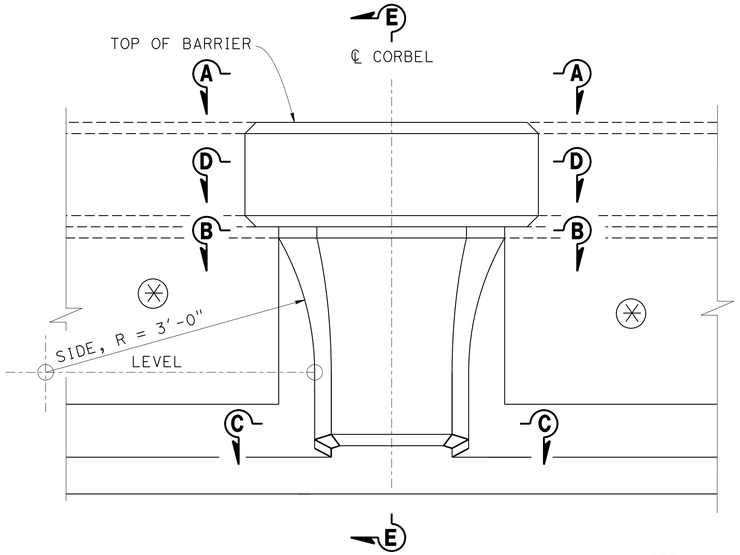

ELEVATION

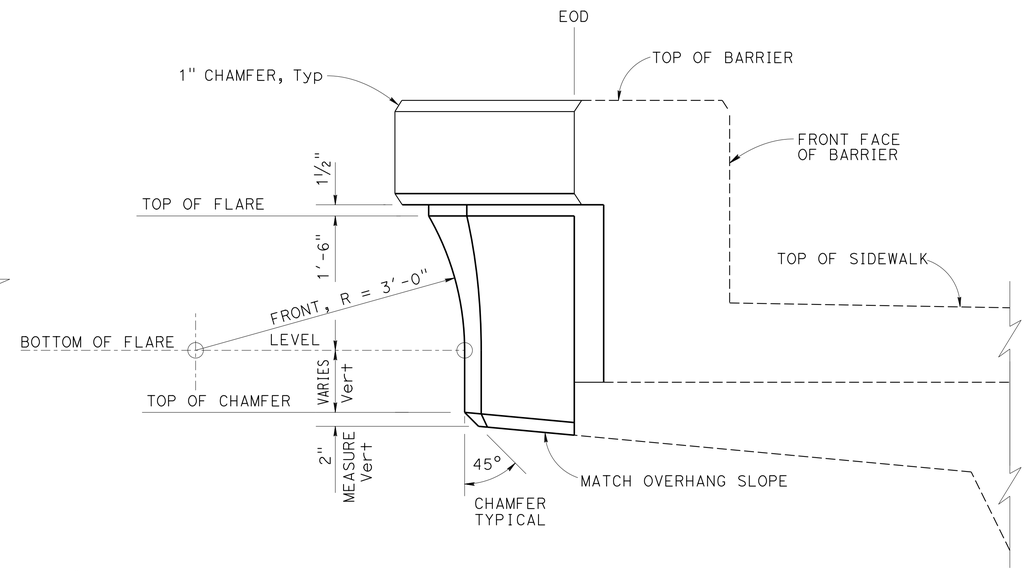

SIDE VIEW

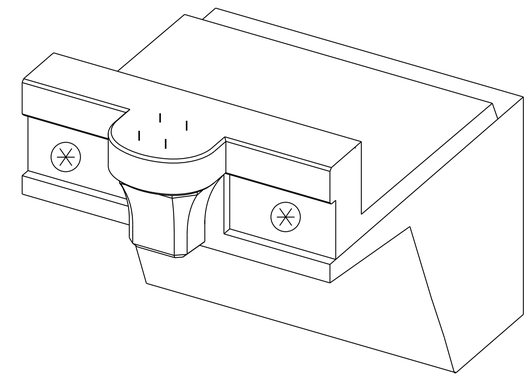

PICTORIAL VIEW

NOTE:

(✳) For Barrier architectural treatment See "ARCHITECTURAL TREATMENT DETAILS" sheet

1. For 'Section D-D' & 'Section E-E', See "LUMINAIRE CORBEL DETAILS NO. 2" sheet

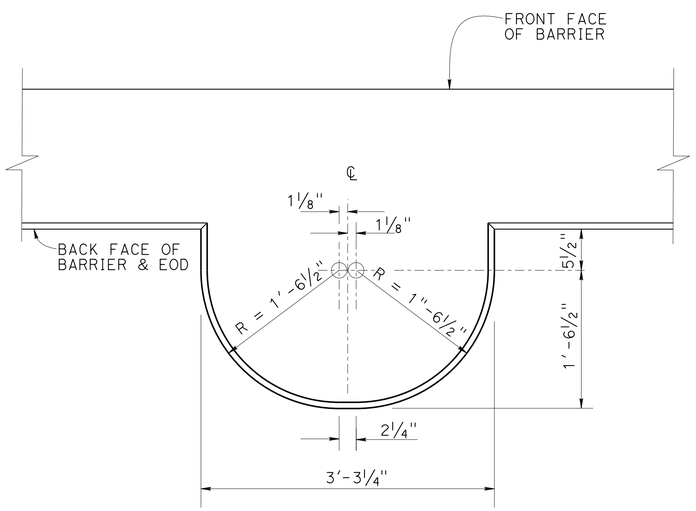

VIEW A-A

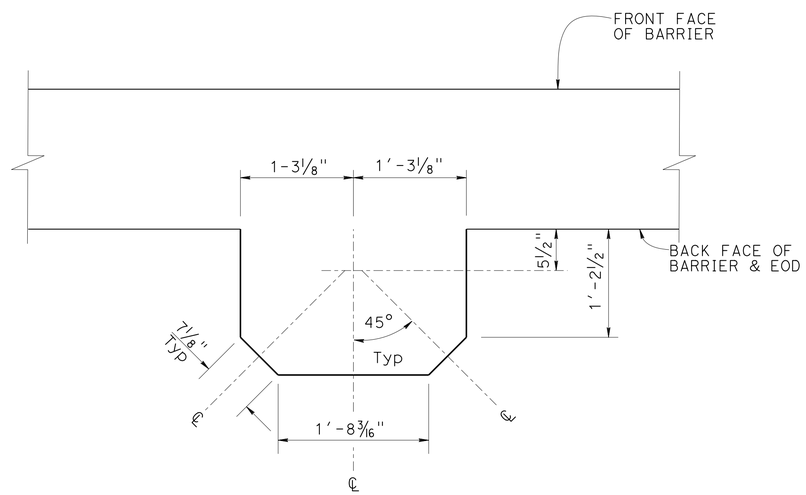

VIEW B-B

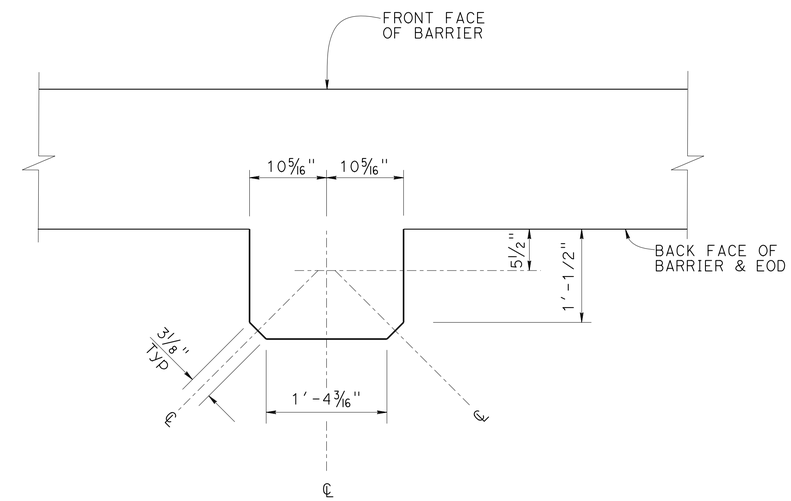

VIEW C-C

NO SCALE

DESIGN	BY D. Texler/K. Andurlekar	CHECKED Krishnakant Andurlekar	
DETAILS	BY Jaime Ramirez	CHECKED Krishnakant Andurlekar	
QUANTITIES	BY Krishnakant Andurlekar	CHECKED Ruperd Wilson	

STATE OF CALIFORNIA DEPARTMENT OF TRANSPORTATION

DIVISION OF ENGINEERING SERVICES STRUCTURE DESIGN DESIGN BRANCH 11

BRIDGE NO. 53C2295 POST MILE 1.15

NB VALLEY VIEW AVE/S FIRESTONE BLVD
LUMINAIRE CORBEL DETAILS NO 1

STRUCTURES DESIGN DETAIL SHEET (ENGLISH) (REV. 09-01-10)

ORIGINAL SCALE IN INCHES FOR REDUCED PLANS 0 1 2 3

UNIT: 3587
PROJECT NUMBER & PHASE: 0715000160-1 CONTRACT NO.: 07-2159U4

DISREGARD PRINTS BEARING EARLIER REVISION DATES

REVISION DATES 5-30-14

SHEET 25 OF 29

FILE => 53c2295-w-corbel01.dgn

USERNAME => s125624 DATE PLOTTED => 03-FEB-2016 TIME PLOTTED => 13:53

DIST	COUNTY	ROUTE	POST MILES TOTAL PROJECT	SHEET No.	TOTAL SHEETS
07	LA,Ora	5	0.0/1.5, 44.3/44.4	1356	1622

REGISTERED CIVIL ENGINEER 3-18-15 DATE

1-25-16
PLANS APPROVAL DATE

REGISTERED PROFESSIONAL ENGINEER Phu V. Nguyen No. 60358 Exp. 6-30-16 CIVIL STATE OF CALIFORNIA

The State of California or its officers or agents shall not be responsible for the accuracy or completeness of electronic copies of this plan sheet.

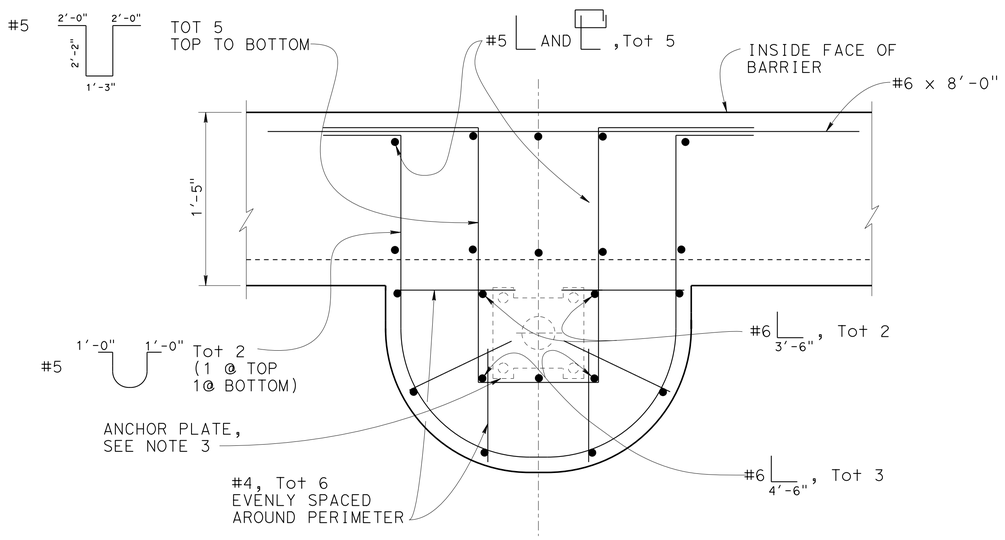

SECTION D-D

Not to Scale

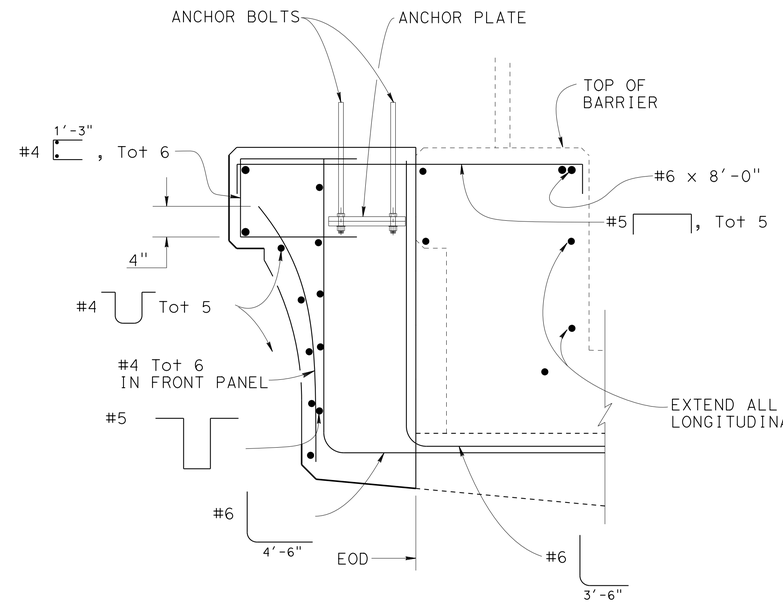

SECTION E-E

Not to Scale

NOTES:

1. For other Details, see "LUMINAIRE CORBEL DETAIL No. 1" sheet.
2. All bars not shown, For Barrier Details, see B11-54 (RSP)
3. For Electrolier details see "ROAD PLANS"

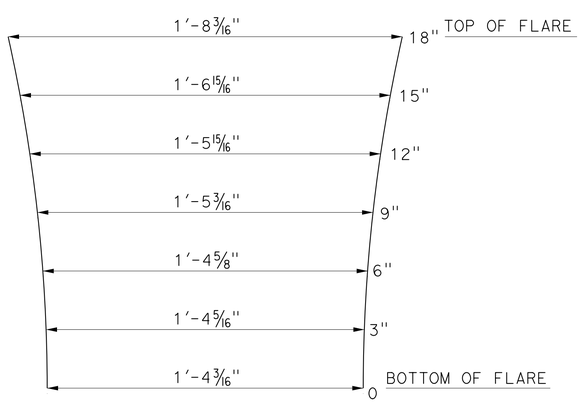

FRONT PANEL FACE

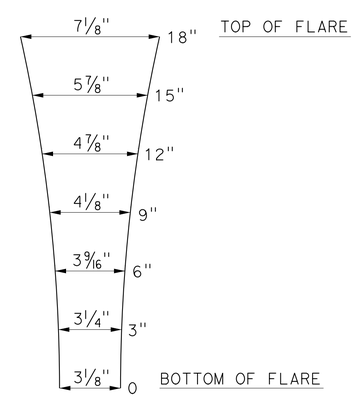

CORNER PANEL FACE

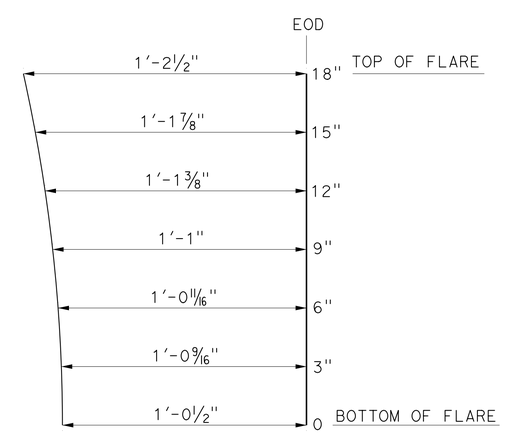

SIDE PANEL FACE

NO SCALE

DESIGN	BY D. Texler/K. Andurlekar	CHECKED Krishnakant Andurlekar	
DETAILS	BY Jaime Ramirez	CHECKED Krishnakant Andurlekar	
QUANTITIES	BY Krishnakant Andurlekar	CHECKED Ruperd Wilson	

STATE OF CALIFORNIA DEPARTMENT OF TRANSPORTATION

DIVISION OF ENGINEERING SERVICES STRUCTURE DESIGN DESIGN BRANCH 11

BRIDGE NO. 53C2295 POST MILE 1.15

NB VALLEY VIEW AVE/S FIRESTONE BLVD
LUMINAIRE CORBEL DETAILS NO 2

STRUCTURES DESIGN DETAIL SHEET (ENGLISH) (REV. 09-01-10)

ORIGINAL SCALE IN INCHES FOR REDUCED PLANS 0 1 2 3

UNIT: 3587
PROJECT NUMBER & PHASE: 0715000160-1 CONTRACT NO.: 07-2159U4

DISREGARD PRINTS BEARING EARLIER REVISION DATES

REVISION DATES 5-30-14

SHEET 26 OF 29

FILE => 53c2295-w-corbel02.dgn

USERNAME => s125624 DATE PLOTTED => 03-FEB-2016 TIME PLOTTED => 13:53

DIST	COUNTY	ROUTE	POST MILES TOTAL PROJECT	SHEET No.	TOTAL SHEETS
07	LA,Ora	5	0.0/1.5, 44.3/44.4	1357	1622

REGISTERED CIVIL ENGINEER 05/20/15 DATE

1-25-16
PLANS APPROVAL DATE

REGISTERED PROFESSIONAL ENGINEER MICHAEL G. SMITH No. 2229 Exp. 03/31/16 GEOTECHNICAL STATE OF CALIFORNIA

URS CORPORATION
2020 EAST FIRST STREET, SUITE 400
SANTA ANA, CA 92705

The State of California or its officers or agents shall not be responsible for the accuracy or completeness of electronic copies of this plan sheet.

1-This LOTB sheet was prepared in accordance with the Caltrans Soil & Rock Logging, Classification, & Presentation Manual (2010 Edition).

2-For protection of underground utility lines, hand-auger was used to remove top 5 to 10 feet of subsurface material for exploratory borings and Cone Penetration Testings.

3-2.5" to 1.4" blow counts conversion factors for fine-grain and coarse-grain soils have been 0.8 and 0.55, respectively.

BENCH MARK

GPS 0888
ELEVATION 63.317 FT
FOUND 2-1/2 INCH CADT DISK IN CONCRETE CURB, FLUSH, STAMPED "LA51.2 1995"
THE MARK IS LOCATED 0.1 MI NORTHERLY OF THE VALLEY VIEW OVERCROSSING OF THE 5 (SANTA ANA) FWY ON THE SOUTHWESTERLY CURB OF FIRESTONE BLVD AT THE FIRST DRIVEWAY CUT NORTH OF THE FWY.
NORTHING 542603.017
EASTING 1997274.832
DATUM NAVD88

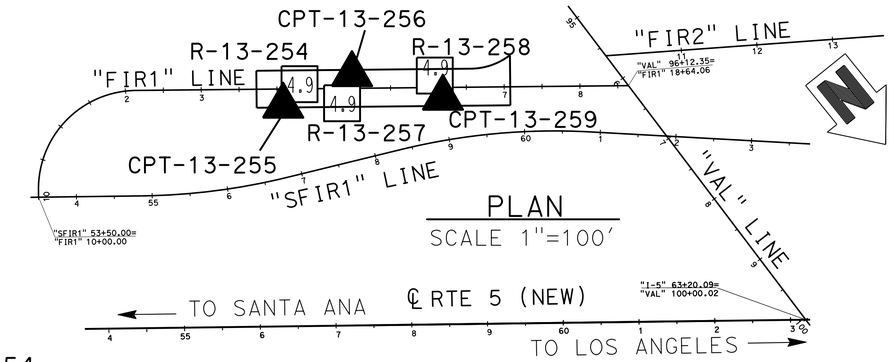

PLAN
SCALE 1"=100'

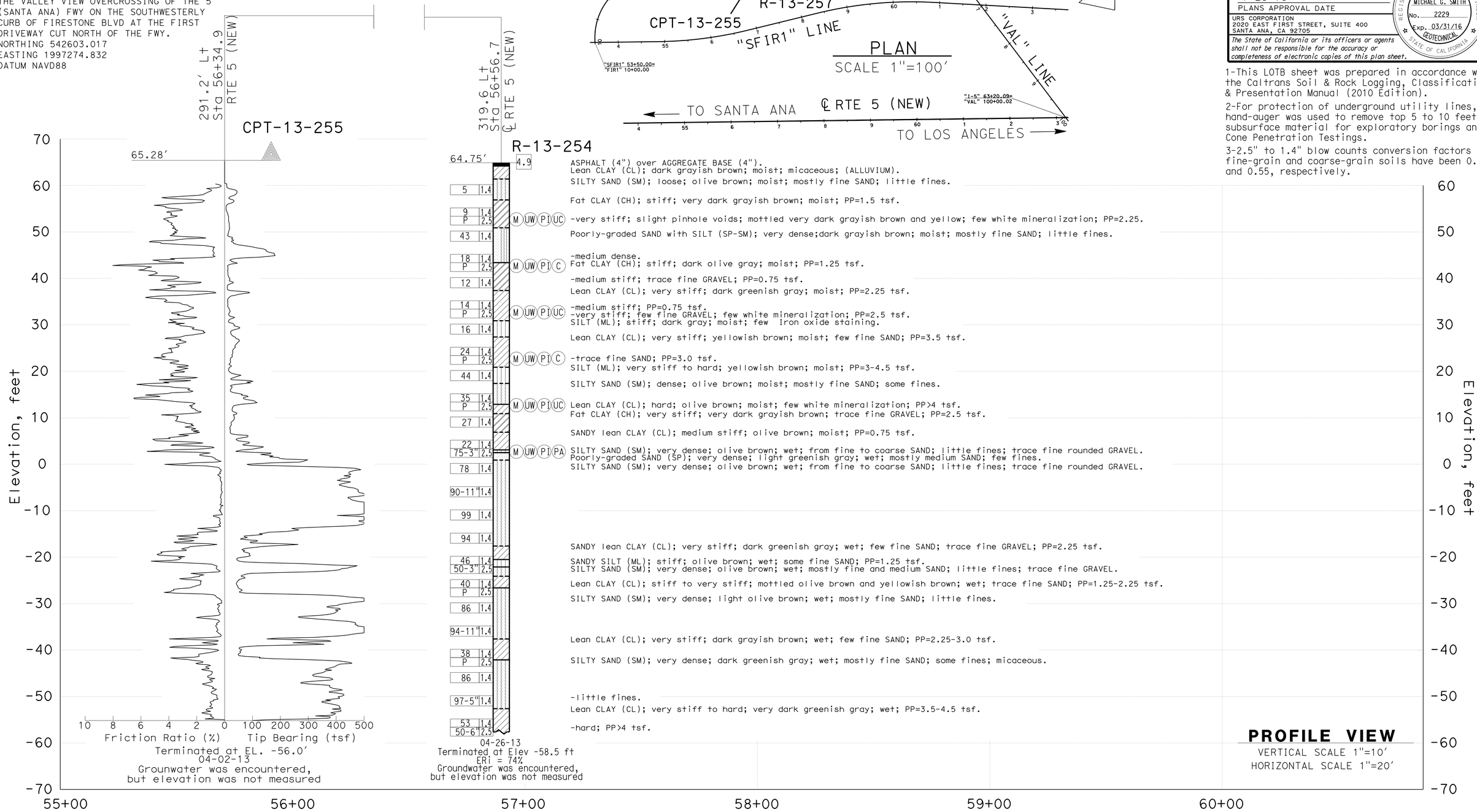

PROFILE VIEW
VERTICAL SCALE 1"=10'
HORIZONTAL SCALE 1"=20'

F.MOTAMED DESIGN OVERSIGHT	DRAWN BY	T.PANAH	D.ORRIS/T.PANAH FIELD INVESTIGATION BY:
05/20/15 SIGN OFF DATE	CHECKED BY	E.Pintard	DATE: 04/02/13 - 04/26/13

PREPARED FOR THE STATE OF CALIFORNIA DEPARTMENT OF TRANSPORTATION

M.G. SMITH
PROJECT ENGINEER

BRIDGE NO. 53C-2295
POST MILES 1.15

NB VALLEY VIEW AVE/S FIRESTONE BLVD
LOG OF TEST BORINGS SHEET 1 OF 3

GS CIVIL LOG OF TEST BORINGS SHEET (ENGLISH) (REV. 03/14/12)

ORIGINAL SCALE IN INCHES FOR REDUCED PLANS 0 1 2 3

UNIT: 3658
PROJECT NUMBER & PHASE: 07150001601 CONTRACT NO.: 07-2159U4

DISREGARD PRINTS BEARING EARLIER REVISION DATES

REVISION DATES 5/12/15 SHEET 27 OF 29

FILE => 53c2295-z-lotb1.dgn

USERNAME => S35624 DATE PLOTTED => 03-FEB-2016 TIME PLOTTED => 13:53

DIST	COUNTY	ROUTE	POST MILES TOTAL PROJECT	SHEET No.	TOTAL SHEETS
07	LA,Ora	5	0.0/1.5, 44.3/44.4	1358	1622

REGISTERED CIVIL ENGINEER 05/20/15 DATE

1-25-16
PLANS APPROVAL DATE

REGISTERED PROFESSIONAL ENGINEER MICHAEL G. SMITH No. 2229 Exp. 03/31/16 GEOTECHNICAL STATE OF CALIFORNIA

URS CORPORATION
2020 EAST FIRST STREET, SUITE 400
SANTA ANA, CA 92705

The State of California or its officers or agents shall not be responsible for the accuracy or completeness of electronic copies of this plan sheet.

1-This LOTB sheet was prepared in accordance with the Caltrans Soil & Rock Logging, Classification, & Presentation Manual (2010 Edition).

2-For protection of underground utility lines, hand-auger was used to remove top 5 to 10 feet of subsurface material for exploratory borings and Cone Penetration Testings.

3-2.5" to 1.4" blow counts conversion factors for fine-grain and coarse-grain soils have been 0.8 and 0.55, respectively.

FOR PLAN VIEW, SEE
"LOG OF TEST BORINGS" SHEET 1 OF 3

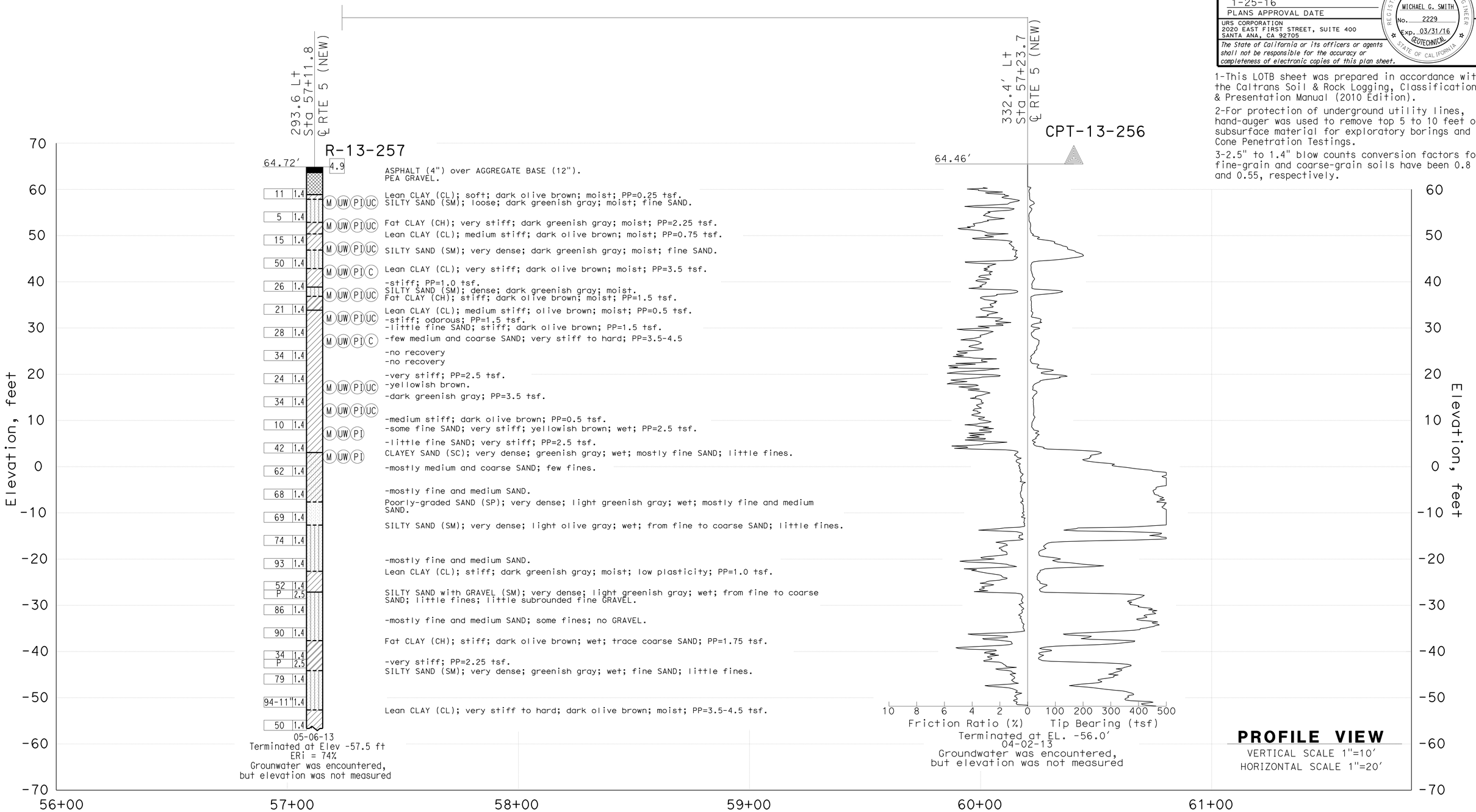

F.MOTAMED DESIGN OVERSIGHT	DRAWN BY	T.PANAH	D.ORRIS/T.PANAH FIELD INVESTIGATION BY:	PREPARED FOR THE STATE OF CALIFORNIA DEPARTMENT OF TRANSPORTATION	M.G.SMITH PROJECT ENGINEER	BRIDGE NO. 53C-2295 POST MILES 1.15	NB VALLEY VIEW AVE/S FIRESTONE BLVD
05/20/15 SIGN OFF DATE	CHECKED BY	E.PINTARD	DATE: 04/02/13 - 05/06/13				LOG OF TEST BORINGS SHEET 2 OF 3

GS CIVIL LOG OF TEST BORINGS SHEET (ENGLISH) (REV. 03/14/12)

ORIGINAL SCALE IN INCHES FOR REDUCED PLANS 0 1 2 3

UNIT: 3658
PROJECT NUMBER & PHASE: 07150001601 CONTRACT NO.: 07-2159U4

DISREGARD PRINTS BEARING EARLIER REVISION DATES → REVISION DATES 5/12/15

SHEET 28 OF 29

FILE => 53c2295-z-lotb2.dgn

USERNAME => s125624 DATE PLOTTED => 03-FEB-2016 TIME PLOTTED => 13:53

DIST	COUNTY	ROUTE	POST MILES TOTAL PROJECT	SHEET No.	TOTAL SHEETS
07	LA,Ora	5	0.0/1.5, 44.3/44.4	1359	1622

REGISTERED CIVIL ENGINEER 05/20/15 DATE

1-25-16
PLANS APPROVAL DATE

REGISTERED PROFESSIONAL ENGINEER MICHAEL G. SMITH No. 2229 Exp. 03/31/16 GEOTECHNICAL STATE OF CALIFORNIA

URS CORPORATION
2020 EAST FIRST STREET, SUITE 400
SANTA ANA, CA 92705

The State of California or its officers or agents shall not be responsible for the accuracy or completeness of electronic copies of this plan sheet.

1-This LOTB sheet was prepared in accordance with the Caltrans Soil & Rock Logging, Classification, & Presentation Manual (2010 Edition).

2-For protection of underground utility lines, hand-auger was used to remove top 5 to 10 feet of subsurface material for exploratory borings and Cone Penetration Testings.

3-2.5" to 1.4" blow counts conversion factors for fine-grain and coarse-grain soils have been 0.8 and 0.55, respectively.

FOR PLAN VIEW, SEE
"LOG OF TEST BORINGS" SHEET 1 OF 3

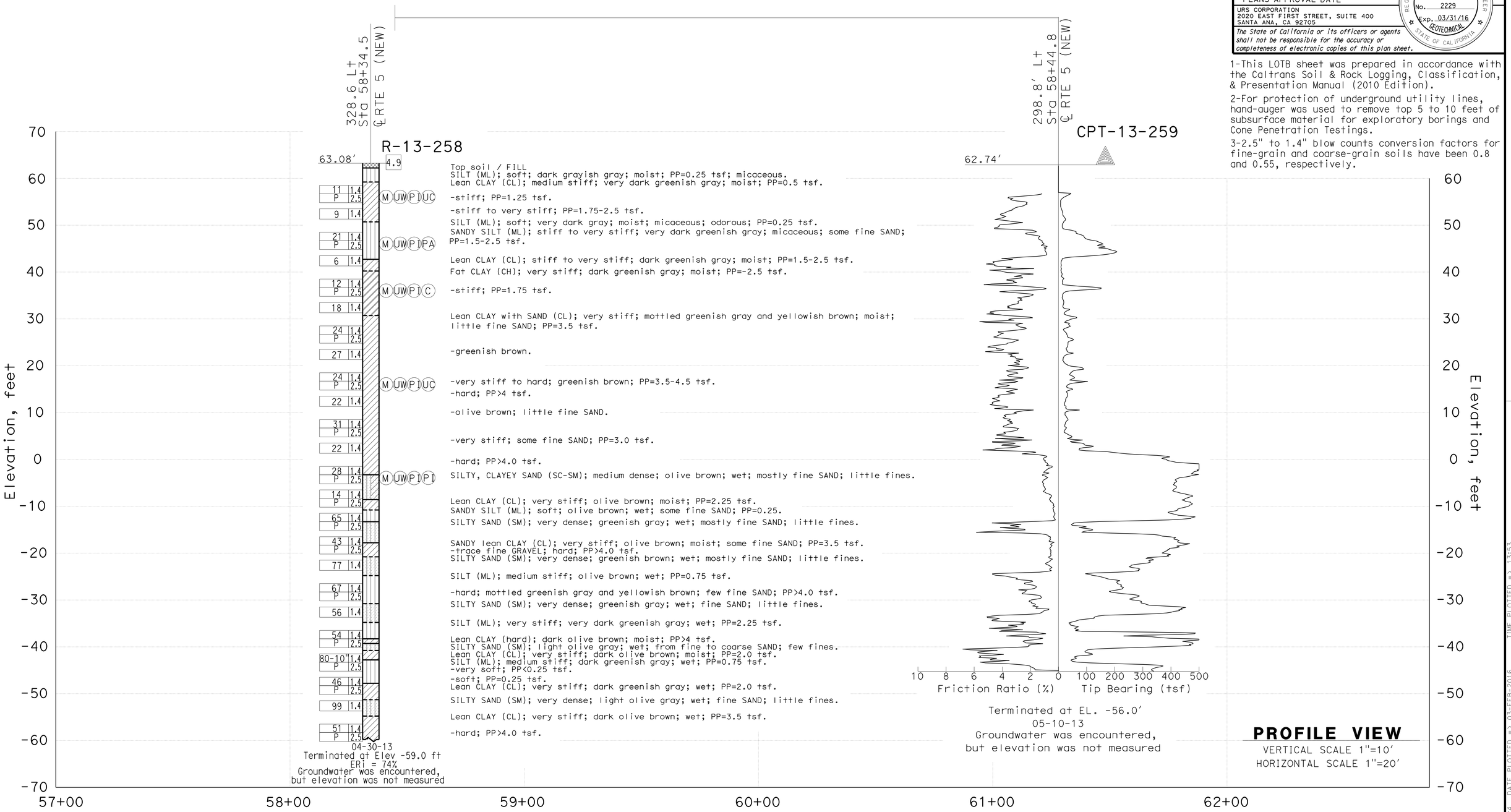

F. MOTAMED DESIGN OVERSIGHT	DRAWN BY	T.PANAH	D.ORRIS/T.PANAH FIELD INVESTIGATION BY:	PREPARED FOR THE STATE OF CALIFORNIA DEPARTMENT OF TRANSPORTATION	M.G.SMITH PROJECT ENGINEER	BRIDGE NO. 53C-2295 POST MILES 1.15
05/20/15 SIGN OFF DATE	CHECKED BY	E.PINTARD	DATE: 04/30/13 - 05/10/13			

NB VALLEY VIEW AVE/S FIRESTONE BLVD
LOG OF TEST BORINGS SHEET 3 OF 3

GS CIVIL LOG OF TEST BORINGS SHEET (ENGLISH) (REV. 03/14/12)

ORIGINAL SCALE IN INCHES FOR REDUCED PLANS 0 1 2 3

UNIT: 3658
PROJECT NUMBER & PHASE: 07150001601 CONTRACT NO.: 07-2159U4

DISREGARD PRINTS BEARING EARLIER REVISION DATES → 5/12/15

REVISION DATES | SHEET 29 | OF 29

FILE => 53c2295-z-lotb3.dgn

USERNAME => s125624 DATE PLOTTED => 03-FEB-2016 TIME PLOTTED => 13:53

DIST	COUNTY	ROUTE	POST MILES TOTAL PROJECT	SHEET No.	TOTAL SHEETS
07	LA,Ora	5	0.0/1.5, 44.3/44.4	1360	1622

REGISTERED CIVIL ENGINEER 3-18-15 DATE

1-25-16
PLANS APPROVAL DATE

REGISTERED PROFESSIONAL ENGINEER Phu V. Nguyen No. 60358 Exp. 6-30-16 CIVIL STATE OF CALIFORNIA

The State of California or its officers or agents shall not be responsible for the accuracy or completeness of electronic copies of this plan sheet.

QUANTITIES

STRUCTURE EXCAVATION (BRIDGE)	850	CY
STRUCTURE BACKFILL (BRIDGE)	300	CY
FURNISH 24" STEEL PIPE PILING	5,001	LF
DRIVE 24" STEEL PIPE PILE	96	EA
STRUCTURAL CONCRETE, BRIDGE FOOTING	284	CY
STRUCTURAL CONCRETE, BRIDGE	1,815	CY
STRUCTURAL CONCRETE, APPROACH SLAB (TYPE N)	68	CY
ARCHITECTURAL TREATMENT (SPLIT SLATE)	689	SQFT
JOINT SEAL (MR 2")	47	LF
BAR REINFORCING STEEL (BRIDGE)	717,100	LB
BAR REINFORCING STEEL (GALVANIZED)	624	LB
MISCELLANEOUS METAL (RESTRAINER - PIPE TYPE)	204	LB
BRIDGE DECK DRAINAGE SYSTEM	7,500	LB
TUBULAR HANDRAILING (MODIFIED)	921	LF
CONCRETE BARRIER (TYPE 26 MODIFIED)	921	LF

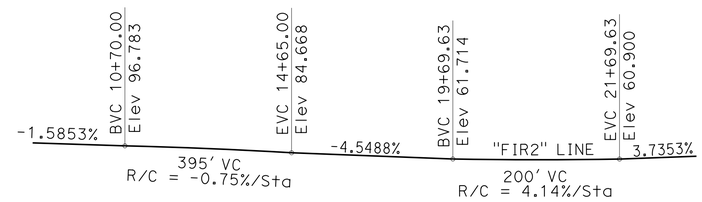

PROFILE GRADE

NO SCALE

NOTES:

1. Paint "Br No 53C2296"
2. Paint "SB VALLEY VIEW AVE/S FIRESTONE BLVD"
3. Paint Bent & Col No. "B_ C_"
4. Structure Approach Type N(30S)
5. Concrete Barrier Type 26 Mod
6. Ramp Hinge
7. Tubular Hand Railing (MODIFIED)
8. Luminaire Corbel. For Decorative Lighting, see Road Plans

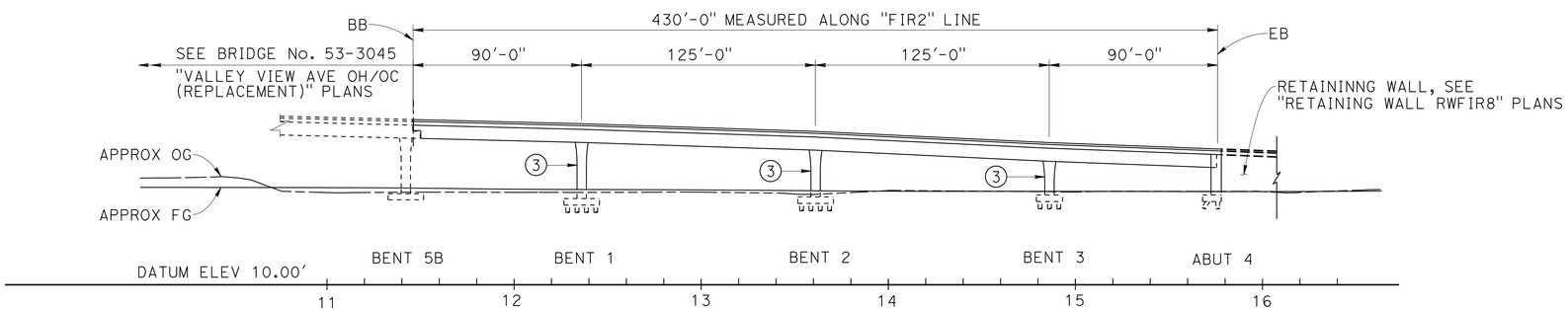

ELEVATION

1" = 40'-0"

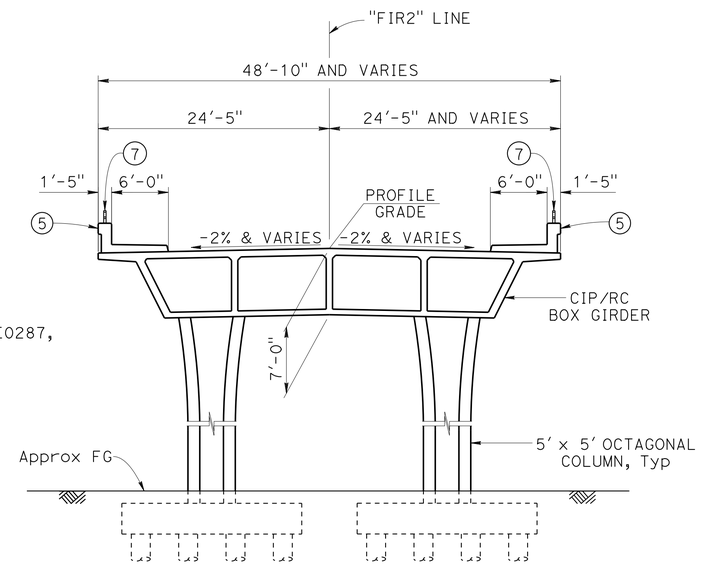

TYPICAL SECTION

1/8" = 1'-0"

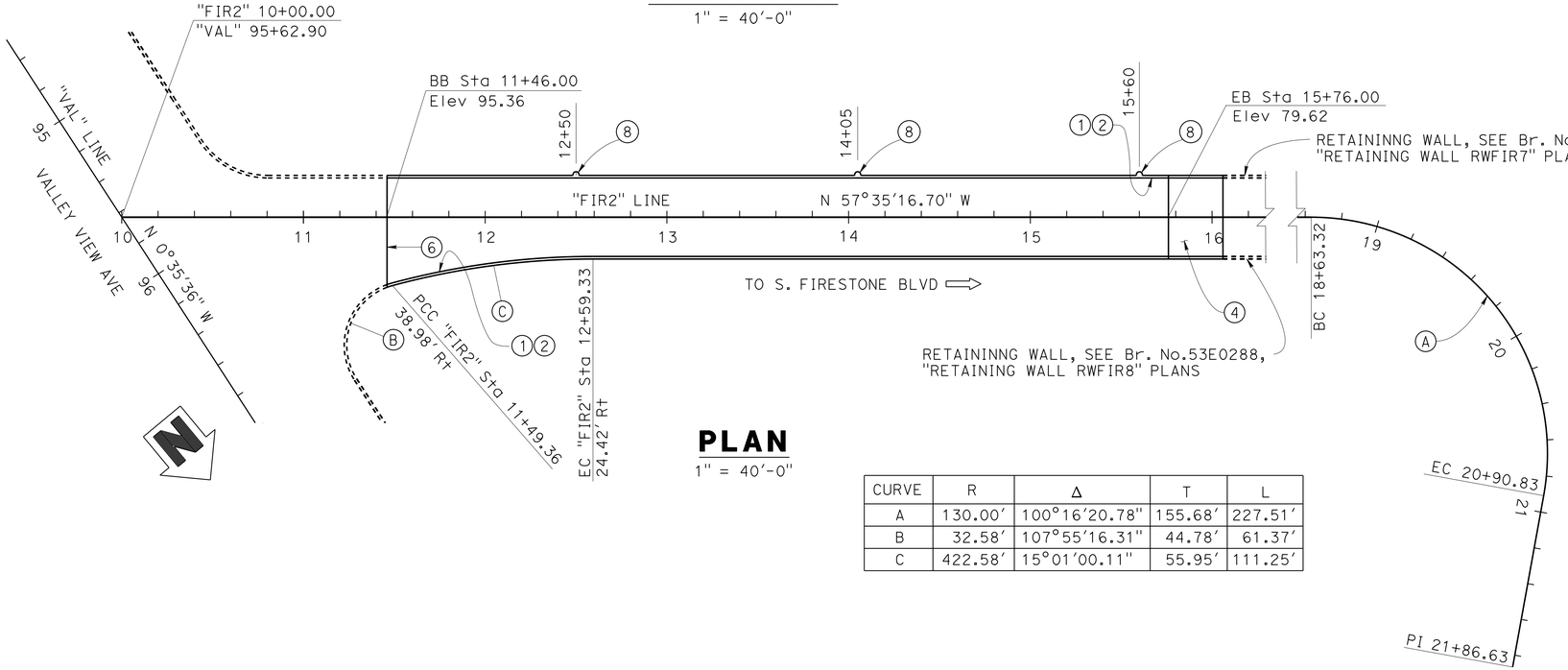

PLAN

1" = 40'-0"

CURVE	R	Δ	T	L
A	130.00'	100°16'20.78"	155.68'	227.51'
B	32.58'	107°55'16.31"	44.78'	61.37'
C	422.58'	15°01'00.11"	55.95'	111.25'

Ramin Rashedi 3-18-15
DESIGN ENGINEER

	BY	CHECKED
DESIGN	Yeo Yoon	L. Bahia/J. Peterson
DETAILS	Jaime Ramirez	Laith Bahia
QUANTITIES	Yeo Yoon	Evan Franciliso

LOAD & RESISTANCE FACTOR DESIGN — LIVE LOADING: HL93 W/"LOW-BOY"; PERMIT DESIGN VEHICLE

	BY	CHECKED
LAYOUT	Yeo Yoon	Laith Bahia
SPECIFICATIONS	Xiahong Li	PLANS AND SPECS COMPARED Xiahong Li

ORIGINAL SCALE IN INCHES FOR REDUCED PLANS 0 1 2 3

STATE OF CALIFORNIA
DEPARTMENT OF TRANSPORTATION

DIVISION OF ENGINEERING SERVICES
STRUCTURE DESIGN
DESIGN BRANCH 11

UNIT: 3587
PROJECT NUMBER & PHASE: 0715000160-1
CONTRACT NO.: 07-2159u4

BRIDGE NO. 53C2296
POST MILE 1.27

SB VALLEY VIEW AVE/S. FIRESTONE BLVD
GENERAL PLAN

DISREGARD PRINTS BEARING EARLIER REVISION DATES

REVISION DATES 10-22-13 1-26-15 5-14-15 9-10-15

SHEET 1 OF 30

STRUCTURES DESIGN GENERAL PLAN SHEET (ENGLISH) (REV.09-01-10)

FILE => 53c2296-a-gp.dgn

USERNAME => s125624 DATE PLOTTED => 03-FEB-2016 TIME PLOTTED => 13:53

DIST	COUNTY	ROUTE	POST MILES TOTAL PROJECT	SHEET No.	TOTAL SHEETS
07	LA,Ora	5	0.0/1.5, 44.3/44.4	1361	1622

REGISTERED CIVIL ENGINEER — DATE 3-18-15

1-25-16
PLANS APPROVAL DATE

REGISTERED PROFESSIONAL ENGINEER — Phu V. Nguyen — No. 60358 — Exp. 6/30/16 — CIVIL — STATE OF CALIFORNIA

The State of California or its officers or agents shall not be responsible for the accuracy or completeness of electronic copies of this plan sheet.

INDEX TO PLANS

SHEET NO.	TITLE
1	GENERAL PLAN
2	INDEX TO PLANS
3	FOUNDATION PLAN
4	DECK CONTOUR
5	PILE DETAILS
6	ABUTMENT 4 LAYOUT
7	ABUTMENT DETAILS NO. 1
8	FOOTING DETAILS
9	BENT DETAILS
10	COLUMN DETAILS NO. 1
11	COLUMN DETAILS NO. 2
12	TYPICAL SECTION NO. 1
13	TYPICAL SECTION NO. 2
14	TYPICAL SECTION NO. 3
15	GIRDER LAYOUT
16	ADDITIONAL REINFORCEMENT NO. 1
17	ADDITIONAL REINFORCEMENT NO. 2
18	HINGE LAYOUT
19	HINGE DETAILS NO. 1
20	HINGE DETAILS NO. 2
21	DRAINAGE LAYOUT
22	STRUCTURE APPROACH TYPE N(30S)
23	STRUCTURE APPROACH DRAINAGE DETAILS
24	ARCHITECTURAL TREATMENT DETAILS
25	LUMINAIRE CORBEL DETAILS NO. 1
26	LUMINAIRE CORBEL DETAILS NO. 2
27	LOG OF TEST BORINGS - SHEET 1 OF 4
28	LOG OF TEST BORINGS - SHEET 2 OF 4
29	LOG OF TEST BORINGS - SHEET 3 OF 4
30	LOG OF TEST BORINGS - SHEET 4 OF 4

STANDARD PLAN SHEET NO.

DETAIL NO.

PILE DATA

SUPPORT LOCATION	PILE TYPE	NOMINAL RESISTANCE (KIPS)		DESIGN TIP ELEVATION (FT)	SPECIFIED TIP ELEVATION (FT)	NOMINAL DRIVING RESISTANCE (KIPS)
		COMPRESSION	TENSION			
BENT 1	PP24x0.5	320	70	9 (a) 37 (b) 11 (c) 34 (d)	9	350
BENT 2	PP24x0.5	290	10	7 (a) 50 (b) 20 (c) 28 (d)	7	320
BENT 3	PP24x0.5	440	50	-6 (a) 41 (b) 19 (c) 25 (d)	-6	470
Abut 4	PP24x0.5	400	0	-3 (a) 20 (c)	-3	430

NOTES:

1. Design Tip Elevations for Abutments are controlled by: (a) Compression, (c) Settlement.
2. Design Tip Elevations for Bents are controlled by: (a) Compression, (b) Tension, (c) Settlement, (d) Lateral Load.
3. The specified tip elevation shall not be raised above the design tip elevation for tension load, lateral load and tolerable settlement.
4. The nominal driving resistance is equal to nominal resistance needed for factored load per pile plus driving resistance needed for factored load per support.

GENERAL NOTES
LOAD AND RESISTANCE FACTOR DESIGN

DESIGN: AASHTO LRFD BRIDGE DESIGN SPECIFICATIONS, 4th EDITION WITH CALIFORNIA AMENDMENTS

SEISMIC DESIGN: CALTRANS SEISMIC DESIGN CRITERIA (SDC), Version 1.6, November 2010

DEAD LOAD: Includes 35 Psf for Future Wearing Surface

LIVE LOADING: HL93 and Permit Design Vehicle.

SEISMIC LOADING: See Site Specific, Acceleration Response Spectra

REINFORCED CONCRETE: f_y = 60 ksi

f'_c = 4000 psi

STEEL PIPE PILE: fy (minimum yield strength) = 45,000 psi

fu (minimum tensile strength) = 66,000 psi

ACCELERATION RESPONSE SPECTRUM (WITH 5% DAMPING)

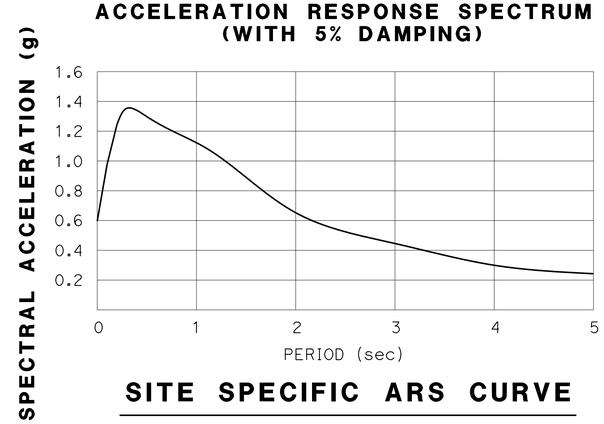

SITE SPECIFIC ARS CURVE

STANDARD PLANS 2010

A10A	ACRONYMS AND ABBREVIATIONS (A-L)
RSP A10B	ACRONYMS AND ABBREVIATIONS (M-Z)
A10C	LINES AND SYMBOLS (SHEET 1 OF 3)
A10D	LINES AND SYMBOLS (SHEET 2 OF 3)
A10E	LINES AND SYMBOLS (SHEET 3 OF 3)
A62B	LIMITS OF PAYMENT FOR EXCAVATION AND BACKFILL - BRIDGE SURCHARGE AND WALL
A62C	LIMITS OF PAYMENT FOR EXCAVATION AND BACKFILL - BRIDGE
B0-1	BRIDGE DETAILS
B0-3	BRIDGE DETAILS
B0-5	BRIDGE DETAILS
B0-13	BRIDGE DETAILS
B6-21	JOINT SEALS (MAXIMUM MOVEMENT RATING = 2")
B7-1	BOX GIRDER DETAILS
B7-6	DECK DRAIN-TYPE D-1 AND D-2
B7-8	DECK DRAINAGE DETAILS
B7-10	UTILITY OPENING-BOX GIRDER
B11-51	TUBULAR HAND RAILING
RSP B11-54	CONCRETE BARRIER TYPE 26
B14-5	WATER SUPPLY LINE (DETAILS) (PIPE SIZES LESS THAN 4")

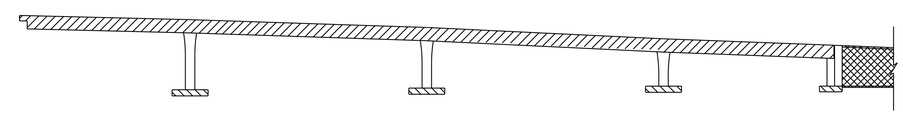

STRUCTURAL CONCRETE, BRIDGE (4000 psi @ 28 DAYS)

STRUCTURAL CONCRETE, BRIDGE FOOTING (4000 psi @ 28 DAYS)

STRUCTURAL CONCRETE, BRIDGE (4000 psi @ 28 DAYS)

STRUCTURAL CONCRETE, RETAINING WALL

CONCRETE STRENGTH AND TYPE LIMITS

NO SCALE

	BY	CHECKED
DESIGN	Yeo Yoon	L. Bahia/J. Peterson
DETAILS	Loren Goldthwait	Laith Bahia
QUANTITIES	Yeo Yoon	Evan Franciliso

STATE OF CALIFORNIA
DEPARTMENT OF TRANSPORTATION

DIVISION OF ENGINEERING SERVICES
STRUCTURE DESIGN
DESIGN BRANCH 11

BRIDGE NO. 53C2296
POST MILE 1.27

SB VALLEY VIEW AVE/S. FIRESTONE BLVD
INDEX TO PLANS

STRUCTURES DESIGN DETAIL SHEET (ENGLISH) (REV. 09-01-10)

ORIGINAL SCALE IN INCHES FOR REDUCED PLANS 0 1 2 3

UNIT: 3587
PROJECT NUMBER & PHASE: 0715000160-1
CONTRACT NO.: 07-2159u4

DISREGARD PRINTS BEARING EARLIER REVISION DATES

REVISION DATES: 3-18-13 9-06-13 9-12-13 5-08-15

SHEET 2 OF 30

FILE => 53c2296-b-itp.dgn

USERNAME => s125624 DATE PLOTTED => 03-FEB-2016 TIME PLOTTED => 13:53

DIST	COUNTY	ROUTE	POST MILES TOTAL PROJECT	SHEET No.	TOTAL SHEETS
07	LA,Ora	5	0.0/1.5, 44.3/44.4	1362	1622

REGISTERED CIVIL ENGINEER 3-18-15 DATE

1-25-16
PLANS APPROVAL DATE

REGISTERED PROFESSIONAL ENGINEER Phu V. Nguyen No. 60358 Exp. 6-30-16 CIVIL STATE OF CALIFORNIA

The State of California or its officers or agents shall not be responsible for the accuracy or completeness of electronic copies of this plan sheet.

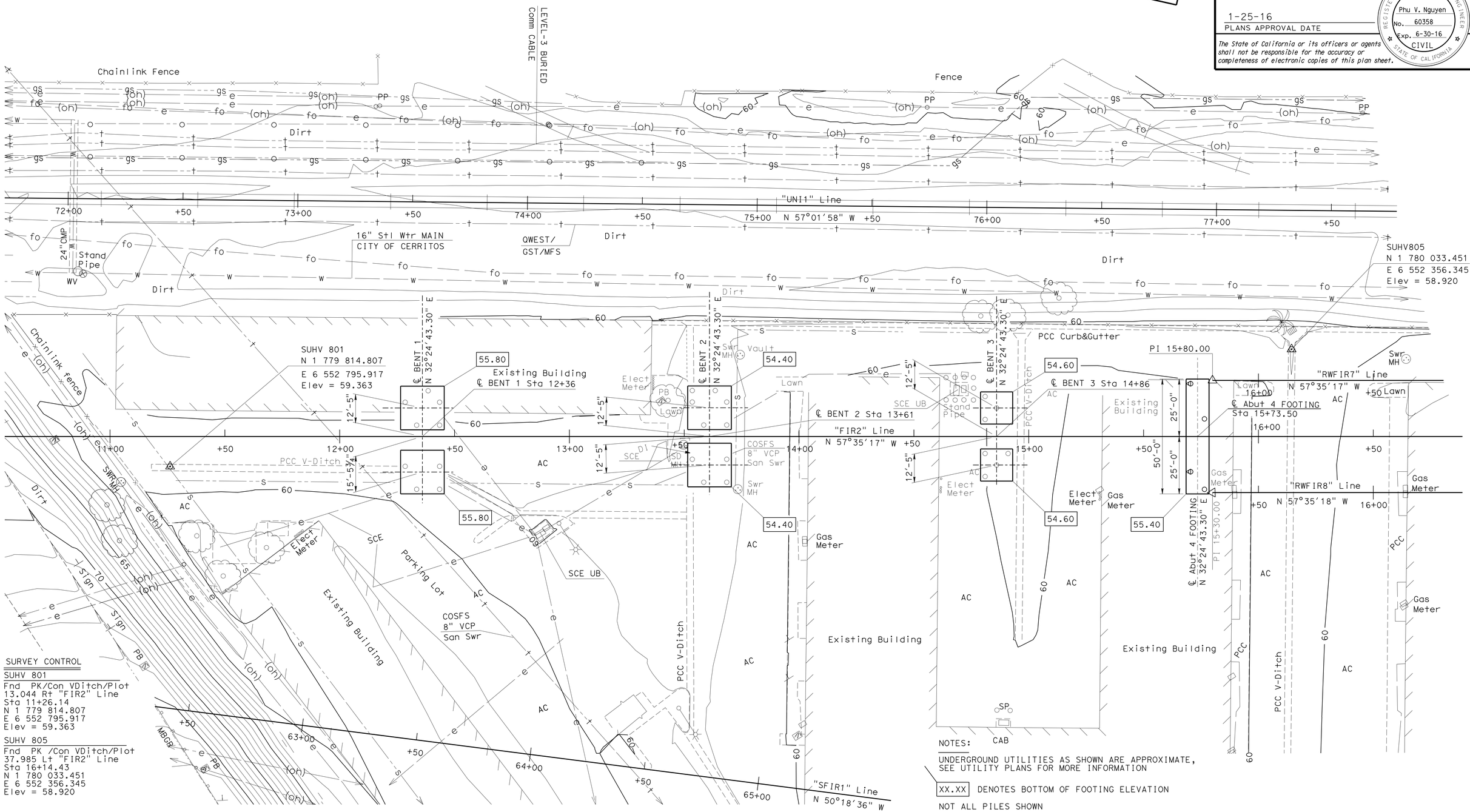

SURVEY CONTROL

SUHV 801
Fnd PK/Con VDitch/Plot
13.044 Rt "FIR2" Line
Sta 11+26.14
N 1 779 814.807
E 6 552 795.917
Elev = 59.363

SUHV 805
Fnd PK /Con VDitch/Plot
37.985 Lt "FIR2" Line
Sta 16+14.43
N 1 780 033.451
E 6 552 356.345
Elev = 58.920

NOTES:

UNDERGROUND UTILITIES AS SHOWN ARE APPROXIMATE, SEE UTILITY PLANS FOR MORE INFORMATION

XX.XX DENOTES BOTTOM OF FOOTING ELEVATION

NOT ALL PILES SHOWN

PRELIMINARY INVESTIGATION SECTION

SCALE 1"=20'	VERT.DATUM NAVD 88	PHOTOGRAMMETRY AS OF: X		
	HORZ.DATUM NAD 83	SURVEYED	BY C. Stewart	CHECKED BY C. Stewart
ALIGNMENT TIES Dist. Traverse Sheet		DRAFTED	BY M. Sadaghiani 7-13	CHECKED BY E. Vigjar 7-13

DESIGN	BY Y. Yoon	CHECKED L. Bahia/J. Peterson
DETAILS	BY J. Ramirez	CHECKED L. Bahia
QUANTITIES	BY Y. Yoon	CHECKED E. Franciliso

STATE OF CALIFORNIA
DEPARTMENT OF TRANSPORTATION

DIVISION OF ENGINEERING SERVICES
STRUCTURE DESIGN
DESIGN BRANCH 11

BRIDGE NO. 53C-2296
POST MILE 1.27

SB VALLEY VIEW AVE/S. FIRESTONE BLVD
FOUNDATION PLAN

STRUCTURES FOUNDATION PLAN SHEET (ENGLISH) (REV. 09-01-10)

ORIGINAL SCALE IN INCHES FOR REDUCED PLANS 0 1 2 3

UNIT: 3647
PROJECT NUMBER & PHASE: 0715000160-1
CONTRACT NO.: 07-2159u4

DISREGARD PRINTS BEARING EARLIER REVISION DATES

REVISION DATES 7-29-13 9-26-13 9-10-13

SHEET 3 OF 30

FILE => 53c2296-c-fp.dgn

DIST	COUNTY	ROUTE	POST MILES TOTAL PROJECT	SHEET No.	TOTAL SHEETS
07	LA,Ora	5	0.0/1.5, 44.3/44.4	1363	1622

REGISTERED CIVIL ENGINEER — DATE 3-18-15

1-25-16
PLANS APPROVAL DATE

REGISTERED PROFESSIONAL ENGINEER — Phu V. Nguyen — No. 60358 — Exp. 6-30-16 — CIVIL — STATE OF CALIFORNIA

The State of California or its officers or agents shall not be responsible for the accuracy or completeness of scanned copies of this plan sheet.

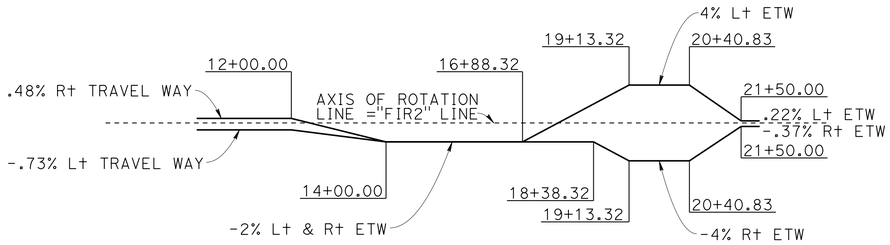

SUPERELEVATION

NO SCALE

NOTES:

1. Contours do not include camber
2. Contour interval = 0.25′
3. Except where noted, deck contours shall conform to the PG and Superelevation Diagram associated with the "VAL" Line

× Indicates 10.0′ intervals along station line

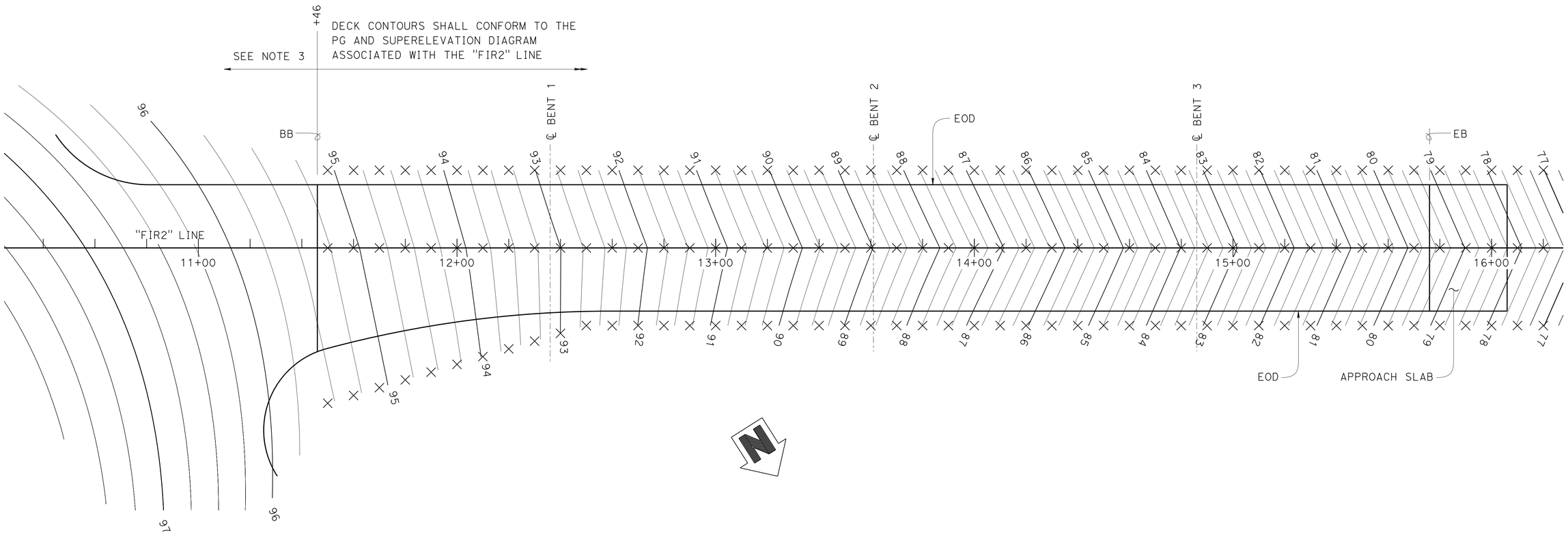

PLAN

1" = 20′-0"

DESIGN	BY Yeo Yoon	CHECKED L. Bahia/J. Peterson	
DETAILS	BY T. Bittermann	CHECKED Laith Bahia	
QUANTITIES	BY Yeo Yoon	CHECKED Evan Franciliso	

STATE OF CALIFORNIA
DEPARTMENT OF TRANSPORTATION

DIVISION OF ENGINEERING SERVICES
STRUCTURE DESIGN
DESIGN BRANCH 11

BRIDGE NO. 53C2296
POST MILE 1.27

SB VALLEY VIEW AVE/S. FIRESTONE BLVD
DECK CONTOURS

STRUCTURES DESIGN DETAIL SHEET (ENGLISH) (REV. 09-01-10)

ORIGINAL SCALE IN INCHES FOR REDUCED PLANS 0 1 2 3

UNIT: 3587
PROJECT NUMBER & PHASE: 0715000160-1
CONTRACT NO.: 07-2159U4

DISREGARD PRINTS BEARING EARLIER REVISION DATES

REVISION DATES: ~~11-29-12~~ 5-28-13

SHEET 4 OF 30

FILE => 53c2296-d-dc.dgn

USERNAME => s125624 DATE PLOTTED => 03-FEB-2016 TIME PLOTTED => 13:53

DIST	COUNTY	ROUTE	POST MILES TOTAL PROJECT	SHEET No.	TOTAL SHEETS
07	LA,Ora	5	0.0/1.5, 44.3/44.4	1364	1622

REGISTERED CIVIL ENGINEER 3-18-15 DATE

1-25-16
PLANS APPROVAL DATE

REGISTERED PROFESSIONAL ENGINEER Phu V. Nguyen No. 60358 Exp. 6-30-16 CIVIL STATE OF CALIFORNIA

The State of California or its officers or agents shall not be responsible for the accuracy or completeness of electronic copies of this plan sheet.

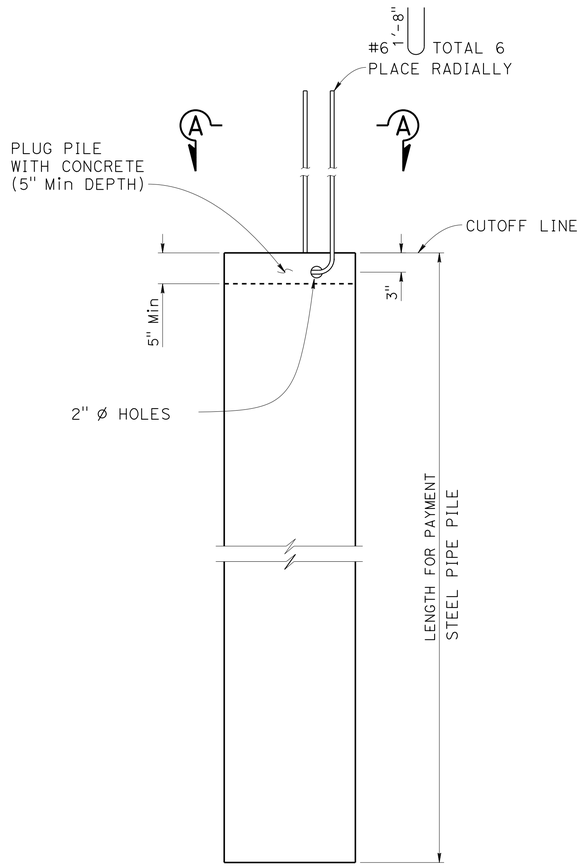

24"Ø STEEL PIPE PILE (PP24 X 0.5)

NO SCALE

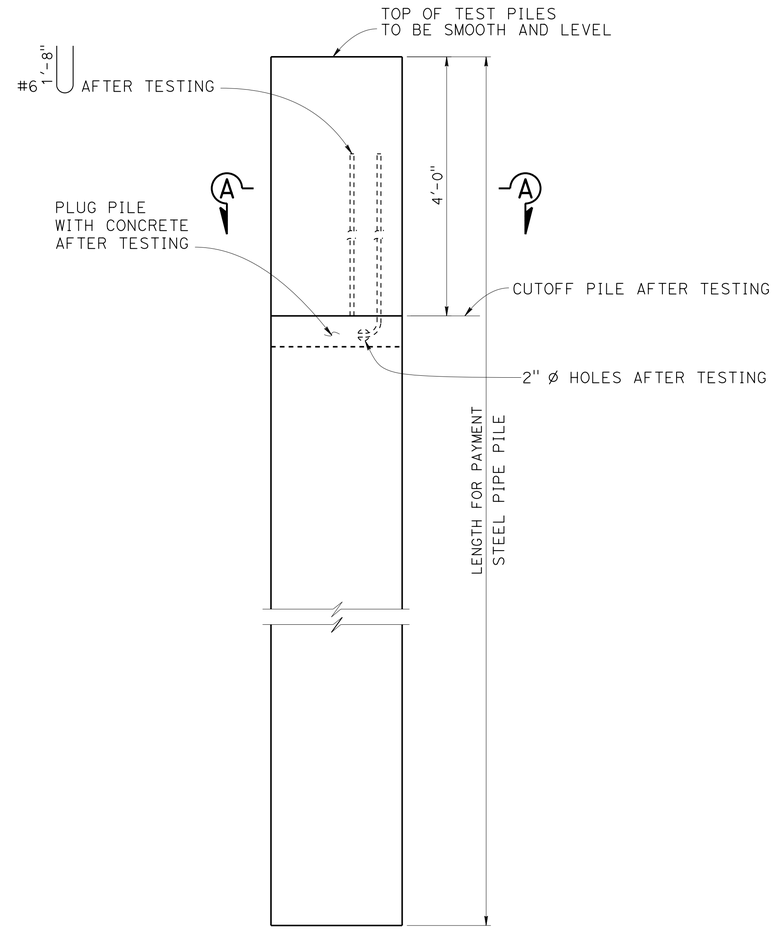

LOAD TEST PILES

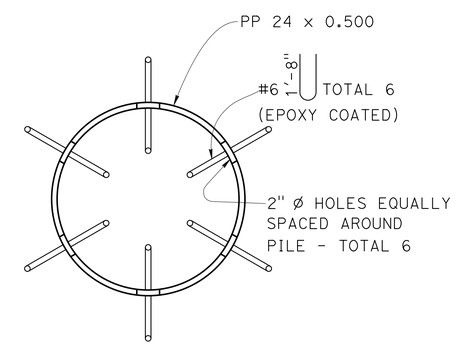

SECTION A-A

NO SCALE

NOTES:

1. Pile reinforcement extending into footing shall be hooked as required to provide clearance to top of footing.
2. One test pile is required at each of Bents 1 thru 3 and Abut 4. Specific test pile at each support to be determined by the Contractor and approved by the Engineer.

	BY	CHECKED
DESIGN	Yeo Yoon	L. Bahia/J. Peterson
DETAILS	Jaime Ramirez	Laith Bahia
QUANTITIES	Yeo Yoon	Evan Franciliso

STATE OF CALIFORNIA
DEPARTMENT OF TRANSPORTATION

DIVISION OF ENGINEERING SERVICES
STRUCTURE DESIGN
DESIGN BRANCH 11

BRIDGE NO. 53C2296
POST MILE 1.27

SB VALLEY VIEW AVE/S. FIRESTONE BLVD
PILE DETAILS

STRUCTURES DESIGN DETAIL SHEET (ENGLISH) (REV. 09-01-10)

ORIGINAL SCALE IN INCHES FOR REDUCED PLANS 0 1 2 3

UNIT: 3587
PROJECT NUMBER & PHASE: 0715000160-1
CONTRACT NO.: 07-2159u4

DISREGARD PRINTS BEARING EARLIER REVISION DATES

REVISION DATES 4-29-13 5-28-13 12-3-13

SHEET 5 OF 30

FILE => 53c2296-d-pdt01.dgn

USERNAME => s125624 DATE PLOTTED => 03-FEB-2016 TIME PLOTTED => 13:53

DIST	COUNTY	ROUTE	POST MILES TOTAL PROJECT	SHEET No.	TOTAL SHEETS
07	LA,Ora	5	0.0/1.5, 44.3/44.4	1365	1622

REGISTERED CIVIL ENGINEER 3-18-15 DATE

1-25-16
PLANS APPROVAL DATE

REGISTERED PROFESSIONAL ENGINEER Phu V. Nguyen No. 60358 Exp. 6-30-16 CIVIL STATE OF CALIFORNIA

The State of California or its officers or agents shall not be responsible for the accuracy or completeness of electronic copies of this plan sheet.

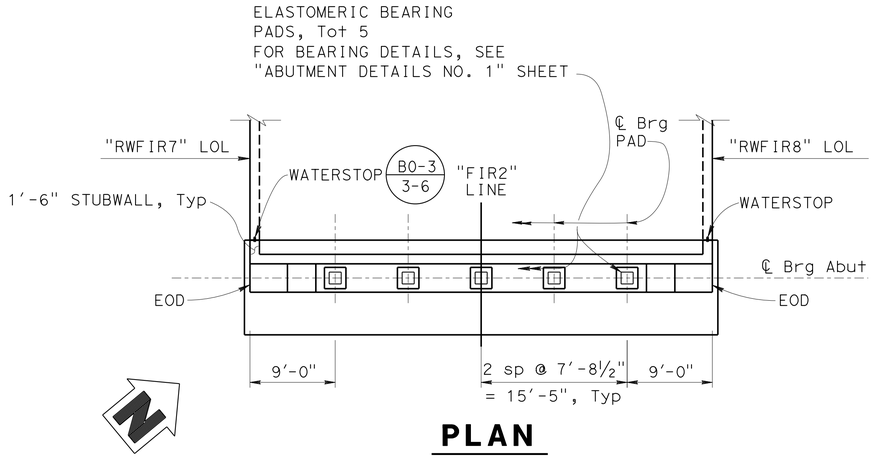

PLAN

⅛" = 1'-0"

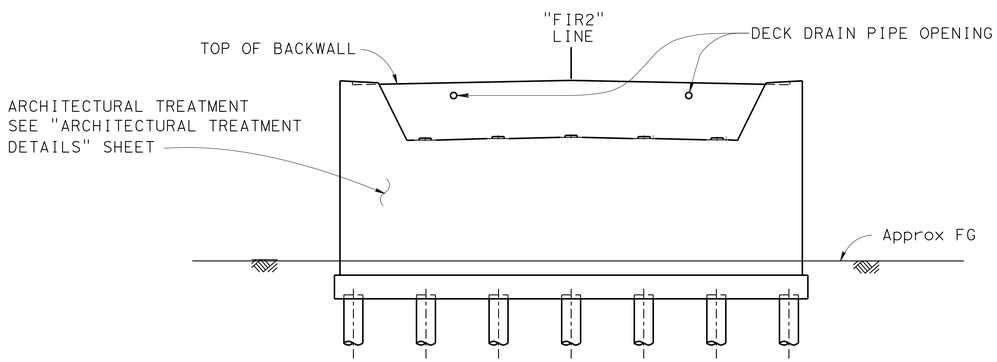

ELEVATION

⅛" = 1'-0"

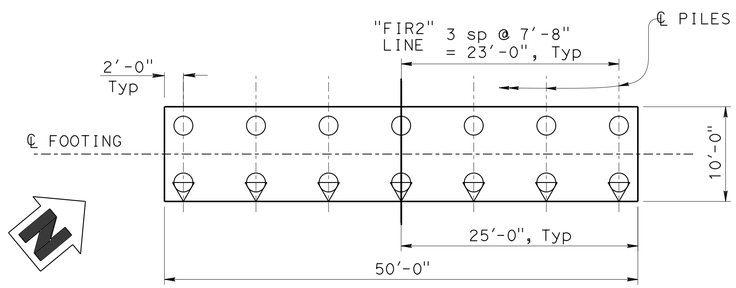

PILE LAYOUT

⅛" = 1'-0"

LEGEND:

- ○ - INDICATES 24"ø STEEL PIPE PILE (PP 24 x 0.5)
- ⊖ - INDICATES (1:3) BATTERED 24"ø STEEL PIPE PILE (PP 24 x 0.5)

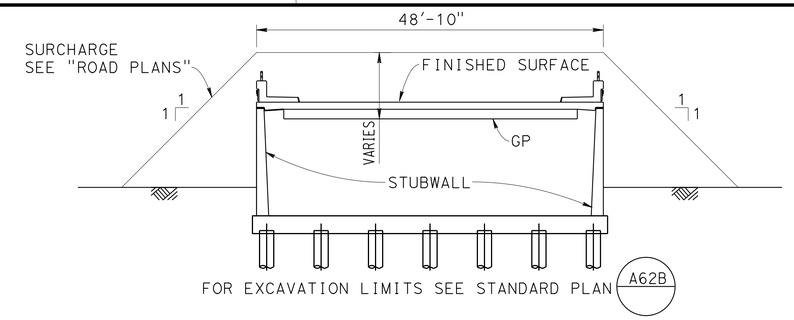

EMBANKMENT SURCHARGE

NOT TO SCALE

NOTES:

1. Joint Seal MR = 2" (B6-21)
2. Expanded Polystyrene (B0-13)

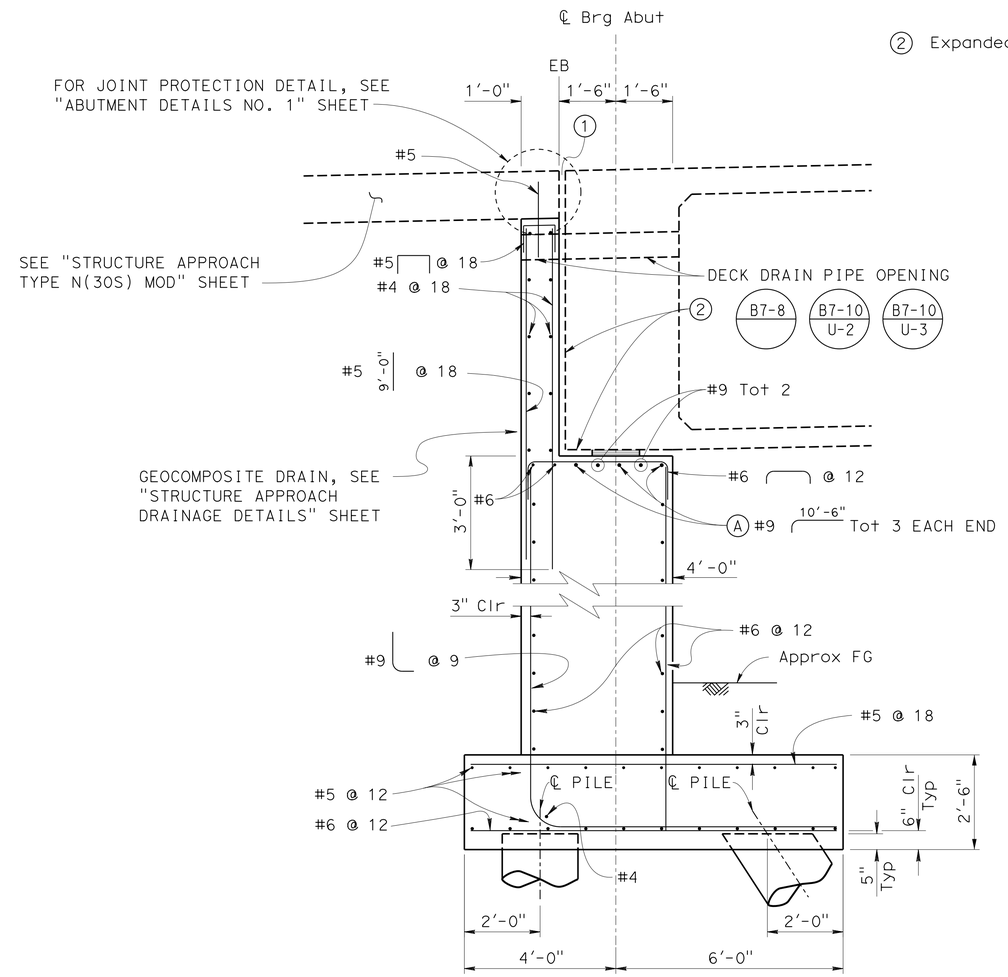

ABUTMENT SECTION

½" = 1'-0"

DESIGN	BY Yeo Yoon	CHECKED L. Bahia/J. Peterson	STATE OF CALIFORNIA DEPARTMENT OF TRANSPORTATION	DIVISION OF ENGINEERING SERVICES STRUCTURE DESIGN DESIGN BRANCH 11	BRIDGE NO. 53C2296
DETAILS	BY Jaime Ramirez	CHECKED Laith Bahia			POST MILE 1.27
QUANTITIES	BY Yeo Yoon	CHECKED Evan Franciliso			

SB VALLEY VIEW AVE/S. FIRESTONE BLVD

ABUTMENT 4 LAYOUT

STRUCTURES DESIGN DETAIL SHEET (ENGLISH) (REV. 09-01-10)

ORIGINAL SCALE IN INCHES FOR REDUCED PLANS 0 1 2 3

UNIT: 3587
PROJECT NUMBER & PHASE: 0715000160-1 CONTRACT NO.: 07-2159u4

DISREGARD PRINTS BEARING EARLIER REVISION DATES

REVISION DATES 12-26-12 9-11-13 9-26-13 5-28-15 SHEET 6 OF 30

FILE => 53c2296-e-abt_lo.dgn

USERNAME => s125624 DATE PLOTTED => 03-FEB-2016 TIME PLOTTED => 13:53

DIST	COUNTY	ROUTE	POST MILES TOTAL PROJECT	SHEET No.	TOTAL SHEETS
07	LA,Ora	5	0.0/1.5, 44.3/44.4	1366	1622

REGISTERED CIVIL ENGINEER 3-18-15 DATE

1-25-16
PLANS APPROVAL DATE

REGISTERED PROFESSIONAL ENGINEER Phu V. Nguyen No. 60358 Exp. 6-30-16 CIVIL STATE OF CALIFORNIA

The State of California or its officers or agents shall not be responsible for the accuracy or completeness of electronic copies of this plan sheet.

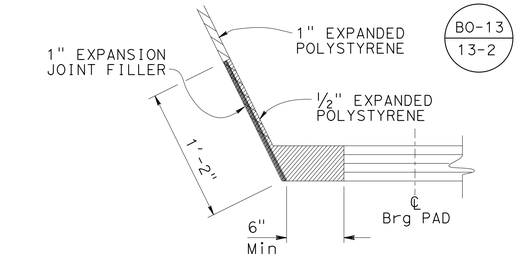

DETAIL A

NO SCALE

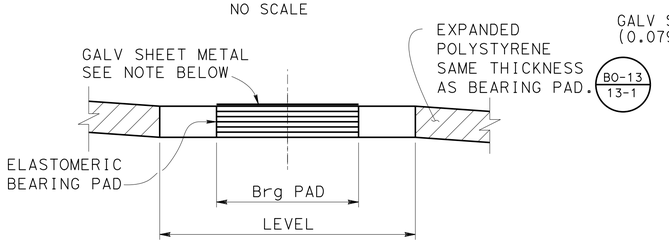

NOTE: Coat top of Bearing Pad with silicone grease prior to placing sheet metal

SECTION D-D
BEARING PAD DETAIL

NO SCALE

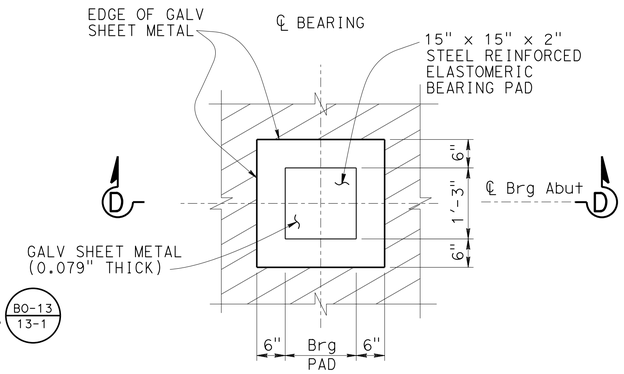

BEARING PAD PLAN

NO SCALE

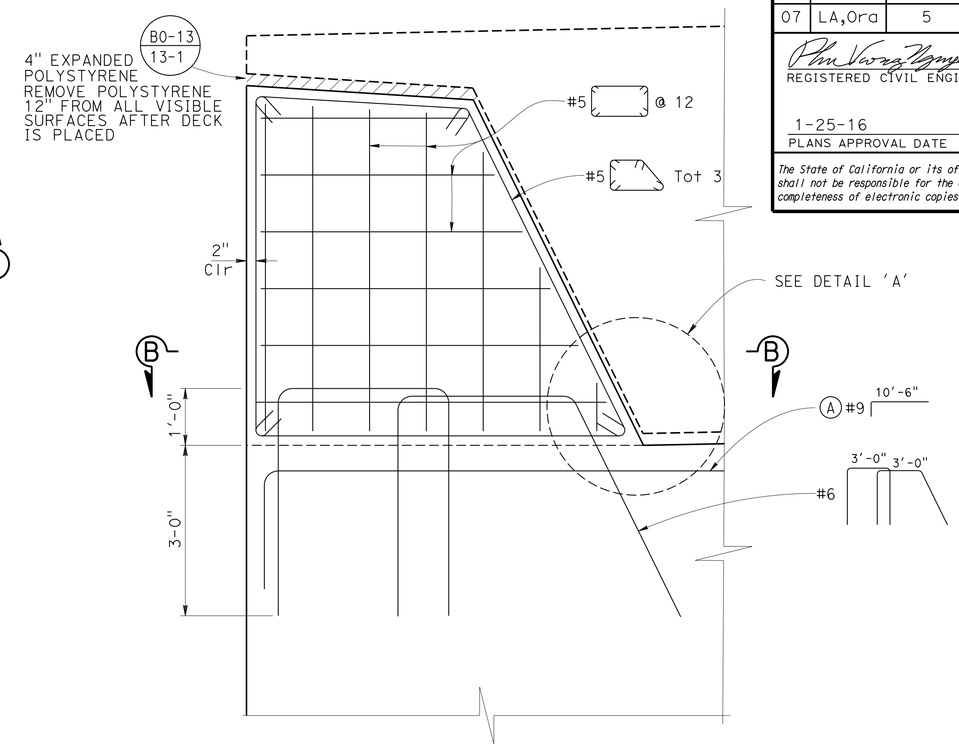

EXTERNAL SHEAR KEY

¾" = 1'-0"

NOTE: Lt Shear Key Reinf shown
Rt Shear Key Reinf similar

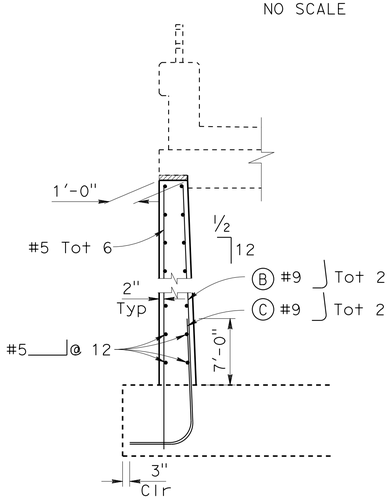

SECTION E-E

NO SCALE

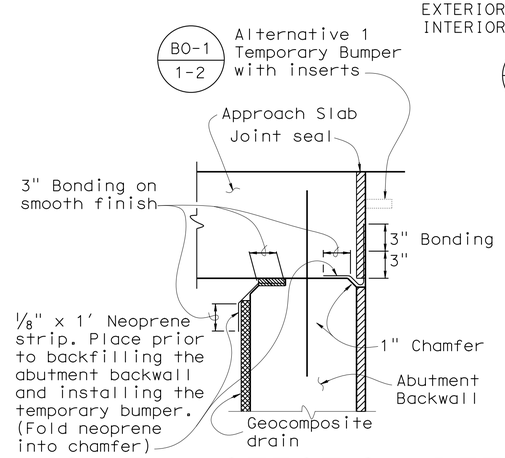

JOINT PROTECTION DETAIL

NO SCALE

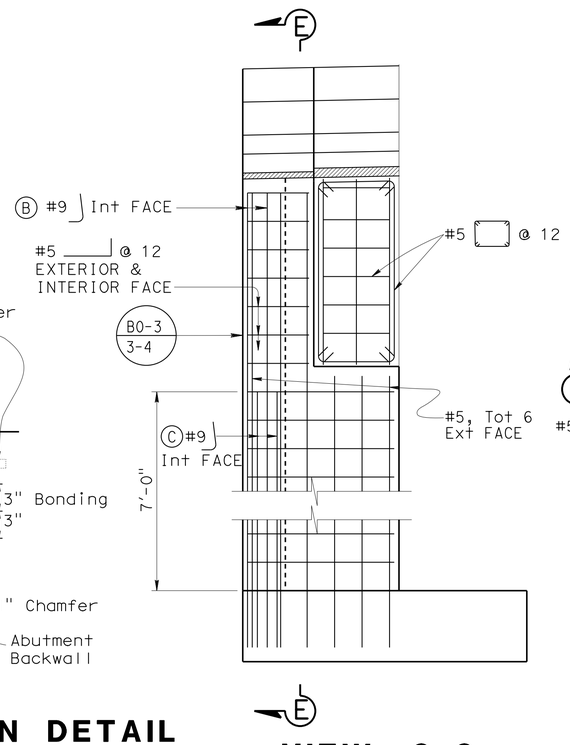

VIEW C-C

NO SCALE

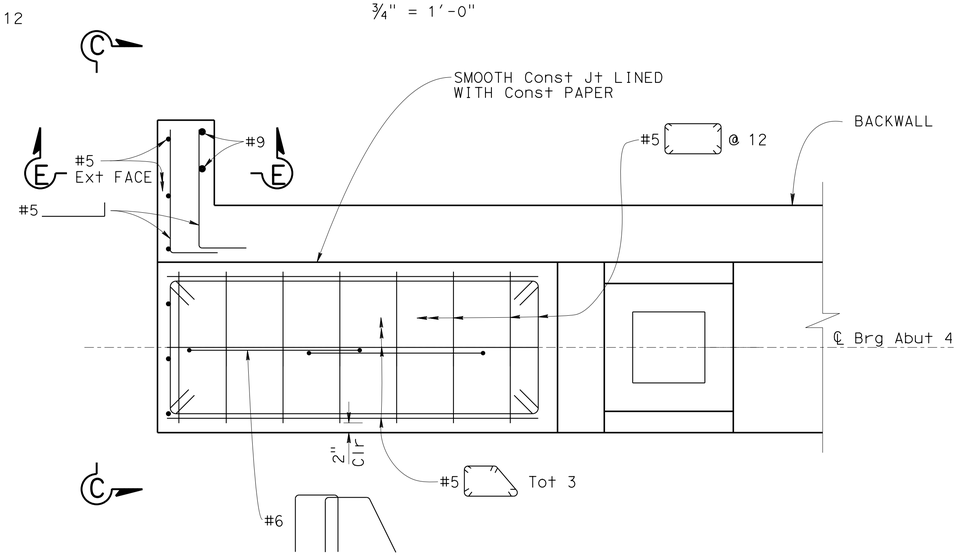

SECTION B-B

¾" = 1'-0"

NOTE:

For reinforcement and details not shown see Concrete Barrier Type 26, Structure Approach Type N(30S), and Abutment Footing sheets

DESIGN	BY Yeo Yoon	CHECKED L. Bahia/J. Peterson	
DETAILS	BY Jaime Ramirez	CHECKED Laith Bahia	
QUANTITIES	BY Yeo Yoon	CHECKED Evan Franciliso	

STATE OF CALIFORNIA
DEPARTMENT OF TRANSPORTATION

DIVISION OF ENGINEERING SERVICES
STRUCTURE DESIGN
DESIGN BRANCH 11

BRIDGE NO. 53C2296
POST MILE 1.27

SB VALLEY VIEW AVE/S. FIRESTONE BLVD
ABUTMENT DETAILS NO. 1

STRUCTURES DESIGN DETAIL SHEET (ENGLISH) (REV. 09-01-10)

ORIGINAL SCALE IN INCHES FOR REDUCED PLANS 0 1 2 3

UNIT: 3587
PROJECT NUMBER & PHASE: 0715000160-1
CONTRACT NO.: 07-2159u4

DISREGARD PRINTS BEARING EARLIER REVISION DATES

REVISION DATES 12-28-12 5-8-13 5-28-13 9-26-13

SHEET 7 OF 30

FILE => 53c2296-e-abtdet.dgn

USERNAME => s125624 DATE PLOTTED => 03-FEB-2016 TIME PLOTTED => 13:53

DIST	COUNTY	ROUTE	POST MILES TOTAL PROJECT	SHEET No.	TOTAL SHEETS
07	LA,Ora	5	0.0/1.5, 44.3/44.4	1367	1622

REGISTERED CIVIL ENGINEER 3-18-15 DATE

1-25-16
PLANS APPROVAL DATE

REGISTERED PROFESSIONAL ENGINEER Phu V. Nguyen No. 60358 Exp. 6/30/16 CIVIL STATE OF CALIFORNIA

The State of California or its officers or agents shall not be responsible for the accuracy or completeness of scanned copies of this plan sheet.

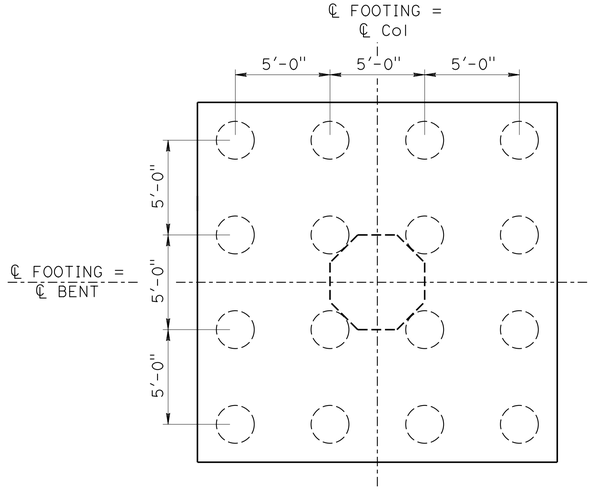

PILE LAYOUT, BENTS 1 & 2

1/4" = 1'-0"

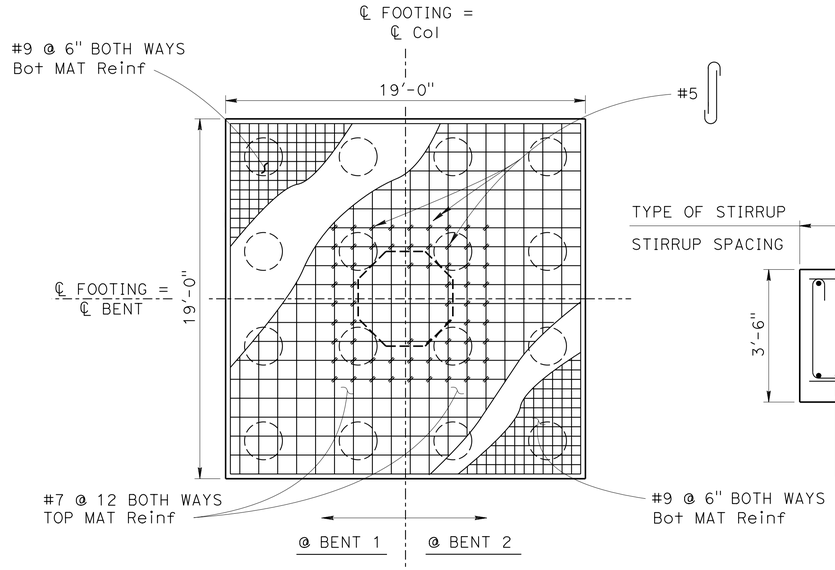

FOOTING PLAN

1/4" = 1'-0"

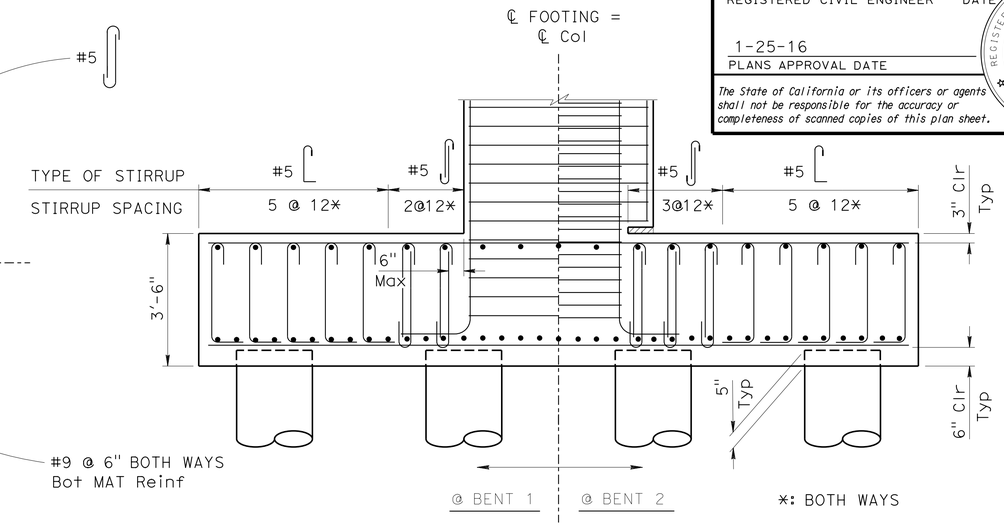

SECTION

1/2" = 1'-0"

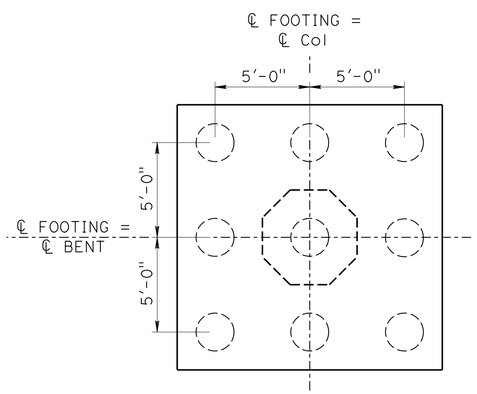

PILE LAYOUT, BENT 3

1/4" = 1'-0"

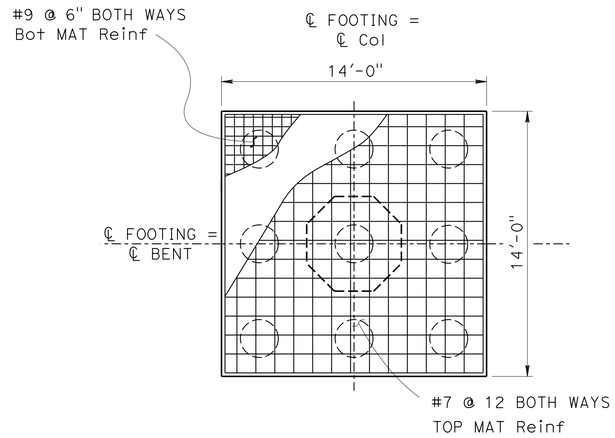

FOOTING PLAN, BENT 3

1/4" = 1'-0"

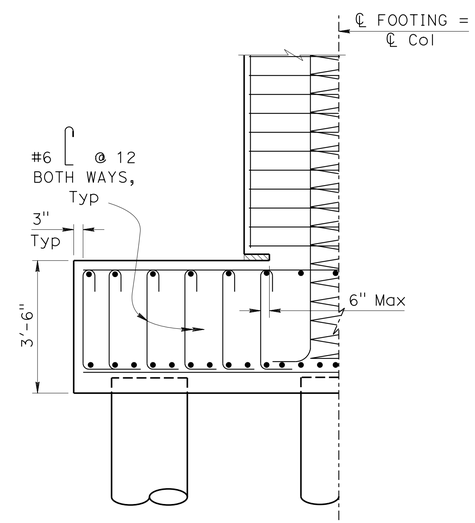

SECTION, BENT 3

1/2" = 1'-0"

LEGEND:

Indicates 24" ø Steel Pipe Pile (PP 24 x 0.5)

NOTE:

1. Details are symmetrical about ℄ Bent & ℄ Footing

	BY	CHECKED
DESIGN	Yeo Yoon	L. Bahia/J. Peterson
DETAILS	Loren Goldthwait	Laith Bahia
QUANTITIES	Yeo Yoon	Evan Franciliso

STATE OF CALIFORNIA
DEPARTMENT OF TRANSPORTATION

DIVISION OF ENGINEERING SERVICES
STRUCTURE DESIGN
DESIGN BRANCH 11

BRIDGE NO. 53C2296
POST MILE 1.27

SB VALLEY VIEW AVE/S. FIRESTONE BLVD

FOOTING DETAILS

STRUCTURES DESIGN DETAIL SHEET (ENGLISH) (REV. 09-01-10)

ORIGINAL SCALE IN INCHES FOR REDUCED PLANS 0 1 2 3

UNIT: 3587
PROJECT NUMBER & PHASE: 0715000160-1
CONTRACT NO.: 07-2159U4

DISREGARD PRINTS BEARING EARLIER REVISION DATES

REVISION DATES: 12-24-12 5-28-13 9-10-13 3-13-13

SHEET 8 OF 30

FILE => 53c2296-k-ftgdet.dgn

USERNAME => s129624 DATE PLOTTED => 03-FEB-2016 TIME PLOTTED => 13:53

DIST	COUNTY	ROUTE	POST MILES TOTAL PROJECT	SHEET No.	TOTAL SHEETS
07	LA,Ora	5	0.0/1.5, 44.3/44.4	1368	1622

REGISTERED CIVIL ENGINEER — DATE 3-18-15

1-25-16
PLANS APPROVAL DATE

REGISTERED PROFESSIONAL ENGINEER — Phu V. Nguyen — No. 60358 — Exp. 12/31/16 — CIVIL — STATE OF CALIFORNIA

The State of California or its officers or agents shall not be responsible for the accuracy or completeness of electronic copies of this plan sheet.

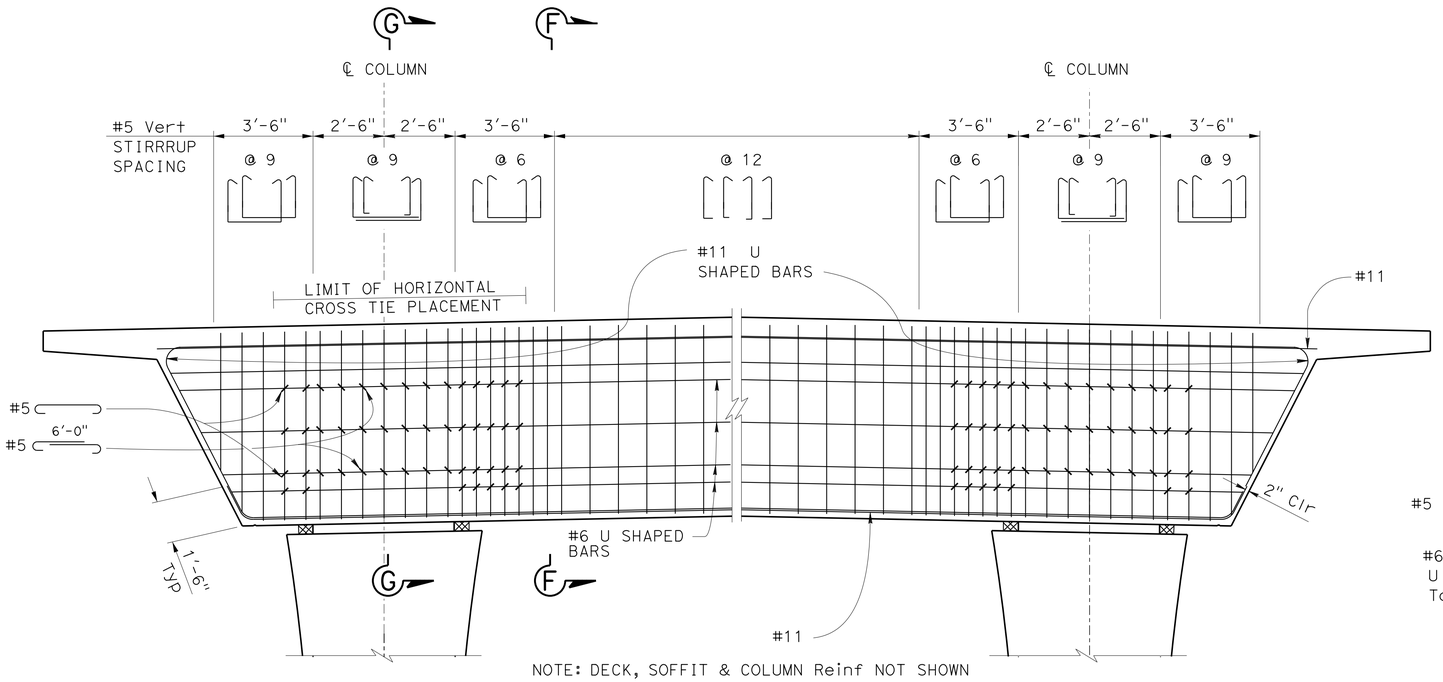

NOTE: DECK, SOFFIT & COLUMN Reinf NOT SHOWN

BENTS 1, 2 & 3 ELEVATION

NO SCALE

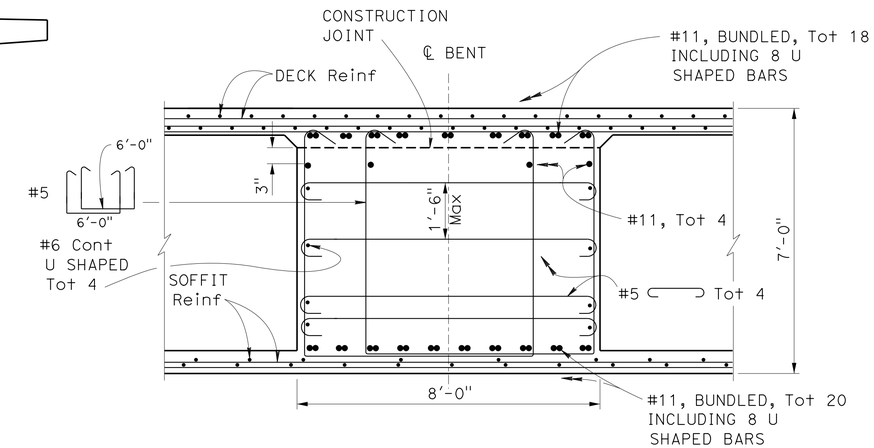

SECTION F-F - BENT CAP DETAIL

½" = 1'-0"

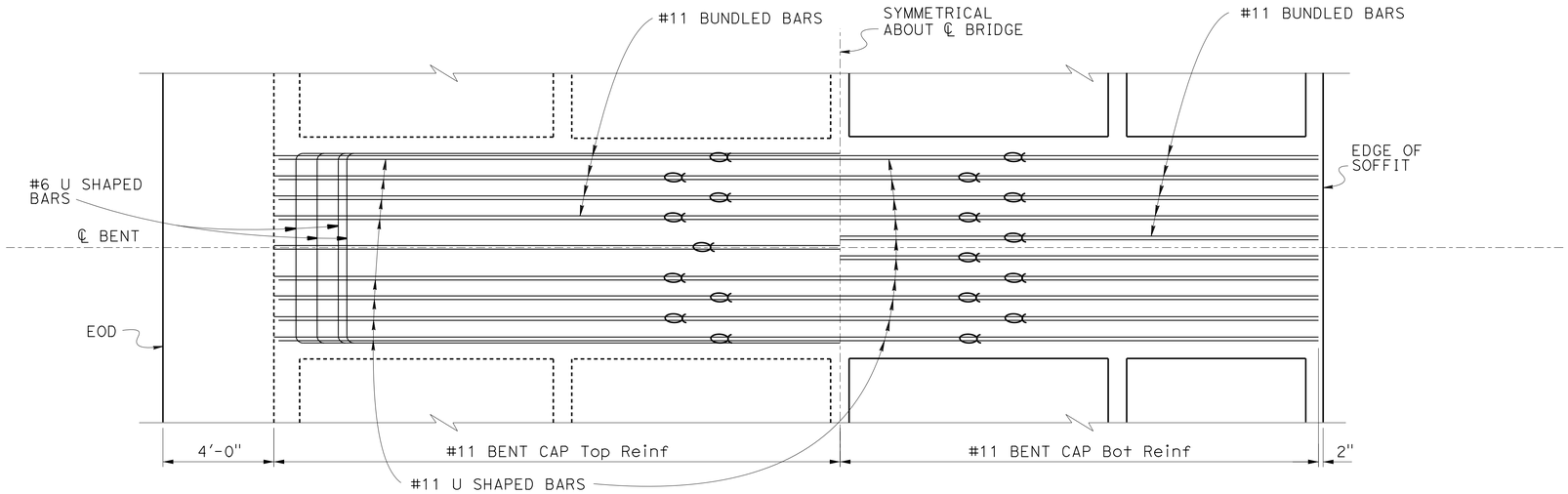

PLAN

NO SCALE

NOTES:

1. Deck, Soffit and Column reinf not shown
2. Minor adjustments may be made in #11 BUNDLED BAR spacing to clear column reinf

Indicates Bundled Bars

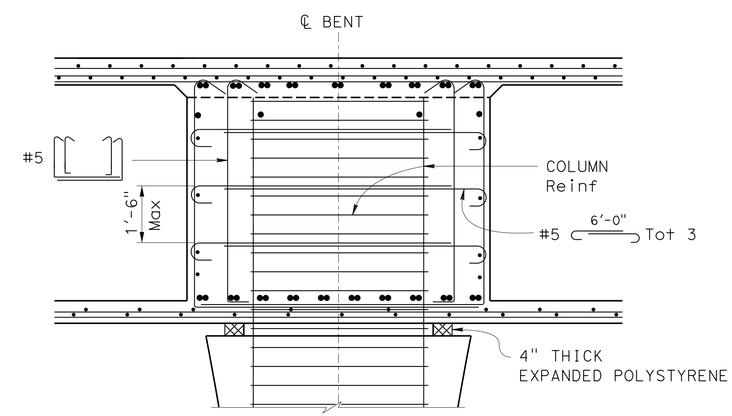

NOTE: SEE SECTION E-E FOR DETAILS NOT SHOWN

SECTION G-G - BENT CAP DETAIL AT COLUMN

½" = 1'-0"

NOTE:
THE CONTRACTOR SHALL VERIFY ALL CONTROLLING FIELD DIMENSIONS BEFORE ORDERING OR FABRICATING ANY MATERIAL.

	BY	CHECKED
DESIGN	Yeo Yoon	L. Bahia/J. Peterson
DETAILS	Loren Goldthwait	Laith Bahia
QUANTITIES	Yeo Yoon	Evan Franciliso

STATE OF CALIFORNIA
DEPARTMENT OF TRANSPORTATION

DIVISION OF ENGINEERING SERVICES
STRUCTURE DESIGN
DESIGN BRANCH 11

BRIDGE NO. 53C2296
POST MILE 1.27

SB VALLEY VIEW AVE/S. FIRESTONE BLVD
BENT DETAILS

STRUCTURES DESIGN DETAIL SHEET (ENGLISH) (REV. 09-01-10)

ORIGINAL SCALE IN INCHES FOR REDUCED PLANS 0 1 2 3

UNIT: 3587
PROJECT NUMBER & PHASE: 0715000160-1
CONTRACT NO.: 07-2159u4

DISREGARD PRINTS BEARING EARLIER REVISION DATES

REVISION DATES: 1-14-13 3-28-13 4-08-13 5-28-13

SHEET 9 OF 30

FILE => 53c2296-m-bntdet.dgn

USERNAME => s129624 DATE PLOTTED => 03-FEB-2016 TIME PLOTTED => 13:53

DIST	COUNTY	ROUTE	POST MILES TOTAL PROJECT	SHEET No.	TOTAL SHEETS
07	LA,Ora	5	0.0/1.5, 44.3/44.4	1369	1622

REGISTERED CIVIL ENGINEER — DATE 3-18-15

1-25-16
PLANS APPROVAL DATE

REGISTERED PROFESSIONAL ENGINEER — Phu V. Nguyen — No. 60358 — Exp. 6/30/16 — CIVIL — STATE OF CALIFORNIA

The State of California or its officers or agents shall not be responsible for the accuracy or completeness of scanned copies of this plan sheet.

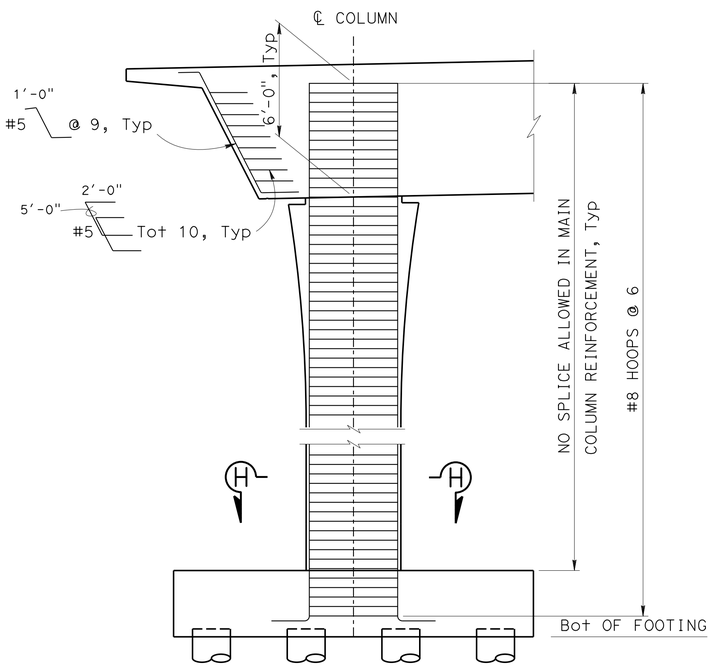

BENT 1 ELEVATION

1/4" = 1'-0"

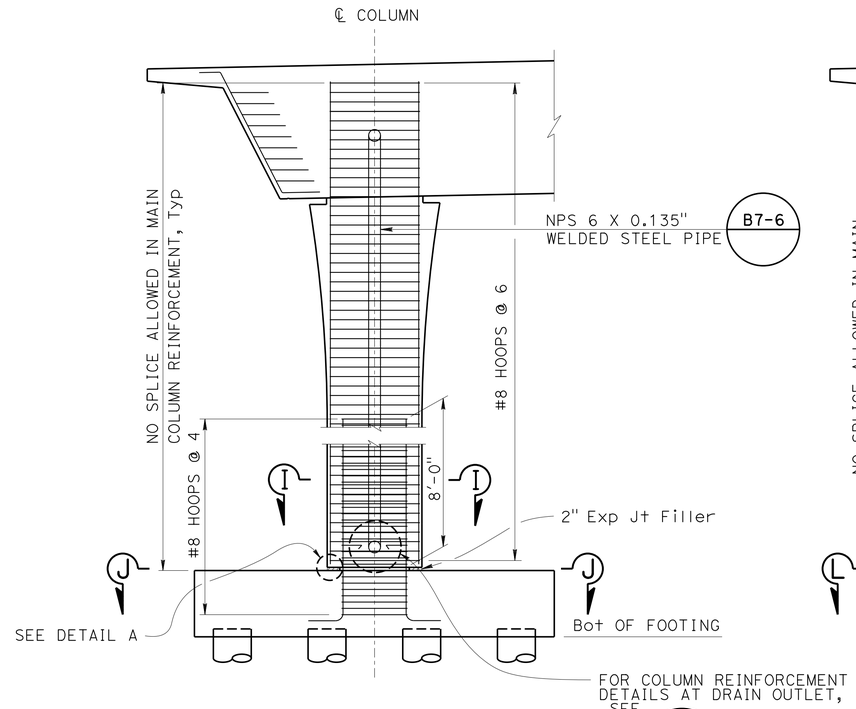

BENT 2 ELEVATION

1/4" = 1'-0"

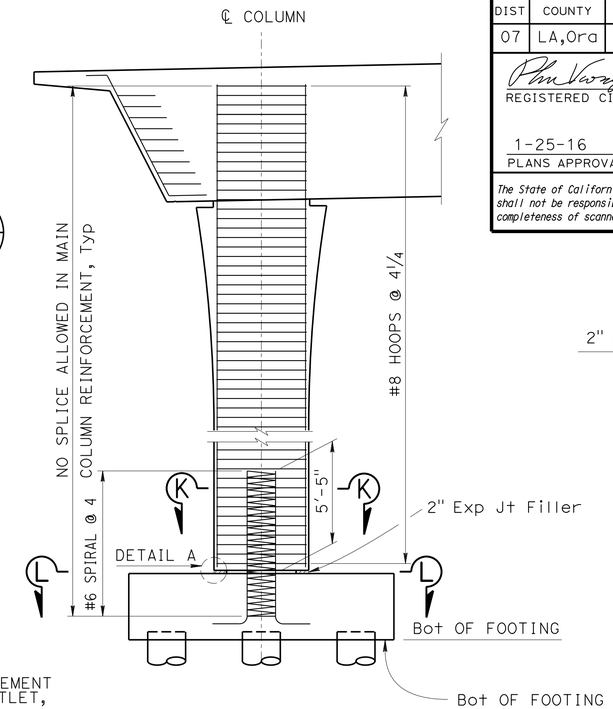

BENT 3 ELEVATION

1/4" = 1'-0"

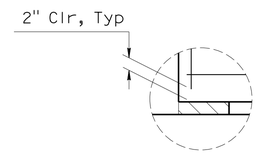

DETAIL A

NO SCALE

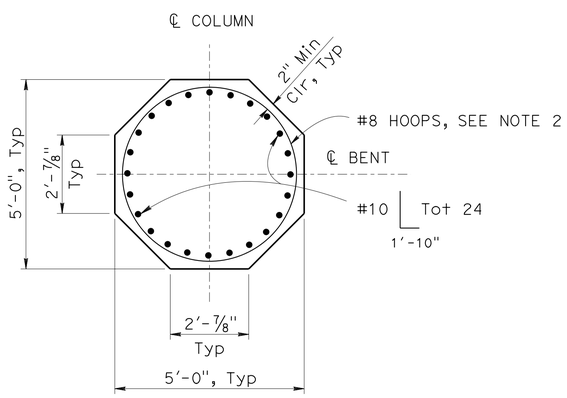

SECTION H-H, BENT 1

1/2" = 1'-0"

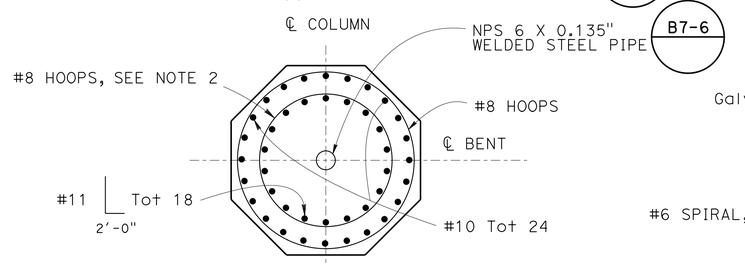

SECTION I-I, BENT 2

1/2" = 1'-0"

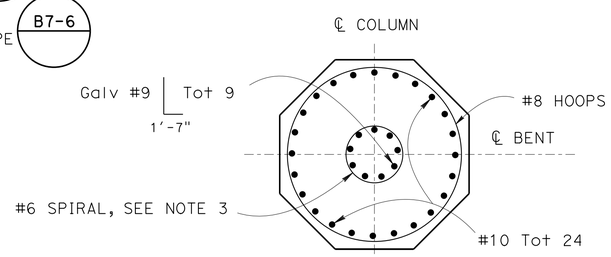

SECTION K-K, BENT 3

1/2" = 1'-0"

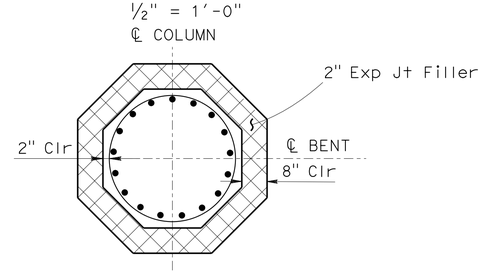

SECTION J-J, BENT 2

1/2" = 1'-0"

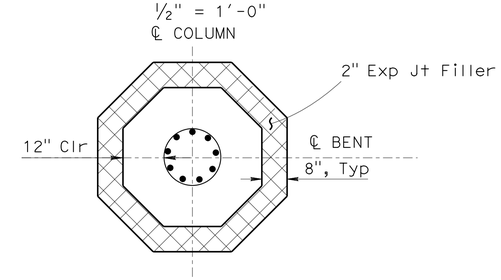

SECTION L-L, BENT 3

1/2" = 1'-0"

Notes

1. For reinforcing rebar steels in footings, see 'FOOTING DETAILS" sheet.
2. Extend column hoops into footing at same spacing as in cloumn, to point of tangency of column reinforcing rebar steels.
3. Spiral at ends shall be terminated with a 135° hook with a 6" tail hooked around column reinforcing rebar steels.
4. All hoops and spirals are "Ultimate " Butt Spliced continuous.

	BY	CHECKED
DESIGN	Yeo Yoon	L. Bahia/J. Peterson
DETAILS	Loren Goldthwait	Laith Bahia
QUANTITIES	Yeo Yoon	Evan Franciliso

STATE OF CALIFORNIA
DEPARTMENT OF TRANSPORTATION

DIVISION OF ENGINEERING SERVICES
STRUCTURE DESIGN
DESIGN BRANCH 11

BRIDGE NO. 53C2296
POST MILE 1.27

SB VALLEY VIEW AVE/S. FIRESTONE BLVD
COLUMN DETAILS NO.1

STRUCTURES DESIGN DETAIL SHEET (ENGLISH) (REV. 09-01-10)

ORIGINAL SCALE IN INCHES FOR REDUCED PLANS 0 1 2 3

UNIT: 3587
PROJECT NUMBER & PHASE: 0715000160-1
CONTRACT NO.: 07-2159U4

DISREGARD PRINTS BEARING EARLIER REVISION DATES

REVISION DATES: 12-12-12 | 9-04-13 | 9-12-13 | 9-27-13

SHEET 10 OF 30

FILE => 53c2296-m-coldet1.dgn

USERNAME => s125624 DATE PLOTTED => 03-FEB-2016 TIME PLOTTED => 13:53

DIST	COUNTY	ROUTE	POST MILES TOTAL PROJECT	SHEET No.	TOTAL SHEETS
07	LA,Ora	5	0.0/1.5, 44.3/44.4	1370	1622

REGISTERED CIVIL ENGINEER 3-18-15 DATE

1-25-16
PLANS APPROVAL DATE

REGISTERED PROFESSIONAL ENGINEER Phu V. Nguyen No. 60358 Exp. 6/30/16 CIVIL STATE OF CALIFORNIA

The State of California or its officers or agents shall not be responsible for the accuracy or completeness of scanned copies of this plan sheet.

LEGEND

(H) = #6 / Tot 19

(I) = #7 HOOPS @ 6, STAGGER SPLICES

(J) = #6 / Tot 12

(K) = #6 2'-3" / 2'-3" 1'-6" @ 6

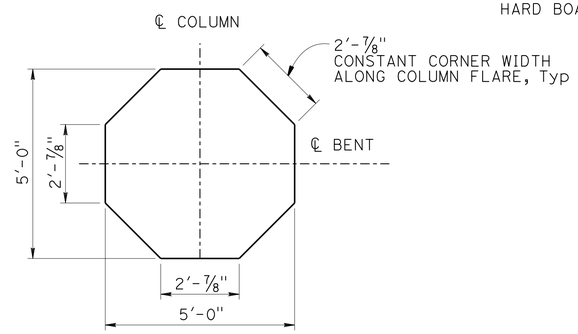

SECTION M-M

1/2" = 1'-0"

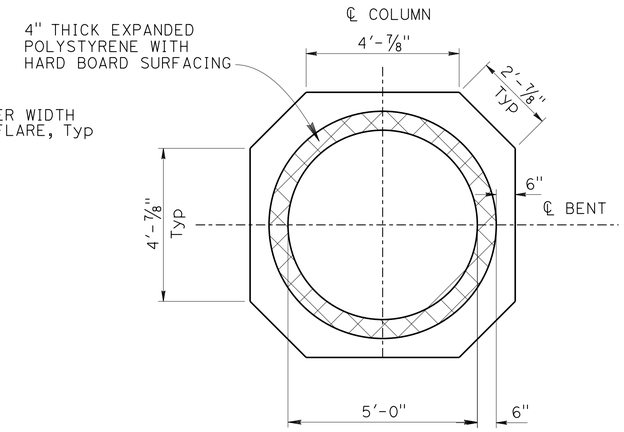

SECTION N-N

1/2" = 1'-0"

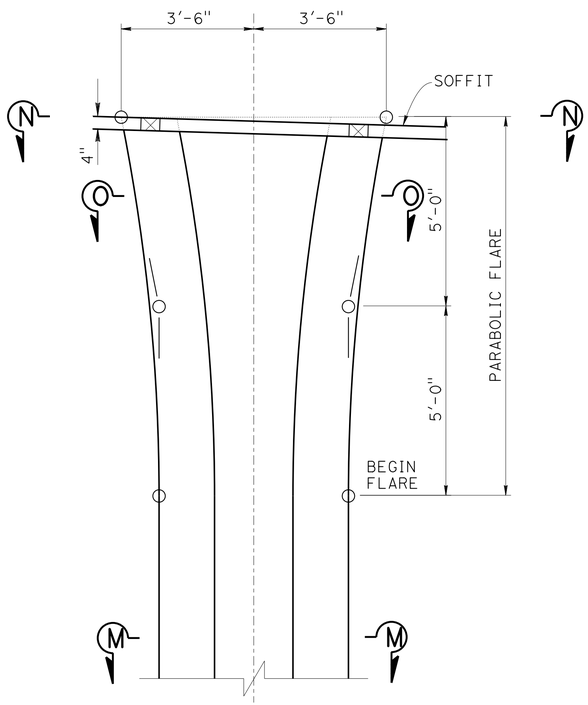

TYPICAL COLUMN GEOMETRY

1/2" = 1'-0"

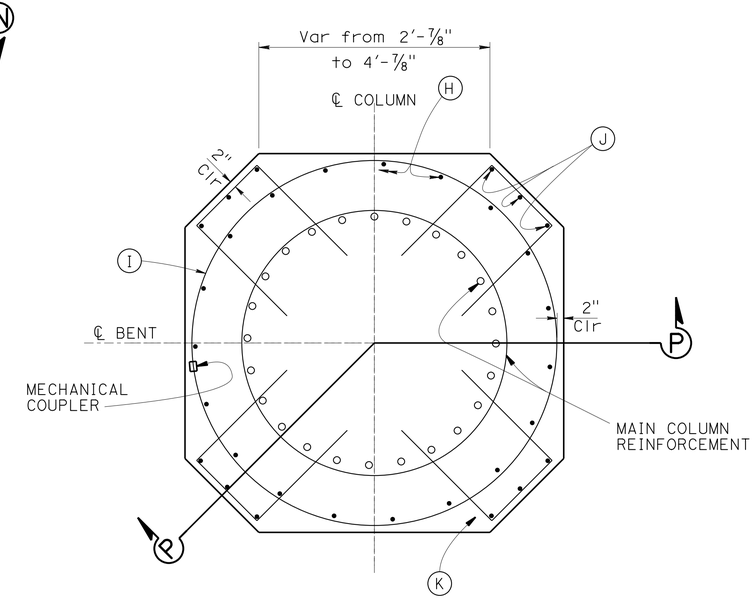

SECTION O-O

3/4" = 1'-0"

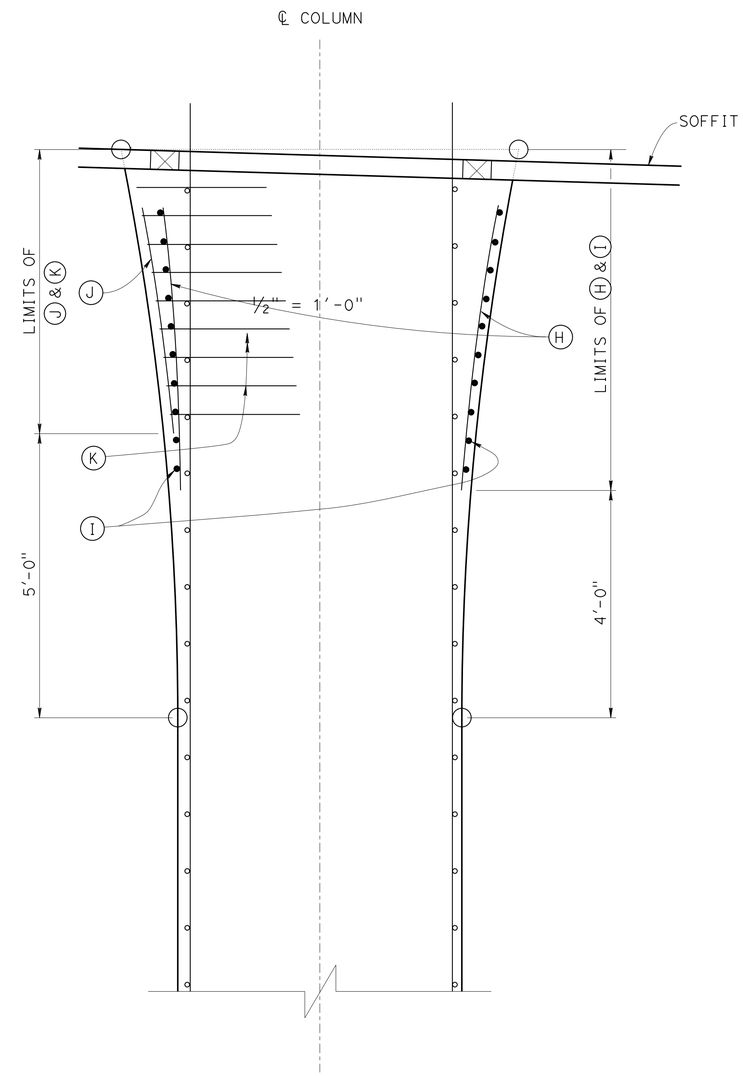

SECTION P-P

3/4" = 1'-0"

DESIGN	BY Yeo Yoon	CHECKED L. Bahia/J. Peterson	
DETAILS	BY Loren Goldthwait	CHECKED Laith Bahia	
QUANTITIES	BY Yeo Yoon	CHECKED Evan Franciliso	

STATE OF CALIFORNIA DEPARTMENT OF TRANSPORTATION

DIVISION OF ENGINEERING SERVICES STRUCTURE DESIGN DESIGN BRANCH 11

BRIDGE NO. 53C2296

POST MILE 1.27

SB VALLEY VIEW AVE/S. FIRESTONE BLVD
COLUMN DETAILS NO. 2

STRUCTURES DESIGN DETAIL SHEET (ENGLISH) (REV. 09-01-10)

ORIGINAL SCALE IN INCHES FOR REDUCED PLANS 0 1 2 3

UNIT: 3587
PROJECT NUMBER & PHASE: 0715000160-1
CONTRACT NO.: 07-2159u4

DISREGARD PRINTS BEARING EARLIER REVISION DATES

REVISION DATES 3-18-13 4-08-13 5-07-13 5-28-13

SHEET 11 OF 30

FILE => 53c2296-m-coldet2.dgn

USERNAME => s125624 DATE PLOTTED => 03-FEB-2016 TIME PLOTTED => 13:53

DIST	COUNTY	ROUTE	POST MILES TOTAL PROJECT	SHEET No.	TOTAL SHEETS
07	LA,Ora	5	0.0/1.5, 44.3/44.4	1371	1622

REGISTERED CIVIL ENGINEER 3-18-15 DATE

1-25-16
PLANS APPROVAL DATE

REGISTERED PROFESSIONAL ENGINEER Phu V. Nguyen No. 60358 Exp. 6-30-16 CIVIL STATE OF CALIFORNIA

The State of California or its officers or agents shall not be responsible for the accuracy or completeness of electronic copies of this plan sheet.

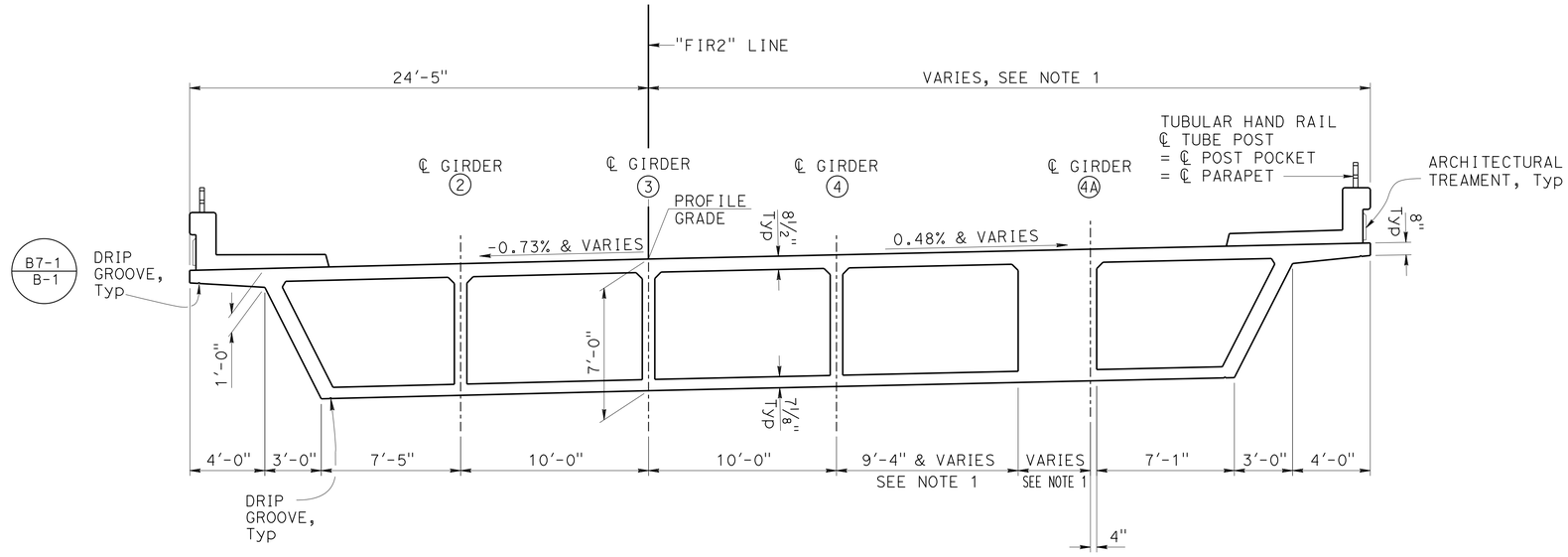

TYPICAL SECTION - SPAN 1

1/4" = 1'-0"

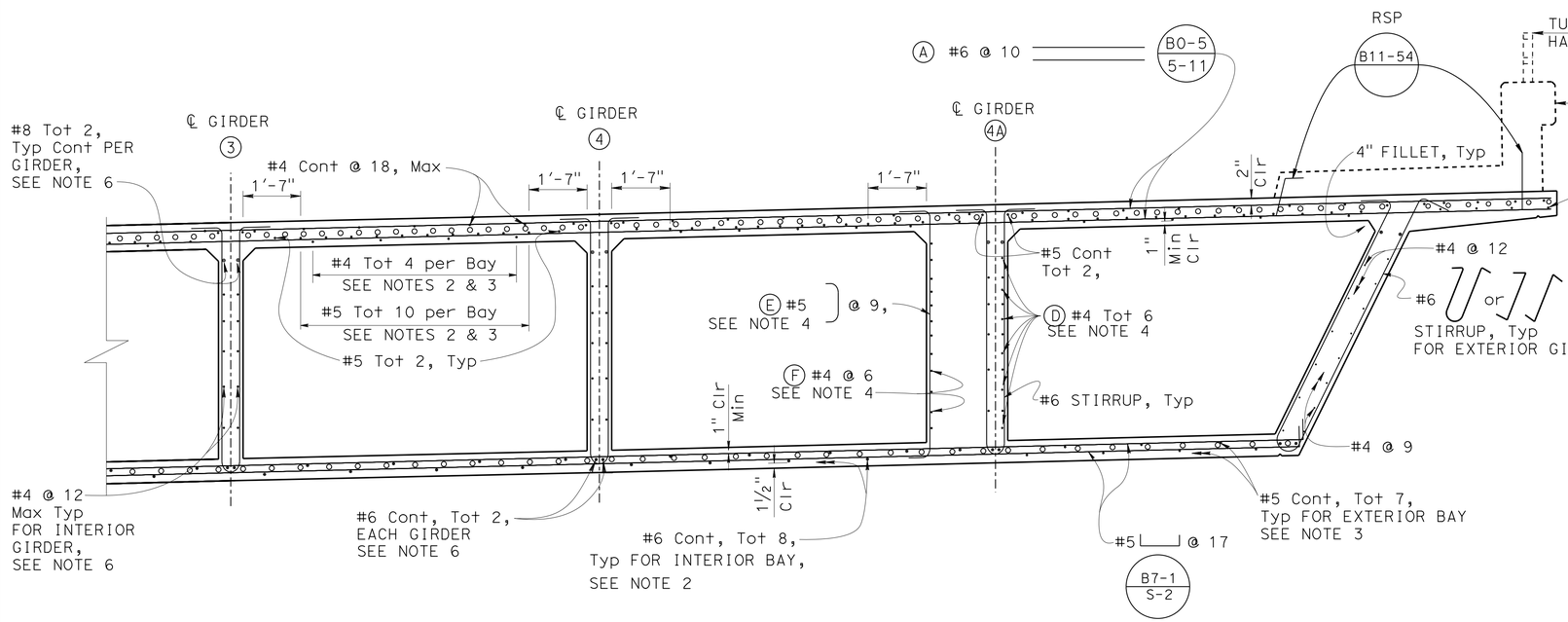

PART SECTION Q-Q

1/2" = 1'-0"

B0-5 B7-1 B11-51 RSP B11-54

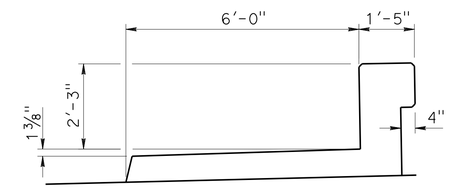

FOR REINFORCEMENTS WITHIN TYPE 26 Mod BARRIER, SEE "STANDARD PLANS" RSP B11-54

TYPE 26 MOD

NO SCALE

NOTES:

- Indicates additional reinforcement. See "ADDITIONAL REINFORCEMENT" sheets

1 Girder spacing & width vary. See "GIRDER LAYOUT" sheet for dimensions

2 For the reinforcements within the bay between ℄ Girders 4 & 4A, space normal to and place parallel to ℄ Girder 4, and extend 16 in beyond the vertical face of ℄ Girder 4A . See Detail "A" of "GIRDER LAYOUT" sheet for vertical face of Girder 4A.

3 For the reinforcements within the bay between ℄ Girder 4A & exterior Girder, space normal to and place parallel to ℄ Girder 4A.

4 For limits of D, E & F placement, See "GIRDER LAYOUT" sheet.

5 For stirrup spacing, see "GIRDER LAYOUT" sheet.

6 For the reinforcements at Girder 4A, extend 30" into Bent 1 Cap.

	BY	CHECKED
DESIGN	Yeo Yoon	L. Bahia/J. Peterson
DETAILS	Jaime Ramirez	Laith Bahia
QUANTITIES	Yeo Yoon	Evan Franciliso

STATE OF CALIFORNIA
DEPARTMENT OF TRANSPORTATION

DIVISION OF ENGINEERING SERVICES
STRUCTURE DESIGN
DESIGN BRANCH 11

BRIDGE NO. 53C2296
POST MILE 1.27

SB VALLEY VIEW AVE/S. FIRESTONE BLVD
TYPICAL SECTION NO. 1

STRUCTURES DESIGN DETAIL SHEET (ENGLISH) (REV. 09-01-10)

ORIGINAL SCALE IN INCHES FOR REDUCED PLANS 0 1 2 3

UNIT: 3587
PROJECT NUMBER & PHASE: 0715000160-1
CONTRACT NO.: 07-2159U4

DISREGARD PRINTS BEARING EARLIER REVISION DATES

REVISION DATES 11-14-12 5-28-13 9-27-13 4-11-13

SHEET 12 OF 30

FILE => 53c2296-na-ts1.dgn

USERNAME => s129624 DATE PLOTTED => 03-FEB-2016 TIME PLOTTED => 13:53

DIST	COUNTY	ROUTE	POST MILES TOTAL PROJECT	SHEET No.	TOTAL SHEETS
07	LA,Ora	5	0.0/1.5, 44.3/44.4	1372	1622

REGISTERED CIVIL ENGINEER 3-18-15 DATE

1-25-16
PLANS APPROVAL DATE

REGISTERED PROFESSIONAL ENGINEER
Phu V. Nguyen
No. 60358
Exp. 6-30-16
CIVIL
STATE OF CALIFORNIA

The State of California or its officers or agents shall not be responsible for the accuracy or completeness of electronic copies of this plan sheet.

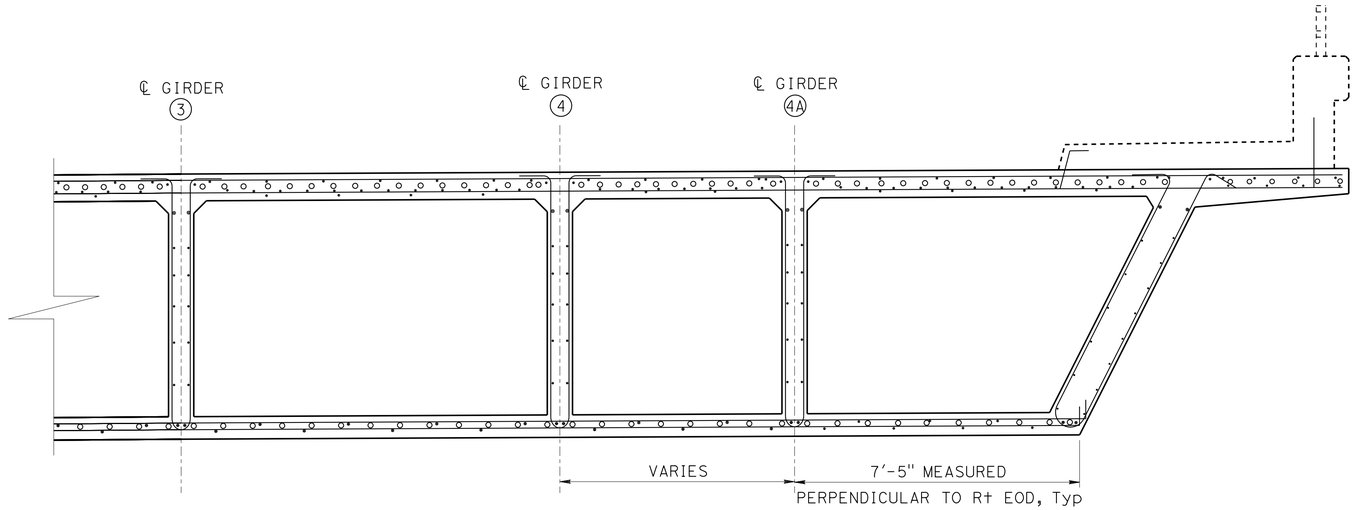

RSP
B0-5 B7-1 B11-51 B11-54

PART SECTION R-R

½" = 1'-0"

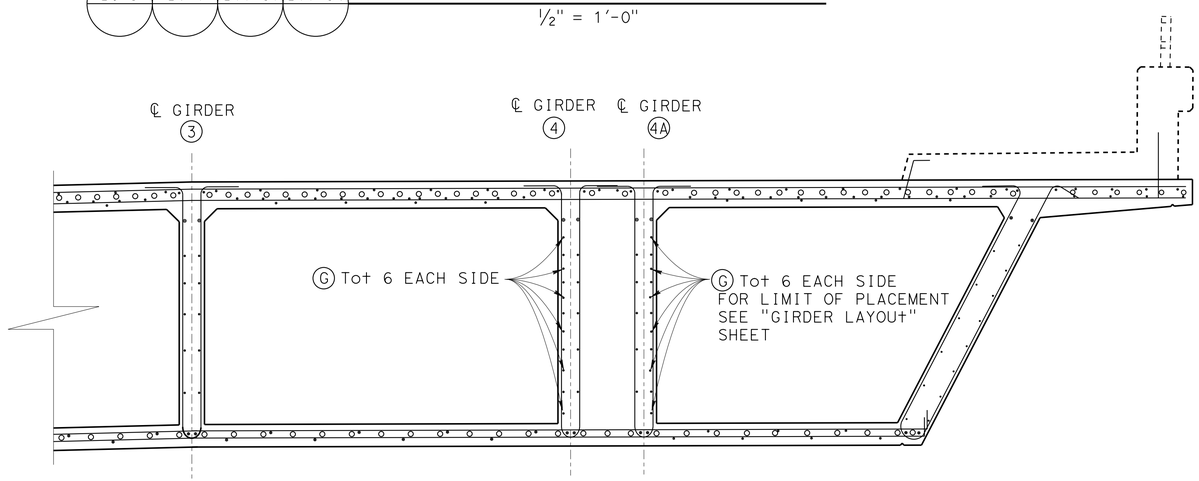

RSP
B0-5 B7-1 B11-51 B11-54

PART SECTION S-S

½" = 1'-0"

DESIGN	BY Yeo Yoon	CHECKED L. Bahia/J. Peterson	
DETAILS	BY Jaime Ramirez	CHECKED Laith Bahia	
QUANTITIES	BY Yeo Yoon	CHECKED Evan Franciliso	

STATE OF CALIFORNIA
DEPARTMENT OF TRANSPORTATION

DIVISION OF ENGINEERING SERVICES
STRUCTURE DESIGN
DESIGN BRANCH 11

BRIDGE NO. 53C2296
POST MILE 1.27

SB VALLEY VIEW AVE/S. FIRESTONE BLVD
TYPICAL SECTION NO. 2

STRUCTURES DESIGN DETAIL SHEET (ENGLISH) (REV. 09-01-10)

ORIGINAL SCALE IN INCHES FOR REDUCED PLANS 0 1 2 3

UNIT: 3587
PROJECT NUMBER & PHASE: 0715000160-1
CONTRACT NO.: 07-2159U4

DISREGARD PRINTS BEARING EARLIER REVISION DATES

REVISION DATES 12-13-12 4-19-13 5-28-13 3-29-13

SHEET 13 OF 30

FILE => 53c2296-na-ts2.dgn

USERNAME => s125624 DATE PLOTTED => 03-FEB-2016 TIME PLOTTED => 13:53

DIST	COUNTY	ROUTE	POST MILES TOTAL PROJECT	SHEET No.	TOTAL SHEETS
07	LA,Ora	5	0.0/1.5, 44.3/44.4	1373	1622

REGISTERED CIVIL ENGINEER 3-18-15 DATE

1-25-16
PLANS APPROVAL DATE

REGISTERED PROFESSIONAL ENGINEER Phu V. Nguyen No. 60358 Exp. 6-30-16 CIVIL STATE OF CALIFORNIA

The State of California or its officers or agents shall not be responsible for the accuracy or completeness of electronic copies of this plan sheet.

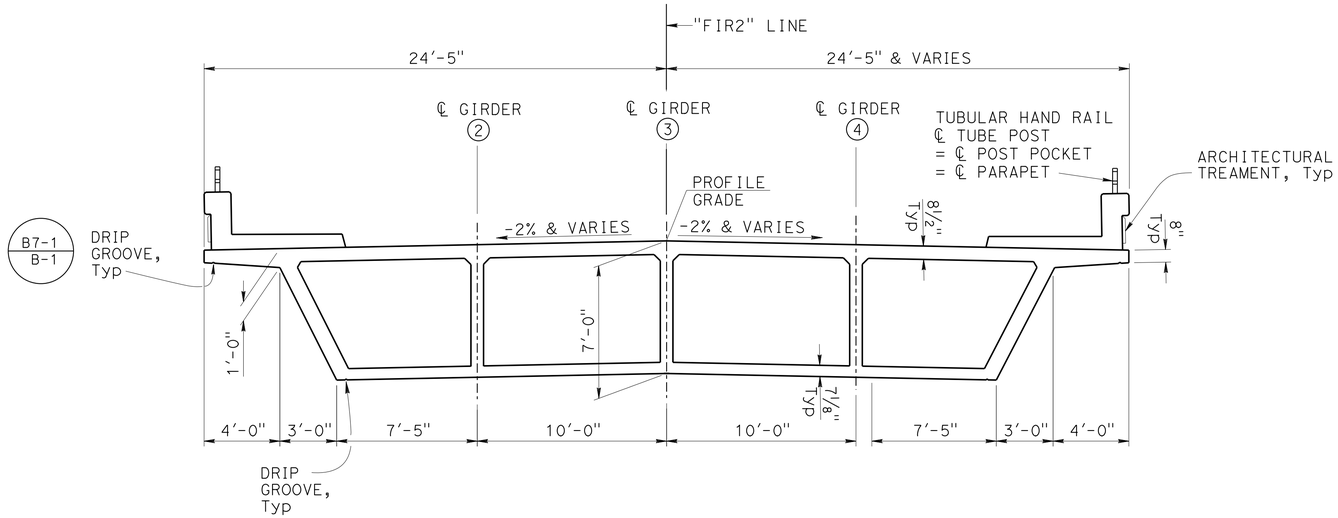

TYPICAL SECTION - SPANS 2 THRU 4

¼" = 1'-0"

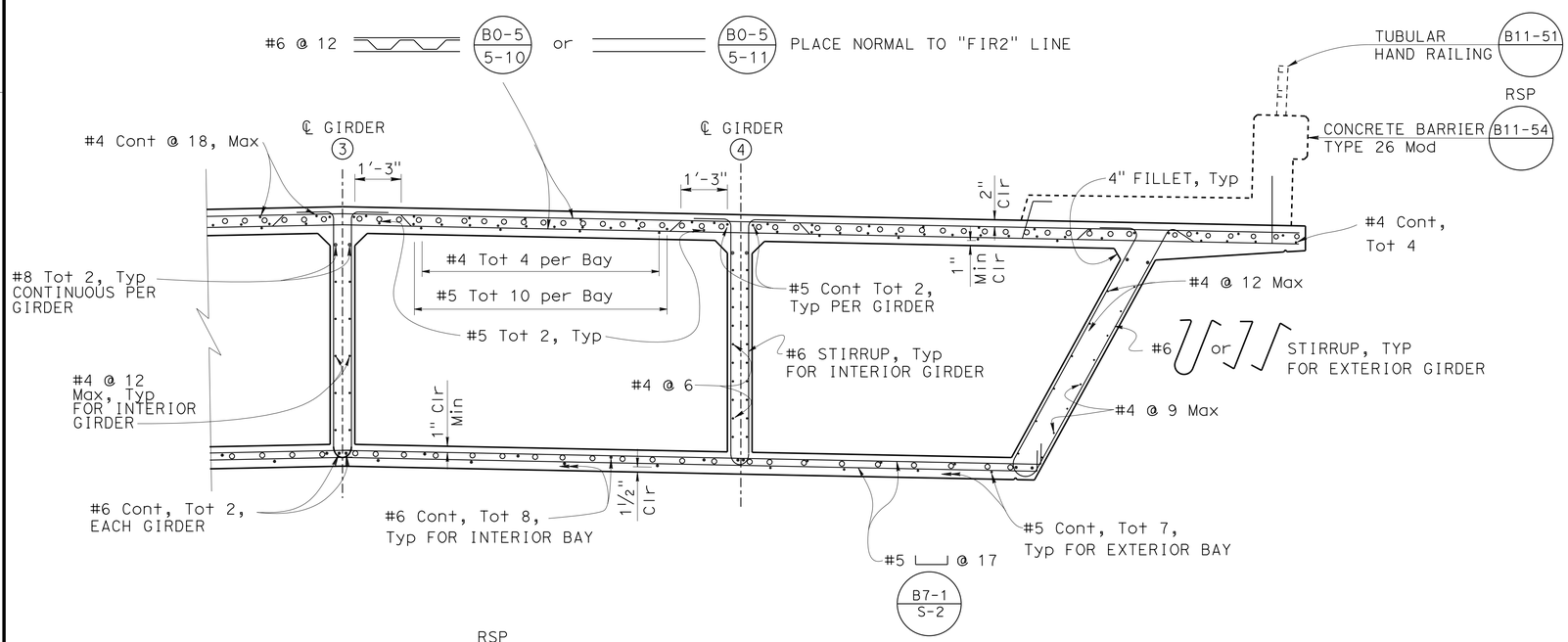

RSP

B0-5 B7-1 B11-51 B11-54

PART TYPICAL SECTION

½" = 1'-0"

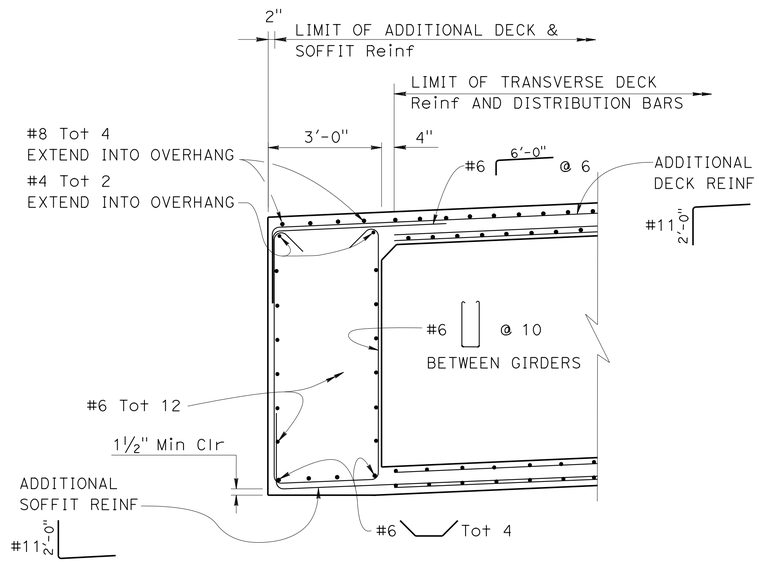

END DIAPHRAGM (AT ABUT)

½" = 1'-0"

NOTES:

- ∘ Indicates additional reinforcement. See "ADDITIONAL REINFORCEMENT" sheets
- 1 At Span 2 , Girder 4 width varies. See "GIRDER LAYOUT" sheet for dimensions.
- 2 For stirrup spacing, see "GIRDER LAYOUT" sheet

	BY	CHECKED
DESIGN	Yeo Yoon	L. Bahia/J. Peterson
DETAILS	Jaime Ramirez	Laith Bahia
QUANTITIES	Yeo Yoon	Evan Franciliso

STATE OF CALIFORNIA DEPARTMENT OF TRANSPORTATION

DIVISION OF ENGINEERING SERVICES STRUCTURE DESIGN DESIGN BRANCH 11

BRIDGE NO. 53C2296
POST MILE 1.27

SB VALLEY VIEW AVE/S. FIRESTONE BLVD
TYPICAL SECTION NO. 3

STRUCTURES DESIGN DETAIL SHEET (ENGLISH) (REV. 09-01-10)

ORIGINAL SCALE IN INCHES FOR REDUCED PLANS 0 1 2 3

UNIT: 3587
PROJECT NUMBER & PHASE: 0715000160-1
CONTRACT NO.: 07-2159u4

DISREGARD PRINTS BEARING EARLIER REVISION DATES

REVISION DATES 11-30-12 4-11-13 5-28-13 9-27-13

SHEET 14 OF 30

FILE => 53c2296-na-ts3.dgn

USERNAME => s123624 DATE PLOTTED => 03-FEB-2016 TIME PLOTTED => 13:53

DIST	COUNTY	ROUTE	POST MILES TOTAL PROJECT	SHEET No.	TOTAL SHEETS
07	LA,Ora	5	0.0/1.5, 44.3/44.4	1374	1622

REGISTERED CIVIL ENGINEER — DATE 3-18-15

1-25-16
PLANS APPROVAL DATE

REGISTERED PROFESSIONAL ENGINEER — Phu V. Nguyen — No. 60358 — Exp. 6-30-16 — CIVIL — STATE OF CALIFORNIA

The State of California or its officers or agents shall not be responsible for the accuracy or completeness of scanned copies of this plan sheet.

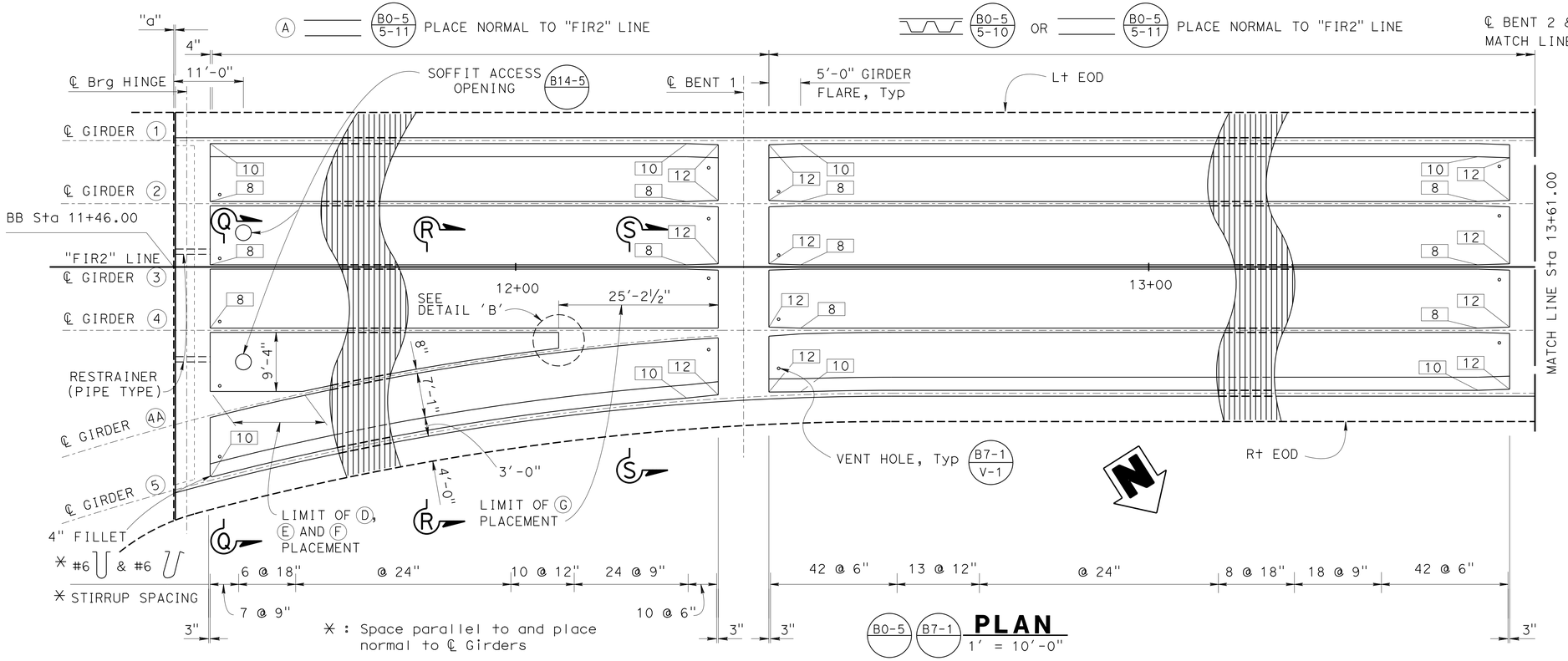

NOTES:

1. For 'Section Q-Q', see "TYPICAL SECTION NO. 1" sheet
2. For 'Section R-R' and 'S-S', see "TYPICAL SECTION NO. 2" sheet

LEGEND:

XX INDICATES GIRDER STEM WIDTH IN INCHES

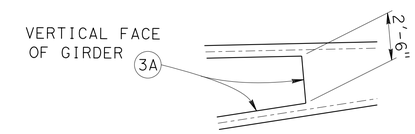

DETAIL B

¼" = 1'-0"

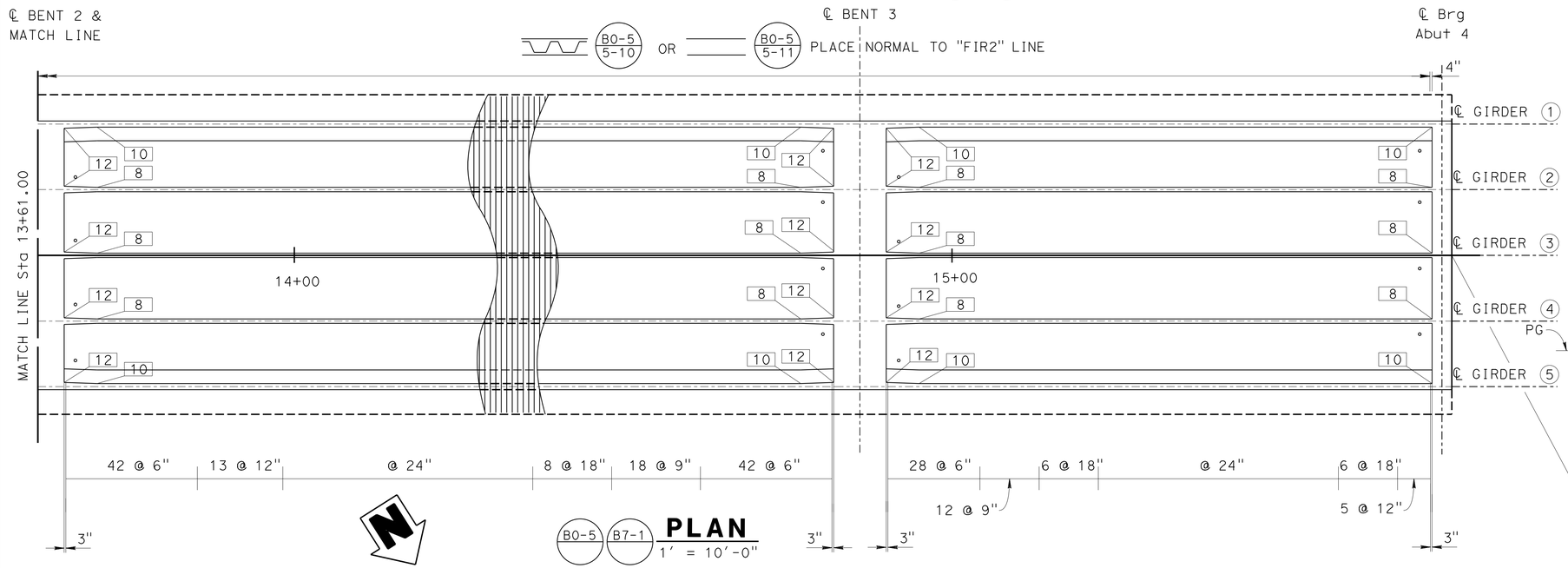

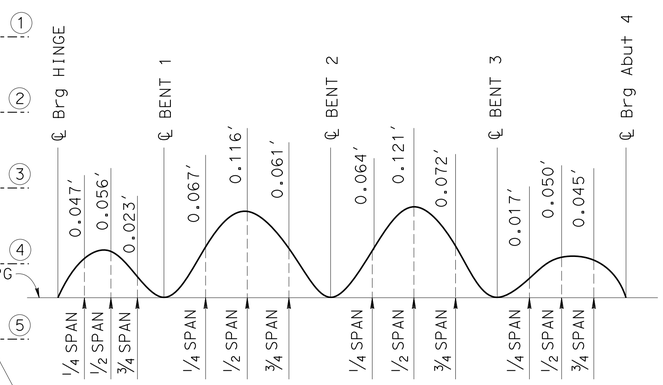

NOTE: Camber values shown do not include allowances for falsework settlement

CAMBER DIAGRAM

NO SCALE

	BY	CHECKED
DESIGN	Yeo Yoon	L. Bahia/J. Peterson
DETAILS	Loren Goldthwait	Laith Bahia
QUANTITIES	Yeo Yoon	Evan Franciliso

STATE OF CALIFORNIA
DEPARTMENT OF TRANSPORTATION

DIVISION OF ENGINEERING SERVICES
STRUCTURE DESIGN
DESIGN BRANCH 11

BRIDGE NO. 53C2296
POST MILE 1.27

SB VALLEY VIEW AVE/S. FIRESTONE BLVD
GIRDER LAYOUT

STRUCTURES DESIGN DETAIL SHEET (ENGLISH) (REV. 09-01-10)

ORIGINAL SCALE IN INCHES FOR REDUCED PLANS 0 1 2 3

UNIT: 3587
PROJECT NUMBER & PHASE: 0715000160-1
CONTRACT NO.: 07-2159u4

DISREGARD PRINTS BEARING EARLIER REVISION DATES

REVISION DATES 11-20-12 5-29-13 3-28-13 4-09-13

SHEET 15 OF 30

FILE => 53c2296-nb-gr_lo.dgn

USERNAME => s129624 DATE PLOTTED => 03-FEB-2016 TIME PLOTTED => 13:53

DIST	COUNTY	ROUTE	POST MILES TOTAL PROJECT	SHEET No.	TOTAL SHEETS
07	LA,Ora	5	0.0/1.5, 44.3/44.4	1375	1622

REGISTERED CIVIL ENGINEER 3-18-15 DATE

1-25-16
PLANS APPROVAL DATE

REGISTERED PROFESSIONAL ENGINEER Phu V. Nguyen No. 60358 Exp. 6-30-16 CIVIL STATE OF CALIFORNIA

The State of California or its officers or agents shall not be responsible for the accuracy or completeness of electronic copies of this plan sheet.

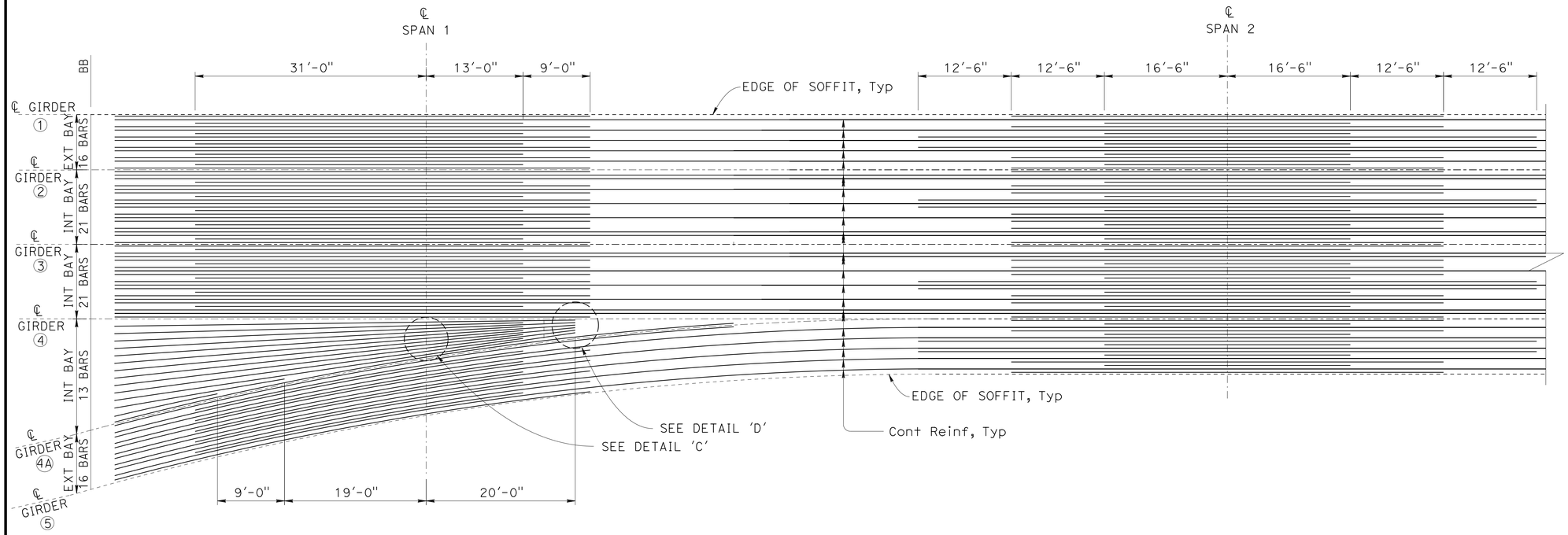

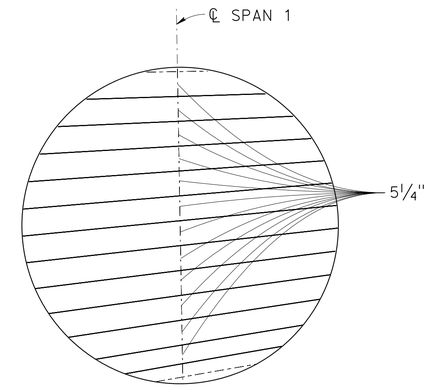

DETAIL C

3/4" = 1'-0"

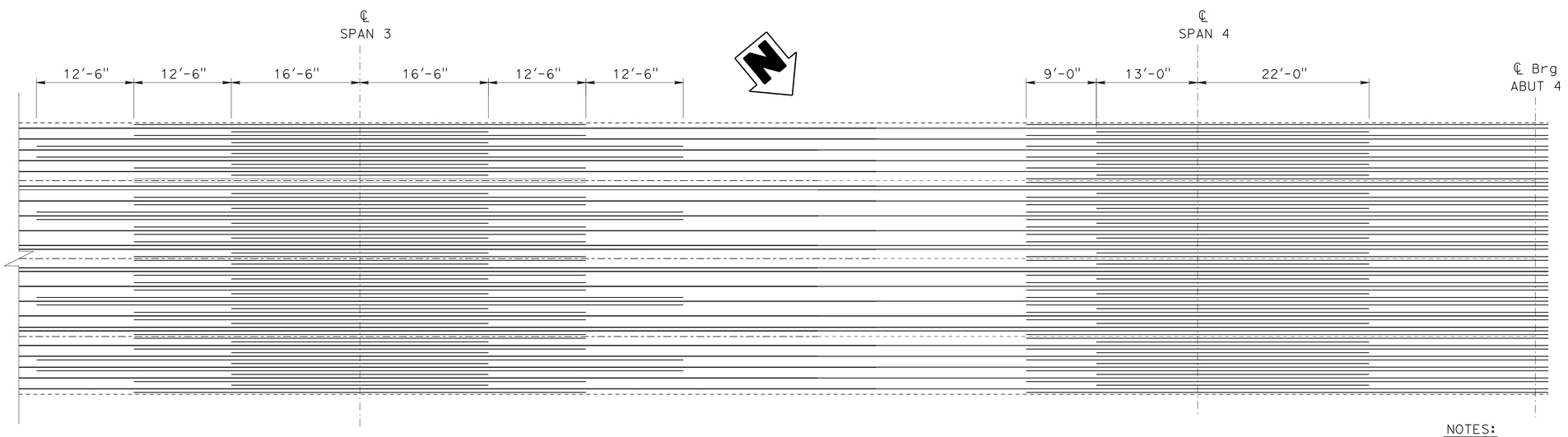

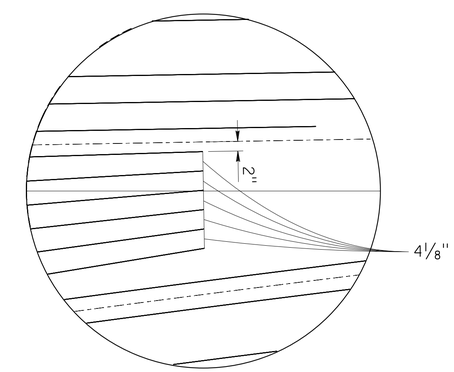

DETAIL D

3/4" = 1'-0"

NOTES:

1. Bars shall be #11
2. No splices allowed for bars less than 60'-0" long
3. Continuous bars shall be lap spliced with 2 times the standard lap length.
4. No splices allowed at mid span.

ADDITIONAL REINFORCEMENT - SOFFIT

1/8" = 1'-0"

	BY	CHECKED
DESIGN	Yeo Yoon	L. Bahia/J. Peterson
DETAILS	Jaime Ramirez	Laith Bahia
QUANTITIES	Yeo Yoon	Evan Franciliso

STATE OF CALIFORNIA DEPARTMENT OF TRANSPORTATION

DIVISION OF ENGINEERING SERVICES STRUCTURE DESIGN DESIGN BRANCH 11

BRIDGE NO. 53C2296
POST MILE 1.27

SB VALLEY VIEW AVE/S. FIRESTONE BLVD
ADDITIONAL REINFORCEMENT NO. 1

STRUCTURES DESIGN DETAIL SHEET (ENGLISH) (REV. 09-01-10)

ORIGINAL SCALE IN INCHES FOR REDUCED PLANS 0 1 2 3

UNIT: 3587
PROJECT NUMBER & PHASE: 0715000160-1
CONTRACT NO.: 07-2159u4

DISREGARD PRINTS BEARING EARLIER REVISION DATES

REVISION DATES 2-18-13 9-10-13 3-27-13 5-29-13

SHEET 16 OF 30

FILE => 53c2296-nc-grrf1.dgn

USERNAME => s125624 DATE PLOTTED => 03-FEB-2016 TIME PLOTTED => 13:53

DIST	COUNTY	ROUTE	POST MILES TOTAL PROJECT	SHEET No.	TOTAL SHEETS
07	LA,Ora	5	0.0/1.5, 44.3/44.4	1376	1622

REGISTERED CIVIL ENGINEER 3-18-15 DATE

1-25-16
PLANS APPROVAL DATE

REGISTERED PROFESSIONAL ENGINEER Phu V. Nguyen No. 60358 Exp. 6-30-16 CIVIL STATE OF CALIFORNIA

The State of California or its officers or agents shall not be responsible for the accuracy or completeness of electronic copies of this plan sheet.

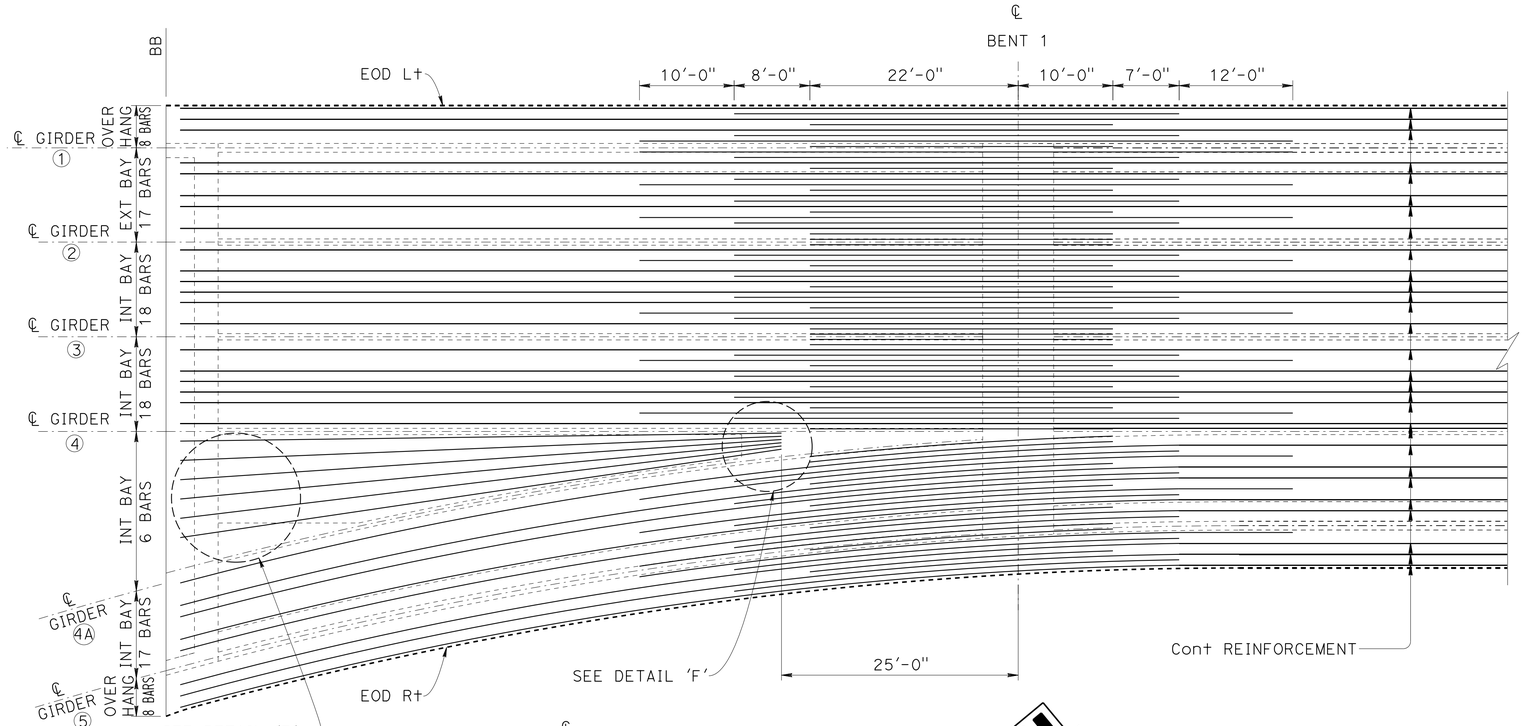

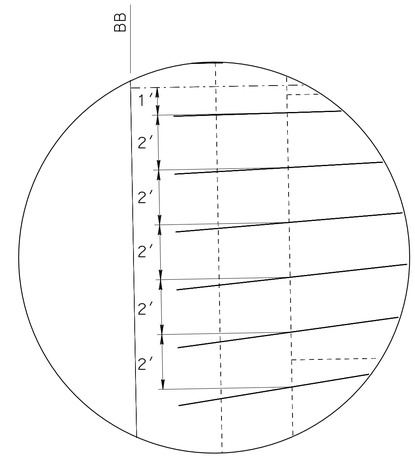

DETAIL E

3/8" = 1'-0"

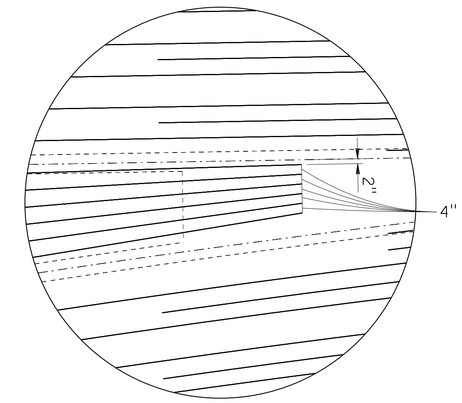

DETAIL F

3/8" = 1'-0"

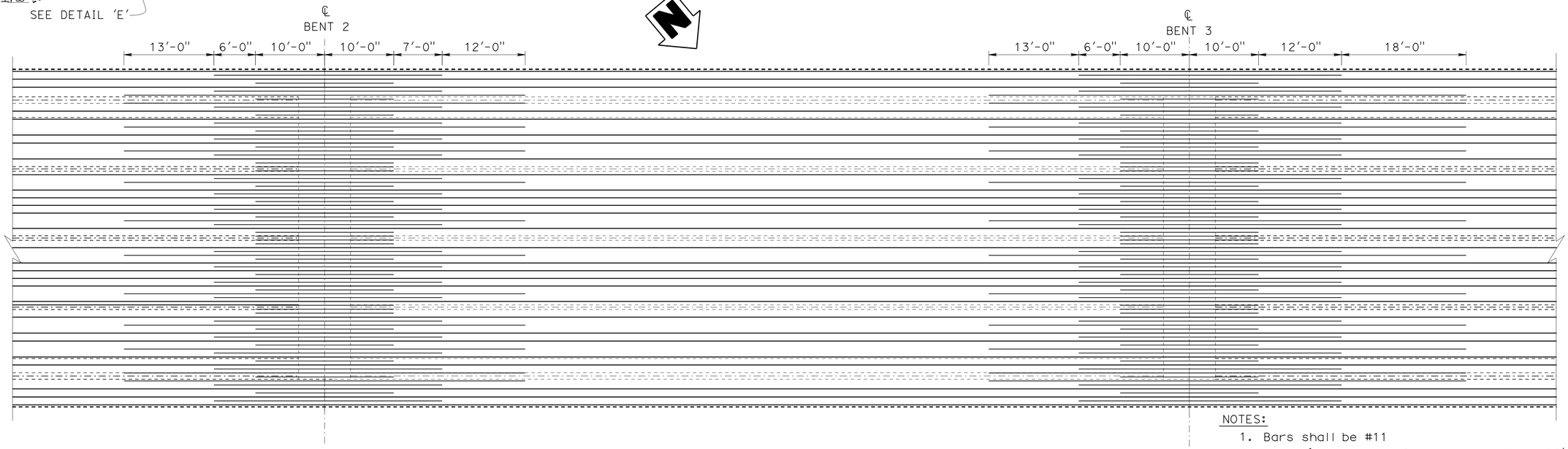

ADDITIONAL REINFORCEMENT - DECK

1/8" = 1'-0"

NOTES:

1. Bars shall be #11
2. No splices allowed for bars less than 60'-0" long
3. Continuous bars shall be lap spliced with 2 times the standard lap length.
4. No splices allowed at mid span.

	BY	CHECKED
DESIGN	Yeo Yoon	L. Bahia/J. Peterson
DETAILS	Jaime Ramirez	Laith Bahia
QUANTITIES	Yeo Yoon	Evan Franciliso

STATE OF CALIFORNIA
DEPARTMENT OF TRANSPORTATION

DIVISION OF ENGINEERING SERVICES
STRUCTURE DESIGN
DESIGN BRANCH 11

BRIDGE NO. 53C2296
POST MILE 1.27

SB VALLEY VIEW AVE/S. FIRESTONE BLVD
ADDITIONAL REINFORCEMENT NO. 2

STRUCTURES DESIGN DETAIL SHEET (ENGLISH) (REV. 09-01-10)

ORIGINAL SCALE IN INCHES FOR REDUCED PLANS 0 1 2 3

UNIT: 3587
PROJECT NUMBER & PHASE: 0715000160-1
CONTRACT NO.: 07-2159u4

DISREGARD PRINTS BEARING EARLIER REVISION DATES

REVISION DATES: 2-13-13 9-18-13 9-26-13 4-04-13

SHEET 17 OF 30

FILE => 53c2296-nc-grrf2.dgn

USERNAME => s125624 DATE PLOTTED => 03-FEB-2016 TIME PLOTTED => 13:53

DIST	COUNTY	ROUTE	POST MILES TOTAL PROJECT	SHEET No.	TOTAL SHEETS
07	LA,Ora	5	0.0/1.5, 44.3/44.4	1377	1622

REGISTERED CIVIL ENGINEER 3-18-15 DATE

1-25-16
PLANS APPROVAL DATE

REGISTERED PROFESSIONAL ENGINEER Phu V. Nguyen No. 60358 Exp. 12/31/16 CIVIL STATE OF CALIFORNIA

The State of California or its officers or agents shall not be responsible for the accuracy or completeness of electronic copies of this plan sheet.

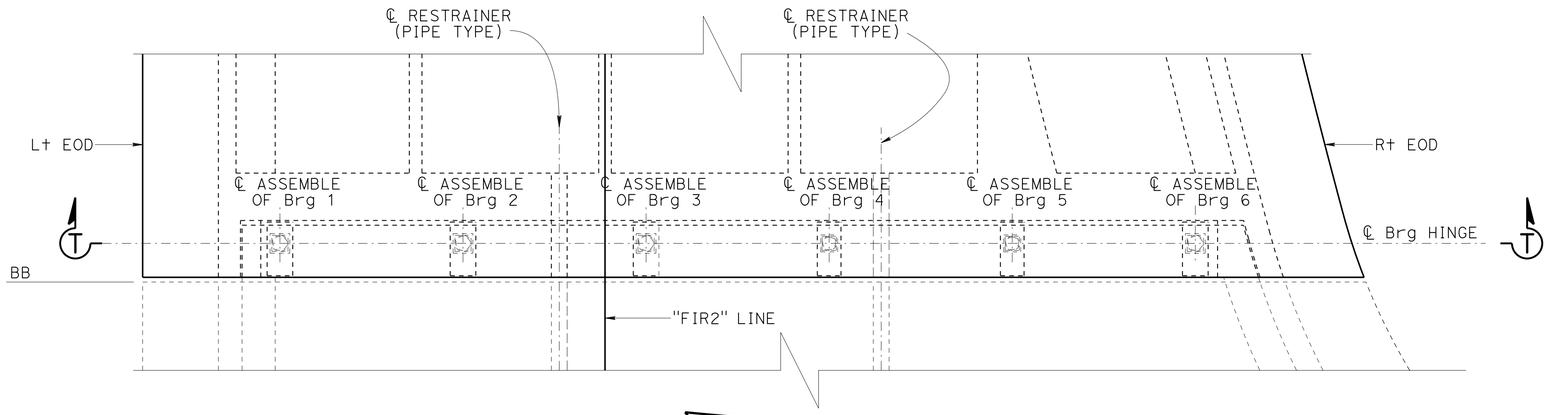

Note: Conc Barrier not shown

PLAN
1/4" = 1'-0"

NOTES:

1. For PTFE Bearing Pad Details, see Br No. 53-3045 Plans
2. For Restrainer (Pipe Type) details, see HINGE DETAILS NO. 2" sheet.
3. For 'Section U-U' and 'V-V', see "HINGE DETAILS NO. 1" sheet
4. For 'Section Y-Y', see "HINGE DETAILS NO. 2" sheet

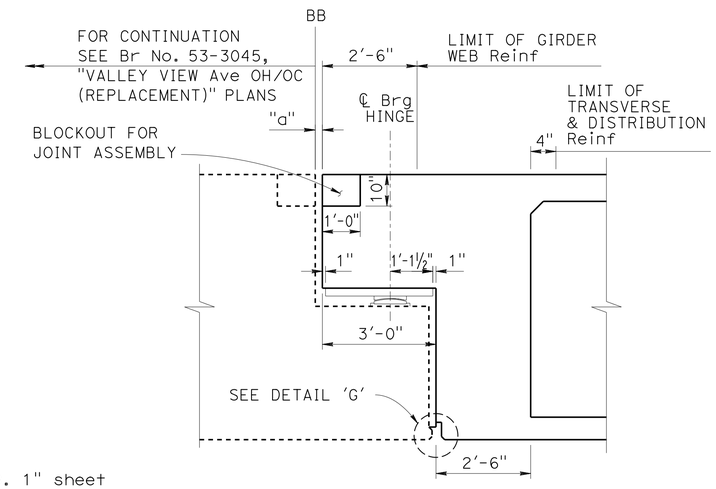

HINGE SECTION
½" = 1'-0"

LEGEND:

INDICATES EXPANDED POLYSTYRENE

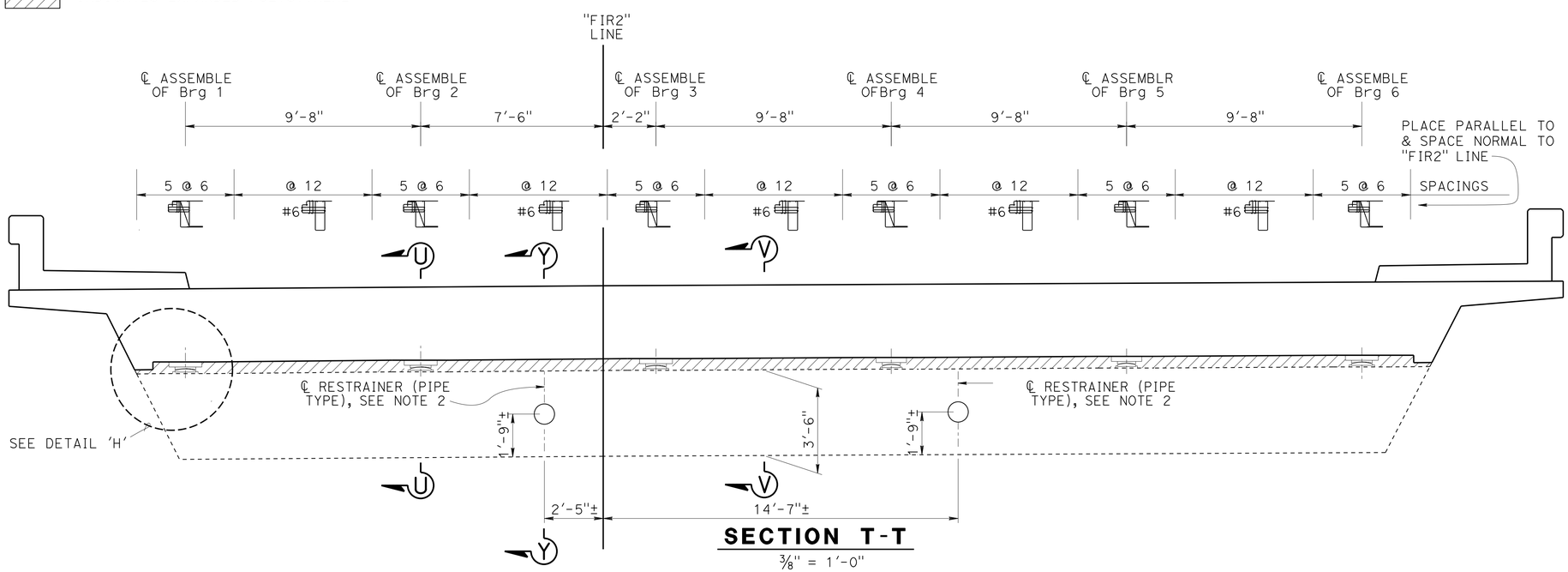

SECTION T-T
3/8" = 1'-0"

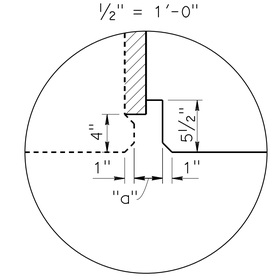

DETAIL G
1½" = 1'-0"

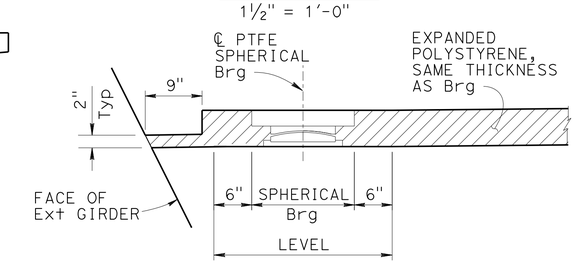

DETAIL H
1" = 1'-0"

DESIGN	BY Yeo Yoon	CHECKED L. Bahia/J. Peterson	
DETAILS	BY Jaime Ramirez	CHECKED Laith Bahia	
QUANTITIES	BY Yeo Yoon	CHECKED Evan Franciliso	

STATE OF CALIFORNIA
DEPARTMENT OF TRANSPORTATION

DIVISION OF ENGINEERING SERVICES
STRUCTURE DESIGN
DESIGN BRANCH 11

BRIDGE NO. 53C2296
POST MILE 1.27

SB VALLEY VIEW AVE/S. FIRESTONE BLVD
HINGE LAYOUT

STRUCTURES DESIGN DETAIL SHEET (ENGLISH) (REV. 09-01-10)

ORIGINAL SCALE IN INCHES FOR REDUCED PLANS 0 1 2 3

UNIT: 3587
PROJECT NUMBER & PHASE: 0715000160-1
CONTRACT NO.: 07-2159u4

DISREGARD PRINTS BEARING EARLIER REVISION DATES

REVISION DATES: ~~3-5-13~~ 9-26-13 ~~5-28-13~~ ~~9-04-13~~

SHEET 18 OF 30

FILE => 53c2296-nc-hng_lo.dgn

USERNAME => s123624 DATE PLOTTED => 03-FEB-2016 TIME PLOTTED => 13:53

DIST	COUNTY	ROUTE	POST MILES TOTAL PROJECT	SHEET No.	TOTAL SHEETS
07	LA,Ora	5	0.0/1.5, 44.3/44.4	1378	1622

REGISTERED CIVIL ENGINEER 3-18-15 DATE

1-25-16
PLANS APPROVAL DATE

REGISTERED PROFESSIONAL ENGINEER Phu V. Nguyen No. 60358 Exp. 12/31/16 CIVIL STATE OF CALIFORNIA

The State of California or its officers or agents shall not be responsible for the accuracy or completeness of electronic copies of this plan sheet.

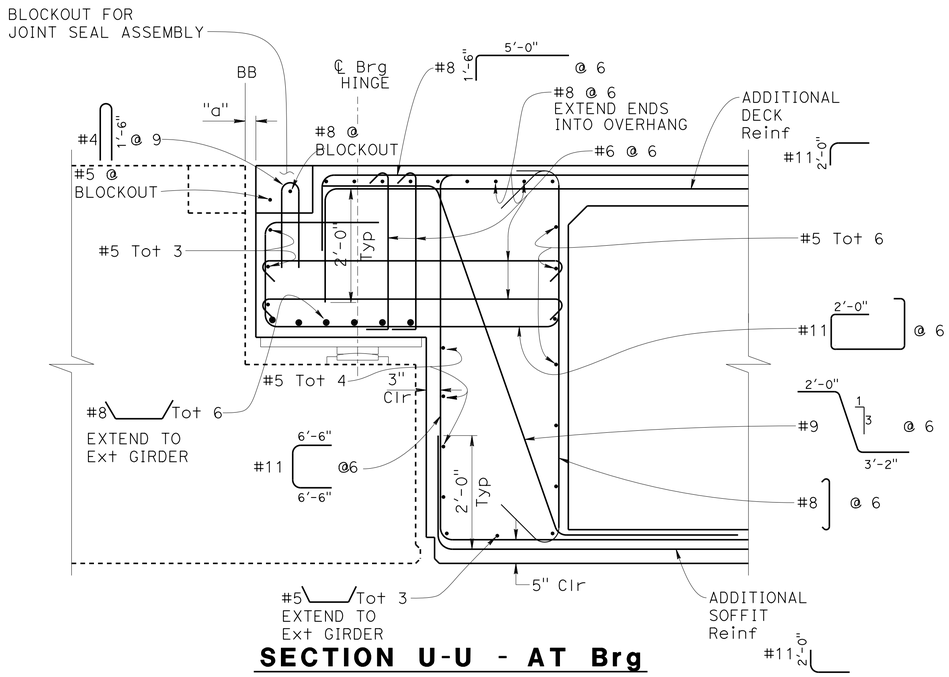

SECTION U-U - AT Brg

¾" = 1'-0"

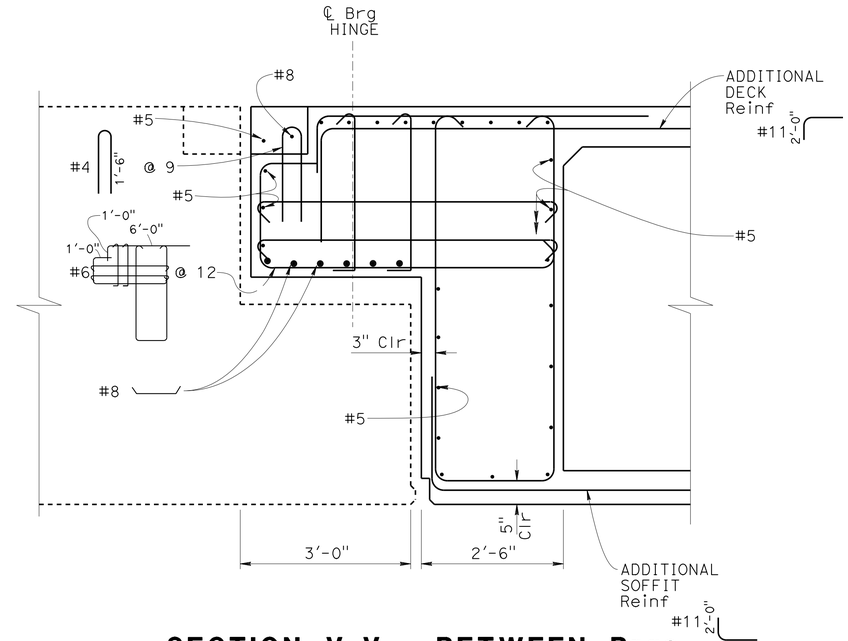

SECTION V-V - BETWEEN Brgs

¾" = 1'-0"

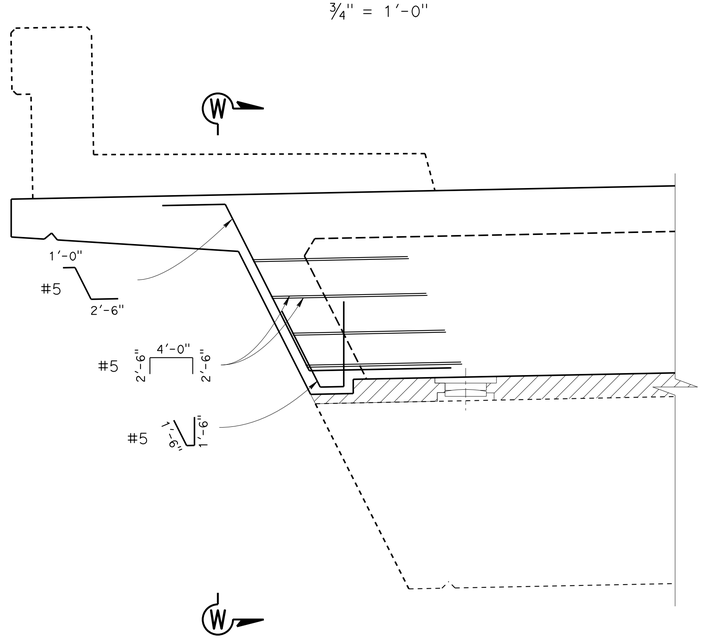

EXTERIOR GIRDER SIDE REINFORCEMENT

¾" = 1'-0"

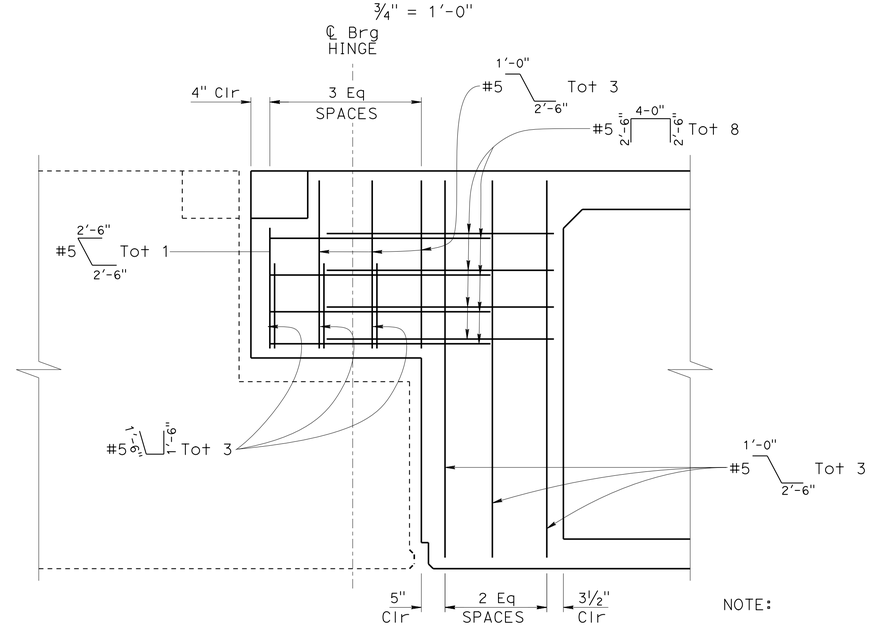

ELEVATION W-W

¾" = 1'-0"

NOTE:

1. Reinforcement extending into the Blockout shall be manipulated as required to accommodate installation of the Joint Seal Assembly upon approval of the shop plans and as directed by the Engineer.

	BY	CHECKED
DESIGN	Yeo Yoon	L. Bahia/J. Peterson
DETAILS	Jaime Ramirez	Laith Bahia
QUANTITIES	Yeo Yoon	Evan Franciliso

STATE OF CALIFORNIA DEPARTMENT OF TRANSPORTATION

DIVISION OF ENGINEERING SERVICES STRUCTURE DESIGN DESIGN BRANCH 11

BRIDGE NO. 53C2296
POST MILE 1.27

SB VALLEY VIEW AVE/S. FIRESTONE BLVD
HINGE DETAILS NO. 1

STRUCTURES DESIGN DETAIL SHEET (ENGLISH) (REV. 09-01-10)

ORIGINAL SCALE IN INCHES FOR REDUCED PLANS 0 1 2 3

UNIT: 3587
PROJECT NUMBER & PHASE: 0715000160-1
CONTRACT NO.: 07-2159u4

DISREGARD PRINTS BEARING EARLIER REVISION DATES

REVISION DATES 3-14-13 4-08-13 5-28-13 9-27-13

SHEET 19 OF 30

FILE => 53c2296-nd-hngdet1.dgn

USERNAME => s175624

DIST	COUNTY	ROUTE	POST MILES TOTAL PROJECT	SHEET No.	TOTAL SHEETS
07	LA,Ora	5	0.0/1.5, 44.3/44.4	1379	1622

REGISTERED CIVIL ENGINEER 3-18-15 DATE

1-25-16
PLANS APPROVAL DATE

REGISTERED PROFESSIONAL ENGINEER Phu V. Nguyen No. 60358 Exp. 12/31/16 CIVIL STATE OF CALIFORNIA

The State of California or its officers or agents shall not be responsible for the accuracy or completeness of electronic copies of this plan sheet.

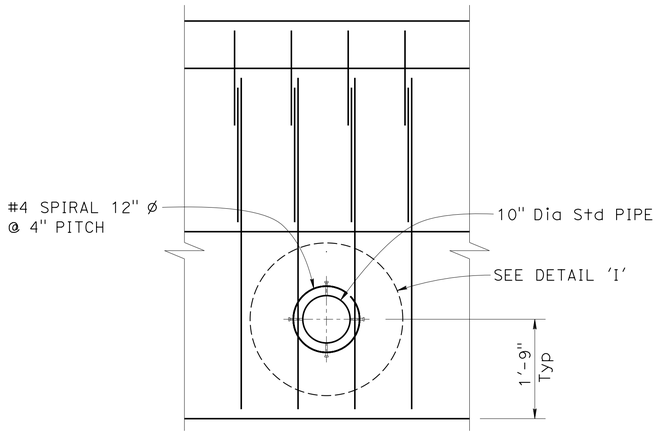

VIEW X-X

¾" = 1'-0"

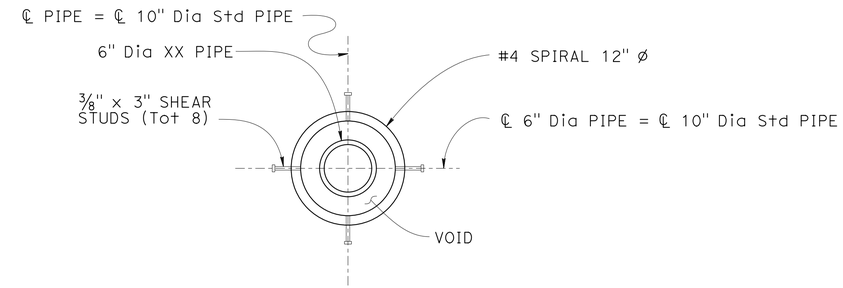

DETAIL I

1½" = 1'-0"

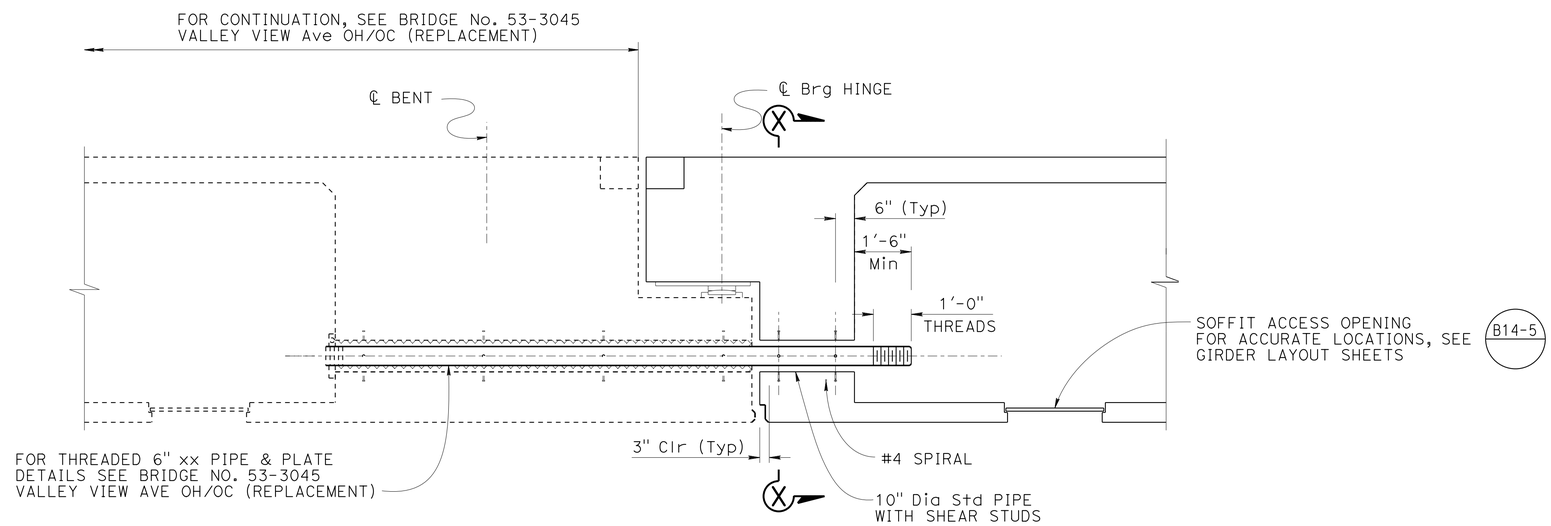

SECTION Y-Y

½" = 1'-0"

NOTE: For additional Hinge Restrainer (Pipe Type) Details, see Br No. 53-3045, "Valley View Ave OH/OC" plans

	BY	CHECKED
DESIGN	Yeo Yoon	L. Bahia/J. Peterson
DETAILS	Jaime Ramirez	Laith Bahia
QUANTITIES	Yeo Yoon	Evan Franciliso

STATE OF CALIFORNIA
DEPARTMENT OF TRANSPORTATION

DIVISION OF ENGINEERING SERVICES
STRUCTURE DESIGN
DESIGN BRANCH 11

BRIDGE NO. 53C2296
POST MILE 1.27

SB VALLEY VIEW AVE/S. FIRESTONE BLVD
HINGE DETAILS NO. 2

STRUCTURES DESIGN DETAIL SHEET (ENGLISH) (REV. 09-01-10)

ORIGINAL SCALE IN INCHES FOR REDUCED PLANS 0 1 2 3

UNIT: 3587
PROJECT NUMBER & PHASE: 0715000160-1
CONTRACT NO.: 07-2159u4

DISREGARD PRINTS BEARING EARLIER REVISION DATES

REVISION DATES: 3-12-13 9-04-13 3-28-13 6-28-13

SHEET 20 OF 30

FILE => 53c2296-nd-hngdet2.dgn

USERNAME => s125624 DATE PLOTTED => 03-FEB-2016 TIME PLOTTED => 13:53

DIST	COUNTY	ROUTE	POST MILES TOTAL PROJECT	SHEET No.	TOTAL SHEETS
07	LA,Ora	5	0.0/1.5, 44.3/44.4	1380	1622

REGISTERED CIVIL ENGINEER 3-18-15 DATE

1-25-16
PLANS APPROVAL DATE

REGISTERED PROFESSIONAL ENGINEER
Phu V. Nguyen
No. 60358
Exp. 6-30-16
CIVIL
STATE OF CALIFORNIA

The State of California or its officers or agents shall not be responsible for the accuracy or completeness of scanned copies of this plan sheet.

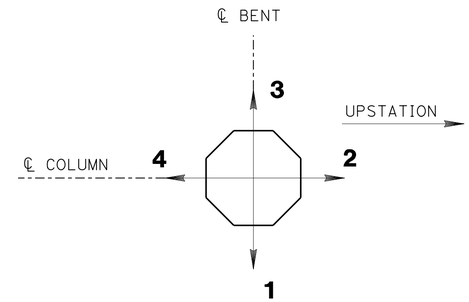

OUTLET DIRECTION

NO SCALE

BENT	OUTLET DIRECTION
2	2

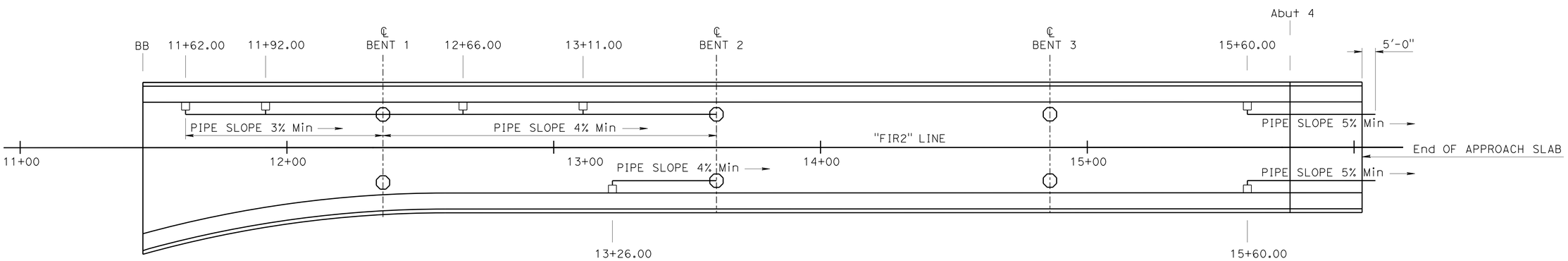

PLAN

1" = 20'-0"

Notes:

1. For drain outlet detail at column, see B7-6 and B7-8
2. For pipe detail at abutment, see B7-8

—— Indicates NPS 6 x 0.135" Welded Steel Pipe B7-6

☐ Indicates deck drain Type D-1 B7-6 / 7-7

DESIGN	BY Yeo Yoon	CHECKED L. Bahia/J. Peterson	
DETAILS	BY Loren Goldthwait	CHECKED Laith Bahia	
QUANTITIES	BY Yeo Yoon	CHECKED Evan Franciliso	

STATE OF CALIFORNIA
DEPARTMENT OF TRANSPORTATION

DIVISION OF ENGINEERING SERVICES
STRUCTURE DESIGN
DESIGN BRANCH 11

BRIDGE NO. 53C2296
POST MILE 1.27

SB VALLEY VIEW AVE/ S. FIRESTONE BLVD
DRAINAGE LAYOUT

STRUCTURES DESIGN DETAIL SHEET (ENGLISH) (REV. 09-01-10)

ORIGINAL SCALE IN INCHES FOR REDUCED PLANS 0 1 2 3

UNIT: 3587
PROJECT NUMBER & PHASE: 0715000160-1
CONTRACT NO.: 07-2159U4

DISREGARD PRINTS BEARING EARLIER REVISION DATES

REVISION DATES: 3-18-13 4-08-13 5-29-13

SHEET 21 OF 30

FILE => 53c2296-p-drn_lo.dgn

USERNAME => s125624 DATE PLOTTED => 03-FEB-2016 TIME PLOTTED => 13:53

DIST	COUNTY	ROUTE	POST MILES TOTAL PROJECT	SHEET No.	TOTAL SHEETS
07	LA,Ora	5	0.0/1.5, 44.3/44.4	1381	1622

REGISTERED CIVIL ENGINEER 1-26-15 DATE

1-25-16
PLANS APPROVAL DATE

REGISTERED PROFESSIONAL ENGINEER Phu V. Nguyen No. 60358 Exp. 6/30/16 CIVIL STATE OF CALIFORNIA

The State of California or its officers or agents shall not be responsible for the accuracy or completeness of electronic copies of this plan sheet.

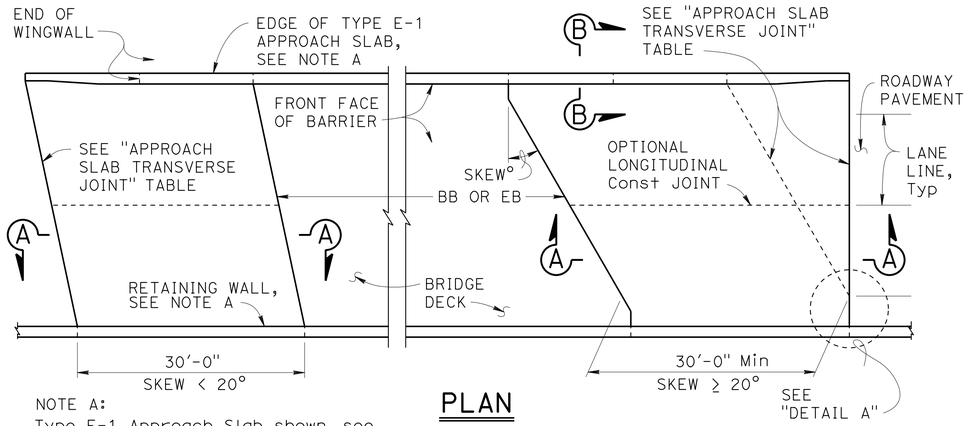

NOTE A:
Type E-1 Approach Slab shown, see "SECTION B-B" for Type E-2 details.

PLAN
1" = 10'

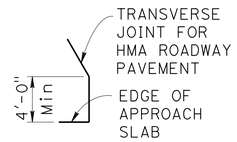

DETAIL A
No Scale

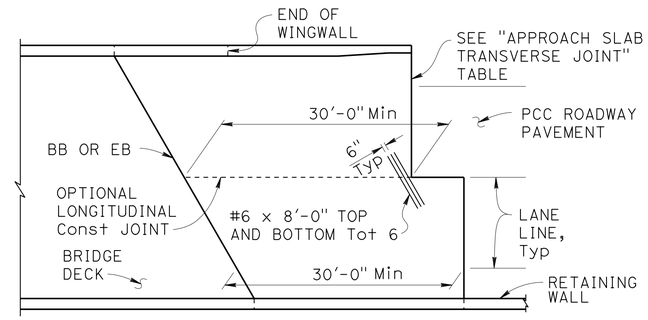

END STAGGER DETAIL
1" = 10'

APPROACH SLAB TRANSVERSE JOINT		
APPROACH SKEW	WITH HMA ROADWAY PAVEMENT	WITH PCC ROADWAY PAVEMENT
< 20°	PARALLEL TO BB OR EB	PARALLEL TO BB OR EB
20° - 45°	PARALLEL TO BB OR EB USE "DETAIL A"	STAGGER AT LANE LINES 24' TO 36' APART, SEE "END STAGGER DETAIL"
> 45°	PARALLEL TO BB OR EB USE "DETAIL A"	STAGGER AT EACH LANE LINE, SEE "END STAGGER DETAIL"

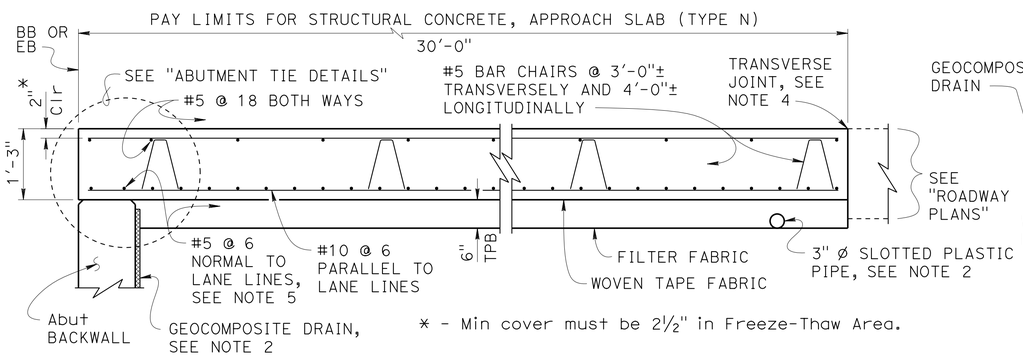

* - Min cover must be 2½" in Freeze-Thaw Area.

SECTION A-A
¾" = 1'-0"

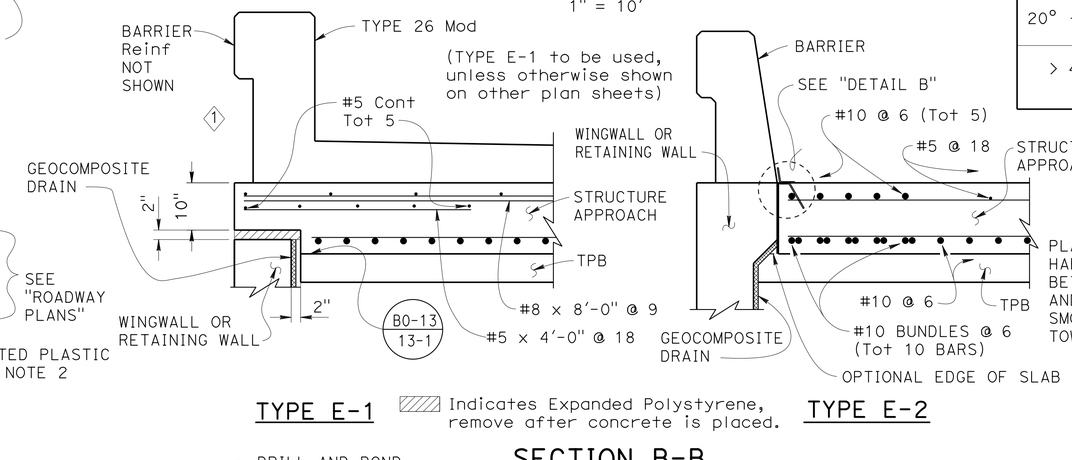

TYPE E-1 — Indicates Expanded Polystyrene, remove after concrete is placed. — TYPE E-2

SECTION B-B
¾" = 1'-0"

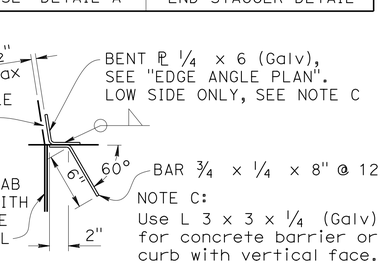

DETAIL B
1½" = 1'-0"

DESIGN NOTES

DESIGN: AASHTO LRFD Bridge Design Specifications, 2012 Edition with Caltrans Amendments, preface dated January 2014

LIMIT STATES: Service I, Strength I & II, Extreme II and Fatigue I (γ_{FAT} = 1.0)

DEAD LOAD: Includes 35 psf for future wearing surface

LIVE LOAD: HL93 and permit design load
Equivalent strip width method: W_1 = 12 ft
Slab span: L_1 = 24.5 ft

REINFORCED CONCRETE:
f_y = 60 ksi
f'_c = 3.6 ksi
n = 8

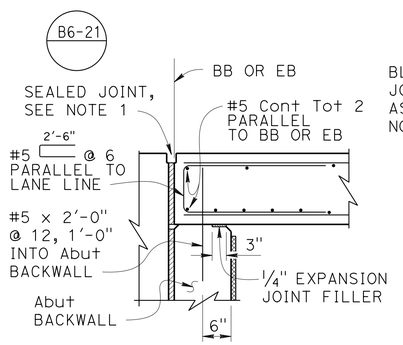

MR ≤ 2"

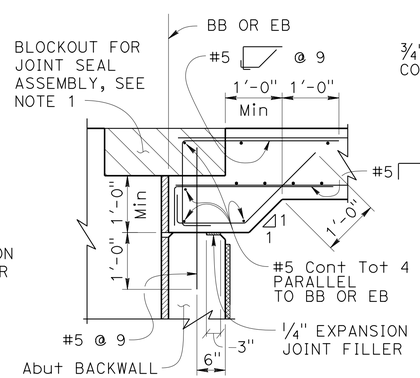

MR > 2"

ABUTMENT TIE DETAILS
¾" = 1'-0"

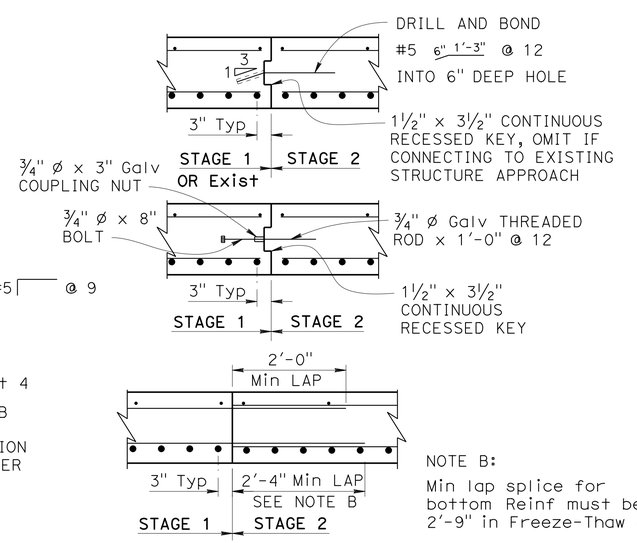

NOTE B:
Min lap splice for bottom Reinf must be 2'-9" in Freeze-Thaw Area.

LONGITUDINAL CONSTRUCTION JOINT ALTERNATIVES
¾" = 1'-0"

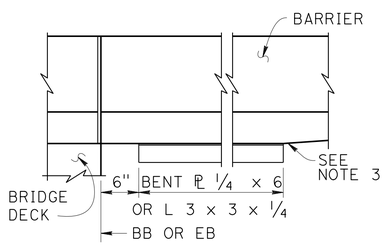

EDGE ANGLE PLAN
1" = 1'-0"

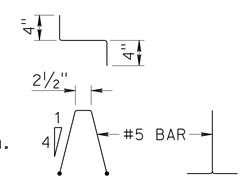

BAR CHAIR DETAIL
1" = 1'-0"

NOTES:

1. For joint protection details, blockout dimensions for joint seal assembly, and other details not shown, see other plan sheets. For MR ≤ 2", adjust reinforcement to clear sawcut for sealed joint. For MR > 2", haunch reinforcement placed for joint seal assembly blockout must be normal to BB or EB and spaced to avoid joint seal assembly anchorage.
2. For drainage details, see "STRUCTURE APPROACH DRAINAGE DETAILS" sheet.
3. End the plate or edge angle at beginning of barrier transition, end of wingwall, or end of structure approach as applicable.
4. ⟨2⟩ Transverse Joint must be a minimum of 5'-0" from an existing or constructed weakened plane joint in approach PCC roadway pavement. Refer to Standard Plans RSP P10 and RSP P14.
5. At the Contractor's option, approach slab transverse reinforcement may be placed parallel to BB or EB. Spacing of transverse reinforcement is measured along ℄ roadway.

STANDARD DRAWING
FILE NO. xs3-120
APPROVAL DATE January 2015

⟨1⟩ Modified Detail
⟨2⟩ Modified Note

STATE OF CALIFORNIA
DEPARTMENT OF TRANSPORTATION

DIVISION OF ENGINEERING SERVICES

BRIDGE NO. 53C2296
POST MILE 1.27

SB VALLEY VIEW AVE/S. FIRESTONE BLVD
STRUCTURE APPROACH TYPE N(30S)

DS OSD 2147A (ENGLISH STANDARD DRAWING "XS" BORDER REV. (10-01-14)

ORIGINAL SCALE IN INCHES FOR REDUCED PLANS 0 1 2 3

UNIT: 3587
PROJECT NUMBER & PHASE: 0715000160-1
CONTRACT NO.: 07-2159u4

DISREGARD PRINTS BEARING EARLIER REVISION DATES
REVISION DATES: 3-14-13 5-28-13 9-04-13

SHEET 22 OF 30

FILE => 53c2296-r-sa.dgn

USERNAME => s125824 DATE PLOTTED => 03-FEB-2016 TIME PLOTTED => 13:53

DIST	COUNTY	ROUTE	POST MILES TOTAL PROJECT	SHEET No.	TOTAL SHEETS
07	LA,Ora	5	0.0/1.5, 44.3/44.4	1382	1622

REGISTERED CIVIL ENGINEER 3-18-15 DATE

1-25-16
PLANS APPROVAL DATE

The State of California or its officers or agents shall not be responsible for the accuracy or completeness of electronic copies of this plan sheet.

REGISTERED PROFESSIONAL ENGINEER Phu V. Nguyen No. 60358 Exp. 12/31/16 CIVIL STATE OF CALIFORNIA

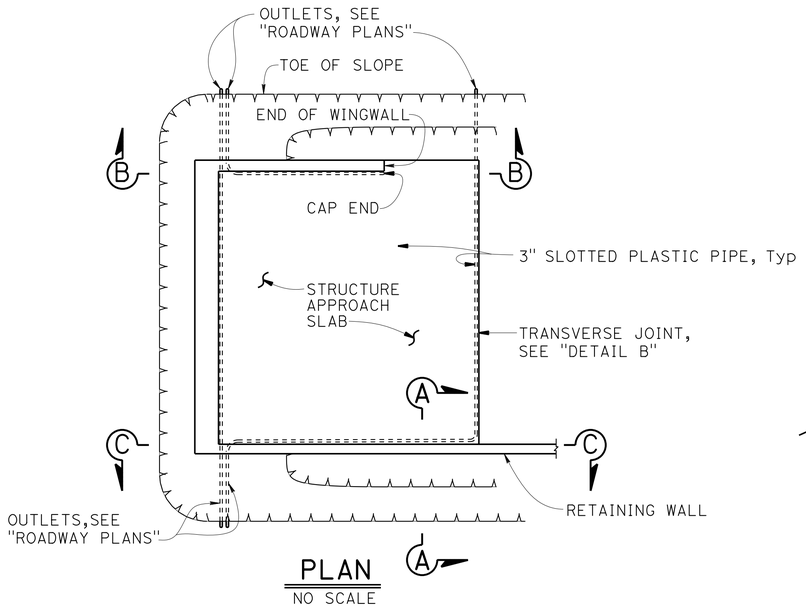

PLAN
NO SCALE

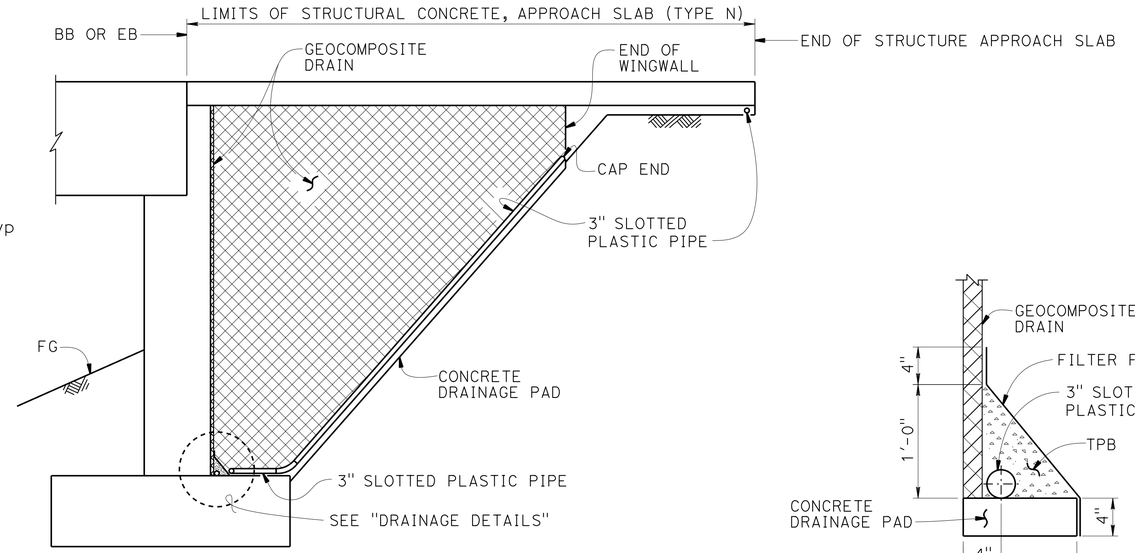

NOTE: TPB not shown for clarity.

SECTION B-B
NO SCALE

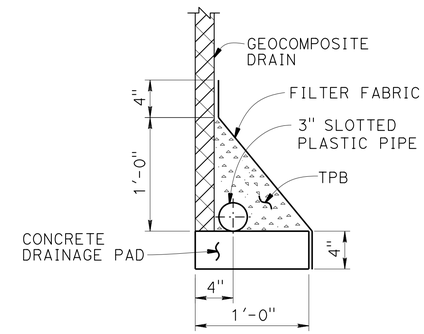

DRAINAGE PAD

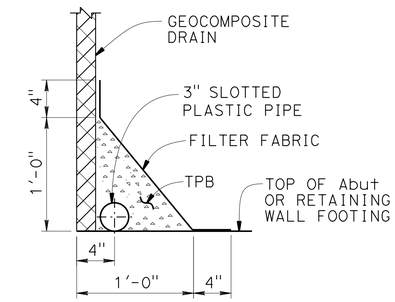

FOOTING

DRAINAGE DETAILS
1½" = 1'-0"

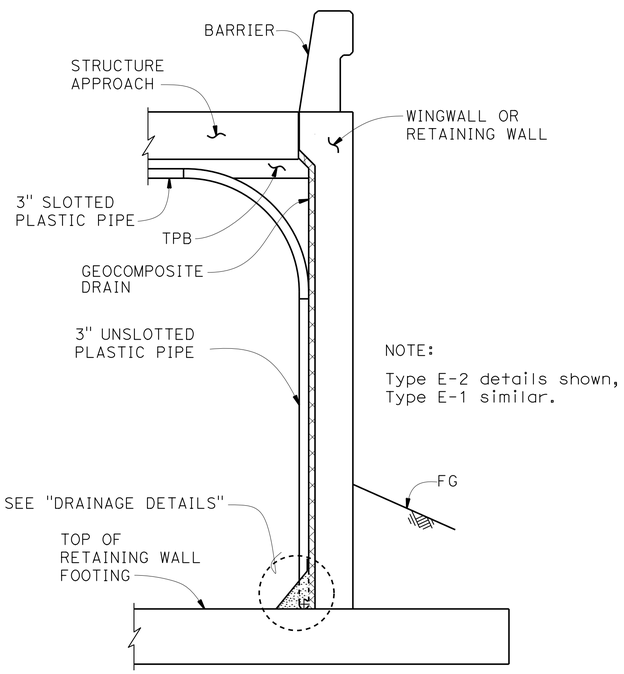

NOTE:

Type E-2 details shown, Type E-1 similar.

SECTION A-A
NO SCALE

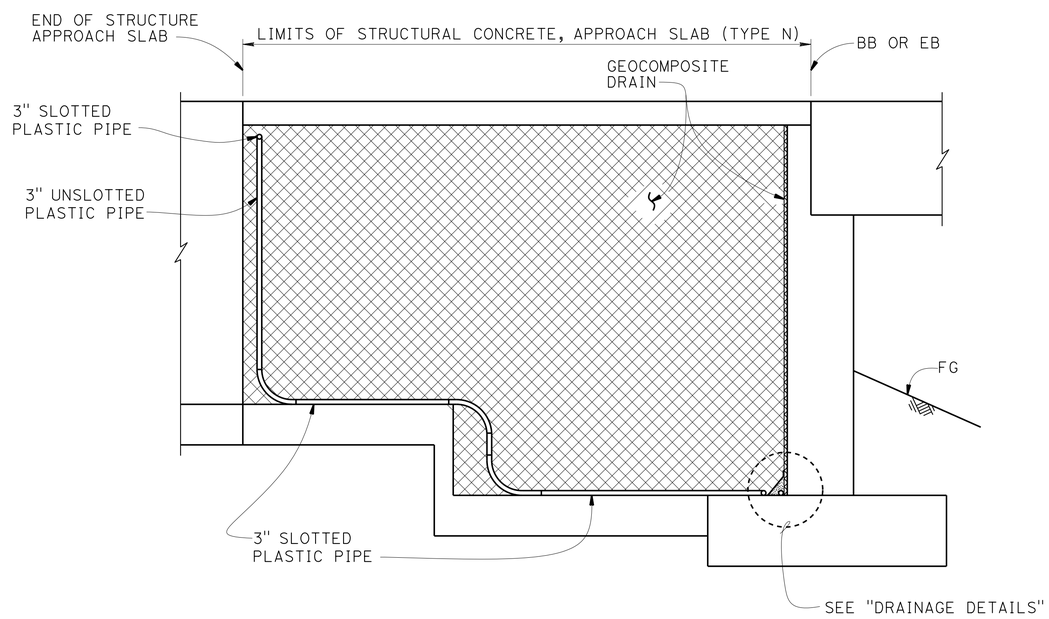

SECTION C-C
NO SCALE

NOTE: TPB not shown for clarity.

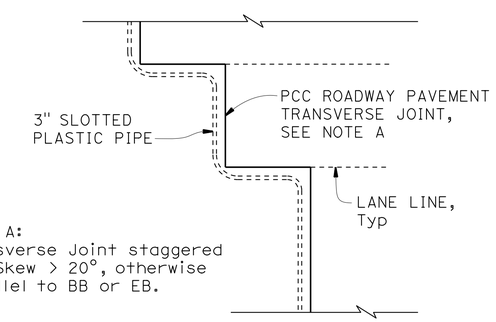

NOTE A:
Transverse Joint staggered for Skew > 20°, otherwise parallel to BB or EB.

DETAIL B
NO SCALE

NOTES:

1. For structural approach and other details not shown, see other plan sheets.
2. All bends in plastic pipe must have 3'-0" minimum radius. Plastic pipe used for bends is not required to be slotted.

REVISED STANDARD DRAWING

FILE NO. xs3-110

APPROVAL DATE January 2015

STATE OF CALIFORNIA DEPARTMENT OF TRANSPORTATION

DIVISION OF ENGINEERING SERVICES

BRIDGE NO. 53C2296

POST MILE 1.27

SB VALLEY VIEW AVE/ S. FIRESTONE BLVD

STRUCTURE APPROACH DRAINAGE DETAILS

DS OSD 2147A (ENGLISH STANDARD DRAWING "XS" BORDER REV. (02-02-11)

ORIGINAL SCALE IN INCHES FOR REDUCED PLANS 0 1 2 3

UNIT: 3587
PROJECT NUMBER & PHASE: 0715000160-1
CONTRACT NO.: 07-2159u4

DISREGARD PRINTS BEARING EARLIER REVISION DATES

REVISION DATES 3-22-13 5-29-13

SHEET 23 OF 30

FILE => 53c2296-s-sadd.dgn

USERNAME => s128624 DATE PLOTTED => 03-FEB-2016 TIME PLOTTED => 13:53

DIST	COUNTY	ROUTE	POST MILES TOTAL PROJECT	SHEET No.	TOTAL SHEETS
07	LA,Ora	5	0.0/1.5, 44.3/44.4	1383	1622

REGISTERED CIVIL ENGINEER 3-18-15 DATE

1-25-16
PLANS APPROVAL DATE

REGISTERED PROFESSIONAL ENGINEER Phu V. Nguyen No. 60358 Exp. 6/30/16 CIVIL STATE OF CALIFORNIA

The State of California or its officers or agents shall not be responsible for the accuracy or completeness of scanned copies of this plan sheet.

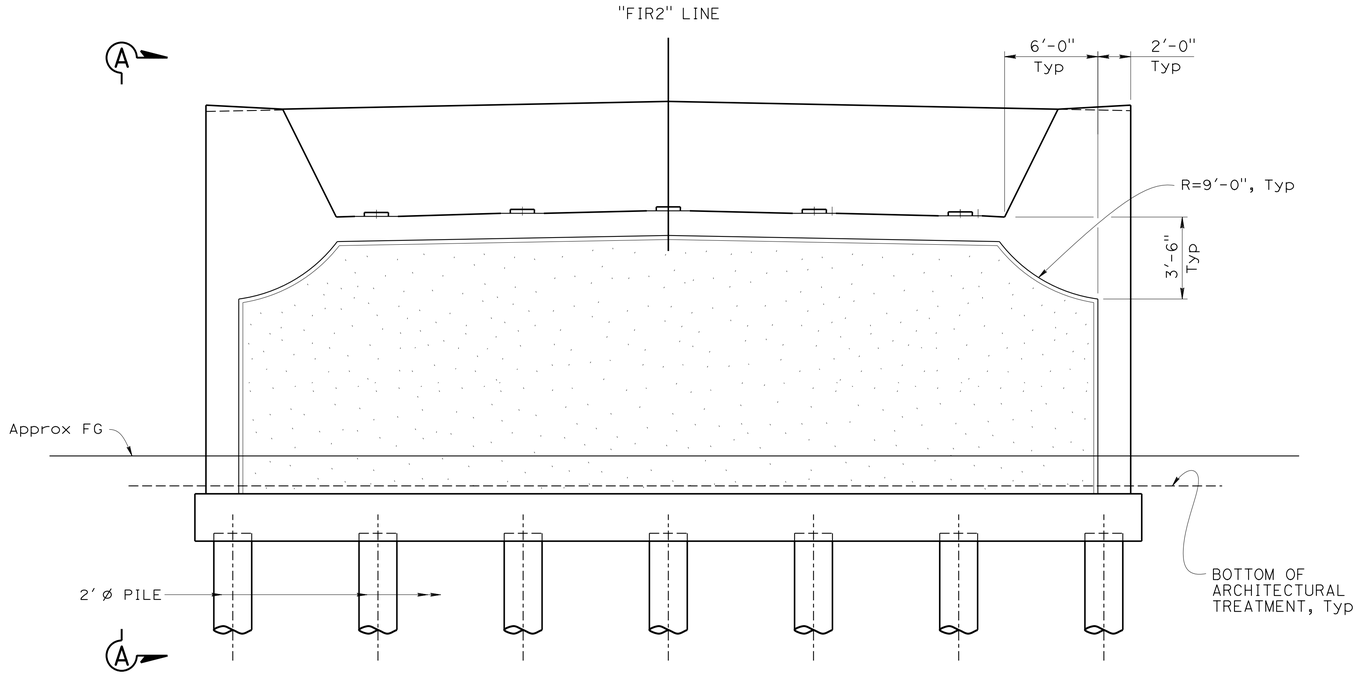

DEVELOPED ELEVATION
1/4" = 1'-0"

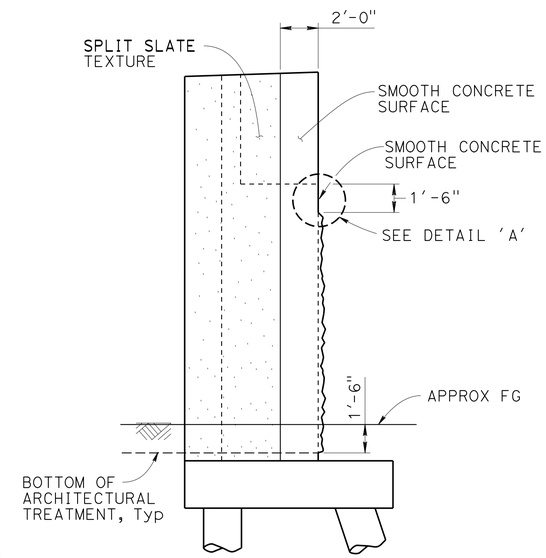

NOTE: Left stubwall shown, right stubwall similar

VIEW A-A
1/4" = 1'-0"

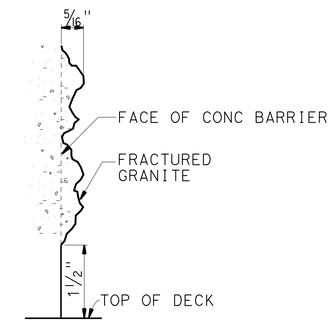

DETAIL B
NO SCALE

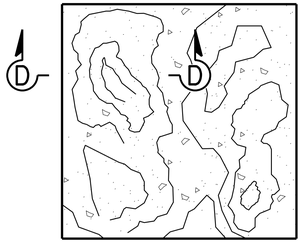

SPLIT SLATE TEXTURE
NO SCALE

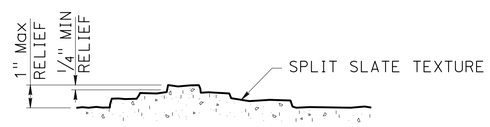

SECTION D-D
NO SCALE

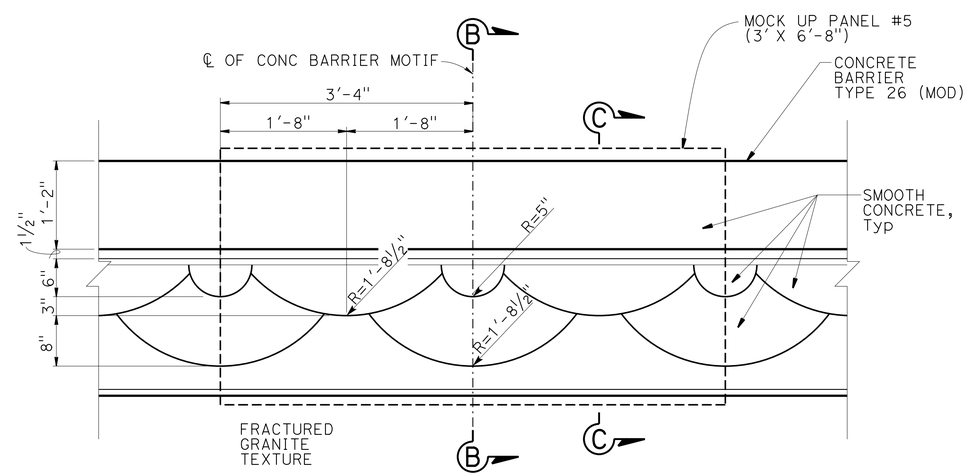

ELEVATION - BARRIER MOTIF
1" = 1'-0"

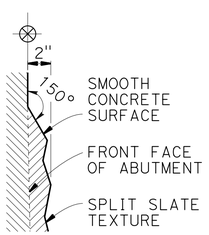

DETAIL A
NO SCALE

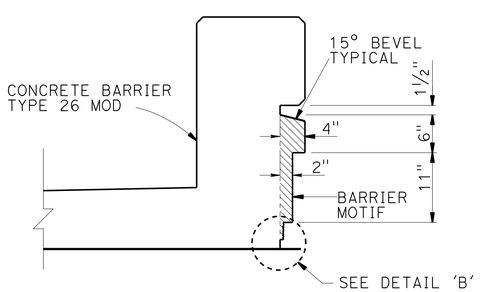

SECTION B-B
1" = 1'-0"

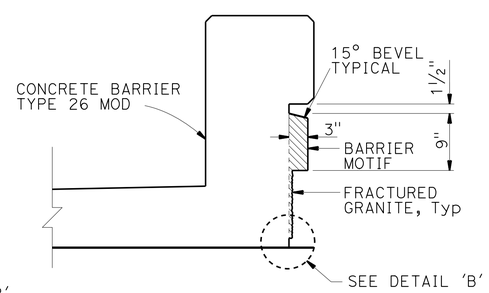

SECTION C-C
1" = 1'-0"

DESIGN	BY H. Javier Chavez	CHECKED Isaac Tasabia	
DETAILS	BY Jaime Ramirez	CHECKED Isaac Tasabia	
QUANTITIES	BY Yeo Yoon	CHECKED Evan Franciliso	

STATE OF CALIFORNIA
DEPARTMENT OF TRANSPORTATION

DIVISION OF ENGINEERING SERVICES
STRUCTURE DESIGN
DESIGN BRANCH 11

BRIDGE NO. 53C2296
POST MILE 1.27

SB VALLEY VIEW AVE/S FIRESTONE BLVD
ARCHITECTURAL TREATMENT DETAILS

STRUCTURES DESIGN DETAIL SHEET (ENGLISH) (REV. 09-01-10)

ORIGINAL SCALE IN INCHES FOR REDUCED PLANS 0 1 2 3

UNIT: 3587
PROJECT NUMBER & PHASE: 0715000160-1
CONTRACT NO.: 07-2159U4

DISREGARD PRINTS BEARING EARLIER REVISION DATES

REVISION DATES: 5-7-13 5-28-13 9-11-13

SHEET 24 OF 30

FILE => 53c2296-v-arch.dgn

USERNAME => s125624 DATE PLOTTED => 03-FEB-2016 TIME PLOTTED => 13:53

DIST	COUNTY	ROUTE	POST MILES TOTAL PROJECT	SHEET No.	TOTAL SHEETS
07	LA,Ora	5	0.0/1.5, 44.3/44.4	1384	1622

REGISTERED CIVIL ENGINEER 3-18-15 DATE

1-25-16
PLANS APPROVAL DATE

REGISTERED PROFESSIONAL ENGINEER Phu V. Nguyen No. 60358 Exp. 6-30-16 CIVIL STATE OF CALIFORNIA

The State of California or its officers or agents shall not be responsible for the accuracy or completeness of electronic copies of this plan sheet.

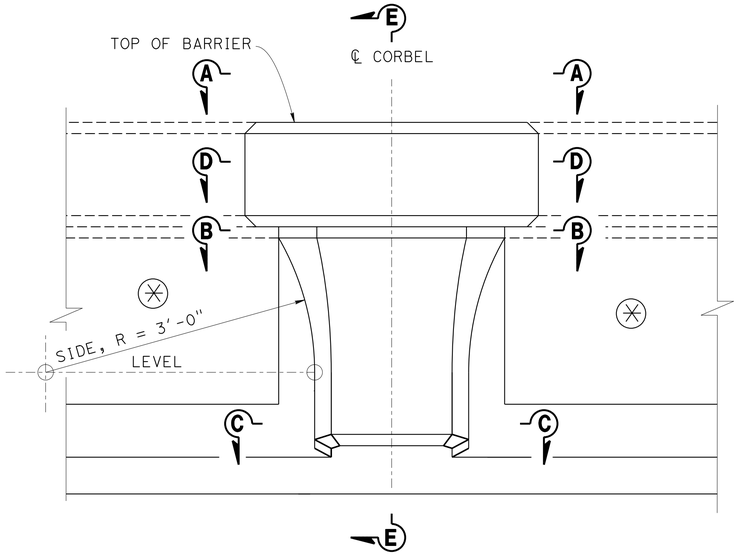

ELEVATION

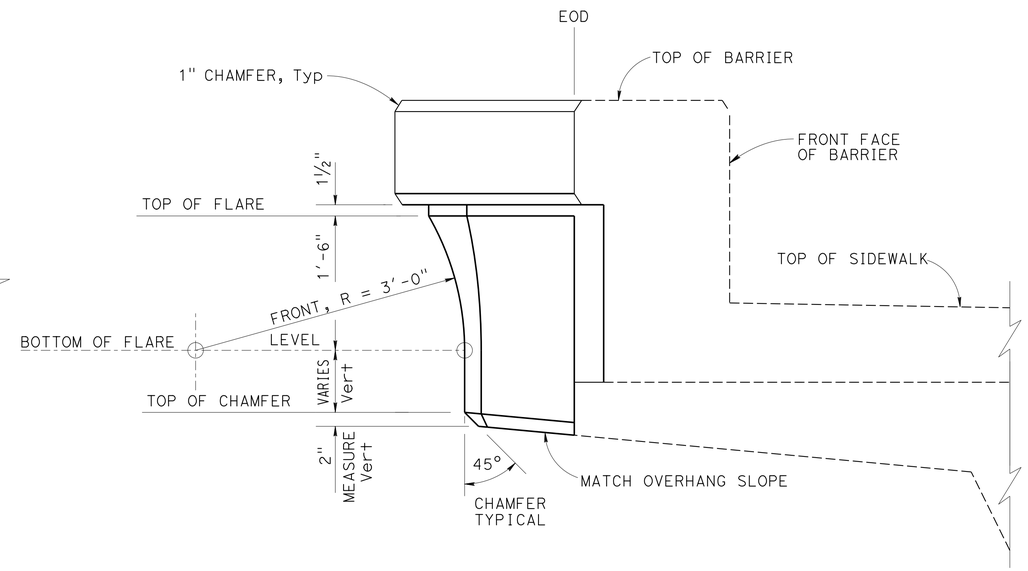

SIDE VIEW

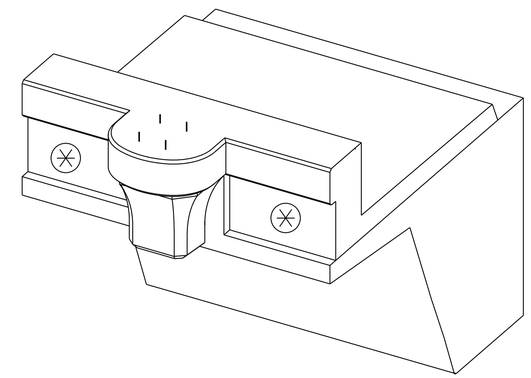

PICTORIAL VIEW

NOTE:

⊛ For Barrier architectural treatment See "ARCHITECTURAL TREATMENT DETAILS" sheet

1. For 'Section D-D' & 'Section E-E', See "LUMINAIRE CORBEL DETAILS NO. 2" sheet

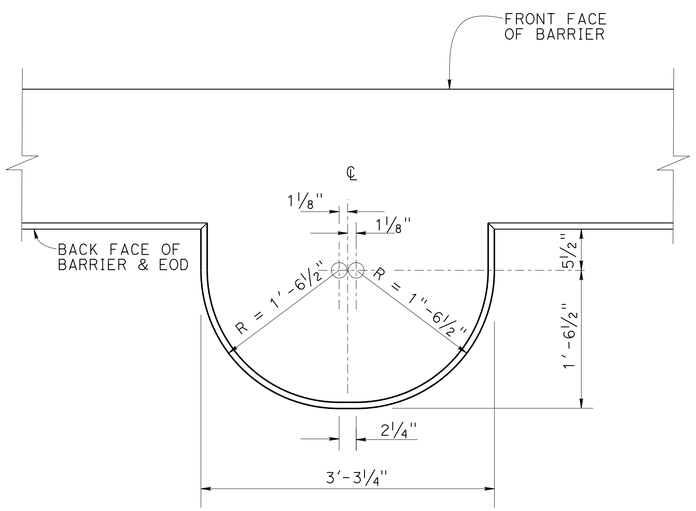

VIEW A-A

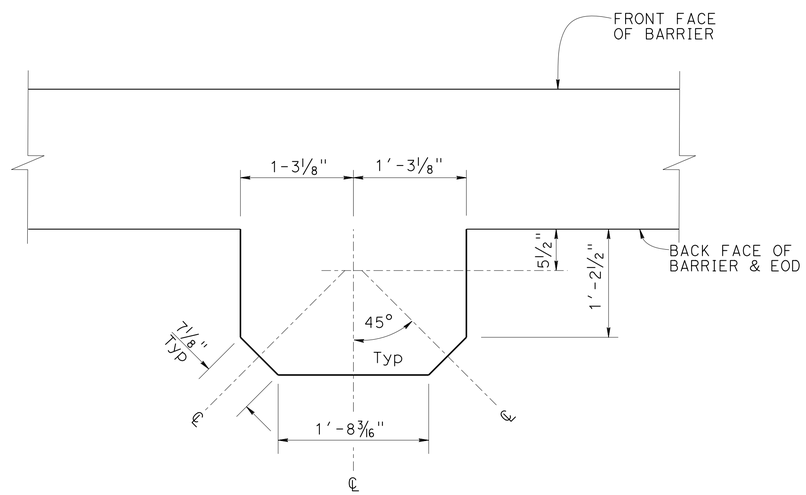

VIEW B-B

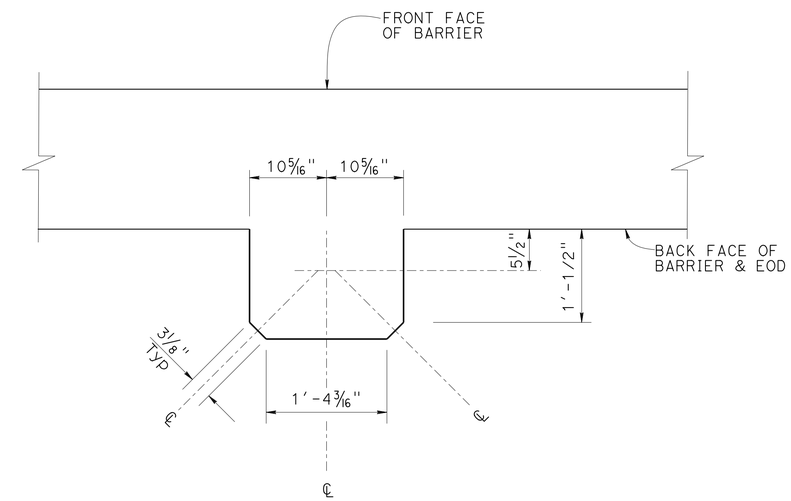

VIEW C-C

NO SCALE

DESIGN	BY D. Texler/K. Andurlekar	CHECKED Krishnakant Andurlekar	
DETAILS	BY Jaime Ramirez	CHECKED Krishnakant Andurlekar	
QUANTITIES	BY Krishnakant Andurlekar	CHECKED Ruperd Wilson	

STATE OF CALIFORNIA DEPARTMENT OF TRANSPORTATION

DIVISION OF ENGINEERING SERVICES STRUCTURE DESIGN DESIGN BRANCH 11

BRIDGE NO. 53C2296
POST MILE 1.27

SB VALLEY VIEW AVE/S. FIRESTONE BLVD
LUMINAIRE CORBEL DETAILS NO 1

STRUCTURES DESIGN DETAIL SHEET (ENGLISH) (REV. 09-01-10)

ORIGINAL SCALE IN INCHES FOR REDUCED PLANS 0 1 2 3

UNIT: 3587
PROJECT NUMBER & PHASE: 0715000160-1
CONTRACT NO.: 07-2159U4

DISREGARD PRINTS BEARING EARLIER REVISION DATES

REVISION DATES 5-30-14

SHEET 25 OF 30

FILE => 53c2296-w-corbel01.dgn

USERNAME => s129624 DATE PLOTTED => 03-FEB-2016 TIME PLOTTED => 13:53

DIST	COUNTY	ROUTE	POST MILES TOTAL PROJECT	SHEET No.	TOTAL SHEETS
07	LA,Ora	5	0.0/1.5, 44.3/44.4	1385	1622

REGISTERED CIVIL ENGINEER 3-18-15 DATE

1-25-16
PLANS APPROVAL DATE

REGISTERED PROFESSIONAL ENGINEER Phu V. Nguyen No. 60358 Exp. 6-30-16 CIVIL STATE OF CALIFORNIA

The State of California or its officers or agents shall not be responsible for the accuracy or completeness of electronic copies of this plan sheet.

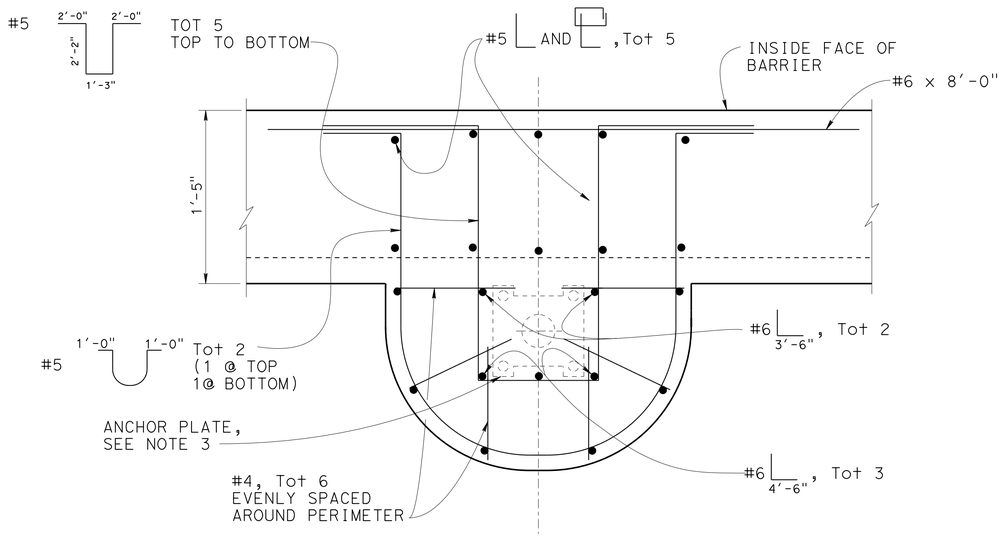

SECTION D-D

Not to Scale

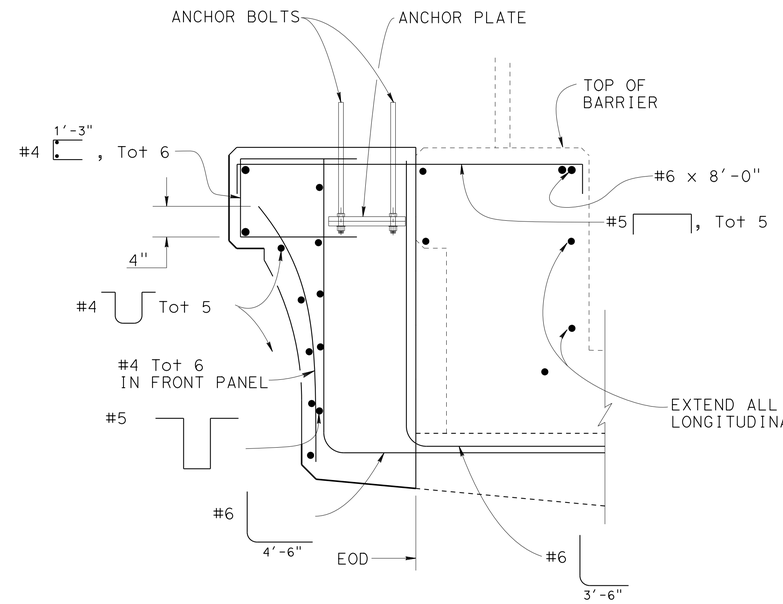

SECTION E-E

Not to Scale

NOTES:

1. For other Details, see "LUMINAIRE CORBEL DETAIL No. 1" sheet.
2. All bars not shown, For Barrier Details, see RSP B11-54
3. For Electrolier details see "ROAD PLANS"

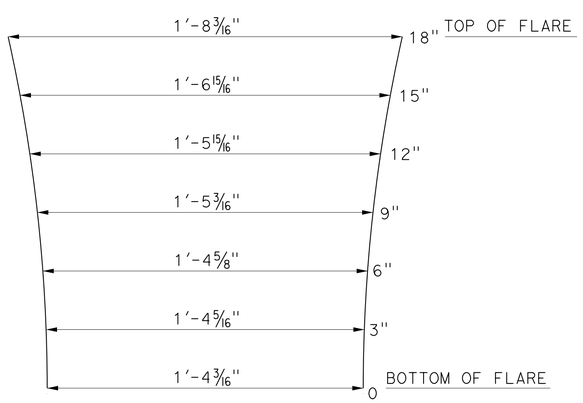

FRONT PANEL FACE

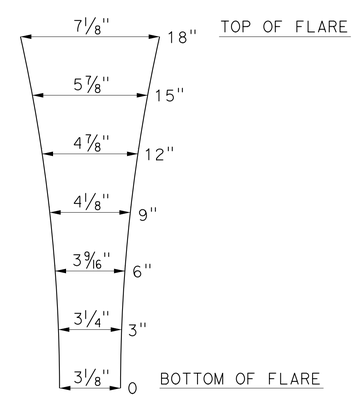

CORNER PANEL FACE

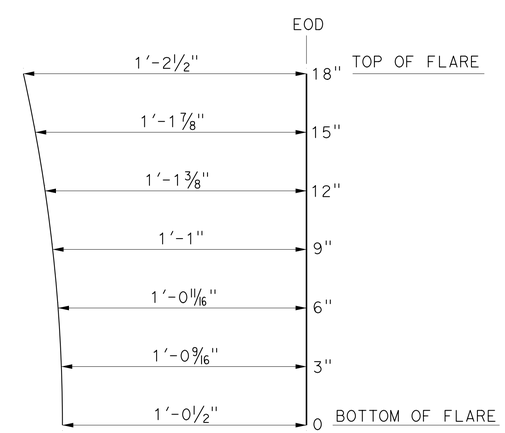

SIDE PANEL FACE

NO SCALE

DESIGN	BY D. Texler/K. Andurlekar	CHECKED Krishnakant Andurlekar	
DETAILS	BY Jaime Ramirez	CHECKED Krishnakant Andurlekar	
QUANTITIES	BY Krishnakant Andurlekar	CHECKED Ruperd Wilson	

STATE OF CALIFORNIA DEPARTMENT OF TRANSPORTATION

DIVISION OF ENGINEERING SERVICES STRUCTURE DESIGN DESIGN BRANCH 11

BRIDGE NO. 53C2296
POST MILE 1.27

SB VALLEY VIEW AVE/S. FIRESTONE BLVD
LUMINAIRE CORBEL DETAILS NO 2

STRUCTURES DESIGN DETAIL SHEET (ENGLISH) (REV. 09-01-10)

ORIGINAL SCALE IN INCHES FOR REDUCED PLANS 0 1 2 3

UNIT: 3587
PROJECT NUMBER & PHASE: 0715000160-1
CONTRACT NO.: 07-2159U4

DISREGARD PRINTS BEARING EARLIER REVISION DATES

REVISION DATES 5-30-14

SHEET 26 OF 30

FILE => 53c2296-w-corbel02.dgn

USERNAME => s129624 DATE PLOTTED => 03-FEB-2016 TIME PLOTTED => 13:53

DIST	COUNTY	ROUTE	POST MILES TOTAL PROJECT	SHEET No.	TOTAL SHEETS
07	LA,Ora	5	0.0/1.5, 44.3/44.4	1386	1622

REGISTERED CIVIL ENGINEER — DATE 07/16/15

1-25-16
PLANS APPROVAL DATE

REGISTERED PROFESSIONAL ENGINEER — FARID MOTAMED — No. 2738 — EXP. 06/30/17 — GEOTECHNICAL — STATE OF CALIFORNIA

FUGRO CONSULTANTS
700 S. FLOWER STREET, SUITE 2116
LOS ANGELES, CA 90017

The State of California or its officers or agents shall not be responsible for the accuracy or completeness of electronic copies of this plan sheet.

1-This LOTB sheet was prepared in accordance with the Caltrans Soil & Rock Logging, Classification, & Presentation Manual (2010 Edition).

2-For protection of underground utility lines, hand-auger was used to remove top 5 to 10 feet of subsurface material for exploratory borings and Cone Penetration Testings.

3-2.0" to 1.4" blow counts conversion factors for fine-grain and coarse-grain soils have been 0.8 and 0.55, respectively.

BENCH MARK

GPS 0888
ELEVATION 63.317 FT
FOUND 2-1/2 INCH CADT DISK IN CONCRETE CURB, FLUSH, STAMPED "LA51.2 1995"
THE MARK IS LOCATED 0.1 MI NORTHERLY OF THE VALLEY VIEW OVERCROSSING OF THE 5 (SANTA ANA) FWY ON THE SOUTHWESTERLY CURB OF FIRESTONE BLVD AT THE FIRST DRIVEWAY CUT NORTH OF THE FWY.
NORTHING 542603.017
EASTING 1997274.832
DATUM NAVD88

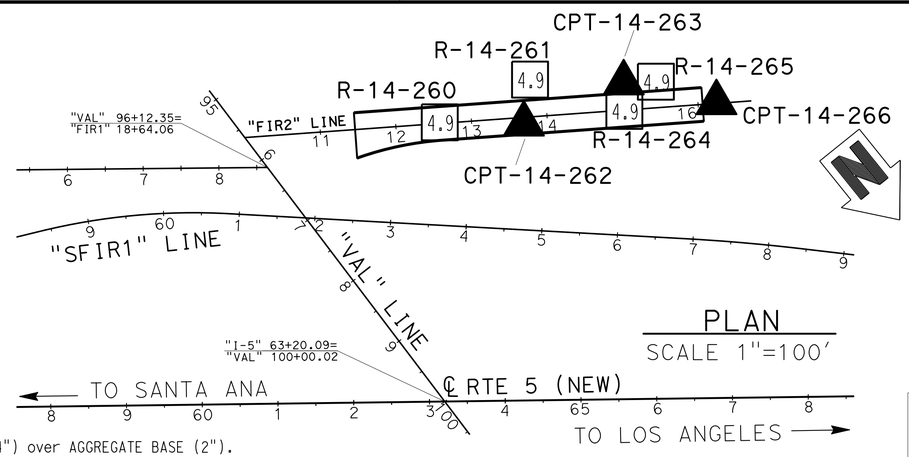

PLAN
SCALE 1"=100'

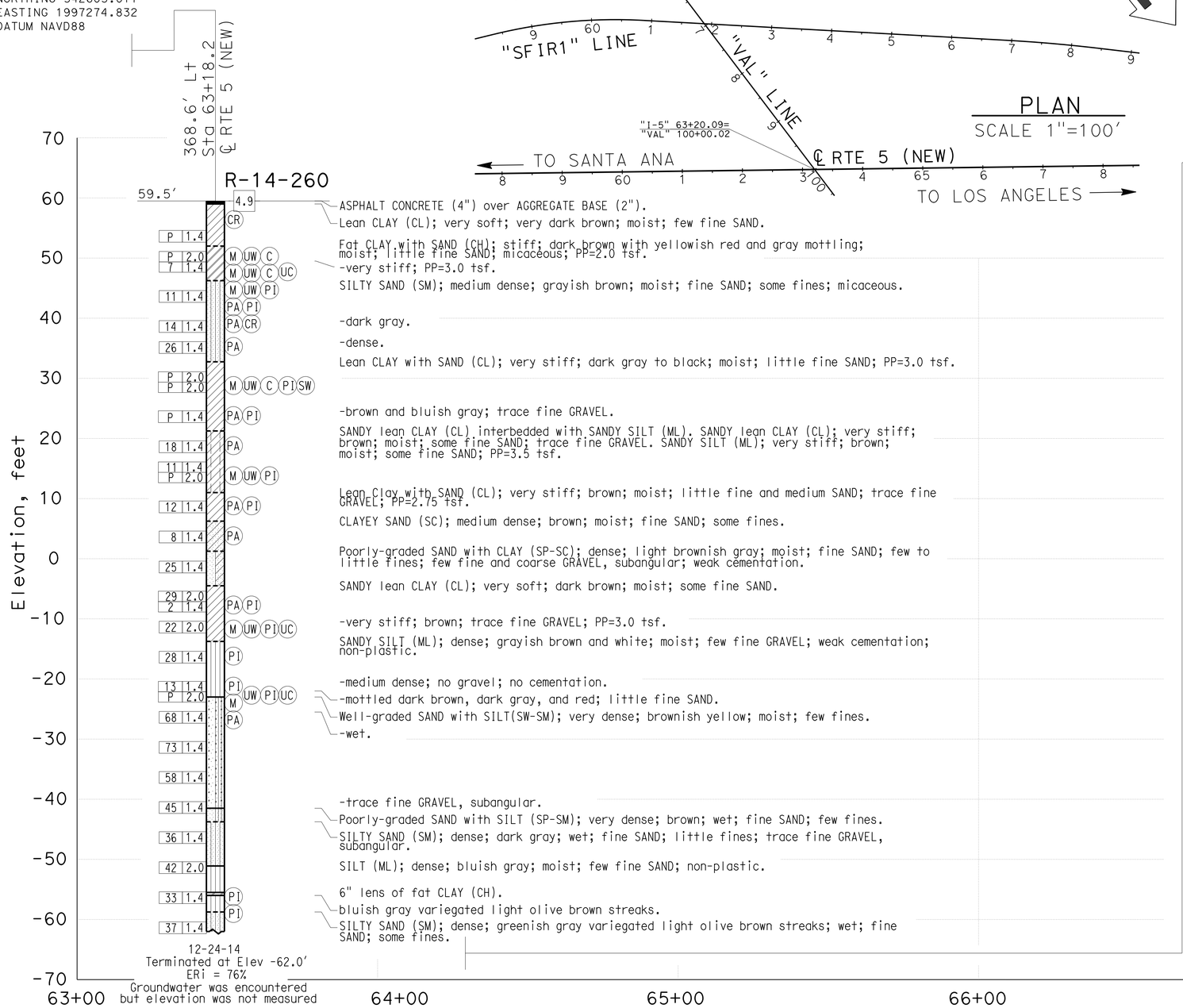

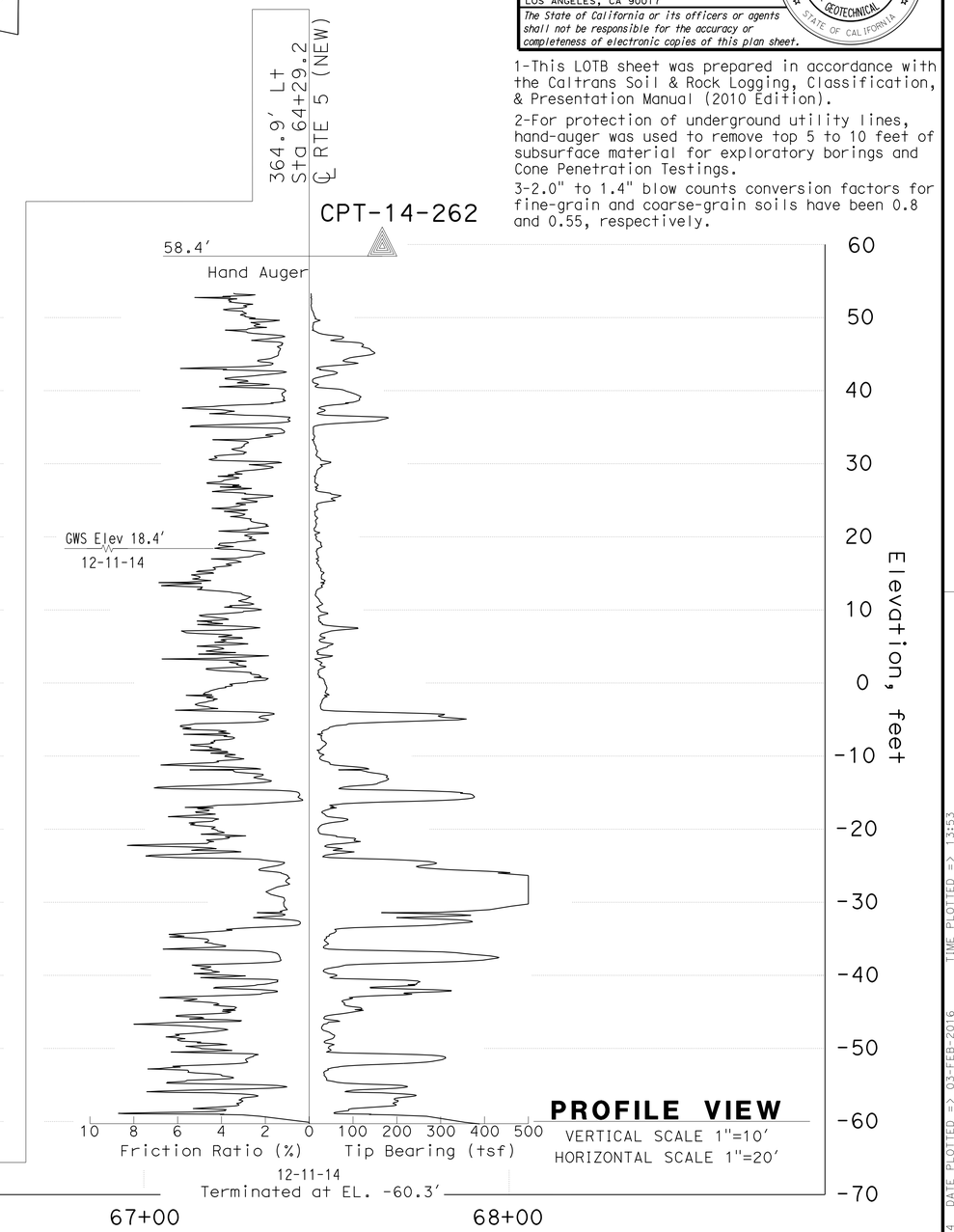

PROFILE VIEW
VERTICAL SCALE 1"=10'
HORIZONTAL SCALE 1"=20'

F.MOTAMED — DESIGN OVERSIGHT	DRAWN BY	T.PANAH	M.MARIN — FIELD INVESTIGATION BY:
07/16/15 — SIGN OFF DATE	CHECKED BY	EJ.JEON	DATE: 12/11/14 - 12/24/14

PREPARED FOR THE STATE OF CALIFORNIA DEPARTMENT OF TRANSPORTATION

F.MOTAMED — PROJECT ENGINEER

BRIDGE NO. 53C-2296
POST MILES 1.27

SB VALLEY VIEW AVE/S. FIRESTONE BLVD
LOG OF TEST BORINGS SHEET 1 OF 4

GS CIVIL LOG OF TEST BORINGS SHEET (ENGLISH) (REV. 03/14/12)

ORIGINAL SCALE IN INCHES FOR REDUCED PLANS 0 1 2 3

UNIT: 3658
PROJECT NUMBER & PHASE: 07150001601
CONTRACT NO.: 07-2159U4

DISREGARD PRINTS BEARING EARLIER REVISION DATES → 5/13/15 07/16/15

REVISION DATES | SHEET 27 | OF 30

FILE => 53c2296-z-lotb1.dgn

USERNAME => s125624 DATE PLOTTED => 03-FEB-2016 TIME PLOTTED => 13:53

DIST	COUNTY	ROUTE	POST MILES TOTAL PROJECT	SHEET No.	TOTAL SHEETS
07	LA,Ora	5	0.0/1.5, 44.3/44.4	1387	1622

REGISTERED CIVIL ENGINEER 07/16/15 DATE

1-25-16
PLANS APPROVAL DATE

REGISTERED PROFESSIONAL ENGINEER FARID MOTAMED No. 2738 Exp. 06/30/17 GEOTECHNICAL STATE OF CALIFORNIA

FUGRO CONSULTANTS
700 S. FLOWER STREET, SUITE 2116
LOS ANGELES, CA 90017

The State of California or its officers or agents shall not be responsible for the accuracy or completeness of electronic copies of this plan sheet.

1-This LOTB sheet was prepared in accordance with the Caltrans Soil & Rock Logging, Classification, & Presentation Manual (2010 Edition).

2-For protection of underground utility lines, hand-auger was used to remove top 5 to 10 feet of subsurface material for exploratory borings and Cone Penetration Testings.

3-2.0" to 1.4" blow counts conversion factors for fine-grain and coarse-grain soils have been 0.8 and 0.55, respectively.

FOR PLAN VIEW, SEE
"LOG OF TEST BORINGS" SHEET 1 OF 4

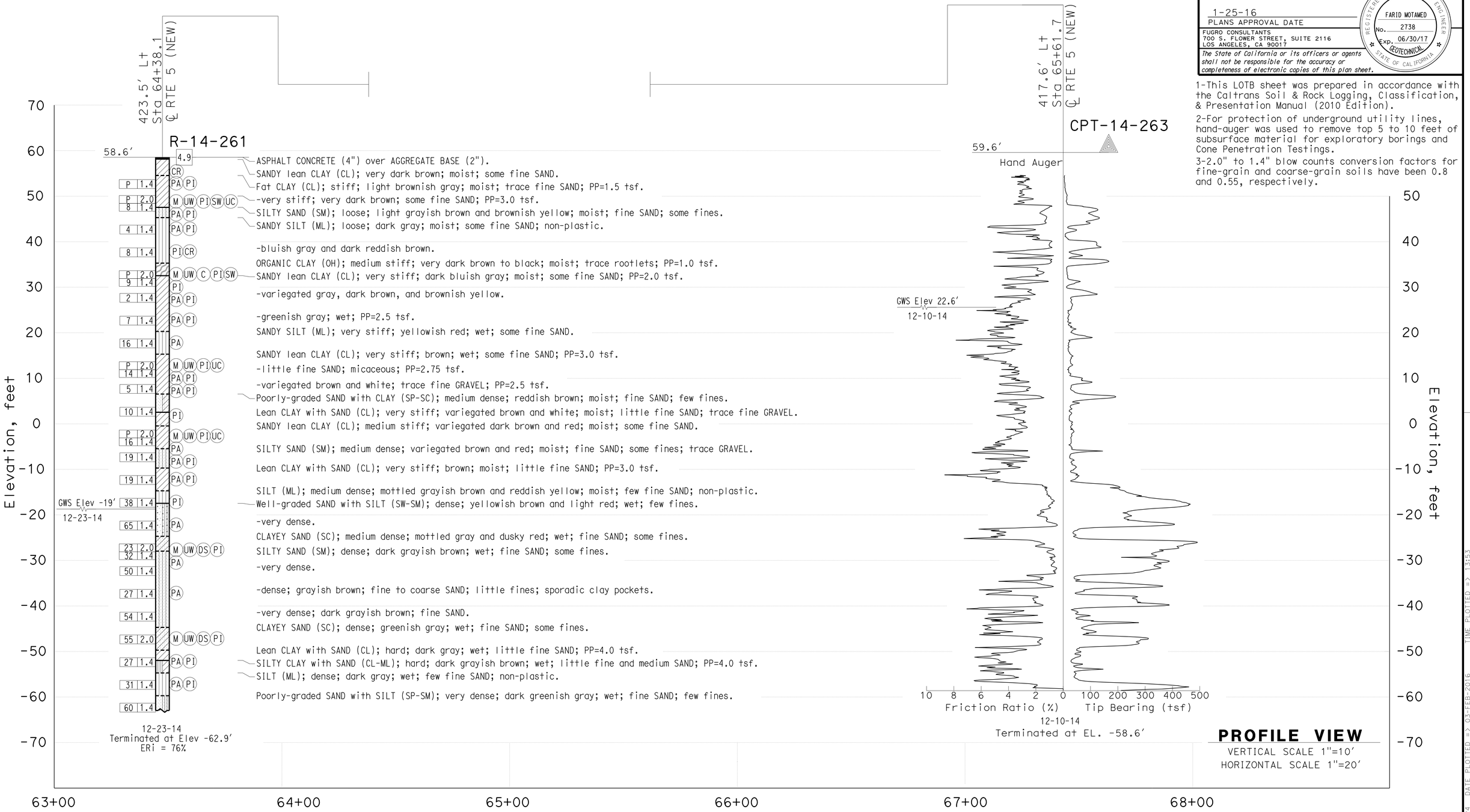

PROFILE VIEW
VERTICAL SCALE 1"=10'
HORIZONTAL SCALE 1"=20'

F.MOTAMED DESIGN OVERSIGHT	DRAWN BY	T.PANAH	M.MARIN FIELD INVESTIGATION BY:	PREPARED FOR THE STATE OF CALIFORNIA DEPARTMENT OF TRANSPORTATION	BRIDGE NO. 53C-2296
07/16/15 SIGN OFF DATE	CHECKED BY	EJ.JEON	DATE: 12/10/14 - 12/23/14	F.MOTAMED PROJECT ENGINEER	POST MILES 1.27

SB VALLEY VIEW AVE/S. FIRESTONE BLVD
LOG OF TEST BORINGS SHEET 2 OF 4

GS CIVIL LOG OF TEST BORINGS SHEET (ENGLISH) (REV. 03/14/12)

ORIGINAL SCALE IN INCHES FOR REDUCED PLANS 0 1 2 3

UNIT: 3658
PROJECT NUMBER & PHASE: 07150001601 CONTRACT NO.: 07-2159U4

DISREGARD PRINTS BEARING EARLIER REVISION DATES

REVISION DATES 8/13/15 07/16/15 SHEET 28 OF 30

FILE => 53c2296-z-lotb2.dgn

USERNAME => s125624 DATE PLOTTED => 03-FEB-2016 TIME PLOTTED => 13:53

DIST	COUNTY	ROUTE	POST MILES TOTAL PROJECT	SHEET No.	TOTAL SHEETS
07	LA,Ora	5	0.0/1.5, 44.3/44.4	1388	1622

REGISTERED CIVIL ENGINEER 07/16/15 DATE

1-25-16
PLANS APPROVAL DATE

FUGRO CONSULTANTS
700 S. FLOWER STREET, SUITE 2116
LOS ANGELES, CA 90017

The State of California or its officers or agents shall not be responsible for the accuracy or completeness of electronic copies of this plan sheet.

REGISTERED PROFESSIONAL ENGINEER FARID MOTAMED No. 2738 Exp. 06/30/17 GEOTECHNICAL STATE OF CALIFORNIA

1-This LOTB sheet was prepared in accordance with the Caltrans Soil & Rock Logging, Classification, & Presentation Manual (2010 Edition).

2-For protection of underground utility lines, hand-auger was used to remove top 5 to 10 feet of subsurface material for exploratory borings and Cone Penetration Testings.

3-2.0" to 1.4" blow counts conversion factors for fine-grain and coarse-grain soils have been 0.8 and 0.55, respectively.

FOR PLAN VIEW, SEE
"LOG OF TEST BORINGS" SHEET 1 OF 4

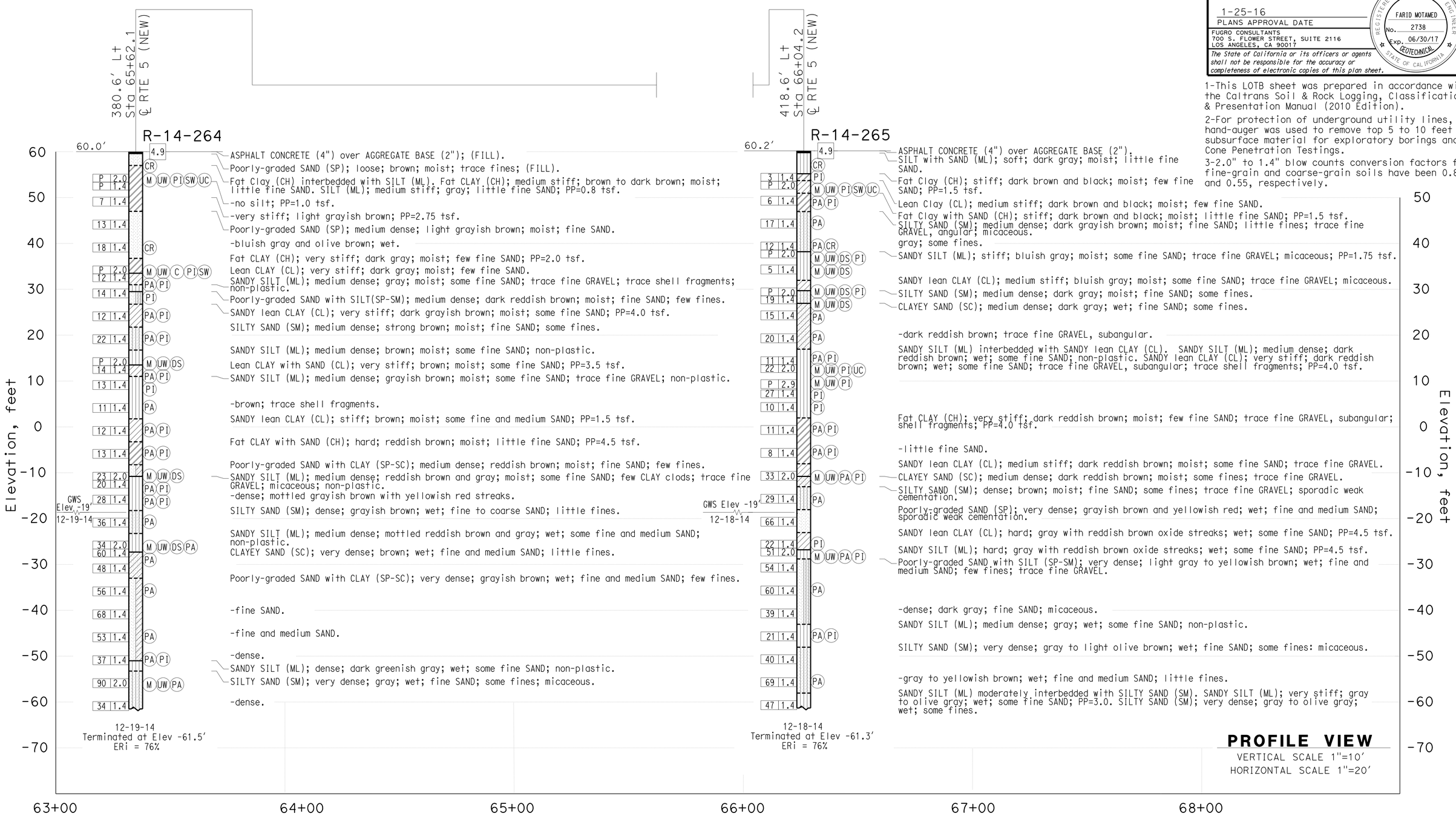

PROFILE VIEW
VERTICAL SCALE 1"=10'
HORIZONTAL SCALE 1"=20'

F.MOTAMED DESIGN OVERSIGHT 07/16/15 SIGN OFF DATE	DRAWN BY T.PANAH	M.MARIN FIELD INVESTIGATION BY: DATE: 12/18/14 - 12/19/14	PREPARED FOR THE STATE OF CALIFORNIA DEPARTMENT OF TRANSPORTATION
	CHECKED BY EJ.JEON		

F.MOTAMED PROJECT ENGINEER

BRIDGE NO. 53C-2296
POST MILES 1.27

SB VALLEY VIEW AVE/S. FIRESTONE BLVD
LOG OF TEST BORINGS SHEET 3 OF 4

GS CIVIL LOG OF TEST BORINGS SHEET (ENGLISH) (REV. 03/14/12)

ORIGINAL SCALE IN INCHES FOR REDUCED PLANS 0 1 2 3

UNIT: 3658
PROJECT NUMBER & PHASE: 07150001601 CONTRACT NO.: 07-2159U4

DISREGARD PRINTS BEARING EARLIER REVISION DATES → 07/22/15 07/16/15

REVISION DATES | SHEET 29 | OF 30

FILE => 53c2296-z-lotb3.dgn

USERNAME => s125624 DATE PLOTTED => 03-FEB-2016 TIME PLOTTED => 13:53

DIST	COUNTY	ROUTE	POST MILES TOTAL PROJECT	SHEET No.	TOTAL SHEETS
07	LA,Ora	5	0.0/1.5, 44.3/44.4	1389	1622

REGISTERED CIVIL ENGINEER — DATE 07/16/15

1-25-16
PLANS APPROVAL DATE

FUGRO CONSULTANTS
700 S. FLOWER STREET, SUITE 2116
LOS ANGELES, CA 90017

The State of California or its officers or agents shall not be responsible for the accuracy or completeness of electronic copies of this plan sheet.

REGISTERED PROFESSIONAL ENGINEER — FARID MOTAMED — No. 2738 — EXP. 06/30/17 — GEOTECHNICAL — STATE OF CALIFORNIA

1-This LOTB sheet was prepared in accordance with the Caltrans Soil & Rock Logging, Classification, & Presentation Manual (2010 Edition).

2-For protection of underground utility lines, hand-auger was used to remove top 5 to 10 feet of subsurface material for exploratory borings and Cone Penetration Testings.

3-2.0" to 1.4" blow counts conversion factors for fine-grain and coarse-grain soils have been 0.8 and 0.55, respectively.

FOR PLAN VIEW, SEE
"LOG OF TEST BORINGS" SHEET 1 OF 4

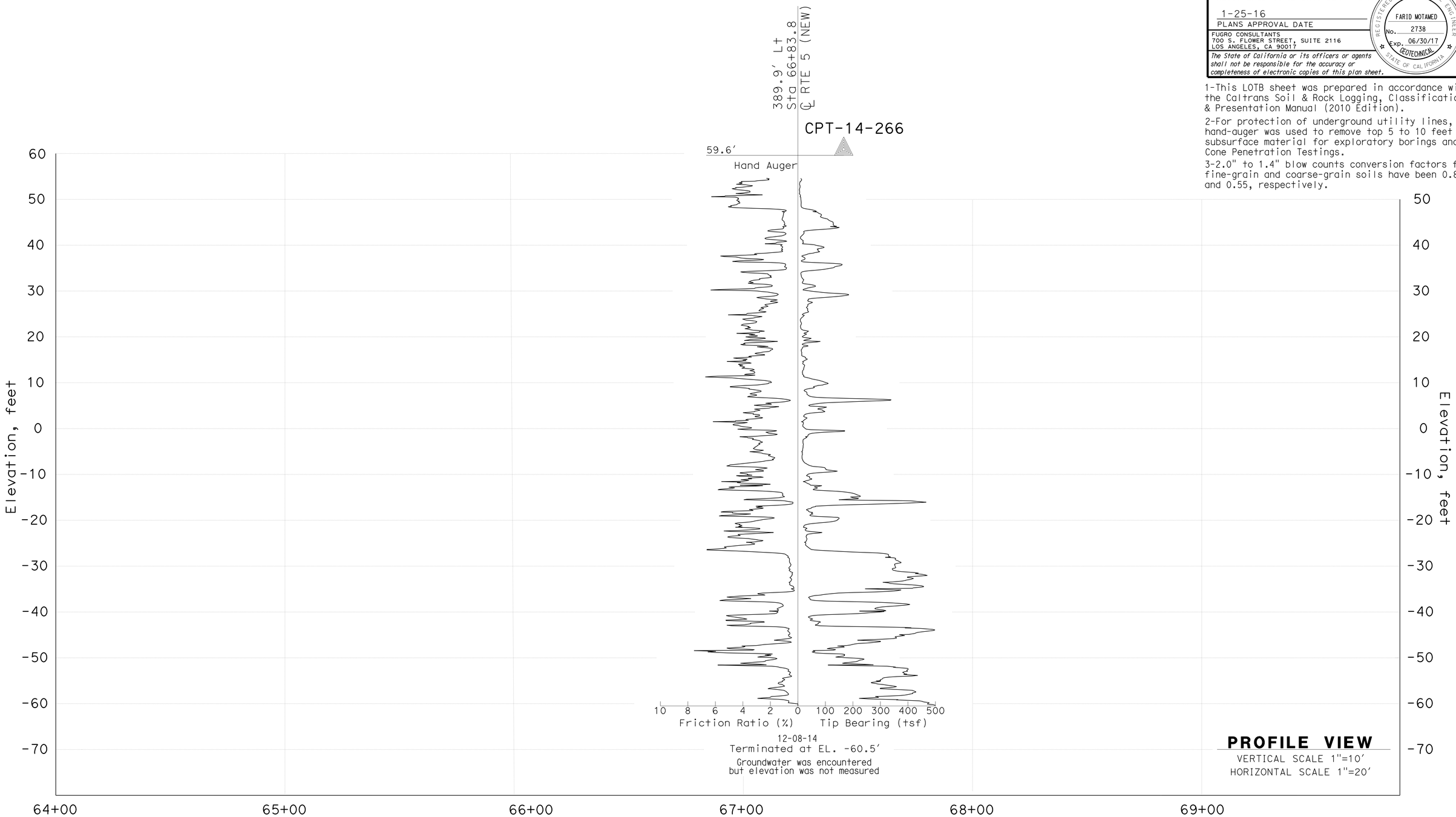

PROFILE VIEW
VERTICAL SCALE 1"=10'
HORIZONTAL SCALE 1"=20'

F.MOTAMED — DESIGN OVERSIGHT	DRAWN BY	T.PANAH	M.MARIN — FIELD INVESTIGATION BY:
07/16/15 — SIGN OFF DATE	CHECKED BY	EJ.JEON	DATE: 12/08/14

PREPARED FOR THE STATE OF CALIFORNIA DEPARTMENT OF TRANSPORTATION

F.MOTAMED — PROJECT ENGINEER

BRIDGE NO. 53C-2296
POST MILES 1.27

SB VALLEY VIEW AVE/S. FIRESTONE BLVD
LOG OF TEST BORINGS SHEET 4 OF 4

GS CIVIL LOG OF TEST BORINGS SHEET (ENGLISH) (REV. 03/14/12)

ORIGINAL SCALE IN INCHES FOR REDUCED PLANS 0 1 2 3

UNIT: 3658
PROJECT NUMBER & PHASE: 07150001601 CONTRACT NO.: 07-2159U4

DISREGARD PRINTS BEARING EARLIER REVISION DATES → 07/13/15 07/16/15

REVISION DATES | SHEET 30 | OF 30

FILE => 53c2296-z-lotb4.dgn

USERNAME => s125624 DATE PLOTTED => 03-FEB-2016 TIME PLOTTED => 13:53

DIST	COUNTY	ROUTE	POST MILES TOTAL PROJECT	SHEET No.	TOTAL SHEETS
07	LA,Ora	5	0.0/1.5, 44.3/44.4	1390	1622

Daryoush Tavatli 3-16-15
REGISTERED CIVIL ENGINEER DATE

1-25-16
PLANS APPROVAL DATE

REGISTERED PROFESSIONAL ENGINEER
DARYOUSH TAVATLI
No. 56183
Exp. 12-31-16
CIVIL
STATE OF CALIFORNIA

The State of California or its officers or agents shall not be responsible for the accuracy or completeness of scanned copies of this plan sheet.

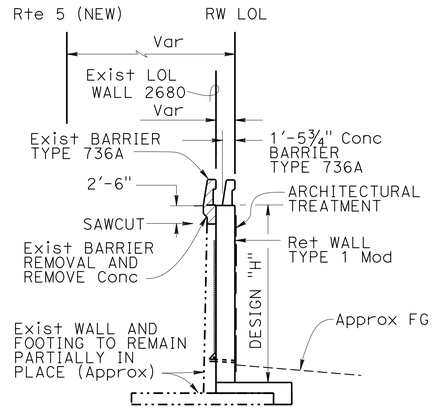

FROM Sta 10+00.00 TO Sta 11+80.00

TYPICAL SECTION
NO SCALE

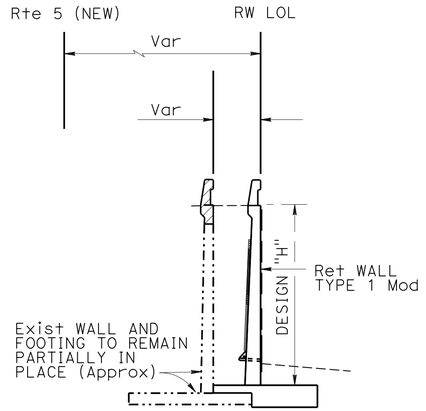

Note:
For information not shown see "TYPICAL SECTION" FROM Sta 10+00 to Sta 11+80

FROM Sta 11+80.00 TO Sta 12+47.74

TYPICAL SECTION
NO SCALE

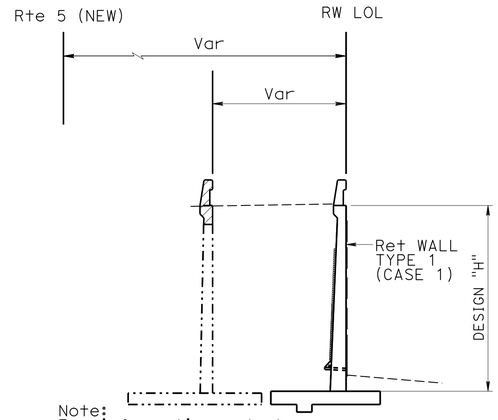

Note:
For information not shown see "TYPICAL SECTION" FROM Sta 10+00 to Sta 11+80

FROM Sta 12+47.74 TO Sta 16+72.00 &
FROM Sta 17+20.00 TO Sta 17+46.03

TYPICAL SECTION
NO SCALE

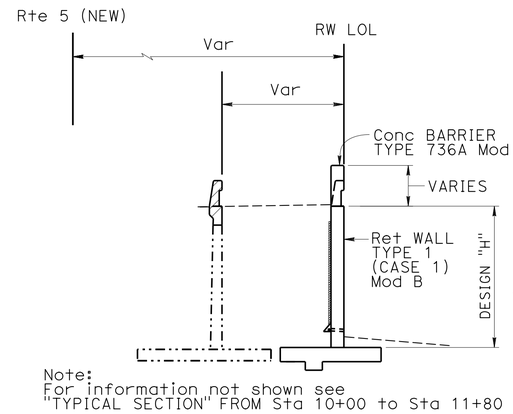

Note:
For information not shown see "TYPICAL SECTION" FROM Sta 10+00 to Sta 11+80

FROM Sta 16+72.00 TO Sta 17+20.00

TYPICAL SECTION
NO SCALE

INDEX TO PLANS

Sheet No.	Title
1	GENERAL PLAN
2	STRUCTURE PLAN NO. 1
3	STRUCTURE PLAN NO. 2
4	STRUCTURE PLAN NO. 3
5	TYPE 1 MOD - DETAILS NO. 1
6	TYPE 1 MOD - DETAILS NO. 2
7	DRILL & BOND LAYOUT NO. 1
8	DRILL & BOND LAYOUT NO. 2
9	TYPE 1 (CASE 1) MOD DETAILS
10	GEOCOMPOSITE DRAIN DETAILS
11	LIMITS OF EXCAVATION AND BACKFILL
12	ARCHITECTURAL LAYOUT
13	AESTHETIC DETAILS NO. 1
14	AESTHETIC DETAILS NO. 2
15	AESTHETIC DETAILS NO. 3
16	AESTHETIC DETAILS NO. 4
17	LOG OF TEST BORINGS

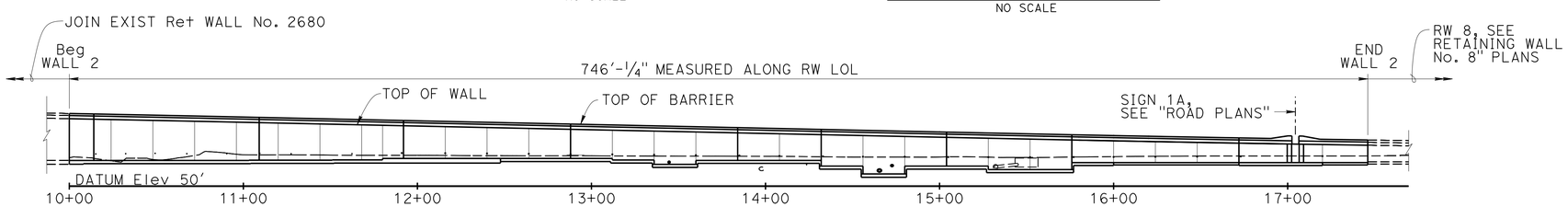

DEVELOPED ELEVATION
1" = 40'

STANDARD PLANS DATED 2010

	A10A	ABBREVIATIONS (SHEET 1 OF 2)
RSP	A10B	ABBREVIATIONS (SHEET 2 OF 2)
	A10C	LINES AND SYMBOLS (SHEET 1 OF 3)
	A10D	LINES AND SYMBOLS (SHEET 2 OF 3)
	A10E	LINES AND SYMBOLS (SHEET 3 OF 3)
RSP	A10F	LEGEND - SOIL (SHEET 1 OF 2)
RSP	A10G	LEGEND - SOIL (SHEET 2 OF 2)
	A10H	LEGEND - ROCK
	A62B	LIMITS OF PAYMENT FOR EXCAVATION AND BACKFILL- BRIDGE SURCHARGE AND WALL
	B0-3	BRIDGE DETAILS
RSP	B3-1A	RETAINING WALL TYPE 1 (CASE 1)
RSP	B3-5	RETAINING WALL DETAILS NO. 1
	B3-6	RETAINING WALL DETAILS NO. 2
RSP	B11-56	CONCRETE BARRIER TYPE 736

STANDARD PLAN SHEET No.
DETAIL No.

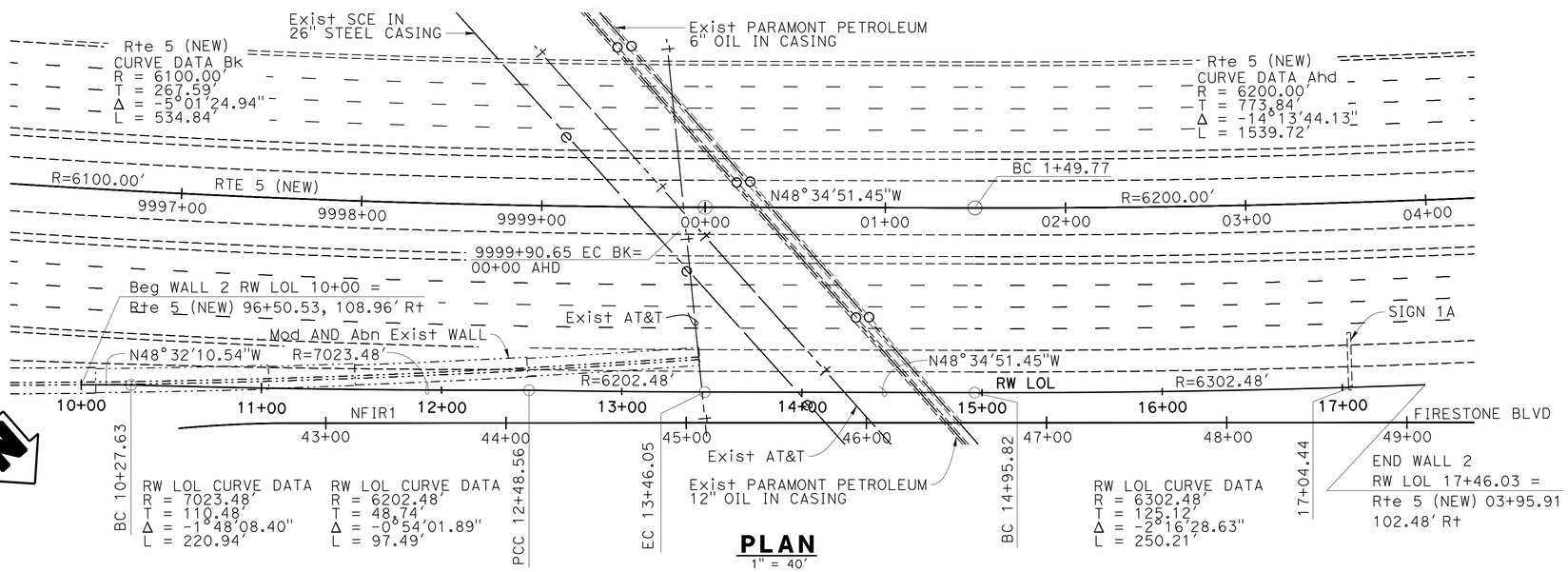

PLAN
1" = 40'

QUANTITIES

	LUMP	SUM
BRIDGE REMOVAL (PORTION), LOCATION B		
STRUCTURE EXCAVATION (RETAINING WALL)	4,700	CY
STRUCTURE BACKFILL (RETAINING WALL)	3,960	CY
PERVIOUS BACKFILL MATERIAL (RETAINING WALL)	8	CY
STRUCTURAL CONCRETE, RETAINING WALL	1,465	CY
ARCHITECTURAL TREATMENT (WALL 2 MOTIF)	10,525	SQFT
DRILL AND BOND DOWEL	2,230	LF
BAR REINFORCING STEEL (RETAINING WALL)	247,500	LB
MISCELLANEOUS METAL (BRIDGE)	486	LB
CONCRETE BARRIER (TYPE 736A)	746	LF

Ramin Rashedi 3-16-15
DESIGN ENGINEER

	BY	CHECKED
DESIGN	Yeo Yoon	Daryoush Tavatli
DETAILS	Pauline Tong	Yeo Yoon
QUANTITIES	Daryoush Tavatli	Yeo Yoon

LOAD & RESISTANCE FACTOR DESIGN — LIVE LOADING: HL93 W/"LOW-BOY"; PERMIT DESIGN VEHICLE

	BY	CHECKED
LAYOUT	Yeo Yoon	Daryoush Tavatli
SPECIFICATIONS	X. Li	PLANS AND SPECS COMPARED X. Li

ORIGINAL SCALE IN INCHES FOR REDUCED PLANS 0 1 2 3

STATE OF CALIFORNIA
DEPARTMENT OF TRANSPORTATION

DIVISION OF ENGINEERING SERVICES
STRUCTURE DESIGN
DESIGN BRANCH 11

BRIDGE NO. 53E0251
POST MILE 44.31

RETAINING WALL 2
GENERAL PLAN

UNIT: 3587
PROJECT NUMBER & PHASE: 0715000160-1
CONTRACT NO.: 07-2159U4

DISREGARD PRINTS BEARING EARLIER REVISION DATES

REVISION DATES: 5-23-12 9-23-13 3-16-15

SHEET 1 OF 17

USERNAME => s125624 DATE PLOTTED => 03-FEB-2016 TIME PLOTTED => 13:53

STRUCTURES DESIGN GENERAL PLAN SHEET (ENGLISH) (REV.09-01-10)

FILE => rw2-a-gp.dgn

DIST	COUNTY	ROUTE	POST MILES TOTAL PROJECT	SHEET No.	TOTAL SHEETS
07	LA,Ora	5	0.0/1.5, 44.3/44.4	1391	1622

REGISTERED CIVIL ENGINEER 3-16-15 DATE

1-25-16
PLANS APPROVAL DATE

REGISTERED PROFESSIONAL ENGINEER DARYOUSH TAVATLI No. 56183 Exp. 12-31-16 CIVIL STATE OF CALIFORNIA

The State of California or its officers or agents shall not be responsible for the accuracy or completeness of electronic copies of this plan sheet.

NOTE:

1. Match existing footing
2. Match existing expansion joint

LEGEND:

Indicates existing barrier and concrete removal

Indicates existing WH approx locations and numbers.
For existing WH locations, see "GEOCOMPOSITE DRAIN DETAILS" sheet.

Indicates existing WH extension and numbers.
For existing WH extension details and invert elevation at RW2 face, see "GEOCOMPOSITE DRAIN DETAILS" sheet.

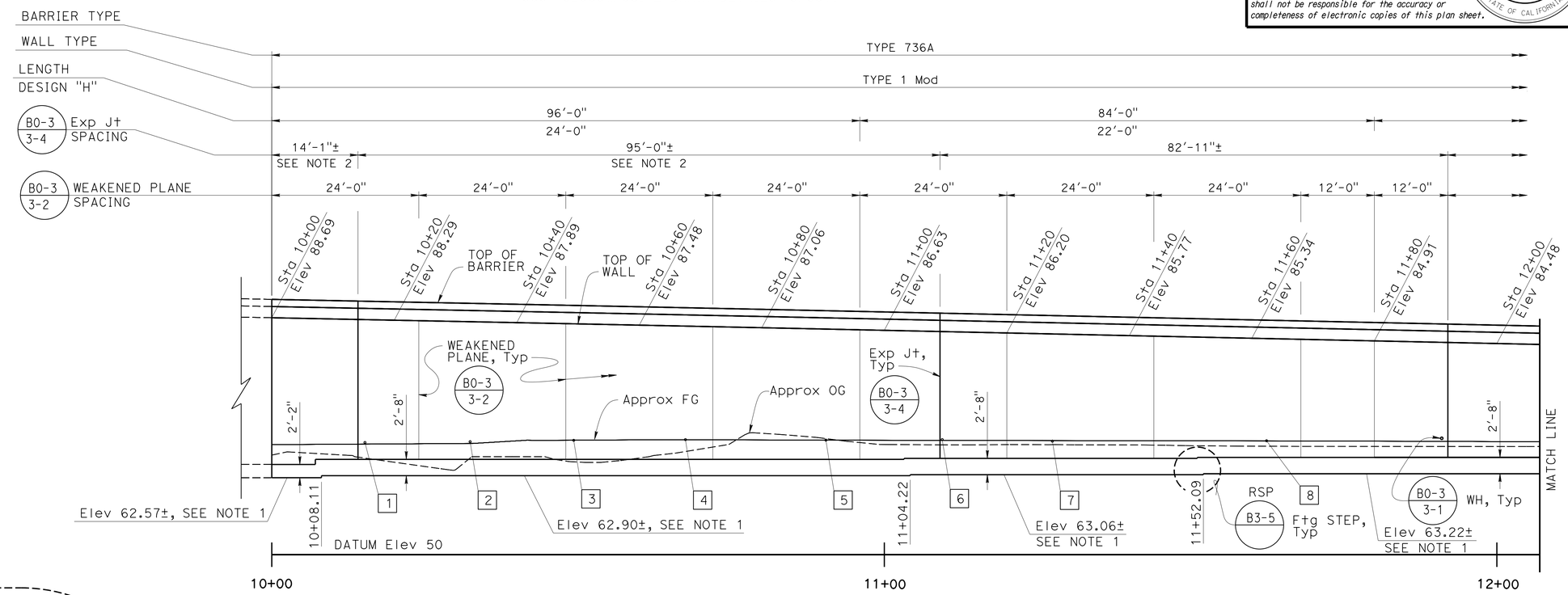

ELEVATION

1' = 10'-0"

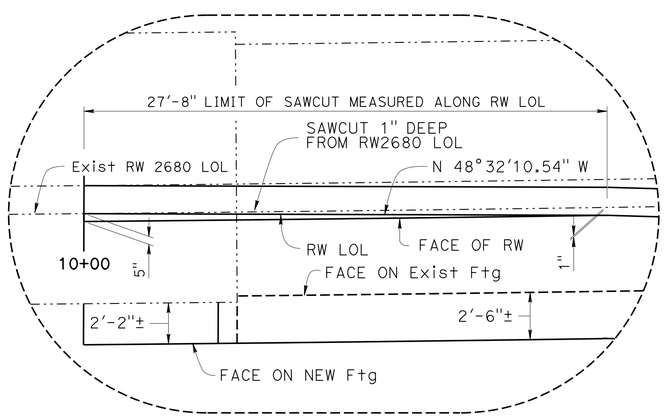

DETAIL A

1/4" = 1'-0"

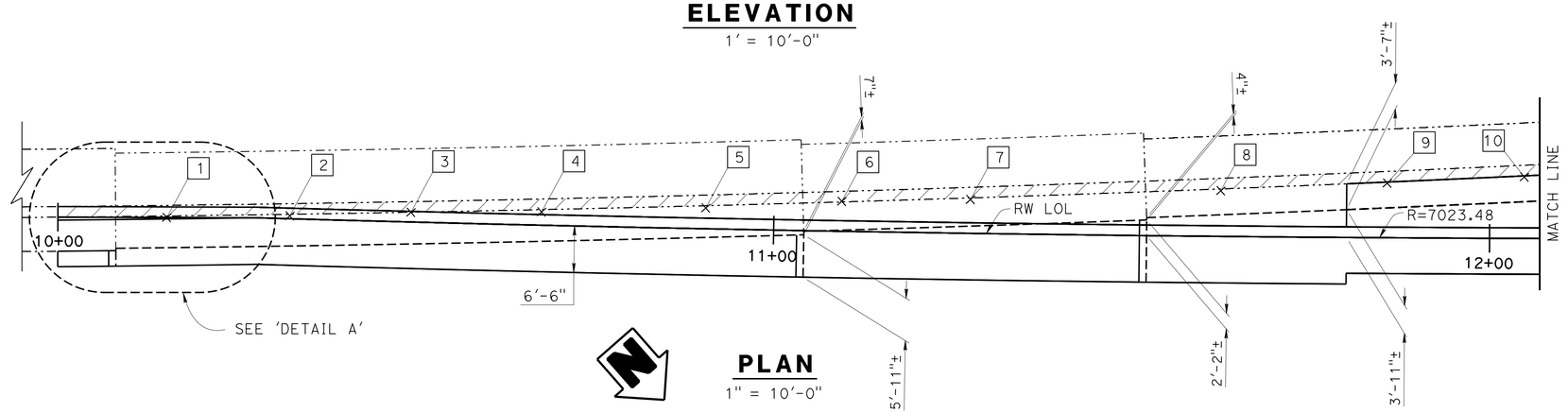

PLAN

1" = 10'-0"

DESIGN	BY Yeo Yoon	CHECKED Daryoush Tavatli	
DETAILS	BY Pauline Tong	CHECKED Yeo Yoon	
QUANTITIES	BY Daryoush Tavatli	CHECKED Yeo Yoon	

STATE OF CALIFORNIA
DEPARTMENT OF TRANSPORTATION

DIVISION OF ENGINEERING SERVICES
STRUCTURE DESIGN
DESIGN BRANCH 11

BRIDGE NO. 53E0251
POST MILE 44.31

RETAINING WALL 2
STRUCTURE PLAN NO. 1

STRUCTURES DESIGN DETAIL SHEET (ENGLISH) (REV. 09-01-10)

ORIGINAL SCALE IN INCHES FOR REDUCED PLANS 0 1 2 3

UNIT: 3587
PROJECT NUMBER & PHASE: 0715000160-1
CONTRACT NO.: 07-2159u4

DISREGARD PRINTS BEARING EARLIER REVISION DATES

REVISION DATES 9-27-13 3-16-15

SHEET 2 OF 17

FILE => rw2-c-sp1.dgn

USERNAME => s125624 DATE PLOTTED => 03-FEB-2016 TIME PLOTTED => 13:53

DIST	COUNTY	ROUTE	POST MILES TOTAL PROJECT	SHEET No.	TOTAL SHEETS
07	LA,Ora	5	0.0/1.5, 44.3/44.4	1392	1622

REGISTERED CIVIL ENGINEER — DATE 3-18-15

1-25-16
PLANS APPROVAL DATE

REGISTERED PROFESSIONAL ENGINEER — DARYOUSH TAVATLI — No. 56183 — Exp. 12-31-16 — CIVIL — STATE OF CALIFORNIA

The State of California or its officers or agents shall not be responsible for the accuracy or completeness of electronic copies of this plan sheet.

NOTE:

1. Match existing footing

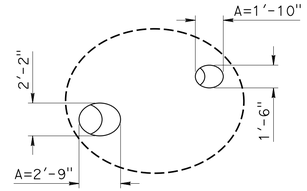

DETAIL B
B3-6
NO SCALE

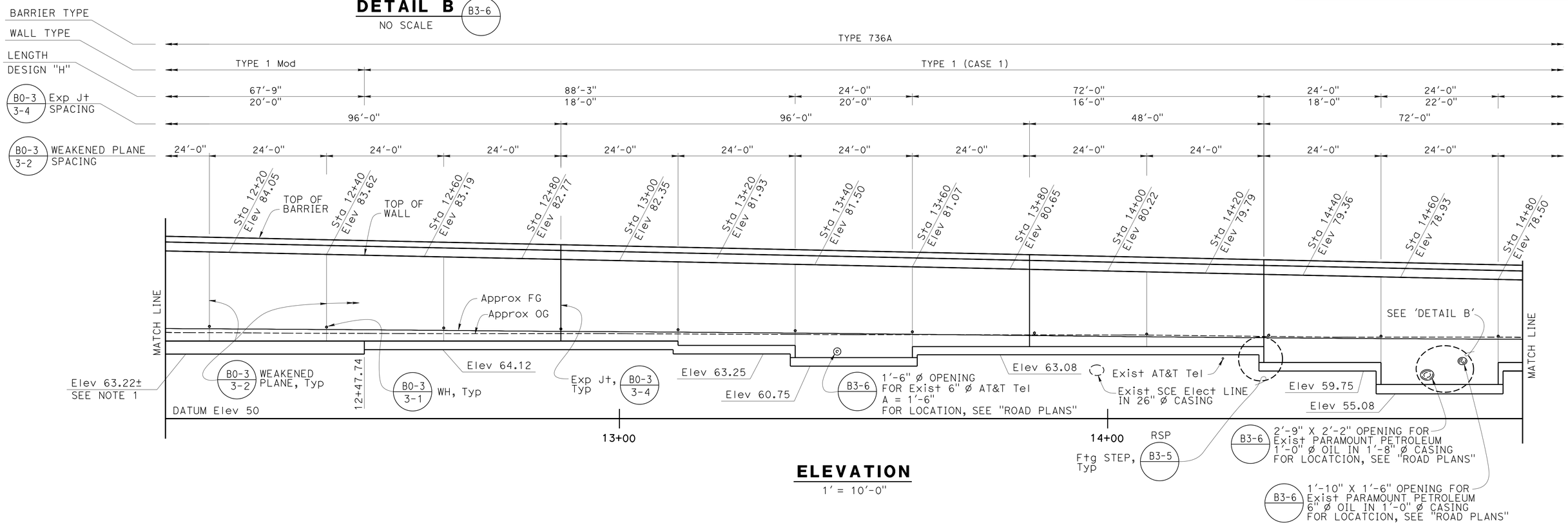

ELEVATION
1' = 10'-0"

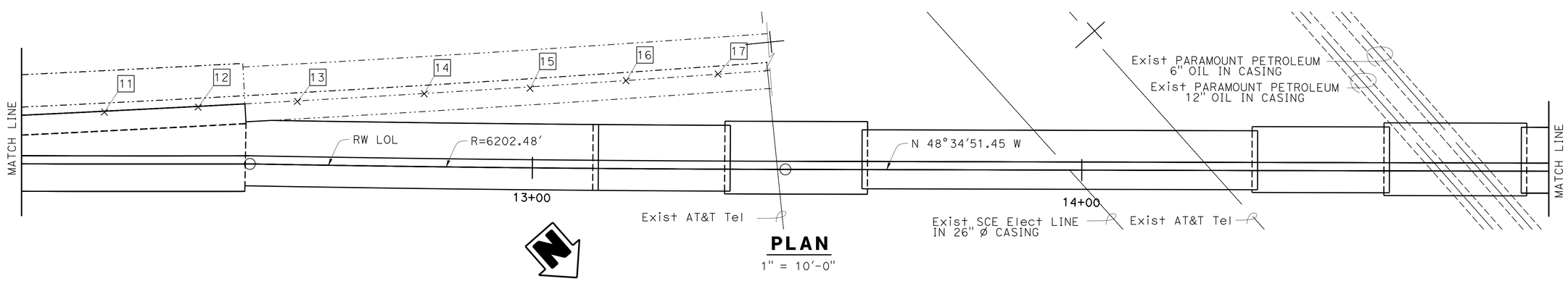

PLAN
1" = 10'-0"

DESIGN	BY Yeo Yoon	CHECKED Daryoush Tavatli	
DETAILS	BY Pauline Tong	CHECKED Yeo Yoon	
QUANTITIES	BY Daryoush Tavatli	CHECKED Yeo Yoon	

STATE OF CALIFORNIA
DEPARTMENT OF TRANSPORTATION

DIVISION OF ENGINEERING SERVICES
STRUCTURE DESIGN
DESIGN BRANCH 11

BRIDGE NO. 53E0251
POST MILE 44.31

RETAINING WALL 2
STRUCTURE PLAN NO. 2

STRUCTURES DESIGN DETAIL SHEET (ENGLISH) (REV. 09-01-10)

ORIGINAL SCALE IN INCHES FOR REDUCED PLANS 0 1 2 3

UNIT: 3587
PROJECT NUMBER & PHASE: 0715000160-1
CONTRACT NO.: 07-2159U4

DISREGARD PRINTS BEARING EARLIER REVISION DATES

REVISION DATES: 3-18-15

SHEET 3 OF 17

FILE => rw2-c-sp2.dgn

USERNAME => s125624 DATE PLOTTED => 03-FEB-2016 TIME PLOTTED => 13:54

DIST	COUNTY	ROUTE	POST MILES TOTAL PROJECT	SHEET No.	TOTAL SHEETS
07	LA,Ora	5	0.0/1.5, 44.3/44.4	1393	1622

REGISTERED CIVIL ENGINEER 3-18-15 DATE

1-25-16
PLANS APPROVAL DATE

REGISTERED PROFESSIONAL ENGINEER DARYOUSH TAVATLI No. 56183 Exp. 12-31-16 CIVIL STATE OF CALIFORNIA

The State of California or its officers or agents shall not be responsible for the accuracy or completeness of electronic copies of this plan sheet.

NOTE: For Type 1 (Case 1) Mod, Barrier Type 736A Mod and Sign Pedestal layout, see "TYPE 1 (CASE 1) MOD - DETAILS" sheet

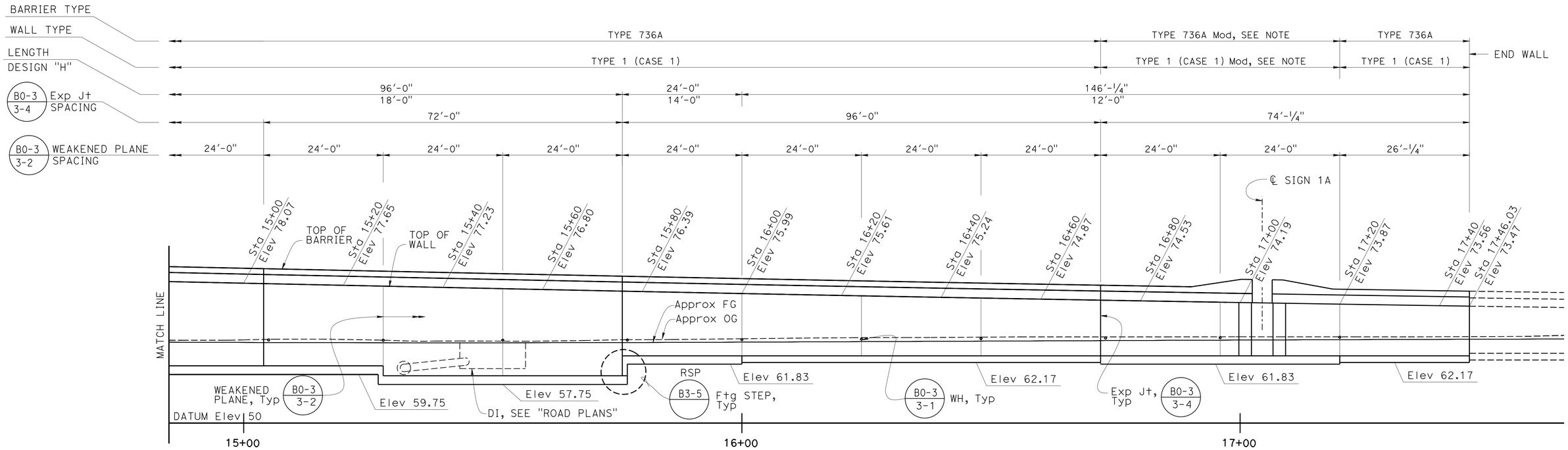

ELEVATION

1" = 10'-0"

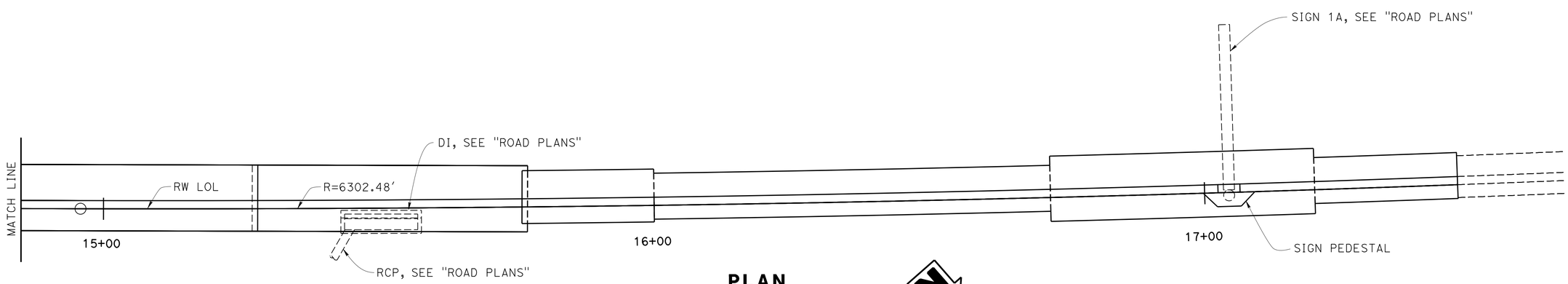

PLAN

1" = 10'-0"

DESIGN	BY Yeo Yoon	CHECKED Daryoush Tavatli	
DETAILS	BY Pauline Tong	CHECKED Yeo Yoon	
QUANTITIES	BY Daryoush Tavatli	CHECKED Yeo Yoon	

STATE OF CALIFORNIA
DEPARTMENT OF TRANSPORTATION

DIVISION OF ENGINEERING SERVICES
STRUCTURE DESIGN
DESIGN BRANCH 11

BRIDGE NO. 53E0251
POST MILE 44.31

RETAINING WALL 2
STRUCTURE PLAN NO. 3

STRUCTURES DESIGN DETAIL SHEET (ENGLISH) (REV. 09-01-10)

ORIGINAL SCALE IN INCHES FOR REDUCED PLANS 0 1 2 3

UNIT: 3587
PROJECT NUMBER & PHASE: 0715000160-1
CONTRACT NO.: 07-2159u4

DISREGARD PRINTS BEARING EARLIER REVISION DATES

REVISION DATES 3-18-15

SHEET 4 OF 17

FILE => rw2-c-sp3.dgn

USERNAME => s125624 DATE PLOTTED => 03-FEB-2016 TIME PLOTTED => 13:54

DIST	COUNTY	ROUTE	POST MILES TOTAL PROJECT	SHEET No.	TOTAL SHEETS
07	LA,Ora	5	0.0/1.5, 44.3/44.4	1394	1622

REGISTERED CIVIL ENGINEER 3-18-15 DATE

1-25-16
PLANS APPROVAL DATE

REGISTERED PROFESSIONAL ENGINEER DARYOUSH TAVATLI No. 56183 Exp. 12-31-16 CIVIL STATE OF CALIFORNIA

The State of California or its officers or agents shall not be responsible for the accuracy or completeness of electronic copies of this plan sheet.

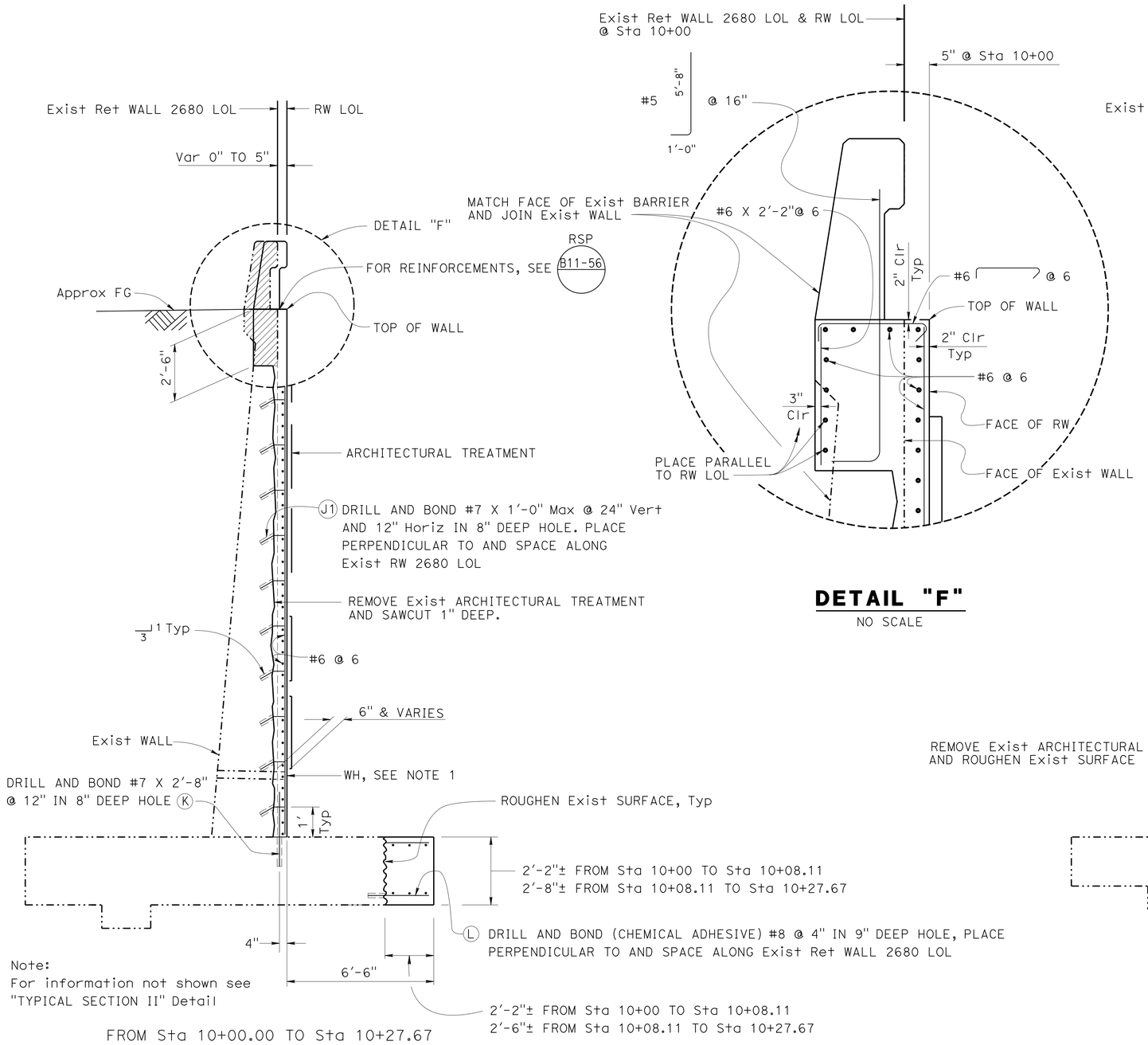

Note:
For information not shown see "TYPICAL SECTION II" Detail

FROM Sta 10+00.00 TO Sta 10+27.67

TYPICAL SECTION I

NO SCALE

DETAIL "F"

NO SCALE

FROM Sta 10+27.67 TO Sta 10+51.84

TYPICAL SECTION II

NO SCALE

NOTES:

1. Extend exist WH to new face of wall, see "GEOCOMPOSITE DRAIN DETAILS" sheet
2. For location of Drill and Bond dowels, see "DRILL AND BOND LAYOUT " sheet.
3. Minimum f'c = 3,600 psi @ 28 days & fy = 60,000 psi.

LEGEND:

- Indicates limits of Exist Barrier Removal and Remove Concrete
- Indicates Added Concrete to Cover Top of Existing Wall

FOUNDATION BEARING STRESS TABLE

	B'	qo	q'o
Ser:	13.2	----	2.8
Str:	9.0	4.4	----
Ext I:	5.3	7.6	----
Ext II:	12.5	3.2	----

FROM Sta 10+00.00 TO Sta 11+80.00

DESIGN	BY Y. Yoon	CHECKED Daryoush Tavatli	
DETAILS	BY T. Bittermann	CHECKED Yeo Yoon	
QUANTITIES	BY Daryoush Tavatli	CHECKED Yeo Yoon	

STATE OF CALIFORNIA
DEPARTMENT OF TRANSPORTATION

DIVISION OF ENGINEERING SERVICES
STRUCTURE DESIGN
DESIGN BRANCH 11

BRIDGE NO. 53E0251
POST MILE 44.31

RETAINING WALL 2
TYPE 1 MOD - DETAILS NO. 1

STRUCTURES DESIGN DETAIL SHEET (ENGLISH) (REV. 09-01-10)

ORIGINAL SCALE IN INCHES FOR REDUCED PLANS 0 1 2 3

UNIT: 3587
PROJECT NUMBER & PHASE: 0715000160-1
CONTRACT NO.: 07-2159u4

DISREGARD PRINTS BEARING EARLIER REVISION DATES

REVISION DATES 9/27/13

SHEET 5 OF 17

FILE => rw2-g-retdtl.dgn

USERNAME => s129824 DATE PLOTTED => 03-FEB-2016 TIME PLOTTED => 13:54

DIST	COUNTY	ROUTE	POST MILES TOTAL PROJECT	SHEET No.	TOTAL SHEETS
07	LA,Ora	5	0.0/1.5, 44.3/44.4	1395	1622

REGISTERED CIVIL ENGINEER 3-18-15 DATE

1-25-16
PLANS APPROVAL DATE

REGISTERED PROFESSIONAL ENGINEER DARYOUSH TAVATLI No. 56183 Exp. 12-31-16 CIVIL STATE OF CALIFORNIA

The State of California or its officers or agents shall not be responsible for the accuracy or completeness of electronic copies of this plan sheet.

LEGEND:

- Indicates limits of Exist Barrier Removal and Remove Concrete
- Indicates Added Concrete to cover Top of Existing Wall
- ⁎ Measured perpendicular to exist RW 2680 LOL

NOTES:

1. Extend exist WH to new face of wall, see 'EXIST WH EXTENSION DETAILS' on "GEOCOMPOSITE DRAIN DETAILS" sheet
2. (Q) Provide #6, 15'-0" bars @ 10 over a distance of 8'-0" each way (ahead & back) from all Exp Jts except at Sta 11+80 which shall be provided with bars 8'-0" ahead only. For H = 14' and less, hook bars into footing and reduce bar length as needed to maintain Min Clr cover
3. For location of Drill and Bond dowels, see "DRILL AND BOND LAYOUT " sheet.
4. Minimum f'c = 3,600 psi @ 28 days & fy = 60,000 psi.
5. Horizontal (R) bars and bottom (S) bars shall be extended over a distance of 10'-0" back from Sta 11+80

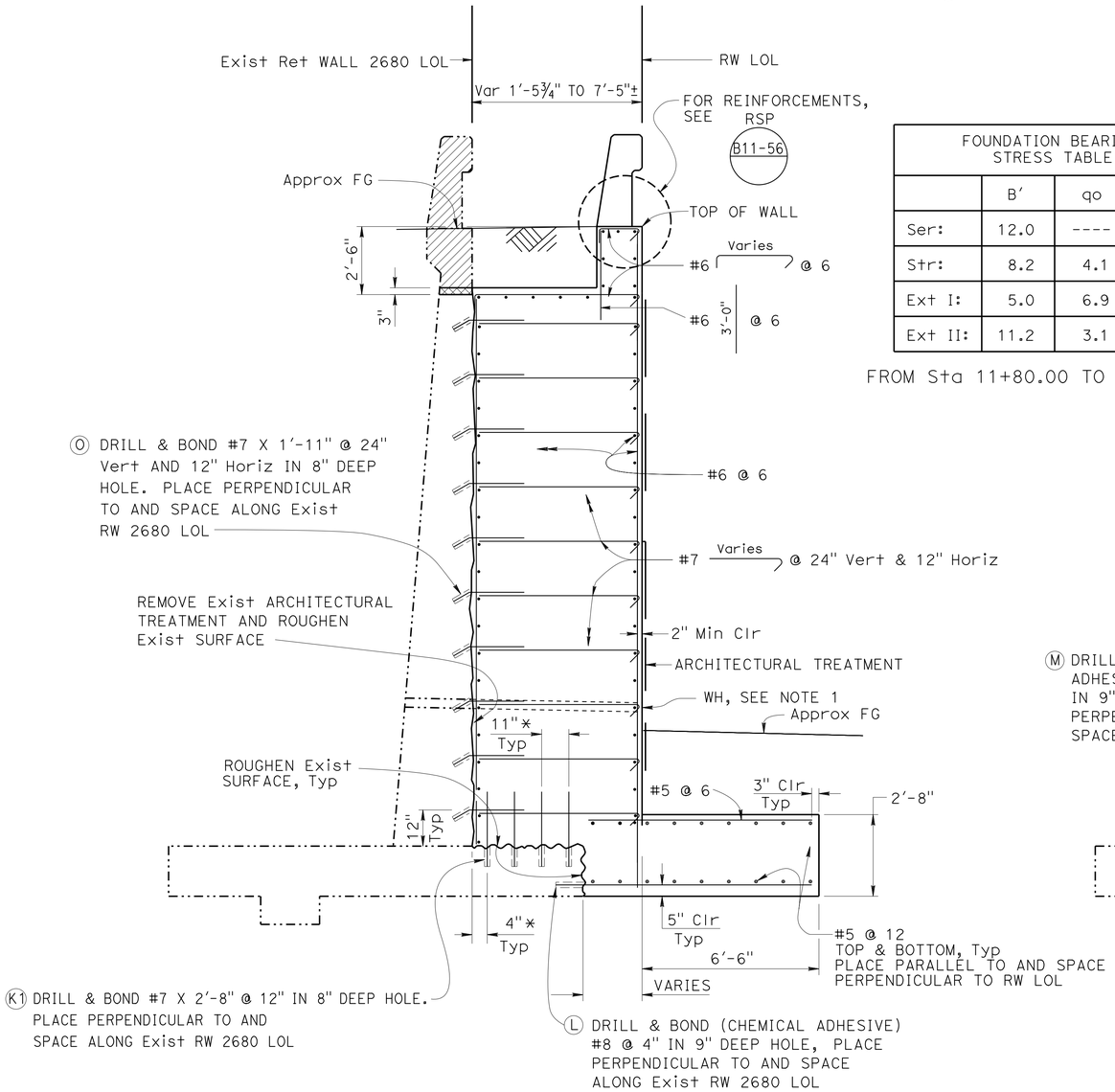

FROM Sta 10+51.84 TO Sta 11+80.00

TYPICAL SECTION III

NO SCALE

FOUNDATION BEARING STRESS TABLE			
	B'	qo	q'o
Ser:	12.0	----	2.8
Str:	8.2	4.1	----
Ext I:	5.0	6.9	----
Ext II:	11.2	3.1	----

FROM Sta 11+80.00 TO Sta 12+47.74

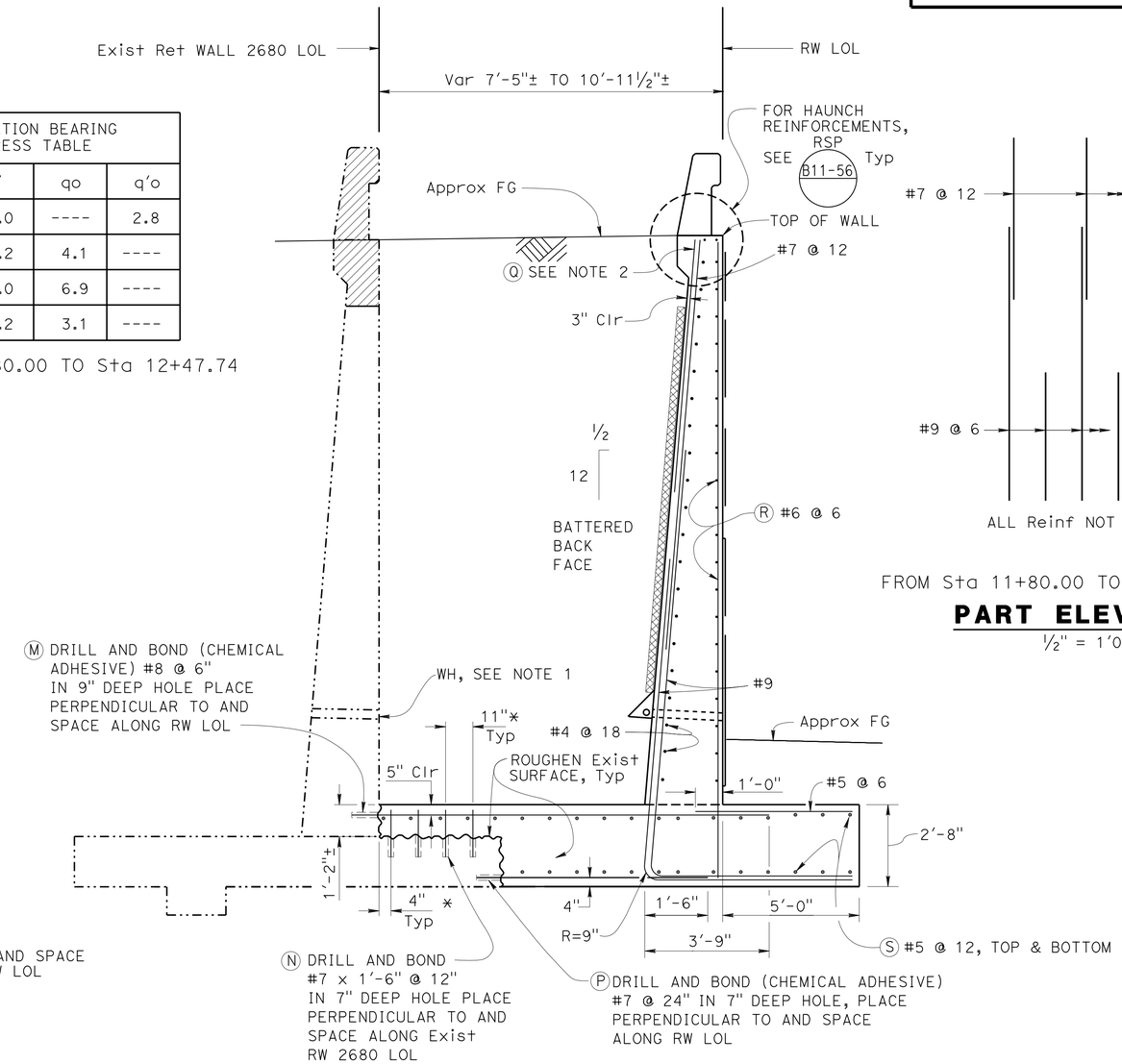

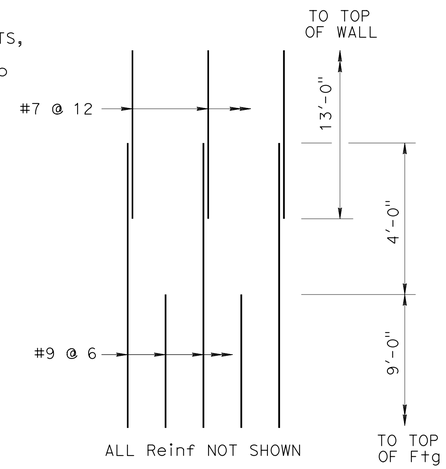

FROM Sta 11+80.00 TO Sta 12+47.74

PART ELEVATION

½" = 1'0"

FROM Sta 11+80.00 TO Sta 12+47.74

TYPICAL SECTION IV

NO SCALE

	BY	CHECKED
DESIGN	Y. Yoon	Daryoush Tavatli
DETAILS	T. Bittermann	Yeo Yoon
QUANTITIES	Daryoush Tavatli	Yeo Yoon

STATE OF CALIFORNIA DEPARTMENT OF TRANSPORTATION

DIVISION OF ENGINEERING SERVICES STRUCTURE DESIGN DESIGN BRANCH 11

BRIDGE NO. 53E0251
POST MILE 44.31

RETAINING WALL 2
TYPE 1 MOD - DETAILS NO. 2

STRUCTURES DESIGN DETAIL SHEET (ENGLISH) (REV. 09-01-10)

ORIGINAL SCALE IN INCHES FOR REDUCED PLANS 0 1 2 3

UNIT: 3587
PROJECT NUMBER & PHASE: 0715000160-1
CONTRACT NO.: 07-2159u4

DISREGARD PRINTS BEARING EARLIER REVISION DATES

REVISION DATES 9/27/13

SHEET 6 OF 17

FILE => rw2-g-retdt2.dgn

USERNAME => s125624 DATE PLOTTED => 03-FEB-2016 TIME PLOTTED => 13:54

DIST	COUNTY	ROUTE	POST MILES TOTAL PROJECT	SHEET No.	TOTAL SHEETS
07	LA,Ora	5	0.0/1.5, 44.3/44.4	1396	1622

REGISTERED CIVIL ENGINEER 3-18-15 DATE

1-25-16
PLANS APPROVAL DATE

REGISTERED PROFESSIONAL ENGINEER DARYOUSH TAVATLI No. 56183 Exp. 12-31-16 CIVIL STATE OF CALIFORNIA

The State of California or its officers or agents shall not be responsible for the accuracy or completeness of scanned copies of this plan sheet.

NOTE:

The location of Drill and Bond dowels shall be adjusted slightly in order to prevent a conflict with the exist reinforcment of RW2680.

NOTE:

1. Not all Ⓛ, Ⓜ and Ⓟ dowels (chemical adhesive) shown

LEGEND:

- ∘ Indicates Drill and Bond locations

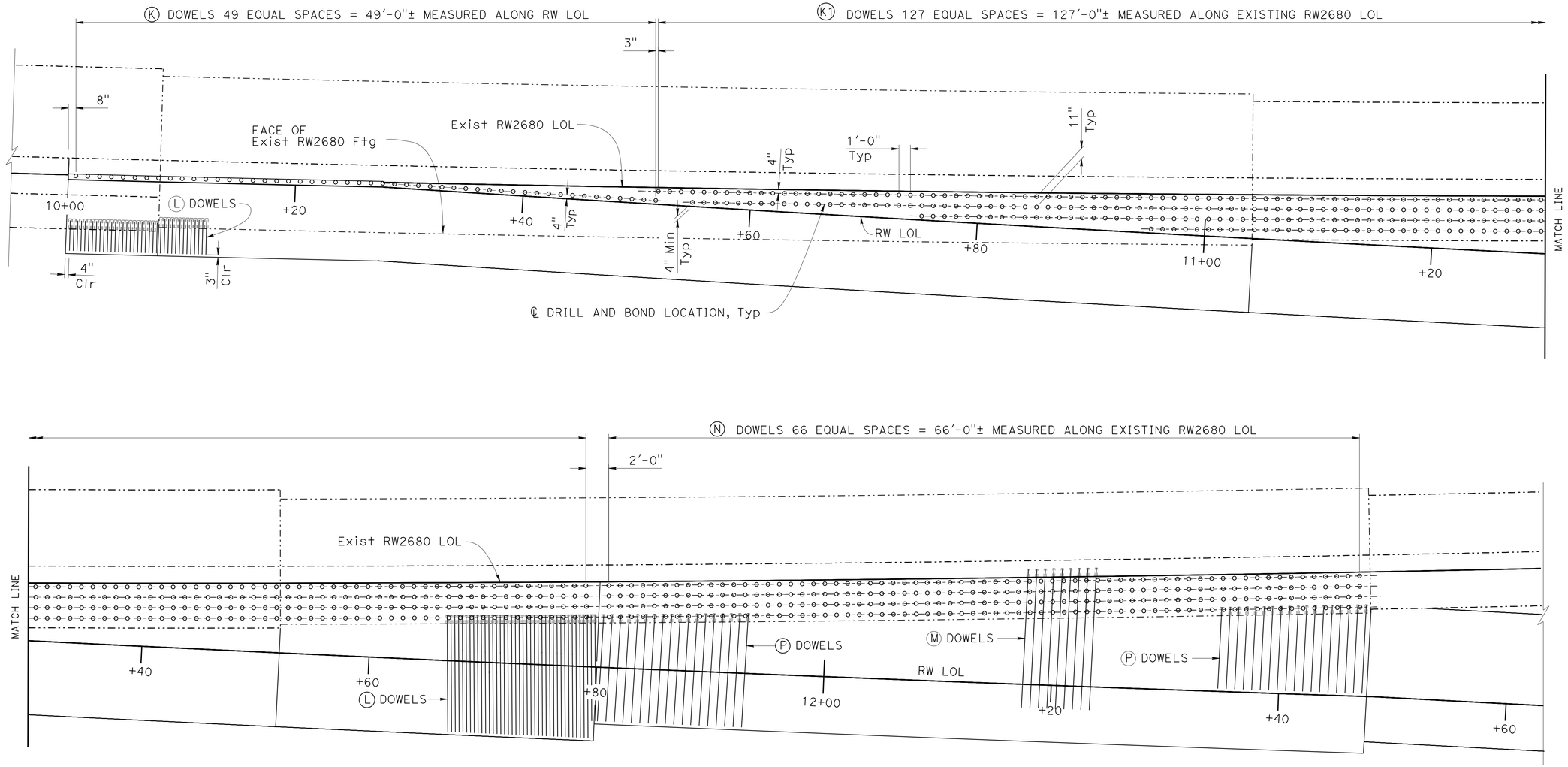

PLAN - DOWEL LAYOUT

1" = 5'-0"

DESIGN	BY Yeo Yoon	CHECKED Daryoush Tavatli	
DETAILS	BY Pauline Tong	CHECKED Yeo Yoon	
QUANTITIES	BY Daryoush Tavatli	CHECKED Yeo Yoon	

STATE OF CALIFORNIA
DEPARTMENT OF TRANSPORTATION

DIVISION OF ENGINEERING SERVICES
STRUCTURE DESIGN
DESIGN BRANCH 11

BRIDGE NO. 53E0251
POST MILE 44.31

RETAINING WALL 2
DRILL & BOND LAYOUT NO. 1

STRUCTURES DESIGN DETAIL SHEET (ENGLISH) (REV. 09-01-10)

ORIGINAL SCALE IN INCHES FOR REDUCED PLANS 0 1 2 3

UNIT: 3587
PROJECT NUMBER & PHASE: 0715000160-1
CONTRACT NO.: 07-2159U4

DISREGARD PRINTS BEARING EARLIER REVISION DATES

REVISION DATES 9/27/13

SHEET 7 OF 17

FILE => rw2-g-retdt3.dgn

USERNAME => s125624 DATE PLOTTED => 03-FEB-2016 TIME PLOTTED => 13:54

DIST	COUNTY	ROUTE	POST MILES TOTAL PROJECT	SHEET No.	TOTAL SHEETS
07	LA,Ora	5	0.0/1.5, 44.3/44.4	1397	1622

REGISTERED CIVIL ENGINEER — DATE 3-18-15

1-25-16
PLANS APPROVAL DATE

REGISTERED PROFESSIONAL ENGINEER — DARYOUSH TAVATLI — No. 56183 — Exp. 12-31-16 — CIVIL — STATE OF CALIFORNIA

The State of California or its officers or agents shall not be responsible for the accuracy or completeness of scanned copies of this plan sheet.

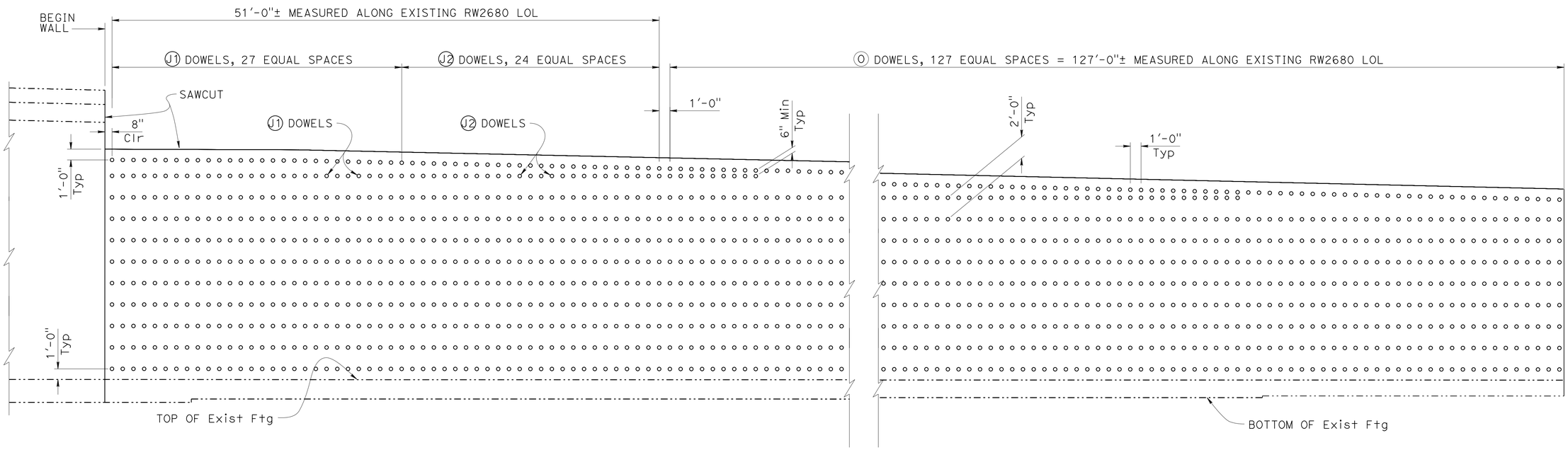

ELEVATION

1" = 5'-0"

	BY	CHECKED
DESIGN	Yeo Yoon	Daryoush Tavatli
DETAILS	Pauline Tong	Yeo Yoon
QUANTITIES	Daryoush Tavatli	Yeo Yoon

STATE OF CALIFORNIA
DEPARTMENT OF TRANSPORTATION

DIVISION OF ENGINEERING SERVICES
STRUCTURE DESIGN
DESIGN BRANCH 11

BRIDGE NO. 53E0251
POST MILE 44.31

RETAINING WALL 2
DRILL & BOND LAYOUT NO. 2

STRUCTURES DESIGN DETAIL SHEET (ENGLISH) (REV. 09-01-10)

ORIGINAL SCALE IN INCHES FOR REDUCED PLANS 0 1 2 3

UNIT: 3587
PROJECT NUMBER & PHASE: 0715000160-1
CONTRACT NO.: 07-2159U4

DISREGARD PRINTS BEARING EARLIER REVISION DATES

REVISION DATES: 3-18-15

SHEET 8 OF 17

FILE => rw2-g-retdt4.dgn

USERNAME => s125624 DATE PLOTTED => 03-FEB-2016 TIME PLOTTED => 13:54

DIST	COUNTY	ROUTE	POST MILES TOTAL PROJECT	SHEET No.	TOTAL SHEETS
07	LA,Org	5	0.0/1.5, 44.3/44.4	1398	1622

REGISTERED CIVIL ENGINEER — DATE 12-4-13

1-25-16
PLANS APPROVAL DATE

REGISTERED PROFESSIONAL ENGINEER — Andrew Bui — No. 63560 — Exp. 09-30-16 — CIVIL — STATE OF CALIFORNIA

The State of California or its officers or agents shall not be responsible for the accuracy or completeness of scanned copies of this plan sheet.

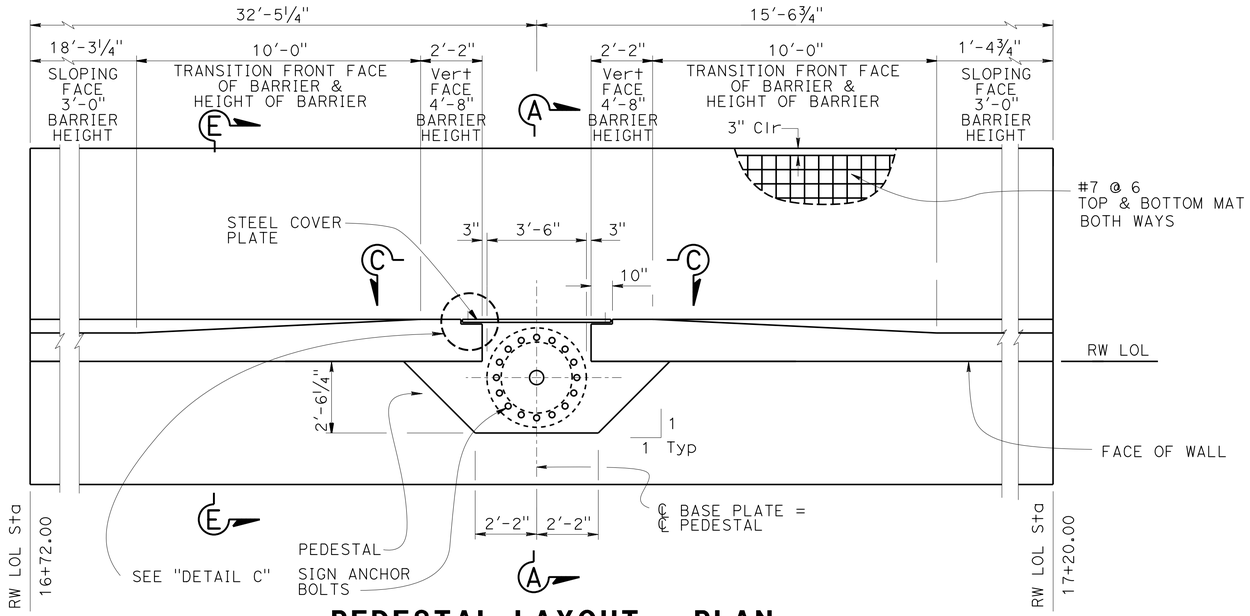

PEDESTAL LAYOUT - PLAN

NO SCALE

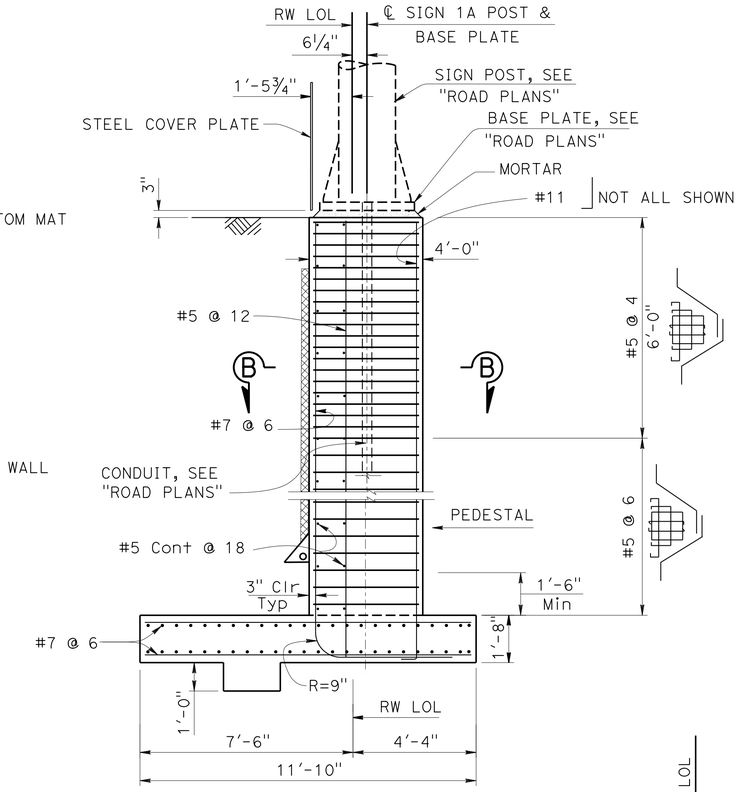

SECTION A-A

NO SCALE

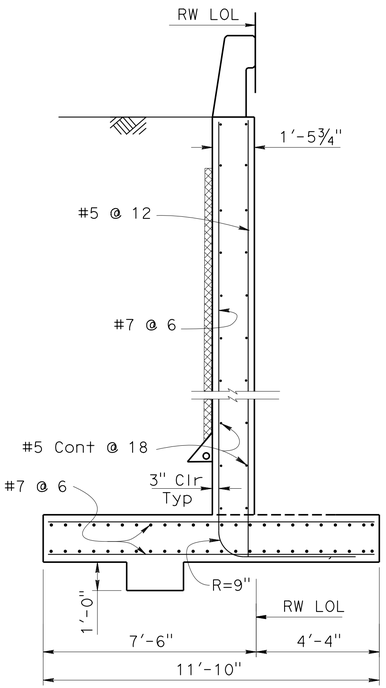

SECTION E-E

NO SCALE

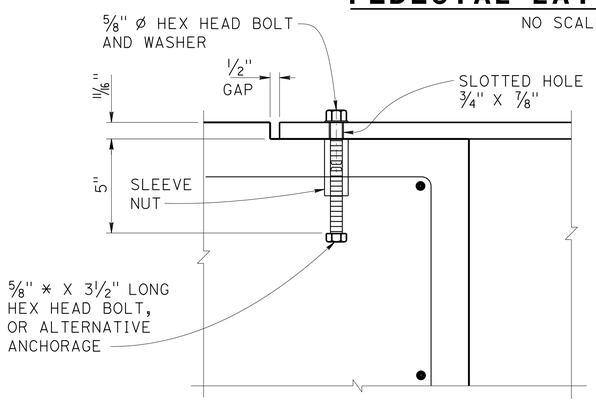

Note: Left side shown, right side similar

DETAIL C

NO SCALE

FOUNDATION BEARING STRESS TABLE			
	B'	qo	q'o
Ser:	9.7	----	2.1
Str:	10.0	2.9	----
Ext I:	4.3	4.7	----
Ext II:	8.3	2.5	----

NOTES

1. For sign 1A details not shown, see "ROAD PLANS."
2. Bar reinforcing steel for Ret wall and Sign Pedestal may be adjusted to clear the Sign Anchor Bolts
3. Reinforcing steel shall be centered from sign axis.
4. Minimum f'_c = 3,600 psi @ 28 days.
5. Minimum concrete strength shall be acheived and backfill placed prior to installation of signs truss.
6. For post base plate anchors and gusset plate details see "ROADWAY PLANS".
7. For steel cover plate, f_y = 50,000 psi.

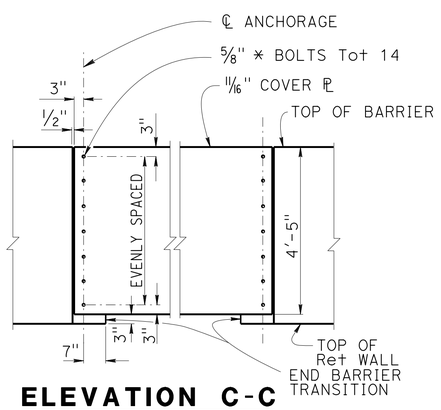

ELEVATION C-C

NO SCALE

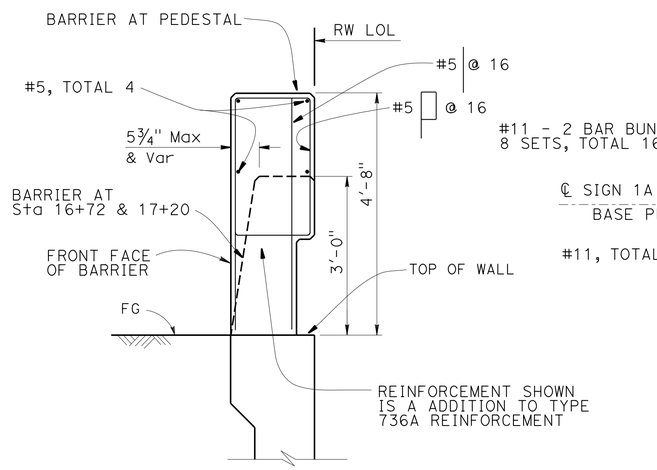

BARRIER TYPE 736A (Mod) TRANSITION

NO SCALE

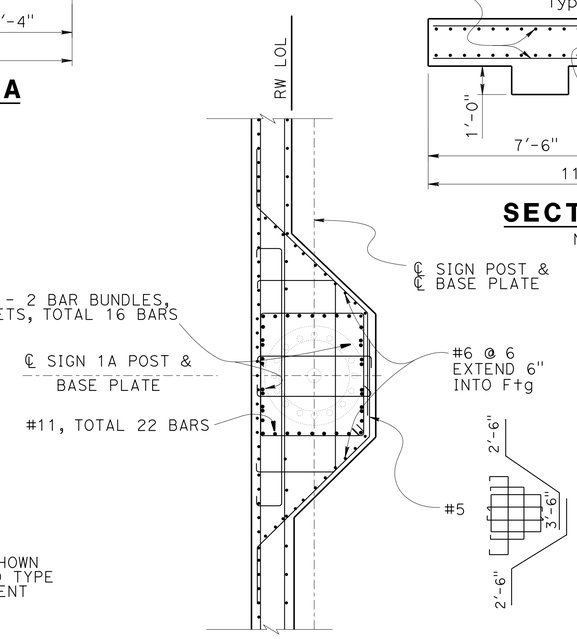

VIEW B-B

NO SCALE

BRANCH CHIEF	JEFF WOODY	DESIGN	BY D VORA	CHECKED A BUI	
		DETAILS	BY D W JUSTICE Jr	CHECKED D VORA	
		QUANTITIES	BY D TAVATLI	CHECKED Y YOON	

STATE OF CALIFORNIA
DEPARTMENT OF TRANSPORTATION

DIVISION OF ENGINEERING SERVICES
STRUCTURE DESIGN
SPECIAL DESIGN BRANCH

BRIDGE NO. 53E0251
POST MILE 44.31

RETAINING WALL 2
TYPE 1 (CASE 1) MOD B - DETAILS

STRUCTURES DESIGN SPECIAL DESIGN SHEET (ENGLISH) (REV. 09-01-10)

ORIGINAL SCALE IN INCHES FOR REDUCED PLANS 0 1 2 3

UNIT: 3619
PROJECT NUMBER & PHASE: 0715000160-1
CONTRACT NO.: 07-2159u4

DISREGARD PRINTS BEARING EARLIER REVISION DATES

REVISION DATES: 9-14-13 9-19-13 9-20-13 3-18-15

SHEET 9 OF 17

FILE =>spec_des_br_prj/_2013sd/rw2-g-retdt5.dgn

USERNAME => s125624 DATE PLOTTED => 03-FEB-2016 TIME PLOTTED => 13:54

DIST	COUNTY	ROUTE	POST MILES TOTAL PROJECT	SHEET No.	TOTAL SHEETS
07	LA,Ora	5	0.0/1.5, 44.3/44.4	1399	1622

REGISTERED CIVIL ENGINEER 3-18-15 DATE

1-25-16
PLANS APPROVAL DATE

REGISTERED PROFESSIONAL ENGINEER DARYOUSH TAVATLI No. 56183 Exp. 12-31-16 CIVIL STATE OF CALIFORNIA

The State of California or its officers or agents shall not be responsible for the accuracy or completeness of electronic copies of this plan sheet.

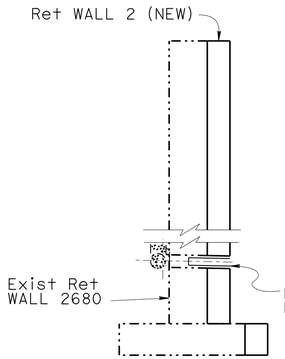

FROM WALL Sta 10+00 TO Sta 11+80.00

SECTION

NO SCALE

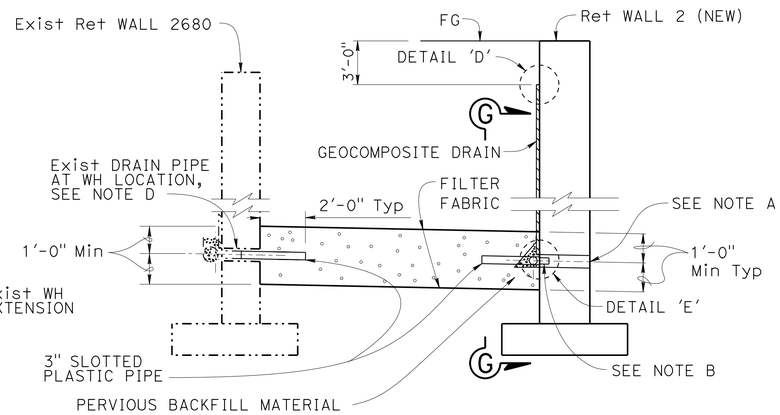

FROM Sta 11+80.00 TO Sta 13+40.00

SECTION

NO SCALE

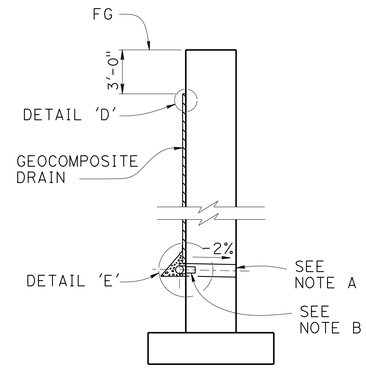

FROM Sta 13+40.00 TO Sta 17+46.03

SECTION

NO SCALE

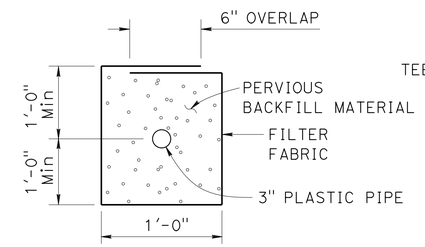

SECTION G-G

NO SCALE

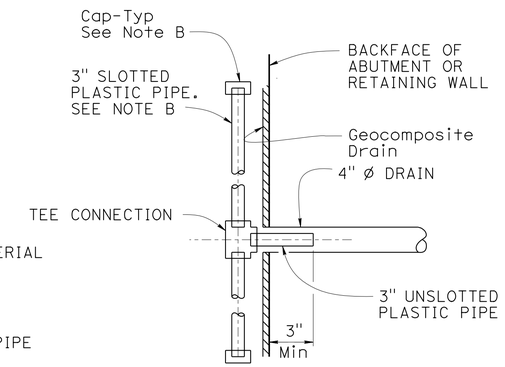

SECTION K-K

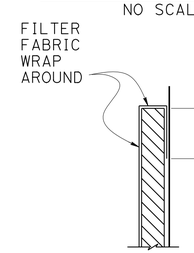

DETAIL 'D'

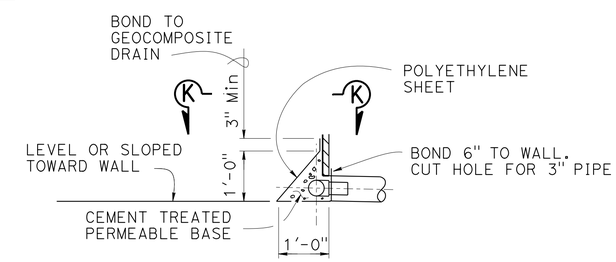

DETAIL 'E'

WEEP HOLE AND GEOCOMPOSITE DRAIN

NO SCALE

NOTES:

A. 4" Ø drains at intermediate sag points and at 25'-0" center to center. For walls adjacent to sidewalks or curbs, provide 4" Ø cast iron or asbestos cement pipe under the sidewalk to discharge through curb face. Exposed wall drains shall be located 3" ± above finished grade.

B. Geocomposite drain, cement treated permeable base, and 3" Ø slotted plastic pipe continuous behind retaining wall or abutment. Cap ends of pipe. Provide "Tee" connection at each 4" Ø drain.

C. Connect the low end of plastic pipe to the main outlet pipe as applicable.

D. New 3" Ø Pipe shall be coupled with the Existing Pipe to ensure the water flow at the connection. Clear the exist drain pipe of any obstructions as required.

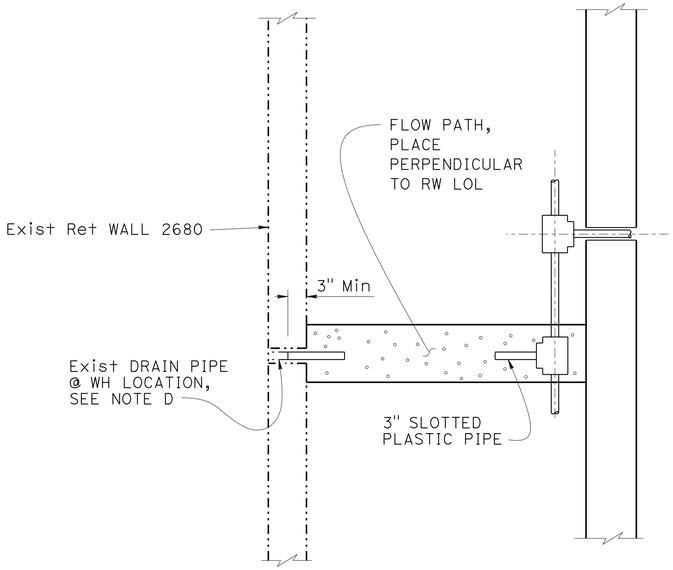

FROM Sta 11+80.00 TO Sta 13+40.00

PLAN

NO SCALE

WEEP HOLE INVERT ELEVATION TABLE

EXIST WH NUMBERS	RW LOL Sta	OFFSET	EXIST WH Inv Elev @ RW2680	EXIST WH EXTENSION Inv Elev @ RW2 FACE
1	10+15.21	0.00' Lt	68.32	68.32
2	10+32.38	0.40' Lt	68.45	68.45
3	10+49.29	1.35' Lt	68.68	68.68
4	10+67.53	1.85' Lt	68.49	68.79
5	10+90.46	2.90' Lt	68.52	68.71
6	11+09.45	4.18' Lt	68.79	68.79
7	11+27.43	4.72' Lt	68.52	68.64
8	11+62.40	6.38' Lt	68.56	68.58
9	11+85.67	7.62' Lt	68.47	
10	12+04.84	8.58' Lt	68.62	
11	12+22.09	9.45' Lt	68.66	
12	12+39.18	10.36' Lt	68.61	
13	12+57.03	11.52' Lt	68.68	
14	12+80.15	13.27' Lt	68.69	
15	12+99.45	14.48' Lt	68.69	
16	13+16.94	16.03' Lt	68.45	
17	13+33.71	17.33' Lt	68.44	

Note:
All Stations, Offsets and Invert Elevations shown in Table are approximate and must be verified by Contractor.

EXIST WH EXTENSION DETAILS

	BY	CHECKED
DESIGN	Y. Yoon	Daryoush Tavatli
DETAILS	John Hunter	Yeo Yoon
QUANTITIES	Daryoush Tavatli	Yeo Yoon

STATE OF CALIFORNIA
DEPARTMENT OF TRANSPORTATION

DIVISION OF ENGINEERING SERVICES
STRUCTURE DESIGN
DESIGN BRANCH 11

BRIDGE NO. 53E0251
POST MILE 44.31

RETAINING WALL 2
GEOCOMPOSITE DRAIN DETAILS

STRUCTURES DESIGN DETAIL SHEET (ENGLISH) (REV. 09-01-10)

ORIGINAL SCALE IN INCHES FOR REDUCED PLANS 0 1 2 3

UNIT: 3587
PROJECT NUMBER & PHASE: 0715000160-1
CONTRACT NO.: 07-2159U4

DISREGARD PRINTS BEARING EARLIER REVISION DATES

REVISION DATES: 6/28/12 5-18-13 3-18-15 3-18-13

SHEET 10 OF 17

FILE => rw2-m-drndt.dgn

USERNAME => s125624 DATE PLOTTED => 03-FEB-2016 TIME PLOTTED => 13:54

DIST	COUNTY	ROUTE	POST MILES TOTAL PROJECT	SHEET No.	TOTAL SHEETS
07	LA,Ora	5	0.0/1.5, 44.3/44.4	1400	1622

REGISTERED CIVIL ENGINEER 3-18-15 DATE

1-25-16
PLANS APPROVAL DATE

REGISTERED PROFESSIONAL ENGINEER DARYOUSH TAVATLI No. 56183 Exp. 12-31-16 CIVIL STATE OF CALIFORNIA

The State of California or its officers or agents shall not be responsible for the accuracy or completeness of electronic copies of this plan sheet.

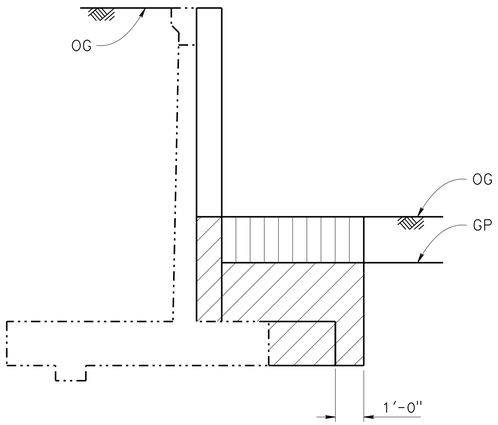

EXCAVATION

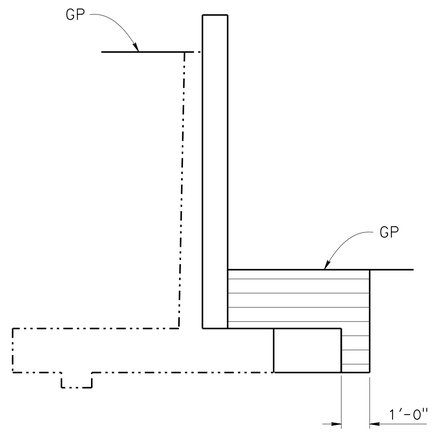

BACKFILL

FROM Sta 10+00.00 TO 11+80.00

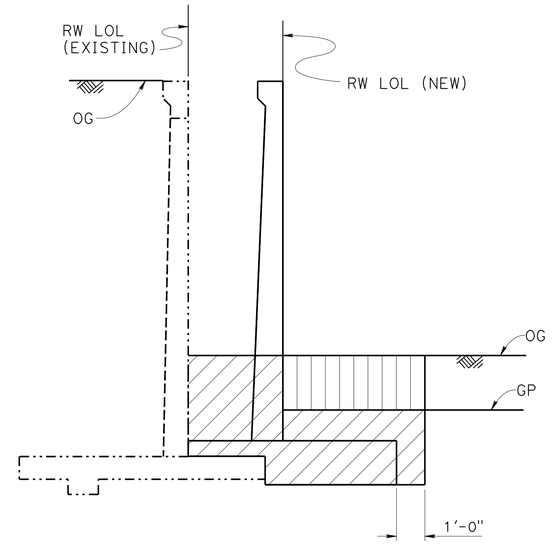

EXCAVATION

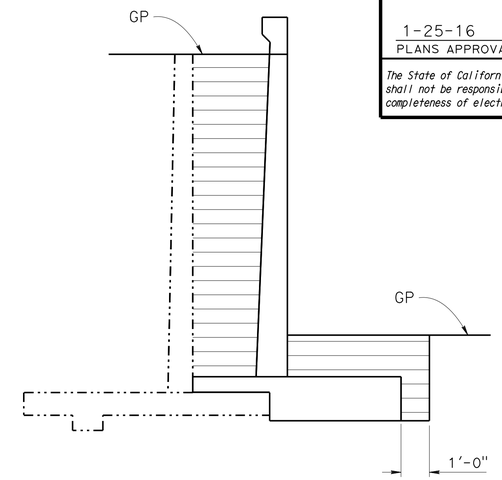

BACKFILL

FROM Sta 11+80.00 TO 12+47.74

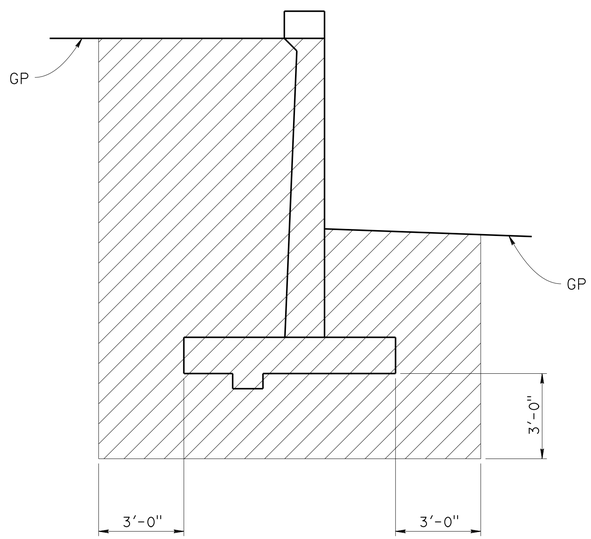

EXCAVATION

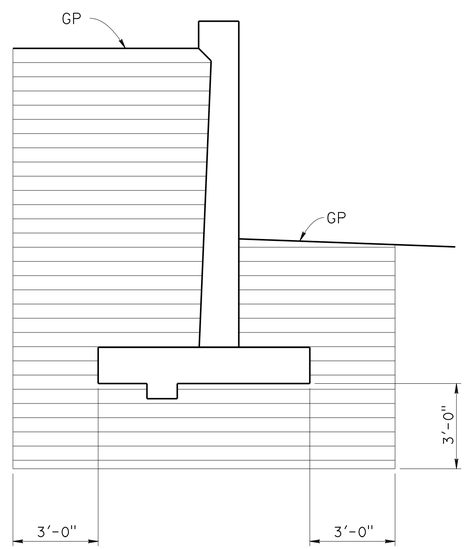

BACKFILL

FROM Sta 12+47.74 TO 17+46.03

LEGEND:

- STRUCTURE EXCAVATION
- ROADWAY EXCAVATION
- STRUCTURE BACKFILL

GP - PLANNED GRADING PLANE

LIMITS OF EXCAVATION AND BACKFILL

NO SCALE

	BY	CHECKED
DESIGN	Yeo Yoon	Daryoush Tavatli
DETAILS	Yeo Yoon	Daryoush Tavatli
QUANTITIES	Daryoush Tavatli	Yeo Yoon

STATE OF CALIFORNIA
DEPARTMENT OF TRANSPORTATION

DIVISION OF ENGINEERING SERVICES
STRUCTURE DESIGN
DESIGN BRANCH 11

BRIDGE NO. 53E0251
POST MILE 44.31

RETAINING WALL 2

LIMITS OF EXCAVATION AND BACKFILL

STRUCTURES DESIGN DETAIL SHEET (ENGLISH) (REV. 09-01-10)

ORIGINAL SCALE IN INCHES FOR REDUCED PLANS 0 1 2 3

UNIT: 3587
PROJECT NUMBER & PHASE: 0715000160-1
CONTRACT NO.: 07-2159u4

DISREGARD PRINTS BEARING EARLIER REVISION DATES

REVISION DATES 5-15-13 3-18-15

SHEET 11 OF 17

FILE => rw2-n-exc.dgn

USERNAME => s125624 DATE PLOTTED => 03-FEB-2016 TIME PLOTTED => 13:54