DIST	COUNTY	ROUTE	POST MILES TOTAL PROJECT	SHEET No.	TOTAL SHEETS
07	LA,Ora	5	0.0/1.5, 44.3/44.4	1201	1622

William Kemp 3-18-15
REGISTERED CIVIL ENGINEER DATE

1-25-16
PLANS APPROVAL DATE

REGISTERED PROFESSIONAL ENGINEER
WILLIAM D. KEMP
No. 55730
Exp. 12/31/16
CIVIL
STATE OF CALIFORNIA

The State of California or its officers or agents shall not be responsible for the accuracy or completeness of scanned copies of this plan sheet.

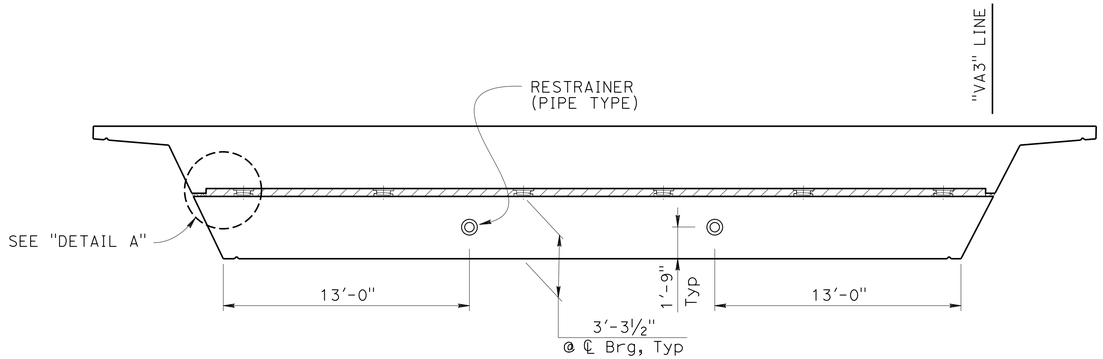

TYPICAL END VIEW

¼" = 1'-0"

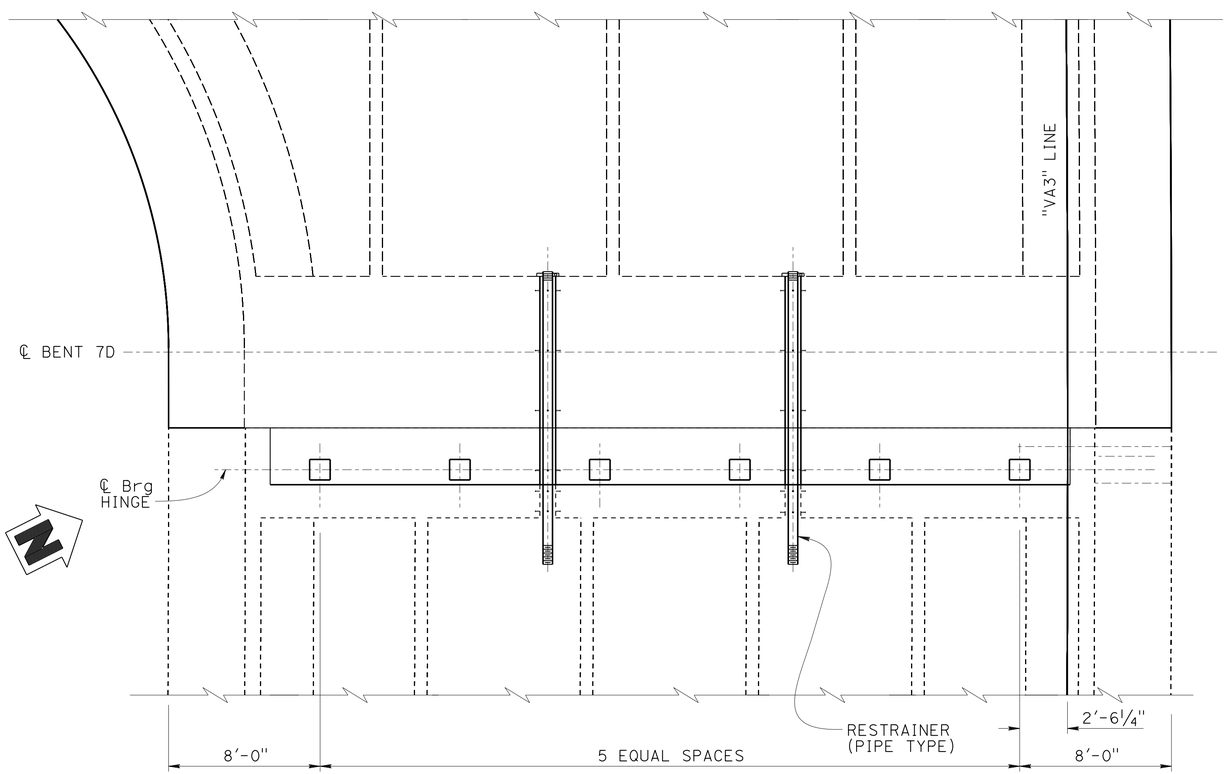

PLAN

¼" = 1'-0"

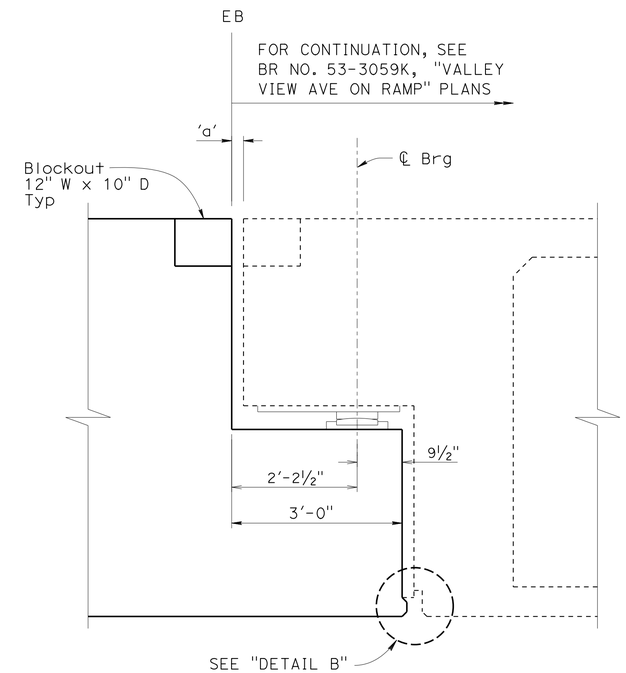

HINGE SECTION

¾" = 1'-0"

NOTES:

1. For PTFE Bearing Pad details, see "PTFE EXPANSION BEARING DETAILS NO. 1" sheet.
2. For "DETAIL A", "DETAIL B" reinforcement and Restrainer (Pipe Type) details, see "RAMP HINGE DETAILS" sheet.

	BY	CHECKED
DESIGN	B. Kemp	M. Okimura
DETAILS	T. Bittermann	M. Okimura
QUANTITIES	M. Okimura	J. Radu

STATE OF CALIFORNIA
DEPARTMENT OF TRANSPORTATION

DIVISION OF ENGINEERING SERVICES
STRUCTURE DESIGN
DESIGN BRANCH 11

BRIDGE NO. 53-3045
POST MILE 1.21

VALLEY VIEW AVE OH/OC (REPLACEMENT)
ON RAMP HINGE LAYOUT

STRUCTURES DESIGN DETAIL SHEET (ENGLISH) (REV. 09-01-10)

ORIGINAL SCALE IN INCHES FOR REDUCED PLANS 0 1 2 3

UNIT: 3587
PROJECT NUMBER & PHASE: 0715000160-1
CONTRACT NO.: 07-2159u4

DISREGARD PRINTS BEARING EARLIER REVISION DATES

REVISION DATES: 10-24-12 6-18-13 3-18-15 5-30-13

SHEET 134 OF 182

FILE => 53-3045-pq-rmp_hng_lyt01.dgn

USERNAME => s125824 DATE PLOTTED => 28-JAN-2016 TIME PLOTTED => 12:09

DIST	COUNTY	ROUTE	POST MILES TOTAL PROJECT	SHEET No.	TOTAL SHEETS
07	LA,Ora	5	0.0/1.5, 44.3/44.4	1202	1622

REGISTERED CIVIL ENGINEER — DATE 3-18-15

1-25-16
PLANS APPROVAL DATE

REGISTERED PROFESSIONAL ENGINEER — WILLIAM D. KEMP — No. 55730 — Exp. 12/31/16 — CIVIL — STATE OF CALIFORNIA

The State of California or its officers or agents shall not be responsible for the accuracy or completeness of scanned copies of this plan sheet.

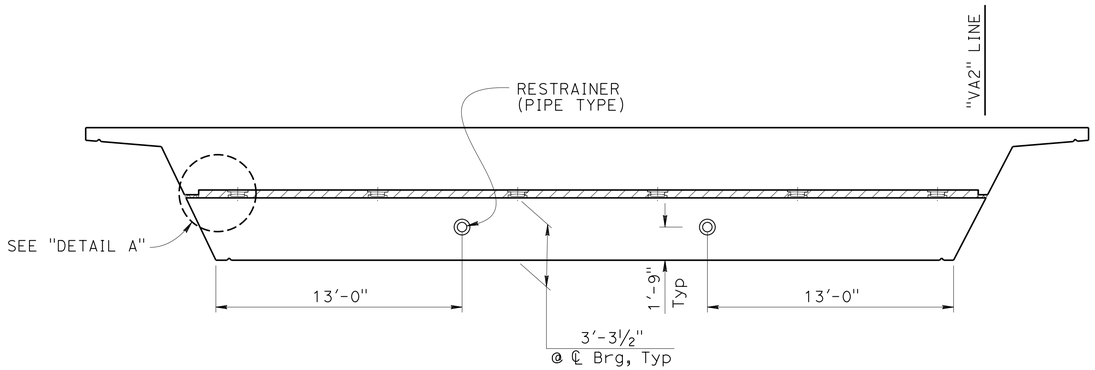

TYPICAL END VIEW

¼" = 1'-0"

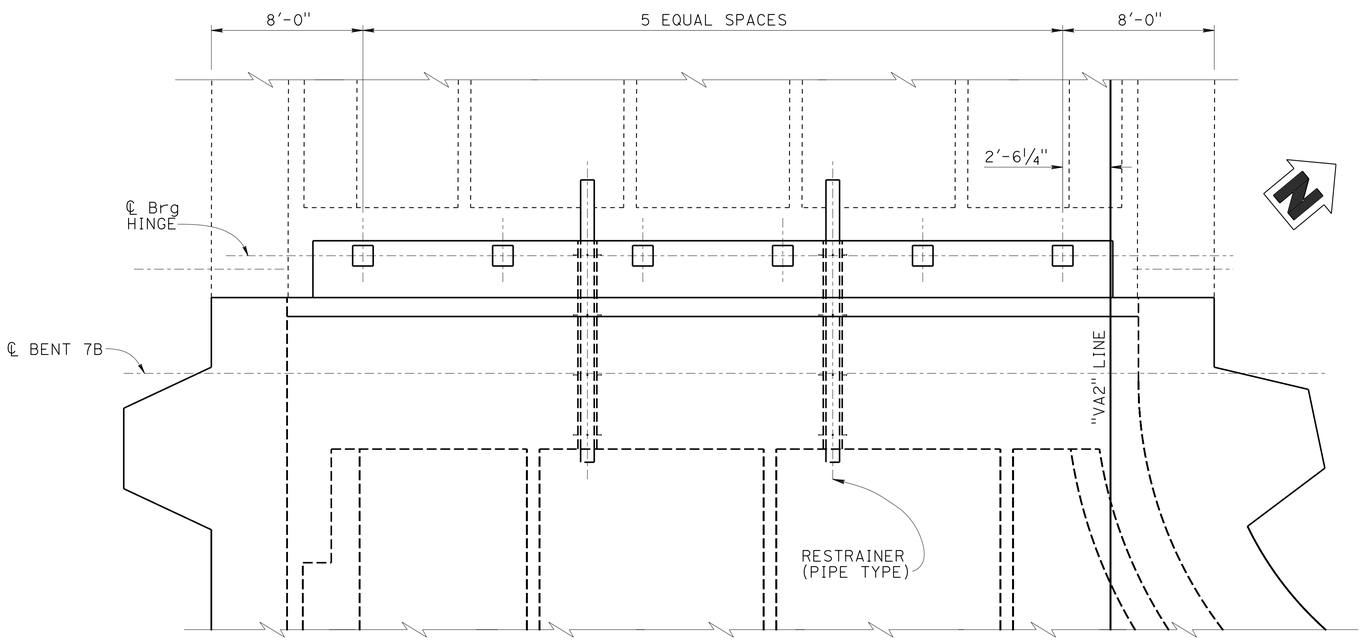

PLAN

¼" = 1'-0"

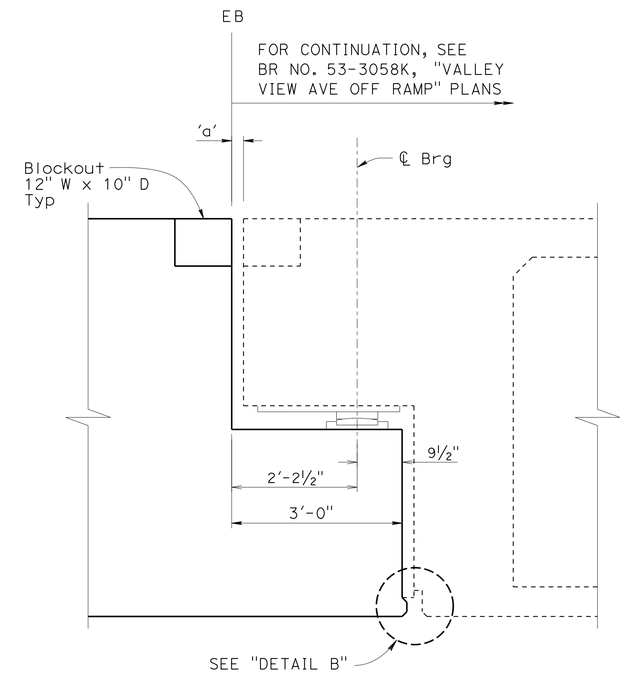

HINGE SECTION

¾" = 1'-0"

NOTES:

1. For PTFE Bearing Pad details, see "PTFE EXPANSION BEARING DETAILS NO. 1" sheet
2. For "DETAIL A" and "DETAIL B" reinforcement, and Restrainer (Pipe Type) details, see "RAMP HINGE DETAILS" sheet.

	BY	CHECKED
DESIGN	B. Kemp	M. Okimura
DETAILS	T. Bittermann	M. Okimura
QUANTITIES	M. Okimura	J. Radu

STATE OF CALIFORNIA
DEPARTMENT OF TRANSPORTATION

DIVISION OF ENGINEERING SERVICES
STRUCTURE DESIGN
DESIGN BRANCH 11

BRIDGE NO. 53-3045
POST MILE 1.21

VALLEY VIEW AVE OH/OC (REPLACEMENT)
OFF RAMP HINGE LAYOUT

STRUCTURES DESIGN DETAIL SHEET (ENGLISH) (REV. 09-01-10)

ORIGINAL SCALE IN INCHES FOR REDUCED PLANS 0 1 2 3

UNIT: 3587
PROJECT NUMBER & PHASE: 0715000160-1
CONTRACT NO.: 07-2159U4

DISREGARD PRINTS BEARING EARLIER REVISION DATES

REVISION DATES: 2-26-13 5-29-13 6-18-13 3-18-15

SHEET 135 OF 182

FILE => 53-3045-pq-rmp_hng_lyt02.dgn

USERNAME => s125624 DATE PLOTTED => 28-JAN-2016 TIME PLOTTED => 12:09

DIST	COUNTY	ROUTE	POST MILES TOTAL PROJECT	SHEET No.	TOTAL SHEETS
07	LA,Ora	5	0.0/1.5, 44.3/44.4	1203	1622

William Kemp 3-18-15
REGISTERED CIVIL ENGINEER DATE

1-25-16
PLANS APPROVAL DATE

REGISTERED PROFESSIONAL ENGINEER WILLIAM D. KEMP No. 55730 Exp. 6-30-16 CIVIL STATE OF CALIFORNIA

The State of California or its officers or agents shall not be responsible for the accuracy or completeness of scanned copies of this plan sheet.

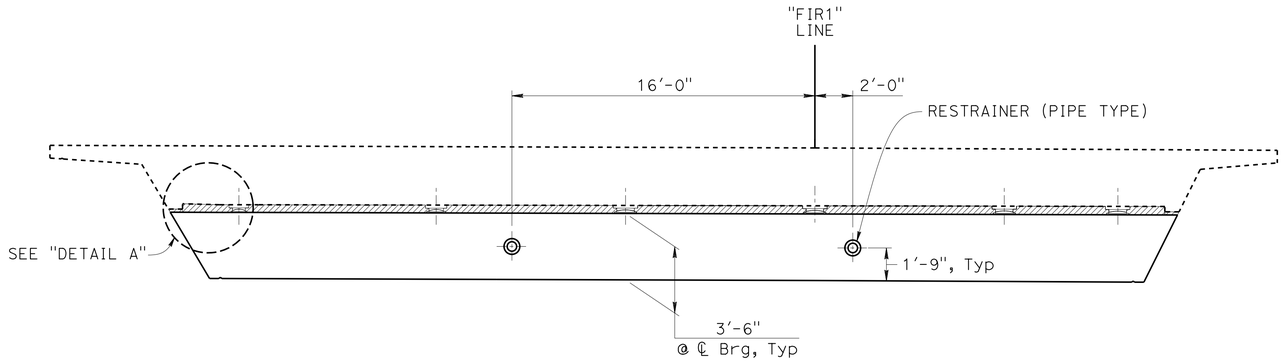

SECTION A-A
1/4" = 1'-0"

NOTES:

1. For PTFE Bearing Pad details, see "PTFE EXPANSION BEARING DETAILS NO. 1" sheet.
2. For "DETAIL A", "DETAIL B" reinforcement and Restrainer (Pipe Type) details, see "RAMP HINGE DETAILS" sheet.

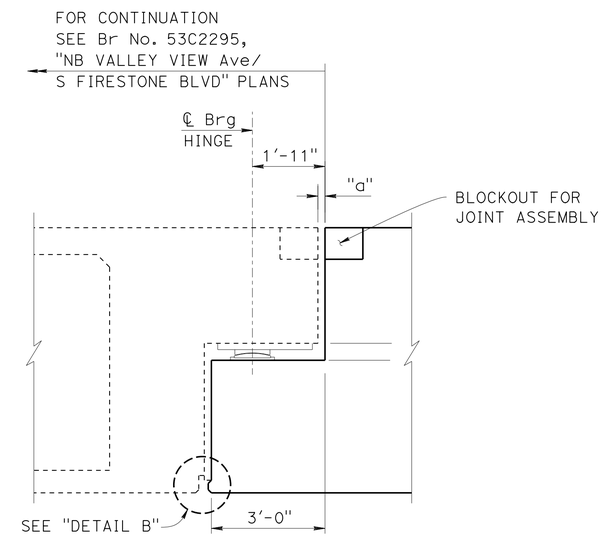

HINGE SECTION
1/2" = 1'-0"

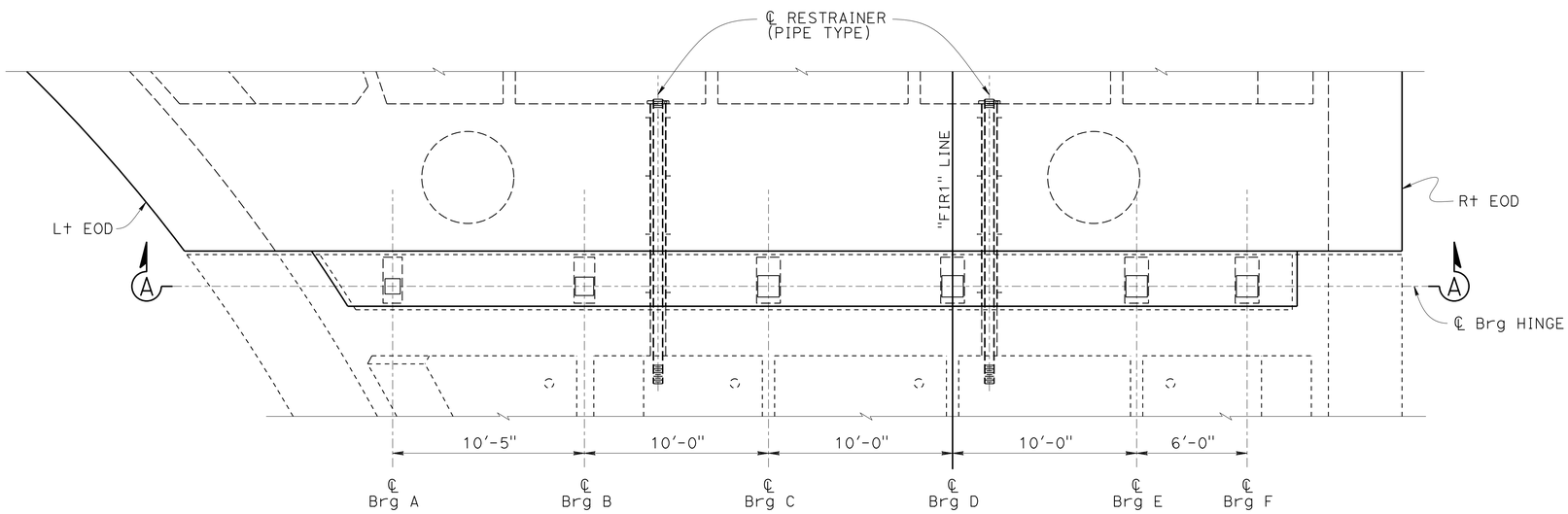

PLAN
1/4" = 1'-0"

DESIGN	BY M. Okimura	CHECKED Phu Nguyen	
DETAILS	BY L. Goldthwait	CHECKED Phu Nguyen	
QUANTITIES	BY M. Okimura	CHECKED J. Radu	

STATE OF CALIFORNIA
DEPARTMENT OF TRANSPORTATION

DIVISION OF ENGINEERING SERVICES
STRUCTURE DESIGN
DESIGN BRANCH 11

BRIDGE NO. 53-3045
POST MILE 1.21

VALLEY VIEW AVE OH/OC (REPLACEMENT)
NB VALLEY VIEW AVE HINGE LAYOUT

STRUCTURES DESIGN DETAIL SHEET (ENGLISH) (REV. 09-01-10)

ORIGINAL SCALE IN INCHES FOR REDUCED PLANS 0 1 2 3

UNIT: 3587
PROJECT NUMBER & PHASE: 0715000160-1
CONTRACT NO.: 07-2159u4

DISREGARD PRINTS BEARING EARLIER REVISION DATES

REVISION DATES: 5-31-13 6/18/13 5-28-13 5-31-13

SHEET 136 OF 182

FILE => 53-3045-pq-rmp_hng_lyt03.dgn

USERNAME => s125624 DATE PLOTTED => 28-JAN-2016 TIME PLOTTED => 12:10

DIST	COUNTY	ROUTE	POST MILES TOTAL PROJECT	SHEET No.	TOTAL SHEETS
07	LA,Ora	5	0.0/1.5, 44.3/44.4	1204	1622

REGISTERED CIVIL ENGINEER — DATE: 3-18-15

1-25-16
PLANS APPROVAL DATE

REGISTERED PROFESSIONAL ENGINEER — WILLIAM D. KEMP — No. 55730 — Exp. 12/31/16 — CIVIL — STATE OF CALIFORNIA

The State of California or its officers or agents shall not be responsible for the accuracy or completeness of electronic copies of this plan sheet.

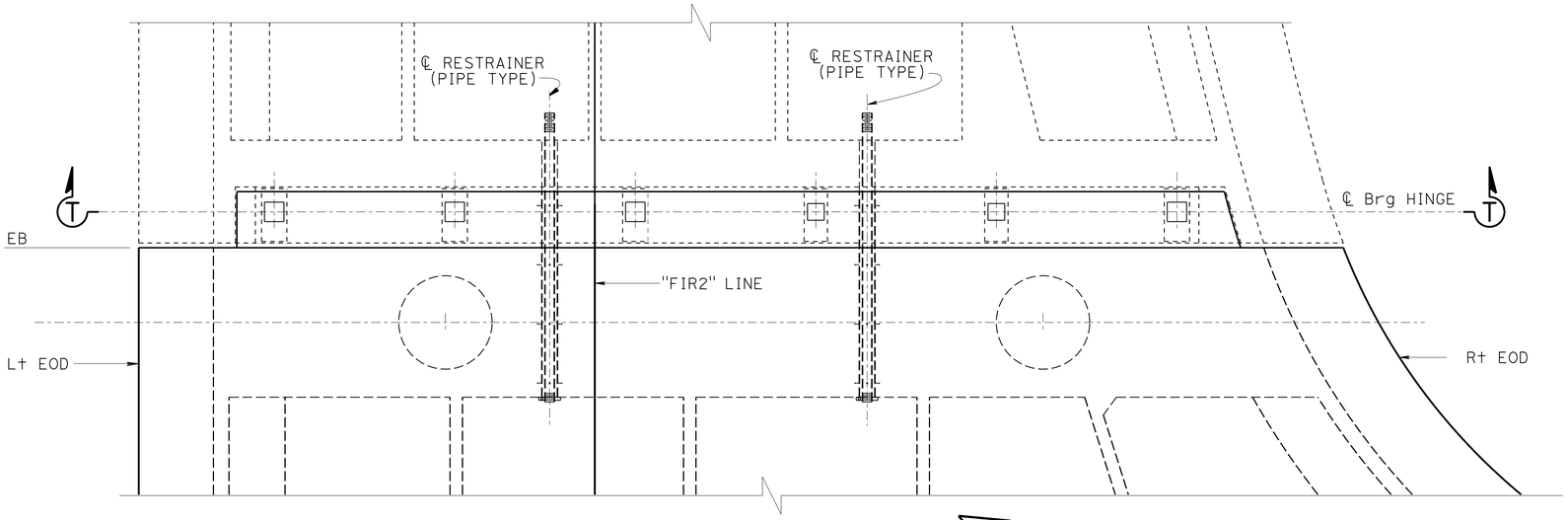

PLAN
1/4" = 1'-0"

NOTES:

1. For PTFE Bearing Pad details, see "PTFE EXPANSION BEARING DETAILS NO. 1" sheet.
2. For "DETAIL A", "DETAIL B" reinforcement and Restrainer (Pipe Type) details, see "RAMP HINGE DETAILS" sheet.

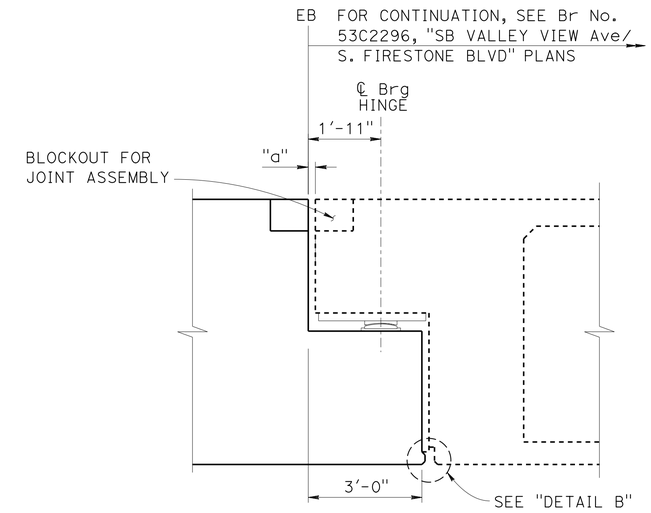

HINGE SECTION
1/2" = 1'-0"

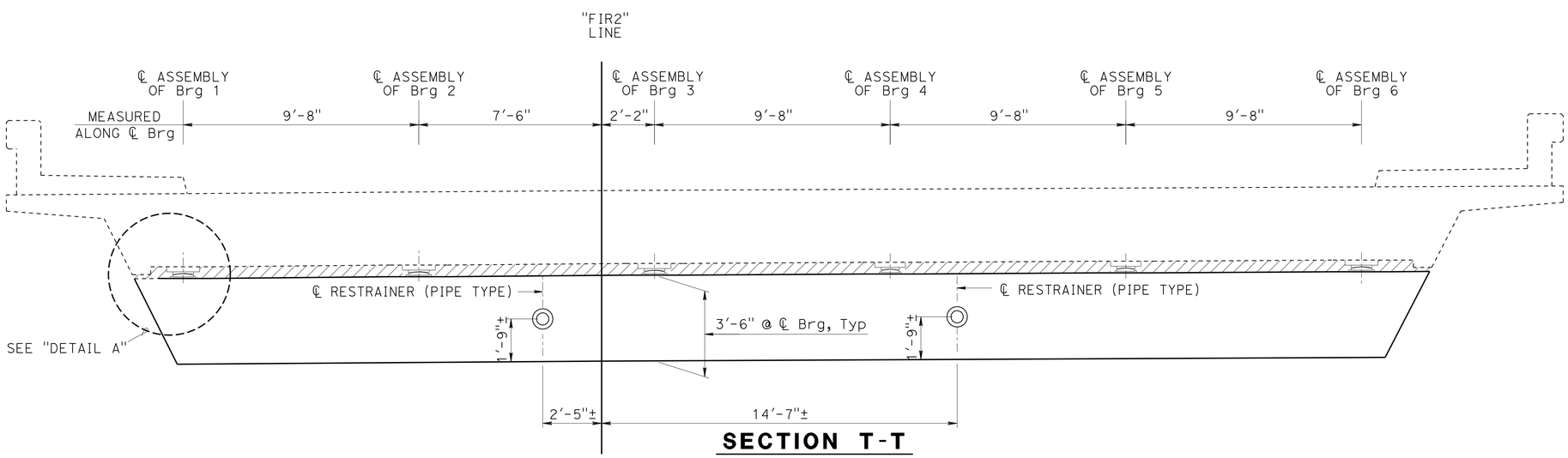

SECTION T-T
3/8" = 1'-0"

DESIGN	BY M. Okimura	CHECKED Phu Nguyen	
DETAILS	BY L. Goldthwait	CHECKED Phu Nguyen	
QUANTITIES	BY M. Okimura	CHECKED J. Radu	

STATE OF CALIFORNIA
DEPARTMENT OF TRANSPORTATION

DIVISION OF ENGINEERING SERVICES
STRUCTURE DESIGN
DESIGN BRANCH 11

BRIDGE NO. 53-3045
POST MILE 1.21

VALLEY VIEW AVE OH/OC (REPLACEMENT)
SB VALLEY VIEW AVE HINGE LAYOUT

STRUCTURES DESIGN DETAIL SHEET (ENGLISH) (REV. 09-01-10)

ORIGINAL SCALE IN INCHES FOR REDUCED PLANS 0 1 2 3

UNIT: 3587
PROJECT NUMBER & PHASE: 0715000160-1
CONTRACT NO.: 07-2159u4

DISREGARD PRINTS BEARING EARLIER REVISION DATES

REVISION DATES: 3-5-13 4-18-13 5-31-13 6/18/13

SHEET 137 OF 182

FILE => 53-3045-pq-rmp_hng_lyt04.dgn

USERNAME => s125624 DATE PLOTTED => 28-JAN-2016 TIME PLOTTED => 12:10

DIST	COUNTY	ROUTE	POST MILES TOTAL PROJECT	SHEET No.	TOTAL SHEETS
07	LA,Ora	5	0.0/1.5, 44.3/44.4	1205	1622

REGISTERED CIVIL ENGINEER — DATE 3-18-15

1-25-16
PLANS APPROVAL DATE

REGISTERED PROFESSIONAL ENGINEER — WILLIAM D. KEMP — No. 55730 — Exp. 12/31/16 — CIVIL — STATE OF CALIFORNIA

The State of California or its officers or agents shall not be responsible for the accuracy or completeness of electronic copies of this plan sheet.

NOTES:

1. Tightly wrap fixed side of pipe with 2 layers of 15 lb building paper. Paper is to remain in place as a bond breaker.
2. Thread Pipe and Plate: 8 threads per inch per ASME B 1.20.1.
3. Apply thread locking system after grouting and place plate snug against diaphragm.
4. 3" deep holes in plate are to receive a 1"* rod used in the removal of the plate

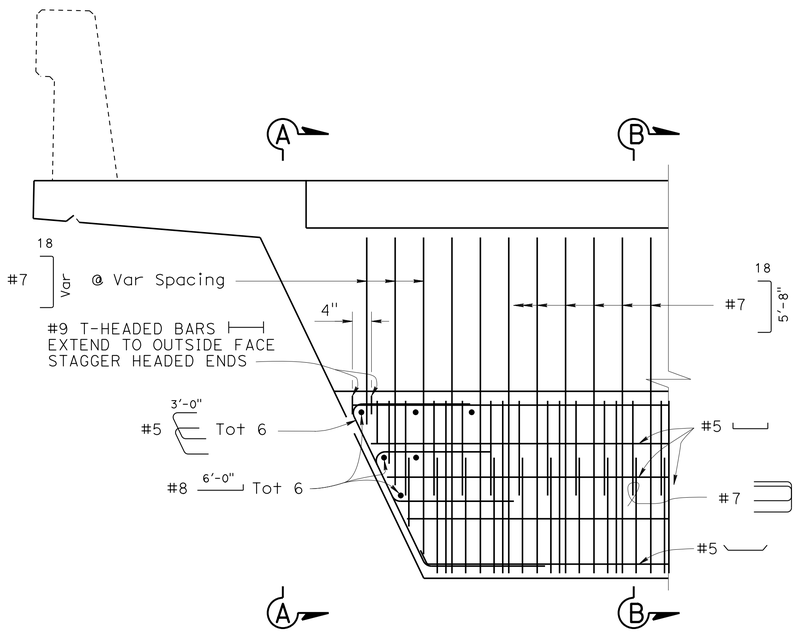

SIDE REINFORCEMENT

3/4" = 1'-0"

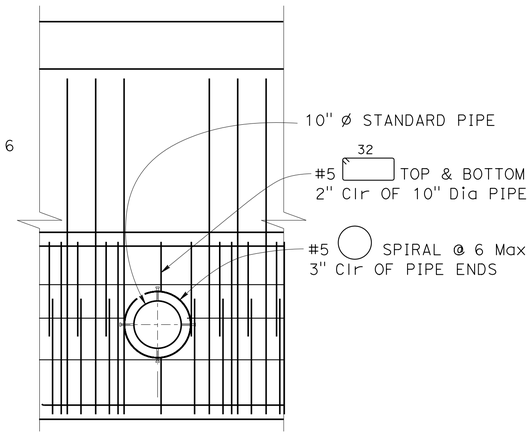

AT HINGE RESTRAINER (PIPE TYPE)

3/4" = 1'-0"

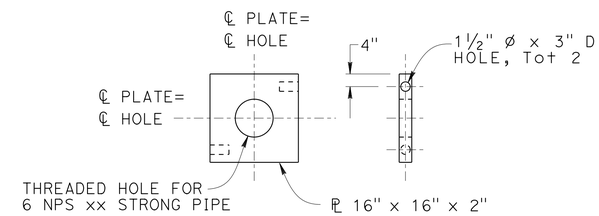

THREADED PLATE DETAILS

NO SCALE

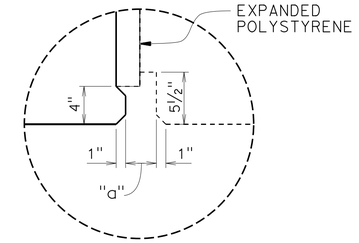

DETAIL B

1 1/2" = 1'-0"

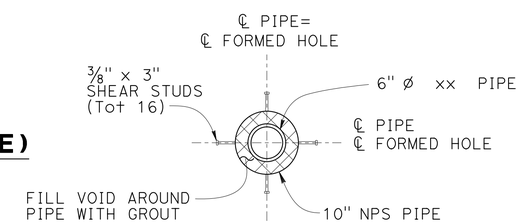

FIXED END, SUPPORT SEAT SIDE

SECTION C-C

NO SCALE

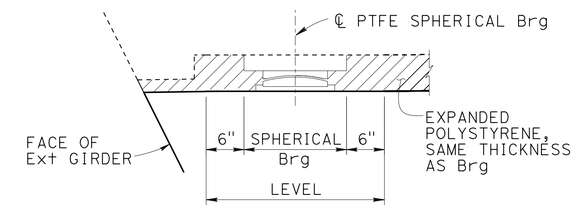

DETAIL A

1" = 1'-0"

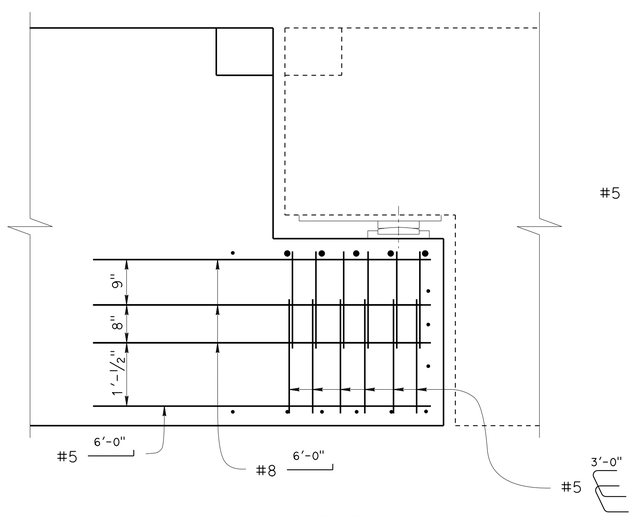

ELEVATION A-A

3/4" = 1'-0"

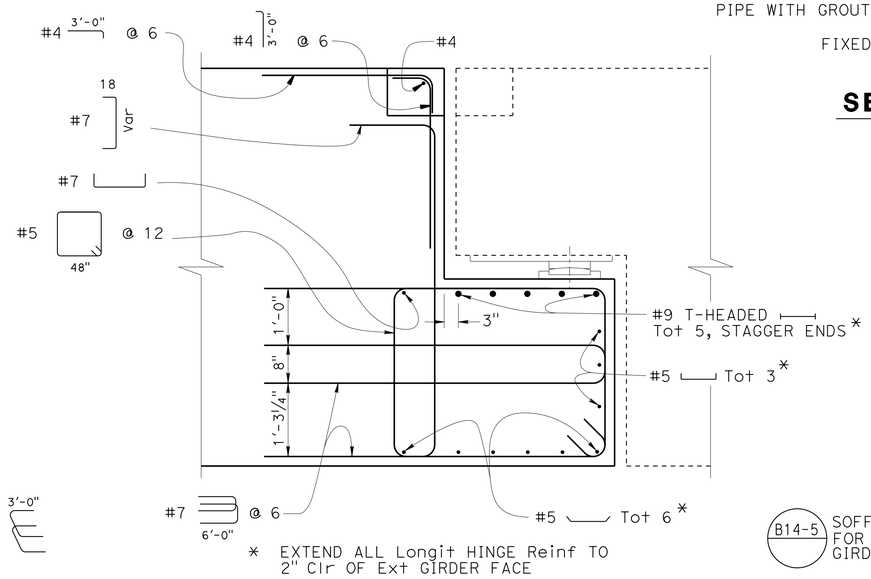

* EXTEND ALL Longit HINGE Reinf TO 2" Clr OF Ext GIRDER FACE

SECTION B-B

3/4" = 1'-0"

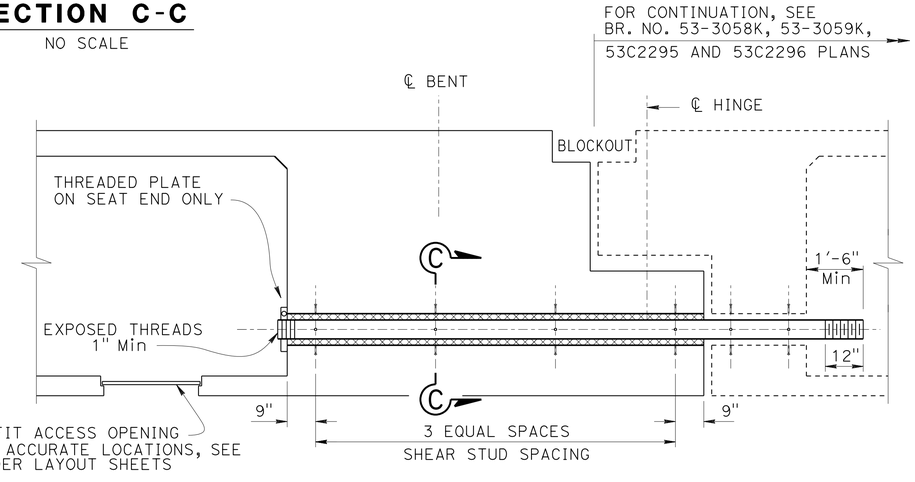

TYPICAL SECTION AT RESTRAINER (PIPE TYPE)

1/2" = 1'-0"

	BY	CHECKED
DESIGN	Bill Kemp	Mark Okimura
DETAILS	Pauline Tong	Mark Okimura
QUANTITIES	Mark Okimura	John Radu

STATE OF CALIFORNIA
DEPARTMENT OF TRANSPORTATION

DIVISION OF ENGINEERING SERVICES
STRUCTURE DESIGN
DESIGN BRANCH 11

BRIDGE NO. 53-3045
POST MILE 1.21

VALLEY VIEW AVE OH/OC (REPLACEMENT)
RAMP HINGE DETAILS

STRUCTURES DESIGN DETAIL SHEET (ENGLISH) (REV. 09-01-10)

ORIGINAL SCALE IN INCHES FOR REDUCED PLANS 0 1 2 3

UNIT: 3587
PROJECT NUMBER & PHASE: 0715000160-1
CONTRACT NO.: 07-2159u4

DISREGARD PRINTS BEARING EARLIER REVISION DATES

REVISION DATES: 3-13-12 3-28-13 5-30-13 6/5/13

SHEET 138 OF 182

FILE => 53-3045-pr-rmp_hngdt01.dgn

USERNAME => s125624 DATE PLOTTED => 28-JAN-2016 TIME PLOTTED => 12:10

DIST	COUNTY	ROUTE	POST MILES TOTAL PROJECT	SHEET No.	TOTAL SHEETS
07	LA,Ora	5	0.0/1.5, 44.3/44.4	1206	1622

REGISTERED CIVIL ENGINEER 3-18-15 DATE

1-25-16
PLANS APPROVAL DATE

REGISTERED PROFESSIONAL ENGINEER WILLIAM D. KEMP No. 55730 Exp. 12/31/16 CIVIL STATE OF CALIFORNIA

The State of California or its officers or agents shall not be responsible for the accuracy or completeness of electronic copies of this plan sheet.

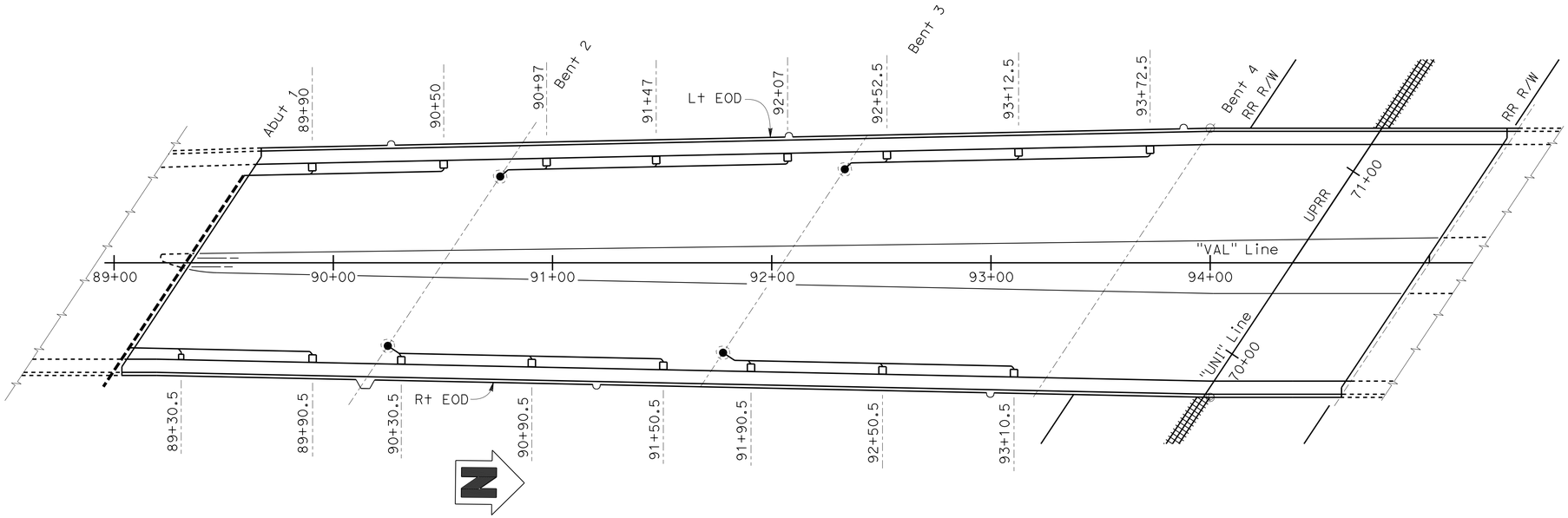

PLAN - FRAME 1

1" = 30'

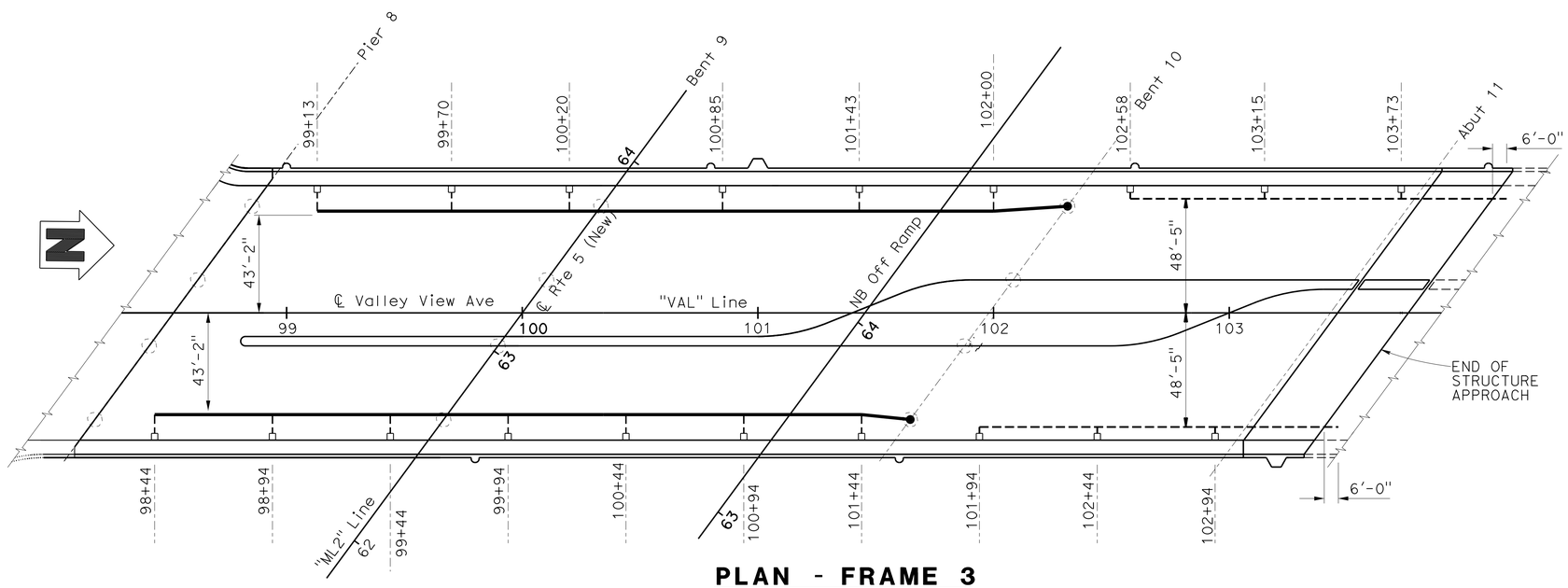

PLAN - FRAME 3

1" = 30'

LEGEND:

- □ Indicates Deck Drain - Type D1
- ● Indicates drainage through column. Locate the centerline of the column drain, 12" below Finish Grade. Provide Bell Recess at column drain outlet. See "ROAD PLANS" for drainage conveyance.

BENT	COLUMN OUTLET DIRECTION
2	SOUTH
3	SOUTH
10	NORTH

——— Indicates 6" ø Std Pipe 3% Min slope.

▬▬▬ Indicates 10" ø Std Pipe 2% Min slope.

- - - - Indicates 10" ø Std Pipe, 2% Min slope. For drainage details beyond Abut 1, see "DRAINAGE DETAILS" sheet

- - - - Indicates 6" ø Std Pipe 2% Min slope. End drain pipe 6' beyond Abutment 11 approach slab. For drain continuation, see "ROAD PLANS"

NOTES:

1. For drain outlet at Column, see B7-6
2. For drain outlet at Abutment 1 and 11, see B7-8

DESIGN	BY B. Kemp	CHECKED Dauryoush Tavatli	
DETAILS	BY T. Bittermann	CHECKED Dauryoush Tavatli	
QUANTITIES	BY Krishnakant Andurlekar	CHECKED Ruperd Wilson	

STATE OF CALIFORNIA
DEPARTMENT OF TRANSPORTATION

DIVISION OF ENGINEERING SERVICES
STRUCTURE DESIGN
DESIGN BRANCH 11

BRIDGE NO. 53-3045
POST MILE 1.21

VALLEY VIEW AVE OH/OC (REPLACEMENT)

DRAINAGE LAYOUT

STRUCTURES DESIGN DETAIL SHEET (ENGLISH) (REV. 09-01-10)

ORIGINAL SCALE IN INCHES FOR REDUCED PLANS 0 1 2 3

UNIT: 3587
PROJECT NUMBER & PHASE: 0715000160-1
CONTRACT NO.: 07-2159u4

DISREGARD PRINTS BEARING EARLIER REVISION DATES

REVISION DATES 3-6-12 8-29-13 9-30-13 7-11-13

SHEET 139 OF 182

FILE => 53-3045-qa-drn_lo1.dgn

USERNAME => s125624 DATE PLOTTED => 28-JAN-2016 TIME PLOTTED => 12:10

DIST	COUNTY	ROUTE	POST MILES TOTAL PROJECT	SHEET No.	TOTAL SHEETS
07	LA,Ora	5	0.0/1.5, 44.3/44.4	1207	1622

William Kemp 3-18-15
REGISTERED CIVIL ENGINEER DATE

1-25-16
PLANS APPROVAL DATE

REGISTERED PROFESSIONAL ENGINEER
WILLIAM D. KEMP
No. 55730
Exp. 12/31/16
CIVIL
STATE OF CALIFORNIA

The State of California or its officers or agents shall not be responsible for the accuracy or completeness of scanned copies of this plan sheet.

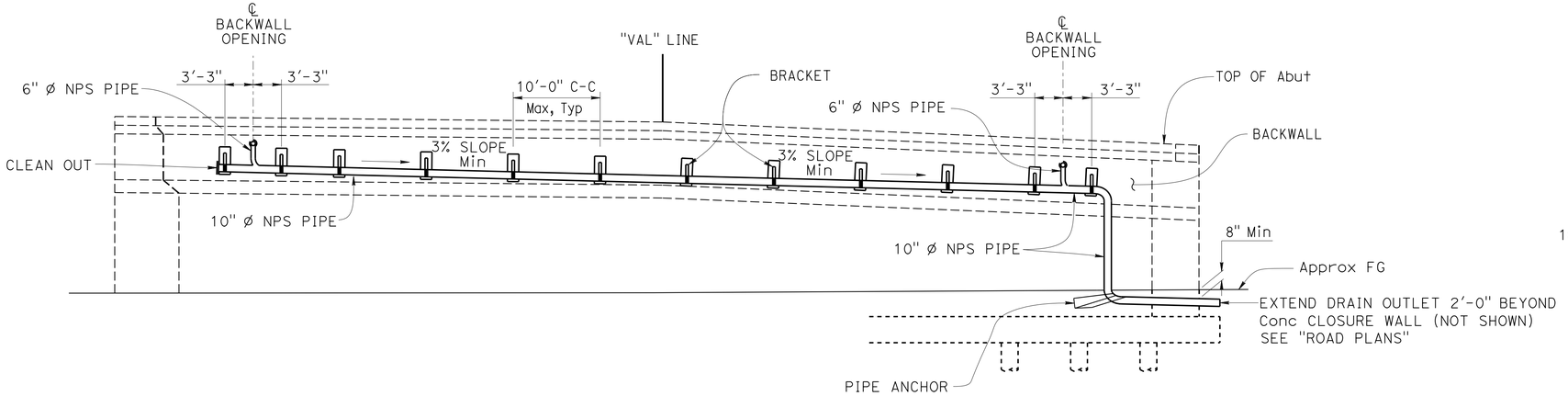

BACKWALL ELEVATION - ABUT 1

1/8" = 1'-0"

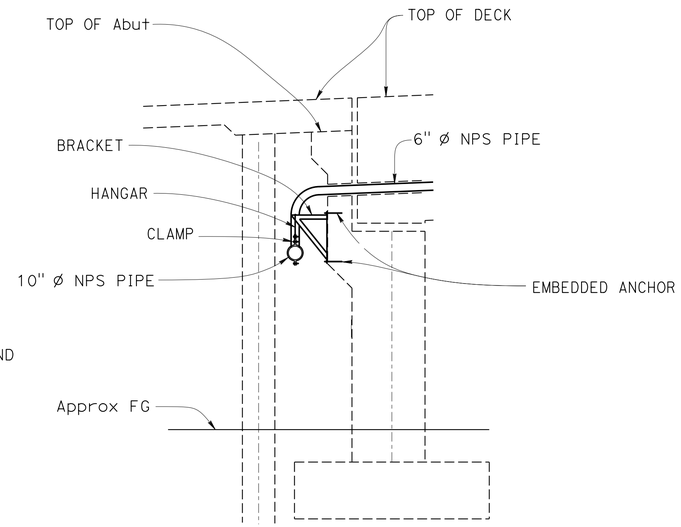

SECTION W-W

1/4" = 1'-0"

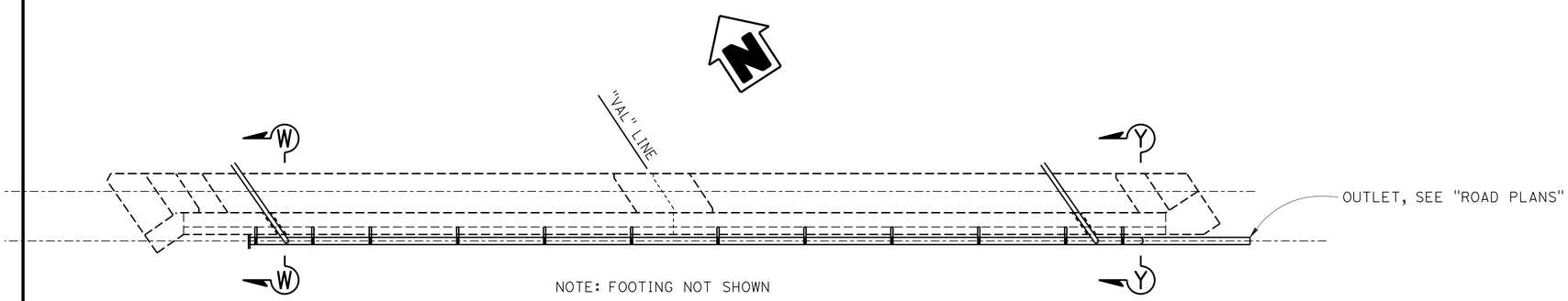

BACKWALL PLAN - ABUT 1

1/8" = 1'-0"

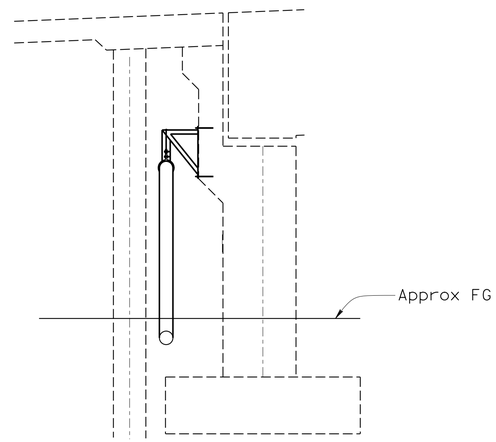

SECTION Y-Y

1/4 = 1'-0"

DESIGN	BY B. Kemp	CHECKED D. Tavatli	
DETAILS	BY T. Bittermann	CHECKED D. Tavatli	
QUANTITIES	BY B. Kemp	CHECKED K. Andurlakar	

STATE OF CALIFORNIA
DEPARTMENT OF TRANSPORTATION

DIVISION OF ENGINEERING SERVICES
STRUCTURE DESIGN
DESIGN BRANCH 11

BRIDGE NO. 53-3045
POST MILE 1.21

VALLEY VIEW AVE OH/OC (REPLACEMENT)
DRAINAGE DETAILS

STRUCTURES DESIGN DETAIL SHEET (ENGLISH) (REV. 09-01-10)

ORIGINAL SCALE IN INCHES FOR REDUCED PLANS 0 1 2 3

UNIT: 3587
PROJECT NUMBER & PHASE: 0715000160-1
CONTRACT NO.: 07-2159U4

DISREGARD PRINTS BEARING EARLIER REVISION DATES

REVISION DATES: 8-8-13 8-29-13

SHEET 140 OF 182

FILE => 53-3045-qe-drndt1.dgn

USERNAME => s125624 DATE PLOTTED => 28-JAN-2016 TIME PLOTTED => 12:10

DIST	COUNTY	ROUTE	POST MILES TOTAL PROJECT	SHEET No.	TOTAL SHEETS
07	LA,Ora	5	0.0/1.5, 44.3/44.4	1208	1622

REGISTERED CIVIL ENGINEER 3-18-15 DATE

1-25-16
PLANS APPROVAL DATE

REGISTERED PROFESSIONAL ENGINEER William D. Kemp No. 55730 Exp. 12/21/16 CIVIL STATE OF CALIFORNIA

The State of California or its officers or agents shall not be responsible for the accuracy or completeness of electronic copies of this plan sheet.

NOTE:

(*) For Barrier architectural treatment See "BARRIER MOTIF DETAILS" sheet

1. For 'Section D-D' & 'Section E-E', See "LUMINAIRE CORBEL DETAILS NO. 2" sheet

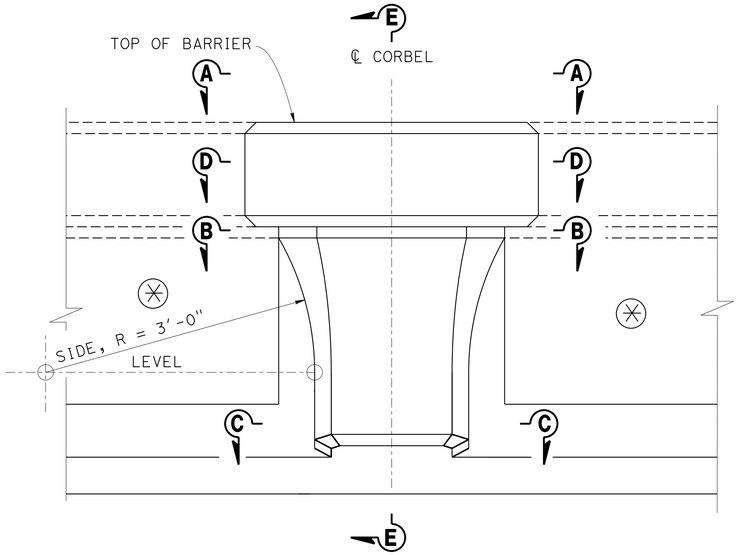

ELEVATION

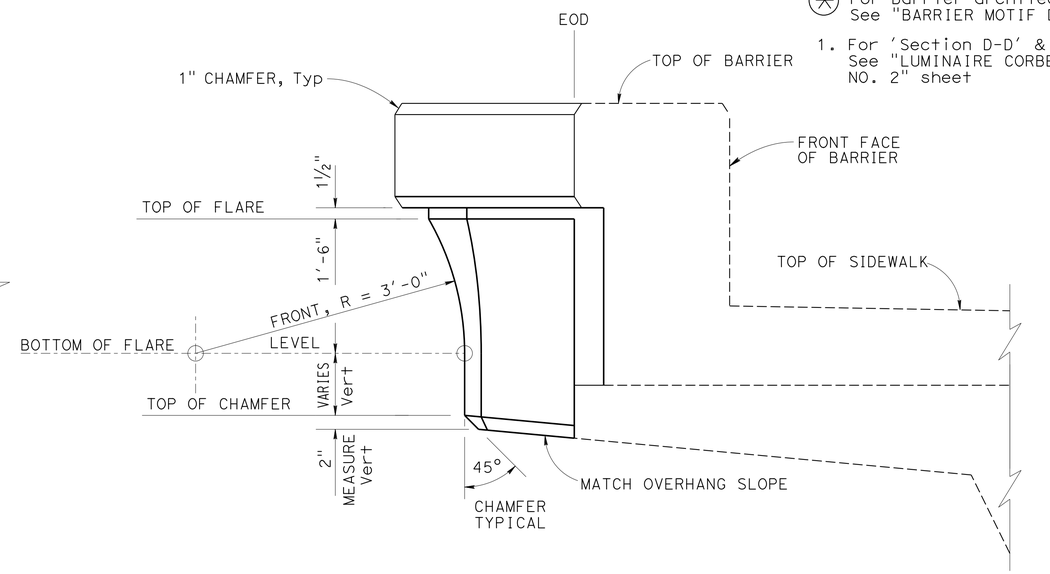

SIDE VIEW

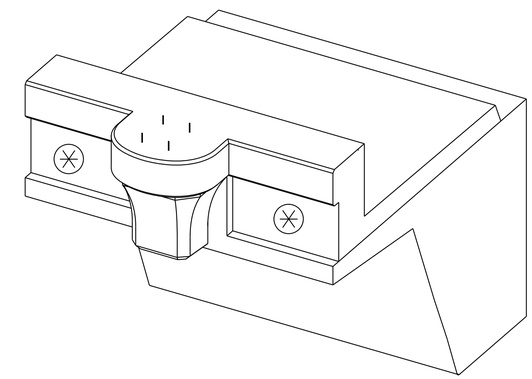

PICTORIAL VIEW

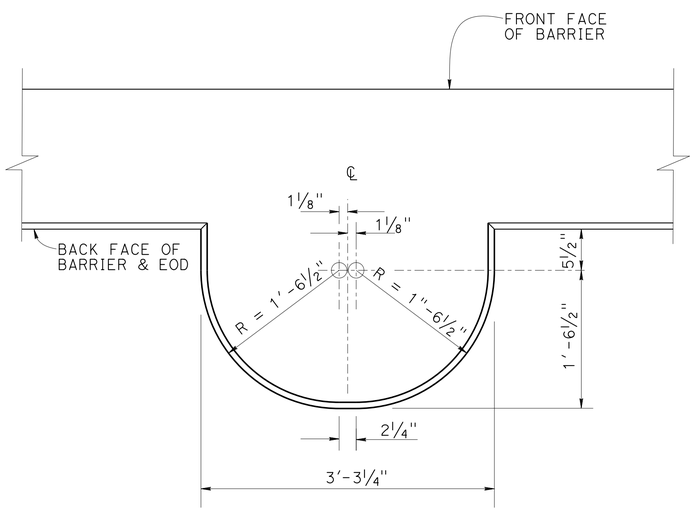

VIEW A-A

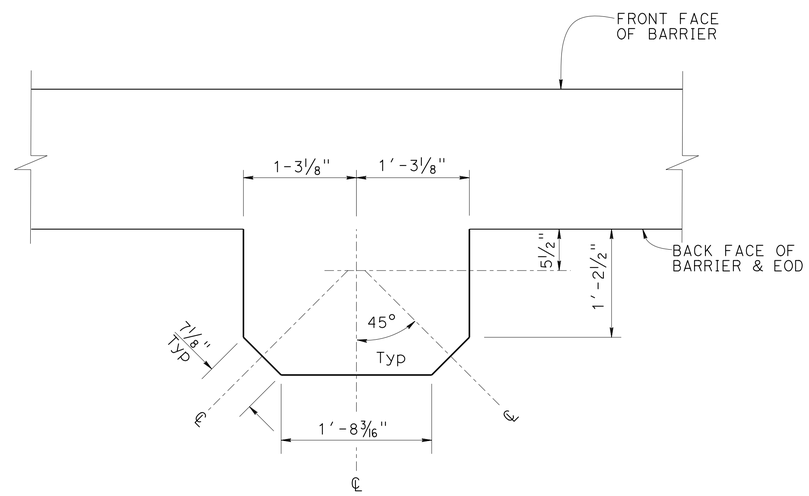

VIEW B-B

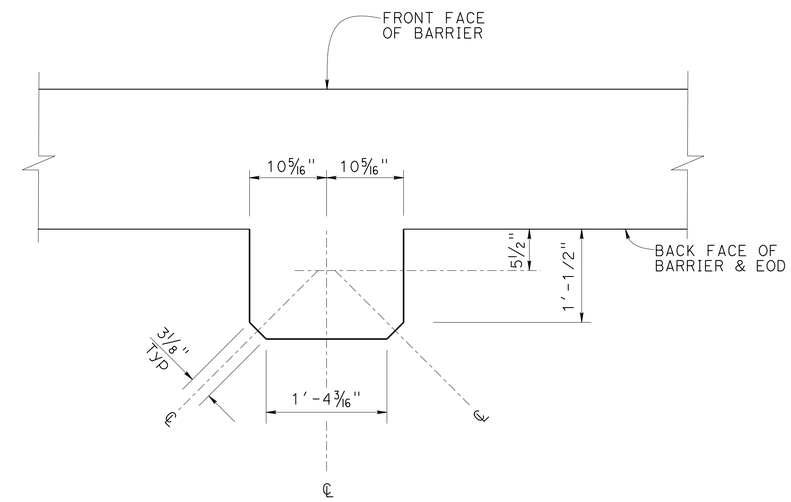

VIEW C-C

NO SCALE

DESIGN	BY D. Texler/K. Andurlekar	CHECKED Krishnakant Andurlekar	
DETAILS	BY Jaime Ramirez	CHECKED Krishnakant Andurlekar	
QUANTITIES	BY Krishnakant Andurlekar	CHECKED Ruperd Wilson	

STATE OF CALIFORNIA DEPARTMENT OF TRANSPORTATION

DIVISION OF ENGINEERING SERVICES STRUCTURE DESIGN DESIGN BRANCH 11

BRIDGE NO. 53-3045
POST MILE 1.21

VALLEY VIEW AVE OC (REPLACEMENT)
LUMINAIRE CORBEL DETAILS NO 1

STRUCTURES DESIGN DETAIL SHEET (ENGLISH) (REV. 09-01-10)

ORIGINAL SCALE IN INCHES FOR REDUCED PLANS 0 1 2 3

UNIT: 3587
PROJECT NUMBER & PHASE: 0715000160-1
CONTRACT NO.: 07-2159U4

DISREGARD PRINTS BEARING EARLIER REVISION DATES

REVISION DATES 12-10-10 5-27-12 4-5-13

SHEET 141 OF 182

FILE => 53-3045-qr-corbel01.dgn

USERNAME => s125624 DATE PLOTTED => 28-JAN-2016 TIME PLOTTED => 12:10

DIST	COUNTY	ROUTE	POST MILES TOTAL PROJECT	SHEET No.	TOTAL SHEETS
07	LA,Ora	5	0.0/1.5, 44.3/44.4	1209	1622

REGISTERED CIVIL ENGINEER 3-18-15 DATE

1-25-16
PLANS APPROVAL DATE

REGISTERED PROFESSIONAL ENGINEER William D. Kemp No. 55730 Exp. 12/31/16 CIVIL STATE OF CALIFORNIA

The State of California or its officers or agents shall not be responsible for the accuracy or completeness of electronic copies of this plan sheet.

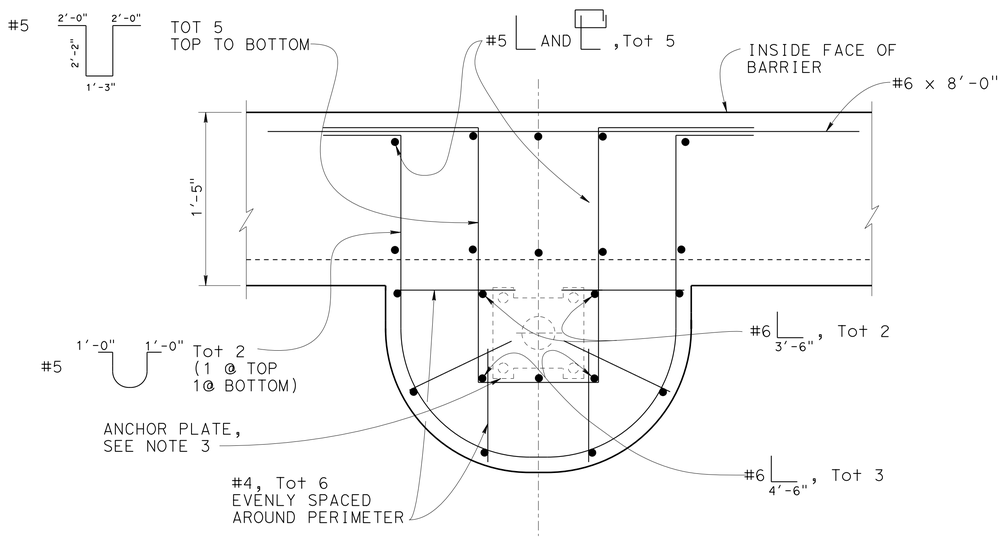

SECTION D-D

Not to Scale

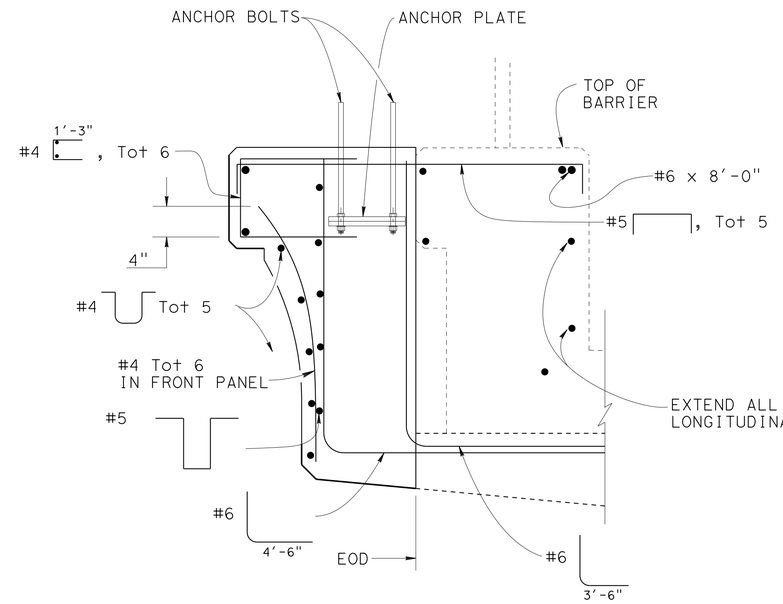

SECTION E-E

Not to Scale

NOTES:

1. For other Details, see "LUMINAIRE CORBEL DETAIL No. 1" sheet.
2. All bars not shown, For Barrier Details, see RSP B11-54
3. For Electrolier details see "ROAD PLANS"

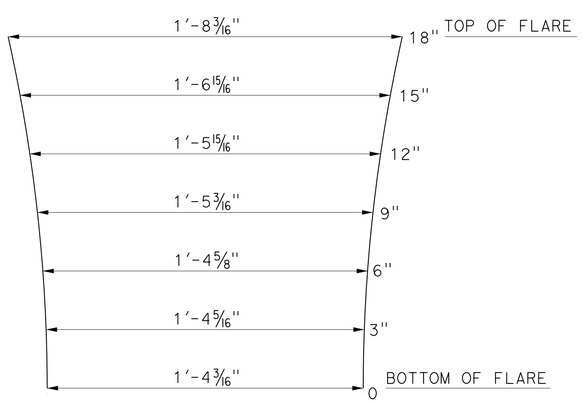

FRONT PANEL FACE

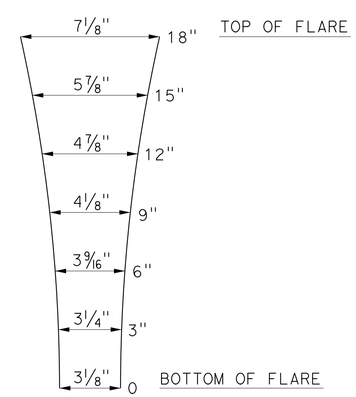

CORNER PANEL FACE

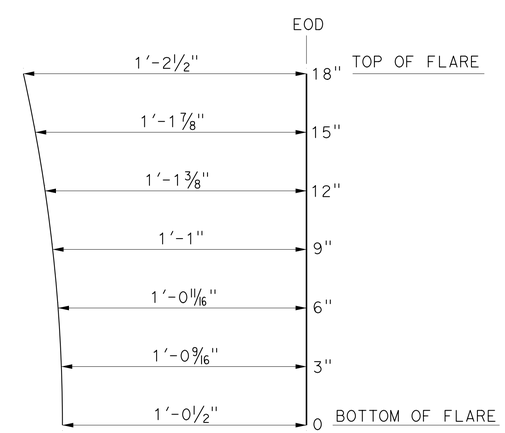

SIDE PANEL FACE

NO SCALE

DESIGN	BY D. Texler/K. Andurlekar	CHECKED Krishnakant Andurlekar	
DETAILS	BY Jaime Ramirez	CHECKED Krishnakant Andurlekar	
QUANTITIES	BY Krishnakant Andurlekar	CHECKED Ruperd Wilson	

STATE OF CALIFORNIA DEPARTMENT OF TRANSPORTATION

DIVISION OF ENGINEERING SERVICES STRUCTURE DESIGN DESIGN BRANCH 11

BRIDGE NO. 53-3045
POST MILE 1.21

VALLEY VIEW AVE OH/OC (REPLACEMENT)

LUMINAIRE CORBEL DETAILS NO 2

STRUCTURES DESIGN DETAIL SHEET (ENGLISH) (REV. 09-01-10)

ORIGINAL SCALE IN INCHES FOR REDUCED PLANS 0 1 2 3

UNIT: 3587
PROJECT NUMBER & PHASE: 0715000160-1 CONTRACT NO.: 07-2159U4

DISREGARD PRINTS BEARING EARLIER REVISION DATES

REVISION DATES 12-10-10 5-27-12 4-5-13

SHEET 142 OF 182

FILE => 53-3045-qr-corbel02.dgn

USERNAME => s125624 DATE PLOTTED => 28-JAN-2016 TIME PLOTTED => 12:10

DIST	COUNTY	ROUTE	POST MILES TOTAL PROJECT	SHEET No.	TOTAL SHEETS
07	LA,Ora	5	0.0/1.5, 44.3/44.4	1210	1622

REGISTERED CIVIL ENGINEER — DATE 3-18-15

1-25-16
PLANS APPROVAL DATE

REGISTERED PROFESSIONAL ENGINEER — WILLIAM D. KEMP — No. 55730 — Exp. 12/31/16 — CIVIL — STATE OF CALIFORNIA

The State of California or its officers or agents shall not be responsible for the accuracy or completeness of electronic copies of this plan sheet.

NOTE: For "SECTION C-C", "D-D" and "E-E" for Sign 7B right pedestal, see "SIGN PEDESTAL DETAILS NO. 2" sheet

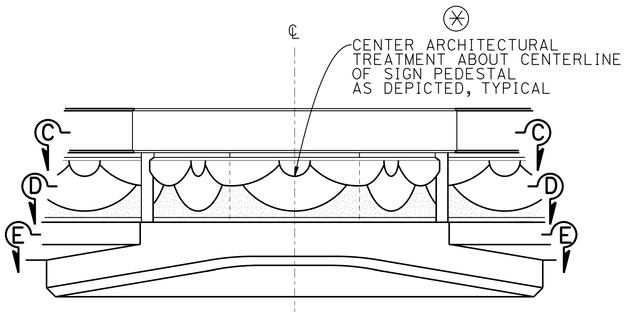

ELEVATION
No Scale

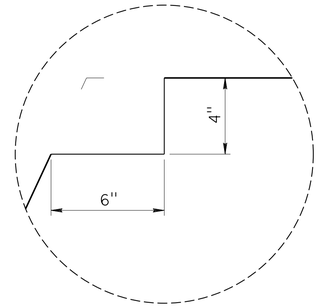

DETAIL 'A'
No Scale

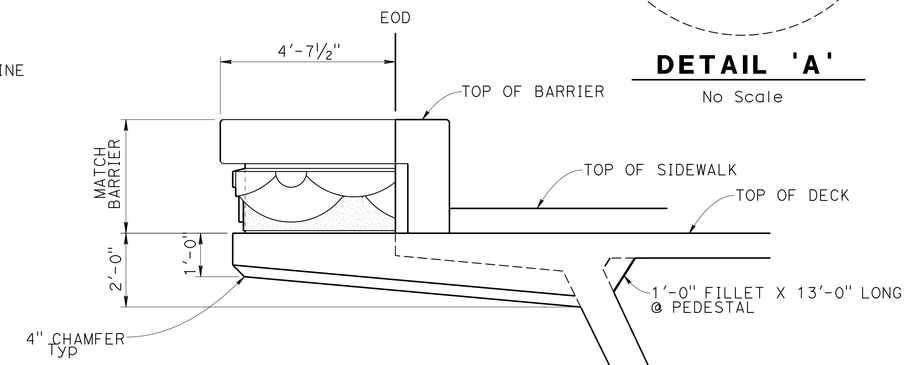

NOTE: Concrete Barrier Type 26 (Mod) shown, Concrete Barrier Type 736 (Mod) similar

SIDE VIEW
No Scale

NOTE:
For Architectural Treatment, see "BARRIER MOTIF DETAILS" sheet

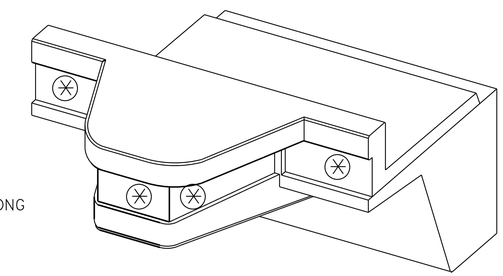

PICTORIAL VIEW
No Scale

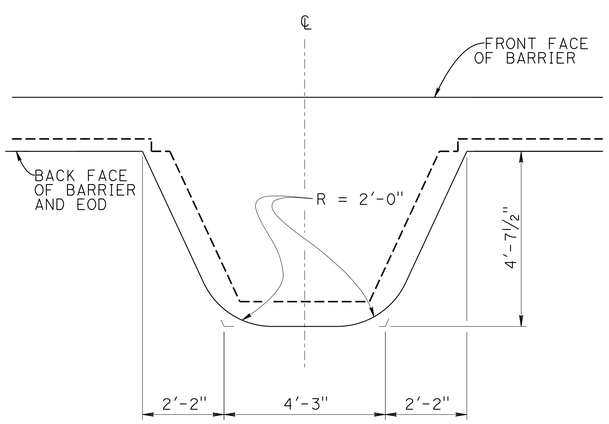

SECTION C-C
½" = 1'-0"

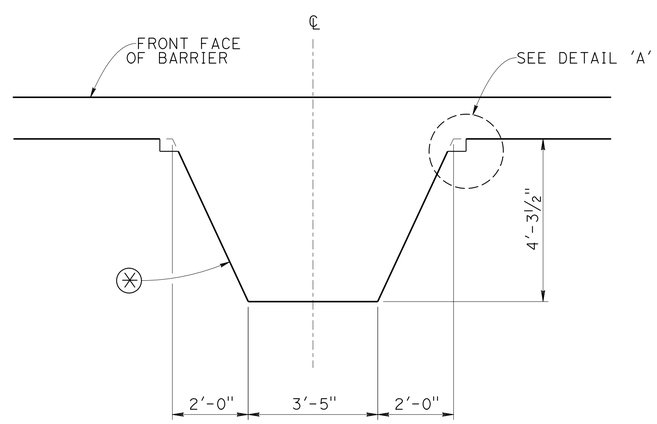

SECTION D-D
½" = 1'-0"

* - SECTION D-D PROJECTED ONTO SECTION E-E

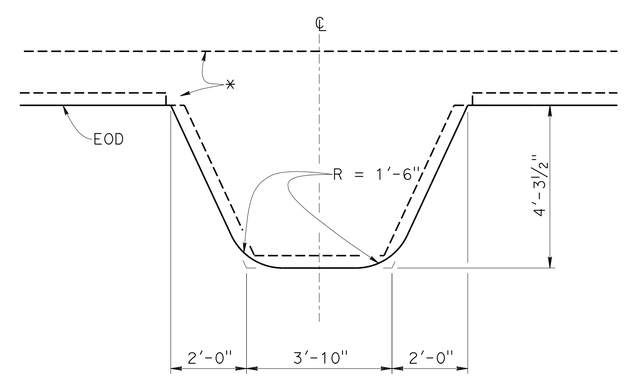

SECTION E-E
½" = 1'-0"

DESIGN	BY Karen Doll	CHECKED Dauryoush Tavatli	
DETAILS	BY Jaime Ramirez	CHECKED Dauryoush Tavatli	
QUANTITIES	BY Krishnakant Andurlekar	CHECKED Ruperd Wilson	

STATE OF CALIFORNIA
DEPARTMENT OF TRANSPORTATION

DIVISION OF ENGINEERING SERVICES
STRUCTURE DESIGN
DESIGN BRANCH 11

BRIDGE NO. 53-3045
POST MILE 1.21

VALLEY VIEW AVE OH/OC (REPLACEMENT)
SIGN PEDESTAL DETAILS NO 1

STRUCTURES DESIGN DETAIL SHEET (ENGLISH) (REV. 09-01-10)

ORIGINAL SCALE IN INCHES FOR REDUCED PLANS 0 1 2 3

UNIT: 3587
PROJECT NUMBER & PHASE: 0715000160-1
CONTRACT NO.: 07-2159u4

DISREGARD PRINTS BEARING EARLIER REVISION DATES

REVISION DATES: 1-25-12 2-13-12 6-17-13

SHEET 143 OF 182

FILE => 53-3045-qs-sgnped01.dgn

USERNAME => s125624 DATE PLOTTED => 28-JAN-2016 TIME PLOTTED => 12:10

DIST	COUNTY	ROUTE	POST MILES TOTAL PROJECT	SHEET No.	TOTAL SHEETS
07	LA,Ora	5	0.0/1.5, 44.3/44.4	1211	1622

REGISTERED CIVIL ENGINEER 3-18-15 DATE

1-25-16
PLANS APPROVAL DATE

REGISTERED PROFESSIONAL ENGINEER WILLIAM D. KEMP No. 55730 Exp. 12/31/16 CIVIL STATE OF CALIFORNIA

The State of California or its officers or agents shall not be responsible for the accuracy or completeness of electronic copies of this plan sheet.

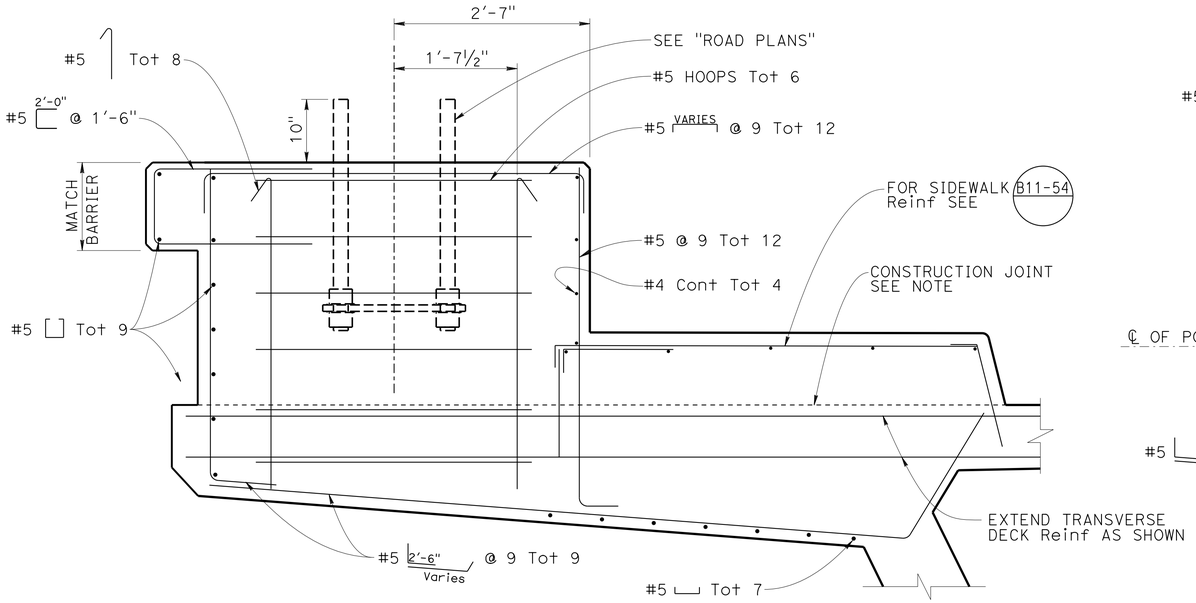

NOTE: Concrete Barrier Type 26 (Mod) shown,
Concrete Barrier Type 736 similar

SECTION A-A
1"=1'-0"

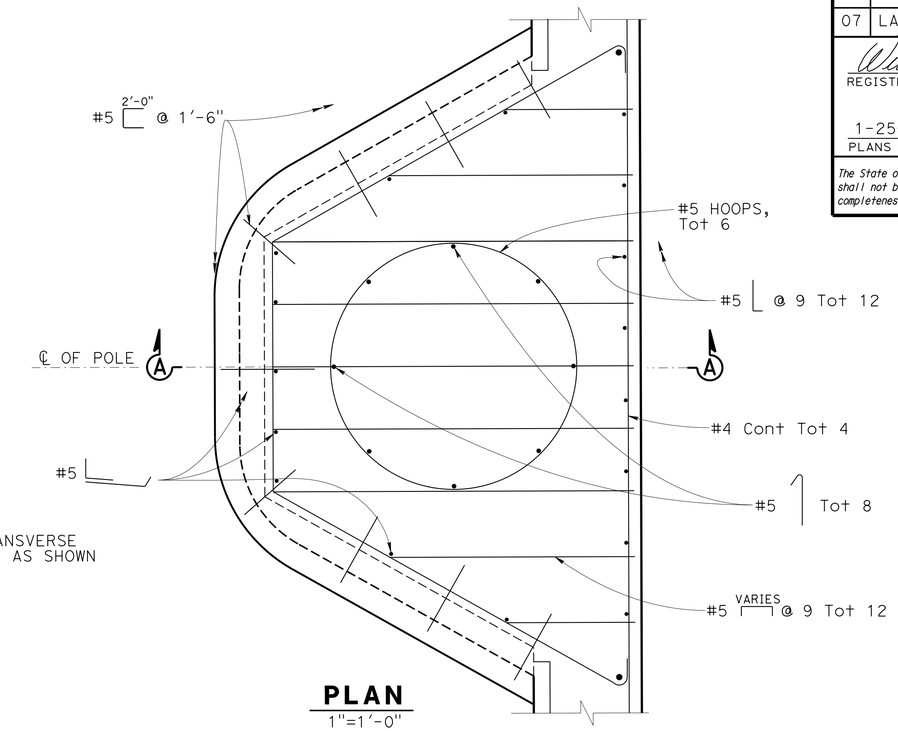

PLAN
1"=1'-0"

NOTES:

1. For additional barrier details, see "STANDARD PLANS" B11-54, and "ROAD PLANS".
2. Barrier and pedestal shall have a minimum of 1" concrete cover over rebar.
3. Longitudinal deck reinforcement is not shown for clarity.
4. Some sidewalk reinforcement not shown for clarity see standard plan B11-54.
5. Chamfers are 1" typically.
6. Architectural treatment not shown, see "BARRIER MOTIF DETAILS" sheet.
7. Reinforcement can be rearranged for anchor bolts.
8. For overhead sign-lightweight details, see "STANDARD PLANS" RSP S44, S45, S46, and S47.
9. See "Road plans" for sign locations and all other details.
10. Concrete extending from 10'-0" on each end of pedestal shall have f'_c = 6000 psi.
11. Concrete above construction joint shall have f'_c = 6000 psi.
12. For "DETAIL A", see "SIGN PEDESTAL DETAILS NO. 1" sheet.

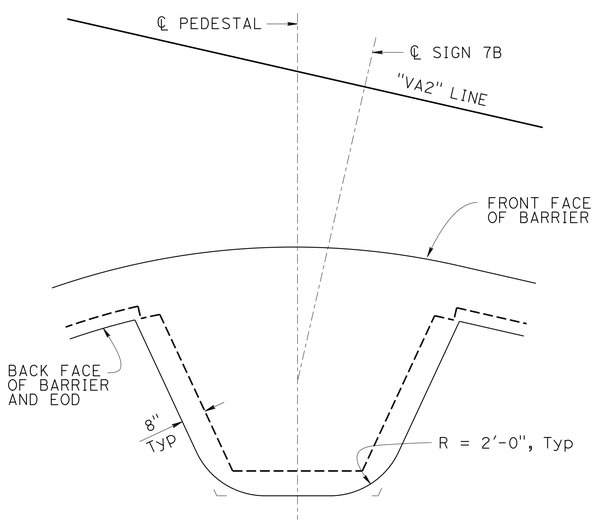

SECTION C-C

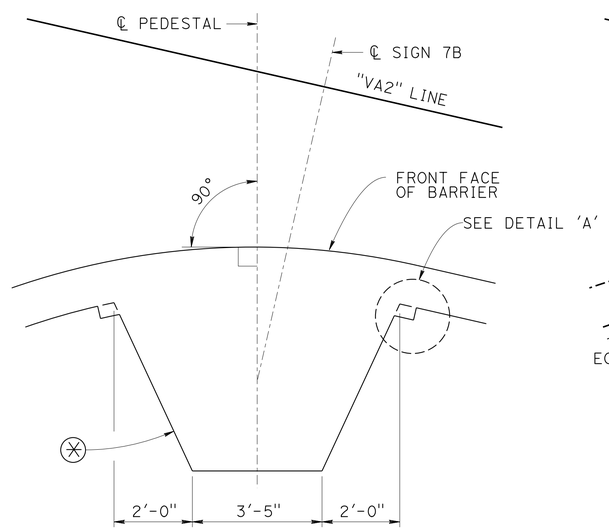

SECTION D-D

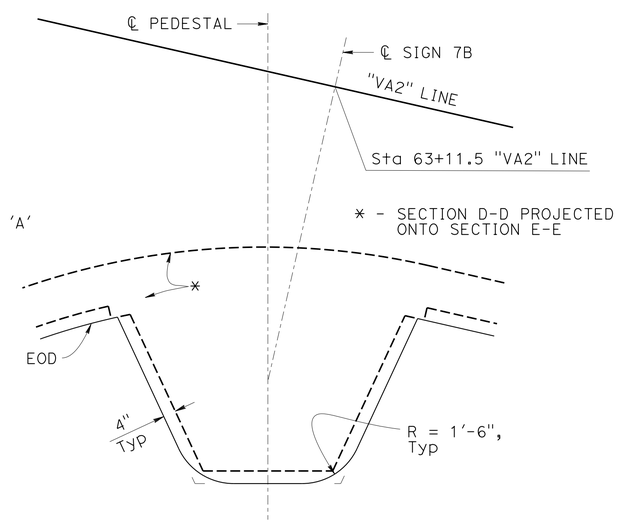

SECTION E-E

SIGN 7B RIGHT PEDESTAL
½" = 1'-0"

NOTE:
(*) For Architectural Treatment, see "BARRIER MOTIF DETAILS" sheet

	BY	CHECKED
DESIGN	Karen Doll / M.Okimura	Dauryoush Tavatli
DETAILS	Jaime Ramirez	Dauryoush Tavatli
QUANTITIES	Krishnakant Andurlekar	Ruperd Wilson

STATE OF CALIFORNIA
DEPARTMENT OF TRANSPORTATION

DIVISION OF ENGINEERING SERVICES
STRUCTURE DESIGN
DESIGN BRANCH 11

BRIDGE NO. 53-3045
POST MILE 1.21

VALLEY VIEW AVE OH/OC (REPLACEMENT)
SIGN PEDESTAL DETAILS NO 2

STRUCTURES DESIGN DETAIL SHEET (ENGLISH) (REV. 09-01-10)

ORIGINAL SCALE IN INCHES FOR REDUCED PLANS 0 1 2 3

UNIT: 3587
PROJECT NUMBER & PHASE: 0715000160-1
CONTRACT NO.: 07-2159U4

DISREGARD PRINTS BEARING EARLIER REVISION DATES

REVISION DATES: 1-26-12 2-13-12 6-17-13

SHEET 144 OF 182

FILE => 53-3045-qs-sgnped02.dgn

USERNAME => s125624 DATE PLOTTED => 28-JAN-2016 TIME PLOTTED => 12:10

DIST	COUNTY	ROUTE	POST MILES TOTAL PROJECT	SHEET No	TOTAL SHEETS
07	LA,Ora	5	0.0/1.5, 44.3/44.4	1212	1622

Jeffrey B Woody 3-18-15
REGISTERED CIVIL ENGINEER DATE

1-25-16
PLANS APPROVAL DATE

REGISTERED PROFESSIONAL ENGINEER JEFFREY B. WOODY No. C41260 Exp. 3/31/17 CIVIL STATE OF CALIFORNIA

The State of California or its officers or agents shall not be responsible for the accuracy or completeness of scanned copies of this plan sheet.

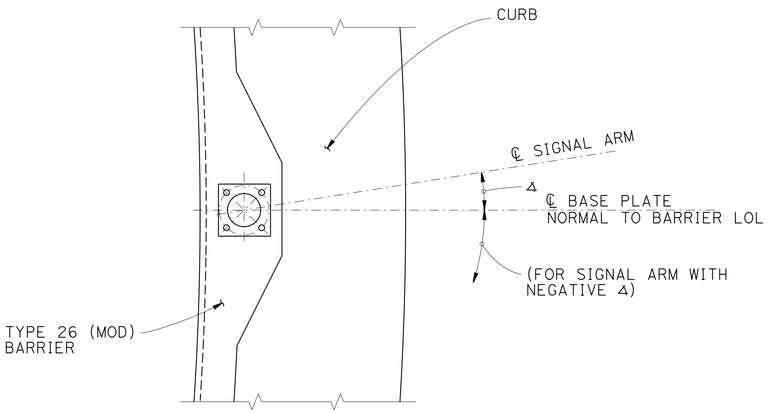

POLE DATA				
Item	Station VALLEY VIEW LOL	Δ	"b" Anchor Bolt Length	Electrical Sheet
Type 21TS	97+75L	24°14′29"	42.5"	E-83
Type 29A-5-100	97+46L	0°	45.5"	E-83
Type 19A-4-100	96+84R	-29°7′8"	44.5"	E-83
Type 26A-4-100	97+92R	4°59′8"	45.5"	E-83
Type 21TS	98+86L	0°	42.5"	E-83

GENERAL NOTES:

Anchor Bolts = ASTM F1554, Grade 55 (all thread)

Reinforced Concrete: f′c = 3,600 psi
fy = 60,000 psi

NOTES:

1. For details not shown see "2010 STANDARD PLANS" and "2010 REVISED STANDARD PLANS".
2. For details and anchor bolt data not shown, see "2010 STANDARD PLANS" and "2010 REVISED STANDARD PLANS".
3. Reinforcement shown is in addition to Type 26 (Mod) reinforcement, and deck reinforcement
4. For Type 21TS, see Standard Plan RSP ES-7A, for Type 19A-4-100, see Standard Plan RSP ES-7F, for Type 26A-4-100, see Standard Plan RSP ES-7F, for Type 29A-5-100, see Standard Plan ES-7G.
5. Anchor plate shall be centered approximately between the top and bottom Type 26 curb transverse reinforcement.
6. Bottom ⌐ shall be below top transverse deck reinforcement.
7. Barrier Motif to match adjacent barrier.

PLAN VIEW

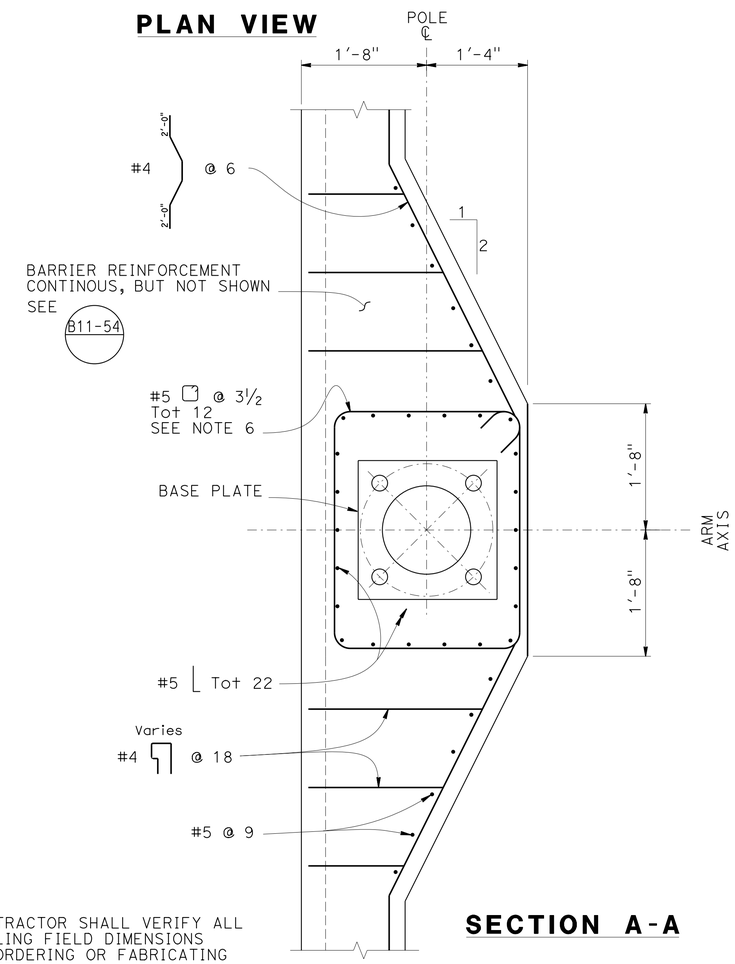

SECTION A-A

NOTE:
THE CONTRACTOR SHALL VERIFY ALL CONTROLLING FIELD DIMENSIONS BEFORE ORDERING OR FABRICATING ANY MATERIAL.

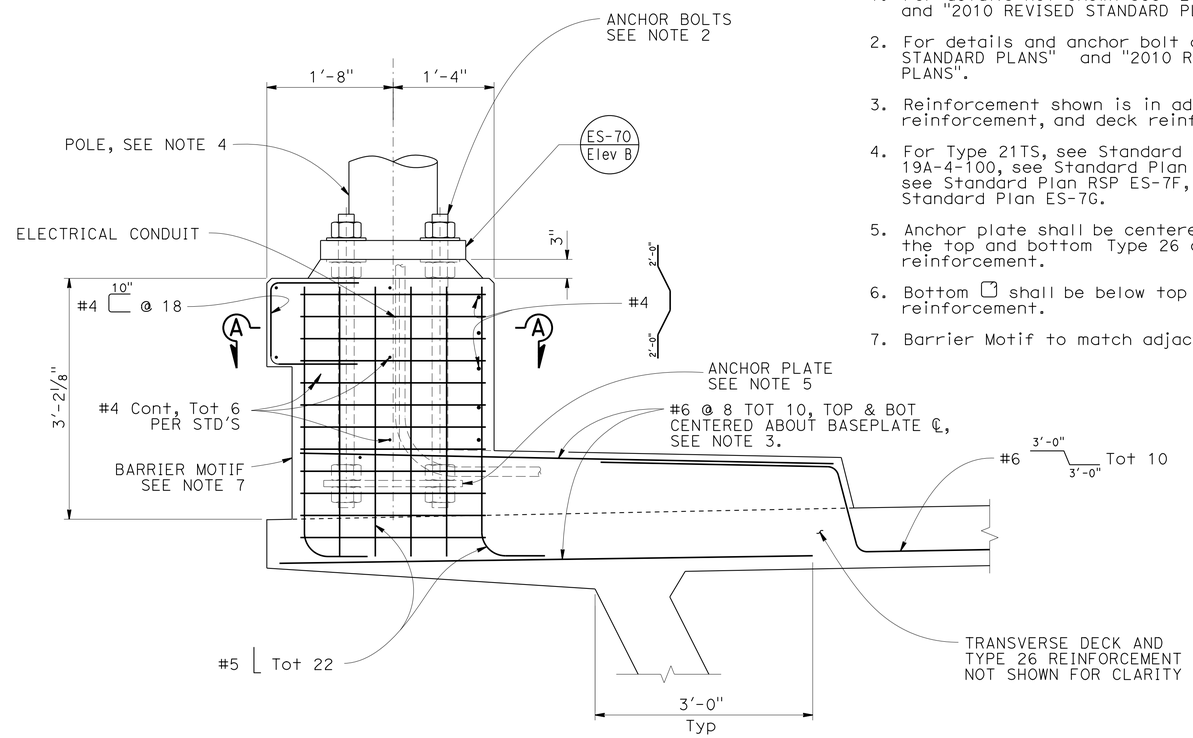

CORBEL DETAIL

NO SCALE

BRANCH CHIEF	JEFF WOODY	DESIGN	BY M LICHA	CHECKED A BUI
		DETAILS	BY D W JUSTICE Jr	CHECKED M LICHA
		QUANTITIES	BY	CHECKED

STATE OF CALIFORNIA
DEPARTMENT OF TRANSPORTATION

DIVISION OF ENGINEERING SERVICES
DESIGN AND TECHNICAL SERVICES
SPECIAL DESIGNS BRANCH
A

BRIDGE NO. 53-3045
POST MILE 1.21

VALLEY VIEW AVE OC/OH (REPLACEMENT)
TYPE 26 BARRIER (MOD) REINFORCEMENT DETAILS NO. 1

(ENGLISH) SPECIAL DESIGNS BRANCH BORDER SHEET (REV. 7-1-09)

ORIGINAL SCALE IN INCHES FOR REDUCED PLANS 0 1 2 3

UNIT: 3619
PROJECT NUMBER & PHASE: 0715000160-1
CONTRACT NO.: 07-2159u4

DISREGARD PRINTS BEARING EARLIER REVISION DATES
REVISION DATES 3-21-13 8-26-13 10-01-13 10-03-14

SHEET 145 OF 182

FILE => 53-3045-qt-sigcorbel01.dgn

USERNAME => s125624 DATE PLOTTED => 28-JAN-2016 TIME PLOTTED => 12:10

DIST	COUNTY	ROUTE	POST MILES TOTAL PROJECT	SHEET No	TOTAL SHEETS
07	LA,Ora	5	0.0/1.5, 44.3/44.4	1213	1622

Jeffrey B Woody 3-18-15
REGISTERED CIVIL ENGINEER DATE

1-25-16
PLANS APPROVAL DATE

REGISTERED PROFESSIONAL ENGINEER JEFFREY B. WOODY No. C41260 Exp. 3/31/17 CIVIL STATE OF CALIFORNIA

The State of California or its officers or agents shall not be responsible for the accuracy or completeness of scanned copies of this plan sheet.

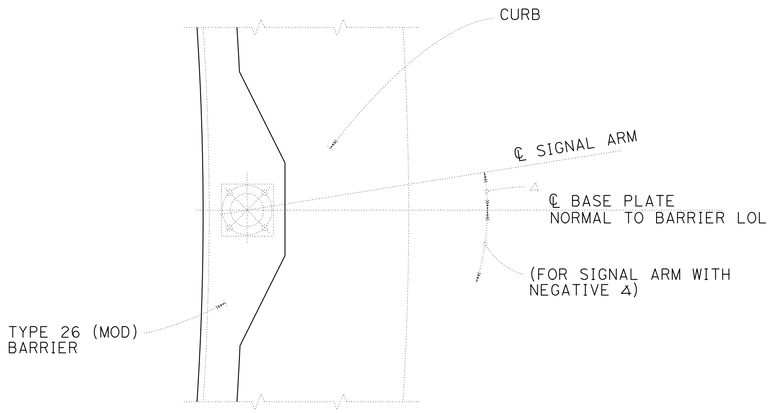

POLE DATA

Item	Station VALLEY VIEW LOL	Δ	"b" Anchor Bolt Length	Electrical Sheet
Type 24A-4-100	87+60L	16°44′ 52"	44.5"	E-82
Type 24A-4-100	87+90R	0°	42.5"	E-82
Type 26A-4-100	88+75R	0°	44.5"	E-82
Type 21TS	89+20L	20°23′ 44"	42.5"	E-82
Type 21TS	00+73L*	0°	42.5"	E-82

* Valley view south frontage LOL

GENERAL NOTES:

Anchor Bolts = ASTM F1554, Grade 55 (all thread)

Reinforced Concrete: f′c = 3,600 psi
fy = 60,000 psi

NOTES:

1. For details not shown see "2010 STANDARD PLANS" and "2010 REVISED STANDARD PLANS".
2. For details and anchor bolt data not shown, see "2010 STANDARD PLANS" and "2010 REVISED STANDARD PLANS".
3. Reinforcement shown is in addition to Type 26 (Mod) reinforcement, and deck reinforcement
4. For Type 21TS, see Standard Plan RSP ES-7A, for Type 24A-4-100 and Type 26A-4-100, see Standard Plan RSP ES-7F.
5. Anchor plate shall be centered approximately between the top and bottom Type 26 curb transverse reinforcement.
6. Bottom ⬚ shall be below top transverse deck reinforcement.
7. Barrier Motif to match adjacent barrier.

PLAN VIEW

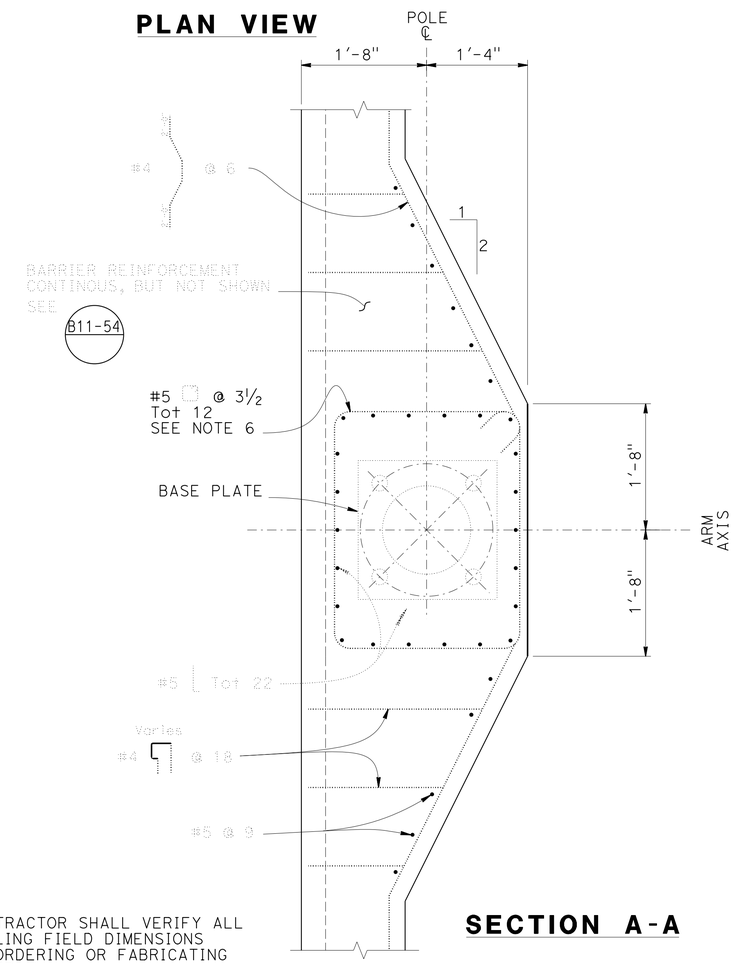

SECTION A-A

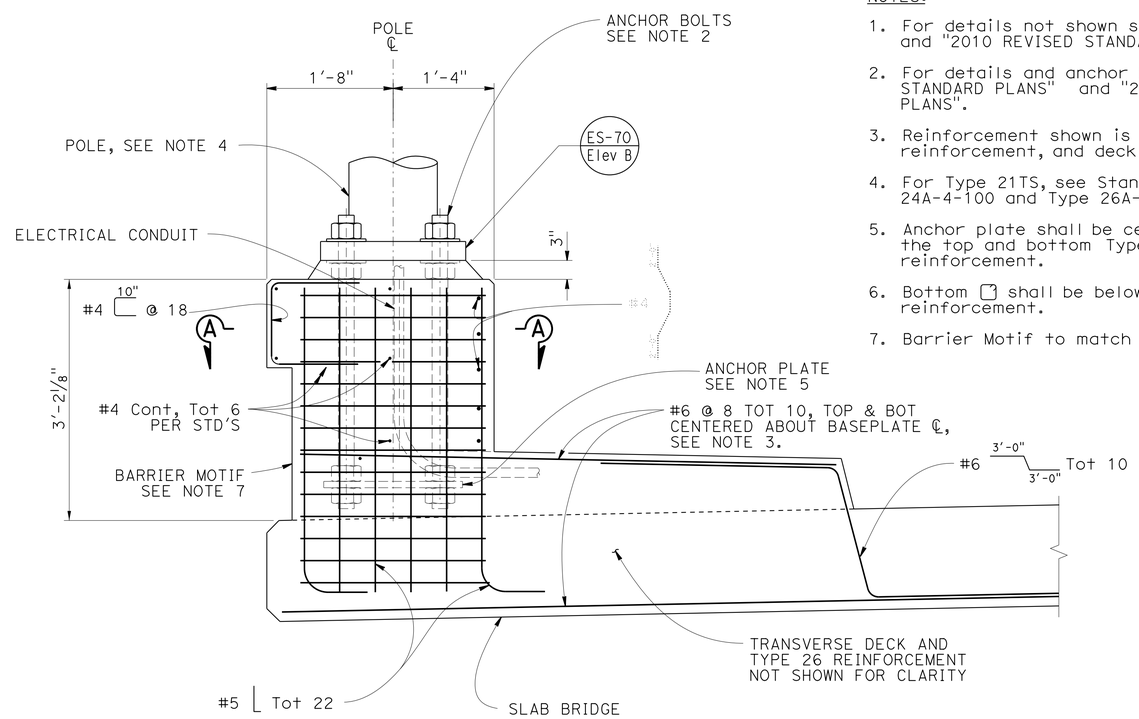

CORBEL DETAIL

NOTE:
THE CONTRACTOR SHALL VERIFY ALL CONTROLLING FIELD DIMENSIONS BEFORE ORDERING OR FABRICATING ANY MATERIAL.

BRANCH CHIEF	JEFF WOODY	DESIGN	BY M LICHA	CHECKED A BUI
		DETAILS	BY D W JUSTICE Jr	CHECKED M LICHA
		QUANTITIES	BY	CHECKED

STATE OF CALIFORNIA
DEPARTMENT OF TRANSPORTATION

DIVISION OF ENGINEERING SERVICES
DESIGN AND TECHNICAL SERVICES
SPECIAL DESIGNS BRANCH
A

BRIDGE NO. 53-3045
POST MILE 1.21

VALLEY VIEW AVE OC/OH (REPLACEMENT)
TYPE 26 BARRIER (MOD) REINFORCEMENT DETAILS NO. 2

(ENGLISH) SPECIAL DESIGNS BRANCH BORDER SHEET (REV. 7-1-09)

ORIGINAL SCALE IN INCHES FOR REDUCED PLANS 0 1 2 3

UNIT: 3619
PROJECT NUMBER & PHASE: 0715000160-1
CONTRACT NO.: 07-2159u4

DISREGARD PRINTS BEARING EARLIER REVISION DATES

REVISION DATES: 2-26-13 10-03-14 5-18-13 8-26-13

SHEET 146 OF 182

FILE => 53-3045-qt-sigcorbel02.dgn

USERNAME => s125624 DATE PLOTTED => 28-JAN-2016 TIME PLOTTED => 12:10

DIST	COUNTY	ROUTE	POST MILES TOTAL PROJECT	SHEET No	TOTAL SHEETS
07	LA,Ora	5	0.0/1.5, 44.3/44.4	1214	1622

REGISTERED CIVIL ENGINEER 3-18-15 DATE

1-25-16
PLANS APPROVAL DATE

The State of California or its officers or agents shall not be responsible for the accuracy or completeness of scanned copies of this plan sheet.

REGISTERED PROFESSIONAL ENGINEER JEFFREY B. WOODY No. C41260 Exp. 3/31/17 CIVIL STATE OF CALIFORNIA

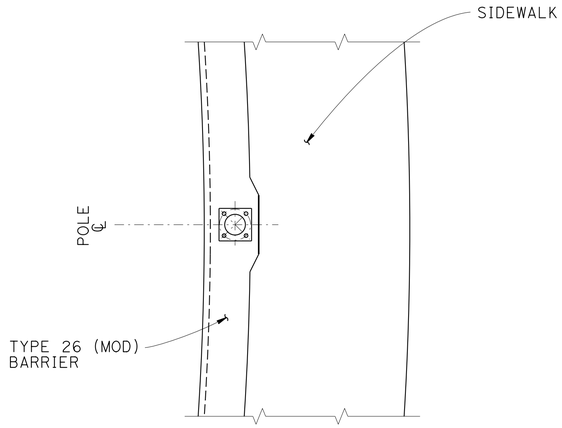

PLAN VIEW

POLE DATA			
Item	Station	"b" Anchor Bolt Length	Electrical Sheet
Type 1A	98+62	42.5"	E-83
Type 1A	96+53.62	42.5"	E-83
Type 1A	98+20	42.5"	E-83

GENERAL NOTES:

Anchor Bolts = ASTM F1554, Grade 55 (all thread)

Reinforced Concrete: f'c = 3,600 psi
fy = 60,000 psi

NOTES:

1. For details not shown see "2010 STANDARD PLANS" and "2010 REVISED STANDARD PLANS".
2. For details and anchor bolt data not shown, see "2010 STANDARD PLANS" and "2010 REVISED STANDARD PLANS".
3. Reinforcement shown is in addition to Type 26 (Mod) reinforcement, and deck reinforcement.
4. Type 1A, see Standard Plan ES-7B.
5. Anchor plate shall be centered approximately between the top and bottom Type 26 curb transverse reinforcement.
6. Bottom ⊐ shall be below top transverse deck reinforcement.
7. Barrier Motif to match adjacent barrier.

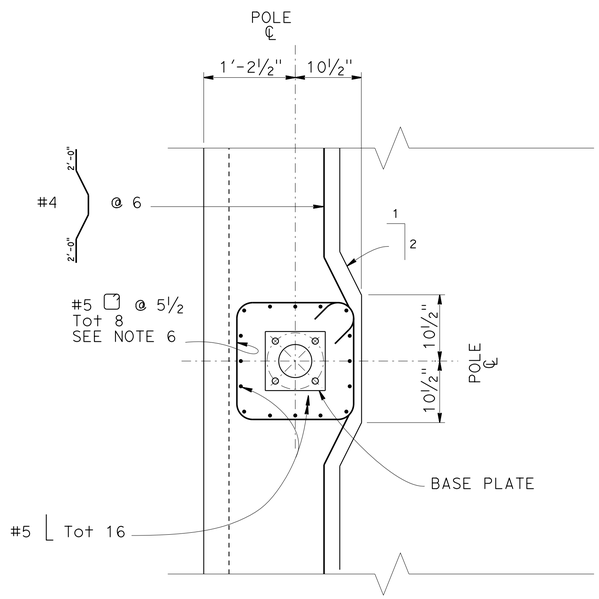

SECTION A-A

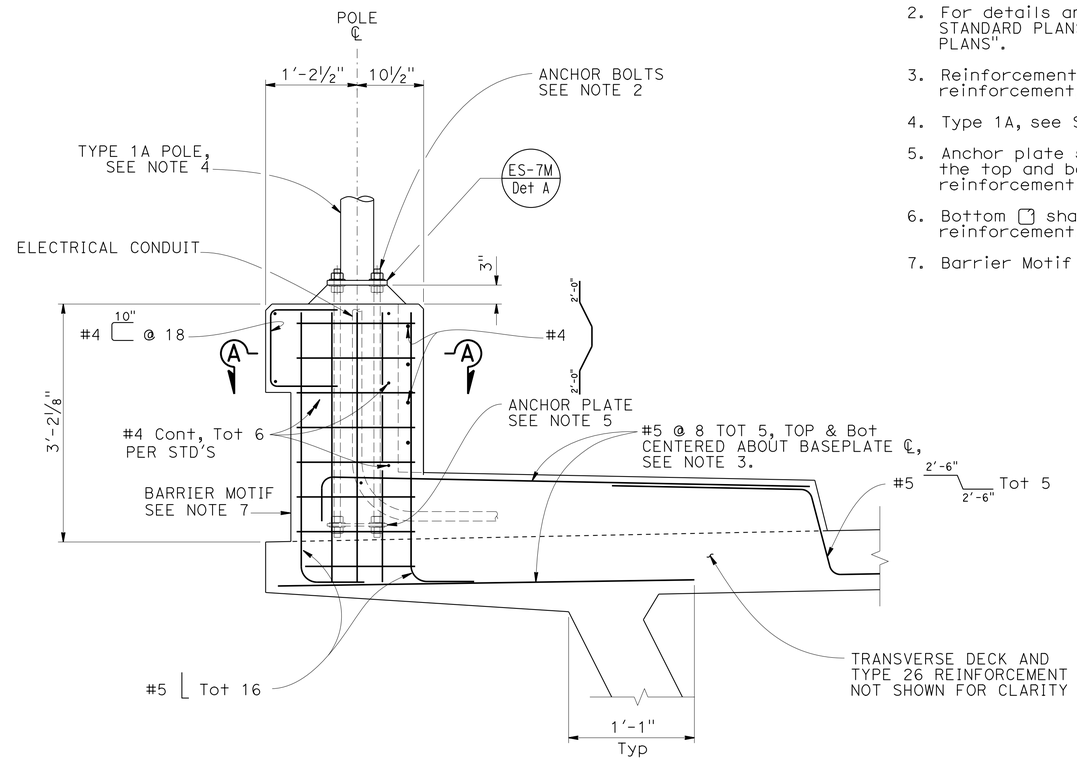

CORBEL DETAIL

NOTE:
THE CONTRACTOR SHALL VERIFY ALL CONTROLLING FIELD DIMENSIONS BEFORE ORDERING OR FABRICATING ANY MATERIAL.

BRANCH CHIEF JEFF WOODY	DESIGN	BY M LICHA	CHECKED A BUI
	DETAILS	BY D W JUSTICE Jr	CHECKED M LICHA
	QUANTITIES	BY	CHECKED

STATE OF CALIFORNIA
DEPARTMENT OF TRANSPORTATION

DIVISION OF ENGINEERING SERVICES
DESIGN AND TECHNICAL SERVICES
SPECIAL DESIGNS BRANCH A

BRIDGE NO. 53-3045
POST MILE 1.21

VALLEY VIEW AVE OC/OH (REPLACEMENT)

TYPE 26 BARRIER (MOD) REINFORCEMENT DETAILS NO. 3

(ENGLISH) SPECIAL DESIGNS BRANCH BORDER SHEET (REV. 7-1-09)

ORIGINAL SCALE IN INCHES FOR REDUCED PLANS 0 1 2 3

UNIT: 3619
PROJECT NUMBER & PHASE: 0715000160-1
CONTRACT NO.: 07-2159u4

DISREGARD PRINTS BEARING EARLIER REVISION DATES

REVISION DATES 11-26-12 12-6-12 8-26-13 10-03-14

SHEET 147 OF 182

FILE => 53-3045-qt-sigcorbel03.dgn

USERNAME => s125624 DATE PLOTTED => 28-JAN-2016 TIME PLOTTED => 12:10

DIST	COUNTY	ROUTE	POST MILES TOTAL PROJECT	SHEET No.	TOTAL SHEETS
07	LA,Ora	5	0.0/1.5, 44.3/44.4	1215	1622

REGISTERED CIVIL ENGINEER 3-18-15 DATE

1-25-16
PLANS APPROVAL DATE

REGISTERED PROFESSIONAL ENGINEER WILLIAM D. KEMP No. 55730 Exp. 12/31/16 CIVIL STATE OF CALIFORNIA

The State of California or its officers or agents shall not be responsible for the accuracy or completeness of electronic copies of this plan sheet.

CURVE DATA				
No.	R	Δ	T	L
1	2.50′	74°50′44.90″	1.91′	3.27′
2	68.84′	21°29′31.85″	13.06′	25.82′
3	80.00′	22°2′49.89″	15.58′	30.78′
4	80.00′	22°2′49.89″	15.58′	30.78′
5	80.00′	22°36′57.83″	16.00′	31.58′
6	80.00′	22°2′49.89″	15.58′	30.78′

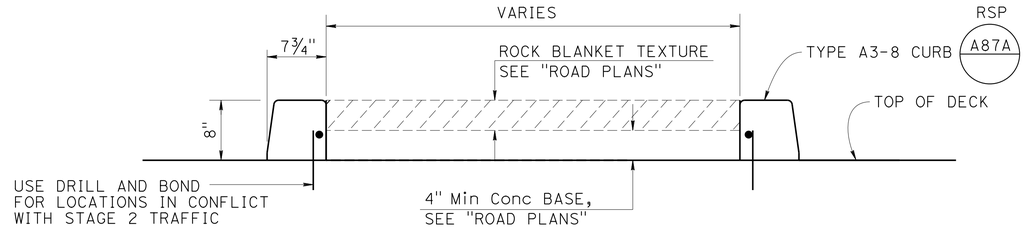

TYPICAL SECTION-MEDIANS ON BRIDGE & APPROACH SLABS

NO SCALE

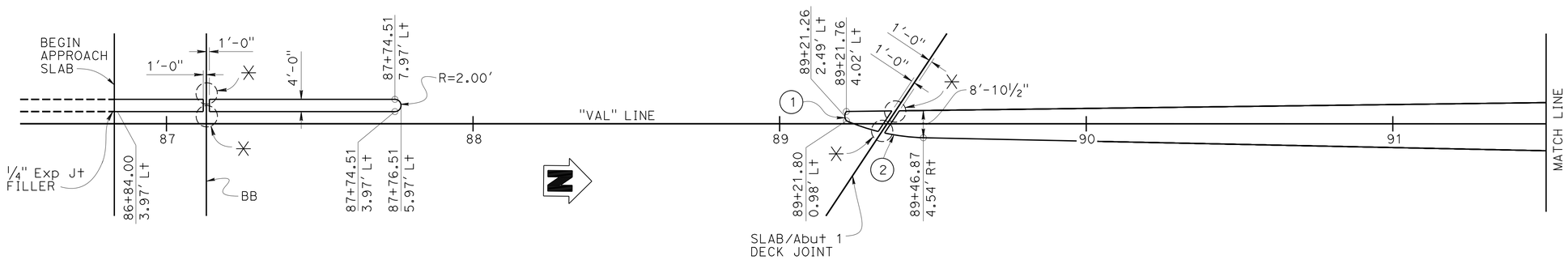

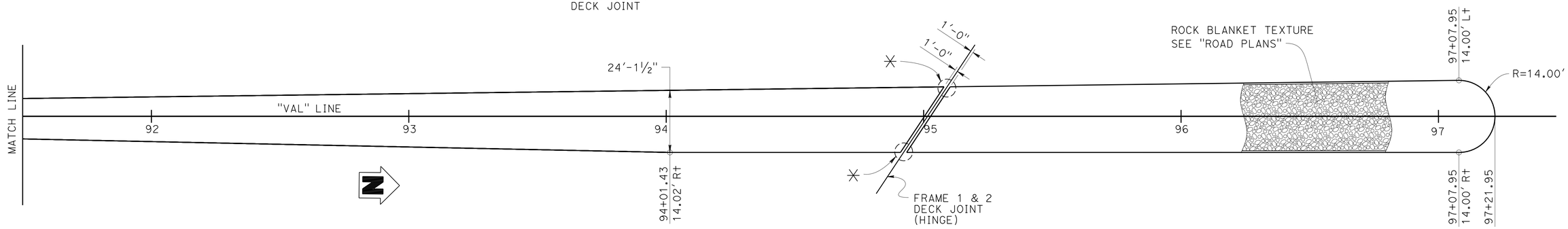

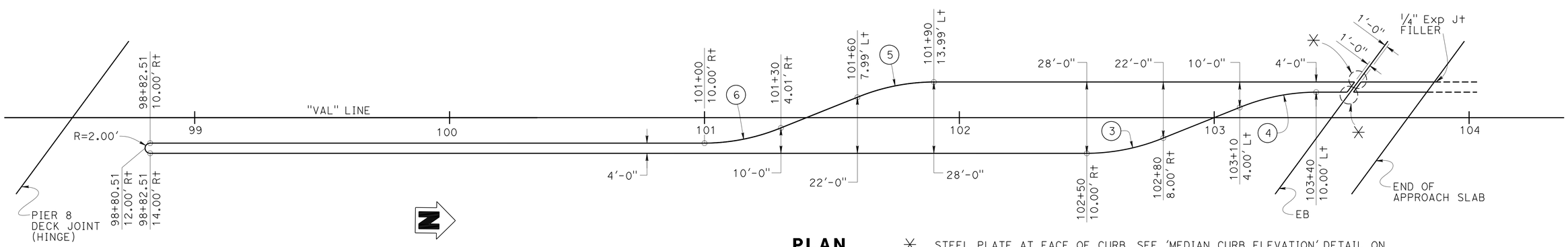

PLAN

1" = 20′

✳ STEEL PLATE AT FACE OF CURB, SEE 'MEDIAN CURB ELEVATION' DETAIL ON "JOINT SEAL ASSEMBLY DETAILS No. 2 - MOVEMENT RATING GREATER THAN 4" " SHEET

	BY	CHECKED
DESIGN	Bill Kemp	Mark Okimura
DETAILS	Pauline Tong	Mark Okimura
QUANTITIES	Mark Okimura	John Radu

STATE OF CALIFORNIA
DEPARTMENT OF TRANSPORTATION

DIVISION OF ENGINEERING SERVICES
STRUCTURE DESIGN
DESIGN BRANCH 11

BRIDGE NO. 53-3045
POST MILE 1.21

VALLEY VIEW AVE OH/OC (REPLACEMENT)
MEDIAN CURB DETAILS

STRUCTURES DESIGN DETAIL SHEET (ENGLISH) (REV. 09-01-10)

ORIGINAL SCALE IN INCHES FOR REDUCED PLANS 0 1 2 3

UNIT: 3587
PROJECT NUMBER & PHASE: 0715000160-1
CONTRACT NO.: 07-2159u4

DISREGARD PRINTS BEARING EARLIER REVISION DATES

REVISION DATES 12-8-11 8/1/13 3/27/13 7-31-13

SHEET 148 OF 182

FILE => 53-3045-qu-island.dgn

USERNAME => s125624 DATE PLOTTED => 28-JAN-2016 TIME PLOTTED => 12:10

DIST	COUNTY	ROUTE	POST MILES TOTAL PROJECT	SHEET No.	TOTAL SHEETS
07	LA,Ora	5	0.0/1.5, 44.3/44.4	1216	1622

REGISTERED CIVIL ENGINEER — DATE 2-19-15

1-25-16
PLANS APPROVAL DATE

REGISTERED PROFESSIONAL ENGINEER — WILLIAM D. KEMP No. 55730 Exp. 12/31/16 CIVIL — STATE OF CALIFORNIA

The State of California or its officers or agents shall not be responsible for the accuracy or completeness of electronic copies of this plan sheet.

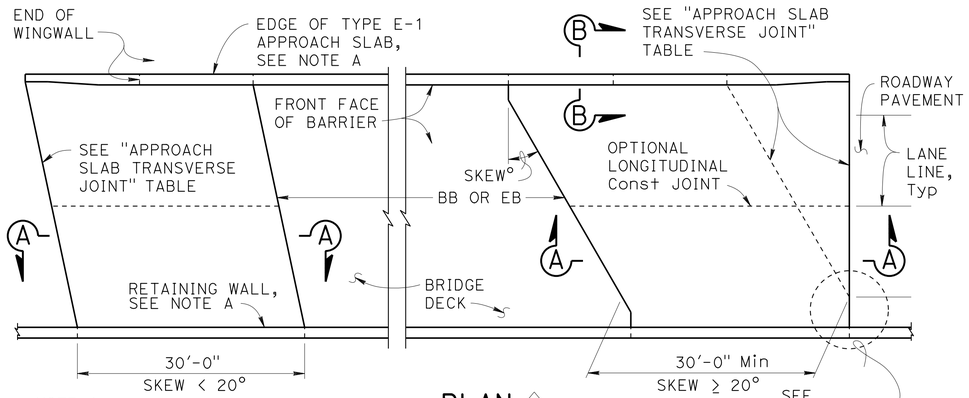

NOTE A:
Type E-1 Approach Slab shown, see "SECTION B-B" for Type E-2 details.

PLAN ◇3
1" = 10'

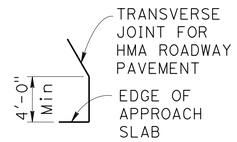

DETAIL A
No Scale

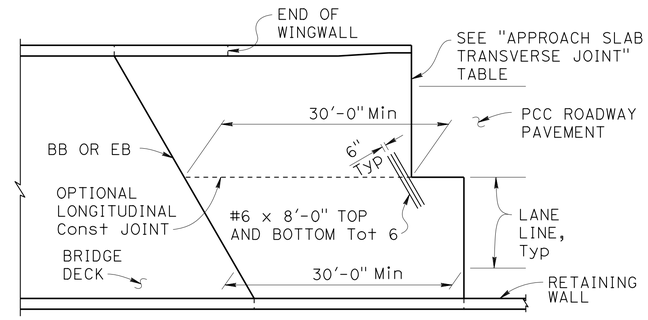

END STAGGER DETAIL
1" = 10'

APPROACH SLAB TRANSVERSE JOINT		
APPROACH SKEW	WITH HMA ROADWAY PAVEMENT	WITH PCC ROADWAY PAVEMENT
< 20°	PARALLEL TO BB OR EB	PARALLEL TO BB OR EB
20° - 45°	PARALLEL TO BB OR EB USE "DETAIL A"	STAGGER AT LANE LINES 24' TO 36' APART, SEE "END STAGGER DETAIL"
> 45°	PARALLEL TO BB OR EB USE "DETAIL A"	STAGGER AT EACH LANE LINE, SEE "END STAGGER DETAIL"

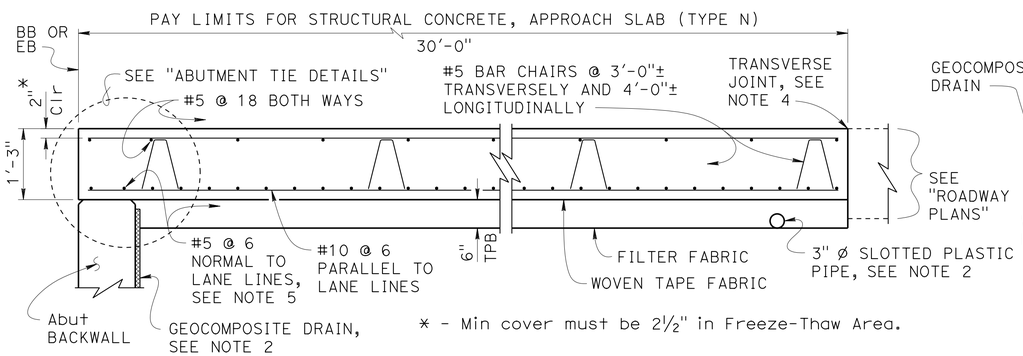

* - Min cover must be 2½" in Freeze-Thaw Area.

SECTION A-A
¾" = 1'-0"

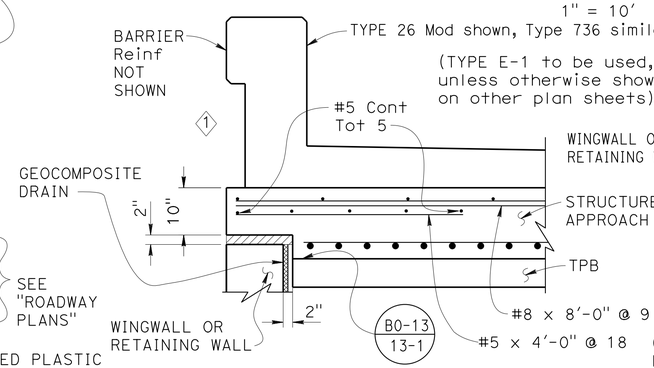

TYPE E-1

Indicates Expanded Polystyrene, remove after concrete is placed.

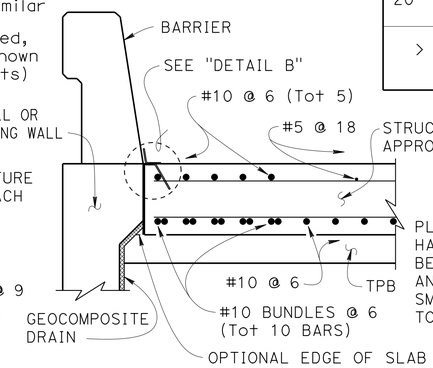

TYPE E-2

SECTION B-B
¾" = 1'-0"

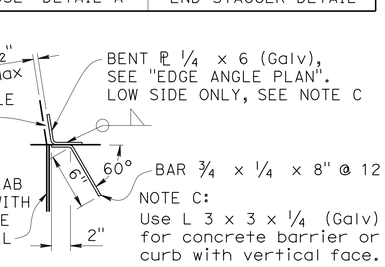

NOTE C:
Use L 3 x 3 x ¼ (Galv) for concrete barrier or curb with vertical face.

DETAIL B
1½" = 1'-0"

DESIGN NOTES

DESIGN: AASHTO LRFD Bridge Design Specifications, 2012 Edition with Caltrans Amendments, preface dated January 2014

LIMIT STATES: Service I, Strength I & II, Extreme II and Fatigue I (γ_{FAT} = 1.0)

DEAD LOAD: Includes 35 psf for future wearing surface

LIVE LOAD: HL93 and permit design load
Equivalent strip width method: W_1 = 12 ft
Slab span: L_1 = 24.5 ft

REINFORCED CONCRETE:
f_y = 60 ksi
f'_c = 3.6 ksi
n = 8

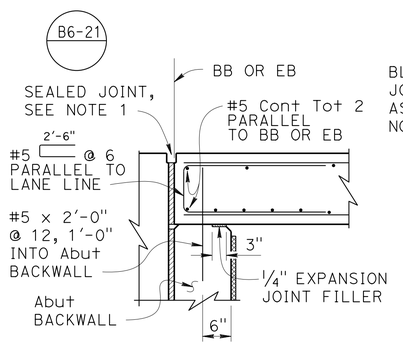

MR ≤ 2"

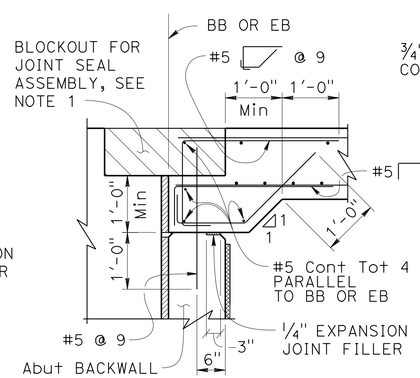

MR > 2"

ABUTMENT TIE DETAILS
¾" = 1'-0"

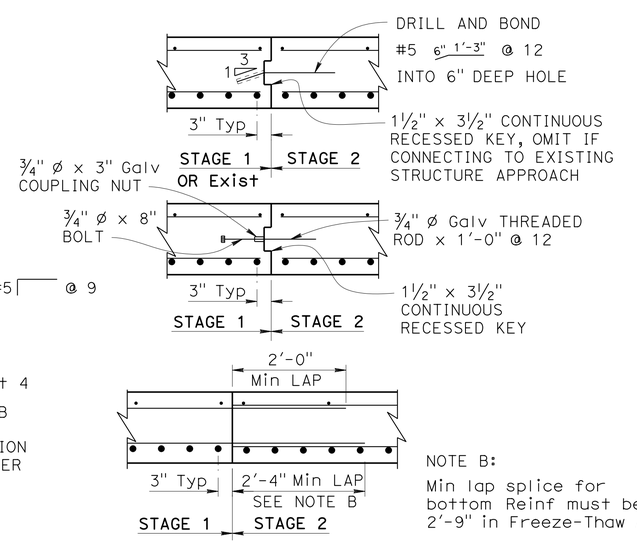

NOTE B:
Min lap splice for bottom Reinf must be 2'-9" in Freeze-Thaw Area.

LONGITUDINAL CONSTRUCTION JOINT ALTERNATIVES
¾" = 1'-0"

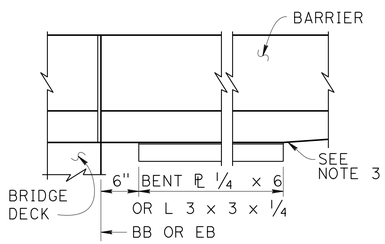

EDGE ANGLE PLAN
1" = 1'-0"

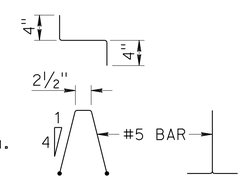

BAR CHAIR DETAIL
1" = 1'-0"

NOTES:

1. For joint protection details, blockout dimensions for joint seal assembly, and other details not shown, see other plan sheets. For MR ≤ 2", adjust reinforcement to clear sawcut for sealed joint. For MR > 2", haunch reinforcement placed for joint seal assembly blockout must be normal to BB or EB and spaced to avoid joint seal assembly anchorage.
2. For drainage details, see "STRUCTURE APPROACH DRAINAGE DETAILS" sheet.
3. End the plate or edge angle at beginning of barrier transition, end of wingwall, or end of structure approach as applicable.
4. ◇2 Transverse Joint must be a minimum of 5'-0" from an existing or constructed weakened plane joint in approach PCC roadway pavement. Refer to Standard Plans RSP P10 and RSP P14.
5. At the Contractor's option, approach slab transverse reinforcement may be placed parallel to BB or EB. Spacing of transverse reinforcement is measured along ℄ roadway.

STANDARD DRAWING
FILE NO. xs3-120
APPROVAL DATE January 2015

◇1 Modified Detail
◇2 Modified Note
◇3 See "MOVEMENT RATING GREATER THAN 4" sheet for additional approach slab dimensions and details at Abutment 11

STATE OF CALIFORNIA
DEPARTMENT OF TRANSPORTATION
DIVISION OF ENGINEERING SERVICES

BRIDGE NO. 53-3045
POST MILE 1.21

VALLEY VIEW AVE OH/OC (REPLACEMENT)
STRUCTURE APPROACH TYPE N(30S)

DS OSD 2147A (ENGLISH STANDARD DRAWING "XS" BORDER REV. (10-01-14)

ORIGINAL SCALE IN INCHES FOR REDUCED PLANS 0 1 2 3

UNIT: 3587
PROJECT NUMBER & PHASE: 0715000160-1
CONTRACT NO.: 07-2159u4

DISREGARD PRINTS BEARING EARLIER REVISION DATES
REVISION DATES 7/24/12 8/3/12 9/28/12 2-19-15

SHEET 149 OF 182

FILE => 53-3045-qv-sa.dgn

USERNAME => s125624 DATE PLOTTED => 28-JAN-2016 TIME PLOTTED => 12:10

DIST	COUNTY	ROUTE	POST MILES TOTAL PROJECT	SHEET No.	TOTAL SHEETS
07	LA,Ora	5	0.0/1.5, 44.3/44.4	1217	1622

REGISTERED CIVIL ENGINEER — DATE 3-18-15

1-25-16
PLANS APPROVAL DATE

REGISTERED PROFESSIONAL ENGINEER — WILLIAM D. KEMP — No. 55730 — Exp. 12/31/16 — CIVIL — STATE OF CALIFORNIA

The State of California or its officers or agents shall not be responsible for the accuracy or completeness of electronic copies of this plan sheet.

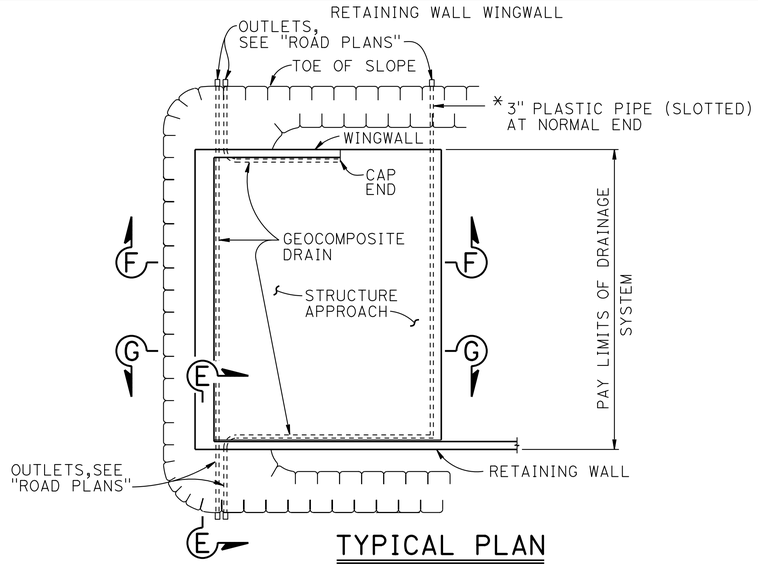

TYPICAL PLAN

1" = 10'

* FOR PIPE LAYOUT AT STAGGERED END, SEE "DETAIL B"

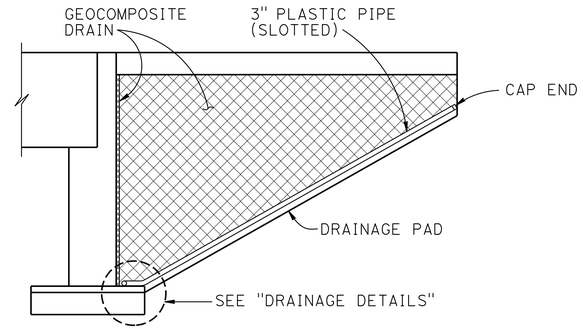

CANTILEVER WINGWALL

SECTION F-F

1/4" = 1'-0"

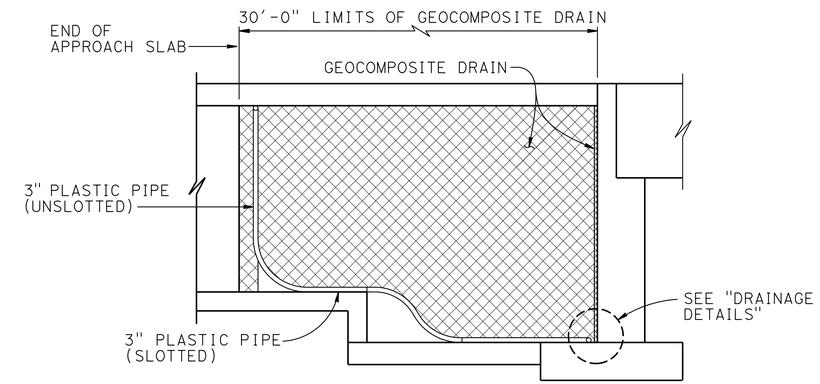

RETAINING WALL WINGWALL DRAINAGE DETAILS

SECTION G-G

1/4" = 1'-0"

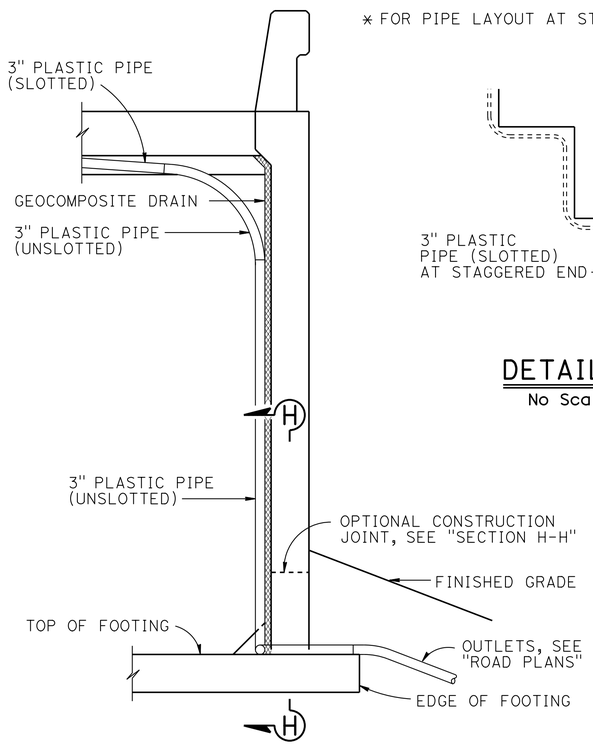

SECTION E-E

1/2" = 1'-0"

NOTE: Bends and junctions in 3" plastic pipe are 30" radius Min

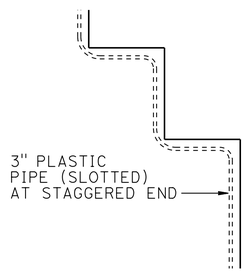

DETAIL B

No Scale

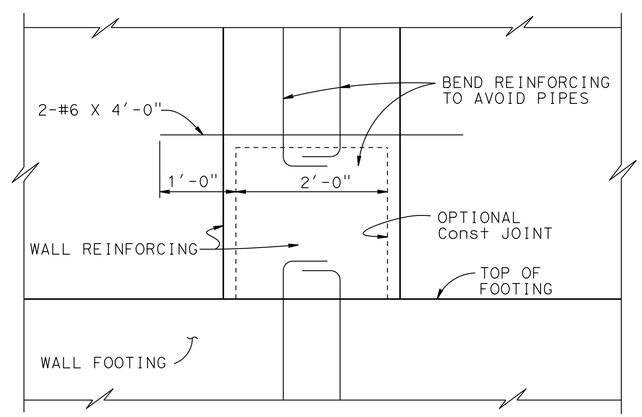

SECTION H-H

1" = 1'-0"

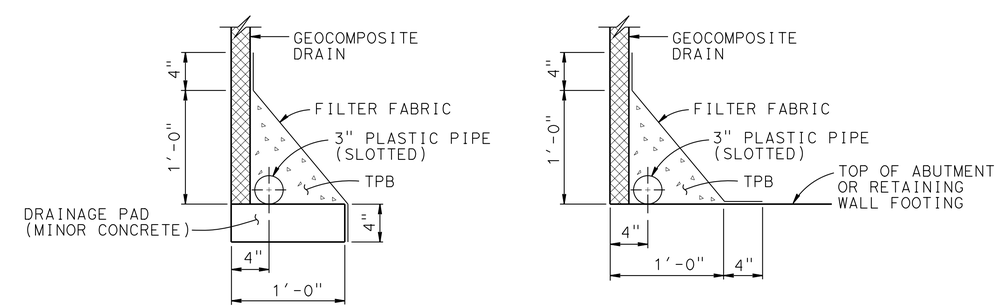

WITHOUT FOOTING — WITH FOOTING

DRAINAGE DETAILS

1 1/2" = 1'-0"

STANDARD DRAWING		STATE OF CALIFORNIA DEPARTMENT OF TRANSPORTATION	DIVISION OF ENGINEERING SERVICES	BRIDGE NO. 53-3045 / POST MILE 1.21	VALLEY VIEW AVE OH/OC (REPLACEMENT)
FILE NO. xs3-110	APPROVAL DATE July 2011				STRUCTURE APPOACH DRAINAGE DETAILS

DS OSD 2147A (ENGLISH STANDARD DRAWING "XS" BORDER REV. (02-02-11)

ORIGINAL SCALE IN INCHES FOR REDUCED PLANS 0 1 2 3

UNIT: 3587
PROJECT NUMBER & PHASE: 0715000160-1 CONTRACT NO.: 07-2159u4

DISREGARD PRINTS BEARING EARLIER REVISION DATES 10/1/12

REVISION DATES | SHEET 150 | OF 182

FILE => 53-3045-qv-sadd.dgn

USERNAME => s123624 DATE PLOTTED => 28-JAN-2016 TIME PLOTTED => 12:10

DIST	COUNTY	ROUTE	POST MILES TOTAL PROJECT	SHEET No.	TOTAL SHEETS
07	LA,Ora	5	0.0/1.5, 44.3/44.4	1218	1622

REGISTERED CIVIL ENGINEER 3-18-15 DATE

1-25-16
PLANS APPROVAL DATE

REGISTERED PROFESSIONAL ENGINEER
WILLIAM D. KEMP
No. 55730
Exp. 12/31/16
CIVIL
STATE OF CALIFORNIA

The State of California or its officers or agents shall not be responsible for the accuracy or completeness of electronic copies of this plan sheet.

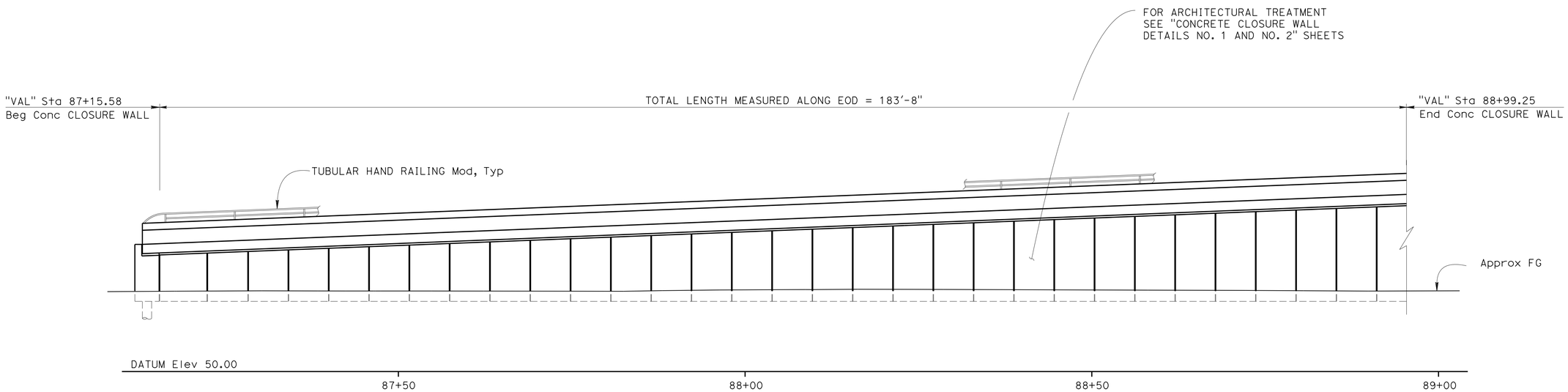

ELEVATION

1/8" = 1'

DESIGN	BY K. Doll	CHECKED S. Pahlavan	
DETAILS	BY L. Goldthwait	CHECKED S. Pahlavan	
QUANTITIES	BY K. Doll	CHECKED N. Shah	

STATE OF CALIFORNIA
DEPARTMENT OF TRANSPORTATION

DIVISION OF ENGINEERING SERVICES
STRUCTURE DESIGN
DESIGN BRANCH 11

BRIDGE NO. 53-3045
POST MILE 1.21

VALLEY VIEW AVE OH/OC (REPLACEMENT)
CONCRETE CLOSURE WALL NO 1

STRUCTURES DESIGN DETAIL SHEET (ENGLISH) (REV. 09-01-10)

ORIGINAL SCALE IN INCHES FOR REDUCED PLANS 0 1 2 3

UNIT: 3587
PROJECT NUMBER & PHASE: 0715000160-1
CONTRACT NO.: 07-2159U4

DISREGARD PRINTS BEARING EARLIER REVISION DATES

REVISION DATES: 8-2-11 6-11-13 8-28-13 9-27-13

SHEET 151 OF 182

FILE => 53-3045-ra-ccla_wall01.dgn

USERNAME => s125624 DATE PLOTTED => 28-JAN-2016 TIME PLOTTED => 12:10

DIST	COUNTY	ROUTE	POST MILES TOTAL PROJECT	SHEET No.	TOTAL SHEETS
07	LA,Ora	5	0.0/1.5, 44.3/44.4	1219	1622

REGISTERED CIVIL ENGINEER — DATE 3-18-15

1-25-16
PLANS APPROVAL DATE

REGISTERED PROFESSIONAL ENGINEER — WILLIAM D. KEMP — No. 55730 — Exp. 12/31/16 — CIVIL — STATE OF CALIFORNIA

The State of California or its officers or agents shall not be responsible for the accuracy or completeness of electronic copies of this plan sheet.

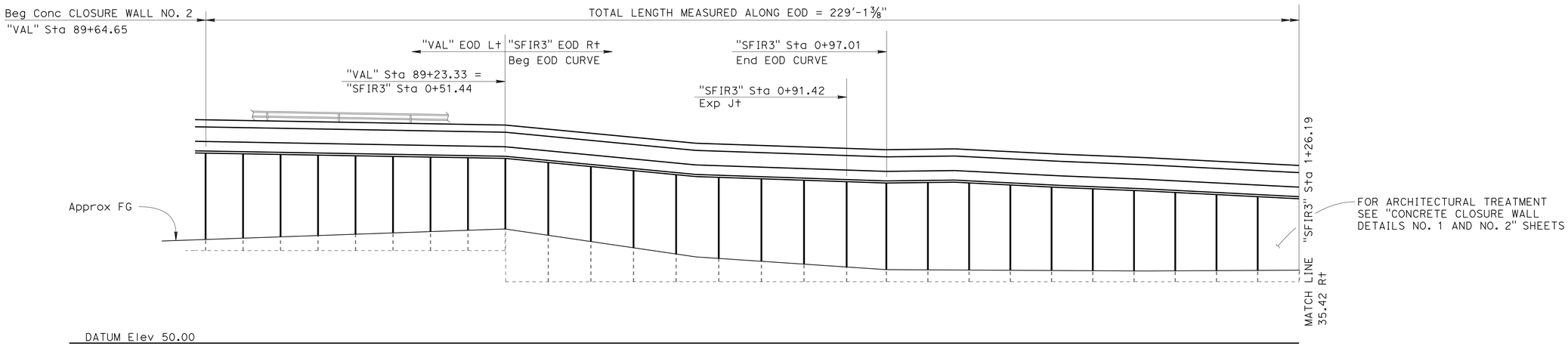

DEVELOPED ELEVATION

⅛" = 1'-0"

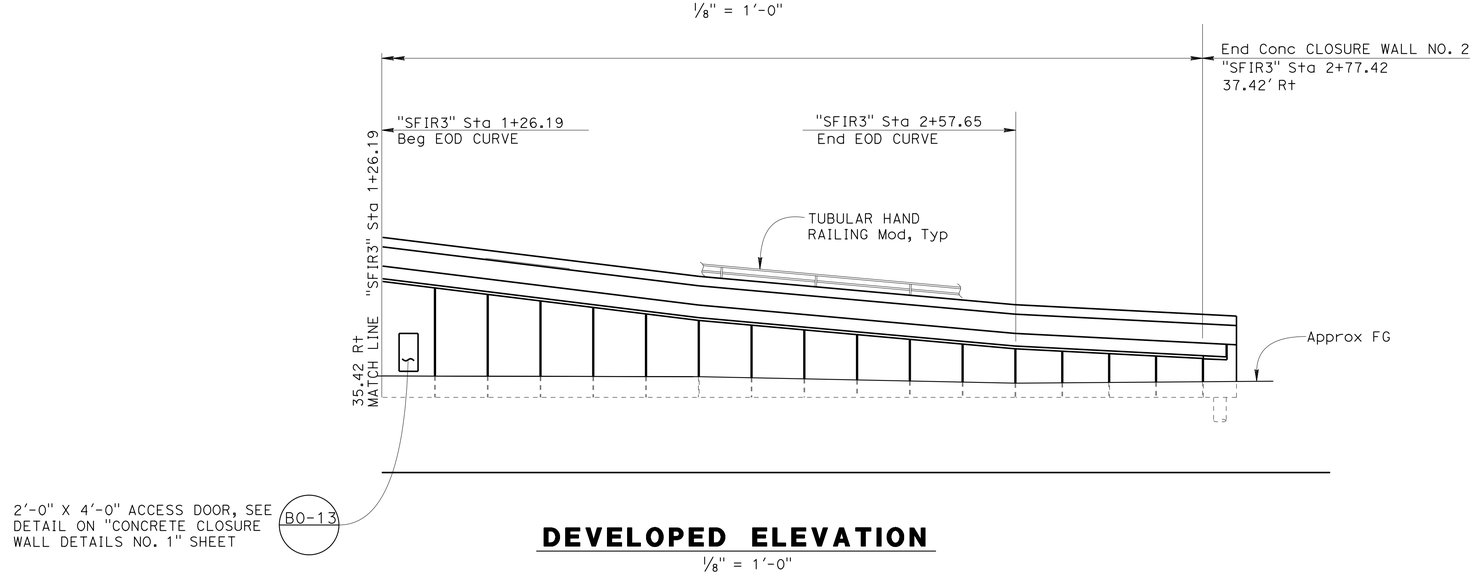

NOTE:

For EOD curve information see "STRUCTURE PLAN NO. 1" sheet

DEVELOPED ELEVATION

⅛" = 1'-0"

DESIGN	BY K. Doll	CHECKED S. Pahlavan	
DETAILS	BY L. Goldthwait	CHECKED S. Pahlavan	
QUANTITIES	BY K. Doll	CHECKED N. Shah	

STATE OF CALIFORNIA
DEPARTMENT OF TRANSPORTATION

DIVISION OF ENGINEERING SERVICES
STRUCTURE DESIGN
DESIGN BRANCH 11

BRIDGE NO. 53-3045
POST MILE 1.21

VALLEY VIEW AVE OH/OC (REPLACEMENT)
CONCRETE CLOSURE WALL NO 2

STRUCTURES DESIGN DETAIL SHEET (ENGLISH) (REV. 09-01-10)

ORIGINAL SCALE IN INCHES FOR REDUCED PLANS 0 1 2 3

UNIT: 3587
PROJECT NUMBER & PHASE: 0715000160-1
CONTRACT NO.: 07-2159U4

DISREGARD PRINTS BEARING EARLIER REVISION DATES

REVISION DATES: 8-2-11 4-19-13 8-28-13 3-18-15

SHEET 152 OF 182

FILE => 53-3045-ra-cclo_wall02.dgn

USERNAME => s125624 DATE PLOTTED => 28-JAN-2016 TIME PLOTTED => 12:10

DIST	COUNTY	ROUTE	POST MILES TOTAL PROJECT	SHEET No.	TOTAL SHEETS
07	LA,Ora	5	0.0/1.5, 44.3/44.4	1220	1622

REGISTERED CIVIL ENGINEER — DATE 3-18-15

1-25-16
PLANS APPROVAL DATE

REGISTERED PROFESSIONAL ENGINEER — WILLIAM D. KEMP — No. 55730 — Exp. 12/31/16 — CIVIL — STATE OF CALIFORNIA

The State of California or its officers or agents shall not be responsible for the accuracy or completeness of electronic copies of this plan sheet.

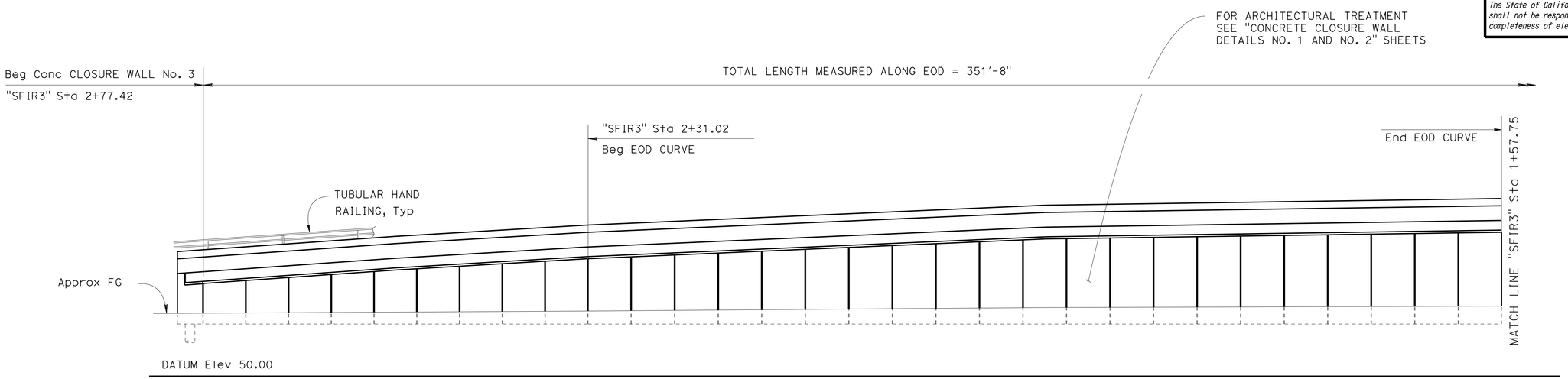

NOTE:

For EOD Curve information see "STRUCTURE PLAN No. 1 - SLAB" sheet

DEVELOPED ELEVATION

1/8" = 1'-0"

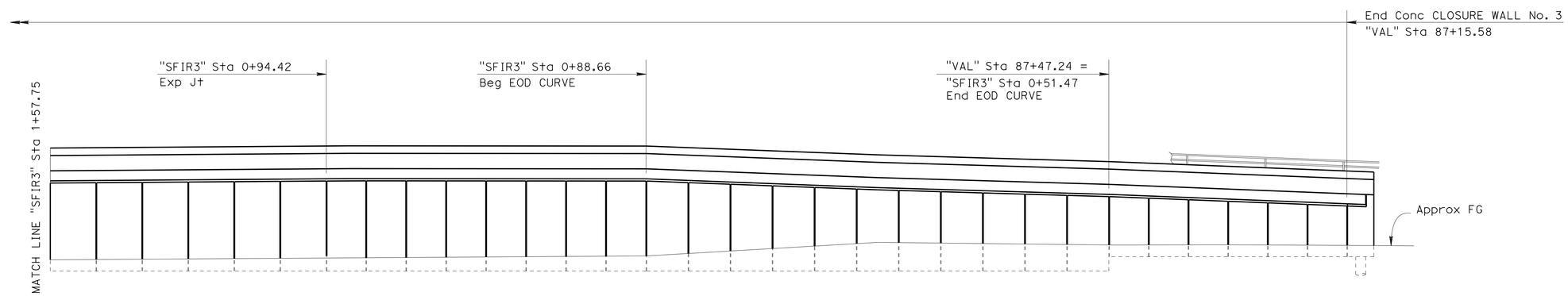

DEVELOPED ELEVATION

1/8" = 1'-0"

DESIGN	BY K. Doll	CHECKED S. Pahlavan	
DETAILS	BY L. Goldthwait	CHECKED S. Pahlavan	
QUANTITIES	BY K. Doll	CHECKED N. Shah	

STATE OF CALIFORNIA
DEPARTMENT OF TRANSPORTATION

DIVISION OF ENGINEERING SERVICES
STRUCTURE DESIGN
DESIGN BRANCH 11

BRIDGE NO. 53-3045
POST MILE 1.21

VALLEY VIEW AVE OH/OC (REPLACEMENT)
CONCRETE CLOSURE WALL NO 3

STRUCTURES DESIGN DETAIL SHEET (ENGLISH) (REV. 09-01-10)

ORIGINAL SCALE IN INCHES FOR REDUCED PLANS 0 1 2 3

UNIT: 3587
PROJECT NUMBER & PHASE: 0715000160-1
CONTRACT NO.: 07-2159U4

DISREGARD PRINTS BEARING EARLIER REVISION DATES

REVISION DATES: 1-28-11 8-28-13 10-01-13 4-14-13

SHEET 153 OF 182

FILE => 53-3045-ra-ccla_wall03.dgn

USERNAME => s129624 DATE PLOTTED => 28-JAN-2016 TIME PLOTTED => 12:10

DIST	COUNTY	ROUTE	POST MILES TOTAL PROJECT	SHEET No.	TOTAL SHEETS
07	LA,Ora	5	0.0/1.5, 44.3/44.4	1221	1622

William Kemp 3-18-15
REGISTERED CIVIL ENGINEER DATE

1-25-16
PLANS APPROVAL DATE

REGISTERED PROFESSIONAL ENGINEER
WILLIAM D. KEMP
No. 55730
Exp. 12/31/16
CIVIL
STATE OF CALIFORNIA

The State of California or its officers or agents shall not be responsible for the accuracy or completeness of electronic copies of this plan sheet.

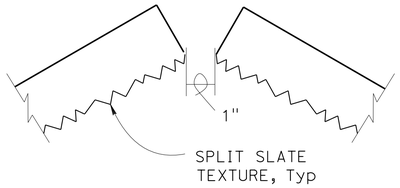

PANEL DETAIL AT INSIDE CURVE/CONTROL BOX

No Scale

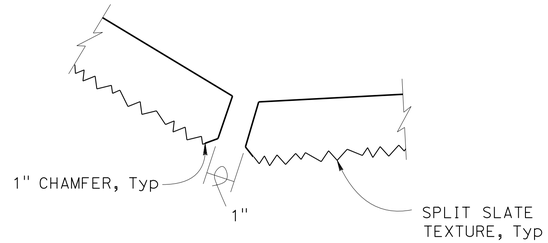

PANEL DETAIL AT CONTROL BOX CORNER

No Scale

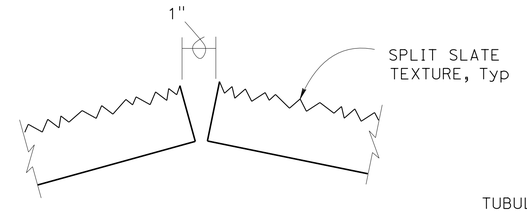

PANEL DETAIL AT OUTSIDE CURVE

No Scale

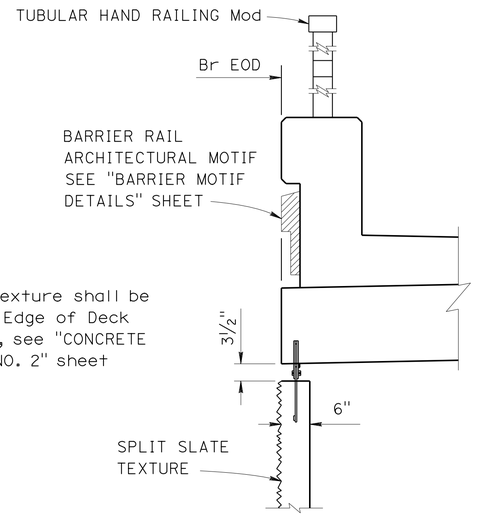

Notes:

1. All surface Relief and Texture shall be measured from Bridge Edge of Deck
2. For Split Slate Texture, see "CONCRETE CLOSURE WALL DETAILS NO. 2" sheet

SECTION A-A

¾" = 1'-0"

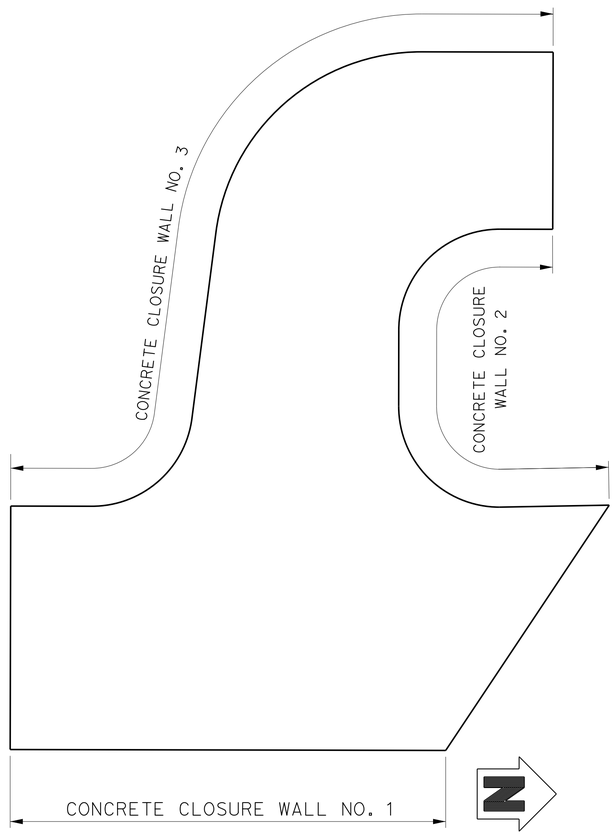

CONCRETE CLOSURE WALL KEY MAP

No Scale

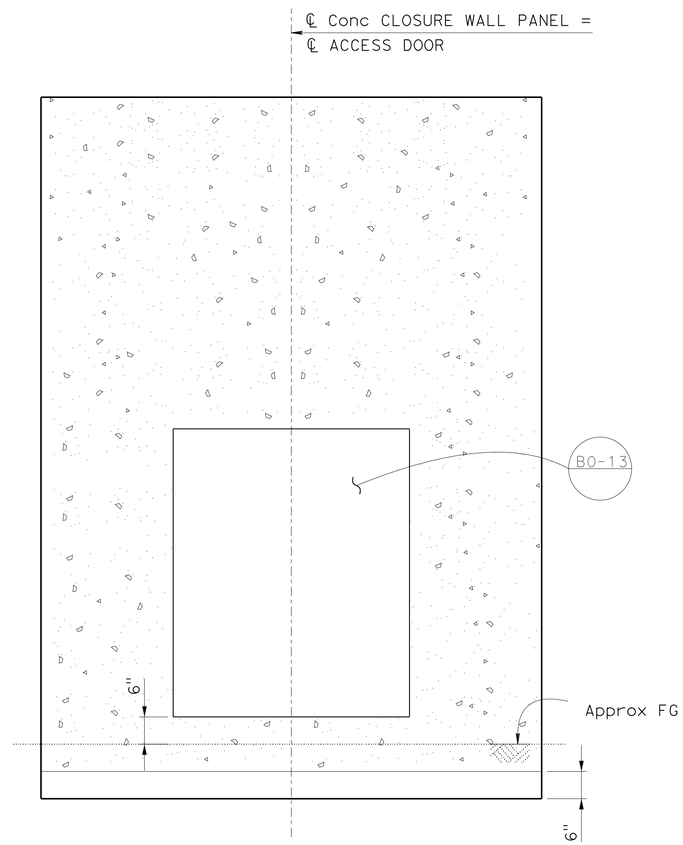

ACCESS DOOR

No Scale

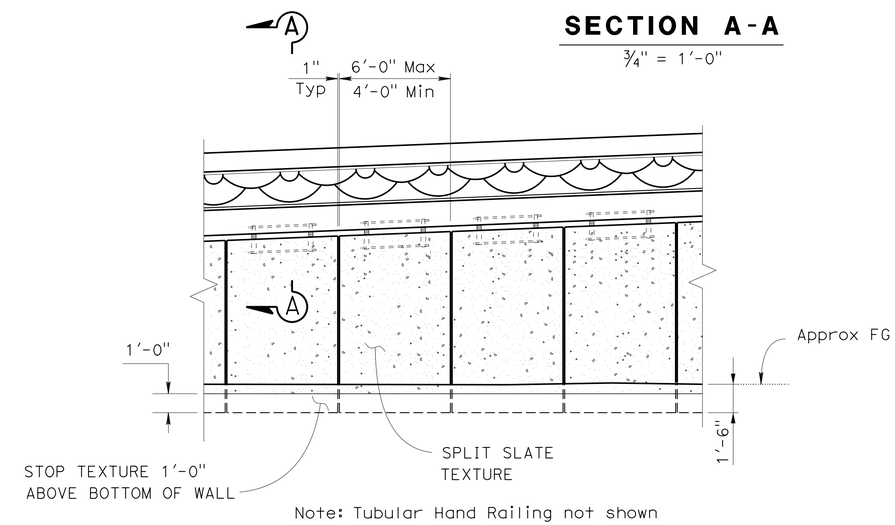

Note: Tubular Hand Railing not shown

CONCRETE CLOSURE WALL PANEL DETAIL

¼" = 1'-0"

DESIGN	BY K. Doll	CHECKED S. Pahlavan	
DETAILS	BY L. Goldthwait	CHECKED S. Pahlavan	
QUANTITIES	BY K. Doll	CHECKED N. Shah	

STATE OF CALIFORNIA
DEPARTMENT OF TRANSPORTATION

DIVISION OF ENGINEERING SERVICES
STRUCTURE DESIGN
DESIGN BRANCH 11

BRIDGE NO. 53-3045
POST MILE 1.21

VALLEY VIEW AVE OH/OC (REPLACEMENT)
CONCRETE CLOSURE WALL DETAILS NO 1

STRUCTURES DESIGN DETAIL SHEET (ENGLISH) (REV. 09-01-10)

ORIGINAL SCALE IN INCHES FOR REDUCED PLANS 0 1 2 3

UNIT: 3587
PROJECT NUMBER & PHASE: 0715000160-1
CONTRACT NO.: 07-2159u4

DISREGARD PRINTS BEARING EARLIER REVISION DATES

REVISION DATES: 7-28-11 8-28-13 3-14-12 4-11-13

SHEET 154 OF 182

FILE => 53-3045-ra-cclo_walldt01.dgn

USERNAME => s125824 DATE PLOTTED => 28-JAN-2016 TIME PLOTTED => 12:10

DIST	COUNTY	ROUTE	POST MILES TOTAL PROJECT	SHEET No.	TOTAL SHEETS
07	LA,Ora	5	0.0/1.5, 44.3/44.4	1222	1622

REGISTERED CIVIL ENGINEER 3-18-15 DATE

1-25-16
PLANS APPROVAL DATE

REGISTERED PROFESSIONAL ENGINEER WILLIAM D. KEMP No. 55730 Exp. 12/31/16 CIVIL STATE OF CALIFORNIA

The State of California or its officers or agents shall not be responsible for the accuracy or completeness of electronic copies of this plan sheet.

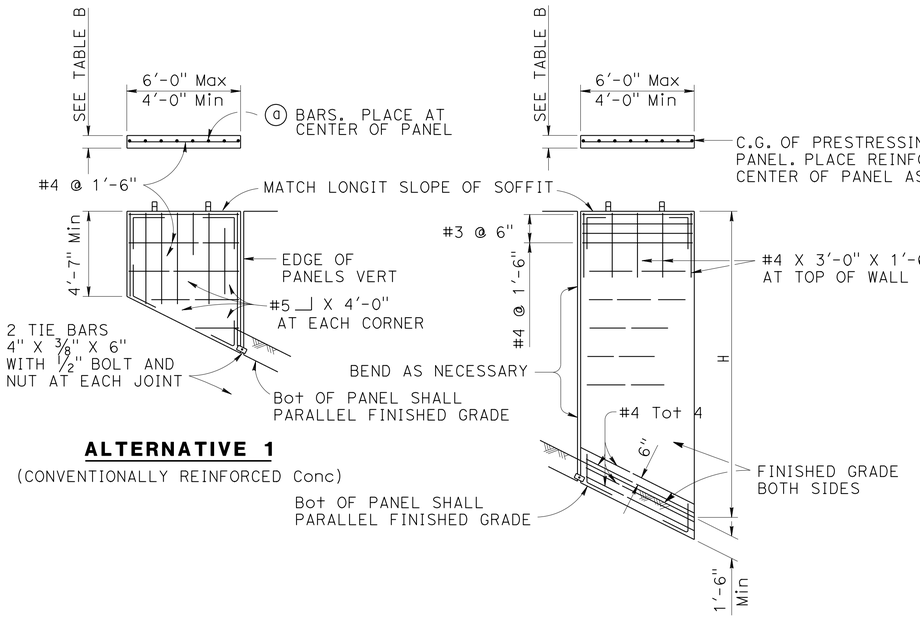

ALTERNATIVE 1
(CONVENTIONALLY REINFORCED Conc)

ALTERNATIVE 2
(PRESTRESSED CONCRETE)

ELEVATION

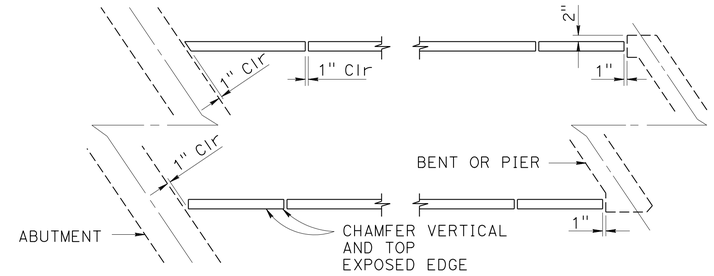

PLAN
SKEW NOT TO SCALE

PRESTRESSING NOTES:

Post - tensioned prestressing will not be permitted.

Pf = the force per foot of panel width remaining after all losses including those due to creep and shrinkage of concrete and creep of steel have occurred.

Spacing of prestressing tendons shall not exceed 1'-6".

Concrete strength:

f'c = 3500 psi @ 28 days

f'ci = 3500 psi @ time of stressing

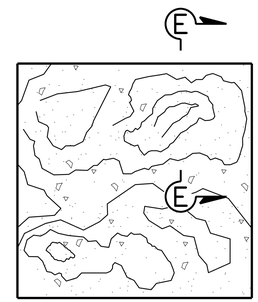

SPLIT SLATE TEXTURE
NO SCALE

TABLE A

HORIZONTAL REINFORCEMENT INSIDE FACE TOP 7'-10" OF WALL	
L	
to 19'-8"	#4 @ 1'-6"
19'-8" to 25'-0"	#4 @ 1'-0"
25'-0" to 29'-6"	#4 @ 9"
29'-6" to 34'-9"	#4 @ 6"
34'-9" to 40'-0"	#4 @ 5"
40'-0" to 45'-0"	#5 @ 6"
45'-0" to 50'-0"	#5 @ 5"

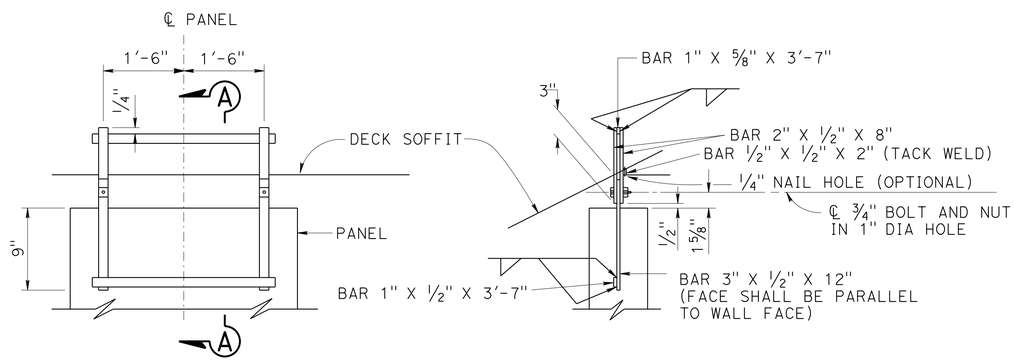

ANCHORAGE DETAIL
USE WITH ALTERNATIVE 1 OR 2

SECTION A-A

PRECAST PANELS, ALTERNATIVE 1 OR 2
NO SCALE

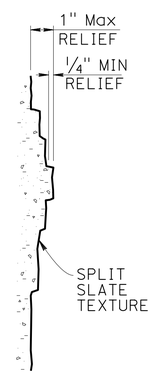

SECTION E-E
NO SCALE

TABLE B

VERTICAL REINFORCEMENT OR PRESTRESSING FORCE AND WALL THICKNESS				
H	ALT 1	ALT 2	WALL THICKNESS	
	ⓐ bars	Pf (kip/ft)	ALT 1	ALT 2
9'-10" & less	#4 @ 1'-6"	7.19	6"	4"
11'-10"	#4 @ 1'-6"	10.62	6"	4"
14'-2"	#4 @ 1'-0"	14.39	6"	4"
16'-1"	#4 @ 10"	18.23	6"	4"
18'-0"	#4 @ 8"	23.50	6"	4"
20'-0"	#4 @ 6"	28.78	6"	4"
22'-0"	#4 @ 7"	22.34	8"	4 3/4"
24'-0"	#4 @ 6"	26.59	8"	4 3/4"
26'-0"	#4 @ 5"	31.25	8"	4 3/4"

NO SCALE

	BY	CHECKED
DESIGN	K. Doll	S. Pahlavan
DETAILS	L. Goldthwait	S. Pahlavan
QUANTITIES	K. Doll	N. Shah

STATE OF CALIFORNIA
DEPARTMENT OF TRANSPORTATION

DIVISION OF ENGINEERING SERVICES
STRUCTURE DESIGN
DESIGN BRANCH 11

BRIDGE NO. 53-3045
POST MILE 1.21

VALLEY VIEW AVE OH/OC (REPLACEMENT)
CONCRETE CLOSURE WALL DETAILS NO 2

STRUCTURES DESIGN DETAIL SHEET (ENGLISH) (REV. 09-01-10)

ORIGINAL SCALE IN INCHES FOR REDUCED PLANS 0 1 2 3

UNIT: 3587
PROJECT NUMBER & PHASE: 0715000160-1 CONTRACT NO.: 07-2159U4

DISREGARD PRINTS BEARING EARLIER REVISION DATES → 6-28-11 4-24-13 8-27-13

SHEET 155 OF 182

FILE => 53-3045-ra-ccio_walldt02.dgn

USERNAME => s125624 DATE PLOTTED => 28-JAN-2016 TIME PLOTTED => 12:10

DIST	COUNTY	ROUTE	POST MILES TOTAL PROJECT	SHEET No.	TOTAL SHEETS
07	LA,Ora	5	0.0/1.5, 44.3/44.4	1223	1622

REGISTERED CIVIL ENGINEER — DATE 3-18-15

1-25-16
PLANS APPROVAL DATE

The State of California or its officers or agents shall not be responsible for the accuracy or completeness of electronic copies of this plan sheet.

REGISTERED PROFESSIONAL ENGINEER — WILLIAM D. KEMP — No. 55730 — Exp. 12/31/16 — CIVIL — STATE OF CALIFORNIA

NOTES:

1. Alternatively, fillet or full penetration welds may be used at anchor studs.
2. Alternate types of anchor studs may be permitted subject to the approval by the Engineer
3. Joint seal assembly to be used in conjunction with closure pour. (See other sheets for limits). Closure pour shall not be placed until final deck surface is within the tolerances specified
4. Use joint at crown of roadway, at any change in traverse slope in deck and at changes in horizontal direction. Place other joints at or near lanes. All metal parts to be painted or galvanized after fabrication
5. Sheet Neoprene shall be fabricated in one continuous piece and shall be fabricated to bend around corners. Field splices of the neoprene are not allowed.
6. ~~Insert assembly or expansion anchorage for 5/8" x 1 3/4" bolts. Use installation bolts extended 1/2" minimum past nut and coat with bond breaker, after concrete has cured, remove installation bolts, install A325 bolts and sheet neoprene~~ (3)
7. Sidewalk Detail similar to Barrier Detail on low side at both sides if the roadway is crowned or if the difference in elevation between the ends of the seal is 0.5' or less
8. a_c, a_s, are the thermal expansion coefficients for concrete and steel respectively.
9. See "JOINT DEAL ASSEMBLY DETAILS No. 1 - MOVEMENT RATING GREATER THAN 4" " sheet for steel cover plates on barreir and sidewalk. (4)
10. Joint seal limits at sidewalk and barriers shown. Joint Seal is continuous through medium and Closure area. (4)

JOINT INFORMATION			"a" DIMENSIONS		
LOCATION	MOVEMENT RATING (MR)	SKEW	WINTER	SPRING & FALL	SUMMER
Abut 11	3.5"	36.4°	1.9"	1.45"	0.98"
VV AVE SB OFF RAMP HINGE	3.0"	0	2.8"	2.0"	1.4"
VV AVE SB ON RAMP HINGE	3.0"	0	2.8"	2.0"	1.4"
NB VV AVE HINGE	3.0"	0	2.8"	2.0"	1.4"
SB VV AVE HINGE	3.0"	0	2.8"	2.0"	1.4"

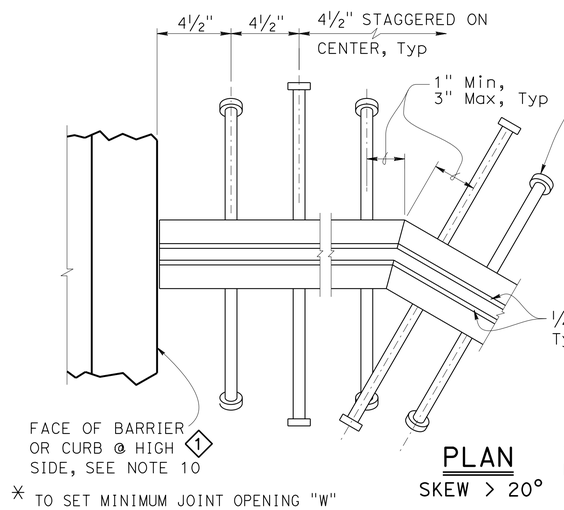

PLAN
SKEW > 20°

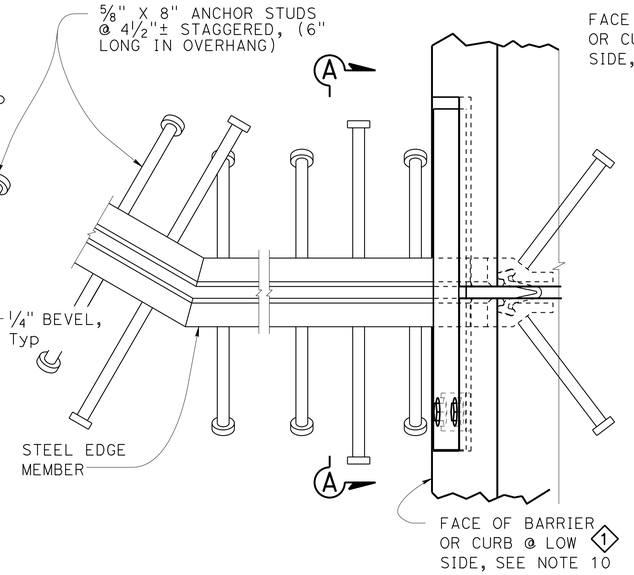

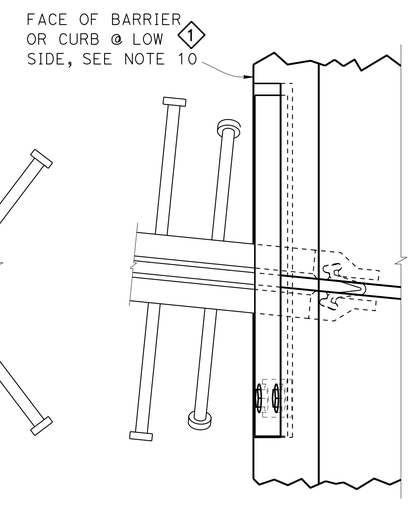

PLAN
SKEW ≤ 20°

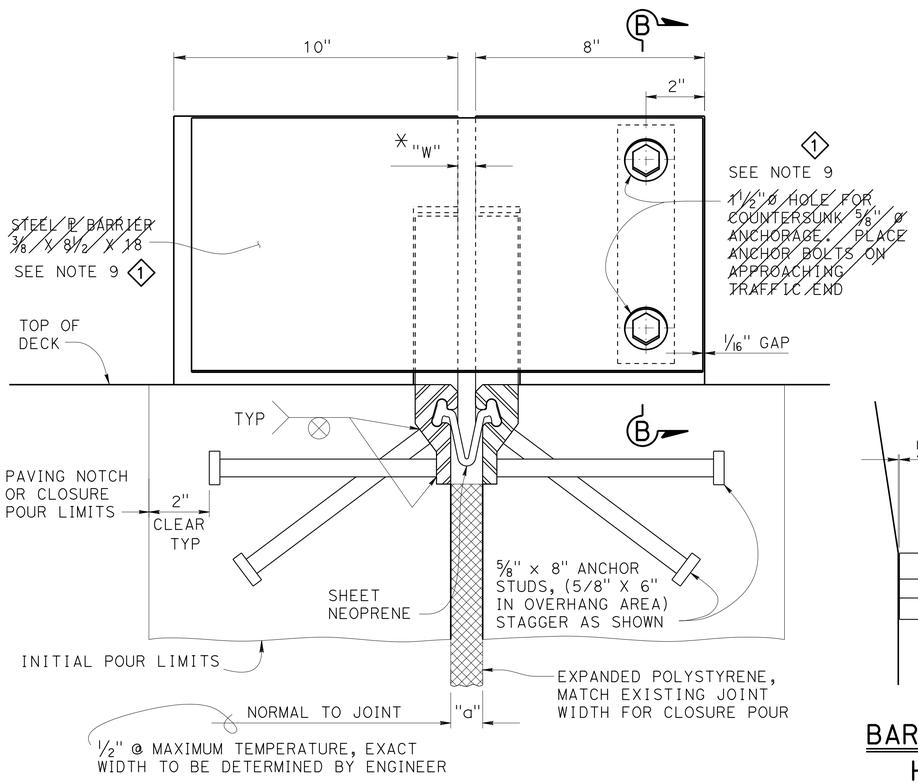

SECTION A-A

$$"W" = \begin{cases} 1/2" + [(\text{Max Str temperature in F°}) - (\text{actual Str temperature in F°})] * (a_c \text{ or } a_s)(12)(\text{contributory L in feet}) \\ 1/2" \text{ Minimum} \\ a_c = 0.0000060 \\ a_s = 0.0000065 \end{cases}$$

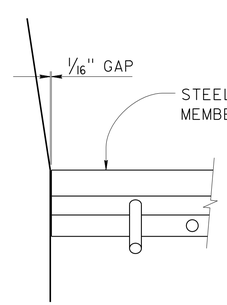

BARRIER DETAIL
HIGH SIDE

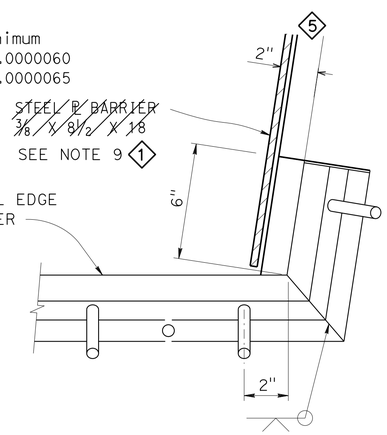

BARRIER DETAIL
LOW SIDE

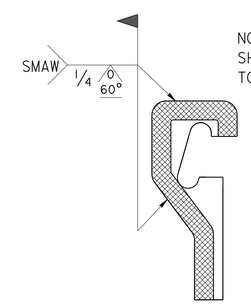

NOTE:
SHADED AREAS TO BE WELDED

FIELD WELD
DETAIL

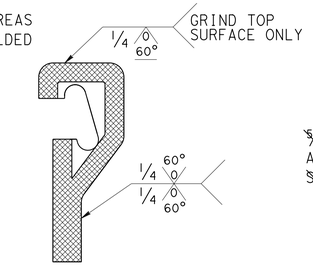

SHOP WELD
DETAIL

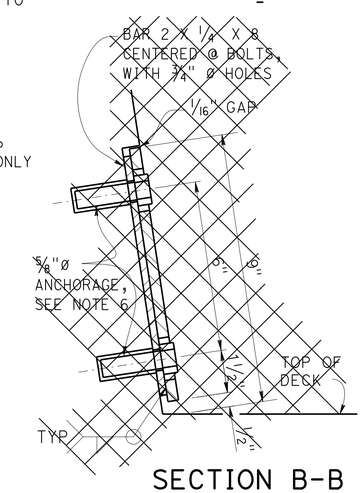

SECTION B-B
(1) (2) SEE NOTE 9

SPECIAL DETAILS

VALLEY VIEW AVE OH/OC (REPLACEMENT)

JOINT SEAL ASSEMBLY

MAXIMUM MOVEMENT RATING = 4"

REVISED STANDARD DRAWING

FILE NO. xs8-010

APPROVAL DATE JUNE 2012

(1) REVISED NOTE (2) DELETED DETAIL (3) DELETED NOTE (4) ADDED NOTE (5) MODIFIED DETAIL

STATE OF CALIFORNIA
DEPARTMENT OF TRANSPORTATION

DIVISION OF ENGINEERING SERVICES

BRIDGE NO. 53-3045
POST MILE 1.21

DS OSD 2147A (ENGLISH STANDARD DRAWING "XS" BORDER REV. (02-02-11)

ORIGINAL SCALE IN INCHES FOR REDUCED PLANS 0 1 2 3

UNIT: 3587
PROJECT NUMBER & PHASE: 0715000160-1
CONTRACT NO.: 07-2159U4

DISREGARD PRINTS BEARING EARLIER REVISION DATES

REVISION DATES 8/2/12 7/22/13 8/1/13 2/5/15

SHEET 156 OF 182

FILE => 53-3045-rd-jntseal01.dgn

USERNAME => s125624 DATE PLOTTED => 28-JAN-2016 TIME PLOTTED => 12:10

DIST	COUNTY	ROUTE	POST MILES TOTAL PROJECT	SHEET No.	TOTAL SHEETS
07	LA,Ora	5	0.0/1.5, 44.3/44.4	1224	1622

REGISTERED CIVIL ENGINEER — DATE: 3-18-15

1-25-16
PLANS APPROVAL DATE

REGISTERED PROFESSIONAL ENGINEER — WILLIAM D. KEMP — No. 55730 — Exp. 12/31/16 — CIVIL — STATE OF CALIFORNIA

The State of California or its officers or agents shall not be responsible for the accuracy or completeness of electronic copies of this plan sheet.

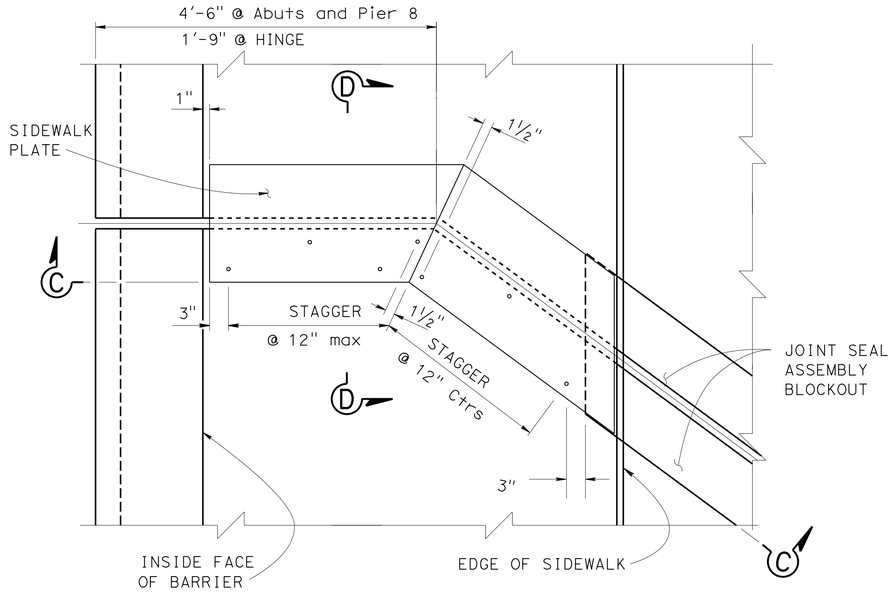

PLAN - SIDEWALK EXPANSION JOINT ARMOR AT ABUTMENTS 1 & 11, MAIN HINGE AND PIER 8

1" = 1'-0"

Barrier plate Details not shown for clarity
Left Edge of deck shown, Right side opposite hand

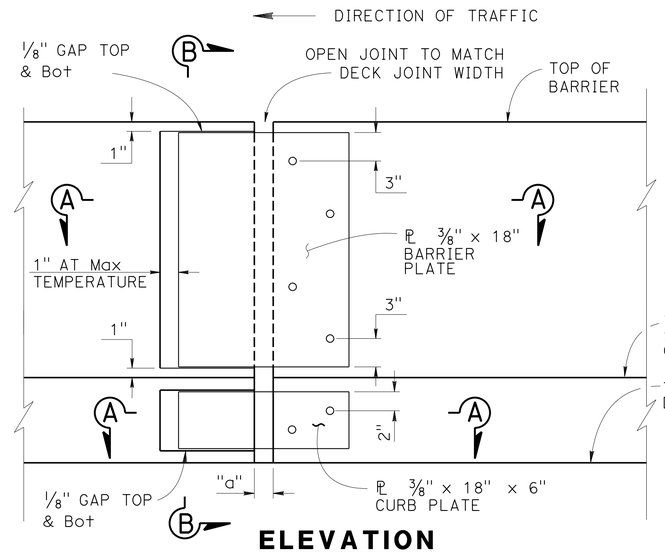

ELEVATION

1½" = 1'-0"

NOTES:

1. Sidewalk plate Details not shown for clarity
2. Conc Barrier Type 26 Mod shown, Conc Barrier Type 736 Mod similar

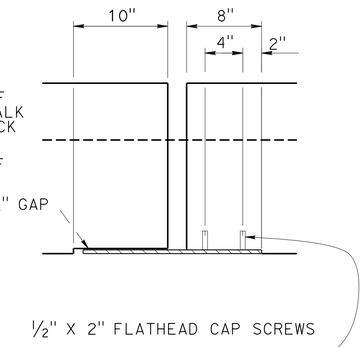

SECTION A-A

1½" = 1'-0"

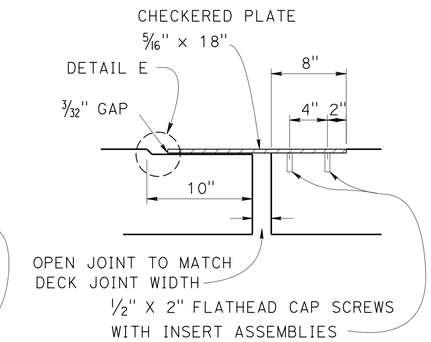

SECTION D-D

1½" = 1'-0"

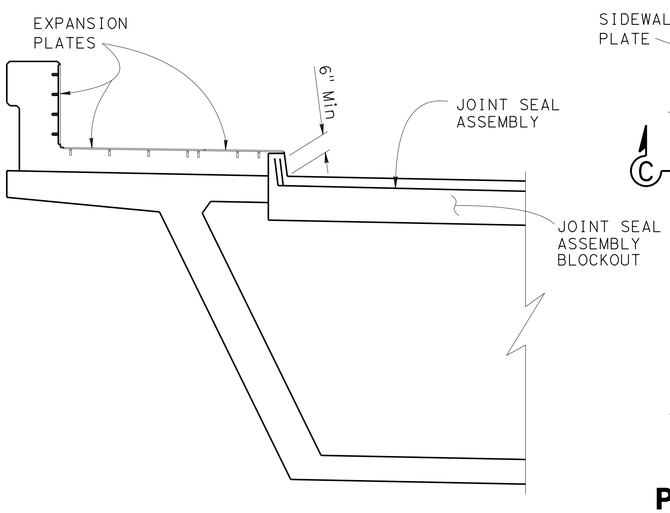

VIEW C-C

½" = 1'-0"

Note:
Limit of Joint Seal at sidewalk shown, Joint Seal to continue through median and closure pour area

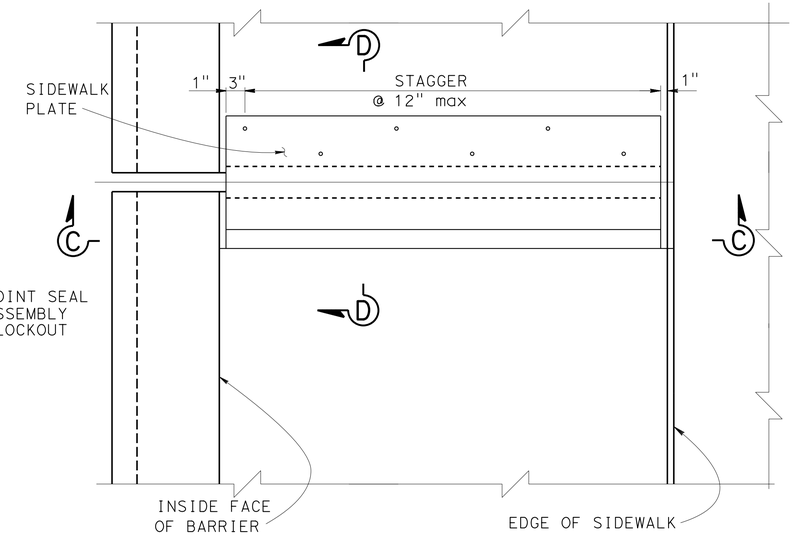

PLAN - SIDEWALK EXPANSION JOINT ARMOR AT FIRESTONE RAMP HINGES

1" = 1'-0"

JOINT INFORMATION		"a" DIMENSIONS			
LOCATION	MOVEMENT RATING (M.R.)	SKEW	WINTER	SPRING & FALL	SUMMER
ABUT 1	6.0"	32.56 °	4.0"	3.0"	2.0"
MAIN HINGE	6.5"	32.56 °	4.0"	3.0"	2.0"
PIER 8	9.0"	36.40 °	3.31"	2.49"	1.66"

Movement rating is based on a bridge, longitudinal, skewed dimension

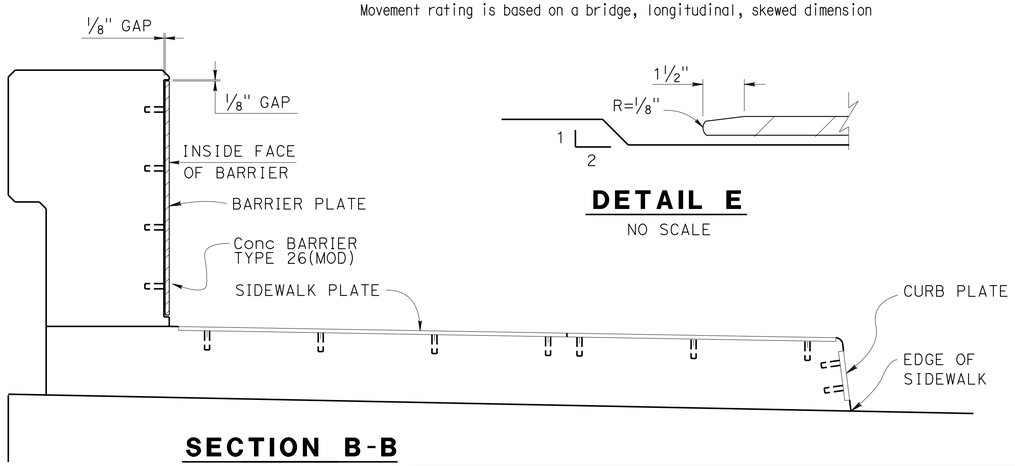

SECTION B-B

1½" = 1'-0"

DETAIL E

NO SCALE

VALLEY VIEW AVE OH/OC (REPLACEMENT)

JOINT SEAL ASSEMBLY DETAILS No. 1

MOVEMENT RATING GREATER THAN 4"

	BY	CHECKED
DESIGN	Jay Posey/ Bill Kemp	Mark Okimura
DETAILS	John M Hunter	Mark Okimura
QUANTITIES	Mark Okimura	John Radu

STATE OF CALIFORNIA
DEPARTMENT OF TRANSPORTATION

DIVISION OF ENGINEERING SERVICES
STRUCTURE DESIGN
DESIGN BRANCH 11

BRIDGE NO. 53-3045
POST MILE 1.21

STRUCTURES DESIGN DETAIL SHEET (ENGLISH) (REV. 09-01-10)

ORIGINAL SCALE IN INCHES FOR REDUCED PLANS 0 1 2 3

UNIT: 3587
PROJECT NUMBER & PHASE: 0715000160-1
CONTRACT NO.: 07-2159u4

DISREGARD PRINTS BEARING EARLIER REVISION DATES

REVISION DATES: 3-18-15 9/12/13 2/28/13 7/30/13

SHEET 157 OF 182

FILE => 53-3045-rd-jntseal02.dgn

USERNAME => s125624 DATE PLOTTED => 28-JAN-2016 TIME PLOTTED => 12:10

DIST	COUNTY	ROUTE	POST MILES TOTAL PROJECT	SHEET No.	TOTAL SHEETS
07	LA,Ora	5	0.0/1.5, 44.3/44.4	1225	1622

REGISTERED CIVIL ENGINEER — DATE 2-19-15

1-25-16
PLANS APPROVAL DATE

REGISTERED PROFESSIONAL ENGINEER — WILLIAM D. KEMP — No. 55730 — Exp 12/31/16 — CIVIL — STATE OF CALIFORNIA

The State of California or its officers or agents shall not be responsible for the accuracy or completeness of electronic copies of this plan sheet.

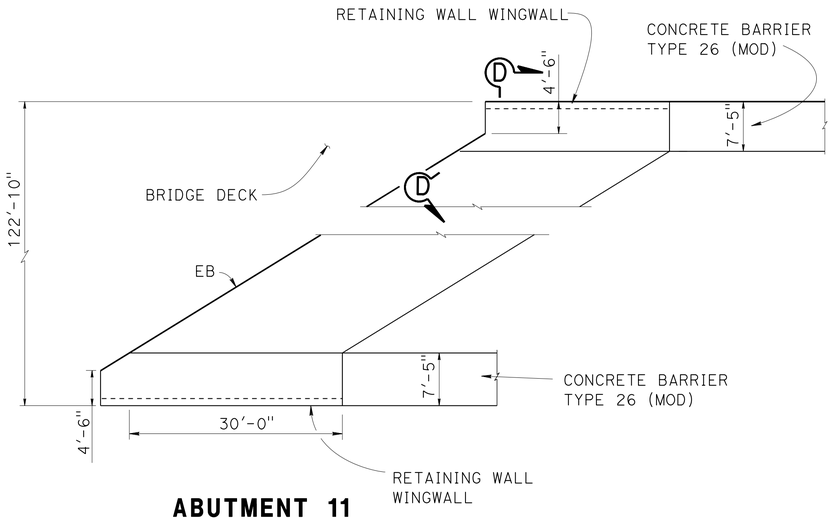

ABUTMENT 11 APPROACH SLAB PLAN

NO SCALE

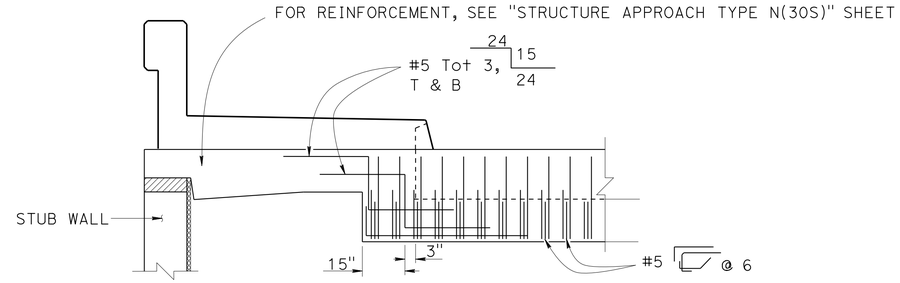

NOTE: All Bars/Dimensions shown are spaced normal to "B" Line

DEVELOPED BLOCKOUT REINFORCING SECTION ALONG JOINT SECTION D-D

NO SCALE

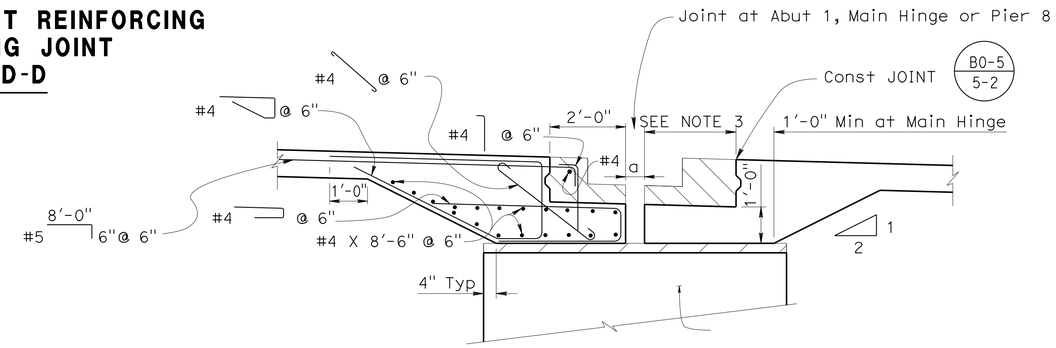

SECTION A-A

1/2" = 1'-0"

NOTES:

1. Reinf shown is in addition to Slab Reinf, Reinf and notes are symetrical about joint
2. closure pour area at Pier 8 shown, Closure Pour area at Main Hinge similar except as noted.
3. 2'-0" at Pier 8, 2'-0" Max and Var at Main Hinge. Blockout width may vary to accomodate joint seal supports and to avoid conflict with precast girders. Width to be determined by the Contractor and approved by the Engineer.
4. Joint seal to continue throughout closure pour

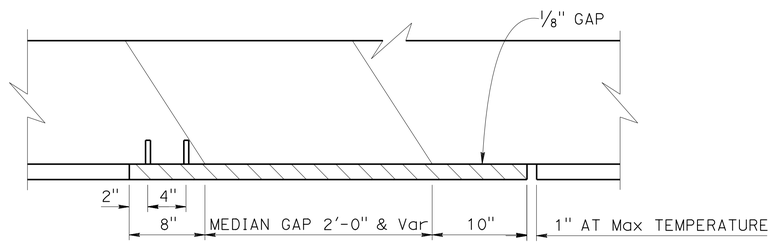

SECTION G-G

NO SCALE

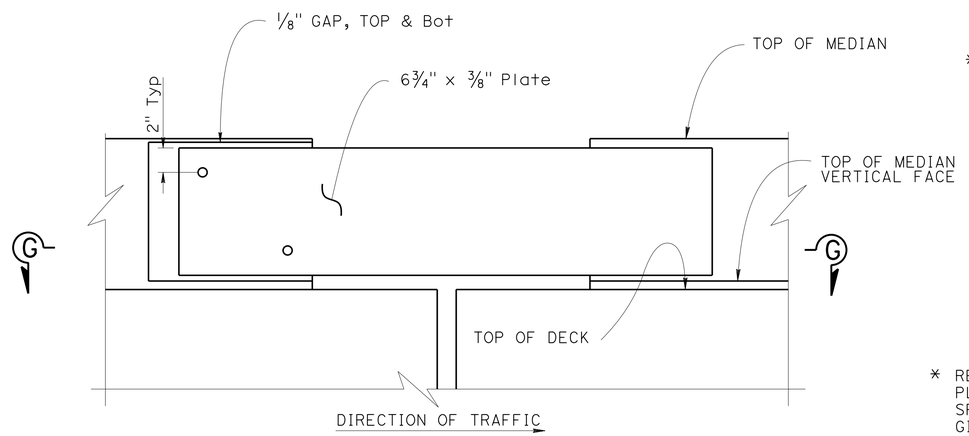

MEDIAN CURB ELEVATION

NO SCALE

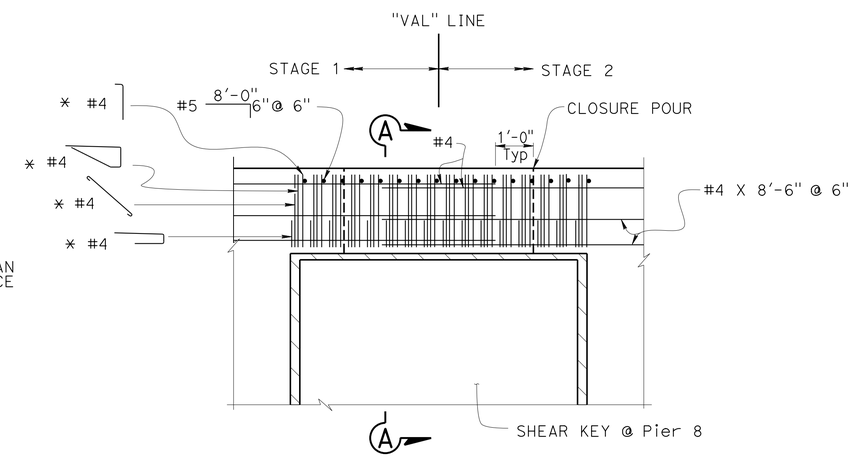

* REPEAT PATTERN @ 6", PLACE PARALLEL AND SPACE NORMAL TO GIRDERS

ELEVATION

1/2" = 1'-0"

VALLEY VIEW AVE OH/OC (REPLACEMENT)

JOINT SEAL ASSEMBLY DETAILS NO. 2 MOVEMENT RATING GREATER THAN 4"

	BY	CHECKED
DESIGN	Jay Posey	Mark Okimura
DETAILS	John M Hunter	Mark Okimura
QUANTITIES	Mark Okimura	John Radu

STATE OF CALIFORNIA DEPARTMENT OF TRANSPORTATION

DIVISION OF ENGINEERING SERVICES STRUCTURE DESIGN — DESIGN BRANCH 11

BRIDGE NO. 53-3045 — POST MILE 1.21

STRUCTURES DESIGN DETAIL SHEET (ENGLISH) (REV. 09-01-10)

ORIGINAL SCALE IN INCHES FOR REDUCED PLANS 0 1 2 3

UNIT: 3587
PROJECT NUMBER & PHASE: 0715000160-1
CONTRACT NO.: 07-2159U4

DISREGARD PRINTS BEARING EARLIER REVISION DATES — REVISION DATES 2-19-15

SHEET 158 OF 182

FILE => 53-3045-rd-jtseal03.dgn

USERNAME => s125624 DATE PLOTTED => 28-JAN-2016 TIME PLOTTED => 12:10

DIST	COUNTY	ROUTE	POST MILES TOTAL PROJECT	SHEET No.	TOTAL SHEETS
07	LA,Ora	5	0.0/1.5, 44.3/44.4	1226	1622

REGISTERED CIVIL ENGINEER — DATE 3-18-15

1-25-16
PLANS APPROVAL DATE

REGISTERED PROFESSIONAL ENGINEER — WILLIAM D. KEMP — No. 55730 — Exp. 12/31/16 — CIVIL — STATE OF CALIFORNIA

The State of California or its officers or agents shall not be responsible for the accuracy or completeness of electronic copies of this plan sheet.

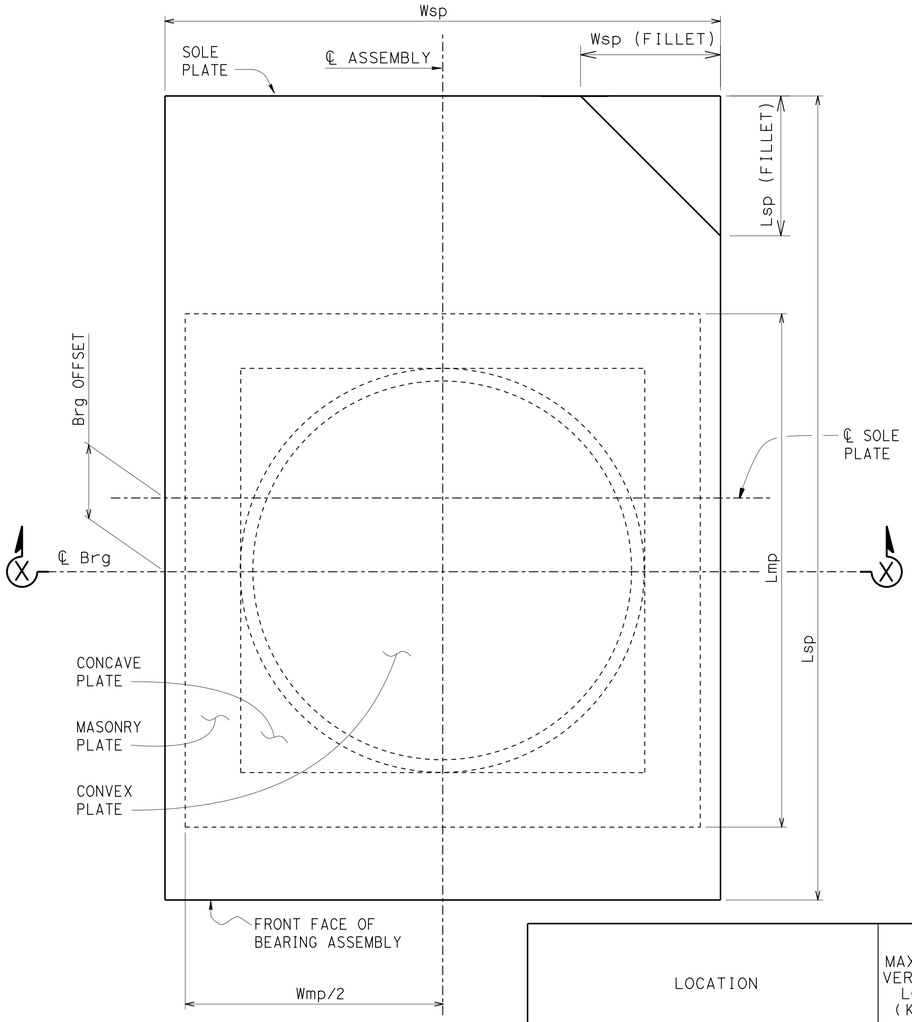

② PLAN

NO SCALE

SPECIAL DETAIL

NOTES:

1. Anchorage method not shown
2. All units in inches unless otherwise noted
3. All dimensions shown are steel only unless otherwise noted
4. H^{act} includes stainless steel
5. A^{h} includes PTFE, substratum and stainless steel, (varies)
6. R^{act} is to sliding surface
7. For Masonry Plate and Sole Plate width and length see "PTFE/SPHERICAL EXPANSION BEARING DETAILS NO. 3" sheet.
8. W_{sp} (Fillet) by L_{sp} (Fillet) are corner removal dimensions of the Sole ℙ

④

LOCATION	W_{sp} (FILLET)	L_{sp} (FILLET)
Abut 1	5"	3.25"

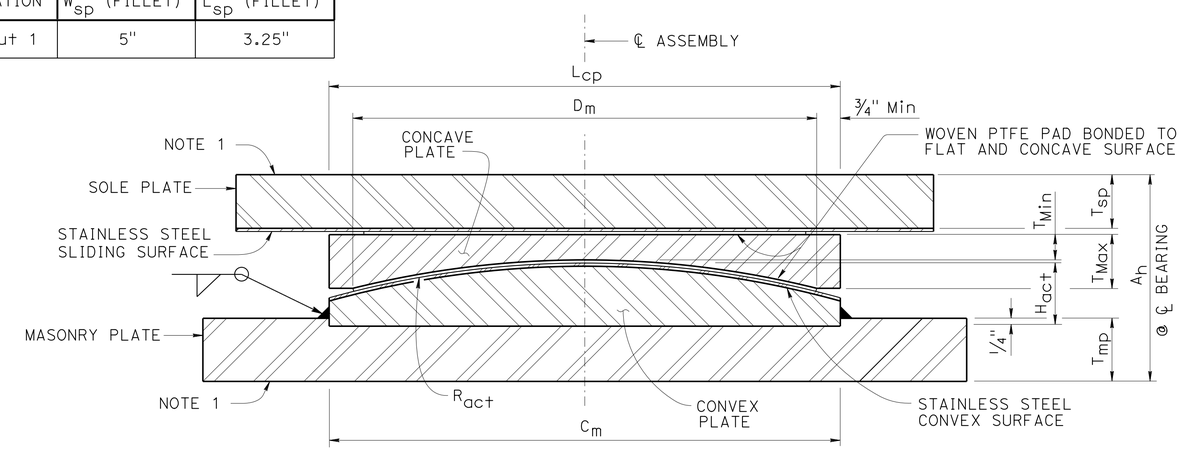

SECTION X-X

③ EXPANSION BEARING TABLE

LOCATION	MAXIMUM VERTICAL LOAD (KIPS)	MINIMUM DEAD LOAD (KIPS)	DESIGN ROTATION (RADIANS)	CONCAVE PLATE						CONVEX PLATE		MASONRY PLATE			SOLE PLATE			ASSEMBLY HEIGHT	BEARING OFFSET (in)
				WIDTH / LENGTH	FLAT PTFE AREA (in²)	DIAMETER	SPHERICAL RADIUS	MINIMUM THICKNESS	MAXIMUM THICKNESS	DIAMETER	MAXIMUM THICKNESS	WIDTH	LENGTH	THICKNESS	WIDTH	LENGTH	THICKNESS		
				L_{cp}	A_{PTFE}	D_m	R_{act}	T_{Min}	T_{Max}	C_m	H_{act}	W_{mp}	L_{mp}	T_{mp}	W_{sp}	L_{sp}	T_{sp}	A_h	
Abut 1	475	275	0.0349	13.125	110	12	26	0.75	1.75	13.75	1.75	18	18	1.495	20	35	2.0	6.0	2.5
MAIN HINGE	342	225	0.0349	11.5	81	10	21.75	0.75	1.75	11.5	1.75	SEE NOTE 7		1.25	SEE NOTE 7		1.75	5.5	6
PIER 8 SUPPORT - SOUTH	395	250	0.0349	13.125	121	12	26	0.75	1.75	13.75	1.75	19	19	1.625	20	36	1.875	6.0	0.0
PIER 8 SUPPORT - NORTH	498	380	0.0349	13.125	121	12	26	0.75	1.75	13.75	1.75	19	19	1.625	20	36	1.875	6.0	0.0
Abut 11	498	380	0.0349	13.125	121	12	26	0.75	1.75	13.75	1.75	19	19	1.625	20	29	1.875	6.0	4.5
VV AVE SB OFF RAMP HINGE	255	88	0.0349	9.625	56	8.5	18.5	0.75	1.50	9.75	1.50	13	13	1.25	14	30	1.5	5.0	6.0
VV AVE SB ON RAMP HINGE	245	88	0.0349	9.625	56	8.5	18.5	0.75	1.50	9.75	1.50	13	13	1.25	14	30	1.5	5.0	6.0
NB VV AVE/HINGE/Brg A	151	75	0.0349	9.125	43	8	17.25	0.75	1.50	9.25	1.38	11	11	0.875	13.75	30	2.0	5.375	4
NB VV AVE/HINGE/Brg B	175	98	0.0349	11.125	64	10	21.5	0.75	1.625	11.5	1.53	14	14	1.00	15.5	30	2.0	5.375	4
NB VV AVE/HINGE/Brgs C,D,E & F	224	148	0.0349	11.125	64	10	21.5	0.75	1.625	11.5	1.53	14	14	1.00	15.5	30	2.0	5.375	4
SB VV AVE/HINGE/Brgs 1,2,3 & 6	218	143	0.0349	10.25	64.0	9.0	19.5	0.75	1.50	10.5	1.50	12.5	12.5	1.00	16.25	30	2.5	5.625	3.5
SB VV AVE/HINGE/Brgs 4 & 5	164	107	0.0349	9.0	49.0	8.0	16.5	0.75	1.50	9.0	1.50	10.75	10.75	0.875	15.0	30	2.5	5.625	3.5

REVISED STANDARD DRAWING

FILE NO. xs9-010

APPROVAL DATE July 2011

① NOTE 1 AMENDED
② MODIFIED DETAIL
③ MODIFIED TABLE
④ ADDED TABLE

STATE OF CALIFORNIA
DEPARTMENT OF TRANSPORTATION

DIVISION OF ENGINEERING SERVICES

BRIDGE NO. 53-3045
POST MILE 1.21

VALLEY VIEW AVE OH/OC (REPLACEMENT)

PTFE/SPHERICAL EXPANSION BEARING DETAILS NO 1

DS OSD 2147A (ENGLISH STANDARD DRAWING "XS" BORDER REV. (02-02-11)

ORIGINAL SCALE IN INCHES FOR REDUCED PLANS 0 1 2 3

UNIT: 3587
PROJECT NUMBER & PHASE: 0715000160-1
CONTRACT NO.: 07-2159u4

DISREGARD PRINTS BEARING EARLIER REVISION DATES

REVISION DATES: 12-23-10 6-24-13 8-22-13 9/6/13

SHEET 159 OF 182

FILE => 53-3045-s-ptfe1.dgn

USERNAME => s125624 DATE PLOTTED => 28-JAN-2016 TIME PLOTTED => 12:10

DIST	COUNTY	ROUTE	POST MILES TOTAL PROJECT	SHEET No.	TOTAL SHEETS
07	LA,Ora	5	0.0/1.5, 44.3/44.4	1227	1622

REGISTERED CIVIL ENGINEER — DATE: 3-18-15

1-25-16
PLANS APPROVAL DATE

REGISTERED PROFESSIONAL ENGINEER — WILLIAM D. KEMP — No. 55730 — Exp. 12/31/16 — CIVIL — STATE OF CALIFORNIA

The State of California or its officers or agents shall not be responsible for the accuracy or completeness of electronic copies of this plan sheet.

MASONARY PLATE LOCATION	# SPACES (WIDTH)	# SPACES (LENGTH)
ABUT 1	2	2
MAIN HINGE	SEE NOTE 1	
PIER 8 (SOUTH SUPPORT)	2	2
PIER 8 (NORTH SUPPORT)	2	2
ABUT 11	2	2
SB OFF RAMP (HINGE)	1	1
SB ON RAMP (HINGE)	1	1
NB VALLEY VIEW RAMP (HINGE)	2	2
SB VALLEY VIEW RAMP (HINGE)	2	2

SOLE PLATE LOCATION	# SPACES (WIDTH)	# SPACES (LENGTH)
ABUT 1	2	3
MAIN HINGE	SEE NOTE 1	
PIER 8 (SOUTH SUPPORT)	2	3
PIER 8 (NORTH SUPPORT)	2	3
ABUT 11	2	3
SB OFF RAMP (HINGE)	2	2
SB ON RAMP (HINGE)	2	2
NB VALLEY VIEW RAMP (HINGE)	2	3
SB VALLEY VIEW RAMP (HINGE)	2	3

NOTE:

1. For Main Hinge Masonry Plate and Sole Plate layout see "PTFE/SPHERICAL EXPANSION BEARING DETAILS NO. 3" sheet.

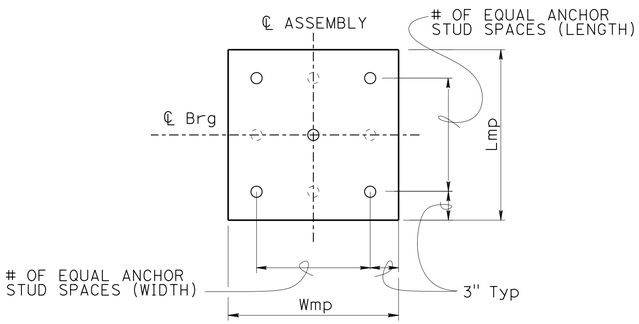

PLAN-MASONRY PLATE

NO SCALE

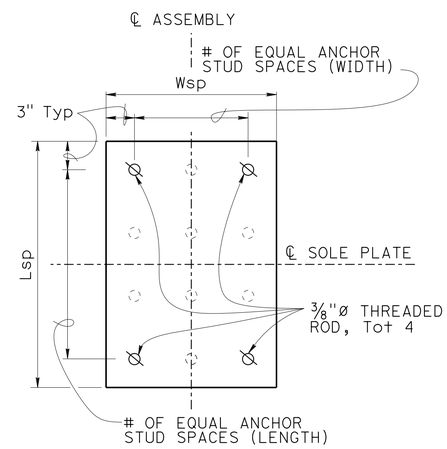

PLAN-SOLE PLATE

NO SCALE

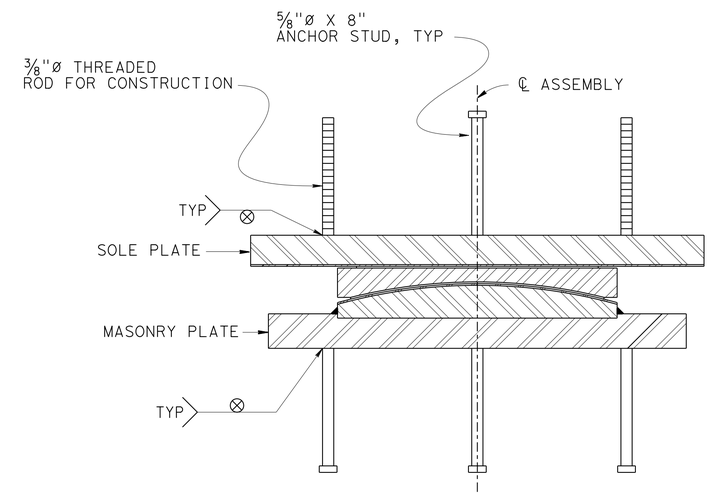

ANCHORAGE DETAIL

NO SCALE

DESIGN	BY William Kemp	CHECKED Dauryoush Tavatli	
DETAILS	BY J. Hunter	CHECKED Dauryoush Tavatli	
QUANTITIES	BY Krishnakant Andurlekar	CHECKED Ruperd Wilson	

STATE OF CALIFORNIA
DEPARTMENT OF TRANSPORTATION

DIVISION OF ENGINEERING SERVICES
STRUCTURE DESIGN
DESIGN BRANCH 11

BRIDGE NO. 53-3045
POST MILE 1.21

VALLEY VIEW AVE OH/OC (REPLACEMENT)
PTFE/SPHERICAL EXPANSION BEARING DETAILS NO 2

STRUCTURES DESIGN DETAIL SHEET (ENGLISH) (REV. 09-01-10)

ORIGINAL SCALE IN INCHES FOR REDUCED PLANS 0 1 2 3

UNIT: 3587
PROJECT NUMBER & PHASE: 0715000160-1
CONTRACT NO.: 07-2159U4

DISREGARD PRINTS BEARING EARLIER REVISION DATES → 12-23-10 5-27-11

REVISION DATES | SHEET 160 | OF 182

FILE => 53-3045-s-ptfe2.dgn

USERNAME => s123624 DATE PLOTTED => 28-JAN-2016 TIME PLOTTED => 12:10

DIST	COUNTY	ROUTE	POST MILES TOTAL PROJECT	SHEET No.	TOTAL SHEETS
07	LA,Ora	5	0.0/1.5, 44.3/44.4	1228	1622

REGISTERED CIVIL ENGINEER 3-18-15 DATE

1-25-16
PLANS APPROVAL DATE

REGISTERED PROFESSIONAL ENGINEER WILLIAM D. KEMP No. 55730 Exp. 12/31/16 CIVIL STATE OF CALIFORNIA

The State of California or its officers or agents shall not be responsible for the accuracy or completeness of scanned copies of this plan sheet.

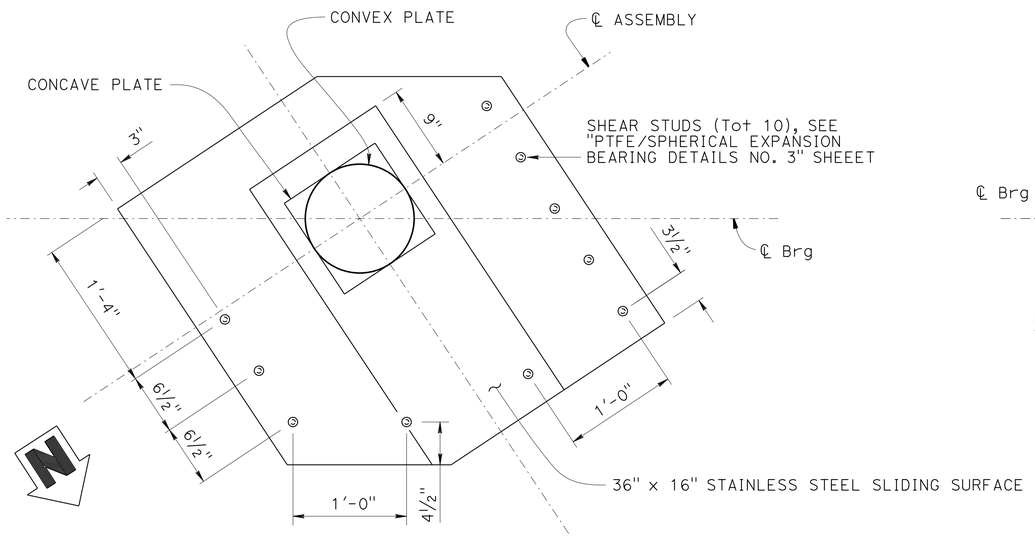

NOTE: For dimensions not shown, see "SOLE PLATE PLAN AT INTERIOR GIRDERS" detail.

SOLE PLATE PLAN AT OUTSIDE EXTERIOR GIRDERS

1½" = 1'-0"

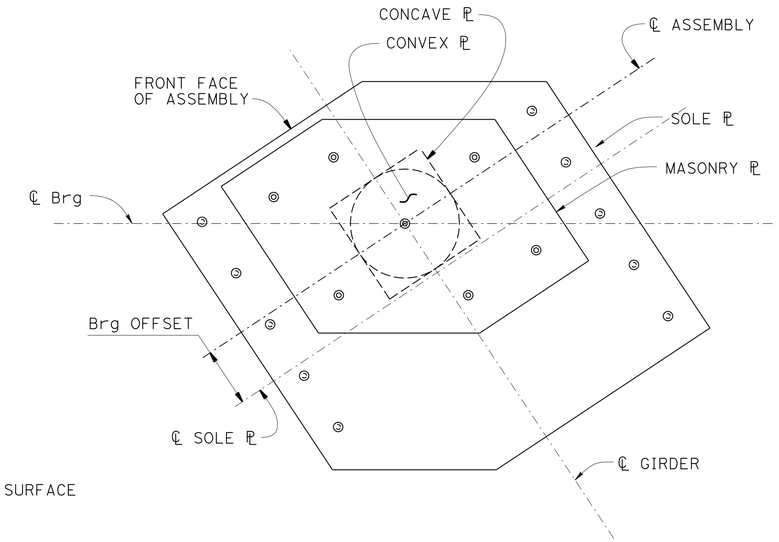

BEARING ASSEMBLY PLAN

1½" = 1'-0"

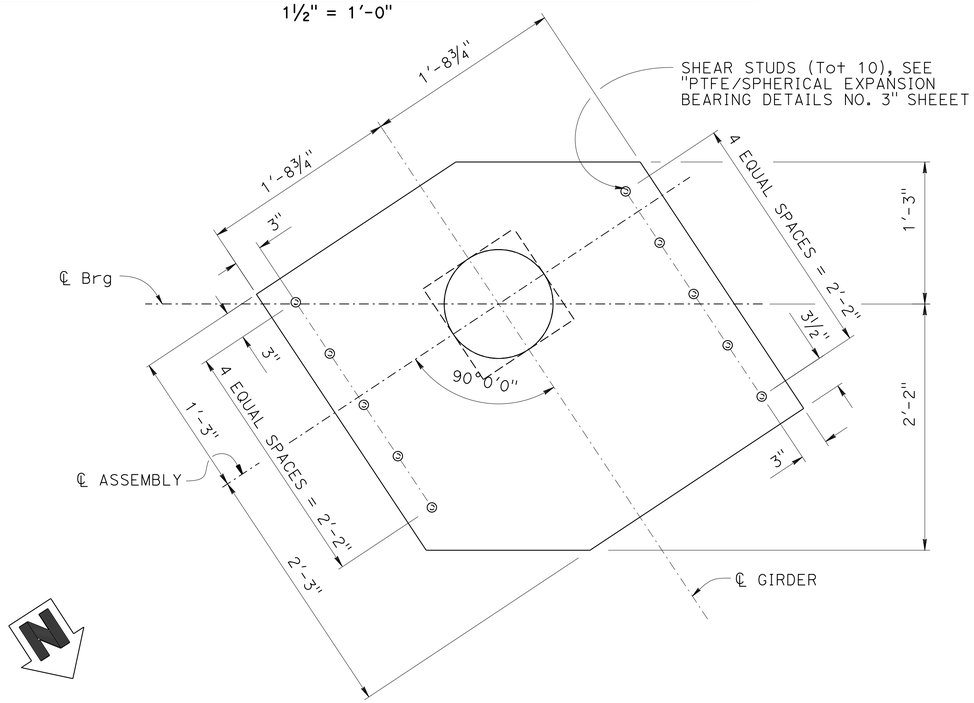

SOLE PLATE PLAN AT INTERIOR GIRDERS

1½" = 1'-0"

NOTE: For concave plate, convex plate and stainless steel surface, see "SOLE PLATE PLAN AT OUTSIDE EXTERIOR GIRDERS" detail.

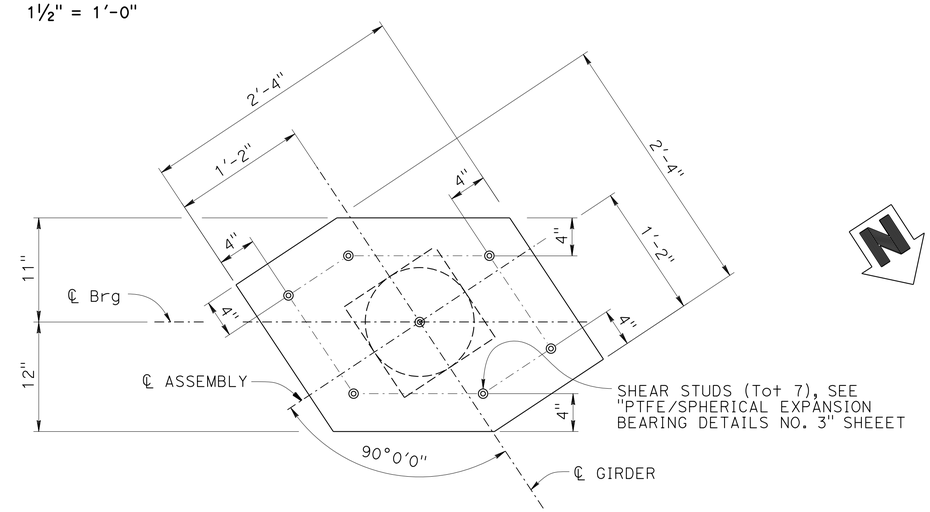

MASONRY PLATE PLAN

1½" = 1'-0"

DESIGN	BY Bill Kemp	CHECKED Mark Okimura	
DETAILS	BY Herman Mauroschadt	CHECKED Mark okimura	
QUANTITIES	BY Mark Okimura	CHECKED John Radu	

STATE OF CALIFORNIA
DEPARTMENT OF TRANSPORTATION

DIVISION OF ENGINEERING SERVICES
STRUCTURE DESIGN
DESIGN BRANCH 11

BRIDGE NO. 53-3045
POST MILE 1.21

VALLEY VIEW AVE OH/OC (REPLACEMENT)

PTFE/SPHERICAL EXPANSION BEARING DETAILS NO 3

STRUCTURES DESIGN DETAIL SHEET (ENGLISH) (REV. 09-01-10)

ORIGINAL SCALE IN INCHES FOR REDUCED PLANS 0 1 2 3

UNIT: 3587
PROJECT NUMBER & PHASE: 0715000160-1
CONTRACT NO.: 07-2159U4

DISREGARD PRINTS BEARING EARLIER REVISION DATES

REVISION DATES: 3-4-13 8-12-13 8-15-13 9/6/13

SHEET 161 OF 182

FILE => 53-3045-s-ptfe3.dgn

USERNAME => s125624 DATE PLOTTED => 28-JAN-2016 TIME PLOTTED => 12:10

DIST	COUNTY	ROUTE	POST MILES TOTAL PROJECT	SHEET No.	TOTAL SHEETS
07	LA,Ora	5	0.0/1.5, 44.3/44.4	1229	1622

REGISTERED CIVIL ENGINEER — DATE 3-18-15

1-25-16
PLANS APPROVAL DATE

REGISTERED PROFESSIONAL ENGINEER — WILLIAM D. KEMP No. 55730 Exp 12/31/16 CIVIL — STATE OF CALIFORNIA

The State of California or its officers or agents shall not be responsible for the accuracy or completeness of electronic copies of this plan sheet.

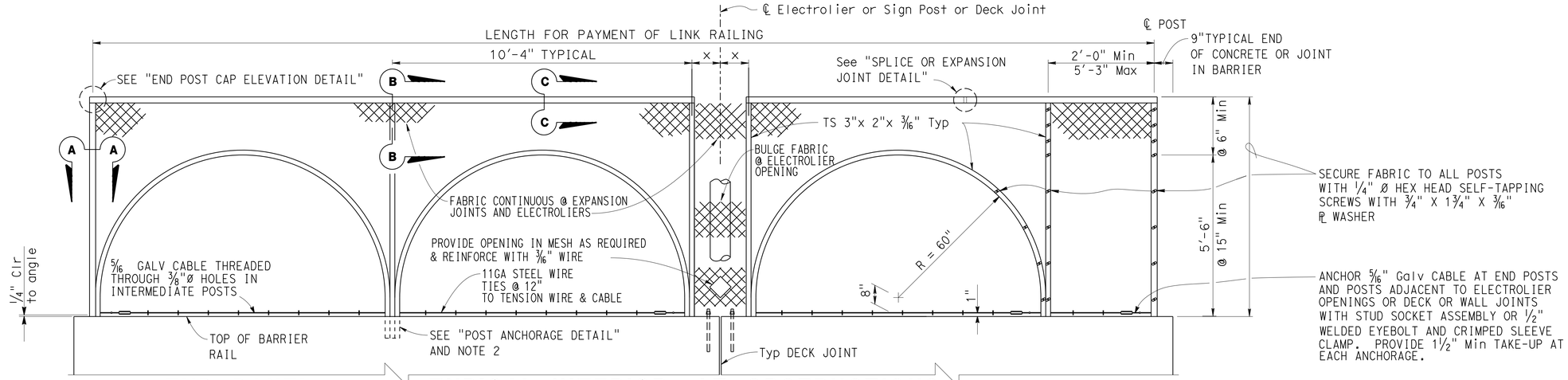

END PANEL | **TYPICAL INTERIOR PANEL** | **AT OBSTRUCTIONS & DECK JOINTS** | **ALTERNATE END PANEL**

ELEVATION

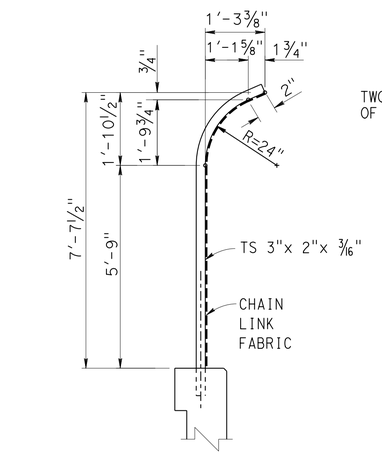

TYPICAL SECTION

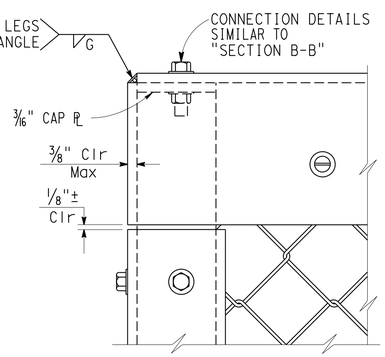

END POST CAP ELEVATION

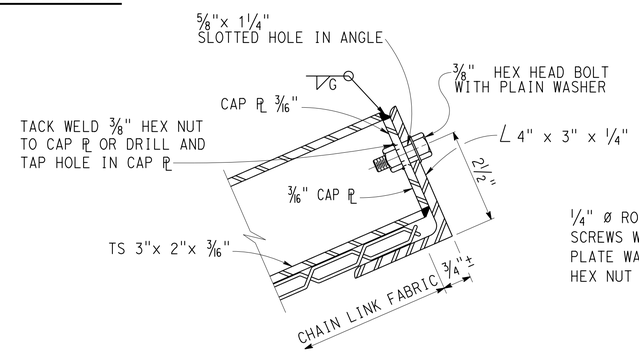

SECTION B-B

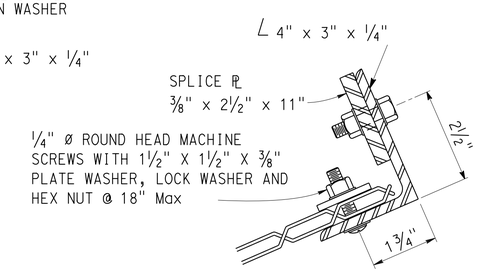

SECTION C-C

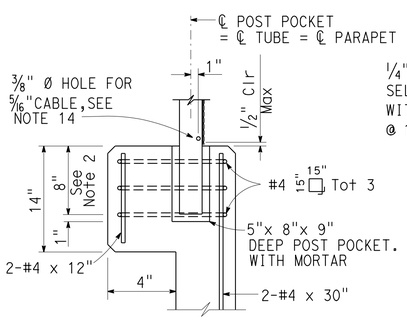

POST ANCHORAGE DETAIL

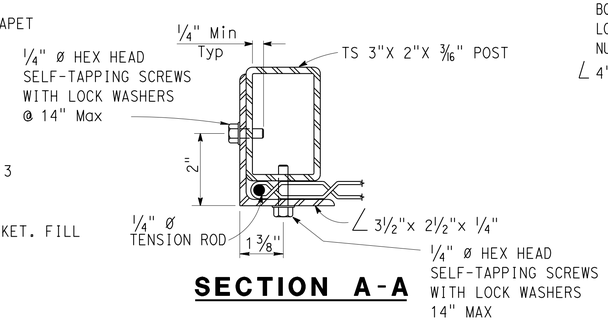

SECTION A-A

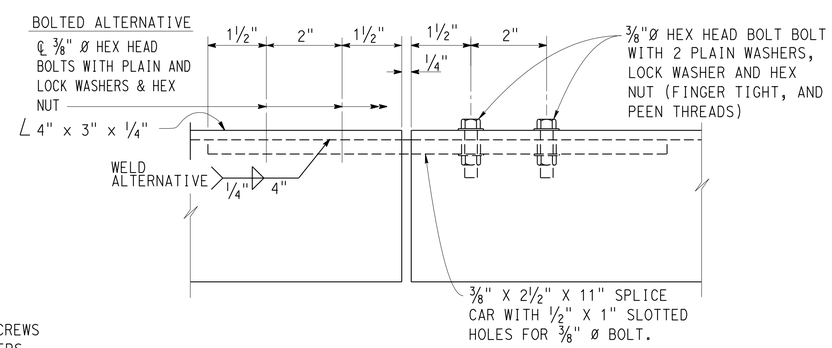

SPLICE OR EXPANSION JOINT DETAIL

NOTES:

X = 1'-0" Min @ Electroliers & Sign Post
2'-0" Max

X = 1'-0" Min @ Deck Joints
1'-4" Max

1. Horizontal angle shall be continuous over not less than two intermediate posts except that a shorter length is permitted at expansion joints,electroliers and other rail discontinuities.
2. One post may be embedded 12" minimum to accomodate grade changes, otherwise fabricate post lengths as required.
3. Curved posts may be rotated in plan within its post pocket to accomodate curved horizontal alignment.
4. Straight posts and straight portions of curved posts shall be installed normal to bridge profile grade.
5. Top horizontal angle shall be parallel to bridge profile grade and shall be shop bent to fit horizontal curves.
6. When railing is on slope, fabric shall be placed parallel to slope.
7. Alternative details may be submitted by Contractor for Engineer's approval.
8. Railing assembly except chain link fabric shall be galvanized after fabrication.
9. For details and reinforcement not shown for Type 26 Mod Barrier, see RSP B11-54
10. See "STRUCTURE PLAN -----" for limits of Chain Link Railing (Mod).
11. Provide thimbles at all cable loops.
12. Chain link fabric to be 96" wide with 1" mesh and with knuckled selvage top and bottom.
13. When railing is placed on a horizontal alignment with a radius of 150'-0" or less, thread 5/16" cable through 3/8" Ø welded eye rods embedded 4" into the top of the concrete parapet and equally spaced to limit the middle ordinate distance between the 5/16" cable and the curve to 1" max.
14. Holes in posts for 5/16" cable and its anchorage may be field drilled and painted with zinc rich paint.

	BY	CHECKED
DESIGN	Bill Kemp	KA/DT
DETAILS	J. Hunter	Bill Kemp
QUANTITIES	KA/MO/JP	John R/Ruperd W/Nikki T

STATE OF CALIFORNIA
DEPARTMENT OF TRANSPORTATION

DIVISION OF ENGINEERING SERVICES
STRUCTURE DESIGN
DESIGN BRANCH 11

BRIDGE NO. 53-3045
POST MILE 1.21

VALLEY VIEW AVE OH/OC (REPLACEMENT)
CHAIN LINK RAILING DETAILS

STRUCTURES DESIGN DETAIL SHEET (ENGLISH) (REV. 09-01-10)

ORIGINAL SCALE IN INCHES FOR REDUCED PLANS 0 1 2 3

UNIT: 3587
PROJECT NUMBER & PHASE: 0715000160-1
CONTRACT NO.: 07-2159U4

DISREGARD PRINTS BEARING EARLIER REVISION DATES
REVISION DATES 1/20/11 10/01/13

SHEET 162 OF 182

FILE => 53-3045-t-chnlnk.dgn

USERNAME => s125624 DATE PLOTTED => 28-JAN-2016 TIME PLOTTED => 12:10

DIST	COUNTY	ROUTE	POST MILES TOTAL PROJECT	SHEET No.	TOTAL SHEETS
07	LA,Ora	5	0.0/1.5, 44.3/44.4	1230	1622

REGISTERED CIVIL ENGINEER — DATE: 3-18-15

1-25-16
PLANS APPROVAL DATE

REGISTERED PROFESSIONAL ENGINEER — WILLIAM D. KEMP — No. 55730 — Exp. 12/31/16 — CIVIL — STATE OF CALIFORNIA

The State of California or its officers or agents shall not be responsible for the accuracy or completeness of electronic copies of this plan sheet.

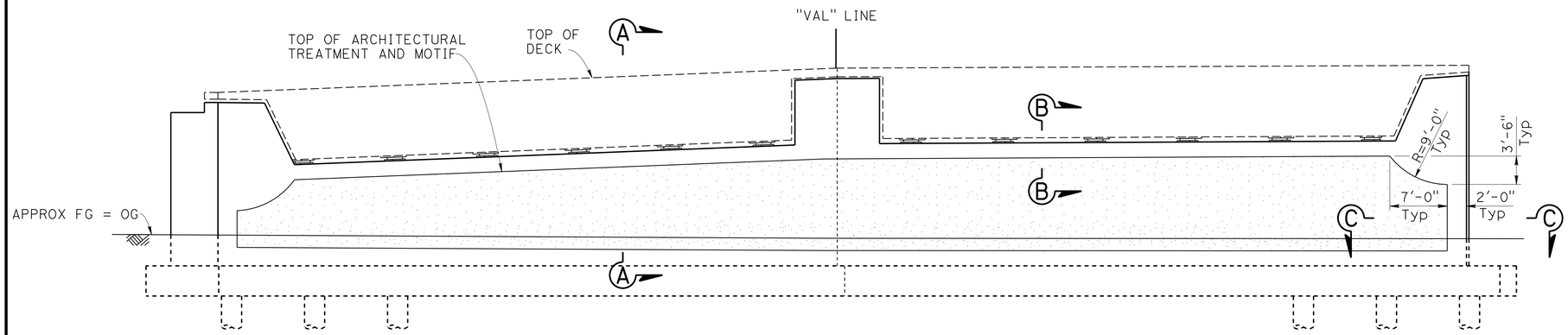

ABUTMENT 1 ELEVATION

1/8 = 1'-0"

LEGEND:

-TEXTURED CONCRETE SURFACE = SPLIT SLATE TEXTURE

-SMOOTH CONCRETE SURFACE

NOTE:

1. For Sections 'A-A', 'B-B', 'C-C' & 'D-D', see "SECTIONS & MOTIF DETAILS AT ABUTMENTS" sheet
2. For Archectural Treatment on Retaining Wall SEE "RETAINING WALL VA103" and "RETAINING WALL V1014" SHEETS
3. Abutment 1 Elevation shown, Abutment 11 similar.

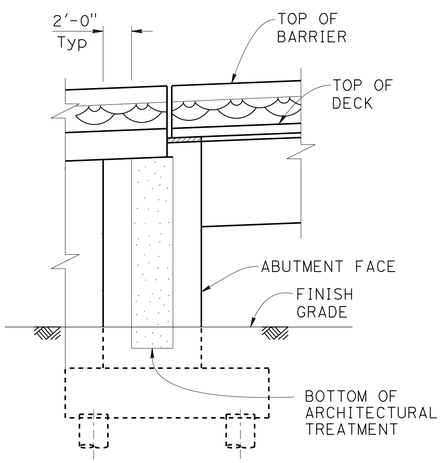

ELEVATION ALONG RT EOD

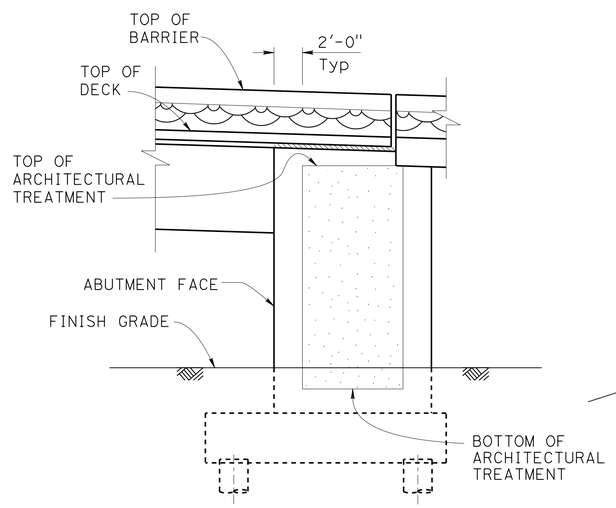

ELEVATION ALONG LT EOD

ABUTMENT 1

3/16" = 1'-0"

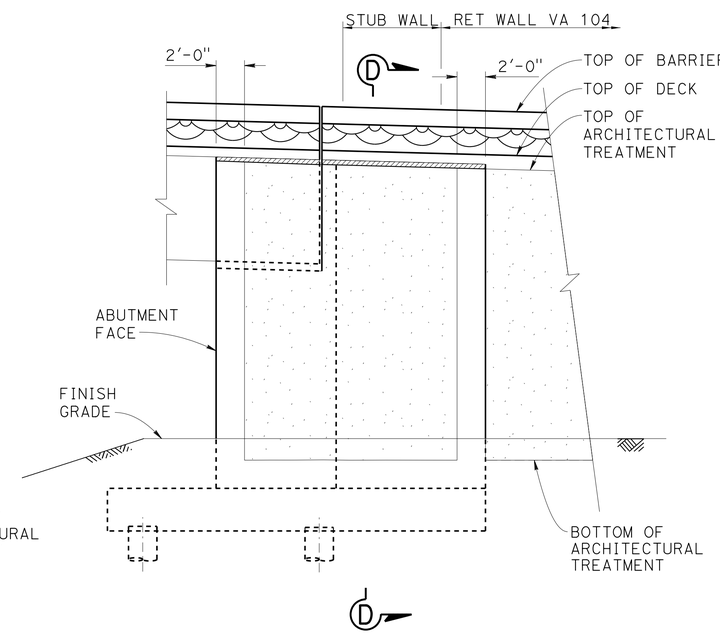

ELEVATION ALONG RT EOD

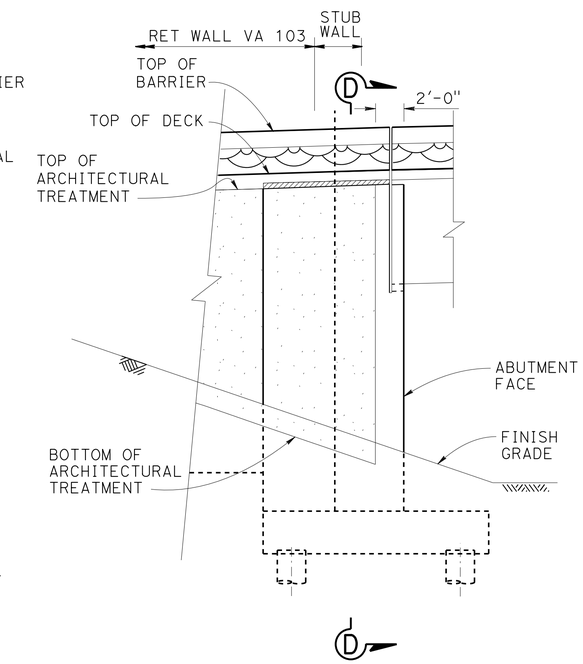

ELEVATION ALONG LT EOD

ABUTMENT 11

3/16" = 1'-0"

DESIGN	BY H. Javier Chavez	CHECKED Issac Tasabia	
DETAILS	BY Jaime Ramirez	CHECKED H. Javier Chavez	
QUANTITIES	BY Krishnakant Andurlekar	CHECKED Ruperd Wilson	

STATE OF CALIFORNIA
DEPARTMENT OF TRANSPORTATION

DIVISION OF ENGINEERING SERVICES
STRUCTURE DESIGN
DESIGN BRANCH 11

BRIDGE NO. 53-3045
POST MILE 1.21

VALLEY VIEW AVE OH/OC (REPLACEMENT)
ARCHITECTURAL ELEVATIONS AT ABUTMENTS

STRUCTURES DESIGN DETAIL SHEET (ENGLISH) (REV. 09-01-10)

ORIGINAL SCALE IN INCHES FOR REDUCED PLANS 0 1 2 3

UNIT: 3587
PROJECT NUMBER & PHASE: 0715000160-1
CONTRACT NO.: 07-2159U4

DISREGARD PRINTS BEARING EARLIER REVISION DATES

REVISION DATES: 8-9-12, 1-31-13, 4-03-13, 9-19-13

SHEET 163 OF 182

FILE => 53-3045-y-arch1.dgn

USERNAME => s125624 DATE PLOTTED => 28-JAN-2016 TIME PLOTTED => 12:10

DIST	COUNTY	ROUTE	POST MILES TOTAL PROJECT	SHEET No.	TOTAL SHEETS
07	LA,Ora	5	0.0/1.5, 44.3/44.4	1231	1622

REGISTERED CIVIL ENGINEER 3-18-15 DATE

1-25-16
PLANS APPROVAL DATE

REGISTERED PROFESSIONAL ENGINEER WILLIAM D. KEMP No. 55730 Exp. 12/31/16 CIVIL STATE OF CALIFORNIA

The State of California or its officers or agents shall not be responsible for the accuracy or completeness of electronic copies of this plan sheet.

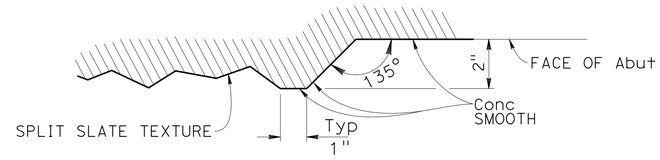

SECTION C-C
NO SCALE

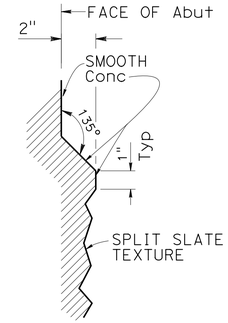

SECTION B-B
NO SCALE

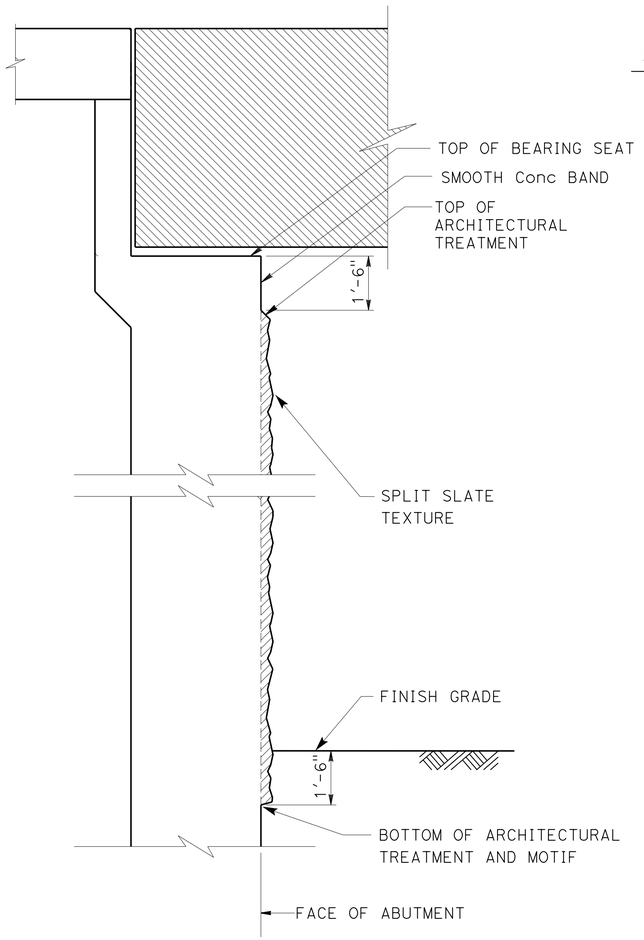

SECTION A-A
NO SCALE

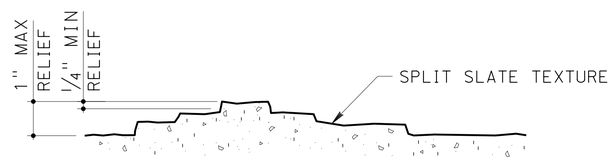

SECTION E-E
NO SCALE

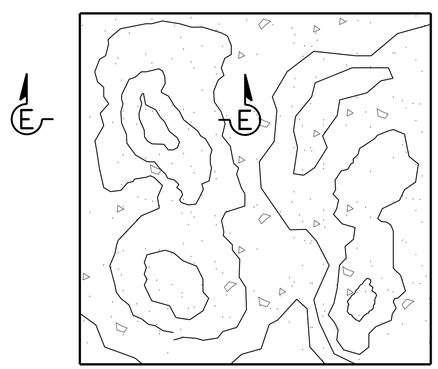

BENT PLAN

SPLIT SLATE TEXTURE
NO SCALE

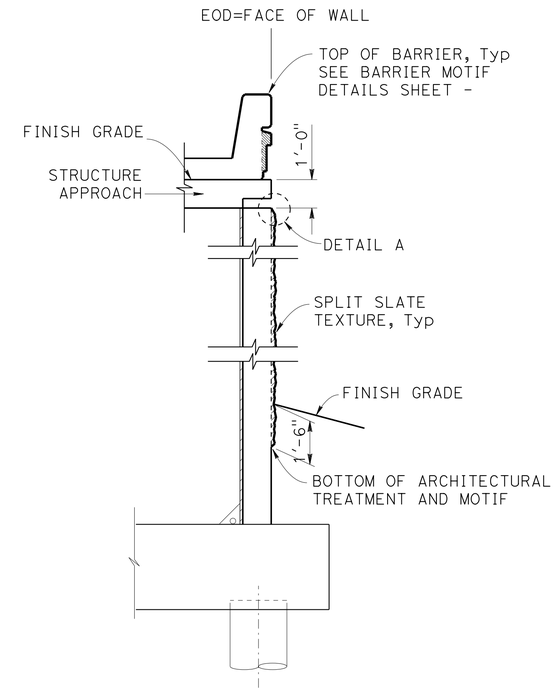

SECTION D-D
NO SCALE

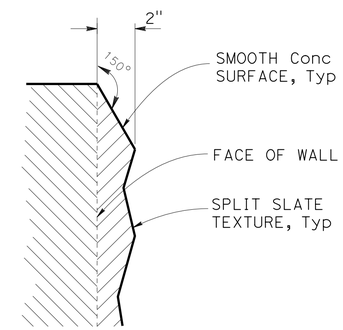

DETAIL A
NO SCALE

NOTES

1. All reference to surface dimensions of wall details are from datum 0 = face of Abutment, Typ
2. For section cuts A-A, B-B, C-C & D-D, see "ARCHITECTURAL ELEVATIONS AT ABUTMENTS" sheet

DESIGN	BY H. Javier Chavez	CHECKED Issac Tasabia	
DETAILS	BY Jaime Ramirez	CHECKED H. Javier Chavez	
QUANTITIES	BY Krishnakant Andurlekar	CHECKED Ruperd Wilson	

STATE OF CALIFORNIA
DEPARTMENT OF TRANSPORTATION

DIVISION OF ENGINEERING SERVICES
STRUCTURE DESIGN
DESIGN BRANCH 11

BRIDGE NO. 53-3045
POST MILE 1.21

VALLEY VIEW AVE OH/OC (REPLACEMENT)
SECTIONS & MOTIF DETAILS AT ABUTMENTS

STRUCTURES DESIGN DETAIL SHEET (ENGLISH) (REV. 09-01-10)

ORIGINAL SCALE IN INCHES FOR REDUCED PLANS 0 1 2 3

UNIT: 3587
PROJECT NUMBER & PHASE: 0715000160-1
CONTRACT NO.: 07-2159u4

DISREGARD PRINTS BEARING EARLIER REVISION DATES
REVISION DATES 8-13-12 8-14-12 9-19-12

SHEET 164 OF 182

FILE => 53-3045-y-arch2.dgn

USERNAME => s125624 DATE PLOTTED => 28-JAN-2016 TIME PLOTTED => 12:10

DIST	COUNTY	ROUTE	POST MILES TOTAL PROJECT	SHEET No.	TOTAL SHEETS
07	LA,Ora	5	0.0/1.5, 44.3/44.4	1232	1622

REGISTERED CIVIL ENGINEER — DATE 3-18-15

1-25-16
PLANS APPROVAL DATE

REGISTERED PROFESSIONAL ENGINEER — WILLIAM D. KEMP — No. 55730 — Exp. 12/31/16 — CIVIL — STATE OF CALIFORNIA

The State of California or its officers or agents shall not be responsible for the accuracy or completeness of electronic copies of this plan sheet.

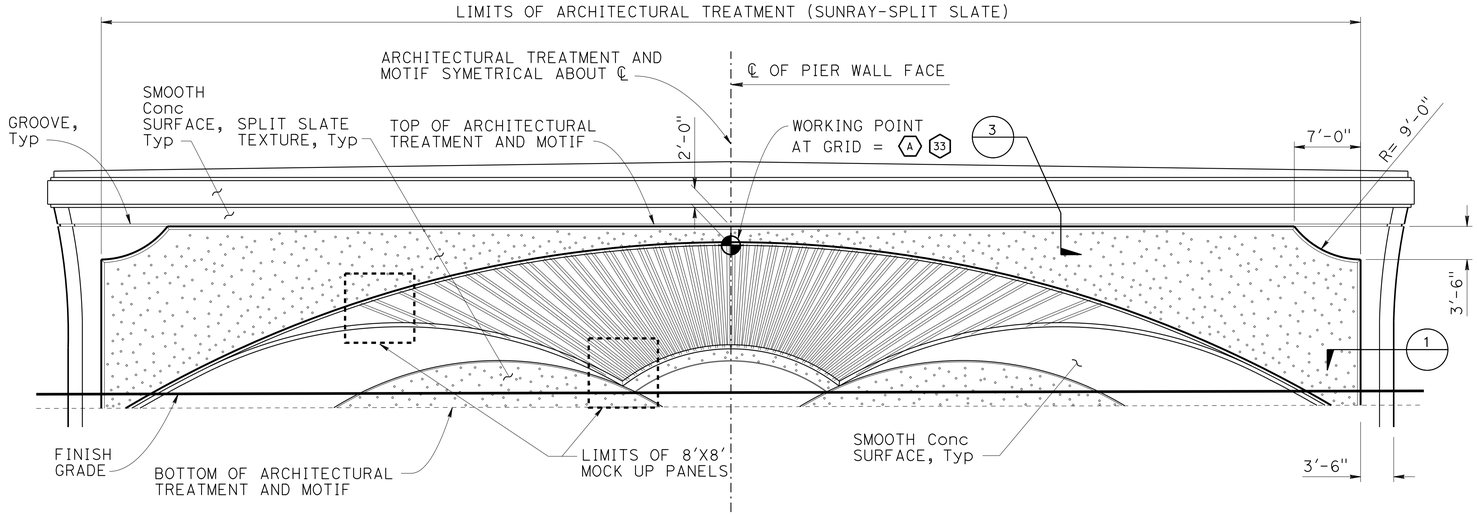

ELEVATION AT PIER 8

1/8" = 1'-0"

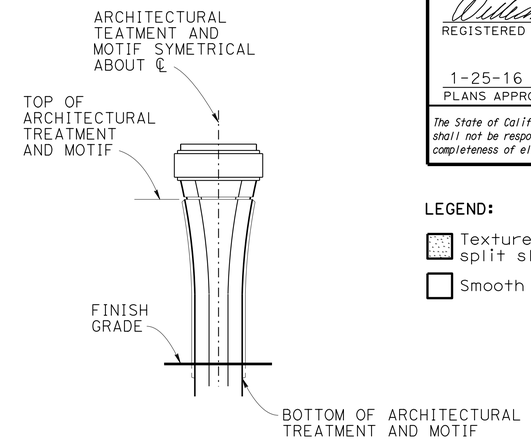

ELEVATION AT PIER 8 SIDE VIEW

1/8" = 1'-0"

LEGEND:

- Textured concrete surface = split slate texture
- Smooth concrete surface

NOTE: For Detail 1 and 3, see "PIER 8 ARCHITECTURAL MOTIF AND DETAILS" sheet

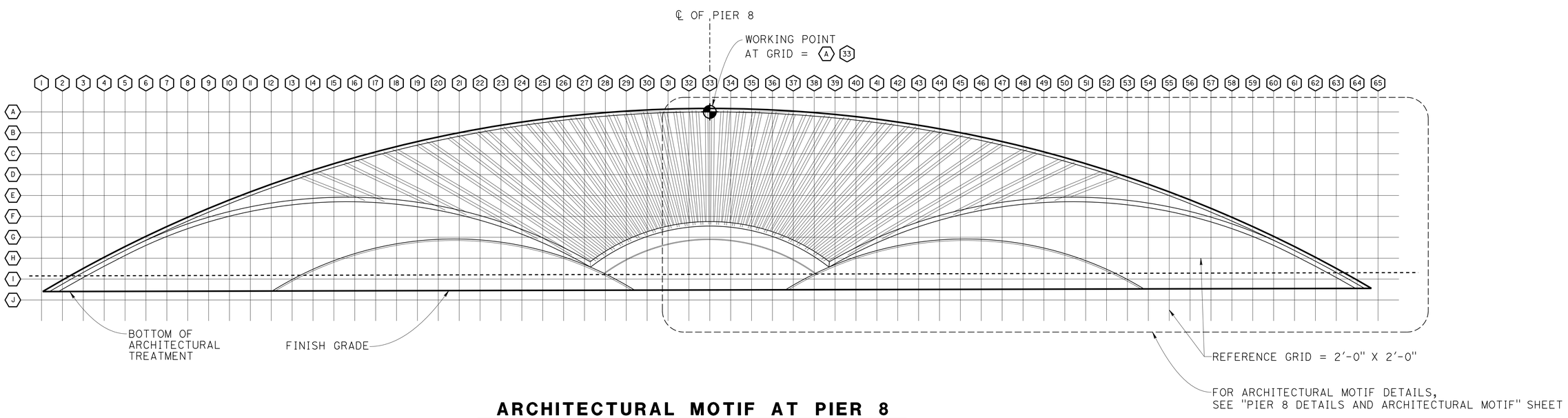

ARCHITECTURAL MOTIF AT PIER 8

1" = 5'-0"

	BY	CHECKED
DESIGN	H. Javier Chavez	Isaac Tasabia
DETAILS	Jaime Ramirez	Isaac Tasabia
QUANTITIES	Gabriel Galo	Margie Thach

STATE OF CALIFORNIA
DEPARTMENT OF TRANSPORTATION

DIVISION OF ENGINEERING SERVICES
STRUCTURE DESIGN
DESIGN BRANCH 11

BRIDGE NO. 53-3045
POST MILE 1.21

VALLEY VIEW AVE OH/OC (REPLACEMENT)
PIER 8 ELEVATION AND ARCHITECTURAL MOTIF

STRUCTURES DESIGN DETAIL SHEET (ENGLISH) (REV. 09-01-10)

ORIGINAL SCALE IN INCHES FOR REDUCED PLANS 0 1 2 3

UNIT: 3587
PROJECT NUMBER & PHASE: 0715000160-1
CONTRACT NO.: 07-2159U4

DISREGARD PRINTS BEARING EARLIER REVISION DATES

REVISION DATES: 4-20-12 2-1-13 5-16-13 9-06-13

SHEET 165 OF 182

FILE => 53-3045-y-arch3.dgn

USERNAME => s125624 DATE PLOTTED => 28-JAN-2016 TIME PLOTTED => 12:10

DIST	COUNTY	ROUTE	POST MILES TOTAL PROJECT	SHEET No.	TOTAL SHEETS
07	LA,Ora	5	0.0/1.5, 44.3/44.4	1233	1622

REGISTERED CIVIL ENGINEER — DATE 3-18-15

1-25-16
PLANS APPROVAL DATE

REGISTERED PROFESSIONAL ENGINEER — WILLIAM D. KEMP No. 55730 Exp. 12/31/16 CIVIL — STATE OF CALIFORNIA

The State of California or its officers or agents shall not be responsible for the accuracy or completeness of electronic copies of this plan sheet.

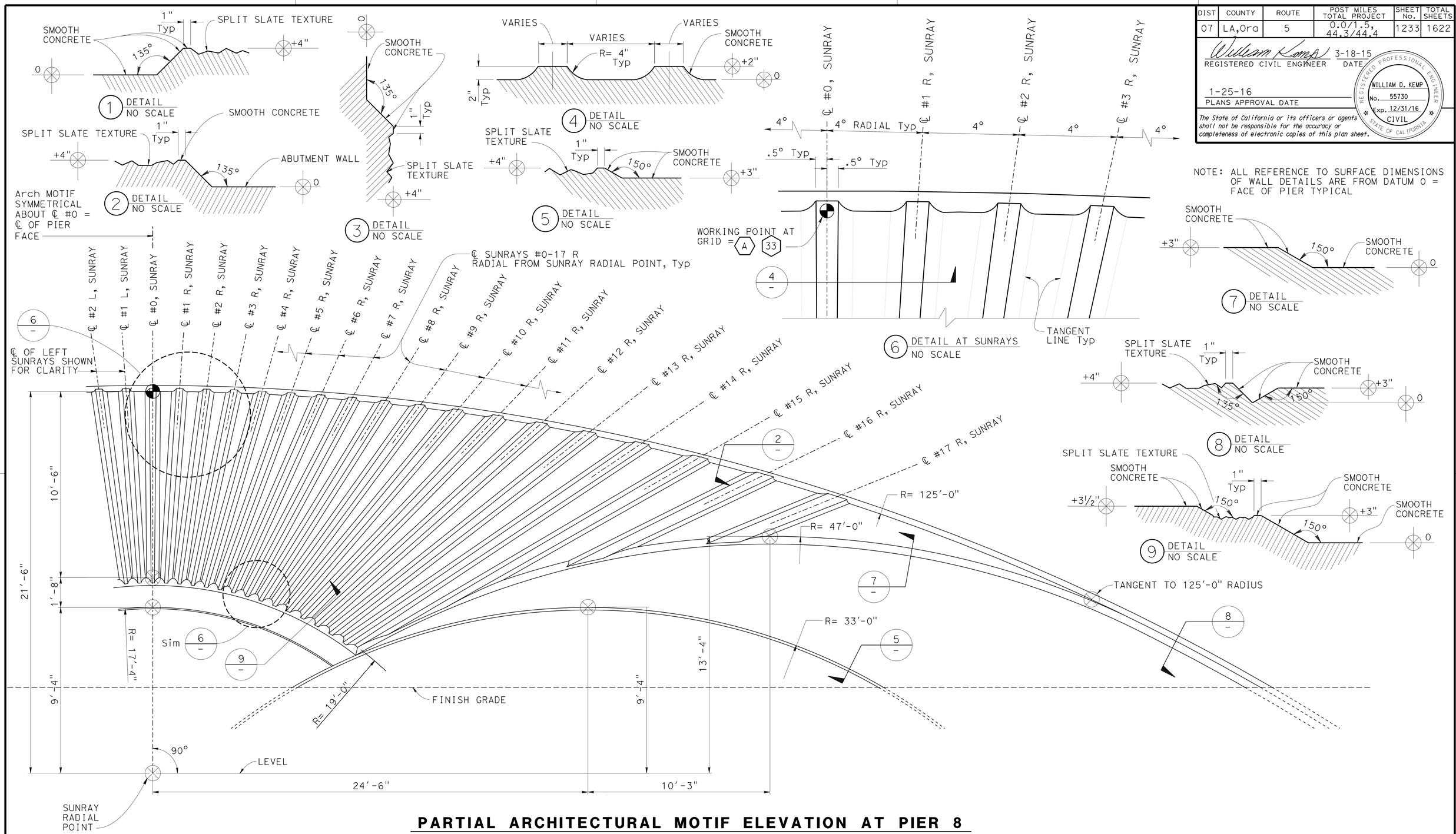

PARTIAL ARCHITECTURAL MOTIF ELEVATION AT PIER 8

3/16" = 1'-0"

DESIGN	BY H. Javier Chavez	CHECKED Isaac Tasabia	
DETAILS	BY Jaime Ramirez	CHECKED Isaac Tasabia	
QUANTITIES	BY Gabreal Galo	CHECKED Margie Thach	

STATE OF CALIFORNIA DEPARTMENT OF TRANSPORTATION

DIVISION OF ENGINEERING SERVICES STRUCTURE DESIGN — DESIGN BRANCH 11

BRIDGE NO. 53-3045 — POST MILE 1.21

VALLEY VIEW AVE OH/OC (REPLACEMENT)
PIER 8 ARCHITECTURAL MOTIF AND DETAILS

STRUCTURES DESIGN DETAIL SHEET (ENGLISH) (REV. 09-01-10)

ORIGINAL SCALE IN INCHES FOR REDUCED PLANS 0 1 2 3

UNIT: 3587
PROJECT NUMBER & PHASE: 0715000160-1
CONTRACT NO.: 07-2159u4

DISREGARD PRINTS BEARING EARLIER REVISION DATES — REVISION DATES 4-23-12 5-16-13

SHEET 166 OF 182

FILE => 53-3045-y-arch4.dgn

USERNAME => s123624 DATE PLOTTED => 28-JAN-2016 TIME PLOTTED => 12:10

DIST	COUNTY	ROUTE	POST MILES TOTAL PROJECT	SHEET No.	TOTAL SHEETS
07	LA,Ora	5	0.0/1.5, 44.3/44.4	1234	1622

REGISTERED CIVIL ENGINEER — DATE: 3-18-15

1-25-16
PLANS APPROVAL DATE

REGISTERED PROFESSIONAL ENGINEER — William D. Kemp — No. 55730 — Exp. 12-31-16 — CIVIL — STATE OF CALIFORNIA

The State of California or its officers or agents shall not be responsible for the accuracy or completeness of electronic copies of this plan sheet.

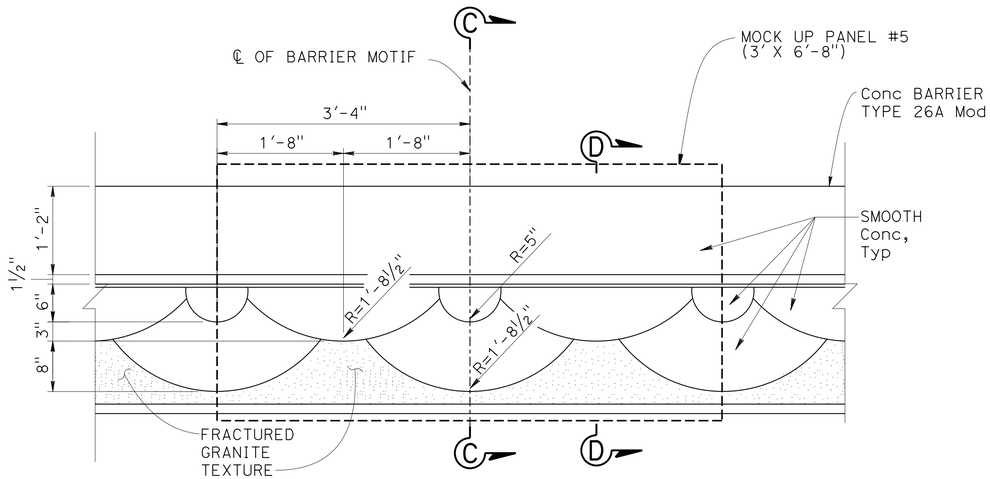

ELEVATION - BARRIER MOTIF

NOT TO SCALE

Note:

All Surface Relief and Texture shall be measured from RWLOL, Typical.

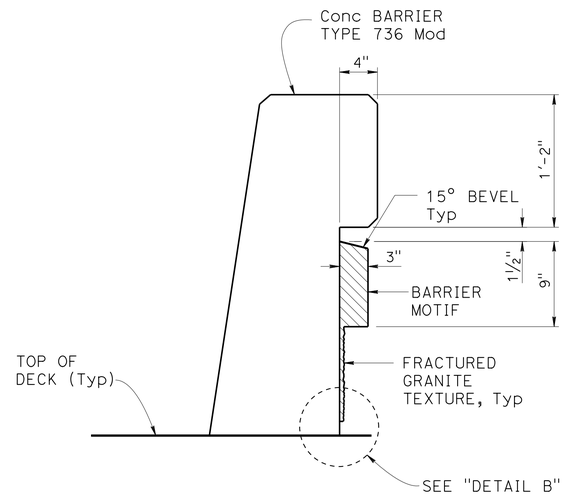

SECTION D-D

1½" = 1'-0"

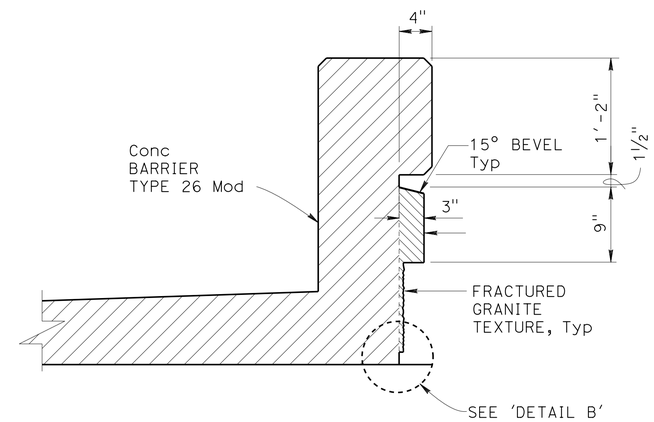

SECTION D-D

NO TO SCALE

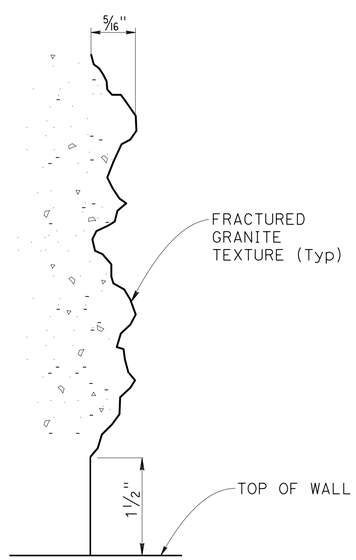

DETAIL B

NOT TO SCALE

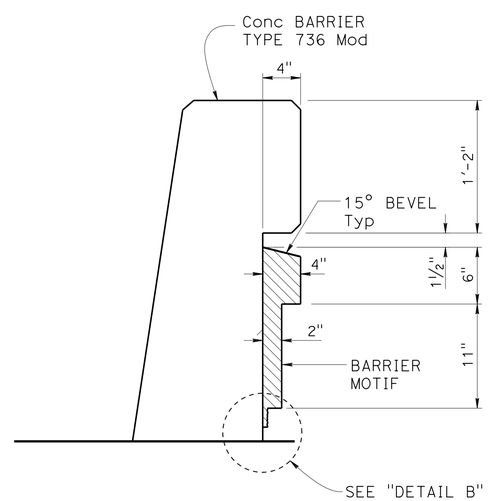

SECTION C-C

1½" = 1'-0"

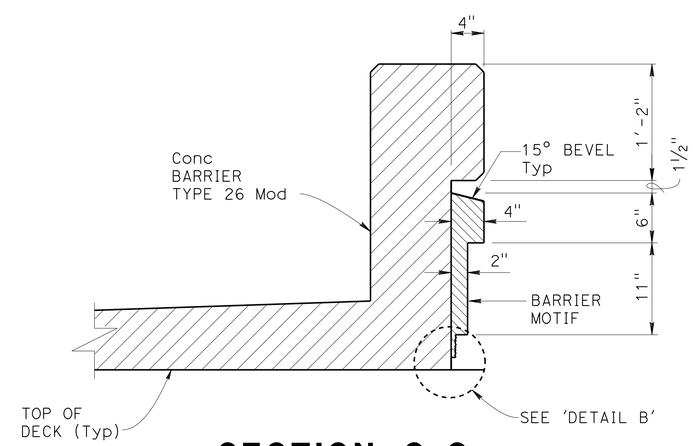

SECTION C-C

NO TO SCALE

DESIGN	BY H. Javier Chavez	CHECKED Issac Tasabia	
DETAILS	BY Jaime Ramirez	CHECKED Issac Tasabia	
QUANTITIES	BY KD/KA/MO/JP	CHECKED NS/JR/RW/NT	

STATE OF CALIFORNIA
DEPARTMENT OF TRANSPORTATION

DIVISION OF ENGINEERING SERVICES
STRUCTURE DESIGN
DESIGN BRANCH 11

BRIDGE NO. 53-3045
POST MILE 1.21

VALLEY VIEW AVE OH/OC (REPLACEMENT)
BARRIER MOTIF DETAILS

STRUCTURES DESIGN DETAIL SHEET (ENGLISH) (REV. 09-01-10)

ORIGINAL SCALE IN INCHES FOR REDUCED PLANS 0 1 2 3

UNIT: 3587
PROJECT NUMBER & PHASE: 0715000160-1
CONTRACT NO.: 07-2159U4

DISREGARD PRINTS BEARING EARLIER REVISION DATES

REVISION DATES: 6-3-13 8-29-13

SHEET 167 OF 182

FILE => 53-3045-y-arch5.dgn

USERNAME => s125624 DATE PLOTTED => 28-JAN-2016 TIME PLOTTED => 12:10

DIST	COUNTY	ROUTE	POST MILES TOTAL PROJECT	SHEET No.	TOTAL SHEETS
07	LA,Ora	5	0.0/1.5, 44.3/44.4	1235	1622

REGISTERED CIVIL ENGINEER 05/20/15 DATE

1-25-16
PLANS APPROVAL DATE

REGISTERED PROFESSIONAL ENGINEER MICHAEL G. SMITH No. 2229 Exp. 03/31/16 GEOTECHNICAL STATE OF CALIFORNIA

URS CORPORATION
2020 EAST FIRST STREET, SUITE 400
SANTA ANA, CA 92705

The State of California or its officers or agents shall not be responsible for the accuracy or completeness of electronic copies of this plan sheet.

BENCH MARK

GPS 0888
ELEVATION 63.317 FT
FOUND 2-1/2 INCH CADT DISK IN CONCRETE CURB, FLUSH, STAMPED "LA51.2 1995"
THE MARK IS LOCATED 0.1 MI NORTHERLY OF THE VALLEY VIEW OVERCROSSING OF THE 5 (SANTA ANA) FWY ON THE SOUTHWESTERLY CURB OF FIRESTONE BLVD AT THE FIRST DRIVEWAY CUT NORTH OF THE FWY.
NORTHING 542603.017
EASTING 1997274.832
DATUM NAVD88

PLAN

SCALE 1"=100'

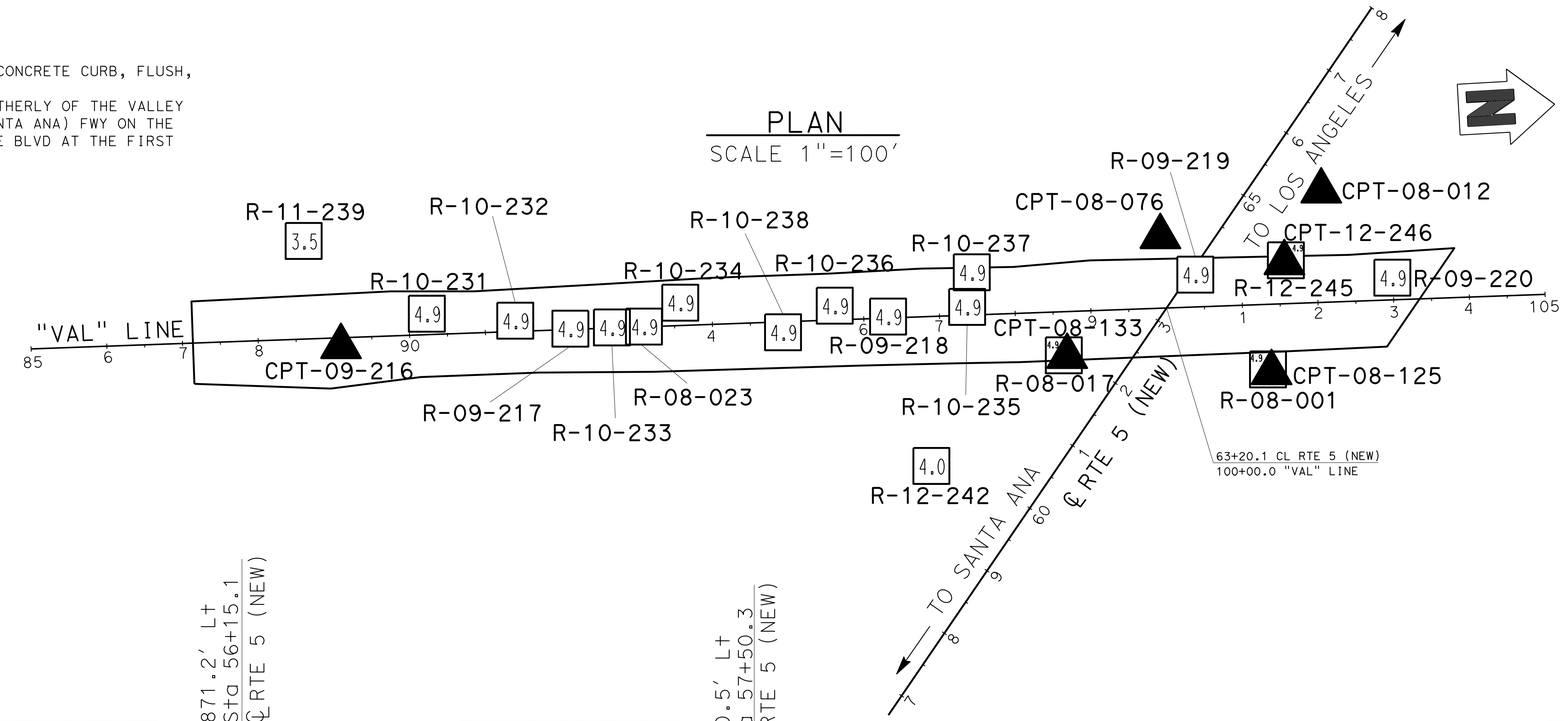

1-This LOTB sheet was prepared in accordance with the Caltrans Soil & Rock Logging, Classification, & Presentation Manual (2010 Edition).

2-For protection of underground utility lines, hand-auger was used to remove top 5 to 10 feet of subsurface material for exploratory borings and Cone Penetration Testings.

3-2.5" to 1.4" blow counts conversion factors for fine-grain and coarse-grain soils have been 0.8 and 0.55, respectively.

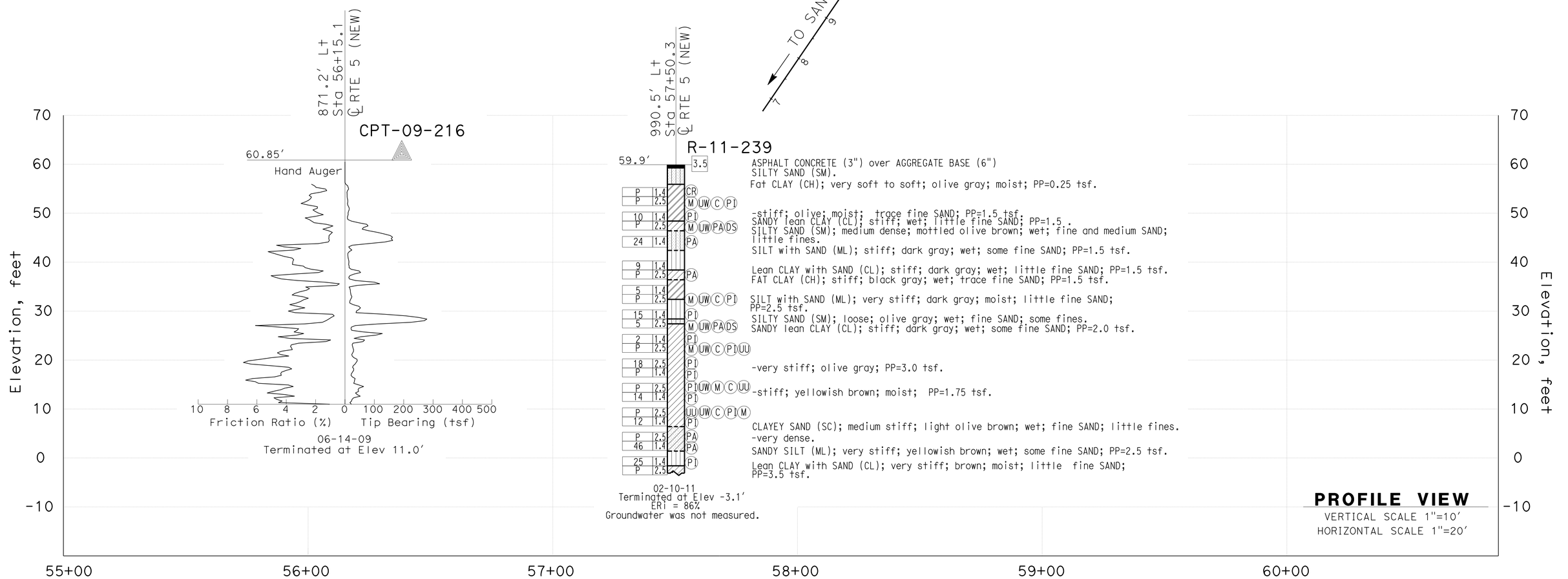

PROFILE VIEW

VERTICAL SCALE 1"=10'
HORIZONTAL SCALE 1"=20'

F.MOTAMED	DRAWN BY	T.PANAH	P.MCDONALD/L.ROEBUCK
DESIGN OVERSIGHT			FIELD INVESTIGATION BY:
05/20/15	CHECKED BY	A.GHAZINOOR/L.KHALKHALI	DATE: 06/14/09 - 02/10/11
SIGN OFF DATE			

PREPARED FOR THE STATE OF CALIFORNIA DEPARTMENT OF TRANSPORTATION

M.G.SMITH
PROJECT ENGINEER

BRIDGE NO. 53-3045
POST MILES 1.21

VALLEY VIEW AVE OH/OC (REPLACE)

LOG OF TEST BORINGS SHEET 1 OF 15

GS CIVIL LOG OF TEST BORINGS SHEET (ENGLISH) (REV. 03/14/12)

ORIGINAL SCALE IN INCHES FOR REDUCED PLANS 0 1 2 3

UNIT: 3658
PROJECT NUMBER & PHASE: 07150001601 CONTRACT NO.: 07-2159U4

DISREGARD PRINTS BEARING EARLIER REVISION DATES

REVISION DATES 5/12/15

SHEET 168 OF 182

FILE => 53-3045-z-lotb01.dgn

USERNAME => s125624 DATE PLOTTED => 28-JAN-2016 TIME PLOTTED => 12:10

DIST	COUNTY	ROUTE	POST MILES TOTAL PROJECT	SHEET No.	TOTAL SHEETS
07	LA,Ora	5	0.0/1.5, 44.3/44.4	1236	1622

REGISTERED CIVIL ENGINEER 05/20/15 DATE

1-25-16
PLANS APPROVAL DATE

REGISTERED PROFESSIONAL ENGINEER MICHAEL G. SMITH No. 2229 Exp. 03/31/16 GEOTECHNICAL STATE OF CALIFORNIA

URS CORPORATION
2020 EAST FIRST STREET, SUITE 400
SANTA ANA, CA 92705

The State of California or its officers or agents shall not be responsible for the accuracy or completeness of electronic copies of this plan sheet.

1-This LOTB sheet was prepared in accordance with the Caltrans Soil & Rock Logging, Classification, & Presentation Manual (2010 Edition).

2-For protection of underground utility lines, hand-auger was used to remove top 5 to 10 feet of subsurface material for exploratory borings and Cone Penetration Testings.

3-2.5" to 1.4" blow counts conversion factors for fine-grain and coarse-grain soils have been 0.8 and 0.55, respectively.

FOR PLAN VIEW, SEE
"LOG OF TEST BORINGS" 1 OF 15

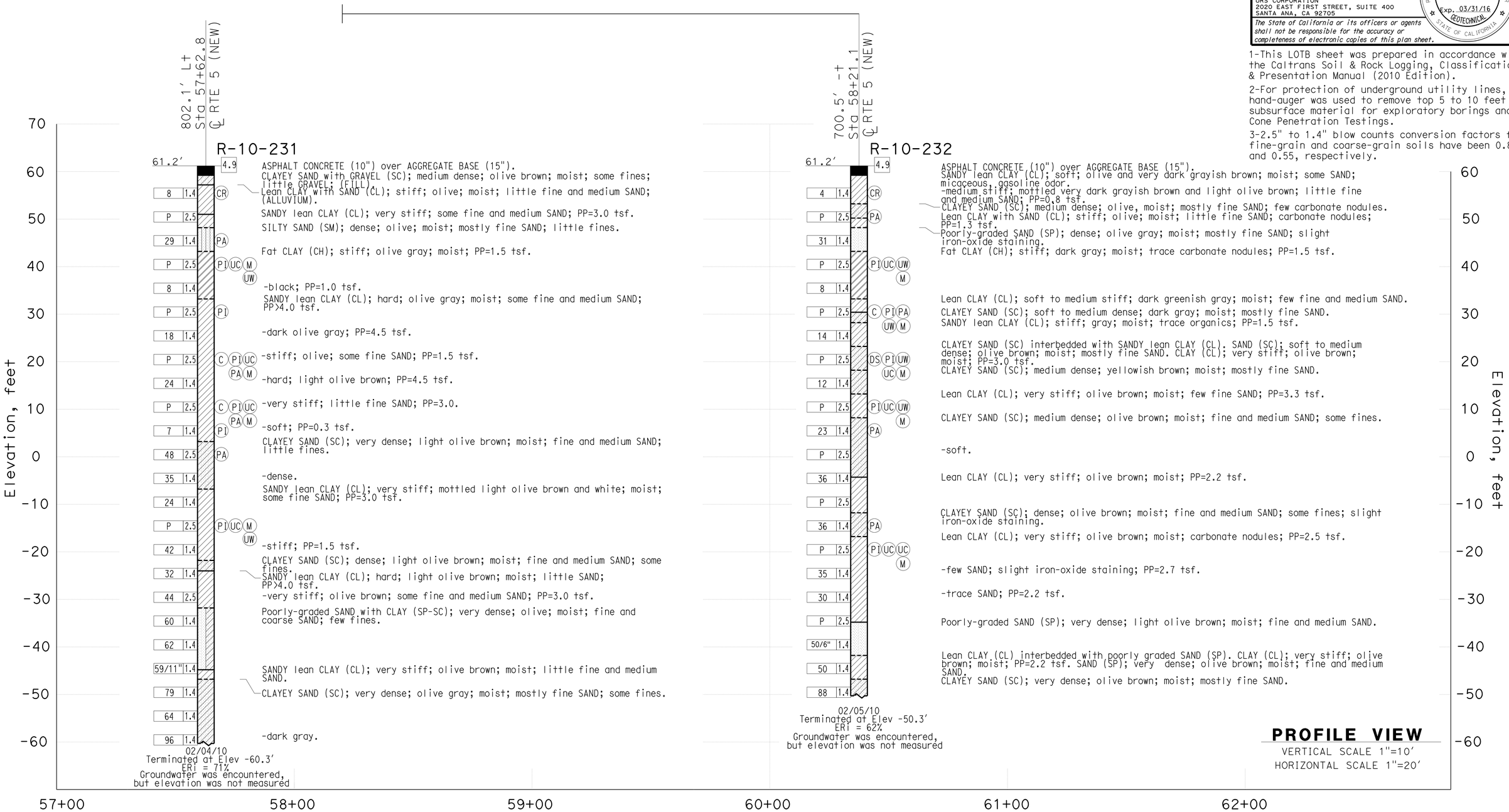

PROFILE VIEW
VERTICAL SCALE 1"=10'
HORIZONTAL SCALE 1"=20'

F.MOTAMED	DRAWN BY	T.PANAH	EJ.JEON/D.ORRIS
DESIGN OVERSIGHT	CHECKED BY	A.GHAZINOOR/L.KHALKHALI	FIELD INVESTIGATION BY:
05/20/15			DATE: 02/04/10 - 02/05/10
SIGN OFF DATE			

PREPARED FOR THE STATE OF CALIFORNIA DEPARTMENT OF TRANSPORTATION

M.G.SMITH
PROJECT ENGINEER

BRIDGE NO. 53-3045
POST MILES 1.21

VALLEY VIEW AVE OH/OC (REPLACE)
LOG OF TEST BORINGS SHEET 2 OF 15

GS CIVIL LOG OF TEST BORINGS SHEET (ENGLISH) (REV. 03/14/12)

ORIGINAL SCALE IN INCHES FOR REDUCED PLANS 0 1 2 3

UNIT: 3658
PROJECT NUMBER & PHASE: 07150001601 CONTRACT NO.: 07-2159U4

DISREGARD PRINTS BEARING EARLIER REVISION DATES

REVISION DATES 5/12/15

SHEET 169 OF 182

FILE => 53-3045-z-lotb02.dgn

USERNAME => s125624 DATE PLOTTED => 28-JAN-2016 TIME PLOTTED => 12:10

DIST	COUNTY	ROUTE	POST MILES TOTAL PROJECT	SHEET No.	TOTAL SHEETS
07	LA,Ora	5	0.0/1.5, 44.3/44.4	1237	1622

REGISTERED CIVIL ENGINEER 05/20/15 DATE

1-25-16
PLANS APPROVAL DATE

REGISTERED PROFESSIONAL ENGINEER MICHAEL G. SMITH No. 2229 Exp. 03/31/16 GEOTECHNICAL STATE OF CALIFORNIA

URS CORPORATION
2020 EAST FIRST STREET, SUITE 400
SANTA ANA, CA 92705

The State of California or its officers or agents shall not be responsible for the accuracy or completeness of electronic copies of this plan sheet.

1-This LOTB sheet was prepared in accordance with the Caltrans Soil & Rock Logging, Classification, & Presentation Manual (2010 Edition).

2-For protection of underground utility lines, hand-auger was used to remove top 5 to 10 feet of subsurface material for exploratory borings and Cone Penetration Testings.

3-2.5" to 1.4" blow counts conversion factors for fine-grain and coarse-grain soils have been 0.8 and 0.55, respectively.

FOR PLAN VIEW, SEE
"LOG OF TEST BORINGS" 1 OF 15

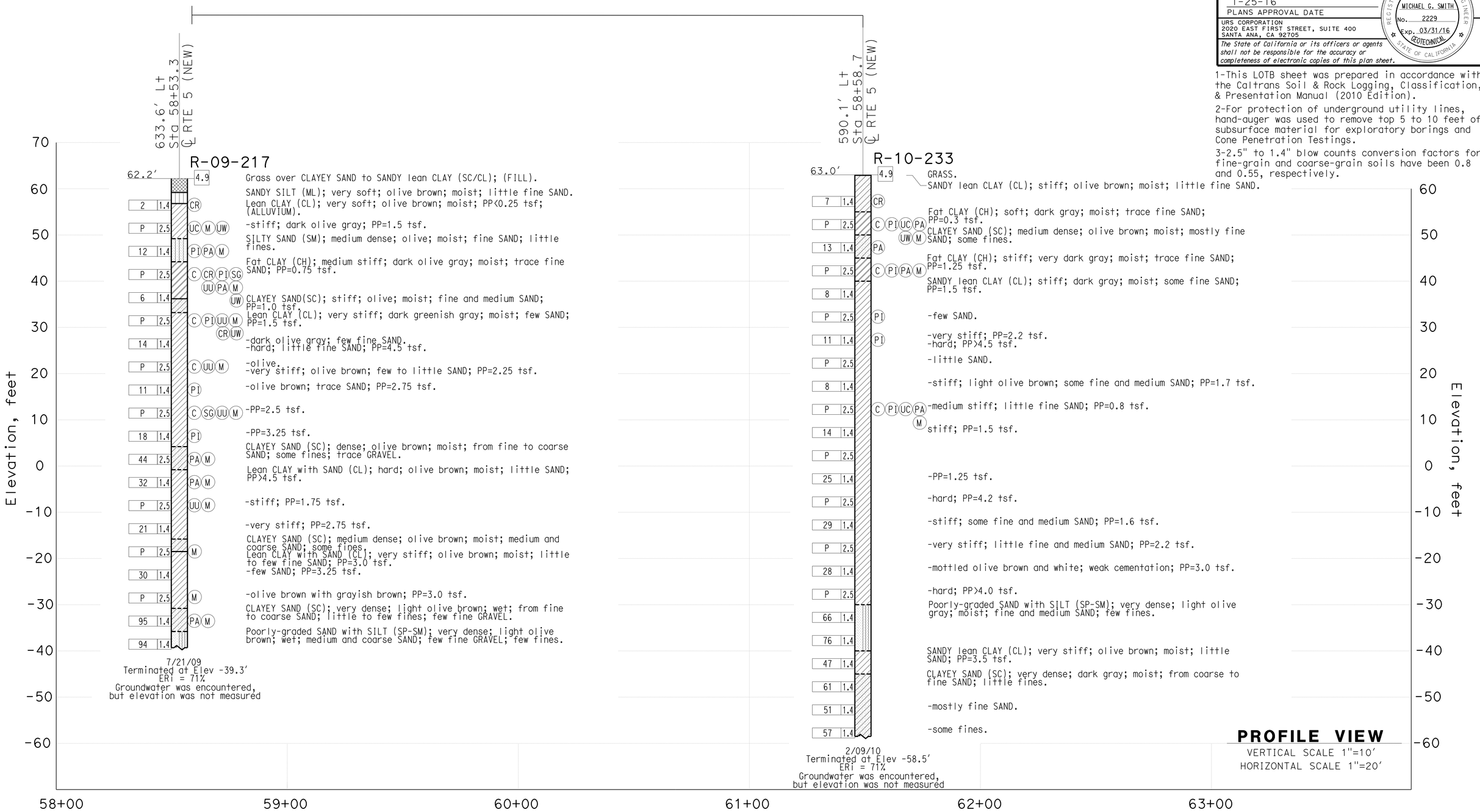

PROFILE VIEW
VERTICAL SCALE 1"=10'
HORIZONTAL SCALE 1"=20'

F.MOTAMED	DRAWN BY	T.PANAH	D.ORRIS/EJ.JEON
DESIGN OVERSIGHT			FIELD INVESTIGATION BY:
05/20/15	CHECKED BY	A.GHAZINOOR/L.KHALKHALI	DATE: 07/21/09 - 02/09/10
SIGN OFF DATE			

PREPARED FOR THE STATE OF CALIFORNIA DEPARTMENT OF TRANSPORTATION

M.G.SMITH
PROJECT ENGINEER

BRIDGE NO. 53-3045
POST MILES 1.21

VALLEY VIEW AVE OH/OC (REPLACE)
LOG OF TEST BORINGS SHEET 3 OF 15

GS CIVIL LOG OF TEST BORINGS SHEET (ENGLISH) (REV. 03/14/12)

ORIGINAL SCALE IN INCHES FOR REDUCED PLANS 0 1 2 3

UNIT: 3658
PROJECT NUMBER & PHASE: 07150001601 CONTRACT NO.: 07-2159U4

DISREGARD PRINTS BEARING EARLIER REVISION DATES → 5/12/15

REVISION DATES			SHEET	OF
5/12/15			170	182

FILE => 53-3045-z-lotb03.dgn

USERNAME => s125624 DATE PLOTTED => 28-JAN-2016 TIME PLOTTED => 12:10

DIST	COUNTY	ROUTE	POST MILES TOTAL PROJECT	SHEET No.	TOTAL SHEETS
07	LA,Ora	5	0.0/1.5, 44.3/44.4	1238	1622

REGISTERED CIVIL ENGINEER 05/20/15 DATE

1-25-16
PLANS APPROVAL DATE

REGISTERED PROFESSIONAL ENGINEER MICHAEL G. SMITH No. 2229 Exp. 03/31/16 GEOTECHNICAL STATE OF CALIFORNIA

URS CORPORATION
2020 EAST FIRST STREET, SUITE 400
SANTA ANA, CA 92705

The State of California or its officers or agents shall not be responsible for the accuracy or completeness of electronic copies of this plan sheet.

1-This LOTB sheet was prepared in accordance with the Caltrans Soil & Rock Logging, Classification, & Presentation Manual (2010 Edition).

2-For protection of underground utility lines, hand-auger was used to remove top 5 to 10 feet of subsurface material for exploratory borings and Cone Penetration Testings.

3-2.5" to 1.4" blow counts conversion factors for fine-grain and coarse-grain soils have been 0.8 and 0.55, respectively.

FOR PLAN VIEW, SEE
"LOG OF TEST BORINGS" 1 OF 15

F.MOTAMED DESIGN OVERSIGHT	DRAWN BY	T.PANAH	P.CHAU FIELD INVESTIGATION BY:	PREPARED FOR THE STATE OF CALIFORNIA DEPARTMENT OF TRANSPORTATION	M.G.SMITH PROJECT ENGINEER
05/20/15 SIGN OFF DATE	CHECKED BY	A.GHAZINOOR/L.KHALKHALI	DATE: 09/23/08 - 04/10/12		

BRIDGE NO. 53-3045
POST MILES 1.21

VALLEY VIEW AVE OH/OC (REPLACE)
LOG OF TEST BORINGS SHEET 4 OF15

GS CIVIL LOG OF TEST BORINGS SHEET (ENGLISH) (REV. 03/14/12)

ORIGINAL SCALE IN INCHES FOR REDUCED PLANS 0 1 2 3

UNIT: 3658
PROJECT NUMBER & PHASE: 07150001601 CONTRACT NO.: 07-2159U4

DISREGARD PRINTS BEARING EARLIER REVISION DATES → 5/12/15

REVISION DATES | SHEET 171 | OF 182

FILE => 53-3045-z-lotb04.dgn

USERNAME => s125624 DATE PLOTTED => 28-JAN-2016 TIME PLOTTED => 12:10

DIST	COUNTY	ROUTE	POST MILES TOTAL PROJECT	SHEET No.	TOTAL SHEETS
07	LA,Ora	5	0.0/1.5, 44.3/44.4	1239	1622

REGISTERED CIVIL ENGINEER 05/20/15 DATE

1-25-16
PLANS APPROVAL DATE

URS CORPORATION
2020 EAST FIRST STREET, SUITE 400
SANTA ANA, CA 92705

The State of California or its officers or agents shall not be responsible for the accuracy or completeness of electronic copies of this plan sheet.

REGISTERED PROFESSIONAL ENGINEER MICHAEL G. SMITH No. 2229 Exp. 3/31/16 GEOTECHNICAL STATE OF CALIFORNIA

1-This LOTB sheet was prepared in accordance with the Caltrans Soil & Rock Logging, Classification, & Presentation Manual (2010 Edition).

2-For protection of underground utility lines, hand-auger was used to remove top 5 to 10 feet of subsurface material for exploratory borings and Cone Penetration Testings.

3-2.5" to 1.4" blow counts conversion factors for fine-grain and coarse-grain soils have been 0.8 and 0.55, respectively.

FOR PLAN VIEW, SEE
"LOG OF TEST BORINGS" 1 OF 15

534.1' Lt
Sta 59+63.6
℄ RTE 5 (NEW)

R-10-234

63.0'

Blows	Recovery	Symbols	Description
	4.9		ASPHALT CONCRETE (10") over AGGREGATE BASE (5").
P	2.5	CR	CLAYEY SAND (SC); medium dense; yellowish brown; moist; few fine GRAVEL; (FILL). -olive gray. Fat CLAY (CH); stiff; mottled dark olive and black; moist; PP=1.25 tsf; (ALLUVIUM).
5	1.4		dark gray; slight pinhole porosity; trace carbonates; PP=1.0 tsf.
P	2.5	DS PA M UW	SILTY SAND (SM); loose to medium dense; dark gray; moist; mostly fine SAND; little fines; gasoline odor.
17	1.4		Interlayered lean CLAY (CL) and CLAYEY SAND (SC). CLAY (CL); stiff; dark gray; moist; PP=1.75 tsf. SAND (SC); medium dense; dark gray; moist; mostly fine SAND.
P	2.5	C UC PI M	Lean CLAY with SAND (CL); stiff; dark gray; moist; micaceous; little fine SAND; PP=1.0 tsf.
15	1.4	PI	-few fine SAND; trace carbonate nodules; PP=2.0 tsf.
P	2.5		-very stiff; very dark gray; some fine and medium SAND; slight pinhole porosity; trace organics; PP=2.8 tsf.
24	1.4		-dark gray. -olive brown; trace fine SAND; PP=2.5 tsf. CLAYEY SAND (SC); soft to medium dense; brown; moist; mostly fine SAND.
P	2.5		Lean CLAY (CL); stiff; dark grayish brown; moist; PP=1.5 tsf.
15	1.4	PI	
P	2.5		-very stiff; light olive brown; trace white mineralization; PP=3.2 tsf. SILTY SAND (SM); very dense; light olive brown; moist; fine and medium SAND; little fines.
67	1.4	PA	
30	1.4		Lean CLAY (CL); very stiff; dark grayish brown; moist; few fine and medium SAND; PP=2.2 tsf.
18	1.4		-yellowish brown; slight pinhole porosity; slight carbonates; PP=2.5 tsf.
P	2.5	UC PI M	-olive brown; increased SAND; PP=3.7 tsf.
39	1.4		-stiff; olive brown; some medium SAND; PP=1.5 tsf. -few SAND.
P	2.5		-very stiff; slight iron-oxide staining; PP=3.3 tsf.
22	1.4		-stiff; trace carbonates; PP=2.0 tsf. Poorly-graded SAND (SP); very dense; grayish brown; moist; fine and medium SAND.
50/6"	2.5		
50/5"	1.4		-occasional fine-grained lamination.
63	1.4		Lean CLAY (CL); very stiff; grayish brown; moist; slight iron-oxide staining; PP=2.1 tsf. Poorly-graded SAND (SP); very dense; olive gray; moist; mostly fine SAND; few fines; micaceous.
81	1.4		
32	1.4		Lean CLAY (CL); very stiff; dark gray; moist; trace carbonates; PP=2.5 tsf.
66	1.4		Interlayered lean CLAY (CL) and Poorly graded SAND (SP). CLAY (CL); very stiff; grayish brown; moist; PP=2.2 tsf. SAND (SP); very dense; grayish brown; moist; mostly fine SAND.
88	1.4		Interlayered lean CLAY (CL) and CLAYEY SAND (SC). CLAY (CL); very stiff; dark gray; moist; slight iron-oxide staining; PP=2.5 tsf. SAND (SC); very dense; dark gray; moist; mostly fine SAND.

02/11/10
Terminated at Elev -68.5'
ERI = 62%
Groundwater was encountered, but elevation was not measured

400.0' Lt
Sta 60+07.9
℄ RTE 5 (NEW)

R-10-238

63.5'

Blows	Recovery	Symbols	Description
	4.9		ASPHALT CONCRETE (6") over AGGREGATE BASE (6"). CLAYEY SAND (SC); medium dense; olive gray; moist; fine and medium SAND; little fines; (FILL).
P	2.5	CR	Lean CLAY with SAND (CL); soft; olive brown; moist; little SAND; (ALLUVIUM). CLAYEY SAND (SC); olive brown; moist; some fines.
2	1.4		SANDY fat CLAY (CH); stiff; black; moist; some SAND; PP=1.5 tsf.
P	2.5	PA	CLAYEY SAND (SC); soft; olive gray; moist; mostly fine SAND; some fines.
22	1.4		-medium dense; dark gray; little fines.
P	2.5		-some fines. Fat CLAY (CH); stiff; mottled dark gray and light gray; moist; few fine SAND; PP=1.75 tsf.
12	1.4	C PI	SANDY lean CLAY (CL); medium stiff; dark gray; moist; some fine and medium SAND.
P	2.5	PI M UW C UC	
6	1.4		-olive gray; few fine SAND.
P	2.5		-very stiff; light olive brown; PP=3.0 tsf.
17	1.4		
P	2.5	PI UC M UW	-stiff; mottled olive brown and white; little fine SAND; PP=2.0 tsf. CLAYEY SAND (SC); medium dense; olive brown; moist; fine and medium SAND; some fines.
16	1.4		Lean CLAY with SAND (CL); stiff; mottled olive brown and white; moist; little fine SAND; PP=1.0 tsf.
P	2.5	PI	-very stiff; PP=2.7 tsf.
P	2.5		-olive brown and grayish brown; PP=3.0 tsf.
P	2.5		-mottled very dark gray, olive brown and white; PP=3.2.
74/11"	2.5		Poorly-graded SAND with CLAY (SP-SC); very dense; light olive brown; moist; medium and coarse SAND; few fines.
25	1.4		SANDY lean CLAY (CL); stiff; mottled olive gray and olive brown; moist; some fine and medium SAND; PP=1.7 tsf.
P	2.5	PI	
P	2.5		-PP=1.5 tsf. Poorly-graded SAND with CLAY (SP-SC); very dense; grayish brown; moist; medium and coarse SAND; few fines.
71	1.4		
63	1.4		CLAYEY SAND to SANDY lean CLAY (SC/CL); very dense/very stiff; olive; moist; mostly fine SAND; some fines; PP=2.5 tsf.
58	1.4		SANDY lean CLAY (CL); very stiff; olive gray; moist; little fine SAND; PP=3.0 tsf.
48	1.4		CLAYEY SAND (SC); very dense; olive gray; moist; mostly fine SAND; little fines. Lean CLAY (CL); very stiff; olive gray; moist; few fine SAND; PP=3.2 tsf.
37	1.4		

02/23/10
Terminated at Elev -58.0'
ERI = 71%
Groundwater was encountered, but elevation was not measured

Elevation, feet: 70, 60, 50, 40, 30, 20, 10, 0, -10, -20, -30, -40, -50, -60, -70

59+00 60+00 61+00 62+00 63+00 64+00

PROFILE VIEW

VERTICAL SCALE 1"=10'
HORIZONTAL SCALE 1"=20'

F.MOTAMED DESIGN OVERSIGHT	DRAWN BY	T.PANAH	D.ORRIS/EJ.JEON FIELD INVESTIGATION BY:
05/20/15 SIGN OFF DATE	CHECKED BY	A.GHAZINOOR/L.KHALKHALI	DATE: 02/11/10 - 02/23/10

PREPARED FOR THE STATE OF CALIFORNIA DEPARTMENT OF TRANSPORTATION

M.G.SMITH
PROJECT ENGINEER

BRIDGE NO. 53-3045
POST MILES 1.21

VALLEY VIEW AVE OH/OC (REPLACE)
LOG OF TEST BORINGS SHEET 5 OF15

GS CIVIL LOG OF TEST BORINGS SHEET (ENGLISH) (REV. 03/14/12)

ORIGINAL SCALE IN INCHES FOR REDUCED PLANS 0 1 2 3

UNIT: 3658
PROJECT NUMBER & PHASE: 07150001601 CONTRACT NO.: 07-2159U4

DISREGARD PRINTS BEARING EARLIER REVISION DATES

REVISION DATES 5/12/15

SHEET 172 OF 182

FILE => 53-3045-z-lotb05.dgn

USERNAME => s125624 DATE PLOTTED => 28-JAN-2016 TIME PLOTTED => 12:10

DIST	COUNTY	ROUTE	POST MILES TOTAL PROJECT	SHEET No.	TOTAL SHEETS
07	LA,Ora	5	0.0/1.5, 44.3/44.4	1240	1622

REGISTERED CIVIL ENGINEER 05/20/15 DATE

1-25-16
PLANS APPROVAL DATE

URS CORPORATION
2020 EAST FIRST STREET, SUITE 400
SANTA ANA, CA 92705

The State of California or its officers or agents shall not be responsible for the accuracy or completeness of electronic copies of this plan sheet.

REGISTERED PROFESSIONAL ENGINEER MICHAEL G. SMITH No. 2229 Exp. 03/310/16 GEOTECHNICAL STATE OF CALIFORNIA

1-This LOTB sheet was prepared in accordance with the Caltrans Soil & Rock Logging, Classification, & Presentation Manual (2010 Edition).

2-For protection of underground utility lines, hand-auger was used to remove top 5 to 10 feet of subsurface material for exploratory borings and Cone Penetration Testings.

3-2.5" to 1.4" blow counts conversion factors for fine-grain and coarse-grain soils have been 0.8 and 0.55, respectively.

FOR PLAN VIEW, SEE
"LOG OF TEST BORINGS" 1 OF 15

PROFILE VIEW
VERTICAL SCALE 1"=10'
HORIZONTAL SCALE 1"=20'

F.MOTAMED	DRAWN BY	T.PANAH	D.ORRIS
DESIGN OVERSIGHT			FIELD INVESTIGATION BY:
05/20/15	CHECKED BY	A.GHAZINOOR/L.KHALKHALI	DATE: 07/16/09 - 02/16/10
SIGN OFF DATE			

PREPARED FOR THE STATE OF CALIFORNIA DEPARTMENT OF TRANSPORTATION

M.G.SMITH
PROJECT ENGINEER

BRIDGE NO. 53-3045
POST MILES 1.21

VALLEY VIEW AVE OH/OC (REPLACE)
LOG OF TEST BORINGS SHEET 6 OF15

GS CIVIL LOG OF TEST BORINGS SHEET (ENGLISH) (REV. 03/14/12)

ORIGINAL SCALE IN INCHES FOR REDUCED PLANS 0 1 2 3

UNIT: 3658
PROJECT NUMBER & PHASE: 07150001601 CONTRACT NO.: 07-2159U4

DISREGARD PRINTS BEARING EARLIER REVISION DATES → 5/12/15

REVISION DATES | SHEET 173 | OF 182

FILE => 53-3045-z-lotb06.dgn

USERNAME => s125624 DATE PLOTTED => 28-JAN-2016 TIME PLOTTED => 12:10

DIST	COUNTY	ROUTE	POST MILES TOTAL PROJECT	SHEET No.	TOTAL SHEETS
07	LA,Ora	5	0.0/1.5, 44.3/44.4	1241	1622

REGISTERED CIVIL ENGINEER 05/20/15 DATE

1-25-16
PLANS APPROVAL DATE

REGISTERED PROFESSIONAL ENGINEER MICHAEL G. SMITH No. 2229 Exp. 03/31/16 GEOTECHNICAL STATE OF CALIFORNIA

URS CORPORATION
2020 EAST FIRST STREET, SUITE 400
SANTA ANA, CA 92705

The State of California or its officers or agents shall not be responsible for the accuracy or completeness of electronic copies of this plan sheet.

1-This LOTB sheet was prepared in accordance with the Caltrans Soil & Rock Logging, Classification, & Presentation Manual (2010 Edition).

2-For protection of underground utility lines, hand-auger was used to remove top 5 to 10 feet of subsurface material for exploratory borings and Cone Penetration Testings.

3-2.5" to 1.4" blow counts conversion factors for fine-grain and coarse-grain soils have been 0.8 and 0.55, respectively.

FOR PLAN VIEW, SEE
"LOG OF TEST BORINGS" 1 OF 15

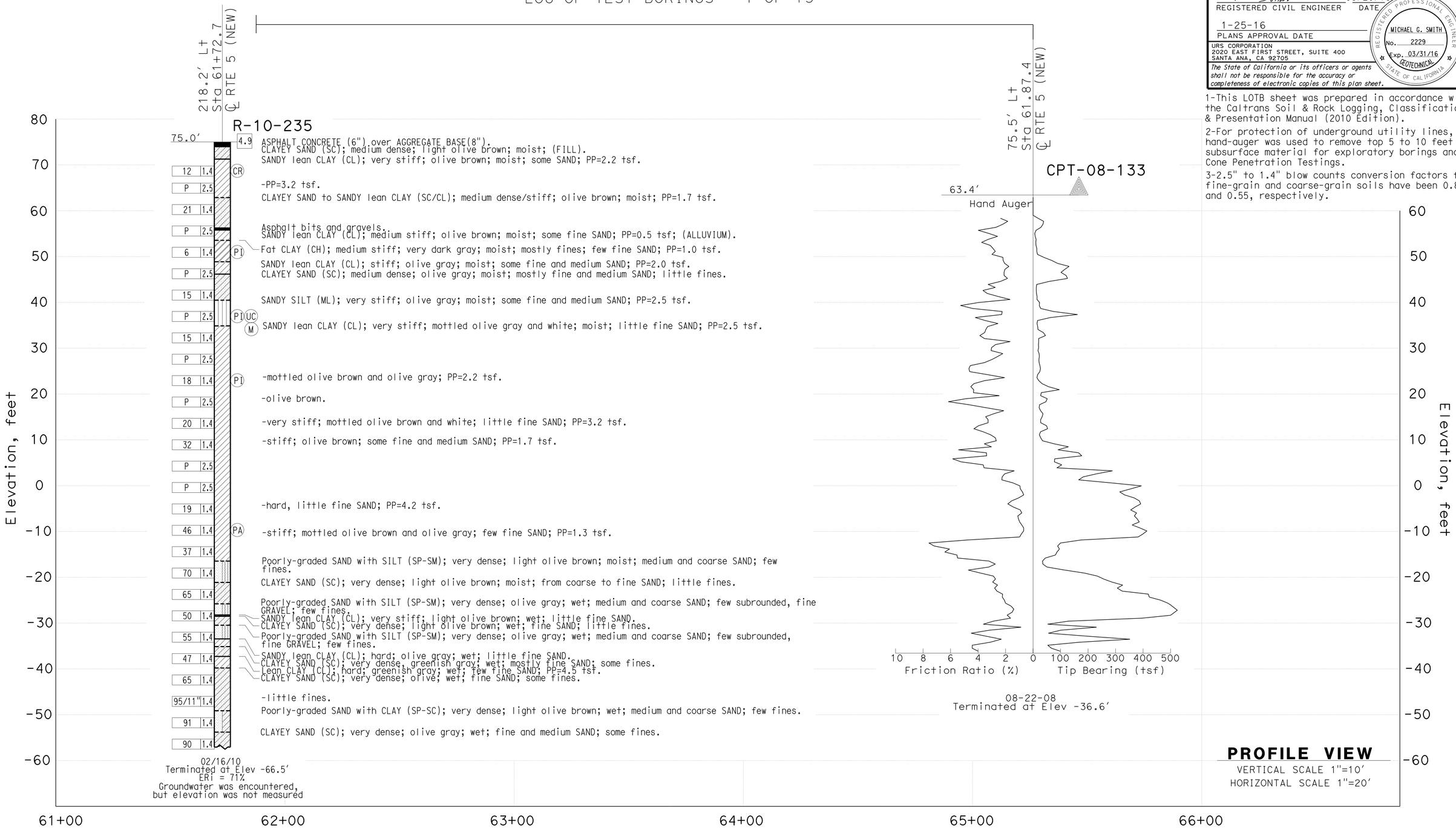

F.MOTAMED DESIGN OVERSIGHT	DRAWN BY	T.PANAH	EJ.JEON/P.MCDONALD FIELD INVESTIGATION BY:	PREPARED FOR THE STATE OF CALIFORNIA DEPARTMENT OF TRANSPORTATION	M.G.SMITH PROJECT ENGINEER	BRIDGE NO. 53-3045 POST MILES 1.21	VALLEY VIEW AVE OH/OC (REPLACE)
05/20/15 SIGN OFF DATE	CHECKED BY	A.GHAZINOOR/L.KHALKHALI	DATE: 08/22/08 - 02/16/10				LOG OF TEST BORINGS SHEET 7 OF15

GS CIVIL LOG OF TEST BORINGS SHEET (ENGLISH) (REV. 03/14/12)

ORIGINAL SCALE IN INCHES FOR REDUCED PLANS 0 1 2 3

UNIT: 3658
PROJECT NUMBER & PHASE: 07150001601 CONTRACT NO.: 07-2159U4

DISREGARD PRINTS BEARING EARLIER REVISION DATES → 5/12/15

REVISION DATES | SHEET 174 | OF 182

FILE => 53-3045-z-lotb07.dgn

USERNAME => s125624 DATE PLOTTED => 28-JAN-2016 TIME PLOTTED => 12:10

DIST	COUNTY	ROUTE	POST MILES TOTAL PROJECT	SHEET No.	TOTAL SHEETS
07	LA,Ora	5	0.0/1.5, 44.3/44.4	1242	1622

REGISTERED CIVIL ENGINEER 05/20/15 DATE

1-25-16
PLANS APPROVAL DATE

REGISTERED PROFESSIONAL ENGINEER MICHAEL G. SMITH No. 2229 Exp. 03/31/16 GEOTECHNICAL STATE OF CALIFORNIA

URS CORPORATION
2020 EAST FIRST STREET, SUITE 400
SANTA ANA, CA 92705

The State of California or its officers or agents shall not be responsible for the accuracy or completeness of electronic copies of this plan sheet.

1-This LOTB sheet was prepared in accordance with the Caltrans Soil & Rock Logging, Classification, & Presentation Manual (2010 Edition).

2-For protection of underground utility lines, hand-auger was used to remove top 5 to 10 feet of subsurface material for exploratory borings and Cone Penetration Testings.

3-2.5" to 1.4" blow counts conversion factors for fine-grain and coarse-grain soils have been 0.8 and 0.55, respectively.

FOR PLAN VIEW, SEE
"LOG OF TEST BORINGS" 1 OF 15

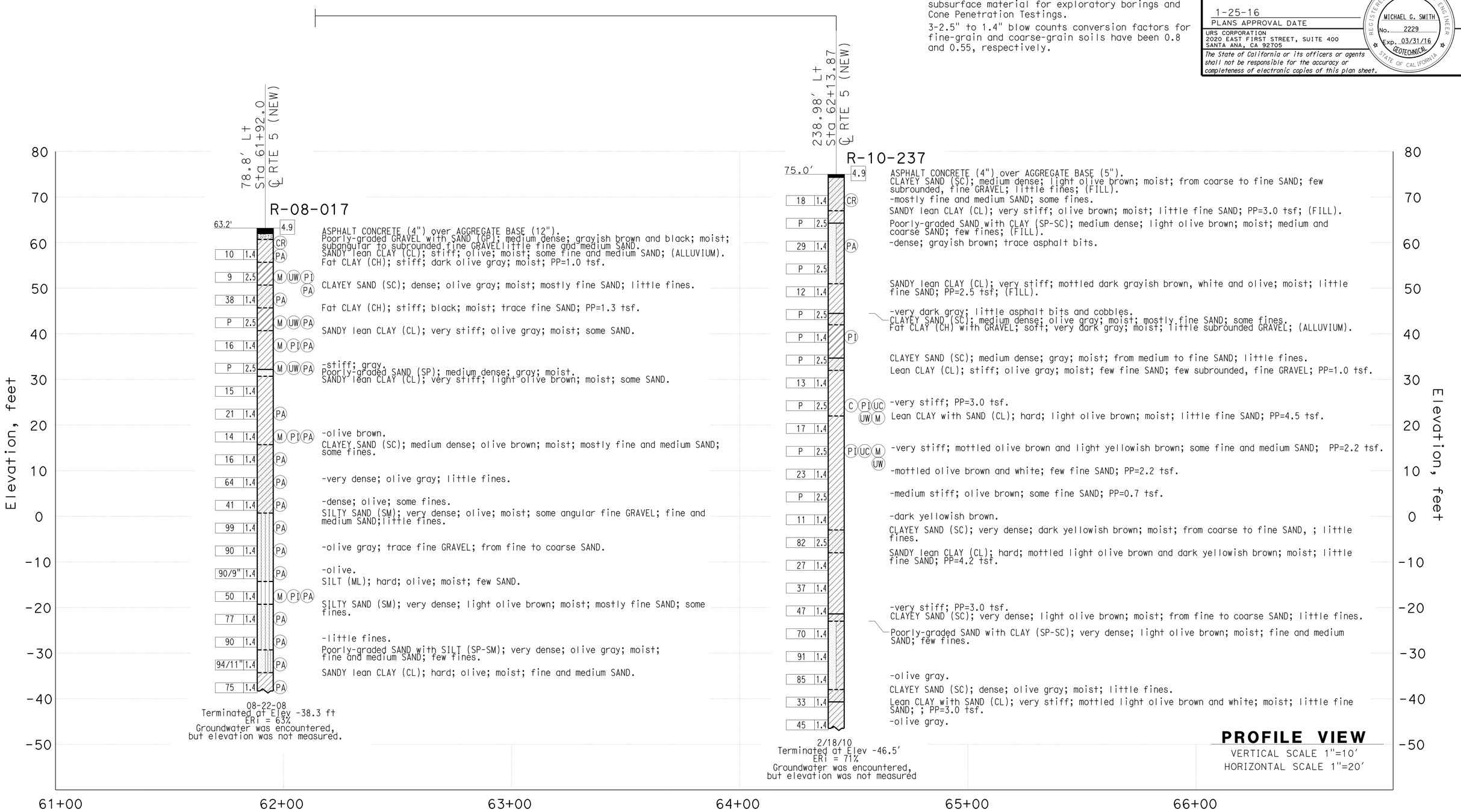

F.MOTAMED DESIGN OVERSIGHT	DRAWN BY	T.PANAH	P.CHAU/EJ.JEON FIELD INVESTIGATION BY:
05/20/15 SIGN OFF DATE	CHECKED BY	A.GHAZINOOR/L.KHALKHALI	DATE: 08/22/08 - 02/18/10

PREPARED FOR THE STATE OF CALIFORNIA DEPARTMENT OF TRANSPORTATION

M.G.SMITH
PROJECT ENGINEER

BRIDGE NO. 53-3045
POST MILES 1.21

VALLEY VIEW AVE OH/OC (REPLACE)
LOG OF TEST BORINGS SHEET 8 OF15

GS CIVIL LOG OF TEST BORINGS SHEET (ENGLISH) (REV. 03/14/12)

ORIGINAL SCALE IN INCHES FOR REDUCED PLANS 0 1 2 3

UNIT: 3658
PROJECT NUMBER & PHASE: 07150001601 CONTRACT NO.: 07-2159U4

DISREGARD PRINTS BEARING EARLIER REVISION DATES → 5/12/15

REVISION DATES | SHEET 175 | OF 182

FILE => 53-3045-z-lotb08.dgn

USERNAME => s125624 DATE PLOTTED => 28-JAN-2016 TIME PLOTTED => 12:10

DIST	COUNTY	ROUTE	POST MILES TOTAL PROJECT	SHEET No.	TOTAL SHEETS
07	LA,Ora	5	0.0/1.5, 44.3/44.4	1243	1622

REGISTERED CIVIL ENGINEER 05/20/15 DATE

1-25-16
PLANS APPROVAL DATE

URS CORPORATION
2020 EAST FIRST STREET, SUITE 400
SANTA ANA, CA 92705

The State of California or its officers or agents shall not be responsible for the accuracy or completeness of electronic copies of this plan sheet.

REGISTERED PROFESSIONAL ENGINEER MICHAEL G. SMITH No. 2229 Exp. 03/31/16 GEOTECHNICAL STATE OF CALIFORNIA

1-This LOTB sheet was prepared in accordance with the Caltrans Soil & Rock Logging, Classification, & Presentation Manual (2010 Edition).

2-For protection of underground utility lines, hand-auger was used to remove top 5 to 10 feet of subsurface material for exploratory borings and Cone Penetration Testings.

3-2.5" to 1.4" blow counts conversion factors for fine-grain and coarse-grain soils have been 0.8 and 0.55, respectively.

FOR PLAN VIEW, SEE
"LOG OF TEST BORINGS" 1 OF 15

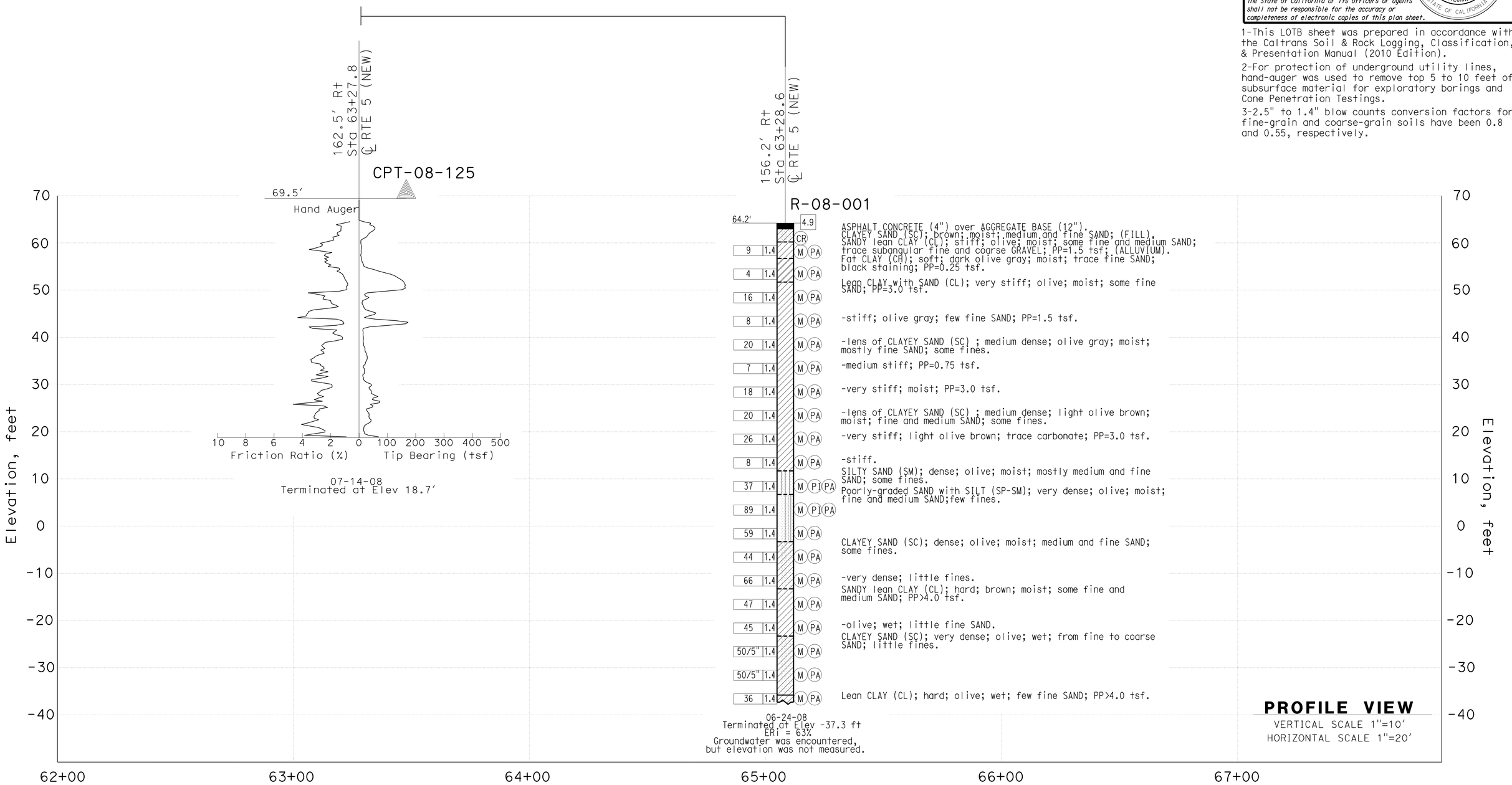

PROFILE VIEW
VERTICAL SCALE 1"=10'
HORIZONTAL SCALE 1"=20'

F.MOTAMED DESIGN OVERSIGHT	DRAWN BY	T.PANAH	P.MCDONALD/C.CARBINO FIELD INVESTIGATION BY:	PREPARED FOR THE STATE OF CALIFORNIA DEPARTMENT OF TRANSPORTATION	M.G.SMITH PROJECT ENGINEER	BRIDGE NO. 53-3045 POST MILES 1.21	VALLEY VIEW AVE OH/OC (REPLACE)
05/20/15 SIGN OFF DATE	CHECKED BY	A.GHAZINOOR/L.KHALKHALI	DATE: 06/24/08 - 07/14/08				LOG OF TEST BORINGS SHEET 9 OF15

GS CIVIL LOG OF TEST BORINGS SHEET (ENGLISH) (REV. 03/14/12)

ORIGINAL SCALE IN INCHES FOR REDUCED PLANS 0 1 2 3

UNIT: 3658
PROJECT NUMBER & PHASE: 07150001601 CONTRACT NO.: 07-2159U4

DISREGARD PRINTS BEARING EARLIER REVISION DATES

REVISION DATES 5/12/15 SHEET 176 OF 182

FILE => 53-3045-z-lotb09.dgn

USERNAME => s125624 DATE PLOTTED => 28-JAN-2016 TIME PLOTTED => 12:10

FOR PLAN VIEW, SEE
"LOG OF TEST BORINGS" 1 OF 15

1-This LOTB sheet was prepared in accordance with the Caltrans Soil & Rock Logging, Classification, & Presentation Manual (2010 Edition).

2-For protection of underground utility lines, hand-auger was used to remove top 5 to 10 feet of subsurface material for exploratory borings and Cone Penetration Testings.

3-2.5" to 1.4" blow counts conversion factors for fine-grain and coarse-grain soils have been 0.8 and 0.55, respectively.

DIST	COUNTY	ROUTE	POST MILES TOTAL PROJECT	SHEET No.	TOTAL SHEETS
07	LA,Ora	5	0.0/1.5, 44.3/44.4	1244	1622

REGISTERED CIVIL ENGINEER 05/20/15 DATE

1-25-16
PLANS APPROVAL DATE

REGISTERED PROFESSIONAL ENGINEER MICHAEL G. SMITH No. 2229 Exp. 03/31/16 GEOTECHNICAL STATE OF CALIFORNIA

URS CORPORATION
2020 EAST FIRST STREET, SUITE 400
SANTA ANA, CA 92705

The State of California or its officers or agents shall not be responsible for the accuracy or completeness of electronic copies of this plan sheet.

F.MOTAMED DESIGN OVERSIGHT	DRAWN BY	T.PANAH	EJ.JEON/P.MCDONALD FIELD INVESTIGATION BY:	PREPARED FOR THE STATE OF CALIFORNIA DEPARTMENT OF TRANSPORTATION	M.G.SMITH PROJECT ENGINEER	BRIDGE NO. 53-3045
05/20/15 SIGN OFF DATE	CHECKED BY	A.GHAZINOOR/L.KHALKHALI	DATE: 06/25/08 - 08/27/09			POST MILES 1.21

VALLEY VIEW AVE OH/OC (REPLACE)

LOG OF TEST BORINGS SHEET10 OF15

GS CIVIL LOG OF TEST BORINGS SHEET (ENGLISH) (REV. 03/14/12)

ORIGINAL SCALE IN INCHES FOR REDUCED PLANS 0 1 2 3

UNIT: 3658
PROJECT NUMBER & PHASE: 07150001601 CONTRACT NO.: 07-2159U4

DISREGARD PRINTS BEARING EARLIER REVISION DATES → 5/12/15

REVISION DATES | SHEET 177 | OF 182

FILE => 53-3045-z-lotb10.dgn

USERNAME => s125624 DATE PLOTTED => 28-JAN-2016 TIME PLOTTED => 12:10

DIST	COUNTY	ROUTE	POST MILES TOTAL PROJECT	SHEET No.	TOTAL SHEETS
07	LA,Ora	5	0.0/1.5, 44.3/44.4	1245	1622

REGISTERED CIVIL ENGINEER 05/20/15 DATE

1-25-16
PLANS APPROVAL DATE

REGISTERED PROFESSIONAL ENGINEER CHUNGKEUN LEE No. C69450 Exp. 06/30/16 CIVIL STATE OF CALIFORNIA

The State of California or its officers or agents shall not be responsible for the accuracy or completeness of electronic copies of this plan sheet.

FOR PLAN VIEW, SEE
"LOG OF TEST BORINGS" 1 OF 15

1-This LOTB sheet was prepared in accordance with the Caltrans Soil & Rock Logging, Classification, & Presentation Manual (2010 Edition).

2-For protection of underground utility lines, hand-auger was used to remove top 5 to 10 feet of subsurface material for exploratory borings and Cone Penetration Testings.

3-2.5" to 1.4" blow counts conversion factors for fine-grain and coarse-grain soils have been 0.8 and 0.55, respectively.

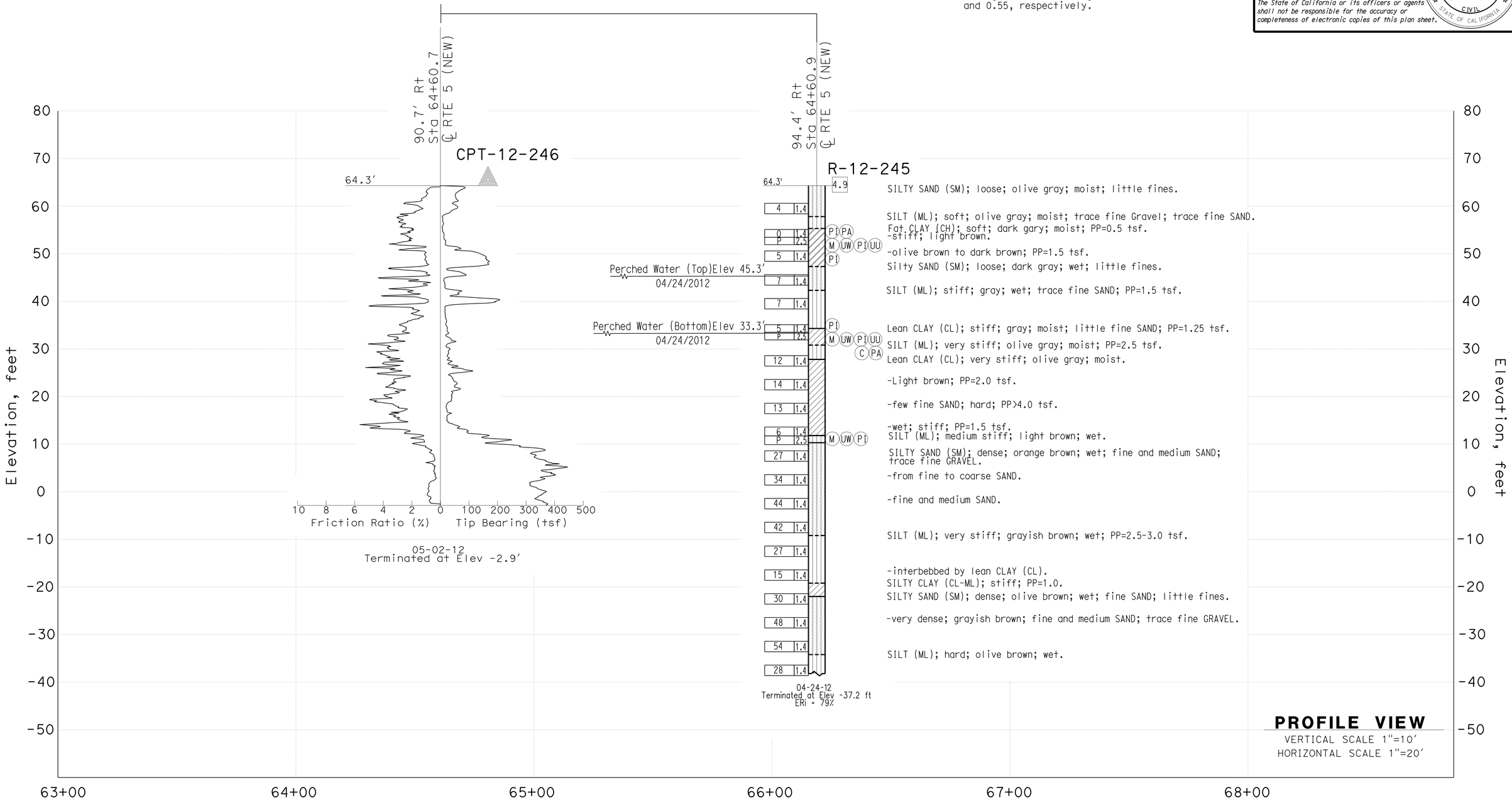

PROFILE VIEW
VERTICAL SCALE 1"=10'
HORIZONTAL SCALE 1"=20'

F.MOTAMED DESIGN OVERSIGHT	DRAWN BY	T.PANAH	M.ISLAM/C.LEE FIELD INVESTIGATION BY:	PREPARED FOR THE STATE OF CALIFORNIA DEPARTMENT OF TRANSPORTATION	C.LEE PROJECT ENGINEER	BRIDGE NO. 53-3045	VALLEY VIEW AVE OH/OC (REPLACE)
05/20/15 SIGN OFF DATE	CHECKED BY	A.GHAZINOOR/L.KHALKHALI	DATE: 04/24/12 - 05/02/12			POST MILES 1.21	LOG OF TEST BORINGS SHEET 11 OF 15

GS CIVIL LOG OF TEST BORINGS SHEET (ENGLISH) (REV. 03/14/12)

ORIGINAL SCALE IN INCHES FOR REDUCED PLANS 0 1 2 3

UNIT: 3658
PROJECT NUMBER & PHASE: 07150001601 CONTRACT NO.: 07-2159U4

DISREGARD PRINTS BEARING EARLIER REVISION DATES → 5/12/15

REVISION DATES | SHEET 178 | OF 182

FILE => 53-3045-z-lotb11.dgn

USERNAME => s125624 DATE PLOTTED => 28-JAN-2016 TIME PLOTTED => 12:10

DIST	COUNTY	ROUTE	POST MILES TOTAL PROJECT	SHEET No.	TOTAL SHEETS
07	LA,Ora	5	0.0/1.5, 44.3/44.4	1246	1622

REGISTERED CIVIL ENGINEER 05/20/15 DATE

1-25-16
PLANS APPROVAL DATE

REGISTERED PROFESSIONAL ENGINEER MICHAEL G. SMITH No. 2229 Exp. 03/31/16 GEOTECHNICAL STATE OF CALIFORNIA

URS CORPORATION
2020 EAST FIRST STREET, SUITE 400
SANTA ANA, CA 92705

The State of California or its officers or agents shall not be responsible for the accuracy or completeness of electronic copies of this plan sheet.

1-This LOTB sheet was prepared in accordance with the Caltrans Soil & Rock Logging, Classification, & Presentation Manual (2010 Edition).

2-For protection of underground utility lines, hand-auger was used to remove top 5 to 10 feet of subsurface material for exploratory borings and Cone Penetration Testings.

3-2.5" to 1.4" blow counts conversion factors for fine-grain and coarse-grain soils have been 0.8 and 0.55, respectively.

FOR PLAN VIEW, SEE
"LOG OF TEST BORINGS" 1 OF 15

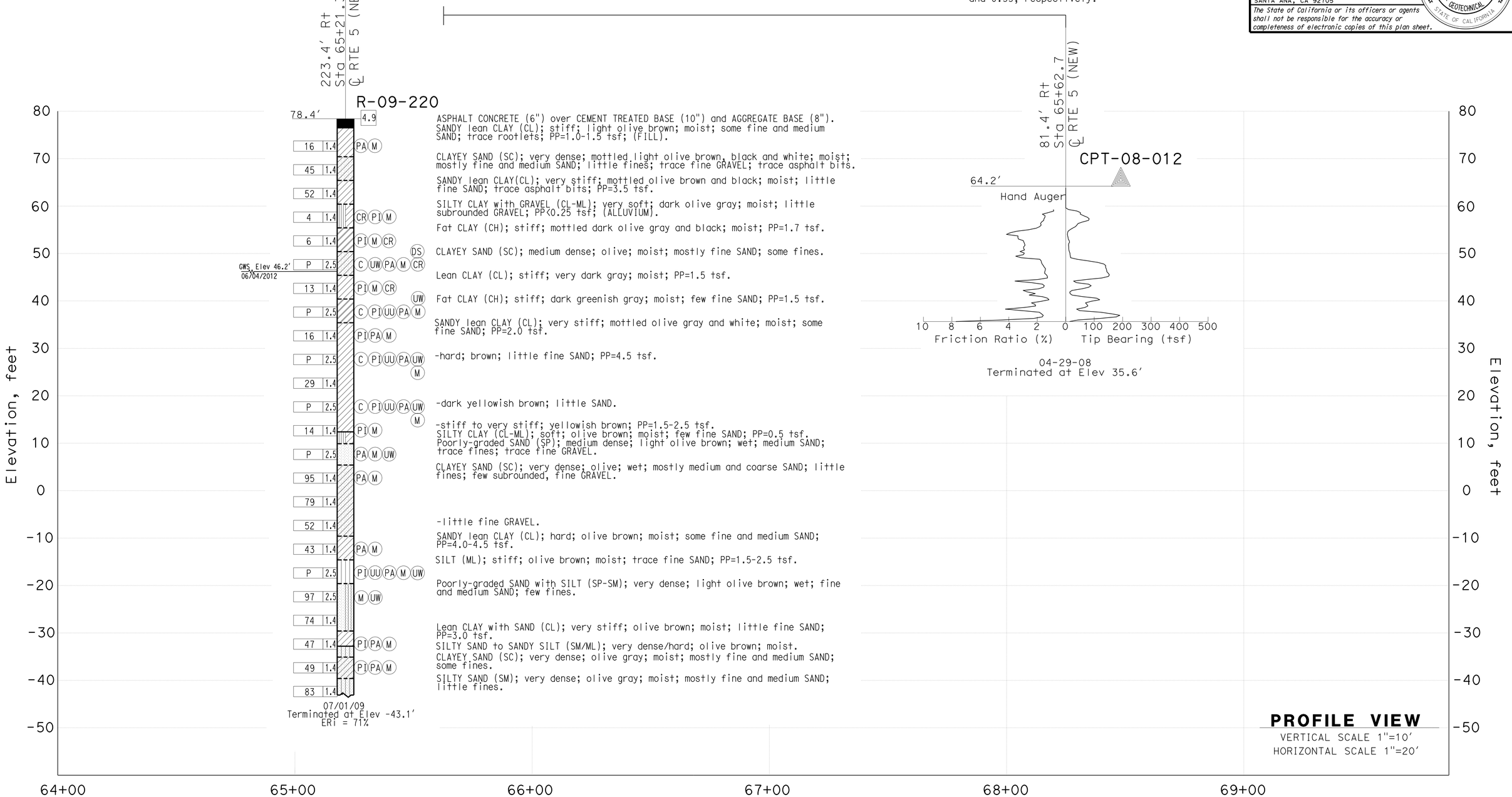

F.MOTAMED	DRAWN BY	T.PANAH	EJ.JEON/P.MCDONALD
DESIGN OVERSIGHT			FIELD INVESTIGATION BY:
05/20/15	CHECKED BY	A.GHAZINOOR/L.KHALKHALI	DATE: 04/29/08 - 07/01/09
SIGN OFF DATE			

PREPARED FOR THE STATE OF CALIFORNIA DEPARTMENT OF TRANSPORTATION

M.G.SMITH
PROJECT ENGINEER

BRIDGE NO. 53-3045
POST MILES 1.21

VALLEY VIEW AVE OH/OC (REPLACE)
LOG OF TEST BORINGS SHEET12 OF15

GS CIVIL LOG OF TEST BORINGS SHEET (ENGLISH) (REV. 03/14/12)

ORIGINAL SCALE IN INCHES FOR REDUCED PLANS 0 1 2 3

UNIT: 3658
PROJECT NUMBER & PHASE: 07150001601 CONTRACT NO.: 07-2159U4

DISREGARD PRINTS BEARING EARLIER REVISION DATES

REVISION DATES 5/12/15

SHEET 179 OF 182

FILE => 53-3045-z-lotb12.dgn

USERNAME => s125624 DATE PLOTTED => 28-JAN-2016 TIME PLOTTED => 12:10

DIST.	COUNTY	ROUTE	POST MILES TOTAL PROJECT	SHEET NO.	TOTAL SHEETS
07	LA	5	1.2/5.1	53	109

W. C. Cain
REGISTERED ENGINEERING GEOLOGIST

REGISTERED GEOLOGIST W.C. CAIN No. 732 Exp. 9-30-96 CERTIFIED ENGINEERING GEOLOGIST STATE OF CALIFORNIA

11-11-96
PLANS APPROVAL DATE

THE STATE OF CALIFORNIA OR ITS OFFICERS OR AGENTS SHALL NOT BE RESPONSIBLE FOR THE ACCURACY OR COMPLETENESS OF ELECTRONIC COPIES OF THIS PLAN SHEET.

BENCH MARK

BM Elev. 81.40
THE PAVING NOTCH SPOT ELEVATION AT INTERSECTION OF B.B. AND C/L BRIDGE No. 53-631L, STA. 8+21.72.

BM Elev. 80.94
THE PAVING NOTCH SPOT ELEVATION AT INTERSECTION OF E.B. AND C/L BRIDGE No. 53-631L, Sta. 11+70.74.

(AS BUILT PLAN)

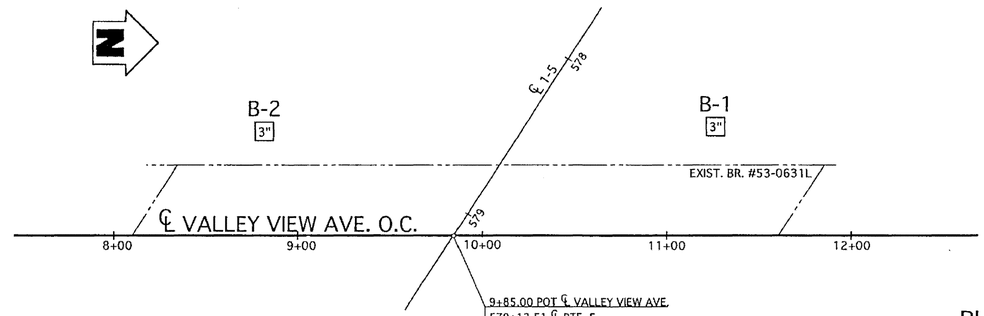

PLAN
1" = 40'

NOTE:
E = BLOW COUNT FOR ONE FOOT PENETRATION EXTRAPOLATED FROM BLOW COUNT FOR LESS THAN ONE FOOT (DUE TO CHANGE IN MATERIAL OR HARD DRIVING)

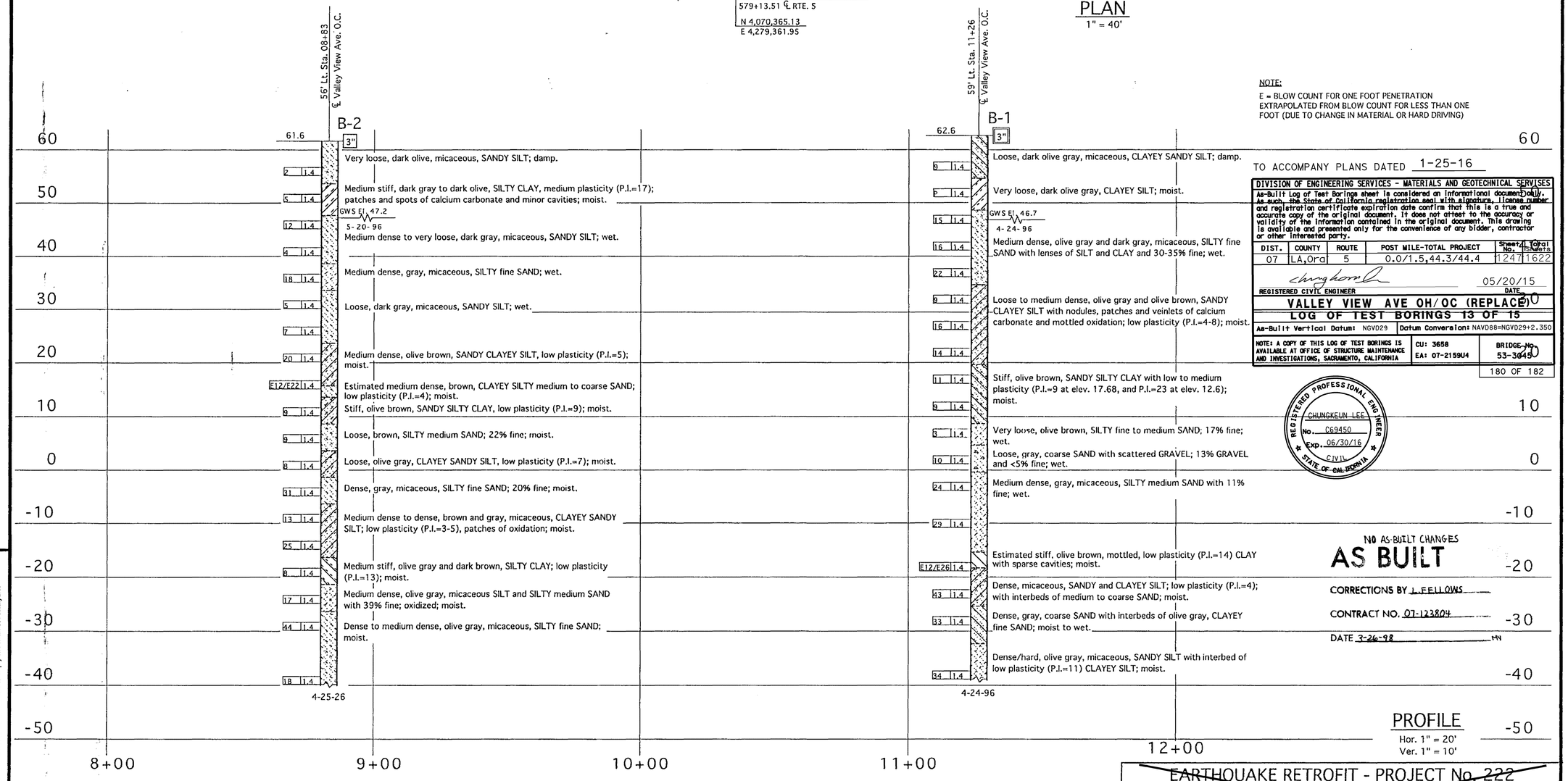

TO ACCOMPANY PLANS DATED 1-25-16

DIVISION OF ENGINEERING SERVICES - MATERIALS AND GEOTECHNICAL SERVICES
As-Built Log of Test Borings sheet is considered an informational document only. As such, the State of California registration seal with signature, license number and registration certificate expiration date confirm that this is a true and accurate copy of the original document. It does not attest to the accuracy or validity of the information contained in the original document. This drawing is available and presented only for the convenience of any bidder, contractor or other interested party.

DIST.	COUNTY	ROUTE	POST MILE-TOTAL PROJECT	Sheet No.	Total Sheets
07	LA,Ora	5	0.0/1.5,44.3/44.4	1247	1622

REGISTERED CIVIL ENGINEER — DATE 05/20/15

VALLEY VIEW AVE OH/OC (REPLACE)
LOG OF TEST BORINGS 13 OF 15

As-Built Vertical Datum: NGVD29 — Datum Conversion: NAVD88=NGVD29+2.350

NOTE: A COPY OF THIS LOG OF TEST BORINGS IS AVAILABLE AT OFFICE OF STRUCTURE MAINTENANCE AND INVESTIGATIONS, SACRAMENTO, CALIFORNIA

CU: 3658
EA: 07-2159U4

BRIDGE No. 53-3045
180 OF 182

REGISTERED PROFESSIONAL ENGINEER CHUNGKEUN LEE No. C69450 Exp. 06/30/16 CIVIL STATE OF CALIFORNIA

NO AS-BUILT CHANGES
AS BUILT
CORRECTIONS BY J. FELLOWS
CONTRACT NO. 07-123804
DATE 3-26-98 MH

PROFILE
Hor. 1" = 20'
Ver. 1" = 10'

LEGEND OF BORING OPERATIONS

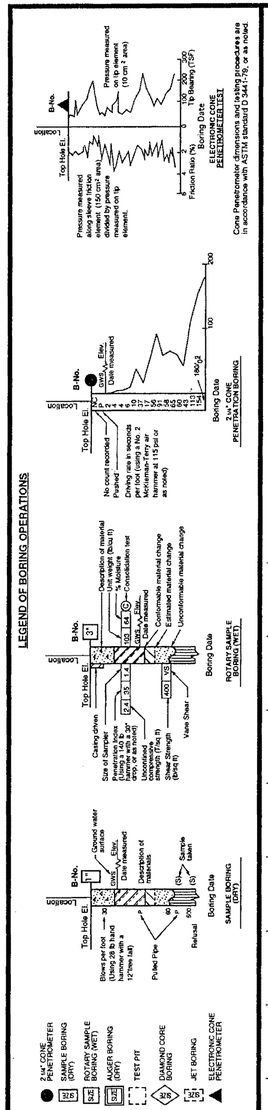

LEGEND OF EARTH MATERIALS

CONSISTENCY CLASSIFICATION FOR SOILS
According to the Standard Penetration Test

Penetration Index (Blows / Ft)	Granular	Cohesive
0-4	Very Loose	Very Soft
5-9	Loose	Soft
10-19	Slightly compact	Stiff
20-34	Compact	Very Stiff
35-69	Dense	Hard
>70	Very Dense	Very Hard

NOTE: Classification of earth material as shown on this sheet is based upon field inspection and is not to be construed to imply mechanical analysis.

ENGINEERING SERVICE CENTER	STRUCTURE FOUNDATIONS
DRAWN BY Irma Figueroa 6-96	
CHECKED BY Faramarz Gerami 7-96	

FIELD INVESTIGATION BY: F. GERAMI

State of CALIFORNIA DEPARTMENT OF TRANSPORTATION

DIVISION OF STRUCTURES STRUCTURE MAINTENANCE DESIGN

BRIDGE NO. 53-0631 L
POST MILE 1.21

CU: 07264
EA: 123801

EARTHQUAKE RETROFIT - PROJECT No. 222
VALLEY VIEW AVE. OVERCROSSING
LOG OF TEST BORINGS 1 OF 2

ORIGINAL SCALE IN INCHES FOR REDUCED PLANS → 0 1 2 3

DISREGARD PRINTS BEARING EARLIER REVISION DATES →

REVISION DATES (PRELIMINARY STAGE ONLY) | SHEET 11 | OF 12

TL 6051 REV. 5/95

53-3045-z-lotb13.tif

FI - 254 (12)

2	CAL.			63	64

Sheet	County	Drawing	Distribution	Sheet No.	Total Sheets
VII	LA	174	D	9	10

JANUARY 25 1954

DIVISION OF ENGINEERING SERVICES - MATERIALS AND GEOTECHNICAL SERVISES

As-Built Log of Test Borings sheet is considered an informational document only. As such, the State of California registration seal with signature, license number and registration certificate expiration date confirm that this is a true and accurate copy of the original document. It does not attest to the accuracy or validity of the information contained in the original document. This drawing is available and presented only for the convenience of any bidder, contractor or other interested party.

DIST.	COUNTY	ROUTE	POST MILE-TOTAL PROJECT	Sheet No.	Total Sheets
07	LA,Ora	5	0.0/1.5,44.3/44.4	1248	1622

REGISTERED CIVIL ENGINEER — DATE 05/20/15

VALLEY VIEW AVE OH/OC (REPLACE)

LOG OF TEST BORINGS 14 OF 15

As-Built Vertical Datum: NGVD29 — Datum Conversion: NAVD88=NGVD29+2.350

NOTE: A COPY OF THIS LOG OF TEST BORINGS IS AVAILABLE AT OFFICE OF STRUCTURE MAINTENANCE AND INVESTIGATIONS, SACRAMENTO, CALIFORNIA

CU: 3658 EA: 07-2159U4 — BRIDGE No. 53-3045

181 OF 182

TO ACCOMPANY PLANS DATED 1-25-16

REGISTERED PROFESSIONAL ENGINEER — CHUNGKEUN LEE — No. C69450 — Exp. 06/30/16 — CIVIL — STATE OF CALIFORNIA

THE STATE OF CALIFORNIA OR ITS OFFICERS OR AGENTS SHALL NOT BE RESPONSIBLE FOR THE ACCURACY OR COMPLETENESS OF ELECTRONIC COPIES OF THIS PLAN SHEET.

SEISMIC RETROFIT - PROJECT No. SR-222

DIST.	COUNTY	ROUTE	POST MILES - TOTAL PROJECT	Sheet No.	Total Sheets
07	LA	5	1.2/5.1	54	109

STRUCTURAL FOUNDATIONS BRANCH - ENGINEERING SERVICE CENTER

CERTIFIED ENGINEERING GEOLOGIST — PLANS APPROVAL DATE 11-11-96

VALLEY VIEW AVE. OVERCROSSING

LOG OF TEST BORINGS 2 OF 2

NOTE: THIS LOG OF TEST BORINGS IS AVAILABLE ON MICROFILM AT OFFICE OF STRUCTURES DESIGN SACRAMENTO, CALIFORNIA — CU: 07264 EA: 123801 — BRIDGE No. 53-0631

REGISTERED GEOLOGIST — W.C. CAIN — No. 732 — Exp. 9-30-96 — CERTIFIED ENGINEERING GEOLOGIST — STATE OF CALIFORNIA

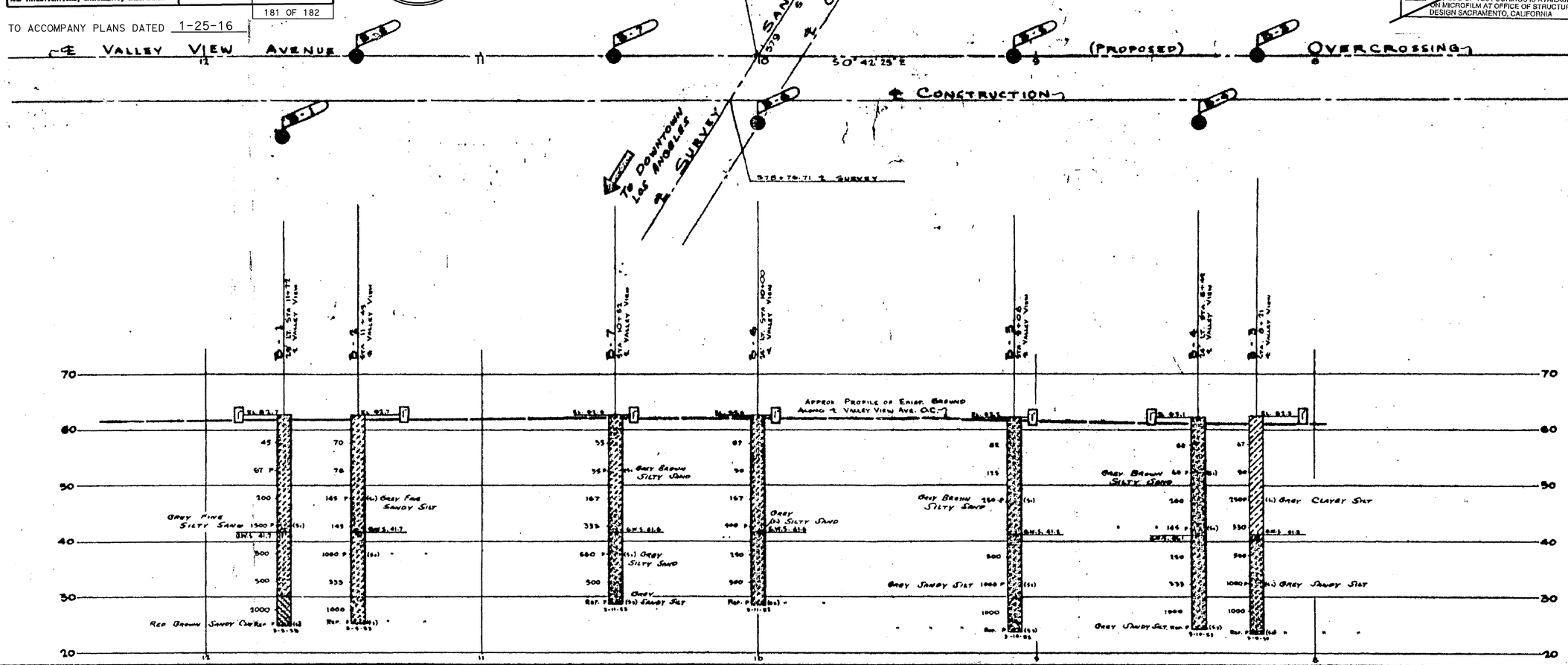

AS BUILT NO CORRECTIONS

CORRECTIONS BY

DATE 8-10-55

Test Boring By Bridge Dept.

B.M. #35B
BRONZE TABLET IN CONC. MON. STAMPED "STATE B.M. 35-B-41", 131' RT. STA. 572+00. ELEV. 58.513'

B.M. #36B
BRONZE TABLET IN CONC. MON. STAMPED "STATE B.M. 36-B-41", 102' RT. STA. 577+65. ELEV. 59.199

SHEET 12 OF 12

CLASSIFICATION OF MATERIAL BASED ON STANDARD GRADE SIZE LIMITS

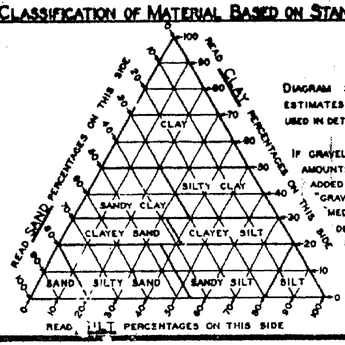

DIAGRAM SHOWING THE BASIS FOR ESTIMATES OF GRADE SIZE DISTRIBUTION USED IN DETERMINATION OF CLASS NAMES

IF GRAVEL IS PRESENT IN APPRECIABLE AMOUNTS THE TERM "GRAVELLY" MAY BE ADDED TO THE CLASS NAME, VIS. "GRAVELLY SAND." THE TERMS "COARSE," "MEDIUM" AND "FINE" WHEN USED TO DESCRIBE GRAVEL, SAND AND SILT REFER TO STANDARD GRADE SIZE LIMITS.

LEGEND OF EARTH MATERIALS

- GRAVEL
- SAND
- SILT
- CLAY
- SANDY CLAY OR CLAYEY SAND
- SANDY SILT OR SILTY SAND
- SILTY CLAY OR CLAYEY SILT
- PEAT AND/OR ORGANIC CLAY
- FILLED MATERIAL
- IGNEOUS ROCK
- SEDIMENTARY ROCK
- METAMORPHIC ROCK

LEGEND OF BORING OPERATIONS

- PLAN OF ANY BORING
- PENETROMETER
- 2½" CONE PENETROMETER
- SAMPLER BORING (DRY)
- ROTARY BORING (WET)
- AUGER BORING (DRY)
- JET BORING
- CORE BORING
- TEST PIT

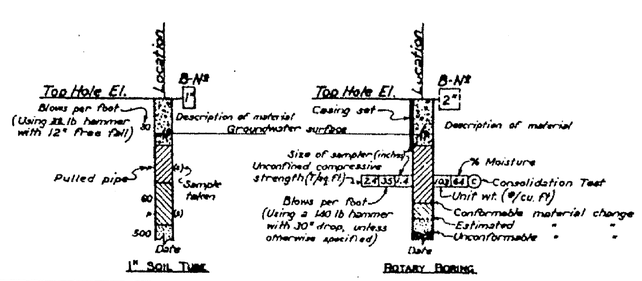

NOTES

THE CONTRACTOR'S ATTENTION IS DIRECTED TO SECTION 2, ARTICLE (c) OF THE STANDARD SPECIFICATIONS AND TO THE SPECIAL PROVISIONS ACCOMPANYING THIS SET OF PLANS. CLASSIFICATION OF EARTH MATERIAL AS SHOWN ON THIS SHEET IS BASED UPON FIELD INSPECTION AND IS NOT TO BE CONSTRUED TO IMPLY MECHANICAL ANALYSIS.

PENETROMETER BORINGS HAVING A RATE OF PENETRATION MEASURED IN SECONDS PER FOOT ARE DRIVEN WITH A No 2 McKIERNAN-TERRY AIR HAMMER AT 115 PSI.

STATE OF CALIFORNIA
DEPARTMENT OF PUBLIC WORKS
DIVISION OF HIGHWAYS

VALLEY VIEW AVE. O. C.

LOG OF TEST BORINGS

SCALE	BRIDGE	FILL	DRAWING
HORIZ. 1" = 10' VERT. 1" = 10'	53-631		1-OC-9

BRIDGE DEPARTMENT

53-3045-z-lotb14.tif

DIST.	COUNTY	ROUTE	POST MILES—TOTAL PROJECT	SHEET NO.	TOTAL SHEETS
07	LA	5	1.2	32	32

G. Bolokowski
ENGINEERING GEOLOGIST NO. 271
DATE APPROVED November 26, 1972

BENCH MARKS

B.M. 1-1 Elev. 60.15
Valley View Avenue and Valley View Off-ramp from Santa Ana Freeway, at the southeast corner, about 78 feet south of the center of Valley View Avenue, and 5.5 feet north of the north rail of the Southern Pacific Railroad, set flush in the northwest corner of concrete culvert under the railroad. Disk stamped "T 33 1962 62" U.S. Geological Survey disk.

BM #15-00045 B Elev. 65.34
A spike in lead set on T.C. at SW corner of Valley View Ave. & Alondra Blvd., 10 feet north of E.C.R. in the west curb of Valley View & 25 south of the south curb of Alondra Blvd.

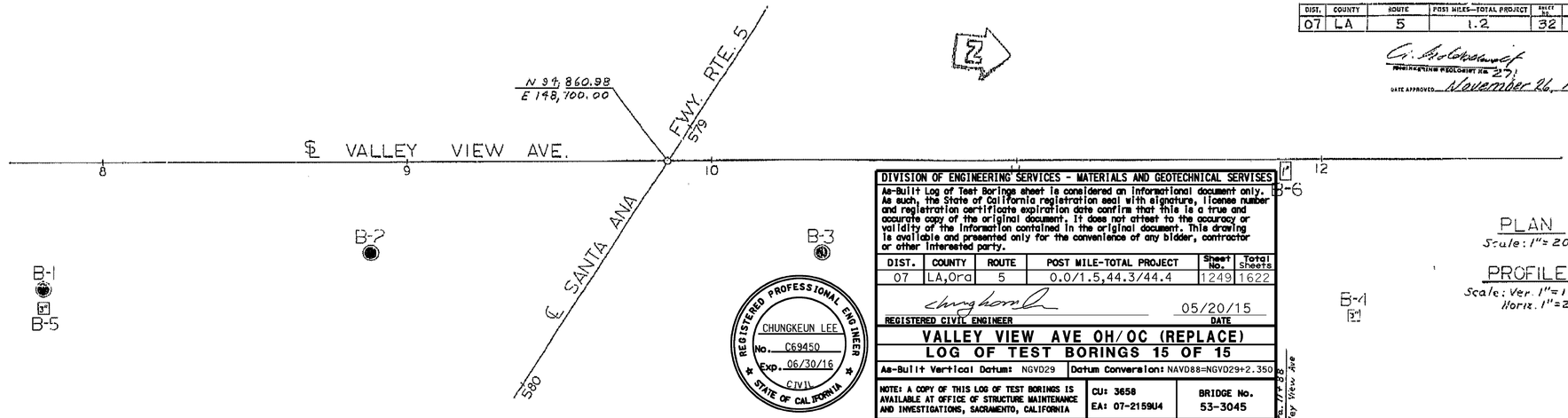

DIVISION OF ENGINEERING SERVICES - MATERIALS AND GEOTECHNICAL SERVICES					
As-Built Log of Test Borings sheet is considered an informational document only. As such, the State of California registration seal with signature, license number and registration certificate expiration date confirm that this is a true and accurate copy of the original document. It does not attest to the accuracy or validity of the information contained in the original document. This drawing is available and presented only for the convenience of any bidder, contractor or other interested party.					
DIST.	COUNTY	ROUTE	POST MILE-TOTAL PROJECT	Sheet No.	Total sheets
07	LA,Ora	5	0.0/1.5,44.3/44.4	1249	1622
REGISTERED CIVIL ENGINEER			05/20/15 DATE		
VALLEY VIEW AVE OH/OC (REPLACE)					
LOG OF TEST BORINGS 15 OF 15					
As-Built Vertical Datum: NGVD29		Datum Conversion: NAVD88=NGVD29+2.350			
NOTE: A COPY OF THIS LOG OF TEST BORINGS IS AVAILABLE AT OFFICE OF STRUCTURE MAINTENANCE AND INVESTIGATIONS, SACRAMENTO, CALIFORNIA		CU: 3658 EA: 07-2159U4	BRIDGE No. 53-3045 182 OF 182		

REGISTERED PROFESSIONAL ENGINEER CHUNGKEUN LEE No. C69450 Exp. 06/30/16 CIVIL STATE OF CALIFORNIA

TO ACCOMPANY PLANS DATED 1-25-16

PLAN
Scale: 1" = 20'

PROFILE
Scale: Ver. 1" = 10'
Horiz. 1" = 20'

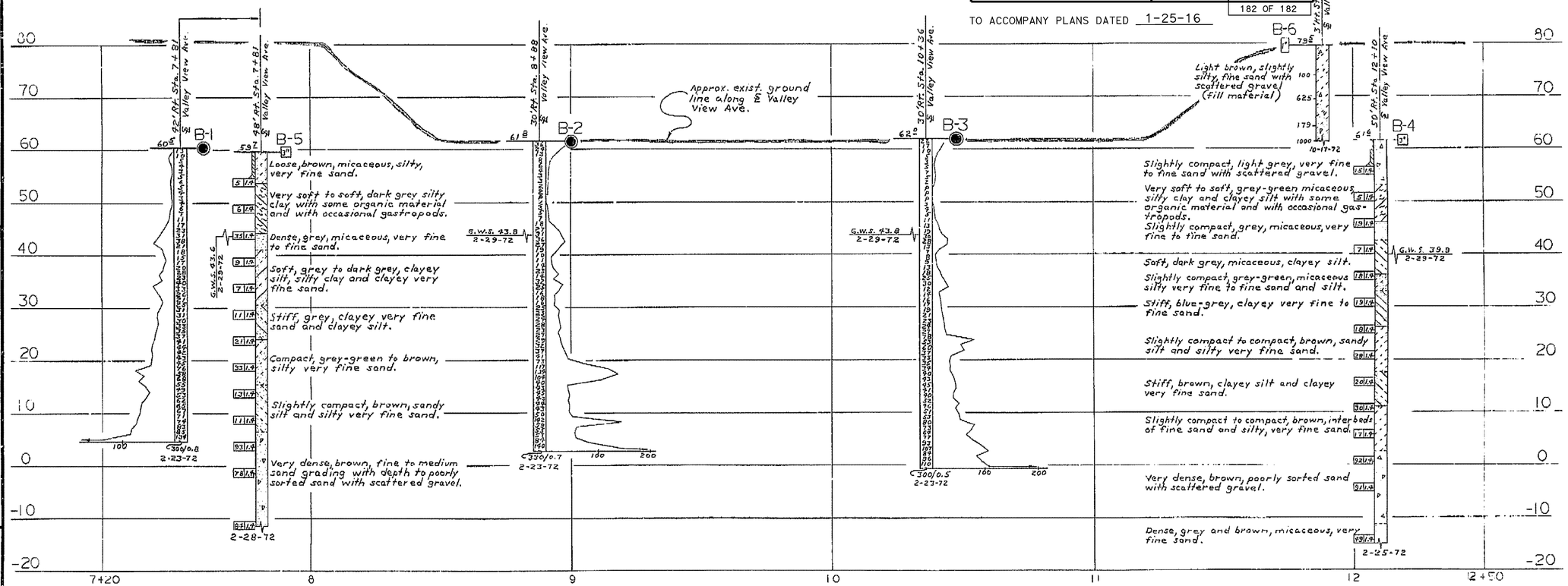

NOTE: REVISION DATE 10-27-72 ADDED BORING NO. 6

No As Built Changes
AS BUILT
CORRECTIONS BY W. H. Hansen
CONTRACT NO. 07-203514
DATE 4-12-76 R&7-12-76

BRIDGE DEPARTMENT ENGINEERING GEOLOGY SECTION	
FIELD STUDY	by W.C. CAIN & R.E. CORBALEY, 10-17-72
DRAWN	by E.S. JIMENEZ, 10-27-72
CHECKED	by W. Cain 10-30-72
Approval Recommended by Engineering Geologist	
Certified Engineering Geologist No.	

STATE OF CALIFORNIA
TRANSPORTATION AGENCY
DEPARTMENT OF PUBLIC WORKS
DIVISION OF HIGHWAYS

VALLEY VIEW AVENUE OVERCROSSING

LOG OF TEST BORINGS

BRIDGE No.	POST MILE	DRAWING NO.	SHEET	OF
56-631 R	1.2		18	18

REVISION DATES (PRELIMINARY STAGE ONLY)
10/31/72

Disregard prints bearing earlier revision dates

WO 203511
CU 07207

MICROFILMED
JUL 2 1975

AS BUILT PLANS
Contract No. 07-203514
Date Completed
Document No. 70007447

I HEREBY CERTIFY THAT THIS IS A TRUE AND ACCURATE COPY OF THE ABOVE DOCUMENT TAKEN UNDER MY DIRECTION AND CONTROL ON THIS DATE IN SACRAMENTO, CALIFORNIA PURSUANT TO AUTHORIZATION BY THE DIRECTOR OF TRANSPORTATION.
DATE 7/22/76 SIGNATURE Dale Pfeiffer TITLE Micrografix Supervisor

53-3045-z-1otb15.tif

32

DIST	COUNTY	ROUTE	POST MILES TOTAL PROJECT	SHEET No.	TOTAL SHEETS
07	LA,Ora	5	0.0/1.5, 44.3/44.4	1250	1622

REGISTERED CIVIL ENGINEER — DATE 2-10-15

1-25-16
PLANS APPROVAL DATE

REGISTERED PROFESSIONAL ENGINEER — WILLIAM D. KEMP — No. 55730 — Exp. 12/31/16 — CIVIL — STATE OF CALIFORNIA

The State of California or its officers or agents shall not be responsible for the accuracy or completeness of electronic copies of this plan sheet.

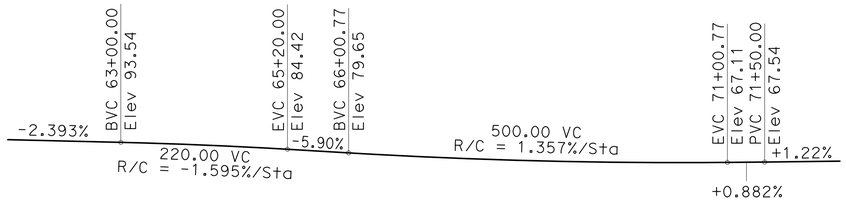

PROFILE GRADE

NO SCALE

NOTES:

1. Paint "Br No 53-3058K"
2. Paint "VALLEY VIEW AVE SB OFF RAMP"
3. Paint Bent & Col No. B_ C_
4. Structure Approach Type N(30S)
5. Concrete Barrier Type 736 Mod
6. Ramp Hinge

FOR GENERAL NOTES AND INDEX TO PLANS, SEE "INDEX TO PLANS" SHEET

QUANTITIES

STRUCTURE EXCAVATION (BRIDGE)	595	CY
STRUCTURE EXCAVATION (TYPE D)	276	CY
STRUCTURE BACKFILL (BRIDGE)	459	CY
FURNISH 24" STEEL PIPE PILING	5,570	LF
DRIVE 24" STEEL PIPE PILE	116	EA
STRUCTURAL CONCRETE, BRIDGE FOOTING	337	CY
STRUCTURAL CONCRETE, BRIDGE	1,625	CY
STRUCTURAL CONCRETE, APPROACH SLAB (TYPE N)	74	CY
ARCHITECTURAL TREATMENT (SPLIT SLATE)	755	SQFT
JOINT SEAL (MR 2")	53	LF
BAR REINFORCING STEEL (BRIDGE)	614,800	LB
BAR REINFORCING STEEL (GALVANIZED)	440	LB
HEADED BAR REINFORCEMENT	320	EA
BRIDGE DECK DRAINAGE SYSTEM	2,400	LB
CONCRETE BARRIER (TYPE 736 MODIFIED)	810	LF
MISCELLANEOUS METAL (RESTRAINER - PIPE TYPE)	210	LB

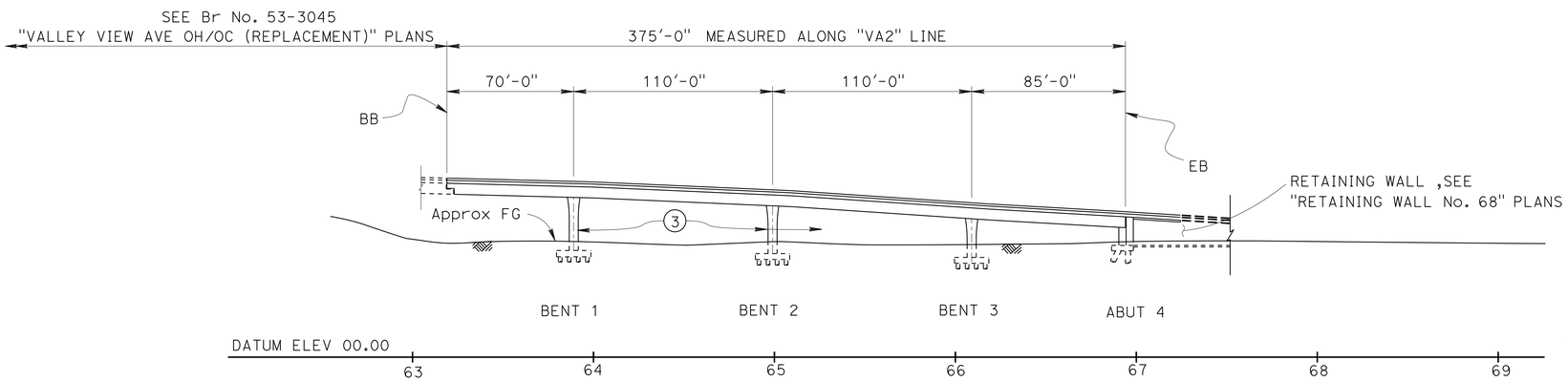

ELEVATION

1" = 40'

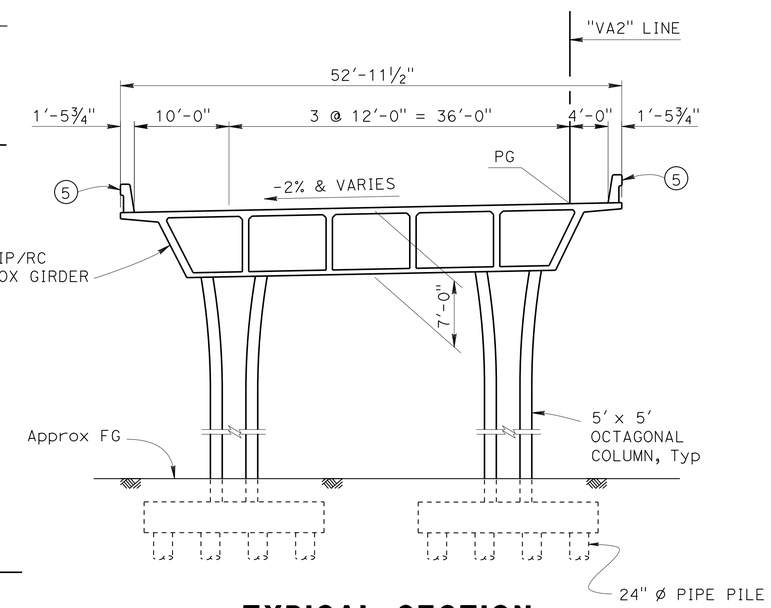

TYPICAL SECTION

⅛" = 1'-0"

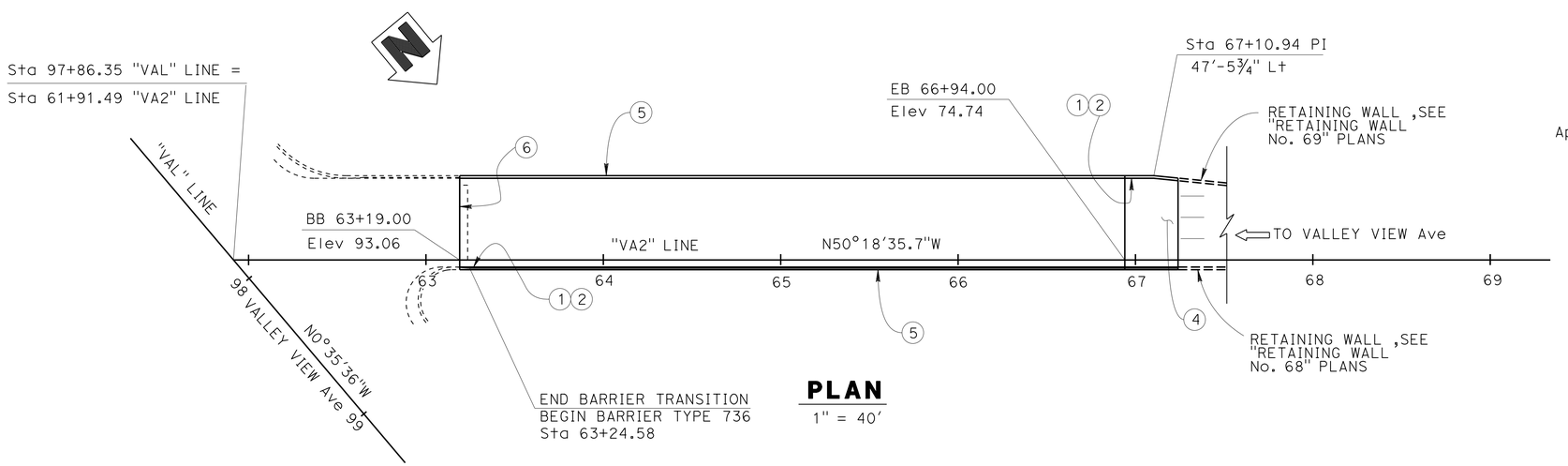

PLAN

1" = 40'

Ramin Rashedi 2-11-15 DESIGN ENGINEER	DESIGN	BY Shervin Pahlaban	CHECKED Yeo Yoon	LOAD & RESISTANCE FACTOR DESIGN	LIVE LOADING: HL93 W/"LOW-BOY": PERMIT DESIGN VEHICLE
	DETAILS	BY Loren Goldthwait	CHECKED Yeo Yoon	LAYOUT	BY Shervin Pahlaban / CHECKED Yeo Yoon
	QUANTITIES	BY Shervin Pahlaban	CHECKED Suzan Moradi	SPECIFICATIONS	BY Xiahong LI / PLANS AND SPECS COMPARED Xiahong Li

ORIGINAL SCALE IN INCHES FOR REDUCED PLANS 0 1 2 3

STATE OF CALIFORNIA
DEPARTMENT OF TRANSPORTATION

DIVISION OF ENGINEERING SERVICES
STRUCTURE DESIGN
DESIGN BRANCH 11

BRIDGE NO. 53-3058K
POST MILE 1.23

VALLEY VIEW AVE SB OFF RAMP
GENERAL PLAN

UNIT: 3587
PROJECT NUMBER & PHASE: 0715000160-1 CONTRACT NO.: 07-2159U4

DISREGARD PRINTS BEARING EARLIER REVISION DATES

REVISION DATES: 11-14-12 3-08-13 6-12-13 2-10-15

SHEET 1 OF 23

USERNAME => s125624 DATE PLOTTED => 28-JAN-2016 TIME PLOTTED => 12:10

STRUCTURES DESIGN GENERAL PLAN SHEET (ENGLISH) (REV.09-01-10)

FILE => 53-3058k-a-gp.dgn

DIST	COUNTY	ROUTE	POST MILES TOTAL PROJECT	SHEET No.	TOTAL SHEETS
07	LA,Ora	5	0.0/1.5, 44.3/44.4	1251	1622

REGISTERED CIVIL ENGINEER — DATE: 3-18-15

1-25-16
PLANS APPROVAL DATE

REGISTERED PROFESSIONAL ENGINEER — WILLIAM D. KEMP — No. 55730 — Exp. 12/31/16 — CIVIL — STATE OF CALIFORNIA

The State of California or its officers or agents shall not be responsible for the accuracy or completeness of electronic copies of this plan sheet.

INDEX TO PLANS

SHEET NO.	TITLE	SHEET NO.	TITLE
1	GENERAL PLAN	13	GIRDER LAYOUT
2	INDEX TO PLANS	14	HINGE LAYOUT
3	FOUNDATION PLAN	15	HINGE DETAILS
4	DECK CONTOUR	16	ADDITIONAL REINFORCEMENT NO. 1
5	ABUTMENT 4 LAYOUT	17	ADDITIONAL REINFORCEMENT NO. 2
6	ABUTMENT DETAILS NO. 1	18	ARCHITECTURAL DETAILS NO. 1
7	ABUTMENT DETAILS NO. 2	19	ARCHITECTURAL DETAILS NO. 2
8	TYPICAL FOOTING DETAILS	20	DRAINAGE LAYOUT
9	BENT DETAILS NO. 1	21	STRUCTURE APPROACH TYPE N(30S)
10	BENT DETAILS NO. 2	22	STRUCTURE APPROACH DRAINAGE DETAILS
11	COLUMN DETAILS	23	LOG OF TEST BORING - 1 OF 1
12	TYPICAL SECTION		

STANDARD PLAN SHEET NO.

DETAIL NO.

GENERAL NOTES
LOAD AND RESISTANCE FACTOR DESIGN

DESIGN: AASHTO LRFD BRIDGE DESIGN SPECIFICATIONS, 4th EDITION WITH CALIFORNIA AMENDMENTS

SEISMIC DESIGN: CALTRANS SEISMIC DESIGN CRITERIA (SDC), Version 1.6, November 2010

DEAD LOAD: Includes 35 Psf for Future Wearing Surface

LIVE LOADING: HL93 with "Low Boy" and Permit Design Vehicle.

SEISMIC LOADING: See Site Specific, Acceleration Response Spectra

REINFORCED CONCRETE: f_y = 60 ksi

f'_c = 4000 psi

STRUCTURAL STEEL
STEEL PIPE PILE:

f_y = 45 ksi

STANDARD PLANS 2010

A10A	ACRONYMS AND ABBREVIATIONS (SHEET 1 OF 2)
RSP A10B	ACRONYMS AND ABBREVIATIONS (SHEET 2 OF 2)
A10C	SYMBOLS (SHEET 1 OF 3)
A10D	SYMBOLS (SHEET 2 OF 3)
A10E	SYMBOLS (SHEET 3 OF 3)
RSP A10F	LEGEND-SOIL (SHEET 1 OF 2)
RSP A10G	LEGEND-SOIL (SHEET 2 OF 2)
A62B	LIMITS OF PAYMENT FOR EXCAVATION AND BACKFILL - BRIDGE SURCHARGE AND WALL
A62C	LIMITS OF PAYMENT FOR EXCAVATION AND BACKFILL - BRIDGE
RSP A77U3	MIDWEST GUARDRAIL SYSTEM CONNECTION TO ABUTMENTS AND WALLS
B0-1	BRIDGE DETAILS
B0-3	BRIDGE DETAILS
B0-5	BRIDGE DETAILS
B0-13	BRIDGE DETAILS
B2-8	PILE DETAILS CLASS 200
B6-21	JOINT SEALS (MAXIMUM MOVEMENT RATING = 2")
B7-1	BOX GIRDER DETAILS
B7-6	DECK DRAINS TYPES D1 AND D2
B7-7	DECK DRAIN TYPE D-3
B7-8	DECK DRAIN DETAILS
RSP B11-56	CONCRETE BARRIER TYPE 736
B14-5	WATER SUPPLY LINE (DETAILS) (PIPE SIZE LESS THAN 4")

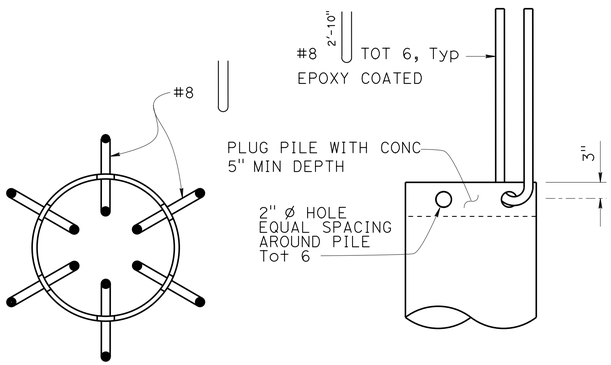

PLAN **ELEVATION**

TYPICAL PIPE PILE ANCHOR
NO SCALE

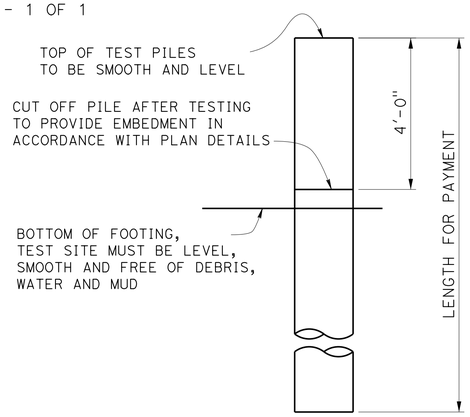

NOTE: One Test Pile is required at each support location from Bent 1 thru Abut 4. Specific pile at each support to be determined by the contractor and apporved by the engineer.

TEST PILE ELEVATION
NO SCALE

ACCELERATION RESPONSE SPECTRUM (WITH 5% DAMPING)

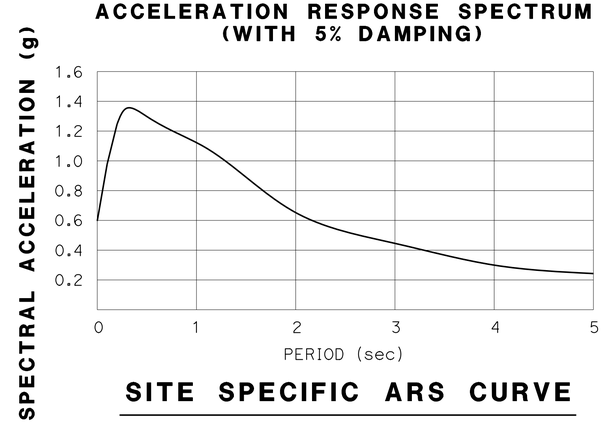

SITE SPECIFIC ARS CURVE

PILE DATA

SUPPORT LOCATION	PILE TYPE	NOMINAL RESISTANCE (KIPS)		DESIGN TIP ELEVATION (FT)	SPECIFIED TIP ELEVATION (FT)	NOMINAL DRIVING RESISTANCE (KIPS)
		COMPRESSION	TENSION			
BENT 1	PP24x0.5	350	150	+7.0 (a) +24.0 (b) +22.0 (c)	+7.0	350
BENT 2		330	130	+9.0 (a) +27.0 (b) 12.0 (c)	+9.0	330
BENT 3		330	0	+5.0 (a) +22.0 (c)	+5.0	330
Abut 4		230	0	+17.0 (a) +21.0 (c)	+17.0	230

NOTES:

1. Design Tip Elevations for Abutments are controlled by: (a) Compression, (c) Settlement.
2. Design Tip Elevations for Bents are controlled by: (a) Compression, (b) Tension, (c) Settlement.
3. The specified tip elevation shall not be raised above the design tip elevation for tension load, lateral load and tolerable settlement.
4. The nominal driving resistance is equal to nominal resistance needed for factored load per pile plus driving resistance needed for factored load per support.

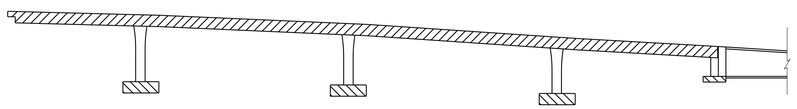

STRUCTURAL CONCRETE, BRIDGE

STRUCTURAL CONCRETE, BRIDGE FOOTING

STRUCTURAL CONCRETE, BRIDGE (4000 psi AT 28 DAYS)

CONCRETE STRENGTH AND TYPE LIMITS
NO SCALE

	BY	CHECKED
DESIGN	Shervin Pahlavan	T. Yoon
DETAILS	Loren Goldthwait	T. Yoon
QUANTITIES	Shervin Pahlavan	Suzan Moradi

STATE OF CALIFORNIA
DEPARTMENT OF TRANSPORTATION

DIVISION OF ENGINEERING SERVICES
STRUCTURE DESIGN
DESIGN BRANCH 11

BRIDGE NO. 53-3058K
POST MILE 1.23

VALLEY VIEW AVE SB OFF RAMP
INDEX TO PLANS

STRUCTURES DESIGN DETAIL SHEET (ENGLISH) (REV. 09-01-10)

ORIGINAL SCALE IN INCHES FOR REDUCED PLANS 0 1 2 3

UNIT: 3587
PROJECT NUMBER & PHASE: 0715000160-1
CONTRACT NO.: 07-2159U4

DISREGARD PRINTS BEARING EARLIER REVISION DATES

REVISION DATES: 9-11-12 11-16-12 9-27-13 6-28-12

SHEET 2 OF 23

FILE => 53-3058K-a-itp.dgn

USERNAME => s123624 DATE PLOTTED => 28-JAN-2016 TIME PLOTTED => 12:10

DIST	COUNTY	ROUTE	POST MILES TOTAL PROJECT	SHEET No.	TOTAL SHEETS
07	LA,Ora	5	0.0/1.5, 44.3/44.4	1252	1622

REGISTERED CIVIL ENGINEER — DATE 3-18-15

1-25-16
PLANS APPROVAL DATE

REGISTERED PROFESSIONAL ENGINEER — WILLIAM D. KEMP — No. 55730 — Exp. 12/31/16 — CIVIL — STATE OF CALIFORNIA

The State of California or its officers or agents shall not be responsible for the accuracy or completeness of electronic copies of this plan sheet.

CURVE DATA

No.	R	Δ	T	L
1	2500.000′	03°33′32"	77.665′	155.280′

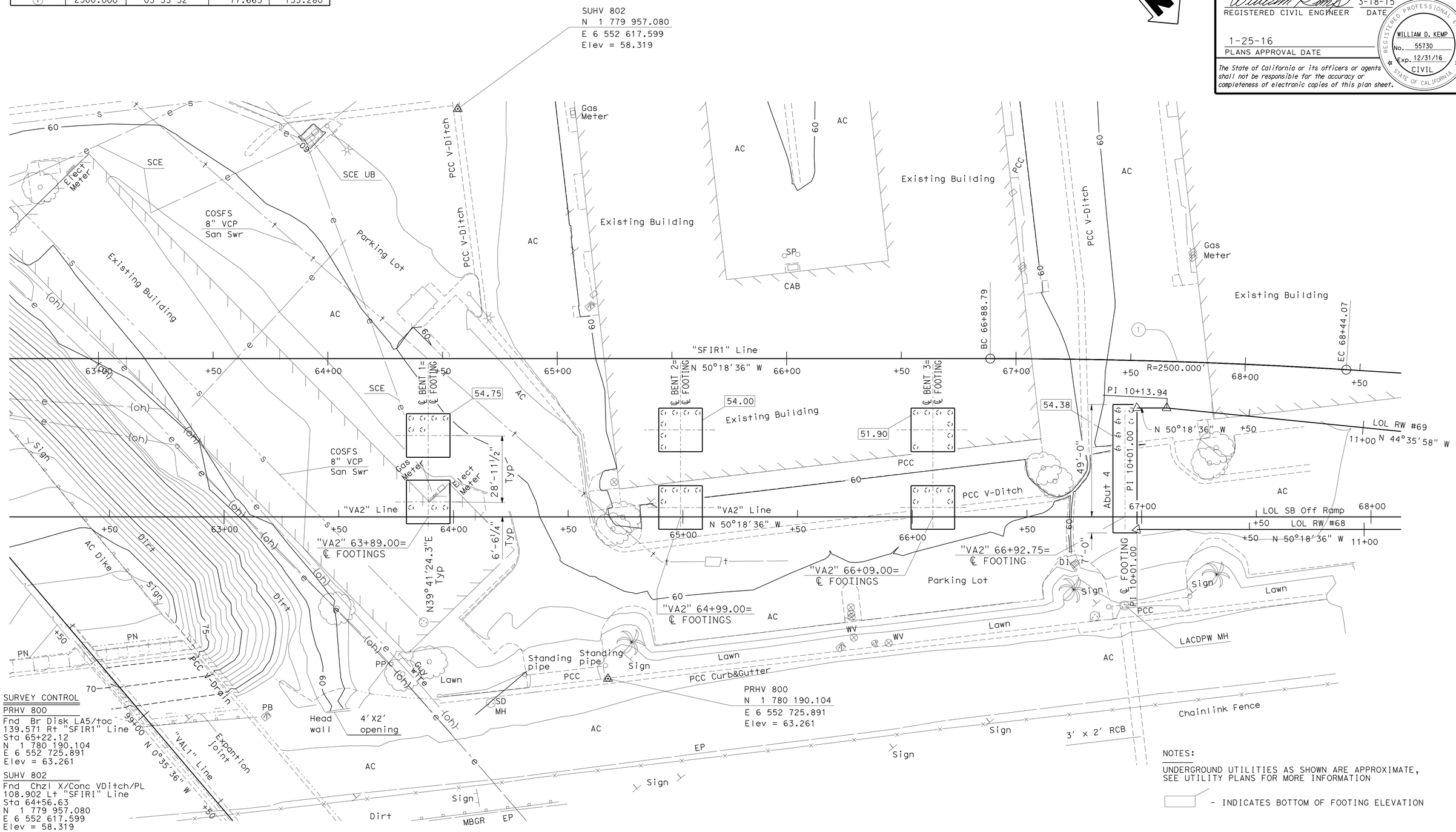

SURVEY CONTROL

PRHV 800
Fnd Br Disk LA5/toc
139.571 Rt "SFIR1" Line
Sta 65+22.12
N 1 780 190.104
E 6 552 725.891
Elev = 63.261

SUHV 802
Fnd Chzl X/Conc VDitch/PL
108.902 Lt "SFIRI" Line
Sta 64+56.63
N 1 779 957.080
E 6 552 617.599
Elev = 58.319

NOTES:

UNDERGROUND UTILITIES AS SHOWN ARE APPROXIMATE, SEE UTILITY PLANS FOR MORE INFORMATION

▭ - INDICATES BOTTOM OF FOOTING ELEVATION

PRELIMINARY INVESTIGATION SECTION

SCALE	VERT.DATUM NAVD 88	PHOTOGRAMMETRY AS OF: X			
1"=20′	HORZ.DATUM NAD 83	SURVEYED	BY C. Stewart	CHECKED	BY C. Stewart
ALIGNMENT TIES Dist. Traverse Sheet		DRAFTED	BY M. Sadaghiani 08-13	CHECKED	BY E. Vigjar 08-13

DESIGN	BY S. Pahlavan	CHECKED	Yeo Yoon
DETAILS	BY T. Bittermann	CHECKED	Yeo Yoon
QUANTITIES	BY S. Pahlavan	CHECKED	Suzan Moradi

STATE OF CALIFORNIA
DEPARTMENT OF TRANSPORTATION

DIVISION OF ENGINEERING SERVICES
STRUCTURE DESIGN
DESIGN BRANCH 11

BRIDGE NO. 53-3058K
POST MILE 1.23

VALLEY VIEW AVE SB OFF RAMP
FOUNDATION PLAN

STRUCTURES FOUNDATION PLAN SHEET (ENGLISH) (REV. 09-01-10)

ORIGINAL SCALE IN INCHES FOR REDUCED PLANS 0 1 2 3

UNIT: 3647
PROJECT NUMBER & PHASE: 0715000160-1
CONTRACT NO.: 07-2159u4

DISREGARD PRINTS BEARING EARLIER REVISION DATES → 8/19/13 8/19/13

SHEET 3 OF 23

FILE => 53-3058k-c-fp.dgn

DIST	COUNTY	ROUTE	POST MILES TOTAL PROJECT	SHEET No.	TOTAL SHEETS
07	LA,Ora	5	0.0/1.5, 44.3/44.4	1253	1622

REGISTERED CIVIL ENGINEER — DATE: 3-18-15

1-25-16
PLANS APPROVAL DATE

REGISTERED PROFESSIONAL ENGINEER — WILLIAM D. KEMP — No. 55730 — Exp. 12/31/16 — CIVIL — STATE OF CALIFORNIA

The State of California or its officers or agents shall not be responsible for the accuracy or completeness of electronic copies of this plan sheet.

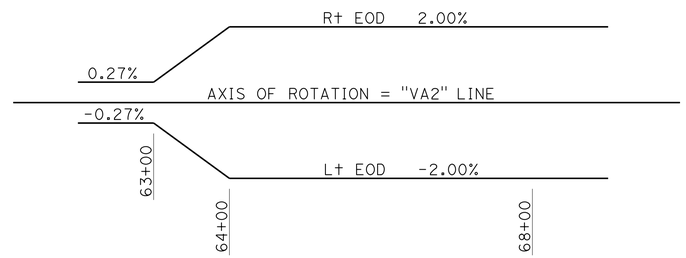

SUPERELEVATION DIAGRAM

NO SCALE

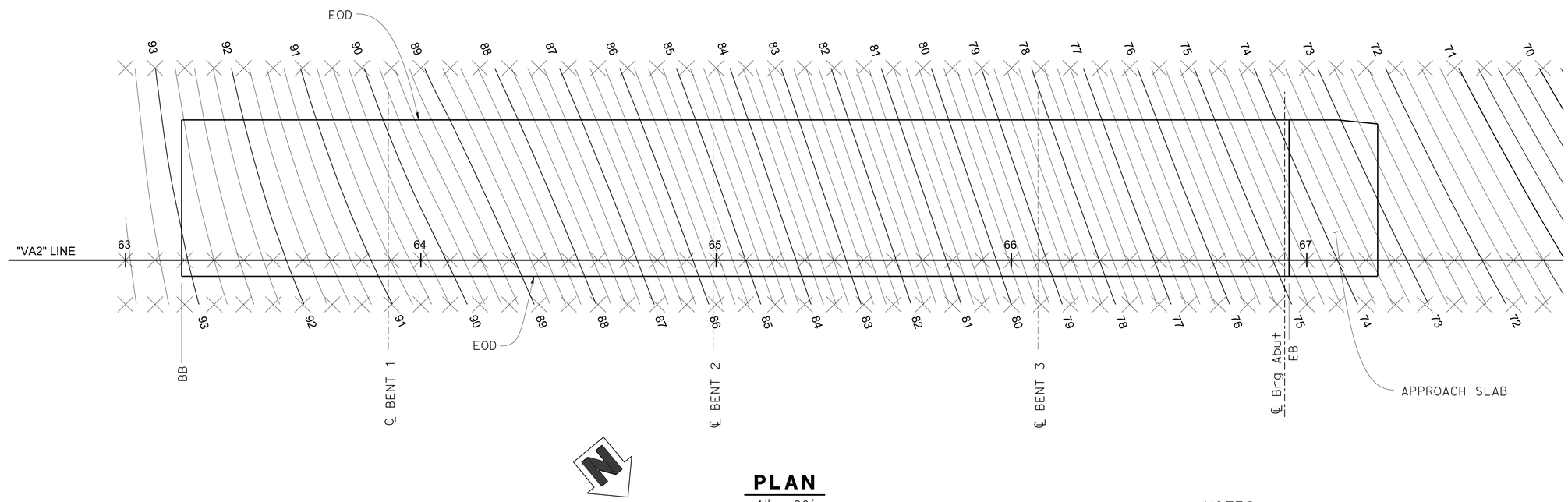

PLAN

1" = 20'

NOTES:

1. Contours do not include camber
2. Contour interval = 0.25'

X Indicates 10.0' intervals along station line.

DESIGN	BY Shervin Pahlavan	CHECKED Yeo Yoon	
DETAILS	BY Pauline Tong	CHECKED Yeo Yoon	
QUANTITIES	BY Shervin Pahlavan	CHECKED Suzan Moradi	

STATE OF CALIFORNIA
DEPARTMENT OF TRANSPORTATION

DIVISION OF ENGINEERING SERVICES
STRUCTURE DESIGN
DESIGN BRANCH 11

BRIDGE NO. 53-3058K
POST MILE 1.23

VALLEY VIEW AVE SB OFF RAMP
DECK CONTOUR

STRUCTURES DESIGN DETAIL SHEET (ENGLISH) (REV. 09-01-10)

ORIGINAL SCALE IN INCHES FOR REDUCED PLANS 0 1 2 3

UNIT: 3587
PROJECT NUMBER & PHASE: 0715000160-1
CONTRACT NO.: 07-2159u4

DISREGARD PRINTS BEARING EARLIER REVISION DATES

REVISION DATES: 7-8-11 7-14-11 2-01-12 6-22-12

SHEET 4 OF 23

FILE => 53-3058k-d-dc.dgn

USERNAME => s125624 DATE PLOTTED => 28-JAN-2016 TIME PLOTTED => 12:10

DIST	COUNTY	ROUTE	POST MILES TOTAL PROJECT	SHEET No.	TOTAL SHEETS
07	LA,Ora	5	0.0/1.5, 44.3/44.4	1254	1622

REGISTERED CIVIL ENGINEER — DATE 2-10-15

1-25-16
PLANS APPROVAL DATE

REGISTERED PROFESSIONAL ENGINEER — WILLIAM D. KEMP — No. 55730 — Exp. 12/31/16 — CIVIL — STATE OF CALIFORNIA

The State of California or its officers or agents shall not be responsible for the accuracy or completeness of electronic copies of this plan sheet.

NOTES:

1. Joint Seal MR = 2" (B6-21)
2. Expanded Polystyrene (B0-13)

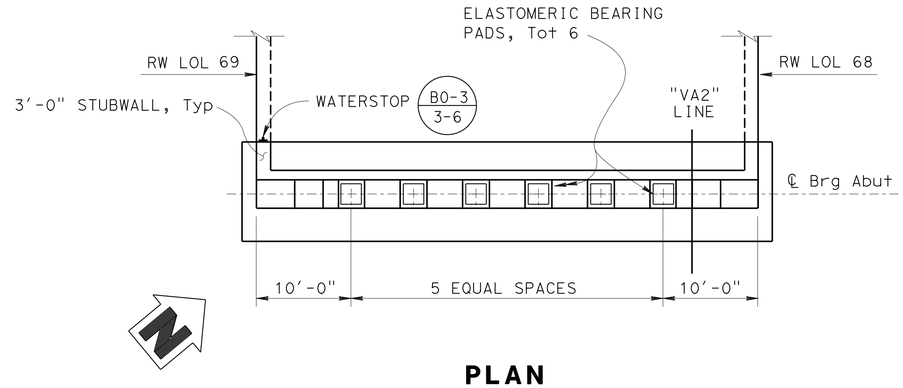

PLAN

1/8" = 1'-0"

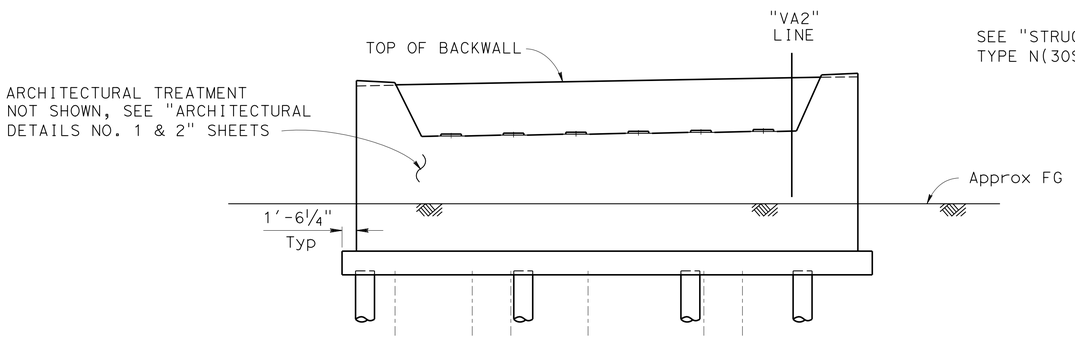

Note: Not all piles shown

ELEVATION

1/8" = 1'-0"

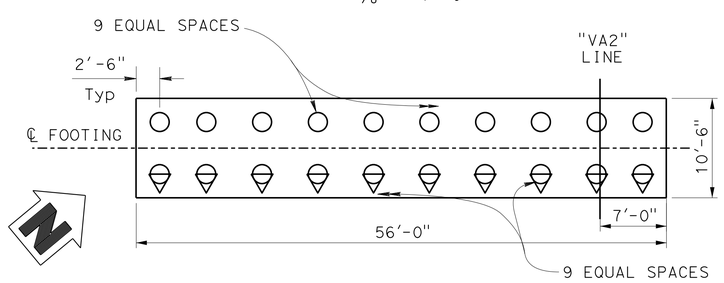

LEGEND:

- ○ - INDICATES TYPICAL PILE
- ⊖ - INDICATES TYPICAL (1:3) BATTERED PILE

PILE LAYOUT

1/8" = 1'-0"

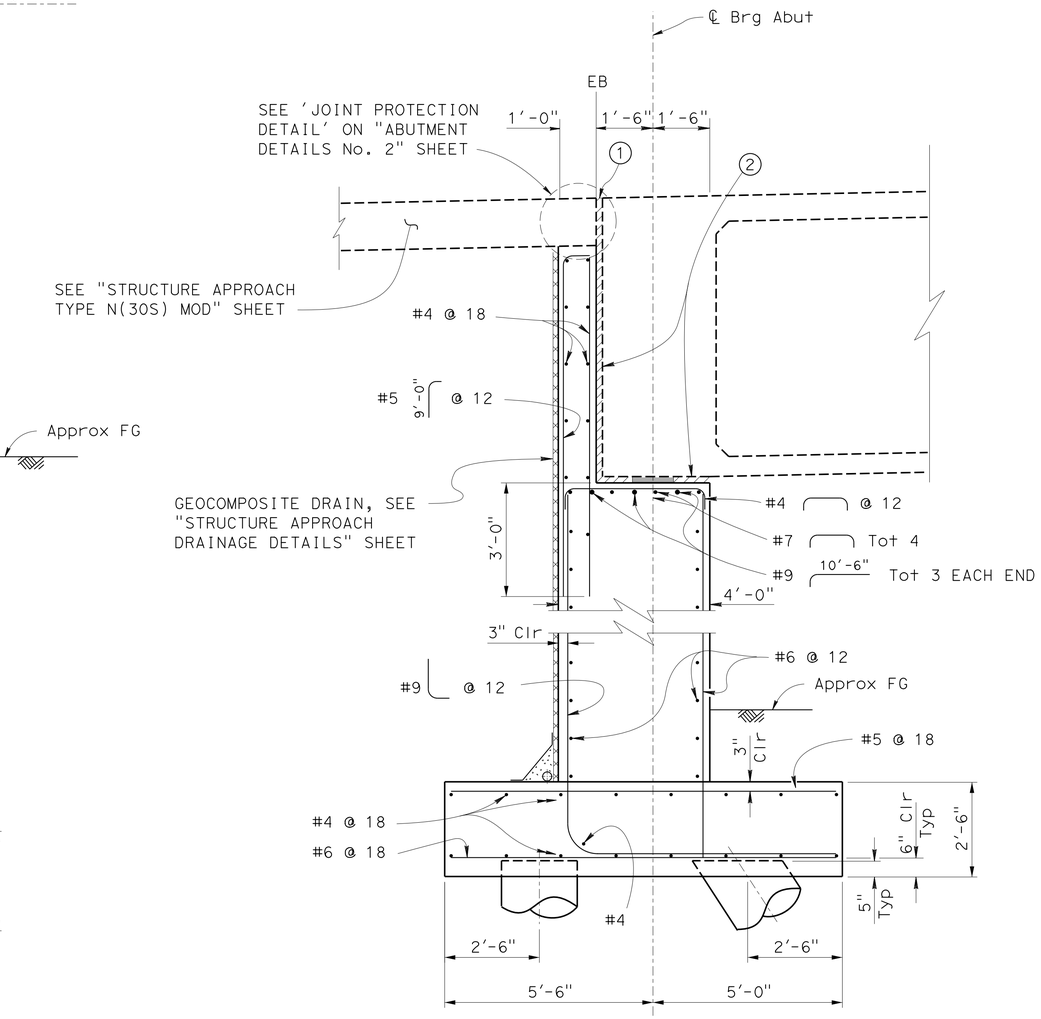

ABUTMENT SECTION

1/2" = 1'-0"

DESIGN	BY Shervin Pahlavan	CHECKED T. Yoon	
DETAILS	BY Loren Goldthwait	CHECKED T. Yoon	
QUANTITIES	BY Shervin Pahlavan	CHECKED Suzan Moradi	

STATE OF CALIFORNIA
DEPARTMENT OF TRANSPORTATION

DIVISION OF ENGINEERING SERVICES
STRUCTURE DESIGN
DESIGN BRANCH 11

BRIDGE NO. 53-3058K
POST MILE 1.23

VALLEY VIEW AVE SB OFF RAMP
ABUTMENT 4 LAYOUT

STRUCTURES DESIGN DETAIL SHEET (ENGLISH) (REV. 09-01-10)

ORIGINAL SCALE IN INCHES FOR REDUCED PLANS 0 1 2 3

UNIT: 3587
PROJECT NUMBER & PHASE: 0715000160-1
CONTRACT NO.: 07-2159U4

DISREGARD PRINTS BEARING EARLIER REVISION DATES

REVISION DATES: 7-02-12 2-22-13 9-23-13 1-10-15

SHEET 5 OF 23

FILE => 53-3058K-e-abt_1o.dgn

USERNAME => s125624 DATE PLOTTED => 28-JAN-2016 TIME PLOTTED => 12:11

DIST	COUNTY	ROUTE	POST MILES TOTAL PROJECT	SHEET No.	TOTAL SHEETS
07	LA,Ora	5	0.0/1.5, 44.3/44.4	1255	1622

REGISTERED CIVIL ENGINEER 2-11-15 DATE

1-25-16
PLANS APPROVAL DATE

REGISTERED PROFESSIONAL ENGINEER WILLIAM D. KEMP No. 55730 Exp. 12/31/16 CIVIL STATE OF CALIFORNIA

The State of California or its officers or agents shall not be responsible for the accuracy or completeness of electronic copies of this plan sheet.

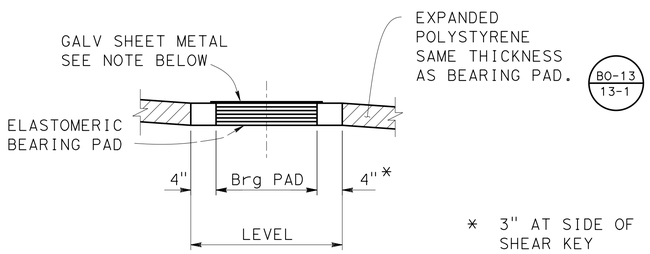

* 3" AT SIDE OF SHEAR KEY

NOTE: Coat top of Bearing Pad with silicone grease prior to placing sheet metal

SECTION D-D
BEARING PAD DETAIL
NO SCALE

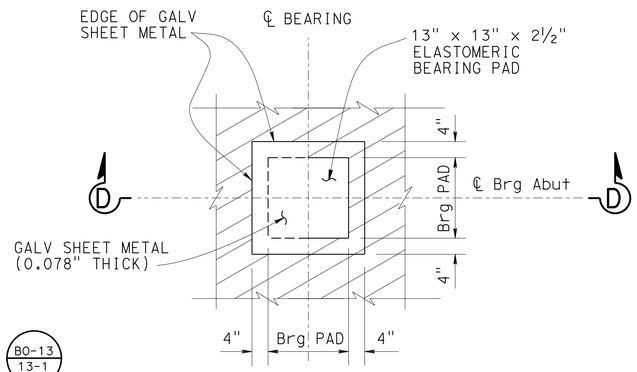

BEARING PAD PLAN
NO SCALE

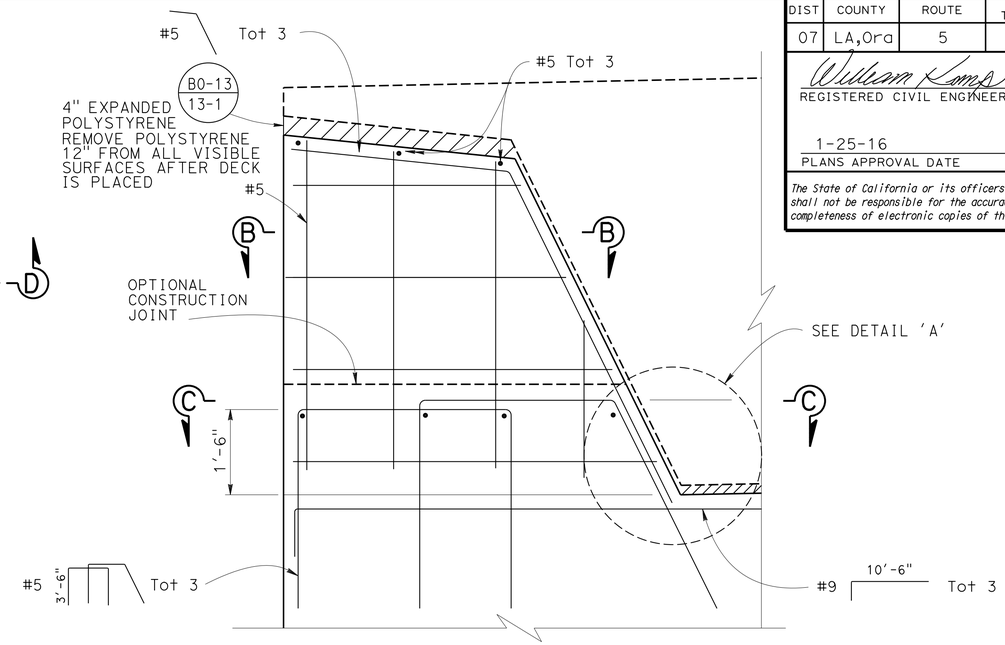

NOTE: Lt Shear Key Reinf shown
Rt Shear Key Reinf similar

EXTERNAL SHEAR KEY
¾" = 1'-0"

Note:

For "ELEVATION M-M" and "SECTION K-K" see "ABUTMENT DETAILS NO. 2" sheet.

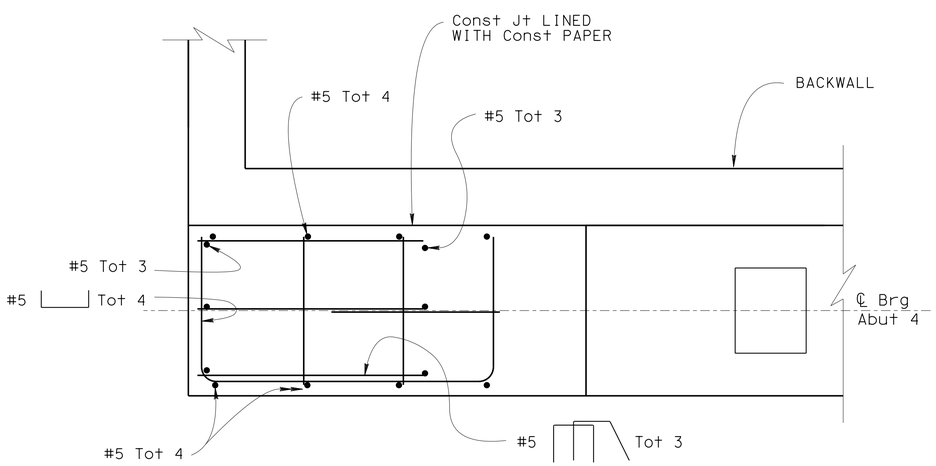

SECTION B-B
¾" = 1'-0"

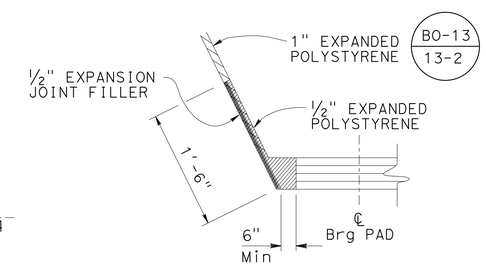

DETAIL A
NO SCALE

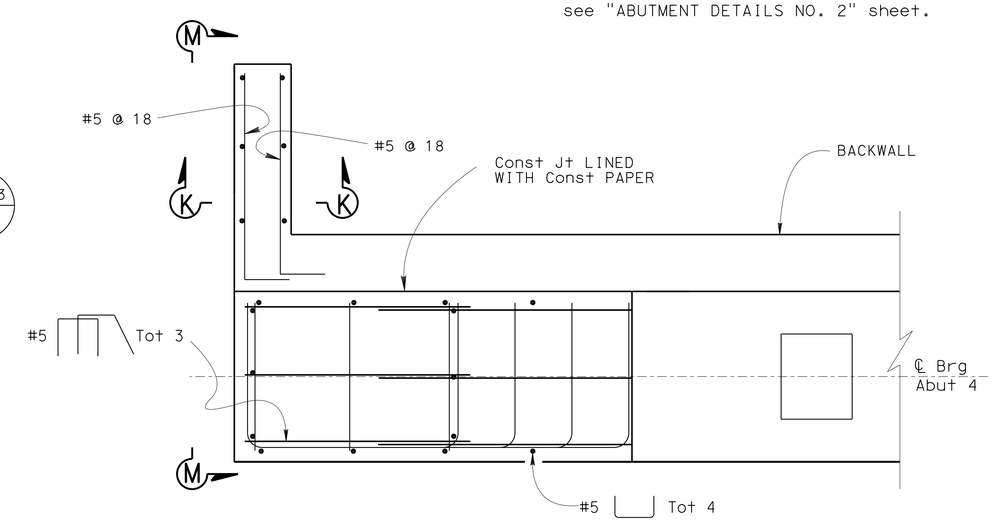

SECTION C-C
¾" = 1'-0"

DESIGN	BY Shervin Pahlavan	CHECKED T. Yoon	
DETAILS	BY Loren Goldthwait	CHECKED T. Yoon	
QUANTITIES	BY Shervin Pahlavan	CHECKED Suzan Moradi	

STATE OF CALIFORNIA
DEPARTMENT OF TRANSPORTATION

DIVISION OF ENGINEERING SERVICES
STRUCTURE DESIGN
DESIGN BRANCH 11

BRIDGE NO. 53-3058K
POST MILE 1.23

VALLEY VIEW AVE SB OFF RAMP
ABUTMENT DETAILS NO. 1

STRUCTURES DESIGN DETAIL SHEET (ENGLISH) (REV. 09-01-10)

ORIGINAL SCALE IN INCHES FOR REDUCED PLANS 0 1 2 3

UNIT: 3587
PROJECT NUMBER & PHASE: 0715000160-1
CONTRACT NO.: 07-2159u4

DISREGARD PRINTS BEARING EARLIER REVISION DATES

REVISION DATES: 3-18-13 4-09-13 2-11-15 3-9-12

SHEET 6 OF 23

FILE => 53-3058K-e-abtdt1.dgn

USERNAME => s125624 DATE PLOTTED => 28-JAN-2016 TIME PLOTTED => 12:11

DIST	COUNTY	ROUTE	POST MILES TOTAL PROJECT	SHEET No.	TOTAL SHEETS
07	LA,Ora	5	0.0/1.5, 44.3/44.4	1256	1622

REGISTERED CIVIL ENGINEER — DATE: 2-10-15

1-25-16
PLANS APPROVAL DATE

REGISTERED PROFESSIONAL ENGINEER — WILLIAM D. KEMP — No. 55730 — Exp. 12/31/16 — CIVIL — STATE OF CALIFORNIA

The State of California or its officers or agents shall not be responsible for the accuracy or completeness of electronic copies of this plan sheet.

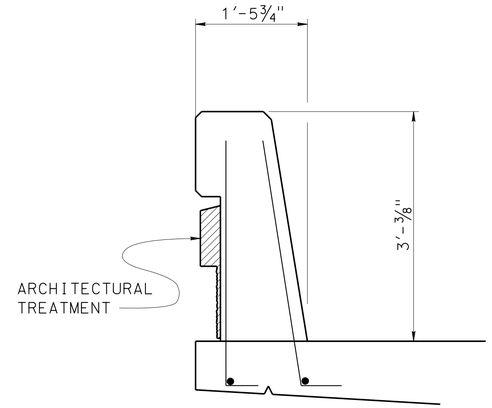

CONCRETE BARRIER TYPE 736 MOD

1" = 1'-0"

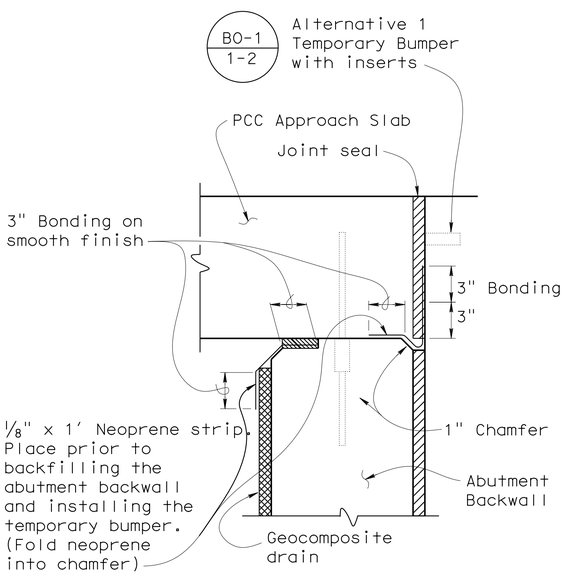

JOINT PROTECTION DETAIL

No Scale

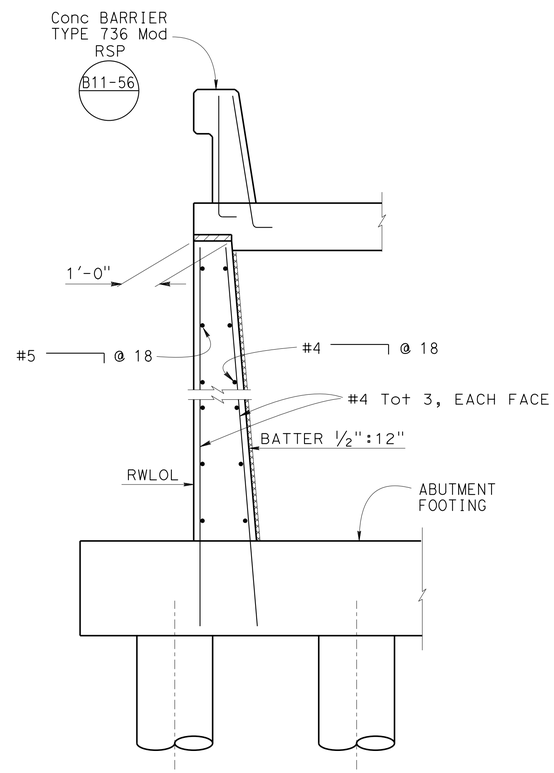

SECTION K-K

NO SCALE

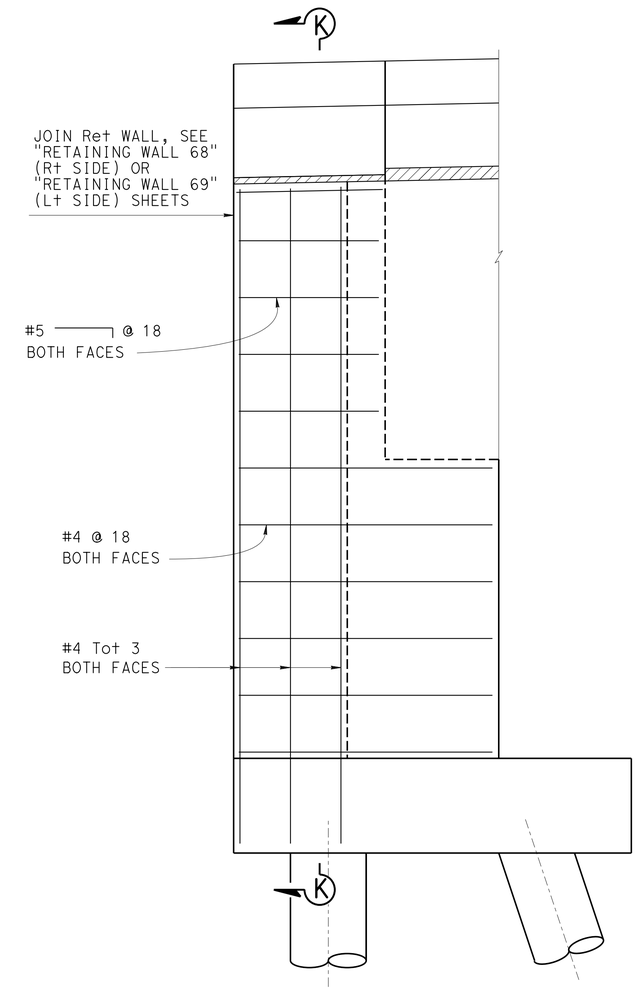

VIEW M-M, STUBWALL ELEVATION

½" = 1'-0"

DESIGN	BY Shervin Pahlavan	CHECKED Yeo Yoon	
DETAILS	BY Loren Goldthwait	CHECKED Yeo Yoon	
QUANTITIES	BY Shervin Pahlavan	CHECKED Suzan Moradi	

STATE OF CALIFORNIA
DEPARTMENT OF TRANSPORTATION

DIVISION OF ENGINEERING SERVICES
STRUCTURE DESIGN
DESIGN BRANCH 11

BRIDGE NO. 53-3058K
POST MILE 1.23

VALLEY VIEW AVE SB OFF RAMP
ABUTMENT DETAILS NO. 2

STRUCTURES DESIGN DETAIL SHEET (ENGLISH) (REV. 09-01-10)

ORIGINAL SCALE IN INCHES FOR REDUCED PLANS 0 1 2 3

UNIT: 3587
PROJECT NUMBER & PHASE: 0715000160-1
CONTRACT NO.: 07-2159U4

DISREGARD PRINTS BEARING EARLIER REVISION DATES

REVISION DATES: 05-24-11 4-09-13 5-30-13 2-10-15

SHEET 7 OF 23

FILE => 53-3058K-e-abtdt2.dgn

USERNAME => s125624 DATE PLOTTED => 28-JAN-2016 TIME PLOTTED => 12:11

DIST	COUNTY	ROUTE	POST MILES TOTAL PROJECT	SHEET No.	TOTAL SHEETS
07	LA,Ora	5	0.0/1.5, 44.3/44.4	1257	1622

REGISTERED CIVIL ENGINEER — DATE 3-18-15

1-25-16
PLANS APPROVAL DATE

REGISTERED PROFESSIONAL ENGINEER — WILLIAM D. KEMP — No. 55730 — Exp. 12/31/16 — CIVIL — STATE OF CALIFORNIA

The State of California or its officers or agents shall not be responsible for the accuracy or completeness of electronic copies of this plan sheet.

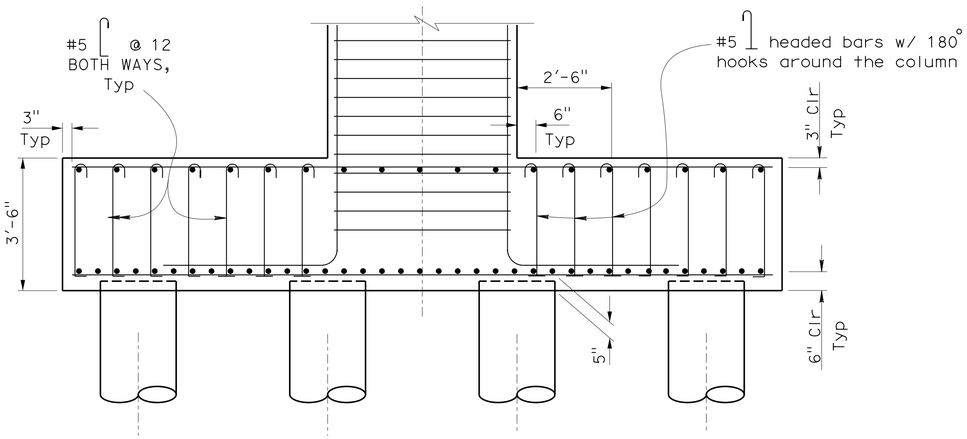

FOOTING, BENTS 1 AND 2

1/2" = 1'-0"

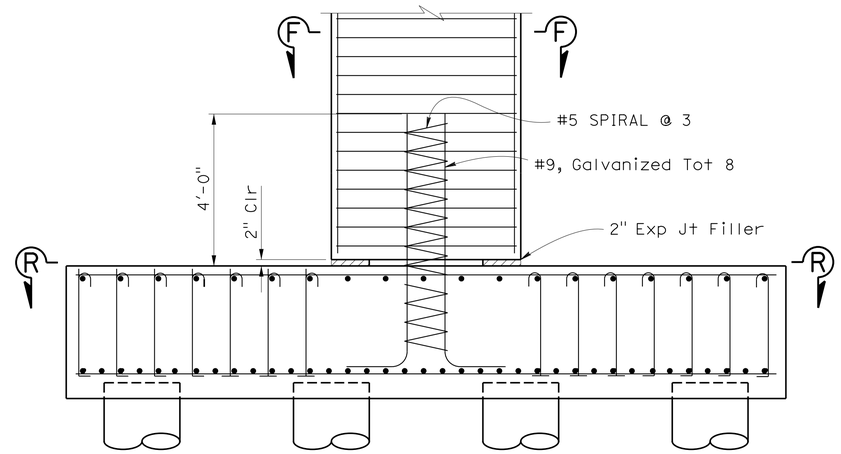

Note: Bent Cap Reinf not shown

FOOTING, BENT 3

1/2" = 1'-0"

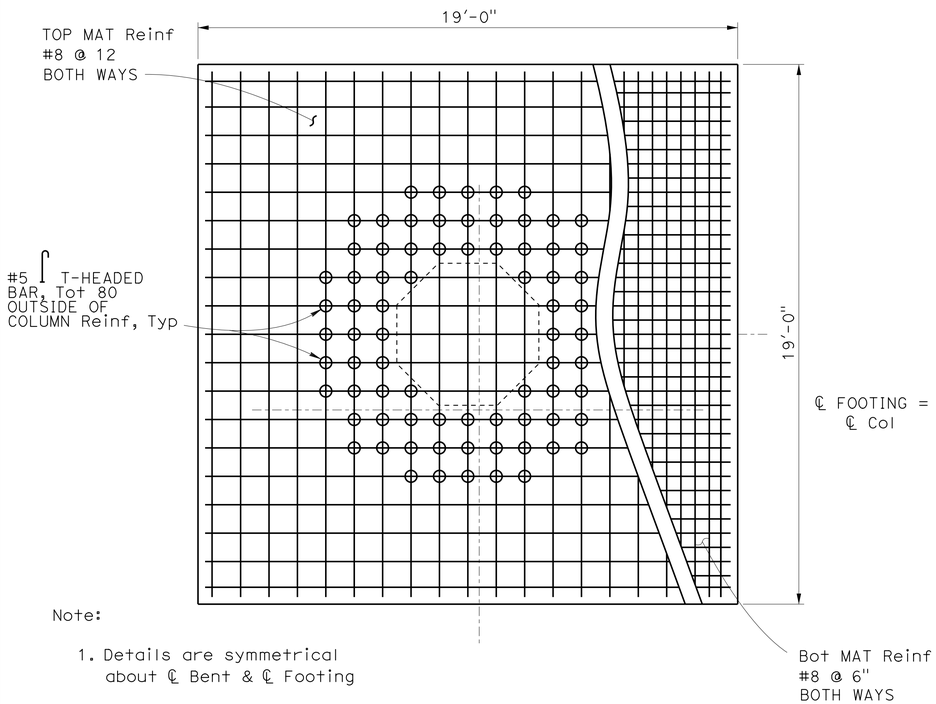

Note:

1. Details are symmetrical about ℄ Bent & ℄ Footing

FOOTING PLAN

1/4" = 1'-0"

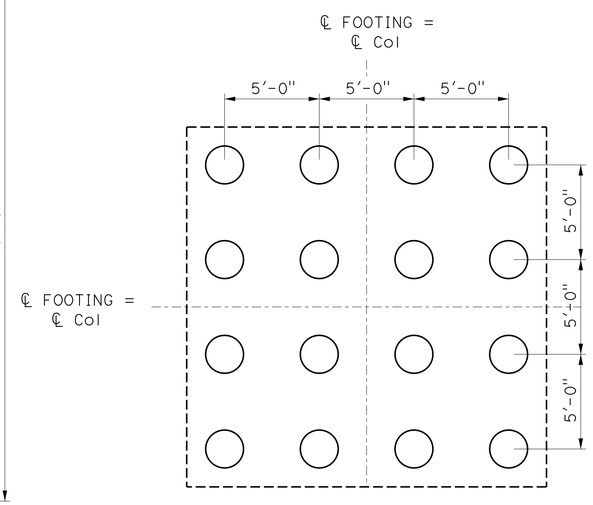

PILE LAYOUT

1/4" = 1'-0"

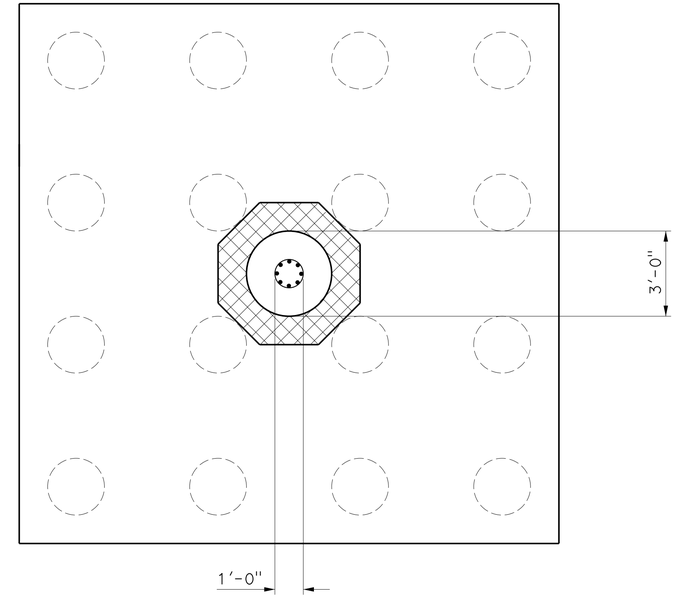

SECTION R-R

3/8" = 1'-0"

DESIGN	BY Shervin Pahlavan	CHECKED Yeo Yoon	
DETAILS	BY Loren Goldthwait	CHECKED Yeo Yoon	
QUANTITIES	BY Shervin Pahlavan	CHECKED Suzan Moradi	

STATE OF CALIFORNIA
DEPARTMENT OF TRANSPORTATION

DIVISION OF ENGINEERING SERVICES
STRUCTURE DESIGN
DESIGN BRANCH 11

BRIDGE NO. 53-3058K
POST MILE 1.23

VALLEY VIEW AVE SB OFF RAMP
TYPICAL FOOTING DETAILS

STRUCTURES DESIGN DETAIL SHEET (ENGLISH) (REV. 09-01-10)

ORIGINAL SCALE IN INCHES FOR REDUCED PLANS 0 1 2 3

UNIT: 3587
PROJECT NUMBER & PHASE: 0715000160-1
CONTRACT NO.: 07-2159U4

DISREGARD PRINTS BEARING EARLIER REVISION DATES

REVISION DATES: 6-08-12 6-28-13 9-27-13 5-30-15

SHEET 8 OF 23

FILE => 53-3058k-f-bntftg.dgn

USERNAME => s125624 DATE PLOTTED => 28-JAN-2016 TIME PLOTTED => 12:11

DIST	COUNTY	ROUTE	POST MILES TOTAL PROJECT	SHEET No.	TOTAL SHEETS
07	LA,Ora	5	0.0/1.5, 44.3/44.4	1258	1622

REGISTERED CIVIL ENGINEER — DATE 3-18-15

1-25-16
PLANS APPROVAL DATE

REGISTERED PROFESSIONAL ENGINEER — WILLIAM D. KEMP No. 55730 Exp. 12/31/16 CIVIL — STATE OF CALIFORNIA

The State of California or its officers or agents shall not be responsible for the accuracy or completeness of electronic copies of this plan sheet.

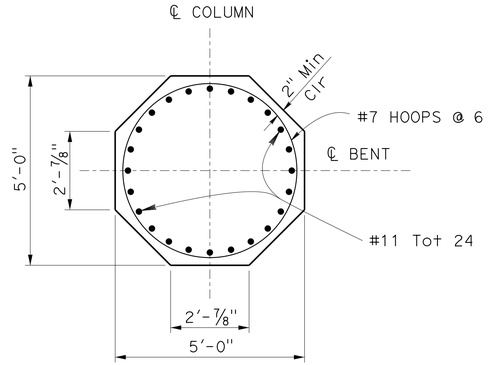

SECTION F-F, BENT 2

1/2" = 1'-0"

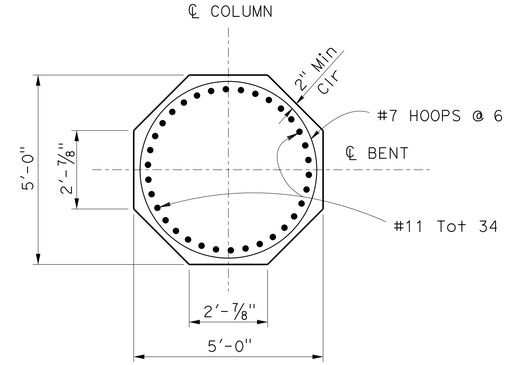

SECTION F-F, BENT 1 & BENT 3

1/2" = 1'-0"

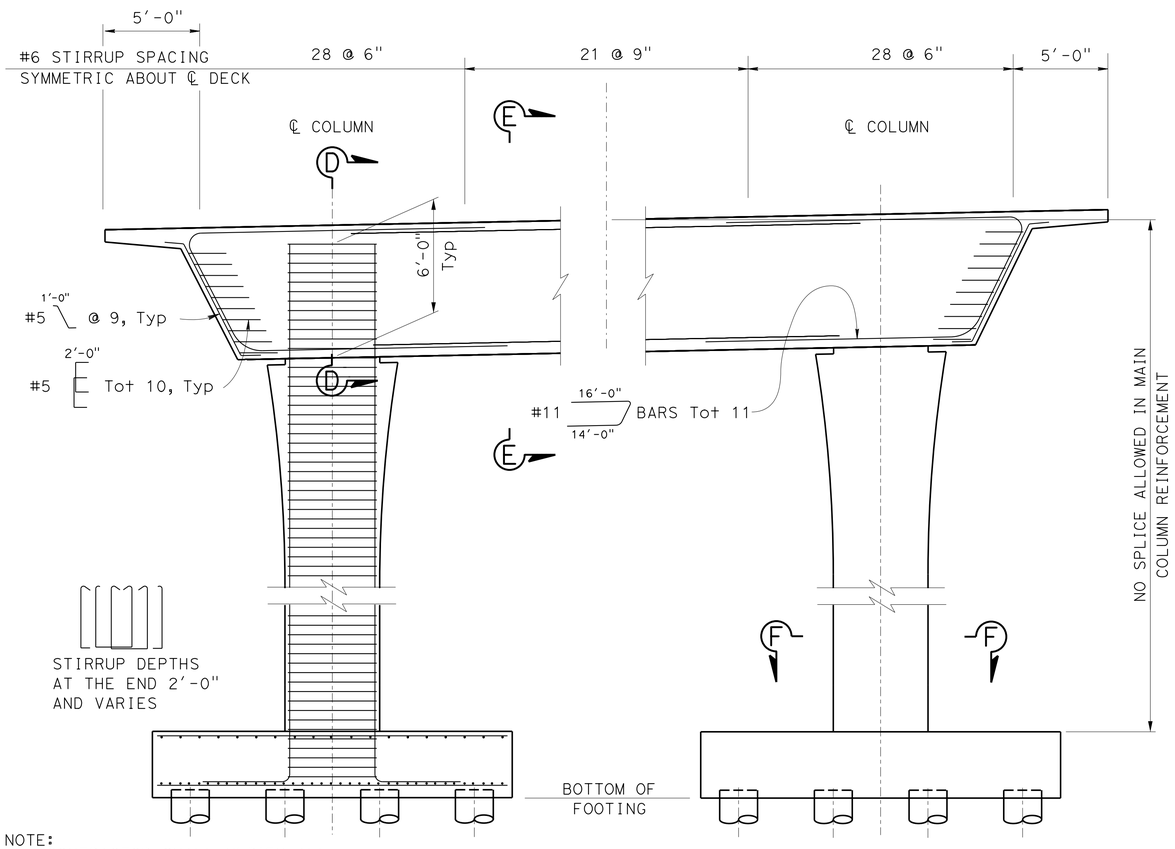

NOTE:
THE CONTRACTOR SHALL VERIFY ALL CONTROLLING FIELD DIMENSIONS BEFORE ORDERING OR FABRICATING ANY MATERIAL.

BENTS 1 & 2 ELEVATION

1/4" = 1'-0"

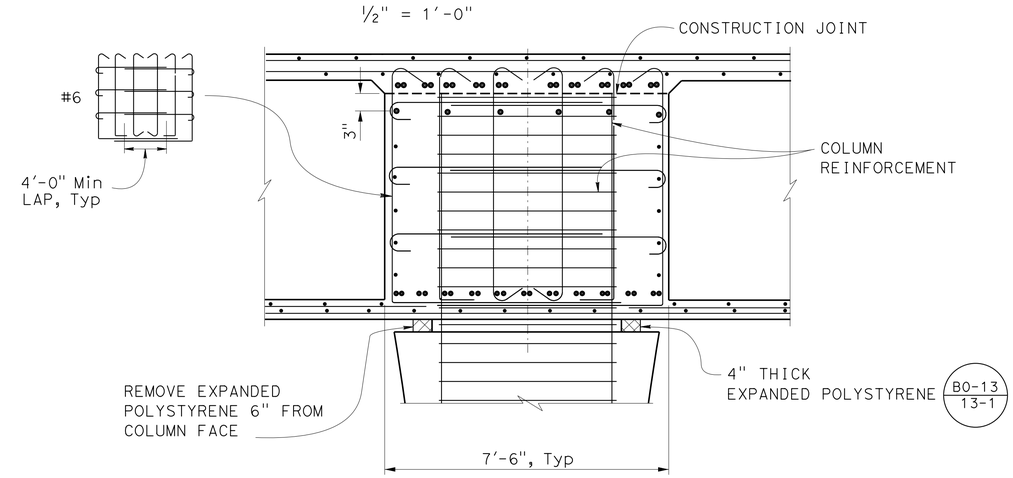

NOTE: See Section C-C for details not shown

SECTION D-D

1/2" = 1'-0"

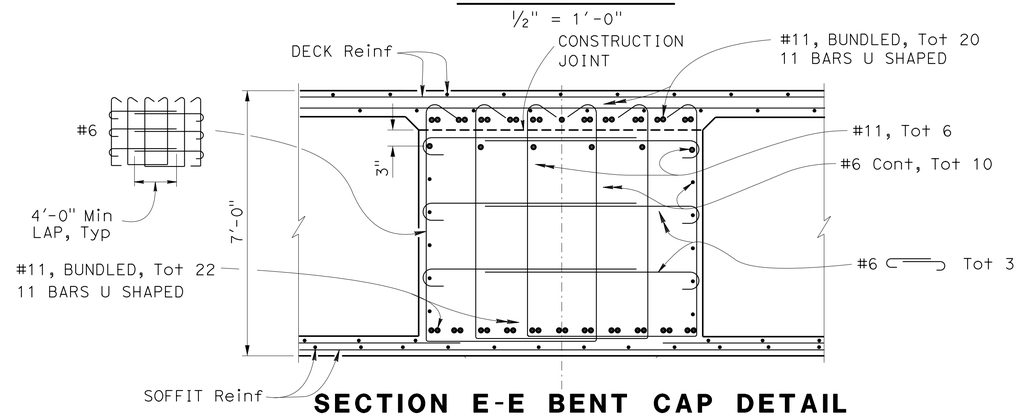

SECTION E-E BENT CAP DETAIL

1/2" = 1'-0"

DESIGN	BY Shervin Pahlavan	CHECKED T. Yoon	
DETAILS	BY Loren Goldthwait	CHECKED T. Yoon	
QUANTITIES	BY Shervin Pahlavan	CHECKED Suzan Moradi	

STATE OF CALIFORNIA
DEPARTMENT OF TRANSPORTATION

DIVISION OF ENGINEERING SERVICES
STRUCTURE DESIGN
DESIGN BRANCH 11

BRIDGE NO. 53-3058K
POST MILE 1.23

VALLEY VIEW AVE SB OFF RAMP
BENT DETAILS NO. 1

STRUCTURES DESIGN DETAIL SHEET (ENGLISH) (REV. 09-01-10)

ORIGINAL SCALE IN INCHES FOR REDUCED PLANS 0 1 2 3

UNIT: 3587
PROJECT NUMBER & PHASE: 0715000160-1
CONTRACT NO.: 07-2159U4

DISREGARD PRINTS BEARING EARLIER REVISION DATES

REVISION DATES: 9-12-12 5-29-13 3-18-13 4-09-13

SHEET 9 OF 23

FILE => 53-3058K-g-bntdt.dgn

USERNAME => s125624 DATE PLOTTED => 28-JAN-2016 TIME PLOTTED => 12:11

DIST	COUNTY	ROUTE	POST MILES TOTAL PROJECT	SHEET No.	TOTAL SHEETS
07	LA,Ora	5	0.0/1.5, 44.3/44.4	1259	1622

William Kemp 3-18-15
REGISTERED CIVIL ENGINEER DATE

1-25-16
PLANS APPROVAL DATE

REGISTERED PROFESSIONAL ENGINEER
William D. Kemp
No. 55730
Exp. 12/31/16
CIVIL
STATE OF CALIFORNIA

The State of California or its officers or agents shall not be responsible for the accuracy or completeness of scanned copies of this plan sheet.

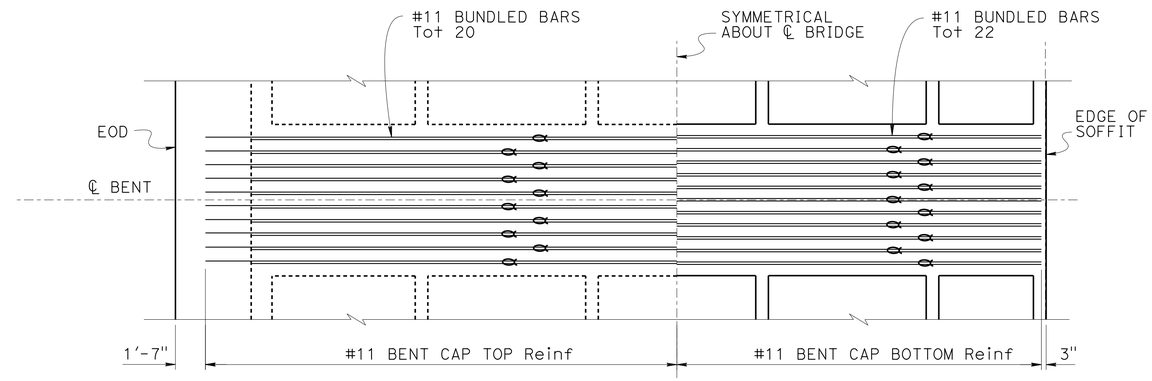

NOTE:
Indicates Bundled Bars

PLAN (Typ)
1/4" = 1'-0"

DESIGN	BY Shervin Pahlavan	CHECKED Yeo Yoon	
DETAILS	BY Loren Goldthwait	CHECKED Yeo Yoon	
QUANTITIES	BY Shervin Pahlaban	CHECKED Suzan Moradi	

STATE OF CALIFORNIA
DEPARTMENT OF TRANSPORTATION

DIVISION OF ENGINEERING SERVICES
STRUCTURE DESIGN
DESIGN BRANCH 11

BRIDGE NO. 53-3058K
POST MILE 1.23

VALLEY VIEW AVE SB OFF RAMP
BENT DETAILS NO. 2

STRUCTURES DESIGN DETAIL SHEET (ENGLISH) (REV. 09-01-10)

ORIGINAL SCALE IN INCHES FOR REDUCED PLANS 0 1 2 3

UNIT: 3587
PROJECT NUMBER & PHASE: 0715000160-1
CONTRACT NO.: 07-2159u4

DISREGARD PRINTS BEARING EARLIER REVISION DATES

REVISION DATES: 10-05-12 9-20-13 3-13-13 9-06-13

SHEET 10 OF 23

FILE => 53-3058k-h-bnt3dt.dgn

USERNAME => s125624 DATE PLOTTED => 28-JAN-2016 TIME PLOTTED => 12:11

DIST	COUNTY	ROUTE	POST MILES TOTAL PROJECT	SHEET No.	TOTAL SHEETS
07	LA,Ora	5	0.0/1.5, 44.3/44.4	1260	1622

REGISTERED CIVIL ENGINEER — DATE 3-18-15

1-25-16
PLANS APPROVAL DATE

REGISTERED PROFESSIONAL ENGINEER — WILLIAM D. KEMP — No. 55730 — Exp. 12/31/16 — CIVIL — STATE OF CALIFORNIA

The State of California or its officers or agents shall not be responsible for the accuracy or completeness of electronic copies of this plan sheet.

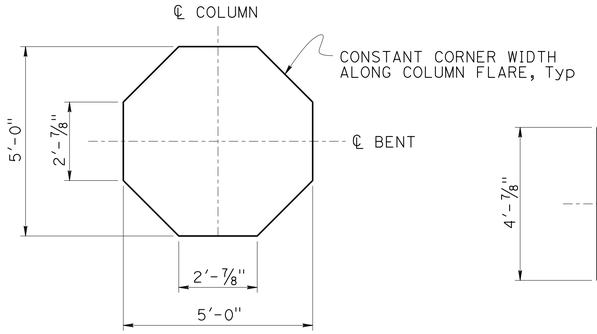

SECTION H-H
1/2" = 1'-0"

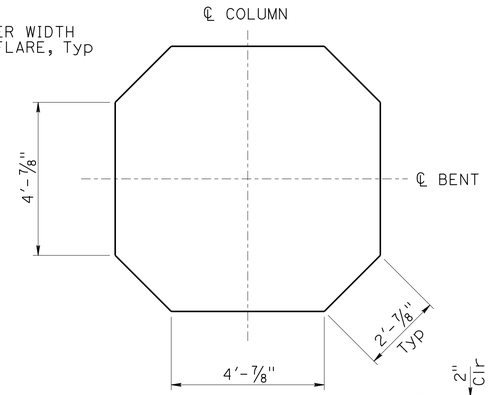

SECTION G-G
1/2" = 1'-0"

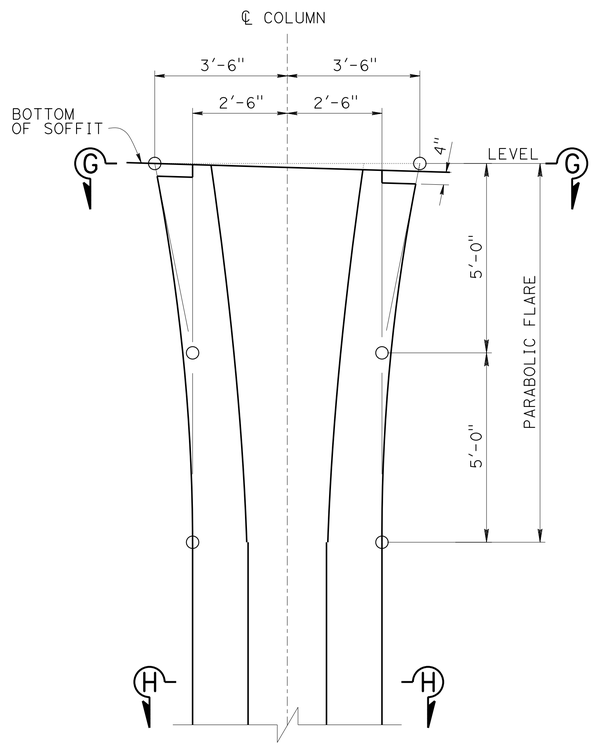

TYPICAL COLUMN GEOMETRY
1/2" = 1'-0"

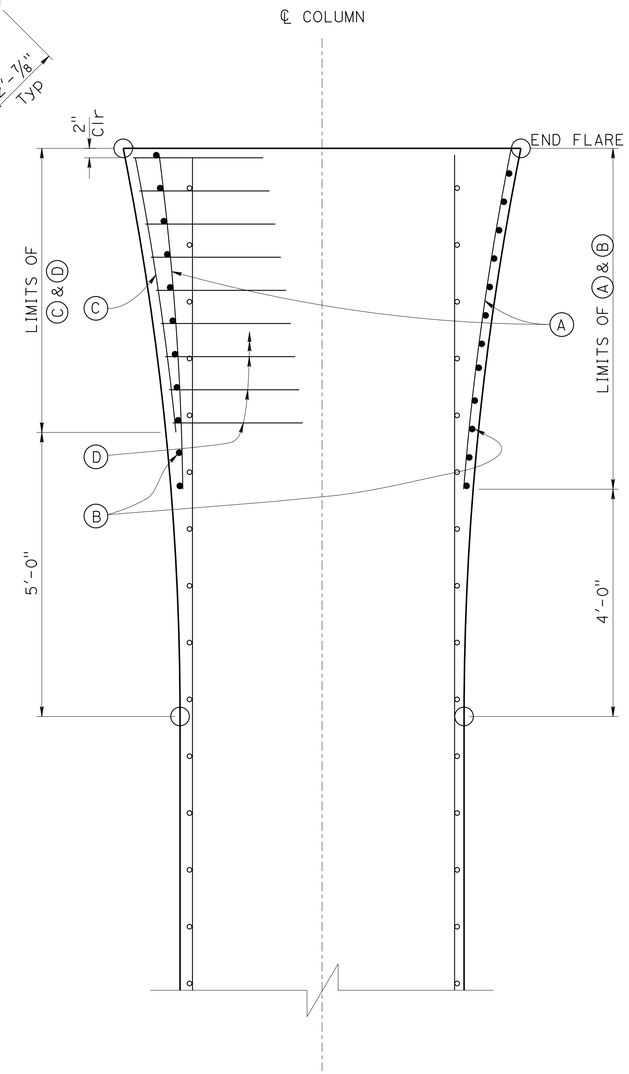

SECTION I-I
3/4" = 1'-0"

LEGEND:

- A = #6 / Tot 21
- B = #8 HOOPS @ 6, STAGGER SPLICES
- C = #6 / Tot 12
- D = #6 ⊐ 2'-0" @ 6

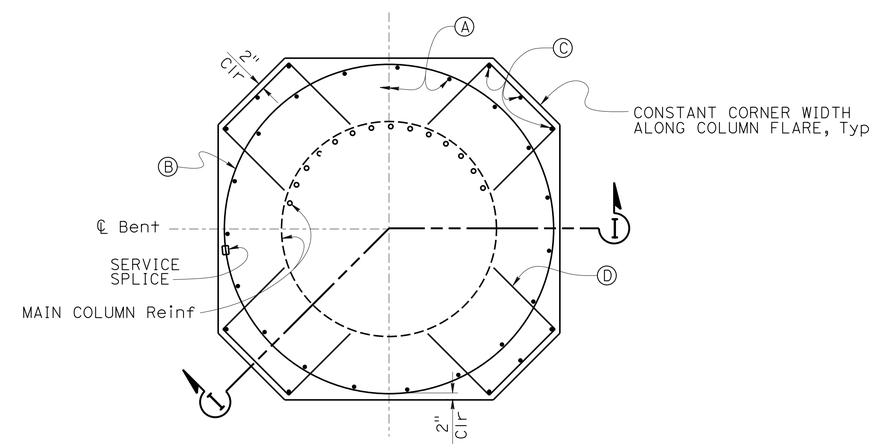

COLUMN FLARE REINF
1/2" = 1'-0"

	BY	CHECKED
DESIGN	Ubong Inyang	Y. Yoon
DETAILS	Pauline Tong	Y. Yoon
QUANTITIES	Ubong Inyang	Suzan Moradi

STATE OF CALIFORNIA
DEPARTMENT OF TRANSPORTATION

DIVISION OF ENGINEERING SERVICES
STRUCTURE DESIGN
DESIGN BRANCH 11

BRIDGE NO. 53-3058K
POST MILE 1.23

VALLEY VIEW AVE SB OFF RAMP
COLUMN DETAILS

STRUCTURES DESIGN DETAIL SHEET (ENGLISH) (REV. 09-01-10)

ORIGINAL SCALE IN INCHES FOR REDUCED PLANS 0 1 2 3

UNIT: 3587
PROJECT NUMBER & PHASE: 0715000160-1
CONTRACT NO.: 07-2159u4

DISREGARD PRINTS BEARING EARLIER REVISION DATES

REVISION DATES: 6-13-11 9-20-13 2-22-12 5-30-13

SHEET 11 OF 23

FILE => 53-3058k-j-coldt1.dgn

USERNAME => s125624 DATE PLOTTED => 28-JAN-2016 TIME PLOTTED => 12:11

DIST	COUNTY	ROUTE	POST MILES TOTAL PROJECT	SHEET No.	TOTAL SHEETS
07	LA,Ora	5	0.0/1.5, 44.3/44.4	1261	1622

REGISTERED CIVIL ENGINEER — DATE 3-18-15

1-25-16
PLANS APPROVAL DATE

REGISTERED PROFESSIONAL ENGINEER — WILLIAM D. KEMP — No. 55730 — Exp. 12/31/16 — CIVIL — STATE OF CALIFORNIA

The State of California or its officers or agents shall not be responsible for the accuracy or completeness of electronic copies of this plan sheet.

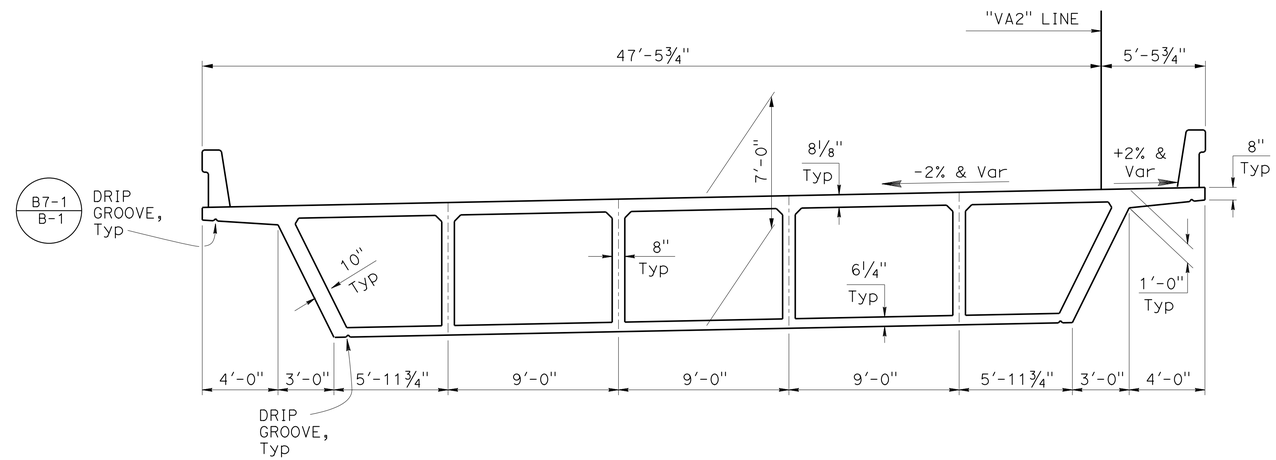

TYPICAL SECTION

¼" = 1'-0"

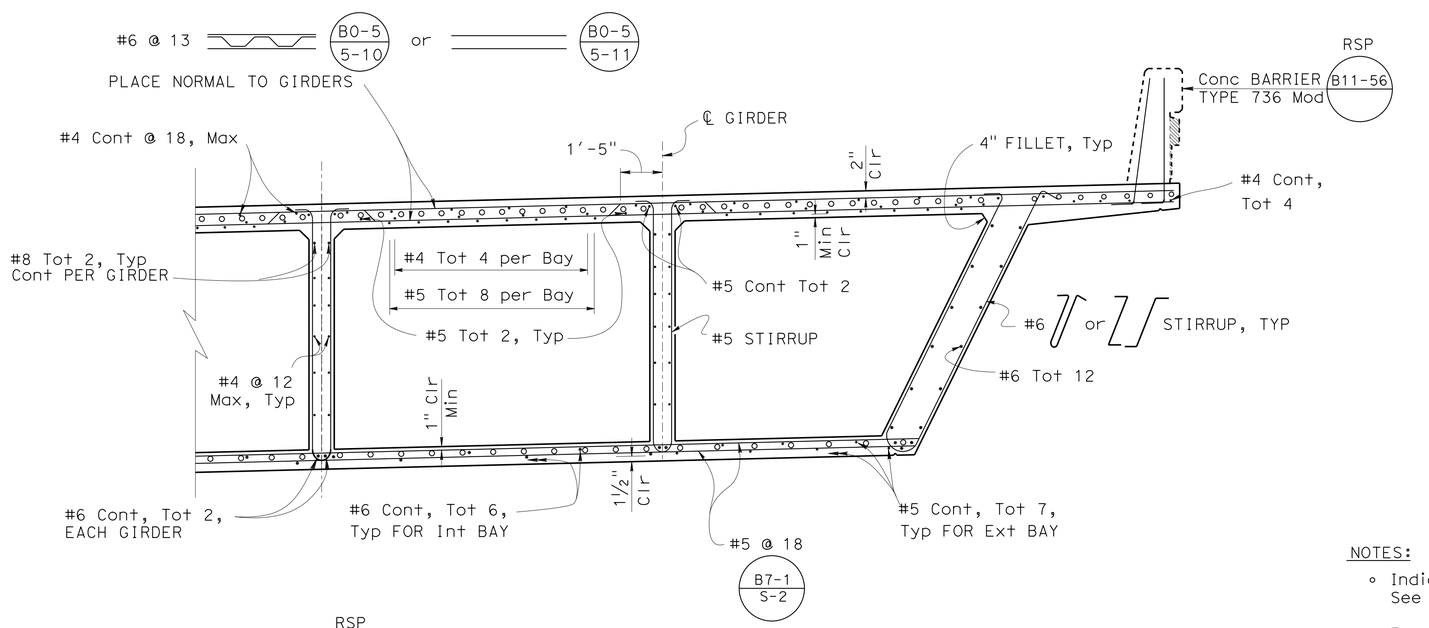

RSP: B0-5, B7-1, B11-56

PART TYPICAL SECTION

½" = 1'-0"

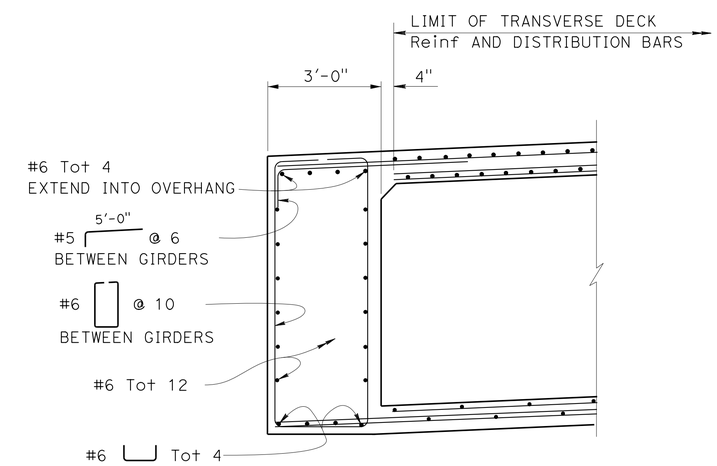

END DIAPHRAGM (AT ABUT)

½" = 1'-0"

NOTES:

- Indicates additional reinforcement. See "ADDITIONAL REINFORCEMENT" sheets

For stirrup spacing, see "GIRDER LAYOUT" sheet

	BY	CHECKED
DESIGN	Shervin Pahlavan	Yeo Yoon
DETAILS	L. Goldthwait	Yeo Yoon
QUANTITIES	Shervin Pahlavan	Suzan Moradi

STATE OF CALIFORNIA
DEPARTMENT OF TRANSPORTATION

DIVISION OF ENGINEERING SERVICES
STRUCTURE DESIGN
DESIGN BRANCH 11

BRIDGE NO. 53-3058K
POST MILE 1.23

VALLEY VIEW AVE SB OFF RAMP
TYPICAL SECTION

STRUCTURES DESIGN DETAIL SHEET (ENGLISH) (REV. 09-01-10)

ORIGINAL SCALE IN INCHES FOR REDUCED PLANS 0 1 2 3

UNIT: 3587
PROJECT NUMBER & PHASE: 0715000160-1
CONTRACT NO.: 07-2159u4

DISREGARD PRINTS BEARING EARLIER REVISION DATES

REVISION DATES: 6-06-12 7-09-12 9-17-13 7-24-14

SHEET 12 OF 23

FILE => 53-3058k-j-ts.dgn

USERNAME => s125624 DATE PLOTTED => 28-JAN-2016 TIME PLOTTED => 12:11

DIST	COUNTY	ROUTE	POST MILES TOTAL PROJECT	SHEET No.	TOTAL SHEETS
07	LA,Ora	5	0.0/1.5, 44.3/44.4	1262	1622

REGISTERED CIVIL ENGINEER 3-18-15 DATE

1-25-16
PLANS APPROVAL DATE

REGISTERED PROFESSIONAL ENGINEER WILLIAM D. KEMP No. 55730 Exp. 12/31/16 CIVIL STATE OF CALIFORNIA

The State of California or its officers or agents shall not be responsible for the accuracy or completeness of electronic copies of this plan sheet.

Note:
#5 stirrups for Int girders
#6 stirrups for Ext girders

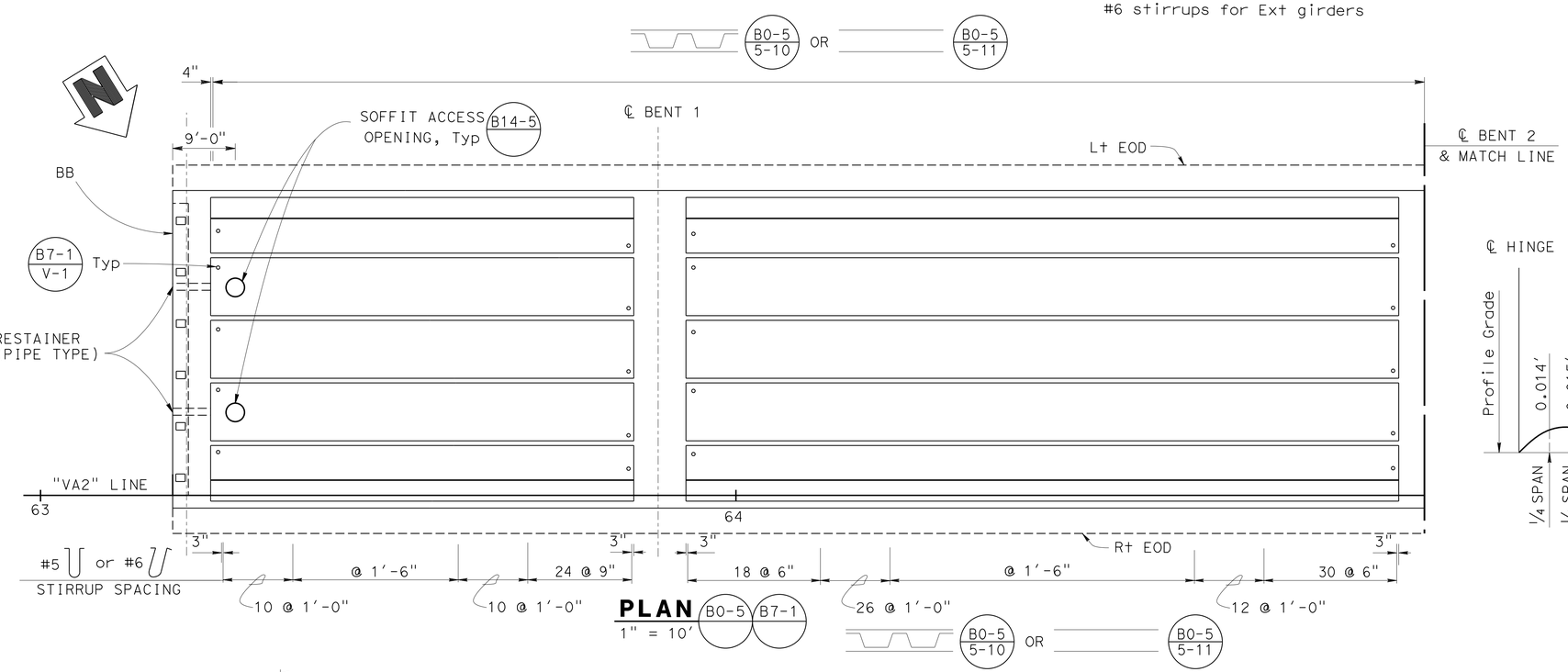

PLAN B0-5 B7-1
1" = 10'

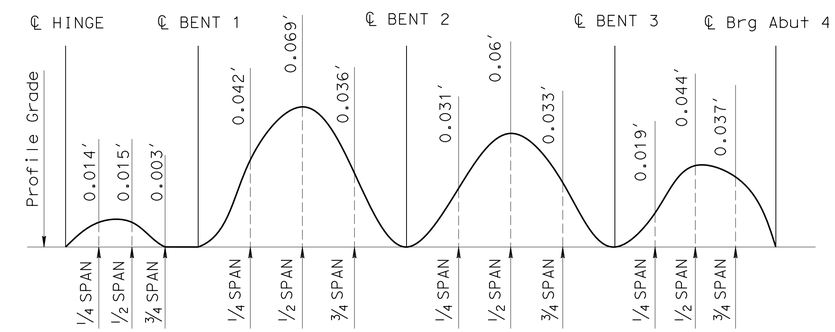

NOTE: Camber values shown do not include allowances for falsework settlement

CAMBER DIAGRAM
NO SCALE

NOTE:

For Restrainer (Pipe Type) see "VALLEY VIEW Ave OH/OC (Replacement) Bridge No. 53-3045

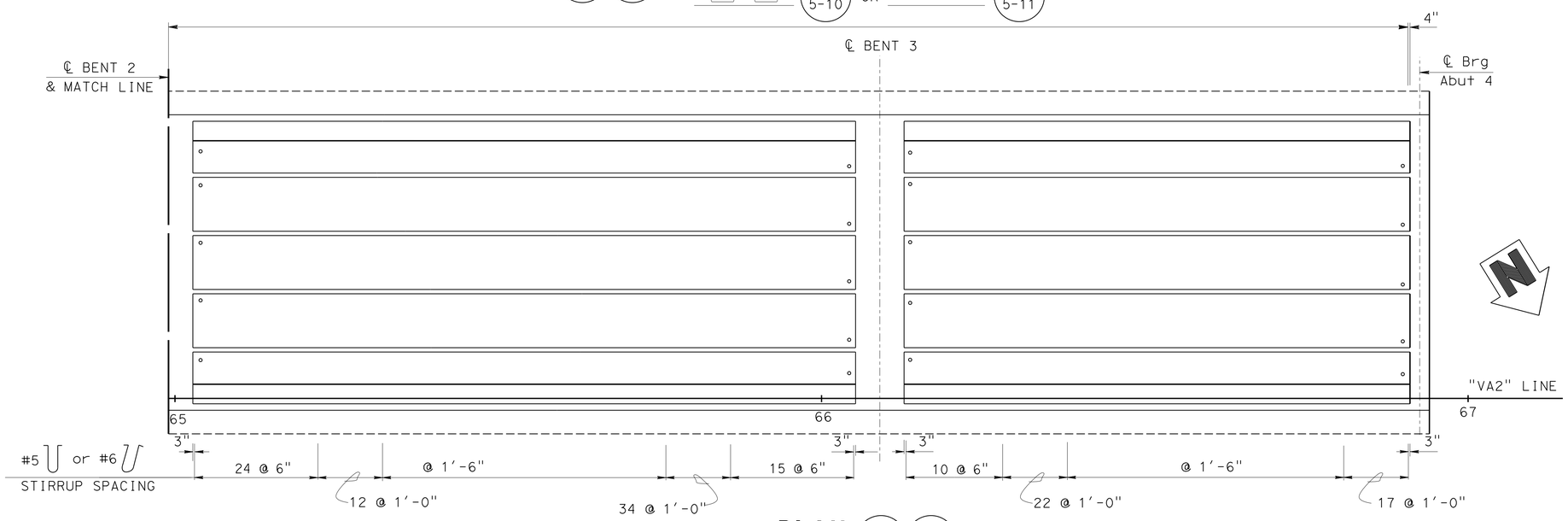

PLAN B0-5 B7-1
1" = 10'

DESIGN	BY S. Pahlavan	CHECKED Yeo Yoon	
DETAILS	BY L. Goldthwait	CHECKED Yeo Yoon	
QUANTITIES	BY S. Pahlavan	CHECKED Suzan Moradi	

STATE OF CALIFORNIA
DEPARTMENT OF TRANSPORTATION

DIVISION OF ENGINEERING SERVICES
STRUCTURE DESIGN
DESIGN BRANCH 11

BRIDGE NO. 53-3058K
POST MILE 1.23

VALLEY VIEW SB OFF RAMP
GIRDER LAYOUT

STRUCTURES DESIGN DETAIL SHEET (ENGLISH) (REV. 09-01-10)

ORIGINAL SCALE IN INCHES FOR REDUCED PLANS 0 1 2 3

UNIT: 3587
PROJECT NUMBER & PHASE: 0715000160-1
CONTRACT NO.: 07-2159u4

DISREGARD PRINTS BEARING EARLIER REVISION DATES

REVISION DATES: 4-10-12 5-30-13 6-12-13 3-01-13

SHEET 13 OF 23

FILE => 53-3058k-k-gr_lo.dgn

USERNAME => s125624 DATE PLOTTED => 28-JAN-2016 TIME PLOTTED => 12:11

DIST	COUNTY	ROUTE	POST MILES TOTAL PROJECT	SHEET No.	TOTAL SHEETS
07	LA,Ora	5	0.0/1.5, 44.3/44.4	1263	1622

REGISTERED CIVIL ENGINEER — DATE 3-18-15

1-25-16
PLANS APPROVAL DATE

REGISTERED PROFESSIONAL ENGINEER — WILLIAM D. KEMP — No. 55730 — Exp. 12/31/16 — CIVIL — STATE OF CALIFORNIA

The State of California or its officers or agents shall not be responsible for the accuracy or completeness of electronic copies of this plan sheet.

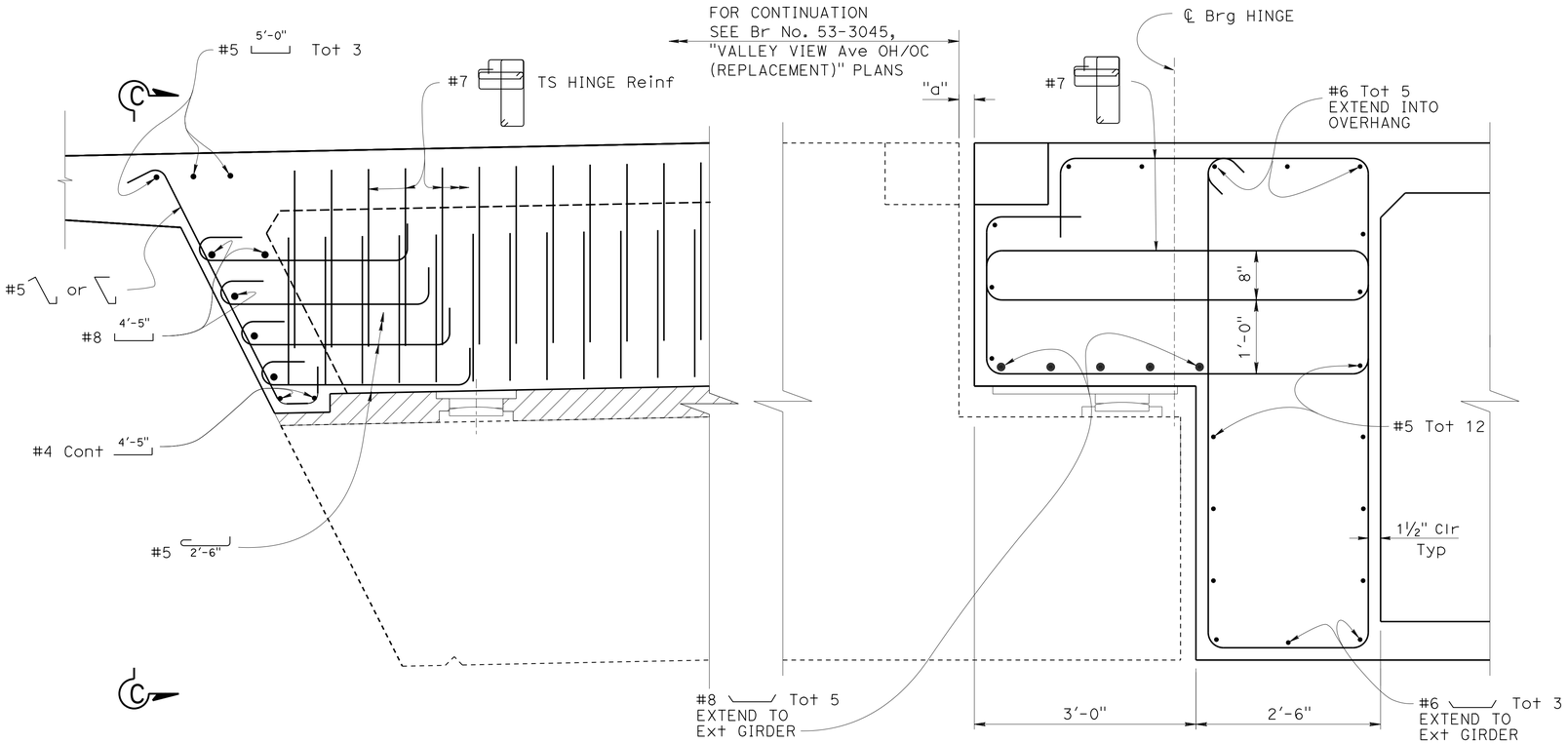

SIDE REINFORCEMENT

1" = 1'-0"

SECTION B-B

1" = 1'-0"

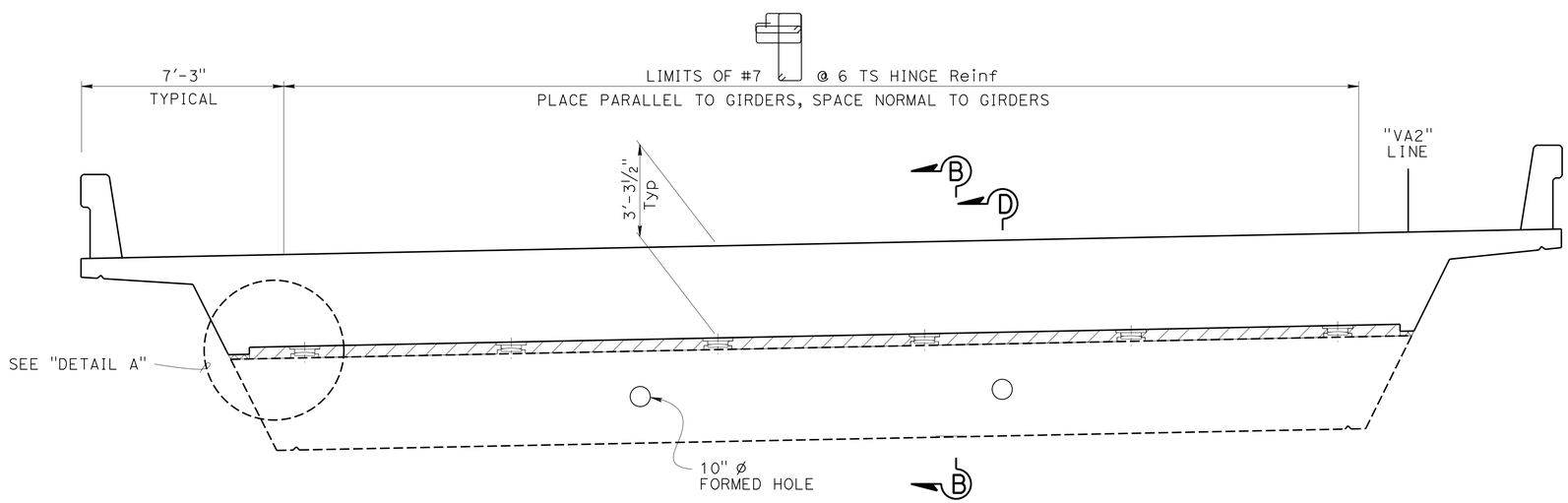

ELEVATION

⅜" = 1'-0"

NOTES:

1. For PTFE Bearing Pad details and layout, see Br. No. 53-3045, "VALLEY VIEW OH/OC AVE (REPLACEMENT)" plans
2. For additional Restrainer (Pipe Type) details, see Br. No. 53-3045, "VALLEY VIEW Ave OH/OC (REPLACEMENT)" plans
3. For section D-D, See "HINGE DETAILS" sheet

LEGEND:

INDICATES EXPANDED POLYSTYRENE

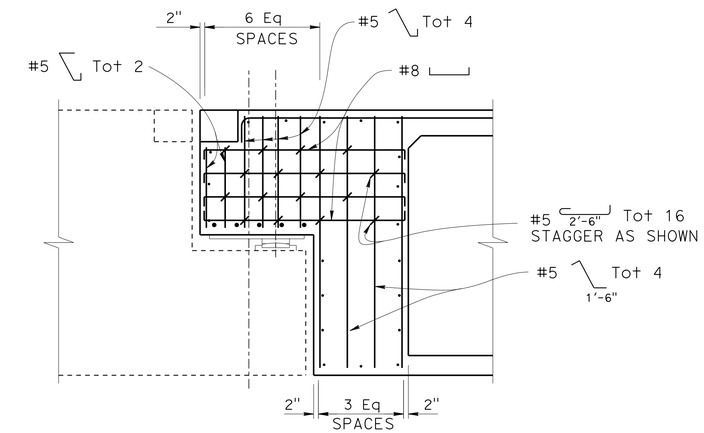

ELEVATION C-C

½" = 1'-0"

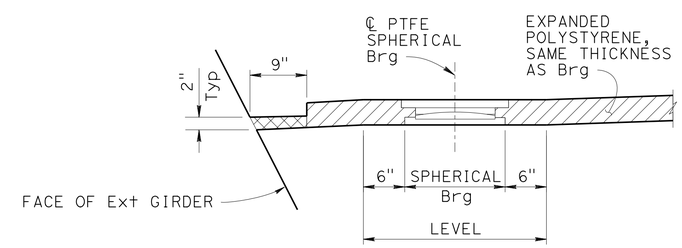

DETAIL A

1" = 1'-0"

DESIGN	BY Bill Kemp	CHECKED Yeo Yoon	
DETAILS	BY Pauline Tong	CHECKED Yeo Yoon	
QUANTITIES	BY Bill Kemp	CHECKED Suzan Moradi	

STATE OF CALIFORNIA
DEPARTMENT OF TRANSPORTATION

DIVISION OF ENGINEERING SERVICES
STRUCTURE DESIGN
DESIGN BRANCH 11

BRIDGE NO. 53-3058K
POST MILE 1.23

VALLEY VIEW AVE SB OFF RAMP
HINGE LAYOUT

STRUCTURES DESIGN DETAIL SHEET (ENGLISH) (REV. 09-01-10)

ORIGINAL SCALE IN INCHES FOR REDUCED PLANS 0 1 2 3

UNIT: 3587
PROJECT NUMBER & PHASE: 0715000160-1
CONTRACT NO.: 07-2159u4

DISREGARD PRINTS BEARING EARLIER REVISION DATES

REVISION DATES: 3-8-12 2-28-13 3-5-13 3-19-13

SHEET 14 OF 23

FILE => 53-3058K-m-hng_lo.dgn

USERNAME => s125624 DATE PLOTTED => 28-JAN-2016 TIME PLOTTED => 12:11

DIST	COUNTY	ROUTE	POST MILES TOTAL PROJECT	SHEET No.	TOTAL SHEETS
07	LA,Ora	5	0.0/1.5, 44.3/44.4	1264	1622

REGISTERED CIVIL ENGINEER — DATE: 3-18-15

1-25-16
PLANS APPROVAL DATE

REGISTERED PROFESSIONAL ENGINEER — WILLIAM D. KEMP — No. 55730 — Exp. 12/31/16 — CIVIL — STATE OF CALIFORNIA

The State of California or its officers or agents shall not be responsible for the accuracy or completeness of electronic copies of this plan sheet.

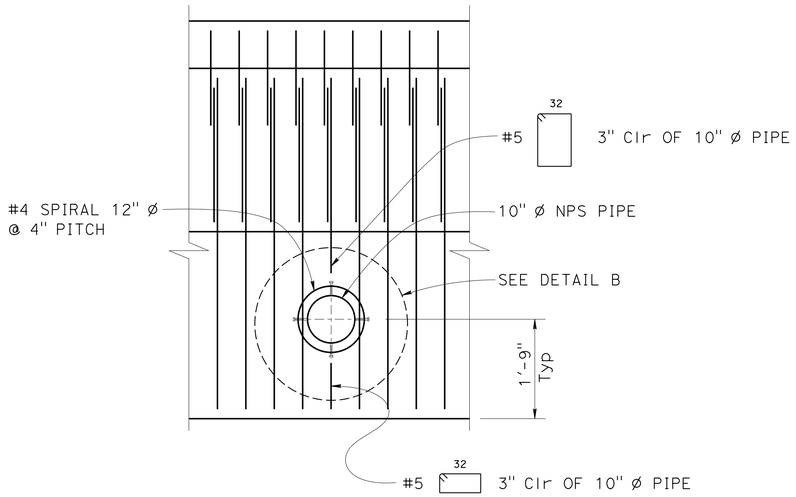

VIEW E-E

¾" = 1'-0"

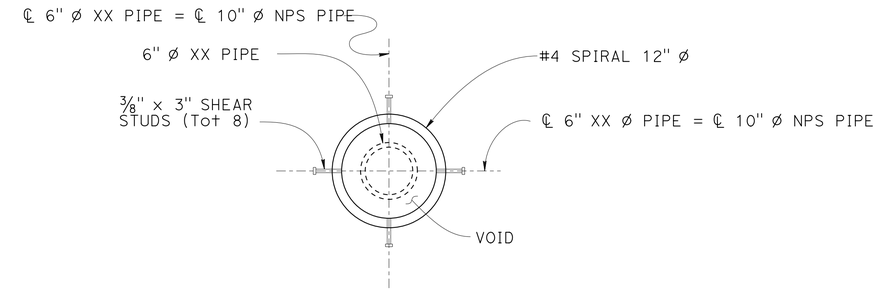

DETAIL B

1½" = 1'-0"

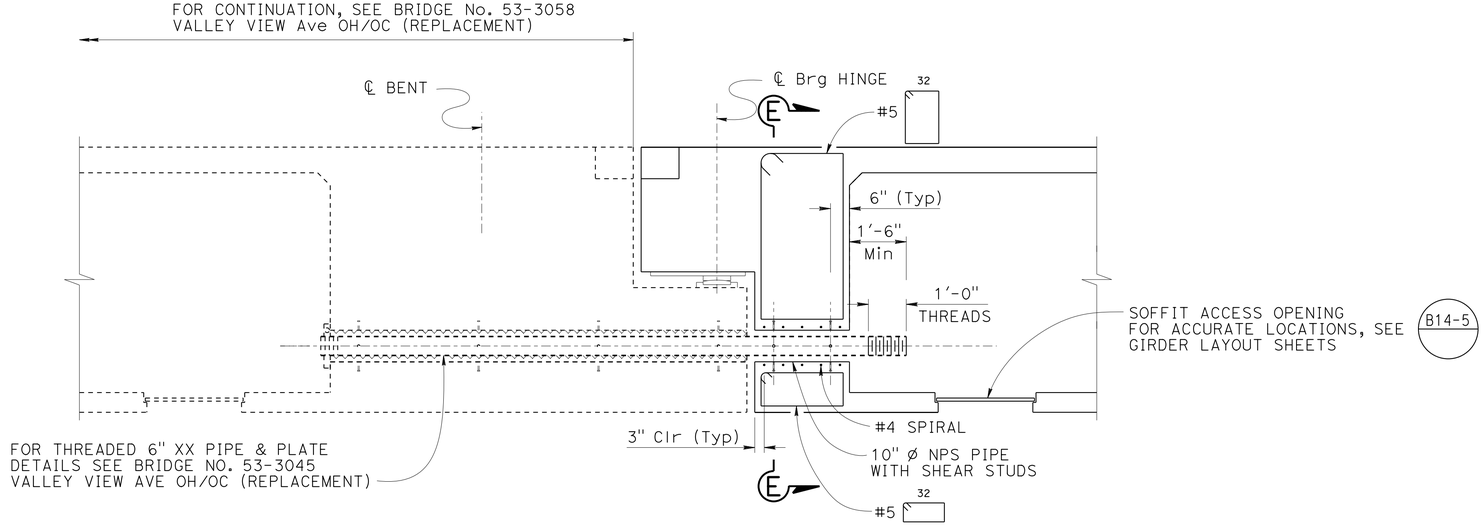

SECTION D-D

½" = 1'-0"

	BY	CHECKED
DESIGN	Bill Kemp	Yeo Yoon
DETAILS	Herman Mauroschadt	Yeo Yoon
QUANTITIES	Shervin Pahlavan	Suzan Moradi

STATE OF CALIFORNIA
DEPARTMENT OF TRANSPORTATION

DIVISION OF ENGINEERING SERVICES
STRUCTURE DESIGN
DESIGN BRANCH 11

BRIDGE NO. 53-3058K
POST MILE 1.23

VALLEY VIEW AVE SB OFF RAMP
HINGE DETAILS

STRUCTURES DESIGN DETAIL SHEET (ENGLISH) (REV. 09-01-10)

ORIGINAL SCALE IN INCHES FOR REDUCED PLANS 0 1 2 3

UNIT: 3587
PROJECT NUMBER & PHASE: 0715000160-1
CONTRACT NO.: 07-2159U4

DISREGARD PRINTS BEARING EARLIER REVISION DATES

REVISION DATES: 3-8-13 3-5-13 4-26-13 5-29-13

SHEET 15 OF 23

FILE => 53-3058k-m-hngdt.dgn

USERNAME => s125624 DATE PLOTTED => 28-JAN-2016 TIME PLOTTED => 12:11

DIST	COUNTY	ROUTE	POST MILES TOTAL PROJECT	SHEET No.	TOTAL SHEETS
07	LA,Ora	5	0.0/1.5, 44.3/44.4	1265	1622

REGISTERED CIVIL ENGINEER — DATE 3-18-15

1-25-16
PLANS APPROVAL DATE

REGISTERED PROFESSIONAL ENGINEER — WILLIAM D. KEMP — No. 55730 — Exp. 12/31/16 — CIVIL — STATE OF CALIFORNIA

The State of California or its officers or agents shall not be responsible for the accuracy or completeness of electronic copies of this plan sheet.

NOTE:
1. Bars shall be #11

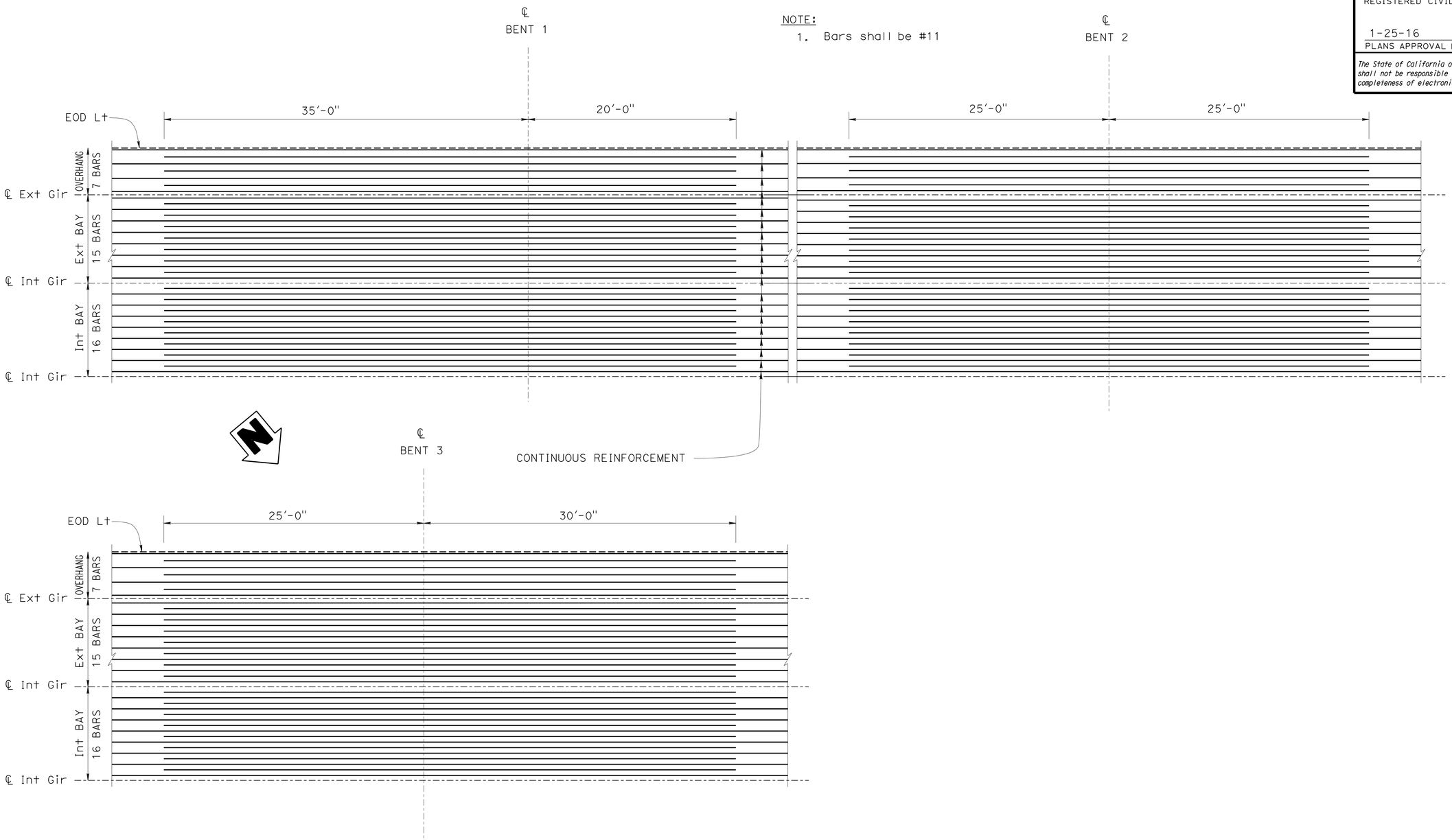

ADDITIONAL REINFORCEMENT - DECK

NO SCALE

	BY	CHECKED
DESIGN	Shervin Pahlavan	Yeo Yoon
DETAILS	T. Bittermann	Yeo Yoon
QUANTITIES	Shervin Pahlavan	Suzan Moradi

STATE OF CALIFORNIA
DEPARTMENT OF TRANSPORTATION

DIVISION OF ENGINEERING SERVICES
STRUCTURE DESIGN
DESIGN BRANCH 11

BRIDGE NO. 53-3058K
POST MILE 1.23

VALLEY VIEW AVE SB OFF RAMP
ADDITIONAL REINFORCEMENT NO. 1

STRUCTURES DESIGN DETAIL SHEET (ENGLISH) (REV. 09-01-10)

ORIGINAL SCALE IN INCHES FOR REDUCED PLANS 0 1 2 3

UNIT: 3587
PROJECT NUMBER & PHASE: 0715000160-1
CONTRACT NO.: 07-2159u4

DISREGARD PRINTS BEARING EARLIER REVISION DATES

REVISION DATES: 5-02-11 6-13-11 10-05-11 7-13-12

SHEET 16 OF 23

FILE => 53-3058k-p-grrf1.dgn

USERNAME => s125624 DATE PLOTTED => 28-JAN-2016 TIME PLOTTED => 12:11

DIST	COUNTY	ROUTE	POST MILES TOTAL PROJECT	SHEET No.	TOTAL SHEETS
07	LA,Ora	5	0.0/1.5, 44.3/44.4	1266	1622

William Kemp 3-18-15
REGISTERED CIVIL ENGINEER DATE

1-25-16
PLANS APPROVAL DATE

REGISTERED PROFESSIONAL ENGINEER
WILLIAM D. KEMP
No. 55730
Exp. 12/31/16
CIVIL
STATE OF CALIFORNIA

The State of California or its officers or agents shall not be responsible for the accuracy or completeness of electronic copies of this plan sheet.

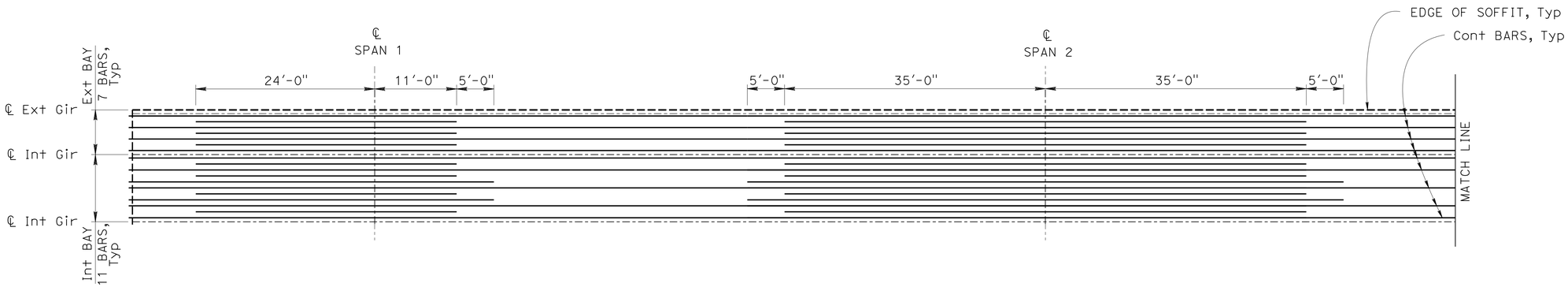

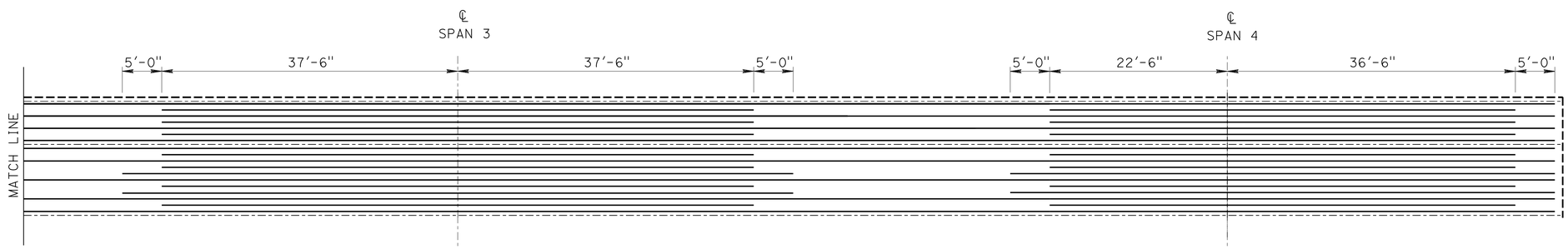

NOTE:

1. Bars shall be #11

ADDITIONAL REINFORCEMENT - SOFFIT

NO SCALE

	BY	CHECKED
DESIGN	Shervin Pahlavan	Yeo Yoon
DETAILS	T. Bittermann	Yeo Yoon
QUANTITIES	Shervin Pahlavan	Suzan Moradi

STATE OF CALIFORNIA
DEPARTMENT OF TRANSPORTATION

DIVISION OF ENGINEERING SERVICES
STRUCTURE DESIGN
DESIGN BRANCH 11

BRIDGE NO. 53-3058K
POST MILE 1.23

VALLEY VIEW AVE SB OFF RAMP
ADDITIONAL REINFORCEMENT NO. 2

STRUCTURES DESIGN DETAIL SHEET (ENGLISH) (REV. 09-01-10)

ORIGINAL SCALE IN INCHES FOR REDUCED PLANS 0 1 2 3

UNIT: 3587
PROJECT NUMBER & PHASE: 0715000160-1
CONTRACT NO.: 07-2159U4

DISREGARD PRINTS BEARING EARLIER REVISION DATES

REVISION DATES: 5-02-11 5-31-13 7-16-12 5/14/13

SHEET 17 OF 23

FILE => 53-3058k-p-grrf2.dgn

USERNAME => s125624 DATE PLOTTED => 28-JAN-2016 TIME PLOTTED => 12:11

DIST	COUNTY	ROUTE	POST MILES TOTAL PROJECT	SHEET No.	TOTAL SHEETS
07	LA,Ora	5	0.0/1.5, 44.3/44.4	1267	1622

REGISTERED CIVIL ENGINEER 3-18-15 DATE

1-25-16
PLANS APPROVAL DATE

REGISTERED PROFESSIONAL ENGINEER
William D. Kemp
No. 55730
Exp. 12/31/16
CIVIL
STATE OF CALIFORNIA

The State of California or its officers or agents shall not be responsible for the accuracy or completeness of scanned copies of this plan sheet.

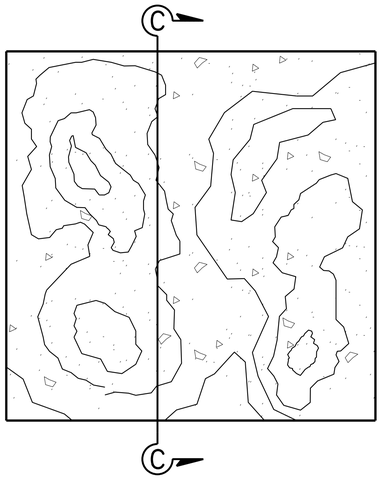

SPLIT SLATE TEXTURE
NO SCALE

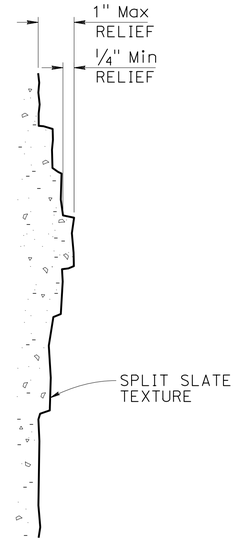

SECTION C-C
NO SCALE

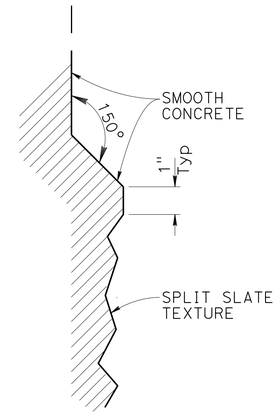

SECTION D-D
NO SCALE

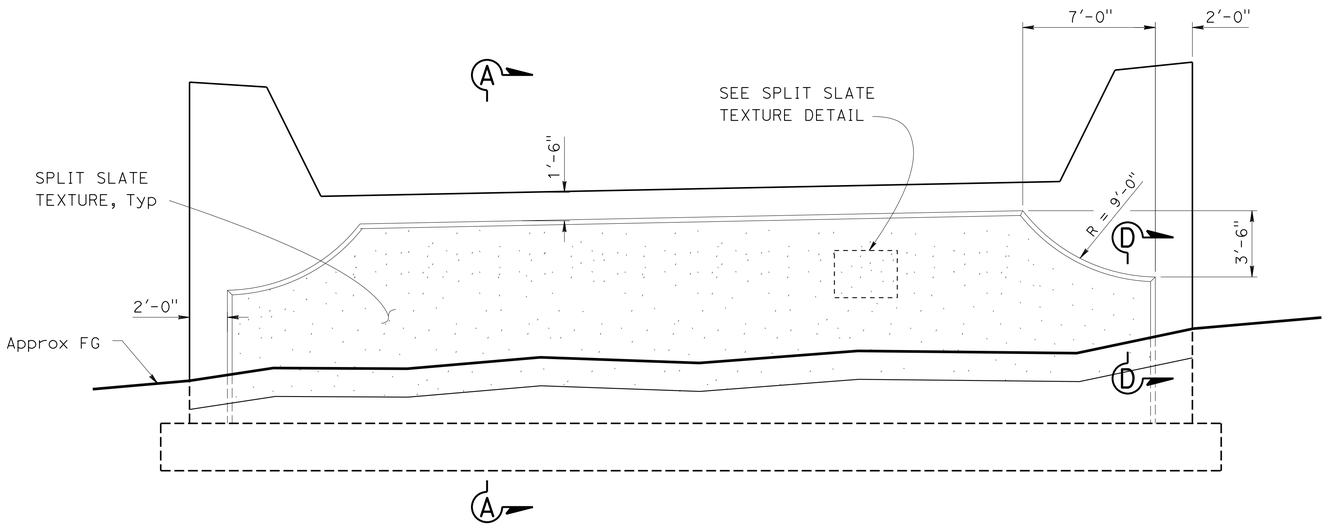

Note: For Detail 'C' and Section A-A, see "SECTIONS & MOTIF DETAILS AT ABUTMENT" Sheet

ABUTMENT 4 ELEVATION
1/4" = 1'-0"

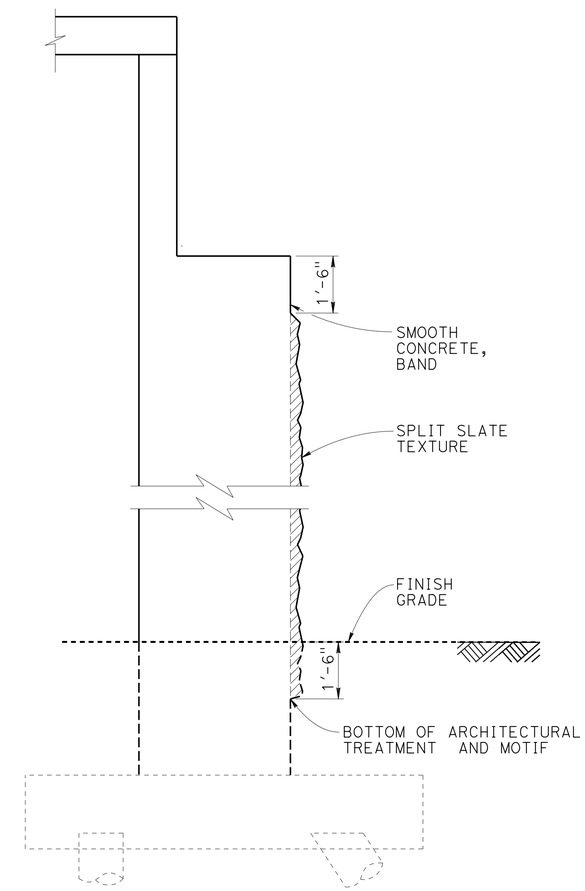

SECTION A-A
NO SCALE

DESIGN	BY H. Javier Chavez	CHECKED Isaac Tasabia	
DETAILS	BY Loren Goldthwait	CHECKED Isaac Tasabia	
QUANTITIES	BY H. Javier Chavez	CHECKED Suzan Moradi	

STATE OF CALIFORNIA
DEPARTMENT OF TRANSPORTATION

DIVISION OF ENGINEERING SERVICES
STRUCTURE DESIGN
DESIGN BRANCH 11

BRIDGE NO. 53-3058K
POST MILE 1.23

VALLEY VIEW AVE SB OFF RAMP
ARCHITECTURAL DETAILS NO. 1

STRUCTURES DESIGN DETAIL SHEET (ENGLISH) (REV. 09-01-10)

ORIGINAL SCALE IN INCHES FOR REDUCED PLANS 0 1 2 3

UNIT: 3587
PROJECT NUMBER & PHASE: 0715000160-1
CONTRACT NO.: 07-2159U4

DISREGARD PRINTS BEARING EARLIER REVISION DATES

REVISION DATES: ~~11-09-12~~ 7-17-13

SHEET 18 OF 23

FILE => 53-3058k-t-arch1.dgn

USERNAME => s125624 DATE PLOTTED => 28-JAN-2016 TIME PLOTTED => 12:11

DIST	COUNTY	ROUTE	POST MILES TOTAL PROJECT	SHEET No.	TOTAL SHEETS
07	LA,Ora	5	0.0/1.5, 44.3/44.4	1268	1622

REGISTERED CIVIL ENGINEER — DATE: 3-18-15

1-25-16
PLANS APPROVAL DATE

The State of California or its officers or agents shall not be responsible for the accuracy or completeness of scanned copies of this plan sheet.

REGISTERED PROFESSIONAL ENGINEER — William D. Kemp — No. 55730 — Exp. 12/31/16 — CIVIL — STATE OF CALIFORNIA

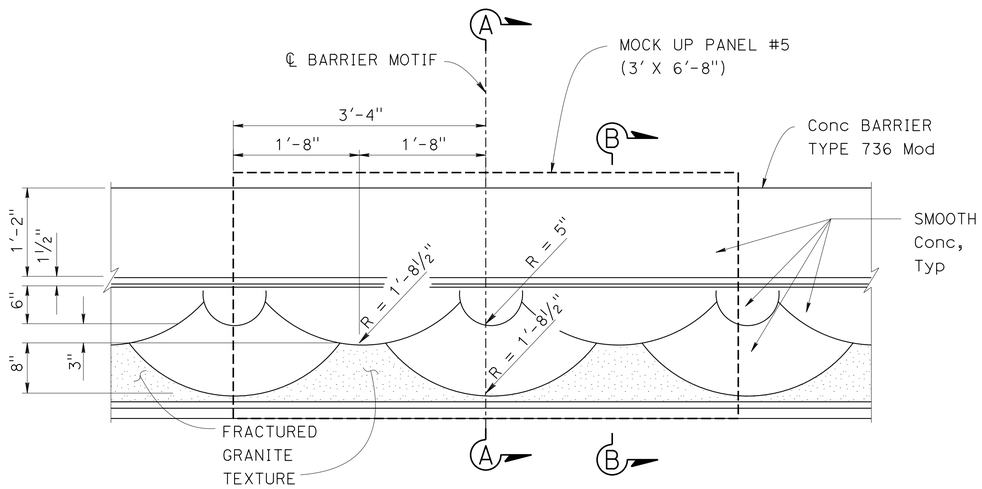

PARTIAL ELEVATION - BARRIER MOTIF

1" = 1'-0"

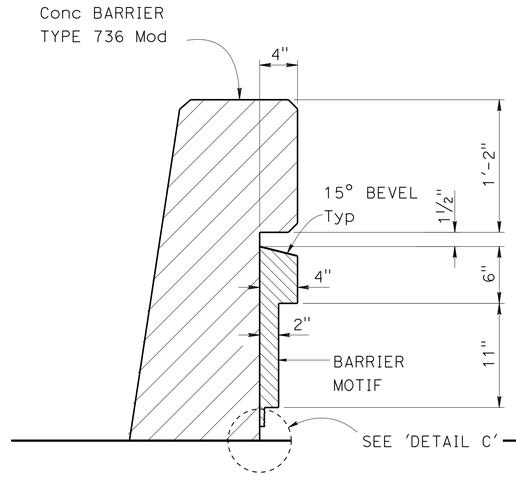

SECTION A-A

1½" = 1'-0"

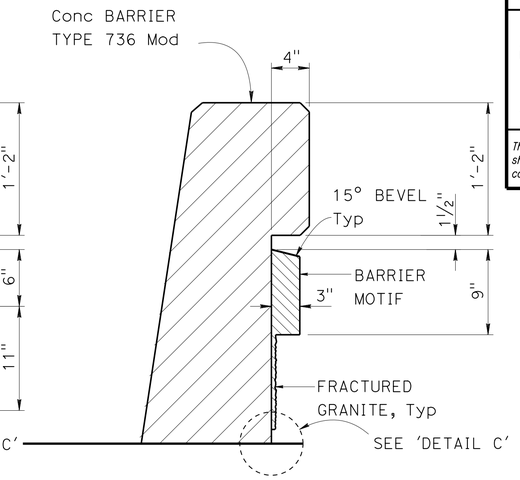

SECTION B-B

1½" = 1'-0"

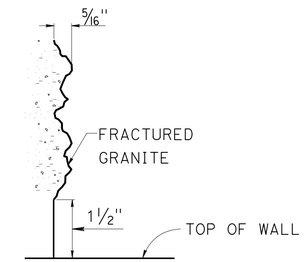

DETAIL C

NO SCALE

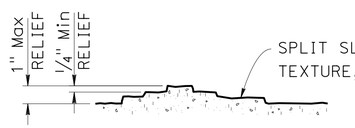

SPLIT SLATE TEXTURE

NO SCALE

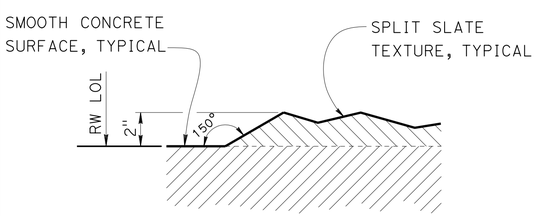

DETAIL F

NO SCALE

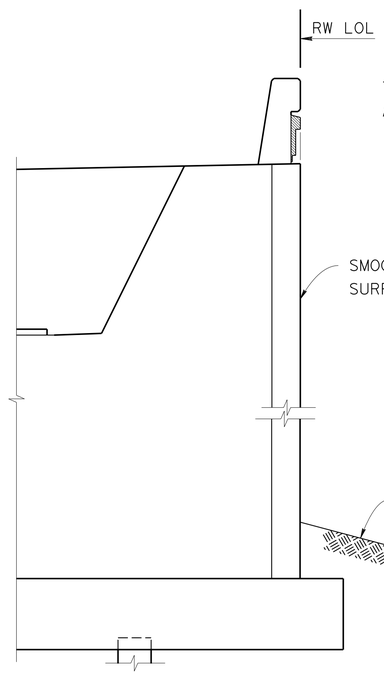

SECTION C-C

⅜" = 1'-0"

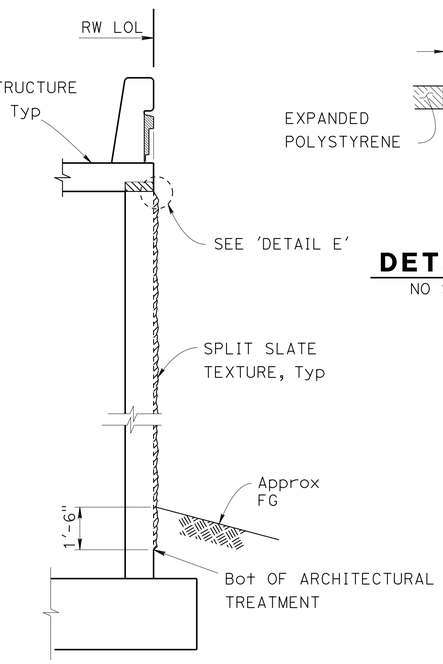

SECTION D-D

⅜" = 1'-0"

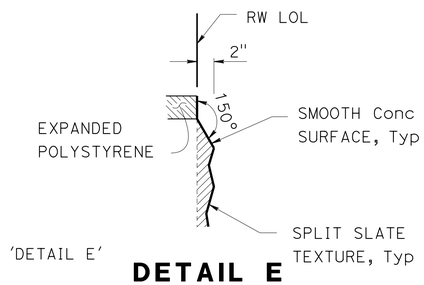

DETAIL E

NO SCALE

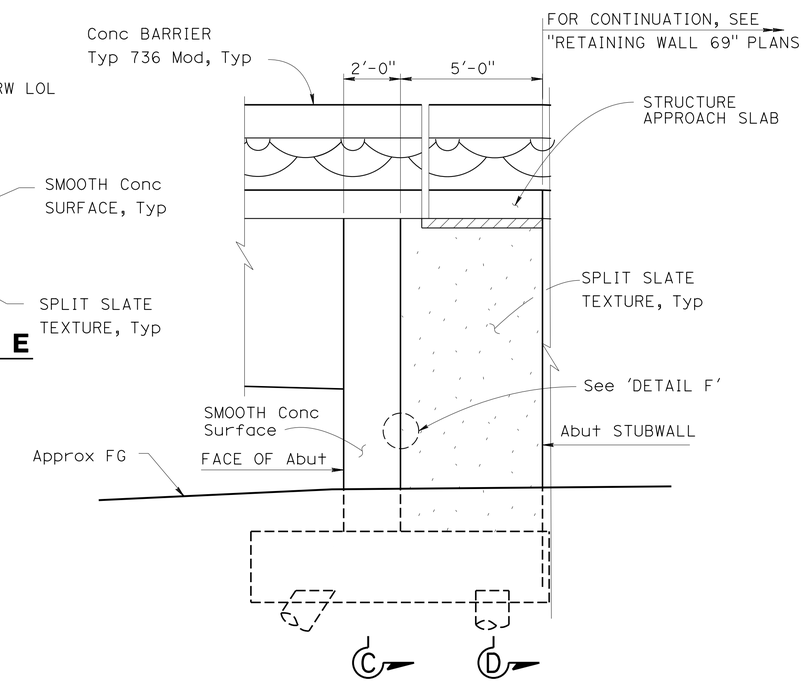

Note: Right side shown, left side similar

ABUTMENT 4 LEFT ELEVATION ARCHITECTURAL TREATMENT

⅜" = 1'-0"

	BY	CHECKED
DESIGN	H. Javier Chavez	Isaac Tasabia
DETAILS	Loren Goldthwait	Isaac Tasabia
QUANTITIES	H. Javier Chavez	Suzan Moradi

STATE OF CALIFORNIA
DEPARTMENT OF TRANSPORTATION

DIVISION OF ENGINEERING SERVICES
STRUCTURE DESIGN
DESIGN BRANCH 11

BRIDGE NO. 53-3058K
POST MILE 1.23

VALLEY VIEW AVE SB OFF RAMP
ARCHITECTURAL DETAILS NO. 2

STRUCTURES DESIGN DETAIL SHEET (ENGLISH) (REV. 09-01-10)

ORIGINAL SCALE IN INCHES FOR REDUCED PLANS 0 1 2 3

UNIT: 3587
PROJECT NUMBER & PHASE: 0715000160-1
CONTRACT NO.: 07-2159U4

DISREGARD PRINTS BEARING EARLIER REVISION DATES

REVISION DATES: 11-29-12 12-05-12

SHEET 19 OF 23

FILE => 53-3058K-t-arch2.dgn

USERNAME => s125624 DATE PLOTTED => 28-JAN-2016 TIME PLOTTED => 12:11

DIST	COUNTY	ROUTE	POST MILES TOTAL PROJECT	SHEET No.	TOTAL SHEETS
07	LA,Ora	5	0.0/1.5, 44.3/44.4	1269	1622

REGISTERED CIVIL ENGINEER 3-18-15 DATE

1-25-16
PLANS APPROVAL DATE

REGISTERED PROFESSIONAL ENGINEER WILLIAM D. KEMP No. 55730 Exp. 12/31/16 CIVIL STATE OF CALIFORNIA

The State of California or its officers or agents shall not be responsible for the accuracy or completeness of electronic copies of this plan sheet.

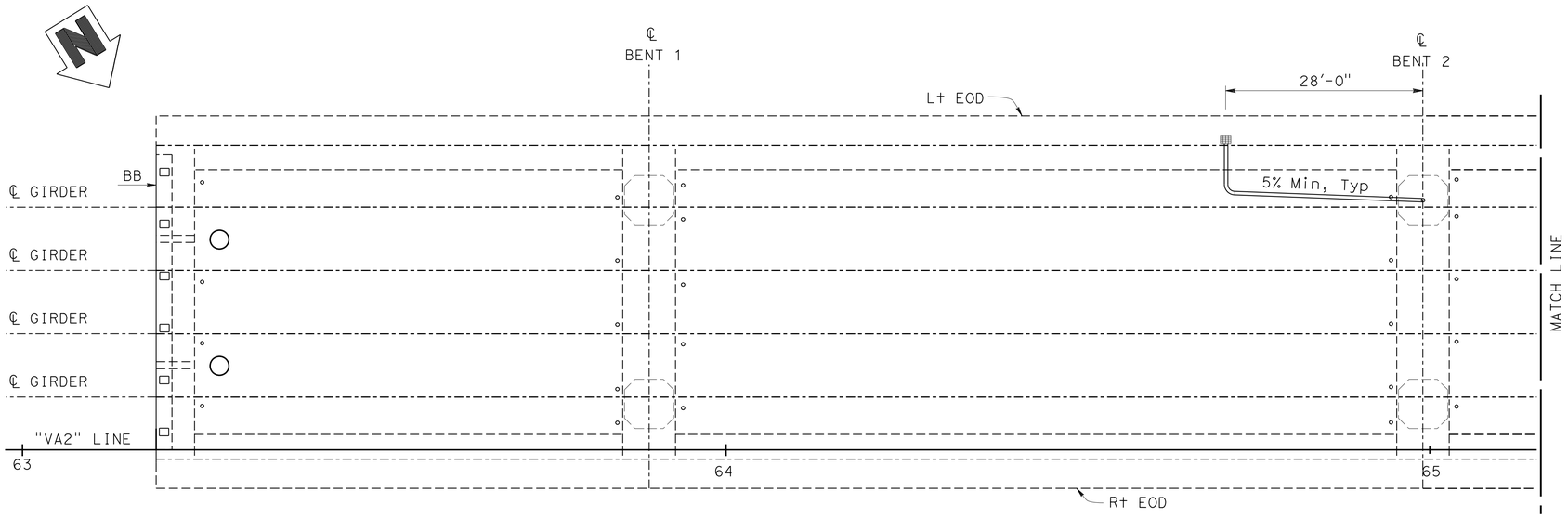

LEGEND

▦ Drain Inlet (Type D-3)

Note:

Place drainage outlet at the NorthWest face of the left column. Adjust column hoops to clear drain pipe.

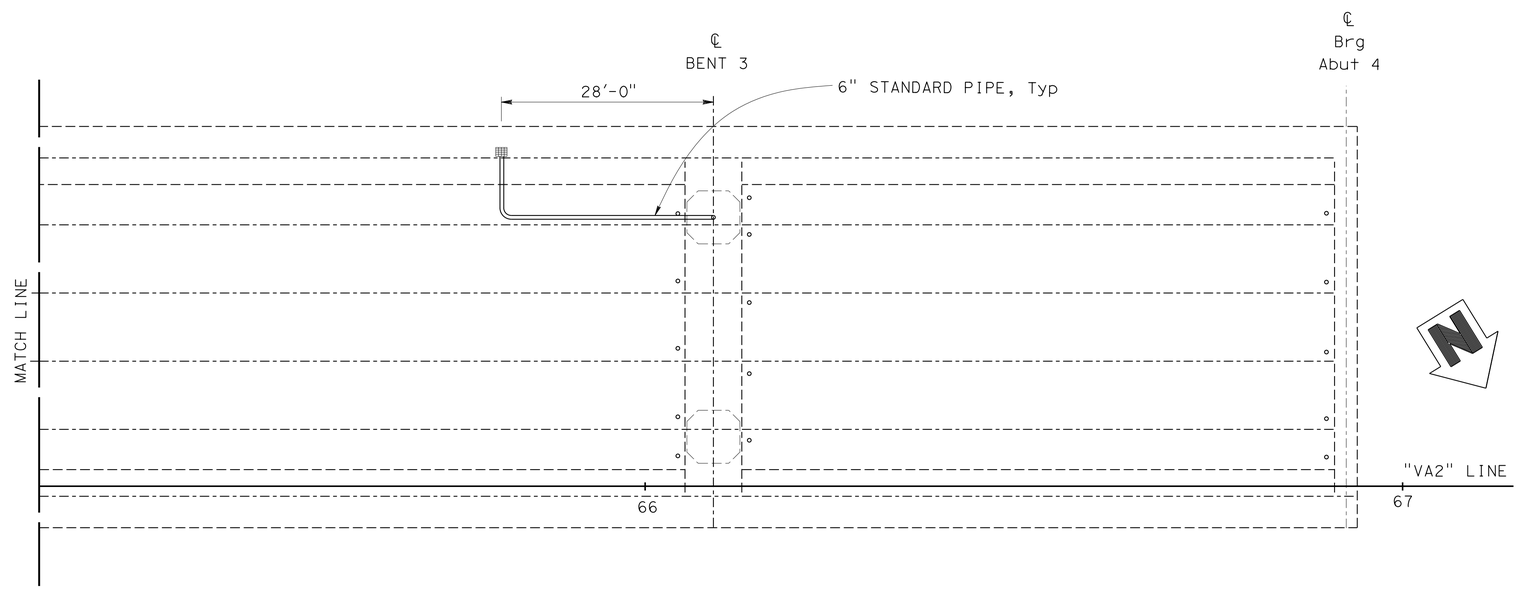

DRAINAGE PLAN (B7-6) (B7-7)

1'=10'

DESIGN	BY S. Pahlavan	CHECKED Yeo Yoon
DETAILS	BY L. Goldthwait	CHECKED Yeo Yoon
QUANTITIES	BY S. Pahlavan	CHECKED Suzan Moradi

STATE OF CALIFORNIA
DEPARTMENT OF TRANSPORTATION

DIVISION OF ENGINEERING SERVICES
STRUCTURE DESIGN
DESIGN BRANCH 11

BRIDGE NO. 53-3058K
POST MILE 1.23

VALLEY VIEW SB OFF RAMP
DRAINAGE LAYOUT

STRUCTURES DESIGN DETAIL SHEET (ENGLISH) (REV. 09-01-10)

ORIGINAL SCALE IN INCHES FOR REDUCED PLANS 0 1 2 3

UNIT: 3587
PROJECT NUMBER & PHASE: 0715000160-1
CONTRACT NO.: 07-2159u4

DISREGARD PRINTS BEARING EARLIER REVISION DATES

REVISION DATES: 3-08-13 5-31-13 9-27-13

SHEET 20 OF 23

FILE => 53-3058k-t-drn_10.dgn

USERNAME => S125624 DATE PLOTTED => 28-JAN-2016 TIME PLOTTED => 12:11

DIST	COUNTY	ROUTE	POST MILES TOTAL PROJECT	SHEET No.	TOTAL SHEETS
07	LA,Ora	5	0.0/1.5, 44.3/44.4	1270	1622

REGISTERED CIVIL ENGINEER — DATE 2-10-15

1-25-16
PLANS APPROVAL DATE

REGISTERED PROFESSIONAL ENGINEER — WILLIAM D. KEMP No. 55730 Exp. 12/31/16 CIVIL — STATE OF CALIFORNIA

The State of California or its officers or agents shall not be responsible for the accuracy or completeness of electronic copies of this plan sheet.

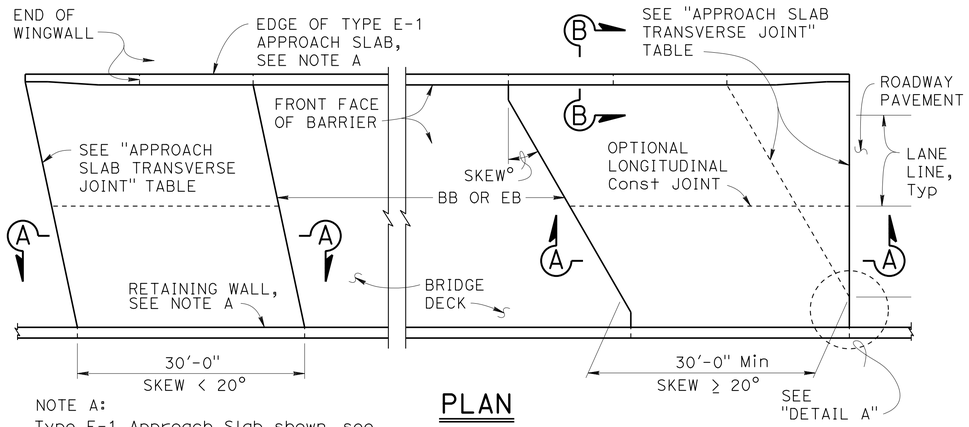

NOTE A:
Type E-1 Approach Slab shown, see "SECTION B-B" for Type E-2 details.

PLAN
1" = 10'

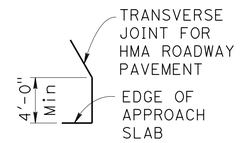

DETAIL A
No Scale

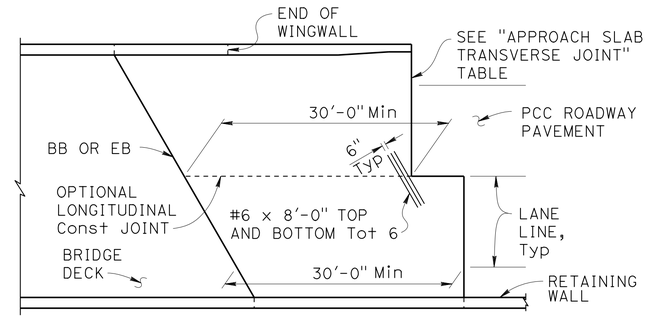

END STAGGER DETAIL
1" = 10'

APPROACH SLAB TRANSVERSE JOINT		
APPROACH SKEW	WITH HMA ROADWAY PAVEMENT	WITH PCC ROADWAY PAVEMENT
< 20°	PARALLEL TO BB OR EB	PARALLEL TO BB OR EB
20° - 45°	PARALLEL TO BB OR EB USE "DETAIL A"	STAGGER AT LANE LINES 24' TO 36' APART, SEE "END STAGGER DETAIL"
> 45°	PARALLEL TO BB OR EB USE "DETAIL A"	STAGGER AT EACH LANE LINE, SEE "END STAGGER DETAIL"

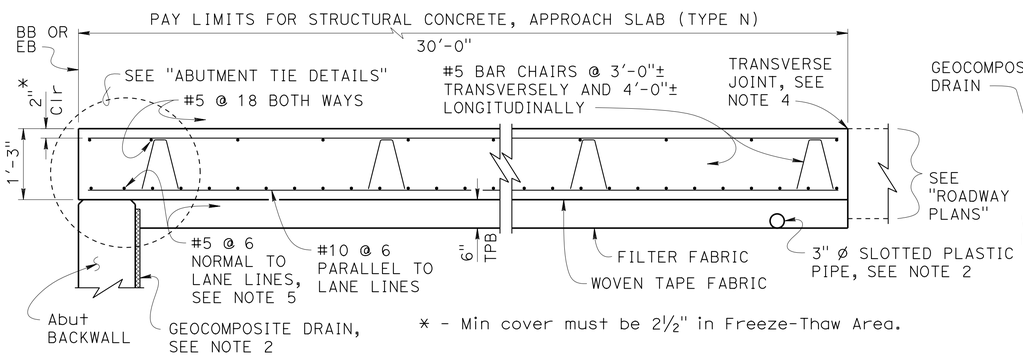

* - Min cover must be 2½" in Freeze-Thaw Area.

SECTION A-A
¾" = 1'-0"

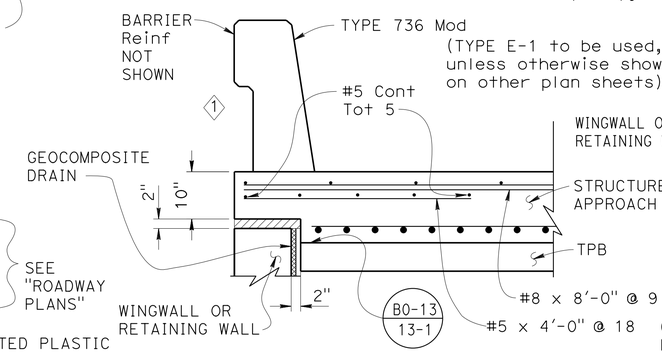

TYPE E-1

Indicates Expanded Polystyrene, remove after concrete is placed.

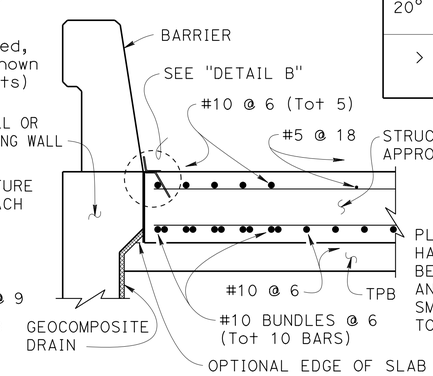

TYPE E-2

SECTION B-B
¾" = 1'-0"

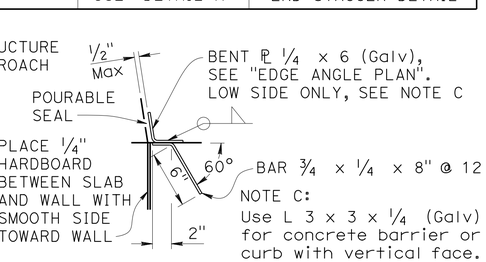

NOTE C:
Use L 3 x 3 x ¼ (Galv) for concrete barrier or curb with vertical face.

DETAIL B
1½" = 1'-0"

DESIGN NOTES

DESIGN: AASHTO LRFD Bridge Design Specifications, 2012 Edition with Caltrans Amendments, preface dated January 2014

LIMIT STATES: Service I, Strength I & II, Extreme II and Fatigue I (γ_{FAT} = 1.0)

DEAD LOAD: Includes 35 psf for future wearing surface

LIVE LOAD: HL93 and permit design load
Equivalent strip width method: W_1 = 12 ft
Slab span: L_1 = 24.5 ft

REINFORCED CONCRETE:
f_y = 60 ksi
f'_c = 3.6 ksi
n = 8

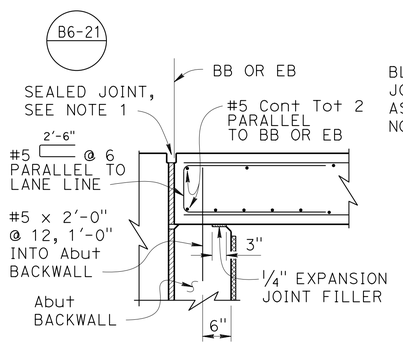

MR ≤ 2"

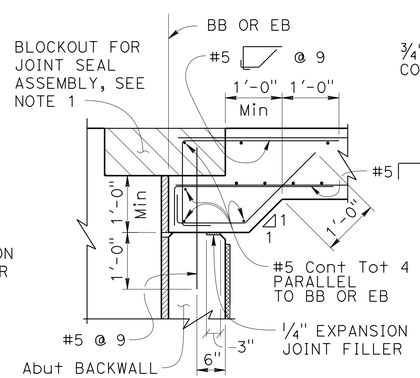

MR > 2"

ABUTMENT TIE DETAILS
¾" = 1'-0"

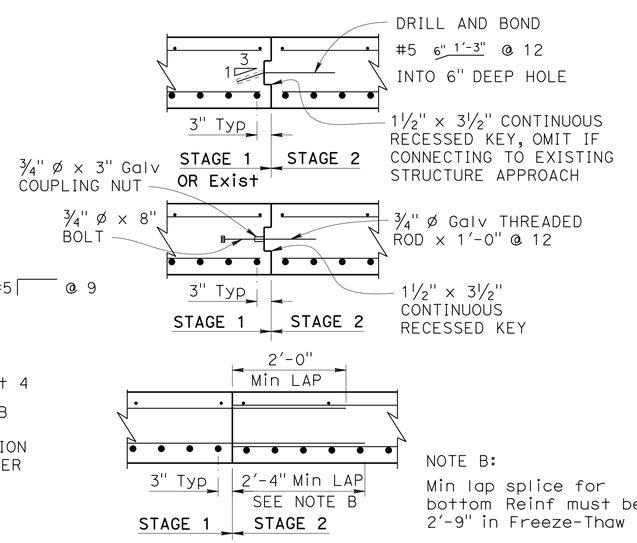

NOTE B:
Min lap splice for bottom Reinf must be 2'-9" in Freeze-Thaw Area.

LONGITUDINAL CONSTRUCTION JOINT ALTERNATIVES
¾" = 1'-0"

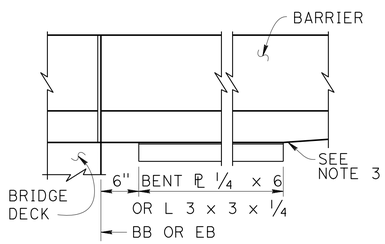

EDGE ANGLE PLAN
1" = 1'-0"

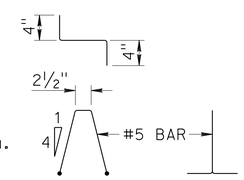

BAR CHAIR DETAIL
1" = 1'-0"

NOTES:

1. For joint protection details, blockout dimensions for joint seal assembly, and other details not shown, see other plan sheets. For MR ≤ 2", adjust reinforcement to clear sawcut for sealed joint. For MR > 2", haunch reinforcement placed for joint seal assembly blockout must be normal to BB or EB and spaced to avoid joint seal assembly anchorage.
2. For drainage details, see "STRUCTURE APPROACH DRAINAGE DETAILS" sheet.
3. End the plate or edge angle at beginning of barrier transition, end of wingwall, or end of structure approach as applicable.
4. ⟨2⟩ Transverse Joint must be a minimum of 5'-0" from an existing or constructed weakened plane joint in approach PCC roadway pavement. Refer to Standard Plans RSP P10 and RSP P14.
5. At the Contractor's option, approach slab transverse reinforcement may be placed parallel to BB or EB. Spacing of transverse reinforcement is measured along ℄ roadway.

STANDARD DRAWING
FILE NO. xs3-120
APPROVAL DATE January 2015

⟨1⟩ Modified Detail
⟨2⟩ Modified Note

STATE OF CALIFORNIA
DEPARTMENT OF TRANSPORTATION

DIVISION OF ENGINEERING SERVICES

BRIDGE NO. 53-3058K
POST MILE 1.23

VALLEY VIEW AVE SB OFF RAMP
STRUCTURE APPROACH TYPE N(30S)

DS OSD 2147A (ENGLISH STANDARD DRAWING "XS" BORDER REV. (10-01-14)

ORIGINAL SCALE IN INCHES FOR REDUCED PLANS 0 1 2 3

UNIT: 3587
PROJECT NUMBER & PHASE: 0715000160-1
CONTRACT NO.: 07-2159u4

DISREGARD PRINTS BEARING EARLIER REVISION DATES

REVISION DATES: 2-10-15

SHEET 21 OF 23

FILE => 53-3058k-u-sa30s.dgn

USERNAME => s125624 DATE PLOTTED => 28-JAN-2016 TIME PLOTTED => 12:11

DIST	COUNTY	ROUTE	POST MILES TOTAL PROJECT	SHEET No.	TOTAL SHEETS
07	LA,Ora	5	0.0/1.5, 44.3/44.4	1271	1622

REGISTERED CIVIL ENGINEER 2-10-15 DATE

1-25-16
PLANS APPROVAL DATE

The State of California or its officers or agents shall not be responsible for the accuracy or completeness of electronic copies of this plan sheet.

REGISTERED PROFESSIONAL ENGINEER WILLIAM D. KEMP No. 55730 Exp. 12/31/16 CIVIL STATE OF CALIFORNIA

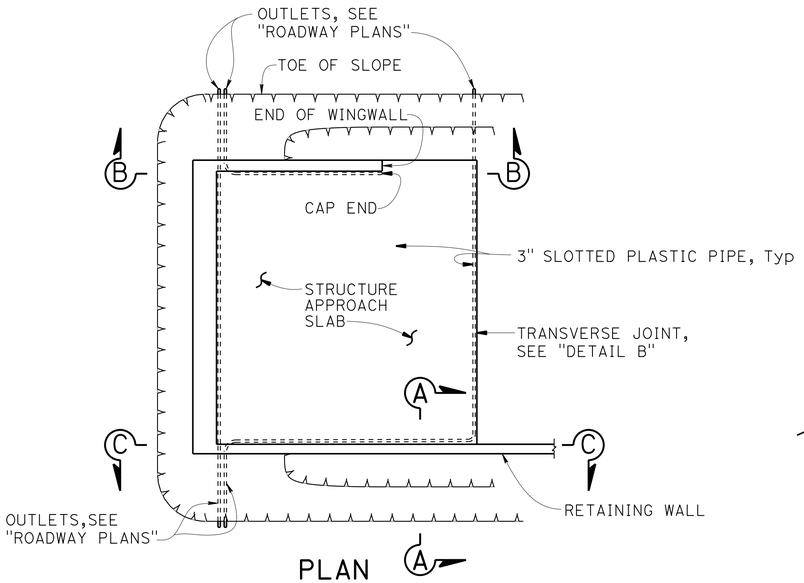

PLAN
NO SCALE

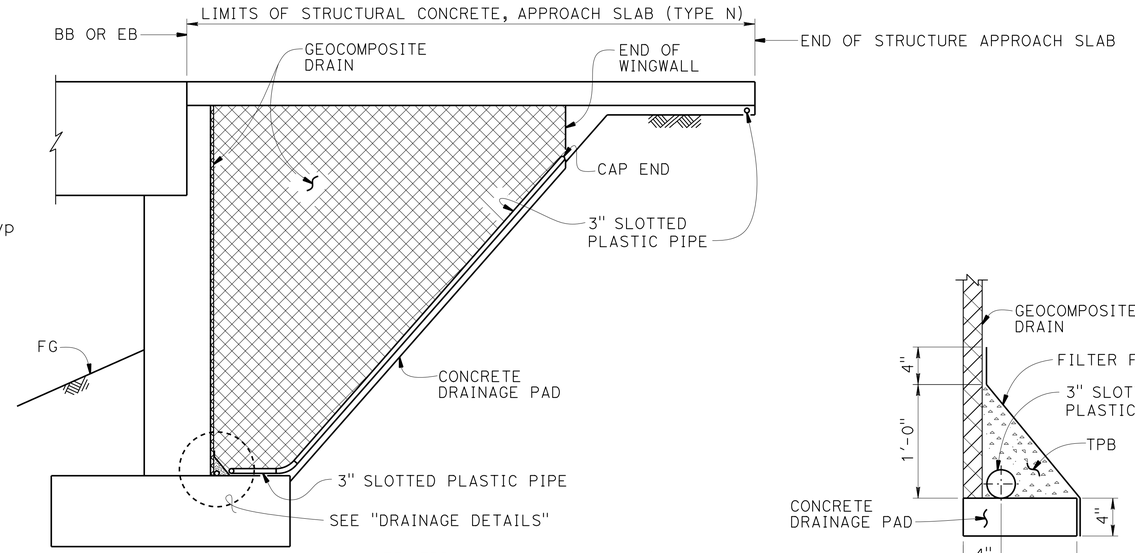

NOTE: TPB not shown for clarity.

SECTION B-B
NO SCALE

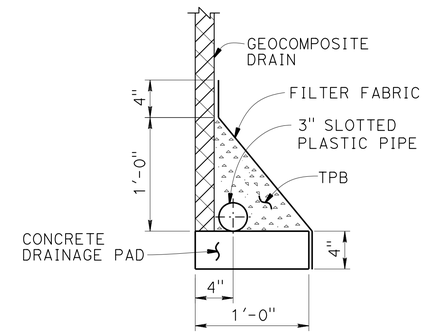

DRAINAGE PAD

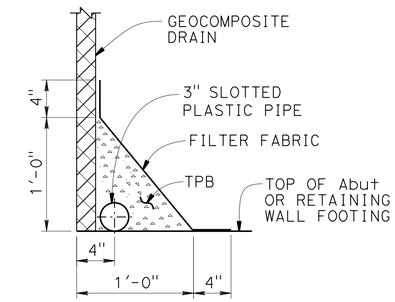

FOOTING

DRAINAGE DETAILS
1½" = 1'-0"

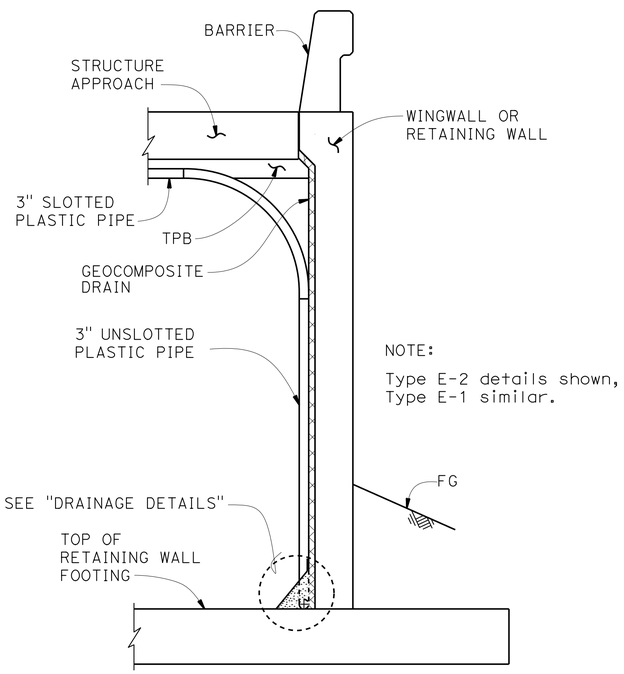

NOTE:

Type E-2 details shown, Type E-1 similar.

SECTION A-A
NO SCALE

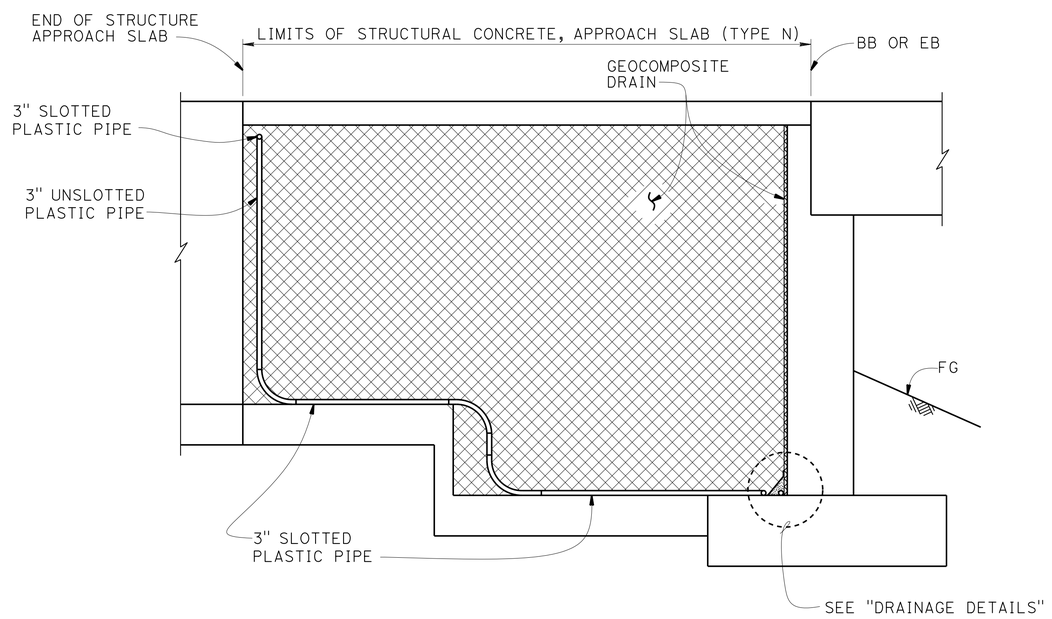

SECTION C-C
NO SCALE

NOTE: TPB not shown for clarity.

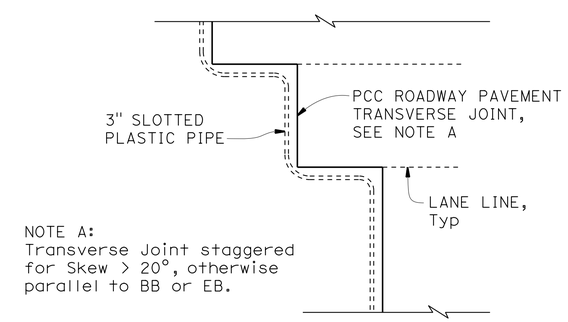

NOTE A:
Transverse Joint staggered for Skew > 20°, otherwise parallel to BB or EB.

DETAIL B
NO SCALE

NOTES:

1. For structural approach and other details not shown, see other plan sheets.
2. All bends in plastic pipe must have 3'-0" minimum radius. Plastic pipe used for bends is not required to be slotted.

STANDARD DRAWING

FILE NO. xs3-110

APPROVAL DATE January 2015

STATE OF CALIFORNIA DEPARTMENT OF TRANSPORTATION

DIVISION OF ENGINEERING SERVICES

BRIDGE NO. 53-3058K

POST MILE 1.23

VALLEY VIEW AVE SB OFF RAMP
STRUCTURE APPROACH DRAINAGE DETAILS

DS OSD 2147A (ENGLISH STANDARD DRAWING "XS" BORDER REV. (10-01-14)

ORIGINAL SCALE IN INCHES FOR REDUCED PLANS 0 1 2 3

UNIT: 3587
PROJECT NUMBER & PHASE: 0715000160-1
CONTRACT NO.: 07-2159u4

DISREGARD PRINTS BEARING EARLIER REVISION DATES

REVISION DATES 2-10-15

SHEET 22 OF 23

FILE => 53-3058k-v-sadd.dgn

USERNAME => s128624 DATE PLOTTED => 28-JAN-2016 TIME PLOTTED => 12:11

BENCH MARK

GPS 0888
ELEVATION 63.317 FT
FOUND 2-1/2 INCH CADT DISK IN CONCRETE CURB, FLUSH, STAMPED "LA51.2 1995"
THE MARK IS LOCATED 0.1 MI NORTHERLY OF THE VALLEY VIEW OVERCROSSING OF THE 5 (SANTA ANA) FWY ON THE SOUTHWESTERLY CURB OF FIRESTONE BLVD AT THE FIRST DRIVEWAY CUT NORTH OF THE FWY.
NORTHING 542603.017
EASTING 1997274.832
DATUM NAVD88

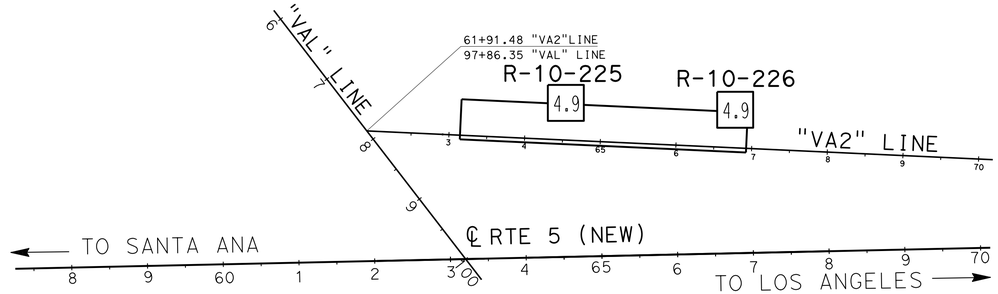

PLAN
SCALE 1"=100'

DIST	COUNTY	ROUTE	POST MILES TOTAL PROJECT	SHEET No.	TOTAL SHEETS
07	LA,Ora	5	0.0/1.5, 44.3/44.4	1272	1622

REGISTERED CIVIL ENGINEER 05/20/15 DATE

1-25-16
PLANS APPROVAL DATE

REGISTERED PROFESSIONAL ENGINEER MICHAEL G. SMITH No. 2229 Exp. 03/31/16 GEOTECHNICAL STATE OF CALIFORNIA

URS CORPORATION
2020 EAST FIRST STREET, SUITE 400
SANTA ANA, CA 92705

The State of California or its officers or agents shall not be responsible for the accuracy or completeness of electronic copies of this plan sheet.

1-This LOTB sheet was prepared in accordance with the Caltrans Soil & Rock Logging, Classification, & Presentation Manual (2010 Edition).

2-For protection of underground utility lines, hand-auger was used to remove top 5 to 10 feet of subsurface material for exploratory borings and Cone Penetration Testings.

3-2.5" to 1.4" blow counts converion factors for fine-grain and coarse-grain soils have been 0.8 and 0.55, respectively.

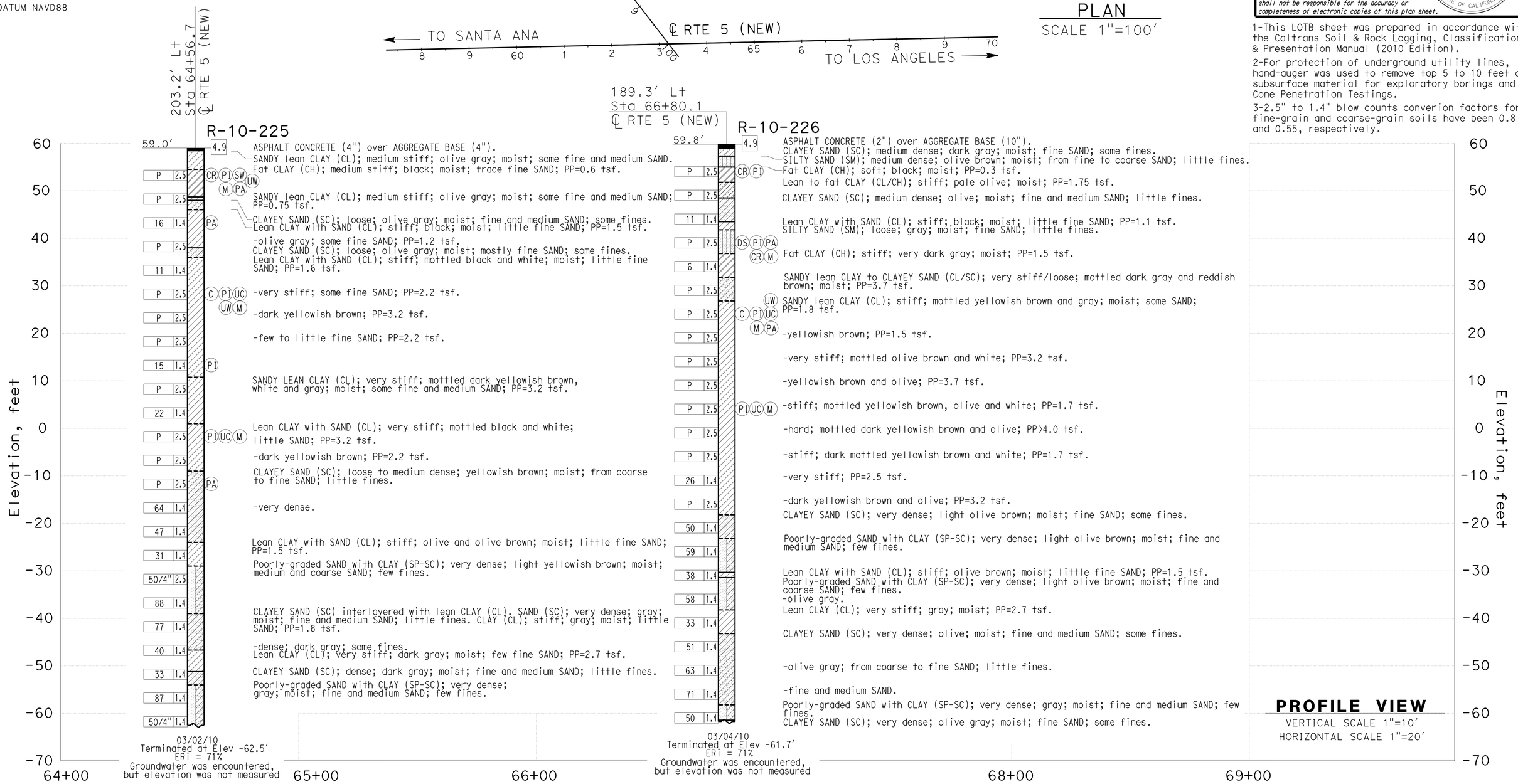

PROFILE VIEW
VERTICAL SCALE 1"=10'
HORIZONTAL SCALE 1"=20'

F.MOTAMED	DRAWN BY	T.PANAH	EJ.JEON
DESIGN OVERSIGHT	CHECKED BY	A.GHAZINOOR/L.KHALKHALI	FIELD INVESTIGATION BY:
05/20/15			DATE: 03/02/10 - 03/04/10
SIGN OFF DATE			

PREPARED FOR THE STATE OF CALIFORNIA DEPARTMENT OF TRANSPORTATION

M.G. SMITH
PROJECT ENGINEER

BRIDGE NO. 53-3058K
POST MILES 1.23

VALLEY VIEW AVE SB OFF RAMP
LOG OF TEST BORINGS SHEET 1 OF 1

GS CIVIL LOG OF TEST BORINGS SHEET (ENGLISH) (REV. 03/14/12)

ORIGINAL SCALE IN INCHES FOR REDUCED PLANS 0 1 2 3

UNIT: 3658
PROJECT NUMBER & PHASE: 07150001601 CONTRACT NO.: 07-2159U4

DISREGARD PRINTS BEARING EARLIER REVISION DATES

REVISION DATES 5/12/15 | SHEET 23 OF 23

FILE => 53-3058k-z-lotb.dgn

USERNAME => s125624 DATE PLOTTED => 28-JAN-2016 TIME PLOTTED => 12:11

DIST	COUNTY	ROUTE	POST MILES TOTAL PROJECT	SHEET No.	TOTAL SHEETS
07	LA,Ora	5	0.0/1.5, 44.3/44.4	1273	1622

REGISTERED CIVIL ENGINEER — DATE 2-11-15

1-25-16
PLANS APPROVAL DATE

REGISTERED PROFESSIONAL ENGINEER — WILLIAM D. KEMP — No. 55730 — Exp. 12/31/16 — CIVIL — STATE OF CALIFORNIA

The State of California or its officers or agents shall not be responsible for the accuracy or completeness of electronic copies of this plan sheet.

NOTES:

1. Paint "53-3059K"
2. Paint "VALLEY VIEW AVE SB ON RAMP"
3. Paint Bent number
4. Structure Approach Type N(30S)
5. Concrete Barrier Type 736 Mod
6. Anchor Block, see ROAD PLANS
7. Architectural Treatment not shown, see "ARCHITECTURAL TREATMENT DETAILS" sheet

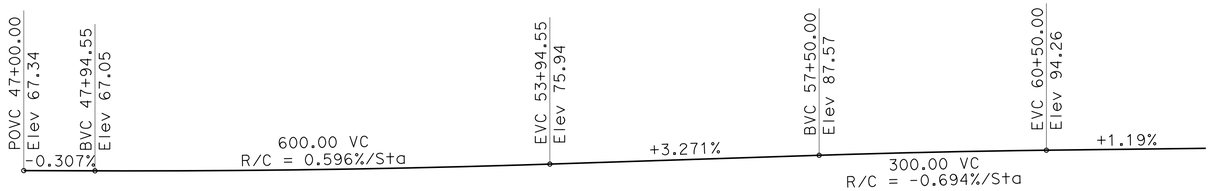

PROFILE GRADE

NO SCALE

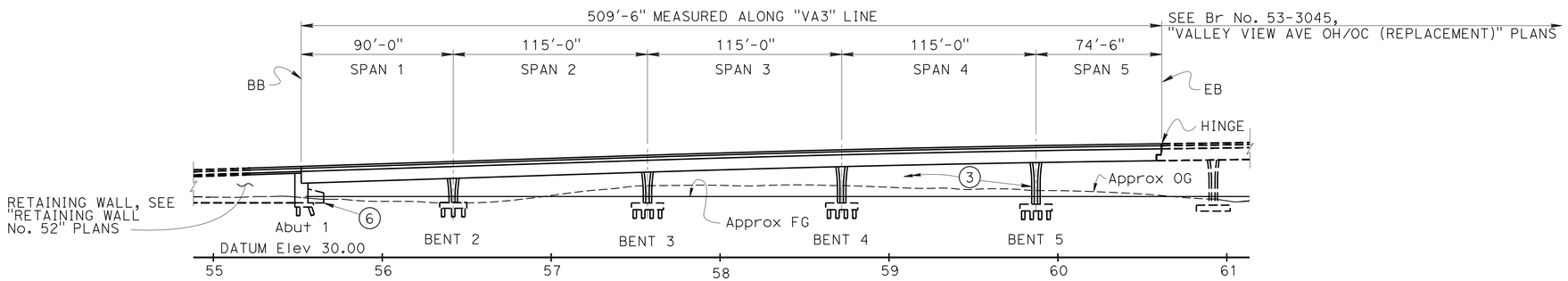

ELEVATION

1" = 40'

QUANTITIES

STRUCTURE EXCAVATION (BRIDGE)	499	CY
STRUCTURE EXCAVATION (CONTAMINATED MATERIALS)	196	CY
STRUCTURE BACKFILL (BRIDGE)	375	CY
FURNISH 24" STEEL PIPE PILING	5,318	LF
DRIVE 24" STEEL PIPE PILE	111	EA
STRUCTURAL CONCRETE, BRIDGE FOOTING	358	CY
STRUCTURAL CONCRETE, BRIDGE	2,035	CY
STRUCTURAL CONCRETE, APPROACH SLAB (TYPE N)	68	CY
ARCHITECTURAL TREATMENT (SPLIT SLATE)	483	SQFT
JOINT SEAL (MR 2")	43	LF
BAR REINFORCING STEEL (BRIDGE)	792,400	LB
BAR REINFORCING STEEL (GALVANIZED)	1,700	LB
HEADED BAR REINFORCEMENT	496	EA
MISCELLANEOUS METAL (RESTRAINER - PIPE TYPE)	210	LB
BRIDGE DECK DRAINAGE SYSTEM	5,395	LB
CONCRETE BARRIER (TYPE 736 MODIFIED)	1,077	LF

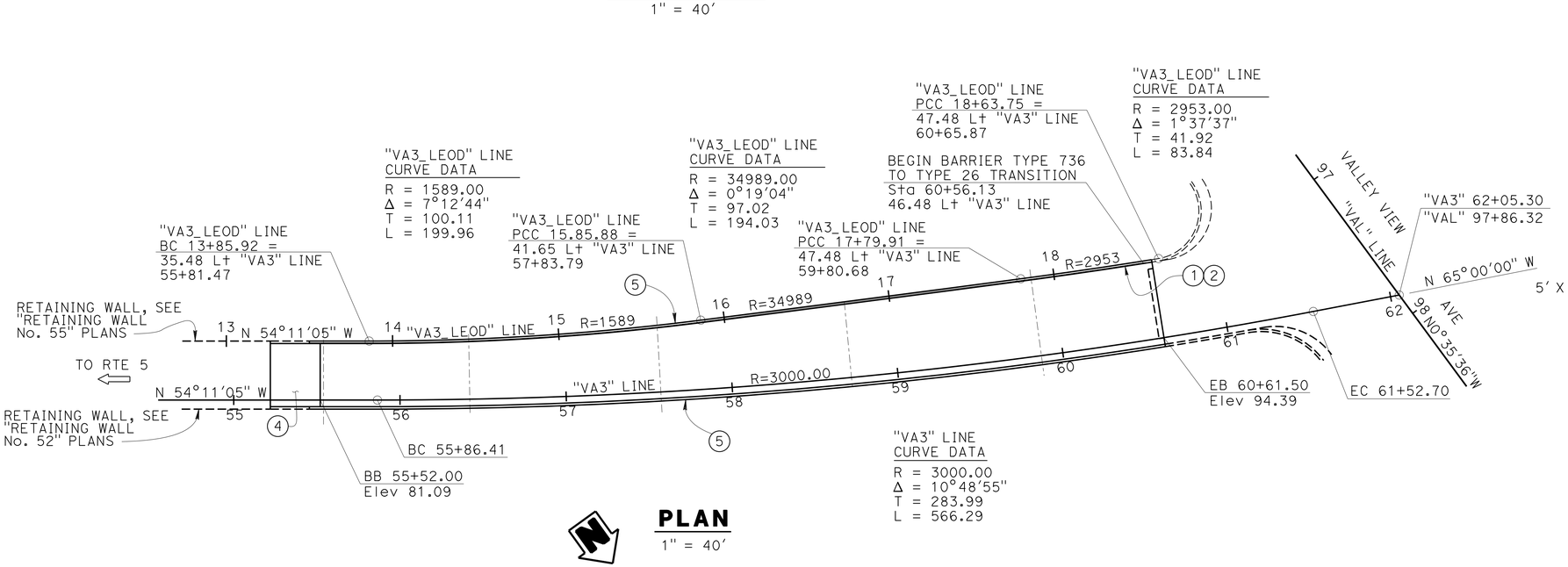

PLAN

1" = 40'

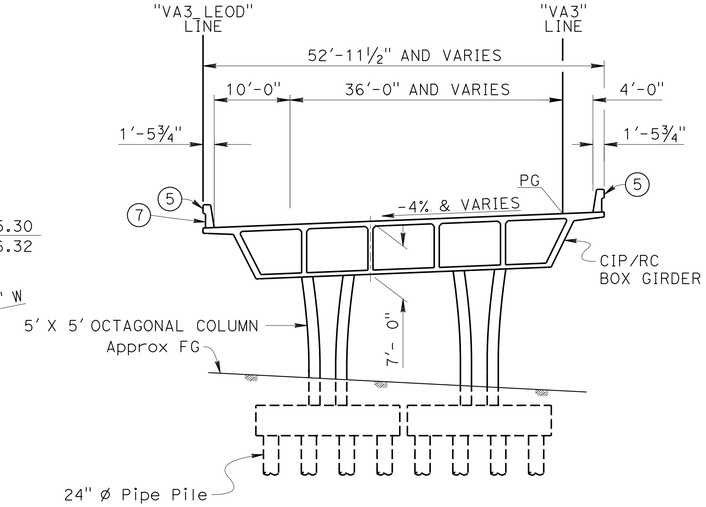

TYPICAL SECTION

1" = 10'

Ramin Rashedi 2-11-15 DESIGN ENGINEER	DESIGN	BY Ubong Inyang	CHECKED John Radu	LOAD & RESISTANCE FACTOR DESIGN	LIVE LOADING: HL93 W/"LOW-BOY"; PERMIT DESIGN VEHICLE
	DETAILS	BY Pauline Tong	CHECKED John Radu	LAYOUT BY Ubong Inyang	CHECKED John Radu
	QUANTITIES	BY Ubong Inyang	CHECKED Karen Doll	SPECIFICATIONS BY Xiahong Li	PLANS AND SPECS COMPARED Xiahong Li

ORIGINAL SCALE IN INCHES FOR REDUCED PLANS 0 1 2 3

STATE OF CALIFORNIA DEPARTMENT OF TRANSPORTATION

DIVISION OF ENGINEERING SERVICES STRUCTURE DESIGN DESIGN BRANCH 11

BRIDGE NO. 53-3059K
POST MILE 1.14

VALLEY VIEW AVE SB ON RAMP
GENERAL PLAN

UNIT: 3587
PROJECT NUMBER & PHASE: 0715000160-1
CONTRACT NO.: 07-2159U4

DISREGARD PRINTS BEARING EARLIER REVISION DATES

REVISION DATES: 7-09-12, 9-11-13, 9-14-13, 2-11-15

SHEET 1 OF 35

STRUCTURES DESIGN GENERAL PLAN SHEET (ENGLISH) (REV.09-01-10)

FILE => 53-3059k-a-gp.dgn

USERNAME => s125624 DATE PLOTTED => 28-JAN-2016 TIME PLOTTED => 12:11

DIST	COUNTY	ROUTE	POST MILES TOTAL PROJECT	SHEET No.	TOTAL SHEETS
07	LA,Ora	5	0.0/1.5, 44.3/44.4	1274	1622

REGISTERED CIVIL ENGINEER — DATE 3-18-15

1-25-16
PLANS APPROVAL DATE

REGISTERED PROFESSIONAL ENGINEER — WILLIAM D. KEMP — No. 55730 — Exp. 12/31/16 — CIVIL — STATE OF CALIFORNIA

The State of California or its officers or agents shall not be responsible for the accuracy or completeness of electronic copies of this plan sheet.

INDEX TO PLANS

SHEET NO.	TITLE
1	GENERAL PLAN
2	INDEX TO PLANS
3	FOUNDATION PLAN
4	DECK CONTOUR
5	ABUTMENT LAYOUT
6	ABUTMENT DETAILS
7	BENT FOOTING DETAILS NO 1
8	BENT FOOTING DETAILS NO 2
9	BENT 2 DETAILS
10	BENT 3 DETAILS
11	BENT 4 DETAILS
12	BENT 5 DETAILS
13	COLUMN DETAILS
14	TYPICAL SECTION NO 1
15	TYPICAL SECTION NO 2
16	GIRDER LAYOUT
17	ADDITIONAL SOFFIT REINF NO 1
18	ADDITIONAL SOFFIT REINF NO 2
19	ADDITIONAL SOFFIT REINF NO 3
20	ADDITIONAL SOFFIT REINF NO 4
21	ADDITIONAL SOFFIT REINF NO 5
22	ADDITIONAL DECK REINF NO 1
23	ADDITIONAL DECK REINF NO 2
24	ADDITIONAL DECK REINF NO 3
25	ADDITIONAL DECK REINF NO 4
26	HINGE LAYOUT
27	HINGE DETAILS
28	DRAINAGE LAYOUT
29	STRUCTURE APPROACH TYPE N(30S)
30	STRUCTURE APPROACH DRAINAGE DETAILS
31	ARCHITECTURAL DETAILS NO 1
32	ARCHITECTURAL DETAILS NO 2
33	LOG OF TEST BORINGS SHEET 1 OF 3
34	LOG OF TEST BORINGS SHEET 2 OF 3
35	LOG OF TEST BORINGS SHEET 3 OF 3

ACCELERATION RESPONSE SPECTRUM (WITH 5% DAMPING)

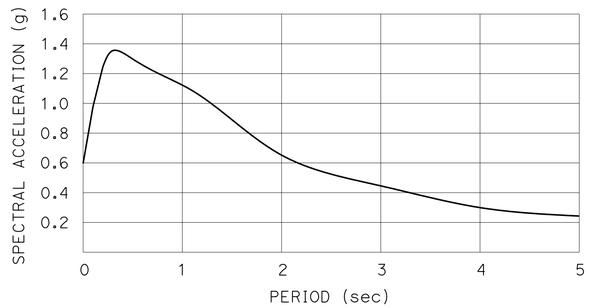

SITE SPECIFIC ARS CURVE

GENERAL NOTES
LOAD AND RESISTANCE FACTOR DESIGN

DESIGN: AASHTO LRFD BRIDGE DESIGN SPECIFICATIONS, 4th EDITION WITH CALIFORNIA AMENDMENTS, PREFACE DATED DEC. 2008

SEISMIC DESIGN: CALTRANS SEISMIC DESIGN CRITERIA (SDC), Version 1.6, November 2010

DEAD LOAD: Includes 35 Psf for Future Wearing Surface

LIVE LOADING: HL93 with "Low Boy" and Permit Design Vehicle.

SEISMIC LOADING: See Site Specific, Acceleration Response Spectra

REINFORCED CONCRETE: f_y = 60 ksi

f'_c = 4000 psi

n = 8

STRUCTURAL STEEL STEEL PIPE PILE:

fy (minimum yield strength) = 45,000 psi

STANDARD PLANS DATED 2010

A10A	ABBREVIATIONS (SHEET 1 OF 2)
RSP A10B	ABBREVIATIONS (SHEET 2 OF 2)
A10C	LINES AND SYMBOLS (SHEET 1 OF 3)
A10D	LINES AND SYMBOLS (SHEET 2 OF 3)
A10E	LINES AND SYMBOLS (SHEET 3 OF 3)
RSP A10F	LEGEND-SOIL (SHEET 1 OF 2)
RSP A10G	LEGEND-SOIL (SHEET 2 OF 2)
A62B	LIMITS OF PAYMENT FOR EXCAVATION AND BACKFILL - BRIDGE SURCHARGE AND WALL
A62C	LIMITS OF PAYMENT FOR EXCAVATION AND BACKFILL - BRIDGE
A77J3	METAL BEAM GUARD RAILING CONNECTIONS TO ABUTMENTS AND WALLS
B0-1	BRIDGE DETAILS
B0-3	BRIDGE DETAILS
B0-5	BRIDGE DETAILS
B0-13	BRIDGE DETAILS
B2-8	PILE DETAILS CLASS 200
B6-21	JOINT SEALS (MAXIMUM MOVEMENT RATING = 2")
B7-1	BOX GIRDER DETAILS
B7-6	DECK DRAINS TYPES D1 AND D2
B7-7	DECK DRAIN TYPE D-3
B7-8	DECK DRAINAGE DETAILS
RSP B11-56	CONCRETE BARRIER TYPE 736
B14-5	WATER SUPPLY LINE DETAILS (PIPE SIZES LESS THAN 4")

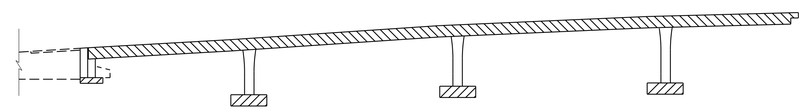

STRUCTURAL CONCRETE, BRIDGE(4000 psi AT 28 DAYS)

STRUCTURAL CONCRETE, BRIDGE FOOTING (4000 psi AT 28 DAYS)

STRUCTURAL CONCRETE, BRIDGE (4000 psi AT 28 DAYS)

CONCRETE STRENGTH AND TYPE LIMITS

NO SCALE

PILE DATA

SUPPORT LOCATION	PILE TYPE	NOMINAL RESISTANCE (KIPS) COMPRESSION	NOMINAL RESISTANCE (KIPS) TENSION	DESIGN TIP ELEVATION (FT)	SPECIFIED TIP ELEVATION (FT)	NOMINAL DRIVING RESISTANCE (KIPS)
Abut 1	PP24x0.5	330	0	+11.0 (a) +21.0 (c)	+11.0	330
BENT 2		380	0	+5.0 (a) +50.0 (b) +20.0 (c) +13.0 (d)	+5.0	380
BENT 3		410	0	+4.0 (a) +17.0 (c) +13.0 (d)	+4.0	410
BENT 4		290	0	+12.0 (a) +45.0 (b) +16.0 (c) +14.0 (d)	+12.0	290
BENT 5		300	0	+12.0 (a) +38.0 (b) +16.0 (c) +14.0 (d)	+12.0	300

NOTES:

1. Design Tip Elevations for Abutments are controlled by: (a) Compression, (c) Settlement, (d) Lateral Load
2. Design Tip Elevations for Bents are controlled by: (a) Compression, (b) Tension, (c) Settlement, (d) Lateral
3. The specified tip elevation shall not be raised above the design tip elevation for tension load, lateral load and tolerable settlement.
4. The nominal driving resistance is equal to nominal resistance needed for factored load per pile plus driving resistance needed for factored load per support.

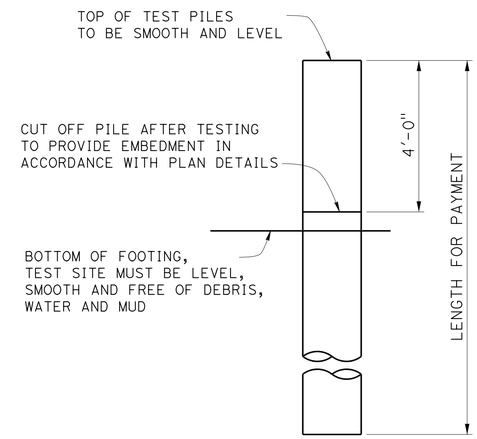

NOTE: One Test Pile is required at each support location from Abut 1 thru Bent 5. Specific pile at each support to be determined by the contractor and apporved by the engineer.

TEST PILE ELEVATION

NO SCALE

STANDARD PLAN SHEET NO.

DETAIL NO.

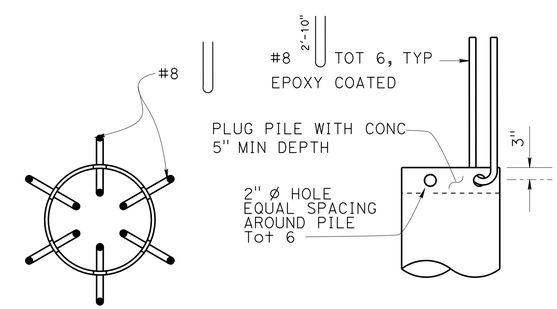

PLAN — ELEVATION

TYPICAL PIPE PILE ANCHOR

NO SCALE

	BY	CHECKED
DESIGN	U. Inyang	J. Radu
DETAILS	J. Hunter	J. Radu
QUANTITIES	U. Inyang	K. Doll

STATE OF CALIFORNIA
DEPARTMENT OF TRANSPORTATION

DIVISION OF ENGINEERING SERVICES
STRUCTURE DESIGN
DESIGN BRANCH 11

BRIDGE NO. 53-3059K
POST MILE 1.14

VALLEY VIEW AVE SB ON RAMP
INDEX TO PLANS

STRUCTURES DESIGN DETAIL SHEET (ENGLISH) (REV. 09-01-10)

ORIGINAL SCALE IN INCHES FOR REDUCED PLANS 0 1 2 3

UNIT: 3587
PROJECT NUMBER & PHASE: 0715000160-1
CONTRACT NO.: 07-2159U4

DISREGARD PRINTS BEARING EARLIER REVISION DATES

REVISION DATES: 3/13/12 9-27-13 8-28-13 9-06-13

SHEET 2 OF 35

FILE => 53-3059K-a-itp.dgn

USERNAME => s125624 DATE PLOTTED => 28-JAN-2016 TIME PLOTTED => 12:11

DIST	COUNTY	ROUTE	POST MILES TOTAL PROJECT	SHEET No.	TOTAL SHEETS
07	LA,Ora	5	0.0/1.5, 44.3/44.4	1275	1622

William Kemp 3-18-15
REGISTERED CIVIL ENGINEER DATE

1-25-16
PLANS APPROVAL DATE

REGISTERED PROFESSIONAL ENGINEER
WILLIAM D. KEMP
No. 55730
Exp. 12/31/16
CIVIL
STATE OF CALIFORNIA

The State of California or its officers or agents shall not be responsible for the accuracy or completeness of electronic copies of this plan sheet.

CURVE DATA

No.	R	Δ	T	L
1	850.000′	13°00′30"	96.907′	192.981′
2	850.000′	16°52′38"	126.102′	250.377′
3	3000.000′	10°48′55"	283.987′	566.286′
4	24 606.299′	08°37′52"	1856.864′	3706.702′

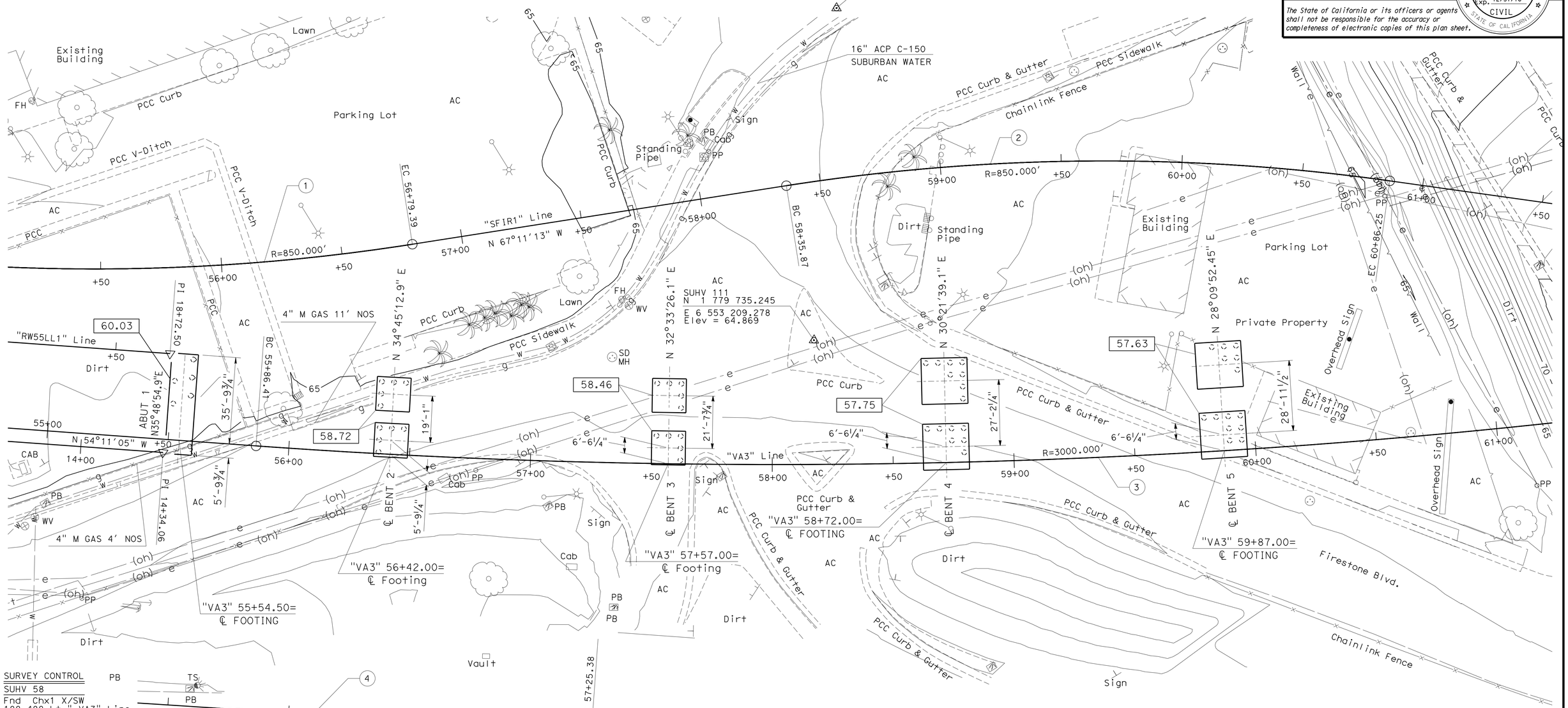

SURVEY CONTROL

SUHV 58
Fnd Chx1 X/SW
188.488 Lt " VA3" Line
Sta 58+28.25
N 1 779 623.395
E 6 553 129.217
Elev = 63.690

SUHV 111
Fnd PK/Island
51.323 Lt "VA3" Line
Sta 58+17.52
N 1 779 735.245
E 6 553 209.278
Elev = 64.869

INDICATES BOTTOM OF FOOTING ELEVATION

NOTES:

UNDERGROUND UTILITIES AS SHOWN ARE APPROXIMATE, SEE UTILITY PLANS FOR MORE INFORMATION

PRELIMINARY INVESTIGATION SECTION

SCALE	VERT.DATUM NAVD 88	PHOTOGRAMMETRY AS OF: X			
1"=20′	HORZ.DATUM NAD 83	SURVEYED	BY C. Stewart	CHECKED	BY C. Stewart
ALIGNMENT TIES Dist. Traverse Sheet		DRAFTED	BY M. Sadaghiani 08-13	CHECKED	BY E. Viajar 08-13

	BY	CHECKED
DESIGN	U. Inyang	J. Radu
DETAILS	T. Bittermann	J. Radu
QUANTITIES	U. Inyang	K. Doll

STATE OF CALIFORNIA
DEPARTMENT OF TRANSPORTATION

DIVISION OF ENGINEERING SERVICES
STRUCTURE DESIGN
DESIGN BRANCH 11

BRIDGE NO. 53-3059K
POST MILE 1.14

VALLEY VIEW AVE SB ON RAMP
FOUNDATION PLAN

STRUCTURES FOUNDATION PLAN SHEET (ENGLISH) (REV. 09-01-10)

ORIGINAL SCALE IN INCHES FOR REDUCED PLANS 0 1 2 3

UNIT: 3647
PROJECT NUMBER & PHASE: 0715000160-1
CONTRACT NO.: 07-2159u4

DISREGARD PRINTS BEARING EARLIER REVISION DATES

REVISION DATES: 8-30-13 8-30-13 9-05-13

SHEET 3 OF 35

FILE => 53-3059k-c-fp.dgn

DIST	COUNTY	ROUTE	POST MILES TOTAL PROJECT	SHEET No.	TOTAL SHEETS
07	LA,Ora	5	0.0/1.5, 44.3/44.4	1276	1622

REGISTERED CIVIL ENGINEER — DATE: 3-18-15

1-25-16
PLANS APPROVAL DATE

REGISTERED PROFESSIONAL ENGINEER — WILLIAM D. KEMP — No. 55730 — Exp. 12/31/16 — CIVIL — STATE OF CALIFORNIA

The State of California or its officers or agents shall not be responsible for the accuracy or completeness of electronic copies of this plan sheet.

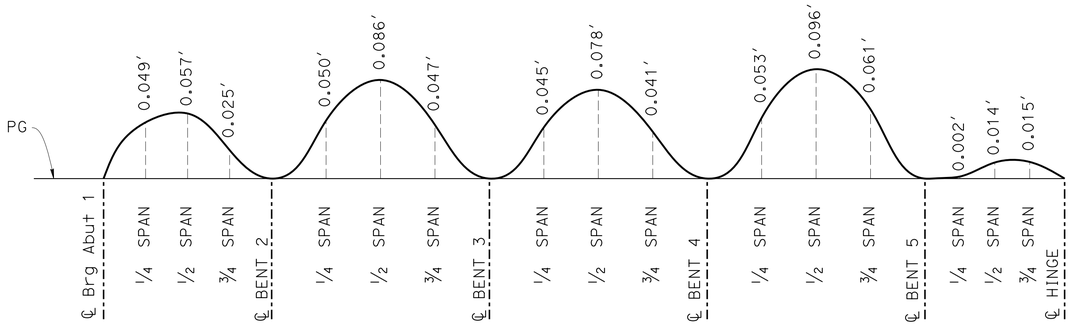

NOTE: Camber values shown do not include allowances for falsework settlement

CAMBER DIAGRAM

NO SCALE

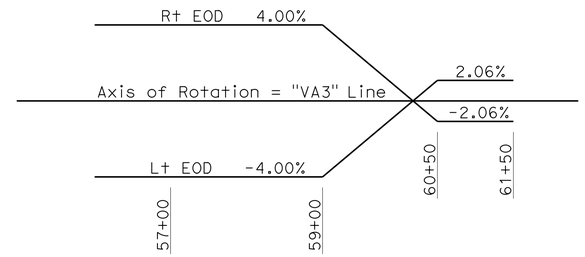

SUPERELEVATION DIAGRAM

NO SCALE

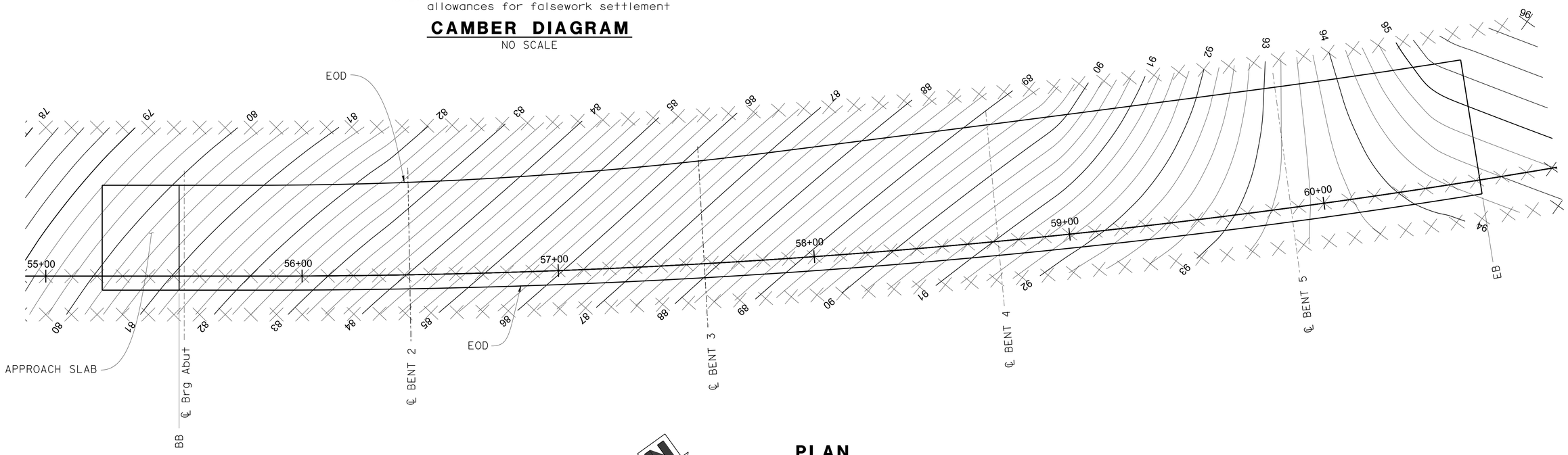

PLAN

1"=20′

NOTES:

1. Contours do not include camber
2. Contour interval = 0.25′

X Indicates 10.0′ intervals along station line.

DESIGN	BY U. Inyang	CHECKED J. Radu	
DETAILS	BY P. Tong	CHECKED J. Radu	
QUANTITIES	BY U. Inyang	CHECKED K. Doll	

STATE OF CALIFORNIA
DEPARTMENT OF TRANSPORTATION

DIVISION OF ENGINEERING SERVICES
STRUCTURE DESIGN
DESIGN BRANCH 11

BRIDGE NO. 53-3059K
POST MILE 1.14

VALLEY VIEW AVE SB ON RAMP
DECK CONTOUR

STRUCTURES DESIGN DETAIL SHEET (ENGLISH) (REV. 09-01-10)

ORIGINAL SCALE IN INCHES FOR REDUCED PLANS 0 1 2 3

UNIT: 3587
PROJECT NUMBER & PHASE: 0715000160-1
CONTRACT NO.: 07-2159U4

DISREGARD PRINTS BEARING EARLIER REVISION DATES

REVISION DATES: 7-8-11 9-05-13 7-18-13 7-22-13

SHEET 4 OF 35

FILE => 53-3059k-d-dc.dgn

USERNAME => s125624 DATE PLOTTED => 28-JAN-2016 TIME PLOTTED => 12:11

DIST	COUNTY	ROUTE	POST MILES TOTAL PROJECT	SHEET No.	TOTAL SHEETS
07	LA,Ora	5	0.0/1.5, 44.3/44.4	1277	1622

REGISTERED CIVIL ENGINEER — DATE 2-11-15

1-25-16
PLANS APPROVAL DATE

REGISTERED PROFESSIONAL ENGINEER — WILLIAM D. KEMP — No. 55730 — Exp. 12/31/16 — CIVIL — STATE OF CALIFORNIA

The State of California or its officers or agents shall not be responsible for the accuracy or completeness of electronic copies of this plan sheet.

NOTES:

1. Joint Seal (B6-21)
   MR = 2"
2. Expanded Polystyrene (BO-13)

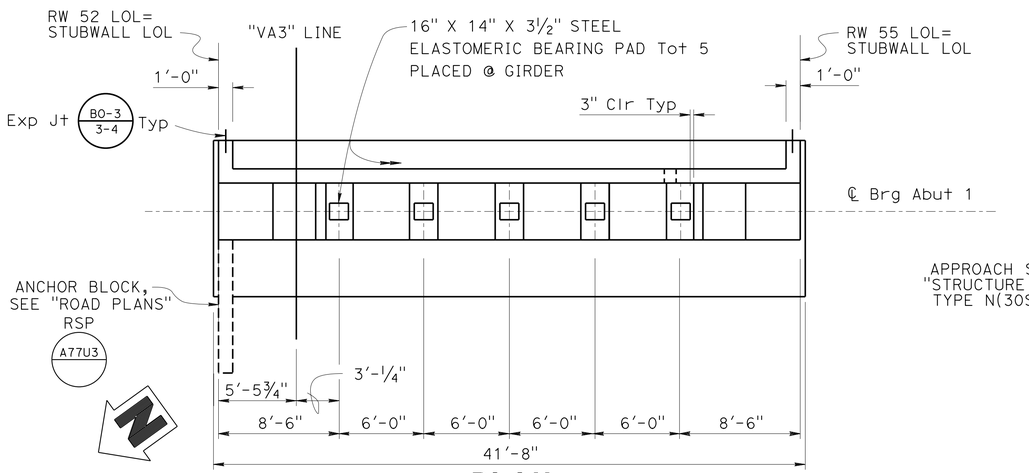

PLAN

3/16" = 1'-0"

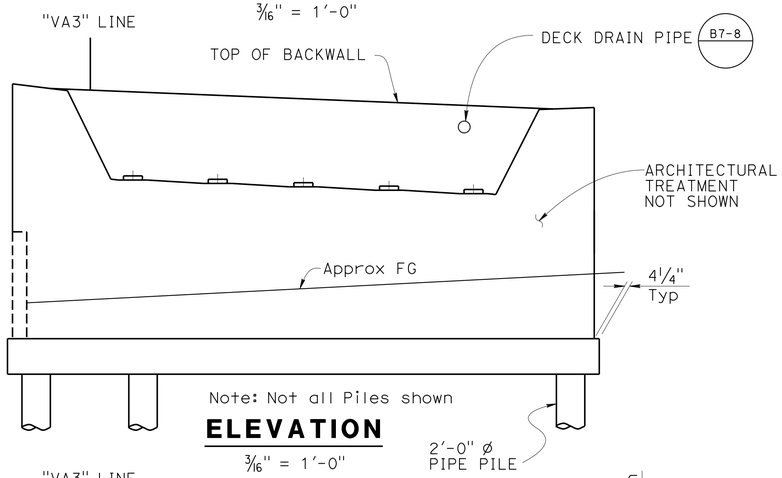

ELEVATION

3/16" = 1'-0"

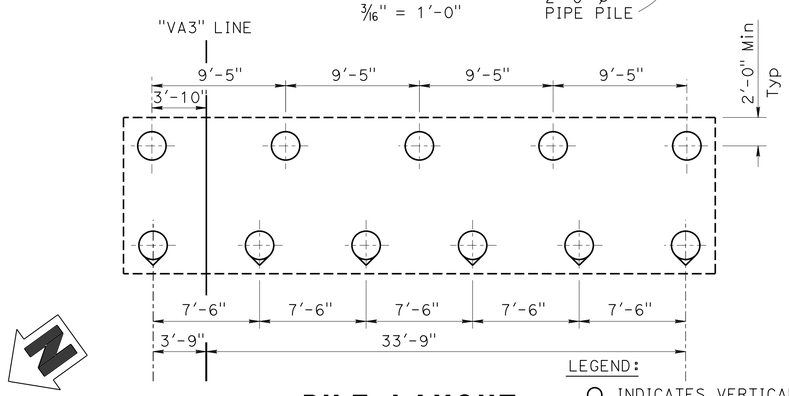

PILE LAYOUT

3/16" = 1'-0"

LEGEND:

- ○ INDICATES VERTICAL PIPE PILES PP24x0.5
- ○ INDICATES BATTERED PIPE PILES PP24x0.5
- ▨ INDICATES EXPANDED POLYSTRENE

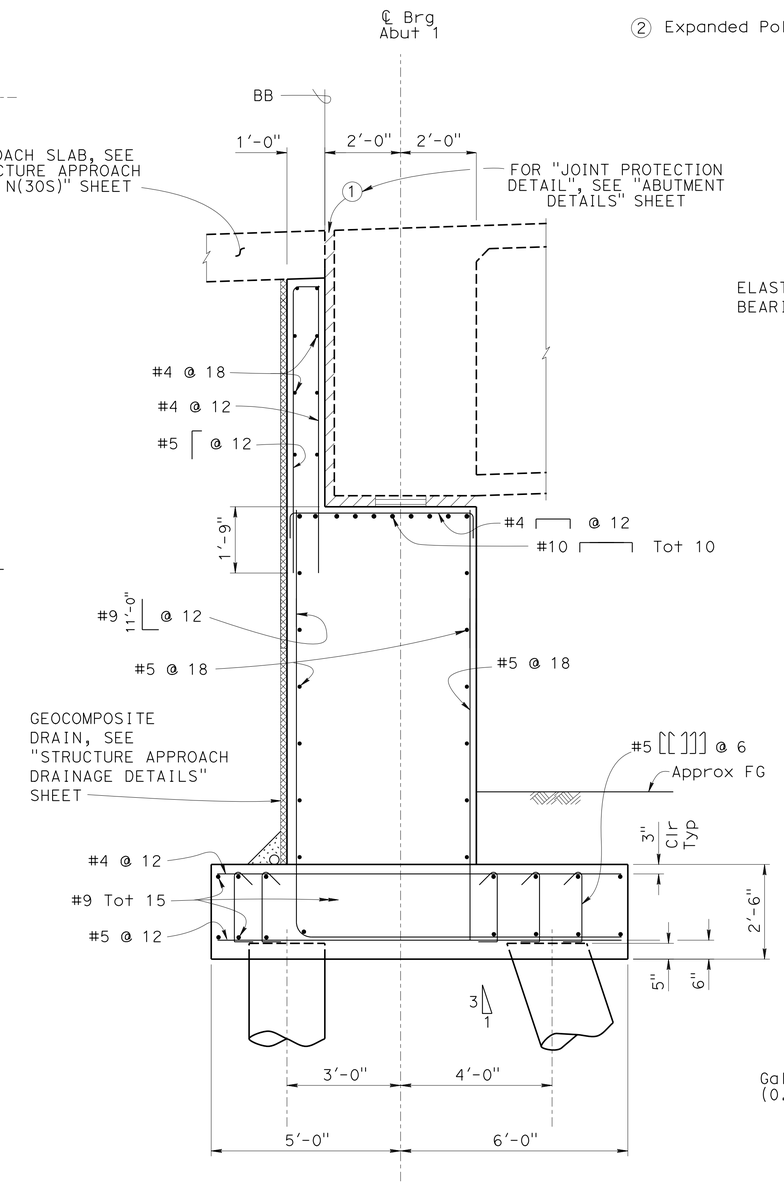

TYPICAL SECTION

½" = 1'-0"

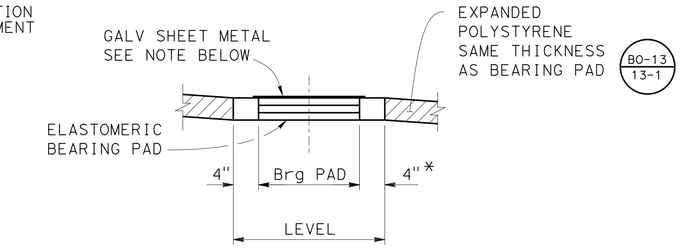

Note: Coat top of Bearing Pad with silicone grease prior to placing galvanized sheet metal

* 3" at side of Shear Key

SECTION A-A

NO SCALE

NOTES:

For Architectural Treatment, see "ARCHITECTURAL ELEVATIONS AT ABUTMENTS" and "SECTION AND MOTIF DETAILS AT ABUTMENTS" sheet.

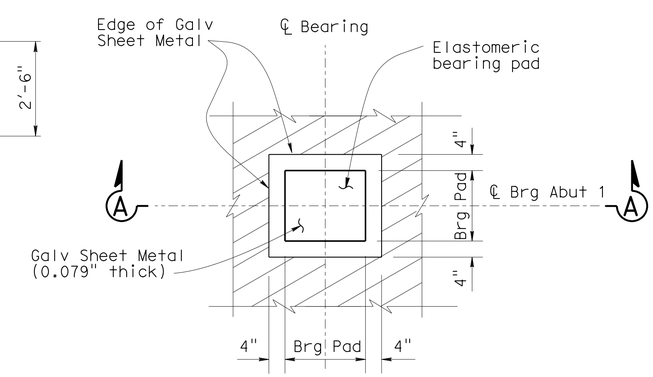

BEARING PAD DETAIL

NO SCALE

DESIGN	BY U. Inyang	CHECKED J. Radu	
DETAILS	BY P. Tong	CHECKED J. Radu	
QUANTITIES	BY U. Inyang	CHECKED K. Doll	

STATE OF CALIFORNIA
DEPARTMENT OF TRANSPORTATION

DIVISION OF ENGINEERING SERVICES
STRUCTURE DESIGN
DESIGN BRANCH 11

BRIDGE NO. 53-3059K
POST MILE 1.14

VALLEY VIEW AVE SB ON RAMP
ABUTMENT LAYOUT

STRUCTURES DESIGN DETAIL SHEET (ENGLISH) (REV. 09-01-10)

ORIGINAL SCALE IN INCHES FOR REDUCED PLANS 0 1 2 3

UNIT: 3587
PROJECT NUMBER & PHASE: 0715000160-1
CONTRACT NO.: 07-2159u4

DISREGARD PRINTS BEARING EARLIER REVISION DATES

REVISION DATES: 4-02-12 7-22-13 9-22-13 2-11-15

SHEET 5 OF 35

FILE => 53-3059k-f-abt_lo.dgn

USERNAME => s129624 DATE PLOTTED => 28-JAN-2016 TIME PLOTTED => 12:11

DIST	COUNTY	ROUTE	POST MILES TOTAL PROJECT	SHEET No.	TOTAL SHEETS
07	LA,Ora	5	0.0/1.5, 44.3/44.4	1278	1622

REGISTERED CIVIL ENGINEER — DATE 2-11-15

1-25-16
PLANS APPROVAL DATE

REGISTERED PROFESSIONAL ENGINEER — WILLIAM D. KEMP — No. 55730 — Exp. 12/31/16 — CIVIL — STATE OF CALIFORNIA

The State of California or its officers or agents shall not be responsible for the accuracy or completeness of electronic copies of this plan sheet.

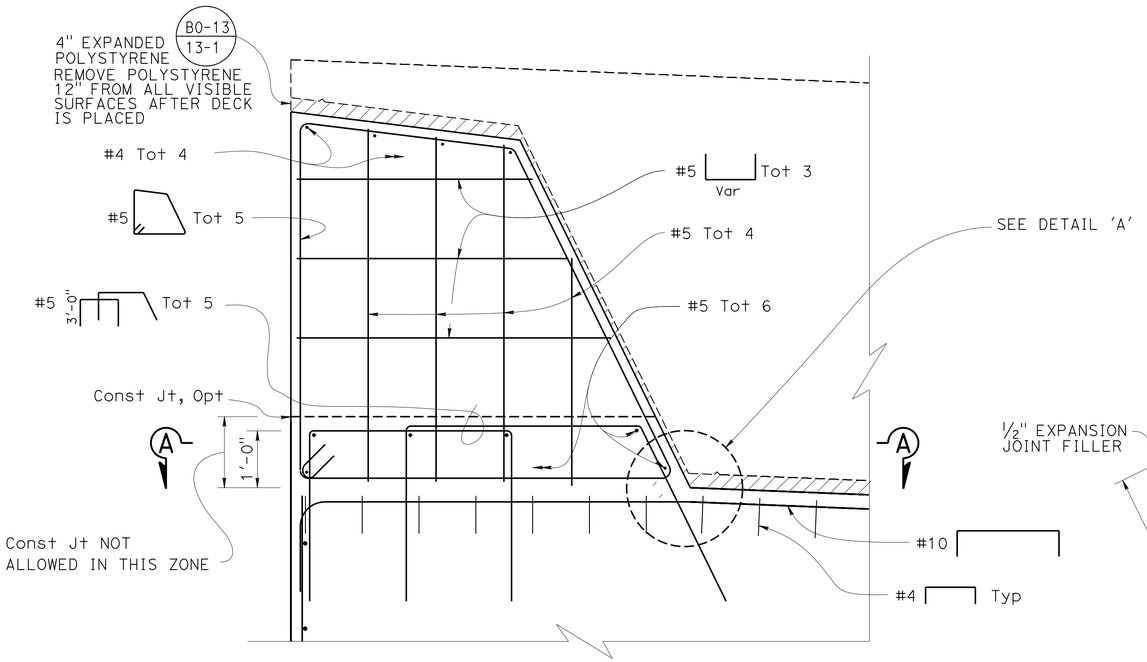

Note: Right shear key shown, left shear key opposite hand.

ABUTMENT SHEAR KEY DETAIL

3/4" = 1'-0"

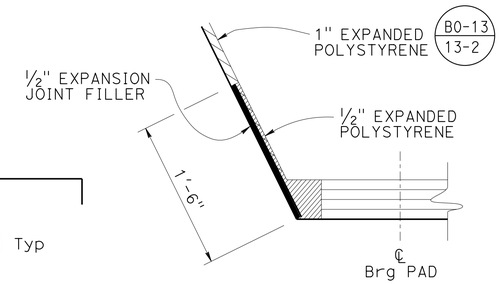

DETAIL A

NO SCALE

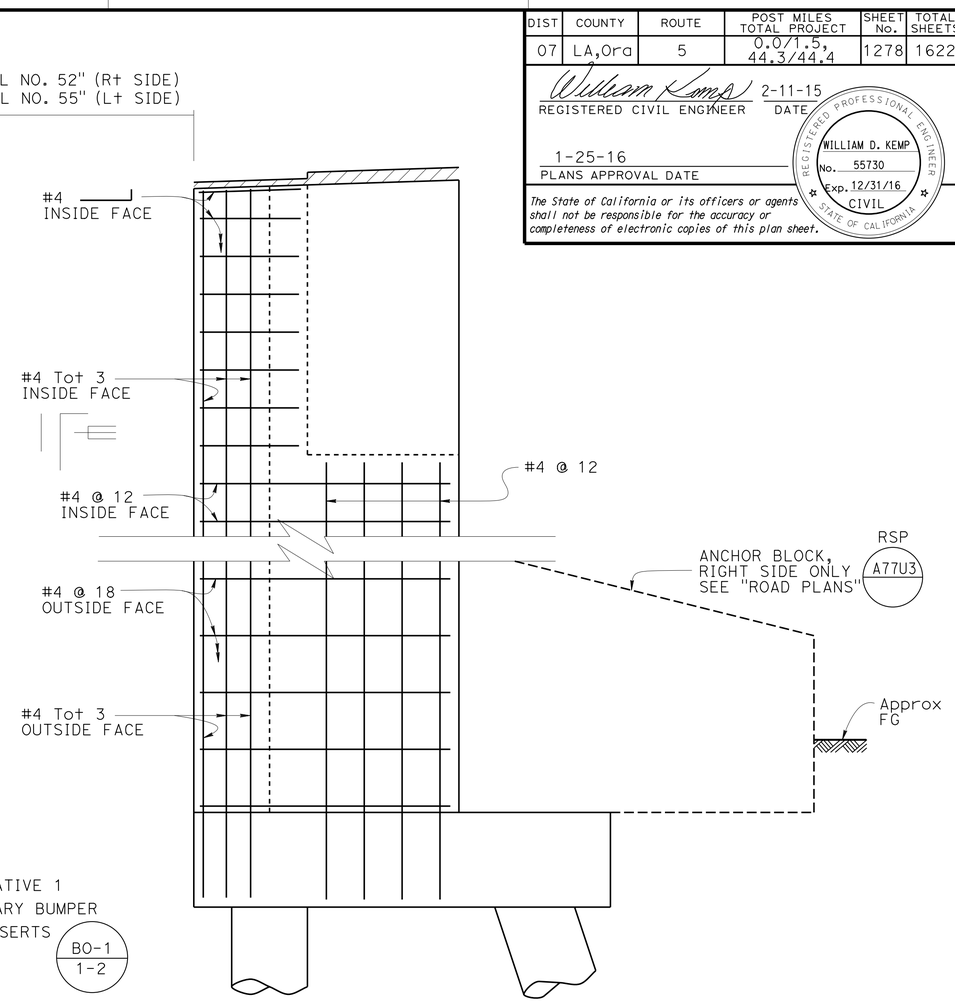

Note: Right side shown, left side opposite hand.

STUBWALL ELEVATION

1/2" = 1'-0"

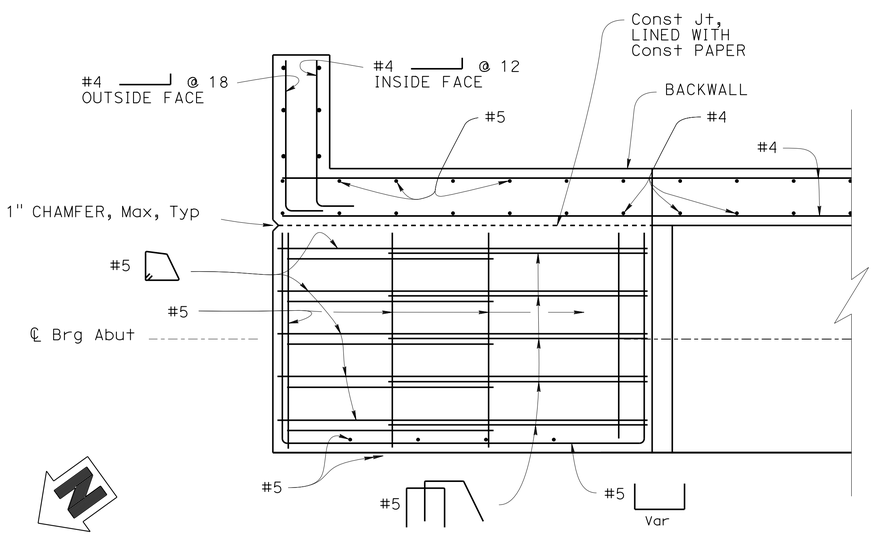

SECTION A-A

3/4" = 1'-0"

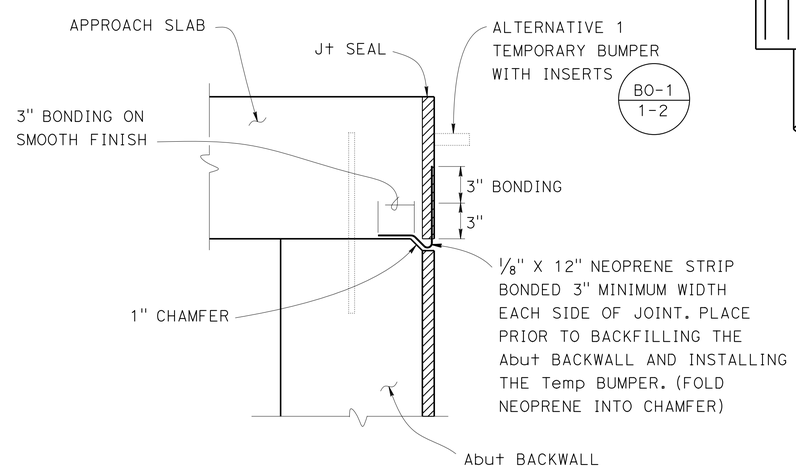

JOINT PROTECTION DETAIL

NO SCALE

	BY	CHECKED
DESIGN	U. Inyang	J. Radu
DETAILS	P. Tong	J. Radu
QUANTITIES	U. Inyang	K. Doll

STATE OF CALIFORNIA
DEPARTMENT OF TRANSPORTATION

DIVISION OF ENGINEERING SERVICES
STRUCTURE DESIGN
DESIGN BRANCH 11

BRIDGE NO. 53-3059K
POST MILE 1.14

VALLEY VIEW AVE SB ON RAMP
ABUTMENT DETAILS

STRUCTURES DESIGN DETAIL SHEET (ENGLISH) (REV. 09-01-10)

ORIGINAL SCALE IN INCHES FOR REDUCED PLANS 0 1 2 3

UNIT: 3587
PROJECT NUMBER & PHASE: 0715000160-1
CONTRACT NO.: 07-2159u4

DISREGARD PRINTS BEARING EARLIER REVISION DATES

REVISION DATES: 5-2-11 2-11-15 9-08-13 9-22-13

SHEET 6 OF 35

FILE => 53-3059k-f-abtdt.dgn

USERNAME => s125624 DATE PLOTTED => 28-JAN-2016 TIME PLOTTED => 12:11

DIST	COUNTY	ROUTE	POST MILES TOTAL PROJECT	SHEET No.	TOTAL SHEETS
07	LA,Ora	5	0.0/1.5, 44.3/44.4	1279	1622

REGISTERED CIVIL ENGINEER 3-18-15 DATE

1-25-16
PLANS APPROVAL DATE

REGISTERED PROFESSIONAL ENGINEER WILLIAM D. KEMP No. 55730 Exp. 12/31/16 CIVIL STATE OF CALIFORNIA

The State of California or its officers or agents shall not be responsible for the accuracy or completeness of electronic copies of this plan sheet.

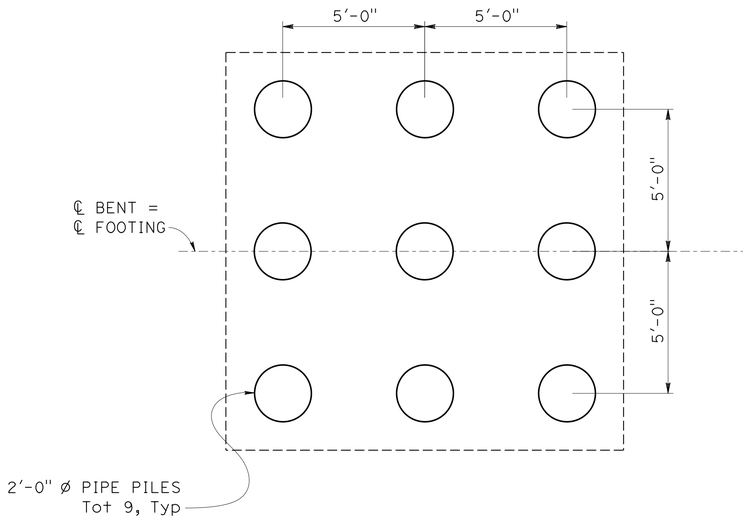

BENTS 2 & 3 PILE LAYOUT

3/8" = 1'-0"

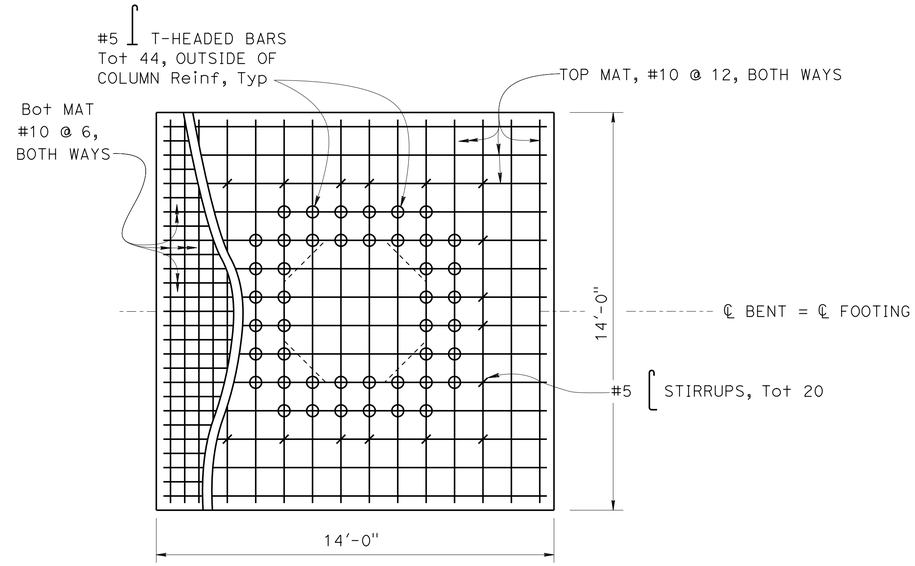

BENTS 2 & 3 FOOTING PLAN

3/8" = 1'-0"

NOTES:

1. Details are symmetrical about ℄ Bent and ℄ Footing
2. Place stirrups as shown

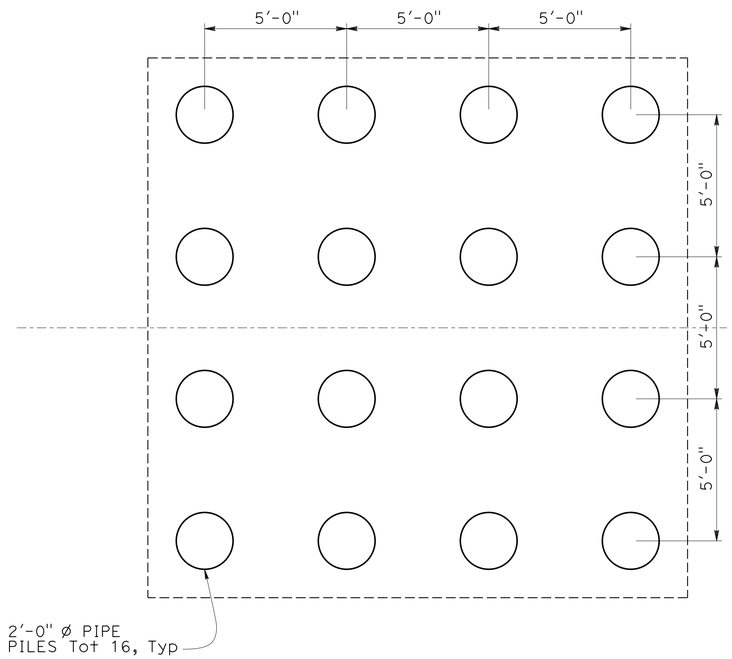

BENTS 4 & 5 PILE LAYOUT

3/8" = 1'-0"

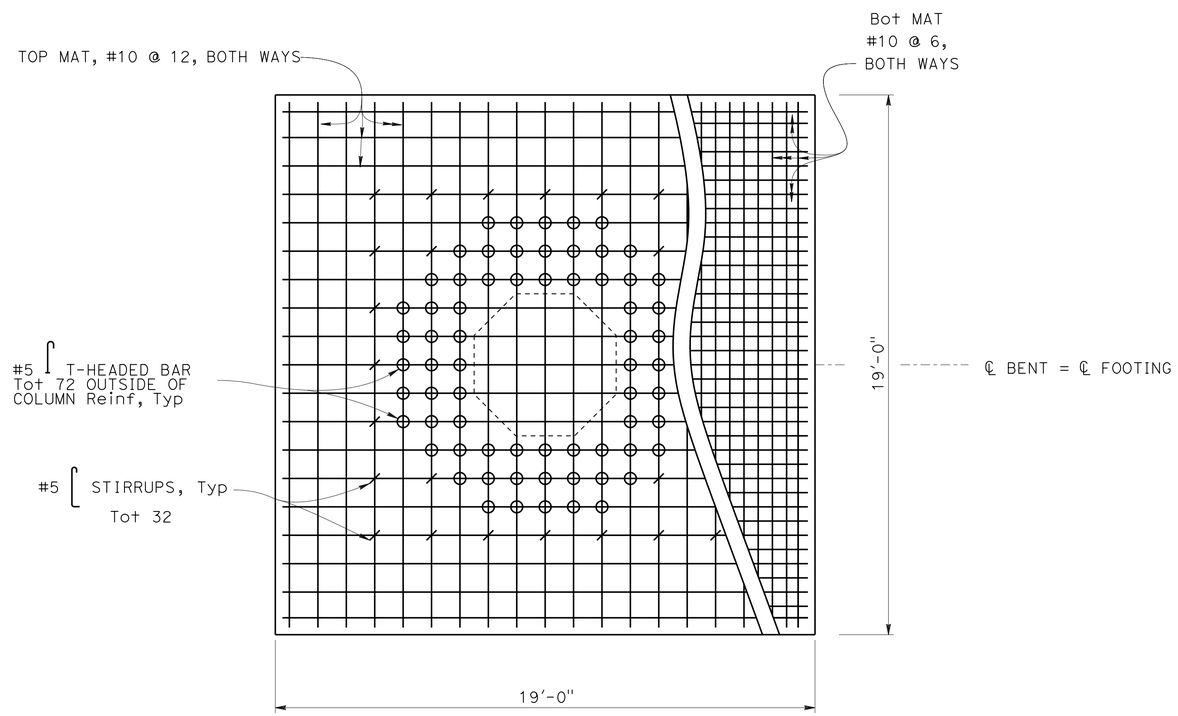

BENTS 4 & 5 FOOTING PLAN

3/8" = 1'-0"

DESIGN	BY U. Inyang	CHECKED J. Radu	
DETAILS	BY L. Goldthwait	CHECKED J. Radu	
QUANTITIES	BY U. Inyang	CHECKED K. Doll	

STATE OF CALIFORNIA
DEPARTMENT OF TRANSPORTATION

DIVISION OF ENGINEERING SERVICES
STRUCTURE DESIGN
DESIGN BRANCH 11

BRIDGE NO. 53-3059K
POST MILE 1.14

VALLEY VIEW AVE SB ON RAMP
BENT FOOTING DETAILS NO. 1

STRUCTURES DESIGN DETAIL SHEET (ENGLISH) (REV. 09-01-10)

ORIGINAL SCALE IN INCHES FOR REDUCED PLANS 0 1 2 3

UNIT: 3587
PROJECT NUMBER & PHASE: 0715000160-1
CONTRACT NO.: 07-2159u4

DISREGARD PRINTS BEARING EARLIER REVISION DATES

REVISION DATES: 12-06-12 9-05-13 7-18-13 7-22-13

SHEET 7 OF 35

FILE => 53-3059k-ga-bnfftg1.dgn

USERNAME => s125624 DATE PLOTTED => 28-JAN-2016 TIME PLOTTED => 12:11

DIST	COUNTY	ROUTE	POST MILES TOTAL PROJECT	SHEET No.	TOTAL SHEETS
07	LA,Ora	5	0.0/1.5, 44.3/44.4	1280	1622

REGISTERED CIVIL ENGINEER — DATE 3-18-15

1-25-16
PLANS APPROVAL DATE

REGISTERED PROFESSIONAL ENGINEER — WILLIAM D. KEMP — No. 55730 — Exp. 12/31/16 — CIVIL — STATE OF CALIFORNIA

The State of California or its officers or agents shall not be responsible for the accuracy or completeness of electronic copies of this plan sheet.

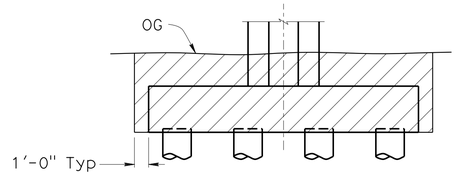

Limit of contaminated materials

EXCAVATION TABLE	
BENT #	COLUMN
5	BOTH

NOTES:

1. Details are symmetrical about ℄ Bent and ℄ Footing
2. Place stirrups & T-headed bars as shown
3. All hoops shall be ultimate butt spliced

STRUCTURE EXCAVATION CONTAMINATED MATERIALS

NO SCALE

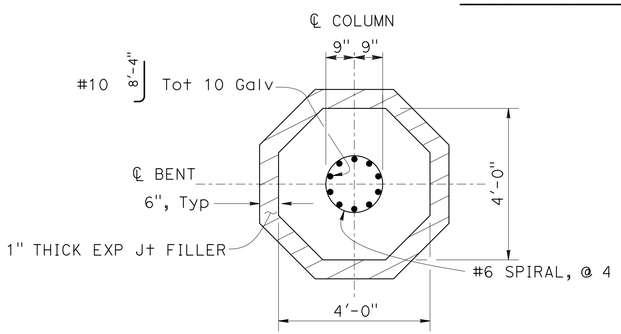

BENTS 2 & 3 SECTION M-M

½" = 1'-0"

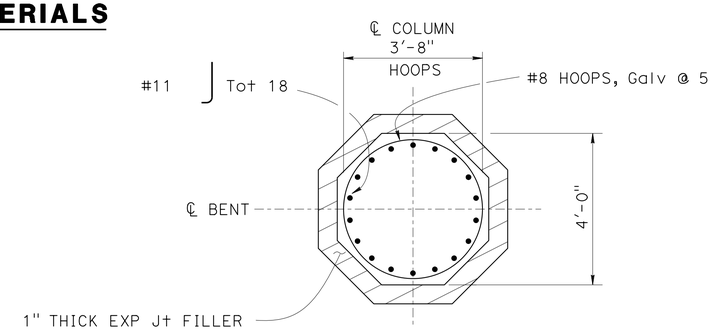

BENT 4 SECTION Q-Q

½" = 1'-0"

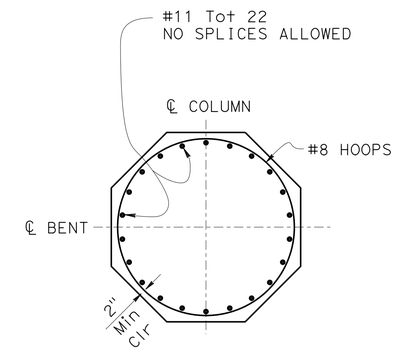

BENT 5 TYPICAL SECTION

½" = 1'-0"

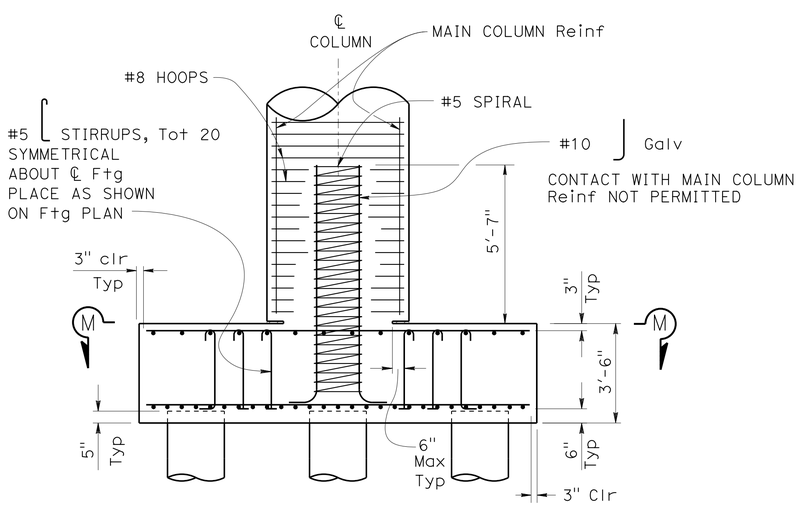

BENTS 2 & 3 FOOTING SECTION

⅜" = 1'-0"

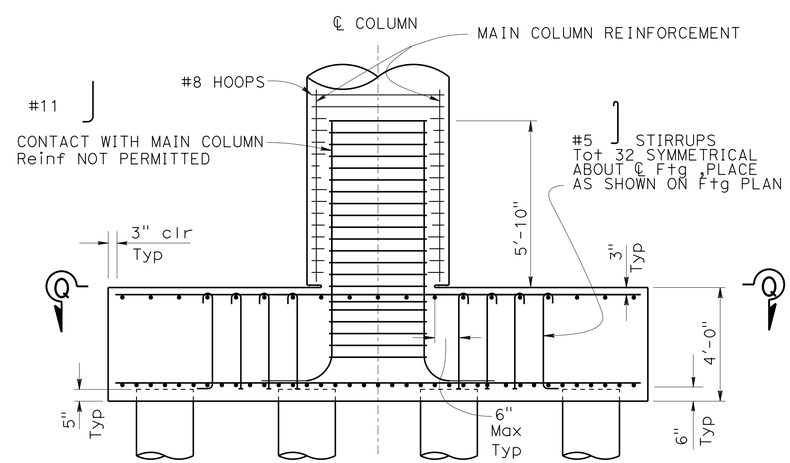

BENT 4 FOOTING SECTION

⅜" = 1'-0"

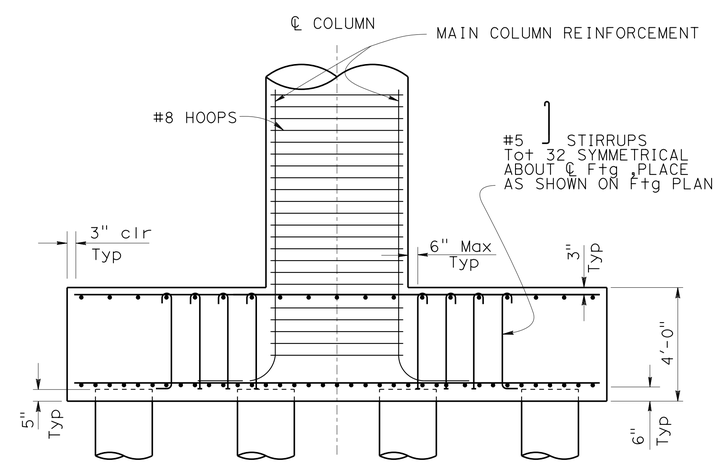

BENT 5 FOOTING SECTION

⅜" = 1'-0"

	BY	CHECKED
DESIGN	Ubong Inyang	John Radu
DETAILS	L. Goldthwait	J. Radu
QUANTITIES	U. Inyang	K. Doll

STATE OF CALIFORNIA
DEPARTMENT OF TRANSPORTATION

DIVISION OF ENGINEERING SERVICES
STRUCTURE DESIGN
DESIGN BRANCH 11

BRIDGE NO. 53-3059K
POST MILE 1.14

VALLEY VIEW AVE SB ON RAMP
BENT FOOTING DETAILS NO. 2

STRUCTURES DESIGN DETAIL SHEET (ENGLISH) (REV. 09-01-10)

ORIGINAL SCALE IN INCHES FOR REDUCED PLANS 0 1 2 3

UNIT: 3587
PROJECT NUMBER & PHASE: 0715000160-1
CONTRACT NO.: 07-2159U4

DISREGARD PRINTS BEARING EARLIER REVISION DATES

REVISION DATES: 6-14-11 9-05-13 7-22-13 7-24-13

SHEET 8 OF 35

FILE => 53-3059k-gb-bntftg2.dgn

USERNAME => s125624 DATE PLOTTED => 28-JAN-2016 TIME PLOTTED => 12:11

DIST	COUNTY	ROUTE	POST MILES TOTAL PROJECT	SHEET No.	TOTAL SHEETS
07	LA,Ora	5	0.0/1.5, 44.3/44.4	1281	1622

REGISTERED CIVIL ENGINEER — DATE 3-18-15

1-25-16
PLANS APPROVAL DATE

REGISTERED PROFESSIONAL ENGINEER — WILLIAM D. KEMP No. 55730 Exp. 12/31/16 CIVIL — STATE OF CALIFORNIA

The State of California or its officers or agents shall not be responsible for the accuracy or completeness of electronic copies of this plan sheet.

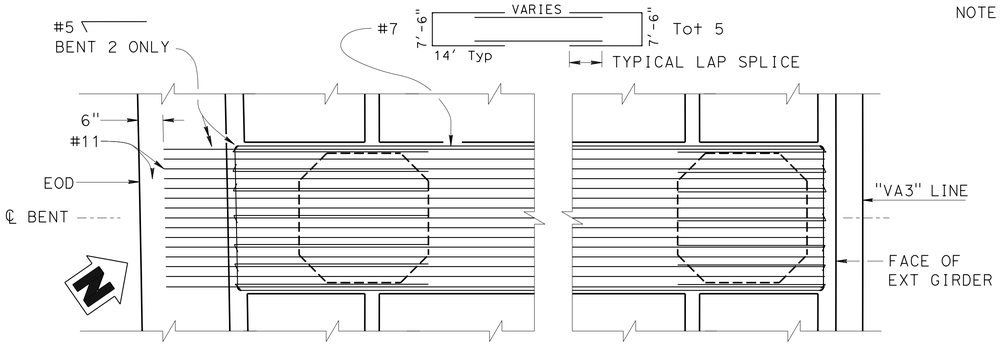

DECK REINFORCEMENT SOFFIT REINFORCEMENT

BENT CAP - PLAN

1/4" = 1'-0"

NOTE: For END VIEW reinf. not shown, see BENT - ELEVATION view

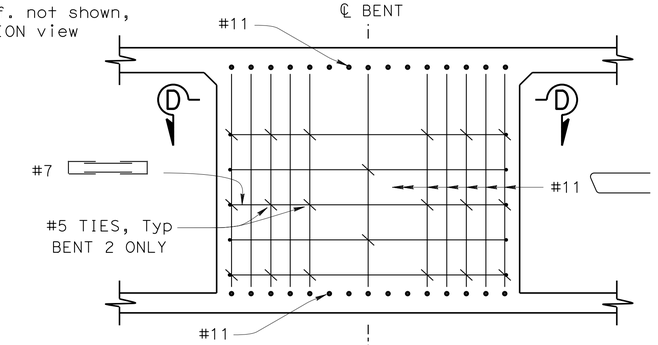

END VIEW

1/2" = 1'-0"

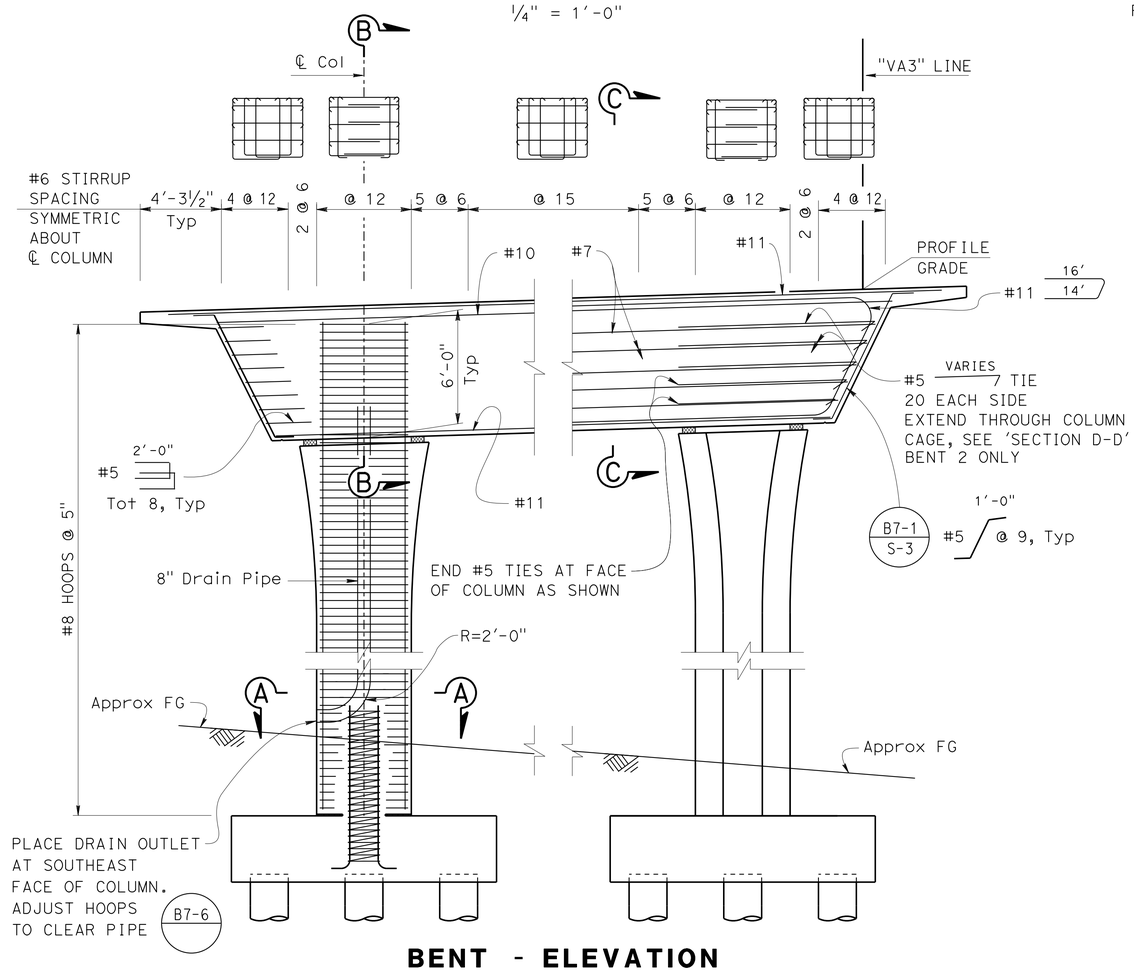

BENT - ELEVATION

1/4" = 1'-0"

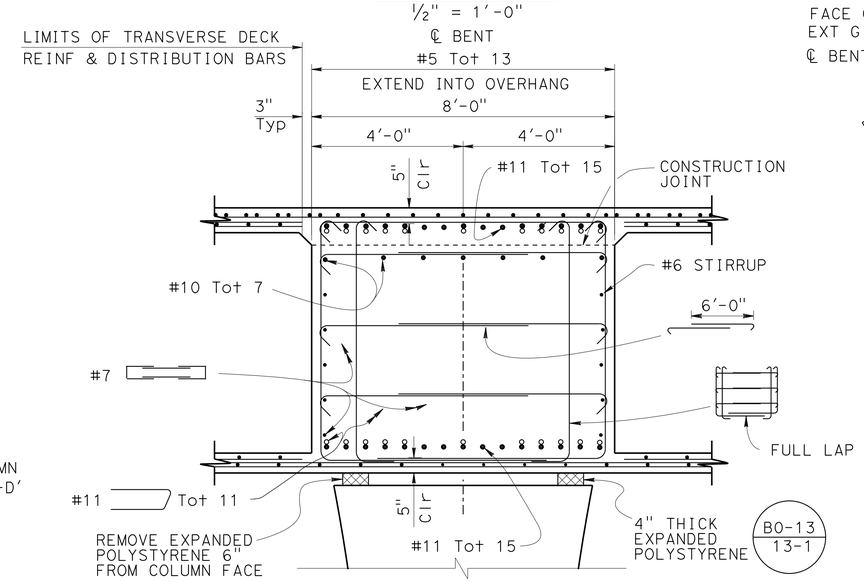

SECTION B-B

1/2" = 1'-0"

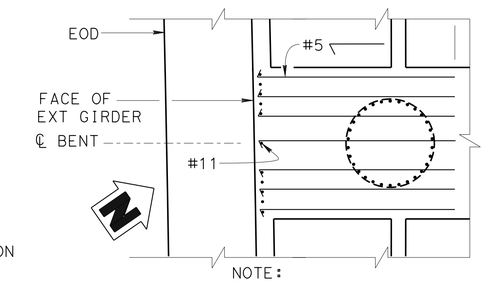

NOTE:
Top Ties shown, other
Ties similar for
both ends
BENT 2 ONLY

SECTION D-D

1/4" = 1'-0"

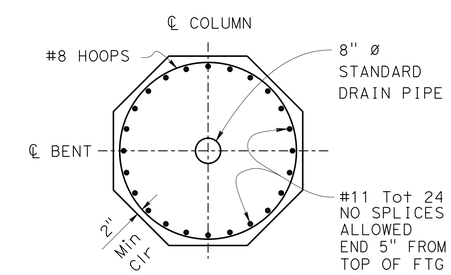

BENT 2
SECTION A-A

1/2" = 1'-0"

NOTE: All hoops shall be ultimate butt spliced.

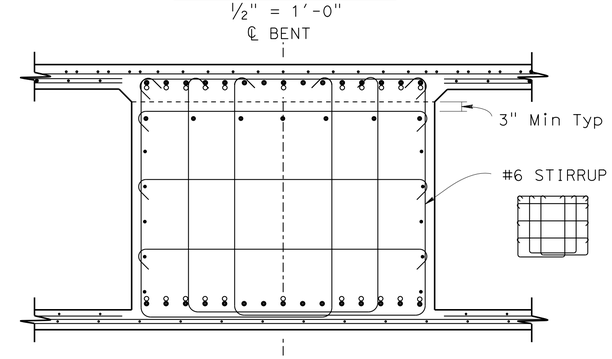

SECTION C-C

1/2" = 1'-0"

Indicates bundled bars

Reinf similar to
'SECTION B-B' except as shown

	BY	CHECKED
DESIGN	U. Inyang	J. Radu
DETAILS	T. Bittermann	J. Radu
QUANTITIES	U. Inyang	K. Doll

STATE OF CALIFORNIA
DEPARTMENT OF TRANSPORTATION

DIVISION OF ENGINEERING SERVICES
STRUCTURE DESIGN
DESIGN BRANCH 11

BRIDGE NO. 53-3059K
POST MILE 1.14

VALLEY VIEW AVE SB ON RAMP
BENT 2 DETAILS

STRUCTURES DESIGN DETAIL SHEET (ENGLISH) (REV. 09-01-10)

ORIGINAL SCALE IN INCHES FOR REDUCED PLANS 0 1 2 3

UNIT: 3587
PROJECT NUMBER & PHASE: 0715000160-1
CONTRACT NO.: 07-2159u4

DISREGARD PRINTS BEARING EARLIER REVISION DATES

REVISION DATES: 6-16-11 9-27-13 9-28-13 9-06-13

SHEET 9 OF 35

FILE => 53-3059k-h-bnt2dt1.dgn

USERNAME => s125624 DATE PLOTTED => 28-JAN-2016 TIME PLOTTED => 12:11

DIST	COUNTY	ROUTE	POST MILES TOTAL PROJECT	SHEET No.	TOTAL SHEETS
07	LA,Ora	5	0.0/1.5, 44.3/44.4	1282	1622

REGISTERED CIVIL ENGINEER — DATE: 3-18-15

1-25-16
PLANS APPROVAL DATE

REGISTERED PROFESSIONAL ENGINEER — WILLIAM D. KEMP — No. 55730 — Exp. 12/31/16 — CIVIL — STATE OF CALIFORNIA

The State of California or its officers or agents shall not be responsible for the accuracy or completeness of electronic copies of this plan sheet.

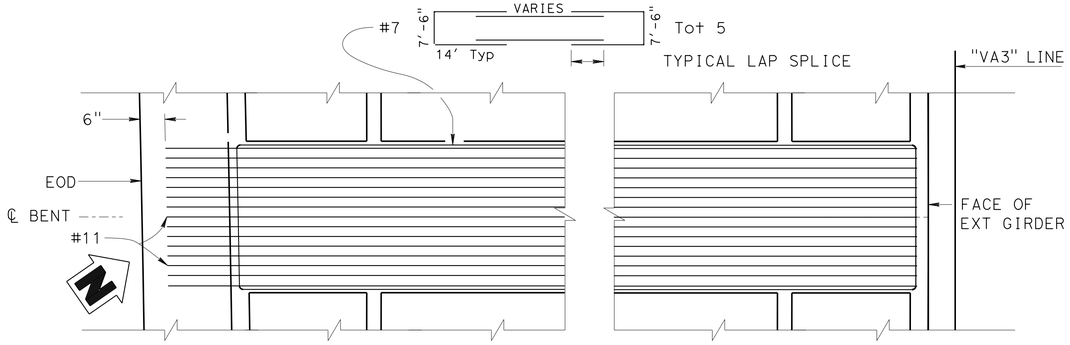

DECK REINFORCEMENT **SOFFIT REINFORCEMENT**

BENT CAP - PLAN

1/4" = 1'-0"

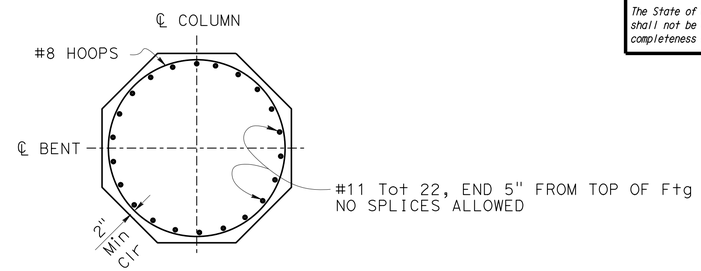

BENT 3 SECTION A-A

1/2" = 1'-0"

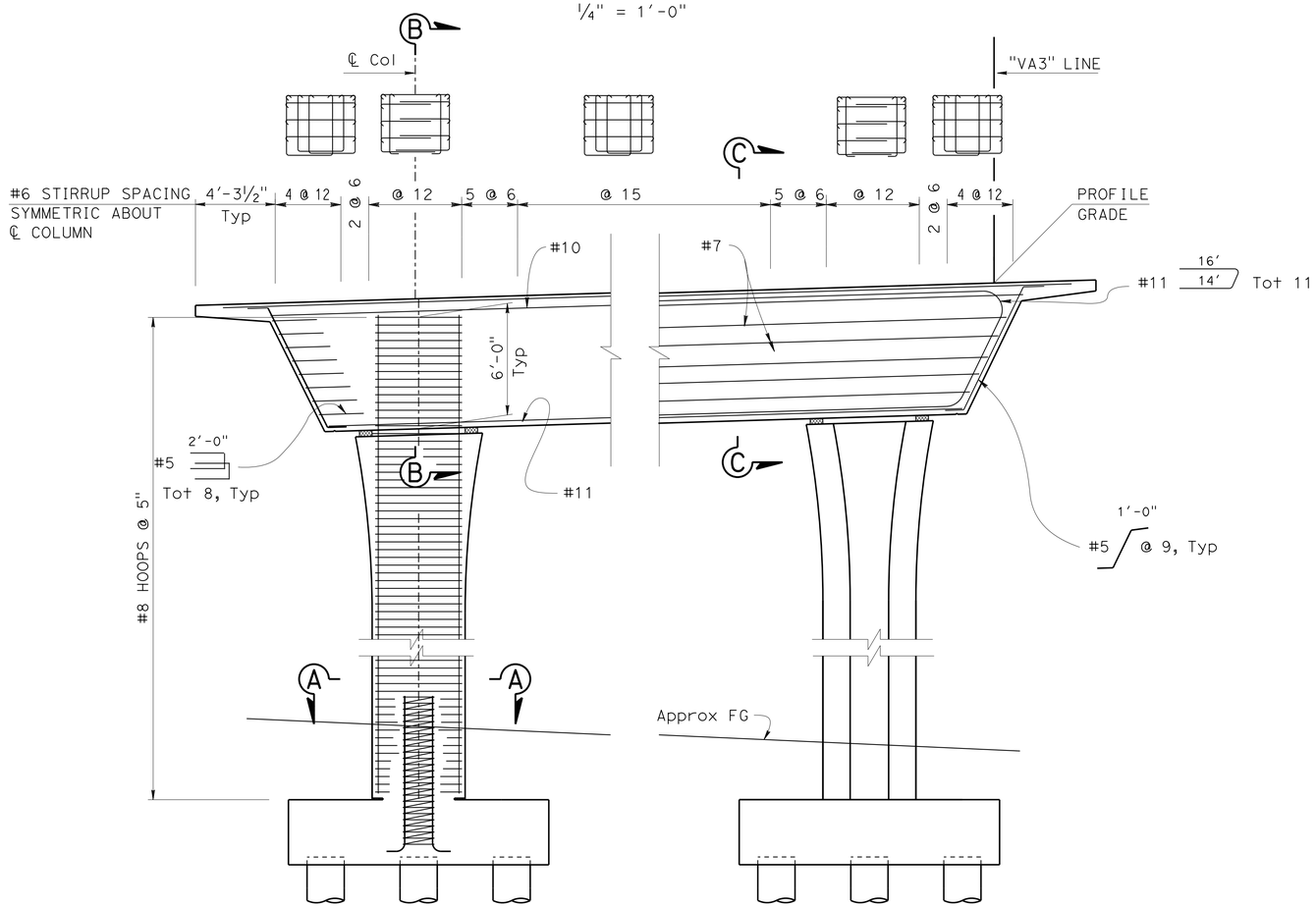

ELEVATION

1/4" = 1'-0"

NOTES:

For Sections B-B & C-C and END VIEW, see "BENT 2 DETAILS" sheet

All hoops shall be ultimate butt spliced.

	BY	CHECKED
DESIGN	U. Inyang	J. Radu
DETAILS	T. Bittermann	J. Radu
QUANTITIES	U. Inyang	K. Doll

STATE OF CALIFORNIA
DEPARTMENT OF TRANSPORTATION

DIVISION OF ENGINEERING SERVICES
STRUCTURE DESIGN
DESIGN BRANCH 11

BRIDGE NO. 53-3059K
POST MILE 1.14

VALLEY VIEW AVE SB ON RAMP
BENT 3 DETAILS

STRUCTURES DESIGN DETAIL SHEET (ENGLISH) (REV. 09-01-10)

ORIGINAL SCALE IN INCHES FOR REDUCED PLANS 0 1 2 3

UNIT: 3587
PROJECT NUMBER & PHASE: 0715000160-1
CONTRACT NO.: 07-2159U4

DISREGARD PRINTS BEARING EARLIER REVISION DATES

REVISION DATES: 6-16-11 9-27-13 8-28-13 9-06-13

SHEET 10 OF 35

FILE => 53-3059K-h-bnt3dt2.dgn

USERNAME => s125624 DATE PLOTTED => 28-JAN-2016 TIME PLOTTED => 12:11

DIST	COUNTY	ROUTE	POST MILES TOTAL PROJECT	SHEET No.	TOTAL SHEETS
07	LA,Ora	5	0.0/1.5, 44.3/44.4	1283	1622

REGISTERED CIVIL ENGINEER — DATE 3-18-15

1-25-16
PLANS APPROVAL DATE

REGISTERED PROFESSIONAL ENGINEER — WILLIAM D. KEMP — No. 55730 — Exp. 12/31/16 — CIVIL — STATE OF CALIFORNIA

The State of California or its officers or agents shall not be responsible for the accuracy or completeness of electronic copies of this plan sheet.

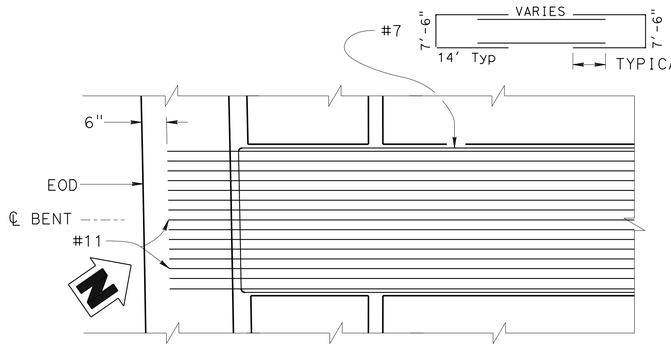

DECK REINFORCEMENT

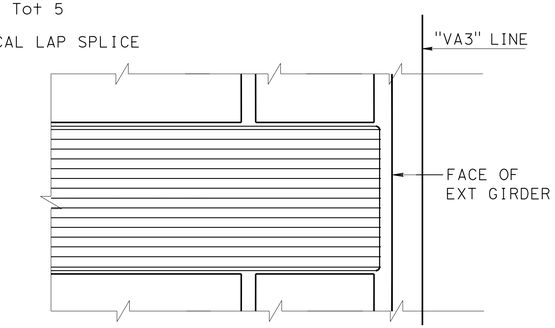

SOFFIT REINFORCEMENT

TYPICAL BENT CAP - PLAN

1/4" = 1'-0"

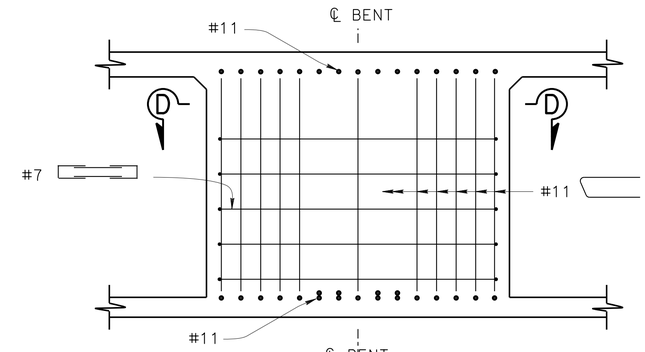

END VIEW

1/2" = 1'-0"

NOTES: For END VIEW reinf. not shown, see ELEVATION view
All hoops shall be ultimate butt spliced.

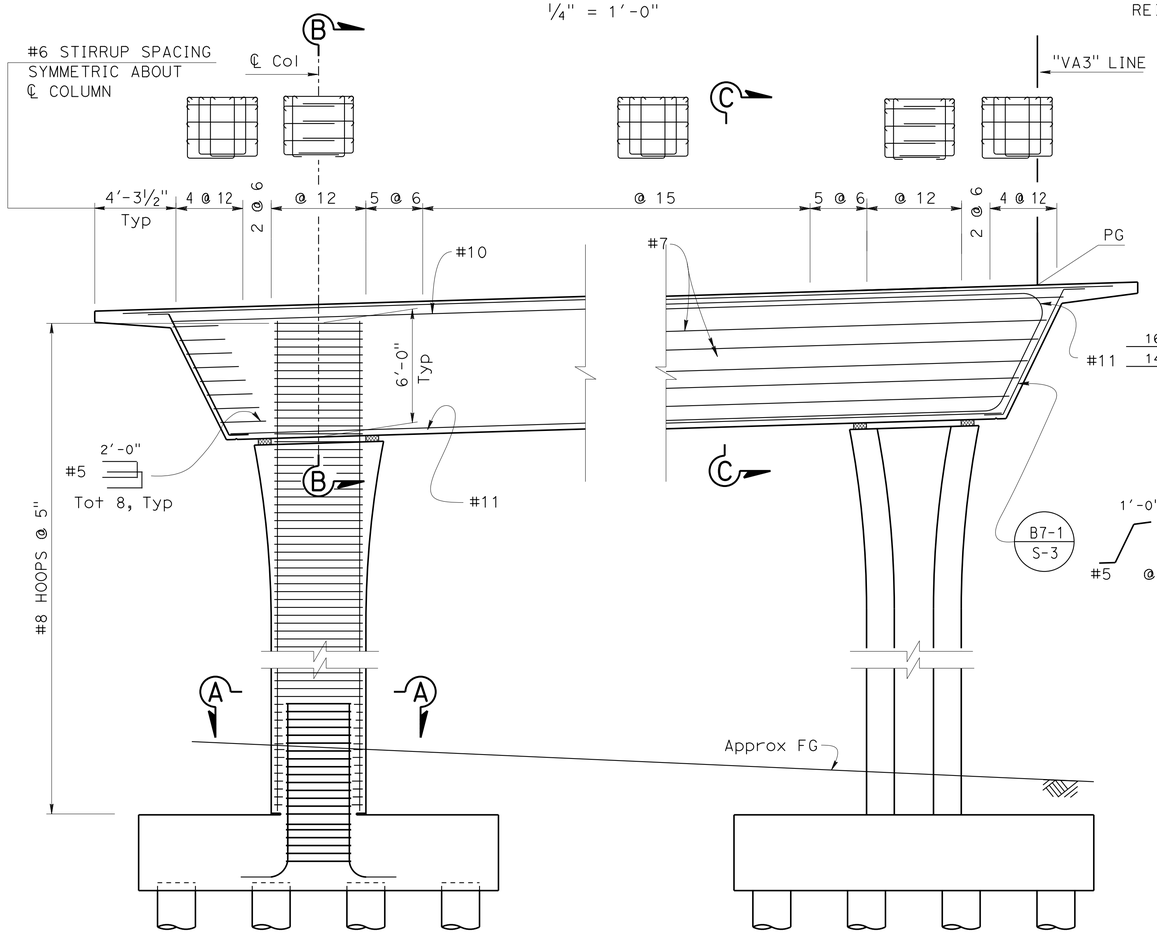

ELEVATION

1/4" = 1'-0"

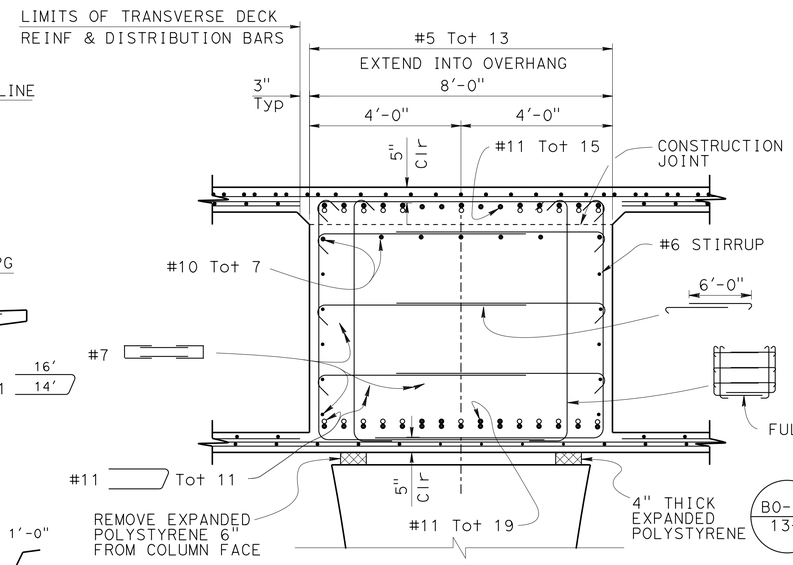

SECTION B-B

1/2" = 1'-0"

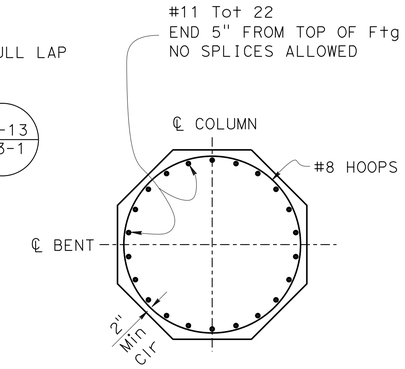

SECTION A-A

1/2" = 1'-0"

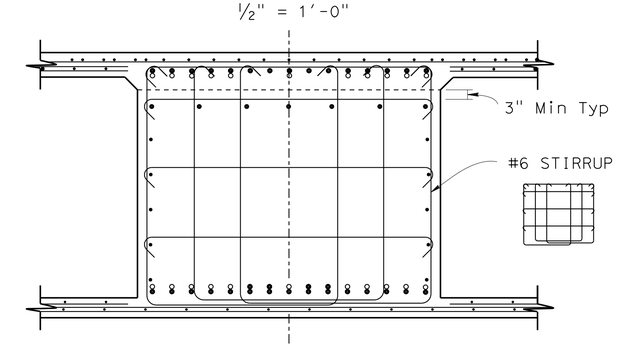

SECTION C-C

1/2" = 1'-0"

Indicates bundled bars

Reinf similar to
'SECTION B-B' except as shown

DESIGN	BY U. Inyang	CHECKED John Radu	
DETAILS	BY T. Bittermann	CHECKED J. Radu	
QUANTITIES	BY U. Inyang	CHECKED K. Doll	

STATE OF CALIFORNIA
DEPARTMENT OF TRANSPORTATION

DIVISION OF ENGINEERING SERVICES
STRUCTURE DESIGN
DESIGN BRANCH 11

BRIDGE NO. 53-3059K
POST MILE 1.14

VALLEY VIEW AVE SB ON RAMP
BENT 4 DETAILS

STRUCTURES DESIGN DETAIL SHEET (ENGLISH) (REV. 09-01-10)

ORIGINAL SCALE IN INCHES FOR REDUCED PLANS 0 1 2 3

UNIT: 3587
PROJECT NUMBER & PHASE: 0715000160-1
CONTRACT NO.: 07-2159u4

DISREGARD PRINTS BEARING EARLIER REVISION DATES

REVISION DATES: 6-16-11 9-06-13 9-27-13 7-22-13

SHEET 11 OF 35

FILE => 53-3059k-n-bnt4dt3.dgn

USERNAME => s125624 DATE PLOTTED => 28-JAN-2016 TIME PLOTTED => 12:11

DIST	COUNTY	ROUTE	POST MILES TOTAL PROJECT	SHEET No.	TOTAL SHEETS
07	LA,Ora	5	0.0/1.5, 44.3/44.4	1284	1622

REGISTERED CIVIL ENGINEER — DATE 3-18-15

1-25-16
PLANS APPROVAL DATE

REGISTERED PROFESSIONAL ENGINEER — WILLIAM D. KEMP — No. 55730 — Exp. 12/31/16 — CIVIL — STATE OF CALIFORNIA

The State of California or its officers or agents shall not be responsible for the accuracy or completeness of electronic copies of this plan sheet.

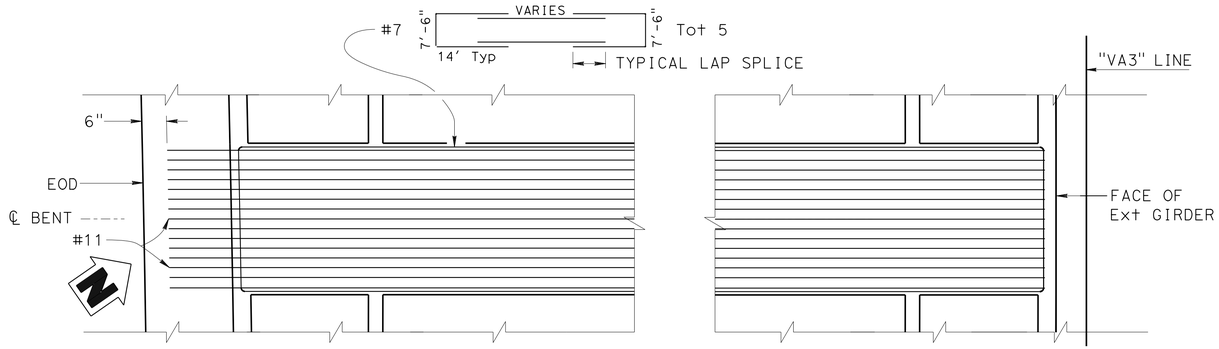

DECK REINFORCEMENT **SOFFIT REINFORCEMENT**

BENT CAP - PLAN

1/4" = 1'-0"

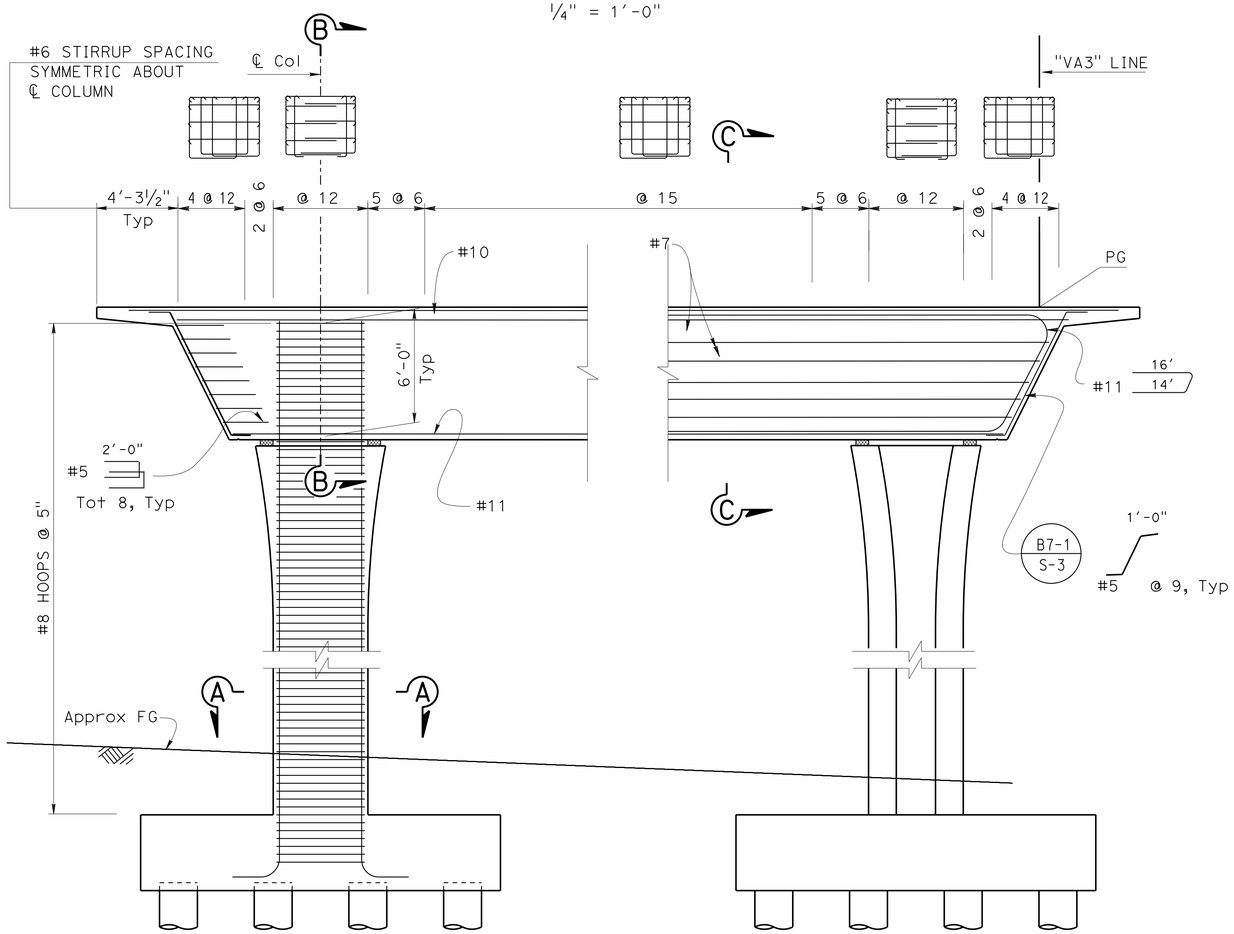

ELEVATION

1/4" = 1'-0"

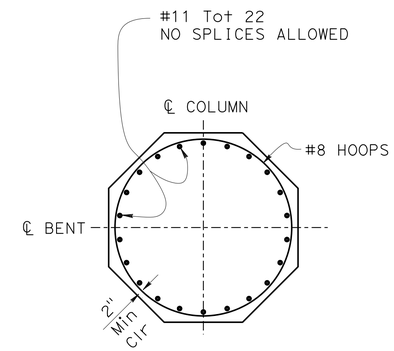

SECTION A-A

1/2" = 1'-0"

NOTES:

For Sections B-B, C-C and END VIEW, see "BENT 4 DETAILS" sheet
All hoops shall be ultimate butt spliced.

	BY	CHECKED
DESIGN	U. Inyang	J. Radu
DETAILS	T. Bittermann	J. Radu
QUANTITIES	U. Inyang	K. Doll

STATE OF CALIFORNIA
DEPARTMENT OF TRANSPORTATION

DIVISION OF ENGINEERING SERVICES
STRUCTURE DESIGN
DESIGN BRANCH 11

BRIDGE NO. 53-3059K
POST MILE 1.14

VALLEY VIEW AVE SB ON RAMP
BENT 5 DETAILS

STRUCTURES DESIGN DETAIL SHEET (ENGLISH) (REV. 09-01-10)

ORIGINAL SCALE IN INCHES FOR REDUCED PLANS 0 1 2 3

UNIT: 3587
PROJECT NUMBER & PHASE: 0715000160-1
CONTRACT NO.: 07-2159U4

DISREGARD PRINTS BEARING EARLIER REVISION DATES

REVISION DATES: 6-16-11 9-27-13 7-22-13 9-09-13

SHEET 12 OF 35

FILE => 53-3059k-h-bnt5dt4.dgn

USERNAME => s125624 DATE PLOTTED => 28-JAN-2016 TIME PLOTTED => 12:11

DIST	COUNTY	ROUTE	POST MILES TOTAL PROJECT	SHEET No.	TOTAL SHEETS
07	LA,Ora	5	0.0/1.5, 44.3/44.4	1285	1622

REGISTERED CIVIL ENGINEER — DATE 3-18-16

1-25-16
PLANS APPROVAL DATE

REGISTERED PROFESSIONAL ENGINEER — WILLIAM D. KEMP — No. 55730 — Exp. 12/31/16 — CIVIL — STATE OF CALIFORNIA

The State of California or its officers or agents shall not be responsible for the accuracy or completeness of electronic copies of this plan sheet.

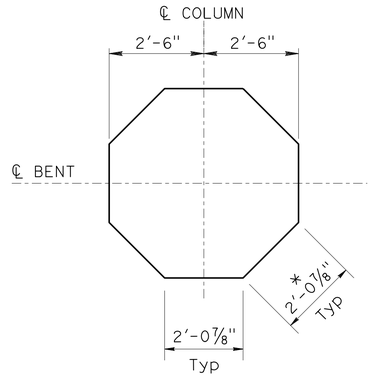

SECTION A-A
1/2" = 1'-0"

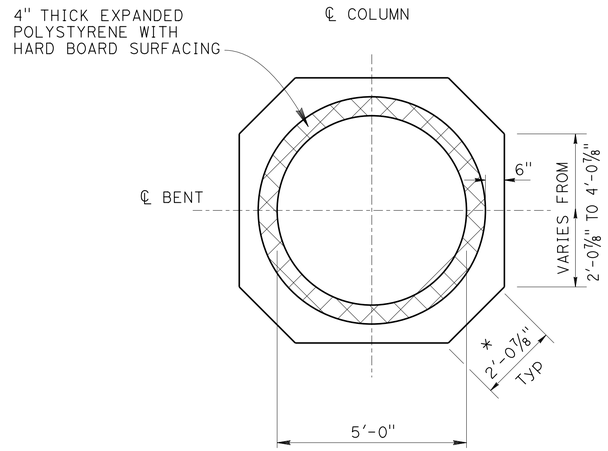

SECTION B-B
1/2" = 1'-0"

LEGEND:

(A) = #6 ⌒ Tot 20

(B) = #8 HOOPS @ 6", STAGGER SERVICE SPLICES

(C) = #6 ⌒ Tot 12

(D) = #6 ⊐ 2'-0" 1'-9" @ 6

NOTE:

* Constant corner width along column flare, Typ

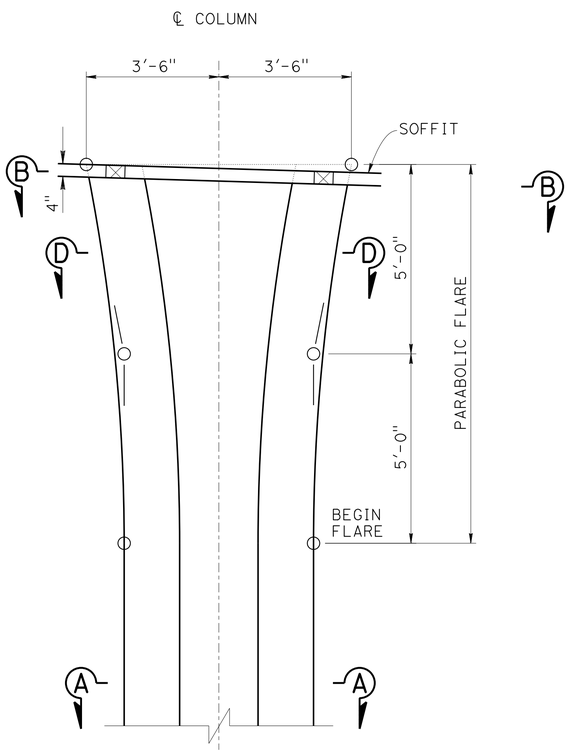

COLUMN GEOMETRY
1/2" = 1'-0"

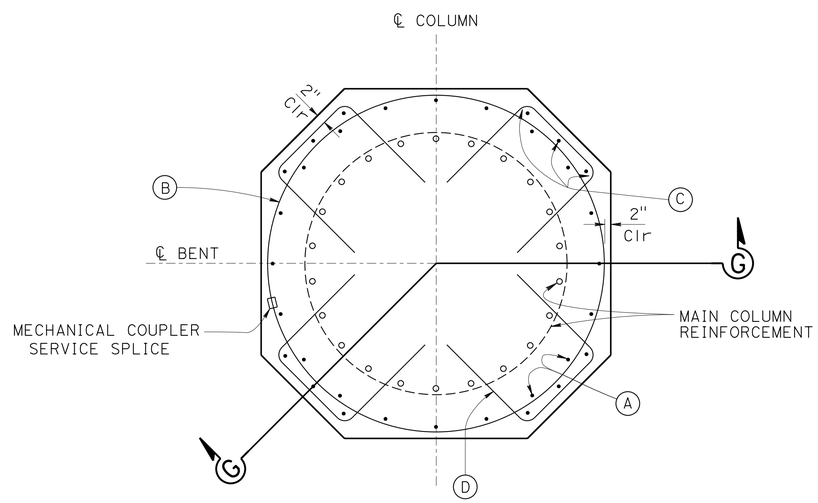

SECTION D-D
3/4" = 1'-0"

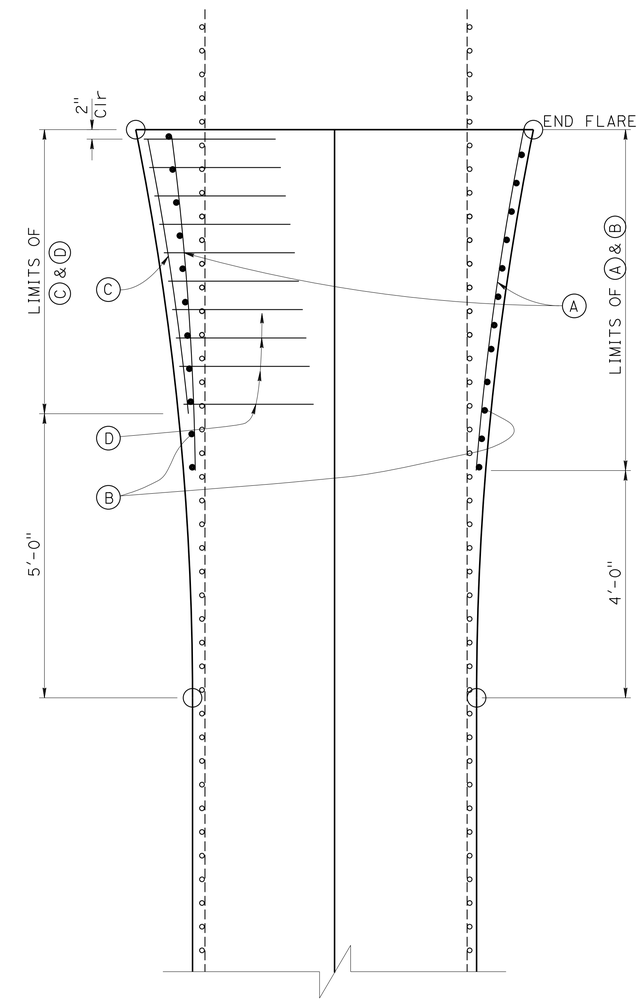

SECTION G-G
3/4" = 1'-0"

	BY	CHECKED
DESIGN	Ubong Inyang	J. Radu
DETAILS	T. Bittermann	J. Radu
QUANTITIES	U. Inyang	K. Doll

STATE OF CALIFORNIA
DEPARTMENT OF TRANSPORTATION

DIVISION OF ENGINEERING SERVICES
STRUCTURE DESIGN
DESIGN BRANCH 11

BRIDGE NO. 53-3059K
POST MILE 1.14

VALLEY VIEW AVE SB ON RAMP
COLUMN DETAILS

STRUCTURES DESIGN DETAIL SHEET (ENGLISH) (REV. 09-01-10)

ORIGINAL SCALE IN INCHES FOR REDUCED PLANS 0 1 2 3

UNIT: 3587
PROJECT NUMBER & PHASE: 0715000160-1
CONTRACT NO.: 07-2159U4

DISREGARD PRINTS BEARING EARLIER REVISION DATES

REVISION DATES: 3-12-13 4-18-13 7-18-13 9-05-13

SHEET 13 OF 35

FILE => 53-3059K-j-coldt.dgn

USERNAME => s125624 DATE PLOTTED => 28-JAN-2016 TIME PLOTTED => 12:11

DIST	COUNTY	ROUTE	POST MILES TOTAL PROJECT	SHEET No.	TOTAL SHEETS
07	LA,Ora	5	0.0/1.5, 44.3/44.4	1286	1622

REGISTERED CIVIL ENGINEER 3-18-15 DATE

1-25-16
PLANS APPROVAL DATE

REGISTERED PROFESSIONAL ENGINEER
WILLIAM D. KEMP
No. 55730
Exp. 12/31/16
CIVIL
STATE OF CALIFORNIA

The State of California or its officers or agents shall not be responsible for the accuracy or completeness of electronic copies of this plan sheet.

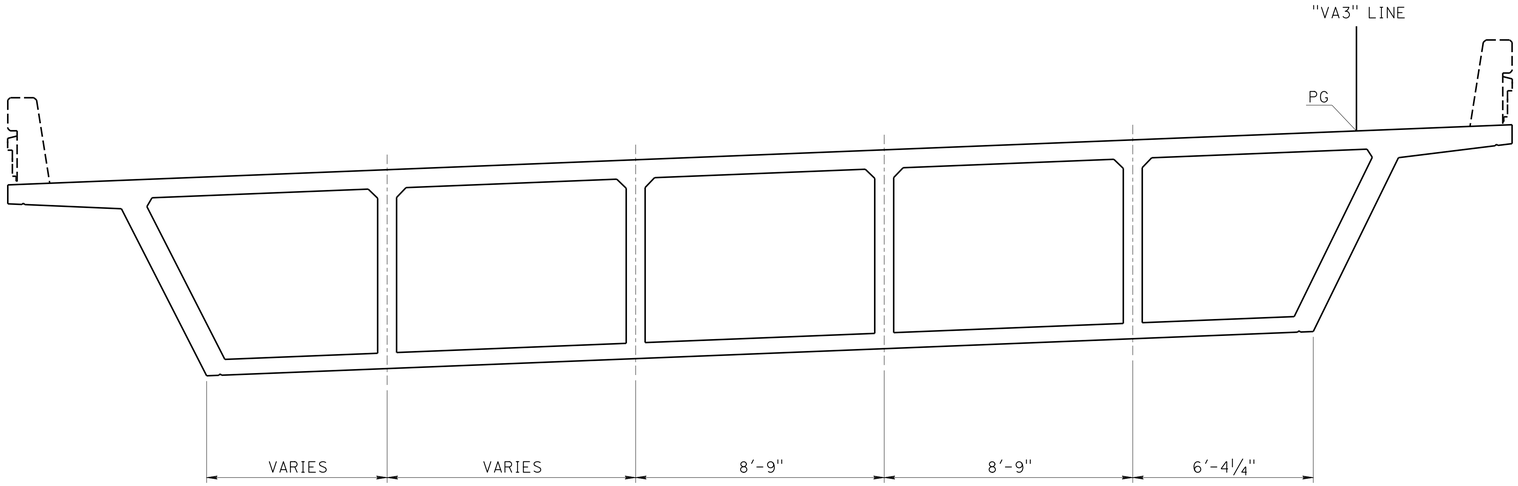

NOTE: For dimensions not shown, see "SPANS 1 & 2 TYPICAL SECTION"

SPANS 3, 4 & 5 TYPICAL SECTION

⅜" = 1'-0"

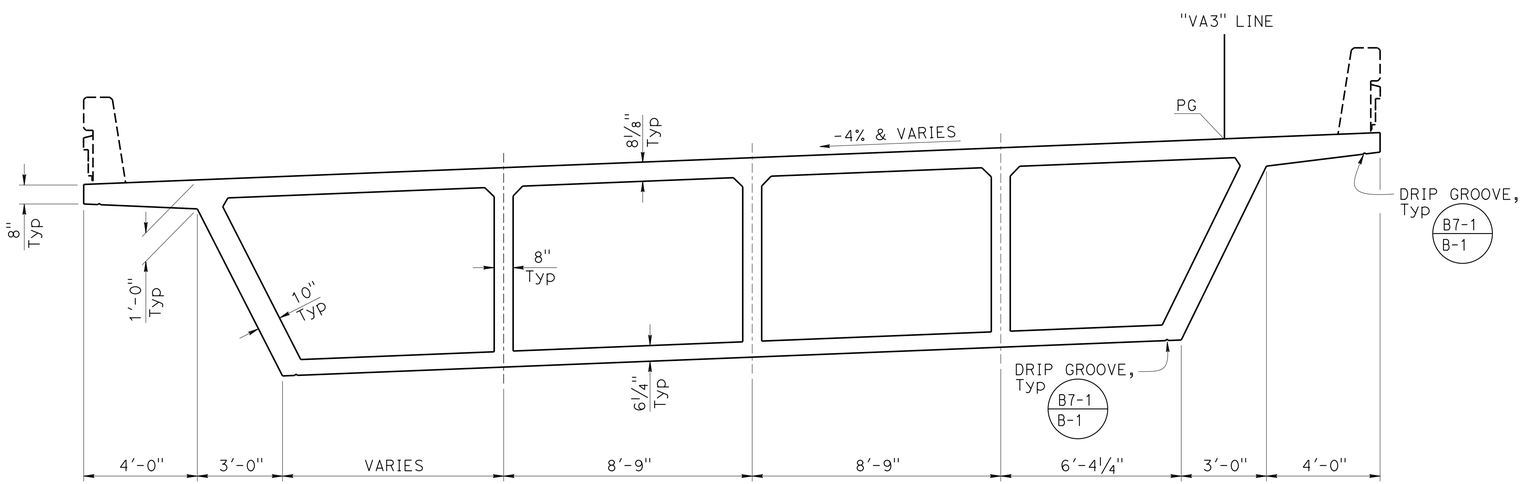

SPANS 1 & 2 TYPICAL SECTION

⅜" = 1'-0"

DESIGN	BY U. Inyang	CHECKED J. Radu	
DETAILS	BY P. Tong	CHECKED J. Radu	
QUANTITIES	BY U. Inyang	CHECKED K. Doll	

STATE OF CALIFORNIA
DEPARTMENT OF TRANSPORTATION

DIVISION OF ENGINEERING SERVICES
STRUCTURE DESIGN
DESIGN BRANCH 11

BRIDGE NO. 53-3059K
POST MILE 1.14

VALLEY VIEW AVE SB ON RAMP
TYPICAL SECTION NO 1

STRUCTURES DESIGN DETAIL SHEET (ENGLISH) (REV. 09-01-10)

ORIGINAL SCALE IN INCHES FOR REDUCED PLANS 0 1 2 3

UNIT: 3587
PROJECT NUMBER & PHASE: 0715000160-1
CONTRACT NO.: 07-2159U4

DISREGARD PRINTS BEARING EARLIER REVISION DATES

REVISION DATES: 2-2-11 9-05-13 7-8-11 7-22-13

SHEET 14 OF 35

FILE => 53-3059K-ka-ts1.dgn

USERNAME => s125624 DATE PLOTTED => 28-JAN-2016 TIME PLOTTED => 12:11

DIST	COUNTY	ROUTE	POST MILES TOTAL PROJECT	SHEET No.	TOTAL SHEETS
07	LA,Ora	5	0.0/1.5, 44.3/44.4	1287	1622

REGISTERED CIVIL ENGINEER — 3-18-15 DATE

1-25-16
PLANS APPROVAL DATE

REGISTERED PROFESSIONAL ENGINEER — WILLIAM D. KEMP No. 77530 Exp. 12/31/16 CIVIL — STATE OF CALIFORNIA

The State of California or its officers or agents shall not be responsible for the accuracy or completeness of electronic copies of this plan sheet.

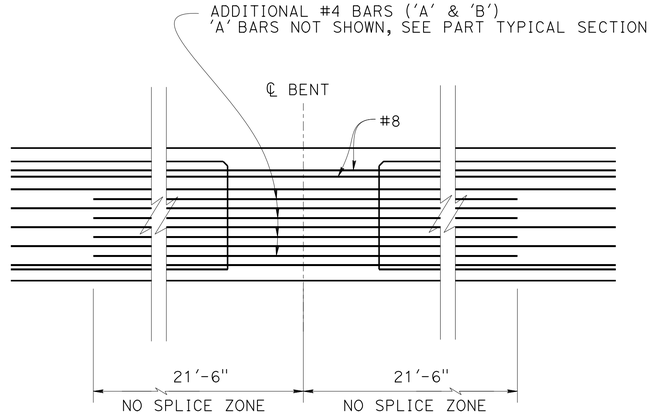

ADDITIONAL STEM REINFORCEMENT

1/4" = 1'-0"

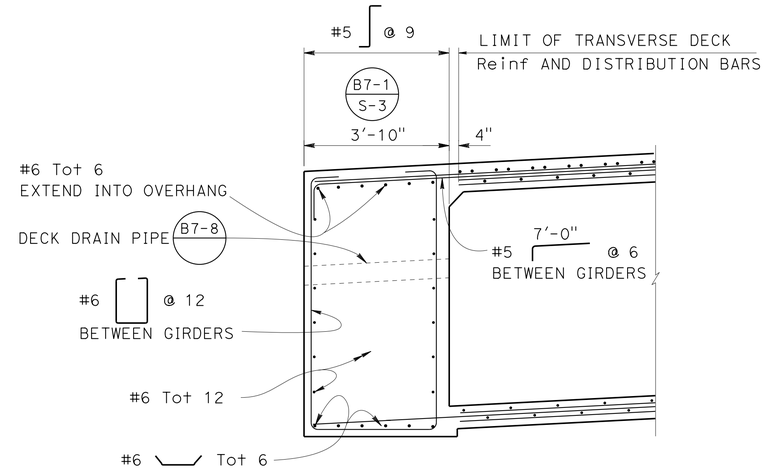

END DIAPHRAGM AT ABUT 1

1/2' = 1'-0"

LEGEND:

o Indicates reinforcement, see ADDITIONAL SOFFIT AND DECK REINFORCEMENT sheets

• Indicates additional reinforcement at Bent Cap

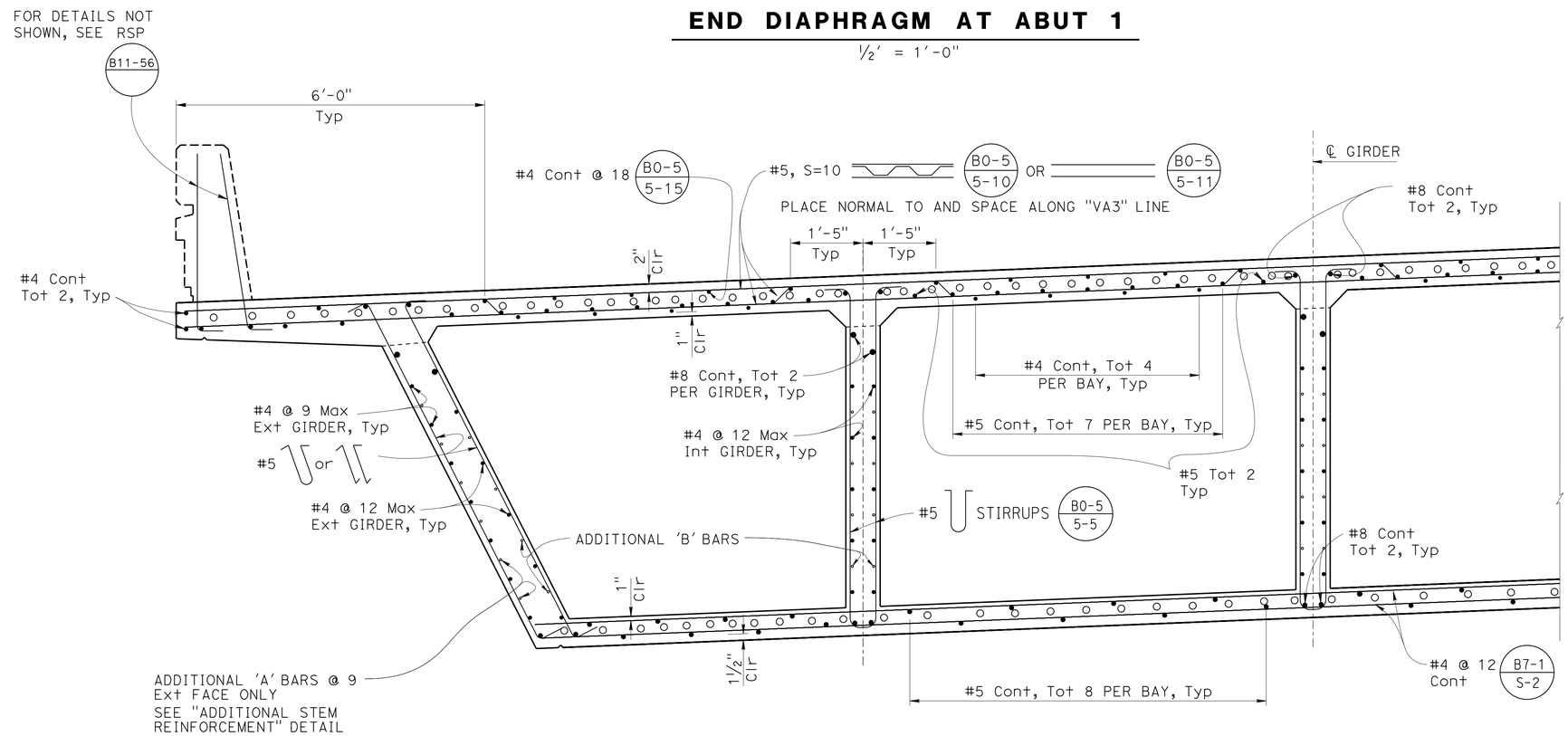

PART TYPICAL SECTION B0-5 B7-1

3/4" = 1'-0"

	BY	CHECKED
DESIGN	U. Inyang	J. Radu
DETAILS	P. Tong	J. Radu
QUANTITIES	U. Inyang	K. Doll

STATE OF CALIFORNIA
DEPARTMENT OF TRANSPORTATION

DIVISION OF ENGINEERING SERVICES
STRUCTURE DESIGN
DESIGN BRANCH 11

BRIDGE NO. 53-3059K
POST MILE 1.14

VALLEY VIEW AVE SB ON RAMP
TYPICAL SECTION NO 2

STRUCTURES DESIGN DETAIL SHEET (ENGLISH) (REV. 09-01-10)

ORIGINAL SCALE IN INCHES FOR REDUCED PLANS 0 1 2 3

UNIT: 3587
PROJECT NUMBER & PHASE: 0715000160-1
CONTRACT NO.: 07-2159u4

DISREGARD PRINTS BEARING EARLIER REVISION DATES

REVISION DATES: 2-2-11 4-19-13 7-22-13 9-05-13

SHEET 15 OF 35

FILE => 53-3059k-ka-ts2.dgn

USERNAME => s123624 DATE PLOTTED => 28-JAN-2016 TIME PLOTTED => 12:11

DIST	COUNTY	ROUTE	POST MILES TOTAL PROJECT	SHEET No.	TOTAL SHEETS
07	LA,Ora	5	0.0/1.5, 44.3/44.4	1288	1622

REGISTERED CIVIL ENGINEER — DATE: 3-18-15

1-25-16
PLANS APPROVAL DATE

REGISTERED PROFESSIONAL ENGINEER — WILLIAM D. KEMP — No. 77530 — Exp. 12/31/16 — CIVIL — STATE OF CALIFORNIA

The State of California or its officers or agents shall not be responsible for the accuracy or completeness of electronic copies of this plan sheet.

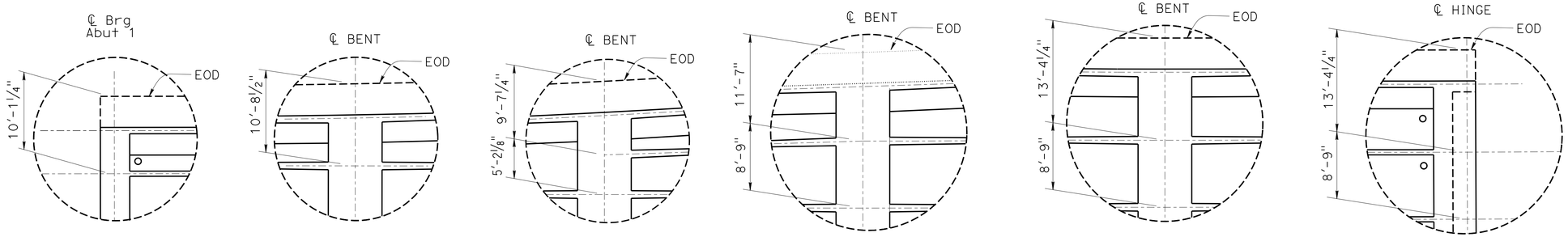

DETAIL A ⅛" = 1'-0"

DETAIL B ⅛" = 1'-0"

DETAIL C ⅛" = 1'-0"

DETAIL D ⅛" = 1'-0"

DETAIL E ⅛" = 1'-0"

DETAIL F ⅛" = 1'-0"

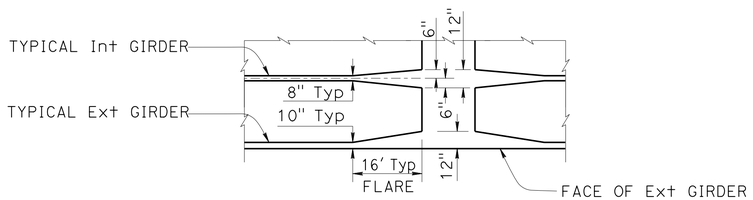

PLAN VIEW

TYPICAL GIRDER FLARES @ BENTS

NO SCALE

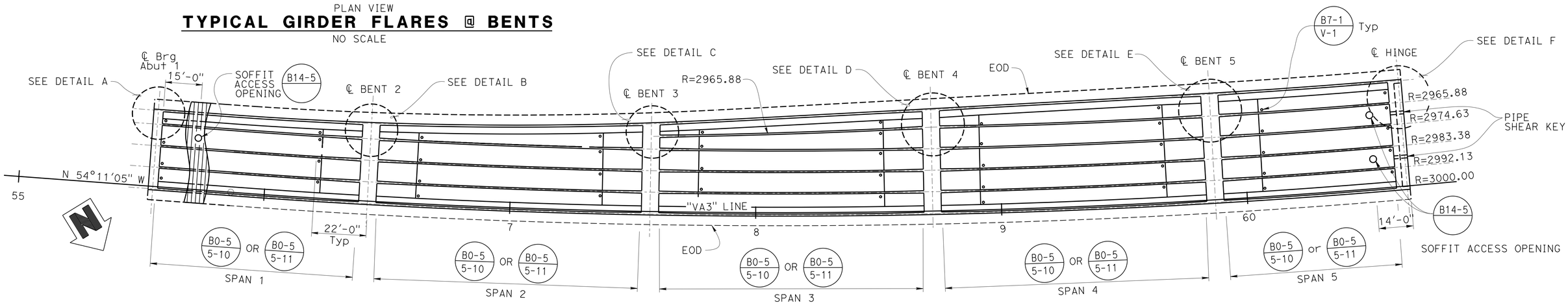

PLAN

1" = 20'

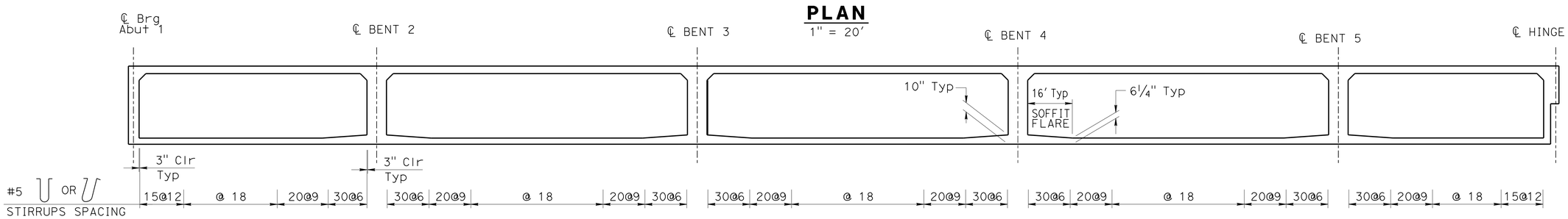

STIRRUP SPACING

NO SCALE

DESIGN	BY U. Inyang	CHECKED J. Radu	
DETAILS	BY P. Tong	CHECKED J. Radu	
QUANTITIES	BY U. Inyang	CHECKED K. Doll	

STATE OF CALIFORNIA
DEPARTMENT OF TRANSPORTATION

DIVISION OF ENGINEERING SERVICES
STRUCTURE DESIGN
DESIGN BRANCH 11

BRIDGE NO. 53-3059K
POST MILE 1.14

VALLEY VIEW AVE SB ON RAMP
GIRDER LAYOUT

STRUCTURES DESIGN DETAIL SHEET (ENGLISH) (REV. 09-01-10)

ORIGINAL SCALE IN INCHES FOR REDUCED PLANS 0 1 2 3

UNIT: 3587
PROJECT NUMBER & PHASE: 0715000160-1
CONTRACT NO.: 07-2159u4

DISREGARD PRINTS BEARING EARLIER REVISION DATES

REVISION DATES: 1-31-11 7-30-13 9-05-13 7-29-13

SHEET 16 OF 35

FILE => 53-3059k-m-gr_lo.dgn

USERNAME => s123624 DATE PLOTTED => 28-JAN-2016 TIME PLOTTED => 12:11

DIST	COUNTY	ROUTE	POST MILES TOTAL PROJECT	SHEET No.	TOTAL SHEETS
07	LA,Ora	5	0.0/1.5, 44.3/44.4	1289	1622

REGISTERED CIVIL ENGINEER — DATE 3-18-15

1-25-16
PLANS APPROVAL DATE

REGISTERED PROFESSIONAL ENGINEER — WILLIAM D. KEMP — No. 77530 — Exp. 12/31/16 — CIVIL — STATE OF CALIFORNIA

The State of California or its officers or agents shall not be responsible for the accuracy or completeness of electronic copies of this plan sheet.

NOTES:

1. All reinforcement are #11
2. Numbers at ends of bars indicate the distance in feet from centerline Span
3. All continuous bars shall be lap spliced with two times the standard lap length
4. No splice allowed at mid-span
5. No splice allowed for bars less than 60' long

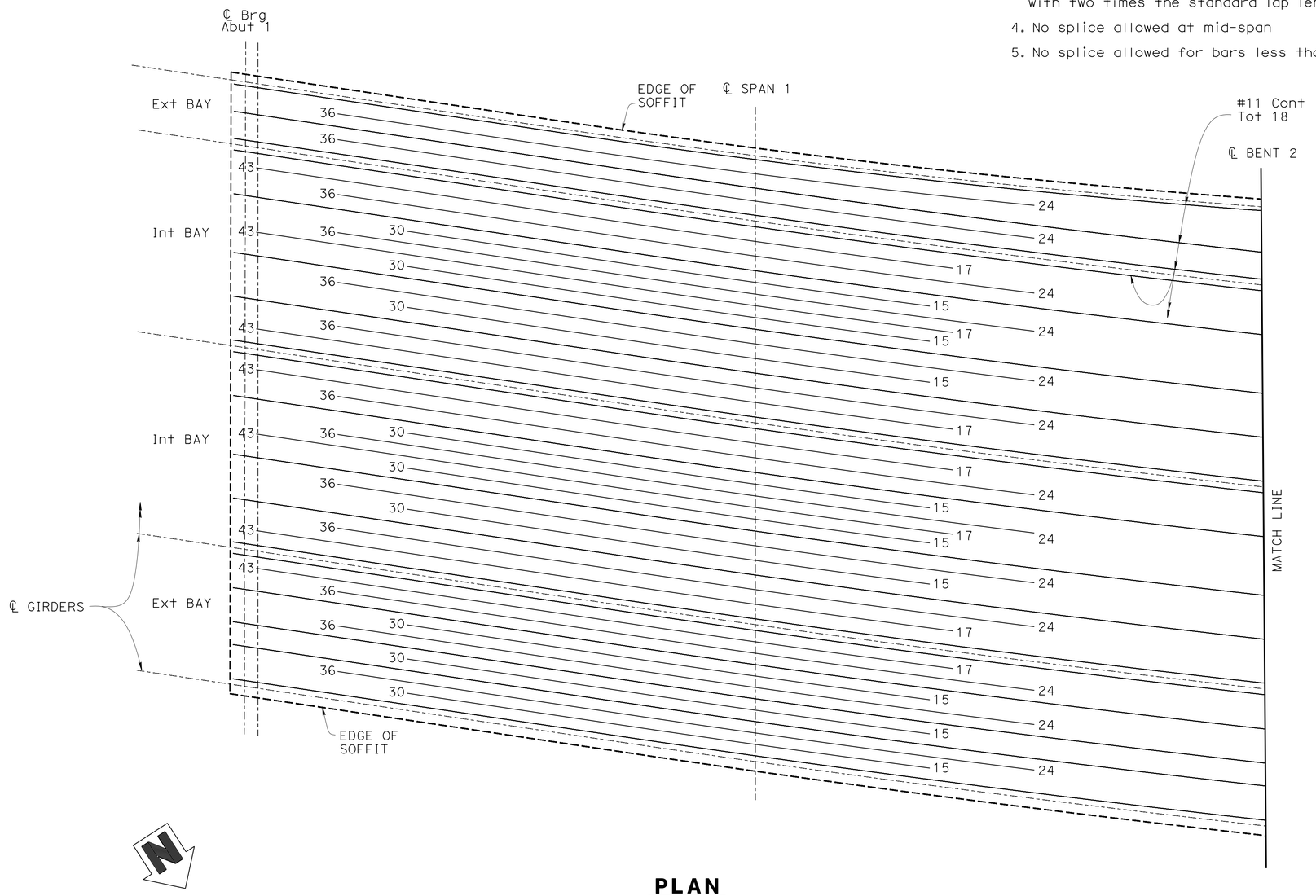

PLAN
NO SCALE

DESIGN	BY U. Inyang	CHECKED J. Radu	
DETAILS	BY P. Tong	CHECKED J. Radu	
QUANTITIES	BY U. Inyang	CHECKED K. Doll	

STATE OF CALIFORNIA
DEPARTMENT OF TRANSPORTATION

DIVISION OF ENGINEERING SERVICES
STRUCTURE DESIGN
DESIGN BRANCH 11

BRIDGE NO. 53-3059K
POST MILE 1.14

VALLEY VIEW AVE SB ON RAMP
ADDITIONAL SOFFIT REINF NO 1

STRUCTURES DESIGN DETAIL SHEET (ENGLISH) (REV. 09-01-10)

ORIGINAL SCALE IN INCHES FOR REDUCED PLANS 0 1 2 3

UNIT: 3587
PROJECT NUMBER & PHASE: 0715000160-1
CONTRACT NO.: 07-2159u4

DISREGARD PRINTS BEARING EARLIER REVISION DATES

REVISION DATES: 5-2-11 7-22-13 9-05-13 7-16-13

SHEET 17 OF 35

FILE => 53-3059K-n-gr01.dgn

USERNAME => s125624 DATE PLOTTED => 28-JAN-2016 TIME PLOTTED => 12:11

DIST	COUNTY	ROUTE	POST MILES TOTAL PROJECT	SHEET No.	TOTAL SHEETS
07	LA,Ora	5	0.0/1.5, 44.3/44.4	1290	1622

REGISTERED CIVIL ENGINEER — DATE 3-18-15

1-25-16
PLANS APPROVAL DATE

REGISTERED PROFESSIONAL ENGINEER — WILLIAM D. KEMP — No. 77530 — Exp. 12/31/16 — CIVIL — STATE OF CALIFORNIA

The State of California or its officers or agents shall not be responsible for the accuracy or completeness of electronic copies of this plan sheet.

NOTES:

1. All reinforcement are #11
2. Numbers at ends of bars indicate the distance in feet from centerline Span
3. All continuous bars shall be lap spliced with two times the standard lap length
4. No splice allowed at mid-span
5. No splice allowed for bars less than 60' long

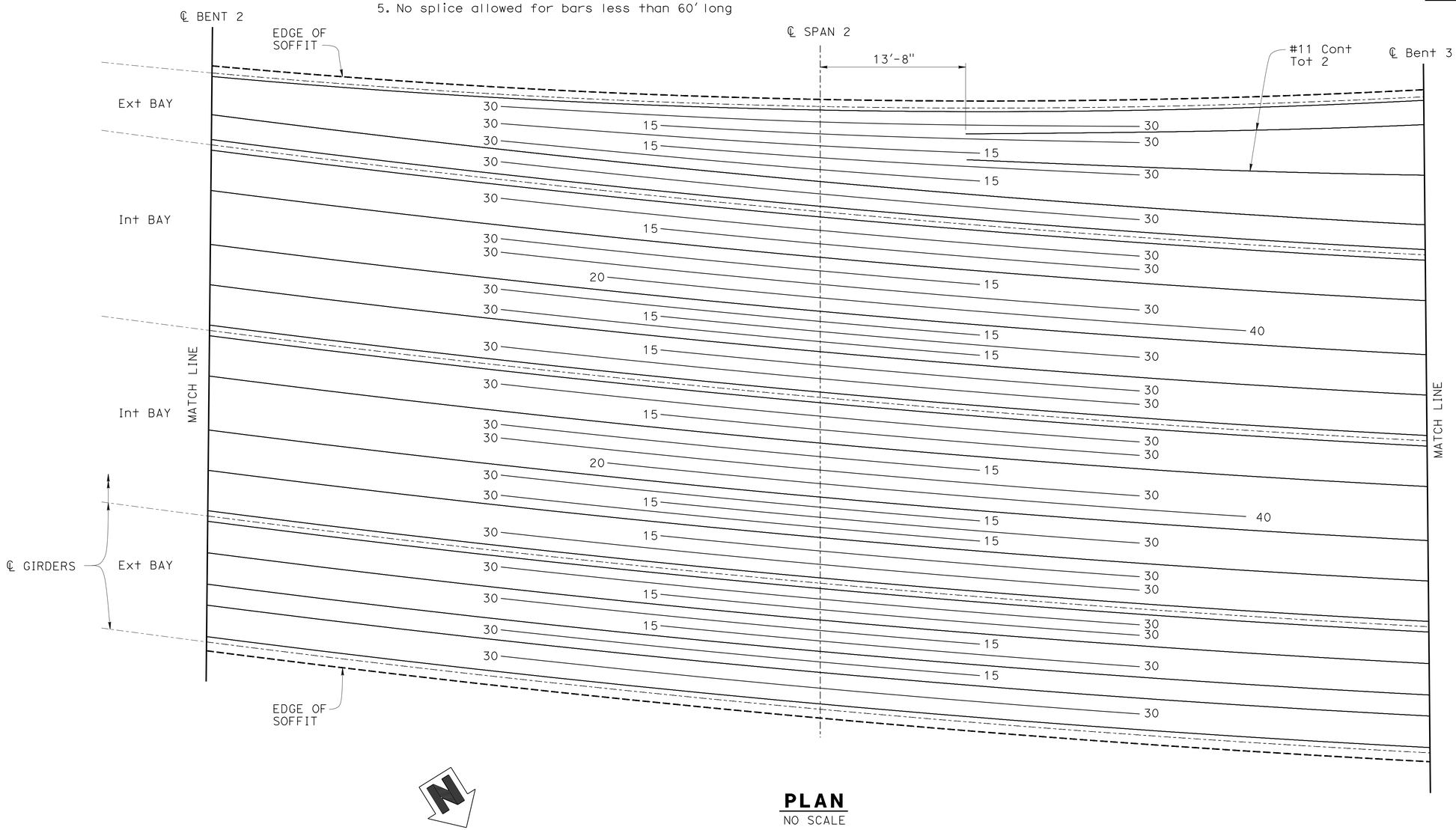

PLAN
NO SCALE

DESIGN	BY U. Inyang	CHECKED J. Radu	
DETAILS	BY P. Tong	CHECKED J. Radu	
QUANTITIES	BY U. Inyang	CHECKED K. Doll	

STATE OF CALIFORNIA
DEPARTMENT OF TRANSPORTATION

DIVISION OF ENGINEERING SERVICES
STRUCTURE DESIGN
DESIGN BRANCH 11

BRIDGE NO. 53-3059K
POST MILE 1.14

VALLEY VIEW AVE SB ON RAMP
ADDITIONAL SOFFIT REINF NO 2

STRUCTURES DESIGN DETAIL SHEET (ENGLISH) (REV. 09-01-10)

ORIGINAL SCALE IN INCHES FOR REDUCED PLANS 0 1 2 3

UNIT: 3587
PROJECT NUMBER & PHASE: 0715000160-1
CONTRACT NO.: 07-2159U4

DISREGARD PRINTS BEARING EARLIER REVISION DATES

REVISION DATES: 5-2-11 9-05-13 7-12-13 7-22-13

SHEET 18 OF 35

FILE => 53-3059K-n-gr02.dgn

USERNAME => s125624 DATE PLOTTED => 28-JAN-2016 TIME PLOTTED => 12:11

DIST	COUNTY	ROUTE	POST MILES TOTAL PROJECT	SHEET No.	TOTAL SHEETS
07	LA,Ora	5	0.0/1.5, 44.3/44.4	1291	1622

William Kemp 3-18-15
REGISTERED CIVIL ENGINEER DATE

1-25-16
PLANS APPROVAL DATE

REGISTERED PROFESSIONAL ENGINEER
WILLIAM D. KEMP
No. 55730
Exp. 12/31/16
CIVIL
STATE OF CALIFORNIA

The State of California or its officers or agents shall not be responsible for the accuracy or completeness of electronic copies of this plan sheet.

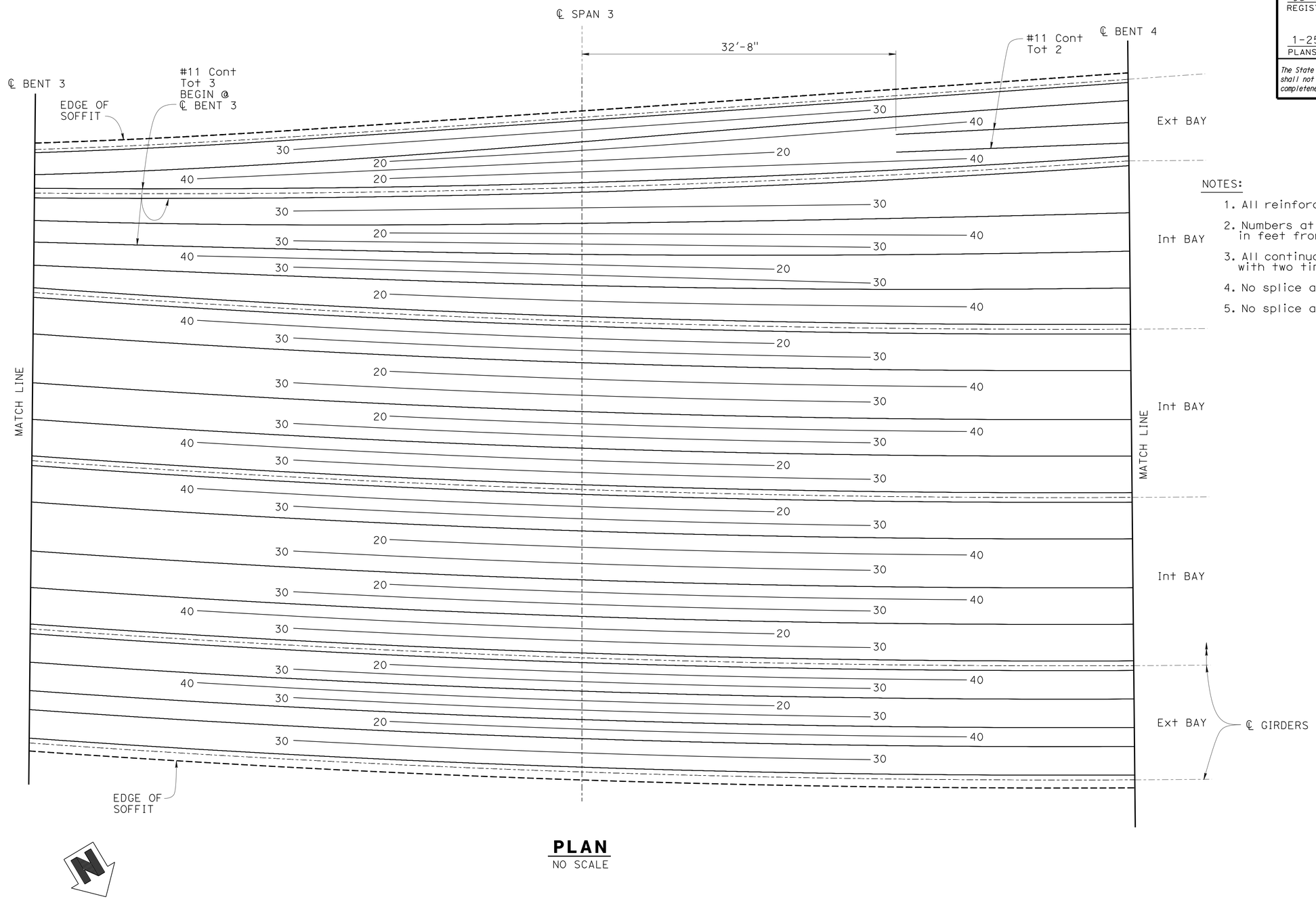

PLAN
NO SCALE

NOTES:

1. All reinforcement are #11
2. Numbers at ends of bars indicate the distance in feet from centerline Span
3. All continuous bars shall be lap spliced with two times the standard lap length
4. No splice allowed at mid-span
5. No splice allowed for bars less than 60' long

DESIGN	BY U. Inyang	CHECKED J. Radu	
DETAILS	BY P. Tong	CHECKED J. Radu	
QUANTITIES	BY U. Inyang	CHECKED K. Doll	

STATE OF CALIFORNIA
DEPARTMENT OF TRANSPORTATION

DIVISION OF ENGINEERING SERVICES
STRUCTURE DESIGN
DESIGN BRANCH 11

BRIDGE NO. 53-3059K
POST MILE 1.14

VALLEY VIEW AVE SB ON RAMP
ADDITIONAL SOFFIT REINF NO 3

STRUCTURES DESIGN DETAIL SHEET (ENGLISH) (REV. 09-01-10)

ORIGINAL SCALE IN INCHES FOR REDUCED PLANS 0 1 2 3

UNIT: 3587
PROJECT NUMBER & PHASE: 0715000160-1
CONTRACT NO.: 07-2159U4

DISREGARD PRINTS BEARING EARLIER REVISION DATES

REVISION DATES: 5-2-11 9-05-13 7-12-13 7-22-13

SHEET 19 OF 35

FILE => 53-3059K-n-gr03.dgn

USERNAME => s125624 DATE PLOTTED => 28-JAN-2016 TIME PLOTTED => 12:11

DIST	COUNTY	ROUTE	POST MILES TOTAL PROJECT	SHEET No.	TOTAL SHEETS
07	LA,Ora	5	0.0/1.5, 44.3/44.4	1292	1622

William Kemp 3-18-15
REGISTERED CIVIL ENGINEER DATE

1-25-16
PLANS APPROVAL DATE

REGISTERED PROFESSIONAL ENGINEER
WILLIAM D. KEMP
No. 55730
Exp. 12/31/16
CIVIL
STATE OF CALIFORNIA

The State of California or its officers or agents shall not be responsible for the accuracy or completeness of electronic copies of this plan sheet.

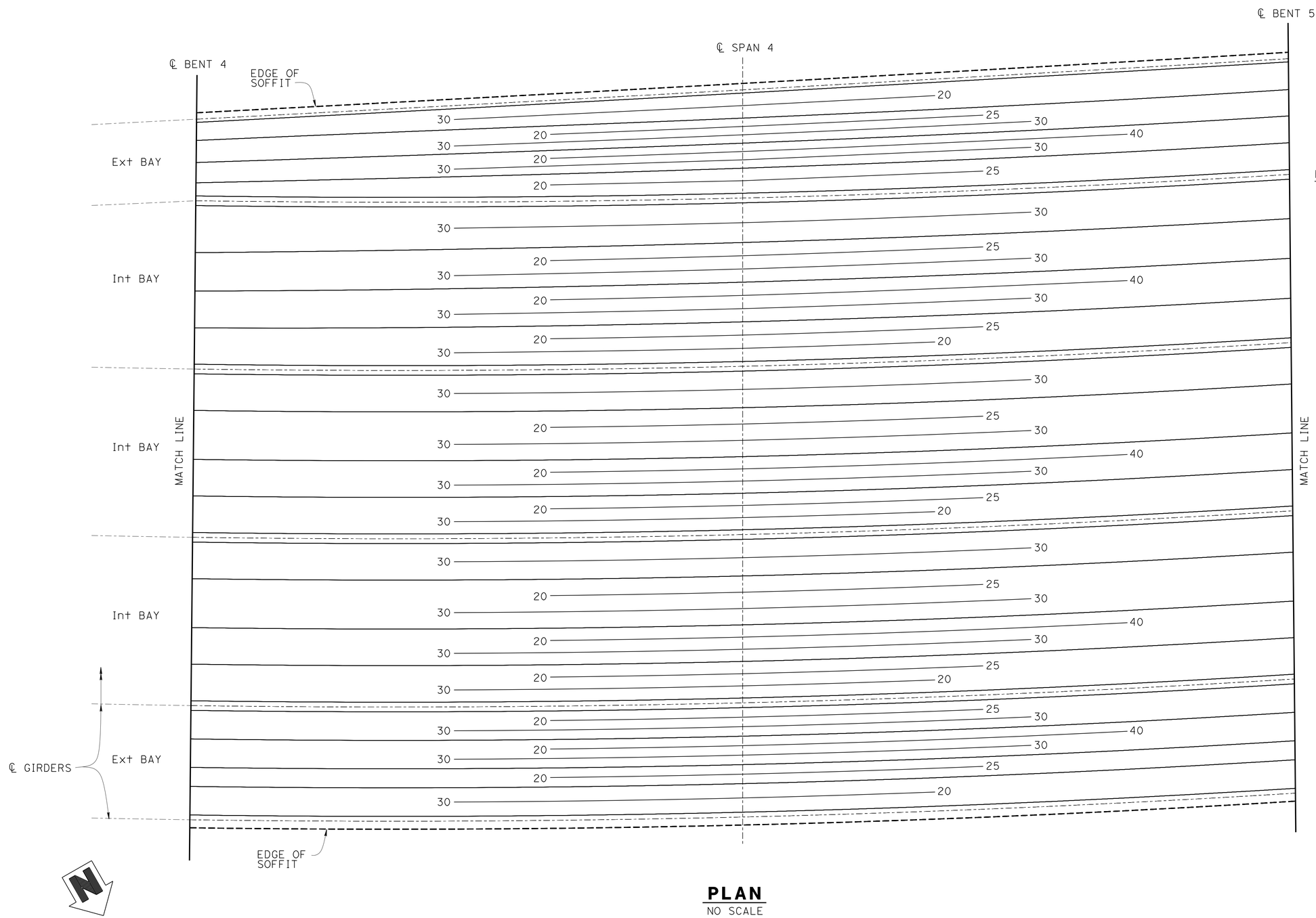

PLAN
NO SCALE

NOTES:

1. All reinforcement are #11
2. Numbers at ends of bars indicate the distance in feet from centerline Span
3. All continuous bars shall be lap spliced with two times the standard lap length
4. No splice allowed at mid-span
5. No splice allowed for bars less than 60' long

DESIGN	BY U. Inyang	CHECKED J. Radu	
DETAILS	BY P. Tong	CHECKED J. Radu	
QUANTITIES	BY U. Inyang	CHECKED K. Doll	

STATE OF CALIFORNIA
DEPARTMENT OF TRANSPORTATION

DIVISION OF ENGINEERING SERVICES
STRUCTURE DESIGN
DESIGN BRANCH 11

BRIDGE NO. 53-3059K
POST MILE 1.14

VALLEY VIEW AVE SB ON RAMP
ADDITIONAL SOFFIT REINF NO 4

STRUCTURES DESIGN DETAIL SHEET (ENGLISH) (REV. 09-01-10)

ORIGINAL SCALE IN INCHES FOR REDUCED PLANS 0 1 2 3

UNIT: 3587
PROJECT NUMBER & PHASE: 0715000160-1
CONTRACT NO.: 07-2159U4

DISREGARD PRINTS BEARING EARLIER REVISION DATES

REVISION DATES: 5-2-11 1-22-12 7-22-13 9-05-13

SHEET 20 OF 35

FILE => 53-3059K-n-gr04.dgn

USERNAME => s125624 DATE PLOTTED => 28-JAN-2016 TIME PLOTTED => 12:11

DIST	COUNTY	ROUTE	POST MILES TOTAL PROJECT	SHEET No.	TOTAL SHEETS
07	LA,Ora	5	0.0/1.5, 44.3/44.4	1293	1622

REGISTERED CIVIL ENGINEER — DATE: 3-18-15

1-25-16
PLANS APPROVAL DATE

REGISTERED PROFESSIONAL ENGINEER — WILLIAM D. KEMP — No. 55730 — Exp. 12/31/15 — CIVIL — STATE OF CALIFORNIA

The State of California or its officers or agents shall not be responsible for the accuracy or completeness of electronic copies of this plan sheet.

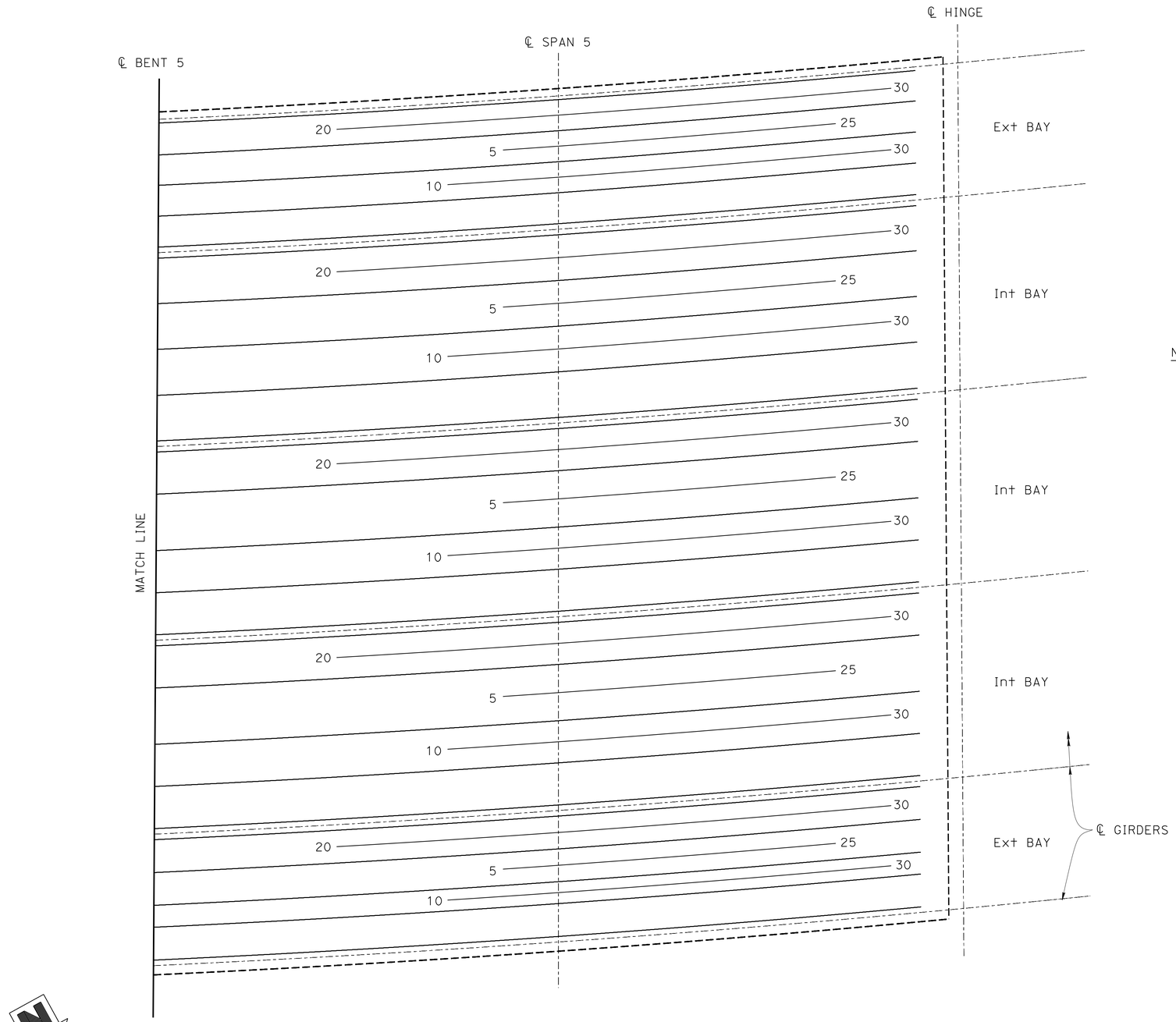

NOTES:

1. All reinforcement are #11
2. Numbers at ends of bars indicate the distance in feet from centerline Span
3. All continuous bars shall be lap spliced with two times the standard lap length
4. No splice allowed at mid-span
5. No splice allowed for bars less than 60' long

PLAN
NO SCALE

	BY	CHECKED
DESIGN	U. Inyang	J. Radu
DETAILS	P. Tong	J. Radu
QUANTITIES	U. Inyang	K. Doll

STATE OF CALIFORNIA
DEPARTMENT OF TRANSPORTATION

DIVISION OF ENGINEERING SERVICES
STRUCTURE DESIGN
DESIGN BRANCH 11

BRIDGE NO. 53-3059K
POST MILE 1.14

VALLEY VIEW AVE SB ON RAMP
ADDITIONAL SOFFIT REINF NO 5

STRUCTURES DESIGN DETAIL SHEET (ENGLISH) (REV. 09-01-10)

ORIGINAL SCALE IN INCHES FOR REDUCED PLANS 0 1 2 3

UNIT: 3587
PROJECT NUMBER & PHASE: 0715000160-1
CONTRACT NO.: 07-2159u4

DISREGARD PRINTS BEARING EARLIER REVISION DATES

REVISION DATES: 5-2-11 7-19-13 7-22-13 9-06-13

SHEET 21 OF 35

FILE => 53-3059k-n-gr05.dgn

USERNAME => s125824 DATE PLOTTED => 28-JAN-2016 TIME PLOTTED => 12:11

DIST	COUNTY	ROUTE	POST MILES TOTAL PROJECT	SHEET No.	TOTAL SHEETS
07	LA,Ora	5	0.0/1.5, 44.3/44.4	1294	1622

William Kemp 3-18-15
REGISTERED CIVIL ENGINEER DATE

1-25-16
PLANS APPROVAL DATE

REGISTERED PROFESSIONAL ENGINEER WILLIAM D. KEMP No. 55730 Exp. 12/31/16 CIVIL STATE OF CALIFORNIA

The State of California or its officers or agents shall not be responsible for the accuracy or completeness of electronic copies of this plan sheet.

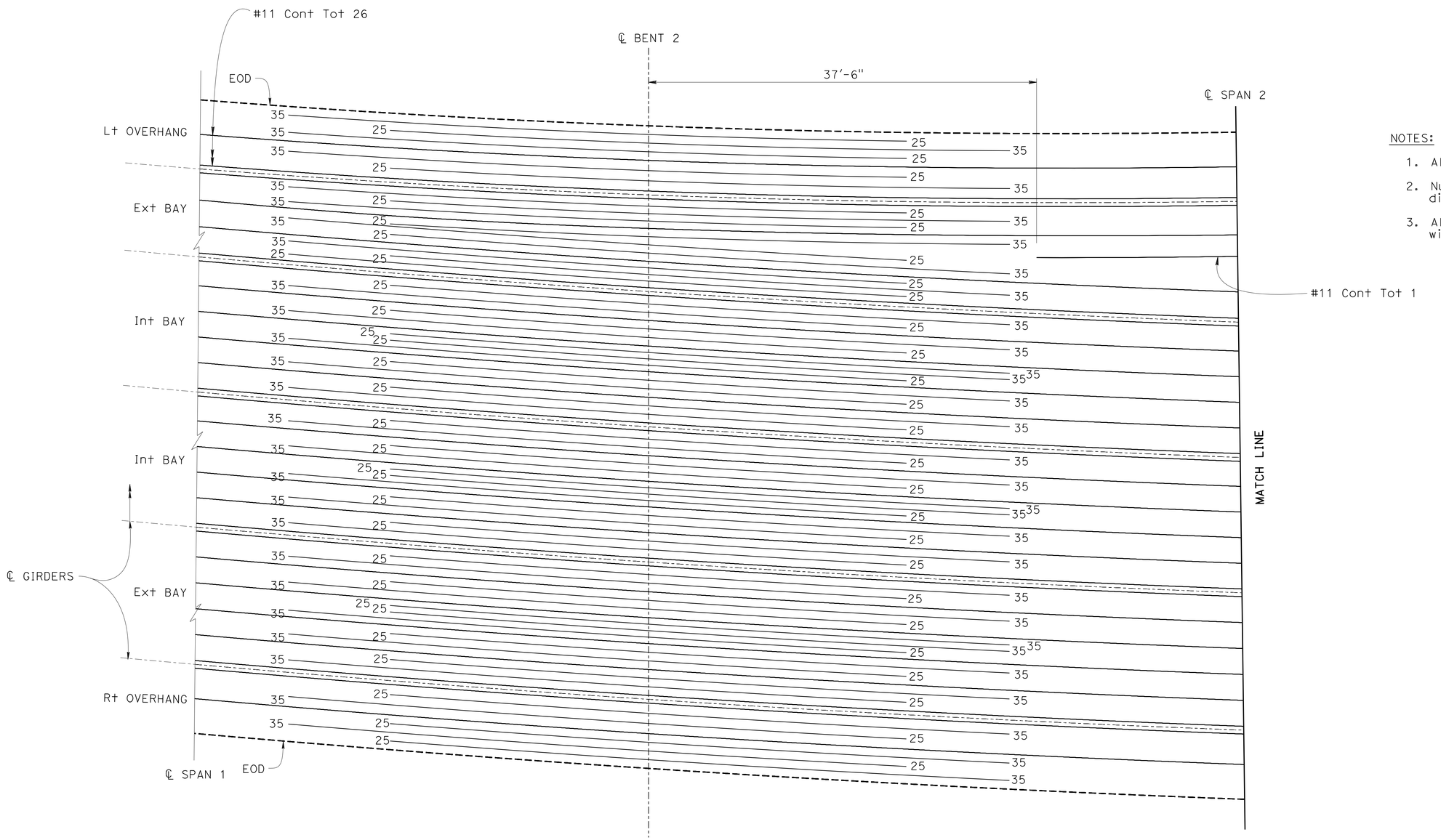

NOTES:

1. All reinforcement are #11
2. Numbers at ends of bars indicate the distance in feet from centerline Bent
3. All continuous bars shall be lap spliced with two times the standard lap length

PLAN
NO SCALE

	BY	CHECKED
DESIGN	U. Inyang	J. Radu
DETAILS	T. Bittermann	J. Radu
QUANTITIES	U. Inyang	K. Doll

STATE OF CALIFORNIA
DEPARTMENT OF TRANSPORTATION

DIVISION OF ENGINEERING SERVICES
STRUCTURE DESIGN
DESIGN BRANCH 11

BRIDGE NO. 53-3059K
POST MILE 1.14

VALLEY VIEW AVE SB ON RAMP
ADDITIONAL DECK REINF NO 1

STRUCTURES DESIGN DETAIL SHEET (ENGLISH) (REV. 09-01-10)

ORIGINAL SCALE IN INCHES FOR REDUCED PLANS 0 1 2 3

UNIT: 3587
PROJECT NUMBER & PHASE: 0715000160-1
CONTRACT NO.: 07-2159u4

DISREGARD PRINTS BEARING EARLIER REVISION DATES

REVISION DATES: 11-01-12 7-12-13 7-22-13 9-05-13

SHEET 22 OF 35

FILE => 53-3059k-n-gr06.dgn

USERNAME => s129624 DATE PLOTTED => 28-JAN-2016 TIME PLOTTED => 12:11

DIST	COUNTY	ROUTE	POST MILES TOTAL PROJECT	SHEET No.	TOTAL SHEETS
07	LA,Ora	5	0.0/1.5, 44.3/44.4	1295	1622

REGISTERED CIVIL ENGINEER — DATE: 3-18-15

1-25-16
PLANS APPROVAL DATE

REGISTERED PROFESSIONAL ENGINEER — WILLIAM D. KEMP — No. 55730 — Exp. 12/31/16 — CIVIL — STATE OF CALIFORNIA

The State of California or its officers or agents shall not be responsible for the accuracy or completeness of electronic copies of this plan sheet.

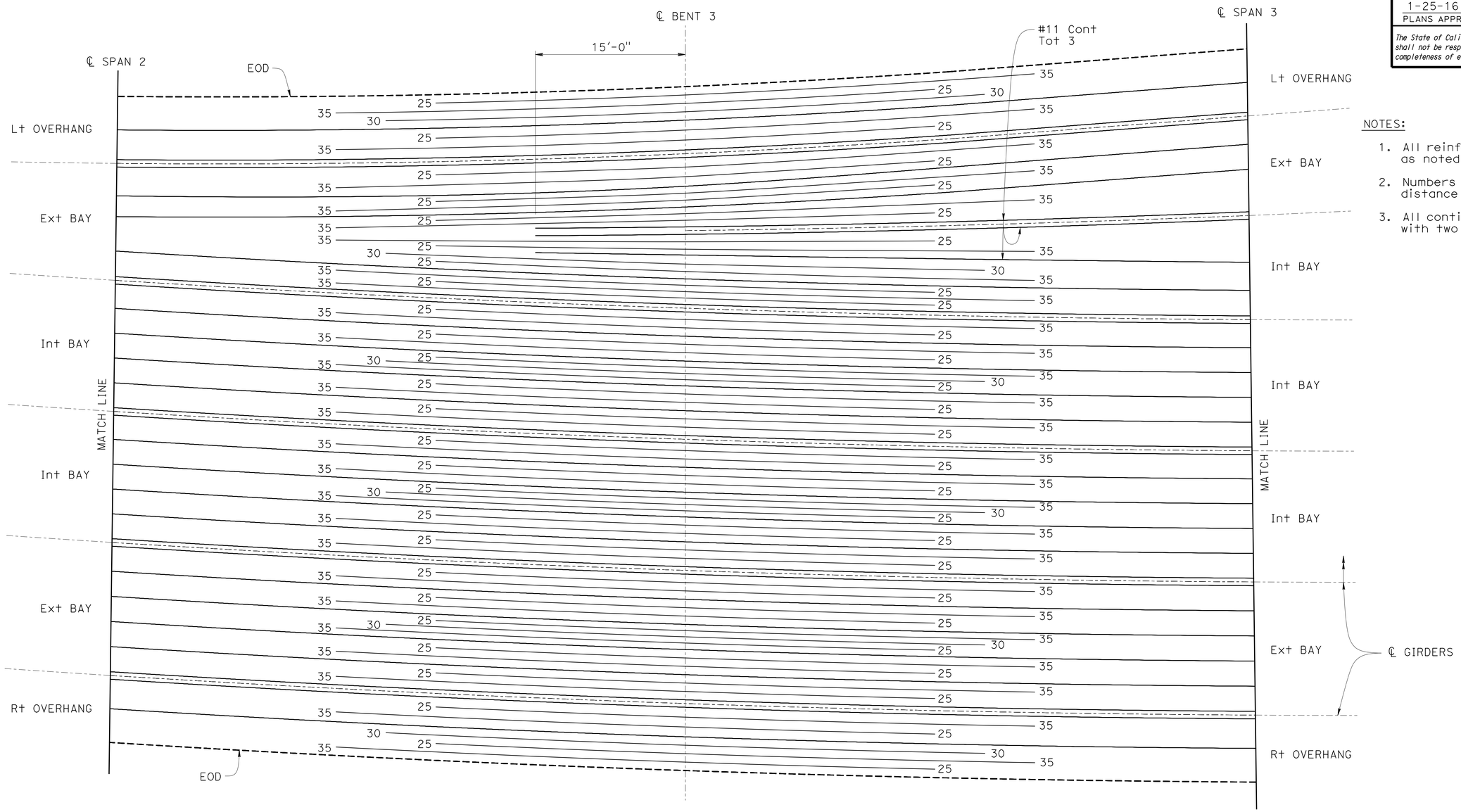

NOTES:

1. All reinforcement are #11 except as noted
2. Numbers at ends of bars indicate the distance in feet from centerline Bent
3. All continuous bars shall be lap spliced with two times the standard lap length

PLAN
NO SCALE

	BY	CHECKED
DESIGN	U. Inyang	J. Radu
DETAILS	T. Bittermann	J. Radu
QUANTITIES	U. Inyang	K. Doll

STATE OF CALIFORNIA
DEPARTMENT OF TRANSPORTATION

DIVISION OF ENGINEERING SERVICES
STRUCTURE DESIGN
DESIGN BRANCH 11

BRIDGE NO. 53-3059K
POST MILE 1.14

VALLEY VIEW AVE SB ON RAMP
ADDITIONAL DECK REINF NO 2

STRUCTURES DESIGN DETAIL SHEET (ENGLISH) (REV. 09-01-10)

ORIGINAL SCALE IN INCHES FOR REDUCED PLANS 0 1 2 3

UNIT: 3587
PROJECT NUMBER & PHASE: 0715000160-1
CONTRACT NO.: 07-2159U4

DISREGARD PRINTS BEARING EARLIER REVISION DATES

REVISION DATES: 4-24-11 7-22-13 9-05-13 11-01-13

SHEET 23 OF 35

FILE => 53-3059K-n-gr07.dgn

USERNAME => s125624 DATE PLOTTED => 28-JAN-2016 TIME PLOTTED => 12:11

DIST	COUNTY	ROUTE	POST MILES TOTAL PROJECT	SHEET No.	TOTAL SHEETS
07	LA,Ora	5	0.0/1.5, 44.3/44.4	1296	1622

REGISTERED CIVIL ENGINEER — DATE: 3-18-15

1-25-16
PLANS APPROVAL DATE

The State of California or its officers or agents shall not be responsible for the accuracy or completeness of electronic copies of this plan sheet.

REGISTERED PROFESSIONAL ENGINEER — WILLIAM D. KEMP — No. 55730 — Exp. 12/31/16 — CIVIL — STATE OF CALIFORNIA

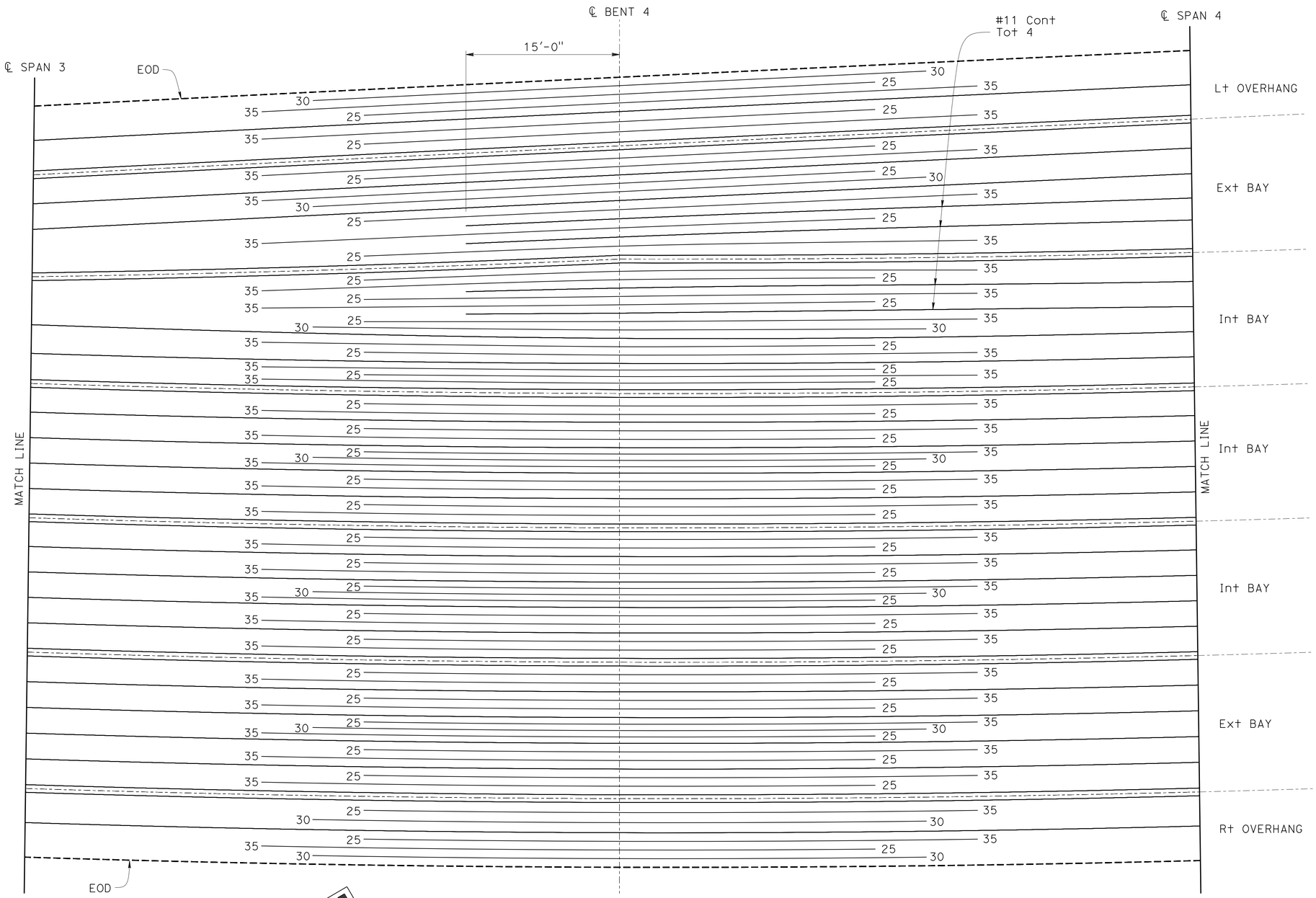

PLAN
NO SCALE

NOTES:

1. All reinforcement are #11 except as noted
2. Numbers at ends of bars indicate the distance in feet from centerline Bent
3. All continuous bars shall be lap spliced with two times the standard lap length

	BY	CHECKED
DESIGN	U. Inyang	J. Radu
DETAILS	T. Bittermann	J. Radu
QUANTITIES	U. Inyang	K. Doll

STATE OF CALIFORNIA
DEPARTMENT OF TRANSPORTATION

DIVISION OF ENGINEERING SERVICES
STRUCTURE DESIGN
DESIGN BRANCH 11

BRIDGE NO. 53-3059K
POST MILE 1.14

VALLEY VIEW AVE SB ON RAMP
ADDITIONAL DECK REINF NO 3

STRUCTURES DESIGN DETAIL SHEET (ENGLISH) (REV. 09-01-10)

ORIGINAL SCALE IN INCHES FOR REDUCED PLANS 0 1 2 3

UNIT: 3587
PROJECT NUMBER & PHASE: 0715000160-1
CONTRACT NO.: 07-2159u4

DISREGARD PRINTS BEARING EARLIER REVISION DATES

REVISION DATES: 4-29-11 7-22-13 10-22-12 7-12-13

SHEET 24 OF 35

FILE => 53-3059K-n-gr08.dgn

USERNAME => s125624 DATE PLOTTED => 28-JAN-2016 TIME PLOTTED => 12:11

DIST	COUNTY	ROUTE	POST MILES TOTAL PROJECT	SHEET No.	TOTAL SHEETS
07	LA,Ora	5	0.0/1.5, 44.3/44.4	1297	1622

REGISTERED CIVIL ENGINEER — DATE 3-18-15

1-25-16
PLANS APPROVAL DATE

REGISTERED PROFESSIONAL ENGINEER — WILLIAM D. KEMP — No. 55730 — Exp. 12/31/16 — CIVIL — STATE OF CALIFORNIA

The State of California or its officers or agents shall not be responsible for the accuracy or completeness of electronic copies of this plan sheet.

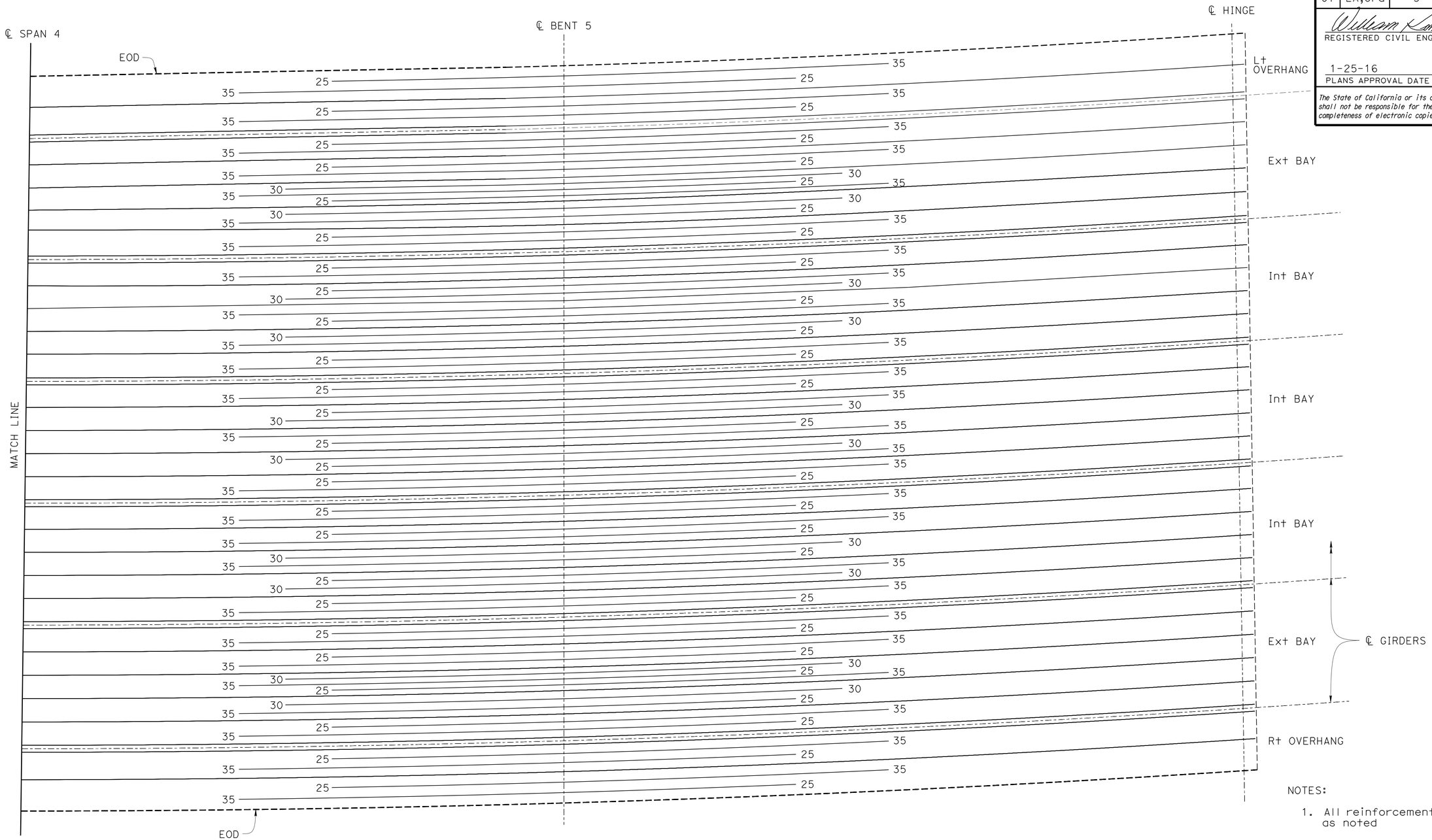

PLAN
NO SCALE

NOTES:

1. All reinforcement are #11 except as noted
2. Numbers at ends of bars indicate the distance in feet from centerline Bent
3. All continuous bars shall be lap spliced with two times the standard lap length

	BY	CHECKED
DESIGN	U. Inyang	J. Radu
DETAILS	T. Bittermann	J. Radu
QUANTITIES	U. Inyang	K. Doll

STATE OF CALIFORNIA
DEPARTMENT OF TRANSPORTATION

DIVISION OF ENGINEERING SERVICES
STRUCTURE DESIGN
DESIGN BRANCH 11

BRIDGE NO. 53-3059K
POST MILE 1.14

VALLEY VIEW AVE SB ON RAMP
ADDITIONAL DECK REINF NO 4

STRUCTURES DESIGN DETAIL SHEET (ENGLISH) (REV. 09-01-10)

ORIGINAL SCALE IN INCHES FOR REDUCED PLANS 0 1 2 3

UNIT: 3587
PROJECT NUMBER & PHASE: 0715000160-1
CONTRACT NO.: 07-2159u4

DISREGARD PRINTS BEARING EARLIER REVISION DATES

REVISION DATES: 10-26-12 9-05-13 3-28-13 7-22-13

SHEET 25 OF 35

FILE => 53-3059k-n-gr09.dgn

USERNAME => s125824 DATE PLOTTED => 28-JAN-2016 TIME PLOTTED => 12:11

DIST	COUNTY	ROUTE	POST MILES TOTAL PROJECT	SHEET No.	TOTAL SHEETS
07	LA,Ora	5	0.0/1.5, 44.3/44.4	1298	1622

REGISTERED CIVIL ENGINEER — DATE: 3-18-15

1-25-16
PLANS APPROVAL DATE

REGISTERED PROFESSIONAL ENGINEER — WILLIAM D. KEMP — No. 55730 — Exp. 12/31/16 — CIVIL — STATE OF CALIFORNIA

The State of California or its officers or agents shall not be responsible for the accuracy or completeness of electronic copies of this plan sheet.

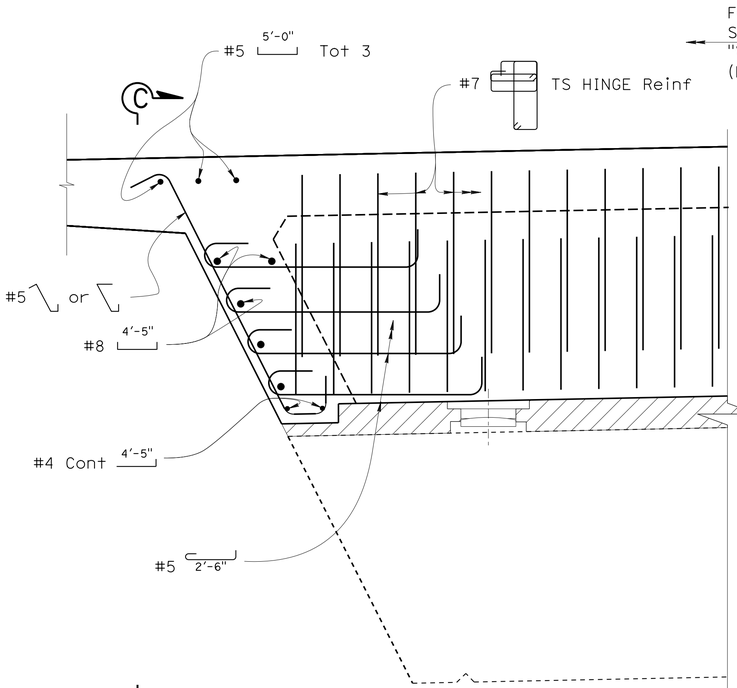

SIDE REINFORCEMENT

1" = 1'-0"

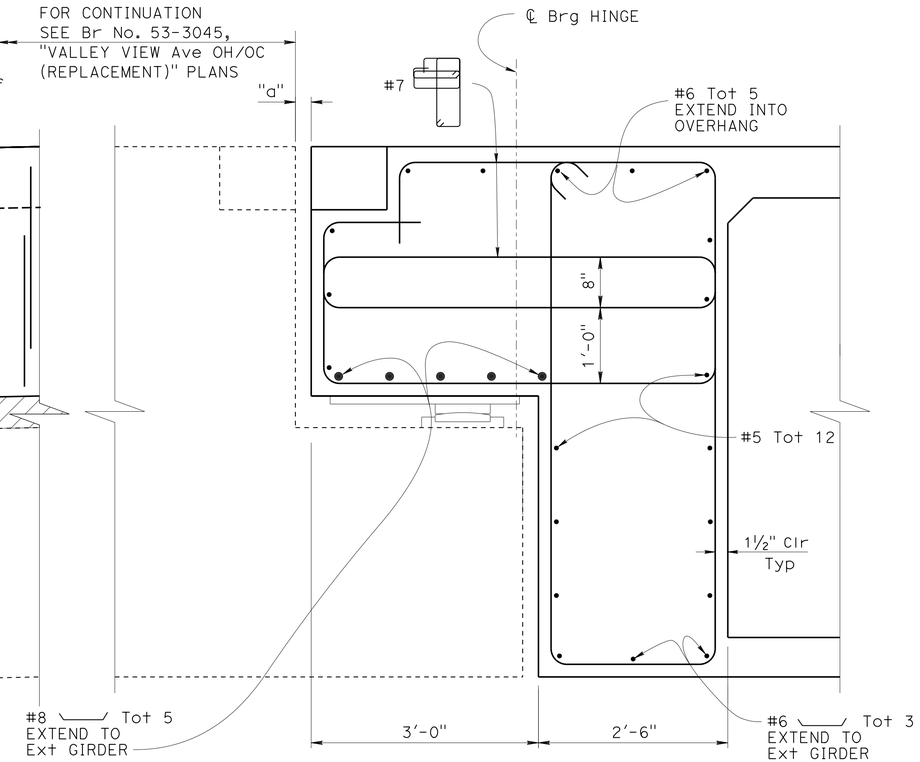

SECTION B-B

1" = 1'-0"

NOTES:

1. For PTFE Bearing Pad details and layout, see Br. No. 53-3045, "VALLEY VIEW OH/OC AVE (REPLACEMENT)" plans
2. For additional Hinge Restrainer (Pipe Type) details, see Br. No. 53-3045, "VALLEY VIEW Ave OH/OC (REPLACEMENT)" plans
3. For section D-D, See "HINGE DETAILS" sheet

LEGEND:

INDICATES EXPANDED POLYSTYRENE

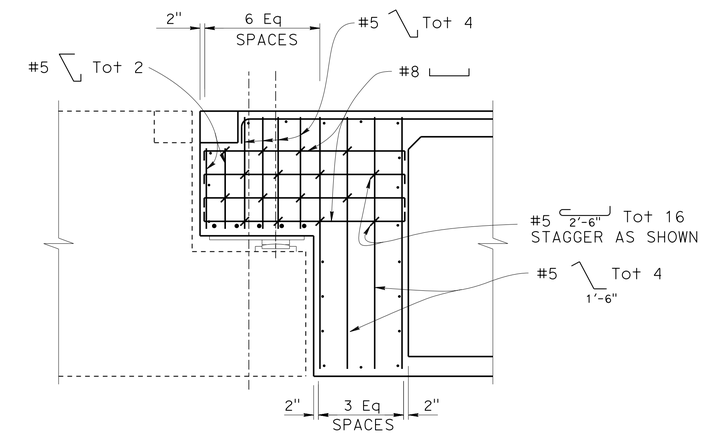

ELEVATION C-C

½" = 1'-0"

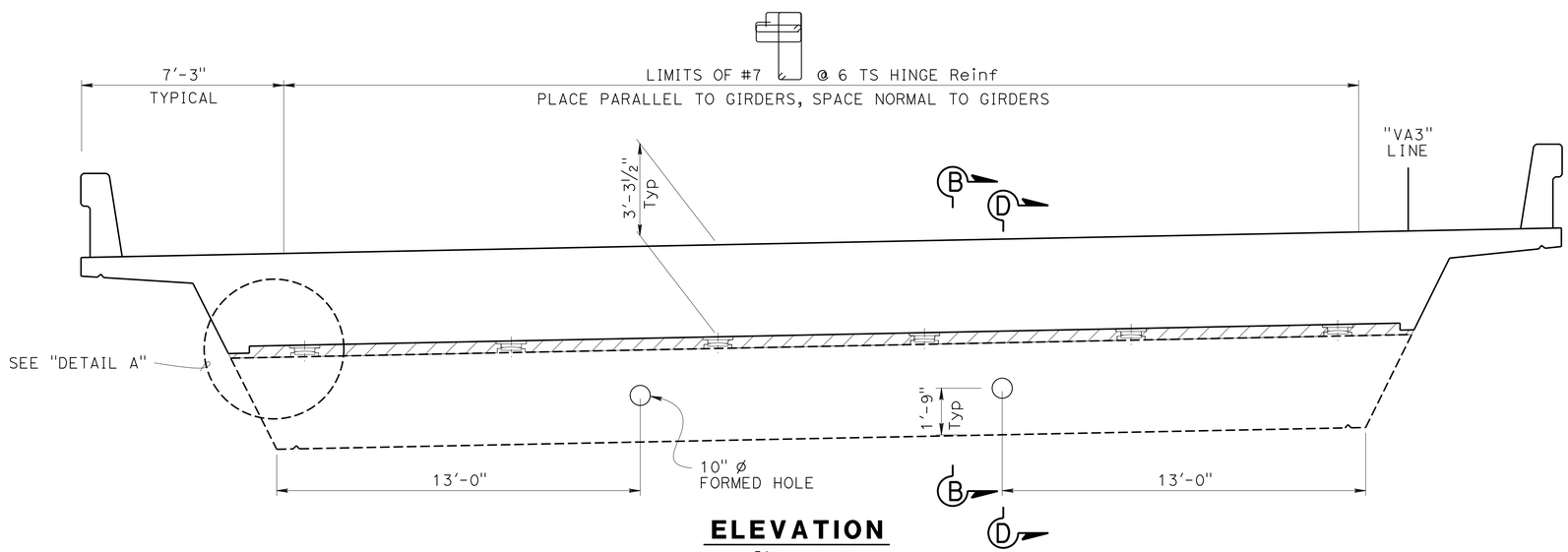

ELEVATION

⅜" = 1'-0"

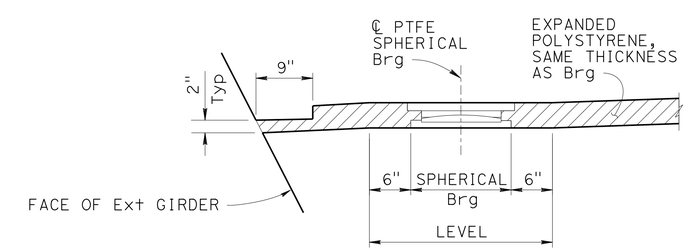

DETAIL A

1" = 1'-0"

DESIGN	BY B. Kemp	CHECKED U. Inyang	
DETAILS	BY P. Tong	CHECKED U. Inyang	
QUANTITIES	BY U. Inyang	CHECKED K. Doll	

STATE OF CALIFORNIA
DEPARTMENT OF TRANSPORTATION

DIVISION OF ENGINEERING SERVICES
STRUCTURE DESIGN
DESIGN BRANCH 11

BRIDGE NO. 53-3059K
POST MILE 1.14

VALLEY VIEW AVE SB ON RAMP
HINGE LAYOUT

STRUCTURES DESIGN DETAIL SHEET (ENGLISH) (REV. 09-01-10)

ORIGINAL SCALE IN INCHES FOR REDUCED PLANS 0 1 2 3

UNIT: 3587
PROJECT NUMBER & PHASE: 0715000160-1
CONTRACT NO.: 07-2159u4

DISREGARD PRINTS BEARING EARLIER REVISION DATES

REVISION DATES: 3-8-12 7-22-13 9-05-13 3-18-13

SHEET 26 OF 35

FILE => 53-3059K-pa-hng_lo.dgn

USERNAME => s125624 DATE PLOTTED => 28-JAN-2016 TIME PLOTTED => 12:11

DIST	COUNTY	ROUTE	POST MILES TOTAL PROJECT	SHEET No.	TOTAL SHEETS
07	LA,Ora	5	0.0/1.5, 44.3/44.4	1299	1622

REGISTERED CIVIL ENGINEER — DATE 3-18-15

1-25-16
PLANS APPROVAL DATE

REGISTERED PROFESSIONAL ENGINEER — WILLIAM D. KEMP — No. 55730 — Exp. 12/31/16 — CIVIL — STATE OF CALIFORNIA

The State of California or its officers or agents shall not be responsible for the accuracy or completeness of electronic copies of this plan sheet.

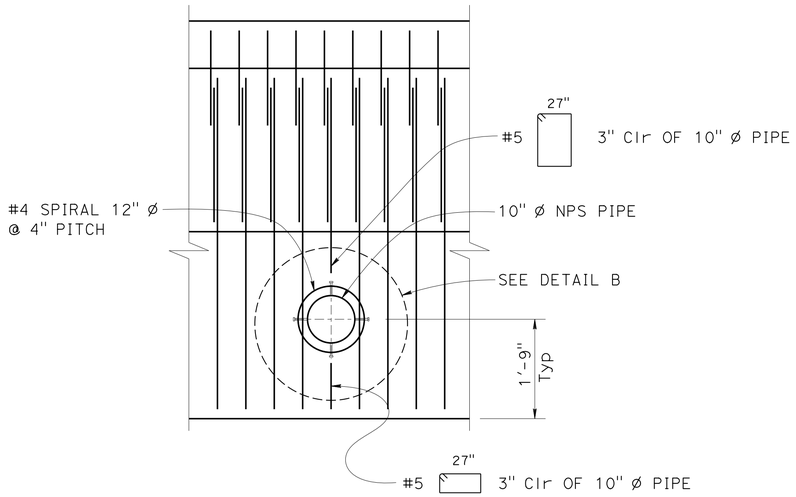

VIEW E-E

¾" = 1'-0"

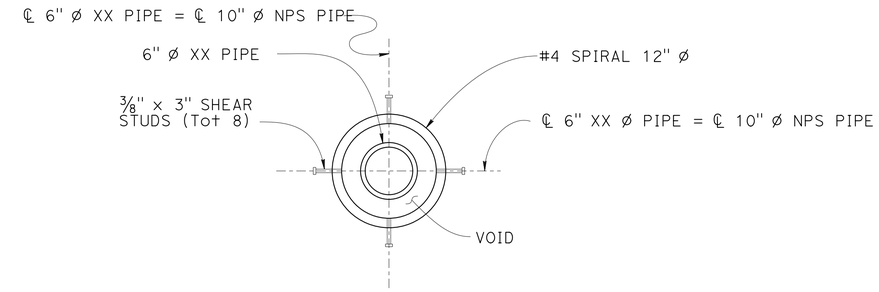

DETAIL B

1½" = 1'-0"

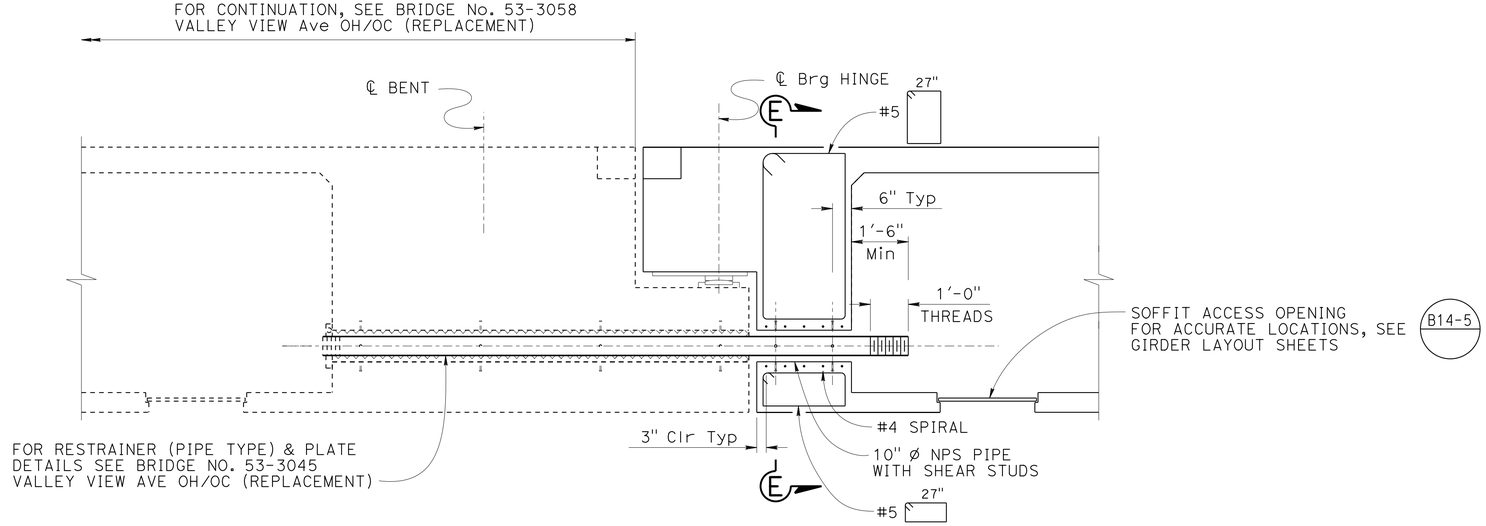

SECTION D-D

½" = 1'-0"

	BY	CHECKED
DESIGN	B. Kemp	U. Inyang
DETAILS	H. Mauroschadt	U. Inyang
QUANTITIES	U. Inyang	K. Doll

STATE OF CALIFORNIA
DEPARTMENT OF TRANSPORTATION

DIVISION OF ENGINEERING SERVICES
STRUCTURE DESIGN
DESIGN BRANCH 11

BRIDGE NO. 53-3059K
POST MILE 1.14

VALLEY VIEW AVE SB ON RAMP
HINGE DETAILS

STRUCTURES DESIGN DETAIL SHEET (ENGLISH) (REV. 09-01-10)

ORIGINAL SCALE IN INCHES FOR REDUCED PLANS 0 1 2 3

UNIT: 3587
PROJECT NUMBER & PHASE: 0715000160-1
CONTRACT NO.: 07-2159u4

DISREGARD PRINTS BEARING EARLIER REVISION DATES

REVISION DATES: 3-4-13 7-22-13 8-28-13 9-05-13

SHEET 27 OF 35

FILE => 53-3059k-pb-hngdt.dgn

USERNAME => s125624 DATE PLOTTED => 28-JAN-2016 TIME PLOTTED => 12:11

DIST	COUNTY	ROUTE	POST MILES TOTAL PROJECT	SHEET No.	TOTAL SHEETS
07	LA,Ora	5	0.0/1.5, 44.3/44.4	1300	1622

REGISTERED CIVIL ENGINEER — DATE 3-18-15

1-25-16
PLANS APPROVAL DATE

REGISTERED PROFESSIONAL ENGINEER — WILLIAM D. KEMP — No. 55730 — Exp. 12/31/16 — CIVIL — STATE OF CALIFORNIA

The State of California or its officers or agents shall not be responsible for the accuracy or completeness of electronic copies of this plan sheet.

LEGEND:

▫ - Deck Drain Inlet, Type D-3, Typ

NOTES:

1. For drainage pipe detail @ Abut, see B7-8
2. End Drain Pipe 6'-0" beyond Approach Slab, see "ROADWAY PLANS"
3. For drainage outlet @ Bent 2, see "BENT 2 DETAILS" sheet

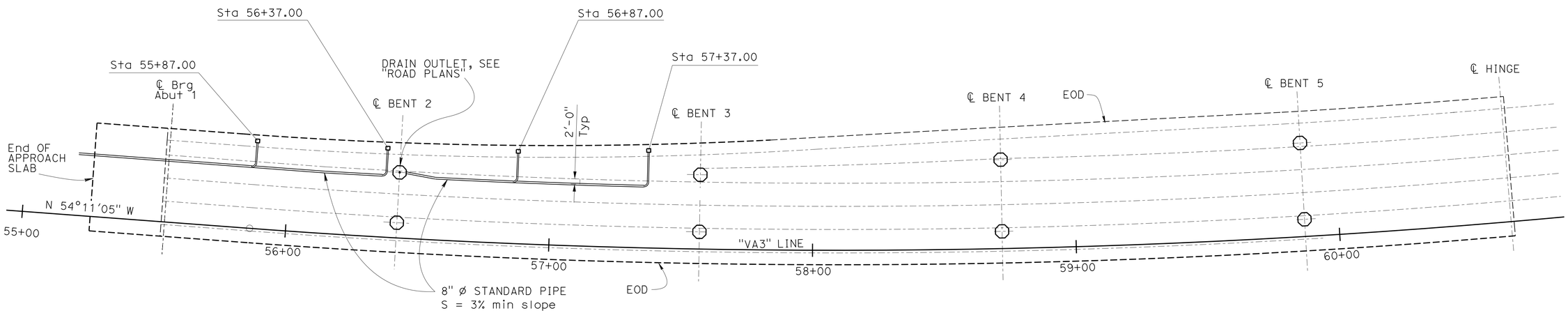

PLAN (B7-7) (B7-6)
1" = 20'-0"

DESIGN	BY B. Kemp	CHECKED J. Radu	
DETAILS	BY H.Mauroschadt	CHECKED J. Radu	
QUANTITIES	BY U. Inyang	CHECKED K. Doll	

STATE OF CALIFORNIA
DEPARTMENT OF TRANSPORTATION

DIVISION OF ENGINEERING SERVICES
STRUCTURE DESIGN
DESIGN BRANCH 11

BRIDGE NO. 53-3059K
POST MILE 1.14

VALLEY VIEW AVE SB ON RAMP
DRAINAGE LAYOUT

STRUCTURES DESIGN DETAIL SHEET (ENGLISH) (REV. 09-01-10)

ORIGINAL SCALE IN INCHES FOR REDUCED PLANS 0 1 2 3

UNIT: 3587
PROJECT NUMBER & PHASE: 0715000160-1
CONTRACT NO.: 07-2159U4

DISREGARD PRINTS BEARING EARLIER REVISION DATES

REVISION DATES: 3-6-13 7-30-13 9-27-13 7-22-13

SHEET 28 OF 35

FILE => 53-3059k-q-drn_lo.dgn

USERNAME => s125624 DATE PLOTTED => 28-JAN-2016 TIME PLOTTED => 12:11