Dist	COUNTY	ROUTE	POST MILES TOTAL PROJECT	SHEET No.	TOTAL SHEETS
07	LA,Ora	5	0.0/1.5, 44.3/44.4	1001	1622

REGISTERED CIVIL ENGINEER

October 30, 2015
PLANS APPROVAL DATE

REGISTERED PROFESSIONAL ENGINEER Stanley P. Johnson No. C57793 Exp. 3-31-16 CIVIL STATE OF CALIFORNIA

THE STATE OF CALIFORNIA OR ITS OFFICERS OR AGENTS SHALL NOT BE RESPONSIBLE FOR THE ACCURACY OR COMPLETENESS OF SCANNED COPIES OF THIS PLAN SHEET.

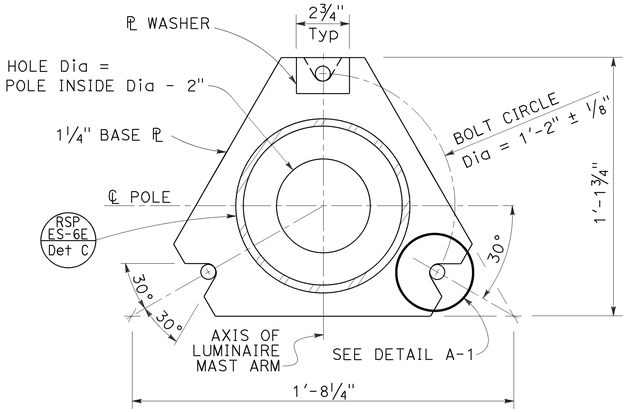

BASE PLATE
DETAIL A

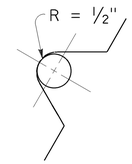

DETAIL A-1

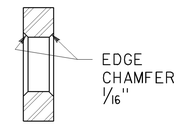

SECTION A-A

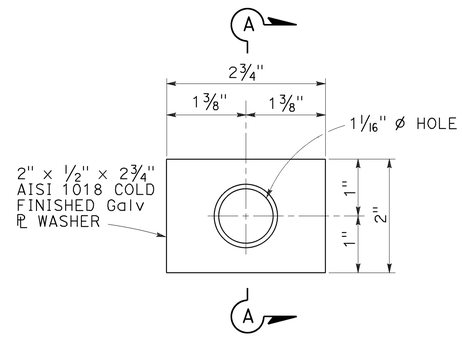

PLATE WASHER
DETAIL D

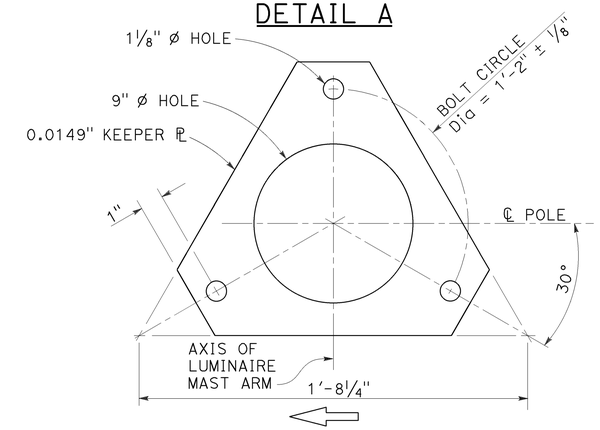

KEEPER PLATE
DETAIL B

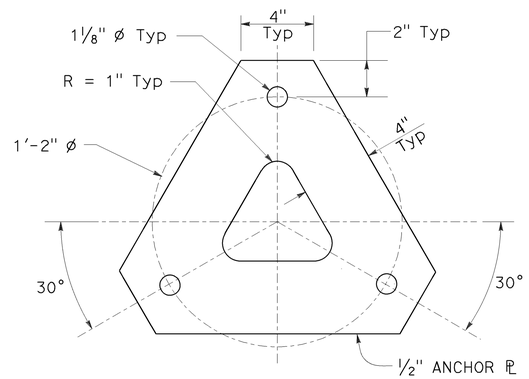

ANCHOR PLATE
DETAIL E

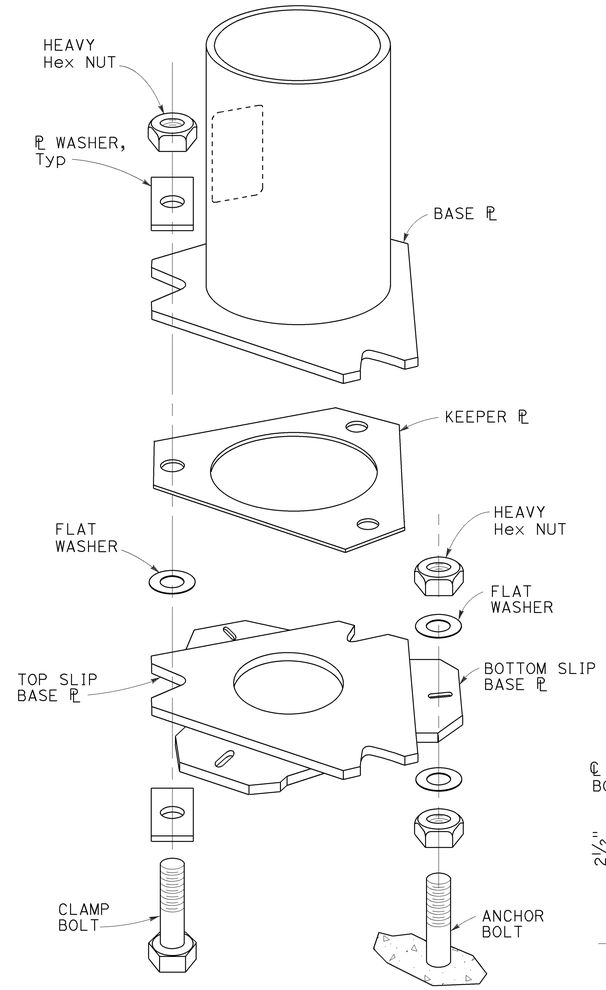

SLIP BASE DETAIL
DETAIL F

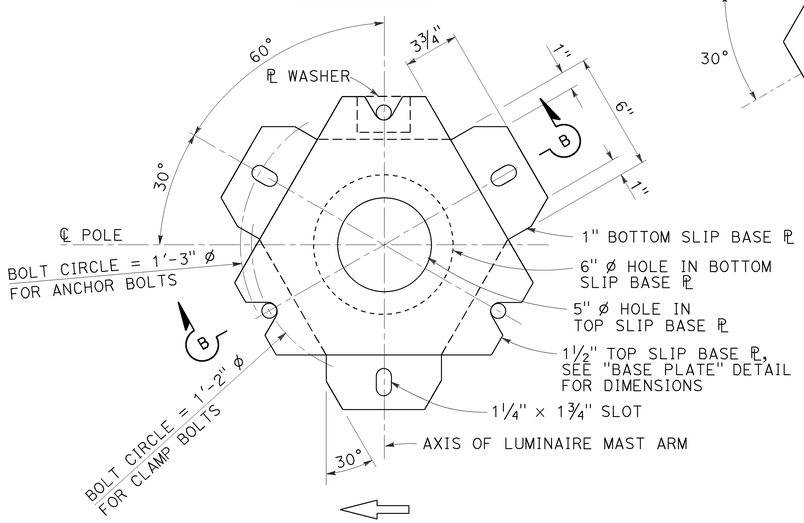

BOTTOM PLATE
DETAIL C

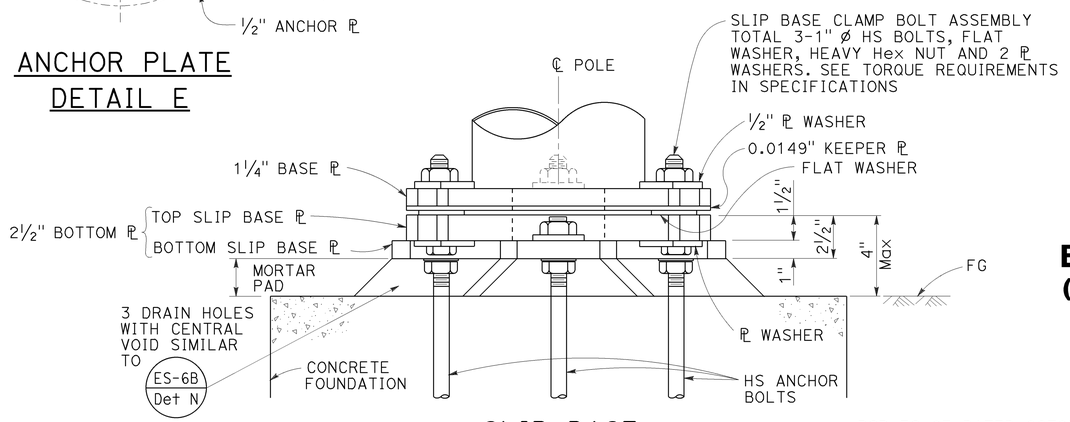

SLIP BASE
ELEVATION A

NOTES: TO ACCOMPANY PLANS DATED 1-25-16

1. 1" ø HS anchor bolts. For clamp bolts, see specifications.
2. Conduit shall not protrude more than 2" above top of foundation.
3. Handhole shall be located on the downstream side of traffic.
4. For Type 30 fixed base and for Type 31 fixed base, see Notes 3 and 4 on Revised Standard Plan RSP ES-6E.

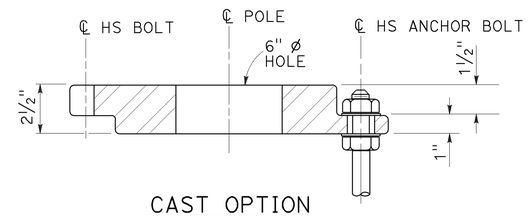

CAST OPTION

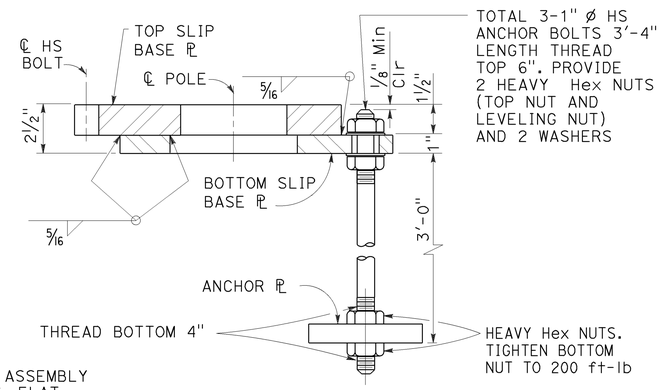

WELDED OPTION

SECTION B-B

STATE OF CALIFORNIA
DEPARTMENT OF TRANSPORTATION

ELECTRICAL SYSTEMS (LIGHTING STANDARD, SLIP BASE PLATE)

NO SCALE

RSP ES-6F DATED OCTOBER 30, 2015 SUPERSEDES STANDARD PLAN ES-6F DATED MAY 20, 2011 - PAGE 457 OF THE STANDARD PLANS BOOK DATED 2010.

REVISED STANDARD PLAN RSP ES-6F

2010 REVISED STANDARD PLAN RSP ES-6F

8-20-15

Dist	COUNTY	ROUTE	POST MILES TOTAL PROJECT	SHEET No.	TOTAL SHEETS
07	LA,Ora	5	0.0/1.5, 44.3/44.4	1002	1622

REGISTERED CIVIL ENGINEER

October 30, 2015
PLANS APPROVAL DATE

REGISTERED PROFESSIONAL ENGINEER
Stanley P. Johnson
No. C57793
Exp. 3-31-16
CIVIL
STATE OF CALIFORNIA

THE STATE OF CALIFORNIA OR ITS OFFICERS OR AGENTS SHALL NOT BE RESPONSIBLE FOR THE ACCURACY OR COMPLETENESS OF SCANNED COPIES OF THIS PLAN SHEET.

TO ACCOMPANY PLANS DATED 1-25-16

2010 REVISED STANDARD PLAN RSP ES-7A

NOTES:

1. For additional notes, details and data for Type 15TS and Type 21TS Standards, see Revised Standard Plan RSP ES-6A.
2. Handhole shall be located on the downstream side of traffic.

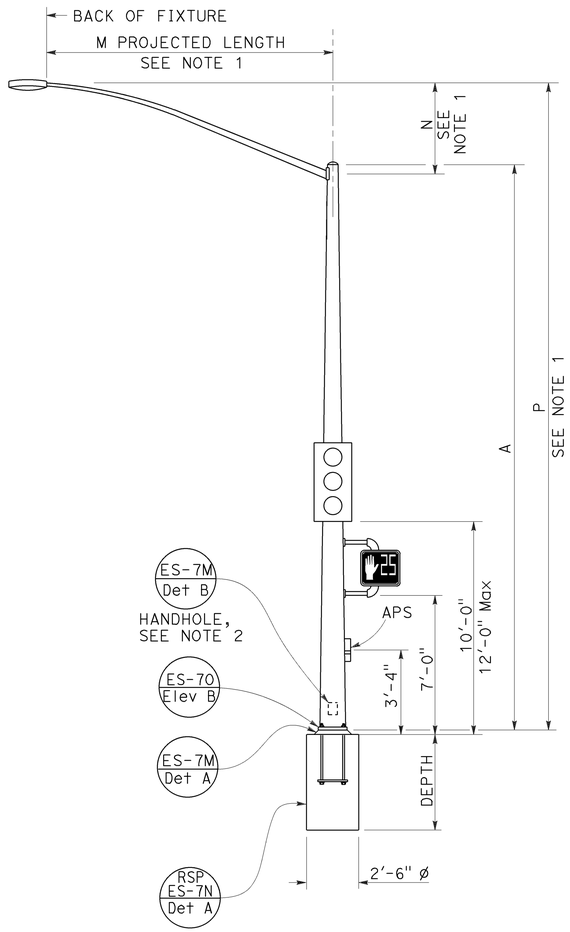

TYPE 15TS AND 21TS STANDARD
ELEVATION A
(See Note 1)

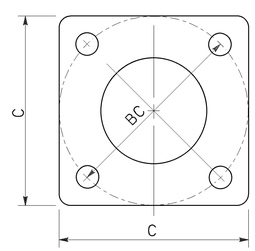

BASE PLATE
TYPE 15TS AND 21TS
DETAIL A

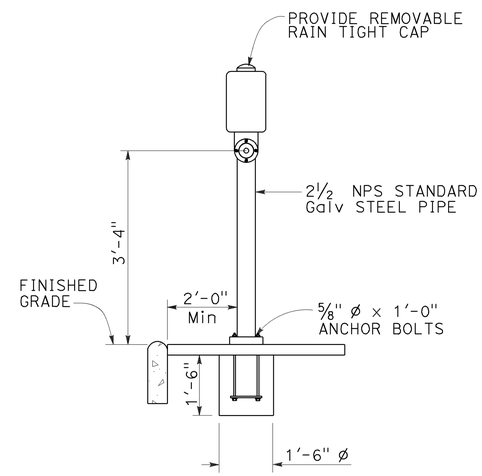

ELEVATION

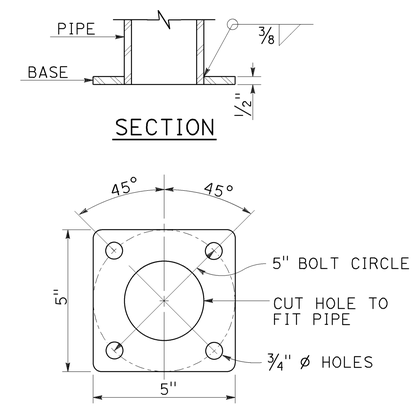

BASE PLATE
PBA POST

PUSH BUTTON ASSEMBLY POST
DETAIL B

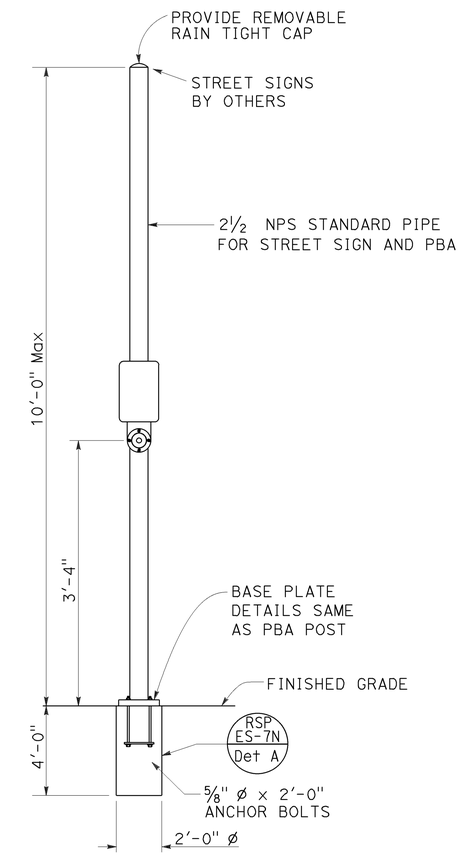

COMBINED STREET SIGN
PUSH BUTTON ASSEMBLY POST
DETAIL C

POLE TYPE	POLE DATA				BASE PLATE DATA				CIDH
	A HEIGHT	Min OD BASE	Min OD TOP	WALL THICKNESS	C	BC = BOLT CIRCLE	THICKNESS	ANCHOR BOLT SIZE	DEPTH
15TS	30'-0"	8"	3 11/16"	0.1793"	1'-1½"	1'-0"	2"	1½" ø x 42"	7'-6"
21TS	35'-0"	9⅜"	3 9/16"		1'-3"	1'-2"			8'-6"

STATE OF CALIFORNIA
DEPARTMENT OF TRANSPORTATION

ELECTRICAL SYSTEMS (SIGNAL AND LIGHTING STANDARD, TYPE TS, AND PUSH BUTTON ASSEMBLY POST)

NO SCALE

RSP ES-7A DATED OCTOBER 30, 2015 SUPERSEDES RSP ES-7A DATED JULY 19, 2013 AND STANDARD PLAN ES-7A DATED MAY 20, 2011 - PAGE 462 OF THE STANDARD PLANS BOOK DATED 2010.

REVISED STANDARD PLAN RSP ES-7A

Dist	COUNTY	ROUTE	POST MILES TOTAL PROJECT	SHEET No.	TOTAL SHEETS
07	LA,Ora	5	0.0/1.5, 44.3/44.4	1003	1622

REGISTERED CIVIL ENGINEER

October 30, 2015
PLANS APPROVAL DATE

REGISTERED PROFESSIONAL ENGINEER
Stanley P. Johnson
No. C57793
Exp. 3-31-16
CIVIL
STATE OF CALIFORNIA

THE STATE OF CALIFORNIA OR ITS OFFICERS OR AGENTS SHALL NOT BE RESPONSIBLE FOR THE ACCURACY OR COMPLETENESS OF SCANNED COPIES OF THIS PLAN SHEET.

TO ACCOMPANY PLANS DATED 1-25-16

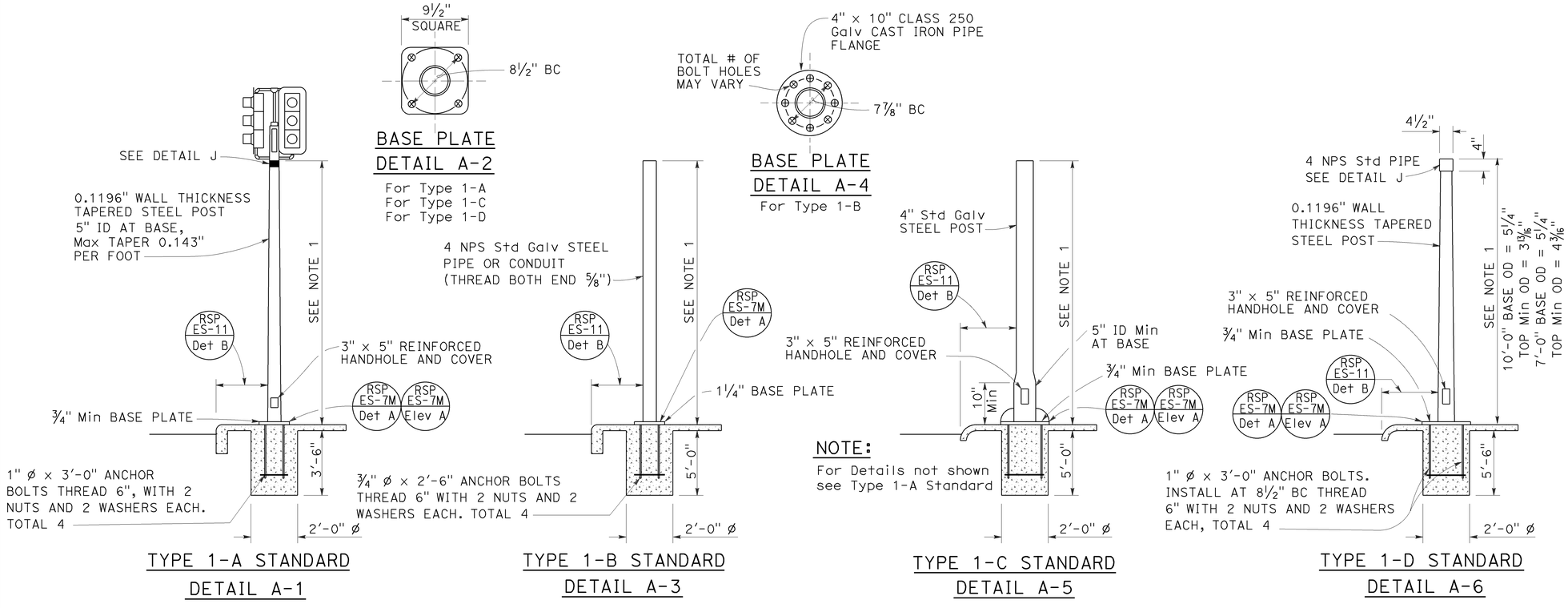

TYPE 1 SIGNAL STANDARDS
DETAIL A

NOTES:

1. Standards shall be 10'-0" ± 2" for vehicle signals and 7'-0" ± 2" for pedestrian signals unless shorter pole is noted on project plans.
2. Top of standards shall be 4½" OD.
3. Conduits shall extend 2" maximum above finished surface of foundation and for Types 1-A, 1-C and 1-D shall be sloped toward handhole.
4. Anchor bolts shall be bonded to conduit or grounding conductor.
5. For additional notes and details, see Revised Standard Plans RSP ES-7M and RSP ES-7N.
6. Pour foundation concrete against undisturbed soil.
7. For standards with handhole, locate in the downstream side of traffic.
8. Coupling nuts to be used only when shown or specified on project plans.

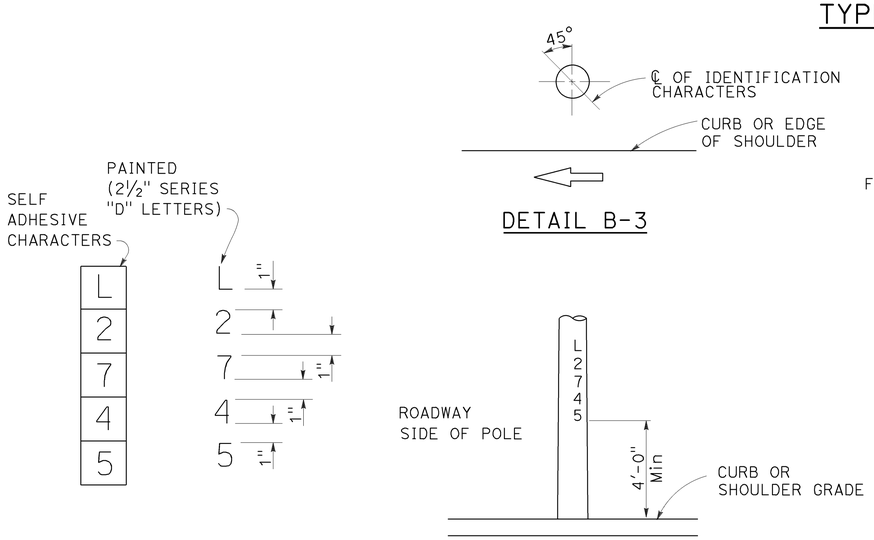

IDENTIFICATION CHARACTER DETAIL
DETAIL B-1

TYPICAL IDENTIFICATION CHARACTER FORMAT
DETAIL B-2

LOCATION OF EQUIPMENT IDENTIFICATION CHARACTERS ON STANDARDS AND POSTS
DETAIL B

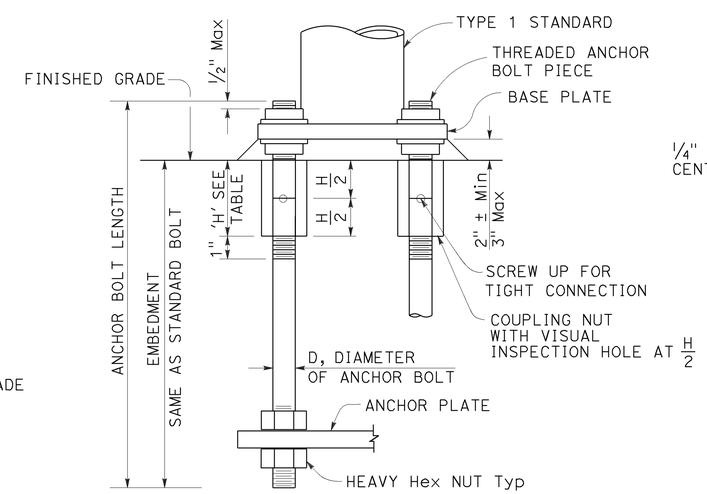

ANCHOR BOLTS WITH SLEEVE NUTS
DETAIL C
(See Note 8)

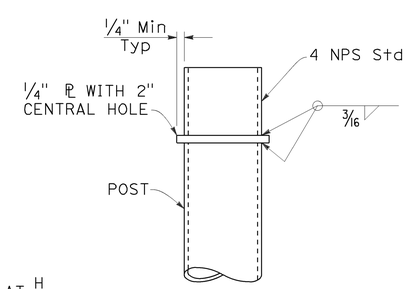

DETAIL J

COUPLING NUT TABLE	
BOLT DIAMETER	NUT TABLE THICKNESS 'H'
¾"	2¼"
1"	3"

STATE OF CALIFORNIA
DEPARTMENT OF TRANSPORTATION

ELECTRICAL SYSTEMS (SIGNAL AND LIGHTING STANDARD, TYPE 1 AND EQUIPMENT IDENTIFICATION CHARACTERS)

NO SCALE

RSP ES-7B DATED OCTOBER 30, 2015 SUPERSEDES STANDARD PLAN ES-7B DATED MAY 20, 2011 - PAGE 463 OF THE STANDARD PLANS BOOK DATED 2010.

REVISED STANDARD PLAN RSP ES-7B

2010 REVISED STANDARD PLAN RSP ES-7B

10-8-15

Dist	COUNTY	ROUTE	POST MILES TOTAL PROJECT	SHEET No.	TOTAL SHEETS
07	LA,Ora	5	0.0/1.5, 44.3/44.4	1004	1622

REGISTERED CIVIL ENGINEER

October 30, 2015

PLANS APPROVAL DATE

REGISTERED PROFESSIONAL ENGINEER Stanley P. Johnson No. C57793 Exp. 3-31-16 CIVIL STATE OF CALIFORNIA

THE STATE OF CALIFORNIA OR ITS OFFICERS OR AGENTS SHALL NOT BE RESPONSIBLE FOR THE ACCURACY OR COMPLETENESS OF SCANNED COPIES OF THIS PLAN SHEET.

TO ACCOMPANY PLANS DATED 1-25-16

NOTE:

Handhole shall be located on the downstream side of traffic.

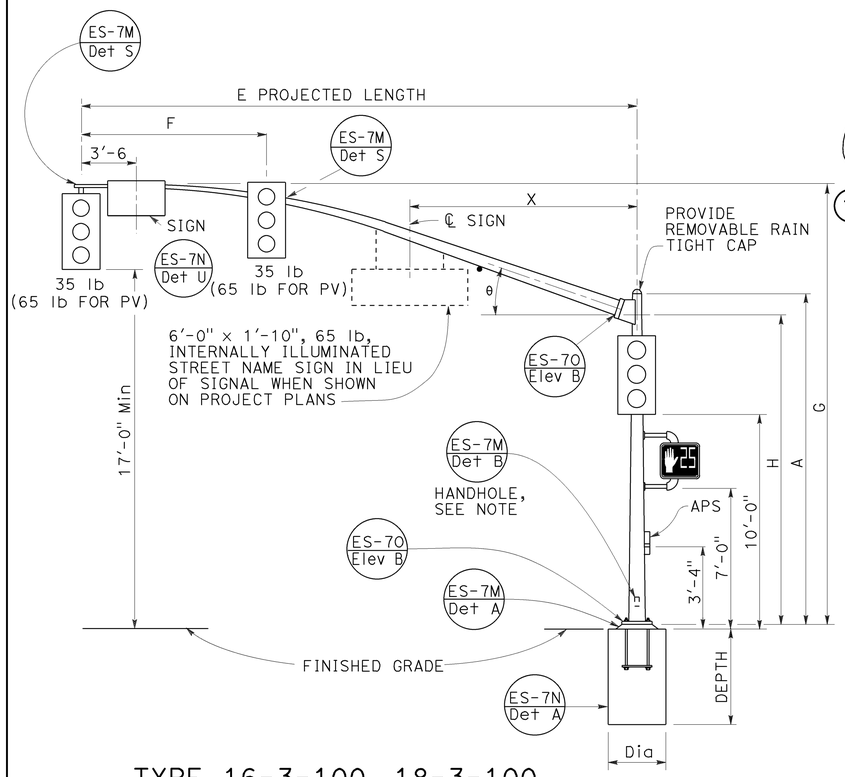

TYPE 16-3-100, 18-3-100, 23-3-100, 27-3-100

ELEVATION A

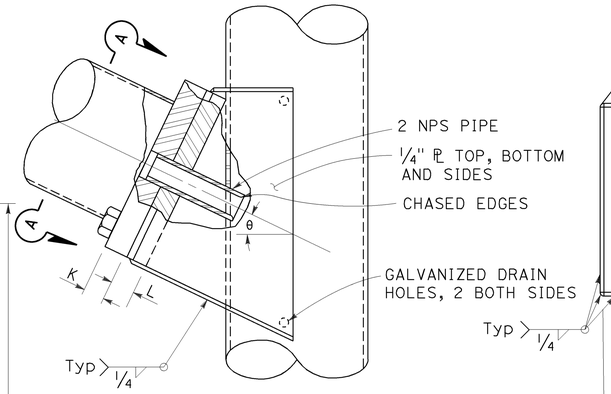

ELEVATION C

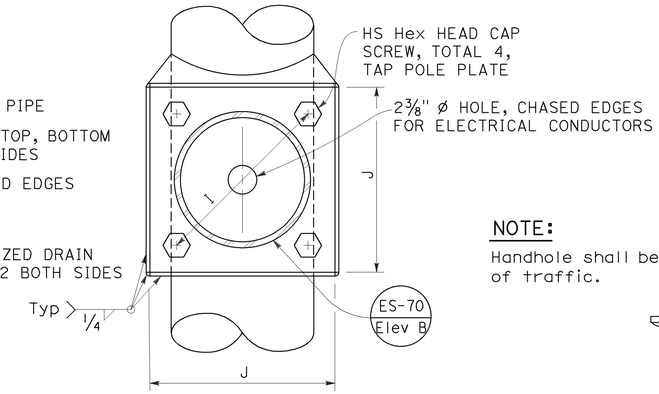

VIEW A-A

SIGNAL MAST ARM CONNECTION

DETAIL A

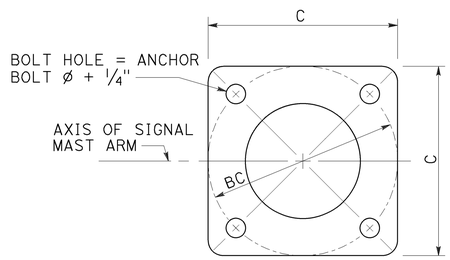

BASE PLATE

DETAIL B

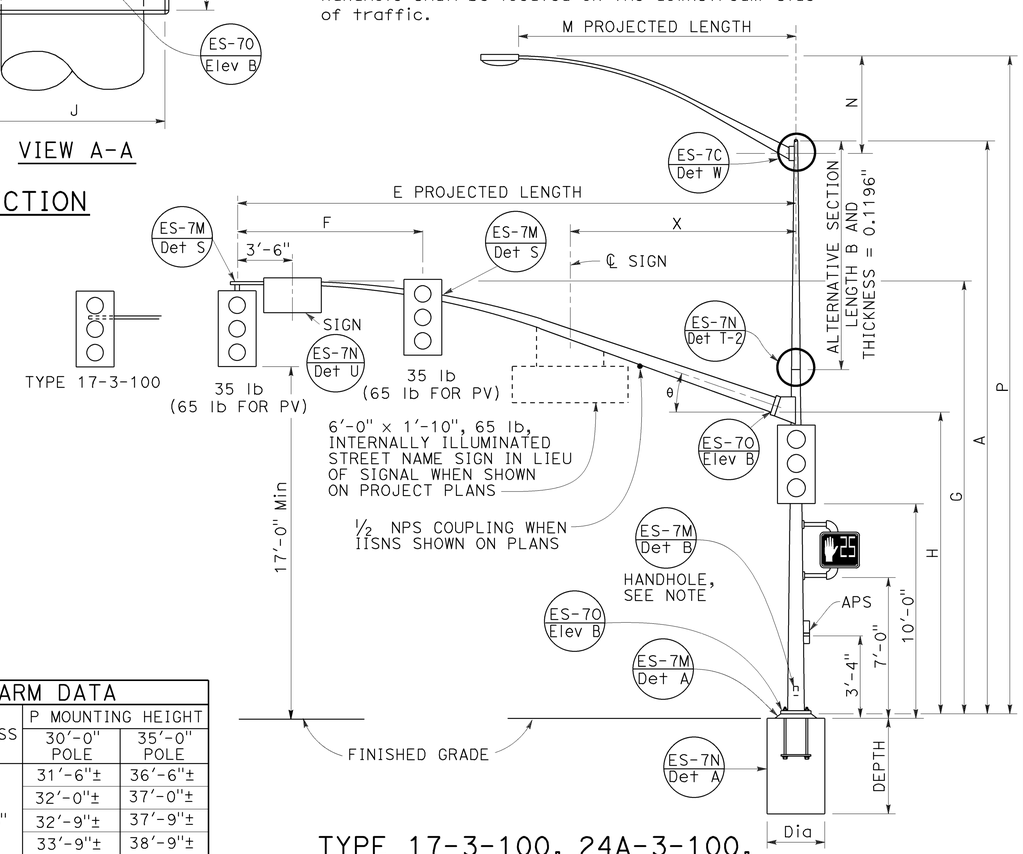

TYPE 17-3-100, 24A-3-100, 19-3-100, 26-3-100, 19A-3-100, 26A-3-100, 24-3-100

ELEVATION B

SIGNAL MAST ARM DATA												
E PROJECTED LENGTH	F Min SPACING	G MOUNTING HEIGHT	H	Min OD AT POLE	THICKNESS	I BOLT CIRCLE	HS CAP SCREWS	J PLATE SIZE	K MAST ARM ℙ THICKNESS	L POLE ℙ THICKNESS	θ	X Max
15'-0"	8'-0"	21'-8"±	17'-6"	7 3/8"	0.1793"	12"	1 1/4"-7NC-3"	1'-0"	1 1/4"	1 1/2"	23°	-
20'-0"		21'-8"±		7 3/8"								
25'-0"	12'-0"	22'-8"±	16'-0"	7 3/8"	0.2391"							10'-6"
30'-0"		23'-0"±		8"								
35'-0"	14'-0"			8 3/4"		13"		1'-1"	1 1/2"	1 3/4"	21°	
40'-0"	15'-0"			9 3/8"							15°	13'-0"
45'-0"		23'-8"±		10 1/16"								

LUMINAIRE MAST ARM DATA					
M PROJECTED LENGTH	N RISE	Min OD AT POLE	THICKNESS	P MOUNTING HEIGHT 30'-0" POLE	P MOUNTING HEIGHT 35'-0" POLE
6'-0"	2'-0"±	3 1/4"	0.1196"	31'-6"±	36'-6"±
8'-0"	2'-6"±	3 1/2"		32'-0"±	37'-0"±
10'-0"	3'-3"±	3 7/8"		32'-9"±	37'-9"±
12'-0"	4'-3"±			33'-9"±	38'-9"±
15'-0"	4'-9"±	4 1/4"		34'-3"±	39'-3"±

POLE TYPE	LOAD CASE	WIND VELOCITY (mph)	POLE DATA: A HEIGHT	Min OD BASE	Min OD TOP	THICKNESS	ALTERNATIVE SECTION B LENGTH	ALTERNATIVE SECTION BOTTOM	ALTERNATIVE SECTION TOP	BASE PLATE DATA: C	BC = BOLT CIRCLE	THICKNESS	ANCHOR BOLT SIZE	LUMINAIRE MAST ARM	SIGNAL MAST ARM	CIDH PILE FOUNDATION: DIAMETER	DEPTH	REINFORCED
16-3-100	3	100	18'-6"	10 3/4"	8 1/16"	0.1793"	NONE			1'-5 1/2"	1'-5 1/2"	3"	1 1/2" ø x 42"	NONE	15'-0", [20'-0"]	3'-0"	8'-6"	YES
17-3-100			30'-0"		6 7/16"		10'-0"	7 7/8"	6 7/16"					6'-15' [12'-0"]				
18-3-100			17'-0"	1'-0"	8 5/16"	0.2391"	NONE			1'-7"			2" ø x 42"	NONE	25'-0", [30'-0"]		9'-6"	
19-3-100			30'-0"		7 11/16"		10'-0"	9 1/8"	7 11/16"					6'-15' [12'-0"]			11'-0"	
19A-3-100			35'-0"		6 15/16"		15'-0"		6 15/16"					6'-15' [15'-0"]				
23-3-100			17'-0"		9 9/16"		NONE							NONE	35'-0"			
24-3-100			30'-0"		7 11/16"		10'-0"	9 1/8"	7 11/16"					6'-15' [12'-0"]				
24A-3-100			35'-0"		6 15/16"		15'-0"		6 15/16"					6'-15' [15'-0"]				
26-3-100			30'-0"	1'-2"	7 13/16"	0.3125"	10'-0"	9 1/4"	7 13/16"	1'-11"	1'-9"		2 1/2" ø x 42"	6'-15' [12'-0"]	40'-0", [45'-0"]	3'-6"	12'-0"	
26A-3-100			35'-0"		7 1/16"		15'-0"		7 1/16"					6'-15' [15'-0"]				
27-3-100			17'-0"		9 11/16"		NONE							NONE				

[ ] INDICATES MAST ARM LENGTH TO BE USED UNLESS OTHERWISE NOTED ON PLANS.

STATE OF CALIFORNIA
DEPARTMENT OF TRANSPORTATION

ELECTRICAL SYSTEMS (SIGNAL AND LIGHTING STANDARD, CASE 3 SIGNAL MAST ARM LOADING, WIND VELOCITY=100 MPH AND SIGNAL MAST ARM LENGTHS 15' TO 45')

NO SCALE

RSP ES-7E DATED OCTOBER 30, 2015 SUPERSEDES RSP ES-7E DATED JULY 19, 2013 AND ES-7E DATED MAY 20, 2011 - PAGE 466 OF THE STANDARD PLANS BOOK DATED 2010.

REVISED STANDARD PLAN RSP ES-7E

2010 REVISED STANDARD PLAN RSP ES-7E

8-24-15

Dist	COUNTY	ROUTE	POST MILES TOTAL PROJECT	SHEET No.	TOTAL SHEETS
07	LA,Ora	5	0.0/1.5, 44.3/44.4	1005	1622

REGISTERED CIVIL ENGINEER

October 30, 2015

PLANS APPROVAL DATE

REGISTERED PROFESSIONAL ENGINEER Stanley P. Johnson No. C57793 Exp. 3-31-16 CIVIL STATE OF CALIFORNIA

THE STATE OF CALIFORNIA OR ITS OFFICERS OR AGENTS SHALL NOT BE RESPONSIBLE FOR THE ACCURACY OR COMPLETENESS OF SCANNED COPIES OF THIS PLAN SHEET.

TO ACCOMPANY PLANS DATED 1-25-16

NOTE:
Handhole shall be located on the downstream side of traffic.

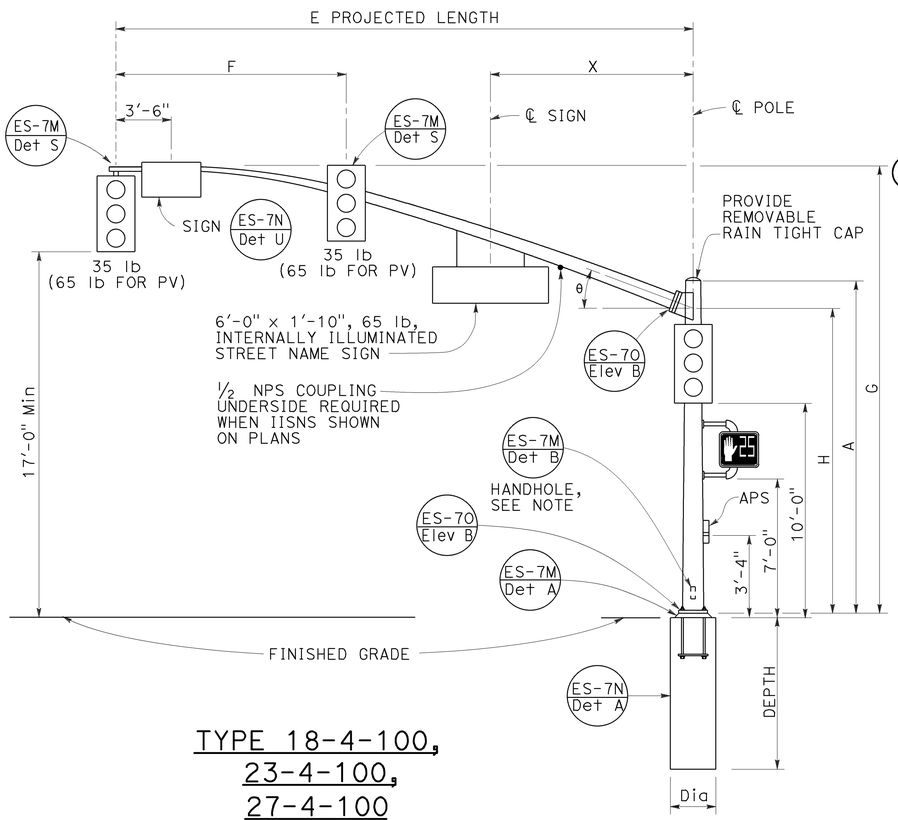

TYPE 18-4-100,
23-4-100,
27-4-100
ELEVATION A

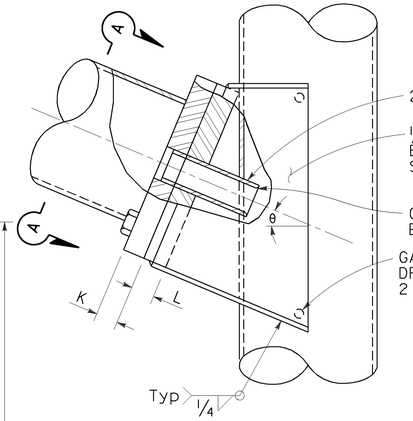

ELEVATION C

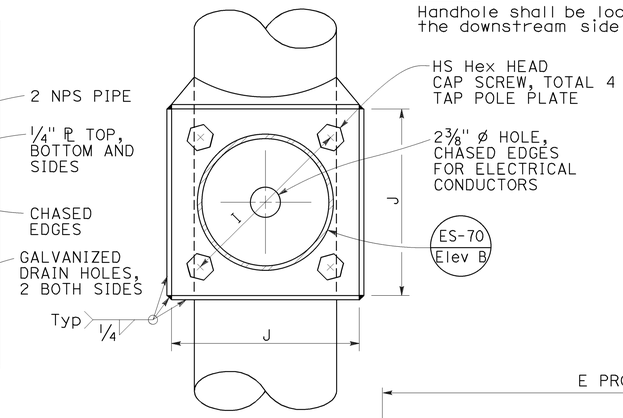

VIEW A-A

SIGNAL MAST ARM CONNECTION
DETAIL A

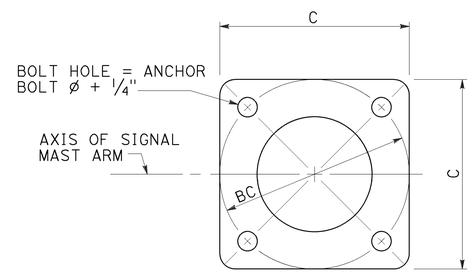

BASE PLATE
DETAIL B

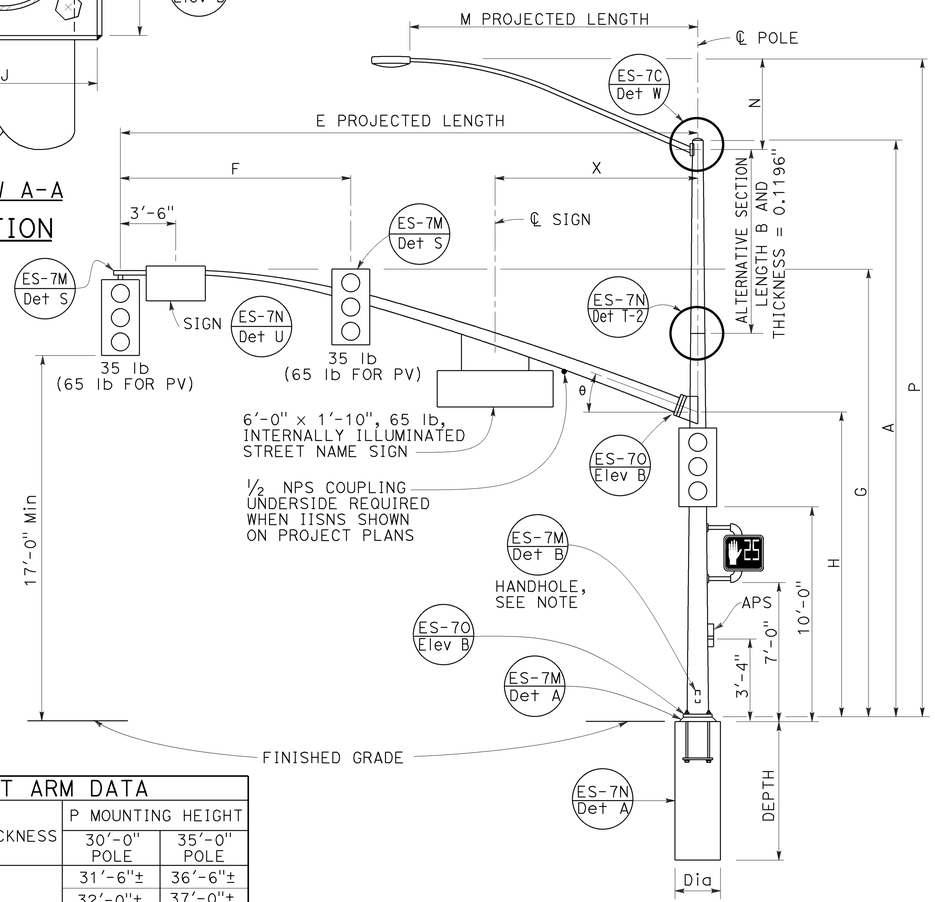

TYPE 19-4-100, 19A-4-100,
24-4-100, 24A-4-100,
26-4-100, 26A-4-100
ELEVATION B

SIGNAL MAST ARM DATA												
E PROJECTED LENGTH	F Min SPACING	G MOUNTING HEIGHT	H	Min OD AT POLE	THICKNESS	I BOLT CIRCLE	HS CAP SCREWS	J PLATE SIZE	K MAST ARM ℄ THICKNESS	L POLE ℄ THICKNESS	θ	X Max
25'-0"	10'-0"	22'-8"±	16'-0"	7⅜"	0.2391"	12"	1¼"-7NC-3"	1'-0"	1¼"	1½"	23°	10'-6"
30'-0"	12'-0"	23'-0"±		8"								
35'-0"	14'-0"			8 11/16"		13½"		1'-1½"	1½"	1¾"	21°	
40'-0"	15'-0"			9⅜"							15°	13'-0"
45'-0"		23'-8"±		10¼"								

LUMINAIRE MAST ARM DATA					
M PROJECTED LENGTH	N RISE	Min OD AT POLE	THICKNESS	P MOUNTING HEIGHT	
				30'-0" POLE	35'-0" POLE
6'-0"	2'-0"±	3¼"	0.1196"	31'-6"±	36'-6"±
8'-0"	2'-6"±	3½"		32'-0"±	37'-0"±
10'-0"	3'-3"±	3⅞"		32'-9"±	37'-9"±
12'-0"	4'-3"±			33'-9"±	38'-9"±
15'-0"	4'-9"±	4¼"		34'-3"±	39'-3"±

POLE TYPE	LOAD CASE	WIND VELOCITY (mph)	POLE DATA							BASE PLATE DATA				LUMINAIRE MAST ARM	SIGNAL MAST ARM	CIDH PILE FOUNDATION		
			A HEIGHT	Min OD BASE	Min OD TOP	THICKNESS	ALTERNATIVE SECTION B LENGTH	ALTERNATIVE SECTION BOTTOM	ALTERNATIVE SECTION TOP	C	BC = BOLT CIRCLE	THICKNESS	ANCHOR BOLT SIZE			Dia	DEPTH	REINFORCED
18-4-100	4	100	17'-0"	12⅛"	9 9/16"	0.3125"	NONE			1'-7"	1'-5½"	3"	2" Ø x 42"	NONE	25'-0", 30'-0"	3'-0"	11'-0"	YES
19-4-100			30'-0"		7 11/16"		10'-0"	9⅛"	7 11/16"					6'-15' 12'-0"				
19A-4-100			35'-0"		6 15/16"		15'-0'		6 15/16"					6'-15' 15'-0"				
23-4-100			17'-0"		9 9/16"		NONE							NONE	35'-0"			
24-4-100			30'-0"		7 11/16"		10'-0"	9⅛"	7 11/16"					6'-15' 12'-0"				
24A-4-100			35'-0"		6 15/16"		15'-0"		6 15/16"					6'-15' 15'-0"				
26-4-100			30'-0"	14"	8 3/16"		10'-0"	9⅝"	8 3/16"	23"	21"		2½" Ø x 42"	6'-15' 12'-0"	40'-0", 45'-0"	3'-6"	12'-0"	
26A-4-100			35'-0"		7 7/16"		15'-0"		7 7/16"					6'-15' 15'-0"				
27-4-100			17'-0"		10 1/16"		NONE							NONE				

INDICATES MAST ARM LENGTH TO BE USED UNLESS OTHERWISE NOTED ON PLANS.

STATE OF CALIFORNIA
DEPARTMENT OF TRANSPORTATION

ELECTRICAL SYSTEMS (SIGNAL AND LIGHTING STANDARD, CASE 4 SIGNAL MAST ARM LOADING, WIND VELOCITY=100 MPH AND SIGNAL MAST ARM LENGTHS 25' TO 45')

NO SCALE

RSP ES-7F DATED OCTOBER 30, 2015 SUPERSEDES RSP ES-7F DATED JULY 19, 2013 AND ES-7F DATED MAY 20, 2011 - PAGE 467 OF THE STANDARD PLANS BOOK DATED 2010.

REVISED STANDARD PLAN RSP ES-7F

2010 REVISED STANDARD PLAN RSP ES-7F

8-24-15

Dist	COUNTY	ROUTE	POST MILES TOTAL PROJECT	SHEET No.	TOTAL SHEETS
07	LA,Ora	5	0.0/1.5, 44.3/44.4	1006	1622

REGISTERED CIVIL ENGINEER

October 30, 2015
PLANS APPROVAL DATE

REGISTERED PROFESSIONAL ENGINEER Stanley P. Johnson No. C57793 Exp. 3-31-16 CIVIL STATE OF CALIFORNIA

THE STATE OF CALIFORNIA OR ITS OFFICERS OR AGENTS SHALL NOT BE RESPONSIBLE FOR THE ACCURACY OR COMPLETENESS OF SCANNED COPIES OF THIS PLAN SHEET.

TO ACCOMPANY PLANS DATED 1-25-16

NOTE:
Handhole shall be located on the downstream side of traffic.

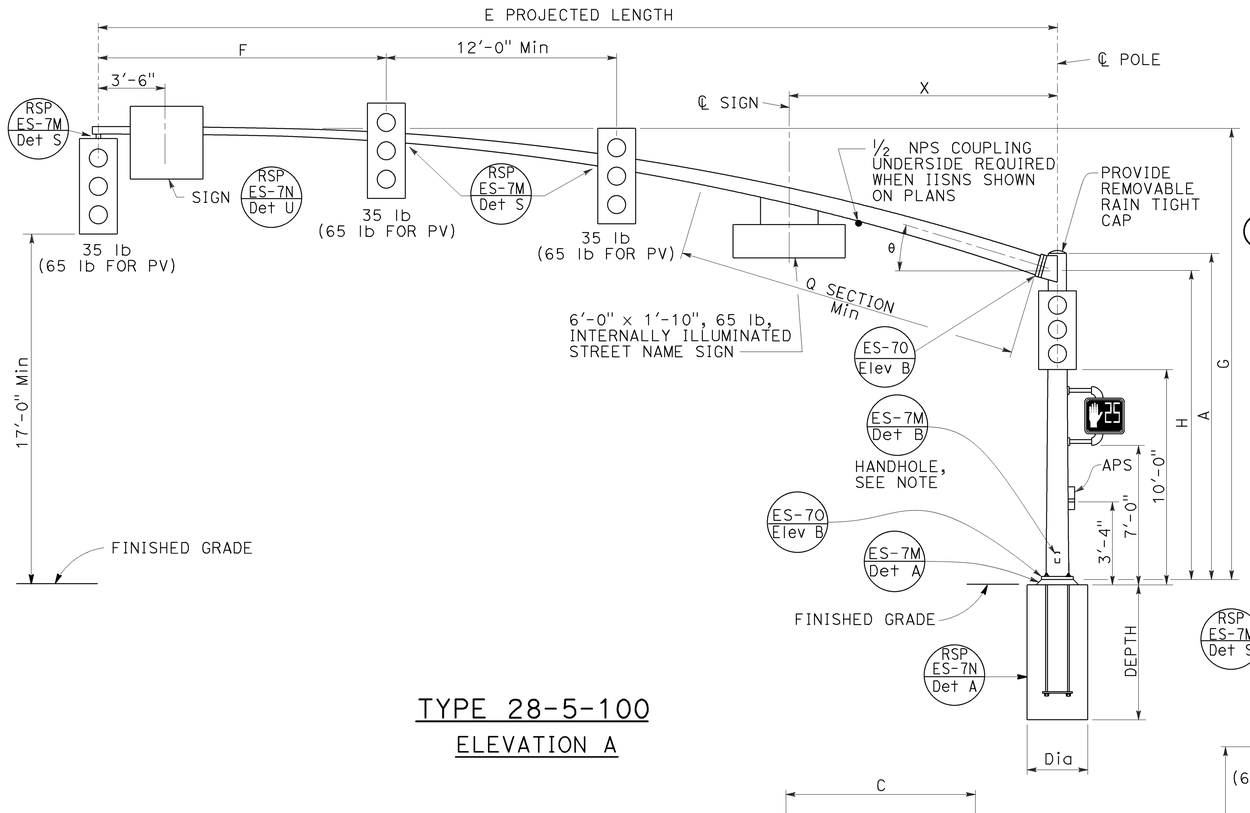

TYPE 28-5-100
ELEVATION A

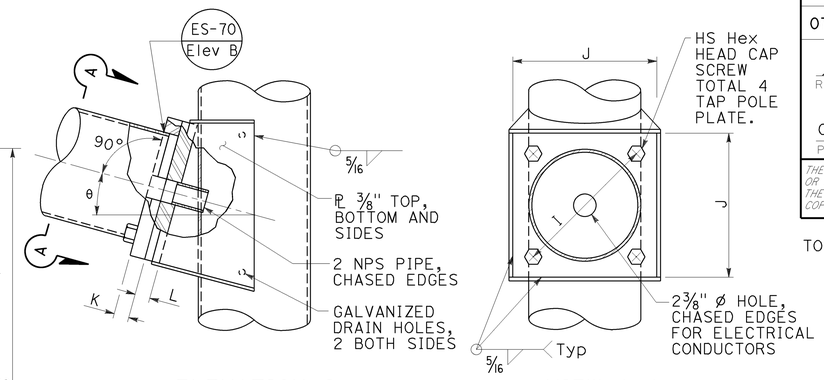

ELEVATION C

VIEW A-A

SIGNAL MAST ARM CONNECTION
DETAIL A

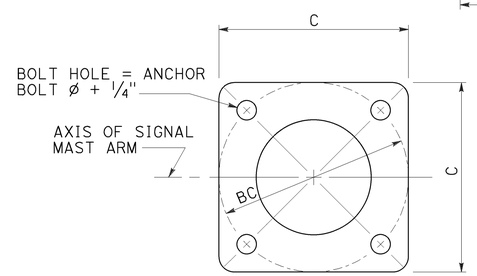

BASE PLATE
DETAIL B

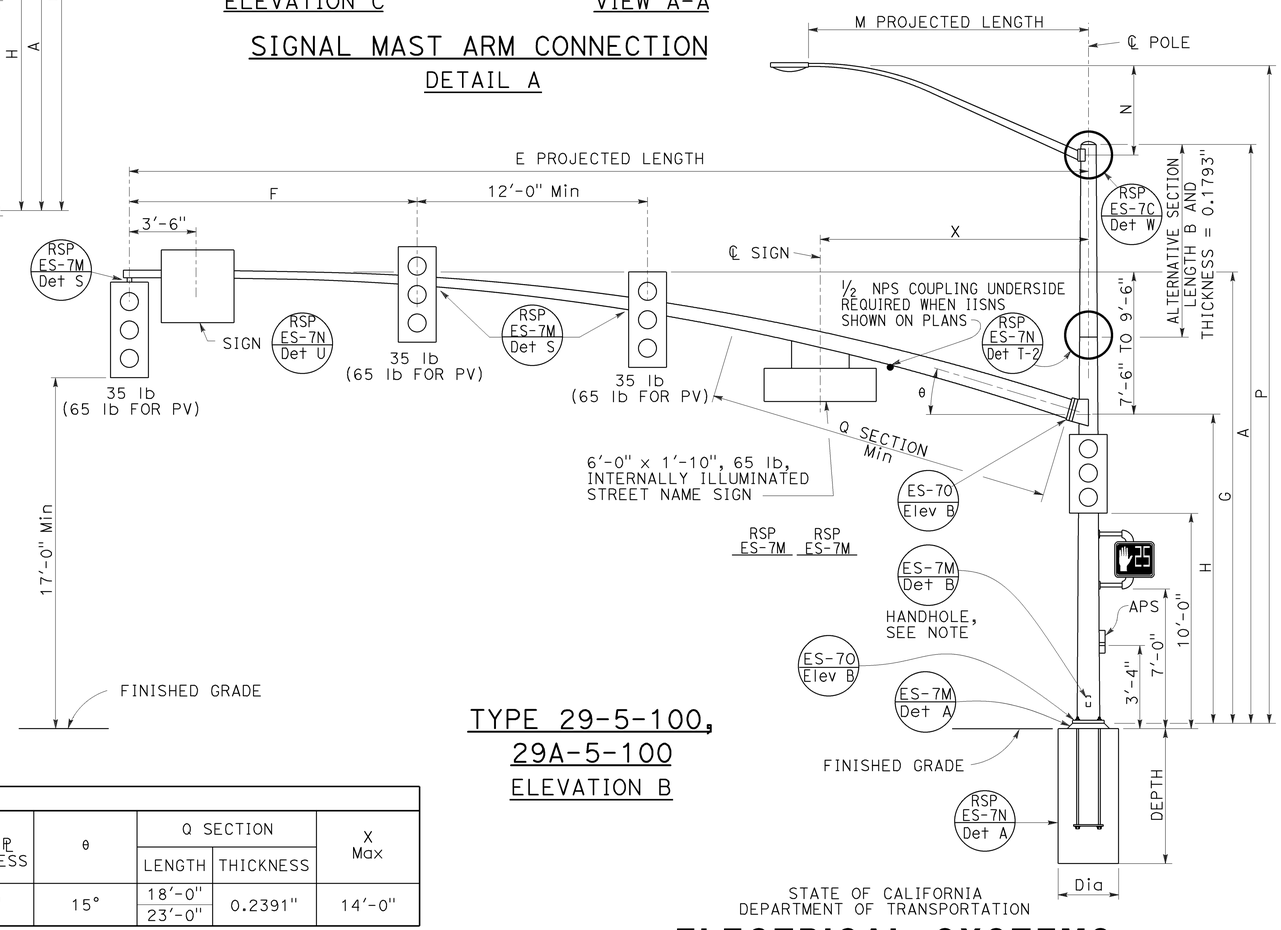

TYPE 29-5-100,
29A-5-100
ELEVATION B

LUMINAIRE MAST ARM DATA					
M PROJECTED LENGTH	N RISE	Min OD AT POLE	THICKNESS	P MOUNTING HEIGHT 30'-0" POLE	P MOUNTING HEIGHT 35'-0" POLE
6'-0"	2'-0"±	3 1/4"	0.1196"	31'-6"±	36'-6"±
8'-0"	2'-6"±	3 1/2"		32'-0"±	37'-0"±
10'-0"	3'-3"±	3 7/8"		32'-9"±	37'-9"±
12'-0"	4'-3"±			33'-9"±	38'-9"±
15'-0"	4'-9"±	4 1/4"		34'-3"±	39'-3"±

SIGNAL MAST ARM DATA														
E PROJECTED LENGTH	F Min SPACING	G MOUNTING HEIGHT	H	Min OD AT POLE	THICKNESS	I BOLT CIRCLE	HS CAP SCREWS	J PLATE SIZE	K MAST ARM ℄ THICKNESS	L POLE ℄ THICKNESS	θ	Q SECTION LENGTH	Q SECTION THICKNESS	X Max
50'-0"	15'-0"	23'-7"± TO 25'-7"±	16'-0"	11 7/16"	0.1793"	16"	1 1/2"-6NC-3 1/4"	1'-4"	1 3/4"	1 3/4"	15°	18'-0"	0.2391"	14'-0"
55'-0"				1'-1/4"								23'-0"		

POLE TYPE	LOAD CASE	WIND VELOCITY (mph)	POLE DATA A HEIGHT	Min OD BASE	Min OD TOP	THICKNESS	ALTERNATIVE SECTION B LENGTH	ALTERNATIVE SECTION BOTTOM	ALTERNATIVE SECTION TOP	BASE PLATE DATA C	BC = BOLT CIRCLE	THICKNESS	ANCHOR BOLT SIZE	LUMINAIRE MAST ARM	SIGNAL MAST ARM	CIDH PILE FOUNDATION Dia	DEPTH	REINFORCED
28-5-100	5	100	17'-0"	14"	11 9/16"	0.3125"	NONE	11 1/8"	9 11/16"	23"	21"	3"	2 1/2" ø x 42"	NONE	50'-0", 55'-0"	3'-6"	12'-0"	YES
29-5-100			30'-0"		9 11/16"		10'-0"							6'-15' 15'-0"				
29A-5-100			35'-0"		8 15/16"		15'-0"		8 15/16"									

INDICATES MAST ARM LENGTH TO BE USED UNLESS OTHERWISE NOTED ON PLANS.

STATE OF CALIFORNIA
DEPARTMENT OF TRANSPORTATION

ELECTRICAL SYSTEMS (SIGNAL AND LIGHTING STANDARD, CASE 5 SIGNAL MAST ARM LOADING, WIND VELOCITY=100 MPH AND SIGNAL MAST ARM LENGTHS 50' TO 55')

NO SCALE

RSP ES-7G DATED OCTOBER 30, 2015 SUPERSEDES RSP ES-7G DATED JULY 19, 2013 AND ES-7G DATED MAY 20, 2011 - PAGE 468 OF THE STANDARD PLANS BOOK DATED 2010.

REVISED STANDARD PLAN RSP ES-7G

2010 REVISED STANDARD PLAN RSP ES-7G

8-24-15

Dist	COUNTY	ROUTE	POST MILES TOTAL PROJECT	SHEET No.	TOTAL SHEETS
07	LA,Ora	5	0.0/1.5, 44.3/44.4	1007	1622

REGISTERED CIVIL ENGINEER

October 30, 2015
PLANS APPROVAL DATE

Stanley P. Johnson
No. C57793
Exp. 3-31-16
CIVIL
STATE OF CALIFORNIA

THE STATE OF CALIFORNIA OR ITS OFFICERS OR AGENTS SHALL NOT BE RESPONSIBLE FOR THE ACCURACY OR COMPLETENESS OF SCANNED COPIES OF THIS PLAN SHEET.

TO ACCOMPANY PLANS DATED 1-25-16

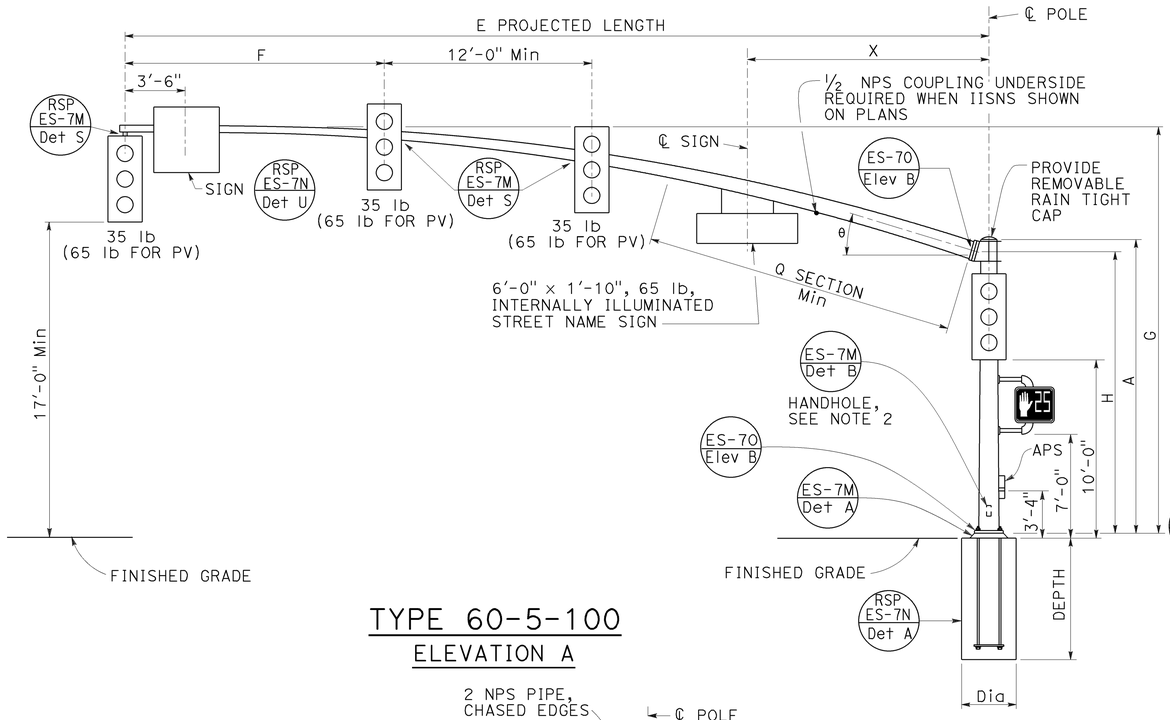

TYPE 60-5-100
ELEVATION A

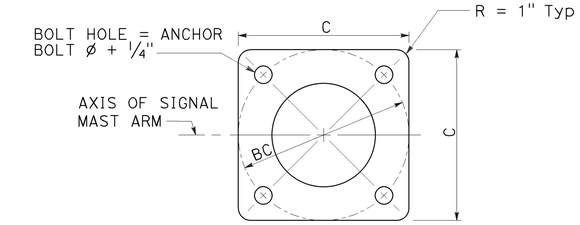

BASE PLATE
DETAIL B

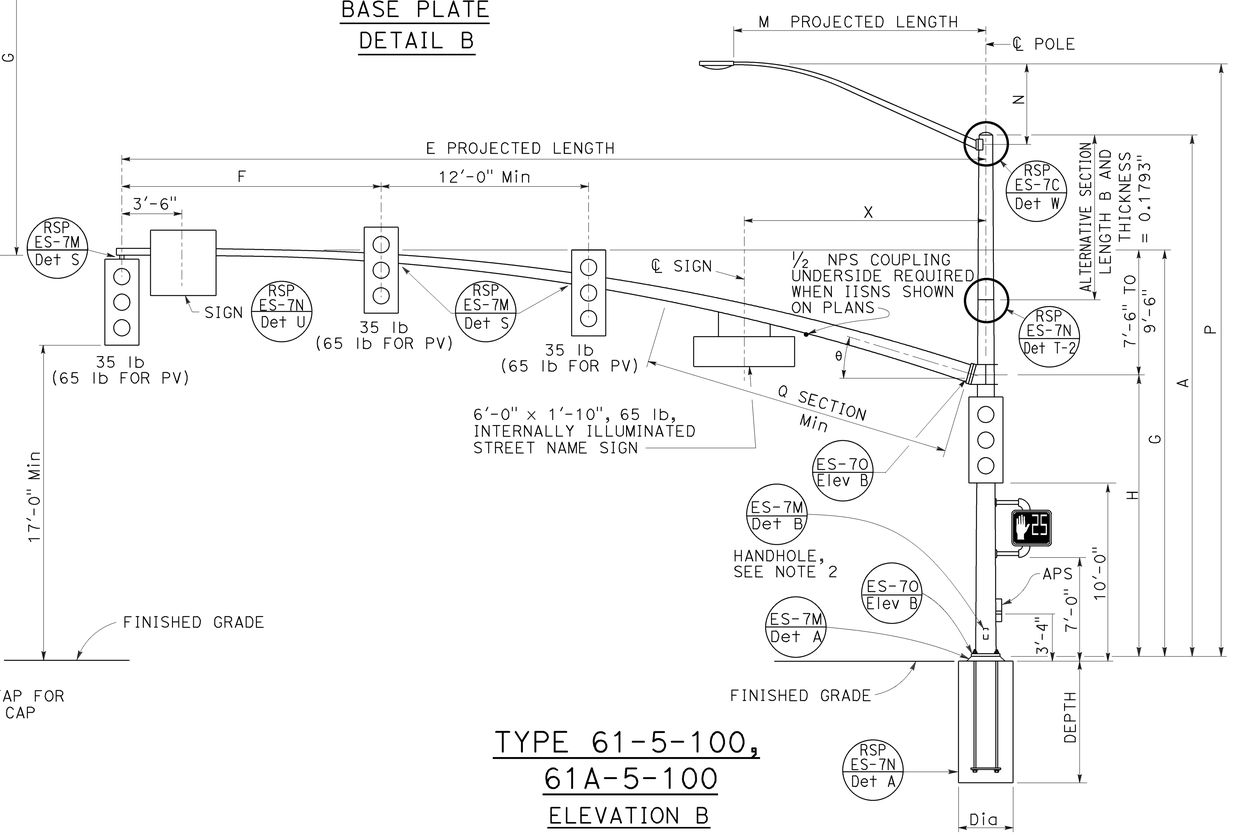

TYPE 61-5-100, 61A-5-100
ELEVATION B

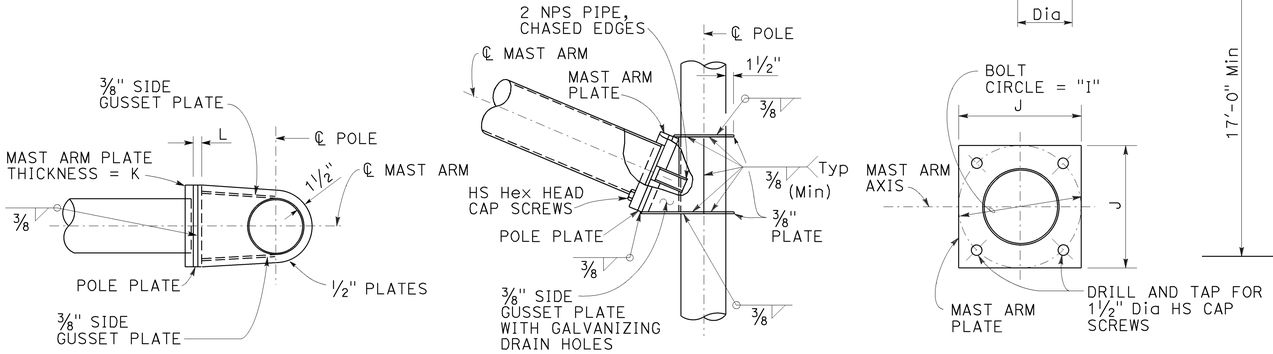

PLAN

ELEVATION
(See Note 1)

MAST ARM PLATE

SIGNAL MAST ARM CONNECTION
DETAIL A

SIGNAL MAST ARM DATA

E PROJECTED LENGTH	F Min SPACING	G MOUNTING HEIGHT	H	Min OD AT POLE	THICKNESS	I BOLT CIRCLE	HS CAP SCREWS	J PLATE SIZE	K MAST ARM ℙ THICKNESS	L POLE ℙ THICKNESS	θ	Q SECTION LENGTH	Q SECTION THICKNESS	X Max
60'-0"	15'-0"	23'-7" TO 25'-7"	16'-0"	1'-1½"	0.1793"	20"	1½"-6NC-4"	1'-8"	2"	2"	15°	24'-0"	0.2391"	14'-0"
65'-0"					0.2391"							29'-0"	0.3125"	

LUMINAIRE MAST ARM DATA

M PROJECTED LENGTH	N RISE	Min OD AT POLE	THICKNESS	P MOUNTING HEIGHT 30'-0" POLE	P MOUNTING HEIGHT 35'-0" POLE
6'-0"	2'-0"±	3¼"	0.1196"	31'-6"±	36'-6"±
8'-0"	2'-6"±	3½"		32'-0"±	37'-0"±
10'-0"	3'-3"±	3⅞"		32'-9"±	37'-9"±
12'-0"	4'-3"±			33'-9"±	38'-9"±
15'-0"	4'-9"±	4¼"		34'-3"±	39'-3"±

POLE DATA / BASE PLATE DATA / CIDH PILE FOUNDATION

POLE TYPE	LOAD CASE	WIND VELOCITY (mph)	A HEIGHT	Min OD BASE	Min OD TOP	THICKNESS	C	BC = BOLT CIRCLE	THICKNESS	ANCHOR BOLT SIZE	LUMINAIRE MAST ARM	SIGNAL MAST ARM	DIAMETER	DEPTH	REINFORCED
60-5-100	5	100	17'-0"	16"	1'-1 9/16"	0.3125"	2'-0"	1'-11"	3"	2½" ø x 60"	NONE	60'-0", 65'-0"	3'-6"	13'-0"	YES
61-5-100			30'-0"		11 11/16"						6'-15' 15'-0"				
61A-5-100			35'-0"		10 15/16"										

INDICATES MAST ARM LENGTH TO BE USED UNLESS OTHERWISE NOTED ON PLANS.

NOTES:

1. The radial separation between the face of the pole and the adjacent insides of the top and bottom gusset plates shall not exceed 3/16". Fillet weld size to be increased by amount of gap.
2. Handhole shall be located on the downstream side of traffic.

STATE OF CALIFORNIA
DEPARTMENT OF TRANSPORTATION

ELECTRICAL SYSTEMS (SIGNAL AND LIGHTING STANDARD, CASE 5 SIGNAL MAST ARM LOADING, WIND VELOCITY=100 MPH AND SIGNAL MAST ARM LENGTHS 60' TO 65')

NO SCALE

RSP ES-7H DATED OCTOBER 30, 2015 SUPERSEDES RSP ES-7H DATED JULY 19, 2013 AND ES-7H DATED MAY 20, 2011 - PAGE 469 OF THE STANDARD PLANS BOOK DATED 2010.

REVISED STANDARD PLAN RSP ES-7H

2010 REVISED STANDARD PLAN RSP ES-7H

8-24-15

Dist	COUNTY	ROUTE	POST MILES TOTAL PROJECT	SHEET No.	TOTAL SHEETS
07	LA,Ora	5	0.0/1.5, 44.3/44.4	1008	1622

REGISTERED CIVIL ENGINEER

October 30, 2015
PLANS APPROVAL DATE

REGISTERED PROFESSIONAL ENGINEER Stanley P. Johnson No. C57793 Exp. 3-31-16 CIVIL STATE OF CALIFORNIA

THE STATE OF CALIFORNIA OR ITS OFFICERS OR AGENTS SHALL NOT BE RESPONSIBLE FOR THE ACCURACY OR COMPLETENESS OF SCANNED COPIES OF THIS PLAN SHEET.

TO ACCOMPANY PLANS DATED 1-25-16

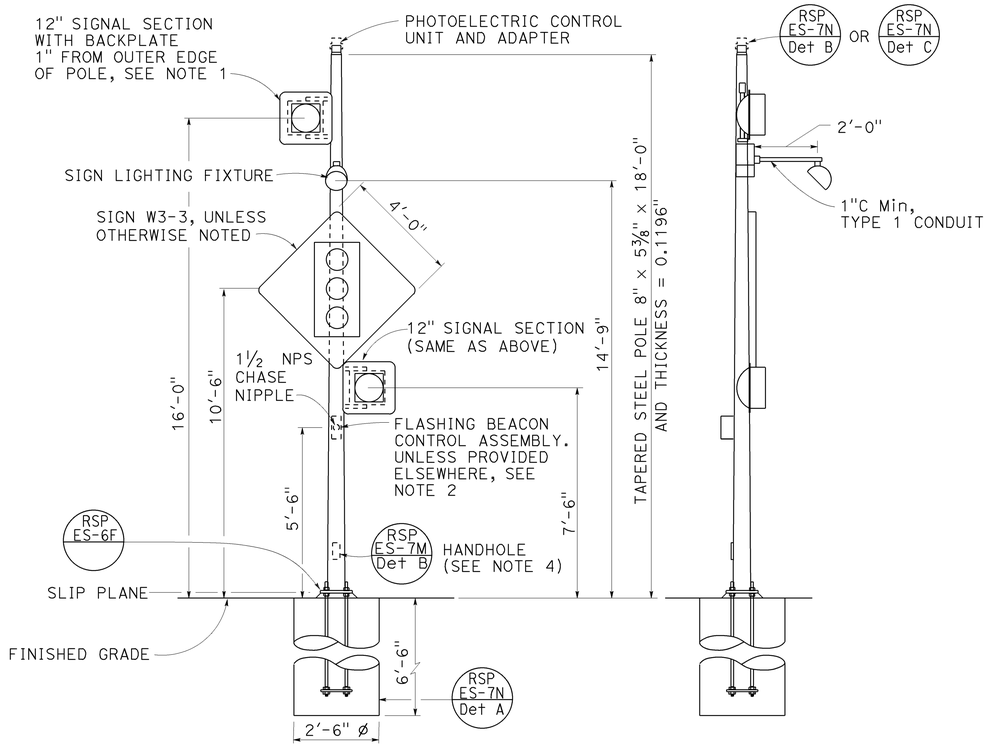

FRONT VIEW

SIDE VIEW

TYPE 15-FBS
ADVANCE FLASHING BEACON WITH SLIP BASE INSTALLATION
DETAIL A

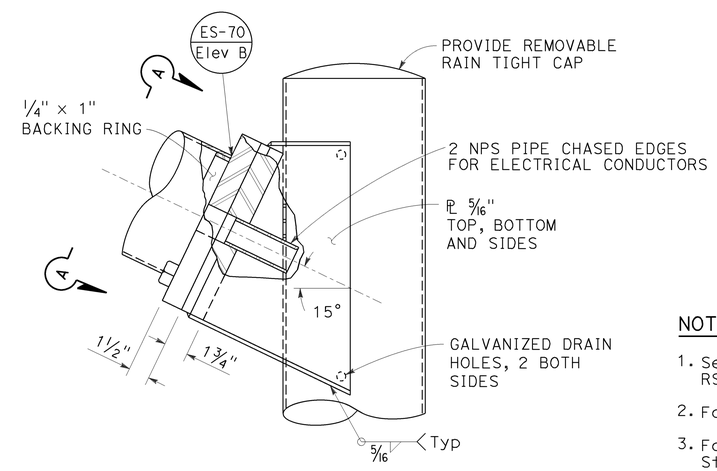

ELEVATION B

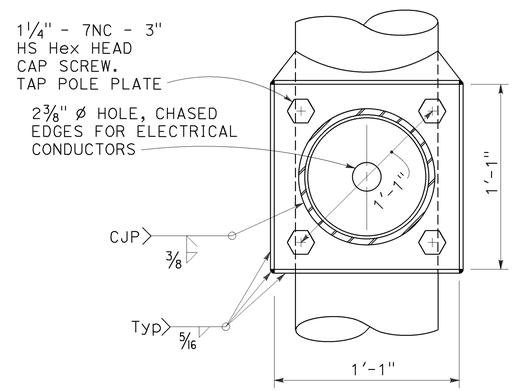

VIEW A-A

FLASHING BEACON MAST ARM CONNECTION DETAIL
DETAIL B

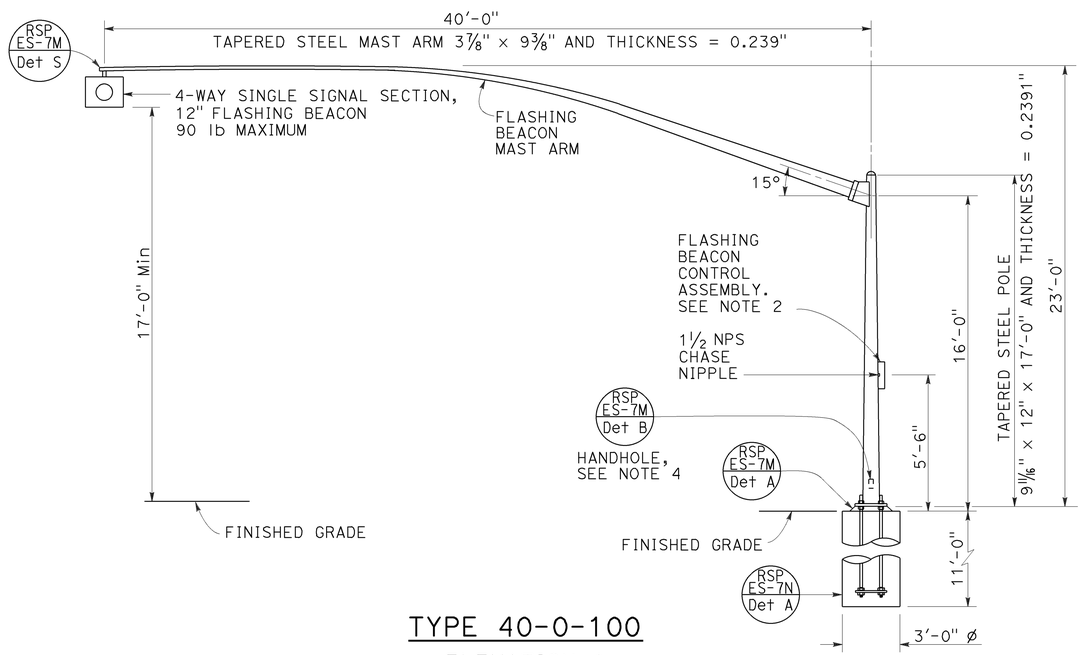

TYPE 40-0-100
ELEVATION A

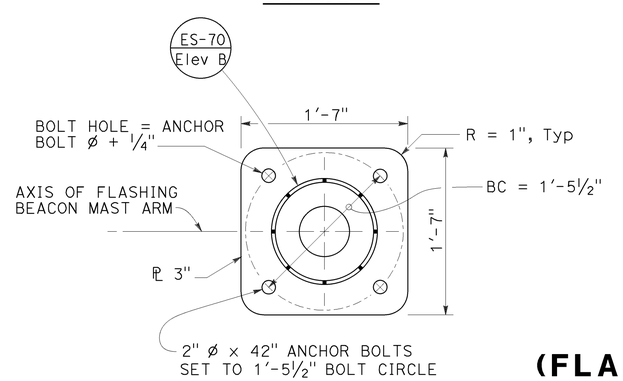

BASE PLATE
DETAIL C

NOTES:

1. See Revised Standard Plans RSP ES-4A and RSP ES-4D for attachment fitting details.
2. For wiring diagram, see Standard Plan ES-14B.
3. For additional notes and details, see Revised Standard Plans RSP ES-7M and RSP ES-7N.
4. Handhole shall be located on the downstream side of traffic.
5. See project plans for type of standard to be installed.

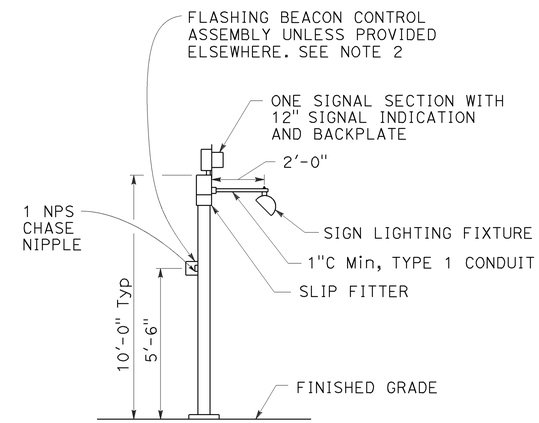

TYPE 1-A, 1-B, 1-C, AND 1-D
ADVANCE FLASHING BEACON INSTALLATION
DETAIL D
See Note 5

STATE OF CALIFORNIA
DEPARTMENT OF TRANSPORTATION

ELECTRICAL SYSTEMS (FLASHING BEACON ON A TYPE 1, TYPE 15-FBS, AND TYPE 40 STANDARD)

NO SCALE

RSP ES-7J DATED OCTOBER 30, 2015 SUPERSEDES RSP ES-7J DATED JULY 19, 2013 AND STANDARD PLAN ES-7J DATED MAY 20, 2011 - PAGE 471 OF THE STANDARD PLANS BOOK DATED 2010.

REVISED STANDARD PLAN RSP ES-7J

2010 REVISED STANDARD PLAN RSP ES-7J

9-1-15

Dist	COUNTY	ROUTE	POST MILES TOTAL PROJECT	SHEET No.	TOTAL SHEETS
07	LA,Ora	5	0.0/1.5, 44.3/44.4	1009	1622

REGISTERED CIVIL ENGINEER

October 30, 2015
PLANS APPROVAL DATE

REGISTERED PROFESSIONAL ENGINEER Stanley P. Johnson No. C57793 Exp. 3-31-16 CIVIL STATE OF CALIFORNIA

THE STATE OF CALIFORNIA OR ITS OFFICERS OR AGENTS SHALL NOT BE RESPONSIBLE FOR THE ACCURACY OR COMPLETENESS OF SCANNED COPIES OF THIS PLAN SHEET.

TO ACCOMPANY PLANS DATED 1-25-16

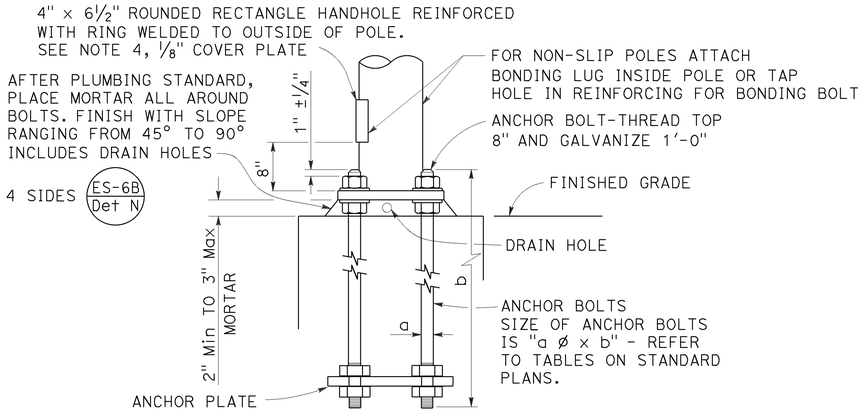

HANDHOLE AND ANCHORAGE
DETAIL A

IDENTIFICATION NUMBER

1. Attach a stamped metal tag with pole's identification number above the handhole. ¼" high number, minimum.
2. Attach a stamped metal tag with mast arm's identification number to the bottom of the signal mast arm near the pole plate. ¼" high number, minimum.

Type — Load case (Use SL for special load case) — Design wind velocity (mph) — Signal mast arm length (ft) {Near handhole: Maximum signal mast arm length for pole type; Near pole plate: Installed signal mast arm length} — Standard plan year — Only for poles or mast arms using Detail F — Only for poles or mast arms using ES-7D

26A - 3 - 100 - 45 - 10 - F or FB

SAMPLE IDENTIFICATION NUMBER

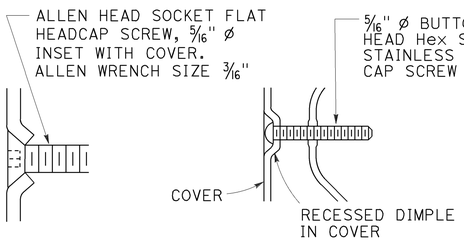

TYPICAL DETAIL
DETAIL B-1

ALTERNATIVE DETAIL
DETAIL B-2

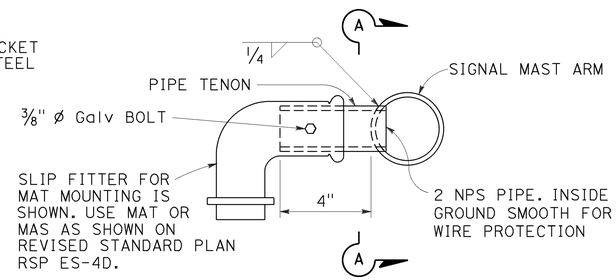

SIDE TENON
DETAIL S-1

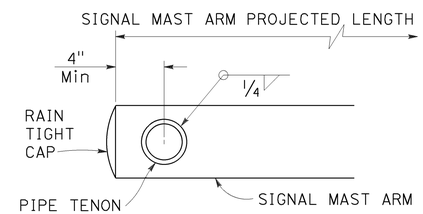

SECTION A-A

PIPE TENONS
DETAIL S

NOTES:

1. Provide a Hex nut, leveling nut and 2 washers for each bolt.
2. Luminaire mast arms shall be round, tapered steel tubes, taper of 0.1375" to 0.143-inch per foot with an end section 2⅜" OD for mounting hardware. Extensions of 2 NPS Standard pipe and 7" long may be used at the option of the manufacturer. When low pressure sodium luminaires are required, the extension shall be 1'-3".
3. Signal mast arms shall be round, tapered steel tubes, maximum taper 0.143-inch per foot.
4. Handhole reinforcement ring shall be ¼" x 2" for 0.1196" to 0.2391" thick poles, ⅜" x 2" for 0.3125" thick poles.
5. Handholes shall be located on the downstream side of traffic.
6. Detail F, fatigue resistant weld, is required at socket welded signal mast arm plate and pole base plate.
7. Cap screws shall be tightened by the turn-of-nut method ⅓ turn from a snug tight condition. No washer will be required.
8. Outside diameter, wall thickness, and corresponding section properties of poles and mast arms as shown in the Standard Plans are minimums. Unless otherwise specified, alternative sections shall require approval by the Engineer.
9. Wind Loading (3 seconds gust): 100 mph
10. Unit Stresses (Structural steel):
    fy = 55,000 psi (tapered steel tube and anchor bolts)
    fy = 50,000 psi (unless otherwise noted)
11. Unit Stresses (Reinforced concrete):
    f'c = 3,625 psi
    fy = 60,000 psi

WELD SIZE	WALL THICKNESS
3/16"	0.1196"
¼"	0.1793"
5/16"	0.2391"
⅜"	0.3125"

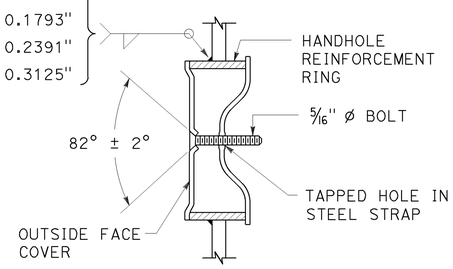

TAMPER RESISTANT HANDHOLE COVER
DETAIL B

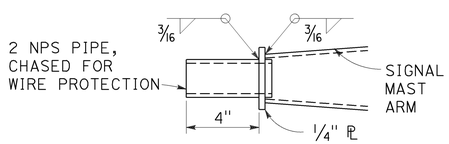

TIP TENON
DETAIL TL

This detail supersedes Detail S when so designated

WELD SIZE	WALL THICKNESS
⅛"	0.1196"
3/16"	0.1793"
¼"	0.2391"

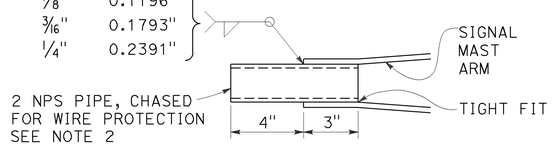

TIP TENON
DETAIL TS

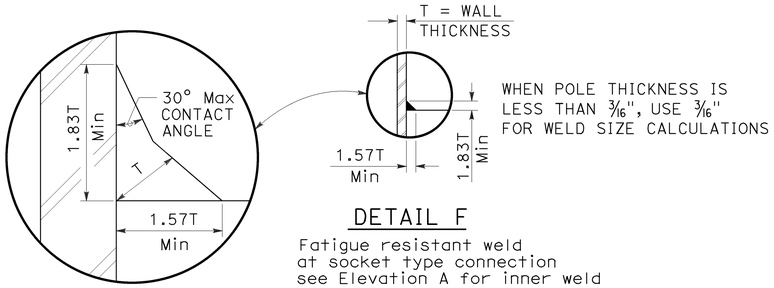

DETAIL F

Fatigue resistant weld at socket type connection see Elevation A for inner weld

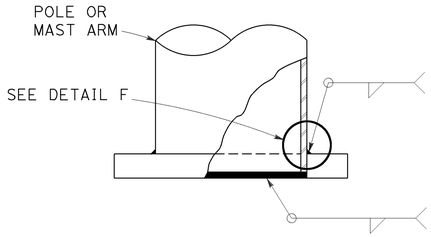

WELD SIZE	WALL THICKNESS
¼"	0.1196"
5/16"	0.1793"
⅜"	0.2391"
7/16"	0.3125"

⅛"	0.1196"
3/16"	0.1793"
¼"	0.2391"
5/16"	0.3125"

ELEVATION A

STATE OF CALIFORNIA
DEPARTMENT OF TRANSPORTATION

ELECTRICAL SYSTEMS (SIGNAL AND LIGHTING STANDARD, DETAIL No. 1)

NO SCALE

RSP ES-7M DATED OCTOBER 30, 2015 SUPERSEDES STANDARD PLAN ES-7M DATED MAY 20, 2011 - PAGE 474 OF THE STANDARD PLANS BOOK DATED 2010.

REVISED STANDARD PLAN RSP ES-7M

2010 REVISED STANDARD PLAN RSP ES-7M

9-1-15

Dist	COUNTY	ROUTE	POST MILES TOTAL PROJECT	SHEET No.	TOTAL SHEETS
07	LA,Ora	5	0.0/1.5, 44.3/44.4	1010	1622

REGISTERED CIVIL ENGINEER

October 30, 2015
PLANS APPROVAL DATE

Stanley P. Johnson
No. C57793
Exp. 3-31-16
CIVIL
STATE OF CALIFORNIA
REGISTERED PROFESSIONAL ENGINEER

THE STATE OF CALIFORNIA OR ITS OFFICERS OR AGENTS SHALL NOT BE RESPONSIBLE FOR THE ACCURACY OR COMPLETENESS OF SCANNED COPIES OF THIS PLAN SHEET.

TO ACCOMPANY PLANS DATED 1-25-16

2010 REVISED STANDARD PLAN RSP ES-7N

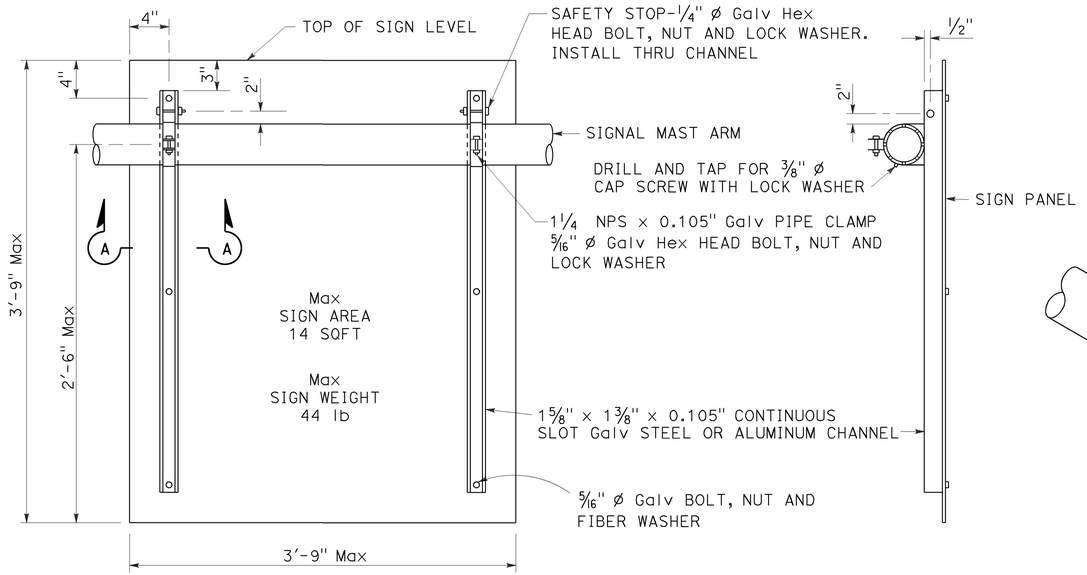

REAR VIEW

SIDE VIEW

SIGN MOUNTING DETAILS
DETAIL U

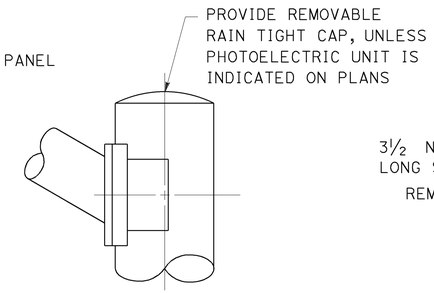

STANDARD TOP
DETAIL B-1

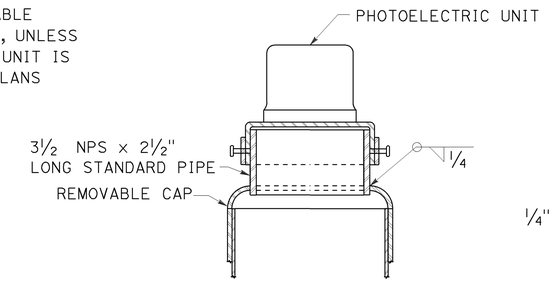

MOUNTING ADAPTER FOR
PHOTOELECTRIC UNIT
DETAIL B-2

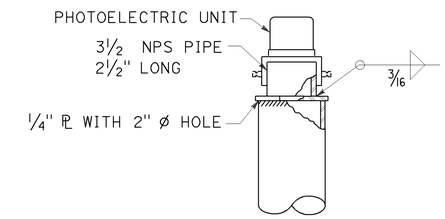

ALTERNATIVE
MOUNTING ADAPTER
DETAIL B-3

POLE TOP DETAILS
DETAIL B

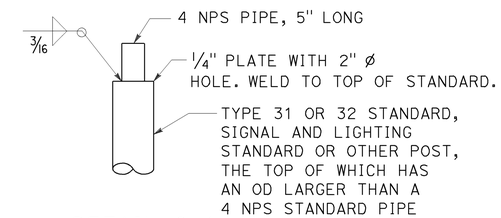

DETAIL C-1

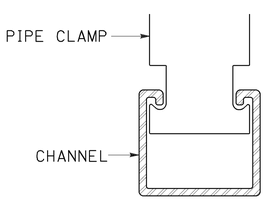

SECTION A-A

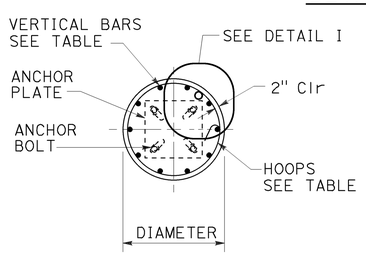

SECTION B-B

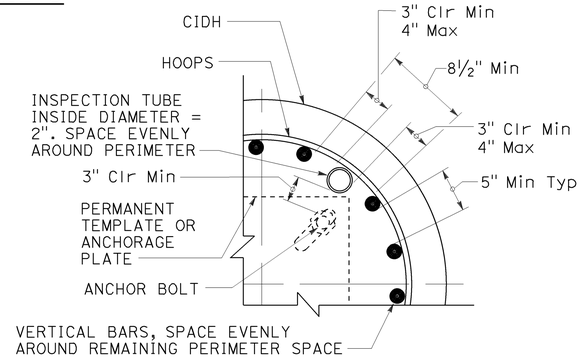

INSPECTION TUBE PLACEMENT
DETAIL I

CIDH REINFORCING AND INSPECTION TUBE SCHEDULE			
CIDH DIAMETER	VERTICAL BARS	HOOPS (WELDED)	INSPECTION TUBE
2 ft	8-#5	#4 AT 6	2
2.5 ft	10-#6		4*
3 ft	12-#7	#5 AT 6	
3.5 ft	14-#8		4
4 ft	18-#9	2-#4 AT 7	5
5 ft	22-#10	2-#5 AT 7	6
6 ft	26-#11	2-#6 AT 7	7

* FOR SLIP BASE VERSIONS WITH 3 ANCHOR BOLTS USE 3 INSPECTION TUBES.

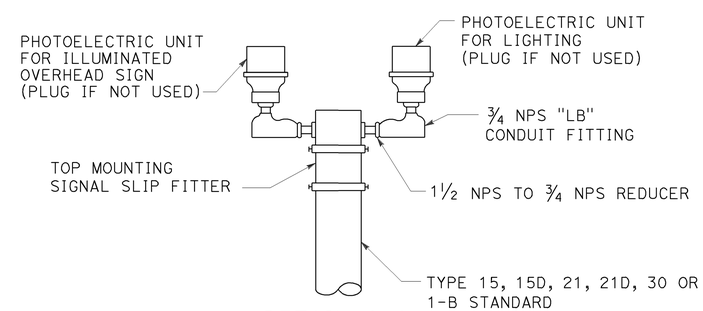

DETAIL C-2

DUAL PHOTOELECTRIC UNIT MOUNTING DETAIL
DETAIL C

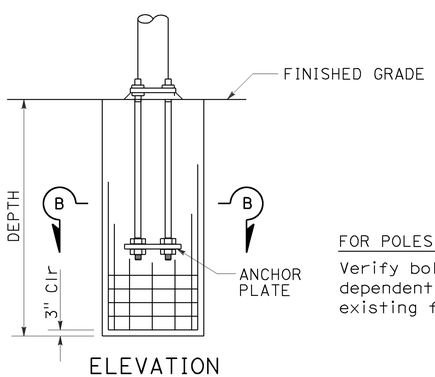

ELEVATION

FOR POLES TO BE INSTALLED ON EXISTING FOUNDATION:
Verify bolt circles, anchor bolt sizes and dependent dimensions for poles to be installed on existing foundations before fabricating the poles.

CAST-IN-DRILLED-HOLE PILE FOUNDATION, REINFORCED PILE
DETAIL A

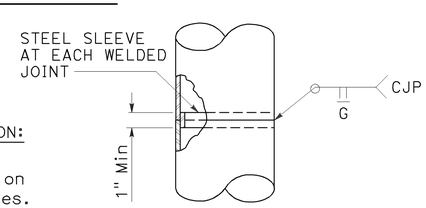

FOR UNIFORM TUBE THICKNESS
DETAIL T-1

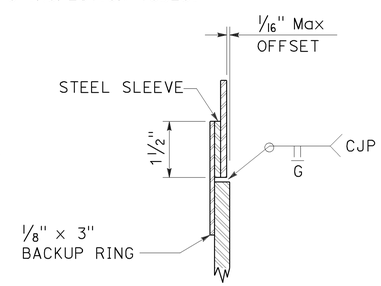

AT TUBE THICKNESS CHANGE
DETAIL T-2

POLE SPLICES
DETAIL T

STATE OF CALIFORNIA
DEPARTMENT OF TRANSPORTATION

ELECTRICAL SYSTEMS (SIGNAL AND LIGHTING STANDARD, DETAIL No. 2)

NO SCALE

RSP ES-7N DATED OCTOBER 30, 2015 SUPERSEDES STANDARD PLAN ES-7N DATED MAY 20, 2011 - PAGE 475 OF THE STANDARD PLANS BOOK DATED 2010.

REVISED STANDARD PLAN RSP ES-7N

9-1-15

Dist	COUNTY	ROUTE	POST MILES TOTAL PROJECT	SHEET No.	TOTAL SHEETS
07	LA,Ora	5	0.0/1.5, 44.3/44.4	1011	1622

REGISTERED CIVIL ENGINEER

October 30, 2015
PLANS APPROVAL DATE

REGISTERED PROFESSIONAL ENGINEER
Stanley P. Johnson
No. C57793
Exp. 3-31-16
CIVIL
STATE OF CALIFORNIA

THE STATE OF CALIFORNIA OR ITS OFFICERS OR AGENTS SHALL NOT BE RESPONSIBLE FOR THE ACCURACY OR COMPLETENESS OF SCANNED COPIES OF THIS PLAN SHEET.

TO ACCOMPANY PLANS DATED 1-25-16

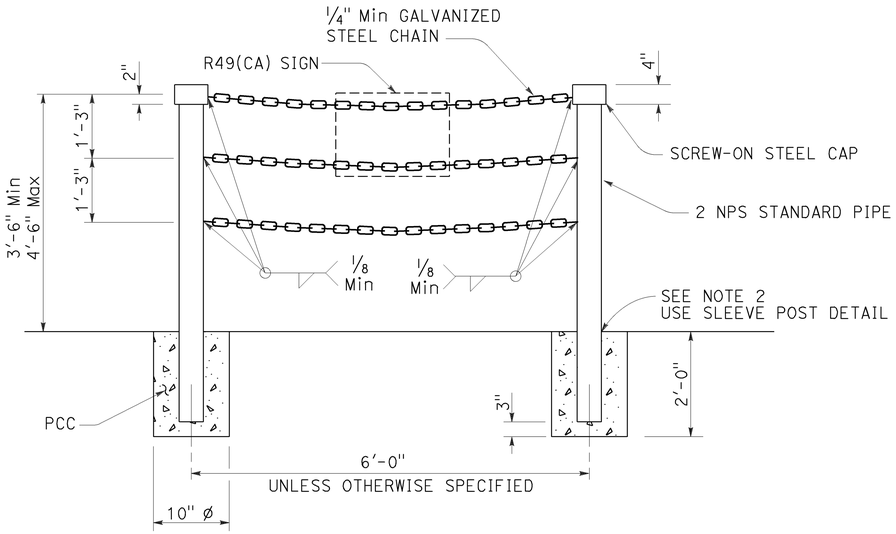

TYPE II

DETAIL A

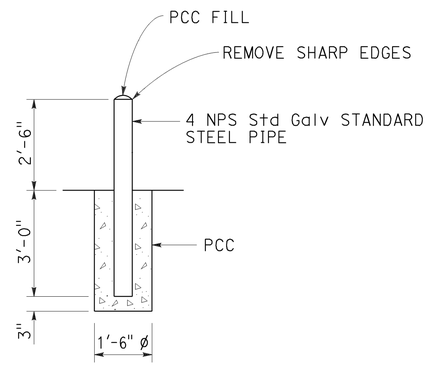

GUARD POST

DETAIL B

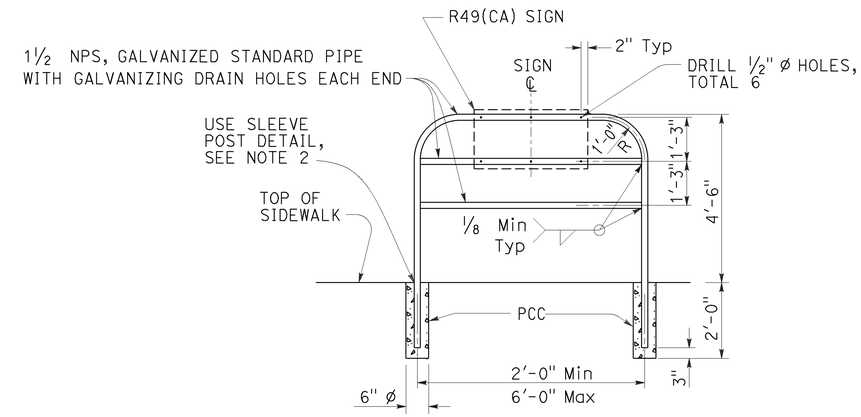

TYPE I

DETAIL C

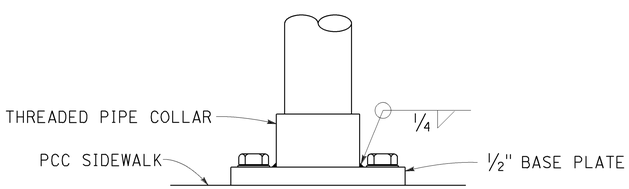

ELEVATION

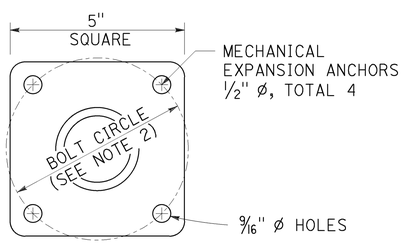

PLAN

POST ANCHORAGE DETAIL

DETAIL D

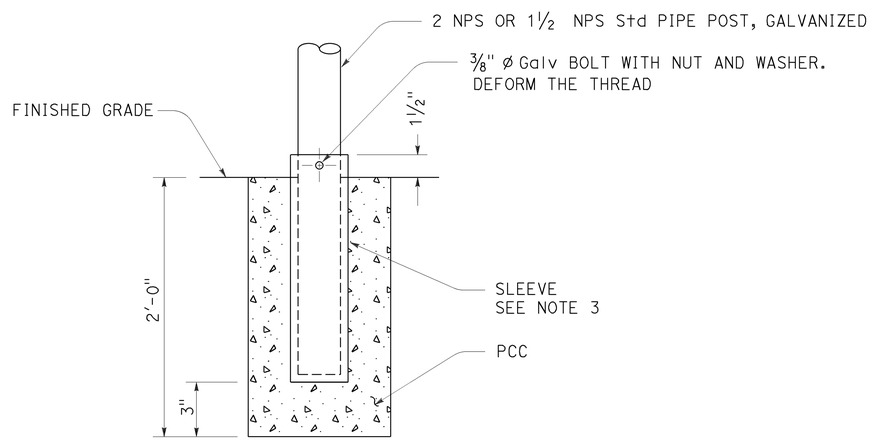

SLEEVE POST DETAIL

Use unless otherwise specified or shown on plans

DETAIL E

NOTES:

1. Pipe post to be set 1'-6" back from face of curb unless otherwise specified.
2. Where barricade posts are installed in existing concrete sidewalk, the post may be anchored to the sidewalk as shown in the "Post Anchorage Detail". Bolt circle diameter shall be 4" minimum for Type I barricade and 5" minimum for Type II barricade.
3. Steel sleeve shall be constructed with an inside diameter 1/10" larger than the post's outside diameter. Wall thickness of sleeve shall be same as post or larger.
4. Alternative details may be submitted for approval by the Engineer.

STATE OF CALIFORNIA
DEPARTMENT OF TRANSPORTATION

ELECTRICAL SYSTEMS (PEDESTRIAN BARRICADES)

NO SCALE

RSP ES-7Q DATED OCTOBER 30, 2015 SUPERSEDES STANDARD PLAN ES-7Q DATED MAY 20, 2011 - PAGE 478 OF THE STANDARD PLANS BOOK DATED 2010.

REVISED STANDARD PLAN RSP ES-7Q

2010 REVISED STANDARD PLAN RSP ES-7Q

8-24-15

Dist	COUNTY	ROUTE	POST MILES TOTAL PROJECT	SHEET No.	TOTAL SHEETS
07	LA,Ora	5	0.0/1.5, 44.3/44.4	1012	1622

REGISTERED CIVIL ENGINEER

October 30, 2015
PLANS APPROVAL DATE

REGISTERED PROFESSIONAL ENGINEER
Stanley P. Johnson
No. C57793
Exp. 3-31-16
CIVIL
STATE OF CALIFORNIA

THE STATE OF CALIFORNIA OR ITS OFFICERS OR AGENTS SHALL NOT BE RESPONSIBLE FOR THE ACCURACY OR COMPLETENESS OF SCANNED COPIES OF THIS PLAN SHEET.

TO ACCOMPANY PLANS DATED 1-25-16

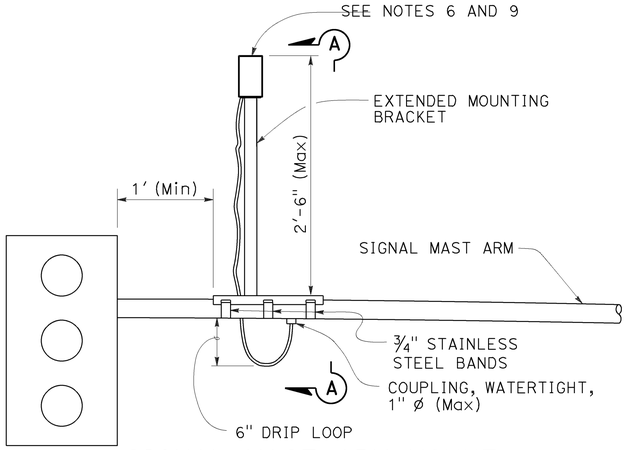

SIGNAL MAST ARM MOUNT

DETAIL A

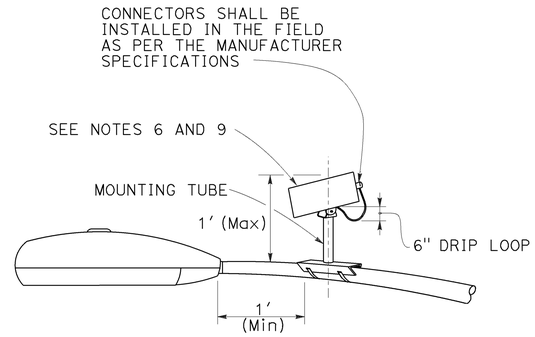

LUMINAIRE MAST ARM MOUNT

DETAIL B

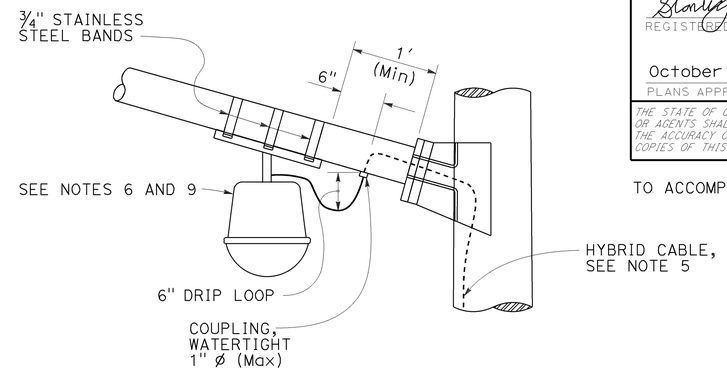

LUMINAIRE MAST ARM MOUNT

DETAIL C

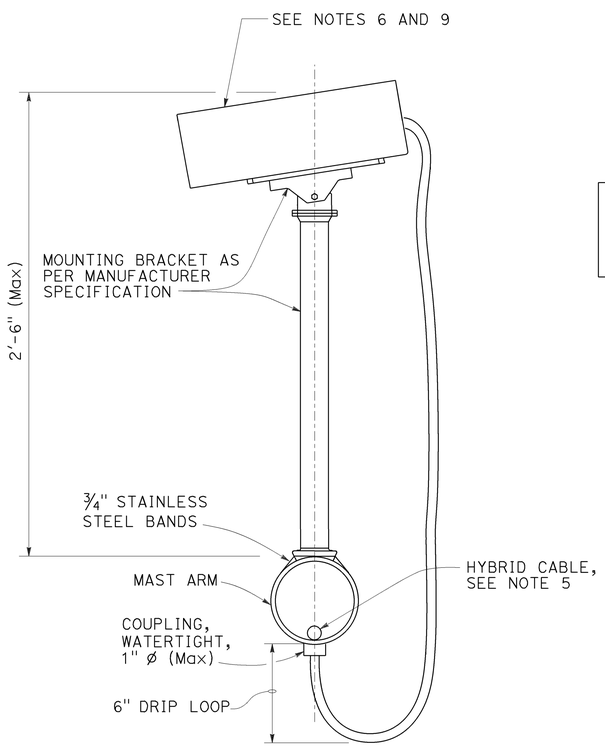

SECTION A-A

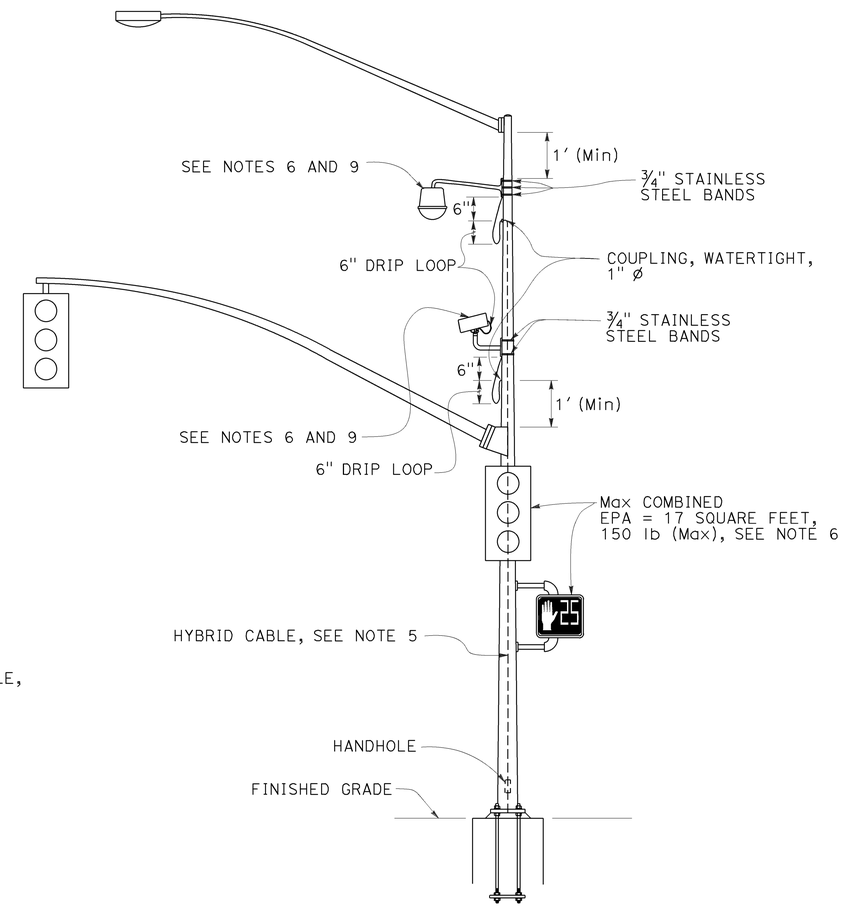

SIGNAL POLE MOUNT

DETAIL D

NOTES:

1. Exact mounting location of miscellaneous attachment and bracket shall be approved by the Engineer per manufacturer's recommendation.
2. Location of cable entrances on signal pole shall be a minimum of 1′ from any flange or base plate.
3. Hybrid cable entrances on signal pole shall be drilled for weathertight coupling as required.
4. Hybrid cable shall have a drip loop at the entrance into signal pole, luminaire mast arm and signal mast arm.
5. A single hybrid cable shall run continuous and shall not be twisted from the miscellaneous attachment to the controller cabinet. No splices shall be allowed.
6. Use the manufacturer's Effective Projected Area (EPA) for miscellaneous attachment. The maximum EPA for each miscellaneous attachment shall be 1.6 square feet with 10 lb Max.
7. Maximum of two miscellaneous attachments per traffic signal standard.
8. Maximum of one miscellaneous attachment per mast arm.
9. Miscellaneous attachment shall be mounted using clamping devices.

STATE OF CALIFORNIA
DEPARTMENT OF TRANSPORTATION

ELECTRICAL SYSTEMS (SIGNAL AND LIGHTING, MISCELLANEOUS ATTACHMENT)

NO SCALE

RSP ES-7R DATED OCTOBER 30, 2015 SUPERSEDES RSP ES-7R DATED JULY 19, 2013 AND STANDARD PLAN ES-7R DATED MAY 20, 2011 - PAGE 479 OF THE STANDARD PLANS BOOK DATED 2010.

REVISED STANDARD PLAN RSP ES-7R

2010 REVISED STANDARD PLAN RSP ES-7R

8-21-15

DIST	COUNTY	ROUTE	POST MILES TOTAL PROJECT	SHEET NO.	TOTAL SHEETS
07	LA,Ora	5	0.0/1.5, 44.3/44.4	1013	1622

Theresa Gabriel
REGISTERED ELECTRICAL ENGINEER

October 30, 2015
PLANS APPROVAL DATE

REGISTERED PROFESSIONAL ENGINEER Theresa Aziz Gabriel No. E15129 Exp. 6-30-16 ELECTRICAL STATE OF CALIFORNIA

THE STATE OF CALIFORNIA OR ITS OFFICERS OR AGENTS SHALL NOT BE RESPONSIBLE FOR THE ACCURACY OR COMPLETENESS OF SCANNED COPIES OF THIS PLAN SHEET.

TO ACCOMPANY PLANS DATED 1-25-16

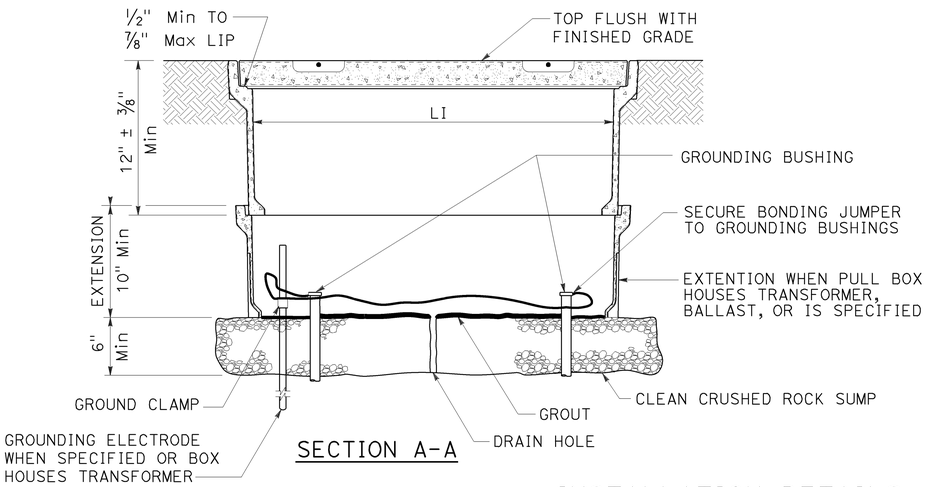

SECTION A-A

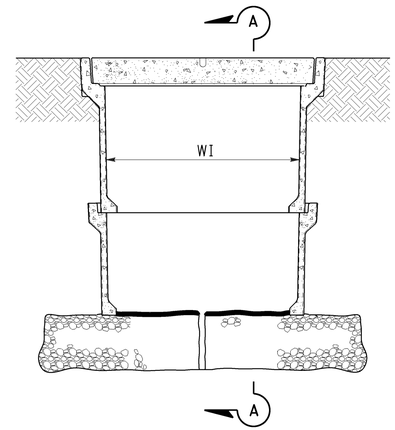

SIDE VIEW

INSTALLATION DETAILS

DETAIL A

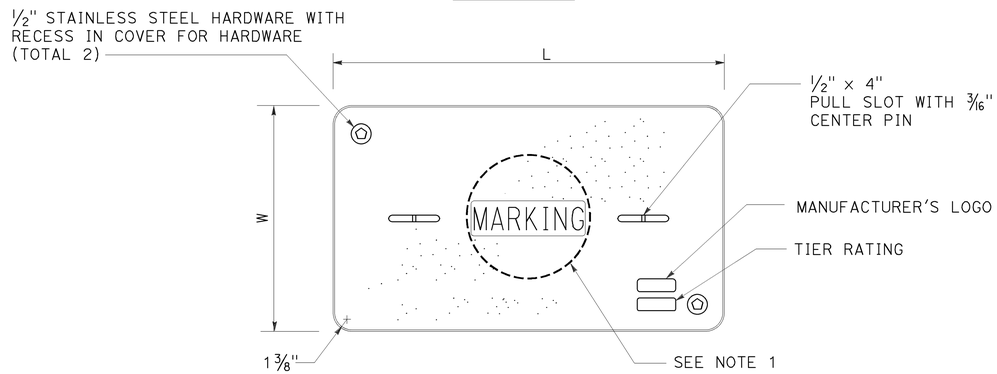

COVER TOP VIEW

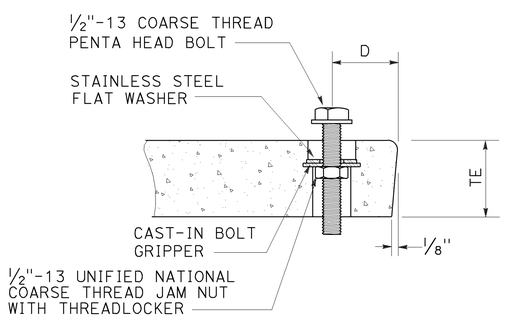

TYPICAL COVER CAPTIVE BOLT

OR SIMILAR

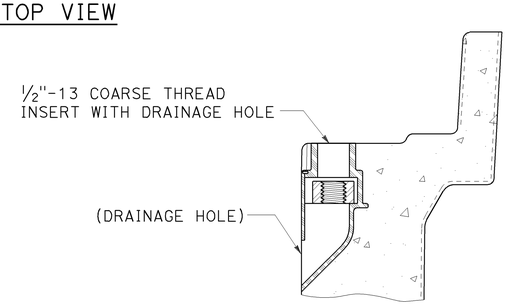

TYPICAL THREADED INSERT

OR SIMILAR

NOTES:

1. Pull box covers shall be marked as follows: "SERVICE" Service circuits between service point and service disconnect; "SPRINKLER-CONTROL" sprinkler control circuits, 50 V or less; "CALTRANS" on all pull boxes, except pull boxes marked "SPRINKLER-CONTROL"; and "TELEPHONE" Telephone service;
   - A) No. 3½ pull box.
     - 1) "SIGNAL" - Traffic signal circuits with or without lighting or sign lighting circuits.
     - 2) "LIGHTING" - Lighting or sign lighting circuits where voltage is under 600 V.
   - B) No. 5, 6, 9 or 9A pull box.
     - 1) "TRAFFIC SIGNAL" - Traffic signal circuits with or without lighting or sign lighting circuits.
     - 2) "LIGHTING" - Lighting or sign lighting circuits where voltage is under 600 V.
     - 3) "LIGHTING-HIGH VOLTAGE" - Lighting or sign lighting circuits where voltage is above 600 V.
     - 4) "IRRIGATION" - Circuits to irrigation controller 120 V or more.
     - 5) "RAMP METER" - Ramp meter circuits.
     - 6) "COUNT STATION" - Count or speed monitor circuits.
     - 7) "COMMUNICATIONS" - Communication circuits.
     - 8) "TOS COMMUNICATIONS" - TOS communication line.
     - 9) "TOS POWER" - TOS power.
     - 10) "TDC POWER" - Telephone demarcation cabinet power.
     - 11) "CCTV" - Closed circuit television circuits.
     - 12) "TMS" - Traffic monitoring station circuits.
     - 13) "CMS" - Changeable message sign circuits.
     - 14) "HAR" - Highway advisory radio circuits.
     - 15) "BOOSTER PUMP" - Booster pump circuit.
2. The nominal dimensions of the opening in which the cover sets shall be the same as the cover dimensions except the length and width dimensions shall be 1/8" greater.
3. Covers and boxes shall be interchangeable with California standard male and female gages. When interchanged with a standard male or female gage, the top surfaces shall be flush within 1/8". Top outside radius of covers and pull boxes shall have a 1/8" radius.
4. Pull box extension may be another pull box as long as the bottom edge of the pull box can fit into the cover opening.
5. Dimensions for the cover for non-traffic pull box are nominal values.

DIMENSION TABLE

PULL BOX	PULL BOX					COVER				
	MINIMUM DEPTH BOX	MINIMUM DEPTH EXTENSION	MINIMUM WEIGHT	LI Min	WI Min	TE	D	L	W	MINIMUM WEIGHT
No. 3½	12"	N/A	40 lb	1' - 3"	9"	1¾"	1¾"	1'-3¼" - 1'-3⅜"	10" - 10⅛"	30 lb
No. 5	12"	10"	55 lb	1' - 8"	11"	2"	1¾"	1'-11¼"	1'-1¾"	60 lb
No. 6	12"	10"	70 lb	2' - 4¼"	1' - 3¼"	2"	2"	2'-6½"	1'-5½"	85 lb

STATE OF CALIFORNIA
DEPARTMENT OF TRANSPORTATION

ELECTRICAL SYSTEMS (NON-TRAFFIC PULL BOX)

NO SCALE

RSP ES-8A DATED OCTOBER 30, 2015 SUPERSEDES RSP ES-8A DATED JULY 19, 2013 AND RSP ES-8A DATED JANUARY 20, 2012 THAT SUPPLEMENTS THE STANDARD PLANS BOOK DATED 2010.

REVISED STANDARD PLAN RSP ES-8A

2010 REVISED STANDARD PLAN RSP ES-8A

8-25-15

DIST	COUNTY	ROUTE	POST MILES TOTAL PROJECT	SHEET NO.	TOTAL SHEETS
07	LA,Ora	5	0.0/1.5, 44.3/44.4	1014	1622

Theresa Gabriel
REGISTERED ELECTRICAL ENGINEER

October 30, 2015
PLANS APPROVAL DATE

REGISTERED PROFESSIONAL ENGINEER
Theresa Aziz Gabriel
No. E15129
Exp. 6-30-16
ELECTRICAL
STATE OF CALIFORNIA

THE STATE OF CALIFORNIA OR ITS OFFICERS OR AGENTS SHALL NOT BE RESPONSIBLE FOR THE ACCURACY OR COMPLETENESS OF SCANNED COPIES OF THIS PLAN SHEET.

TO ACCOMPANY PLANS DATED 1-25-16

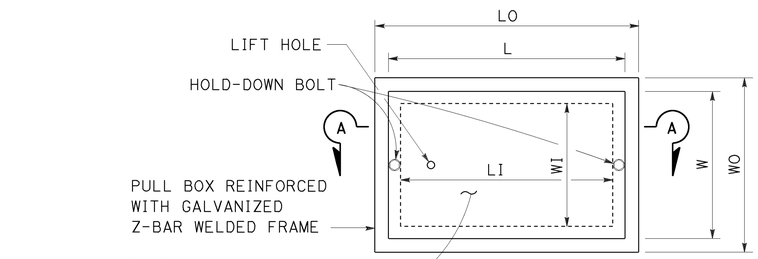

TOP VIEW

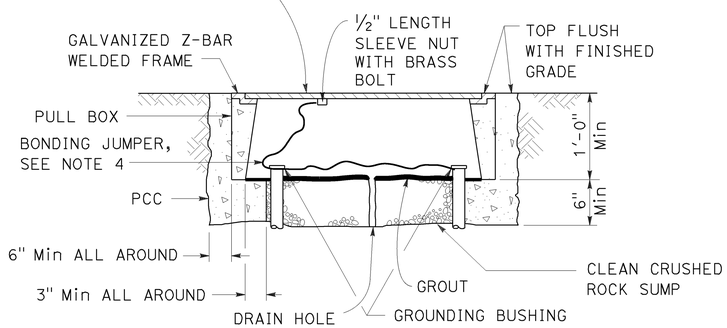

SECTION A-A

No. 3½(T), No. 5(T) AND No. 6(T) TRAFFIC PULL BOX

NOTES:

1. Traffic pull box shall be provided with steel cover and special concrete footing. Steel cover shall have embossed non-skid pattern.
2. Steel reinforcing shall be as regularly used in the standard products of the respective manufacturer.
3. Pull box covers shall be marked as follows: "SERVICE" Service circuits between service point and service disconnect; "SPRINKLER-CONTROL" Sprinkler control circuits, 50 V or less; "CALTRANS" On all pull boxes, except pull boxes marked "SPRINKLER-CONTROL"; and "TELEPHONE" Telephone service.
   A) No. 3½(T) pull box.
      1) "SIGNAL" - Traffic signal circuits with or without lighting or sign lighting circuits.
      2) "LIGHTING" - Lighting or sign lighting circuits where voltage is under 600 V.
   B) No. 5(T) or 6(T) pull box.
      1) "TRAFFIC SIGNAL" - Traffic signal circuits with or without lighting or sign lighting circuits.
      2) "LIGHTING" - Lighting or sign lighting circuits where voltage is under 600 V.
      3) "LIGHTING-HIGH VOLTAGE" - Lighting or sign lighting circuits where voltage is above 600 V.
      4) "IRRIGATION" - Circuits to irrigation controller 120 V or more.
      5) "RAMP METER" - Ramp meter circuits.
      6) "COUNT STATION" - Count or speed monitor circuits.
      7) "COMMUNICATION" - Communication circuits.
      8) "TOS COMMUNICATIONS" - TOS communications line.
      9) "TOS POWER" - TOS power.
      10) "TDC POWER" - Telephone demarcation cabinet power.
      11) "CCTV" - Closed circuit television circuits.
      12) "TMS" - Traffic monitoring station circuits.
      13) "CMS" - Changeable message sign circuits.
      14) "HAR" - Highway advisory radio circuits.
      15) "BOOSTER PUMP" - Booster pump circuit.
4. Bonding jumper for metal covers shall be 3' long, minimum.
5. The nominal dimensions of the opening in which the cover sets shall be the same as the cover dimensions except the length and width dimensions shall be ⅛" greater.
6. Covers and boxes shall be interchangeable with California standard male and female gages. When interchanged with a standard male or female gage, the top surfaces shall be flush within ⅛".

DIMENSION TABLE

PULL BOX	PULL BOX						COVER	
	MINIMUM * THICKNESS	MINIMUM DEPTH BOX AND EXTENSION	LO	LI	WO	WI	L **	W **
No. 3½(T)	1½"	1'-0"	1'-10" - 1'-11"	1'-5" - 1'-6½"	1'-3" - 1'-4"	10" - 1'-0"	1'-8" -1'-8½"	1'-1" - 1'-2"
No. 5(T)	1¾"	1'-0"	2'-5" - 2'-6"	2'-0" - 2'-1"	1'-6" - 1'-7"	1'-1" - 1'-2"	2'-3" - 2'-3½"	1'-4" - 1'-4½"
No. 6(T)	2"	1'-0"	2'-11" - 3'-1"	2'-6" - 2'-7"	1'-10" - 2'-0"	1'-5" - 1'-6"	2'-9" - 2'-9½"	1'-8" - 1'-8½"

* EXCLUDING CONDUIT WEB ** TOP DIMENSION

STATE OF CALIFORNIA
DEPARTMENT OF TRANSPORTATION

ELECTRICAL SYSTEMS (TRAFFIC PULL BOX)

NO SCALE

RSP ES-8B DATED OCTOBER 30, 2015 SUPERSEDES RSP ES-8B DATED JULY 19, 2013 AND RSP ES-8B DATED JANUARY 20, 2012 THAT SUPPLEMENTS THE STANDARD PLANS BOOK DATED 2010.

REVISED STANDARD PLAN RSP ES-8B

2010 REVISED STANDARD PLAN RSP ES-8B

8-25-15

Dist	COUNTY	ROUTE	POST MILES TOTAL PROJECT	SHEET No.	TOTAL SHEETS
07	LA,Ora	5	0.0/1.5, 44.3/44.4	1015	1622

Theresa Gabriel
REGISTERED ELECTRICAL ENGINEER

October 30, 2015
PLANS APPROVAL DATE

REGISTERED PROFESSIONAL ENGINEER Theresa Aziz Gabriel No. E15129 Exp. 6-30-16 ELECTRICAL STATE OF CALIFORNIA

THE STATE OF CALIFORNIA OR ITS OFFICERS OR AGENTS SHALL NOT BE RESPONSIBLE FOR THE ACCURACY OR COMPLETENESS OF SCANNED COPIES OF THIS PLAN SHEET.

TO ACCOMPANY PLANS DATED 1-25-16

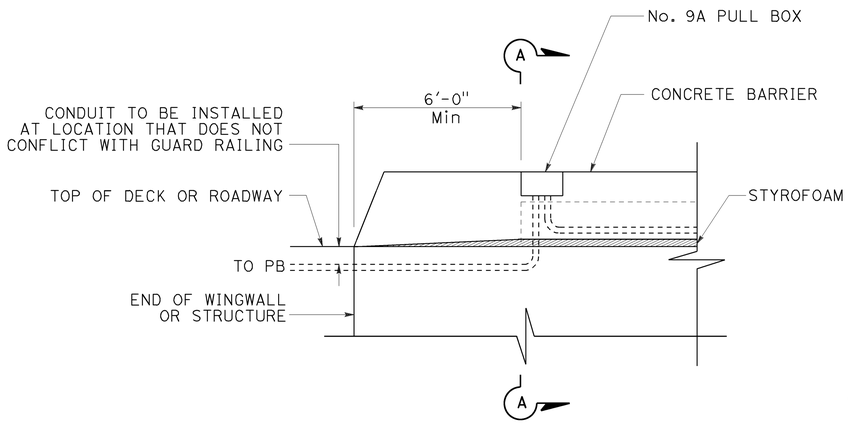

SIDE VIEW

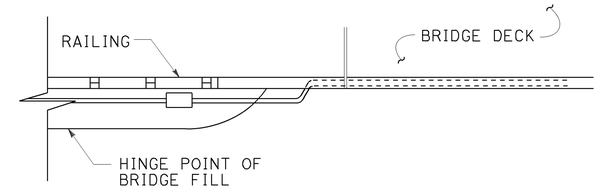

TOP VIEW

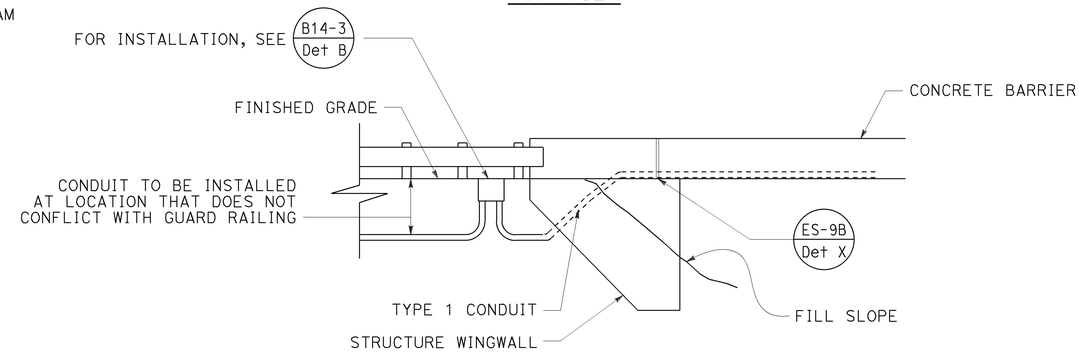

SIDE VIEW

CONDUIT TERMINATION
DETAIL I

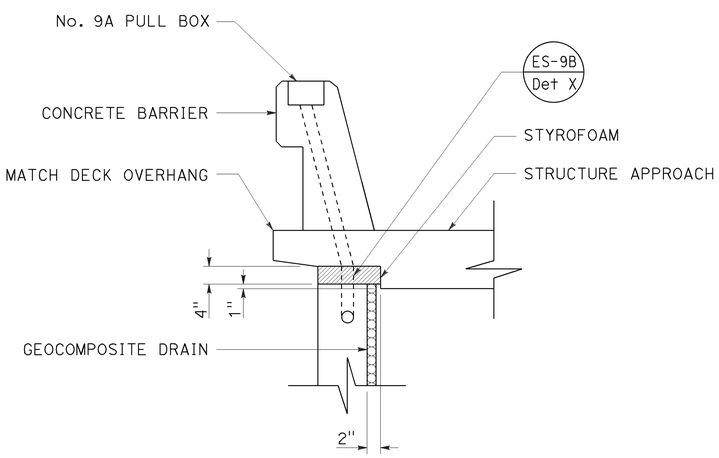

SECTION A-A

CONDUIT TERMINATION
DETAIL A

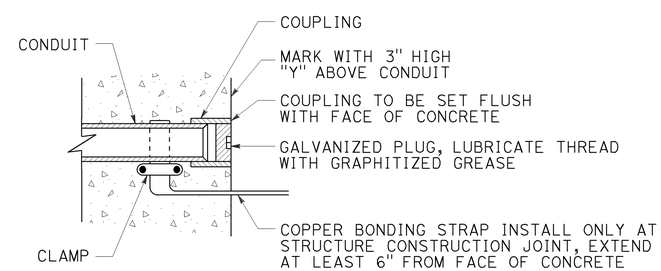

CONDUIT TERMINATION
DETAIL C

STATE OF CALIFORNIA
DEPARTMENT OF TRANSPORTATION

ELECTRICAL SYSTEMS (STRUCTURE PULL BOX INSTALLATIONS)

NO SCALE

RSP ES-9A DATED OCTOBER 30, 2015 SUPERSEDES STANDARD PLAN ES-9A DATED MAY 20, 2011 - PAGE 481 OF THE STANDARD PLANS BOOK DATED 2010.

REVISED STANDARD PLAN RSP ES-9A

2010 REVISED STANDARD PLAN RSP ES-9A

Dist	COUNTY	ROUTE	POST MILES TOTAL PROJECT	SHEET No.	TOTAL SHEETS
07	LA,Ora	5	0.0/1.5, 44.3/44.4	1016	1622

Jaswinder S Gill
REGISTERED ELECTRICAL ENGINEER

October 30, 2015
PLANS APPROVAL DATE

REGISTERED PROFESSIONAL ENGINEER Jaswinder S. Gill No. E18551 Exp. 12-31-16 ELECTRICAL STATE OF CALIFORNIA

THE STATE OF CALIFORNIA OR ITS OFFICERS OR AGENTS SHALL NOT BE RESPONSIBLE FOR THE ACCURACY OR COMPLETENESS OF SCANNED COPIES OF THIS PLAN SHEET.

TO ACCOMPANY PLANS DATED 1-25-16

2010 REVISED STANDARD PLAN RSP ES-9B

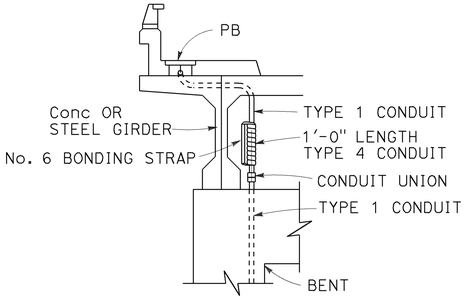

CONDUIT RISER CONNECTION

DETAIL R

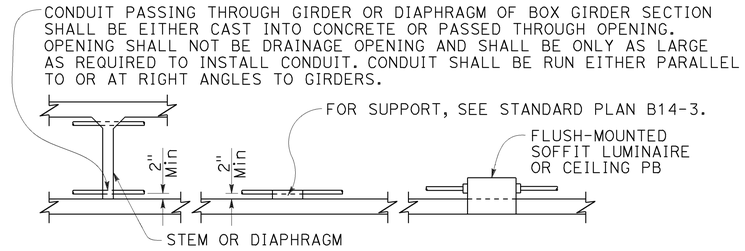

CONDUIT INSTALLATION WITHIN BOX GIRDER SECTIONS

DETAIL S

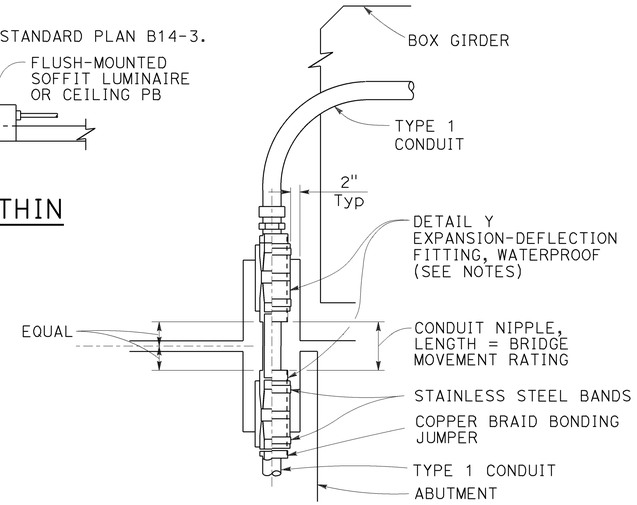

NOTES:

1. Fitting and pocket required only where movement can occur between girder and abutment.
2. Fill pocket around fitting with resilient waterproof compound.

CONDUIT RISER CONNECTION AT COLUMN, ABUTMENT OR STRUCTURE WING WALL

DETAIL U

NOTES:

1. Except for sidewalk joints, a conduit expansion fitting or expansion-deflection fitting shall be installed at each ½" or greater structure joint, hinge or abutment.
2. Fittings or combination of fittings shall be installed to accommodate the movement rating as shown on the structure plans.
3. Fittings shall be installed parallel to superstructure girders.
4. Where lateral movement greater than ¼" may occur, a neoprene sleeve expansion-deflection fitting shall be installed straddling the joint.

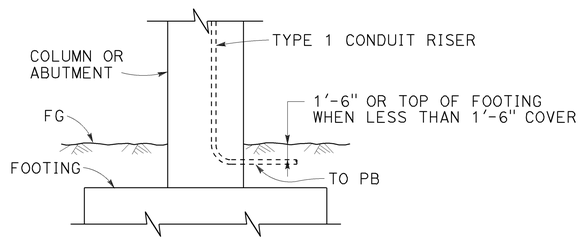

LOWER END OF CONDUIT RISER AT COLUMN OR ABUTMENT

DETAIL T

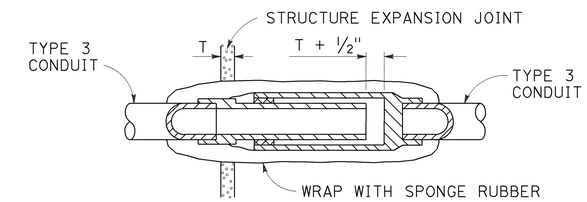

NON-METALLIC CONDUIT EXPANSION FITTING INSTALLATION DETAIL

To be used only when shown or specified on Project Plans

DETAIL V

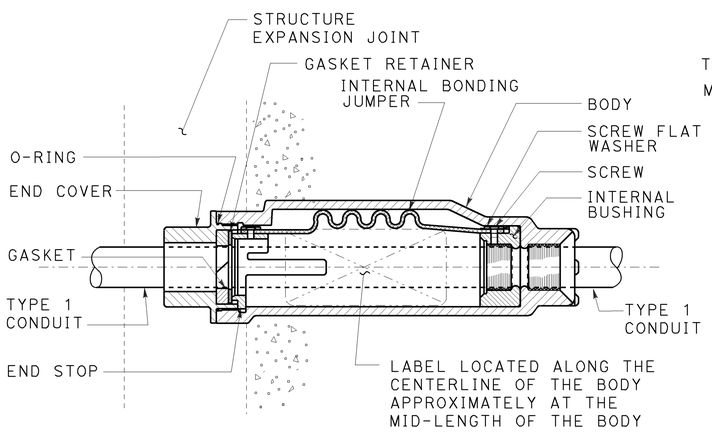

CONDUIT EXPANSION FITTING

DETAIL X

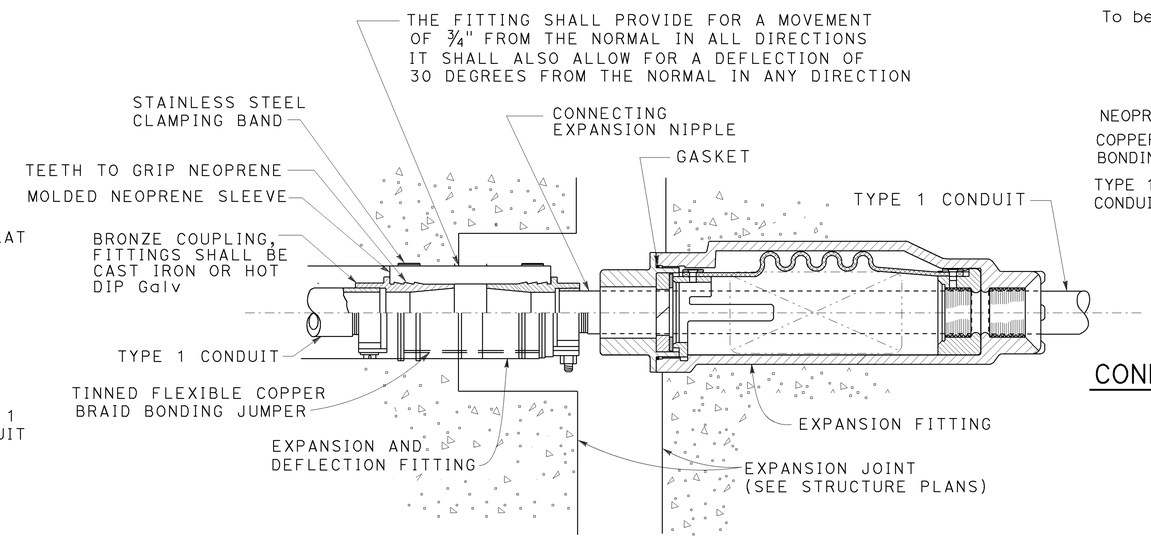

COMBINATION EXPANSION-DEFLECTION FITTINGS

METALLIC CONDUIT INSTALLATION

DETAIL XY

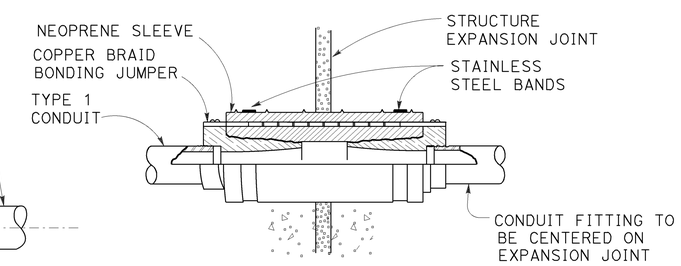

CONDUIT EXPANSION-DEFLECTION FITTING

DETAIL Y

STATE OF CALIFORNIA
DEPARTMENT OF TRANSPORTATION

ELECTRICAL SYSTEMS (CONDUIT RISER AND EXPANSION FITTING, STRUCTURE INSTALLATIONS)

NO SCALE

RSP ES-9B DATED OCTOBER 30, 2015 SUPERSEDES STANDARD PLAN ES-9B DATED MAY 20, 2011 - PAGE 482 OF THE STANDARD PLANS BOOK DATED 2010.

REVISED STANDARD PLAN RSP ES-9B

Dist	COUNTY	ROUTE	POST MILES TOTAL PROJECT	SHEET No.	TOTAL SHEETS
07	LA,Ora	5	0.0/1.5, 44.3/44.4	1017	1622

Theresa Gabriel
REGISTERED ELECTRICAL ENGINEER

October 30, 2015
PLANS APPROVAL DATE

REGISTERED PROFESSIONAL ENGINEER Theresa Aziz Gabriel No. E15129 Exp. 6-30-16 ELECTRICAL STATE OF CALIFORNIA

THE STATE OF CALIFORNIA OR ITS OFFICERS OR AGENTS SHALL NOT BE RESPONSIBLE FOR THE ACCURACY OR COMPLETENESS OF SCANNED COPIES OF THIS PLAN SHEET.

TO ACCOMPANY PLANS DATED 1-25-16

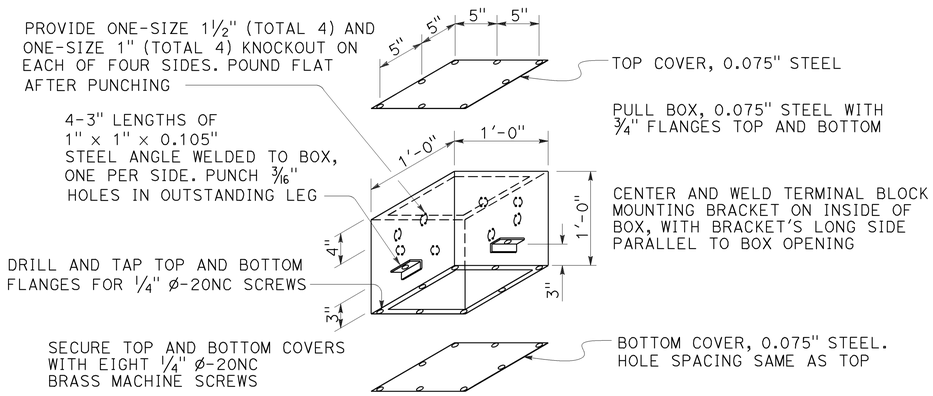

No. 7 CEILING PULL BOX

See Note 6

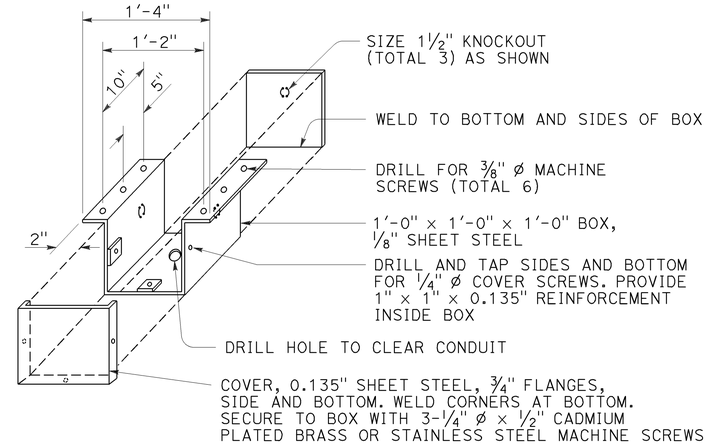

No. 8 PULL BOX

NOTES:

1. Corner joints shall be lapped and secured by spot welding or riveting.
2. Where cap screws are used to attach cover to box, either of the following methods of providing adequate threading may be used:
   a. Tack weld stainless steel Hex nut to bottom of flange (total 4)
   b. Tack weld a ¼" × ⅝" × 8" bar beneath flange (total 2)
3. Pound knockouts flat after punching.
4. Multiple size knockouts (concentric) shall not be permitted.
5. Pull box covers shall be marked as specified on Revised Standard Plans RSP ES-8A and RSP ES-8B.
6. Installation of No. 7 pull box:
   a) Install with bottom flange flush with concrete.
   b) Both covers shall be on a box during pouring.
7. Install box parallel to top of railing. Cover box during pouring with ¼" plywood of sufficient size to provide 1:1 chamfer on 3 sides of cover. Upper edge of plywood shall fit against lower edge of rain tight hood.

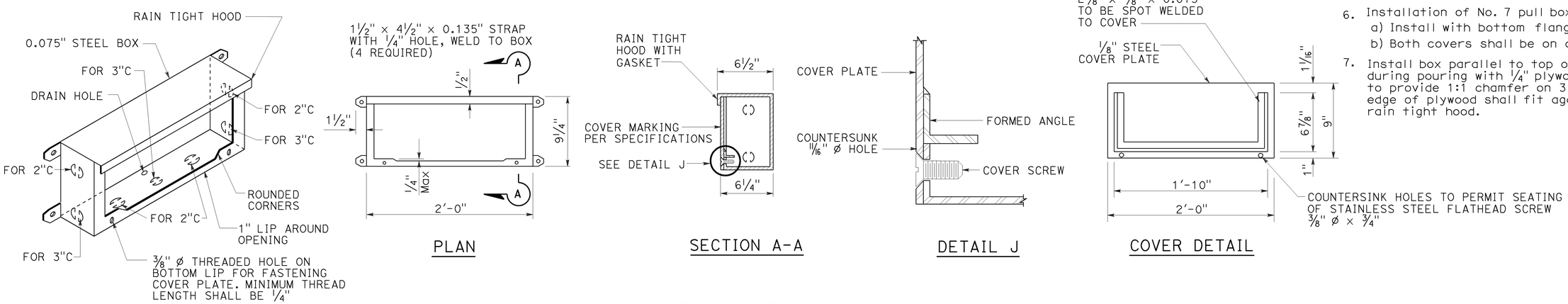

No. 9 STRUCTURE PULL BOX

See Note 7

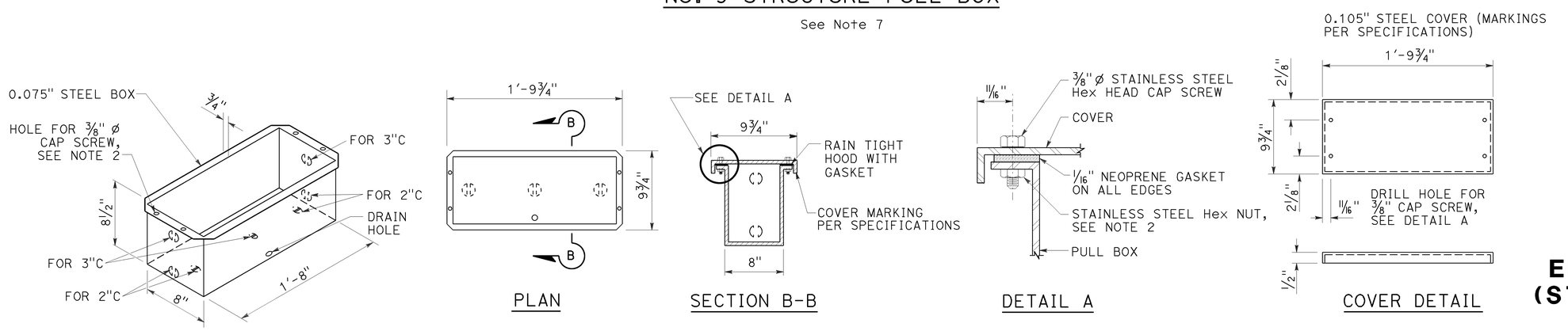

No. 9A STRUCTURE PULL BOX

STATE OF CALIFORNIA
DEPARTMENT OF TRANSPORTATION

ELECTRICAL SYSTEMS (STRUCTURE PULL BOX)

NO SCALE

RSP ES-9C DATED OCTOBER 30, 2015 SUPERSEDES STANDARD PLAN ES-9C DATED MAY 20, 2011 - PAGE 483 OF THE STANDARD PLANS BOOK DATED 2010.

REVISED STANDARD PLAN RSP ES-9C

2010 REVISED STANDARD PLAN RSP ES-9C

9-1-15

Dist	COUNTY	ROUTE	POST MILES TOTAL PROJECT	SHEET No.	TOTAL SHEETS
07	LA,Ora	5	0.0/1.5, 44.3/44.4	1018	1622

Theresa Gabriel
REGISTERED ELECTRICAL ENGINEER

October 30, 2015
PLANS APPROVAL DATE

REGISTERED PROFESSIONAL ENGINEER Theresa Aziz Gabriel No. E15129 Exp. 6-30-16 ELECTRICAL STATE OF CALIFORNIA

THE STATE OF CALIFORNIA OR ITS OFFICERS OR AGENTS SHALL NOT BE RESPONSIBLE FOR THE ACCURACY OR COMPLETENESS OF SCANNED COPIES OF THIS PLAN SHEET.

TO ACCOMPANY PLANS DATED 1-25-16

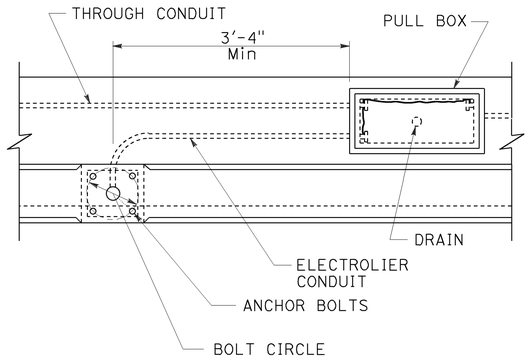

TOP VIEW

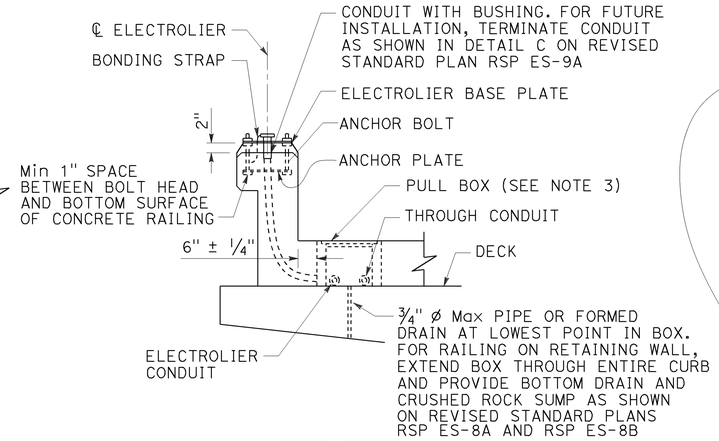

END VIEW

No. 3½, 5, OR 6 PULL BOX INSTALLATION

DETAIL A

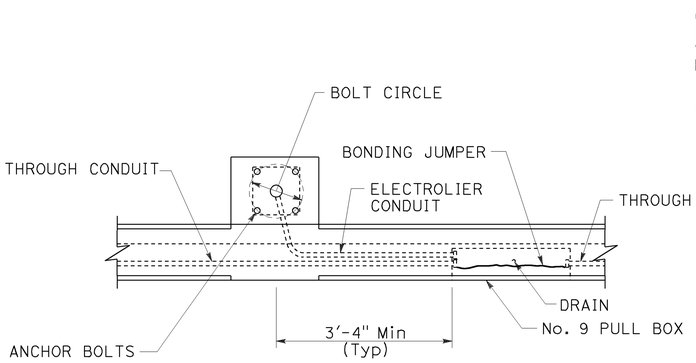

TOP VIEW

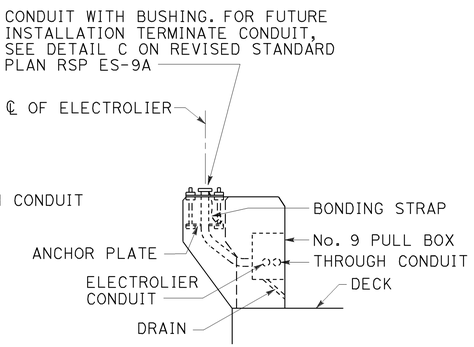

END VIEW

No. 9 PULL BOX INSTALLATION

DETAIL B

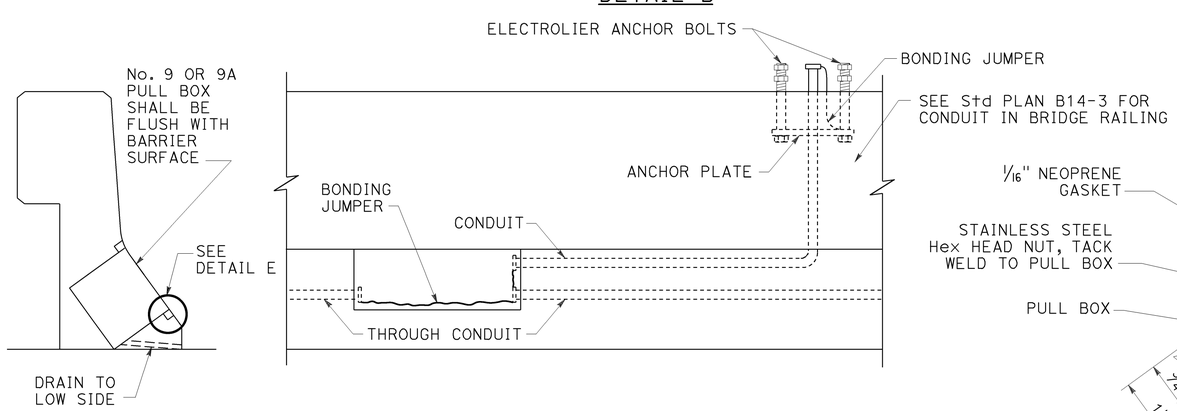

INSTALLATION IN SLOPING PARAPETS

DETAIL D

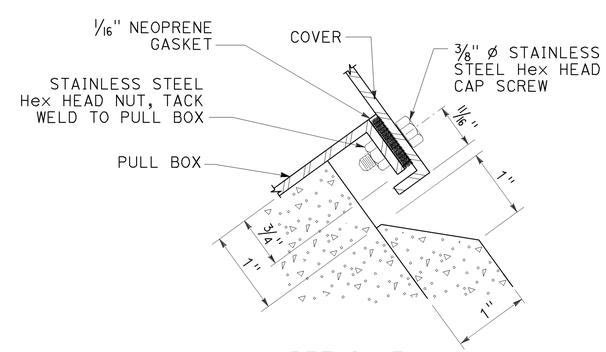

DETAIL E

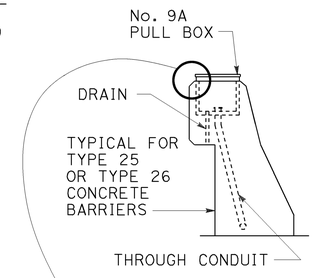

END VIEW

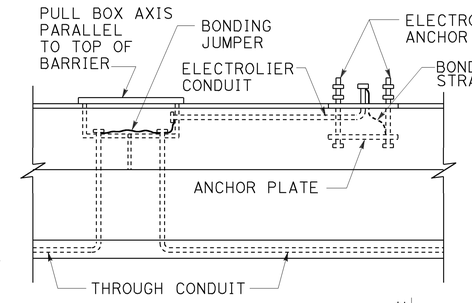

SIDE VIEW

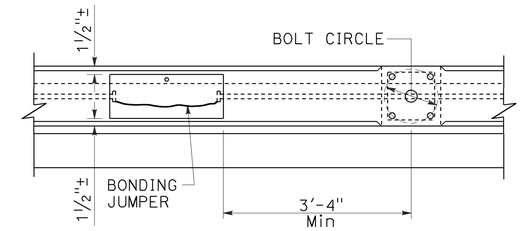

TOP VIEW

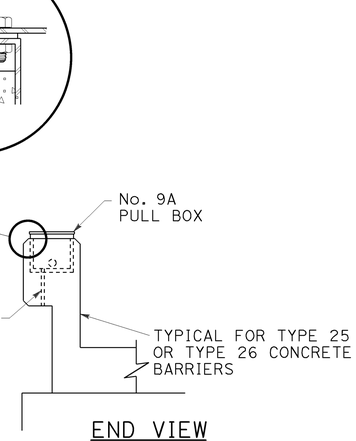

END VIEW

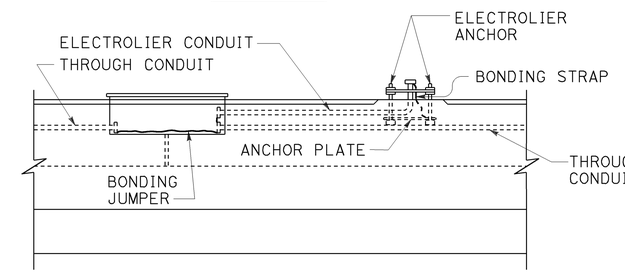

SIDE VIEW

No. 9A PULL BOX INSTALLATION

DETAIL C

NOTES:

1. Axis of pull box shall be parallel to top of barrier, sidewalk or railing.
2. See railing sheet for reinforcement and structural details at electroliers and pull boxes.
3. Top of pull boxes in sidewalk areas shall be flush with sidewalk. Modify base of pull box as required.
4. Boxes inside of vertical barrier or railing shall be closed during pouring of PCC with 1/4" plywood of sufficient size to provide 1:1 chamfer on 3 sides of cover. Upper edge of plywood shall fit against lower edge of raintight hood.
5. Use drain in center if box is horizontal, or at low end if box is inclined. When box is mounted in sloping parapet 1/2" elongated drain hole inside at center or near end as required for drainage.
6. For electrolier anchorage bolts and grouting details, see Standard Plan ES-6B.
7. See Standard Plan B14-3 for conduit in concrete barrier.

STATE OF CALIFORNIA
DEPARTMENT OF TRANSPORTATION

ELECTRICAL SYSTEMS (STRUCTURE PULL BOX INSTALLATIONS)

NO SCALE

RSP ES-9D DATED OCTOBER 30, 2015 SUPERSEDES STANDARD PLAN ES-9D DATED MAY 20, 2011 - PAGE 484 OF THE STANDARD PLANS BOOK DATED 2010.

REVISED STANDARD PLAN RSP ES-9D

2010 REVISED STANDARD PLAN RSP ES-9D

Dist	COUNTY	ROUTE	POST MILES TOTAL PROJECT	SHEET No.	TOTAL SHEETS
07	LA,Ora	5	0.0/1.5, 44.3/44.4	1019	1622

Theresa Gabriel
REGISTERED ELECTRICAL ENGINEER

October 30, 2015
PLANS APPROVAL DATE

REGISTERED PROFESSIONAL ENGINEER Theresa Aziz Gabriel No. E15129 Exp. 6-30-16 ELECTRICAL STATE OF CALIFORNIA

THE STATE OF CALIFORNIA OR ITS OFFICERS OR AGENTS SHALL NOT BE RESPONSIBLE FOR THE ACCURACY OR COMPLETENESS OF SCANNED COPIES OF THIS PLAN SHEET.

TO ACCOMPANY PLANS DATED 1-25-16

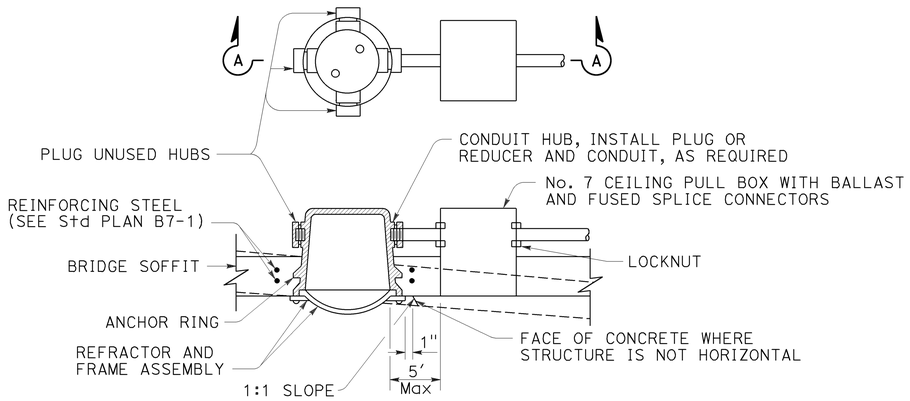

SECTION A-A

FLUSH-MOUNTED SOFFIT LUMINAIRE INSTALLATION

DETAIL F

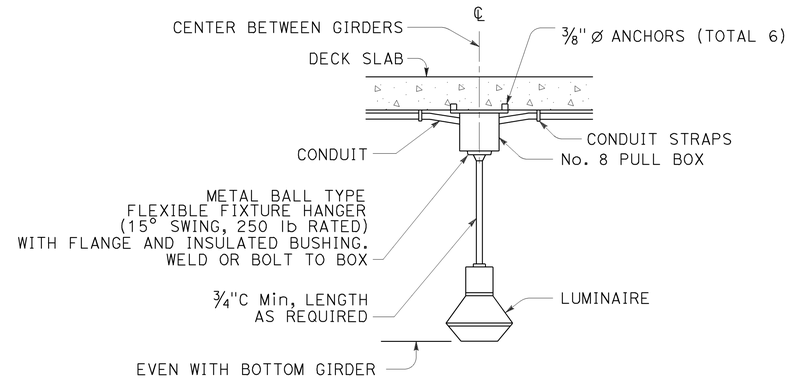

PENDANT SOFFIT LUMINAIRE INSTALLATION

DETAIL P

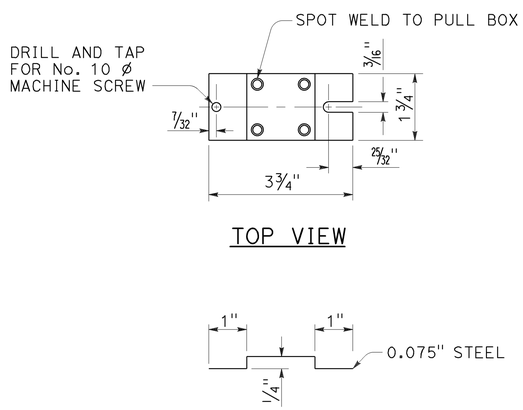

TERMINAL BLOCK MOUNTING BRACKET

DETAIL T

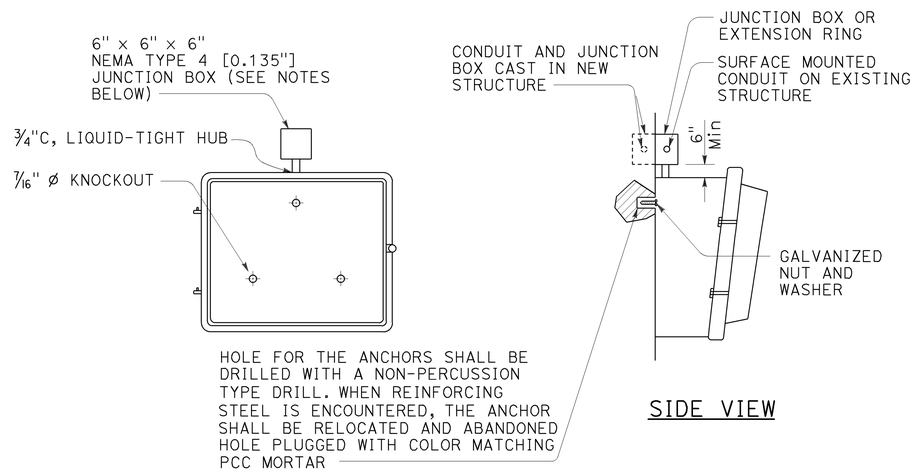

WALL-MOUNTED LUMINAIRE INSTALLATION

DETAIL W

STATE OF CALIFORNIA
DEPARTMENT OF TRANSPORTATION

ELECTRICAL SYSTEMS (FLUSH-MOUNTED SOFFIT, PENDANT SOFFIT AND WALL-MOUNTED LUMINAIRE STRUCTURE INSTALLATIONS)

NO SCALE

RSP ES-9E DATED OCTOBER 30, 2015 SUPERSEDES STANDARD PLAN ES-9E DATED MAY 20, 2011 - PAGE 485 OF THE STANDARD PLANS BOOK DATED 2010.

REVISED STANDARD PLAN RSP ES-9E

2010 REVISED STANDARD PLAN RSP ES-9E

8-20-15

Dist	COUNTY	ROUTE	POST MILES TOTAL PROJECT	SHEET No.	TOTAL SHEETS
07	LA,Ora	5	0.0/1.5, 44.3/44.4	1020	1622

Theresa Gabriel
REGISTERED ELECTRICAL ENGINEER

October 30, 2015
PLANS APPROVAL DATE

REGISTERED PROFESSIONAL ENGINEER Theresa Aziz Gabriel No. E15129 Exp. 6-30-16 ELECTRICAL STATE OF CALIFORNIA

THE STATE OF CALIFORNIA OR ITS OFFICERS OR AGENTS SHALL NOT BE RESPONSIBLE FOR THE ACCURACY OR COMPLETENESS OF SCANNED COPIES OF THIS PLAN SHEET.

TO ACCOMPANY PLANS DATED 1-25-16

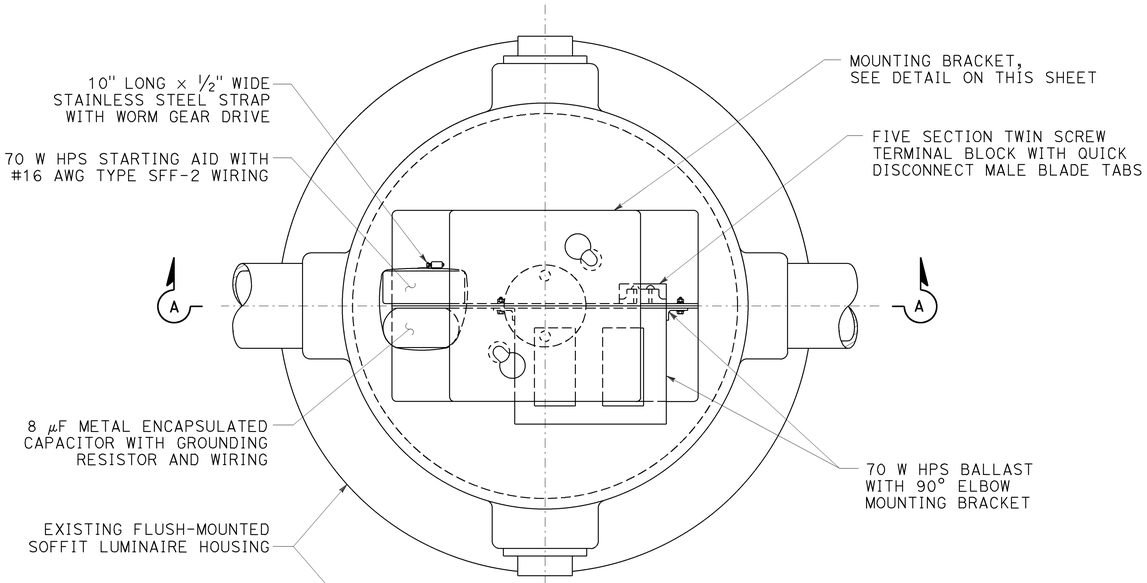

PLAN

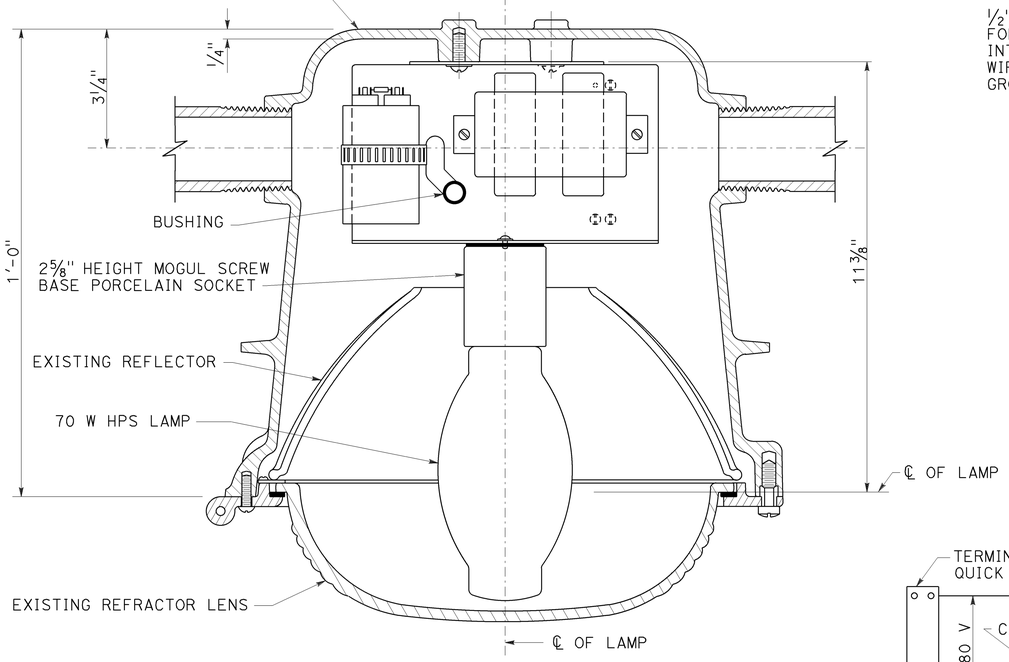

SECTION A-A

FLUSH-MOUNTED SOFFIT LUMINAIRE ASSEMBLY

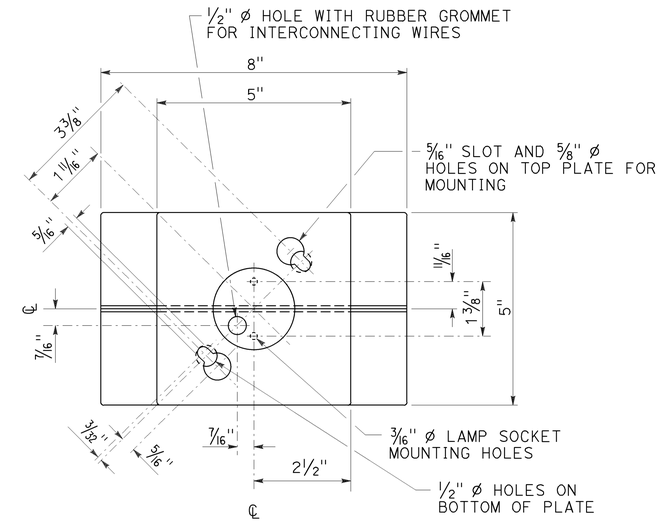

TOP VIEW

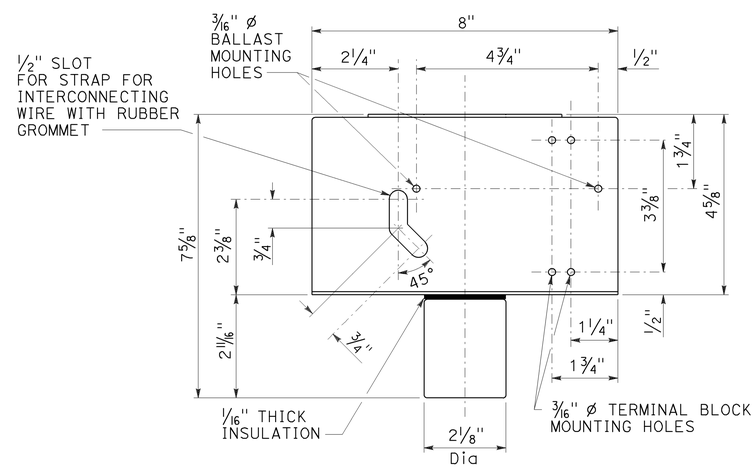

FRONT VIEW

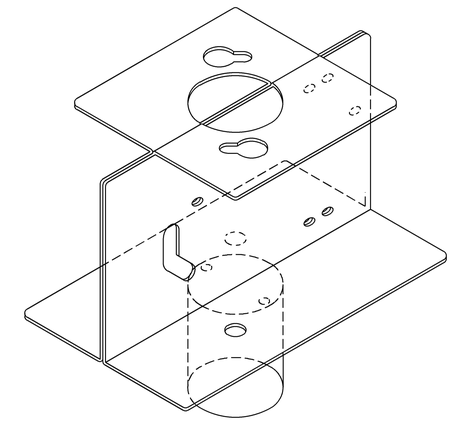

PREFORM TWO SHEETS 1/16" MILD STEEL AS SHOWN, SPOTWELD TOGETHER IN EACH CORNER WITH FOUR SPOTWELDS.

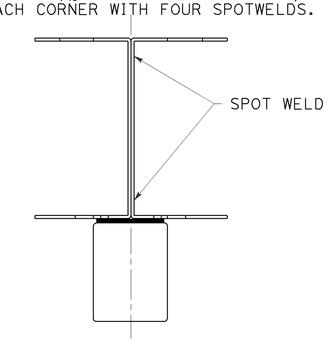

SIDE VIEW

MOUNTING BRACKET DETAILS

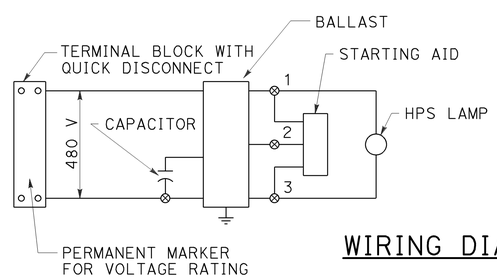

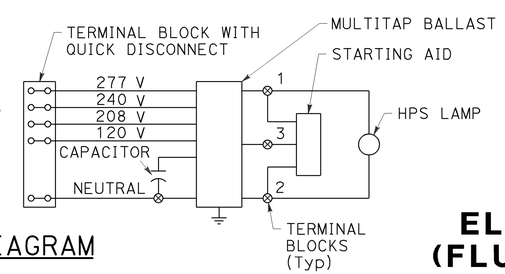

WIRING DIAGRAM

NOTES:

1. Use No. 8 ø machine screws, lockwashers and nuts for mounting ballast and terminal strips.
2. In-line fuse as required on Standard Plan ES-13B.

STATE OF CALIFORNIA
DEPARTMENT OF TRANSPORTATION

ELECTRICAL SYSTEMS (FLUSH-MOUNTED SOFFIT LUMINAIRE DETAILS)

NO SCALE

RSP ES-9F DATED OCTOBER 30, 2015 SUPERSEDES STANDARD PLAN ES-9F DATED MAY 20, 2011 - PAGE 486 OF THE STANDARD PLANS BOOK DATED 2010.

REVISED STANDARD PLAN RSP ES-9F

2010 REVISED STANDARD PLAN RSP ES-9F

9-1-15

Dist	COUNTY	ROUTE	POST MILES TOTAL PROJECT	SHEET No.	TOTAL SHEETS
07	LA,Ora	5	0.0/1.5, 44.3/44.4	1021	1622

Theresa Gabriel
REGISTERED ELECTRICAL ENGINEER

October 30, 2015
PLANS APPROVAL DATE

REGISTERED PROFESSIONAL ENGINEER
Theresa Aziz Gabriel
No. E15129
Exp. 6-30-16
ELECTRICAL
STATE OF CALIFORNIA

THE STATE OF CALIFORNIA OR ITS OFFICERS OR AGENTS SHALL NOT BE RESPONSIBLE FOR THE ACCURACY OR COMPLETENESS OF SCANNED COPIES OF THIS PLAN SHEET.

TO ACCOMPANY PLANS DATED 1-25-16

NOTE:
Curves represent the minimum footcandle (FC).

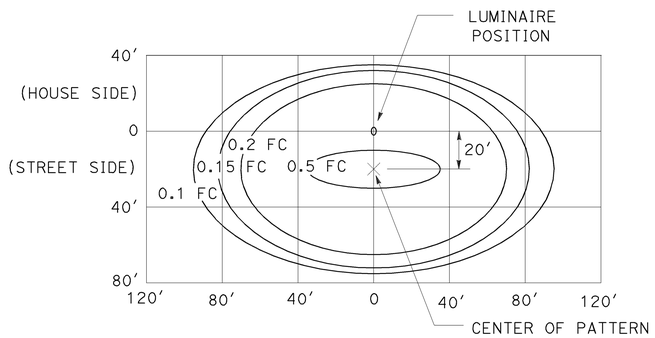

LED LUMINAIRE 165 W
34′ Mounting Height

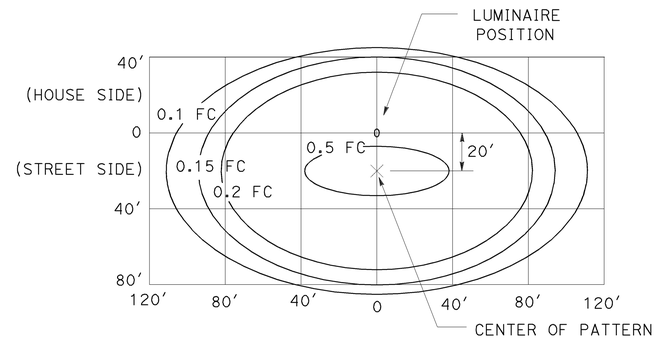

LED LUMINAIRE 235 W
40′ Mounting Height

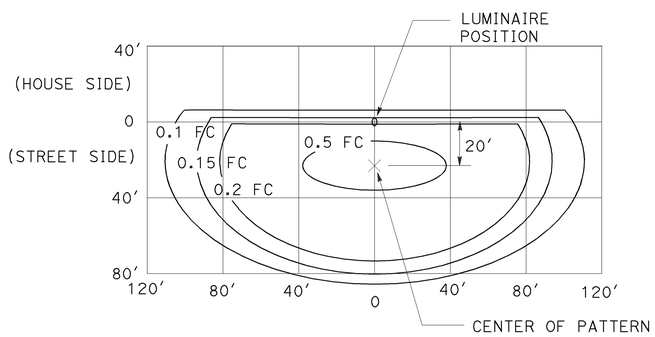

LED LUMINAIRE 235 W
40′ Mounting Height
with back side control

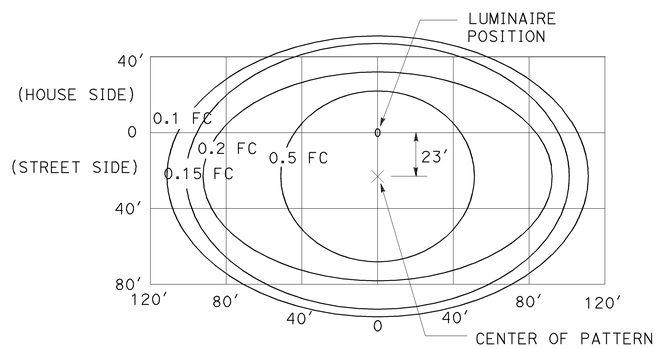

LED LUMINAIRE 300 W
40′ Mounting Height

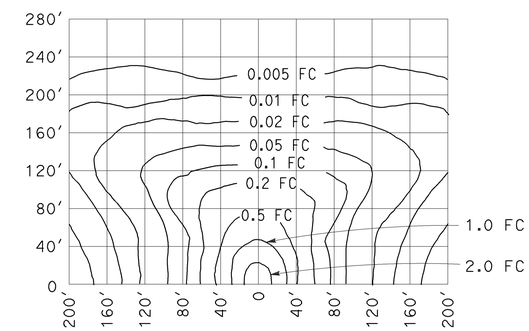

LOW-PRESSURE SODIUM LUMINAIRE 180 W
40′ Mounting Height
Lamp operated at 33,000 lm

STATE OF CALIFORNIA
DEPARTMENT OF TRANSPORTATION

ELECTRICAL SYSTEMS (ISOFOOTCANDLE CURVES)

NO SCALE

RSP ES-10A DATED OCTOBER 30, 2015 SUPERSEDES RSP ES-10A DATED JULY 19, 2013 THAT SUPPLEMENTS THE STANDARD PLANS BOOK DATED 2010.

REVISED STANDARD PLAN RSP ES-10A

2010 REVISED STANDARD PLAN RSP ES-10A

9-29-15

Dist	COUNTY	ROUTE	POST MILES TOTAL PROJECT	SHEET No.	TOTAL SHEETS
07	LA,Ora	5	0.0/1.5, 44.3/44.4	1022	1622

Theresa Gabriel
REGISTERED ELECTRICAL ENGINEER

October 30, 2015
PLANS APPROVAL DATE

REGISTERED PROFESSIONAL ENGINEER
Theresa Aziz Gabriel
No. E15129
Exp. 6-30-16
ELECTRICAL
STATE OF CALIFORNIA

THE STATE OF CALIFORNIA OR ITS OFFICERS OR AGENTS SHALL NOT BE RESPONSIBLE FOR THE ACCURACY OR COMPLETENESS OF SCANNED COPIES OF THIS PLAN SHEET.

TO ACCOMPANY PLANS DATED 1-25-16

NOTE:

Curves represent the minimum footcandle (FC).

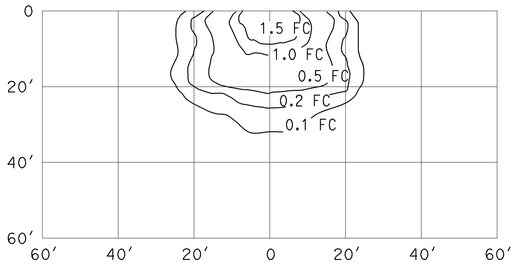

HIGH-PRESSURE SODIUM
WALL-MOUNTED LUMINAIRE 70 W

15′ Mounting Height
ANSI Designation S62
Lamp operated at 5,800 lm

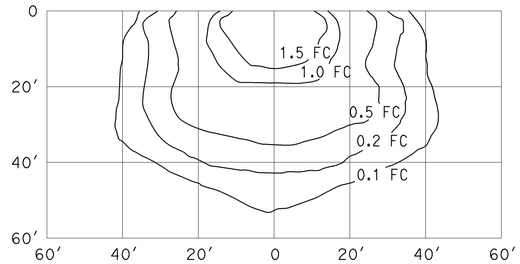

HIGH-PRESSURE SODIUM
WALL-MOUNTED LUMINAIRE 100 W

15′ Mounting Height
ANSI Designation S54
Lamp operated at 9,500 lm

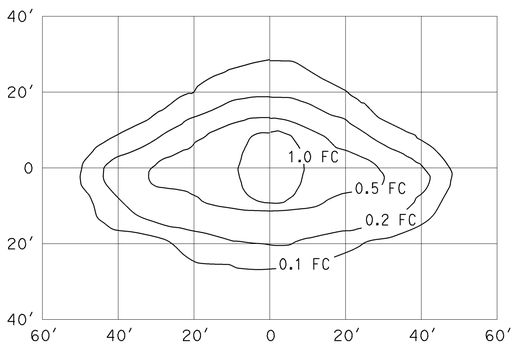

HIGH-PRESSURE SODIUM
PENDANT SOFFIT LUMINAIRE 70 W
TYPE III SHORT

17′ Mounting Height
ANSI Designation S62
Lamp operated at 5,800 lm

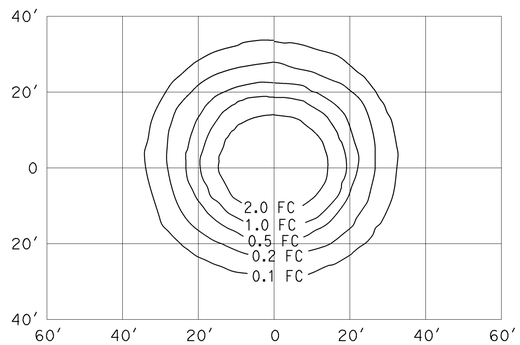

HIGH-PRESSURE SODIUM
PENDANT SOFFIT LUMINAIRE 70 W

17′ Mounting Height
ANSI Designation S62
Lamp operated at 5,800 lm

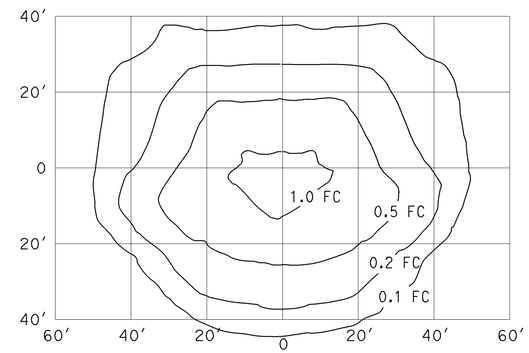

HIGH-PRESSURE SODIUM
FLUSH-MOUNTED SOFFIT LUMINAIRE 70 W

17′ Mounting Height
ANSI Designation S62
Lamp operated at 5,800 lm

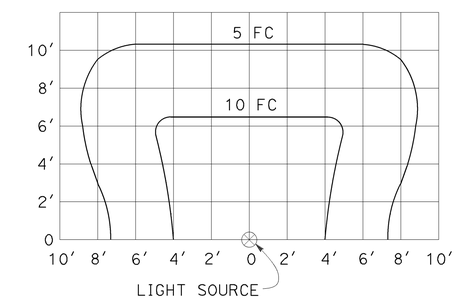

INDUCTION SIGN
LIGHTING FIXTURE 85 W

STATE OF CALIFORNIA
DEPARTMENT OF TRANSPORTATION

ELECTRICAL SYSTEMS (ISOFOOTCANDLE CURVES)

NO SCALE

RSP ES-10B DATED OCTOBER 30, 2015 SUPERSEDES RSP ES-10B DATED JULY 20, 2012 THAT SUPPLEMENTS THE STANDARD PLANS BOOK DATED 2010.

REVISED STANDARD PLAN RSP ES-10B

2010 REVISED STANDARD PLAN RSP ES-10B

Dist	COUNTY	ROUTE	POST MILES TOTAL PROJECT	SHEET No.	TOTAL SHEETS
07	LA,Ora	5	0.0/1.5, 44.3/44.4	1023	1622

REGISTERED CIVIL ENGINEER

July 19, 2013
PLANS APPROVAL DATE

REGISTERED PROFESSIONAL ENGINEER
Stanley P. Johnson
No. C57793
Exp. 3-31-14
CIVIL
STATE OF CALIFORNIA

THE STATE OF CALIFORNIA OR ITS OFFICERS OR AGENTS SHALL NOT BE RESPONSIBLE FOR THE ACCURACY OR COMPLETENESS OF SCANNED COPIES OF THIS PLAN SHEET.

TO ACCOMPANY PLANS DATED 1-25-16

STANDARD TYPE	SETBACK (DIMENSION A)
32	30'-0" (Min)
31	20'-0" (Min)
15, 15D, 15-SB, 21, 21D, 30	ARM LENGTH (Min)

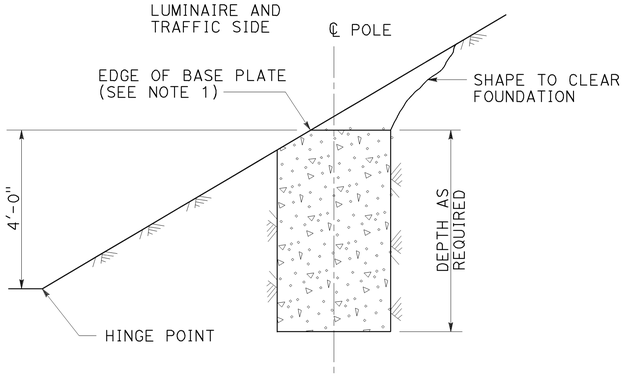

CUT SLOPES
STEEPER THAN 4:1,
LESS THAN 2:1
DETAIL A-1
See Note 2 and 3

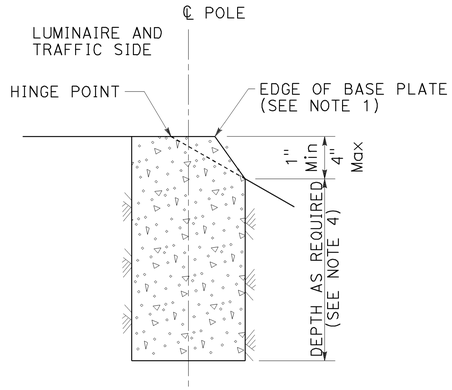

FILL SLOPES
STEEPER THAN 4:1,
LESS THAN 2:1
DETAIL A-2
See Note 2 and 3

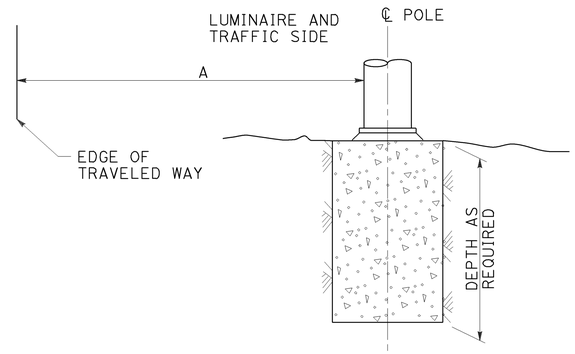

FLAT SECTIONS, CUT OR FILL SLOPES
4:1 OR FLATTER
DETAIL A-3
See Note 2

FOUNDATIONS ADJACENT TO ALL ROADWAYS EXCEPT
IN SIDEWALK, MEDIAN AND ISLAND AREAS
DETAIL A

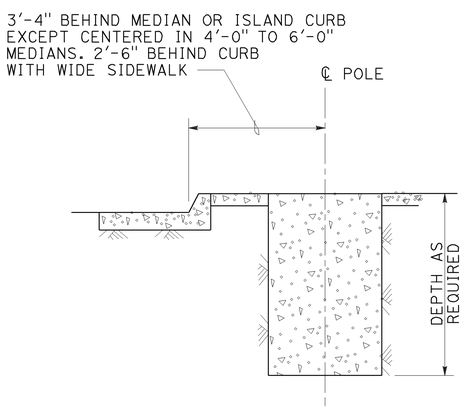

MEDIAN, ISLAND
OR WIDE SIDEWALK
DETAIL B-1
7' Wide and wider

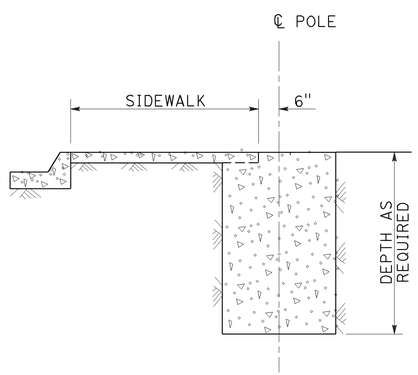

NARROW SIDEWALK
DETAIL B-2
Less than 7' wide

FOUNDATIONS IN SIDEWALK, MEDIAN AND ISLAND AREAS
DETAIL B

NOTES:

1. Where a portion of the foundation is above grade, the top edges shall have a 1" chamfer.
2. Slopes shall be horizontal to vertical ratio (Horizontal : Vertical).
3. Horizontal setbacks on cut and fill slopes steeper than 4:1 shall not exceed the distance shown for flat sections.
4. CIDH embedment depth shall be increased beyond standard depths by the diameter of the CIDH.

STATE OF CALIFORNIA
DEPARTMENT OF TRANSPORTATION

ELECTRICAL SYSTEMS (FOUNDATION INSTALLATIONS)

NO SCALE

RSP ES-11 DATED JULY 19, 2013 SUPERSEDES STANDARD PLAN ES-11
DATED MAY 20, 2011 - PAGE 488 OF THE STANDARD PLANS BOOK DATED 2010.

REVISED STANDARD PLAN RSP ES-11

2010 REVISED STANDARD PLAN RSP ES-11

7-9-13

Dist	COUNTY	ROUTE	POST MILES TOTAL PROJECT	SHEET No.	TOTAL SHEETS
07	LA,Ora	5	0.0/1.5, 44.3/44.4	1024	1622

Theresa Gabriel
REGISTERED ELECTRICAL ENGINEER

October 30, 2015
PLANS APPROVAL DATE

REGISTERED PROFESSIONAL ENGINEER
Theresa Aziz Gabriel
No. E15129
Exp. 6-30-16
ELECTRICAL
STATE OF CALIFORNIA

THE STATE OF CALIFORNIA OR ITS OFFICERS OR AGENTS SHALL NOT BE RESPONSIBLE FOR THE ACCURACY OR COMPLETENESS OF SCANNED COPIES OF THIS PLAN SHEET.

TO ACCOMPANY PLANS DATED 1-25-16

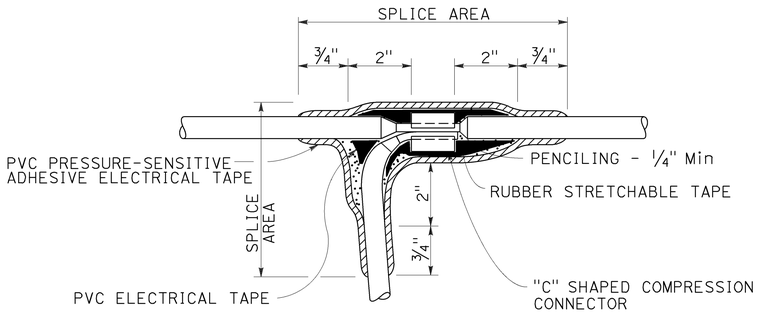

TYPE C SPLICE

See Note 3

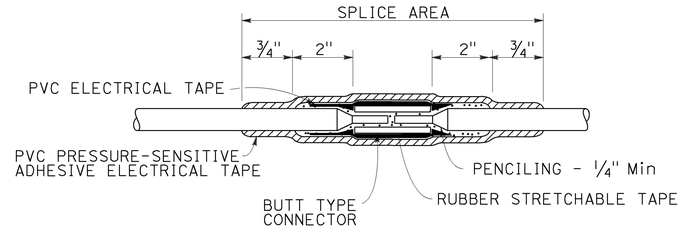

TYPE S SPLICE

See Note 4

NOTES:

1. Dimensions are minimum.
2. Rubber tapes shall be rolled after application.
3. Between 1 free-end and 1 through conductor.
4. Between 2 free-end conductors.
5. Between 3 free-end conductors.

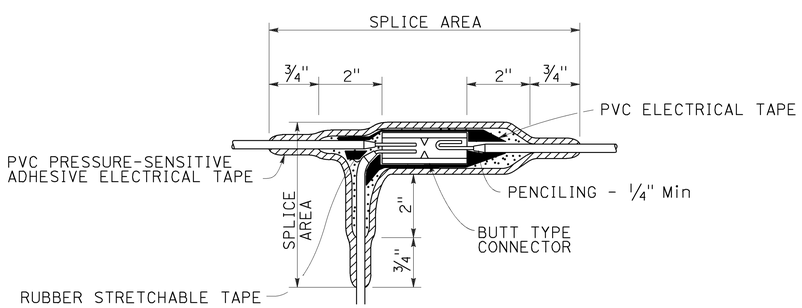

TYPE ST SPLICE

See Note 5

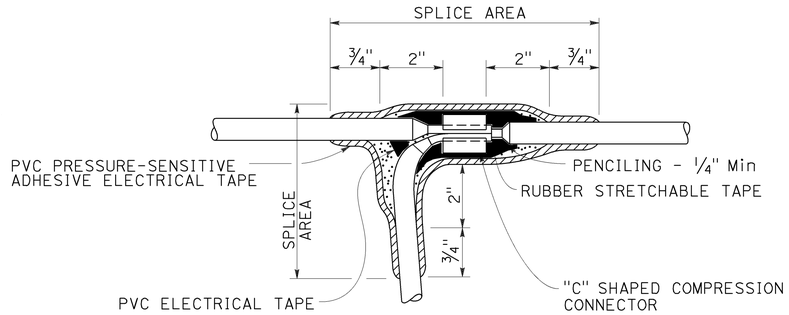

TYPE T SPLICE

See Note 5

STATE OF CALIFORNIA
DEPARTMENT OF TRANSPORTATION

ELECTRICAL SYSTEMS (SPLICING DETAILS)

NO SCALE

RSP ES-13A DATED OCTOBER 30, 2015 SUPERSEDES STANDARD PLAN ES-13A DATED MAY 20, 2011 - PAGE 491 OF THE STANDARD PLANS BOOK DATED 2010.

REVISED STANDARD PLAN RSP ES-13A

2010 REVISED STANDARD PLAN RSP ES-13A

Dist	COUNTY	ROUTE	POST MILES TOTAL PROJECT	SHEET No.	TOTAL SHEETS
07	LA,Ora	5	0.0/1.5, 44.3/44.4	1025	1622

Theresa Gabriel
REGISTERED ELECTRICAL ENGINEER

October 30, 2015
PLANS APPROVAL DATE

REGISTERED PROFESSIONAL ENGINEER Theresa Aziz Gabriel No. E15129 Exp. 6-30-16 ELECTRICAL STATE OF CALIFORNIA

THE STATE OF CALIFORNIA OR ITS OFFICERS OR AGENTS SHALL NOT BE RESPONSIBLE FOR THE ACCURACY OR COMPLETENESS OF SCANNED COPIES OF THIS PLAN SHEET.

TO ACCOMPANY PLANS DATED 1-25-16

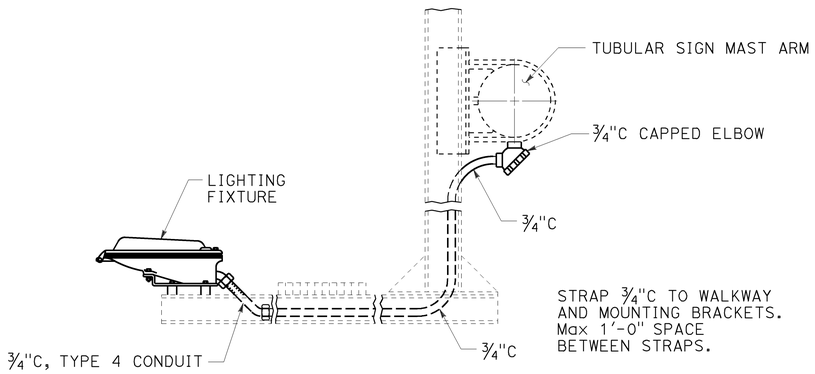

TYPICAL SIGN ILLUMINATION EQUIPMENT INSTALLATION FOR OVERHEAD SIGNS TUBULAR

DETAIL A

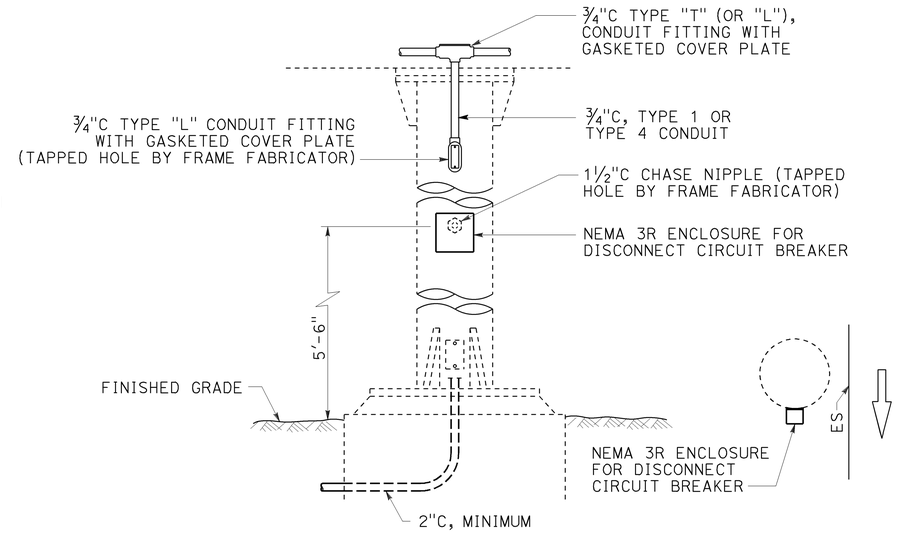

TYPICAL SIGN ILLUMINATION EQUIPMENT INSTALLATION FOR OVERHEAD SIGNS ROUND POST

DETAIL B

NOTES:

1. Type 4 conduit shall be secured to the nearest walkway bracket using one-hole galvanized malleable iron or steel straps and brass machine screws tapped into the bracket.
2. See Overhead Signs Standard Plans for overhead signs and frame juncture details for photoelectric unit installation.
3. Enclosures and straps shall be secured by ⅜" maximum size screws.
4. The Contactor and test switch enclosures shall be readily accessible from the sign walkway.

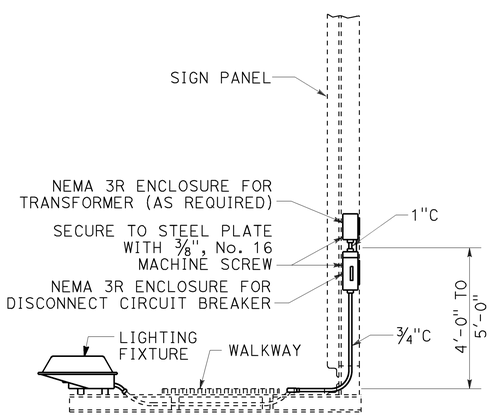

SIDE VIEW

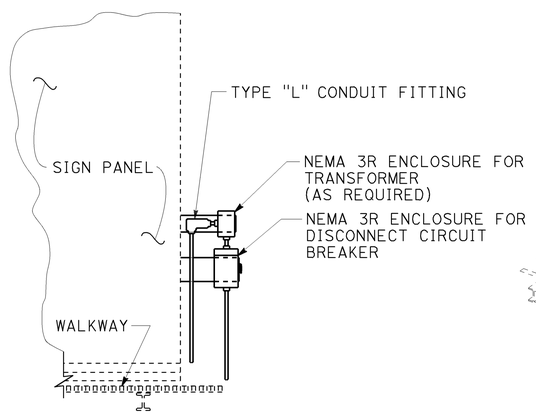

FRONT VIEW

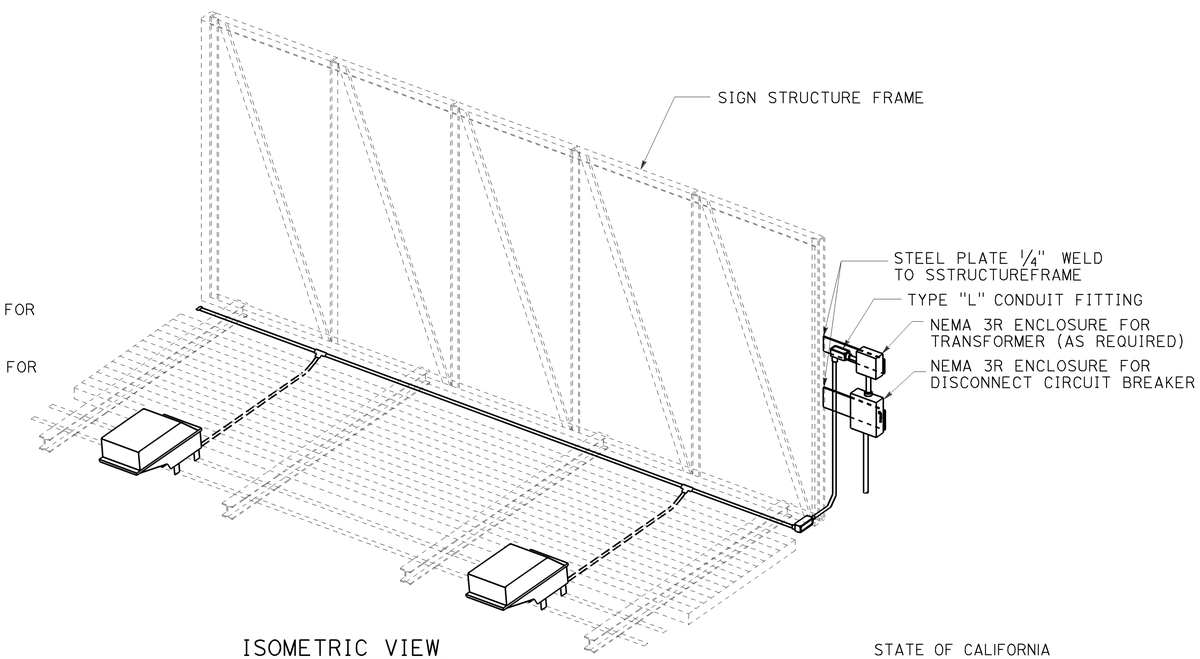

ISOMETRIC VIEW

TYPICAL SIGN ILLUMINATION EQUIPMENT INSTALLATION FOR OVERHEAD SIGNS BRIDGE MOUNTED

DETAIL C

See Note 4

STATE OF CALIFORNIA
DEPARTMENT OF TRANSPORTATION

ELECTRICAL SYSTEMS (SIGN ILLUMINATION EQUIPMENT)

NO SCALE

RSP ES-15C DATED OCTOBER 30, 2015 SUPERSEDES STANDARD PLAN ES-15C DATED MAY 20, 2011 - PAGE 498 OF THE STANDARD PLANS BOOK DATED 2010.

REVISED STANDARD PLAN RSP ES-15C

2010 REVISED STANDARD PLAN RSP ES-15C

8-24-15

Dist	COUNTY	ROUTE	POST MILES TOTAL PROJECT	SHEET No.	TOTAL SHEETS
07	LA,Ora	5	0.0/1.5, 44.3/44.4	1026	1622

Theresa Gabriel
REGISTERED ELECTRICAL ENGINEER

October 30, 2015
PLANS APPROVAL DATE

REGISTERED PROFESSIONAL ENGINEER Theresa Aziz Gabriel No. E15129 Exp. 6-30-16 ELECTRICAL STATE OF CALIFORNIA

THE STATE OF CALIFORNIA OR ITS OFFICERS OR AGENTS SHALL NOT BE RESPONSIBLE FOR THE ACCURACY OR COMPLETENESS OF SCANNED COPIES OF THIS PLAN SHEET.

TO ACCOMPANY PLANS DATED 1-25-16

2010 REVISED STANDARD PLAN RSP ES-15D

NOTE:

Type SC1A, SC2A, SC3A controls are similar to Types SC1, SC2 and SC controls respectively except test switch and wiring are not required.

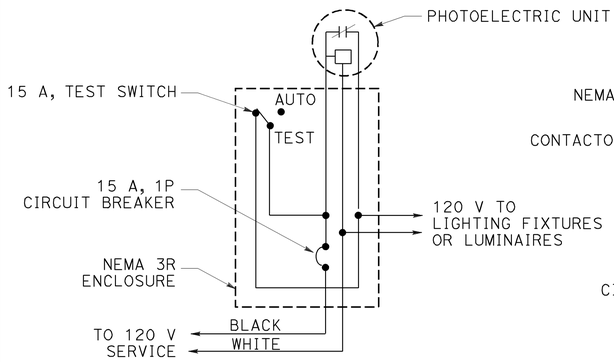

TYPE LC1 CONTROL

For 120 V unswitched circuit with no more than 1000 W load.

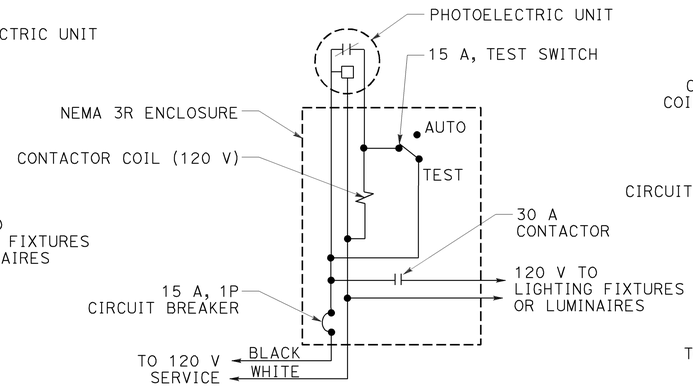

TYPE LC2 CONTROL

For 120 V unswitched circuit

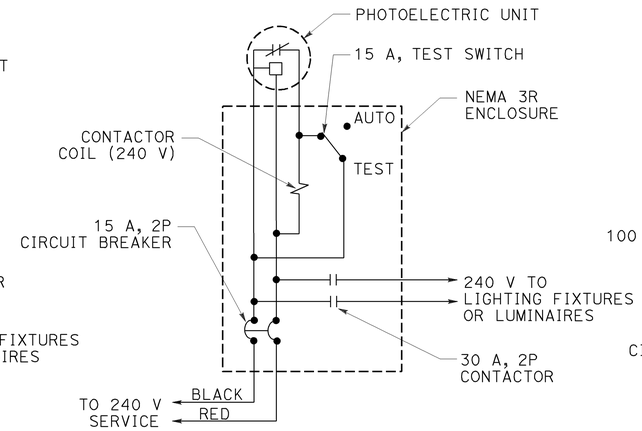

TYPE LC3 CONTROL

For 240 V unswitched circuits

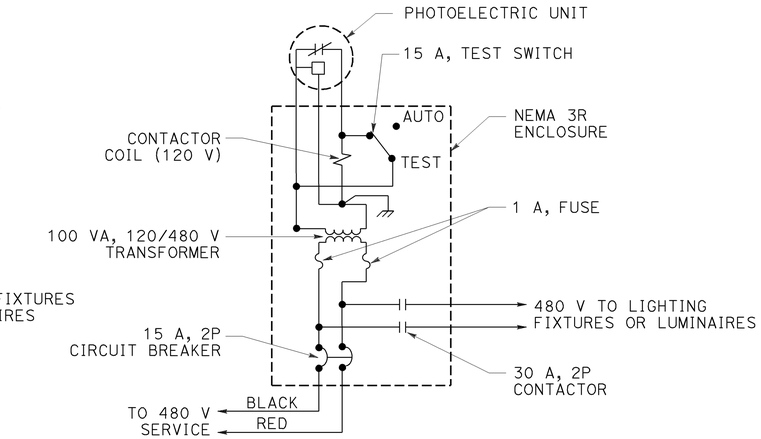

TYPE LC4 CONTROL

For 480 V unswitched circuits

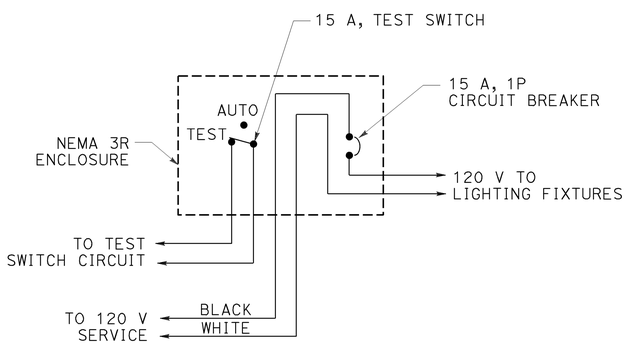

TYPE SC1 CONTROL

For 120 V switched circuit, see Note 1 for Type SC1A

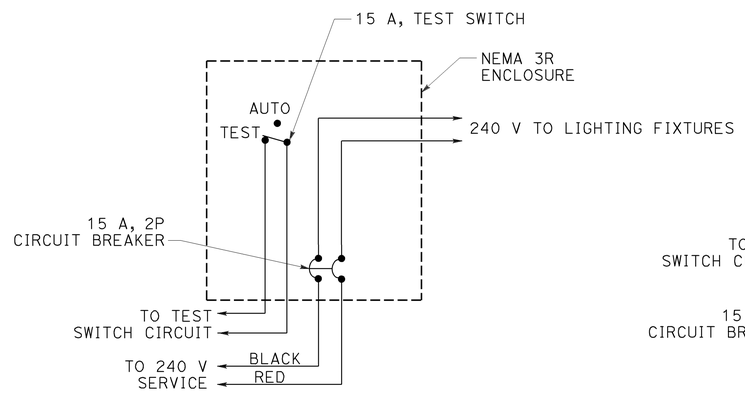

TYPE SC2 CONTROL

For 240 V switched circuit, see Note 1 for Type SC2A

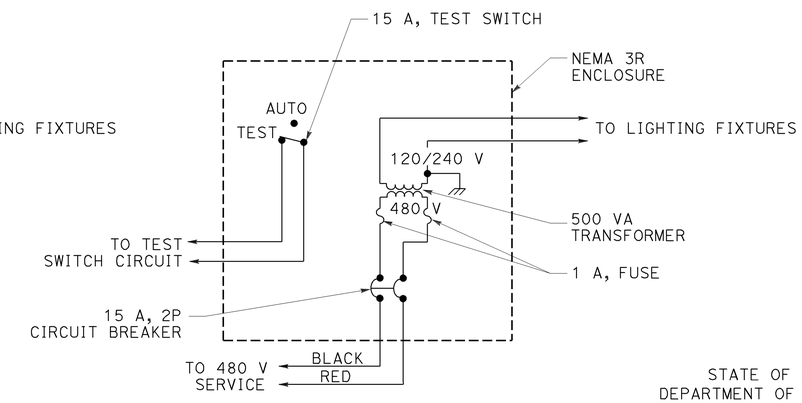

TYPE SC3 CONTROL

For 480 V switched sign circuit, see Note 1 for Type SC3A

STATE OF CALIFORNIA
DEPARTMENT OF TRANSPORTATION

ELECTRICAL SYSTEMS (LIGHTING AND SIGN ILLUMINATION CONTROL)

NO SCALE

RSP ES-15D DATED OCTOBER 30, 2015 SUPERSEDES STANDARD PLAN ES-15D DATED MAY 20, 2011 - PAGE 499 OF THE STANDARD PLANS BOOK DATED 2010.

REVISED STANDARD PLAN RSP ES-15D

8-20-15

Dist	COUNTY	ROUTE	POST MILES TOTAL PROJECT	SHEET No.	TOTAL SHEETS
07	LA,Ora	5	0.0/1.5, 44.3/44.4	1027	1622

REGISTERED CIVIL ENGINEER

October 30, 2015
PLANS APPROVAL DATE

REGISTERED PROFESSIONAL ENGINEER Stanley P. Johnson No. C57793 Exp. 3-31-16 CIVIL STATE OF CALIFORNIA

THE STATE OF CALIFORNIA OR ITS OFFICERS OR AGENTS SHALL NOT BE RESPONSIBLE FOR THE ACCURACY OR COMPLETENESS OF SCANNED COPIES OF THIS PLAN SHEET.

TO ACCOMPANY PLANS DATED 1-25-16

POLE EXTENSION TYPE	POLE DATA				HANDHOLE SIZE
	HEIGHT "h"	Min OD		THICKNESS	
		BASE	TOP		
CCTV 5	5′	4 9/16"	3 3/4"	0.1793"	3" x 5"
CCTV 10	10′	5 1/4"			
CCTV 15	15′	5 15/16"			

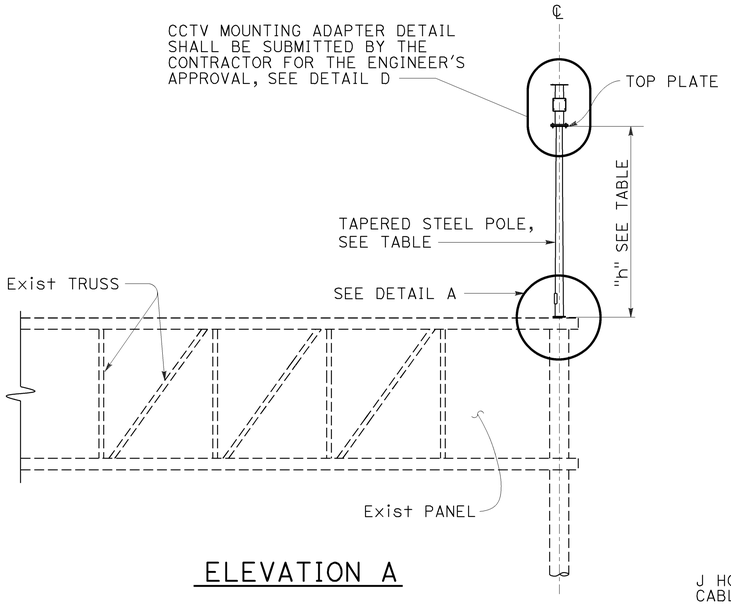

ELEVATION A

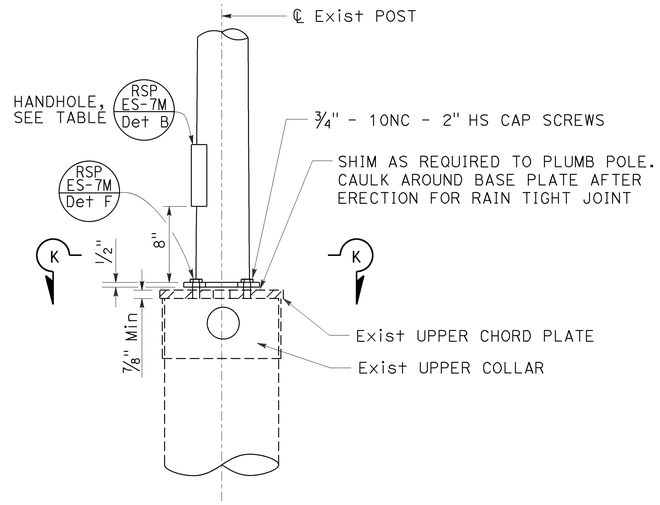

DETAIL A

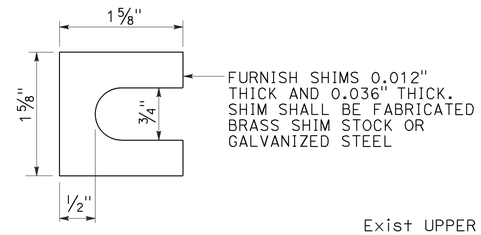

SHIM

DETAIL B

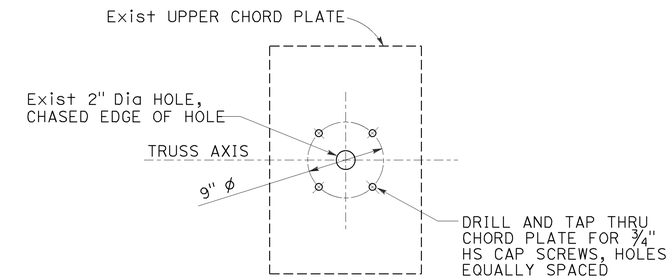

UPPER CHORD PLATE

DETAIL C

See Note 3

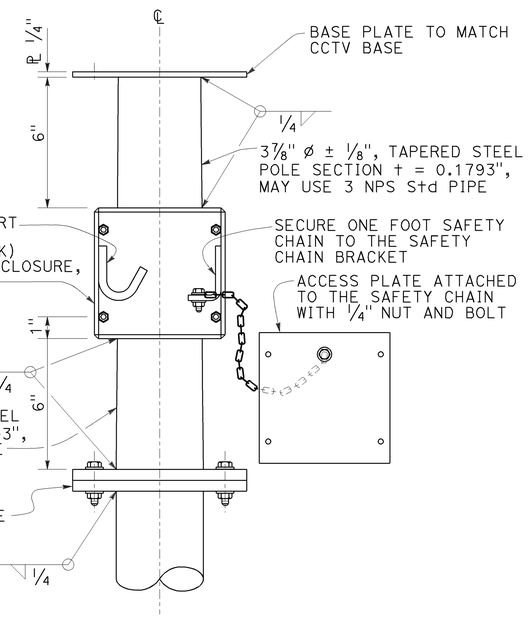

CLOSED CIRCUIT TELEVISION MOUNTING ADAPTER

DETAIL D

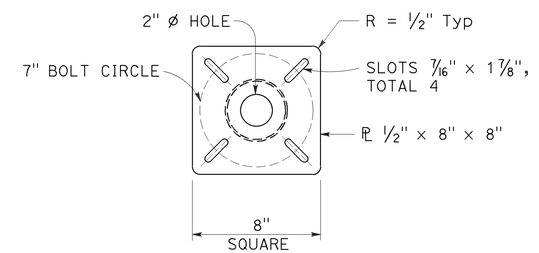

TOP PLATE

DETAIL E

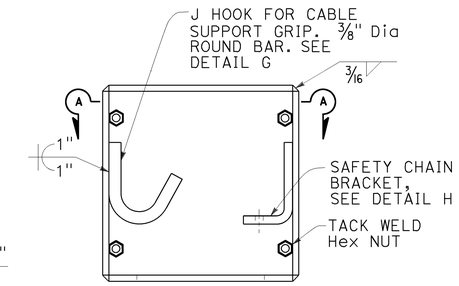

BOX ENCLOSURE

DETAIL F

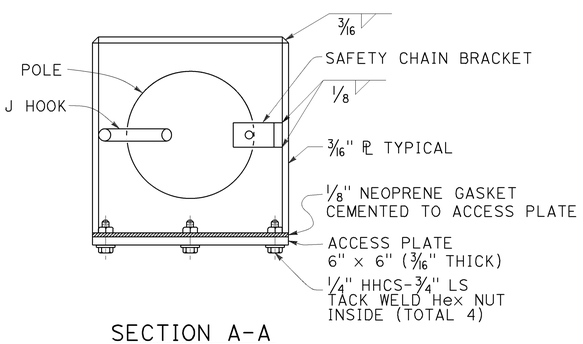

SECTION A-A

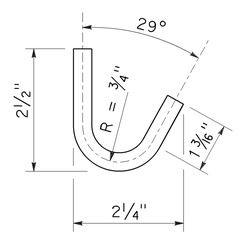

J HOOK

DETAIL G

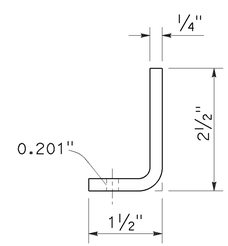

SAFETY CHAIN BRACKET

DETAIL H

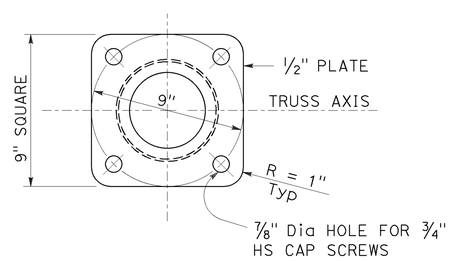

SECTION K-K

NOTES:

1. Verify controlling field dimensions before ordering or fabricating any material.
2. Bolt hole locations may vary at the discretion of the Engineer.
3. See Std Plan S13.
4. Wind Loadings (3-second gust) : 100 mph.
5. Unit Stresses (Structural Steel):
   a. fy = 55,000 psi (tapered steel tube)
   b. fy = 50,000 psi (unless otherwise noted)

STATE OF CALIFORNIA
DEPARTMENT OF TRANSPORTATION

ELECTRICAL SYSTEMS (CLOSED CIRCUIT TELEVISION, 5' TO 15' OVERHEAD SIGN MOUNTED POLE)

NO SCALE

RSP ES-16A DATED OCTOBER 30, 2015 SUPERSEDES STANDARD PLAN ES-16A DATED MAY 20, 2011 - PAGE 500 OF THE STANDARD PLANS BOOK DATED 2010.

REVISED STANDARD PLAN RSP ES-16A

2010 REVISED STANDARD PLAN RSP ES-16A

8-24-15

DIST	COUNTY	ROUTE	POST MILES TOTAL PROJECT	SHEET No.	TOTAL SHEETS
07	LA,Ora	5	0.0/1.5, 44.3/44.4	1028	1622

REGISTERED CIVIL ENGINEER 2-23-15 DATE

1-25-16
PLANS APPROVAL DATE

The State of California or its officers or agents shall not be responsible for the accuracy or completeness of electronic copies of this plan sheet.

REGISTERED PROFESSIONAL ENGINEER Daryoush Tavatli No. 56183 Exp. 12-31-16 CIVIL STATE OF CALIFORNIA

NOTE: For General Notes, Quantities and Index to Plans, see "INDEX TO PLANS" sheet

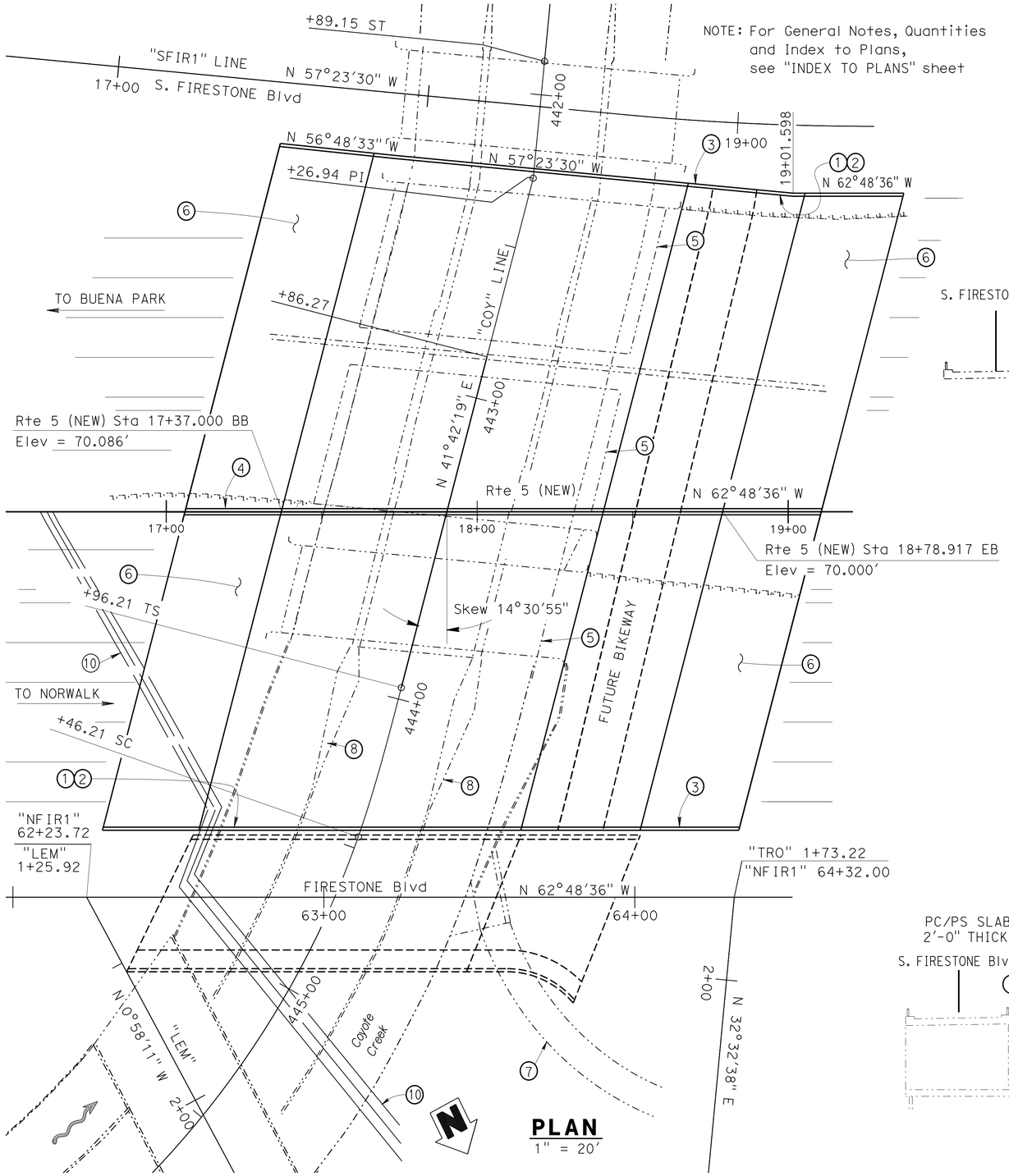

PLAN
1" = 20'

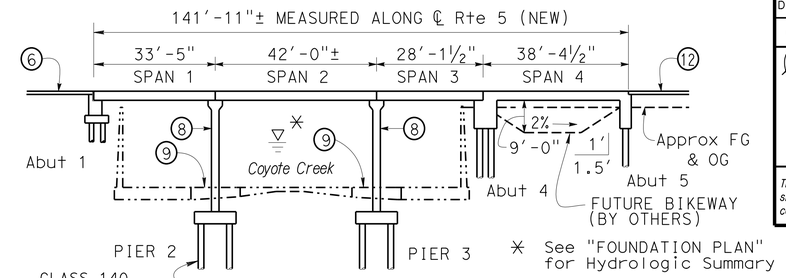

ELEVATION
1" = 20'

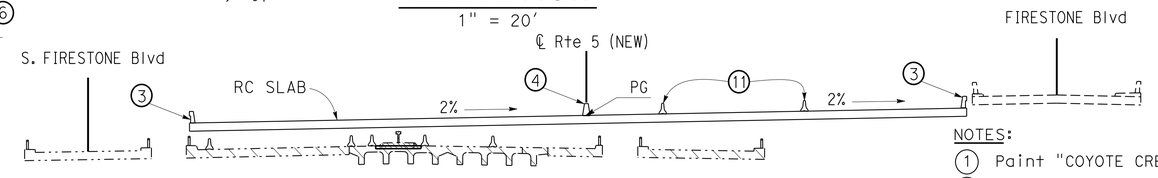

TYPICAL SECTION - SPAN 4
1" = 20'

NOTES:

1. Paint "COYOTE CREEK BR"
2. Paint "53-3044"
3. Conc Barrier, Type 736 Mod
4. Conc Barrier, Type 60GA
5. Remove exist superstructures, abutments and piers
6. Structure Approach Slab Type N(30S)
7. Exist side drain - 90"± ø with approx 7'-6" H x 15' W opening in channel wall
8. Remove portions of exist channel divider walls or bridge piers. Replace with new bridge piers. For concrete remove notes for partial channel wall, see "PAY LIMITS DETAILS NO. 1" sheet
9. Remove existing bridge footings
10. Relocate existing oil pipelines by others
11. Temp Railing Type K, See "ROAD PLANS"
12. Structure Approach Slab Type N(30D)

LEGEND:

- Indicates existing structure
- Indicates New Construction
- Indicates Bridge Removal

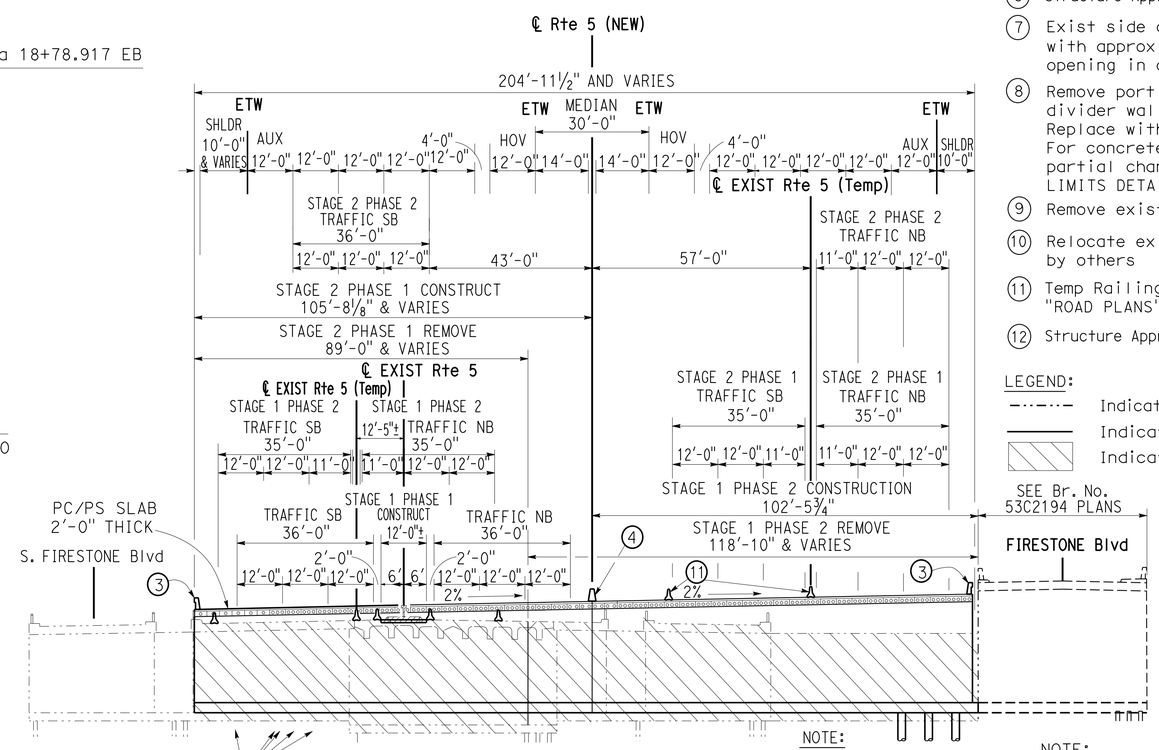

NOTE:
All piles not shown

TYPICAL SECTION - SPANS 1, 2 & 3
1" = 20'

NOTE:
THE CONTRACTOR MUST VERIFY ALL CONTROLLING FIELD DIMENSIONS BEFORE ORDERING OR FABRICATING ANY MATERIAL.

Ramin Rashedi 2-23-15 DESIGN ENGINEER	DESIGN	BY D. Tavatli	CHECKED J. Posey	LOAD & RESISTANCE FACTOR DESIGN	LIVE LOADING: HL93 W/"LOW-BOY": PERMIT DESIGN VEHICLE
	DETAILS	BY T. Bittermann	CHECKED D. Tavatli	LAYOUT BY D. Tavatli	CHECKED J. Posey
	QUANTITIES	BY D. Tavatli	CHECKED F. Fong	SPECIFICATIONS BY X. Li	PLANS AND SPECS COMPARED X

ORIGINAL SCALE IN INCHES FOR REDUCED PLANS 0 1 2 3

STATE OF CALIFORNIA
DEPARTMENT OF TRANSPORTATION

DIVISION OF ENGINEERING SERVICES
STRUCTURE DESIGN
DESIGN BRANCH 11

BRIDGE NO. 53-3044
POST MILE 0.34

COYOTE CREEK BRIDGE (REPLACE)
GENERAL PLAN

UNIT: 3587
PROJECT NUMBER & PHASE: 0715000160-1
CONTRACT NO.: 07-2159U4

DISREGARD PRINTS BEARING EARLIER REVISION DATES → 3-29-12 9-27-13 2-23-15 9-30-15

SHEET 1 OF 40

USERNAME => s125624 DATE PLOTTED => 28-JAN-2016 TIME PLOTTED => 11:55

STRUCTURES DESIGN GENERAL PLAN SHEET (ENGLISH) (REV.09-01-10)

FILE => 53-3044-a-gp.dgn

DIST	COUNTY	ROUTE	POST MILES TOTAL PROJECT	SHEET No.	TOTAL SHEETS
07	LA,Ora	5	0.0/1.5, 44.3/44.4	1029	1622

REGISTERED CIVIL ENGINEER 2-23-15 DATE

1-25-16
PLANS APPROVAL DATE

REGISTERED PROFESSIONAL ENGINEER Daryoush Tavatli No. 56183 Exp. 12-31-16 CIVIL STATE OF CALIFORNIA

The State of California or its officers or agents shall not be responsible for the accuracy or completeness of electronic copies of this plan sheet.

INDEX TO PLANS

SHEET No.	TITLE
1	GENERAL PLAN
2	INDEX TO PLANS
3	DECK CONTOURS
4	FOUNDATION PLAN No. 1
5	FOUNDATION PLAN No. 2
6	ABUTMENT 1 LAYOUT
7	ABUTMENT 4 LAYOUT
8	ABUTMENT 5 LAYOUT
9	ABUTMENT DETAILS No. 1
10	ABUTMENT DETAILS NO. 2
11	PIER 2 LAYOUT
12	PIER 3 LAYOUT
13	PIER PILE LAYOUTS
14	PIER DETAILS
15	TYPICAL SECTION
16	TYPICAL SECTION DETAILS
17	CIP/RC SLAB TYPICAL SECTION
18	TOP DECK REINFORCEMENT
19	SLAB REINFORCEMENT
20	GIRDER LAYOUT
21	PRECAST SLAB DETAILS No. 1
22	PRECAST SLAB DETAILS No. 2
23	PRECAST SLAB DETAILS No. 3
24	PRECAST SLAB DETAILS No. 4
25	PRECAST SLAB DETAILS NO. 5
26	DRAINAGE LAYOUT
27	DRAINAGE DETAILS NO. 1
28	DRAINAGE DETAILS NO. 2
29	PAY LIMITS DETAILS NO. 1
30	PAY LIMITS DETAILS NO. 2
31	AERIALLY DEPOSITED LEAD EXCAVATION LIMITS
32	STRUCTURE APPROACH DRAINAGE DETAILS
33	STRUCTURE APPROACH TYPE N(30S)
34	STRUCTURE APPRAOCH TYPE N(30D)
35	ARCHITECTURAL TREATMENT DETAILS
36	LOG OF TEST BORINGS SHEET 1 OF 5
37	LOG OF TEST BORINGS SHEET 2 OF 5
38	LOG OF TEST BORINGS SHEET 3 OF 5
39	LOG OF TEST BORINGS SHEET 4 OF 5
40	LOG OF TEST BORINGS SHEET 5 OF 5

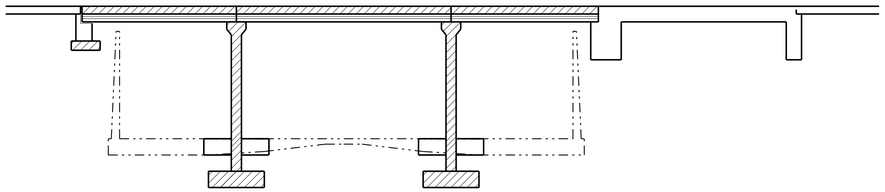

STRUCTURAL CONCRETE, BRIDGE 3600 PSI @ 28 DAYS)
STRUCTURAL CONCRETE, BRIDGE (4000 PSI @ 28 DAYS)
PC/PS CONCRETE SLAB (SEE PRESTRESSING NOTES FOR CONC STRENGTH)

CONCRETE STRENGTH AND TYPE LIMITS

NO SCALE

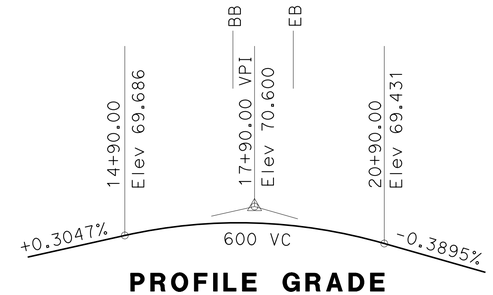

PROFILE GRADE

NO SCALE

PILE DATA TABLE

LOCATION	PILE TYPE	NOMINAL RESISTANCE (KIPS) COMPRESSION	NOMINAL RESISTANCE (KIPS) TENSION	CUT-OFF ELEV (FT)	DESIGN TIP ELEVATION (FT)	SPECIFIED TIP ELEVATION (FT)	NOMINAL DRIVING RESISTANCE (KIPS)
Abut 1	CLASS 140 Alt "W"	160	0	58.92 60.92 62.92	70.0 (a) 18.5 (c)	7.0	160
PIER 2	CLASS 140 Alt "W"	210	110	40.92	-14.0 (a) -4.0 (b) 2.0 (c)	-14.0	210
PIER 3	CLASS 140 Alt "W"	210	110	40.92	-14.0 (a) -4.0 (b) 2.0 (c)	-14.0	210
Abut 4	CLASS 140 Alt "W"	280	0	60.92 62.92 64.92	-13.0 (a) 12.5 (c)	-13.0	280
Abut 5	CLASS 140 Alt "W"	220	0	60.92 62.92 64.92	2.0 (a) 19.5 (c)	2.0	220

NOTES:
1. Design Tip Elevations are controlled by: (a) Compression (b) Tension (c) Settlement, (d) Lateral Load
2. The specified tip elevation shall not be raised above the design tip elevation for Tension, Settlement, and Lateral Load
3. Piles at abutments 1 and 4 shall be drilled to elevation 46.0 ft

QUANTITIES

BRIDGE REMOVAL, LOCATION B	LUMP	SUM
STRUCTURE EXCAVATION (BRIDGE)	883	CY
STRUCTURE EXCAVATION (TYPE D)	1,075	CY
STRUCTURE EXCAVATION (TYPE Y-1) (AERIALLY DEPOSITED LEAD)	49	CY
STRUCTURE EXCAVATION (TYPE Y-2) (AERIALLY DEPOSITED LEAD)	33	CY
STRUCTURE BACKFILL (BRIDGE)	1,030	CY
GEOSYNTHETIC REINFORCE EMBACKMENT	912	CY
FURNISH PILING (CLASS 140) (ALTERNATIVE W)	21,436	LF
DRIVE PILE (CLASS 140) (ALTERNATIVE W)	362	EA
STRUCTURAL CONCRETE, BRIDGE FOOTING	419	CY
STRUCTURAL CONCRETE, BRIDGE	2,666	CY
STRUCTURAL CONCRETE, APPROACH SLAB (TYPE N)	606	CY
DRILL AND BOND DOWEL	92	LF
DRILL AND BOND DOWEL (CHEMICAL ADHESIVE)	936	EA
FURNISH PRECAST PRESTRESSED CONCRETE SLAB (TYPE SIII MODIFIED)	22,400	SQFT
ERECT PRECAST PRESTRESSED CONCRETE DECK UNIT	165	EA
JOINT SEAL (MR1/2")	654	LF
BAR REINFORCING STEEL (BRIDGE)	470,550	LB
BAR REINFORCING STEEL (EPOXY COATED) (BRIDGE)	44,284	LB
BRIDGE DECK DRAINAGE SYSTEM	1,705	LB
CONCRETE BARRIER (TYPE 60GA)	202	LF
CONCRETE BARRIER (TYPE 736 MODIFIED)	404	LF

STANDARD PLANS DATED 2010

	A10A	ABBREVIATIONS (SHEET 1 OF 2)
RSP	A10B	ABBREVIATIONS (SHEET 2 OF 2)
	A10C	LINES AND SYMBOLS (SHEET 1 OF 3)
	A10D	LINES AND SYMBOLS (SHEET 2 OF 3)
	A10E	LINES AND SYMBOLS (SHEET 3 OF 3)
RSP	A10F	LEGEND-SOIL (SHEET 1 OF 2)
RSP	A10G	LEGEND-SOIL (SHEET 2 OF 2)
	A10H	LEGEND-ROCK
	A62B	LIMITS OF PAYMENT FOR EXCAVATION AND BACKFILL - BRIDGE SURCHARGE AND WALL
RSP	A76A	CONCRETE BARRIER TYPE 60
	A76D	CONCRETE BARRIER TYPE 60G
	B0-1	BRIDGE DETAILS
	B0-5	BRIDGE DETAILS
	B0-13	BRIDGE DETAILS
	B2-5	PIPE DETAILS CLASS 90 AND CLASS 140
	B6-21	JOINT SEALS (MAXIMUM MOVEMENT RATING=2")
	B7-8	DECK DRAINAGE DETAILS
RSP	B11-56	CONCRETE BARRIER TYPE 736
	B14-3	COMMUNICATION AND SPRINKLER CONTROL CONDUITS (CONDUIT LESS THAN 4")

STANDARD PLAN SHEET No.

DETAIL No.

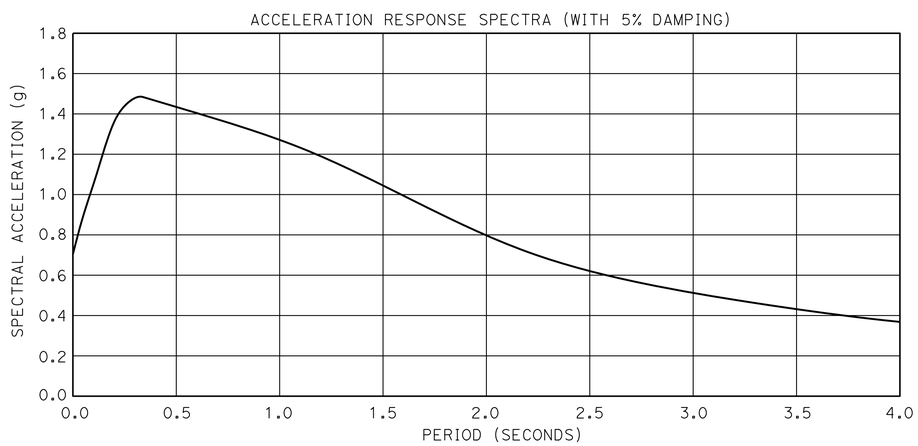

SITE SPECIFIC ARS CURVE

GENERAL NOTES
LOAD AND RESISTANCE FACTOR DESIGN

DESIGN:

AASHTO LRFD Bridge Design Specification, 4th edition with interims through 2010 and the Caltrans amendment v3.06.01

SEISMIC DESIGN:

Caltrans Seismic Design Criteria (SDC), Version 1.6 dated November 2010

DEAD LOAD:

Includes 35 psf for future wearing surface.

LIVE LOADING:

HL93 and permit design load.

CONCRETE:

fy = 60 ksi
f'c = 3.6 ksi
n = 8

See prestressing notes on "PC/PS SLAB DETAILS" sheet

	BY	CHECKED
DESIGN	D. Tavatli	J. Posey
DETAILS	J. Ramirez	D. Tavatli
QUANTITIES	D. Tavatli	F. Fong

STATE OF CALIFORNIA
DEPARTMENT OF TRANSPORTATION

DIVISION OF ENGINEERING SERVICES
STRUCTURE DESIGN
DESIGN BRANCH 11

BRIDGE NO. 53-3044
POST MILE 0.34

COYOTE CREEK BRIDGE (REPLACE)
INDEX TO PLANS

STRUCTURES DESIGN DETAIL SHEET (ENGLISH) (REV. 09-01-10)

ORIGINAL SCALE IN INCHES FOR REDUCED PLANS 0 1 2 3

UNIT: 3587
PROJECT NUMBER & PHASE: 0715000160-1
CONTRACT NO.: 07-2159u4

DISREGARD PRINTS BEARING EARLIER REVISION DATES

REVISION DATES: 3-22-12 3-22-13 3-22-14 2-23-15

SHEET 2 OF 40

FILE => 53-3044-a-itp.dgn

USERNAME => s125624 DATE PLOTTED => 28-JAN-2016 TIME PLOTTED => 11:55

DIST	COUNTY	ROUTE	POST MILES TOTAL PROJECT	SHEET No.	TOTAL SHEETS
07	LA,Ora	5	0.0/1.5, 44.3/44.4	1030	1622

REGISTERED CIVIL ENGINEER 3-18-15 DATE

1-25-16
PLANS APPROVAL DATE

REGISTERED PROFESSIONAL ENGINEER
Daryoush Tavatli
No. 56183
Exp. 12-31-16
CIVIL
STATE OF CALIFORNIA

The State of California or its officers or agents shall not be responsible for the accuracy or completeness of electronic copies of this plan sheet.

NOTES:

1. Contours do not include camber
2. Contour interval = 0.25′

× Indicates 10.0′ intervals along station line

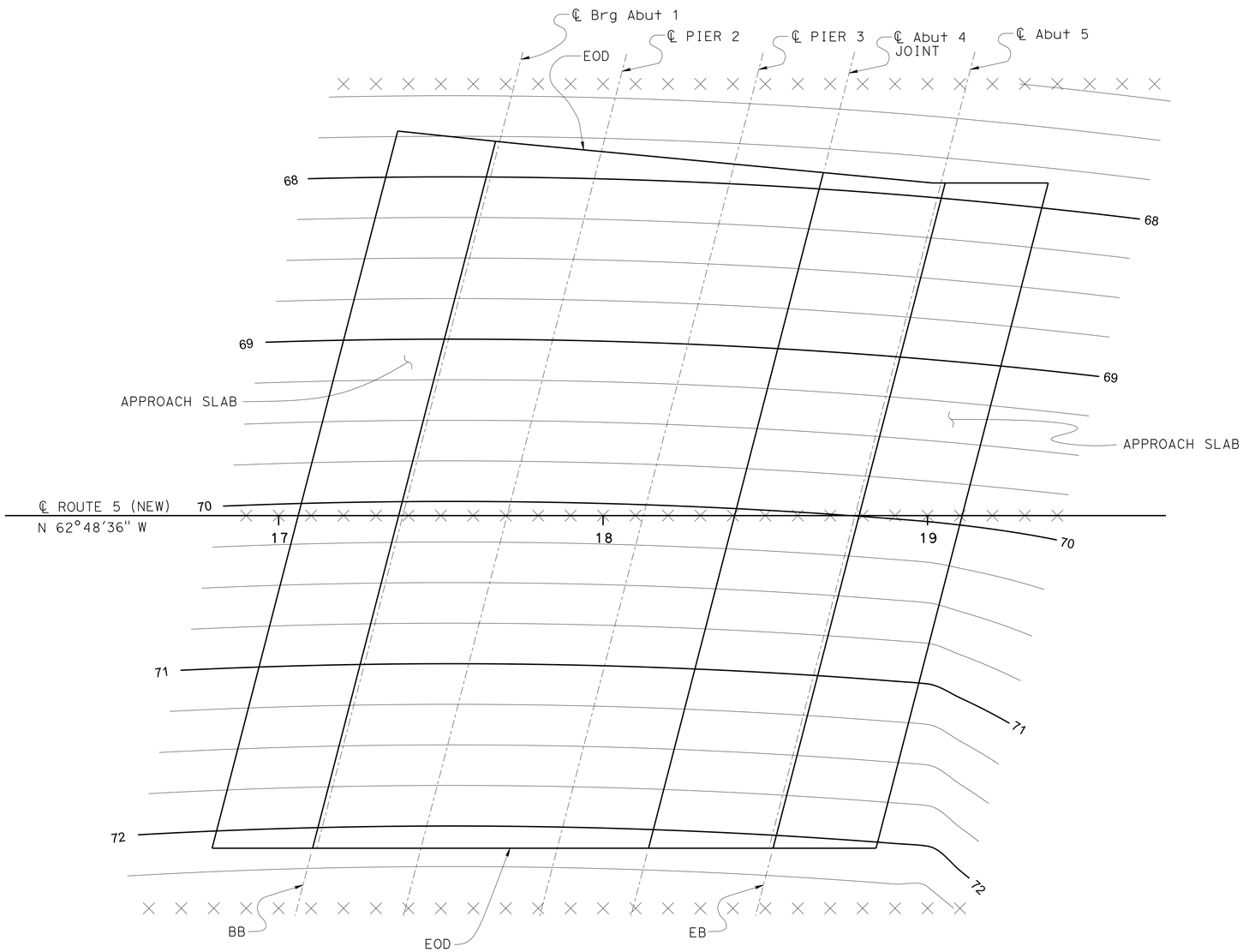

PLAN
1″ = 20′-0″

DESIGN	BY D. Tavatli	CHECKED J. Posey	
DETAILS	BY P. Tong	CHECKED D. Tavatli	
QUANTITIES	BY D. Tavatli	CHECKED F. Fong	

STATE OF CALIFORNIA
DEPARTMENT OF TRANSPORTATION

DIVISION OF ENGINEERING SERVICES
STRUCTURE DESIGN
DESIGN BRANCH 11

BRIDGE NO. 53-3044
POST MILE 0.34

COYOTE CREEK BRIDGE (REPLACE)
DECK CONTOURS

STRUCTURES DESIGN DETAIL SHEET (ENGLISH) (REV. 09-01-10)

ORIGINAL SCALE IN INCHES FOR REDUCED PLANS 0 1 2 3

UNIT: 3587
PROJECT NUMBER & PHASE: 0715000160-1
CONTRACT NO.: 07-2159U4

DISREGARD PRINTS BEARING EARLIER REVISION DATES

REVISION DATES: 06-25-12 7-20-13 9-20-13 3-26-12

SHEET 3 OF 40

FILE => 53-3044-b-dc.dgn

USERNAME => s123624 DATE PLOTTED => 28-JAN-2016 TIME PLOTTED => 11:55

DIST	COUNTY	ROUTE	POST MILES TOTAL PROJECT	SHEET No	TOTAL SHEETS
07	LA,Ora	5	0.0/1.5, 44.3/44.4	1031	1622

REGISTERED CIVIL ENGINEER 3-18-15 DATE

1-25-16
PLANS APPROVAL DATE

The State of California or its officers or agents shall not be responsible for the accuracy or completeness of electronic copies of this plan sheet.

REGISTERED PROFESSIONAL ENGINEER Daryoush Tavatli No. 56183 Exp. 12-31-16 CIVIL STATE OF CALIFORNIA

CURVE DATA				
No.	R	Δ	T	L
1	6069.55	15°18′22"	815.57	1621.42
5	850.00	05°27′36"	40.53	81.00
6	300.00	38°10′19"	103.80	199.87
7	1700.00	04°53′29"	72.61	145.13

SPIRAL CURVE DATA				
No.	Δs	Ls	TL	Ts
2	0°50′33"	50.00	33.334	16.667

Bridge #53-3044 Location

(AA) - 105.28 LT. ℄ SR 5, STA. 17+73.92, EL.= 68.139±
(BB) - 2.68 LT. ℄ SR 5, STA. 17+47.41, EL.= 67.917±
(CC) - 97.27 LT. ℄ SR 5, STA. 18+60.77, EL.= 68.153±

(A) STA.442+03.81 "COY" LINE = STA.18+36.19 "FRS1" LINE

(B) STA.443+37.76 "COY" LINE = STA.17+90.24 ℄ ROUTE 5

PRHV54
N 1 777 602.265
E 6 556 736.703
ELEV. = 68.06′

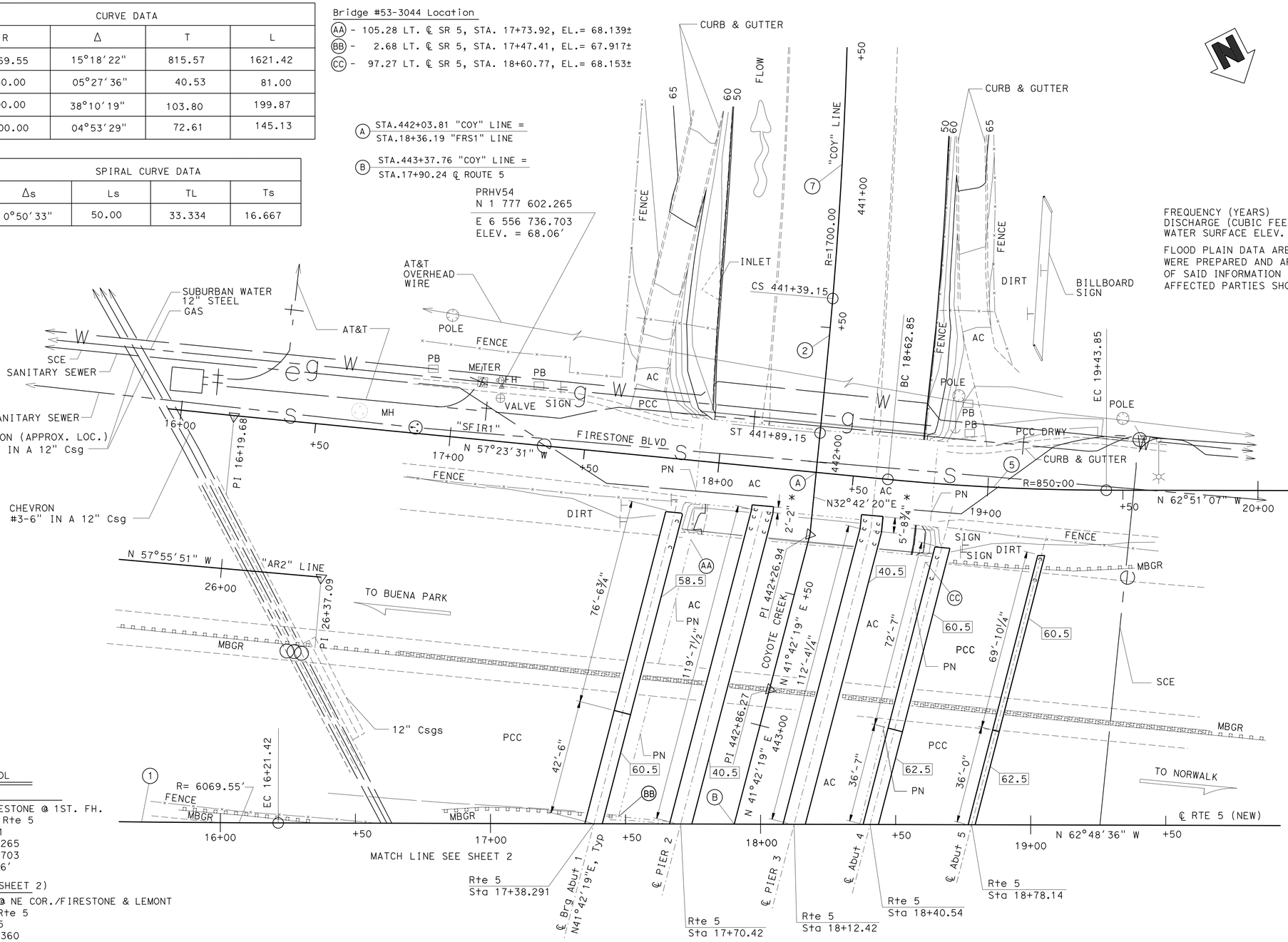

HYDROLOGIC SUMMARY

DRAINAGE AREA: 45 SQUARE MILE

	DESIGN FLOOD	BASE FLOOD	CHANNEL CAMPACITY
FREQUENCY (YEARS)	50	100	N/A
DISCHARGE (CUBIC FEET PER SECOND)	10,000	16,000	21,500
WATER SURFACE ELEV. AT BRIDGE (FEET)	57.4	61.9	65.6

FLOOD PLAIN DATA ARE BASED UPON INFORMATION AVAILABLE WHEN THE PLANS WERE PREPARED AND ARE SHOWN TO MEET FEDERAL REQUIREMENTS. THE ACCURACY OF SAID INFORMATION IS NOT WARRANTED BY THE STATE AND INTERESTED OR AFFECTED PARTIES SHOULD MAKE THEIR OWN INVESTIGATIONS.

SURVEY CONTROL

PRHV54
"X"ON TC/FIRESTONE @ 1ST. FH.
161.67′Lt. ℄ Rte 5
Sta. 17+03.71
N 1 777 602.265
E 6 556 736.703
Elev. = 68.06′

PRHV65 (SEE SHEET 2)
Fnd"X"ON TC @ NE COR./FIRESTONE & LEMONT
30.40′Rt. ℄ Rte 5
Sta. 15+90.75
N 1 777 721.360
E 6 556 925.050
Elev.= 68.28′

NOTES:

UNDERGROUND UTILITIES AS SHOWN ARE APPROXIMATE

* - Approximate, to be determined.

** - Exist bridge to be removed.

XX.X INDICATES BOTTOM OF FOOTING ELEVATION

PRELIMINARY INVESTIGATION SECTION

SCALE	VERT.DATUM NAVD 88	PHOTOGRAMMETRY AS OF: X		
1:20	HORZ.DATUM NAD 83(1991.35)	SURVEYED	BY C. STEWART/T. PHUNG	CHECKED BY C. STEWART 12/09
ALIGNMENT TIES Dist. Trav. Sheets		DRAFTED	BY S. ABASSY 01/2010	CHECKED BY L. MANABO 01/2010

	BY	CHECKED
DESIGN	D. Tavatli	J. Posey
DETAILS	T. Bittermann	D. Tavatli
QUANTITIES	D. Tavatli	F. Fong

STATE OF CALIFORNIA DEPARTMENT OF TRANSPORTATION

DIVISION OF ENGINEERING SERVICES STRUCTURE DESIGN DESIGN BRANCH 11

BRIDGE NO. 53-3044
POST MILE 0.34

COYOTE CREEK BRIDGE (REPLACE)
FOUNDATION PLAN NO. 1

STRUCTURES FOUNDATION PLAN SHEET (ENGLISH) (REV. 10/25/05)

ORIGINAL SCALE IN INCHES FOR REDUCED PLANS 0 1 2 3

CU 07223
EA 07-2159u4

DISREGARD PRINTS BEARING EARLIER REVISION DATES

REVISION DATES: 01/28/10 01/06/11 9-28-11 4-6-12 4-16-12 5-04-12 06-13-12 6/27/13 8/20/13

SHEET 4 OF 40

FILE => 53-3044-c-fp1.dgn

USERNAME => s125824 DATE PLOTTED => 28-JAN-2016 TIME PLOTTED => 11:55

DIST	COUNTY	ROUTE	POST MILES TOTAL PROJECT	SHEET No	TOTAL SHEETS
07	LA,Ora	5	0.0/1.5, 44.3/44.4	1032	1622

REGISTERED CIVIL ENGINEER — DATE 3-18-15

1-25-16
PLANS APPROVAL DATE

The State of California or its officers or agents shall not be responsible for the accuracy or completeness of electronic copies of this plan sheet.

REGISTERED PROFESSIONAL ENGINEER — Daryoush Tavatli — No. 56183 — Exp. 12-31-16 — CIVIL — STATE OF CALIFORNIA

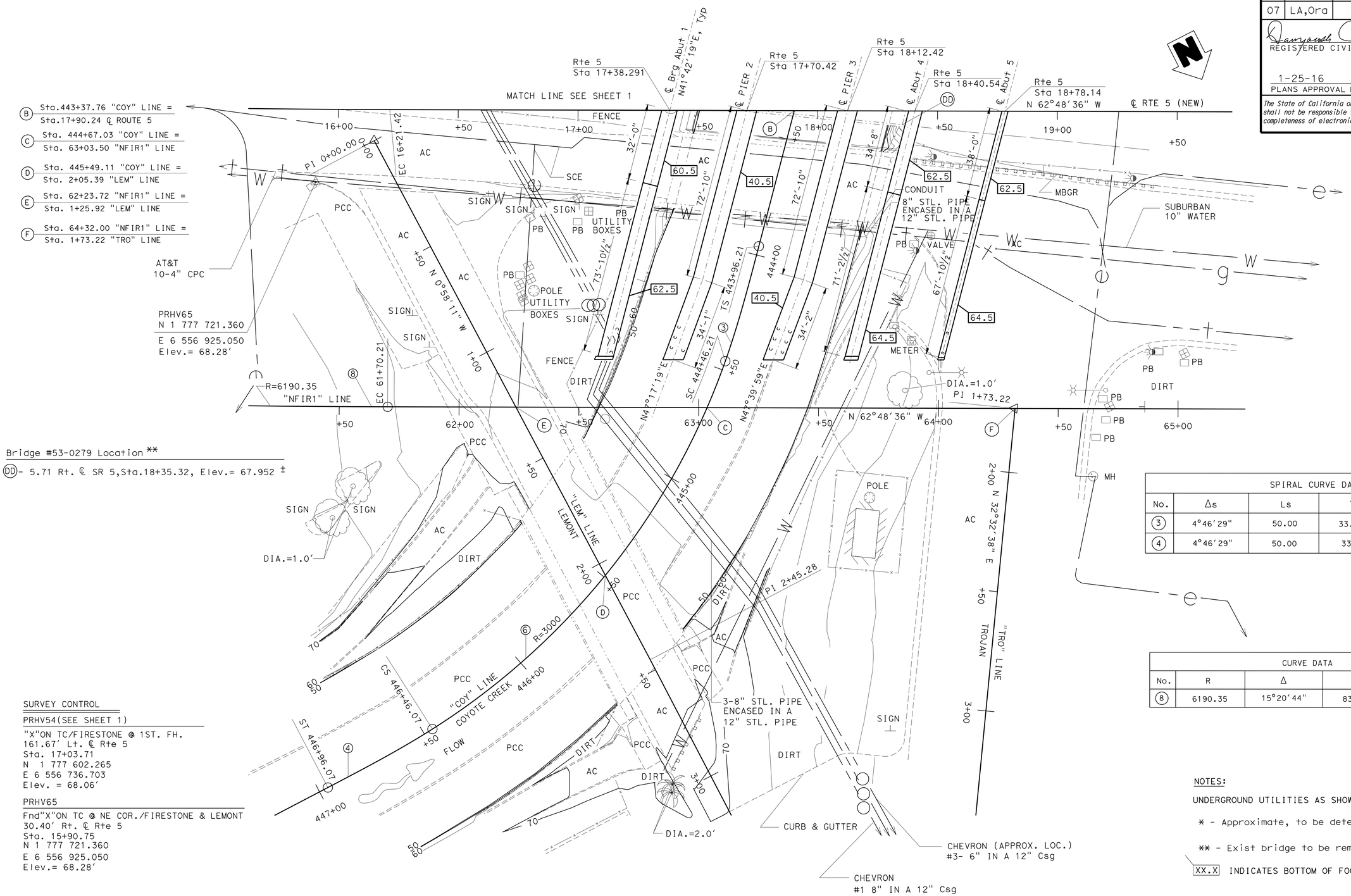

Bridge #53-0279 Location **

Ⓓ- 5.71 Rt. ℄ SR 5,Sta.18+35.32, Elev.= 67.952 ±

SURVEY CONTROL

PRHV54(SEE SHEET 1)

"X"ON TC/FIRESTONE @ 1ST. FH.
161.67' Lt. ℄ Rte 5
Sta. 17+03.71
N 1 777 602.265
E 6 556 736.703
Elev. = 68.06'

PRHV65

Fnd"X"ON TC @ NE COR./FIRESTONE & LEMONT
30.40' Rt. ℄ Rte 5
Sta. 15+90.75
N 1 777 721.360
E 6 556 925.050
Elev.= 68.28'

SPIRAL CURVE DATA

No.	Δs	Ls	TL	Ts
3	4°46'29"	50.00	33.345	16.678
4	4°46'29"	50.00	33.345	16.678

CURVE DATA

No.	R	Δ	T	L
8	6190.35	15°20'44"	833.98	1657.97

NOTES:

UNDERGROUND UTILITIES AS SHOWN ARE APPROXIMATE

* - Approximate, to be determined.

** - Exist bridge to be removed.

XX.X INDICATES BOTTOM OF FOOTING ELEVATION

PRELIMINARY INVESTIGATION SECTION

SCALE	VERT.DATUM NAVD 88	PHOTOGRAMMETRY AS OF: X			
1:20	HORZ.DATUM NAD 83(1991.35)	SURVEYED	BY C. STEWART/T. PHUNG	CHECKED	BY C. STEWART 12/09
ALIGNMENT TIES Dist. Trav. Sheets		DRAFTED	BY S. ABASSY 01/2010	CHECKED	BY L. MANABO 01/2010

	BY	CHECKED
DESIGN	D. Tavatli	J. Posey
DETAILS	T. Bittermann	D. Tavatli
QUANTITIES	D. Tavatli	F. Fong

STATE OF CALIFORNIA
DEPARTMENT OF TRANSPORTATION

DIVISION OF ENGINEERING SERVICES
STRUCTURE DESIGN
DESIGN BRANCH 11

BRIDGE NO. 53-3044
POST MILE 0.34

COYOTE CREEK BRIDGE (REPLACE)
FOUNDATION PLAN NO. 2

STRUCTURES FOUNDATION PLAN SHEET (ENGLISH) (REV. 10/25/05)

ORIGINAL SCALE IN INCHES FOR REDUCED PLANS 0 1 2 3

CU 07223
EA 07-2159u4

DISREGARD PRINTS BEARING EARLIER REVISION DATES

REVISION DATES: 01/28/10 01/05/11 9-30-11 1-3-12 3-6-12 5-16-12 06-13-12 7/29/13

SHEET 5 OF 40

FILE => 53-3044-c-fp2.dgn

USERNAME => s125624 DATE PLOTTED => 28-JAN-2016 TIME PLOTTED => 11:55

DIST	COUNTY	ROUTE	POST MILES TOTAL PROJECT	SHEET No.	TOTAL SHEETS
07	LA,Ora	5	0.0/1.5, 44.3/44.4	1033	1622

REGISTERED CIVIL ENGINEER — DATE 2-23-15

1-25-16
PLANS APPROVAL DATE

REGISTERED PROFESSIONAL ENGINEER — Daryoush Tavatli — No. 56183 — Exp. 12-31-16 — CIVIL — STATE OF CALIFORNIA

The State of California or its officers or agents shall not be responsible for the accuracy or completeness of electronic copies of this plan sheet.

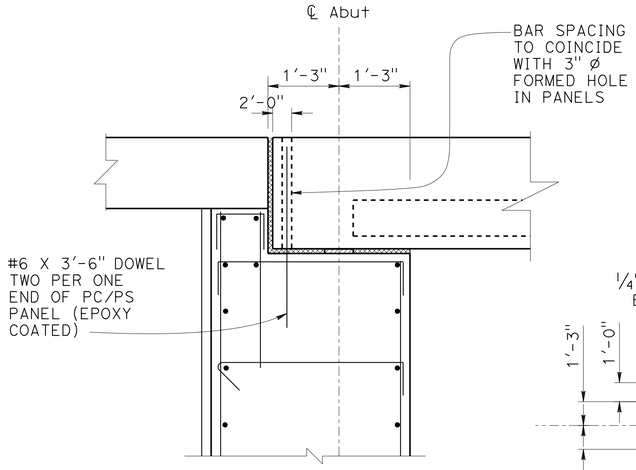

DETAIL A
3/4" = 1'-0"

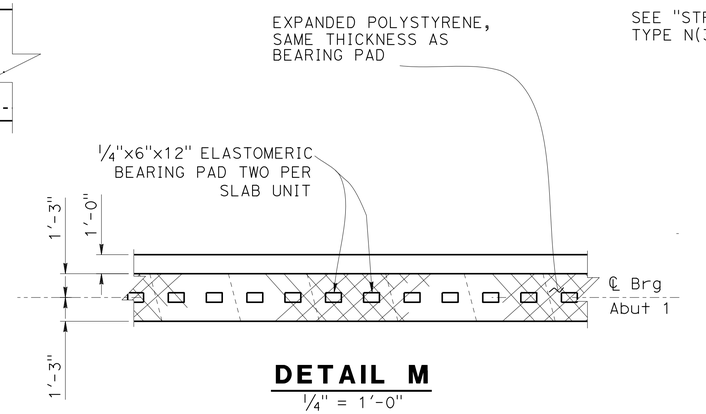

DETAIL M
1/4" = 1'-0"

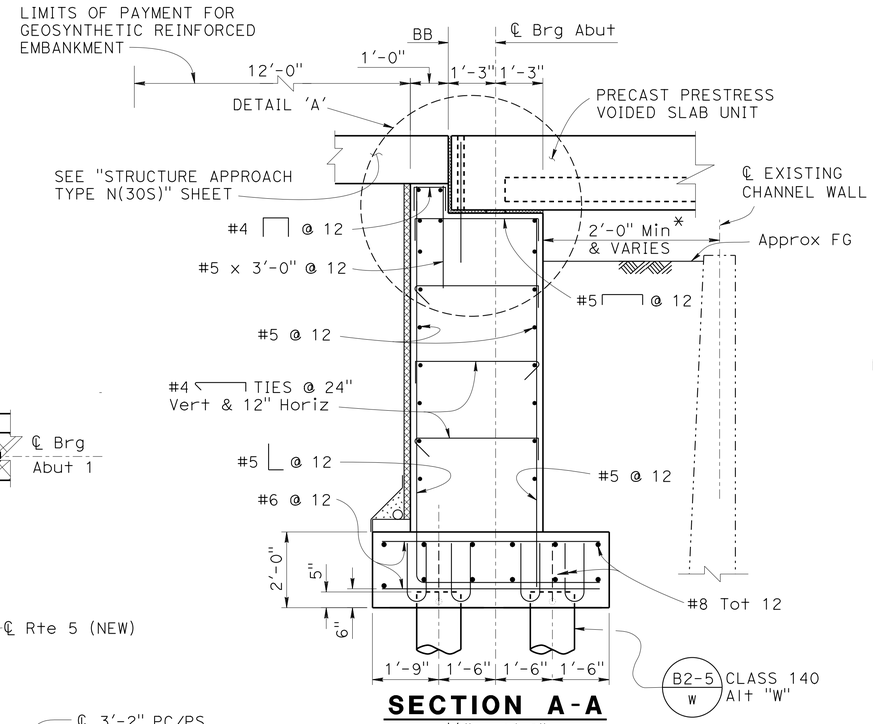

SECTION A-A
1/2" = 1'-0"

* - Contractor to verify Channel wall location

NOTE:

1. For 'DETAIL G' AND 'DETAIL R' See "ABUTMENT DETAILS NO. 2" sheet
2. For Abut 1 Geosynthetic Reinforced Embankment see "ABUTMENT DETAILS NO. 2" sheet

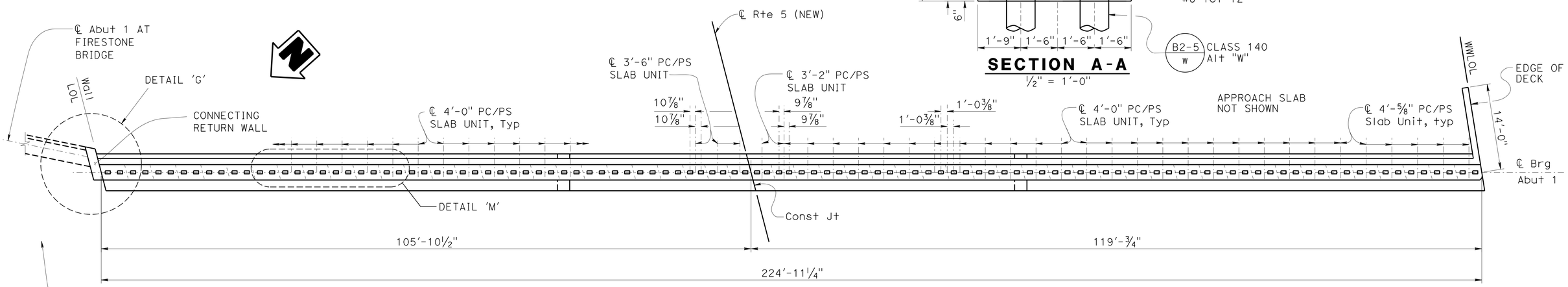

PLAN
1/8" = 1'-0"

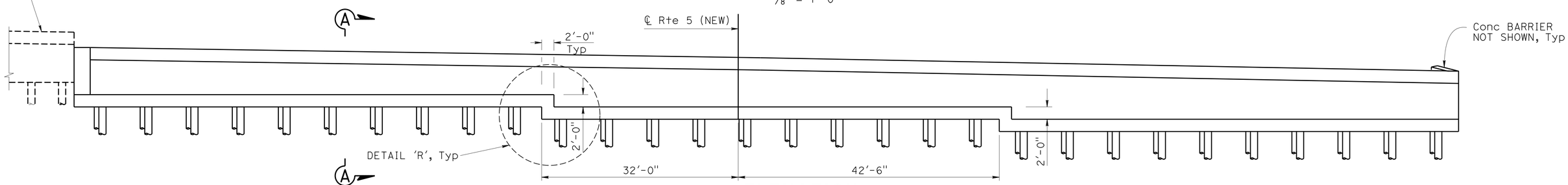

ELEVATION
1/8" = 1'-0"

	BY	CHECKED
DESIGN	D. Tavatli	J. Posey
DETAILS	J. Ramirez	D. Tavatli
QUANTITIES	D. Tavatli	F. Fong

STATE OF CALIFORNIA
DEPARTMENT OF TRANSPORTATION

DIVISION OF ENGINEERING SERVICES
STRUCTURE DESIGN
DESIGN BRANCH 11

BRIDGE NO. 53-3044
POST MILE 0.34

COYOTE CREEK BRIDGE
ABUTMENT 1 LAYOUT

STRUCTURES DESIGN DETAIL SHEET (ENGLISH) (REV. 09-01-10)

ORIGINAL SCALE IN INCHES FOR REDUCED PLANS 0 1 2 3

UNIT: 3587
PROJECT NUMBER & PHASE: 0715000160-1
CONTRACT NO.: 07-2159u4

DISREGARD PRINTS BEARING EARLIER REVISION DATES

REVISION DATES: 4-04-12 9-12-13 2-23-15 08-26-13

SHEET 6 OF 40

FILE => 53-3044-d-abt1_1o.dgn

USERNAME => s125624 DATE PLOTTED => 28-JAN-2016 TIME PLOTTED => 11:55

DIST	COUNTY	ROUTE	POST MILES TOTAL PROJECT	SHEET No.	TOTAL SHEETS
07	LA,Ora	5	0.0/1.5, 44.3/44.4	1034	1622

REGISTERED CIVIL ENGINEER 3-18-15 DATE

1-25-16
PLANS APPROVAL DATE

REGISTERED PROFESSIONAL ENGINEER Daryoush Tavatli No. 56183 Exp. 12-31-16 CIVIL STATE OF CALIFORNIA

The State of California or its officers or agents shall not be responsible for the accuracy or completeness of electronic copies of this plan sheet.

NOTES:

For Detail 'N' see "ABUTMENT DETAILS No. 2" sheet

For Detail 'M' see "ABUTMENT 1 LAYOUT" sheet

For View 'PP' see "ABUTMENT DETAILS NO. 1" sheet

* - Contractor to verify channel wall location

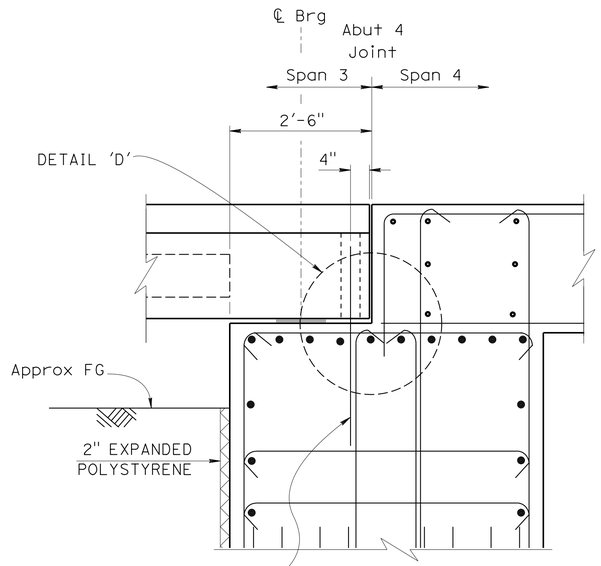

DETAIL B
3/4" = 1'-0"

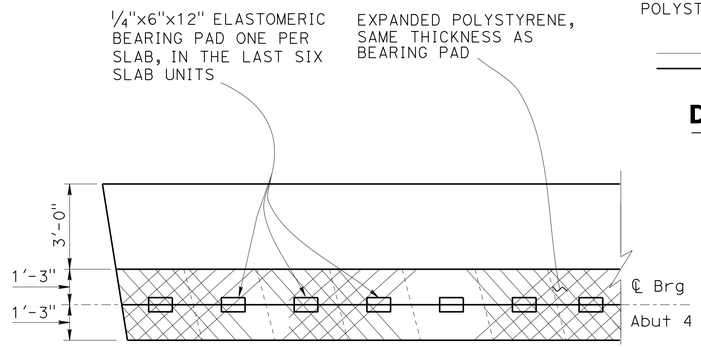

DETAIL P
3/8" = 1'-0"

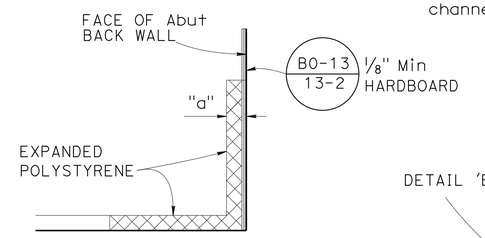

DETAIL 'D'
NO SCALE

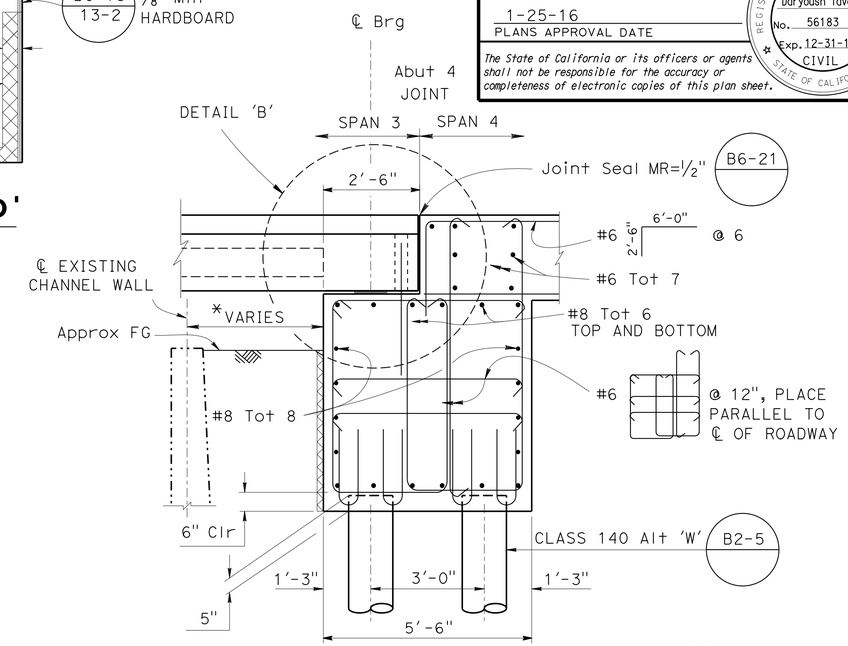

SECTION C-C
1/2" = 1'-0"

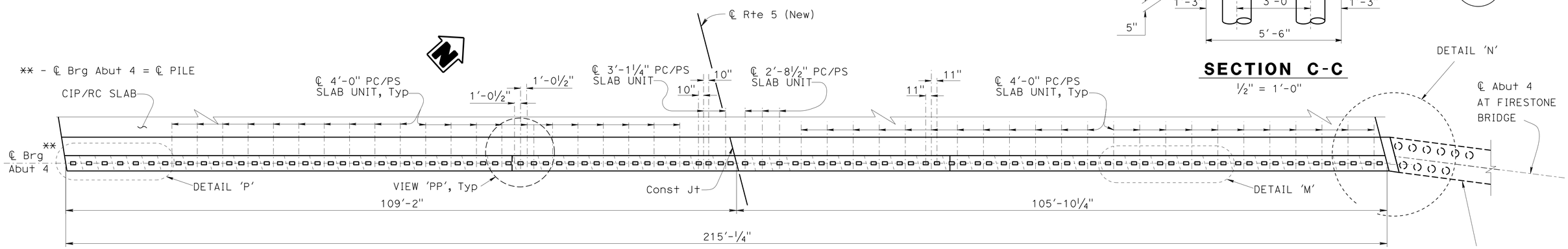

PLAN
1/8" = 1'-0"

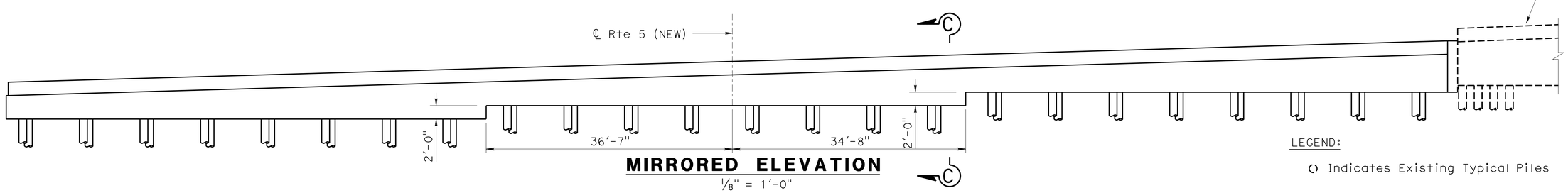

MIRRORED ELEVATION
1/8" = 1'-0"

LEGEND:

Indicates Existing Typical Piles

	BY	CHECKED
DESIGN	D. Tavatli	J. Posey
DETAILS	J. Ramirez	D. Tavatli
QUANTITIES	D. Tavatli	F. Fong

STATE OF CALIFORNIA
DEPARTMENT OF TRANSPORTATION

DIVISION OF ENGINEERING SERVICES
STRUCTURE DESIGN
DESIGN BRANCH 11

BRIDGE NO. 53-3044
POST MILE 0.34

COYOTE CREEK BRIDGE
ABUTMENT 4 LAYOUT

STRUCTURES DESIGN DETAIL SHEET (ENGLISH) (REV. 09-01-10)

ORIGINAL SCALE IN INCHES FOR REDUCED PLANS 0 1 2 3

UNIT: 3587
PROJECT NUMBER & PHASE: 0715000160-1
CONTRACT NO.: 07-2159u4

DISREGARD PRINTS BEARING EARLIER REVISION DATES

REVISION DATES: 6-26-12 8-07-13 08-21-13 9-17-13

SHEET 7 OF 40

FILE => 53-3044-d-abt4_lo.dgn

USERNAME => s125624 DATE PLOTTED => 28-JAN-2016 TIME PLOTTED => 11:55

DIST	COUNTY	ROUTE	POST MILES TOTAL PROJECT	SHEET No.	TOTAL SHEETS
07	LA,Ora	5	0.0/1.5, 44.3/44.4	1035	1622

REGISTERED CIVIL ENGINEER — DATE 2-23-15

1-25-16
PLANS APPROVAL DATE

REGISTERED PROFESSIONAL ENGINEER — Daryoush Tavatli No. 56138 Exp. 12-31-16 CIVIL — STATE OF CALIFORNIA

The State of California or its officers or agents shall not be responsible for the accuracy or completeness of electronic copies of this plan sheet.

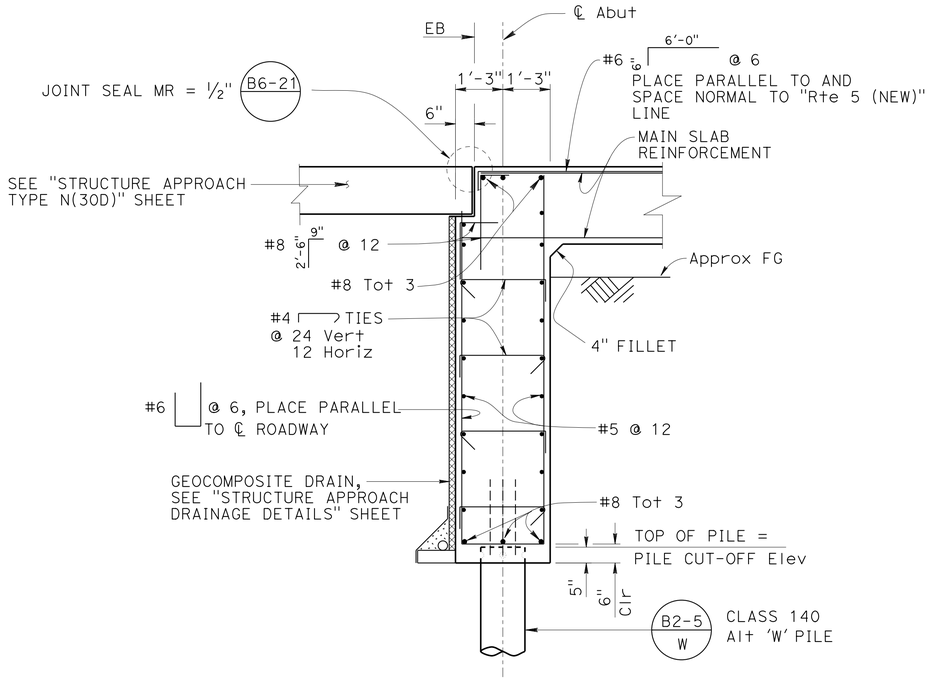

SECTION E-E
1/2" = 1'-0"

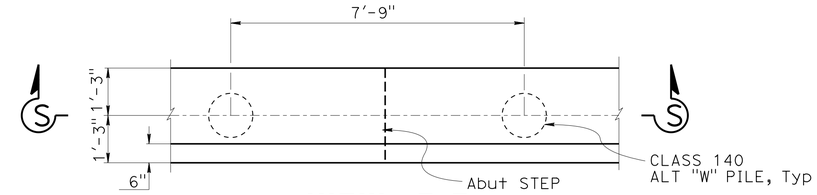

VIEW F-F
1/2" = 1'-0"

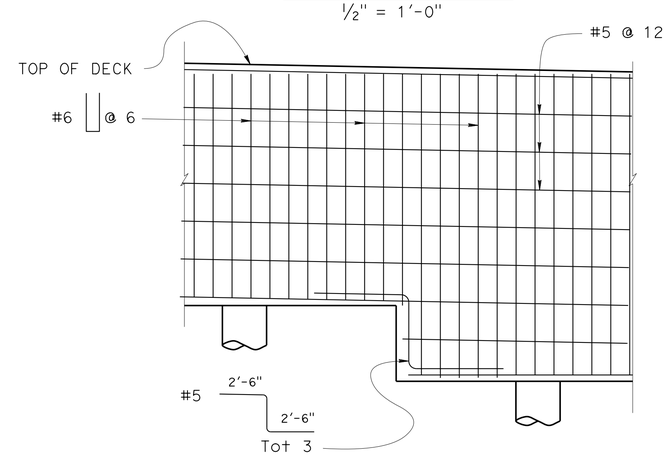

SECTION S-S
1/2" = 1'-0"

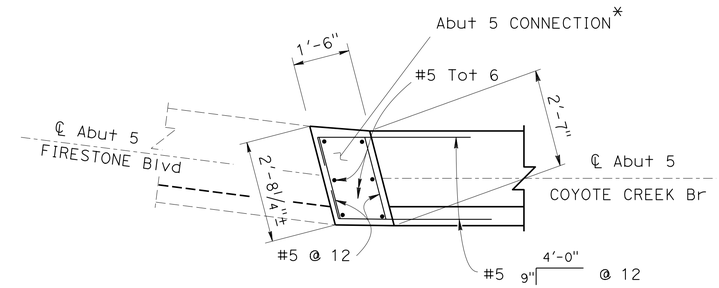

DETAIL 'F'
1/2" = 1'-0"

* - For Additional reinforcement Firestone Blvd Bridge

** - ℄ Abut 5 = ℄ pile

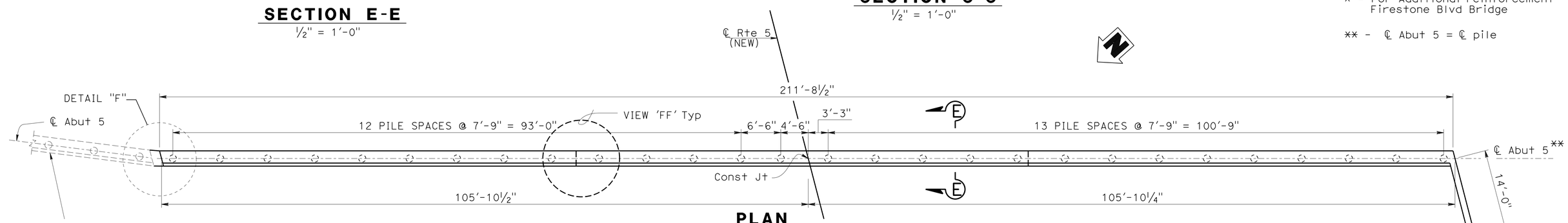

PLAN
1/8" = 1'-0"

NOTE: Approach slab not shown

Legend:

() Indicates Typical Piles

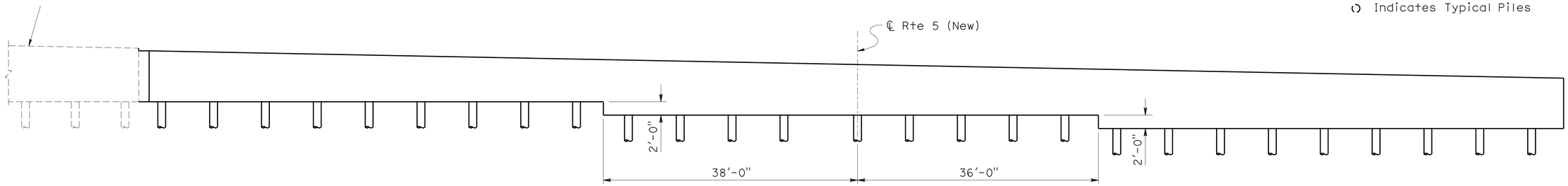

ELEVATION
1/8" = 1'-0"

	BY	CHECKED
DESIGN	D. Tavatli	J. Posey
DETAILS	J. Ramirez	D. Tavatli
QUANTITIES	D. Tavatli	F. Fong

STATE OF CALIFORNIA
DEPARTMENT OF TRANSPORTATION

DIVISION OF ENGINEERING SERVICES
STRUCTURE DESIGN
DESIGN BRANCH 11

BRIDGE NO. 53-3044
POST MILE 0.34

COYOTE CREEK BRIDGE (REPLACE)
ABUTMENT 5 LAYOUT

STRUCTURES DESIGN DETAIL SHEET (ENGLISH) (REV. 09-01-10)

ORIGINAL SCALE IN INCHES FOR REDUCED PLANS 0 1 2 3

UNIT: 3587
PROJECT NUMBER & PHASE: 0715000160-1
CONTRACT NO.: 07-2159U4

DISREGARD PRINTS BEARING EARLIER REVISION DATES

REVISION DATES: 06/25/12 2-23-15 8-24-15 9-12-15

SHEET 8 OF 40

FILE => 53-3044-d-abt5_lo.dgn

USERNAME => s125624 DATE PLOTTED => 28-JAN-2016 TIME PLOTTED => 11:55

DIST	COUNTY	ROUTE	POST MILES TOTAL PROJECT	SHEET No.	TOTAL SHEETS
07	LA,Ora	5	0.0/1.5, 44.3/44.4	1036	1622

REGISTERED CIVIL ENGINEER 3-18-15 DATE

1-25-16
PLANS APPROVAL DATE

REGISTERED PROFESSIONAL ENGINEER Daryoush Tavatli No. 56183 Exp. 12-31-16 CIVIL STATE OF CALIFORNIA

The State of California or its officers or agents shall not be responsible for the accuracy or completeness of electronic copies of this plan sheet.

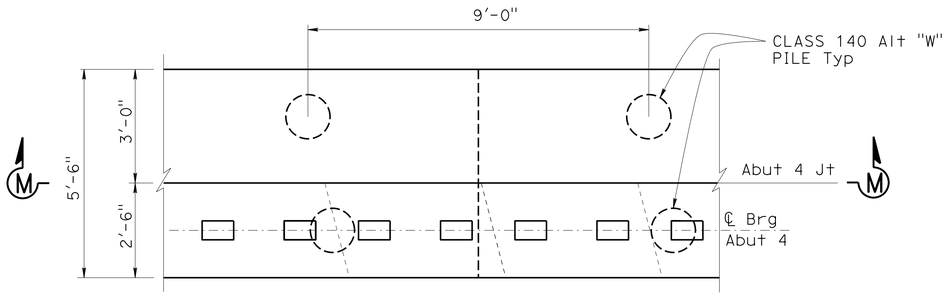

VIEW P-P

½" = 1'-0"

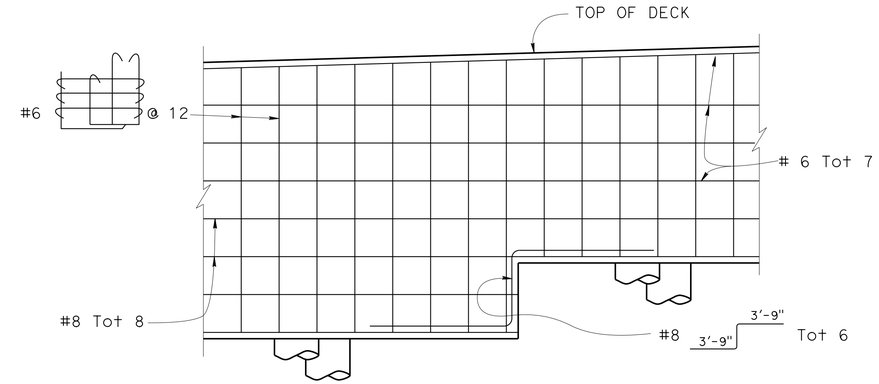

SECTION M-M

½" = 1'-0"

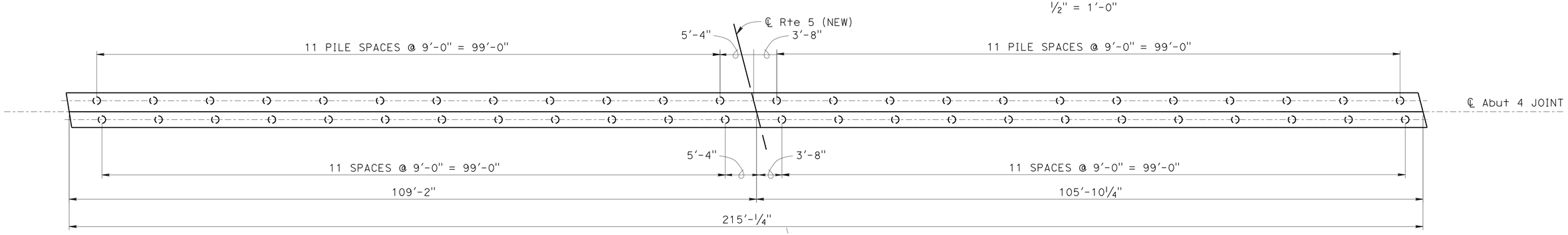

ABUTMENT 4
PILE LAYOUT

⅛" = 1'-0"

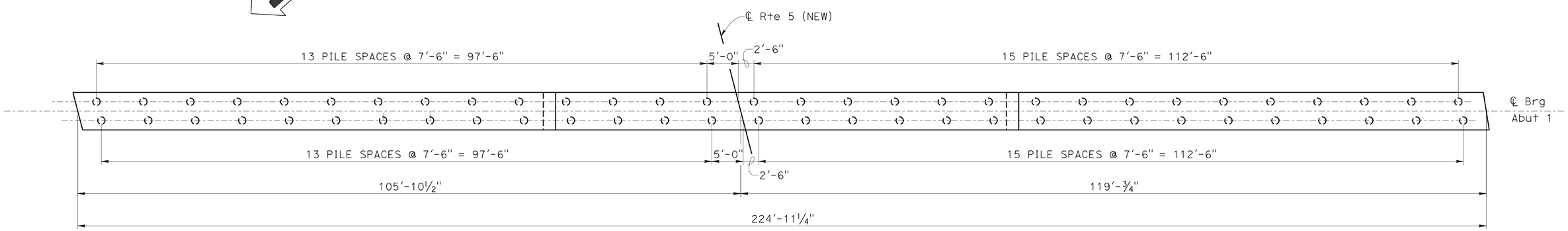

ABUTMENT 1
PILE LAYOUT

⅛" = 1'-0"

LEGEND:

Denotes Typical Vertical Piles

	BY	CHECKED
DESIGN	D. Tavatli	J. Posey
DETAILS	J. Ramirez	D. Tavatli
QUANTITIES	D. Tavatli	F. Fong

STATE OF CALIFORNIA
DEPARTMENT OF TRANSPORTATION

DIVISION OF ENGINEERING SERVICES
STRUCTURE DESIGN
DESIGN BRANCH 11

BRIDGE NO. 53-3044
POST MILE 0.34

COYOTE CREEK BRIDGE
ABUTMENT DETAILS NO. 1

STRUCTURES DESIGN DETAIL SHEET (ENGLISH) (REV. 09-01-10)

ORIGINAL SCALE IN INCHES FOR REDUCED PLANS 0 1 2 3

UNIT: 3587
PROJECT NUMBER & PHASE: 0715000160-1
CONTRACT NO.: 07-2159U4

DISREGARD PRINTS BEARING EARLIER REVISION DATES

REVISION DATES: 3-28-12 8-07-13 9-18-13 7/29/15

SHEET 9 OF 40

FILE => 53-3044-e-abdt1.dgn

USERNAME => s125624 DATE PLOTTED => 28-JAN-2016 TIME PLOTTED => 11:55

DIST	COUNTY	ROUTE	POST MILES TOTAL PROJECT	SHEET No.	TOTAL SHEETS
07	LA,Ora	5	0.0/1.5, 44.3/44.4	1037	1622

REGISTERED CIVIL ENGINEER 3-18-15 DATE

1-25-16
PLANS APPROVAL DATE

REGISTERED PROFESSIONAL ENGINEER Daryoush Tavatli No. 56138 Exp. 12-31-16 CIVIL STATE OF CALIFORNIA

The State of California or its officers or agents shall not be responsible for the accuracy or completeness of electronic copies of this plan sheet.

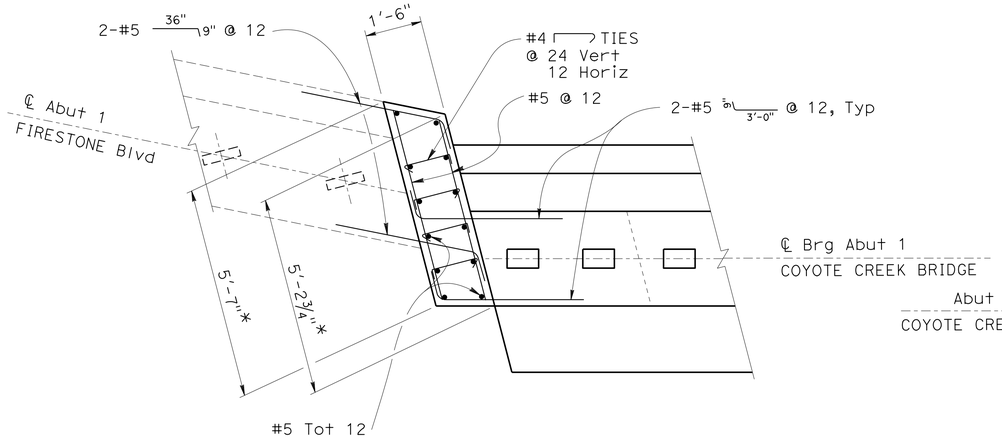

DETAIL 'G'

½" = 1'-0"

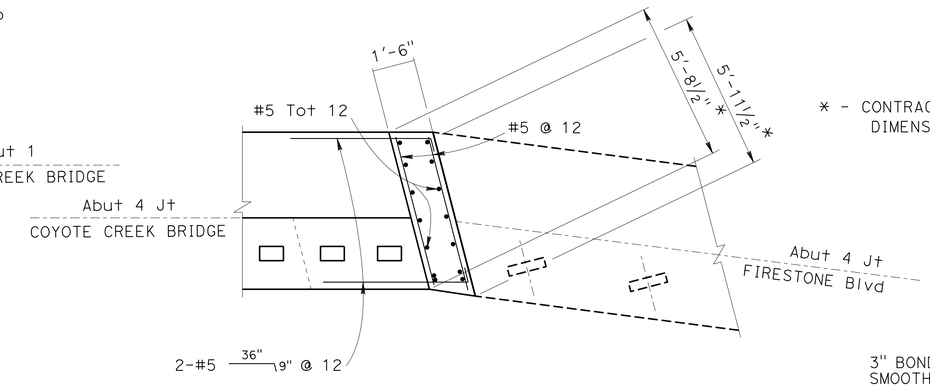

DETAIL 'N'

⅜" = 1'-0"

* - CONTRACTOR SHALL VERIFY THE DIMENSIONS IN THE FIELD

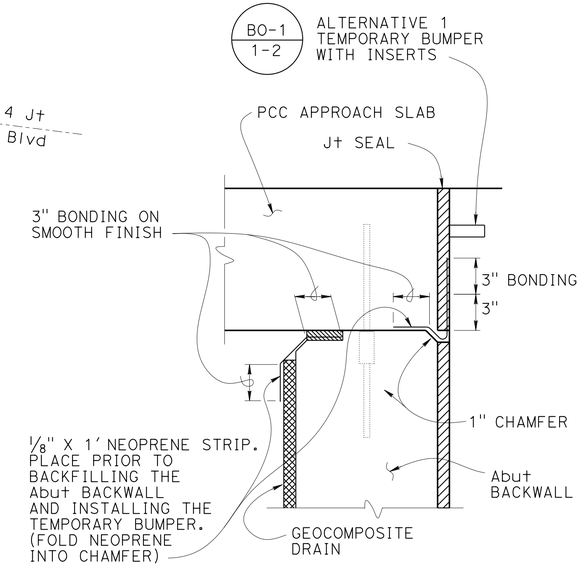

JOINT PROTECTION DETAIL

NO SCALE

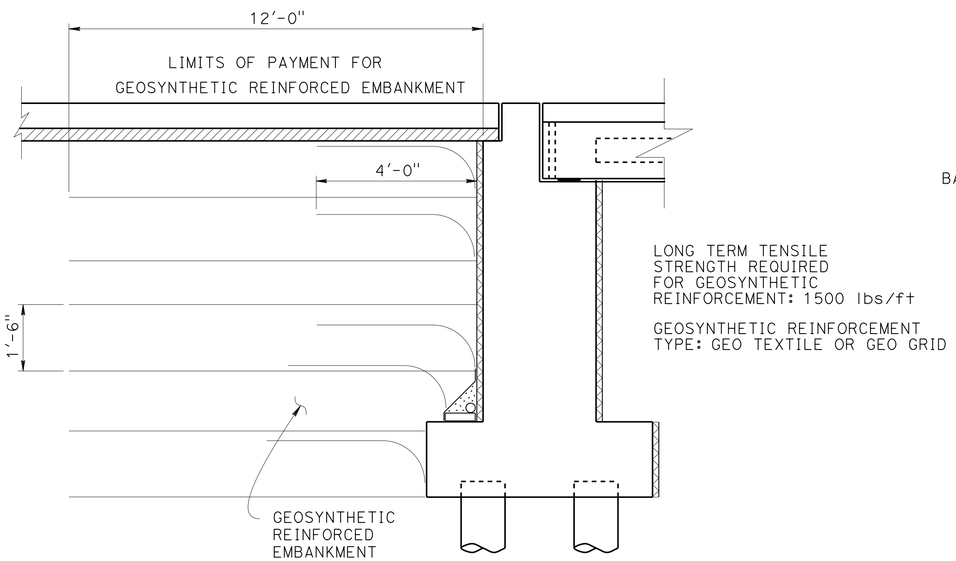

ABUTMENT 1 GEOSYNTHETIC REINFORCED EMBANKMENT

½" = 1'-0"

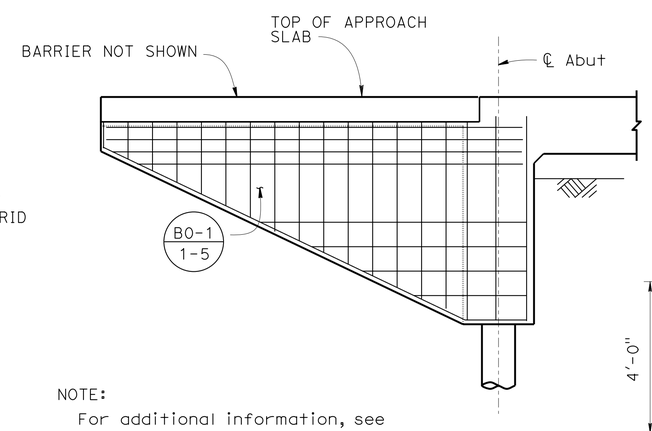

NOTE:
For additional information, see "STRUCTURE APPROACH TYPE N(30D)" sheet

WINGWALL ELEVATION

⅜" = 1'-0"

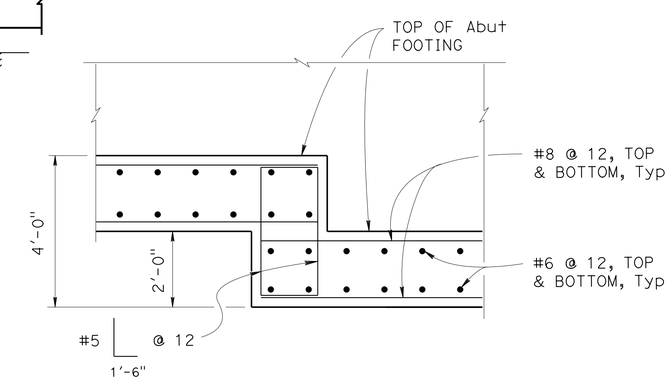

DETAIL 'R'

½" = 1'-0"

DESIGN	BY D. Tavatli	CHECKED J. Posey	
DETAILS	BY J. Ramirez	CHECKED D. Tavatli	
QUANTITIES	BY D. Tavatli	CHECKED F. Fong	

STATE OF CALIFORNIA
DEPARTMENT OF TRANSPORTATION

DIVISION OF ENGINEERING SERVICES
STRUCTURE DESIGN
DESIGN BRANCH 11

BRIDGE NO. 53-3044
POST MILE 0.34

COYOTE CREEK BRIDGE (REPLACE)
ABUTMENT DETAILS NO. 2

STRUCTURES DESIGN DETAIL SHEET (ENGLISH) (REV. 09-01-10)

ORIGINAL SCALE IN INCHES FOR REDUCED PLANS 0 1 2 3

UNIT: 3587
PROJECT NUMBER & PHASE: 0715000160-1
CONTRACT NO.: 07-2159U4

DISREGARD PRINTS BEARING EARLIER REVISION DATES

REVISION DATES: 3-29-12 9-18-13 7/29/13

SHEET 10 OF 40

FILE => 53-3044-e-abdt2.dgn

USERNAME => s125624 DATE PLOTTED => 28-JAN-2016 TIME PLOTTED => 11:55

DIST	COUNTY	ROUTE	POST MILES TOTAL PROJECT	SHEET No.	TOTAL SHEETS
07	LA,Ora	5	0.0/1.5, 44.3/44.4	1038	1622

REGISTERED CIVIL ENGINEER 3-18-15 DATE

1-25-16
PLANS APPROVAL DATE

REGISTERED PROFESSIONAL ENGINEER Daryoush Tavatli No. 56138 Exp. 12-31-16 CIVIL STATE OF CALIFORNIA

The State of California or its officers or agents shall not be responsible for the accuracy or completeness of electronic copies of this plan sheet.

** - Contractor to verify the distance

NOTE:
For location of 'SECTION F-F', 'SECTION G-G', 'SECTION J-J' and 'DETAIL M', see "PIER DETAILS" sheet

*** - Measured along the skew line

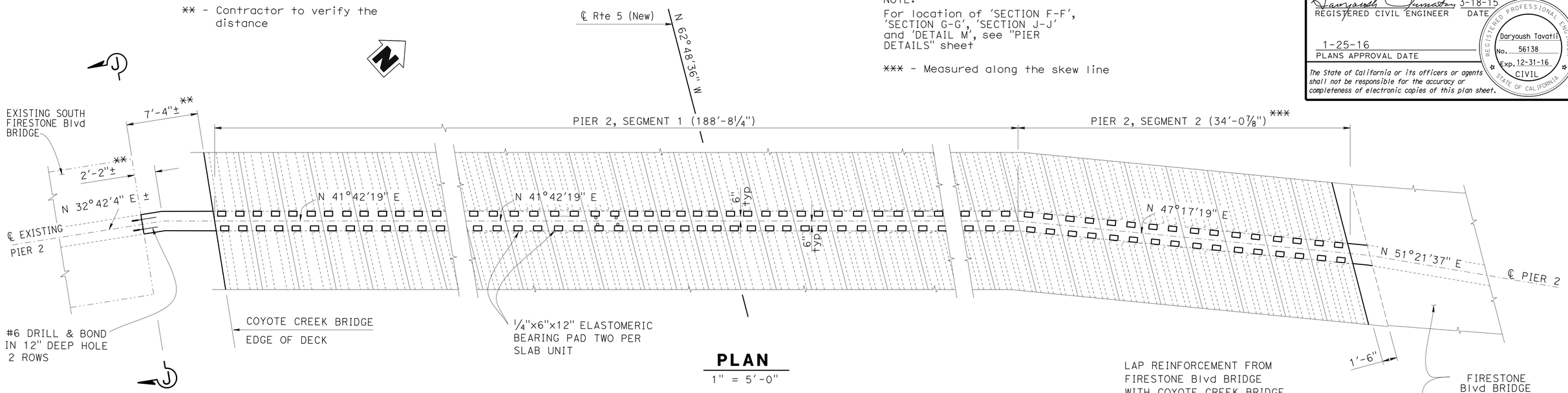

PLAN
1" = 5'-0"

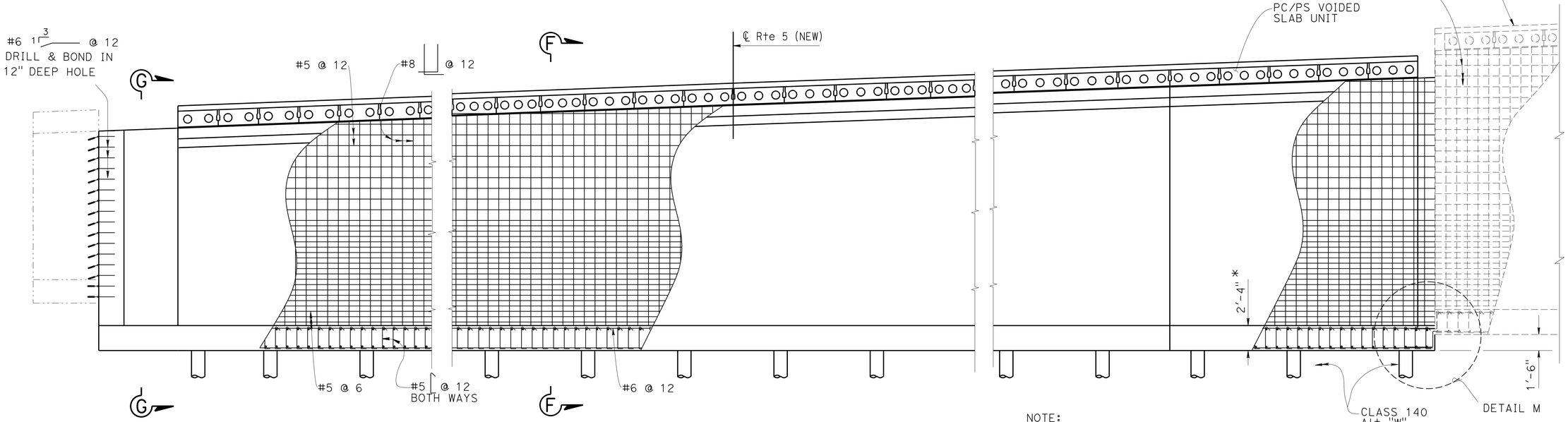

ELEVATION
1" = 5'-0"

NOTE:
For "DETAIL M", See "PIER DETAILS" Sheet

* - Match the existing Channel invert

DESIGN	BY D. Tavatli	CHECKED J. Posey	
DETAILS	BY J. Ramirez	CHECKED D. Tavatli	
QUANTITIES	BY D. Tavatli	CHECKED F. Fong	

STATE OF CALIFORNIA
DEPARTMENT OF TRANSPORTATION

DIVISION OF ENGINEERING SERVICES
STRUCTURE DESIGN
DESIGN BRANCH 11

BRIDGE NO. 53-3044
POST MILE 0.34

COYOTE CREEK BRIDGE (REPLACE)
PIER 2 LAYOUT

STRUCTURES DESIGN DETAIL SHEET (ENGLISH) (REV. 09-01-10)

ORIGINAL SCALE IN INCHES FOR REDUCED PLANS 0 1 2 3

UNIT: 3587
PROJECT NUMBER & PHASE: 0715000160-1
CONTRACT NO.: 07-2159u4

DISREGARD PRINTS BEARING EARLIER REVISION DATES

REVISION DATES 6-05-12 08-21-13 9-11-13 9-18-13

SHEET 11 OF 40

FILE => 53-3044-e-pier2_lo.dgn

USERNAME => s125624 DATE PLOTTED => 28-JAN-2016 TIME PLOTTED => 11:55

DIST	COUNTY	ROUTE	POST MILES TOTAL PROJECT	SHEET No.	TOTAL SHEETS
07	LA,Ora	5	0.0/1.5, 44.3/44.4	1039	1622

REGISTERED CIVIL ENGINEER 3-18-15 DATE

1-25-16
PLANS APPROVAL DATE

REGISTERED PROFESSIONAL ENGINEER Daryoush Tavatli No. 56138 Exp. 12-31-16 CIVIL STATE OF CALIFORNIA

The State of California or its officers or agents shall not be responsible for the accuracy or completeness of electronic copies of this plan sheet.

** - Contractor to verify the distance

NOTE:
For location of 'SECTION F-F', 'SECTION G-G', 'SECTION J-J' and 'DETAIL M', see "PIER DETAILS" sheet

*** - Measured along the skew line

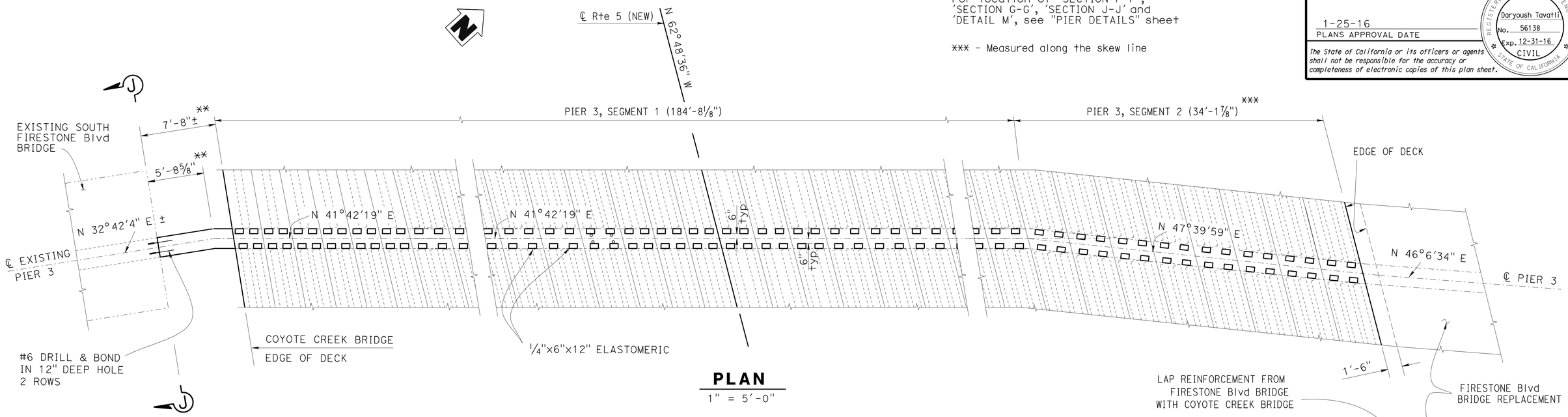

PLAN
1" = 5'-0"

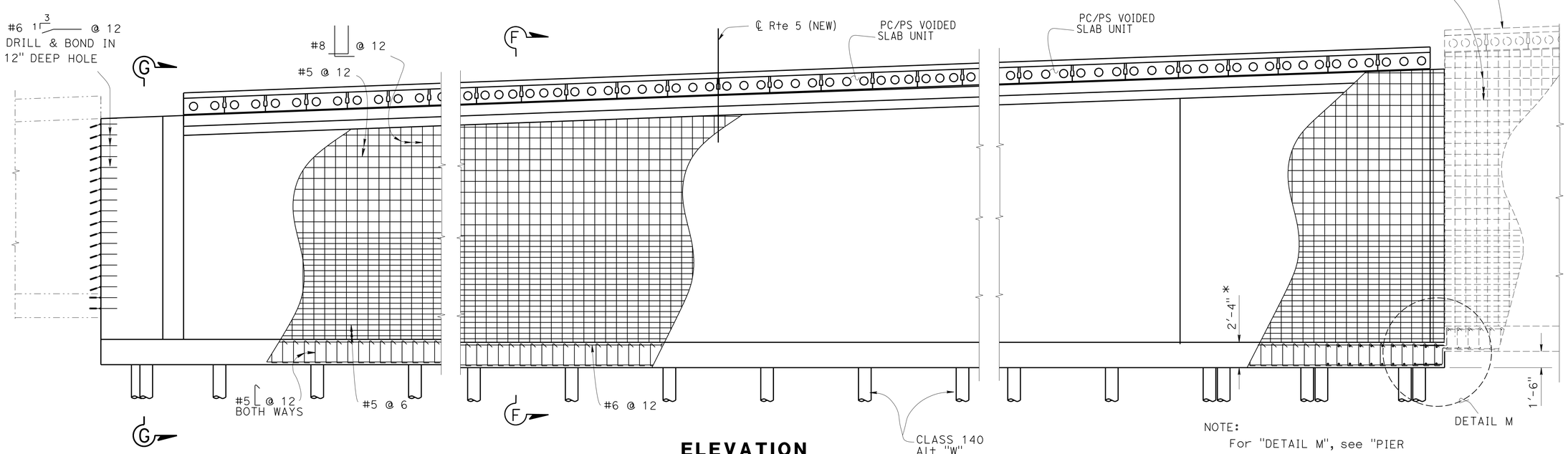

ELEVATION
1" = 5'-0"

NOTE:
For "DETAIL M", see "PIER DETAILS" sheet

* - Match top of Footing with the existing Channel invert

	BY	CHECKED
DESIGN	D. Tavatli	J. Posey
DETAILS	J. Ramirez	D. Tavatli
QUANTITIES	D. Tavatli	F. Fong

STATE OF CALIFORNIA
DEPARTMENT OF TRANSPORTATION

DIVISION OF ENGINEERING SERVICES
STRUCTURE DESIGN
DESIGN BRANCH 11

BRIDGE NO. 53-3044
POST MILE 0.34

COYOTE CREEK BRIDGE (REPLACE)
PIER 3 LAYOUT

STRUCTURES DESIGN DETAIL SHEET (ENGLISH) (REV. 09-01-10)

ORIGINAL SCALE IN INCHES FOR REDUCED PLANS 0 1 2 3

UNIT: 3587
PROJECT NUMBER & PHASE: 0715000160-1
CONTRACT NO.: 07-2159u4

DISREGARD PRINTS BEARING EARLIER REVISION DATES

REVISION DATES: 3-28-12 9-14-13 9-18-13

SHEET 12 OF 40

FILE => 53-3044-e-pier3_io.dgn

USERNAME => s125624 DATE PLOTTED => 28-JAN-2016 TIME PLOTTED => 11:55

DIST	COUNTY	ROUTE	POST MILES TOTAL PROJECT	SHEET No.	TOTAL SHEETS
07	LA,Ora	5	0.0/1.5, 44.3/44.4	1040	1622

REGISTERED CIVIL ENGINEER 3-18-15 DATE

1-25-16
PLANS APPROVAL DATE

REGISTERED PROFESSIONAL ENGINEER Daryoush Tavatli No. 56138 Exp. 12-31-16 CIVIL STATE OF CALIFORNIA

The State of California or its officers or agents shall not be responsible for the accuracy or completeness of electronic copies of this plan sheet.

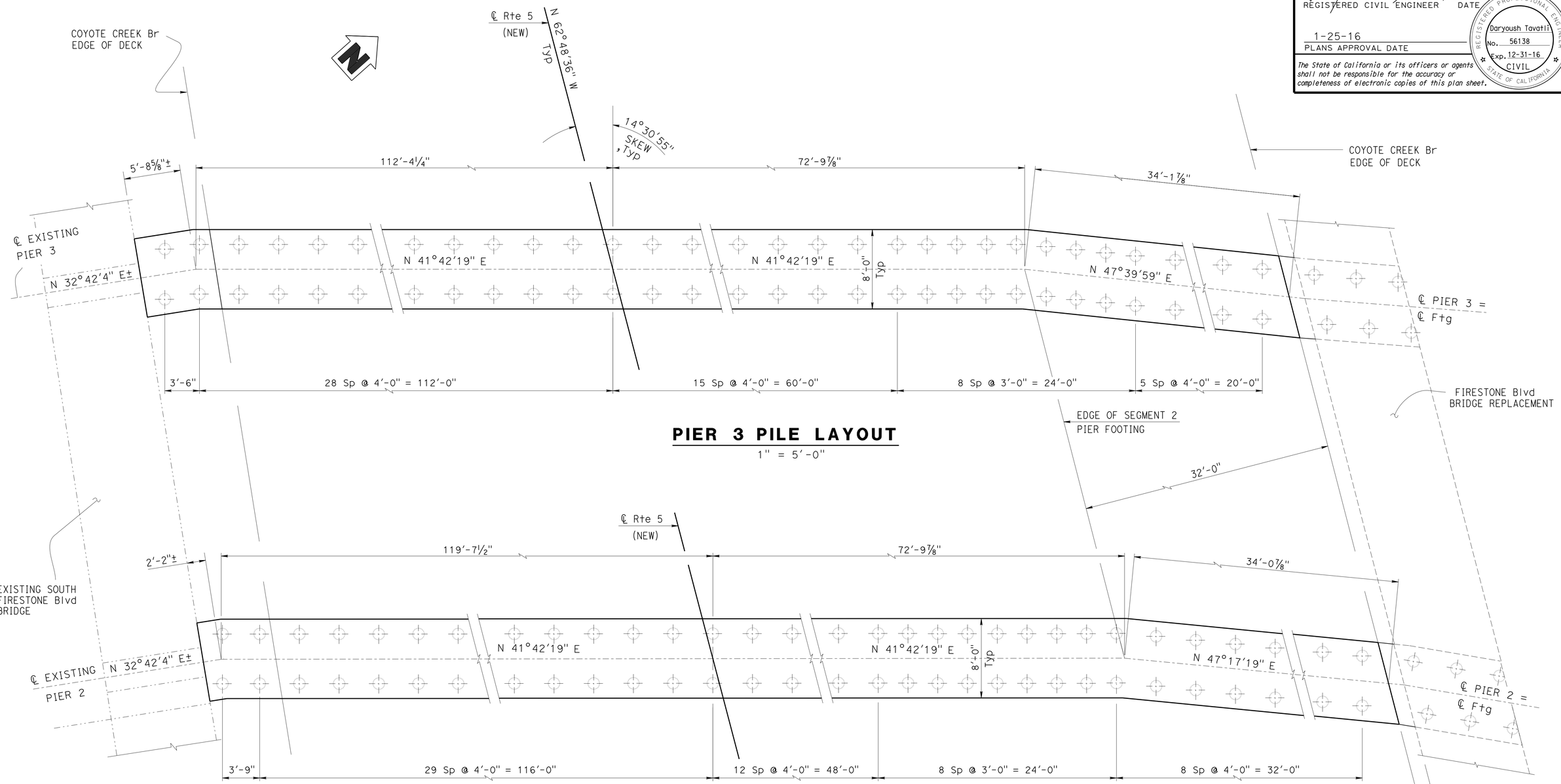

PIER 3 PILE LAYOUT

1" = 5'-0"

PIER 2 PILE LAYOUT

1" = 5'-0"

	BY	CHECKED
DESIGN	D. Tavatli	J. Posey
DETAILS	J. Ramirez	D. Tavatli
QUANTITIES	D. Tavatli	F. Fong

STATE OF CALIFORNIA
DEPARTMENT OF TRANSPORTATION

DIVISION OF ENGINEERING SERVICES
STRUCTURE DESIGN
DESIGN BRANCH 11

BRIDGE NO. 53-3044
POST MILE 0.34

COYOTE CREEK BRIDGE (REPLACE)
PIER PILE LAYOUTS

STRUCTURES DESIGN DETAIL SHEET (ENGLISH) (REV. 09-01-10)

ORIGINAL SCALE IN INCHES FOR REDUCED PLANS 0 1 2 3

UNIT: 3587
PROJECT NUMBER & PHASE: 0715000160-1
CONTRACT NO.: 07-2159u4

DISREGARD PRINTS BEARING EARLIER REVISION DATES

REVISION DATES 12-28-10 9-18-13 10/3/13 7/28/15

SHEET 13 OF 40

FILE => 53-3044-e-pier3ftg.dgn

USERNAME => s125624 DATE PLOTTED => 28-JAN-2016 TIME PLOTTED => 11:55

DIST	COUNTY	ROUTE	POST MILES TOTAL PROJECT	SHEET No.	TOTAL SHEETS
07	LA,Ora	5	0.0/1.5, 44.3/44.4	1041	1622

REGISTERED CIVIL ENGINEER 3-18-15 DATE

1-25-16
PLANS APPROVAL DATE

REGISTERED PROFESSIONAL ENGINEER Daryoush Tavatli No. 56138 Exp. 12-31-16 CIVIL STATE OF CALIFORNIA

The State of California or its officers or agents shall not be responsible for the accuracy or completeness of electronic copies of this plan sheet.

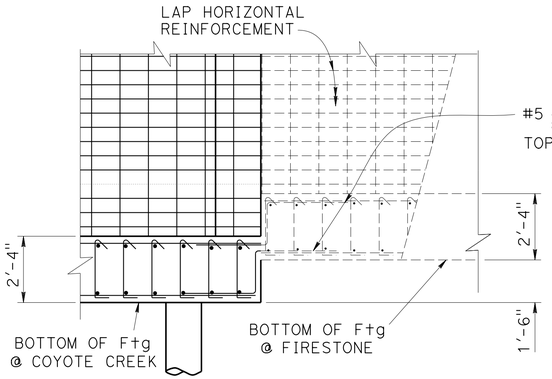

DETAIL M
3/8" = 1'-0"

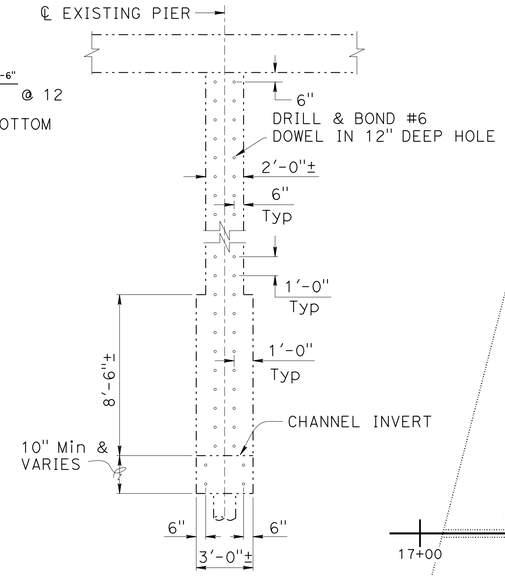

SECTION J-J
1/4" = 1'-0"

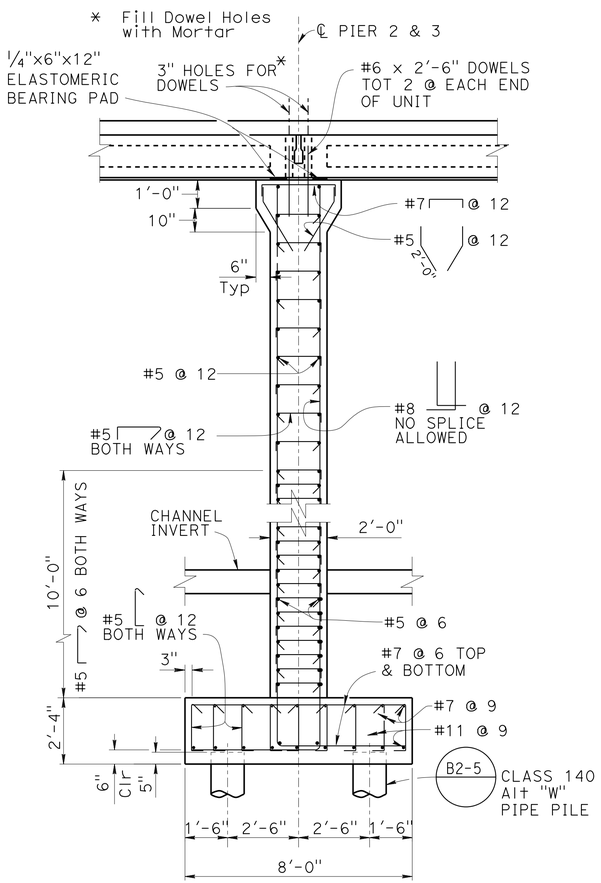

SECTION F-F
3/8" = 1'-0"

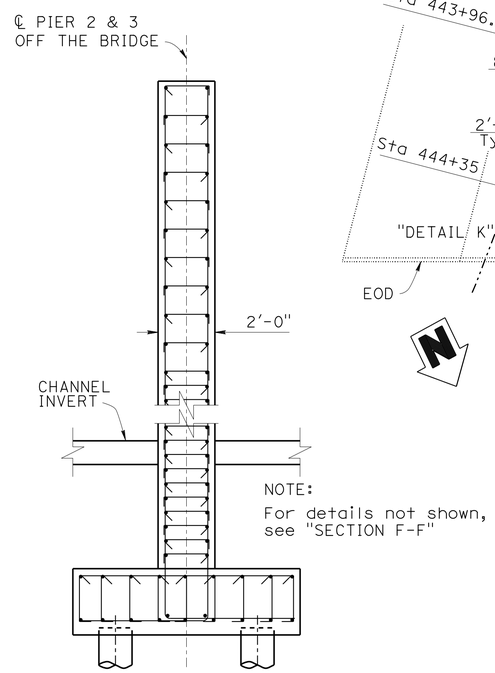

SECTION G-G
3/8" = 1'-0"

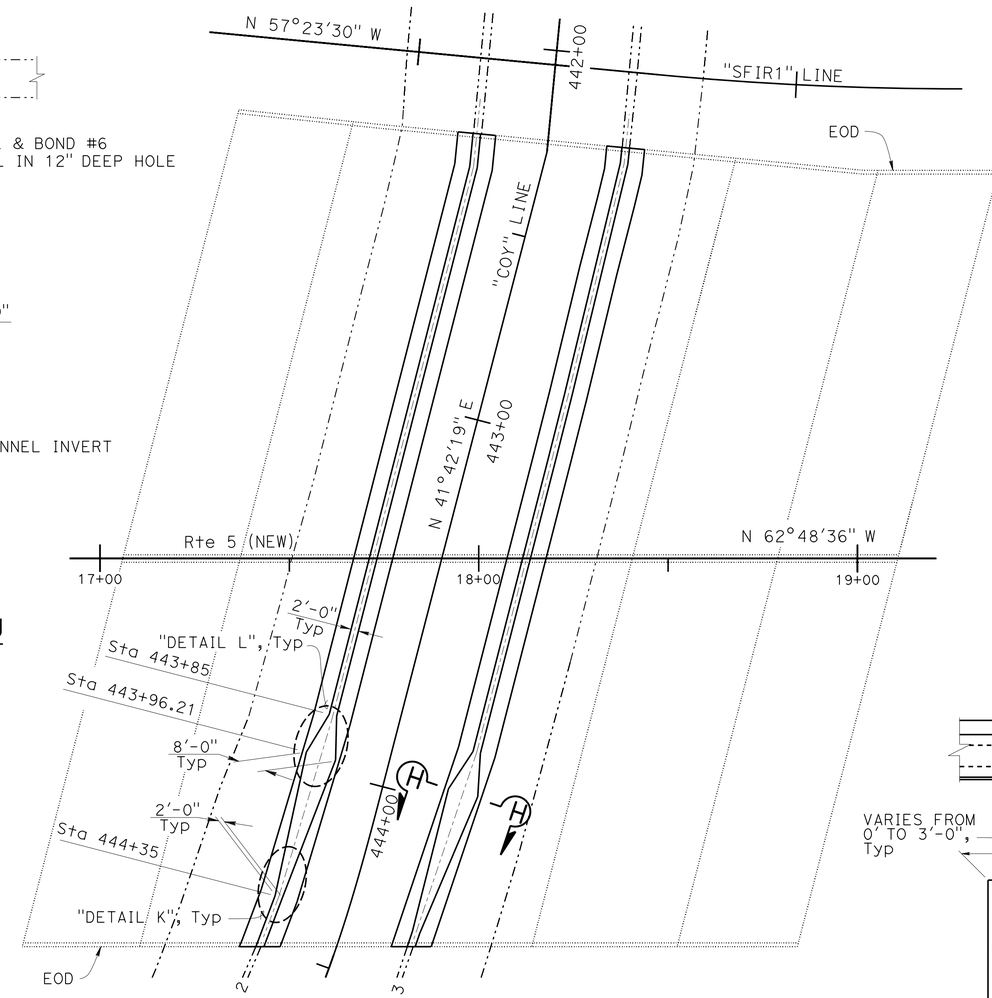

PLAN
NO SCALE

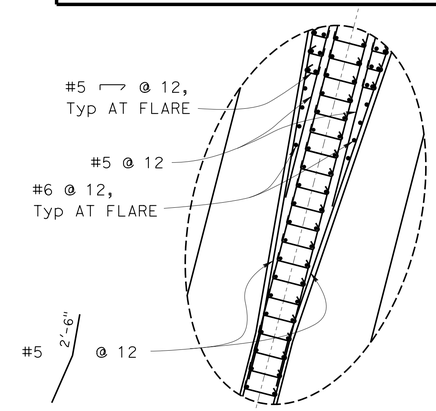

DETAIL K
1/4" = 1'-0"

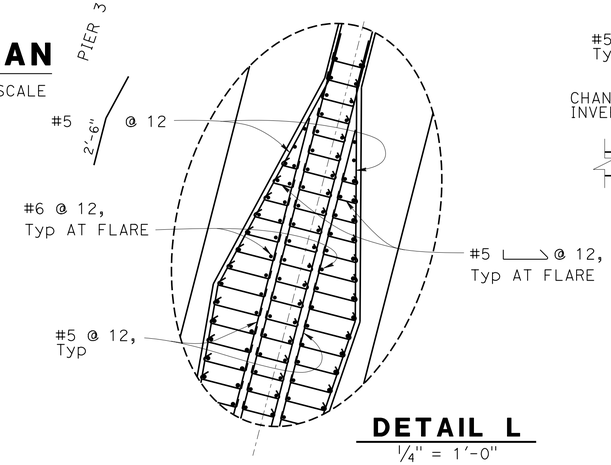

DETAIL L
1/4" = 1'-0"

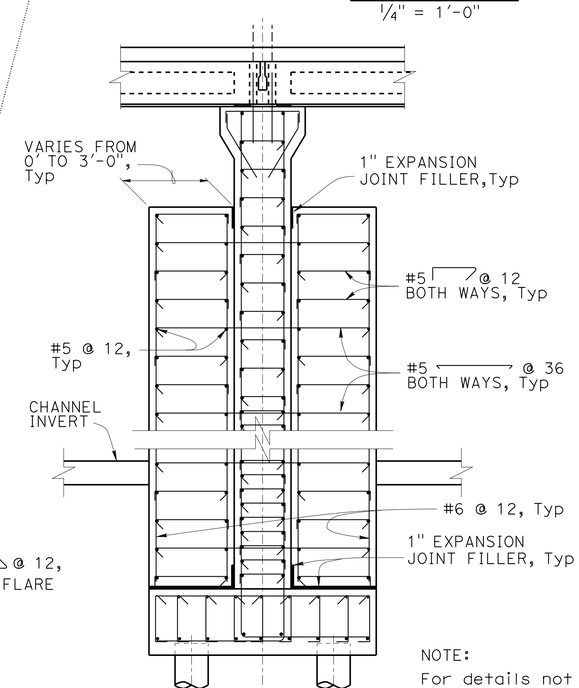

SECTION H-H
3/8" = 1'-0"

	BY	CHECKED
DESIGN	D. Tavatli	J. Posey
DETAILS	J. Ramirez	D. Tavatli
QUANTITIES	D. Tavatli	F. Fong

STATE OF CALIFORNIA
DEPARTMENT OF TRANSPORTATION

DIVISION OF ENGINEERING SERVICES
STRUCTURE DESIGN
DESIGN BRANCH 11

BRIDGE NO. 53-3044
POST MILE 0.34

COYOTE CREEK BRIDGE (REPLACE)
PIER DETAILS

STRUCTURES DESIGN DETAIL SHEET (ENGLISH) (REV. 09-01-10)

ORIGINAL SCALE IN INCHES FOR REDUCED PLANS 0 1 2 3

UNIT: 3587
PROJECT NUMBER & PHASE: 0715000160-1
CONTRACT NO.: 07-2159U4

DISREGARD PRINTS BEARING EARLIER REVISION DATES

REVISION DATES 3-26-12 9-18-13 9/11/13

SHEET 14 OF 40

FILE => 53-3044-e-pierdt.dgn

USERNAME => s129624 DATE PLOTTED => 28-JAN-2016 TIME PLOTTED => 11:55

DIST	COUNTY	ROUTE	POST MILES TOTAL PROJECT	SHEET No.	TOTAL SHEETS
07	LA,Ora	5	0.0/1.5, 44.3/44.4	1042	1622

REGISTERED CIVIL ENGINEER 3-18-15 DATE

1-25-16
PLANS APPROVAL DATE

REGISTERED PROFESSIONAL ENGINEER Daryoush Tavatli No. 56138 Exp. 12-31-16 CIVIL STATE OF CALIFORNIA

The State of California or its officers or agents shall not be responsible for the accuracy or completeness of scanned copies of this plan sheet.

NOTES:
1. For details "A", "B" & "C" see "TYPICAL SECTION DETAILS" sheet

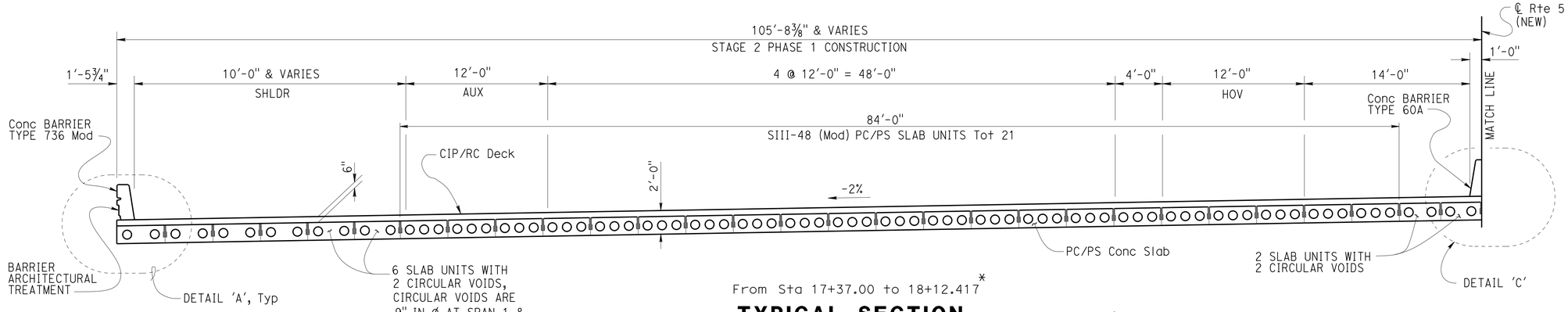

From Sta 17+37.00 to 18+12.417*

TYPICAL SECTION
SPANS 1 & 2

1"= 5'

* - Stations are measured along ℄ Rte 5 (New)

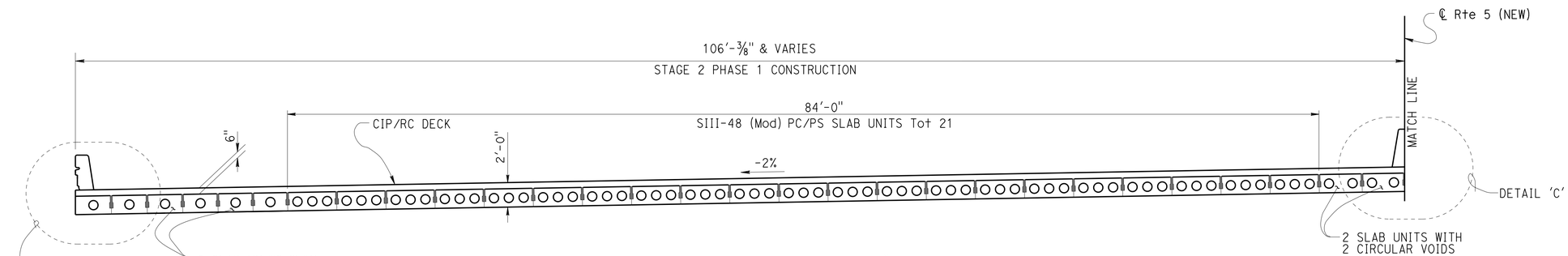

From Sta 18+12.417 to 18+40.542*

TYPICAL SECTION
SPAN 3 ONLY

1"= 5'

NOTE:
For details not shown, see "TYPICAL SECTION SPANS 1 & 2"

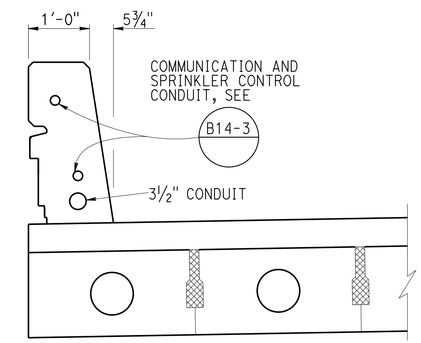

VIEW "BB"

¾" = 1'-0"

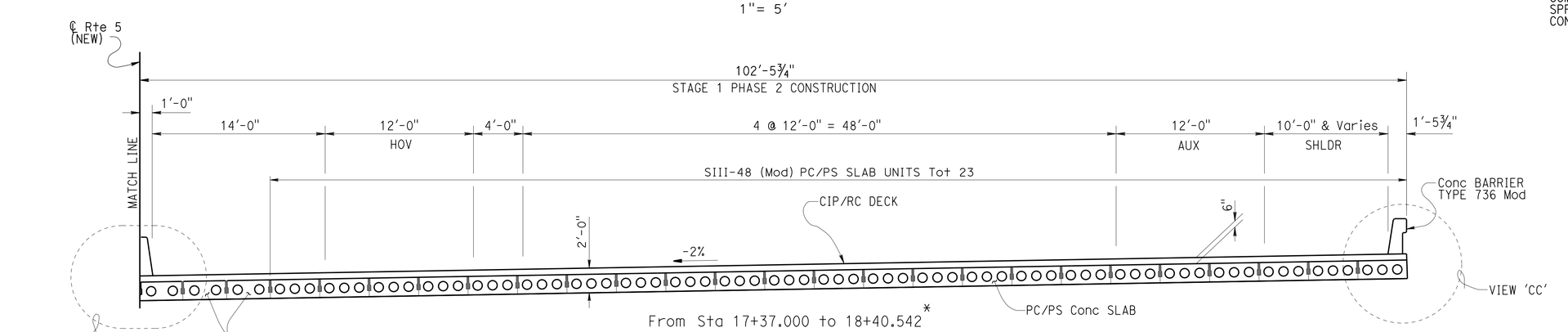

From Sta 17+37.000 to 18+40.542*

TYPICAL SECTION

1"= 5'

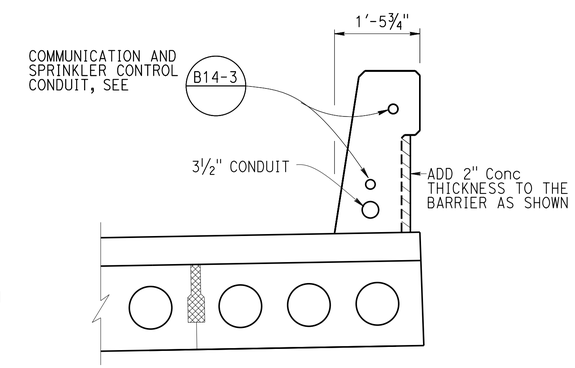

VIEW "CC"

¾" = 1'-0"

	BY	CHECKED
DESIGN	D. Tavatli	J. Posey
DETAILS	J. Ramirez	D. Tavatli
QUANTITIES	D. Tavatli	F. Fong

STATE OF CALIFORNIA
DEPARTMENT OF TRANSPORTATION

DIVISION OF ENGINEERING SERVICES
STRUCTURE DESIGN
DESIGN BRANCH 11

BRIDGE NO. 53-3044
POST MILE 0.34

COYOTE CREEK BRIDGE (REPLACE)
TYPICAL SECTION

STRUCTURES DESIGN DETAIL SHEET (ENGLISH) (REV. 09-01-10)

ORIGINAL SCALE IN INCHES FOR REDUCED PLANS 0 1 2 3

UNIT:
PROJECT NUMBER & PHASE: 0715000160-1
CONTRACT NO.: 07-2159u4

DISREGARD PRINTS BEARING EARLIER REVISION DATES

REVISION DATES: 5-04-12, 9-18-13, 08-07-13

SHEET 15 OF 40

FILE => 53-3044-g-ts1.dgn

USERNAME => s125624 DATE PLOTTED => 28-JAN-2016 TIME PLOTTED => 11:55

DIST	COUNTY	ROUTE	POST MILES TOTAL PROJECT	SHEET No.	TOTAL SHEETS
07	LA,Ora	5	0.0/1.5, 44.3/44.4	1043	1622

REGISTERED CIVIL ENGINEER 3-18-15 DATE

1-25-16
PLANS APPROVAL DATE

REGISTERED PROFESSIONAL ENGINEER Daryoush Tavatli No. 56138 Exp. 12-31-16 CIVIL STATE OF CALIFORNIA

The State of California or its officers or agents shall not be responsible for the accuracy or completeness of electronic copies of this plan sheet.

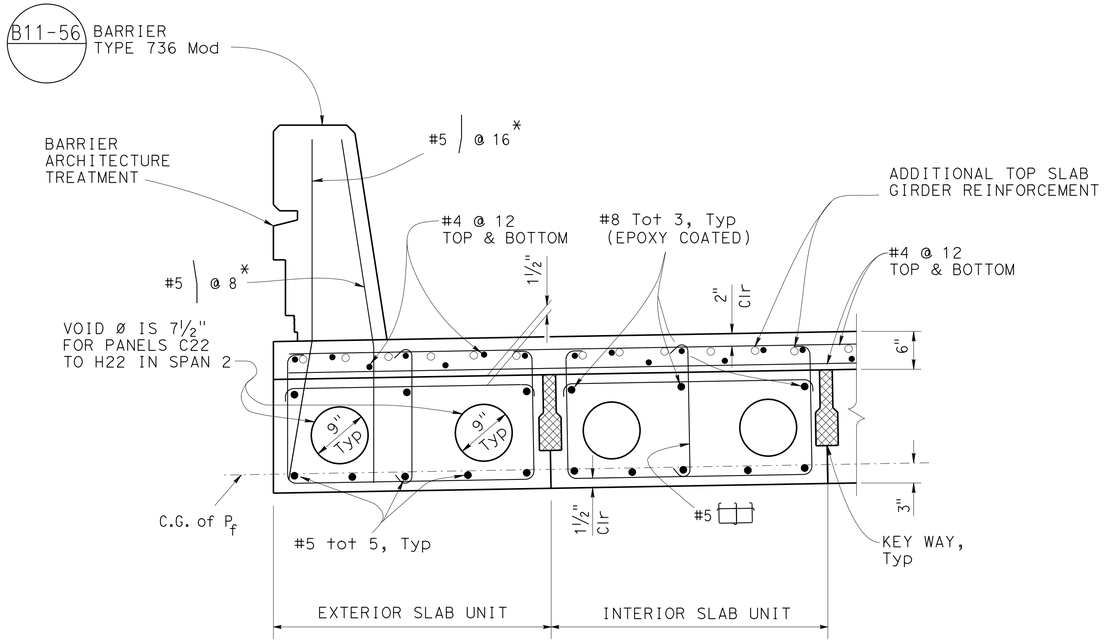

DETAIL 'A'

1" = 1'-0"

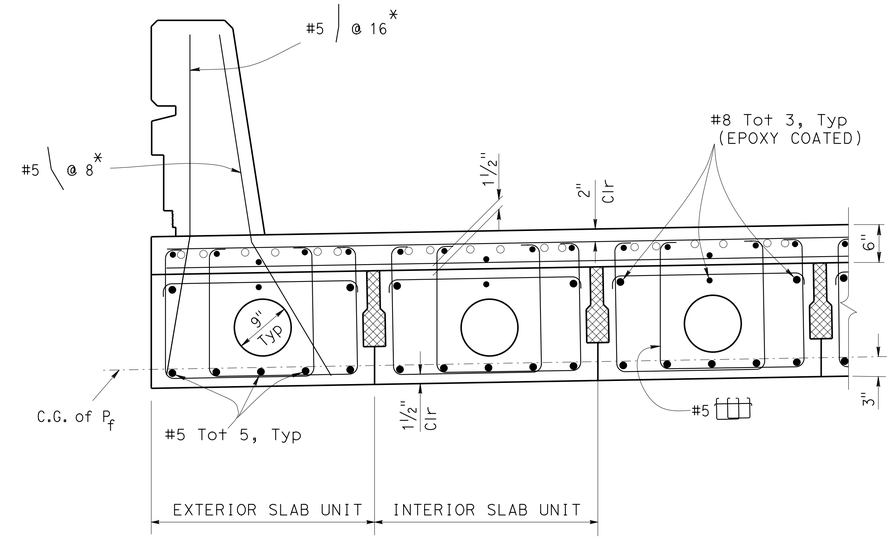

DETAIL 'B'

1" = 1'-0"

* - Bars shall be placed in Exterior Precast units prior to installation

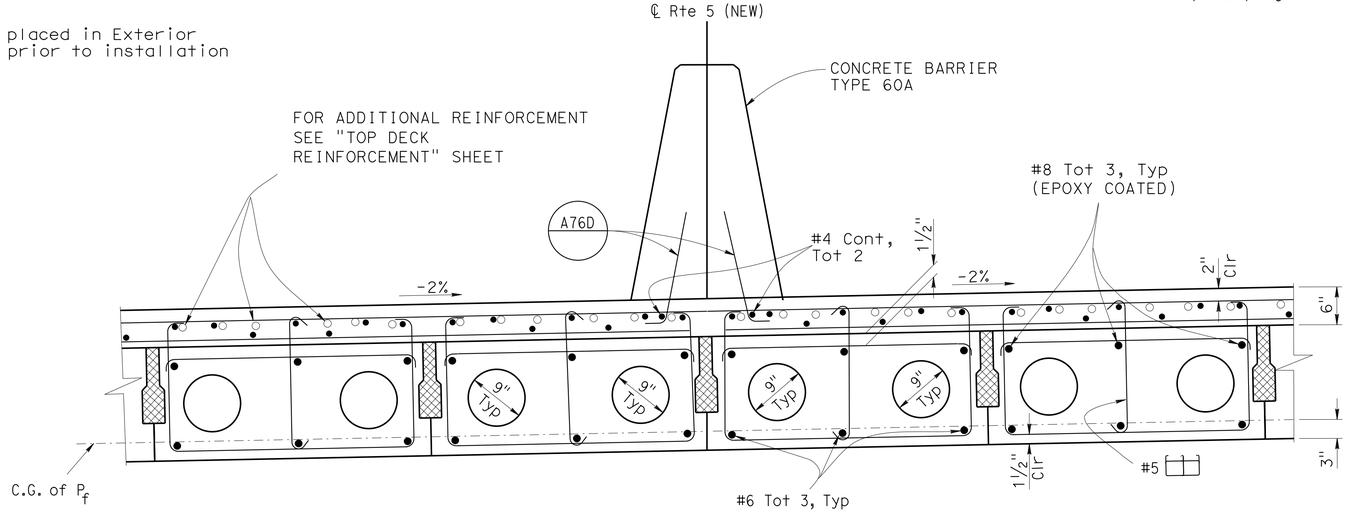

DETAIL 'C'

1" = 1'-0"

DESIGN	BY D. Tavatli	CHECKED J. Posey	
DETAILS	BY J. Ramirez	CHECKED D. Tavatli	
QUANTITIES	BY D. Tavatli	CHECKED F. Fong	

STATE OF CALIFORNIA
DEPARTMENT OF TRANSPORTATION

DIVISION OF ENGINEERING SERVICES
STRUCTURE DESIGN
DESIGN BRANCH 11

BRIDGE NO. 53-3044
POST MILE 0.34

COYOTE CREEK BRIDGE (REPLACE)
TYPICAL SECTION DETAILS

STRUCTURES DESIGN DETAIL SHEET (ENGLISH) (REV. 09-01-10)

ORIGINAL SCALE IN INCHES FOR REDUCED PLANS 0 1 2 3

UNIT: 3587
PROJECT NUMBER & PHASE: 0715000160-1
CONTRACT NO.: 07-2159u4

DISREGARD PRINTS BEARING EARLIER REVISION DATES

REVISION DATES: 1-31-11 08-21-13 9-18-13 10/3/13

SHEET 16 OF 40

FILE => 53-3044-g-ts2.dgn

USERNAME => s125624 DATE PLOTTED => 28-JAN-2016 TIME PLOTTED => 11:55

DIST	COUNTY	ROUTE	POST MILES TOTAL PROJECT	SHEET No.	TOTAL SHEETS
07	LA,Ora	5	0.0/1.5, 44.3/44.4	1044	1622

REGISTERED CIVIL ENGINEER 3-18-15 DATE

1-25-16
PLANS APPROVAL DATE

REGISTERED PROFESSIONAL ENGINEER Daryoush Tavatli No. 56183 Exp. 12-31-16 CIVIL STATE OF CALIFORNIA

The State of California or its officers or agents shall not be responsible for the accuracy or completeness of electronic copies of this plan sheet.

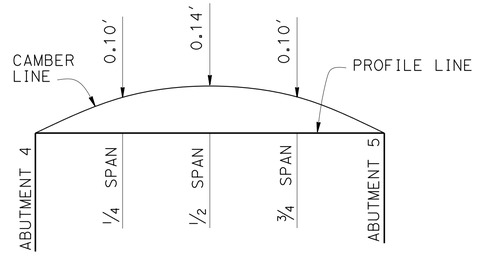

CAMBER DIAGRAM

NO SCALE

FALSEWORK RELEASE

Alternative 1:
Falsework shall be released as soon as permitted by the specifications. Closure pour shall not be placed sooner than 60 days after falsework had been released

Alternative 2:
Falsework shall not be released less than 28 days after the last concrete has been placed. Closure pour shall not be placed sooner than 14 days after the falsework has been released.
When Falsework Release Alternative 2 is used, camber value are 0.75 times those shown

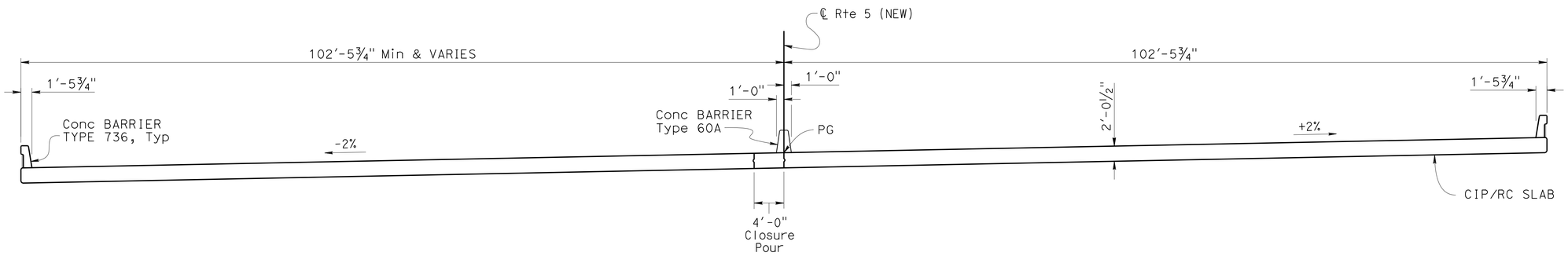

SPAN 4
TYPICAL SECTION

1/8" = 1'-0"

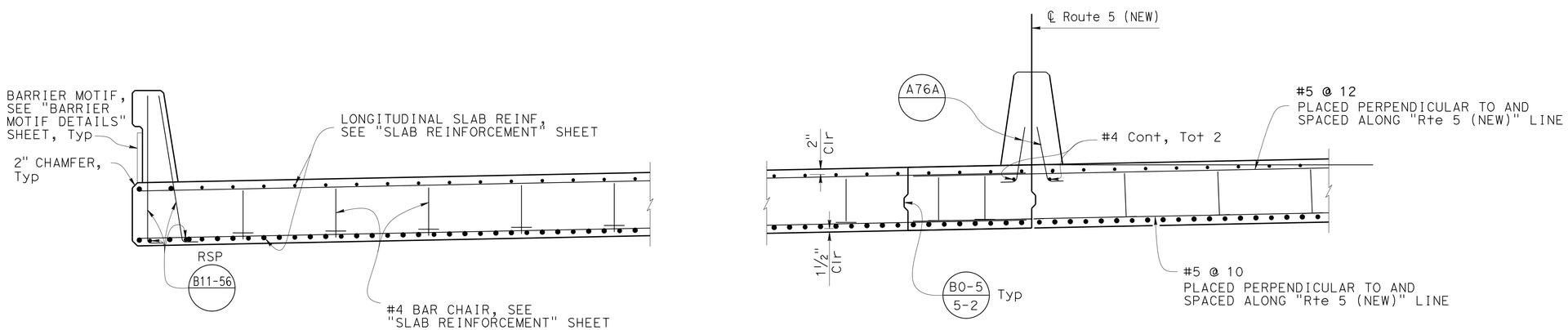

SPAN 4
PART TYPICAL SECTION

1/2" = 1'-0"

DESIGN	BY D. Tavatli	CHECKED J. Posey	
DETAILS	BY J. Ramirez	CHECKED D. Tavatli	
QUANTITIES	BY D. Tavatli	CHECKED F. Fong	

STATE OF CALIFORNIA
DEPARTMENT OF TRANSPORTATION

DIVISION OF ENGINEERING SERVICES
STRUCTURE DESIGN
DESIGN BRANCH 11

BRIDGE NO. 53-3044
POST MILE 0.34

COYOTE CREEK BRIDGE (REPLACE)
CIP/RC SLAB TYPICAL SECTION

STRUCTURES DESIGN DETAIL SHEET (ENGLISH) (REV. 09-01-10)

ORIGINAL SCALE IN INCHES FOR REDUCED PLANS 0 1 2 3

UNIT: 3587
PROJECT NUMBER & PHASE: 0715000160-1
CONTRACT NO.: 07-2159U4

DISREGARD PRINTS BEARING EARLIER REVISION DATES

REVISION DATES 2-1-11 08-09-13 9-23-13 1-09-13

SHEET 17 OF 40

FILE => 53-3044-g-ts3.dgn

USERNAME => s125624 DATE PLOTTED => 28-JAN-2016 TIME PLOTTED => 11:55

DIST	COUNTY	ROUTE	POST MILES TOTAL PROJECT	SHEET No.	TOTAL SHEETS
07	LA,Ora	5	0.0/1.5, 44.3/44.4	1045	1622

REGISTERED CIVIL ENGINEER 3-18-15 DATE

1-25-16
PLANS APPROVAL DATE

REGISTERED PROFESSIONAL ENGINEER
Daryoush Tavatli
No. 56138
Exp. 12-31-16
CIVIL
STATE OF CALIFORNIA

The State of California or its officers or agents shall not be responsible for the accuracy or completeness of electronic copies of this plan sheet.

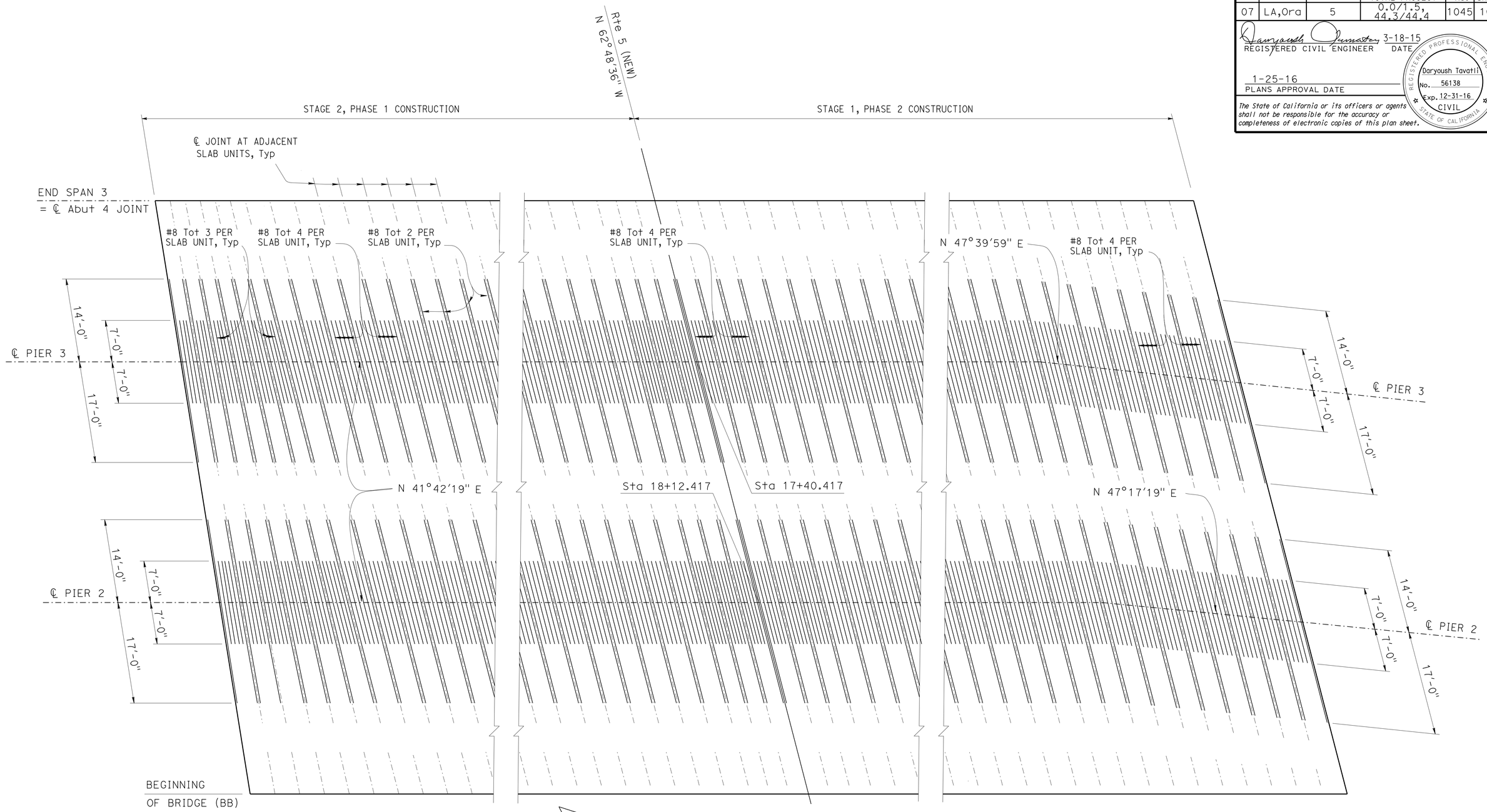

ADDED TOP SLAB REINFORCEMENT

1/8" = 1'-0"

DESIGN	BY D. Tavatli	CHECKED J. Posey	
DETAILS	BY T. Bittermann	CHECKED D. Tavatli	
QUANTITIES	BY D. Tavatli	CHECKED F. Fong	

STATE OF CALIFORNIA
DEPARTMENT OF TRANSPORTATION

DIVISION OF ENGINEERING SERVICES
STRUCTURE DESIGN
DESIGN BRANCH 11

BRIDGE NO. 53-3044
POST MILE 0.34

COYOTE CREEK BRIDGE (REPLACE)
TOP DECK REINFORCEMENT

STRUCTURES DESIGN DETAIL SHEET (ENGLISH) (REV. 09-01-10)

ORIGINAL SCALE IN INCHES FOR REDUCED PLANS 0 1 2 3

UNIT: 3587
PROJECT NUMBER & PHASE: 0715000160-1
CONTRACT NO.: 07-2159U4

DISREGARD PRINTS BEARING EARLIER REVISION DATES

REVISION DATES: 5-01-12 9-18-13 10/3/13 3-28-12

SHEET 18 OF 40

FILE => 53-3044-g-ts4-corf.dgn

USERNAME => s125624 DATE PLOTTED => 28-JAN-2016 TIME PLOTTED => 11:55

DIST	COUNTY	ROUTE	POST MILES TOTAL PROJECT	SHEET No.	TOTAL SHEETS
07	LA,Ora	5	0.0/1.5, 44.3/44.4	1046	1622

REGISTERED CIVIL ENGINEER 3-18-15 DATE

1-25-16
PLANS APPROVAL DATE

REGISTERED PROFESSIONAL ENGINEER Daryoush Tavatli No. 56138 Exp. 12-31-16 CIVIL STATE OF CALIFORNIA

The State of California or its officers or agents shall not be responsible for the accuracy or completeness of electronic copies of this plan sheet.

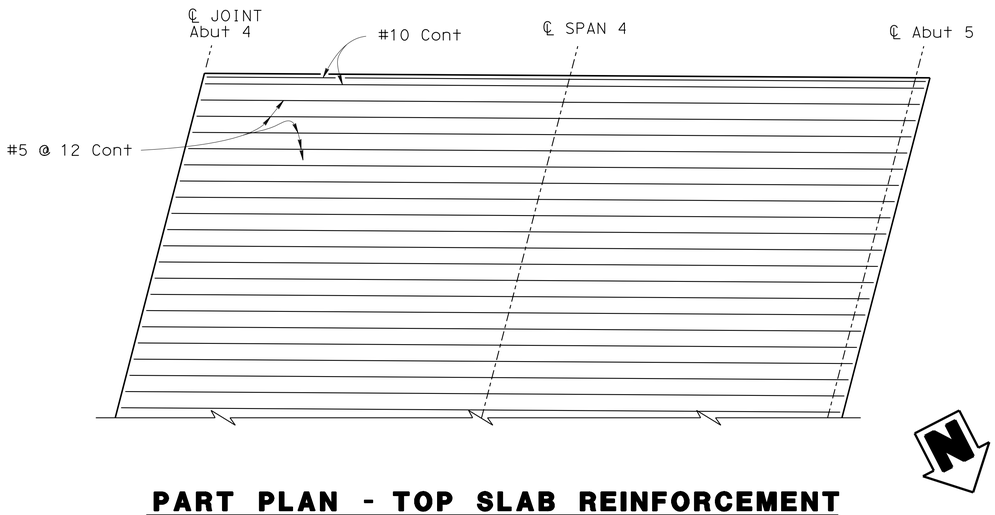

PART PLAN - TOP SLAB REINFORCEMENT

1/4" = 1'-0"

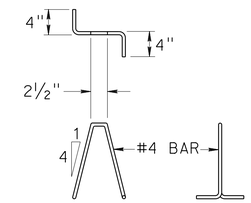

BAR CHAIR DETAIL

NO SCALE

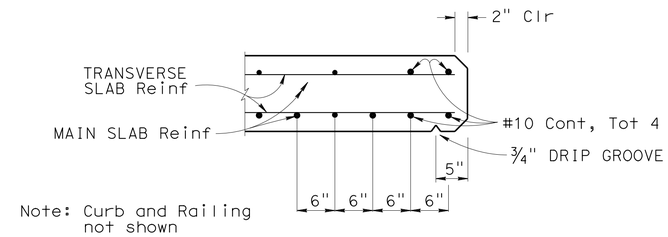

EDGE OF SLAB DETAILS

NO SCALE

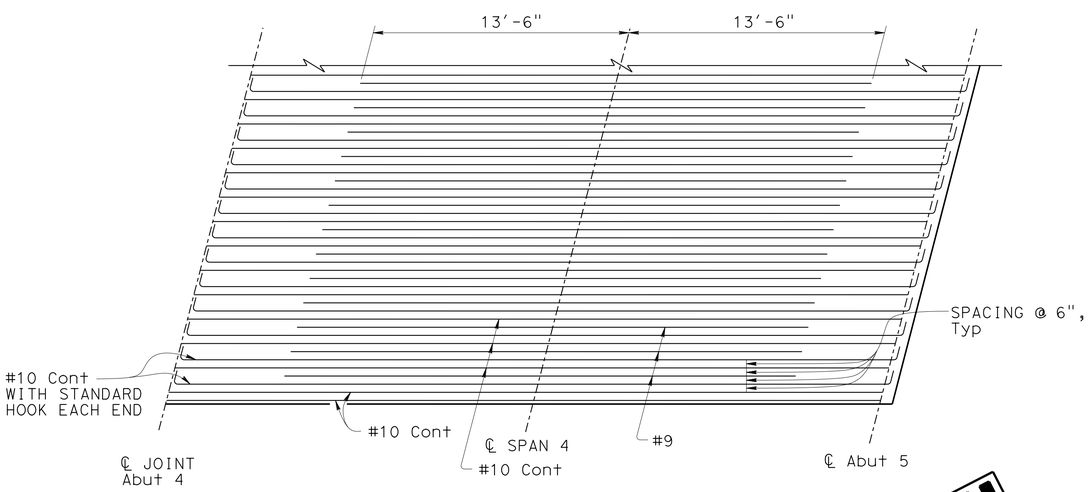

PART PLAN - BOTTOM SLAB REINFORCEMENT

1/4" = 1'-0"

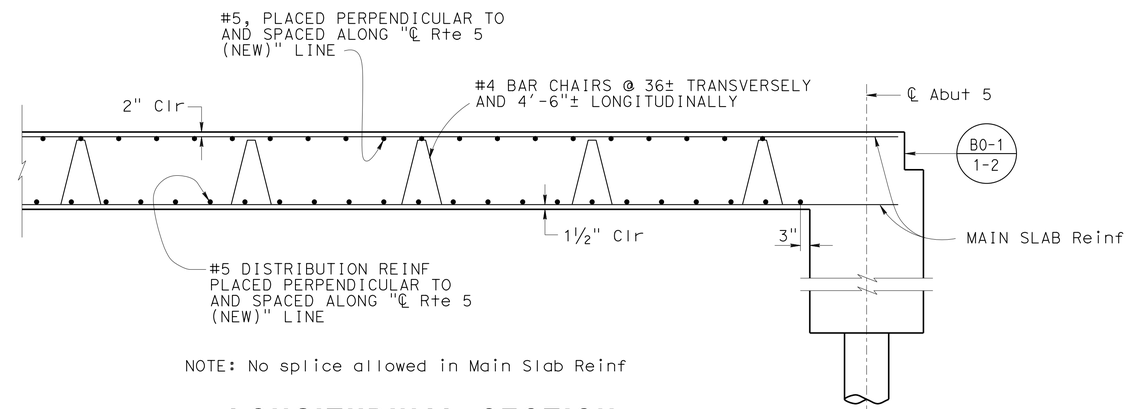

NOTE: No splice allowed in Main Slab Reinf

LONGITUDINAL SECTION

1/2" = 1'-0"

BAR SPLICE LENGTH

BAR SIZE	#4	#5	#6	#7	#8	#9	#10	#11
ALL BARS, EXCEPT TOP BARS IN SPANS OVER 24'	23"	28"	34"	39"	45"	68"	76"	85"
TOP BARS IN SPANS OVER 24'	23"	28"	34"	53"	60"	77"	97"	120"

	BY	CHECKED
DESIGN	D. Tavatli	J. Posey
DETAILS	J. Ramirez	D. Tavatli
QUANTITIES	D. Tavatli	F. Fong

STATE OF CALIFORNIA
DEPARTMENT OF TRANSPORTATION

DIVISION OF ENGINEERING SERVICES
STRUCTURE DESIGN
DESIGN BRANCH 11

BRIDGE NO. 53-3044
POST MILE 0.34

COYOTE CREEK BRIDGE (REPLACE)
SLAB REINFORCEMENT

STRUCTURES DESIGN DETAIL SHEET (ENGLISH) (REV. 09-01-10)

ORIGINAL SCALE IN INCHES FOR REDUCED PLANS 0 1 2 3

UNIT: 3587
PROJECT NUMBER & PHASE: 0715000160-1
CONTRACT NO.: 07-2159U4

DISREGARD PRINTS BEARING EARLIER REVISION DATES

REVISION DATES: 2-2-11 9-19-13 1/28/15

SHEET 19 OF 40

FILE => 53-3044-h-grrf.dgn

USERNAME => s125624 DATE PLOTTED => 28-JAN-2016 TIME PLOTTED => 11:55

DIST	COUNTY	ROUTE	POST MILES TOTAL PROJECT	SHEET No.	TOTAL SHEETS
07	LA,Ora	5	0.0/1.5, 44.3/44.4	1047	1622

REGISTERED CIVIL ENGINEER — DATE 3-18-15

1-25-16
PLANS APPROVAL DATE

REGISTERED PROFESSIONAL ENGINEER — Daryoush Tavatli — No. 56138 — Exp. 12-31-16 — CIVIL — STATE OF CALIFORNIA

The State of California or its officers or agents shall not be responsible for the accuracy or completeness of electronic copies of this plan sheet.

NOTES:

(A11) - Indicates Slab Type

LEGEND:

A = Slab Type
1 = Construction Phase
1 = Span

* - Last voided slab girder in group panel
(A11), (A12) & (A13) should have the width as shown

** - Last voided slab girder in group panel
(A21), (A22) & (A23) should have the width as shown

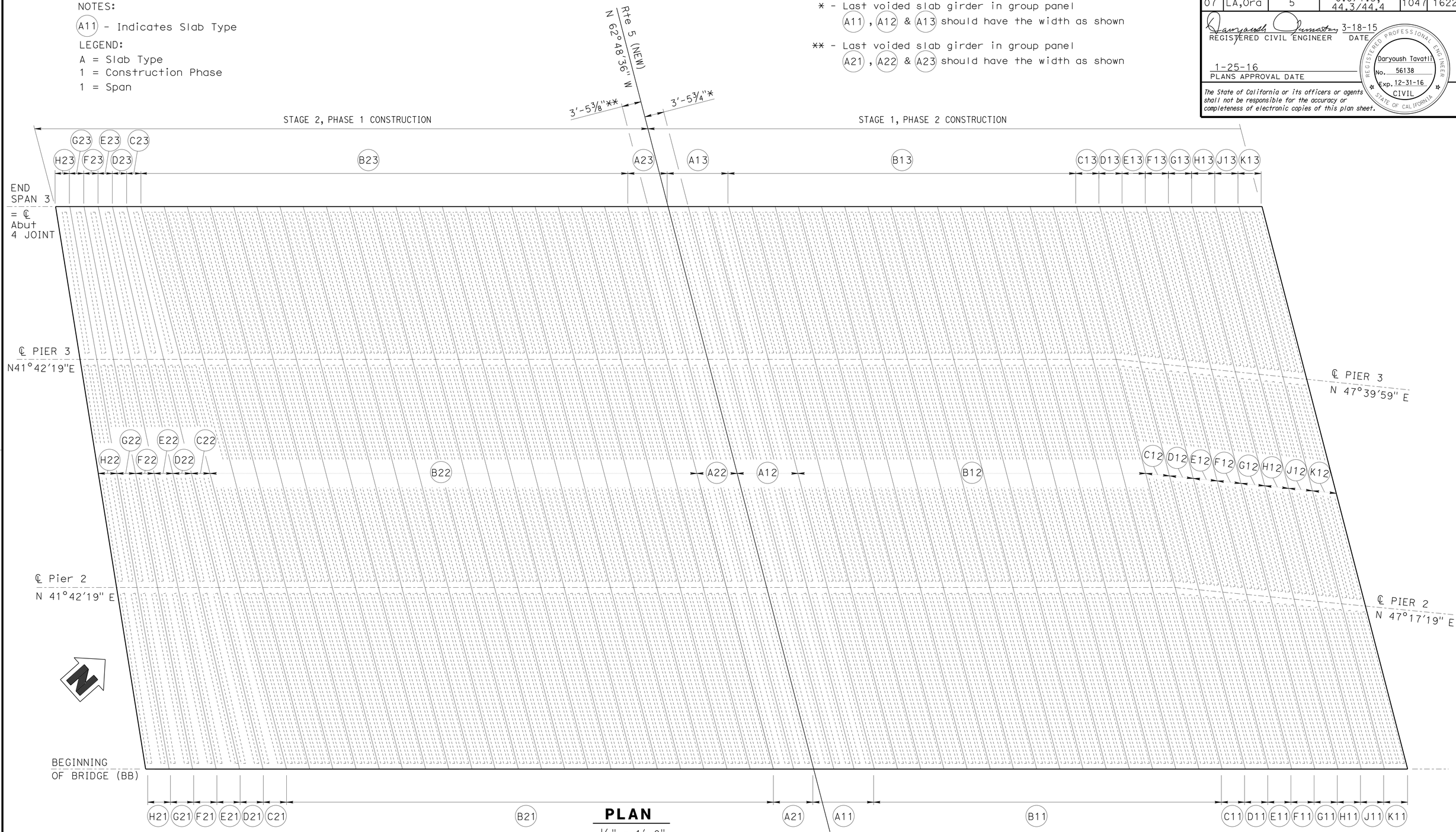

PLAN
1/8" = 1'-0"

	BY	CHECKED
DESIGN	D. Tavatli	J. Posey
DETAILS	T. Bittermann	D. Tavatli
QUANTITIES	D. Tavatli	F. Fong

STATE OF CALIFORNIA
DEPARTMENT OF TRANSPORTATION

DIVISION OF ENGINEERING SERVICES
STRUCTURE DESIGN
DESIGN BRANCH 11

BRIDGE NO. 53-3044
POST MILE 0.34

COYOTE CREEK BRIDGE (REPLACE)
GIRDER LAYOUT

STRUCTURES DESIGN DETAIL SHEET (ENGLISH) (REV. 09-01-10)

ORIGINAL SCALE IN INCHES FOR REDUCED PLANS 0 1 2 3

UNIT: 3587
PROJECT NUMBER & PHASE: 0715000160-1
CONTRACT NO.: 07-2159u4

DISREGARD PRINTS BEARING EARLIER REVISION DATES

REVISION DATES: 3-30-11 7-29-13 9-23-13 5-02-14

SHEET 20 OF 40

FILE => 53-3044-j-gr_lo.dgn

USERNAME => s125624 DATE PLOTTED => 28-JAN-2016 TIME PLOTTED => 11:55

DIST	COUNTY	ROUTE	POST MILES TOTAL PROJECT	SHEET No.	TOTAL SHEETS
07	LA,Ora	5	0.0/1.5, 44.3/44.4	1048	1622

REGISTERED CIVIL ENGINEER 3-18-15 DATE

1-25-16
PLANS APPROVAL DATE

REGISTERED PROFESSIONAL ENGINEER Daryoush Tavatli No. 56138 Exp. 12-31-16 CIVIL STATE OF CALIFORNIA

The State of California or its officers or agents shall not be responsible for the accuracy or completeness of electronic copies of this plan sheet.

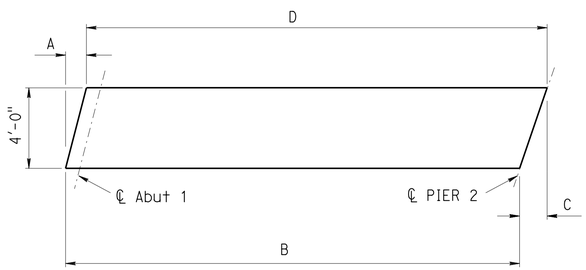

PANEL	A	B	C	D
C11	1'-0 3/8"	32'-11 7/8"	1'-5 5/8"	33'-5"
D11	1'-0 3/8"	32'-6 3/4"	1'-5 5/8"	32'-11 7/8"
E11	1'-0 3/8"	32'-1 5/8"	1'-5 5/8"	32'-6 3/4"
F11	1'-0 3/8"	31'-8 1/2"	1'-1 5/8"	32'-1 5/8"
G11	1'-0 3/8"	31'-3 3/8"	1'-5 5/8"	31'-8 1/2"
H11	1'-0 3/8"	30'-10 1/8"	1'-5 5/8"	31'-3 3/8"
J11	1'-0 3/8"	30'-5"	1'-5 5/8"	30'-10 1/8"
K11	1'-0 3/8"	29'-11 7/8"	1'-5 5/8"	30'-5"

PANELS C11 TO K11 DIMENSIONS

NO SCALE

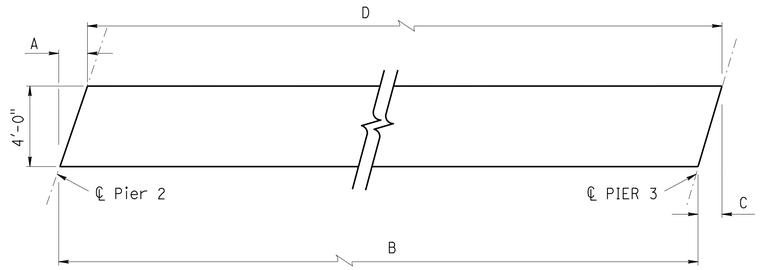

PANEL	A	B	C	D
C12	1'-5 5/8"	41'-11 5/8"	1'-5 7/8"	42'-0"
D12	1'-5 5/8"	41'-11 1/4"	1'-5 7/8"	41'-11 5/8"
E12	1'-5 5/8"	41'-10 7/8"	1'-5 7/8"	41'-11 1/4"
F12	1'-5 5/8"	41'-10 1/2"	1'-5 7/8"	41'-10 7/8"
G12	1'-5 5/8"	41'-10 1/4"	1'-5 7/8"	41'-10 1/2"
H12	1'-5 5/8"	41'-9 7/8"	1'-5 7/8"	41'-10 1/4"
J12	1'-5 5/8"	41'-9 1/2"	1'-5 7/8"	41'-9 7/8"
K12	1'-5 5/8"	41'-9 1/8"	1'-5 7/8"	41'-9 1/2"

PANELS C12 TO K12 DIMENSIONS

NO SCALE

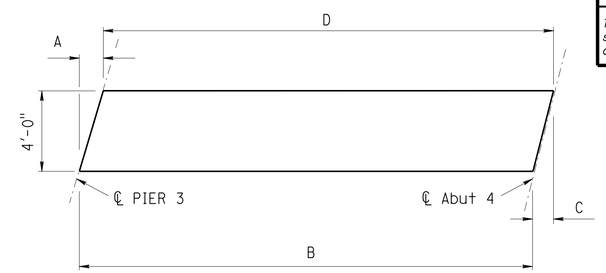

PANEL	A	B	C	D
C13	1'-5 7/8"	28'-7"	1'-0 3/8"	28'-1 1/2"
D13	1'-5 7/8"	29'-0 1/2"	1'-0 3/8"	28'-7"
E13	1'-5 7/8"	29'-6"	1'-0 3/8"	29'-0 1/2"
F13	1'-5 7/8"	29'-11 1/2"	1'-0 3/8"	29'-6"
G13	1'-5 7/8"	30'-5"	1'-0 3/8"	29'-11 1/2"
H13	1'-5 7/8"	30'-10 1/2"	1'-0 3/8"	30'-5"
J13	1'-5 7/8"	31'-4"	1'-0 3/8"	30'-10 1/2"
K13	1'-5 7/8"	31'-9 1/2"	1'-0 3/8"	31'-4"

PANELS C13 TO K13 DIMENSIONS

NO SCALE

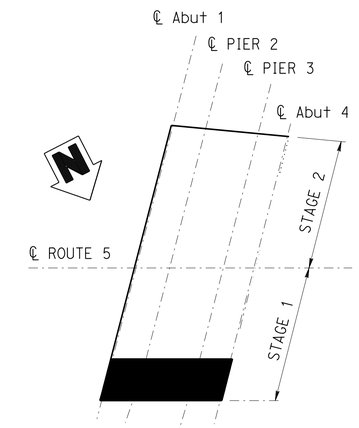

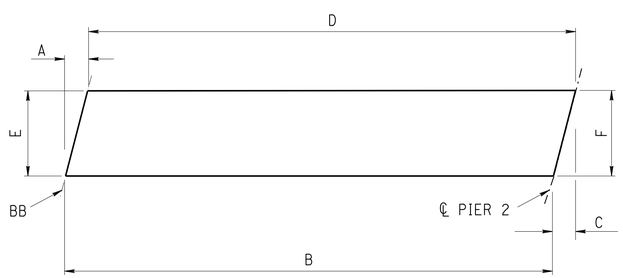

PANEL	A	B	C	D	E	F
A11	0'-10 7/8"	33'-5"	0'-10 7/8"	33'-5"	3'-6"	3'-6"*
A21	0'-10 7/8"	33'-5"	0'-10 7/8"	33'-5"	3'-6"	3'-6"**

PANELS A11 & A21 DIMENSIONS

NO SCALE

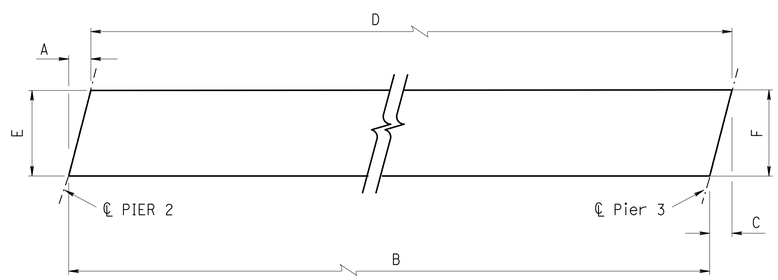

PANEL	A	B	C	D	E	F
A12	0'-10 7/8"	42'-0"	0'-10 7/8"	42'-0"	3'-6"	3'-6"*
A22	0'-10 7/8"	42'-0"	0'-10 7/8"	42'-0"	3'-6"	3'-6"**

PANELS A12 & A22 DIMENSIONS

NO SCALE

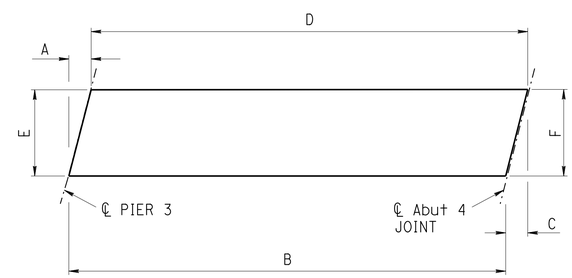

PANEL	A	B	C	D	E	F
A13	0'-10 7/8"	28'-1 1/2"	0'-10 7/8"	28'-1 1/2"	3'-6"	3'-6"*
A23	0'-10 7/8"	28'-1 1/2"	0'-10 7/8"	28'-1 1/2"	3'-6"	3'-6"**

PANELS A13 & A23 DIMENSIONS

NO SCALE

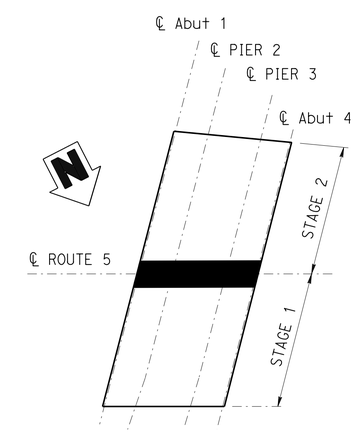

* - Last voided slab girder in (A11), (A12) & (A13) group of girders should have 3'-5 3/4" width. See "GIRDER LAYOUT" sheet

** - Last voided slab girder in (A21), (A22) & (A23) group of girders should have 3'-5 3/8" width. See "GIRDER LAYOUT" sheet

	BY	CHECKED
DESIGN	D. Tavatli	J. Posey
DETAILS	J. Ramirez	D. Tavatli
QUANTITIES	D. Tavatli	F.Fong

STATE OF CALIFORNIA
DEPARTMENT OF TRANSPORTATION

DIVISION OF ENGINEERING SERVICES
STRUCTURE DESIGN
DESIGN BRANCH 11

BRIDGE NO. 53-3044
POST MILE 0.34

COYOTE CREEK BRIDGE (REPLACE)
PRECAST SLAB DETAILS NO. 1

STRUCTURES DESIGN DETAIL SHEET (ENGLISH) (REV. 09-01-10)

ORIGINAL SCALE IN INCHES FOR REDUCED PLANS 0 1 2 3

UNIT: 3587
PROJECT NUMBER & PHASE: 0715000160-1
CONTRACT NO.: 07-2159U4

DISREGARD PRINTS BEARING EARLIER REVISION DATES

REVISION DATES 7/29/13 9-23-13 06-13-12

SHEET 21 OF 40

FILE => 53-3044-j-precst1.dgn

USERNAME => s129624 DATE PLOTTED => 28-JAN-2016 TIME PLOTTED => 11:55

DIST	COUNTY	ROUTE	POST MILES TOTAL PROJECT	SHEET No.	TOTAL SHEETS
07	LA,Ora	5	0.0/1.5, 44.3/44.4	1049	1622

REGISTERED CIVIL ENGINEER 3-18-15 DATE

1-25-16
PLANS APPROVAL DATE

REGISTERED PROFESSIONAL ENGINEER Daryoush Tavatli No. 56138 Exp. 12-31-16 CIVIL STATE OF CALIFORNIA

The State of California or its officers or agents shall not be responsible for the accuracy or completeness of electronic copies of this plan sheet.

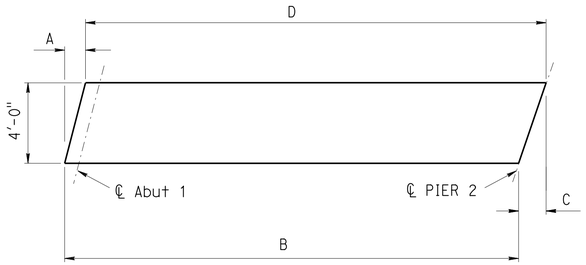

PANEL	A	B	C	D
B11	1'-0⅜"	33'-5"	1'-0⅜"	33'-5"
B21	1'-0⅜"	33'-5"	1'-0⅜"	33'-5"

PANELS B11 & B21 DIMENSIONS

NO SCALE

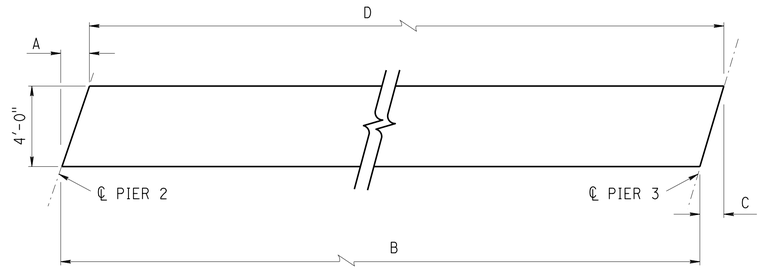

PANEL	A	B	C	D
B12	1'-0⅜"	42'-0"	1'-0⅜"	42'-0"
B22	1'-0⅜"	42'-0"	1'-0⅜"	42'-0"

PANELS B12 & B22 DIMENSIONS

NO SCALE

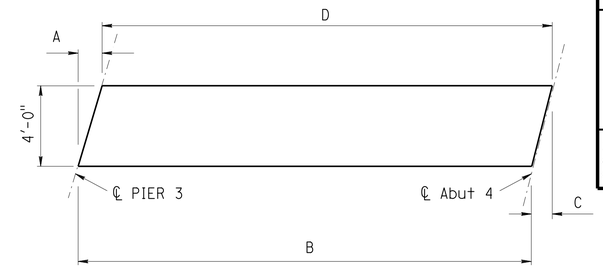

PANEL	A	B	C	D
B13	1'-0⅜"	28'-1½"	1'-0⅜"	28'-1½"
B23	1'-0⅜"	28'-1½"	1'-0⅜"	28'-1½"

PANELS B13 & B23 DIMENSIONS

NO SCALE

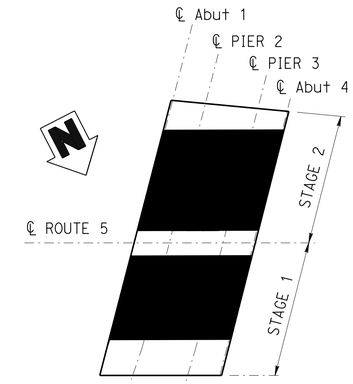

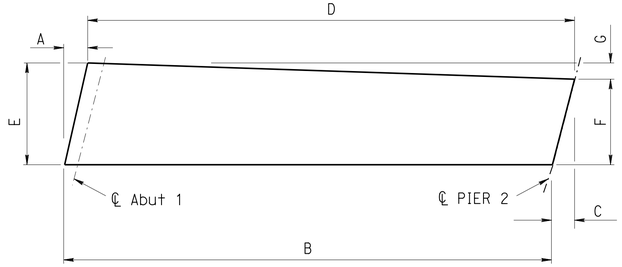

PANEL	A	B	C	D	E	F	G
C21	1'-0⅝"	33'-5"	0'-11"	33'-3½"	4'-0⅞"	3'-6⅜"	0'-6¼"
D21	0'-11⅞"	33'-3½"	0'-10⅜"	33'-2"	4'-1"	3'-6⅝"	0'-6¼"
E21	0'-11⅛"	33'-2"	0'-9⅝"	33'-0⅝"	4'-1⅛"	3'-6¾"	0'-6¼"
F21	0'-10¼"	33'-0⅝"	0'-9"	32'-11⅜"	4'-1⅜"	3'-6⅞"	0'-6¼"
G21	0'-9½"	32'-11⅜"	0'-8¼"	32'-10¼"	4'-1½"	3'-7"	0'-6¼"
H21	0'-8¾"	32'-10¼"	0'-7⅝"	32'-9⅛"	4'-1⅝"	3'-7⅛"	0'-6¼"

PANELS C21 TO H21 DIMENSIONS

NO SCALE

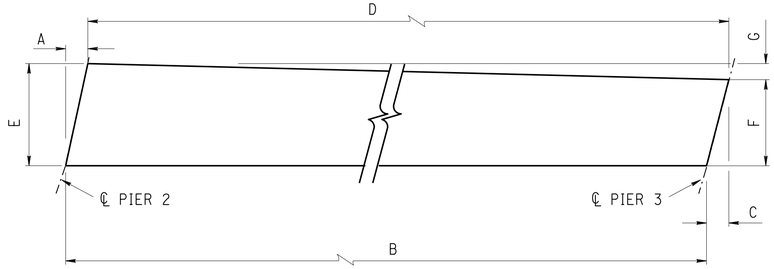

PANEL	A	B	C	D	E	F	G
C22	0'-11"	42'-0"	0'-9"	41'-10"	3'-6⅜"	2'-10⅝"	0'-7¾"
D22	0'-10⅜"	41'-10"	0'-8⅜"	41'-8⅛"	3'-6⅝"	2'-10¾"	0'-7¾"
E22	0'-9⅝"	41'-8¼"	0'-7⅞"	41'-6½"	3'-6¾"	2'-10⅞"	0'-7⅞"
F22	0'-9"	41'-6½"	0'-7⅜"	41'-4⅞"	3'-6⅞"	2'-11"	0'-7⅞"
G22	0'-8¼"	41'-4⅞"	0'-6¾"	41'-3⅜"	3'-7"	2'-11⅛"	0'-7⅞"
H22	0'-7⅝"	41'-3½"	0'-6¼"	41'-2⅛"	3'-7⅛"	2'-11¼"	0'-8"

PANELS C22 TO H22 DIMENSIONS

NO SCALE

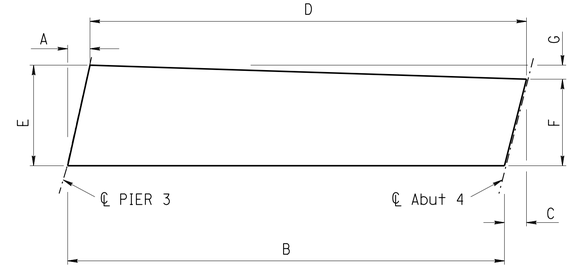

PANEL	A	B	C	D	E	F	G
C23	0'-9"	28'-1½"	0'-7⅝"	28'-0⅛"	2'-10⅝"	2'-5⅝"	0'-5¼"
D23	0'-8⅜"	28'-0⅛"	0'-7¼"	27'-11"	2'-10¾"	2'-5⅝"	0'-5¼"
E23	0'-7⅞"	27'-11"	0'-6¾"	27'-9¾"	2'-10⅞"	2'-5¾"	0'-5⅛"
F23	0'-7⅜"	27'-9¾"	0'-6¼"	27'-8¾"	2'-11"	2'-5⅞"	0'-5¼"
G23	0'-6¾"	27'-8¾"	0'-5¾"	27'-7¾"	2'-11⅛"	2'-6"	0'-5¼"
H23	0'-6¼"	27'-7¾"	0'-5¼"	27'-6⅞"	2'-11¼"	2'-6"	0'-5¼"

PANELS C23 TO H23 DIMENSIONS

NO SCALE

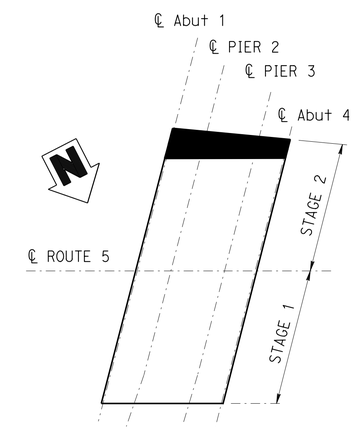

DESIGN	BY D. Tavatli	CHECKED J. Posey	
DETAILS	BY J. Ramirez	CHECKED D. Tavatli	
QUANTITIES	BY D. Tavatli	CHECKED F. Fong	

STATE OF CALIFORNIA
DEPARTMENT OF TRANSPORTATION

DIVISION OF ENGINEERING SERVICES
STRUCTURE DESIGN
DESIGN BRANCH 11

BRIDGE NO. 53-3044
POST MILE 0.34

COYOTE CREEK BRIDGE (REPLACE)
PRECAST SLAB DETAILS NO. 2

STRUCTURES DESIGN DETAIL SHEET (ENGLISH) (REV. 09-01-10)

ORIGINAL SCALE IN INCHES FOR REDUCED PLANS 0 1 2 3

UNIT: 3587
PROJECT NUMBER & PHASE: 0715000160-1
CONTRACT NO.: 07-2159U4

DISREGARD PRINTS BEARING EARLIER REVISION DATES

REVISION DATES: 1-6-11 5-30-12 7-29-13 9-23-13

SHEET 22 OF 40

FILE => 53-3044-j-precst2.dgn

USERNAME => s125624 DATE PLOTTED => 28-JAN-2016 TIME PLOTTED => 11:55

DIST	COUNTY	ROUTE	POST MILES TOTAL PROJECT	SHEET No.	TOTAL SHEETS
07	LA,Ora	5	0.0/1.5, 44.3/44.4	1050	1622

REGISTERED CIVIL ENGINEER 3-18-15 DATE

1-25-16
PLANS APPROVAL DATE

REGISTERED PROFESSIONAL ENGINEER Daryoush Tavatli No. 56138 Exp. 12-31-16 CIVIL STATE OF CALIFORNIA

The State of California or its officers or agents shall not be responsible for the accuracy or completeness of electronic copies of this plan sheet.

PRESTRESSING NOTES

1. P_f is the force required at center of span after all losses.
2. Slabs designed for pretensioning.
3. Concrete strength at time of stressing, f'_c= 4.5 ksi at 28 days, f'_c = 6 ksi
4. Live loading = HL 93 with "LOW-BOY"; PERMIT DESIGN VEHICLE (LRFD).
5. Design 35 psf for surfacing.
6. Keyways to be filled with grout.
7. See other sheets for railing requirements.

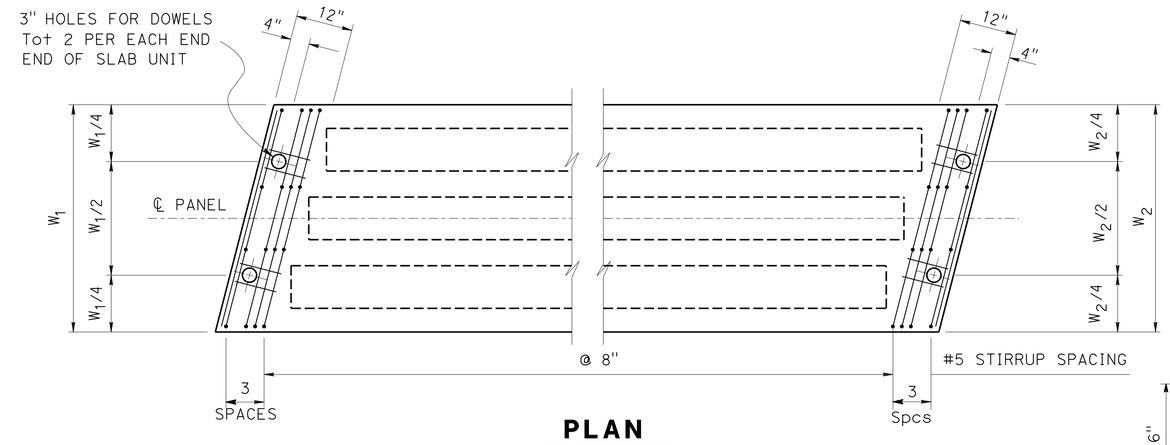

PLAN

PANELS B11 & B21, B12 & B22, B13 & B23

C11 TO K11 , C12 TO K12 & C13 TO K13

¾" = 1'-0"

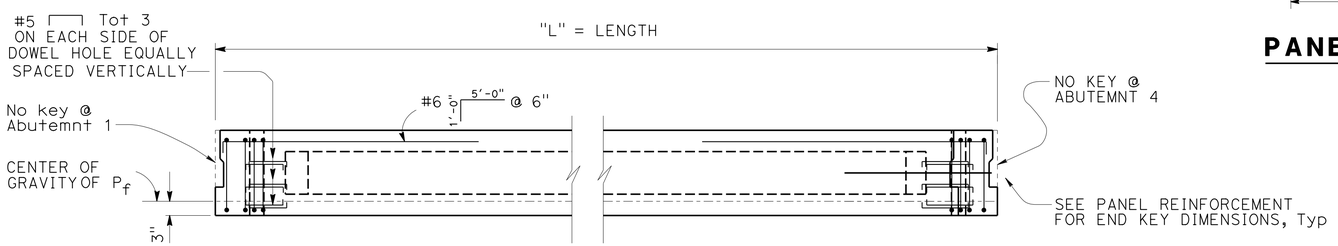

ELEVATION

¾" = 1'-0"

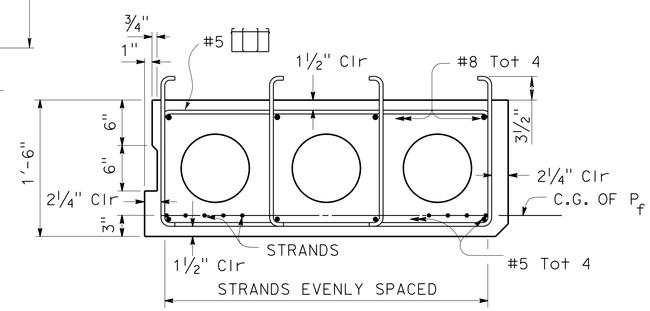

PANEL REINFORCEMENT

NO SCALE

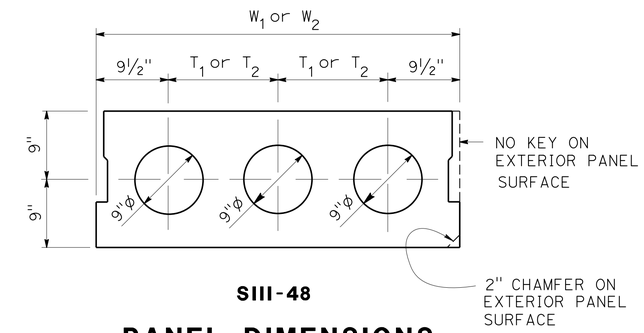

SIII-48

PANEL DIMENSIONS

NO SCALE

PANEL	ABUT 1 W_1	ABUT 1 T_1	PIER 2 W_2	PIER 2 T_2	NO. OF STRANDS	P_f = WORKING FORCE IN KIPS
B11	4'-0"	1'-2½"	4'-0"	1'-2½"	6	241
B21	4'-0"	1'-2½"	4'-0"	1'-2½"	6	241
C11 TO K11	4'-0"	1'-2½"	4'-0"	1'-2½"	6	241

PANEL	PIER 2 W_1	PIER 2 T_1	PIER 3 W_2	PIER 3 T_2	NO. OF STRANDS	P_f = WORKING FORCE IN KIPS
B12	4'-0"	1'-2½"	4'-0"	1'-2½"	8	320
B22	4'-0"	1'-2½"	4'-0"	1'-2½"	8	320
C12 TO K12	4'-0"	1'-2½"	4'-0"	1'-2½"	8	320

PANEL	PIER 3 W_1	PIER 3 T_1	ABUT 4 W_2	ABUT 4 T_2	NO. OF STRANDS	P_f = WORKING FORCE IN KIPS
B13	4'-0"	1'-2½"	4'-0"	1'-2½"	6	240
B23	4'-0"	1'-2½"	4'-0"	1'-2½"	6	240
C13 TO K13	4'-0"	1'-2½"	4'-0"	1'-2½"	6	240

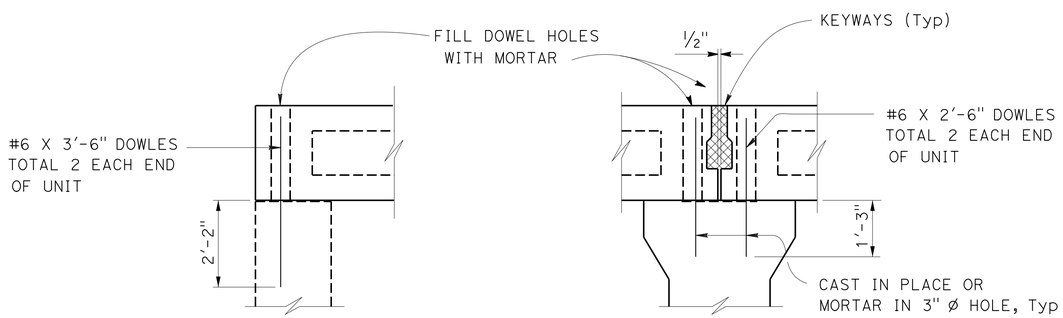

AT ABUTMENT 1 & 4 **AT PIERS 2 & 3**

SUPPORT DETAILS

No Scale

	BY	CHECKED
DESIGN	D. Tavatli	J. Posey
DETAILS	L. Goldthwait	D. Tavatli
QUANTITIES	D. Tavatli	F. Fong

STATE OF CALIFORNIA
DEPARTMENT OF TRANSPORTATION

DIVISION OF ENGINEERING SERVICES
STRUCTURE DESIGN
DESIGN BRANCH 11

BRIDGE NO. 53-3044
POST MILE 0.34

COYOTE CREEK BRIDGE (REPLACE)

PRECAST SLAB DETAILS NO. 3

STRUCTURES DESIGN DETAIL SHEET (ENGLISH) (REV. 09-01-10)

ORIGINAL SCALE IN INCHES FOR REDUCED PLANS 0 1 2 3

UNIT: 3587
PROJECT NUMBER & PHASE: 0715000160-1
CONTRACT NO.: 07-2159u4

DISREGARD PRINTS BEARING EARLIER REVISION DATES

REVISION DATES: 03-27-12 9-23-13 1-28-13 8-29-13

SHEET 23 OF 40

FILE => 53-3044-j-precst3.dgn

USERNAME => s123624 DATE PLOTTED => 28-JAN-2016 TIME PLOTTED => 11:55

DIST	COUNTY	ROUTE	POST MILES TOTAL PROJECT	SHEET No.	TOTAL SHEETS
07	LA,Ora	5	0.0/1.5, 44.3/44.4	1051	1622

REGISTERED CIVIL ENGINEER 3-18-15 DATE

1-25-16
PLANS APPROVAL DATE

REGISTERED PROFESSIONAL ENGINEER Daryoush Tavatli No. 56138 Exp. 12-31-16 CIVIL STATE OF CALIFORNIA

The State of California or its officers or agents shall not be responsible for the accuracy or completeness of electronic copies of this plan sheet.

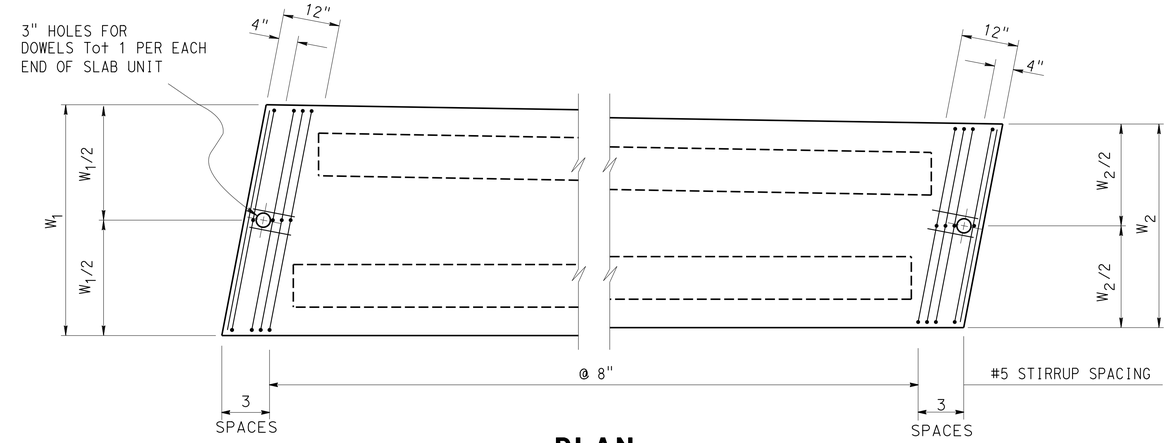

PLAN

PANELS C21 TO H21 & C22 TO H22

A11 & A21, A12 & A22, A13 & A23

3/4" = 1'-0"

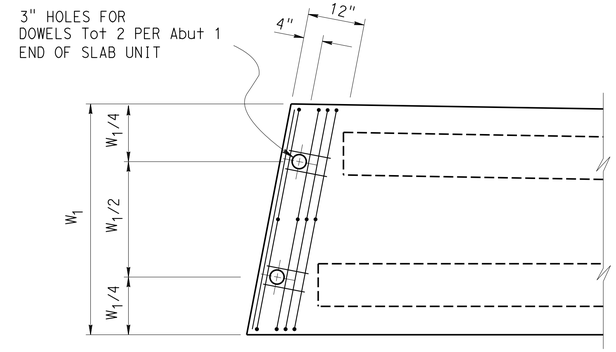

PARTIAL PLAN

PANELS C21 TO H21 AT ABUT 1 END

3/4" = 1'-0"

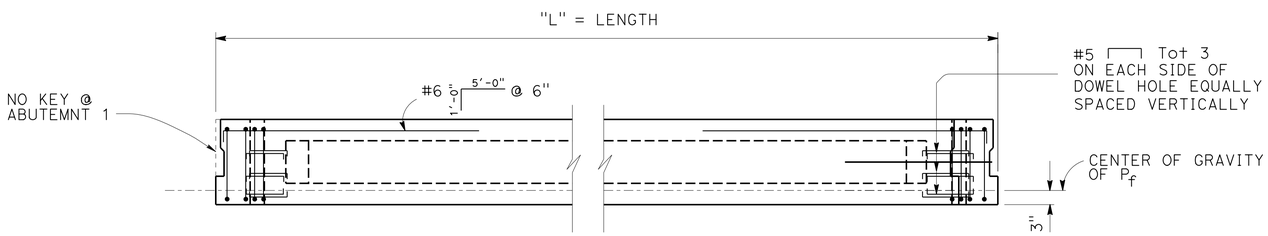

ELEVATION

3/4" = 1'-0"

* - Panel reinforcement similar for panels C22 to H22

** - Panel dimensions does not apply to panels C22 to H22

	ABUT 1		PIER 2		NO. OF STRANDS	P_f = WORKING FORCE IN KIPS
PANEL	W_1	T_1	W_2	T_2		
A11	3'-6"	1'-9"	3'-6"	1'-9"	6	240
A11 LAST PANEL	3'-5 3/4"	1'-8 3/4"	3'-5 3/4"	1'-8 3/4"	6	240
A21	3'-6"	1'-9"	3'-6"	1'-9"	6	240
A21 LAST PANEL	3'-5 3/8"	1'-8 3/8"	3'-5 3/8"	1'-8 3/8"	6	240
C21	4'-0 7/8"	2'-3 7/8"	3'-6 3/8"	1'-9 3/8"	6	240
D21	4'-1"	2'-4"	3'-6 5/8"	1'-9 5/8"	6	240
E21	4'-1 1/8"	2'-4 1/8"	3'-6 3/4"	1'-9 3/4"	6	240
F21	4'-1 3/8"	2'-4 3/8"	3'-6 7/8"	1'-9 7/8"	6	240
G21	4'-1 1/2"	2'-4 1/2"	3'-7"	1'-10"	6	240
H21	4'-1 5/8"	2'-4 5/8"	3'-7 1/8"	1'-10 1/8"	6	240

	PIER 2		PIER 3		NO. OF STRANDS	P_f = WORKING FORCE IN KIPS
PANEL	W_1	T_1	W_2	T_2		
A12	3'-6"	1'-9"	3'-6"	1'-9"	8	318
A12 LAST PANEL	3'-5 3/4"	1'-8 3/4"	3'-5 3/4"	1'-8 3/4"	8	318
A22	3'-6"	1'-9"	3'-6"	1'-9"	8	318
A22 LAST PANEL	3'-5 3/8"	1'-8 3/8"	3'-5 3/8"	1'-8 3/8"	8	318
C22	3'-6 3/8"	1'-9 3/8"	2'-10 5/8"	1'-1 5/8"	8	318
D22	3'-6 5/8"	1'-9 5/8"	2'-10 3/4"	1'-1 3/4"	8	318
E22	3'-6 3/4"	1'-9 3/4"	2'-10 7/8"	1'-1 7/8"	8	318
F22	3'-6 7/8"	1'-9 7/8"	2'-11"	1'-2"	8	318
G22	3'-7"	1'-10"	2'-11 1/8"	1'-2 1/8"	8	318
H22	3'-7 1/8"	1'-10 1/8"	2'-11 1/4"	1'-2 1/4"	8	318

	PIER 3		ABUT 4		NO. OF STRANDS	P_f = WORKING FORCE IN KIPS
PANEL	W_1	T_1	W_2	T_2		
A13	3'-6"	1'-9"	3'-6"	1'-9"	5	201
A13 LAST PANEL	3'-5 3/4"	1'-8 3/4"	3'-5 3/4"	1'-8 3/4"	5	201
A23	3'-6"	1'-9"	3'-6"	1'-9"	5	201
A23 LAST PANEL	3'-5 3/8"	1'-8 3/8"	3'-5 3/8"	1'-8 3/8"	5	201

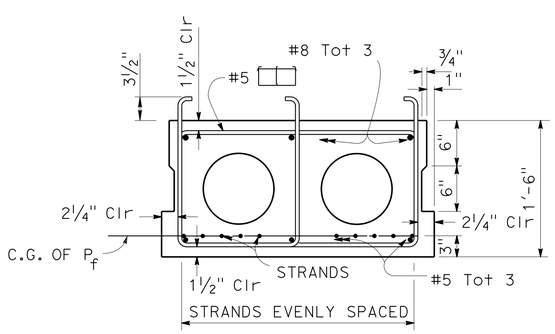

PANEL REINFORCEMENT *

NO SCALE

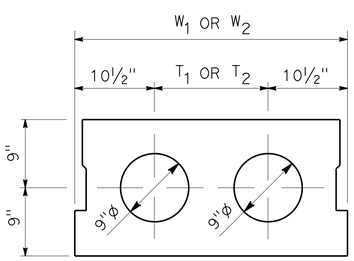

PANEL DIMENSIONS **

NO SCALE

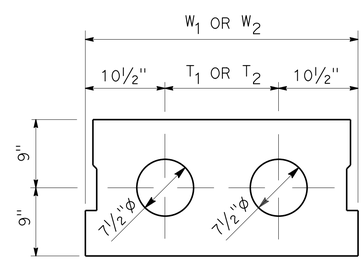

PANELS C22 TO H22 DIMENSIONS

NO SCALE

DESIGN	BY D. Tavatli	CHECKED J. Posey	
DETAILS	BY L. Goldthwait	CHECKED D. Tavatli	
QUANTITIES	BY D. Tavatli	CHECKED F. Fong	

STATE OF CALIFORNIA
DEPARTMENT OF TRANSPORTATION

DIVISION OF ENGINEERING SERVICES
STRUCTURE DESIGN
DESIGN BRANCH 11

BRIDGE NO. 53-3044
POST MILE 0.34

COYOTE CREEK BRIDGE (REPLACE)

PRECAST SLAB DETAILS NO. 4

STRUCTURES DESIGN DETAIL SHEET (ENGLISH) (REV. 09-01-10)

ORIGINAL SCALE IN INCHES FOR REDUCED PLANS 0 1 2 3

UNIT: 3587
PROJECT NUMBER & PHASE: 0715000160-1
CONTRACT NO.: 07-2159U4

DISREGARD PRINTS BEARING EARLIER REVISION DATES

REVISION DATES: 03-08-11 5-30-12 1-28-13 9-23-13

SHEET 24 OF 40

FILE => 53-3044-j-precst4.dgn

USERNAME => s125624 DATE PLOTTED => 28-JAN-2016 TIME PLOTTED => 11:55

DIST	COUNTY	ROUTE	POST MILES TOTAL PROJECT	SHEET No.	TOTAL SHEETS
07	LA,Ora	5	0.0/1.5, 44.3/44.4	1052	1622

REGISTERED CIVIL ENGINEER 3-18-15 DATE

1-25-16
PLANS APPROVAL DATE

REGISTERED PROFESSIONAL ENGINEER Daryoush Tavatli No. 56138 Exp. 12-31-16 CIVIL STATE OF CALIFORNIA

The State of California or its officers or agents shall not be responsible for the accuracy or completeness of electronic copies of this plan sheet.

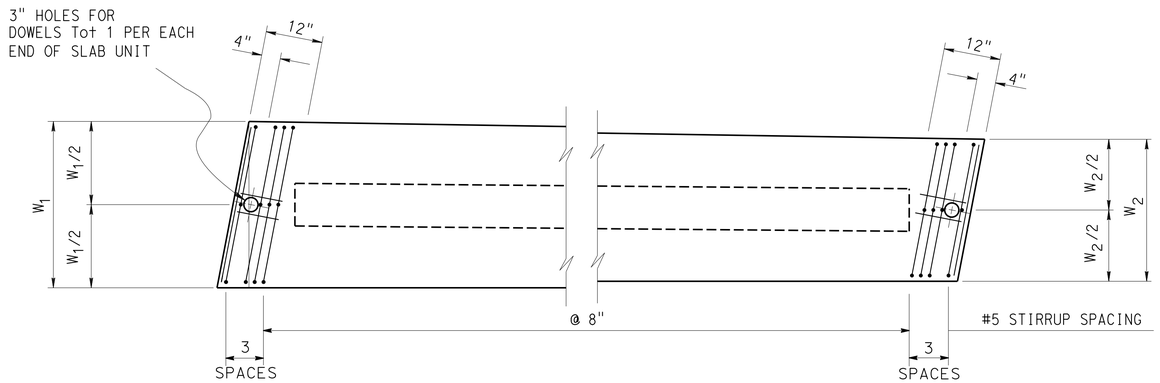

PLAN
PANELS C23 TO H23

3/4" = 1'-0"

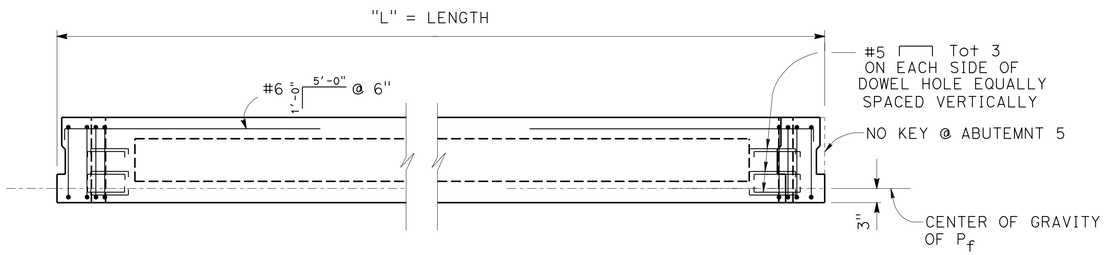

ELEVATION

3/4" = 1'-0"

PANEL	PIER 3 W_1	ABUT 4 W_2	NO. OF STRANDS	P_f = WORKING FORCE IN KIPS
C23	2'-10 5/8"	2'-5 5/8"	4	161
D23	2'-10 3/4"	2'-5 5/8"	4	161
E23	2'-10 7/8"	2'-5 3/4"	4	161
F23	2'- 11"	2'-5 7/8"	4	161
G23	2'-11 1/8"	2'-6"	4	161
H23	2'-11 1/4"	2'-6"	4	161

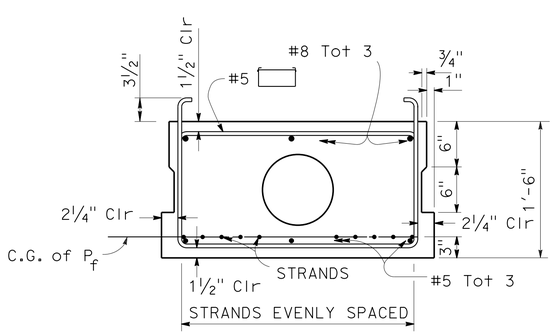

PANEL REINFORCEMENT

NO SCALE

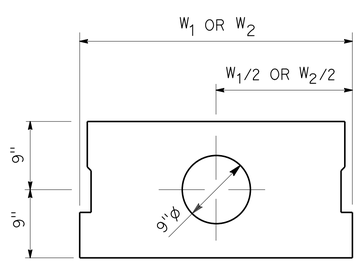

PANEL DIMENSIONS

NO SCALE

	BY	CHECKED
DESIGN	D. Tavatli	J. Posey
DETAILS	L. Goldthwait	D. Tavatli
QUANTITIES	D. Tavatli	F. Fong

STATE OF CALIFORNIA
DEPARTMENT OF TRANSPORTATION

DIVISION OF ENGINEERING SERVICES
STRUCTURE DESIGN
DESIGN BRANCH 11

BRIDGE NO. 53-3044
POST MILE 0.34

COYOTE CREEK BRIDGE (REPLACE)
PRECAST SLAB DETAILS NO. 5

STRUCTURES DESIGN DETAIL SHEET (ENGLISH) (REV. 09-01-10)

ORIGINAL SCALE IN INCHES FOR REDUCED PLANS 0 1 2 3

UNIT: 3587
PROJECT NUMBER & PHASE: 0715000160-1
CONTRACT NO.: 07-2159u4

DISREGARD PRINTS BEARING EARLIER REVISION DATES

REVISION DATES: 03-06-11 5-31-12 1-28-13 9-23-13

SHEET 25 OF 40

FILE => 53-3044-j-precst5.dgn

USERNAME => s125624 DATE PLOTTED => 28-JAN-2016 TIME PLOTTED => 11:55

DIST	COUNTY	ROUTE	POST MILES TOTAL PROJECT	SHEET No.	TOTAL SHEETS
07	LA,Ora	5	0.0/1.5, 44.3/44.4	1053	1622

REGISTERED CIVIL ENGINEER 3-18-15 DATE

1-25-16
PLANS APPROVAL DATE

REGISTERED PROFESSIONAL ENGINEER
Daryoush Tavatli
No. 56138
Exp. 12-31-16
CIVIL
STATE OF CALIFORNIA

The State of California or its officers or agents shall not be responsible for the accuracy or completeness of electronic copies of this plan sheet.

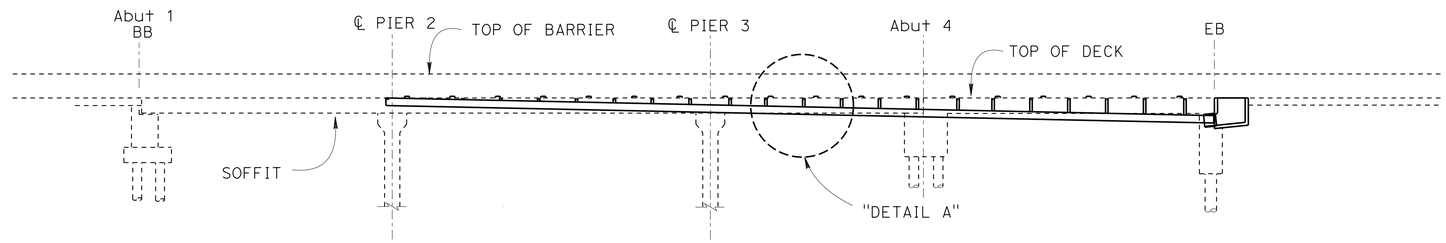

MIRRORED ELEVATION

1" = 10'-0"

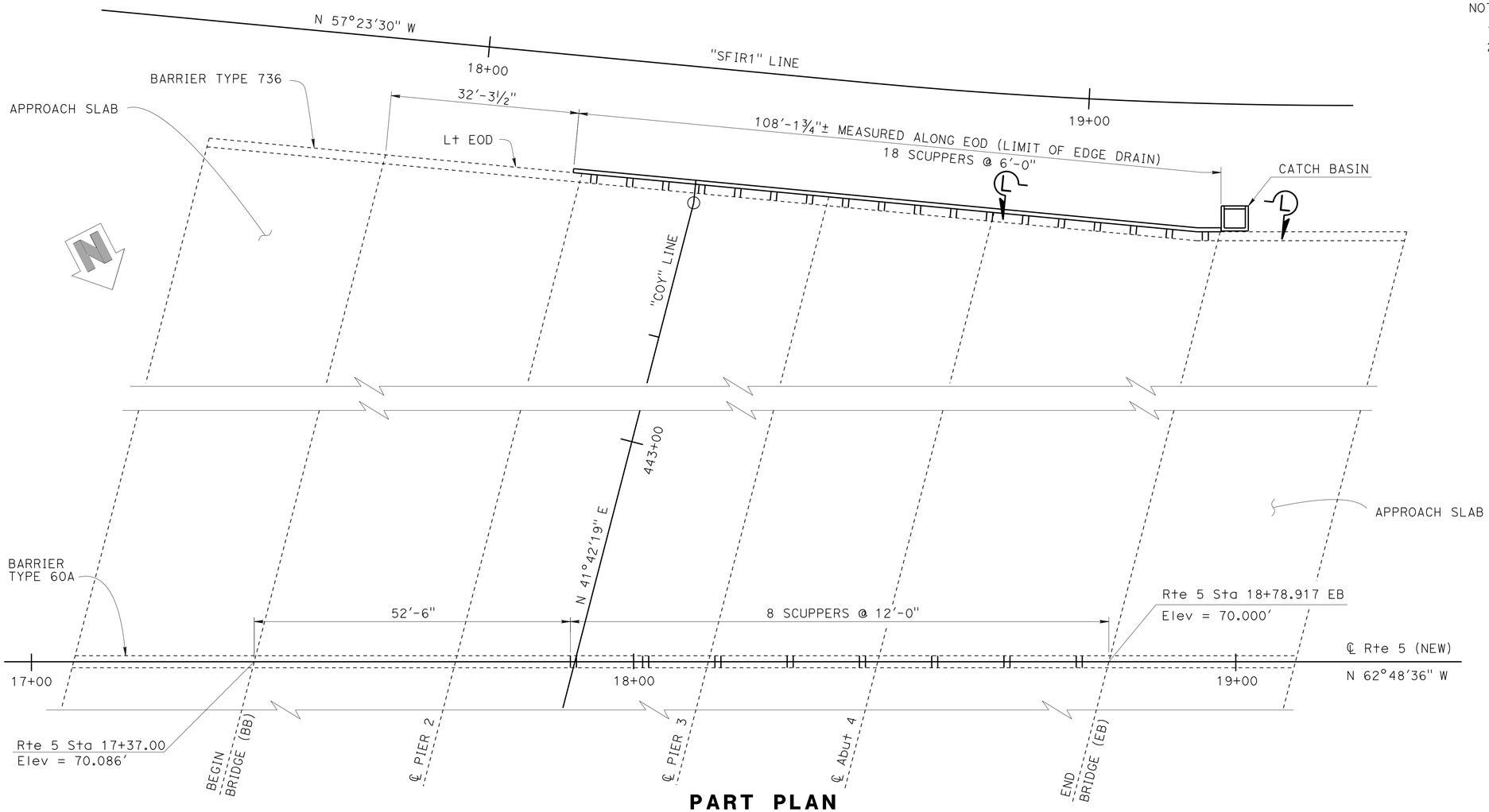

PART PLAN

1" = 10'-0"

NOTES:

1. For "DETAIL A", see "DRAINAGE DETAILS NO. 2" sheet
2. For "VIEW L-L", see "DRAINAGE DETAILS NO. 1" sheet

	BY	CHECKED
DESIGN	Y. Yoon	J. Posey
DETAILS	L. Goldthwait	D. Tavatli
QUANTITIES	D. Tavatli	F. Fong

STATE OF CALIFORNIA
DEPARTMENT OF TRANSPORTATION

DIVISION OF ENGINEERING SERVICES
STRUCTURE DESIGN
DESIGN BRANCH 11

BRIDGE NO. 53-3044
POST MILE 0.34

COYOTE CREEK BRIDGE (REPLACE)
DRAINAGE LAYOUT

STRUCTURES DESIGN DETAIL SHEET (ENGLISH) (REV. 09-01-10)

ORIGINAL SCALE IN INCHES FOR REDUCED PLANS 0 1 2 3

UNIT: 3587
PROJECT NUMBER & PHASE: 0715000160-1
CONTRACT NO.: 07-2159U4

DISREGARD PRINTS BEARING EARLIER REVISION DATES

REVISION DATES: 8-5-11 6-12-12

SHEET 26 OF 40

FILE => 53-3044-s-drn_lo.dgn

USERNAME => s125624 DATE PLOTTED => 28-JAN-2016 TIME PLOTTED => 11:55

DIST	COUNTY	ROUTE	POST MILES TOTAL PROJECT	SHEET No.	TOTAL SHEETS
07	LA,Ora	5	0.0/1.5, 44.3/44.4	1054	1622

REGISTERED CIVIL ENGINEER 3-18-15 DATE

1-25-16
PLANS APPROVAL DATE

REGISTERED PROFESSIONAL ENGINEER Daryoush Tavatli No. 56138 Exp. 12-31-16 CIVIL STATE OF CALIFORNIA

The State of California or its officers or agents shall not be responsible for the accuracy or completeness of electronic copies of this plan sheet.

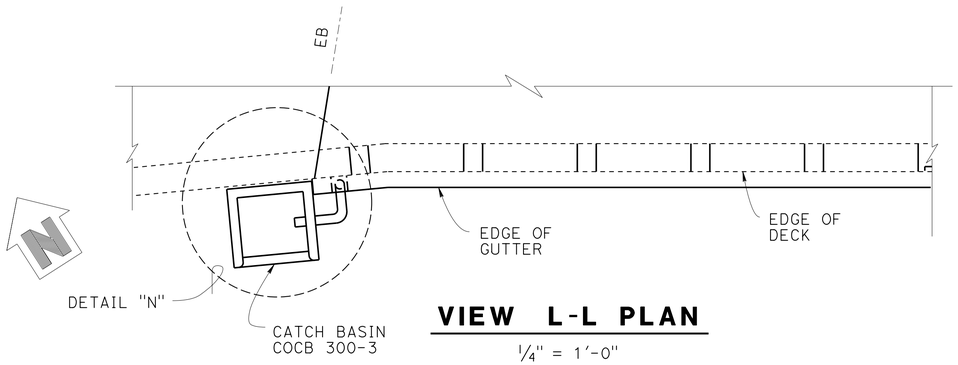

VIEW L-L PLAN

1/4" = 1'-0"

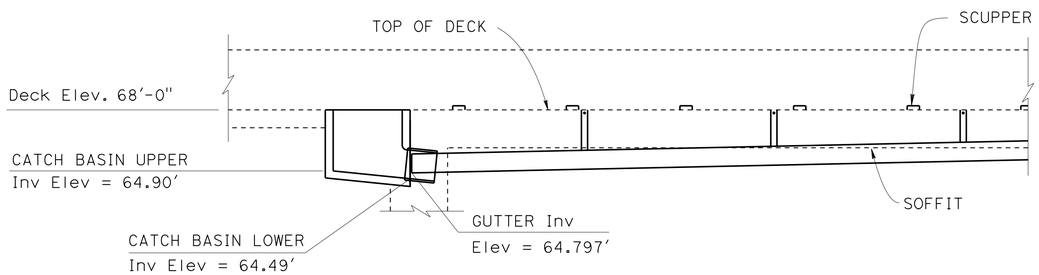

VIEW L-L ELEVATION

B7-8

1/4" = 1'-0"

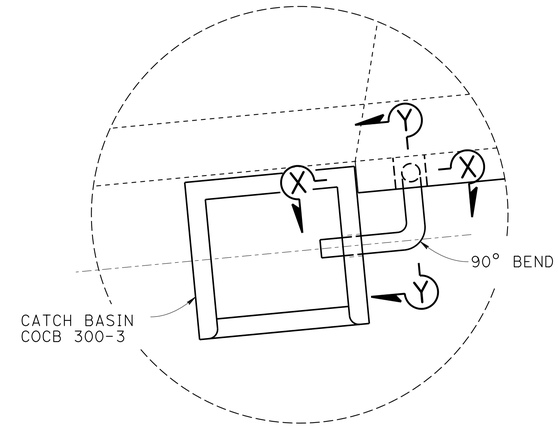

DETAIL N

NO SCALE

NOTE: (apply to to this sheet only)

All steel pipe shall be 10" ø x 0.134" wall thickness and shall be galvanized. Fittings and bends shall have a minimum wall thickness of 0.125". All joints or connections to be connected by a steel pipe sleeve and to be smooth throughout inside of pipe except as noted. All bends to be 2'-0" radius measured along centerline of pipe. All bends shall be smooth.

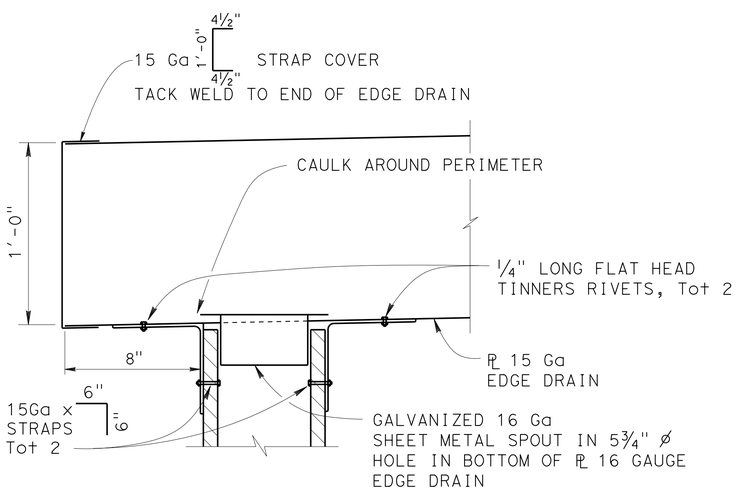

SECTION X-X

NO SCALE

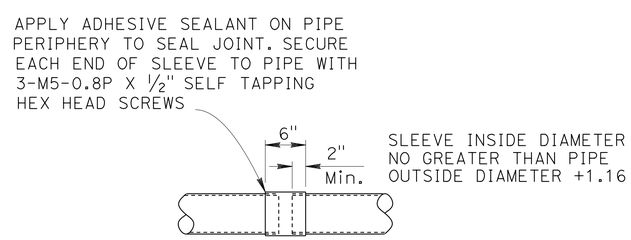

SLEEVE CONNECTION

NO SCALE

NOTE:

Galvanize sheet metal sizes are:
15 Ga = 0.071"(1.8mm)
16 Ga = 0.0635"(1.61mm)

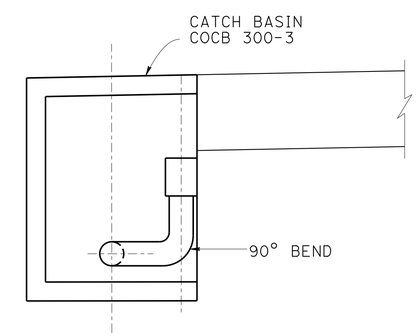

SECTION Y-Y

1/4" = 1'-0"

DESIGN	BY D. Tavatli	CHECKED J. Posey	
DETAILS	BY L. Goldthwait	CHECKED D. Tavatli	
QUANTITIES	BY D. Tavatli	CHECKED F. Fong	

STATE OF CALIFORNIA
DEPARTMENT OF TRANSPORTATION

DIVISION OF ENGINEERING SERVICES
STRUCTURE DESIGN
DESIGN BRANCH 11

BRIDGE NO. 53-3044
POST MILE 0.34

COYOTE CREEK BRIDGE (REPLACE)
DRAINAGE DETAILS NO. 1

STRUCTURES DESIGN DETAIL SHEET (ENGLISH) (REV. 09-01-10)

ORIGINAL SCALE IN INCHES FOR REDUCED PLANS 0 1 2 3

UNIT: 3587
PROJECT NUMBER & PHASE: 0715000160-1
CONTRACT NO.: 07-2159u4

DISREGARD PRINTS BEARING EARLIER REVISION DATES

REVISION DATES 8-8-11 7-29-13 9-23-13

SHEET 27 OF 40

FILE => 53-3044-s-drnd+1.dgn

USERNAME => s125824 DATE PLOTTED => 28-JAN-2016 TIME PLOTTED => 11:55

DIST	COUNTY	ROUTE	POST MILES TOTAL PROJECT	SHEET No.	TOTAL SHEETS
07	LA,Ora	5	0.0/1.5, 44.3/44.4	1055	1622

REGISTERED CIVIL ENGINEER 3-18-15 DATE

1-25-16
PLANS APPROVAL DATE

REGISTERED PROFESSIONAL ENGINEER Daryoush Tavatli No. 56138 Exp. 12-31-16 CIVIL STATE OF CALIFORNIA

The State of California or its officers or agents shall not be responsible for the accuracy or completeness of electronic copies of this plan sheet.

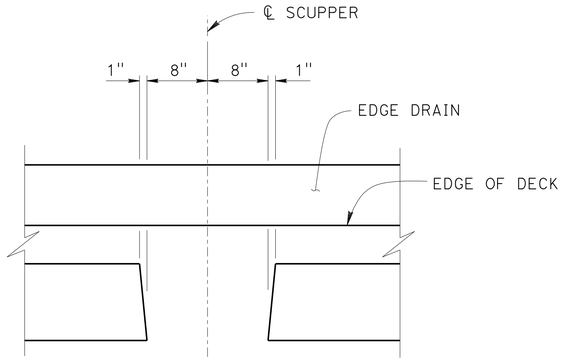

SECTION A-A

NO SCALE

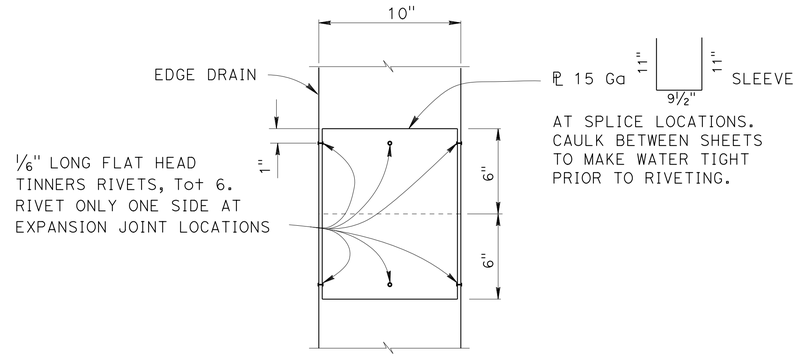

SECTION C-C

3" = 1'-0"

FOR DETAILS NOT SHOWN SEE 'SECTION B-B'

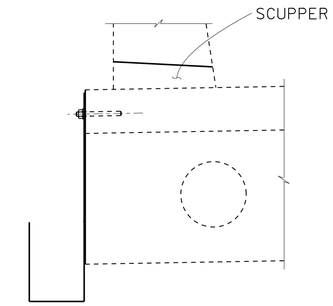

SECTION K-K

NO SCALE

NOTES: (Apply to this sheet only)

1. For drainage details not shown, see B7-8
2. All steel components shall be galvanized. All joints or connections to be connected by a steel pipe sleeve and to be smooth throughout inside of pipe except as noted. All bends to be 2 ft radius measured along centerline of pipe. All bends to be smooth.
3. If Strap spacing coinsides with Scupper spacing move the Strap to clear the scupper

NOTE:
Galvanized sheet Metal sizes are:
15 Ga = 0.071"(1.8mm)
16 Ga = 0.0635"(1.61mm)

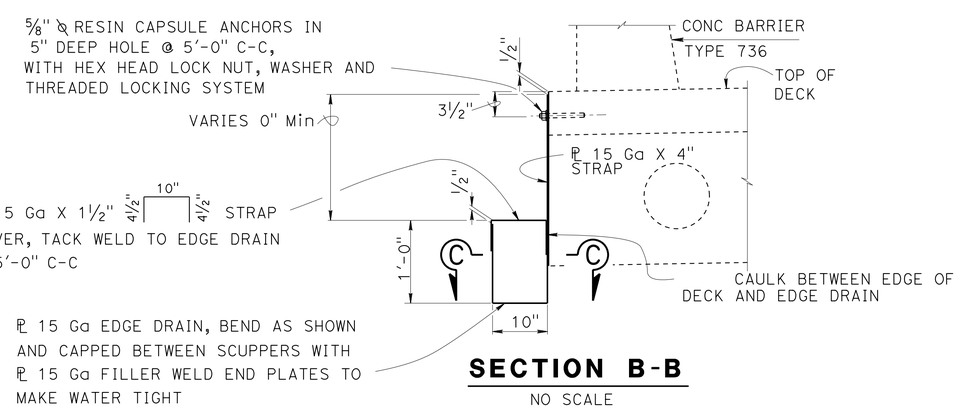

SECTION B-B

NO SCALE

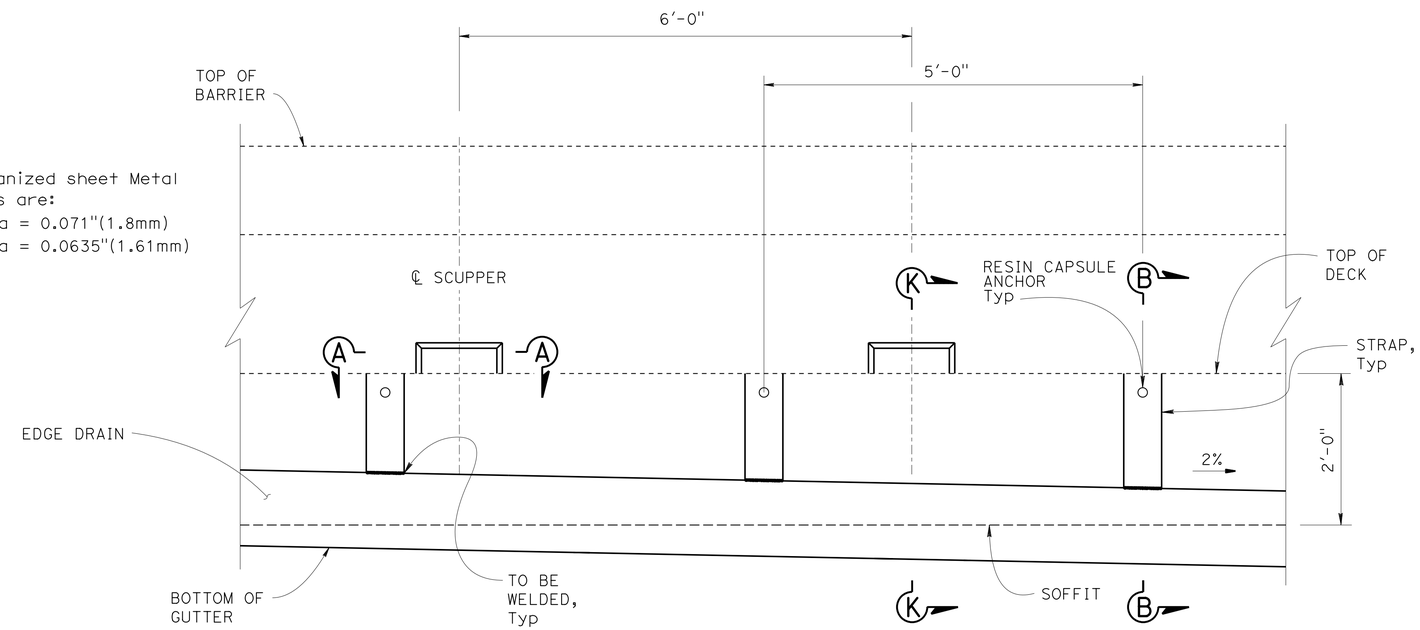

DETAIL A

NO SCALE

DESIGN	BY D. Tavatli	CHECKED J. Posey	
DETAILS	BY L. Goldthwait	CHECKED D. Tavatli	
QUANTITIES	BY D. Tavatli	CHECKED F. Fong	

STATE OF CALIFORNIA
DEPARTMENT OF TRANSPORTATION

DIVISION OF ENGINEERING SERVICES
STRUCTURE DESIGN
DESIGN BRANCH 11

BRIDGE NO. 53-3044
POST MILE 0.34

COYOTE CREEK BRIDGE (REPLACE)
DRAINAGE DETAILS NO. 2

STRUCTURES DESIGN DETAIL SHEET (ENGLISH) (REV. 09-01-10)

ORIGINAL SCALE IN INCHES FOR REDUCED PLANS 0 1 2 3

UNIT: 3587
PROJECT NUMBER & PHASE: 0715000160-1
CONTRACT NO.: 07-2159u4

DISREGARD PRINTS BEARING EARLIER REVISION DATES

REVISION DATES 8-9-11 8-02-13 9-23-13

SHEET 28 OF 40

FILE => 53-3044-s-drndt2.dgn

USERNAME => s125624 DATE PLOTTED => 28-JAN-2016 TIME PLOTTED => 11:55

DIST	COUNTY	ROUTE	POST MILES TOTAL PROJECT	SHEET No.	TOTAL SHEETS
07	LA,Ora	5	0.0/1.5, 44.3/44.4	1056	1622

REGISTERED CIVIL ENGINEER 3-18-15 DATE

1-25-16
PLANS APPROVAL DATE

REGISTERED PROFESSIONAL ENGINEER Daryoush Tavatli No. 56138 Exp. 12-31-16 CIVIL STATE OF CALIFORNIA

The State of California or its officers or agents shall not be responsible for the accuracy or completeness of electronic copies of this plan sheet.

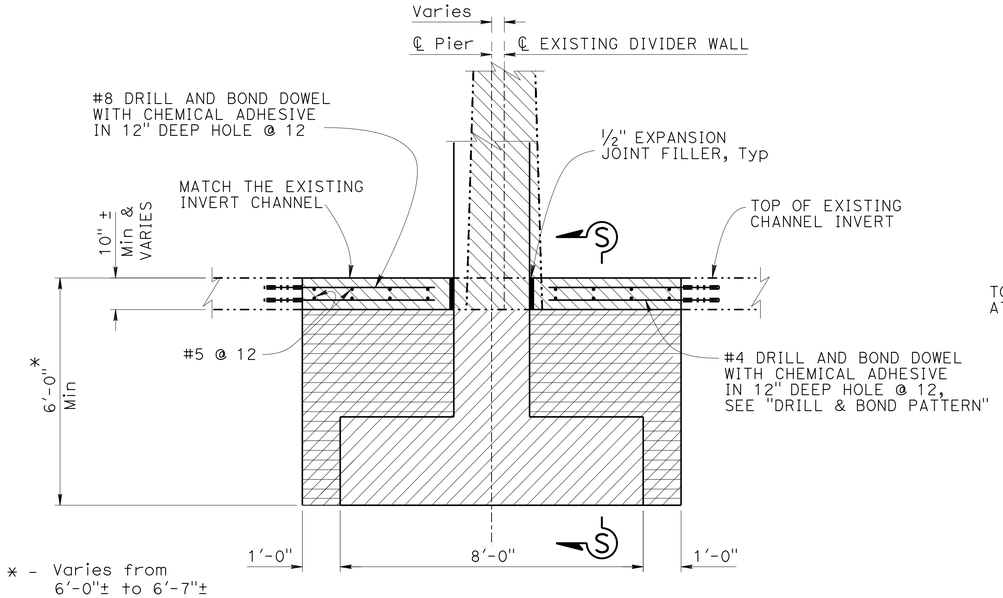

* - Varies from 6'-0"± to 6'-7"±

TYPICAL PAY LIMIT AT PIER 2 & 3
FROM Sta 442+19.75± TO Sta 443+85.60±

½" = 1'-0"

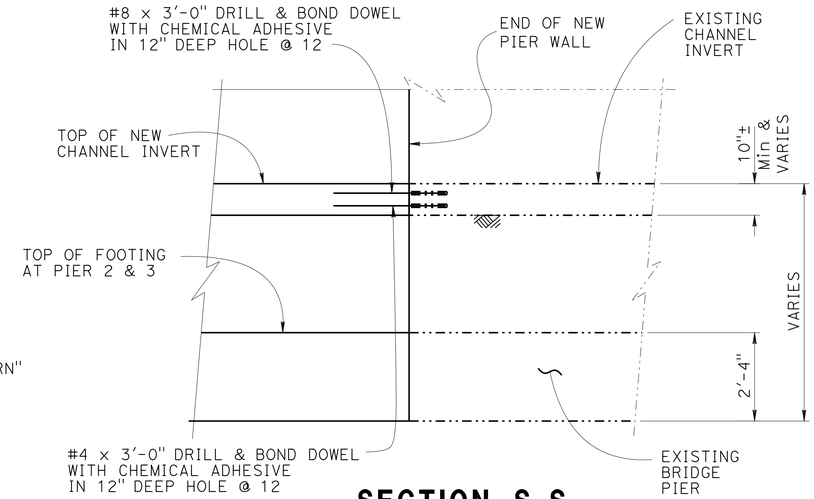

SECTION S-S

½" = 1'-0"

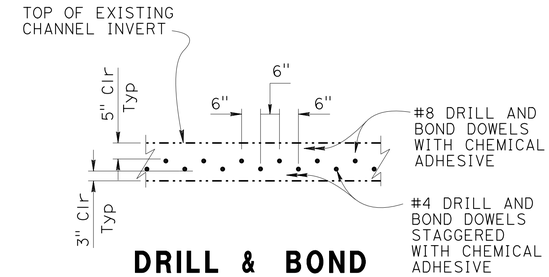

DRILL & BOND PATTERN (TYP)

½" = 1'-0"

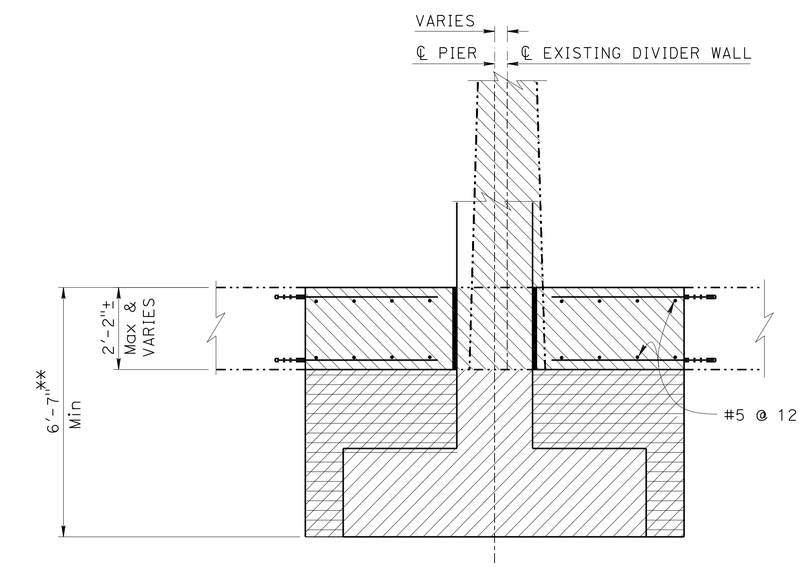

** - Varies from 6'-7"± to 7'-0"±

TYPICAL PAY LIMIT AT PIER 2 & 3
FROM Sta 443+85.60± TO Sta 444+46.21

½" = 1'-0"

NOTES:

1. For details not shown, see 'TYPICAL PAY LIMIT AT PIER 2 & 3, from 442+19.75± to 443+85.60±'
2. ALL Reinf IN CHANNEL INVERT SHALL BE PREFABRICATED EPOXY COATED.

LEGEND:

- Structure Backfill
- Structure Excavation (Type D)
- Bridge Removal

BRIDGE REMOVAL NOTES FOR PARTIAL CHANNEL WALL

Where a section of an existing structure is to be separated from a new structure, and the reinforcement is to be cut at the point of separation, the Contractor shall saw cut through the wall with a concrete saw that is approved by the Engineer. Any saw cut or irregularities in the surface of the remaining wall or joint is to be filled with an epoxy grout mixture to obtain a smooth plane. The reinforcing steel exposed by concrete removal shall be burned off 1" below the surface of the remaining concrete and the resulting voids shall be patched with epoxy. Epoxy shall be a commercial quality, two-component mixture, specially manufactured for the intended purpose, and be applied in accordance with the manufacturer's directions.

Where reinforcement is required to extend through the new joint, concrete shall be removed in the following sequence.

A. A sawcut shall be made ¾" deep at the removal limits without cutting the reinforcing steel in the remaining slab. The existing reinforcing steel shall be retained and extended into the new construction as indicated on the plans.

B. Using handheld equipment, the concrete shall be carefully removed for the full depth of the wall or slab and for a minimum distance from the saw cut equal to the longest extension of the existing bars to be extended unless otherwise shown.

C. Existing reinforcement shall be cut to the required bar extension as shown on the plans.

D. The remaining concrete may be removed by any suitable method upon approval of the Engineer.

E. No equipment in excess of H-10 (10,000 lbs) AASHTO truck loading, and no stockpiling of material will be permitted along channel within a distance of one-half wall height.

F. No equipment in excess of H-20 (40,000 lbs) AASHTO truck loading will be permitted to operate on the invert of the channel. Only rubber-tired, legally loaded equipment shall be operated on the exposed channel invert. If steel crawler type equipment is used, wooden matting shall be provided over the invert in the operating area. Loads from track vehicles shall not excess 300 psf on a surface at the bottom of the invert slab.

	BY	CHECKED
DESIGN	D. Tavatli	J. Posey
DETAILS	L. Goldthwait	D. Tavatli
QUANTITIES	D. Tavatli	F. Fong

STATE OF CALIFORNIA
DEPARTMENT OF TRANSPORTATION

DIVISION OF ENGINEERING SERVICES
STRUCTURE DESIGN
DESIGN BRANCH 11

BRIDGE NO. 53-3044
POST MILE 0.34

COYOTE CREEK BRIDGE (REPLACE)
PAY LIMITS DETAILS NO. 1

STRUCTURES DESIGN DETAIL SHEET (ENGLISH) (REV. 09-01-10)

ORIGINAL SCALE IN INCHES FOR REDUCED PLANS 0 1 2 3

UNIT: 3587
PROJECT NUMBER & PHASE: 0715000160-1
CONTRACT NO.: 07-2159U4

DISREGARD PRINTS BEARING EARLIER REVISION DATES

REVISION DATES: 4-02-12 9-28-13 9/27/13 7/29/13

SHEET 29 OF 40

FILE => 53-3044-t-misc1.dgn

USERNAME => s125624 DATE PLOTTED => 28-JAN-2016 TIME PLOTTED => 11:55

DIST	COUNTY	ROUTE	POST MILES TOTAL PROJECT	SHEET No.	TOTAL SHEETS
07	LA,Ora	5	0.0/1.5, 44.3/44.4	1057	1622

REGISTERED CIVIL ENGINEER 3-18-15 DATE

1-25-16
PLANS APPROVAL DATE

REGISTERED PROFESSIONAL ENGINEER Daryoush Tavatli No. 56138 Exp. 12-31-16 CIVIL STATE OF CALIFORNIA

The State of California or its officers or agents shall not be responsible for the accuracy or completeness of electronic copies of this plan sheet.

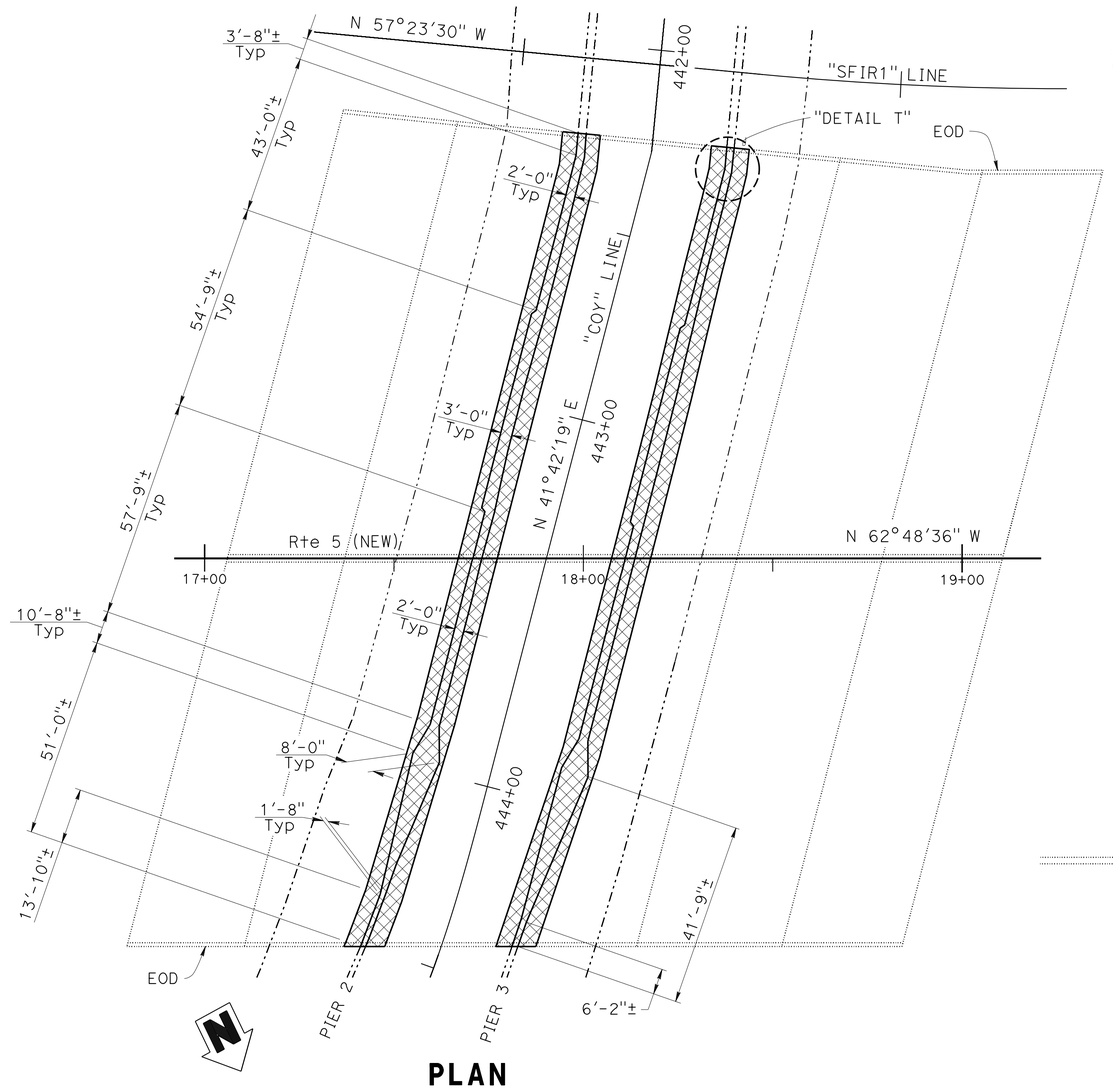

PLAN

NO SCALE

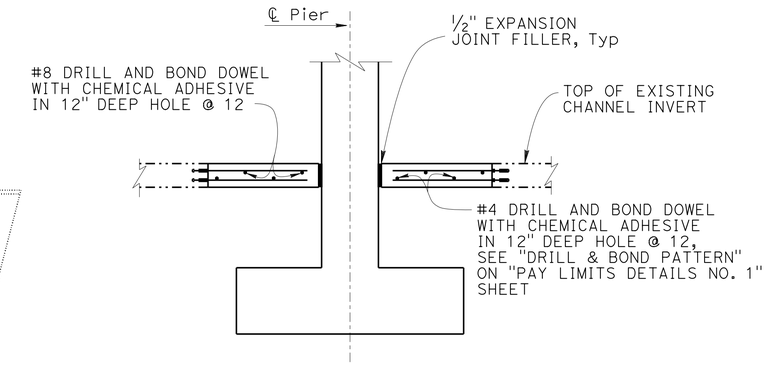

SECTION M-M

NO SCALE

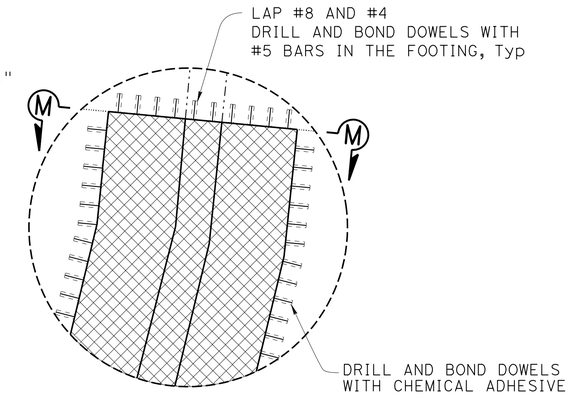

DETAIL T

NO SCALE

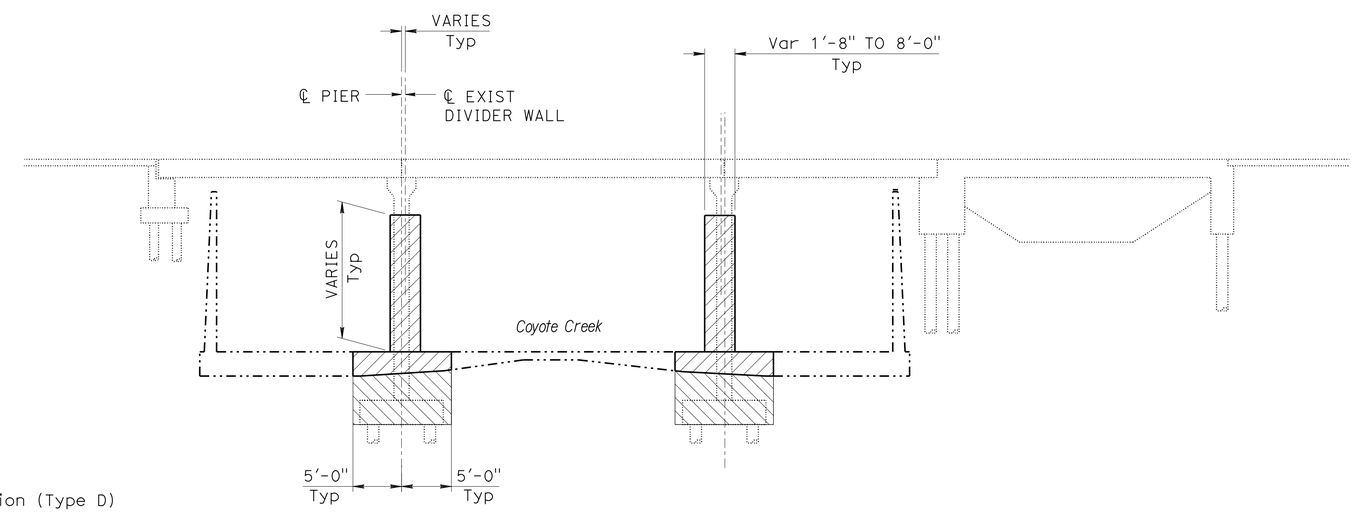

ELEVATION

NO SCALE

LEGEND

Bridge Removal

Structure Excavation (Type D)

NOTE:
THE CONTRACTOR SHALL VERIFY ALL CONTROLLING FIELD DIMENSIONS BEFORE ORDERING OR FABRICATING ANY MATERIAL.

	BY	CHECKED
DESIGN	D. Tavatli	J. Posey
DETAILS	P. Tong	D. Tavatli
QUANTITIES	D. Tavatli	F. Fong

STATE OF CALIFORNIA
DEPARTMENT OF TRANSPORTATION

DIVISION OF ENGINEERING SERVICES
STRUCTURE DESIGN
DESIGN BRANCH 11

BRIDGE NO. 53-3044
POST MILE 0.34

COYOTE CREEK BRIDGE (REPLACE)
PAY LIMITS DETAILS NO. 2

STRUCTURES DESIGN DETAIL SHEET (ENGLISH) (REV. 09-01-10)

ORIGINAL SCALE IN INCHES FOR REDUCED PLANS 0 1 2 3

UNIT: 3587
PROJECT NUMBER & PHASE: 0715000160-1
CONTRACT NO.: 07-2159u4

DISREGARD PRINTS BEARING EARLIER REVISION DATES

REVISION DATES: 3-18-15

SHEET 30 OF 40

FILE => 53-3044-t-misc2.dgn

USERNAME => s125624 DATE PLOTTED => 28-JAN-2016 TIME PLOTTED => 11:55

DIST	COUNTY	ROUTE	POST MILES TOTAL PROJECT	SHEET No.	TOTAL SHEETS
07	LA,Ora	5	0.0/1.5, 44.3/44.4	1058	1622

REGISTERED CIVIL ENGINEER 3-18-15 DATE

1-25-16
PLANS APPROVAL DATE

REGISTERED PROFESSIONAL ENGINEER DARYOUSH TAVATLI No. 56183 Exp. 12-31-16 CIVIL STATE OF CALIFORNIA

The State of California or its officers or agents shall not be responsible for the accuracy or completeness of scanned copies of this plan sheet.

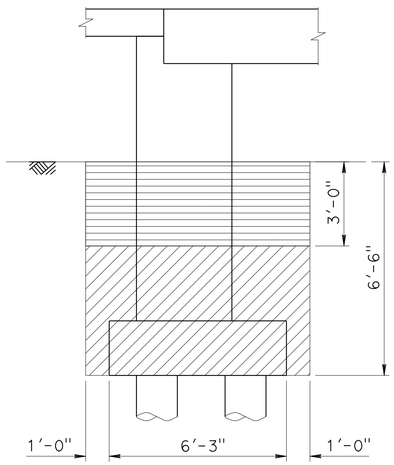

ADL EXCAVATION TYPE Y-2
ABUTMENT 1

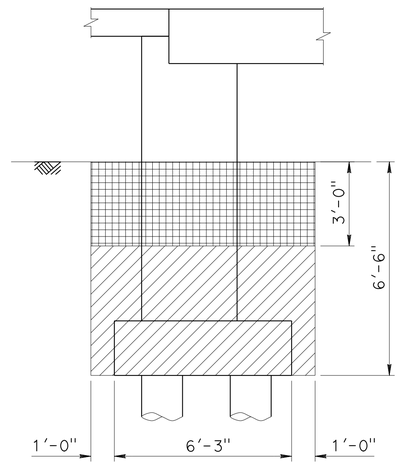

ADL EXCAVATION TYPE Y-1
ABUTMENT 1

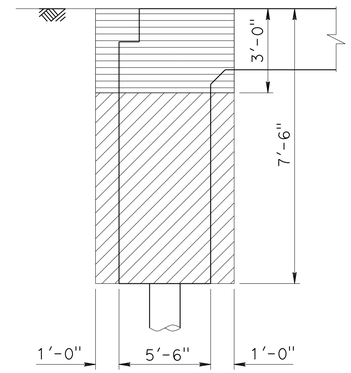

ADL EXCAVATION TYPE Y-2
ABUTMENT 5

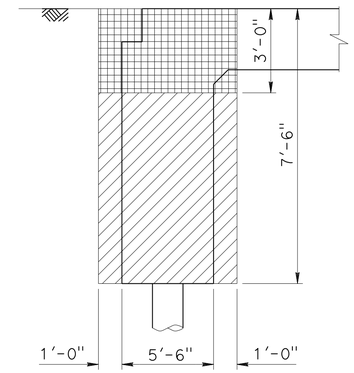

ADL EXCAVATION TYPE Y-1
ABUTMENT 5

LEGEND:

- STRUCTURE EXCAVATION (TYPE Y-1)
- STRUCTURE EXCAVATION (TYPE Y-2)
- STRUCTURAL EXCAVATION

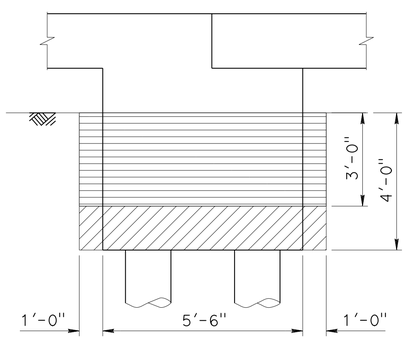

ADL EXCAVATION TYPE Y-2
ABUTMENT 4

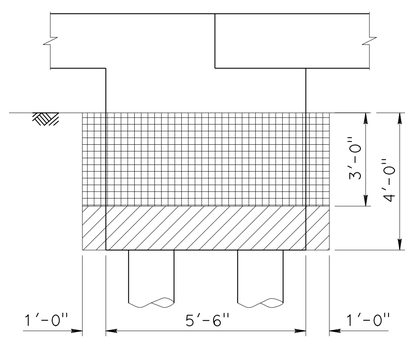

ADL EXCAVATION TYPE Y-1
ABUTMENT 4

LIMITS OF STRUCTURE EXCAVATION AERIALLY DEPOSITED LEAD

NO SCALE

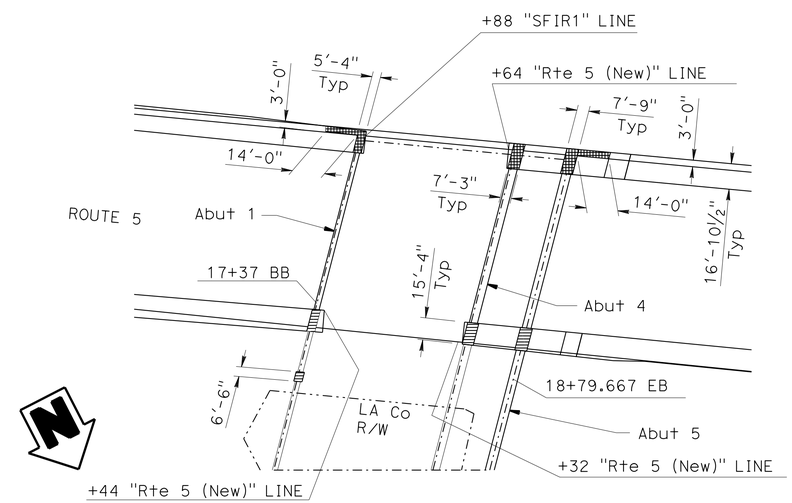

PLAN

AERIALLY DEPOSITED LEAD LOCATION

NO SCALE

DESIGN	BY D. Tavatli	CHECKED J. Posey	
DETAILS	BY B. Huddleston	CHECKED D. Tavatli	
QUANTITIES	BY D. Tavatli	CHECKED F. Fong	

STATE OF CALIFORNIA
DEPARTMENT OF TRANSPORTATION

DIVISION OF ENGINEERING SERVICES
STRUCTURE DESIGN
DESIGN BRANCH 11

BRIDGE NO. 53-3044
POST MILE 0.34

COYOTE CREEK BRIDGE (REPLACE)

AERIALLY DEPOSITED LEAD EXCAVATION LIMITS

STRUCTURES DESIGN DETAIL SHEET (ENGLISH) (REV. 09-01-10)

ORIGINAL SCALE IN INCHES FOR REDUCED PLANS 0 1 2 3

UNIT: 3587
PROJECT NUMBER & PHASE: 0715000160-1
CONTRACT NO.: 07-2159u4

DISREGARD PRINTS BEARING EARLIER REVISION DATES

REVISION DATES 9-2-13 10/3/13

SHEET 31 OF 40

FILE => 53-3044-u-excav.dgn

USERNAME => s123624 DATE PLOTTED => 28-JAN-2016 TIME PLOTTED => 11:55

DIST	COUNTY	ROUTE	POST MILES TOTAL PROJECT	SHEET No.	TOTAL SHEETS
07	LA,Ora	5	0.0/1.5, 44.3/44.4	1059	1622

REGISTERED CIVIL ENGINEER 3-18-15 DATE

1-25-16
PLANS APPROVAL DATE

REGISTERED PROFESSIONAL ENGINEER Daryoush Tavatli No. 56138 Exp. 12-31-16 CIVIL STATE OF CALIFORNIA

The State of California or its officers or agents shall not be responsible for the accuracy or completeness of electronic copies of this plan sheet.

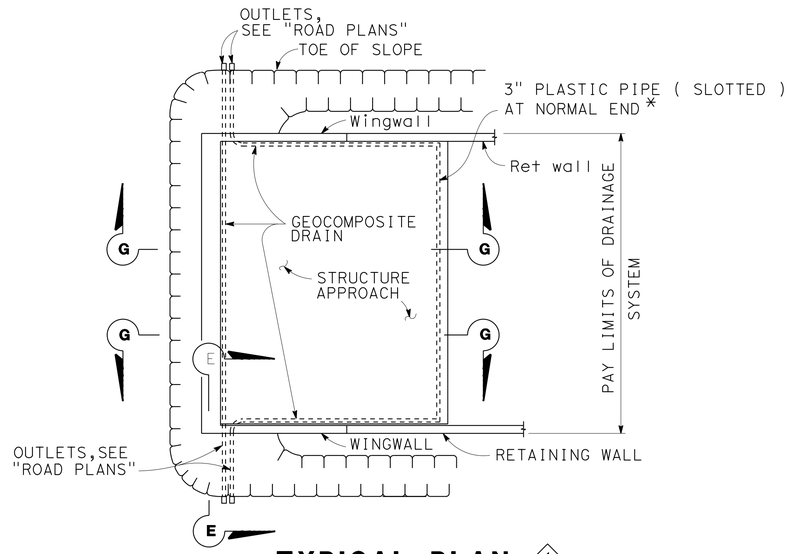

TYPICAL PLAN (1)

1" = 10'

*For pipe layout at staggered end, see "Detail B".

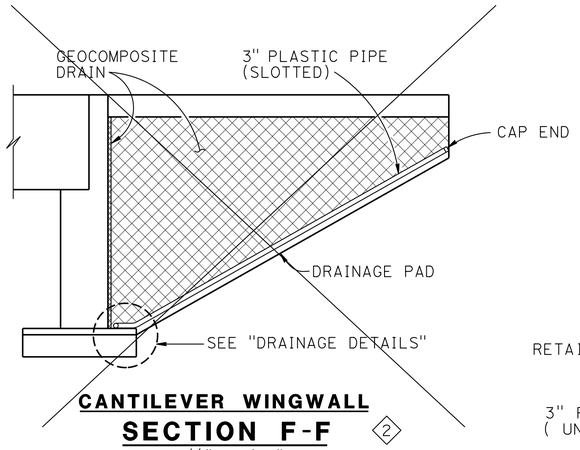

CANTILEVER WINGWALL SECTION F-F (2)

1/4" = 1'-0"

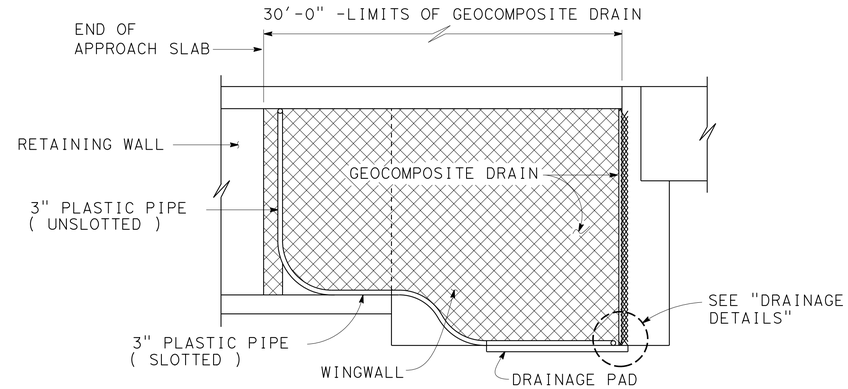

RETAINING WALL WINGWALL SECTION G-G (1)

1/4" = 1'-0"

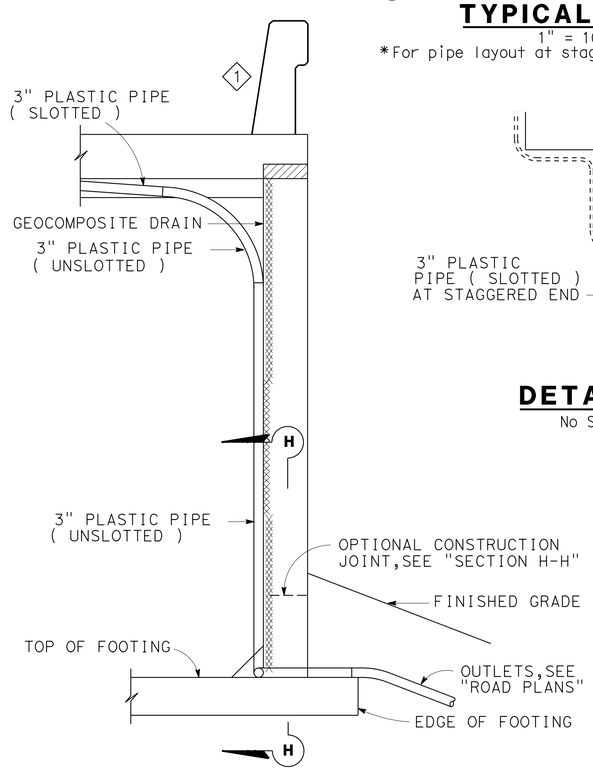

SECTION E-E

1/2" = 1'-0"

NOTE: Bends and junctions in 3" plastic pipe are 30" radius min.

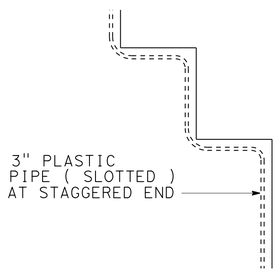

DETAIL B

No Scale

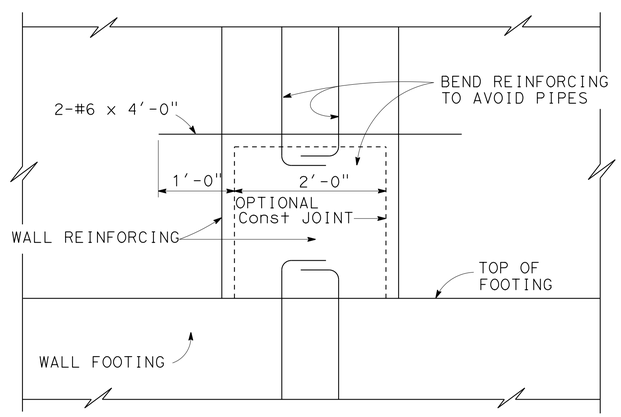

SECTION H-H

1" = 1'-0"

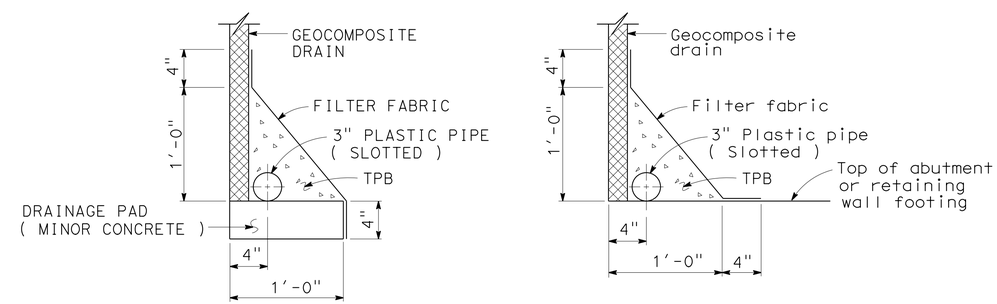

WITHOUT FOOTING **WITH FOOTING**

DRAINAGE DETAILS

1 1/2" = 1'-0"

STANDARD DRAWING

FILE NO. xs3-110e

APPROVAL DATE Revised

(1) Revised Detail
(2) Deleted Detail

STATE OF CALIFORNIA DEPARTMENT OF TRANSPORTATION

DIVISION OF ENGINEERING SERVICES

BRIDGE NO. 53-3044
POST MILE 0.34

SPECIAL DETAIL
COYOTE CREEK BRIDGE (REPLACE)
STRUCTURE APPROACH DRAINAGE DETAILS

DS OSD 2147A (ENGLISH STANDARD DRAWING "XS" BORDER REV. (02-02-11)

ORIGINAL SCALE IN INCHES FOR REDUCED PLANS 0 1 2 3

UNIT: 3587
PROJECT NUMBER & PHASE: 0715000160-1
CONTRACT NO.: 07-2159U4

DISREGARD PRINTS BEARING EARLIER REVISION DATES

REVISION DATES 4-02-12 06-14-12 8-02-13 9-23-13

SHEET 32 OF 40

FILE => 53-3044-w-sadd.dgn

USERNAME => s125624 DATE PLOTTED => 28-JAN-2016 TIME PLOTTED => 11:55

DIST	COUNTY	ROUTE	POST MILES TOTAL PROJECT	SHEET No.	TOTAL SHEETS
07	LA,Ora	5	0.0/1.5, 44.3/44.4	1060	1622

REGISTERED CIVIL ENGINEER 2-23-15 DATE

1-25-16
PLANS APPROVAL DATE

REGISTERED PROFESSIONAL ENGINEER Daryoush Tavatli No. 56138 Exp. 12-31-16 CIVIL STATE OF CALIFORNIA

The State of California or its officers or agents shall not be responsible for the accuracy or completeness of electronic copies of this plan sheet.

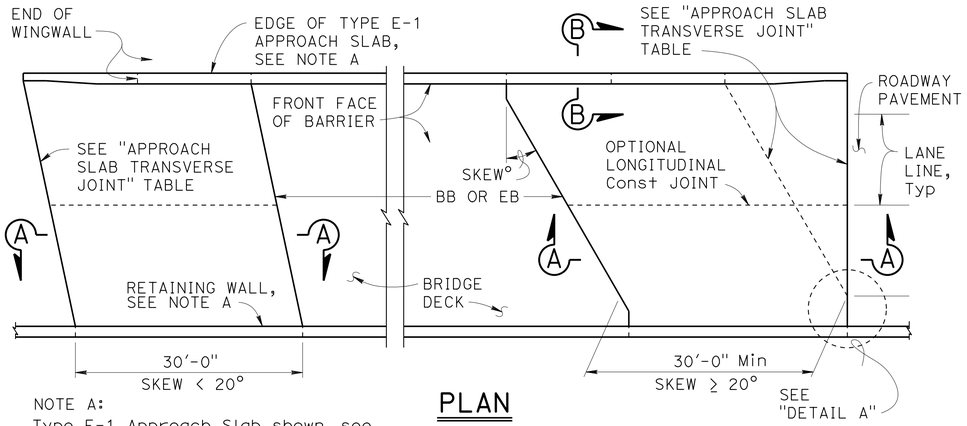

NOTE A:
Type E-1 Approach Slab shown, see "SECTION B-B" for Type E-2 details.

PLAN
1" = 10'

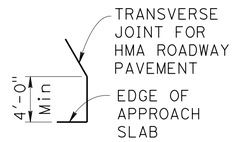

DETAIL A
No Scale

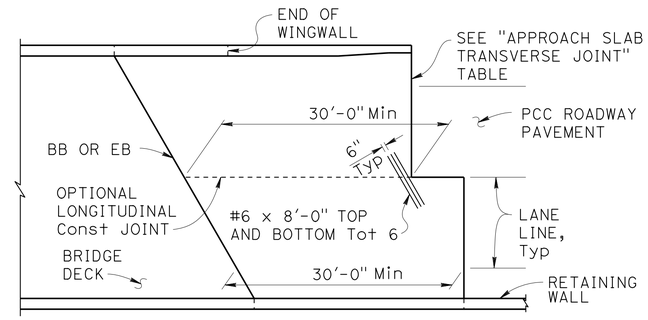

END STAGGER DETAIL
1" = 10'

APPROACH SLAB TRANSVERSE JOINT		
APPROACH SKEW	WITH HMA ROADWAY PAVEMENT	WITH PCC ROADWAY PAVEMENT
< 20°	PARALLEL TO BB OR EB	PARALLEL TO BB OR EB
20° - 45°	PARALLEL TO BB OR EB USE "DETAIL A"	STAGGER AT LANE LINES 24' TO 36' APART, SEE "END STAGGER DETAIL"
> 45°	PARALLEL TO BB OR EB USE "DETAIL A"	STAGGER AT EACH LANE LINE, SEE "END STAGGER DETAIL"

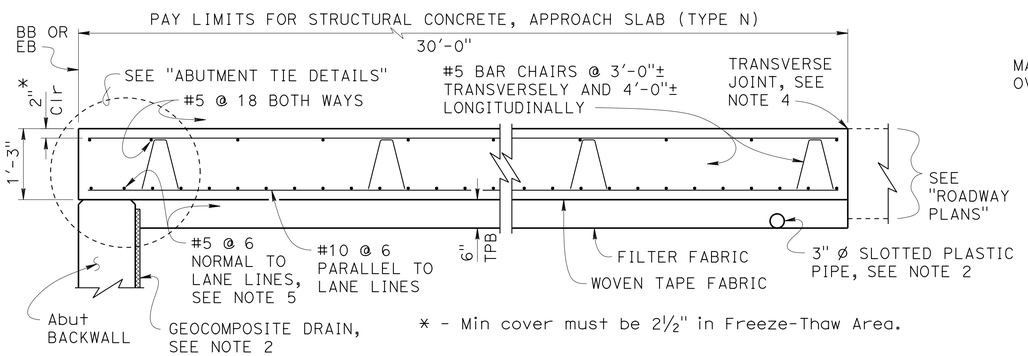

* - Min cover must be 2½" in Freeze-Thaw Area.

SECTION A-A
¾" = 1'-0"

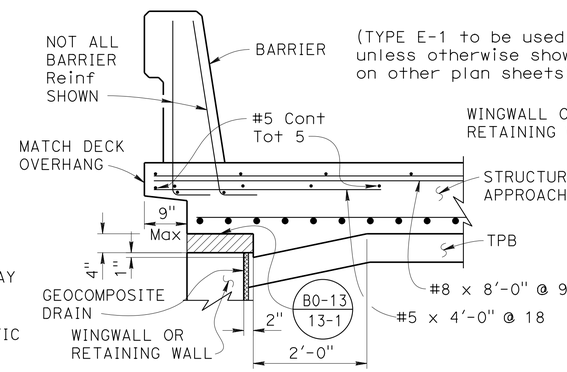

TYPE E-1

Indicates Expanded Polystyrene, remove after concrete is placed.

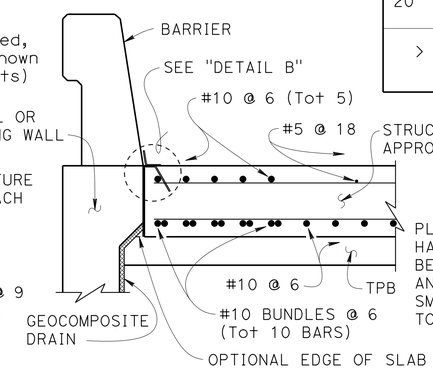

TYPE E-2

SECTION B-B
¾" = 1'-0"

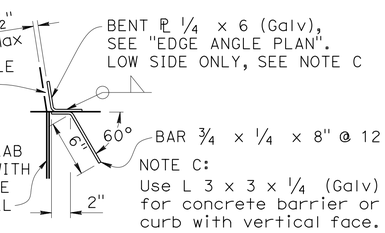

DETAIL B
1½" = 1'-0"

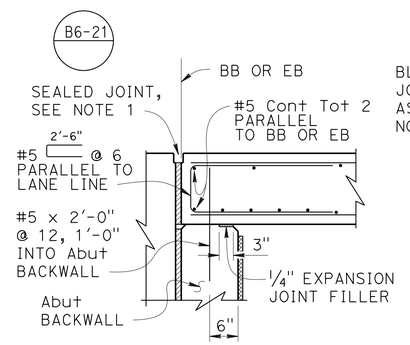

MR ≤ 2"

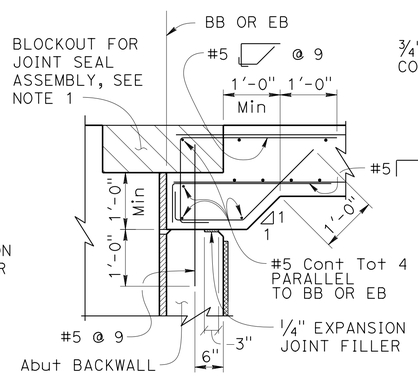

MR > 2"

ABUTMENT TIE DETAILS
¾" = 1'-0"

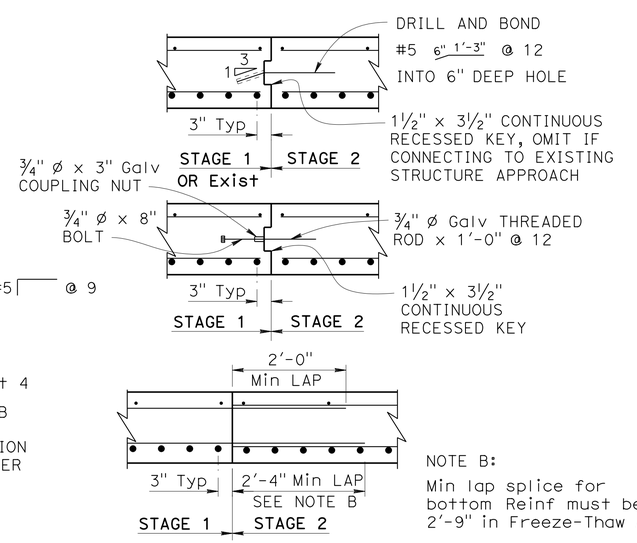

NOTE B:
Min lap splice for bottom Reinf must be 2'-9" in Freeze-Thaw Area.

LONGITUDINAL CONSTRUCTION JOINT ALTERNATIVES
¾" = 1'-0"

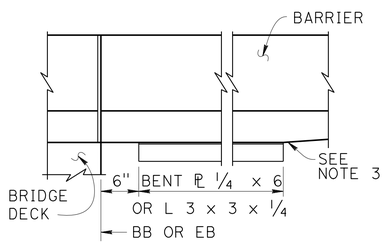

EDGE ANGLE PLAN
1" = 1'-0"

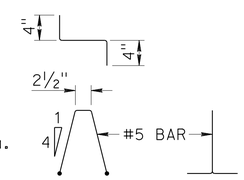

BAR CHAIR DETAIL
1" = 1'-0"

DESIGN NOTES

DESIGN: AASHTO LRFD Bridge Design Specifications, 2012 Edition with Caltrans Amendments, preface dated January 2014

LIMIT STATES: Service I, Strength I & II, Extreme II and Fatigue I (γ_{FAT} = 1.0)

DEAD LOAD: Includes 35 psf for future wearing surface

LIVE LOAD: HL93 and permit design load
Equivalent strip width method: W_1 = 12 ft
Slab span: L_1 = 24.5 ft

REINFORCED CONCRETE:
f_y = 60 ksi
f'_c = 3.6 ksi
n = 8

NOTES:

1. For joint protection details, blockout dimensions for joint seal assembly, and other details not shown, see other plan sheets. For MR ≤ 2", adjust reinforcement to clear sawcut for sealed joint. For MR > 2", haunch reinforcement placed for joint seal assembly blockout must be normal to BB or EB and spaced to avoid joint seal assembly anchorage.
2. For drainage details, see "STRUCTURE APPROACH DRAINAGE DETAILS" sheet.
3. End the plate or edge angle at beginning of barrier transition, end of wingwall, or end of structure approach as applicable.
4. Transverse Joint must be a minimum of 5'-0" from an existing or constructed weakened plane joint in approach PCC roadway pavement. Refer to Standard Plans P10 and P14.
5. At the Contractor's option, approach slab transverse reinforcement may be placed parallel to BB or EB. Spacing of transverse reinforcement is measured along ℄ roadway.

STANDARD DRAWING
FILE NO. xs3-120
APPROVAL DATE January 2015

STATE OF CALIFORNIA
DEPARTMENT OF TRANSPORTATION

DIVISION OF ENGINEERING SERVICES

BRIDGE NO. 53-3044
POST MILE 0.34

COYOTE CREEK BRIDGE (REPLACE)
STRUCTURE APPROACH TYPE N (30S)

DS OSD 2147A (ENGLISH STANDARD DRAWING "XS" BORDER REV. (10-01-14)

ORIGINAL SCALE IN INCHES FOR REDUCED PLANS 0 1 2 3

UNIT: 3587
PROJECT NUMBER & PHASE: 0715000160-1
CONTRACT NO.: 07-2159u4

DISREGARD PRINTS BEARING EARLIER REVISION DATES

REVISION DATES 4-1-12 06-11-12 9-23-13 2-23-15

SHEET 33 OF 40

FILE => 53-3044-x-sa.dgn

USERNAME => s125624 DATE PLOTTED => 28-JAN-2016 TIME PLOTTED => 11:55

DIST	COUNTY	ROUTE	POST MILES TOTAL PROJECT	SHEET No.	TOTAL SHEETS
07	LA,Ora	5	0.0/1.5, 44.3/44.4	1061	1622

REGISTERED CIVIL ENGINEER 2-23-15 DATE

1-25-16
PLANS APPROVAL DATE

REGISTERED PROFESSIONAL ENGINEER Daryoush Tavatli No. 56138 Exp. 12-31-16 CIVIL STATE OF CALIFORNIA

The State of California or its officers or agents shall not be responsible for the accuracy or completeness of electronic copies of this plan sheet.

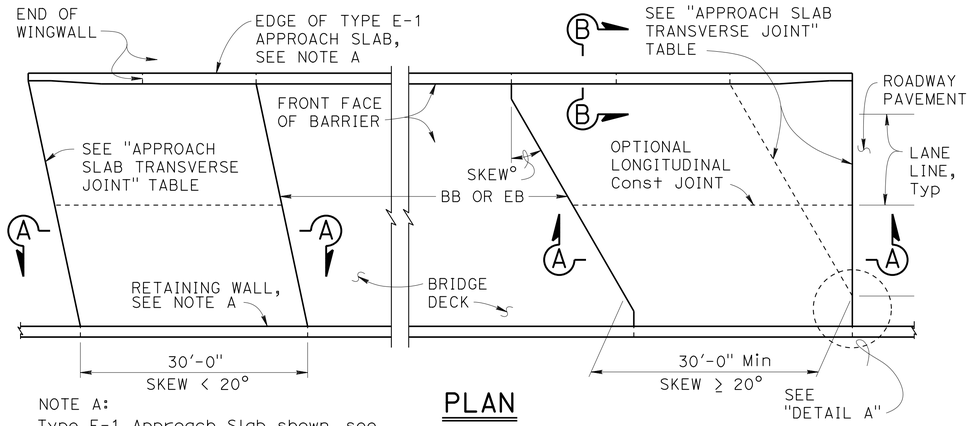

NOTE A:
Type E-1 Approach Slab shown, see "SECTION B-B" for Type E-2 details.

PLAN
1" = 10'

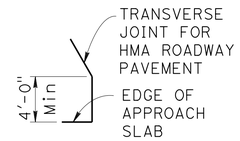

DETAIL A
No Scale

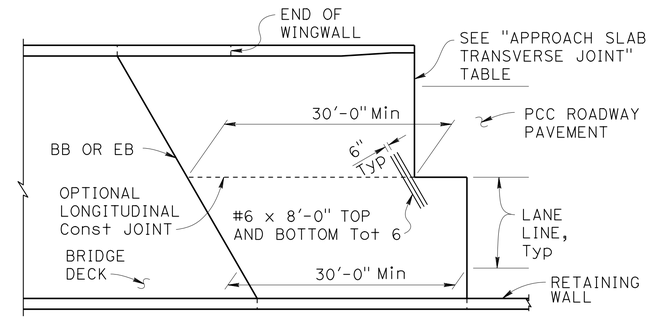

END STAGGER DETAIL
1" = 10'

APPROACH SLAB TRANSVERSE JOINT		
APPROACH SKEW	WITH HMA ROADWAY PAVEMENT	WITH PCC ROADWAY PAVEMENT
< 20°	PARALLEL TO BB OR EB	PARALLEL TO BB OR EB
20° - 45°	PARALLEL TO BB OR EB USE "DETAIL A"	STAGGER AT LANE LINES 24' TO 36' APART, SEE "END STAGGER DETAIL"
> 45°	PARALLEL TO BB OR EB USE "DETAIL A"	STAGGER AT EACH LANE LINE, SEE "END STAGGER DETAIL"

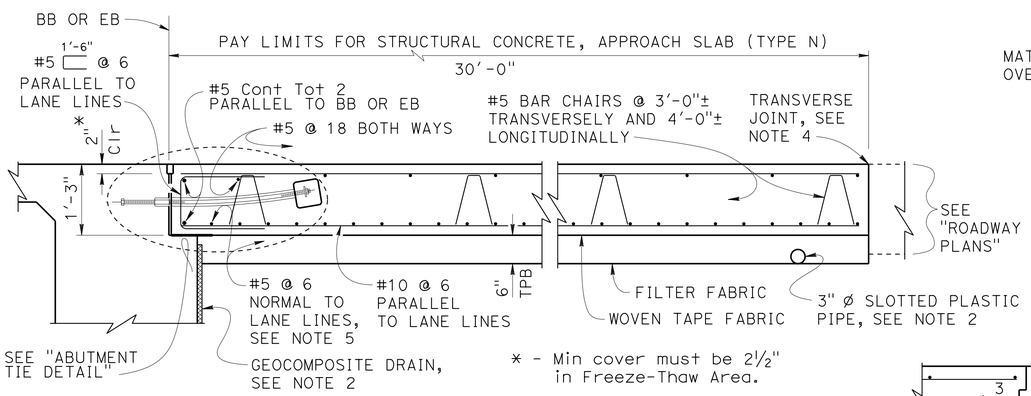

* - Min cover must be 2½" in Freeze-Thaw Area.

SECTION A-A
¾" = 1'-0"

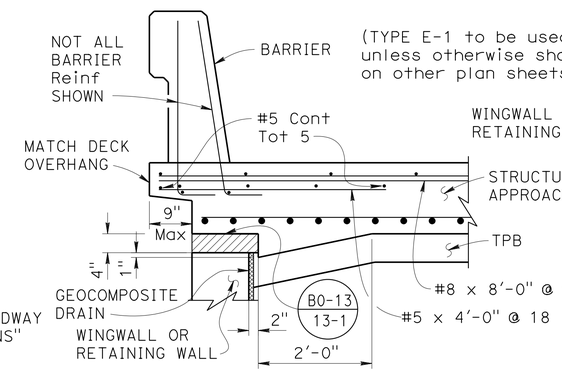

TYPE E-1

Indicates Expanded Polystyrene, remove after concrete is placed.

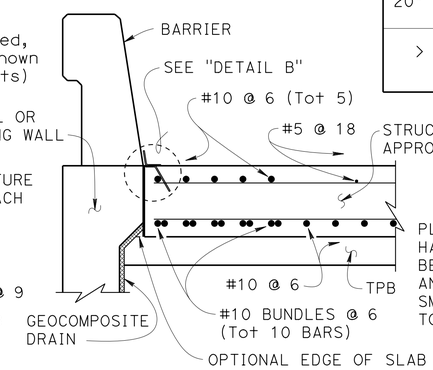

TYPE E-2

SECTION B-B
¾" = 1'-0"

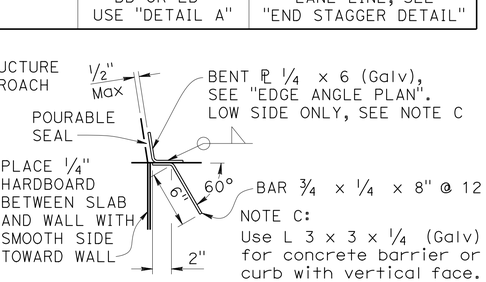

NOTE C:
Use L 3 x 3 x ¼ (Galv) for concrete barrier or curb with vertical face.

DETAIL B
1½" = 1'-0"

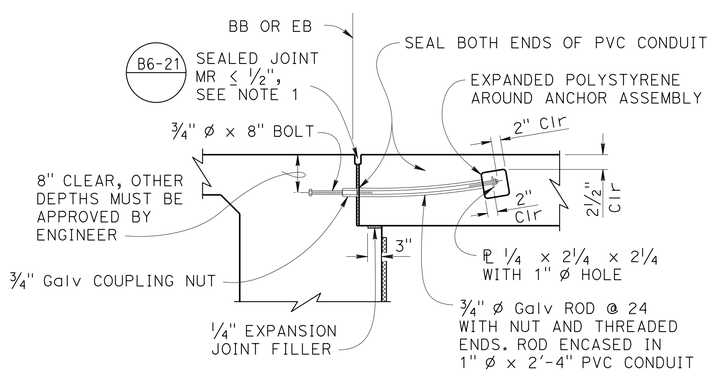

ABUTMENT TIE DETAILS
¾" = 1'-0"

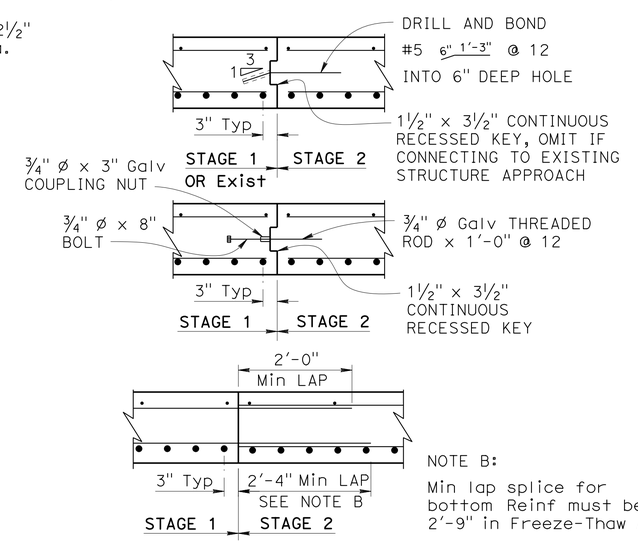

NOTE B:
Min lap splice for bottom Reinf must be 2'-9" in Freeze-Thaw Area.

LONGITUDINAL CONSTRUCTION JOINT ALTERNATIVES
¾" = 1'-0"

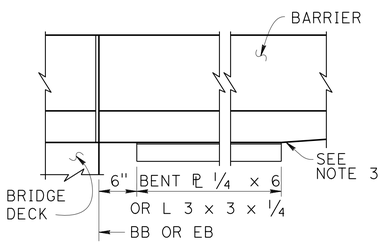

EDGE ANGLE PLAN
1" = 1'-0"

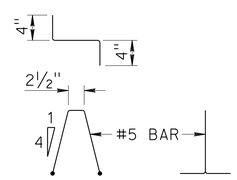

BAR CHAIR DETAIL
1" = 1'-0"

DESIGN NOTES

DESIGN: AASHTO LRFD Bridge Design Specifications, 2012 Edition with Caltrans Amendments, preface dated January 2014

LIMIT STATES: Service I, Strength I & II, Extreme II and Fatigue I (γ_{FAT} = 1.0)

DEAD LOAD: Includes 35 psf for future wearing surface

LIVE LOAD: HL93 and permit design load
Equivalent strip width method: W_1 = 12 ft
Slab span: L_1 = 24.5 ft

REINFORCED CONCRETE:
f_y = 60 ksi
f'_c = 3.6 ksi
n = 8

NOTES:

1. For details not shown, see other plan sheets. Adjust reinforcement to clear sawcut for sealed joint.
2. For drainage details, see "STRUCTURE APPROACH DRAINAGE DETAILS" sheet.
3. End the plate or edge angle at beginning of barrier transition, end of wingwall, or end of structure approach as applicable.
4. Transverse Joint must be a minimum of 5'-0" from an existing or constructed weakened plane joint in approach PCC roadway pavement. Refer to Standard Plans P10 and P14.
5. At the Contractor's option, approach slab transverse reinforcement may be placed parallel to BB or EB. Spacing of transverse reinforcement is measured along ℄ roadway.

STANDARD DRAWING
FILE NO. xs3-140
APPROVAL DATE January 2015

STATE OF CALIFORNIA
DEPARTMENT OF TRANSPORTATION

DIVISION OF ENGINEERING SERVICES

BRIDGE NO. 53-3044
POST MILE 0.34

COYOTE CREEK BRIDGE (REPLACE)
STRUCTURE APPROACH TYPE N (30D)

DS OSD 2147A (ENGLISH STANDARD DRAWING "XS" BORDER REV. (10-01-14)

ORIGINAL SCALE IN INCHES FOR REDUCED PLANS 0 1 2 3

UNIT: 3587
PROJECT NUMBER & PHASE: 0715000160-1
CONTRACT NO.: 07-2159u4

DISREGARD PRINTS BEARING EARLIER REVISION DATES

REVISION DATES 2-23-15

SHEET 34 OF 40

FILE => 53-3044-x-sa2.dgn

USERNAME => s125624 DATE PLOTTED => 28-JAN-2016 TIME PLOTTED => 11:55

DIST	COUNTY	ROUTE	POST MILES TOTAL PROJECT	SHEET No.	TOTAL SHEETS
07	LA,Ora	5	0.0/1.5, 44.3/44.4	1062	1622

REGISTERED CIVIL ENGINEER 3-18-15 DATE

1-25-16
PLANS APPROVAL DATE

REGISTERED PROFESSIONAL ENGINEER
DARYOUSH TAVATLI
No. 56183
Exp. 12-31-16
CIVIL
STATE OF CALIFORNIA

The State of California or its officers or agents shall not be responsible for the accuracy or completeness of scanned copies of this plan sheet.

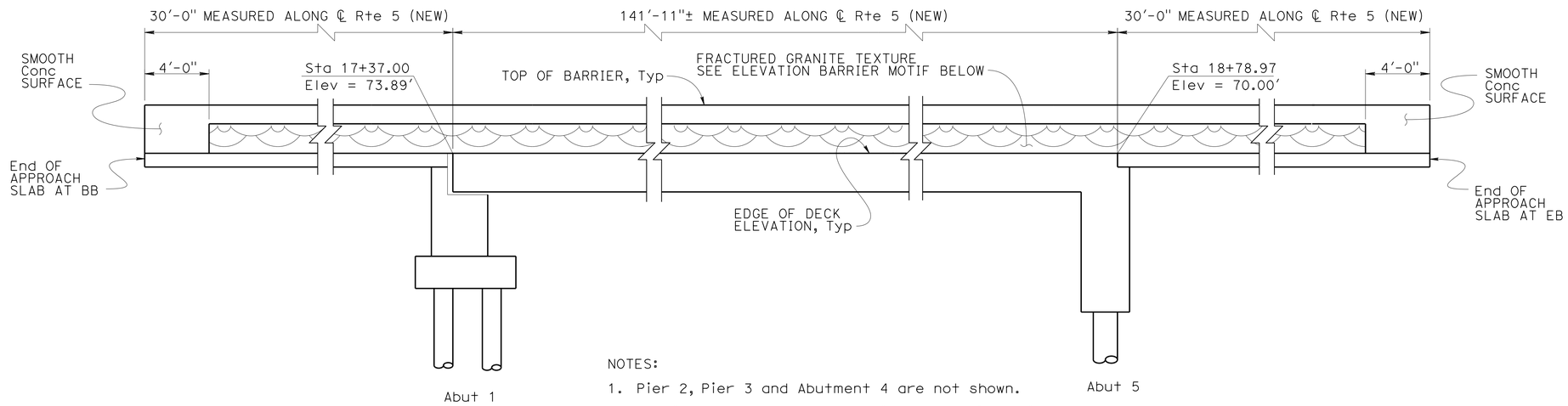

NOTES:

1. Pier 2, Pier 3 and Abutment 4 are not shown.
2. Architectural treatment applies to barrier rail on left side of bridge only.

MIRROR ELEVATION

1/4" = 1'-0"

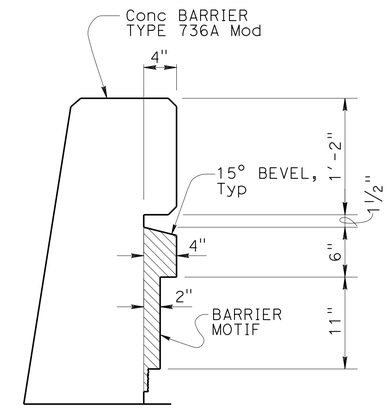

SECTION D-D

1" = 1'-0"

NOTE:

All surface relief and texture shall be measured from RW LOL, Typ

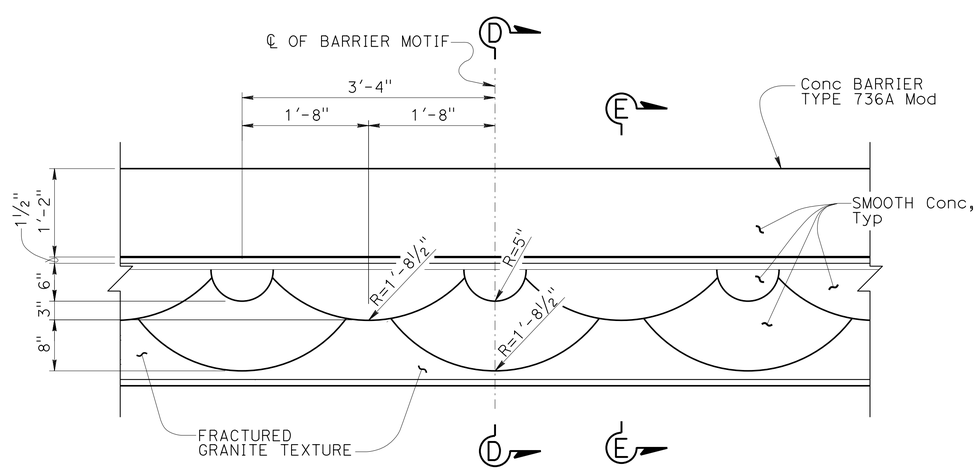

ELEVATION - BARRIER MOTIF

NO SCALE

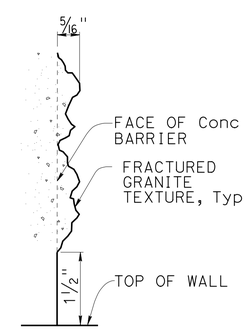

DETAIL D

NO SCALE

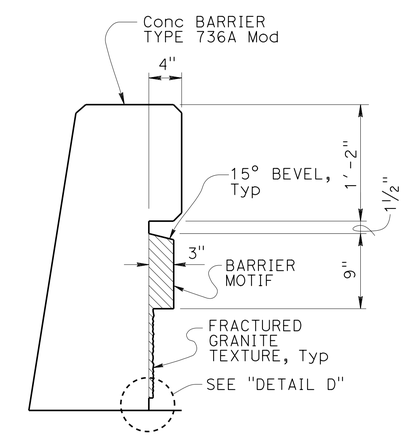

SECTION E-E

1" = 1'-0"

DESIGN	BY H. Javier Chavez	CHECKED Issac Tasabia	
DETAILS	BY Anthony Valdez	CHECKED Daryoush Tavatli	
QUANTITIES	BY Daryoush Tavatli	CHECKED F. Fong	

STATE OF CALIFORNIA
DEPARTMENT OF TRANSPORTATION

DIVISION OF ENGINEERING SERVICES
STRUCTURE DESIGN
DESIGN BRANCH 11

BRIDGE NO. 53-3044
POST MILE 0.34

COYOTE CREEK BRIDGE (REPLACE)
ARCHITECTURAL TREATMENT DETAILS

STRUCTURES DESIGN DETAIL SHEET (ENGLISH) (REV. 09-01-10)

ORIGINAL SCALE IN INCHES FOR REDUCED PLANS 0 1 2 3

UNIT: 3587
PROJECT NUMBER & PHASE: 0715000160-1
CONTRACT NO.: 07-2159U4

DISREGARD PRINTS BEARING EARLIER REVISION DATES

REVISION DATES: 07-02-13 8-01-13 9-27-13

SHEET 35 OF 40

FILE => 53-3044-y-arch.dgn

USERNAME => s129624 DATE PLOTTED => 28-JAN-2016 TIME PLOTTED => 11:55

BENCH MARK

GPS 0886
Elevation 68.842 ft
FOUND 3-1/2 INCH BRONZE REFERENCE MARK DISK IN HEADWALL, FLUSH, STAMPED "BUENA NO.2 1963". THE MARK IS LOCATED ON THE SOUTHERLY HEADWALL OF THE EAST FORK COYOTE CREEK ALONG FIRESTONE BLVD., 0.2 MI NORTHWESTERLY OF KNOTT AVE.
NORTHING 551827.270
EASTING 1998479.842
DATUM NAVD88

DIST	COUNTY	ROUTE	POST MILES TOTAL PROJECT	SHEET No.	TOTAL SHEETS
07	LA,Ora	5	0.0/1.5, 44.3/44.4	1063	1622

REGISTERED CIVIL ENGINEER 05/20/15 DATE

1-25-16
PLANS APPROVAL DATE

URS CORPORATION
2020 EAST FIRST STREET, SUITE 400
SANTA ANA, CA 92705

The State of California or its officers or agents shall not be responsible for the accuracy or completeness of electronic copies of this plan sheet.

REGISTERED PROFESSIONAL ENGINEER MICHAEL G. SMITH No. 2229 Exp. 03/31/16 GEOTECHNICAL STATE OF CALIFORNIA

1-This LOTB sheet was prepared in accordance with the Caltrans Soil & Rock Logging, Classification, & Presentation Manual (2010 Edition).
2-For protection of underground utility lines, hand-auger was used to remove top 5 to 10 feet of subsurface material for exploratory borings and Cone Penetration Testings.
3-2.5" to 1.4" blow counts conversion factors for fine-grain and coarse-grain soils have been 0.8 and 0.55, respectively.

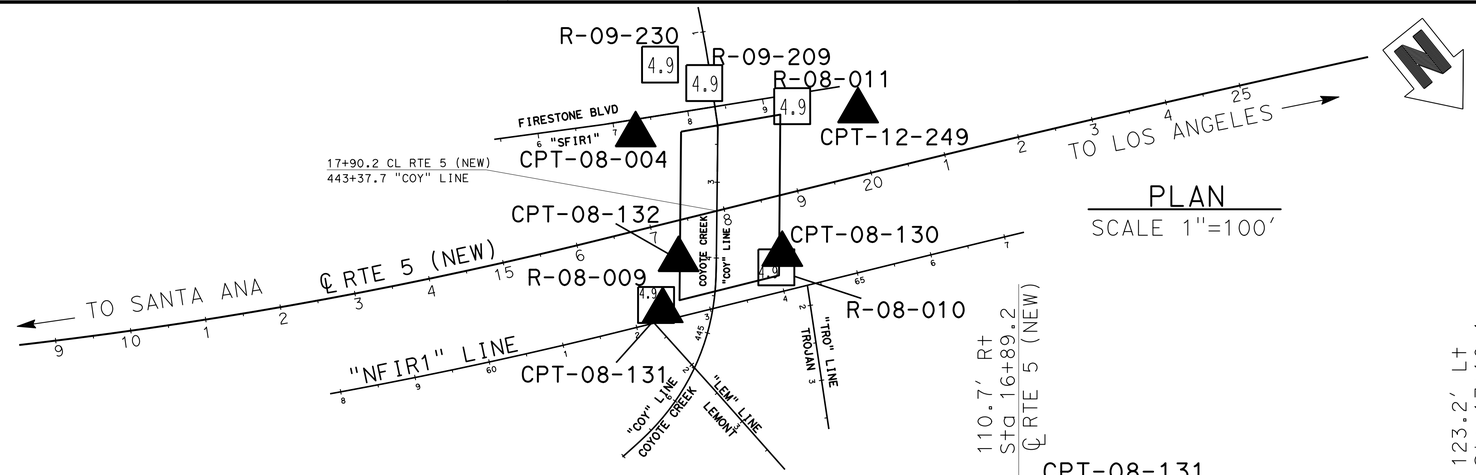

PLAN
SCALE 1"=100'

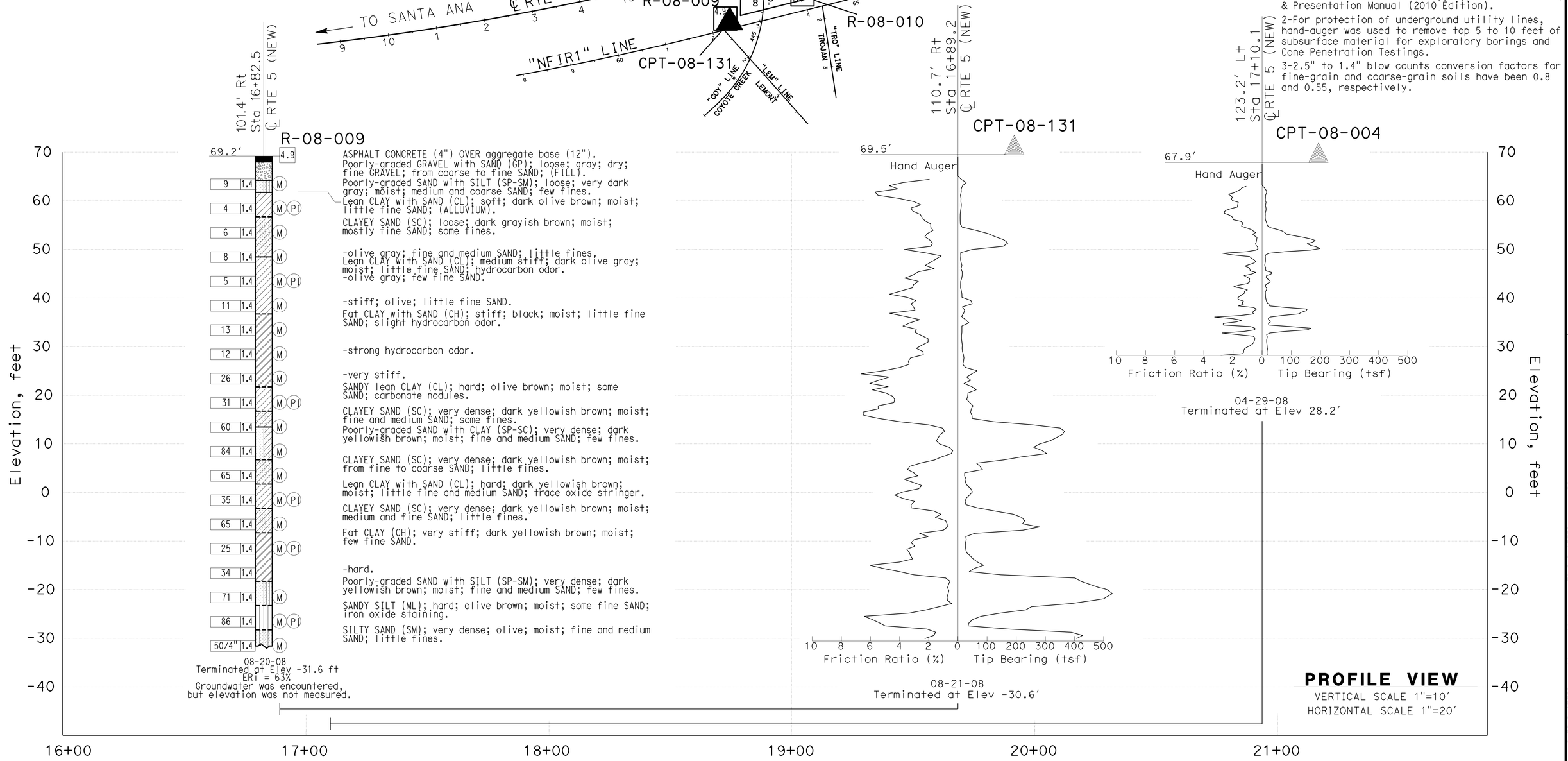

PROFILE VIEW
VERTICAL SCALE 1"=10'
HORIZONTAL SCALE 1"=20'

F.MOTAMED	DRAWN BY	T.PANAH	D.ORRIS
DESIGN OVERSIGHT			FIELD INVESTIGATION BY:
05/20/15	CHECKED BY	A.GHAZINOOR/L.KHALKHALI	DATE: 08/20/08 - 08/21/08
SIGN OFF DATE			

PREPARED FOR THE STATE OF CALIFORNIA DEPARTMENT OF TRANSPORTATION

M.G. SMITH
PROJECT ENGINEER

BRIDGE NO. 53-3044
POST MILES 0.34

COYOTE CREEK BLVD BRIDGE (REPLACE)
LOG OF TEST BORINGS SHEET 1 OF 5

GS CIVIL LOG OF TEST BORINGS SHEET (ENGLISH) (REV. 03/14/12)

ORIGINAL SCALE IN INCHES FOR REDUCED PLANS 0 1 2 3

UNIT: 3658
PROJECT NUMBER & PHASE: 07150001601 CONTRACT NO.: 07-2159U4

DISREGARD PRINTS BEARING EARLIER REVISION DATES

REVISION DATES 5/12/15

SHEET 36 OF 40

FILE => 53-3044-z-lotb01.dgn

USERNAME => s125624 DATE PLOTTED => 28-JAN-2016 TIME PLOTTED => 11:55

DIST	COUNTY	ROUTE	POST MILES TOTAL PROJECT	SHEET No.	TOTAL SHEETS
07	LA,Ora	5	0.0/1.5, 44.3/44.4	1064	1622

REGISTERED CIVIL ENGINEER 05/20/15 DATE

1-25-16
PLANS APPROVAL DATE

REGISTERED PROFESSIONAL ENGINEER MICHAEL G. SMITH No. 2229 Exp. 03/31/16 GEOTECHNICAL STATE OF CALIFORNIA

URS CORPORATION
2020 EAST FIRST STREET, SUITE 400
SANTA ANA, CA 92705

The State of California or its officers or agents shall not be responsible for the accuracy or completeness of electronic copies of this plan sheet.

1-This LOTB sheet was prepared in accordance with the Caltrans Soil & Rock Logging, Classification, & Presentation Manual (2010 Edition).

2-For protection of underground utility lines, hand-auger was used to remove top 5 to 10 feet of subsurface material for exploratory borings and Cone Penetration Testings.

3-2.5" to 1.4" blow counts conversion factors for fine-grain and coarse-grain soils have been 0.8 and 0.55, respectively.

FOR PLAN VIEW, SEE
"LOG OF TEST BORINGS" 1 OF 5

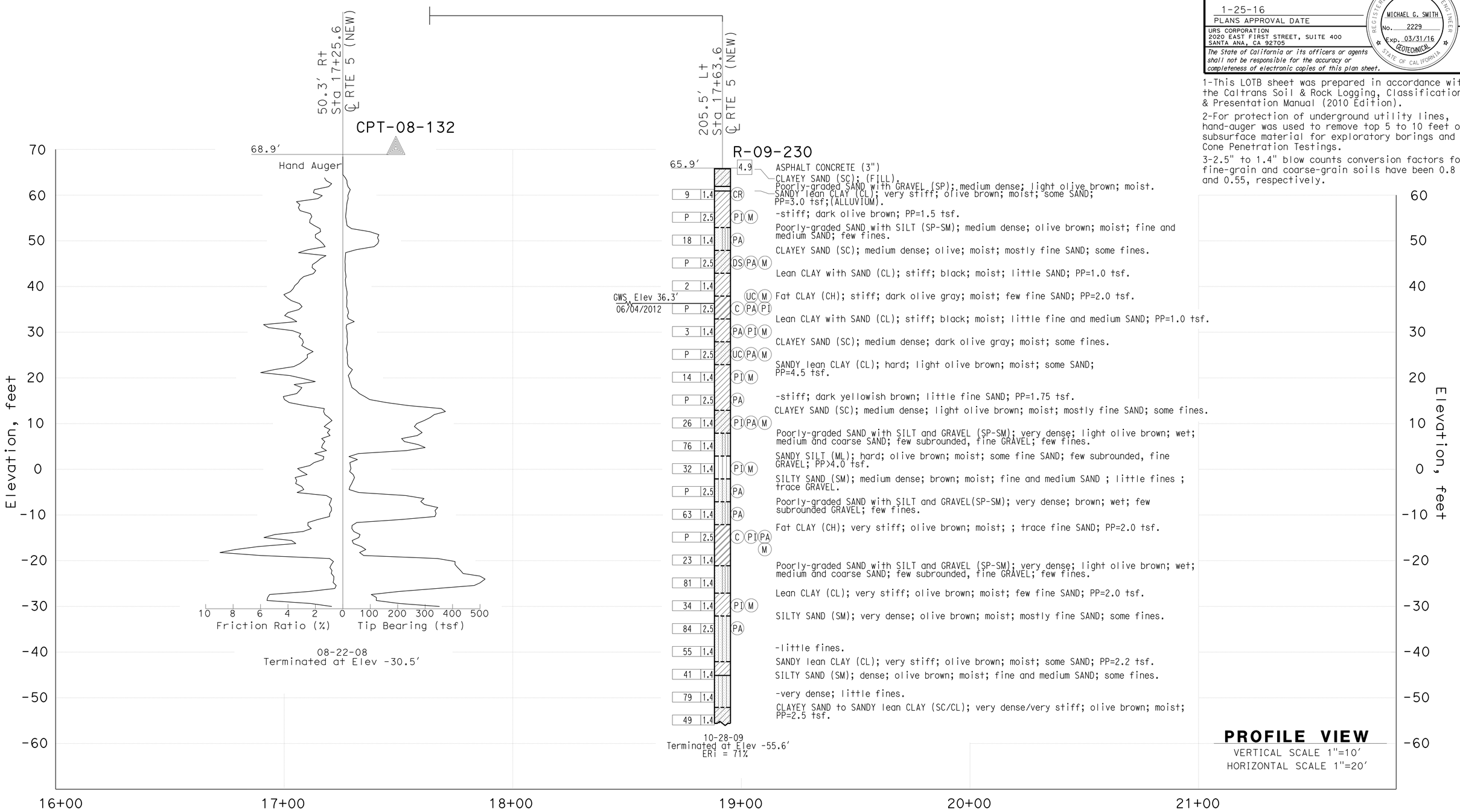

PROFILE VIEW
VERTICAL SCALE 1"=10'
HORIZONTAL SCALE 1"=20'

F.MOTAMED	DRAWN BY	T.PANAH	D.ORRIS
DESIGN OVERSIGHT			FIELD INVESTIGATION BY:
05/20/15	CHECKED BY	A.GHAZINOOR/L.KHALKHALI	DATE: 08/22/08 - 10/28/09
SIGN OFF DATE			

PREPARED FOR THE STATE OF CALIFORNIA DEPARTMENT OF TRANSPORTATION

M.G. SMITH
PROJECT ENGINEER

BRIDGE NO. 53-3044
POST MILES 0.34

COYOTE CREEK BLVD BRIDGE (REPLACE)
LOG OF TEST BORINGS SHEET 2 OF 5

GS CIVIL LOG OF TEST BORINGS SHEET (ENGLISH) (REV. 03/14/12)

ORIGINAL SCALE IN INCHES FOR REDUCED PLANS 0 1 2 3

UNIT: 3658 3658
PROJECT NUMBER & PHASE: 07150001601 CONTRACT NO.: 07-2159U4

DISREGARD PRINTS BEARING EARLIER REVISION DATES → 5/12/15

SHEET 37 OF 40

FILE => 53-3044-z-lotb02.dgn

USERNAME => s125624 DATE PLOTTED => 28-JAN-2016 TIME PLOTTED => 11:55

DIST	COUNTY	ROUTE	POST MILES TOTAL PROJECT	SHEET No.	TOTAL SHEETS
07	LA,Ora	5	0.0/1.5, 44.3/44.4	1065	1622

REGISTERED CIVIL ENGINEER 05/20/15 DATE

1-25-16
PLANS APPROVAL DATE

REGISTERED PROFESSIONAL ENGINEER MICHAEL G. SMITH No. 2229 Exp. 03/31/16 GEOTECHNICAL STATE OF CALIFORNIA

URS CORPORATION
2020 EAST FIRST STREET, SUITE 400
SANTA ANA, CA 92705

The State of California or its officers or agents shall not be responsible for the accuracy or completeness of electronic copies of this plan sheet.

1-This LOTB sheet was prepared in accordance with the Caltrans Soil & Rock Logging, Classification, & Presentation Manual (2010 Edition).

2-For protection of underground utility lines, hand-auger was used to remove top 5 to 10 feet of subsurface material for exploratory borings and Cone Penetration Testings.

3-2.5" to 1.4" blow counts conversion factors for fine-grain and coarse-grain soils have been 0.8 and 0.55, respectively.

FOR PLAN VIEW, SEE
"LOG OF TEST BORINGS" 1 OF 5

PROFILE VIEW
VERTICAL SCALE 1"=10'
HORIZONTAL SCALE 1"=20'

F.MOTAMED DESIGN OVERSIGHT	DRAWN BY	T.PANAH	D.ORRIS FIELD INVESTIGATION BY:	PREPARED FOR THE STATE OF CALIFORNIA DEPARTMENT OF TRANSPORTATION	M.G. SMITH PROJECT ENGINEER
05/20/15 SIGN OFF DATE	CHECKED BY	A.GHAZINOOR/L.KHALKHALI	DATE: 09/09/08 - 09/03/09		

BRIDGE NO. 53-3044
POST MILES 0.34

COYOTE CREEK BLVD BRIDGE (REPLACE)
LOG OF TEST BORINGS SHEET 3 OF 5

GS CIVIL LOG OF TEST BORINGS SHEET (ENGLISH) (REV. 03/14/12)

ORIGINAL SCALE IN INCHES FOR REDUCED PLANS 0 1 2 3

UNIT: 3658
PROJECT NUMBER & PHASE: 07150001601 CONTRACT NO.: 07-2159U4

DISREGARD PRINTS BEARING EARLIER REVISION DATES → 5/12/15

REVISION DATES | SHEET 38 | OF 40

FILE => 53-3044-z-lotb03.dgn

USERNAME => s125624 DATE PLOTTED => 28-JAN-2016 TIME PLOTTED => 11:55

DIST	COUNTY	ROUTE	POST MILES TOTAL PROJECT	SHEET No.	TOTAL SHEETS
07	LA,Ora	5	0.0/1.5, 44.3/44.4	1066	1622

REGISTERED CIVIL ENGINEER 05/20/15 DATE

1-25-16
PLANS APPROVAL DATE

REGISTERED PROFESSIONAL ENGINEER MICHAEL G. SMITH No. 2229 Exp. 03/31/16 GEOTECHNICAL STATE OF CALIFORNIA

URS CORPORATION
2020 EAST FIRST STREET, SUITE 400
SANTA ANA, CA 92705

The State of California or its officers or agents shall not be responsible for the accuracy or completeness of electronic copies of this plan sheet.

FOR PLAN VIEW, SEE
"LOG OF TEST BORINGS" 1 OF 5

1-This LOTB sheet was prepared in accordance with the Caltrans Soil & Rock Logging, Classification, & Presentation Manual (2010 Edition).

2-For protection of underground utility lines, hand-auger was used to remove top 5 to 10 feet of subsurface material for exploratory borings and Cone Penetration Testings.

3-2.5" to 1.4" blow counts conversion factors for fine-grain and coarse-grain soils have been 0.8 and 0.55, respectively.

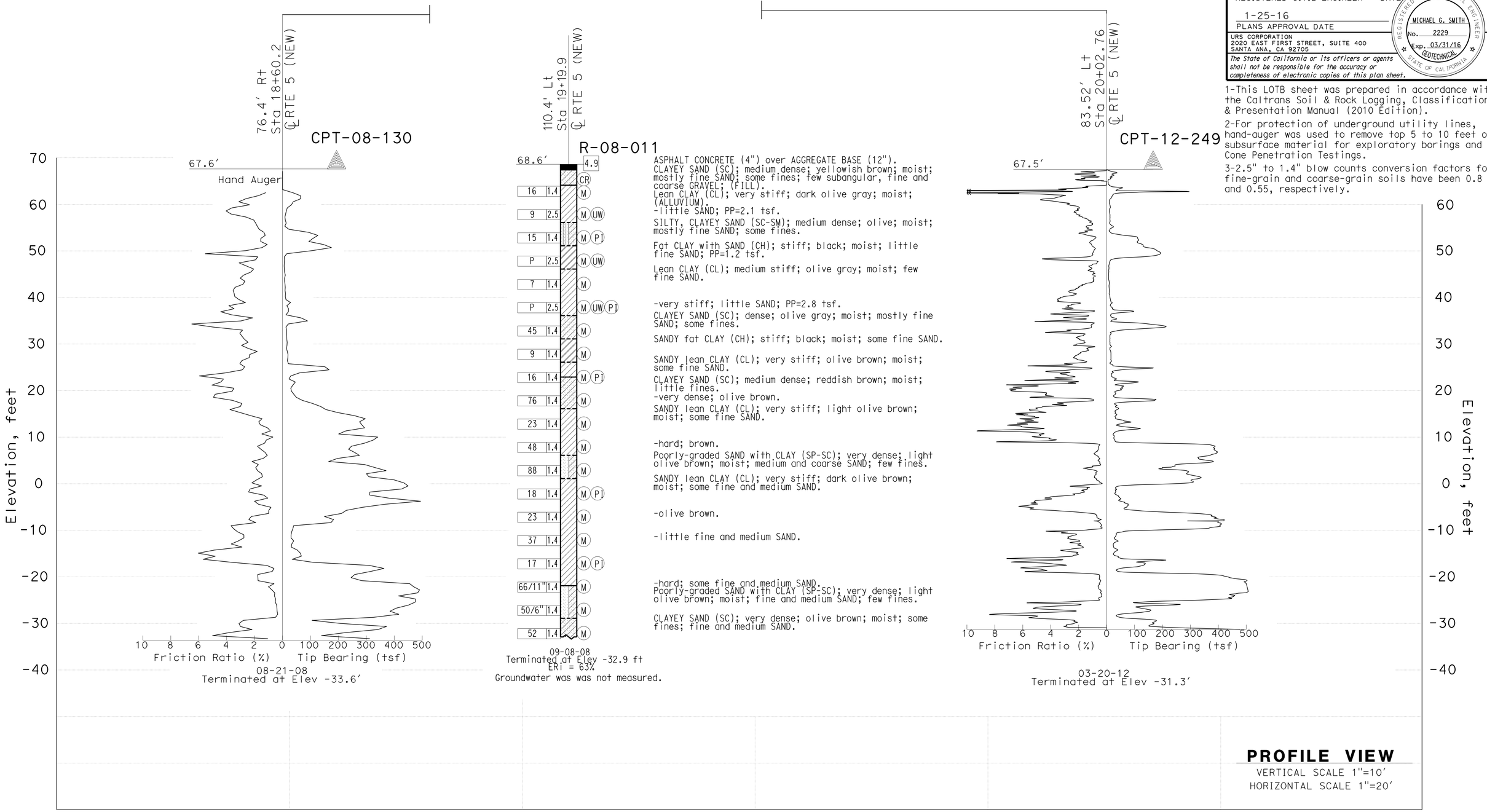

F.MOTAMED DESIGN OVERSIGHT	DRAWN BY	T.PANAH	D.ORRIS FIELD INVESTIGATION BY:	PREPARED FOR THE STATE OF CALIFORNIA DEPARTMENT OF TRANSPORTATION	M.G. SMITH PROJECT ENGINEER	BRIDGE NO. 53-3044 POST MILES 0.34
05/20/15 SIGN OFF DATE	CHECKED BY	A.GHAZINOOR/L.KHALKHALI	DATE: 08/21/08 - 03/20/12			

COYOTE CREEK BLVD BRIDGE (REPLACE)

LOG OF TEST BORINGS SHEET 4 OF 5

GS CIVIL LOG OF TEST BORINGS SHEET (ENGLISH) (REV. 03/14/12)

ORIGINAL SCALE IN INCHES FOR REDUCED PLANS 0 1 2 3

UNIT: 3658
PROJECT NUMBER & PHASE: 07150001601 CONTRACT NO.: 07-2159U4

DISREGARD PRINTS BEARING EARLIER REVISION DATES → 5/12/15

REVISION DATES | SHEET 39 | OF 40

FILE => 53-3044-z-lotb04.dgn

USERNAME => s125624 DATE PLOTTED => 28-JAN-2016 TIME PLOTTED => 11:55

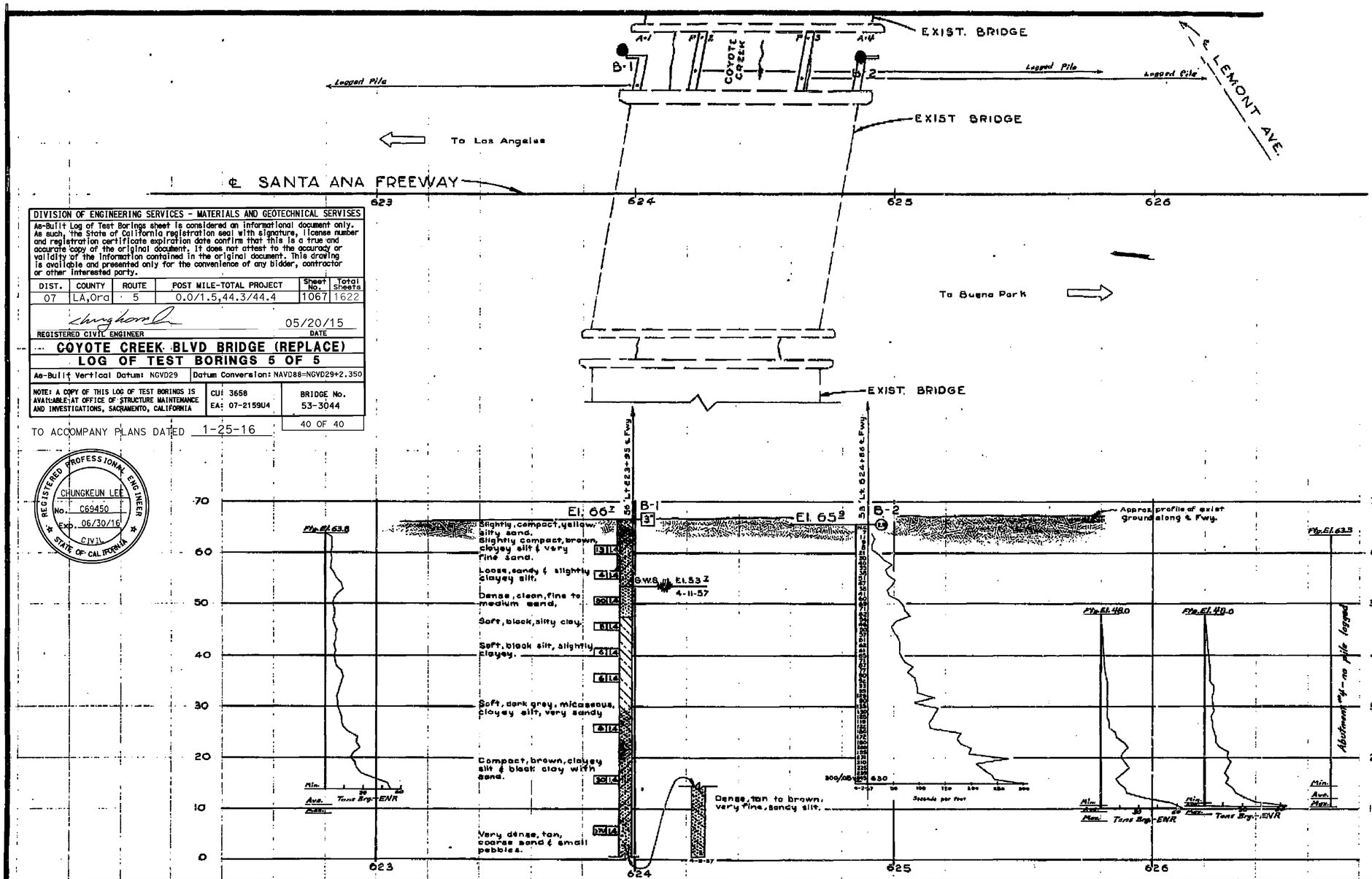

DIVISION OF ENGINEERING SERVICES - MATERIALS AND GEOTECHNICAL SERVISES					
As-Built Log of Test Borings sheet is considered an informational document only. As such, the State of California registration seal with signature, license number and registration certificate expiration date confirm that this is a true and accurate copy of the original document. It does not attest to the accuracy or validity of the information contained in the original document. This drawing is available and presented only for the convenience of any bidder, contractor or other interested party.					
DIST.	COUNTY	ROUTE	POST MILE-TOTAL PROJECT	Sheet No.	Total Sheets
07	LA,Ora	5	0.0/1.5,44.3/44.4	1067	1622
REGISTERED CIVIL ENGINEER			05/20/15 DATE		
COYOTE CREEK BLVD BRIDGE (REPLACE)					
LOG OF TEST BORINGS 5 OF 5					
As-Built Vertical Datum: NGVD29			Datum Conversion: NAVD88=NGVD29+2.350		
NOTE: A COPY OF THIS LOG OF TEST BORINGS IS AVAILABLE AT OFFICE OF STRUCTURE MAINTENANCE AND INVESTIGATIONS, SACRAMENTO, CALIFORNIA			CU: 3658 EA: 07-2159U4	BRIDGE No. 53-3044	
TO ACCOMPANY PLANS DATED 1-25-16				40 OF 40	

REGISTERED PROFESSIONAL ENGINEER
CHUNGKEUN LEE
No. C69450
Exp. 06/30/16
CIVIL
STATE OF CALIFORNIA

BRIDGE DEPARTMENT

FIELD STUDY BY		
DRAWN		
CHECKED		
Approval Recommended by		

AS BUILT PLANS
Contract No. 59-7VC23
Date Completed
Document No. 7000 2090

AS BUILT
CONTRACT NO. 59-7VC23-F1
RESIDENT ENGR.
DATE March 1959
D.F. Guild, S.D.R.

BM 62-A-55 (L.A.CO.)
L.&T. in West end of So. hdwl. of 30" C.M.P., 120' Rt. of Sta. 627+50 Elev. = 63.81'

CLASSIFICATION OF MATERIAL BASED ON STANDARD GRADE SIZE LIMITS

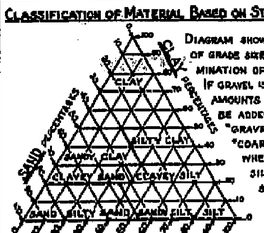

DIAGRAM SHOWING THE BASIS FOR ESTIMATES OF GRADE SIZE DISTRIBUTION USED IN DETERMINATION OF CLASS NAMES. IF GRAVEL IS PRESENT IN APPRECIABLE AMOUNTS THE TERM "GRAVELLY" MAY BE ADDED TO THE CLASS NAME, VIZ. "GRAVELLY SAND." THE TERMS "COARSE," "MEDIUM" AND "FINE" WHEN USED TO DESCRIBE SAND, SILT AND GRAVEL REFER TO STANDARD GRADE SIZE LIMITS.

LEGEND OF EARTH MATERIALS

- GRAVEL
- SAND
- SILT
- CLAY
- SANDY CLAY OR CLAYEY SAND
- SANDY SILT OR SILTY SAND
- SILTY CLAY OR CLAYEY SILT
- PEAT AND/OR ORGANIC MATTER
- FILL MATERIAL
- IGNEOUS ROCK
- SEDIMENTARY ROCK
- METAMORPHIC ROCK

LEGEND OF BORING OPERATIONS

- PLAN OF ANY BORING
- PENETROMETER
- 2¼" CONE PENETROMETER
- SAMPLER BORING (DRY)
- ROTARY BORING (WET)
- AUGER BORING (DRY)
- JET BORING
- CORE BORING
- TEST PIT

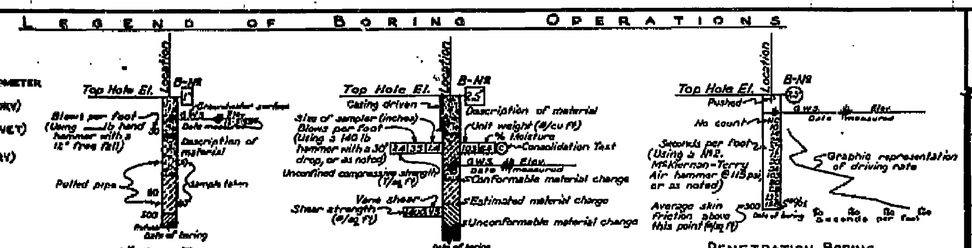

NOTES

The contractor's attention is directed to Section 2, Article (c) of the Standard Specifications and to the Special Provisions accompanying this set of plans.

Classification of earth material as shown on this sheet is based upon field inspection and is not to be construed to imply mechanical analysis.

STATE OF CALIFORNIA
DEPARTMENT OF PUBLIC WORKS
DIVISION OF HIGHWAYS

SANTA ANA FREEWAY
COYOTE CREEK BRIDGE WIDENING

LOG OF TEST BORINGS

SCALE	BRIDGE	FILE	DRAWING
Horiz. 1"=20' Vert. 1"=10'	53-279	E-3	C-5674-5

PREL DRAWING NO P-

52

BOX T-23

I HEREBY CERTIFY THAT THIS IS A TRUE AND ACCURATE COPY OF THE ABOVE DOCUMENT TAKEN UNDER MY DIRECTION AND CONTROL ON THIS DATE IN SACRAMENTO, CALIFORNIA PURSUANT TO AUTHORIZATION BY THE DIRECTOR OF PUBLIC WORKS.

DATE 8/16/21 SIGNATURE [illegible] TITLE HAO II

53-3044-z-lotb05.tif

DIST	COUNTY	ROUTE	POST MILES TOTAL PROJECT	SHEET No.	TOTAL SHEETS
07	LA,Ora	5	0.0/1.5, 44.3/44.4	1068	1622

REGISTERED CIVIL ENGINEER — DATE 2-26-15

1-25-16
PLANS APPROVAL DATE

REGISTERED PROFESSIONAL ENGINEER — WILLIAM D. KEMP No. 55730 Exp. 12/31/16 CIVIL — STATE OF CALIFORNIA

The State of California or its officers or agents shall not be responsible for the accuracy or completeness of electronic copies of this plan sheet.

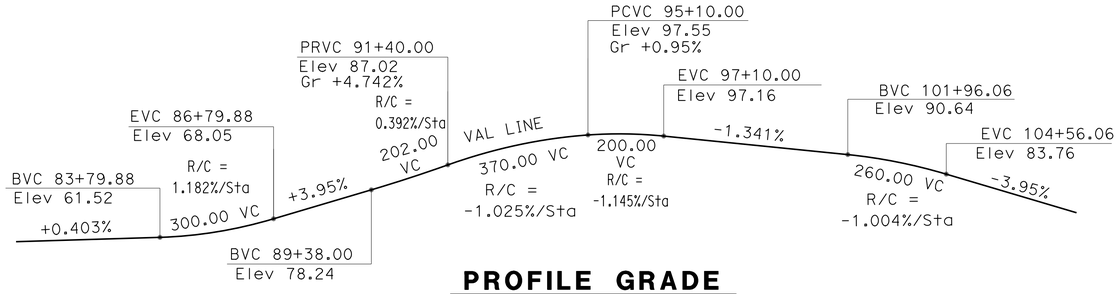

PROFILE GRADE

NO SCALE

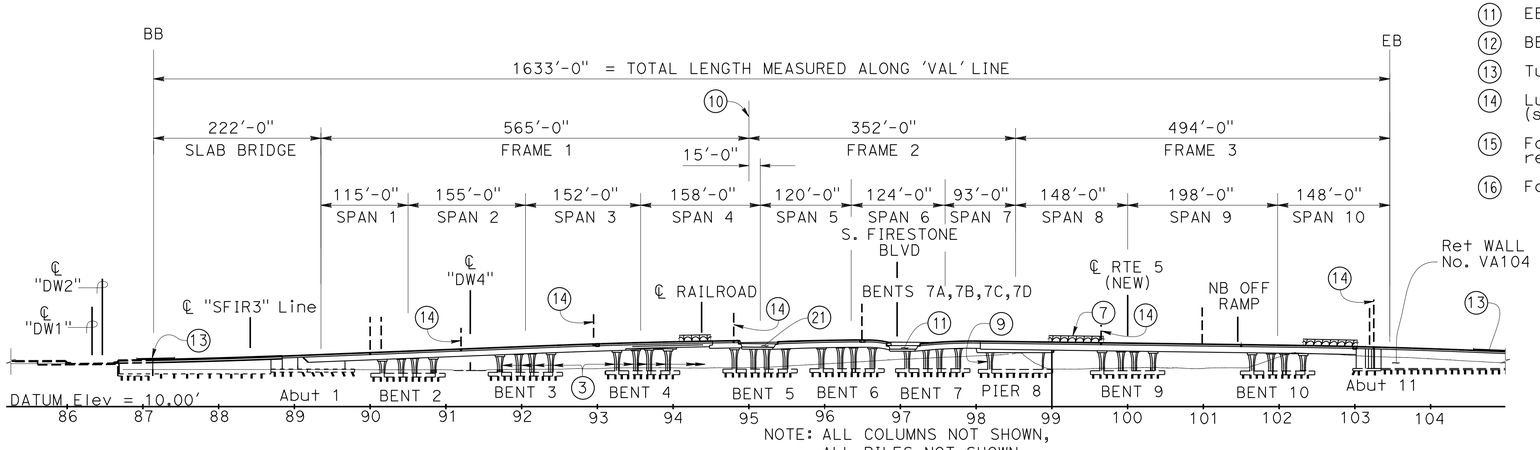

ELEVATION

1" = 100'

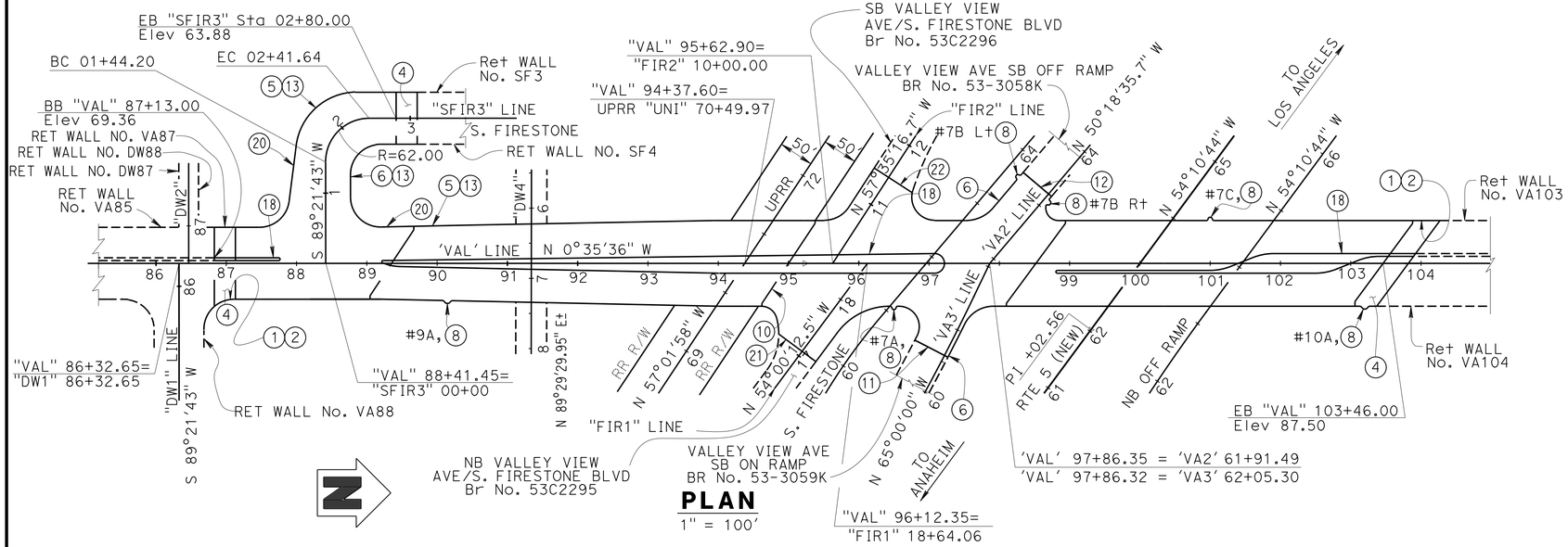

PLAN

1" = 100'

NOTES:

1. Paint "Br NO. 53-3045"
2. Paint "VALLEY VIEW OH/OC"
3. Paint Bent & Column number "B_C_"
4. Structure Approach Type N(30S) Mod
5. Conc Barrier Type 26 Mod
6. Conc Barrier Type 736 Mod
7. Chain Link Railing (Mod)
8. Sign Pedestal (for signs, see "ROAD PLANS")
9. Pier Wall
10. ℄ Brg Main Hinge
11. EB SB On Ramp Hinge
12. BB SB Off Ramp Hinge
13. Tubular Handrailing (Mod)
14. Luminaire Corbel (see "ROAD PLANS")
15. For location of exist Valley View bridges to be removed, see "STRUCTURE PLAN NO. 4 - FRAME 3" plan
16. For Index, see "INDEX TO PLANS" sheet
18. Median Island
19. Temporary Railing, Type K (see "ROAD PLANS")
20. Concrete Closure Wall
21. EB-NB Valley View Ave/S Firestone Blvd Hinge
22. BB-SB Valley View Ave/N Firestone Blvd Hinge
23. Pendant mounted light fixture with embedded conduit and junction boxes. See "ROAD PLANS"

QUANTITIES

WORK AREA MONITORING (BRIDGE)	LUMP SUM
REMOVE RETAINING WALL (CY)	48 CY
BRIDGE REMOVAL, LOCATION A	LUMP SUM
STRUCTURE EXCAVATION (BRIDGE)	16,700 CY
STRUCTURE EXCAVATION (CONTAMINATED MATERIALS)	3,850 CY
STRUCTURE EXCAVATION (TYPE D)	2,420 CY
STRUCTURE BACKFILL (BRIDGE)	7,973 CY
FURNISH 24" STEEL PIPE PILING	75,162 LF
DRIVE 24" STEEL PIPE PILE	1,421 EA
42" CAST-IN-DRILLED-HOLE CONCRETE PILING	2,416 LF
FURNISH 24" CAST-IN-STEEL SHELL CONCRETE PILING	9,387 LF
DRIVE 24" CAST-IN-STEEL SHELL CONCRETE PILE	242 EA
PRESTRESSING CAST-IN-PLACE CONCRETE	LUMP SUM
STRUCTURAL CONCRETE, BRIDGE FOOTING	5,265 CY
STRUCTURAL CONCRETE, BRIDGE	22,395 CY
STRUCTURAL CONCRETE, APPROACH SLAB (TYPE N MODIFIED)	420 CY
ARCHITECTURAL TREATMENT (SPLIT SLATE)	4,140 SQFT
ARCHITECTURAL TREATMENT (SUNRAY-SPLIT SLATE)	5,100 SQFT
FURNISH PRECAST PRESTRESSED CONCRETE BULB-TEE GIRDER (120'-130')	14 EA
ERECT PRECAST PRESTRESSED CONCRETE GIRDER	14 EA
CONCRETE CLOSURE WALL	8,033 SQFT
PTFE SPHERICAL BEARING	98 EA
JOINT SEAL (MR 1")	178 LF
JOINT SEAL (MR 1 1/2")	87 LF
JOINT SEAL ASSEMBLY (MR 3")	237 LF
JOINT SEAL ASSEMBLY (MR 3 1/2")	135 LF
JOINT SEAL ASSEMBLY (MR 6")	122 LF
JOINT SEAL ASSEMBLY (MR 6 1/2")	148 LF
JOINT SEAL ASSEMBLY (MR 9")	135 LF
BAR REINFORCING STEEL (BRIDGE)	8,110,000 LB
BAR REINFORCING STEEL (GALVANIZED)	3,260 LB
HEADED BAR REINFORCEMENT	3,830 EA
MINOR CONCRETE (MEDIAN ISLAND)	43 CY
MISCELLANEOUS METAL (RESTRAINER - PIPE TYPE)	15,395 LB
MISCELLANEOUS METAL (BRIDGE)	140 LB
BRIDGE DECK DRAINAGE SYSTEM	72,600 LB
CHAIN LINK RAILING (MODIFIED)	2,458 LF
TUBULAR HANDRAILING (MODIFIED)	1,077 LF
CONCRETE BARRIER (TYPE 26 MODIFIED)	3,575 LF
CONCRETE BARRIER (TYPE 736 MODIFIED)	263 LF

Ramin Rashedi 2-26-15
DESIGN ENGINEER

	BY	CHECKED		
DESIGN	BK/KD/KA/MO/JP	SP/DT/KA/PT	LOAD & RESISTANCE FACTOR DESIGN	LIVE LOADING: HL93 W/"LOW-BOY"; PERMIT DESIGN VEHICLE
DETAILS	T. Bittermann	Dauryoush Tavatli	LAYOUT: BK/KD/KA/MO/JP	BK/KD/KA/MO/JP
QUANTITIES	Krishnakant Andurlekar	Ruperd Wilson	SPECIFICATIONS: Xiahong Li	PLANS AND SPECS COMPARED: Xiahong Li

ORIGINAL SCALE IN INCHES FOR REDUCED PLANS 0 1 2 3

STATE OF CALIFORNIA
DEPARTMENT OF TRANSPORTATION

DIVISION OF ENGINEERING SERVICES
STRUCTURE DESIGN
DESIGN BRANCH 11

BRIDGE NO. 53-3045
POST MILE 1.21

VALLEY VIEW AVE OH/OC (REPLACEMENT)
GENERAL PLAN NO 1 OF 3

UNIT: 3587
PROJECT NUMBER & PHASE: 0715000160-1
CONTRACT NO.: 07-2159U4

DISREGARD PRINTS BEARING EARLIER REVISION DATES
REVISION DATES: 10-15-12 9-27-13 2-26-15 9-24-13
SHEET 1 OF 182

USERNAME => s1256624 DATE PLOTTED => 28-JAN-2016 TIME PLOTTED => 11:55

STRUCTURES DESIGN GENERAL PLAN SHEET (ENGLISH) (REV.09-01-10)

FILE => 53-3045-a-gp01.dgn

DIST	COUNTY	ROUTE	POST MILES TOTAL PROJECT	SHEET No.	TOTAL SHEETS
07	LA,Ora	5	0.0/1.5, 44.3/44.4	1069	1622

REGISTERED CIVIL ENGINEER 3-18-15 DATE

1-25-16
PLANS APPROVAL DATE

REGISTERED PROFESSIONAL ENGINEER WILLIAM D. KEMP No. 55730 Exp. 12/31/16 CIVIL STATE OF CALIFORNIA

The State of California or its officers or agents shall not be responsible for the accuracy or completeness of electronic copies of this plan sheet.

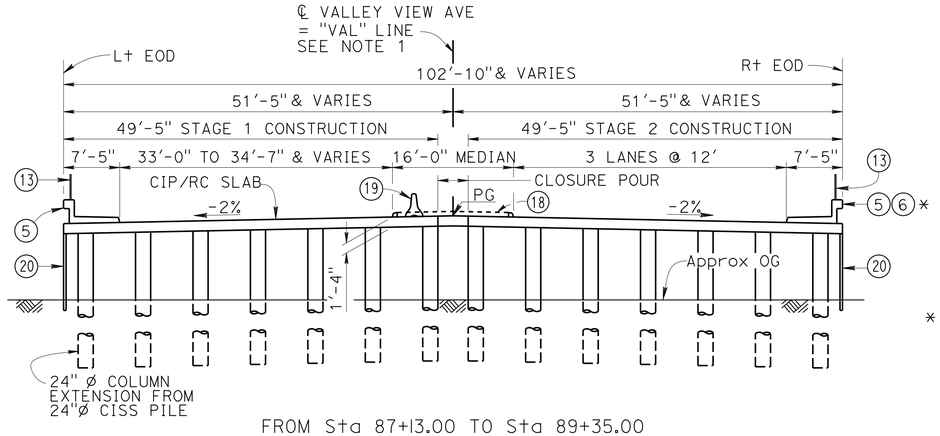

FROM Sta 87+13.00 TO Sta 89+35.00

SLAB BRIDGE - TYPICAL SECTION

SCALE 1" = 10'

* RAIL TYPE VARIES, SEE "STRUCTURE PLAN NO. 1 - SLAB BRIDGE" SHEET FOR LIMITS

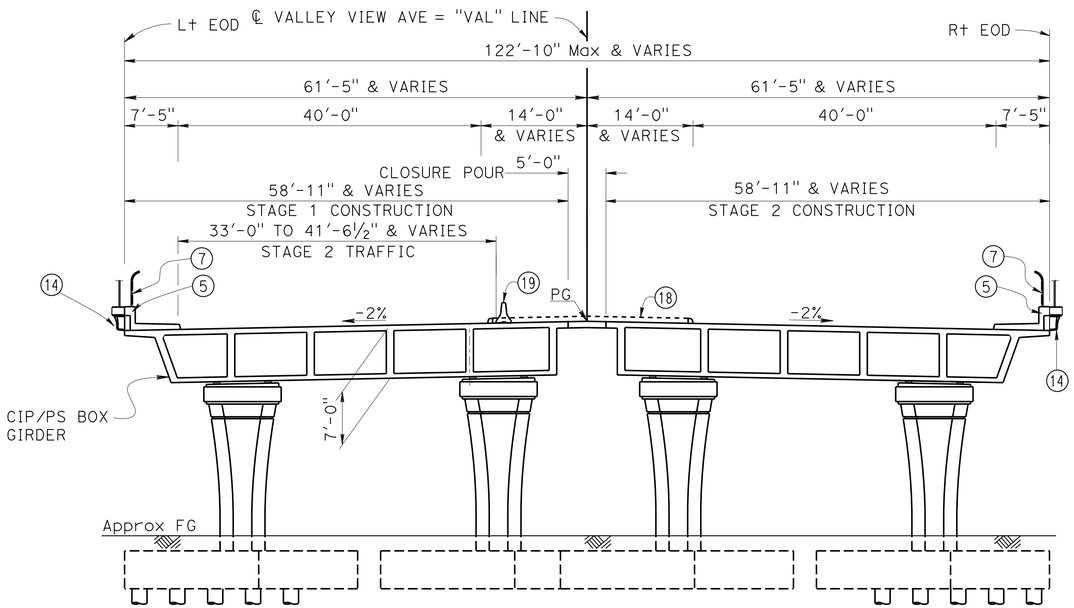

FROM Sta 89+35.00 TO Sta 93+76.00

FRAME 1 - TYPICAL SECTION

SCALE 1" = 10'

NOT ALL PILES SHOWN

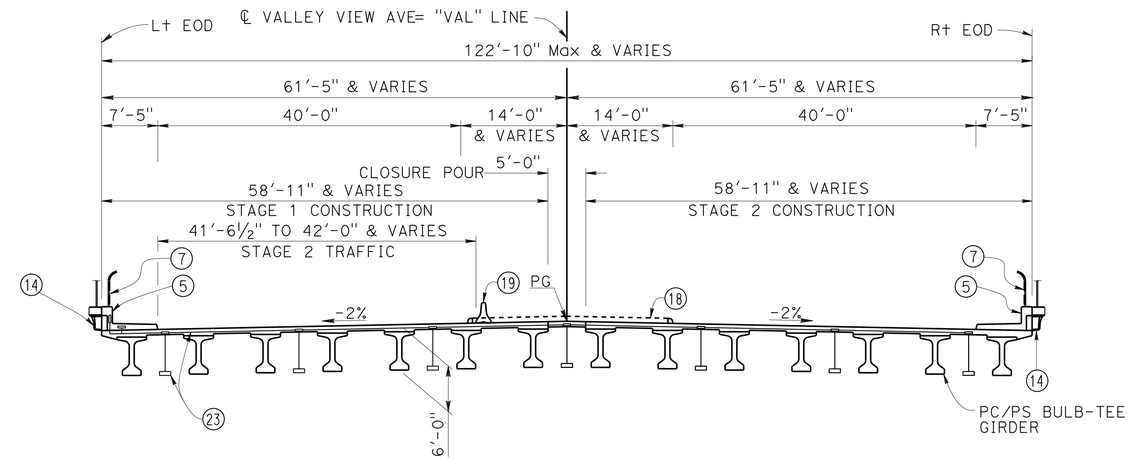

FROM Sta 93+76.00 TO Sta 95+00.00

FRAME 1 - TYPICAL SECTION (AT RAILROAD CROSSING)

SCALE 1" = 10'

NOTES:

1. SLAB BRIDGE - TYPICAL SECTION' for "SFIR3" Line similar
2. For Notes, see "GENERAL PLAN NO. 1 OF 3" sheet

Ramin Rashedi 3-18-15
DESIGN ENGINEER

	BY	CHECKED
DESIGN	K. Doll/K. Andurlekar	S. Pahlavan/D. Tavatli
DETAILS	T. Bittermann	S. Pahlavan/D. Tavatli
QUANTITIES	Krishnakant Andurlekar	Ruperd Wilson

LOAD & RESISTANCE FACTOR DESIGN — LIVE LOADING: HL93 W/"LOW-BOY"; PERMIT DESIGN VEHICLE

	BY	CHECKED
LAYOUT	K. Doll/K. Andurlekar	S. Pahlavan/D. Tavatli
SPECIFICATIONS	Xiahong Li	PLANS AND SPECS COMPARED: Xiahong Li

ORIGINAL SCALE IN INCHES FOR REDUCED PLANS 0 1 2 3

STATE OF CALIFORNIA
DEPARTMENT OF TRANSPORTATION

DIVISION OF ENGINEERING SERVICES
STRUCTURE DESIGN
DESIGN BRANCH 11

BRIDGE NO. 53-3045
POST MILE 1.21

VALLEY VIEW AVE OH/OC (REPLACEMENT)
GENERAL PLAN NO 2 OF 3

UNIT: 3587
PROJECT NUMBER & PHASE: 0715000160-1
CONTRACT NO.: 07-2159u4

DISREGARD PRINTS BEARING EARLIER REVISION DATES

REVISION DATES: 2-14-11 9-24-13 12-6-13 12-17-13

SHEET 2 OF 182

USERNAME => s125624 DATE PLOTTED => 28-JAN-2016 TIME PLOTTED => 11:55

STRUCTURES DESIGN GENERAL PLAN SHEET (ENGLISH) (REV.09-01-10)

FILE => 53-3045-a-gp02.dgn

DIST	COUNTY	ROUTE	POST MILES TOTAL PROJECT	SHEET No.	TOTAL SHEETS
07	LA,Ora	5	0.0/1.5, 44.3/44.4	1070	1622

REGISTERED CIVIL ENGINEER 3-18-15 DATE

1-25-16
PLANS APPROVAL DATE

REGISTERED PROFESSIONAL ENGINEER WILLIAM D. KEMP No. 55730 Exp. 12/31/16 CIVIL STATE OF CALIFORNIA

The State of California or its officers or agents shall not be responsible for the accuracy or completeness of electronic copies of this plan sheet.

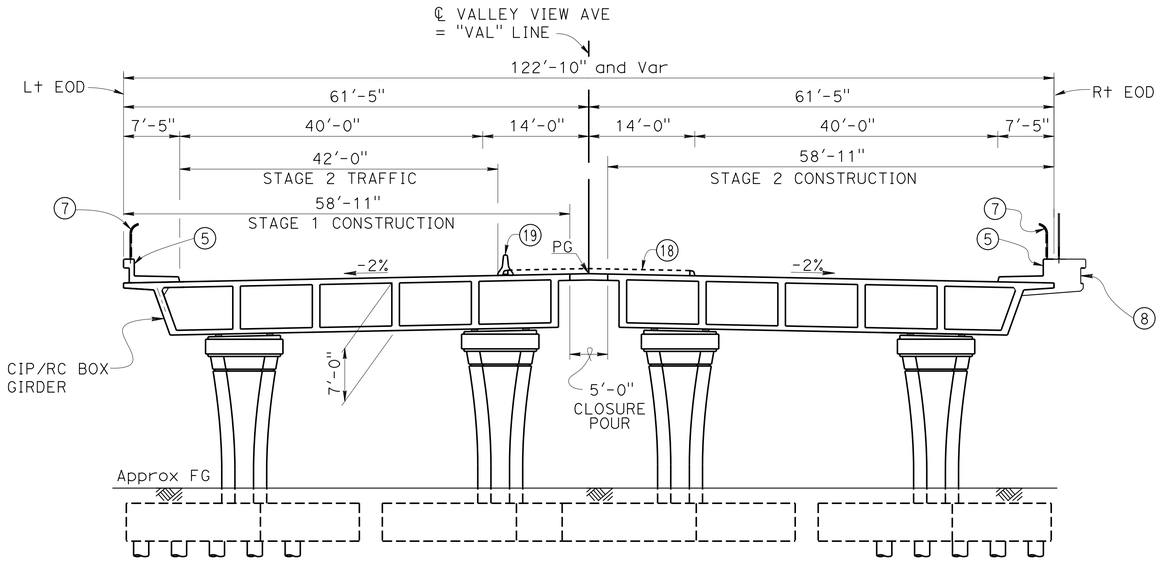

FROM Sta 95+00.00 TO Sta 98+52.00

FRAME 2 - TYPICAL SECTION

NOT ALL PILES SHOWN

1" = 10'

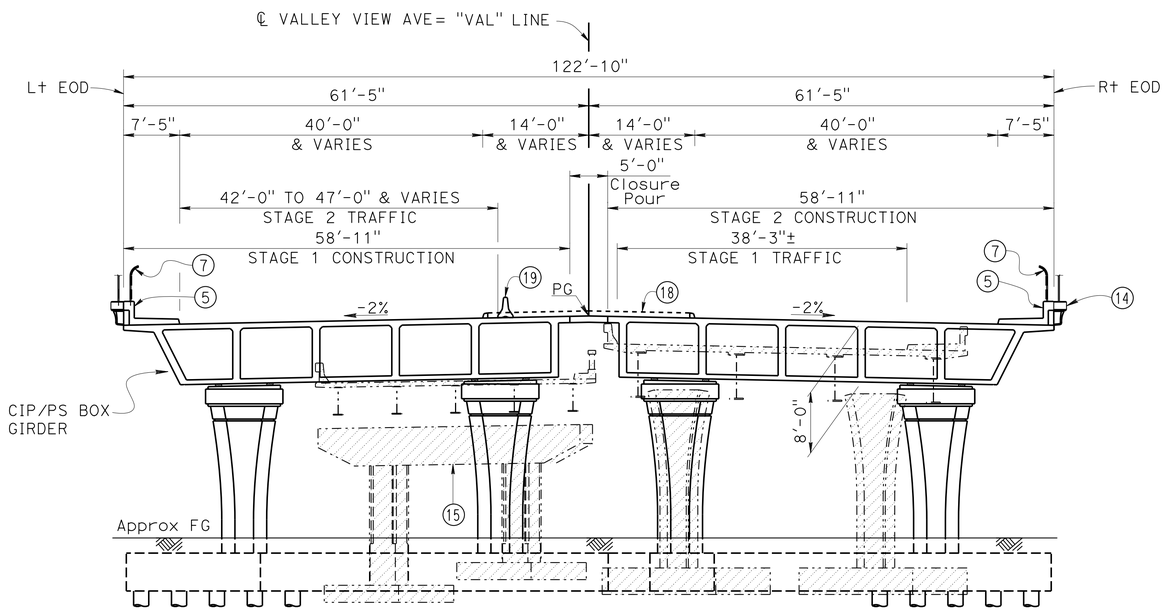

FROM Sta 98+52.00 TO Sta 103+46.00

FRAME 3 - TYPICAL SECTION

NOT ALL PILES SHOWN

SCALE 1" = 10'

LEGEND:

Indicates existing structure

Indicates new construction

Indicates bridge removal

NOTES:

1. For Notes, see "GENERAL PLAN NO. 1 OF 3" sheet
2. Bridge removal at Bent 10 will require complete removal of existing Footings, existing Battered Piles must be removed at existing "VALLEY VIEW LEFT BR 53-0631L ABUT 7".
3. Remove entire pile cap at existing Left Bridge Abut 7 and existing Right Bridge Bents 4.

Ramin Rashedi 3-18-15
DESIGN ENGINEER

	BY	CHECKED
DESIGN	Dan Texler/Jay Posey	K.R.A./Mark Okimura
DETAILS	T. Bittermann	K.R.A./Mark Okimura
QUANTITIES	J. Posey/M. Okimura	J. Radu/Nikki Tiongco

LOAD & RESISTANCE FACTOR DESIGN — LIVE LOADING: HL93 W/"LOW-BOY": PERMIT DESIGN VEHICLE

	BY	CHECKED
LAYOUT	Dan Texler/Jay Posey	K.R.A./Mark Okimura
SPECIFICATIONS	Xiahong Li	PLANS AND SPECS COMPARED Xiahong Li

ORIGINAL SCALE IN INCHES FOR REDUCED PLANS 0 1 2 3

STATE OF CALIFORNIA
DEPARTMENT OF TRANSPORTATION

DIVISION OF ENGINEERING SERVICES
STRUCTURE DESIGN
DESIGN BRANCH 11

BRIDGE NO. 53-3045
POST MILE 1.21

VALLEY VIEW AVE OH/OC (REPLACEMENT)
GENERAL PLAN NO 3 OF 3

UNIT: 3587
PROJECT NUMBER & PHASE: 0715000160-1
CONTRACT NO.: 07-2159U4

DISREGARD PRINTS BEARING EARLIER REVISION DATES

REVISION DATES 1-3-12 8/28/13 9/24/13 4/04/13

SHEET 3 OF 182

USERNAME => s125624 DATE PLOTTED => 28-JAN-2016 TIME PLOTTED => 11:55

STRUCTURES DESIGN GENERAL PLAN SHEET (ENGLISH) (REV.09-01-10)

FILE => 53-3045-a-gp03.dgn

DIST	COUNTY	ROUTE	POST MILES TOTAL PROJECT	SHEET No.	TOTAL SHEETS
07	LA,Ora	5	0.0/1.5, 44.3/44.4	1071	1622

William Kemp 3-18-15
REGISTERED CIVIL ENGINEER DATE

1-25-16
PLANS APPROVAL DATE

REGISTERED PROFESSIONAL ENGINEER
WILLIAM D. KEMP
No. 55730
Exp. 12/31/16
CIVIL
STATE OF CALIFORNIA

The State of California or its officers or agents shall not be responsible for the accuracy or completeness of electronic copies of this plan sheet.

INDEX TO PLANS

SHEET No.	TITLE
1	GENERAL PLAN NO 1 OF 3
2	GENERAL PLAN NO 2 OF 3
3	GENERAL PLAN NO 3 OF 3
4	INDEX TO PLANS 1 OF 2
5	INDEX TO PLANS 2 OF 2
6	SCHEMATIC DIAGRAMS
7	STRUCTURE PLAN NO 1 - SLAB BRIDGE
8	STRUCTURE PLAN NO 2 - FRAME 1
9	STRUCTURE PLAN NO 3 - FRAME 2
10	STRUCTURE PLAN NO 4 - FRAME 3
11	STRUCTURE PLAN NO 5 - BARRIER DETAILS
12	CONSTRUCTION STAGING DETAILS - FRAME 1
13	PILE DATA TABLE NO 1
14	PILE DATA TABLE NO 2
15	DECK CONTOURS NO 1
16	DECK CONTOURS NO 2
17	CAMBER DIAGRAM
18	FOUNDATION PLAN NO. 1 OF 5
19	FOUNDATION PLAN NO. 2 OF 5
20	FOUNDATION PLAN NO. 3 OF 5
21	FOUNDATION PLAN NO. 4 OF 5
22	FOUNDATION PLAN NO. 5 OF 5
23	ABUTMENT SA1 LAYOUT - SLAB BRIDGE
24	ABUTMENT SA21 LAYOUT - SLAB BRIDGE
25	ABUTMENT 1 LAYOUT - FRAME 1
26	ABUTMENT 11 LAYOUT - FRAME 3
27	ABUTMENT DETAILS NO. 1 - SLAB BRIDGE
28	ABUTMENT DETAILS NO. 2 - FRAME 1
29	ABUTMENT DETAILS NO. 3 - FRAME 1
30	ABUTMENT DETAILS NO. 4 - FRAME 1
31	ABUTMENT DETAILS NO. 5 - FRAME 3
32	ABUTMENT DETAILS NO. 6 - FRAME 3
33	ABUTMENT DETAILS NO. 7 - FRAME 3
34	BENT FOOTING DETAILS NO. 1 - FRAME 1
35	BENT FOOTING DETAILS NO. 2 - FRAME 1
36	BENT FOOTING DETAILS NO. 3 - FRAME 2
37	BENT FOOTING DETAILS NO. 4 - FRAME 2
38	BENT FOOTING DETAILS NO. 5 - FRAME 3
39	BENT SB2 LAYOUT - SLAB BRIDGE
40	BENT SB3 LAYOUT - SLAB BRIDGE
41	BENT SB4, SB5, AND SB6 LAYOUT - SLAB BRIDGE
42	BENT SB7 LAYOUT - SLAB BRIDGE
43	BENT SB8 LAYOUT - SLAB BRIDGE
44	BENT SB9 LAYOUT - SLAB BRIDGE
45	BENT SB10 LAYOUT - SLAB BRIDGE
46	BENT SB11 LAYOUT - SLAB BRIDGE
47	BENT SB12 LAYOUT - SLAB BRIDGE
48	BENT SB13 LAYOUT - SLAB BRIDGE
49	BENT SB14 LAYOUT - SLAB BRIDGE
50	BENT SB15 LAYOUT - SLAB BRIDGE
51	BENT SB16 LAYOUT - SLAB BRIDGE
52	BENT SB17 LAYOUT - SLAB BRIDGE
53	BENT SB18 LAYOUT - SLAB BRIDGE
54	BENT SB19 LAYOUT - SLAB BRIDGE
55	BENT SB20 LAYOUT - SLAB BRIDGE
56	BENT 2 LAYOUT - FRAME 1
57	BENT 3 LAYOUT - FRAME 1
58	BENT 4 LAYOUT - FRAME 1
59	TEMPORARY HINGE LAYOUT - FRAME 1
60	BENTS 5, 6 AND 7 LAYOUT - FRAME 2
61	BENT 5A LAYOUT - FRAME 2
62	BENT 5B LAYOUT - FRAME 2
63	BENT 5C LAYOUT - FRAME 2
64	BENT 5D LAYOUT - FRAME 2
65	BENT 7A LAYOUT - FRAME 2
66	BENT 7B LAYOUT - FRAME 2
67	BENT 7C LAYOUT - FRAME 2
68	BENT 7D LAYOUT - FRAME 2
69	PIER 8 LAYOUT
70	BENTS 9 AND 10 LAYOUT - FRAME 3
71	BENT DETAILS NO. 1 - SLAB BRIDGE
72	BENT DETAILS NO. 2 - FRAME 1
73	BENT DETAILS NO. 3 - FRAME 1
74	BENT DETAILS NO. 4 - FRAME 1
75	BENT DETAILS NO. 5 - FRAME 1
76	BENT DETAILS NO 6 - FRAME 2
77	BENT DETAILS NO 7 - FRAME 2
78	BENT DETAILS NO 8 - FRAME 2
79	BENT DETAILS NO 9 - FRAME 3
80	COLUMN DETAILS NO 1 - FRAMES 1, 2 AND 3
81	COLUMN DETAILS NO 2 - FRAMES 1, 2 AND 3
82	COLUMN DETAILS NO 3 - FRAME 2
83	PIER 8 DETAILS
84	PIER 8 REINFORCEMENT NO. 1
85	PIER 8 REINFORCEMENT NO. 2
86	PIER 8 REINFORCEMENT NO. 3
87	TYPICAL SECTION NO. 1 - SLAB BRIDGE
88	TYPICAL SECTION NO. 2 - FRAME 1
89	TYPICAL SECTION NO. 3 - FRAME 1
90	TYPICAL SECTION NO. 4 - FRAME 1
91	TYPICAL SECTION NO. 5 - FRAME 2
92	TYPICAL SECTION NO. 6 - FRAME 2
93	TYPICAL SECTION NO. 7 - FRAME 2
94	TYPICAL SECTION NO. 8 - FRAME 2
95	TYPICAL SECTION NO. 9 - FRAME 2
96	TYPICAL SECTION NO. 10 - FRAME 2
97	TYPICAL SECTION NO. 11 - FRAME 2
98	TYPICAL SECTION NO. 12 - FRAME 2
99	TYPICAL SECTION NO. 13 - FRAME 3
100	GIRDER LAYOUT NO. 1 - FRAME 1
101	GIRDER LAYOUT NO. 2 - FRAME 1
102	GIRDER LAYOUT NO. 3 - FRAME 2
103	GIRDER LAYOUT NO. 4 - FRAME 2
104	GIRDER LAYOUT NO. 5 - FRAME 2
105	GIRDER LAYOUT NO. 6 - FRAME 2
106	GIRDER LAYOUT NO. 7 - FRAME 2
107	GIRDER LAYOUT NO. 8 - FRAME 2
108	GIRDER LAYOUT NO. 9 - FRAME 3
109	PC/PS BULB TEE GIRDER DETAILS NO. 1
110	PC/PS BULB TEE GIRDER DETAILS NO. 2
111	PC/PS BULB TEE GIRDER DETAILS NO. 3
112	GIRDER DETAILS NO. 1 - FRAME 3
113	SLAB REINFORCEMENT DETAILS NO. 1
114	SLAB REINFORCEMENT DETAILS NO. 2
115	SOFFIT REINFORCEMENT DETAILS NO. 1 - FRAME 1
116	SOFFIT REINFORCEMENT DETAILS NO. 2 - FRAME 2
117	SOFFIT REINFORCEMENT DETAILS NO. 3 - FRAME 2
118	SOFFIT REINFORCEMENT DETAILS NO. 4 - FRAME 2
119	SOFFIT REINFORCEMENT DETAILS NO. 5 - FRAME 2
120	SOFFIT REINFORCEMENT DETAILS NO. 6 - FRAME 2
121	DECK REINFORCEMENT DETAILS NO. 1 - FRAME 1
122	DECK REINFORCEMENT DETAILS NO. 2 - FRAME 1
123	DECK REINFORCEMENT DETAILS NO. 3 - FRAME 2
124	DECK REINFORCEMENT DETAILS NO. 4 - FRAME 2
125	DECK REINFORCEMENT DETAILS NO. 5 - FRAME 2
126	DECK REINFORCEMENT DETAILS NO. 6 - FRAME 2
127	DECK REINFORCEMENT DETAILS NO. 7 - FRAME 2
128	MAIN HINGE LAYOUT
129	MAINLINE HINGE DETAILS NO. 1
130	MAINLINE HINGE DETAILS NO. 2
131	MAINLINE HINGE DETAILS NO. 3
132	MAINLINE HINGE DETAILS NO. 4
133	MAINLINE HINGE DETAILS NO. 5
134	ON RAMP HINGE LAYOUT
135	OFF RAMP HINGE LAYOUT
136	NB VALLEY VIEW AVE HINGE LAYOUT
137	SB VALLEY VIEW AVE HINGE LAYOUT
138	RAMP HINGE DETAILS
139	DRAINAGE LAYOUT
140	DRAINAGE DETAILS
141	LUMINAIRE CORBEL DETAILS NO 1
142	LUMINAIRE CORBEL DETAILS NO 2
143	SIGN PEDESTAL DETAILS NO 1
144	SIGN PEDESTAL DETAILS NO 2
145	TYPE 26 BARRIER (MOD) REINFORCEMENT DETAILS NO.1
146	TYPE 26 BARRIER (MOD) REINFORCEMENT DETAILS NO.2
147	TYPE 26 BARRIER (MOD) REINFORCEMENT DETAILS NO.3
148	MEDIAN CURB DETAILS
149	STRUCTURE APPROACH TYPE N(30S) MOD
150	STRUCTURE APPROACH DRAINAGE DETAILS
151	CONCRETE CLOSURE WALL NO 1
152	CONCRETE CLOSURE WALL NO 2
153	CONCRETE CLOSURE WALL NO 3
154	CONCRETE CLOSURE WALL DETAILS NO 1
155	CONCRETE CLOSURE WALL DETAILS NO 2
156	JOINT SEAL ASSEMBLY - MAXIMUM MOVEMENT RATING = 4"
157	JOINT SEAL ASSEMBLY DETAILS No. 1 - MOVEMENT RATING GREATER THAN 4"
158	JOINT SEAL ASSEMBLY DETAILS No. 2 - MOVEMENT RATING GREATER THAN 4"
159	PTFE/SPHERICAL EXPANSION BEARING DETAILS NO 1
160	PTFE/SPHERICAL EXPANSION BEARING DETAILS NO 2
161	PTFE/SPHERICAL EXPANSION BEARING DETAILS NO 3
162	CHAIN LINK RAILING DETAILS
163	ARCHITECTURAL ELEVATIONS AT ABUTMENTS
164	SECTIONS AND MOTIF DETAILS AT ABUTMENTS
165	PIER 8 ELEVATION AND ARCHITECTURAL MOTIF
166	PIER 8 ARCHITECTURAL MOTIF AND DETAILS
167	BARRIER MOTIF DETAILS
168	LOG OF TEST BORINGS SHEET 1 OF 15
169	LOG OF TEST BORINGS SHEET 2 OF 15
170	LOG OF TEST BORINGS SHEET 3 OF 15
171	LOG OF TEST BORINGS SHEET 4 OF 15
172	LOG OF TEST BORINGS SHEET 5 OF 15
173	LOG OF TEST BORINGS SHEET 6 OF 15
174	LOG OF TEST BORINGS SHEET 7 OF 15
175	LOG OF TEST BORINGS SHEET 8 OF 15
176	LOG OF TEST BORINGS SHEET 9 OF 15
177	LOG OF TEST BORINGS SHEET 10 OF 15
178	LOG OF TEST BORINGS SHEET 11 OF 15
179	LOG OF TEST BORINGS SHEET 12 OF 15
180	LOG OF TEST BORINGS SHEET 13 OF 15
181	LOG OF TEST BORINGS SHEET 14 OF 15
182	LOG OF TEST BORINGS SHEET 15 OF 15

STANDARD PLANS DATED JULY 2010

	A10A	ABBREVIATIONS (SHEET 1 OF 2)
RSP	A10B	ABBREVIATIONS (SHEET 2 OF 2)
	A10C	LINES AND SYMBOLS (SHEET 1 OF 3)
	A10D	LINES AND SYMBOLS (SHEET 2 OF 3)
	A10E	LINES AND SYMBOLS (SHEET 3 OF 3)
RSP	A10F	LEGEND - SOIL (SHEET 1 OF 2)
RSP	A10G	LEGEND - SOIL (SHEET 2 OF 2)
	A62B	LIMITS OF PAYMENT FOR EXCAVATION AND BACKFILL - BRIDGE SURCHARGE AND WALL*
RSP	A87A	CURBS AND DRIVEWAYS
	A62C	LIMITS OF PAYMENT FOR EXCAVATION AND BACKFILL - BRIDGE
	BO-1	BRIDGE DETAILS
	BO-3	BRIDGE DETAILS
	BO-5	BRIDGE DETAILS
	BO-13	BRIDGE DETAILS
	B7-1	BOX GIRDER DETAILS
	B7-6	DECK DRAIN - TYPES D-1 AND D-2
	B7-8	DECK DRAIN DETAILS
	B7-10	UTILITY OPENING-BOX GIRDER
RSP	B8-5	CAST-IN-PLACE POST TENSIONED GIRDER DETAILS
RSP	B11-54	CONCRETE BARRIER TYPE 26
RSP	B11-56	CONCRETE BARRIER TYPE 736
	B14-5	WATER SUPPLY LINE (DETAILS) (PIPE SIZES LESS THAN 4")

* Note: For Surcharge limit, see "ROAD PLANS"

STANDARD PLAN SHEET. NO.

DETAIL NO.

	BY	CHECKED
DESIGN	K. Andurlekar/B. Kemp	M. Okimura/J. Posey
DETAILS	Jaime Ramirez	Krishnakant Andurlekar
QUANTITIES	BK/KD/KA/MO/JP	SP/DT/KA

STATE OF CALIFORNIA
DEPARTMENT OF TRANSPORTATION

DIVISION OF ENGINEERING SERVICES
STRUCTURE DESIGN
DESIGN BRANCH 11

BRIDGE NO. 53-3045
POST MILE 1.21

VALLEY VIEW AVE OH/OC (REPLACEMENT)
INDEX TO PLANS 1 OF 2

STRUCTURES DESIGN DETAIL SHEET (ENGLISH) (REV. 09-01-10)

ORIGINAL SCALE IN INCHES FOR REDUCED PLANS 0 1 2 3

UNIT: 3587
PROJECT NUMBER & PHASE: 0715000160-1
CONTRACT NO.: 07-2159U4

DISREGARD PRINTS BEARING EARLIER REVISION DATES

REVISION DATES: 12-2-11 12/10/13 9/12/13 9-24-13

SHEET 4 OF 182

FILE => 53-3045-bb-itp01.dgn

USERNAME => s125624 DATE PLOTTED => 28-JAN-2016 TIME PLOTTED => 11:55

DIST	COUNTY	ROUTE	POST MILES TOTAL PROJECT	SHEET No.	TOTAL SHEETS
07	LA,Ora	5	0.0/1.5, 44.3/44.4	1072	1622

REGISTERED CIVIL ENGINEER 3-18-15 DATE

1-25-16
PLANS APPROVAL DATE

REGISTERED PROFESSIONAL ENGINEER WILLIAM D. KEMP No. 55730 Exp. 12/31/16 CIVIL STATE OF CALIFORNIA

The State of California or its officers or agents shall not be responsible for the accuracy or completeness of electronic copies of this plan sheet.

GENERAL NOTES
LOAD AND RESISTANCE FACTOR DESIGN

DESIGN:
"AASHTO LRFD Bridge Design Specifications, 4th Edition and the Caltrans Amendments, preface dated December 2008

SEISMIC DESIGN:
Caltrans Seismic Design Criteria (SDC), Version 1.6 dated Nov 2010

DEAD LOAD:
Includes 35 psf for future wearing surface.

LIVE LOADING:
HL93 and Permit Design Load

SEISMIC LOADING:
Site Specific Acceleration Response Spectra Curve

REINFORCED CONCRETE:
fy = 60 ksi
f'c = 4 ksi
n = 8

PRESTRESSED CONCRETE:
See "Prestressing Notes" on "Girder Layout No. 2" sheet

Precast Prestressed Bulb Tee Girders:
See "PC/PS BULB TEE GIRDER DETAILS NO. 1" sheet

STRUCTURAL STEEL:
Steel Pipe Piles:
fy = 45 ksi

RECOMMENDED DESIGN ACCELERATION RESPONSE SPECTRUM (ARS)

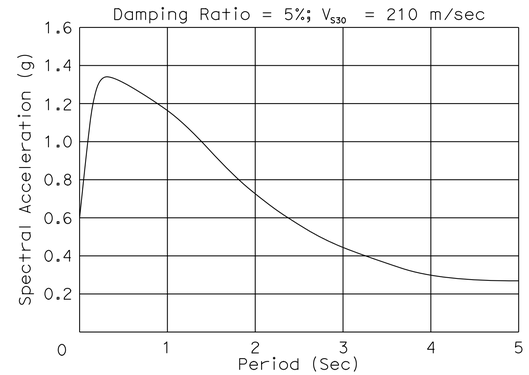

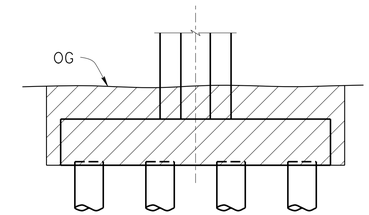

NOTE: For details not shown, see A62C

Limit of contaminated materials

STRUCTURE EXCAVATION (CONTAMINATED MATERIALS)

NO SCALE

EXCAVATION TABLE

BENT #	COLUMN #
2 & 3	C & D
5 & 6	A, B, C & D
5A & 5C	A, B & C
5B, 5D & 7D	A & B

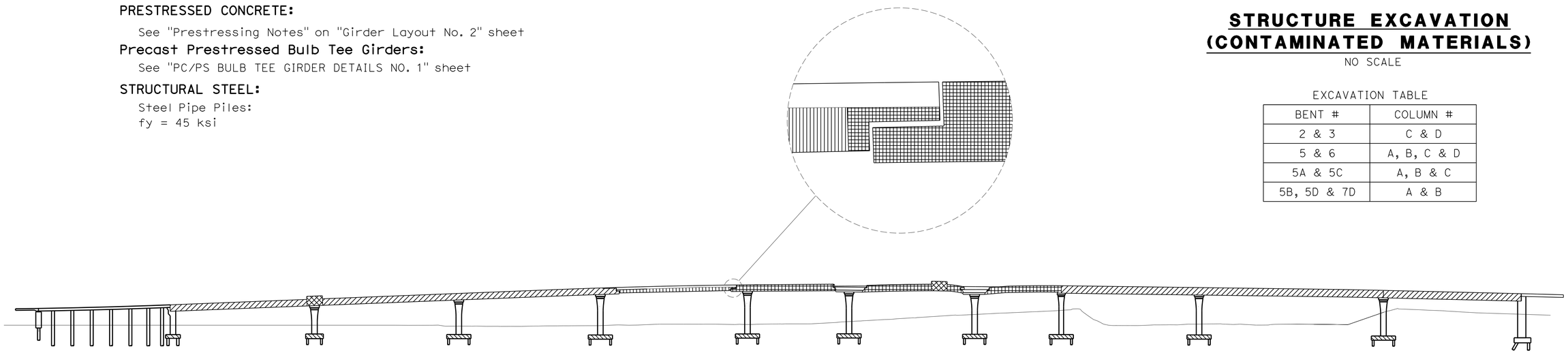

Structural Concrete, Bridge (4,000 psi @ 28 days)
Structural Concrete, Bridge (5,000 psi @ 28 days)
Structural Concrete (P/S), Bridge (4,000 psi @ 28 days)
PC/PS Bulb Tee Girders see "PC/PS BULB TEE GIRDER DETAILS NO. 1" sheet
Structural Concrete, Bridge Footing (4,000 psi @ 28 days)
Structural Concrete, Sign Pedestal (6,000 psi @ 28 days)

CONCRETE STRENGTH AND TYPE LIMITS

NO SCALE

	BY	CHECKED
DESIGN	Krishnakant Andurlekar	BK/MO/JP/KD
DETAILS	Jaime Ramirez	Bill Kemp
QUANTITIES	Krishnakant Andurlekar	Ruperd Wilson

STATE OF CALIFORNIA
DEPARTMENT OF TRANSPORTATION

DIVISION OF ENGINEERING SERVICES
STRUCTURE DESIGN
DESIGN BRANCH 11

BRIDGE NO. 53-3045
POST MILE 1.21

VALLEY VIEW AVE OH/OC (REPLACEMENT)
INDEX TO PLANS 2 OF 2

STRUCTURES DESIGN DETAIL SHEET (ENGLISH) (REV. 09-01-10)

ORIGINAL SCALE IN INCHES FOR REDUCED PLANS 0 1 2 3

UNIT: 3587
PROJECT NUMBER & PHASE: 0715000160-1
CONTRACT NO.: 07-2159U4

DISREGARD PRINTS BEARING EARLIER REVISION DATES

REVISION DATES: 12-2-11 9-24-13 4-17-13 8-21-13

SHEET 5 OF 182

FILE => 53-3045-bb-itp02.dgn

USERNAME => s125624 DATE PLOTTED => 28-JAN-2016 TIME PLOTTED => 11:55

DIST	COUNTY	ROUTE	POST MILES TOTAL PROJECT	SHEET No.	TOTAL SHEETS
07	LA,Ora	5	0.0/1.5, 44.3/44.4	1073	1622

REGISTERED CIVIL ENGINEER 3-18-15 DATE

1-25-16
PLANS APPROVAL DATE

REGISTERED PROFESSIONAL ENGINEER WILLIAM D. KEMP No. 55730 Exp. 12/31/16 CIVIL STATE OF CALIFORNIA

The State of California or its officers or agents shall not be responsible for the accuracy or completeness of electronic copies of this plan sheet.

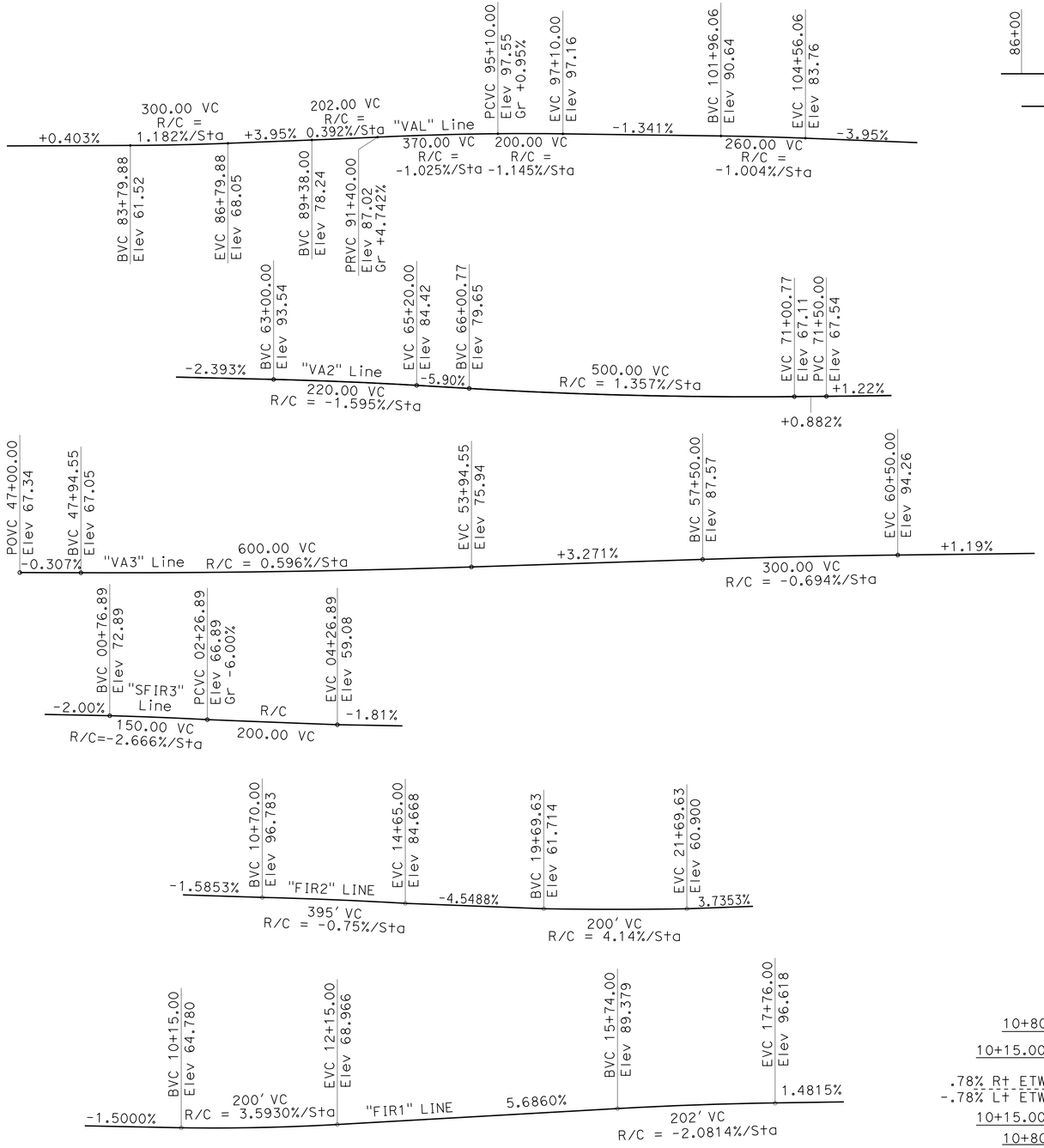

PROFILE GRADES

No Scale

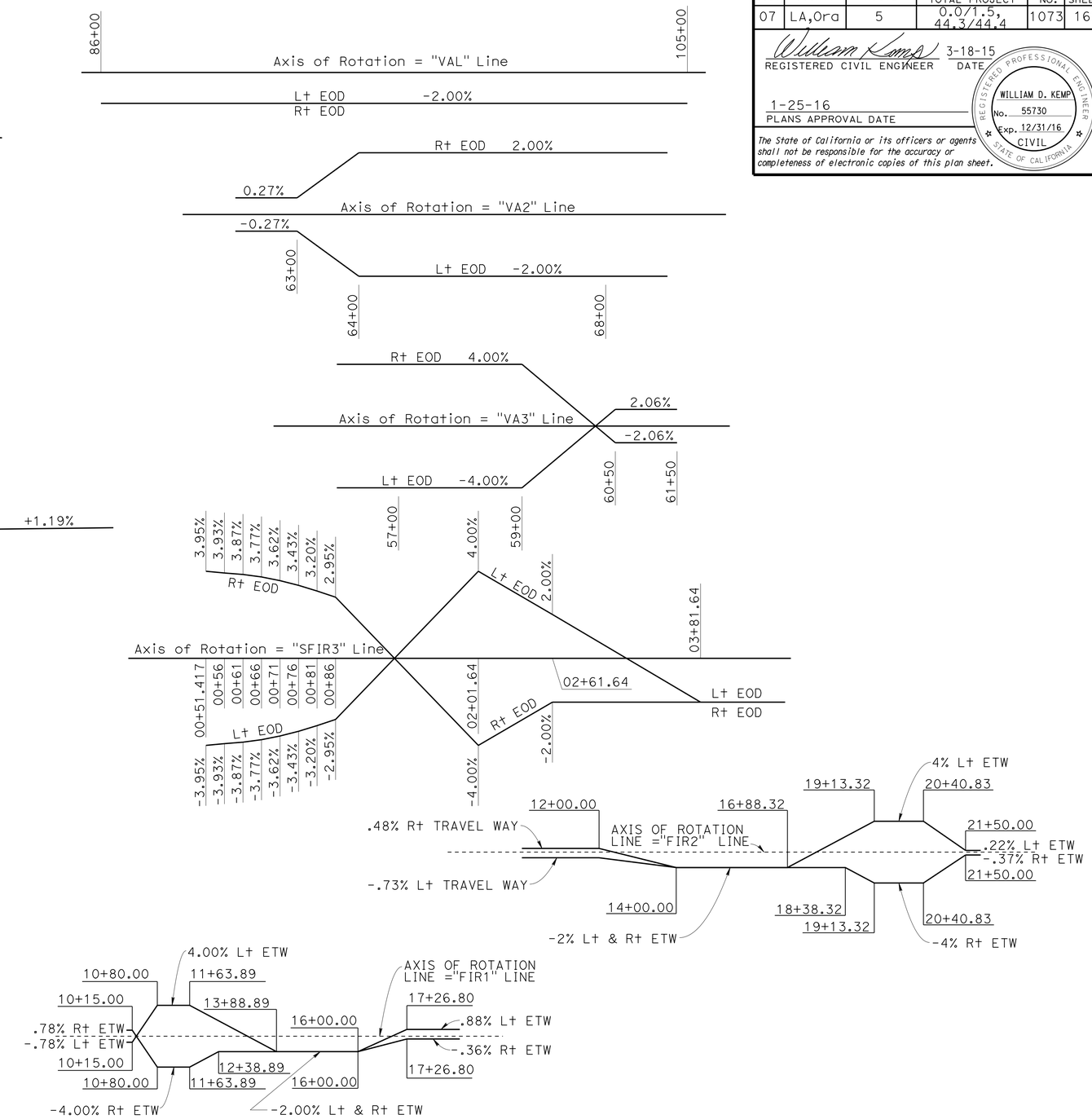

SUPERELEVATION DIAGRAMS

No Scale

DESIGN	BY DT/BK/KD/KA/MO/JP	CHECKED SP/DT/MO/KA	
DETAILS	BY Pauline Tong	CHECKED SP/DT/MO/KA	
QUANTITIES	BY KD/KA/MO/JP	CHECKED NS/RW/JR/NT	

STATE OF CALIFORNIA
DEPARTMENT OF TRANSPORTATION

DIVISION OF ENGINEERING SERVICES
STRUCTURE DESIGN
DESIGN BRANCH 11

BRIDGE NO. 53-3045
POST MILE 1.21

VALLEY VIEW AVE OH/OC (REPLACEMENT)
SCHEMATIC DIAGRAMS

STRUCTURES DESIGN DETAIL SHEET (ENGLISH) (REV. 09-01-10)

ORIGINAL SCALE IN INCHES FOR REDUCED PLANS 0 1 2 3

UNIT: 3587
PROJECT NUMBER & PHASE: 0715000160-1
CONTRACT NO.: 07-2159U4

DISREGARD PRINTS BEARING EARLIER REVISION DATES

REVISION DATES: 6-28-12 7-27-12 9-26-13 9-24-13

SHEET 6 OF 182

FILE => 53-3045-bc-sch01.dgn

USERNAME => s125624 DATE PLOTTED => 28-JAN-2016 TIME PLOTTED => 11:55

DIST	COUNTY	ROUTE	POST MILES TOTAL PROJECT	SHEET No.	TOTAL SHEETS
07	LA,Ora	5	0.0/1.5, 44.3/44.4	1074	1622

REGISTERED CIVIL ENGINEER — DATE 3-18-15

1-25-16
PLANS APPROVAL DATE

REGISTERED PROFESSIONAL ENGINEER — WILLIAM D. KEMP — No. 55730 — Exp. 12/31/16 — CIVIL — STATE OF CALIFORNIA

The State of California or its officers or agents shall not be responsible for the accuracy or completeness of electronic copies of this plan sheet.

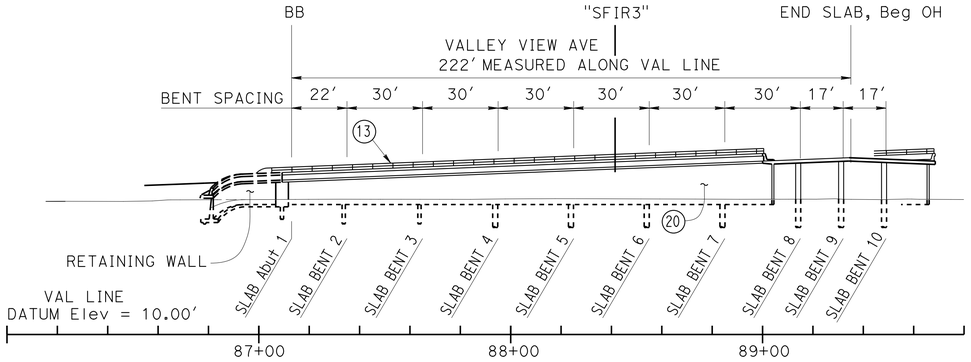

VALLEY VIEW ELEVATION - SLAB

1" = 30'

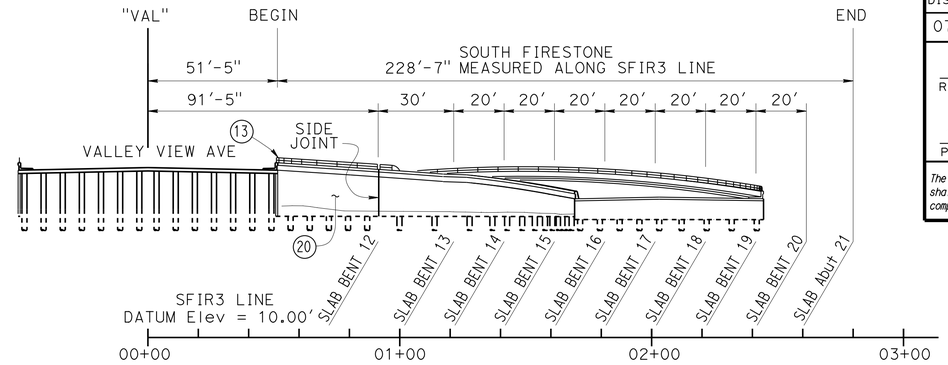

SOUTH FIRESTONE ELEVATION - SLAB

1" = 30'

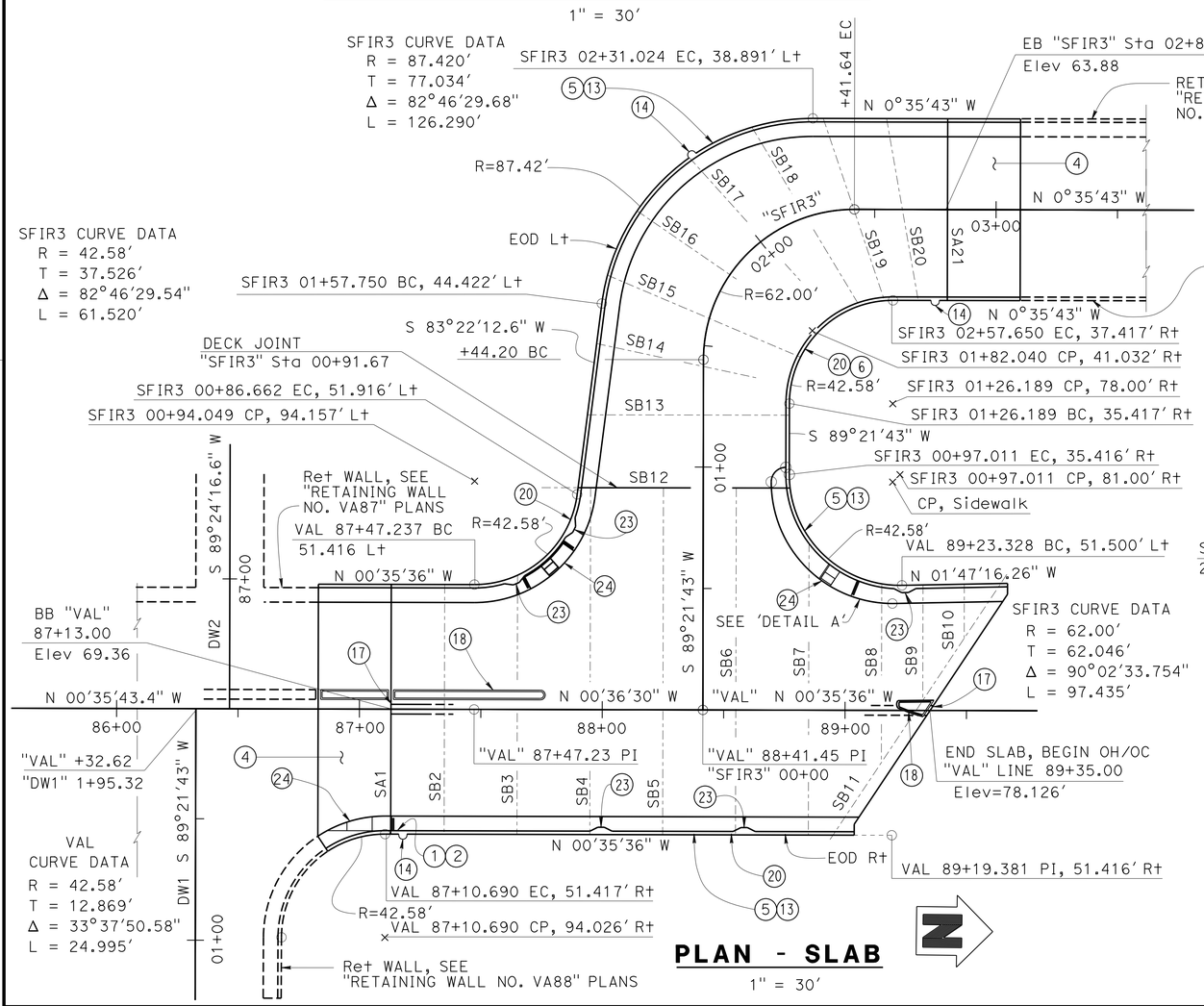

PLAN - SLAB

1" = 30'

SKEWS AT ABUT'S AND BENT'S (SLAB)

SA1-SB10	= 00°01'00"
SB11	= 33°33'38"
SB12-SB13	= 00°00'00"
SB14	= 12°00'00"
SB15	= 07°00'00"
SB16	= 00°00'00"
SB17	= 05°00'00"
SB18	= 12°30'00"
SB19	= 18°30'00"
SB20	= 11°11'26"
SA21	= 00°00'00"

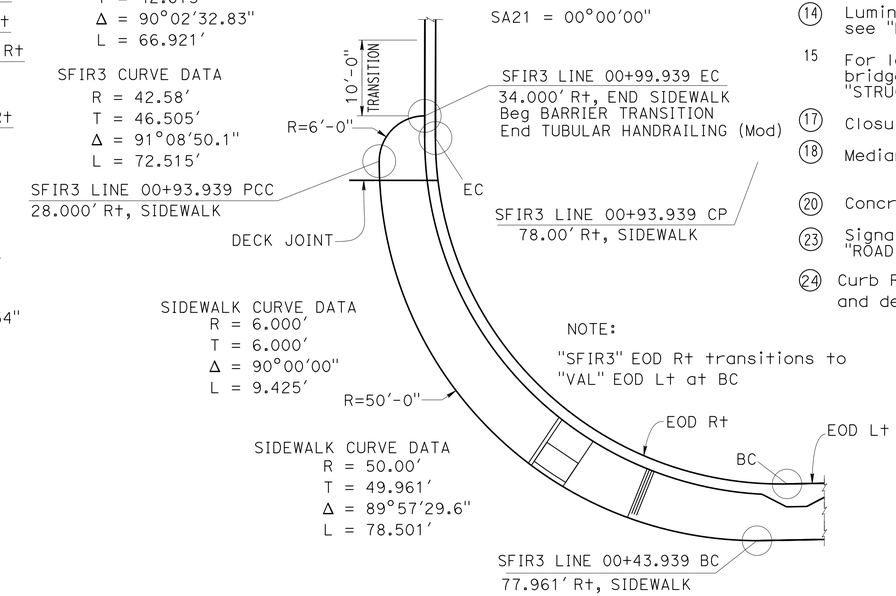

DETAIL A

1" = 10'

NOTES:

1. Paint "53-3045"
2. Paint "VALLEY VIEW OH/OC"
3. Paint Bent & Column number "B_C_"
4. Structure Approach Type N(30S) Mod
5. Conc Barrier Type 26 Mod
6. Conc Barrier Type 736 Mod
7. Chain Link Railing (Mod)
8. Sign Pedestal
10. Main Hinge
11. EB SB On Ramp
12. BB SB Off Ramp
13. Tubular Handrailing (Mod)
14. Luminaire Corbel, for locations, see "ROAD PLANS"
15. For location of exist Valley View bridges to be removed, see "STRUCTURE PLAN NO. 4 - FRAME 3" sheet
17. Closure Pour, 4'-0" Wide
18. Median Island
20. Concrete Closure Wall
23. Signal Pedestal, for locations, see "ROAD PLANS"
24. Curb Ramp, for locations and details, see "ROAD PLANS"

	BY	CHECKED
DESIGN	K. Doll	S. Pahlavan
DETAILS	T. Bittermann	S. Pahlavan
QUANTITIES	K. Doll	N. Shah

STATE OF CALIFORNIA
DEPARTMENT OF TRANSPORTATION

DIVISION OF ENGINEERING SERVICES
STRUCTURE DESIGN
DESIGN BRANCH 11

BRIDGE NO. 53-3045
POST MILE 1.21

VALLEY VIEW AVE OH/OC (REPLACEMENT)
STRUCTURE PLAN NO 1 - SLAB BRIDGE

STRUCTURES DESIGN DETAIL SHEET (ENGLISH) (REV. 09-01-10)

ORIGINAL SCALE IN INCHES FOR REDUCED PLANS 0 1 2 3

UNIT: 3587
PROJECT NUMBER & PHASE: 0715000160-1
CONTRACT NO.: 07-2159u4

DISREGARD PRINTS BEARING EARLIER REVISION DATES

REVISION DATES: 5-31-11 9-06-13 9-18-13 4-18-13

SHEET 7 OF 182

FILE => 53-3045-cc-sp01.dgn

USERNAME => s125624 DATE PLOTTED => 28-JAN-2016 TIME PLOTTED => 11:55

DIST	COUNTY	ROUTE	POST MILES TOTAL PROJECT	SHEET No.	TOTAL SHEETS
07	LA,Ora	5	0.0/1.5, 44.3/44.4	1075	1622

William Kemp 3-18-15
REGISTERED CIVIL ENGINEER DATE

1-25-16
PLANS APPROVAL DATE

REGISTERED PROFESSIONAL ENGINEER WILLIAM D. KEMP No. 55730 Exp. 12/31/16 CIVIL STATE OF CALIFORNIA

The State of California or its officers or agents shall not be responsible for the accuracy or completeness of electronic copies of this plan sheet.

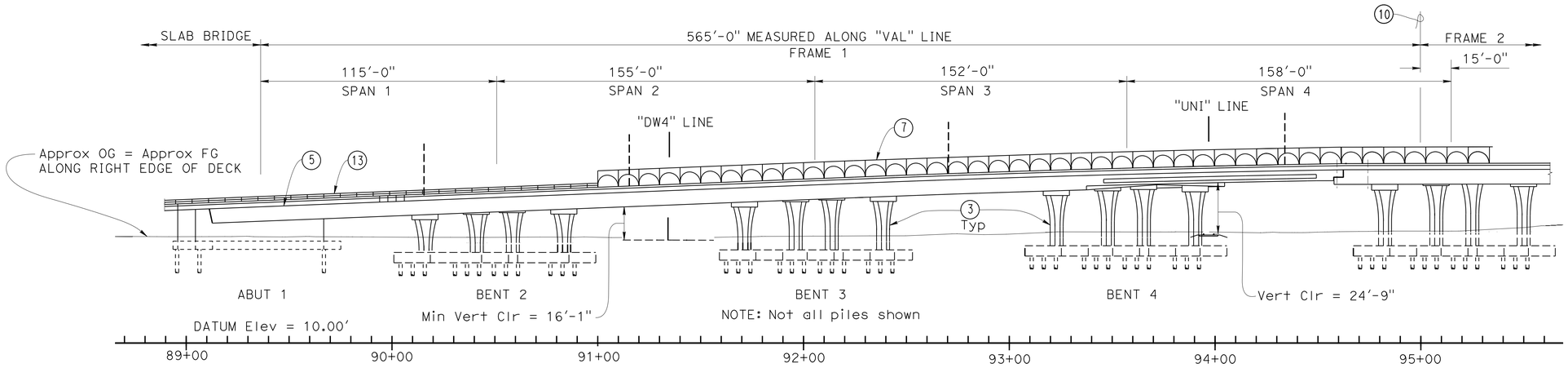

ELEVATION - FRAME 1

1" = 30'

NOTES:

- (3) Paint Bent and Column number "B_C_"
- (5) Conc Barrier Type 26 Mod
- (7) Chain Link Railing (Mod)
- (8) Sign Pedestal
- (10) CL Brg Main Hinge
- (13) Tubular Handrailing (Mod)
- (14) Luminaire Corbel, for locations see "ROAD PLANS"
- (18) Median Island, See "MEDIAN ISLAND DETAILS" sheet

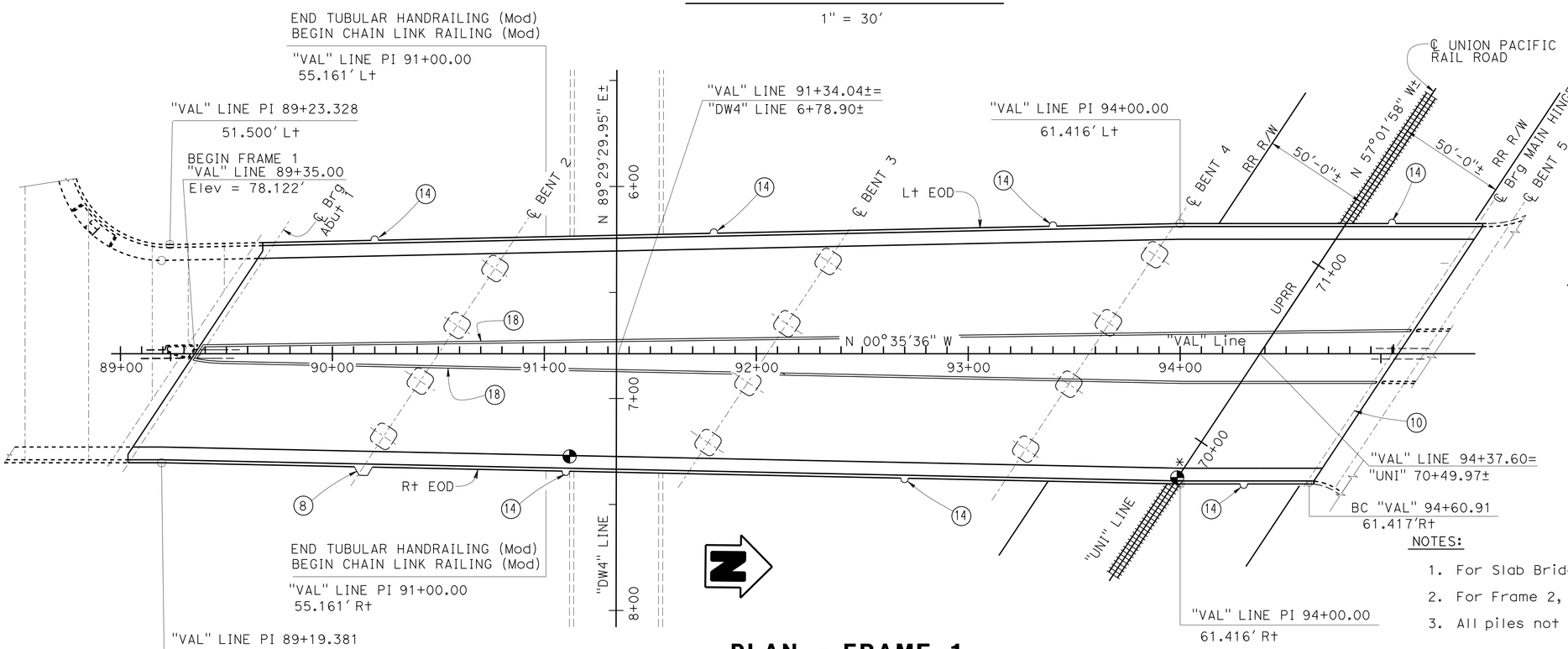

PLAN - FRAME 1

1" = 30'

LEGEND

- —— Indicates new construction
- ⊛ Indicates Point of Minimum vertical clearance for UPRR
- ◕ Indicates Point of Minimum vertical clearance

SKEWS:

Abut	1	33°33'38"
Bents	2-4	33°33'38"
Main Hinge		33°33'38"

NOTES:

1. For Slab Bridge, refer "STRUCTURE PLAN No.1" sheet
2. For Frame 2, refer "STRUCTURE PLAN No. 3" sheet
3. All piles not shown for clarity

	BY	CHECKED
DESIGN	Krishnakant Andurlekar	Dauryoush Tavatli
DETAILS	T. Bittermann	Dauryoush Tavatli
QUANTITIES	Krishnakant Andurlekar	Ruperd Wilson

STATE OF CALIFORNIA
DEPARTMENT OF TRANSPORTATION

DIVISION OF ENGINEERING SERVICES
STRUCTURE DESIGN
DESIGN BRANCH 11

BRIDGE NO. 53-3045
POST MILE 1.21

VALLEY VIEW AVE OH/OC (REPLACEMENT)
STRUCTURE PLAN NO 2 - FRAME 1

STRUCTURES DESIGN DETAIL SHEET (ENGLISH) (REV. 09-01-10)

ORIGINAL SCALE IN INCHES FOR REDUCED PLANS 0 1 2 3

UNIT: 3587
PROJECT NUMBER & PHASE: 0715000160-1
CONTRACT NO.: 07-2159u4

DISREGARD PRINTS BEARING EARLIER REVISION DATES

REVISION DATES: 2-12-13 12-6-13 9-2-15 9-16-15

SHEET 8 OF 182

FILE => 53-3045-cc-sp02.dgn

USERNAME => s125624 DATE PLOTTED => 28-JAN-2016 TIME PLOTTED => 11:55

DIST	COUNTY	ROUTE	POST MILES TOTAL PROJECT	SHEET No.	TOTAL SHEETS
07	LA,Ora	5	0.0/1.5, 44.3/44.4	1076	1622

REGISTERED CIVIL ENGINEER — DATE 3-18-15

1-25-16
PLANS APPROVAL DATE

REGISTERED PROFESSIONAL ENGINEER — WILLIAM D. KEMP — No. 55730 — Exp. 12/31/16 — CIVIL — STATE OF CALIFORNIA

The State of California or its officers or agents shall not be responsible for the accuracy or completeness of electronic copies of this plan sheet.

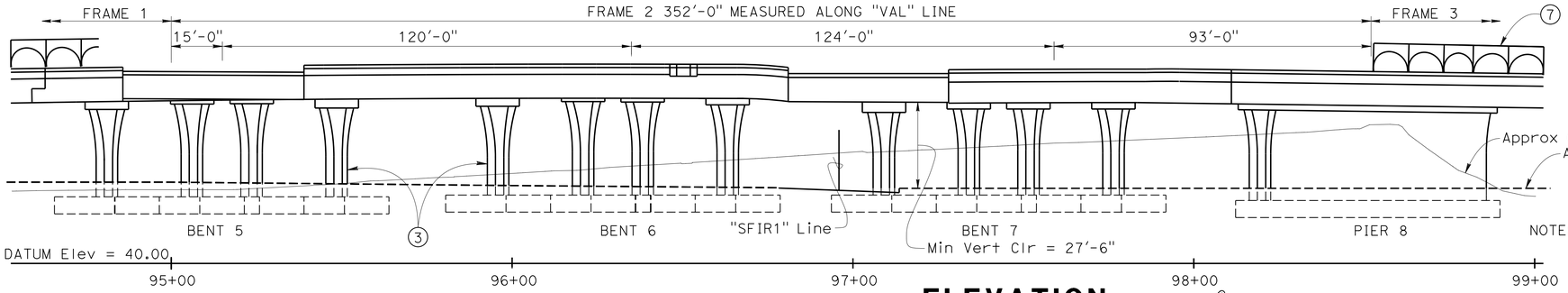

NOTE: All columns not shown.
All piles not shown

ELEVATION
1" = 20'-0"

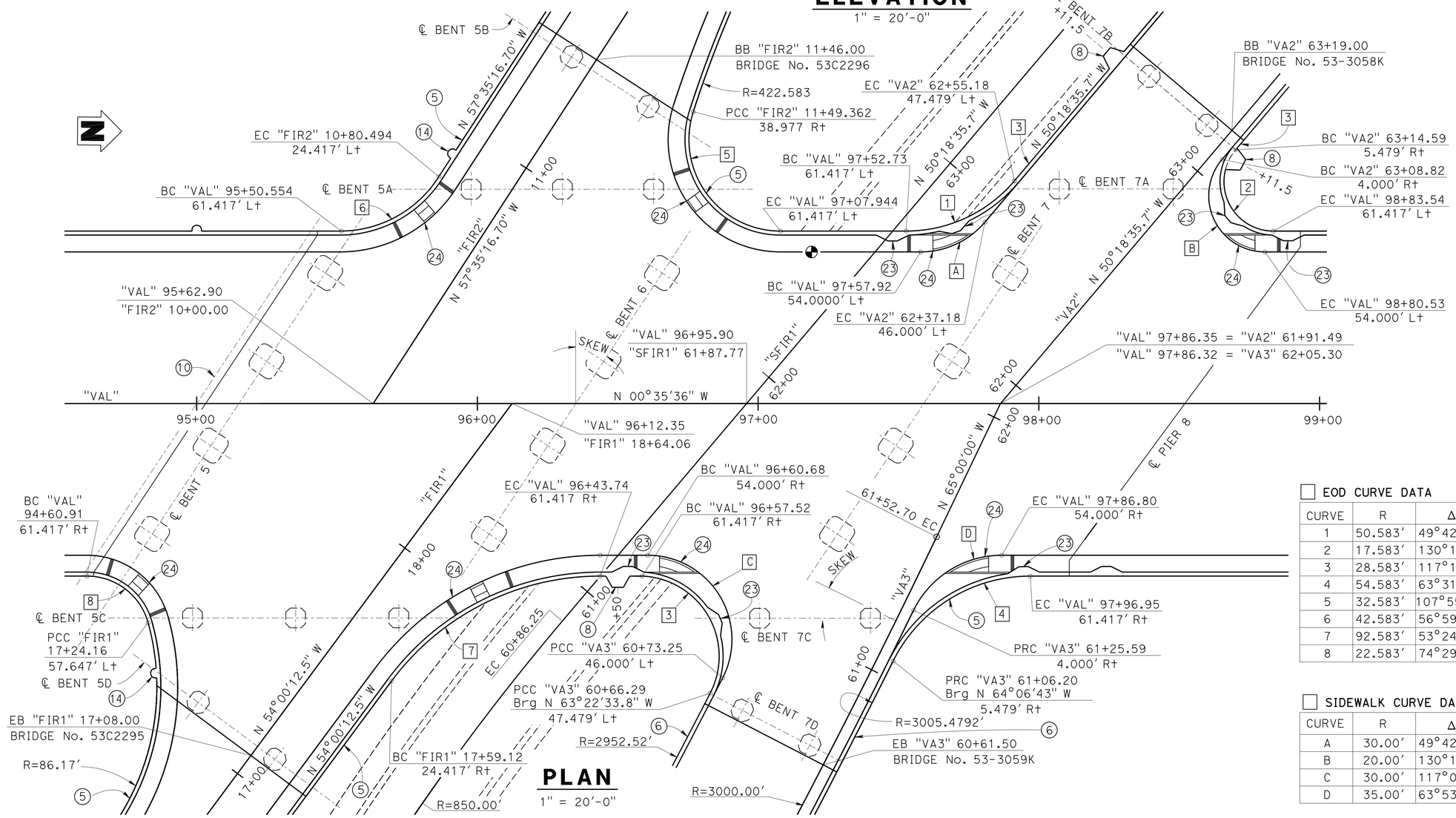

PLAN
1" = 20'-0"

LEGEND:

Indicates Point of Minimum vertical clearance

NOTES:

(3) Paint Bent and Column Number "B_C_"

(5) Conc Barrier Type 26 Mod

(6) Conc Barrier Type 736 Mod

(7) Chain Link Railing (Mod), see "STRUCTURE PLAN No. 5-BARRIER DETAILS" for limits at Br No. 53-3058K and 53-3059K. End Chain Link Railing (Mod) at EB and BB at Br No. 53C2295 and 53C2296.

(8) Sign Pedestal

(10) ℄ Brg Main Hinge

(14) For Luminaire locations see "ROAD PLANS"

(23) Signal Pedestal, for locations, see "ROAD PLANS"

(24) Curb Ramp, for locations and details, see "ROAD PLANS"

☐ EOD CURVE DATA

CURVE	R	Δ	T	L
1	50.583'	49°42'60"	23.440'	43.892'
2	17.583'	130°17'00"	37.952'	39.982'
3	28.583'	117°16'05"	46.890'	58.502'
4	54.583'	63°31'10"	33.790'	60.512'
5	32.583'	107°55'16.31"	44.782'	61.373'
6	42.583'	56°59'40.76"	23.118'	42.360'
7	92.583'	53°24'36.60"	46.575'	86.305'
8	22.583'	74°29'44.70"	17.171'	29.363'

☐ SIDEWALK CURVE DATA

CURVE	R	Δ	T	L
A	30.00'	49°42'60"	13.899'	26.032'
B	20.00'	130°17'00"	43.169'	45.477'
C	30.00'	117°06'38"	49.062'	61.319
D	35.00'	63°53'20"	21.823'	39.028'

℄	SKEW
HINGE	33°33'37.96"
BENT 5	33°33'37.96"
BENT 5A	33°00'19.24"
BENT 5B	0°0'0"
BENT 5C	36°35'23.38"
BENT 5D	0°0'0"
BENT 6	33°33'37.96"
BENT 7	33°33'37.96"
BENT 7A	40°17'00.21"
BENT 7B	0°0'0"
BENT 7C	26°12'29.60"
BENT 7D	0°0'0"
PIER 8	36°24'52.21"

DESIGN	Dan Texler/Mark Okimura	CHECKED	Phu Nguyen
DETAILS	BY Jaime Ramirez	CHECKED	Mark Okimura
QUANTITIES	BY Mark Okimura	CHECKED	John Radu

STATE OF CALIFORNIA
DEPARTMENT OF TRANSPORTATION

DIVISION OF ENGINEERING SERVICES
STRUCTURE DESIGN
DESIGN BRANCH 11

BRIDGE NO. 53-3045
POST MILE 1.21

VALLEY VIEW AVE OH/OC (REPLACEMENT)
STRUCTURE PLAN NO 3 - FRAME 2

STRUCTURES DESIGN DETAIL SHEET (ENGLISH) (REV. 09-01-10)

ORIGINAL SCALE IN INCHES FOR REDUCED PLANS 0 1 2 3

UNIT: 3587
PROJECT NUMBER & PHASE: 0715000160-1
CONTRACT NO.: 07-2159u4

DISREGARD PRINTS BEARING EARLIER REVISION DATES

REVISION DATES: 10-15-12 9-18-13 6-12-13 9-06-13

SHEET 9 OF 182

FILE => 53-3045-cc-sp03.dgn

USERNAME => s125624 DATE PLOTTED => 28-JAN-2016 TIME PLOTTED => 11:55

DIST	COUNTY	ROUTE	POST MILES TOTAL PROJECT	SHEET No.	TOTAL SHEETS
07	LA,Ora	5	0.0/1.5, 44.3/44.4	1077	1622

REGISTERED CIVIL ENGINEER — DATE: 3-18-15

1-25-16
PLANS APPROVAL DATE

REGISTERED PROFESSIONAL ENGINEER — WILLIAM D. KEMP — No. 55730 — Exp. 12/31/16 — CIVIL — STATE OF CALIFORNIA

The State of California or its officers or agents shall not be responsible for the accuracy or completeness of electronic copies of this plan sheet.

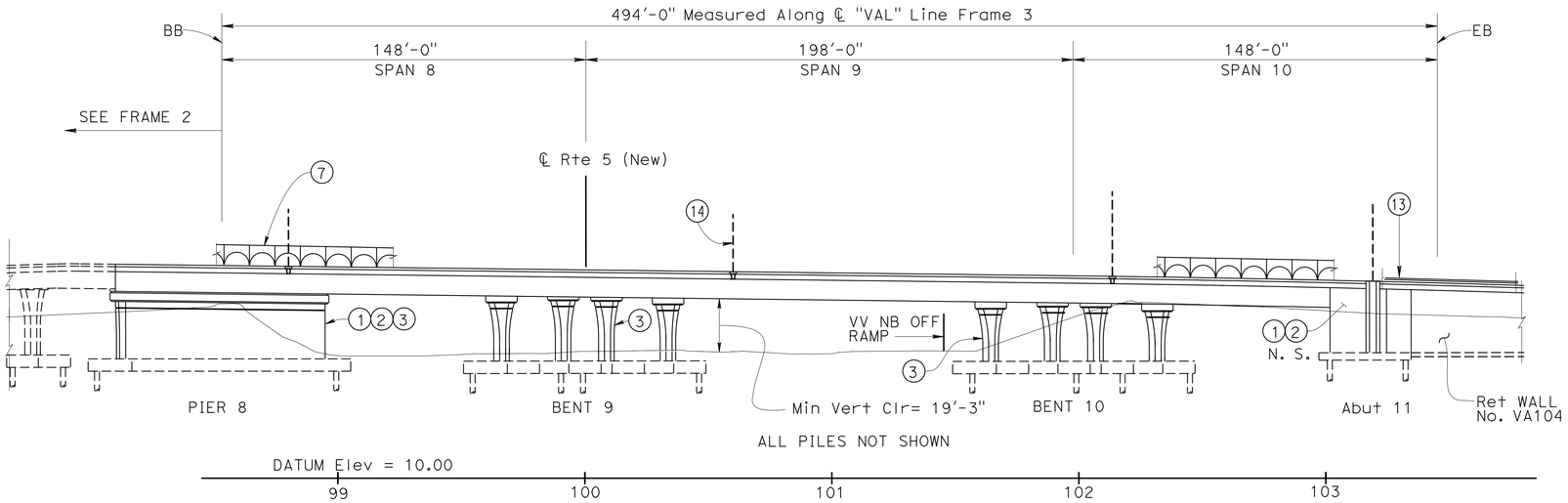

ELEVATION - FRAME 3

1" = 30'

NOTES:

1. Paint "Br. No. 53-3045"
2. Paint "VALLEY VIEW AVE OH/OC"
3. Paint Bent number
4. Structure Approach Type N(30S) Mod
5. Conc Barrier Type 26 Mod with Sidewalk
7. Chain Link Railing (Mod)
8. Sign Pedestal (for signs, see "ROAD PLANS")
13. Tubular Handrailing (Mod)
14. Luminaire Corbel. For locations, see "ROAD PLANS"
16. Existing Retaining Wall to be removed see "ABUTMENT 11 LAYOUT FRAME 3" for limits
18. Median Island

Indicates Bridge Removal (Br. No. 53-0631L/R)

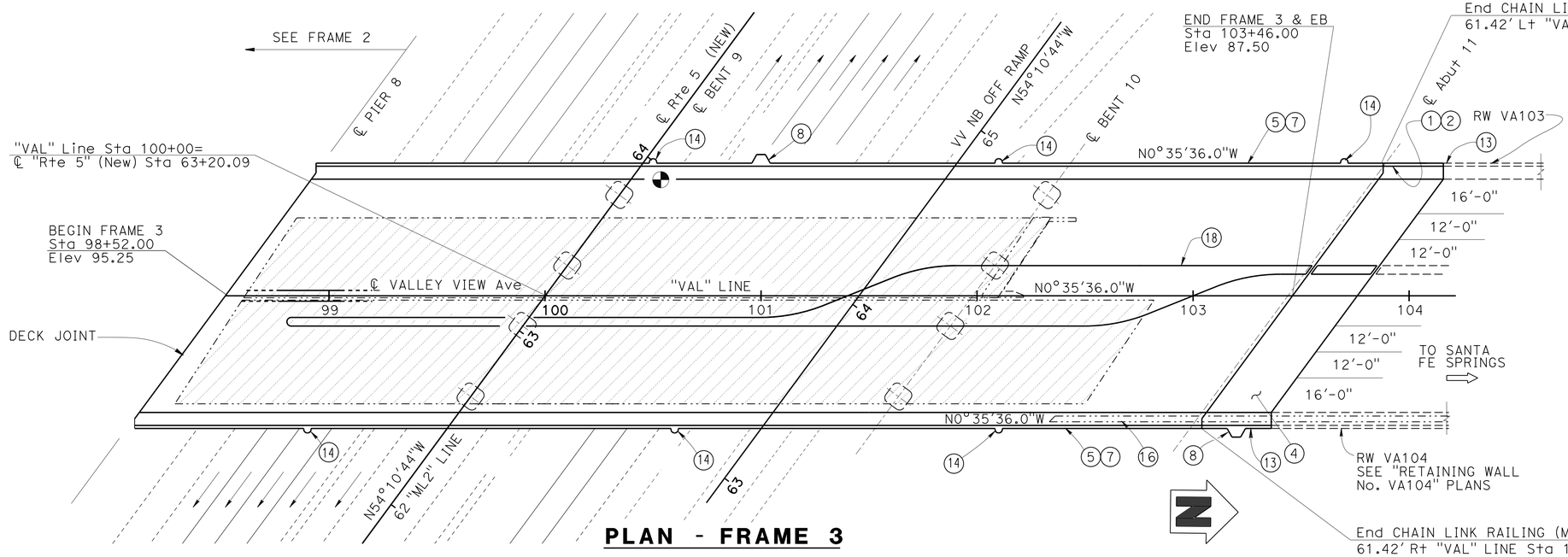

℄	SKEW
BENT 9	36°24'52"
BENT 10	36°24'52"
Abut 11	36°24'52"

PLAN - FRAME 3

1" = 30'

	BY	CHECKED
DESIGN	Jay Posey	P. Nguyen/K. Andurlekar
DETAILS	T. Bittermann	P. Nguyen/K. Andurlekar
QUANTITIES	Jay Posey	Nikki Tiongco

STATE OF CALIFORNIA
DEPARTMENT OF TRANSPORTATION

DIVISION OF ENGINEERING SERVICES
STRUCTURE DESIGN
DESIGN BRANCH 11

BRIDGE NO. 53-3045
POST MILE 1.21

VALLEY VIEW AVE OH/OC (REPLACEMENT)
STRUCTURE PLAN NO 4 - FRAME 3

STRUCTURES DESIGN DETAIL SHEET (ENGLISH) (REV. 09-01-10)

ORIGINAL SCALE IN INCHES FOR REDUCED PLANS 0 1 2 3

UNIT: 3587
PROJECT NUMBER & PHASE: 0715000160-1
CONTRACT NO.: 07-2159u4

DISREGARD PRINTS BEARING EARLIER REVISION DATES

REVISION DATES: 9-10-12 8/29/13 7-17-13 8-21-13

SHEET 10 OF 182

FILE => 53-3045-cc-sp04.dgn

USERNAME => s125624 DATE PLOTTED => 28-JAN-2016 TIME PLOTTED => 11:55

DIST	COUNTY	ROUTE	POST MILES TOTAL PROJECT	SHEET No.	TOTAL SHEETS
07	LA,Ora	5	0.0/1.5, 44.3/44.4	1078	1622

REGISTERED CIVIL ENGINEER — DATE 3-18-15

1-25-16
PLANS APPROVAL DATE

REGISTERED PROFESSIONAL ENGINEER — WILLIAM D. KEMP — No. 55730 — Exp. 12/31/16 — CIVIL — STATE OF CALIFORNIA

The State of California or its officers or agents shall not be responsible for the accuracy or completeness of electronic copies of this plan sheet.

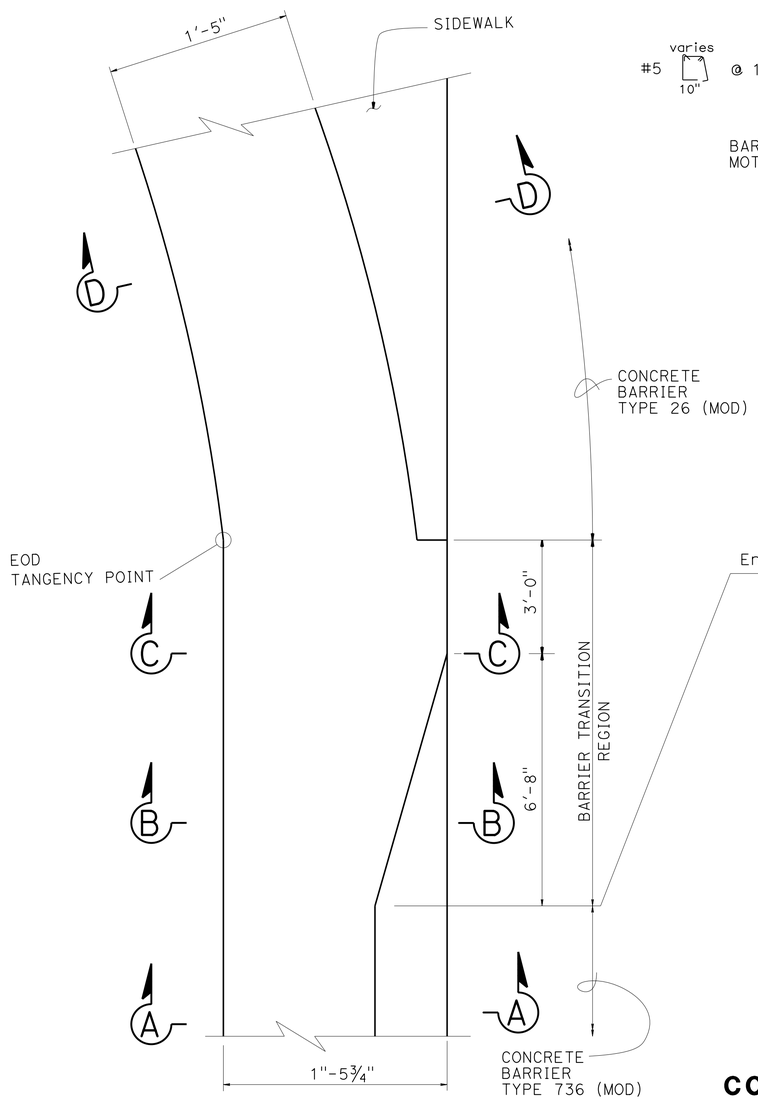

CONCRETE BARRIER - TRANSITION REGION PLAN

NOT TO SCALE

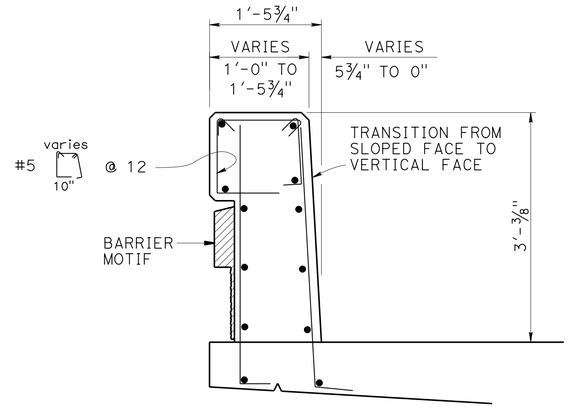

SECTION B-B

1" = 1'-0"

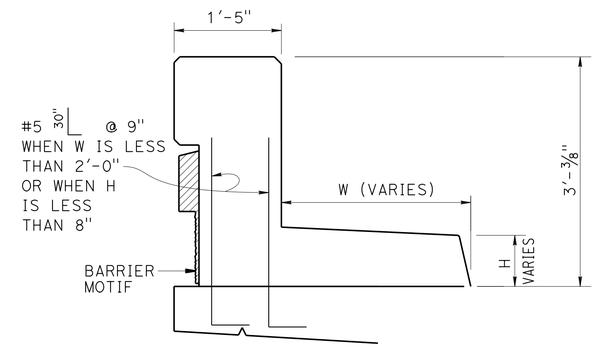

SECTION D-D CONCRETE BARRIER TYPE 26 MOD

1" = 1'-0"

NOTES:

1. For concrete barrier reinforcement and other details not shown here, see

RSP B11-54 & RSP B11-56

2. For Barrier Motif, see "BARRIER MOTIF DETAILS" sheet.

LEGEND:

Indicates Architectural Treatment

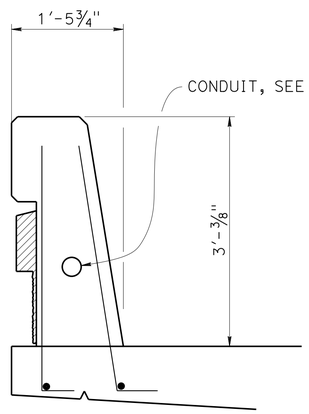

SECTION A-A CONCRETE BARRIER TYPE 736 MOD

1" = 1'-0"

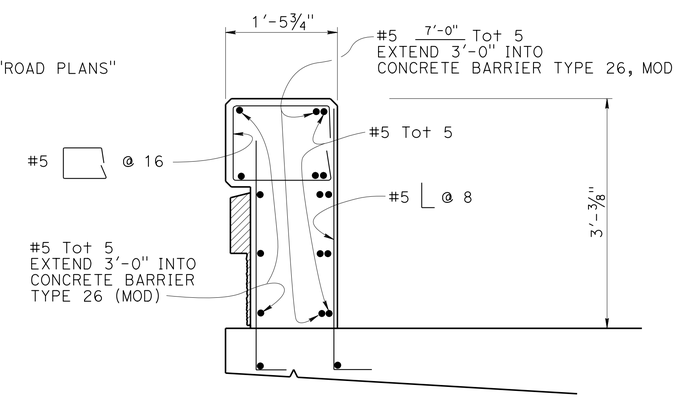

SECTION C-C

1" = 1'-0"

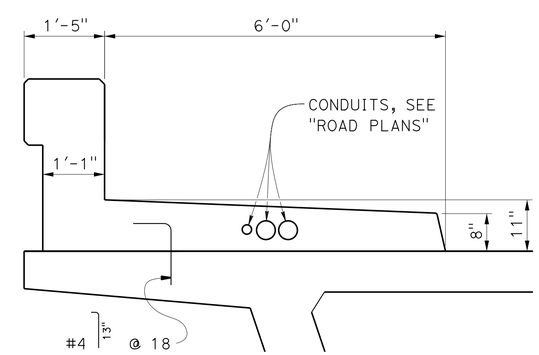

CONCRETE BARRIER TYPE 26 MOD

¾" = 1'-0"

DESIGN	BY Dan Texler	CHECKED Mark Okimura	
DETAILS	BY Pauline Tong	CHECKED Bill Kemp	
QUANTITIES	BY Mark Okimura	CHECKED John Radu	

STATE OF CALIFORNIA DEPARTMENT OF TRANSPORTATION

DIVISION OF ENGINEERING SERVICES STRUCTURE DESIGN DESIGN BRANCH 11

BRIDGE NO. 53-3045
POST MILE 1.21

VALLEY VIEW AVE OH/OC (REPLACEMENT)
STRUCTURE PLAN NO 5 - BARRIER DETAILS

STRUCTURES DESIGN DETAIL SHEET (ENGLISH) (REV. 09-01-10)

ORIGINAL SCALE IN INCHES FOR REDUCED PLANS 0 1 2 3

UNIT: 3587
PROJECT NUMBER & PHASE: 0715000160-1
CONTRACT NO.: 07-2159u4

DISREGARD PRINTS BEARING EARLIER REVISION DATES

REVISION DATES: 6-22-11 4/08/13 9-14-13 2/14/15

SHEET 11 OF 182

FILE => 53-3045-cc-sp05.dgn

USERNAME => s125624 DATE PLOTTED => 28-JAN-2016 TIME PLOTTED => 11:56

DIST	COUNTY	ROUTE	POST MILES TOTAL PROJECT	SHEET No.	TOTAL SHEETS
07	LA,Ora	5	0.0/1.5, 44.3/44.4	1079	1622

REGISTERED CIVIL ENGINEER — DATE: 3-18-15

1-25-16
PLANS APPROVAL DATE

REGISTERED PROFESSIONAL ENGINEER — WILLIAM D. KEMP — No. 55730 — Exp. 12/31/16 — CIVIL — STATE OF CALIFORNIA

The State of California or its officers or agents shall not be responsible for the accuracy or completeness of electronic copies of this plan sheet.

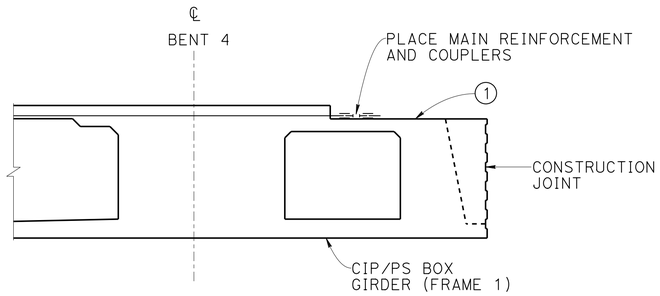

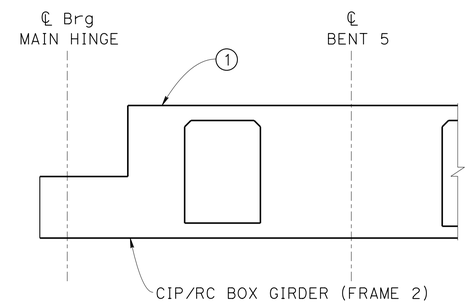

ELEVATION STAGE 1

NO SCALE

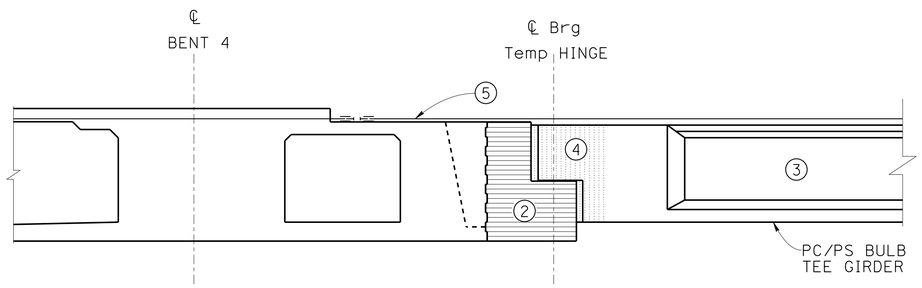

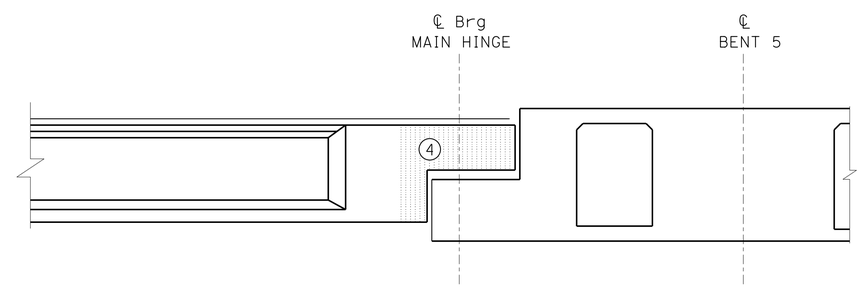

ELEVATION STAGE 2

NO SCALE

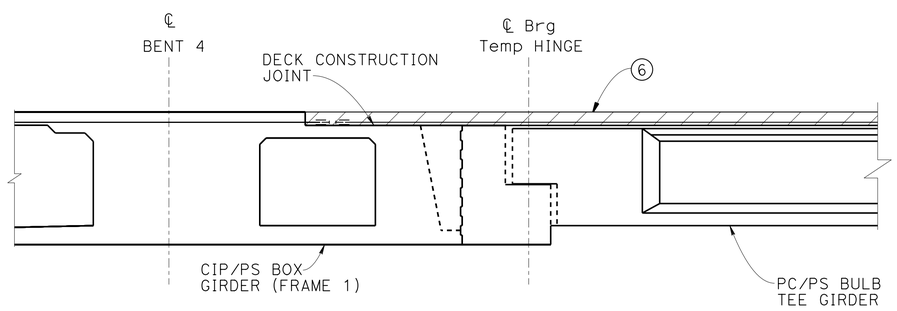

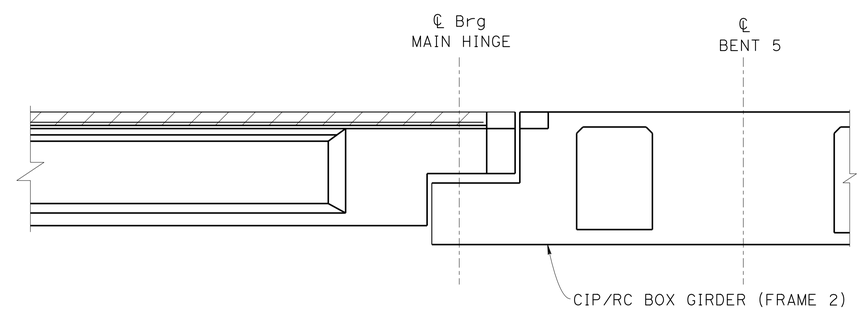

ELEVATION STAGE 3

NO SCALE

CONSTRUCTION SEQUENCE:

1. Erect & Post Tension CIP/PS section of Frame 1
   Erect Frame 2 (CIP/RC)
2. Construct support seat for PC/PS Bulb-Tee girders next to Bent 4.
   Support seat to be placed no sooner than 30 days after Prestressing of frame 1 is completed
3. Place Precast Bulb-Tee girders
4. Pour end Diaphragms between Precast girders
5. Place deck reinforcement over Precast Span
6. Place deck pour on PS/PS Bulb-Tee girders and CIP/PS Box Girder

NOTES:

1. Falsework supporting span 3, span 5 and precast girder seats (span 4) to remain until deck pour on precast span is completed.
2. The age of the precast girders shall be at least 90 days before placing deck pour on precast span.
3. For clarity, only primary girder reinforcing is shown. For additional information see, "TYPICAL SECTION NO. 2 - FRAME 1", "TYPICAL SECTION NO. 3 - FRAME 1", "TYPICAL SECTION NO. 4 - FRAME 1" & "BENT DETAILS NO. 1 - FRAME 1" sheets.

	BY	CHECKED
DESIGN	Krishnakant Andurlekar	Daryoush Tavatli
DETAILS	Jaime Ramirez	Daryoush Tavatli
QUANTITIES	Krishnakant Andurlekar	Ruperd Wilson

STATE OF CALIFORNIA
DEPARTMENT OF TRANSPORTATION

DIVISION OF ENGINEERING SERVICES
STRUCTURE DESIGN
DESIGN BRANCH 11

BRIDGE NO. 53-3045
POST MILE 1.21

VALLEY VIEW AVE OH/OC (REPLACEMENT)
CONSTRUCTION STAGING DETAILS - FRAME 1

STRUCTURES DESIGN DETAIL SHEET (ENGLISH) (REV. 09-01-10)

ORIGINAL SCALE IN INCHES FOR REDUCED PLANS 0 1 2 3

UNIT: 3587
PROJECT NUMBER & PHASE: 0715000160-1
CONTRACT NO.: 07-2159u4

DISREGARD PRINTS BEARING EARLIER REVISION DATES

REVISION DATES: 7-6-12 8-28-13 9-09-13 9-24-13

SHEET 12 OF 182

FILE => 53-3045-cd-stagedt.dgn

USERNAME => 1315256624 DATE PLOTTED => 28-JAN-2016 TIME PLOTTED =>

DIST	COUNTY	ROUTE	POST MILES TOTAL PROJECT	SHEET No.	TOTAL SHEETS
07	LA,Ora	5	0.0/1.5, 44.3/44.4	1080	1622

REGISTERED CIVIL ENGINEER — DATE 3-18-15

1-25-16
PLANS APPROVAL DATE

REGISTERED PROFESSIONAL ENGINEER — WILLIAM D. KEMP — No. 55730 — Exp. 12/31/16 — CIVIL — STATE OF CALIFORNIA

The State of California or its officers or agents shall not be responsible for the accuracy or completeness of electronic copies of this plan sheet.

PILE DATA TABLE - SLAB BRIDGE

LOCATION	PILE TYPE CISS	NOMINAL RESISTANCE (kips) COMPRESSION	NOMINAL RESISTANCE (kips) TENSION	CUT OFF ELEVATION	DESIGN TIP ELEVATION	SPECIFIED TIP ELEVATION	NOMINAL DRIVING RESISTANCE (kips)
Abut SA1	CISS 24"ø X ½" WALL	60	0	59.83′	40.00 (a) 46.00 (c)	40.00	60
BENT SB2	CISS 24"ø X ½" WALL	190	0	60.18′	20.00 (a) 20.00 (b) 33.00 (c)	20.00	190
BENT SB3	CISS 24"ø X ½" WALL	200	0	60.15′	19.00 (a) 20.00 (b) 30.00 (c)	19.00	200
BENT SB4	CISS 24"ø X ½" WALL	150	0	60.23′	25.00 (a) 20.00 (b) 35.00 (c)	25.00	150
BENT SB5	CISS 24"ø X ½" WALL	160	0	60.39′	24.00 (a) 20.00 (b) 35.00 (c)	24.00	160
BENT SB6	CISS 24"ø X ½" WALL	150	0	60.30′	25.00 (a) 20.00 (b) 35.00 (c)	25.00	150
BENT SB7	CISS 24"ø X ½" WALL	180	0	60.19′	20.00 (a) 20.00 (b) 33.00 (c)	22.00	180
BENT SB8	CISS 24"ø X ½" WALL	160	0	60.18′	24.00 (a) 20.00 (b) 35.00 (c)	24.00	160
BENT SB9	CISS 24"ø X ½" WALL	130	0	60.33′	23.00 (a) 20.00 (b) 38.00 (c)	23.00	170
BENT SB10	CISS 24"ø X ½" WALL	190	0	60.03′	14.00 (a) 20.00 (b) 33.00 (c)	14.00	240
BENT SB11	CISS 24"ø X ½" WALL	190	0	60.03	20.00 (a) 20.00 (b) 33.00 (c)	20.00	190
BENT SB12	CISS 24"ø X ½" WALL	80	0	58.68′	32.00 (a) 18.00 (b) 43.00 (c)	32.00	100
BENT SB13	CISS 24"ø X ½" WALL	230	0	58.41′	13.00 (a) 18.00 (b) 26.00 (c)	13.00	230
BENT SB14	CISS 24"ø X ½" WALL	150	0	58.20′	24.00 (a) 18.00 (b) 36.00 (c)	24.00	150
BENT SB15	CISS 24"ø X ½" WALL	180	0	58.19′	20.00 (a) 18.00 (b) 30.00 (c)	20.00	180
BENT SB16	CISS 24"ø X ½" WALL	180	0	58.27′	20.00 (a) 18.00 (b) 30.00 (c)	20.00	180
BENT SB17	CISS 24"ø X ½" WALL	180	0	58.12′	20.00 (a) 18.00 (b) 30.00 (c)	20.00	180
BENT SB18	CISS 24"ø X ½" WALL	180	0	57.85′	19.00 (a) 17.00 (b) 31.00 (c)	19.00	180
BENT SB19	CISS 24"ø X ½" WALL	160	0	57.44′	20.00 (a) 17.00 (b) 30.00 (c)	20.00	160
BENT SB20	CISS 24′ø X ½" WALL	180	0	57.59′	16.00 (a) 17.00 (b) 31.00 (c)	16.00	200
Abut SA21	CISS 24"ø X ½" WALL	60	0	57.49′	38.00 (a) 44.00 (c)	38.00	60

NOTES: 1. Design tip elevations for Abutments are controlled by: (a) Compression, (c) Settlement.
2. Design tip elevations for Bents are controlled by: (a) Compression, (b) Lateral, (c) Settlement,

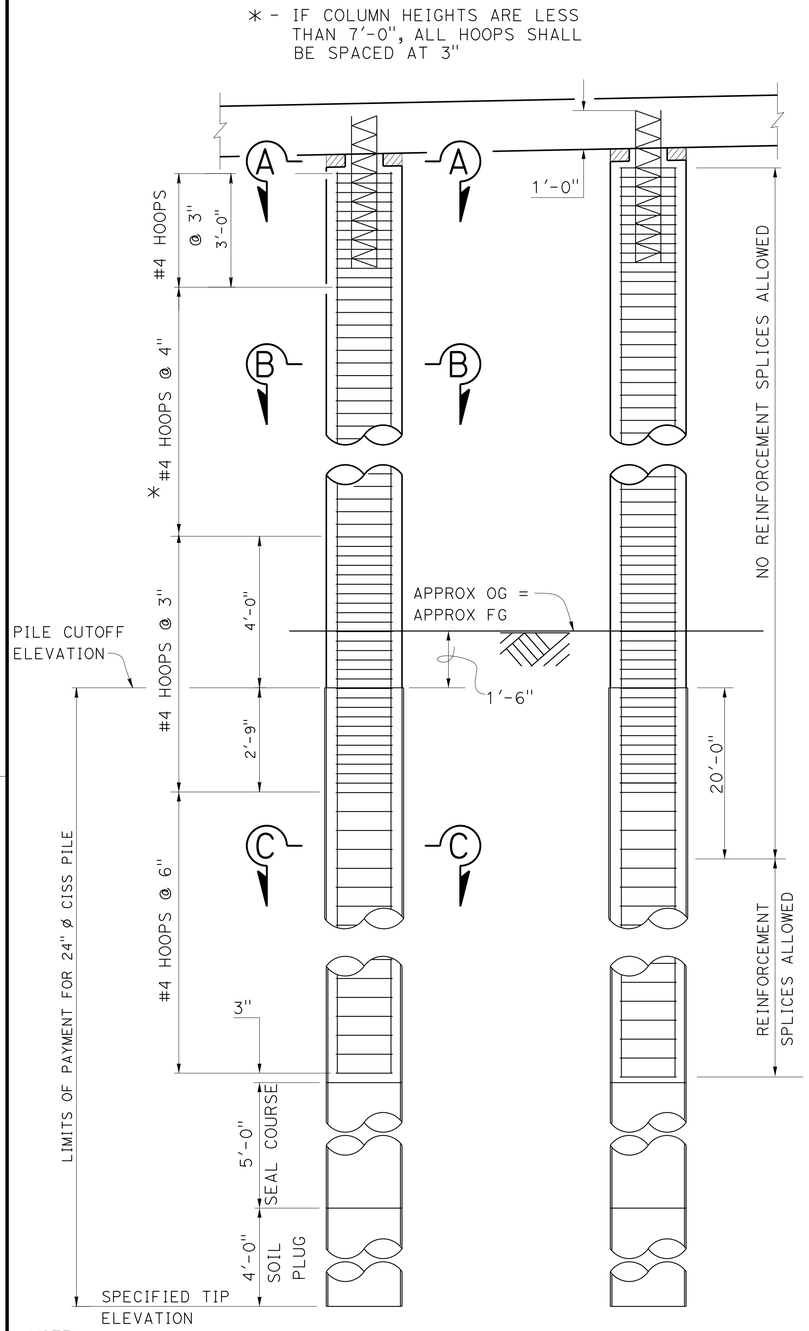

NOTE:
All reinf Splices & Hoop fabrications in Columns & Piles shall conform to Ultimate splice requirements

ELEVATION

NO SCALE

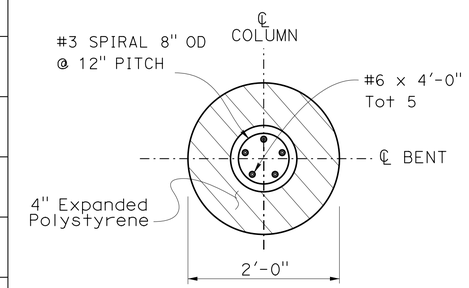

SECTION A-A

1" = 1′

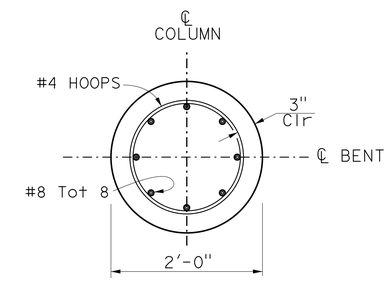

SECTION B-B

1" = 1′

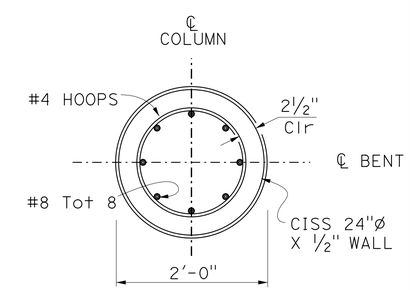

SECTION C-C

1" = 1′

DESIGN	BY K. Doll	CHECKED S. Pahlavan	
DETAILS	BY John M Hunter	CHECKED S. Pahlavan	
QUANTITIES	BY K. Doll	CHECKED N. Shah	

STATE OF CALIFORNIA
DEPARTMENT OF TRANSPORTATION

DIVISION OF ENGINEERING SERVICES
STRUCTURE DESIGN
DESIGN BRANCH 11

BRIDGE NO. 53-3045
POST MILE 1.21

VALLEY VIEW AVE OH/OC (REPLACEMENT)
PILE DATA TABLE NO 1

STRUCTURES DESIGN DETAIL SHEET (ENGLISH) (REV. 09-01-10)

ORIGINAL SCALE IN INCHES FOR REDUCED PLANS 0 1 2 3

UNIT: 3587
PROJECT NUMBER & PHASE: 0715000160-1
CONTRACT NO.: 07-2159u4

DISREGARD PRINTS BEARING EARLIER REVISION DATES

REVISION DATES 7/27/11 8/30/13 9/24/13 7/12/13

SHEET 13 OF 182

FILE => 53-3045-ce-pdata01.dgn

USERNAME => s125624 DATE PLOTTED => 28-JAN-2016 TIME PLOTTED => 11:56

DIST	COUNTY	ROUTE	POST MILES TOTAL PROJECT	SHEET No.	TOTAL SHEETS
07	LA,Ora	5	0.0/1.5, 44.3/44.4	1081	1622

REGISTERED CIVIL ENGINEER 3-18-15 DATE

1-25-16
PLANS APPROVAL DATE

REGISTERED PROFESSIONAL ENGINEER WILLIAM D. KEMP No. 55730 Exp 12/31/16 CIVIL STATE OF CALIFORNIA

The State of California or its officers or agents shall not be responsible for the accuracy or completeness of electronic copies of this plan sheet.

PILE DATA TABLE

LOCATION	PILE TYPE	NOMINAL RESISTANCE (Kips)		DESIGN TIP ELEVATION (Ft)	SPECIFIED TIP ELEVATION (Ft)	NOMINAL DRIVING RESISTANCE (Kips)
		COMPRESSION	TENSION			
ABUT 1	PP24X0.5	400	0	+1.0 (a) +21.0 (c) +2.0 (d)	+1.0	400
BENT 2	PP24X0.5	400	100	-1.0 (a) +33.0 (b) +9.0 (c) +1.0 (d)	-1.0	400
BENT 3	PP24X0.5	360	110	+6.0 (a) +28.0 (b) +16.0 (c) +3.0 (d)	+6.0	360
BENT 4	PP24X0.5	450	160	-3.0 (a) +23.0 (b) +13.0 (c) -2.0 (d)	-3.0	450
BENT 5	PP24X0.5	400	140	-7.0 (a) +14.0 (b) +15.0 (c) +23.0 (d)	-7.0	400
BENT 5A	PP24X0.5	380	170	-1.0 (a) +20.0 (b) +12.0 (c) +24.0 (d)	-1.0	380
BENT 5B	PP24X0.5	380	170	-1.0 (a) +19.0 (b) +12.0 (c) +26.0 (d)	-1.0	380
BENT 5C	PP24X0.5	380	170	-1.0 (a) +20.0 (b) +12.0 (c) +24.0 (d)	-1.0	380
BENT 5D	PP24X0.5	380	170	-1.0 (a) +19.0 (b) +12.0 (c) +26.0 (d)	-1.0	380
BENT 6	PP24X0.5	400	140	-5.0 (a) +14.0 (b) +14.0 (c) +24.0 (d)	-5.0	400
BENT 7	PP24X0.5	400	140	-1.0 (a) +20.0 (b) +16.0 (c) +25.0 (d)	-1.0	400
BENT 7A	PP24X0.5	400	140	-1.0 (a) +17.0 (b) +15.0 (c) +25.0 (d)	-1.0	400
BENT 7B	PP24X0.5	400	140	-1.0 (a) +17.0 (b) +10.0 (c) +24.0 (d)	-1.0	400
BENT 7C	PP24X0.5	400	140	-1.0 (a) +17.0 (b) +15.0 (c) +25.0 (d)	-1.0	400
BENT 7D	PP24X0.5	400	140	-1.0 (a) +17.0 (b) +10.0 (c) +26.0 (d)	-1.0	400
PIER 8	PP24X0.5	400	190	-3.0 (a) +11.0 (b) +7.0 (c) +1.0 (d)	-3.0	400
BENT 9	PP24X0.5	400	90	+2.0 (a) +34.0 (b) +10.0 (c) +18.0 (d)	+2.0	400

PILE DATA TABLE - CONT

LOCATION	PILE TYPE	NOMINAL RESISTANCE (Kips)		DESIGN TIP ELEVATION (Ft)	SPECIFIED TIP ELEVATION (Ft)	NOMINAL DRIVING RESISTANCE (Kips)
		COMPRESSION	TENSION			
BENT 10	PP24X0.5	400	90	+1.0 (a) +34.0 (b) +9.0 (c) +18.0 (d)	+1.0	400
ABUT 11 LEFT SIDE (See Note 5)	42- INCH CIDH	900	0	-10.0 (a) +8.0 (c) +24.00 (d)	-10.0	N/A
ABUT 11 RIGHT SIDE (See Note 5)	42- INCH CIDH	900	0	-10.0 (a) +8.0 (c) +27.00 (d)	-10.0	N/A

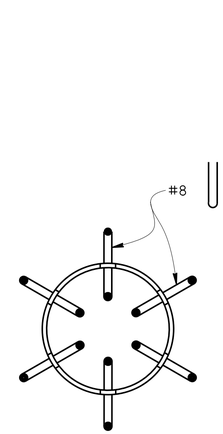

PLAN

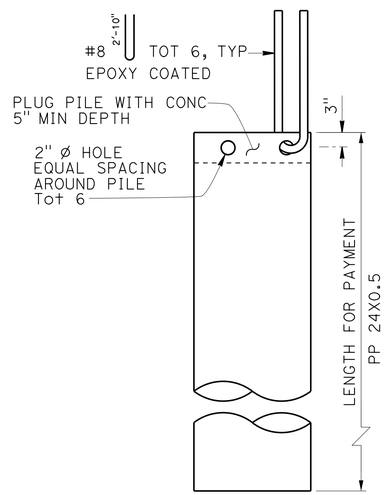

ELEVATION

TYPICAL PIPE PILE ANCHOR

NO SCALE

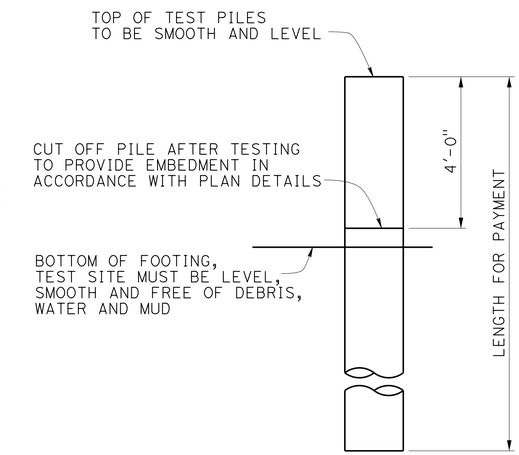

NOTE: One Test Pile is required at Bents SB2, SB5, SB15, SB20, Abut 1, and Bents 2 thru 10. Specific pile at each support to be determined by the contractor and apporved by the engineer.

TEST PILE ELEVATION

NO SCALE

NOTES:

1. Design tip elevations for Abutments are controlled by: (a) Compression, (c) Settlement, (d) Lateral Load.
2. Design tip elevations for Bents are controlled by: (a) Compression, (b) Tension, (c) Settlement, (d) Lateral.
3. The specified tip elevation shall not be raised above the design tip elevation load, lateral load, and tolerable settlement
4. Driven piles at Bents 4 and 5 should be predrilled to elevations 48 and 50, respectively.
5. For 42" CIDH Pile Details see "ABUTMENT DETAILS NO. 7 - FRAME 3" Sheet.

	BY	CHECKED
DESIGN	K.R.A/MO/JP	DT/Bill Kemp
DETAILS	John Hunter	Dauryoush Tavatli
QUANTITIES	K.R.A/MO/JP	Ruperd Wilson

STATE OF CALIFORNIA
DEPARTMENT OF TRANSPORTATION

DIVISION OF ENGINEERING SERVICES
STRUCTURE DESIGN
DESIGN BRANCH 11

BRIDGE NO. 53-3045
POST MILE 1.21

VALLEY VIEW AVE OC/OH (REPLACEMENT)
PILE DATA TABLE NO 2

STRUCTURES DESIGN DETAIL SHEET (ENGLISH) (REV. 09-01-10)

ORIGINAL SCALE IN INCHES FOR REDUCED PLANS 0 1 2 3

UNIT: 3587
PROJECT NUMBER & PHASE: 0715000160-1
CONTRACT NO.: 07-2159U4

DISREGARD PRINTS BEARING EARLIER REVISION DATES

REVISION DATES 5/8/15 7/17/15 8/28/15 9-24-15

SHEET 14 OF 182

FILE => 53-3045-ce-pdata02.dgn

USERNAME => s125624 DATE PLOTTED => 28-JAN-2016 TIME PLOTTED => 11:56

DIST	COUNTY	ROUTE	POST MILES TOTAL PROJECT	SHEET No.	TOTAL SHEETS
07	LA,Ora	5	0.0/1.5, 44.3/44.4	1082	1622

REGISTERED CIVIL ENGINEER — DATE: 3-18-15

1-25-16
PLANS APPROVAL DATE

REGISTERED PROFESSIONAL ENGINEER — WILLIAM D. KEMP — No. 55730 — Exp. 12/31/16 — CIVIL — STATE OF CALIFORNIA

The State of California or its officers or agents shall not be responsible for the accuracy or completeness of electronic copies of this plan sheet.

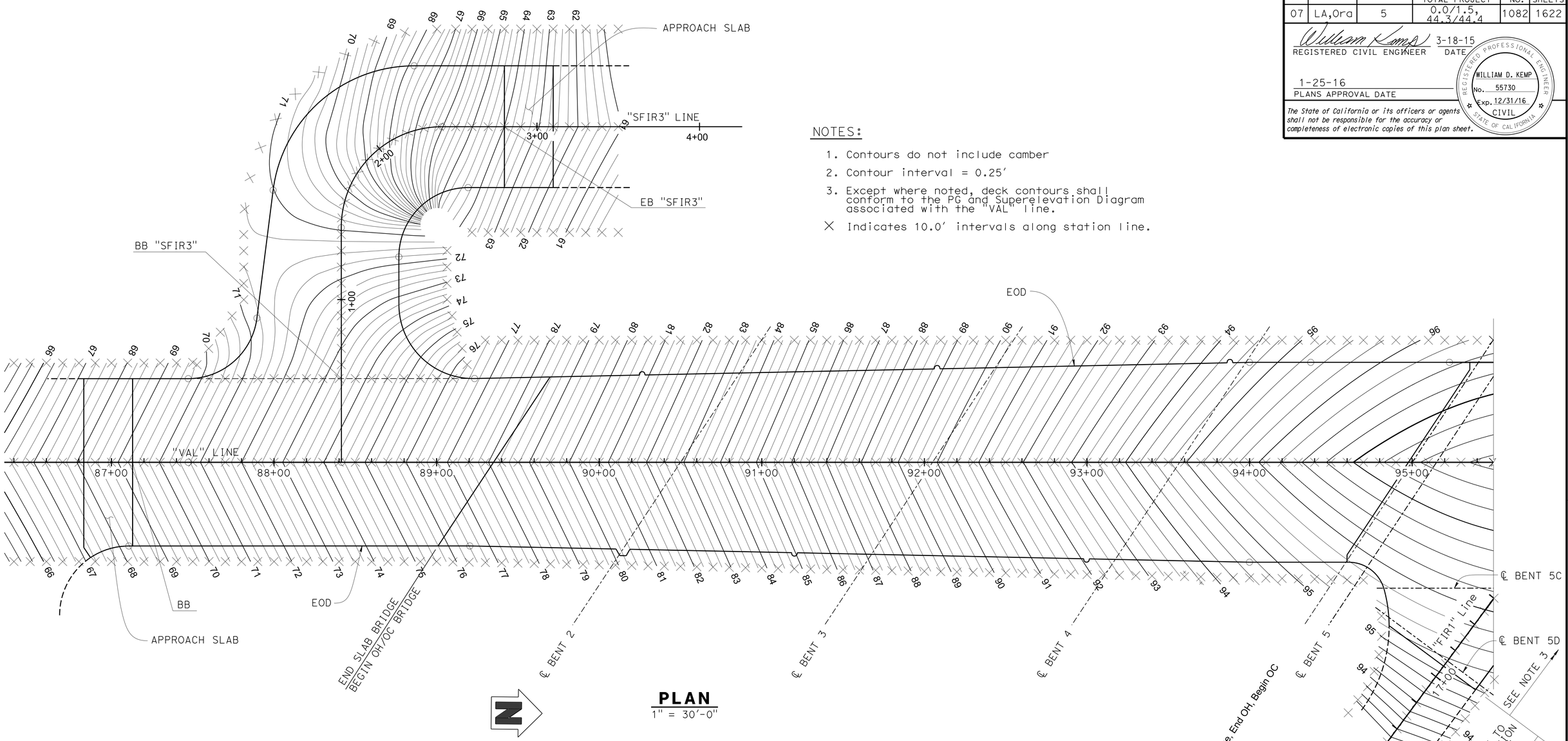

NOTES:

1. Contours do not include camber
2. Contour interval = 0.25′
3. Except where noted, deck contours shall conform to the PG and Superelevation Diagram associated with the "VAL" line.

X Indicates 10.0′ intervals along station line.

PLAN
1" = 30′-0"

DESIGN	BY Dan Texler	CHECKED KD/KRA	
DETAILS	BY Pauline Tong	CHECKED KD/KRA	
QUANTITIES	BY Mark Okimura	CHECKED John Radu	

STATE OF CALIFORNIA
DEPARTMENT OF TRANSPORTATION

DIVISION OF ENGINEERING SERVICES
STRUCTURE DESIGN
DESIGN BRANCH 11

BRIDGE NO. 53-3045
POST MILE 1.21

VALLEY VIEW AVE OH/OC (REPLACEMENT)
DECK CONTOURS NO 1

STRUCTURES DESIGN DETAIL SHEET (ENGLISH) (REV. 09-01-10)

ORIGINAL SCALE IN INCHES FOR REDUCED PLANS 0 1 2 3

UNIT: 3587
PROJECT NUMBER & PHASE: 0715000160-1
CONTRACT NO.: 07-2159U4

DISREGARD PRINTS BEARING EARLIER REVISION DATES

REVISION DATES: 12-4-12 9-24-13 ~~6-23-13~~ ~~8-31-13~~

SHEET 15 OF 182

FILE => 53-3045-cf-dc01.dgn

USERNAME => s125624 DATE PLOTTED => 28-JAN-2016 TIME PLOTTED => 11:56

DIST	COUNTY	ROUTE	POST MILES TOTAL PROJECT	SHEET No.	TOTAL SHEETS
07	LA,Ora	5	0.0/1.5, 44.3/44.4	1083	1622

REGISTERED CIVIL ENGINEER 3-18-15 DATE

1-25-16
PLANS APPROVAL DATE

REGISTERED PROFESSIONAL ENGINEER WILLIAM D. KEMP No. 55730 Exp. 12/31/16 CIVIL STATE OF CALIFORNIA

The State of California or its officers or agents shall not be responsible for the accuracy or completeness of electronic copies of this plan sheet.

NOTES:

1. Contours do not include camber
2. Contour interval = 0.25′
3. Except where noted, deck contours shall conform to the PG and Superelevation Diagram associated with the "VAL" line.

X Indicates 10.0′ intervals along station line.

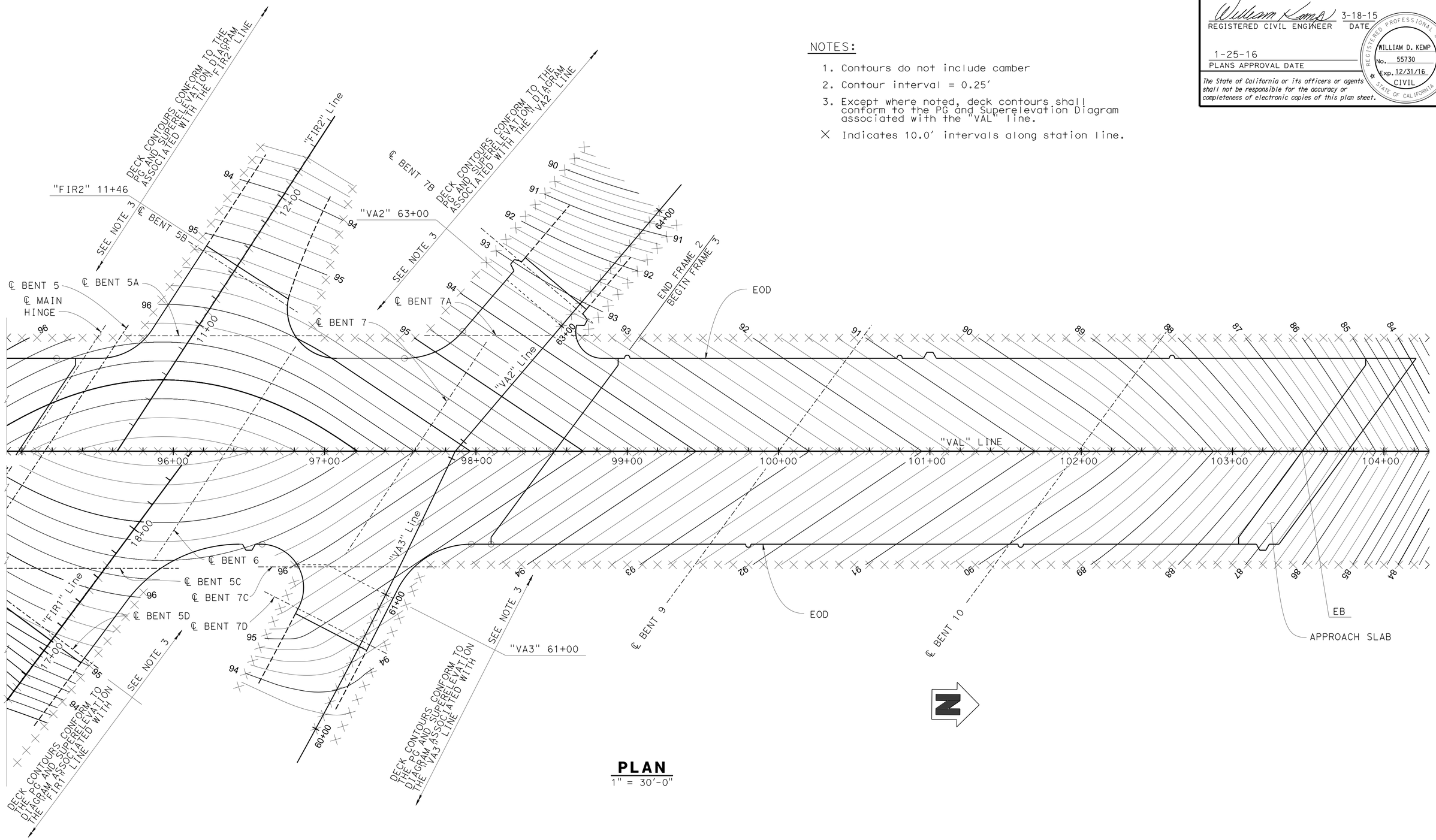

PLAN
1" = 30′-0"

DESIGN	BY DT/MO	CHECKED Phu Nguyen	
DETAILS	BY Pauline Tong	CHECKED Phu Nguyen	
QUANTITIES	BY Mark Okimura	CHECKED John Radu	

STATE OF CALIFORNIA
DEPARTMENT OF TRANSPORTATION

DIVISION OF ENGINEERING SERVICES
STRUCTURE DESIGN
DESIGN BRANCH 11

BRIDGE NO. 53-3045
POST MILE 1.21

VALLEY VIEW AVE OH/OC (REPLACEMENT)
DECK CONTOURS NO 2

STRUCTURES DESIGN DETAIL SHEET (ENGLISH) (REV. 09-01-10)

ORIGINAL SCALE IN INCHES FOR REDUCED PLANS 0 1 2 3

UNIT: 3587
PROJECT NUMBER & PHASE: 0715000160-1
CONTRACT NO.: 07-2159u4

DISREGARD PRINTS BEARING EARLIER REVISION DATES

REVISION DATES: 12-03-12 4-11-13 4-23-13 6-17-13

SHEET 16 OF 182

FILE => 53-3045-cf-dc02.dgn

USERNAME => s125624 DATE PLOTTED => 28-JAN-2016 TIME PLOTTED => 11:56

DIST	COUNTY	ROUTE	POST MILES TOTAL PROJECT	SHEET No.	TOTAL SHEETS
07	LA,Ora	5	0.0/1.5, 44.3/44.4	1084	1622

REGISTERED CIVIL ENGINEER — DATE 3-18-15

1-25-16
PLANS APPROVAL DATE

REGISTERED PROFESSIONAL ENGINEER
WILLIAM D. KEMP
No. 55730
Exp. 12/31/16
CIVIL
STATE OF CALIFORNIA

The State of California or its officers or agents shall not be responsible for the accuracy or completeness of electronic copies of this plan sheet.

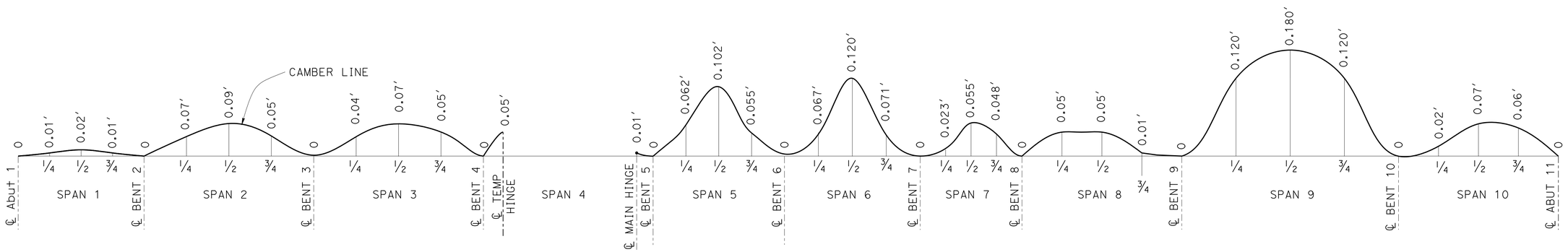

CAMBER DIAGRAM

No Scale

Note:

1. Camber values shown do not include allowances for falsework settlement.

DESIGN	BY KRA/MO/JP	CHECKED DT/KRA	
DETAILS	BY Jaime Ramirez	CHECKED DT/KRA	
QUANTITIES	BY Krishnakant Andurlekar	CHECKED Ruperd Wilson	

STATE OF CALIFORNIA
DEPARTMENT OF TRANSPORTATION

DIVISION OF ENGINEERING SERVICES
STRUCTURE DESIGN
DESIGN BRANCH 11

BRIDGE NO. 53-3045
POST MILE 1.21

VALLEY VIEW AVE OH/OC (REPLACEMENT)
CAMBER DIAGRAM

STRUCTURES DESIGN DETAIL SHEET (ENGLISH) (REV. 09-01-10)

ORIGINAL SCALE IN INCHES FOR REDUCED PLANS 0 1 2 3

UNIT: 3587
PROJECT NUMBER & PHASE: 0715000160-1
CONTRACT NO.: 07-2159u4

DISREGARD PRINTS BEARING EARLIER REVISION DATES

REVISION DATES: 3-29-12 8-22-13 9-24-13 3-18-15

SHEET 17 OF 182

FILE => 53-3045-cg-cam.dgn

USERNAME => s125624 DATE PLOTTED => 28-JAN-2016 TIME PLOTTED => 11:56

DIST	COUNTY	ROUTE	POST MILES TOTAL PROJECT	SHEET No.	TOTAL SHEETS
07	LA,Ora	5	0.0/1.5, 44.3/44.4	1085	1622

REGISTERED CIVIL ENGINEER 3-18-15 DATE

1-25-16
PLANS APPROVAL DATE

REGISTERED PROFESSIONAL ENGINEER William D. Kemp No. 55730 Exp. 12/31/16 CIVIL STATE OF CALIFORNIA

The State of California or its officers or agents shall not be responsible for the accuracy or completeness of electronic copies of this plan sheet.

CURVE DATA

No.	R	Δ	T	L
1	44.285′	89°52′41"	44.191′	69.469′

(A) Sta 86+32.65 "VAL" Line = Sta 86+32.65 "DW1" Line

(B) Sta 86+46.50 "VAL" Line = Sta 86+46.50 "DW2" Line

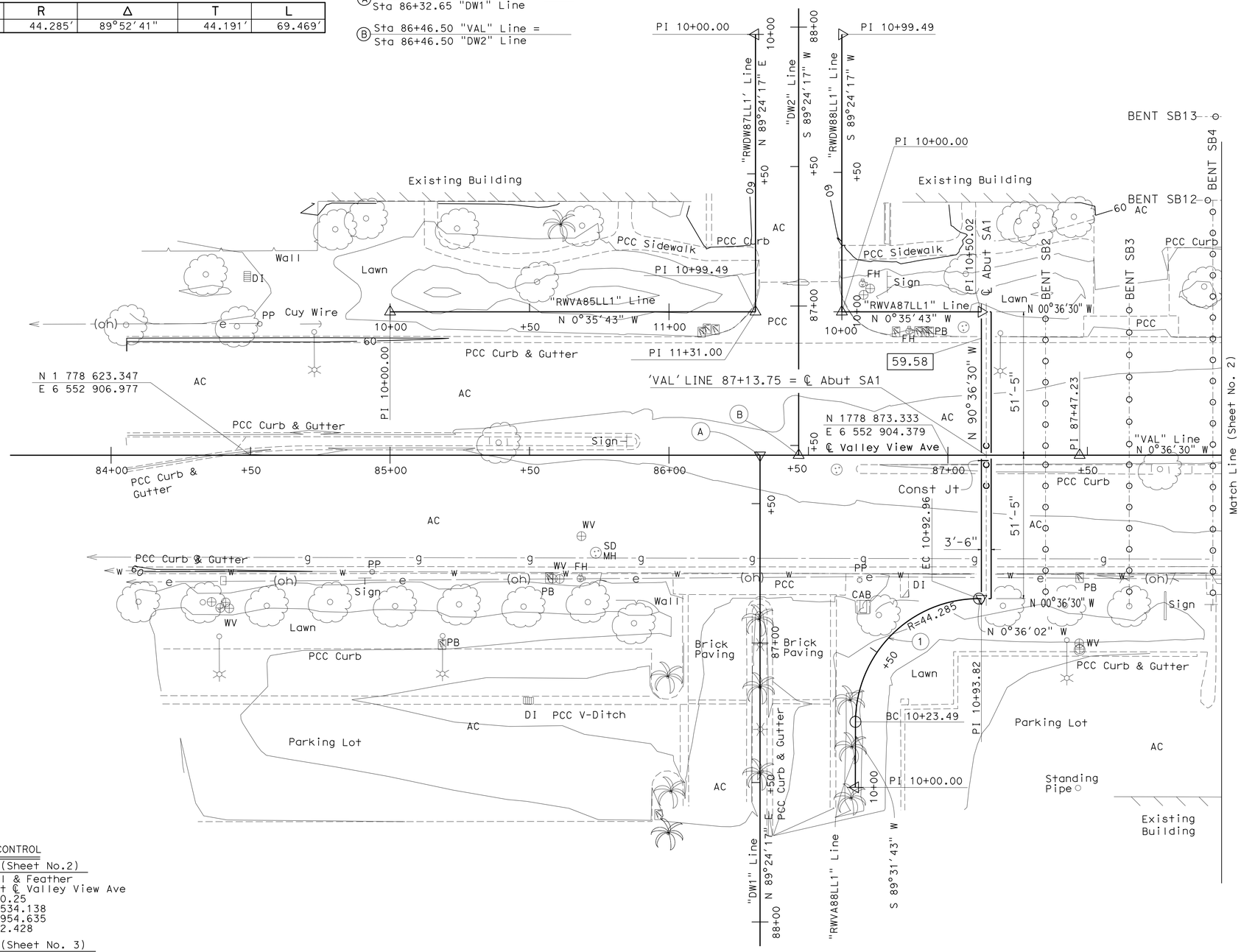

SURVEY CONTROL

SUHV123 (Sheet No.2)
Fnd Nail & Feather
57.122 Rt ℄ Valley View Ave
Sta 93+60.25
N 1 779 534.138
E 6 552 954.635
Elev = 62.428

SUHV114 (Sheet No. 3)
Fnd PK & TIN
3.127 Lt ℄ Valley View Ave
Sta 94+62.69
N 1 779 635.952
E 6 552 893.328
Elev = 64.286

NOTES:

1. UNDERGROUND UTILITIES AS SHOWN ARE APPROXIMATE, SEE UTILITY PLANS FOR MORE INFORMATION
2. ☐ INDICATES BOTTOM OF FOOTING ELEVATION.
3. FOR ACCURATE LOCATION OF PILES, SEE ABUTMENT OR SLAB BENT LAYOUT SHEETS

PRELIMINARY INVESTIGATION SECTION

SCALE	VERT.DATUM NAVD 88	PHOTOGRAMMETRY AS OF: X		
1"=20′	HORZ.DATUM NAD 83	SURVEYED	BY C Stewart 12-11	CHECKED BY C. Stewart 12-11
ALIGNMENT TIES Dist. Traverse Sheet		DRAFTED	BY M. Sadaghiani 1-12	CHECKED BY E. Vigjar 1-12

DESIGN	BY K. Doll	CHECKED S. Pahlavan
DETAILS	BY T. Bittermann	CHECKED S. Pahlavan
QUANTITIES	BY K. Doll	CHECKED N. Shah

STATE OF CALIFORNIA
DEPARTMENT OF TRANSPORTATION

DIVISION OF ENGINEERING SERVICES
STRUCTURE DESIGN
DESIGN BRANCH 11

BRIDGE NO. 53-3045
POST MILE 1.21

Valley View Ave - RPL
FOUNDATION PLAN No. 1 of 5

STRUCTURES FOUNDATION PLAN SHEET (ENGLISH) (REV. 09-01-10)

ORIGINAL SCALE IN INCHES FOR REDUCED PLANS 0 1 2 3

UNIT: 3647
PROJECT NUMBER & PHASE: 0715000160-1
CONTRACT NO.: 07-2159u4

DISREGARD PRINTS BEARING EARLIER REVISION DATES

REVISION DATES 1/30/13 6/14/13 3/5/13 9/9/13

SHEET 18 OF 182

FILE => 53-3045-d-fp01.dgn

DIST	COUNTY	ROUTE	POST MILES TOTAL PROJECT	SHEET No.	TOTAL SHEETS
07	LA,Ora	5	0.0/1.5, 44.3/44.4	1086	1622

William Kemp 3-18-15
REGISTERED CIVIL ENGINEER DATE

1-25-16
PLANS APPROVAL DATE

REGISTERED PROFESSIONAL ENGINEER William D. Kemp No. 55730 Exp. 12/31/16 CIVIL STATE OF CALIFORNIA

The State of California or its officers or agents shall not be responsible for the accuracy or completeness of electronic copies of this plan sheet.

Ⓒ Sta 88+41.45 "VAL" Line =
Sta 0+00.00 "SFIR3" Line

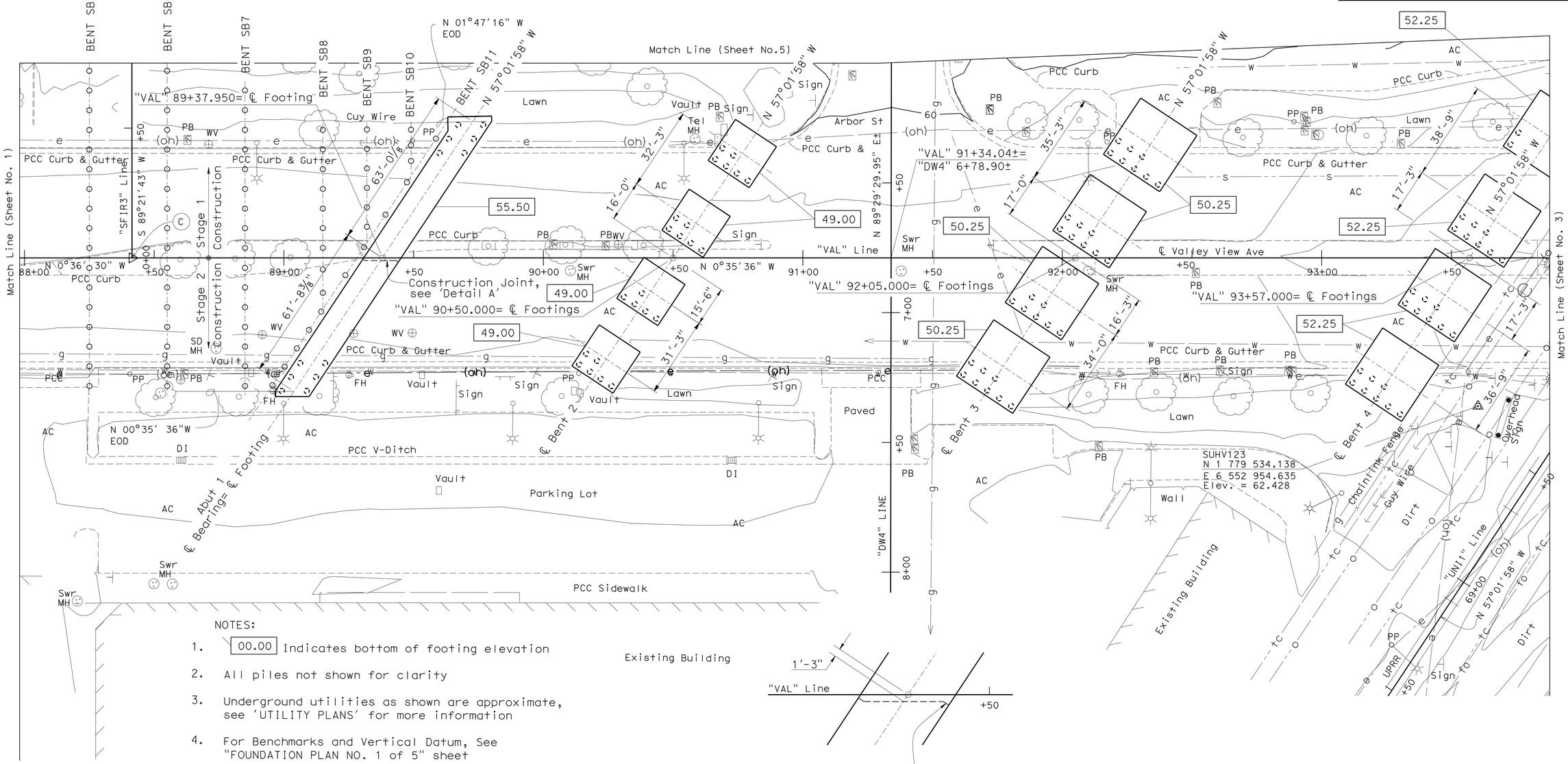

NOTES:

1. 00.00 Indicates bottom of footing elevation
2. All piles not shown for clarity
3. Underground utilities as shown are approximate, see 'UTILITY PLANS' for more information
4. For Benchmarks and Vertical Datum, See "FOUNDATION PLAN NO. 1 of 5" sheet
5. For footing dimensions & pile layouts, see "ABUTMENT 1 LAYOUT - FRAME 1", "BENT FOOTING DETAILS NO. 1 - FRAME 1" and "BENT FOOTING DETAILS NO. 2 - FRAME 1" sheets

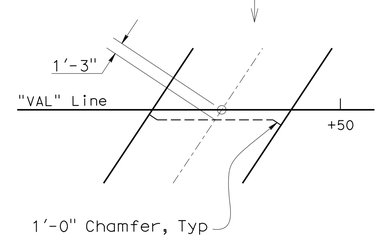

DETAIL A
CONSTRUCTION JOINT
No Scale

SURVEY CONTROL
See Sheet No. 1

PRELIMINARY INVESTIGATION SECTION							
SCALE 1"=20'	VERT.DATUM NAVD 88	PHOTOGRAMMETRY AS OF: X					
	HORZ.DATUM NAD 83	SURVEYED	BY District	CHECKED	BY C. Stewart		
ALIGNMENT TIES Dist. Traverse Sheet		DRAFTED	BY M. Sadaghiani 11/11	CHECKED	BY E. Vigjar 11/11		

DESIGN	BY Krishnakant Andurlekar	CHECKED Dauryoush Tavatli
DETAILS	BY T. Bittermann	CHECKED Dauryoush Tavatli
QUANTITIES	BY Krishnakant Andurlekar	CHECKED Ruperd Wilson

STATE OF CALIFORNIA
DEPARTMENT OF TRANSPORTATION

DIVISION OF ENGINEERING SERVICES
STRUCTURE DESIGN
DESIGN BRANCH 11

BRIDGE NO. 53-3045
POST MILE 1.21

Valley View Ave - RPL
FOUNDATION PLAN No. 2 of 5

STRUCTURES FOUNDATION PLAN SHEET (ENGLISH) (REV. 09-01-10)

ORIGINAL SCALE IN INCHES FOR REDUCED PLANS 0 1 2 3

UNIT: 3647
PROJECT NUMBER & PHASE: 0715000160-1
CONTRACT NO.: 07-2159U4

DISREGARD PRINTS BEARING EARLIER REVISION DATES

REVISION DATES 1/30/13 9-14-13 3-18-15 9/9/13

SHEET 19 OF 182

FILE => 53-3045-d-fp02.dgn

DIST	COUNTY	ROUTE	POST MILES TOTAL PROJECT	SHEET No.	TOTAL SHEETS
07	LA,Ora	5	0.0/1.5, 44.3/44.4	1087	1622

REGISTERED CIVIL ENGINEER — DATE 3-18-15

1-25-16
PLANS APPROVAL DATE

REGISTERED PROFESSIONAL ENGINEER — William D. Kemp — No. 55730 — Exp. 12/31/16 — CIVIL — STATE OF CALIFORNIA

The State of California or its officers or agents shall not be responsible for the accuracy or completeness of electronic copies of this plan sheet.

CURVE DATA

No.	R	Δ	T	L
②	850.000′	16°52′38"	126.102′	250.377′
③	3000.000′	10°48′55"	283.987′	566.286′

(D) Sta 94+37.60 "VAL" Line = Sta 70+49.97 "UNI1" Line
(E) Sta 95+62.90 "VAL" Line = Sta 10+00.00 "FIR2" Line
(F) Sta 96+12.35 "VAL" Line = Sta 18+64.06 "FIR1" Line
(G) Sta 96+95.90 "VAL" Line = Sta 61+87.77 "SFIR1" Line
(H) Sta 97+86.35 "VAL" Line = Sta 61+91.49 "VA2" Line
(I) Sta 97+86.32 "VAL" Line = Sta 62+05.30 "VA3" Line

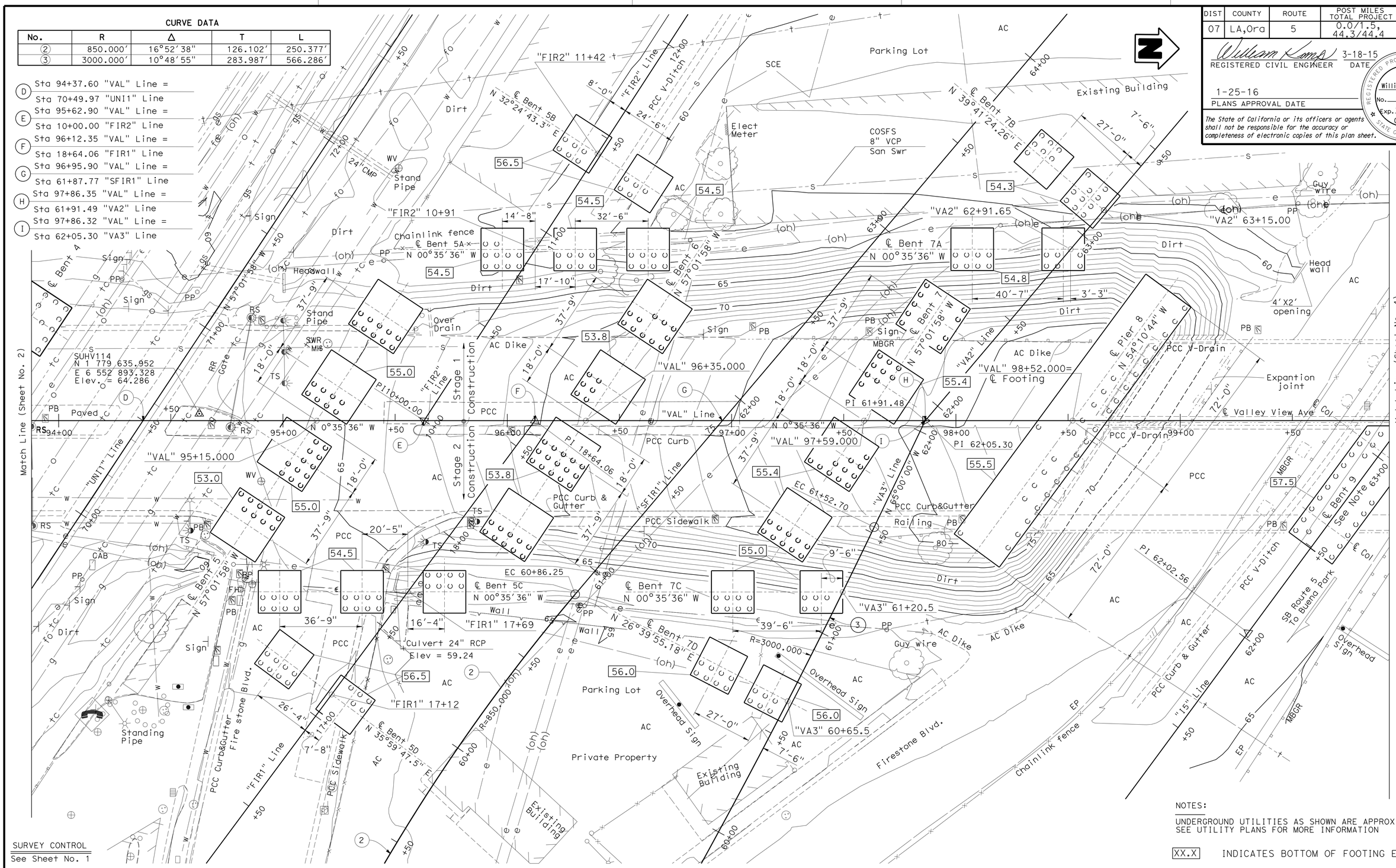

SURVEY CONTROL
See Sheet No. 1

NOTES:

UNDERGROUND UTILITIES AS SHOWN ARE APPROXIMATE, SEE UTILITY PLANS FOR MORE INFORMATION

XX.X INDICATES BOTTOM OF FOOTING ELEVATION

PRELIMINARY INVESTIGATION SECTION

SCALE	VERT.DATUM NAVD 88	PHOTOGRAMMETRY AS OF: X		
1"=20′	HORZ.DATUM NAD 83	SURVEYED	BY District	CHECKED BY C. Stewart
ALIGNMENT TIES Dist. Traverse Sheet		DRAFTED	BY M. Sadaghiani 11/11	CHECKED BY E. Vigjar 11/11

	BY	CHECKED
DESIGN	D. Texler	M. Okimura
DETAILS	T. Bittermann	M. Okimura
QUANTITIES	M. Okimura	J. Radu

STATE OF CALIFORNIA
DEPARTMENT OF TRANSPORTATION

DIVISION OF ENGINEERING SERVICES
STRUCTURE DESIGN
DESIGN BRANCH 11

BRIDGE NO. 53-3045
POST MILE 1.21

Valley View Ave - RPL
FOUNDATION PLAN No. 3 of 5

STRUCTURES FOUNDATION PLAN SHEET (ENGLISH) (REV. 09-01-10)

ORIGINAL SCALE IN INCHES FOR REDUCED PLANS 0 1 2 3

UNIT: 3647
PROJECT NUMBER & PHASE: 0715000160-1
CONTRACT NO.: 07-2159u4

DISREGARD PRINTS BEARING EARLIER REVISION DATES

REVISION DATES: 1/30/13 9-11-13 9/5/13 9/9/13

SHEET 20 OF 182

FILE => 53-3045-d-fp03.dgn

DIST	COUNTY	ROUTE	POST MILES TOTAL PROJECT	SHEET No.	TOTAL SHEETS
07	LA,Ora	5	0.0/1.5, 44.3/44.4	1088	1622

REGISTERED CIVIL ENGINEER — DATE 3-18-15

1-25-16
PLANS APPROVAL DATE

REGISTERED PROFESSIONAL ENGINEER — William D. Kemp — No. 55730 — Exp. 12/31/16 — CIVIL — STATE OF CALIFORNIA

The State of California or its officers or agents shall not be responsible for the accuracy or completeness of electronic copies of this plan sheet.

CURVE DATA

No.	R	Δ	T	L
4	2700.000′	02°31′18"	59.426′	118.834′
5	37.583′	111°05′14"	54.773′	72.868′
6	161.583′	41°49′37"	61.746′	117.959′

(K) Sta 100+00.02 "VAL" Line = Sta 63+20.09 "I5" Line

(L) Sta 101+45.41 "VAL" Line = Sta 64+06.61 "VA4" Line

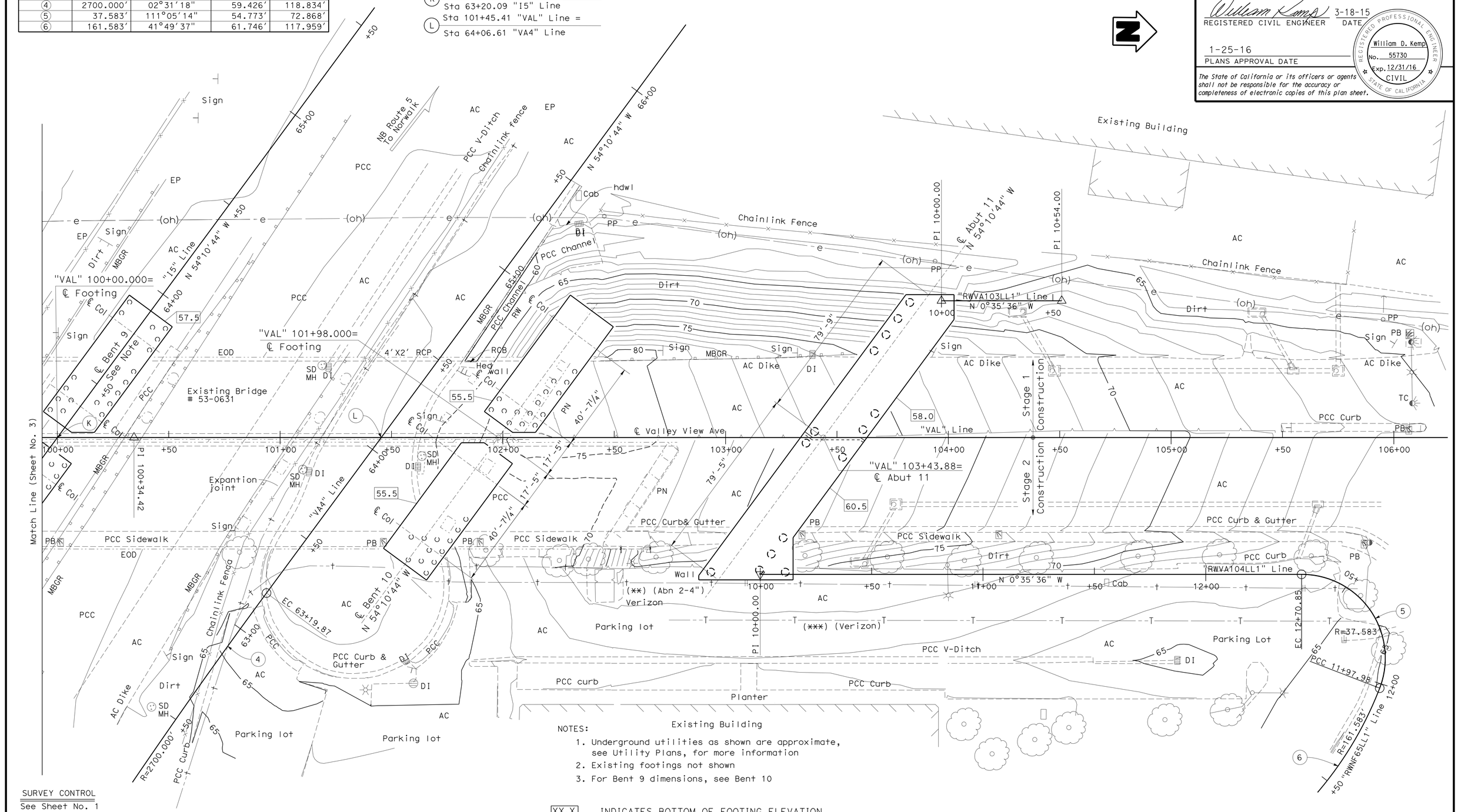

NOTES:

1. Underground utilities as shown are approximate, see Utility Plans, for more information
2. Existing footings not shown
3. For Bent 9 dimensions, see Bent 10

SURVEY CONTROL
See Sheet No. 1

XX.X INDICATES BOTTOM OF FOOTING ELEVATION

PRELIMINARY INVESTIGATION SECTION

SCALE 1"=20′	VERT.DATUM NAVD 88	PHOTOGRAMMETRY AS OF: X	
	HORZ.DATUM NAD 83	SURVEYED BY District	CHECKED BY C. Stewart
ALIGNMENT TIES Dist. Traverse Sheet		DRAFTED BY M. Sadaghiani 11/11	CHECKED BY E. Vigjar 11/11

DESIGN	BY J. Posey	CHECKED K. Andurlakar
DETAILS	BY T. Bittermann	CHECKED J. Posey
QUANTITIES	BY J. Posey	CHECKED N. Tiongco

STATE OF CALIFORNIA
DEPARTMENT OF TRANSPORTATION

DIVISION OF ENGINEERING SERVICES
STRUCTURE DESIGN
DESIGN BRANCH 11

BRIDGE NO. 53-3045
POST MILE 1.21

Valley View Ave - RPL
FOUNDATION PLAN No. 4 of 5

STRUCTURES FOUNDATION PLAN SHEET (ENGLISH) (REV. 09-01-10)

ORIGINAL SCALE IN INCHES FOR REDUCED PLANS 0 1 2 3

UNIT: 3647
PROJECT NUMBER & PHASE: 0715000160-1
CONTRACT NO.: 07-2159u4

DISREGARD PRINTS BEARING EARLIER REVISION DATES

REVISION DATES: 1/30/13 6/14/13 9/5/13 9/9/13

SHEET 21 OF 182

FILE => 53-3045-d-fp04.dgn

DIST	COUNTY	ROUTE	POST MILES TOTAL PROJECT	SHEET No.	TOTAL SHEETS
07	LA,Ora	5	0.0/1.5, 44.3/44.4	1089	1622

REGISTERED CIVIL ENGINEER — DATE 3-18-15

1-25-16
PLANS APPROVAL DATE

REGISTERED PROFESSIONAL ENGINEER — William D. Kemp — No. 55730 — Exp. 12/31/16 — CIVIL — STATE OF CALIFORNIA

The State of California or its officers or agents shall not be responsible for the accuracy or completeness of electronic copies of this plan sheet.

CURVE DATA

No.	R	Δ	T	L
7	62.000′	90°02′33″	62.046′	97.435′

(M) Sta 4+72.64 "SFIR3" Line = Sta 0+00.00 "ARB1" Line

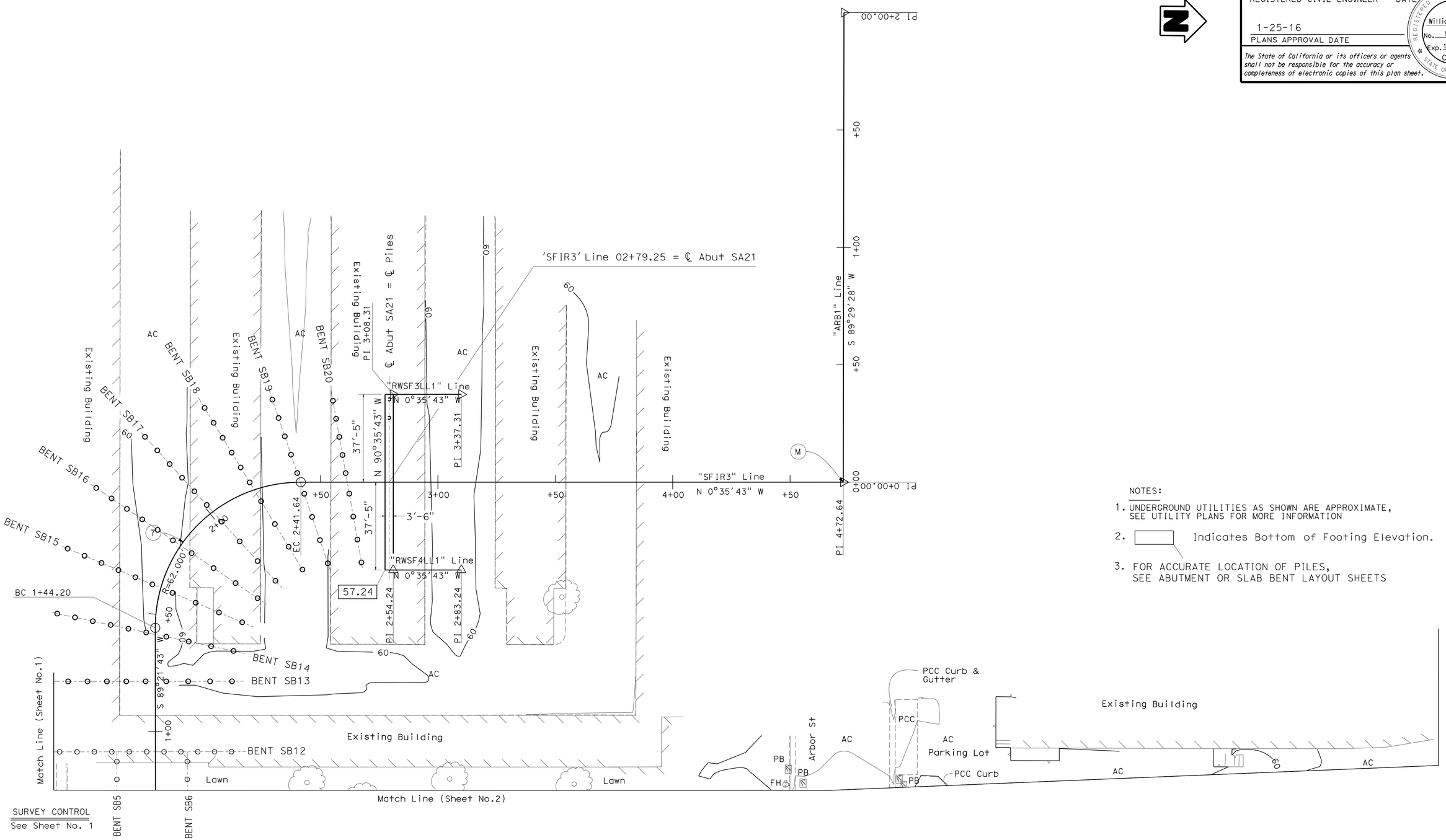

NOTES:

1. UNDERGROUND UTILITIES AS SHOWN ARE APPROXIMATE, SEE UTILITY PLANS FOR MORE INFORMATION
2. ▭ Indicates Bottom of Footing Elevation.
3. FOR ACCURATE LOCATION OF PILES, SEE ABUTMENT OR SLAB BENT LAYOUT SHEETS

SURVEY CONTROL
See Sheet No. 1

PRELIMINARY INVESTIGATION SECTION

SCALE 1"=20′	VERT.DATUM NAVD 88	PHOTOGRAMMETRY AS OF: X		
	HORZ.DATUM NAD 83	SURVEYED	BY District	CHECKED BY X
ALIGNMENT TIES Dist. Traverse Sheet		DRAFTED	BY M. Sadaghiani 2-12	CHECKED BY X

DESIGN	BY K. Doll	CHECKED S. Pahlavan
DETAILS	BY T. Bittermann	CHECKED S. Pahlavan
QUANTITIES	BY K. Doll	CHECKED N. Shah

STATE OF CALIFORNIA
DEPARTMENT OF TRANSPORTATION

DIVISION OF ENGINEERING SERVICES
STRUCTURE DESIGN
DESIGN BRANCH 11

BRIDGE NO. 53-3045
POST MILE 1.21

Valley View Ave - RPL
FOUNDATION PLAN No. 5 of 5

STRUCTURES FOUNDATION PLAN SHEET (ENGLISH) (REV. 09-01-10)

ORIGINAL SCALE IN INCHES FOR REDUCED PLANS 0 1 2 3

UNIT: 3647
PROJECT NUMBER & PHASE: 0715000160-1
CONTRACT NO.: 07-2159u4

DISREGARD PRINTS BEARING EARLIER REVISION DATES

REVISION DATES: 3/2/12 01/30/13 06/04/13 09/09/13

SHEET 22 OF 182

FILE => 53-3045-d-fp05.dgn

DIST	COUNTY	ROUTE	POST MILES TOTAL PROJECT	SHEET No.	TOTAL SHEETS
07	LA,Ora	5	0.0/1.5, 44.3/44.4	1090	1622

REGISTERED CIVIL ENGINEER 2-19-15 DATE

1-25-16
PLANS APPROVAL DATE

REGISTERED PROFESSIONAL ENGINEER
WILLIAM D. KEMP
No. 55730
Exp. 12/31/16
CIVIL
STATE OF CALIFORNIA

The State of California or its officers or agents shall not be responsible for the accuracy or completeness of electronic copies of this plan sheet.

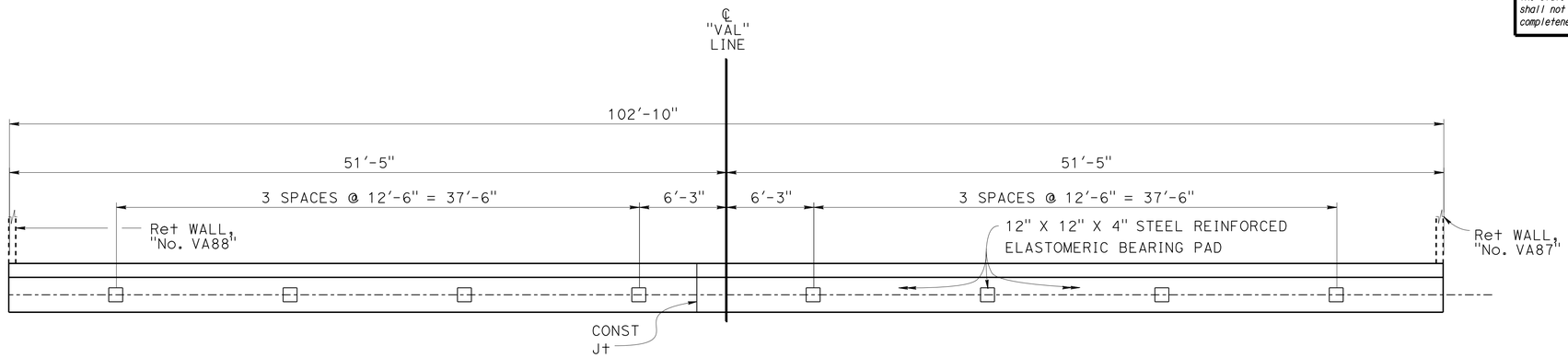

PLAN

1" = 5'-0"

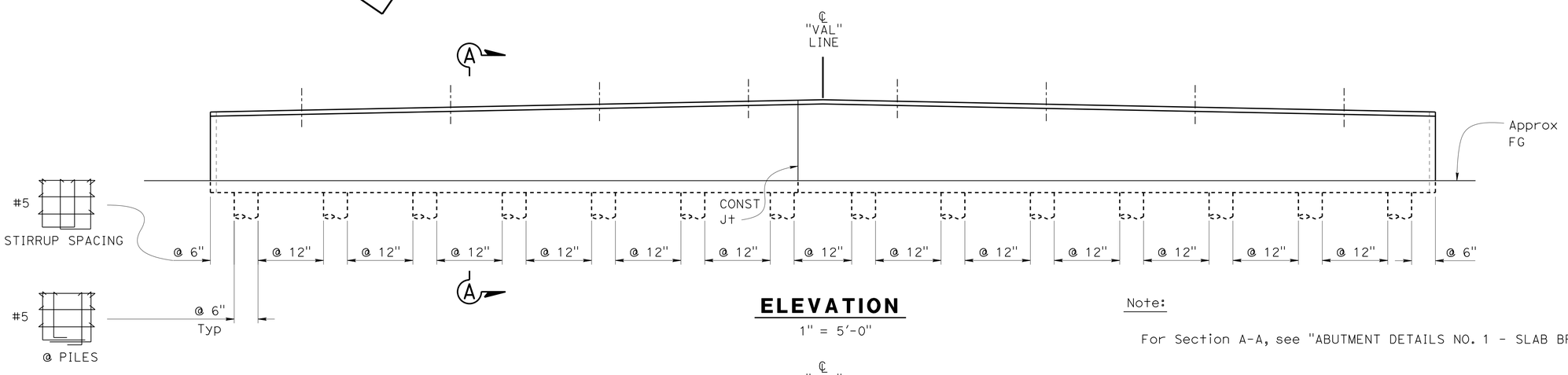

ELEVATION

1" = 5'-0"

Note:

For Section A-A, see "ABUTMENT DETAILS NO. 1 - SLAB BRIDGE" sheet

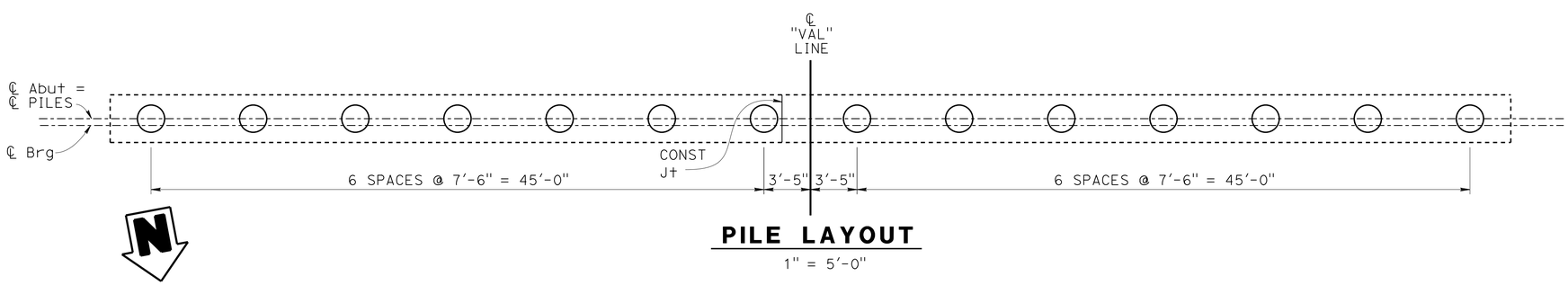

PILE LAYOUT

1" = 5'-0"

DESIGN	BY Karen Doll	CHECKED S. Pahlavan	
DETAILS	BY Jaime Ramirez	CHECKED S. Pahlavan	
QUANTITIES	BY K. Doll	CHECKED N. Shah	

STATE OF CALIFORNIA
DEPARTMENT OF TRANSPORTATION

DIVISION OF ENGINEERING SERVICES
STRUCTURE DESIGN
DESIGN BRANCH 11

BRIDGE NO. 53-3045
POST MILE 1.21

VALLEY VIEW AVE OH/OC (REPLACEMENT)
ABUTMENT SA1 LAYOUT - SLAB BRIDGE

STRUCTURES DESIGN DETAIL SHEET (ENGLISH) (REV. 09-01-10)

ORIGINAL SCALE IN INCHES FOR REDUCED PLANS 0 1 2 3

UNIT: 3587
PROJECT NUMBER & PHASE: 0715000160-1
CONTRACT NO.: 07-2159U4

DISREGARD PRINTS BEARING EARLIER REVISION DATES

REVISION DATES: 5-9-12 9-26-13 2-19-15 8-22-13

SHEET 23 OF 182

FILE => 53-3045-fa-sa01_lo1.dgn

USERNAME => s125624 DATE PLOTTED => 28-JAN-2016 TIME PLOTTED => 11:56

DIST	COUNTY	ROUTE	POST MILES TOTAL PROJECT	SHEET No.	TOTAL SHEETS
07	LA,Ora	5	0.0/1.5, 44.3/44.4	1091	1622

REGISTERED CIVIL ENGINEER 2-19-15 DATE

1-25-16
PLANS APPROVAL DATE

REGISTERED PROFESSIONAL ENGINEER WILLIAM D. KEMP No. 55730 Exp. 12/31/16 CIVIL STATE OF CALIFORNIA

The State of California or its officers or agents shall not be responsible for the accuracy or completeness of electronic copies of this plan sheet.

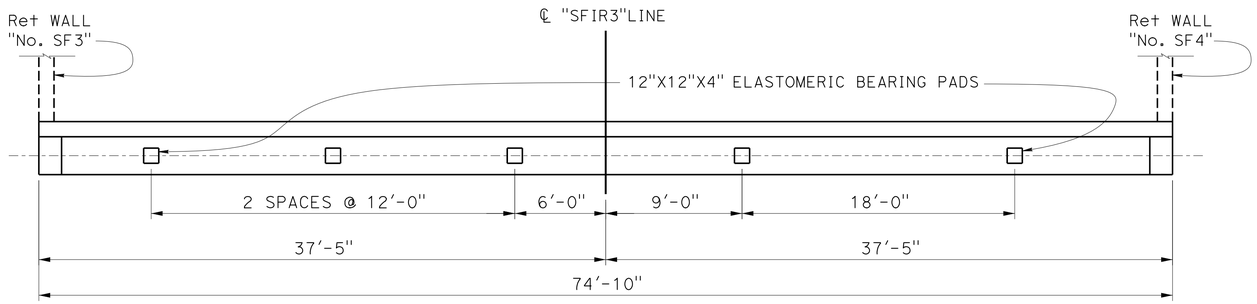

PLAN

SCALE: 1" = 5'-0"

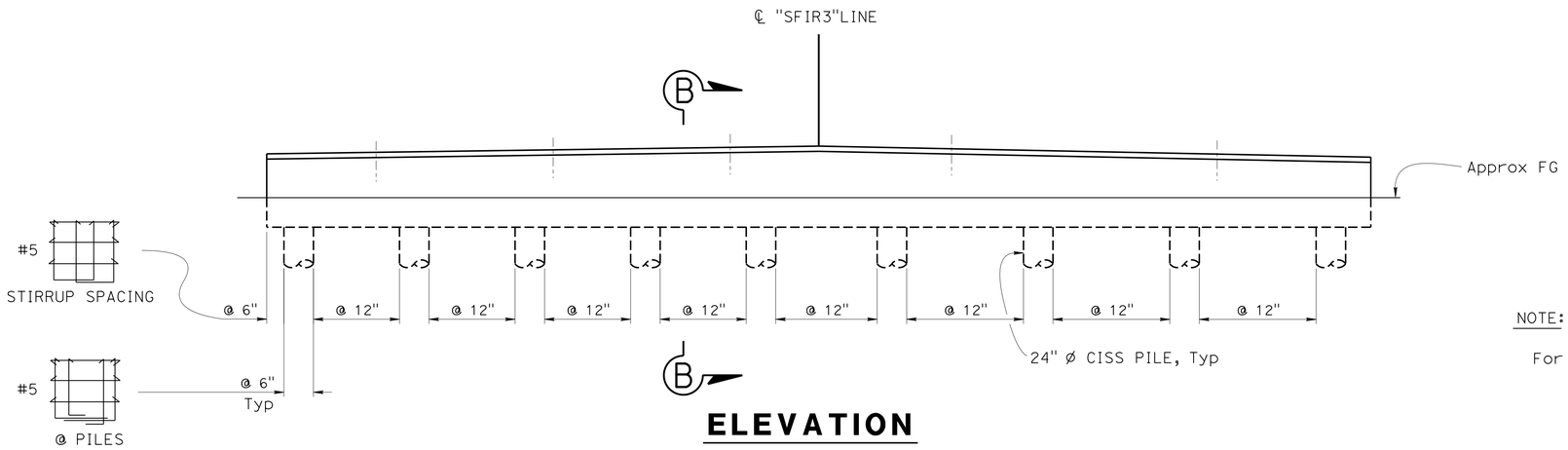

ELEVATION

SCALE: 1" = 5'-0"

NOTE:

For Section B-B, see "ABUTMENT DETAILS NO. 1 - SLAB BRIDGE" sheet

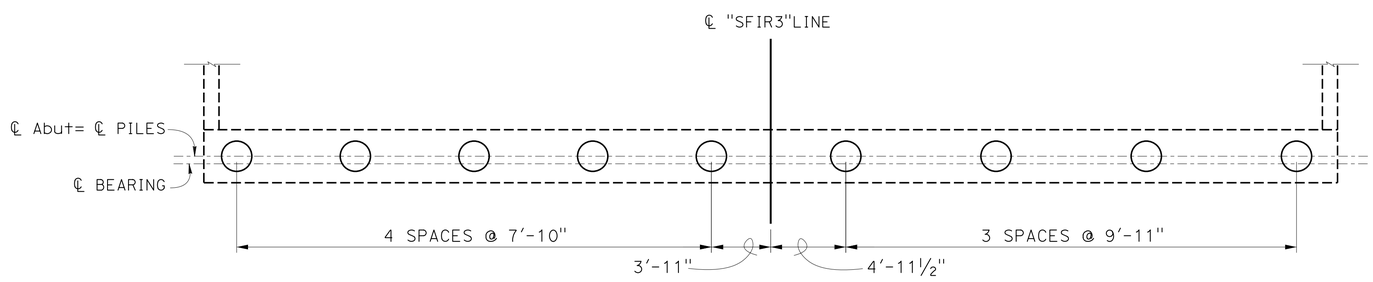

PILE LAYOUT

Scale: 1" = 5'-0"

DESIGN	BY K. Doll	CHECKED S. Pahlavan	
DETAILS	BY T. Bittermann	CHECKED S. Pahlavan	
QUANTITIES	BY K. Doll	CHECKED N. Shah	

STATE OF CALIFORNIA DEPARTMENT OF TRANSPORTATION

DIVISION OF ENGINEERING SERVICES STRUCTURE DESIGN DESIGN BRANCH 11

BRIDGE NO. 53-3045
POST MILE 1.21

VALLEY VIEW AVE OH/OC (REPLACEMENT)
ABUTMENT SA21 LAYOUT - SLAB BRIDGE

STRUCTURES DESIGN DETAIL SHEET (ENGLISH) (REV. 09-01-10)

ORIGINAL SCALE IN INCHES FOR REDUCED PLANS 0 1 2 3

UNIT: 3587
PROJECT NUMBER & PHASE: 0715000160-1
CONTRACT NO.: 07-2159u4

DISREGARD PRINTS BEARING EARLIER REVISION DATES

REVISION DATES 7-6-11 8-22-13 2-19-15 4-10-15

SHEET 24 OF 182

FILE => 53-3045-fa-sa21_lo1.dgn

USERNAME => s125624 DATE PLOTTED => 28-JAN-2016 TIME PLOTTED => 11:56

DIST	COUNTY	ROUTE	POST MILES TOTAL PROJECT	SHEET No.	TOTAL SHEETS
07	LA,Ora	5	0.0/1.5, 44.3/44.4	1092	1622

REGISTERED CIVIL ENGINEER — DATE 3-18-15

1-25-16
PLANS APPROVAL DATE

REGISTERED PROFESSIONAL ENGINEER — WILLIAM D. KEMP No. 55730 Exp. 12/31/16 CIVIL — STATE OF CALIFORNIA

The State of California or its officers or agents shall not be responsible for the accuracy or completeness of electronic copies of this plan sheet.

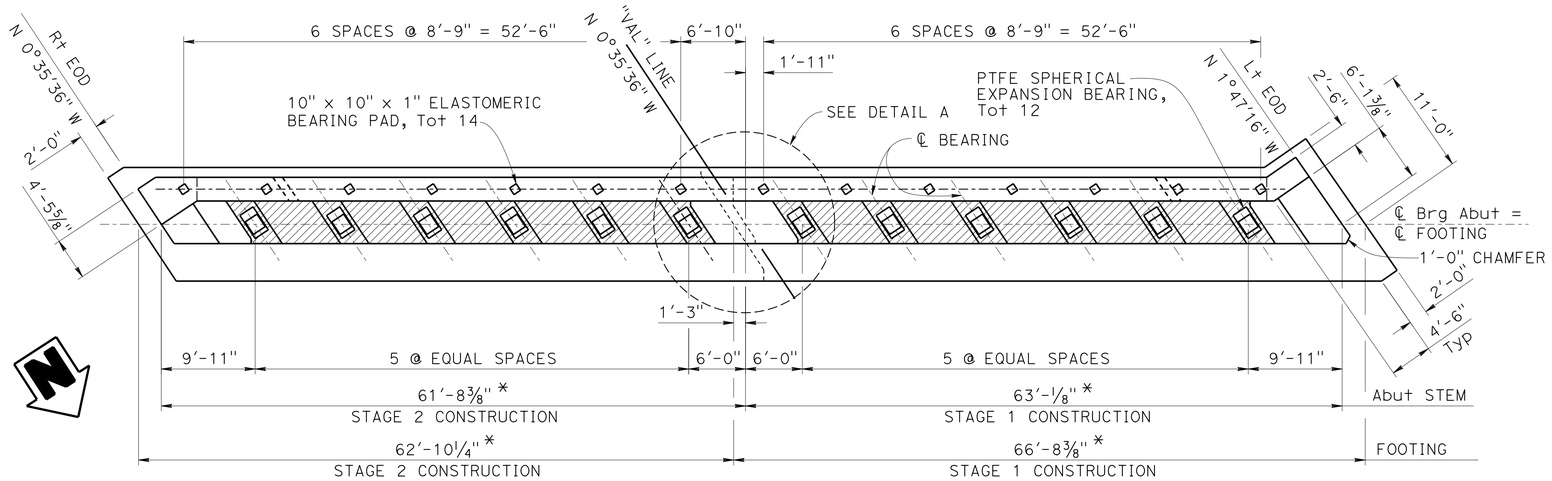

PLAN
⅛"=1'-0"

* Dimension measured along ℄ Bearing = ℄ Footing

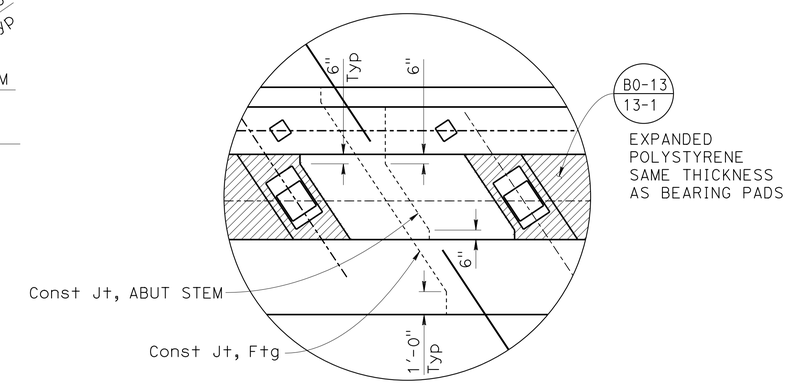

DETAIL A
¼"=1'-0"

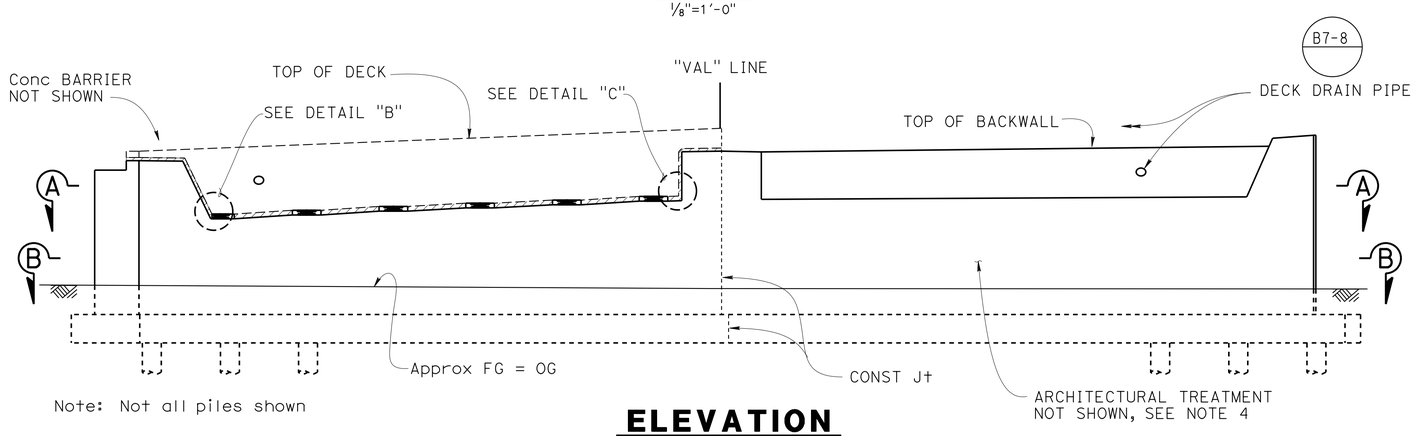

Note: Not all piles shown

ELEVATION
⅛"=1'-0"

LEGEND:

- Indicates expanded polystyrene
- Indicates 2'-0" dia vertical pipe piles

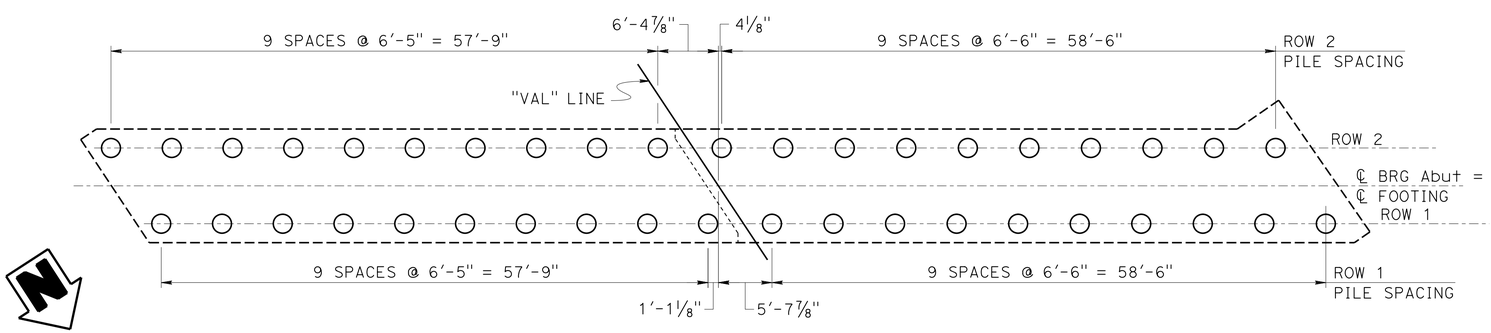

PILE LAYOUT
⅛"=1'-0"

NOTES:

1. For 'Detail B' and 'Detail C', see "ABUTMENT DETAILS NO. 2 - FRAME 1" sheet
2. For 'Section A-A' and 'Section B-B', see "ABUTMENT DETAILS NO. 3 - FRAME 1" sheet
3. For PTFE Spherical Expansion Bearing, see "PTFE SPHERICAL EXPANSION BEARING DETAILS NO. 1" and "PTFE SPHERICAL EXPANSION BEARING DETAILS NO. 2" sheets
4. For Architectural Treatment, see "ARCHITECTURAL ELEVATIONS AT ABUTMENTS" and "SECTION AND MOTIF DETAILS AT ABUTMENTS" sheets

	BY	CHECKED
DESIGN	Krishnakant Andurlekar	Daryoush Tavatli
DETAILS	Pauline Tong	Daryoush Tavatli
QUANTITIES	Krishnakant Andurlekar	Ruperd Wilson

STATE OF CALIFORNIA
DEPARTMENT OF TRANSPORTATION

DIVISION OF ENGINEERING SERVICES
STRUCTURE DESIGN
DESIGN BRANCH 11

BRIDGE NO. 53-3045
POST MILE 1.21

VALLEY VIEW AVE OH/OC (REPLACEMENT)
ABUTMENT 1 LAYOUT - FRAME 1

STRUCTURES DESIGN DETAIL SHEET (ENGLISH) (REV. 09-01-10)

ORIGINAL SCALE IN INCHES FOR REDUCED PLANS 0 1 2 3

UNIT: 3587
PROJECT NUMBER & PHASE: 0715000160-1
CONTRACT NO.: 07-2159u4

DISREGARD PRINTS BEARING EARLIER REVISION DATES

REVISION DATES: 8-23-11 5-4-13 6-24-13 3-26-15

SHEET 25 OF 182

FILE => 53-3045-fb-a01_lo1.dgn

USERNAME => s125624 DATE PLOTTED => 28-JAN-2016 TIME PLOTTED => 11:56

DIST	COUNTY	ROUTE	POST MILES TOTAL PROJECT	SHEET No.	TOTAL SHEETS
07	LA,Ora	5	0.0/1.5, 44.3/44.4	1093	1622

REGISTERED CIVIL ENGINEER — DATE: 3-18-15

1-25-16
PLANS APPROVAL DATE

REGISTERED PROFESSIONAL ENGINEER — WILLIAM D. KEMP — No. 55730 — Exp. 12/31/16 — CIVIL — STATE OF CALIFORNIA

The State of California or its officers or agents shall not be responsible for the accuracy or completeness of electronic copies of this plan sheet.

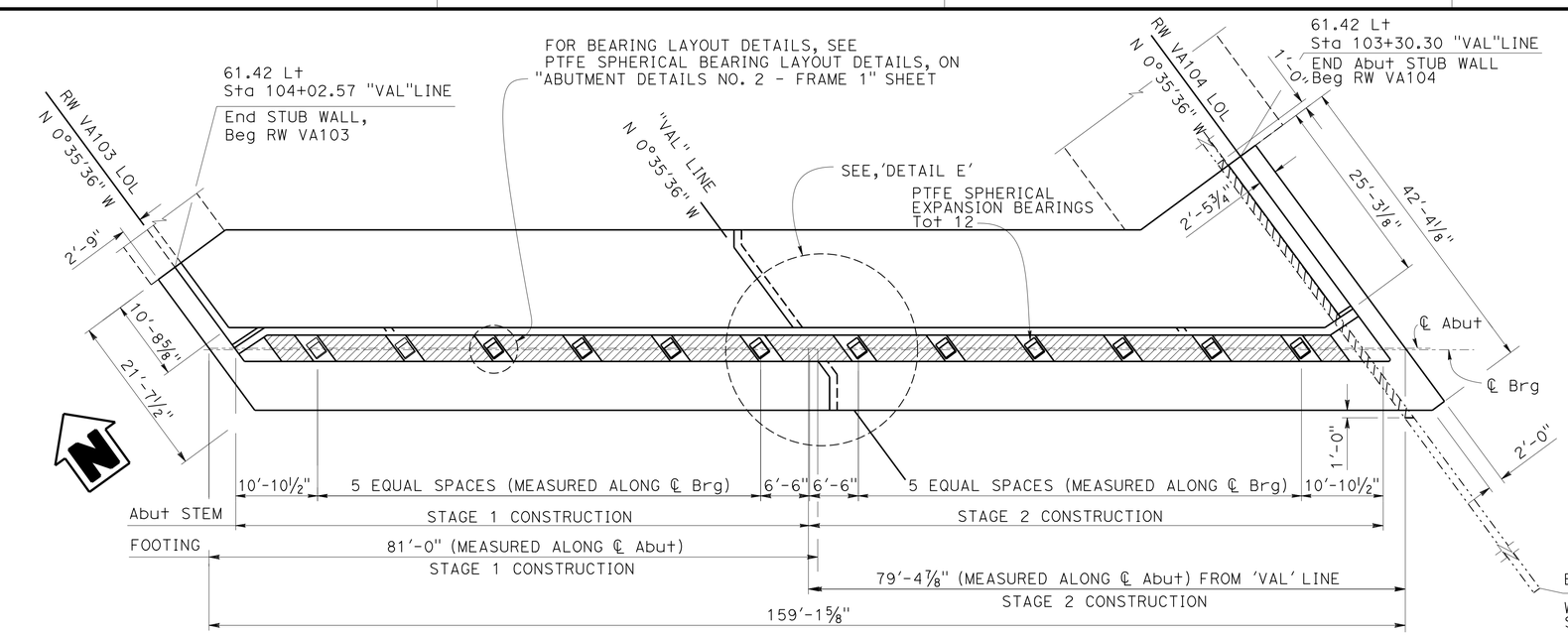

PLAN
1" = 10'-0"

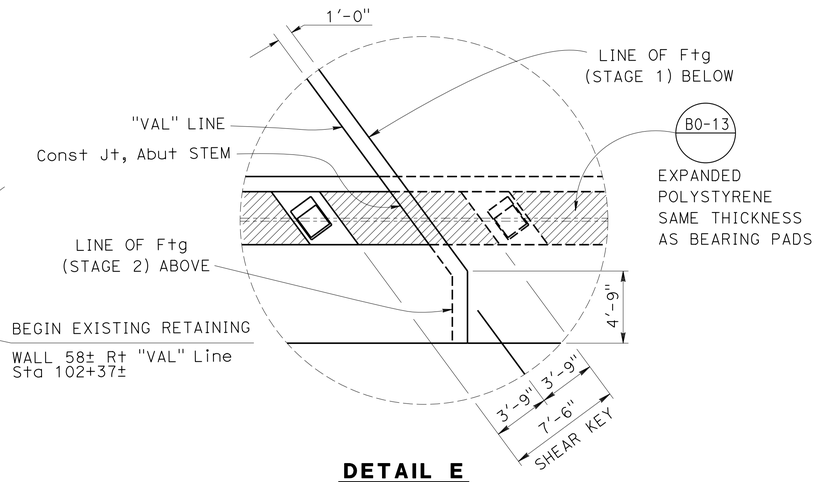

DETAIL E
1" = 5'-0"

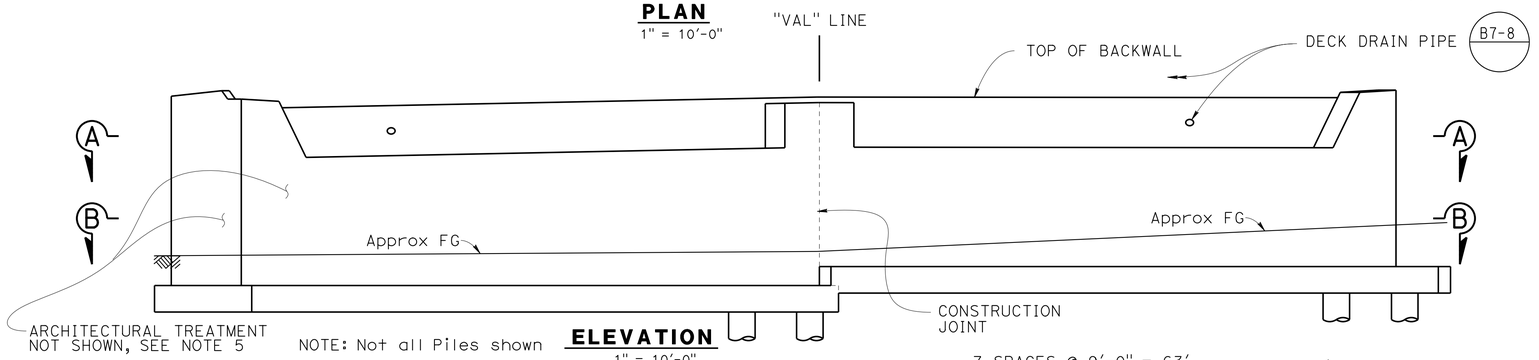

NOTE: Not all Piles shown

ELEVATION
1" = 10'-0"

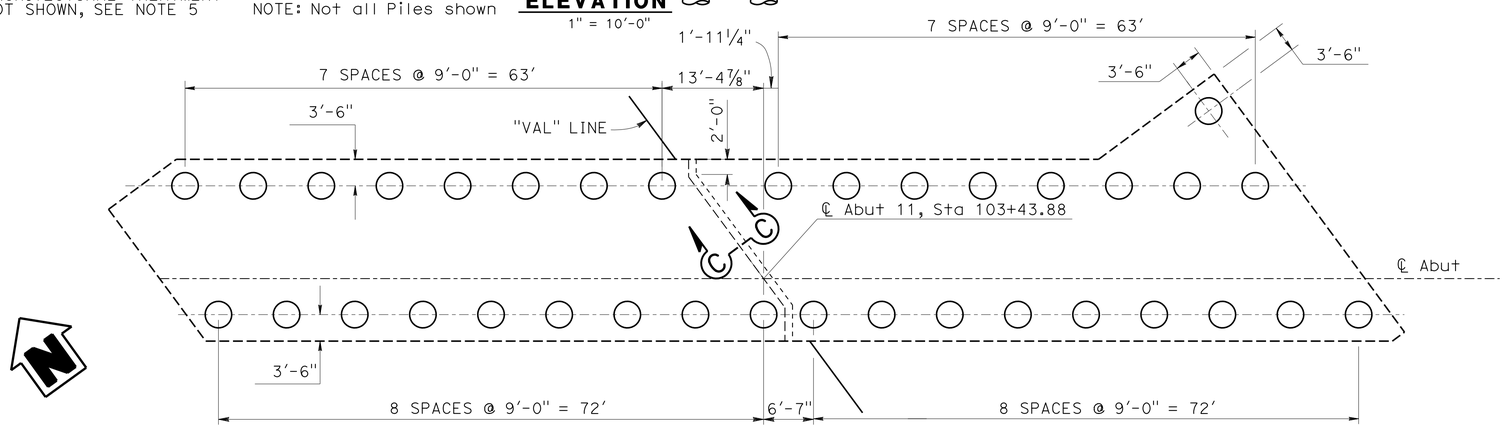

PILE LAYOUT
1" = 10'-0"

LEGEND:

- Indicates expanded polystyrene
- Existing Retaining Wall to be removed (see "ROAD PLANS" and "RETAINING WALL 104" plans for for additional wall removal limits)
- Indicates 42" ø CIDH Piles

NOTES:

1. For PTFE Spherical Expansion Bearing, see "PTFE SPHERICAL EXPANSION BEARING DETAILS NO. 1" sheet
2. For PTFE Brg Layout see "PTFE SPHERICAL BEARING LAYOUT DETAIL" on "ABUTMENT DETAILS NO. 2 - FRAME 1" sheet
3. For Section C-C see, "ABUTMENT DETAIL NO. 5 - FRAME 3" sheet
4. Temporary shoring will be required between stage 1 and stage 2 Abutment construction
5. For Architectural Treatment, see "SECTIONS AND MOTIF DETAILS AT ABUTMENTS" and "ARCHITECTURAL ELEVATIONS AT ABUTMENTS" sheets
6. For Sections "SECTION A-A" and "SECTION B-B", see "ABUTMENT DETAILS NO. 6 - FRAME 3" sheet

	BY	CHECKED
DESIGN	Jay Posey	Krishnakant Andurlekar
DETAILS	Pauline Tong	Krishnakant Andurlekar
QUANTITIES	Jay Posey	Nikki Tiongco

STATE OF CALIFORNIA
DEPARTMENT OF TRANSPORTATION

DIVISION OF ENGINEERING SERVICES
STRUCTURE DESIGN
DESIGN BRANCH 11

BRIDGE NO. 53-3045
POST MILE 1.21

VALLEY VIEW AVE OH/OC (REPLACEMENT)
ABUTMENT 11 LAYOUT - FRAME 3

STRUCTURES DESIGN DETAIL SHEET (ENGLISH) (REV. 09-01-10)

ORIGINAL SCALE IN INCHES FOR REDUCED PLANS 0 1 2 3

UNIT: 3587
PROJECT NUMBER & PHASE: 0715000160-1
CONTRACT NO.: 07-2159u4

DISREGARD PRINTS BEARING EARLIER REVISION DATES

REVISION DATES: 1-18-11 9-5-13 9-20-13 9-12-13

SHEET 26 OF 182

FILE => 53-3045-fb-a11_lo1.dgn

USERNAME => s125624 DATE PLOTTED => 28-JAN-2016 TIME PLOTTED => 11:56

DIST	COUNTY	ROUTE	POST MILES TOTAL PROJECT	SHEET No.	TOTAL SHEETS
07	LA,Ora	5	0.0/1.5, 44.3/44.4	1094	1622

REGISTERED CIVIL ENGINEER — DATE 2-19-15

1-25-16
PLANS APPROVAL DATE

REGISTERED PROFESSIONAL ENGINEER — WILLIAM D. KEMP No. 55730 Exp. 12/31/16 CIVIL — STATE OF CALIFORNIA

The State of California or its officers or agents shall not be responsible for the accuracy or completeness of electronic copies of this plan sheet.

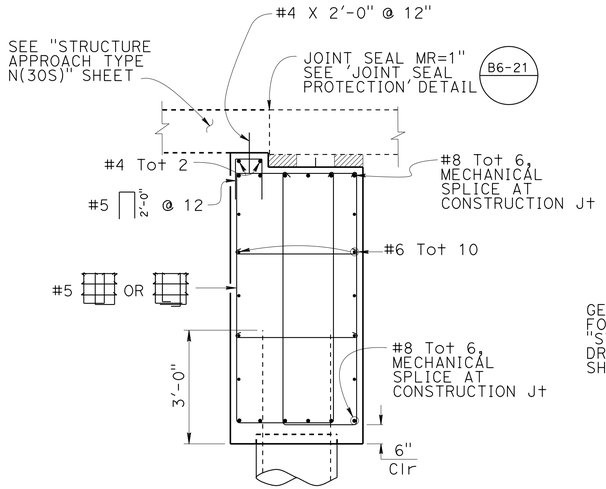

ABUTMENT SA1 REINFORCEMENT

½" = 1'-0"

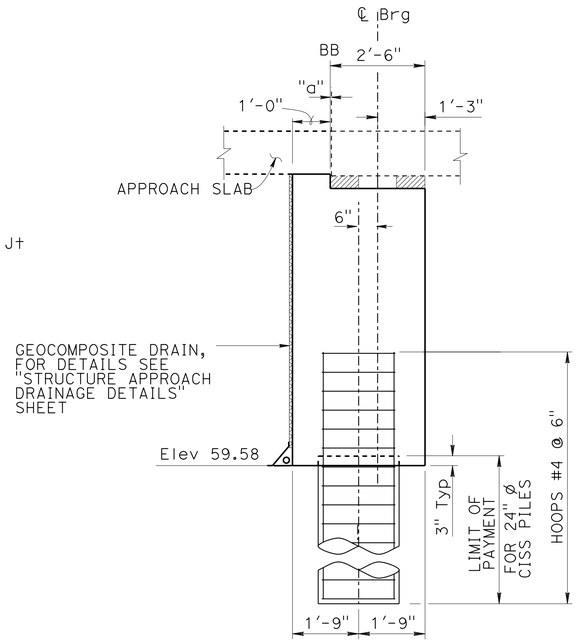

℄ Abut = ℄ PILES

SECTION A-A

½" = 1'-0"

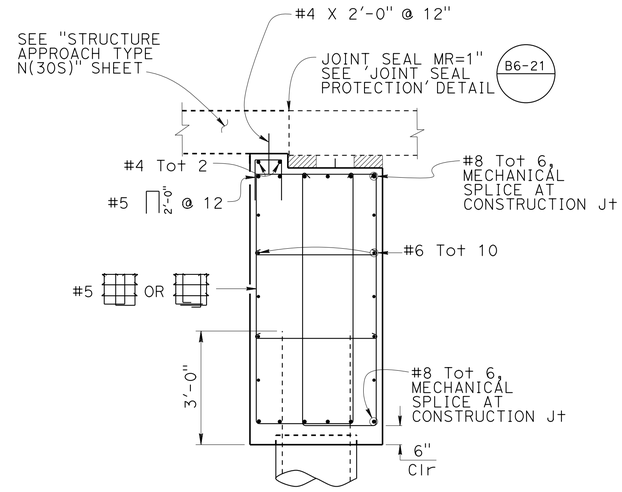

ABUTMENT SA21 REINFORCEMENT

½" = 1'-0"

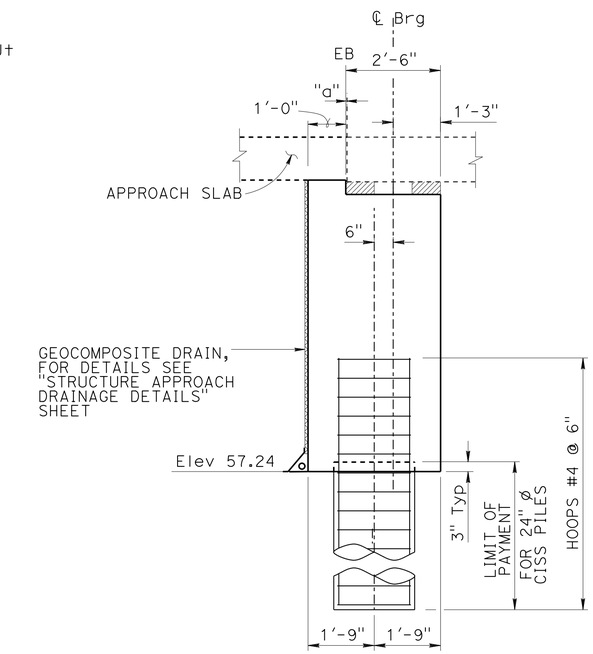

℄ Abut = ℄ PILES

SECTION B-B

½" = 1'-0"

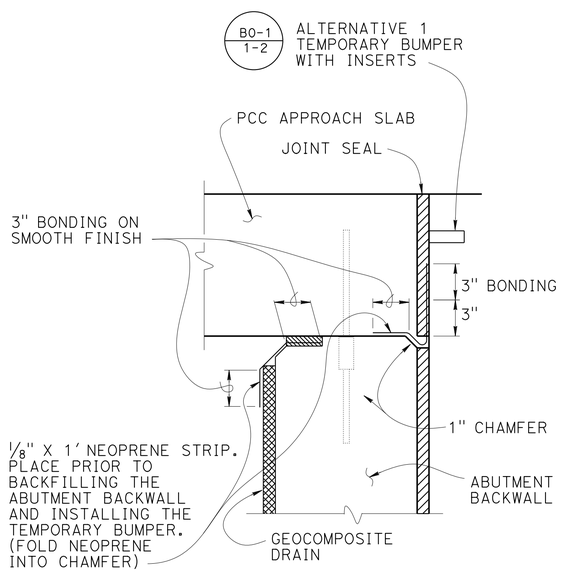

JOINT PROTECTION DETAIL

NO SCALE

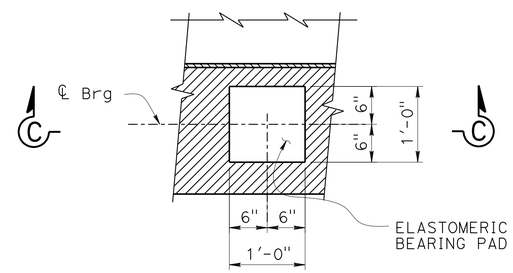

PLAN

1" = 1'-0"

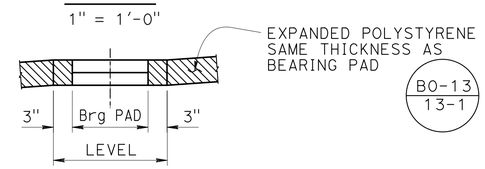

SECTION C-C

1" = 1'-0"

BEARING PAD DETAIL

DETAILS TYPICAL AT ALL BEARING PADS

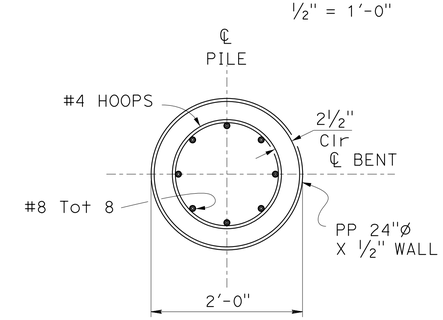

PILE SECTION

1" = 1'-0"

DESIGN	BY K. Doll	CHECKED S. Pahlavan	
DETAILS	BY L. Goldthwait	CHECKED S. Pahlavan	
QUANTITIES	BY K. Doll	CHECKED N. Shah	

STATE OF CALIFORNIA DEPARTMENT OF TRANSPORTATION

DIVISION OF ENGINEERING SERVICES STRUCTURE DESIGN DESIGN BRANCH 11

BRIDGE NO. 53-3045
POST MILE 1.21

VALLEY VIEW AVE OH/OC (REPLACEMENT)
ABUTMENT DETAILS NO 1 - SLAB BRIDGE

STRUCTURES DESIGN DETAIL SHEET (ENGLISH) (REV. 09-01-10)

ORIGINAL SCALE IN INCHES FOR REDUCED PLANS 0 1 2 3

UNIT: 3587
PROJECT NUMBER & PHASE: 0715000160-1
CONTRACT NO.: 07-2159u4

DISREGARD PRINTS BEARING EARLIER REVISION DATES

REVISION DATES: 5-30-12 | 7-19-15 | 8-22-13 | 9-26-13

SHEET 27 OF 182

FILE => 53-3045-fc-a01dt01.dgn

USERNAME => s125624 DATE PLOTTED => 28-JAN-2016 TIME PLOTTED => 11:56

DIST	COUNTY	ROUTE	POST MILES TOTAL PROJECT	SHEET No.	TOTAL SHEETS
07	LA,Ora	5	0.0/1.5, 44.3/44.4	1095	1622

William Kemp 3-18-15
REGISTERED CIVIL ENGINEER DATE

1-25-16
PLANS APPROVAL DATE

REGISTERED PROFESSIONAL ENGINEER WILLIAM D. KEMP No. 55730 Exp. 12/31/16 CIVIL STATE OF CALIFORNIA

The State of California or its officers or agents shall not be responsible for the accuracy or completeness of electronic copies of this plan sheet.

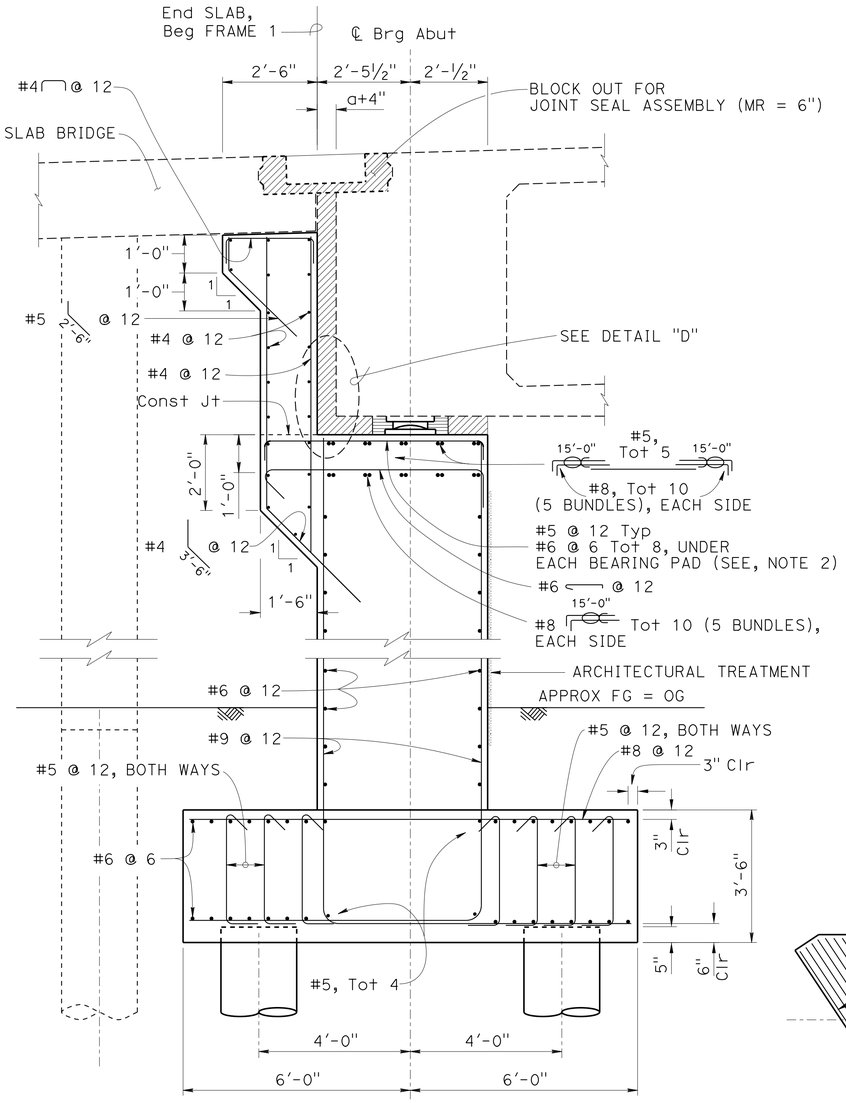

TYPICAL SECTION (ABUTMENT 1)

½" = 1'-0"

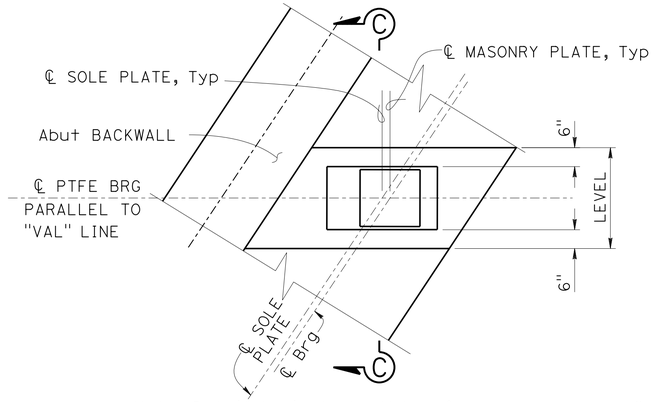

Note: Detail typical at all bearing pads

PTFE SPHERICAL BEARING LAYOUT DETAIL

No Scale

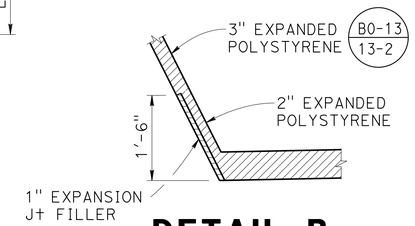

DETAIL B

¾" = 1'-0"

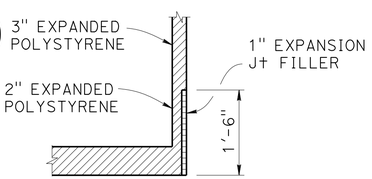

DETAIL C

¾" = 1'-0"

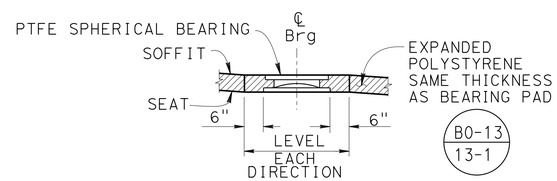

SECTION C-C

NO SCALE

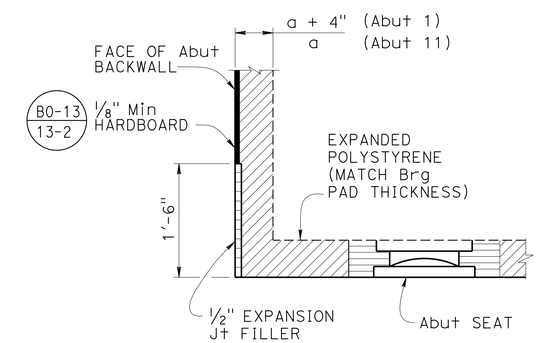

DETAIL D

NO SCALE

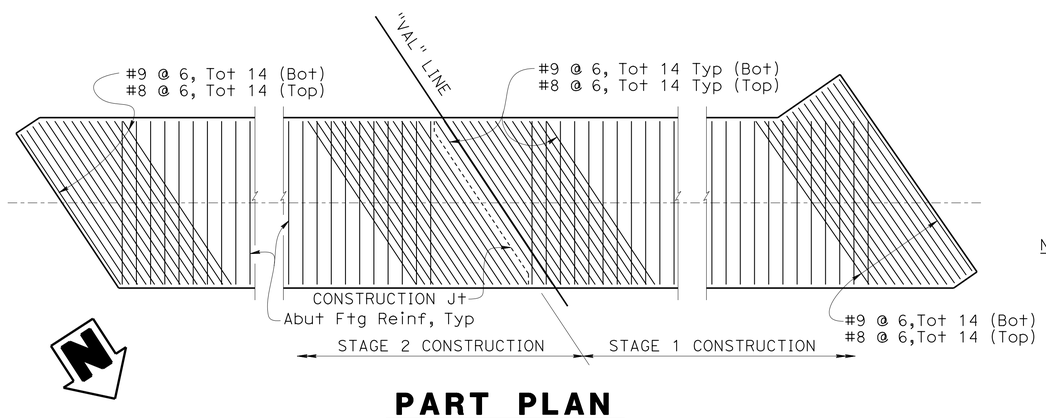

PART PLAN FOOTING REINFORCEMENT ABUTMENT 1

⅜" = 1'-0"

LEGEND:

- Indicates Expanded Polystyrene
- Indicates Expansion Joint Filler
- Indicates bundled bars

NOTES:

1. Place Abut backwall after prestressing operation is complete
2. Place the reinforcement normal to ℄ Abut Brg and space normal to ℄ Abut Brg
3. For PTFE spherical expansion bearing see "PTFE/SPHERICAL EXPANSION BEARING DETAILS NO. 1" and "PTFE/SPHERICAL EXPANSION BEARING DETAILS NO. 2" sheets
4. For Architectural Treatment, see "ARCHITECTURAL ELEVATIONS AT ABUTMENTS" and "SECTIONS AND MOTIFF DETAILS AT ABUTMENTS" sheets.

	BY	CHECKED
DESIGN	Krishnakant Andurlekar	Daryoush Tavatli
DETAILS	Pauline Tong	Daryoush Tavatli
QUANTITIES	Krishnakant Andurlekar	Ruperd Wilson

STATE OF CALIFORNIA
DEPARTMENT OF TRANSPORTATION

DIVISION OF ENGINEERING SERVICES
STRUCTURE DESIGN
DESIGN BRANCH 11

BRIDGE NO. 53-3045
POST MILE 1.21

VALLEY VIEW AVE OH/OC (REPLACEMENT)
ABUTMENT DETAILS NO 2 - FRAME 1

STRUCTURES DESIGN DETAIL SHEET (ENGLISH) (REV. 09-01-10)

ORIGINAL SCALE IN INCHES FOR REDUCED PLANS 0 1 2 3

UNIT: 3587
PROJECT NUMBER & PHASE: 0715000160-1
CONTRACT NO.: 07-2159u4

DISREGARD PRINTS BEARING EARLIER REVISION DATES

REVISION DATES: 10-19-11 8-29-13 8-15-13 7-16-13

SHEET 28 OF 182

FILE => 53-3045-fd-a01dt02.dgn

USERNAME => s123624 DATE PLOTTED => 28-JAN-2016 TIME PLOTTED => 11:56

DIST	COUNTY	ROUTE	POST MILES TOTAL PROJECT	SHEET No.	TOTAL SHEETS
07	LA,Ora	5	0.0/1.5, 44.3/44.4	1096	1622

REGISTERED CIVIL ENGINEER — DATE 2-23-15

1-25-16
PLANS APPROVAL DATE

REGISTERED PROFESSIONAL ENGINEER — WILLIAM D. KEMP — No. 55730 — Exp. 12/31/16 — CIVIL — STATE OF CALIFORNIA

The State of California or its officers or agents shall not be responsible for the accuracy or completeness of electronic copies of this plan sheet.

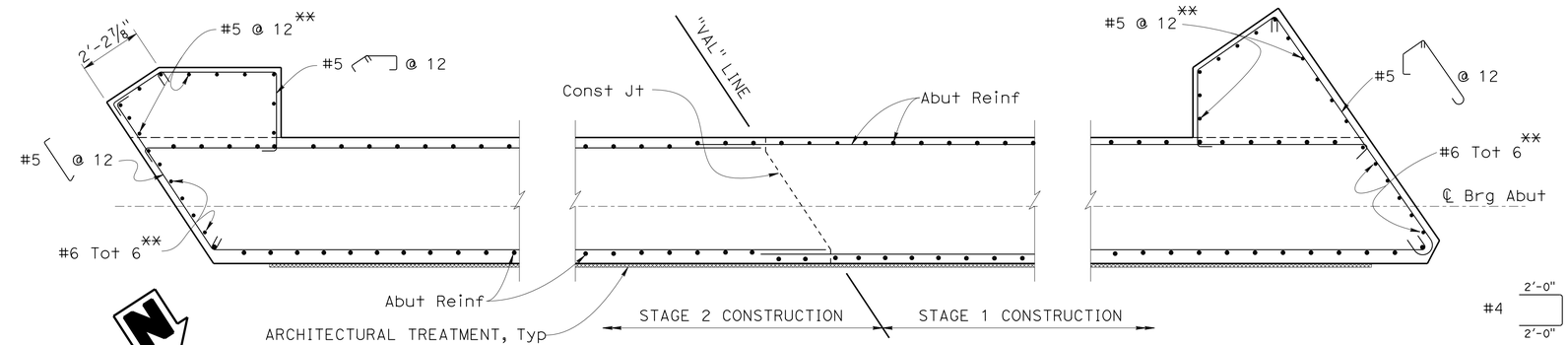

PART SECTION B-B (ABUTMENT 1)

3/8" = 1'-0"

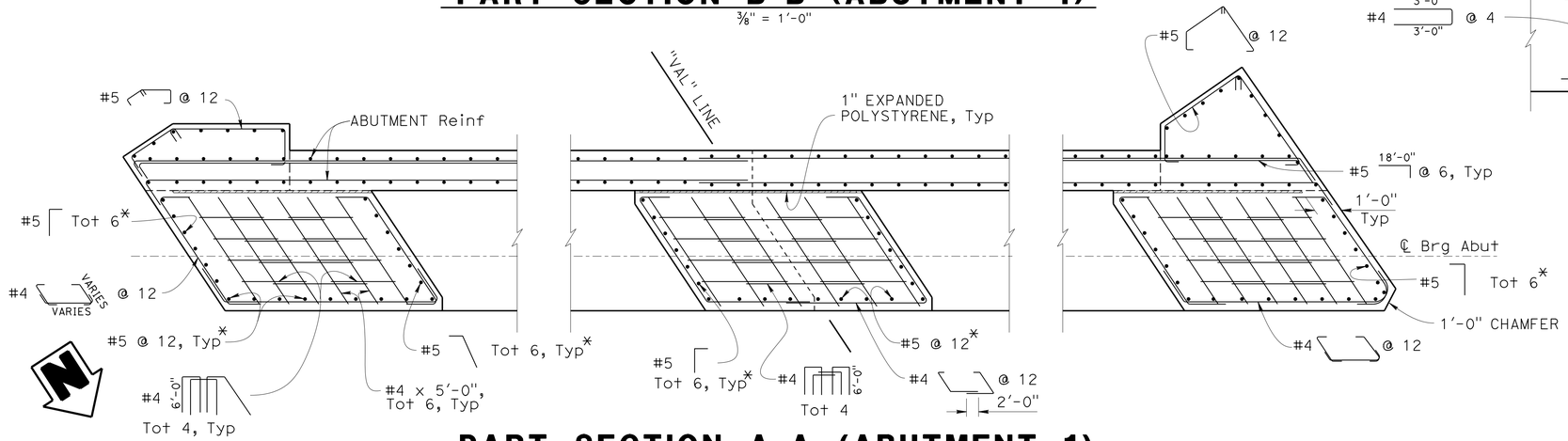

PART SECTION A-A (ABUTMENT 1)

3/8" = 1'-0"

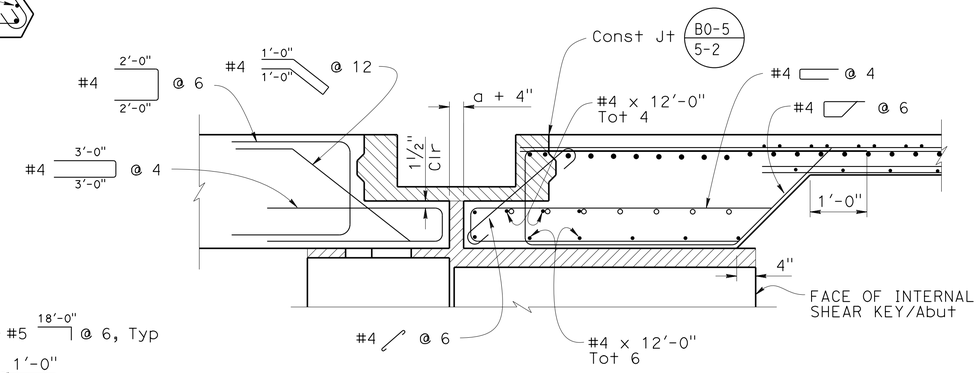

SECTION C-C

3/8" = 1'-0"

* REINFORCEMENT TO DISCONTINUE AT ABUTMENT SEAT LEVEL.

** EXTEND 2'-6" INTO FOOTING

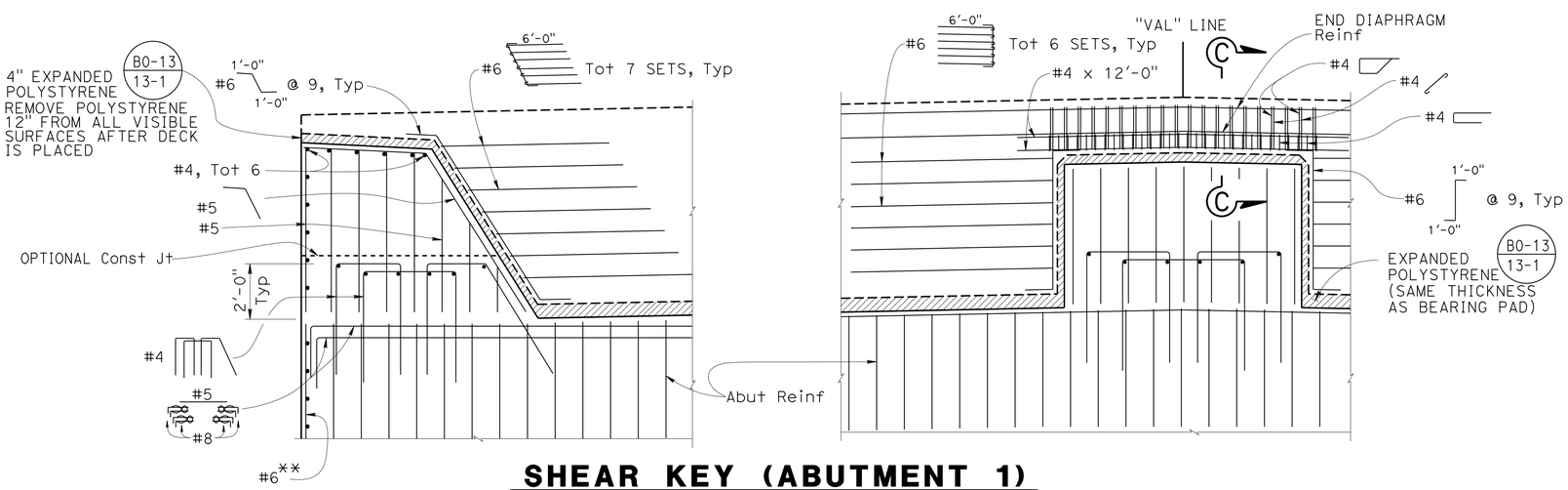

SHEAR KEY (ABUTMENT 1)

3/8" = 1'-0"

LEGEND:

- Indicates Expanded Polystyrene
- Indicates joint seal assembly blockout
- Indicates bundled bars

NOTES:

1. For Section cuts 'A-A' & 'B-B', see "ABUTMENT 1 LAYOUT - FRAME 1" sheet
2. For Architectural Treatment see "ARCHITECTURAL ELEVATIONS AT ABUTMENT" and "SECTIONS AND MOTIF DETAILS AT ABUTMENTS " sheets

	BY	CHECKED
DESIGN	Krishnakant Andurlekar	Daryoush Tavatli
DETAILS	P. Tong/J. Ramirez	Daryoush Tavatli
QUANTITIES	Krishnakant Andurlekar	Ruperd Wilson

STATE OF CALIFORNIA
DEPARTMENT OF TRANSPORTATION

DIVISION OF ENGINEERING SERVICES
STRUCTURE DESIGN
DESIGN BRANCH 11

BRIDGE NO. 53-3045
POST MILE 1.21

VALLEY VIEW AVE OH/OC (REPLACEMENT)
ABUTMENT DETAILS NO 3 - FRAME 1

STRUCTURES DESIGN DETAIL SHEET (ENGLISH) (REV. 09-01-10)

ORIGINAL SCALE IN INCHES FOR REDUCED PLANS 0 1 2 3

UNIT: 3587
PROJECT NUMBER & PHASE: 0715000160-1
CONTRACT NO.: 07-2159U4

DISREGARD PRINTS BEARING EARLIER REVISION DATES

REVISION DATES: 10-18-11 6-24-13 2-23-15 4-16-15

SHEET 29 OF 182

FILE => 53-3045-fd-a01dt03.dgn

USERNAME => s125624 DATE PLOTTED => 28-JAN-2016 TIME PLOTTED => 11:56

DIST	COUNTY	ROUTE	POST MILES TOTAL PROJECT	SHEET No.	TOTAL SHEETS
07	LA,Ora	5	0.0/1.5, 44.3/44.4	1097	1622

REGISTERED CIVIL ENGINEER — DATE 3-18-15

1-25-16
PLANS APPROVAL DATE

REGISTERED PROFESSIONAL ENGINEER — WILLIAM D. KEMP No. 55730 Exp 12/31/16 CIVIL — STATE OF CALIFORNIA

The State of California or its officers or agents shall not be responsible for the accuracy or completeness of electronic copies of this plan sheet.

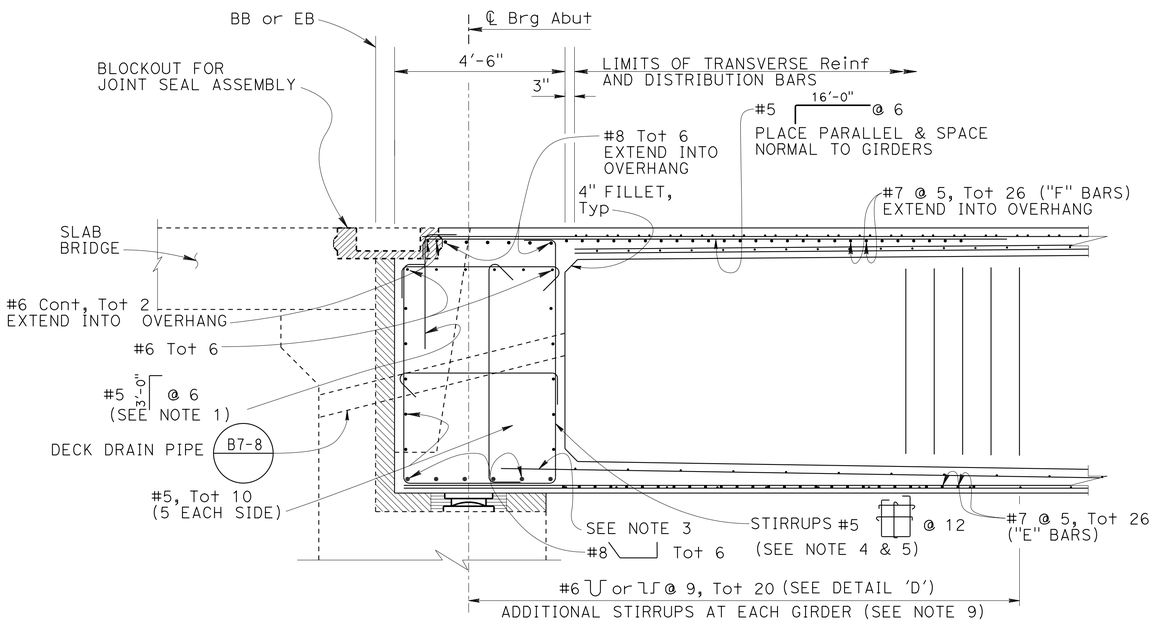

NOTE: End Diaphragm at Abutment 1 shown

END DIAPHRAGM (ABUT 1)

½" = 1'-0"

RSP B7-8 B8-5

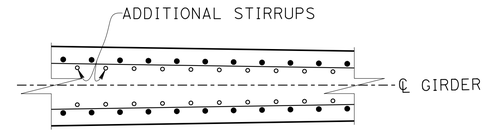

Note: Additional Stirrups may be bundled with main stirrups

PLAN VIEW

DETAIL D

NO SCALE

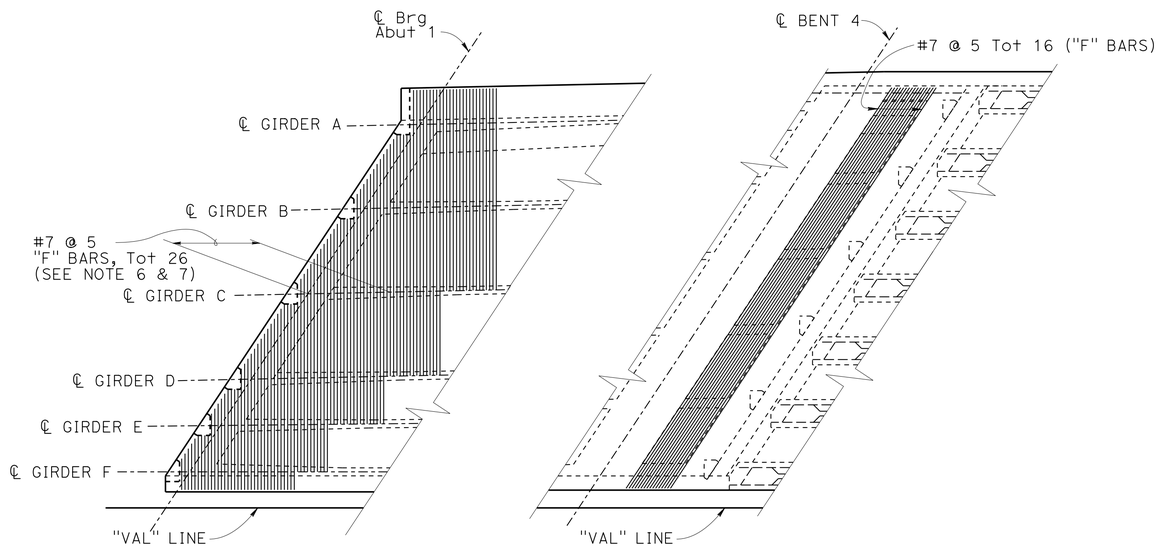

NOTES: -"F" bars shown "E" bars similar

- Reinforcement for stage 1 shown, Reinf for stage 2 similar

DECK SLAB & BOTTOM SLAB GENERAL ZONE ANCHORAGE REINFORCEMENT DETAIL

NO SCALE

NOTES:

1. Reinf extending into the joint seal blockout may be adjusted as necessary to accommodate installation of joint seal assembly upon approval of joint seal shop plans and as directed by the Engineer
2. For transverse Reinf & distribution bars, see 'Part Typical Section' on "TYPICAL SECTION NO. 2" sheet.
3. Extend 2'-0" into End Diaphragm
4. Place stirrups parallel and space normal to girders.
5. Adjust position of stirrups to avoid prestress tendons
6. Extend reinforcement to at least the second girder beyond girder of note, within 16 ft distance from bearing plate
7. Bars can be placed as shown or as directed by the Engineer
8. For Abutment Joint Seal Assembly, see "JOINT SEAL ASSEMBLY MOVEMENT RATING GREATER THAN 4" sheet.
9. Stirrups shown are in addition to Stirrups shown on "GIRDER LAYOUT No. 2" sheet. Place reinforcement as shown or as directed by the Engineer.
10. For Transverse Reinf extending into End Diaphragm, see "GIRDER DETAILS NO.1 - FRAME 3" sheet.

	BY	CHECKED
DESIGN	Krishnakant Andurlakar	Dauryoush Tavatli
DETAILS	Jaime Ramirez	Dauryoush Tavatli
QUANTITIES	Krishnakant Andurlakar	Ruperd Wilson

STATE OF CALIFORNIA
DEPARTMENT OF TRANSPORTATION

DIVISION OF ENGINEERING SERVICES
STRUCTURE DESIGN
DESIGN BRANCH 11

BRIDGE NO. 53-3045
POST MILE 1.21

VALLEY VIEW AVE OH/OC (REPLACEMENT)
ABUTMENT DETAILS NO 4 - FRAME 1

STRUCTURES DESIGN DETAIL SHEET (ENGLISH) (REV. 09-01-10)

ORIGINAL SCALE IN INCHES FOR REDUCED PLANS 0 1 2 3

UNIT: 3587
PROJECT NUMBER & PHASE: 0715000160-1
CONTRACT NO.: 07-2159u4

DISREGARD PRINTS BEARING EARLIER REVISION DATES

REVISION DATES: 11-24-10 2-26-13 1-30-13 1-31-13

SHEET 30 OF 182

FILE => 53-3045-fd-a01dt04.dgn

USERNAME => s125624 DATE PLOTTED => 28-JAN-2016 TIME PLOTTED => 11:56

DIST	COUNTY	ROUTE	POST MILES TOTAL PROJECT	SHEET No.	TOTAL SHEETS
07	LA,Ora	5	0.0/1.5, 44.3/44.4	1098	1622

REGISTERED CIVIL ENGINEER — DATE 2-23-15

1-25-16
PLANS APPROVAL DATE

REGISTERED PROFESSIONAL ENGINEER — WILLIAM D. KEMP No. 55730 Exp. 12/31/16 CIVIL — STATE OF CALIFORNIA

The State of California or its officers or agents shall not be responsible for the accuracy or completeness of electronic copies of this plan sheet.

NOTES:

1. For Architectural Treatment, see "ARCHITECTURAL MOTIF AT ABUTMENTS" and "ARCHITECTURAL MOTIF DETAILS AT ABUTMENTS" sheets.
2. Place Abut back wall after prestressing operation is complete
3. For PTFE spherical expansion bearing, see "PTFE/SPHERICAL EXPANSION BEARING DETAIL NO. 1" sheet
4. For Movement Rating, see "JOINT SEAL ASSEMBLY MAXIMUM MOVEMENT RATING = 4" sheet
5. For DETAIL "D", see "ABUTMENT DETAILS NO. 2 - FRAME 1" sheet
6. Place the reinforcement normal to ℄ Abut Brg and space normal to ℄ Abut Brg

Indicates EXpanded Polystyrene

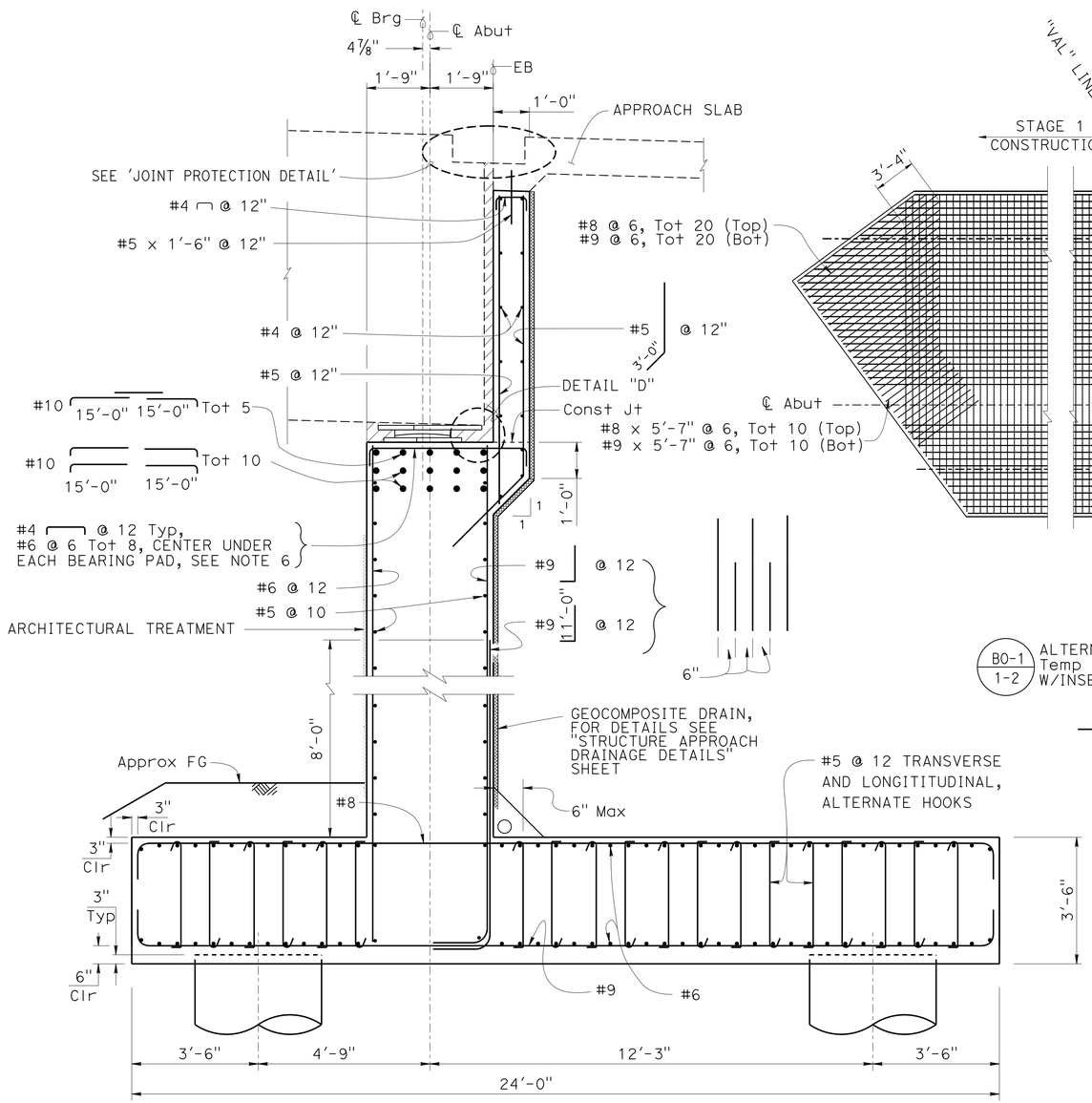

ABUT 11
TYPICAL SECTION
½" = 1'-0"

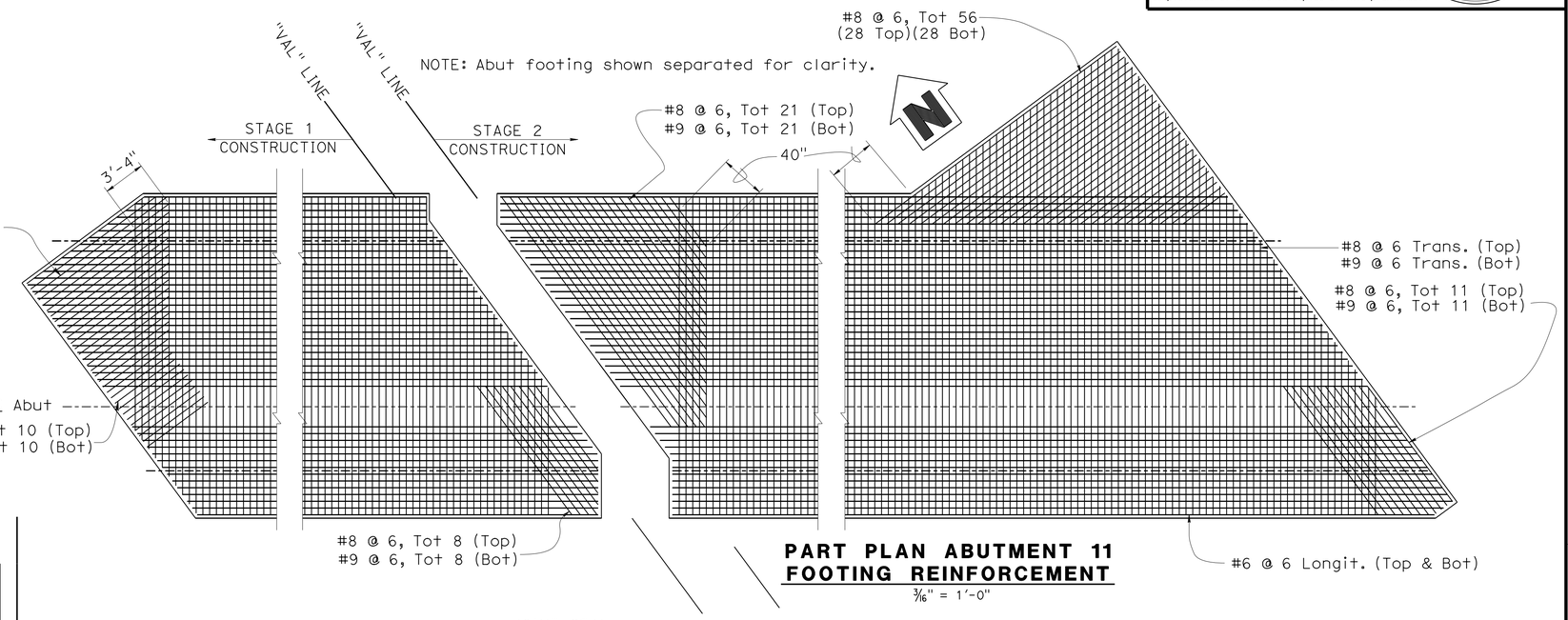

PART PLAN ABUTMENT 11
FOOTING REINFORCEMENT
3/16" = 1'-0"

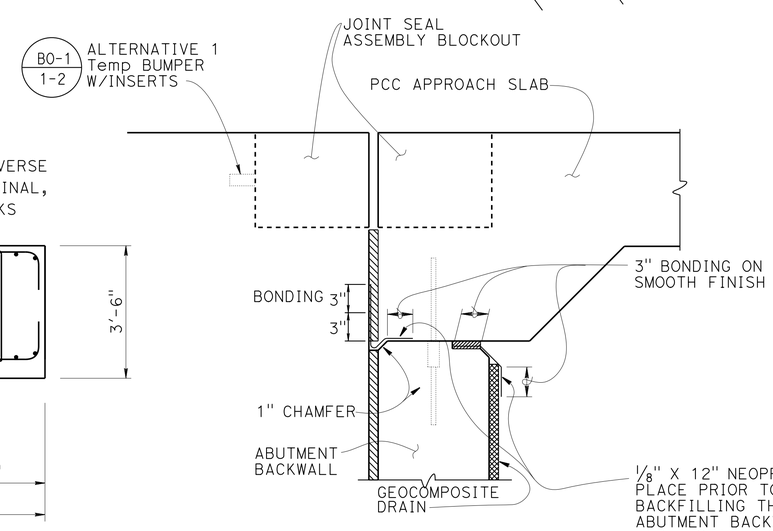

JOINT PROTECTION DETAIL
1½" = 1'-0"

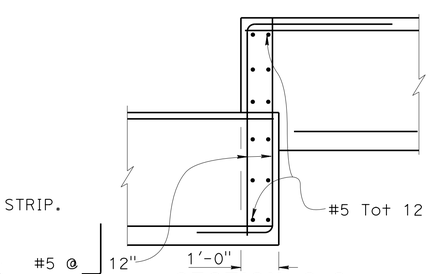

SECTION C-C
½" = 1'-0"

DESIGN	BY Jay Posey	CHECKED Krishnakant Andurlekar	
DETAILS	BY John Hunter	CHECKED Krishnakant Andurlekar	
QUANTITIES	BY Jay Posey	CHECKED Nikki Tiongco	

STATE OF CALIFORNIA
DEPARTMENT OF TRANSPORTATION

DIVISION OF ENGINEERING SERVICES
STRUCTURE DESIGN
DESIGN BRANCH 11

BRIDGE NO. 53-3045
POST MILE 1.21

VALLEY VIEW AVE OH/OC (REPLACEMENT)
ABUTMENT DETAILS NO. 5 - FRAME 3

STRUCTURES DESIGN DETAIL SHEET (ENGLISH) (REV. 09-01-10)

ORIGINAL SCALE IN INCHES FOR REDUCED PLANS 0 1 2 3

UNIT: 3587
PROJECT NUMBER & PHASE: 0715000160-1
CONTRACT NO.: 07-2159U4

DISREGARD PRINTS BEARING EARLIER REVISION DATES

REVISION DATES: 8/31/12 2-23-15 7-10-13 8/29/13

SHEET 31 OF 182

FILE => 53-3045-fd-a11dt05.dgn

USERNAME => s125824 DATE PLOTTED => 28-JAN-2016 TIME PLOTTED => 11:56

DIST	COUNTY	ROUTE	POST MILES TOTAL PROJECT	SHEET No.	TOTAL SHEETS
07	LA,Ora	5	0.0/1.5, 44.3/44.4	1099	1622

REGISTERED CIVIL ENGINEER — DATE 2-24-15

1-25-16
PLANS APPROVAL DATE

REGISTERED PROFESSIONAL ENGINEER — WILLIAM D. KEMP — No. 55730 — Exp. 12/31/16 — CIVIL — STATE OF CALIFORNIA

The State of California or its officers or agents shall not be responsible for the accuracy or completeness of electronic copies of this plan sheet.

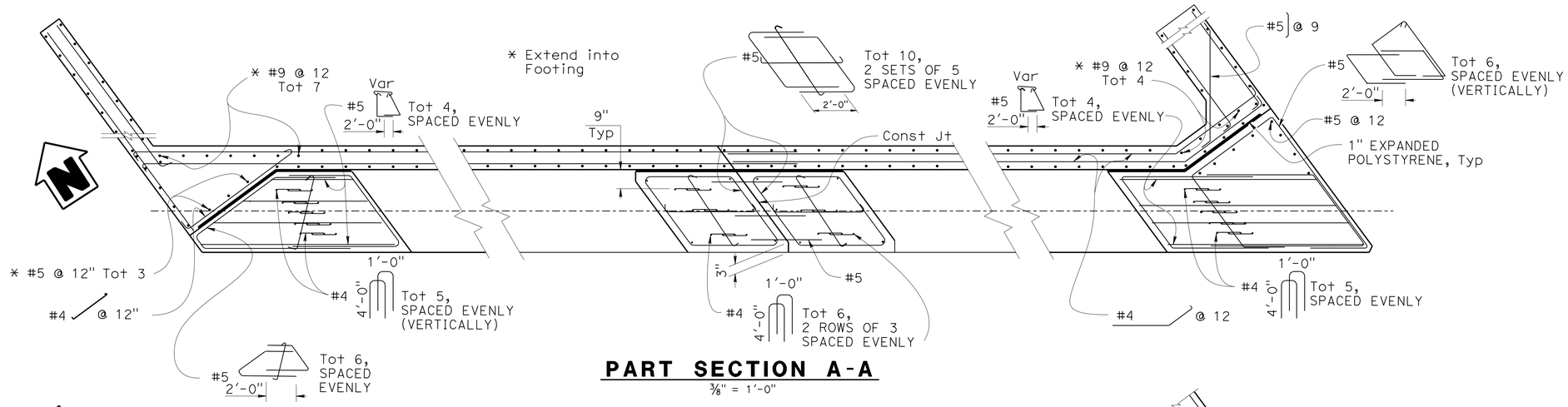

PART SECTION A-A

⅜" = 1'-0"

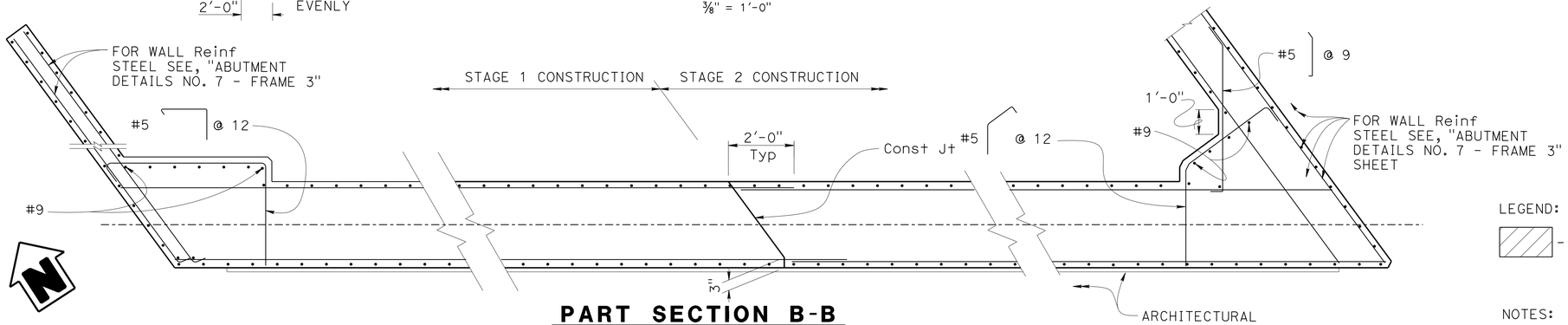

PART SECTION B-B

⅜" = 1'-0"

LEGEND:

- Indicates Expanded Polystyrene

NOTES:

1. For Architectural Treatment, see "ARCHITECTURAL ELEVATIONS AT ABUTMENTS" and "SECTIONS AND MOTIF DETAILS AT ABUTMENTS" sheet
2. For "SECTION C-C", see "ABUTMENT DETAILS NO. 7 - FRAME 3" Sheet
3. For "DETAIL B" and "DETAIL C", see "ABUTMENT DETAILS NO. 2 - FRAME 2" sheet

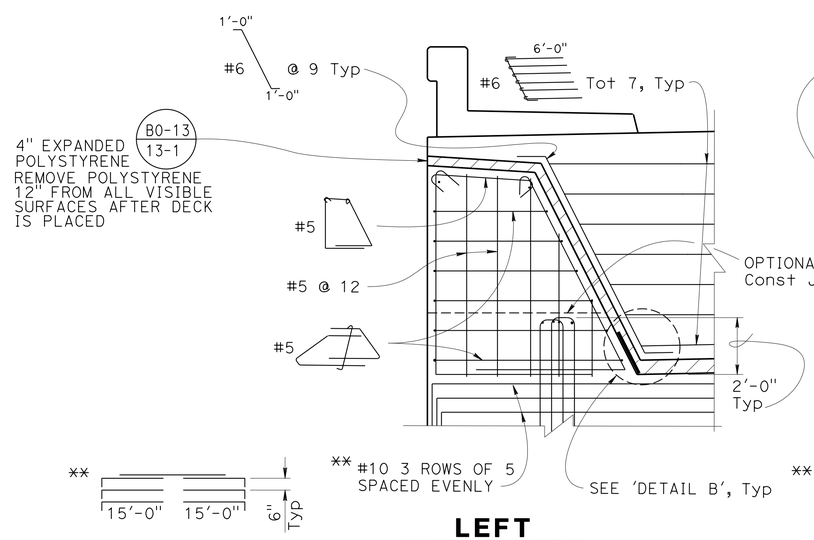

LEFT SHEAR KEY

⅜" = 1'-0"

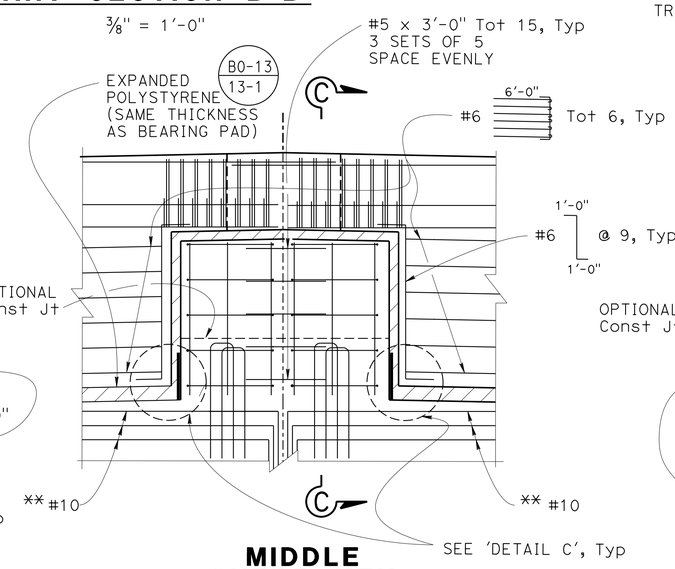

MIDDLE SHEAR KEY

⅜" = 1'-0"

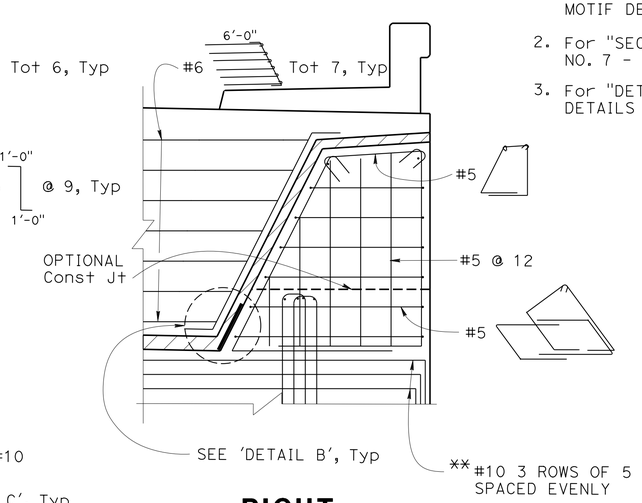

RIGHT SHEAR KEY

⅜" = 1'-0"

DESIGN	BY Jay Posey	CHECKED Krishnakant Andurlekar	
DETAILS	BY John M Hunter	CHECKED Krishnakant Andurlekar	
QUANTITIES	BY Jay Posey	CHECKED Nikki Tiongco	

STATE OF CALIFORNIA
DEPARTMENT OF TRANSPORTATION

DIVISION OF ENGINEERING SERVICES
STRUCTURE DESIGN
DESIGN BRANCH 11

BRIDGE NO. 53-3045
POST MILE 1.21

VALLEY VIEW AVE OH/OC (REPLACEMENT)
ABUTMENT DETAILS NO. 6 - FRAME 3

STRUCTURES DESIGN DETAIL SHEET (ENGLISH) (REV. 09-01-10)

ORIGINAL SCALE IN INCHES FOR REDUCED PLANS 0 1 2 3

UNIT: 3587
PROJECT NUMBER & PHASE: 0715000160-1
CONTRACT NO.: 07-2159u4

DISREGARD PRINTS BEARING EARLIER REVISION DATES

REVISION DATES: 4/20/12 9-28-13 9-26-13 2-24-15

SHEET 32 OF 182

FILE => 53-3045-fd-a11dt06.dgn

USERNAME => s125624 DATE PLOTTED => 28-JAN-2016 TIME PLOTTED => 11:56

DIST	COUNTY	ROUTE	POST MILES TOTAL PROJECT	SHEET No.	TOTAL SHEETS
07	LA,Ora	5	0.0/1.5, 44.3/44.4	1100	1622

REGISTERED CIVIL ENGINEER 2-23-15 DATE

1-25-16
PLANS APPROVAL DATE

REGISTERED PROFESSIONAL ENGINEER WILLIAM D. KEMP No. 55730 Exp. 12/31/16 CIVIL STATE OF CALIFORNIA

The State of California or its officers or agents shall not be responsible for the accuracy or completeness of electronic copies of this plan sheet.

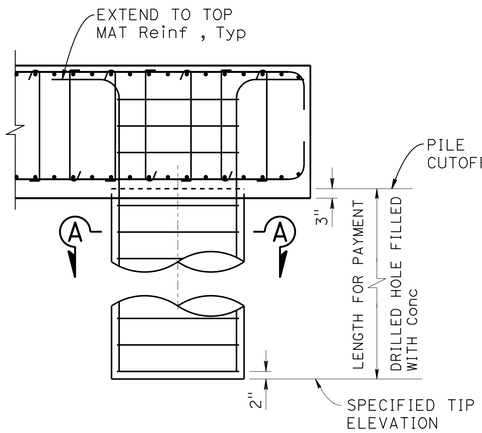

42" DIA PILE PARTIAL

½" = 1'-0"

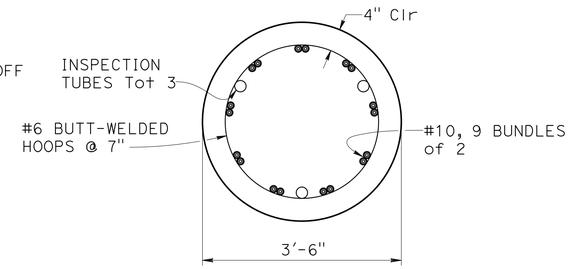

SECTION A-A

¾" = 1'-0"

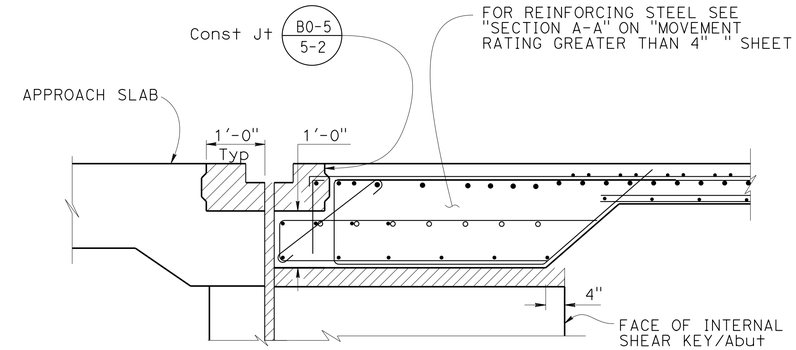

SECTION C-C

¾" = 1'-0"

NOTES:
1. Bottom mat reinf may be adjusted to accommodate Pile reinf as approved by the engineer.
2. See "ABUTMENT DETAILS NO. 5 - FRAME 3" sheet for reinf steel not called out.
3. Hoops fabrication shall conform to Ultimate Slice Requirements.

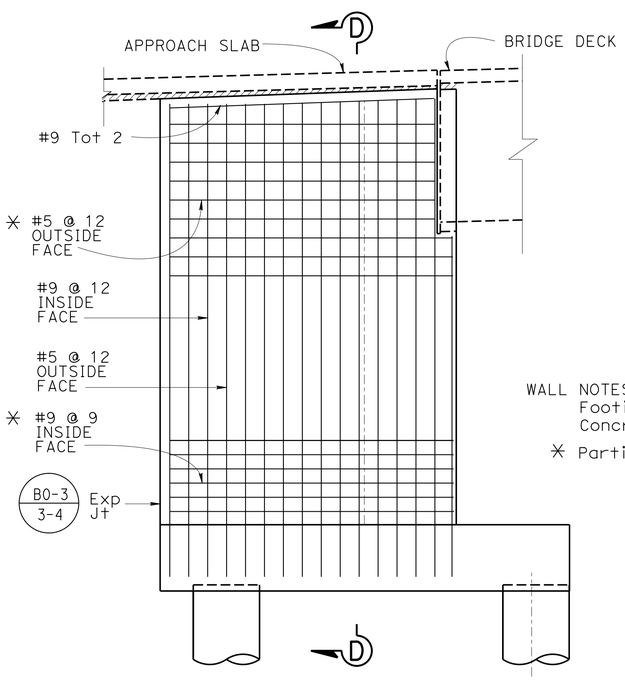

ABUT 11 ELEVATION ALONG LEFT EOD

¼" = 1'-0"

WALL NOTES:
Footing and Abut steel not shown
Concrete barrier not shown
✳ Partial wall steel shown

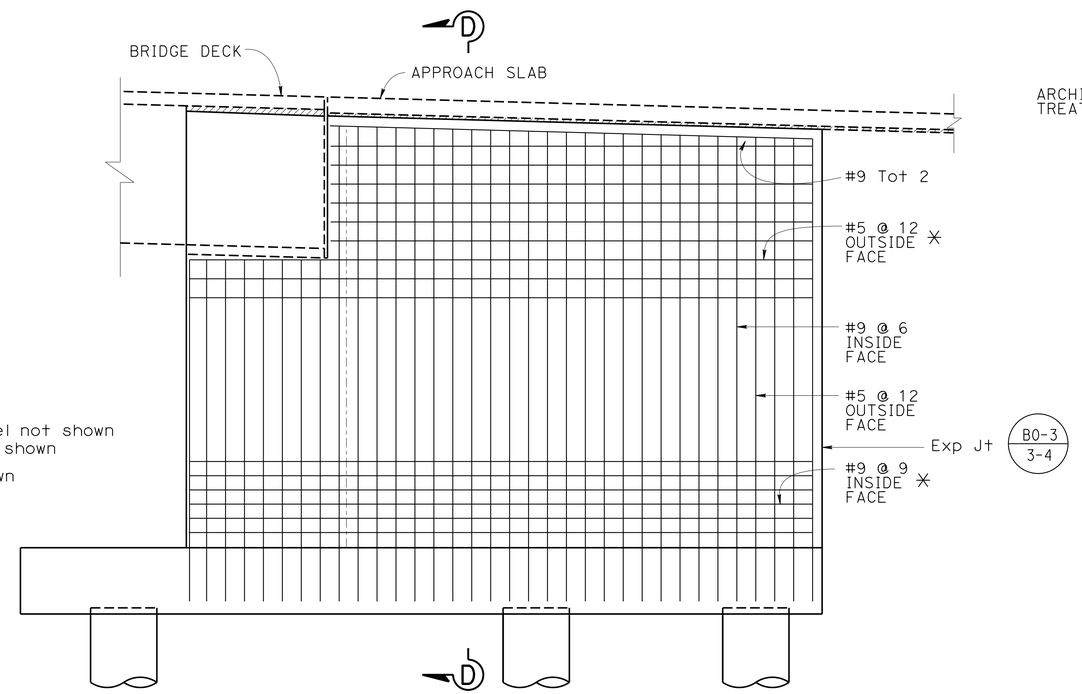

ABUT 11 ELEVATION ALONG RIGHT EOD

¼" = 1'-0"

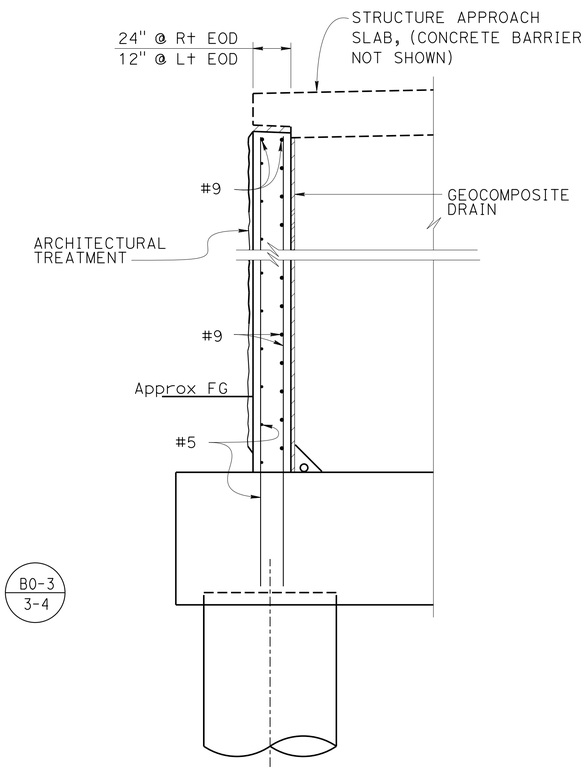

SECTION D-D

½" = 1'-0"

DESIGN	BY Jay Posey	CHECKED Krishnakant Andurleker	
DETAILS	BY John Hunter	CHECKED Krishnakant Andurleker	
QUANTITIES	BY Jay Posey	CHECKED Nikki Tiongco	

STATE OF CALIFORNIA
DEPARTMENT OF TRANSPORTATION

DIVISION OF ENGINEERING SERVICES
STRUCTURE DESIGN
DESIGN BRANCH 11

BRIDGE NO. 53-3045
POST MILE 1.21

VALLEY VIEW AVE OH/OC (REPLACEMENT)
ABUTMENT DETAILS NO. 7 - FRAME 3

STRUCTURES DESIGN DETAIL SHEET (ENGLISH) (REV. 09-01-10)

ORIGINAL SCALE IN INCHES FOR REDUCED PLANS 0 1 2 3

UNIT: 3587
PROJECT NUMBER & PHASE: 0715000160-1
CONTRACT NO.: 07-2159u4

DISREGARD PRINTS BEARING EARLIER REVISION DATES

REVISION DATES: 9/5/12 2-23-15 8/30/13 9-24-13

SHEET 33 OF 182

FILE => 53-3045-fd-a11dt07.dgn

USERNAME => s125624 DATE PLOTTED => 28-JAN-2016 TIME PLOTTED =>