Dist	COUNTY	ROUTE	POST MILES TOTAL PROJECT	SHEET No.	TOTAL SHEETS
07	LA,Ora	5	0.0/1.5, 44.3/44.4	401	1622

REGISTERED CIVIL ENGINEER 5-7-14 DATE

1-25-16
PLANS APPROVAL DATE

REGISTERED PROFESSIONAL ENGINEER WING-YAN LEE No. 61452 Exp. 6-30-17 CIVIL STATE OF CALIFORNIA

THE STATE OF CALIFORNIA OR ITS OFFICERS OR AGENTS SHALL NOT BE RESPONSIBLE FOR THE ACCURACY OR COMPLETENESS OF SCANNED COPIES OF THIS PLAN SHEET.

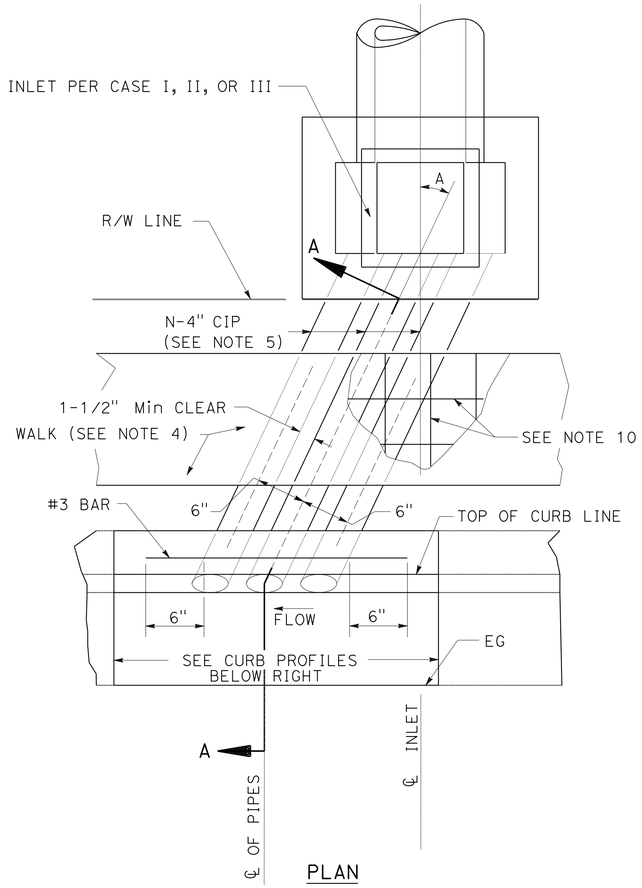

PLAN

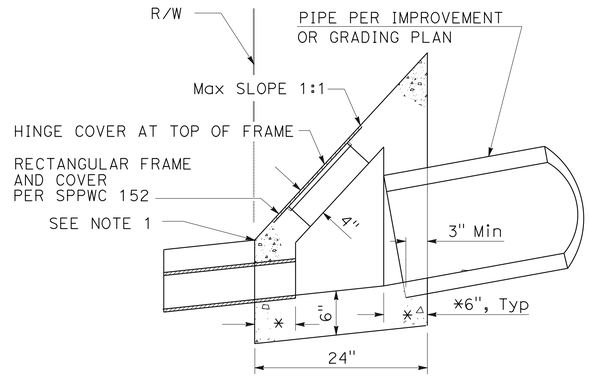

CASE I INLET

TRANSITION STRUCTURE SECTION

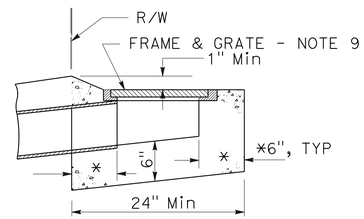

CASE II INLET

DROP INLET CATCH BASIN SECTION

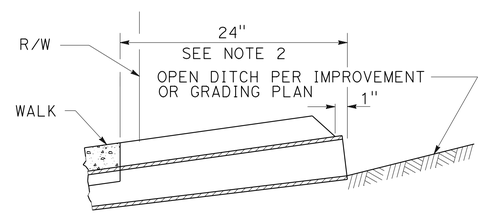

CASE III INLET

GRADED DITCH SECTION

NOTES:

1. IF THE TOP OF SLOPE IS ALLOWED WITHIN THE R/W, INLET CASE I BEGINS AT THE TOP RATHER THAN THE R/W LINE.
2. FOR OPEN DITCH (CASE INLET III), THE 24" EXTENSION BEYOND THE R/W LINE IS NOT REQUIRED WHEN BACK OF WALK IS 24" OR MORE FROM THE R/W LINE; HOWEVER, PIPE SHALL EXTEND TO R/W LINE.
3. TOP OF INLET STRUCTURE (CASE I AND II) TO BE FLUSH WITH ADJACENT SURFACE WHERE PRACTICAL.
4. CONSTRUCT PCC WALK WHEN SPECIFIED ON PLANS. THE CONTRACT PRICE PAID FOR PCC WALK ITEM SHALL INCLUDE WALK CONSTRUCTED IN CONJUNCTION WITH PARKWAY CULVERT.
5. "N" EQUALS NUMBER OF PIPES (MAXIMUM OF THREE) AS SPECIFIED ON PLANS.
6. INLET CASE TO BE SPECIFIED ON PLANS.
7. ANGLE A EQUALS 0°, UNLESS OTHERWISE SPECIFIED.
8. TYPE, DIMENSIONS AND ELEVATIONS OF PCC CURB AND GUTTER PER PLANS.
9. UNLESS OTHERWISE SPECIFIED, FRAME AND GRATE FOR CASE II INLET SHALL BE GALVANIZED CAST IRON. WEIGHT OF FRAME AND GRATE SHALL BE 80 LBS.
10. AT LOCATIONS WITH LESS THAN 8" CURB FACE, USE 6x6-10/10 (152x152-MW9.1xMW9.1) GALVANIZED WIRE FABRIC. WIRE FABRIC SHALL EXTEND 8" BEYOND THE EDGE OF CAST IRON PIPES.

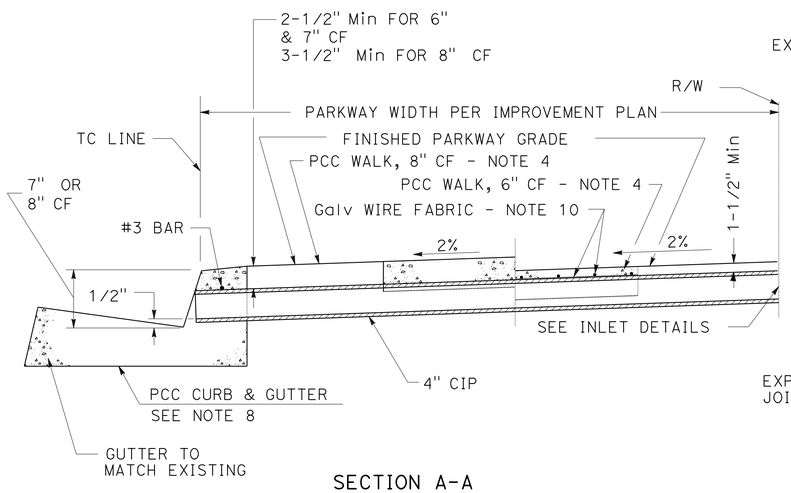

SECTION A-A

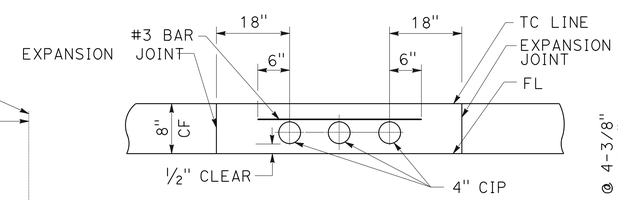

NOTE: APPLIES TO ANY NUMBER OF PIPES

CURB PROFILE

8" CURB FACE

NOTE: APPLIES TO ANY NUMBER OF PIPES
Z = TOP-OF-CURB LINE SHOWN ON PROFILE

CURB PROFILE

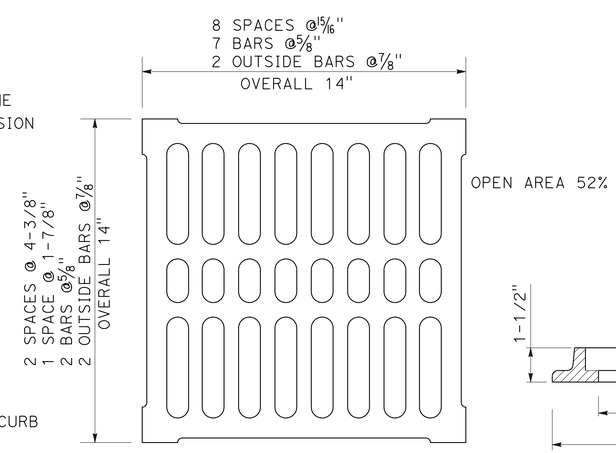

TOP OF GRATE

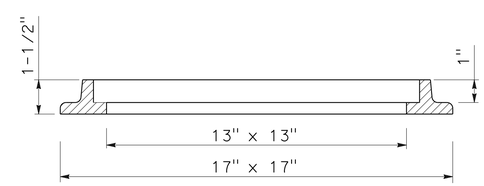

SECTION THRU FRAME

GRATE FOR CASE II INLET

CURB DRAIN (150-3)

DRAINAGE DETAILS

NO SCALE

DD-58

REVISED BY | DATE REVISED
ROMULO ROBENIOL | WING YAN LEE
CALCULATED-DESIGNED BY | CHECKED BY
FUNCTIONAL SUPERVISOR: MARIA QUINONEZ
STATE OF CALIFORNIA - DEPARTMENT OF TRANSPORTATION
Caltrans® HYDRAULICS

LAST REVISION 00-00-00 | DATE PLOTTED => 03-FEB-2016 | TIME PLOTTED => 11:12

Dist	COUNTY	ROUTE	POST MILES TOTAL PROJECT	SHEET No.	TOTAL SHEETS
07	LA,Ora	5	0.0/1.5, 44.3/44.4	402	1622

REGISTERED CIVIL ENGINEER 5-7-14 DATE

1-25-16
PLANS APPROVAL DATE

REGISTERED PROFESSIONAL ENGINEER WING-YAN LEE No. 61452 Exp. 6-30-17 CIVIL STATE OF CALIFORNIA

THE STATE OF CALIFORNIA OR ITS OFFICERS OR AGENTS SHALL NOT BE RESPONSIBLE FOR THE ACCURACY OR COMPLETENESS OF SCANNED COPIES OF THIS PLAN SHEET.

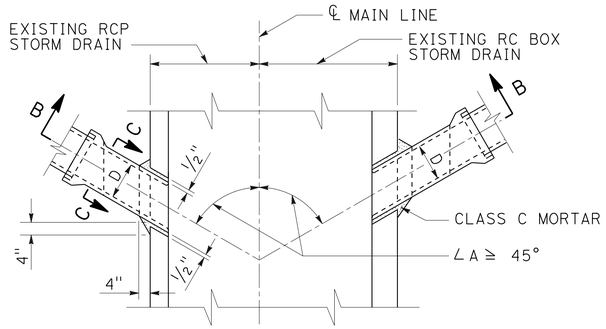

PLAN

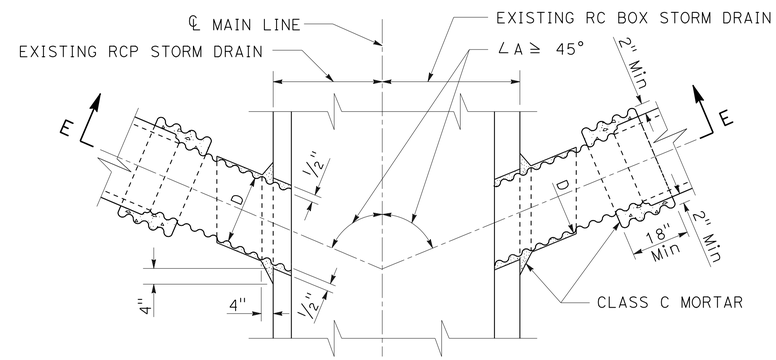

PLAN

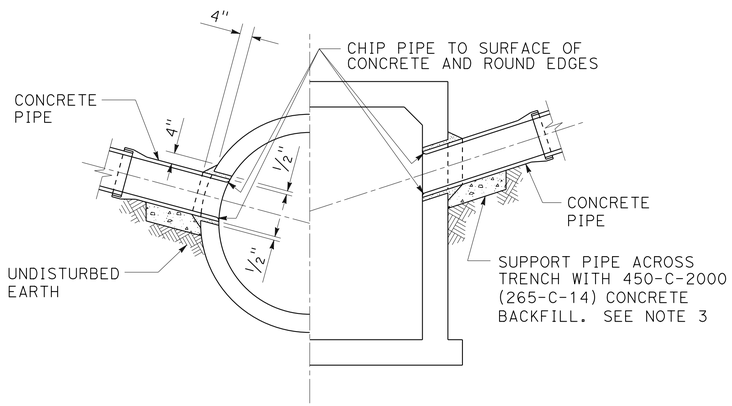

SECTION B-B

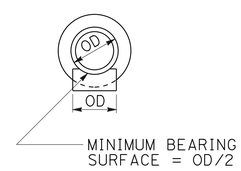

SECTION C-C

CASE 1
PLAIN CONCRETE PIPE
D = 24" Max

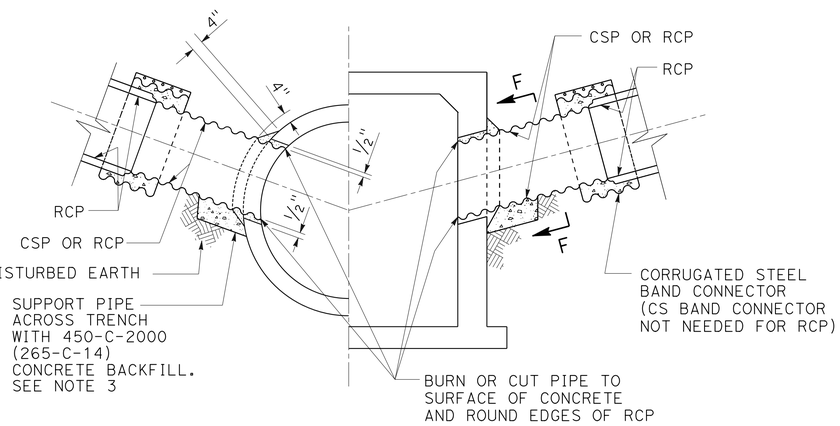

SECTION E-E

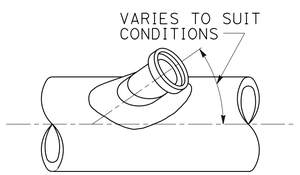

SADDLE
PLAN

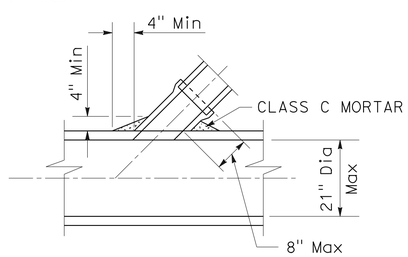

SADDLE
SECTION

CASE 2
SADDLE CONNECTION

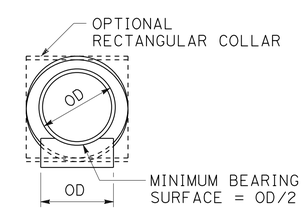

SECTION F-F

DIAMETER OF CSP	Min GAGE
15" - 21"	16
24"	14

RCP OR CSP
D = 24" Max

PIPE CONNECTIONS TO EXISTING STORM DRAINS (335-2)

DRAINAGE DETAILS
NO SCALE

DD-59

STATE OF CALIFORNIA - DEPARTMENT OF TRANSPORTATION
Caltrans
HYDRAULICS
FUNCTIONAL SUPERVISOR: MARIA QUINONEZ
CALCULATED-DESIGNED BY: WING YAN LEE
CHECKED BY
REVISED BY: ROMULO ROBENIOL
DATE REVISED

LAST REVISION 00-00-00
DATE PLOTTED => 03-FEB-2016
TIME PLOTTED => 11:12

Dist	COUNTY	ROUTE	POST MILES TOTAL PROJECT	SHEET No.	TOTAL SHEETS
07	LA,Ora	5	0.0/1.5, 44.3/44.4	403	1622

REGISTERED CIVIL ENGINEER 5-7-14 DATE

1-25-16
PLANS APPROVAL DATE

REGISTERED PROFESSIONAL ENGINEER WING-YAN LEE No. 61452 Exp. 6-30-17 CIVIL STATE OF CALIFORNIA

THE STATE OF CALIFORNIA OR ITS OFFICERS OR AGENTS SHALL NOT BE RESPONSIBLE FOR THE ACCURACY OR COMPLETENESS OF SCANNED COPIES OF THIS PLAN SHEET.

NOTES:

CASE 1 AND CASE 3

1. OUTSIDE DIAMETER OF THE CONNECTOR PIPE SHALL NOT BE GREATER THAN ½" THE INSIDE DIAMETER OF THE RCP MAIN LINE.
2. INSIDE DIAMETER D OF THE CONNECTOR PIPE SHALL NOT BE GREATER THAN 24".
3. THE MINIMUM OPENING INTO THE EXISTING STORM DRAIN SHALL BE THE OUTSIDE DIAMETER OF THE CONNECTING PIPE PLUS 1". THE CONCRETE BACKFILL SUPPORTING THE CONNECTING PIPE MAY BE OMITTED IF THE PIPE IS LAID ON UNDISTURBED EARTH TO STORM DRAIN WALL.
4. ALL CSP AND FITTINGS SHALL BE GALVANIZED. BAND CONNECTORS MAY BE 2 GAGES LIGHTER THAN THE PIPE, BUT WITH A MINIMUM GAGE OF 16. THEY SHALL BE CONNECTED AT THE ENDS BY ANGLES HAVING MINIMUM DIMENSIONS OF 2" × 2" × 3/16" AND 5 ½" BOLTS
5. WHEN JOINING A RCP CONNECTOR PIPE TO A CSP CONNECTOR PIPE, THE INSIDE DIAMETER D OF THE CSP SHALL BE AT LEAST EQUAL TO BUT NOT MORE THAN 3" GREATER THAN THAT OF THE RCP.
6. CONNECTOR PIPES SHALL BE NOT MORE THAN 5′ ABOVE THE INVERT.
7. CONNECTOR PIPES SHALL ENTER MAIN LINE RCP RADIALLY.
8. WHEN CONNECTING TO A RCB, SPPWC 333 SHALL BE USED IF THE TOP OF THE CONNECTOR PIPE IS LESS THAN 12" BELOW THE SOFFIT OF THE RCB OR THE FLOW LINE OF THE PIPE IS LESS THAN 13" ABOVE THE FLOOR OF THE RCB AT THE INSIDE FACE.

CASE 2

9. SADDLE CONNECTIONS SHALL BE USED WHEN CONNECTING TO PIPES 21" OR LESS IN DIAMETER WITHOUT THE USE OF JUNCTION STRUCTURES OR PRECAST Y BRANCHES.
10. TRIM OR CUT SADDLE TO FIT SNUGLY OVER THE OUTSIDE OF THE MAIN PIPE SO ITS AXIS WILL BE ON THE LINE AND GRADE OF THE CONNECTING PIPE.
11. THE OPENING INTO THE PIPE SHALL BE CUT AND TRIMMED TO FIT THE SADDLE SO THAT NO PART WILL PROJECT WITHIN THE BORE OF THE SADDLE PIPE.
12. THE CONNECTOR PIPE SHALL BE SUPPORTED AS SHOWN IN CASE 1 AND CASE 3.

PIPE CONNECTIONS TO EXISTING STORM DRAINS (335-2)

DRAINAGE DETAILS

NO SCALE

DD-60

REVISED BY | DATE REVISED
ROMULO ROBENIOL | WING YAN LEE
CALCULATED-DESIGNED BY | CHECKED BY
FUNCTIONAL SUPERVISOR: MARIA QUINONEZ
STATE OF CALIFORNIA - DEPARTMENT OF TRANSPORTATION
Caltrans® HYDRAULICS

LAST REVISION 00-00-00 | DATE PLOTTED => 03-FEB-2016 | TIME PLOTTED => 11:12

Dist	COUNTY	ROUTE	POST MILES TOTAL PROJECT	SHEET No.	TOTAL SHEETS
07	LA,Ora	5	0.0/1.5, 44.3/44.4	404	1622

REGISTERED CIVIL ENGINEER 5-7-14 DATE

1-25-16
PLANS APPROVAL DATE

REGISTERED PROFESSIONAL ENGINEER WING-YAN LEE No. 61452 Exp. 6-30-17 CIVIL STATE OF CALIFORNIA

THE STATE OF CALIFORNIA OR ITS OFFICERS OR AGENTS SHALL NOT BE RESPONSIBLE FOR THE ACCURACY OR COMPLETENESS OF SCANNED COPIES OF THIS PLAN SHEET.

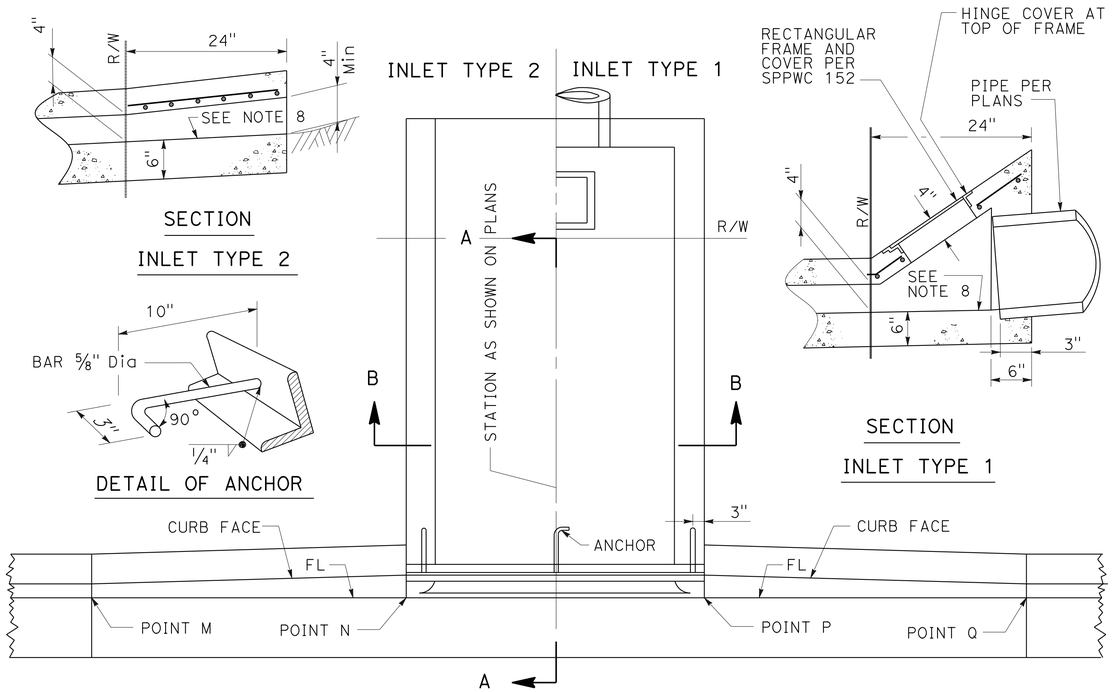

PLAN

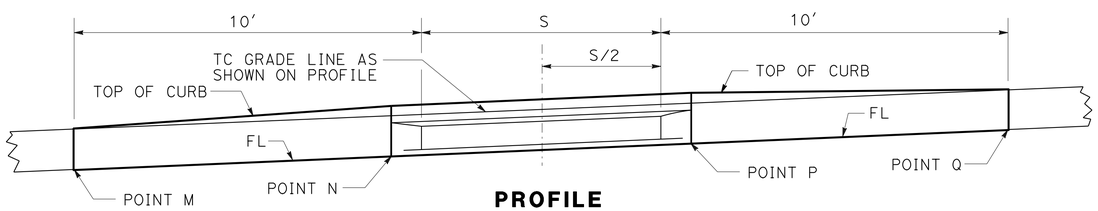

PROFILE

S, INCHES	J BAR SPACING
12"	7"
18"	7"
24"	7"
30"	7"
36"	7"
42"	6"
48"	5"
54"	6-1/2"
60"	5"
66"	4"
72"	3-1/2"

FOR S=30" AND LESS, USE 2 ANCHORS. OTHERWISE, USE 3 ANCHORS.

FOR S=48" AND LESS, B=3" USE 2-1/2"x2"x3/8" GALVANIZED STEEL ANGLE. OTHERWISE, B=4", USE 3-1/2"x3"x1/2" GALVANIZED STEEL ANGLE.

J BARS ARE #3.

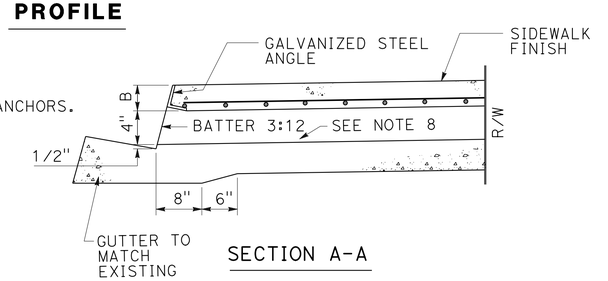

SECTION A-A

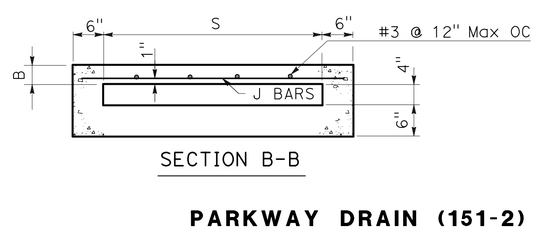

SECTION B-B

PARKWAY DRAIN (151-2)

NOTES:

1. FLOOR OF BOX SHALL BE TROWELED SMOOTH.
2. IF THE TOE OF SLOPE IS ALLOWED WITHIN THE R/W, INLET TYPE 1 BEGINS AT THE TOE RATHER THAN AT THE R/W LINE.
3. FOR OPEN DITCH (TYPE 2), THE 24" EXTENSION BEYOND THE R/W LINE IS NOT REQUIRED WHEN BACK OF WALK IS 24" OR MORE FROM THE R/W LINE; HOWEVER, THE PIPE SHALL EXTEND TO THE R/W LINE IN ANY EVENT.
4. TOP OF INLET STRUCTURE (TYPE 1 & 2) SHALL BE FLUSH WITH ADJACENT SURFACE WHERE PRACTICAL.
5. A HEADED STEEL STUD 5/8" x 6-3/8" WITH A 1" HEAD ATTACHED BY A FULL PENETRATION BUTT WELD MAY BE USED AS AN ALTERNATE ANCHOR.
6. NORMAL CURB FACE AT POINT M AND Q. CURB FACE IS B+5" AT POINT N AND P.
7. THE 3" LEG OF THE 5/8" DIA ANCHORS SHALL BE PARALLEL TO THE TOP OF SIDEWALK.
8. SLOPE=2.0%.

DRAINAGE DETAILS

NO SCALE

DD-61

STATE OF CALIFORNIA - DEPARTMENT OF TRANSPORTATION
Caltrans® HYDRAULICS

FUNCTIONAL SUPERVISOR: MARIA QUINONEZ
CALCULATED-DESIGNED BY: ROMULO ROBENIOL
CHECKED BY: WING YAN LEE
REVISED BY
DATE REVISED

LAST REVISION 00-00-00
DATE PLOTTED => 03-FEB-2016
TIME PLOTTED => 11:12

Dist	COUNTY	ROUTE	POST MILES TOTAL PROJECT	SHEET No.	TOTAL SHEETS
07	LA,Ora	5	0.0/1.5, 44.3/44.4	405	1622

REGISTERED CIVIL ENGINEER 5-7-14 DATE

1-25-16
PLANS APPROVAL DATE

REGISTERED PROFESSIONAL ENGINEER WING-YAN LEE No. 61452 Exp. 6-30-17 CIVIL STATE OF CALIFORNIA

THE STATE OF CALIFORNIA OR ITS OFFICERS OR AGENTS SHALL NOT BE RESPONSIBLE FOR THE ACCURACY OR COMPLETENESS OF SCANNED COPIES OF THIS PLAN SHEET.

NOTE:

FOR DRAINAGE SYSTEMS SEE DRAINAGE PLANS.

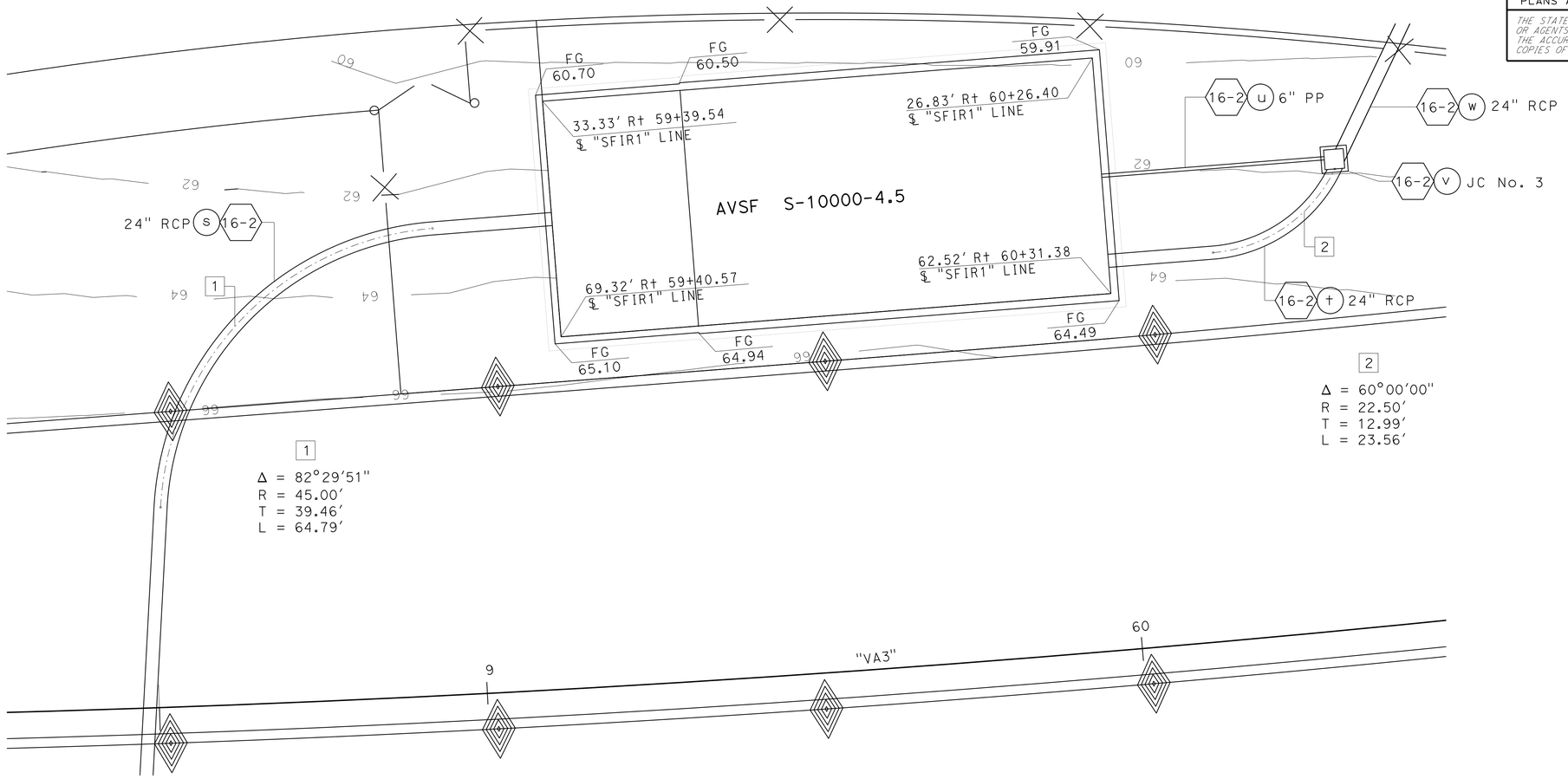

WALL DESIGN TABLE													
DESIGN BASIN WALL	DESIGN WALL HT. H	TOP OF WALL ELEVATION						TOP OF FOOTING ELEVATION					
		WE1	WE2	WE3	WE4	WE5	WE6	FE0	FE1	FE2	FE3	FE4	FE5
SED	10'	65.60	65.60	65.60	65.60	65.60	65.60	57.12	57.08	56.66	54.16	53.53	53.51
FILL	14'												

AVSF S-10000-4.5

DRAINAGE DETAILS

NO SCALE

DD- 62

STATE OF CALIFORNIA - DEPARTMENT OF TRANSPORTATION
Caltrans HYDRAULICS

FUNCTIONAL SUPERVISOR: MARIA QUINONEZ
CALCULATED-DESIGNED BY: ROMULO ROBENIOL
CHECKED BY: WING YAN LEE
REVISED BY
DATE REVISED

LAST REVISION 00-00-00
DATE PLOTTED => 03-FEB-2016
TIME PLOTTED => 11:12

Dist	COUNTY	ROUTE	POST MILES TOTAL PROJECT	SHEET No.	TOTAL SHEETS
07	LA,Ora	5	0.0/1.5, 44.3/44.4	406	1622

REGISTERED CIVIL ENGINEER 5-7-14 DATE

1-25-16
PLANS APPROVAL DATE

REGISTERED PROFESSIONAL ENGINEER WING-YAN LEE No. 61452 Exp. 6-30-17 CIVIL STATE OF CALIFORNIA

THE STATE OF CALIFORNIA OR ITS OFFICERS OR AGENTS SHALL NOT BE RESPONSIBLE FOR THE ACCURACY OR COMPLETENESS OF SCANNED COPIES OF THIS PLAN SHEET.

NOTE:

FOR DRAINAGE SYSTEMS SEE DRAINAGE PLANS.

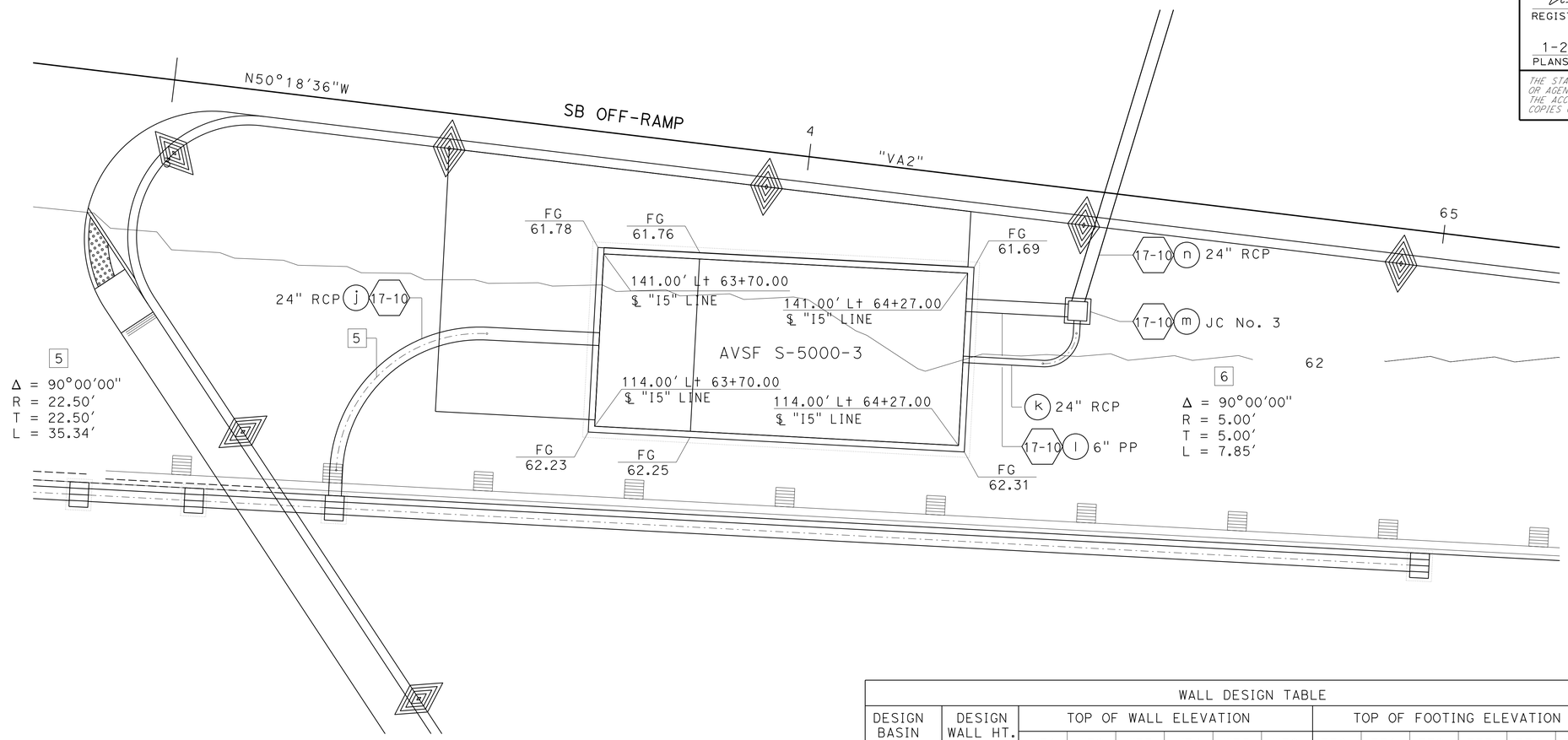

WALL DESIGN TABLE													
DESIGN BASIN WALL	DESIGN WALL HT. H	TOP OF WALL ELEVATION						TOP OF FOOTING ELEVATION					
		WE1	WE2	WE3	WE4	WE5	WE6	FE0	FE1	FE2	FE3	FE4	FE5
SED	8'	63.00	63.00	63.00	63.00	63.00	63.00	55.61	55.57	55.27	52.77	52.35	52.33
FILL	12'												

AVSF S-5000-3

DRAINAGE DETAILS

NO SCALE

DD- 63

REVISED BY | DATE REVISED
WING YAN LEE | WING YAN LEE
CALCULATED-DESIGNED BY | CHECKED BY
FUNCTIONAL SUPERVISOR
MARIA QUINONEZ
STATE OF CALIFORNIA - DEPARTMENT OF TRANSPORTATION
Caltrans HYDRAULICS

LAST REVISION 00-00-00 | DATE PLOTTED => 03-FEB-2016 | TIME PLOTTED => 11:12

Dist	COUNTY	ROUTE	POST MILES TOTAL PROJECT	SHEET No.	TOTAL SHEETS
07	LA,Ora	5	0.0/1.5, 44.3/44.4	407	1622

REGISTERED CIVIL ENGINEER 5-7-14 DATE

1-25-16
PLANS APPROVAL DATE

REGISTERED PROFESSIONAL ENGINEER WING-YAN LEE No. 61452 Exp. 6-30-17 CIVIL STATE OF CALIFORNIA

THE STATE OF CALIFORNIA OR ITS OFFICERS OR AGENTS SHALL NOT BE RESPONSIBLE FOR THE ACCURACY OR COMPLETENESS OF SCANNED COPIES OF THIS PLAN SHEET.

NOTE:
FOR DRAINAGE SYSTEMS SEE DRAINAGE PLANS.

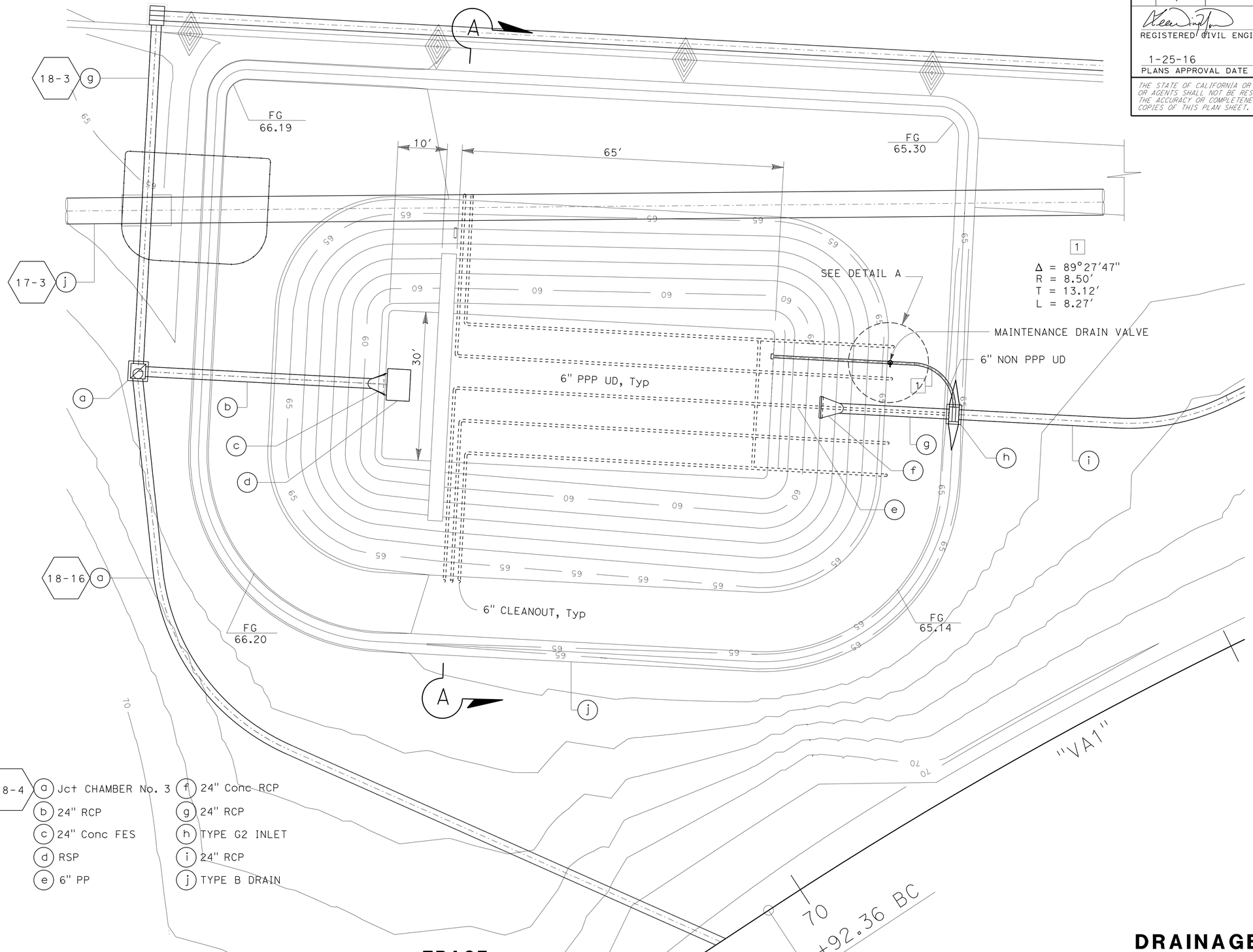

18-4
- a Jct CHAMBER No. 3
- b 24″ RCP
- c 24″ Conc FES
- d RSP
- e 6″ PP
- f 24″ Conc RCP
- g 24″ RCP
- h TYPE G2 INLET
- i 24″ RCP
- j TYPE B DRAIN

EBASF
PARTIAL SEDIMENTATION

DRAINAGE DETAILS

NO SCALE

DD- 64

STATE OF CALIFORNIA - DEPARTMENT OF TRANSPORTATION
Caltrans® HYDRAULICS

FUNCTIONAL SUPERVISOR: MARIA QUINONEZ
CALCULATED-DESIGNED BY: ROMULO ROBENIOL
CHECKED BY: WING YAN LEE
REVISED BY
DATE REVISED

LAST REVISION 00-00-00
DATE PLOTTED => 03-FEB-2016
TIME PLOTTED => 11:12

Dist	COUNTY	ROUTE	POST MILES TOTAL PROJECT	SHEET No.	TOTAL SHEETS
07	LA,Ora	5	0.0/1.5, 44.3/44.4	408	1622

REGISTERED CIVIL ENGINEER 5-7-14 DATE

1-25-16
PLANS APPROVAL DATE

REGISTERED PROFESSIONAL ENGINEER WING-YAN LEE No. 61452 Exp. 6-30-17 CIVIL STATE OF CALIFORNIA

THE STATE OF CALIFORNIA OR ITS OFFICERS OR AGENTS SHALL NOT BE RESPONSIBLE FOR THE ACCURACY OR COMPLETENESS OF SCANNED COPIES OF THIS PLAN SHEET.

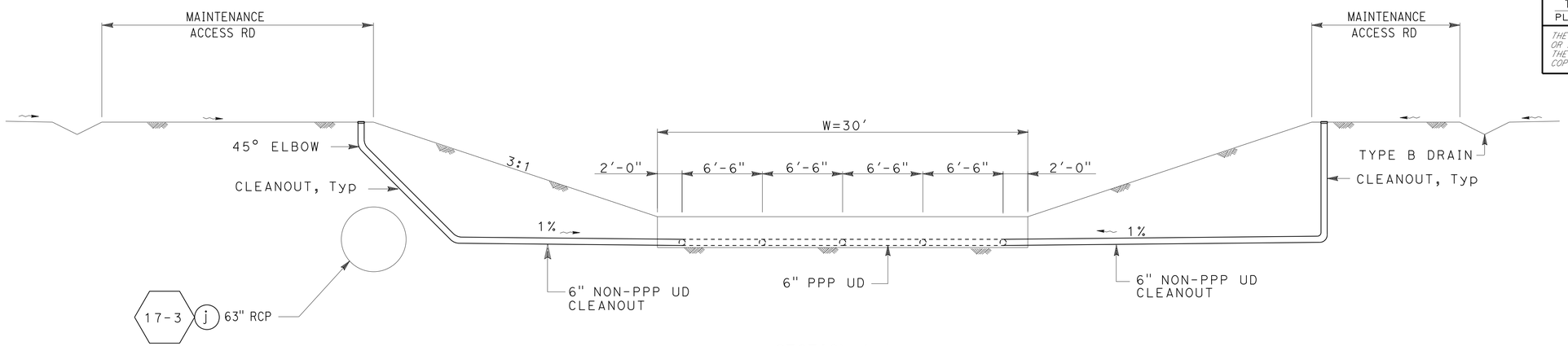

SECTION A-A

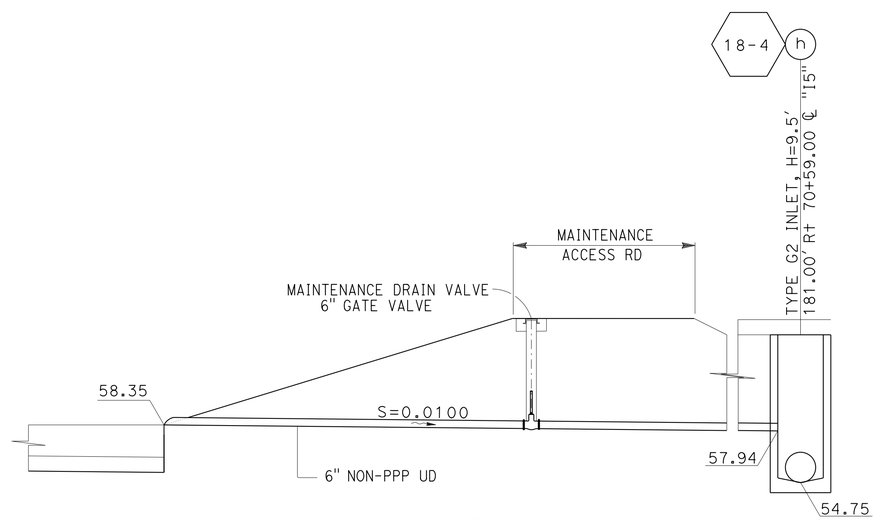

DETAIL A

NOTE: FOR INFORMATION AND DETAILS NOT SHOWN SEE STANDARD PLANS

EBASF
PARTIAL SEDIMENTATION

DRAINAGE DETAILS

NO SCALE

DD- 65

STATE OF CALIFORNIA - DEPARTMENT OF TRANSPORTATION
Caltrans® HYDRAULICS

FUNCTIONAL SUPERVISOR: MARIA QUINONEZ
CALCULATED-DESIGNED BY: ROMULO ROBENIOL
CHECKED BY: WING YAN LEE
REVISED BY
DATE REVISED

LAST REVISION 00-00-00 | DATE PLOTTED => 03-FEB-2016 | TIME PLOTTED => 11:12

Dist	COUNTY	ROUTE	POST MILES TOTAL PROJECT	SHEET No.	TOTAL SHEETS
07	LA,Ora	5	0.0/1.5, 44.3/44.4	409	1622

REGISTERED CIVIL ENGINEER 5-7-14 DATE

1-25-16
PLANS APPROVAL DATE

REGISTERED PROFESSIONAL ENGINEER WING-YAN LEE No. 61452 Exp. 6-30-17 CIVIL STATE OF CALIFORNIA

THE STATE OF CALIFORNIA OR ITS OFFICERS OR AGENTS SHALL NOT BE RESPONSIBLE FOR THE ACCURACY OR COMPLETENESS OF SCANNED COPIES OF THIS PLAN SHEET.

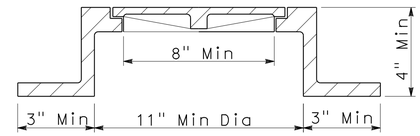

VALVE BOX AND COVE

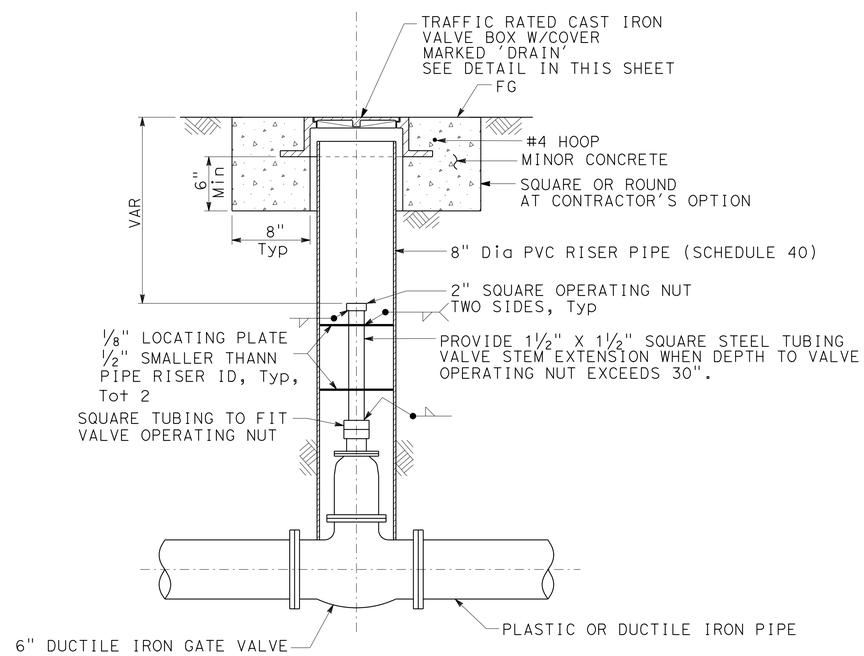

MAINTENANCE DRAIN VALVE DETAIL

DRAINAGE DETAILS

NO SCALE

DD- 66

STATE OF CALIFORNIA - DEPARTMENT OF TRANSPORTATION
Caltrans® HYDRAULICS

FUNCTIONAL SUPERVISOR: MARIA QUINONEZ

CALCULATED-DESIGNED BY: WING YAN LEE
CHECKED BY: WING YAN LEE

REVISED BY | DATE REVISED

LAST REVISION 00-00-00 | DATE PLOTTED => 03-FEB-2016 | TIME PLOTTED => 11:12

Dist	COUNTY	ROUTE	POST MILES TOTAL PROJECT	SHEET No.	TOTAL SHEETS
07	LA,Ora	5	0.0/1.5, 44.3/44.4	410	1622

REGISTERED CIVIL ENGINEER 5-7-14 DATE

1-25-16
PLANS APPROVAL DATE

REGISTERED PROFESSIONAL ENGINEER WING-YAN LEE No. 61452 Exp. 6-30-17 CIVIL STATE OF CALIFORNIA

THE STATE OF CALIFORNIA OR ITS OFFICERS OR AGENTS SHALL NOT BE RESPONSIBLE FOR THE ACCURACY OR COMPLETENESS OF SCANNED COPIES OF THIS PLAN SHEET.

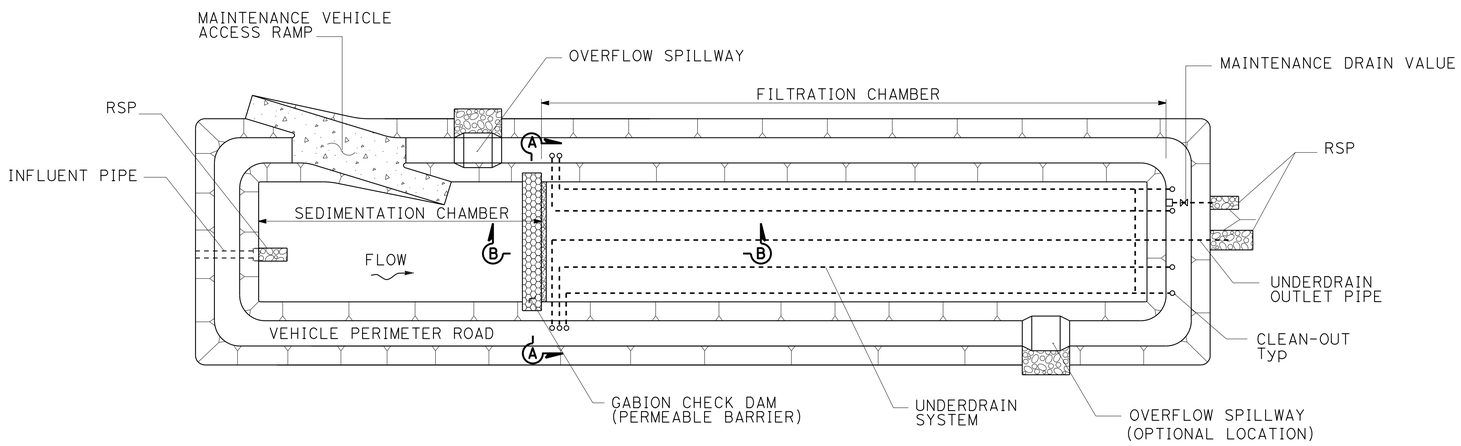

PLAN

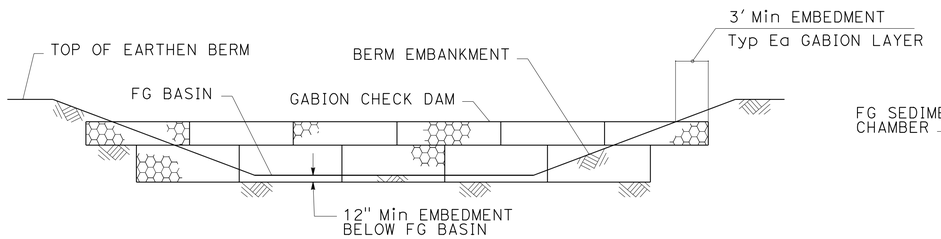

SECTION A-A

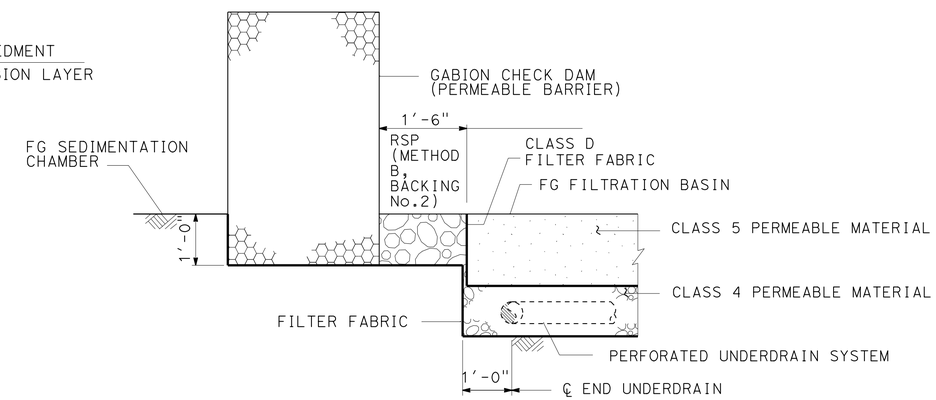

SECTION B-B

EBASF

PARTIAL SEDIMENTATION

DRAINAGE DETAILS

NO SCALE

DD-67

STATE OF CALIFORNIA - DEPARTMENT OF TRANSPORTATION
Caltrans
HYDRAULICS

FUNCTIONAL SUPERVISOR: MARIA QUINONEZ
CALCULATED-DESIGNED BY: ROMULO ROBENIOL
CHECKED BY: WING YAN LEE
REVISED BY
DATE REVISED

LAST REVISION 00-00-00
DATE PLOTTED => 03-FEB-2016
TIME PLOTTED => 11:12

Dist	COUNTY	ROUTE	POST MILES TOTAL PROJECT	SHEET No.	TOTAL SHEETS
07	LA,Ora	5	0.0/1.5, 44.3/44.4	411	1622

REGISTERED CIVIL ENGINEER 5-7-14 DATE

1-25-16
PLANS APPROVAL DATE

REGISTERED PROFESSIONAL ENGINEER
WING-YAN LEE
No. 61452
Exp. 6-30-17
CIVIL
STATE OF CALIFORNIA

THE STATE OF CALIFORNIA OR ITS OFFICERS OR AGENTS SHALL NOT BE RESPONSIBLE FOR THE ACCURACY OR COMPLETENESS OF SCANNED COPIES OF THIS PLAN SHEET.

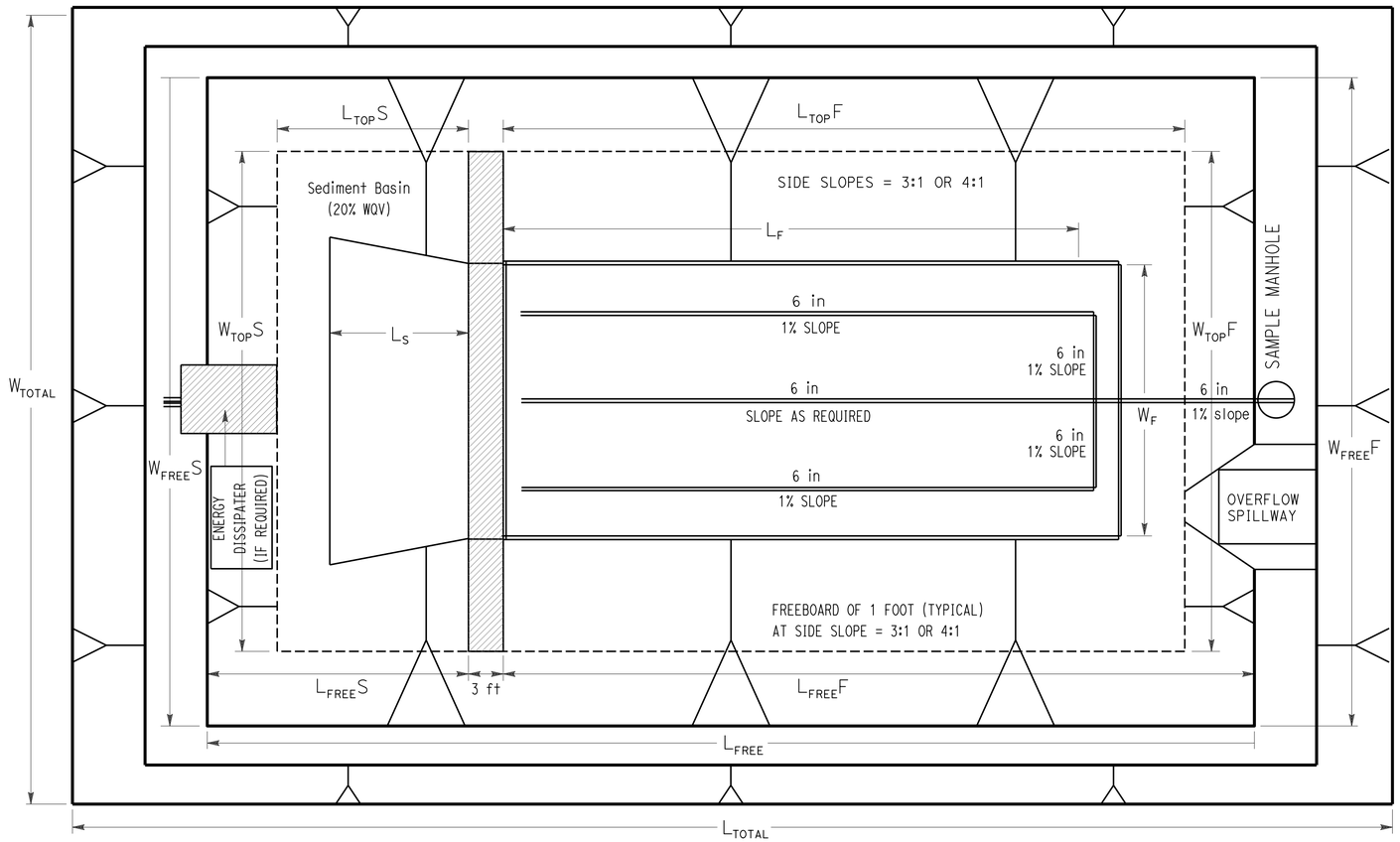

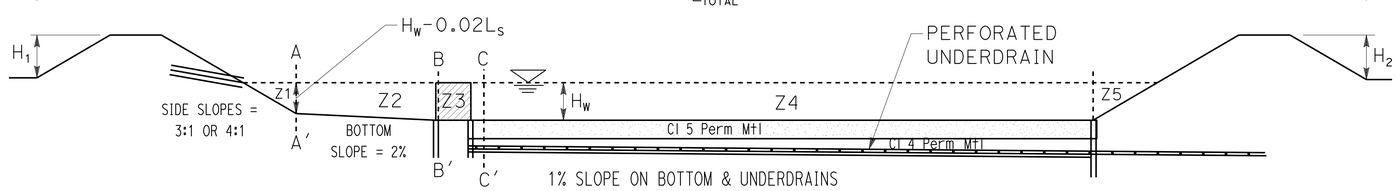

EBASF
PARTIAL SEDIMENTATION

FOR ADDITIONAL INFORMATION AND DETAILS NOT SHOWN, SEE WATER POLLUTION CONTROL DETAIL SHEETS

DRAINAGE DETAILS

NO SCALE

DD-68

REVISED BY | DATE REVISED
ROMULO ROBENIOL | WING YAN LEE
CALCULATED-DESIGNED BY | CHECKED BY
FUNCTIONAL SUPERVISOR
MARIA QUINONEZ

STATE OF CALIFORNIA - DEPARTMENT OF TRANSPORTATION
Caltrans
HYDRAULICS

LAST REVISION 00-00-00
DATE PLOTTED => 03-FEB-2016
TIME PLOTTED => 11:12

Dist	COUNTY	ROUTE	POST MILES TOTAL PROJECT	SHEET No.	TOTAL SHEETS
07	LA,Ora	5	0.0/1.5, 44.3/44.4	412	1622

REGISTERED CIVIL ENGINEER 5-7-14 DATE

1-25-16
PLANS APPROVAL DATE

REGISTERED PROFESSIONAL ENGINEER WING-YAN LEE No. 61452 Exp. 6-30-17 CIVIL STATE OF CALIFORNIA

THE STATE OF CALIFORNIA OR ITS OFFICERS OR AGENTS SHALL NOT BE RESPONSIBLE FOR THE ACCURACY OR COMPLETENESS OF SCANNED COPIES OF THIS PLAN SHEET.

NOTE:

JOINTS ARE STANDARD JOINT TYPE

SUMMARY OF DRAINAGE QUANTITIES

DRAINAGE PLAN SHEET No.	DRAINAGE SYSTEM No.	DRAINAGE UNIT	"H" OR "V"	MINOR CONCRETE (MINOR STRUCTURE)	MINOR CONCRETE (GUTTER DEPRESSION)	MINOR CONCRETE (SIDEWALK AND CURB RAMP)	CONCRETE BACKFILL (PIPE TRENCH)	CONCRETE (DITCH LINING)	CONCRETE (CHANNEL LINING)	MISCELLANEOUS IRON AND STEEL	RCP (12" - 30") 12" RCP	18" RCP	24" RCP	27" RCP	30" RCP	36" RCP	42" RCP	48" RCP	54" RCP	60" RCP	63" RCP	69" RCP	81" RCP	18" SLOTTED CSP (0.079" THICK)	6" NON-PERFORATED PLASTIC PIPE UNDERDRAIN	36" PRECAST CONCRETE PIPE MANHOLE	42" AUTOMATIC DRAINAGE GATE	24" CONCRETE FLARED END SECTION	DITCH EXCAVATION	HOT MIX ASPHALT (TYPE A)	PLACE HOT MIX ASPHALT (Misc AREA)	CONCRETED-ROCK SLOPE PROTECTION (FACING, METHOD B)	ROCK SLOPE PROTECTION FABRIC (CLASS 8)	GRATED LINE DRAIN	CABLE RAILING	REMOVE CONCRETE	REMOVE PIPE	REMOVE INLET	REMOVE MANHOLE	REMOVE CATCH BASIN	ADJUST MANHOLE	TYPE 24-12 FRAME AND GRATE (N)	MANHOLE FRAME AND COVER (630-3, U45) (N)	MANHOLE FRAME AND COVER (312-3) (N)	MANHOLE FRAME AND COVER (U46) (N)	FRAME & GRATING FOR CATCH BASINS(311-2) (N)	MAXIMUM COVER	DESCRIPTION	STATION
			FT	CY	CY	CY	CY	CY	CY	LB	LF	LF	LF	LF	LF	LF	LF	LF	LF	LF	LF	LF	LF	LF	LF	EA	EA	CY	TON	SQYD	CY	SQYD	LF	LF	CY	LF	EA	EA	EA	EA	EA	EA	EA	EA	EA	FT		
D-1	1-1	a																																			1										REMOVE GD-1 INLET	9995+23.23 ℄ "I5"
		b																																		325.0									2.8	REMOVE 24" RCP	
		c																																			1										REMOVE GD-1 INLET	14.50′ Lt 9998+51.41 ℄ "I5"
		d																																		259.5									2.7	REMOVE 24" RCP	
		e																																			1										REMOVE GD-1 INLET	29.96′ Lt 1+123.26 ℄ "I5"
		f																																		128.0									2.2	REMOVE 24" RCP	
		g																																			1										REMOVE GD-1 INLET	41.68′ Lt 2+54.59 ℄ "I5"
		h																																		133.0									2.8	REMOVE 24" RCP	
		i																																			1										REMOVE GD-1 INLET	54.49′ Lt 3+86.23 ℄ "I5"
		j																																		64.0									2.8	REMOVE 24" RCP	
		k																																			1										REMOVE GD-1 INLET	61.00′ Lt 4+50.25 ℄ "I5"
		l																																		64.0									2.8	REMOVE 24" RCP	
	1-2	a																																			1										REMOVE GD-1 INLET	92.90′ Lt 9995+85.85 ℄ "I5"
		b																																		191.0									2.7	REMOVE 24" RCP	
		c																																			1										REMOVE GD-1 INLET	80.81′ Lt 9997.82.72 ℄ "I5"
		d																																		127.0									3.8	REMOVE 24" RCP	
		e																																			1										REMOVE GD-1 INLET	79.60′ Lt 9999+14.16 ℄ "I5"
		f																																		74.5									3.9	REMOVE 24" RCP	
		g																																1.20														REMOVE STRAIGHT HEADWALL	107.06′ Lt 9998+40.42 ℄ "I5"
		h																																20.05														REMOVE Conc RSP	
SHEET TOTAL																																		21.25	1,366.0	9											

(N) = NOT A SEPARATE PAY ITEM, FOR INFORMATION ONLY

DRAINAGE QUANTITIES
DQ-1

STATE OF CALIFORNIA - DEPARTMENT OF TRANSPORTATION
Caltrans HYDRAULICS

FUNCTIONAL SUPERVISOR: MARIA QUINONEZ

CALCULATED-DESIGNED BY: SIEW MEI TAN
CHECKED BY: WING YAN LEE
REVISED BY
DATE REVISED

LAST REVISION 00-00-00
DATE PLOTTED => 03-FEB-2016
TIME PLOTTED => 11:12

Dist	COUNTY	ROUTE	POST MILES TOTAL PROJECT	SHEET No.	TOTAL SHEETS
07	LA,Ora	5	0.0/1.5, 44.3/44.4	413	1622

REGISTERED CIVIL ENGINEER 5-7-14 DATE

1-25-16
PLANS APPROVAL DATE

REGISTERED PROFESSIONAL ENGINEER WING-YAN LEE No. 61452 Exp. 6-30-17 CIVIL STATE OF CALIFORNIA

THE STATE OF CALIFORNIA OR ITS OFFICERS OR AGENTS SHALL NOT BE RESPONSIBLE FOR THE ACCURACY OR COMPLETENESS OF SCANNED COPIES OF THIS PLAN SHEET.

NOTE:

JOINTS ARE STANDARD JOINT TYPE

SUMMARY OF DRAINAGE QUANTITIES

DRAINAGE PLAN SHEET No. ⬡	DRAINAGE SYSTEM No. ○	DRAINAGE UNIT	"H" OR "V" FT	MINOR CONCRETE (MINOR STRUCTURE) CY	MINOR CONCRETE (GUTTER DEPRESSION) CY	MINOR CONCRETE (SIDEWALK AND CURB RAMP) CY	CONCRETE BACKFILL (PIPE TRENCH) CY	CONCRETE (DITCH LINING) CY	CONCRETE (CHANNEL LINING) CY	MISCELLANEOUS IRON AND STEEL LB	RCP (12" - 30") 12" RCP LF	18" RCP LF	24" RCP LF	27" RCP LF	30" RCP LF	36" RCP LF	42" RCP LF	48" RCP LF	54" RCP LF	60" RCP LF	63" RCP LF	69" RCP LF	81" RCP LF	18" SLOTTED CSP (0.079" THICK) LF	6" NON-PERFORATED PLASTIC PIPE UNDERDRAIN LF	36" PRECAST CONCRETE PIPE MANHOLE LF	42" AUTOMATIC DRAINAGE GATE EA	24" CONCRETE FLARED END SECTION EA	DITCH EXCAVATION CY	HOT MIX ASPHALT (TYPE A) TON	PLACE HOT MIX ASPHALT (Misc AREA) SQYD	CONCRETED-ROCK SLOPE PROTECTION (FACING, METHOD B) CY	ROCK SLOPE PROTECTION FABRIC (CLASS 8) SQYD	GRATED LINE DRAIN LF	CABLE RAILING LF	REMOVE CONCRETE CY	REMOVE PIPE LF	REMOVE INLET EA	REMOVE MANHOLE EA	REMOVE CATCH BASIN EA	ADJUST MANHOLE EA	TYPE 24-12 FRAME AND GRATE (N) EA	MANHOLE FRAME AND COVER (630-3, U45) (N) EA	MANHOLE FRAME AND COVER (312-3) (N) EA	MANHOLE FRAME AND COVER (U46) (N) EA	FRAME & GRATING FOR CATCH BASINS(311-2) (N) EA	MAXIMUM COVER FT	DESCRIPTION	STATION
D-1	1-3	a																																			1											REMOVE MH	18.77′ R+ 46+08.64 ℄ "NFIR1"
	1-4	a																																												4.8	REMOVE 18" CMP	
		b																																				1									REMOVE COCB	28.25′ L+ 3+24.12 ℄ "KNO"
D-2	2-1	a																																			1										REMOVE TYPE GT1 INLET	17.29′ R+ 4+32.77 ℄ "SFIR1"
		b																																	71.40											REMOVE 6′ x 1′ RCB	
		c																																			1										REMOVE TYPE GT1 INLET	17.56′ R+ 6+14.39 ℄ "SFIR1"
		d																																	70.60											REMOVE 6′ x 1′ RCB	
		e																																			1										REMOVE TYPE GT1 INLET	17.48′ R+ 8+43.65 ℄ "SFIR1"
	2-2	a																																			1										REMOVE GD-2 INLET	4.77′ L+ 5+93.62 ℄ "I5"
		b																																	47.94											REMOVE 4′ x 1′ RCB	
		c																																			1										REMOVE GD-2 INLET	16.34′ L+ 7+53.73 ℄ "I5"
		d																																	36.86											REMOVE 4′ x 1′ RCB	
		e																																			1										REMOVE GD-2 INLET	29.25′ L+ 8+77.65 ℄ "I5"
		f																																		213.4								4.3	REMOVE 18" RCP	
		g																																			1										REMOVE INLET	29.62′ L+ 10+98.32 ℄ "I5"
SHEET TOTAL																																			226.80	296.4	7	1	1									

(N) = NOT A SEPARATE PAY ITEM, FOR INFORMATION ONLY

DRAINAGE QUANTITIES
DQ-2

STATE OF CALIFORNIA - DEPARTMENT OF TRANSPORTATION
Caltrans® HYDRAULICS

FUNCTIONAL SUPERVISOR: MARIA QUINONEZ

CALCULATED-DESIGNED BY: SIEW MEI TAN
CHECKED BY: WING YAN LEE
REVISED BY
DATE REVISED

LAST REVISION 00-00-00
DATE PLOTTED => 03-FEB-2016
TIME PLOTTED => 11:12

Dist	COUNTY	ROUTE	POST MILES TOTAL PROJECT	SHEET No.	TOTAL SHEETS
07	LA,Ora	5	0.0/1.5, 44.3/44.4	414	1622

REGISTERED CIVIL ENGINEER 5-7-14 DATE

1-25-16
PLANS APPROVAL DATE

REGISTERED PROFESSIONAL ENGINEER WING-YAN LEE No. 61452 Exp. 6-30-17 CIVIL STATE OF CALIFORNIA

THE STATE OF CALIFORNIA OR ITS OFFICERS OR AGENTS SHALL NOT BE RESPONSIBLE FOR THE ACCURACY OR COMPLETENESS OF SCANNED COPIES OF THIS PLAN SHEET.

NOTE:

JOINTS ARE STANDARD JOINT TYPE

SUMMARY OF DRAINAGE QUANTITIES

DRAINAGE PLAN SHEET No.	DRAINAGE SYSTEM No.	DRAINAGE UNIT	"H" OR "V"	MINOR CONCRETE (MINOR STRUCTURE)	MINOR CONCRETE (GUTTER DEPRESSION)	MINOR CONCRETE (SIDEWALK AND CURB RAMP)	CONCRETE BACKFILL (PIPE TRENCH)	CONCRETE (DITCH LINING)	CONCRETE (CHANNEL LINING)	MISCELLANEOUS IRON AND STEEL	RCP (12" - 30") 12" RCP	18" RCP	24" RCP	27" RCP	30" RCP	36" RCP	42" RCP	48" RCP	54" RCP	60" RCP	63" RCP	69" RCP	81" RCP	18" SLOTTED CSP (0.079" THICK)	6" NON-PERFORATED PLASTIC PIPE UNDERDRAIN	36" PRECAST CONCRETE PIPE MANHOLE	42" AUTOMATIC DRAINAGE GATE	24" CONCRETE FLARED END SECTION	DITCH EXCAVATION	HOT MIX ASPHALT (TYPE A)	PLACE HOT MIX ASPHALT (Misc AREA)	CONCRETED-ROCK SLOPE PROTECTION (FACING, METHOD B)	ROCK SLOPE PROTECTION FABRIC (CLASS 8)	GRATED LINE DRAIN	CABLE RAILING	REMOVE CONCRETE	REMOVE PIPE	REMOVE INLET	REMOVE MANHOLE	REMOVE CATCH BASIN	ADJUST MANHOLE	TYPE 24-12 FRAME AND GRATE (N)	MANHOLE FRAME AND COVER (630-3, U45) (N)	MANHOLE FRAME AND COVER (312-3) (N)	MANHOLE FRAME AND COVER (U46) (N)	FRAME & GRATING FOR CATCH BASINS(311-2) (N)	MAXIMUM COVER	DESCRIPTION	STATION
			FT	CY	CY	CY	CY	CY	CY	LB	LF	LF	LF	LF	LF	LF	LF	LF	LF	LF	LF	LF	LF	LF	LF	EA	EA	CY	TON	SQYD	CY	SQYD	LF	LF	CY	LF	EA	EA	EA	EA	EA	EA	EA	EA	EA	FT		
D-2	2-3	a																																		133.0										0.4	REMOVE 29" x 18" CMP ARCH	
	2-4	a																																		324.0										4.2	REMOVE 2-24" CMP	
	2-5	a																																		210.0										4.5	REMOVE 30" CMP	
	2-6	a																																	17.56												REMOVE PARKWAY DRAIN	
	2-7	a																																		29.6											REMOVE 2-4" CIP	
D-3	3-1	a																																		160.1										6.0	REMOVE 30" CMP	
		b																																			1										REMOVE INLET	22.26′ L† 13+94.00 ℄ "I5"
		c																																		74.9										5.0	REMOVE 30" CMP	
	3-2	a																																			1										RREMOVE INLET	17.00′ R† 14+84.95 $ "SFIR1"
		b																																	100.62												REMOVE 6′ x 2.5′ RCB	
		c																																			1										REMOVE INLET	48.68′ R† 14+24.57 ℄ "I5"
	3-3	a																																		206.4										5.0	REMOVE 30" CMP	
	3-4	a																																	0.61												REMOVE TRANSITION STRUCTURE	
		b																																		33.8										12.0	REMOVE 12" CMP	
		c																																			1										REMOVE INLET	16.98′ L† 3+44.21 $ "ACC2"
SHEET TOTAL																																			118.79	1,171.8	4											

(N) = NOT A SEPARATE PAY ITEM, FOR INFORMATION ONLY

DRAINAGE QUANTITIES
DQ-3

STATE OF CALIFORNIA - DEPARTMENT OF TRANSPORTATION
Caltrans® HYDRAULICS

FUNCTIONAL SUPERVISOR: MARIA QUINONEZ

CALCULATED-DESIGNED BY: WING YAN LEE
CHECKED BY:
REVISED BY:
DATE REVISED:

LAST REVISION 00-00-00
DATE PLOTTED => 03-FEB-2016
TIME PLOTTED => 11:12

Dist	COUNTY	ROUTE	POST MILES TOTAL PROJECT	SHEET No.	TOTAL SHEETS
07	LA,Ora	5	0.0/1.5, 44.3/44.4	415	1622

REGISTERED CIVIL ENGINEER 5-7-14 DATE

1-25-16
PLANS APPROVAL DATE

REGISTERED PROFESSIONAL ENGINEER WING-YAN LEE No. 61452 Exp. 6-30-17 CIVIL STATE OF CALIFORNIA

THE STATE OF CALIFORNIA OR ITS OFFICERS OR AGENTS SHALL NOT BE RESPONSIBLE FOR THE ACCURACY OR COMPLETENESS OF SCANNED COPIES OF THIS PLAN SHEET.

NOTE:

JOINTS ARE STANDARD JOINT TYPE

SUMMARY OF DRAINAGE QUANTITIES

DRAINAGE PLAN SHEET No. ⬡	DRAINAGE SYSTEM No. ○	DRAINAGE UNIT	"H" OR "V"	MINOR CONCRETE (MINOR STRUCTURE)	MINOR CONCRETE (GUTTER DEPRESSION)	MINOR CONCRETE (SIDEWALK AND CURB RAMP)	CONCRETE BACKFILL (PIPE TRENCH)	CONCRETE (DITCH LINING)	CONCRETE (CHANNEL LINING)	MISCELLANEOUS IRON AND STEEL	RCP (12" - 30") 12" RCP	18" RCP	24" RCP	27" RCP	30" RCP	36" RCP	42" RCP	48" RCP	54" RCP	60" RCP	63" RCP	69" RCP	81" RCP	18" SLOTTED CSP (0.079" THICK)	6" NON-PERFORATED PLASTIC PIPE UNDERDRAIN	36" PRECAST CONCRETE PIPE MANHOLE	42" AUTOMATIC DRAINAGE GATE	24" CONCRETE FLARED END SECTION	DITCH EXCAVATION	HOT MIX ASPHALT (TYPE A)	PLACE HOT MIX ASPHALT (Misc AREA)	CONCRETED-ROCK SLOPE PROTECTION (FACING, METHOD B)	ROCK SLOPE PROTECTION FABRIC (CLASS 8)	GRATED LINE DRAIN	CABLE RAILING	REMOVE CONCRETE	REMOVE PIPE	REMOVE INLET	REMOVE MANHOLE	REMOVE CATCH BASIN	ADJUST MANHOLE	TYPE 24-12 FRAME AND GRATE (N)	MANHOLE FRAME AND COVER (630-3, U45) (N)	MANHOLE FRAME AND COVER (312-3) (N)	MANHOLE FRAME AND COVER (U46) (N)	FRAME & GRATING FOR CATCH BASINS(311-2) (N)	MAXIMUM COVER	DESCRIPTION	STATION
			FT	CY	CY	CY	CY	CY	CY	LB	LF	LF	LF	LF	LF	LF	LF	LF	LF	LF	LF	LF	LF	LF	LF	EA	EA	CY	TON	SQYD	CY	SQYD	LF	LF	CY	LF	EA	EA	EA	EA	EA	EA	EA	EA	EA	FT		
D-3	3-5	a																																		30.7									6.0	REMOVE 60" RCP	
		b																																	3.76											REMOVE INLET STRUCTURE	40.61' Lt 17+65.97 ℄ "SFIR1"
		c																																	10.44											REMOVE TRANSITION STRUCTURE	
	3-6	a																																		377.3									8.0	REMOVE 81" RCP	
		b																																				1								REMOVE MH No. 3	24.62' Lt 67+31.18 ℄ "NFIR1"
		c																																		208.3									4.2	REMOVE 81" RCP	
	3-7	a																																												REMOVE HEADWALL	78.48' Rt 20+81.78 ℄ "I5"
		n																																		103.5									4.5	REMOVE 24" CMP	
		c																																			1									REMOVE INLET (PLUGGED)	26.58' Lt 20+91.41 ℄ "I5"
		d																																		53.0									4.5	REMOVE 24" CMP	
		e																																			1									REMOVE INLET	82.43' Lt 20+96.89 ℄ "I5"
		f																																		61.3									3.0	REMOVE 24" CMP	
	3-8	a																																		17.4									15.0	REMOVE 30" RCP	
		b																																		162.7									8.0	REMOVE 30" RCP	
		c																																			1									REMOVE JUNCTION CHAMBER	6.80' Lt 20+17.30 ℄ "SFIR1"
		d																																		274.0									6.0	REMOVE 18" CMP	
		e																																			1									REMOVE INLET (CAPPED)	18.34' Rt 23.47.23 ℄ "SFIR1"
		f																																		272.0									4.0	REMOVE18" CMP	
		g																																			1									REMOVE INLET (CAPPED)	40.64' Rt 26+21.61 ℄ "SFIR1"
SHEET TOTAL																																			14.20	1,560.6	5	1										

(N) = NOT A SEPARATE PAY ITEM, FOR INFORMATION ONLY

DRAINAGE QUANTITIES
DQ-4

STATE OF CALIFORNIA - DEPARTMENT OF TRANSPORTATION
Caltrans® HYDRAULICS

FUNCTIONAL SUPERVISOR: MARIA QUINONEZ

CALCULATED-DESIGNED BY: SIEW MEI TAN
CHECKED BY: WING YAN LEE
REVISED BY
DATE REVISED

LAST REVISION 00-00-00
DATE PLOTTED => 03-FEB-2016
TIME PLOTTED => 11:12

Dist	COUNTY	ROUTE	POST MILES TOTAL PROJECT	SHEET No.	TOTAL SHEETS
07	LA,Ora	5	0.0/1.5, 44.3/44.4	416	1622

REGISTERED CIVIL ENGINEER 5-7-14 DATE

1-25-16
PLANS APPROVAL DATE

REGISTERED PROFESSIONAL ENGINEER WING-YAN LEE No. 61452 Exp. 6-30-17 CIVIL STATE OF CALIFORNIA

THE STATE OF CALIFORNIA OR ITS OFFICERS OR AGENTS SHALL NOT BE RESPONSIBLE FOR THE ACCURACY OR COMPLETENESS OF SCANNED COPIES OF THIS PLAN SHEET.

NOTE:

JOINTS ARE STANDARD JOINT TYPE

SUMMARY OF DRAINAGE QUANTITIES

DRAINAGE PLAN SHEET No. ⬡	DRAINAGE SYSTEM No. ◯	DRAINAGE UNIT	"H" OR "V"	MINOR CONCRETE (MINOR STRUCTURE)	MINOR CONCRETE (GUTTER DEPRESSION)	MINOR CONCRETE (SIDEWALK AND CURB RAMP)	CONCRETE BACKFILL (PIPE TRENCH)	CONCRETE (DITCH LINING)	CONCRETE (CHANNEL LINING)	MISCELLANEOUS IRON AND STEEL	RCP (12" - 30") 12" RCP	18" RCP	24" RCP	27" RCP	30" RCP	36" RCP	42" RCP	48" RCP	54" RCP	60" RCP	63" RCP	69" RCP	81" RCP	18" SLOTTED CSP (0.079" THICK)	6" NON-PERFORATED PLASTIC PIPE UNDERDRAIN	36" PRECAST CONCRETE PIPE MANHOLE	42" AUTOMATIC DRAINAGE GATE	24" CONCRETE FLARED END SECTION	DITCH EXCAVATION	HOT MIX ASPHALT (TYPE A)	PLACE HOT MIX ASPHALT (Misc AREA)	CONCRETED-ROCK SLOPE PROTECTION (FACING, METHOD B)	ROCK SLOPE PROTECTION FABRIC (CLASS 8)	GRATED LINE DRAIN	CABLE RAILING	REMOVE CONCRETE	REMOVE PIPE	REMOVE INLET	REMOVE MANHOLE	REMOVE CATCH BASIN	ADJUST MANHOLE	TYPE 24-12 FRAME AND GRATE (N)	MANHOLE FRAME AND COVER (630-3, U45) (N)	MANHOLE FRAME AND COVER (312-3) (N)	MANHOLE FRAME AND COVER (U46) (N)	FRAME & GRATING FOR CATCH BASINS(311-2) (N)	MAXIMUM COVER	DESCRIPTION	STATION
			FT	CY	CY	CY	CY	CY	CY	LB	LF	LF	LF	LF	LF	LF	LF	LF	LF	LF	LF	LF	LF	LF	LF	EA	EA	CY	TON	SQYD	CY	SQYD	LF	LF	CY	LF	EA	EA	EA	EA	EA	EA	EA	EA	EA	FT		
D-3	3-8	h																																		272.0									2.5	REMOVE18" CMP	
		i																																			1										REMOVE INLET (CAPPED)	60.27′ R+ 28+97.51 ℄ "SFIR1"
		j																																		58.0									2.3	REMOVE18" CMP	
		k																																			1										REMOVE INLET (CAPPED)	22.47′ L+ 29+16.86 ℄ "I5"
		l																																		58.6									4.0	REMOVE 18" CMP	
		m																																			1										REMOVE INLET (CAPPED)	39.05′ R+ 29+13.23 ℄ "I5"
		n																																		62.0									4.0	REMOVE 18" CMP	
		o																																			1										REMOVE INLET (CAPPED)	103.44′ R+ 29+09.46 ℄ "I5"
	3-9	a																																		12.0									3.3	REMOVE 12" PVC	
		b																																				1									REMOVE COCB, W=7′	12.41′ R+ 65+78.38 ℄ "NFIR1"
		c																																		226.2									3.5	REMOVE 24" RCP	
		d																																				1									REMOVE COCB, W=3.5′	32.22′ R+ 68+61.44 ℄ "NFIR1"
		e																																		6.5									4.0	REMOVE 24" RCP	
D-4	4-1	a																																				1									REMOVE COCB, W=7′	26.86′ L+ 72+90.36 ℄ "NFIR1"
		b																																		41.8									6.2	REMOVE 18" RCP	
	4-2	a																																			1									REMOVE CSP FLARE INLET	13.13′ L+ 77+12.15 ℄ "NFIR1"
	4-3	a																																			1									REMOVE CSP FLARE INLET	53.14′ R+ 77+33.87 ℄ "NFIR1"
SHEET TOTAL																																				737.1	6		3								

(N) = NOT A SEPARATE PAY ITEM, FOR INFORMATION ONLY

DRAINAGE QUANTITIES
DQ-5

STATE OF CALIFORNIA - DEPARTMENT OF TRANSPORTATION
Caltrans® HYDRAULICS

FUNCTIONAL SUPERVISOR: MARIA QUINONEZ

CALCULATED-DESIGNED BY: SIEW MEI TAN
CHECKED BY: WING YAN LEE
REVISED BY
DATE REVISED

LAST REVISION 00-00-00
DATE PLOTTED => 03-FEB-2016
TIME PLOTTED => 11:12

Dist	COUNTY	ROUTE	POST MILES TOTAL PROJECT	SHEET No.	TOTAL SHEETS
07	LA,Ora	5	0.0/1.5, 44.3/44.4	417	1622

REGISTERED CIVIL ENGINEER 5-7-14 DATE

1-25-16
PLANS APPROVAL DATE

REGISTERED PROFESSIONAL ENGINEER WING-YAN LEE No. 61452 Exp. 6-30-17 CIVIL STATE OF CALIFORNIA

THE STATE OF CALIFORNIA OR ITS OFFICERS OR AGENTS SHALL NOT BE RESPONSIBLE FOR THE ACCURACY OR COMPLETENESS OF SCANNED COPIES OF THIS PLAN SHEET.

NOTE:

JOINTS ARE STANDARD JOINT TYPE

SUMMARY OF DRAINAGE QUANTITIES

DRAINAGE PLAN SHEET No.	DRAINAGE SYSTEM No.	DRAINAGE UNIT	"H" OR "V"	MINOR CONCRETE (MINOR STRUCTURE)	MINOR CONCRETE (GUTTER DEPRESSION)	MINOR CONCRETE (SIDEWALK AND CURB RAMP)	CONCRETE BACKFILL (PIPE TRENCH)	CONCRETE (DITCH LINING)	CONCRETE (CHANNEL LINING)	MISCELLANEOUS IRON AND STEEL	RCP (12" - 30") 12" RCP	18" RCP	24" RCP	27" RCP	30" RCP	36" RCP	42" RCP	48" RCP	54" RCP	60" RCP	63" RCP	69" RCP	81" RCP	18" SLOTTED CSP (0.079" THICK)	6" NON-PERFORATED PLASTIC PIPE UNDERDRAIN	36" PRECAST CONCRETE PIPE MANHOLE	42" AUTOMATIC DRAINAGE GATE	24" CONCRETE FLARED END SECTION	DITCH EXCAVATION	HOT MIX ASPHALT (TYPE A)	PLACE HOT MIX ASPHALT (Misc AREA)	CONCRETED-ROCK SLOPE PROTECTION (FACING, METHOD B)	ROCK SLOPE PROTECTION FABRIC (CLASS 8)	GRATED LINE DRAIN	CABLE RAILING	REMOVE CONCRETE	REMOVE PIPE	REMOVE INLET	REMOVE MANHOLE	REMOVE CATCH BASIN	ADJUST MANHOLE	TYPE 24-12 FRAME AND GRATE (N)	MANHOLE FRAME AND COVER (630-3, U45) (N)	MANHOLE FRAME AND COVER (312-3) (N)	MANHOLE FRAME AND COVER (U46) (N)	FRAME & GRATING FOR CATCH BASINS(311-2) (N)	MAXIMUM COVER	DESCRIPTION	STATION
			FT	CY	CY	CY	CY	CY	CY	LB	LF	LF	LF	LF	LF	LF	LF	LF	LF	LF	LF	LF	LF	LF	LF	EA	EA	CY	TON	SQYD	CY	SQYD	LF	LF	CY	LF	EA	EA	EA	EA	EA	EA	EA	EA	EA	FT		
D-4	4-4	a																																	0.45											REMOVE CURB DRAIN	73.15′ L+ 27+77.53 ℄ "I5"
		b																																		26.7										REMOVE 4" CIP	
	4-5	a																																	0.45											REMOVE CURB DRAIN	70.26′ L+ 28+22.77 ℄ "I5"
		b																																		25.7										REMOVE 4" CIP	
	4-6	a																																	0.44											REMOVE CURB DRAIN	64.65′ L+ 29+19.25 ℄ "I5"
		b																																		25.6										REMOVE 4" CIP	
D-5	5-1	a																																	1.20											REMOVE HEADWALL	4.34′ L+ 42+85.96 ℄ "I5"
		b																																		90.0									3.7	REMOVE 24" CMP	
		c																																			1									REMOVE JUNCTION CHAMBER	87.66′ R+ 42+85.41 ℄ "I5"
		d																																		96.0									4.2	REMOVE 18" CMP	
		e																																	0.91											REMOVE HEADWALL	185.14′ R+ 42+84.82 ℄ "I5"
	5-2	a																																	0.40											REMOVE CURB DRAIN	36.54′ L+ 34+82.58 ℄ "I5"
		b																																		63.2										REMOVE 4" CIP	
	5-3	a																																	0.47											REMOVE CURB DRAIN	17.24′ L+ 42+10.00 ℄ "I5"
		b																																		93.2										REMOVE 4- 4" CIP	
																																					1									REMOVE INLET	40.50′ L+ 42+10.00 ℄ "I5"
SHEET TOTAL																																			4.32	420.4	2										

(N) = NOT A SEPARATE PAY ITEM, FOR INFORMATION ONLY

DRAINAGE QUANTITIES
DQ-6

STATE OF CALIFORNIA - DEPARTMENT OF TRANSPORTATION
Caltrans® HYDRAULICS

FUNCTIONAL SUPERVISOR: MARIA QUINONEZ
CALCULATED-DESIGNED BY: WING YAN LEE
CHECKED BY
REVISED BY
DATE REVISED

LAST REVISION 00-00-00
DATE PLOTTED => 03-FEB-2016
TIME PLOTTED => 11:12

Dist	COUNTY	ROUTE	POST MILES TOTAL PROJECT	SHEET No.	TOTAL SHEETS
07	LA,Ora	5	0.0/1.5, 44.3/44.4	418	1622

REGISTERED CIVIL ENGINEER 5-7-14 DATE

1-25-16
PLANS APPROVAL DATE

REGISTERED PROFESSIONAL ENGINEER WING-YAN LEE No. 61452 Exp. 6-30-17 CIVIL STATE OF CALIFORNIA

THE STATE OF CALIFORNIA OR ITS OFFICERS OR AGENTS SHALL NOT BE RESPONSIBLE FOR THE ACCURACY OR COMPLETENESS OF SCANNED COPIES OF THIS PLAN SHEET.

NOTE:

JOINTS ARE STANDARD JOINT TYPE

SUMMARY OF DRAINAGE QUANTITIES

DRAINAGE PLAN SHEET No. ⬡	DRAINAGE SYSTEM No. ◯	DRAINAGE UNIT	"H" OR "V"	MINOR CONCRETE (MINOR STRUCTURE)	MINOR CONCRETE (GUTTER DEPRESSION)	MINOR CONCRETE (SIDEWALK AND CURB RAMP)	CONCRETE BACKFILL (PIPE TRENCH)	CONCRETE (DITCH LINING)	CONCRETE (CHANNEL LINING)	MISCELLANEOUS IRON AND STEEL	RCP (12" - 30") 12" RCP	18" RCP	24" RCP	27" RCP	30" RCP	36" RCP	42" RCP	48" RCP	54" RCP	60" RCP	63" RCP	69" RCP	81" RCP	18" SLOTTED CSP (0.079" THICK)	6" NON-PERFORATED PLASTIC PIPE UNDERDRAIN	36" PRECAST CONCRETE PIPE MANHOLE	42" AUTOMATIC DRAINAGE GATE	24" CONCRETE FLARED END SECTION	DITCH EXCAVATION	HOT MIX ASPHALT (TYPE A)	PLACE HOT MIX ASPHALT (Misc AREA)	CONCRETED-ROCK SLOPE PROTECTION (FACING, METHOD B)	ROCK SLOPE PROTECTION FABRIC (CLASS 8)	GRATED LINE DRAIN	CABLE RAILING	REMOVE CONCRETE	REMOVE PIPE	REMOVE INLET	REMOVE MANHOLE	REMOVE CATCH BASIN	ADJUST MANHOLE	TYPE 24-12 FRAME AND GRATE (N)	MANHOLE FRAME AND COVER (630-3, U45) (N)	MANHOLE FRAME AND COVER (312-3) (N)	MANHOLE FRAME AND COVER (U46) (N)	FRAME & GRATING FOR CATCH BASINS(311-2) (N)	MAXIMUM COVER	DESCRIPTION	STATION
			FT	CY	CY	CY	CY	CY	CY	LB	LF	LF	LF	LF	LF	LF	LF	LF	LF	LF	LF	LF	LF	LF	LF	EA	EA	CY	TON	SQYD	CY	SQYD	LF	LF	CY	LF	EA	EA	EA	EA	EA	EA	EA	EA	EA	FT		
D-6	6-1	a																																	6.93											REMOVE HEADWALL	14.90′ Lt 45+35.87 ℄ "I5"
		b																																	185.40											REMOVE 2-6′ x 4′ RCB	
		c																																	6.93											REMOVE HEADWALL	192.19 Rt 45+37.13 ℄ "I5"
	6-2	a																																	0.42											REMOVE CURB DRAIN	20.95′ Lt 50+06.14 ℄ "I5"
		b																																		102.8										REMOVE 4" CIP	
	6-3	a																																	0.75											REMOVE Prkway DRAIN	28.39′ Lt 52+93.76 ℄ "I5"
		b																																	0.40											REMOVE Conc GUTTER	
D-7	7-1	a																																	1.20											REMOVE HEADWALL	107.23′ Lt 57+48.80 ℄ "I5"
		b																																		45.5									0.8	REMOVE 24" CMP	
		c																																			1									REMOVE INLET	84.25′ Lt 57+88.18 ℄ "I5"
		d																																		101.1									0.4	REMOVE 18" CMP	
	7-2	a																																		87.0									3.1	REMOVE 24" CMP	
		b																																			1									REMOVE JC-3-C Mod	47.21′ Rt 60+28.97 ℄ "I5"
		c																																		90.0									3.1	REMOVE 24" CMP	
		d																																	1.20											REMOVE HEADWALL	90.00′ Rt 60+48.97 ℄ "I5"
		e																																	4.47											REMOVE Trap Conc CHANNEL	
SHEET TOTAL																																			207.70	426.4	2										

(N) = NOT A SEPARATE PAY ITEM, FOR INFORMATION ONLY

DRAINAGE QUANTITIES
DQ-7

STATE OF CALIFORNIA - DEPARTMENT OF TRANSPORTATION
Caltrans® HYDRAULICS

FUNCTIONAL SUPERVISOR: MARIA QUINONEZ
CALCULATED-DESIGNED BY: SIEW MEI TAN
CHECKED BY: WING YAN LEE
REVISED BY
DATE REVISED

LAST REVISION 00-00-00
DATE PLOTTED => 03-FEB-2016
TIME PLOTTED => 11:12

Dist	COUNTY	ROUTE	POST MILES TOTAL PROJECT	SHEET No.	TOTAL SHEETS
07	LA,Ora	5	0.0/1.5, 44.3/44.4	419	1622

REGISTERED CIVIL ENGINEER 5-7-14 DATE

1-25-16
PLANS APPROVAL DATE

REGISTERED PROFESSIONAL ENGINEER WING-YAN LEE No. 61452 Exp. 6-30-17 CIVIL STATE OF CALIFORNIA

THE STATE OF CALIFORNIA OR ITS OFFICERS OR AGENTS SHALL NOT BE RESPONSIBLE FOR THE ACCURACY OR COMPLETENESS OF SCANNED COPIES OF THIS PLAN SHEET.

NOTE:

JOINTS ARE STANDARD JOINT TYPE

SUMMARY OF DRAINAGE QUANTITIES

DRAINAGE PLAN SHEET No.	DRAINAGE SYSTEM No.	DRAINAGE UNIT	"H" OR "V"	MINOR CONCRETE (MINOR STRUCTURE)	MINOR CONCRETE (GUTTER DEPRESSION)	MINOR CONCRETE (SIDEWALK AND CURB RAMP)	CONCRETE BACKFILL (PIPE TRENCH)	CONCRETE (DITCH LINING)	CONCRETE (CHANNEL LINING)	MISCELLANEOUS IRON AND STEEL	RCP (12" - 30") 12" RCP	18" RCP	24" RCP	27" RCP	30" RCP	36" RCP	42" RCP	48" RCP	54" RCP	60" RCP	63" RCP	69" RCP	81" RCP	18" SLOTTED CSP (0.079" THICK)	6" NON-PERFORATED PLASTIC PIPE UNDERDRAIN	36" PRECAST CONCRETE PIPE MANHOLE	42" AUTOMATIC DRAINAGE GATE	24" CONCRETE FLARED END SECTION	DITCH EXCAVATION	HOT MIX ASPHALT (TYPE A)	PLACE HOT MIX ASPHALT (Misc AREA)	CONCRETED-ROCK SLOPE PROTECTION (FACING, METHOD B)	ROCK SLOPE PROTECTION FABRIC (CLASS 8)	GRATED LINE DRAIN	CABLE RAILING	REMOVE CONCRETE	REMOVE PIPE	REMOVE INLET	REMOVE MANHOLE	REMOVE CATCH BASIN	ADJUST MANHOLE	TYPE 24-12 FRAME AND GRATE (N)	MANHOLE FRAME AND COVER (630-3, U45) (N)	MANHOLE FRAME AND COVER (312-3) (N)	MANHOLE FRAME AND COVER (U46) (N)	FRAME & GRATING FOR CATCH BASINS(311-2) (N)	MAXIMUM COVER	DESCRIPTION	STATION
			FT	CY	CY	CY	CY	CY	CY	LB	LF	LF	LF	LF	LF	LF	LF	LF	LF	LF	LF	LF	LF	LF	LF	EA	EA	CY	TON	SQYD	CY	SQYD	LF	LF	CY	LF	EA	EA	EA	EA	EA	EA	EA	EA	EA	FT		
D-7	7-3	a																																		82.0									2.4	REMOVE 36" x 22" CMPA	
		b																																				1								REMOVE MANHOLE	158.46' Lt 60+36.10 ℄ "I5"
		c																																		105.6									2.1	REMOVE 2-24" RCP	
		d																																1.72													REMOVE HEADWALL	107.90' Lt 60+47.30 ℄ "I5"
	7-4	a																																			1									REMOVE INLET	79.57' Rt 60+14.21 ℄ "I5"
		b																																		22.3									1.1	REMOVE 18" RCP	
		c																																0.91													REMOVE HEADWALL	9.74' Rt 60+23.67 ℄ "I5"
		d																																3.63													REMOVE Trap CHANNEL	
	7-5	a																																			1									REMOVE CATCH BASIN	95.95' Rt 58+84.40 ℄ "I5"
		b																																		28.2									1.9	REMOVE 18" RCP	
D-7	7-6	a																																2.34													REMOVE HEADWALL	33.53' Rt 57+10.21 ⅊ "VA4"
		b																																21.04													REMOVE Trap Conc CHANNEL	
		c																																1.20													REMOVE HEADWALL	42.76' Rt 58+52.03 ⅊ "VA4"
		d																																		157.0									2.5	REMOVE 24" RCP	
		e																																1.20													REMOVE HEADWALL	37.37' Rt 60+04.43 ⅊ "VA4"
		f																																64.40													REMOVE Trap Conc Channel	
		g																																1.20													REMOVE HEADWALL	2.91' Rt 61+97.42 ⅊ "VA4"
SHEET TOTAL																																		97.64	395.1	2	1										

(N) = NOT A SEPARATE PAY ITEM, FOR INFORMATION ONLY

DRAINAGE QUANTITIES
DQ- 8

STATE OF CALIFORNIA - DEPARTMENT OF TRANSPORTATION
Caltrans HYDRAULICS

FUNCTIONAL SUPERVISOR: MARIA QUINONEZ
CALCULATED-DESIGNED BY: SIEW MEI TAN
CHECKED BY: WING YAN LEE
REVISED BY
DATE REVISED

LAST REVISION 00-00-00
DATE PLOTTED => 03-FEB-2016
TIME PLOTTED => 11:12

Dist	COUNTY	ROUTE	POST MILES TOTAL PROJECT	SHEET No.	TOTAL SHEETS
07	LA,Ora	5	0.0/1.5, 44.3/44.4	420	1622

REGISTERED CIVIL ENGINEER 5-7-14 DATE

1-25-16
PLANS APPROVAL DATE

REGISTERED PROFESSIONAL ENGINEER WING-YAN LEE No. 61452 Exp. 6-30-17 CIVIL STATE OF CALIFORNIA

THE STATE OF CALIFORNIA OR ITS OFFICERS OR AGENTS SHALL NOT BE RESPONSIBLE FOR THE ACCURACY OR COMPLETENESS OF SCANNED COPIES OF THIS PLAN SHEET.

NOTE:

JOINTS ARE STANDARD JOINT TYPE

SUMMARY OF DRAINAGE QUANTITIES

DRAINAGE PLAN SHEET No. ⬡	DRAINAGE SYSTEM No. ◯	DRAINAGE UNIT	"H" OR "V"	MINOR CONCRETE (MINOR STRUCTURE)	MINOR CONCRETE (GUTTER DEPRESSION)	MINOR CONCRETE (SIDEWALK AND CURB RAMP)	CONCRETE BACKFILL (PIPE TRENCH)	CONCRETE (DITCH LINING)	CONCRETE (CHANNEL LINING)	MISCELLANEOUS IRON AND STEEL	RCP (12" - 30") 12" RCP	18" RCP	24" RCP	27" RCP	30" RCP	36" RCP	42" RCP	48" RCP	54" RCP	60" RCP	63" RCP	69" RCP	81" RCP	18" SLOTTED CSP (0.079" THICK)	6" NON-PERFORATED PLASTIC PIPE UNDERDRAIN	36" PRECAST CONCRETE PIPE MANHOLE	42" AUTOMATIC DRAINAGE GATE	24" CONCRETE FLARED END SECTION	DITCH EXCAVATION	HOT MIX ASPHALT (TYPE A)	PLACE HOT MIX ASPHALT (Misc AREA)	CONCRETED-ROCK SLOPE PROTECTION (FACING, METHOD B)	ROCK SLOPE PROTECTION FABRIC (CLASS 8)	GRATED LINE DRAIN	CABLE RAILING	REMOVE CONCRETE	REMOVE PIPE	REMOVE INLET	REMOVE MANHOLE	REMOVE CATCH BASIN	ADJUST MANHOLE	TYPE 24-12 FRAME AND GRATE (N)	MANHOLE FRAME AND COVER (630-3, U45) (N)	MANHOLE FRAME AND COVER (312-3) (N)	MANHOLE FRAME AND COVER (U46) (N)	FRAME & GRATING FOR CATCH BASINS(311-2) (N)	MAXIMUM COVER	DESCRIPTION	STATION
			FT	CY	CY	CY	CY	CY	CY	LB	LF	LF	LF	LF	LF	LF	LF	LF	LF	LF	LF	LF	LF	LF	LF	EA	EA	CY	TON	SQYD	CY	SQYD	LF	LF	CY	LF	EA	EA	EA	EA	EA	EA	EA	EA	EA	FT		
D-7	7-6	h																																		32.1									5.1	REMOVE 24" RCP	
		i																																24.00											REMOVE JUNCTION STRUCTURE	10.30′ Lt 62+42.41 ℄ "VA4"
		j																																	161.1									2.7	REMOVE 54" RCP	
		k																																5.20											REMOVE JUNCTION STRUCTURE	43.14′ Lt 64+16.98 ℄ "VA4"
		l																																	277.6									3.9	REMOVE 60" RCP	
		m																																2.00											REMOVE JUNCTION STRUCTURE	72.85′ Rt 66+99.27 ℄ "I5"
		n																																	242.0									5.2	REMOVE 63" RCP	
		o																																12.70											REMOVE Trans STRUCTURE	58.72′ Rt 69+44.45 ℄ "I5"
		p																																	580.3									8.7	REMOVE 69" RCP	
		q																																			1								REMOVE MANHOLE	47.10′ Rt 75+38.32 ℄ "I5"
		r																																	268.6									9.4	REMOVE 69" RCP	
	7-7	a																																2.73											REMOVE HEADWALL	49.45′ Lt 66+92.52 ℄ "I5"
		b																																49.23											REMOVE 4′ x 2′ RCB	
		c																																17.86											REMOVE 4′ x 2′ RCB	
		d																																		1									REMOVE INLET	79.08′ Rt 64+19.28 ℄ "I5"
		e																																1.53											REMOVE 4′ x 5′ RCB	
SHEET TOTAL																																		115.25	1,561.7	1	1									

(N) = NOT A SEPARATE PAY ITEM, FOR INFORMATION ONLY

DRAINAGE QUANTITIES
DQ-9

STATE OF CALIFORNIA - DEPARTMENT OF TRANSPORTATION
Caltrans® HYDRAULICS

FUNCTIONAL SUPERVISOR: MARIA QUINONEZ

CALCULATED-DESIGNED BY: SIEW MEI TAN
CHECKED BY: WING YAN LEE
REVISED BY
DATE REVISED

LAST REVISION 00-00-00
DATE PLOTTED => 03-FEB-2016
TIME PLOTTED => 11:12

Dist	COUNTY	ROUTE	POST MILES TOTAL PROJECT	SHEET No.	TOTAL SHEETS
07	LA,Ora	5	0.0/1.5, 44.3/44.4	421	1622

REGISTERED CIVIL ENGINEER 5-7-14 DATE

1-25-16
PLANS APPROVAL DATE

REGISTERED PROFESSIONAL ENGINEER WING-YAN LEE No. 61452 Exp. 6-30-17 CIVIL STATE OF CALIFORNIA

THE STATE OF CALIFORNIA OR ITS OFFICERS OR AGENTS SHALL NOT BE RESPONSIBLE FOR THE ACCURACY OR COMPLETENESS OF SCANNED COPIES OF THIS PLAN SHEET.

NOTE:

JOINTS ARE STANDARD JOINT TYPE

SUMMARY OF DRAINAGE QUANTITIES

DRAINAGE PLAN SHEET No.	DRAINAGE SYSTEM No.	DRAINAGE UNIT	"H" OR "V"	MINOR CONCRETE (MINOR STRUCTURE)	MINOR CONCRETE (GUTTER DEPRESSION)	MINOR CONCRETE (SIDEWALK AND CURB RAMP)	CONCRETE BACKFILL (PIPE TRENCH)	CONCRETE (DITCH LINING)	CONCRETE (CHANNEL LINING)	MISCELLANEOUS IRON AND STEEL	RCP (12" - 30") 12" RCP	18" RCP	24" RCP	27" RCP	30" RCP	36" RCP	42" RCP	48" RCP	54" RCP	60" RCP	63" RCP	69" RCP	81" RCP	18" SLOTTED CSP (0.079" THICK)	6" NON-PERFORATED PLASTIC PIPE UNDERDRAIN	36" PRECAST CONCRETE PIPE MANHOLE	42" AUTOMATIC DRAINAGE GATE	24" CONCRETE FLARED END SECTION	DITCH EXCAVATION	HOT MIX ASPHALT (TYPE A)	PLACE HOT MIX ASPHALT (Misc AREA)	CONCRETED-ROCK SLOPE PROTECTION (FACING, METHOD B)	ROCK SLOPE PROTECTION FABRIC (CLASS 8)	GRATED LINE DRAIN	CABLE RAILING	REMOVE CONCRETE	REMOVE PIPE	REMOVE INLET	REMOVE MANHOLE	REMOVE CATCH BASIN	ADJUST MANHOLE	TYPE 24-12 FRAME AND GRATE (N)	MANHOLE FRAME AND COVER (630-3, U45) (N)	MANHOLE FRAME AND COVER (312-3) (N)	MANHOLE FRAME AND COVER (U46) (N)	FRAME & GRATING FOR CATCH BASINS(311-2) (N)	MAXIMUM COVER	DESCRIPTION	STATION
			FT	CY	CY	CY	CY	CY	CY	LB	LF	LF	LF	LF	LF	LF	LF	LF	LF	LF	LF	LF	LF	LF	LF	EA	EA	CY	TON	SQYD	CY	SQYD	LF	LF	CY	LF	EA	EA	EA	EA	EA	EA	EA	EA	EA	FT		
D-7	7-8	a																																				1									REMOVE COCB, W=3.5′	99.48′ R+ 63+74.57 ℄ "I5"
		b																																		44.6									1.2	REMOVE 18" RCP	
		c																																				1									REMOVE COCB, W=10′	133.06′ R+ 104+19.50 ℄ "I5"
		d																																		43.8									2.0	REMOVE 18" RCP	
		e																																21.10													REMOVE Conc CHANNEL	
	7-9	a																																				1									REMOVE COCB, W=5′	68.97′ L+ 54+69.79 ℄ "I5"
		b																																		267.3									2.3	REMOVE 18" RCP	
		c																																			1									REMOVE MANHOLE	155.69′ L+ 57+22.30 ℄ "I5"
		d																																		219.5									2.3	REMOVE 18" RCP	
		e																																				1									REMOVE COCB, W=7′	86.22′ L+ 59+24.01 ⅊ "SFIR1"
		f																																		110.3									3.8	REMOVE 18" RCP	
	7-10	a																																				1									REMOVE COCB, W=5′	40.48′ L+ 59+58.62 ⅊ "SFIR1"
		b																																		89.2									3.0	REMOVE 18" RCP	
	7-11	a																																				1									REMOVE COCB, W=3.5′	15.30′ R+ 62+37.42 ⅊ "VA4"
		b																																		8.0									4.0	REMOVE 18" RCP	
		c																																		50.8									2.7	REMOVE 48" RCP	
	7-12	a																																				1									REMOVE COCB, W=3.5′	141.47′ L+ 64+51.60 ℄ "SFIR1"
		b																																		27.5									3.8	REMOVE 24" RCP	
SHEET TOTAL																																		21.10	861.0		1	7										

(N) = NOT A SEPARATE PAY ITEM, FOR INFORMATION ONLY

DRAINAGE QUANTITIES
DQ-10

STATE OF CALIFORNIA - DEPARTMENT OF TRANSPORTATION
Caltrans® HYDRAULICS

FUNCTIONAL SUPERVISOR: MARIA QUINONEZ

CALCULATED-DESIGNED BY: SIEW MEI TAN
CHECKED BY: WING YAN LEE
REVISED BY
DATE REVISED

LAST REVISION 00-00-00
DATE PLOTTED => 03-FEB-2016
TIME PLOTTED => 11:12

Dist	COUNTY	ROUTE	POST MILES TOTAL PROJECT	SHEET No.	TOTAL SHEETS
07	LA,Ora	5	0.0/1.5, 44.3/44.4	422	1622

REGISTERED CIVIL ENGINEER 5-7-14 DATE

1-25-16
PLANS APPROVAL DATE

REGISTERED PROFESSIONAL ENGINEER WING-YAN LEE No. 61452 Exp. 6-30-17 CIVIL STATE OF CALIFORNIA

THE STATE OF CALIFORNIA OR ITS OFFICERS OR AGENTS SHALL NOT BE RESPONSIBLE FOR THE ACCURACY OR COMPLETENESS OF SCANNED COPIES OF THIS PLAN SHEET.

NOTE:

JOINTS ARE STANDARD JOINT TYPE

SUMMARY OF DRAINAGE QUANTITIES

DRAINAGE PLAN SHEET No. ⬡	DRAINAGE SYSTEM No. ○	DRAINAGE UNIT	"H" OR "V"	MINOR CONCRETE (MINOR STRUCTURE)	MINOR CONCRETE (GUTTER DEPRESSION)	MINOR CONCRETE (SIDEWALK AND CURB RAMP)	CONCRETE BACKFILL (PIPE TRENCH)	CONCRETE (DITCH LINING)	CONCRETE (CHANNEL LINING)	MISCELLANEOUS IRON AND STEEL	RCP (12" - 30") 12" RCP	18" RCP	24" RCP	27" RCP	30" RCP	36" RCP	42" RCP	48" RCP	54" RCP	60" RCP	63" RCP	69" RCP	81" RCP	18" SLOTTED CSP (0.079" THICK)	6" NON-PERFORATED PLASTIC PIPE UNDERDRAIN	36" PRECAST CONCRETE PIPE MANHOLE	42" AUTOMATIC DRAINAGE GATE	24" CONCRETE FLARED END SECTION	DITCH EXCAVATION	HOT MIX ASPHALT (TYPE A)	PLACE HOT MIX ASPHALT (Misc AREA)	CONCRETED-ROCK SLOPE PROTECTION (FACING, METHOD B)	ROCK SLOPE PROTECTION FABRIC (CLASS 8)	GRATED LINE DRAIN	CABLE RAILING	REMOVE CONCRETE	REMOVE PIPE	REMOVE INLET	REMOVE MANHOLE	REMOVE CATCH BASIN	ADJUST MANHOLE	TYPE 24-12 FRAME AND GRATE (N)	MANHOLE FRAME AND COVER (630-3, U45) (N)	MANHOLE FRAME AND COVER (312-3) (N)	MANHOLE FRAME AND COVER (U46) (N)	FRAME & GRATING FOR CATCH BASINS(311-2) (N)	MAXIMUM COVER	DESCRIPTION	STATION
			FT	CY	CY	CY	CY	CY	CY	LB	LF	LF	LF	LF	LF	LF	LF	LF	LF	LF	LF	LF	LF	LF	LF	EA	EA	CY	TON	SQYD	CY	SQYD	LF	LF	CY	LF	EA	EA	EA	EA	EA	EA	EA	EA	EA	FT		
D-7	7-13	a																																	0.45											REMOVE CURB DRAIN	66.67′ Rt 54+11.90 ℄ "VA3"
		b																																		88.1										REMOVE 4" CIP	
	7-14	a																																	0.45											REMOVE CURB DRAIN	46.67′ Rt 54+64.85 ℄ "VA3"
		b																																		15.8										REMOVE 4" CIP	
		c																																			1										REMOVE INLET	36.54′ Rt 54+52.74 ℄ "VA3"
	7-15	a																																	0.37											REMOVE CURB DRAIN	0.34′ Lt 55+78.16 ℄ "VA3"
		b																																		23.4										REMOVE 4" CIP	
	7-16	a																																	0.54											REMOVE CURB DRAIN	10.30′ Lt 56+02.38 ℄ "VA3"
		b																																		31.5										REMOVE 3-4" CIP	
		c																																			1										REMOVE INLET	20.82′ Lt 56+02.74 ℄ "VA3"
	7-17	a																																	2.15											REMOVE Conc V-DITCH	
		b																																	5.10											REMOVE Conc V-DITCH	
		c																																	2.20											REMOVE Conc V-DITCH	
SHEET TOTAL																																			11.26	158.8	2											

(N) = NOT A SEPARATE PAY ITEM, FOR INFORMATION ONLY

DRAINAGE QUANTITIES
DQ-11

STATE OF CALIFORNIA - DEPARTMENT OF TRANSPORTATION
Caltrans® HYDRAULICS

FUNCTIONAL SUPERVISOR: MARIA QUINONEZ

CALCULATED-DESIGNED BY: SIEW MEI TAN
CHECKED BY: WING YAN LEE
REVISED BY
DATE REVISED

LAST REVISION 00-00-00
DATE PLOTTED => 03-FEB-2016
TIME PLOTTED => 11:12

Dist	COUNTY	ROUTE	POST MILES TOTAL PROJECT	SHEET No.	TOTAL SHEETS
07	LA,Ora	5	0.0/1.5, 44.3/44.4	423	1622

REGISTERED CIVIL ENGINEER 5-7-14 DATE

1-25-16
PLANS APPROVAL DATE

REGISTERED PROFESSIONAL ENGINEER WING-YAN LEE No. 61452 Exp. 6-30-17 CIVIL STATE OF CALIFORNIA

THE STATE OF CALIFORNIA OR ITS OFFICERS OR AGENTS SHALL NOT BE RESPONSIBLE FOR THE ACCURACY OR COMPLETENESS OF SCANNED COPIES OF THIS PLAN SHEET.

NOTE:

JOINTS ARE STANDARD JOINT TYPE

SUMMARY OF DRAINAGE QUANTITIES

DRAINAGE PLAN SHEET No.	DRAINAGE SYSTEM No.	DRAINAGE UNIT	"H" OR "V"	MINOR CONCRETE (MINOR STRUCTURE)	MINOR CONCRETE (GUTTER DEPRESSION)	MINOR CONCRETE (SIDEWALK AND CURB RAMP)	CONCRETE BACKFILL (PIPE TRENCH)	CONCRETE (DITCH LINING)	CONCRETE (CHANNEL LINING)	MISCELLANEOUS IRON AND STEEL	RCP (12" - 30") 12" RCP	18" RCP	24" RCP	27" RCP	30" RCP	36" RCP	42" RCP	48" RCP	54" RCP	60" RCP	63" RCP	69" RCP	81" RCP	18" SLOTTED CSP (0.079" THICK)	6" NON-PERFORATED PLASTIC PIPE UNDERDRAIN	36" PRECAST CONCRETE PIPE MANHOLE	42" AUTOMATIC DRAINAGE GATE	24" CONCRETE FLARED END SECTION	DITCH EXCAVATION	HOT MIX ASPHALT (TYPE A)	PLACE HOT MIX ASPHALT (Misc AREA)	CONCRETED-ROCK SLOPE PROTECTION (FACING, METHOD B)	ROCK SLOPE PROTECTION FABRIC (CLASS 8)	GRATED LINE DRAIN	CABLE RAILING	REMOVE CONCRETE	REMOVE PIPE	REMOVE INLET	REMOVE MANHOLE	REMOVE CATCH BASIN	ADJUST MANHOLE	TYPE 24-12 FRAME AND GRATE (N)	MANHOLE FRAME AND COVER (630-3, U45) (N)	MANHOLE FRAME AND COVER (312-3) (N)	MANHOLE FRAME AND COVER (U46) (N)	FRAME & GRATING FOR CATCH BASINS(311-2) (N)	MAXIMUM COVER	DESCRIPTION	STATION
			FT	CY	CY	CY	CY	CY	CY	LB	LF	LF	LF	LF	LF	LF	LF	LF	LF	LF	LF	LF	LF	LF	LF	EA	EA	CY	TON	SQYD	CY	SQYD	LF	LF	CY	LF	EA	EA	EA	EA	EA	EA	EA	EA	EA	FT		
D-8	8-1	a																																			1										REMOVE INLET	49.45′ L+ 66+92.52 ℄ "I5"
		b																																	34.26											REMOVE 3′ x 2′ RCB	
		c																																	10.17											REMOVE 3′ x 2′ RCB	
		d																																					1							REMOVE CATCH BASIN	112.00′ R+ 67+00.88 ℄ "I5"
	8-2	a																																			1									REMOVE INLET	61.67′ L+ 69+42.11 ℄ "I5"
		b																																		471.2									4.0	REMOVE 4-24" CMP	
		c																																		540.0									2.6	REMOVE 4-24" CMP	
		d																																	1.50											REMOVE HEADWALL	99.14′ R+ 69+51.10 ℄ "I5"
	8-3	a																																			1									REMOVE GD-1 INLET	94.45′ L+ 77+18.00 ℄ "I5"
		b																																		194.7									2.3	REMOVE 24" RCP	
		c																																			1									REMOVE GD-1 INLET	89.04′ L+ 75+20.00 ℄ "I5"
		d																																		197.2									2.5	REMOVE 24" RCP	
		e																																			1									REMOVE GD-1 INLET	81.57′ L+ 73+20.00 ℄ "I5"
		f																																		197.2									2.0	REMOVE 24" RCP	
		g																																			1									REMOVE GD-1 INLET	72.18′ L+ 71+20.00 ℄ "I5"
		h																																		83.4									2.5	REMOVE 24" RCP	
		i																																			1									REMOVE GD-1 INLET	67.89′ L+ 70+32.00 ℄ "I5"
		j																																		113.3									4.0	REMOVE 24" RCP	
SHEET TOTAL																																			45.93	1,797.0	7		1								

(N) = NOT A SEPARATE PAY ITEM, FOR INFORMATION ONLY

DRAINAGE QUANTITIES
DQ-12

STATE OF CALIFORNIA - DEPARTMENT OF TRANSPORTATION
Caltrans HYDRAULICS

FUNCTIONAL SUPERVISOR: MARIA QUINONEZ
CALCULATED-DESIGNED BY: SIEW MEI TAN
CHECKED BY: WING YAN LEE
REVISED BY
DATE REVISED

LAST REVISION 00-00-00
DATE PLOTTED => 03-FEB-2016
TIME PLOTTED => 11:12

Dist	COUNTY	ROUTE	POST MILES TOTAL PROJECT	SHEET No.	TOTAL SHEETS
07	LA,Ora	5	0.0/1.5, 44.3/44.4	424	1622

REGISTERED CIVIL ENGINEER 5-7-14 DATE

1-25-16
PLANS APPROVAL DATE

REGISTERED PROFESSIONAL ENGINEER WING-YAN LEE No. 61452 Exp. 6-30-17 CIVIL STATE OF CALIFORNIA

THE STATE OF CALIFORNIA OR ITS OFFICERS OR AGENTS SHALL NOT BE RESPONSIBLE FOR THE ACCURACY OR COMPLETENESS OF SCANNED COPIES OF THIS PLAN SHEET.

NOTE:

JOINTS ARE STANDARD JOINT TYPE

SUMMARY OF DRAINAGE QUANTITIES

DRAINAGE PLAN SHEET No. ⬡	DRAINAGE SYSTEM No. ○	DRAINAGE UNIT	"H" OR "V"	MINOR CONCRETE (MINOR STRUCTURE)	MINOR CONCRETE (GUTTER DEPRESSION)	MINOR CONCRETE (SIDEWALK AND CURB RAMP)	CONCRETE BACKFILL (PIPE TRENCH)	CONCRETE (DITCH LINING)	CONCRETE (CHANNEL LINING)	MISCELLANEOUS IRON AND STEEL	RCP (12" - 30") 12" RCP	18" RCP	24" RCP	27" RCP	30" RCP	36" RCP	42" RCP	48" RCP	54" RCP	60" RCP	63" RCP	69" RCP	81" RCP	18" SLOTTED CSP (0.079" THICK)	6" NON-PERFORATED PLASTIC PIPE UNDERDRAIN	36" PRECAST CONCRETE PIPE MANHOLE	42" AUTOMATIC DRAINAGE GATE	24" CONCRETE FLARED END SECTION	DITCH EXCAVATION	HOT MIX ASPHALT (TYPE A)	PLACE HOT MIX ASPHALT (Misc AREA)	CONCRETED-ROCK SLOPE PROTECTION (FACING, METHOD B)	ROCK SLOPE PROTECTION FABRIC (CLASS 8)	GRATED LINE DRAIN	CABLE RAILING	REMOVE CONCRETE	REMOVE PIPE	REMOVE INLET	REMOVE MANHOLE	REMOVE CATCH BASIN	ADJUST MANHOLE	TYPE 24-12 FRAME AND GRATE (N)	MANHOLE FRAME AND COVER (630-3, U45) (N)	MANHOLE FRAME AND COVER (312-3) (N)	MANHOLE FRAME AND COVER (U46) (N)	FRAME & GRATING FOR CATCH BASINS(311-2) (N)	MAXIMUM COVER	DESCRIPTION	STATION
			FT	CY	CY	CY	CY	CY	CY	LB	LF	LF	LF	LF	LF	LF	LF	LF	LF	LF	LF	LF	LF	LF	LF	EA	EA	CY	TON	SQYD	CY	SQYD	LF	LF	CY	LF	EA	EA	EA	EA	EA	EA	EA	EA	EA	FT		
D-8	8-3	k																																			1										REMOVE GD-1 INLET	48.87′ R+ 70+32.00 ℄ "I5"
		l																																		2.4									8.8	REMOVE 24" RCP	
		m																																		5.3									1.8	REMOVE 18" RCP	
		n																																			1										REMOVE GD-1 INLET	52.96′ R+ 70+40.00 ℄ "I5"
	8-4	a																																			1										REMOVE GD-1 INLET	43.75′ R+ 72+26.00 ℄ "I5"
		b																																		172.1									5.6	REMOVE 24" RCP	
		c																																			1										REMOVE GD-1 INLET	54.91′ R+ 74+00.00 ℄ "I5"
		d																																		9.6									12.6	REMOVE 24" RCP	
	8-5	a																																			1										REMOVE TYPE G3 INLET	47.81′ L+ 73+63.90 ⅊ "VA1"
		b																																		48.0									2.4	REMOVE 18" RCP	
		c																																			1										REMOVE TYPE G3 INLET	3.65′ L+ 73+90.39 ⅊ "VA1"
		d																																		38.1									2.2	REMOVE 18" RCP	
		e																																			1										REMOVE JC 3-C	35.50′ R+ 73+84.87 ⅊ "VA1"
		f																																	12.50												REMOVE TYPE B DRAIN	
		g																																		106.5									6.3	REMOVE 18" RCP	
		h																																			1										REMOVE TYPE G3 INLET	9.46′ L+ 74+98.97 ⅊ "VA1"
		i																																		197.2									10.8	REMOVE 18" RCP	
		j																																			1										REMOVE GD-1 INLET	14.96′ R+ 76+97.92 ⅊ "VA1"
SHEET TOTAL																																			12.50	579.2	9											

(N) = NOT A SEPARATE PAY ITEM, FOR INFORMATION ONLY

DRAINAGE QUANTITIES
DQ-13

STATE OF CALIFORNIA - DEPARTMENT OF TRANSPORTATION
Caltrans® HYDRAULICS

FUNCTIONAL SUPERVISOR: MARIA QUINONEZ
CALCULATED-DESIGNED BY: SIEW MEI TAN
CHECKED BY: WING YAN LEE
REVISED BY
DATE REVISED

LAST REVISION 00-00-00
DATE PLOTTED => 03-FEB-2016
TIME PLOTTED => 11:12

Dist	COUNTY	ROUTE	POST MILES TOTAL PROJECT	SHEET No.	TOTAL SHEETS
07	LA,Ora	5	0.0/1.5, 44.3/44.4	425	1622

REGISTERED CIVIL ENGINEER 5-7-14 DATE

1-25-16
PLANS APPROVAL DATE

REGISTERED PROFESSIONAL ENGINEER WING-YAN LEE No. 61452 Exp. 6-30-17 CIVIL STATE OF CALIFORNIA

THE STATE OF CALIFORNIA OR ITS OFFICERS OR AGENTS SHALL NOT BE RESPONSIBLE FOR THE ACCURACY OR COMPLETENESS OF SCANNED COPIES OF THIS PLAN SHEET.

NOTE:

JOINTS ARE STANDARD JOINT TYPE

SUMMARY OF DRAINAGE QUANTITIES

DRAINAGE PLAN SHEET No.	DRAINAGE SYSTEM No.	DRAINAGE UNIT	"H" OR "V"	MINOR CONCRETE (MINOR STRUCTURE)	MINOR CONCRETE (GUTTER DEPRESSION)	MINOR CONCRETE (SIDEWALK AND CURB RAMP)	CONCRETE BACKFILL (PIPE TRENCH)	CONCRETE (DITCH LINING)	CONCRETE (CHANNEL LINING)	MISCELLANEOUS IRON AND STEEL	RCP (12" - 30") 12" RCP	18" RCP	24" RCP	27" RCP	30" RCP	36" RCP	42" RCP	48" RCP	54" RCP	60" RCP	63" RCP	69" RCP	81" RCP	18" SLOTTED CSP (0.079" THICK)	6" NON-PERFORATED PLASTIC PIPE UNDERDRAIN	36" PRECAST CONCRETE PIPE MANHOLE	42" AUTOMATIC DRAINAGE GATE	24" CONCRETE FLARED END SECTION	DITCH EXCAVATION	HOT MIX ASPHALT (TYPE A)	PLACE HOT MIX ASPHALT (Misc AREA)	CONCRETED-ROCK SLOPE PROTECTION (FACING, METHOD B)	ROCK SLOPE PROTECTION FABRIC (CLASS 8)	GRATED LINE DRAIN	CABLE RAILING	REMOVE CONCRETE	REMOVE PIPE	REMOVE INLET	REMOVE MANHOLE	REMOVE CATCH BASIN	ADJUST MANHOLE	TYPE 24-12 FRAME AND GRATE (N)	MANHOLE FRAME AND COVER (630-3, U45) (N)	MANHOLE FRAME AND COVER (312-3) (N)	MANHOLE FRAME AND COVER (U46) (N)	FRAME & GRATING FOR CATCH BASINS(311-2) (N)	MAXIMUM COVER	DESCRIPTION	STATION
			FT	CY	CY	CY	CY	CY	CY	LB	LF	LF	LF	LF	LF	LF	LF	LF	LF	LF	LF	LF	LF	LF	LF	EA	EA	CY	TON	SQYD	CY	SQYD	LF	LF	CY	LF	EA	EA	EA	EA	EA	EA	EA	EA	EA	FT		
D-8	8-5	k																																		137.5									3.9	REMOVE 18" RCP	
		l																																			1									REMOVE GD-1 INLET	21.48′ R+ 78+38.33 ℄ "VA1"
		m																																		49.2									17.5	REMOVE 24" RCP	
	8-6	a																																				1								REMOVE COCB, W=3.5′	15.18′ R+ 73+04.16 ℄ "VA1"
		b																																		53.9									2.3	REMOVE 18" RCP	
		c																																			1									REMOVE JC 3	10.10′ L+ 73+53.40 ℄ "VA1"
		d																																		82.3									7.5	REMOVE 18" RCP	
		e																																		90.8									2.8	REMOVE 18" RCP	
		f																																				1								REMOVE COCB, W=3.5′	77.05′ R+ 73+91.16 ℄ "VA1"
	8-7	a																																				1								REMOVE COCB, W=3.5′	114.80′ R+ 67+36.56 ℄ "SFIR1"
		b																																		20.9										REMOVE 18" RCP	
		c																																1.05														REMOVE SIDEWALK CULVERT TRANSITION	91.02′ R+ 67+27.32 ℄ "SFIR1"
	8-8	a																																		18.7										REMOVE 4" CIP	
	8-9	a																																		52.8										REMOVE 4-4" CIP	
	8-10	a																																		48.0										REMOVE 4-4" CIP	
SHEET TOTAL																																		1.05		554.1	2		3								

(N) = NOT A SEPARATE PAY ITEM, FOR INFORMATION ONLY

DRAINAGE QUANTITIES
DQ-14

STATE OF CALIFORNIA - DEPARTMENT OF TRANSPORTATION
Caltrans® HYDRAULICS

FUNCTIONAL SUPERVISOR: MARIA QUINONEZ
CALCULATED-DESIGNED BY: SIEW MEI TAN
CHECKED BY: WING YAN LEE
REVISED BY
DATE REVISED

LAST REVISION 00-00-00
DATE PLOTTED => 03-FEB-2016
TIME PLOTTED => 11:12

Dist	COUNTY	ROUTE	POST MILES TOTAL PROJECT	SHEET No.	TOTAL SHEETS
07	LA,Ora	5	0.0/1.5, 44.3/44.4	426	1622

REGISTERED CIVIL ENGINEER 5-7-14 DATE

1-25-16
PLANS APPROVAL DATE

REGISTERED PROFESSIONAL ENGINEER WING-YAN LEE No. 61452 Exp. 6-30-17 CIVIL STATE OF CALIFORNIA

THE STATE OF CALIFORNIA OR ITS OFFICERS OR AGENTS SHALL NOT BE RESPONSIBLE FOR THE ACCURACY OR COMPLETENESS OF SCANNED COPIES OF THIS PLAN SHEET.

NOTE:

JOINTS ARE STANDARD JOINT TYPE

SUMMARY OF DRAINAGE QUANTITIES

DRAINAGE PLAN SHEET No.	DRAINAGE SYSTEM No.	DRAINAGE UNIT	"H" OR "V"	MINOR CONCRETE (MINOR STRUCTURE)	MINOR CONCRETE (GUTTER DEPRESSION)	MINOR CONCRETE (SIDEWALK AND CURB RAMP)	CONCRETE BACKFILL (PIPE TRENCH)	CONCRETE (DITCH LINING)	CONCRETE (CHANNEL LINING)	MISCELLANEOUS IRON AND STEEL	RCP (12" - 30") 12" RCP	18" RCP	24" RCP	27" RCP	30" RCP	36" RCP	42" RCP	48" RCP	54" RCP	60" RCP	63" RCP	69" RCP	81" RCP	18" SLOTTED CSP (0.079" THICK)	6" NON-PERFORATED PLASTIC PIPE UNDERDRAIN	36" PRECAST CONCRETE PIPE MANHOLE	42" AUTOMATIC DRAINAGE GATE	24" CONCRETE FLARED END SECTION	DITCH EXCAVATION	HOT MIX ASPHALT (TYPE A)	PLACE HOT MIX ASPHALT (Misc AREA)	CONCRETED-ROCK SLOPE PROTECTION (FACING, METHOD B)	ROCK SLOPE PROTECTION FABRIC (CLASS 8)	GRATED LINE DRAIN	CABLE RAILING	REMOVE CONCRETE	REMOVE PIPE	REMOVE INLET	REMOVE MANHOLE	REMOVE CATCH BASIN	ADJUST MANHOLE	TYPE 24-12 FRAME AND GRATE (N)	MANHOLE FRAME AND COVER (630-3, U45) (N)	MANHOLE FRAME AND COVER (312-3) (N)	MANHOLE FRAME AND COVER (U46) (N)	FRAME & GRATING FOR CATCH BASINS(311-2) (N)	MAXIMUM COVER	DESCRIPTION	STATION
			FT	CY	CY	CY	CY	CY	CY	LB	LF	LF	LF	LF	LF	LF	LF	LF	LF	LF	LF	LF	LF	LF	LF	EA	EA	CY	TON	SQYD	CY	SQYD	LF	LF	CY	LF	EA	EA	EA	EA	EA	EA	EA	EA	EA	FT		
D-8	8-11	a																																		24.0										REMOVE 4-4" CIP	
		b																																			1									REMOVE INLET	92.53′ R+ 70+92.13 ℄ "I5"
	8-12	a																																		24.0										REMOVE 4-4" CIP	
		b																																			1									REMOVE INLET	89.54′ R+ 71+54.45 ℄ "I5"
	8-13	a																																		16.0										REMOVE 4" CIP	
	8-14	a																																		35.6										REMOVE 4" CIP	
	8-15	a																																		82.5										REMOVE 5-4" CIP	
	8-16	a																																	1.25											REMOVE PARKWAY DRAIN	23.90′ R+ 74+47.43 ℄ "Fwy Dr"
D-9	9-1	a																																				1								REMOVE MANHOLE	35.03′ R+ 85+73.48 ℄ "VAL"
		b																																		296.1									2.4	REMOVE 27" RCP	
		c																																				1								REMOVE MANHOLE	34.98 R+ 88+74.13 ℄ "VAL"
		d																																		474.8									4.0	REMOVE 27" RCP	
		e																																				1								REMOVE MANHOLE	51.25′ R+ 94+66.30 ℄ "VAL"
		f																																	5.66											REMOVE 5′ x 3′ RCB	
		g																																		166.2									4.0	REMOVE 2-24" RCP	
		h																																	2.72											REMOVE HEADWALL	72.11′ R+ 95+50.35 ℄ "VAL"
SHEET TOTAL																																			9.63	1,119.2	2	3									

(N) = NOT A SEPARATE PAY ITEM, FOR INFORMATION ONLY

DRAINAGE QUANTITIES
DQ-15

STATE OF CALIFORNIA - DEPARTMENT OF TRANSPORTATION
Caltrans® HYDRAULICS

FUNCTIONAL SUPERVISOR: MARIA QUINONEZ

CALCULATED-DESIGNED BY: SIEW MEI TAN
CHECKED BY: WING YAN LEE
REVISED BY
DATE REVISED

LAST REVISION 00-00-00
DATE PLOTTED => 03-FEB-2016
TIME PLOTTED => 11:12

Dist	COUNTY	ROUTE	POST MILES TOTAL PROJECT	SHEET No.	TOTAL SHEETS
07	LA,Ora	5	0.0/1.5, 44.3/44.4	427	1622

REGISTERED CIVIL ENGINEER 5-7-14 DATE

1-25-16
PLANS APPROVAL DATE

REGISTERED PROFESSIONAL ENGINEER WING YAN LEE No. 61452 Exp. 6-30-17 CIVIL STATE OF CALIFORNIA

THE STATE OF CALIFORNIA OR ITS OFFICERS OR AGENTS SHALL NOT BE RESPONSIBLE FOR THE ACCURACY OR COMPLETENESS OF SCANNED COPIES OF THIS PLAN SHEET.

NOTE:

JOINTS ARE STANDARD JOINT TYPE

SUMMARY OF DRAINAGE QUANTITIES

DRAINAGE PLAN SHEET No.	DRAINAGE SYSTEM No.	DRAINAGE UNIT	"H" OR "V"	MINOR CONCRETE (MINOR STRUCTURE)	MINOR CONCRETE (GUTTER DEPRESSION)	MINOR CONCRETE (SIDEWALK AND CURB RAMP)	CONCRETE BACKFILL (PIPE TRENCH)	CONCRETE (DITCH LINING)	CONCRETE (CHANNEL LINING)	MISCELLANEOUS IRON AND STEEL	RCP (12" - 30") 12" RCP	18" RCP	24" RCP	27" RCP	30" RCP	36" RCP	42" RCP	48" RCP	54" RCP	60" RCP	63" RCP	69" RCP	81" RCP	18" SLOTTED CSP (0.079" THICK)	6" NON-PERFORATED PLASTIC PIPE UNDERDRAIN	36" PRECAST CONCRETE PIPE MANHOLE	42" AUTOMATIC DRAINAGE GATE	24" CONCRETE FLARED END SECTION	DITCH EXCAVATION	HOT MIX ASPHALT (TYPE A)	PLACE HOT MIX ASPHALT (Misc AREA)	CONCRETED-ROCK SLOPE PROTECTION (FACING, METHOD B)	ROCK SLOPE PROTECTION FABRIC (CLASS 8)	GRATED LINE DRAIN	CABLE RAILING	REMOVE CONCRETE	REMOVE PIPE	REMOVE INLET	REMOVE MANHOLE	REMOVE CATCH BASIN	ADJUST MANHOLE	TYPE 24-12 FRAME AND GRATE (N)	MANHOLE FRAME AND COVER (630-3, U45) (N)	MANHOLE FRAME AND COVER (312-3) (N)	MANHOLE FRAME AND COVER (U46) (N)	FRAME & GRATING FOR CATCH BASINS(311-2) (N)	MAXIMUM COVER	DESCRIPTION	STATION
			FT	CY	CY	CY	CY	CY	CY	LB	LF	LF	LF	LF	LF	LF	LF	LF	LF	LF	LF	LF	LF	LF	LF	LF	EA	EA	CY	TON	SQYD	CY	SQYD	LF	LF	CY	LF	EA	EA	EA	EA	EA	EA	EA	EA	EA	FT		
D-9	9-2	a																																						1								REMOVE COCB, W=7′	3.00′ L+ 6+68.47 ℄ "ARB"
	9-3	a																																		1.37												REMOVE PARKWAY DRAIN	42.04′ R+ 86+84.04 ℄ "VAL"
	9-4	a																																				1										REMOVE INLET	76.69′ R+ 88+60.37 ℄ "VAL"
		b																																			42.0											REMOVE 12" RCP	
D-10	10-1	a																																						1								REMOVE COCB, W=10′	30.93′ R+ 67+10.35 ℄ "NFIR2"
		b																																			62.0									1.2	REMOVE 30" RCP	
		c																																						1								REMOVE COCB, W=10′	31.07′ L+ 67+09.96 ℄ "NFIR2"
		d																																			14.9									2.5	REMOVE 30" RCP	
	10-2	a																																						1								REMOVE COCB, W=3.5′	40.86′ L+ 67+00.25 ℄ "NFIR2"
		b																																			7.0									3.0	REMOVE 12" RCP	
	10-3	a																																			142.4									3.5	REMOVE 36" RCP	
		b																																				1									REMOVE MH No. 4	31.58′ R+ 107+08.68 ℄ "VAL"
		c																																			298.3									2.2	REMOVE 30" RCP	
		d																																				1									REMOVE MH No. 1	31.59′ R+ 110+11.84 ℄ "VAL"
		e																																			4.0									2.4	REMOVE 24" RCP	
SHEET TOTAL																																				1.37	570.6	1	2	4									

(N) = NOT A SEPARATE PAY ITEM, FOR INFORMATION ONLY

DRAINAGE QUANTITIES
DQ-16

STATE OF CALIFORNIA - DEPARTMENT OF TRANSPORTATION
Caltrans
HYDRAULICS

FUNCTIONAL SUPERVISOR: MARIA QUINONEZ
CALCULATED-DESIGNED BY: SIEW MEI TAN
CHECKED BY: WING YAN LEE
REVISED BY
DATE REVISED

LAST REVISION 00-00-00
DATE PLOTTED => 03-FEB-2016
TIME PLOTTED => 11:12

Dist	COUNTY	ROUTE	POST MILES TOTAL PROJECT	SHEET No.	TOTAL SHEETS
07	LA,Ora	5	0.0/1.5, 44.3/44.4	428	1622

REGISTERED CIVIL ENGINEER 5-7-14 DATE

1-25-16
PLANS APPROVAL DATE

REGISTERED PROFESSIONAL ENGINEER WING YAN LEE No. 61452 Exp. 6-30-17 CIVIL STATE OF CALIFORNIA

THE STATE OF CALIFORNIA OR ITS OFFICERS OR AGENTS SHALL NOT BE RESPONSIBLE FOR THE ACCURACY OR COMPLETENESS OF SCANNED COPIES OF THIS PLAN SHEET.

NOTE:
JOINTS ARE STANDARD JOINT TYPE

SUMMARY OF DRAINAGE QUANTITIES

DRAINAGE PLAN SHEET No.	DRAINAGE SYSTEM No.	DRAINAGE UNIT	"H" OR "V"	MINOR CONCRETE (MINOR STRUCTURE)	MINOR CONCRETE (GUTTER DEPRESSION)	MINOR CONCRETE (SIDEWALK AND CURB RAMP)	CONCRETE BACKFILL (PIPE TRENCH)	CONCRETE (DITCH LINING)	CONCRETE (CHANNEL LINING)	MISCELLANEOUS IRON AND STEEL	RCP (12" - 30") 12" RCP	18" RCP	24" RCP	27" RCP	30" RCP	36" RCP	42" RCP	48" RCP	54" RCP	60" RCP	63" RCP	69" RCP	81" RCP	18" SLOTTED CSP (0.079" THICK)	6" NON-PERFORATED PLASTIC PIPE UNDERDRAIN	36" PRECAST CONCRETE PIPE MANHOLE	42" AUTOMATIC DRAINAGE GATE	24" CONCRETE FLARED END SECTION	DITCH EXCAVATION	HOT MIX ASPHALT (TYPE A)	PLACE HOT MIX ASPHALT (Misc AREA)	CONCRETED-ROCK SLOPE PROTECTION (FACING, METHOD B)	ROCK SLOPE PROTECTION FABRIC (CLASS 8)	GRATED LINE DRAIN	CABLE RAILING	REMOVE CONCRETE	REMOVE PIPE	REMOVE INLET	REMOVE MANHOLE	REMOVE CATCH BASIN	ADJUST MANHOLE	TYPE 24-12 FRAME AND GRATE (N)	MANHOLE FRAME AND COVER (630-3, U45) (N)	MANHOLE FRAME AND COVER (312-3) (N)	MANHOLE FRAME AND COVER (U46) (N)	FRAME & GRATING FOR CATCH BASINS(311-2) (N)	MAXIMUM COVER	DESCRIPTION	STATION
			FT	CY	CY	CY	CY	CY	CY	LB	LF	LF	LF	LF	LF	LF	LF	LF	LF	LF	LF	LF	LF	LF	LF	EA	EA	CY	TON	SQYD	CY	SQYD	LF	LF	CY	LF	EA	EA	EA	EA	EA	EA	EA	EA	EA	FT		
D-10	10-4	a																																					1							REMOVE COCB, W=10′	39.91′ R+ 107+18.59 ℄ "VAL"
		b																																		7.0								2.2	REMOVE 24" RCP	
	10-5	a																																					1							REMOVE COCB, W=10′	40.03′ R+ 110+12.01 ℄ "VAL"
		b																																		9.2								2.0	REMOVE 24" RCP	
	10-6	a																																	0.80											REMOVE PARKWAY DRAIN	30.83′ R+ 65+71.36 ℄ "FIR2"
		b																																	0.60											REMOVE 2.75′ x 0.6′ RECTANGULAR CHANNEL	
	10-7	a																																	1.70											REMOVE PARKWAY DRAIN	40.34′ L+ 106+86.58 ℄ "VAL"
	10-8	a																																	1.30											REMOVE PARKWAY DRAIN	40.00′ L+ 107+86.65 ℄ "VAL"
		b																																		35.3										REMOVE 4" CIP	
		c																																			1									REMOVE INLET	62.45′ L+ 108+19.54 ℄ "VAL"
SHEET TOTAL																																			4.40	51.5	1		2								

(N) = NOT A SEPARATE PAY ITEM, FOR INFORMATION ONLY

DRAINAGE QUANTITIES
DQ-17

CALCULATED-DESIGNED BY SIEW MEI TAN
CHECKED BY WING YAN LEE
REVISED BY
DATE REVISED
FUNCTIONAL SUPERVISOR MARIA QUINONEZ
STATE OF CALIFORNIA - DEPARTMENT OF TRANSPORTATION
Caltrans HYDRAULICS

LAST REVISION 00-00-00
DATE PLOTTED => 03-FEB-2016
TIME PLOTTED => 11:12

Dist	COUNTY	ROUTE	POST MILES TOTAL PROJECT	SHEET No.	TOTAL SHEETS
07	LA,Ora	5	0.0/1.5, 44.3/44.4	429	1622

REGISTERED CIVIL ENGINEER 5-7-14 DATE

1-25-16
PLANS APPROVAL DATE

REGISTERED PROFESSIONAL ENGINEER WING YAN LEE No. 61452 Exp. 6-30-17 CIVIL STATE OF CALIFORNIA

THE STATE OF CALIFORNIA OR ITS OFFICERS OR AGENTS SHALL NOT BE RESPONSIBLE FOR THE ACCURACY OR COMPLETENESS OF SCANNED COPIES OF THIS PLAN SHEET.

NOTE:

JOINTS ARE STANDARD JOINT TYPE

SUMMARY OF DRAINAGE QUANTITIES

DRAINAGE PLAN SHEET No. ⬡	DRAINAGE SYSTEM No. ◯	DRAINAGE UNIT	"H" OR "V"	MINOR CONCRETE (MINOR STRUCTURE)	MINOR CONCRETE (GUTTER DEPRESSION)	MINOR CONCRETE (SIDEWALK AND CURB RAMP)	CONCRETE BACKFILL (PIPE TRENCH)	CONCRETE (DITCH LINING)	CONCRETE (CHANNEL LINING)	MISCELLANEOUS IRON AND STEEL	RCP (12" - 30") 12" RCP	18" RCP	24" RCP	27" RCP	30" RCP	36" RCP	42" RCP	48" RCP	54" RCP	60" RCP	63" RCP	69" RCP	81" RCP	18" SLOTTED CSP (0.079" THICK)	6" NON-PERFORATED PLASTIC PIPE UNDERDRAIN	36" PRECAST CONCRETE PIPE MANHOLE	42" AUTOMATIC DRAINAGE GATE	24" CONCRETE FLARED END SECTION	DITCH EXCAVATION	HOT MIX ASPHALT (TYPE A)	PLACE HOT MIX ASPHALT (Misc AREA)	CONCRETED-ROCK SLOPE PROTECTION (FACING, METHOD B)	ROCK SLOPE PROTECTION FABRIC (CLASS 8)	GRATED LINE DRAIN	CABLE RAILING	REMOVE CONCRETE	REMOVE PIPE	REMOVE INLET	REMOVE MANHOLE	REMOVE CATCH BASIN	ADJUST MANHOLE	TYPE 24-12 FRAME AND GRATE (N)	MANHOLE FRAME AND COVER (630-3, U45) (N)	MANHOLE FRAME AND COVER (312-3) (N)	MANHOLE FRAME AND COVER (U46) (N)	FRAME & GRATING FOR CATCH BASINS(311-2) (N)	MAXIMUM COVER	DESCRIPTION	STATION
			FT	CY	CY	CY	CY	CY	CY	LB	LF	LF	LF	LF	LF	LF	LF	LF	LF	LF	LF	LF	LF	LF	LF	EA	EA	CY	TON	SQYD	CY	SQYD	LF	LF	CY	LF	EA	EA	EA	EA	EA	EA	EA	EA	EA	FT		
D-10	10-9	a																																	1.35											REMOVE CURB DRAIN	
		b																																		48.4										REMOVE 4-4" CIP	
		c																																			1									REMOVE INLET	
	10-10	a																																	2.00											REMOVE CURB DRAIN	
		b																																		71.2										REMOVE 4-4" CIP	
		c																																			1									REMOVE INLET	
	10-11	a																																			1									REMOVE INLET	
		b																																		35.5										REMOVE 12" RCP	
		c																																	0.60											REMOVE HEADWALL	
SHEET TOTAL																																			3.95	155.1	3										

(N) = NOT A SEPARATE PAY ITEM, FOR INFORMATION ONLY

DRAINAGE QUANTITIES
DQ-18

STATE OF CALIFORNIA - DEPARTMENT OF TRANSPORTATION
Caltrans HYDRAULICS

FUNCTIONAL SUPERVISOR: MARIA QUINONEZ
CALCULATED-DESIGNED BY: WING YAN LEE
CHECKED BY
REVISED BY
DATE REVISED

LAST REVISION 00-00-00
DATE PLOTTED => 03-FEB-2016
TIME PLOTTED => 11:12

Dist	COUNTY	ROUTE	POST MILES TOTAL PROJECT	SHEET No.	TOTAL SHEETS
07	LA,Ora	5	0.0/1.5, 44.3/44.4	430	1622

REGISTERED CIVIL ENGINEER 5-7-14 DATE

1-25-16
PLANS APPROVAL DATE

REGISTERED PROFESSIONAL ENGINEER WING YAN LEE No. 61452 Exp. 6-30-17 CIVIL STATE OF CALIFORNIA

THE STATE OF CALIFORNIA OR ITS OFFICERS OR AGENTS SHALL NOT BE RESPONSIBLE FOR THE ACCURACY OR COMPLETENESS OF SCANNED COPIES OF THIS PLAN SHEET.

NOTE:

JOINTS ARE STANDARD JOINT TYPE

SUMMARY OF DRAINAGE QUANTITIES

⬡ DRAINAGE PLAN SHEET No.	○ DRAINAGE SYSTEM No.	DRAINAGE UNIT	"H" OR "V"	MINOR CONCRETE (MINOR STRUCTURE)	MINOR CONCRETE (GUTTER DEPRESSION)	MINOR CONCRETE (SIDEWALK AND CURB RAMP)	CONCRETE BACKFILL (PIPE TRENCH)	CONCRETE (DITCH LINING)	CONCRETE (CHANNEL LINING)	MISCELLANEOUS IRON AND STEEL	RCP (12" - 30") 12" RCP	18" RCP	24" RCP	27" RCP	30" RCP	36" RCP	42" RCP	48" RCP	54" RCP	60" RCP	63" RCP	69" RCP	81" RCP	18" SLOTTED CSP (0.079" THICK)	6" NON-PERFORATED PLASTIC PIPE UNDERDRAIN	36" PRECAST CONCRETE PIPE MANHOLE	42" AUTOMATIC DRAINAGE GATE	24" CONCRETE FLARED END SECTION	DITCH EXCAVATION	HOT MIX ASPHALT (TYPE A)	PLACE HOT MIX ASPHALT (Misc AREA)	CONCRETED-ROCK SLOPE PROTECTION (FACING, METHOD B)	ROCK SLOPE PROTECTION FABRIC (CLASS 8)	GRATED LINE DRAIN	CABLE RAILING	REMOVE CONCRETE	REMOVE PIPE	REMOVE INLET	REMOVE MANHOLE	REMOVE CATCH BASIN	ADJUST MANHOLE	TYPE 24-12 FRAME AND GRATE (N)	MANHOLE FRAME AND COVER (630-3, U45) (N)	MANHOLE FRAME AND COVER (312-3) (N)	MANHOLE FRAME AND COVER (U46) (N)	FRAME & GRATING FOR CATCH BASINS(311-2) (N)	MAXIMUM COVER	DESCRIPTION	STATION
			FT	CY	CY	CY	CY	CY	CY	LB	LF	LF	LF	LF	LF	LF	LF	LF	LF	LF	LF	LF	LF	LF	LF	LF	EA	EA	CY	TON	SQYD	CY	SQYD	LF	LF	CY	LF	EA	EA	EA	EA	EA	EA	EA	EA	EA	FT		
D-11	11-1	a	3.9	1.61						580																																2						GD-1 INLET	90.17′ L+ 9995+85.00 ℄ "I5"
		b											74.1																																	2.0	24" RCP	
		c	3.8	1.58						580																																2						GD-1 INLET	88.50′ L+ 9996+63.00 ℄ "I5"
		d											134.1																																	1.7	24" RCP	
		e	4.1	1.67						580																																2						GD-1 INLET	88.50′ L+ 9998+02.00 ℄ "I5"
		f											44.4																																	2.0	24" RCP	
		g	6.0	2.22						580																																2						GD-1 INLET	88.50′ L+ 9998+50.00 ℄ "I5"
		h					1.80					47.4																																		2.0	18" RCP W/ Conc Bkf	
		i		3.60																																											PIPE "L" HEADWALL Mod	118.75′ L+ 9998+17.63 ℄ "I5"
		j																														4.00	21.5															CONCRETED RSP	
		k																																	22.7													CABLE RAILING	
	11-2	a	5.0	1.82						326														97.1																			1						TYPE G2 INLET	1.50′ R+ 9995+23.00 ℄ "I5"
		b																																														18" SCSP	
		c											97.1																																	2.8	24" RCP	
		d	5.2	1.87						326																																1						TYPE G2 INLET	1.50′ R+ 9996+23.00 ℄ "I5"
		e																						97.1																								18" SCSP	
		f											97.1																																	2.8	24" RCP	
		g	5.2	1.87						326																																1						TYPE G2 INLET	1.50′ R+ 9997+23.00 ℄ "I5"
		h																						97.1																								18" SCSP	
		i											97.1																																	2.8	24" RCP	
		j	5.2	1.87						326																																1						TYPE G2 INLET	1.50′ R+ 9998+23.00 ℄ "I5"
SHEET TOTAL				18.11			1.80			3,624		47.4	543.9											291.3								4.00	21.5		22.7							12							

(N) = NOT A SEPARATE PAY ITEM, FOR INFORMATION ONLY

DRAINAGE QUANTITIES
DQ- 19

STATE OF CALIFORNIA - DEPARTMENT OF TRANSPORTATION
Caltrans® HYDRAULICS

FUNCTIONAL SUPERVISOR: MARIA QUINONEZ
CALCULATED-DESIGNED BY: SIEW MEI TAN
CHECKED BY: WING YAN LEE
REVISED BY
DATE REVISED

LAST REVISION 00-00-00
DATE PLOTTED => 03-FEB-2016
TIME PLOTTED => 11:12

Dist	COUNTY	ROUTE	POST MILES TOTAL PROJECT	SHEET No.	TOTAL SHEETS
07	LA,Ora	5	0.0/1.5, 44.3/44.4	431	1622

REGISTERED CIVIL ENGINEER 5-7-14 DATE

1-25-16
PLANS APPROVAL DATE

REGISTERED PROFESSIONAL ENGINEER WING YAN LEE No. 61452 Exp. 6-30-17 CIVIL STATE OF CALIFORNIA

THE STATE OF CALIFORNIA OR ITS OFFICERS OR AGENTS SHALL NOT BE RESPONSIBLE FOR THE ACCURACY OR COMPLETENESS OF SCANNED COPIES OF THIS PLAN SHEET.

NOTE:

JOINTS ARE STANDARD JOINT TYPE

SUMMARY OF DRAINAGE QUANTITIES

DRAINAGE PLAN SHEET No. ⬡	DRAINAGE SYSTEM No. ○	DRAINAGE UNIT	"H" OR "V"	MINOR CONCRETE (MINOR STRUCTURE)	MINOR CONCRETE (GUTTER DEPRESSION)	MINOR CONCRETE (SIDEWALK AND CURB RAMP)	CONCRETE BACKFILL (PIPE TRENCH)	CONCRETE (DITCH LINING)	CONCRETE (CHANNEL LINING)	MISCELLANEOUS IRON AND STEEL	RCP (12" - 30") 12" RCP	18" RCP	24" RCP	27" RCP	30" RCP	36" RCP	42" RCP	48" RCP	54" RCP	60" RCP	63" RCP	69" RCP	81" RCP	18" SLOTTED CSP (0.079" THICK)	6" NON-PERFORATED PLASTIC PIPE UNDERDRAIN	36" PRECAST CONCRETE PIPE MANHOLE	42" AUTOMATIC DRAINAGE GATE	24" CONCRETE FLARED END SECTION	DITCH EXCAVATION	HOT MIX ASPHALT (TYPE A)	PLACE HOT MIX ASPHALT (Misc AREA)	CONCRETED-ROCK SLOPE PROTECTION (FACING, METHOD B)	ROCK SLOPE PROTECTION FABRIC (CLASS 8)	GRATED LINE DRAIN	CABLE RAILING	REMOVE CONCRETE	REMOVE PIPE	REMOVE INLET	REMOVE MANHOLE	REMOVE CATCH BASIN	ADJUST MANHOLE	TYPE 24-12 FRAME AND GRATE (N)	MANHOLE FRAME AND COVER (630-3, U45) (N)	MANHOLE FRAME AND COVER (312-3) (N)	MANHOLE FRAME AND COVER (U46) (N)	FRAME & GRATING FOR CATCH BASINS(311-2) (N)	MAXIMUM COVER	DESCRIPTION	STATION
			FT	CY	CY	CY	CY	CY	CY	LB	LF	LF	LF	LF	LF	LF	LF	LF	LF	LF	LF	LF	LF	LF	LF	LF	EA	EA	CY	TON	SQYD	CY	SQYD	LF	LF	CY	LF	EA	EA	EA	EA	EA	EA	EA	EA	EA	FT		
D-11	11-2	k																						97.1																							18" SCSP	
		l											97.1																																2.8	24" RCP	
		m	5.2	1.87						326																															1					TYPE G2 INLET	1.50' Rt 9999+23.00 ℄ "I5"
		n																						96.7																							18" SCSP	
		o											96.7																																2.8	24" RCP	
		p	5.2	1.87						326																															1					TYPE G2 INLET	1.50' Rt 0+32.00 ℄ "I5"
		q																						97.1																							18" SCSP	
		r											97.1																																2.8	24" RCP	
		s	5.2	1.87						326																															1					TYPE G2 INLET	1.50' Rt 1+32.00 ℄ "I5"
		t																						97.1																							18" SCSP	
		u											97.1																																2.3	24" RCP	
		v	5.2	1.87						326																															1					TYPE G2 INLET	1.50' Rt 2+32.00 ℄ "I5"
		w																						97.1																							18" SCSP	
		x											97.1																																2.3	24" RCP	
		y	5.2	1.87						326																															1					TYPE G2 INLET	1.50' Rt 3+32.00 ℄ "I5"
		z																						97.1																							18" SCSP	
D-12		a1											97.1																																2.3	24" RCP	
		b1	5.2	1.87						326																															1					TYPE G2 INLET	1.50' Rt 4+32.00 ℄ "I5"
		c1																						61.0																							18" SCSP	
		d1											61.0																																2.3	24" RCP	
		e1	5.1	1.85						326																															1					TYPE G2 INLET	1.50' Rt 4+96.00 ℄ "I5"
SHEET TOTAL				13.07						2,282			643.2											643.2																		7						

(N) = NOT A SEPARATE PAY ITEM, FOR INFORMATION ONLY

DRAINAGE QUANTITIES
DQ-20

STATE OF CALIFORNIA - DEPARTMENT OF TRANSPORTATION
Caltrans®
HYDRAULICS

FUNCTIONAL SUPERVISOR: MARIA QUINONEZ
CALCULATED-DESIGNED BY: SIEW MEI TAN
CHECKED BY: WING YAN LEE
REVISED BY
DATE REVISED

LAST REVISION 00-00-00
DATE PLOTTED => 03-FEB-2016
TIME PLOTTED => 11:12

Dist	COUNTY	ROUTE	POST MILES TOTAL PROJECT	SHEET No.	TOTAL SHEETS
07	LA,Ora	5	0.0/1.5, 44.3/44.4	432	1622

REGISTERED CIVIL ENGINEER 5-7-14 DATE

1-25-16
PLANS APPROVAL DATE

REGISTERED PROFESSIONAL ENGINEER WING YAN LEE No. 61452 Exp. 6-30-17 CIVIL STATE OF CALIFORNIA

THE STATE OF CALIFORNIA OR ITS OFFICERS OR AGENTS SHALL NOT BE RESPONSIBLE FOR THE ACCURACY OR COMPLETENESS OF SCANNED COPIES OF THIS PLAN SHEET.

NOTE:

JOINTS ARE STANDARD JOINT TYPE

SUMMARY OF DRAINAGE QUANTITIES

⬡ DRAINAGE PLAN SHEET No.	○ DRAINAGE SYSTEM No.	DRAINAGE UNIT	"H" OR "V" (FT)	MINOR CONCRETE (MINOR STRUCTURE) (CY)	MINOR CONCRETE (GUTTER DEPRESSION) (CY)	MINOR CONCRETE (SIDEWALK AND CURB RAMP) (CY)	CONCRETE BACKFILL (PIPE TRENCH) (CY)	CONCRETE (DITCH LINING) (CY)	CONCRETE (CHANNEL LINING) (CY)	MISCELLANEOUS IRON AND STEEL (LB)	RCP (12" - 30") 12" RCP (LF)	18" RCP (LF)	24" RCP (LF)	27" RCP (LF)	30" RCP (LF)	36" RCP (LF)	42" RCP (LF)	48" RCP (LF)	54" RCP (LF)	60" RCP (LF)	63" RCP (LF)	69" RCP (LF)	81" RCP (LF)	18" SLOTTED CSP (0.079" THICK) (LF)	6" NON-PERFORATED PLASTIC PIPE UNDERDRAIN (LF)	36" PRECAST CONCRETE PIPE MANHOLE (LF)	42" AUTOMATIC DRAINAGE GATE (EA)	24" CONCRETE FLARED END SECTION (EA)	DITCH EXCAVATION (CY)	HOT MIX ASPHALT (TYPE A) (TON)	PLACE HOT MIX ASPHALT (Misc AREA) (SQYD)	CONCRETED-ROCK SLOPE PROTECTION (FACING, METHOD B) (CY)	ROCK SLOPE PROTECTION FABRIC (CLASS 8) (SQYD)	GRATED LINE DRAIN (LF)	CABLE RAILING (LF)	REMOVE CONCRETE (CY)	REMOVE PIPE (LF)	REMOVE INLET (EA)	REMOVE MANHOLE (EA)	REMOVE CATCH BASIN (EA)	ADJUST MANHOLE (EA)	TYPE 24-12 FRAME AND GRATE (N) (EA)	MANHOLE FRAME AND COVER (630-3, U45) (N) (EA)	MANHOLE FRAME AND COVER (312-3) (N) (EA)	MANHOLE FRAME AND COVER (U46) (N) (EA)	FRAME & GRATING FOR CATCH BASINS(311-2) (N) (EA)	MAXIMUM COVER (FT)	DESCRIPTION	STATION
D-11	11-3	a	5.2	3.15						435																2.9															1					MH 321-2	22.22′ R+ 46+08.95 ℄ "NFIR1"
		b												149.6																															7.5	27" RCP	
		c		0.66																																										JS-PIPE TO PIPE 331-3	10.60′ R+ 46+68.94 ℄ "NFIR1"
		d		0.66																																										JS-PIPE TO PIPE 331-3	10.60′ R+ 46+96.04 ℄ "NFIR1"
		e	4.8	2.98						435																0.5															1					MH 321-2	10.60′ R+ 47+60.00 ℄ "NFIR1"
		f										24.2																																	6.7	18" RCP	
		g	4.5	2.48						115																																1					COCB 300-3, W=7.0′	10.60′ R+ 47+72.10 ℄ "NFIR1"
	11-4	a										112.5																																	2.5	18" RCP	
		b	4.5	2.48						115																																1					COCB 300-3, W=7.0′	28.29′ L+ 3+64.92 ℄ "KNO"
	11-5	a										23.5																																	3.8	18" RCP	
		b	4.5	4.88	0.59					2240																																		4		COCB WITH GRATING(S) 302-3,W=13.2′,LD 313-3	28.29′ L+ 47+08.00 ℄ "NFIR1"
	11-6	a	6.5	2.37						580																															2					GD-1 INLET	88.50′ L+ 1+89.00 ℄ "I5"
		b											28.1																																4.0	24" RCP	
SHEET TOTAL				19.66	0.59					3,920		160.2	28.1	149.6												3.4															2	2	2		4			

(N) = NOT A SEPARATE PAY ITEM, FOR INFORMATION ONLY

DRAINAGE QUANTITIES
DQ- 21

STATE OF CALIFORNIA - DEPARTMENT OF TRANSPORTATION
Caltrans® HYDRAULICS

CALCULATED-DESIGNED BY: SIEW MEI TAN
CHECKED BY: WING YAN LEE
FUNCTIONAL SUPERVISOR: MARIA QUINONEZ
REVISED BY / DATE REVISED

LAST REVISION 00-00-00 | DATE PLOTTED => 03-FEB-2016 | TIME PLOTTED => 11:12

Dist	COUNTY	ROUTE	POST MILES TOTAL PROJECT	SHEET No.	TOTAL SHEETS
07	LA,Ora	5	0.0/1.5, 44.3/44.4	433	1622

REGISTERED CIVIL ENGINEER 5-7-14 DATE

1-25-16
PLANS APPROVAL DATE

REGISTERED PROFESSIONAL ENGINEER WING YAN LEE No. 61452 Exp. 6-30-17 CIVIL STATE OF CALIFORNIA

THE STATE OF CALIFORNIA OR ITS OFFICERS OR AGENTS SHALL NOT BE RESPONSIBLE FOR THE ACCURACY OR COMPLETENESS OF SCANNED COPIES OF THIS PLAN SHEET.

NOTE:

JOINTS ARE STANDARD JOINT TYPE

SUMMARY OF DRAINAGE QUANTITIES

⬡ DRAINAGE PLAN SHEET No.	○ DRAINAGE SYSTEM No.	DRAINAGE UNIT	"H" OR "V"	MINOR CONCRETE (MINOR STRUCTURE)	MINOR CONCRETE (GUTTER DEPRESSION)	MINOR CONCRETE (SIDEWALK AND CURB RAMP)	CONCRETE BACKFILL (PIPE TRENCH)	CONCRETE (DITCH LINING)	CONCRETE (CHANNEL LINING)	MISCELLANEOUS IRON AND STEEL	RCP (12" - 30") 12" RCP	18" RCP	24" RCP	27" RCP	30" RCP	36" RCP	42" RCP	48" RCP	54" RCP	60" RCP	63" RCP	69" RCP	81" RCP	18" SLOTTED CSP (0.079" THICK)	6" NON-PERFORATED PLASTIC PIPE UNDERDRAIN	36" PRECAST CONCRETE PIPE MANHOLE	42" AUTOMATIC DRAINAGE GATE	24" CONCRETE FLARED END SECTION	DITCH EXCAVATION	HOT MIX ASPHALT (TYPE A)	PLACE HOT MIX ASPHALT (Misc AREA)	CONCRETED-ROCK SLOPE PROTECTION (FACING, METHOD B)	ROCK SLOPE PROTECTION FABRIC (CLASS 8)	GRATED LINE DRAIN	CABLE RAILING	REMOVE CONCRETE	REMOVE PIPE	REMOVE INLET	REMOVE MANHOLE	REMOVE CATCH BASIN	ADJUST MANHOLE	TYPE 24-12 FRAME AND GRATE (N)	MANHOLE FRAME AND COVER (630-3, U45) (N)	MANHOLE FRAME AND COVER (312-3) (N)	MANHOLE FRAME AND COVER (U46) (N)	FRAME & GRATING FOR CATCH BASINS(311-2) (N)	MAXIMUM COVER	DESCRIPTION	STATION
			FT	CY	CY	CY	CY	CY	CY	LB	LF	LF	LF	LF	LF	LF	LF	LF	LF	LF	LF	LF	LF	LF	LF	LF	EA	EA	CY	TON	SQYD	CY	SQYD	LF	LF	CY	LF	EA	EA	EA	EA	EA	EA	EA	EA	EA	FT		
D-11	11-7	a										13.4																																		6.9	18" RCP	
		b	4.5	1.29	0.59					560																																			1		COCB WITH GRATING(S) 302-3,W=2.95',LD 313-3	15.00' R+ 43+25.00 ℄ "NFIR1"
	11-8	a		0.66																																										JS-PIPE TO PIPE 331-3	32.59' R+ 42+25.44 ℄ "NFIR1"
		b										10.9																																	5.4	18" RCP	
		c	4.5	1.29	0.59					560																																			1		COCB WITH GRATING(S) 302-3,W=2.95',LD 313-3	19.65' R+ 42+30.00 ℄ "NFIR1"
D-12	12-1	a	3.8	1.58						580																															2							GD-1 INLET	88.50' L+ 3+88.00 ℄ "I5"
		b											66.0																																1.8	24" RCP	
		c	4.1	1.67						580																															2							GD-1 INLET	88.50' L+ 4+58.00 ℄ "I5"
		d											93.9																																2.5	24" RCP	
		e											33.9																																2.0	24" RCP	
		f	4.0	1.65						580																															2							GD-1 INLET	124.41' L+ 4+46.00 ℄ "I5"
SHEET TOTAL				8.14	1.18					2,860		24.3	193.8																												6				2			

(N) = NOT A SEPARATE PAY ITEM, FOR INFORMATION ONLY

DRAINAGE QUANTITIES
DQ- 22

CALCULATED-DESIGNED BY SIEW MEI TAN
CHECKED BY WING YAN LEE
REVISED BY
DATE REVISED
FUNCTIONAL SUPERVISOR MARIA QUINONEZ

STATE OF CALIFORNIA - DEPARTMENT OF TRANSPORTATION
Caltrans
HYDRAULICS

LAST REVISION 00-00-00
DATE PLOTTED => 03-FEB-2016
TIME PLOTTED => 11:12

Dist	COUNTY	ROUTE	POST MILES TOTAL PROJECT	SHEET No.	TOTAL SHEETS
07	LA,Ora	5	0.0/1.5, 44.3/44.4	434	1622

REGISTERED CIVIL ENGINEER 5-7-14 DATE

1-25-16
PLANS APPROVAL DATE

REGISTERED PROFESSIONAL ENGINEER WING YAN LEE No. 61452 Exp. 6-30-17 CIVIL STATE OF CALIFORNIA

THE STATE OF CALIFORNIA OR ITS OFFICERS OR AGENTS SHALL NOT BE RESPONSIBLE FOR THE ACCURACY OR COMPLETENESS OF SCANNED COPIES OF THIS PLAN SHEET.

NOTE:
JOINTS ARE STANDARD JOINT TYPE

SUMMARY OF DRAINAGE QUANTITIES

DRAINAGE PLAN SHEET No.	DRAINAGE SYSTEM No.	DRAINAGE UNIT	"H" OR "V"	MINOR CONCRETE (MINOR STRUCTURE)	MINOR CONCRETE (GUTTER DEPRESSION)	MINOR CONCRETE (SIDEWALK AND CURB RAMP)	CONCRETE BACKFILL (PIPE TRENCH)	CONCRETE (DITCH LINING)	CONCRETE (CHANNEL LINING)	MISCELLANEOUS IRON AND STEEL	RCP (12" - 30") 12" RCP	18" RCP	24" RCP	27" RCP	30" RCP	36" RCP	42" RCP	48" RCP	54" RCP	60" RCP	63" RCP	69" RCP	81" RCP	18" SLOTTED CSP (0.079" THICK)	6" NON-PERFORATED PLASTIC PIPE UNDERDRAIN	36" PRECAST CONCRETE PIPE MANHOLE	42" AUTOMATIC DRAINAGE GATE	24" CONCRETE FLARED END SECTION	DITCH EXCAVATION	HOT MIX ASPHALT (TYPE A)	PLACE HOT MIX ASPHALT (Misc AREA)	CONCRETED-ROCK SLOPE PROTECTION (FACING, METHOD B)	ROCK SLOPE PROTECTION FABRIC (CLASS 8)	GRATED LINE DRAIN	CABLE RAILING	REMOVE CONCRETE	REMOVE PIPE	REMOVE INLET	REMOVE MANHOLE	REMOVE CATCH BASIN	ADJUST MANHOLE	TYPE 24-12 FRAME AND GRATE (N)	MANHOLE FRAME AND COVER (630-3, U45) (N)	MANHOLE FRAME AND COVER (312-3) (N)	MANHOLE FRAME AND COVER (U46) (N)	FRAME & GRATING FOR CATCH BASINS(311-2) (N)	MAXIMUM COVER	DESCRIPTION	STATION
			FT	CY	CY	CY	CY	CY	CY	LB	LF	LF	LF	LF	LF	LF	LF	LF	LF	LF	LF	LF	LF	LF	LF	LF	EA	EA	CY	TON	SQYD	CY	SQYD	LF	LF	CY	LF	EA	EA	EA	EA	EA	EA	EA	EA	EA	FT		
D-12	12-2	a	2.0	0.73						326																																1						CLEANOUT TYPE CL3	1.50′ R+ 5+28.00 ℄ "I5"
		b																					57.0																									18" SCSP	
		c	5.0	1.82						326																																1						TYPE G2 INLET	1.50′ R+ 5+88.00 ℄ "I5"
		d																					97.1																									18" SCSP	
		e											97.1																																	3.0	24" RCP	
		f	5.2	1.87						326																																1						TYPE G2 INLET	1.50′ R+ 6+88.00 ℄ "I5"
		g																					97.1																									18" SCSP	
		h											97.1																																	2.6	24" RCP	
		i	5.7	2.00						326																																1						TYPE G2 INLET	1.50′ R+ 7+88.00 ℄ "I5"
		j																					57.0																									18" SCSP	
		k											57.0																																	4.2	24" RCP	
		l	6.4	2.18						326																																1						TYPE G2 INLET	1.50′ R+ 8+48.00 ℄ "I5"
		m																					11.4																									18" SCSP	
		n											11.4																																	4.5	24" RCP	
		o	9.3	3.94						326																																1						TYPE G2 INLET	1.67′ R+ 8+62.40 ℄ "I5"
		p																					11.6																									18" SCSP	
		q											11.6																																	7.3	24" RCP	
		r	9.5	4.01						326																																1						TYPE G2 INLET	1.67′ R+ 8+77.00 ℄ "I5"
		s																					82.0																									18" SCSP	
		t											82.0																																	7.8	24" RCP	
SHEET TOTAL				16.55						2,282			356.2										413.2																			7							

(N) = NOT A SEPARATE PAY ITEM, FOR INFORMATION ONLY

DRAINAGE QUANTITIES
DQ- 23

STATE OF CALIFORNIA - DEPARTMENT OF TRANSPORTATION
Caltrans® HYDRAULICS

FUNCTIONAL SUPERVISOR MARIA QUINONEZ
CALCULATED-DESIGNED BY SIEW MEI TAN
CHECKED BY WING YAN LEE
REVISED BY
DATE REVISED

LAST REVISION 00-00-00
DATE PLOTTED => 03-FEB-2016
TIME PLOTTED => 11:12

Dist	COUNTY	ROUTE	POST MILES TOTAL PROJECT	SHEET No.	TOTAL SHEETS
07	LA,Ora	5	0.0/1.5, 44.3/44.4	435	1622

REGISTERED CIVIL ENGINEER 5-7-14 DATE

1-25-16
PLANS APPROVAL DATE

REGISTERED PROFESSIONAL ENGINEER WING YAN LEE No. 61452 Exp. 6-30-17 CIVIL STATE OF CALIFORNIA

THE STATE OF CALIFORNIA OR ITS OFFICERS OR AGENTS SHALL NOT BE RESPONSIBLE FOR THE ACCURACY OR COMPLETENESS OF SCANNED COPIES OF THIS PLAN SHEET.

NOTE:

JOINTS ARE STANDARD JOINT TYPE

SUMMARY OF DRAINAGE QUANTITIES

⬡ DRAINAGE PLAN SHEET No.	◯ DRAINAGE SYSTEM No.	DRAINAGE UNIT	"H" OR "V"	MINOR CONCRETE (MINOR STRUCTURE)	MINOR CONCRETE (GUTTER DEPRESSION)	MINOR CONCRETE (SIDEWALK AND CURB RAMP)	CONCRETE BACKFILL (PIPE TRENCH)	CONCRETE (DITCH LINING)	CONCRETE (CHANNEL LINING)	MISCELLANEOUS IRON AND STEEL	RCP (12" - 30") 12" RCP	18" RCP	24" RCP	27" RCP	30" RCP	36" RCP	42" RCP	48" RCP	54" RCP	60" RCP	63" RCP	69" RCP	81" RCP	18" SLOTTED CSP (0.079" THICK)	6" NON-PERFORATED PLASTIC PIPE UNDERDRAIN	36" PRECAST CONCRETE PIPE MANHOLE	42" AUTOMATIC DRAINAGE GATE	24" CONCRETE FLARED END SECTION	DITCH EXCAVATION	HOT MIX ASPHALT (TYPE A)	PLACE HOT MIX ASPHALT (Misc AREA)	CONCRETED-ROCK SLOPE PROTECTION (FACING, METHOD B)	ROCK SLOPE PROTECTION FABRIC (CLASS 8)	GRATED LINE DRAIN	CABLE RAILING	REMOVE CONCRETE	REMOVE PIPE	REMOVE INLET	REMOVE MANHOLE	REMOVE CATCH BASIN	ADJUST MANHOLE	TYPE 24-12 FRAME AND GRATE (N)	MANHOLE FRAME AND COVER (630-3, U45) (N)	MANHOLE FRAME AND COVER (312-3) (N)	MANHOLE FRAME AND COVER (U46) (N)	FRAME & GRATING FOR CATCH BASINS(311-2) (N)	MAXIMUM COVER	DESCRIPTION	STATION
			FT	CY	CY	CY	CY	CY	CY	LB	LF	LF	LF	LF	LF	LF	LF	LF	LF	LF	LF	LF	LF	LF	LF	LF	EA	EA	CY	TON	SQYD	CY	SQYD	LF	LF	CY	LF	EA	EA	EA	EA	EA	EA	EA	EA	EA	FT		
D-12	12-2	u	10.1	4.25						326																																1						TYPE G2 INLET	1.67′ R+ 9+62.00 ℄ "I5"
		v																					93.0																								18" SCSP	
		w											93.0																																	8.5	24" RCP	
		x	10.7	4.44						326																																1						TYPE G2 INLET	1.67′ R+ 10+58.00 ℄ "I5"
		y																					97.1																								18" SCSP	
		z											97.1																																	9.2	24" RCP	
		a1	11.4	4.69						326																																1						TYPE G2 INLET	1.67′ R+ 11+58.00 ℄ "I5"
		b1																					97.1																								18" SCSP	
		c1											97.1																																	9.9	24" RCP	
		d1	12.1	4.94						326																																1						TYPE G2 INLET	1.67′ R+ 12+58.00 ℄ "I5"
		e1																					97.1																								18" SCSP	
		f1											97.1																																	10.6	24" RCP	
D-13		g1	12.8	5.19						326																																1						TYPE G2 INLET	1.67′ R+ 13+58.00 ℄ "I5"
		h1																					97.1																								18" SCSP	
		i1											97.1																																	11.3	24" RCP	
		j1	13.5	5.43						326																																1						TYPE G2 INLET	1.67′ R+ 14+58.00 ℄ "I5"
		k1																					97.1																								18" SCSP	
		l1											97.1																																	11.9	24" RCP	
		m1	14.2	5.71						326																																1						TYPE G2 INLET	1.67′ R+ 15+58.00 ℄ "I5"
		n1																					91.1																								18" SCSP	
SHEET TOTAL				34.65						2,282			578.5										669.6																				7							

(N) = NOT A SEPARATE PAY ITEM, FOR INFORMATION ONLY

DRAINAGE QUANTITIES
DQ-24

STATE OF CALIFORNIA - DEPARTMENT OF TRANSPORTATION
Caltrans
HYDRAULICS

FUNCTIONAL SUPERVISOR: MARIA QUINONEZ
CALCULATED-DESIGNED BY: SIEW MEI TAN
CHECKED BY: WING YAN LEE
REVISED BY
DATE REVISED

LAST REVISION 00-00-00
DATE PLOTTED => 03-FEB-2016
TIME PLOTTED => 11:12

Dist	COUNTY	ROUTE	POST MILES TOTAL PROJECT	SHEET No.	TOTAL SHEETS
07	LA,Ora	5	0.0/1.5, 44.3/44.4	436	1622

REGISTERED CIVIL ENGINEER 5-7-14 DATE

1-25-16
PLANS APPROVAL DATE

REGISTERED PROFESSIONAL ENGINEER WING YAN LEE No. 61452 Exp. 6-30-17 CIVIL STATE OF CALIFORNIA

THE STATE OF CALIFORNIA OR ITS OFFICERS OR AGENTS SHALL NOT BE RESPONSIBLE FOR THE ACCURACY OR COMPLETENESS OF SCANNED COPIES OF THIS PLAN SHEET.

NOTE:

JOINTS ARE STANDARD JOINT TYPE

SUMMARY OF DRAINAGE QUANTITIES

DRAINAGE PLAN SHEET No.	DRAINAGE SYSTEM No.	DRAINAGE UNIT	"H" OR "V"	MINOR CONCRETE (MINOR STRUCTURE)	MINOR CONCRETE (GUTTER DEPRESSION)	MINOR CONCRETE (SIDEWALK AND CURB RAMP)	CONCRETE BACKFILL (PIPE TRENCH)	CONCRETE (DITCH LINING)	CONCRETE (CHANNEL LINING)	MISCELLANEOUS IRON AND STEEL	RCP (12" - 30") 12" RCP	18" RCP	24" RCP	27" RCP	30" RCP	36" RCP	42" RCP	48" RCP	54" RCP	60" RCP	63" RCP	69" RCP	81" RCP	18" SLOTTED CSP (0.079" THICK)	6" NON-PERFORATED PLASTIC PIPE UNDERDRAIN	36" PRECAST CONCRETE PIPE MANHOLE	42" AUTOMATIC DRAINAGE GATE	24" CONCRETE FLARED END SECTION	DITCH EXCAVATION	HOT MIX ASPHALT (TYPE A)	PLACE HOT MIX ASPHALT (Misc AREA)	CONCRETED-ROCK SLOPE PROTECTION (FACING, METHOD B)	ROCK SLOPE PROTECTION FABRIC (CLASS 8)	GRATED LINE DRAIN	CABLE RAILING	REMOVE CONCRETE	REMOVE PIPE	REMOVE INLET	REMOVE MANHOLE	REMOVE CATCH BASIN	ADJUST MANHOLE	TYPE 24-12 FRAME AND GRATE (N)	MANHOLE FRAME AND COVER (630-3, U45) (N)	MANHOLE FRAME AND COVER (312-3) (N)	MANHOLE FRAME AND COVER (U46) (N)	FRAME & GRATING FOR CATCH BASINS(311-2) (N)	MAXIMUM COVER	DESCRIPTION	STATION
			FT	CY	CY	CY	CY	CY	CY	LB	LF	LF	LF	LF	LF	LF	LF	LF	LF	LF	LF	LF	LF	LF	LF	LF	EA	EA	CY	TON	SQYD	CY	SQYD	LF	LF	CY	LF	EA	EA	EA	EA	EA	EA	EA	EA	EA	FT		
	12-2	o1											91.1																																	12.5	24" RCP	
		p1	14.8	5.93						326																														1						TYPE G2 INLET	1.67′ Rt 16+52.04 ℄ "I5"
		q1																						46.3																							18" SCSP	
		r1	2.0	0.73						326																														1						CLEANOUT TYPE CL3	1.50′ Rt 16+94.00 ℄ "I5"
	12-3	a	4.6	1.81						580																														2						GD-1 INLET	88.50′ Lt 6+08.00 ℄ "I5"
		b											117.3																																2.3	24" RCP	
		c	4.6	1.81						580																														2						GD-1 INLET	88.50′ Lt 7+30.00 ℄ "I5"
		d											71.9																																2.6	24" RCP	
		e	5.0	1.93						580																														2						GD-1 INLET	88.50′ Lt 8+06.00 ℄ "I5"
		f																						40.4																							18" SCSP	
		g											40.4																																3.0	24" RCP	
		h	5.7	2.13						580																														2						GD-1 INLET	88.50′ Lt 8+50.00 ℄ "I5"
		i											6.9																																3.3	24" RCP	
		j	7.1	2.54						580																														2						GD-1 INLET	88.50′ Lt 8+60.00 ℄ "I5"
		k											6.9																																3.5	24" RCP	
		l	6.9	2.48						580																														2						GD-1 INLET	88.50′ Lt 8+70.00 ℄ "I5"
		m																						55.2																							18" SCSP	
		n											55.2																																4.5	24" RCP	
		o	6.6	2.39						580																														2						GD-1 INLET	88.50′ Lt 9+29.00 ℄ "I5"
		p											55.2																																4.3	24" RCP	
		q	6.5	2.37						580																														2						GD-1 INLET	88.50′ Lt 9+88.00 ℄ "I5"
SHEET TOTAL				24.12						5,292			444.9											141.9																18							

(N) = NOT A SEPARATE PAY ITEM, FOR INFORMATION ONLY

DRAINAGE QUANTITIES
DQ- 25

STATE OF CALIFORNIA - DEPARTMENT OF TRANSPORTATION
Caltrans® HYDRAULICS

FUNCTIONAL SUPERVISOR: MARIA QUINONEZ
CALCULATED-DESIGNED BY: SIEW MEI TAN
CHECKED BY: WING YAN LEE
REVISED BY
DATE REVISED

LAST REVISION 00-00-00
DATE PLOTTED => 03-FEB-2016
TIME PLOTTED => 11:12

Dist	COUNTY	ROUTE	POST MILES TOTAL PROJECT	SHEET No.	TOTAL SHEETS
07	LA,Ora	5	0.0/1.5, 44.3/44.4	437	1622

REGISTERED CIVIL ENGINEER 5-7-14 DATE

1-25-16
PLANS APPROVAL DATE

REGISTERED PROFESSIONAL ENGINEER WING YAN LEE No. 61452 Exp. 6-30-17 CIVIL STATE OF CALIFORNIA

THE STATE OF CALIFORNIA OR ITS OFFICERS OR AGENTS SHALL NOT BE RESPONSIBLE FOR THE ACCURACY OR COMPLETENESS OF SCANNED COPIES OF THIS PLAN SHEET.

NOTE:

JOINTS ARE STANDARD JOINT TYPE

SUMMARY OF DRAINAGE QUANTITIES

DRAINAGE PLAN SHEET No.	DRAINAGE SYSTEM No.	DRAINAGE UNIT	"H" OR "V"	MINOR CONCRETE (MINOR STRUCTURE)	MINOR CONCRETE (GUTTER DEPRESSION)	MINOR CONCRETE (SIDEWALK AND CURB RAMP)	CONCRETE BACKFILL (PIPE TRENCH)	CONCRETE (DITCH LINING)	CONCRETE (CHANNEL LINING)	MISCELLANEOUS IRON AND STEEL	RCP (12" - 30") 12" RCP	18" RCP	24" RCP	27" RCP	30" RCP	36" RCP	42" RCP	48" RCP	54" RCP	60" RCP	63" RCP	69" RCP	81" RCP	18" SLOTTED CSP (0.079" THICK)	6" NON-PERFORATED PLASTIC PIPE UNDERDRAIN	36" PRECAST CONCRETE PIPE MANHOLE	42" AUTOMATIC DRAINAGE GATE	24" CONCRETE FLARED END SECTION	DITCH EXCAVATION	HOT MIX ASPHALT (TYPE A)	PLACE HOT MIX ASPHALT (Misc AREA)	CONCRETED-ROCK SLOPE PROTECTION (FACING, METHOD B)	ROCK SLOPE PROTECTION FABRIC (CLASS 8)	GRATED LINE DRAIN	CABLE RAILING	REMOVE CONCRETE	REMOVE PIPE	REMOVE INLET	REMOVE MANHOLE	REMOVE CATCH BASIN	ADJUST MANHOLE	TYPE 24-12 FRAME AND GRATE (N)	MANHOLE FRAME AND COVER (630-3, U45) (N)	MANHOLE FRAME AND COVER (312-3) (N)	MANHOLE FRAME AND COVER (U46) (N)	FRAME & GRATING FOR CATCH BASINS(311-2) (N)	MAXIMUM COVER	DESCRIPTION	STATION
			FT	CY	CY	CY	CY	CY	CY	LB	LF	LF	LF	LF	LF	LF	LF	LF	LF	LF	LF	LF	LF	LF	LF	EA	EA	CY	TON	SQYD	CY	SQYD	LF	LF	CY	LF	EA	EA	EA	EA	EA	EA	EA	EA	EA	FT		
D-12	12-4	a											86.2																																	7.1	24" RCP	
	12-5	a											101.6																																4.5	24" RCP	
		b	5.0	5.31	0.59					2240																																	4		COCB WITH GRATING(S) 302-3,W=13.2′,LD 313-3	23.08′ L+ 54+91.00 ℄ "NFIR1"
		c										53.2																																4.0	18" RCP	
		d	5.0	1.77						115																															1			COCB 300-3, W=3.5′	17.00′ R+ 55+25.45 ℄ "NFIR1"
		e										89.9																																2.6	18" RCP	
		f	4.5	1.63						115																															1			COCB 300-3, W=3.5′	17.00′ R+ 54+35.78 ℄ "NFIR1"
	12-6	a											63.8																																4.1	24" RCP	
		b	5.6	1.18						235																																1			JC 3-C MOD	40.18′ L+ 20+20.00 ℄ "AR2"
		c										187.0																																2.4	18" RCP	
		d	3.5	1.06						326																														1					TYPE G1 INLET	37.18′ L+ 22+10.00 ℄ "AR2"
	12-7	a						22.50																			22.50																			TYPE B DRAIN	
D-13		b						33.30																			33.30																			TYPE B DRAIN	
SHEET TOTAL				10.95	0.59			55.80		3,031		330.1	251.6														55.80													1		2	1	4			

(N) = NOT A SEPARATE PAY ITEM, FOR INFORMATION ONLY

DRAINAGE QUANTITIES
DQ- 26

STATE OF CALIFORNIA - DEPARTMENT OF TRANSPORTATION
Caltrans® HYDRAULICS

FUNCTIONAL SUPERVISOR: MARIA QUINONEZ
CALCULATED-DESIGNED BY: SIEW MEI TAN
CHECKED BY: WING YAN LEE
REVISED BY
DATE REVISED

LAST REVISION 00-00-00
DATE PLOTTED => 03-FEB-2016
TIME PLOTTED => 11:12

Dist	COUNTY	ROUTE	POST MILES TOTAL PROJECT	SHEET No.	TOTAL SHEETS
07	LA,Ora	5	0.0/1.5, 44.3/44.4	438	1622

REGISTERED CIVIL ENGINEER 5-7-14 DATE

1-25-16
PLANS APPROVAL DATE

REGISTERED PROFESSIONAL ENGINEER WING YAN LEE No. 61452 Exp. 6-30-17 CIVIL STATE OF CALIFORNIA

THE STATE OF CALIFORNIA OR ITS OFFICERS OR AGENTS SHALL NOT BE RESPONSIBLE FOR THE ACCURACY OR COMPLETENESS OF SCANNED COPIES OF THIS PLAN SHEET.

NOTE:

JOINTS ARE STANDARD JOINT TYPE

SUMMARY OF DRAINAGE QUANTITIES

DRAINAGE PLAN SHEET No.	DRAINAGE SYSTEM No.	DRAINAGE UNIT	"H" OR "V"	MINOR CONCRETE (MINOR STRUCTURE)	MINOR CONCRETE (GUTTER DEPRESSION)	MINOR CONCRETE (SIDEWALK AND CURB RAMP)	CONCRETE BACKFILL (PIPE TRENCH)	CONCRETE (DITCH LINING)	CONCRETE (CHANNEL LINING)	MISCELLANEOUS IRON AND STEEL	RCP (12" - 30") 12" RCP	18" RCP	24" RCP	27" RCP	30" RCP	36" RCP	42" RCP	48" RCP	54" RCP	60" RCP	63" RCP	69" RCP	81" RCP	18" SLOTTED CSP (0.079" THICK)	6" NON-PERFORATED PLASTIC PIPE UNDERDRAIN	36" PRECAST CONCRETE PIPE MANHOLE	42" AUTOMATIC DRAINAGE GATE	24" CONCRETE FLARED END SECTION	DITCH EXCAVATION	HOT MIX ASPHALT (TYPE A)	PLACE HOT MIX ASPHALT (Misc AREA)	CONCRETED-ROCK SLOPE PROTECTION (FACING, METHOD B)	ROCK SLOPE PROTECTION FABRIC (CLASS 8)	GRATED LINE DRAIN	CABLE RAILING	REMOVE CONCRETE	REMOVE PIPE	REMOVE INLET	REMOVE MANHOLE	REMOVE CATCH BASIN	ADJUST MANHOLE	TYPE 24-12 FRAME AND GRATE (N)	MANHOLE FRAME AND COVER (630-3, U45) (N)	MANHOLE FRAME AND COVER (312-3) (N)	MANHOLE FRAME AND COVER (U46) (N)	FRAME & GRATING FOR CATCH BASINS(311-2) (N)	MAXIMUM COVER	DESCRIPTION	STATION
			FT	CY	CY	CY	CY	CY	CY	LB	LF	LF	LF	LF	LF	LF	LF	LF	LF	LF	LF	LF	LF	LF	LF	LF	EA	EA	CY	TON	SQYD	CY	SQYD	LF	LF	CY	LF	EA	EA	EA	EA	EA	EA	EA	EA	EA	FT		
D-13	13-1	a	5.0	1.82						326																																1					TYPE G2 INLET	1.50′ Rt 19+25.50 ℄ "I5"
		b																					61.5																								18" SCSP	
		c											61.5																																3.2	24" RCP	
		d	5.3	1.90						326																																1					TYPE G2 INLET	1.50′ Rt 19+90.00 ℄ "I5"
		e																					69.0																								18" SCSP	
		f											69.0																																3.5	24" RCP	
		g	5.6	1.97						326																																1					TYPE G2 INLET	1.50′ Rt 20+62.00 ℄ "I5"
		h											98.1																																3.6	24" RCP	
	13-2	a																				296.5																								10.8	81" RCP	
		b		8.61						435															7.1																	1				MH 320-2	7.50′ Lt 66+54.51 ⅊ "NFIR1"
D-14		c																				280.9																								10.8	81" RCP	
		d		8.61						435															3.3																	1				MH 320-2	7.03′ Lt 69+40.02 ⅊ "NFIR1"
D-13	13-3	a																	15.1																										12.3	60" RCP	
		b		8.09						435															11.5																	1				MH 322-2	41.69′ Lt 17+79.20 ⅊ "SFIR1"
		c														209.2																													11.7	36" RCP	
		d													26.1																														13.1	30" RCP	
SHEET TOTAL				31.00						2283			228.6		26.1	209.2			15.1			577.4	130.5		21.9																3	3					

(N) = NOT A SEPARATE PAY ITEM, FOR INFORMATION ONLY

DRAINAGE QUANTITIES
DQ- 27

STATE OF CALIFORNIA - DEPARTMENT OF TRANSPORTATION
Caltrans® HYDRAULICS

FUNCTIONAL SUPERVISOR: MARIA QUINONEZ
CALCULATED-DESIGNED BY: SIEW MEI TAN
CHECKED BY: WING YAN LEE
REVISED BY
DATE REVISED

LAST REVISION 00-00-00
DATE PLOTTED => 03-FEB-2016
TIME PLOTTED => 11:12

Dist	COUNTY	ROUTE	POST MILES TOTAL PROJECT	SHEET No.	TOTAL SHEETS
07	LA,Ora	5	0.0/1.5, 44.3/44.4	439	1622

REGISTERED CIVIL ENGINEER 5-7-14 DATE

1-25-16
PLANS APPROVAL DATE

REGISTERED PROFESSIONAL ENGINEER WING YAN LEE No. 61452 Exp. 6-30-17 CIVIL STATE OF CALIFORNIA

THE STATE OF CALIFORNIA OR ITS OFFICERS OR AGENTS SHALL NOT BE RESPONSIBLE FOR THE ACCURACY OR COMPLETENESS OF SCANNED COPIES OF THIS PLAN SHEET.

NOTE:

JOINTS ARE STANDARD JOINT TYPE

SUMMARY OF DRAINAGE QUANTITIES

DRAINAGE PLAN SHEET No. ⬡	DRAINAGE SYSTEM No. ○	DRAINAGE UNIT	"H" OR "V"	MINOR CONCRETE (MINOR STRUCTURE)	MINOR CONCRETE (GUTTER DEPRESSION)	MINOR CONCRETE (SIDEWALK AND CURB RAMP)	CONCRETE BACKFILL (PIPE TRENCH)	CONCRETE (DITCH LINING)	CONCRETE (CHANNEL LINING)	MISCELLANEOUS IRON AND STEEL	RCP (12" - 30") 12" RCP	18" RCP	24" RCP	27" RCP	30" RCP	36" RCP	42" RCP	48" RCP	54" RCP	60" RCP	63" RCP	69" RCP	81" RCP	18" SLOTTED CSP (0.079" THICK)	6" NON-PERFORATED PLASTIC PIPE UNDERDRAIN	36" PRECAST CONCRETE PIPE MANHOLE	42" AUTOMATIC DRAINAGE GATE	24" CONCRETE FLARED END SECTION	DITCH EXCAVATION	HOT MIX ASPHALT (TYPE A)	PLACE HOT MIX ASPHALT (Misc AREA)	CONCRETED-ROCK SLOPE PROTECTION (FACING, METHOD B)	ROCK SLOPE PROTECTION FABRIC (CLASS 8)	GRATED LINE DRAIN	CABLE RAILING	REMOVE CONCRETE	REMOVE PIPE	REMOVE INLET	REMOVE MANHOLE	REMOVE CATCH BASIN	ADJUST MANHOLE	TYPE 24-12 FRAME AND GRATE (N)	MANHOLE FRAME AND COVER (630-3, U45) (N)	MANHOLE FRAME AND COVER (312-3) (N)	MANHOLE FRAME AND COVER (U46) (N)	FRAME & GRATING FOR CATCH BASINS(311-2) (N)	MAXIMUM COVER	DESCRIPTION	STATION
			FT	CY	CY	CY	CY	CY	CY	LB	LF	LF	LF	LF	LF	LF	LF	LF	LF	LF	LF	LF	LF	LF	LF	LF	EA	EA	CY	TON	SQYD	CY	SQYD	LF	LF	CY	LF	EA	EA	EA	EA	EA	EA	EA	EA	EA	FT		
D-14	13-4	a													123.2																															12.3	30" RCP	
		b	4.0	2.61						435																10.1																	1				MH 321-2	6.00′ R† 20+06.77 ℄ "SFIR1"
		c													251.2																															9.1	30" RCP	
		d	4.0	2.61						435																6.8																	1				MH 321-2	6.00′ R† 22+62.00 ℄ "SFIR1"
		e													295.9																															8.0	30" RCP	
		f	4.0	2.61						435																5.8																	1				MH 321-2	6.00′ R† 25+62.00 ℄ "SFIR1"
		g													295.9																															7.9	30" RCP	
		h	4.0	2.61						435																3.8																	1				MH 321-2	6.00′ R† 28+62.00 ℄ "SFIR1"
		i													260.9																															6.0	30" RCP	
		j	4.0	2.61						435																4.0																	1				MH 321-2	6.00′ R† 31+27.00 ℄ "SFIR1"
D-15		k													298.4																															6.2	30" RCP	
		l	5.9	3.43						435																0.9																	1				MH 321-2	6.00′ R† 34+30.00 ℄ "SFIR1"
		m													266.4																															5.9	30" RCP	
		n	4.0	2.61						435																3.6																	1				MH 321-2	6.00′ R† 37+00.00 ℄ "SFIR1"
		o													296.0																															6.0	30" RCP	
D-16		p	4.0	2.61						435																3.7																	1				MH 321-2	6.00′ R† 40+00.00 ℄ "SFIR1"
		q													296.0																															5.9	30" RCP	
		r		0.66																																											JUNCTION STRUCTURE 331-3	6.00′ R† 42+13.77 ℄ "SFIR1"
		s	5.3	3.17						435																0.9																	1				MH 321-2	6.00′ R† 42+90.00 ℄ "SFIR1"
		†													296.0																															3.8	30" RCP	
		u		0.61																																											JUNCTION STRUCTURE 331-3	6.00′ R† 44+24.33 ℄ "SFIR1"
SHEET TOTAL				26.14						3,915					2,679.9											39.6																	9					

(N) = NOT A SEPARATE PAY ITEM, FOR INFORMATION ONLY

DRAINAGE QUANTITIES
DQ- 28

STATE OF CALIFORNIA - DEPARTMENT OF TRANSPORTATION
Caltrans® HYDRAULICS

FUNCTIONAL SUPERVISOR: MARIA QUINONEZ
CALCULATED-DESIGNED BY: WING YAN LEE
CHECKED BY: SIEW MEI TAN
REVISED BY / DATE REVISED

LAST REVISION 00-00-00
DATE PLOTTED => 03-FEB-2016
TIME PLOTTED => 11:12

Dist	COUNTY	ROUTE	POST MILES TOTAL PROJECT	SHEET No.	TOTAL SHEETS
07	LA,Ora	5	0.0/1.5, 44.3/44.4	440	1622

REGISTERED CIVIL ENGINEER 5-7-14 DATE

1-25-16
PLANS APPROVAL DATE

REGISTERED PROFESSIONAL ENGINEER WING YAN LEE No. 61452 Exp. 6-30-17 CIVIL STATE OF CALIFORNIA

THE STATE OF CALIFORNIA OR ITS OFFICERS OR AGENTS SHALL NOT BE RESPONSIBLE FOR THE ACCURACY OR COMPLETENESS OF SCANNED COPIES OF THIS PLAN SHEET.

NOTE:

JOINTS ARE STANDARD JOINT TYPE

SUMMARY OF DRAINAGE QUANTITIES

DRAINAGE PLAN SHEET No.	DRAINAGE SYSTEM No.	DRAINAGE UNIT	"H" OR "V"	MINOR CONCRETE (MINOR STRUCTURE)	MINOR CONCRETE (GUTTER DEPRESSION)	MINOR CONCRETE (SIDEWALK AND CURB RAMP)	CONCRETE BACKFILL (PIPE TRENCH)	CONCRETE (DITCH LINING)	CONCRETE (CHANNEL LINING)	MISCELLANEOUS IRON AND STEEL	RCP (12" - 30") 12" RCP	18" RCP	24" RCP	27" RCP	30" RCP	36" RCP	42" RCP	48" RCP	54" RCP	60" RCP	63" RCP	69" RCP	81" RCP	18" SLOTTED CSP (0.079" THICK)	6" NON-PERFORATED PLASTIC PIPE UNDERDRAIN	36" PRECAST CONCRETE PIPE MANHOLE	42" AUTOMATIC DRAINAGE GATE	24" CONCRETE FLARED END SECTION	DITCH EXCAVATION	HOT MIX ASPHALT (TYPE A)	PLACE HOT MIX ASPHALT (Misc AREA)	CONCRETED-ROCK SLOPE PROTECTION (FACING, METHOD B)	ROCK SLOPE PROTECTION FABRIC (CLASS 8)	GRATED LINE DRAIN	CABLE RAILING	REMOVE CONCRETE	REMOVE PIPE	REMOVE INLET	REMOVE MANHOLE	REMOVE CATCH BASIN	ADJUST MANHOLE	TYPE 24-12 FRAME AND GRATE (N)	MANHOLE FRAME AND COVER (630-3, U45) (N)	MANHOLE FRAME AND COVER (312-3) (N)	MANHOLE FRAME AND COVER (U46) (N)	FRAME & GRATING FOR CATCH BASINS(311-2) (N)	MAXIMUM COVER	DESCRIPTION	STATION
			FT	CY	CY	CY	CY	CY	CY	LB	LF	LF	LF	LF	LF	LF	LF	LF	LF	LF	LF	LF	LF	LF	LF	EA	EA	CY	TON	SQYD	CY	SQYD	LF	LF	CY	LF	EA	EA	EA	EA	EA	EA	EA	EA	EA	FT		
D-16	13-4	v	4.6	2.87						435															0.9																1					MH 321-2	6.00′ Rt 45+93.00 ℄ "SFIR1"
		w													296.0																													3.7	30" RCP	
		x	4.6	2.87						435															0.9																1					MH 321-2	6.00′ Rt 48+12.00 ℄ "SFIR1"
		y													4.0																													3.7	30" RCP	
D-13	13-5	a	4.5	2.48						115																															1					COCB 300-3, W=7′	17.00′ Lt 22+63.50 ℄ "SFIR1"
		b										23.2																																8.7	18" RCP	
		c										12.7																																8.7	18" RCP	
		d	4.5	2.48						115																															1					COCB 300-3, W=7′	17.00′ Rt 22+63.50 ℄ "SFIR1"
	13-6	a	7.0	2.33						115																															1					COCB 300-3, W=3.5′	17.00′ Rt 19+26.70 ℄ "SFIR1"
		b										29.7																																5.5	18" RCP	
		c	7.1	2.36						115																															1					COCB 300-3, W=3.5′	17.00′ Rt 19+56.16 ℄ "SFIR1"
		d										2.8																																4.8	18" RCP	
	13-7	a	4.5	1.63						115																															1					COCB 300-3, W=3.5′	17.00′ Lt 64+42.00 ℄ "NFIR1"
		b										170.2																																2.8	18" RCP	
		c	4.5	1.63						115																															1					COCB 300-3, W=3.5′	17.00′ Lt 66+12.10 ℄ "NFIR1"
		d										2.8																																3.3	18" RCP	
SHEET TOTAL				18.65						1,560		241.4			300.0										1.8															2	6					

(N) = NOT A SEPARATE PAY ITEM, FOR INFORMATION ONLY

DRAINAGE QUANTITIES
DQ- 29

STATE OF CALIFORNIA - DEPARTMENT OF TRANSPORTATION
Caltrans® HYDRAULICS

FUNCTIONAL SUPERVISOR: MARIA QUINONEZ
CALCULATED-DESIGNED BY: WING YAN LEE
CHECKED BY: SIEW MEI TAN
REVISED BY / DATE REVISED

LAST REVISION 00-00-00
DATE PLOTTED => 03-FEB-2016
TIME PLOTTED => 11:12

Dist	COUNTY	ROUTE	POST MILES TOTAL PROJECT	SHEET No.	TOTAL SHEETS
07	LA,Ora	5	0.0/1.5, 44.3/44.4	441	1622

REGISTERED CIVIL ENGINEER 5-7-14 DATE

1-25-16
PLANS APPROVAL DATE

REGISTERED PROFESSIONAL ENGINEER WING YAN LEE No. 61452 Exp. 6-30-17 CIVIL STATE OF CALIFORNIA

THE STATE OF CALIFORNIA OR ITS OFFICERS OR AGENTS SHALL NOT BE RESPONSIBLE FOR THE ACCURACY OR COMPLETENESS OF SCANNED COPIES OF THIS PLAN SHEET.

NOTE:

JOINTS ARE STANDARD JOINT TYPE

SUMMARY OF DRAINAGE QUANTITIES

DRAINAGE PLAN SHEET No. ⬡	DRAINAGE SYSTEM No. ○	DRAINAGE UNIT	"H" OR "V"	MINOR CONCRETE (MINOR STRUCTURE)	MINOR CONCRETE (GUTTER DEPRESSION)	MINOR CONCRETE (SIDEWALK AND CURB RAMP)	CONCRETE BACKFILL (PIPE TRENCH)	CONCRETE (DITCH LINING)	CONCRETE (CHANNEL LINING)	MISCELLANEOUS IRON AND STEEL	RCP (12" - 30") 12" RCP	18" RCP	24" RCP	27" RCP	30" RCP	36" RCP	42" RCP	48" RCP	54" RCP	60" RCP	63" RCP	69" RCP	81" RCP	18" SLOTTED CSP (0.079" THICK)	6" NON-PERFORATED PLASTIC PIPE UNDERDRAIN	36" PRECAST CONCRETE PIPE MANHOLE	42" AUTOMATIC DRAINAGE GATE	24" CONCRETE FLARED END SECTION	DITCH EXCAVATION	HOT MIX ASPHALT (TYPE A)	PLACE HOT MIX ASPHALT (Misc AREA)	CONCRETED-ROCK SLOPE PROTECTION (FACING, METHOD B)	ROCK SLOPE PROTECTION FABRIC (CLASS 8)	GRATED LINE DRAIN	CABLE RAILING	REMOVE CONCRETE	REMOVE PIPE	REMOVE INLET	REMOVE MANHOLE	REMOVE CATCH BASIN	ADJUST MANHOLE	TYPE 24-12 FRAME AND GRATE (N)	MANHOLE FRAME AND COVER (630-3, U45) (N)	MANHOLE FRAME AND COVER (312-3) (N)	MANHOLE FRAME AND COVER (U46) (N)	FRAME & GRATING FOR CATCH BASINS(311-2) (N)	MAXIMUM COVER	DESCRIPTION	STATION
			FT	CY	CY	CY	CY	CY	CY	LB	LF	LF	LF	LF	LF	LF	LF	LF	LF	LF	LF	LF	LF	LF	LF	LF	EA	EA	CY	TON	SQYD	CY	SQYD	LF	LF	CY	LF	EA	EA	EA	EA	EA	EA	EA	EA	EA	FT		
D-13	13-8	a	2.7	0.95						326																																1						TYPE G1 INLET	43.51′ R+ 2+22.00 ℄ "TRO"
		b									28.5																																			4.6	12" RCP	
		c	12.7	4.30						235																																	1					JC 3	57.92′ L+ 2+50.00 ℄ "TRO"
		d									69.5																																			13.6	12" RCP	
		e	14.6	7.52						235																																		1			JC 3-C (Mod)	18.30′ L+ 3+80.00 ℄ "ACC2"
		f																												1.4	9.4																	AC OVERSIDE DRAIN	
	13-9	a		0.65																																												RECTANGULAR CHANNEL	46.76′ L+ 2+79.00 ℄ "TRO"
		b									6.0																																			3.3	12" RCP	
		c	4.5	1.63						115																																	1				COCB 300-3, W=3.5′	32.00′ L+ 2+78.00 ℄ "TRO"
		d									72.1																																			5.6	12" RCP	
		e	7.6	2.51						115																																	1				COCB 300-3, W=3.5′	32.00′ R+ 2+50.00 ℄ "TRO"
		f					1.40				21.0																																			4.1	12" RCP W/Conc BACKFILL	
	13-10	a				36.67																																										PARKWAY DRAIN	15.00′ R+ 67+92.00 ℄ "NFIR1"
	13-11	a	6.7	2.24						326																																						TYPE G2 INLET	25.17′ R+ 65+81.50 ℄ "NFIR1"
		b											220.7																													1				4.7	24" RCP	
		c	4.0	1.54						326																																						TYPE G2 INLET	25.68′ R+ 68+05.40 ℄ "NFIR1"
		d											8.0																													1				2.0	24" RCP	
SHEET TOTAL				21.34		36.67	1.40			1,678	197.1		228.7																	1.4	9.4											3	1	2	1				

(N) = NOT A SEPARATE PAY ITEM, FOR INFORMATION ONLY

DRAINAGE QUANTITIES
DQ- 30

STATE OF CALIFORNIA - DEPARTMENT OF TRANSPORTATION
Caltrans® HYDRAULICS

FUNCTIONAL SUPERVISOR: MARIA QUINONEZ
CALCULATED-DESIGNED BY: SIEW MEI TAN
CHECKED BY: WING YAN LEE
REVISED BY
DATE REVISED

LAST REVISION 00-00-00
DATE PLOTTED => 03-FEB-2016
TIME PLOTTED => 11:12

Dist	COUNTY	ROUTE	POST MILES TOTAL PROJECT	SHEET No.	TOTAL SHEETS
07	LA,Ora	5	0.0/1.5, 44.3/44.4	442	1622

REGISTERED CIVIL ENGINEER 5-7-14 DATE

1-25-16
PLANS APPROVAL DATE

REGISTERED PROFESSIONAL ENGINEER WING YAN LEE No. 61452 Exp. 6-30-17 CIVIL STATE OF CALIFORNIA

THE STATE OF CALIFORNIA OR ITS OFFICERS OR AGENTS SHALL NOT BE RESPONSIBLE FOR THE ACCURACY OR COMPLETENESS OF SCANNED COPIES OF THIS PLAN SHEET.

NOTE:

JOINTS ARE STANDARD JOINT TYPE

SUMMARY OF DRAINAGE QUANTITIES

DRAINAGE PLAN SHEET No.	DRAINAGE SYSTEM No.	DRAINAGE UNIT	"H" OR "V"	MINOR CONCRETE (MINOR STRUCTURE)	MINOR CONCRETE (GUTTER DEPRESSION)	MINOR CONCRETE (SIDEWALK AND CURB RAMP)	CONCRETE BACKFILL (PIPE TRENCH)	CONCRETE (DITCH LINING)	CONCRETE (CHANNEL LINING)	MISCELLANEOUS IRON AND STEEL	RCP (12" - 30") 12" RCP	18" RCP	24" RCP	27" RCP	30" RCP	36" RCP	42" RCP	48" RCP	54" RCP	60" RCP	63" RCP	69" RCP	81" RCP	18" SLOTTED CSP (0.079" THICK)	6" NON-PERFORATED PLASTIC PIPE UNDERDRAIN	36" PRECAST CONCRETE PIPE MANHOLE	42" AUTOMATIC DRAINAGE GATE	24" CONCRETE FLARED END SECTION	DITCH EXCAVATION	HOT MIX ASPHALT (TYPE A)	PLACE HOT MIX ASPHALT (Misc AREA)	CONCRETED-ROCK SLOPE PROTECTION (FACING, METHOD B)	ROCK SLOPE PROTECTION FABRIC (CLASS 8)	GRATED LINE DRAIN	CABLE RAILING	REMOVE CONCRETE	REMOVE PIPE	REMOVE INLET	REMOVE MANHOLE	REMOVE CATCH BASIN	ADJUST MANHOLE	TYPE 24-12 FRAME AND GRATE (N)	MANHOLE FRAME AND COVER (630-3, U45) (N)	MANHOLE FRAME AND COVER (312-3) (N)	MANHOLE FRAME AND COVER (U46) (N)	FRAME & GRATING FOR CATCH BASINS(311-2) (N)	MAXIMUM COVER	DESCRIPTION	STATION
			FT	CY	CY	CY	CY	CY	CY	LB	LF	LF	LF	LF	LF	LF	LF	LF	LF	LF	LF	LF	LF	LF	LF	LF	EA	EA	CY	TON	SQYD	CY	SQYD	LF	LF	CY	LF	EA	EA	EA	EA	EA	EA	EA	EA	EA	FT		
D-13	14-1	a	5.0	1.39						326																															1						TYPE G1 INLET	100.50′ R+ 20+64.00 ℄ "I5"
		b											94.7																																3.3	18" RCP	
		c																						94.7																							18" SCSP	
		d	5.6	2.12						580																															2						GD-1 INLET	100.50′ R+ 21+62.00 ℄ "I5"
D-14		e											293.8																																2.9	24" RCP	
		f	5.0	1.94						580																															2						GD-1 INLET	100.50′ R+ 24+60.00 ℄ "I5"
		g											295.9																																2.4	24" RCP	
		h	4.5	1.80						580																															2						GD-1 INLET	100.50′ R+ 27+60.00 ℄ "I5"
		i											140.5																																2.5	24" RCP	
		j	4.6	1.83						580																															2						GD-1 INLET	101.90′ R+ 29+04.00 ℄ "I5"
		k											7.0																																2.7	24" RCP	
		l	4.9	1.89						580																															2						GD-1 INLET	102.70′ R+ 29+13.91 ℄ "I5"
		m											13.1																																2.6	24" RCP	
		n	4.6	1.83						580																																				GD-1 INLET	102.37′ R+ 29+30.00 ℄ "I5"
		o											87.2																																2.5	24" RCP	
		p	4.4	1.77						580																															2						GD-1 INLET	104.61′ R+ 30+20.00 ℄ "I5"
		q											195.2																																2.5	24" RCP	
		r	4.3	1.74						580																															2						GD-1 INLET	112.14′ R+ 32+20.00 ℄ "I5"
		s											47.2																																6.4	24" RCP	
		t				0.20																																								PIPE CONNECTION 335-2	23.49′ R+ 74+56.44 ⅊ "NFIR1"
SHEET TOTAL				16.31			0.20			4,966			1,174.6											94.7																	15							

(N) = NOT A SEPARATE PAY ITEM, FOR INFORMATION ONLY

DRAINAGE QUANTITIES
DQ- 31

STATE OF CALIFORNIA - DEPARTMENT OF TRANSPORTATION
Caltrans® HYDRAULICS

FUNCTIONAL SUPERVISOR: MARIA QUINONEZ
CALCULATED-DESIGNED BY: WING YAN LEE
CHECKED BY: SIEW MEI TAN
REVISED BY / DATE REVISED

LAST REVISION 00-00-00
DATE PLOTTED => 03-FEB-2016
TIME PLOTTED => 11:12

Dist	COUNTY	ROUTE	POST MILES TOTAL PROJECT	SHEET No.	TOTAL SHEETS
07	LA,Ora	5	0.0/1.5, 44.3/44.4	443	1622

REGISTERED CIVIL ENGINEER 5-7-14 DATE

1-25-16
PLANS APPROVAL DATE

REGISTERED PROFESSIONAL ENGINEER WING YAN LEE No. 61452 Exp. 6-30-17 CIVIL STATE OF CALIFORNIA

THE STATE OF CALIFORNIA OR ITS OFFICERS OR AGENTS SHALL NOT BE RESPONSIBLE FOR THE ACCURACY OR COMPLETENESS OF SCANNED COPIES OF THIS PLAN SHEET.

NOTE:

JOINTS ARE STANDARD JOINT TYPE

SUMMARY OF DRAINAGE QUANTITIES

DRAINAGE PLAN SHEET No. ⬡	DRAINAGE SYSTEM No. ◯	DRAINAGE UNIT	"H" OR "V"	MINOR CONCRETE (MINOR STRUCTURE)	MINOR CONCRETE (GUTTER DEPRESSION)	MINOR CONCRETE (SIDEWALK AND CURB RAMP)	CONCRETE BACKFILL (PIPE TRENCH)	CONCRETE (DITCH LINING)	CONCRETE (CHANNEL LINING)	MISCELLANEOUS IRON AND STEEL	RCP (12" - 30") 12" RCP	18" RCP	24" RCP	27" RCP	30" RCP	36" RCP	42" RCP	48" RCP	54" RCP	60" RCP	63" RCP	69" RCP	81" RCP	18" SLOTTED CSP (0.079" THICK)	6" NON-PERFORATED PLASTIC PIPE UNDERDRAIN	36" PRECAST CONCRETE PIPE MANHOLE	42" AUTOMATIC DRAINAGE GATE	24" CONCRETE FLARED END SECTION	DITCH EXCAVATION	HOT MIX ASPHALT (TYPE A)	PLACE HOT MIX ASPHALT (Misc AREA)	CONCRETED-ROCK SLOPE PROTECTION (FACING, METHOD B)	ROCK SLOPE PROTECTION FABRIC (CLASS 8)	GRATED LINE DRAIN	CABLE RAILING	REMOVE CONCRETE	REMOVE PIPE	REMOVE INLET	REMOVE MANHOLE	REMOVE CATCH BASIN	ADJUST MANHOLE	TYPE 24-12 FRAME AND GRATE (N)	MANHOLE FRAME AND COVER (630-3, U45) (N)	MANHOLE FRAME AND COVER (312-3) (N)	MANHOLE FRAME AND COVER (U46) (N)	FRAME & GRATING FOR CATCH BASINS(311-2) (N)	MAXIMUM COVER	DESCRIPTION	STATION
			FT	CY	CY	CY	CY	CY	CY	LB	LF	LF	LF	LF	LF	LF	LF	LF	LF	LF	LF	LF	LF	LF	LF	LF	EA	EA	CY	TON	SQYD	CY	SQYD	LF	LF	CY	LF	EA	EA	EA	EA	EA	EA	EA	EA	EA	FT		
D-13	14-2	a	6.5	2.38						580																																2						GD-1 INLET	100.50' L+ 19+41.00 ℄ "I5"
		b											46.0																																	4.6	24" RCP	
		c	6.8	2.47						580																																2						GD-1 INLET	100.50' L+ 19+90.00 ℄ "I5"
		d											69.2																																	4.9	24" RCP	
		e	7.1	2.55						580																																2						GD-1 INLET	100.50' L+ 20+62.00 ℄ "I5"
		f											105.5																																	5.2	24" RCP	
		g	7.3	2.61						580																																2						GD-1 INLET	100.50' L+ 21+70.00 ℄ "I5"
D-14		h											228.0																																	5.4	24" RCP	
		i	7.6	2.70						580																																2						GD-1 INLET	100.50' L+ 24+00.00 ℄ "I5"
		j											147.7																																	5.7	24" RCP	
		k	8.2	3.88						580																																2						GD-1 INLET	100.50' L+ 25+50.00 ℄ "I5"
		l											248.1																																	5.9	24" RCP	
		m	6.1	2.26						580																																2						GD-1 INLET	100.50' L+ 28+00.00 ℄ "I5"
		n											97.5																																	4.0	24" RCP	
	14-2	o	5.5	2.09						580																																2						GD-1 INLET	100.50' L+ 29+00.00 ℄ "I5"
		p											11.1																																	3.3	24" RCP	
		q	5.3	2.03						580																																2						GD-1 INLET	100.50' L+ 29+14.00 ℄ "I5"
		r											13.2																																	3.1	24" RCP	
		s	4.1	1.68						580																																2						GD-1 INLET	100.50' L+ 29+30.00 ℄ "I5"
		t											127.6																																	2.8	24" RCP	
		u	3.9	1.62						580																																2						GD-1 INLET	100.50' L+ 30+60.00 ℄ "I5"
		v											137.7																																	2.6	24" RCP	
SHEET TOTAL				26.27						6,380			1,231.6																													22							

(N) = NOT A SEPARATE PAY ITEM, FOR INFORMATION ONLY

DRAINAGE QUANTITIES
DQ- 32

STATE OF CALIFORNIA - DEPARTMENT OF TRANSPORTATION
Caltrans® HYDRAULICS

FUNCTIONAL SUPERVISOR: MARIA QUINONEZ
CALCULATED-DESIGNED BY: WING YAN LEE
CHECKED BY: SIEW MEI TAN
REVISED BY / DATE REVISED

LAST REVISION 00-00-00
DATE PLOTTED => 03-FEB-2016
TIME PLOTTED => 11:12

Dist	COUNTY	ROUTE	POST MILES TOTAL PROJECT	SHEET No.	TOTAL SHEETS
07	LA,Ora	5	0.0/1.5, 44.3/44.4	444	1622

REGISTERED CIVIL ENGINEER 5-7-14 DATE

1-25-16
PLANS APPROVAL DATE

REGISTERED PROFESSIONAL ENGINEER WING-YAN LEE No. 61452 Exp. 6-30-17 CIVIL STATE OF CALIFORNIA

THE STATE OF CALIFORNIA OR ITS OFFICERS OR AGENTS SHALL NOT BE RESPONSIBLE FOR THE ACCURACY OR COMPLETENESS OF SCANNED COPIES OF THIS PLAN SHEET.

NOTE:

JOINTS ARE STANDARD JOINT TYPE

SUMMARY OF DRAINAGE QUANTITIES

DRAINAGE PLAN SHEET No.	DRAINAGE SYSTEM No.	DRAINAGE UNIT	"H" OR "V"	MINOR CONCRETE (MINOR STRUCTURE)	MINOR CONCRETE (GUTTER DEPRESSION)	MINOR CONCRETE (SIDEWALK AND CURB RAMP)	CONCRETE BACKFILL (PIPE TRENCH)	CONCRETE (DITCH LINING)	CONCRETE (CHANNEL LINING)	MISCELLANEOUS IRON AND STEEL	RCP (12" - 30") 12" RCP	18" RCP	24" RCP	27" RCP	30" RCP	36" RCP	42" RCP	48" RCP	54" RCP	60" RCP	63" RCP	69" RCP	81" RCP	18" SLOTTED CSP (0.079" THICK)	6" NON-PERFORATED PLASTIC PIPE UNDERDRAIN	36" PRECAST CONCRETE PIPE MANHOLE	42" AUTOMATIC DRAINAGE GATE	24" CONCRETE FLARED END SECTION	DITCH EXCAVATION	HOT MIX ASPHALT (TYPE A)	PLACE HOT MIX ASPHALT (Misc AREA)	CONCRETED-ROCK SLOPE PROTECTION (FACING, METHOD B)	ROCK SLOPE PROTECTION FABRIC (CLASS 8)	6" GRATED LINE DRAIN	CABLE RAILING	REMOVE CONCRETE	REMOVE PIPE	REMOVE INLET	REMOVE MANHOLE	REMOVE CATCH BASIN	ADJUST MANHOLE	TYPE 24-12 FRAME AND GRATE (N)	MANHOLE FRAME AND COVER (630-3, U45) (N)	MANHOLE FRAME AND COVER (312-3) (N)	MANHOLE FRAME AND COVER (U46) (N)	FRAME & GRATING FOR CATCH BASINS(311-2) (N)	MAXIMUM COVER	DESCRIPTION	STATION
			FT	CY	CY	CY	CY	CY	CY	LB	LF	LF	LF	LF	LF	LF	LF	LF	LF	LF	LF	LF	LF	LF	LF	LF	EA	EA	CY	TON	SQYD	CY	SQYD	LF	LF	CY	LF	EA	EA	EA	EA	EA	EA	EA	EA	EA	FT		
D-14		w	3.8	1.59						580																																2						GD-1 INLET	100.50' L+ 32+00.00 ℄ "I5"
D-15		x											298.3																																	2.5	24" RCP	
		y	3.8	1.59						580																																2						GD-1 INLET	100.50' L+ 35+00.00 ℄ "I5"
		z											298.3																																	2.2	24" RCP	
		a1	3.6	1.53						580																																2						GD-1 INLET	100.50' L+ 38+00.00 ℄ "I5"
		b1											137.6																																	2.0	24" RCP	
		c1	3.5	1.50						580																																2						GD-1 INLET	100.50' L+ 39+40.00 ℄ "I5"
	14-3	a											20.0																																	7.0	24" RCP	
	14-4	a	3.0	1.86						115																																	1					COCB 300-3, W=7'	17.00' L+ 28+74.50 ⅊ "SFIR1"
		b					2.98					26.3																																		5.7	18" RCP W/ 12.5' Conc Bkf	
		c										16.8																																		5.7	18" RCP	
		d	4.5	2.48						115																																	1					COCB 300-3, W=7'	17.00' R+ 28+74.50 ⅊ "SFIR1"
	14-5	a	4.8	1.71						115																																	1					COCB 300-3, W=3.5'	12.75' L+ 32+12.14 ⅊ "NFIR1"
		b										5.2																																		2.8	18" RCP	
	14-6	a	7.0	3.51						115																																	1					COCB 300-3, W=7.0'	52.43' R+ 77+31.50 ⅊ "NFIR1"
SHEET TOTAL				15.77			2.98			2,780		48.3	754.2																													8		4					

(N) = NOT A SEPARATE PAY ITEM, FOR INFORMATION ONLY

DRAINAGE QUANTITIES
DQ- 33

STATE OF CALIFORNIA - DEPARTMENT OF TRANSPORTATION
Caltrans
HYDRAULICS

FUNCTIONAL SUPERVISOR: MARIA QUINONEZ
CALCULATED-DESIGNED BY: WING YAN LEE
CHECKED BY: SIEW MEI TAN
REVISED BY / DATE REVISED

LAST REVISION 00-00-00
DATE PLOTTED => 03-FEB-2016
TIME PLOTTED => 11:12

Dist	COUNTY	ROUTE	POST MILES TOTAL PROJECT	SHEET No.	TOTAL SHEETS
07	LA,Ora	5	0.0/1.5, 44.3/44.4	445	1622

REGISTERED CIVIL ENGINEER 5-7-14 DATE

1-25-16
PLANS APPROVAL DATE

REGISTERED PROFESSIONAL ENGINEER WING YAN LEE No. 61452 Exp. 6-30-17 CIVIL STATE OF CALIFORNIA

THE STATE OF CALIFORNIA OR ITS OFFICERS OR AGENTS SHALL NOT BE RESPONSIBLE FOR THE ACCURACY OR COMPLETENESS OF SCANNED COPIES OF THIS PLAN SHEET.

NOTE:
JOINTS ARE STANDARD JOINT TYPE

SUMMARY OF DRAINAGE QUANTITIES

DRAINAGE PLAN SHEET No.	DRAINAGE SYSTEM No.	DRAINAGE UNIT	"H" OR "V"	MINOR CONCRETE (MINOR STRUCTURE)	MINOR CONCRETE (GUTTER DEPRESSION)	MINOR CONCRETE (SIDEWALK AND CURB RAMP)	CONCRETE BACKFILL (PIPE TRENCH)	CONCRETE (DITCH LINING)	CONCRETE (CHANNEL LINING)	MISCELLANEOUS IRON AND STEEL	RCP (12" - 30") 12" RCP	18" RCP	24" RCP	27" RCP	30" RCP	36" RCP	42" RCP	48" RCP	54" RCP	60" RCP	63" RCP	69" RCP	81" RCP	18" SLOTTED CSP (0.079" THICK)	6" NON-PERFORATED PLASTIC PIPE UNDERDRAIN	36" PRECAST CONCRETE PIPE MANHOLE	42" AUTOMATIC DRAINAGE GATE	24" CONCRETE FLARED END SECTION	DITCH EXCAVATION	HOT MIX ASPHALT (TYPE A)	PLACE HOT MIX ASPHALT (Misc AREA)	CONCRETED-ROCK SLOPE PROTECTION (FACING, METHOD B)	ROCK SLOPE PROTECTION FABRIC (CLASS 8)	GRATED LINE DRAIN	CABLE RAILING	REMOVE CONCRETE	REMOVE PIPE	REMOVE INLET	REMOVE MANHOLE	REMOVE CATCH BASIN	ADJUST MANHOLE	TYPE 24-12 FRAME AND GRATE (N)	MANHOLE FRAME AND COVER (630-3, U45) (N)	MANHOLE FRAME AND COVER (312-3) (N)	MANHOLE FRAME AND COVER (U46) (N)	FRAME & GRATING FOR CATCH BASINS(311-2) (N)	MAXIMUM COVER	DESCRIPTION	STATION
			FT	CY	CY	CY	CY	CY	CY	LB	LF	LF	LF	LF	LF	LF	LF	LF	LF	LF	LF	LF	LF	LF	LF	EA	EA	CY	TON	SQYD	CY	SQYD	LF	LF	CY	LF	EA	EA	EA	EA	EA	EA	EA	EA	EA	FT		
D-14	14-7	a	4.5	2.48						115																																	1				COCB 300-3, W=7.0′	17.00′ L+ 71+16.50 ℄ "NFIR1"
		b										20.8																																	6.4	18" RCP	
		c					0.20																																							PIPE CONNECTION 335-2	3.00′ R+ 71+15.97 ℄ "NFIR1"
	14-8	a										8.0																																		18" RCP	
		b		0.68																																										JS 331-3	6.00′ R+ 30+23.00 ℄ "SFIR1"
D-15	15-1	a					0.20																																							PIPE CONNECTION 335-2	29.03′ R+ 35+81.68 ℄ "NFIR2"
		b										47.6																																	6.4	18" RCP	
		c	3.5	1.41						235																																1			JC 3-C	125.50 R+ 35+53.29 ℄ "I5"
		d						43.50																				43.50																		TYPE B DRAIN	
	15-2	a	4.5	2.48						115																																1				COCB 300-3, W=7′	17.00′ L+ 34+34.00 ℄ "SFIR1"
		b										22.4																																	4.7	18" RCP	
		c										11.1																																	4.7	18" RCP	
		d	4.5	2.48						115																																1				COCB 300-3, W=7′	17.00′ R+ 34+34.00 ℄ "SFIR1"
	15-3	a	4.5	2.48						115																																1				COCB 300-3, W=7′	17.00′ R+ 42+16.50 ℄ "SFIR1"
		b										8.6																																	4.7	18" RCP	
SHEET TOTAL				12.01			0.40	43.50		695		118.5																43.50														4	1				

(N) = NOT A SEPARATE PAY ITEM, FOR INFORMATION ONLY

DRAINAGE QUANTITIES
DQ- 34

STATE OF CALIFORNIA - DEPARTMENT OF TRANSPORTATION
Caltrans® HYDRAULICS

FUNCTIONAL SUPERVISOR MARIA QUINONEZ
CALCULATED-DESIGNED BY WING YAN LEE
CHECKED BY SIEW MEI TAN
REVISED BY
DATE REVISED

LAST REVISION 00-00-00
DATE PLOTTED => 03-FEB-2016
TIME PLOTTED => 11:12

Dist	COUNTY	ROUTE	POST MILES TOTAL PROJECT	SHEET No.	TOTAL SHEETS
07	LA,Ora	5	0.0/1.5, 44.3/44.4	446	1622

REGISTERED CIVIL ENGINEER 5-7-14 DATE

1-25-16
PLANS APPROVAL DATE

REGISTERED PROFESSIONAL ENGINEER WING YAN LEE No. 61452 Exp. 6-30-17 CIVIL STATE OF CALIFORNIA

THE STATE OF CALIFORNIA OR ITS OFFICERS OR AGENTS SHALL NOT BE RESPONSIBLE FOR THE ACCURACY OR COMPLETENESS OF SCANNED COPIES OF THIS PLAN SHEET.

NOTE:

JOINTS ARE STANDARD JOINT TYPE

SUMMARY OF DRAINAGE QUANTITIES

DRAINAGE PLAN SHEET No. ⬡	DRAINAGE SYSTEM No. ○	DRAINAGE UNIT	"H" OR "V" FT	MINOR CONCRETE (MINOR STRUCTURE) CY	MINOR CONCRETE (GUTTER DEPRESSION) CY	MINOR CONCRETE (SIDEWALK AND CURB RAMP) CY	CONCRETE BACKFILL (PIPE TRENCH) CY	CONCRETE (DITCH LINING) CY	CONCRETE (CHANNEL LINING) CY	MISCELLANEOUS IRON AND STEEL LB	RCP (12" - 30") 12" RCP LF	18" RCP LF	24" RCP LF	27" RCP LF	30" RCP LF	36" RCP LF	42" RCP LF	48" RCP LF	54" RCP LF	60" RCP LF	63" RCP LF	69" RCP LF	81" RCP LF	18" SLOTTED CSP (0.079" THICK) LF	6" NON-PERFORATED PLASTIC PIPE UNDERDRAIN LF	36" PRECAST CONCRETE PIPE MANHOLE LF	42" AUTOMATIC DRAINAGE GATE EA	24" CONCRETE FLARED END SECTION EA	DITCH EXCAVATION CY	HOT MIX ASPHALT (TYPE A) TON	PLACE HOT MIX ASPHALT (Misc AREA) SQYD	CONCRETED-ROCK SLOPE PROTECTION (FACING, METHOD B) CY	ROCK SLOPE PROTECTION FABRIC (CLASS 8) SQYD	GRATED LINE DRAIN LF	CABLE RAILING LF	REMOVE CONCRETE CY	REMOVE PIPE LF	REMOVE INLET EA	REMOVE MANHOLE EA	REMOVE CATCH BASIN EA	ADJUST MANHOLE EA	TYPE 24-12 FRAME AND GRATE (N) EA	MANHOLE FRAME AND COVER (630-3, U45) (N) EA	MANHOLE FRAME AND COVER (312-3) (N) EA	MANHOLE FRAME AND COVER (U46) (N) EA	FRAME & GRATING FOR CATCH BASINS(311-2) (N) EA	MAXIMUM COVER FT	DESCRIPTION	STATION
D-16	16-1	a						48.45																					48.45																		TYPE B DRAIN	
		b	4.2	1.59						235																																		1			JC 3-C	132.53′ R+ 52+36.19 ℄ "I5"
		c					4.18						59.2																																	2.9	24" RCP W/ Conc BACKFILL	
		d	3.9	1.61						580																															2					GD-1 INLET	129.03′ R+ 53+00.00 ℄ "I5"
		e					27.34						187.7																																	2.3	24" RCP W/ Conc BACKFILL	
D-17		f	4.3	1.72						580																															2					GD-1 INLET	132.63′ R+ 54+90.00 ℄ "I5"
		g											156.4																																	2.7	24" RCP	
		h	4.7	1.84						580																															2					GD-1 INLET	21.50′ R+ 56+53.75 ℄ "VA4"
		i											13.3																																	2.8	24" RCP	
		j	4.8	1.87						580																															2					GD-1 INLET	21.50′ R+ 56+70.00 ℄ "VA4"
		k											17.0																																	3.1	24" RCP	
		l	5.1	1.95						580																															2					GD-1 INLET	21.50′ R+ 56+90.00 ℄ "VA4"
		m											27.0																																	3.5	24" RCP	
		n	5.5	2.07						580																															2					GD-1 INLET	21.50′ R+ 57+20.00 ℄ "VA4"
		o										42.8																																	5.2	18" RCP	
		p	5.0	1.41						326																															1					TYPE G1 INLET	4.00′ L+ 57+60.00 ℄ "VA4"
		q										17.0																																	3.5	18" RCP	
		r																						17.0																								18" SCSP	
		s	4.7	1.34						326																															1					TYPE G1 INLET	4.00′ L+ 57+60.00 ℄ "VA4"
		t										17.0																																	3.5	18" RCP	
		u																						17.0																								18" SCSP	
		v	4.3	1.25						326																															1					TYPE G1 INLET	4.00′ L+ 58+00.00 ℄ "VA4"
SHEET TOTAL				16.65			31.52	48.45		4,693		76.8	460.6											34.0				48.45													15		1				

(N) = NOT A SEPARATE PAY ITEM, FOR INFORMATION ONLY

DRAINAGE QUANTITIES
DQ- 35

STATE OF CALIFORNIA - DEPARTMENT OF TRANSPORTATION
Caltrans®
HYDRAULICS

FUNCTIONAL SUPERVISOR: MARIA QUINONEZ
CALCULATED-DESIGNED BY: SIEW MEI TAN
CHECKED BY: WING YAN LEE
REVISED BY
DATE REVISED

LAST REVISION 00-00-00
DATE PLOTTED => 03-FEB-2016
TIME PLOTTED => 11:12

Dist	COUNTY	ROUTE	POST MILES TOTAL PROJECT	SHEET No.	TOTAL SHEETS
07	LA,Ora	5	0.0/1.5, 44.3/44.4	447	1622

REGISTERED CIVIL ENGINEER 5-7-14 DATE

1-25-16
PLANS APPROVAL DATE

REGISTERED PROFESSIONAL ENGINEER WING YAN LEE No. 61452 Exp. 6-30-17 CIVIL STATE OF CALIFORNIA

THE STATE OF CALIFORNIA OR ITS OFFICERS OR AGENTS SHALL NOT BE RESPONSIBLE FOR THE ACCURACY OR COMPLETENESS OF SCANNED COPIES OF THIS PLAN SHEET.

NOTE:

JOINTS ARE STANDARD JOINT TYPE

SUMMARY OF DRAINAGE QUANTITIES

DRAINAGE PLAN SHEET No.	DRAINAGE SYSTEM No.	DRAINAGE UNIT	"H" OR "V"	MINOR CONCRETE (MINOR STRUCTURE)	MINOR CONCRETE (GUTTER DEPRESSION)	MINOR CONCRETE (SIDEWALK AND CURB RAMP)	CONCRETE BACKFILL (PIPE TRENCH)	CONCRETE (DITCH LINING)	CONCRETE (CHANNEL LINING)	MISCELLANEOUS IRON AND STEEL	RCP (12" - 30") 12" RCP	18" RCP	24" RCP	27" RCP	30" RCP	36" RCP	42" RCP	48" RCP	54" RCP	60" RCP	63" RCP	69" RCP	81" RCP	18" SLOTTED CSP (0.079" THICK)	6" NON-PERFORATED PLASTIC PIPE UNDERDRAIN	36" PRECAST CONCRETE PIPE MANHOLE	42" AUTOMATIC DRAINAGE GATE	24" CONCRETE FLARED END SECTION	DITCH EXCAVATION	HOT MIX ASPHALT (TYPE A)	PLACE HOT MIX ASPHALT (Misc AREA)	CONCRETED-ROCK SLOPE PROTECTION (FACING, METHOD B)	ROCK SLOPE PROTECTION FABRIC (CLASS 8)	GRATED LINE DRAIN	CABLE RAILING	REMOVE CONCRETE	REMOVE PIPE	REMOVE INLET	REMOVE MANHOLE	REMOVE CATCH BASIN	ADJUST MANHOLE	TYPE 24-12 FRAME AND GRATE (N)	MANHOLE FRAME AND COVER (630-3, U45) (N)	MANHOLE FRAME AND COVER (312-3) (N)	MANHOLE FRAME AND COVER (U46) (N)	FRAME & GRATING FOR CATCH BASINS(311-2) (N)	MAXIMUM COVER	DESCRIPTION	STATION
			FT	CY	CY	CY	CY	CY	CY	LB	LF	LF	LF	LF	LF	LF	LF	LF	LF	LF	LF	LF	LF	LF	LF	LF	EA	EA	CY	TON	SQYD	CY	SQYD	LF	LF	CY	LF	EA	EA	EA	EA	EA	EA	EA	EA	EA	FT		
D-17	16-1	w											10.3																																	6.4	24" RCP	
	16-2	a	5.0	1.94						580																														2						GD-1 INLET	33.50′ L+ 55+20.00 ℄ "VA3"
		b										367.2																																	4.0	18" RCP	
D-16		c	5.6	1.52						326																														1						TYPE G1 INLET	33.50′ L+ 51+50.00 ℄ "VA3"
		d																						40.0																							18" SCSP	
		e										40.0																																	4.2	18" RCP	
		f	5.8	1.57						326																														1						TYPE G1 INLET	33.50′ L+ 51+07.00 ℄ "VA3"
		g										32.5																																	4.4	18" RCP	
		h	6.1	2.10						326																														1						TYPE G2 INLET	4.00′ R+ 51+07.00 ℄ "VA3"
		i										166.0																																	4.7	18" RCP	
		j	3.6	1.08						326																														1						TYPE G1 INLET	4.00′ R+ 49+38.00 ℄ "VA3"
		k										16.5																																	4.2	18" RCP	
		l	4.4	1.76						580																														2						GD-1 INLET	101.00′ L+ 49+35.04 ℄ "I5"
		m											303.3																																	2.5	24" RCP	
		n	4.2	1.71						580																														2						GD-1 INLET	101.00′ L+ 52+40.00 ℄ "I5"
D-17		o											298.2																																	2.2	24" RCP	
		p	5.3	2.03						580																														2						GD-1 INLET	101.00′ L+ 55+40.00 ℄ "I5"
		q											298.3																																	2.9	24" RCP	
		r	5.0	1.94						580																														2						GD-1 INLET	101.00′ L+ 58+40.00 ℄ "I5"
		s											132.9																																	3.7	24" RCP	
		t				11.86							39.6																																	2.0	24" RCP	
SHEET TOTAL				15.65			11.86			4,204		622.2	1,082.6											40.0																14								

(N) = NOT A SEPARATE PAY ITEM, FOR INFORMATION ONLY

DRAINAGE QUANTITIES
DQ- 36

STATE OF CALIFORNIA - DEPARTMENT OF TRANSPORTATION
Caltrans® HYDRAULICS

FUNCTIONAL SUPERVISOR: MARIA QUINONEZ
CALCULATED-DESIGNED BY: SIEW MEI TAN
CHECKED BY: WING YAN LEE
REVISED BY
DATE REVISED

LAST REVISION 00-00-00
DATE PLOTTED => 03-FEB-2016
TIME PLOTTED => 11:12

Dist	COUNTY	ROUTE	POST MILES TOTAL PROJECT	SHEET No.	TOTAL SHEETS
07	LA,Ora	5	0.0/1.5, 44.3/44.4	448	1622

REGISTERED CIVIL ENGINEER 5-7-14 DATE

1-25-16
PLANS APPROVAL DATE

REGISTERED PROFESSIONAL ENGINEER WING YAN LEE No. 61452 Exp. 6-30-17 CIVIL STATE OF CALIFORNIA

THE STATE OF CALIFORNIA OR ITS OFFICERS OR AGENTS SHALL NOT BE RESPONSIBLE FOR THE ACCURACY OR COMPLETENESS OF SCANNED COPIES OF THIS PLAN SHEET.

NOTE:
JOINTS ARE STANDARD JOINT TYPE

SUMMARY OF DRAINAGE QUANTITIES

DRAINAGE PLAN SHEET No.	DRAINAGE SYSTEM No.	DRAINAGE UNIT	"H" OR "V"	MINOR CONCRETE (MINOR STRUCTURE)	MINOR CONCRETE (GUTTER DEPRESSION)	MINOR CONCRETE (SIDEWALK AND CURB RAMP)	CONCRETE BACKFILL (PIPE TRENCH)	CONCRETE (DITCH LINING)	CONCRETE (CHANNEL LINING)	MISCELLANEOUS IRON AND STEEL	RCP (12" - 30") 12" RCP	18" RCP	24" RCP	27" RCP	30" RCP	36" RCP	42" RCP	48" RCP	54" RCP	60" RCP	63" RCP	69" RCP	81" RCP	18" SLOTTED CSP (0.079" THICK)	6" NON-PERFORATED PLASTIC PIPE UNDERDRAIN	36" PRECAST CONCRETE PIPE MANHOLE	42" AUTOMATIC DRAINAGE GATE	24" CONCRETE FLARED END SECTION	DITCH EXCAVATION	HOT MIX ASPHALT (TYPE A)	PLACE HOT MIX ASPHALT (Misc AREA)	CONCRETED-ROCK SLOPE PROTECTION (FACING, METHOD B)	ROCK SLOPE PROTECTION FABRIC (CLASS 8)	GRATED LINE DRAIN	CABLE RAILING	REMOVE CONCRETE	REMOVE PIPE	REMOVE INLET	REMOVE MANHOLE	REMOVE CATCH BASIN	ADJUST MANHOLE	TYPE 24-12 FRAME AND GRATE (N)	MANHOLE FRAME AND COVER (630-3, U45) (N)	MANHOLE FRAME AND COVER (312-3) (N)	MANHOLE FRAME AND COVER (U46) (N)	FRAME & GRATING FOR CATCH BASINS(311-2) (N)	MAXIMUM COVER	DESCRIPTION	STATION
			FT	CY	CY	CY	CY	CY	CY	LB	LF	LF	LF	LF	LF	LF	LF	LF	LF	LF	LF	LF	LF	LF	LF	LF	EA	EA	CY	TON	SQYD	CY	SQYD	LF	LF	CY	LF	EA	EA	EA	EA	EA	EA	EA	EA	EA	FT		
D-17	16-2	u																							34.0																					11.4	6" PP	
		v	9.5	3.31						235																																	1			JC 3-C	39.50′ R+ 60+65.79 ℄ "SFIR1"
		w											28.6																																11.0	24" RCP	
D-16	16-3	a											4.0																																4.0	24" RCP	
		b	4.3	2.74						435																0.9															1					MH 321-2	6.00′ R+ 52+24.44 ℄ "SFIR1"
		c											115.1																																5.5	24" RCP	
		d	4.0	2.65						435																2.8															1					MH 321-2	6.00′ R+ 53+44.00 ℄ "SFIR1"
		e											252.0																																8.3	24" RCP	
D-17		f	4.0	2.63						435																5.8															1					MH 321-2	6.00′ R+ 56+00.00 ℄ "SFIR1"
		g													246.0																														8.3	30" RCP	
		h		0.57																																										JUNCTION STRUCTURE 331-3	6.00′ R+ 57+54.90 ℄ "SFIR1"
		i	4.0	2.61						435																3.3															1					MH 321-2	6.00′ R+ 58+50.00 ℄ "SFIR1"
		j													222.5																														5.8	30" RCP	
		k		0.52																																										JUNCTION STRUCTURE 331-3	6.00′ R+ 60+01.90 ℄ "SFIR1"
		l		2.97						435																3.6															1					MH 322-2	6.00′ R+ 60+78.39 ℄ "SFIR1"
		m															272.4																												5.7	42" RCP	
		n		2.64						435																5.1															1					MH 320-2	6.00′ R+ 63+57.15 ℄ "SFIR1"
		o															149.3																												5.8	42" RCP	
		p		3.36						435																4.8															1					MH 322-2	6.00′ R+ 65+13.42 ℄ "SFIR1"
		q															281.0																												5.8	42" RCP	
D-18		r		0.57																																										JUNCTION STRUCTURE 331-3	6.00′ R+ 66+56.06 ℄ "SFIR1"
SHEET TOTAL				24.57						3,280			399.7		468.5		702.7								34.0	26.3														7		1					

(N) = NOT A SEPARATE PAY ITEM, FOR INFORMATION ONLY

DRAINAGE QUANTITIES
DQ- 37

STATE OF CALIFORNIA - DEPARTMENT OF TRANSPORTATION
Caltrans®
HYDRAULICS

FUNCTIONAL SUPERVISOR: MARIA QUINONEZ
CALCULATED-DESIGNED BY: WING YAN LEE
CHECKED BY: SIEW MEI TAN
REVISED BY
DATE REVISED

LAST REVISION 00-00-00
DATE PLOTTED => 03-FEB-2016
TIME PLOTTED => 11:12

Dist	COUNTY	ROUTE	POST MILES TOTAL PROJECT	SHEET No.	TOTAL SHEETS
07	LA,Ora	5	0.0/1.5, 44.3/44.4	449	1622

REGISTERED CIVIL ENGINEER 5-7-14 DATE

1-25-16
PLANS APPROVAL DATE

REGISTERED PROFESSIONAL ENGINEER WING YAN LEE No. 61452 Exp. 6-30-17 CIVIL STATE OF CALIFORNIA

THE STATE OF CALIFORNIA OR ITS OFFICERS OR AGENTS SHALL NOT BE RESPONSIBLE FOR THE ACCURACY OR COMPLETENESS OF SCANNED COPIES OF THIS PLAN SHEET.

NOTE:
JOINTS ARE STANDARD JOINT TYPE

SUMMARY OF DRAINAGE QUANTITIES

DRAINAGE PLAN SHEET No.	DRAINAGE SYSTEM No.	DRAINAGE UNIT	"H" OR "V"	MINOR CONCRETE (MINOR STRUCTURE)	MINOR CONCRETE (GUTTER DEPRESSION)	MINOR CONCRETE (SIDEWALK AND CURB RAMP)	CONCRETE BACKFILL (PIPE TRENCH)	CONCRETE (DITCH LINING)	CONCRETE (CHANNEL LINING)	MISCELLANEOUS IRON AND STEEL	RCP (12" - 30") 12" RCP	18" RCP	24" RCP	27" RCP	30" RCP	36" RCP	42" RCP	48" RCP	54" RCP	60" RCP	63" RCP	69" RCP	81" RCP	18" SLOTTED CSP (0.079" THICK)	6" NON-PERFORATED PLASTIC PIPE UNDERDRAIN	36" PRECAST CONCRETE PIPE MANHOLE	42" AUTOMATIC DRAINAGE GATE	24" CONCRETE FLARED END SECTION	DITCH EXCAVATION	HOT MIX ASPHALT (TYPE A)	PLACE HOT MIX ASPHALT (Misc AREA)	CONCRETED-ROCK SLOPE PROTECTION (FACING, METHOD B)	ROCK SLOPE PROTECTION FABRIC (CLASS 8)	GRATED LINE DRAIN	CABLE RAILING	REMOVE CONCRETE	REMOVE PIPE	REMOVE INLET	REMOVE MANHOLE	REMOVE CATCH BASIN	ADJUST MANHOLE	TYPE 24-12 FRAME AND GRATE (N)	MANHOLE FRAME AND COVER (630-3, U45) (N)	MANHOLE FRAME AND COVER (312-3) (N)	MANHOLE FRAME AND COVER (U46) (N)	FRAME & GRATING FOR CATCH BASINS(311-2) (N)	MAXIMUM COVER	DESCRIPTION	STATION
			ft	CY	CY	CY	CY	CY	CY	LB	LF	LF	LF	LF	LF	LF	LF	LF	LF	LF	LF	LF	LF	LF	LF	EA	EA	CY	TON	SQYD	CY	SQYD	LF	LF	CY	LF	EA	EA	EA	EA	EA	EA	EA	EA	ft		
D-18	16-3	s		0.57																																										JUNCTION STRUCTURE 331-3	6.00′ R† 67+41.96 ℄ "SFIR1"
		†		2.64						435															4.1																1				MH 320-2	6.00′ R† 68+00.00 ℄ "SFIR1"
		u															305.8																											8.0	42" RCP	
		v		3.36						435															7.4																1				MH 322-2	6.00′ R† 71+11.00 ℄ "SFIR1"
		w															383.2																											8.0	42" RCP	
		x		0.57																																									JUNCTION STRUCTURE 331-3	6.00′ R† 72+15.18 ℄ "SFIR1"
		y		0.57																																									JUNCTION STRUCTURE 331-3	6.00′ R† 73+42.95 ℄ "SFIR1"
		z		2.64						435															10.1																1				MH 320-2	6.00′ R† 75+00.00 ℄ "SFIR1"
		a1															276.0																											13.6	42" RCP	
		b1		9.10																																									JUNCTION STRUCTURE D	81.79′ L† 77+27.98 ℄ "SFIR1"
		c1																								1																				42" STEEL AUTOMATIC DRAINAGE GATE	
D-16	16-4	a	4.5	5.89						115																															1				COCB 300-3, W=21′	17.00′ L† 52+18.28 ℄ "SFIR1"
		b										21.8																																3.5	18" RCP	
		c										11.4																																3.5	18" RCP	
		d	4.5	2.48						115																															1				COCB 300-3, W=7′	17.00′ R† 52+18.28 ℄ "SFIR1"
	16-5	a	4.5	2.48						115																															1				COCB 300-3, W=7′	17.00′ L† 44+36.50 ℄ "SFIR1"
		b										23.0																																4.4	18" RCP	
SHEET TOTAL				30.30						1,650		56.2					965.0								21.6	1															3	3				

(N) = NOT A SEPARATE PAY ITEM, FOR INFORMATION ONLY

DRAINAGE QUANTITIES
DQ-38

STATE OF CALIFORNIA - DEPARTMENT OF TRANSPORTATION
Caltrans® HYDRAULICS

FUNCTIONAL SUPERVISOR: MARIA QUINONEZ
CALCULATED-DESIGNED BY: SIEW MEI TAN
CHECKED BY: WING YAN LEE
REVISED BY
DATE REVISED

LAST REVISION 00-00-00
DATE PLOTTED => 03-FEB-2016
TIME PLOTTED => 11:12

Dist	COUNTY	ROUTE	POST MILES TOTAL PROJECT	SHEET No.	TOTAL SHEETS
07	LA,Ora	5	0.0/1.5, 44.3/44.4	450	1622

REGISTERED CIVIL ENGINEER 5-7-14 DATE

1-25-16
PLANS APPROVAL DATE

REGISTERED PROFESSIONAL ENGINEER WING YAN LEE No. 61452 Exp. 6-30-17 CIVIL STATE OF CALIFORNIA

THE STATE OF CALIFORNIA OR ITS OFFICERS OR AGENTS SHALL NOT BE RESPONSIBLE FOR THE ACCURACY OR COMPLETENESS OF SCANNED COPIES OF THIS PLAN SHEET.

NOTE:
JOINTS ARE STANDARD JOINT TYPE

SUMMARY OF DRAINAGE QUANTITIES

DRAINAGE PLAN SHEET No. ⬡	DRAINAGE SYSTEM No. ○	DRAINAGE UNIT	"H" OR "V" FT	MINOR CONCRETE (MINOR STRUCTURE) CY	MINOR CONCRETE (GUTTER DEPRESSION) CY	MINOR CONCRETE (SIDEWALK AND CURB RAMP) CY	CONCRETE BACKFILL (PIPE TRENCH) CY	CONCRETE (DITCH LINING) CY	CONCRETE (CHANNEL LINING) CY	MISCELLANEOUS IRON AND STEEL LB	RCP (12" - 30") 12" RCP LF	18" RCP LF	24" RCP LF	27" RCP LF	30" RCP LF	36" RCP LF	42" RCP LF	48" RCP LF	54" RCP LF	60" RCP LF	63" RCP LF	69" RCP LF	81" RCP LF	18" SLOTTED CSP (0.079" THICK) LF	6" NON-PERFORATED PLASTIC PIPE UNDERDRAIN LF	36" PRECAST CONCRETE PIPE MANHOLE LF	42" AUTOMATIC DRAINAGE GATE EA	24" CONCRETE FLARED END SECTION EA	DITCH EXCAVATION CY	HOT MIX ASPHALT (TYPE A) TON	PLACE HOT MIX ASPHALT (Misc AREA) SQYD	CONCRETED-ROCK SLOPE PROTECTION (FACING, METHOD B) CY	ROCK SLOPE PROTECTION FABRIC (CLASS 8) SQYD	GRATED LINE DRAIN LF	CABLE RAILING LF	REMOVE CONCRETE CY	REMOVE PIPE LF	REMOVE INLET EA	REMOVE MANHOLE EA	REMOVE CATCH BASIN EA	ADJUST MANHOLE EA	TYPE 24-12 FRAME AND GRATE (N) EA	MANHOLE FRAME AND COVER (630-3, U45) (N) EA	MANHOLE FRAME AND COVER (312-3) (N) EA	MANHOLE FRAME AND COVER (U46) (N) EA	FRAME & GRATING FOR CATCH BASINS(311-2) (N) EA	MAXIMUM COVER FT	DESCRIPTION	STATION
D-16	16-6	a	4.5	2.48						115																														1					COCB 300-3, W=7′	17.00′ R+ 48+19.00 ℄ "SFIR1"
		b										12.6																																3.4	18" RCP	
	16-7	a	4.0	1.17						326																												1					TYPE G1 INLET	4.00′ R+ 48+70.00 ℄ "VA3"
		b										17.0																																2.6	18" RCP	
		c	4.2	1.21						326																												1					TYPE G1 INLET	4.00′ R+ 48+50.00 ℄ "VA3"
		d										15.9																																2.2	18" RCP	
		e	4.5	1.28						326																												1					TYPE G1 INLET	4.00′ R+ 48+31.00 ℄ "VA3"
		f										133.0																																4.4	18" RCP	
		g	6.1	2.10						326																												1					TYPE G1 INLET	4.00′ R+ 46+95.00 ℄ "VA3"
		h																						20.0																					18" SCSP	
		i										20.0																																6.3	18" RCP	
		j	6.5	2.20						326																												1					TYPE G1 INLET	4.00′ R+ 46+72.00 ℄ "VA3"
		k										52.3																																4.7	18" RCP	
		l	6.4	2.34						326																												1					TYPE G1 INLET	126.52′ L+ 46+12.00 ℄ "I5"
		m											20.3																															4.4	24" RCP	
		n	6.5	2.38						580																												2					GD-1 INLET	123.79′ L+ 46+00.00 ℄ "I5"
		o											14.1																															4.6	24" RCP	
		p	6.9	2.47						580																												2					GD-1 INLET	122.15′ L+ 45+88.00 ℄ "I5"
		q											42.9																															2.9	24" RCP	
SHEET TOTAL				17.63						3,231		250.8	77.3											20.0														10		1					

(N) = NOT A SEPARATE PAY ITEM, FOR INFORMATION ONLY

DRAINAGE QUANTITIES
DQ- 39

STATE OF CALIFORNIA - DEPARTMENT OF TRANSPORTATION
Caltrans®
HYDRAULICS

FUNCTIONAL SUPERVISOR: MARIA QUINONEZ
CALCULATED-DESIGNED BY: SIEW MEI TAN
CHECKED BY: WING YAN LEE
REVISED BY
DATE REVISED

LAST REVISION 00-00-00
DATE PLOTTED => 03-FEB-2016
TIME PLOTTED => 11:12

Dist	COUNTY	ROUTE	POST MILES TOTAL PROJECT	SHEET No.	TOTAL SHEETS
07	LA,Ora	5	0.0/1.5, 44.3/44.4	451	1622

REGISTERED CIVIL ENGINEER 5-7-14 DATE

1-25-16
PLANS APPROVAL DATE

REGISTERED PROFESSIONAL ENGINEER WING YAN LEE No. 61452 Exp. 6-30-17 CIVIL STATE OF CALIFORNIA

THE STATE OF CALIFORNIA OR ITS OFFICERS OR AGENTS SHALL NOT BE RESPONSIBLE FOR THE ACCURACY OR COMPLETENESS OF SCANNED COPIES OF THIS PLAN SHEET.

NOTE:

JOINTS ARE STANDARD JOINT TYPE

SUMMARY OF DRAINAGE QUANTITIES

DRAINAGE PLAN SHEET No.	DRAINAGE SYSTEM No.	DRAINAGE UNIT	"H" OR "V"	MINOR CONCRETE (MINOR STRUCTURE)	MINOR CONCRETE (GUTTER DEPRESSION)	MINOR CONCRETE (SIDEWALK AND CURB RAMP)	CONCRETE BACKFILL (PIPE TRENCH)	CONCRETE (DITCH LINING)	CONCRETE (CHANNEL LINING)	MISCELLANEOUS IRON AND STEEL	RCP (12" - 30") 12" RCP	18" RCP	24" RCP	27" RCP	30" RCP	36" RCP	42" RCP	48" RCP	54" RCP	60" RCP	63" RCP	69" RCP	81" RCP	18" SLOTTED CSP (0.079" THICK)	6" NON-PERFORATED PLASTIC PIPE UNDERDRAIN	36" PRECAST CONCRETE PIPE MANHOLE	42" AUTOMATIC DRAINAGE GATE	24" CONCRETE FLARED END SECTION	DITCH EXCAVATION	HOT MIX ASPHALT (TYPE A)	PLACE HOT MIX ASPHALT (Misc AREA)	CONCRETED-ROCK SLOPE PROTECTION (FACING, METHOD B)	ROCK SLOPE PROTECTION FABRIC (CLASS 8)	GRATED LINE DRAIN	CABLE RAILING	REMOVE CONCRETE	REMOVE PIPE	REMOVE INLET	REMOVE MANHOLE	REMOVE CATCH BASIN	ADJUST MANHOLE	TYPE 24-12 FRAME AND GRATE (N)	MANHOLE FRAME AND COVER (630-3, U45) (N)	MANHOLE FRAME AND COVER (312-3) (N)	MANHOLE FRAME AND COVER (U46) (N)	FRAME & GRATING FOR CATCH BASINS(311-2) (N)	MAXIMUM COVER	DESCRIPTION	STATION
			FT	CY	CY	CY	CY	CY	CY	LB	LF	LF	LF	LF	LF	LF	LF	LF	LF	LF	LF	LF	LF	LF	LF	LF	EA	EA	CY	TON	SQYD	CY	SQYD	LF	LF	CY	LF	EA	EA	EA	EA	EA	EA	EA	EA	EA	FT		
D-17	17-1	a	4.0	1.65						580																																2						GD-1 INLET	101.00′ R+ 61+70.00 ℄ "I5"
		b											122.1																																	2.4	24" RCP	
		c	4.5	1.80						580																																2						GD-1 INLET	101.00′ R+ 62+95.00 ℄ "I5"
		d											10.1																																	2.6	24" RCP	
		e	4.7	1.85						580																																2						GD-1 INLET	101.00′ R+ 63+08.00 ℄ "I5"
		f											8.6																																	2.6	24" RCP	
		g	4.6	1.83						580																																2						GD-1 INLET	101.00′ R+ 63+20.00 ℄ "I5"
		h											87.1																																	2.4	24" RCP	
		i	4.1	1.68						580																																2						GD-1 INLET	101.00′ R+ 64+10.00 ℄ "I5"
		j											40.5																																	4.4	24" RCP	
		k	7.0	2.33						326																																1						TYPE G2 INLET	24.17′ R+ 63+12.22 ℄ "VA4"
		l											9.7																																	5.0	24" RCP	
		m		0.85																																												J.S. 331-3	41.31′ R+ 63+13.72 ℄ "VA4"
	17-2	a	2.0	0.73						326																																1						TYPE CL3 CLEANOUT	4.00′ L+ 60+79.00 ℄ "VA4"
		b																						20.0																								18" SCSP	
		c	3.5	1.06						326																																1						TYPE G1 INLET	4.00′ L+ 61+02.00 ℄ "VA4"
		d										125.0																																		3.2	18" RCP	
		e	4.8	1.35						326																																1						TYPE G1 INLET	4.00′ L+ 62+30.00 ℄ "VA4"
		f										19.7																																		2.9	18" RCP	
		g	4.9	1.91						580																																2						GD-1 INLET	21.50′ R+ 62+30.00 ℄ "VA4"
		h											20.3																																	7.4	24" RCP	
		i											17.9																																	2.7	24" RCP	
SHEET TOTAL				17.04						4,784		144.7	316.3											20.0																		16							

(N) = NOT A SEPARATE PAY ITEM, FOR INFORMATION ONLY

DRAINAGE QUANTITIES
DQ-40

STATE OF CALIFORNIA - DEPARTMENT OF TRANSPORTATION
Caltrans®
HYDRAULICS

CALCULATED-DESIGNED BY: SIEW MEI TAN
CHECKED BY: WING YAN LEE
REVISED BY
DATE REVISED
FUNCTIONAL SUPERVISOR: MARIA QUINONEZ

LAST REVISION 00-00-00
DATE PLOTTED => 03-FEB-2016
TIME PLOTTED => 11:12

Dist	COUNTY	ROUTE	POST MILES TOTAL PROJECT	SHEET No.	TOTAL SHEETS
07	LA,Ora	5	0.0/1.5, 44.3/44.4	452	1622

REGISTERED CIVIL ENGINEER 5-7-14 DATE

1-25-16
PLANS APPROVAL DATE

REGISTERED PROFESSIONAL ENGINEER WING-YAN LEE No. 61452 Exp. 6-30-17 CIVIL STATE OF CALIFORNIA

THE STATE OF CALIFORNIA OR ITS OFFICERS OR AGENTS SHALL NOT BE RESPONSIBLE FOR THE ACCURACY OR COMPLETENESS OF SCANNED COPIES OF THIS PLAN SHEET.

NOTE:

JOINTS ARE STANDARD JOINT TYPE

SUMMARY OF DRAINAGE QUANTITIES

DRAINAGE PLAN SHEET No.	DRAINAGE SYSTEM No.	DRAINAGE UNIT	"H" OR "V"	MINOR CONCRETE (MINOR STRUCTURE)	MINOR CONCRETE (GUTTER DEPRESSION)	MINOR CONCRETE (SIDEWALK AND CURB RAMP)	CONCRETE BACKFILL (PIPE TRENCH)	CONCRETE (DITCH LINING)	CONCRETE (CHANNEL LINING)	MISCELLANEOUS IRON AND STEEL	RCP (12" - 30") 12" RCP	18" RCP	24" RCP	27" RCP	30" RCP	36" RCP	42" RCP	48" RCP	54" RCP	60" RCP	63" RCP	69" RCP	81" RCP	18" SLOTTED CSP (0.079" THICK)	6" NON-PERFORATED PLASTIC PIPE UNDERDRAIN	36" PRECAST CONCRETE PIPE MANHOLE	42" AUTOMATIC DRAINAGE GATE	24" CONCRETE FLARED END SECTION	DITCH EXCAVATION	HOT MIX ASPHALT (TYPE A)	PLACE HOT MIX ASPHALT (Misc AREA)	CONCRETED-ROCK SLOPE PROTECTION (FACING, METHOD B)	ROCK SLOPE PROTECTION FABRIC (CLASS 8)	GRATED LINE DRAIN	CABLE RAILING	REMOVE CONCRETE	REMOVE PIPE	REMOVE INLET	REMOVE MANHOLE	REMOVE CATCH BASIN	ADJUST MANHOLE	TYPE 24-12 FRAME AND GRATE (N)	MANHOLE FRAME AND COVER (630-3, U45) (N)	MANHOLE FRAME AND COVER (312-3) (N)	MANHOLE FRAME AND COVER (U46) (N)	FRAME & GRATING FOR CATCH BASINS(311-2) (N)	MAXIMUM COVER	DESCRIPTION	STATION
			FT	CY	CY	CY	CY	CY	CY	LB	LF	LF	LF	LF	LF	LF	LF	LF	LF	LF	LF	LF	LF	LF	LF	LF	EA	EA	CY	TON	SQYD	CY	SQYD	LF	LF	CY	LF	EA	EA	EA	EA	EA	EA	EA	EA	EA	FT		
D-17	17-2	j	4.2	1.71						580																																2						GD-1 INLET	21.50′ R+ 62+51.00 ℄ "VA4"
		k											16.9																																	2.0	24" RCP	
		l	4.0	1.65						580																																2						GD-1 INLET	21.50′ R+ 62+71.00 ℄ "VA4"
	17-3	a	8.2	3.38						580																																2						GD-2 INLET	33.38′ R+ 57+20.00 ℄ "VA4"
		b																292.6																												3.8	48" RCP	
		c	5.4	3.23						435															3.7																		1					MANHOLE No. 2	35.00′ R+ 60+12.32 ℄ "VA4"
		d																	220.8																											4.6	54" RCP	
		e	6.5	4.26						435															4.1																		1					MANHOLE No. 2	38.67′ R+ 62+38.68 ℄ "VA4"
		f																		216.5																										4.6	60" RCP	
		g	6.1	5.33						435															3.5																		1					MANHOLE No. 2	68.47′ R+ 64+55.85 ℄ "VA4"
		h																			280.9																									2.8	63" RCP	
		i	7.8	5.76						435															0.7																		1					MANHOLE No. 2	31.56′ R+ 67+36.52 ℄ "VA4"
		j				9.10															436.4																									7.9	63" RCP W/ Conc Bkf	
		k		7.95																																											JUNCTION STRUCTURE No. 2	59.40′ L+ 71+88.27 ℄ "VA1"
		l																				91.0																									10.0	69" RCP	
		m	6.6	6.30						435															10.0																		1					MANHOLE No. 2	31.30′ L+ 72+77.23 ℄ "VA1"
		n																				527.7																									12.5	69" RCP	
SHEET TOTAL				39.57			9.10			3,915			16.9					292.6	220.8	216.5	717.3	618.7				22.0																6	5						

(N) = NOT A SEPARATE PAY ITEM, FOR INFORMATION ONLY

DRAINAGE QUANTITIES
DQ-41

STATE OF CALIFORNIA - DEPARTMENT OF TRANSPORTATION
Caltrans HYDRAULICS

FUNCTIONAL SUPERVISOR: MARIA QUINONEZ
CALCULATED-DESIGNED BY: WING YAN LEE
CHECKED BY: SIEW MEI TAN
REVISED BY / DATE REVISED

LAST REVISION 00-00-00
DATE PLOTTED => 03-FEB-2016
TIME PLOTTED => 11:12

Dist	COUNTY	ROUTE	POST MILES TOTAL PROJECT	SHEET No.	TOTAL SHEETS
07	LA,Ora	5	0.0/1.5, 44.3/44.4	453	1622

REGISTERED CIVIL ENGINEER 5-7-14 DATE

1-25-16
PLANS APPROVAL DATE

REGISTERED PROFESSIONAL ENGINEER WING-YAN LEE No. 61452 Exp. 6-30-17 CIVIL STATE OF CALIFORNIA

THE STATE OF CALIFORNIA OR ITS OFFICERS OR AGENTS SHALL NOT BE RESPONSIBLE FOR THE ACCURACY OR COMPLETENESS OF SCANNED COPIES OF THIS PLAN SHEET.

NOTE:

JOINTS ARE STANDARD JOINT TYPE

SUMMARY OF DRAINAGE QUANTITIES

DRAINAGE PLAN SHEET No.	DRAINAGE SYSTEM No.	DRAINAGE UNIT	"H" OR "V"	MINOR CONCRETE (MINOR STRUCTURE)	MINOR CONCRETE (GUTTER DEPRESSION)	MINOR CONCRETE (SIDEWALK AND CURB RAMP)	CONCRETE BACKFILL (PIPE TRENCH)	CONCRETE (DITCH LINING)	CONCRETE (CHANNEL LINING)	MISCELLANEOUS IRON AND STEEL	RCP (12" - 30") 12" RCP	18" RCP	24" RCP	27" RCP	30" RCP	36" RCP	42" RCP	48" RCP	54" RCP	60" RCP	63" RCP	69" RCP	81" RCP	18" SLOTTED CSP (0.079" THICK)	6" NON-PERFORATED PLASTIC PIPE UNDERDRAIN	36" PRECAST CONCRETE PIPE MANHOLE	42" AUTOMATIC DRAINAGE GATE	24" CONCRETE FLARED END SECTION	DITCH EXCAVATION	HOT MIX ASPHALT (TYPE A)	PLACE HOT MIX ASPHALT (Misc AREA)	CONCRETED-ROCK SLOPE PROTECTION (FACING, METHOD B)	ROCK SLOPE PROTECTION FABRIC (CLASS 8)	GRATED LINE DRAIN	CABLE RAILING	REMOVE CONCRETE	REMOVE PIPE	REMOVE INLET	REMOVE MANHOLE	REMOVE CATCH BASIN	ADJUST MANHOLE	TYPE 24-12 FRAME AND GRATE (N)	MANHOLE FRAME AND COVER (630-3, U45) (N)	MANHOLE FRAME AND COVER (312-3) (N)	MANHOLE FRAME AND COVER (U46) (N)	FRAME & GRATING FOR CATCH BASINS(311-2) (N)	MAXIMUM COVER	DESCRIPTION	STATION
			FT	CY	CY	CY	CY	CY	CY	LB	LF	LF	LF	LF	LF	LF	LF	LF	LF	LF	LF	LF	LF	LF	LF	LF	EA	EA	CY	TON	SQYD	CY	SQYD	LF	LF	CY	LF	EA	EA	EA	EA	EA	EA	EA	EA	FT		
D-17	17-4	a											71.3																																4.9	24" RCP	
		b	4.3	2.78						435															0.9																1					MH 321-2	6.00′ Lt 10+70.00 ℄ "FIR1"
		c		0.48																																										JS 331-3	6.00′ Lt 11+05.00 ℄ "FIR1"
		d					22.12						291.3																																3.8	24" RCP W/ 72.0′ Conc Bkf	
		e	4.5	2.87						435															0.9																1					MH 321-2	6.00′ Lt 13+65.00 ℄ "FIR1"
		f	4.5	1.63						115																																1				COCB 300-3, W=3.5′	17.00′ Lt 13+70.00 ℄ "FIR1"
		g										11.1																																	3.4	18" RCP	
		h										22.8																														1			3.4	18" RCP	
		i	4.5	1.63						115																																				COCB 300-3, W=3.5′	17.00′ Rt 13+70.00 ℄ "FIR1"
	17-5	a	4.5	2.48						115																																1				COCB 300-3, W=7.0′	17.00′ Lt 57+00.00 ℄ "SFIR1"
		b										46.5																																	3.4	18" RCP	
		c	4.8	1.71						115																																1				COCB 300-3, W=3.5′	17.00′ Lt 57+50.00 ℄ "SFIR1"
		d										24.1																																	3.4	18" RCP	
	17-6	a	4.5	2.48						115																																1				COCB 300-3, W=7′	17.00′ Rt 60+00.00 ℄ "SFIR1"
		b										8.2																																	4.0	18" RCP	
	17-7	a										47.7																																	3.3	18" RCP	
		b	4.5	1.63						115																																1				COCB 300-3, W=3.5′	34.84′ Rt 10+98.00 ℄ "FIR1"
SHEET TOTAL				17.69			22.12			1,560		160.4	362.6												1.8																2	6					

(N) = NOT A SEPARATE PAY ITEM, FOR INFORMATION ONLY

DRAINAGE QUANTITIES
DQ-42

STATE OF CALIFORNIA - DEPARTMENT OF TRANSPORTATION
Caltrans® HYDRAULICS

FUNCTIONAL SUPERVISOR: MARIA QUINONEZ
CALCULATED-DESIGNED BY: WING YAN LEE
CHECKED BY: SIEW MEI TAN
REVISED BY / DATE REVISED

LAST REVISION 00-00-00
DATE PLOTTED => 03-FEB-2016
TIME PLOTTED => 11:12

Dist	COUNTY	ROUTE	POST MILES TOTAL PROJECT	SHEET No.	TOTAL SHEETS
07	LA,Ora	5	0.0/1.5, 44.3/44.4	454	1622

REGISTERED CIVIL ENGINEER 5-7-14 DATE

1-25-16
PLANS APPROVAL DATE

REGISTERED PROFESSIONAL ENGINEER WING-YAN LEE No. 61452 Exp. 6-30-17 CIVIL STATE OF CALIFORNIA

THE STATE OF CALIFORNIA OR ITS OFFICERS OR AGENTS SHALL NOT BE RESPONSIBLE FOR THE ACCURACY OR COMPLETENESS OF SCANNED COPIES OF THIS PLAN SHEET.

NOTE:

JOINTS ARE STANDARD JOINT TYPE

SUMMARY OF DRAINAGE QUANTITIES

DRAINAGE PLAN SHEET No. ⬡	DRAINAGE SYSTEM No. ○	DRAINAGE UNIT	"H" OR "V"	MINOR CONCRETE (MINOR STRUCTURE)	MINOR CONCRETE (GUTTER DEPRESSION)	MINOR CONCRETE (SIDEWALK AND CURB RAMP)	CONCRETE BACKFILL (PIPE TRENCH)	CONCRETE (DITCH LINING)	CONCRETE (CHANNEL LINING)	MISCELLANEOUS IRON AND STEEL	RCP (12" - 30") 12" RCP	18" RCP	24" RCP	27" RCP	30" RCP	36" RCP	42" RCP	48" RCP	54" RCP	60" RCP	63" RCP	69" RCP	81" RCP	18" SLOTTED CSP (0.079" THICK)	6" NON-PERFORATED PLASTIC PIPE UNDERDRAIN	36" PRECAST CONCRETE PIPE MANHOLE	42" AUTOMATIC DRAINAGE GATE	24" CONCRETE FLARED END SECTION	DITCH EXCAVATION	HOT MIX ASPHALT (TYPE A)	PLACE HOT MIX ASPHALT (Misc AREA)	CONCRETED-ROCK SLOPE PROTECTION (FACING, METHOD B)	ROCK SLOPE PROTECTION FABRIC (CLASS 8)	GRATED LINE DRAIN	CABLE RAILING	REMOVE CONCRETE	REMOVE PIPE	REMOVE INLET	REMOVE MANHOLE	REMOVE CATCH BASIN	ADJUST MANHOLE	TYPE 24-12 FRAME AND GRATE (N)	MANHOLE FRAME AND COVER (630-3, U45) (N)	MANHOLE FRAME AND COVER (312-3) (N)	MANHOLE FRAME AND COVER (U46) (N)	FRAME & GRATING FOR CATCH BASINS(311-2) (N)	MAXIMUM COVER	DESCRIPTION	STATION
			FT	CY	CY	CY	CY	CY	CY	LB	LF	LF	LF	LF	LF	LF	LF	LF	LF	LF	LF	LF	LF	LF	LF	LF	EA	EA	CY	TON	SQYD	CY	SQYD	LF	LF	CY	LF	EA	EA	EA	EA	EA	EA	EA	EA	EA	FT		
D-17	17-8	a	4.5	1.63						115																																	1				COCB 300-3, W=3.5′	26.61′ L+ 11+10.00 ℄ "FIR1"
		b										18.9																																		2.9	18" RCP	
	17-9	a	4.5	1.80						580																															2					GD-1 INLET	101.00′ L+ 62+10.00 ℄ "I5"
		b											67.1																																2.8	24" RCP	
		c	4.9	1.91						580																															2					GD-1 INLET	101.00′ L+ 62+90.00 ℄ "I5"
		d											15.1																																3.0	24" RCP	
		e	5.2	2.00						580																															2					GD-1 INLET	101.00′ L+ 63+08.00 ℄ "I5"
		f											9.1																																3.2	24" RCP	
		g	5.4	2.06						580																															2					GD-1 INLET	101.00′ L+ 63+20.00 ℄ "I5"
		h											167.1																																2.8	24" RCP	
		i	4.8	1.88						580																															2					GD-1 INLET	101.00′ L+ 65+00.00 ℄ "I5"
		j											56.9																																4.7	24" RCP	
		k				4.45							16.0																																1.5	24" RCP w/ 14.5′ Conc Bkf	
		l																						22.4																						8.2	6" PP	
		m	10.6	4.36						235																																		1		JC 3	136.00′ L+ 64+44.50 ℄ "I5"
		n											79.4																																6.9	24" RCP	
SHEET TOTAL				15.64			4.45			3,250		18.9	410.7											22.4																	10		1	1			

(N) = NOT A SEPARATE PAY ITEM, FOR INFORMATION ONLY

DRAINAGE QUANTITIES
DQ-43

STATE OF CALIFORNIA - DEPARTMENT OF TRANSPORTATION
Caltrans® HYDRAULICS

FUNCTIONAL SUPERVISOR: MARIA QUINONEZ

CALCULATED-DESIGNED BY: SIEW MEI TAN
CHECKED BY: WING YAN LEE
REVISED BY
DATE REVISED

LAST REVISION 00-00-00
DATE PLOTTED => 03-FEB-2016
TIME PLOTTED => 11:12

Dist	COUNTY	ROUTE	POST MILES TOTAL PROJECT	SHEET No.	TOTAL SHEETS
07	LA,Ora	5	0.0/1.5, 44.3/44.4	455	1622

REGISTERED CIVIL ENGINEER 5-7-14 DATE

1-25-16
PLANS APPROVAL DATE

REGISTERED PROFESSIONAL ENGINEER WING-YAN LEE No. 61452 Exp. 6-30-17 CIVIL STATE OF CALIFORNIA

THE STATE OF CALIFORNIA OR ITS OFFICERS OR AGENTS SHALL NOT BE RESPONSIBLE FOR THE ACCURACY OR COMPLETENESS OF SCANNED COPIES OF THIS PLAN SHEET.

NOTE:

JOINTS ARE STANDARD JOINT TYPE

SUMMARY OF DRAINAGE QUANTITIES

DRAINAGE PLAN SHEET No. ⬡	DRAINAGE SYSTEM No. ○	DRAINAGE UNIT	"H" OR "V"	MINOR CONCRETE (MINOR STRUCTURE)	MINOR CONCRETE (GUTTER DEPRESSION)	MINOR CONCRETE (SIDEWALK AND CURB RAMP)	CONCRETE BACKFILL (PIPE TRENCH)	CONCRETE (DITCH LINING)	CONCRETE (CHANNEL LINING)	MISCELLANEOUS IRON AND STEEL	RCP (12" - 30") 12" RCP	18" RCP	24" RCP	27" RCP	30" RCP	36" RCP	42" RCP	48" RCP	54" RCP	60" RCP	63" RCP	69" RCP	81" RCP	18" SLOTTED CSP (0.079" THICK)	6" NON-PERFORATED PLASTIC PIPE UNDERDRAIN	36" PRECAST CONCRETE PIPE MANHOLE	42" AUTOMATIC DRAINAGE GATE	24" CONCRETE FLARED END SECTION	DITCH EXCAVATION	HOT MIX ASPHALT (TYPE A)	PLACE HOT MIX ASPHALT (Misc AREA)	CONCRETED-ROCK SLOPE PROTECTION (FACING, METHOD B)	ROCK SLOPE PROTECTION FABRIC (CLASS 8)	GRATED LINE DRAIN	CABLE RAILING	REMOVE CONCRETE	REMOVE PIPE	REMOVE INLET	REMOVE MANHOLE	REMOVE CATCH BASIN	ADJUST MANHOLE	TYPE 24-12 FRAME AND GRATE (N)	MANHOLE FRAME AND COVER (630-3, U45) (N)	MANHOLE FRAME AND COVER (312-3) (N)	MANHOLE FRAME AND COVER (U46) (N)	FRAME & GRATING FOR CATCH BASINS(311-2) (N)	MAXIMUM COVER	DESCRIPTION	STATION
			FT	CY	CY	CY	CY	CY	CY	LB	LF	LF	LF	LF	LF	LF	LF	LF	LF	LF	LF	LF	LF	LF	LF	LF	EA	EA	CY	TON	SQYD	CY	SQYD	LF	LF	CY	LF	EA	EA	EA	EA	EA	EA	EA	EA	EA	FT		
D-17	17-10	a	3.0	0.95						326																																1						TYPE G1 INLET	54.84′ R† 63+79.84 ℄ "VA4"
		b									66.8																																			2.1	12" RCP	
		c	4.1	1.19						326																																1						TYPE G1 INLET	54.84′ R† 64+49.59 ℄ "VA4"
		d									180.3																																			2.9	12" RCP	
		e	3.0	0.95						326																																1						TYPE G1 INLET	54.84′ L† 64+95.84 ℄ "VA4"
		f									11.1																																			5.6	12" RCP	
	17-11	a	4.1	1.57						235																																		1				JC 3-C	24.85′ L† 13+51.79 ℄ "FIR2"
		b					1.27																					1.27																			TYPE B DRAIN	
		c		0.19																																											Conc PAD	
		d		0.19																																											Conc PAD	
	17-12	a		0.13																																											Conc PAD	
	17-13	a		0.13																																											Conc PAD	
	17-14	a		0.19																																											Conc PAD	
	17-15	a		0.13																																											Conc PAD	
	17-16	a		0.19																																											Conc PAD	
	17-17	a		0.19																																											Conc PAD	
SHEET TOTAL				6.00				1.27		1,213	258.2																	1.27														3			1				

(N) = NOT A SEPARATE PAY ITEM, FOR INFORMATION ONLY

DRAINAGE QUANTITIES
DQ-44

STATE OF CALIFORNIA - DEPARTMENT OF TRANSPORTATION
Caltrans® HYDRAULICS

FUNCTIONAL SUPERVISOR: MARIA QUINONEZ
CALCULATED-DESIGNED BY: WING YAN LEE
CHECKED BY: SIEW MEI TAN
REVISED BY / DATE REVISED

LAST REVISION 00-00-00
DATE PLOTTED => 03-FEB-2016
TIME PLOTTED => 11:12

Dist	COUNTY	ROUTE	POST MILES TOTAL PROJECT	SHEET No.	TOTAL SHEETS
07	LA,Ora	5	0.0/1.5, 44.3/44.4	456	1622

REGISTERED CIVIL ENGINEER 5-7-14 DATE

1-25-16
PLANS APPROVAL DATE

REGISTERED PROFESSIONAL ENGINEER WING-YAN LEE No. 61452 Exp. 6-30-17 CIVIL STATE OF CALIFORNIA

THE STATE OF CALIFORNIA OR ITS OFFICERS OR AGENTS SHALL NOT BE RESPONSIBLE FOR THE ACCURACY OR COMPLETENESS OF SCANNED COPIES OF THIS PLAN SHEET.

NOTE:

JOINTS ARE STANDARD JOINT TYPE

SUMMARY OF DRAINAGE QUANTITIES

DRAINAGE PLAN SHEET No.	DRAINAGE SYSTEM No.	DRAINAGE UNIT	"H" OR "V"	MINOR CONCRETE (MINOR STRUCTURE)	MINOR CONCRETE (GUTTER DEPRESSION)	MINOR CONCRETE (SIDEWALK AND CURB RAMP)	CONCRETE BACKFILL (PIPE TRENCH)	CONCRETE (DITCH LINING)	CONCRETE (CHANNEL LINING)	MISCELLANEOUS IRON AND STEEL	RCP (12" - 30") 12" RCP	18" RCP	24" RCP	27" RCP	30" RCP	36" RCP	42" RCP	48" RCP	54" RCP	60" RCP	63" RCP	69" RCP	81" RCP	18" SLOTTED CSP (0.079" THICK)	6" NON-PERFORATED PLASTIC PIPE UNDERDRAIN	36" PRECAST CONCRETE PIPE MANHOLE	42" AUTOMATIC DRAINAGE GATE	24" CONCRETE FLARED END SECTION	DITCH EXCAVATION	HOT MIX ASPHALT (TYPE A)	PLACE HOT MIX ASPHALT (Misc AREA)	CONCRETED-ROCK SLOPE PROTECTION (FACING, METHOD B)	ROCK SLOPE PROTECTION FABRIC (CLASS 8)	GRATED LINE DRAIN	CABLE RAILING	REMOVE CONCRETE	REMOVE PIPE	REMOVE INLET	REMOVE MANHOLE	REMOVE CATCH BASIN	ADJUST MANHOLE	TYPE 24-12 FRAME AND GRATE (N)	MANHOLE FRAME AND COVER (630-3, U45) (N)	MANHOLE FRAME AND COVER (312-3) (N)	MANHOLE FRAME AND COVER (U46) (N)	FRAME & GRATING FOR CATCH BASINS(311-2) (N)	MAXIMUM COVER	DESCRIPTION	STATION
			FT	CY	CY	CY	CY	CY	CY	LB	LF	LF	LF	LF	LF	LF	LF	LF	LF	LF	LF	LF	LF	LF	LF	LF	EA	EA	CY	TON	SQYD	CY	SQYD	LF	LF	CY	LF	EA	EA	EA	EA	EA	EA	EA	EA	EA	FT		
D-18	18-1	a	8.0	3.80						580																																2						GD-1 INLET	135.39′ L+ 70+50.00 ℄ "I5"
		b											17.1																																	4.7	24" RCP	
		c	6.7	2.44						580																																2						GD-1 INLET	134.21′ L+ 70+70.00 ℄ "I5"
		d											136.2																																	4.5	24" RCP	
		e	5.9	2.20						580																																2						GD-1 INLET	124.78′ L+ 72+10.00 ℄ "I5"
		f											171.5																																	3.9	24" RCP	
		g	6.0	2.23						580																																2						GD-1 INLET	112.05′ L+ 73+80.00 ℄ "I5"
		h											153.0																																	3.9	24" RCP	
		i	4.5	1.80						580																																2						GD-1 INLET	100.04′ L+ 75+40.00 ℄ "I5"
		j											166.2																																	3.6	24" RCP	
		k	5.0	1.94						580																																2						GD-1 INLET	95.16′ L+ 77+10.00 ℄ "I5"
	18-2	a	2.9	1.32						580																																2						GD-1 INLET	40.28′ R+ 74+17.00 ⅊ "VA1"
		b					6.67						21.7																																	1.1	24" RCP W/ Conc BACKFILL	
		c	3.1	1.37						580																																2						GD-1 INLET	39.55′ R+ 74+42.00 ⅊ "VA1"
		d					42.83						197.0																																	2.4	24" RCP W/ Conc BACKFILL	
		e	4.4	1.77						580																																2						GD-1 INLET	21.50′ R+ 76+43.00 ⅊ "VA1"
		f											124.1																																	2.2	24" RCP	
		g	4.3	1.72						580																																2						GD-1 INLET	21.50′ R+ 77+70.00 ⅊ "VA1"
		h											67.1																																	2.3	24" RCP	
		i	4.0	1.63						580																																2						GD-1 INLET	21.50′ R+ 78+40.00 ⅊ "VA1"
SHEET TOTAL				22.22			49.50			6,380			1,053.9																													22							

(N) = NOT A SEPARATE PAY ITEM, FOR INFORMATION ONLY

DRAINAGE QUANTITIES
DQ-45

STATE OF CALIFORNIA - DEPARTMENT OF TRANSPORTATION
Caltrans® HYDRAULICS

FUNCTIONAL SUPERVISOR: MARIA QUINONEZ
CALCULATED-DESIGNED BY: SIEW MEI TAN
CHECKED BY: WING YAN LEE
REVISED BY
DATE REVISED

LAST REVISION 00-00-00
DATE PLOTTED => 03-FEB-2016
TIME PLOTTED => 11:12

Dist	COUNTY	ROUTE	POST MILES TOTAL PROJECT	SHEET No.	TOTAL SHEETS
07	LA,Ora	5	0.0/1.5, 44.3/44.4	457	1622

REGISTERED CIVIL ENGINEER 5-7-14 DATE

1-25-16
PLANS APPROVAL DATE

REGISTERED PROFESSIONAL ENGINEER WING-YAN LEE No. 61452 Exp. 6-30-17 CIVIL STATE OF CALIFORNIA

THE STATE OF CALIFORNIA OR ITS OFFICERS OR AGENTS SHALL NOT BE RESPONSIBLE FOR THE ACCURACY OR COMPLETENESS OF SCANNED COPIES OF THIS PLAN SHEET.

NOTE:

JOINTS ARE STANDARD JOINT TYPE

SUMMARY OF DRAINAGE QUANTITIES

⬡ DRAINAGE PLAN SHEET No.	○ DRAINAGE SYSTEM No.	DRAINAGE UNIT	"H" OR "V"	MINOR CONCRETE (MINOR STRUCTURE)	MINOR CONCRETE (GUTTER DEPRESSION)	MINOR CONCRETE (SIDEWALK AND CURB RAMP)	CONCRETE BACKFILL (PIPE TRENCH)	CONCRETE (DITCH LINING)	CONCRETE (CHANNEL LINING)	MISCELLANEOUS IRON AND STEEL	RCP (12" - 30") 12" RCP	18" RCP	24" RCP	27" RCP	30" RCP	36" RCP	42" RCP	48" RCP	54" RCP	60" RCP	63" RCP	69" RCP	81" RCP	18" SLOTTED CSP (0.079" THICK)	6" NON-PERFORATED PLASTIC PIPE UNDERDRAIN	36" PRECAST CONCRETE PIPE MANHOLE	42" AUTOMATIC DRAINAGE GATE	24" CONCRETE FLARED END SECTION	DITCH EXCAVATION	HOT MIX ASPHALT (TYPE A)	PLACE HOT MIX ASPHALT (Misc AREA)	CONCRETED-ROCK SLOPE PROTECTION (FACING, METHOD B)	ROCK SLOPE PROTECTION FABRIC (CLASS 8)	GRATED LINE DRAIN	CABLE RAILING	REMOVE CONCRETE	REMOVE PIPE	REMOVE INLET	REMOVE MANHOLE	REMOVE CATCH BASIN	ADJUST MANHOLE	TYPE 24-12 FRAME AND GRATE (N)	MANHOLE FRAME AND COVER (630-3, U45) (N)	MANHOLE FRAME AND COVER (312-3) (N)	MANHOLE FRAME AND COVER (U46) (N)	FRAME & GRATING FOR CATCH BASINS(311-2) (N)	MAXIMUM COVER	DESCRIPTION	STATION
			FT	CY	CY	CY	CY	CY	CY	LB	LF	LF	LF	LF	LF	LF	LF	LF	LF	LF	LF	LF	LF	LF	LF	LF	EA	EA	CY	TON	SQYD	CY	SQYD	LF	LF	CY	LF	EA	EA	EA	EA	EA	EA	EA	EA	EA	FT		
D-18	18-3	a					1.87						56.3																																	6.4	24" RCP W/ Conc BACKFILL	
		b	7.4	2.62						580																															2						GD-1 INLET	102.33' R+ 78+40.00 ℄ "I5"
		c											258.2																																	6.4	24" RCP	
		d	5.6	2.10						580																															2						GD-1 INLET	101.00' R+ 71+40.00 ℄ "I5"
		e					14.32						237.1																																	3.6	24" RCP W/ Conc BACKFILL	
		f	3.8	1.58						580																															2						GD-1 INLET	101.00' R+ 69+00.00 ℄ "I5"
		g											68.5																																	6.0	24" RCP	
	18-4	a	8.0	2.58						235																																		1			JUNCTION CHAMBER No. 3	170.94' R+ 68+90.94 ℄ "I5"
		b											46.9																																	6.0	24" RCP	
		c																										1																			24" Conc FES	171.24' R+ 69+40.95 ℄ "I5"
		d																														1.3	6.4														CONCRETED RSP	
		e																							37.0																					9.8	6" PP	
		f																										1																			24" Conc FES	
		g											22.3																																	2.3	24" RCP	
		h	9.5	4.02						326																															1						TYPE G2 INLET	181.00' R+ 70+59.00 ℄ "I5"
		i											133.3																																	12.8	24" RCP	
		j						27.52																					27.52																		TYPE B DRAIN	
SHEET TOTAL				12.90			16.19	27.52		2,301			822.6												37.0			2	27.52			1.3	6.4									7			1				

(N) = NOT A SEPARATE PAY ITEM, FOR INFORMATION ONLY

DRAINAGE QUANTITIES
DQ-46

STATE OF CALIFORNIA - DEPARTMENT OF TRANSPORTATION
Caltrans® HYDRAULICS

FUNCTIONAL SUPERVISOR: MARIA QUINONEZ
CALCULATED-DESIGNED BY: SIEW MEI TAN
CHECKED BY: WING YAN LEE
REVISED BY
DATE REVISED

LAST REVISION 00-00-00
DATE PLOTTED => 03-FEB-2016
TIME PLOTTED => 11:12

Dist	COUNTY	ROUTE	POST MILES TOTAL PROJECT	SHEET No.	TOTAL SHEETS
07	LA,Ora	5	0.0/1.5, 44.3/44.4	458	1622

REGISTERED CIVIL ENGINEER 5-7-14 DATE

1-25-16
PLANS APPROVAL DATE

REGISTERED PROFESSIONAL ENGINEER WING-YAN LEE No. 61452 Exp. 6-30-17 CIVIL STATE OF CALIFORNIA

THE STATE OF CALIFORNIA OR ITS OFFICERS OR AGENTS SHALL NOT BE RESPONSIBLE FOR THE ACCURACY OR COMPLETENESS OF SCANNED COPIES OF THIS PLAN SHEET.

NOTE:

JOINTS ARE STANDARD JOINT TYPE

SUMMARY OF DRAINAGE QUANTITIES

DRAINAGE PLAN SHEET No. ⬡	DRAINAGE SYSTEM No. ○	DRAINAGE UNIT	"H" OR "V"	MINOR CONCRETE (MINOR STRUCTURE)	MINOR CONCRETE (GUTTER DEPRESSION)	MINOR CONCRETE (SIDEWALK AND CURB RAMP)	CONCRETE BACKFILL (PIPE TRENCH)	CONCRETE (DITCH LINING)	CONCRETE (CHANNEL LINING)	MISCELLANEOUS IRON AND STEEL	RCP (12" - 30") 12" RCP	18" RCP	24" RCP	27" RCP	30" RCP	36" RCP	42" RCP	48" RCP	54" RCP	60" RCP	63" RCP	69" RCP	81" RCP	18" SLOTTED CSP (0.079" THICK)	6" NON-PERFORATED PLASTIC PIPE UNDERDRAIN	36" PRECAST CONCRETE PIPE MANHOLE	42" AUTOMATIC DRAINAGE GATE	24" CONCRETE FLARED END SECTION	DITCH EXCAVATION	HOT MIX ASPHALT (TYPE A)	PLACE HOT MIX ASPHALT (Misc AREA)	CONCRETED-ROCK SLOPE PROTECTION (FACING, METHOD B)	ROCK SLOPE PROTECTION FABRIC (CLASS 8)	GRATED LINE DRAIN	CABLE RAILING	REMOVE CONCRETE	REMOVE PIPE	REMOVE INLET	REMOVE MANHOLE	REMOVE CATCH BASIN	ADJUST MANHOLE	TYPE 24-12 FRAME AND GRATE (N)	MANHOLE FRAME AND COVER (630-3, U45) (N)	MANHOLE FRAME AND COVER (312-3) (N)	MANHOLE FRAME AND COVER (U46) (N)	FRAME & GRATING FOR CATCH BASINS(311-2) (N)	MAXIMUM COVER	DESCRIPTION	STATION
			FT	CY	CY	CY	CY	CY	CY	LB	LF	LF	LF	LF	LF	LF	LF	LF	LF	LF	LF	LF	LF	LF	LF	LF	EA	EA	CY	TON	SQYD	CY	SQYD	LF	LF	CY	LF	EA	EA	EA	EA	EA	EA	EA	EA	EA	FT		
D-18	18-5	a	4.7	1.84						580																																2						GD-1 INLET	51.46′ R+ 68+50.00 ℄ "VA4"
		b											16.0																																	3.5	24" RCP	
		c	5.5	2.07						580																																2						GD-1 INLET	54.54′ R+ 68+77.50 ℄ "VA4"
		d											15.5																																	4.3	24" RCP	
		e	6.3	2.30						580																																2						GD-1 INLET	57.20′ R+ 69+05.00 ℄ "VA4"
		f											100.0																																	3.5	24" RCP	
		g	4.1	1.57						326																				2.30	20.5											1						TYPE G2 INLET W/INLET APRON	179.78′ L+ 104+53.94 ℄ "VAL"
		h											111.2																																	4.8	24" RCP	
	18-6	a	4.5	1.63						115																																		1					COCB 300-3, W=3.5′	17.00′ L+ 66+50.00 ℄ "SFIR1"
		b										19.9																																		5.6	18" RCP	
	18-7	a	4.5	2.48						115																																		1					COCB 300-3, W=7′	17.00′ L+ 67+40.00 ℄ "SFIR1"
		b										7.9																																		4.8	18" RCP	
	18-8	a											18.6																																	8.5	24" RCP	
	18-9	a	4.5	2.48						115																																		1					COCB 300-3, W=7′	17.00′ L+ 72+10.00 ℄ "SFIR1"
		b										20.4																																		7.8	18" RCP	
	18-10	a	4.5	1.63						115																																		1					COCB 300-3, W=3.5′	17.00′ L+ 72+90.00 ℄ "SFIR1"
		b										46.5																																		3.4	18" RCP	
SHEET TOTAL				16.00						2,526		94.7	261.3																	2.30	20.5											7		4					

(N) = NOT A SEPARATE PAY ITEM, FOR INFORMATION ONLY

DRAINAGE QUANTITIES
DQ-47

STATE OF CALIFORNIA - DEPARTMENT OF TRANSPORTATION
Caltrans® HYDRAULICS

FUNCTIONAL SUPERVISOR: MARIA QUINONEZ
CALCULATED-DESIGNED BY: SIEW MEI TAN
CHECKED BY: WING YAN LEE
REVISED BY
DATE REVISED

LAST REVISION 00-00-00
DATE PLOTTED => 03-FEB-2016
TIME PLOTTED => 11:12

Dist	COUNTY	ROUTE	POST MILES TOTAL PROJECT	SHEET No.	TOTAL SHEETS
07	LA,Ora	5	0.0/1.5, 44.3/44.4	459	1622

REGISTERED CIVIL ENGINEER 5-7-14 DATE

1-25-16
PLANS APPROVAL DATE

REGISTERED PROFESSIONAL ENGINEER WING-YAN LEE No. 61452 Exp. 6-30-17 CIVIL STATE OF CALIFORNIA

THE STATE OF CALIFORNIA OR ITS OFFICERS OR AGENTS SHALL NOT BE RESPONSIBLE FOR THE ACCURACY OR COMPLETENESS OF SCANNED COPIES OF THIS PLAN SHEET.

NOTE:

JOINTS ARE STANDARD JOINT TYPE

SUMMARY OF DRAINAGE QUANTITIES

⬡ DRAINAGE PLAN SHEET No.	○ DRAINAGE SYSTEM No.	DRAINAGE UNIT	"H" OR "V"	MINOR CONCRETE (MINOR STRUCTURE)	MINOR CONCRETE (GUTTER DEPRESSION)	MINOR CONCRETE (SIDEWALK AND CURB RAMP)	CONCRETE BACKFILL (PIPE TRENCH)	CONCRETE (DITCH LINING)	CONCRETE (CHANNEL LINING)	MISCELLANEOUS IRON AND STEEL	RCP (12" - 30") 12" RCP	18" RCP	24" RCP	27" RCP	30" RCP	36" RCP	42" RCP	48" RCP	54" RCP	60" RCP	63" RCP	69" RCP	81" RCP	18" SLOTTED CSP (0.079" THICK)	6" NON-PERFORATED PLASTIC PIPE UNDERDRAIN	36" PRECAST CONCRETE PIPE MANHOLE	42" AUTOMATIC DRAINAGE GATE	24" CONCRETE FLARED END SECTION	DITCH EXCAVATION	HOT MIX ASPHALT (TYPE A)	PLACE HOT MIX ASPHALT (Misc AREA)	CONCRETED-ROCK SLOPE PROTECTION (FACING, METHOD B)	ROCK SLOPE PROTECTION FABRIC (CLASS 8)	GRATED LINE DRAIN	CABLE RAILING	REMOVE CONCRETE	REMOVE PIPE	REMOVE INLET	REMOVE MANHOLE	REMOVE CATCH BASIN	ADJUST MANHOLE	TYPE 24-12 FRAME AND GRATE (N)	MANHOLE FRAME AND COVER (630-3, U45) (N)	MANHOLE FRAME AND COVER (312-3) (N)	MANHOLE FRAME AND COVER (U46) (N)	FRAME & GRATING FOR CATCH BASINS(311-2) (N)	MAXIMUM COVER	DESCRIPTION	STATION
			FT	CY	CY	CY	CY	CY	CY	LB	LF	LF	LF	LF	LF	LF	LF	LF	LF	LF	LF	LF	LF	LF	LF	LF	EA	EA	CY	TON	SQYD	CY	SQYD	LF	LF	CY	LF	EA	EA	EA	EA	EA	EA	EA	EA	EA	FT		
D-18	18-10	c	5.9	2.02						115																																	1				COCB 300-3, W=3.5′	17.00′ L+ 73+40.00 ℄ "SFIR1"
		d										8.9																																		7.7	18" RCP	
	18-11	a	4.0	2.68						435															0.7																		1				MH 321-2	6.00′ R+ 16+21.00 ℄ "FIR2"
		b										147.2																																		3.7	18" RCP	
		c	4.0	2.68						435															0.7																		1				MH 321-2	6.00′ R+ 17+72.00 ℄ "FIR2"
		d										253.9																																		3.9	18" RCP	
		e	4.0	2.68						435															0.9																		1				MH 321-2	10.98′ R+ 20+40.50 ℄ "FIR2"
												34.3																																		6.1	18" RCP	
	18-12	a	4.5	1.63						115																																	1				COCB 300-3, W=3.5′	17.00′ L+ 16+11.00 ℄ "FIR2"
		b										24.0																																			18" RCP	
		c										13.8																																		2.7	18" RCP	
		d	4.5	1.63						115																																	1				COCB 300-3, W=3.5′	6.00′ R+ 16+11.00 ℄ "FIR2"
	18-13	a	4.5	1.63						115																																	1				COCB 300-3, W=3.5′	17.00′ L+ 17+59.00 ℄ "FIR2"
		b										25.1																																		2.7	18" RCP	
	18-14	a										18.6																																		3.1	18" RCP	
		b	4.5	2.48						115																																	1				COCB 300-3, W=7.0′	23.00′ R+ 20+57.00 ℄ "FIR2"
	18-15	a	7.7	2.51						326																															1					TYPE G2 INLET	292.96′ L+ 70+91.92 ℄ "SFIR1"
		b											135.4																																	5.8	24" RCP	
SHEET TOTAL				19.94						2,206		525.8	135.4												2.3																1	3	5					

(N) = NOT A SEPARATE PAY ITEM, FOR INFORMATION ONLY

DRAINAGE QUANTITIES
DQ-48

STATE OF CALIFORNIA - DEPARTMENT OF TRANSPORTATION
Caltrans® HYDRAULICS

FUNCTIONAL SUPERVISOR: MARIA QUINONEZ

CALCULATED-DESIGNED BY: SIEW MEI TAN
CHECKED BY: WING YAN LEE
REVISED BY
DATE REVISED

LAST REVISION 00-00-00
DATE PLOTTED => 03-FEB-2016
TIME PLOTTED => 11:12

Dist	COUNTY	ROUTE	POST MILES TOTAL PROJECT	SHEET No.	TOTAL SHEETS
07	LA,Ora	5	0.0/1.5, 44.3/44.4	460	1622

REGISTERED CIVIL ENGINEER 5-7-14 DATE

1-25-16
PLANS APPROVAL DATE

REGISTERED PROFESSIONAL ENGINEER WING-YAN LEE No. 61452 Exp. 6-30-17 CIVIL STATE OF CALIFORNIA

THE STATE OF CALIFORNIA OR ITS OFFICERS OR AGENTS SHALL NOT BE RESPONSIBLE FOR THE ACCURACY OR COMPLETENESS OF SCANNED COPIES OF THIS PLAN SHEET.

NOTE:

JOINTS ARE STANDARD JOINT TYPE

SUMMARY OF DRAINAGE QUANTITIES

⬡ DRAINAGE PLAN SHEET No.	○ DRAINAGE SYSTEM No.	DRAINAGE UNIT	"H" OR "V"	MINOR CONCRETE (MINOR STRUCTURE)	MINOR CONCRETE (GUTTER DEPRESSION)	MINOR CONCRETE (SIDEWALK AND CURB RAMP)	CONCRETE BACKFILL (PIPE TRENCH)	CONCRETE (DITCH LINING)	CONCRETE (CHANNEL LINING)	MISCELLANEOUS IRON AND STEEL	RCP (12" - 30") 12" RCP	18" RCP	24" RCP	27" RCP	30" RCP	36" RCP	42" RCP	48" RCP	54" RCP	60" RCP	63" RCP	69" RCP	81" RCP	18" SLOTTED CSP (0.079" THICK)	6" NON-PERFORATED PLASTIC PIPE UNDERDRAIN	36" PRECAST CONCRETE PIPE MANHOLE	42" AUTOMATIC DRAINAGE GATE	24" CONCRETE FLARED END SECTION	DITCH EXCAVATION	HOT MIX ASPHALT (TYPE A)	PLACE HOT MIX ASPHALT (Misc AREA)	CONCRETED-ROCK SLOPE PROTECTION (FACING, METHOD B)	ROCK SLOPE PROTECTION FABRIC (CLASS 8)	GRATED LINE DRAIN	CABLE RAILING	REMOVE CONCRETE	REMOVE PIPE	REMOVE INLET	REMOVE MANHOLE	REMOVE CATCH BASIN	ADJUST MANHOLE	TYPE 24-12 FRAME AND GRATE (N)	MANHOLE FRAME AND COVER (630-3, U45) (N)	MANHOLE FRAME AND COVER (312-3) (N)	MANHOLE FRAME AND COVER (U46) (N)	FRAME & GRATING FOR CATCH BASINS(311-2) (N)	MAXIMUM COVER	DESCRIPTION	STATION
			FT	CY	CY	CY	CY	CY	CY	LB	LF	LF	LF	LF	LF	LF	LF	LF	LF	LF	LF	LF	LF	LF	LF	LF	EA	EA	CY	TON	SQYD	CY	SQYD	LF	LF	CY	LF	EA	EA	EA	EA	EA	EA	EA	EA	EA	FT		
D-18	18-15	c	4.0	2.68						435																3.1																	1					MH 321-2	28.10′ Lt 20+40.00 ℄ "FIR2"
		d										54.2																																		6.1	18" RCP	
		e	4.5	2.48						115																																	1				COCB 300-3, W=7′	23.84′ Lt 20+87.00 ℄ "FIR2"
D-18	18-16	a											216.5																																	4.8	24" RCP	
		b	6.8	2.45						580																																2				GD-1 INLET	33.50 Rt 70+00.00 ℄ "VA1"
		c											189.1																																	4.8	24" RCP	
		d	4.5	1.78						580																																2				GD-1 INLET	33.50 Rt 72+00.00 ℄ "VA1"
		e																															21.0														GRATED LINE DRAIN W/ 0.6% PRE-SLOPED SECTIONS	
		f											21.0																																	2.5	24" RCP	
		g	4.2	1.69						580																																2				GD-1 INLET	33.50 Rt 72+25.00 ℄ "VA1"
		h																															21.0														GRATED LINE DRAIN W/ 0.6% PRE-SLOPED SECTIONS	
		i											21.0																																	2.2	24" RCP	
		j	3.9	1.61						580																																2				GD-1 INLET	33.50 Rt 72+50.00 ℄ "VA1"
D-18	18-17	a											77.2																																	12.4	24" RCP	
		b	7.6	2.72						652																																2				GD-3 INLET	48.18′ Rt 72+57.90 ℄ "VA1"
		c											130.4																																	5.6	24" RCP	
		d	4.8	2.60						115																																	1				COCB 300-3, W=7′	54.20′ Rt 73+95.50 ℄ "VA1"
		e										80.6																																		2.8	18" RCP	
		f	4.5	2.48						115																																	1				COCB 300-3, W=7′	24.05′ Rt 74+94.01 ℄ "FRE"
	18-18	a				3.52																																										CURB DRAIN	14.60′ Rt 74+64.32 ℄ "FRE"
SHEET TOTAL				20.49		3.52				3,752		134.8	655.2													3.1								42.0									10	1	3				

(N) = NOT A SEPARATE PAY ITEM, FOR INFORMATION ONLY

DRAINAGE QUANTITIES
DQ-49

STATE OF CALIFORNIA - DEPARTMENT OF TRANSPORTATION
Caltrans® HYDRAULICS

FUNCTIONAL SUPERVISOR: MARIA QUINONEZ
CALCULATED-DESIGNED BY: SIEW MEI TAN
CHECKED BY: WING YAN LEE
REVISED BY
DATE REVISED

LAST REVISION 00-00-00
DATE PLOTTED => 03-FEB-2016
TIME PLOTTED => 11:12

Dist	COUNTY	ROUTE	POST MILES TOTAL PROJECT	SHEET No.	TOTAL SHEETS
07	LA,Ora	5	0.0/1.5, 44.3/44.4	461	1622

REGISTERED CIVIL ENGINEER 5-7-14 DATE

1-25-16
PLANS APPROVAL DATE

REGISTERED PROFESSIONAL ENGINEER WING-YAN LEE No. 61452 Exp. 6-30-17 CIVIL STATE OF CALIFORNIA

THE STATE OF CALIFORNIA OR ITS OFFICERS OR AGENTS SHALL NOT BE RESPONSIBLE FOR THE ACCURACY OR COMPLETENESS OF SCANNED COPIES OF THIS PLAN SHEET.

NOTE:

JOINTS ARE STANDARD JOINT TYPE

SUMMARY OF DRAINAGE QUANTITIES

DRAINAGE PLAN SHEET No. ⬡	DRAINAGE SYSTEM No. ○	DRAINAGE UNIT	"H" OR "V"	MINOR CONCRETE (MINOR STRUCTURE)	MINOR CONCRETE (GUTTER DEPRESSION)	MINOR CONCRETE (SIDEWALK AND CURB RAMP)	CONCRETE BACKFILL (PIPE TRENCH)	CONCRETE (DITCH LINING)	CONCRETE (CHANNEL LINING)	MISCELLANEOUS IRON AND STEEL	RCP (12" - 30") 12" RCP	18" RCP	24" RCP	27" RCP	30" RCP	36" RCP	42" RCP	48" RCP	54" RCP	60" RCP	63" RCP	69" RCP	81" RCP	18" SLOTTED CSP (0.079" THICK)	6" NON-PERFORATED PLASTIC PIPE UNDERDRAIN	36" PRECAST CONCRETE PIPE MANHOLE	42" AUTOMATIC DRAINAGE GATE	24" CONCRETE FLARED END SECTION	DITCH EXCAVATION	HOT MIX ASPHALT (TYPE A)	PLACE HOT MIX ASPHALT (Misc AREA)	CONCRETED-ROCK SLOPE PROTECTION (FACING, METHOD B)	ROCK SLOPE PROTECTION FABRIC (CLASS 8)	GRATED LINE DRAIN	CABLE RAILING	REMOVE CONCRETE	REMOVE PIPE	REMOVE INLET	REMOVE MANHOLE	REMOVE CATCH BASIN	ADJUST MANHOLE	TYPE 24-12 FRAME AND GRATE (N)	MANHOLE FRAME AND COVER (630-3, U45) (N)	MANHOLE FRAME AND COVER (312-3) (N)	MANHOLE FRAME AND COVER (U46) (N)	FRAME & GRATING FOR CATCH BASINS(311-2) (N)	MAXIMUM COVER	DESCRIPTION	STATION
			FT	CY	CY	CY	CY	CY	CY	LB	LF	LF	LF	LF	LF	LF	LF	LF	LF	LF	LF	LF	LF	LF	LF	EA	EA	CY	TON	SQYD	CY	SQYD	LF	LF	CY	LF	EA	EA	EA	EA	EA	EA	EA	EA	EA	FT		
D-19	19-1	a	4.0	2.63						435															3.5																1					MH 321-2	35.03′ R+ 85+73.18 ℄ "VAL"
		b												78.5																														5.9	27" RCP	
		c	4.5	2.85						435															0.9																1					MH 321-2	67.20′ R+ 86+46.92 ℄ "VAL"
		d												298.9																														3.8	27" RCP	
		e	3.5	2.41						435															0.8																1					MH 321-2	67.23′ R+ 89+49.78 ℄ "VAL"
		f												318.7																														2.6	27" RCP	
		g	3.5	2.41						435															0.7																1					MH 321-2	20.50′ R+ 92+56.14 ℄ "VAL"
		h												92.4																														3.8	27" RCP	
		i	4.1	2.67						435															1.3																1					MH 321-2	35.00′ R+ 93+48.97 ℄ "VAL"
		j												8.0																														4.0	27" RCP	
		k	6.2	2.11						235																															1					JC 3	56.97′ R+ 94+72.46 ℄ "VAL"
		l												8.0																														3.5	27" RCP	
		m		1.39																																										PIPE CULVERT HEADWALL	62.69′ R+ 94+64.87 ℄ "VAL"
	19-2	a	2.9	1.80						115																																1				COCB 300-3, W=7′	3.00′ L+ 6+68.47 ⅊ "ARB"
		b					79.21					332.0																																1.5	18" RCP W/ Conc BACKFILL	
		c	3.0	1.28						235																																	1			JC 3 (MOD)	3.00′ L+ 3+35.47 ⅊ "ARB"
		d					67.76					284.0																																2.4	18" RCP W/ Conc BACKFILL	
		e	3.9	1.50						235																																	1			JC 3 (MOD)	3.00′ L+ 3+35.47 ⅊ "ARB"
		f										232.7																																2.0	18" RCP	
		g	3.5	1.42						235																																	1			JC 3 (MOD)	1.05′ R+ 4+69.64 ⅊ "SFIR3"
SHEET TOTAL				22.47			146.97			3,230		848.7		804.5											7.2																6	1	3					

(N) = NOT A SEPARATE PAY ITEM, FOR INFORMATION ONLY

DRAINAGE QUANTITIES
DQ-50

STATE OF CALIFORNIA - DEPARTMENT OF TRANSPORTATION
Caltrans® HYDRAULICS

FUNCTIONAL SUPERVISOR: MARIA QUINONEZ
CALCULATED-DESIGNED BY: SIEW MEI TAN
CHECKED BY: WING YAN LEE
REVISED BY
DATE REVISED

LAST REVISION 00-00-00
DATE PLOTTED => 03-FEB-2016
TIME PLOTTED => 11:13

Dist	COUNTY	ROUTE	POST MILES TOTAL PROJECT	SHEET No.	TOTAL SHEETS
07	LA,Ora	5	0.0/1.5, 44.3/44.4	462	1622

REGISTERED CIVIL ENGINEER 5-7-14 DATE

1-25-16
PLANS APPROVAL DATE

REGISTERED PROFESSIONAL ENGINEER WING-YAN LEE No. 61452 Exp. 6-30-17 CIVIL STATE OF CALIFORNIA

THE STATE OF CALIFORNIA OR ITS OFFICERS OR AGENTS SHALL NOT BE RESPONSIBLE FOR THE ACCURACY OR COMPLETENESS OF SCANNED COPIES OF THIS PLAN SHEET.

NOTE:

JOINTS ARE STANDARD JOINT TYPE

SUMMARY OF DRAINAGE QUANTITIES

DRAINAGE PLAN SHEET No.	DRAINAGE SYSTEM No.	DRAINAGE UNIT	"H" OR "V"	MINOR CONCRETE (MINOR STRUCTURE)	MINOR CONCRETE (GUTTER DEPRESSION)	MINOR CONCRETE (SIDEWALK AND CURB RAMP)	CONCRETE BACKFILL (PIPE TRENCH)	CONCRETE (DITCH LINING)	CONCRETE (CHANNEL LINING)	MISCELLANEOUS IRON AND STEEL	RCP (12" - 30") 12" RCP	18" RCP	24" RCP	27" RCP	30" RCP	36" RCP	42" RCP	48" RCP	54" RCP	60" RCP	63" RCP	69" RCP	81" RCP	18" SLOTTED CSP (0.079" THICK)	6" NON-PERFORATED PLASTIC PIPE UNDERDRAIN	36" PRECAST CONCRETE PIPE MANHOLE	42" AUTOMATIC DRAINAGE GATE	24" CONCRETE FLARED END SECTION	DITCH EXCAVATION	HOT MIX ASPHALT (TYPE A)	PLACE HOT MIX ASPHALT (Misc AREA)	CONCRETED-ROCK SLOPE PROTECTION (FACING, METHOD B)	ROCK SLOPE PROTECTION FABRIC (CLASS 8)	GRATED LINE DRAIN	CABLE RAILING	REMOVE CONCRETE	REMOVE PIPE	REMOVE INLET	REMOVE MANHOLE	REMOVE CATCH BASIN	ADJUST MANHOLE	TYPE 24-12 FRAME AND GRATE (N)	MANHOLE FRAME AND COVER (630-3, U45) (N)	MANHOLE FRAME AND COVER (312-3) (N)	MANHOLE FRAME AND COVER (U46) (N)	FRAME & GRATING FOR CATCH BASINS(311-2) (N)	MAXIMUM COVER	DESCRIPTION	STATION
			FT	CY	CY	CY	CY	CY	CY	LB	LF	LF	LF	LF	LF	LF	LF	LF	LF	LF	LF	LF	LF	LF	LF	LF	EA	EA	CY	TON	SQYD	CY	SQYD	LF	LF	CY	LF	EA	EA	EA	EA	EA	EA	EA	EA	EA	FT		
D-19	19-3	a	4.0	2.27						115																																		1				COCB 300-3, W=7′	32.43′ Rt 4+00.00 ℄ "SFIR3"
		b										75.0																																		2.0	18" RCP	
	19-4	a	1.7	0.54						326																																1					TYPE G1 INLET	41.79′ Lt 92+26.00 ℄ "VAL"
		b					16.90				96.8																																			1.2	12" RCP W/ Conc BACKFILL	
		c	2.4	0.76						326																																1					TYPE G1 INLET	41.88′ Rt 91+71.00 ℄ "VAL"
		d									21.0																																			2.5	12" RCP	
		e		0.38																																											JS 331-3	67.20′ Rt 91+64.52 ℄ "VAL"
	19-5	a	1.7	0.54						326																																1					TYPE G1 INLET	42.01′ Lt 90+70.00 ℄ "VAL"
		b					16.68				95.5																																			1.8	12" RCP W/ Conc BACKFILL	
		c	3.3	1.02						326																																1					TYPE G1 INLET	42.09′ Rt 90+18.00 ℄ "VAL"
		d									22.8																																			3.9	12" RCP	
		e		0.38																																											JS 331-3	67.20′ Rt 90+11.58 ℄ "VAL"
SHEET TOTAL				5.89			33.58			1,419	236.1	75.0																														4		1				

(N) = NOT A SEPARATE PAY ITEM, FOR INFORMATION ONLY

DRAINAGE QUANTITIES
DQ-51

STATE OF CALIFORNIA - DEPARTMENT OF TRANSPORTATION
Caltrans® HYDRAULICS

FUNCTIONAL SUPERVISOR: MARIA QUINONEZ

CALCULATED-DESIGNED BY: SIEW MEI TAN
CHECKED BY: WING YAN LEE
REVISED BY
DATE REVISED

LAST REVISION 00-00-00
DATE PLOTTED => 03-FEB-2016
TIME PLOTTED => 11:13

Dist	COUNTY	ROUTE	POST MILES TOTAL PROJECT	SHEET No.	TOTAL SHEETS
07	LA,Ora	5	0.0/1.5, 44.3/44.4	463	1622

REGISTERED CIVIL ENGINEER 5-7-14 DATE

1-25-16
PLANS APPROVAL DATE

REGISTERED PROFESSIONAL ENGINEER WING-YAN LEE No. 61452 Exp. 6-30-17 CIVIL STATE OF CALIFORNIA

THE STATE OF CALIFORNIA OR ITS OFFICERS OR AGENTS SHALL NOT BE RESPONSIBLE FOR THE ACCURACY OR COMPLETENESS OF SCANNED COPIES OF THIS PLAN SHEET.

NOTE:

JOINTS ARE STANDARD JOINT TYPE

SUMMARY OF DRAINAGE QUANTITIES

DRAINAGE PLAN SHEET No.	DRAINAGE SYSTEM No.	DRAINAGE UNIT	"H" OR "V"	MINOR CONCRETE (MINOR STRUCTURE)	MINOR CONCRETE (GUTTER DEPRESSION)	MINOR CONCRETE (SIDEWALK AND CURB RAMP)	CONCRETE BACKFILL (PIPE TRENCH)	CONCRETE (DITCH LINING)	CONCRETE (CHANNEL LINING)	MISCELLANEOUS IRON AND STEEL	RCP (12" - 30") 12" RCP	18" RCP	24" RCP	27" RCP	30" RCP	36" RCP	42" RCP	48" RCP	54" RCP	60" RCP	63" RCP	69" RCP	81" RCP	18" SLOTTED CSP (0.079" THICK)	6" NON-PERFORATED PLASTIC PIPE UNDERDRAIN	36" PRECAST CONCRETE PIPE MANHOLE	42" AUTOMATIC DRAINAGE GATE	24" CONCRETE FLARED END SECTION	DITCH EXCAVATION	HOT MIX ASPHALT (TYPE A)	PLACE HOT MIX ASPHALT (Misc AREA)	CONCRETED-ROCK SLOPE PROTECTION (FACING, METHOD B)	ROCK SLOPE PROTECTION FABRIC (CLASS 8)	GRATED LINE DRAIN	CABLE RAILING	REMOVE CONCRETE	REMOVE PIPE	REMOVE INLET	REMOVE MANHOLE	REMOVE CATCH BASIN	ADJUST MANHOLE	TYPE 24-12 FRAME AND GRATE (N)	MANHOLE FRAME AND COVER (630-3, U45) (N)	MANHOLE FRAME AND COVER (312-3) (N)	MANHOLE FRAME AND COVER (U46) (N)	FRAME & GRATING FOR CATCH BASINS(311-2) (N)	MAXIMUM COVER	DESCRIPTION	STATION
			FT	CY	CY	CY	CY	CY	CY	LB	LF	LF	LF	LF	LF	LF	LF	LF	LF	LF	LF	LF	LF	LF	LF	LF	EA	EA	CY	TON	SQYD	CY	SQYD	LF	LF	CY	LF	EA	EA	EA	EA	EA	EA	EA	EA	EA	FT		
D-19	19-6	a									13.6																																			2.5	12" RCP	
		b		0.38																																											JS 331-3	67.29′ R+ 88+85.40 ℄ "VAL"
	19-7	a																																						1							ADJUST MANHOLE	34.93′ R+ 82+73.99 ℄ "VAL"
	19-8	a	3.0	0.95						326																															1						TYPE G1 INLET	76.69′ R+ 88+60.37 ℄ "VAL"
		b									7.5																																			2.7	12" RCP	
		c		0.39																																											JS 331-3	67.29′ R+ 88+55.59 ℄ "VAL"
	19-9	a	4.0	1.48						115																																1					COCB 300-3 , W=3.5′	90.06′ R+ 86+83.63 ℄ "VAL"
		b									16.0																																			3.0	12" RCP	
		c		0.40																																											JS 331-3	67.21′ R+ 86+85.26 ℄ "VAL"
D-20	20-1	a		0.65																																											J.S. 331-3	4.07′ L+ 68+03.09 ⅊ "NFIR2"
		b										42.0																																		12.0	18" RCP	
		c	2.5	0.93						326																															1						TYPE G3 INLET	39.14′ R+ 67+87.92 ⅊ "NFIR2"
		d						26.82																																							TYPE A DRAIN	
SHEET TOTAL				5.18				26.82		767	37.1	42.0																													1	2		1				

(N) = NOT A SEPARATE PAY ITEM, FOR INFORMATION ONLY

DRAINAGE QUANTITIES
DQ-52

STATE OF CALIFORNIA - DEPARTMENT OF TRANSPORTATION
Caltrans® HYDRAULICS

FUNCTIONAL SUPERVISOR: MARIA QUINONEZ

CALCULATED-DESIGNED BY: WING YAN LEE
CHECKED BY: SIEW MEI TAN
REVISED BY
DATE REVISED

LAST REVISION 00-00-00
DATE PLOTTED => 03-FEB-2016
TIME PLOTTED => 11:13

Dist	COUNTY	ROUTE	POST MILES TOTAL PROJECT	SHEET No.	TOTAL SHEETS
07	LA,Ora	5	0.0/1.5, 44.3/44.4	464	1622

REGISTERED CIVIL ENGINEER 5-7-14 DATE

1-25-16
PLANS APPROVAL DATE

REGISTERED PROFESSIONAL ENGINEER WING-YAN LEE No. 61452 Exp. 6-30-17 CIVIL STATE OF CALIFORNIA

THE STATE OF CALIFORNIA OR ITS OFFICERS OR AGENTS SHALL NOT BE RESPONSIBLE FOR THE ACCURACY OR COMPLETENESS OF SCANNED COPIES OF THIS PLAN SHEET.

NOTE:

JOINTS ARE STANDARD JOINT TYPE

SUMMARY OF DRAINAGE QUANTITIES

DRAINAGE PLAN SHEET No. ⬡	DRAINAGE SYSTEM No. ○	DRAINAGE UNIT	"H" OR "V"	MINOR CONCRETE (MINOR STRUCTURE)	MINOR CONCRETE (GUTTER DEPRESSION)	MINOR CONCRETE (SIDEWALK AND CURB RAMP)	CONCRETE BACKFILL (PIPE TRENCH)	CONCRETE (DITCH LINING)	CONCRETE (CHANNEL LINING)	MISCELLANEOUS IRON AND STEEL	RCP (12" - 30") 12" RCP	18" RCP	24" RCP	27" RCP	30" RCP	36" RCP	42" RCP	48" RCP	54" RCP	60" RCP	63" RCP	69" RCP	81" RCP	18" SLOTTED CSP (0.079" THICK)	6" NON-PERFORATED PLASTIC PIPE UNDERDRAIN	36" PRECAST CONCRETE PIPE MANHOLE	42" AUTOMATIC DRAINAGE GATE	24" CONCRETE FLARED END SECTION	DITCH EXCAVATION	HOT MIX ASPHALT (TYPE A)	PLACE HOT MIX ASPHALT (Misc AREA)	CONCRETED-ROCK SLOPE PROTECTION (FACING, METHOD B)	ROCK SLOPE PROTECTION FABRIC (CLASS 8)	GRATED LINE DRAIN	CABLE RAILING	REMOVE CONCRETE	REMOVE PIPE	REMOVE INLET	REMOVE MANHOLE	REMOVE CATCH BASIN	ADJUST MANHOLE	TYPE 24-12 FRAME AND GRATE (N)	MANHOLE FRAME AND COVER (630-3, U45) (N)	MANHOLE FRAME AND COVER (312-3) (N)	MANHOLE FRAME AND COVER (U46) (N)	FRAME & GRATING FOR CATCH BASINS(311-2) (N)	MAXIMUM COVER	DESCRIPTION	STATION
			FT	CY	CY	CY	CY	CY	CY	LB	LF	LF	LF	LF	LF	LF	LF	LF	LF	LF	LF	LF	LF	LF	LF	EA	EA	CY	TON	SQYD	CY	SQYD	LF	LF	CY	LF	EA	EA	EA	EA	EA	EA	EA	EA	EA	FT		
D-20	20-2	a														142.8																														15.0	36" RCP	
		b		2.54						435															10.1																	1				MH 322-2	31.59′ R+ 107+07.93 ℄ "VAL"
		c														346.7																														10.7	36" RCP	
		d		2.41						435															0.7																	1				MH 322-2	31.59′ R+ 110+59.00 ℄ "VAL"
		e													4.0																														1.9	30" RCP	
	20-3	a	4.5	2.48						115																																1				COCB 300-3, W=7′	54.00′ R+ 103+74.87 ℄ "VAL"
		b										26.3																																2.9	18" RCP	
		c	5.2	3.21						435															0.9																	1				MH 321-2	30.00′ R+ 103+86.72 ℄ "VAL"
		d											232.3																																4.3	24" RCP	
		e	5.8	3.43						435															0.9																	1				MH 321-2	30.00′ R+ 116+23.00 ℄ "VAL"
		f											40.2																																14.9	24" RCP	
		g		0.82																																										JS 331-3	76.72′ R+ 116+24.00 ℄ "VAL"
		h					1.29																	16.6																						2.0	6" PP W/ Conc BACKFILL	
	20-4	a	4.5	3.21						115																																1				COCB 300-3, W=10′	54.00′ R+ 105+58.00 ℄ "VAL"
		b										21.0																																5.1	18" RCP	
		c		0.55																																						1				JS 331-3	30.00′ R+ 105+66.12 ℄ "VAL"
SHEET TOTAL				18.65			1.29			1,970		47.3	272.5		4.0	489.5								16.6	12.6																	5	2					

(N) = NOT A SEPARATE PAY ITEM, FOR INFORMATION ONLY

DRAINAGE QUANTITIES
DQ-53

STATE OF CALIFORNIA - DEPARTMENT OF TRANSPORTATION
Caltrans® HYDRAULICS

FUNCTIONAL SUPERVISOR: MARIA QUINONEZ

CALCULATED-DESIGNED BY: SIEW MEI TAN
CHECKED BY: WING YAN LEE
REVISED BY
DATE REVISED

LAST REVISION 00-00-00
DATE PLOTTED => 03-FEB-2016
TIME PLOTTED => 11:13

Dist	COUNTY	ROUTE	POST MILES TOTAL PROJECT	SHEET No.	TOTAL SHEETS
07	LA,Ora	5	0.0/1.5, 44.3/44.4	465	1622

REGISTERED CIVIL ENGINEER 5-7-14 DATE

1-25-16
PLANS APPROVAL DATE

REGISTERED PROFESSIONAL ENGINEER WING-YAN LEE No. 61452 Exp. 6-30-17 CIVIL STATE OF CALIFORNIA

THE STATE OF CALIFORNIA OR ITS OFFICERS OR AGENTS SHALL NOT BE RESPONSIBLE FOR THE ACCURACY OR COMPLETENESS OF SCANNED COPIES OF THIS PLAN SHEET.

NOTE:

JOINTS ARE STANDARD JOINT TYPE

SUMMARY OF DRAINAGE QUANTITIES

⬡ DRAINAGE PLAN SHEET No.	○ DRAINAGE SYSTEM No.	DRAINAGE UNIT	"H" OR "V"	MINOR CONCRETE (MINOR STRUCTURE)	MINOR CONCRETE (GUTTER DEPRESSION)	MINOR CONCRETE (SIDEWALK AND CURB RAMP)	CONCRETE BACKFILL (PIPE TRENCH)	CONCRETE (DITCH LINING)	CONCRETE (CHANNEL LINING)	MISCELLANEOUS IRON AND STEEL	RCP (12" - 30") 12" RCP	18" RCP	24" RCP	27" RCP	30" RCP	36" RCP	42" RCP	48" RCP	54" RCP	60" RCP	63" RCP	69" RCP	81" RCP	18" SLOTTED CSP (0.079" THICK)	6" NON-PERFORATED PLASTIC PIPE UNDERDRAIN	36" PRECAST CONCRETE PIPE MANHOLE	42" AUTOMATIC DRAINAGE GATE	24" CONCRETE FLARED END SECTION	DITCH EXCAVATION	HOT MIX ASPHALT (TYPE A)	PLACE HOT MIX ASPHALT (Misc AREA)	CONCRETED-ROCK SLOPE PROTECTION (FACING, METHOD B)	ROCK SLOPE PROTECTION FABRIC (CLASS 8)	GRATED LINE DRAIN	CABLE RAILING	REMOVE CONCRETE	REMOVE PIPE	REMOVE INLET	REMOVE MANHOLE	REMOVE CATCH BASIN	ADJUST MANHOLE	TYPE 24-12 FRAME AND GRATE (N)	MANHOLE FRAME AND COVER (630-3, U45) (N)	MANHOLE FRAME AND COVER (312-3) (N)	MANHOLE FRAME AND COVER (U46) (N)	FRAME & GRATING FOR CATCH BASINS(311-2) (N)	MAXIMUM COVER	DESCRIPTION	STATION
			FT	CY	CY	CY	CY	CY	CY	LB	LF	LF	LF	LF	LF	LF	LF	LF	LF	LF	LF	LF	LF	LF	LF	LF	EA	EA	CY	TON	SQYD	CY	SQYD	LF	LF	CY	LF	EA	EA	EA	EA	EA	EA	EA	EA	EA	FT		
D-20	20-5	a	4.5	3.21						115																																		1				COCB 300-3, W=10′	53.44′ R+ 107+18.00 ℄ "VAL"
		b											23.6																																	11.5	24" RCP	
	20-6	a	4.5	4.19						115																																		1				COCB 300-3, W=14′	41.23′ R+ 110+63.50 ℄ "VAL"
		b											7.3																																	2.2	24" RCP	
	20-7	a	3.5	2.43						435															0.9																			1				MH 321-2	44.88′ L+ 67+18.36 ⅊ "NFIR2"
		b											164.9																																	2.8	24" RCP	
		c		0.48																																											JS 331-3	44.76′ L+ 66+04.05 ⅊ "NFIR2"
		d	3.5	2.43						435															0.5																			1				MH 321-2	44.00′ L+ 65+26.56 ⅊ "NFIR2"
	20-8	a										7.6																																			5.7	18" RCP	
		b	6.0	5.19						115																																		1				COCB 300-3, W=14′	31.00′ L+ 65+98.82 ⅊ "NFIR2"
		c										63.0																																			3.6	18" RCP	
		d	4.5	4.19						115																																		1				COCB 300-3, W=7′	31.00′ L+ 65+98.82 ⅊ "NFIR2"
SHEET TOTAL				22.12						1,330		70.6	195.8												1.4																			2	4					

(N) = NOT A SEPARATE PAY ITEM, FOR INFORMATION ONLY

DRAINAGE QUANTITIES
DQ-54

REVISED BY | DATE REVISED

SIEW MEI TAN | WING YAN LEE

CALCULATED-DESIGNED BY | CHECKED BY

FUNCTIONAL SUPERVISOR: MARIA QUINONEZ

STATE OF CALIFORNIA - DEPARTMENT OF TRANSPORTATION

Caltrans® HYDRAULICS

LAST REVISION 00-00-00 | DATE PLOTTED => 03-FEB-2016 | TIME PLOTTED => 11:13

Dist	COUNTY	ROUTE	POST MILES TOTAL PROJECT	SHEET No.	TOTAL SHEETS
07	LA,Ora	5	0.0/1.5, 44.3/44.4	466	1622

REGISTERED CIVIL ENGINEER 5-7-14 DATE

1-25-16
PLANS APPROVAL DATE

REGISTERED PROFESSIONAL ENGINEER WING-YAN LEE No. 61452 Exp. 6-30-17 CIVIL STATE OF CALIFORNIA

THE STATE OF CALIFORNIA OR ITS OFFICERS OR AGENTS SHALL NOT BE RESPONSIBLE FOR THE ACCURACY OR COMPLETENESS OF SCANNED COPIES OF THIS PLAN SHEET.

NOTE:

JOINTS ARE STANDARD JOINT TYPE

SUMMARY OF DRAINAGE QUANTITIES

DRAINAGE PLAN SHEET No.	DRAINAGE SYSTEM No.	DRAINAGE UNIT	"H" OR "V"	MINOR CONCRETE (MINOR STRUCTURE)	MINOR CONCRETE (GUTTER DEPRESSION)	MINOR CONCRETE (SIDEWALK AND CURB RAMP)	CONCRETE BACKFILL (PIPE TRENCH)	CONCRETE (DITCH LINING)	CONCRETE (CHANNEL LINING)	MISCELLANEOUS IRON AND STEEL	RCP (12" - 30") 12" RCP	18" RCP	24" RCP	27" RCP	30" RCP	36" RCP	42" RCP	48" RCP	54" RCP	60" RCP	63" RCP	69" RCP	81" RCP	18" SLOTTED CSP (0.079" THICK)	6" NON-PERFORATED PLASTIC PIPE UNDERDRAIN	36" PRECAST CONCRETE PIPE MANHOLE	42" AUTOMATIC DRAINAGE GATE	24" CONCRETE FLARED END SECTION	DITCH EXCAVATION	HOT MIX ASPHALT (TYPE A)	PLACE HOT MIX ASPHALT (Misc AREA)	CONCRETED-ROCK SLOPE PROTECTION (FACING, METHOD B)	ROCK SLOPE PROTECTION FABRIC (CLASS 8)	GRATED LINE DRAIN	CABLE RAILING	REMOVE CONCRETE	REMOVE PIPE	REMOVE INLET	REMOVE MANHOLE	REMOVE CATCH BASIN	ADJUST MANHOLE	TYPE 24-12 FRAME AND GRATE (N)	MANHOLE FRAME AND COVER (630-3, U45) (N)	MANHOLE FRAME AND COVER (312-3) (N)	MANHOLE FRAME AND COVER (U46) (N)	FRAME & GRATING FOR CATCH BASINS(311-2) (N)	MAXIMUM COVER	DESCRIPTION	STATION
			FT	CY	CY	CY	CY	CY	CY	LB	LF	LF	LF	LF	LF	LF	LF	LF	LF	LF	LF	LF	LF	LF	LF	LF	EA	EA	CY	TON	SQYD	CY	SQYD	LF	LF	CY	LF	EA	EA	EA	EA	EA	EA	EA	EA	EA	FT		
D-20	20-9	a										7.6																																		3.0	18" RCP	
		b	5.1	2.73						115																																	1			COCB 300-3, W=7′	31.00′ Lt 65+25.66 ℄ "NFIR2"
		c										63.0																																	2.7	18" RCP	
		d	4.5	2.48						115																																	1			COCB 300-3, W=7′	31.00′ Rt 65+25.66 ℄ "NFIR2"
		e									39.3																																		2.2	12" RCP	
		f	4.0	1.54						235																																		1		JC 3-C	40.48′ Rt 65+71.75 ℄ "NFIR2"
		g							0.06																																					1.0′ Conc CHANNEL TRANSITION	
	20-10	a	4.0	2.68						435																0.9																	1				MH 321-2	30.00′ Lt 104+58.43 ℄ "VAL"
		b										111.7																																	3.6	24" RCP	
		c	4.0	2.65						435																0.9																	1				MH 321-2	30.00′ Lt 105+74.08 ℄ "VAL"
		d										59.5																																	3.6	24" RCP	
	20-11	a	4.5	2.48						115																																	1			COCB 300-3, W=7′	54.00′ Lt 104+46.30 ℄ "VAL"
		b										26.3																																	2.9	18" RCP	
		c					1.29																		16.6																						6" PP W/ Conc BACKFILL	
SHEET TOTAL				14.56			1.29		0.06	1,450	39.3	268.1													16.6	1.8																2	3	1				

(N) = NOT A SEPARATE PAY ITEM, FOR INFORMATION ONLY

DRAINAGE QUANTITIES
DQ-55

STATE OF CALIFORNIA - DEPARTMENT OF TRANSPORTATION
Caltrans® HYDRAULICS

FUNCTIONAL SUPERVISOR: MARIA QUINONEZ
CALCULATED-DESIGNED BY: SIEW MEI TAN
CHECKED BY: WING YAN LEE
REVISED BY
DATE REVISED

LAST REVISION 00-00-00
DATE PLOTTED => 03-FEB-2016
TIME PLOTTED => 11:13

Dist	COUNTY	ROUTE	POST MILES TOTAL PROJECT	SHEET No.	TOTAL SHEETS
07	LA,Ora	5	0.0/1.5, 44.3/44.4	467	1622

REGISTERED CIVIL ENGINEER 5-7-14 DATE

1-25-16
PLANS APPROVAL DATE

REGISTERED PROFESSIONAL ENGINEER WING-YAN LEE No. 61452 Exp. 6-30-17 CIVIL STATE OF CALIFORNIA

THE STATE OF CALIFORNIA OR ITS OFFICERS OR AGENTS SHALL NOT BE RESPONSIBLE FOR THE ACCURACY OR COMPLETENESS OF SCANNED COPIES OF THIS PLAN SHEET.

NOTE:

JOINTS ARE STANDARD JOINT TYPE

SUMMARY OF DRAINAGE QUANTITIES

DRAINAGE PLAN SHEET No. ⬡	DRAINAGE SYSTEM No. ○	DRAINAGE UNIT	"H" OR "V"	MINOR CONCRETE (MINOR STRUCTURE)	MINOR CONCRETE (GUTTER DEPRESSION)	MINOR CONCRETE (SIDEWALK AND CURB RAMP)	CONCRETE BACKFILL (PIPE TRENCH)	CONCRETE (DITCH LINING)	CONCRETE (CHANNEL LINING)	MISCELLANEOUS IRON AND STEEL	RCP (12" - 30") 12" RCP	18" RCP	24" RCP	27" RCP	30" RCP	36" RCP	42" RCP	48" RCP	54" RCP	60" RCP	63" RCP	69" RCP	81" RCP	18" SLOTTED CSP (0.079" THICK)	6" NON-PERFORATED PLASTIC PIPE UNDERDRAIN	36" PRECAST CONCRETE PIPE MANHOLE	42" AUTOMATIC DRAINAGE GATE	24" CONCRETE FLARED END SECTION	DITCH EXCAVATION	HOT MIX ASPHALT (TYPE A)	PLACE HOT MIX ASPHALT (Misc AREA)	CONCRETED-ROCK SLOPE PROTECTION (FACING, METHOD B)	ROCK SLOPE PROTECTION FABRIC (CLASS 8)	GRATED LINE DRAIN	CABLE RAILING	REMOVE CONCRETE	REMOVE PIPE	REMOVE INLET	REMOVE MANHOLE	REMOVE CATCH BASIN	ADJUST MANHOLE	TYPE 24-12 FRAME AND GRATE (N)	MANHOLE FRAME AND COVER (630-3, U45) (N)	MANHOLE FRAME AND COVER (312-3) (N)	MANHOLE FRAME AND COVER (U46) (N)	FRAME & GRATING FOR CATCH BASINS(311-2) (N)	MAXIMUM COVER	DESCRIPTION	STATION
			FT	CY	CY	CY	CY	CY	CY	LB	LF	LF	LF	LF	LF	LF	LF	LF	LF	LF	LF	LF	LF	LF	LF	LF	EA	EA	CY	TON	SQYD	CY	SQYD	LF	LF	CY	LF	EA	EA	EA	EA	EA	EA	EA	EA	EA	FT		
D-20	20-12	a	4.5	2.48						115																																		1				COCB 300-3, W=7′	54.00′ Lt 105+42.00 ℄ "VAL"
		b										24.6																																		2.8	18" RCP	
		c		0.55																																											JS 331-3	30.00′ Lt 105+55.28 ℄ "VAL"
	20-13	a													4.0																															1.9	30" RCP	
		b		1.97						435															1.4																	1				MH 322-2	28.00′ Lt 110+60.93 ℄ "VAL"
		c														351.9																													10.7	36" RCP	
		d		2.28						435															10.3																	1				MH 322-2	28.00′ Lt 107+04.35 ℄ "VAL"
		e														114.0																													12.4	36" RCP	
		f	15.5	6.79						580																														2					GD-1 INLET	4.00′ Lt 72+18.00 ℄ "VA4"
		g																						89.2																							18" SCSP	
		h										89.2																																	5.7	18" RCP	
		i	6.0	1.61						326																														1					TYPE G1 INLET	4.00′ Lt 71+26.00 ℄ "VA4"
	20-14	a	4.5	4.19						115																																1				COCB 300-3, W=14′	40.90′ Lt 110+67.50 ℄ "VAL"
		b											11.1																																2.7	24" RCP	
	20-15	a	4.5	2.48						115																																1				COCB 300-3, W=7′	54.02′ Lt 107+18.50 ℄ "VAL"
		b											25.4																																12.4	24" RCP	
SHEET TOTAL				22.35						2,121		113.8	36.5		4.0	465.9								89.2		11.7														3	2	3					

(N) = NOT A SEPARATE PAY ITEM, FOR INFORMATION ONLY

DRAINAGE QUANTITIES
DQ-56

STATE OF CALIFORNIA - DEPARTMENT OF TRANSPORTATION
Caltrans® HYDRAULICS

FUNCTIONAL SUPERVISOR: MARIA QUINONEZ
CALCULATED-DESIGNED BY: SIEW MEI TAN
CHECKED BY: WING YAN LEE
REVISED BY
DATE REVISED

LAST REVISION 00-00-00
DATE PLOTTED => 03-FEB-2016
TIME PLOTTED => 11:13

Dist	COUNTY	ROUTE	POST MILES TOTAL PROJECT	SHEET No.	TOTAL SHEETS
07	LA,Ora	5	0.0/1.5, 44.3/44.4	468	1622

REGISTERED CIVIL ENGINEER 5-7-14 DATE

1-25-16
PLANS APPROVAL DATE

REGISTERED PROFESSIONAL ENGINEER WING-YAN LEE No. 61452 Exp. 6-30-17 CIVIL STATE OF CALIFORNIA

THE STATE OF CALIFORNIA OR ITS OFFICERS OR AGENTS SHALL NOT BE RESPONSIBLE FOR THE ACCURACY OR COMPLETENESS OF SCANNED COPIES OF THIS PLAN SHEET.

NOTE:

JOINTS ARE STANDARD JOINT TYPE

SUMMARY OF DRAINAGE QUANTITIES

DRAINAGE PLAN SHEET No.	DRAINAGE SYSTEM No.	DRAINAGE UNIT	"H" OR "V"	MINOR CONCRETE (MINOR STRUCTURE)	MINOR CONCRETE (GUTTER DEPRESSION)	MINOR CONCRETE (SIDEWALK AND CURB RAMP)	CONCRETE BACKFILL (PIPE TRENCH)	CONCRETE (DITCH LINING)	CONCRETE (CHANNEL LINING)	MISCELLANEOUS IRON AND STEEL	RCP (12" - 30") 12" RCP	18" RCP	24" RCP	27" RCP	30" RCP	36" RCP	42" RCP	48" RCP	54" RCP	60" RCP	63" RCP	69" RCP	81" RCP	18" SLOTTED CSP (0.079" THICK)	6" NON-PERFORATED PLASTIC PIPE UNDERDRAIN	36" PRECAST CONCRETE PIPE MANHOLE	42" AUTOMATIC DRAINAGE GATE	24" CONCRETE FLARED END SECTION	DITCH EXCAVATION	HOT MIX ASPHALT (TYPE A)	PLACE HOT MIX ASPHALT (Misc AREA)	CONCRETED-ROCK SLOPE PROTECTION (FACING, METHOD B)	ROCK SLOPE PROTECTION FABRIC (CLASS 8)	GRATED LINE DRAIN	CABLE RAILING	REMOVE CONCRETE	REMOVE PIPE	REMOVE INLET	REMOVE MANHOLE	REMOVE CATCH BASIN	ADJUST MANHOLE	TYPE 24-12 FRAME AND GRATE (N)	MANHOLE FRAME AND COVER (630-3, U45) (N)	MANHOLE FRAME AND COVER (312-3) (N)	MANHOLE FRAME AND COVER (U46) (N)	FRAME & GRATING FOR CATCH BASINS(311-2) (N)	MAXIMUM COVER	DESCRIPTION	STATION
			FT	CY	CY	CY	CY	CY	CY	LB	LF	LF	LF	LF	LF	LF	LF	LF	LF	LF	LF	LF	LF	LF	LF	EA	EA	CY	TON	SQYD	CY	SQYD	LF	LF	CY	LF	EA	EA	EA	EA	EA	EA	EA	EA	EA	FT		
D-20	20-16	a											54.3																																	16.0	24" RCP	
		b	18.3	7.92						580																													2						GD-1 INLET	58.00 R+ 72+18.00 ℄ "VA4"
		c											146.6																															18.2	24" RCP	
	20-17	a	3.0	1.79						326																													1						TYPE G2 INLET	85.93 R+ 67+20.36 ℄ "VA1"
		b											103.1																															15.6	24" RCP	
	20-18	a	2.0	0.73						326																													1						TYPE G1 INLET	64.50′ L+ 108+19.45 ℄ "VAL"
		b									8.0																																	7.2	12" RCP	
		c					0.05																																						JS 332-2	29.50′ L+ 108+19.45 ℄ "VAL"
	20-19	a	2.0	0.73						326																													1						TYPE G1 INLET	55.95′ L+ 109+85.50 ℄ "VAL"
		b					0.52				3.0																																	1.0	12" RCP W/ Conc BACKFILL	
		c	2.2	0.78						326																													1						TYPE G1 INLET	53.59′ L+ 109+81.68 ℄ "VAL"
		d					0.98				34.1																																	3.8	12" RCP W/ Conc BACKFILL	
		e					0.05																																						JS 332-2	29.50′ L+ 109+57.63 ℄ "VAL"
SHEET TOTAL				11.95			1.60			1,884	45.1		304.0																										6							

(N) = NOT A SEPARATE PAY ITEM, FOR INFORMATION ONLY

DRAINAGE QUANTITIES
DQ-57

STATE OF CALIFORNIA - DEPARTMENT OF TRANSPORTATION
Caltrans HYDRAULICS

FUNCTIONAL SUPERVISOR: MARIA QUINONEZ
CALCULATED-DESIGNED BY: SIEW MEI TAN
CHECKED BY: WING YAN LEE
REVISED BY
DATE REVISED

LAST REVISION 00-00-00
DATE PLOTTED => 03-FEB-2016
TIME PLOTTED => 11:13

Dist	COUNTY	ROUTE	POST MILES TOTAL PROJECT	SHEET No.	TOTAL SHEETS
07	LA,Ora	5	0.0/1.5, 44.3/44.4	469	1622

REGISTERED CIVIL ENGINEER 5-7-14 DATE

1-25-16
PLANS APPROVAL DATE

REGISTERED PROFESSIONAL ENGINEER WING-YAN LEE No. 61452 Exp. 6-30-17 CIVIL STATE OF CALIFORNIA

THE STATE OF CALIFORNIA OR ITS OFFICERS OR AGENTS SHALL NOT BE RESPONSIBLE FOR THE ACCURACY OR COMPLETENESS OF SCANNED COPIES OF THIS PLAN SHEET.

NOTE:

JOINTS ARE STANDARD JOINT TYPE

SUMMARY OF DRAINAGE QUANTITIES

DRAINAGE PLAN SHEET No. ⬡	DRAINAGE SYSTEM No. ○	DRAINAGE UNIT	"H" OR "V"	MINOR CONCRETE (MINOR STRUCTURE)	MINOR CONCRETE (GUTTER DEPRESSION)	MINOR CONCRETE (SIDEWALK AND CURB RAMP)	CONCRETE BACKFILL (PIPE TRENCH)	CONCRETE (DITCH LINING)	CONCRETE (CHANNEL LINING)	MISCELLANEOUS IRON AND STEEL	RCP (12" - 30") 12" RCP	18" RCP	24" RCP	27" RCP	30" RCP	36" RCP	42" RCP	48" RCP	54" RCP	60" RCP	63" RCP	69" RCP	81" RCP	18" SLOTTED CSP (0.079" THICK)	6" NON-PERFORATED PLASTIC PIPE UNDERDRAIN	36" PRECAST CONCRETE PIPE MANHOLE	42" AUTOMATIC DRAINAGE GATE	24" CONCRETE FLARED END SECTION	DITCH EXCAVATION	HOT MIX ASPHALT (TYPE A)	PLACE HOT MIX ASPHALT (Misc AREA)	CONCRETED-ROCK SLOPE PROTECTION (FACING, METHOD B)	ROCK SLOPE PROTECTION FABRIC (CLASS 8)	GRATED LINE DRAIN	CABLE RAILING	REMOVE CONCRETE	REMOVE PIPE	REMOVE INLET	REMOVE MANHOLE	REMOVE CATCH BASIN	ADJUST MANHOLE	TYPE 24-12 FRAME AND GRATE (N)	MANHOLE FRAME AND COVER (630-3, U45) (N)	MANHOLE FRAME AND COVER (312-3) (N)	MANHOLE FRAME AND COVER (U46) (N)	FRAME & GRATING FOR CATCH BASINS(311-2) (N)	MAXIMUM COVER	DESCRIPTION	STATION
			FT	CY	CY	CY	CY	CY	CY	LB	LF	LF	LF	LF	LF	LF	LF	LF	LF	LF	LF	LF	LF	LF	LF	LF	EA	EA	CY	TON	SQYD	CY	SQYD	LF	LF	CY	LF	EA	EA	EA	EA	EA	EA	EA	EA	EA	FT		
D-20	20-20	a	3.0	1.03						326																																1						TYPE G3 INLET	39.09' Lt 67+00.00 ℄ "NFIR2"
		b									13.2																																			3.8	12" RCP	
SHEET TOTAL				1.03						326	13.2																															1							
SUBTOTAL				729.23	2.36	40.19	336.25	203.36	0.06	113,272	826.1	4,521.0	13,521.8	954.1	3,482.5	1,164.6	1,667.7	292.6	220.8	231.6	717.3	618.7	577.4	2,587.6	126.6	178.5	1	2	176.54	3.70	29.9	5.3	27.9	42.0	22.7	917.14	13,782.0	65	10	21	1	248	55	58	12	10			
Q-2 SUBTOTAL				2.60																																													
GRAND TOTAL				731.83	2.36	*	336.25	203.36	0.06	113,272	23,305.5					1,164.6	1,667.7	292.6	220.8	231.6	717.3	618.7	577.4	2,587.6	**	178.5	1	2	176.54	*	*	5.3	27.9	42.0	**	917.14	13,782.0	65	10	21	1	248	55	58	12	10			

* INCLUDED IN HIGHWAY QUANTITIES
** SEE DQ-59 FOR GRAND TOTAL
(N) = NOT A SEPARATE PAY ITEM, FOR INFORMATION ONLY

DRAINAGE QUANTITIES
DQ-58

CALCULATED-DESIGNED BY SIEW MEI TAN
CHECKED BY WING YAN LEE
REVISED BY
DATE REVISED
FUNCTIONAL SUPERVISOR MARIA QUINONEZ

STATE OF CALIFORNIA - DEPARTMENT OF TRANSPORTATION
Caltrans HYDRAULICS

LAST REVISION 00-00-00
DATE PLOTTED => 03-FEB-2016
TIME PLOTTED => 11:13

Dist	COUNTY	ROUTE	POST MILES TOTAL PROJECT	SHEET No.	TOTAL SHEETS
07	LA,Ora	5	0.0/1.5, 44.3/44.4	470	1622

REGISTERED CIVIL ENGINEER 5-7-14 DATE

1-25-16
PLANS APPROVAL DATE

REGISTERED PROFESSIONAL ENGINEER WING-YAN LEE No. 61452 Exp. 6-30-17 CIVIL STATE OF CALIFORNIA

THE STATE OF CALIFORNIA OR ITS OFFICERS OR AGENTS SHALL NOT BE RESPONSIBLE FOR THE ACCURACY OR COMPLETENESS OF SCANNED COPIES OF THIS PLAN SHEET.

SUMMARY OF MEDIA FILTERS QUANTITIES

DRAINAGE PLAN SHEET No.	NAME	TYPE	STRUCTURE EXCAVATION	STRUCTURE BACKFILL	STRUCTURAL CONCRETE	JOINT SEAL (TYPE AL)	BAR REINFORCING STEEL	6" PERFORATED PLASTIC PIPE UNDERDRAIN	6" NON-PERFORATED PLASTIC PIPE UNDERDRAIN	CLASS 4 PERMEABLE MATERIAL	CLASS 5 PERMEABLE MATERIAL	GABION	CLASS D FILTER FABRIC	MISCELLANEOUS METAL	CABLE RAILING	6" GATE VALVE	ROCK SLOPE PROTECTION (No. 2, METHOD B)
			CY	CY	CY	LF	LB	LF	LF	CY	CY	CY	SQYD	LB	LF	EA	CY
D-17	AVSF	S-10000-4.5	1,576.1	230.0	338.0	41.0	78,012	356.7	54.8	126.0	110.0	18.0	285.0	115	237.0		
D-17	AVSF	S-5000-3	825.0	142.0	171.0	32.0	38,820	150.0	23.5	63.0	51.0	9.0	149.0	115	165.0		
D-18	EBASF							338.9	390.0	87.1	105.8	15.4	498.1			1	2.0
TOTAL			2,401.1	372.0	509.0	73.0	116,832	845.6	468.3	276.1	266.8	42.4	932.1	230	402.0	1	2.0
DQ-58 SUBTOTAL									126.6						22.7		
Q-3 SUBTOTAL							3,755										
GRAND TOTAL			2,401.1	372.0	509.0	73.0	120,587	845.6	594.9	276.1	266.8	42.4	932.1	230	424.7	1	2.0

(N) = NOT A SEPARATE PAY ITEM, FOR INFORMATION ONLY

DRAINAGE QUANTITIES
DQ-59

REVISED BY | DATE REVISED
SIEW MEI TAN | WING YAN LEE
CALCULATED-DESIGNED BY | CHECKED BY
FUNCTIONAL SUPERVISOR
MARIA QUINONEZ

STATE OF CALIFORNIA - DEPARTMENT OF TRANSPORTATION
Caltrans® HYDRAULICS

LAST REVISION 00-00-00 | DATE PLOTTED => 03-FEB-2016 | TIME PLOTTED => 11:13

Dist	COUNTY	ROUTE	POST MILES TOTAL PROJECT	SHEET No.	TOTAL SHEETS
07	LA,Ora	5	0.0/1.5, 44.3/44.4	471	1622

REGISTERED CIVIL ENGINEER 5-7-14 DATE

1-25-16
PLANS APPROVAL DATE

REGISTERED PROFESSIONAL ENGINEER WING-YAN LEE No. 61452 Exp. 6-30-17 CIVIL STATE OF CALIFORNIA

THE STATE OF CALIFORNIA OR ITS OFFICERS OR AGENTS SHALL NOT BE RESPONSIBLE FOR THE ACCURACY OR COMPLETENESS OF SCANNED COPIES OF THIS PLAN SHEET.

LEGEND:

- DRAINAGE INLET
- CLEANOUT, VENT OR OUTLET
- PP(S) — PLASTIC PIPE (SLOTTED)
- PP(U) — PLASTIC PIPE (UNSLOTTED)
- DIRECTION OF FLOW

+00.00	STATION
O O	CL-CLEANOUT, O-OUTLET OR V-VENT
B D	TYPE OF CLEANOUT, OUTLET OR VENT
1.0 2.1	LENGTH OF UNSLOTTED PIPE IN FEET

NOTE: THE CONTRACTOR MUST VERIFY FIELD CONDITION AND SELECT THE PROPER TYPE OF EDGE DRAIN OUTLET.

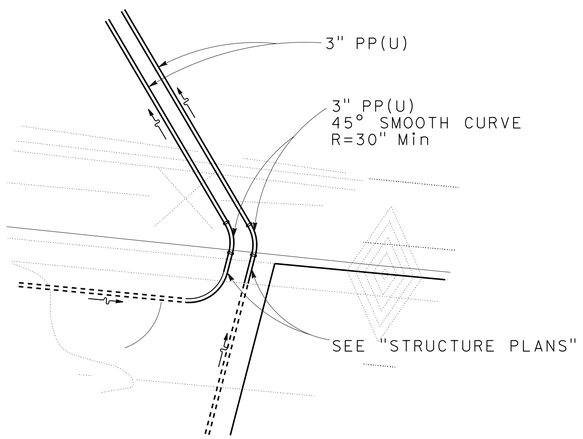

DETAIL A

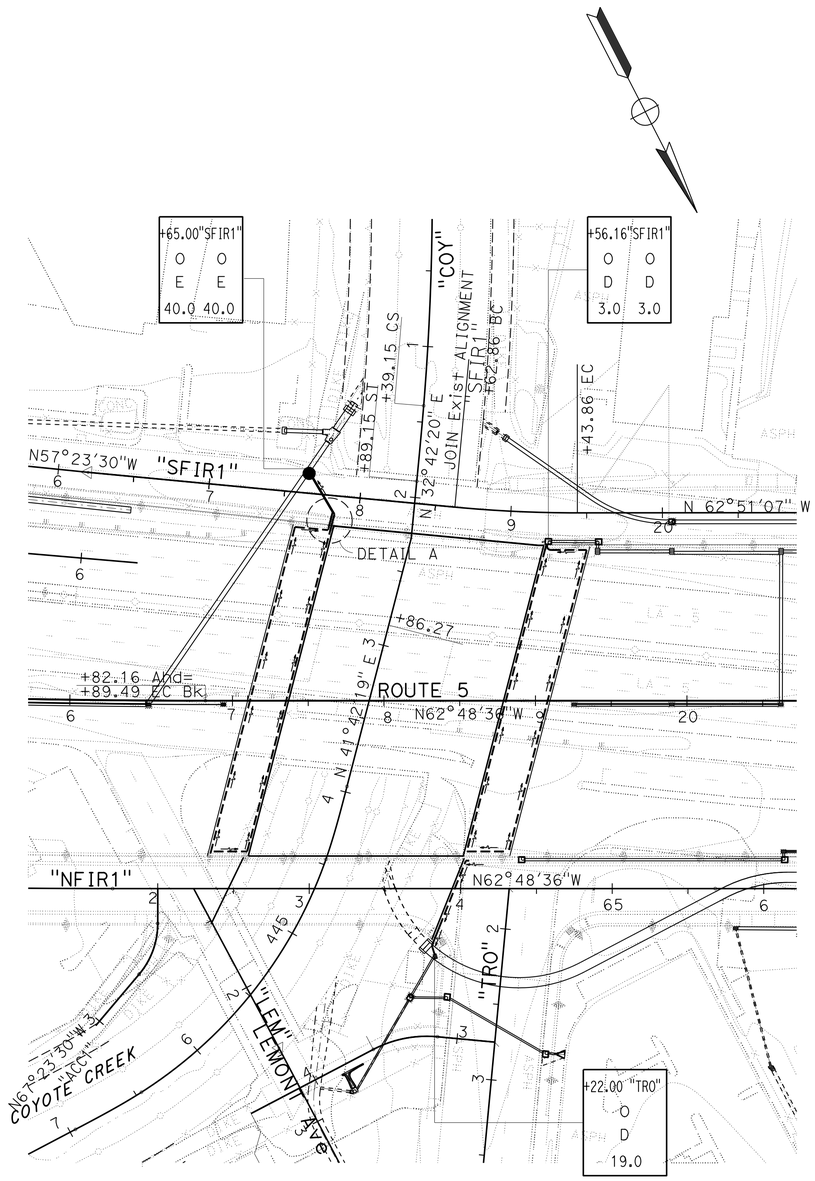

AT COYOTE CREEK BRIDGE AND FIRESTONE Blvd BRIDGE

SUBSURFACE DRAINAGE PLAN
(STRUCTURE APPROACH)

SCALE: 1" = 50'

SB-1

APPROVED FOR SUBSURFACE DRAINAGE WORK ONLY

STATE OF CALIFORNIA - DEPARTMENT OF TRANSPORTATION
Caltrans® HYDRAULICS

FUNCTIONAL SUPERVISOR: MARIA QUINONEZ
CALCULATED-DESIGNED BY: ROMULO ROBENIOL
CHECKED BY: WING YAN LEE
REVISED BY / DATE REVISED

LAST REVISION 00-00-00 | DATE PLOTTED => 03-FEB-2016 | TIME PLOTTED => 11:13

Dist	COUNTY	ROUTE	POST MILES TOTAL PROJECT	SHEET No.	TOTAL SHEETS
07	LA,Ora	5	0.0/1.5, 44.3/44.4	472	1622

REGISTERED CIVIL ENGINEER 5-7-14 DATE

1-25-16
PLANS APPROVAL DATE

REGISTERED PROFESSIONAL ENGINEER WING-YAN LEE No. 61452 Exp. 6-30-17 CIVIL STATE OF CALIFORNIA

THE STATE OF CALIFORNIA OR ITS OFFICERS OR AGENTS SHALL NOT BE RESPONSIBLE FOR THE ACCURACY OR COMPLETENESS OF SCANNED COPIES OF THIS PLAN SHEET.

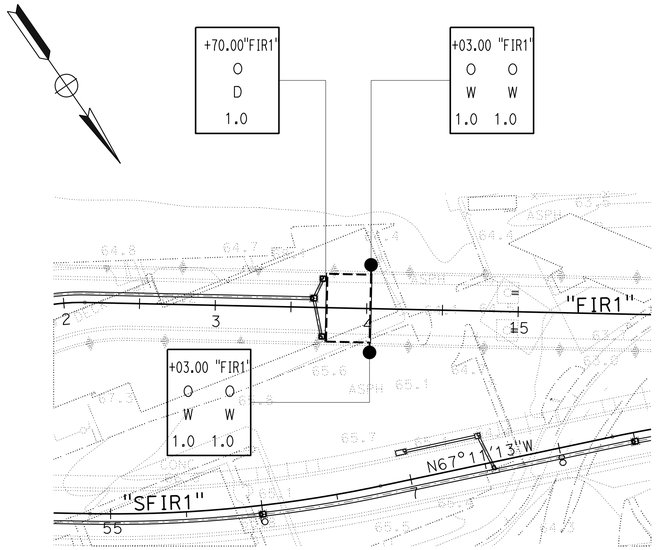

AT NB VALLEY VIEW Ave/ (SOUTH SIDE) FIRESTONE Blvd

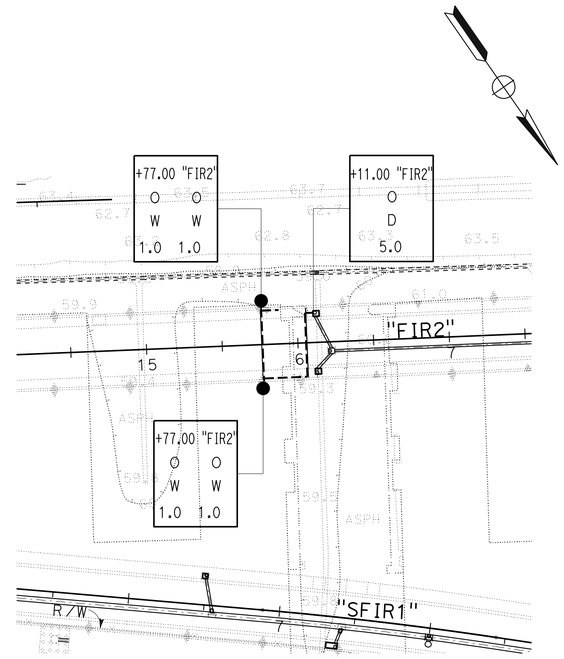

AT SB VALLEY VIEW Ave/ (SOUTH SIDE) FIRESTONE Blvd

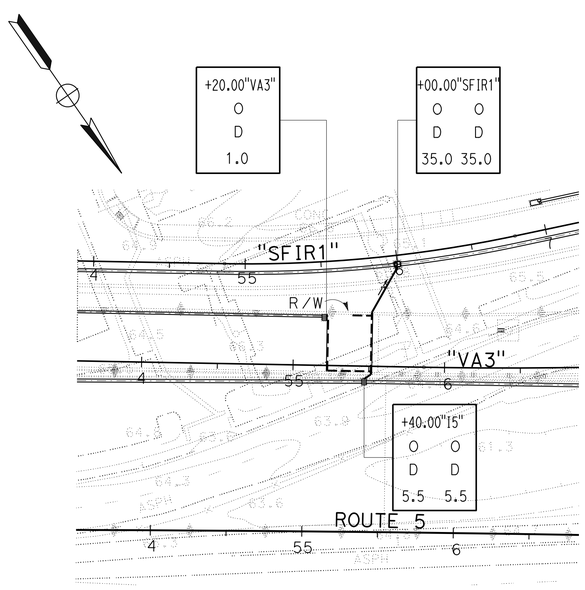

AT VALLEY VIEW Ave SB ON-RAMP

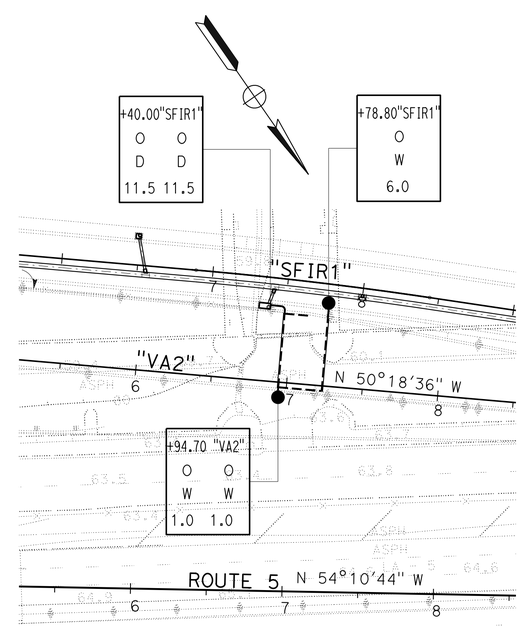

AT VALLEY VIEW Ave SB OFF-RAMP

SUBSURFACE DRAINAGE PLAN
(STRUCTURE APPROACH)

SCALE: 1" = 50'

SB-2

APPROVED FOR SUBSURFACE DRAINAGE WORK ONLY

STATE OF CALIFORNIA - DEPARTMENT OF TRANSPORTATION
Caltrans® HYDRAULICS

FUNCTIONAL SUPERVISOR: MARIA QUINONEZ
CALCULATED-DESIGNED BY: ROMULO ROBENIOL
CHECKED BY: WING YAN LEE
REVISED BY
DATE REVISED

LAST REVISION 00-00-00 | DATE PLOTTED => 03-FEB-2016 | TIME PLOTTED => 11:13

Dist	COUNTY	ROUTE	POST MILES TOTAL PROJECT	SHEET No.	TOTAL SHEETS
07	LA,Ora	5	0.0/1.5, 44.3/44.4	473	1622

REGISTERED CIVIL ENGINEER 5-7-14 DATE

1-25-16
PLANS APPROVAL DATE

REGISTERED PROFESSIONAL ENGINEER WING-YAN LEE No. 61452 Exp. 6-30-17 CIVIL STATE OF CALIFORNIA

THE STATE OF CALIFORNIA OR ITS OFFICERS OR AGENTS SHALL NOT BE RESPONSIBLE FOR THE ACCURACY OR COMPLETENESS OF SCANNED COPIES OF THIS PLAN SHEET.

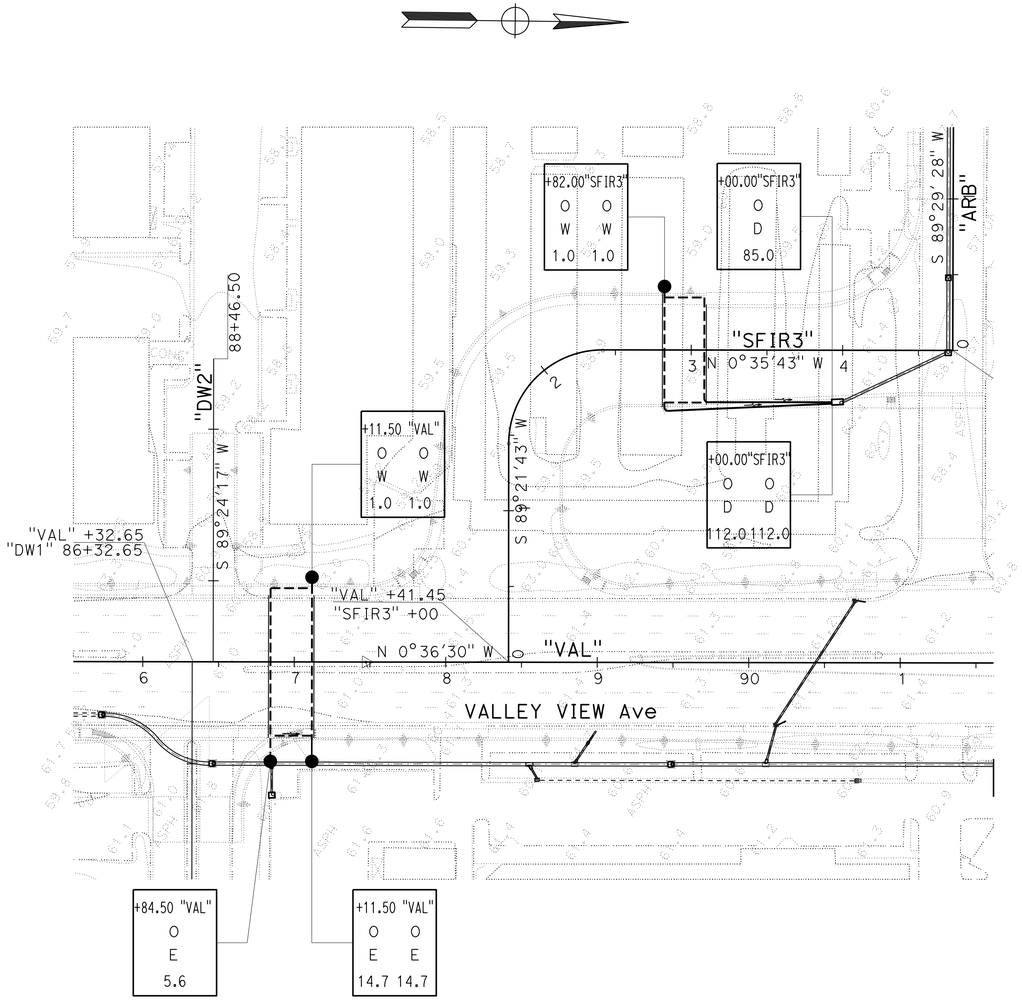

AT VALLEY VIEW Ave OH/OC
SLAB ABUT 1 & SLAB ABUT 21
(SOUTH END)

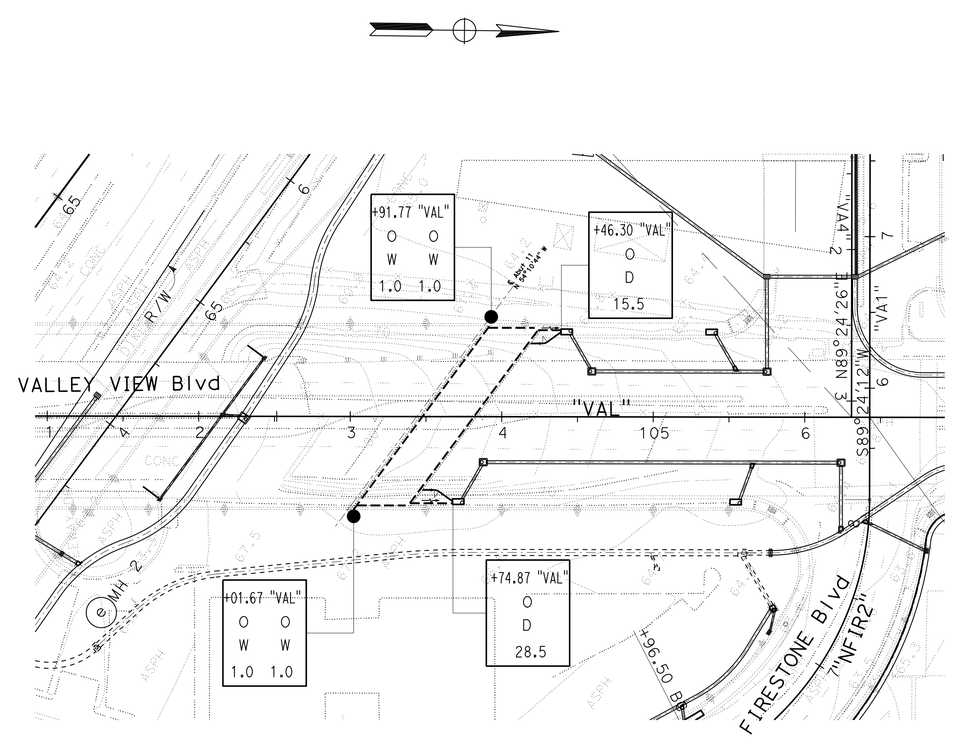

AT VALLEY VIEW Ave OH/OC
ABUT 11
(NORTH END)

SUBSURFACE DRAINAGE PLAN
(STRUCTURE APPROACH)

SCALE: 1" = 50'

SB-3

APPROVED FOR SUBSURFACE DRAINAGE WORK ONLY

STATE OF CALIFORNIA - DEPARTMENT OF TRANSPORTATION
Caltrans® HYDRAULICS
FUNCTIONAL SUPERVISOR: MARIA QUINONEZ
CALCULATED-DESIGNED BY: ROMULO ROBENIOL
CHECKED BY: WING YAN LEE
REVISED BY
DATE REVISED

LAST REVISION 00-00-00
DATE PLOTTED => 03-FEB-2016
TIME PLOTTED => 11:13

Dist	COUNTY	ROUTE	POST MILES TOTAL PROJECT	SHEET No.	TOTAL SHEETS
07	LA,Ora	5	0.0/1.5, 44.3/44.4	474	1622

REGISTERED CIVIL ENGINEER 5-7-14 DATE

1-25-16
PLANS APPROVAL DATE

REGISTERED PROFESSIONAL ENGINEER WING-YAN LEE No. 61452 Exp. 6-30-17 CIVIL STATE OF CALIFORNIA

THE STATE OF CALIFORNIA OR ITS OFFICERS OR AGENTS SHALL NOT BE RESPONSIBLE FOR THE ACCURACY OR COMPLETENESS OF SCANNED COPIES OF THIS PLAN SHEET.

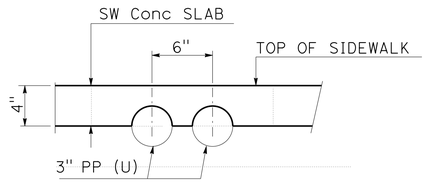

NEW SIDEWALK

SECTION B-B

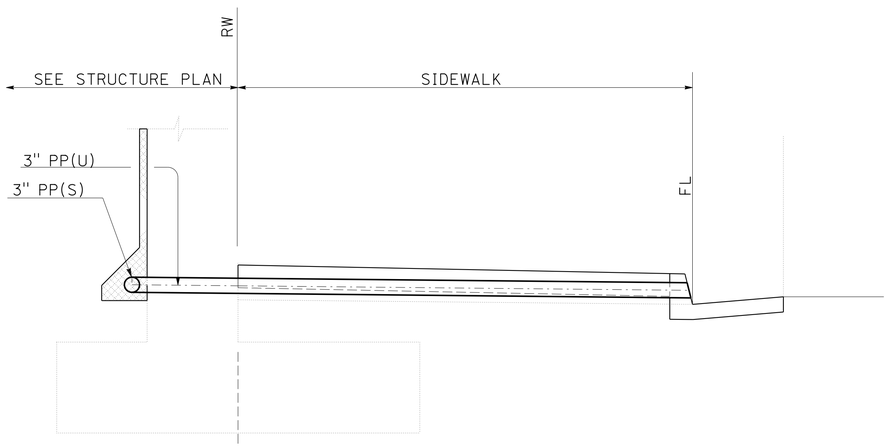

SECTION A-A

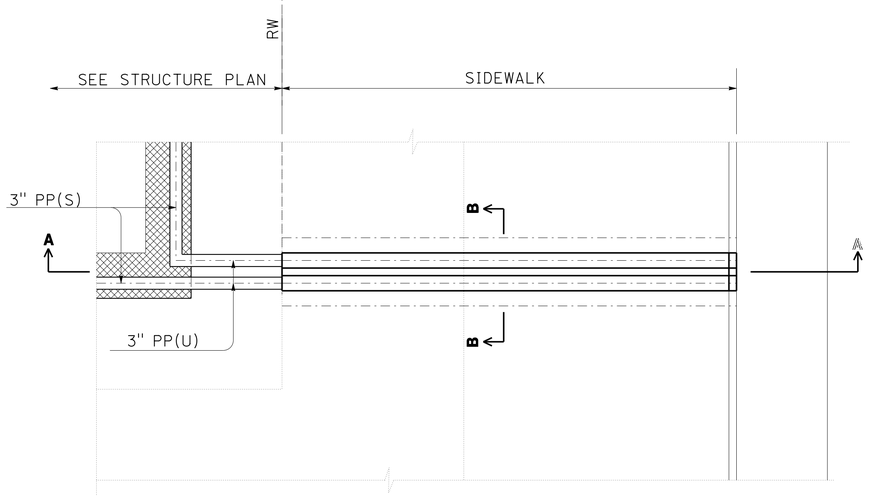

PLAN

TYPE W OUTLET

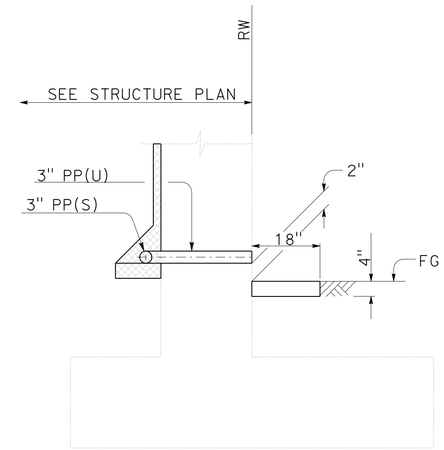

SECTION C-C

NOTE:

NOT REQUIRED, IF PIPE(S) IS (ARE) DISCHARGING ONTO A PAVED SURFACE.

⊛ W=24" FOR 2-3" PP (U)
W=12" FOR 1-3" PP (U)

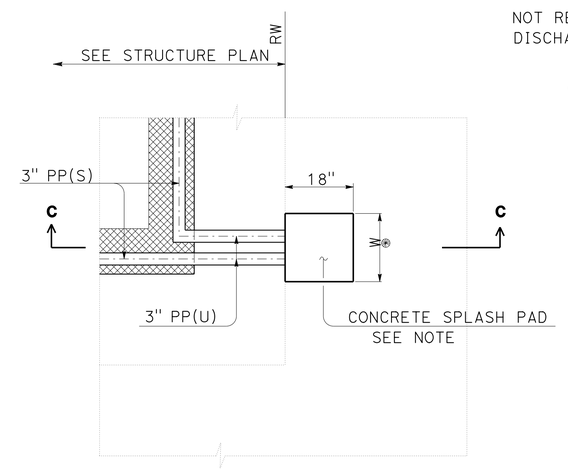

PLAN

TYPE W OUTLET
WITH CONCRETE SPLASH PAD

SUBSURFACE DRAINAGE DETAILS
(STRUCTURE APPROACH)

NO SCALE

SBD-1

STATE OF CALIFORNIA - DEPARTMENT OF TRANSPORTATION
Caltrans® HYDRAULICS

FUNCTIONAL SUPERVISOR: MARIA QUINONEZ
CALCULATED-DESIGNED BY: ROMULO ROBENIOL
CHECKED BY: WING YAN LEE
REVISED BY
DATE REVISED

LAST REVISION 00-00-00
DATE PLOTTED => 03-FEB-2016
TIME PLOTTED => 11:13

Dist	COUNTY	ROUTE	POST MILES TOTAL PROJECT	SHEET No.	TOTAL SHEETS
07	LA,Ora	5	0.0/1.5, 44.3/44.4	475	1622

REGISTERED CIVIL ENGINEER 5-7-14 DATE

1-25-16
PLANS APPROVAL DATE

REGISTERED PROFESSIONAL ENGINEER WING-YAN LEE No. 61452 Exp. 6-30-17 CIVIL STATE OF CALIFORNIA

THE STATE OF CALIFORNIA OR ITS OFFICERS OR AGENTS SHALL NOT BE RESPONSIBLE FOR THE ACCURACY OR COMPLETENESS OF SCANNED COPIES OF THIS PLAN SHEET.

NOTE:
1. 3" PLASTIC PIPE (UNSLOTTED)
   = 3" PLASTIC PIPE (EDGE DRAIN OUTLET)

EDGE DRAIN QUANTITIES

SHEET No.	ROUTE	STATIONS	LOCATION	TYPE OF OUTLET/ VENT	3" PLASTIC PIPE (EDGE DRAIN OUTLET) LF
ED-1	COYOTE CREEK BRIDGE				
	"SFIR1"	17+65.00	L+	E/E	40.0/40.0
	"SFIR1"	19+56.16	R+	D/D	3.0/3.0
	FIRESTONE Blvd BRIDGE				
ED-1	"TRO"	2+22.00	R+	D	19.0
ED-2	NB VALLEY VIEW Ave/ FIRESTONE Blvd				
	"FIR1"	13+70.00	L+	D	1.0
	"FIR1"	14+03.00	L+	W/W	1.0/1.0
	"FIR1"	14+03.00	R+	W/W	1.0/1.0
	SB VALLEY VIEW Ave/ FIRESTONE Blvd				
	"FIR2"	15+77.00	L+	W/W	1.0/1.0
	"FIR2"	15+77.00	R+	W/W	1.0/1.0
	"FIR2"	16+11.00	L+	D	5.0
	VALLEY VIEW Ave SB ON RAMP				
	"VA3"	55+20.00	L+	D	1.0
	"I5"	55+40.00	L+	D/D	5.5/5.5
	"SFIR1"	56+00.00	R+	D/D	35.0/35.0
	VALLEY VIEW Ave SB OFF RAMP				
	"SFIR1"	67+40.00	R+	D/D	11.5/11.5
	"VA2"	66+94.70	R+	W/W	1.0/1.0
ED-2	"SFIR1"	67+78.80	R+	W	6.0
SUBTOTAL					232.0

SHEET No.	ROUTE	STATIONS	LOCATION	TYPE OF OUTLET/ VENT	3" PLASTIC PIPE (EDGE DRAIN OUTLET) LF
ED-3	VALLEY VIEW Ave OH/OC SLAB ABUT 1				
	"VAL"	86+84.50	R+	E	14.0
	"VAL"	87+11.50	L+	W/W	1.0/1.0
	"VAL"	87+11.50	R+	E/E	14.0/14.0
	VALLEY VIEW Ave OH/OC SLAB ABUT 21				
	"SFIR3"	2+83.00	L+	W/W	1.0/1.0
	"SFIR3"	4+00.00	R+	D/D	112.0/112.0
	"SFIR3"	4+00.00	R+	D	85.0
	VALLEY VIEW Ave OH/OC ABUT 11				
	"VAL"	103+91.77	L+	W/W	1.0/1.0
	"VAL"	103+01.67	R+	W/W	1.0/1.0
	"VAL"	103+74.87	R+	D	28.5
ED-3	"VAL"	104+46.30	L+	D	15.5
SUBTOTAL (THIS TABLE)					403.0
TOTAL					635.0

SUBSURFACE DRAINAGE QUANTITIES
(STRUCTURE APPROACH)

SBQ-1

REVISED BY | DATE REVISED
ROMULO ROBENIOL | WING YAN LEE
CALCULATED-DESIGNED BY | CHECKED BY
FUNCTIONAL SUPERVISOR | MARIA QUINONEZ
STATE OF CALIFORNIA - DEPARTMENT OF TRANSPORTATION
Caltrans® HYDRAULICS

LAST REVISION 00-00-00
DATE PLOTTED => 03-FEB-2016
TIME PLOTTED => 11:13

Dist	COUNTY	ROUTE	POST MILES TOTAL PROJECT	SHEET No.	TOTAL SHEETS
07	LA,Ora	5	0.0/1.5, 44.3/44.4	476	1622

REGISTERED CIVIL ENGINEER 4-2-14 DATE

1-25-16
PLANS APPROVAL DATE

REGISTERED PROFESSIONAL ENGINEER KHANH Q. NGUYEN No. C68193 Exp. 9-30-17 CIVIL STATE OF CALIFORNIA

THE STATE OF CALIFORNIA OR ITS OFFICERS OR AGENTS SHALL NOT BE RESPONSIBLE FOR THE ACCURACY OR COMPLETENESS OF SCANNED COPIES OF THIS PLAN SHEET.

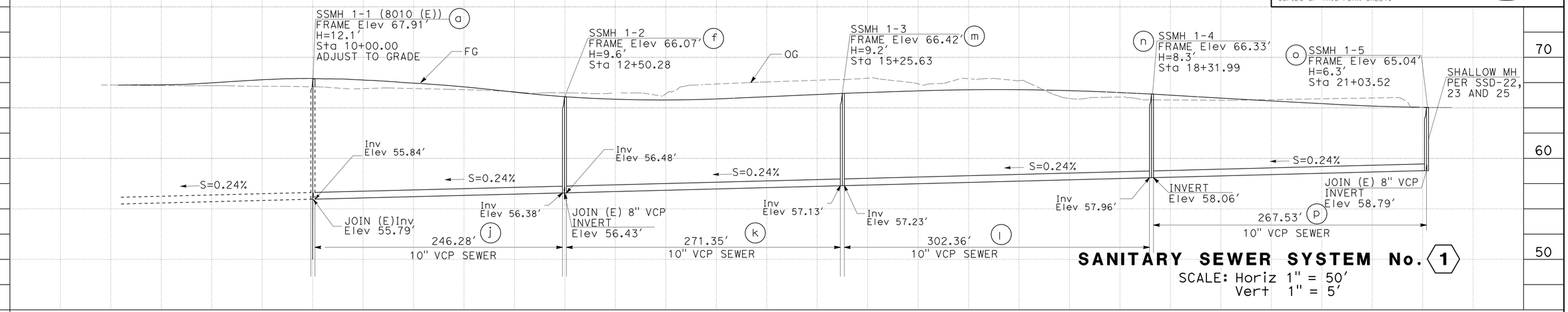

SANITARY SEWER SYSTEM No. 1

SCALE: Horiz 1" = 50′
Vert 1" = 5′

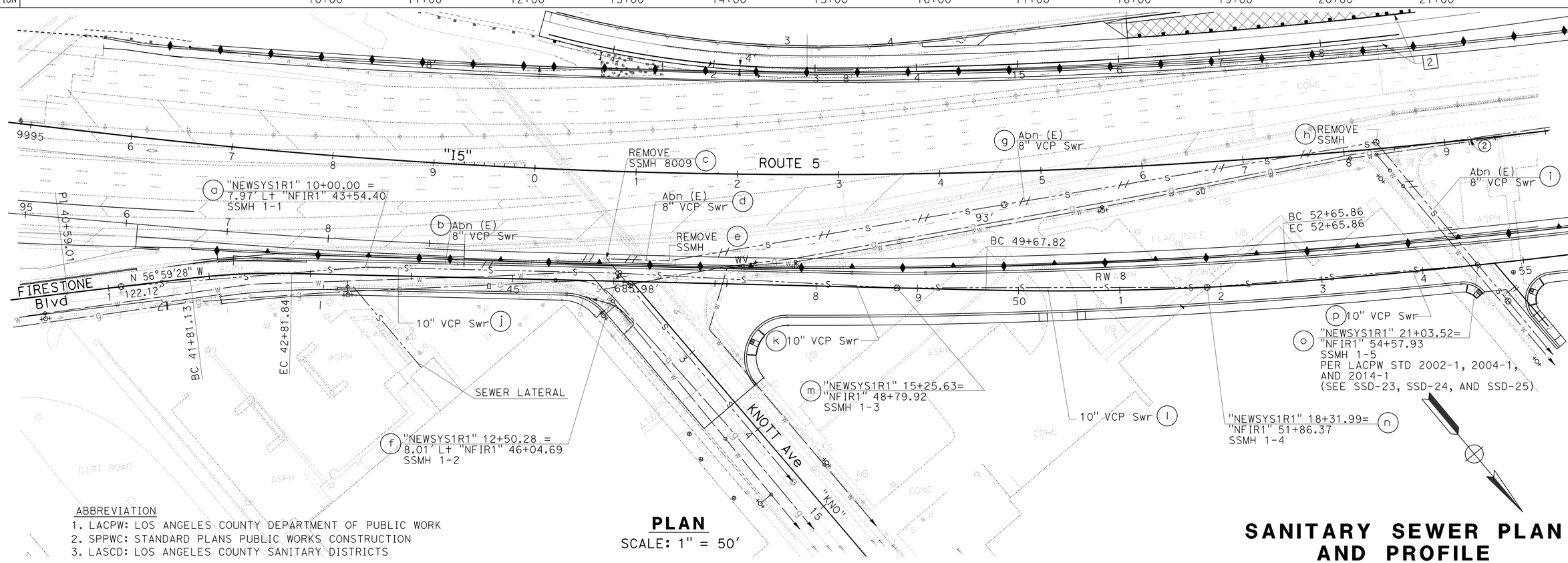

ABBREVIATION
1. LACPW: LOS ANGELES COUNTY DEPARTMENT OF PUBLIC WORK
2. SPPWC: STANDARD PLANS PUBLIC WORKS CONSTRUCTION
3. LASCD: LOS ANGELES COUNTY SANITARY DISTRICTS

PLAN

SCALE: 1" = 50′

SANITARY SEWER PLAN AND PROFILE

SCALE AS SHOWN

SS-1

APPROVED FOR SANITARY SEWER WORK ONLY

STATE OF CALIFORNIA - DEPARTMENT OF TRANSPORTATION
Caltrans
DESIGN

FUNCTIONAL SUPERVISOR: RICHARD CHIANG
CALCULATED-DESIGNED BY: KHANH Q. NGUYEN
CHECKED BY: H.S. CHEN
REVISED BY
DATE REVISED

LAST REVISION 05-12-14
DATE PLOTTED => 03-FEB-2016
TIME PLOTTED => 11:13

Dist	COUNTY	ROUTE	POST MILES TOTAL PROJECT	SHEET No.	TOTAL SHEETS
07	LA,Ora	5	0.0/1.5, 44.3/44.4	477	1622

REGISTERED CIVIL ENGINEER 4-2-14 DATE

1-25-16
PLANS APPROVAL DATE

REGISTERED PROFESSIONAL ENGINEER
KHANH Q. NGUYEN
No. C68193
Exp. 9-30-17
CIVIL
STATE OF CALIFORNIA

THE STATE OF CALIFORNIA OR ITS OFFICERS OR AGENTS SHALL NOT BE RESPONSIBLE FOR THE ACCURACY OR COMPLETENESS OF SCANNED COPIES OF THIS PLAN SHEET.

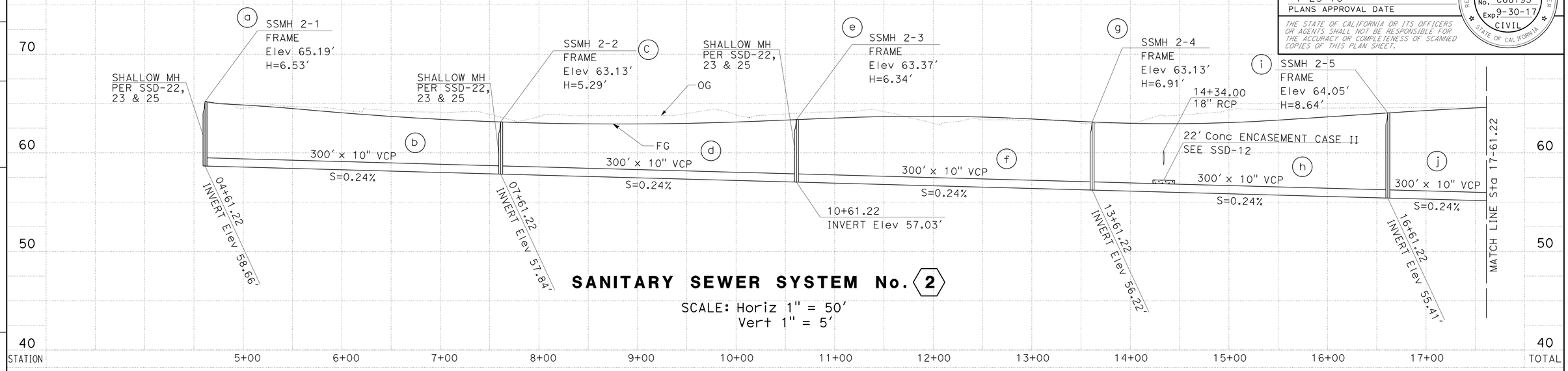

SANITARY SEWER SYSTEM No. 2

SCALE: Horiz 1" = 50'
Vert 1" = 5'

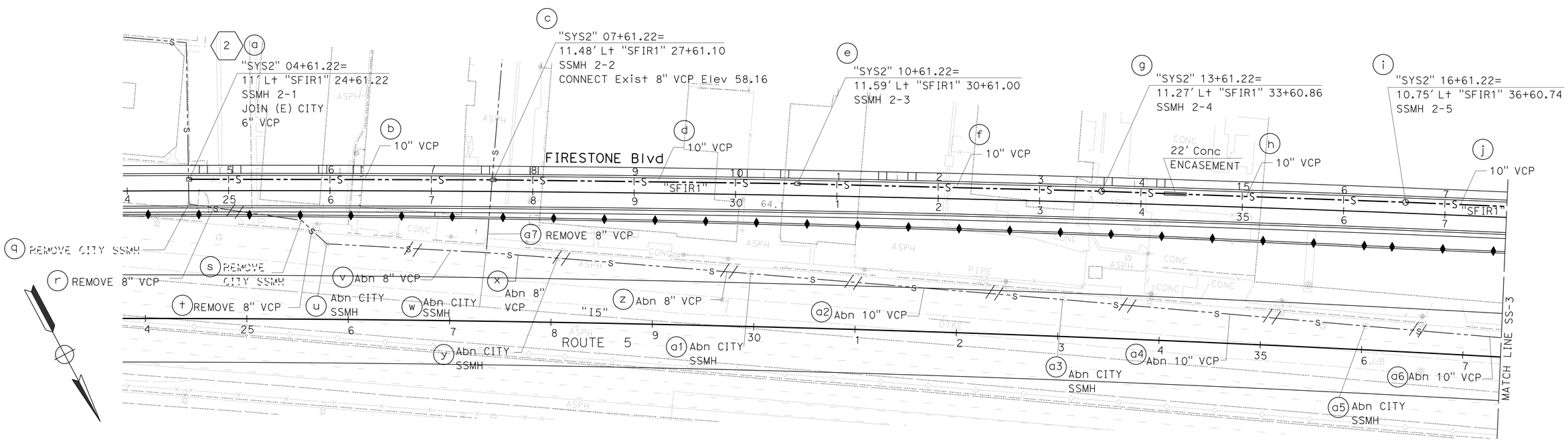

PLAN

SCALE: 1" = 50'

APPROVED FOR SANITARY SEWER WORK ONLY

SANITARY SEWER PLAN AND PROFILE

SCALE AS SHOWN **SS-2**

REVISED BY | DATE REVISED
AINSLEY C KUNG | H.S. CHEN
CALCULATED-DESIGNED BY | CHECKED BY
FUNCTIONAL SUPERVISOR | RICHARD CHIANG

STATE OF CALIFORNIA - DEPARTMENT OF TRANSPORTATION
Caltrans
DESIGN

LAST REVISION 05-12-14 | DATE PLOTTED => 03-FEB-2016 | TIME PLOTTED => 11:13

Dist	COUNTY	ROUTE	POST MILES TOTAL PROJECT	SHEET No.	TOTAL SHEETS
07	LA,Ora	5	0.0/1.5, 44.3/44.4	478	1622

REGISTERED CIVIL ENGINEER 4-2-14 DATE

1-25-16
PLANS APPROVAL DATE

REGISTERED PROFESSIONAL ENGINEER KHANH Q. NGUYEN No. C68193 Exp. 9-30-17 CIVIL STATE OF CALIFORNIA

THE STATE OF CALIFORNIA OR ITS OFFICERS OR AGENTS SHALL NOT BE RESPONSIBLE FOR THE ACCURACY OR COMPLETENESS OF SCANNED COPIES OF THIS PLAN SHEET.

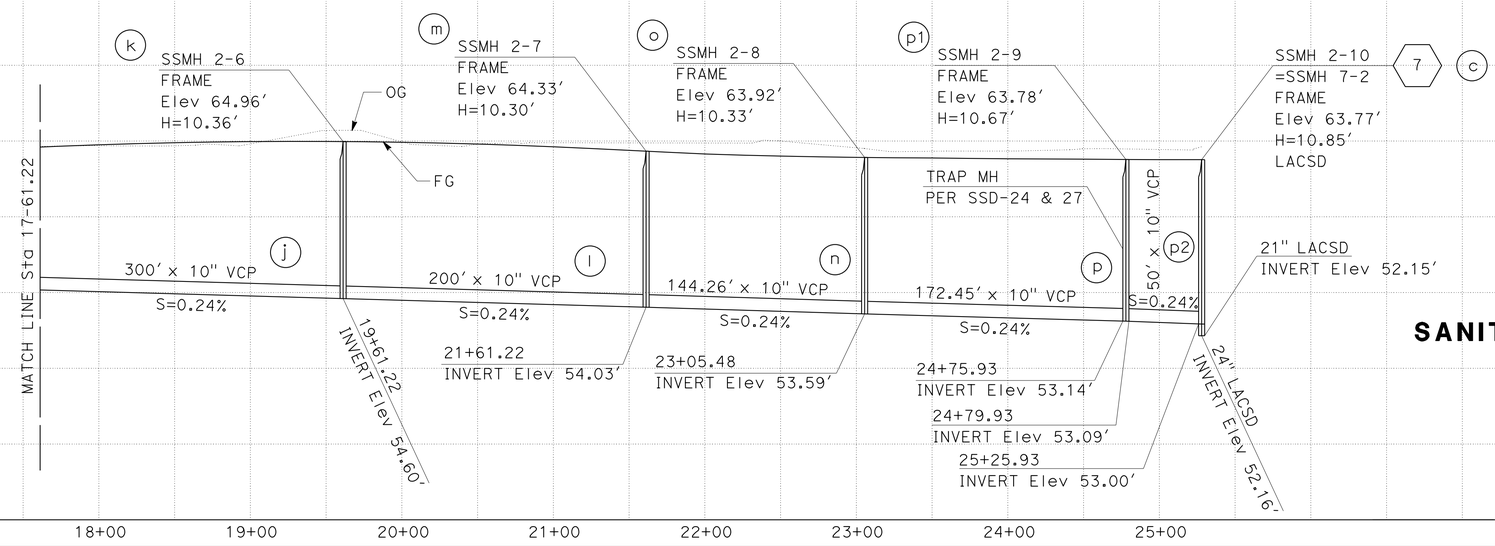

SANITARY SEWER SYSTEM No. 2

SCALE: Horiz 1" = 50′
Vert 1" = 5′

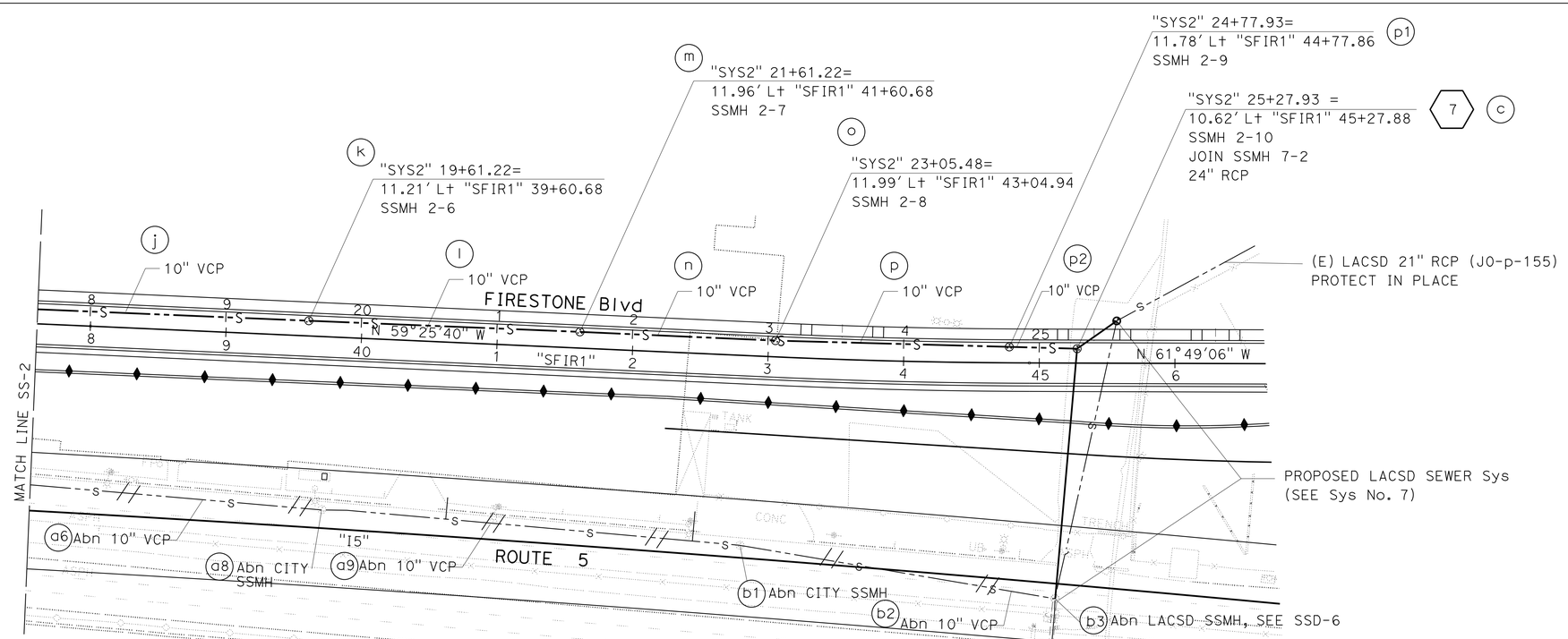

PLAN

SCALE: 1" = 50′

APPROVED FOR SANITARY SEWER WORK ONLY

SANITARY SEWER PLAN AND PROFILE

SCALE AS SHOWN

SS-3

REVISED BY | DATE REVISED
AINSLEY C KUNG | H.S. CHEN
CALCULATED-DESIGNED BY | CHECKED BY
FUNCTIONAL SUPERVISOR: RICHARD CHIANG

STATE OF CALIFORNIA - DEPARTMENT OF TRANSPORTATION
Caltrans
DESIGN

LAST REVISION 05-12-14 | DATE PLOTTED => 03-FEB-2016 | TIME PLOTTED => 11:13

Dist	COUNTY	ROUTE	POST MILES TOTAL PROJECT	SHEET No.	TOTAL SHEETS
07	LA,Ora	5	0.0/1.5, 44.3/44.4	479	1622

REGISTERED CIVIL ENGINEER 4-2-14 DATE

1-25-16
PLANS APPROVAL DATE

REGISTERED PROFESSIONAL ENGINEER KHANH Q. NGUYEN No. C68193 Exp. 9-30-17 CIVIL STATE OF CALIFORNIA

THE STATE OF CALIFORNIA OR ITS OFFICERS OR AGENTS SHALL NOT BE RESPONSIBLE FOR THE ACCURACY OR COMPLETENESS OF SCANNED COPIES OF THIS PLAN SHEET.

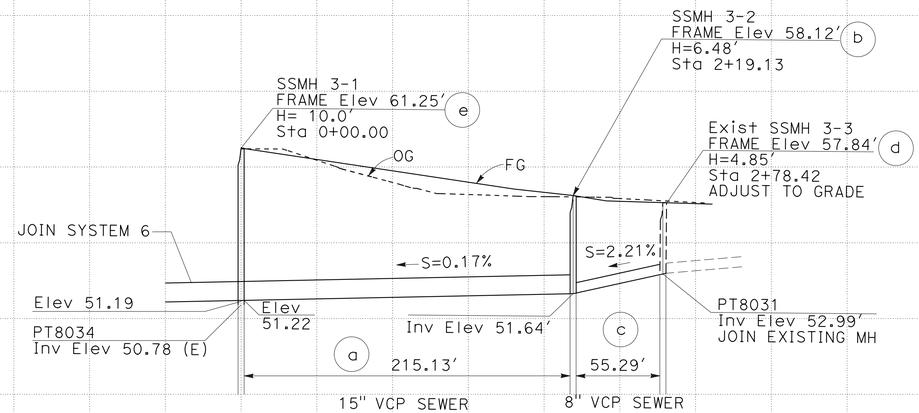

SANITARY SEWER SYSTEM No. 3

SCALE: Horiz 1" = 50′
Vert 1" = 5′

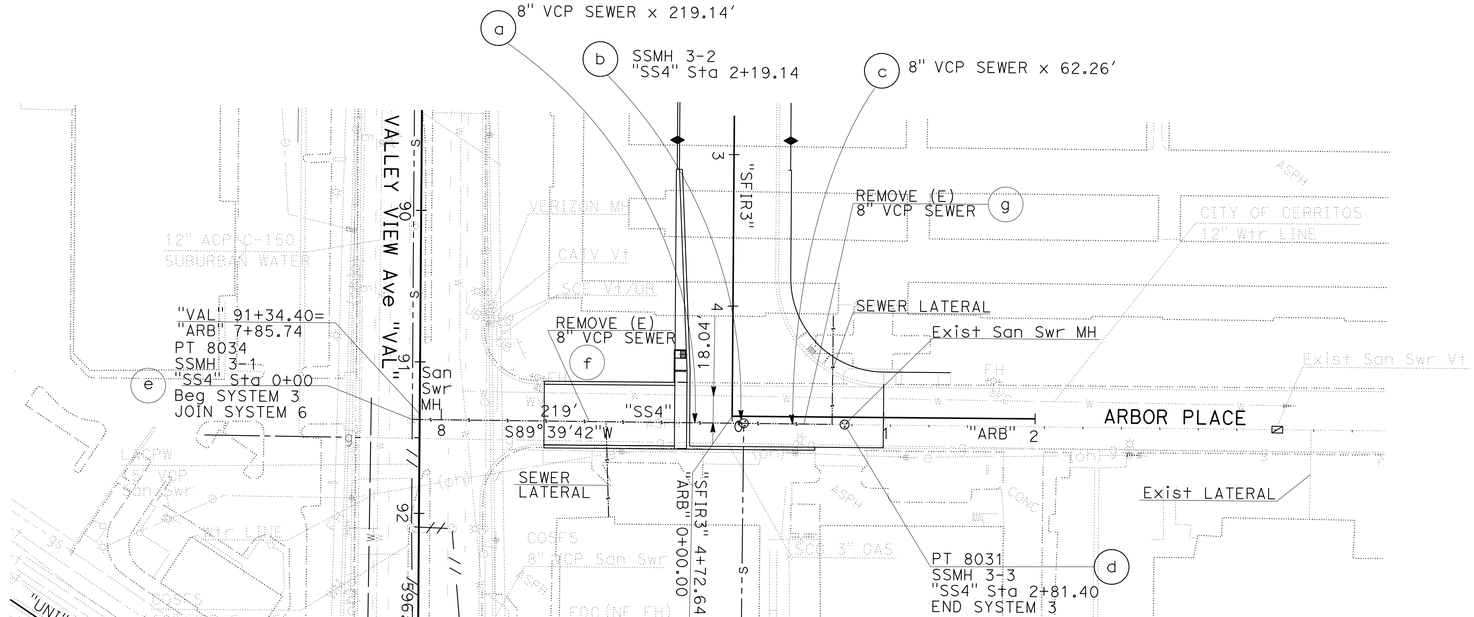

PLAN

SCALE: 1" = 50′

APPROVED FOR SANITARY SEWER WORK ONLY

SANITARY SEWER PLAN AND PROFILE

SCALE AS SHOWN

SS-4

REVISED BY | DATE REVISED
RICKEY LEE | NGUYEN MAI
CALCULATED-DESIGNED BY | CHECKED BY
FUNCTIONAL SUPERVISOR: RICHARD CHIANG

STATE OF CALIFORNIA - DEPARTMENT OF TRANSPORTATION
Caltrans
DESIGN

LAST REVISION 05-12-14 | DATE PLOTTED => 03-FEB-2016 | TIME PLOTTED => 11:13

Dist	COUNTY	ROUTE	POST MILES TOTAL PROJECT	SHEET No.	TOTAL SHEETS
07	LA,Ora	5	0.0/1.5, 44.3/44.4	480	1622

REGISTERED CIVIL ENGINEER 4-2-14 DATE

1-25-16
PLANS APPROVAL DATE

REGISTERED PROFESSIONAL ENGINEER KHANH Q. NGUYEN No. C68193 Exp. 9-30-17 CIVIL STATE OF CALIFORNIA

THE STATE OF CALIFORNIA OR ITS OFFICERS OR AGENTS SHALL NOT BE RESPONSIBLE FOR THE ACCURACY OR COMPLETENESS OF SCANNED COPIES OF THIS PLAN SHEET.

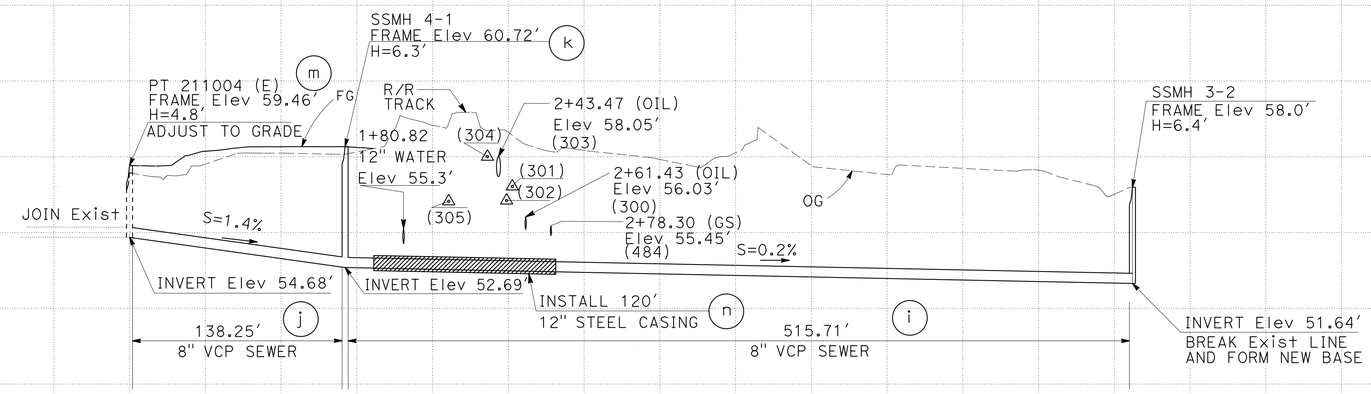

SANITARY SEWER SYSTEM No. 4
PROFILE

SCALE: Horiz 1" = 50'
Vert 1" = 5'

NOTE:

FOR ACCURATE RIGHT OF WAY AND ACCESS DATA, CONTACT RIGHT OF WAY ENGINEERING AT THE DISTRICT OFFICE.

△ POTHOLE NUMBER, SEE UTILITY PLANS

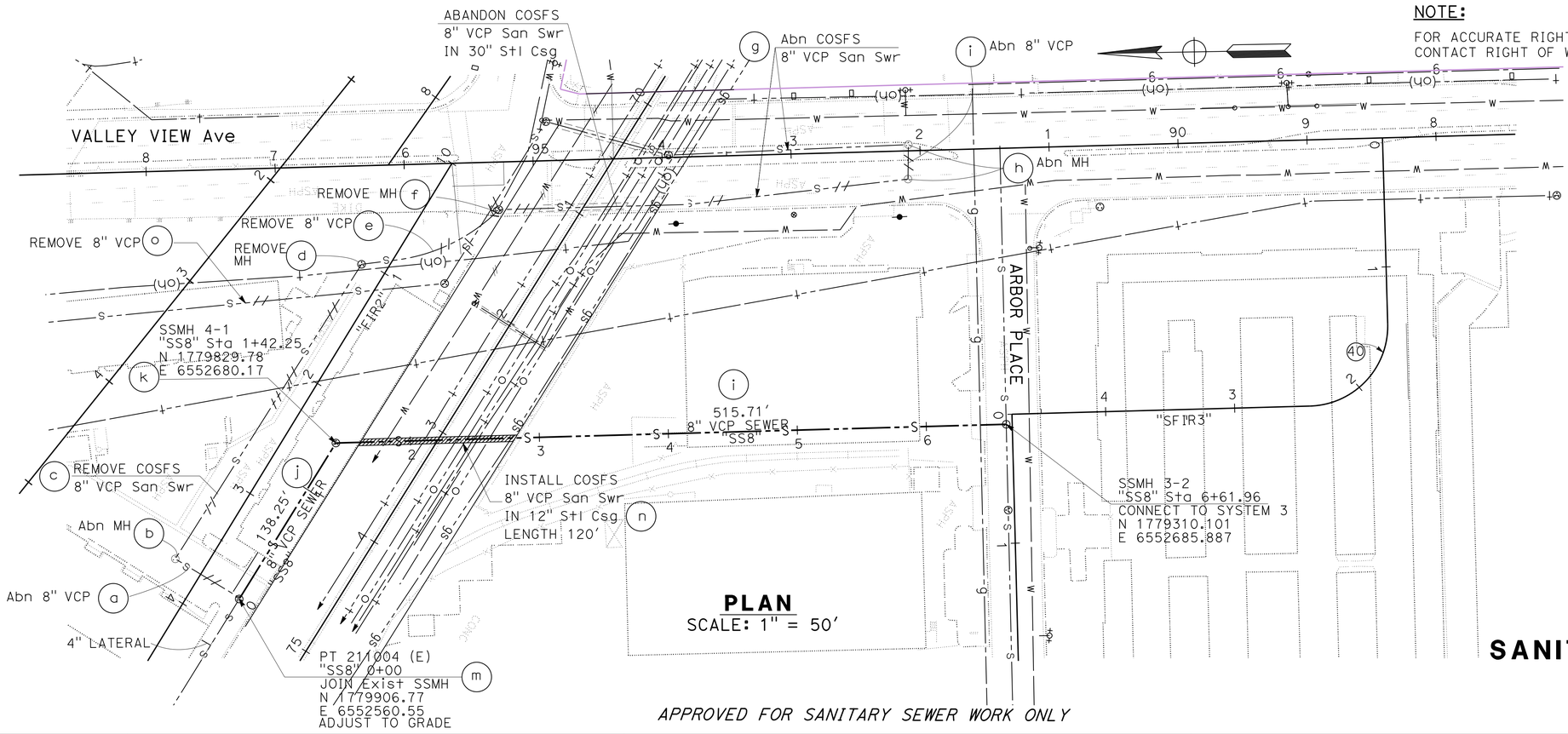

PLAN
SCALE: 1" = 50'

APPROVED FOR SANITARY SEWER WORK ONLY

SANITARY SEWER PLAN AND PROFILE
SCALE AS SHOWN **SS-5**

REVISED BY | DATE REVISED
KHANH Q. NGUYEN | H.S. CHEN
CALCULATED-DESIGNED BY | CHECKED BY
FUNCTIONAL SUPERVISOR: RICHARD CHIANG
STATE OF CALIFORNIA - DEPARTMENT OF TRANSPORTATION
Caltrans
DESIGN

LAST REVISION 05-12-14 | DATE PLOTTED => 03-FEB-2016 | TIME PLOTTED => 11:13

Dist	COUNTY	ROUTE	POST MILES TOTAL PROJECT	SHEET No.	TOTAL SHEETS
07	LA,Ora	5	0.0/1.5, 44.3/44.4	481	1622

REGISTERED CIVIL ENGINEER 4-2-14 DATE

1-25-16
PLANS APPROVAL DATE

REGISTERED PROFESSIONAL ENGINEER KHANH Q. NGUYEN No. C68193 Exp. 9-30-17 CIVIL STATE OF CALIFORNIA

THE STATE OF CALIFORNIA OR ITS OFFICERS OR AGENTS SHALL NOT BE RESPONSIBLE FOR THE ACCURACY OR COMPLETENESS OF SCANNED COPIES OF THIS PLAN SHEET.

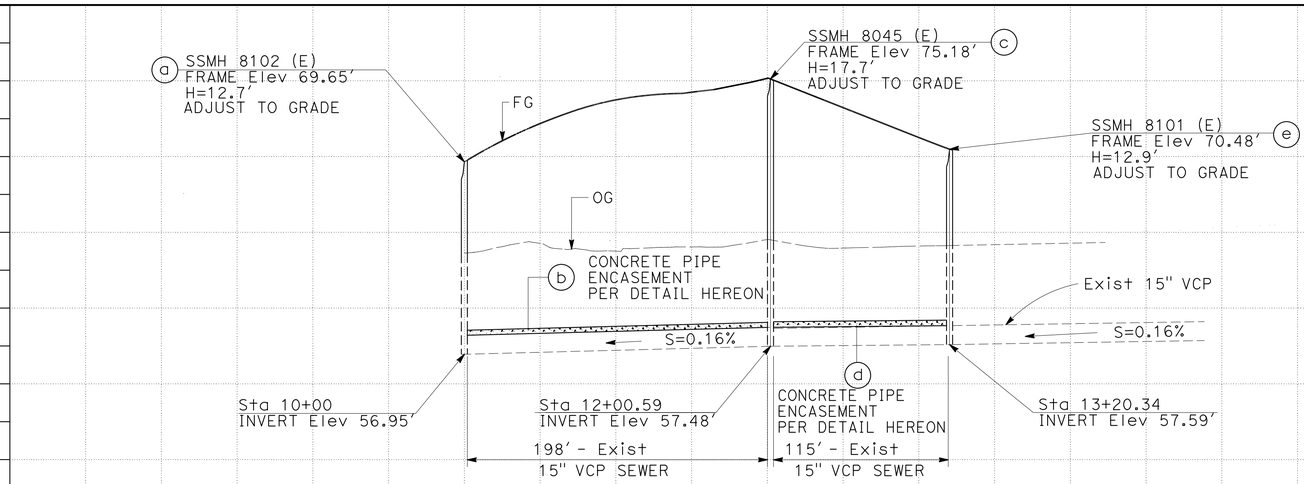

SANITARY SEWER SYSTEM No. 5
PROFILE

SCALE: Horiz 1" = 50'
Vert 1" = 5'

LACSD SEWER MH ADJUSTMENT NOTE:

CONTRACTOR MUST FIELD VERIFY MANHOLE SHAFT TYPE (IE, BRICK OR CONCRETE) PRIOR TO ADJUSTMENT, WHICH MUST BE PERFORMED IN ACCORDANCE WITH THE REQUIREMENTS ON SANITARY SEWER DETAIL.

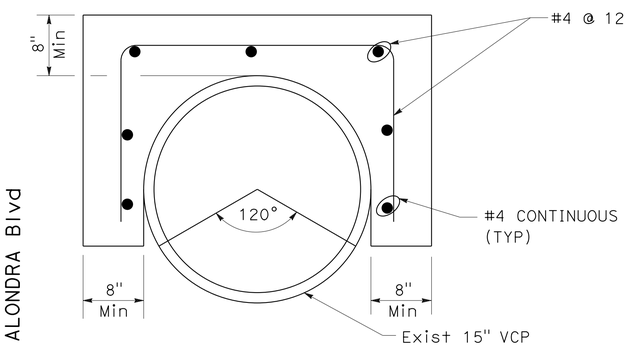

LACSD VCP ENCASEMENT
NOT TO SCALE

1. CONCRETE MUST REACH 70% OF THE SPECIFIED STRENGTH PRIOR TO BACKFILLING. HIGHER STRENGTH CONCRETE MAY BE USED TO BACKFILL EARLIER.
2. REINFORCING BARS MUST HAVE 2 INCHES OF CONCRETE, EXCEPT WHERE CONCRETE IS POURED AGAINST THE SOIL WITHOUT FORMS, THE CONCRETE COVER MUST BE 3 INCHES.

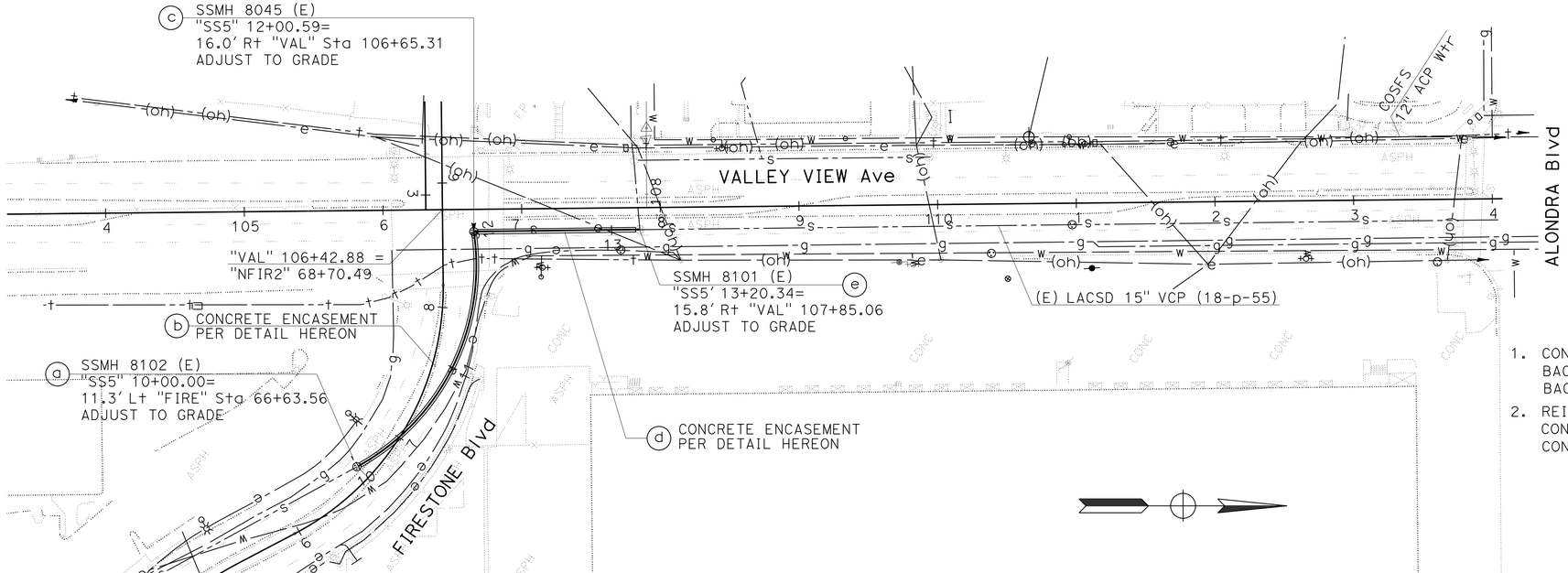

PLAN
SCALE: 1" = 50'

APPROVED FOR SANITARY SEWER WORK ONLY

SANITARY SEWER PLAN AND PROFILE
SCALE AS SHOWN **SS-6**

STATE OF CALIFORNIA - DEPARTMENT OF TRANSPORTATION
Caltrans® DESIGN
FUNCTIONAL SUPERVISOR: RICHARD CHIANG
CALCULATED-DESIGNED BY: AINSLEY KUNG
CHECKED BY: KHANH Q NGUYEN
REVISED BY / DATE REVISED

LAST REVISION 05-12-14
DATE PLOTTED => 03-FEB-2016
TIME PLOTTED => 11:13

Dist	COUNTY	ROUTE	POST MILES TOTAL PROJECT	SHEET No.	TOTAL SHEETS
07	LA,Ora	5	0.0/1.5, 44.3/44.4	482	1622

REGISTERED CIVIL ENGINEER 4-2-14 DATE

1-25-16
PLANS APPROVAL DATE

REGISTERED PROFESSIONAL ENGINEER KHANH Q. NGUYEN No. C68193 Exp. 9-30-17 CIVIL STATE OF CALIFORNIA

THE STATE OF CALIFORNIA OR ITS OFFICERS OR AGENTS SHALL NOT BE RESPONSIBLE FOR THE ACCURACY OR COMPLETENESS OF SCANNED COPIES OF THIS PLAN SHEET.

SANITARY SEWER SYSTEM No. 6

SCALE: Horiz 1" = 50'
Vert 1" = 10'

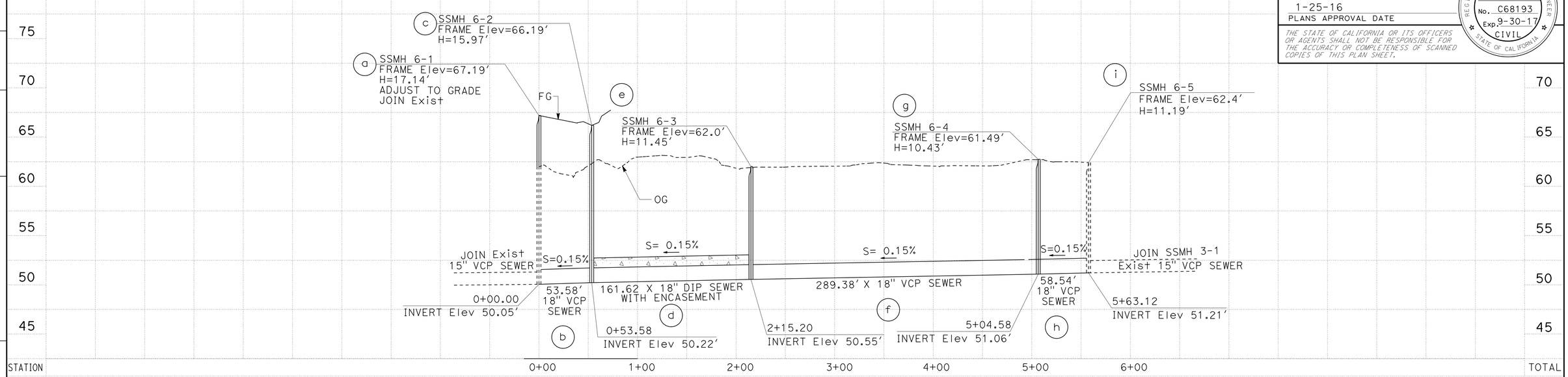

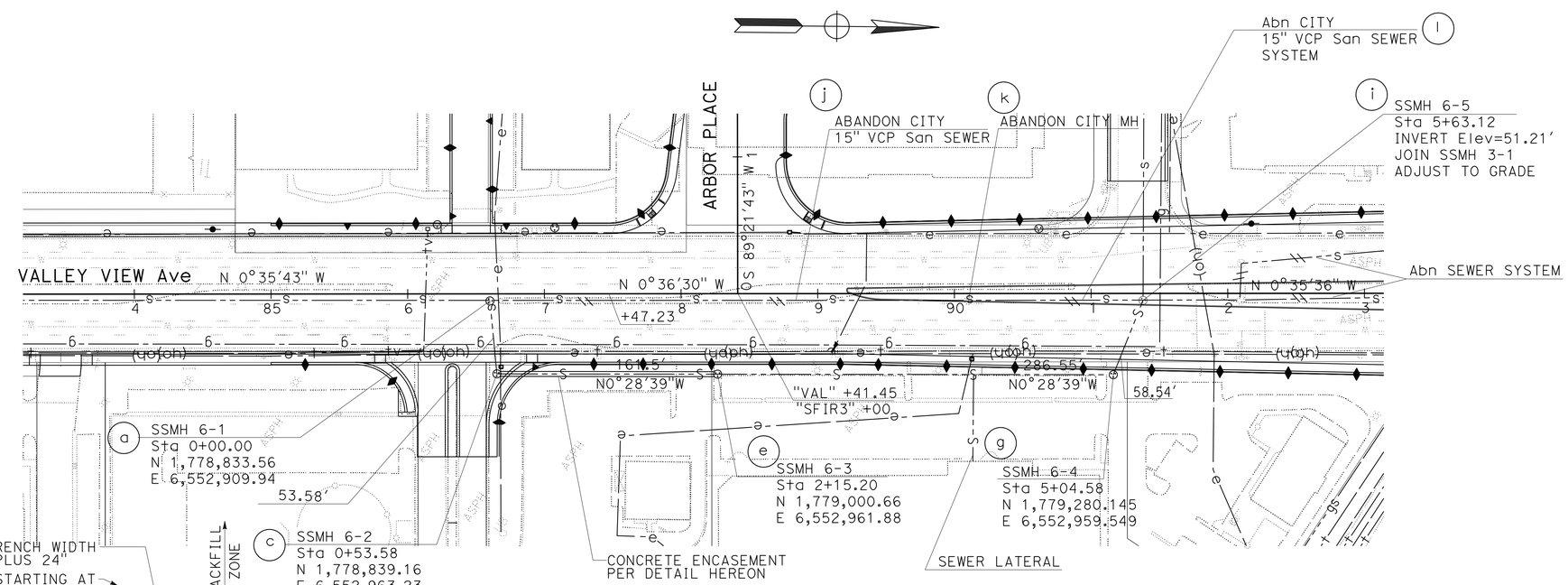

PLAN

SCALE: 1" = 50'

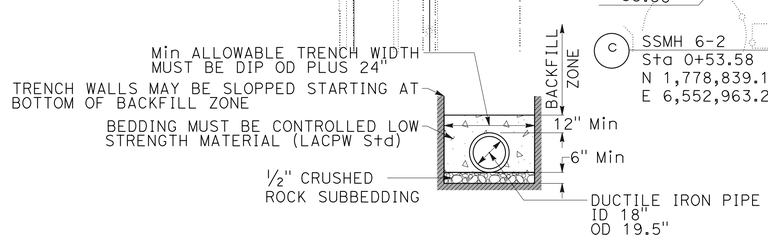

LACPW CONCRETE ENCASEMENT

NOT TO SCALE

APPROVED FOR SANITARY SEWER WORK ONLY

SANITARY SEWER PLAN AND PROFILE

SCALE AS SHOWN

SS-7

STATE OF CALIFORNIA - DEPARTMENT OF TRANSPORTATION

DESIGN

FUNCTIONAL SUPERVISOR: RICHARD CHIANG

CALCULATED-DESIGNED BY: AINSLEY C KUNG

CHECKED BY: H.S. CHEN

REVISED BY / DATE REVISED

LAST REVISION 05-12-14

DATE PLOTTED => 03-FEB-2016
TIME PLOTTED => 11:13

Dist	COUNTY	ROUTE	POST MILES TOTAL PROJECT	SHEET No.	TOTAL SHEETS
07	LA,Ora	5	0.0/1.5, 44.3/44.4	483	1622

REGISTERED CIVIL ENGINEER 4-2-14 DATE

1-25-16
PLANS APPROVAL DATE

REGISTERED PROFESSIONAL ENGINEER KHANH Q. NGUYEN No. C68193 Exp. 9-30-17 CIVIL STATE OF CALIFORNIA

THE STATE OF CALIFORNIA OR ITS OFFICERS OR AGENTS SHALL NOT BE RESPONSIBLE FOR THE ACCURACY OR COMPLETENESS OF SCANNED COPIES OF THIS PLAN SHEET.

NOTE:

PRIOR TO THE START OF CONSTRUCTION, FIELD VERIFY DOWNSTREAM END STATION OF STEEL CASING BY POTHOLING, AND FIELD VERIFY SEWER INVERTS AT MANHOLES F231 AND F232.

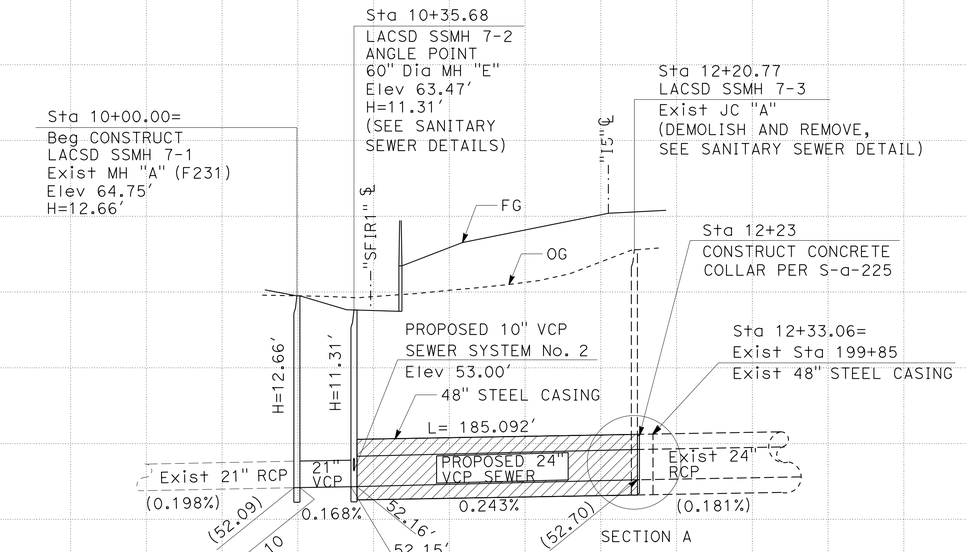

SANITARY SEWER SYSTEM No. 7

SCALE: Horiz 1" = 50'
Vert 1" = 5'

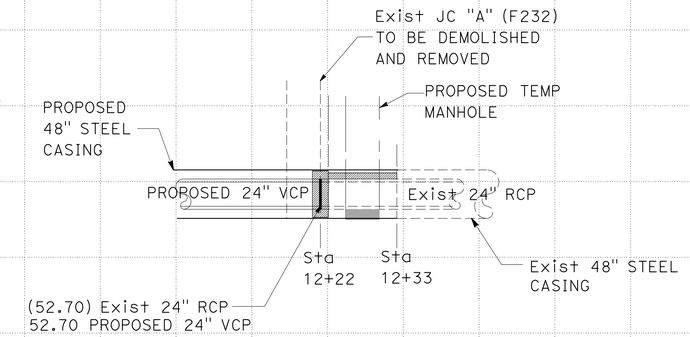

SECTION A

NO SCALE

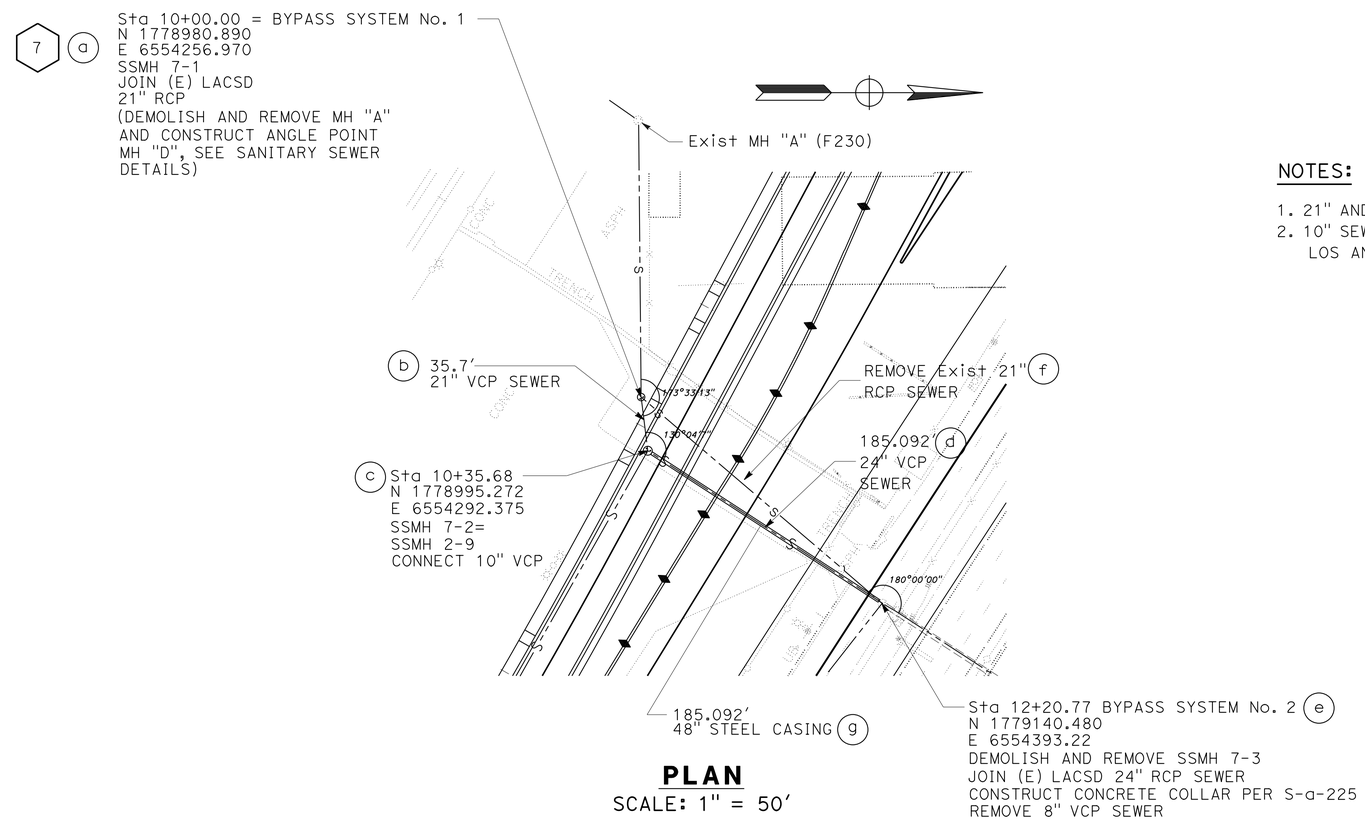

PLAN

SCALE: 1" = 50'

NOTES:

1. 21" AND 24" SEWER OWNED AND MAINTAINED BY LACSD.
2. 10" SEWER OWNED BY CITY OF LA MIRADA AND MAINTAINED BY LOS ANGELES COUNTY CONSOLIDATED SEWER MAINTENANCE DISTRICT.

APPROVED FOR SANITARY SEWER WORK ONLY

SANITARY SEWER PLAN AND PROFILE

SCALE AS SHOWN

SS-8

STATE OF CALIFORNIA - DEPARTMENT OF TRANSPORTATION
Caltrans DESIGN

FUNCTIONAL SUPERVISOR: RICHARD CHIANG
CALCULATED-DESIGNED BY: KHANH Q. NGUYEN
CHECKED BY: STAN PEGADIOTES
REVISED BY: H. CHEN
DATE REVISED: 5/2015

LAST REVISION 05-12-14 | DATE PLOTTED => 03-FEB-2016 | TIME PLOTTED => 11:13

Dist	COUNTY	ROUTE	POST MILES TOTAL PROJECT	SHEET No.	TOTAL SHEETS
07	LA,Ora	5	0.0/1.5, 44.3/44.4	484	1622

REGISTERED CIVIL ENGINEER 4-2-14 DATE

1-25-16
PLANS APPROVAL DATE

REGISTERED PROFESSIONAL ENGINEER KHANH Q. NGUYEN No. C68193 Exp. 9-30-17 CIVIL STATE OF CALIFORNIA

THE STATE OF CALIFORNIA OR ITS OFFICERS OR AGENTS SHALL NOT BE RESPONSIBLE FOR THE ACCURACY OR COMPLETENESS OF SCANNED COPIES OF THIS PLAN SHEET.

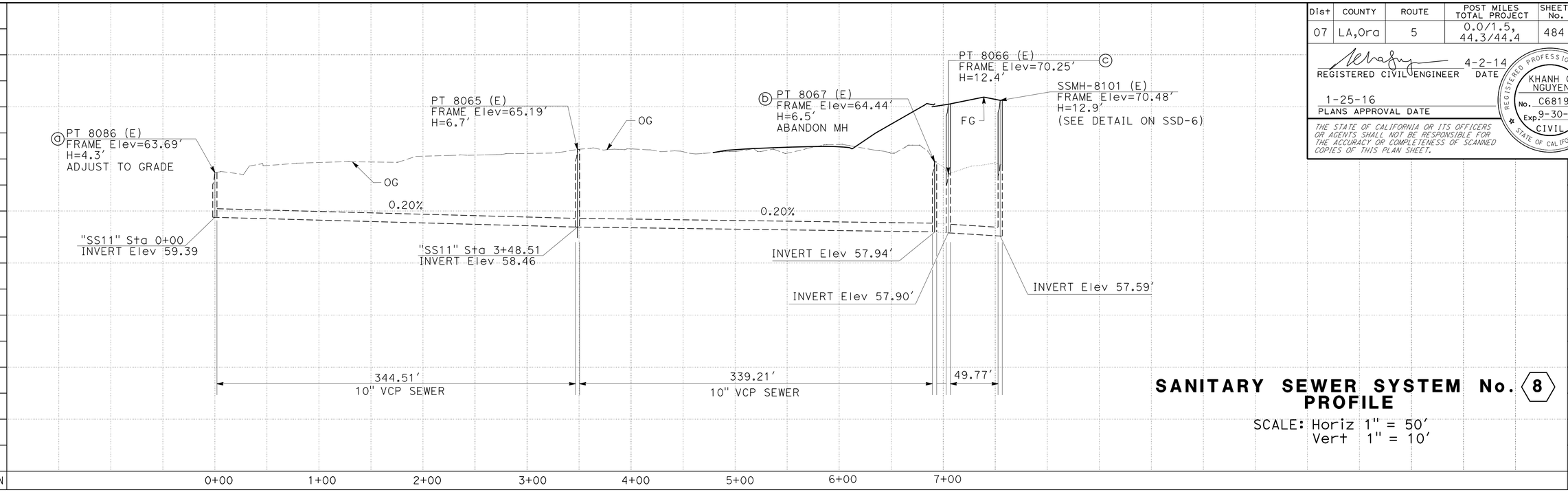

SANITARY SEWER SYSTEM No. 8
PROFILE

SCALE: Horiz 1" = 50′
Vert 1" = 10′

NOTE:

FOR ACCURATE RIGHT OF WAY AND ACCESS DATA, CONTACT RIGHT OF WAY ENGINEERING AT THE DISTRICT OFFICE.

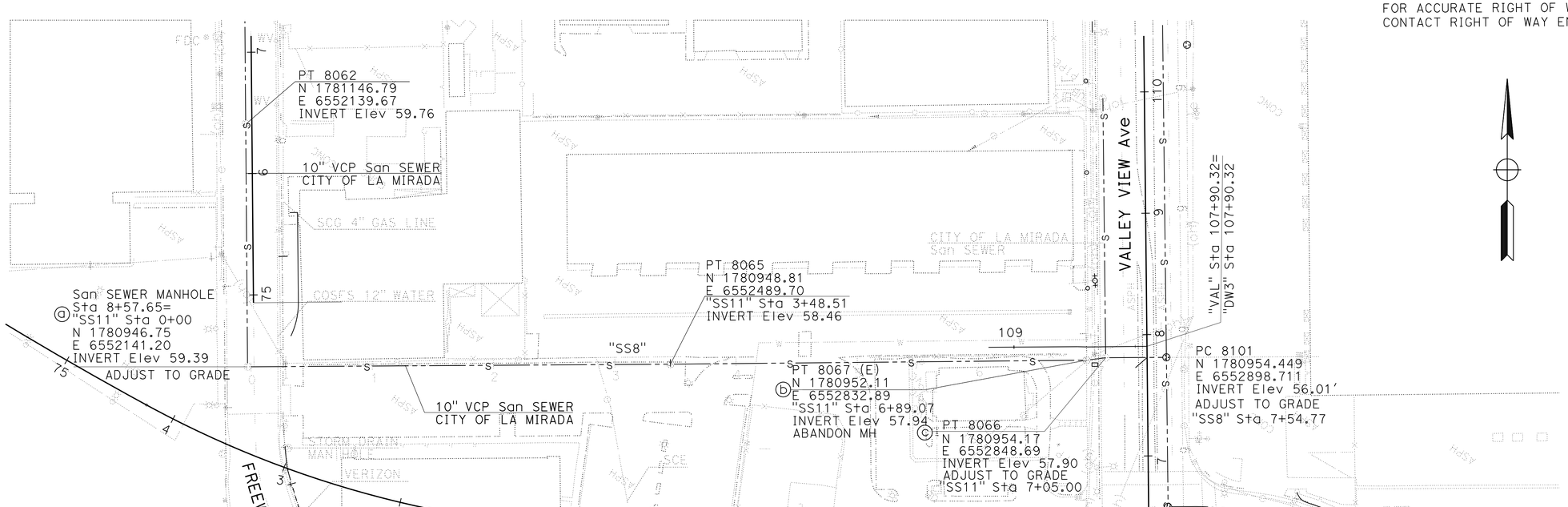

PLAN
SCALE: 1" = 50′

APPROVED FOR SANITARY SEWER WORK ONLY

SANITARY SEWER PLAN AND PROFILE
SCALE AS SHOWN

SS-9

REVISED BY | DATE REVISED
KHANH Q. NGUYEN | H.S. CHEN
CALCULATED-DESIGNED BY | CHECKED BY
FUNCTIONAL SUPERVISOR: RICHARD CHIANG

STATE OF CALIFORNIA - DEPARTMENT OF TRANSPORTATION
Caltrans® DESIGN

LAST REVISION 05-12-14 | DATE PLOTTED => 03-FEB-2016 | TIME PLOTTED => 11:13

Dist	COUNTY	ROUTE	POST MILES TOTAL PROJECT	SHEET No.	TOTAL SHEETS
07	LA,Ora	5	0.0/1.5, 44.3/44.4	485	1622

REGISTERED CIVIL ENGINEER 4-2-14 DATE

1-25-16
PLANS APPROVAL DATE

REGISTERED PROFESSIONAL ENGINEER KHANH Q. NGUYEN No. C68193 Exp. 9-30-17 CIVIL STATE OF CALIFORNIA

THE STATE OF CALIFORNIA OR ITS OFFICERS OR AGENTS SHALL NOT BE RESPONSIBLE FOR THE ACCURACY OR COMPLETENESS OF SCANNED COPIES OF THIS PLAN SHEET.

ABBREVIATION

1. LACPW: LOS ANGELES COUNTY DEPARTMENT OF PUBLIC WORK
2. SPPWC: STANDARD PLANS PUBLIC WORKS CONSTRUCTION
3. LASCD: LOS ANGELES COUNTY SANITARY DISTRICTS

NOTES:

1. PER SPPWC-635 AND SPPWC-636
2. PER LACPW-2015-1

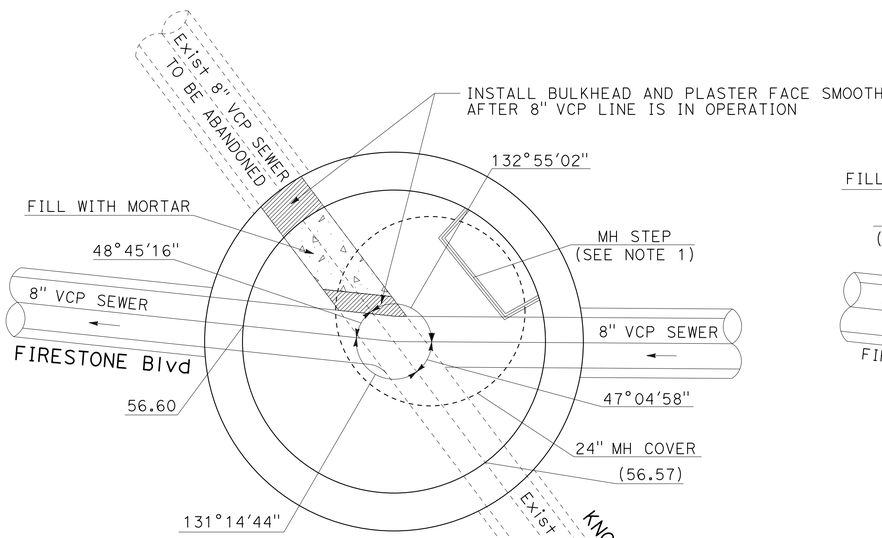

48" Dia MH SSMH 1-2
"NFIR1" 46+04.69, 8.01' Lt

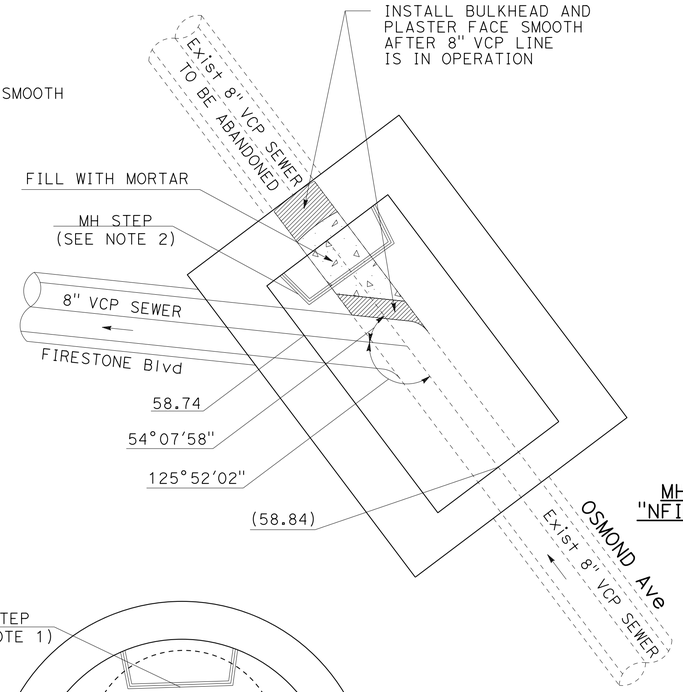

MH SSMH 1-5
"NFIR1" 51+86.37

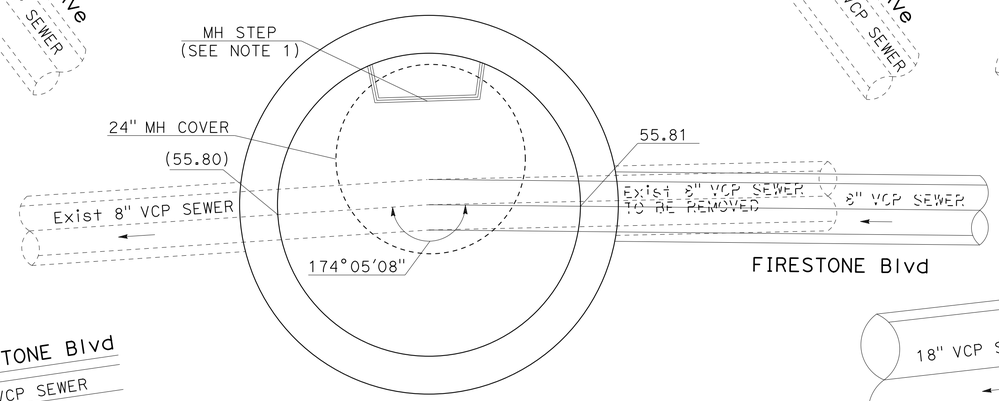

48" Dia MH SSMH 1-1
"NFIR1" 43+54.40, 7.97' Lt

NOTE:
PROVIDE ABOVE-GROUND FLOW BYPASS TO MAINTAIN EXISTING SEWER SERVICE DURING CONSTRUCTION.

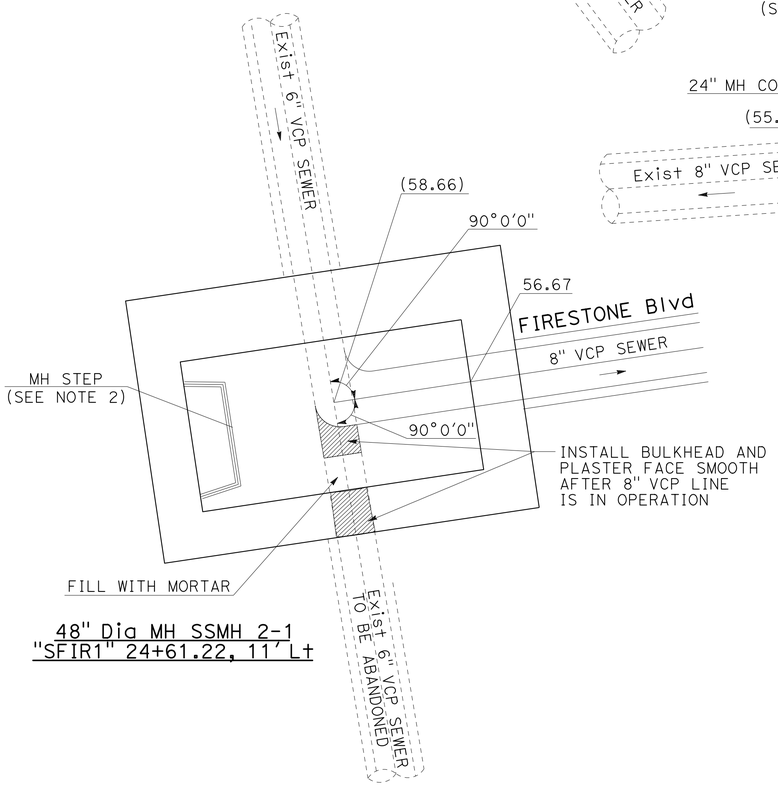

48" Dia MH SSMH 2-1
"SFIR1" 24+61.22, 11' Lt

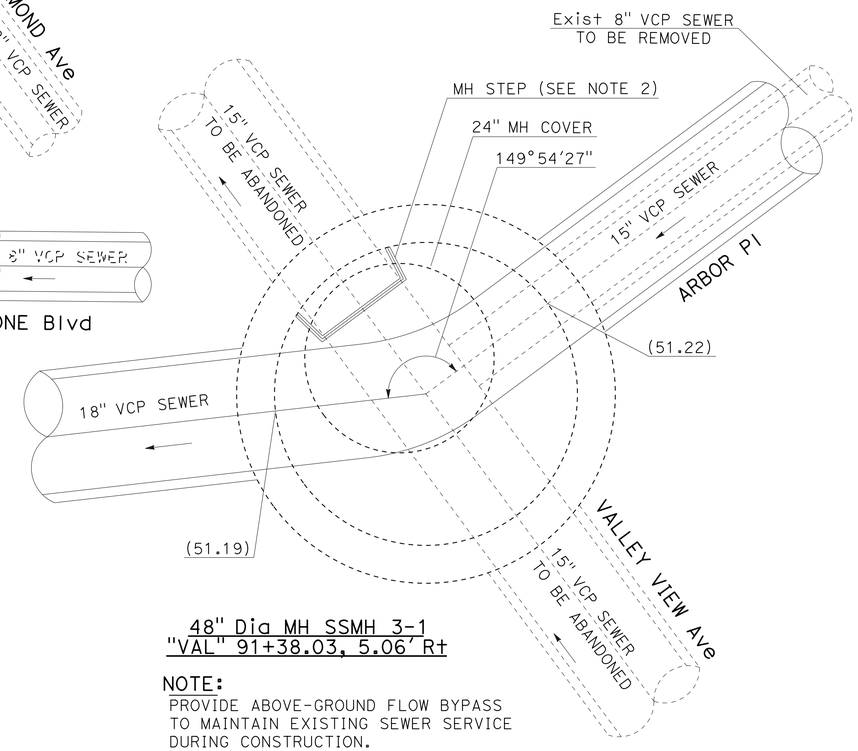

48" Dia MH SSMH 3-1
"VAL" 91+38.03, 5.06' Rt

NOTE:
PROVIDE ABOVE-GROUND FLOW BYPASS TO MAINTAIN EXISTING SEWER SERVICE DURING CONSTRUCTION.

SANITARY SEWER DETAIL

NO SCALE

SSD-1

STATE OF CALIFORNIA - DEPARTMENT OF TRANSPORTATION
Caltrans
DESIGN
FUNCTIONAL SUPERVISOR: RICHARD CHIANG
CALCULATED-DESIGNED BY: RICKY LEE
CHECKED BY: KHANH Q NGUYEN
REVISED BY
DATE REVISED

LAST REVISION 05-02-12
DATE PLOTTED => 03-FEB-2016
TIME PLOTTED => 11:13

Dist	COUNTY	ROUTE	POST MILES TOTAL PROJECT	SHEET No.	TOTAL SHEETS
07	LA,Ora	5	0.0/1.5, 44.3/44.4	486	1622

REGISTERED CIVIL ENGINEER 4-2-14 DATE

1-25-16
PLANS APPROVAL DATE

REGISTERED PROFESSIONAL ENGINEER KHANH Q. NGUYEN No. C68193 Exp. 9-30-17 CIVIL STATE OF CALIFORNIA

THE STATE OF CALIFORNIA OR ITS OFFICERS OR AGENTS SHALL NOT BE RESPONSIBLE FOR THE ACCURACY OR COMPLETENESS OF SCANNED COPIES OF THIS PLAN SHEET.

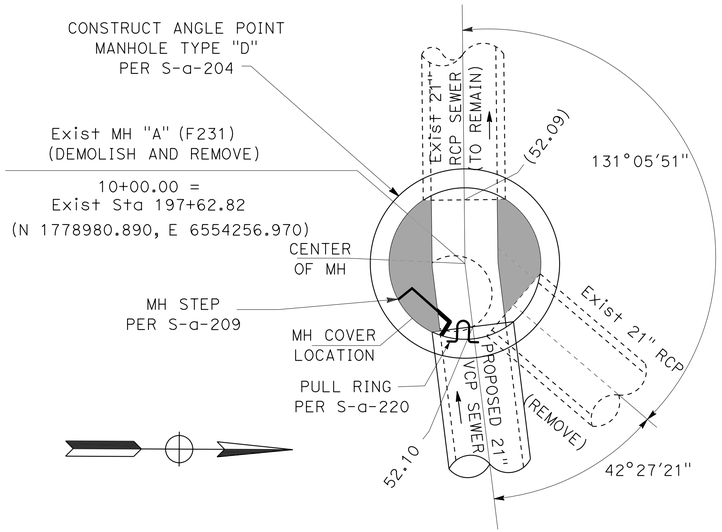

BEGIN OF CONST

Exist MH "A" (F231) AT STA 10+00.00

NOTE:

PROVIDE ABOVE-GROUND FLOW BYPASS IN ACCORDANCE WITH CONSTRUCTION SEQUENCE AND FLOW BYPASS NOTES HEREON IN ORDER TO MAINTAIN EXISTING SEWER SERVICE DURING THIS PORTION OF CONSTRUCTION.

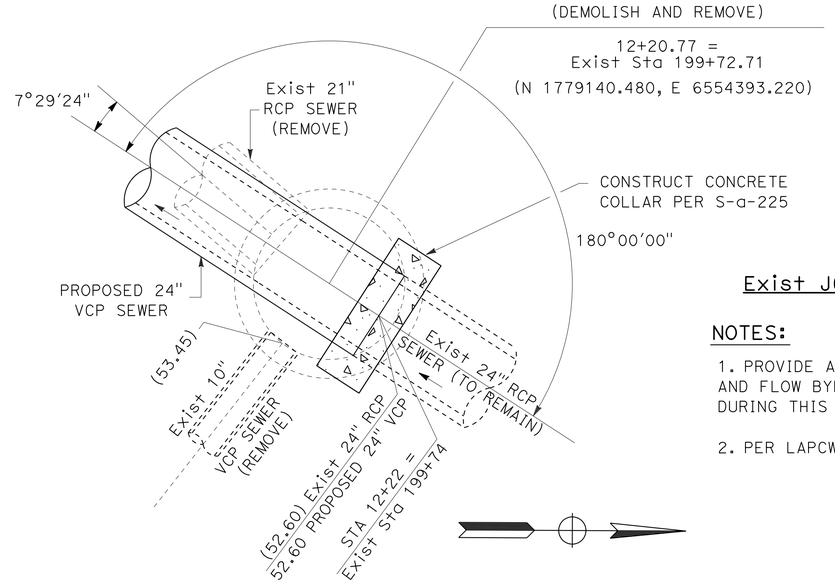

Exist JC "A" (F232) AT STA 12+20.77

NOTES:

1. PROVIDE ABOVE-GROUND FLOW BYPASS IN ACCORDANCE WITH CONSTRUCTION SEQUENCE AND FLOW BYPASS NOTES HEREON IN ORDER TO MAINTAIN EXISTING SEWER SERVICE DURING THIS PORTION OF CONSTRUCTION.

2. PER LAPCW-2015-1

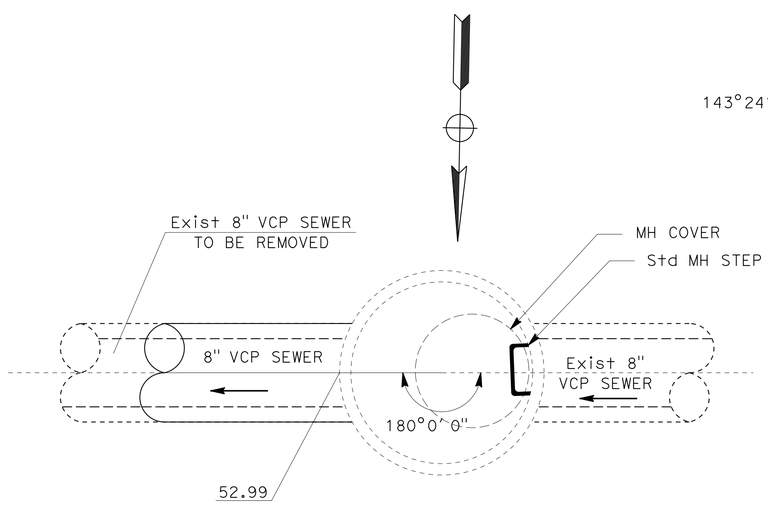

48" Dia MH SSMH 3-3

"ARB" 0+7.69, 4.65' Rt

NOTE:

PROVIDE ABOVE-GROUND FLOW BYPASS IN ORDER TO MAINTAIN EXISTING SEWER SERVICE DURING THIS PORTION OF CONSTRUCTION.

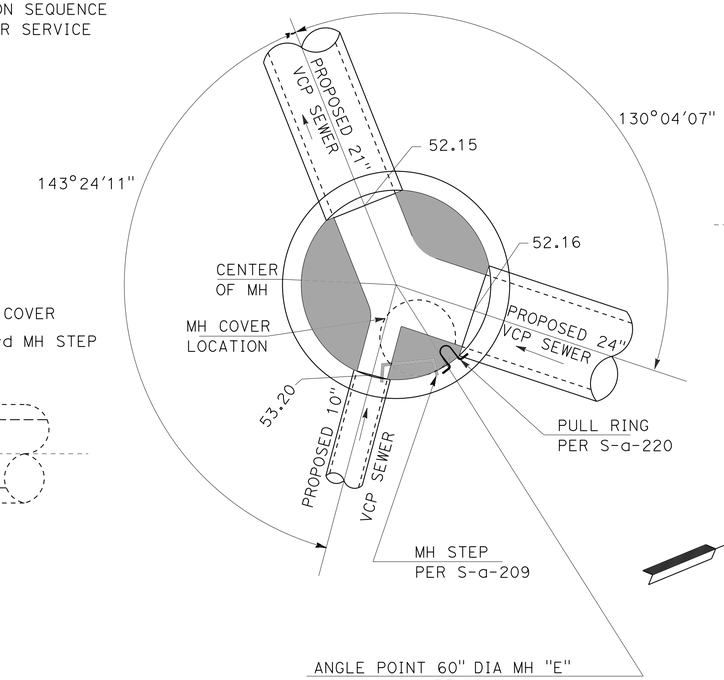

ANGLE POINT 60" DIA MH "E" AT STA 10+35.68

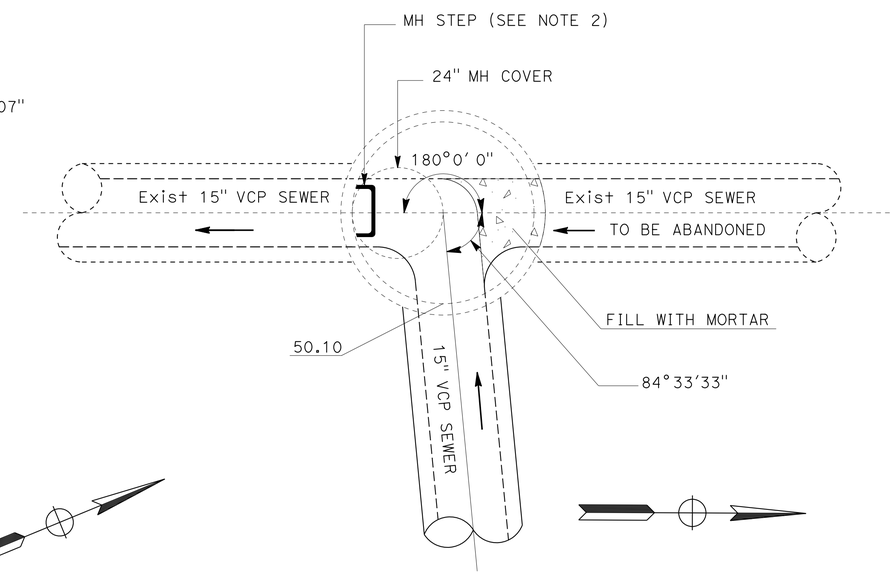

48" Dia MH SSMH-6-1

"VAL" 86+60.09, 2.95' Rt

SANITARY SEWER DETAIL

NO SCALE

SSD-2

STATE OF CALIFORNIA - DEPARTMENT OF TRANSPORTATION
Caltrans
DESIGN

FUNCTIONAL SUPERVISOR: RICHARD CHIANG
CALCULATED-DESIGNED BY: KHANH Q. NGUYEN
CHECKED BY: STAN PEGADIOTES
REVISED BY
DATE REVISED

LAST REVISION 05-14-14
DATE PLOTTED => 03-FEB-2016
TIME PLOTTED => 11:13

Dist	COUNTY	ROUTE	POST MILES TOTAL PROJECT	SHEET No.	TOTAL SHEETS
07	LA,Ora	5	0.0/1.5, 44.3/44.4	487	1622

REGISTERED CIVIL ENGINEER 4-2-14 DATE

1-25-16
PLANS APPROVAL DATE

REGISTERED PROFESSIONAL ENGINEER KHANH Q. NGUYEN No. C68193 Exp. 9-30-17 CIVIL STATE OF CALIFORNIA

THE STATE OF CALIFORNIA OR ITS OFFICERS OR AGENTS SHALL NOT BE RESPONSIBLE FOR THE ACCURACY OR COMPLETENESS OF SCANNED COPIES OF THIS PLAN SHEET.

NOTE:

1. ALL HOUSE CONNECTION SEWERS OR PORTIONS THEREOF CONSTRUCTED ON A SLOPE EXCEEDING 45° MUST BE ANCHORED PER SSD-23

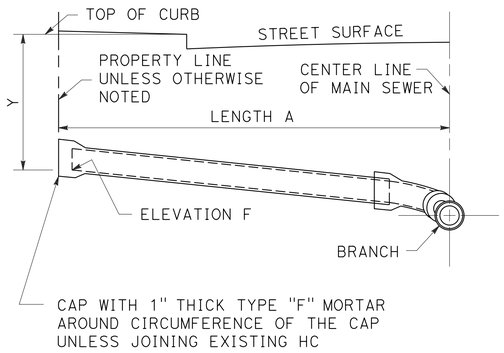

PROFILE
TYPE A

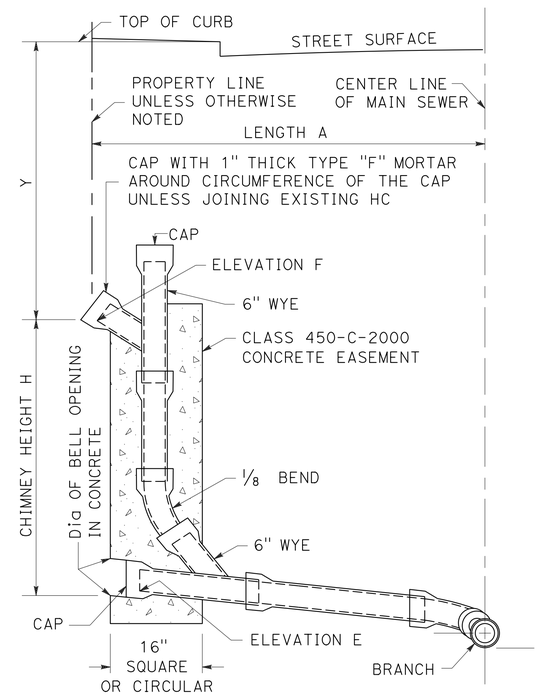

PROFILE
TYPE B

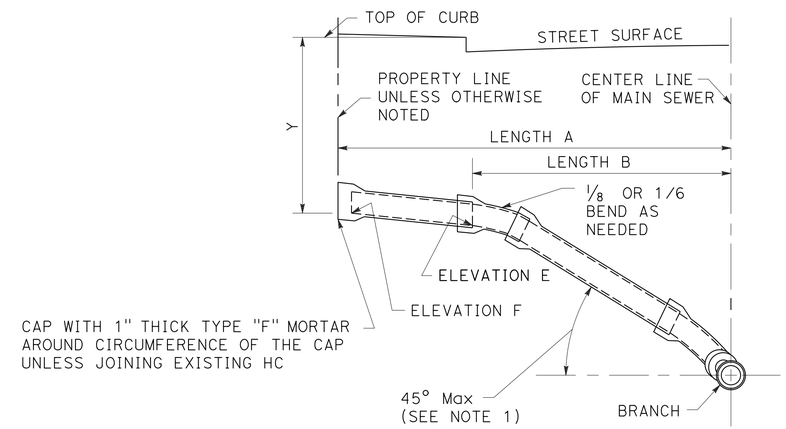

PROFILE
TYPE C

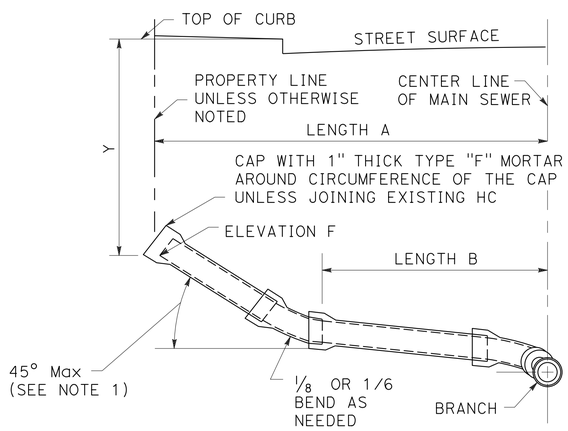

PROFILE
TYPE D

HOUSE CONNECTION SEWER

SANITARY SEWER DETAIL

NO SCALE

SSD-3

STATE OF CALIFORNIA - DEPARTMENT OF TRANSPORTATION
Caltrans
DESIGN
FUNCTIONAL SUPERVISOR: RICHARD CHIANG
CALCULATED-DESIGNED BY: RICKY LEE
CHECKED BY: KHANH Q. NGUYEN
REVISED BY
DATE REVISED

LAST REVISION 05-14-14
DATE PLOTTED => 03-FEB-2016
TIME PLOTTED => 11:13

Dist	COUNTY	ROUTE	POST MILES TOTAL PROJECT	SHEET No.	TOTAL SHEETS
07	LA,Ora	5	0.0/1.5, 44.3/44.4	488	1622

REGISTERED CIVIL ENGINEER 4-2-14 DATE

1-25-16
PLANS APPROVAL DATE

REGISTERED PROFESSIONAL ENGINEER KHANH Q. NGUYEN No. C68193 Exp. 9-30-17 CIVIL STATE OF CALIFORNIA

THE STATE OF CALIFORNIA OR ITS OFFICERS OR AGENTS SHALL NOT BE RESPONSIBLE FOR THE ACCURACY OR COMPLETENESS OF SCANNED COPIES OF THIS PLAN SHEET.

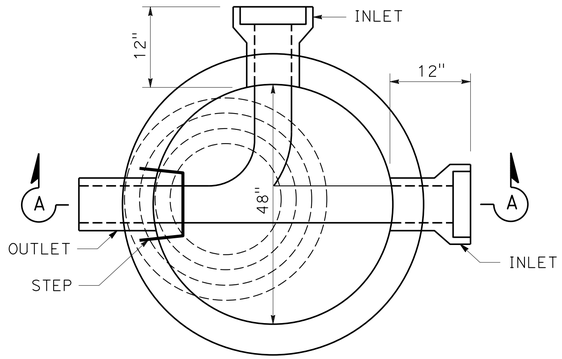

PLAN
SHOWING BASE

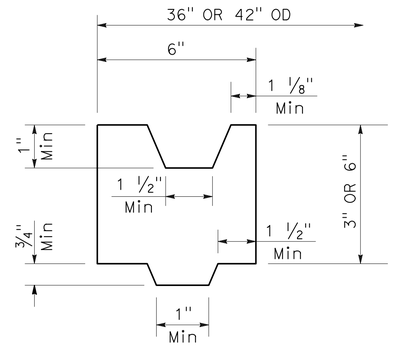

ADJUSTING RING DETAIL

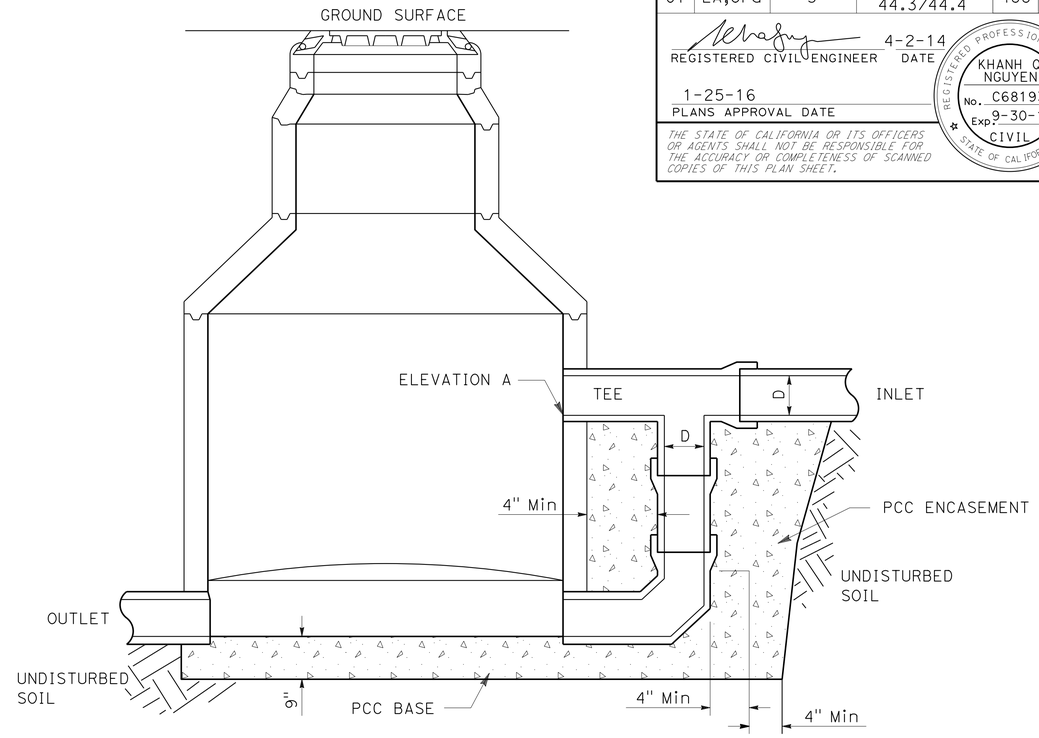

SECTION A-A

STEPS:

1. PER SPPWC 635-3 (SEE SSD-18) OR 636-2 (SEE SSD-19) WITH LEGS SHORTENED TO FIT
2. PER 2015-1 LACPW) (SEE SSD-26) IN CITY OF LA MIRADA

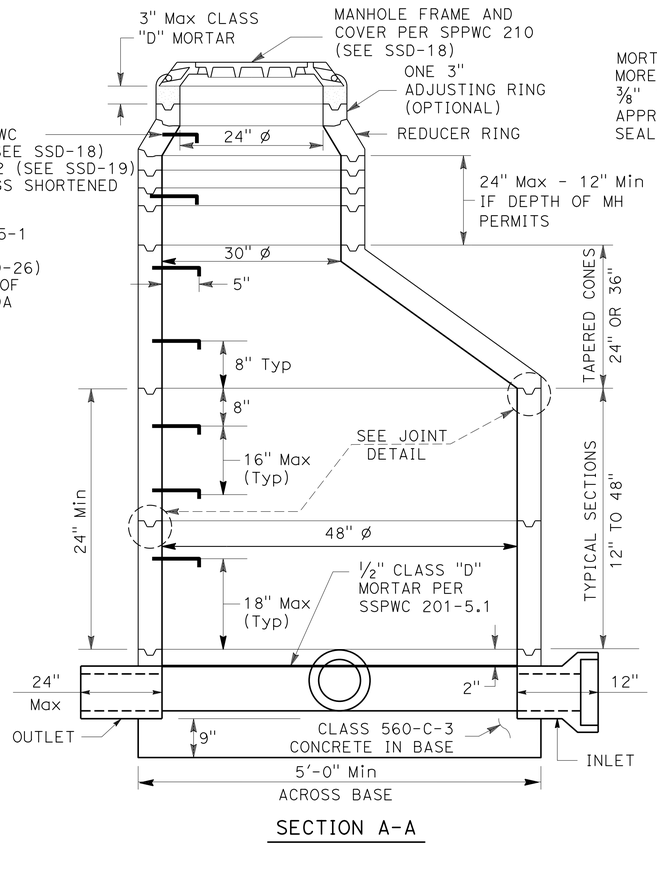

SECTION A-A

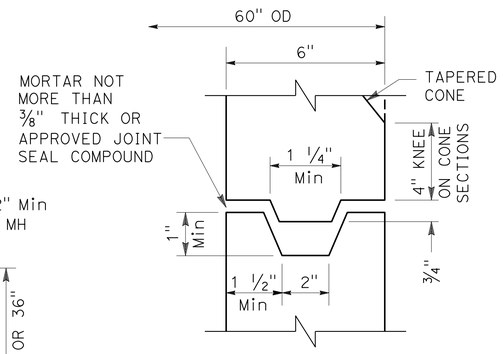

JOINT DETAIL
NON-REINFORCED

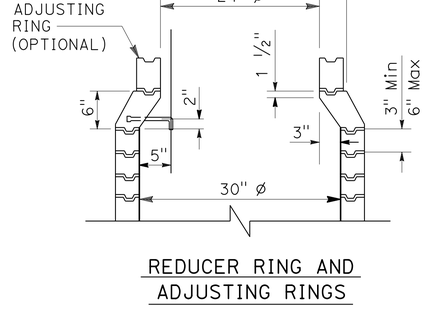

REDUCER RING AND ADJUSTING RINGS

PRECAST CONCRETE SEWER MANHOLE

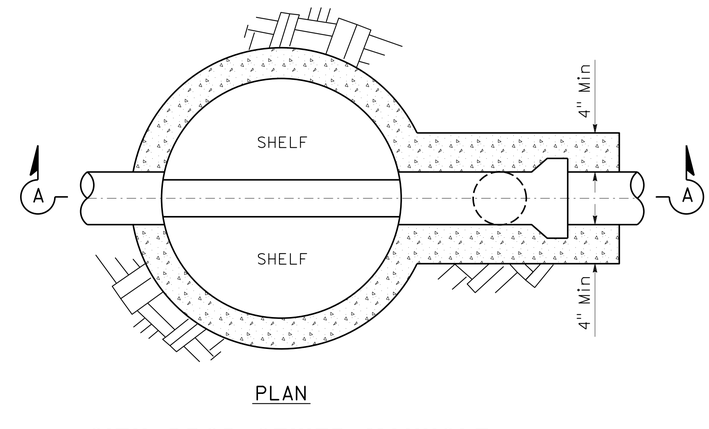

PLAN

CITY DROP SEWER MANHOLE

SANITARY SEWER DETAIL

NO SCALE

SSD-4

STATE OF CALIFORNIA - DEPARTMENT OF TRANSPORTATION
Caltrans®
DESIGN

FUNCTIONAL SUPERVISOR: RICHARD CHIANG
CALCULATED-DESIGNED BY: AINSLEY KUNG
CHECKED BY: STAN PEGADIOTES
REVISED BY
DATE REVISED

LAST REVISION 05-14-14
DATE PLOTTED => 03-FEB-2016
TIME PLOTTED => 11:13

Dist	COUNTY	ROUTE	POST MILES TOTAL PROJECT	SHEET No.	TOTAL SHEETS
07	LA,Ora	5	0.0/1.5, 44.3/44.4	489	1622

REGISTERED CIVIL ENGINEER 4-2-14 DATE

1-25-16
PLANS APPROVAL DATE

REGISTERED PROFESSIONAL ENGINEER KHANH Q. NGUYEN No. C68193 Exp. 9-30-17 CIVIL STATE OF CALIFORNIA

THE STATE OF CALIFORNIA OR ITS OFFICERS OR AGENTS SHALL NOT BE RESPONSIBLE FOR THE ACCURACY OR COMPLETENESS OF SCANNED COPIES OF THIS PLAN SHEET.

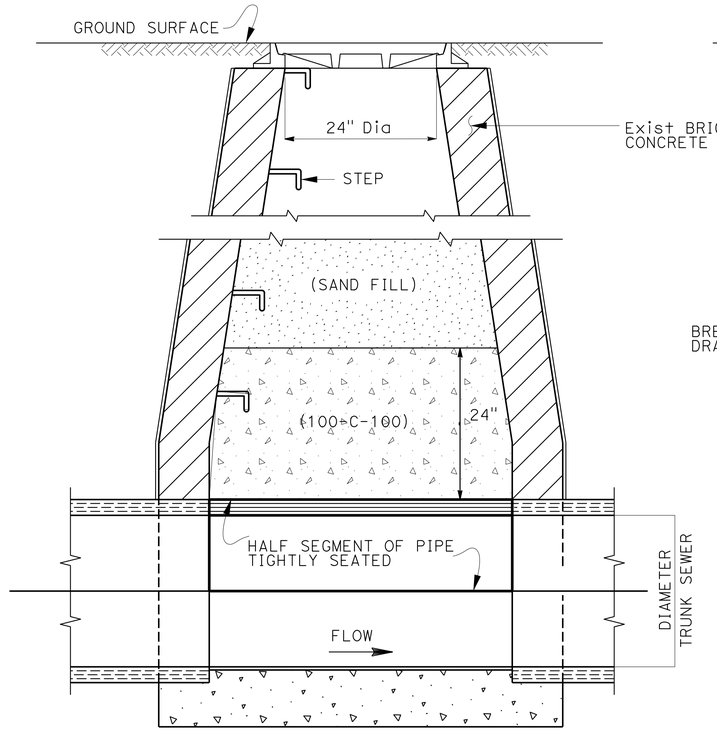

LONGITUDINAL SECTION

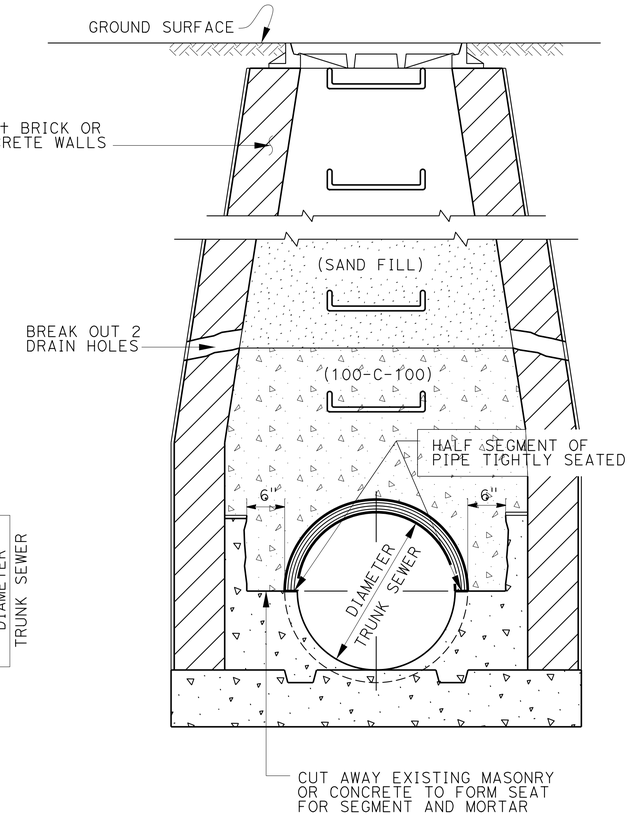

CROSS SECTION

NOTES:

1. THE CONTRACTOR MUST REMOVE A MINIMUM OF THREE (3) FEET OF THE MANHOLE SHAFT BELOW STREET SUBGRADE.
2. IF THE LOWER PORTION OF THE EXISTING CHANNEL THROUGH THE MANHOLE IS NOT AS SHOWN, THE CHANNEL MUST BE REFORMED AS DIRECTED BY THE LACSD REPRESENTATIVE.
3. HALF SEGMENT OF PIPE MUST BE OF THE TYPE USED IN THE SEWER.

ABANDONMENT OF EXISTING LACSD STANDARD MANHOLE

TYPE "A" OR "D" MANHOLES

S-a-218 (LACSD)

SANITARY SEWER DETAIL

NO SCALE

SSD-5

REVISED BY | DATE REVISED
AINSLEY KUNG | STAN PEGADIOTES
CALCULATED-DESIGNED BY | CHECKED BY
FUNCTIONAL SUPERVISOR: RICHARD CHIANG
STATE OF CALIFORNIA - DEPARTMENT OF TRANSPORTATION
Caltrans® DESIGN

LAST REVISION 05-14-14 | DATE PLOTTED => 03-FEB-2016 | TIME PLOTTED => 11:13

Dist	COUNTY	ROUTE	POST MILES TOTAL PROJECT	SHEET No.	TOTAL SHEETS
07	LA,Ora	5	0.0/1.5, 44.3/44.4	490	1622

REGISTERED CIVIL ENGINEER 4-2-14 DATE

1-25-16
PLANS APPROVAL DATE

REGISTERED PROFESSIONAL ENGINEER KHANH Q. NGUYEN No. C68193 Exp. 9-30-17 CIVIL STATE OF CALIFORNIA

THE STATE OF CALIFORNIA OR ITS OFFICERS OR AGENTS SHALL NOT BE RESPONSIBLE FOR THE ACCURACY OR COMPLETENESS OF SCANNED COPIES OF THIS PLAN SHEET.

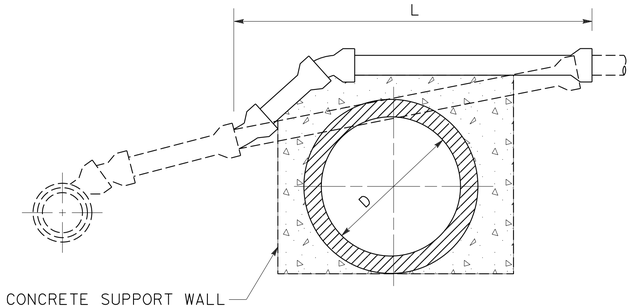

CASE A

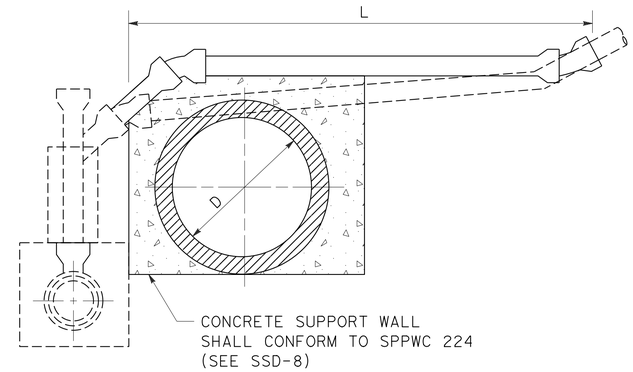

CASE B

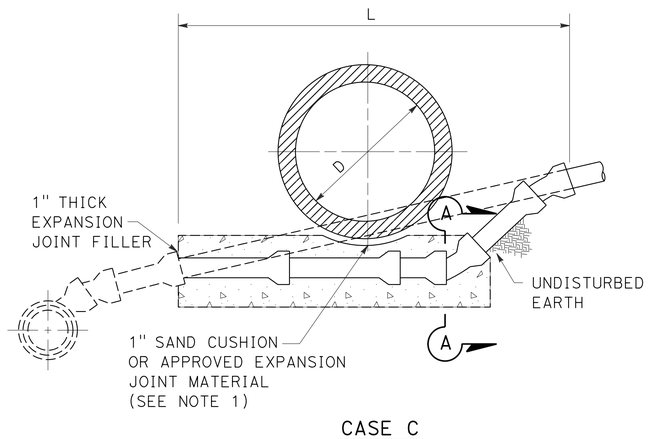

CASE C

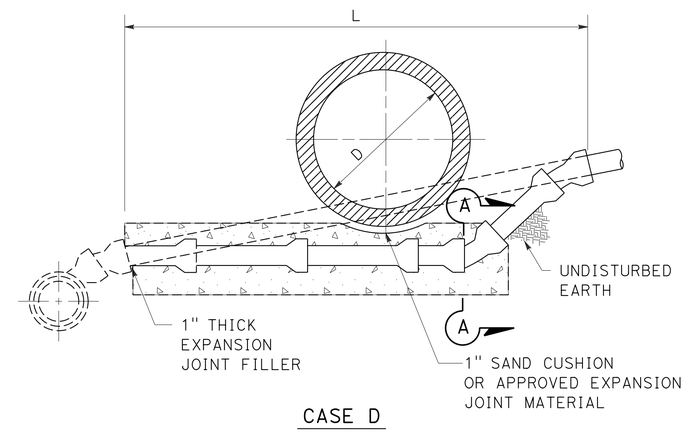

CASE D

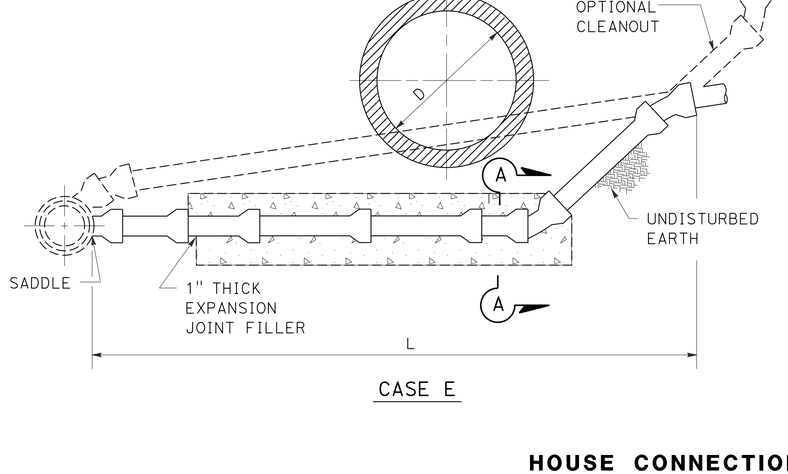

CASE E

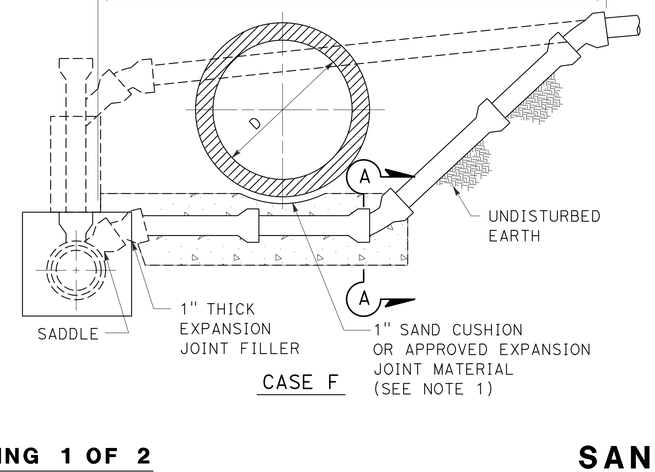

CASE F

NOTE:

1. CONDUITS TO BE INSTALLED OVER OR WITHIN 1" OF ANY CONCRETE ENCASEMENT OR STRUCTURE, WHETHER EXISTING OR TO BE PLACED IN CONFORMITY WITH THE REQUIREMENTS HEREIN, MUST BE STALLED ON A 1" SAND CUSHION OR APPROVED EXPANSION JOINT MATERIAL. CONCRETE ENCASEMENT INSTALLED PERSUANT TO THIS STANDARD PLAN MUST BE SEPARATED FROM EXISTING CONDUIT WITH 1" THICK EXPANSION JOINT MATERIAL.

HOUSE CONNECTION REMODELING 1 OF 2

SANITARY SEWER DETAIL

NO SCALE

SSD-6

STATE OF CALIFORNIA - DEPARTMENT OF TRANSPORTATION
Caltrans® DESIGN

FUNCTIONAL SUPERVISOR: RICHARD CHIANG
CALCULATED-DESIGNED BY: RICKY LEE
CHECKED BY: KHANH Q. NGUYEN
REVISED BY
DATE REVISED

LAST REVISION 05-14-14
DATE PLOTTED => 03-FEB-2016
TIME PLOTTED => 11:13

Dist	COUNTY	ROUTE	POST MILES TOTAL PROJECT	SHEET No.	TOTAL SHEETS
07	LA,Ora	5	0.0/1.5, 44.3/44.4	491	1622

REGISTERED CIVIL ENGINEER 4-2-14 DATE

1-25-16
PLANS APPROVAL DATE

REGISTERED PROFESSIONAL ENGINEER KHANH Q. NGUYEN No. C68193 Exp. 9-30-17 CIVIL STATE OF CALIFORNIA

THE STATE OF CALIFORNIA OR ITS OFFICERS OR AGENTS SHALL NOT BE RESPONSIBLE FOR THE ACCURACY OR COMPLETENESS OF SCANNED COPIES OF THIS PLAN SHEET.

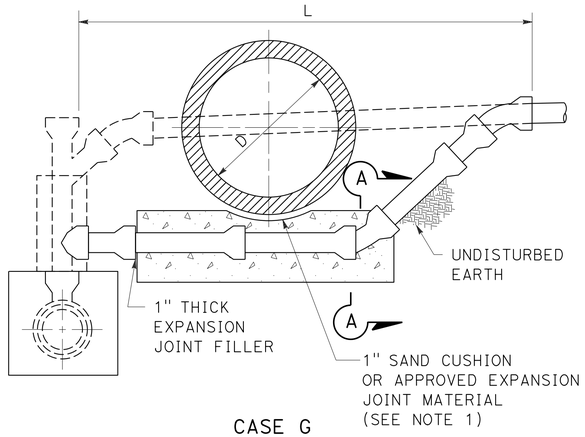

CASE G

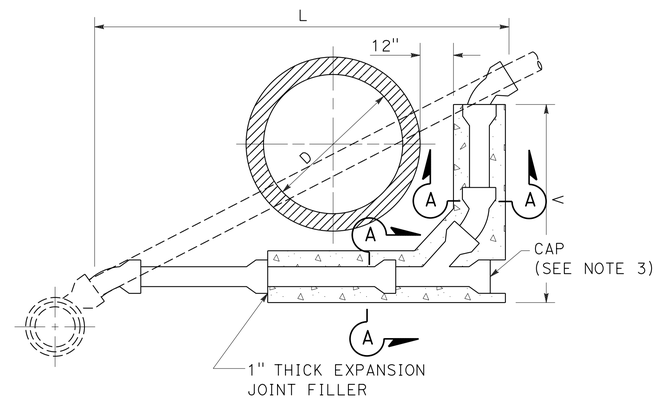

CASE H

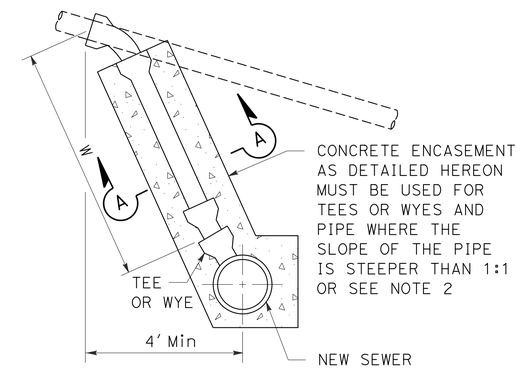

CASE R

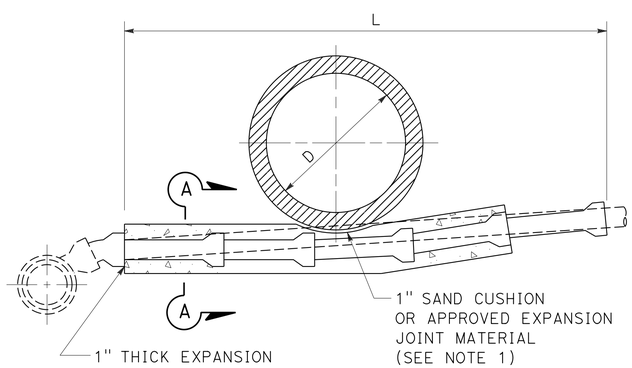

CASE K

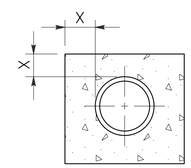

NOMINAL DIAMETER OF PIPE INCHES	MINIMUM DIMENSIONS X INCHES
6	3
8	4
10	5
12	6

SECTON A-A
CONCRETE ENCASEMENT DETAIL
(SEE NOTE 4)

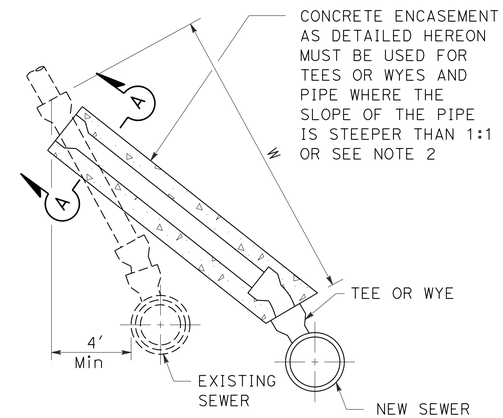

CASE S

HOUSE CONNECTION REMODELING 2 OF 2

NOTES:

1. CONDUITS TO BE INSTALLED OVER OR WITHIN 1" OF ANY CONCRETE ENCASEMENT OR STRUCTURE, WHETHER EXISTING OR TO BE PLACED IN CONFORMITY WITH THE REQUIREMENTS HEREIN, MUST BE INSTALLED ON A 1" SAND CUSHION OR APPROVED EXPANSION JOINT MATERIAL. CONCRETE ENCASEMENT INSTALLED PERSUANT TO THIS STANDARD PLAN MUST BE SEPARATED FROM EXISTING CONDUIT WITH 1" THICK EXPANSION JOINT MATERIAL.

2. FOR CASES R AND S, WHEN THE SLOPE OF THE PIPE EXCEEDS 1:1, THE CONTRACTOR MAY, AT ITS OPTION, CONSTRUCT A CHIMNEY ON THE NEW SEWER IN LIEU OF CONSTRUCTING THE ENCASEMENT SHOWN HEREON.

3. THOSE PORTIONS OF THE ABANDONED PIPE LOCATED BENEATH OR WITHIN 6" OF A RELOCATED HOSE CONNECTION SEWER MUST BE REMOVED. THE EXCAVATION MUST BE REFILLED TO THE GRADE OF THE NEW PIPE INVERT WITH CONCRETE. THE CONTRACTOR MAY, AT ITS OPTION SUBSTITUTE MECHANICALLY COMPACTED BACKFILL IN LIEU OF THE CONCRETE. THOSE PORTIONS OF ABANDONED PIPE NOT REMOVED MUST BE SEALED. WHERE CAPS ARE USED, THEY MUST BE SEALED BY FILLING THE SPACE ABOVE THE CAP WITH SAND AND A 1" THICK COATING OF TYPE "F" MORTAR.

4. ALL HOUSE CONNECTION SEWERS TO BE CONSTRUCTED UNDER A PROPOSED CONDUIT MUST BE ENCASED IN CONCRETE AS SHOWN HEREON. WHEN THE HOUSE CONNECTION SEWERS SLOPE EXCEEDS 1:1 THE CONTRACTOR MAY, AT HIS OPTION, PLACE A CIRCULAR CROSS SECTION WITH MIMUM COVER EQUAL TO DIMENSION "X" AS SHOWN ON SECTION A-A HEREON IN LIEU OF A SQUARE CROSS SECTION OF CONCRETE. CONCRETE BEDDING MUST EXTEND TO THE FIRST PIPE JOINT AT LEAST 1 FOOT BEYOND THE OD OF EACH SIDE OF THE PROPOSED CONDUIT.

SANITARY SEWER DETAIL

NO SCALE

SSD-7

STATE OF CALIFORNIA - DEPARTMENT OF TRANSPORTATION
Caltrans® DESIGN

FUNCTIONAL SUPERVISOR: RICHARD CHIANG
CALCULATED-DESIGNED BY: RICKY LEE
CHECKED BY: KHANH Q. NGUYEN
REVISED BY
DATE REVISED

LAST REVISION 05-14-14
DATE PLOTTED => 03-FEB-2016
TIME PLOTTED => 11:13

Dist	COUNTY	ROUTE	POST MILES TOTAL PROJECT	SHEET No.	TOTAL SHEETS
07	LA,Ora	5	0.0/1.5, 44.3/44.4	492	1622

REGISTERED CIVIL ENGINEER 4-2-14 DATE

1-25-16
PLANS APPROVAL DATE

REGISTERED PROFESSIONAL ENGINEER KHANH Q. NGUYEN No. C68193 Exp. 9-30-17 CIVIL STATE OF CALIFORNIA

THE STATE OF CALIFORNIA OR ITS OFFICERS OR AGENTS SHALL NOT BE RESPONSIBLE FOR THE ACCURACY OR COMPLETENESS OF SCANNED COPIES OF THIS PLAN SHEET.

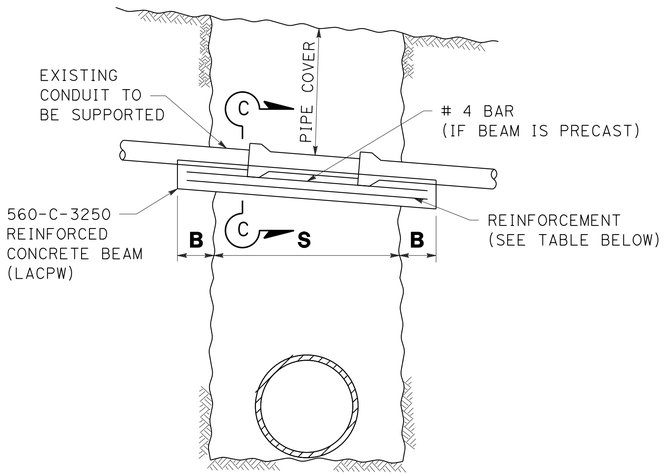

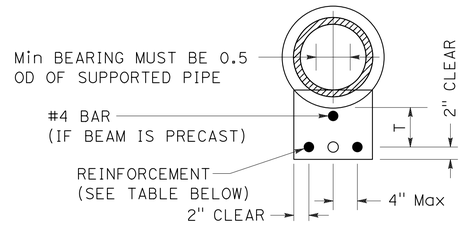

CASE 1
REINFORCED CONCRETE BEAM
FOR 4" TO 24" ID PIPE

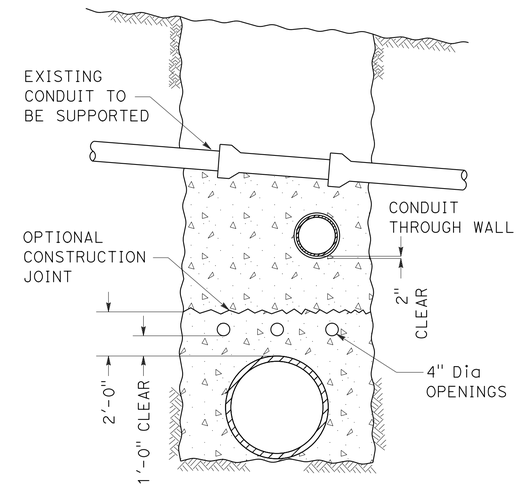

REINFORCED CONCRETE BEAM (DIMENSIONS AND REINFORCEMENT)

S	PIPE COVER														
	0' TO 8'-0"			8'-0" TO 12'-0"			12'-0" TO 16'-0"			16'-0" TO 20'-0"			20'-0" TO 25'-0"		
	T	BARS	B	T	BARS	B	T	BARS	B	T	BARS	B	T	BARS	B
0" TO 4'-0"	8"	#4	1'-6"	8"	#4	1'-6"	9"	#4	1'-6"	10"	#4	1'-6"	10 ½"	#4	1'-6"
4'-0" TO 5'-0"	8"	#4	1'-6"	9 ½"	#4	1'-6"	11"	#4	1'-6"	12"	#4	1'-6"	12 ½"	#5	1'-6"
5'-0" TO 6'-0"	9"	#4	1'-6"	11"	#5	1'-6"	12 ½"	#5	1'-6"	13 ½"	#5	2'-0"	14 ½"	#5	2'-0"
6'-0" TO 7'-0"	10"	#5	1'-6"	12 ½"	#5	2'-0"	14 ½"	#5	2'-0"	15 ½"	#5	2'-0"	16 ½"	#6	2'-0"
7'-0" TO 8'-0"	11"	#5	1'-6"	14"	#5	2'-0"	16"	#5	2'-0"	17 ½"	#5	2'-6"	19"	#6	2'-6"
8'-0" TO 9'-0"	12 ½"	#5	2'-0"	15 ½"	#6	2'-6"	17 ½"	#6	3'-0"	19 ½"	#6	2'-6"	21"	#6	2'-6"
9'-0" TO 10'-0"	13 ½"	#6	2'-0"	17"	#6	2'-6"	19 ½"	#6	3'-0"	21 ½"	#6	3'-0"	23"	#6	3'-0"
10'-0" TO 11'-0"	14 ½"	#6	2'-6"	18 ½"	#6	3'-0"	21"	#6	3'-0"	23 ½"	#7	3'-0"	25"	#7	3'-0"
11'-0" TO 12'-0"	15 ½"	#6	2'-6"	20"	#6	3'-0"	23"	#7	3'-6"	25 ½"	#7	3'-6"	27"	#7	3'-6"
12'-0" TO 13'-0"	17"	#6	3'-0"	21 ½"	#7	3'-6"	24 ½"	#7	3'-6"	27 ½"	#7	4'-0"	29"	#7	4'-0"
13'-0" TO 14'-0"	18"	#7	3'-0"	23"	#7	3'-6"	26 ½"	#7	4'-0"	29 ½"	#7	4'-0"	31 ½"	#7	4'-0"
14'-0" TO 15'-0"	19"	#7	3'-0"	25"	#7	4'-0"	28"	#7	4'-0"	31 ½"	#7	4'-6"			
15'-0" TO 16'-0"	20 ½"	#7	3'-6"	26 ½"	#7	4'-0"	30"	#8	4'-6"						
16'-0" TO 17'-0"	21 ½"	#7	3'-6"	28"	#8	4'-6"									
17'-0" TO 18'-0"	22 ½"	#8	4'-6"	29 ½"	#8	4'-6"									

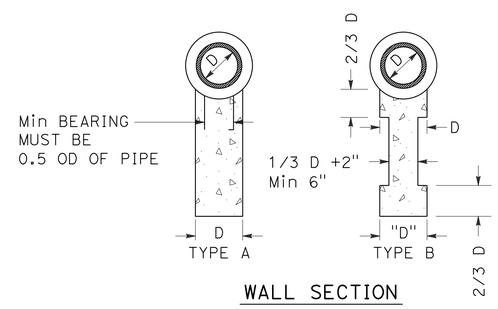

WALL SECTION

CONCRETE WALL
CASE 2

SUPPORT FOR CONDUITS ACROSS TRENCHES 1 of 2

SANITARY SEWER DETAIL

NO SCALE

SSD-8

STATE OF CALIFORNIA - DEPARTMENT OF TRANSPORTATION
Caltrans®
DESIGN
FUNCTIONAL SUPERVISOR: RICHARD CHIANG
CALCULATED-DESIGNED BY: RICKY LEE
CHECKED BY: KHANH Q. NGUYEN
REVISED BY
DATE REVISED

LAST REVISION 05-14-14
DATE PLOTTED => 03-FEB-2016
TIME PLOTTED => 11:13

Dist	COUNTY	ROUTE	POST MILES TOTAL PROJECT	SHEET No.	TOTAL SHEETS
07	LA,Ora	5	0.0/1.5, 44.3/44.4	493	1622

REGISTERED CIVIL ENGINEER 4-2-14 DATE

1-25-16
PLANS APPROVAL DATE

REGISTERED PROFESSIONAL ENGINEER KHANH Q. NGUYEN No. C68193 Exp. 9-30-17 CIVIL STATE OF CALIFORNIA

THE STATE OF CALIFORNIA OR ITS OFFICERS OR AGENTS SHALL NOT BE RESPONSIBLE FOR THE ACCURACY OR COMPLETENESS OF SCANNED COPIES OF THIS PLAN SHEET.

NOTES:

1. 2000-D SPUN RCP OF SAME DIAMETER AS THE EXISTING PIPE MAY BE USED ONLY WHEN THE EXISTING PIPE IS ACP, NRCP OR RCP AND THE TRENCH WIDTH IS 5' OR LESS.
2. THE CONCRETE COLLAR JOINT MUST BE USED FOR JOINTS IN STORM DRAIN PIPE.
3. REINFORCED CONCRETE BEAM DIMENSIONED AND REINFORCED PER TABLE IN CASE 1.

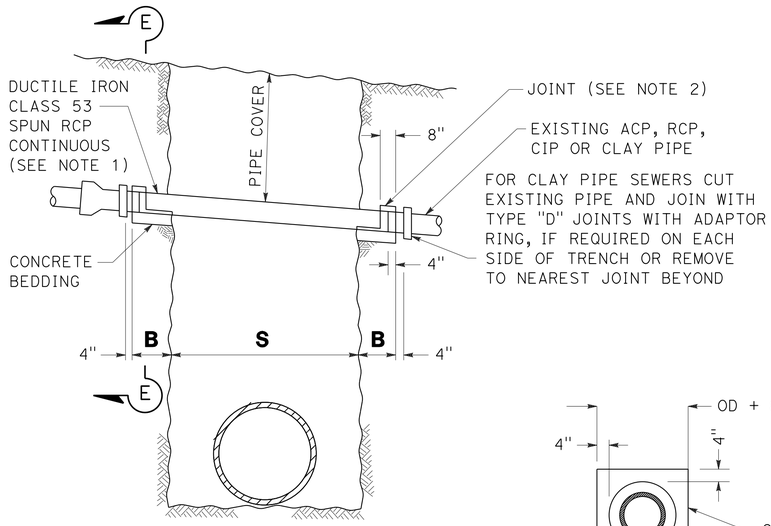

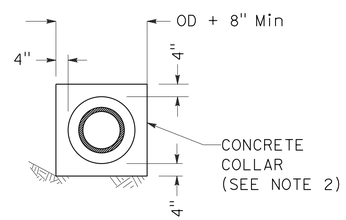

SECTION E-E

DUCTILE IRON PIPE
CASE 3

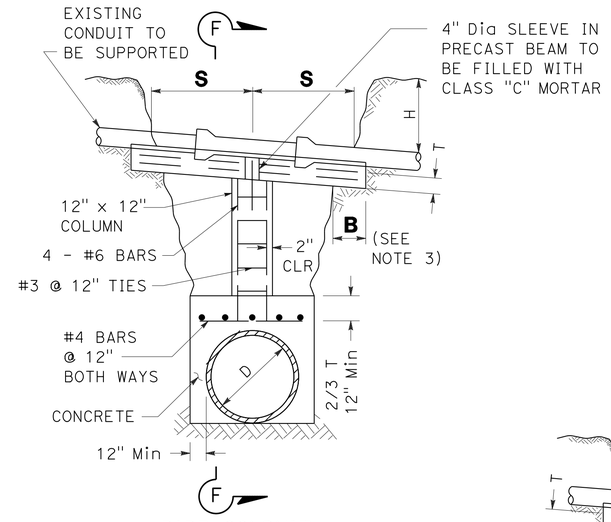

PIPE CONDUIT

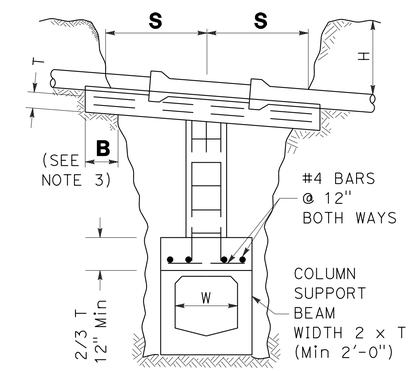

RC BOX CONDUIT

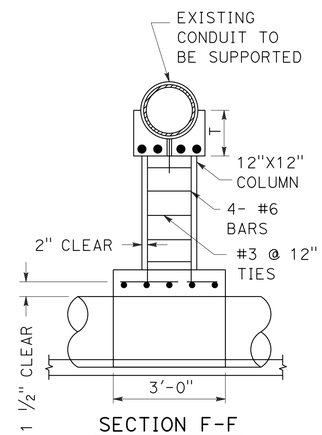

SECTION F-F

COLUMN SUPPORT WITH REINFORCED CONCRETE BEAM
CASE 4

ALLOWABLE SPANS AND Min REQUIRED BEARING FOR DUCTILE IRON PIPE

DEPTH OF COVER	6" PIPE		8" PIPE		10" PIPE	
	S (Max)	B (Max)	S (Max)	B (Max)	S (Max)	B (Max)
0" TO 8'-0"	11'-0"	1'-6"	13'-6"	1'-6"	16'-6"	2'-0"
8' 0" TO 16'-0"	8'-0"	1'-6"	10'-0"	2'-0"	12'-0"	2'-0"
16' 0" TO 25'-0"	7'-0"	1'-6"	9'-0"	2'-0"	10'-6"	2'-6"

SUPPORTS FOR CONDUITS ACROSS TRENCHES 2 OF 2

SANITARY SEWER DETAIL

NO SCALE

SSD-9

STATE OF CALIFORNIA - DEPARTMENT OF TRANSPORTATION
Caltrans® DESIGN

FUNCTIONAL SUPERVISOR: RICHARD CHIANG
RICKY LEE | KHANH Q. NGUYEN
CALCULATED-DESIGNED BY | CHECKED BY
REVISED BY | DATE REVISED

LAST REVISION 05-14-14 | DATE PLOTTED => 03-FEB-2016 | TIME PLOTTED => 11:13

Dist	COUNTY	ROUTE	POST MILES TOTAL PROJECT	SHEET No.	TOTAL SHEETS
07	LA,Ora	5	0.0/1.5, 44.3/44.4	494	1622

REGISTERED CIVIL ENGINEER 4-2-14 DATE

1-25-16
PLANS APPROVAL DATE

REGISTERED PROFESSIONAL ENGINEER KHANH Q. NGUYEN No. C68193 Exp. 9-30-17 CIVIL STATE OF CALIFORNIA

THE STATE OF CALIFORNIA OR ITS OFFICERS OR AGENTS SHALL NOT BE RESPONSIBLE FOR THE ACCURACY OR COMPLETENESS OF SCANNED COPIES OF THIS PLAN SHEET.

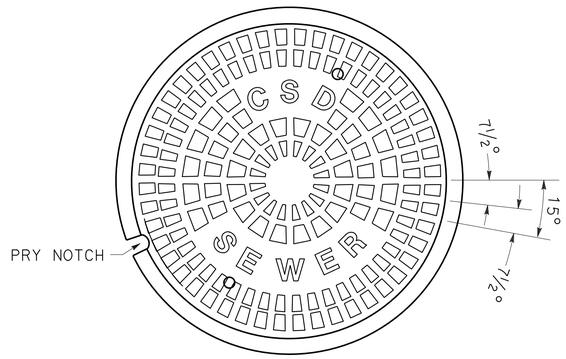

PLAN OF COVER
TOP VIEW

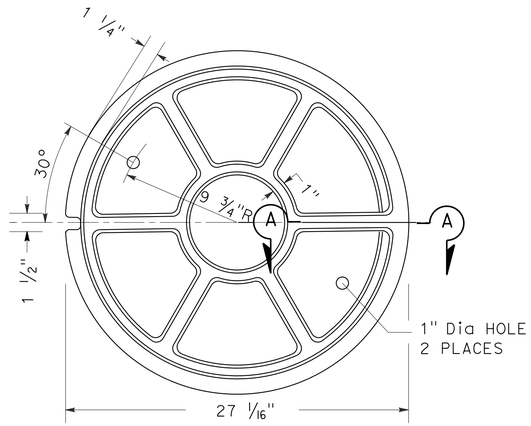

PLAN OF COVER
BOTTOM VIEW

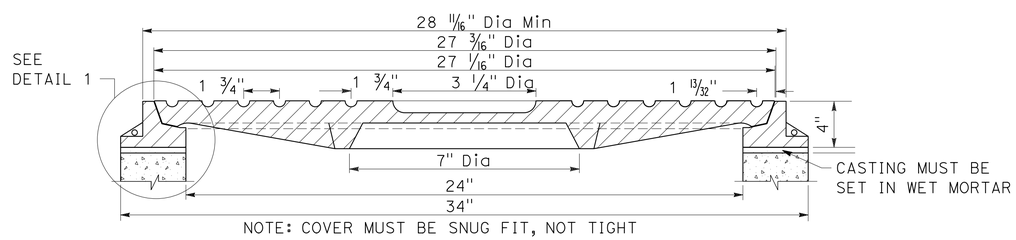

NOTE: COVER MUST BE SNUG FIT, NOT TIGHT

MANHOLE FRAME AND COVER

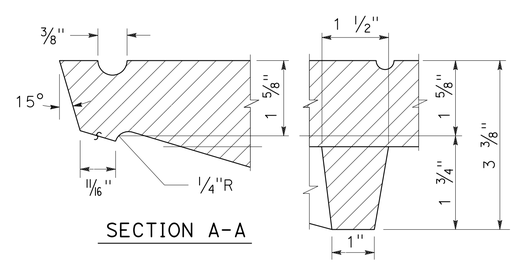

SECTION A-A

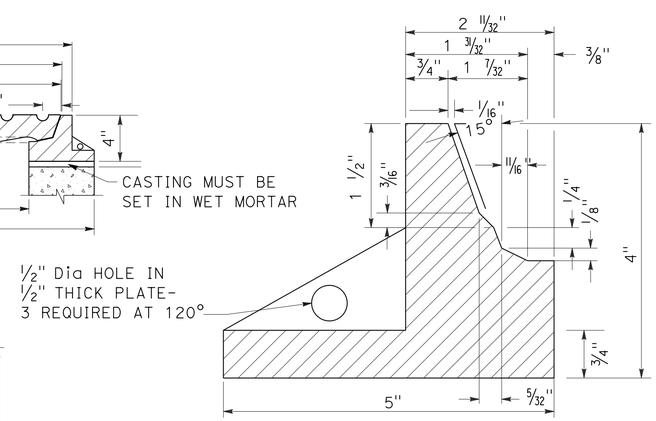

DETAIL 1

LACSD STANDARD 24" TRAFFIC MANHOLE FRAME AND COVER S-a-228

SANITARY SEWER DETAIL

NO SCALE

SSD-10

STATE OF CALIFORNIA - DEPARTMENT OF TRANSPORTATION
Caltrans DESIGN

FUNCTIONAL SUPERVISOR: RICHARD CHIANG
CALCULATED-DESIGNED BY: AINSLEY KUNG
CHECKED BY: STAN PEGADIOTES
REVISED BY
DATE REVISED

LAST REVISION 05-14-14
DATE PLOTTED => 03-FEB-2016
TIME PLOTTED => 11:13

Dist	COUNTY	ROUTE	POST MILES TOTAL PROJECT	SHEET No.	TOTAL SHEETS
07	LA,Ora	5	0.0/1.5, 44.3/44.4	495	1622

REGISTERED CIVIL ENGINEER 4-2-14 DATE

1-25-16
PLANS APPROVAL DATE

REGISTERED PROFESSIONAL ENGINEER KHANH Q. NGUYEN No. C68193 Exp. 9-30-17 CIVIL STATE OF CALIFORNIA

THE STATE OF CALIFORNIA OR ITS OFFICERS OR AGENTS SHALL NOT BE RESPONSIBLE FOR THE ACCURACY OR COMPLETENESS OF SCANNED COPIES OF THIS PLAN SHEET.

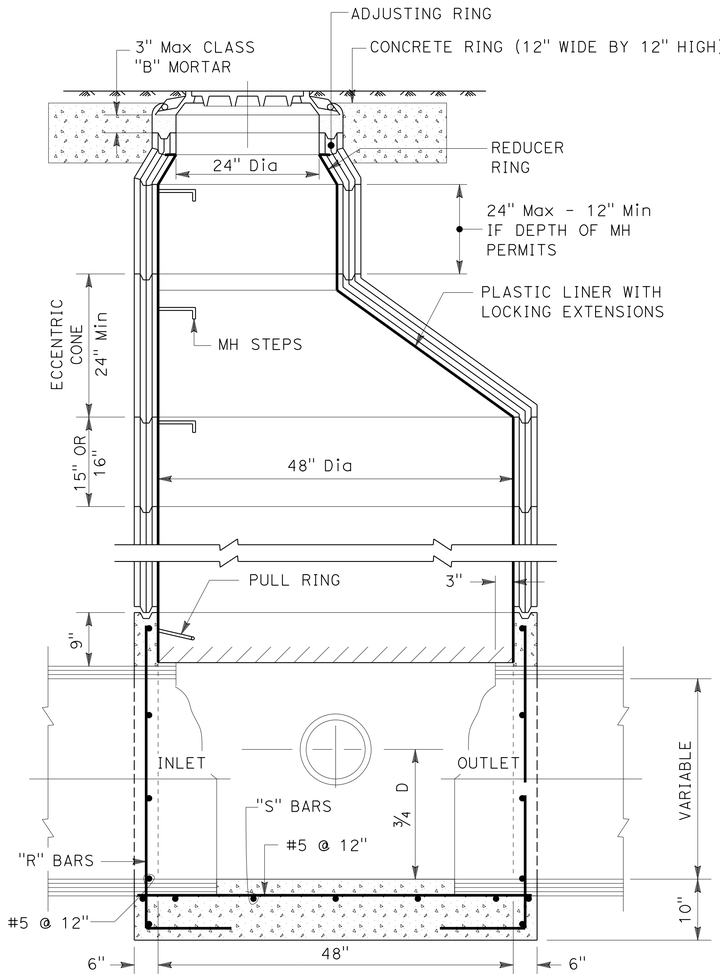

SECTION A-A

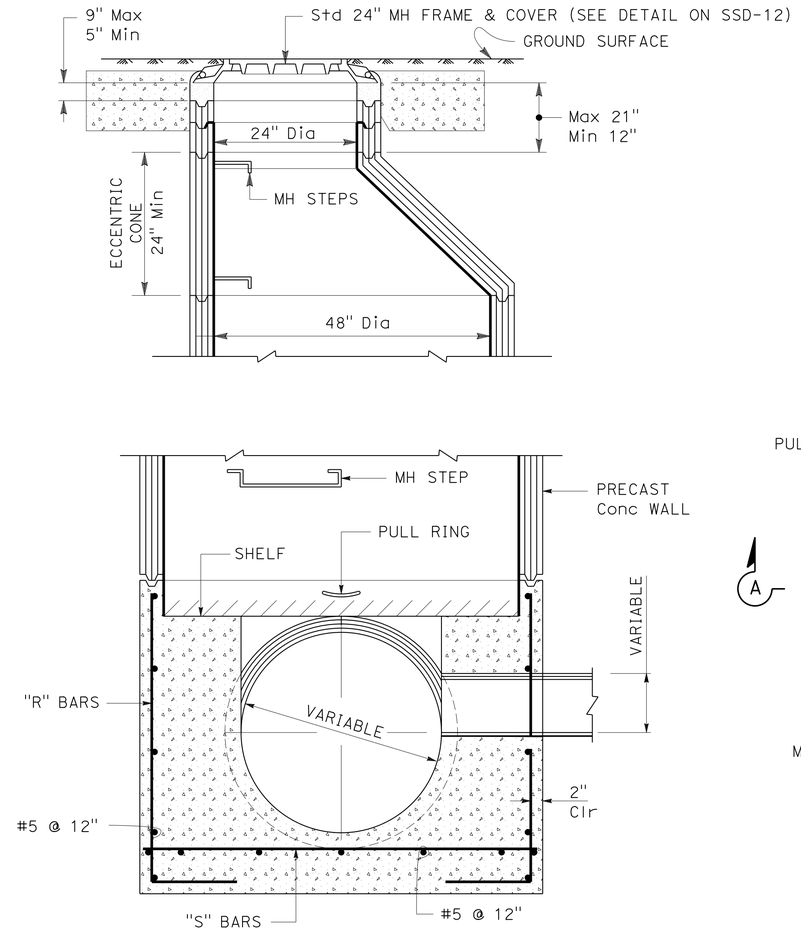

SECTION B-B

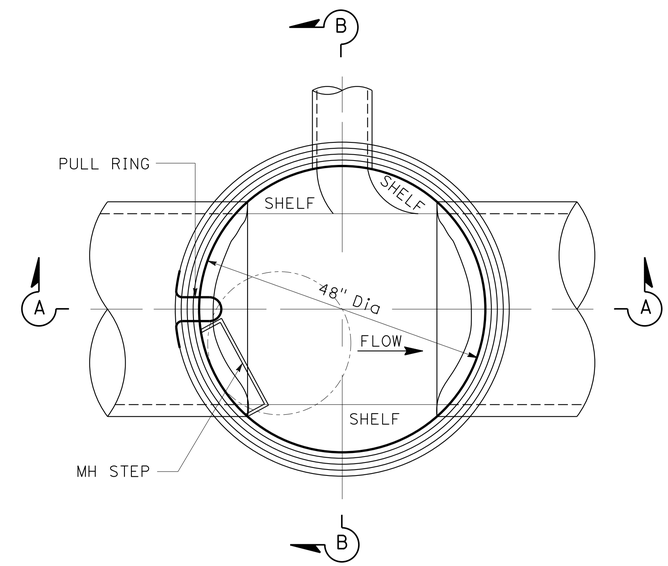

PLAN

NOTE:

1. SEE DETAIL ON SSD-13 FOR MH STEP AND PULL RING.

TABLE OF REINFORCING BARS			
PIPE DIAMETER	DEPTH TO INVERT	BARS "R"	BARS "S"
8" TO 21"	UP TO 15"	#5 @ 12"	#5 @ 12"
	UP TO 30"	#6 @ 12"	#6 @ 12"
24" TO 30"	UP TO 15"	#5 @ 12"	#5 @ 12"
	UP TO 30"	#7 @ 12"	#6 @ 12"

LACSD STANDARD MANHOLE, TYPE "D"
(FOR 8" to 30" PIPE) S-a-204

SANITARY SEWER DETAIL

NO SCALE

SSD-11

STATE OF CALIFORNIA - DEPARTMENT OF TRANSPORTATION
DESIGN
FUNCTIONAL SUPERVISOR: RICHARD CHIANG
CALCULATED-DESIGNED BY: AINSLEY KUNG
CHECKED BY: STAN PEGADIOTES
REVISED BY
DATE REVISED

LAST REVISION 05-14-14
DATE PLOTTED => 03-FEB-2016
TIME PLOTTED => 11:13

Dist	COUNTY	ROUTE	POST MILES TOTAL PROJECT	SHEET No.	TOTAL SHEETS
07	LA,Ora	5	0.0/1.5, 44.3/44.4	496	1622

REGISTERED CIVIL ENGINEER 4-2-14 DATE

1-25-16
PLANS APPROVAL DATE

REGISTERED PROFESSIONAL ENGINEER KHANH Q. NGUYEN No. C68193 Exp. 9-30-17 CIVIL STATE OF CALIFORNIA

THE STATE OF CALIFORNIA OR ITS OFFICERS OR AGENTS SHALL NOT BE RESPONSIBLE FOR THE ACCURACY OR COMPLETENESS OF SCANNED COPIES OF THIS PLAN SHEET.

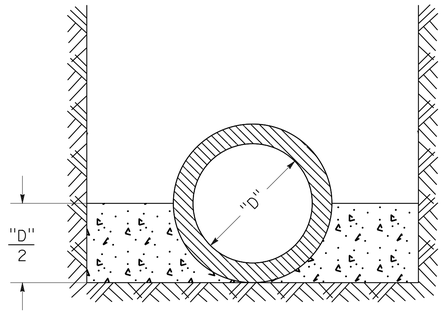

CASE I - CONCRETE CRADLE

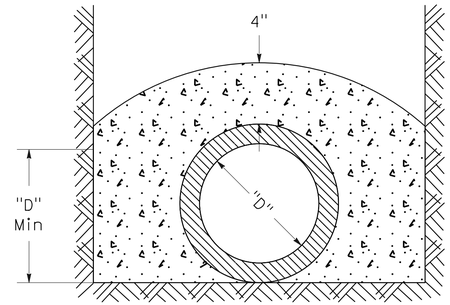

CASE II - CONCRETE ENCASEMENT

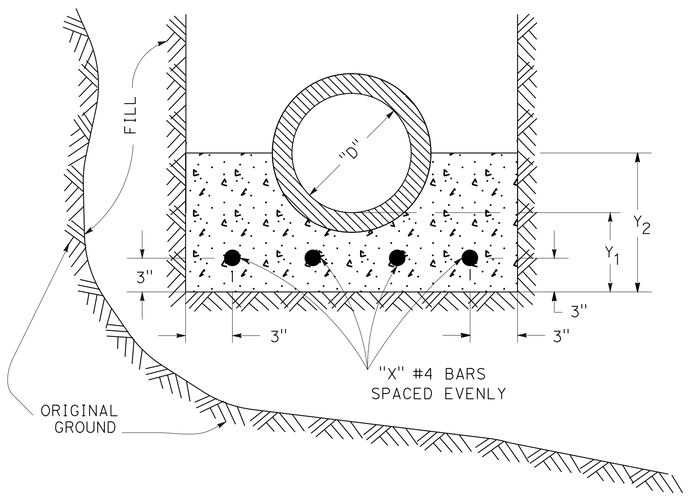

CASE III - SPECIAL CRADLE

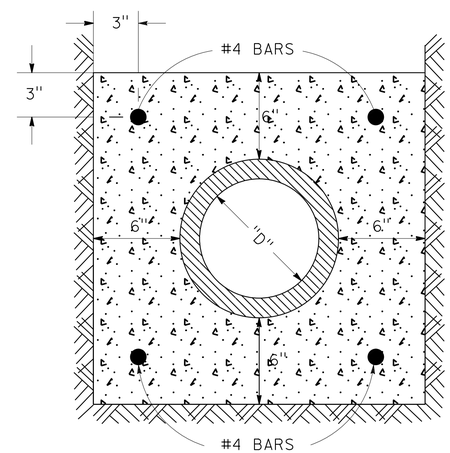

CASE IV - SPECIAL ENCASEMENT

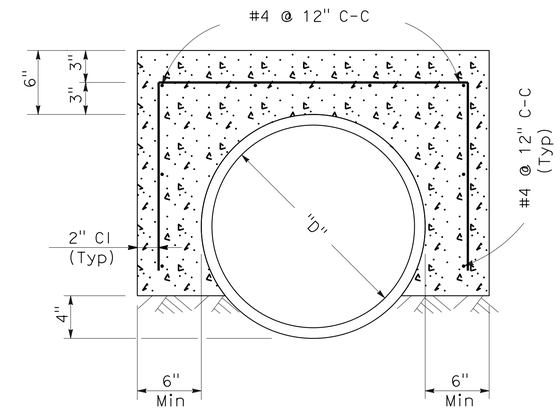

CASE V - CONCRETE ENCASEMENT

SCHEDULE OF DIMENSIONS AND REINFORCING BARS
FOR SPECIAL CRADLE CASE III

"D" (DIAMETER)	"X" NUMBER OF #4 BARS	THICKNESS	
		Y_1	Y_2
6"	2	4"	8"
8"	4	5"	10"
10"	4	6"	12"
12"	4	7"	15"
15"	5	9"	19"
18"	5	10"	22"
21"	6	12"	26"
24"	6	13"	28"

CRADLING AND ENCASEMENT

NOTES:

1. EXTEND BOTH ENDS OF CRADLE OR ENCASEMENT TO A POINT 25 (ONE INCH) SHORT OF FIRST PIPE JOINT BEYOND LOCATIONS SPECIFIED ON PLAN.

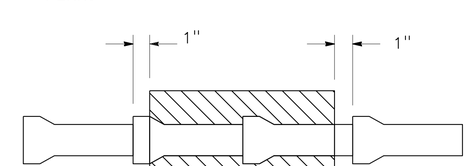

PLAN VIEW

2. APPLY FORM OIL, THIN PLASTIC SHEET, OR OTHER ACCEPTABLE MATERIAL TO PIPE, TO PREVENT BOND BETWEEN PIPE AND CONCRETE.
3. USE TYPE 2 CONCRETE.

SANITARY SEWER DETAIL

NO SCALE

SSD-12

STATE OF CALIFORNIA - DEPARTMENT OF TRANSPORTATION
Caltrans® DESIGN
FUNCTIONAL SUPERVISOR RICHARD CHIANG
CALCULATED-DESIGNED BY AINSLEY KUNG
CHECKED BY STAN PEGADIOTES
REVISED BY
DATE REVISED

LAST REVISION 05-14-14 | DATE PLOTTED => 03-FEB-2016 | TIME PLOTTED => 11:13

Dist	COUNTY	ROUTE	POST MILES TOTAL PROJECT	SHEET No.	TOTAL SHEETS
07	LA,Ora	5	0.0/1.5, 44.3/44.4	497	1622

REGISTERED CIVIL ENGINEER 4-2-14 DATE

1-25-16
PLANS APPROVAL DATE

REGISTERED PROFESSIONAL ENGINEER KHANH Q. NGUYEN No. C68193 Exp. 9-30-17 CIVIL STATE OF CALIFORNIA

THE STATE OF CALIFORNIA OR ITS OFFICERS OR AGENTS SHALL NOT BE RESPONSIBLE FOR THE ACCURACY OR COMPLETENESS OF SCANNED COPIES OF THIS PLAN SHEET.

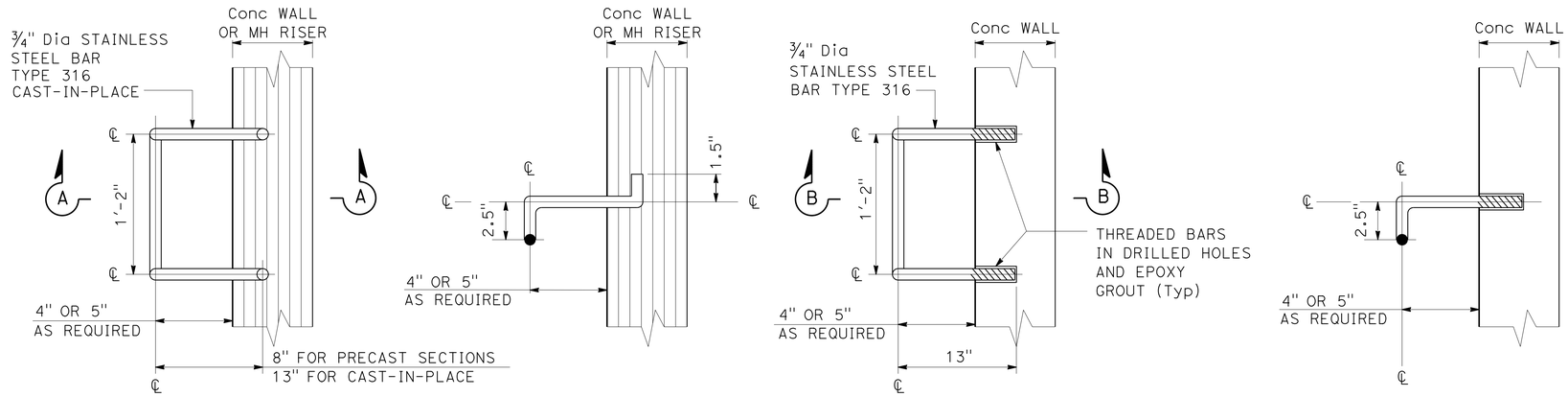

TYPE I MANHOLE STEP

TYPE II MANHOLE STEP

LACSD STANDARD MANHOLE STEP S-a-209

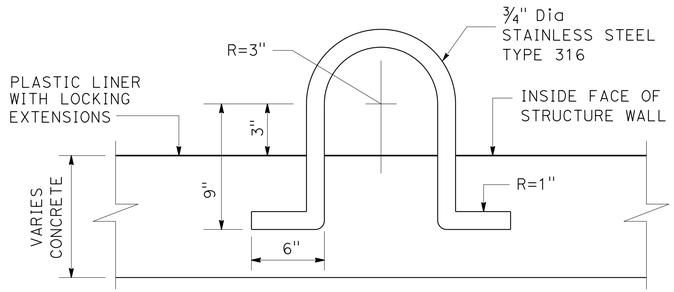

FOR CONCRETE STRUCTURE OR TYPE "A" MANHOLE WALL

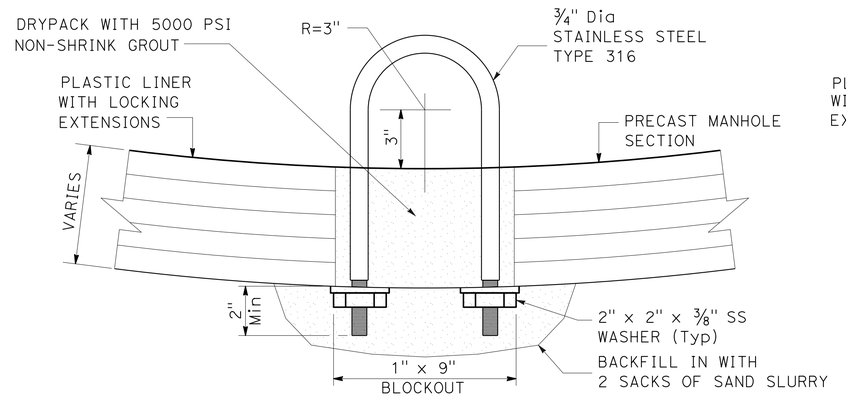

FOR PRECAST MANHOLE SECTION OR CONCRETE WALL LESS THAN 8"

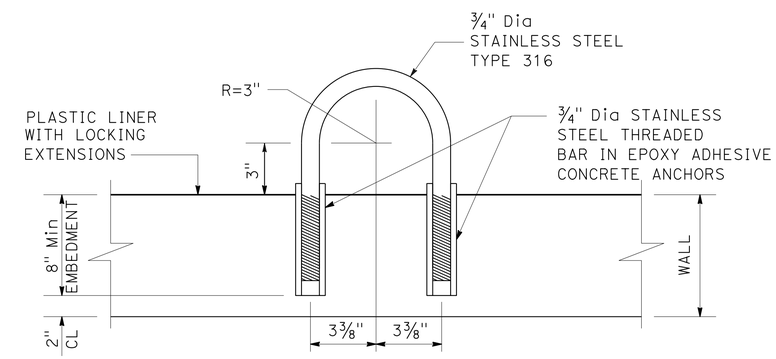

ALTERNATE PULL RING FOR CONCRETE STRUCTURE

LACSD STANDARD PULL RING S-a-220

SANITARY SEWER DETAIL

NO SCALE

SSD-13

STATE OF CALIFORNIA - DEPARTMENT OF TRANSPORTATION
Caltrans® DESIGN

FUNCTIONAL SUPERVISOR: RICHARD CHIANG
CALCULATED-DESIGNED BY: AINSLEY KUNG
CHECKED BY: STAN PEGADIOTES
REVISED BY / DATE REVISED

LAST REVISION 05-14-14 | DATE PLOTTED => 03-FEB-2016 | TIME PLOTTED => 11:13

Dist	COUNTY	ROUTE	POST MILES TOTAL PROJECT	SHEET No.	TOTAL SHEETS
07	LA,Ora	5	0.0/1.5, 44.3/44.4	498	1622

REGISTERED CIVIL ENGINEER 4-2-14 DATE

1-25-16
PLANS APPROVAL DATE

REGISTERED PROFESSIONAL ENGINEER KHANH Q. NGUYEN No. C68193 Exp. 9-30-17 CIVIL STATE OF CALIFORNIA

THE STATE OF CALIFORNIA OR ITS OFFICERS OR AGENTS SHALL NOT BE RESPONSIBLE FOR THE ACCURACY OR COMPLETENESS OF SCANNED COPIES OF THIS PLAN SHEET.

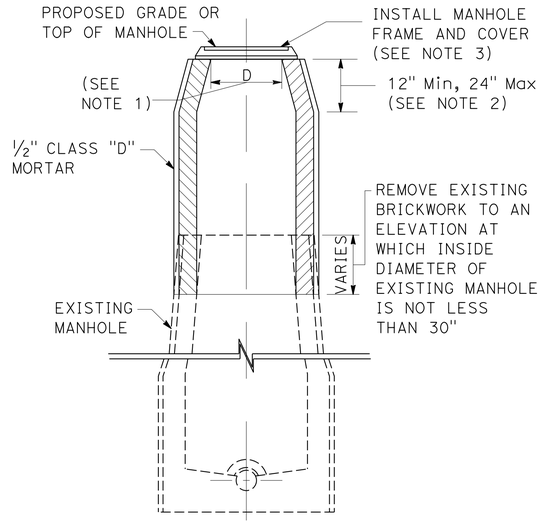

RAISING EXISTING BRICK MANHOLES

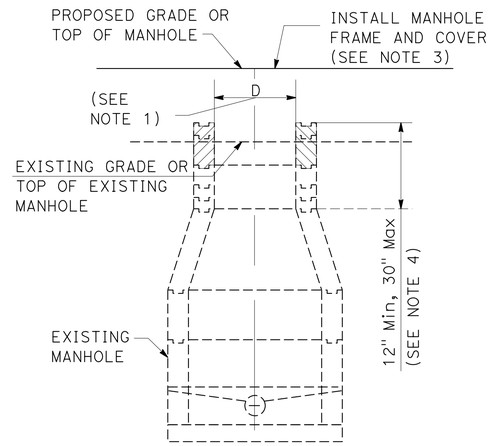

RAISING EXISTING PRECAST CONCRETE SEWER MANHOLES

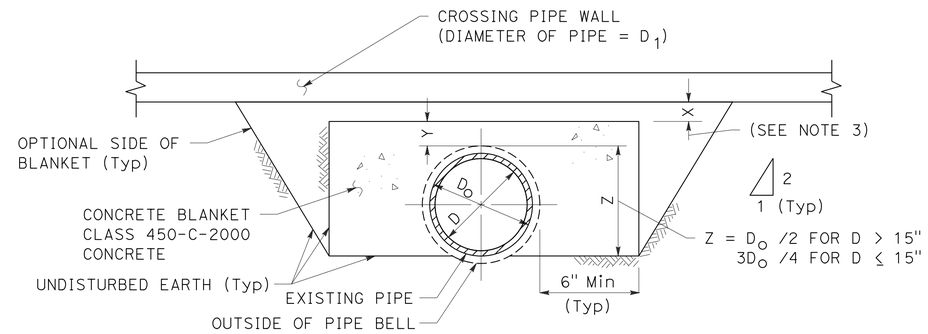

CONCRETE BLANKET

(FOR EXISTING PIPES CROSSED OVER BY A NEW BOX)

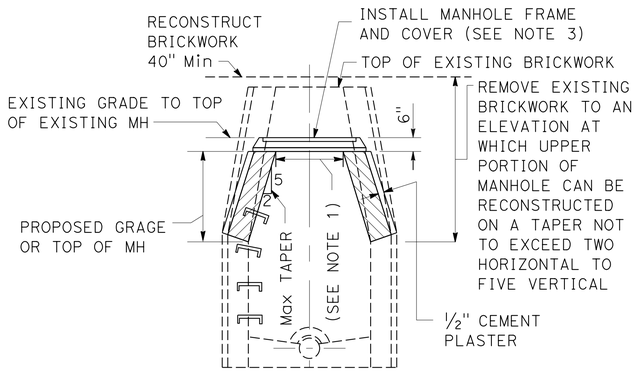

LOWERING EXISTING BRICK MANHOLES

BRICK MANHOLES

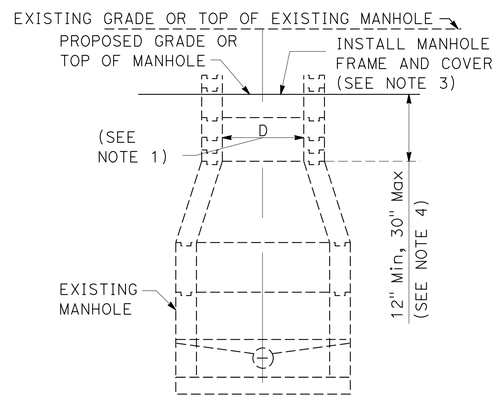

LOWERING EXISTING PRECAST CONCRETE SEWER MANHOLES

PRECAST CONCRETE SEWER MANHOLES

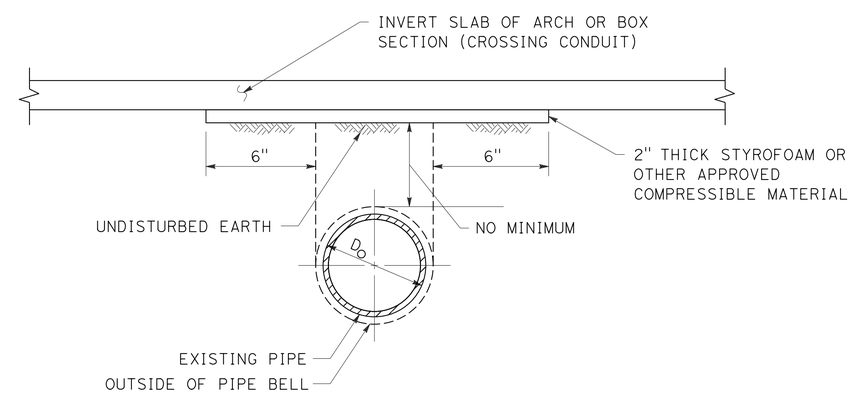

COMPRESSIBLE BLANKET

(FOR EXISTING PIPES CROSSED OVER BY A NEW BOX OR ARCH)

CITY SEWER MANHOLE ADJUSTMENT

BLANKET PROTECTION FOR PIPES

NOTES:

1. DIMENSION "D" WILL BE THE SAME AS THE SIZE OF MANHOLE FRAME AND COVER TO BE USED.
2. BRICK MANHOLES TO BE RAISED LESS THEN 1′ MAY BE EXTENDED VERTICALLY, PROVIDED THAT AT A DEPTH OF 2.5′ BELOW THE TOP OF THE MANHOLE AT ITS NEW ELEVATION, THE INSIDE DIAMETER OF THE MANHOLE IS 30" OR GREATER.
3. THE CONTRACTOR MAY REUSE THE EXISTING MANHOLE FRAME AND COVER, UNLESS DAMAGED DURING THE WORK OR WHEN OTHERWISE SHOWN IN THE CONTRACT DOCUMENTS. ITEMS DAMAGED BY THE CONTRACTOR MUST BE REPLACED WITH IDENTICAL NEW ITEMS AT NO EXPENSE TO THE AGENCY.
4. PRECAST CONCRETE MANHOLES TO BE RAISED LESS THAN 3" MAY BE RAISED BY APPLYING CLASS "D" MORTAR TO THE TOP OF THE EXISTING MANHOLE, PROVIDED THE TOTAL HEIGHT OF MORTAR, EXISTING AND NEWLY APPLIED DOES NOT EXCEED 3"

SANITARY SEWER DETAIL

NO SCALE

SSD-14

REVISED BY | DATE REVISED
AINSLEY KUNG | STAN PEGADIOTES
CALCULATED-DESIGNED BY | CHECKED BY
FUNCTIONAL SUPERVISOR: RICHARD CHIANG

STATE OF CALIFORNIA - DEPARTMENT OF TRANSPORTATION
Caltrans
DESIGN

LAST REVISION 05-14-14 | DATE PLOTTED => 03-FEB-2016 | TIME PLOTTED => 11:13

Dist	COUNTY	ROUTE	POST MILES TOTAL PROJECT	SHEET No.	TOTAL SHEETS
07	LA,Ora	5	0.0/1.5, 44.3/44.4	499	1622

REGISTERED CIVIL ENGINEER 4-2-14 DATE

1-25-16
PLANS APPROVAL DATE

REGISTERED PROFESSIONAL ENGINEER KHANH Q. NGUYEN No. C68193 Exp. 9-30-17 CIVIL STATE OF CALIFORNIA

THE STATE OF CALIFORNIA OR ITS OFFICERS OR AGENTS SHALL NOT BE RESPONSIBLE FOR THE ACCURACY OR COMPLETENESS OF SCANNED COPIES OF THIS PLAN SHEET.

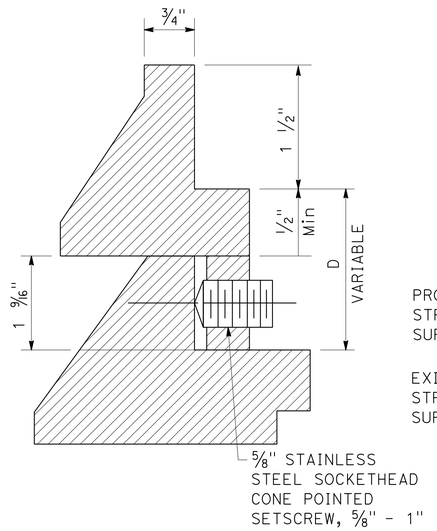

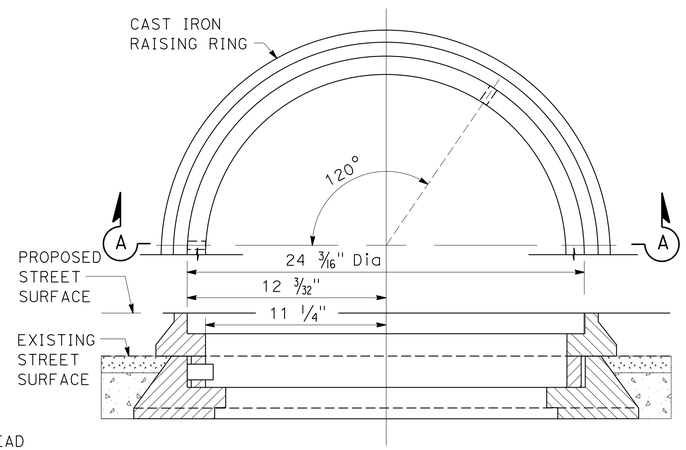

SECTION A-A

CAST IRON RAISING RINGS

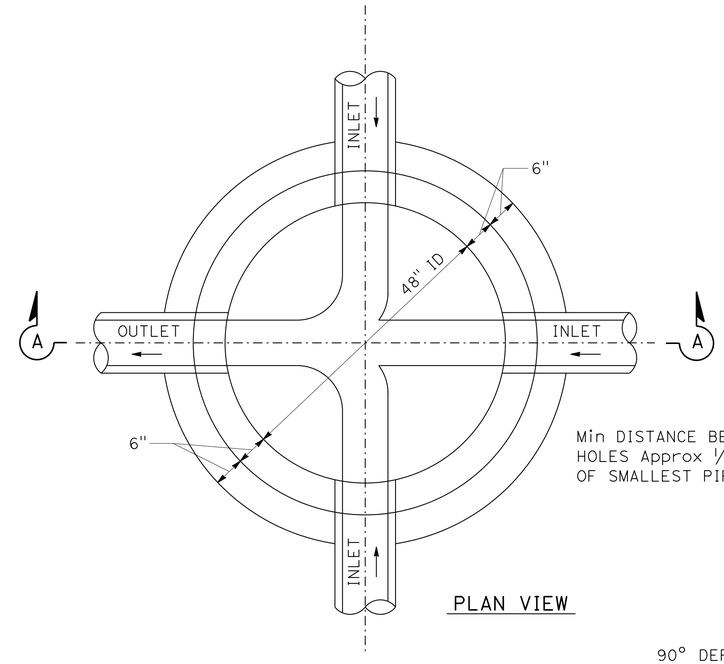

PLAN VIEW

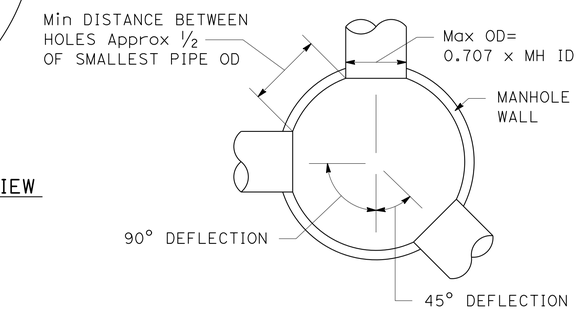

PIPE SPACINGS

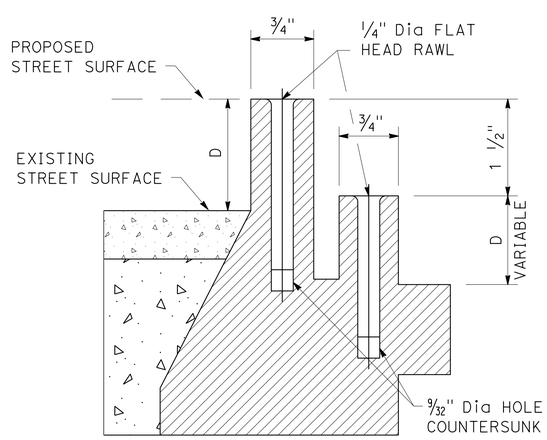

RAWL LENGTH EQUALS D + 1 1/2" Min

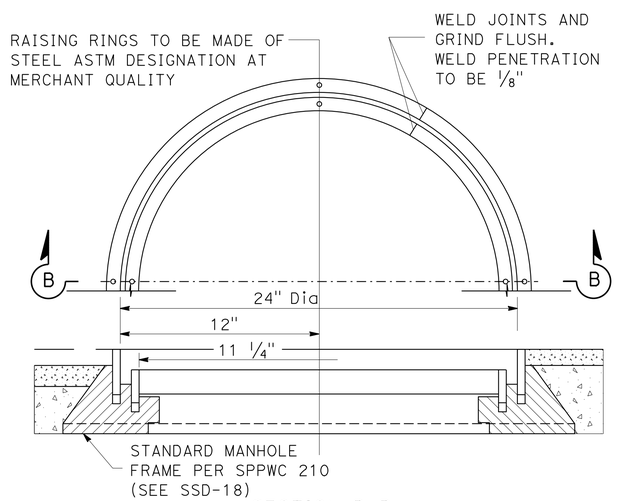

SECTION B-B

STEEL RAISING RINGS

CITY MANHOLE RAISING RINGS

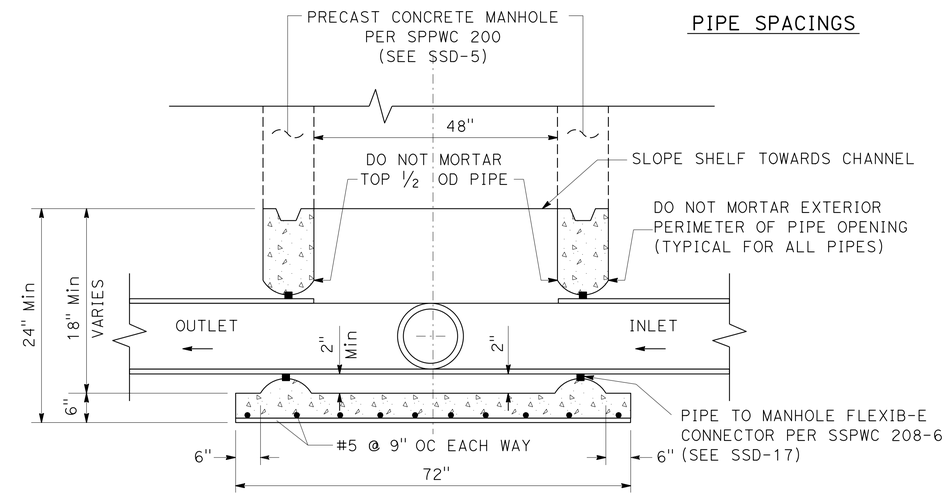

SECTION A-A

CITY PRECAST REINFORCED CONCRETE MANHOLE BASE

SANITARY SEWER DETAIL

NO SCALE

SSD-15

STATE OF CALIFORNIA - DEPARTMENT OF TRANSPORTATION
Caltrans
DESIGN

FUNCTIONAL SUPERVISOR: RICHARD CHIANG
CALCULATED-DESIGNED BY: AINSLEY KUNG
CHECKED BY: STAN PEGADIOTES
REVISED BY
DATE REVISED

LAST REVISION 05-14-14
DATE PLOTTED => 03-FEB-2016
TIME PLOTTED => 11:13

Dist	COUNTY	ROUTE	POST MILES TOTAL PROJECT	SHEET No.	TOTAL SHEETS
07	LA,Ora	5	0.0/1.5, 44.3/44.4	500	1622

REGISTERED CIVIL ENGINEER 4-2-14 DATE

1-25-16
PLANS APPROVAL DATE

REGISTERED PROFESSIONAL ENGINEER KHANH Q. NGUYEN No. C68193 Exp. 9-30-17 CIVIL STATE OF CALIFORNIA

THE STATE OF CALIFORNIA OR ITS OFFICERS OR AGENTS SHALL NOT BE RESPONSIBLE FOR THE ACCURACY OR COMPLETENESS OF SCANNED COPIES OF THIS PLAN SHEET.

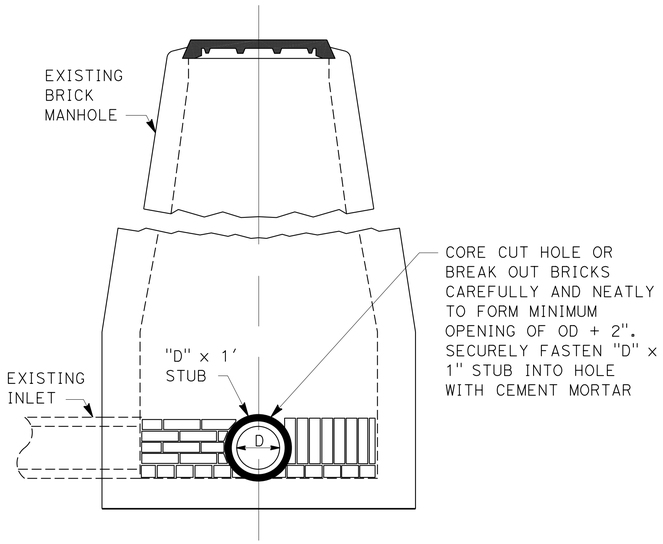

SECTION ELEVATION A-A

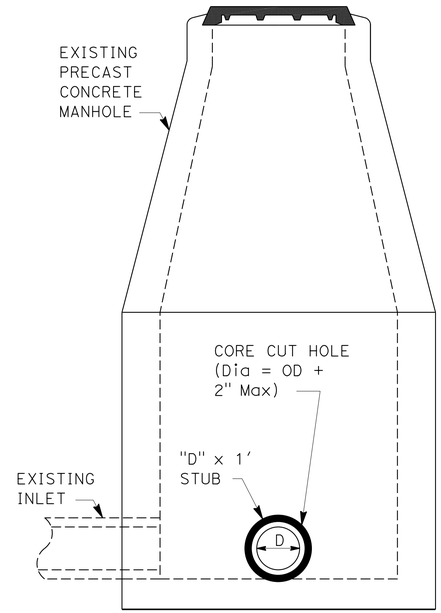

SECTION ELEVATION C-C

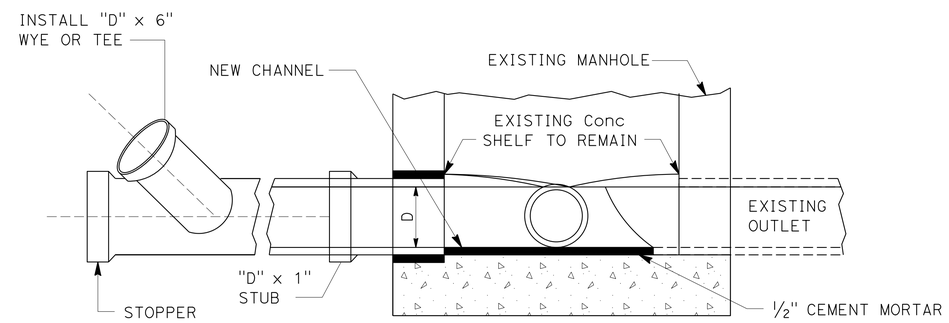

SECTIONAL ELEVATION B-B
CHANNEL BASE

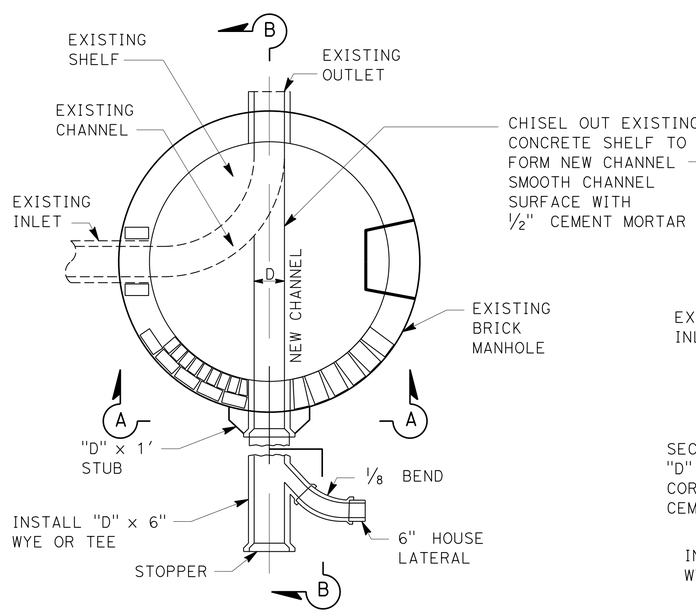

SECTIONAL PLAN OF BASE

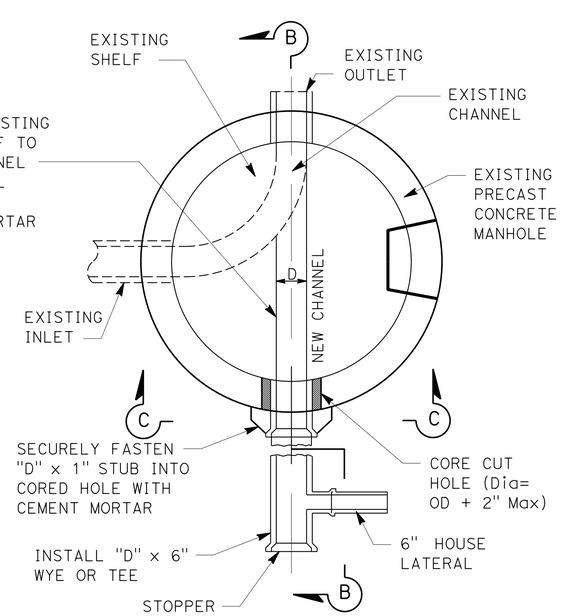

SECTIONAL PLAN OF BASE

BREAKING INTO EXISTING CITY MANHOLES

SANITARY SEWER DETAIL

NO SCALE

SSD-16

STATE OF CALIFORNIA - DEPARTMENT OF TRANSPORTATION
Caltrans® DESIGN
FUNCTIONAL SUPERVISOR RICHARD CHIANG
AINSLEY KUNG | STAN PEGADIOTES
CALCULATED-DESIGNED BY | CHECKED BY
REVISED BY | DATE REVISED

LAST REVISION 05-14-14 | DATE PLOTTED => 03-FEB-2016 | TIME PLOTTED => 11:13