INDEX OF PLANS

NOTE:

THE LISTING OF THE INDEX OF PLANS IS SHOWN ON THE INDEX OF PLANS SHEET.

STATE OF CALIFORNIA
DEPARTMENT OF TRANSPORTATION

ACNHPI-005-2(981)N
DEMO06-6207(062)N

Dist	COUNTY	ROUTE	POST MILES TOTAL PROJECT	SHEET No.	TOTAL SHEETS
07	LA,Ora	5	0.0/1.5, 44.3/44.4	1	1622

PROJECT PLANS FOR CONSTRUCTION ON
STATE HIGHWAY

IN LOS ANGELES AND ORANGE COUNTIES
IN BUENA PARK, LA MIRADA, CERRITOS
AND SANTA FE SPRINGS
FROM ARTESIA BOULEVARD UNDERCROSSING
TO NORTH FORK COYOTE CREEK

TO BE SUPPLEMENTED BY STANDARD PLANS DATED 2010

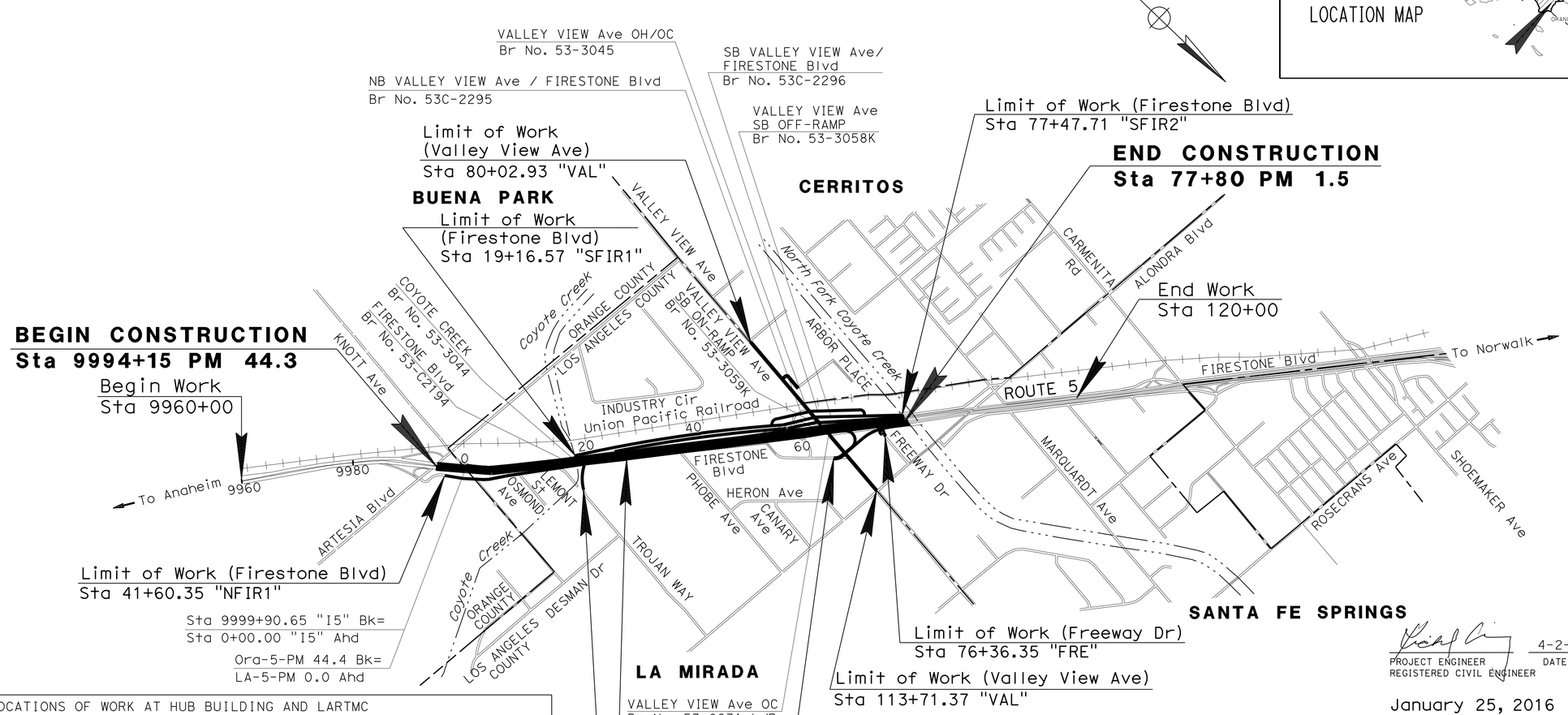

NO SCALE

LOCATIONS OF WORK AT HUB BUILDING AND LARTMC			
ROUTE	PM	LOCATION	DESCRIPTION
2	18.7	ROUTE 134 AND ROUTE 2 SEPARATION (2901 WEST BROADWAY, LOS ANGELES, Ca. 90041)	LARTMC - LOS ANGELES REGIONAL TRANSPORTATION MANAGEMENT CENTER
5	6.8	ROUTE 5 AND ROUTE 605 SEPARATION (SOUTH OF ROSEMEAD Blvd)	NORWALK HUB

THE CONTRACTOR SHALL POSSESS THE CLASS (OR CLASSES) OF LICENSE AS SPECIFIED IN THE "NOTICE TO BIDDERS."

PROJECT MANAGER SYED A. HUQ

DESIGN MANAGER RICHARD CHIANG

PROJECT ENGINEER REGISTERED CIVIL ENGINEER — DATE 4-2-14

REGISTERED PROFESSIONAL ENGINEER RICHARD CHIANG No. C52154 Exp. 12-31-16 CIVIL STATE OF CALIFORNIA

January 25, 2016
PLANS APPROVAL DATE

THE STATE OF CALIFORNIA OR ITS OFFICERS OR AGENTS SHALL NOT BE RESPONSIBLE FOR THE ACCURACY OR COMPLETENESS OF SCANNED COPIES OF THIS PLAN SHEET.

CONTRACT No.	07-2159U4
PROJECT ID	0715000160

LAST REVISION 00-00-00 DATE PLOTTED => 03-FEB-2016 TIME PLOTTED => 09:22

Dist	COUNTY	ROUTE	POST MILES TOTAL PROJECT	SHEET No.	TOTAL SHEETS
07	LA,Ora	5	0.0/1.5, 44.3/44.4	2	1622

H S Chen 4-2-14
REGISTERED CIVIL ENGINEER DATE

1-25-16
PLANS APPROVAL DATE

REGISTERED PROFESSIONAL ENGINEER
H.S. CHEN
No. C48908
Exp. 9-30-16
CIVIL
STATE OF CALIFORNIA

THE STATE OF CALIFORNIA OR ITS OFFICERS OR AGENTS SHALL NOT BE RESPONSIBLE FOR THE ACCURACY OR COMPLETENESS OF SCANNED COPIES OF THIS PLAN SHEET.

INDEX OF PLANS

SHEET No.	DESCRIPTION
1	TITLE AND LOCATION MAP
2	INDEX OF PLANS
3-13	TYPICAL CROSS SECTIONS
14-23	LAYOUTS
24-53	PROFILES AND SUPERELEVATION DIAGRAMS
54-166	CONSTRUCTION DETAILS
167-177	WATER POLLUTION CONTROL PLANS
178-187	CONTOUR GRADING
188-470	DRAINAGE PLANS, PROFILES, DETAILS AND QUANTITIES
471-475	SUBSURFACE DRAINAGE PLANS, DETAILS AND QUANTITIES
476-515	SANITARY SEWER PLANS, PROFILES, DETAILS AND QUANTITIES
516-539	UTILITY PLANS AND DETAILS
540-541	CONSTRUCTION AREA SIGNS
542-560	MOTORIST INFORMATION PLANS, DETAILS AND QUANTITIES
561-665	STAGE CONSTRUCTION PLANS
666-673	TRAFFIC HANDLING DETAILS
674-687	PAVEMENT DELINEATION PLANS, DETAILS AND QUANTITIES
688-743	SIGN PLANS, DETAILS AND QUANTITIES
744-748	SPECIAL DESIGN STRUCTURES
749-755	SUMMARY OF QUANTITIES
756-778	HIGHWAY PLANTING PLANS
779-901	ELECTRICAL PLANS
902-1027	REVISED AND NEW STANDARD PLANS

SHEET No.	STRUCTURE PLANS
1028-1067	COYOTE CREEK BRIDGE (REPLACE) Br No. 53-3044
1068-1249	VALLEY VIEW AVENUE OH/OC (REPLACEMENT) Br No. 53-3045
1250-1272	VALLEY AVENUE SB OFF-RAMP Br No. 53-3058K
1273-1307	VALLEY VIEW AVENUE SB ON-RAMP Br No. 53-3059k
1308-1330	FIRESTONE Blvd BRIDGE Br No. 53-C2194
1331-1359	NB VALLEY VIEW AVENUE/S FIRESTONE Blvd Br. 53-C2295
1360-1389	SB VALLEY VIEW AVENUE/S FIRESTONE Blvd Br. 53-C2296
1390-1406	RETAINING WALL No. 2 Br. 53-E0251
1407-1417	RETAINING WALL No. 8
1418-1425	RETAINING WALL No. 52 Br. 53-E0260
1426-1434	RETAINING WALL No. 55 Br. 53-E0261
1435-1440	RETAINING WALL No. 68 Br. 53-E0262
1441-1446	RETAINING WALL No. 69 Br. 53-E0263
1447-1454	RETAINING WALL No. 70
1455-1464	RETAINING WALL No. 73
1465-1471	RETAINING WALL No. 80
1472-1476	RETAINING WALL No. AC62
1477-1481	RETAINING WALL No. AC63

SHEET No.	STRUCTURE PLANS
1482-1486	RETAINING WALL No. DW87
1487-1491	RETAINING WALL No. DW88
1492-1495	RETAINING WALL No. DW108
1496-1499	RETAINING WALL No. DW109
1500-1507	RETAINING WALL No. NF60
1508-1512	RETAINING WALL No. NF62
1513-1521	RETAINING WALL No. NF65
1522-1529	RETAINING WALL No. NF66
1530-1536	RETAINING WALL No. RWFIR4 Br. 53-E0285
1537-1543	RETAINING WALL No. RWFIR5 Br. 53-E0286
1544-1551	RETAINING WALL No. RWFIR7 Br. 53-E0287
1552-1559	RETAINING WALL No. RWFIR8 Br. 53-E0288
1560-1564	RETAINING WALL No. SF3
1565-1569	RETAINING WALL No. SF4
1570-1575	RETAINING WALL No. TR3 Br. 53-E0250
1576-1580	RETAINING WALL No. VA85
1581-1585	RETAINING WALL No. VA87
1586-1590	RETAINING WALL No. VA88
1591-1595	RETAINING WALL No. VA103 Br. 53-E0266
1596-1604	RETAINING WALL No. VA104 Br. 53-E0267
1605-1610	RETAINING WALL No. VA107
1611-1617	RETAINING WALL No. VA108
1618-1622	RETAINING WALL No. VA109

THE STANDARD PLANS LIST APPLICABLE TO THIS CONTRACT IS INCLUDED IN THE NOTICE TO BIDDERS AND SPECIAL PROVISIONS BOOK.

REVISED BY | DATE REVISED
H. S. CHEN | VAN TRAN
CALCULATED-DESIGNED BY | CHECKED BY
FUNCTIONAL SUPERVISOR
RICHARD CHIANG
STATE OF CALIFORNIA - DEPARTMENT OF TRANSPORTATION
Caltrans
DESIGN

INDEX OF PLANS

IOP-1

LAST REVISION 00-00-00 | DATE PLOTTED => 03-FEB-2016 | TIME PLOTTED => 09:22

Dist	COUNTY	ROUTE	POST MILES TOTAL PROJECT	SHEET No.	TOTAL SHEETS
07	LA,Ora	5	0.0/1.5, 44.3/44.4	3	1622

H S Chen 4-2-14
REGISTERED CIVIL ENGINEER DATE

1-25-16
PLANS APPROVAL DATE

REGISTERED PROFESSIONAL ENGINEER H.S. CHEN No. C48908 Exp. 9-30-16 CIVIL STATE OF CALIFORNIA

THE STATE OF CALIFORNIA OR ITS OFFICERS OR AGENTS SHALL NOT BE RESPONSIBLE FOR THE ACCURACY OR COMPLETENESS OF SCANNED COPIES OF THIS PLAN SHEET.

NOTES:

1. DIMENSIONS OF THE STRUCTURAL SECTIONS ARE SUBJECT TO TOLERANCES SPECIFIED IN THE STANDARD SPECIFICATIONS.
2. SUPERELEVATION AS SHOWN OR AS DIRECTED BY THE ENGINEER.
3. FOR LOCATIONS OF RETAINING WALLS, SEE RETAINING WALL PLANS.

EXISTING STRUCTURAL SECTION

A — 1.00′ PCC, 0.50′ LCB, 0.70′ SB
B — 0.70′ AC, 0.67′ ACB, 1.64′ AS
C — 0.67′ PCC, 0.67′ BASE, 0.67′ & Var SB
D — 0.75′ PCC, 0.58′ BASE, 0.67′ & Var SB
E — 0.15′ RAC, 0.70′ AC, 0.67′ CTB, 1.00′ SB
F — 0.15′ RAC, 0.50′ AC, 0.67′ CTB, 1.00′ SB
G — 0.33′ AC, 0.67′ AB
H — 0.33′ AC, 1.00′ AB
I — 0.15′ RAC, 0.45′ TO 0.18′ AC, 0.50′ UNTREATED ROCK, 1.00′ SB
J — 0.15′ RAC, 0.80′ AC, 0.55′ SB
K — 0.70′ AC, 1.40′ LCB, 0.35′ AB
L — 0.33′ AC
M — 0.33′ AC, 0′ TO 4′ LCB
O — 0.70′ AC, 0.70′LCB, 1.30′ Cl 3 AB

ABBREVIATIONS:

RAC: RUBBERIZED ASPHALT CONCRETE
SB: SUBBASE

DESIGN DESIGNATION:

ADT (2005) 171,000 V = 70 mph
ADT (2030) 281,000 TI_{40} = 16

PAVEMENT CLIMATE REGION

SOUTH COAST

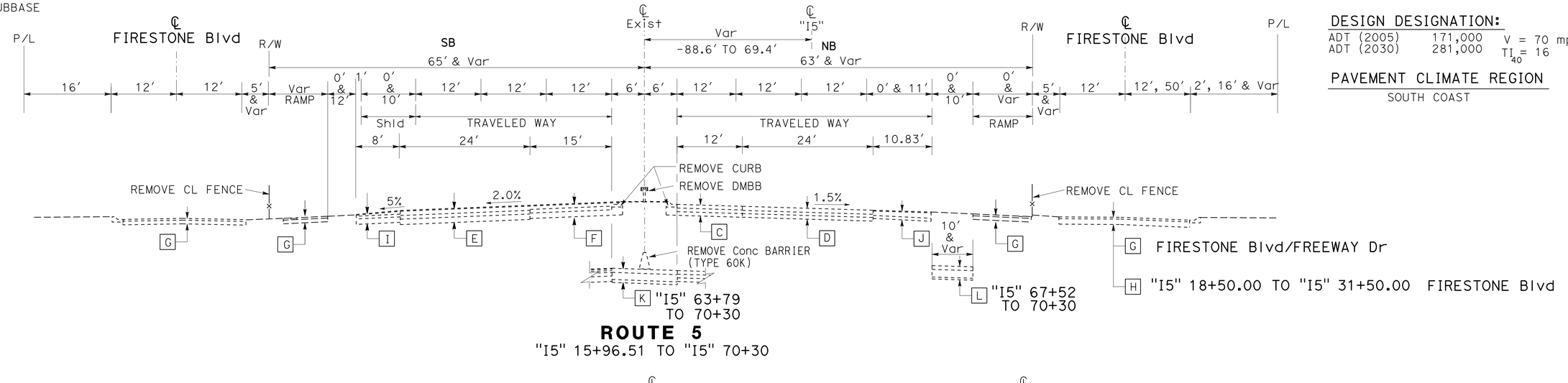

G FIRESTONE Blvd/FREEWAY Dr
H "I5" 18+50.00 TO "I5" 31+50.00 FIRESTONE Blvd
K "I5" 63+79 TO 70+30
L "I5" 67+52 TO 70+30

ROUTE 5
"I5" 15+96.51 TO "I5" 70+30

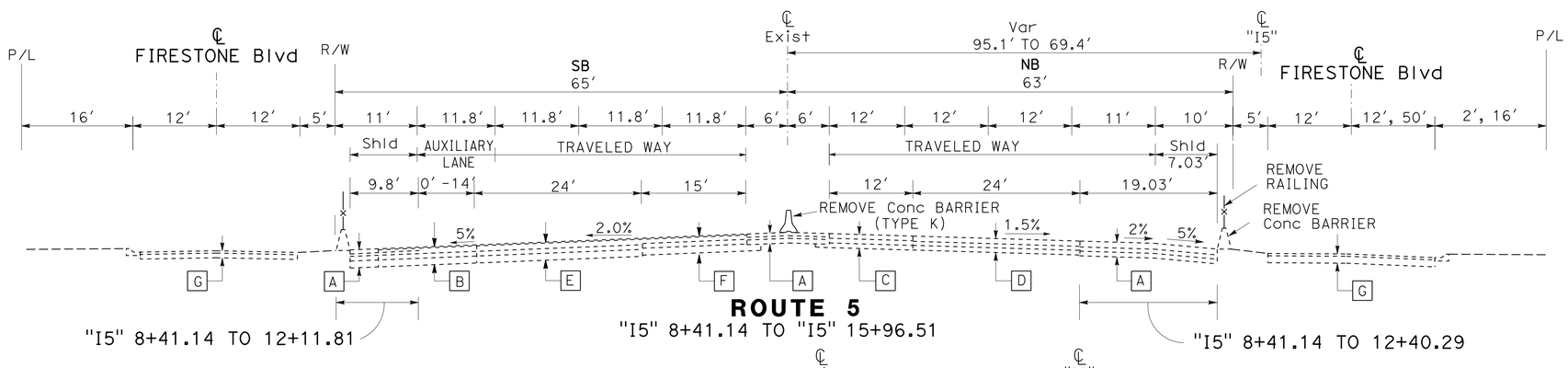

"I5" 8+41.14 TO 12+11.81
ROUTE 5
"I5" 8+41.14 TO "I5" 15+96.51
"I5" 8+41.14 TO 12+40.29

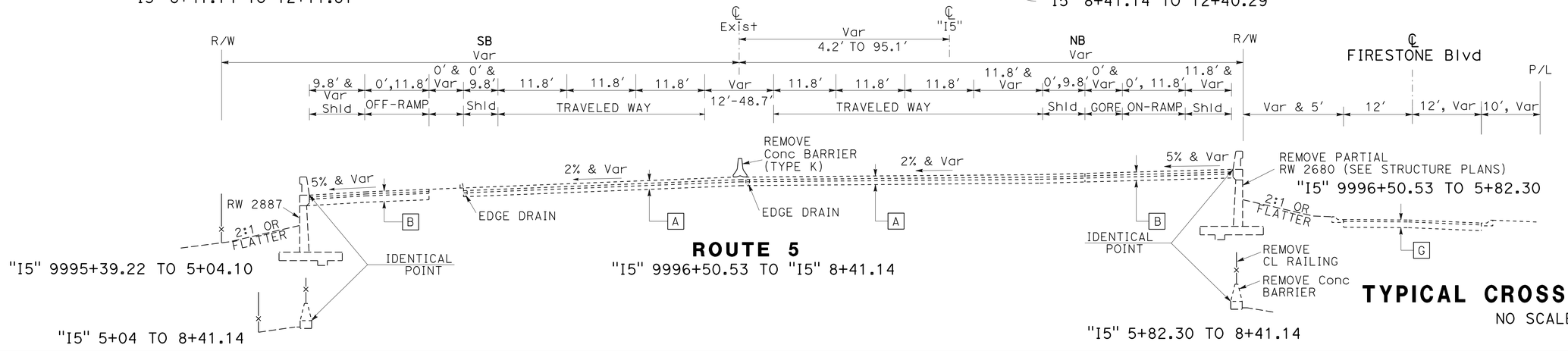

"I5" 9995+39.22 TO 5+04.10
"I5" 5+04 TO 8+41.14
ROUTE 5
"I5" 9996+50.53 TO "I5" 8+41.14
"I5" 9996+50.53 TO 5+82.30
"I5" 5+82.30 TO 8+41.14

TYPICAL CROSS SECTIONS

NO SCALE

X - 1

STATE OF CALIFORNIA - DEPARTMENT OF TRANSPORTATION
Caltrans® DESIGN
FUNCTIONAL SUPERVISOR: RICHARD CHIANG
CALCULATED-DESIGNED BY: H. S. CHEN
CHECKED BY: VAN TRAN
REVISED BY / DATE REVISED

LAST REVISION 00-00-00
DATE PLOTTED => 03-FEB-2016
TIME PLOTTED => 09:22

Dist	COUNTY	ROUTE	POST MILES TOTAL PROJECT	SHEET No.	TOTAL SHEETS
07	LA,Ora	5	0.0/1.5, 44.3/44.4	4	1622

H S Chen 4-2-14
REGISTERED CIVIL ENGINEER DATE

1-25-16
PLANS APPROVAL DATE

REGISTERED PROFESSIONAL ENGINEER H.S. CHEN No. C48908 Exp. 9-30-16 CIVIL STATE OF CALIFORNIA

THE STATE OF CALIFORNIA OR ITS OFFICERS OR AGENTS SHALL NOT BE RESPONSIBLE FOR THE ACCURACY OR COMPLETENESS OF SCANNED COPIES OF THIS PLAN SHEET.

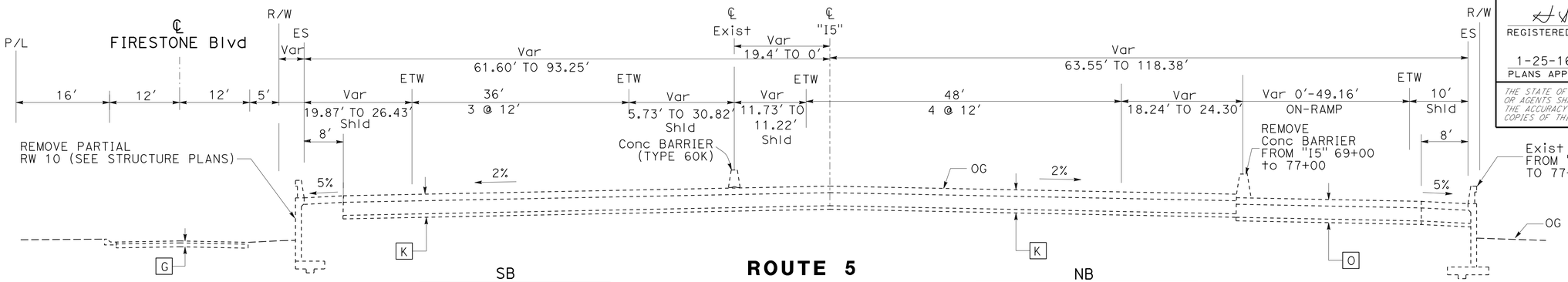

SB
"I5" 74+20 TO 77+21

ROUTE 5

NB
"I5" 74+50 TO 77+79.38

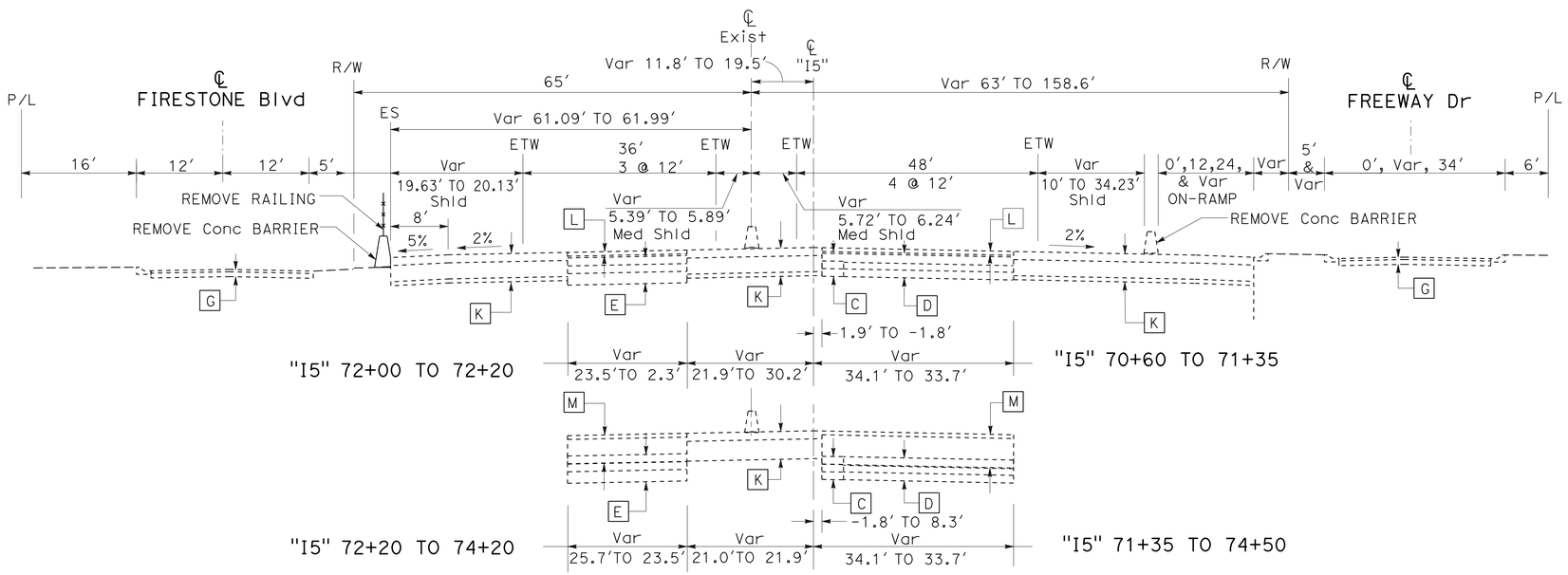

SB
"I5" 72+00 TO 74+20

ROUTE 5

NB
"I5" 70+60 TO 74+50

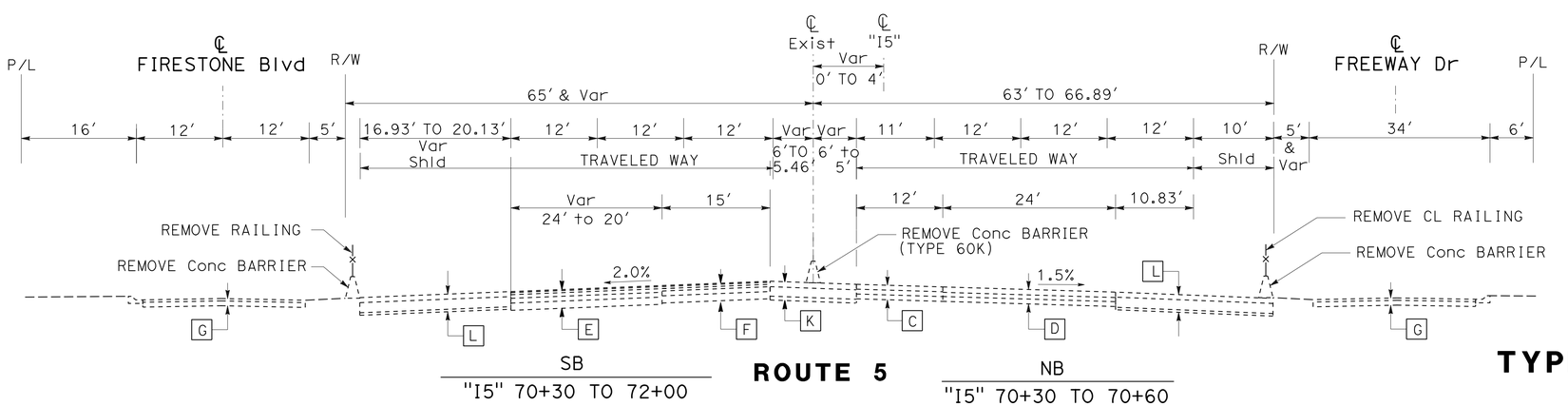

SB
"I5" 70+30 TO 72+00

ROUTE 5

NB
"I5" 70+30 TO 70+60

TYPICAL CROSS SECTIONS

NO SCALE

X - 2

STATE OF CALIFORNIA - DEPARTMENT OF TRANSPORTATION
Caltrans® DESIGN

FUNCTIONAL SUPERVISOR: RICHARD CHIANG
CALCULATED-DESIGNED BY: H. S. CHEN
CHECKED BY: VAN TRAN
REVISED BY
DATE REVISED

LAST REVISION 00-00-00
DATE PLOTTED => 03-FEB-2016
TIME PLOTTED => 09:22

Dist	COUNTY	ROUTE	POST MILES TOTAL PROJECT	SHEET No.	TOTAL SHEETS
07	LA,Ora	5	0.0/1.5, 44.3/44.4	5	1622

H S Chen 4-2-14
REGISTERED CIVIL ENGINEER DATE

1-25-16
PLANS APPROVAL DATE

REGISTERED PROFESSIONAL ENGINEER H.S. CHEN No. C48908 Exp. 9-30-16 CIVIL STATE OF CALIFORNIA

THE STATE OF CALIFORNIA OR ITS OFFICERS OR AGENTS SHALL NOT BE RESPONSIBLE FOR THE ACCURACY OR COMPLETENESS OF SCANNED COPIES OF THIS PLAN SHEET.

NOTES:

1. DIMENSIONS OF THE STRUCTURAL SECTIONS ARE SUBJECT TO TOLERANCES SPECIFIED IN THE STANDARD SPECIFICATIONS.
2. SUPERELEVATIONS ARE SHOWN ON THE SUPERELEVATION DIAGRAMS.
3. THE MAXIMUM JPCP WIDTH IS 15'.

ABBREVIATIONS:

RSC: RAPID STRENGTH Conc
LCBRS: LEAN Conc BASE RAPID SETTING

TYPICAL STRUCTURAL SECTION

1 — 0.80' JPCP, BASE BOND BREAKER, 0.35' LCB, 0.70' Cl 3 AB
2 — 0.95' JPCP, BASE BOND BREAKER, 0.35' LCB, 0.70' Cl 3 AB
3 — 0.70' JPCP, 1.30' Cl 3 AB
4 — 1.05' HMA (TYPE A), 1.15' Cl 3 AB
5 — 0.90' HMA (TYPE A), 0.85' Cl 3 AB
6 — 0.50' HMA (TYPE A), 0.70' Cl 3 AB
7 — 0.95' JPCP, BASE BOND BREAKER, 0.35' LCB, 0.70' Cl 3 AB
8 — 0.70' HMA (TYPE A), 0.35' LCB, 1.30' Cl 3 AB
9 — 0.60' HMA (TYPE A), 0.60' LCB, 1.15' Cl 3 AB
10 — 0.95' JCPC RSC, BASE BOND BREAKER, 0.35' LCBRS, 0.70' Cl 3 AB

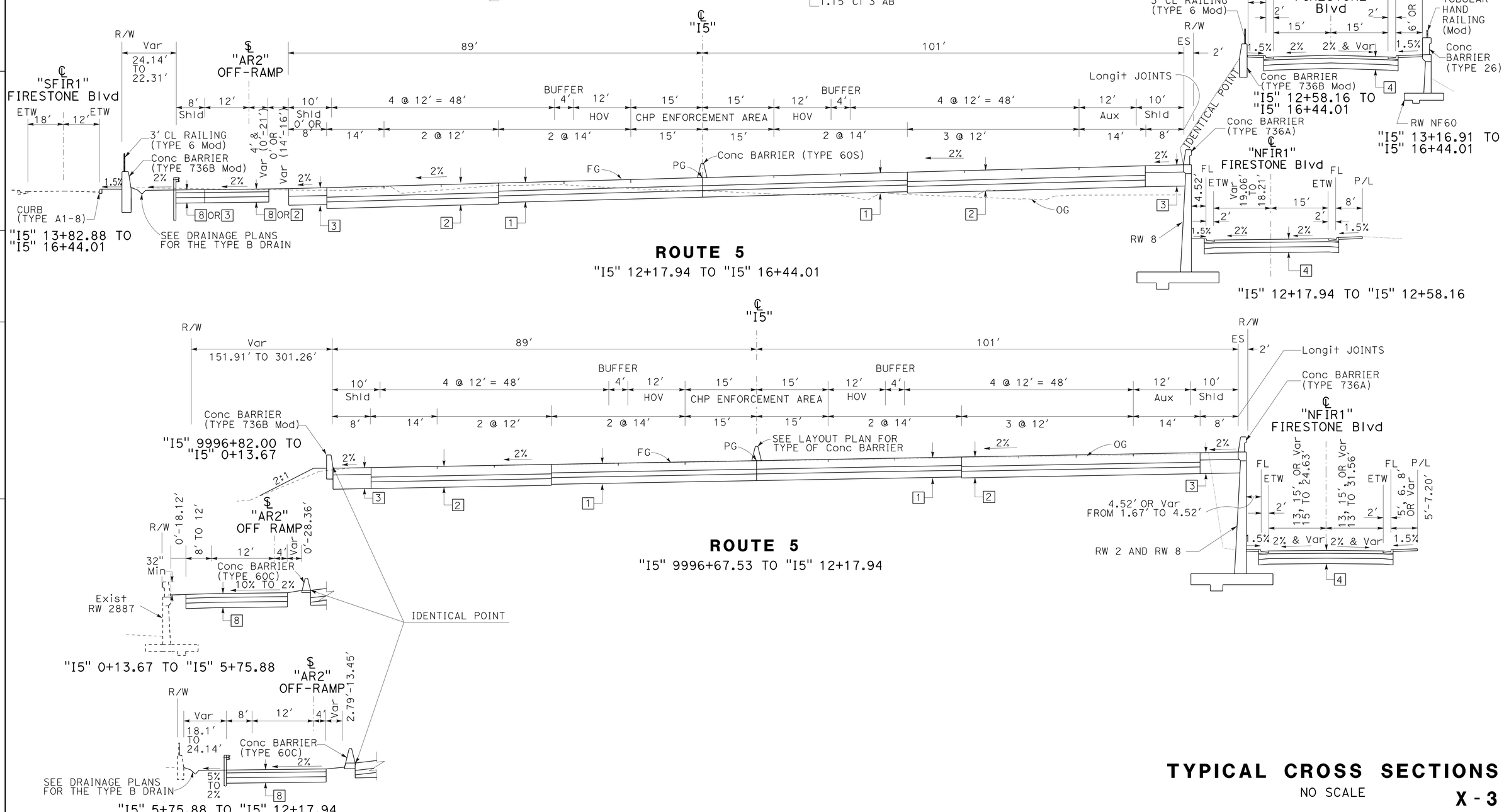

TYPICAL CROSS SECTIONS

NO SCALE

X - 3

STATE OF CALIFORNIA - DEPARTMENT OF TRANSPORTATION
DESIGN
FUNCTIONAL SUPERVISOR: RICHARD CHIANG
CALCULATED-DESIGNED BY: H. S. CHEN
CHECKED BY: VAN TRAN
REVISED BY / DATE REVISED

LAST REVISION 00-00-00 | DATE PLOTTED => 03-FEB-2016 | TIME PLOTTED => 09:22

BORDER LAST REVISED 7/2/2010 | USERNAME => s125624 | DGN FILE => 72159uca003.dgn | RELATIVE BORDER SCALE IS IN INCHES 0 1 2 3 | UNIT 1795 | PROJECT NUMBER & PHASE 07150001601

Dist	COUNTY	ROUTE	POST MILES TOTAL PROJECT	SHEET No.	TOTAL SHEETS
07	LA,Ora	5	0.0/1.5, 44.3/44.4	6	1622

REGISTERED CIVIL ENGINEER 4-2-14 DATE

1-25-16
PLANS APPROVAL DATE

REGISTERED PROFESSIONAL ENGINEER H.S. CHEN No. C48908 Exp. 9-30-16 CIVIL STATE OF CALIFORNIA

THE STATE OF CALIFORNIA OR ITS OFFICERS OR AGENTS SHALL NOT BE RESPONSIBLE FOR THE ACCURACY OR COMPLETENESS OF SCANNED COPIES OF THIS PLAN SHEET.

NOTES:

1. DIMENSIONS OF THE STRUCTURAL SECTIONS ARE SUBJECT TO TOLERANCES SPECIFIED IN THE STANDARD SPECIFICATIONS.
2. SUPERELEVATION AS SHOWN OR AS DIRECTED BY THE ENGINEER.
3. SEE BRIDGE PLANS FOR TYPICAL CROSS SECTIONS WITHIN THE BRIDGE LOCATIONS.

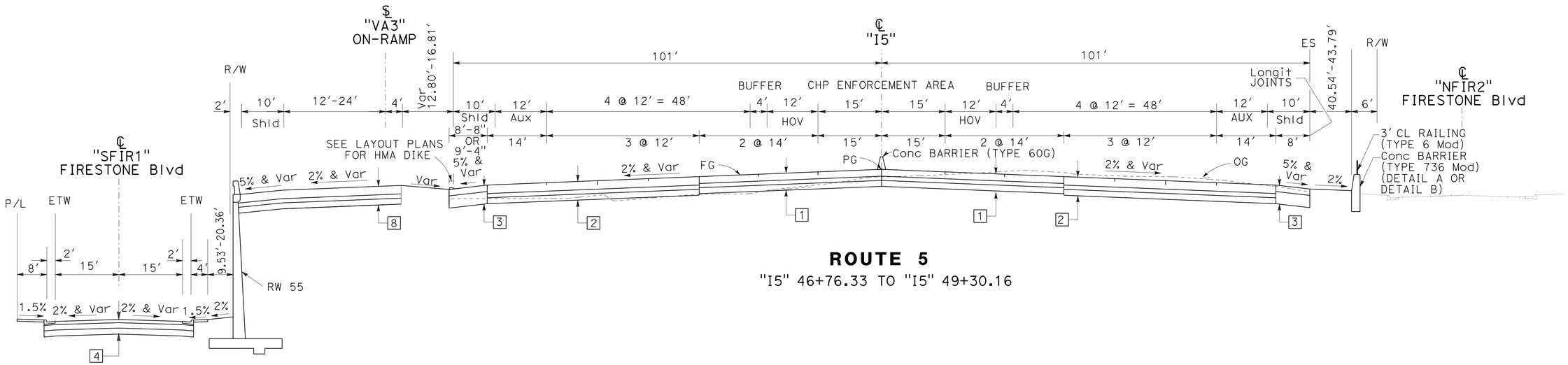

ROUTE 5

"I5" 46+76.33 TO "I5" 49+30.16

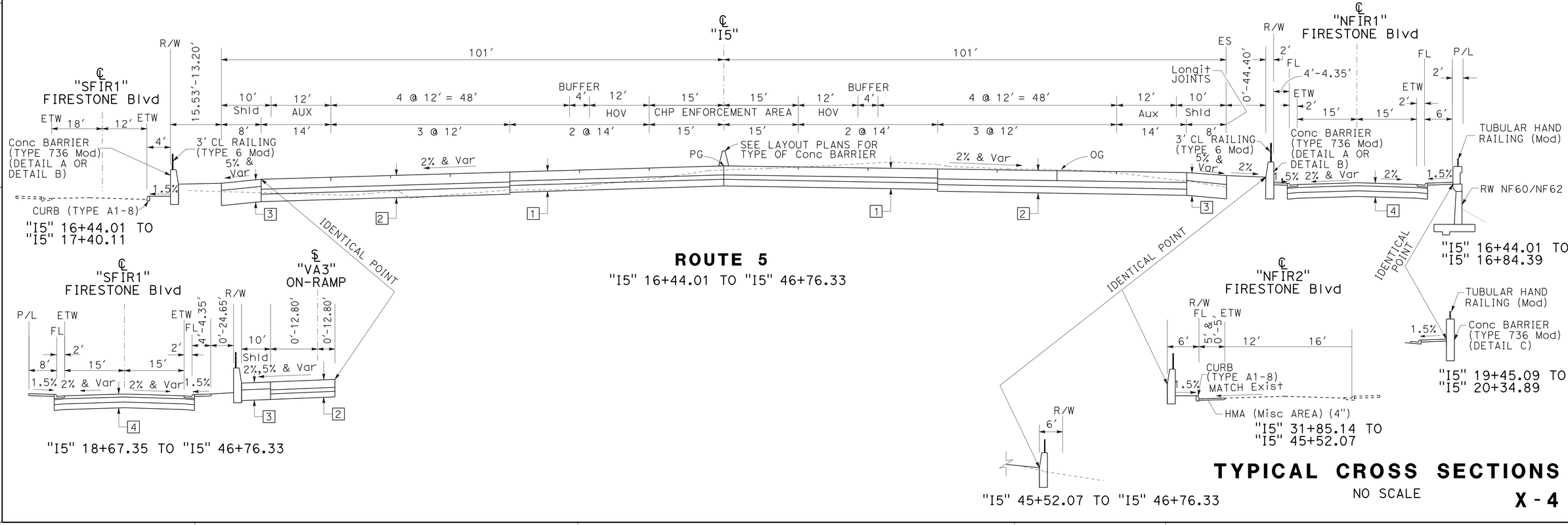

"I5" 16+44.01 TO "I5" 17+40.11

ROUTE 5

"I5" 16+44.01 TO "I5" 46+76.33

"I5" 16+44.01 TO "I5" 16+84.39

"I5" 19+45.09 TO "I5" 20+34.89

"I5" 18+67.35 TO "I5" 46+76.33

"I5" 31+85.14 TO "I5" 45+52.07

"I5" 45+52.07 TO "I5" 46+76.33

TYPICAL CROSS SECTIONS

NO SCALE

X - 4

STATE OF CALIFORNIA - DEPARTMENT OF TRANSPORTATION

DESIGN

FUNCTIONAL SUPERVISOR: RICHARD CHIANG

CALCULATED-DESIGNED BY: H. S. CHEN

CHECKED BY: VAN TRAN

REVISED BY / DATE REVISED

LAST REVISION 00-00-00

DATE PLOTTED => 03-FEB-2016
TIME PLOTTED => 09:22

Dist	COUNTY	ROUTE	POST MILES TOTAL PROJECT	SHEET No.	TOTAL SHEETS
07	LA,Ora	5	0.0/1.5, 44.3/44.4	7	1622

REGISTERED CIVIL ENGINEER 4-2-14 DATE

1-25-16
PLANS APPROVAL DATE

REGISTERED PROFESSIONAL ENGINEER H.S. CHEN No. C48908 Exp. 9-30-16 CIVIL STATE OF CALIFORNIA

THE STATE OF CALIFORNIA OR ITS OFFICERS OR AGENTS SHALL NOT BE RESPONSIBLE FOR THE ACCURACY OR COMPLETENESS OF SCANNED COPIES OF THIS PLAN SHEET.

NOTES:

1. DIMENSIONS OF THE STRUCTURAL SECTIONS ARE SUBJECT TO TOLERANCES SPECIFIED IN THE STANDARD SPECIFICATIONS.
2. SUPERELEVATION AS SHOWN OR AS DIRECTED BY THE ENGINEER.

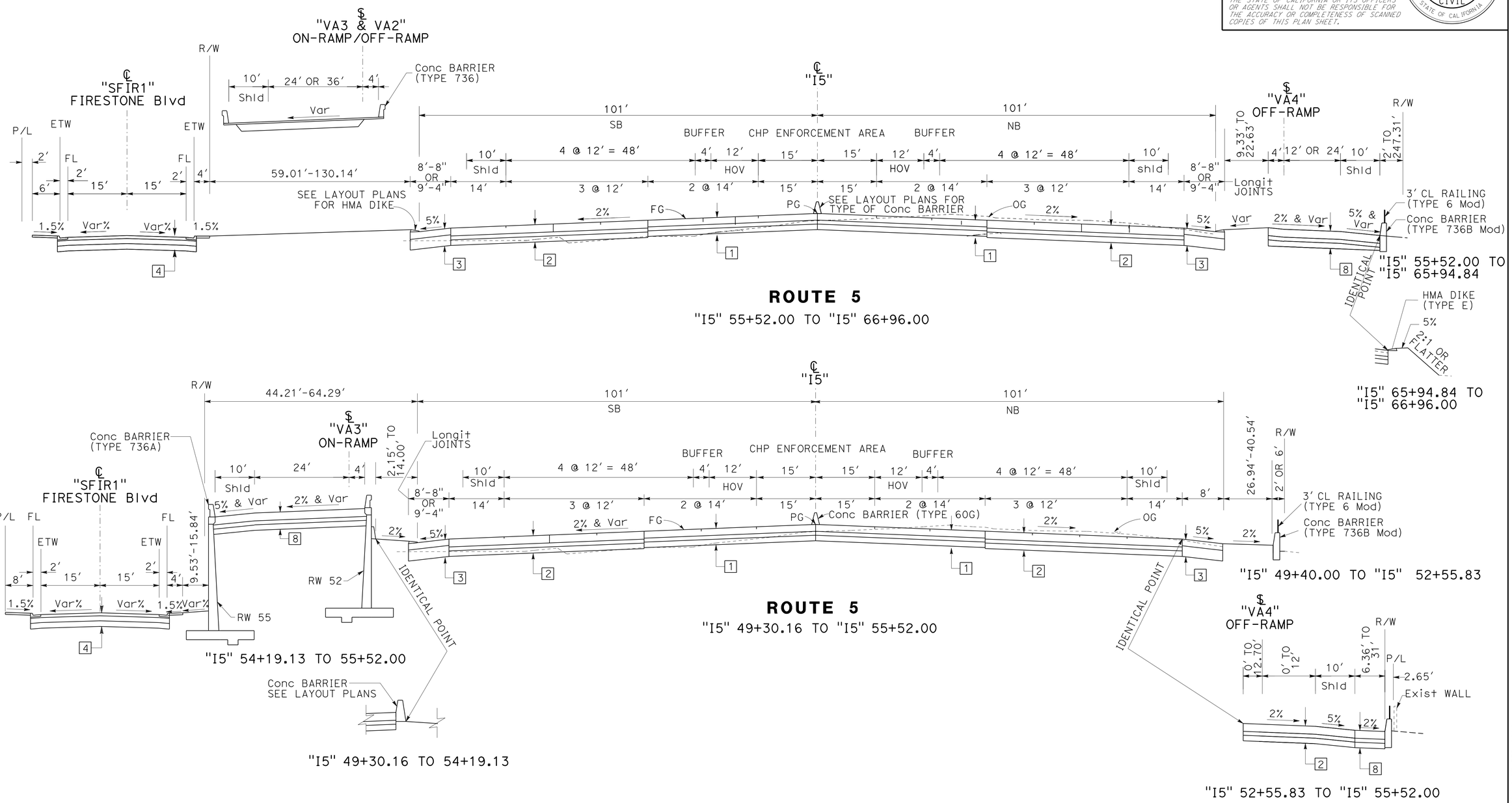

TYPICAL CROSS SECTIONS

NO SCALE

X - 5

STATE OF CALIFORNIA - DEPARTMENT OF TRANSPORTATION
DESIGN

FUNCTIONAL SUPERVISOR: RICHARD CHIANG
CALCULATED-DESIGNED BY: H. S. CHEN
CHECKED BY: VAN TRAN
REVISED BY
DATE REVISED

LAST REVISION 00-00-00
DATE PLOTTED => 03-FEB-2016
TIME PLOTTED => 09:22

Dist	COUNTY	ROUTE	POST MILES TOTAL PROJECT	SHEET No.	TOTAL SHEETS
07	LA,Ora	5	0.0/1.5, 44.3/44.4	8	1622

REGISTERED CIVIL ENGINEER 4-2-14 DATE

1-25-16
PLANS APPROVAL DATE

REGISTERED PROFESSIONAL ENGINEER H.S. CHEN No. C48908 Exp. 9-30-16 CIVIL STATE OF CALIFORNIA

THE STATE OF CALIFORNIA OR ITS OFFICERS OR AGENTS SHALL NOT BE RESPONSIBLE FOR THE ACCURACY OR COMPLETENESS OF SCANNED COPIES OF THIS PLAN SHEET.

NOTES:

1. DIMENSIONS OF THE STRUCTURAL SECTIONS ARE SUBJECT TO TOLERANCES SPECIFIED IN THE STANDARD SPECIFICATIONS.
2. SUPERELEVATION AS SHOWN OR AS DIRECTED BY THE ENGINEER.
3. SEE CONSTRUCTION DETAILS PLANS FOR THE DETAILS OF FRONTAGE Rd.

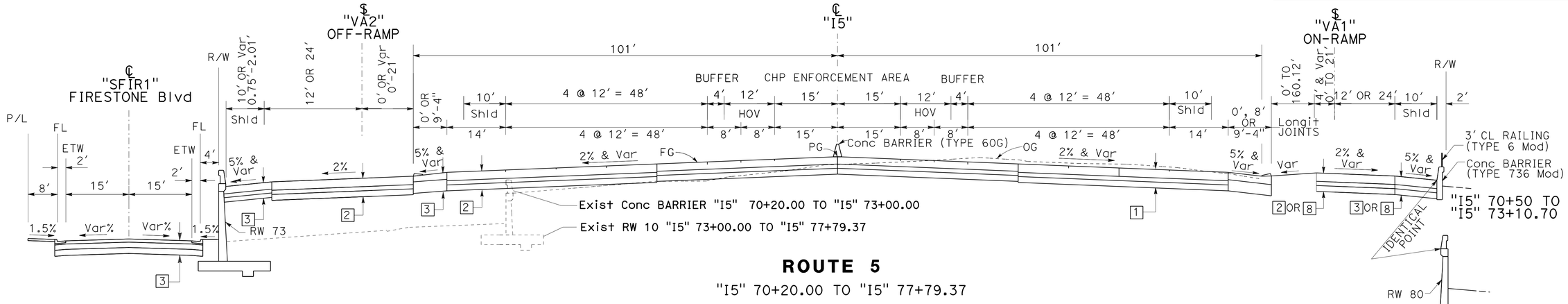

ROUTE 5

"I5" 70+20.00 TO "I5" 77+79.37

"I5" 70+50 TO "I5" 73+10.70

"I5" 73+10.70 TO "I5" 77+79.37

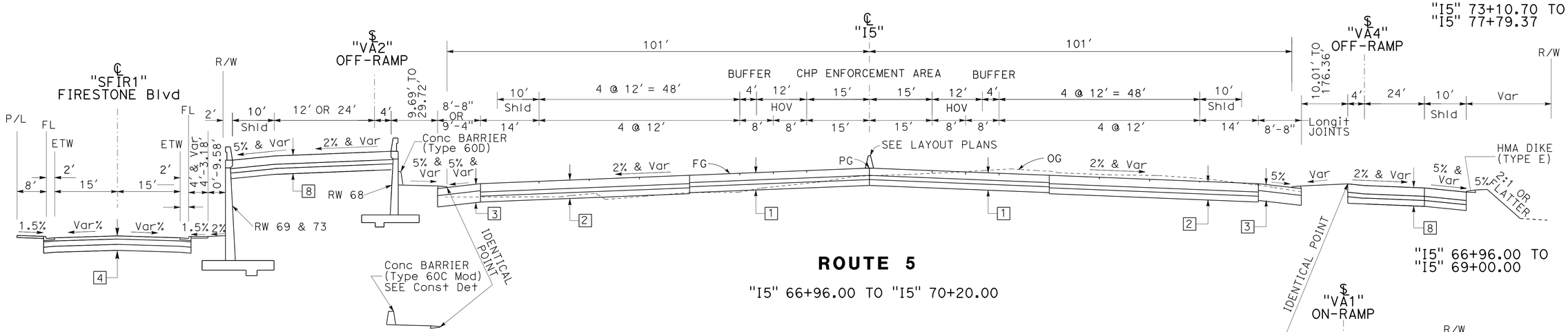

ROUTE 5

"I5" 66+96.00 TO "I5" 70+20.00

"I5" 69+44.71 TO "I5" 70+20.00

"I5" 66+96.00 TO "I5" 69+00.00

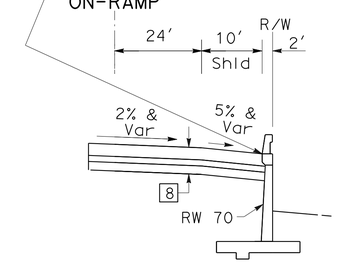

"I5" 69+00.00 TO "I5" 70+20.00

TYPICAL CROSS SECTIONS

NO SCALE

X - 6

STATE OF CALIFORNIA - DEPARTMENT OF TRANSPORTATION
Caltrans® DESIGN

FUNCTIONAL SUPERVISOR: RICHARD CHIANG
CALCULATED-DESIGNED BY: H. S. CHEN
CHECKED BY: VAN TRAN
REVISED BY / DATE REVISED

LAST REVISION 00-00-00 | DATE PLOTTED => 03-FEB-2016 | TIME PLOTTED => 09:22

Dist	COUNTY	ROUTE	POST MILES TOTAL PROJECT	SHEET No.	TOTAL SHEETS
07	LA,Ora	5	0.0/1.5, 44.3/44.4	9	1622

REGISTERED CIVIL ENGINEER 4-2-14 DATE

1-25-16
PLANS APPROVAL DATE

REGISTERED PROFESSIONAL ENGINEER VAN T. TRAN No. C68477 Exp. 9-30-17 CIVIL STATE OF CALIFORNIA

THE STATE OF CALIFORNIA OR ITS OFFICERS OR AGENTS SHALL NOT BE RESPONSIBLE FOR THE ACCURACY OR COMPLETENESS OF SCANNED COPIES OF THIS PLAN SHEET.

NOTES:

1. DIMENSIONS OF THE STRUCTURAL SECTIONS ARE SUBJECT TO TOLERANCES SPECIFIED IN THE STANDARD SPECIFICATIONS.
2. SUPERELEVATION AS SHOWN OR AS DIRECTED BY THE ENGINEER.

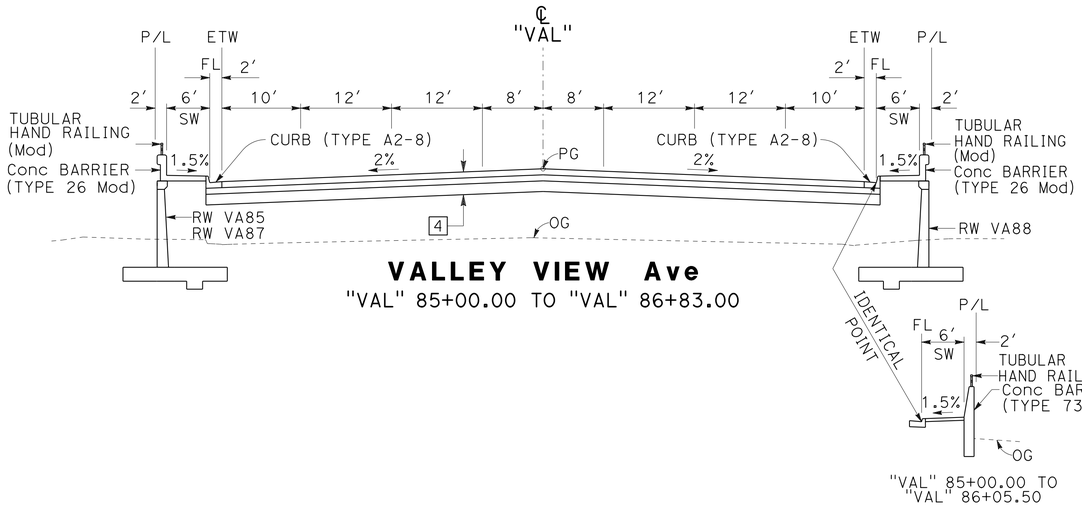

VALLEY VIEW Ave
"VAL" 85+00.00 TO "VAL" 86+83.00

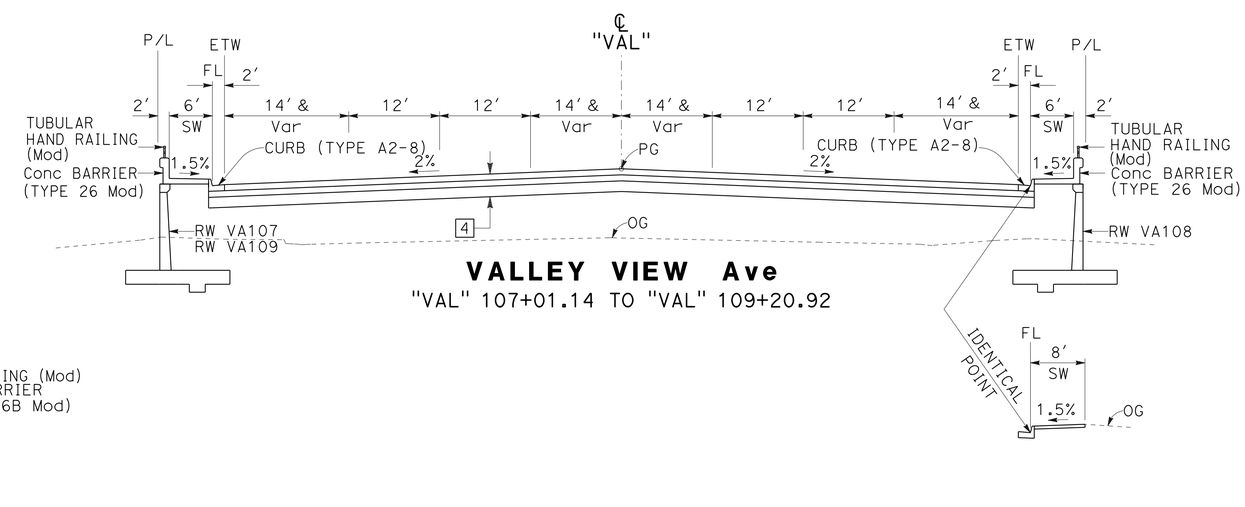

VALLEY VIEW Ave
"VAL" 107+01.14 TO "VAL" 109+20.92

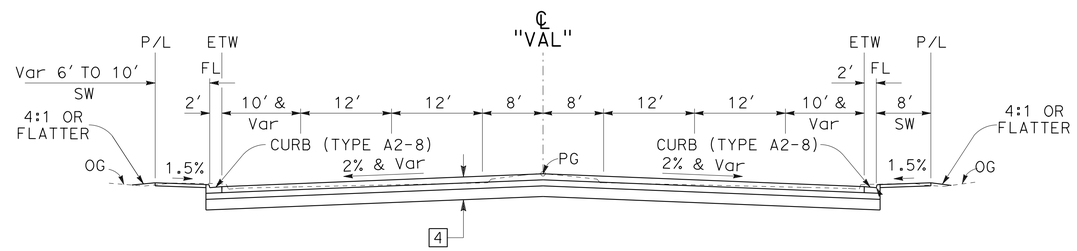

VALLEY VIEW Ave
"VAL" 80+62.59 TO "VAL" 85+00.00
"VAL" 109+20.92 TO "VAL" 111+05.00

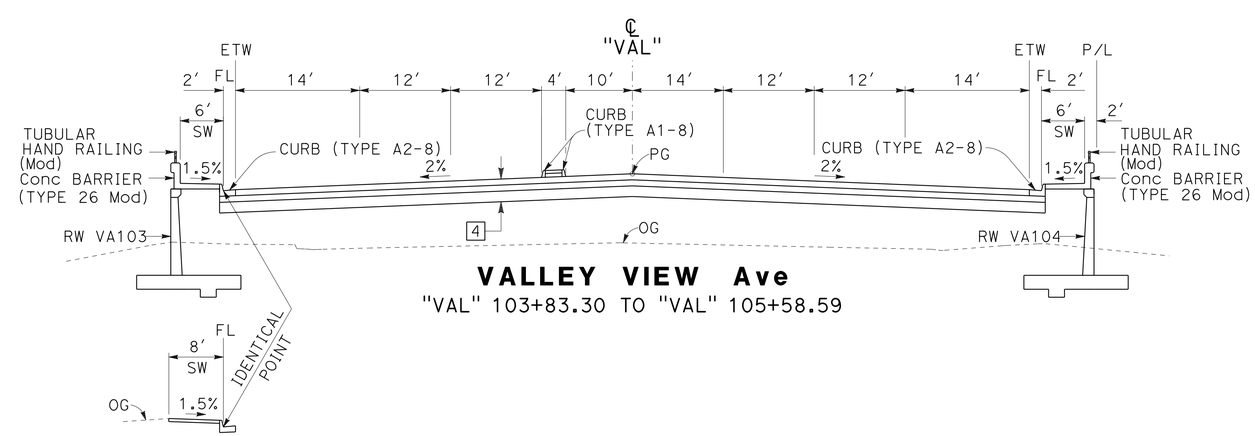

VALLEY VIEW Ave
"VAL" 103+83.30 TO "VAL" 105+58.59

TYPICAL CROSS SECTIONS

NO SCALE

X - 7

STATE OF CALIFORNIA - DEPARTMENT OF TRANSPORTATION
Caltrans® DESIGN

FUNCTIONAL SUPERVISOR: RICHARD CHIANG

VAN TRAN | H. S. CHEN | CALCULATED-DESIGNED BY
H. CHEN | 5/2015 | REVISED BY | DATE REVISED | CHECKED BY

LAST REVISION 00-00-00 | DATE PLOTTED => 03-FEB-2016 | TIME PLOTTED => 09:22

Dist	COUNTY	ROUTE	POST MILES TOTAL PROJECT	SHEET No.	TOTAL SHEETS
07	LA,Ora	5	0.0/1.5, 44.3/44.4	10	1622

REGISTERED CIVIL ENGINEER 4-2-14 DATE

1-25-16
PLANS APPROVAL DATE

REGISTERED PROFESSIONAL ENGINEER VAN T. TRAN No. C68477 Exp. 9-30-17 CIVIL STATE OF CALIFORNIA

THE STATE OF CALIFORNIA OR ITS OFFICERS OR AGENTS SHALL NOT BE RESPONSIBLE FOR THE ACCURACY OR COMPLETENESS OF SCANNED COPIES OF THIS PLAN SHEET.

NOTES:

1. DIMENSIONS OF THE STRUCTURAL SECTIONS ARE SUBJECT TO TOLERANCES SPECIFIED IN THE STANDARD SPECIFICATIONS.

2. SUPERELEVATION AS SHOWN OR AS DIRECTED BY THE ENGINEER.

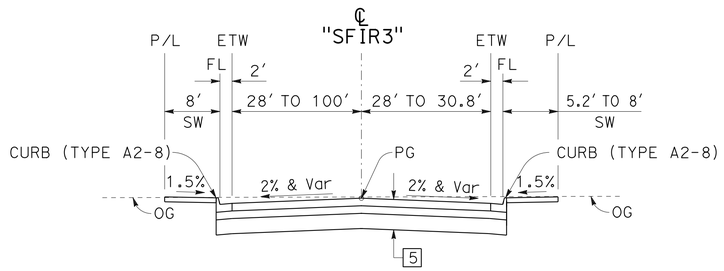

ARBOR PI (SFIR3)
"SFIR3" 3+80.79 TO "SFIR3" 4+72.64

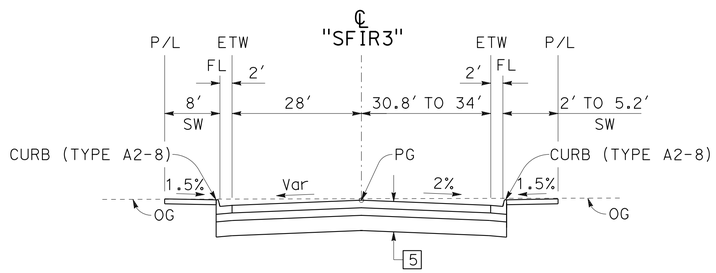

ARBOR PI (SFIR3)
"SFIR3" 3+10.00 TO "SFIR3" 3+80.79

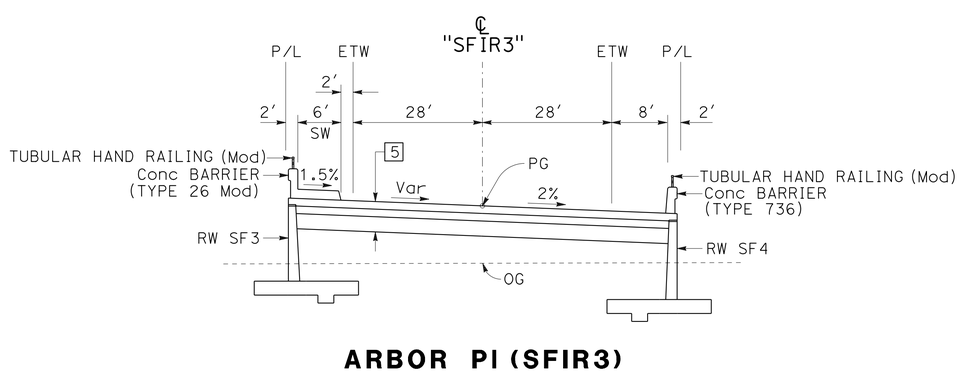

ARBOR PI (SFIR3)
"SFIR3" 2+81.00 TO "SFIR3" 3+10.00

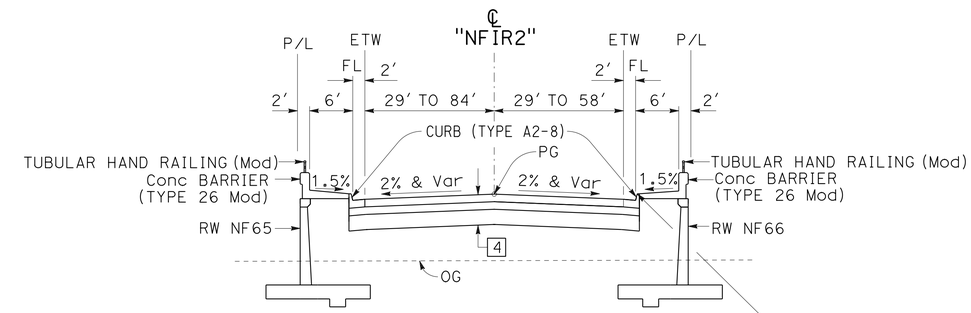

FIRESTONE Blvd (NFIR2)
"NFIR2" 65+04.00 TO "NFIR2" 68+18.46

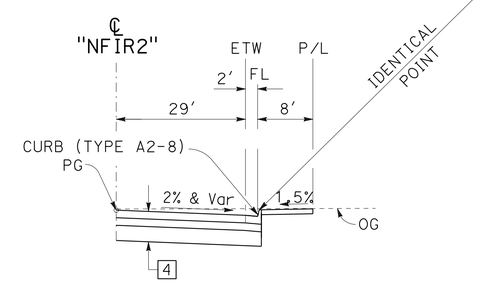

"NFIR2" 65+04.00 TO "NFIR2" 65+53.38

TYPICAL CROSS SECTIONS

NO SCALE

X - 8

REVISED BY	DATE REVISED
H. CHEN	5/2015

CALCULATED-DESIGNED BY: VAN TRAN
CHECKED BY: H. S. CHEN
FUNCTIONAL SUPERVISOR: RICHARD CHIANG

STATE OF CALIFORNIA - DEPARTMENT OF TRANSPORTATION
Caltrans
DESIGN

LAST REVISION 00-00-00
DATE PLOTTED => 03-FEB-2016
TIME PLOTTED => 09:22

Dist	COUNTY	ROUTE	POST MILES TOTAL PROJECT	SHEET No.	TOTAL SHEETS
07	LA,Ora	5	0.0/1.5, 44.3/44.4	11	1622

REGISTERED CIVIL ENGINEER 4-2-14 DATE

1-25-16
PLANS APPROVAL DATE

REGISTERED PROFESSIONAL ENGINEER VAN T. TRAN No. C68477 Exp. 9-30-17 CIVIL STATE OF CALIFORNIA

THE STATE OF CALIFORNIA OR ITS OFFICERS OR AGENTS SHALL NOT BE RESPONSIBLE FOR THE ACCURACY OR COMPLETENESS OF SCANNED COPIES OF THIS PLAN SHEET.

NOTES:

1. DIMENSIONS OF THE STRUCTURAL SECTIONS ARE SUBJECT TO TOLERANCES SPECIFIED IN THE STANDARD SPECIFICATIONS.
2. SUPERELEVATION AS SHOWN OR AS DIRECTED BY THE ENGINEER.

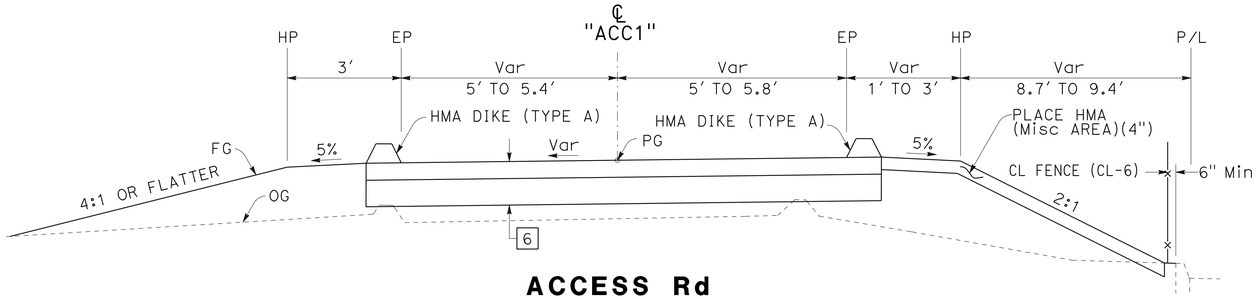

ACCESS Rd
"ACC1" 62+53.52 TO "ACC1" 63+00

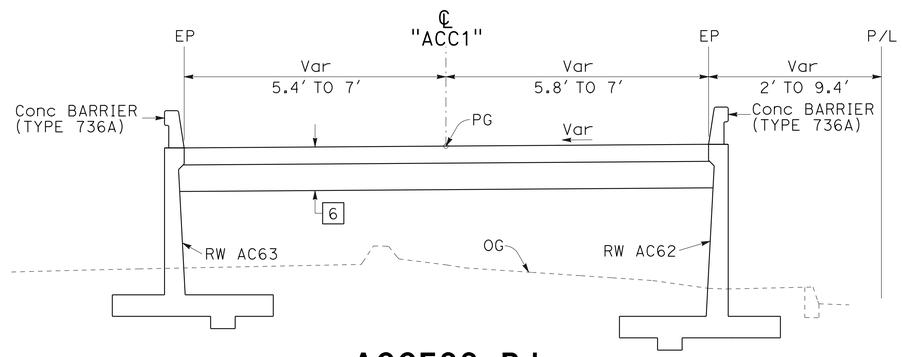

ACCESS Rd
"ACC1" 62+23.00 TO "ACC1" 62+53.52

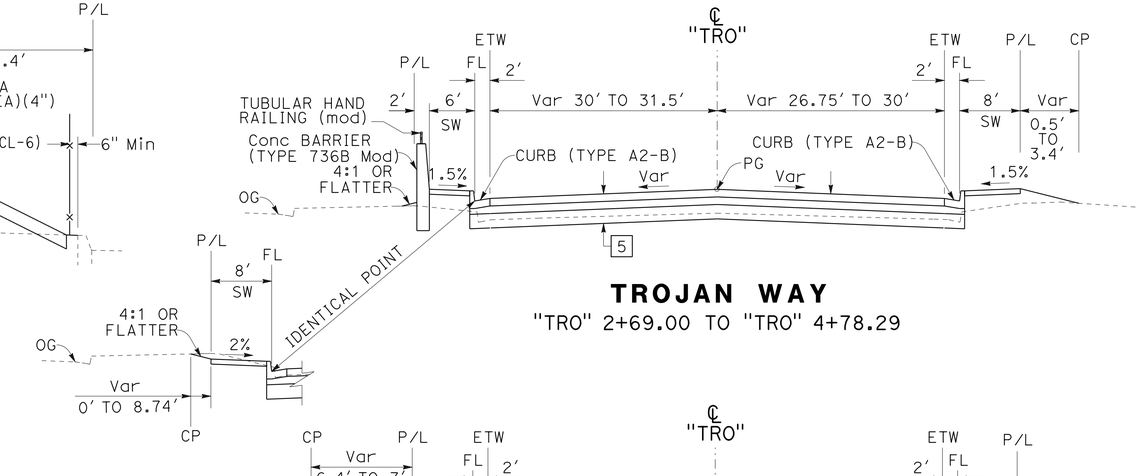

TROJAN WAY
"TRO" 2+69.00 TO "TRO" 4+78.29

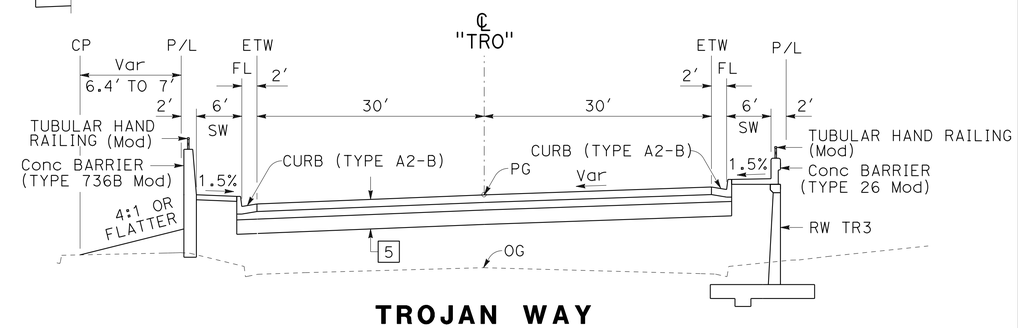

TROJAN WAY
"TRO" 2+31.73 TO "TRO" 2+69.00

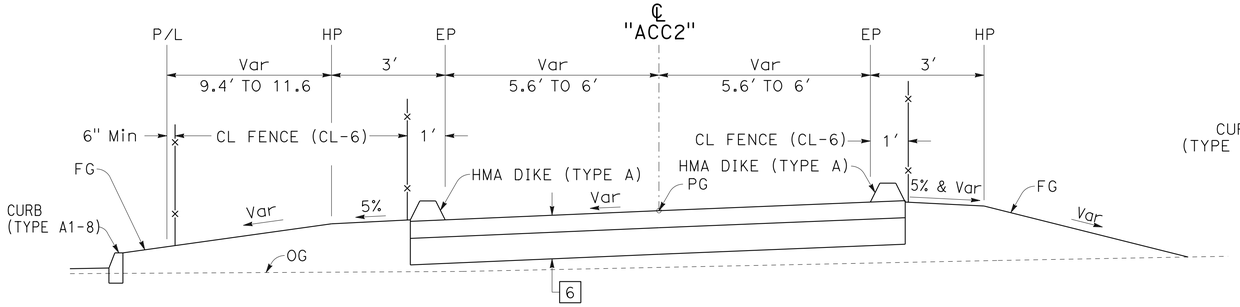

ACCESS Rd
"ACC2" 3+15.00 TO "ACC2" 3+40.00

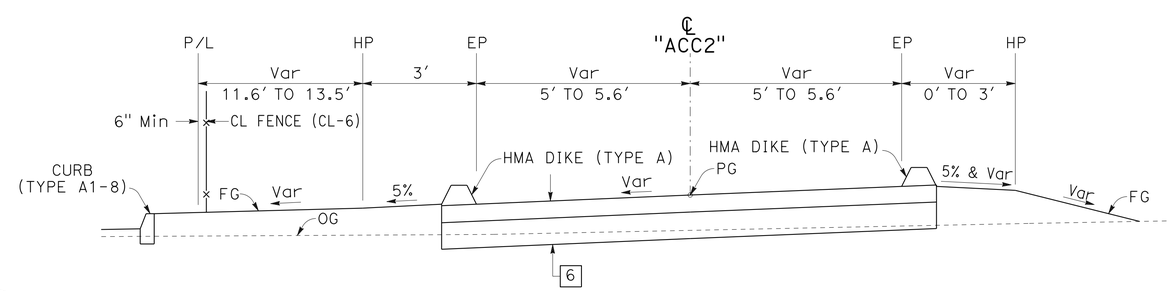

ACCESS Rd
"ACC2" 3+40.00 TO "ACC2" 4+10.75

TYPICAL CROSS SECTIONS

NO SCALE

X-9

REVISED BY	DATE REVISED
H. CHEN	5/2015

CALCULATED-DESIGNED BY	CHECKED BY
VAN TRAN	H. S. CHEN

FUNCTIONAL SUPERVISOR: RICHARD CHIANG

STATE OF CALIFORNIA - DEPARTMENT OF TRANSPORTATION
Caltrans®
DESIGN

LAST REVISION 00-00-00
DATE PLOTTED => 03-FEB-2016
TIME PLOTTED => 09:22

Dist	COUNTY	ROUTE	POST MILES TOTAL PROJECT	SHEET No.	TOTAL SHEETS
07	LA,Ora	5	0.0/1.5, 44.3/44.4	12	1622

REGISTERED CIVIL ENGINEER 4-2-14 DATE

1-25-16
PLANS APPROVAL DATE

REGISTERED PROFESSIONAL ENGINEER
VAN T. TRAN
No. C68477
Exp. 9-30-17
CIVIL
STATE OF CALIFORNIA

THE STATE OF CALIFORNIA OR ITS OFFICERS OR AGENTS SHALL NOT BE RESPONSIBLE FOR THE ACCURACY OR COMPLETENESS OF SCANNED COPIES OF THIS PLAN SHEET.

NOTES:

1. DIMENSIONS OF THE STRUCTURAL SECTIONS ARE SUBJECT TO TOLERANCES SPECIFIED IN THE STANDARD SPECIFICATIONS.
2. SUPERELEVATION AS SHOWN OR AS DIRECTED BY THE ENGINEER.

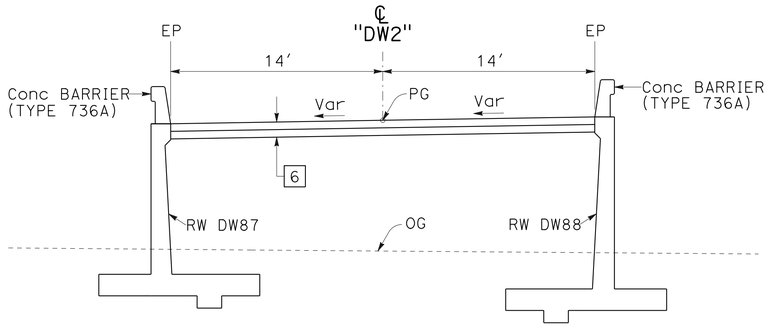

DRIVEWAY (DW2)
"DW2" 86+96.50 TO "DW2" 87+97.41

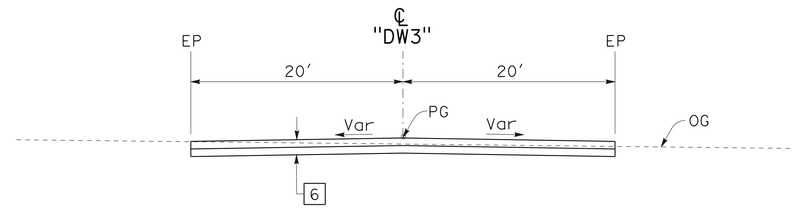

DRIVEWAY (DW3)
"DW3" 109+12.50 TO "DW3" 109+31.68

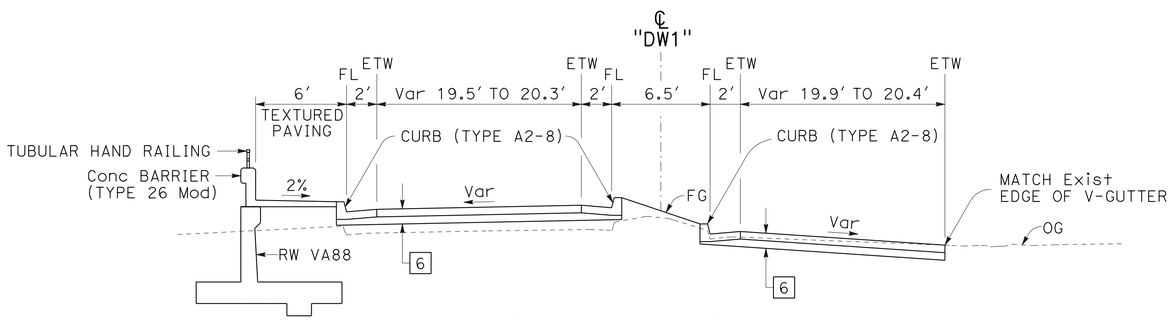

DRIVEWAY (DW1)
"DW1" 87+19.13 TO "DW1" 87+51.74

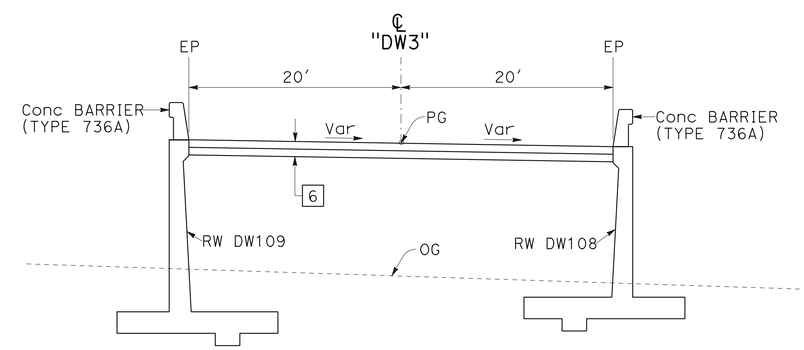

DRIVEWAY (DW3)
"DW3" 108+47.63 TO "DW3" 109+12.50

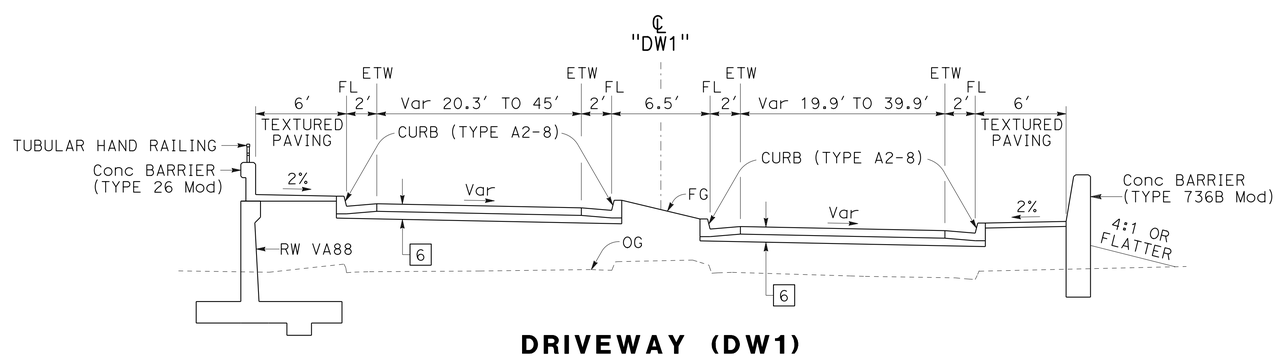

DRIVEWAY (DW1)
"DW1" 86+82.65 TO "DW1" 87+19.13

TYPICAL CROSS SECTIONS

NO SCALE

X - 10

STATE OF CALIFORNIA - DEPARTMENT OF TRANSPORTATION
Caltrans®
DESIGN
FUNCTIONAL SUPERVISOR: RICHARD CHIANG
CALCULATED-DESIGNED BY: VAN TRAN
CHECKED BY: H. S. CHEN
REVISED BY
DATE REVISED

LAST REVISION 00-00-00
DATE PLOTTED => 03-FEB-2016
TIME PLOTTED => 09:22

Dist	COUNTY	ROUTE	POST MILES TOTAL PROJECT	SHEET No.	TOTAL SHEETS
07	LA,Ora	5	0.0/1.5, 44.3/44.4	13	1622

REGISTERED CIVIL ENGINEER 4-2-14 DATE

1-25-16
PLANS APPROVAL DATE

REGISTERED PROFESSIONAL ENGINEER VAN T. TRAN No. C68477 Exp. 9-30-17 CIVIL STATE OF CALIFORNIA

THE STATE OF CALIFORNIA OR ITS OFFICERS OR AGENTS SHALL NOT BE RESPONSIBLE FOR THE ACCURACY OR COMPLETENESS OF SCANNED COPIES OF THIS PLAN SHEET.

NOTES:

1. DIMENSIONS OF THE STRUCTURAL SECTIONS ARE SUBJECT TO TOLERANCES SPECIFIED IN THE STANDARD SPECIFICATIONS.
2. SUPERELEVATION AS SHOWN OR AS DIRECTED BY THE ENGINEER.

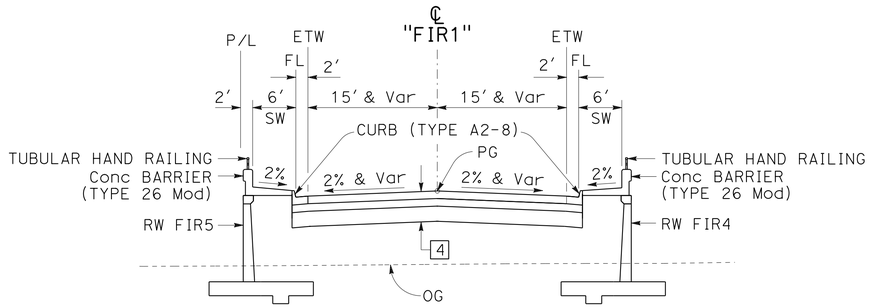

NB VALLEY VIEW Ave/FIRESTONE Blvd (FIR1)
"FIR1" 11+64.92 TO "FIR1" 13+99.88

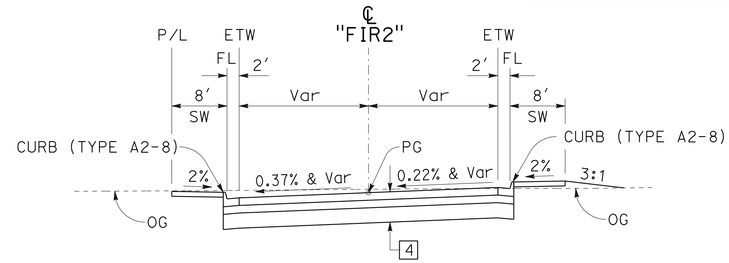

SB VALLEY VIEW Ave/FIRESTONE Blvd (FIR2)
"FIR2" 19+84.61 TO "FIR2" 21+69.99

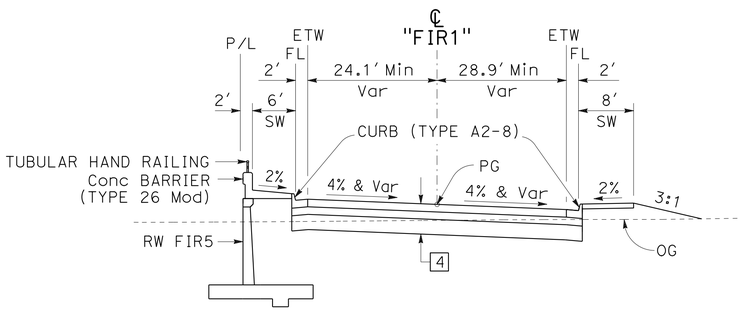

NB VALLEY VIEW Ave/FIRESTONE Blvd (FIR1)
"FIR1" 11+57.39 TO "FIR1" 11+64.92

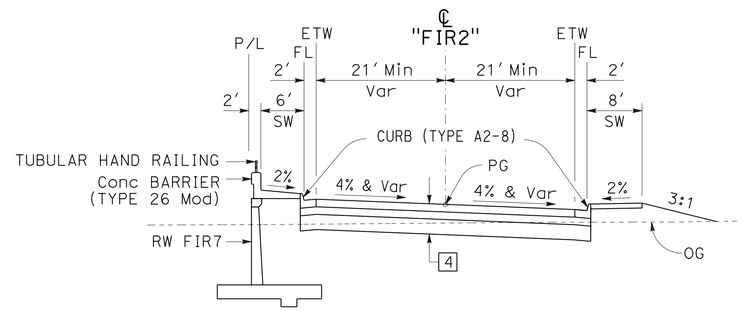

SB VALLEY VIEW Ave/FIRESTONE Blvd (FIR2)
"FIR2" 19+50.86 TO "FIR2" 19+84.61

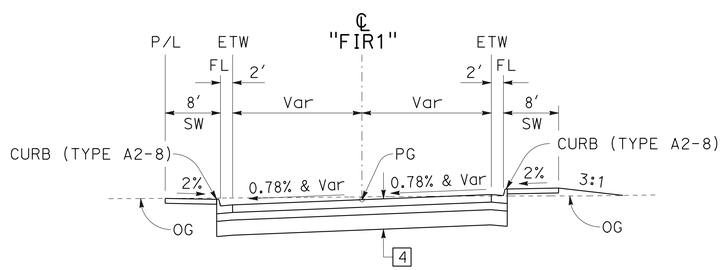

NB VALLEY VIEW Ave/FIRESTONE Blvd (FIR1)
"FIR1" 10+15.00 TO "FIR1" 11+57.39

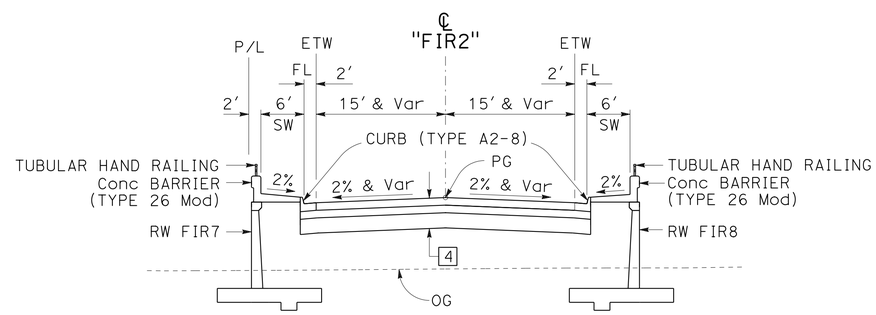

SB VALLEY VIEW Ave/FIRESTONE Blvd (FIR2)
"FIR2" 15+80.00 TO "FIR2" 19+50.86

TYPICAL CROSS SECTIONS

NO SCALE

X - 11

STATE OF CALIFORNIA - DEPARTMENT OF TRANSPORTATION
Caltrans® DESIGN
FUNCTIONAL SUPERVISOR: RICHARD CHIANG
CALCULATED-DESIGNED BY: VAN TRAN
CHECKED BY: H. S. CHEN
REVISED BY
DATE REVISED

LAST REVISION 00-00-00
DATE PLOTTED => 03-FEB-2016
TIME PLOTTED => 09:22

Dist	COUNTY	ROUTE	POST MILES TOTAL PROJECT	SHEET No.	TOTAL SHEETS
07	LA,Ora	5	0.0/1.5, 44.3/44.4	14	1622

H S Chen 4-2-14
REGISTERED CIVIL ENGINEER DATE

1-25-16
PLANS APPROVAL DATE

REGISTERED PROFESSIONAL ENGINEER H.S. CHEN No. C48908 Exp. 9-30-16 CIVIL STATE OF CALIFORNIA

THE STATE OF CALIFORNIA OR ITS OFFICERS OR AGENTS SHALL NOT BE RESPONSIBLE FOR THE ACCURACY OR COMPLETENESS OF SCANNED COPIES OF THIS PLAN SHEET.

NOTES:

1. FOR ACCURATE RIGHT OF WAY DATA, CONTACT RIGHT OF WAY ENGINEERING AT THE DISTRICT OFFICE.
2. SEE CONSTRUCTION DETAILS FOR ADDITIONAL STREET AND DRIVEWAY DETAILS.

LEGEND:

- SHOULDER CROSS SLOPE TRANSITION
- SEE STRUCTURE PLANS FOR DETAILS
- BIOFILTRATION STRIP

ABBREVIATIONS:

AVSF	AUSTIN VAULT SAND FILTER
EBASF	EARTHEN BERM AUSTIN SAND FILTER
EAA	END ANCHOR ASSEMBLY

CURVE DATA

No. (#)	R	Δ	T	L
1	6100.00′	05°01′25"	267.59′	534.84′
2	6200.00′	14°13′44"	773.84′	1539.72′
5	501.96′	34°06′31"	153.99′	298.82′
6	1011.24′	15°07′46"	134.30′	267.03′
7	5000.00′	07°55′09"	346.08′	691.07′
8	7000.00′	03°38′21"	222.37′	444.60′
9	229.66′	39°35′58"	82.68′	158.73′
10	700.00′	08°14′37"	50.44′	100.71′

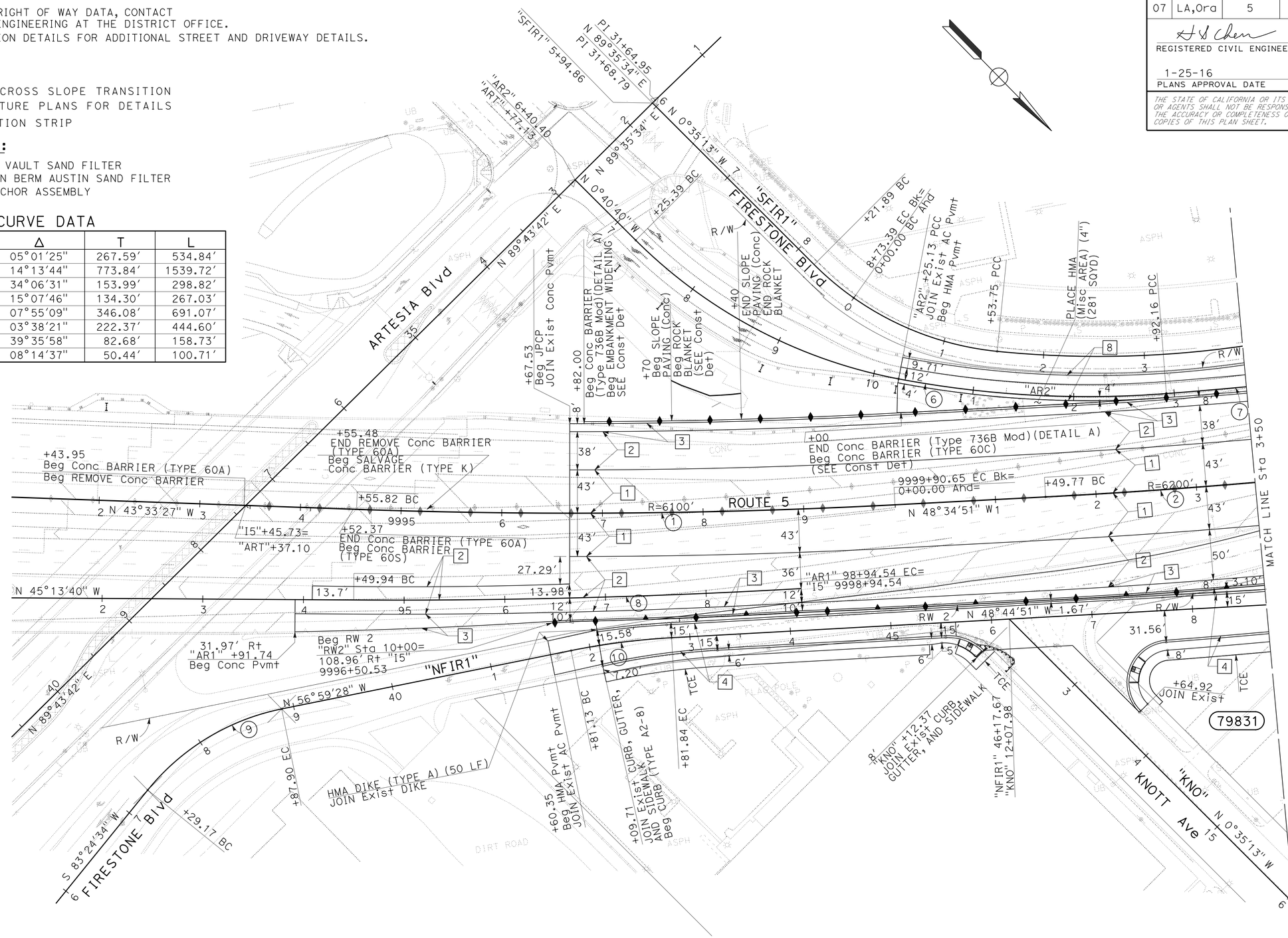

LAYOUT

SCALE: 1" = 50′

L - 1

STATE OF CALIFORNIA - DEPARTMENT OF TRANSPORTATION
Caltrans
DESIGN

FUNCTIONAL SUPERVISOR: RICHARD CHIANG
CALCULATED-DESIGNED BY: H. S. CHEN
CHECKED BY: VAN TRAN
REVISED BY / DATE REVISED

LAST REVISION 00-00-00
DATE PLOTTED => 03-FEB-2016
TIME PLOTTED => 09:22

Dist	COUNTY	ROUTE	POST MILES TOTAL PROJECT	SHEET No.	TOTAL SHEETS
07	LA,Ora	5	0.0/1.5, 44.3/44.4	15	1622

H S Chen 4-2-14
REGISTERED CIVIL ENGINEER DATE

1-25-16
PLANS APPROVAL DATE

REGISTERED PROFESSIONAL ENGINEER H.S. CHEN No. C48908 Exp. 9-30-16 CIVIL STATE OF CALIFORNIA

THE STATE OF CALIFORNIA OR ITS OFFICERS OR AGENTS SHALL NOT BE RESPONSIBLE FOR THE ACCURACY OR COMPLETENESS OF SCANNED COPIES OF THIS PLAN SHEET.

NOTES:

1. FOR ACCURATE RIGHT OF WAY DATA, CONTACT RIGHT OF WAY ENGINEERING AT THE DISTRICT OFFICE.
2. SEE CONSTRUCTION DETAILS FOR ADDITIONAL STREET AND DRIVEWAY DETAILS.
3. VEGETATION CONTROL TO BE CONSTRUCTED FLUSH WITH THE BACK EDGE OF THE POST.

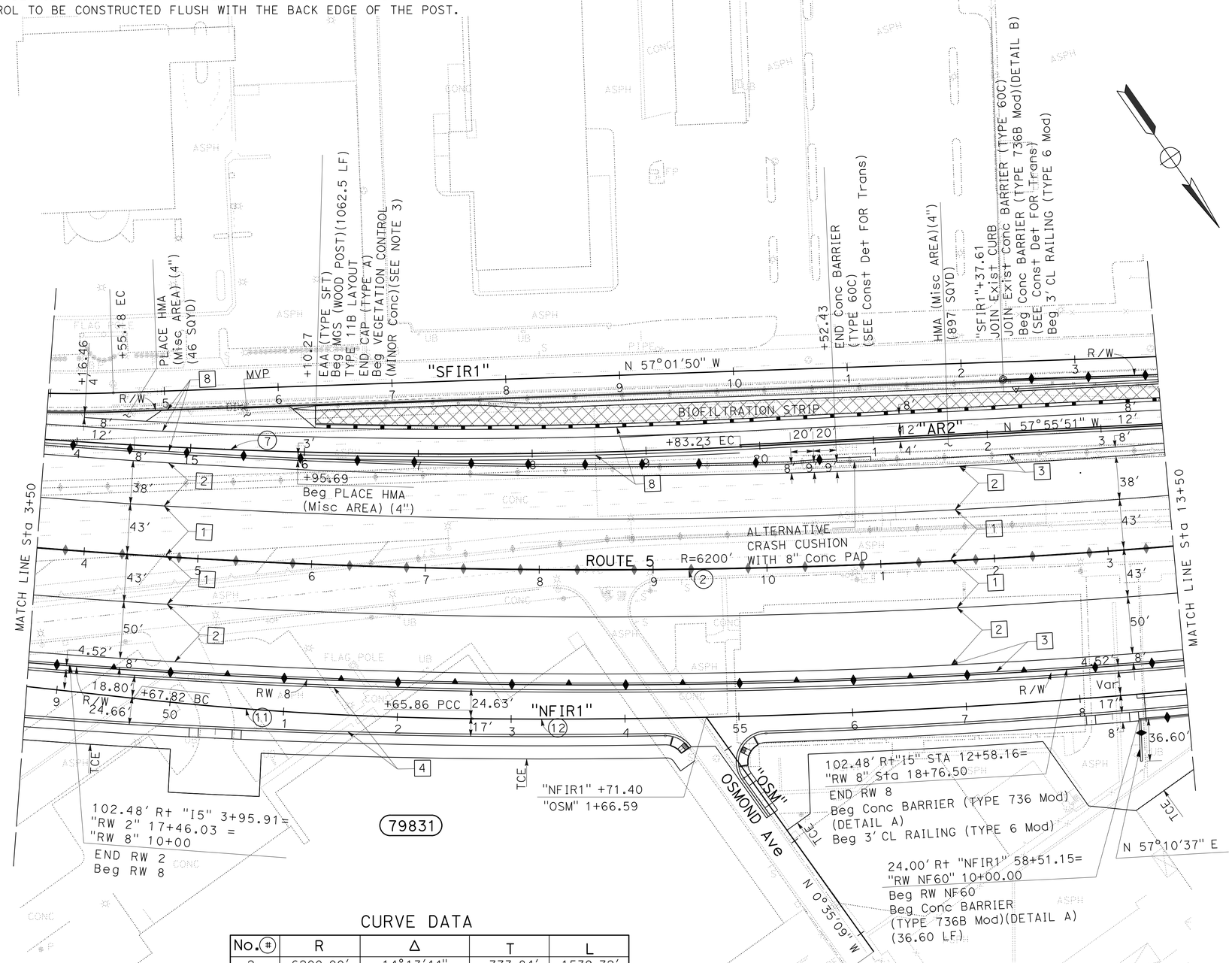

CURVE DATA

No. (#)	R	Δ	T	L
2	6200.00'	14°13'44"	773.84'	1539.72'
7	5000.00'	07°55'09"	346.08'	691.07'
11	3000.00'	05°41'31"	149.14'	298.03'
12	6190.35'	08°22'13"	452.98'	904.35'

LAYOUT

SCALE: 1" = 50'

L - 2

STATE OF CALIFORNIA - DEPARTMENT OF TRANSPORTATION
Caltrans
DESIGN
FUNCTIONAL SUPERVISOR: RICHARD CHIANG
CALCULATED-DESIGNED BY: H. S. CHEN
CHECKED BY: VAN TRAN
REVISED BY
DATE REVISED

LAST REVISION 00-00-00
DATE PLOTTED => 03-FEB-2016
TIME PLOTTED => 09:22

Dist	COUNTY	ROUTE	POST MILES TOTAL PROJECT	SHEET No.	TOTAL SHEETS
07	LA,Ora	5	0.0/1.5, 44.3/44.4	16	1622

REGISTERED CIVIL ENGINEER 4-2-14 DATE

1-25-16
PLANS APPROVAL DATE

REGISTERED PROFESSIONAL ENGINEER H.S. CHEN No. C48908 Exp. 9-30-16 CIVIL STATE OF CALIFORNIA

THE STATE OF CALIFORNIA OR ITS OFFICERS OR AGENTS SHALL NOT BE RESPONSIBLE FOR THE ACCURACY OR COMPLETENESS OF SCANNED COPIES OF THIS PLAN SHEET.

NOTES:

1. FOR COMPLETE RIGHT OF WAY AND ACCURATE ACCESS DATA, SEE RIGHT OF WAY RECORD MAPS AT DISTRICT OFFICE.
2. SEE CONSTRUCTION DETAILS FOR ADDITIONAL STREET AND DRIVEWAY DETAILS.
3. SEE SDS SHEETS FOR TRANSITION FRONT FACE OF Conc BARRIER.
4. DIAGONAL LINES AT 3′ C-C

ABBREVIATIONS:

TS: TANGENT TO SPIRAL
SC: CURVE TO SPIRAL
CS: SPIRAL TO CURVE
ST: SPIRAL TO TANGENT

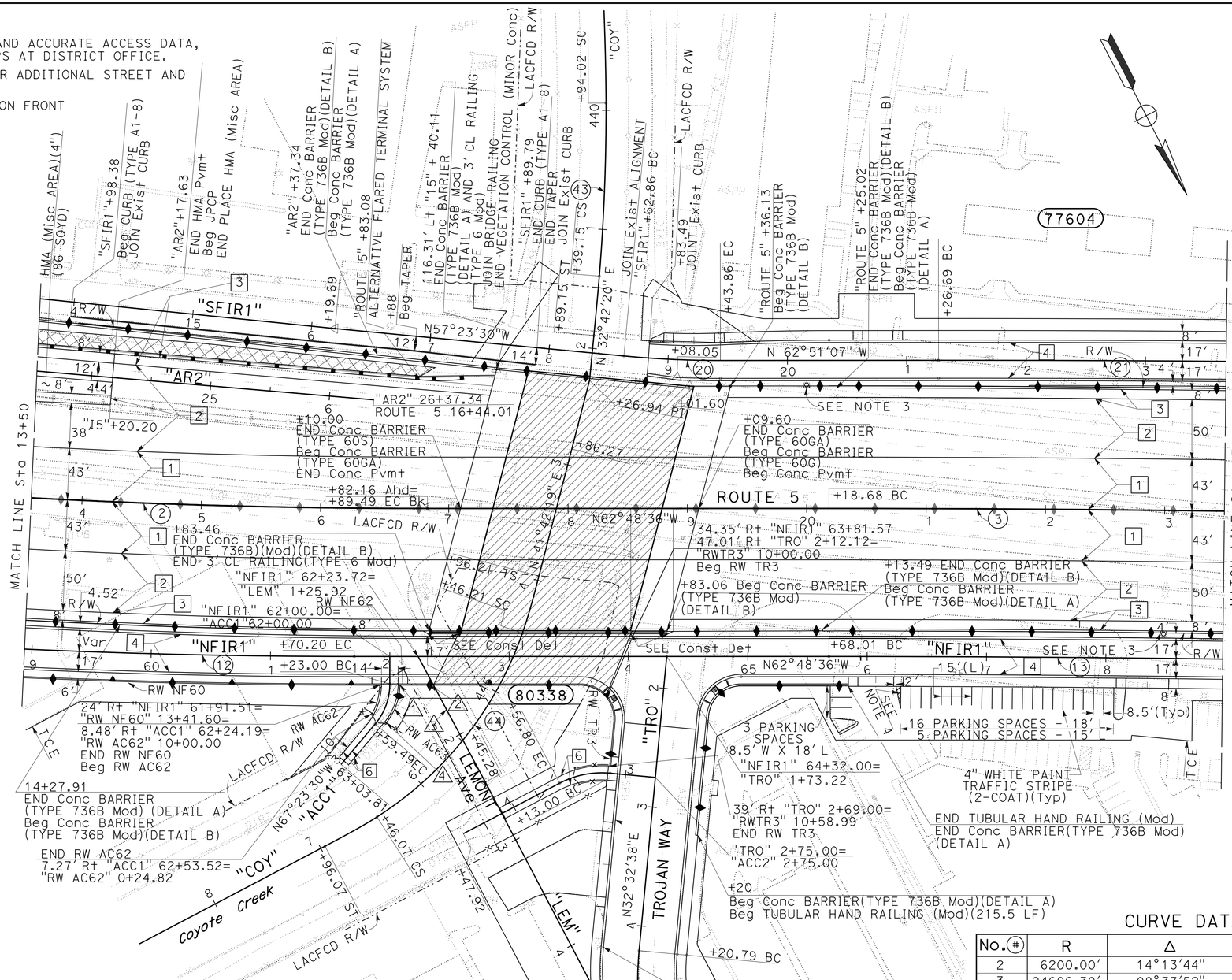

NOTES:

1. 24.00′ Rt "NFIR1" 62+07= "RW NF 62" 62+09.39= 8.48′ Lt "ACC1" 62+23.86= "RWAC63" 10+00.00 Beg RW NF62 Beg RW AC63
2. END RW NF62 24.00′ Rt "NFIR1" 62+33.77= "RW NF 62" 10+25.30
3. N0°58′11″W
4. END RW AC63 6.85′ Lt "ACC1" 62+53.49= "RW AC63" 0+34.19

CURVE DATA

No. (#)	R	Δ	T	L
2	6200.00′	14°13′44″	773.84′	1539.72′
3	24606.30′	08°37′52″	1856.86′	3706.70′
12	6190.35′	08°22′13″	833.98′	1657.97′
13	24482.25′	01°40′26″	357.64′	715.24′
20	850.00′	05°27′36″	40.53′	81.00′
21	28000.00′	03°25′27″	836.92′	1673.35′
43	1700.00′	04°53′29″	72.61′	145.13′
44	300.00′	38°10′19″	103.80′	199.87′
45	300.00′	33°01′56″	88.96′	172.96′

LAYOUT

SCALE: 1″ = 50′ **L-3**

STATE OF CALIFORNIA - DEPARTMENT OF TRANSPORTATION
Caltrans® DESIGN

FUNCTIONAL SUPERVISOR: RICHARD CHIANG
CALCULATED-DESIGNED BY: H. S. CHEN
CHECKED BY: VAN TRAN
REVISED BY / DATE REVISED

LAST REVISION 00-00-00
DATE PLOTTED => 03-FEB-2016
TIME PLOTTED => 09:22

Dist	COUNTY	ROUTE	POST MILES TOTAL PROJECT	SHEET No.	TOTAL SHEETS
07	LA,Ora	5	0.0/1.5, 44.3/44.4	17	1622

REGISTERED CIVIL ENGINEER 4-2-14 DATE

1-25-16
PLANS APPROVAL DATE

REGISTERED PROFESSIONAL ENGINEER H.S. CHEN No. C48908 Exp. 9-30-16 CIVIL STATE OF CALIFORNIA

THE STATE OF CALIFORNIA OR ITS OFFICERS OR AGENTS SHALL NOT BE RESPONSIBLE FOR THE ACCURACY OR COMPLETENESS OF SCANNED COPIES OF THIS PLAN SHEET.

NOTES:

1. FOR ACCURATE RIGHT OF WAY DATA, CONTACT RIGHT OF WAY ENGINEERING AT THE DISTRICT OFFICE.
2. SEE CONSTRUCTION DETAILS FOR ADDITIONAL STREET AND DRIVEWAY DETAILS.

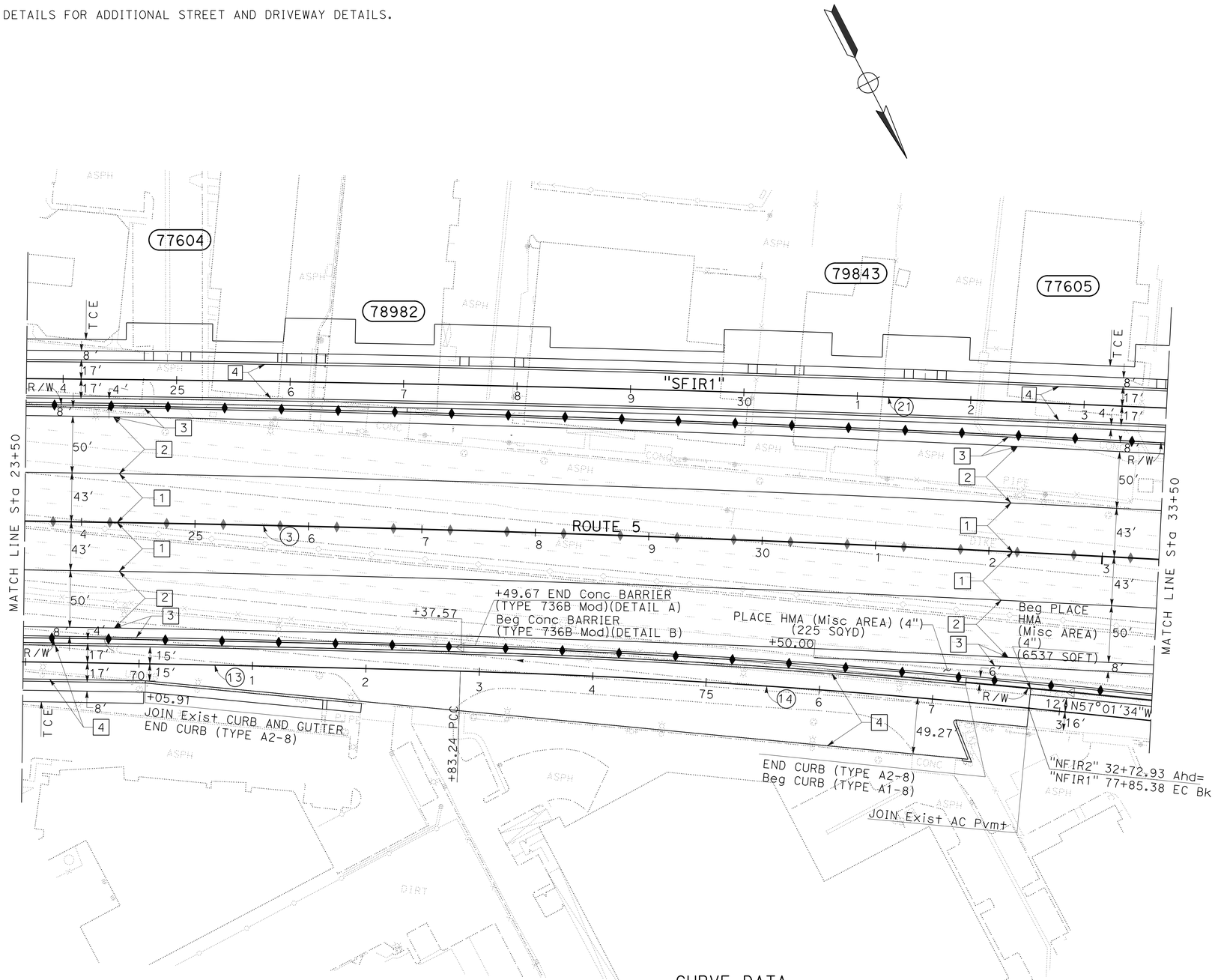

CURVE DATA

No. (#)	R	Δ	T	L
3	24606.30′	8°37′52″	1856.86′	3706.70′
13	24482.25′	1°40′26″	357.64′	715.24′
14	7000.00′	4°06′36″	251.18′	502.13′
21	28000.00′	3°25′27″	836.92′	1673.35′

LAYOUT

SCALE: 1" = 50′

L - 4

STATE OF CALIFORNIA - DEPARTMENT OF TRANSPORTATION
Caltrans
DESIGN

FUNCTIONAL SUPERVISOR: RICHARD CHIANG
CALCULATED-DESIGNED BY: H. S. CHEN
CHECKED BY: VAN TRAN
REVISED BY
DATE REVISED

LAST REVISION 00-00-00
DATE PLOTTED => 03-FEB-2016
TIME PLOTTED => 09:22

Dist	COUNTY	ROUTE	POST MILES TOTAL PROJECT	SHEET No.	TOTAL SHEETS
07	LA,Ora	5	0.0/1.5, 44.3/44.4	18	1622

REGISTERED CIVIL ENGINEER 4-2-14 DATE

1-25-16
PLANS APPROVAL DATE

REGISTERED PROFESSIONAL ENGINEER H.S. CHEN No. C48908 Exp. 9-30-16 CIVIL STATE OF CALIFORNIA

THE STATE OF CALIFORNIA OR ITS OFFICERS OR AGENTS SHALL NOT BE RESPONSIBLE FOR THE ACCURACY OR COMPLETENESS OF SCANNED COPIES OF THIS PLAN SHEET.

NOTES:

1. FOR ACCURATE RIGHT OF WAY DATA, CONTACT RIGHT OF WAY ENGINEERING AT THE DISTRICT OFFICE.
2. SEE CONSTRUCTION DETAILS FOR ADDITIONAL STREET AND DRIVEWAY DETAILS.

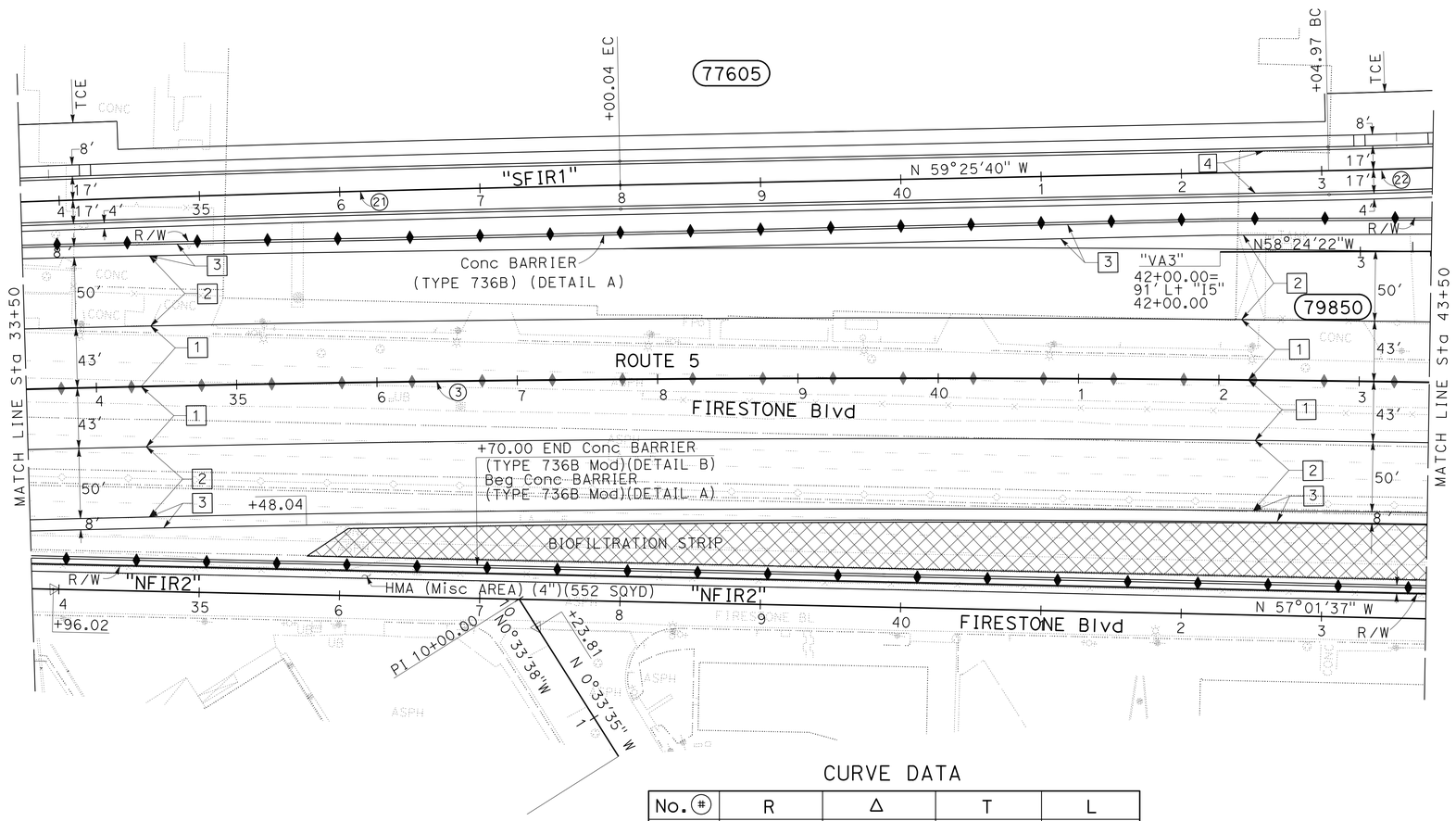

CURVE DATA

No. (#)	R	Δ	T	L
3	24606.30'	08°37'52"	1856.86'	3706.70'
21	28000.00'	03°25'27"	836.92'	1673.35'
22	4500.00'	02°23'26"	93.89'	187.75'

LAYOUT

SCALE: 1" = 50'

L - 5

STATE OF CALIFORNIA - DEPARTMENT OF TRANSPORTATION
Caltrans® DESIGN

FUNCTIONAL SUPERVISOR: RICHARD CHIANG
CALCULATED-DESIGNED BY: H. S. CHEN
CHECKED BY: VAN TRAN
REVISED BY
DATE REVISED

LAST REVISION 00-00-00
DATE PLOTTED => 03-FEB-2016
TIME PLOTTED => 09:22

Dist	COUNTY	ROUTE	POST MILES TOTAL PROJECT	SHEET No.	TOTAL SHEETS
07	LA,Ora	5	0.0/1.5, 44.3/44.4	19	1622

REGISTERED CIVIL ENGINEER 4-2-14 DATE

1-25-16
PLANS APPROVAL DATE

REGISTERED PROFESSIONAL ENGINEER H.S. CHEN No. C48908 Exp. 9-30-16 CIVIL STATE OF CALIFORNIA

THE STATE OF CALIFORNIA OR ITS OFFICERS OR AGENTS SHALL NOT BE RESPONSIBLE FOR THE ACCURACY OR COMPLETENESS OF SCANNED COPIES OF THIS PLAN SHEET.

NOTES:

1. FOR ACCURATE RIGHT OF WAY DATA, CONTACT RIGHT OF WAY ENGINEERING AT THE DISTRICT OFFICE.
2. SEE CONSTRUCTION DETAILS FOR ADDITIONAL STREET AND DRIVEWAY DETAILS.
3. VEGETATION CONTROL TO BE CONSTRUCTED FLUSH WITH THE BACK EDGE OF THE POST.

LEGEND:

1 END HMA DIKE (TYPE E)

2 Beg HMA DIKE (TYPE E) (36 LF)

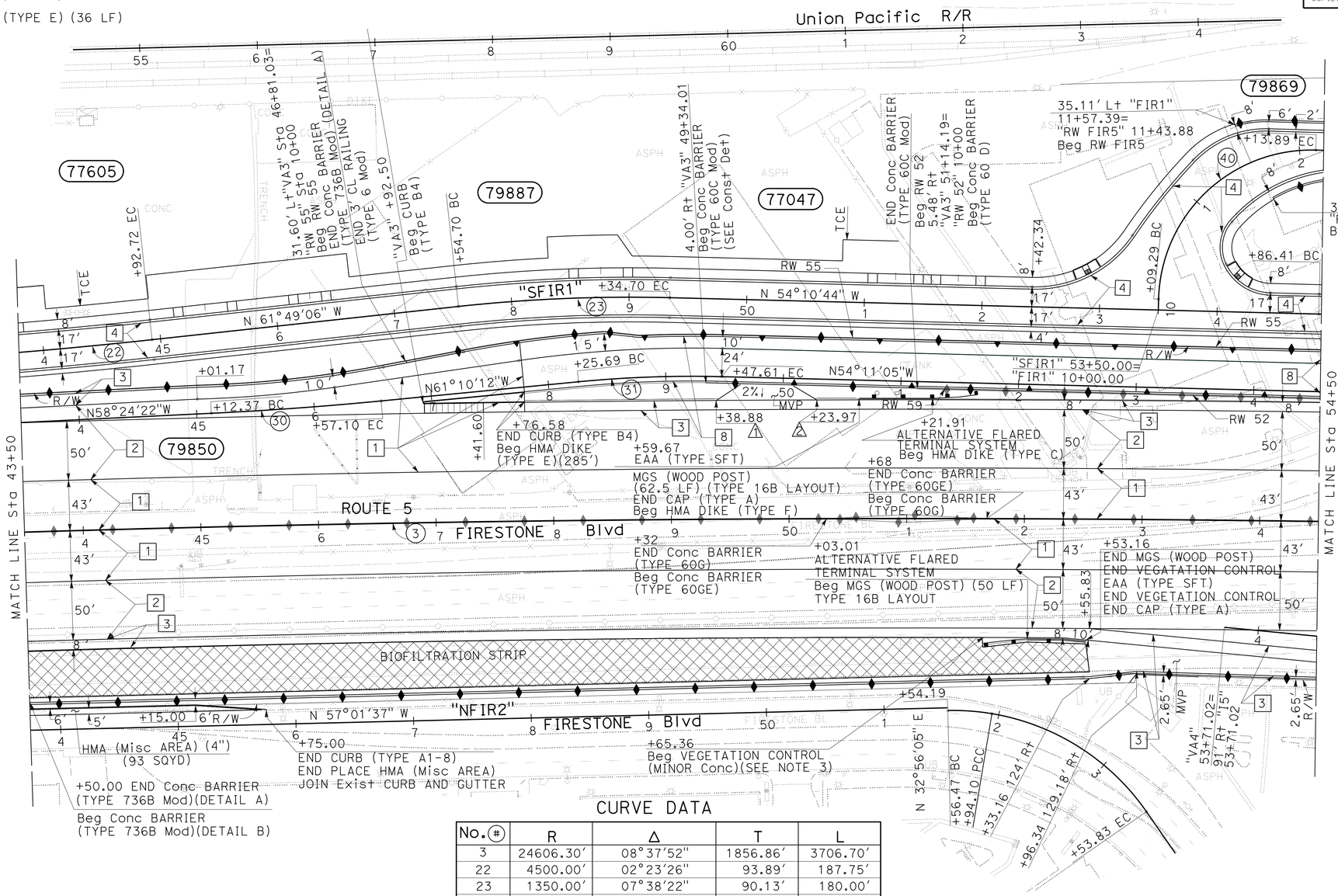

CURVE DATA

No. (#)	R	Δ	T	L
3	24606.30′	08°37′52"	1856.86′	3706.70′
22	4500.00′	02°23′26"	93.89′	187.75′
23	1350.00′	07°38′22"	90.13′	180.00′
30	3000.00′	02°45′50"	72.38′	144.72′
31	1000.00′	06°59′07"	61.03′	121.92′
40	130.00′	90°10′31"	130.40′	204.60′

LAYOUT

SCALE: 1" = 50′

L - 6

STATE OF CALIFORNIA - DEPARTMENT OF TRANSPORTATION
Caltrans® DESIGN

FUNCTIONAL SUPERVISOR: RICHARD CHIANG
CALCULATED-DESIGNED BY: H. S. CHEN
CHECKED BY: VAN TRAN
REVISED BY / DATE REVISED

LAST REVISION 00-00-00
DATE PLOTTED => 03-FEB-2016
TIME PLOTTED => 09:22

Dist	COUNTY	ROUTE	POST MILES TOTAL PROJECT	SHEET No.	TOTAL SHEETS
07	LA,Ora	5	0.0/1.5, 44.3/44.4	20	1622

REGISTERED CIVIL ENGINEER 4-2-14 DATE

1-25-16
PLANS APPROVAL DATE

REGISTERED PROFESSIONAL ENGINEER H.S. CHEN No. C48908 Exp. 9-30-16 CIVIL STATE OF CALIFORNIA

THE STATE OF CALIFORNIA OR ITS OFFICERS OR AGENTS SHALL NOT BE RESPONSIBLE FOR THE ACCURACY OR COMPLETENESS OF SCANNED COPIES OF THIS PLAN SHEET.

NOTES:
1. FOR ACCURATE RIGHT OF WAY DATA, CONTACT RIGHT OF WAY ENGINEERING AT THE DISTRICT OFFICE.
2. SEE CONSTRUCTION DETAILS FOR ADDITIONAL STREET AND DRIVEWAY DETAILS.
3. END HMA DIKE (TYPE E)
   Beg HMA DIKE (TYPE F)
4. END HMA DIKE (TYPE F)
   Beg HMA DIKE (TYPE C)
5. VEGETATION CONTROL TO BE CONSTRUCTED FLUSH WITH THE BACK EDGE OF THE POST.

CURVE DATA

No. (#)	R	Δ	T	L
3	24606.30′	8°37′52"	1856.86′	3706.70′
24	850.00′	13°00′30"	96.91′	192.98′
25	850.00′	16°52′38"	126.10′	250.38′
32	3000.00′	10°48′55"	283.99′	566.29′
35	1100.00′	06°33′56"	63.09′	126.05′
36	2700.00′	02°31′18"	59.43′	118.83′

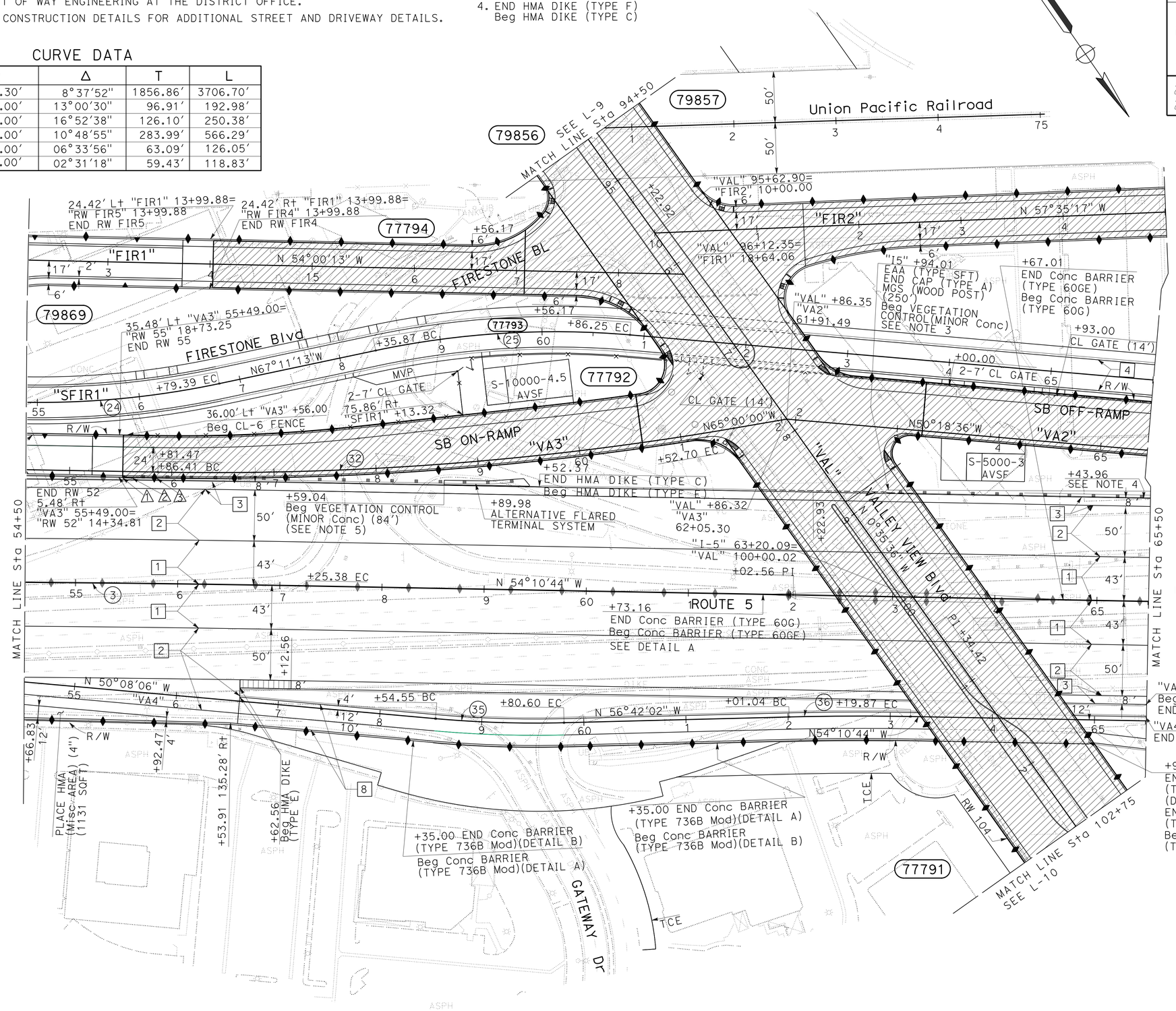

LEGEND:

1. +44.98 END Conc BARRIER (TYPE D) ANCHOR BLOCK (Mod) SEE Const Det
2. +54.36 Trans RAILING (TYPE WB-31)
3. MGS (WOOD POST)(312.5′)

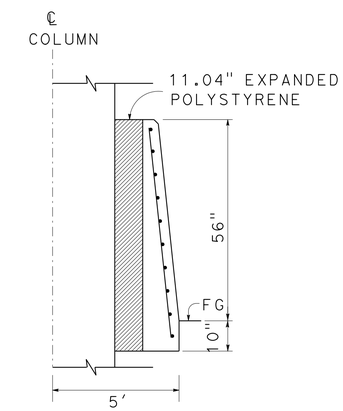

DETAIL A
FROM Sta 62+58.16 TO 63+82.01
NO SCALE

NOTE:
FOR DETAILS NOT SHOWN, SEE Std PLAN A76F

LAYOUT
SCALE: 1" = 50′

L - 7

STATE OF CALIFORNIA - DEPARTMENT OF TRANSPORTATION
Caltrans® DESIGN
FUNCTIONAL SUPERVISOR: RICHARD CHIANG
CALCULATED-DESIGNED BY: H. S. CHEN
CHECKED BY: VAN TRAN
REVISED BY / DATE REVISED

LAST REVISION 00-00-00 | DATE PLOTTED => 03-FEB-2016 | TIME PLOTTED => 09:22

Dist	COUNTY	ROUTE	POST MILES TOTAL PROJECT	SHEET No.	TOTAL SHEETS
07	LA,Ora	5	0.0/1.5, 44.3/44.4	21	1622

REGISTERED CIVIL ENGINEER 4-2-14 DATE

1-25-16
PLANS APPROVAL DATE

REGISTERED PROFESSIONAL ENGINEER H.S. CHEN No. C48908 Exp. 9-30-16 CIVIL STATE OF CALIFORNIA

THE STATE OF CALIFORNIA OR ITS OFFICERS OR AGENTS SHALL NOT BE RESPONSIBLE FOR THE ACCURACY OR COMPLETENESS OF SCANNED COPIES OF THIS PLAN SHEET.

NOTES:

1. FOR ACCURATE RIGHT OF WAY DATA, CONTACT RIGHT OF WAY ENGINEERING AT THE DISTRICT OFFICE.
2. SEE CONSTRUCTION DETAILS FOR ADDITIONAL STREET AND DRIVEWAY DETAILS.
3. END HMA DIKE (TYPE C)
   Beg HMA DIKE (TYPE E)
4. END Conc BARRIER (TYPE 736B Mod)(DETAIL A)
   Beg Conc BARRIER (TYPE 736B Mod)(DETAIL B)

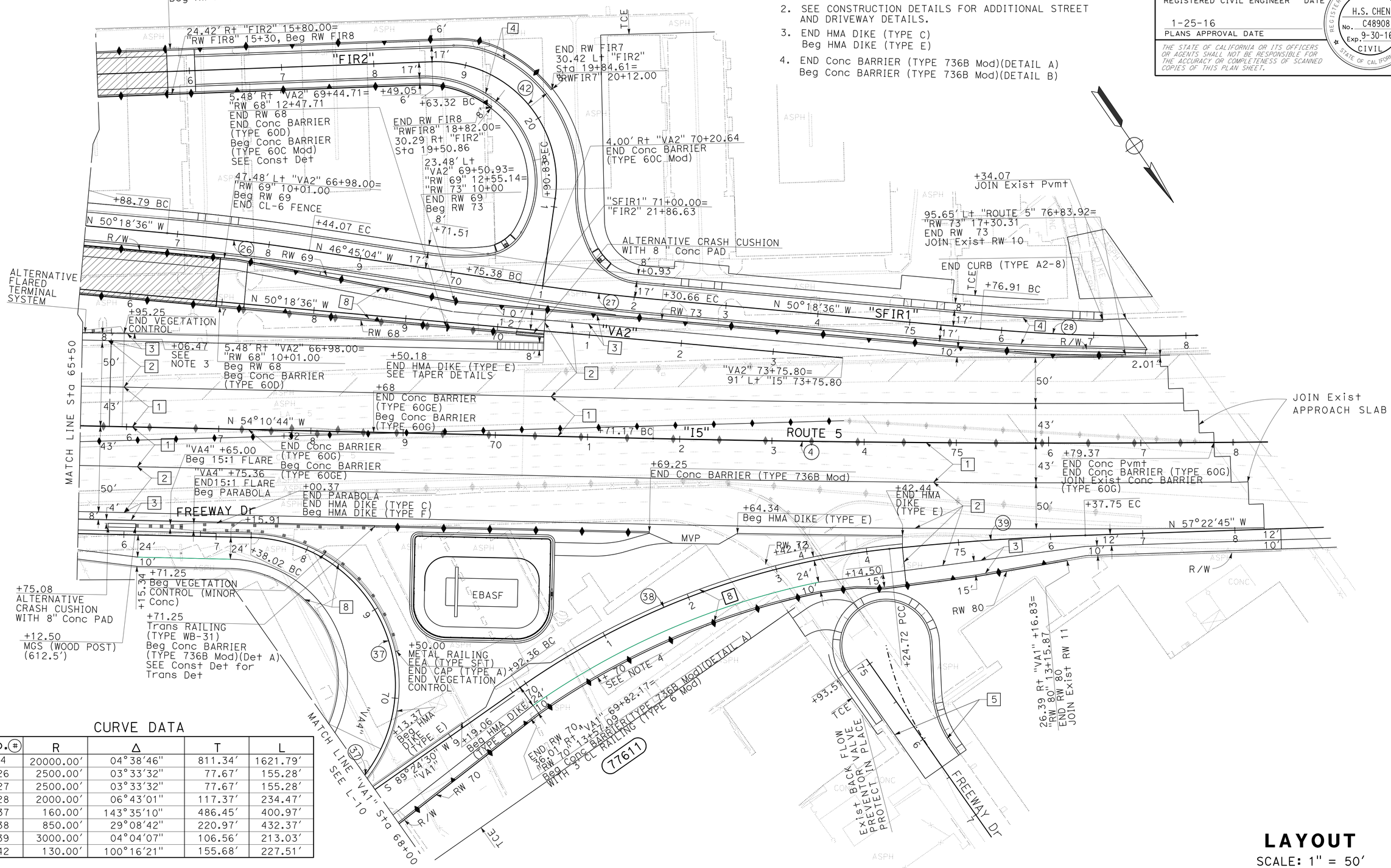

CURVE DATA

No. (#)	R	Δ	T	L
4	20000.00'	04°38'46"	811.34'	1621.79'
26	2500.00'	03°33'32"	77.67'	155.28'
27	2500.00'	03°33'32"	77.67'	155.28'
28	2000.00'	06°43'01"	117.37'	234.47'
37	160.00'	143°35'10"	486.45'	400.97'
38	850.00'	29°08'42"	220.97'	432.37'
39	3000.00'	04°04'07"	106.56'	213.03'
42	130.00'	100°16'21"	155.68'	227.51'

LAYOUT

SCALE: 1" = 50'

L - 8

STATE OF CALIFORNIA - DEPARTMENT OF TRANSPORTATION
Caltrans DESIGN

FUNCTIONAL SUPERVISOR: RICHARD CHIANG
CALCULATED-DESIGNED BY: H. S. CHEN
CHECKED BY: VAN TRAN
REVISED BY / DATE REVISED

LAST REVISION 00-00-00
DATE PLOTTED => 03-FEB-2016
TIME PLOTTED => 09:22

Dist	COUNTY	ROUTE	POST MILES TOTAL PROJECT	SHEET No.	TOTAL SHEETS
07	LA,Ora	5	0.0/1.5, 44.3/44.4	22	1622

REGISTERED CIVIL ENGINEER 4-2-14 DATE

1-25-16
PLANS APPROVAL DATE

REGISTERED PROFESSIONAL ENGINEER H.S. CHEN No. C48908 Exp. 9-30-16 CIVIL STATE OF CALIFORNIA

THE STATE OF CALIFORNIA OR ITS OFFICERS OR AGENTS SHALL NOT BE RESPONSIBLE FOR THE ACCURACY OR COMPLETENESS OF SCANNED COPIES OF THIS PLAN SHEET.

NOTES:

1. FOR ACCURATE RIGHT OF WAY DATA, CONTACT RIGHT OR WAY ENGINEERING AT THE DISTRICT OFFICE.
2. SEE CONSTRUCTION DETAILS FOR ADDITIONAL STREET AND DRIVEWAY DETAILS.

CURVE DATA

No. (41)	R	Δ	T	L
41	62.00′	90°2′34″	62.05′	97.44′

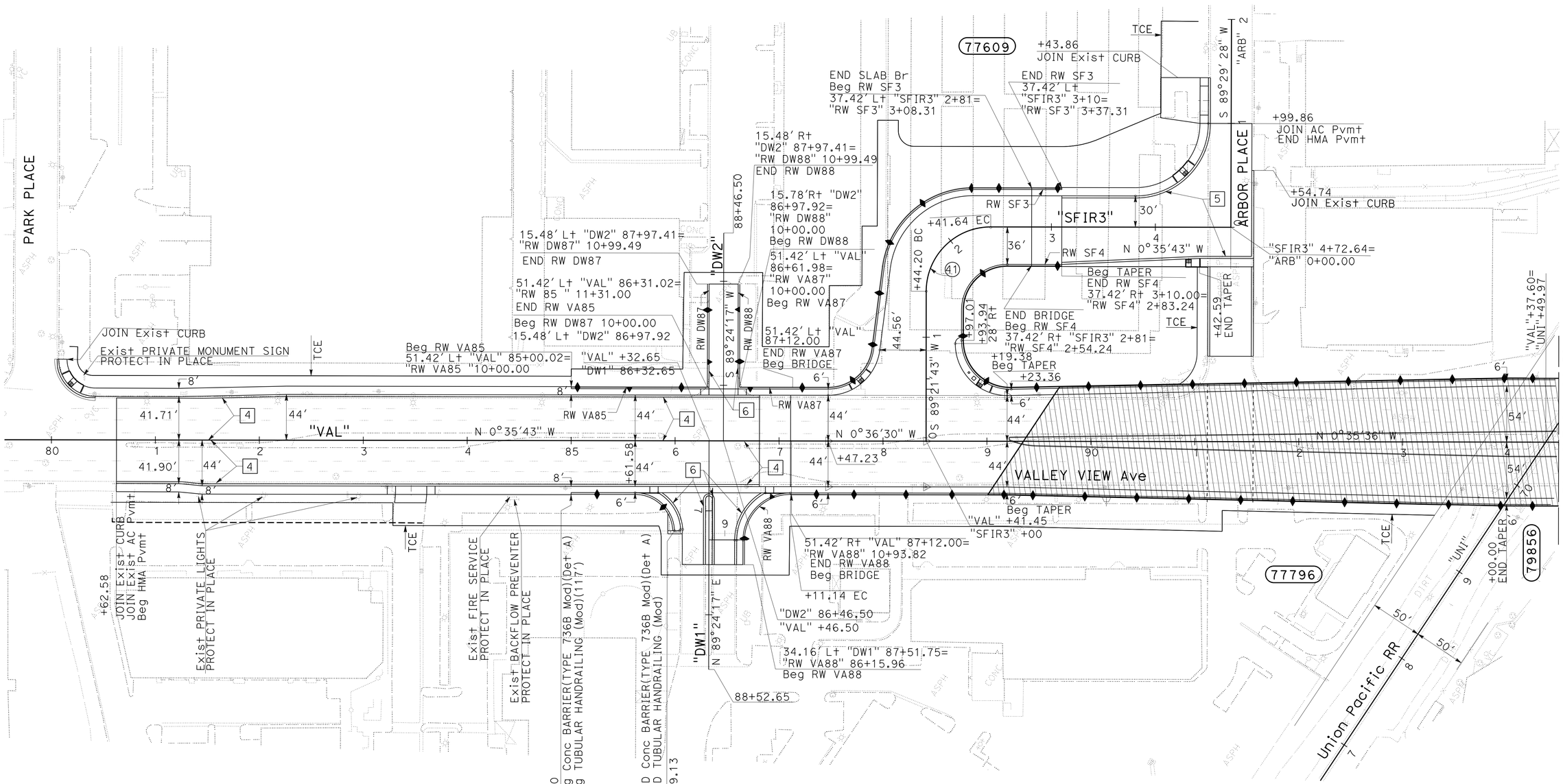

LAYOUT

SCALE: 1" = 50′

L - 9

STATE OF CALIFORNIA - DEPARTMENT OF TRANSPORTATION

Caltrans® **DESIGN**

FUNCTIONAL SUPERVISOR: RICHARD CHIANG

CALCULATED-DESIGNED BY: H. S. CHEN

CHECKED BY: VAN TRAN

REVISED BY: H. CHEN

DATE REVISED: 5/2015

LAST REVISION 00-00-00

DATE PLOTTED => 03-FEB-2016
TIME PLOTTED => 09:22

Dist	COUNTY	ROUTE	POST MILES TOTAL PROJECT	SHEET No.	TOTAL SHEETS
07	LA,Ora	5	0.0/1.5, 44.3/44.4	23	1622

REGISTERED CIVIL ENGINEER 4-2-14 DATE

1-25-16
PLANS APPROVAL DATE

REGISTERED PROFESSIONAL ENGINEER H.S. CHEN No. C48908 Exp. 9-30-16 CIVIL STATE OF CALIFORNIA

THE STATE OF CALIFORNIA OR ITS OFFICERS OR AGENTS SHALL NOT BE RESPONSIBLE FOR THE ACCURACY OR COMPLETENESS OF SCANNED COPIES OF THIS PLAN SHEET.

NOTES:

1. FOR ACCURATE RIGHT OF WAY DATA, CONTACT RIGHT OF WAY ENGINEERING AT THE DISTRICT OFFICE.
2. SEE CONSTRUCTION DETAILS FOR ADDITIONAL STREET AND DRIVEWAY DETAILS.

CURVE DATA

No.(#)	R	Δ	T	L
14	300.00′	22°40′59"	60.17′	118.77′
15	200.00′	62°54′55"	122.36′	219.62′
37	160.00′	143°35′10"	486.45′	400.97′

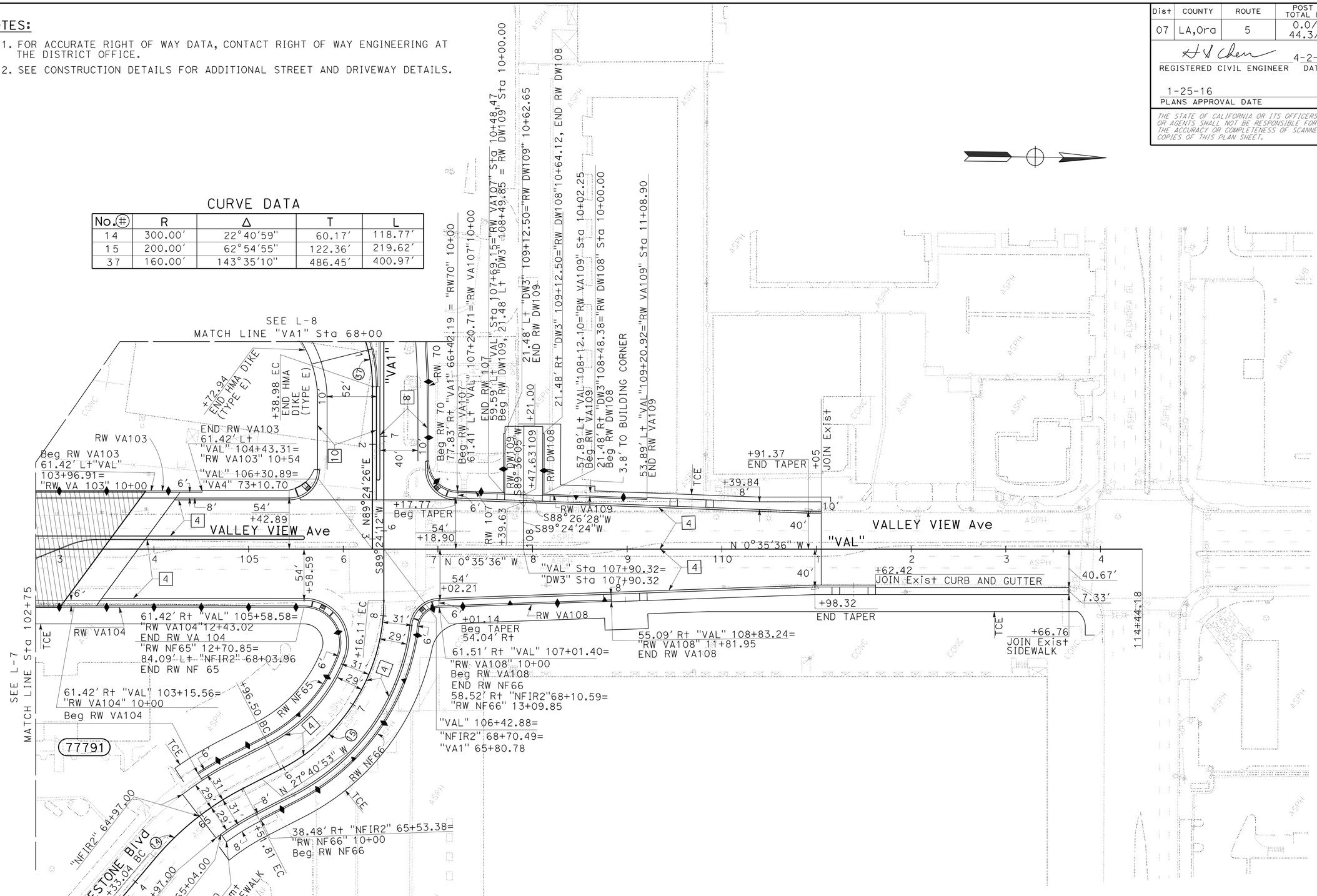

LAYOUT

SCALE: 1" = 50′

L-10

STATE OF CALIFORNIA - DEPARTMENT OF TRANSPORTATION
Caltrans
DESIGN

FUNCTIONAL SUPERVISOR: RICHARD CHIANG
CALCULATED-DESIGNED BY: H. S. CHEN
CHECKED BY: VAN TRAN
REVISED BY
DATE REVISED

LAST REVISION 00-00-00
DATE PLOTTED => 03-FEB-2016
TIME PLOTTED => 09:22

Dist	COUNTY	ROUTE	POST MILES TOTAL PROJECT	SHEET No.	TOTAL SHEETS
07	LA,Ora	5	0.0/1.5, 44.3/44.4	24	1622

REGISTERED CIVIL ENGINEER 4-2-14 DATE

1-25-16
PLANS APPROVAL DATE

REGISTERED PROFESSIONAL ENGINEER VAN T. TRAN No. C68477 Exp. 9-30-17 CIVIL STATE OF CALIFORNIA

THE STATE OF CALIFORNIA OR ITS OFFICERS OR AGENTS SHALL NOT BE RESPONSIBLE FOR THE ACCURACY OR COMPLETENESS OF SCANNED COPIES OF THIS PLAN SHEET.

NOTE (THIS SHEET ONLY):

EXCAVATION AND EMBANKMENT QUANTITIES INCLUDE DRIVEWAYS ("DW1" AND "DW2").

NOTES (FOR P-1 TO P-3, AND PS-1 TO PS-27)):

1. COORDINATES ARE BASED ON THE CALIFORNIA COORDINATE. SYSTEM NORTH AMERICA DATUM OF 1983, EPOCH DATE 1986. COORDINATES ARE PRE-HPGN AND THUS DIFFER FROM CALTRANS' CURRENT DENSIFICATION SURVEYS.
2. BENCH MARK IS BASED ON LA COUNTY BENCH MARK - LA MIRADA QUAD, 2005 ADJUSTMENT, BENCH No. Y11900 @ NE CORNER OF VALLEY VIEW Ave & ALONDRA Blvd WITH AN ELEVATION OF 68.99'.

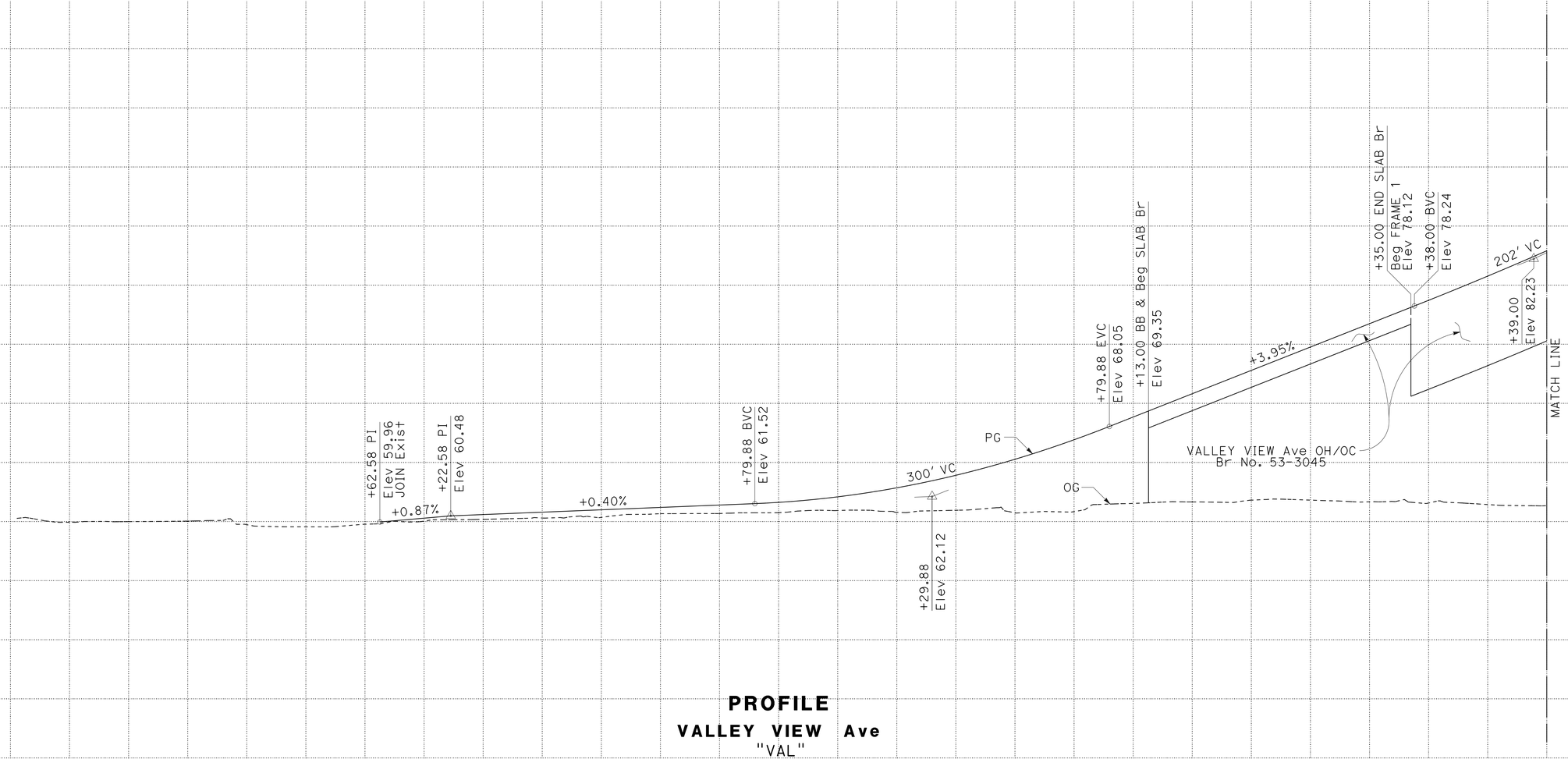

PROFILE
VALLEY VIEW Ave
"VAL"

PROFILE
SCALE: Horiz 1" = 50'
Vert 1" = 5'

P-1

STATION		8	9	80	1	2	3	4	85	6	7	8	9	90	TOTAL
CY	Exc				2,260							SLAB			2,260
	Emb				2,054							BRIDGE			2,054

STATE OF CALIFORNIA - DEPARTMENT OF TRANSPORTATION
Caltrans DESIGN
FUNCTIONAL SUPERVISOR: RICHARD CHIANG
CALCULATED-DESIGNED BY: VAN TRAN
CHECKED BY: H.S. CHEN
REVISED BY
DATE REVISED

LAST REVISION 00-00-00
DATE PLOTTED => 03-FEB-2016
TIME PLOTTED => 09:22

Dist	COUNTY	ROUTE	POST MILES TOTAL PROJECT	SHEET No.	TOTAL SHEETS
07	LA,Ora	5	0.0/1.5, 44.3/44.4	25	1622

REGISTERED CIVIL ENGINEER 4-2-14 DATE

1-25-16
PLANS APPROVAL DATE

REGISTERED PROFESSIONAL ENGINEER
VAN T. TRAN
No. C68477
Exp. 9-30-17
CIVIL
STATE OF CALIFORNIA

THE STATE OF CALIFORNIA OR ITS OFFICERS OR AGENTS SHALL NOT BE RESPONSIBLE FOR THE ACCURACY OR COMPLETENESS OF SCANNED COPIES OF THIS PLAN SHEET.

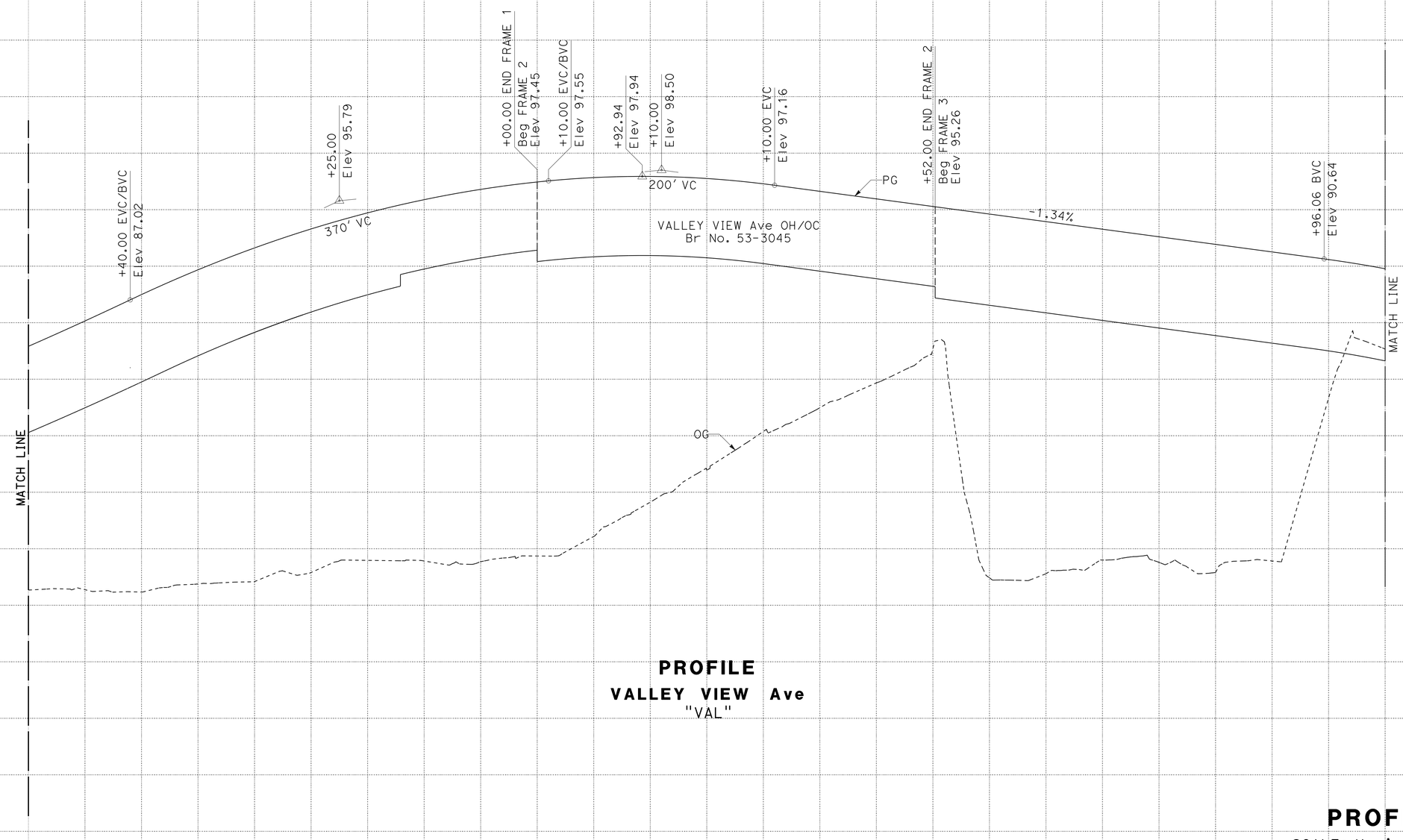

PROFILE
VALLEY VIEW Ave
"VAL"

PROFILE
SCALE: Horiz 1" = 50'
Vert 1" = 5'

P-2

STATION	1	2	3	4	95	6	7	8	9	100	1	2	TOTAL
CY Exc												1091	1091
CY Emb												11	11

STATE OF CALIFORNIA - DEPARTMENT OF TRANSPORTATION
Caltrans
DESIGN

FUNCTIONAL SUPERVISOR: RICHARD CHIANG
CALCULATED-DESIGNED BY: VAN TRAN
CHECKED BY: H.S. CHEN
REVISED BY
DATE REVISED

LAST REVISION 00-00-00
DATE PLOTTED => 03-FEB-2016
TIME PLOTTED => 09:22

Dist	COUNTY	ROUTE	POST MILES TOTAL PROJECT	SHEET No.	TOTAL SHEETS
07	LA,Ora	5	0.0/1.5, 44.3/44.4	26	1622

REGISTERED CIVIL ENGINEER 4-2-14 DATE

1-25-16
PLANS APPROVAL DATE

REGISTERED PROFESSIONAL ENGINEER
VAN T. TRAN
No. C68477
Exp. 9-30-17
CIVIL
STATE OF CALIFORNIA

THE STATE OF CALIFORNIA OR ITS OFFICERS OR AGENTS SHALL NOT BE RESPONSIBLE FOR THE ACCURACY OR COMPLETENESS OF SCANNED COPIES OF THIS PLAN SHEET.

NOTE (THIS SHEET ONLY):

EXCAVATION AND EMBANKMENT QUANTITIES INCLUDE DRIVEWAY ("DW3").

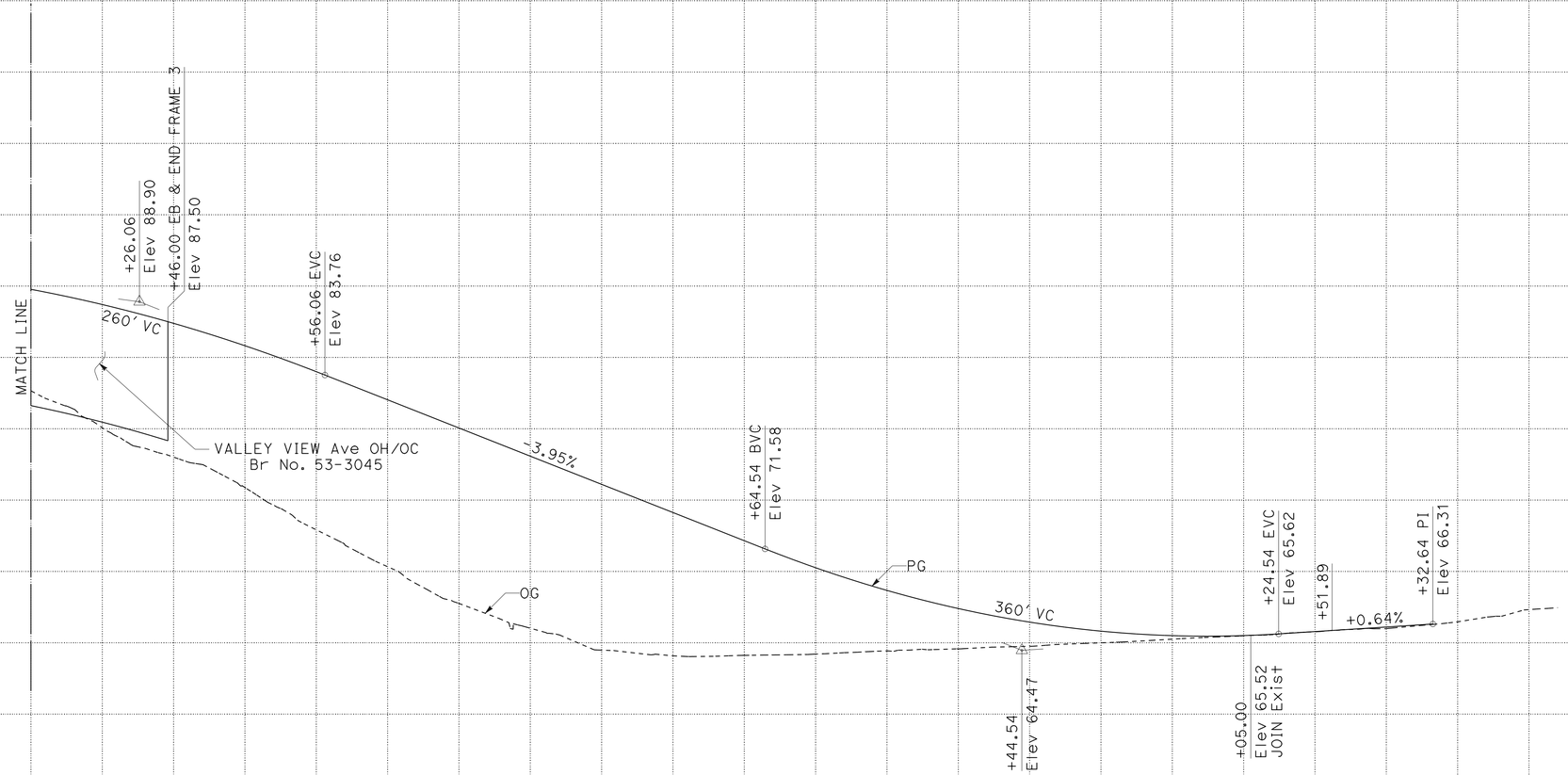

PROFILE
VALLEY VIEW Ave
"VAL"

PROFILE
SCALE: Horiz 1" = 50'
Vert 1" = 5'

P-3

STATION		3	4	105	6	7	8	9	110	1	2	3	TOTAL
CY	Exc	9746											9746
	Emb	17,502											17,502

STATE OF CALIFORNIA - DEPARTMENT OF TRANSPORTATION
Caltrans
DESIGN
FUNCTIONAL SUPERVISOR: RICHARD CHIANG
CALCULATED-DESIGNED BY: VAN TRAN
CHECKED BY: H.S. CHEN
REVISED BY
DATE REVISED

LAST REVISION 00-00-00
DATE PLOTTED => 03-FEB-2016
TIME PLOTTED => 09:22

Dist	COUNTY	ROUTE	POST MILES TOTAL PROJECT	SHEET No.	TOTAL SHEETS
07	LA,Ora	5	0.0/1.5, 44.3/44.4	27	1622

REGISTERED CIVIL ENGINEER 4-2-14 DATE

1-25-16
PLANS APPROVAL DATE

REGISTERED PROFESSIONAL ENGINEER
VAN T. TRAN
No. C68477
Exp. 9-30-17
CIVIL
STATE OF CALIFORNIA

THE STATE OF CALIFORNIA OR ITS OFFICERS OR AGENTS SHALL NOT BE RESPONSIBLE FOR THE ACCURACY OR COMPLETENESS OF SCANNED COPIES OF THIS PLAN SHEET.

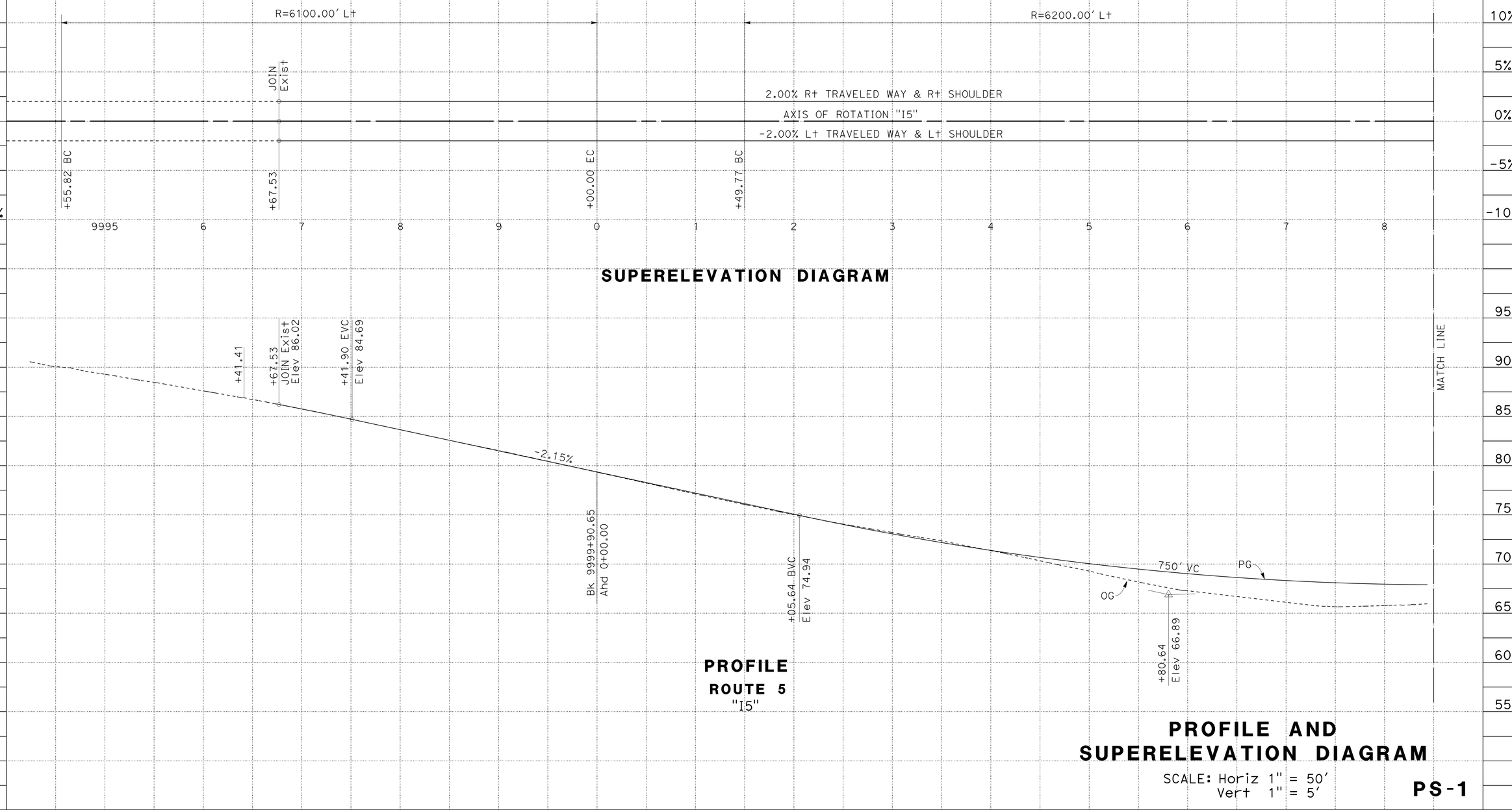

PROFILE AND SUPERELEVATION DIAGRAM

SCALE: Horiz 1" = 50'
Vert 1" = 5'

PS-1

STATION		9995	6	7	8	9	0	1	2	3	4	5	6	7	8	TOTAL
CY	Exc	14,782														14,782
	Emb	8,343														8,341

STATE OF CALIFORNIA - DEPARTMENT OF TRANSPORTATION
Caltrans
DESIGN

FUNCTIONAL SUPERVISOR: RICHARD CHIANG

CALCULATED-DESIGNED BY: H.S. CHEN
CHECKED BY: HUNG TIEU

REVISED BY
DATE REVISED

LAST REVISION 00-00-00
DATE PLOTTED => 03-FEB-2016
TIME PLOTTED => 09:22

Dist	COUNTY	ROUTE	POST MILES TOTAL PROJECT	SHEET No.	TOTAL SHEETS
07	LA,Ora	5	0.0/1.5, 44.3/44.4	28	1622

REGISTERED CIVIL ENGINEER 4-2-14 DATE

1-25-16
PLANS APPROVAL DATE

REGISTERED PROFESSIONAL ENGINEER
VAN T. TRAN
No. C68477
Exp. 9-30-17
CIVIL
STATE OF CALIFORNIA

THE STATE OF CALIFORNIA OR ITS OFFICERS OR AGENTS SHALL NOT BE RESPONSIBLE FOR THE ACCURACY OR COMPLETENESS OF SCANNED COPIES OF THIS PLAN SHEET.

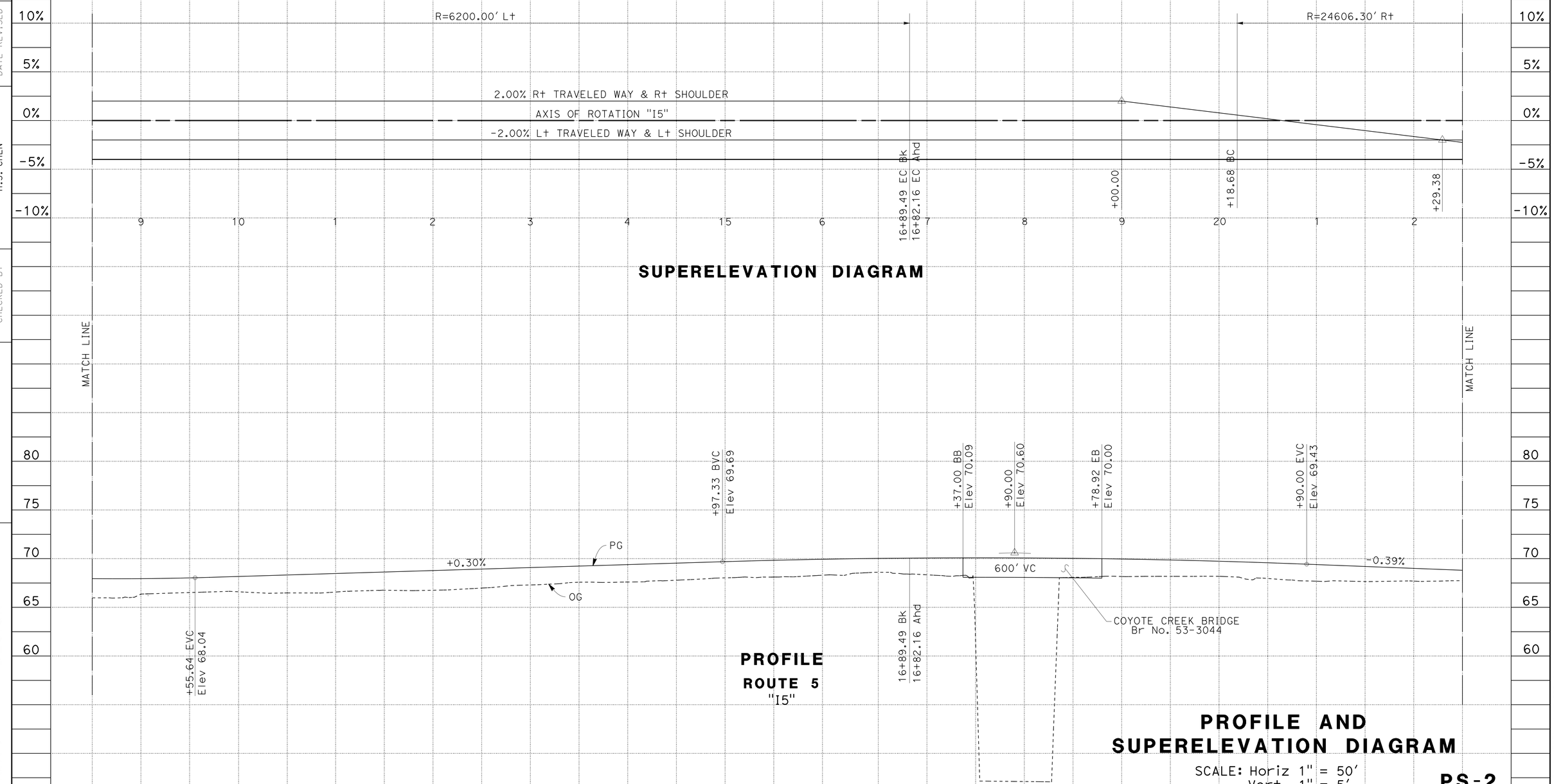

STATION		9	10	1	2	3	4	15	6	7	8	9	20	1	2	TOTAL
CY	Exc	6,997										2,374				9,371
	Emb	1,282										1,074				2,356

REVISED BY | DATE REVISED
HUNG TIEU | H.S. CHEN
CALCULATED-DESIGNED BY | CHECKED BY
FUNCTIONAL SUPERVISOR: RICHARD CHIANG

STATE OF CALIFORNIA - DEPARTMENT OF TRANSPORTATION
Caltrans
DESIGN

LAST REVISION 00-00-00
DATE PLOTTED => 03-FEB-2016
TIME PLOTTED => 09:22

Dist	COUNTY	ROUTE	POST MILES TOTAL PROJECT	SHEET No.	TOTAL SHEETS
07	LA,Ora	5	0.0/1.5, 44.3/44.4	29	1622

REGISTERED CIVIL ENGINEER 4-2-14 DATE

1-25-16
PLANS APPROVAL DATE

REGISTERED PROFESSIONAL ENGINEER
VAN T. TRAN
No. C68477
Exp. 9-30-17
CIVIL
STATE OF CALIFORNIA

THE STATE OF CALIFORNIA OR ITS OFFICERS OR AGENTS SHALL NOT BE RESPONSIBLE FOR THE ACCURACY OR COMPLETENESS OF SCANNED COPIES OF THIS PLAN SHEET.

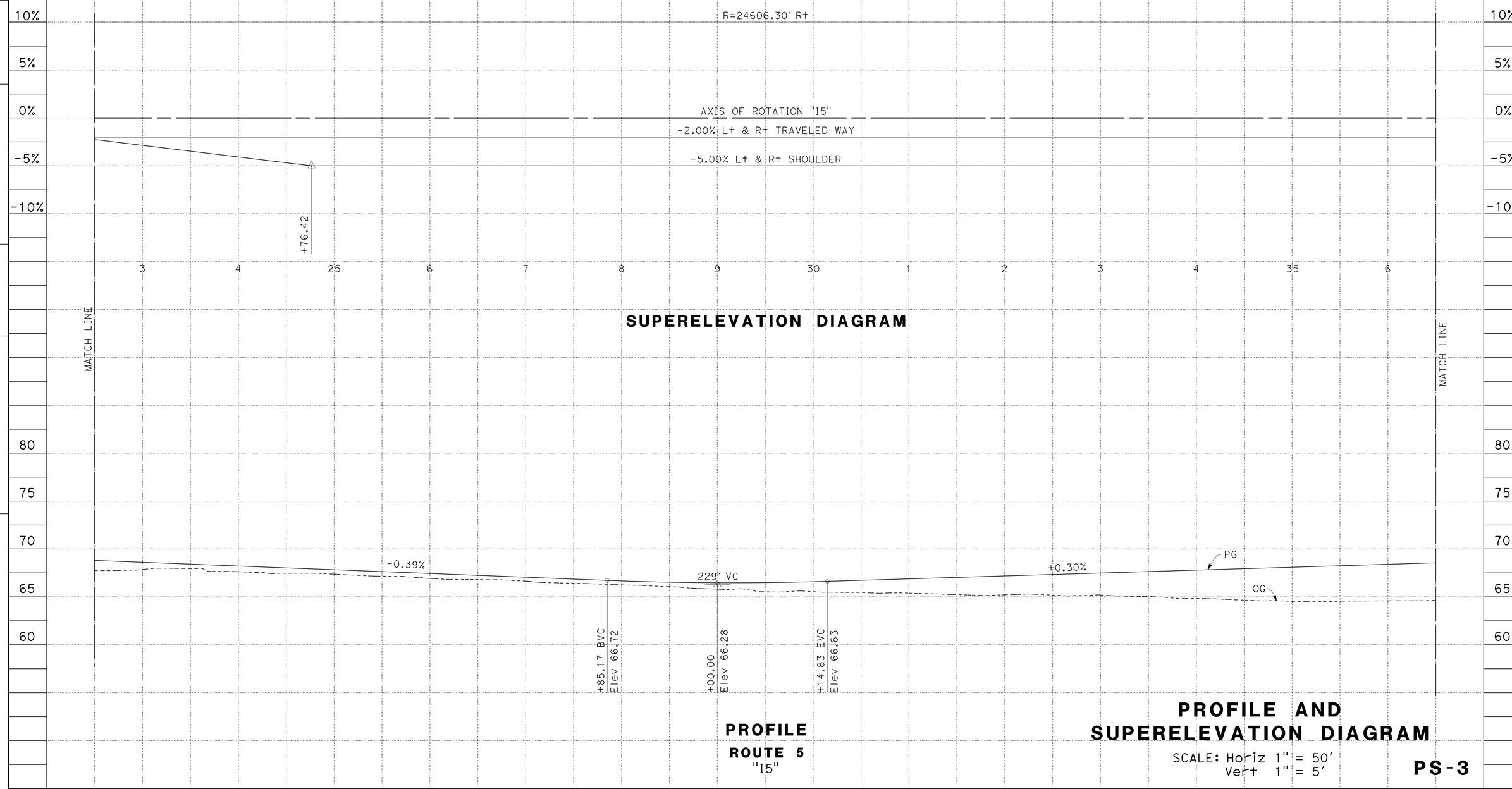

STATION		3	4	25	6	7	8	9	30	1	2	3	4	35	6	TOTAL
CY	Exc	14,267														14,267
	Emb	989														989

REVISED BY | DATE REVISED
HUNG TIEU | H.S. CHEN
CALCULATED-DESIGNED BY | CHECKED BY
FUNCTIONAL SUPERVISOR: RICHARD CHIANG

STATE OF CALIFORNIA - DEPARTMENT OF TRANSPORTATION
Caltrans
DESIGN

LAST REVISION 00-00-00 | DATE PLOTTED => 03-FEB-2016 | TIME PLOTTED => 09:22

Dist	COUNTY	ROUTE	POST MILES TOTAL PROJECT	SHEET No.	TOTAL SHEETS
07	LA,Ora	5	0.0/1.5, 44.3/44.4	30	1622

REGISTERED CIVIL ENGINEER 4-2-14 DATE

1-25-16
PLANS APPROVAL DATE

REGISTERED PROFESSIONAL ENGINEER
VAN T. TRAN
No. C68477
Exp. 9-30-17
CIVIL
STATE OF CALIFORNIA

THE STATE OF CALIFORNIA OR ITS OFFICERS OR AGENTS SHALL NOT BE RESPONSIBLE FOR THE ACCURACY OR COMPLETENESS OF SCANNED COPIES OF THIS PLAN SHEET.

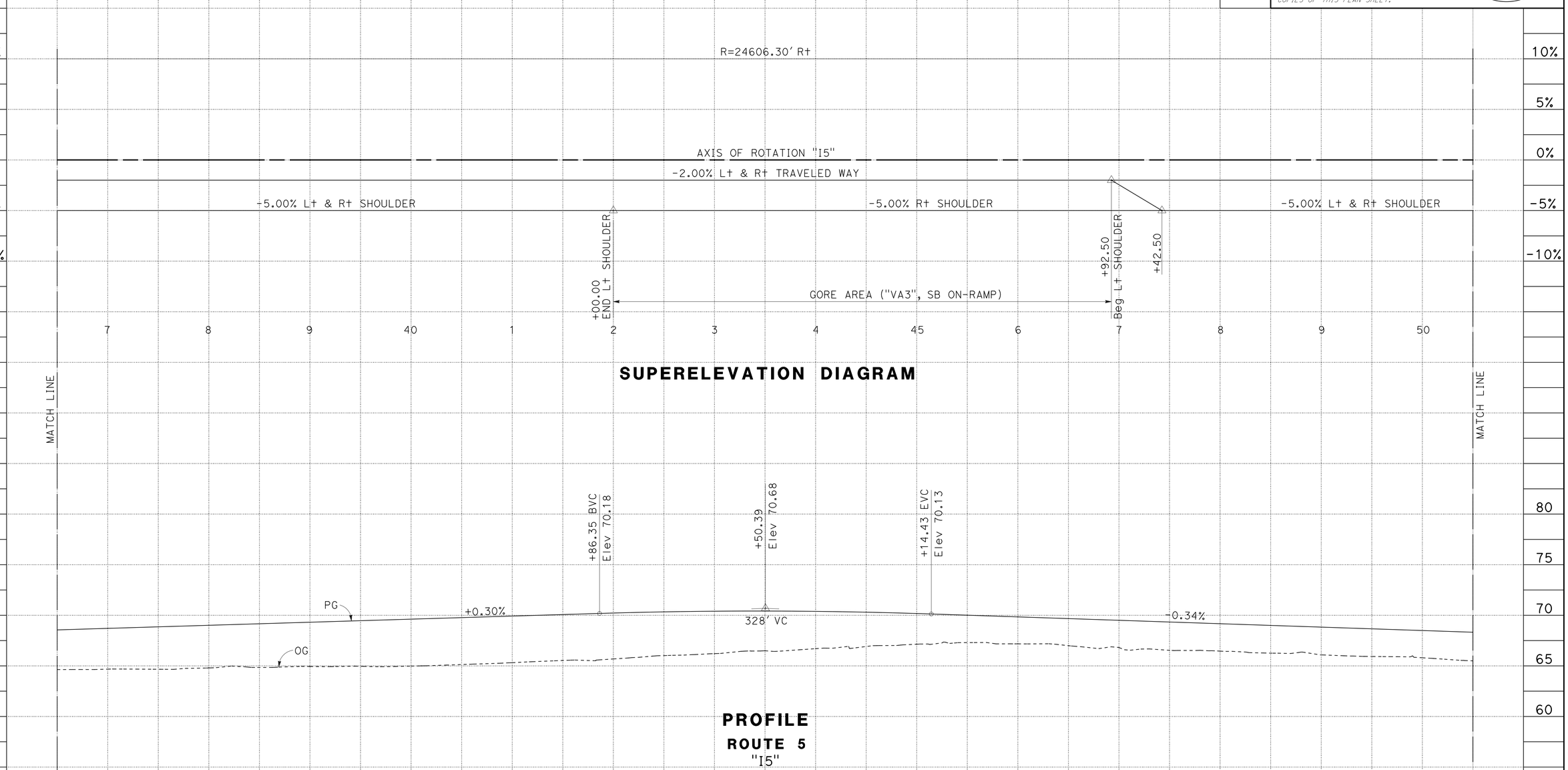

PROFILE AND SUPERELEVATION DIAGRAM

SCALE: Horiz 1" = 50'
Vert 1" = 5'

PS-4

STATION		7	8	9	40	1	2	3	4	45	6	7	8	9	50	TOTAL
CY	Exc	10,456														10,456
	Emb	5,932														5,932

STATE OF CALIFORNIA - DEPARTMENT OF TRANSPORTATION
Caltrans
DESIGN
FUNCTIONAL SUPERVISOR: RICHARD CHIANG
CALCULATED-DESIGNED BY: HUNG TIEU
CHECKED BY: H.S. CHEN
REVISED BY
DATE REVISED

LAST REVISION 00-00-00
DATE PLOTTED => 03-FEB-2016
TIME PLOTTED => 09:22

Dist	COUNTY	ROUTE	POST MILES TOTAL PROJECT	SHEET No.	TOTAL SHEETS
07	LA,Ora	5	0.0/1.5, 44.3/44.4	31	1622

REGISTERED CIVIL ENGINEER 4-2-14 DATE

1-25-16
PLANS APPROVAL DATE

REGISTERED PROFESSIONAL ENGINEER
VAN T. TRAN
No. C68477
Exp. 9-30-17
CIVIL
STATE OF CALIFORNIA

THE STATE OF CALIFORNIA OR ITS OFFICERS OR AGENTS SHALL NOT BE RESPONSIBLE FOR THE ACCURACY OR COMPLETENESS OF SCANNED COPIES OF THIS PLAN SHEET.

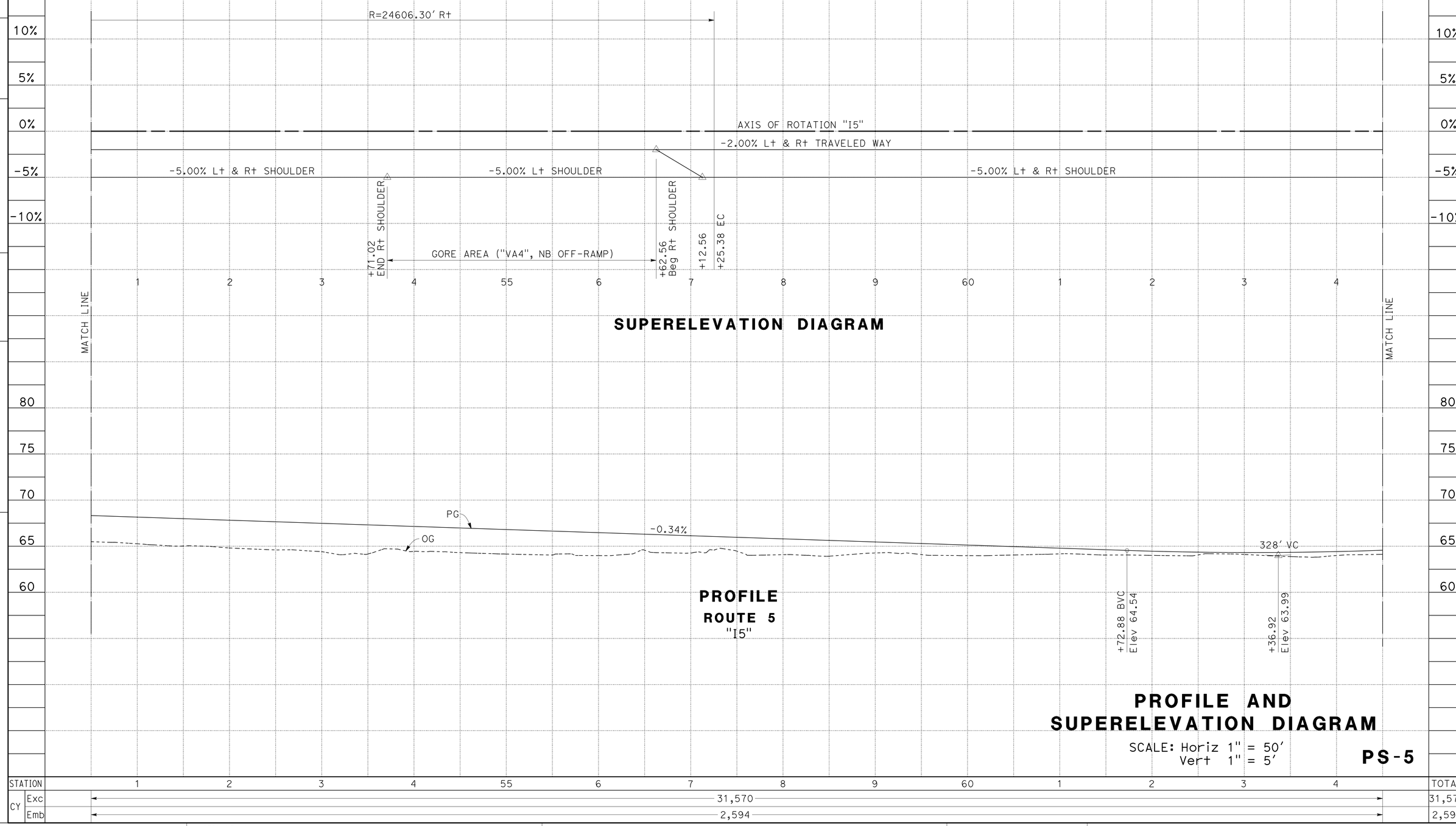

STATION		1	2	3	4	55	6	7	8	9	60	1	2	3	4	TOTAL
CY	Exc	31,570														31,570
	Emb	2,594														2,594

STATE OF CALIFORNIA - DEPARTMENT OF TRANSPORTATION
Caltrans
DESIGN

FUNCTIONAL SUPERVISOR: RICHARD CHIANG
CALCULATED-DESIGNED BY: H.S. CHEN
CHECKED BY: HUNG TIEU
REVISED BY
DATE REVISED

LAST REVISION 00-00-00
DATE PLOTTED => 03-FEB-2016
TIME PLOTTED => 09:22

Dist	COUNTY	ROUTE	POST MILES TOTAL PROJECT	SHEET No.	TOTAL SHEETS
07	LA,Ora	5	0.0/1.5, 44.3/44.4	32	1622

REGISTERED CIVIL ENGINEER 4-2-14 DATE

1-25-16
PLANS APPROVAL DATE

REGISTERED PROFESSIONAL ENGINEER
VAN T. TRAN
No. C68477
Exp. 9-30-17
CIVIL
STATE OF CALIFORNIA

THE STATE OF CALIFORNIA OR ITS OFFICERS OR AGENTS SHALL NOT BE RESPONSIBLE FOR THE ACCURACY OR COMPLETENESS OF SCANNED COPIES OF THIS PLAN SHEET.

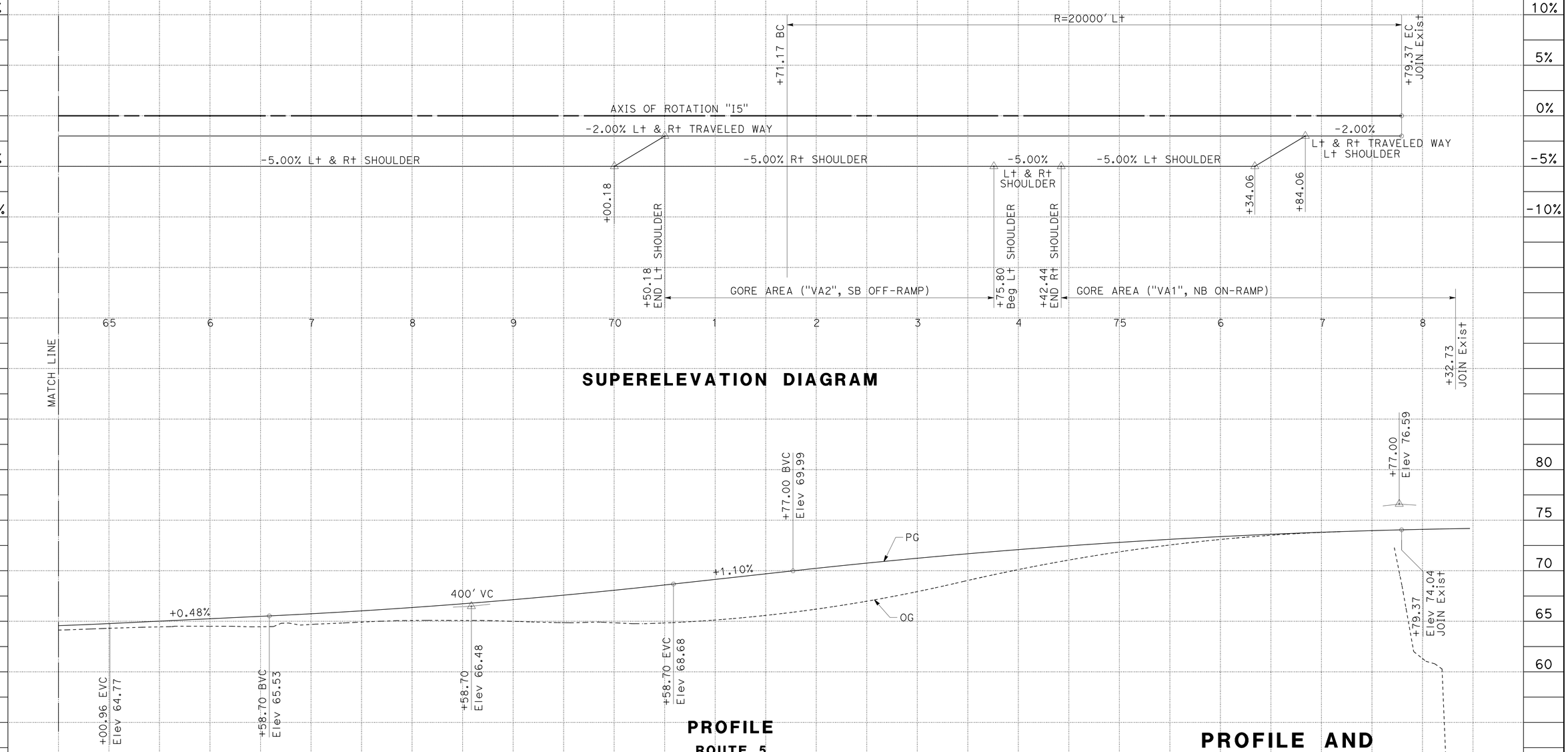

PROFILE AND SUPERELEVATION DIAGRAM

SCALE: Horiz 1" = 50'
Vert 1" = 5'

PS-6

STATION		65	6	7	8	9	70	1	2	3	4	75	6	7	8	TOTAL
CY	Exc	8,545														8,545
	Emb	13,231														13,231

STATE OF CALIFORNIA - DEPARTMENT OF TRANSPORTATION
Caltrans®
DESIGN

FUNCTIONAL SUPERVISOR: RICHARD CHIANG
CALCULATED-DESIGNED BY: H.S. CHEN
CHECKED BY: HUNG TIEU
REVISED BY
DATE REVISED

LAST REVISION 00-00-00
DATE PLOTTED => 03-FEB-2016
TIME PLOTTED => 09:22

Dist	COUNTY	ROUTE	POST MILES TOTAL PROJECT	SHEET No.	TOTAL SHEETS
07	LA,Ora	5	0.0/1.5, 44.3/44.4	33	1622

REGISTERED CIVIL ENGINEER 4-2-14 DATE

1-25-16
PLANS APPROVAL DATE

REGISTERED PROFESSIONAL ENGINEER
VAN T. TRAN
No. C68477
Exp. 9-30-17
CIVIL
STATE OF CALIFORNIA

THE STATE OF CALIFORNIA OR ITS OFFICERS OR AGENTS SHALL NOT BE RESPONSIBLE FOR THE ACCURACY OR COMPLETENESS OF SCANNED COPIES OF THIS PLAN SHEET.

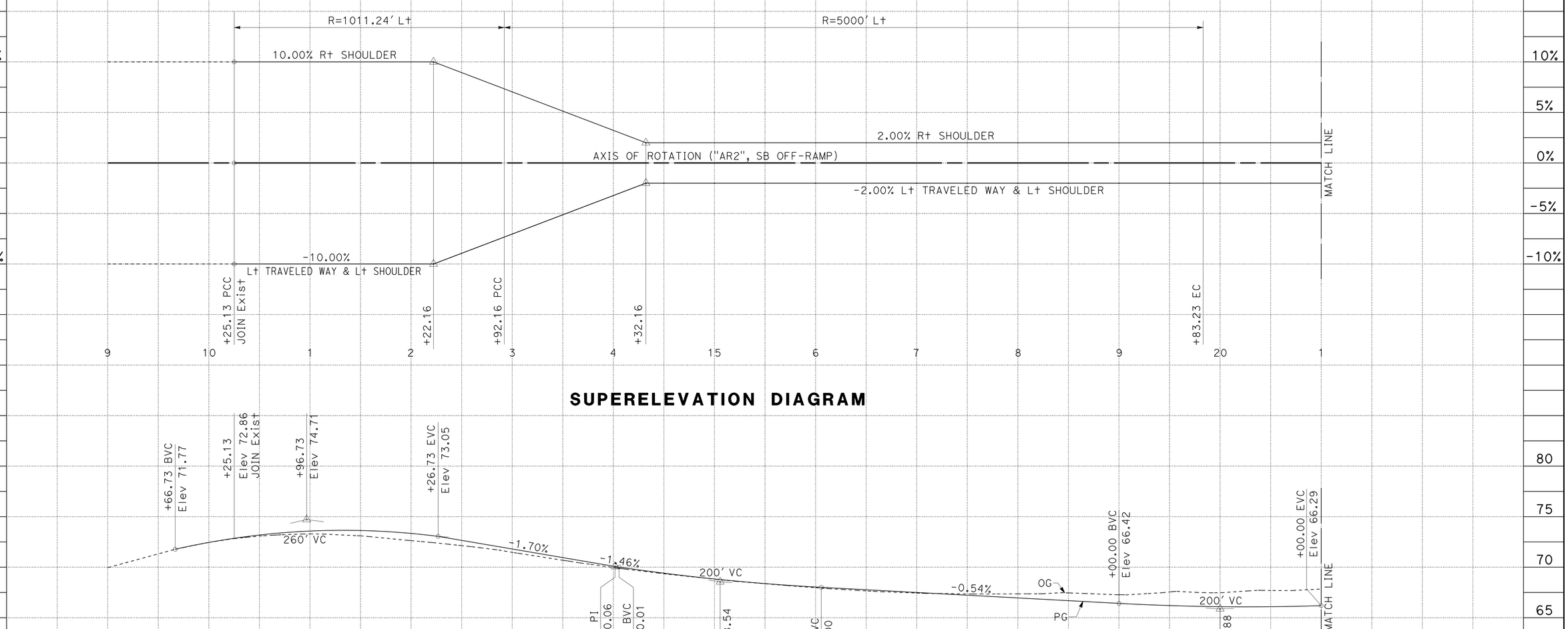

PROFILE AND SUPERELEVATION DIAGRAM

SCALE: Horiz 1" = 50'
Vert 1" = 5'

PS-7

STATION		9	10	1	2	3	4	15	6	7	8	9	20	1	TOTAL
CY	Exc			3,197											3,197
	Emb			4											4

STATE OF CALIFORNIA - DEPARTMENT OF TRANSPORTATION
Caltrans®
DESIGN

FUNCTIONAL SUPERVISOR: RICHARD CHIANG
CALCULATED-DESIGNED BY: HUNG TIEU
CHECKED BY: H.S. CHEN
REVISED BY
DATE REVISED

LAST REVISION 00-00-00
DATE PLOTTED => 03-FEB-2016
TIME PLOTTED => 09:22

Dist	COUNTY	ROUTE	POST MILES TOTAL PROJECT	SHEET No.	TOTAL SHEETS
07	LA,Ora	5	0.0/1.5, 44.3/44.4	34	1622

REGISTERED CIVIL ENGINEER 4-2-14 DATE

1-25-16
PLANS APPROVAL DATE

REGISTERED PROFESSIONAL ENGINEER
VAN T. TRAN
No. C68477
Exp. 9-30-17
CIVIL
STATE OF CALIFORNIA

THE STATE OF CALIFORNIA OR ITS OFFICERS OR AGENTS SHALL NOT BE RESPONSIBLE FOR THE ACCURACY OR COMPLETENESS OF SCANNED COPIES OF THIS PLAN SHEET.

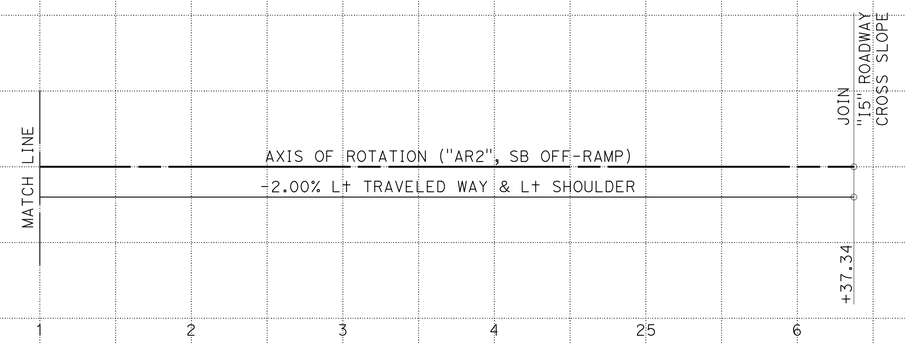

SUPERELEVATION DIAGRAM

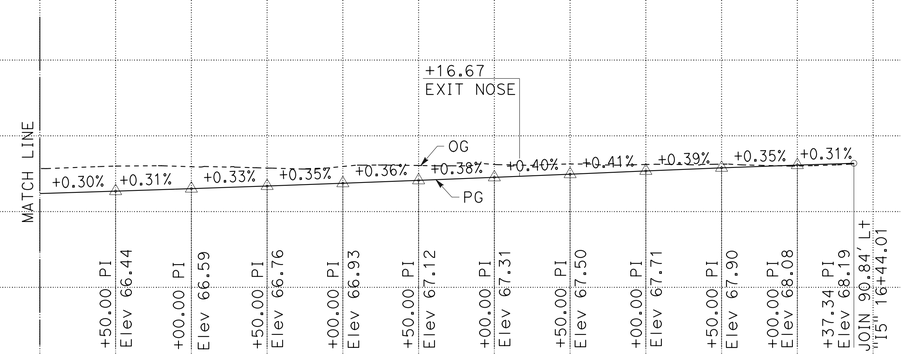

PROFILE

SB OFF-RAMP
ARTESIA Blvd
"AR2"

PROFILE AND SUPERELEVATION DIAGRAM

SCALE: Horiz 1" = 50'
Vert 1" = 5'

PS-8

STATION	1	2	3	4	25	6	7	TOTAL
CY Exc	1,927							1,927
CY Emb	0							0

STATE OF CALIFORNIA - DEPARTMENT OF TRANSPORTATION
Caltrans
DESIGN

FUNCTIONAL SUPERVISOR: RICHARD CHIANG
CALCULATED-DESIGNED BY: H.S. CHEN
CHECKED BY: HUNG TIEU
REVISED BY
DATE REVISED

LAST REVISION 00-00-00
DATE PLOTTED => 03-FEB-2016
TIME PLOTTED => 09:22

Dist	COUNTY	ROUTE	POST MILES TOTAL PROJECT	SHEET No.	TOTAL SHEETS
07	LA,Ora	5	0.0/1.5, 44.3/44.4	35	1622

REGISTERED CIVIL ENGINEER 4-2-14 DATE

1-25-16
PLANS APPROVAL DATE

REGISTERED PROFESSIONAL ENGINEER VAN T. TRAN No. C68477 Exp. 9-30-17 CIVIL STATE OF CALIFORNIA

THE STATE OF CALIFORNIA OR ITS OFFICERS OR AGENTS SHALL NOT BE RESPONSIBLE FOR THE ACCURACY OR COMPLETENESS OF SCANNED COPIES OF THIS PLAN SHEET.

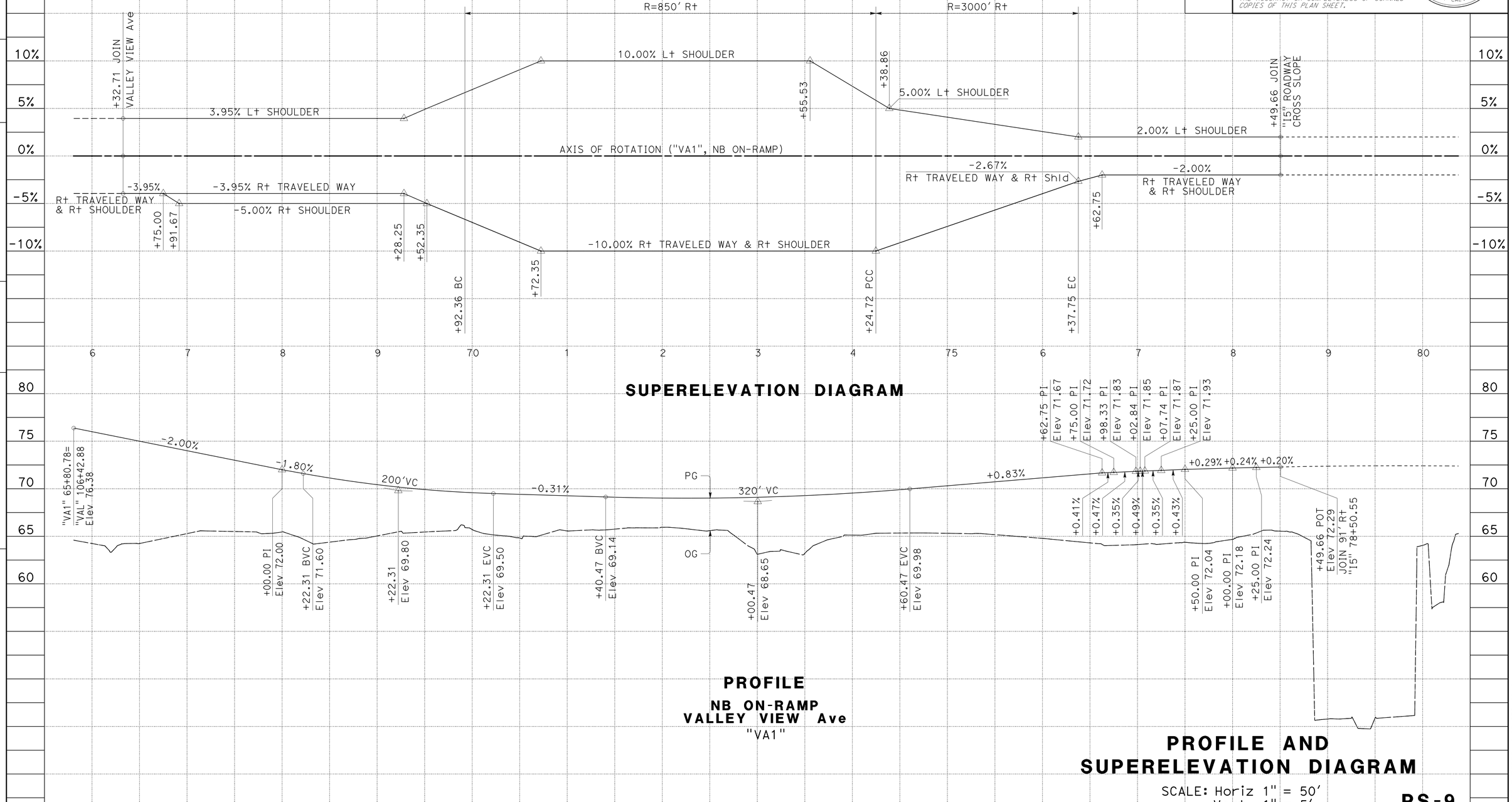

PROFILE AND SUPERELEVATION DIAGRAM

SCALE: Horiz 1" = 50'
Vert 1" = 5'

PS-9

STATION	6	7	8	9	70	1	2	3	4	75	6	7	8	9	80	TOTAL
CY Exc								120								120
CY Emb								5,594								5,594

STATE OF CALIFORNIA - DEPARTMENT OF TRANSPORTATION
Caltrans DESIGN

FUNCTIONAL SUPERVISOR: RICHARD CHIANG
CALCULATED-DESIGNED BY: MARCELO DE LA FUENTE
CHECKED BY: VAN TRAN
REVISED BY
DATE REVISED

LAST REVISION 00-00-00
DATE PLOTTED => 03-FEB-2016
TIME PLOTTED => 09:22

Dist	COUNTY	ROUTE	POST MILES TOTAL PROJECT	SHEET No.	TOTAL SHEETS
07	LA,Ora	5	0.0/1.5, 44.3/44.4	36	1622

REGISTERED CIVIL ENGINEER 4-2-14 DATE

1-25-16
PLANS APPROVAL DATE

REGISTERED PROFESSIONAL ENGINEER VAN T. TRAN No. C68477 Exp. 9-30-17 CIVIL STATE OF CALIFORNIA

THE STATE OF CALIFORNIA OR ITS OFFICERS OR AGENTS SHALL NOT BE RESPONSIBLE FOR THE ACCURACY OR COMPLETENESS OF SCANNED COPIES OF THIS PLAN SHEET.

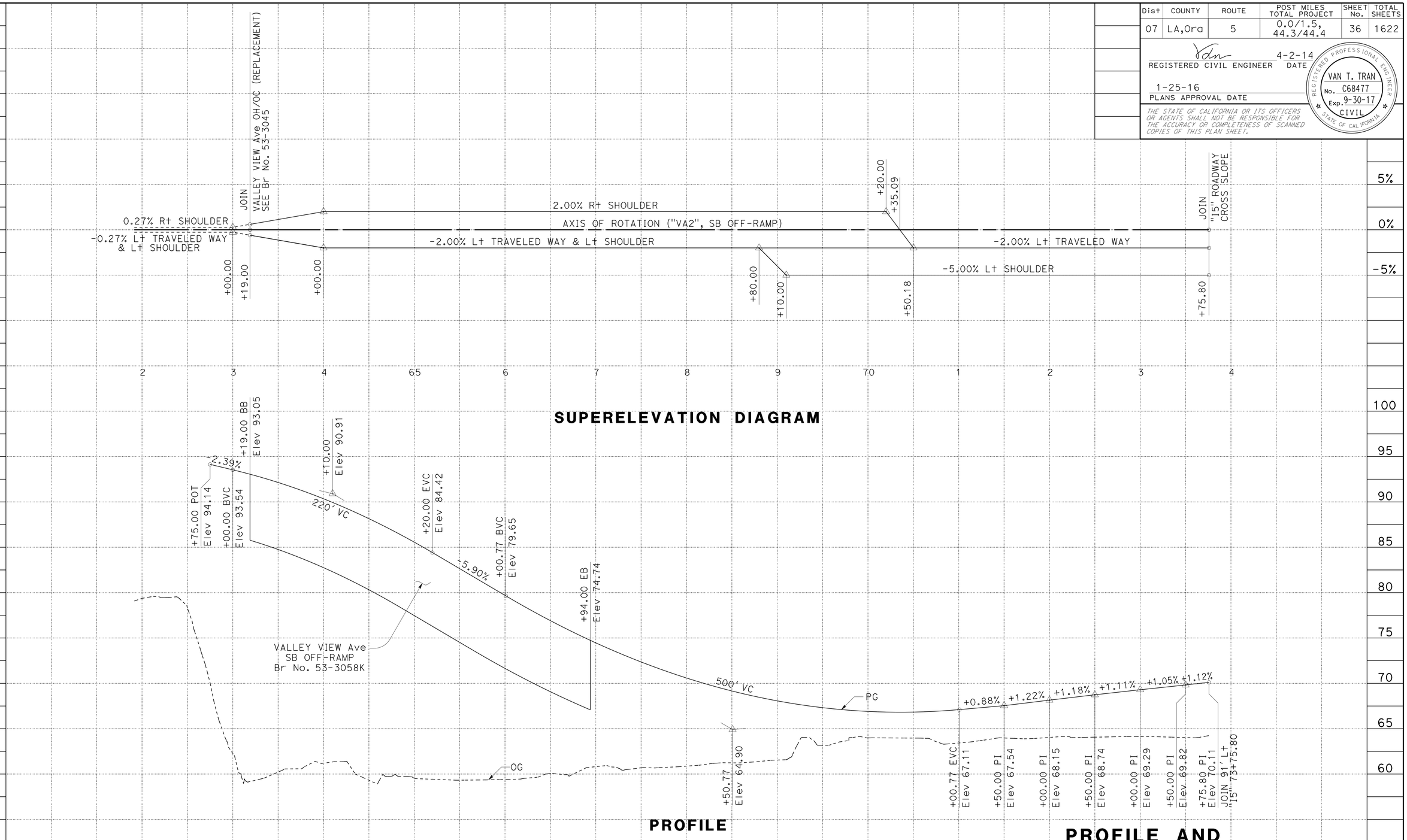

STATION		2	3	4	65	6	7	8	9	70	1	2	3	4	TOTAL
CY	Exc						0				MAIN				0
	Emb						1,095				LINE				1,095

STATE OF CALIFORNIA - DEPARTMENT OF TRANSPORTATION
Caltrans DESIGN
FUNCTIONAL SUPERVISOR RICHARD CHIANG
CALCULATED-DESIGNED BY VAN TRAN
CHECKED BY H.S. CHEN
REVISED BY
DATE REVISED

LAST REVISION 00-00-00
DATE PLOTTED => 03-FEB-2016
TIME PLOTTED => 09:22

Dist	COUNTY	ROUTE	POST MILES TOTAL PROJECT	SHEET No.	TOTAL SHEETS
07	LA,Ora	5	0.0/1.5, 44.3/44.4	37	1622

REGISTERED CIVIL ENGINEER 4-2-14 DATE

1-25-16
PLANS APPROVAL DATE

REGISTERED PROFESSIONAL ENGINEER VAN T. TRAN No. C68477 Exp. 9-30-17 CIVIL STATE OF CALIFORNIA

THE STATE OF CALIFORNIA OR ITS OFFICERS OR AGENTS SHALL NOT BE RESPONSIBLE FOR THE ACCURACY OR COMPLETENESS OF SCANNED COPIES OF THIS PLAN SHEET.

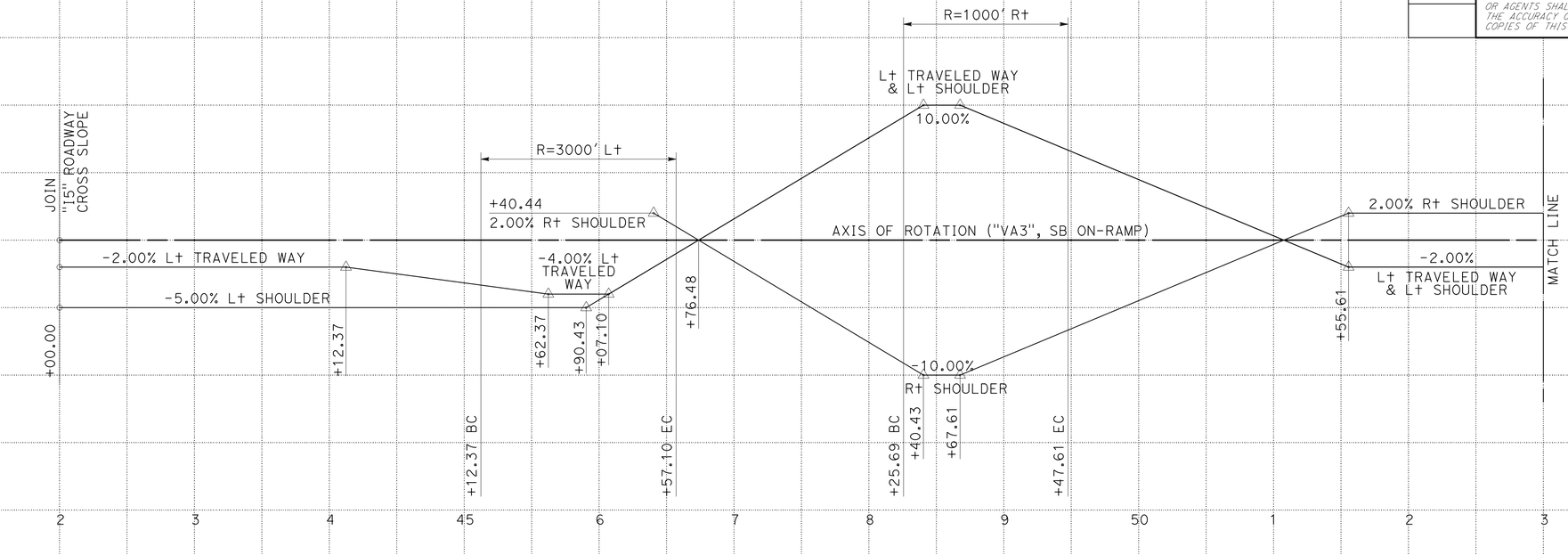

SUPERELEVATION DIAGRAM

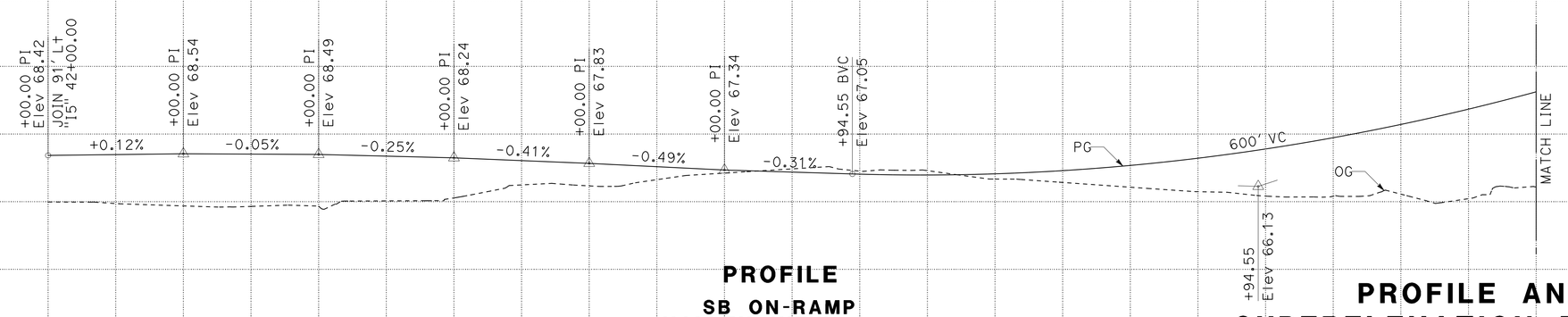

PROFILE

SB ON-RAMP
VALLEY VIEW Ave
"VA3"

PROFILE AND SUPERELEVATION DIAGRAM

SCALE: Horiz 1" = 50'
Vert 1" = 5'

PS-11

STATION	2	3	4	45	6	7	8	9	50	1	2	3	TOTAL
CY Exc	937												937
CY Emb	842												842

STATE OF CALIFORNIA - DEPARTMENT OF TRANSPORTATION
Caltrans
DESIGN
FUNCTIONAL SUPERVISOR: RICHARD CHIANG
CALCULATED-DESIGNED BY: VAN TRAN
CHECKED BY: H.S. CHEN
REVISED BY
DATE REVISED

LAST REVISION 00-00-00
DATE PLOTTED => 03-FEB-2016
TIME PLOTTED => 09:23

Dist	COUNTY	ROUTE	POST MILES TOTAL PROJECT	SHEET No.	TOTAL SHEETS
07	LA,Ora	5	0.0/1.5, 44.3/44.4	38	1622

REGISTERED CIVIL ENGINEER 4-2-14 DATE

1-25-16
PLANS APPROVAL DATE

REGISTERED PROFESSIONAL ENGINEER VAN T. TRAN No. C68477 Exp. 9-30-17 CIVIL STATE OF CALIFORNIA

THE STATE OF CALIFORNIA OR ITS OFFICERS OR AGENTS SHALL NOT BE RESPONSIBLE FOR THE ACCURACY OR COMPLETENESS OF SCANNED COPIES OF THIS PLAN SHEET.

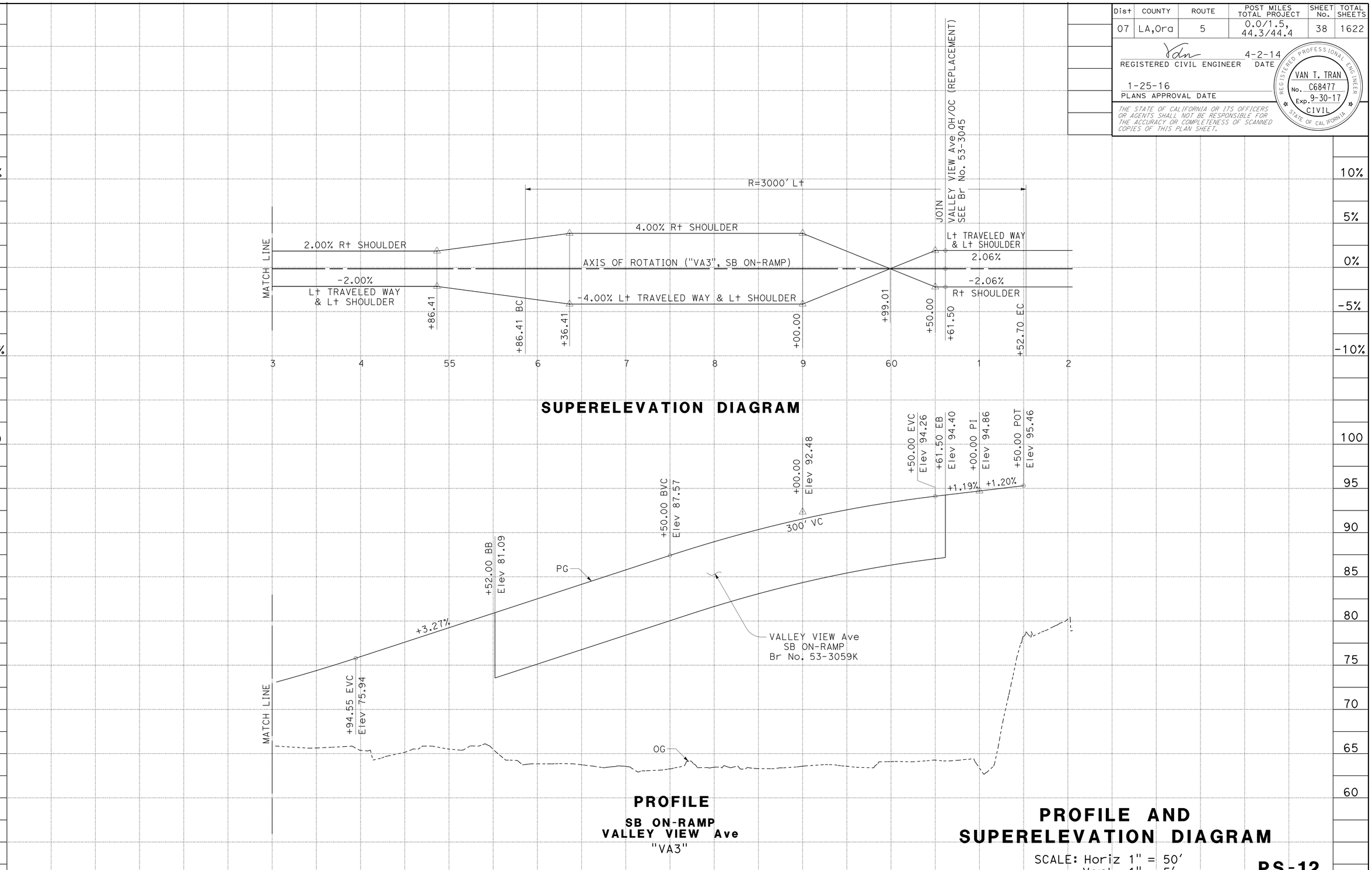

PROFILE AND SUPERELEVATION DIAGRAM

SCALE: Horiz 1" = 50'
Vert 1" = 5'

PS-12

STATION	3	4	55	6	7	8	9	60	1	2	TOTAL
CY Exc	0										0
CY Emb	2,888										2,888

STATE OF CALIFORNIA - DEPARTMENT OF TRANSPORTATION
Caltrans
DESIGN
FUNCTIONAL SUPERVISOR: RICHARD CHIANG
CALCULATED-DESIGNED BY: VAN TRAN
CHECKED BY: H.S. CHEN
REVISED BY
DATE REVISED

LAST REVISION 00-00-00
DATE PLOTTED => 03-FEB-2016
TIME PLOTTED => 09:23

Dist	COUNTY	ROUTE	POST MILES TOTAL PROJECT	SHEET No.	TOTAL SHEETS
07	LA,Ora	5	0.0/1.5, 44.3/44.4	39	1622

REGISTERED CIVIL ENGINEER 4-2-14 DATE

1-25-16
PLANS APPROVAL DATE

REGISTERED PROFESSIONAL ENGINEER VAN T. TRAN No. C68477 Exp. 9-30-17 CIVIL STATE OF CALIFORNIA

THE STATE OF CALIFORNIA OR ITS OFFICERS OR AGENTS SHALL NOT BE RESPONSIBLE FOR THE ACCURACY OR COMPLETENESS OF SCANNED COPIES OF THIS PLAN SHEET.

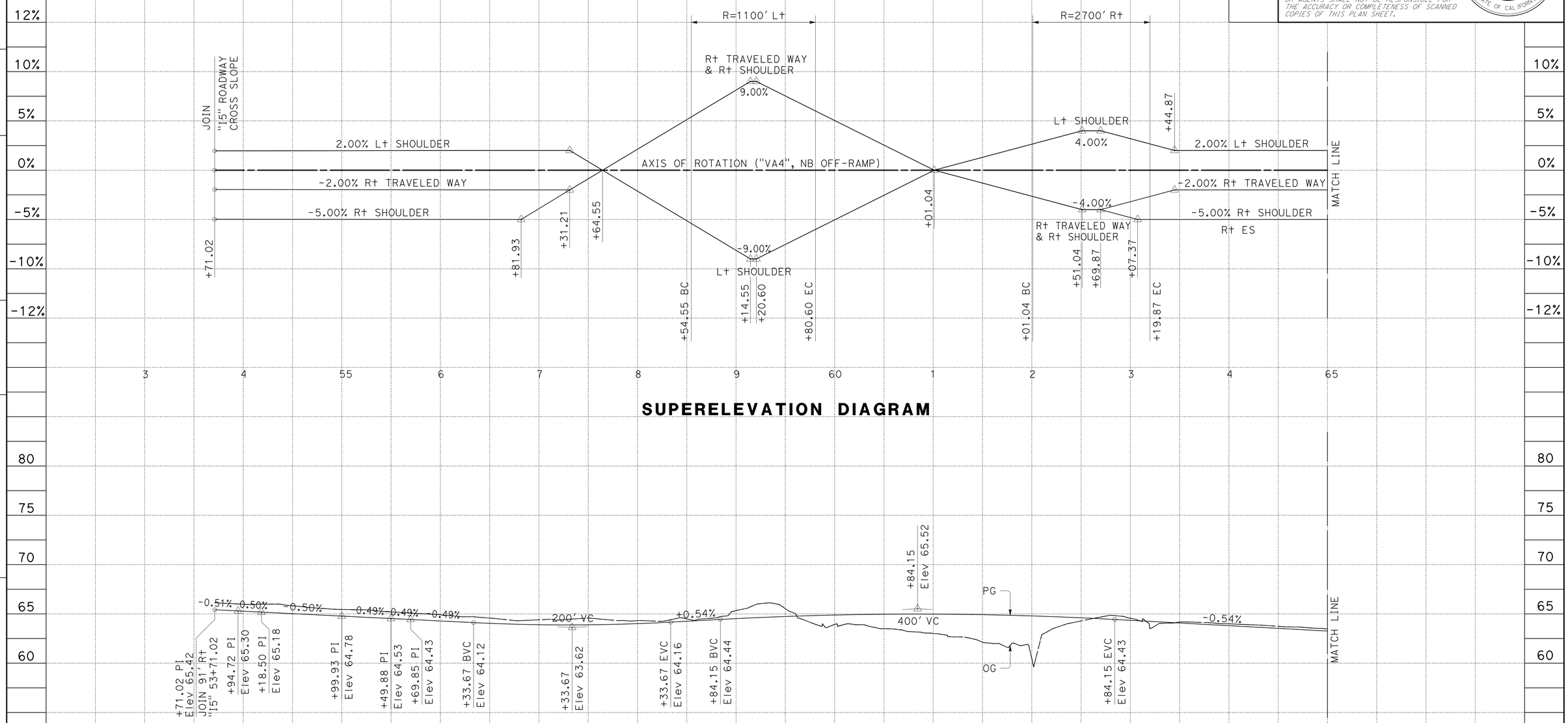

SUPERELEVATION DIAGRAM

PROFILE

NB OFF-RAMP
VALLEY VIEW Ave
"VA4"

PROFILE AND SUPERELEVATION DIAGRAM

SCALE: Horiz 1" = 50'
Vert 1" = 5'

PS-13

STATION	3	4	55	6	7	8	9	60	1	2	3	4	65	TOTAL
CY Exc							1,936							1,936
CY Emb							255							255

STATE OF CALIFORNIA - DEPARTMENT OF TRANSPORTATION
Caltrans DESIGN
FUNCTIONAL SUPERVISOR: RICHARD CHIANG
CALCULATED-DESIGNED BY: VAN TRAN
CHECKED BY: H.S. CHEN
REVISED BY / DATE REVISED

LAST REVISION 00-00-00
DATE PLOTTED => 03-FEB-2016
TIME PLOTTED => 09:23

Dist	COUNTY	ROUTE	POST MILES TOTAL PROJECT	SHEET No.	TOTAL SHEETS
07	LA,Ora	5	0.0/1.5, 44.3/44.4	40	1622

REGISTERED CIVIL ENGINEER 4-2-14 DATE

1-25-16
PLANS APPROVAL DATE

REGISTERED PROFESSIONAL ENGINEER VAN T. TRAN No. C68477 Exp. 9-30-17 CIVIL STATE OF CALIFORNIA

THE STATE OF CALIFORNIA OR ITS OFFICERS OR AGENTS SHALL NOT BE RESPONSIBLE FOR THE ACCURACY OR COMPLETENESS OF SCANNED COPIES OF THIS PLAN SHEET.

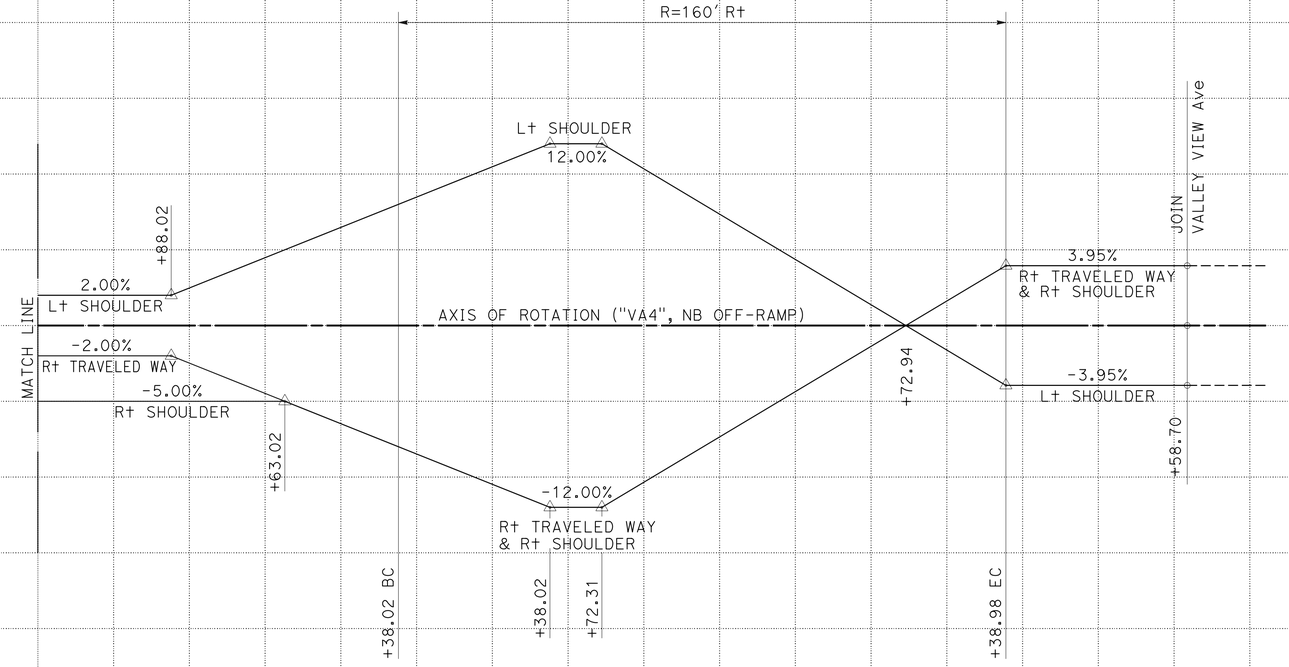

SUPERELEVATION DIAGRAM

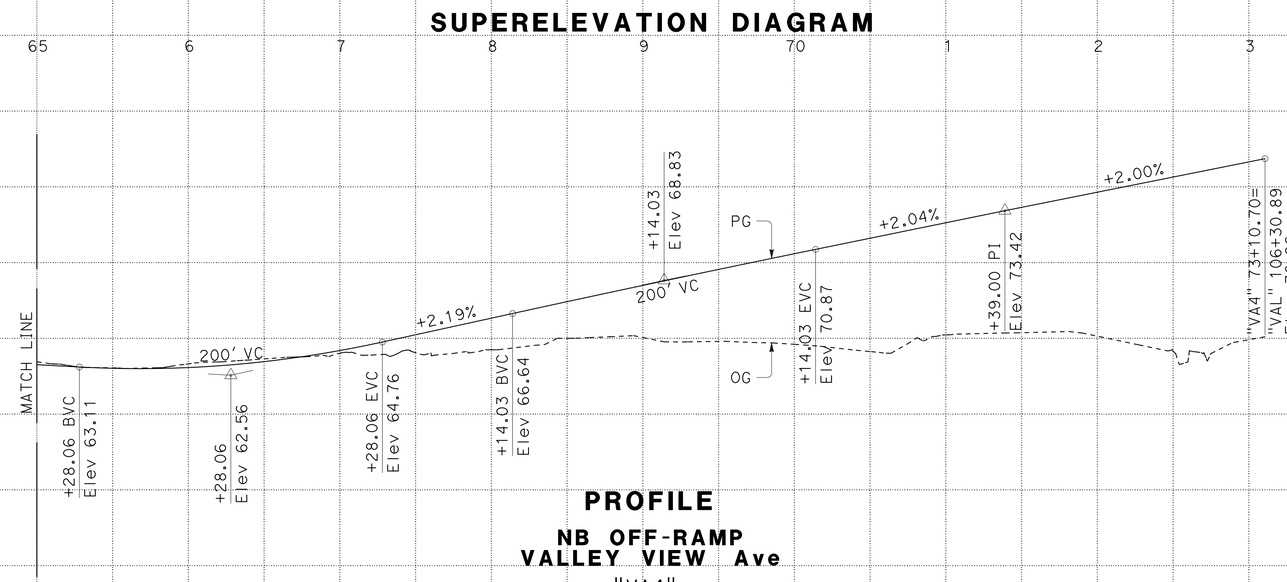

PROFILE

NB OFF-RAMP
VALLEY VIEW Ave
"VA4"

PROFILE AND SUPERELEVATION DIAGRAM

SCALE: Horiz 1" = 50'
Vert 1" = 5'

PS-14

STATION		65	6	7	8	9	70	1	2	3	TOTAL
CY	Exc	1,314									1,314
	Emb	4,760									4,760

STATE OF CALIFORNIA - DEPARTMENT OF TRANSPORTATION
Caltrans DESIGN
FUNCTIONAL SUPERVISOR: RICHARD CHIANG
CALCULATED-DESIGNED BY: VAN TRAN
CHECKED BY: H.S. CHEN
REVISED BY
DATE REVISED

LAST REVISION 00-00-00
DATE PLOTTED => 03-FEB-2016
TIME PLOTTED => 09:23

Dist	COUNTY	ROUTE	POST MILES TOTAL PROJECT	SHEET No.	TOTAL SHEETS
07	LA,Ora	5	0.0/1.5, 44.3/44.4	41	1622

REGISTERED CIVIL ENGINEER 4-2-14 DATE

1-25-16
PLANS APPROVAL DATE

REGISTERED PROFESSIONAL ENGINEER
VAN T. TRAN
No. C68477
Exp. 9-30-17
CIVIL
STATE OF CALIFORNIA

THE STATE OF CALIFORNIA OR ITS OFFICERS OR AGENTS SHALL NOT BE RESPONSIBLE FOR THE ACCURACY OR COMPLETENESS OF SCANNED COPIES OF THIS PLAN SHEET.

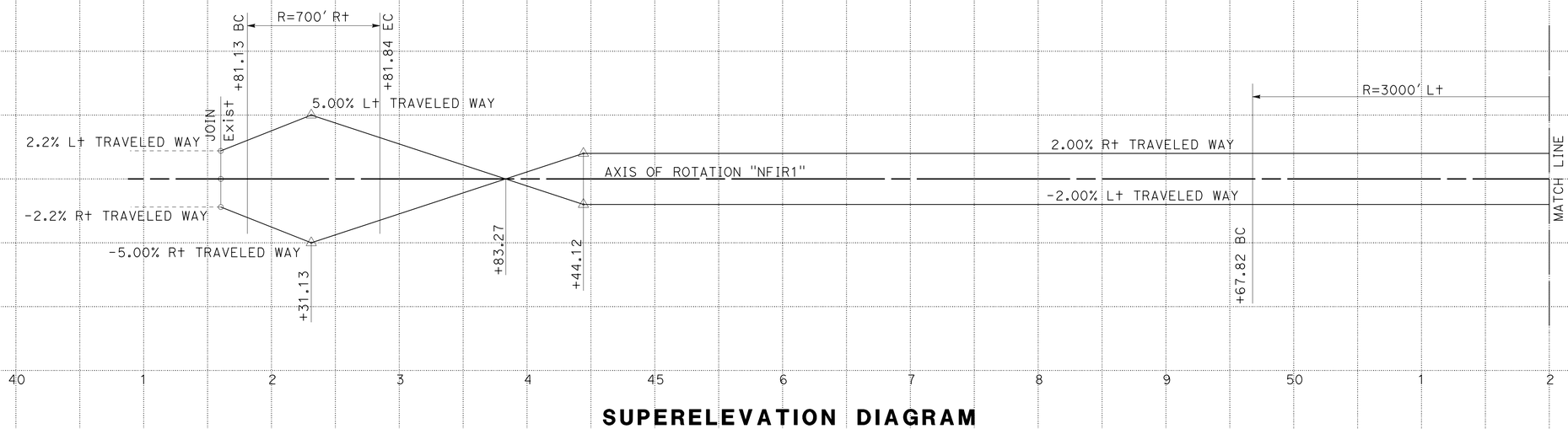

SUPERELEVATION DIAGRAM

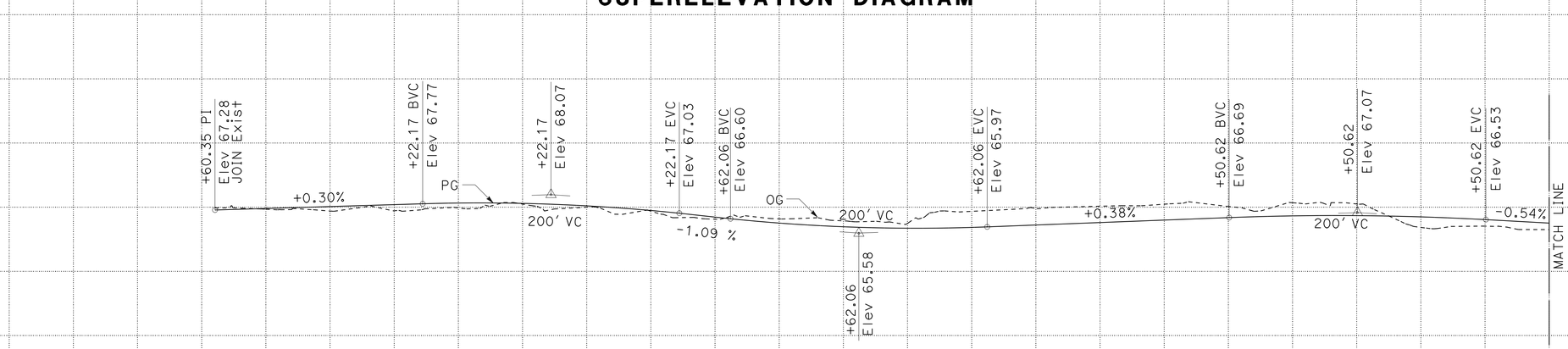

PROFILE

FIRESTONE Blvd

"NFIR1"

PROFILE AND SUPERELEVATION DIAGRAM

SCALE: Horiz 1" = 50'
Vert 1" = 5'

PS-15

STATION		40	1	2	3	4	45	6	7	8	9	50	1	2	TOTAL
CY	Exc			3,387											3,387
	Emb			718											718

STATE OF CALIFORNIA - DEPARTMENT OF TRANSPORTATION
Caltrans
DESIGN

FUNCTIONAL SUPERVISOR: RICHARD CHIANG
CALCULATED-DESIGNED BY: VAN TRAN
CHECKED BY: H.S. CHEN
REVISED BY
DATE REVISED

LAST REVISION 00-00-00
DATE PLOTTED => 03-FEB-2016
TIME PLOTTED => 09:23

Dist	COUNTY	ROUTE	POST MILES TOTAL PROJECT	SHEET No.	TOTAL SHEETS
07	LA,Ora	5	0.0/1.5, 44.3/44.4	42	1622

REGISTERED CIVIL ENGINEER 4-2-14 DATE

1-25-16
PLANS APPROVAL DATE

REGISTERED PROFESSIONAL ENGINEER
VAN T. TRAN
No. C68477
Exp. 9-30-17
CIVIL
STATE OF CALIFORNIA

THE STATE OF CALIFORNIA OR ITS OFFICERS OR AGENTS SHALL NOT BE RESPONSIBLE FOR THE ACCURACY OR COMPLETENESS OF SCANNED COPIES OF THIS PLAN SHEET.

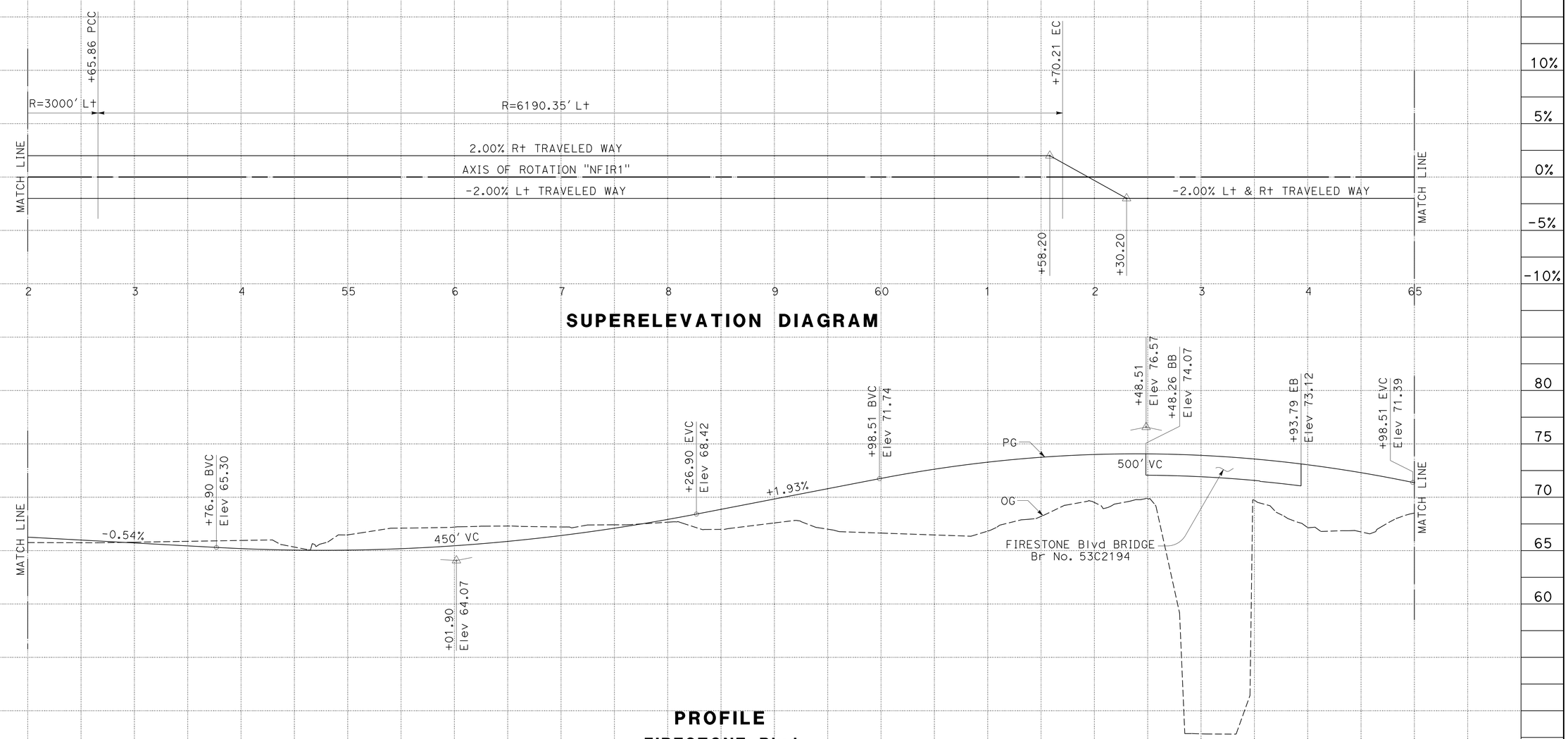

SUPERELEVATION DIAGRAM

PROFILE
FIRESTONE Blvd
"NFIR1"

PROFILE AND SUPERELEVATION DIAGRAM

SCALE: Horiz 1" = 50'
Vert 1" = 5'

PS-16

STATION		2	3	4	55	6	7	8	9	60	1	2	3	4	65	TOTAL
CY	Exc	2,457												0		2,457
	Emb	3,421												1,039		4,460

REVISED BY | DATE REVISED
VAN TRAN | H.S. CHEN
CALCULATED-DESIGNED BY | CHECKED BY
FUNCTIONAL SUPERVISOR: RICHARD CHIANG
STATE OF CALIFORNIA - DEPARTMENT OF TRANSPORTATION
Caltrans DESIGN

LAST REVISION 00-00-00
DATE PLOTTED => 03-FEB-2016
TIME PLOTTED => 09:23

Dist	COUNTY	ROUTE	POST MILES TOTAL PROJECT	SHEET No.	TOTAL SHEETS
07	LA,Ora	5	0.0/1.5, 44.3/44.4	43	1622

REGISTERED CIVIL ENGINEER 4-2-14 DATE

1-25-16
PLANS APPROVAL DATE

REGISTERED PROFESSIONAL ENGINEER
VAN T. TRAN
No. C68477
Exp. 9-30-17
CIVIL
STATE OF CALIFORNIA

THE STATE OF CALIFORNIA OR ITS OFFICERS OR AGENTS SHALL NOT BE RESPONSIBLE FOR THE ACCURACY OR COMPLETENESS OF SCANNED COPIES OF THIS PLAN SHEET.

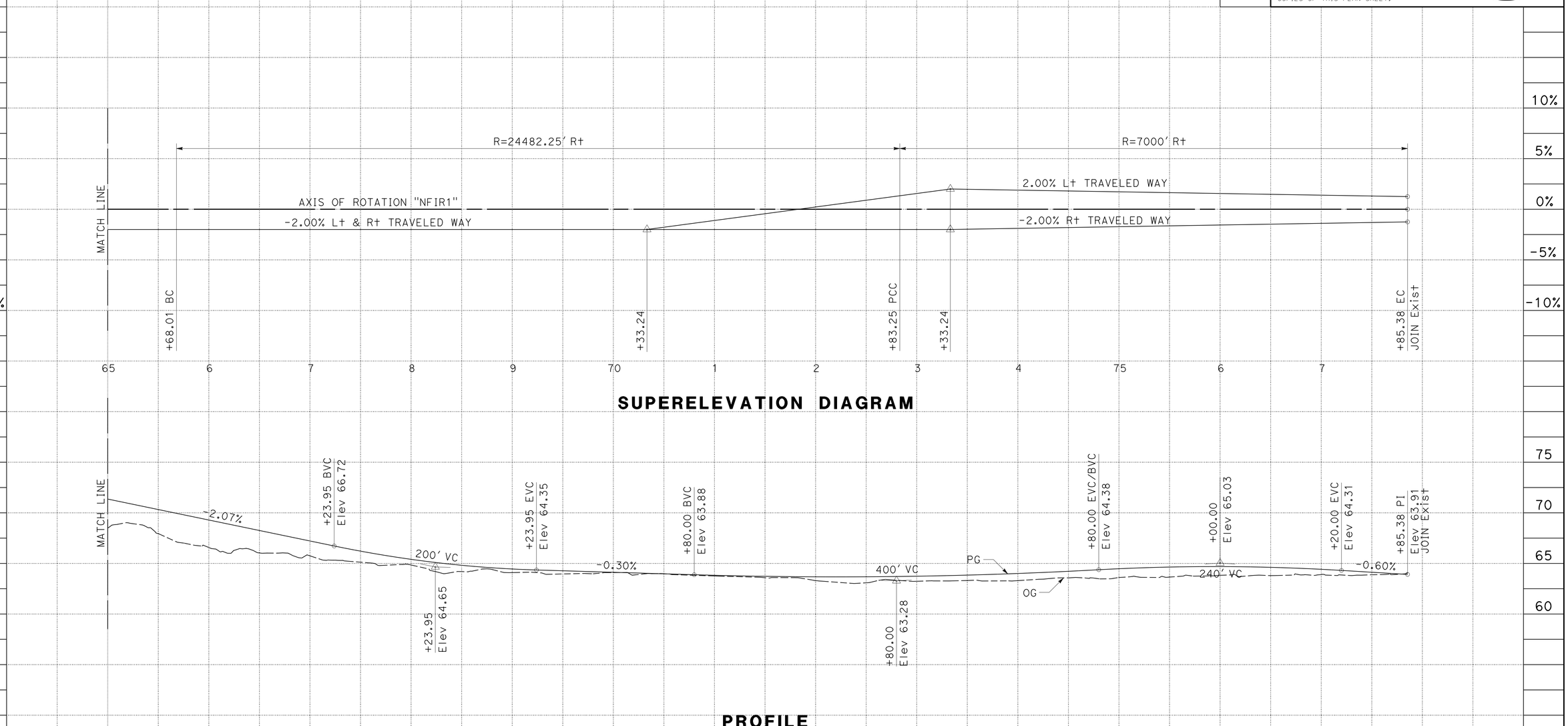

PROFILE

FIRESTONE Blvd
"NFIR1"

PROFILE AND SUPERELEVATION DIAGRAM

SCALE: Horiz 1" = 50'
Vert 1" = 5'

PS-17

STATION		65	6	7	8	9	70	1	2	3	4	75	6	7	TOTAL
CY	Exc	3,903													3,903
	Emb	1,694													1,694

STATE OF CALIFORNIA - DEPARTMENT OF TRANSPORTATION
Caltrans
DESIGN

FUNCTIONAL SUPERVISOR: RICHARD CHIANG
CALCULATED-DESIGNED BY: VAN TRAN
CHECKED BY: H.S. CHEN
REVISED BY
DATE REVISED

LAST REVISION 00-00-00
DATE PLOTTED => 03-FEB-2016
TIME PLOTTED => 09:23

Dist	COUNTY	ROUTE	POST MILES TOTAL PROJECT	SHEET No.	TOTAL SHEETS
07	LA,Ora	5	0.0/1.5, 44.3/44.4	44	1622

REGISTERED CIVIL ENGINEER 4-2-14 DATE

1-25-16
PLANS APPROVAL DATE

REGISTERED PROFESSIONAL ENGINEER
VAN T. TRAN
No. C68477
Exp. 9-30-17
CIVIL
STATE OF CALIFORNIA

THE STATE OF CALIFORNIA OR ITS OFFICERS OR AGENTS SHALL NOT BE RESPONSIBLE FOR THE ACCURACY OR COMPLETENESS OF SCANNED COPIES OF THIS PLAN SHEET.

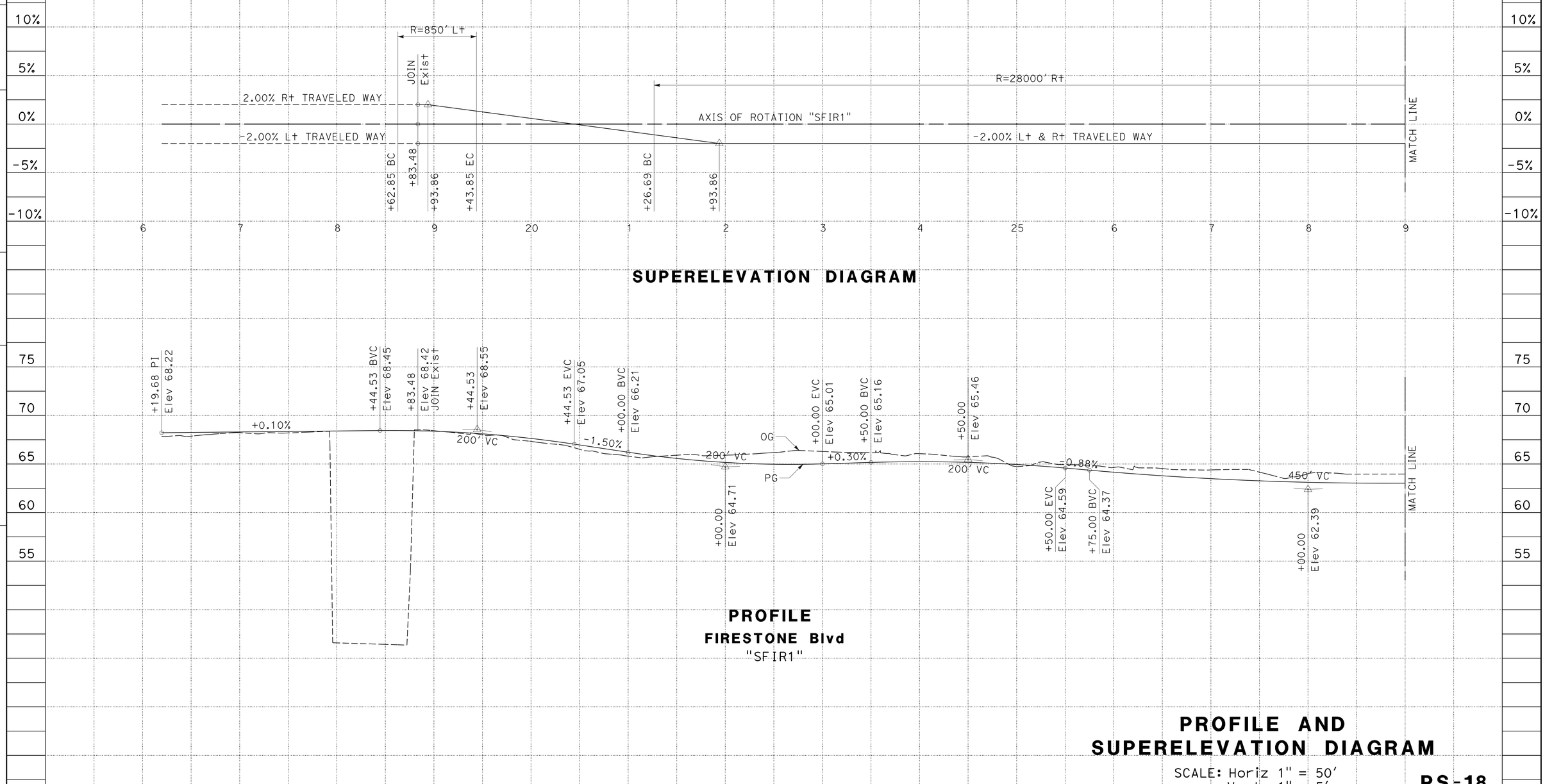

PROFILE AND SUPERELEVATION DIAGRAM

SCALE: Horiz 1" = 50'
Vert 1" = 5'

PS-18

STATION		6	7	8	9	20	1	2	3	4	25	6	7	8	9	TOTAL
CY	Exc				3,767											3,767
	Emb				131											131

STATE OF CALIFORNIA - DEPARTMENT OF TRANSPORTATION
Caltrans DESIGN

FUNCTIONAL SUPERVISOR: RICHARD CHIANG
CALCULATED-DESIGNED BY: VAN TRAN
CHECKED BY: H.S. CHEN
REVISED BY
DATE REVISED

LAST REVISION 00-00-00
DATE PLOTTED => 03-FEB-2016
TIME PLOTTED => 09:23

Dist	COUNTY	ROUTE	POST MILES TOTAL PROJECT	SHEET No.	TOTAL SHEETS
07	LA,Ora	5	0.0/1.5, 44.3/44.4	45	1622

REGISTERED CIVIL ENGINEER 4-2-14 DATE

1-25-16
PLANS APPROVAL DATE

REGISTERED PROFESSIONAL ENGINEER
VAN T. TRAN
No. C68477
Exp. 9-30-17
CIVIL
STATE OF CALIFORNIA

THE STATE OF CALIFORNIA OR ITS OFFICERS OR AGENTS SHALL NOT BE RESPONSIBLE FOR THE ACCURACY OR COMPLETENESS OF SCANNED COPIES OF THIS PLAN SHEET.

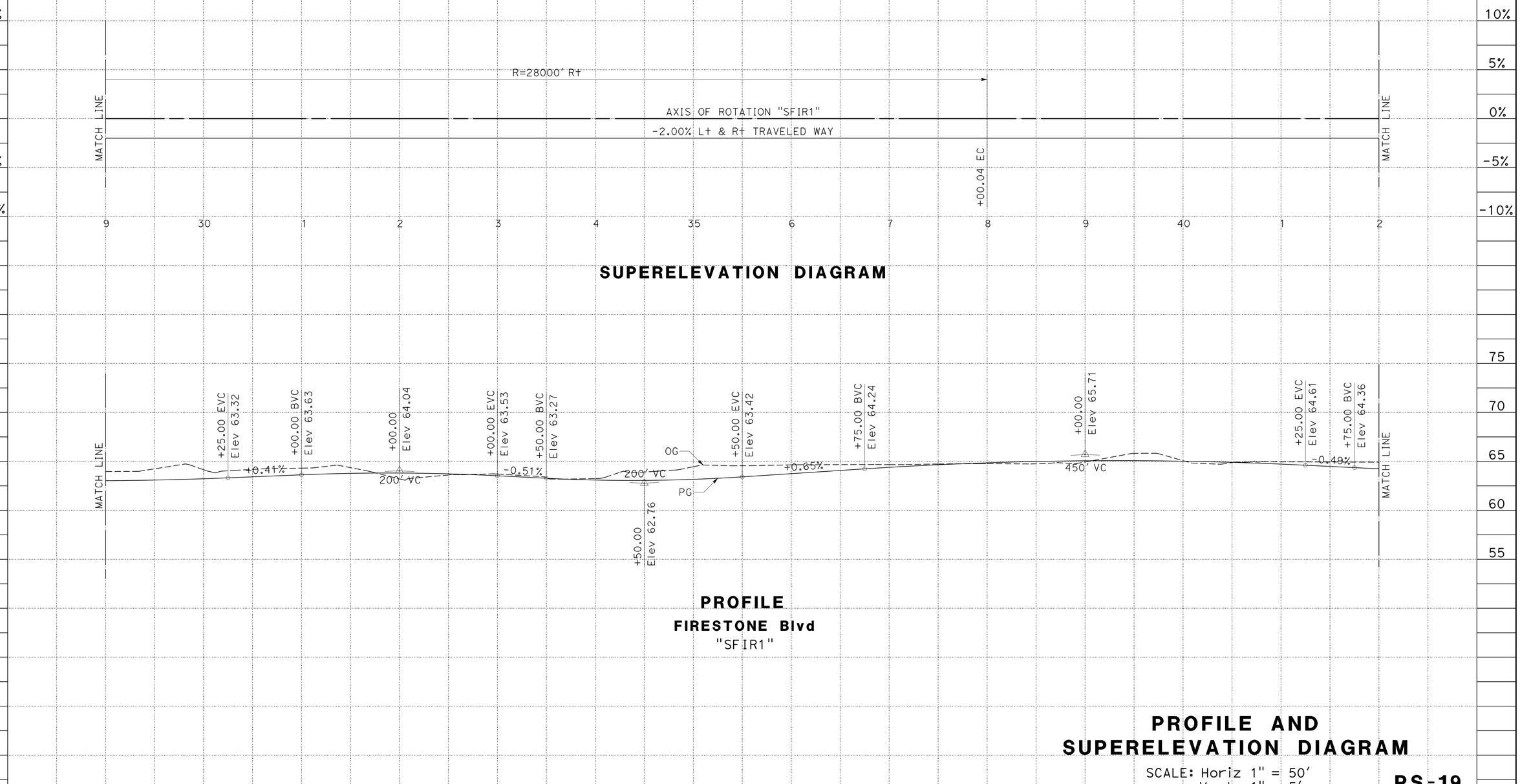

PROFILE AND SUPERELEVATION DIAGRAM

SCALE: Horiz 1" = 50'
Vert 1" = 5'

PS-19

STATION	9	30	1	2	3	4	35	6	7	8	9	40	1	2	TOTAL
CY Exc	4,858														4,858
CY Emb	270														270

STATE OF CALIFORNIA - DEPARTMENT OF TRANSPORTATION
Caltrans
DESIGN

FUNCTIONAL SUPERVISOR: RICHARD CHIANG
CALCULATED-DESIGNED BY: VAN TRAN
CHECKED BY: H.S. CHEN
REVISED BY
DATE REVISED

LAST REVISION 00-00-00
DATE PLOTTED => 03-FEB-2016
TIME PLOTTED => 09:23

Dist	COUNTY	ROUTE	POST MILES TOTAL PROJECT	SHEET No.	TOTAL SHEETS
07	LA,Ora	5	0.0/1.5, 44.3/44.4	46	1622

REGISTERED CIVIL ENGINEER 4-2-14 DATE

1-25-16
PLANS APPROVAL DATE

REGISTERED PROFESSIONAL ENGINEER
VAN T. TRAN
No. C68477
Exp. 9-30-17
CIVIL
STATE OF CALIFORNIA

THE STATE OF CALIFORNIA OR ITS OFFICERS OR AGENTS SHALL NOT BE RESPONSIBLE FOR THE ACCURACY OR COMPLETENESS OF SCANNED COPIES OF THIS PLAN SHEET.

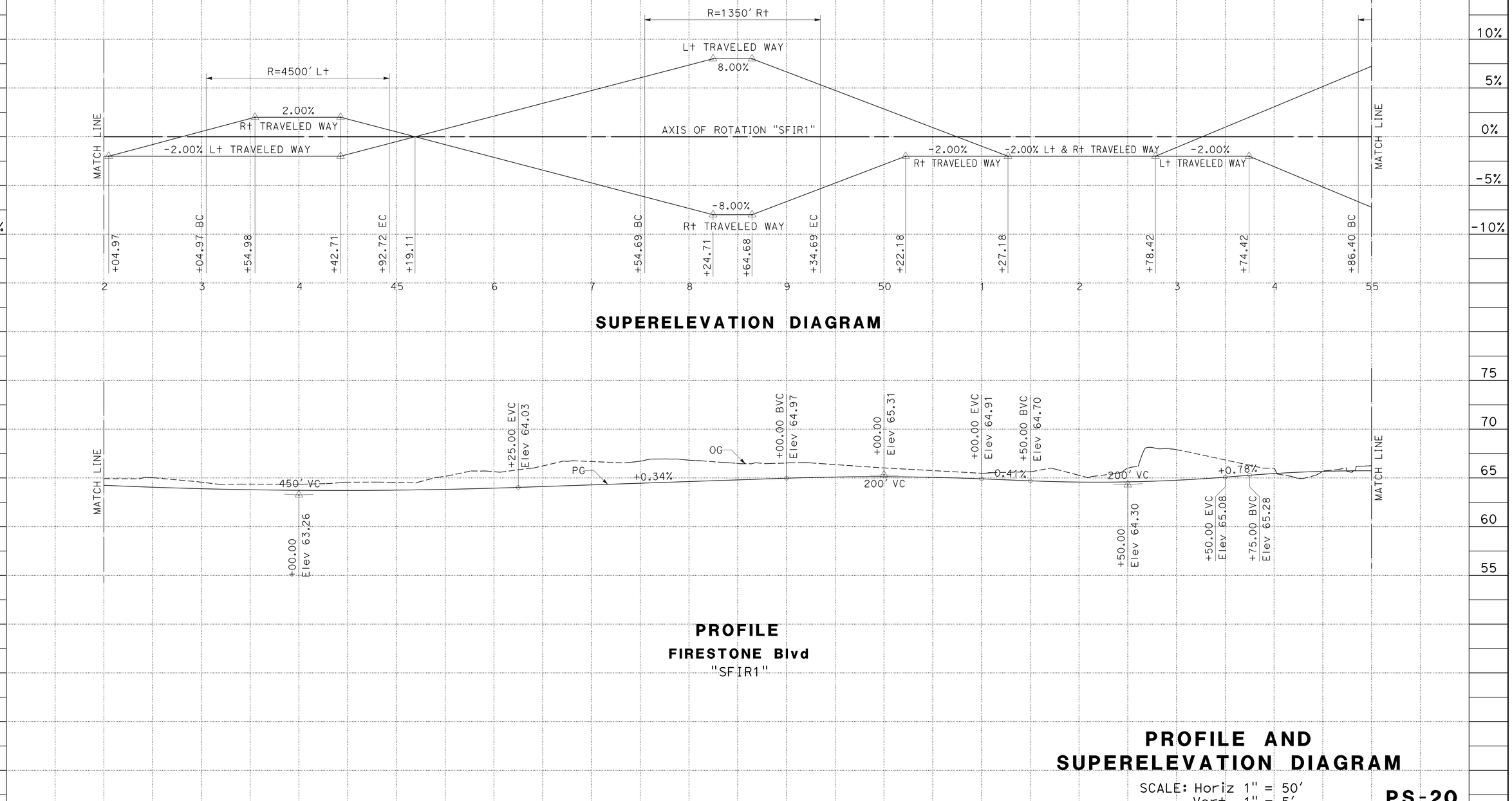

PROFILE AND SUPERELEVATION DIAGRAM

SCALE: Horiz 1" = 50'
Vert 1" = 5'

PS-20

STATION		2	3	4	45	6	7	8	9	50	1	2	3	4	55	TOTAL
CY	Exc	7,082														7,082
	Emb	149														149

STATE OF CALIFORNIA - DEPARTMENT OF TRANSPORTATION
Caltrans® DESIGN

FUNCTIONAL SUPERVISOR: RICHARD CHIANG
CALCULATED-DESIGNED BY: VAN TRAN
CHECKED BY: H.S. CHEN
REVISED BY
DATE REVISED

LAST REVISION 00-00-00
DATE PLOTTED => 03-FEB-2016
TIME PLOTTED => 09:23

Dist	COUNTY	ROUTE	POST MILES TOTAL PROJECT	SHEET No.	TOTAL SHEETS
07	LA,Ora	5	0.0/1.5, 44.3/44.4	47	1622

REGISTERED CIVIL ENGINEER 4-2-14 DATE

1-25-16
PLANS APPROVAL DATE

REGISTERED PROFESSIONAL ENGINEER
VAN T. TRAN
No. C68477
Exp. 9-30-17
CIVIL
STATE OF CALIFORNIA

THE STATE OF CALIFORNIA OR ITS OFFICERS OR AGENTS SHALL NOT BE RESPONSIBLE FOR THE ACCURACY OR COMPLETENESS OF SCANNED COPIES OF THIS PLAN SHEET.

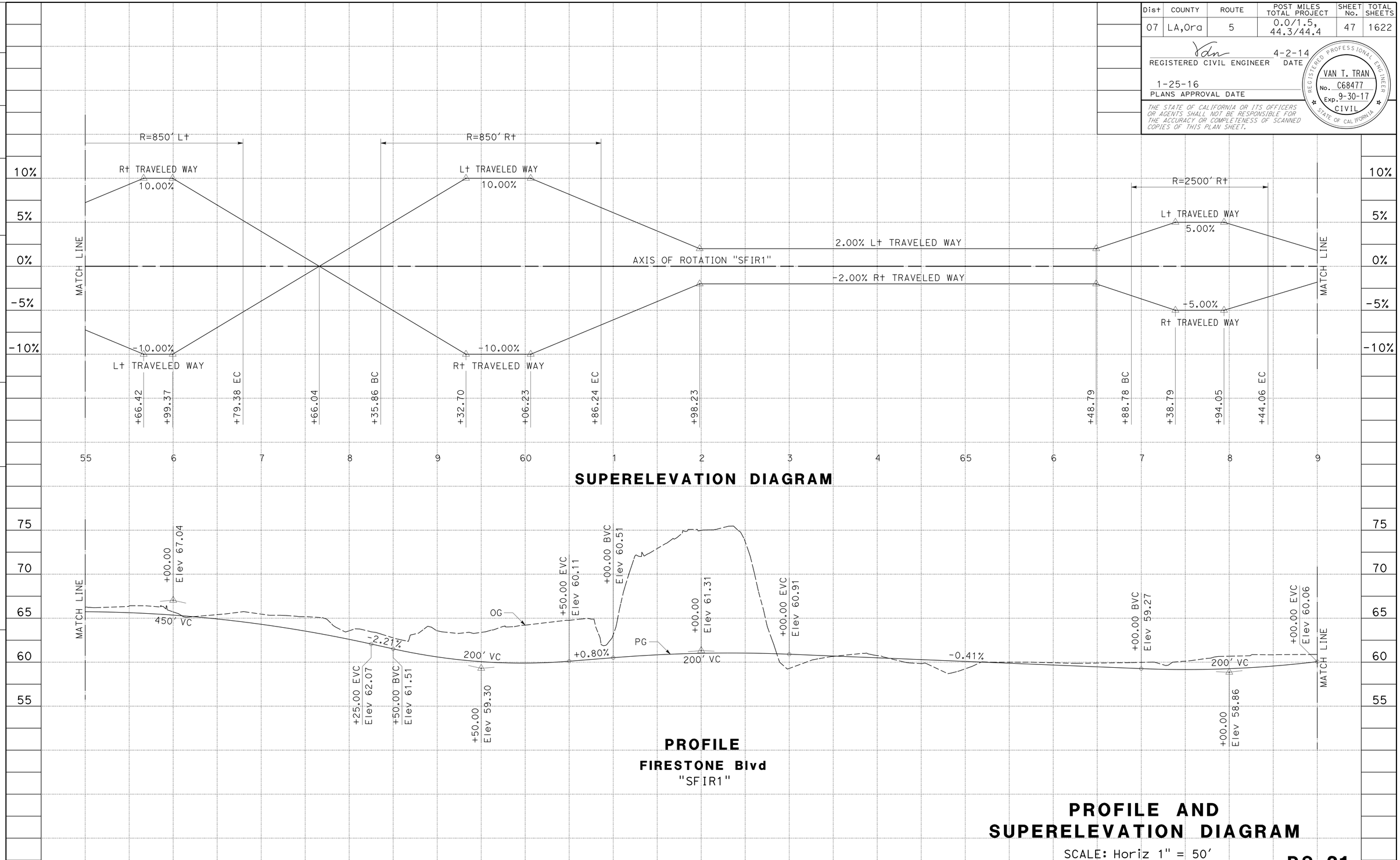

PROFILE AND SUPERELEVATION DIAGRAM

SCALE: Horiz 1" = 50'
Vert 1" = 5'

PS-21

STATION		55	6	7	8	9	60	1	2	3	4	65	6	7	8	9	TOTAL
CY	Exc	14,274															14,274
	Emb	825															825

STATE OF CALIFORNIA - DEPARTMENT OF TRANSPORTATION
Caltrans
DESIGN

FUNCTIONAL SUPERVISOR: RICHARD CHIANG
CALCULATED-DESIGNED BY: VAN TRAN
CHECKED BY: H.S. CHEN
REVISED BY
DATE REVISED

LAST REVISION 00-00-00
DATE PLOTTED => 03-FEB-2016
TIME PLOTTED => 09:23

Dist	COUNTY	ROUTE	POST MILES TOTAL PROJECT	SHEET No.	TOTAL SHEETS
07	LA,Ora	5	0.0/1.5, 44.3/44.4	48	1622

REGISTERED CIVIL ENGINEER 4-2-14 DATE

1-25-16
PLANS APPROVAL DATE

REGISTERED PROFESSIONAL ENGINEER
VAN T. TRAN
No. C68477
Exp. 9-30-17
CIVIL
STATE OF CALIFORNIA

THE STATE OF CALIFORNIA OR ITS OFFICERS OR AGENTS SHALL NOT BE RESPONSIBLE FOR THE ACCURACY OR COMPLETENESS OF SCANNED COPIES OF THIS PLAN SHEET.

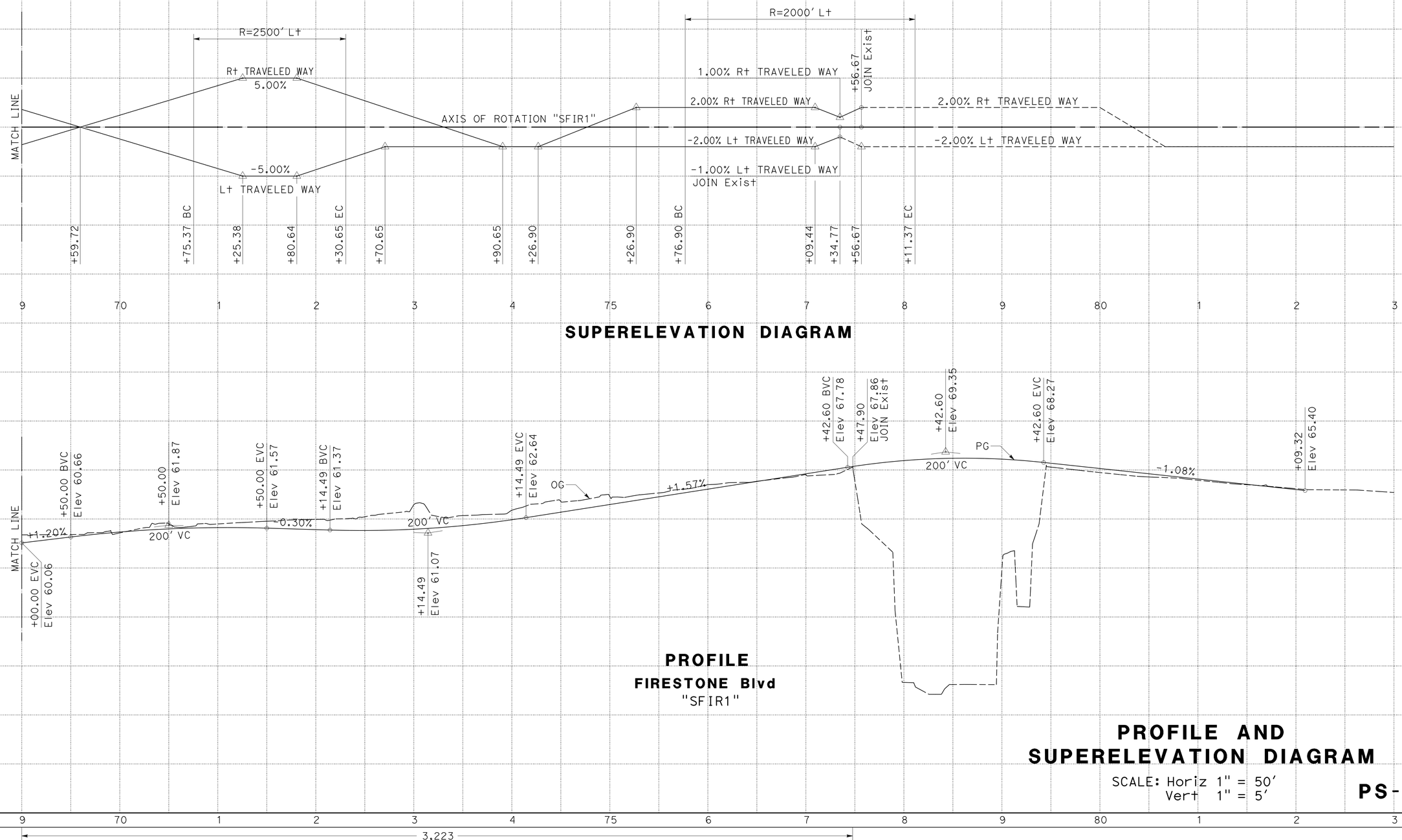

STATE OF CALIFORNIA - DEPARTMENT OF TRANSPORTATION
Caltrans DESIGN

FUNCTIONAL SUPERVISOR: RICHARD CHIANG
CALCULATED-DESIGNED BY: VAN TRAN
CHECKED BY: H.S. CHEN
REVISED BY
DATE REVISED

LAST REVISION 00-00-00
DATE PLOTTED => 03-FEB-2016
TIME PLOTTED => 09:23

Dist	COUNTY	ROUTE	POST MILES TOTAL PROJECT	SHEET No.	TOTAL SHEETS
07	LA,Ora	5	0.0/1.5, 44.3/44.4	49	1622

REGISTERED CIVIL ENGINEER 4-2-14 DATE

1-25-16
PLANS APPROVAL DATE

REGISTERED PROFESSIONAL ENGINEER VAN T. TRAN No. C68477 Exp. 9-30-17 CIVIL STATE OF CALIFORNIA

THE STATE OF CALIFORNIA OR ITS OFFICERS OR AGENTS SHALL NOT BE RESPONSIBLE FOR THE ACCURACY OR COMPLETENESS OF SCANNED COPIES OF THIS PLAN SHEET.

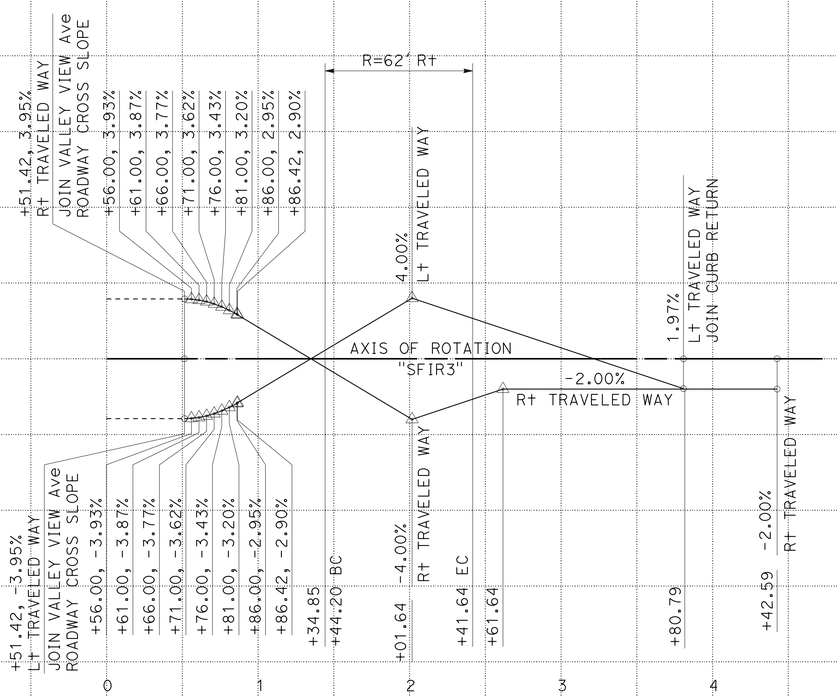

SUPERELEVATION DIAGRAM

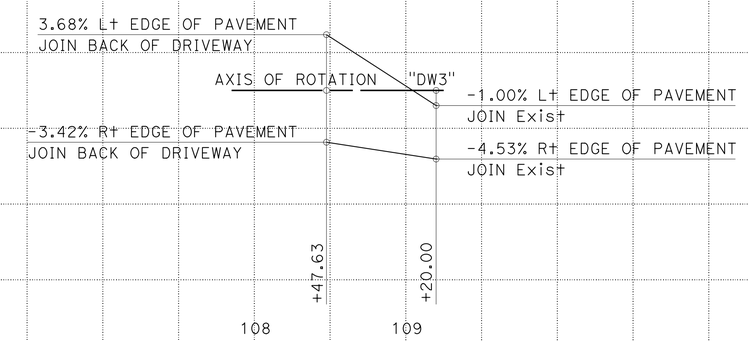

SUPERELEVATION DIAGRAM

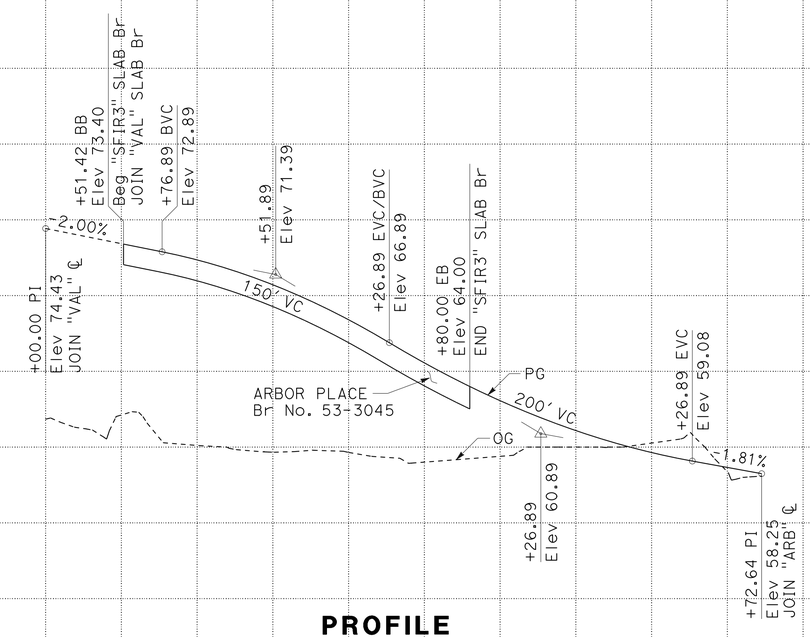

PROFILE
ARBOR PLACE
"SFIR3"

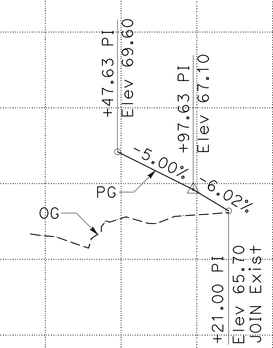

PROFILE
DRIVEWAY
"DW3"

PROFILE AND SUPERELEVATION DIAGRAM

SCALE: Horiz 1" = 50'
Vert 1" = 5'

PS-23

STATION		0	1	2	3	4	108	109	TOTAL
CY	Exc	885						4	889
	Emb	708						200	908

STATE OF CALIFORNIA - DEPARTMENT OF TRANSPORTATION
Caltrans
DESIGN
FUNCTIONAL SUPERVISOR: RICHARD CHIANG
CALCULATED-DESIGNED BY: H.S. CHEN
CHECKED BY: VAN TRAN
REVISED BY
DATE REVISED

LAST REVISION 00-00-00
DATE PLOTTED => 03-FEB-2016
TIME PLOTTED => 09:23

Dist	COUNTY	ROUTE	POST MILES TOTAL PROJECT	SHEET No.	TOTAL SHEETS
07	LA,Ora	5	0.0/1.5, 44.3/44.4	50	1622

REGISTERED CIVIL ENGINEER 4-2-14 DATE

1-25-16
PLANS APPROVAL DATE

REGISTERED PROFESSIONAL ENGINEER VAN T. TRAN No. C68477 Exp. 9-30-17 CIVIL STATE OF CALIFORNIA

THE STATE OF CALIFORNIA OR ITS OFFICERS OR AGENTS SHALL NOT BE RESPONSIBLE FOR THE ACCURACY OR COMPLETENESS OF SCANNED COPIES OF THIS PLAN SHEET.

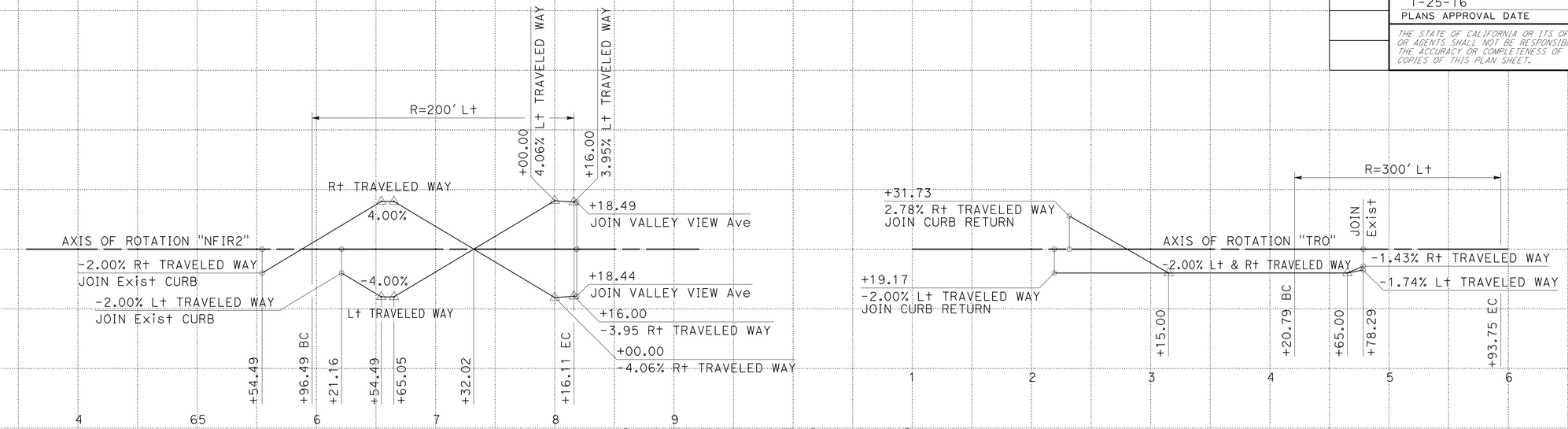

SUPERELEVATION DIAGRAM

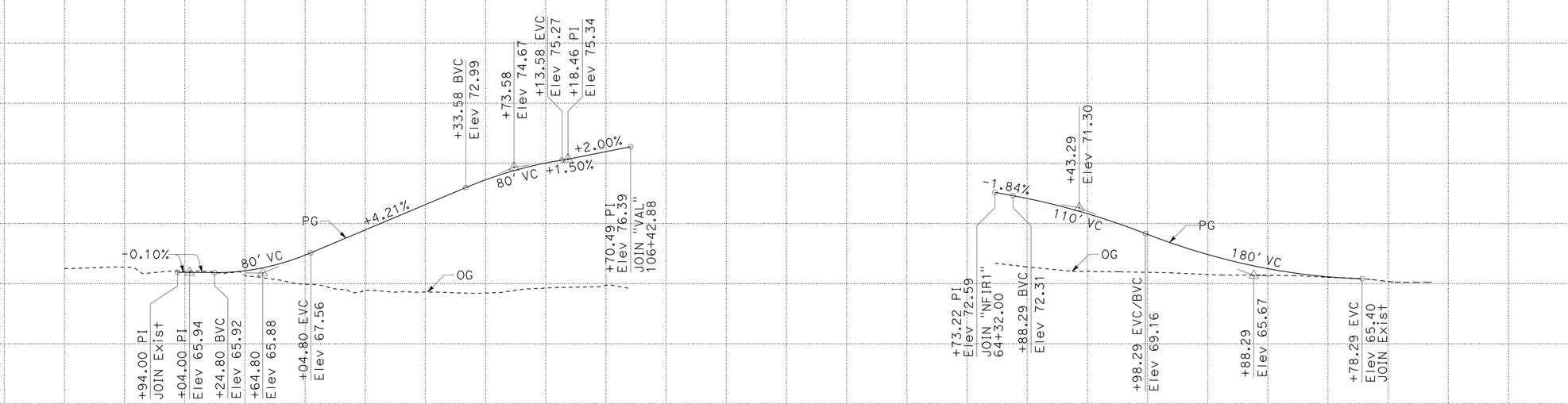

PROFILE
FIRESTONE Blvd
"NFIR2"

PROFILE
TROJAN WAY
"TRO"

PROFILE AND SUPERELEVATION DIAGRAM

SCALE: Horiz 1" = 50'
Vert 1" = 5'

PS-24

STATION		4	65	6	7	8	9	1	2	3	4	5	6	TOTAL
CY	Exc		229						531					760
	Emb		4,234						1,135					5,369

REVISED BY | DATE REVISED
VAN TRAN/ EDUARDO DELPILAR | H.S. CHEN
CALCULATED-DESIGNED BY | CHECKED BY
FUNCTIONAL SUPERVISOR: RICHARD CHIANG

STATE OF CALIFORNIA - DEPARTMENT OF TRANSPORTATION
Caltrans
DESIGN

LAST REVISION 00-00-00 | DATE PLOTTED => 03-FEB-2016 | TIME PLOTTED => 09:23

Dist	COUNTY	ROUTE	POST MILES TOTAL PROJECT	SHEET No.	TOTAL SHEETS
07	LA,Ora	5	0.0/1.5, 44.3/44.4	51	1622

REGISTERED CIVIL ENGINEER 4-2-14 DATE

1-25-16
PLANS APPROVAL DATE

REGISTERED PROFESSIONAL ENGINEER
VAN T. TRAN
No. C68477
Exp. 9-30-17
CIVIL
STATE OF CALIFORNIA

THE STATE OF CALIFORNIA OR ITS OFFICERS OR AGENTS SHALL NOT BE RESPONSIBLE FOR THE ACCURACY OR COMPLETENESS OF SCANNED COPIES OF THIS PLAN SHEET.

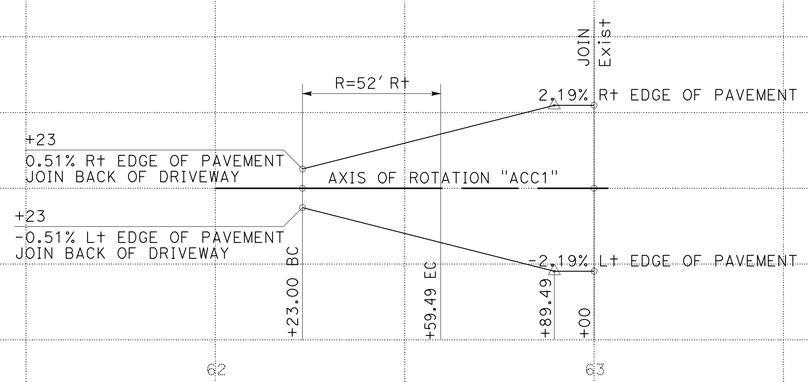

SUPERELEVATION DIAGRAM

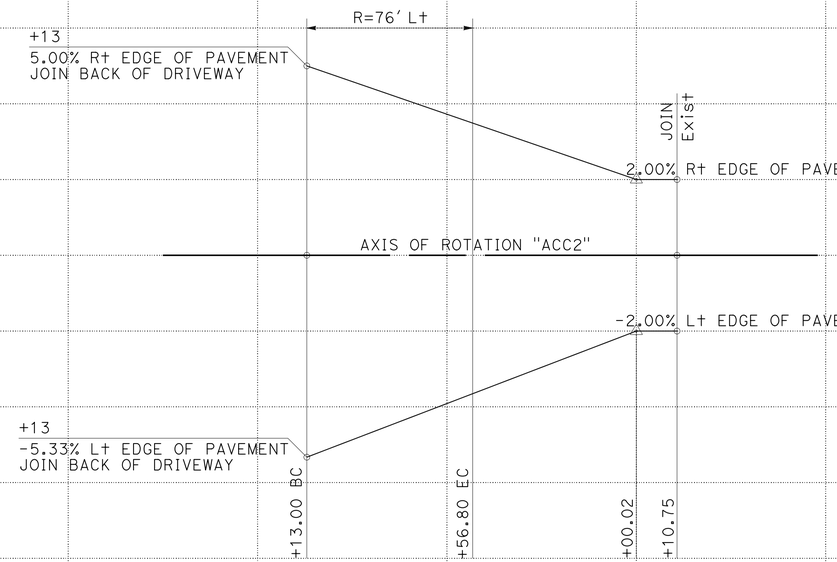

SUPERELEVATION DIAGRAM

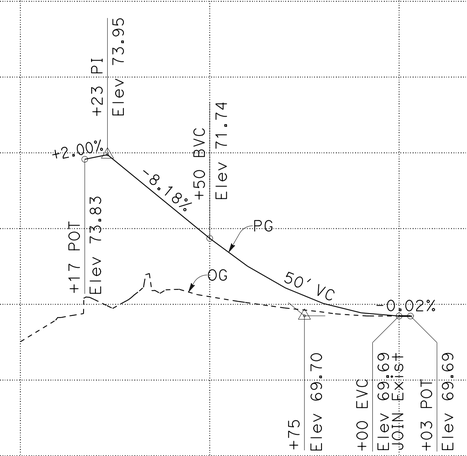

PROFILE
ACCESS Rd
"ACC1"

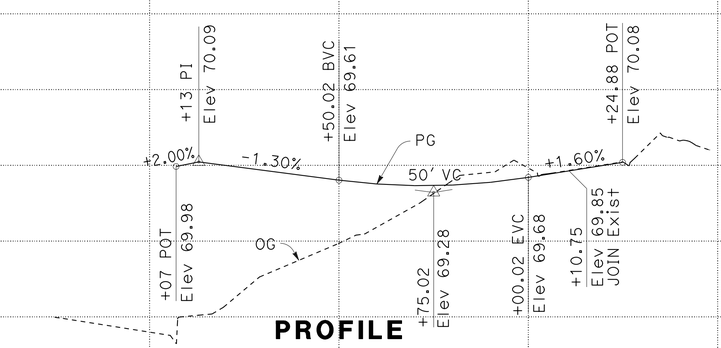

PROFILE
ACCESS Rd
"ACC2"

PROFILE AND SUPERELEVATION DIAGRAM

SCALE: Horiz 1" = 20'
Vert 1" = 2'

PS-25

STATION		62	63	3	4	TOTAL
CY	Exc	16		28		44
	Emb	36		251		287

STATE OF CALIFORNIA - DEPARTMENT OF TRANSPORTATION
DESIGN
Caltrans
FUNCTIONAL SUPERVISOR: RICHARD CHIANG
CALCULATED-DESIGNED BY: VAN TRAN
CHECKED BY: H.S. CHEN
REVISED BY
DATE REVISED

LAST REVISION 00-00-00
DATE PLOTTED => 03-FEB-2016
TIME PLOTTED => 09:23

Dist	COUNTY	ROUTE	POST MILES TOTAL PROJECT	SHEET No.	TOTAL SHEETS
07	LA,Ora	5	0.0/1.5, 44.3/44.4	52	1622

REGISTERED CIVIL ENGINEER 4-2-14 DATE

1-25-16
PLANS APPROVAL DATE

REGISTERED PROFESSIONAL ENGINEER VAN T. TRAN No. C68477 Exp. 9-30-17 CIVIL STATE OF CALIFORNIA

THE STATE OF CALIFORNIA OR ITS OFFICERS OR AGENTS SHALL NOT BE RESPONSIBLE FOR THE ACCURACY OR COMPLETENESS OF SCANNED COPIES OF THIS PLAN SHEET.

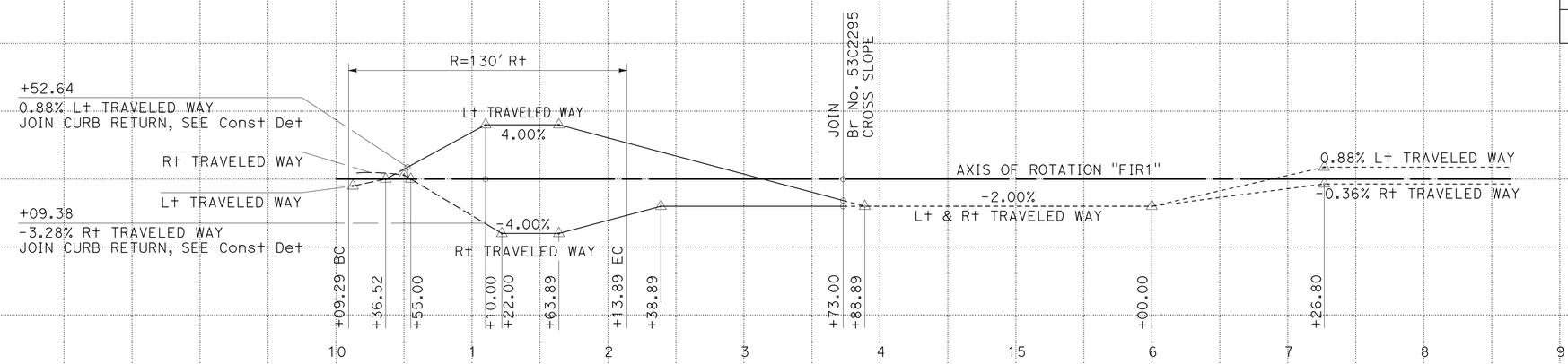

SUPERELEVATION DIAGRAM

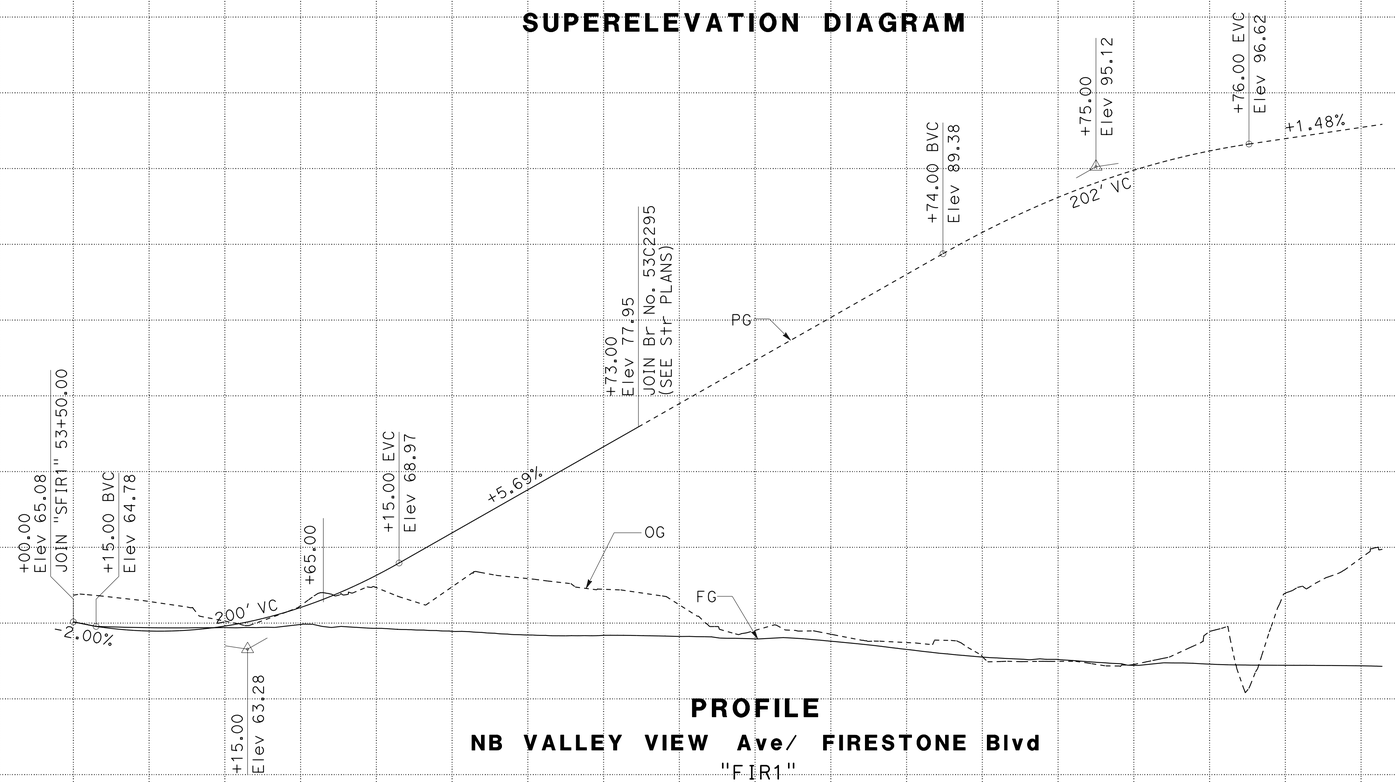

PROFILE

NB VALLEY VIEW Ave/ FIRESTONE Blvd

"FIR1"

PROFILE AND SUPERELEVATION DIAGRAM

SCALE: Horiz 1" = 50'
Vert 1" = 5'

PS-26

STATION		10	1	2	3	4	15	6	7	8	9	TOTAL
CY	Exc		850									850
	Emb		842									842

STATE OF CALIFORNIA - DEPARTMENT OF TRANSPORTATION
Caltrans®
DESIGN

FUNCTIONAL SUPERVISOR: RICHARD CHIANG
CALCULATED-DESIGNED BY: VAN TRAN
CHECKED BY: H.S. CHEN
REVISED BY: H.S. CHEN
DATE REVISED: 5/2015

LAST REVISION 00-00-00
DATE PLOTTED => 03-FEB-2016
TIME PLOTTED => 09:23

Dist	COUNTY	ROUTE	POST MILES TOTAL PROJECT	SHEET No.	TOTAL SHEETS
07	LA,Ora	5	0.0/1.5, 44.3/44.4	53	1622

REGISTERED CIVIL ENGINEER 4-2-14 DATE

1-25-16
PLANS APPROVAL DATE

REGISTERED PROFESSIONAL ENGINEER
VAN T. TRAN
No. C68477
Exp. 9-30-17
CIVIL
STATE OF CALIFORNIA

THE STATE OF CALIFORNIA OR ITS OFFICERS OR AGENTS SHALL NOT BE RESPONSIBLE FOR THE ACCURACY OR COMPLETENESS OF SCANNED COPIES OF THIS PLAN SHEET.

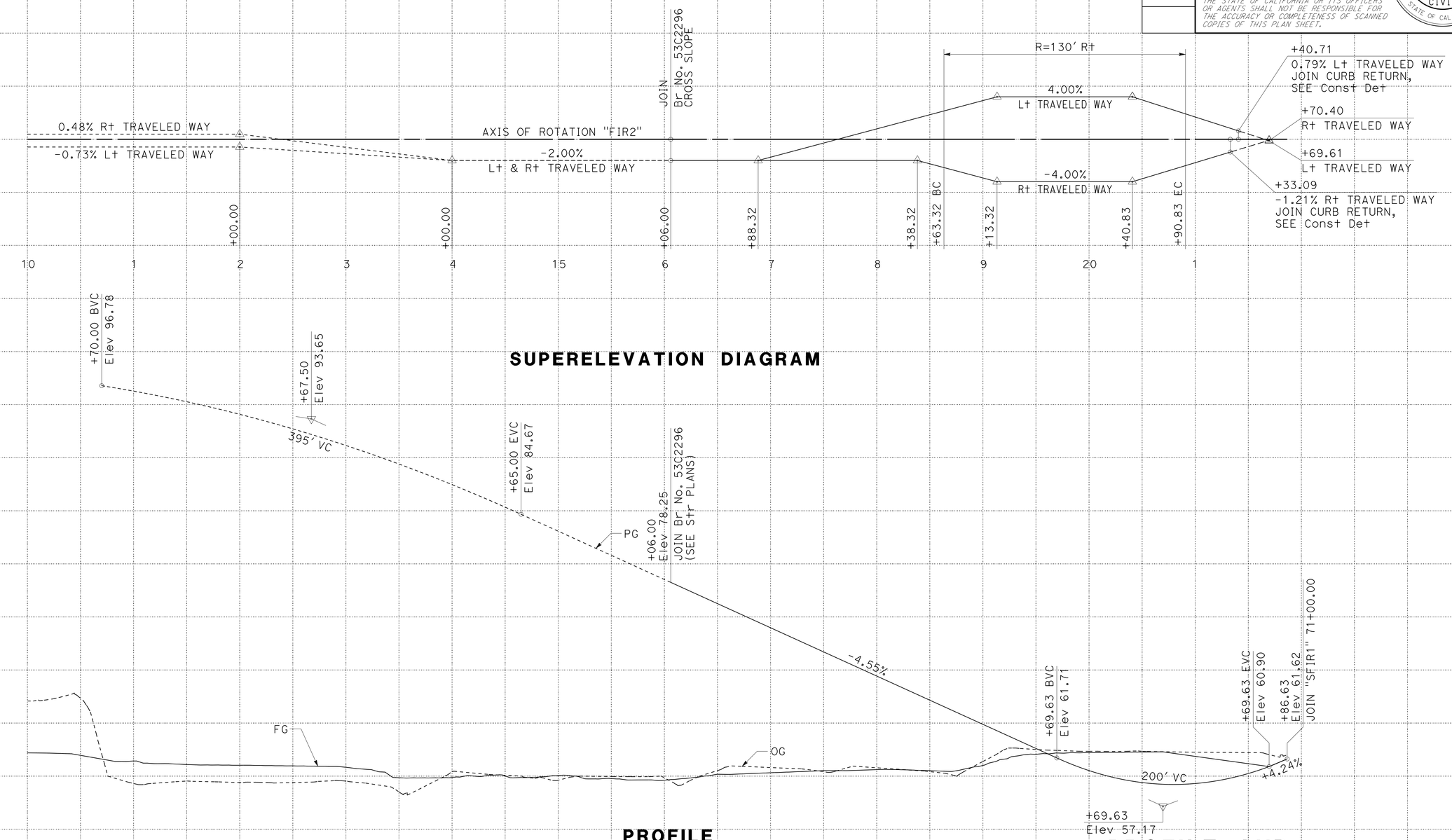

STATION		10	1	2	3	4	15	6	7	8	9	20	1	TOTAL
CY	Exc											973		973
	Emb											5		5

REVISED BY | DATE REVISED
VAN TRAN | H.S. CHEN
CALCULATED-DESIGNED BY | CHECKED BY
FUNCTIONAL SUPERVISOR
RICHARD CHIANG
STATE OF CALIFORNIA - DEPARTMENT OF TRANSPORTATION
Caltrans
DESIGN

LAST REVISION 00-00-00
DATE PLOTTED => 03-FEB-2016
TIME PLOTTED => 09:23

Dist	COUNTY	ROUTE	POST MILES TOTAL PROJECT	SHEET No.	TOTAL SHEETS
07	LA,Ora	5	0.0/1.5, 44.3/44.4	54	1622

REGISTERED CIVIL ENGINEER 4-2-14 DATE

1-25-16
PLANS APPROVAL DATE

REGISTERED PROFESSIONAL ENGINEER
VAN T. TRAN
No. C68477
Exp. 9-30-17
CIVIL
STATE OF CALIFORNIA

THE STATE OF CALIFORNIA OR ITS OFFICERS OR AGENTS SHALL NOT BE RESPONSIBLE FOR THE ACCURACY OR COMPLETENESS OF SCANNED COPIES OF THIS PLAN SHEET.

NOTES:

1. FLOWLINE ELEVATIONS LABELED AT 20′ INTERVAL STATIONING.
2. RECONSTRUCT PARKWAY DRAINS AND VALLEY GUTTERS, IF NECESSARY.
3. MINIMUM 10′ TRANSITION BETWEEN DIFFERENT HMA DIKES, CURBS OR GUTTER; OTHERWISE, CONSTRUCT AS SHOWN ON PLANS.
4. PROVIDE 4:1 VERTICAL TAPER WHERE HMA DIKES AND CURBS END WHEN NEEDED.
5. PLACE RETAINING CURB OR SHORT RETAINING WALL AT DRIVEWAYS, CURB RAMPS AND BACK OF SIDEWALK WHEN NEEDED.
6. GRADE PARKING SPACES 5% MAXIMUM IN ANY DIRECTION.
7. FOR ACCURATE RIGHT OF WAY DATA, CONTACT RIGHT OF WAY ENGINEERING AT THE DISTRICT OFFICE.
8. ALL STRIPING IN PRIVATE PARKING IS THE RESPONSIBILITY OF THE OWNER.

LEGEND:

XX.XX PROPOSED ELEVATION (FEET)
(XX.XX) EXISTING ELEVATION (FEET)

ABBREVIATIONS:

UPRR UNION PACIFIC RAILROAD

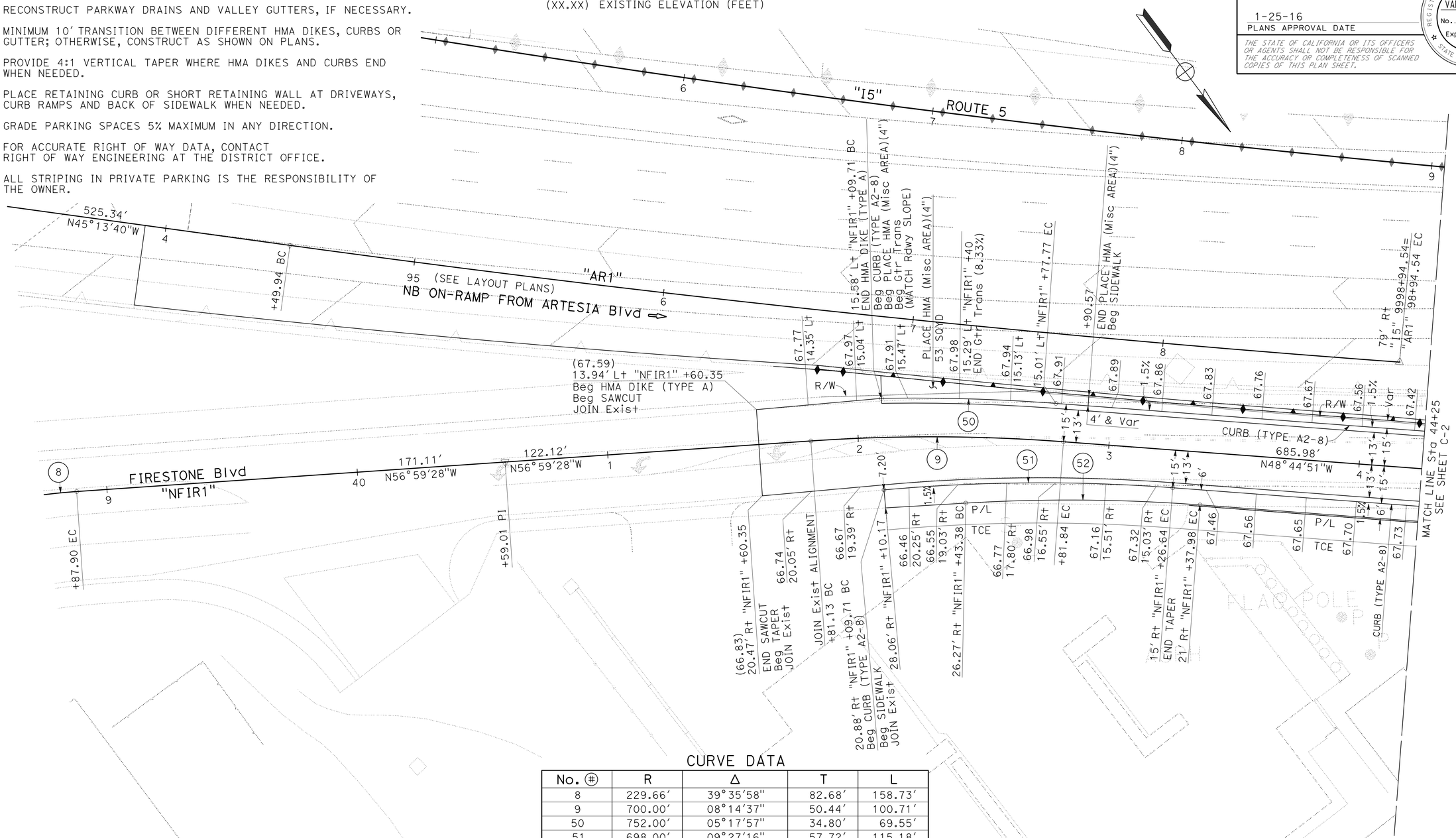

CURVE DATA

No. (#)	R	Δ	T	L
8	229.66′	39°35′58"	82.68′	158.73′
9	700.00′	08°14′37"	50.44′	100.71′
50	752.00′	05°17′57"	34.80′	69.55′
51	698.00′	09°27′16"	57.72′	115.18′
52	693.00′	07°43′24"	46.78′	93.41′

CONSTRUCTION DETAILS

SCALE: 1" = 20′

C-1

STATE OF CALIFORNIA - DEPARTMENT OF TRANSPORTATION
Caltrans
DESIGN

FUNCTIONAL SUPERVISOR: RICHARD CHIANG
CALCULATED-DESIGNED BY: VAN TRAN
CHECKED BY: H.S. CHEN
REVISED BY
DATE REVISED

LAST REVISION 00-00-00
DATE PLOTTED => 03-FEB-2016
TIME PLOTTED => 09:23

Dist	COUNTY	ROUTE	POST MILES TOTAL PROJECT	SHEET No.	TOTAL SHEETS
07	LA,Ora	5	0.0/1.5, 44.3/44.4	55	1622

REGISTERED CIVIL ENGINEER 4-2-14 DATE

1-25-16
PLANS APPROVAL DATE

REGISTERED PROFESSIONAL ENGINEER
VAN T. TRAN
No. C68477
Exp. 9-30-17
CIVIL
STATE OF CALIFORNIA

THE STATE OF CALIFORNIA OR ITS OFFICERS OR AGENTS SHALL NOT BE RESPONSIBLE FOR THE ACCURACY OR COMPLETENESS OF SCANNED COPIES OF THIS PLAN SHEET.

NOTE:

1. FOR ACCURATE RIGHT OF WAY DATA, CONTACT RIGHT OF WAY ENGINEERING AT THE DISTRICT OFFICE.

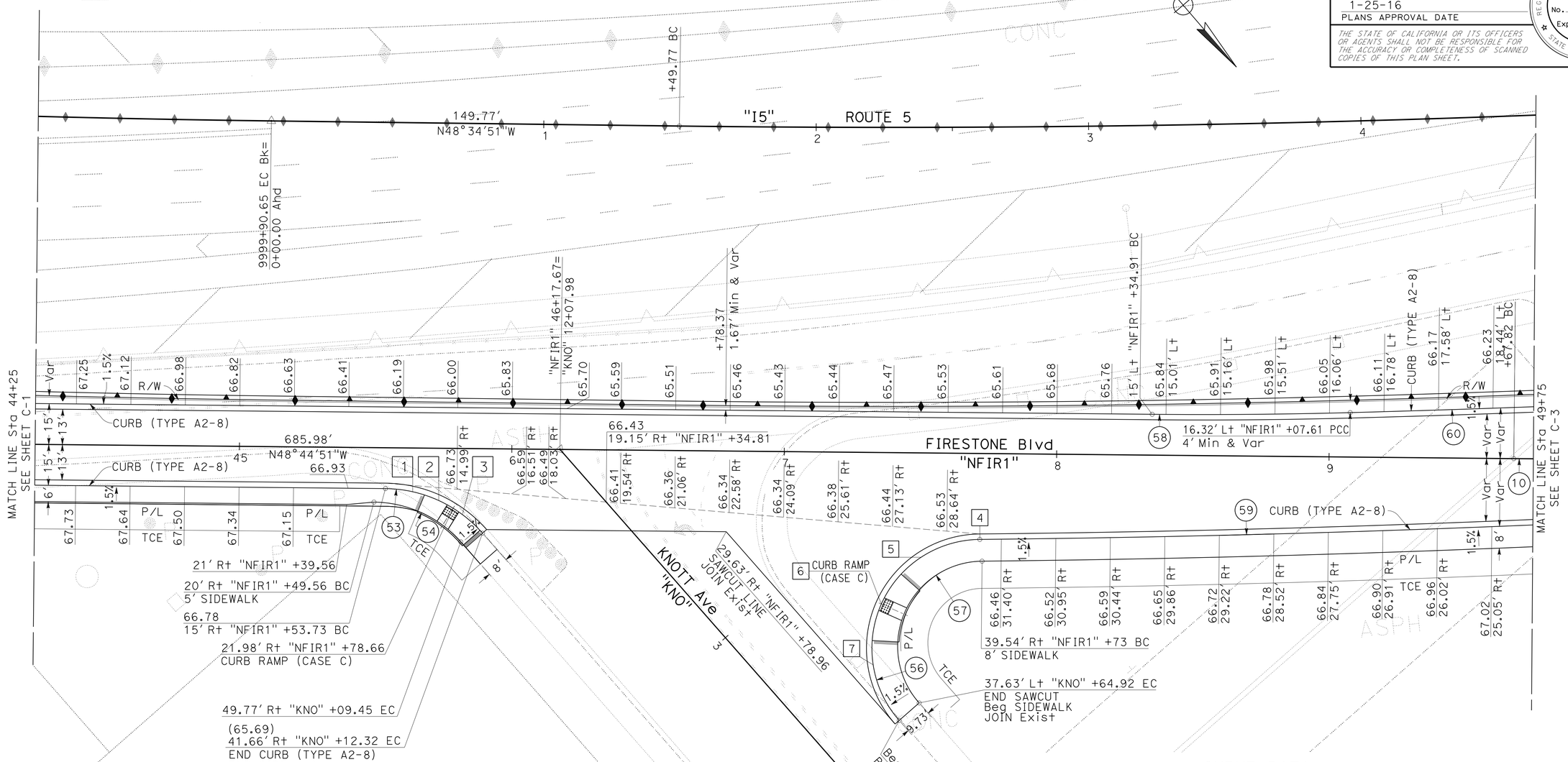

PAVEMENT ELEVATIONS

No. #	LOCATION	ELEVATION
1	16.06' Rt "NFIR1" 45+63.76	66.51
2	19.19' Rt "NFIR1" 45+73.34	66.23
3	24.25' Rt "NFIR1" 45+82.06	65.96
4	31.56' Rt "NFIR1" 47+72.10 BC	66.43
5	38.32' Rt "NFIR1" 47+50.60	66.11
6	55.64' Rt "NFIR1" 47+36.17	65.79
7	34.19' Lt "KNO" 13+43.28	65.47
8	27.90' Lt "KNO" 13+64.92 EC	(65.15)

CURVE DATA

No. #	R	Δ	T	L
10	3000.00'	05°41'31"	149.14'	298.03'
53	48.00'	48°13'40"	21.49'	40.40'
54	43.00'	48°07'11"	19.20'	36.11'
56	40.00'	130°53'15"	87.54'	91.38'
57	31.30'	130°59'50"	68.68'	71.56'
58	2000.00'	02°04'59"	36.36'	72.71'
59	6207.35'	06°09'19"	333.74'	666.85'
60	6307.00'	11°58'46"	661.75'	1318.67'

CONSTRUCTION DETAILS

SCALE: 1" = 20'

C-2

STATE OF CALIFORNIA - DEPARTMENT OF TRANSPORTATION
Caltrans
DESIGN
FUNCTIONAL SUPERVISOR: RICHARD CHIANG
CALCULATED-DESIGNED BY: VAN TRAN
CHECKED BY: H.S. CHEN
REVISED BY
DATE REVISED

LAST REVISION 00-00-00
DATE PLOTTED => 03-FEB-2016
TIME PLOTTED => 09:23

Dist	COUNTY	ROUTE	POST MILES TOTAL PROJECT	SHEET No.	TOTAL SHEETS
07	LA,Ora	5	0.0/1.5, 44.3/44.4	56	1622

REGISTERED CIVIL ENGINEER 4-2-14 DATE

1-25-16
PLANS APPROVAL DATE

REGISTERED PROFESSIONAL ENGINEER VAN T. TRAN No. C68477 Exp. 9-30-17 CIVIL STATE OF CALIFORNIA

THE STATE OF CALIFORNIA OR ITS OFFICERS OR AGENTS SHALL NOT BE RESPONSIBLE FOR THE ACCURACY OR COMPLETENESS OF SCANNED COPIES OF THIS PLAN SHEET.

NOTE:

1. FOR ACCURATE RIGHT OF WAY DATA, CONTACT RIGHT OF WAY ENGINEERING AT THE DISTRICT OFFICE.

CURVE DATA

No. ⊕	R	Δ	T	L
10	3000.00′	05°41′31″	149.14′	298.03′
11	6190.35′	08°22′13″	452.98′	904.35′
59	6207.35′	06°09′19″	333.74′	666.85′
60	6307.00′	11°58′46″	661.75′	1318.67′
61	25.00′	56°34′37″	13.45′	24.69′
62	25.00′	123°45′08″	46.77′	54.00′

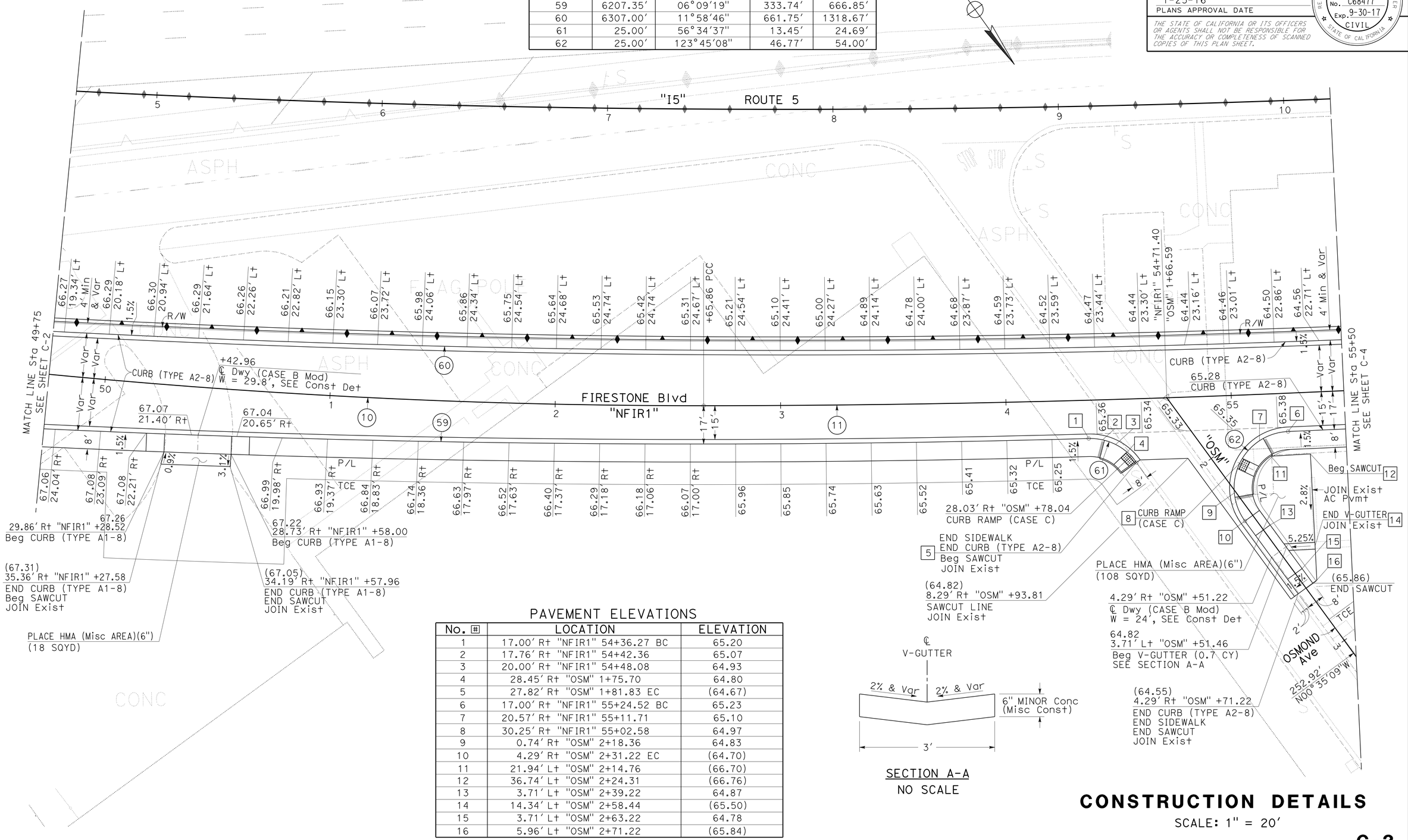

PAVEMENT ELEVATIONS

No. ⊞	LOCATION	ELEVATION
1	17.00′ R+ "NFIR1" 54+36.27 BC	65.20
2	17.76′ R+ "NFIR1" 54+42.36	65.07
3	20.00′ R+ "NFIR1" 54+48.08	64.93
4	28.45′ R+ "OSM" 1+75.70	64.80
5	27.82′ R+ "OSM" 1+81.83 EC	(64.67)
6	17.00′ R+ "NFIR1" 55+24.52 BC	65.23
7	20.57′ R+ "NFIR1" 55+11.71	65.10
8	30.25′ R+ "NFIR1" 55+02.58	64.97
9	0.74′ R+ "OSM" 2+18.36	64.83
10	4.29′ R+ "OSM" 2+31.22 EC	(64.70)
11	21.94′ L+ "OSM" 2+14.76	(66.70)
12	36.74′ L+ "OSM" 2+24.31	(66.76)
13	3.71′ L+ "OSM" 2+39.22	64.87
14	14.34′ L+ "OSM" 2+58.44	(65.50)
15	3.71′ L+ "OSM" 2+63.22	64.78
16	5.96′ L+ "OSM" 2+71.22	(65.84)

SECTION A-A
NO SCALE

CONSTRUCTION DETAILS

SCALE: 1" = 20′

C-3

STATE OF CALIFORNIA - DEPARTMENT OF TRANSPORTATION
Caltrans DESIGN
FUNCTIONAL SUPERVISOR RICHARD CHIANG
CALCULATED-DESIGNED BY VAN TRAN
CHECKED BY H.S. CHEN
REVISED BY
DATE REVISED

LAST REVISION 00-00-00
DATE PLOTTED => 03-FEB-2016
TIME PLOTTED => 09:23

Dist	COUNTY	ROUTE	POST MILES TOTAL PROJECT	SHEET No.	TOTAL SHEETS
07	LA,Ora	5	0.0/1.5, 44.3/44.4	57	1622

REGISTERED CIVIL ENGINEER 4-2-14 DATE

1-25-16
PLANS APPROVAL DATE

REGISTERED PROFESSIONAL ENGINEER VAN T. TRAN No. C68477 Exp. 9-30-17 CIVIL STATE OF CALIFORNIA

THE STATE OF CALIFORNIA OR ITS OFFICERS OR AGENTS SHALL NOT BE RESPONSIBLE FOR THE ACCURACY OR COMPLETENESS OF SCANNED COPIES OF THIS PLAN SHEET.

NOTE:

1. FOR ACCURATE RIGHT OF WAY DATA, CONTACT RIGHT OF WAY ENGINEERING AT THE DISTRICT OFFICE.

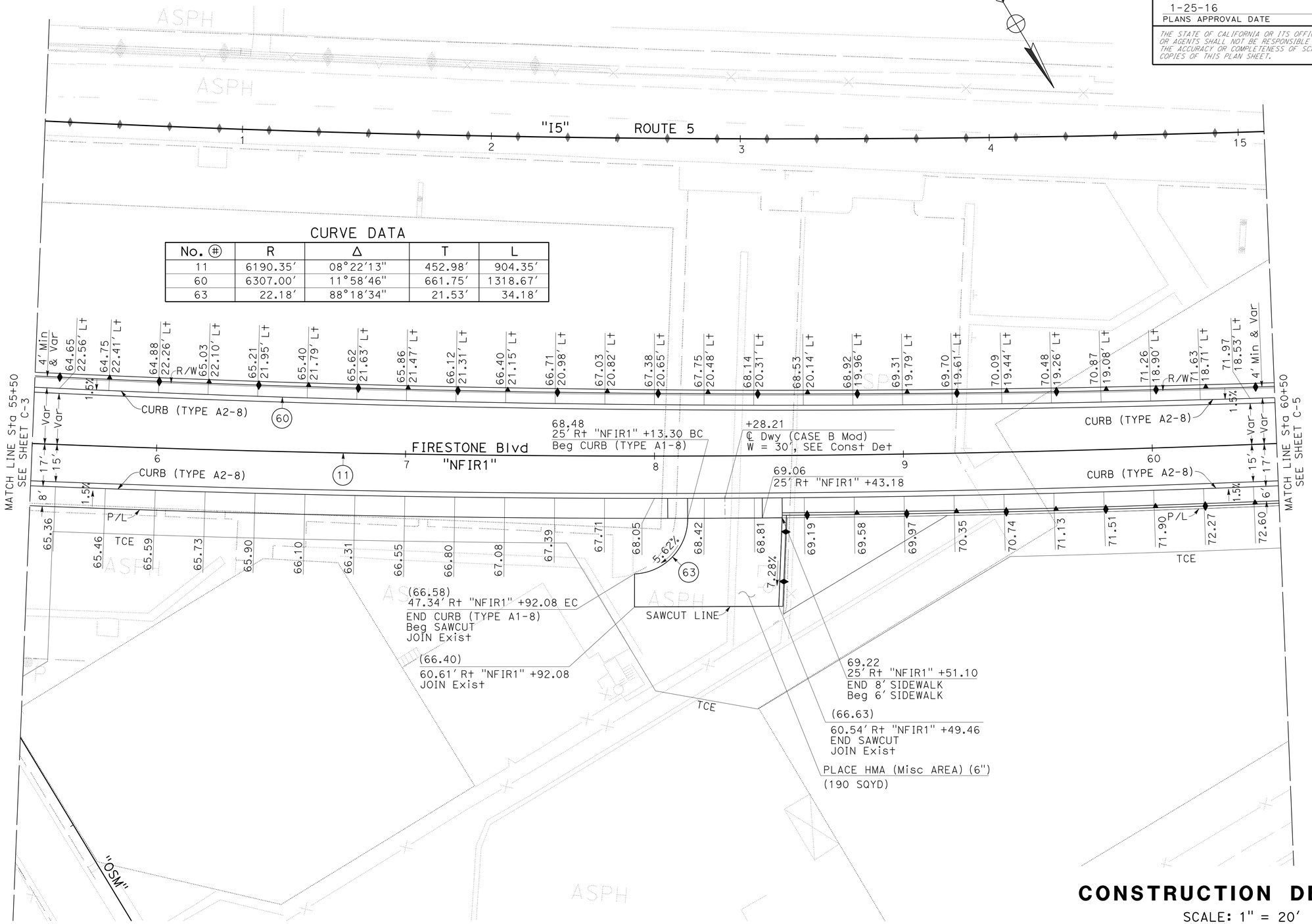

CURVE DATA

No. ⊕	R	Δ	T	L
11	6190.35'	08°22'13"	452.98'	904.35'
60	6307.00'	11°58'46"	661.75'	1318.67'
63	22.18'	88°18'34"	21.53'	34.18'

CONSTRUCTION DETAILS

SCALE: 1" = 20'

C-4

STATE OF CALIFORNIA - DEPARTMENT OF TRANSPORTATION
DESIGN
Caltrans

FUNCTIONAL SUPERVISOR: RICHARD CHIANG
CALCULATED-DESIGNED BY: VAN TRAN
CHECKED BY: H.S. CHEN
REVISED BY
DATE REVISED

LAST REVISION 00-00-00
DATE PLOTTED => 03-FEB-2016
TIME PLOTTED => 09:23

Dist	COUNTY	ROUTE	POST MILES TOTAL PROJECT	SHEET No.	TOTAL SHEETS
07	LA,Ora	5	0.0/1.5, 44.3/44.4	58	1622

REGISTERED CIVIL ENGINEER 4-2-14 DATE

1-25-16
PLANS APPROVAL DATE

REGISTERED PROFESSIONAL ENGINEER VAN T. TRAN No. C68477 Exp. 9-30-17 CIVIL STATE OF CALIFORNIA

THE STATE OF CALIFORNIA OR ITS OFFICERS OR AGENTS SHALL NOT BE RESPONSIBLE FOR THE ACCURACY OR COMPLETENESS OF SCANNED COPIES OF THIS PLAN SHEET.

NOTE:

1. FOR ACCURATE RIGHT OF WAY DATA, CONTACT RIGHT OF WAY ENGINEERING AT THE DISTRICT OFFICE.

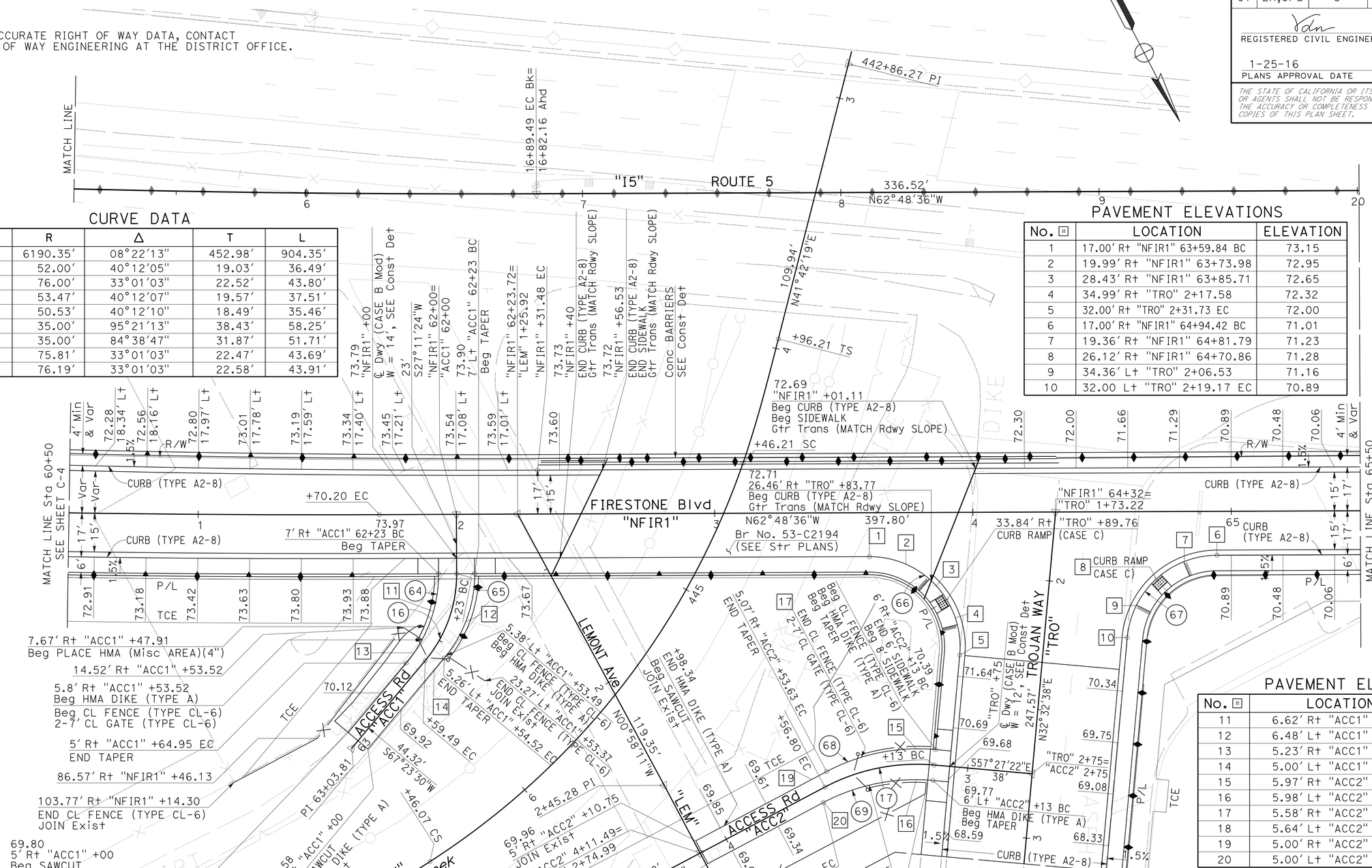

CURVE DATA

No.	R	Δ	T	L
11	6190.35'	08°22'13"	452.98'	904.35'
16	52.00'	40°12'05"	19.03'	36.49'
17	76.00'	33°01'03"	22.52'	43.80'
64	53.47'	40°12'07"	19.57'	37.51'
65	50.53'	40°12'10"	18.49'	35.46'
66	35.00'	95°21'13"	38.43'	58.25'
67	35.00'	84°38'47"	31.87'	51.71'
68	75.81'	33°01'03"	22.47'	43.69'
69	76.19'	33°01'03"	22.58'	43.91'

PAVEMENT ELEVATIONS

No.	LOCATION	ELEVATION
1	17.00' Rt "NFIR1" 63+59.84 BC	73.15
2	19.99' Rt "NFIR1" 63+73.98	72.95
3	28.43' Rt "NFIR1" 63+85.71	72.65
4	34.99' Rt "TRO" 2+17.58	72.32
5	32.00' Rt "TRO" 2+31.73 EC	72.00
6	17.00' Rt "NFIR1" 64+94.42 BC	71.01
7	19.36' Rt "NFIR1" 64+81.79	71.23
8	26.12' Rt "NFIR1" 64+70.86	71.28
9	34.36' Lt "TRO" 2+06.53	71.16
10	32.00 Lt "TRO" 2+19.17 EC	70.89

PAVEMENT ELEVATIONS

No.	LOCATION	ELEVATION
11	6.62' Rt "ACC1" 62+40	72.62
12	6.48' Lt "ACC1" 62+40	72.50
13	5.23' Rt "ACC1" 62+60	71.08
14	5.00' Lt "ACC1" 62+60	70.93
15	5.97' Rt "ACC2" 3+20	70.28
16	5.98' Lt "ACC2" 3+20	69.70
17	5.58' Rt "ACC2" 3+40	69.97
18	5.64' Lt "ACC2" 3+40	69.50
19	5.00' Rt "ACC2" 3+60	69.68
20	5.00' Lt "ACC2" 3+60	69.33

CONSTRUCTION DETAILS

SCALE: 1" = 20'

C-5

STATE OF CALIFORNIA - DEPARTMENT OF TRANSPORTATION
Caltrans
DESIGN

FUNCTIONAL SUPERVISOR: RICHARD CHIANG
CALCULATED-DESIGNED BY: VAN TRAN
CHECKED BY: H.S. CHEN
REVISED BY
DATE REVISED

LAST REVISION 00-00-00
DATE PLOTTED => 03-FEB-2016
TIME PLOTTED => 09:23

Dist	COUNTY	ROUTE	POST MILES TOTAL PROJECT	SHEET No.	TOTAL SHEETS
07	LA,Ora	5	0.0/1.5, 44.3/44.4	59	1622

REGISTERED CIVIL ENGINEER 4-2-14 DATE

1-25-16
PLANS APPROVAL DATE

REGISTERED PROFESSIONAL ENGINEER VAN T. TRAN No. C68477 Exp. 9-30-17 CIVIL STATE OF CALIFORNIA

THE STATE OF CALIFORNIA OR ITS OFFICERS OR AGENTS SHALL NOT BE RESPONSIBLE FOR THE ACCURACY OR COMPLETENESS OF SCANNED COPIES OF THIS PLAN SHEET.

NOTE:

1. FOR ACCURATE RIGHT OF WAY DATA, CONTACT RIGHT OF WAY ENGINEERING AT THE DISTRICT OFFICE.

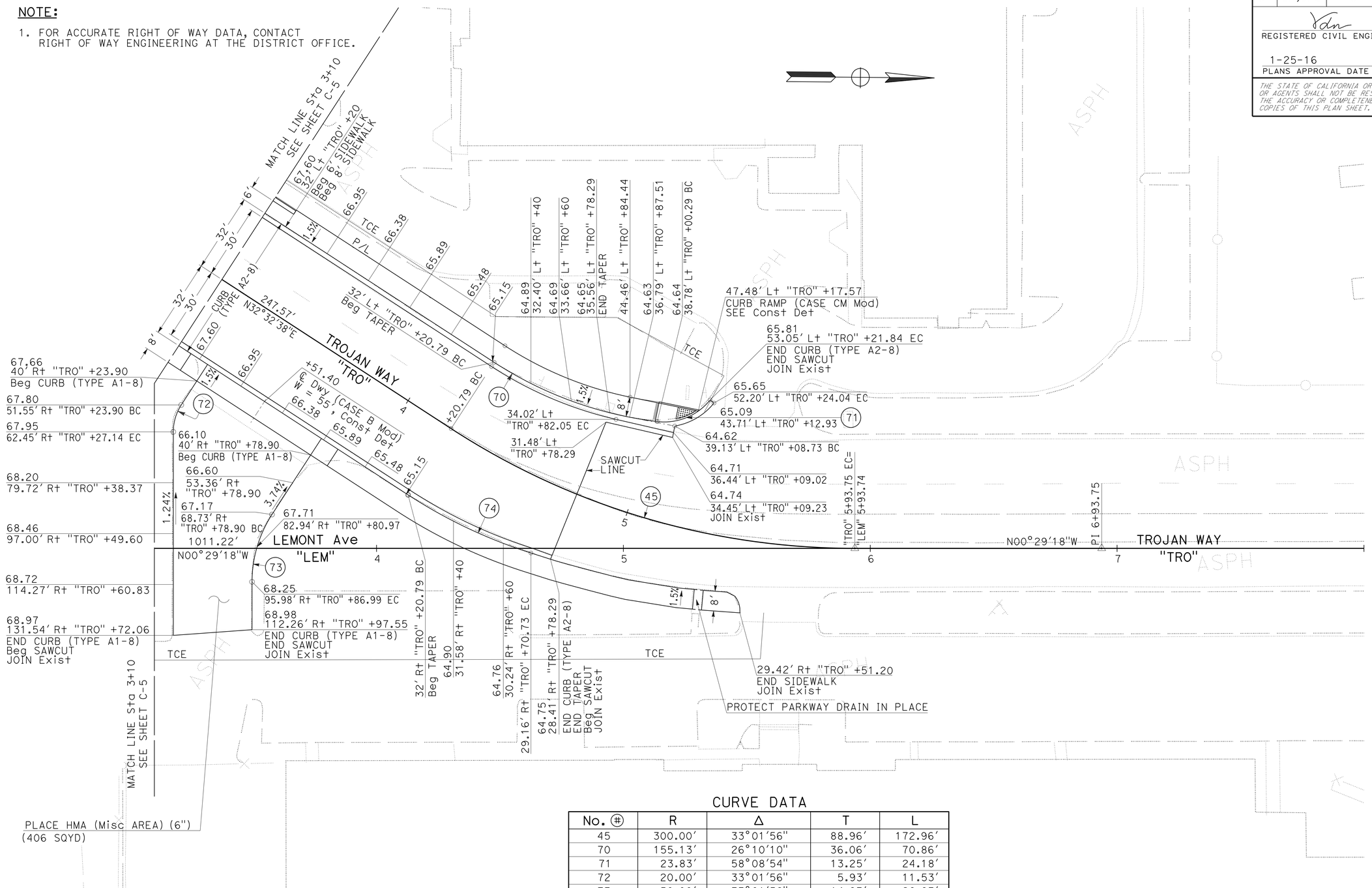

CURVE DATA

No. (#)	R	Δ	T	L
45	300.00′	33°01′56"	88.96′	172.96′
70	155.13′	26°10′10"	36.06′	70.86′
71	23.83′	58°08′54"	13.25′	24.18′
72	20.00′	33°01′56"	5.93′	11.53′
73	50.00′	33°01′56"	14.83′	28.83′
74	204.88′	15°26′24"	27.77′	55.21′

CONSTRUCTION DETAILS

SCALE: 1" = 20′

C-6

STATE OF CALIFORNIA - DEPARTMENT OF TRANSPORTATION
DESIGN
Caltrans

FUNCTIONAL SUPERVISOR: RICHARD CHIANG
CALCULATED-DESIGNED BY: VAN TRAN
CHECKED BY: H.S. CHEN
REVISED BY
DATE REVISED

LAST REVISION 00-00-00
DATE PLOTTED => 03-FEB-2016
TIME PLOTTED => 09:23

Dist	COUNTY	ROUTE	POST MILES TOTAL PROJECT	SHEET No.	TOTAL SHEETS
07	LA,Ora	5	0.0/1.5, 44.3/44.4	60	1622

REGISTERED CIVIL ENGINEER 4-2-14 DATE

1-25-16
PLANS APPROVAL DATE

REGISTERED PROFESSIONAL ENGINEER VAN T. TRAN No. C68477 Exp. 9-30-17 CIVIL STATE OF CALIFORNIA

THE STATE OF CALIFORNIA OR ITS OFFICERS OR AGENTS SHALL NOT BE RESPONSIBLE FOR THE ACCURACY OR COMPLETENESS OF SCANNED COPIES OF THIS PLAN SHEET.

NOTE:

1. FOR ACCURATE RIGHT OF WAY DATA, CONTACT RIGHT OF WAY ENGINEERING AT THE DISTRICT OFFICE.

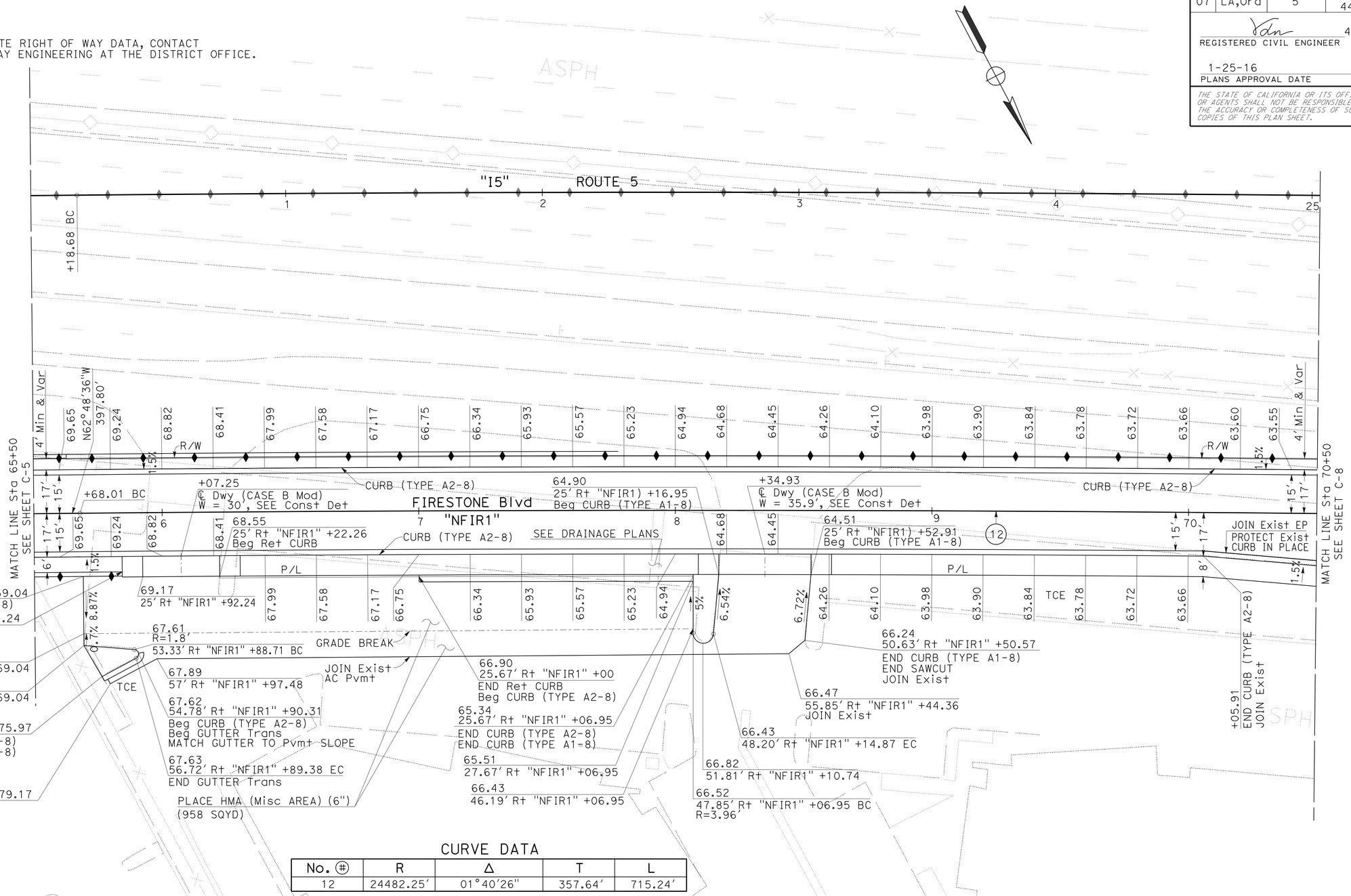

CURVE DATA

No. (#)	R	Δ	T	L
12	24482.25'	01°40'26"	357.64'	715.24'

CONSTRUCTION DETAILS

SCALE: 1" = 20'

C-7

STATE OF CALIFORNIA - DEPARTMENT OF TRANSPORTATION
DESIGN
FUNCTIONAL SUPERVISOR: RICHARD CHIANG
CALCULATED-DESIGNED BY: VAN TRAN
CHECKED BY: H.S. CHEN
REVISED BY
DATE REVISED

LAST REVISION 00-00-00
DATE PLOTTED => 03-FEB-2016
TIME PLOTTED => 09:23

Dist	COUNTY	ROUTE	POST MILES TOTAL PROJECT	SHEET No.	TOTAL SHEETS
07	LA,Ora	5	0.0/1.5, 44.3/44.4	61	1622

REGISTERED CIVIL ENGINEER 4-2-14 DATE

1-25-16
PLANS APPROVAL DATE

REGISTERED PROFESSIONAL ENGINEER VAN T. TRAN No. C68477 Exp. 9-30-17 CIVIL STATE OF CALIFORNIA

THE STATE OF CALIFORNIA OR ITS OFFICERS OR AGENTS SHALL NOT BE RESPONSIBLE FOR THE ACCURACY OR COMPLETENESS OF SCANNED COPIES OF THIS PLAN SHEET.

NOTE:

1. FOR ACCURATE RIGHT OF WAY DATA, CONTACT RIGHT OF WAY ENGINEERING AT THE DISTRICT OFFICE.

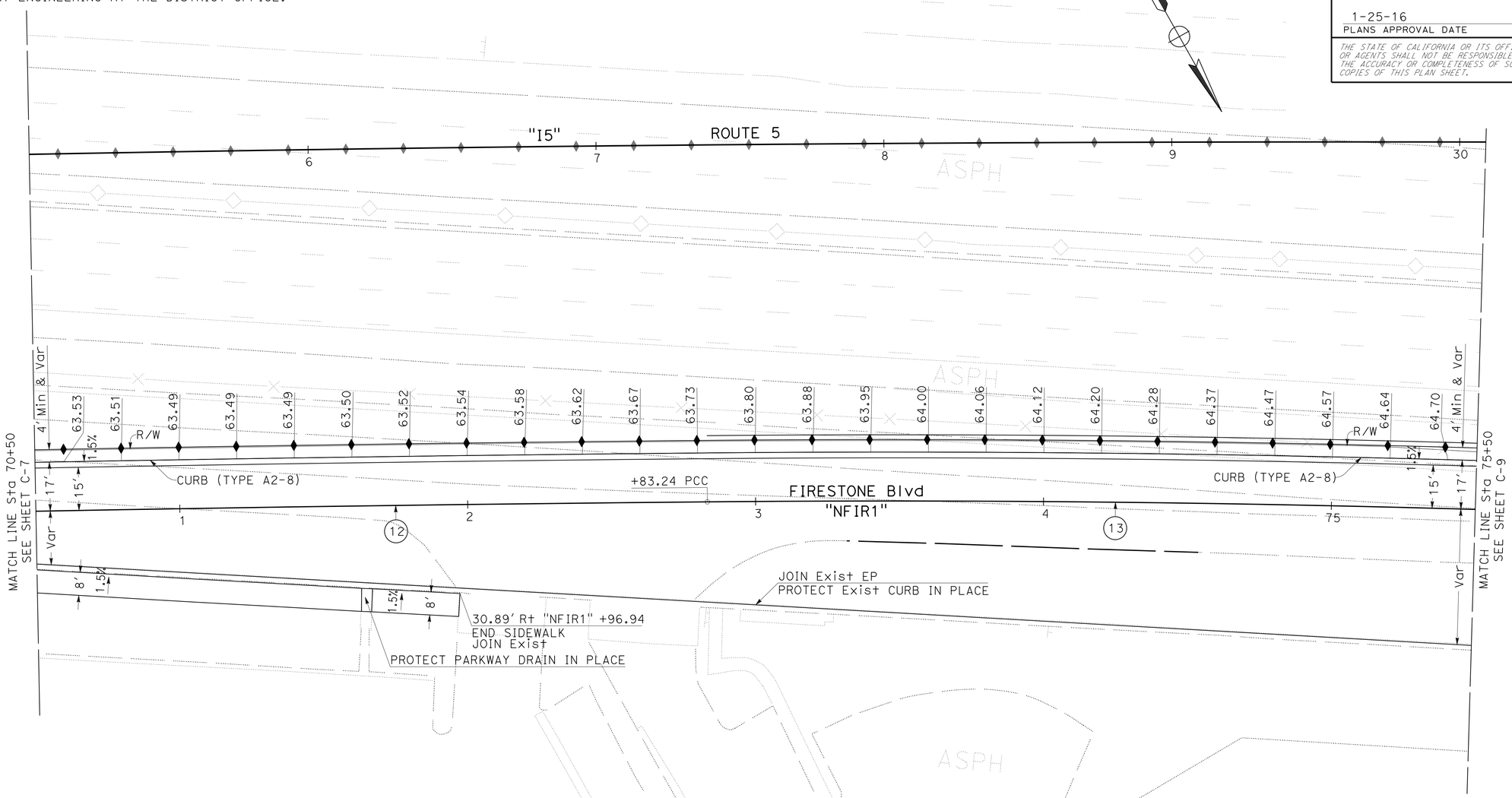

CURVE DATA

No. (#)	R	Δ	T	L
12	24482.25'	01°40'26"	357.64'	715.24'
13	7000.00'	04°06'36"	251.18'	502.13'

CONSTRUCTION DETAILS

SCALE: 1" = 20'

C-8

REVISED BY	DATE REVISED
VAN TRAN	H.S. CHEN
CALCULATED-DESIGNED BY	CHECKED BY
FUNCTIONAL SUPERVISOR	RICHARD CHIANG

STATE OF CALIFORNIA - DEPARTMENT OF TRANSPORTATION

DESIGN

LAST REVISION 00-00-00 | DATE PLOTTED => 03-FEB-2016 | TIME PLOTTED => 09:23

Dist	COUNTY	ROUTE	POST MILES TOTAL PROJECT	SHEET No.	TOTAL SHEETS
07	LA,Ora	5	0.0/1.5, 44.3/44.4	62	1622

REGISTERED CIVIL ENGINEER 4-2-14 DATE

1-25-16
PLANS APPROVAL DATE

REGISTERED PROFESSIONAL ENGINEER VAN T. TRAN No. C68477 Exp. 9-30-17 CIVIL STATE OF CALIFORNIA

THE STATE OF CALIFORNIA OR ITS OFFICERS OR AGENTS SHALL NOT BE RESPONSIBLE FOR THE ACCURACY OR COMPLETENESS OF SCANNED COPIES OF THIS PLAN SHEET.

NOTE:

1. FOR ACCURATE RIGHT OF WAY DATA, CONTACT RIGHT OF WAY ENGINEERING AT THE DISTRICT OFFICE.

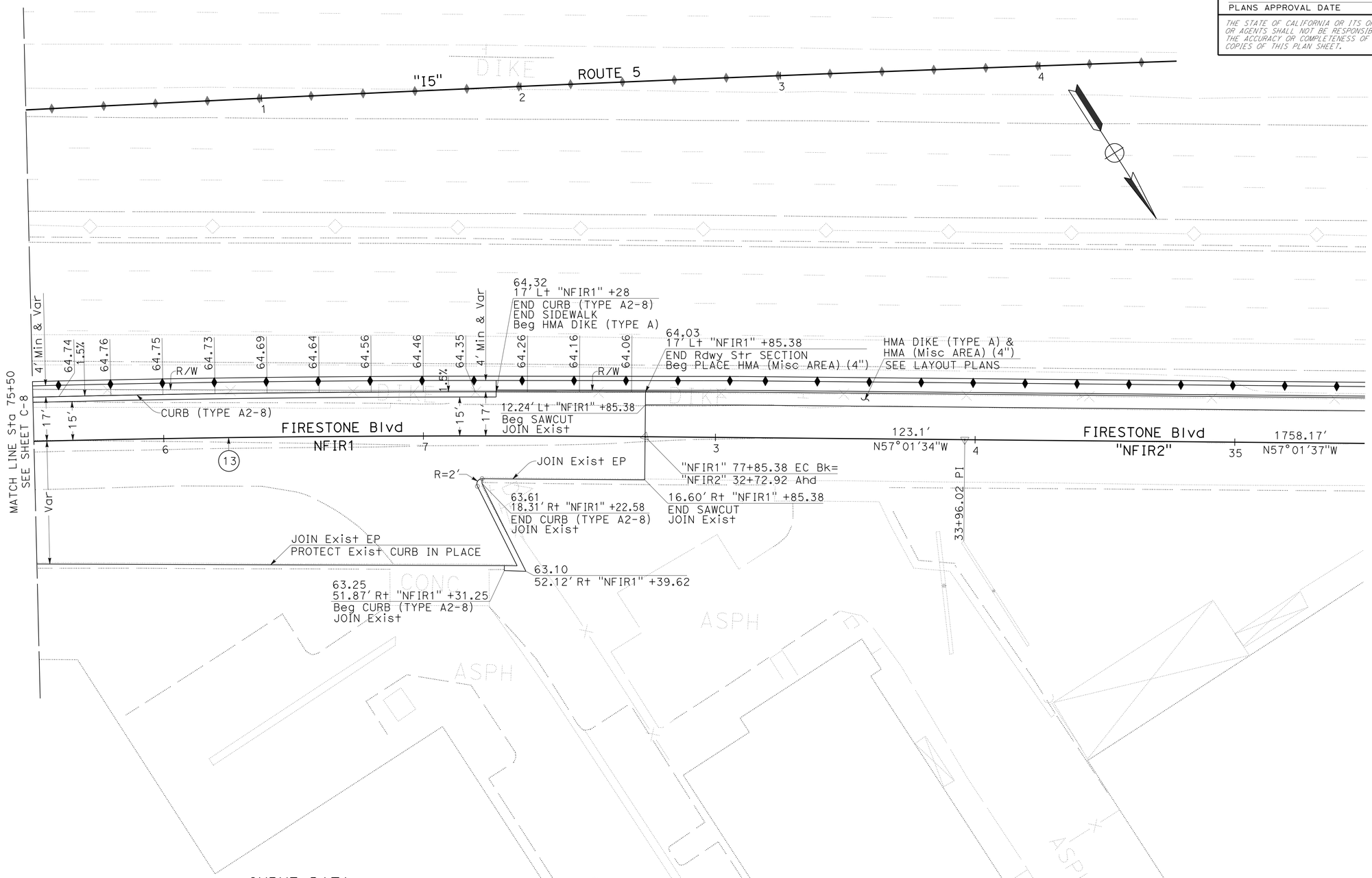

CURVE DATA

No. (#)	R	Δ	T	L
13	7000.00'	4°06'36"	251.18'	502.13'

CONSTRUCTION DETAILS

SCALE: 1" = 20'

C-9

STATE OF CALIFORNIA - DEPARTMENT OF TRANSPORTATION
Caltrans
DESIGN

FUNCTIONAL SUPERVISOR: RICHARD CHIANG
CALCULATED-DESIGNED BY: VAN TRAN
CHECKED BY: H.S. CHEN
REVISED BY
DATE REVISED

LAST REVISION 00-00-00
DATE PLOTTED => 03-FEB-2016
TIME PLOTTED => 09:23

Dist	COUNTY	ROUTE	POST MILES TOTAL PROJECT	SHEET No.	TOTAL SHEETS
07	LA,Ora	5	0.0/1.5, 44.3/44.4	63	1622

REGISTERED CIVIL ENGINEER 4-2-14 DATE

1-25-16
PLANS APPROVAL DATE

REGISTERED PROFESSIONAL ENGINEER VAN T. TRAN No. C68477 Exp. 9-30-17 CIVIL STATE OF CALIFORNIA

THE STATE OF CALIFORNIA OR ITS OFFICERS OR AGENTS SHALL NOT BE RESPONSIBLE FOR THE ACCURACY OR COMPLETENESS OF SCANNED COPIES OF THIS PLAN SHEET.

NOTES:

1. FOR ACCURATE RIGHT OF WAY DATA, CONTACT RIGHT OF WAY ENGINEERING AT THE DISTRICT OFFICE.
2. CONTRACTOR MUST SURVEY EXISTING MINOR CONCRETE (MINOR STRUCTURE) BEFORE RECONSTRUCT.

CURB (TYPE A2-8 Mod)
NO SCALE

CURVE DATA

No. (#)	R	Δ	T	L
20	850.00′	5°27′36"	40.53′	81.00′
81	522.94′	6°30′21"	29.72′	59.38′
82	2109.65′	0°50′47"	15.58′	31.17′

PAVEMENT ELEVATIONS

No. #	LOCATION	ELEVATION
1	13.83′ Lt "SFIR1" 19+00.00	67.97
2	14.21′ Lt "SFIR1" 19+20.00	67.88
3	14.87′ Lt "SFIR1" 19+40.00	67.75
4	15.67′ Lt "SFIR1" 19+60.00	67.59
5	21.88′ Lt "SFIR1" 19+03.59	68.15
6	22.83′ Lt "SFIR1" 19+38.84	67.95
7	55.86′ Lt "SFIR1" 18+86.74	68.78
8	26.86′ Lt "SFIR1" 19+39.53	(68.35)

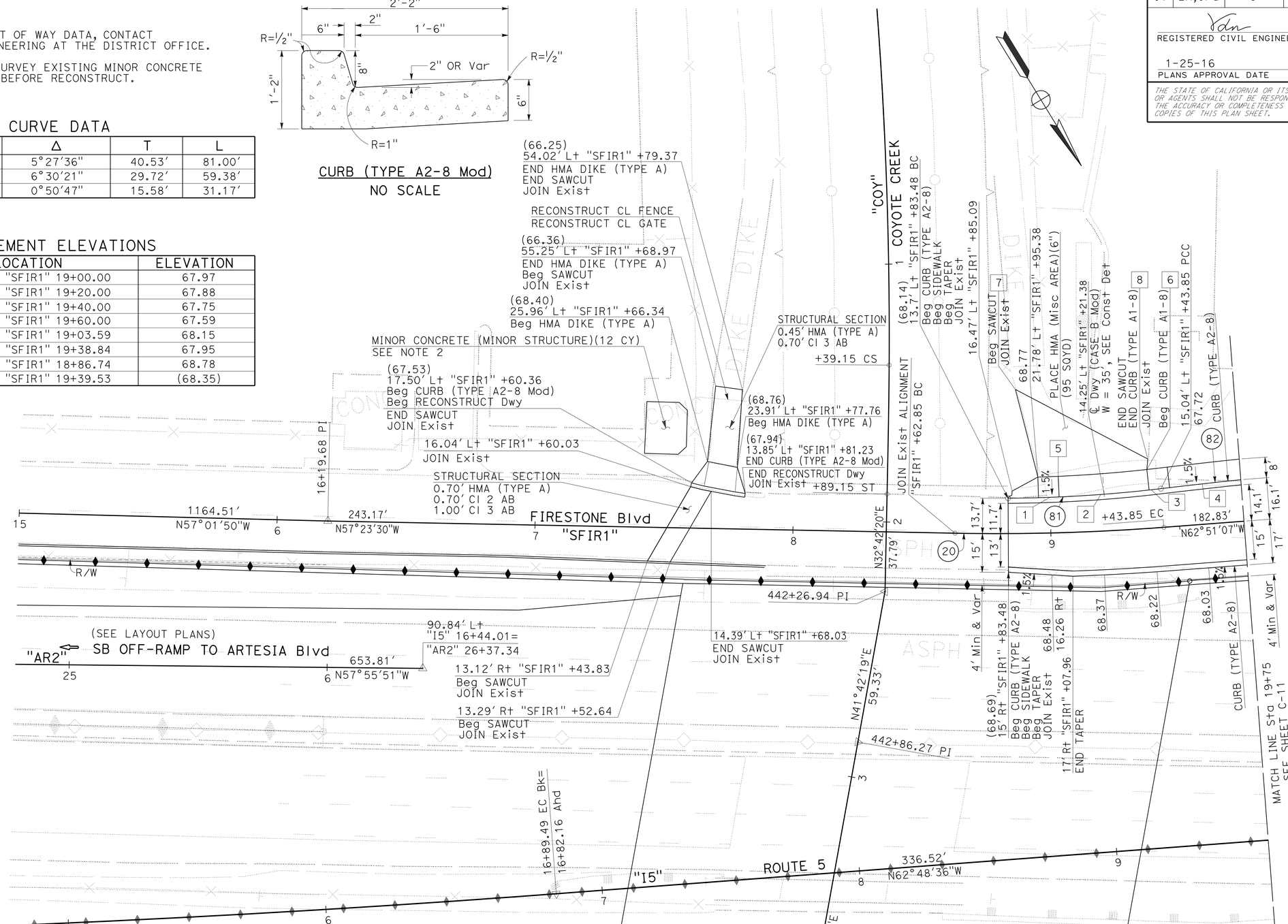

CONSTRUCTION DETAILS

SCALE: 1" = 20′

C-10

STATE OF CALIFORNIA - DEPARTMENT OF TRANSPORTATION
Caltrans® DESIGN

FUNCTIONAL SUPERVISOR: RICHARD CHIANG
CALCULATED-DESIGNED BY: HUNG TIEU
CHECKED BY: VAN TRAN
REVISED BY
DATE REVISED

LAST REVISION 00-00-00 | DATE PLOTTED => 03-FEB-2016 | TIME PLOTTED => 09:23

Dist	COUNTY	ROUTE	POST MILES TOTAL PROJECT	SHEET No.	TOTAL SHEETS
07	LA,Ora	5	0.0/1.5, 44.3/44.4	64	1622

REGISTERED CIVIL ENGINEER 4-2-14 DATE

1-25-16
PLANS APPROVAL DATE

REGISTERED PROFESSIONAL ENGINEER VAN T. TRAN No. C68477 Exp. 9-30-17 CIVIL STATE OF CALIFORNIA

THE STATE OF CALIFORNIA OR ITS OFFICERS OR AGENTS SHALL NOT BE RESPONSIBLE FOR THE ACCURACY OR COMPLETENESS OF SCANNED COPIES OF THIS PLAN SHEET.

NOTE:

1. FOR ACCURATE RIGHT OF WAY DATA, CONTACT RIGHT OF WAY ENGINEERING AT THE DISTRICT OFFICE.

CURVE DATA

No. ⊕	R	Δ	T	L
21	28000.01′	3°25′27"	836.92′	1673.35′
82	2109.65′	2°28′35"	45.60′	91.18′

PAVEMENT ELEVATIONS

No. #	LOCATION	ELEVATION
1	25.00′ Lt "SFIR1" 20+63.11	66.49
2	25.00′ Lt "SFIR1" 20+88.47	66.11
3	32.43′ Lt "SFIR1" 20+63.95	66.02
4	27.00′ Lt "SFIR1" 20+63.42	66.13
5	30.44′ Lt "SFIR1" 20+43.65	66.04
6	35.62′ Lt "SFIR1" 20+46.09	66.16
7	46.00′ Lt "SFIR1" 20+65.25	65.08
8	46.00′ Lt "SFIR1" 20+75.79	65.08
9	32.50′ Lt "SFIR1" 20+89.64	65.56

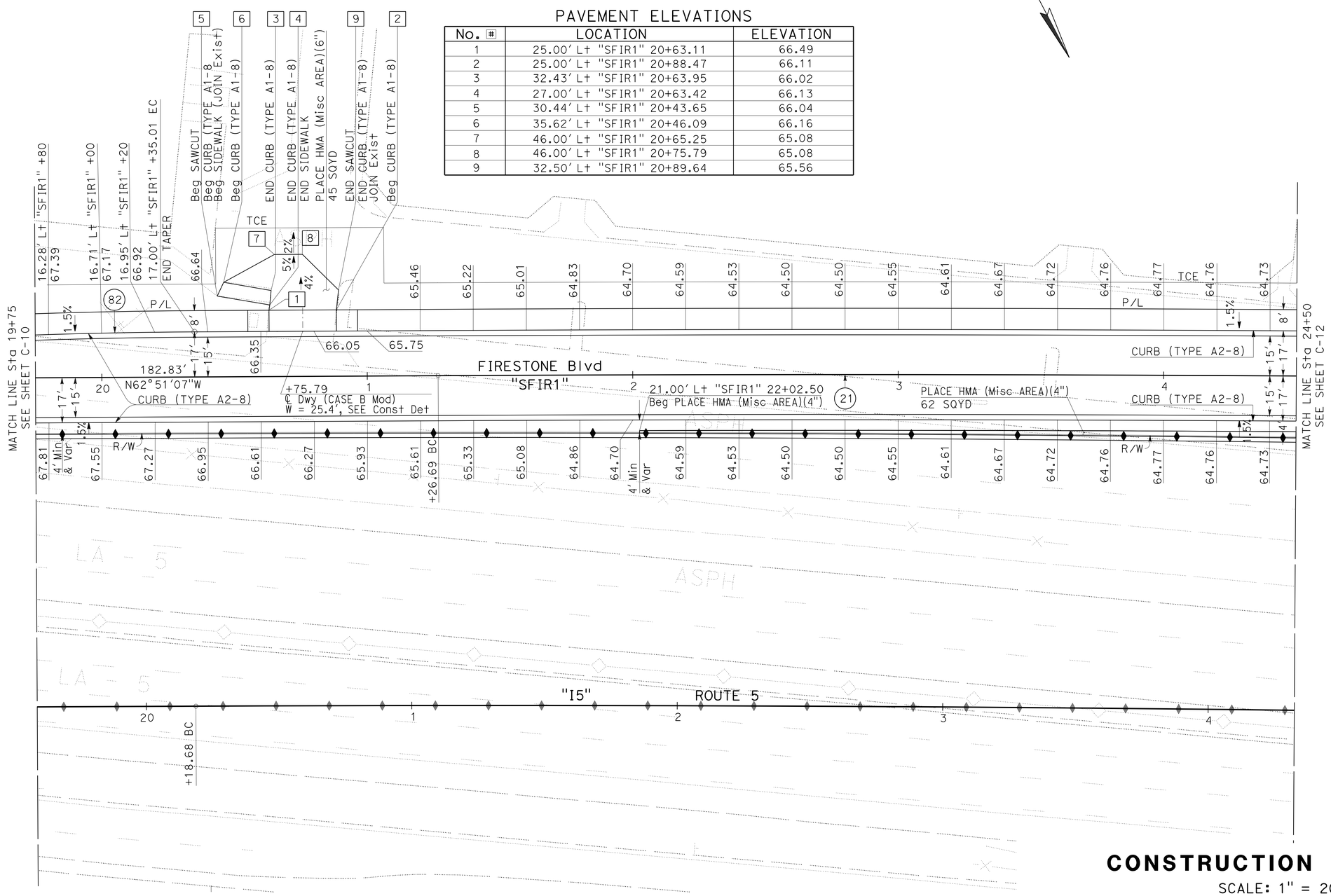

CONSTRUCTION DETAILS

SCALE: 1" = 20′

C-11

STATE OF CALIFORNIA - DEPARTMENT OF TRANSPORTATION
Caltrans DESIGN
FUNCTIONAL SUPERVISOR RICHARD CHIANG
CALCULATED-DESIGNED BY HUNG TIEU
CHECKED BY VAN TRAN
REVISED BY
DATE REVISED

LAST REVISION 00-00-00
DATE PLOTTED => 03-FEB-2016
TIME PLOTTED => 09:23

Dist	COUNTY	ROUTE	POST MILES TOTAL PROJECT	SHEET No.	TOTAL SHEETS
07	LA,Ora	5	0.0/1.5, 44.3/44.4	65	1622

REGISTERED CIVIL ENGINEER 4-2-14 DATE

1-25-16
PLANS APPROVAL DATE

REGISTERED PROFESSIONAL ENGINEER VAN T. TRAN No. C68477 Exp. 9-30-17 CIVIL STATE OF CALIFORNIA

THE STATE OF CALIFORNIA OR ITS OFFICERS OR AGENTS SHALL NOT BE RESPONSIBLE FOR THE ACCURACY OR COMPLETENESS OF SCANNED COPIES OF THIS PLAN SHEET.

NOTE:

1. FOR ACCURATE RIGHT OF WAY DATA, CONTACT RIGHT OF WAY ENGINEERING AT THE DISTRICT OFFICE.

CURVE DATA

No. ⊕	R	Δ	T	L
21	28000.01′	3°25′27″	836.92′	1673.35′

PAVEMENT ELEVATIONS

No. ⊞	LOCATION	ELEVATION
1	25.00′ Lt "SFIR1" 24+79.19	64.78
2	25.00′ Lt "SFIR1" 25+04.17	64.64
3	29.00′ Lt "SFIR1" 24+79.19	64.72
4	29.00′ Lt "SFIR1" 25+22.22	64.74
5	25.00′ Lt "SFIR1" 25+22.19	64.73
6	25.00′ Lt "SFIR1" 25+96.77	63.90
7	25.00′ Lt "SFIR1" 26+22.75	63.70
8	43.00′ Lt "SFIR1" 25+94.05	64.92
9	43.00′ Lt "SFIR1" 26+24.68	64.08

PAVEMENT ELEVATIONS

No. ⊞	LOCATION	ELEVATION
10	25.00′ Lt "SFIR1" 27+57.22	62.96
11	25.00′ Lt "SFIR1" 27+97.20	62.84
12	33.00′ Lt "SFIR1" 27+49.23	64.10
13	25.00′ Lt "SFIR1" 27+45.98	64.25
14	33.00′ Lt "SFIR1" 27+99.06	63.65
15	25.00′ Lt "SFIR1" 28+05.19	63.87

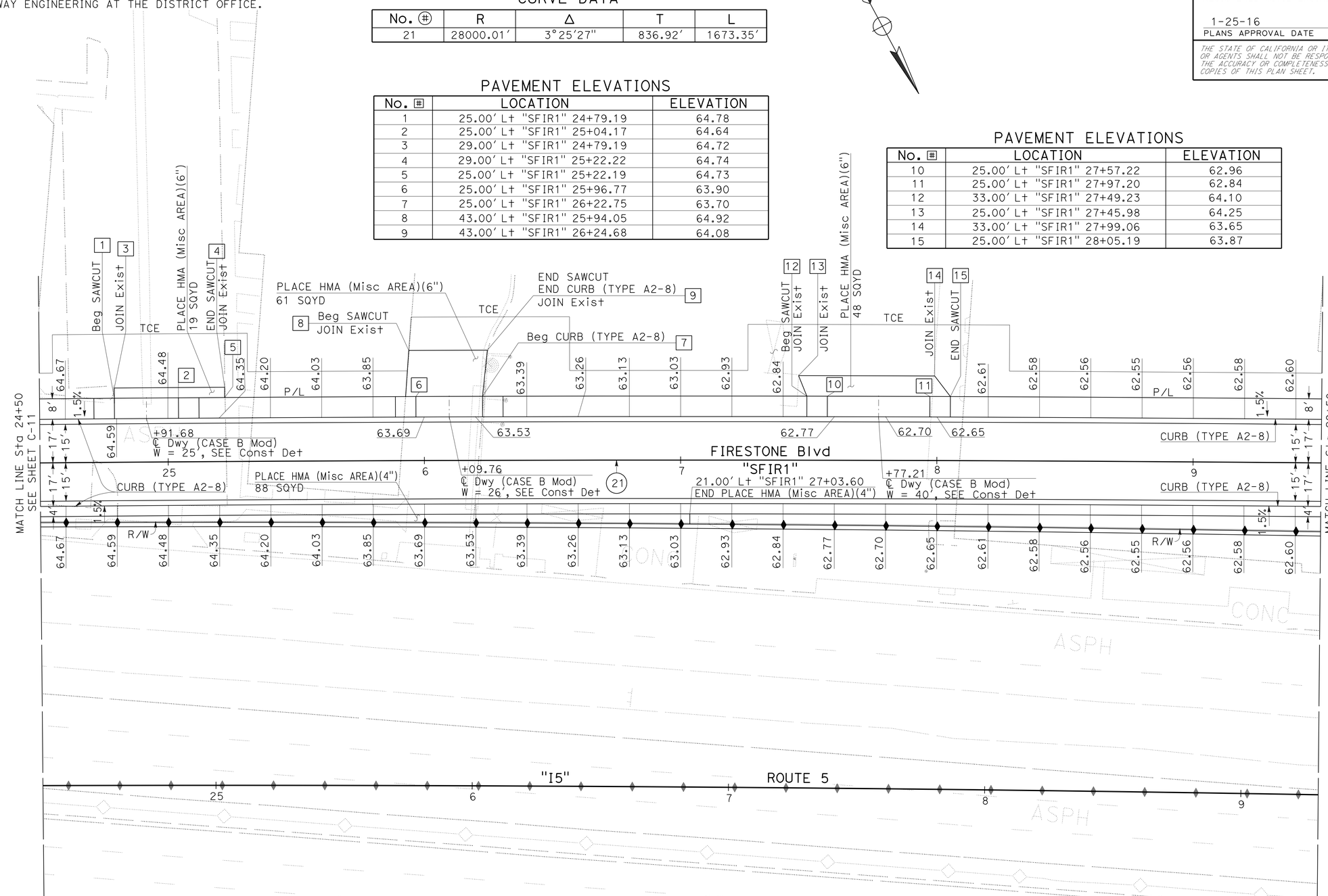

CONSTRUCTION DETAILS

SCALE: 1" = 20′

C-12

STATE OF CALIFORNIA - DEPARTMENT OF TRANSPORTATION
Caltrans DESIGN
FUNCTIONAL SUPERVISOR RICHARD CHIANG
CALCULATED-DESIGNED BY VAN TRAN
CHECKED BY HUNG TIEU
REVISED BY
DATE REVISED

LAST REVISION 00-00-00
DATE PLOTTED => 03-FEB-2016
TIME PLOTTED => 09:23

Dist	COUNTY	ROUTE	POST MILES TOTAL PROJECT	SHEET No.	TOTAL SHEETS
07	LA,Ora	5	0.0/1.5, 44.3/44.4	66	1622

REGISTERED CIVIL ENGINEER 4-2-14 DATE

1-25-16
PLANS APPROVAL DATE

REGISTERED PROFESSIONAL ENGINEER VAN T. TRAN No. C68477 Exp. 9-30-17 CIVIL STATE OF CALIFORNIA

THE STATE OF CALIFORNIA OR ITS OFFICERS OR AGENTS SHALL NOT BE RESPONSIBLE FOR THE ACCURACY OR COMPLETENESS OF SCANNED COPIES OF THIS PLAN SHEET.

NOTE:

1. FOR ACCURATE RIGHT OF WAY DATA, CONTACT RIGHT OF WAY ENGINEERING AT THE DISTRICT OFFICE.

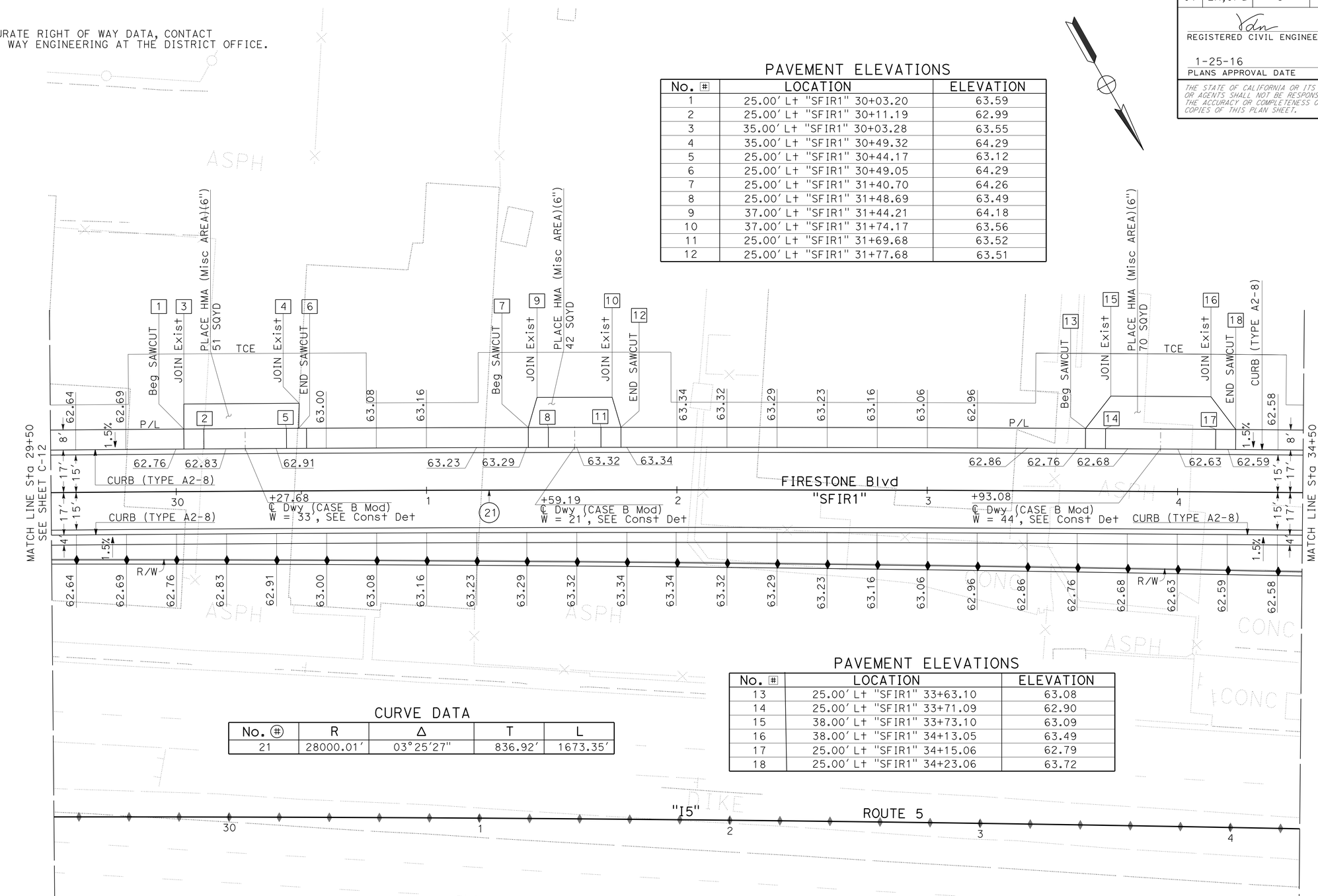

PAVEMENT ELEVATIONS

No. #	LOCATION	ELEVATION
1	25.00' Lt "SFIR1" 30+03.20	63.59
2	25.00' Lt "SFIR1" 30+11.19	62.99
3	35.00' Lt "SFIR1" 30+03.28	63.55
4	35.00' Lt "SFIR1" 30+49.32	64.29
5	25.00' Lt "SFIR1" 30+44.17	63.12
6	25.00' Lt "SFIR1" 30+49.05	64.29
7	25.00' Lt "SFIR1" 31+40.70	64.26
8	25.00' Lt "SFIR1" 31+48.69	63.49
9	37.00' Lt "SFIR1" 31+44.21	64.18
10	37.00' Lt "SFIR1" 31+74.17	63.56
11	25.00' Lt "SFIR1" 31+69.68	63.52
12	25.00' Lt "SFIR1" 31+77.68	63.51

PAVEMENT ELEVATIONS

No. #	LOCATION	ELEVATION
13	25.00' Lt "SFIR1" 33+63.10	63.08
14	25.00' Lt "SFIR1" 33+71.09	62.90
15	38.00' Lt "SFIR1" 33+73.10	63.09
16	38.00' Lt "SFIR1" 34+13.05	63.49
17	25.00' Lt "SFIR1" 34+15.06	62.79
18	25.00' Lt "SFIR1" 34+23.06	63.72

CURVE DATA

No. #	R	Δ	T	L
21	28000.01'	03°25'27"	836.92'	1673.35'

CONSTRUCTION DETAILS

SCALE: 1" = 20'

C-13

STATE OF CALIFORNIA - DEPARTMENT OF TRANSPORTATION
Caltrans
DESIGN

FUNCTIONAL SUPERVISOR: RICHARD CHIANG
CALCULATED-DESIGNED BY: HUNG TIEU
CHECKED BY: VAN TRAN
REVISED BY
DATE REVISED

LAST REVISION 00-00-00
DATE PLOTTED => 03-FEB-2016
TIME PLOTTED => 09:23

Dist	COUNTY	ROUTE	POST MILES TOTAL PROJECT	SHEET No.	TOTAL SHEETS
07	LA,Ora	5	0.0/1.5, 44.3/44.4	67	1622

REGISTERED CIVIL ENGINEER 4-2-14 DATE

1-25-16
PLANS APPROVAL DATE

REGISTERED PROFESSIONAL ENGINEER VAN T. TRAN No. C68477 Exp. 9-30-17 CIVIL STATE OF CALIFORNIA

THE STATE OF CALIFORNIA OR ITS OFFICERS OR AGENTS SHALL NOT BE RESPONSIBLE FOR THE ACCURACY OR COMPLETENESS OF SCANNED COPIES OF THIS PLAN SHEET.

NOTE:

1. FOR ACCURATE RIGHT OF WAY DATA, CONTACT RIGHT OF WAY ENGINEERING AT THE DISTRICT OFFICE.

CURVE DATA

No. (#)	R	Δ	T	L
21	28000.01′	3°25′27"	836.92′	1673.35′

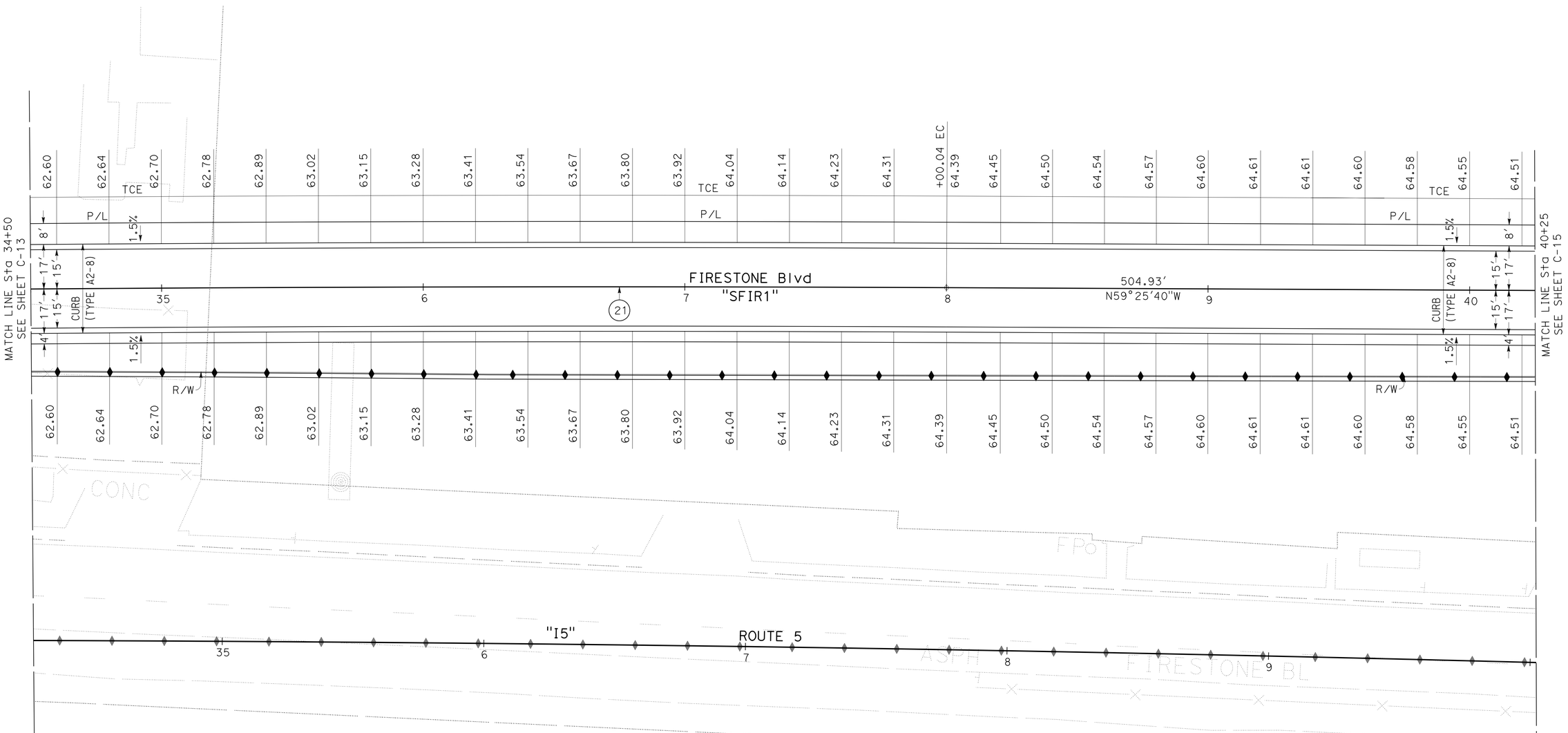

CONSTRUCTION DETAILS

SCALE: 1" = 20′

C-14

STATE OF CALIFORNIA - DEPARTMENT OF TRANSPORTATION
Caltrans
DESIGN

FUNCTIONAL SUPERVISOR: RICHARD CHIANG
CALCULATED-DESIGNED BY: VAN TRAN
CHECKED BY: MARCELO DE LA FUENTE
REVISED BY
DATE REVISED

LAST REVISION 00-00-00
DATE PLOTTED => 03-FEB-2016
TIME PLOTTED => 09:23

Dist	COUNTY	ROUTE	POST MILES TOTAL PROJECT	SHEET No.	TOTAL SHEETS
07	LA,Ora	5	0.0/1.5, 44.3/44.4	68	1622

REGISTERED CIVIL ENGINEER 4-2-14 DATE

1-25-16
PLANS APPROVAL DATE

REGISTERED PROFESSIONAL ENGINEER VAN T. TRAN No. C68477 Exp. 9-30-17 CIVIL STATE OF CALIFORNIA

THE STATE OF CALIFORNIA OR ITS OFFICERS OR AGENTS SHALL NOT BE RESPONSIBLE FOR THE ACCURACY OR COMPLETENESS OF SCANNED COPIES OF THIS PLAN SHEET.

NOTE:

1. FOR ACCURATE RIGHT OF WAY DATA, CONTACT RIGHT OF WAY ENGINEERING AT THE DISTRICT OFFICE.

PAVEMENT ELEVATIONS

No. #	LOCATION	ELEVATION
1	25.00' Lt "SFIR1" +23.38	64.46
2	25.00' Lt "SFIR1" +31.47	63.54
3	43.00' Lt "SFIR1" +33.86	64.42
4	17.00' Lt "SFIR1" +54.05	63.32
5	43.00' Lt "SFIR1" +74.24	64.34
6	25.00' Lt "SFIR1" +76.64	63.47
7	25.00' Lt "SFIR1" +84.67	64.38
8	25.00' Lt "SFIR1" +13.38	64.34
9	38.00' Lt "SFIR1" +20.38	64.31
10	25.00' Lt "SFIR1" +21.38	63.80
11	17.00' Lt "SFIR1" +40.38	63.72

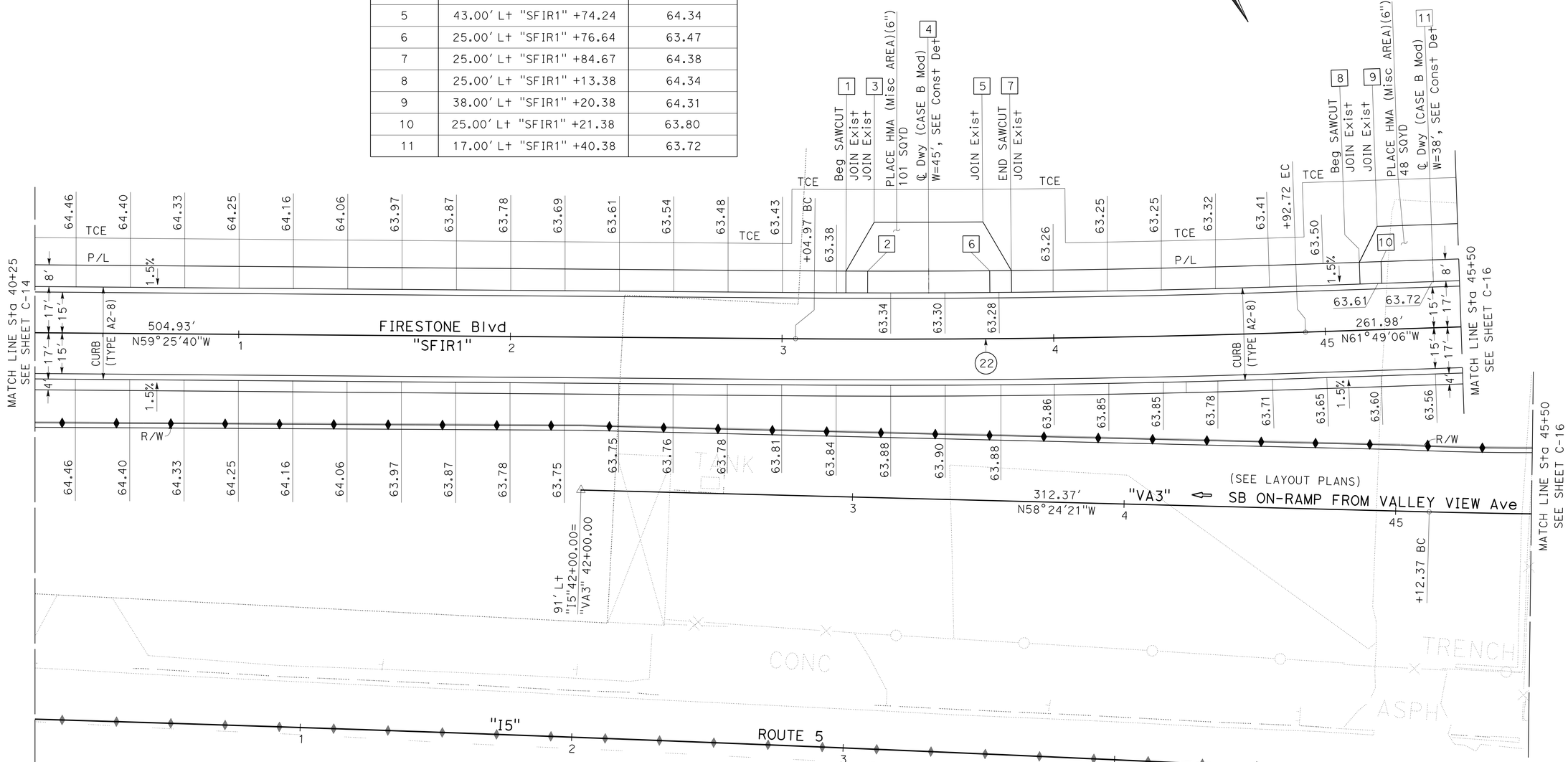

CURVE DATA

No. (#)	R	Δ	T	L
22	4499.68'	2°23'26"	93.89'	187.75'

CONSTRUCTION DETAILS

SCALE: 1" = 20'

C-15

STATE OF CALIFORNIA - DEPARTMENT OF TRANSPORTATION
Caltrans DESIGN

FUNCTIONAL SUPERVISOR: RICHARD CHIANG
CALCULATED-DESIGNED BY: MARCELO DE LA FUENTE
CHECKED BY: VAN TRAN
REVISED BY
DATE REVISED

LAST REVISION 00-00-00
DATE PLOTTED => 03-FEB-2016
TIME PLOTTED => 09:23

Dist	COUNTY	ROUTE	POST MILES TOTAL PROJECT	SHEET No.	TOTAL SHEETS
07	LA,Ora	5	0.0/1.5, 44.3/44.4	69	1622

REGISTERED CIVIL ENGINEER 4-2-14 DATE

1-25-16
PLANS APPROVAL DATE

REGISTERED PROFESSIONAL ENGINEER VAN T. TRAN No. C68477 Exp. 9-30-17 CIVIL STATE OF CALIFORNIA

THE STATE OF CALIFORNIA OR ITS OFFICERS OR AGENTS SHALL NOT BE RESPONSIBLE FOR THE ACCURACY OR COMPLETENESS OF SCANNED COPIES OF THIS PLAN SHEET.

NOTE:

1. FOR ACCURATE RIGHT OF WAY DATA, CONTACT RIGHT OF WAY ENGINEERING AT THE DISTRICT OFFICE.

CURVE DATA

No. #	R	Δ	T	L
23	1349.98′	7°38′22"	90.13′	180.00′

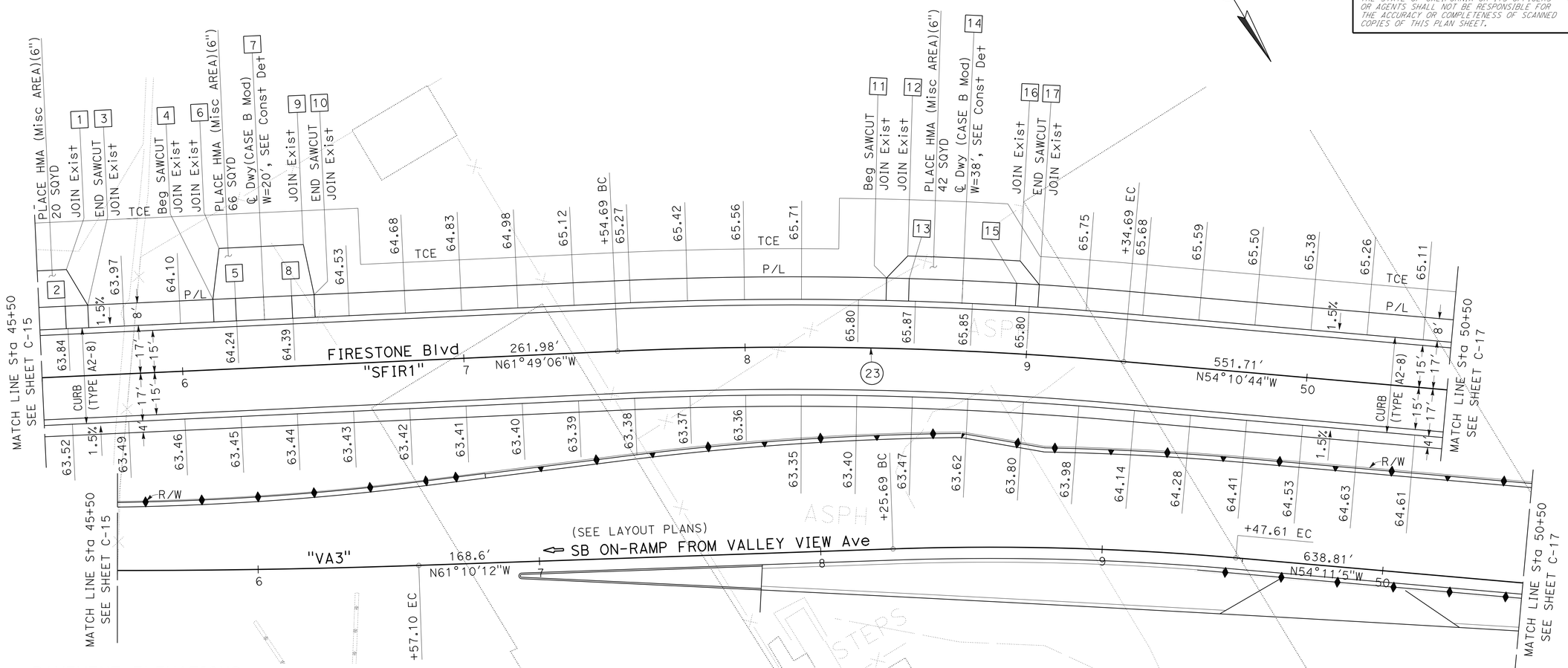

PAVEMENT ELEVATIONS

No. #	LOCATION	ELEVATION
1	38.00′ Lt "SFIR1" +60.38	64.85
2	25.00′ Lt "SFIR1" +59.38	64.02
3	25.00′ Lt "SFIR1" +67.38	65.03
4	25.00′ Lt "SFIR1" +11.90	65.83
5	25.00′ Lt "SFIR1" +19.90	64.43
6	43.00′ Lt "SFIR1" +14.90	65.89
7	17.00′ Lt "SFIR1" +29.90	64.32
8	25.00′ Lt "SFIR1" +39.90	64.58
9	43.00′ Lt "SFIR1" +44.90	65.67
10	25.00′ Lt "SFIR1" +47.90	65.58
11	25.00′ Lt "SFIR1" +49.68	66.03
12	33.00′ Lt "SFIR1" +56.82	65.96
13	25.00′ Lt "SFIR1" +57.58	66.05
14	17.00′ Lt "SFIR1" +76.34	65.85
15	25.00′ Lt "SFIR1" +95.11	66.00
16	33.00′ Lt "SFIR1" +95.87	66.23
17	25.00′ Lt "SFIR1" +03.01	66.28

CONSTRUCTION DETAILS

SCALE: 1" = 20′

C-16

STATE OF CALIFORNIA - DEPARTMENT OF TRANSPORTATION
DESIGN
Caltrans

FUNCTIONAL SUPERVISOR: RICHARD CHIANG
CALCULATED-DESIGNED BY: MARCELO DE LA FUENTE
CHECKED BY: VAN TRAN
REVISED BY
DATE REVISED

LAST REVISION 00-00-00
DATE PLOTTED => 03-FEB-2016
TIME PLOTTED => 09:23

Dist	COUNTY	ROUTE	POST MILES TOTAL PROJECT	SHEET No.	TOTAL SHEETS
07	LA,Ora	5	0.0/1.5, 44.3/44.4	70	1622

REGISTERED CIVIL ENGINEER 4-2-14 DATE

1-25-16
PLANS APPROVAL DATE

REGISTERED PROFESSIONAL ENGINEER VAN T. TRAN No. C68477 Exp. 9-30-17 CIVIL STATE OF CALIFORNIA

THE STATE OF CALIFORNIA OR ITS OFFICERS OR AGENTS SHALL NOT BE RESPONSIBLE FOR THE ACCURACY OR COMPLETENESS OF SCANNED COPIES OF THIS PLAN SHEET.

NOTE:

1. FOR ACCURATE RIGHT OF WAY DATA, CONTACT RIGHT OF WAY ENGINEERING AT THE DISTRICT OFFICE.

CURVE DATA

No. (#)	R	Δ	T	L
24	850.01′	13°00′29"	96.91′	192.98′
83	100.00′	57°17′45"	54.63′	100.00′
84	42.92′	62°58′09"	26.28′	47.17′
91	503.35′	09°22′09"	41.25′	82.31′
92	85.23′	48°06′06"	38.04′	71.55′
93	33.00′	66°58′36"	21.83′	38.58′
94	127.40′	50°13′46"	59.72′	111.69′

PAVEMENT ELEVATIONS

No. (#)	LOCATION	ELEVATION
1	25.00′ Lt "SFIR1" +02.60	65.95
2	43.00′ Lt "SFIR1" +06.10	66.04
3	25.00′ Lt "SFIR1" +10.60	64.68
4	25.00′ Lt "SFIR1" +41.60	64.46
5	25.00′ Lt "SFIR1" +64.42	64.38
6	25.00′ Lt "SFIR1" +94.42	64.26
7	43.00′ Lt "SFIR1" +18.50	65.43
8	25.00′ Lt "SFIR1" +31.82	65.51
9	17.00′ Lt "SFIR1" +42.34 BC	64.11
10	20.11′ Lt "SFIR1" +67.08	64.24
11	29.24′ Lt "SFIR1" +90.28	64.34
12	42.99′ Lt "FIR1" +35.42	64.38
13	32.63′ Lt "FIR1" +53.02 EC	64.57
14	33.45′ Rt "FIR1" +09.57 BC	63.78
15	35.09′ Rt "FIR1" +96.71	63.76
16	38.52′ Rt "FIR1" +84.18	63.81
17	43.67′ Rt "FIR1" +72.30	63.94
18	50.35′ Rt "FIR1" +61.48 BC	64.19
19	60.03′ Rt "FIR1" +49.86	64.52
20	28.99′ Lt "SFIR1" +15.17	64.56
21	23.32′ Lt "SFIR1" +22.50	64.68
22	18.61′ Lt "SFIR1" +33.28	64.83
23	17.00′ Lt "SFIR1" +44.92 EC	64.74

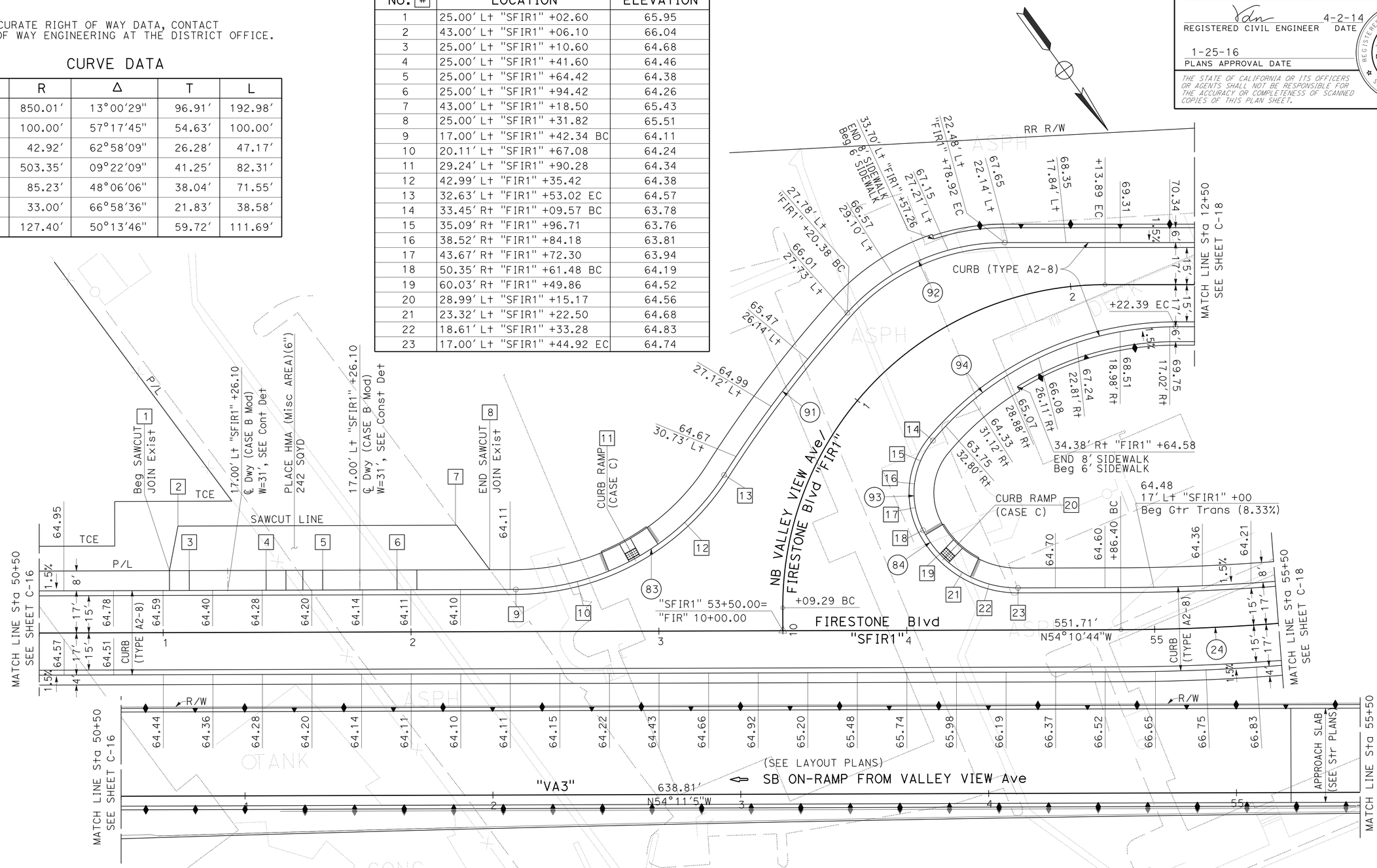

CONSTRUCTION DETAILS

SCALE: 1" = 20′

C-17

STATE OF CALIFORNIA - DEPARTMENT OF TRANSPORTATION
Caltrans DESIGN

FUNCTIONAL SUPERVISOR: RICHARD CHIANG
CALCULATED-DESIGNED BY: MARCELO DE LA FUENTE
CHECKED BY: VAN TRAN
REVISED BY: H.CHEN
DATE REVISED: 5/2015

LAST REVISION 00-00-00 | DATE PLOTTED => 03-FEB-2016 | TIME PLOTTED => 09:23

Dist	COUNTY	ROUTE	POST MILES TOTAL PROJECT	SHEET No.	TOTAL SHEETS
07	LA,Ora	5	0.0/1.5, 44.3/44.4	71	1622

REGISTERED CIVIL ENGINEER 4-2-14 DATE

1-25-16
PLANS APPROVAL DATE

REGISTERED PROFESSIONAL ENGINEER VAN T. TRAN No. C68477 Exp. 9-30-17 CIVIL STATE OF CALIFORNIA

THE STATE OF CALIFORNIA OR ITS OFFICERS OR AGENTS SHALL NOT BE RESPONSIBLE FOR THE ACCURACY OR COMPLETENESS OF SCANNED COPIES OF THIS PLAN SHEET.

NOTE:

1. FOR ACCURATE RIGHT OF WAY DATA, CONTACT RIGHT OF WAY ENGINEERING AT THE DISTRICT OFFICE.

CURVE DATA

No. (#)	R	Δ	T	L
24	850.01′	13°00′29"	96.91′	192.98′
25	849.99′	16°52′39"	126.10′	250.38′

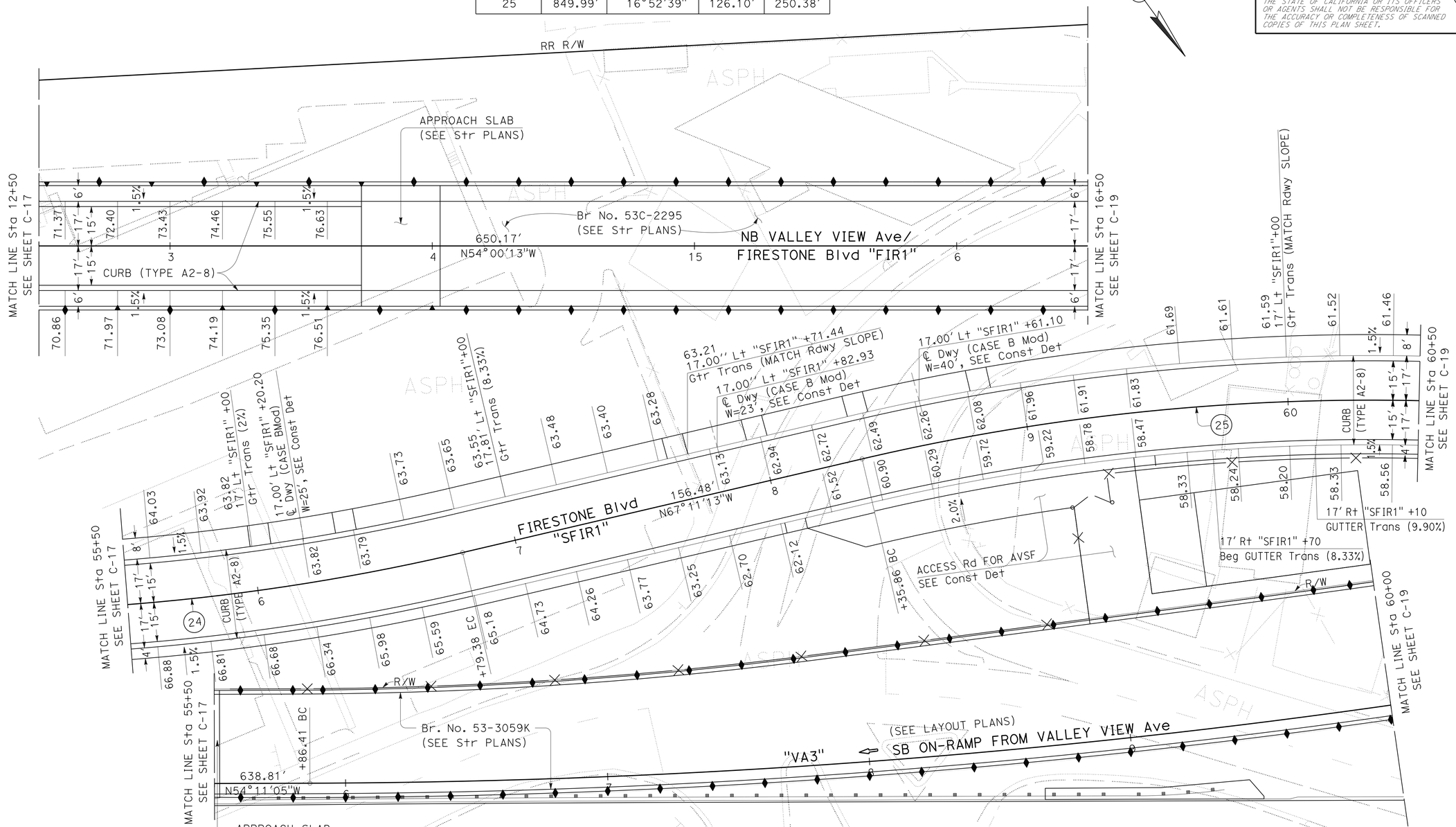

CONSTRUCTION DETAILS

SCALE: 1" = 20′

C-18

STATE OF CALIFORNIA - DEPARTMENT OF TRANSPORTATION
Caltrans DESIGN

FUNCTIONAL SUPERVISOR: RICHARD CHIANG
CALCULATED-DESIGNED BY: MARCELO DE LA FUENTE
CHECKED BY: VAN TRAN
REVISED BY
DATE REVISED

LAST REVISION 00-00-00
DATE PLOTTED => 03-FEB-2016
TIME PLOTTED => 09:23

Dist	COUNTY	ROUTE	POST MILES TOTAL PROJECT	SHEET No.	TOTAL SHEETS
07	LA,Ora	5	0.0/1.5, 44.3/44.4	72	1622

REGISTERED CIVIL ENGINEER 4-2-14 DATE

1-25-16
PLANS APPROVAL DATE

REGISTERED PROFESSIONAL ENGINEER VAN T. TRAN No. C68477 Exp. 9-30-17 CIVIL STATE OF CALIFORNIA

THE STATE OF CALIFORNIA OR ITS OFFICERS OR AGENTS SHALL NOT BE RESPONSIBLE FOR THE ACCURACY OR COMPLETENESS OF SCANNED COPIES OF THIS PLAN SHEET.

CURVE DATA

No. (#)	R	Δ	T	L
25	849.99′	16°52′39″	126.10′	250.38′

NOTE:

1. FOR ACCURATE RIGHT OF WAY DATA, CONTACT RIGHT OF WAY ENGINEERING AT THE DISTRICT OFFICE.

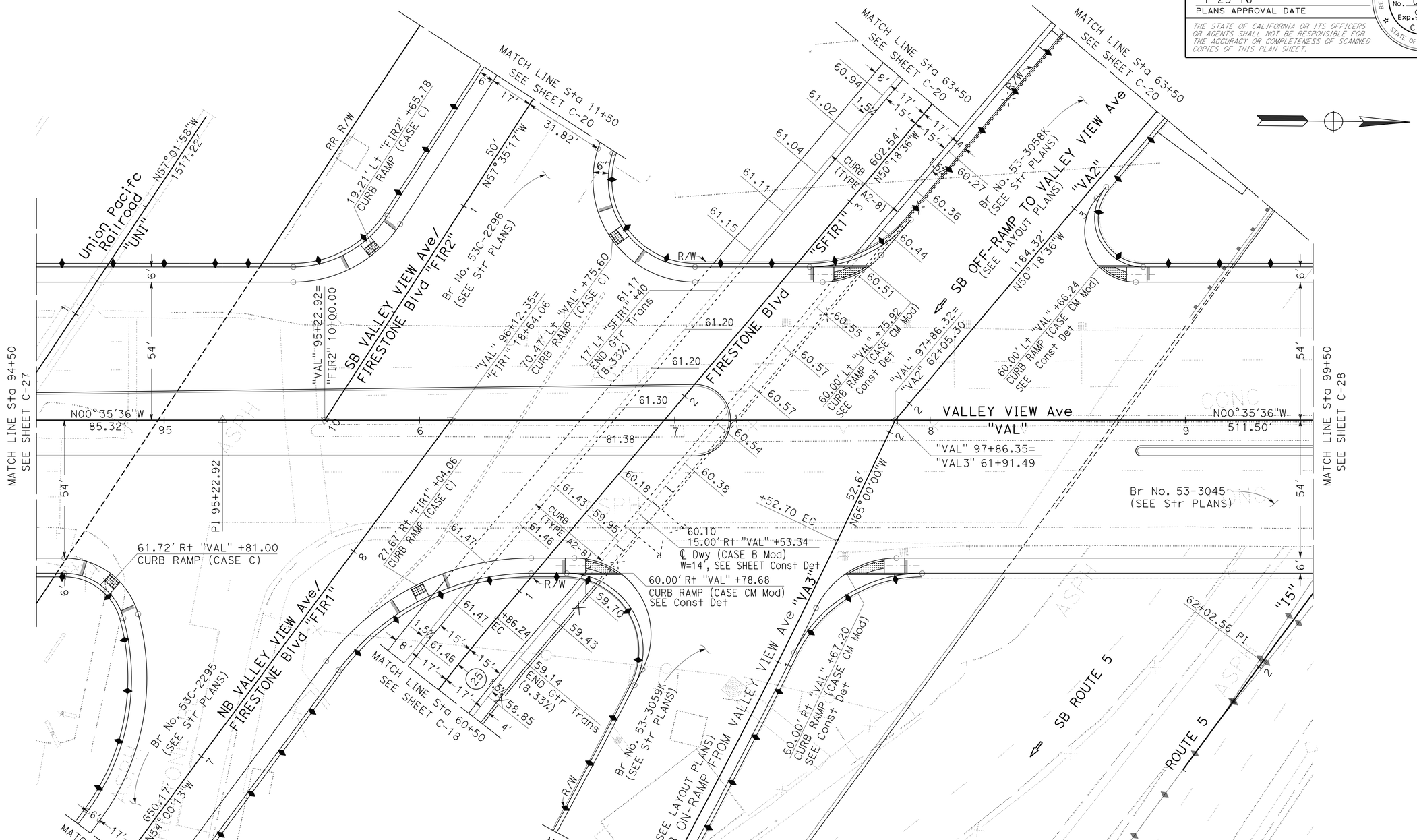

CONSTRUCTION DETAILS

SCALE: 1" = 20′

C-19

STATE OF CALIFORNIA - DEPARTMENT OF TRANSPORTATION
Caltrans DESIGN

FUNCTIONAL SUPERVISOR: RICHARD CHIANG
CALCULATED-DESIGNED BY: VAN TRAN
CHECKED BY: MARCELO DE LA FUENTE
REVISED BY / DATE REVISED

LAST REVISION 00-00-00
DATE PLOTTED => 03-FEB-2016
TIME PLOTTED => 09:23

Dist	COUNTY	ROUTE	POST MILES TOTAL PROJECT	SHEET No.	TOTAL SHEETS
07	LA,Ora	5	0.0/1.5, 44.3/44.4	73	1622

REGISTERED CIVIL ENGINEER 4-2-14 DATE

1-25-16
PLANS APPROVAL DATE

REGISTERED PROFESSIONAL ENGINEER VAN T. TRAN No. C68477 Exp. 9-30-17 CIVIL STATE OF CALIFORNIA

THE STATE OF CALIFORNIA OR ITS OFFICERS OR AGENTS SHALL NOT BE RESPONSIBLE FOR THE ACCURACY OR COMPLETENESS OF SCANNED COPIES OF THIS PLAN SHEET.

NOTE:

1. FOR ACCURATE RIGHT OF WAY DATA, CONTACT RIGHT OF WAY ENGINEERING AT THE DISTRICT OFFICE.

CURVE DATA

No. (#)	R	Δ	T	L
26	2500.00′	03°33′32″	77.67′	155.28′

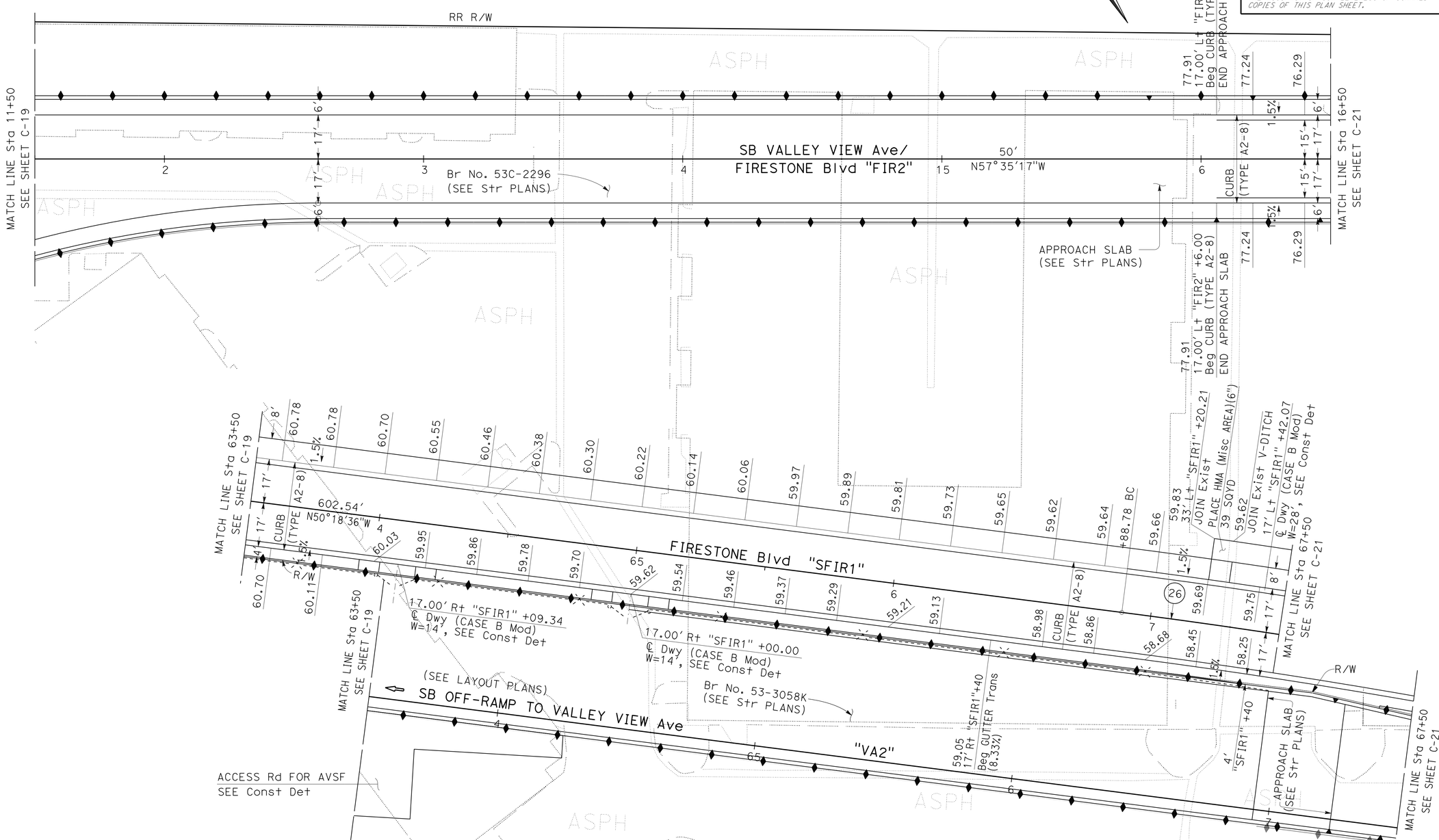

CONSTRUCTION DETAILS

SCALE: 1" = 20′

C-20

REVISED BY	DATE REVISED	CALCULATED-DESIGNED BY	CHECKED BY	FUNCTIONAL SUPERVISOR
H. CHEN	5/2015	MARCELO DE LA FUENTE	VAN TRAN	RICHARD CHIANG

STATE OF CALIFORNIA - DEPARTMENT OF TRANSPORTATION

Caltrans DESIGN

LAST REVISION 00-00-00 DATE PLOTTED => 03-FEB-2016 TIME PLOTTED => 09:23

Dist	COUNTY	ROUTE	POST MILES TOTAL PROJECT	SHEET No.	TOTAL SHEETS
07	LA,Ora	5	0.0/1.5, 44.3/44.4	74	1622

REGISTERED CIVIL ENGINEER 4-2-14 DATE

1-25-16
PLANS APPROVAL DATE

REGISTERED PROFESSIONAL ENGINEER
VAN T. TRAN
No. C68477
Exp. 9-30-17
CIVIL
STATE OF CALIFORNIA

THE STATE OF CALIFORNIA OR ITS OFFICERS OR AGENTS SHALL NOT BE RESPONSIBLE FOR THE ACCURACY OR COMPLETENESS OF SCANNED COPIES OF THIS PLAN SHEET.

NOTE:

1. FOR ACCURATE RIGHT OF WAY DATA, CONTACT RIGHT OF WAY ENGINEERING AT THE DISTRICT OFFICE.

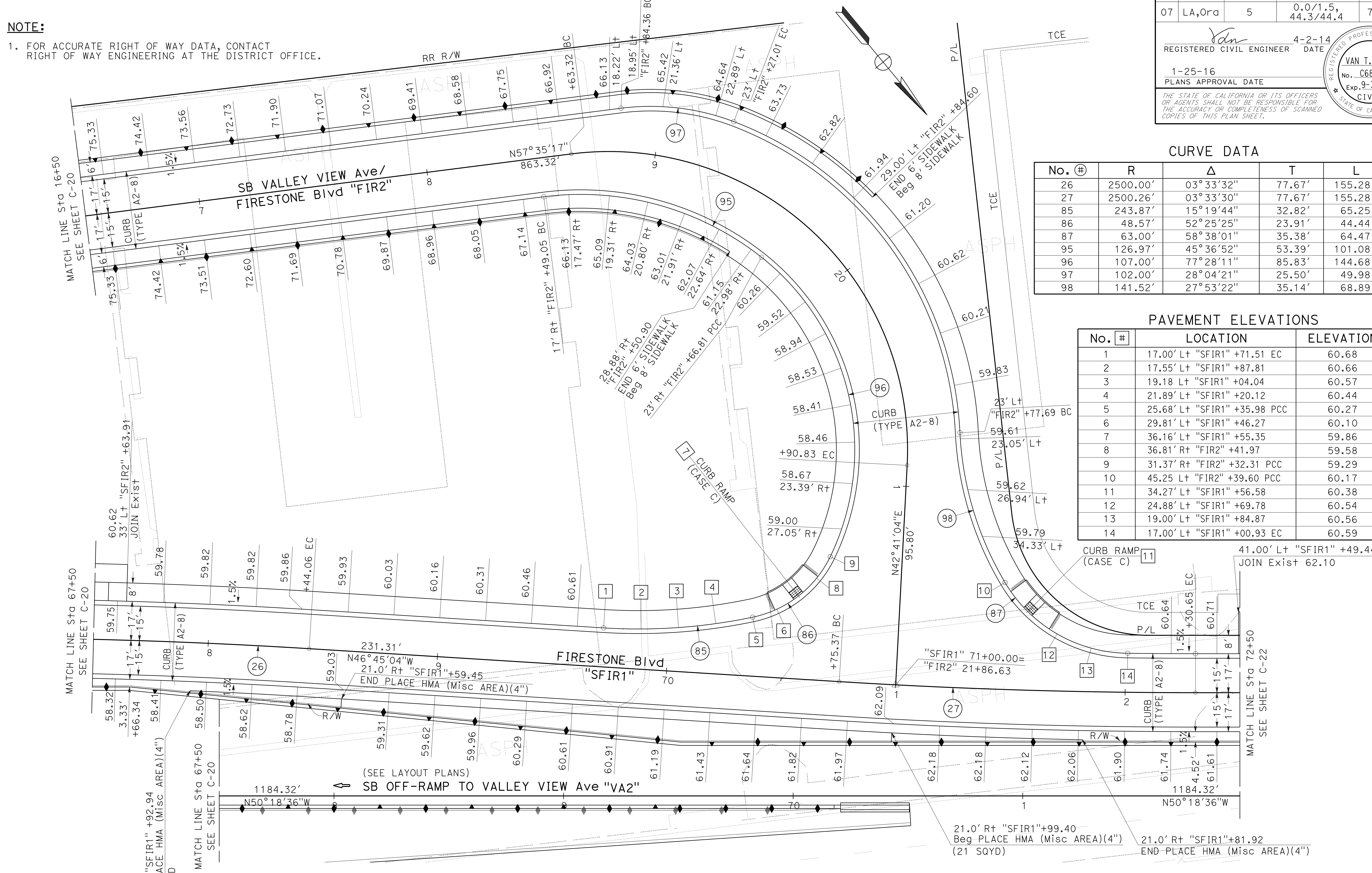

CURVE DATA

No. #	R	Δ	T	L
26	2500.00'	03°33'32"	77.67'	155.28'
27	2500.26'	03°33'30"	77.67'	155.28'
85	243.87'	15°19'44"	32.82'	65.25'
86	48.57'	52°25'25"	23.91'	44.44'
87	63.00'	58°38'01"	35.38'	64.47'
95	126.97'	45°36'52"	53.39'	101.08'
96	107.00'	77°28'11"	85.83'	144.68'
97	102.00'	28°04'21"	25.50'	49.98'
98	141.52'	27°53'22"	35.14'	68.89'

PAVEMENT ELEVATIONS

No. #	LOCATION	ELEVATION
1	17.00' Lt "SFIR1" +71.51 EC	60.68
2	17.55' Lt "SFIR1" +87.81	60.66
3	19.18 Lt "SFIR1" +04.04	60.57
4	21.89' Lt "SFIR1" +20.12	60.44
5	25.68' Lt "SFIR1" +35.98 PCC	60.27
6	29.81' Lt "SFIR1" +46.27	60.10
7	36.16' Lt "SFIR1" +55.35	59.86
8	36.81' Rt "FIR2" +41.97	59.58
9	31.37' Rt "FIR2" +32.31 PCC	59.29
10	45.25 Lt "FIR2" +39.60 PCC	60.17
11	34.27' Lt "SFIR1" +56.58	60.38
12	24.88' Lt "SFIR1" +69.78	60.54
13	19.00' Lt "SFIR1" +84.87	60.56
14	17.00' Lt "SFIR1" +00.93 EC	60.59

CONSTRUCTION DETAILS

SCALE: 1" = 20'

C-21

Dist	COUNTY	ROUTE	POST MILES TOTAL PROJECT	SHEET No.	TOTAL SHEETS
07	LA,Ora	5	0.0/1.5, 44.3/44.4	75	1622

REGISTERED CIVIL ENGINEER 4-2-14 DATE

1-25-16
PLANS APPROVAL DATE

REGISTERED PROFESSIONAL ENGINEER VAN T. TRAN No. C68477 Exp. 9-30-17 CIVIL STATE OF CALIFORNIA

THE STATE OF CALIFORNIA OR ITS OFFICERS OR AGENTS SHALL NOT BE RESPONSIBLE FOR THE ACCURACY OR COMPLETENESS OF SCANNED COPIES OF THIS PLAN SHEET.

NOTE:

1. FOR ACCURATE RIGHT OF WAY DATA, CONTACT RIGHT OF WAY ENGINEERING AT THE DISTRICT OFFICE.

CURVE DATA

No. (#)	R	Δ	T	L
28	1999.91′	06°43′02″	117.37′	234.47′
88	2827.25′	03°15′51″	80.56′	161.07′
89	2000.00′	04°27′59″	77.99′	155.91′

CONSTRUCTION DETAILS

SCALE: 1" = 20′

C-22

STATE OF CALIFORNIA - DEPARTMENT OF TRANSPORTATION
Caltrans
DESIGN

FUNCTIONAL SUPERVISOR: RICHARD CHIANG
CALCULATED-DESIGNED BY: MARCELO DE LA FUENTE
CHECKED BY: VAN TRAN
REVISED BY
DATE REVISED

LAST REVISION 00-00-00
DATE PLOTTED => 03-FEB-2016
TIME PLOTTED => 09:23

Dist	COUNTY	ROUTE	POST MILES TOTAL PROJECT	SHEET No.	TOTAL SHEETS
07	LA,Ora	5	0.0/1.5, 44.3/44.4	76	1622

REGISTERED CIVIL ENGINEER 4-2-14 DATE

1-25-16
PLANS APPROVAL DATE

REGISTERED PROFESSIONAL ENGINEER VAN T. TRAN No. C68477 Exp. 9-30-17 CIVIL STATE OF CALIFORNIA

THE STATE OF CALIFORNIA OR ITS OFFICERS OR AGENTS SHALL NOT BE RESPONSIBLE FOR THE ACCURACY OR COMPLETENESS OF SCANNED COPIES OF THIS PLAN SHEET.

NOTE:

1. FOR ACCURATE RIGHT OF WAY DATA, CONTACT RIGHT OF WAY ENGINEERING AT THE DISTRICT OFFICE.

CURVE DATA

No. (#)	R	Δ	T	L
28	1999.91′	06°43′02"	117.37′	234.47′
88	2827.25′	03°15′51"	80.56′	161.07′
89	2000.00′	04°27′59"	77.99′	155.91′

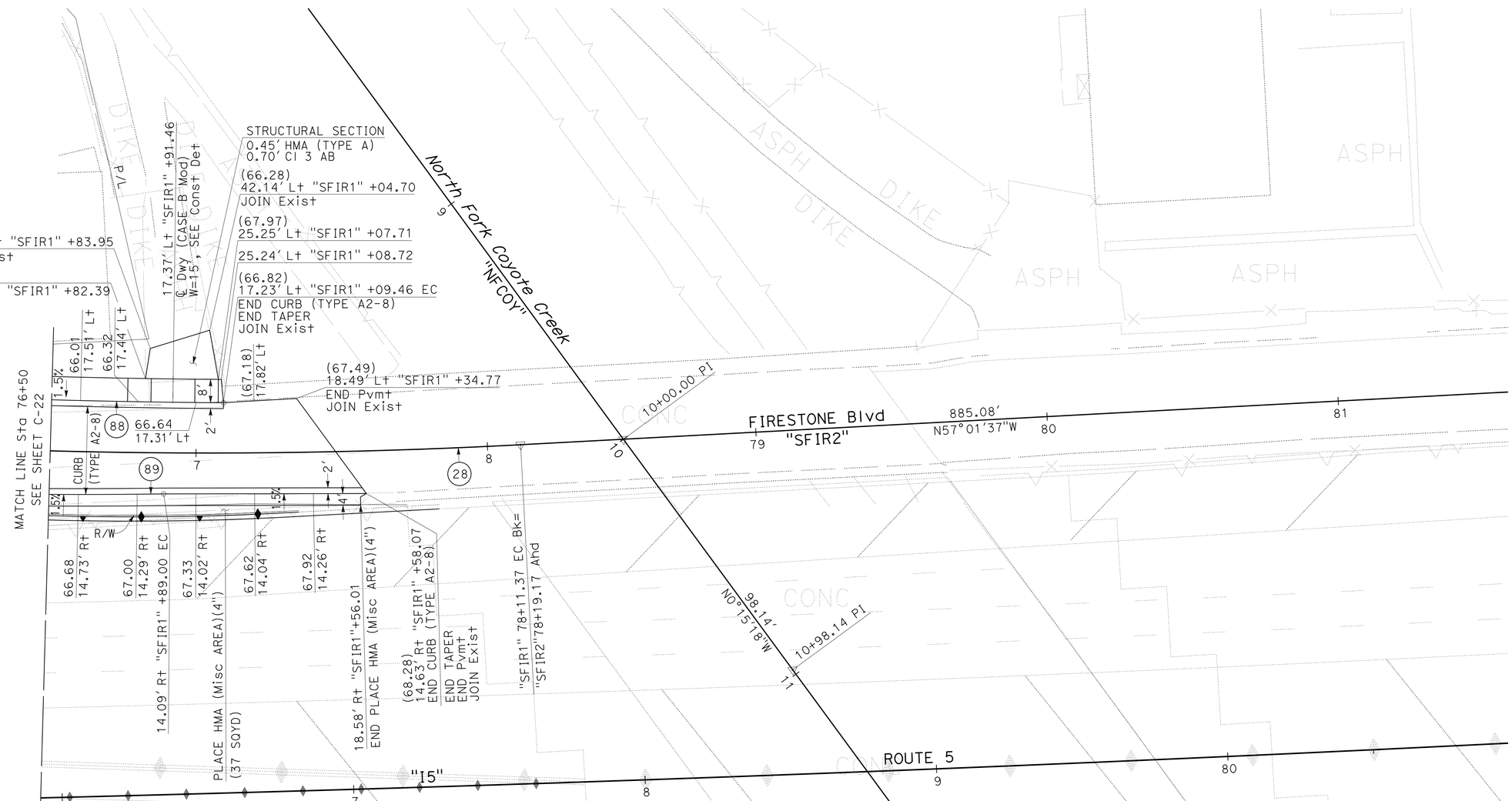

CONSTRUCTION DETAILS

SCALE: 1" = 20′

C-23

STATE OF CALIFORNIA - DEPARTMENT OF TRANSPORTATION
Caltrans DESIGN

FUNCTIONAL SUPERVISOR: RICHARD CHIANG
CALCULATED-DESIGNED BY: MARCELO DE LA FUENTE
CHECKED BY: VAN TRAN
REVISED BY
DATE REVISED

LAST REVISION 00-00-00
DATE PLOTTED => 03-FEB-2016
TIME PLOTTED => 09:23

Dist	COUNTY	ROUTE	POST MILES TOTAL PROJECT	SHEET No.	TOTAL SHEETS
07	LA,Ora	5	0.0/1.5, 44.3/44.4	77	1622

REGISTERED CIVIL ENGINEER 4-2-14 DATE

1-25-16
PLANS APPROVAL DATE

REGISTERED PROFESSIONAL ENGINEER VAN T. TRAN No. C68477 Exp. 9-30-17 CIVIL STATE OF CALIFORNIA

THE STATE OF CALIFORNIA OR ITS OFFICERS OR AGENTS SHALL NOT BE RESPONSIBLE FOR THE ACCURACY OR COMPLETENESS OF SCANNED COPIES OF THIS PLAN SHEET.

NOTE:

1. FOR ACCURATE RIGHT OF WAY DATA, CONTACT RIGHT OF WAY ENGINEERING AT THE DISTRICT OFFICE.

CURVE DATA

No. #	R	Δ	T	L
110	35.28′	90°42′59″	35.72′	55.86′

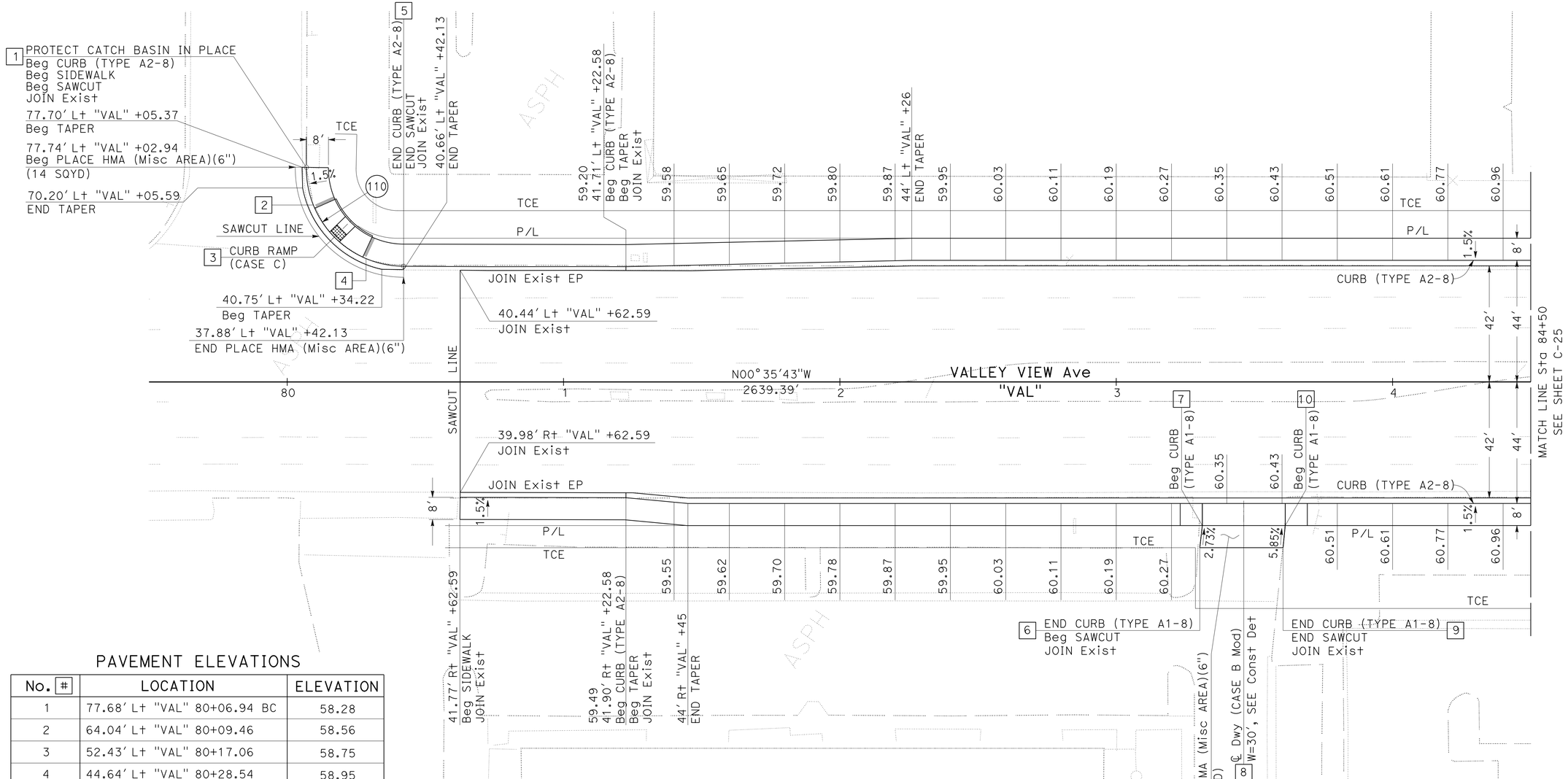

PAVEMENT ELEVATIONS

No. #	LOCATION	ELEVATION
1	77.68′ Lt "VAL" 80+06.94 BC	58.28
2	64.04′ Lt "VAL" 80+09.46	58.56
3	52.43′ Lt "VAL" 80+17.06	58.75
4	44.64′ Lt "VAL" 80+28.54	58.95
5	41.88′ Lt "VAL" 80+42.14 EC	59.15
6	60.00′ Rt "VAL" 83+30.24	60.72
7	52.00′ Rt "VAL" 83+31.15	60.50
8	44.00′ Rt "VAL" 83+46.15	60.37
9	60.00′ Rt "VAL" 83+60.38	61.09
10	52.00′ Rt "VAL" 83+61.15	60.62

CONSTRUCTION DETAILS

SCALE: 1" = 20′

C-24

REVISED BY | DATE REVISED
MARCELO DE LA FUENTE | VAN TRAN
CALCULATED-DESIGNED BY | CHECKED BY
FUNCTIONAL SUPERVISOR | RICHARD CHIANG
STATE OF CALIFORNIA - DEPARTMENT OF TRANSPORTATION
Caltrans DESIGN

LAST REVISION 00-00-00 | DATE PLOTTED => 03-FEB-2016 | TIME PLOTTED => 09:23

Dist	COUNTY	ROUTE	POST MILES TOTAL PROJECT	SHEET No.	TOTAL SHEETS
07	LA,Ora	5	0.0/1.5, 44.3/44.4	78	1622

REGISTERED CIVIL ENGINEER 4-2-14 DATE

1-25-16
PLANS APPROVAL DATE

REGISTERED PROFESSIONAL ENGINEER VAN T. TRAN No. C68477 Exp. 9-30-17 CIVIL STATE OF CALIFORNIA

THE STATE OF CALIFORNIA OR ITS OFFICERS OR AGENTS SHALL NOT BE RESPONSIBLE FOR THE ACCURACY OR COMPLETENESS OF SCANNED COPIES OF THIS PLAN SHEET.

NOTE:

1. FOR ACCURATE RIGHT OF WAY DATA, CONTACT RIGHT OF WAY ENGINEERING AT THE DISTRICT OFFICE.

PAVEMENT ELEVATIONS

No. #	LOCATION	ELEVATION
1	48.89′ Rt "DW1" 86+82.65 BC	63.94
2	40.61′ Rt "DW1" 86+88.90	63.22
3	32.21′ Rt "DW1" 87+00	62.24
4	28.37′ Rt "DW1" 87+10	61.49
5	27.14′ Rt "DW1" 87+18.07 EC/BC	60.92
6	28.14′ Rt "DW1" 87+19.13 EC	60.81
7	33.10′ Rt "DW1" 87+19.13 EC	60.78
8	39.55′ Rt "DW1" 87+19.13	60.74
9	39.55′ Rt "DW1" 87+20.63	60.67
10	39.55′ Rt "DW1" 87+22.13	60.69
11	27.07′ Rt "DW1" 87+20.63	60.79
12	25.69′ Rt "DW1" 87+22.13	60.90
13	25.55′ Rt "DW1" 87+40	61.01
14	25.64′ Rt "DW1" 87+51.74	61.04
15	3.25′ Rt "DW1" 87+51.74	61.66
16	3.25′ Rt "DW1" 86+88.90 BC	64.80
17	℄ "DW1" 86+85.65	65.24
18	3.25′ Lt "DW1" 86+88.90 EC	65.16
19	3.25′ Lt "DW1" 87+51.74	62.17

PAVEMENT ELEVATIONS

No. #	LOCATION	ELEVATION
20	26.74′ Lt "DW1" 87+51.74	61.73
21	26.77′ Lt "DW1" 87+40.00	62.65
22	26.80′ Lt "DW1" 87+28.24 BC	63.58
23	27.62′ Lt "DW1" 87+19.13	64.22
24	30.16′ Lt "DW1" 87+10.00	64.87
25	35.26′ Lt "DW1" 87+00.00	65.66
26	45.08′ Lt "DW1" 86+88.90	66.69
27	54.32′ Lt "DW1" 86+82.65 EC	67.47

CURVE DATA

No. #	R	Δ	T	L
111	44.00′	56°22′22"	23.58′	43.29′
112	3.25′	180°00′00"	-	10.21′
113	51.70′	61°59′55"	31.06′	55.95′

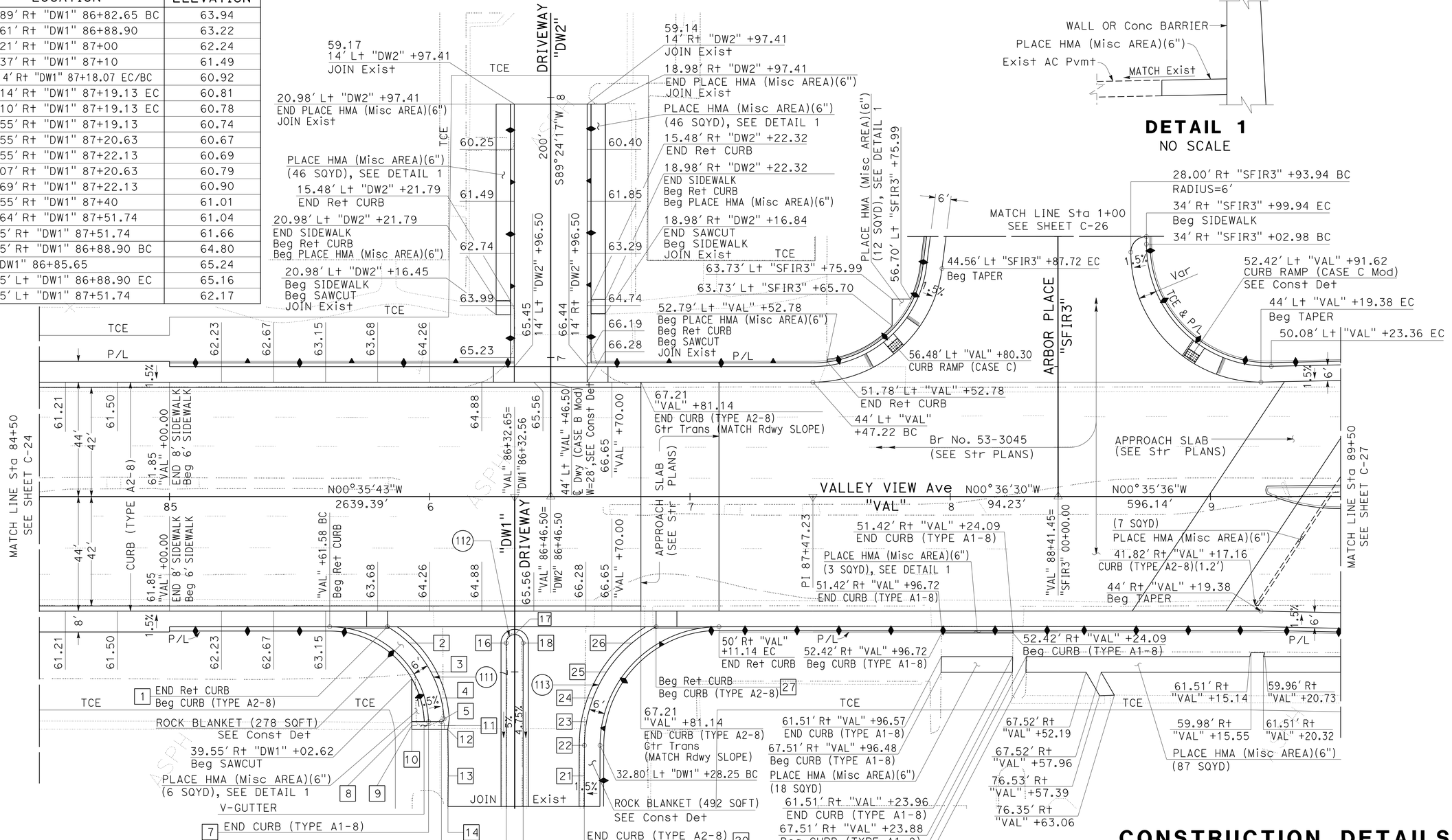

DETAIL 1
NO SCALE

CONSTRUCTION DETAILS

SCALE: 1" = 20′

C-25

STATE OF CALIFORNIA - DEPARTMENT OF TRANSPORTATION
Caltrans DESIGN

FUNCTIONAL SUPERVISOR: RICHARD CHIANG
CALCULATED-DESIGNED BY: VAN TRAN
CHECKED BY: MARCELO DE LA FUENTE
REVISED BY / DATE REVISED

LAST REVISION 00-00-00
DATE PLOTTED => 03-FEB-2016
TIME PLOTTED => 09:23

Dist	COUNTY	ROUTE	POST MILES TOTAL PROJECT	SHEET No.	TOTAL SHEETS
07	LA,Ora	5	0.0/1.5, 44.3/44.4	79	1622

REGISTERED CIVIL ENGINEER 4-2-14 DATE

1-25-16
PLANS APPROVAL DATE

REGISTERED PROFESSIONAL ENGINEER VAN T. TRAN No. C68477 Exp. 9-30-17 CIVIL STATE OF CALIFORNIA

THE STATE OF CALIFORNIA OR ITS OFFICERS OR AGENTS SHALL NOT BE RESPONSIBLE FOR THE ACCURACY OR COMPLETENESS OF SCANNED COPIES OF THIS PLAN SHEET.

NOTE:

1. FOR ACCURATE RIGHT OF WAY DATA, CONTACT RIGHT OF WAY ENGINEERING AT THE DISTRICT OFFICE.

PAVEMENT ELEVATIONS

No. #	LOCATION	ELEVATION
1	22.00′ Lt "ARB" +43.86	57.17
2	27.32′ Lt "ARB" +73.10	57.84
3	50.47′ Lt "SFIR3" +30.25	58.37
4	35.32′ Lt "SFIR3" +07.56	58.89
5	30.47′ Rt "SFIR3" +32.09	58.25
6	30.00′ Rt "SFIR3" +42.59	58.06
7	30.00′ Rt "SFIR3" +72.59	57.90

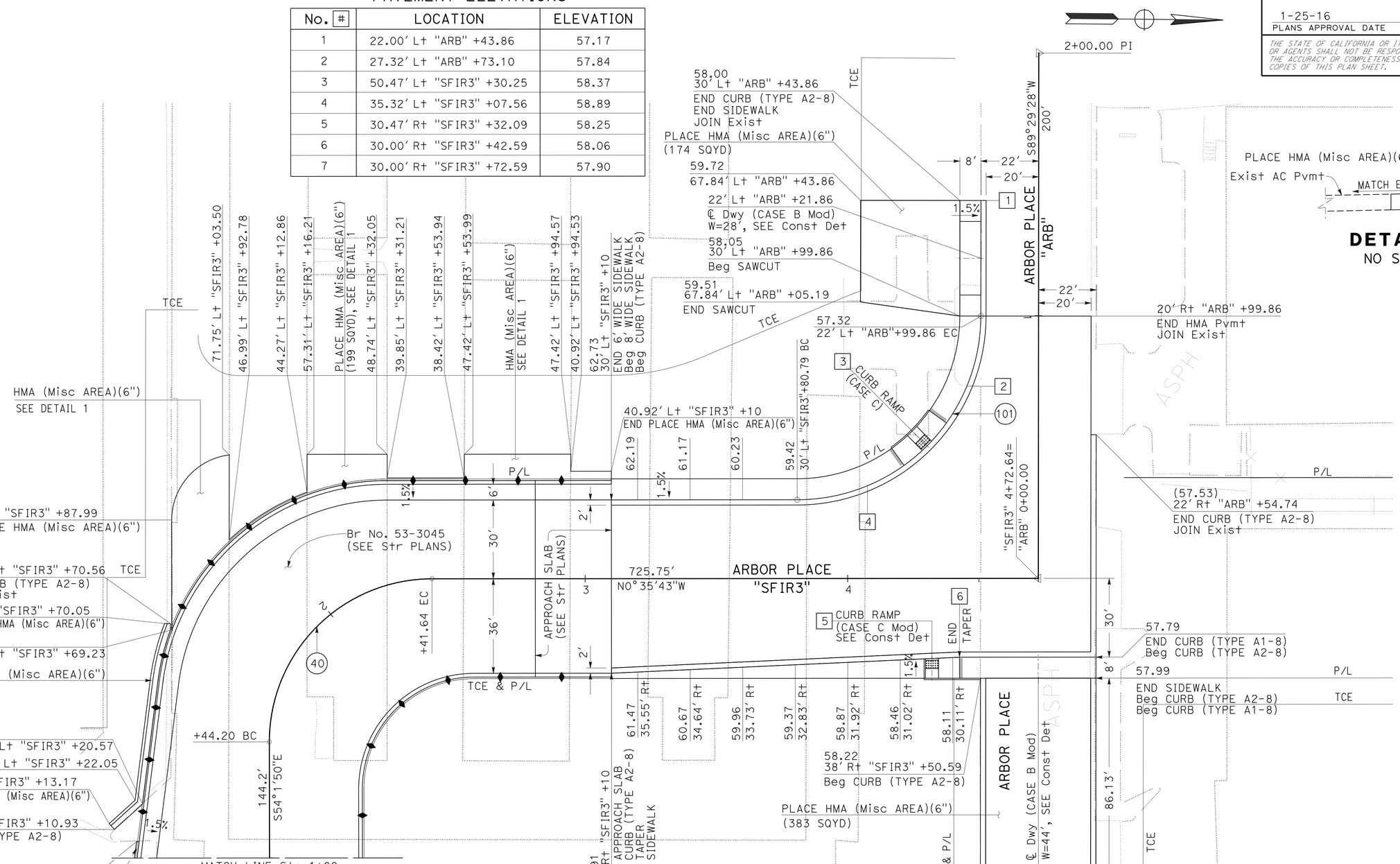

CURVE DATA

No. ⊕	R	Δ	T	L
40	62.00′	90°02′34"	62.05′	97.44′
101	70.00′	89°54′49"	69.89′	109.85′

CONSTRUCTION DETAILS

SCALE: 1" = 20′

C-26

STATE OF CALIFORNIA - DEPARTMENT OF TRANSPORTATION
DESIGN

FUNCTIONAL SUPERVISOR: RICHARD CHIANG
CALCULATED-DESIGNED BY: MARCELO DE LA FUENTE
CHECKED BY: VAN TRAN
REVISED BY
DATE REVISED

LAST REVISION 00-00-00
DATE PLOTTED => 03-FEB-2016
TIME PLOTTED => 09:23

Dist	COUNTY	ROUTE	POST MILES TOTAL PROJECT	SHEET No.	TOTAL SHEETS
07	LA,Ora	5	0.0/1.5, 44.3/44.4	80	1622

REGISTERED CIVIL ENGINEER 4-2-14 DATE

1-25-16
PLANS APPROVAL DATE

REGISTERED PROFESSIONAL ENGINEER VAN T. TRAN No. C68477 Exp. 9-30-17 CIVIL STATE OF CALIFORNIA

THE STATE OF CALIFORNIA OR ITS OFFICERS OR AGENTS SHALL NOT BE RESPONSIBLE FOR THE ACCURACY OR COMPLETENESS OF SCANNED COPIES OF THIS PLAN SHEET.

NOTE:

1. FOR ACCURATE RIGHT OF WAY DATA, CONTACT RIGHT OF WAY ENGINEERING AT THE DISTRICT OFFICE.

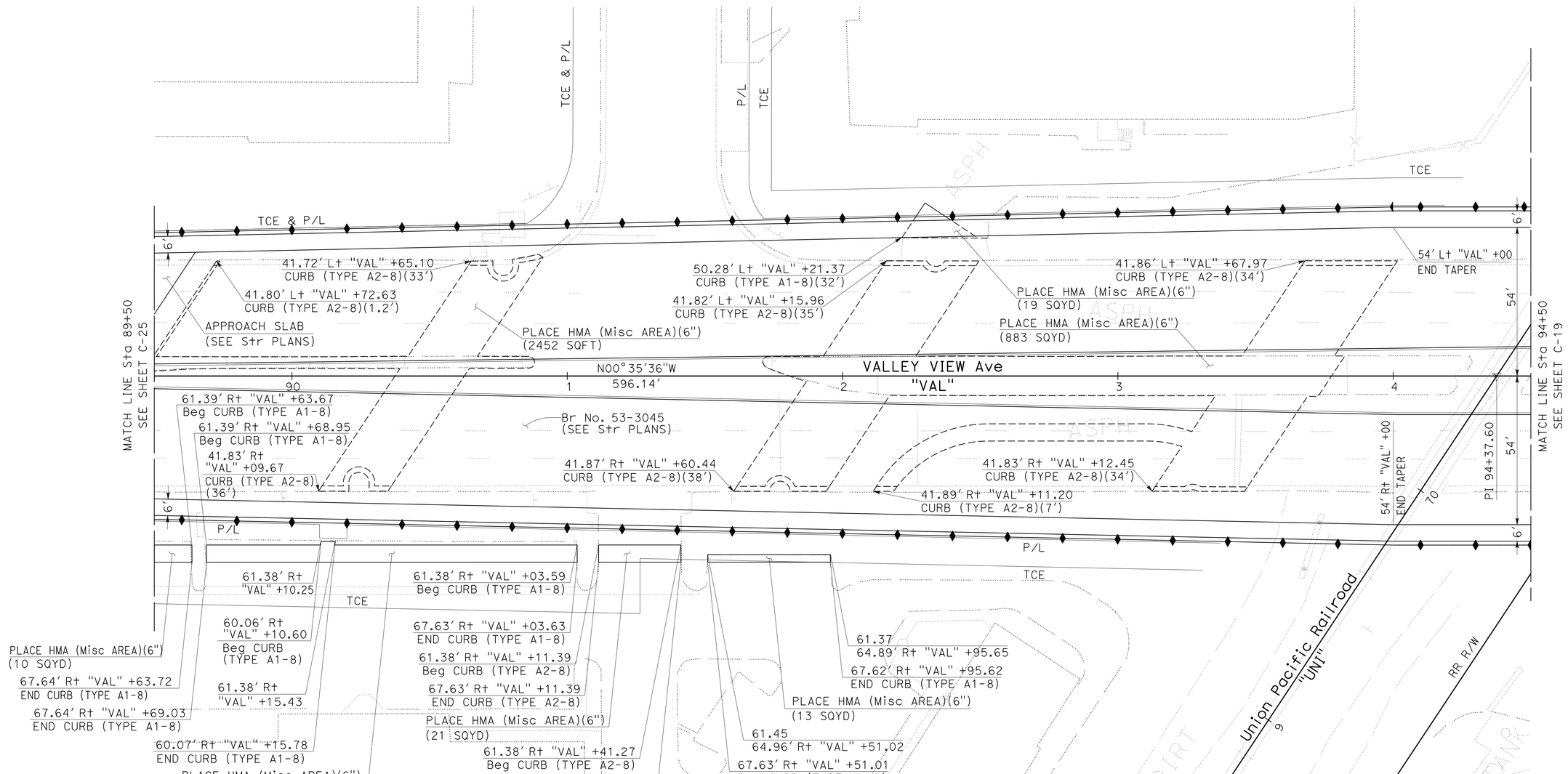

CONSTRUCTION DETAILS

SCALE: 1" = 20'

C-27

STATE OF CALIFORNIA - DEPARTMENT OF TRANSPORTATION
Caltrans
DESIGN

FUNCTIONAL SUPERVISOR: RICHARD CHIANG
CALCULATED-DESIGNED BY: MARCELO DE LA FUENTE
CHECKED BY: VAN TRAN
REVISED BY
DATE REVISED

LAST REVISION 00-00-00
DATE PLOTTED => 03-FEB-2016
TIME PLOTTED => 09:23

Dist	COUNTY	ROUTE	POST MILES TOTAL PROJECT	SHEET No.	TOTAL SHEETS
07	LA,Ora	5	0.0/1.5, 44.3/44.4	81	1622

REGISTERED CIVIL ENGINEER 4-2-14 DATE

1-25-16
PLANS APPROVAL DATE

REGISTERED PROFESSIONAL ENGINEER VAN T. TRAN No. C68477 Exp. 9-30-17 CIVIL STATE OF CALIFORNIA

THE STATE OF CALIFORNIA OR ITS OFFICERS OR AGENTS SHALL NOT BE RESPONSIBLE FOR THE ACCURACY OR COMPLETENESS OF SCANNED COPIES OF THIS PLAN SHEET.

NOTE:

1. FOR ACCURATE RIGHT OF WAY DATA, CONTACT RIGHT OF WAY ENGINEERING AT THE DISTRICT OFFICE.

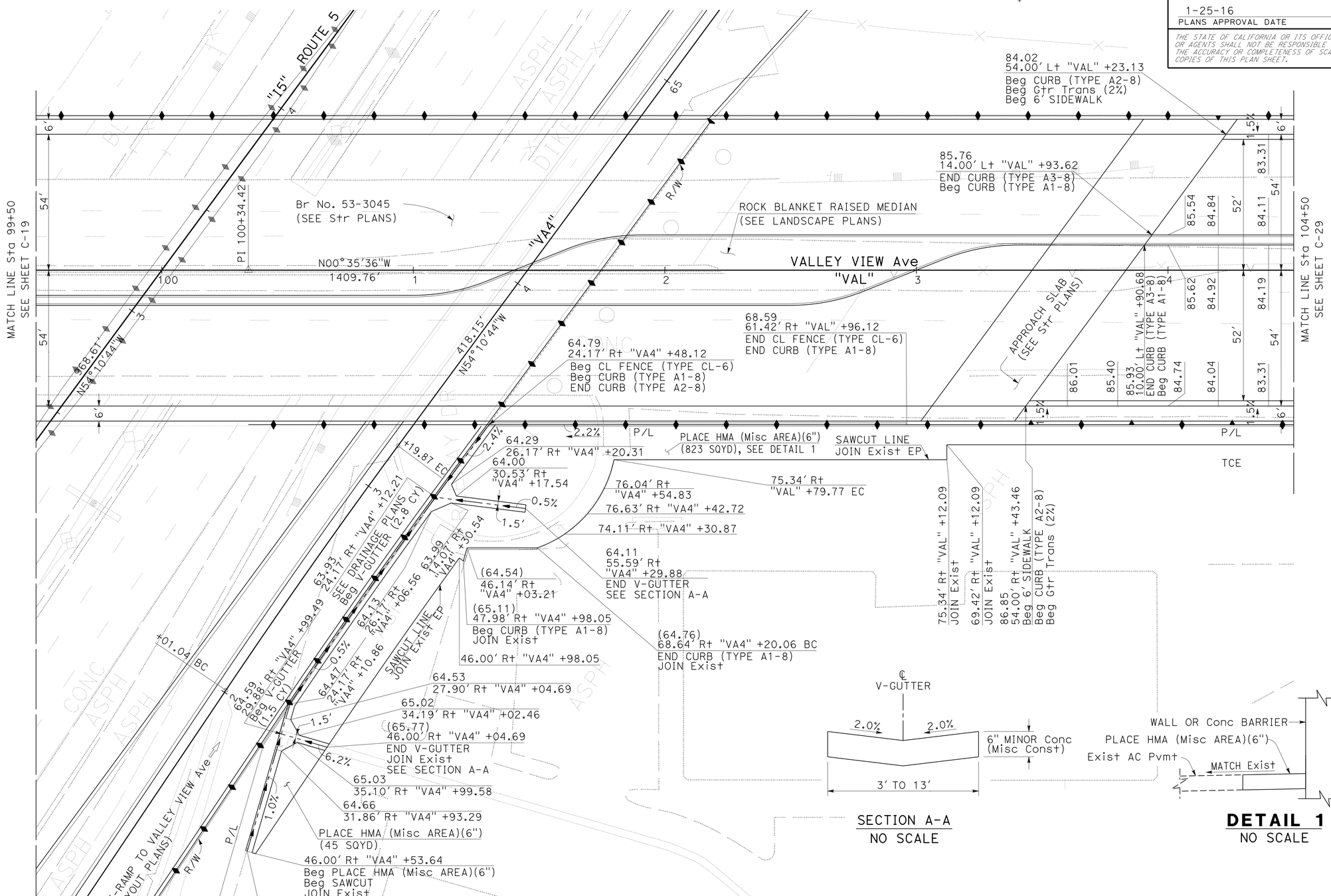

CONSTRUCTION DETAILS

SCALE: 1" = 20'

C-28

STATE OF CALIFORNIA - DEPARTMENT OF TRANSPORTATION
Caltrans DESIGN

FUNCTIONAL SUPERVISOR: RICHARD CHIANG
CALCULATED-DESIGNED BY: EDUARDO M. DEL PILAR
CHECKED BY: VAN TRAN
REVISED BY / DATE REVISED

LAST REVISION 00-00-00
DATE PLOTTED => 03-FEB-2016
TIME PLOTTED => 09:23

Dist	COUNTY	ROUTE	POST MILES TOTAL PROJECT	SHEET No.	TOTAL SHEETS
07	LA,Ora	5	0.0/1.5, 44.3/44.4	82	1622

REGISTERED CIVIL ENGINEER 4-2-14 DATE

1-25-16
PLANS APPROVAL DATE

REGISTERED PROFESSIONAL ENGINEER VAN T. TRAN No. C68477 Exp. 9-30-17 CIVIL STATE OF CALIFORNIA

THE STATE OF CALIFORNIA OR ITS OFFICERS OR AGENTS SHALL NOT BE RESPONSIBLE FOR THE ACCURACY OR COMPLETENESS OF SCANNED COPIES OF THIS PLAN SHEET.

NOTE:

1. FOR ACCURATE RIGHT OF WAY DATA, CONTACT RIGHT OF WAY ENGINEERING AT THE DISTRICT OFFICE.

CURVE DATA

No. (#)	R	Δ	T	L
15	200.00′	62°55′03"	122.36′	219.62′
114	33.00′	70°30′40"	23.33′	40.61′
115	30.00′	89°59′58"	30.00′	47.12′
116	2.00′	90°00′00"	2.00′	3.13′
117	33.00′	88°45′47"	32.30′	51.12′
118	30.00′	87°50′55"	28.89′	46.00′
119	2.00′	172°14′18"	29.48′	6.01′
120	45.00′	111°05′14"	65.58′	87.25′
121	30.00′	81°27′24"	25.83′	42.65′

PAVEMENT ELEVATIONS

No. (#)	LOCATION	ELEVATION
1	58.00′ Rt "VA4" +26.70 EC	77.47
2	60.28′ Rt "VA4" +38.18	77.79
3	66.79′ Rt "VA4" +47.91	78.24
4	56.28′ Lt "VAL" +54.38	78.76
5	54.00′ Lt "VAL" +42.89 BC	79.27
6	54.00′ Rt "VAL" +58.58 BC	78.50
7	59.18′ Rt "VAL" +79.55	77.55
8	46.00′ Lt "NFIR2" +91.16	76.34
9	34.85′ Lt "NFIR2" +67.95	74.81
10	31.00′ Lt "NFIR2" +42.49 EC	73.36
11	46.00′ Rt "VA1" +64.80 BC	72.89
12	48.19′ Rt "VA1" +53.58	73.03
13	54.40′ Rt "VA1" +43.99	72.94
14	56.64′ Lt "VAL" +06.64	72.73
15	54.04′ Lt "VAL" +17.77 EC	72.35
16	54.04′ Rt "VAL" +01.14 EC	72.89
17	56.28′ Rt "VAL" +90.77	73.29
18	61.99′ Rt "VAL" +81.33	73.56

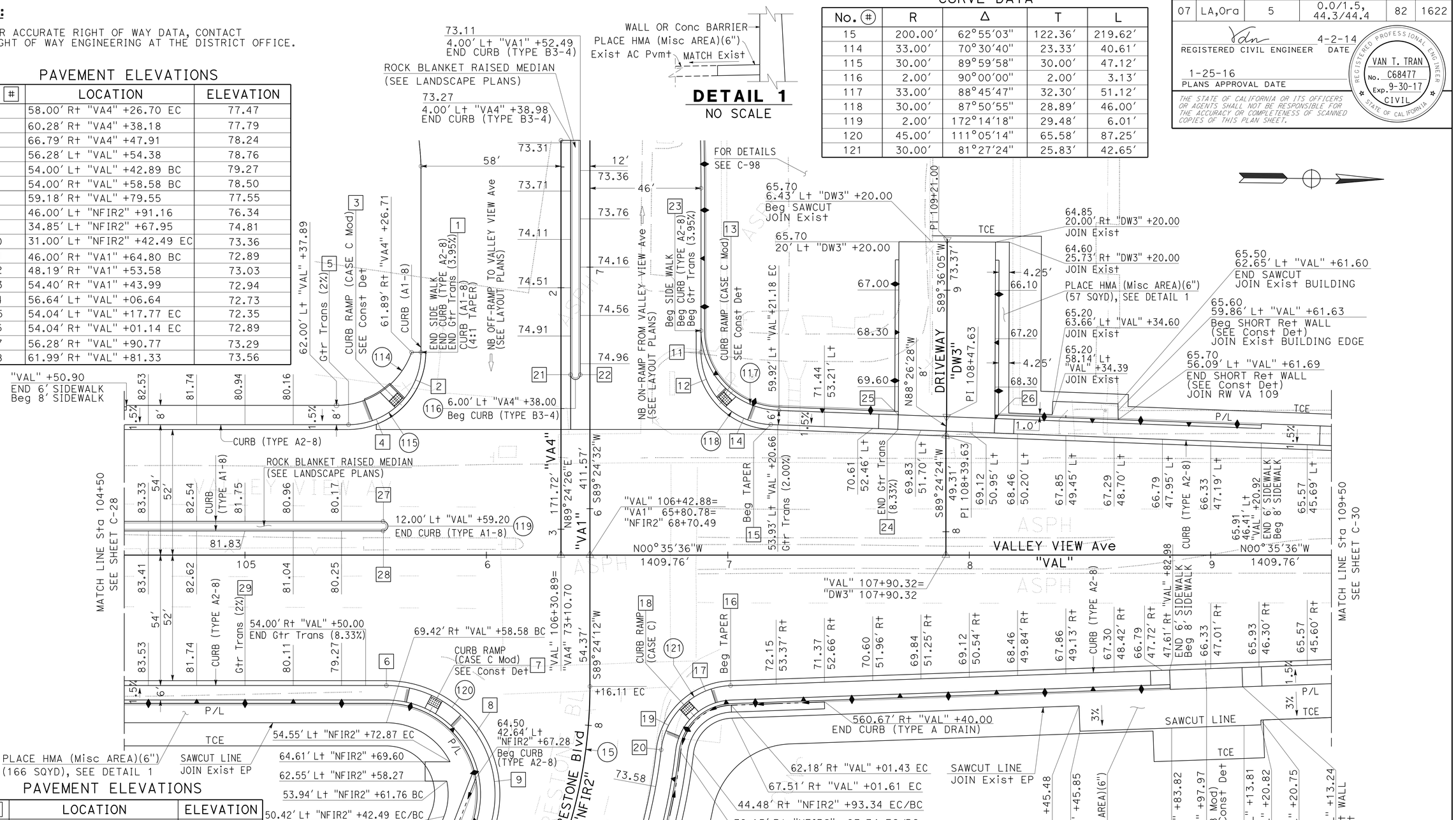

PAVEMENT ELEVATIONS

No. (#)	LOCATION	ELEVATION
19	33.11′ Rt "NFIR2" +02.30	73.66
20	31.00′ Rt "NFIR2" +93.34 BC	73.67
21	04.00′ Lt "VA4" +36.00	72.21
22	04.00′ Lt "VA1" +55.47	75.05
23	46.00′ Rt "VA1" +73.69 BC	72.72
24	52.06′ Lt "VAL" +70.65	72.18
25	20.00′ Lt "DW3" +48.31	70.33
26	20.00′ Rt "DW3" +47.63	68.91
27	14.00′ Lt "VAL" +57.34 EC	79.48
28	10.00′ Lt "VAL" +57.34 BC	79.58
29	54.00′ Rt "VAL" +00.00	80.95

CONSTRUCTION DETAILS

SCALE: 1" = 20′

C-29

STATE OF CALIFORNIA - DEPARTMENT OF TRANSPORTATION
Caltrans DESIGN
FUNCTIONAL SUPERVISOR: RICHARD CHIANG
CALCULATED-DESIGNED BY: EDUARDO M. DEL PILAR
CHECKED BY: VAN TRAN
REVISED BY / DATE REVISED

LAST REVISION 00-00-00 | DATE PLOTTED => 03-FEB-2016 | TIME PLOTTED => 09:23

Dist	COUNTY	ROUTE	POST MILES TOTAL PROJECT	SHEET No.	TOTAL SHEETS
07	LA,Ora	5	0.0/1.5, 44.3/44.4	83	1622

REGISTERED CIVIL ENGINEER 4-2-14 DATE

1-25-16
PLANS APPROVAL DATE

REGISTERED PROFESSIONAL ENGINEER VAN T. TRAN No. C68477 Exp. 9-30-17 CIVIL STATE OF CALIFORNIA

THE STATE OF CALIFORNIA OR ITS OFFICERS OR AGENTS SHALL NOT BE RESPONSIBLE FOR THE ACCURACY OR COMPLETENESS OF SCANNED COPIES OF THIS PLAN SHEET.

NOTE:

1. FOR ACCURATE RIGHT OF WAY DATA, CONTACT RIGHT OF WAY ENGINEERING AT THE DISTRICT OFFICE.

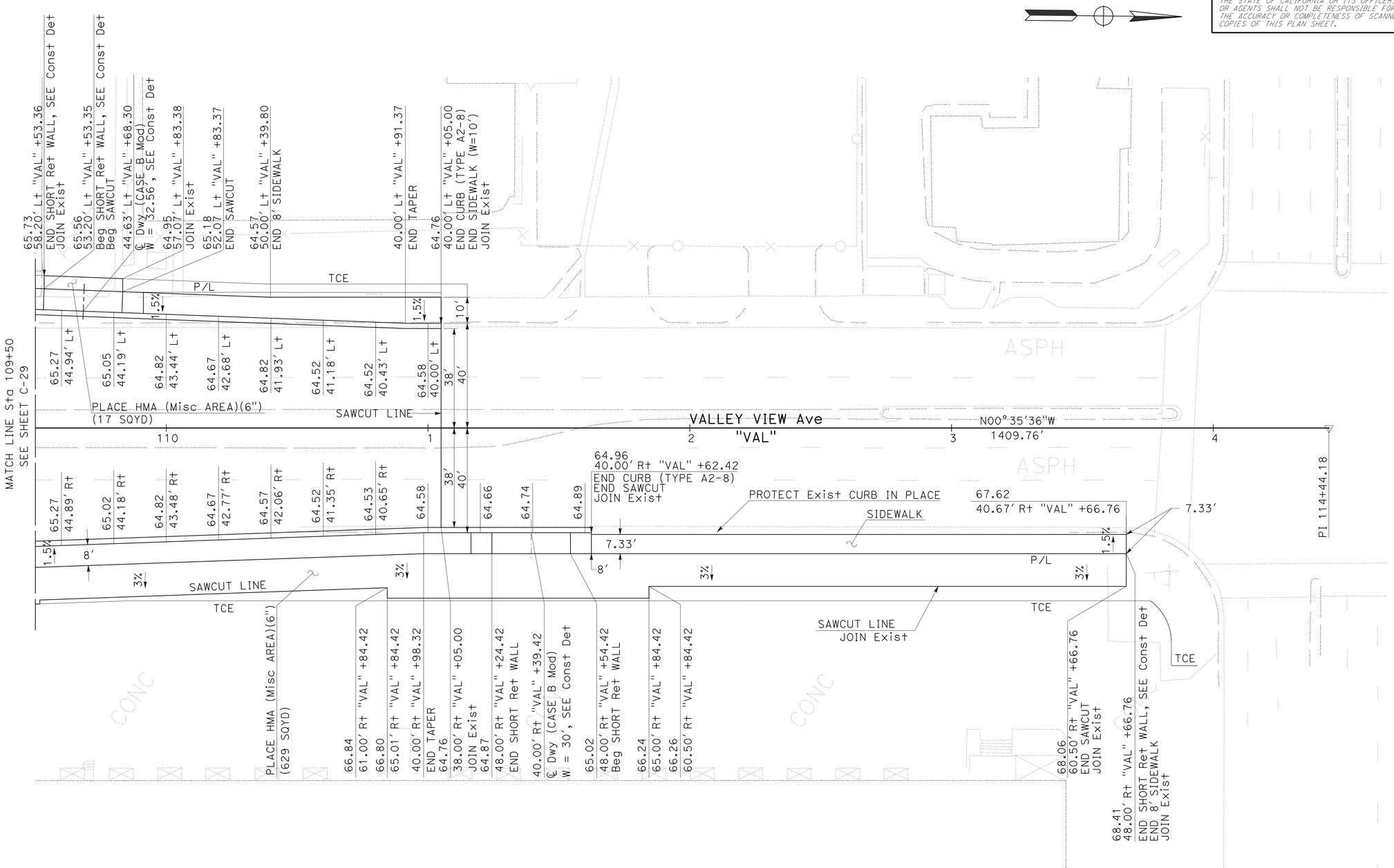

CONSTRUCTION DETAILS

SCALE: 1" = 20'

C-30

EDUARDO M. DEL PILAR	REVISED BY
VAN TRAN	DATE REVISED
CALCULATED-DESIGNED BY	
CHECKED BY	
FUNCTIONAL SUPERVISOR	
RICHARD CHIANG	

STATE OF CALIFORNIA - DEPARTMENT OF TRANSPORTATION

Caltrans

DESIGN

LAST REVISION 00-00-00 | DATE PLOTTED => 03-FEB-2016 | TIME PLOTTED => 09:23

Dist	COUNTY	ROUTE	POST MILES TOTAL PROJECT	SHEET No.	TOTAL SHEETS
07	LA,Ora	5	0.0/1.5, 44.3/44.4	84	1622

REGISTERED CIVIL ENGINEER 4-2-14 DATE

1-25-16
PLANS APPROVAL DATE

REGISTERED PROFESSIONAL ENGINEER
VAN T. TRAN
No. C68477
Exp. 9-30-17
CIVIL
STATE OF CALIFORNIA

THE STATE OF CALIFORNIA OR ITS OFFICERS OR AGENTS SHALL NOT BE RESPONSIBLE FOR THE ACCURACY OR COMPLETENESS OF SCANNED COPIES OF THIS PLAN SHEET.

NOTE:

1. FOR ACCURATE RIGHT OF WAY DATA, CONTACT RIGHT OF WAY ENGINEERING AT THE DISTRICT OFFICE.

CURVE DATA

No. (#)	R	Δ	T	L
14	300.00′	22°41′07″	60.18′	118.78′
15	200.00′	62°55′03″	122.36′	219.62′

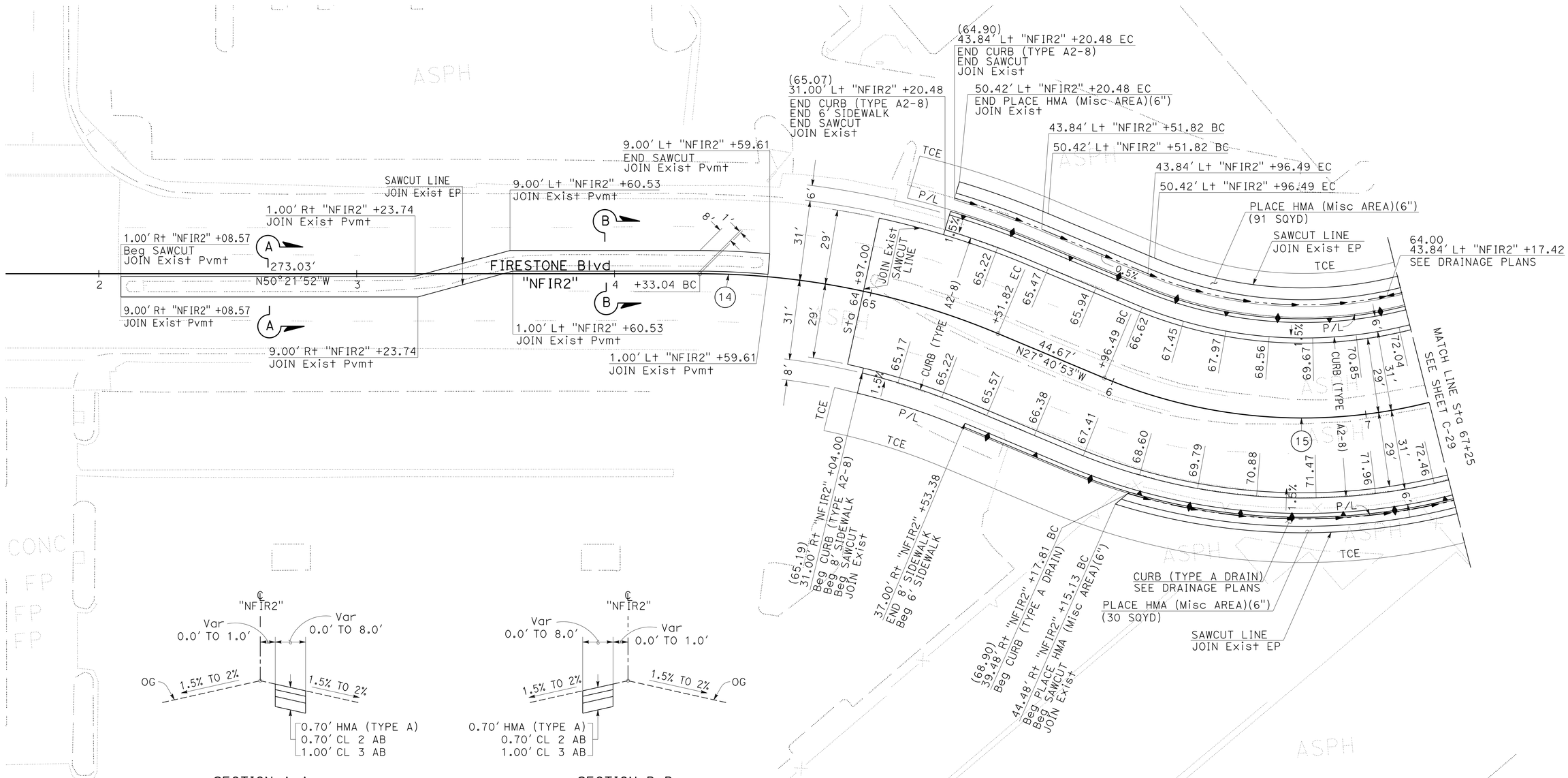

SECTION A-A
"NFIR2" 62+08.57 TO "NFIR2" 63+56.85
NO SCALE

SECTION B-B
"NFIR2" 63+26.35 TO "NFIR2" 64+59.61
NO SCALE

CONSTRUCTION DETAILS

SCALE: 1" = 20′

C-31

STATE OF CALIFORNIA - DEPARTMENT OF TRANSPORTATION
Caltrans
DESIGN

FUNCTIONAL SUPERVISOR: RICHARD CHIANG
CALCULATED-DESIGNED BY: EDUARDO M. DEL PILAR
CHECKED BY: VAN TRAN
REVISED BY
DATE REVISED

LAST REVISION 00-00-00
DATE PLOTTED => 03-FEB-2016
TIME PLOTTED => 09:23

Dist	COUNTY	ROUTE	POST MILES TOTAL PROJECT	SHEET No.	TOTAL SHEETS
07	LA,Ora	5	0.0/1.5, 44.3/44.4	85	1622

REGISTERED CIVIL ENGINEER 4-2-14 DATE

1-25-16
PLANS APPROVAL DATE

REGISTERED PROFESSIONAL ENGINEER VAN T. TRAN No. C68477 Exp. 9-30-17 CIVIL STATE OF CALIFORNIA

THE STATE OF CALIFORNIA OR ITS OFFICERS OR AGENTS SHALL NOT BE RESPONSIBLE FOR THE ACCURACY OR COMPLETENESS OF SCANNED COPIES OF THIS PLAN SHEET.

NOTE:

1. FOR ACCURATE RIGHT OF WAY DATA, CONTACT RIGHT OF WAY ENGINEERING AT THE DISTRICT OFFICE.

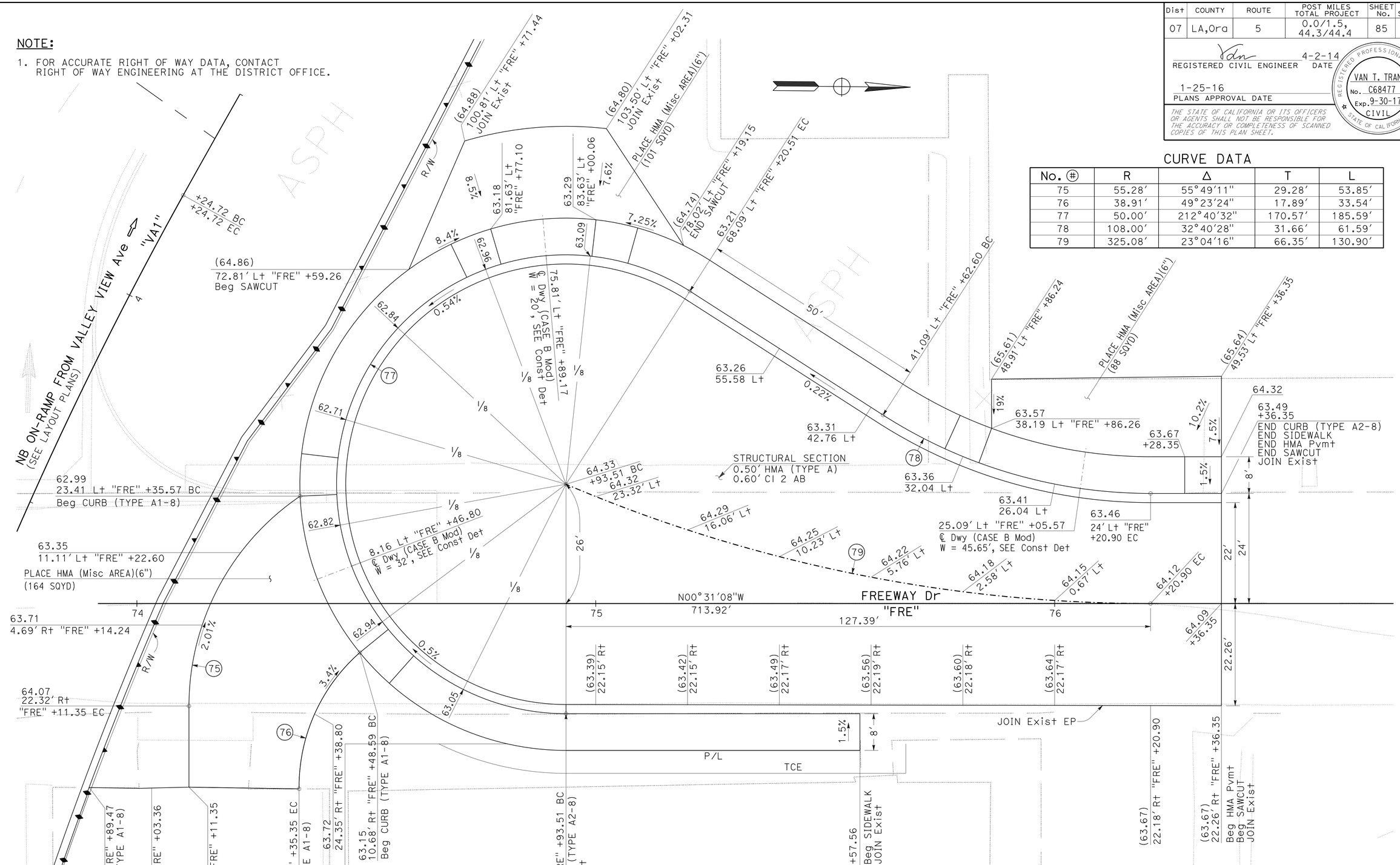

CURVE DATA

No. ⊕	R	Δ	T	L
75	55.28'	55°49'11"	29.28'	53.85'
76	38.91'	49°23'24"	17.89'	33.54'
77	50.00'	212°40'32"	170.57'	185.59'
78	108.00'	32°40'28"	31.66'	61.59'
79	325.08'	23°04'16"	66.35'	130.90'

CONSTRUCTION DETAILS

SCALE: 1" = 10'

C-32

STATE OF CALIFORNIA - DEPARTMENT OF TRANSPORTATION
Caltrans DESIGN

FUNCTIONAL SUPERVISOR: RICHARD CHIANG
CALCULATED-DESIGNED BY: VAN TRAN
CHECKED BY: H.S. CHEN
REVISED BY
DATE REVISED

LAST REVISION 00-00-00
DATE PLOTTED => 03-FEB-2016
TIME PLOTTED => 09:23

Dist	COUNTY	ROUTE	POST MILES TOTAL PROJECT	SHEET No.	TOTAL SHEETS
07	LA,Ora	5	0.0/1.5, 44.3/44.4	86	1622

REGISTERED CIVIL ENGINEER 4-2-14 DATE

1-25-16
PLANS APPROVAL DATE

REGISTERED PROFESSIONAL ENGINEER VAN T. TRAN No. C68477 Exp. 9-30-17 CIVIL STATE OF CALIFORNIA

THE STATE OF CALIFORNIA OR ITS OFFICERS OR AGENTS SHALL NOT BE RESPONSIBLE FOR THE ACCURACY OR COMPLETENESS OF SCANNED COPIES OF THIS PLAN SHEET.

NOTE:

1. ELEVATIONS LABELED AT 20′ INTERVAL STATIONING.

LEGEND:

GORE AREA

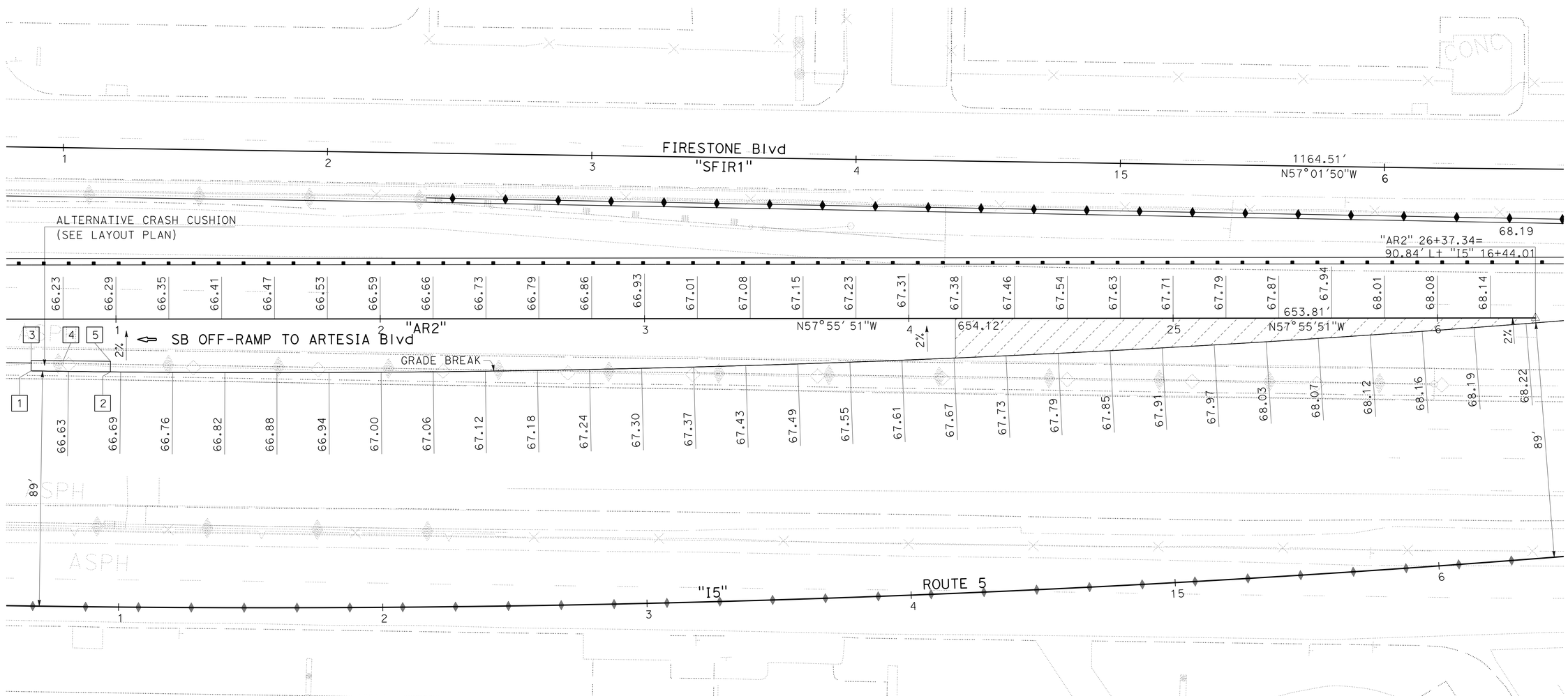

PAVEMENT ELEVATIONS

No. #	LOCATION	ELEVATION
1	89′ Lt "I5" +65.62	66.59
2	89′ Lt "I5" +96.06	66.68
3	15.59′ Rt "AR2" +89.27	66.51
4	15.77′ Rt "AR2" +58.77	66.55
5	15.98′ Rt "AR2" +71.00	66.60

EXIT RAMP (GORE AREA)
SB OFF-RAMP TO ARTESIA Blvd
"AR2"

CONSTRUCTION DETAILS

SCALE: 1" = 20′

C-33

STATE OF CALIFORNIA - DEPARTMENT OF TRANSPORTATION
Caltrans® DESIGN

FUNCTIONAL SUPERVISOR: RICHARD CHIANG
CALCULATED-DESIGNED BY: VAN TRAN
CHECKED BY: MARCELO DE LA FUENTE
REVISED BY
DATE REVISED

LAST REVISION 00-00-00
DATE PLOTTED => 03-FEB-2016
TIME PLOTTED => 09:23

Dist	COUNTY	ROUTE	POST MILES TOTAL PROJECT	SHEET No.	TOTAL SHEETS
07	LA,Ora	5	0.0/1.5, 44.3/44.4	87	1622

REGISTERED CIVIL ENGINEER 4-2-14 DATE

1-25-16
PLANS APPROVAL DATE

REGISTERED PROFESSIONAL ENGINEER
VAN T. TRAN
No. C68477
Exp. 9-30-17
CIVIL
STATE OF CALIFORNIA

THE STATE OF CALIFORNIA OR ITS OFFICERS OR AGENTS SHALL NOT BE RESPONSIBLE FOR THE ACCURACY OR COMPLETENESS OF SCANNED COPIES OF THIS PLAN SHEET.

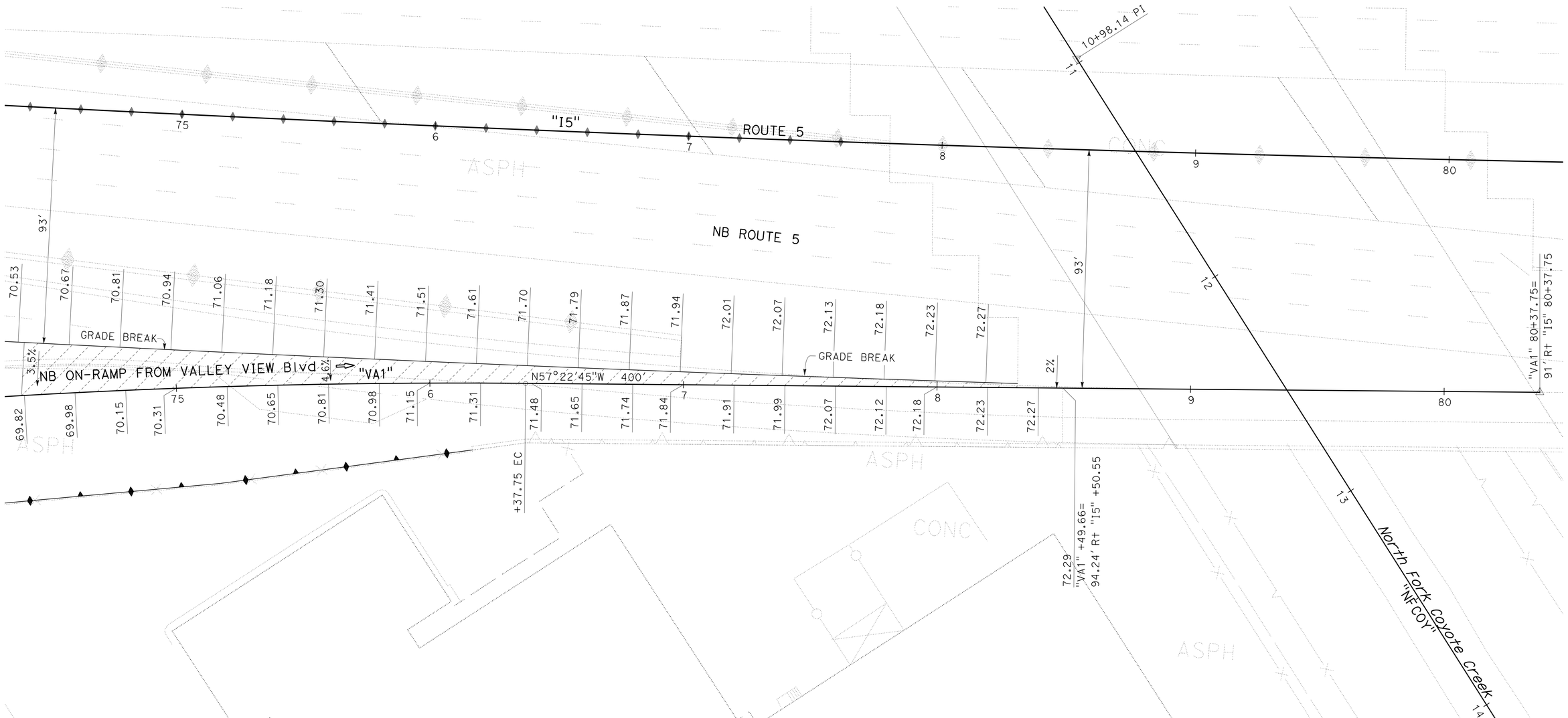

ENTRANCE RAMP (GORE AREA)
NB ON-RAMP FROM VALLEY VIEW Blvd
"VA1"

CONSTRUCTION DETAILS

SCALE: 1" = 20'

C-34

STATE OF CALIFORNIA - DEPARTMENT OF TRANSPORTATION
Caltrans
DESIGN

FUNCTIONAL SUPERVISOR: RICHARD CHIANG
CALCULATED-DESIGNED BY: MARCELO DE LA FUENTE
CHECKED BY: VAN TRAN
REVISED BY
DATE REVISED

LAST REVISION 00-00-00
DATE PLOTTED => 03-FEB-2016
TIME PLOTTED => 09:23

Dist	COUNTY	ROUTE	POST MILES TOTAL PROJECT	SHEET No.	TOTAL SHEETS
07	LA,Ora	5	0.0/1.5, 44.3/44.4	88	1622

REGISTERED CIVIL ENGINEER 4-2-14 DATE

1-25-16
PLANS APPROVAL DATE

REGISTERED PROFESSIONAL ENGINEER VAN T. TRAN No. C68477 Exp. 9-30-17 CIVIL STATE OF CALIFORNIA

THE STATE OF CALIFORNIA OR ITS OFFICERS OR AGENTS SHALL NOT BE RESPONSIBLE FOR THE ACCURACY OR COMPLETENESS OF SCANNED COPIES OF THIS PLAN SHEET.

PAVEMENT ELEVATIONS

No.	LOCATION	ELEVATION
1	101′ Lt "I5" 70+20.00	66.11
2	101′ Lt "I5" 70+40.00	66.41
3	101′ Lt "I5" 70+60.00	66.68
4	101′ Lt "I5" 70+80.00	66.90
5	101′ Lt "I5" 71+00.00	67.12
6	101′ Lt "I5" 71+20.00	67.34
7	101′ Lt "I5" 71+40.00	67.56
8	101′ Lt "I5" 71+60.00	67.78
9	7.00′ Rt "VA2" 71+20.64	66.96
10	7.00′ Rt "VA2" 71+40.00	66.77
11	7.00′ Rt "VA2" 71+50.64	66.69
12	3.00′ Rt "VA2" 70+20.64	66.89
13	3.00′ Rt "VA2" 70+40.00	66.80
14	3.00′ Rt "VA2" 70+50.64	66.77

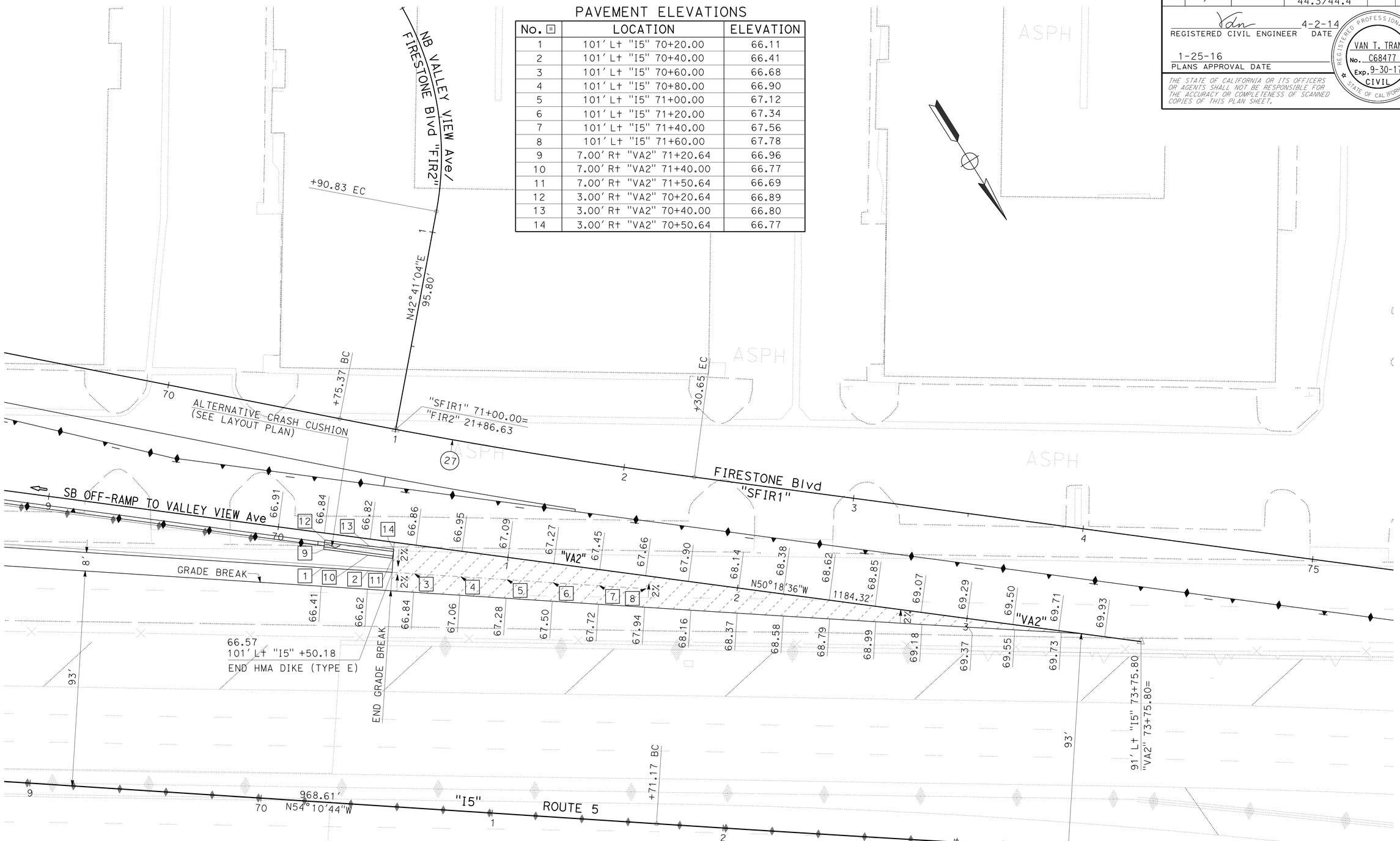

EXIT RAMP (GORE AREA)
SB OFF-RAMP TO VALLEY VIEW Ave
"VA2"

CONSTRUCTION DETAILS

SCALE: 1" = 20′

C-35

STATE OF CALIFORNIA - DEPARTMENT OF TRANSPORTATION
Caltrans®
DESIGN

FUNCTIONAL SUPERVISOR: RICHARD CHIANG
CALCULATED-DESIGNED BY: HUNG TIEU
CHECKED BY: VAN TRAN
REVISED BY
DATE REVISED

LAST REVISION 00-00-00
DATE PLOTTED => 03-FEB-2016
TIME PLOTTED => 09:23

Dist	COUNTY	ROUTE	POST MILES TOTAL PROJECT	SHEET No.	TOTAL SHEETS
07	LA,Ora	5	0.0/1.5, 44.3/44.4	89	1622

REGISTERED CIVIL ENGINEER 4-2-14 DATE

1-25-16
PLANS APPROVAL DATE

REGISTERED PROFESSIONAL ENGINEER VAN T. TRAN No. C68477 Exp. 9-30-17 CIVIL STATE OF CALIFORNIA

THE STATE OF CALIFORNIA OR ITS OFFICERS OR AGENTS SHALL NOT BE RESPONSIBLE FOR THE ACCURACY OR COMPLETENESS OF SCANNED COPIES OF THIS PLAN SHEET.

PAVEMENT ELEVATIONS

No. #	LOCATION	ELEVATION
1	4.00′ Rt "VA3" 46+40.43	67.71
2	4.00′ Rt "VA3" 46+60.44	67.56
3	4.00′ Rt "VA3" 46+80.44	67.42
4	4.00′ Rt "VA3" 46+93.50	67.32
5	4.00′ Rt "VA3" 47+00.44	67.28
6	4.00′ Rt "VA3" 47+20.44	67.17
7	4.00′ Rt "VA3" 47+40.44	67.06
8	4.00′ Rt "VA3" 47+60.44	66.94
9	4.00′ Rt "VA3" 47+79.11	66.85
10	101.00′ Lt "I5" 46+91.60	67.39
11	101.00′ Lt "I5" 47+00.00	67.34
12	101.00′ Lt "I5" 47+20.00	67.23
13	101.00′ Lt "I5" 47+40.00	67.11
14	101.00′ Lt "I5" 47+60.00	67.04

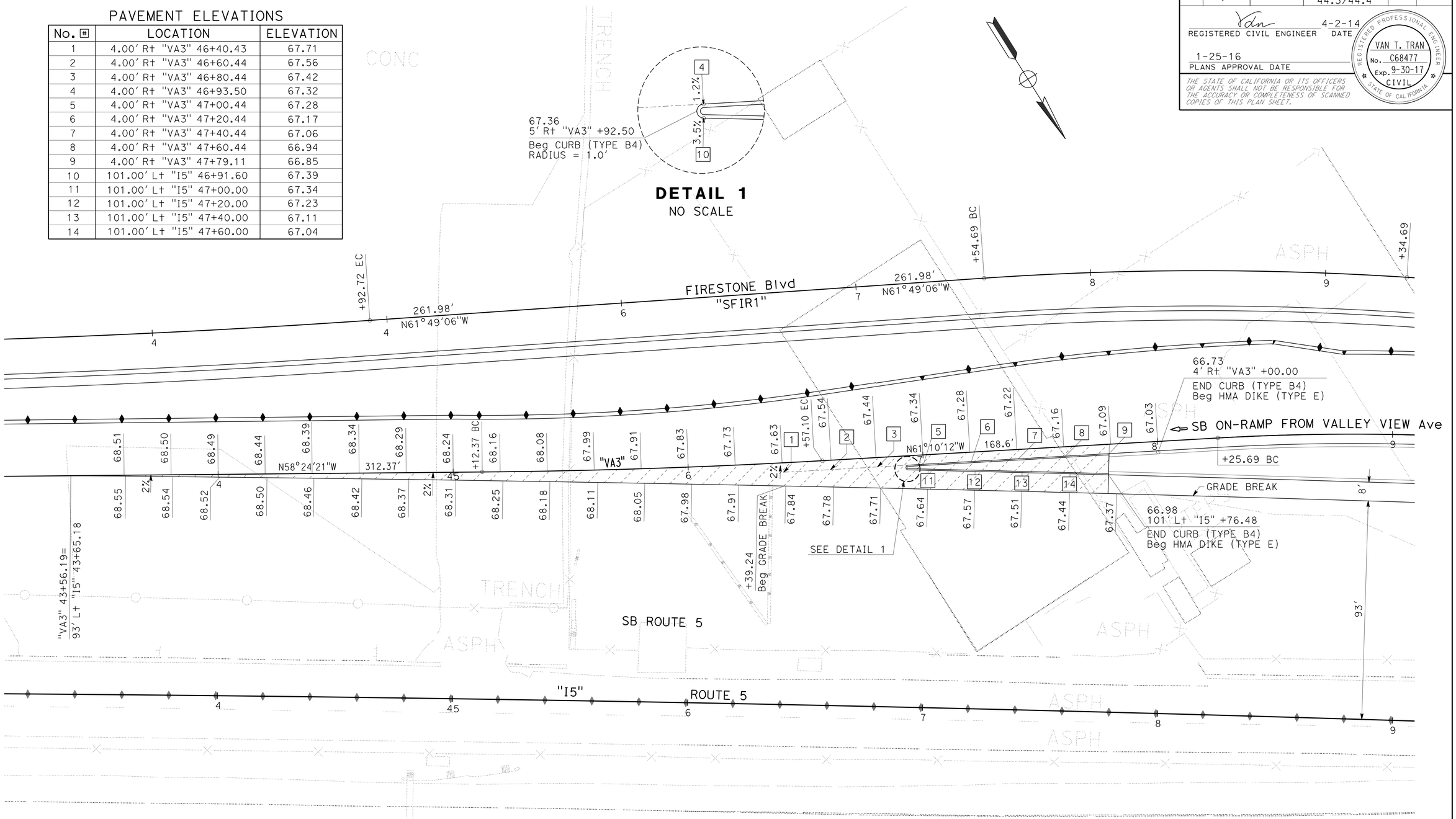

ENTRANCE RAMP (GORE AREA)
SB ON-RAMP FROM VALLEY VIEW Ave
"VA3"

CONSTRUCTION DETAILS

SCALE: 1" = 20′

C-36

STATE OF CALIFORNIA - DEPARTMENT OF TRANSPORTATION
Caltrans® **DESIGN**

FUNCTIONAL SUPERVISOR: RICHARD CHIANG
CALCULATED-DESIGNED BY: HUNG TIEU
CHECKED BY: VAN TRAN
REVISED BY
DATE REVISED

LAST REVISION 00-00-00
DATE PLOTTED => 03-FEB-2016
TIME PLOTTED => 09:23

Dist	COUNTY	ROUTE	POST MILES TOTAL PROJECT	SHEET No.	TOTAL SHEETS
07	LA,Ora	5	0.0/1.5, 44.3/44.4	90	1622

REGISTERED CIVIL ENGINEER 4-2-14 DATE

1-25-16
PLANS APPROVAL DATE

REGISTERED PROFESSIONAL ENGINEER
VAN T. TRAN
No. C68477
Exp. 9-30-17
CIVIL
STATE OF CALIFORNIA

THE STATE OF CALIFORNIA OR ITS OFFICERS OR AGENTS SHALL NOT BE RESPONSIBLE FOR THE ACCURACY OR COMPLETENESS OF SCANNED COPIES OF THIS PLAN SHEET.

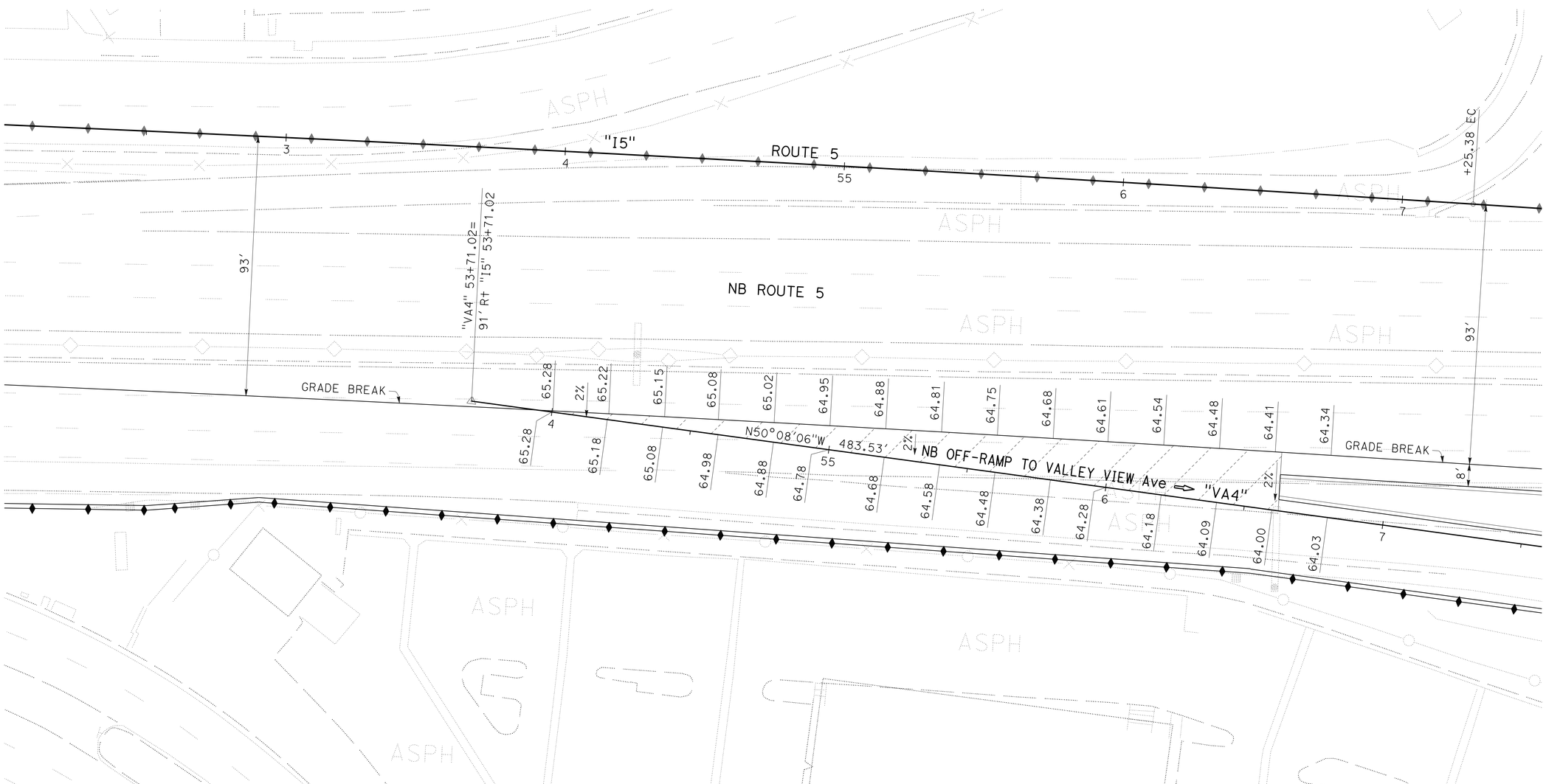

EXIT RAMP (GORE AREA)
NB OFF-RAMP TO VALLEY VIEW Blvd
"VA4"

CONSTRUCTION DETAILS

SCALE: 1" = 20'

C-37

STATE OF CALIFORNIA - DEPARTMENT OF TRANSPORTATION
Caltrans
DESIGN

FUNCTIONAL SUPERVISOR: RICHARD CHIANG
CALCULATED-DESIGNED BY: MARCELO DE LA FUENTE
CHECKED BY: VAN TRAN
REVISED BY
DATE REVISED

LAST REVISION 00-00-00
DATE PLOTTED => 03-FEB-2016
TIME PLOTTED => 09:23

Dist	COUNTY	ROUTE	POST MILES TOTAL PROJECT	SHEET No.	TOTAL SHEETS
07	LA,Ora	5	0.0/1.5, 44.3/44.4	91	1622

REGISTERED CIVIL ENGINEER 4-2-14 DATE

1-25-16
PLANS APPROVAL DATE

REGISTERED PROFESSIONAL ENGINEER H.S. CHEN No. C48908 Exp. 9-30-16 CIVIL STATE OF CALIFORNIA

THE STATE OF CALIFORNIA OR ITS OFFICERS OR AGENTS SHALL NOT BE RESPONSIBLE FOR THE ACCURACY OR COMPLETENESS OF SCANNED COPIES OF THIS PLAN SHEET.

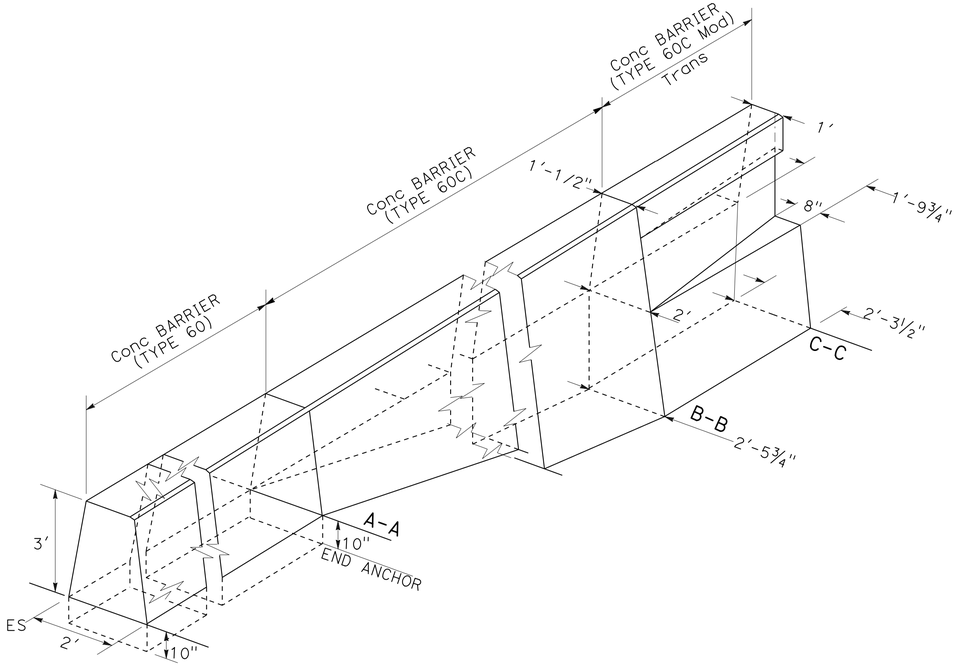

Conc BARRIER (TYPE 60C Mod) TO RETAINING WALL TRANSITION

NOTES:
1. FOR Conc BARRIER (TYPE 60C) DETAILS NOT SHOWN, SEE Std PLAN A76A.
2. THIS DETAIL IS FOR RW 52 TRANSITION ONLY.

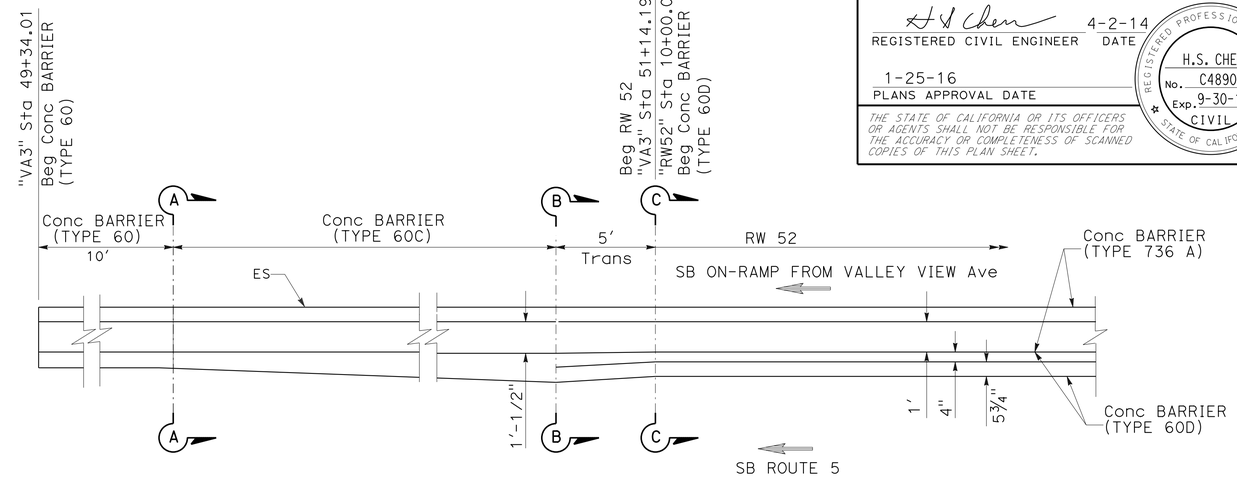

PLAN

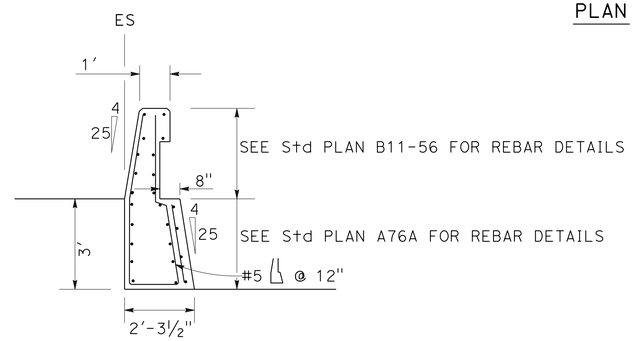

SECTION C-C &
SECTION D-D

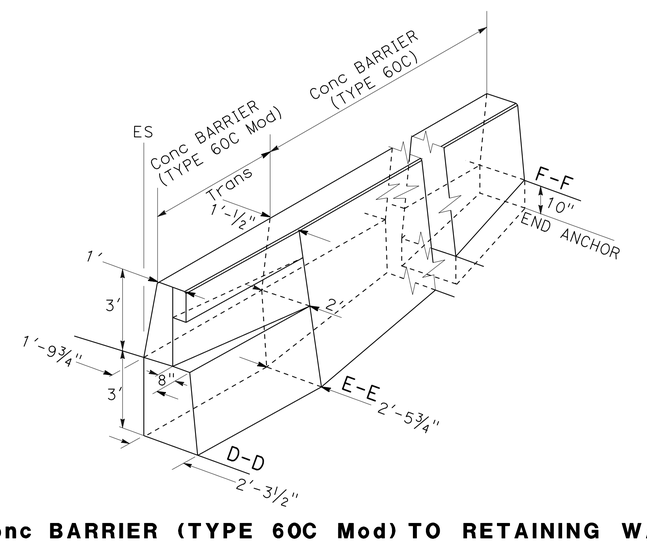

Conc BARRIER (TYPE 60C Mod) TO RETAINING WALL TRANSITION

NOTES:
1. FOR Conc BARRIER (TYPE 60C) DETAILS NOT SHOWN, SEE Std PLAN A76A.
2. THIS DETAIL IS FOR RW 68 TRANSITION ONLY.

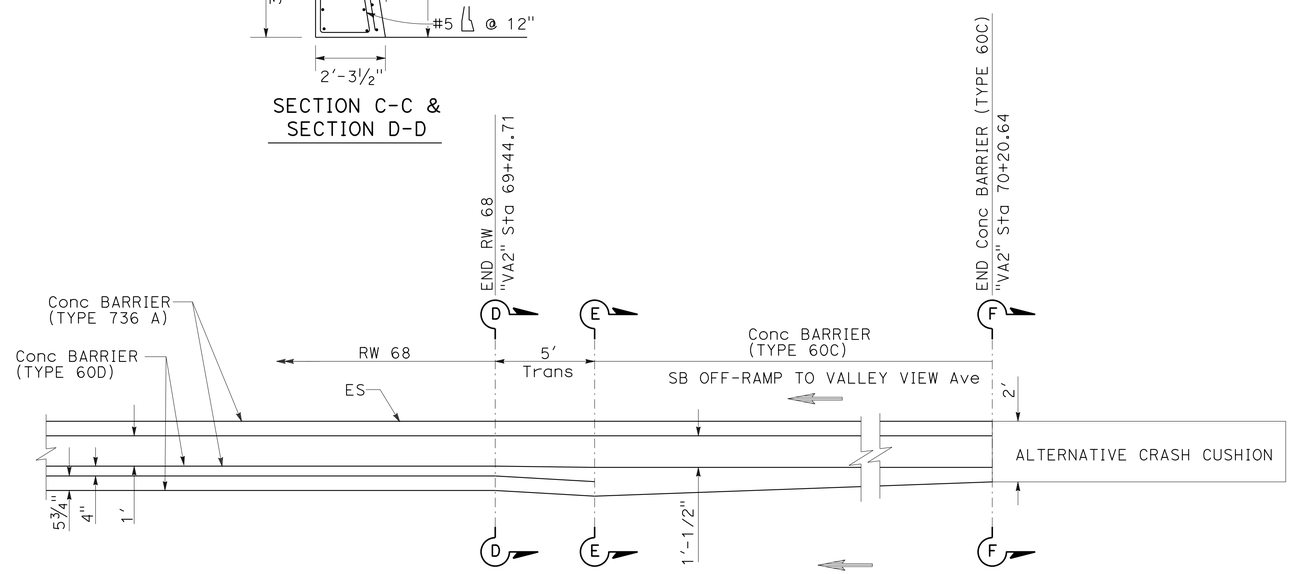

PLAN

CONSTRUCTION DETAILS

NO SCALE

C-38

STATE OF CALIFORNIA - DEPARTMENT OF TRANSPORTATION
Caltrans
DESIGN

FUNCTIONAL SUPERVISOR: RICHARD CHIANG
CALCULATED-DESIGNED BY: H.S. CHEN
CHECKED BY: VAN TRAN
REVISED BY
DATE REVISED

LAST REVISION 00-00-00
DATE PLOTTED => 03-FEB-2016
TIME PLOTTED => 09:23

Dist	COUNTY	ROUTE	POST MILES TOTAL PROJECT	SHEET No.	TOTAL SHEETS
07	LA,Ora	5	0.0/1.5, 44.3/44.4	92	1622

H S Chen 4-2-14
REGISTERED CIVIL ENGINEER DATE

1-25-16
PLANS APPROVAL DATE

REGISTERED PROFESSIONAL ENGINEER
H.S. CHEN
No. C48908
Exp. 9-30-16
CIVIL
STATE OF CALIFORNIA

THE STATE OF CALIFORNIA OR ITS OFFICERS OR AGENTS SHALL NOT BE RESPONSIBLE FOR THE ACCURACY OR COMPLETENESS OF SCANNED COPIES OF THIS PLAN SHEET.

LEGEND:

ADDITIONAL ROADWAY EXCAVATION

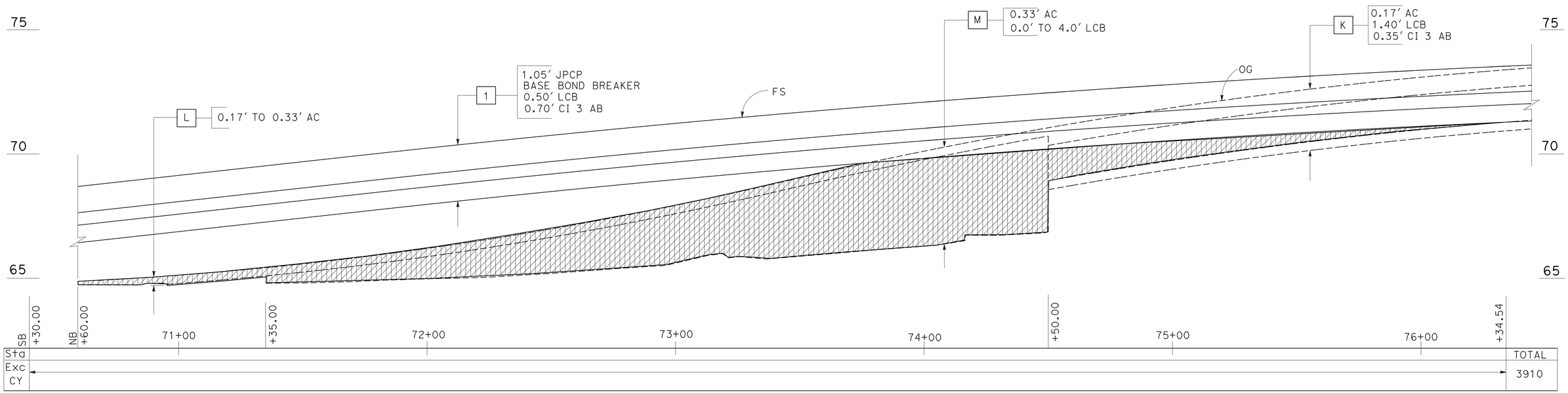

SECTION A-A
"I5" 70+30.00 TO 76+34.54

CONSTRUCTION DETAILS

SCALE: Horiz 1" = 20′
Vert 1" = 2′

C-39

STATE OF CALIFORNIA - DEPARTMENT OF TRANSPORTATION
Caltrans DESIGN
FUNCTIONAL SUPERVISOR: RICHARD CHIANG
CALCULATED-DESIGNED BY: H.S. CHEN
CHECKED BY: VAN TRAN
REVISED BY
DATE REVISED

LAST REVISION 00-00-00
DATE PLOTTED => 03-FEB-2016
TIME PLOTTED => 09:23

Dist	COUNTY	ROUTE	POST MILES TOTAL PROJECT	SHEET No.	TOTAL SHEETS
07	LA,Ora	5	0.0/1.5, 44.3/44.4	93	1622

REGISTERED CIVIL ENGINEER 4-2-14 DATE

1-25-16
PLANS APPROVAL DATE

REGISTERED PROFESSIONAL ENGINEER H.S. CHEN No. C48908 Exp. 9-30-16 CIVIL STATE OF CALIFORNIA

THE STATE OF CALIFORNIA OR ITS OFFICERS OR AGENTS SHALL NOT BE RESPONSIBLE FOR THE ACCURACY OR COMPLETENESS OF SCANNED COPIES OF THIS PLAN SHEET.

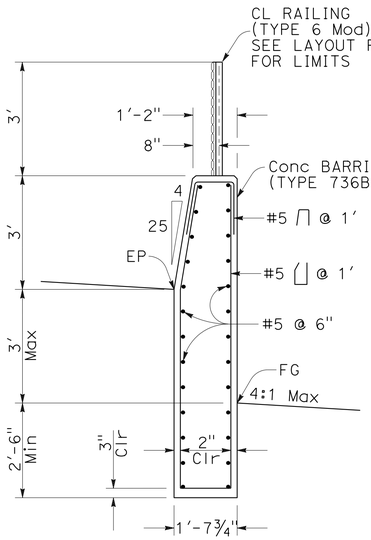

DETAIL A

Conc BARRIER (TYPE 736B Mod)

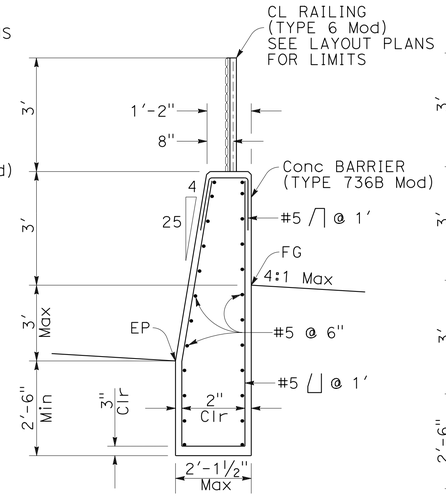

DETAIL B

Conc BARRIER (TYPE 736B Mod)

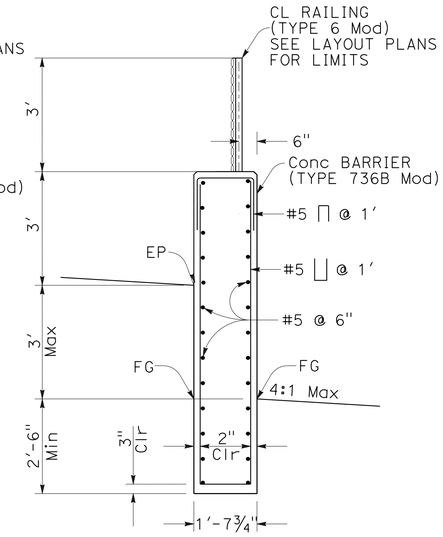

DETAIL C

Conc BARRIER (TYPE 736B Mod)

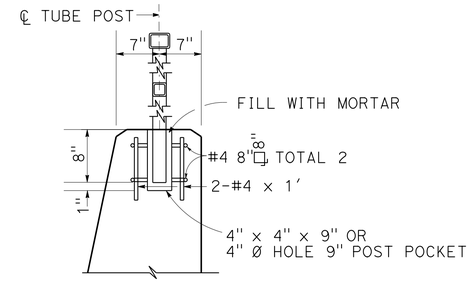

POST ANCHORAGE DETAIL

SEE B11-51 FOR TUBULAR HANDRAILING

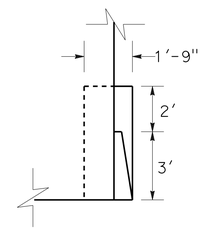

SECTION C-C

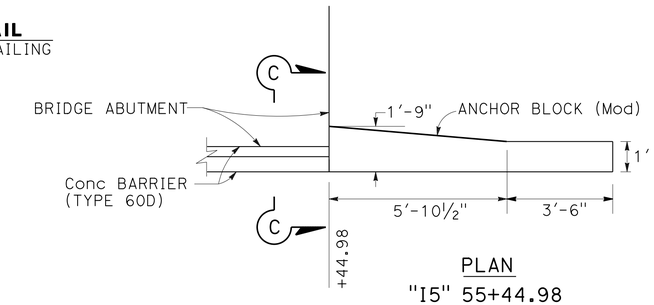

PLAN

"I5" 55+44.98

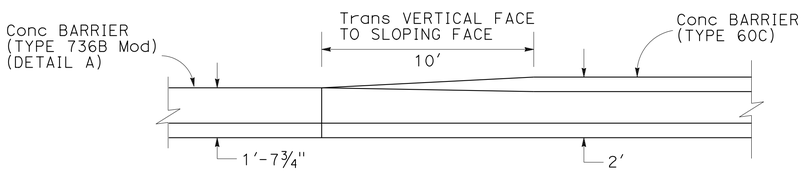

"I5" 0+10.77

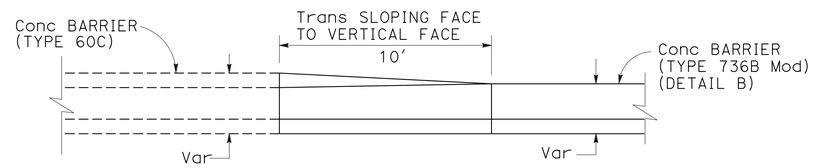

"SFIR3" 12+37.61

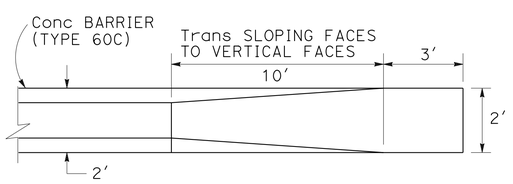

"I5" 10+52.43

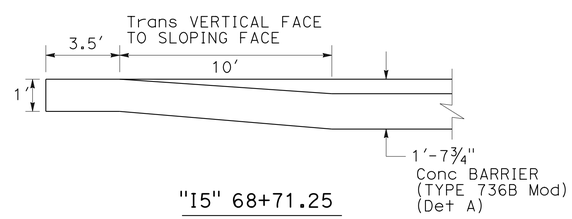

"I5" 68+71.25

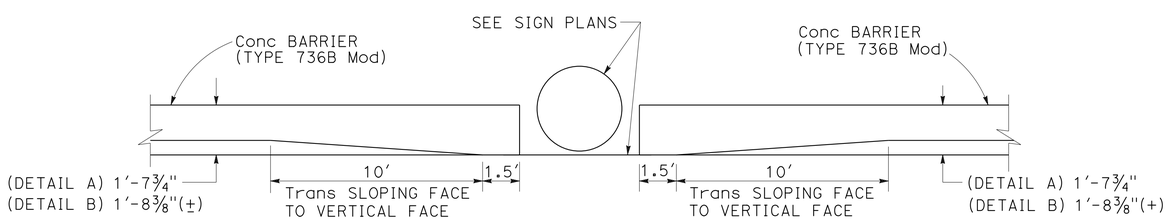

"I5" 20+00.00
"I5" 23+00.00

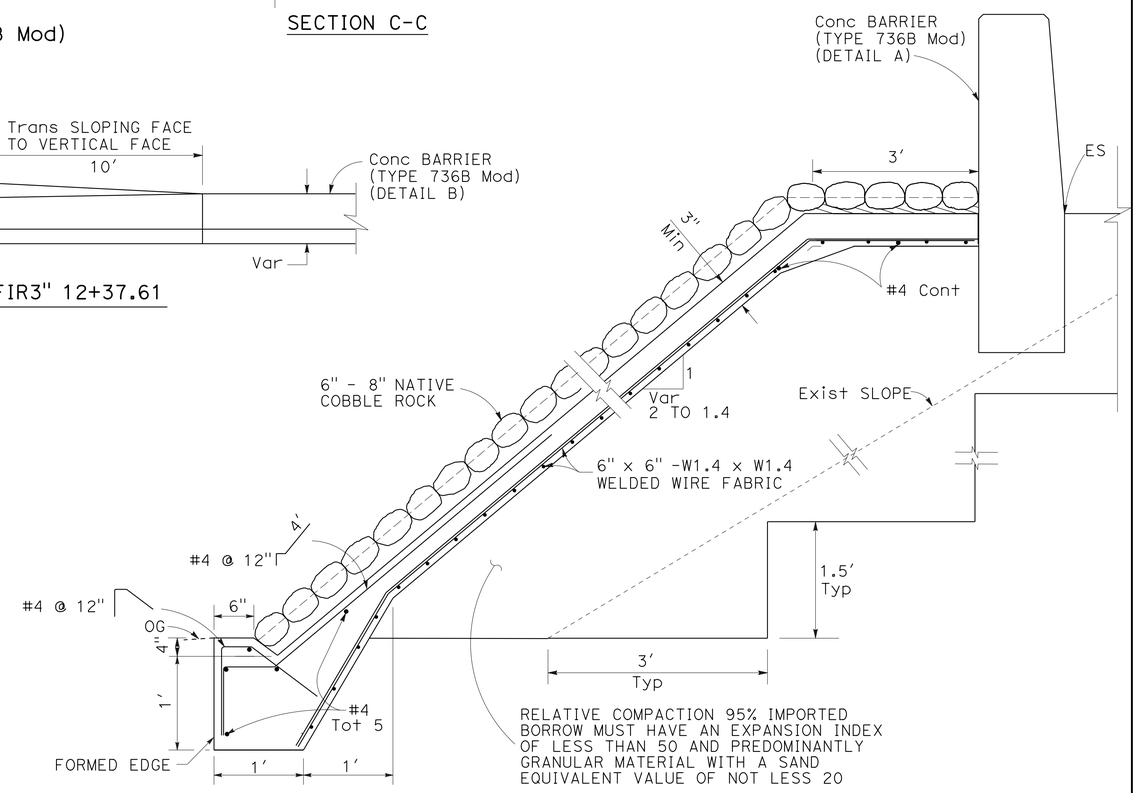

TYPICAL SECTION FOR SLOPE PAVING (CONCRETE)

FOR ROCK BLANKET DETAILS SEE RSP H9A

FOR "I5" Sta 9997+70 TO Sta 9998+40

CONSTRUCTION DETAILS

NO SCALE

C-40

REVISED BY	DATE REVISED	CALCULATED-DESIGNED BY	CHECKED BY	FUNCTIONAL SUPERVISOR
H.S. CHEN	5/2015	H.S. CHEN	VAN TRAN	RICHARD CHIANG

STATE OF CALIFORNIA - DEPARTMENT OF TRANSPORTATION

Caltrans® DESIGN

LAST REVISION 00-00-00 | DATE PLOTTED => 03-FEB-2016 | TIME PLOTTED => 09:23

Dist	COUNTY	ROUTE	POST MILES TOTAL PROJECT	SHEET No.	TOTAL SHEETS
07	LA,Ora	5	0.0/1.5, 44.3/44.4	94	1622

REGISTERED CIVIL ENGINEER 4-2-14 DATE

1-25-16
PLANS APPROVAL DATE

REGISTERED PROFESSIONAL ENGINEER H.S. CHEN No. C48908 Exp. 9-30-16 CIVIL STATE OF CALIFORNIA

THE STATE OF CALIFORNIA OR ITS OFFICERS OR AGENTS SHALL NOT BE RESPONSIBLE FOR THE ACCURACY OR COMPLETENESS OF SCANNED COPIES OF THIS PLAN SHEET.

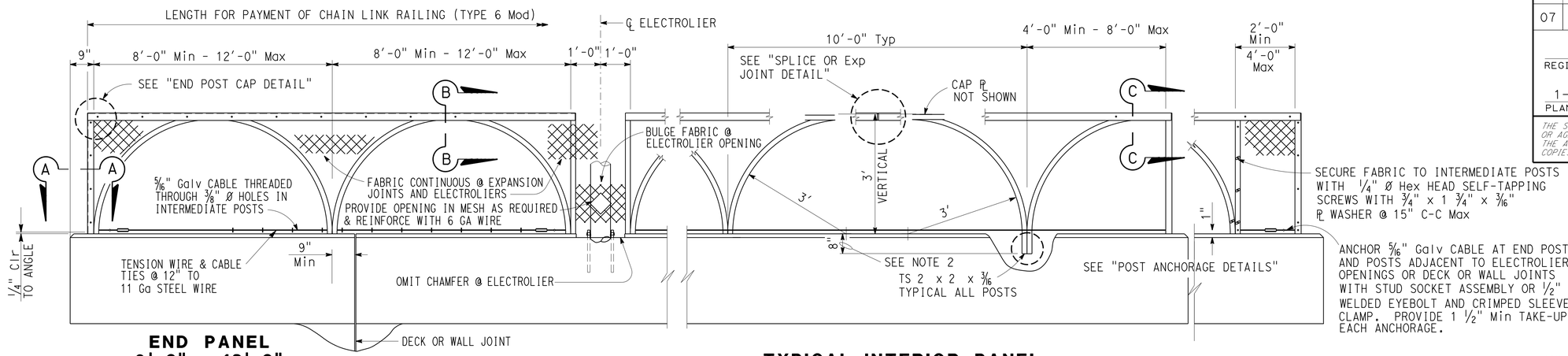

ELEVATION

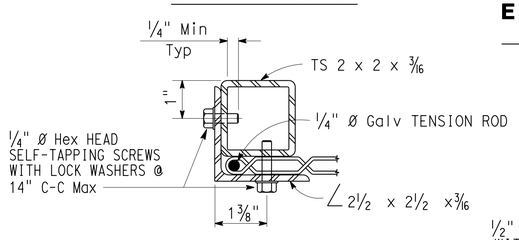

SECTION A-A

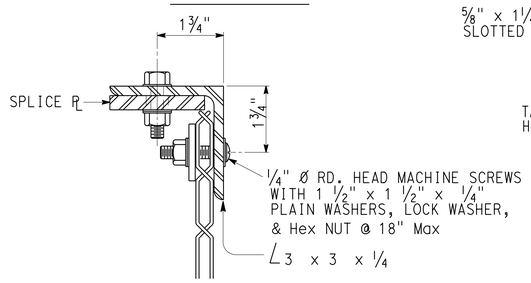

SECTION B-B

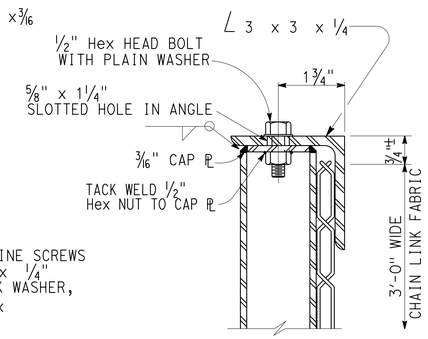

SECTION C-C

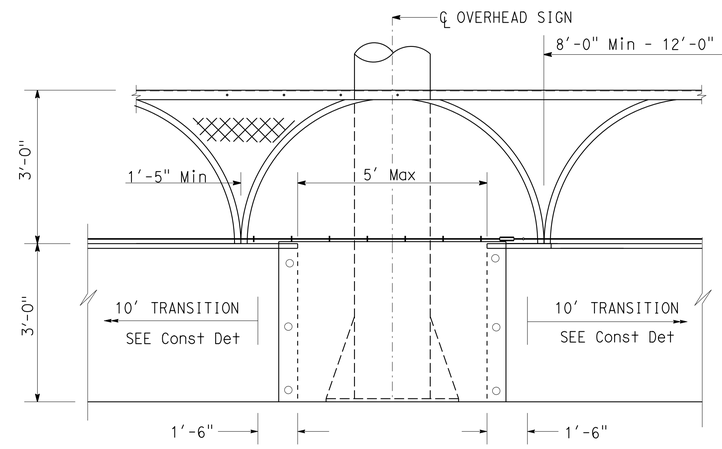

AT OVERHEAD SIGN 3A & 3B

ELEVATION

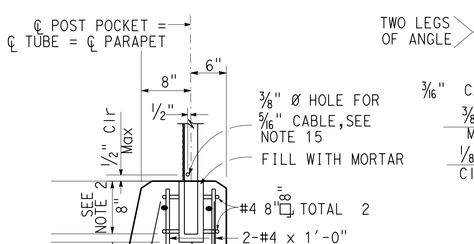

POST ANCHORAGE DETAIL

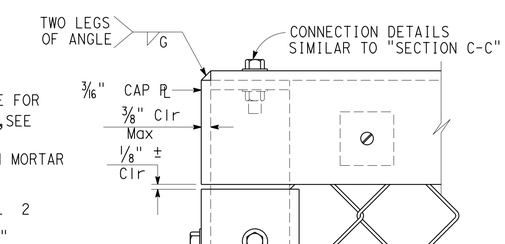

END POST CAP DETAIL

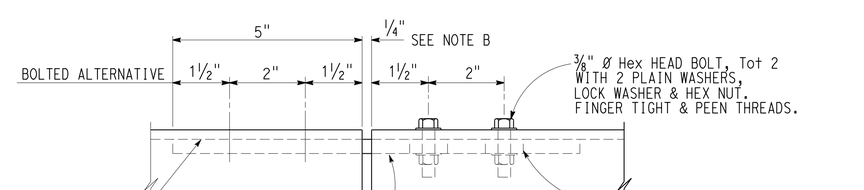

SPLICE OR EXPANSION JOINT DETAIL

NOTE B: EXPANSION JOINT SAME DIMENSION AS EXPANSION JOINT IN DECK OR WALL. INCREASE SLOTTED HOLE LENGTH AND SPLICE ℙ LENGTH CORRESPONDINGLY.

NOTES:

1. HORIZONTAL ANGLE MUST BE CONTINUOUS OVER NOT LESS THAN TWO INTERMEDIATE POSTS EXCEPT THAT A SHORTER LENGTH IS PERMITTED AT EXPANSION JOINTS, ELECTROLIERS AND OTHER RAIL DISCONTINUITIES.
2. ONE POST MAY BE EMBEDDED 6" MINIMUM TO ACCOMODATE GRADE CHANGES, OTHERWISE FABRICATE POST LENGTHS AS REQUIRED.
3. CURVED POSTS MAY BE ROTATED IN PLAN WITHIN ITS POST POCKET TO ACCOMODATE CURVED HORIZONTAL ALIGNMENT.
4. STRAIGHT POSTS AND STRAIGHT PORTIONS OF CURVED POSTS SHALL BE INSTALLED NORMAL TO BRIDGE PROFILE GRADE.
5. TOP HORIZONTAL ANGLE MUST BE PARALLEL TO BRIDGE PROFILE GRADE AND MUST BE SHOP BENT TO FIT HORIZONTAL CURVES.
6. WHEN RAILING IS ON SLOPE, FABRIC MUST BE PLACED PARALLEL TO SLOPE.
7. ALTERNATIVE DETAILS MAY BE SUBMITTED BY CONTRACTOR FOR ENGINEER'S APPROVAL.
8. RAILING ASSEMBLY EXCEPT CHAIN LINK FABRIC MUST BE GALVANIZED AFTER FABRICATION.
9. FOR DETAILS AND REINFORCEMENT NOT SHOWN, SEE CONSTRUCTION DETAIL .
10. SEE BRIDGE PLANS AND ROADWAY PLANS FOR LIMITS OF CHAIN LINK RAILING.
11. PROVIDE THIMBLES AT ALL CABLE LOOPS.
12. CHAIN LINK FABRIC TO BE 6'-0" WIDE WITH 1" MESH AND WITH KNUCKLED SELVAGE TOP AND BOTTOM.
13. WHEN RAILING IS PLACED ON A HORIZONTAL ALIGNMENT WITH A RADIUS OF 150'-0" OR LESS, THREAD 5/16" CABLE THROUGH 3/8" ⌀ WELDED EYE RODS EMBEDDED 4" INTO THE TOP OF THE CONCRETE PARAPET AND EQUALLY SPACED TO LIMIT THE MIDDLE ORDINATE DISTANCE BETWEEN THE 5/16" CABLE AND THE CURVE TO 1" Max.
14. SPLICES AND EXPANSION JOINTS MUST BE LOCATED AT ℄ PANEL.
15. HOLES IN POSTS FOR 5/16" CABLE AND ITS ANCHORAGE MAY BE FIELD DRILLED AND PAINTED WITH ZINC RICH PAINT.
16. RAILING ASSEMBLY MUST HAVE GREEN COATING CLOSELY CONFORMING TO FEDERAL COLOR # FS34092 AND EXISTING CITY OF NORWALK COLORS USED ON LIGHT POLES AT SHOEMAKER Ave BRIDGE.

CHAIN LINK RAILING TYPE 6 MODIFIED
CONSTRUCTION DETAILS

NO SCALE

C-41

STATE OF CALIFORNIA - DEPARTMENT OF TRANSPORTATION
Caltrans®
DESIGN

FUNCTIONAL SUPERVISOR: RICHARD CHIANG
CALCULATED-DESIGNED BY: H.S. CHEN
CHECKED BY: VAN TRAN
REVISED BY
DATE REVISED

LAST REVISION 00-00-00
DATE PLOTTED => 03-FEB-2016
TIME PLOTTED => 09:23

Dist	COUNTY	ROUTE	POST MILES TOTAL PROJECT	SHEET No.	TOTAL SHEETS
07	LA,Ora	5	0.0/1.5, 44.3/44.4	95	1622

REGISTERED CIVIL ENGINEER 4-2-14 DATE

1-25-16
PLANS APPROVAL DATE

REGISTERED PROFESSIONAL ENGINEER VAN T. TRAN No. C68477 Exp. 9-30-17 CIVIL STATE OF CALIFORNIA

THE STATE OF CALIFORNIA OR ITS OFFICERS OR AGENTS SHALL NOT BE RESPONSIBLE FOR THE ACCURACY OR COMPLETENESS OF SCANNED COPIES OF THIS PLAN SHEET.

NOTES:

1. SIDEWALK AND RAMP THICKNESS AT DRIVEWAY MUST BE 6" FOR COMMERCIAL.
2. DIFFERENCE IN SLOPE OF THE DRIVEWAY RAMP AND THE SLOPE OF A LINE BETWEEN THE GUTTER AND A POINT ON THE ROADWAY 5′-0" FROM GUTTER LINE MUST NOT EXCEED 15%. REDUCE DRIVEWAY RAMP SLOPE, NOT GUTTER SLOPE, HERE REQUIRED.
3. MINIMUM WIDTH OF CLEAR PASSAGEWAY FOR SIDEWALK MUST BE 4′-2".
4. RETAINING CURBS AND ACQUISITION OF CONSTRUCTION EASEMENT MAY BE NECESSARY FOR NARROW SIDEWALKS OR CURB HEIGHTS IN EXCESS OF 6".
5. IF LOCATED ON A CURVE, THE SIDES OF THE RAMP NEED NOT BE PARALLEL, BUT THE MINIMUM WIDTH OF THE RAMP MUST BE 4′-2".
6. THE RAMP LENGTH MUST NOT EXCEED 15 FEET WHEN A RUNNING SLOPE IS STEEPER THAN 7.5%.
7. THE CURB RAMP MUST BE OUTLINED, AS SHOWN, WITH A 1′-0" WIDE BORDER WITH 1/4" GROOVES APPROXIMATELY 3/4" ON CENTER. SEE GROOVING DETAIL ON THE REVISED Std PLAN RSP A88A.
8. TRANSITIONS FROM RAMPS AND LANDING TO WALKS, GUTTERS OR STREETS MUST BE FLUSH (NO LIP) AND FREE OF ABRUPT CHANGES.
9. COUNTER SLOPES OF ADJOINING GUTTERS AND ROAD SURFACES IMMEDIATELY ADJACENT TO AND WITHIN 24 INCHES OF THE CURB RAMP MUST NOT BE STEEPER THAN 1:20 (5%). GUTTER PAN SLOPE MUST NOT EXCEED 1" OF DEPTH FOR EACH 2′-0" OF WIDTH.
10. CURB RAMPS MUST HAVE A DETECTABLE WARNING SURFACE THAT EXTENDS THE FULL WIDTH AND 3′-0" DEPTH OF THE RAMP.
11. SIDEWALK AND RAMP THICKNESS, "T", MUST BE 3 1/2" MINIMUM.
12. THE EDGE OF THE DETECTABLE WARNING SURFACE NEAREST THE STREET MUST BE BETWEEN 6" AND 8" FROM THE GUTTER FLOWLINE.
13. UTILITY PULL BOXES, MANHOLES, VAULTS AND ALL OTHER UTILITY FACILITIES WITHIN THE BOUNDARIES OF THE CURB RAMP WILL BE RELOCATED OR ADJUSTED TO GRADE BY THE OWNER PRIOR TO, OR IN CONJUNCTION WITH, CURB RAMP CONSTRUCTION.
14. 6" SQUARE ALUMINUM OR GALVANIZED STEEL WIRE 1/4" MESH HARDWARE CLOTH, MINIMUM WIRE DIAMETER 0.025". ANCHOR FIRMLY TO BACKFACE.
15. ONE CUBIC FOOT PERVIOUS BACKFILL MATERIAL IN A NONWOVEN FILTER FABRIC, SECURELY TIED.
16. ABRUPT CHANGES IN LEVEL, EXCEPT BETWEEN A WALK OR SIDEWALK AND AN ADJACENT STREET OR DRIVEWAYS, EXCEEDING 4 INCHES IN VERTICAL DIMENSION, SUCH AS AT PARKING LOT, PLANTERS OR FOUNTAINS LOCATED IN OR ADJACENT TO WALKS, SIDEWALKS OR OTHER PEDESTRIAN WAYS, MUST BE IDENTIFIED BY CURBS PROJECTING AT LEAST 6 INCHES IN HEIGHT ABOVE THE WALK OR SIDEWALK SURFACE TO WARN THE BLIND OF A POTENTIAL DROP OFF.
17. FOR DETAILS NOT SHOWN, SEE REVISED Std PLAN RSPs A87A, A88A AND A88B.

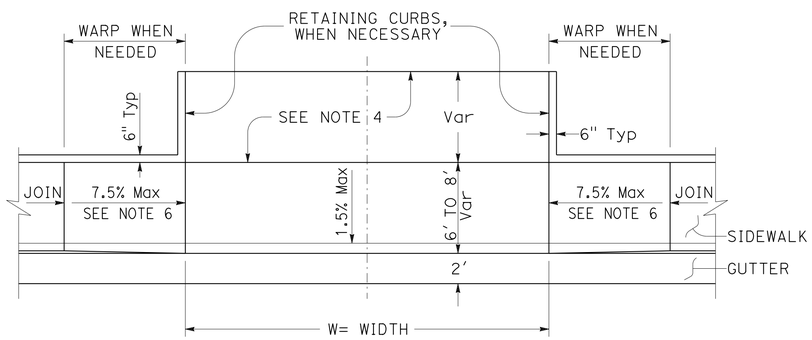

PLAN

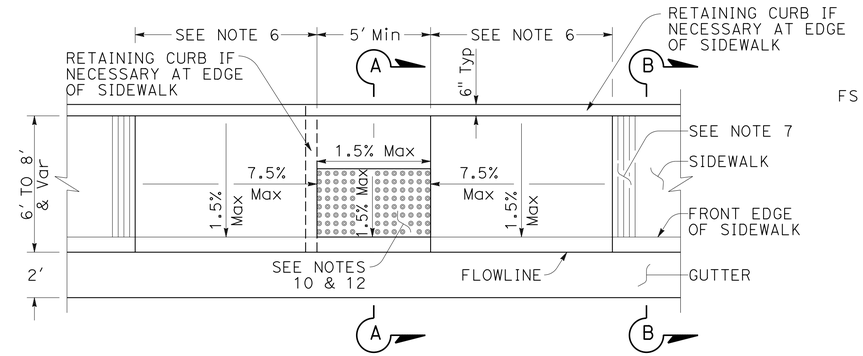

(CASE C Mod)

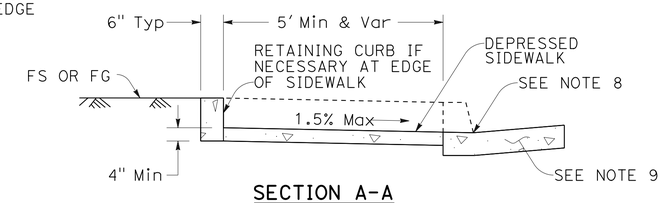

SECTION A-A

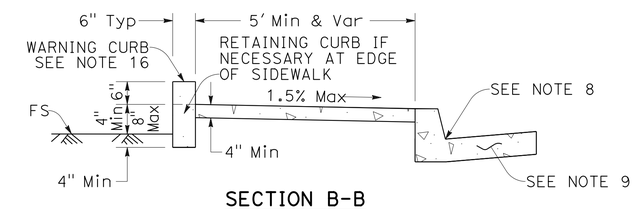

SECTION B-B

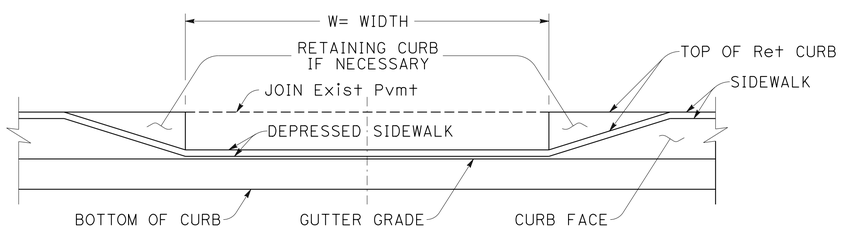

ELEVATION

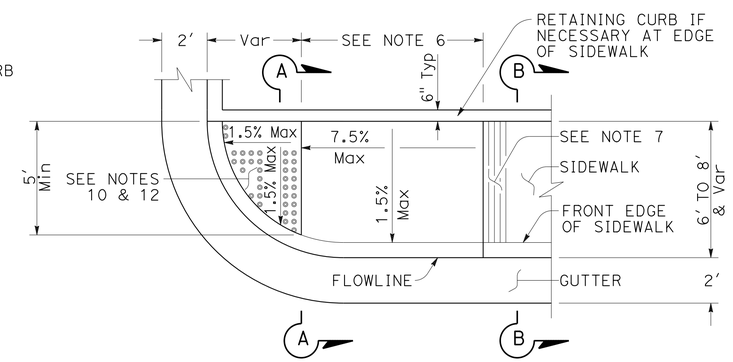

(CASE CM Mod)

CURB RAMP DETAILS

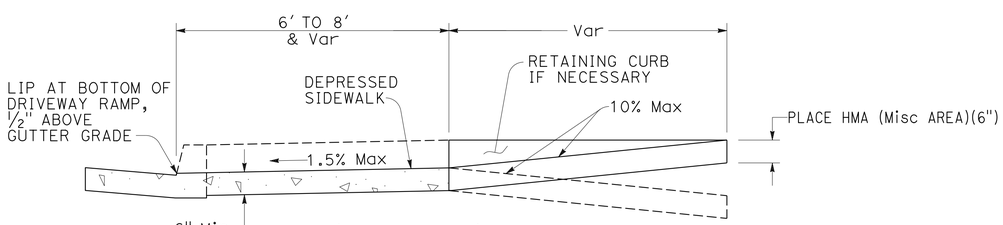

(CASE B Mod)

DRIVEWAY WITH DEPRESSED SIDEWALK

DRIVEWAY

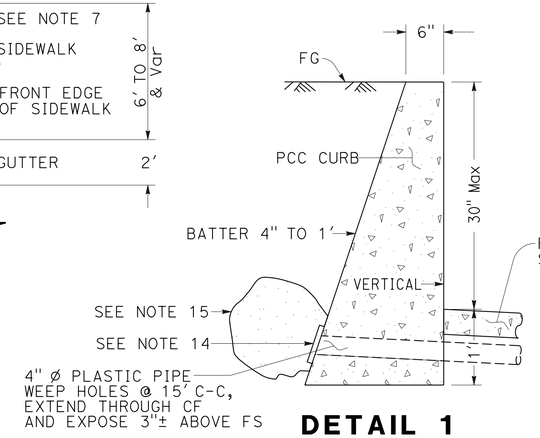

DETAIL 1
SHORT RETAINING WALL

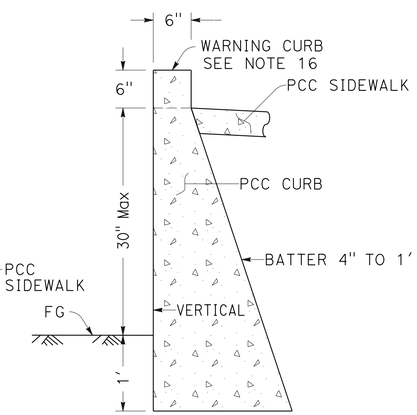

DETAIL 2
SHORT RETAINING WALL

CONSTRUCTION DETAILS

NO SCALE

C-42

STATE OF CALIFORNIA - DEPARTMENT OF TRANSPORTATION
Caltrans
DESIGN
FUNCTIONAL SUPERVISOR: RICHARD CHIANG
CALCULATED-DESIGNED BY: VAN TRAN
CHECKED BY: H.S. CHEN
REVISED BY
DATE REVISED

LAST REVISION 00-00-00
DATE PLOTTED => 03-FEB-2016
TIME PLOTTED => 09:23

Dist	COUNTY	ROUTE	POST MILES TOTAL PROJECT	SHEET No.	TOTAL SHEETS
07	LA,Ora	5	0.0/1.5, 44.3/44.4	96	1622

REGISTERED CIVIL ENGINEER 4-2-14 DATE

1-25-16
PLANS APPROVAL DATE

REGISTERED PROFESSIONAL ENGINEER H.S. CHEN No. C48908 Exp. 9-30-16 CIVIL STATE OF CALIFORNIA

THE STATE OF CALIFORNIA OR ITS OFFICERS OR AGENTS SHALL NOT BE RESPONSIBLE FOR THE ACCURACY OR COMPLETENESS OF SCANNED COPIES OF THIS PLAN SHEET.

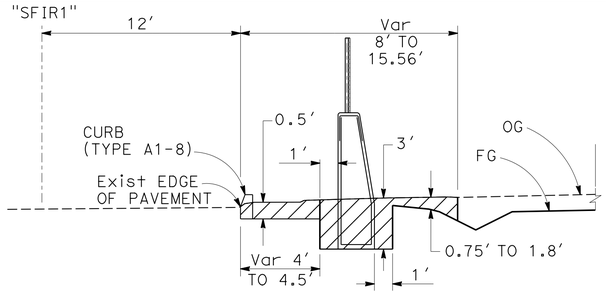

TYPICAL SECTION
"SFIR1" 12+37.57 TO 13+71.40
NO SCALE

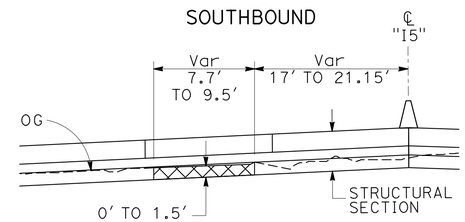

TYPICAL SECTION
"I5" 12+41 TO "I5" 13+50
NO SCALE

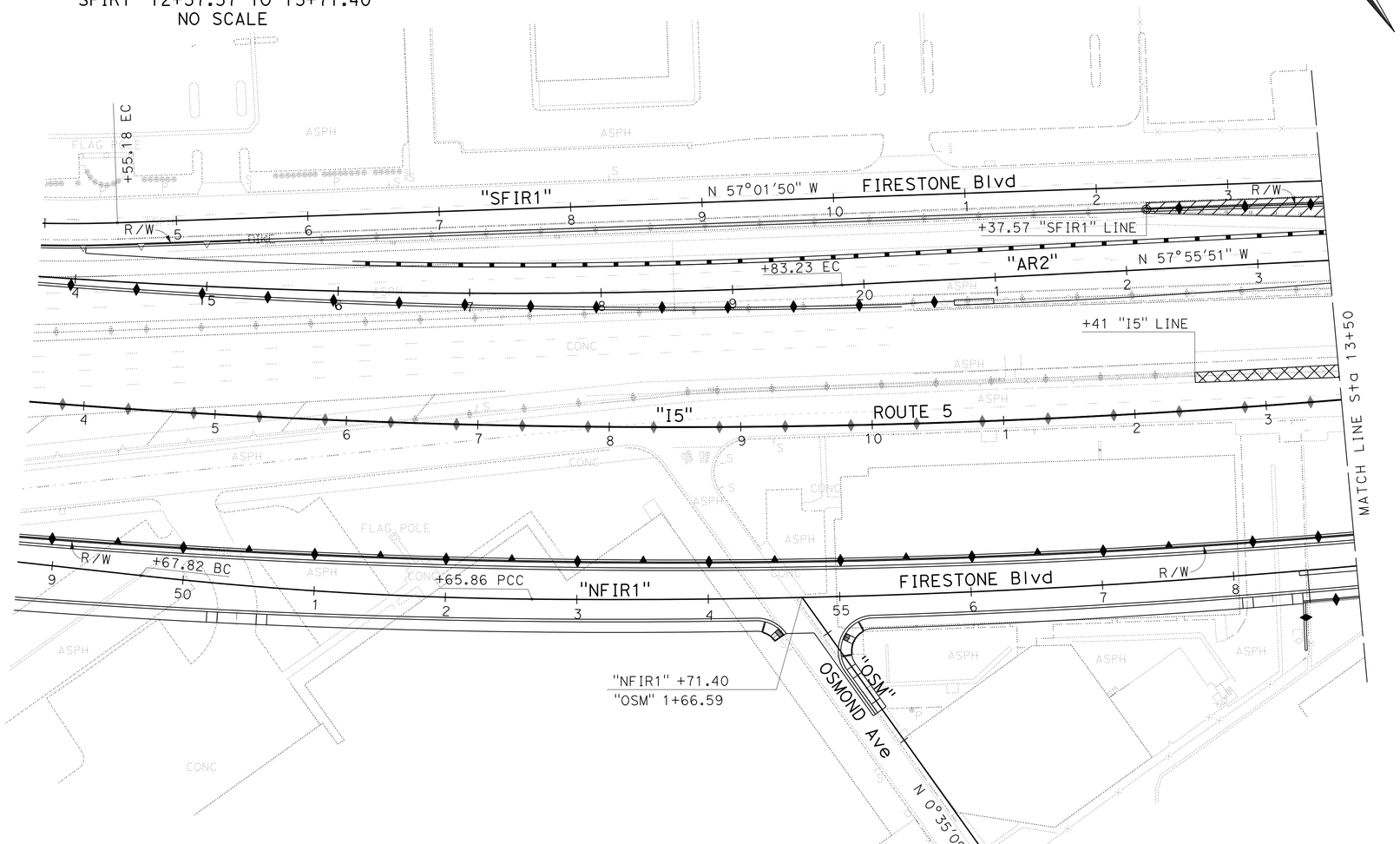

LEGEND:

- ROADWAY EXCAVATION (TYPE Y-1)
- ROADWAY EXCAVATION (TYPE Y-2)
- ROADWAY EMBANKMENT (TYPE Y-1 AND Y-2)
- SEE STRUCTURE PLAN

CONSTRUCTION DETAILS

AERIALLY DEPOSITED LEAD

SCALE: 1" = 50'

C-43

STATE OF CALIFORNIA - DEPARTMENT OF TRANSPORTATION
Caltrans® DESIGN
FUNCTIONAL SUPERVISOR: RICHARD CHIANG
CALCULATED-DESIGNED BY: TRIEU NGUYEN
CHECKED BY: NGUYEN MAI
REVISED BY
DATE REVISED

LAST REVISION 00-00-00 | DATE PLOTTED => 03-FEB-2016 | TIME PLOTTED => 09:24

Dist	COUNTY	ROUTE	POST MILES TOTAL PROJECT	SHEET No.	TOTAL SHEETS
07	LA,Ora	5	0.0/1.5, 44.3/44.4	97	1622

REGISTERED CIVIL ENGINEER 4-2-14 DATE

1-25-16
PLANS APPROVAL DATE

REGISTERED PROFESSIONAL ENGINEER H.S. CHEN No. C48908 Exp. 9-30-16 CIVIL STATE OF CALIFORNIA

THE STATE OF CALIFORNIA OR ITS OFFICERS OR AGENTS SHALL NOT BE RESPONSIBLE FOR THE ACCURACY OR COMPLETENESS OF SCANNED COPIES OF THIS PLAN SHEET.

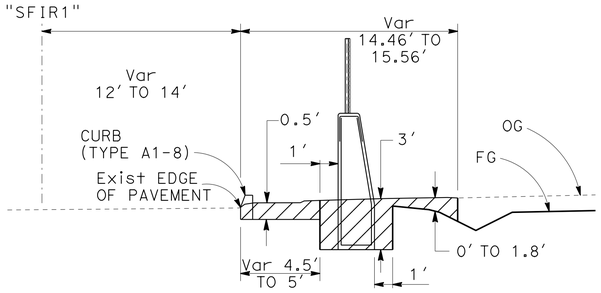

TYPICAL SECTION
"SFIR1" 13+71.40 TO 17+88
NO SCALE

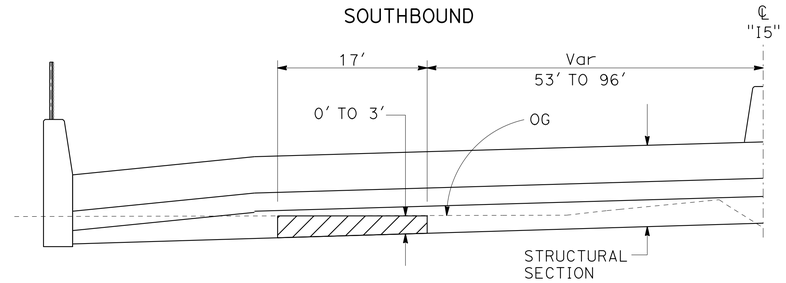

TYPICAL SECTION
"I5" 18+64 TO "I5" 23+50
NO SCALE

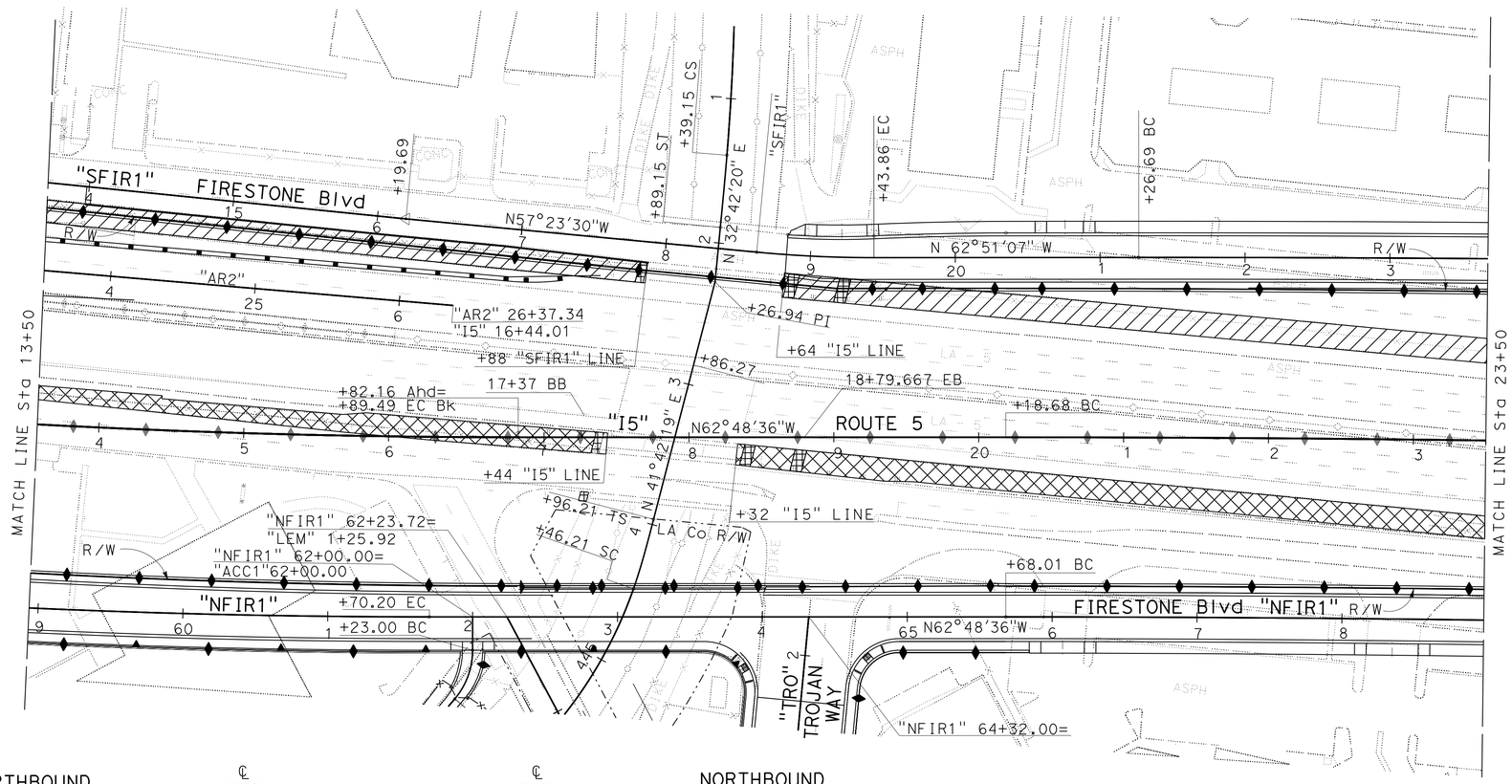

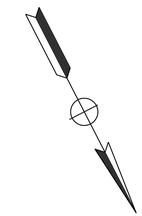

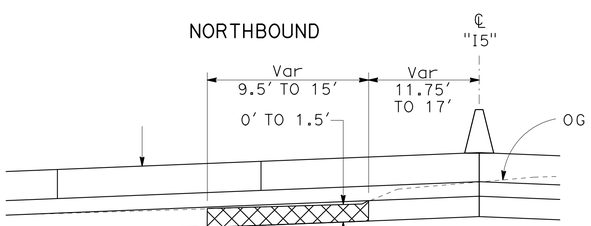

TYPICAL SECTION
"I5" 13+50 TO "I5" 17+44
NO SCALE

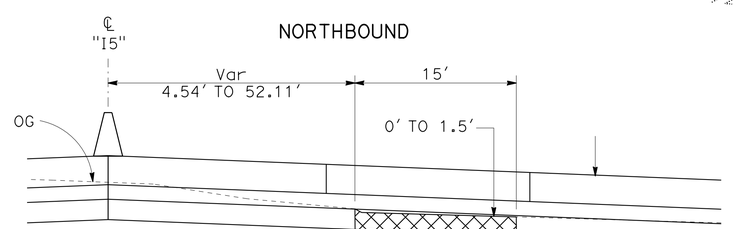

TYPICAL SECTION
"I5" 18+32 TO "I5" 23+50
NO SCALE

CONSTRUCTION DETAILS
AERIALLY DEPOSITED LEAD

SCALE: 1" = 50'

C-44

STATE OF CALIFORNIA - DEPARTMENT OF TRANSPORTATION
Caltrans® DESIGN

FUNCTIONAL SUPERVISOR: RICHARD CHIANG
CALCULATED-DESIGNED BY: TRIEU NGUYEN
CHECKED BY: NGUYEN MAI
REVISED BY / DATE REVISED

LAST REVISION 00-00-00 | DATE PLOTTED => 03-FEB-2016 | TIME PLOTTED => 09:24

Dist	COUNTY	ROUTE	POST MILES TOTAL PROJECT	SHEET No.	TOTAL SHEETS
07	LA,Ora	5	0.0/1.5, 44.3/44.4	98	1622

REGISTERED CIVIL ENGINEER 4-2-14 DATE

1-25-16
PLANS APPROVAL DATE

REGISTERED PROFESSIONAL ENGINEER H.S. CHEN No. C48908 Exp. 9-30-16 CIVIL STATE OF CALIFORNIA

THE STATE OF CALIFORNIA OR ITS OFFICERS OR AGENTS SHALL NOT BE RESPONSIBLE FOR THE ACCURACY OR COMPLETENESS OF SCANNED COPIES OF THIS PLAN SHEET.

SOUTHBOUND

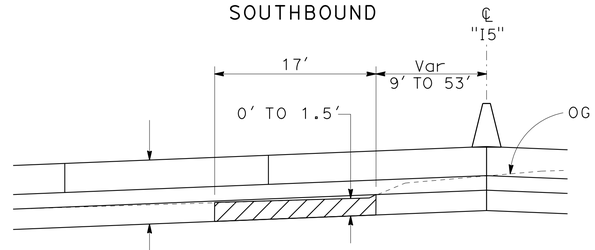

TYPICAL SECTION
"I5" 23+50 TO "I5" 33+50
NO SCALE

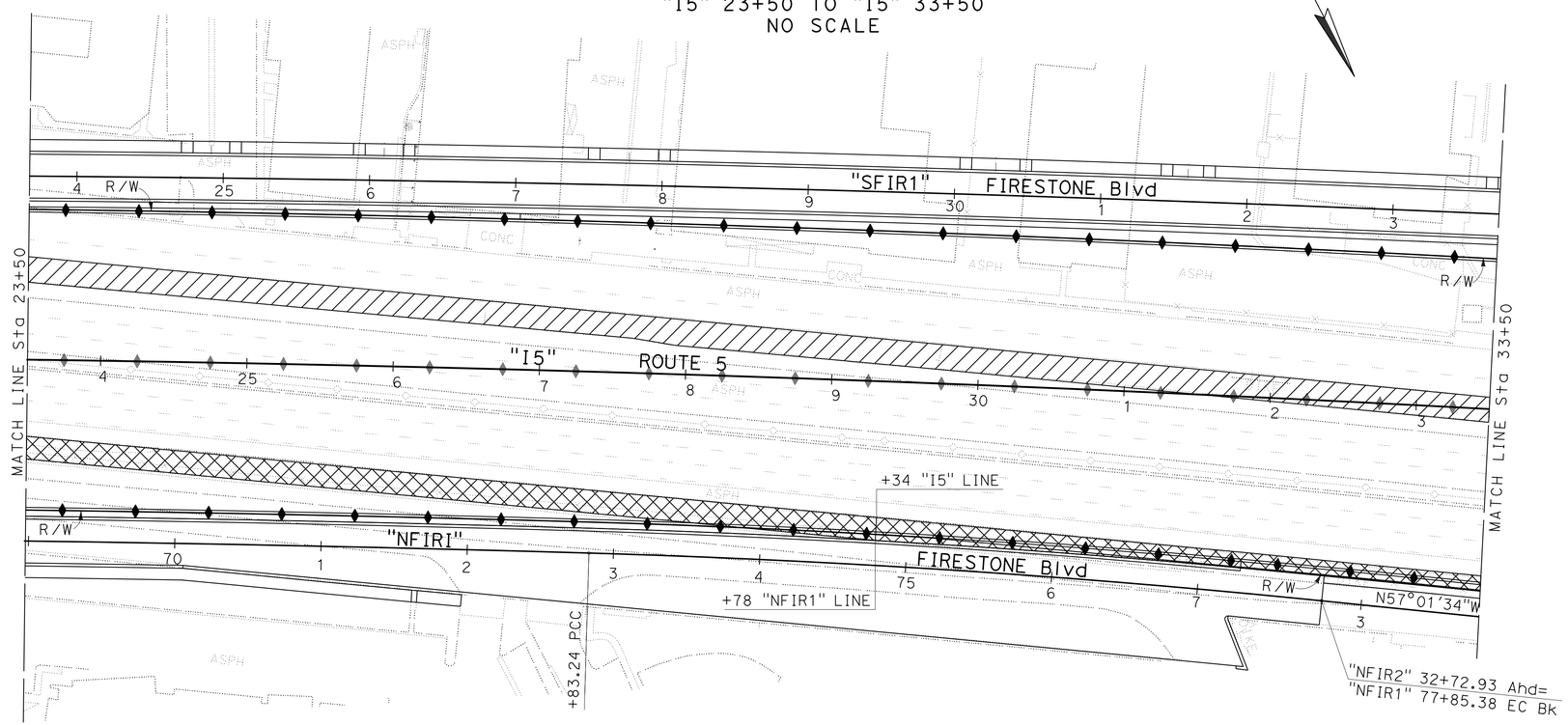

NORTHBOUND

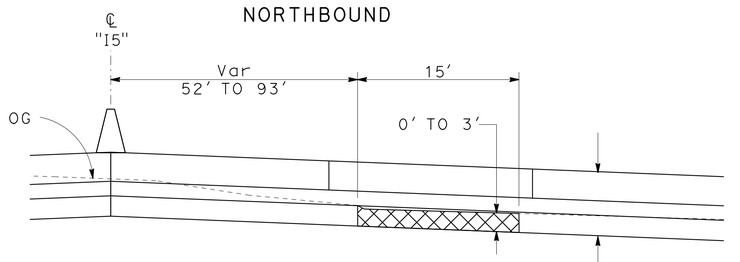

TYPICAL SECTION
"I5" 23+50 TO "I5" 29+34
NO SCALE

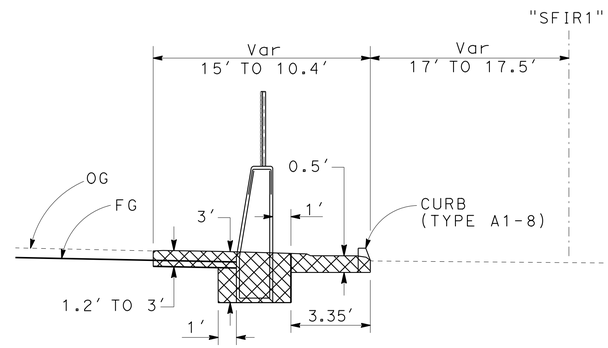

TYPICAL SECTION
"NFIR1" 74+78 TO "NFIR2" 33+80
NO SCALE

CONSTRUCTION DETAILS

AERIALLY DEPOSITED LEAD

SCALE: 1" = 50'

C-45

REVISED BY	DATE REVISED
TRIEU NGUYEN	NGUYEN MAI
CALCULATED-DESIGNED BY	CHECKED BY
FUNCTIONAL SUPERVISOR	RICHARD CHIANG

STATE OF CALIFORNIA - DEPARTMENT OF TRANSPORTATION
Caltrans® DESIGN

LAST REVISION 00-00-00 | DATE PLOTTED => 03-FEB-2016 | TIME PLOTTED => 09:24

Dist	COUNTY	ROUTE	POST MILES TOTAL PROJECT	SHEET No.	TOTAL SHEETS
07	LA,Ora	5	0.0/1.5, 44.3/44.4	99	1622

H S Chen 4-2-14
REGISTERED CIVIL ENGINEER DATE

1-25-16
PLANS APPROVAL DATE

REGISTERED PROFESSIONAL ENGINEER H.S. CHEN No. C48908 Exp. 9-30-16 CIVIL STATE OF CALIFORNIA

THE STATE OF CALIFORNIA OR ITS OFFICERS OR AGENTS SHALL NOT BE RESPONSIBLE FOR THE ACCURACY OR COMPLETENESS OF SCANNED COPIES OF THIS PLAN SHEET.

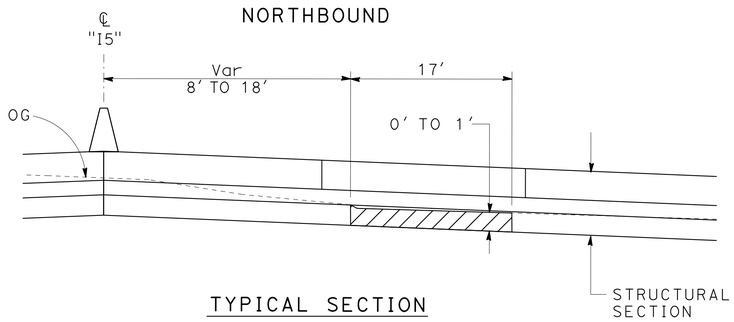

TYPICAL SECTION
"I5" 33+50 TO "I5" 43+50
NO SCALE

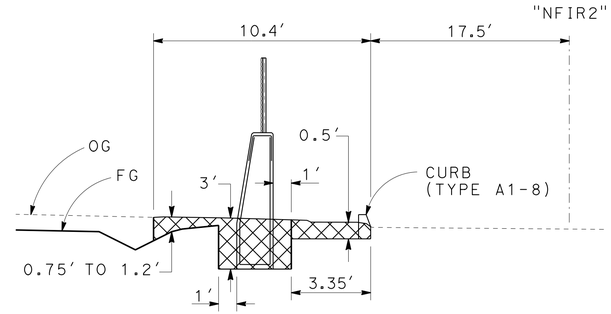

TYPICAL SECTION
"NFIR2" 33+80 TO 43+74
NO SCALE

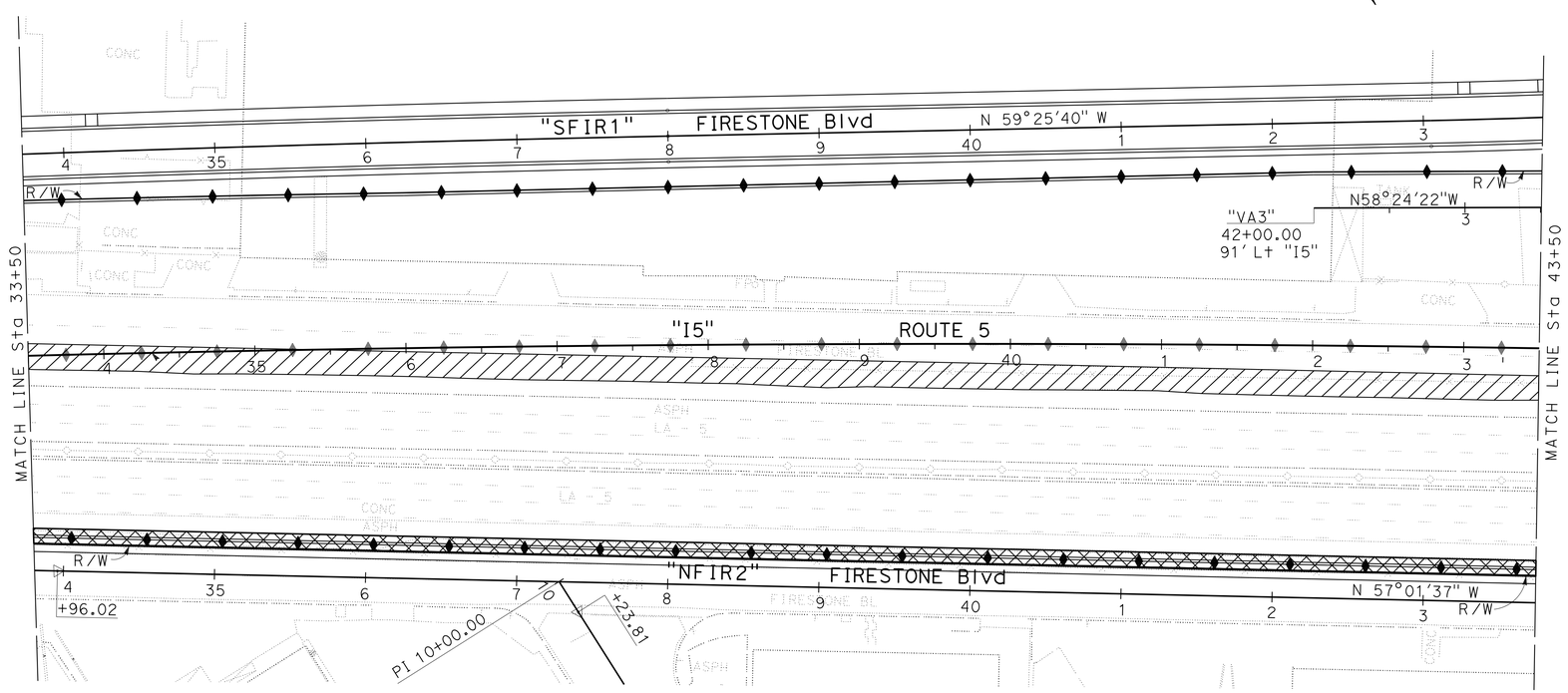

CONSTRUCTION DETAILS
AERIALLY DEPOSITED LEAD
SCALE: 1" = 50'

C-46

STATE OF CALIFORNIA - DEPARTMENT OF TRANSPORTATION
Caltrans
DESIGN

FUNCTIONAL SUPERVISOR: RICHARD CHIANG
CALCULATED-DESIGNED BY: TRIEU NGUYEN
CHECKED BY: NGUYEN MAI
REVISED BY
DATE REVISED

LAST REVISION 00-00-00
DATE PLOTTED => 03-FEB-2016
TIME PLOTTED => 09:24

Dist	COUNTY	ROUTE	POST MILES TOTAL PROJECT	SHEET No.	TOTAL SHEETS
07	LA,Ora	5	0.0/1.5, 44.3/44.4	100	1622

REGISTERED CIVIL ENGINEER 4-2-14 DATE

1-25-16
PLANS APPROVAL DATE

REGISTERED PROFESSIONAL ENGINEER H.S. CHEN No. C48908 Exp. 9-30-16 CIVIL STATE OF CALIFORNIA

THE STATE OF CALIFORNIA OR ITS OFFICERS OR AGENTS SHALL NOT BE RESPONSIBLE FOR THE ACCURACY OR COMPLETENESS OF SCANNED COPIES OF THIS PLAN SHEET.

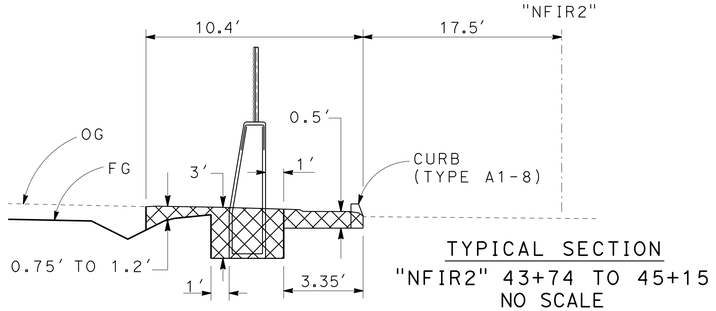

TYPICAL SECTION
"NFIR2" 43+74 TO 45+15
NO SCALE

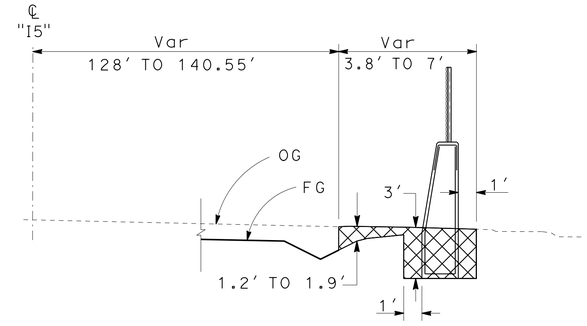

TYPICAL SECTION
"I5" 44+92 TO 52+96
NO SCALE

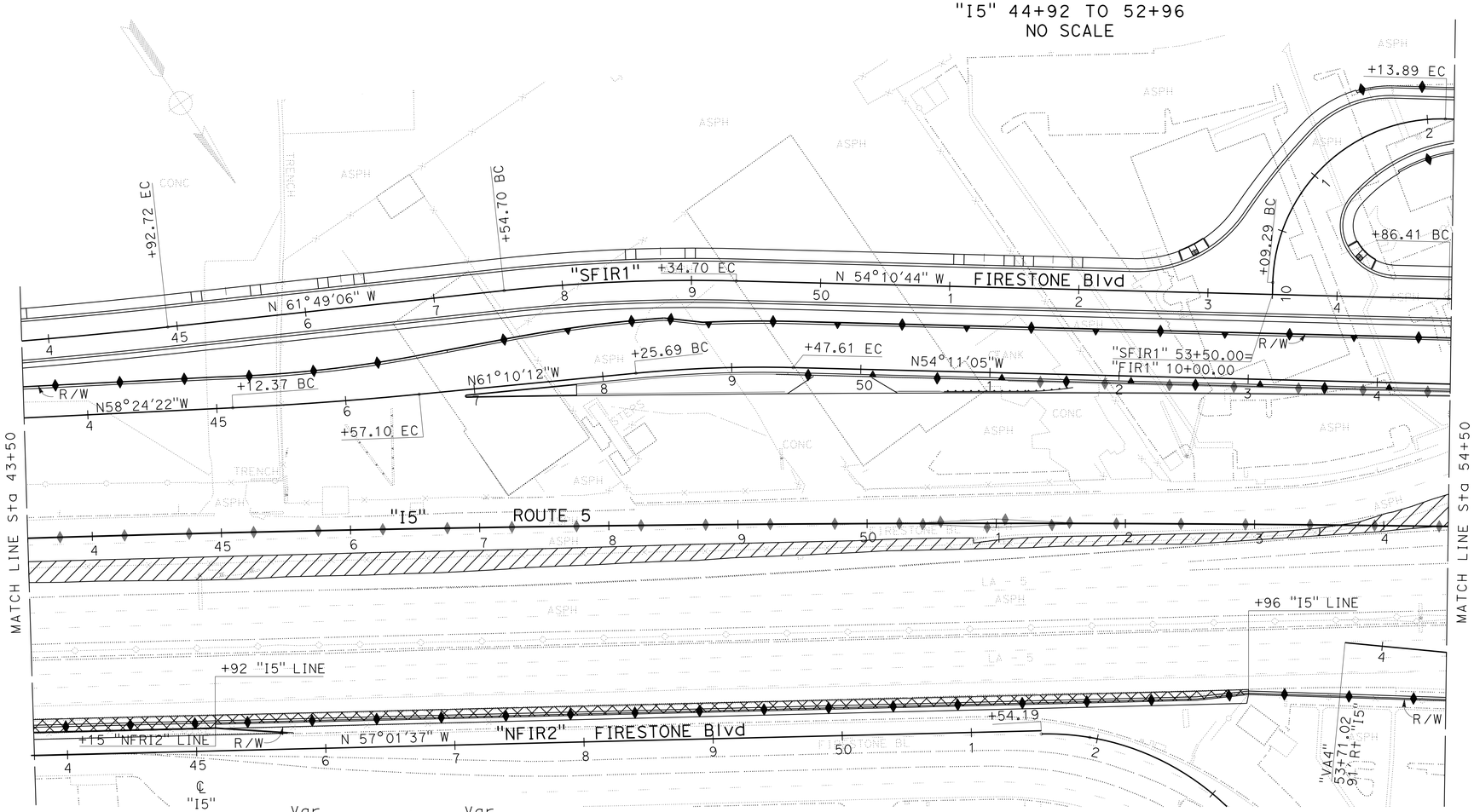

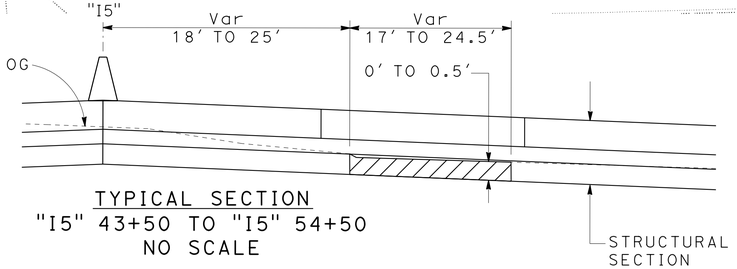

TYPICAL SECTION
"I5" 43+50 TO "I5" 54+50
NO SCALE

CONSTRUCTION DETAILS

AERIALLY DEPOSITED LEAD

SCALE: 1" = 50′

C-47

REVISED BY	DATE REVISED

CALCULATED-DESIGNED BY	TRIEU NGUYEN
CHECKED BY	NGUYEN MAI
FUNCTIONAL SUPERVISOR	RICHARD CHIANG

STATE OF CALIFORNIA - DEPARTMENT OF TRANSPORTATION
Caltrans
DESIGN

LAST REVISION 00-00-00 | DATE PLOTTED => 03-FEB-2016 | TIME PLOTTED => 09:24