Dist	COUNTY	ROUTE	KILOMETER POST TOTAL PROJECT	SHEET No.	TOTAL SHEETS
07	LA	5	2.9/4.9	101	1082

REGISTERED CIVIL ENGINEER 12-23-09 DATE

6-21-10
PLANS APPROVAL DATE

REGISTERED PROFESSIONAL ENGINEER NGIM NANCY PE No. 58161 Exp. 6-30-10 CIVIL STATE OF CALIFORNIA

THE STATE OF CALIFORNIA OR ITS OFFICERS OR AGENTS SHALL NOT BE RESPONSIBLE FOR THE ACCURACY OR COMPLETENESS OF ELECTRONIC COPIES OF THIS PLAN SHEET.

Caltrans Metric

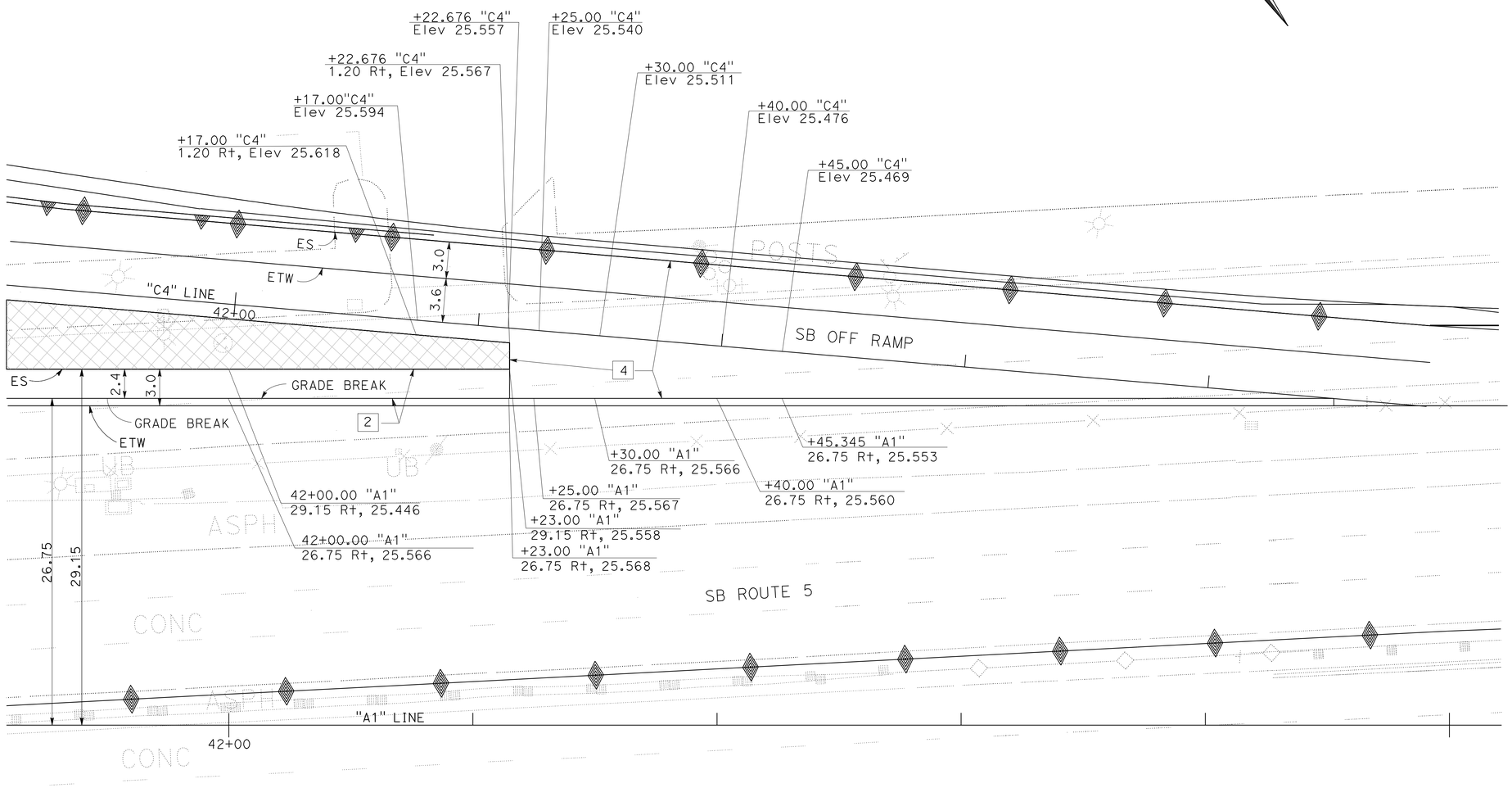

SB OFF RAMP GORE AREA

ALL DIMENSION ARE IN
METERS UNLESS OTHERWISE SHOWN

CONSTRUCTION DETAILS

SCALE 1:200

C-42

REVISED BY	DATE REVISED
NGIM NANCY PE	NGIM NANCY PE

CALCULATED-DESIGNED BY / CHECKED BY

FUNCTIONAL SUPERVISOR: NGIM NANCY PE

STATE OF CALIFORNIA - DEPARTMENT OF TRANSPORTATION
Caltrans OFFICE OF DESIGN A

LAST REVISION 00-00-00 | DATE PLOTTED => 29-JUN-2010 | TIME PLOTTED => 09:06

Dist	COUNTY	ROUTE	KILOMETER POST TOTAL PROJECT	SHEET No.	TOTAL SHEETS
07	LA	5	2.9/4.9	102	1082

Caltrans Metric

REGISTERED CIVIL ENGINEER 12-23-09 DATE

6-21-10
PLANS APPROVAL DATE

REGISTERED PROFESSIONAL ENGINEER NGIM NANCY PE No. 58161 Exp. 6-30-10 CIVIL STATE OF CALIFORNIA

THE STATE OF CALIFORNIA OR ITS OFFICERS OR AGENTS SHALL NOT BE RESPONSIBLE FOR THE ACCURACY OR COMPLETENESS OF ELECTRONIC COPIES OF THIS PLAN SHEET.

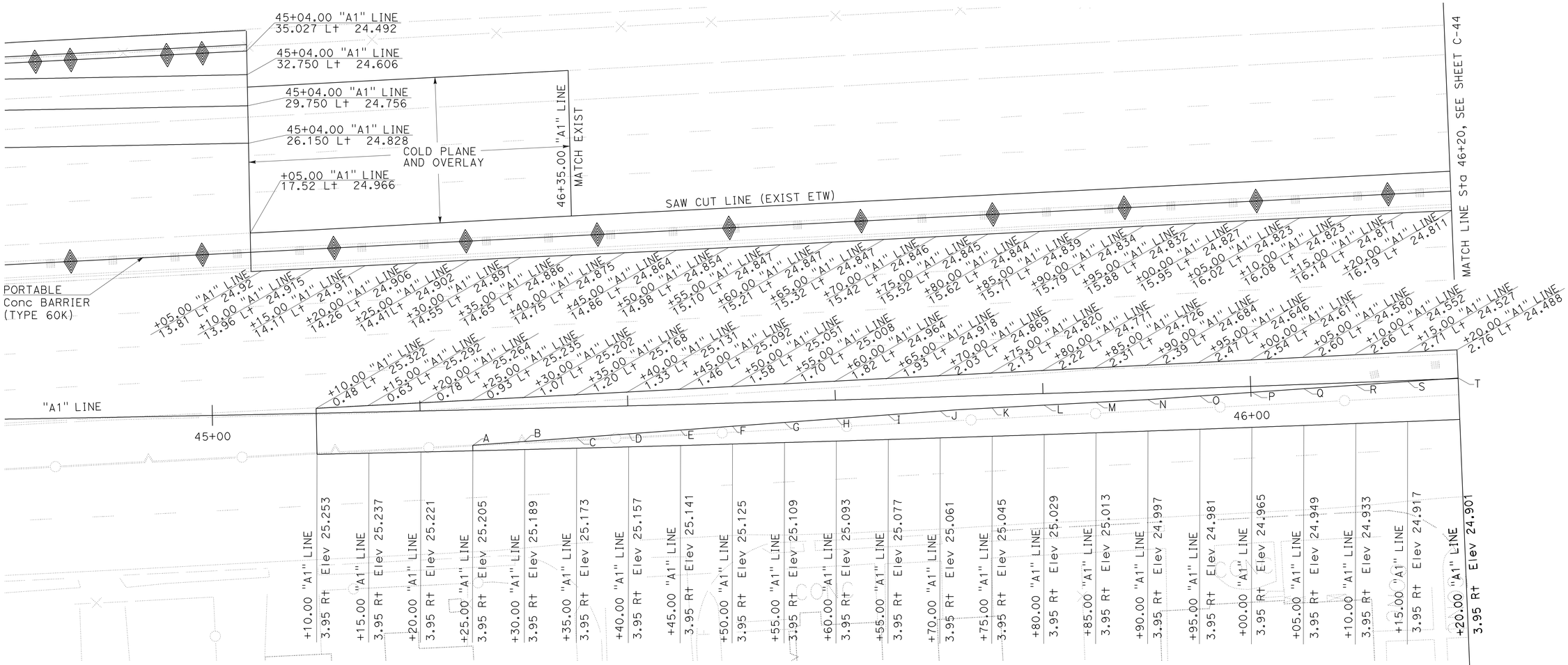

	"A1" LINE STATION	OFFSET Rt "A1" LINE	ELEVATION
A	45+25.00	3.415	25.194
B	45+30.00	3.171	25.196
C	45+35.00	2.931	25.178
D	45+40.00	2.695	25.157
E	45+45.00	2.464	25.132
F	45+50.00	2.236	25.103
G	45+55.00	2.013	25.048
H	45+60.00	1.794	24.987
I	45+65.00	1.580	24.930
J	45+70.00	1.369	24.869

	"A1" LINE STATION	OFFSET Rt "A1" LINE	ELEVATION
K	45+75.00	1.226	24.818
L	45+80.00	1.120	24.749
M	45+85.00	1.019	24.696
N	45+90.00	0.922	24.651
O	45+95.00	0.750	24.596
P	46+00.00	0.582	24.563
Q	46+05.00	0.419	24.526
R	46+10.00	0.259	24.490
S	46+15.00	0.104	24.465
T	46+20.00	0.047	24.423

ALL DIMEMSION ARE IN METERS UNLESS OTHERWISE SHOWN

CONSTRUCTION DETAILS

SCALE 1:200

C-43

REVISED BY | DATE REVISED

KEVIN Q NGUYEN | NGIM NANCY PE

CALCULATED-DESIGNED BY | CHECKED BY

FUNCTIONAL SUPERVISOR | NGIM NANCY PE

STATE OF CALIFORNIA - DEPARTMENT OF TRANSPORTATION
Caltrans OFFICE OF DESIGN A

LAST REVISION 00-00-00 | DATE PLOTTED => 22-JUN-2010 | TIME PLOTTED => 13:26

Dist	COUNTY	ROUTE	KILOMETER POST TOTAL PROJECT	SHEET No.	TOTAL SHEETS
07	LA	5	2.9/4.9	103	1082

REGISTERED CIVIL ENGINEER 12-23-09 DATE

6-21-10
PLANS APPROVAL DATE

REGISTERED PROFESSIONAL ENGINEER NGIM NANCY PE No. 58161 Exp. 6-30-10 CIVIL STATE OF CALIFORNIA

THE STATE OF CALIFORNIA OR ITS OFFICERS OR AGENTS SHALL NOT BE RESPONSIBLE FOR THE ACCURACY OR COMPLETENESS OF ELECTRONIC COPIES OF THIS PLAN SHEET.

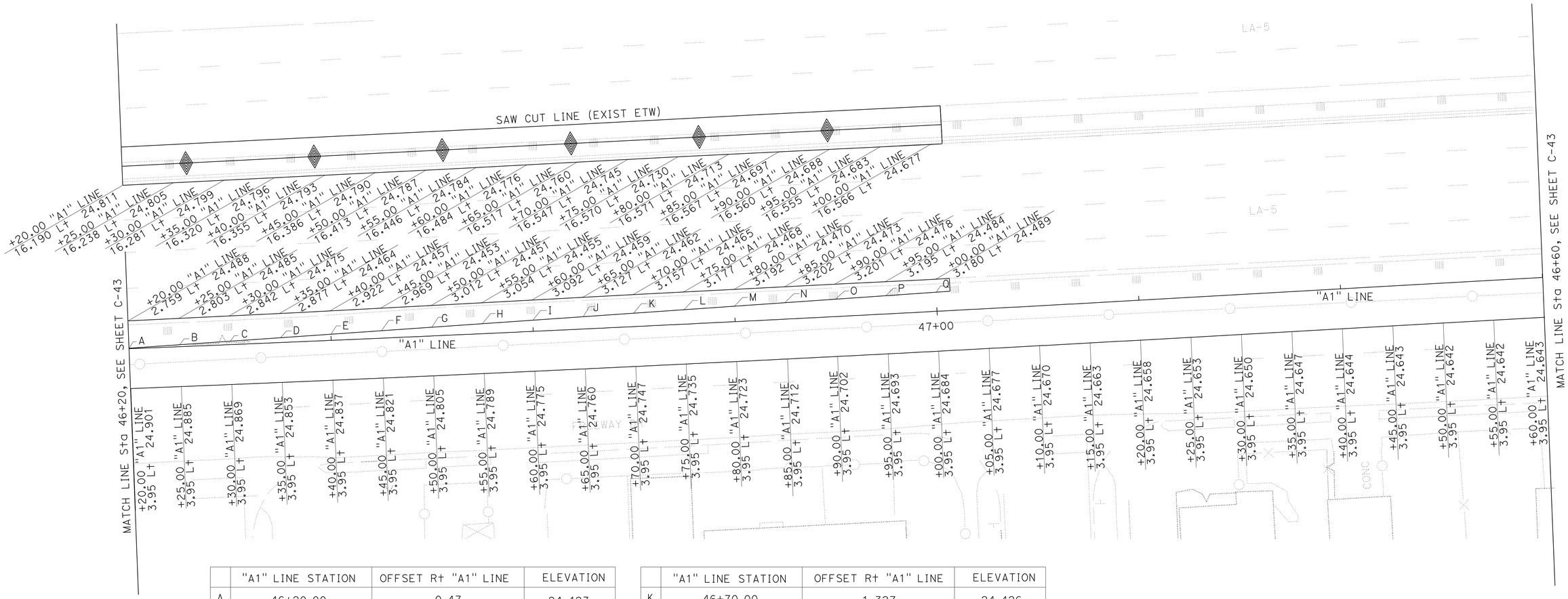

	"A1" LINE STATION	OFFSET R† "A1" LINE	ELEVATION
A	46+20.00	0.47	24.423
B	46+25.00	0.194	24.423
C	46+30.00	0.336	24.414
D	46+35.00	0.475	24.405
E	46+40.00	0.609	24.399
F	46+45.00	0.739	24.397
G	46+50.00	0.865	24.397
H	46+55.00	0.987	24.405
I	46+60.00	1.105	24.412
J	45+65.00	1.218	24.419

	"A1" LINE STATION	OFFSET R† "A1" LINE	ELEVATION
K	46+70.00	1.327	24.426
L	46+75.00	1.433	24.433
M	46+80.00	1.534	24.440
N	46+85.00	1.630	24.447
O	46+90.00	1.723	24.455
P	46+95.00	1.811	24.463
Q	47+00.00	1.896	24.471

ALL DIMEMSION ARE IN METERS UNLESS OTHERWISE SHOWN

CONSTRUCTION DETAILS

SCALE 1:200

C-44

STATE OF CALIFORNIA - DEPARTMENT OF TRANSPORTATION
Caltrans OFFICE OF DESIGN A

FUNCTIONAL SUPERVISOR: NGIM NANCY PE

CALCULATED-DESIGNED BY: KEVIN Q NGUYEN
CHECKED BY: NGIM NANCY PE

REVISED BY
DATE REVISED

LAST REVISION 00-00-00
DATE PLOTTED => 22-JUN-2010
TIME PLOTTED => 13:27

Dist	COUNTY	ROUTE	KILOMETER POST TOTAL PROJECT	SHEET No.	TOTAL SHEETS
07	LA	5	2.9/4.9	104	1082

Ngim N. Pe 12-23-09
REGISTERED CIVIL ENGINEER DATE

6-21-10
PLANS APPROVAL DATE

REGISTERED PROFESSIONAL ENGINEER
NGIM NANCY PE
No. 58161
Exp. 6-30-10
CIVIL
STATE OF CALIFORNIA

THE STATE OF CALIFORNIA OR ITS OFFICERS OR AGENTS SHALL NOT BE RESPONSIBLE FOR THE ACCURACY OR COMPLETENESS OF ELECTRONIC COPIES OF THIS PLAN SHEET.

Caltrans Metric

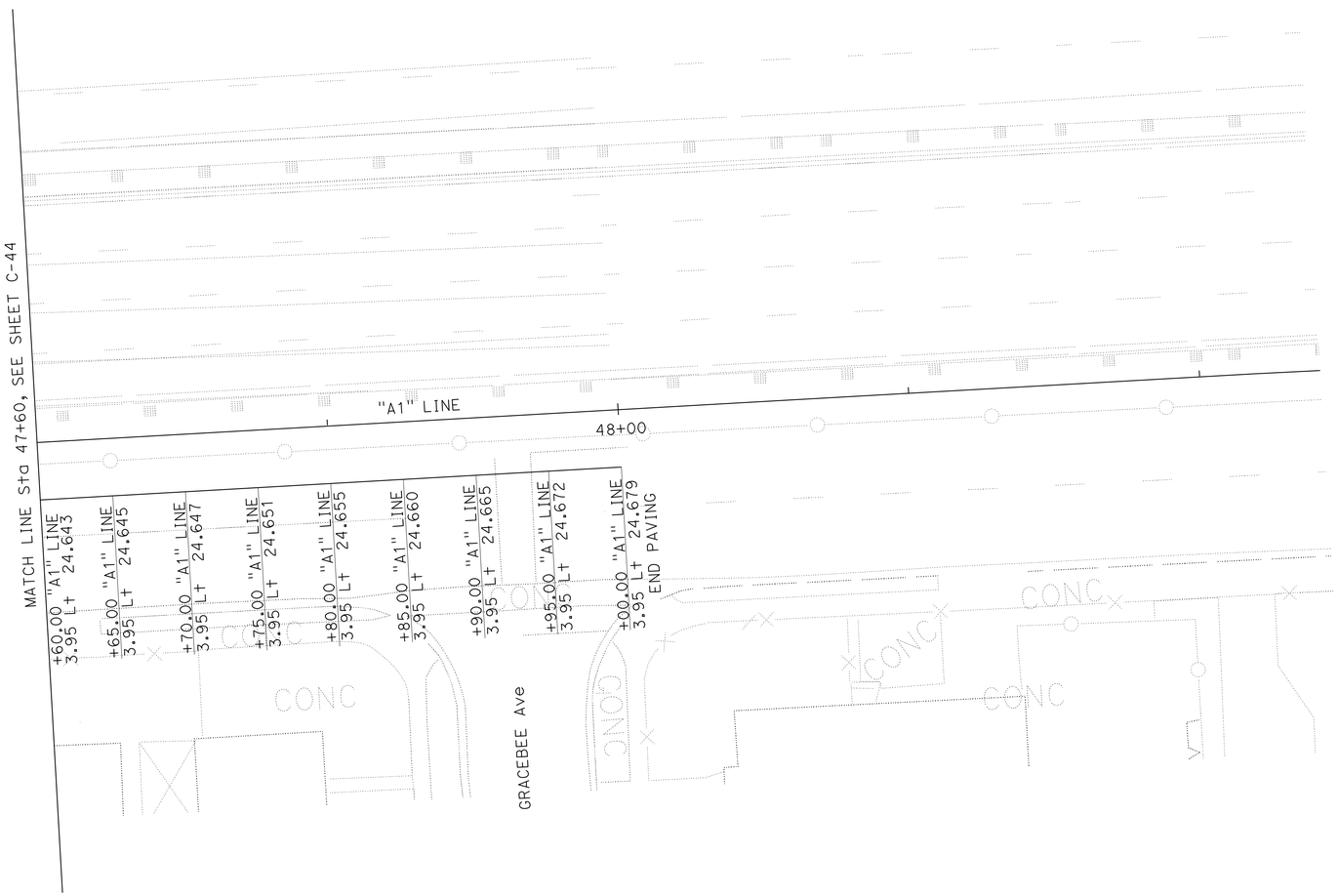

ALL DIMEMSION ARE IN METERS UNLESS OTHERWISE SHOWN

CONSTRUCTION DETAILS

SCALE 1:200

C-45

STATE OF CALIFORNIA - DEPARTMENT OF TRANSPORTATION
Caltrans OFFICE OF DESIGN A

FUNCTIONAL SUPERVISOR: NGIM NANCY PE
CALCULATED-DESIGNED BY: KEVIN Q NGUYEN
CHECKED BY: NGIM NANCY PE
REVISED BY
DATE REVISED

LAST REVISION 00-00-00
DATE PLOTTED => 22-JUN-2010
TIME PLOTTED => 13:27

Dist	COUNTY	ROUTE	KILOMETER POST TOTAL PROJECT	SHEET No.	TOTAL SHEETS
07	LA	5	2.9/4.9	105	1082

REGISTERED CIVIL ENGINEER 12-23-09 DATE

6-21-10
PLANS APPROVAL DATE

REGISTERED PROFESSIONAL ENGINEER NGIM NANCY PE No. 58161 Exp. 6-30-10 CIVIL STATE OF CALIFORNIA

THE STATE OF CALIFORNIA OR ITS OFFICERS OR AGENTS SHALL NOT BE RESPONSIBLE FOR THE ACCURACY OR COMPLETENESS OF ELECTRONIC COPIES OF THIS PLAN SHEET.

Caltrans Metric

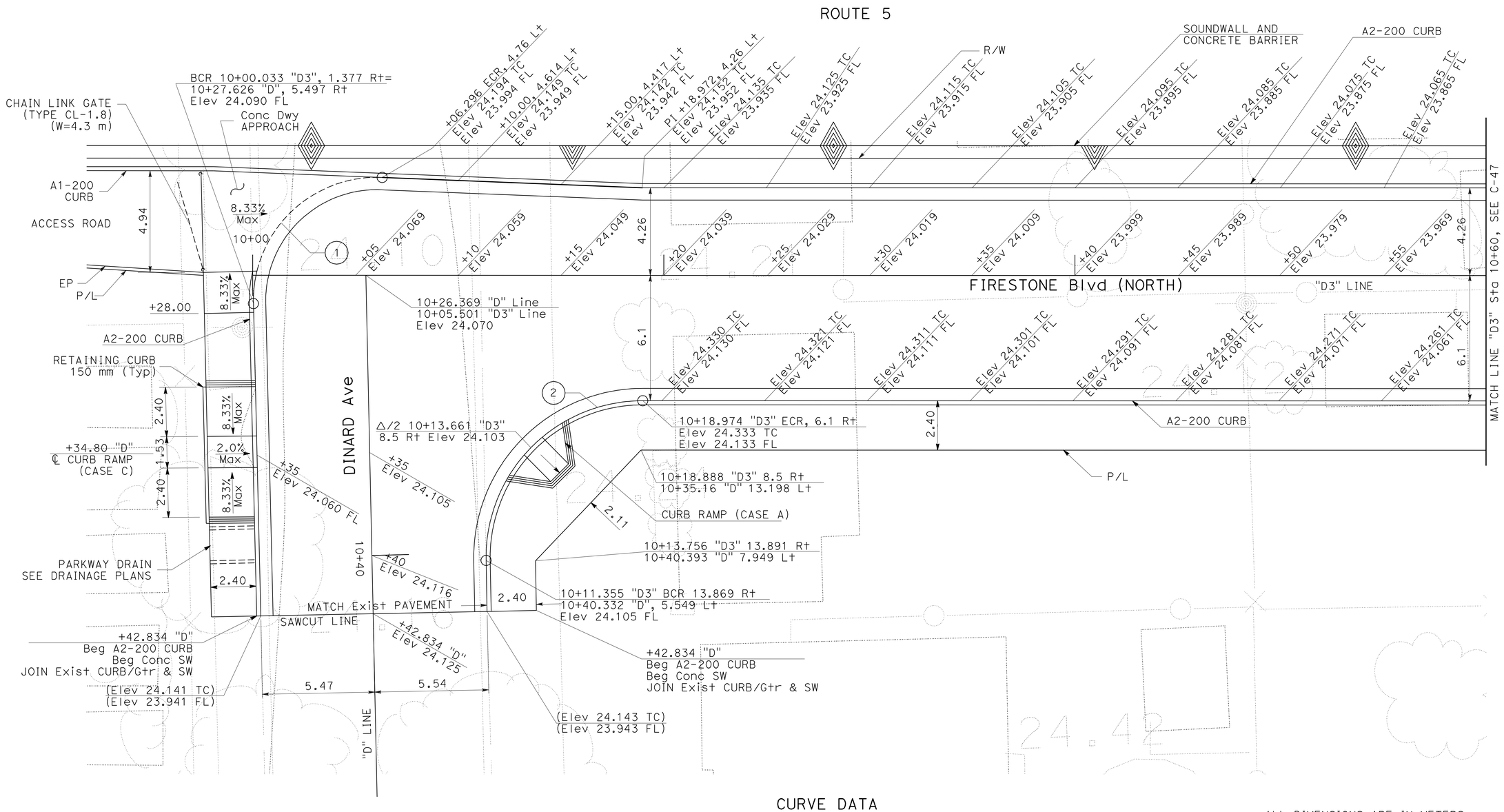

CURVE DATA

No.	R	Δ	T	L
1	6.00	93°53'40"	6.42	9.83
2	7.62	91°7'18"	7.77	12.12

ALL DIMENSIONS ARE IN METERS UNLESS OTHERWISE SHOWN

CONSTRUCTION DETAILS

SCALE 1:100

C-46

REVISED BY	DATE REVISED
WC	5/09

CALCULATED-DESIGNED BY: WILL CARPIO
CHECKED BY: NANCY PE
FUNCTIONAL SUPERVISOR: NGIM NANCY PE

STATE OF CALIFORNIA - DEPARTMENT OF TRANSPORTATION
Caltrans OFFICE OF DESIGN A

S:\projects\2159C1\72159cga046.dgn

LAST REVISION 00-00-00
DATE PLOTTED => 23-JUN-2010
TIME PLOTTED => 10:17

Dist	COUNTY	ROUTE	KILOMETER POST TOTAL PROJECT	SHEET No.	TOTAL SHEETS
07	LA	5	2.9/4.9	106	1082

REGISTERED CIVIL ENGINEER 12-23-09 DATE

6-21-10
PLANS APPROVAL DATE

REGISTERED PROFESSIONAL ENGINEER NGIM NANCY PE No. 58161 Exp. 6-30-10 CIVIL STATE OF CALIFORNIA

THE STATE OF CALIFORNIA OR ITS OFFICERS OR AGENTS SHALL NOT BE RESPONSIBLE FOR THE ACCURACY OR COMPLETENESS OF ELECTRONIC COPIES OF THIS PLAN SHEET.

Caltrans Metric

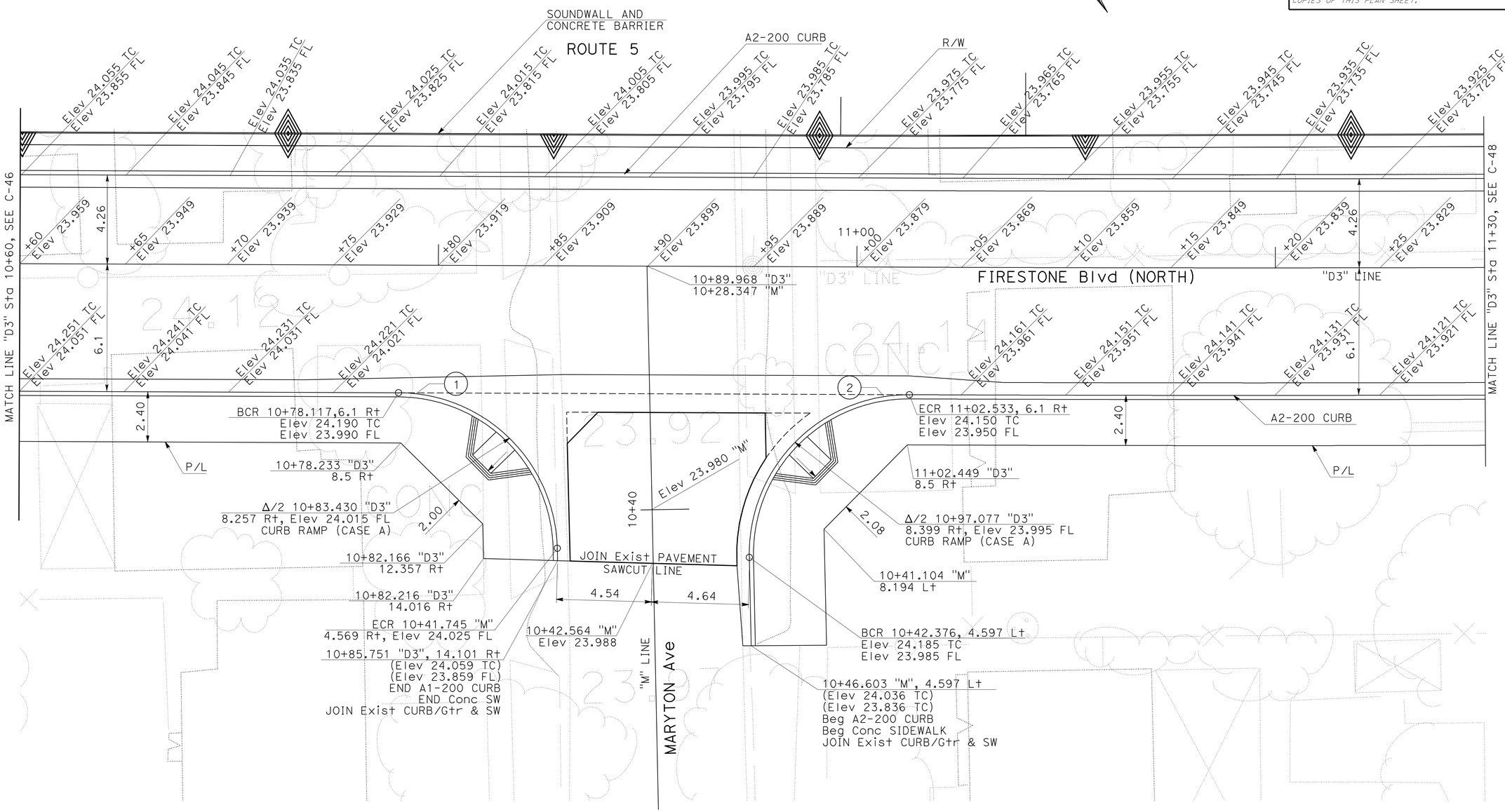

CURVE DATA

No.	R	Δ	T	L
1	7.62	88°24′18″	7.41	11.76
2	7.62	91°26′34″	7.81	12.16

ALL DIMENSIONS ARE IN METERS
UNLESS OTHERWISE SHOWN

CONSTRUCTION DETAILS

SCALE 1:100

C-47

WILL CARPIO	REVISED BY	WC
NANCY PE	DATE REVISED	5/09
CALCULATED-DESIGNED BY		
CHECKED BY		
FUNCTIONAL SUPERVISOR		
NGIM NANCY PE		

STATE OF CALIFORNIA - DEPARTMENT OF TRANSPORTATION
Caltrans OFFICE OF DESIGN A

S:\projects\2159C1\72159cga047.dgn

LAST REVISION 00-00-00 DATE PLOTTED => 23-JUN-2010 TIME PLOTTED => 10:17

Dist	COUNTY	ROUTE	KILOMETER POST TOTAL PROJECT	SHEET No.	TOTAL SHEETS
07	LA	5	2.9/4.9	107	1082

REGISTERED CIVIL ENGINEER 12-23-09 DATE

6-21-10
PLANS APPROVAL DATE

REGISTERED PROFESSIONAL ENGINEER NGIM NANCY PE No. 58161 Exp. 6-30-10 CIVIL STATE OF CALIFORNIA

THE STATE OF CALIFORNIA OR ITS OFFICERS OR AGENTS SHALL NOT BE RESPONSIBLE FOR THE ACCURACY OR COMPLETENESS OF ELECTRONIC COPIES OF THIS PLAN SHEET.

Caltrans Metric

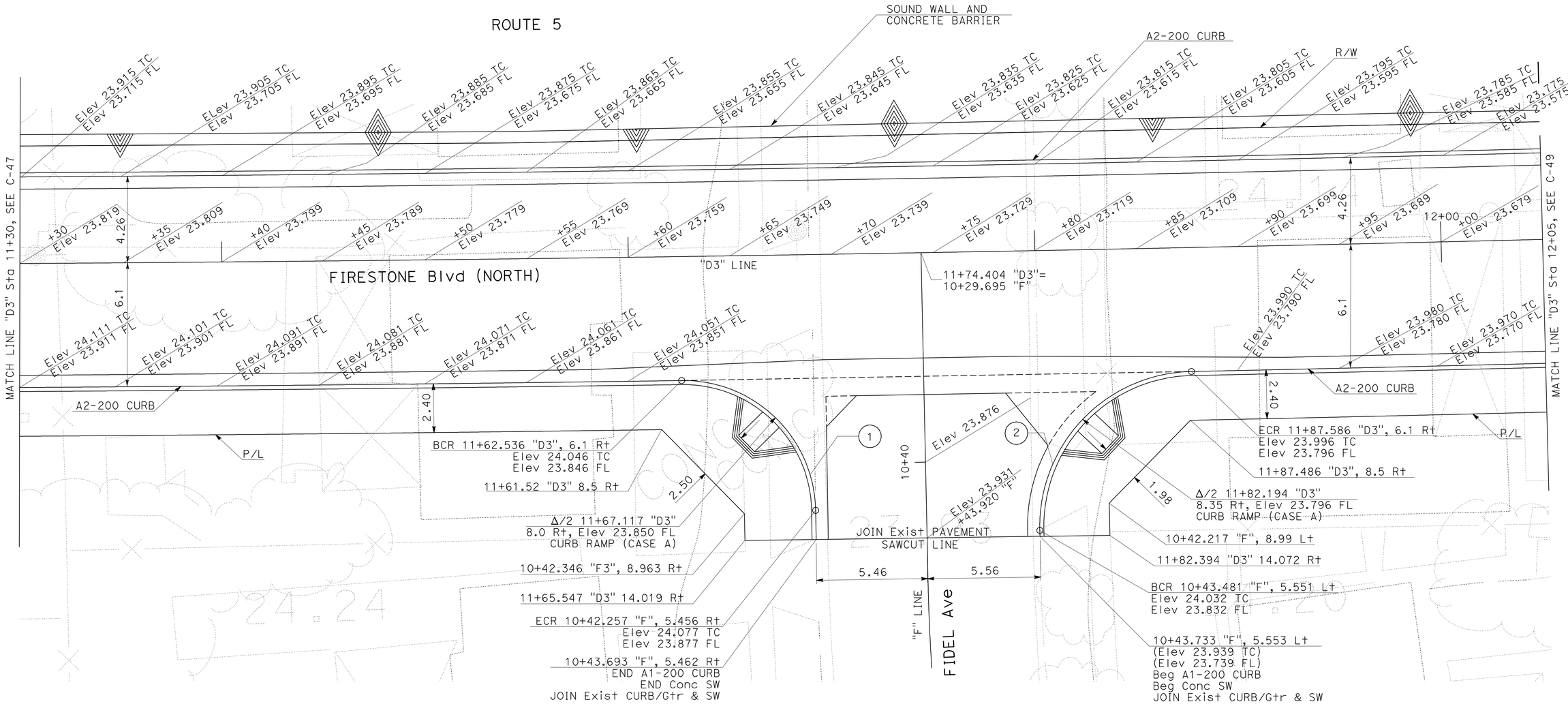

CURVE DATA

No.	R	Δ	T	L
1	6.50	89°50'25"	6.48	10.19
2	7.62	90°18'50"	7.66	12.01

ALL DIMENSIONS ARE IN METERS UNLESS OTHERWISE SHOWN.

CONSTRUCTION DETAILS

SCALE 1:100

C-48

WILL CARPIO	WC	REVISED BY	
NANCY PE	5/09	DATE REVISED	

CALCULATED-DESIGNED BY
CHECKED BY

FUNCTIONAL SUPERVISOR
NGIM NANCY PE

STATE OF CALIFORNIA - DEPARTMENT OF TRANSPORTATION
Caltrans OFFICE OF DESIGN A

LAST REVISION 00-00-00
DATE PLOTTED => 23-JUN-2010
TIME PLOTTED => 10:17

Dist	COUNTY	ROUTE	KILOMETER POST TOTAL PROJECT	SHEET No.	TOTAL SHEETS
07	LA	5	2.9/4.9	108	1082

REGISTERED CIVIL ENGINEER 12-23-09 DATE

6-21-10
PLANS APPROVAL DATE

REGISTERED PROFESSIONAL ENGINEER NGIM NANCY PE No. 58161 Exp. 6-30-10 CIVIL STATE OF CALIFORNIA

THE STATE OF CALIFORNIA OR ITS OFFICERS OR AGENTS SHALL NOT BE RESPONSIBLE FOR THE ACCURACY OR COMPLETENESS OF ELECTRONIC COPIES OF THIS PLAN SHEET.

Caltrans Metric

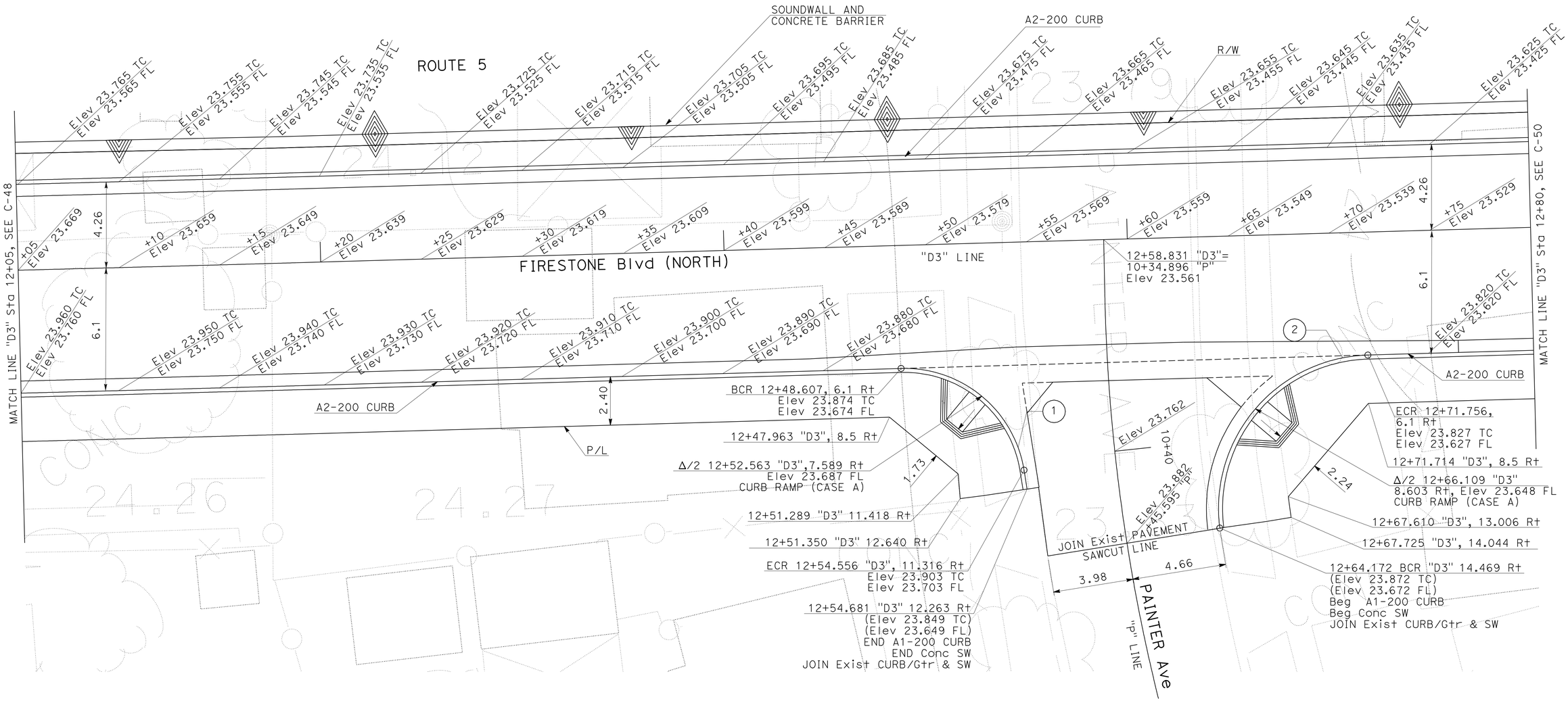

CURVE DATA

No.	R	Δ	T	L
1	6.00	82°29′23″	5.26	8.64
2	7.62	95°38′21″	8.41	12.72

ALL DIMENSIONS ARE IN METERS
UNLESS OTHERWISE SHOWN

CONSTRUCTION DETAILS

SCALE 1:100

C-49

STATE OF CALIFORNIA - DEPARTMENT OF TRANSPORTATION
Caltrans OFFICE OF DESIGN A

FUNCTIONAL SUPERVISOR: NGIM NANCY PE
CALCULATED-DESIGNED BY: WILL CARPIO
CHECKED BY: NANCY PE
REVISED BY: WC
DATE REVISED: 5/09

LAST REVISION 00-00-00 | DATE PLOTTED => 23-JUN-2010 | TIME PLOTTED => 10:17

Dist	COUNTY	ROUTE	KILOMETER POST TOTAL PROJECT	SHEET No.	TOTAL SHEETS
07	LA	5	2.9/4.9	109	1082

REGISTERED CIVIL ENGINEER 12-23-09 DATE

6-21-10
PLANS APPROVAL DATE

REGISTERED PROFESSIONAL ENGINEER NGIM NANCY PE No. 58161 Exp. 6-30-10 CIVIL STATE OF CALIFORNIA

THE STATE OF CALIFORNIA OR ITS OFFICERS OR AGENTS SHALL NOT BE RESPONSIBLE FOR THE ACCURACY OR COMPLETENESS OF ELECTRONIC COPIES OF THIS PLAN SHEET.

Caltrans Metric

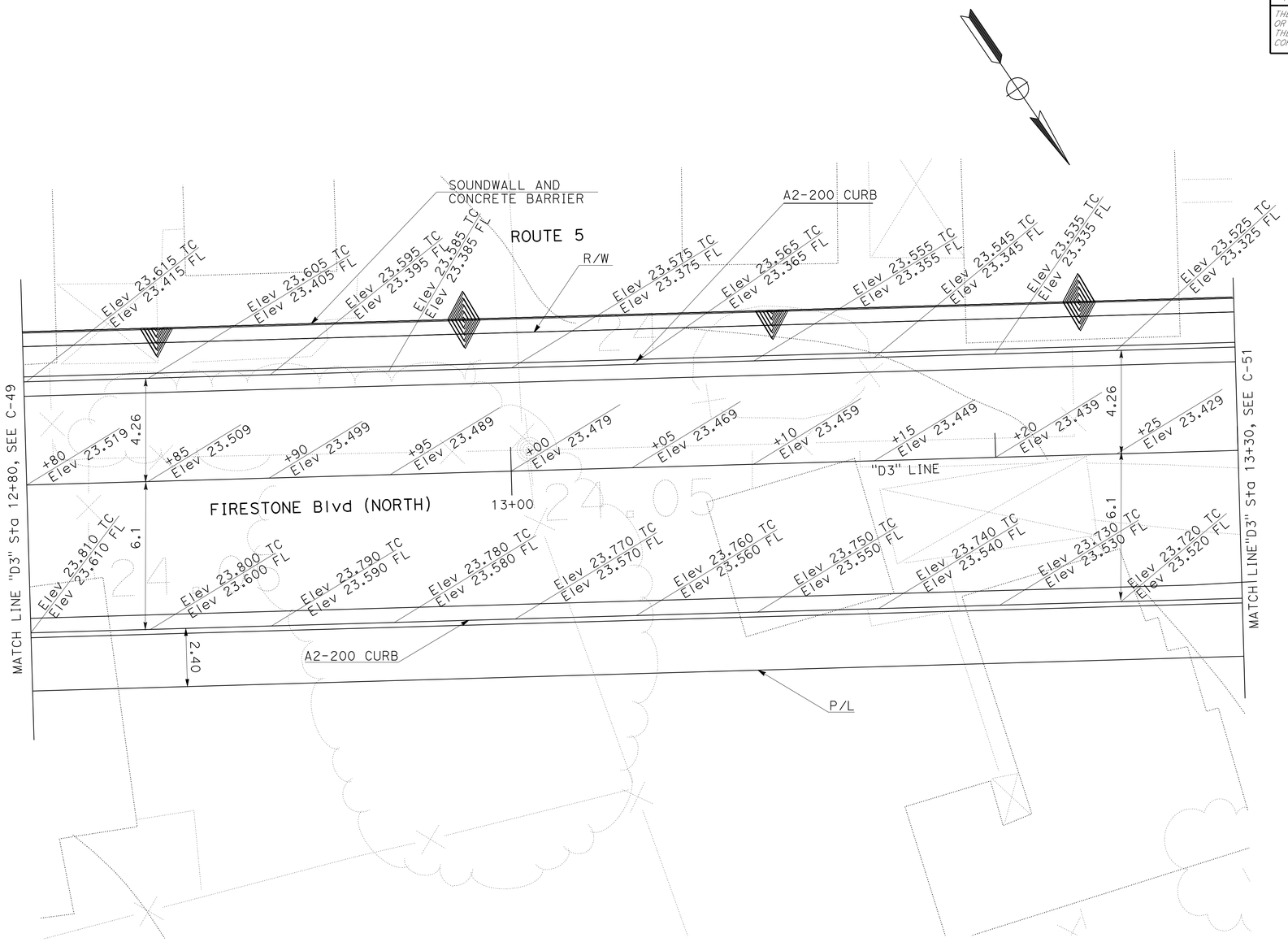

ALL DIMENSIONS ARE IN METERS
UNLESS OTHERWISE SHOWN

CONSTRUCTION DETAILS

SCALE 1:100

C-50

STATE OF CALIFORNIA - DEPARTMENT OF TRANSPORTATION
Caltrans OFFICE OF DESIGN A

FUNCTIONAL SUPERVISOR: NGIM NANCY PE
CALCULATED-DESIGNED BY: WILL CARPIO
CHECKED BY: NANCY PE
REVISED BY: WC
DATE REVISED: 5/09

LAST REVISION 00-00-00
DATE PLOTTED => 22-JUN-2010
TIME PLOTTED => 13:27

Dist	COUNTY	ROUTE	KILOMETER POST TOTAL PROJECT	SHEET No.	TOTAL SHEETS
07	LA	5	2.9/4.9	110	1082

Ngim N. Pe 12-23-09
REGISTERED CIVIL ENGINEER DATE

6-21-10
PLANS APPROVAL DATE

REGISTERED PROFESSIONAL ENGINEER NGIM NANCY PE No. 58161 Exp. 6-30-10 CIVIL STATE OF CALIFORNIA

THE STATE OF CALIFORNIA OR ITS OFFICERS OR AGENTS SHALL NOT BE RESPONSIBLE FOR THE ACCURACY OR COMPLETENESS OF ELECTRONIC COPIES OF THIS PLAN SHEET.

Caltrans Metric

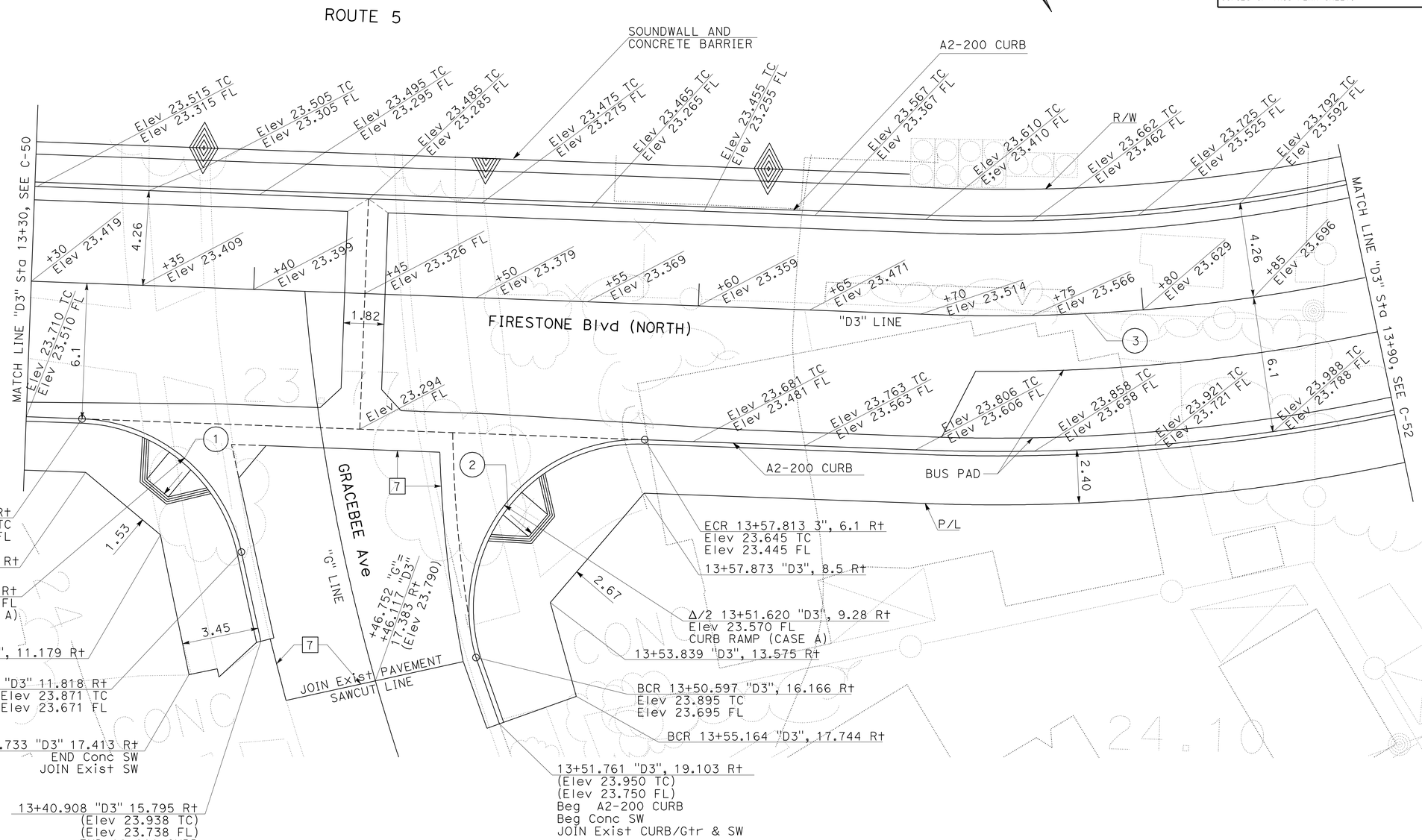

CURVE DATA

No.	R	Δ	T	L
1	7.62	75°32′45"	5.90	10.05
2	7.62	108°43′34"	10.63	14.46
3	80.00	34°39′07"	24.96	48.38

ALL DIMENSIONS ARE IN METERS UNLESS OTHERWISE SHOWN

CONSTRUCTION DETAILS

SCALE 1:100

C-51

STATE OF CALIFORNIA - DEPARTMENT OF TRANSPORTATION
Caltrans OFFICE OF DESIGN A

FUNCTIONAL SUPERVISOR NGIM NANCY PE
CALCULATED-DESIGNED BY WILL CARPIO
CHECKED BY NGIM NANCY PE
REVISED BY WC
DATE REVISED 5/09

LAST REVISION 00-00-00
DATE PLOTTED => 22-JUN-2010
TIME PLOTTED => 13:27

Dist	COUNTY	ROUTE	KILOMETER POST TOTAL PROJECT	SHEET No.	TOTAL SHEETS
07	LA	5	2.9/4.9	111	1082

REGISTERED CIVIL ENGINEER 12-23-09 DATE

6-21-10
PLANS APPROVAL DATE

REGISTERED PROFESSIONAL ENGINEER NGIM NANCY PE No. 58161 Exp. 6-30-10 CIVIL STATE OF CALIFORNIA

THE STATE OF CALIFORNIA OR ITS OFFICERS OR AGENTS SHALL NOT BE RESPONSIBLE FOR THE ACCURACY OR COMPLETENESS OF ELECTRONIC COPIES OF THIS PLAN SHEET.

Caltrans Metric

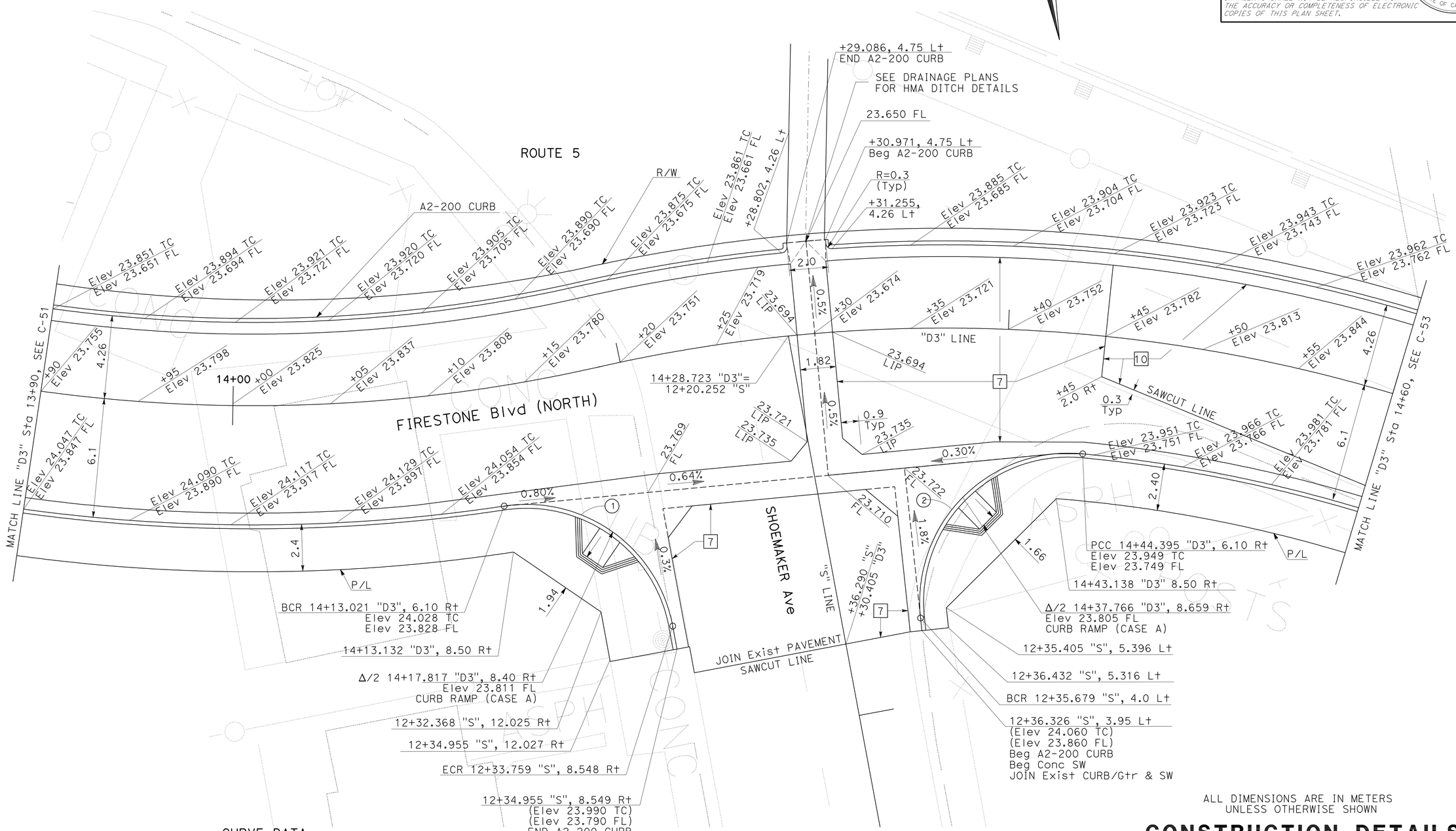

CURVE DATA

No.	R	Δ	T	L
1	7.62	88°3'24"	7.37	11.71
2	7.62	101°35'47"	9.34	13.51

ALL DIMENSIONS ARE IN METERS UNLESS OTHERWISE SHOWN

CONSTRUCTION DETAILS

SCALE 1:100

C-52

STATE OF CALIFORNIA - DEPARTMENT OF TRANSPORTATION	CALCULATED-DESIGNED BY	WILL CARPIO	REVISED BY
Caltrans OFFICE OF DESIGN A	CHECKED BY	NGIM NANCY PE	DATE REVISED
FUNCTIONAL SUPERVISOR	NGIM NANCY PE		WC 5/09

LAST REVISION 00-00-00 DATE PLOTTED => TIME PLOTTED =>

Dist	COUNTY	ROUTE	KILOMETER POST TOTAL PROJECT	SHEET No.	TOTAL SHEETS
07	LA	5	2.9/4.9	112	1082

Ngim N. Pe 12-23-09
REGISTERED CIVIL ENGINEER DATE

6-21-10
PLANS APPROVAL DATE

REGISTERED PROFESSIONAL ENGINEER NGIM NANCY PE No. 58161 Exp. 6-30-10 CIVIL STATE OF CALIFORNIA

THE STATE OF CALIFORNIA OR ITS OFFICERS OR AGENTS SHALL NOT BE RESPONSIBLE FOR THE ACCURACY OR COMPLETENESS OF ELECTRONIC COPIES OF THIS PLAN SHEET.

Caltrans Metric

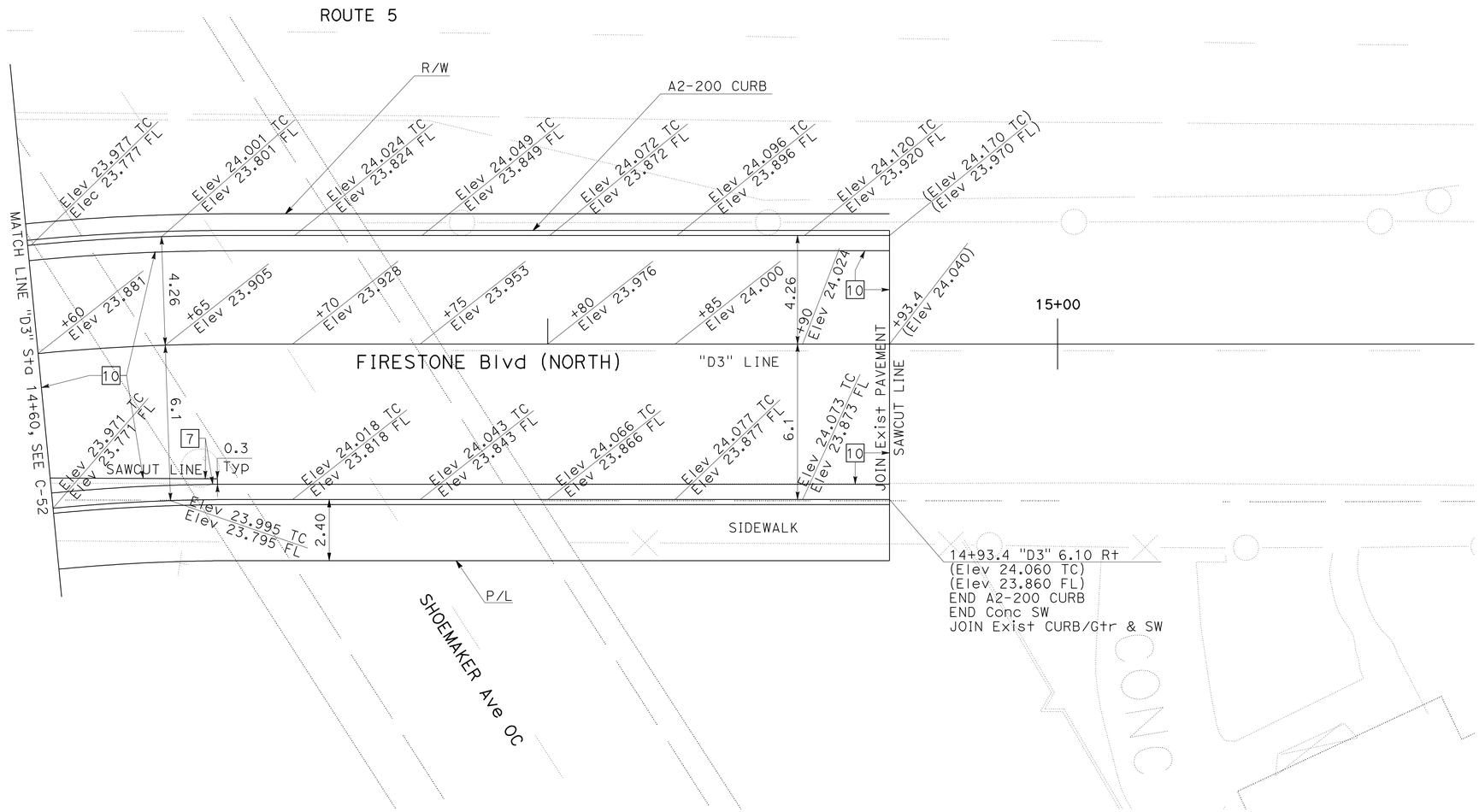

ALL DIMENSIONS ARE IN METERS
UNLESS OTHERWISE SHOWN

CONSTRUCTION DETAILS

SCALE 1:100

C-53

CALCULATED-DESIGNED BY	WILL CARPIO	REVISED BY	WC
CHECKED BY	NGIM NANCY PE	DATE REVISED	5/09
FUNCTIONAL SUPERVISOR	NGIM NANCY PE		

STATE OF CALIFORNIA - DEPARTMENT OF TRANSPORTATION
Caltrans OFFICE OF DESIGN A

LAST REVISION 00-00-00 | DATE PLOTTED => 22-JUN-2010 | TIME PLOTTED => 13:28

Dist	COUNTY	ROUTE	KILOMETER POST TOTAL PROJECT	SHEET No.	TOTAL SHEETS
07	LA	5	2.9/4.9	113	1082

REGISTERED CIVIL ENGINEER 12-23-09 DATE

6-21-10
PLANS APPROVAL DATE

REGISTERED PROFESSIONAL ENGINEER NGIM NANCY PE No. 58161 Exp. 6-30-10 CIVIL STATE OF CALIFORNIA

THE STATE OF CALIFORNIA OR ITS OFFICERS OR AGENTS SHALL NOT BE RESPONSIBLE FOR THE ACCURACY OR COMPLETENESS OF ELECTRONIC COPIES OF THIS PLAN SHEET.

Caltrans Metric

NOTES:

1. DIMENSIONS: L = 26 m, W = 3 m, UNLESS OTHERWISE SHOWN. USE STRUCTURAL SECTION SHOWN BELOW FOR NEW PAVEMENT. USE 200 mm PCC OVER 150 mm CLASS 2 AGGREGATE BASE AT EXISTING PAVEMENT.
2. USE SECTION B-B FOR EXISTING CURB AND GUTTER THAT IS TO REMAIN. USE SECTION C-C FOR NEW CURB AND GUTTER.
3. USE SECTION D-D FOR EXISTING AC PAVEMENT. USE SECTION E-E FOR NEW AC PAVEMENT.
4. AT LOCATIONS WHERE PCC PAVEMENT WILL ABUT EXISTING CONCRETE, AN EPOXY APPROVED BY THE ENGINEER SHALL BE APPLIED TO THE EXISTING CONCRETE SURFACES PRIOR TO CONCRETE PLACEMENT.
5. CLASS 2 AGGREGATE BASE SHALL EXTEND UNDER NEW CURB AND GUTTER.
6. CONSTRUCT LONGITUDINAL WEAKENED-PLANE JOINT TO MATCH JOINING EXISTING GUTTER WIDTH, OR 600 mm IF NO ADJOINING GUTTER EXISTS.
7. USE 50 mm X 100 mm HEADER TO FORM 90 mm STEP. TOP OF HEADER SHALL BE SET TO LINE AND GRADE.
8. ALL EXPOSED PCC CORNERS SHALL BE ROUNDED WITH A 15 mm RADIUS.
9. SURFACE OF CONCRETE SHALL HAVE A ROUGH TRANSVERSE BROOM BRUSH.
10. WHERE DESIGNATED BY THE ENGINEER, UNDESIRABLE SUBGRADE MATERIAL SHALL BE REMOVED AND REPLACED WITH CLASS 2 AGGREGATE BASE, OR AS SPECIFIED BY THE ENGINEER.
11. WHERE NEW CURB AND GUTTER IS CONSTRUCTED ADJACENT TO EXISTING SIDEWALK, SIDEWALK SHALL BE REMOVED AND REPLACED TO NEAREST SCORELINE.
12. CONSTRUCT TRANSVERSE WEAKENED-PLANE JOINTS IN BUS PAD PAVEMENT AT APPROXIMATELY 3 m INTERVALS.
13. CONSTRUCT TRANSVERSE WEAKENED-PLANE JOINTS IN BUS PAD PAVEMENT AT ALL EXISTING CURB/CURB AND GUTTER CONSTRUCTION JOINTS AND WEAKENED-PLANE JOINTS.
14. AT THE OPTION OF THE ENGINEER, THE EXISTING PAVEMENT MAY BE NEATLY SAWCUT AROUND THE DIMENSIONS OF THE BUS PAD, AND CONCRETE POURED DIRECTLY USING THE EXISTING PAVEMENT AS A FORM. THE CONCRETE EDGES SHALL BE ROUNDED WITH A 15 mm RADIUS.

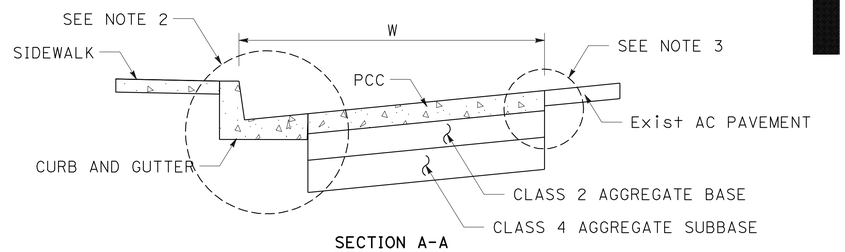

SECTION A-A
SEE NOTE 1

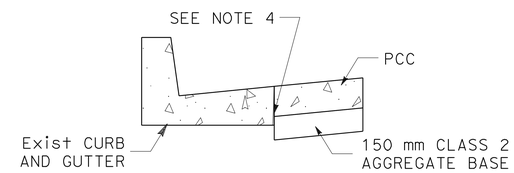

SECTION B-B

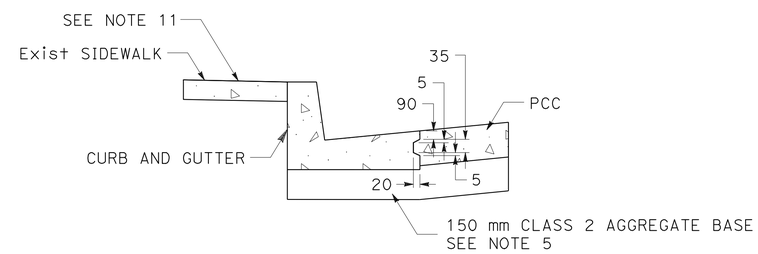

SECTION C-C

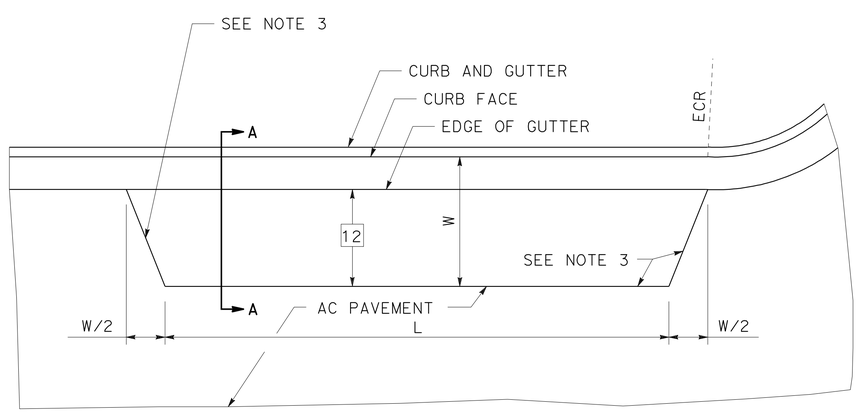

TYPICAL BUS PAD

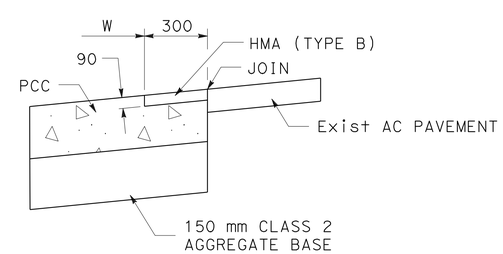

SECTION D-D
SEE NOTE 14

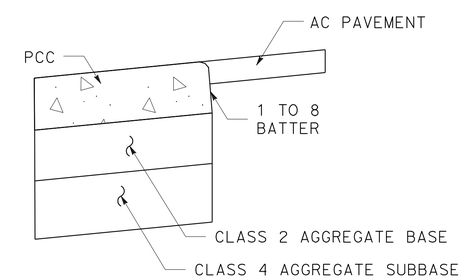

SECTION E-E

STRUCTURAL SECTION:

	200 mm PORTLAND CEMENT CONCRETE
12	330 mm CLASS 2 AGGREGATE BASE
	385 mm CLASS 4 AGGREGATE SUBBASE

BUS PAD

ALL DIMENSIONS ARE IN MILLIMETERS UNLESS OTHERWISE SHOWN

CONSTRUCTION DETAILS

NO SCALE

C-54

REVISED BY	DATE REVISED
YTT	05/09

CALCULATED-DESIGNED BY: WILL CARPIO
CHECKED BY: NGIM NANCY PE
FUNCTIONAL SUPERVISOR: NGIM NANCY PE

STATE OF CALIFORNIA - DEPARTMENT OF TRANSPORTATION
Caltrans OFFICE OF DESIGN A

S:\projects\2159c1\72159cga054.dgn

LAST REVISION 00-00-00 | DATE PLOTTED => 22-JUN-2010 | TIME PLOTTED => 13:28

Dist	COUNTY	ROUTE	KILOMETER POST TOTAL PROJECT	SHEET No.	TOTAL SHEETS
07	LA	5	2.9/4.9	114	1082

REGISTERED CIVIL ENGINEER 12-23-09 DATE

6-21-10
PLANS APPROVAL DATE

REGISTERED PROFESSIONAL ENGINEER NGIM NANCY PE No. 58161 Exp. 6-30-10 CIVIL STATE OF CALIFORNIA

THE STATE OF CALIFORNIA OR ITS OFFICERS OR AGENTS SHALL NOT BE RESPONSIBLE FOR THE ACCURACY OR COMPLETENESS OF ELECTRONIC COPIES OF THIS PLAN SHEET.

Caltrans Metric

STRUCTURAL SECTIONS:

9 180 mm HMA TYPE B
180 mm CLASS 3 AGGREGATE BASE

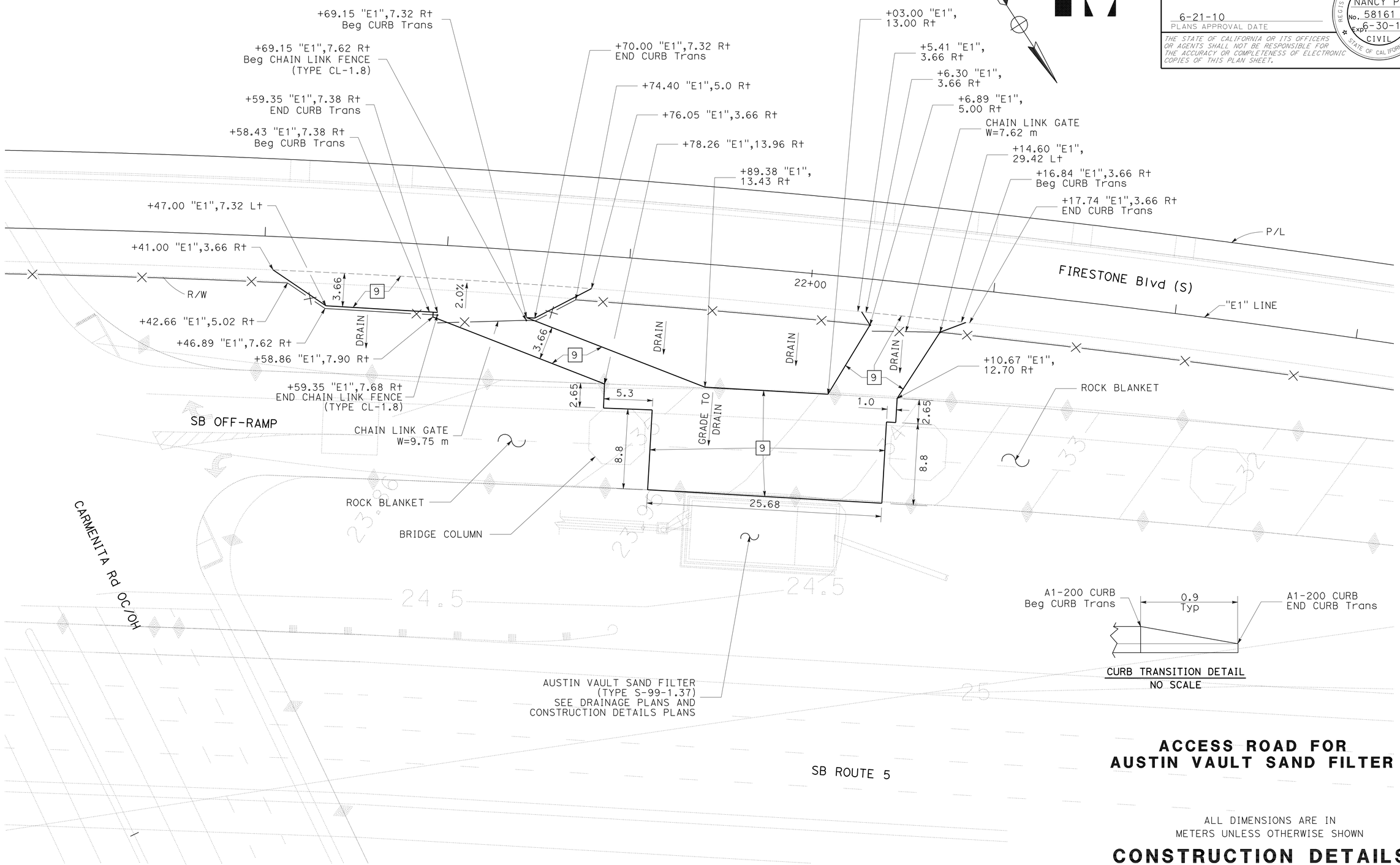

CURB TRANSITION DETAIL
NO SCALE

ACCESS ROAD FOR AUSTIN VAULT SAND FILTER

ALL DIMENSIONS ARE IN METERS UNLESS OTHERWISE SHOWN

CONSTRUCTION DETAILS

SCALE 1:200

C-55

REVISED BY	DATE REVISED

CALCULATED-DESIGNED BY: WILL CARPIO
CHECKED BY: NGIM NANCY PE
FUNCTIONAL SUPERVISOR: MGIM NANCY PE

STATE OF CALIFORNIA - DEPARTMENT OF TRANSPORTATION
Caltrans OFFICE OF DESIGN A

S:\projects\2159c1\replace1\72159cga055.dgn

LAST REVISION 00-00-00 | DATE PLOTTED => 22-JUN-2010 | TIME PLOTTED => 13:28

Dist	COUNTY	ROUTE	KILOMETER POST TOTAL PROJECT	SHEET No.	TOTAL SHEETS
07	LA	5	2.9/4.9	115	1082

Caltrans Metric

REGISTERED CIVIL ENGINEER 12-23-09 DATE

6-21-10
PLANS APPROVAL DATE

REGISTERED PROFESSIONAL ENGINEER NGIM NANCY PE No. 58161 Exp. 6-30-10 CIVIL STATE OF CALIFORNIA

THE STATE OF CALIFORNIA OR ITS OFFICERS OR AGENTS SHALL NOT BE RESPONSIBLE FOR THE ACCURACY OR COMPLETENESS OF ELECTRONIC COPIES OF THIS PLAN SHEET.

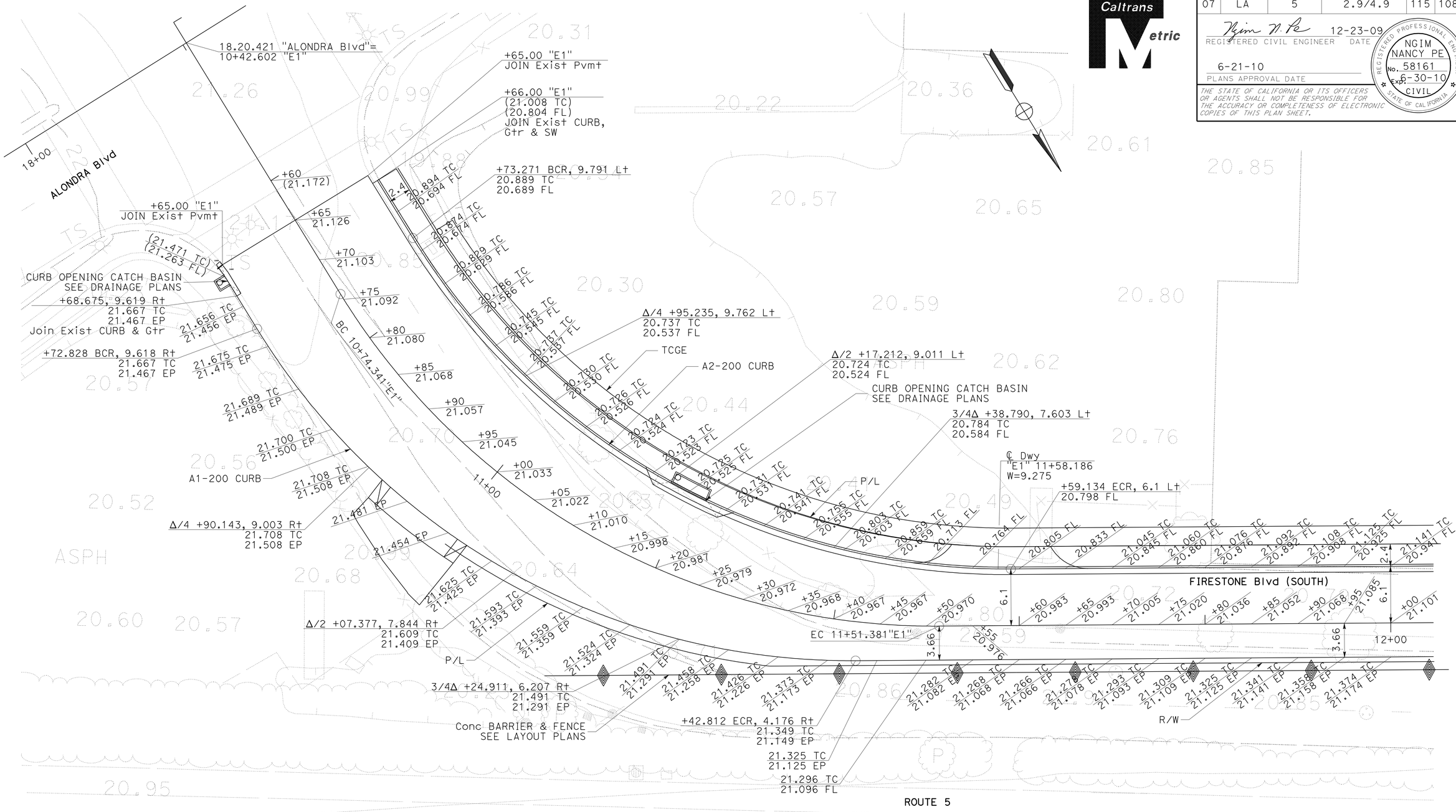

FIRESTONE BLVD AND ALONDRA BLVD

ALL DIMENSIONS ARE IN METERS
UNLESS OTHERWISE SHOWN

CONSTRUCTION DETAILS

SCALE 1:200

C-56

REVISED BY	DATE REVISED

CALCULATED-DESIGNED BY: WILL CARPIO
CHECKED BY: NGIM NANCY PE
FUNCTIONAL SUPERVISOR: NGIM NANCY PE

STATE OF CALIFORNIA - DEPARTMENT OF TRANSPORTATION
Caltrans OFFICE OF DESIGN A

LAST REVISION 00-00-00
DATE PLOTTED => 16-FEB-2011
TIME PLOTTED => 08:26

DIST.	COUNTY	ROUTE	KILOMETER POST TOTAL PROJECT	SHEET NO.	TOTAL SHEETS
07	LA	5	2.9/4.9	116	1082

Caltrans Metric

Timothy B Sobelman 6-3-09
REGISTERED ENGINEER - CIVIL

6-21-10
PLANS APPROVAL DATE

REGISTERED PROFESSIONAL ENGINEER TIMOTHY B. SOBELMAN No. 59249 Exp. 6-30-09 CIVIL STATE OF CALIFORNIA

The State of California or its officers or agents shall not be responsible for the accuracy or completeness of electronic copies of this plan sheet.

GENERAL NOTES

Designation:
Partial Austin Vault Sand Filters (AVSFs) are open air reinforced concrete vaults utilizing both sedimentation and sand filtration basins. Type designation is based on length configuration, water quality volume to be drained in a 24 hour period, and average depth of water.

Standard configurations are noted for the following design water quality volumes (WQV): 99, 142, 187, 283, and 425 cubic meters. Length configurations are either short (S) or long (L). The average water depth can be either 910 mm, 1370 mm, 1830 mm as designed in Design Water Quality Volumes (WQV) table.

Special Reinforcement Coverage:
AVSF Standard Details are not to be used in a corrosive environment or where there is a severe abrasive flow condition or in freeze-thaw locations.

Special Design:
Required for the following conditions: ground water conditions above bottom of AVSF, surcharge loads exceeding HS20 truck load, design bearing pressures or sizes greater than those on this plan, inlet velocities which exceed 2.44 m/sec at gabion wall, and settlement due to liquefaction.

DESIGN WATER QUALITY VOLUMES (WQV)

AVSF Type*	WQV (m^3)	W(m)	Ls(m)	Lf(m)	Hw(m)
S- 99-0.91	99	6.40	4.27	11.58	0.91
L- 99-0.91	99	4.57	5.49	16.15	0.91
S- 99-1.37	124	6.40	4.27	11.58	1.37
L- 99-1.37	124	4.57	5.49	16.15	1.37
S- 99-1.83	149	6.40	4.27	11.58	1.83
L- 99-1.83	149	4.57	5.49	16.15	1.83
S-142-0.91	142	8.23	4.57	12.80	0.91
L-142-0.91	142	5.49	6.40	19.20	0.91
S-142-1.37	177	8.23	4.57	12.80	1.37
L-142-1.37	177	5.49	6.4	19.20	1.37
S-142-1.83	212	8.23	4.57	12.80	1.83
L-142-1.83	212	5.49	6.40	19.20	1.83
S-283-0.91	283	10.97	6.40	19.20	0.91
L-283-0.91	283	7.32	9.14	28.65	0.91
S-283-1.37	354	10.97	6.40	19.20	1.37
L-283-1.37	354	7.32	9.14	28.65	1.37
S-283-1.83	425	10.97	6.40	19.20	1.83
L-283-1.83	425	7.32	9.14	28.65	1.83
S-425-0.91	425	13.72	7.62	23.16	0.91
L-425-0.91	425	9.14	11.28	35.05	0.91
S-425-1.37	531	13.72	7.62	23.16	1.37
L-425-1.37	531	9.14	11.28	35.05	1.37
S-425-1.83	637	13.72	7.62	23.16	1.83
L-425-1.83	637	9.14	11.28	35.05	1.83

* AVSF Type = Length configuration (S or L) - water quality volume (CM) - design water depth (Hw elevation)

DESIGN NOTES

Specifications:
Design:
Bridge Design Specification April 2000 (LFD)
(1996 AASHTO) with interims and revisions by Caltrans

Wall & Footing (LFD): 1.5 D + 1.5 E + 1.5 W + 1.5 SC
Where D = Dead Load
E = Earth Load
W = Water Load
SC = Surcharge
Capacity reduction factor is included.

Earth Load:
20 kPa/m vertical,

Water Load:
9.8 kPa/m horizontal/vertical,

Earth pressure for 1:2 unlimited slope determined from Rankine's formula with ø = 33°42' (Case II).

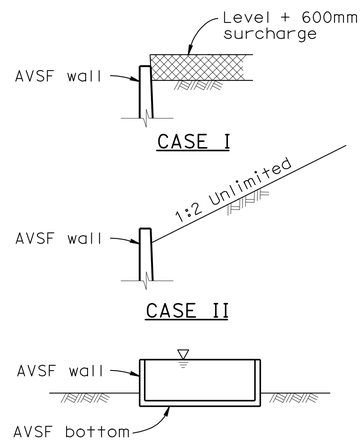

DETAIL OF DESIGN LOADING CASES

CASE I Level + 600mm surcharge, AVSF empty
CASE II 1:2 Unlimited slope, AVSF empty
CASE III AVSF full of water, no soil pressure

Unit Stresses:
f'_c = 25 MPa
fy= 420 MPa

INDEX TO PLAN

SHEET No.	TITLE
1	GENERAL NOTES
2	LAYOUT No. 1
3	LAYOUT No. 2
4	WALL DETAILS
5	DETAILS No. 1
6	DETAILS No. 2
7	DETAILS No. 3
8	DETAILS No. 4
9	MISCELLANEOUS DETAILS No. 1

CONSTRUCTION NOTES

Expansion joints:
Inverts and sidewalls - Place 50 mm expansion joint filler at 9145 mm + centers with waterstop, see "Details No. 2" sheet for specific wall & invert details.

Construction Joints:
Temporary joints may be permitted if normal (or radial) to ℄ of AVSF. Otherwise, the contractor is to submit a proposal for consideration.

Backfill:
See Standard Specifications, except the difference in backfill shall not exceed 2.49 m between side walls and inlet and outlet walls.

Earthwork:
Limits of payment for excavation and backfill.

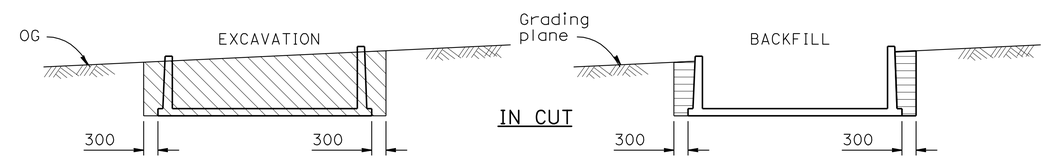

LEGEND:
Structure excavation (AVSF)
Structure backfill (AVSF)
Original ground, OG

NOTES:
1. Slope or shore excavation sides as necessary.
2. Dimensions shown are minimum.
3. 95% COMPACTION 0.91 m below floor slabs

STANDARD PLANS DATED JULY 2004

BO-3	BRIDGE DETAILS (Details No. 2)
B3-9	RETAINING WALL DETAILS No. 2 (Details No. 1)
RSP B6-21	JOINT SEALS (MAXIMUM MOVEMENT RATING = 50 mm) (Details No. 2)
B11-47	CABLE RAILING
D100A	GABION BASKET DETAILS No. 1
D100B	GABION BASKET DETAILS No. 2

STANDARD PLAN SHEET No.
DETAIL No.

ALL DIMENSIONS ARE IN MILLIMETERS UNLESS OTHERWISE SHOWN

CONSTRUCTION DETAILS
C-57

RELEASE DATE ---	DESIGN	BY D.Dunrud	CHECKED J&P Peterson	
FILE NO. ---	DETAILS	BY J&P Peterson	CHECKED J&P Peterson	
	SUBMITTED	BY J&P Peterson	DRAWING DATE 8/07	

STATE OF CALIFORNIA
DEPARTMENT OF TRANSPORTATION

DIVISION OF ENGINEERING SERVICES

BRIDGE NO.
KILOMETER POST

AUSTIN VAULT SAND FILTER
GENERAL NOTES

ORIGINAL SCALE IN MILLIMETERS FOR REDUCED PLANS 0 10 20 30 40 50 60 70 80 90 100

CU 07
EA 2159C1

DISREGARD PRINTS BEARING EARLIER REVISION DATES

REVISION DATES (PRELIMINARY STAGE ONLY)

SHEET 1 OF 9

USERNAME => trpierce

72159cga057.dgn

DATE PLOTTED=>06-JUN-2008 PLOTTED BY=>trpierce

DIST.	COUNTY	ROUTE	KILOMETER POST TOTAL PROJECT	SHEET NO.	TOTAL SHEETS
07	LA	5	2.9/4.9	117	1082

Caltrans Metric

Timothy B Sobelman 6-3-09
REGISTERED ENGINEER - CIVIL

6-24-10
PLANS APPROVAL DATE

REGISTERED PROFESSIONAL ENGINEER TIMOTHY B. SOBELMAN No. 59249 Exp. 6-30-09 CIVIL STATE OF CALIFORNIA

The State of California or its officers or agents shall not be responsible for the accuracy or completeness of electronic copies of this plan sheet.

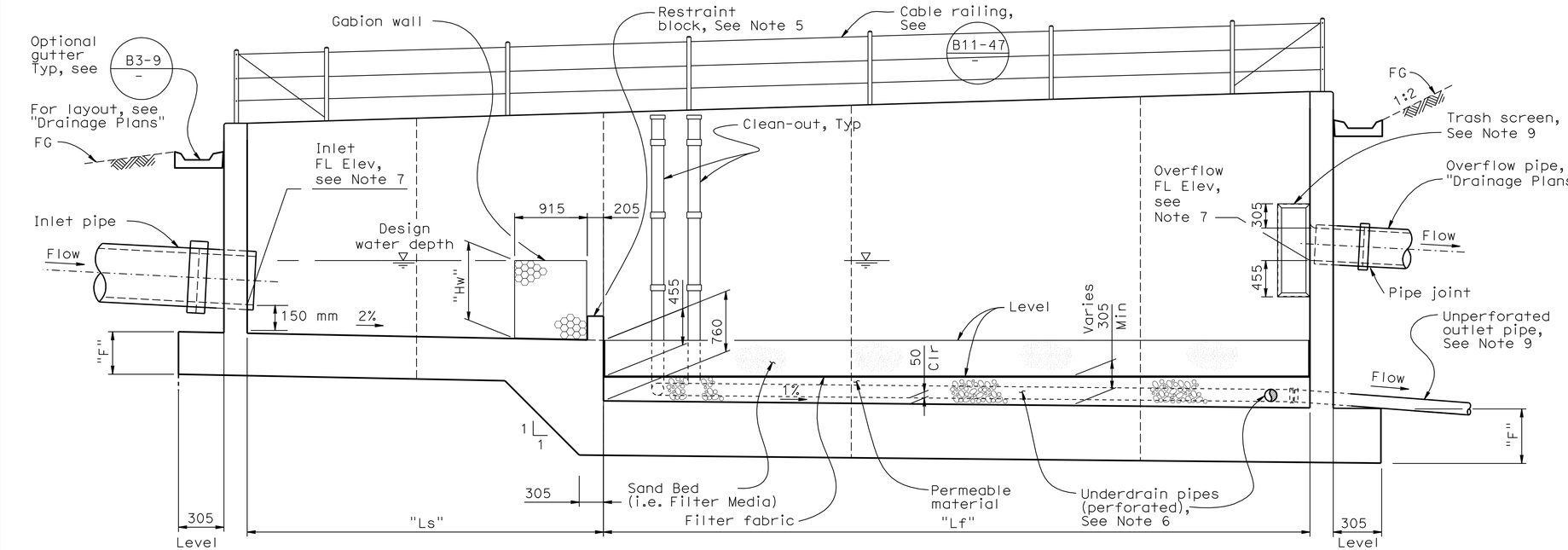

LONGITUDINAL SECTION

No Scale

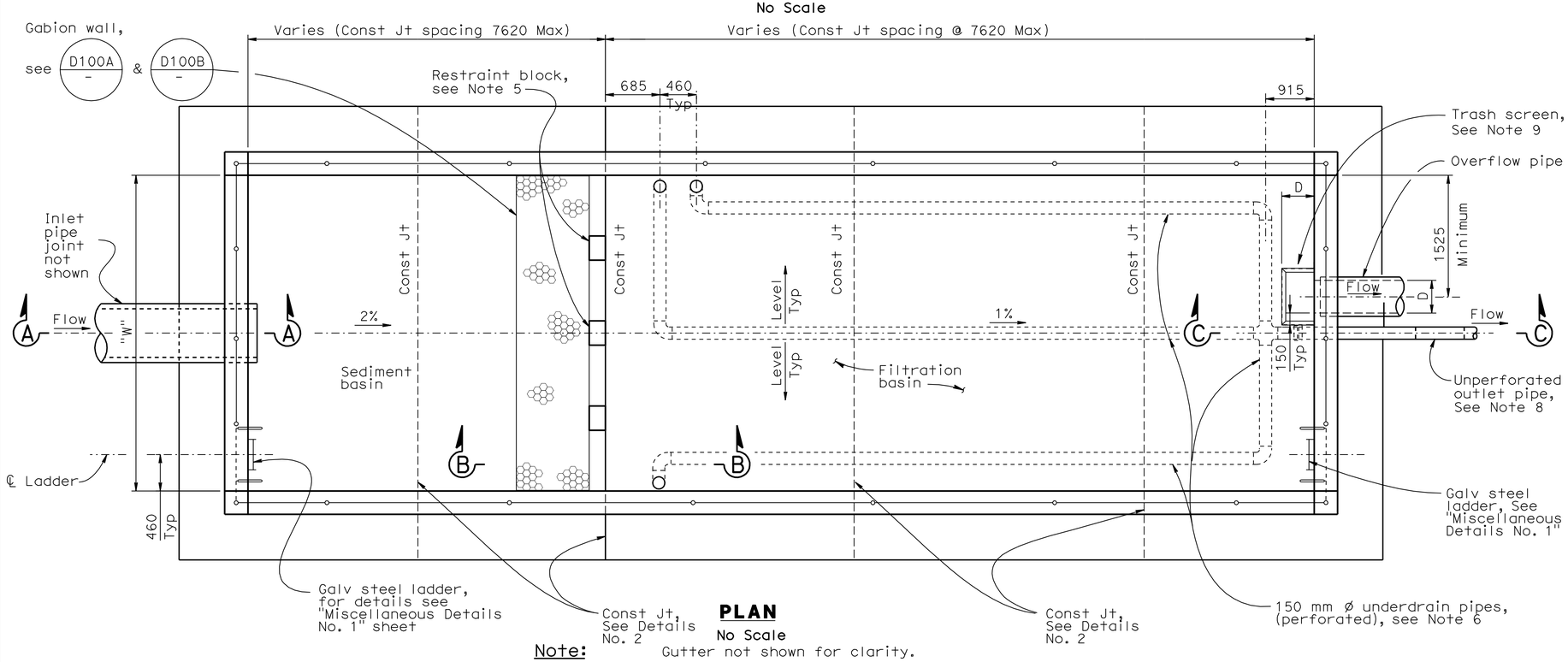

PLAN

No Scale

Note: Gutter not shown for clarity.

NOTES:

1. For dimensions "W", "Ls", "Lf" and "Hw", see Design WQV table on "General Notes" sheet.
2. For dimensions "F", see "Wall Details" sheet.
3. For Typical Section, see "Wall Details" sheet.
4. For Section A - A, B - B and C - C, see "Details No. 1" sheet.
5. For restraint block details, see "Details No. 1" and "Details No. 2" sheets.
6. For details of underdrain (sand filter), see "Details No. 4" sheet.
7. For Layout and FL elevation, see "Drainage Plans".
8. For slope of unperforated outlet pipe, see "Drainage Plans".
9. For trash screen details (frame and perforated metal skin), see "Details No 3" sheet.
10. See "Road Plans" for top of wall elevations.
11. Concrete shall be placed on base or native material which has been compacted to 95% relative compaction.

ALL DIMENSIONS ARE IN MILLIMETERS UNLESS OTHERWISE SHOWN

CONSTRUCTION DETAILS

C-58

RELEASE DATE ---	DESIGN	BY D.Dunrud	CHECKED J&P Peterson	
FILE NO. ---	DETAILS	BY J&P Peterson	CHECKED J&P Peterson	
	SUBMITTED	BY J&P Peterson	DRAWING DATE 8/07	

STATE OF CALIFORNIA DEPARTMENT OF TRANSPORTATION

DIVISION OF ENGINEERING SERVICES

BRIDGE NO.

KILOMETER POST

AUSTIN VAULT SAND FILTER

LAYOUT No. 1

ORIGINAL SCALE IN MILLIMETERS FOR REDUCED PLANS 0 10 20 30 40 50 60 70 80 90 100

CU 07
EA 2159C1

DISREGARD PRINTS BEARING EARLIER REVISION DATES

REVISION DATES (PRELIMINARY STAGE ONLY)

SHEET 2 OF 9

USERNAME => trpierce

72159cga058.dgn

DATE PLOTTED => 22-JUN-2010 TIME PLOTTED => 13:28

DIST.	COUNTY	ROUTE	KILOMETER POST TOTAL PROJECT	SHEET NO.	TOTAL SHEETS
07	LA	5	2.9/4.9	118	1082

Caltrans Metric

Timothy B Sobelman 6-3-09
REGISTERED ENGINEER - CIVIL

6-21-10
PLANS APPROVAL DATE

REGISTERED PROFESSIONAL ENGINEER TIMOTHY B. SOBELMAN No. 59249 Exp. 6-30-09 CIVIL STATE OF CALIFORNIA

The State of California or its officers or agents shall not be responsible for the accuracy or completeness of electronic copies of this plan sheet.

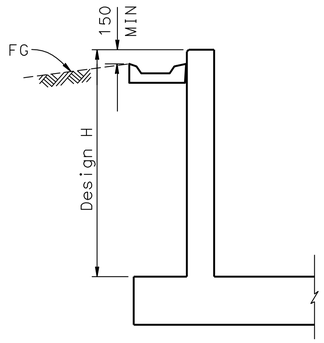

TYPICAL WALL SECTION
(INLET, OUTLET, AND SIDEWALL)
No scale

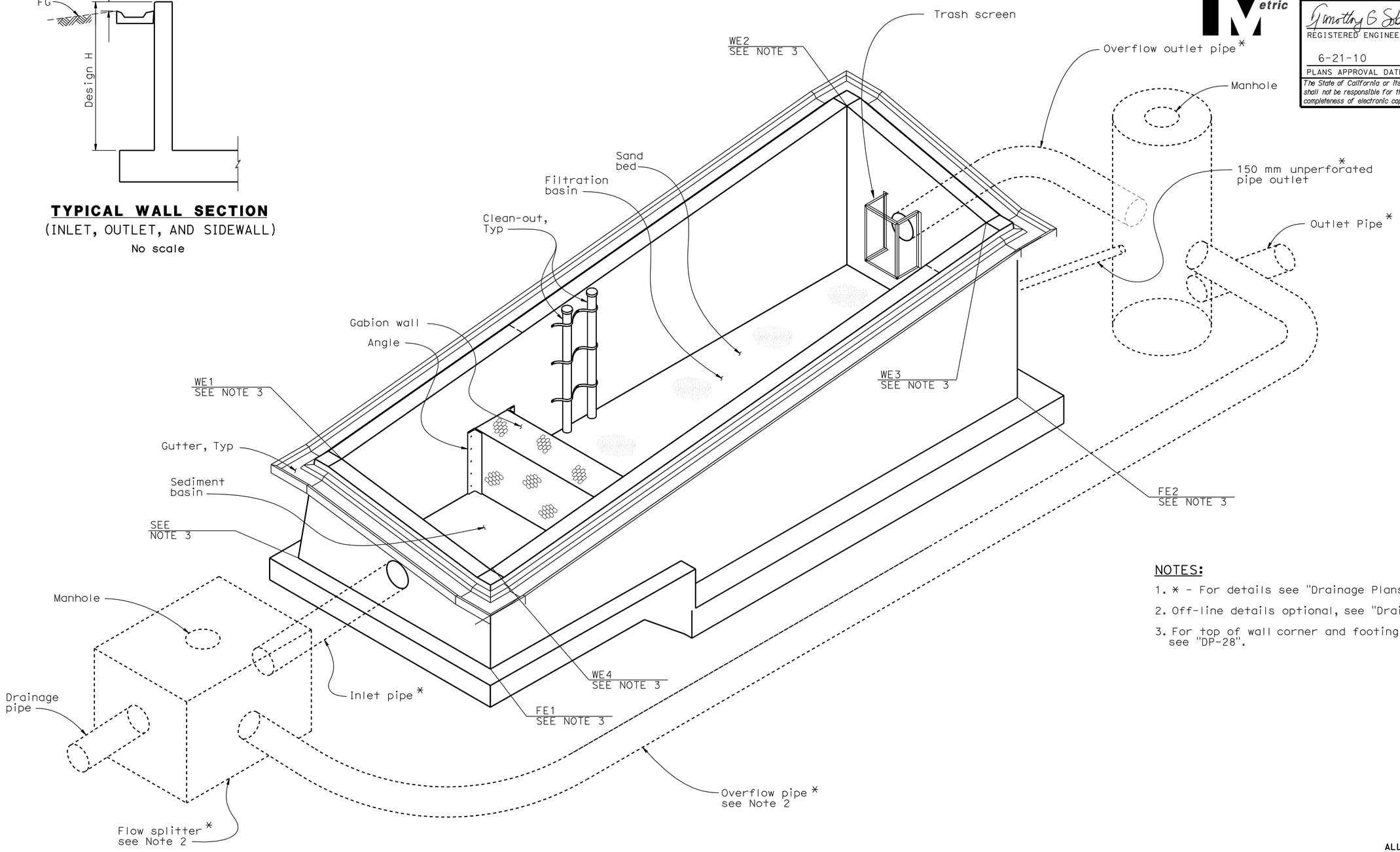

ISOMETRIC VIEW - AUSTIN VAULT SAND FILTER DRAINAGE SYSTEM
No Scale
NOTE: Steel ladders and cable railings not shown for clarity.

NOTES:
1. * - For details see "Drainage Plans".
2. Off-line details optional, see "Drainage Plans".
3. For top of wall corner and footing elevations see "DP-28".

ALL DIMENSIONS ARE IN MILLIMETERS UNLESS OTHERWISE SHOWN

CONSTRUCTION DETAILS
C-59

RELEASE DATE ---	DESIGN	BY D.Dunrud	CHECKED J&P Peterson
FILE NO. ---	DETAILS	BY J&P Peterson	CHECKED J&P Peterson
	SUBMITTED	BY J&P Peterson	DRAWING DATE 8/07

STATE OF CALIFORNIA
DEPARTMENT OF TRANSPORTATION

DIVISION OF ENGINEERING SERVICES

BRIDGE NO.
KILOMETER POST

AUSTIN VAULT SAND FILTER
LAYOUT No. 2

ORIGINAL SCALE IN MILLIMETERS FOR REDUCED PLANS 0 10 20 30 40 50 60 70 80 90 100

CU 07
EA 2159C1

DISREGARD PRINTS BEARING EARLIER REVISION DATES

REVISION DATES (PRELIMINARY STAGE ONLY)

SHEET 3 OF 9

USERNAME => trpierce

72159cga059.dgn

DATE PLOTTED => 22-JUN-2010 TIME PLOTTED => 13:29

DIST.	COUNTY	ROUTE	KILOMETER POST TOTAL PROJECT	SHEET NO.	TOTAL SHEETS
07	LA	5	2.9/4.9	119	1082

Timothy B Sobelman 6-3-09
REGISTERED ENGINEER - CIVIL

6-21-10
PLANS APPROVAL DATE

REGISTERED PROFESSIONAL ENGINEER TIMOTHY B. SOBELMAN No. 59249 Exp. 6-30-09 CIVIL STATE OF CALIFORNIA

The State of California or its officers or agents shall not be responsible for the accuracy or completeness of electronic copies of this plan sheet.

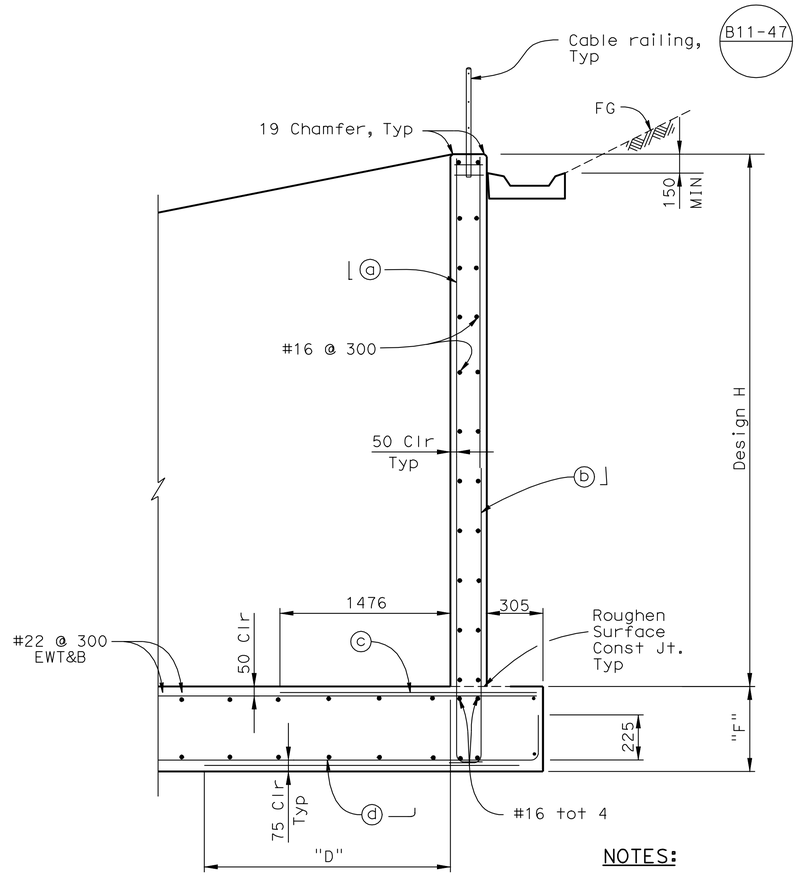

TYPICAL SECTION
No Scale

NOTES:

1. "D" = 2438 when "W" <= 4714.
2. "D" = 3658 when "W" > 4714

NOTES:

1. For dimension W, see "General Notes" sheet.
2. For footing details not shown, see "Footing Details" sheet.
3. The contractor shall have the option of matching the Sedimentation Basin wall thickness with the Filtration Basin wall thickness. This shall be at no
4. additional cost to the State.

   Reinforcement notation "EWT&B" is acronym for "Each Way Top & Bottom".
5. Width "W" is the inside width between walls, see "Layout No. 1" sheet and the Design WQV table on "General Notes" sheet.
6. For additional corner reinforcement not indicated see "Typical Corner Detail" on "Details No. 1" sheet.

TABLE OF REINFORCING STEEL DIMENSIONS AND DATA FOR WALL

Design H	1830	2440	3050	3660	4270	4880
T	305	305	305	305	355	355
F	380	380	380	460	530	530
⌋ ⓐ bars # @ mm	19 @ 300	19 @ 300	19 @ 200	22 @ 200	25 @ 200	29 @ 150
⌊ ⓑ bars # @ mm	19 @ 300	19 @ 300	19 @ 200	22 @ 200	25 @ 200	25 @ 150
ⓒ bars # @ mm	19 @ 300	19 @ 300	19 @ 200	19 @ 200	22 @ 200	22 @ 150
⌋ ⓓ bars # @ mm	19 @ 300	19 @ 300	19 @ 200	19 @ 200	22 @ 200	22 @ 150

ALL DIMENSIONS ARE IN MILLIMETERS UNLESS OTHERWISE SHOWN

CONSTRUCTION DETAILS
C-60

RELEASE DATE ---	DESIGN	BY D.Dunrud	CHECKED J&P Peterson
FILE NO. ---	DETAILS	BY J&P Peterson	CHECKED J&P Peterson
	SUBMITTED	BY J&P Peterson	DRAWING DATE 8/07

STATE OF CALIFORNIA
DEPARTMENT OF TRANSPORTATION

DIVISION OF ENGINEERING SERVICES

BRIDGE NO.
KILOMETER POST

AUSTIN VAULT SAND FILTER
WALL DETAILS

ORIGINAL SCALE IN MILLIMETERS FOR REDUCED PLANS 0 10 20 30 40 50 60 70 80 90 100

CU 07
EA 2159C1

DISREGARD PRINTS BEARING EARLIER REVISION DATES

REVISION DATES (PRELIMINARY STAGE ONLY)

SHEET 4 OF 9

USERNAME => trpierce

72159cga060.dgn

DATE PLOTTED => 22-JUN-2010 TIME PLOTTED => 13:29

DIST.	COUNTY	ROUTE	KILOMETER POST TOTAL PROJECT	SHEET NO.	TOTAL SHEETS
07	LA	5	2.9/4.9	120	1082

Caltrans Metric

Timothy B Sobelman 6-3-09
REGISTERED ENGINEER - CIVIL

6-21-10
PLANS APPROVAL DATE

REGISTERED PROFESSIONAL ENGINEER TIMOTHY B. SOBELMAN No. 59249 Exp. 6-30-09 CIVIL STATE OF CALIFORNIA

The State of California or its officers or agents shall not be responsible for the accuracy or completeness of electronic copies of this plan sheet.

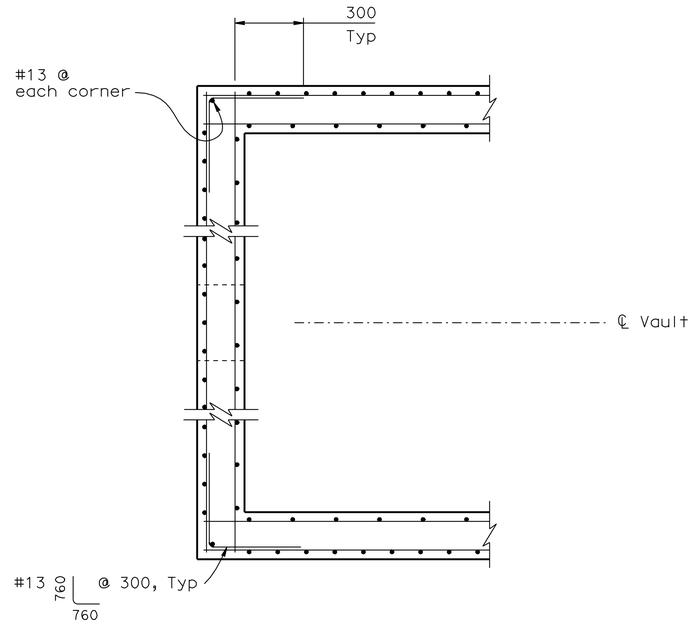

PARTIAL PLAN

No Scale

NOTE: Inlet wall shown, outlet wall similar.

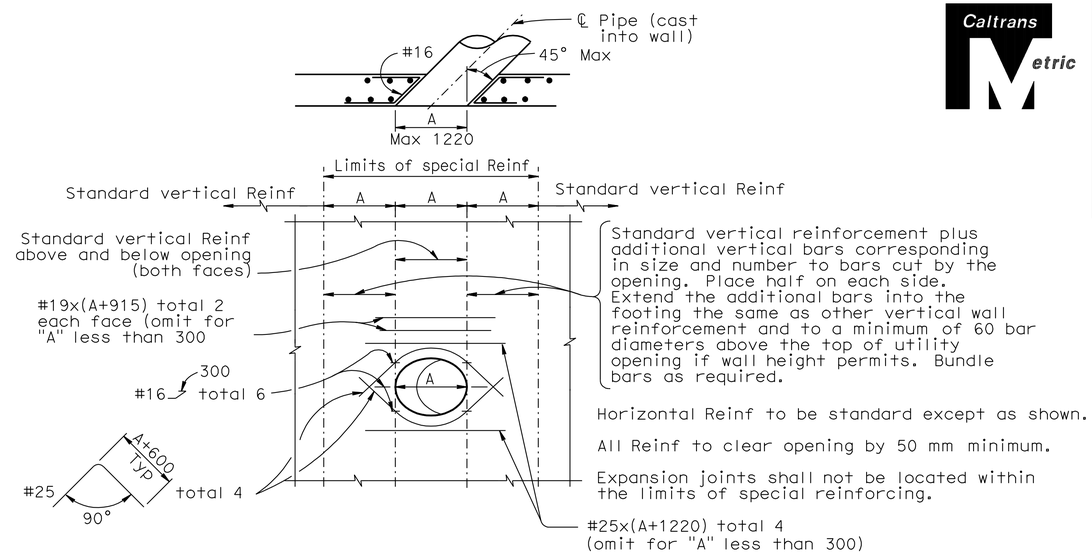

WALL OPENING DETAIL

No Scale

To be used at inlet, outlet and overflow pipe locations

NOTE: The rebar lengths shown are maximum and shall be adjusted due to the limitations of space.

NOTES:

1. For section locations, see "Layout No. 1 " sheet.
2. For wall and footing reinforcement details, see Typical Section on "Wall Details" sheet.

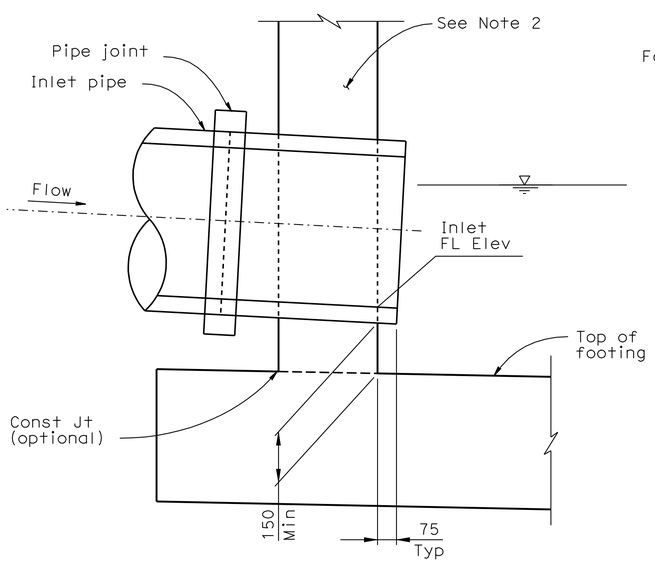

SECTION A - A

No Scale

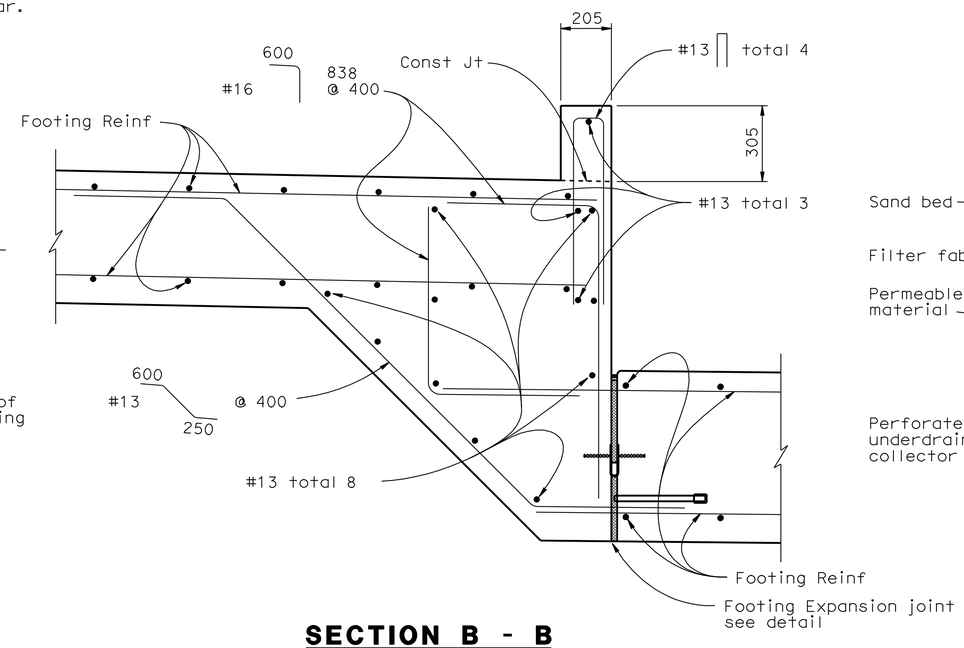

SECTION B - B

No Scale

(Gabion wall and other details not shown for clarity)

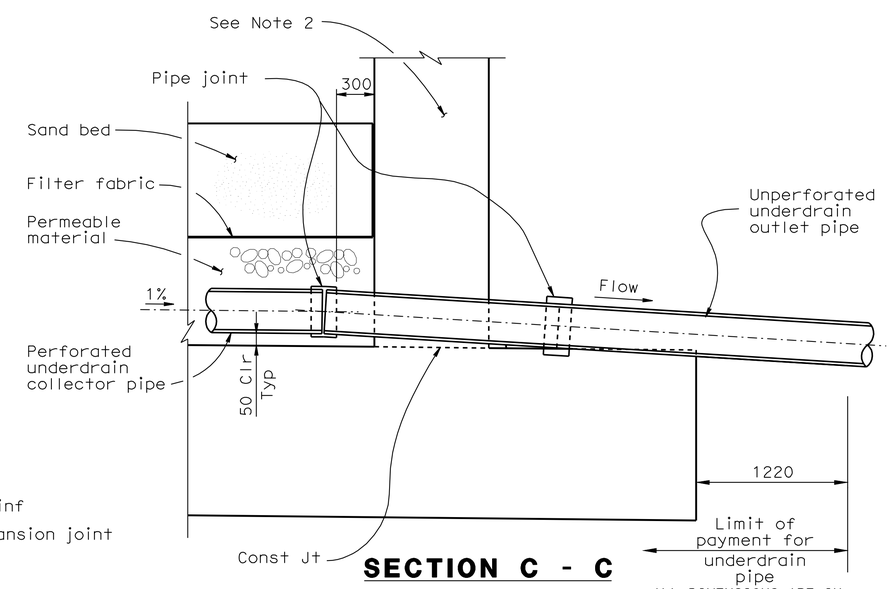

SECTION C - C

No Scale

ALL DIMENSIONS ARE IN MILLIMETERS UNLESS OTHERWISE SHOWN

CONSTRUCTION DETAILS

C-61

RELEASE DATE ---	DESIGN	BY D.Dunrud	CHECKED J&P Peterson
FILE NO. ---	DETAILS	BY J&P Peterson	CHECKED J&P Peterson
	SUBMITTED	BY J&P Peterson	DRAWING DATE 8/07

STATE OF CALIFORNIA
DEPARTMENT OF TRANSPORTATION

DIVISION OF ENGINEERING SERVICES

BRIDGE NO.
KILOMETER POST

AUSTIN VAULT SAND FILTER
DETAILS No. 1

ORIGINAL SCALE IN MILLIMETERS FOR REDUCED PLANS 0 10 20 30 40 50 60 70 80 90 100

CU 07
EA 2159C1

DISREGARD PRINTS BEARING EARLIER REVISION DATES

REVISION DATES (PRELIMINARY STAGE ONLY)

SHEET 5 OF 9

USERNAME => trpierce

72159cga061.dgn

DATE PLOTTED => 22-JUN-2010 TIME PLOTTED => 13:29

DIST.	COUNTY	ROUTE	KILOMETER POST TOTAL PROJECT	SHEET NO.	TOTAL SHEETS
07	LA	5	2.9/4.9	121	1082

Caltrans Metric

Timothy B Sobelman 6-3-09
REGISTERED ENGINEER - CIVIL

6-21-10
PLANS APPROVAL DATE

REGISTERED PROFESSIONAL ENGINEER TIMOTHY B. SOBELMAN No. 59249 Exp. 6-30-09 CIVIL STATE OF CALIFORNIA

The State of California or its officers or agents shall not be responsible for the accuracy or completeness of electronic copies of this plan sheet.

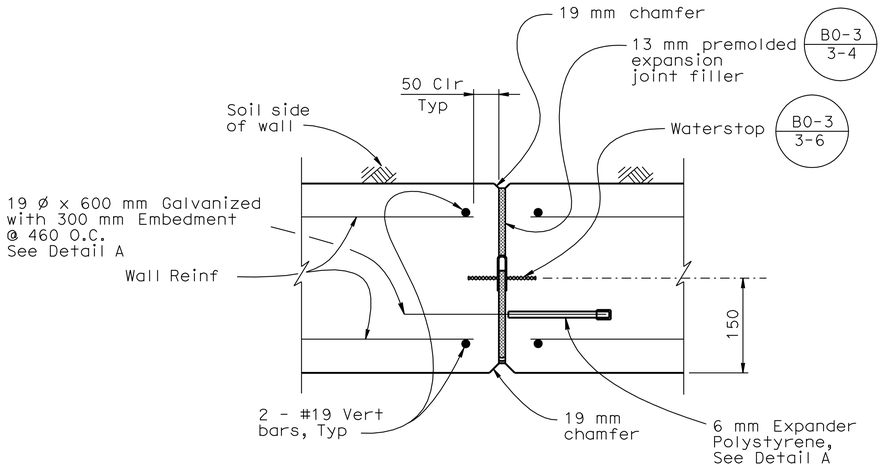

WALL EXPANSION JOINT DETAIL - PLAN SECTION

No Scale

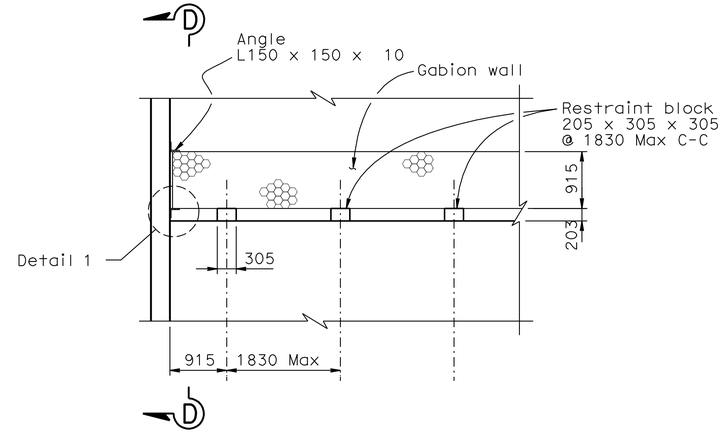

RESTRAINT BLOCK DETAIL

No Scale

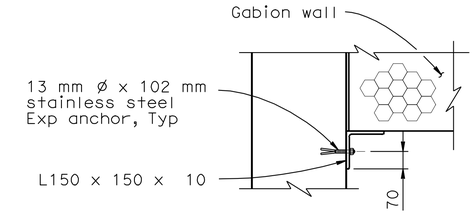

DETAIL 1

1:10

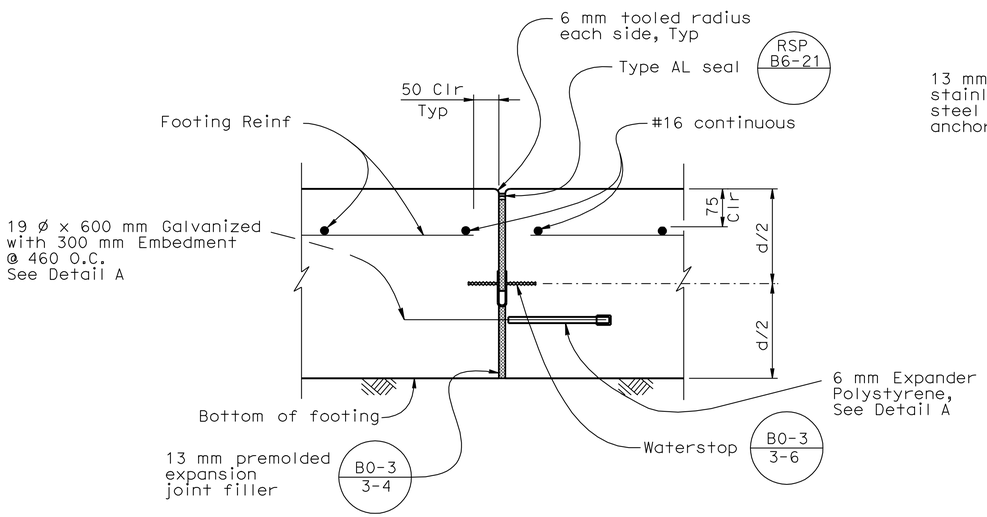

FOOTING EXPANSION JOINT DETAIL

No Scale

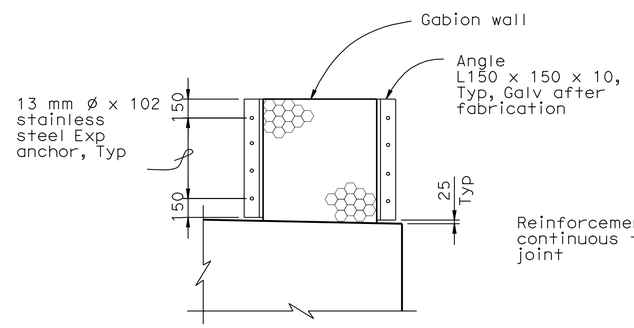

SECTION D - D

No Scale

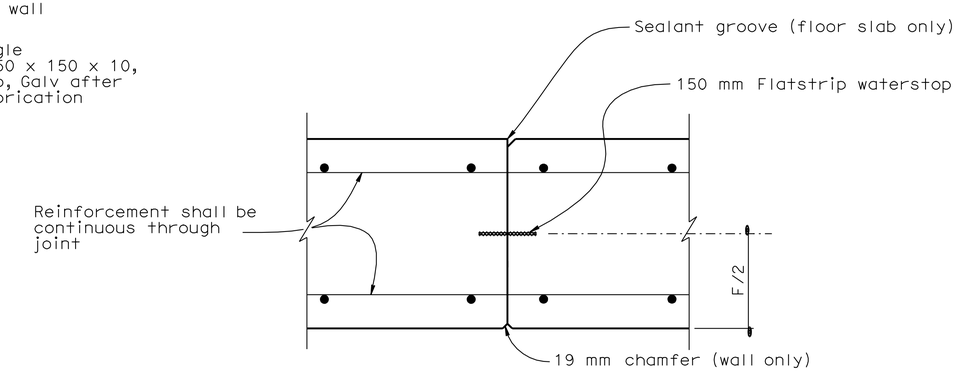

WALL/FOOTING CONSTRUCTION JOINT DETAIL

No Scale

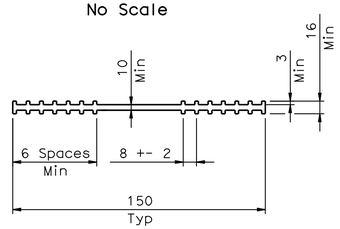

150 mm FLATSTRIP WATER STOP DETAIL

No Scale

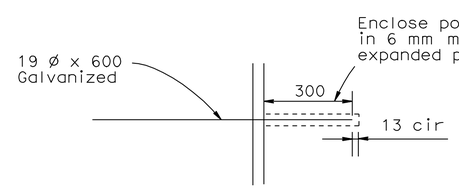

DETAIL A

No Scale

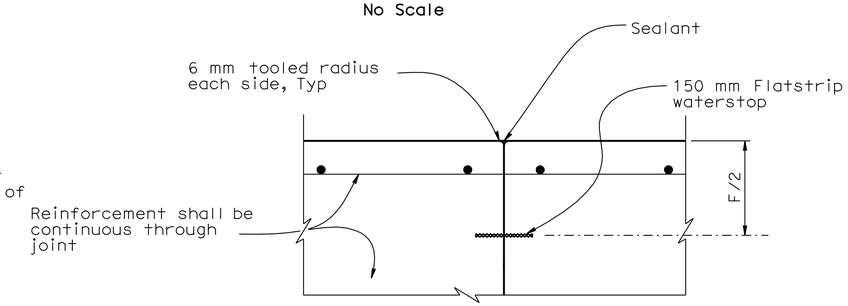

FOOTING CONSTRUCTION JOINT DETAIL

No Scale

ALL DIMENSIONS ARE IN MILLIMETERS UNLESS OTHERWISE SHOWN

CONSTRUCTION DETAILS

C-62

RELEASE DATE ---	DESIGN	BY D.Dunrud	CHECKED J&P Peterson	---
	DETAILS	BY J&P Peterson	CHECKED J&P Peterson	
FILE NO. ---	SUBMITTED	BY J&P Peterson	DRAWING DATE 8/07	

STATE OF CALIFORNIA DEPARTMENT OF TRANSPORTATION

DIVISION OF ENGINEERING SERVICES

BRIDGE NO.

KILOMETER POST

AUSTIN VAULT SAND FILTER

DETAILS No. 2

ORIGINAL SCALE IN MILLIMETERS FOR REDUCED PLANS 0 10 20 30 40 50 60 70 80 90 100

CU 07
EA 2159C1

DISREGARD PRINTS BEARING EARLIER REVISION DATES

REVISION DATES (PRELIMINARY STAGE ONLY)

SHEET 6 OF 9

USERNAME => trpierce

72159cga062.dgn

DATE PLOTTED => 22-JUN-2010 TIME PLOTTED => 13:29

DIST.	COUNTY	ROUTE	KILOMETER POST TOTAL PROJECT	SHEET NO.	TOTAL SHEETS
07	LA	5	2.9/4.9	122	1082

Timothy B Sobelman 6-3-09
REGISTERED ENGINEER - CIVIL

6-21-10
PLANS APPROVAL DATE

REGISTERED PROFESSIONAL ENGINEER TIMOTHY B. SOBELMAN No. 59249 Exp. 6-30-09 CIVIL STATE OF CALIFORNIA

The State of California or its officers or agents shall not be responsible for the accuracy or completeness of electronic copies of this plan sheet.

Caltrans Metric

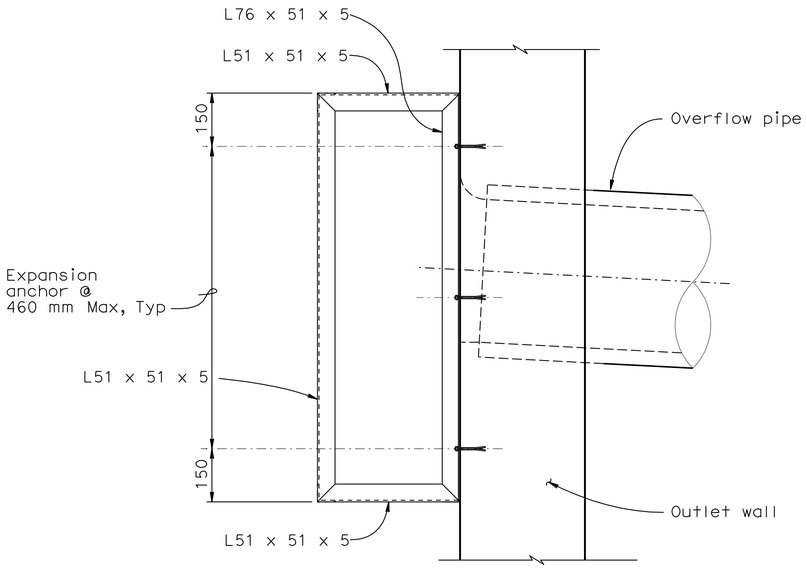

TRASH SCREEN - SIDE ELEVATION
No scale

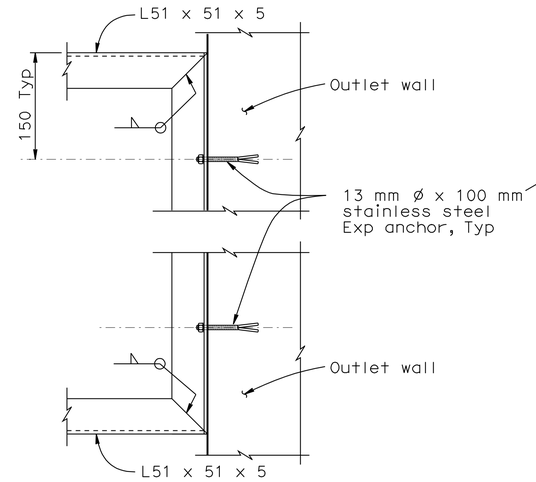

SECTION F - F
No Scale

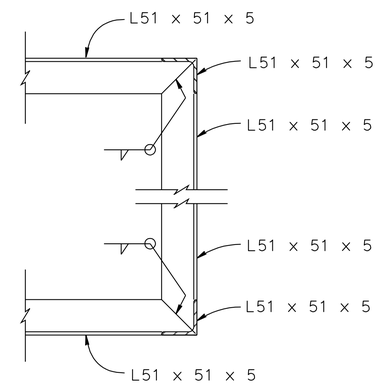

SECTION E - E
No Scale

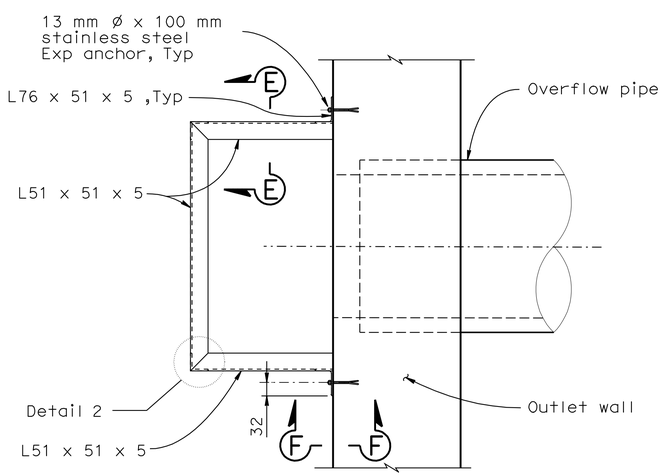

TRASH SCREEN - PLAN
No Scale

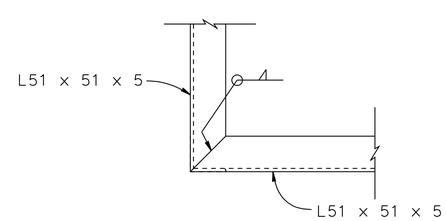

DETAIL 2
No Scale

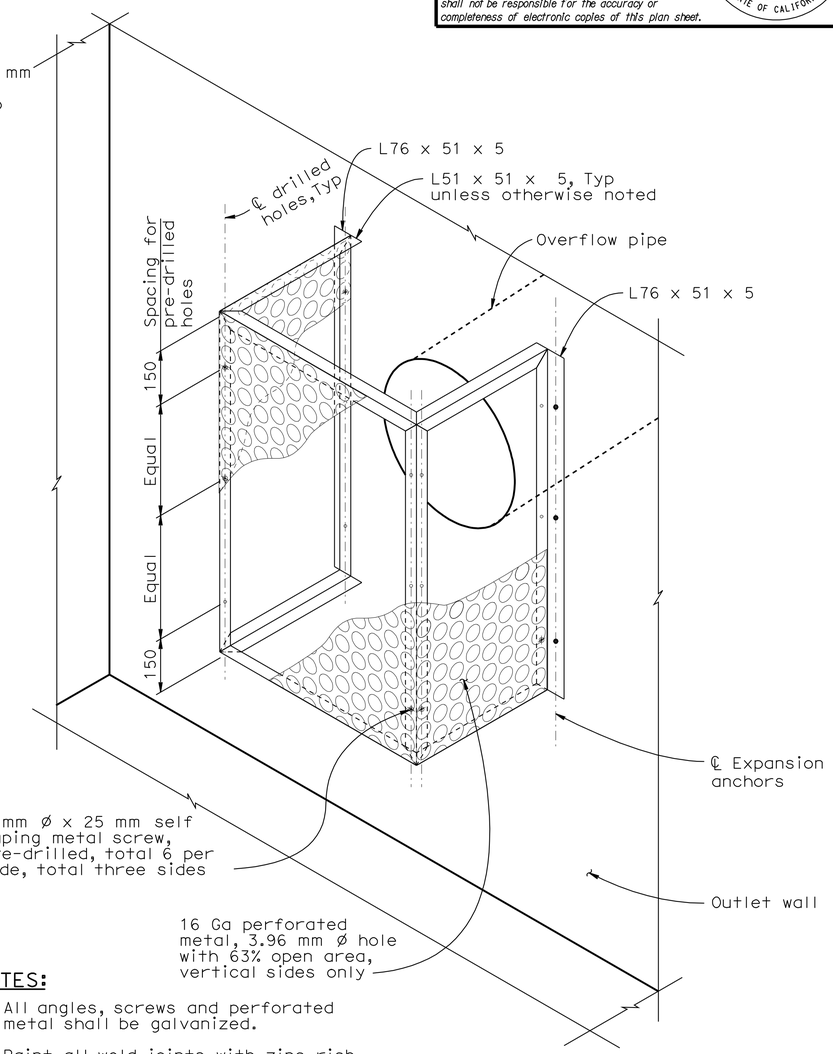

ISOMETRIC VIEW - TRASH SCREEN
No scale

NOTE: Metal hole ø exaggerated for emphasis.

NOTES:

1. All angles, screws and perforated metal shall be galvanized.
2. Paint all weld joints with zinc rich paint or galvanize after welding.

ALL DIMENSIONS ARE IN MILLIMETERS UNLESS OTHERWISE SHOWN

CONSTRUCTION DETAILS
C-63

RELEASE DATE ---	DESIGN	BY D.Dunrud	CHECKED J&P Peterson	---
FILE NO. ---	DETAILS	BY J&P Peterson	CHECKED J&P Peterson	
	SUBMITTED	BY J&P Peterson	DRAWING DATE 8/07	

STATE OF CALIFORNIA
DEPARTMENT OF TRANSPORTATION

DIVISION OF ENGINEERING SERVICES

BRIDGE NO.
KILOMETER POST

AUSTIN VAULT SAND FILTER
DETAILS No. 3

ORIGINAL SCALE IN MILLIMETERS FOR REDUCED PLANS 0 10 20 30 40 50 60 70 80 90 100

CU 07
EA 2159C1

DISREGARD PRINTS BEARING EARLIER REVISION DATES

REVISION DATES (PRELIMINARY STAGE ONLY)

SHEET 7 OF 9

USERNAME => trpierce

72159cga063.dgn

DATE PLOTTED => 22-JUN-2010 TIME PLOTTED => 13:23

DIST.	COUNTY	ROUTE	KILOMETER POST TOTAL PROJECT	SHEET NO.	TOTAL SHEETS
07	LA	5	2.9/4.9	123	1082

Caltrans Metric

Timothy B Sobelman 6-3-09
REGISTERED ENGINEER - CIVIL

6-21-10
PLANS APPROVAL DATE

REGISTERED PROFESSIONAL ENGINEER TIMOTHY B. SOBELMAN No. 59249 Exp. 6-30-09 CIVIL STATE OF CALIFORNIA

The State of California or its officers or agents shall not be responsible for the accuracy or completeness of electronic copies of this plan sheet.

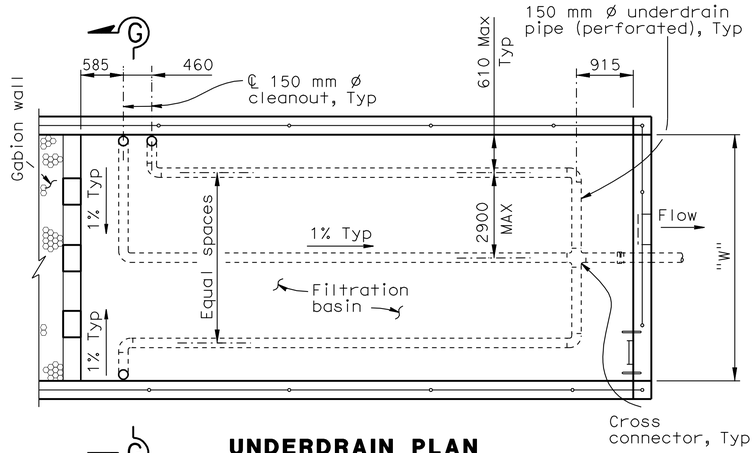

UNDERDRAIN PLAN (FILTRATION BASIN)

"W" = 4570 - 6400
No Scale

AVSF Type = (S or L 99)

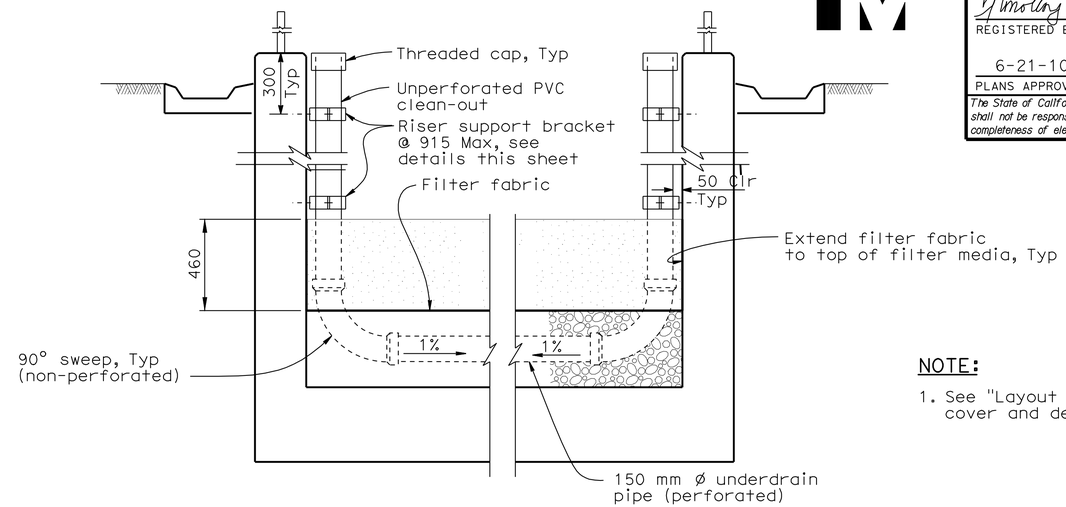

SECTION G - G

No Scale

NOTE:

1. See "Layout No. 1" sheet for Typical cover and depth of sand bed.

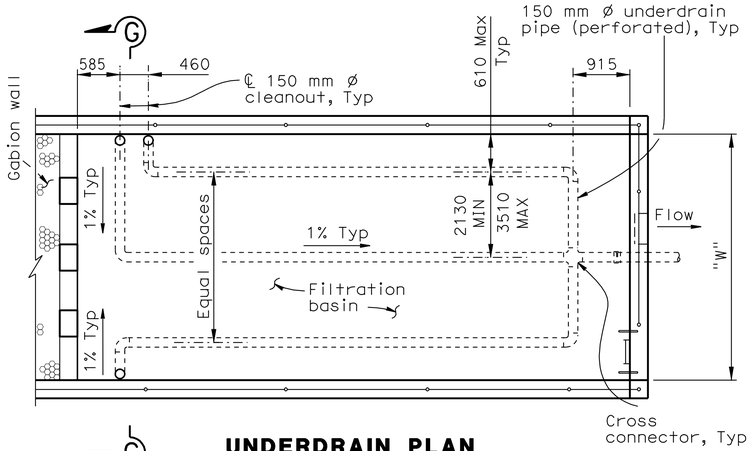

UNDERDRAIN PLAN (FILTRATION BASIN)

"W" = 5490 - 7320 - 8230
No Scale

AVSF Type = (S or L 142), L 283)

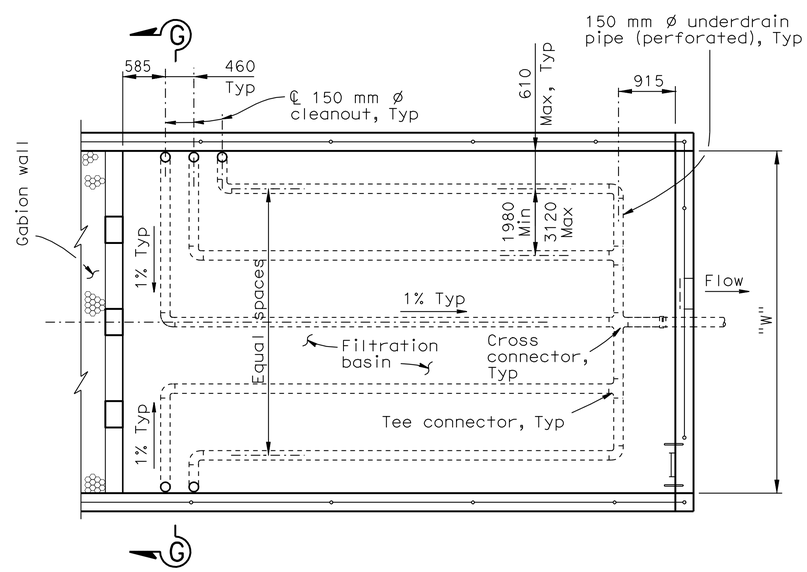

UNDERDRAIN PLAN (FILTRATION BASIN)

"W" = 9140 - 10970 - 13720
No Scale

AVSF Type = (S 283, S or L 425)

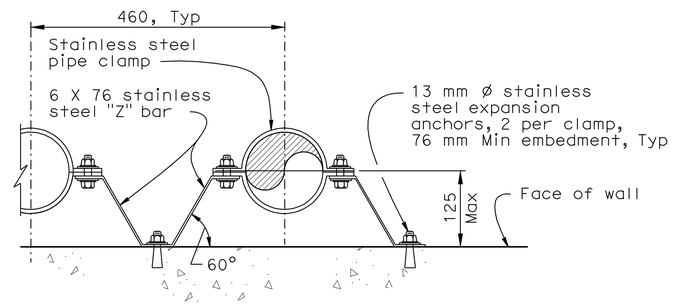

RISER SUPPORT BRACKET DETAIL

No Scale

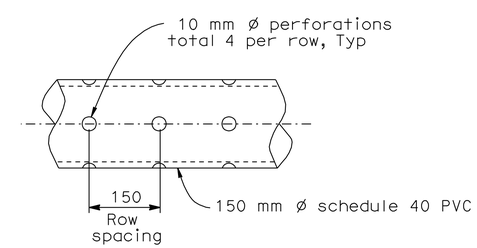

PERFORATED UNDERDRAIN PIPE

No Scale

ALL DIMENSIONS ARE IN MILLIMETERS UNLESS OTHERWISE SHOWN

CONSTRUCTION DETAILS
C-64

RELEASE DATE ---	DESIGN	BY D.Dunrud	CHECKED J&P Peterson	---
FILE NO. ---	DETAILS	BY J&P Peterson	CHECKED J&P Peterson	
	SUBMITTED	BY J&P Peterson	DRAWING DATE 8/07	

STATE OF CALIFORNIA
DEPARTMENT OF TRANSPORTATION

DIVISION OF ENGINEERING SERVICES

BRIDGE NO.
KILOMETER POST

AUSTIN VAULT SAND FILTER
DETAILS No. 4

ORIGINAL SCALE IN MILLIMETERS FOR REDUCED PLANS 0 10 20 30 40 50 60 70 80 90 100

CU 07
EA 2159C1

DISREGARD PRINTS BEARING EARLIER REVISION DATES

REVISION DATES (PRELIMINARY STAGE ONLY)

SHEET 8 OF 9

USERNAME => trpierce

72159cga064.dgn

DATE PLOTTED => 13:29 PLOTTED => 20-JUN-2008 DGN=PLOT

DIST.	COUNTY	ROUTE	KILOMETER POST TOTAL PROJECT	SHEET NO.	TOTAL SHEETS
07	LA	5	2.9/4.9	124	1082

Timothy B Sobelman 6-3-09
REGISTERED ENGINEER - CIVIL

6-21-10
PLANS APPROVAL DATE

REGISTERED PROFESSIONAL ENGINEER TIMOTHY B. SOBELMAN No. 59249 Exp. 6-30-09 CIVIL STATE OF CALIFORNIA

The State of California or its officers or agents shall not be responsible for the accuracy or completeness of electronic copies of this plan sheet.

Caltrans Metric

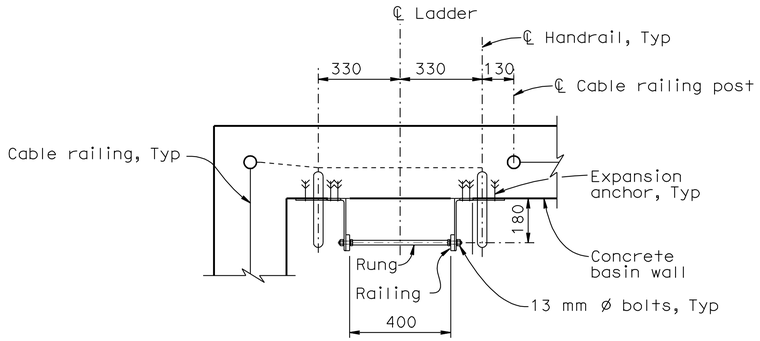

PLAN

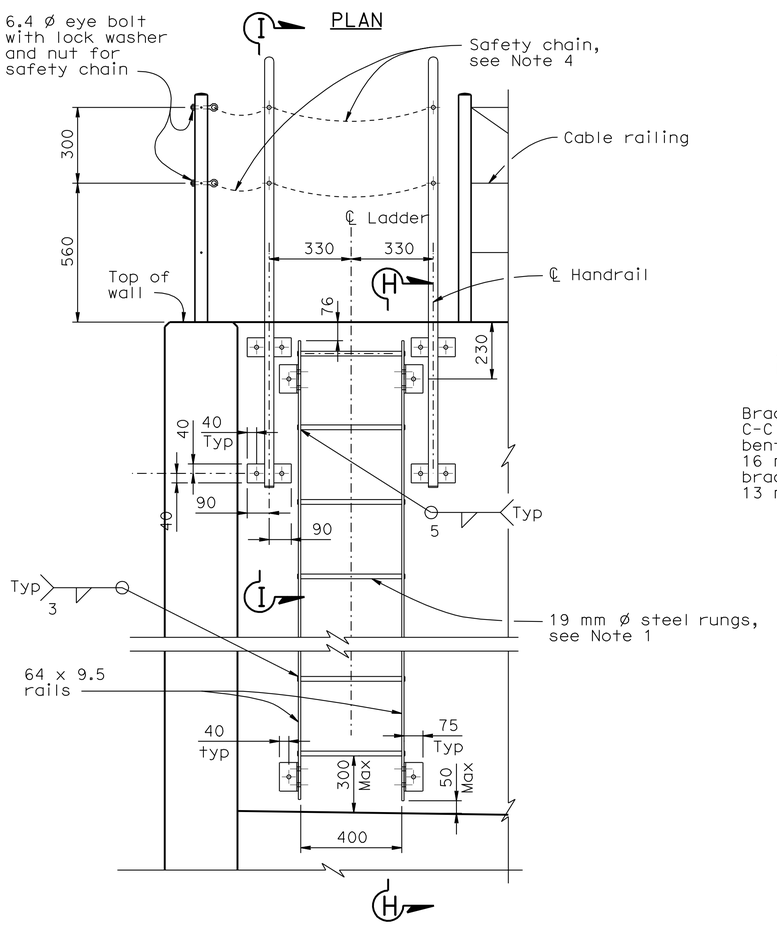

ELEVATION

LADDER

No Scale

NOTE: Cable railing not shown for clarity.

NOTES:

1. The distance between rungs shall not exceed 300 mm and shall be uniform throughout the length of wall.
2. Hardware shall be galvanized after fabrication.
3. Grind exposed corners to 5 mm radius.
4. Safety chain shall be 6 mm galvanized steel coil chain, approximately 12 links per 300 mm. Length shall be minimum which allows lock-up of safety railing. Material shall be grade 43 high test chain ASTM A413.

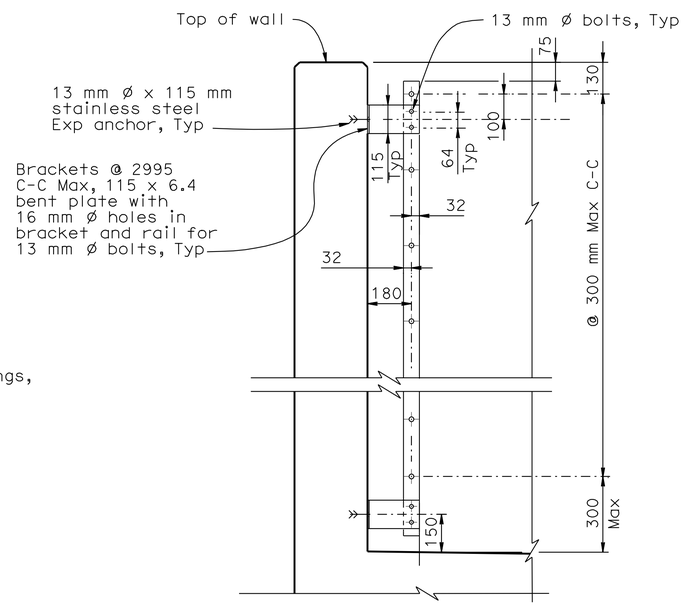

SECTION H - H

No Scale

NOTE: Handrail and cable railing not shown for clarity.

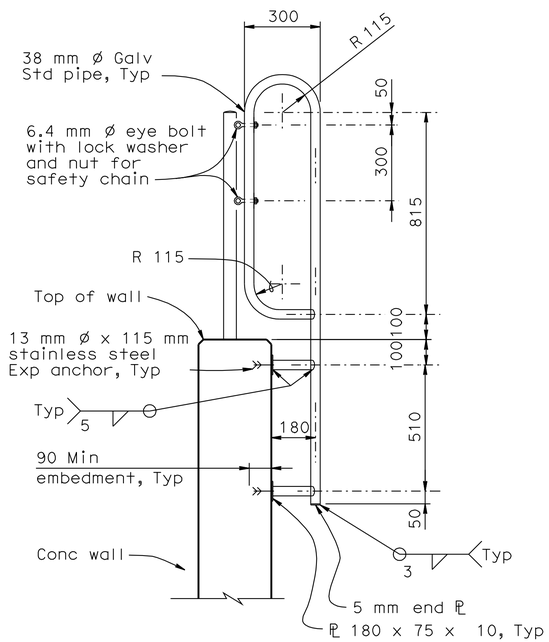

SECTION I - I

No Scale

ALL DIMENSIONS ARE IN MILLIMETERS UNLESS OTHERWISE SHOWN

CONSTRUCTION DETAILS

C-65

RELEASE DATE ---	DESIGN	BY D.Dunrud	CHECKED J&P Peterson
FILE NO. ---	DETAILS	BY J&P Peterson	CHECKED J&P Peterson
	SUBMITTED	BY J&P Peterson	DRAWING DATE 8/07

STATE OF CALIFORNIA
DEPARTMENT OF TRANSPORTATION

DIVISION OF ENGINEERING SERVICES

BRIDGE NO.

KILOMETER POST

AUSTIN VAULT SAND FILTER

MISCELLANEOUS DETAILS No. 1

ORIGINAL SCALE IN MILLIMETERS FOR REDUCED PLANS 0 10 20 30 40 50 60 70 80 90 100

CU 07
EA 2159C1

DISREGARD PRINTS BEARING EARLIER REVISION DATES

REVISION DATES (PRELIMINARY STAGE ONLY)

SHEET 9 OF 9

USERNAME => trpierce

72159cga065.dgn

DATE PLOTTED => 22-JUN-2010 TIME PLOTTED => 13:30

Dist	COUNTY	ROUTE	KILOMETER POST TOTAL PROJECT	SHEET No.	TOTAL SHEETS
07	LA	5	2.9/4.9	125	1082

REGISTERED CIVIL ENGINEER 12-23-09 DATE

6-21-10
PLANS APPROVAL DATE

REGISTERED PROFESSIONAL ENGINEER NGIM NANCY PE No. 58161 Exp. 6-30-10 CIVIL STATE OF CALIFORNIA

THE STATE OF CALIFORNIA OR ITS OFFICERS OR AGENTS SHALL NOT BE RESPONSIBLE FOR THE ACCURACY OR COMPLETENESS OF ELECTRONIC COPIES OF THIS PLAN SHEET.

Caltrans Metric

NOTE:

AERIALLY DEPOSITED LEAD (ADL) MATERIAL EXIST IN THE TOP 0.90 M WITHIN THE DEFINE AREA, AS SHOWN ON THE PLANS.

LEGEND:

- ROADWAY EXCAVATION (TYPE Y-2) AERIALLY DEPOSITED LEAD (ADL) SURFACE TO 0.91 m BELOW GROUND SURFACE.
- ROAD EXCAVATION (CONTAMINATED SOIL)
- CONTAMINATE SOIL DISPOSAL
- STRUCTURE EXCAVATION (CONTAMINATED SOIL)
- AREA WITH CONTAMINATED SOIL

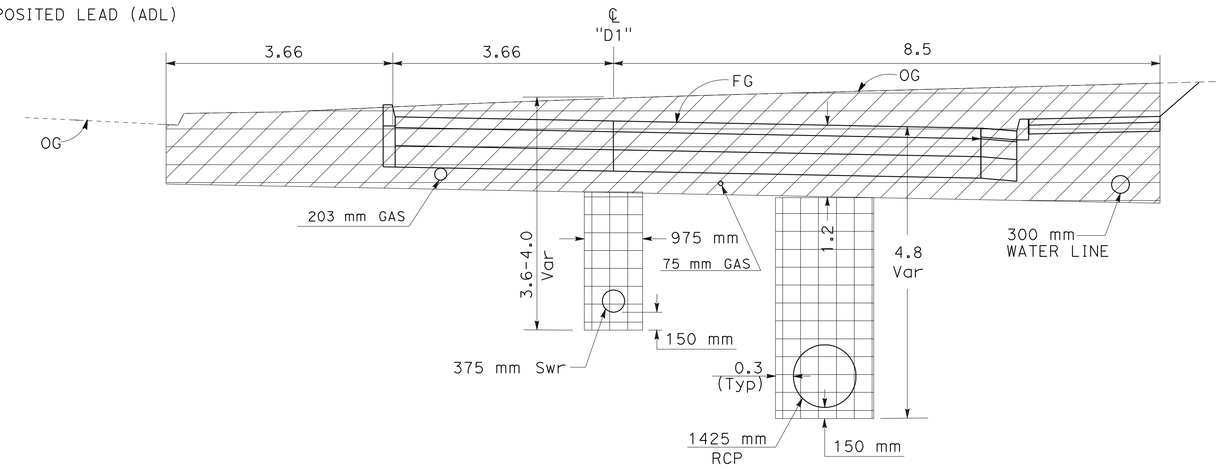

SECTION A-A
NO SCALE

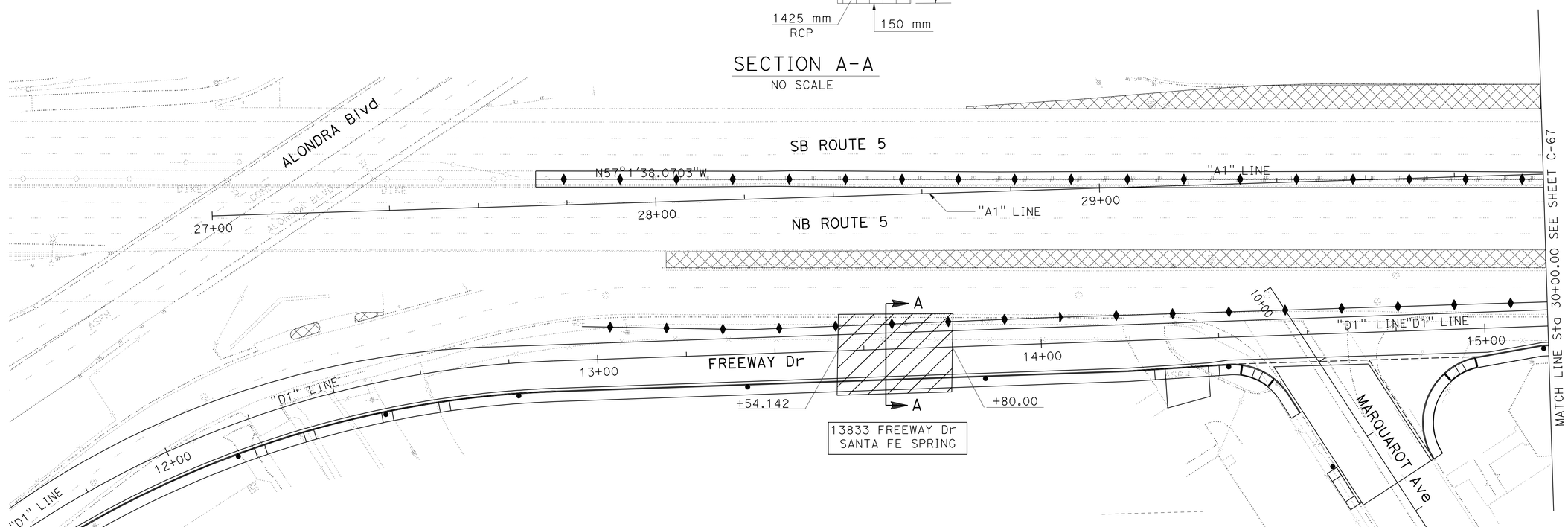

AERIALLY DEPOSITED LEAD (ADL) AND CONTAMINATED SOIL REMOVAL

ALL DIMENSIONS ARE IN METERS UNLESS OTHERWISE SHOWN

CONSTRUCTION DETAILS

SCALE 1:500

C-66

REVISED BY	DATE REVISED

KEVIN Q NGUYEN — NGIM NANCY PE — CALCULATED-DESIGNED BY

NGIM NANCY PE — CHECKED BY — FUNCTIONAL SUPERVISOR

STATE OF CALIFORNIA - DEPARTMENT OF TRANSPORTATION
Caltrans OFFICE OF DESIGN A

LAST REVISION 00-00-00 — DATE PLOTTED => 29-JUN-2010 — TIME PLOTTED => 09:06

Dist	COUNTY	ROUTE	KILOMETER POST TOTAL PROJECT	SHEET No.	TOTAL SHEETS
07	LA	5	2.9/4.9	126	1082

Ngim N. Pe 12-23-09
REGISTERED CIVIL ENGINEER DATE

6-21-10
PLANS APPROVAL DATE

REGISTERED PROFESSIONAL ENGINEER NGIM NANCY PE No. 58161 Exp. 6-30-10 CIVIL STATE OF CALIFORNIA

THE STATE OF CALIFORNIA OR ITS OFFICERS OR AGENTS SHALL NOT BE RESPONSIBLE FOR THE ACCURACY OR COMPLETENESS OF ELECTRONIC COPIES OF THIS PLAN SHEET.

Caltrans Metric

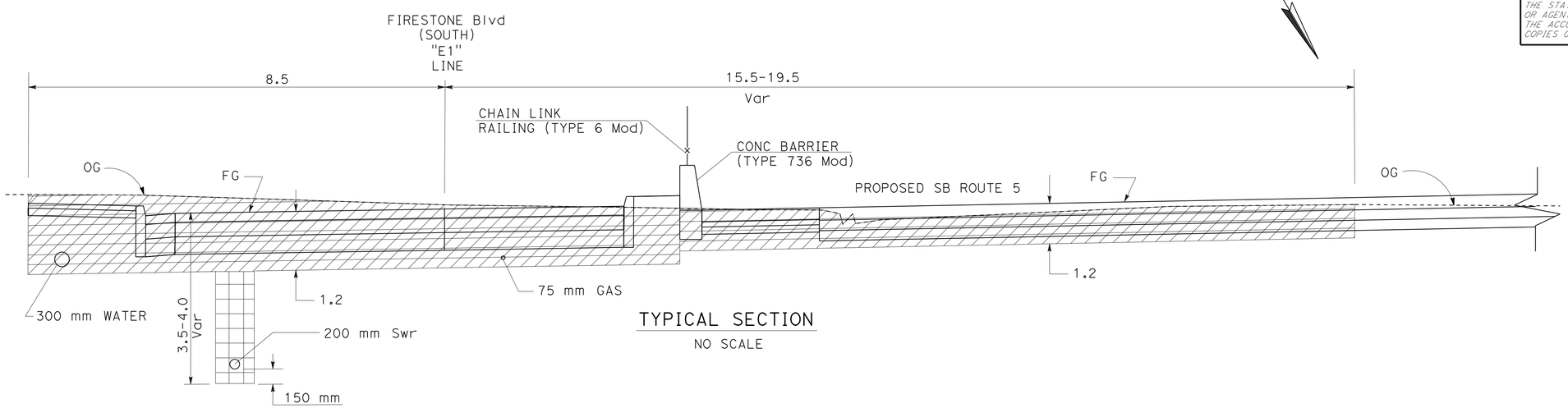

TYPICAL SECTION
NO SCALE

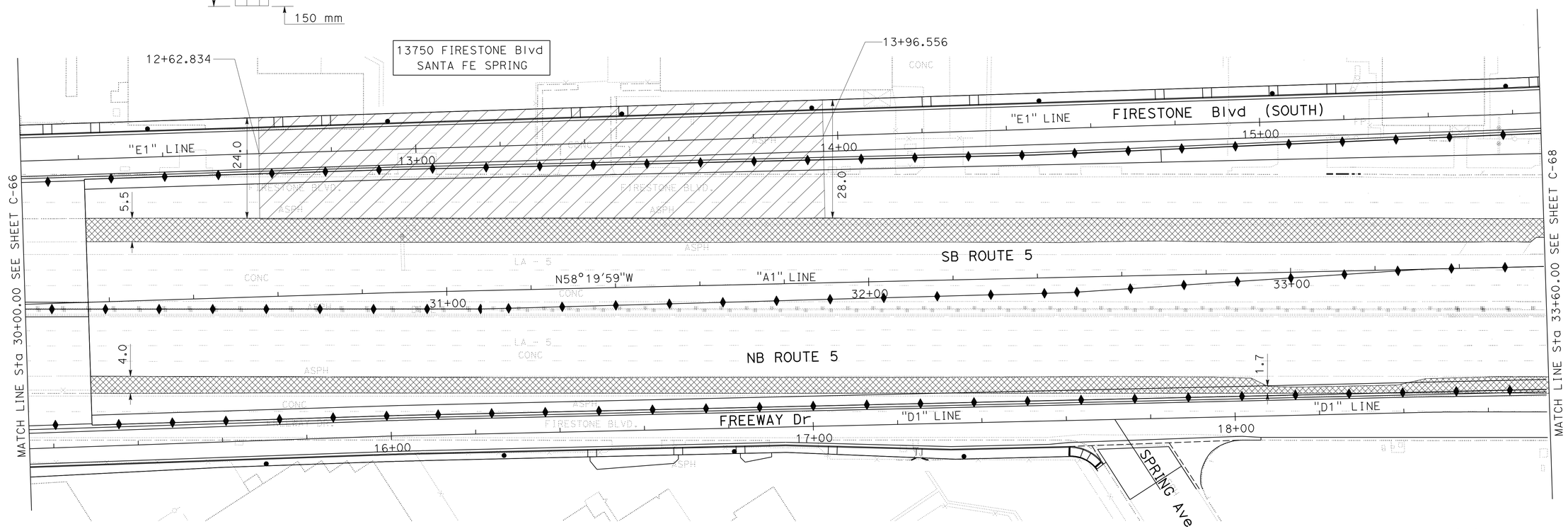

AERIALLY LEAD DEPOSITED (ADL) AND CONTAMINATED SOIL REMOVAL

ALL DIMENSIONS ARE IN METERS UNLESS OTHERWISE SHOWN

CONSTRUCTION DETAILS

SCALE 1:500

C-67

STATE OF CALIFORNIA - DEPARTMENT OF TRANSPORTATION
Caltrans OFFICE OF DESIGN A

FUNCTIONAL SUPERVISOR: NGIM NANCY PE
CALCULATED-DESIGNED BY: KEVIN Q NGUYEN
CHECKED BY: NGIM NANCY PE
REVISED BY / DATE REVISED

LAST REVISION 00-00-00 | DATE PLOTTED => 29-JUN-2010 | TIME PLOTTED => 09:06

Dist	COUNTY	ROUTE	KILOMETER POST TOTAL PROJECT	SHEET No.	TOTAL SHEETS
07	LA	5	2.9/4.9	127	1082

REGISTERED CIVIL ENGINEER 12-23-09 DATE

6-21-10
PLANS APPROVAL DATE

REGISTERED PROFESSIONAL ENGINEER NGIM NANCY PE No. 58161 Exp. 6-30-10 CIVIL STATE OF CALIFORNIA

THE STATE OF CALIFORNIA OR ITS OFFICERS OR AGENTS SHALL NOT BE RESPONSIBLE FOR THE ACCURACY OR COMPLETENESS OF ELECTRONIC COPIES OF THIS PLAN SHEET.

Caltrans Metric

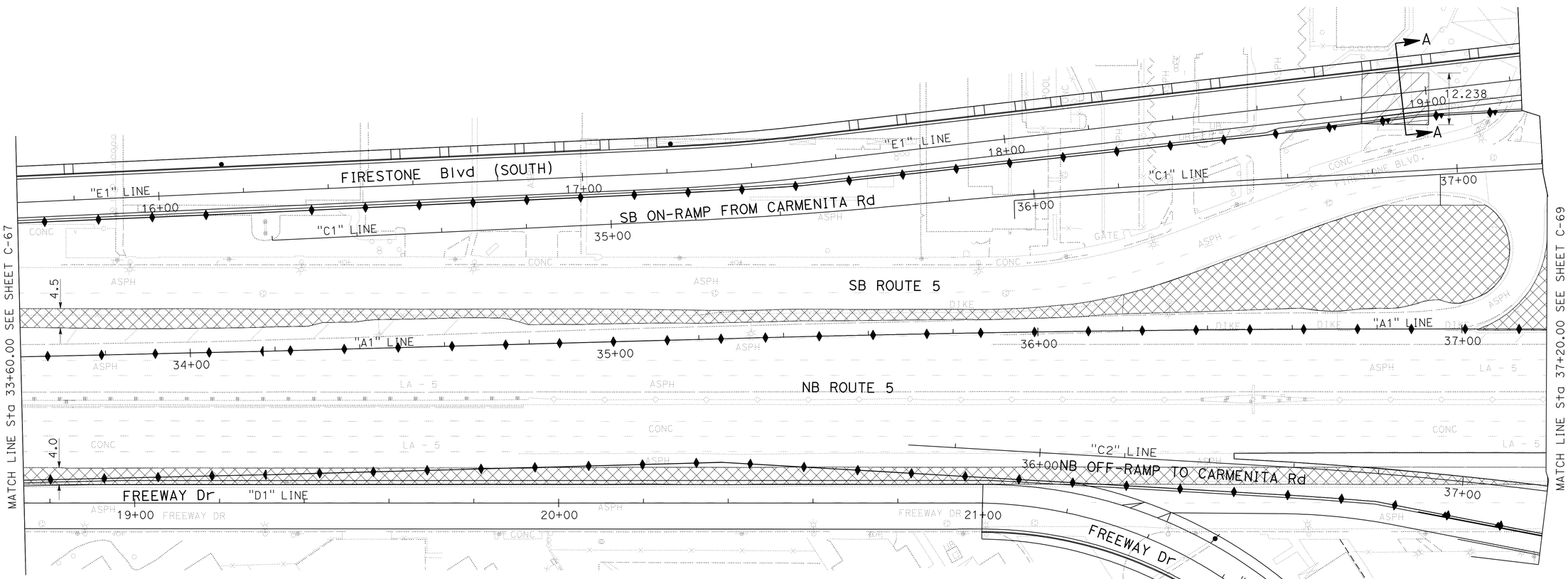

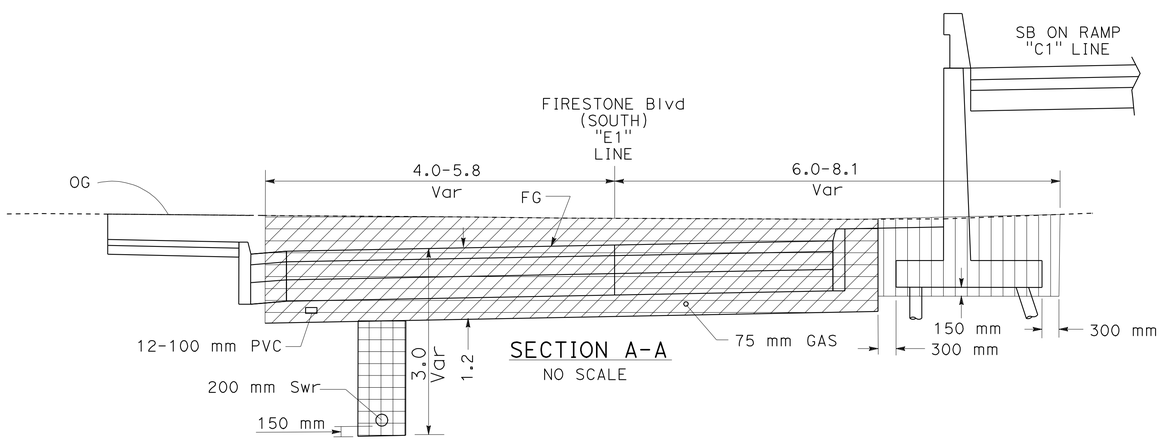

AERIALLY DEPOSITED LEAD (ADL) AND CONTAMINATED SOIL REMOVAL

ALL DIMENSIONS ARE IN METERS UNLESS OTHERWISE SHOWN

CONSTRUCTION DETAILS

SCALE 1:500

C-68

STATE OF CALIFORNIA - DEPARTMENT OF TRANSPORTATION
Caltrans OFFICE OF DESIGN A

FUNCTIONAL SUPERVISOR: NGIM NANCY PE
CALCULATED-DESIGNED BY: KEVIN Q NGUYEN
CHECKED BY: NGIM NANCY PE
REVISED BY
DATE REVISED

LAST REVISION 00-00-00
DATE PLOTTED => 22-JUN-2010
TIME PLOTTED => 13:30

Dist	COUNTY	ROUTE	KILOMETER POST TOTAL PROJECT	SHEET No.	TOTAL SHEETS
07	LA	5	2.9/4.9	128	1082

REGISTERED CIVIL ENGINEER 12-23-09 DATE

6-21-10
PLANS APPROVAL DATE

REGISTERED PROFESSIONAL ENGINEER NGIM NANCY PE No. 58161 Exp. 6-30-10 CIVIL STATE OF CALIFORNIA

THE STATE OF CALIFORNIA OR ITS OFFICERS OR AGENTS SHALL NOT BE RESPONSIBLE FOR THE ACCURACY OR COMPLETENESS OF ELECTRONIC COPIES OF THIS PLAN SHEET.

Caltrans Metric

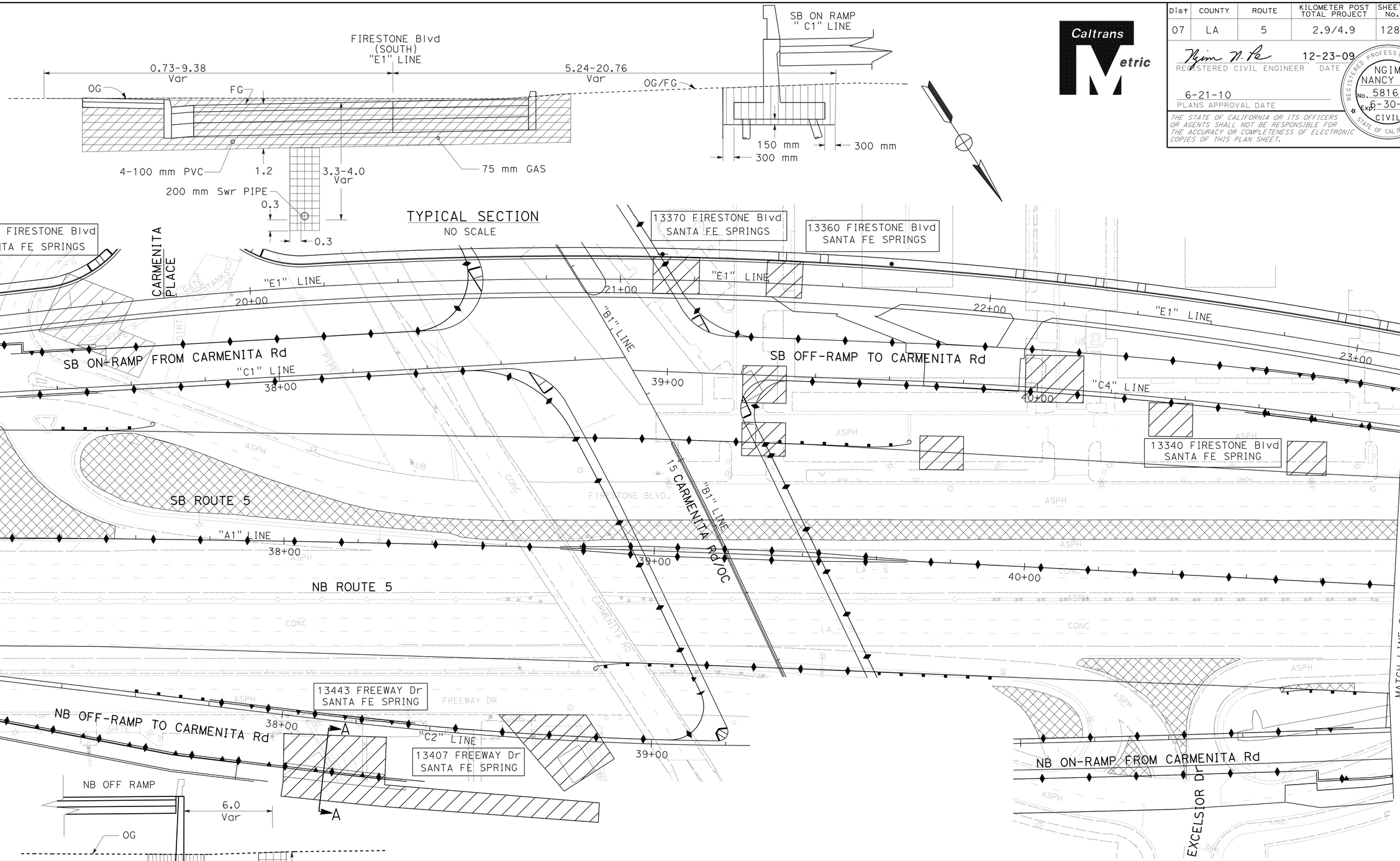

AERIALLY DEPOSITED LEAD (ADL) AND CONTAMINATED SOIL REMOVAL

ALL DIMENSIONS ARE IN METERS UNLESS OTHERWISE SHOWN

CONSTRUCTION DETAILS

SCALE 1:500

C-69

STATE OF CALIFORNIA - DEPARTMENT OF TRANSPORTATION
Caltrans OFFICE OF DESIGN A

FUNCTIONAL SUPERVISOR: NGIM NANCY PE
CALCULATED-DESIGNED BY: KEVIN Q NGUYEN
CHECKED BY: NGIM NANCY PE
REVISED BY / DATE REVISED

LAST REVISION 00-00-00 | DATE PLOTTED => 22-JUN-2010 | TIME PLOTTED => 13:30

Dist	COUNTY	ROUTE	KILOMETER POST TOTAL PROJECT	SHEET No.	TOTAL SHEETS
07	LA	5	2.9/4.9	129	1082

REGISTERED CIVIL ENGINEER 12-23-09 DATE

6-21-10
PLANS APPROVAL DATE

REGISTERED PROFESSIONAL ENGINEER NGIM NANCY PE No. 58161 Exp. 6-30-10 CIVIL STATE OF CALIFORNIA

THE STATE OF CALIFORNIA OR ITS OFFICERS OR AGENTS SHALL NOT BE RESPONSIBLE FOR THE ACCURACY OR COMPLETENESS OF ELECTRONIC COPIES OF THIS PLAN SHEET.

Caltrans Metric

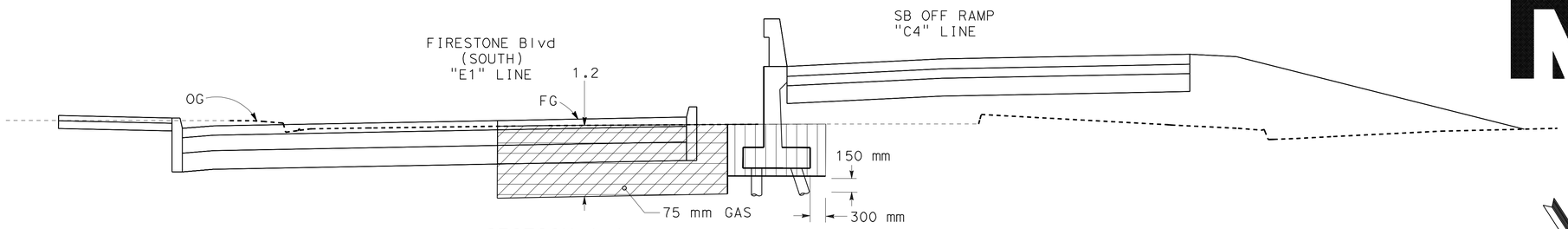

SECTION A-A

NO SCALE

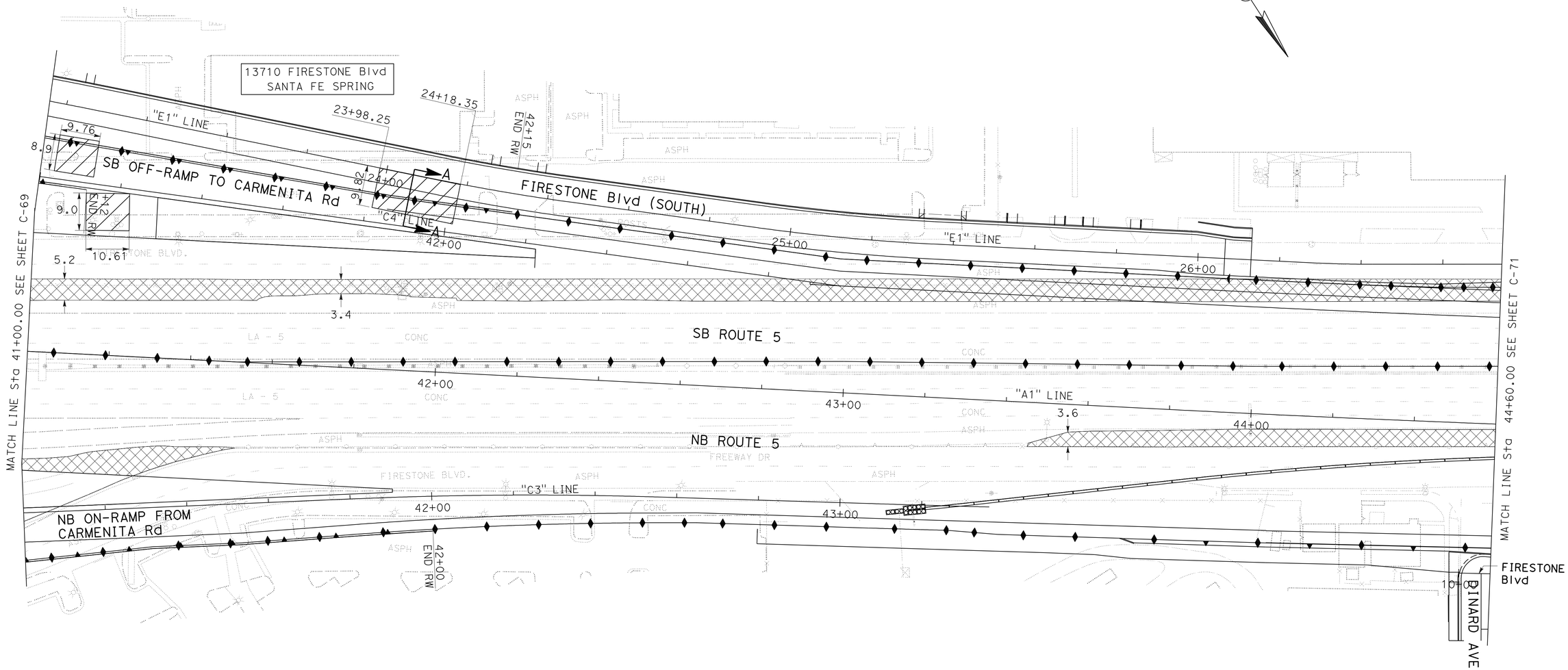

AERIALLY DEPOSITED LEAD (ADL) AND CONTAMINATED SOIL REMOVAL

ALL DIMENSIONS ARE IN METERS UNLESS OTHERWISE SHOWN

CONSTRUCTION DETAILS

SCALE 1:500

C-70

STATE OF CALIFORNIA - DEPARTMENT OF TRANSPORTATION
Caltrans OFFICE OF DESIGN A

FUNCTIONAL SUPERVISOR NGIM NANCY PE
CALCULATED-DESIGNED BY NGIM NANCY PE
CHECKED BY
REVISED BY
DATE REVISED

KEVIN Q NGUYEN

LAST REVISION 00-00-00
DATE PLOTTED => 22-JUN-2010
TIME PLOTTED => 13:31

Dist	COUNTY	ROUTE	KILOMETER POST TOTAL PROJECT	SHEET No.	TOTAL SHEETS
07	LA	5	2.9/4.9	130	1082

Ngim N. Pe 12-23-09
REGISTERED CIVIL ENGINEER DATE

6-21-10
PLANS APPROVAL DATE

REGISTERED PROFESSIONAL ENGINEER NGIM NANCY PE No. 58161 Exp. 6-30-10 CIVIL STATE OF CALIFORNIA

THE STATE OF CALIFORNIA OR ITS OFFICERS OR AGENTS SHALL NOT BE RESPONSIBLE FOR THE ACCURACY OR COMPLETENESS OF ELECTRONIC COPIES OF THIS PLAN SHEET.

Caltrans Metric

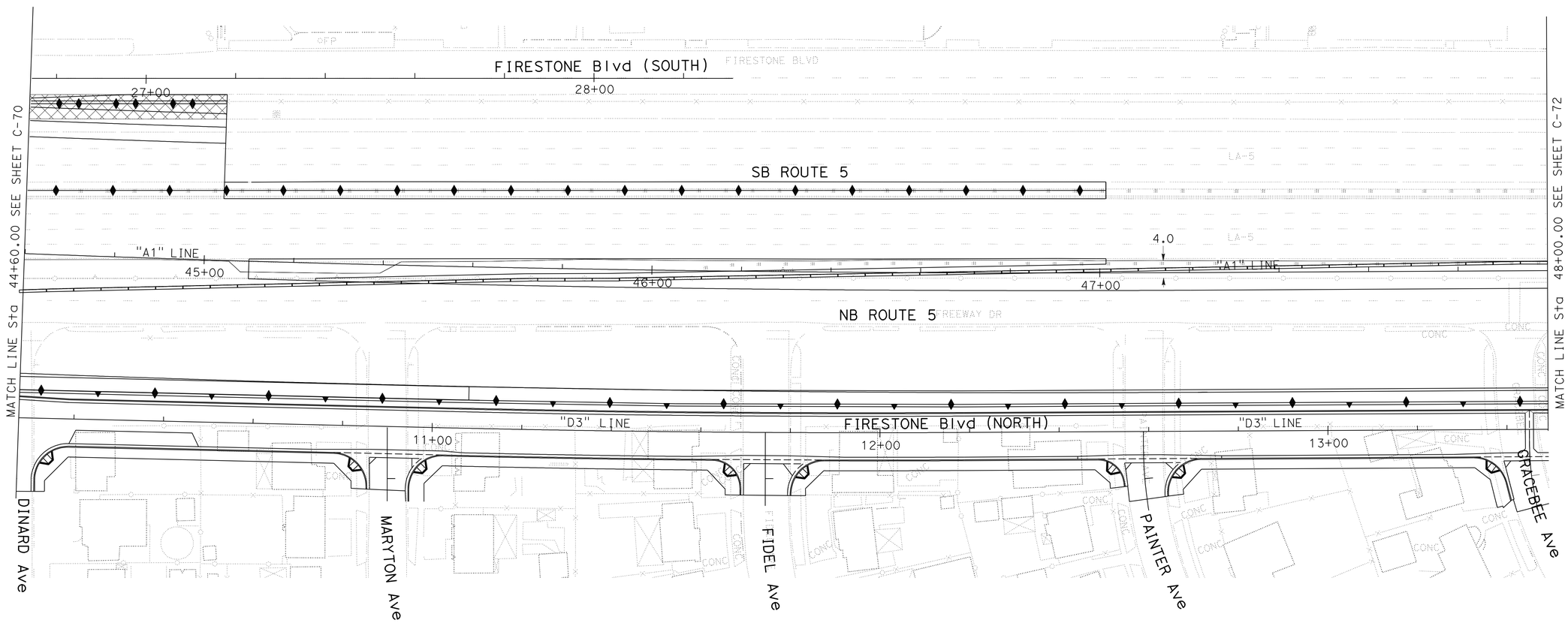

AERIALLY DEPOSITED LEAD (ADL) AND CONTAMINATED SOIL REMOVAL

ALL DIMENSIONS ARE IN METERS UNLESS OTHERWISE SHOWN

CONSTRUCTION DETAILS

SCALE 1:500

C-71

KEVIN Q NGUYEN — CALCULATED-DESIGNED BY
NGIM NANCY PE — CHECKED BY
NGIM NANCY PE — FUNCTIONAL SUPERVISOR
REVISED BY — DATE REVISED

STATE OF CALIFORNIA - DEPARTMENT OF TRANSPORTATION
Caltrans **OFFICE OF DESIGN A**

LAST REVISION 00-00-00 | DATE PLOTTED => 22-JUN-2010 | TIME PLOTTED => 13:31

Dist	COUNTY	ROUTE	KILOMETER POST TOTAL PROJECT	SHEET No.	TOTAL SHEETS
07	LA	5	2.9/4.9	131	1082

Caltrans Metric

REGISTERED CIVIL ENGINEER 12-23-09 DATE

6-21-10
PLANS APPROVAL DATE

REGISTERED PROFESSIONAL ENGINEER NGIM NANCY PE No. 58161 Exp. 6-30-10 CIVIL STATE OF CALIFORNIA

THE STATE OF CALIFORNIA OR ITS OFFICERS OR AGENTS SHALL NOT BE RESPONSIBLE FOR THE ACCURACY OR COMPLETENESS OF ELECTRONIC COPIES OF THIS PLAN SHEET.

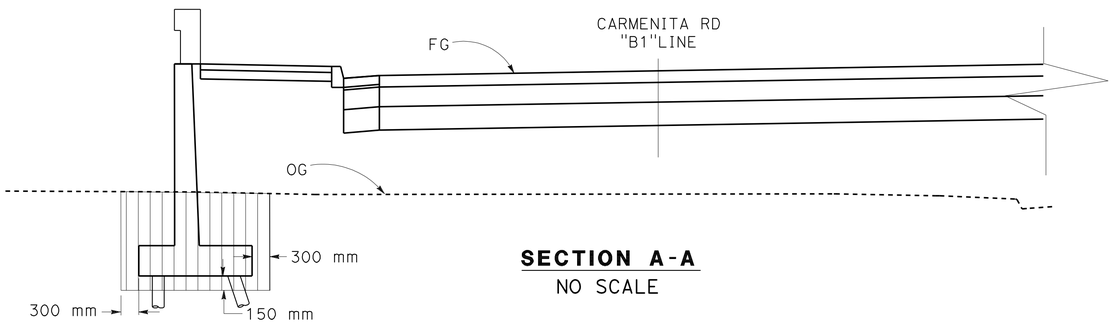

SECTION A-A
NO SCALE

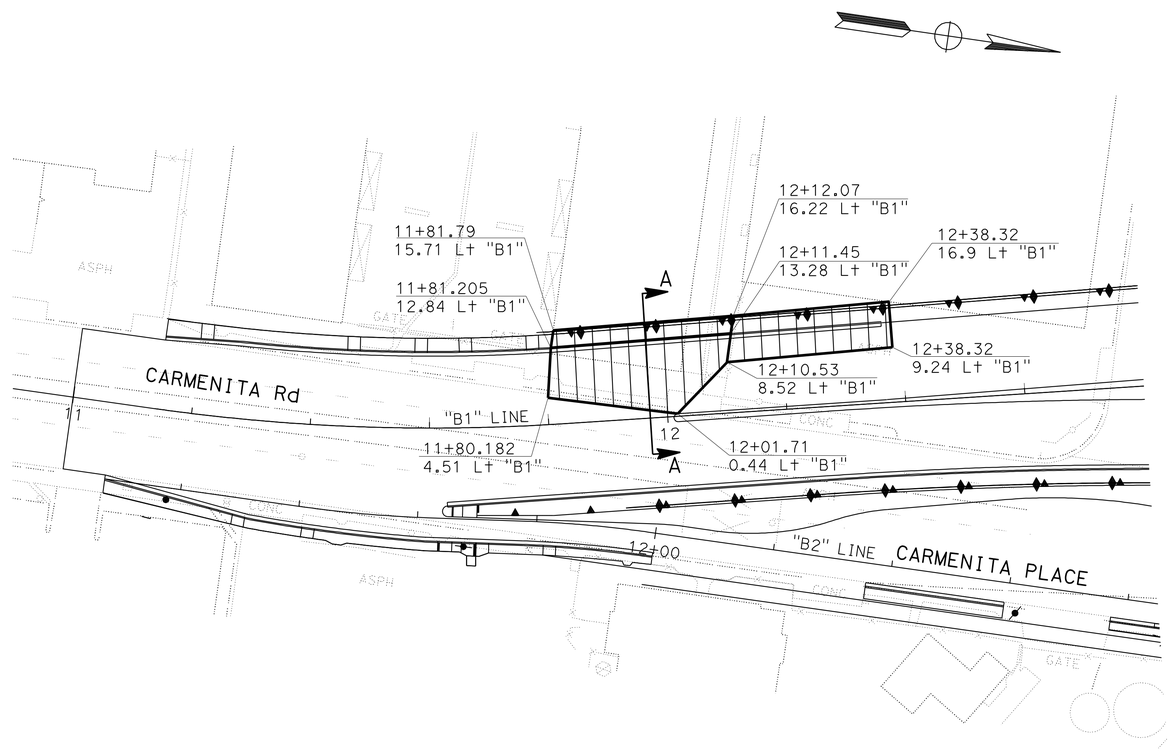

(CONTAMINATED SOIL REMOVAL)

ALL DIMENSIONS ARE IN
METERS UNLESS OTHERWISE SHOWN

CONSTRUCTION DETAILS
SCALE 1:500

C-72

REVISED BY	DATE REVISED
KEVIN Q NGUYEN	
NGIM NANCY PE	
CALCULATED-DESIGNED BY	
CHECKED BY	
FUNCTIONAL SUPERVISOR	
NGIM NANCY PE	

STATE OF CALIFORNIA - DEPARTMENT OF TRANSPORTATION
Caltrans **OFFICE OF DESIGN A**

LAST REVISION 00-00-00 | DATE PLOTTED => 22-JUN-2010 | TIME PLOTTED => 13:31

Dist	COUNTY	ROUTE	KILOMETER POST TOTAL PROJECT	SHEET No.	TOTAL SHEETS
07	LA	5	2.9/4.9	132	1082

Caltrans Metric

REGISTERED CIVIL ENGINEER 12-23-09 DATE

6-21-10
PLANS APPROVAL DATE

REGISTERED PROFESSIONAL ENGINEER NGIM NANCY PE No. 58161 Exp. 6-30-10 CIVIL STATE OF CALIFORNIA

THE STATE OF CALIFORNIA OR ITS OFFICERS OR AGENTS SHALL NOT BE RESPONSIBLE FOR THE ACCURACY OR COMPLETENESS OF ELECTRONIC COPIES OF THIS PLAN SHEET.

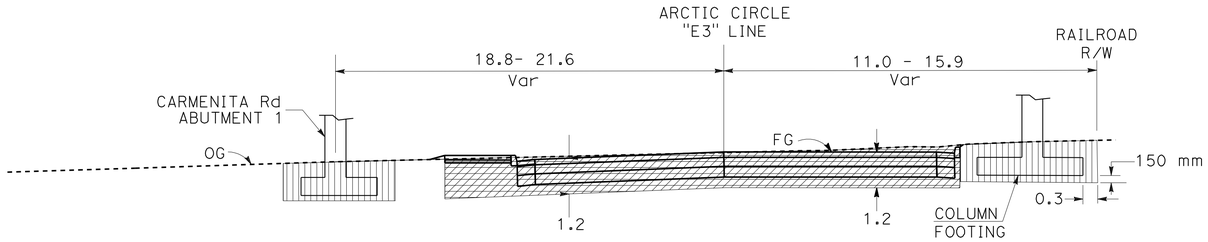

TYPICAL SECTION
NO SCALE

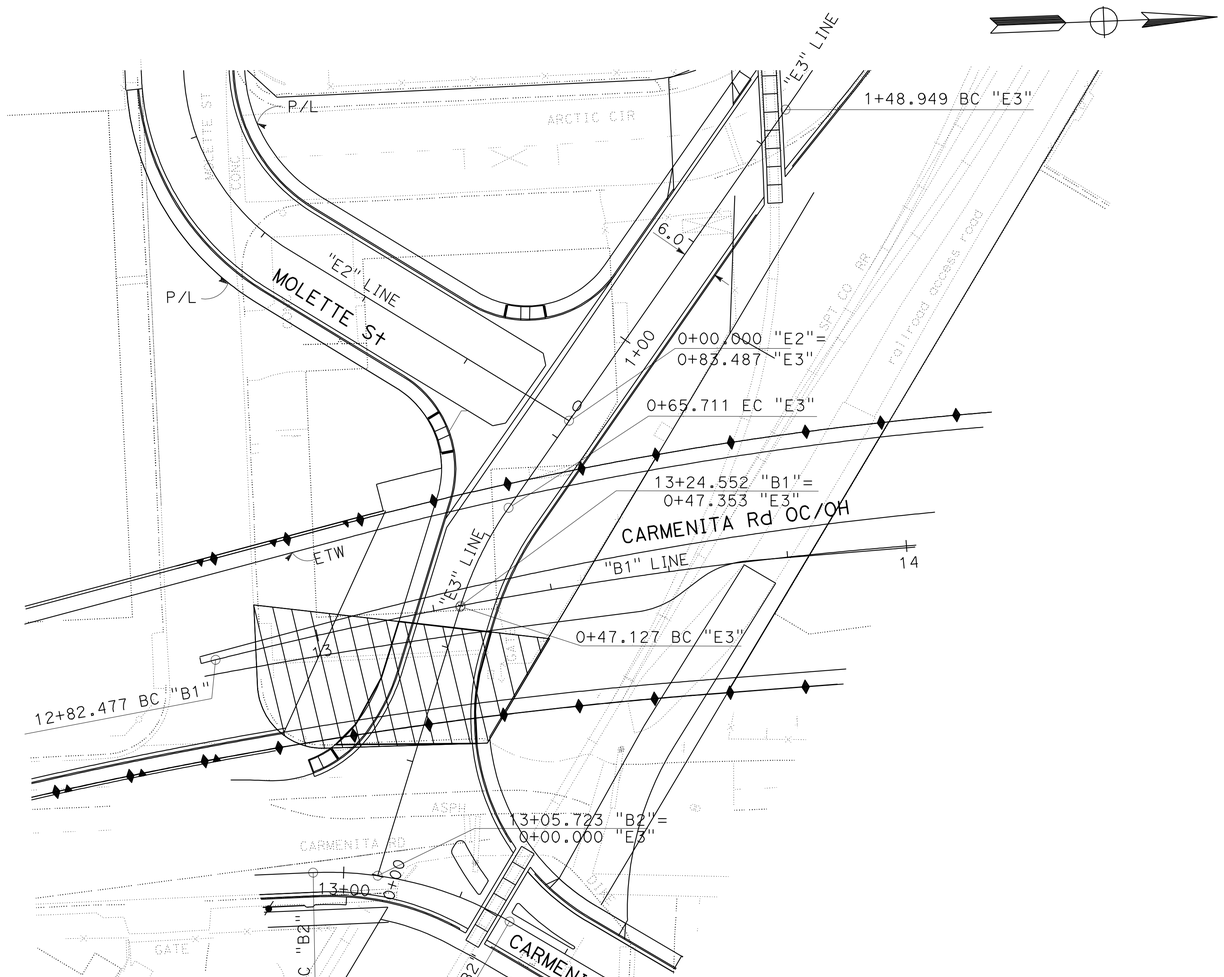

(CONTAMINATED SOIL REMOVAL)

ALL DIMENSIONS ARE IN
METERS UNLESS OTHERWISE SHOWN

CONSTRUCTION DETAILS

SCALE 1:500

C-73

STATE OF CALIFORNIA - DEPARTMENT OF TRANSPORTATION
Caltrans **OFFICE OF DESIGN A**

FUNCTIONAL SUPERVISOR: NGIM NANCY PE

CALCULATED-DESIGNED BY: KEVIN Q NGUYEN
CHECKED BY: NGIM NANCY PE

REVISED BY | DATE REVISED

LAST REVISION 00-00-00 | DATE PLOTTED => 22-JUN-2010 | TIME PLOTTED => 13:31

Dist	COUNTY	ROUTE	KILOMETER POST TOTAL PROJECT	SHEET No.	TOTAL SHEETS
07	LA	5	2.9/4.9	133	1082

Ngim N. Pe 12-23-09
REGISTERED CIVIL ENGINEER DATE

6-21-10
PLANS APPROVAL DATE

REGISTERED PROFESSIONAL ENGINEER NGIM NANCY PE No. 58161 Exp. 6-30-10 CIVIL STATE OF CALIFORNIA

THE STATE OF CALIFORNIA OR ITS OFFICERS OR AGENTS SHALL NOT BE RESPONSIBLE FOR THE ACCURACY OR COMPLETENESS OF ELECTRONIC COPIES OF THIS PLAN SHEET.

Caltrans Metric

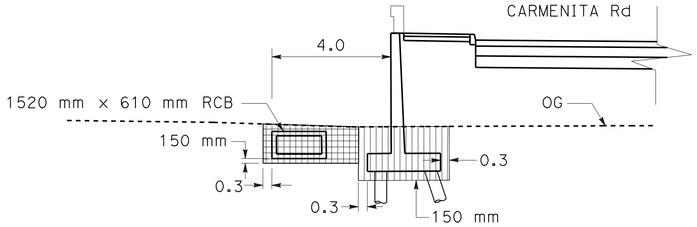

SECTION A-A
NO SCALE

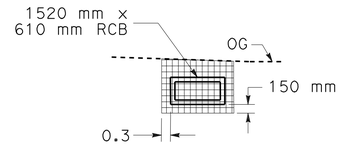

SECTION B-B
NO SCALE

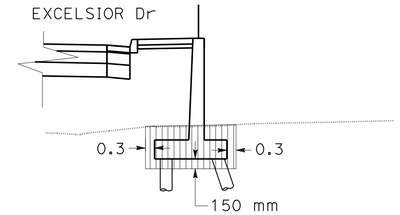

SECTION C-C
NO SCALE

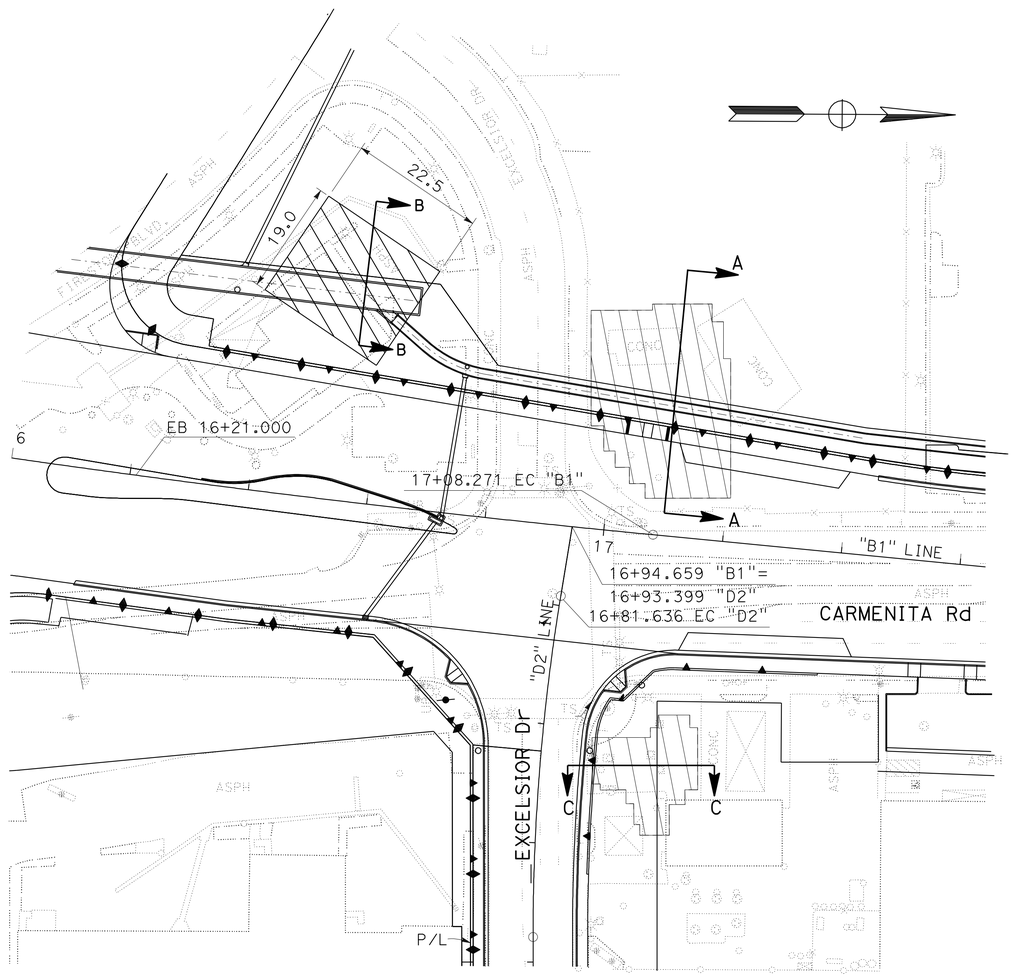

(CONTAMINATED SOIL REMOVAL)

ALL DIMENSIONS ARE IN
METERS UNLESS OTHERWISE SHOWN

CONSTRUCTION DETAILS

SCALE 1:500

C-74

STATE OF CALIFORNIA - DEPARTMENT OF TRANSPORTATION
Caltrans OFFICE OF DESIGN A

FUNCTIONAL SUPERVISOR: NGIM NANCY PE
CALCULATED-DESIGNED BY: KEVIN Q NGUYEN
CHECKED BY: NGIM NANCY PE
REVISED BY
DATE REVISED

LAST REVISION 00-00-00
DATE PLOTTED => 22-JUN-2010
TIME PLOTTED => 13:31

Dist	COUNTY	ROUTE	KILOMETER POST TOTAL PROJECT	SHEET No.	TOTAL SHEETS
07	LA	5	2.9/4.9	134	1082

Caltrans Metric

REGISTERED CIVIL ENGINEER 12-23-09 DATE

6-21-10
PLANS APPROVAL DATE

REGISTERED PROFESSIONAL ENGINEER NGIM NANCY PE No. 58161 Exp. 6-30-10 CIVIL STATE OF CALIFORNIA

THE STATE OF CALIFORNIA OR ITS OFFICERS OR AGENTS SHALL NOT BE RESPONSIBLE FOR THE ACCURACY OR COMPLETENESS OF ELECTRONIC COPIES OF THIS PLAN SHEET.

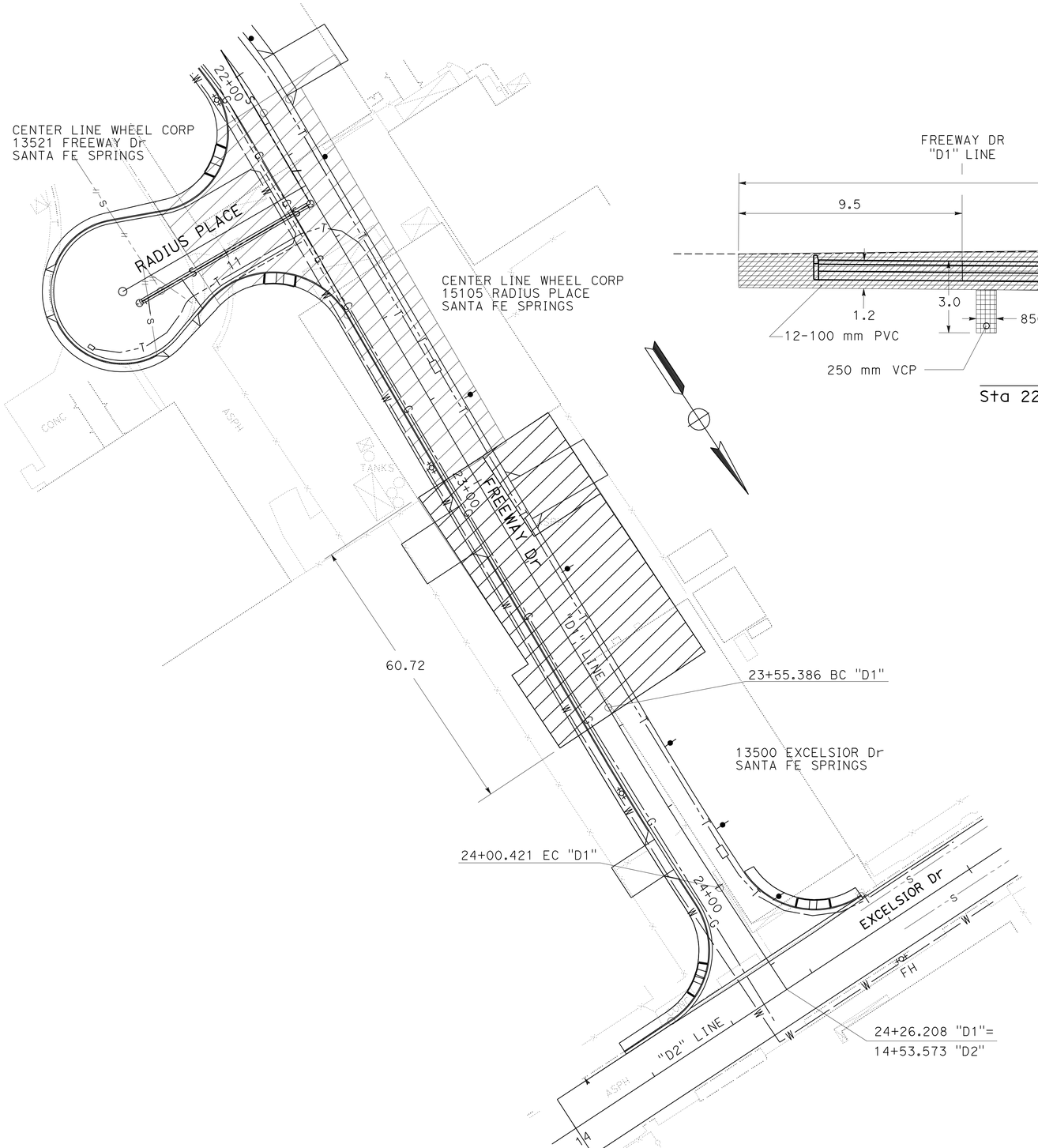

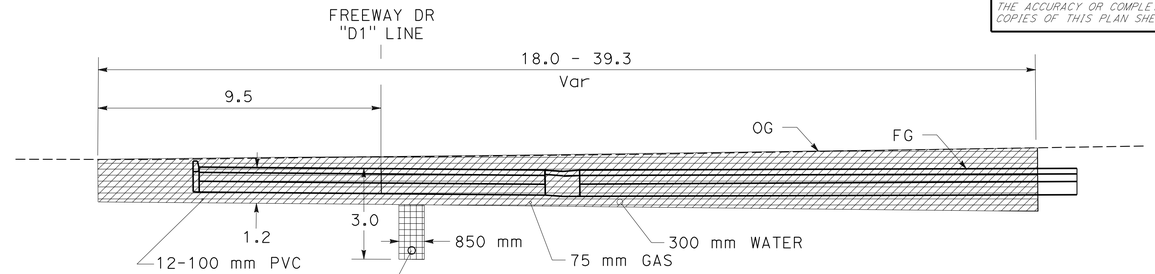

TYPICAL SECTION
Sta 22+07.30 TO 22+55.50 "D1" LINE
NO SCALE

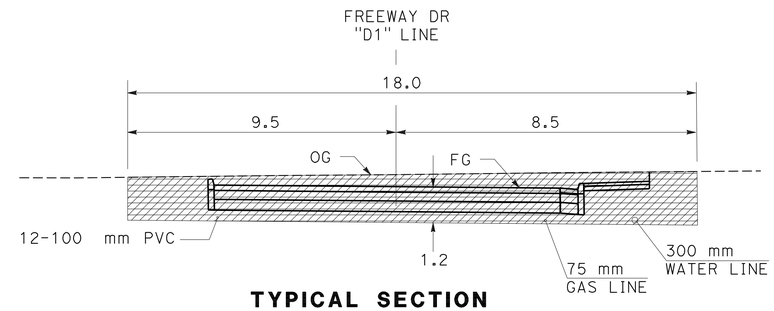

TYPICAL SECTION
Sta 22+55.50 TO 22+95.70 "D1" LINE
NO SCALE

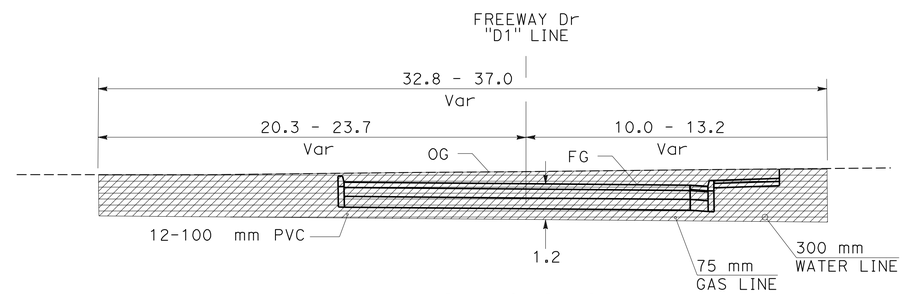

TYPICAL SECTION
Sta 22+95.70 TO 23+56.90 "D1" LINE
NO SCALE

(CONTAMINATED SOIL REMOVAL)

ALL DIMENSIONS ARE IN
METERS UNLESS OTHERWISE SHOWN

CONSTRUCTION DETAILS

SCALE 1:500

C-75

STATE OF CALIFORNIA - DEPARTMENT OF TRANSPORTATION
Caltrans OFFICE OF DESIGN A

FUNCTIONAL SUPERVISOR: NGIM NANCY PE
CALCULATED-DESIGNED BY: KEVIN Q NGUYEN
CHECKED BY: NGIM NANCY PE
REVISED BY
DATE REVISED

LAST REVISION 00-00-00
DATE PLOTTED => 22-JUN-2010
TIME PLOTTED => 13:31

Dist	COUNTY	ROUTE	KILOMETER POST TOTAL PROJECT	SHEET No.	TOTAL SHEETS
07	LA	5	2.9/4.9	135	1082

REGISTERED CIVIL ENGINEER 12-23-09 DATE

6-21-10
PLANS APPROVAL DATE

REGISTERED PROFESSIONAL ENGINEER NGIM NANCY PE No. 58161 Exp. 6-30-10 CIVIL STATE OF CALIFORNIA

THE STATE OF CALIFORNIA OR ITS OFFICERS OR AGENTS SHALL NOT BE RESPONSIBLE FOR THE ACCURACY OR COMPLETENESS OF ELECTRONIC COPIES OF THIS PLAN SHEET.

Caltrans Metric

NOTE:
TOTAL TYPE Y2 REUSE = 9,092 m^3

LEGEND:

STRUCTURE BACKFILL, ADL (TYPE Y-2) AND ROADWAY EMBANKMENT, ADL (TYPE Y-2) REUSE.

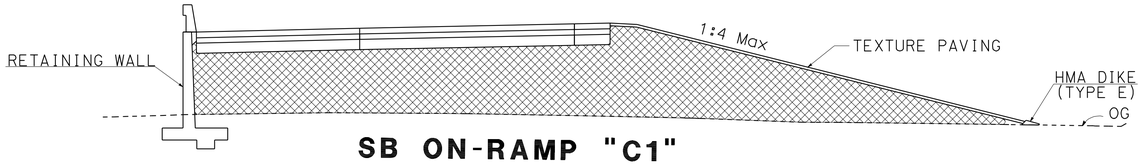

SB ON-RAMP "C1"
SB OFF-RAMP "C4"

NO SCALE

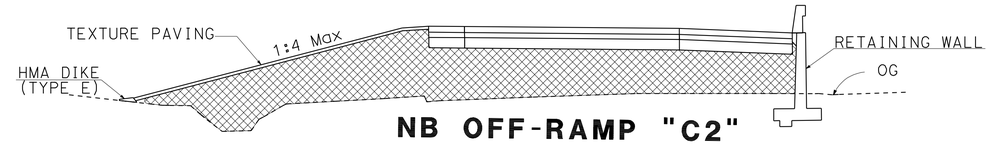

NB OFF-RAMP "C2"
NB ON-RAMP "C3"

NO SCALE

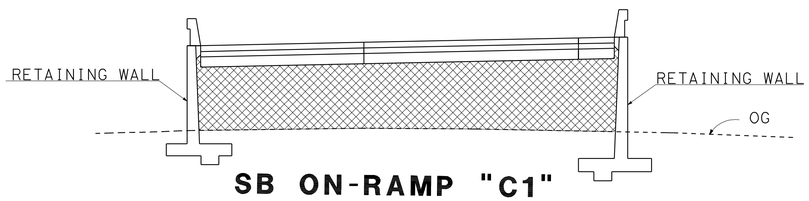

SB ON-RAMP "C1"
SB OFF-RAMP "C4"

NO SCALE

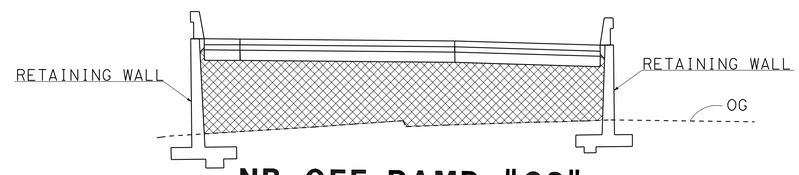

NB OFF-RAMP "C2"
NB ON-RAMP "C3"

NO SCALE

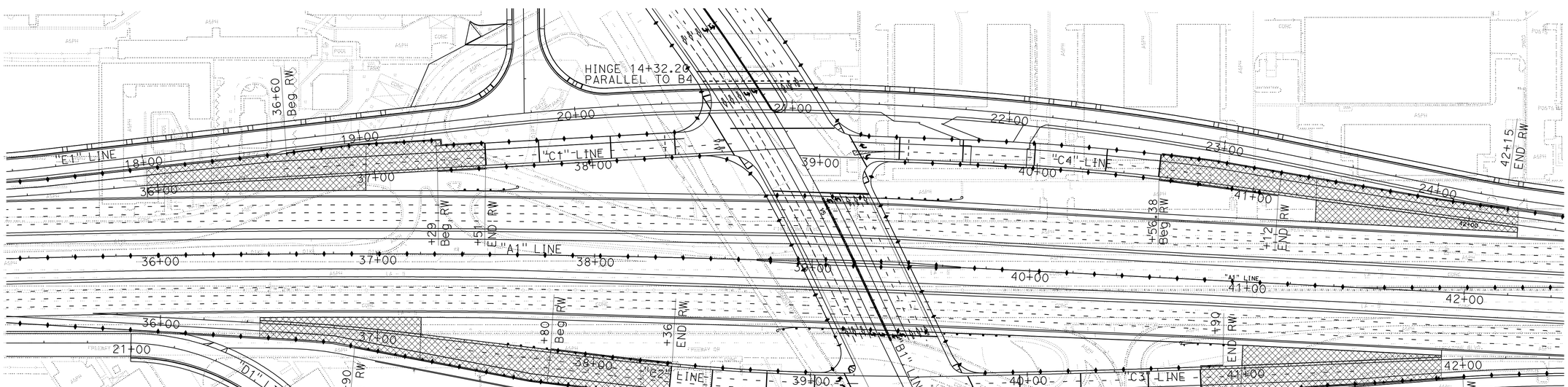

ALL DIMENSIONS ARE IN METERS UNLESS OTHERWISE SHOWN

CONSTRUCTION DETAILS

SCALE 1:1000

C-76

STATE OF CALIFORNIA - DEPARTMENT OF TRANSPORTATION
Caltrans OFFICE OF DESIGN A

FUNCTIONAL SUPERVISOR: NANCY PE
CALCULATED-DESIGNED BY: WILL CARPIO
CHECKED BY: NANCY PE
REVISED BY / DATE REVISED

S:\projects\2159c1\replace1\72159cga076.dgn

LAST REVISION 00-00-00 | DATE PLOTTED => 22-JUN-2010 | TIME PLOTTED => 13:31

BORDER LAST REVISED 3/1/2007 | RELATIVE BORDER SCALE IS IN MILLIMETERS 0 20 40 60 80 | USERNAME => trpierce | DGN FILE => 72159cga076.dgn | CU 07225 | EA 2159C1

Dist	COUNTY	ROUTE	KILOMETER POST TOTAL PROJECT	SHEET No.	TOTAL SHEETS
07	LA	5	2.9/4.9	136	1082

REGISTERED CIVIL ENGINEER 12-23-09 DATE

6-21-10
PLANS APPROVAL DATE

REGISTERED PROFESSIONAL ENGINEER NGIM NANCY PE No. 58161 Exp. 6-30-10 CIVIL STATE OF CALIFORNIA

THE STATE OF CALIFORNIA OR ITS OFFICERS OR AGENTS SHALL NOT BE RESPONSIBLE FOR THE ACCURACY OR COMPLETENESS OF ELECTRONIC COPIES OF THIS PLAN SHEET.

Caltrans Metric

NOTE:

TOTAL TYPE Y2 REUSE = 10,500 m^3

LEGEND:

STRUCTURE BACKFILL, ADL (TYPE Y-2) AND ROADWAY EMBANKMENT, ADL (TYPE Y-2) REUSE.

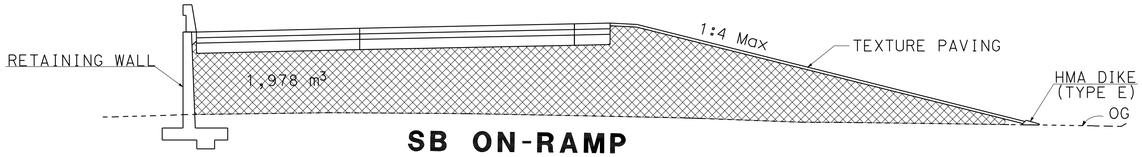

SB ON-RAMP
Sta "C1" 36+00.00 - 36+95.00
SB OFF-RAMP
Sta "C4" 41+30.00-42+20.00
NO SCALE

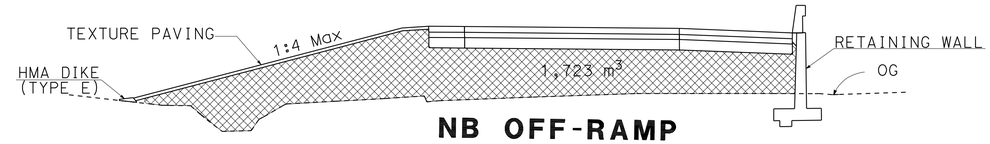

NB OFF-RAMP
Sta "C2" 36+50.00-37+20.00
NB ON-RAMP
Sta "C3" 41+00.00-41+90.00
NO SCALE

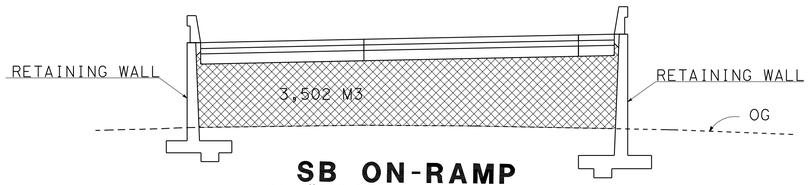

SB ON-RAMP
Sta "C1" 37+30.00 - 37+50.00
SB OFF-RAMP
Sta "C4" 40+56.00 - 41+12.00
NO SCALE

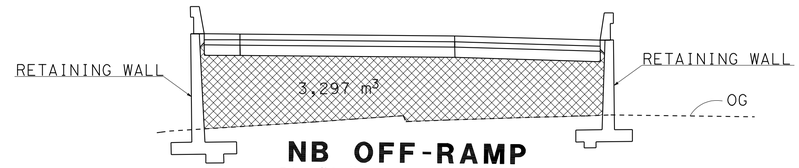

NB OFF-RAMP
Sta "C2" 37+80.00-38+36.00
NB ON-RAMP
Sta "C3" 40+80.00-40+90.00
NO SCALE

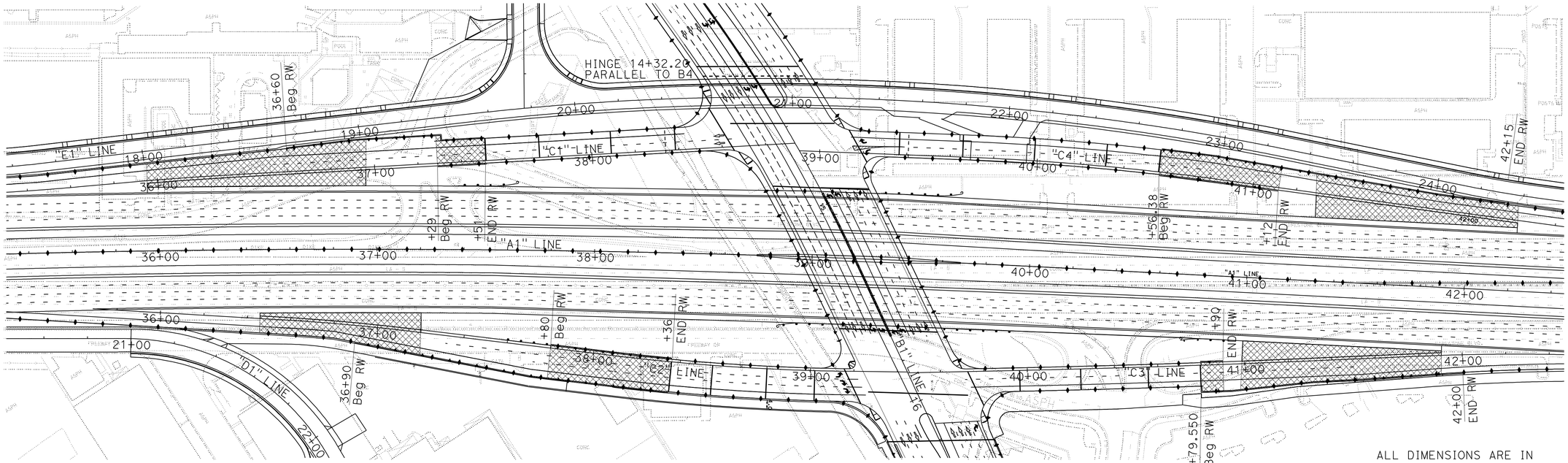

ALL DIMENSIONS ARE IN METERS UNLESS OTHERWISE SHOWN

CONSTRUCTION DETAILS
SCALE 1:1000

C-77

REVISED BY	DATE REVISED

CALCULATED-DESIGNED BY: WILL CARPIO
CHECKED BY: NANCY PE
FUNCTIONAL SUPERVISOR: NANCY PE

STATE OF CALIFORNIA - DEPARTMENT OF TRANSPORTATION
Caltrans OFFICE OF DESIGN A

S:\projects\2159c1\72159cga077.dgn

LAST REVISION 00-00-00 | DATE PLOTTED => 22-JUN-2010 | TIME PLOTTED => 13:32

Dist	COUNTY	ROUTE	KILOMETER POST TOTAL PROJECT	SHEET No.	TOTAL SHEETS
07	LA	5	2.9/4.9	137	1082

REGISTERED CIVIL ENGINEER 12-23-09 DATE

6-21-10
PLANS APPROVAL DATE

REGISTERED PROFESSIONAL ENGINEER NGIM NANCY PE No. 58161 Exp. 6-30-10 CIVIL STATE OF CALIFORNIA

THE STATE OF CALIFORNIA OR ITS OFFICERS OR AGENTS SHALL NOT BE RESPONSIBLE FOR THE ACCURACY OR COMPLETENESS OF ELECTRONIC COPIES OF THIS PLAN SHEET.

Caltrans Metric

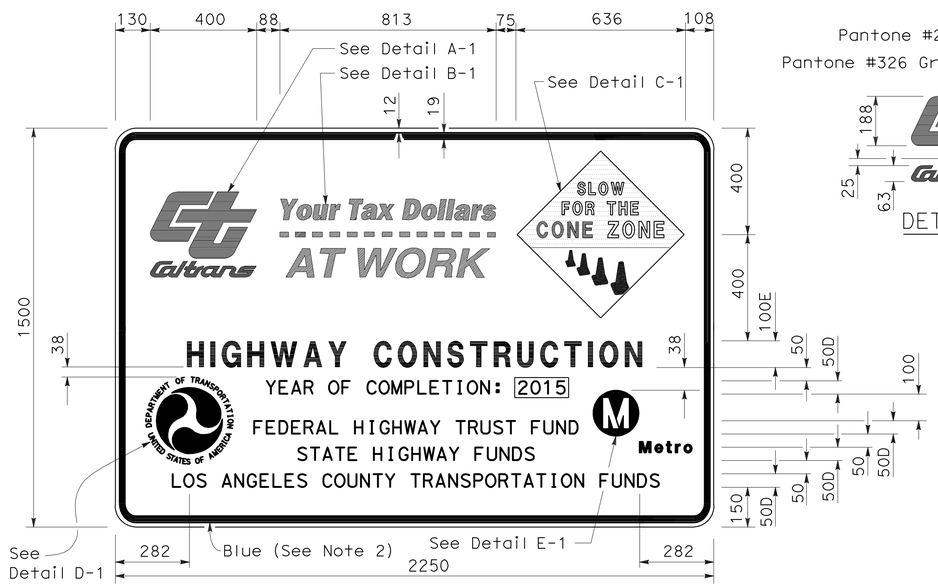

TYPE 1

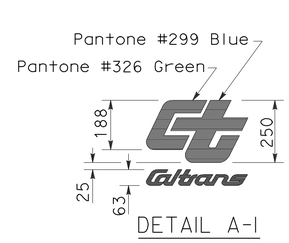

DETAIL A-1

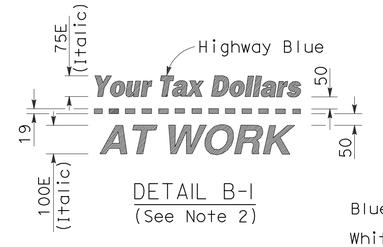

DETAIL B-1
(See Note 2)

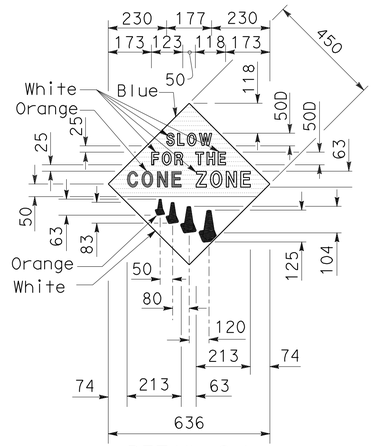

DETAIL C-1
(See Note 3)

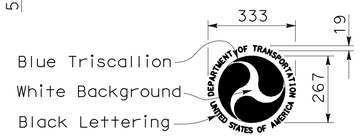

DETAIL D-1

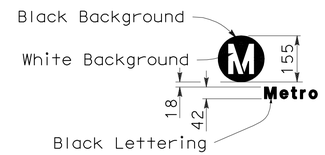

DETAIL E-1

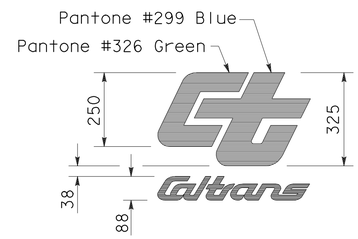

DETAIL A-2

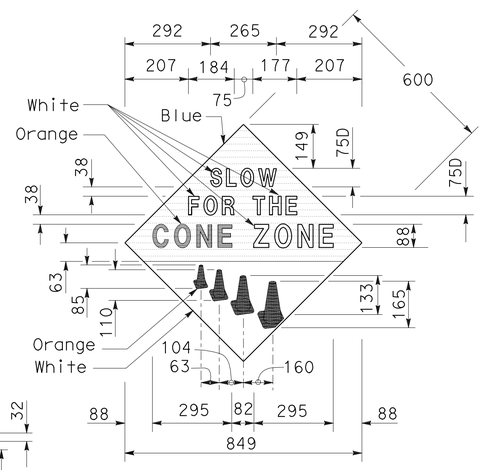

DETAIL C-2
(See Note 3)

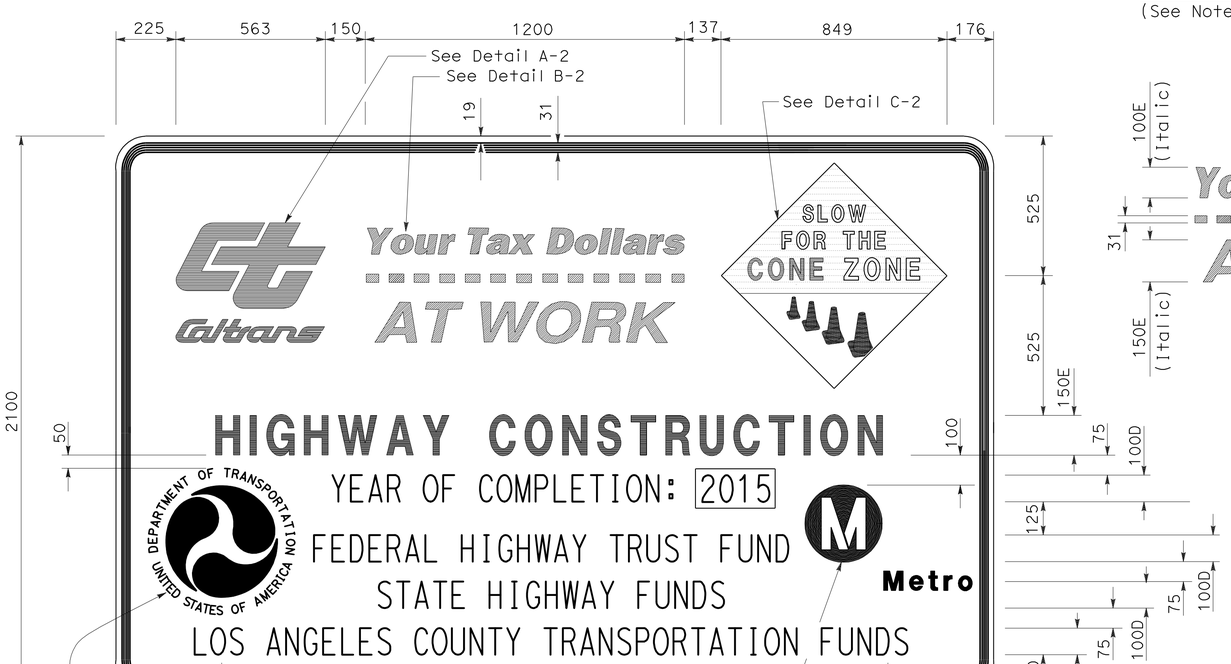

TYPE 2

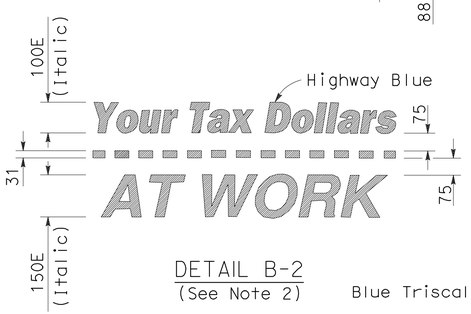

DETAIL B-2
(See Note 2)

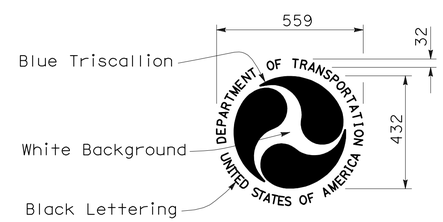

DETAIL D-2

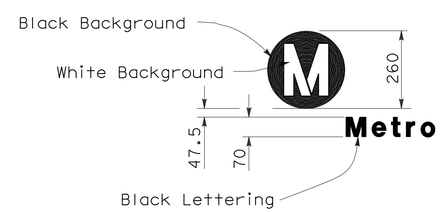

DETAIL E-2

NOTES:

1. Except as otherwise shown, the legend of sign shall be black on a white background (non-reflective).
2. The border of the signs and details "B-1" and "B-2" shall be blue (non-reflective).
3. The diamond in details "C-1" and "C-2" shall be blue for the background of message, "SLOW FOR THE CONE ZONE", and white background for the orange cones. The color and type of font for the "SLOW FOR THE CONE ZONE" message shall be: "SLOW" white D; "FOR THE" white D; "CONE" orange Ariel font; "ZONE" white Ariel font.
4. Year of completion of project construction shown on the overlay is an example only. See the Special Provisions.

ALL DIMENSIONS ARE IN MILLIMETERS UNLESS OTHERWISE SHOWN

CONSTRUCTION DETAILS

CONSTRUCTION PROJECT FUNDING IDENTIFICATION SIGNS

NO SCALE

C-78

STATE OF CALIFORNIA - DEPARTMENT OF TRANSPORTATION
Caltrans OFFICE OF DESIGN A

FUNCTIONAL SUPERVISOR: NGIM NANCY PE
CALCULATED-DESIGNED BY: WILL CARPIO
CHECKED BY: NGIM NANCY PE
REVISED BY / DATE REVISED

LAST REVISION 00-00-00 | DATE PLOTTED => 22-JUN-2010 | TIME PLOTTED => 13:32

Dist	COUNTY	ROUTE	KILOMETER POST TOTAL PROJECT	SHEET No.	TOTAL SHEETS
07	LA	5	2.9/4.9	138	1082

REGISTERED CIVIL ENGINEER 12-23-09 DATE

6-21-10
PLANS APPROVAL DATE

REGISTERED PROFESSIONAL ENGINEER NGIM NANCY PE No. 58161 Exp. 6-30-10 CIVIL STATE OF CALIFORNIA

THE STATE OF CALIFORNIA OR ITS OFFICERS OR AGENTS SHALL NOT BE RESPONSIBLE FOR THE ACCURACY OR COMPLETENESS OF ELECTRONIC COPIES OF THIS PLAN SHEET.

Caltrans Metric

LEGEND:

CONTRACTOR'S YARD AND STORAGE AREA

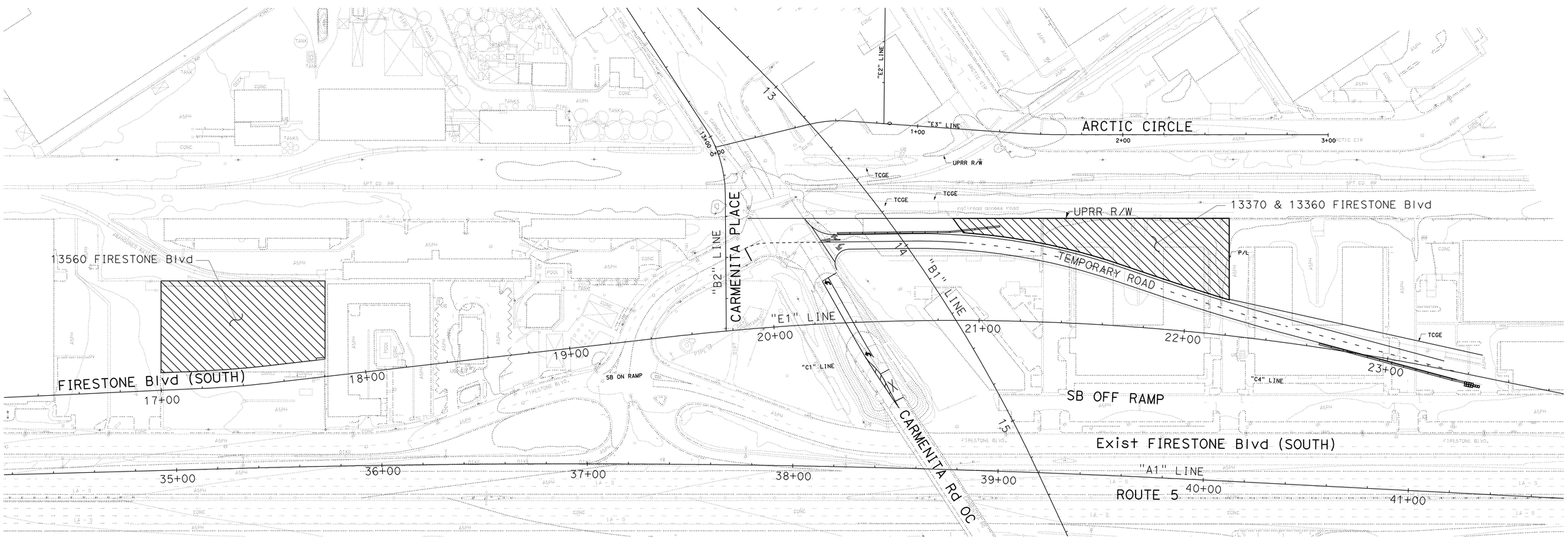

ALL DIMENSIONS ARE IN METERS UNLESS OTHERWISE SHOWN

CONSTRUCTION DETAILS

SCALE 1:1000

C-79

REVISED BY	
DATE REVISED	
CALCULATED-DESIGNED BY	WILL CARPIO
CHECKED BY	NGIM NANCY PE
FUNCTIONAL SUPERVISOR	NGIM NANCY PE

STATE OF CALIFORNIA - DEPARTMENT OF TRANSPORTATION
Caltrans OFFICE OF DESIGN A

S:\projects\2159c1\72159cga079.dgn

LAST REVISION 00-00-00 DATE PLOTTED => 22-JUN-2010 TIME PLOTTED => 13:32

Dist	COUNTY	ROUTE	POST MILES TOTAL PROJECT	SHEET No.	TOTAL SHEETS
07	LA	5	2.9/4.9	139	1082

REGISTERED CIVIL ENGINEER 12-23-09 DATE

6-21-10
PLANS APPROVAL DATE

REGISTERED PROFESSIONAL ENGINEER
NGIM NANCY PE
No. 58161
Exp 6-30-10
CIVIL
STATE OF CALIFORNIA

THE STATE OF CALIFORNIA OR ITS OFFICERS OR AGENTS SHALL NOT BE RESPONSIBLE FOR THE ACCURACY OR COMPLETENESS OF SCANNED COPIES OF THIS PLAN SHEET.

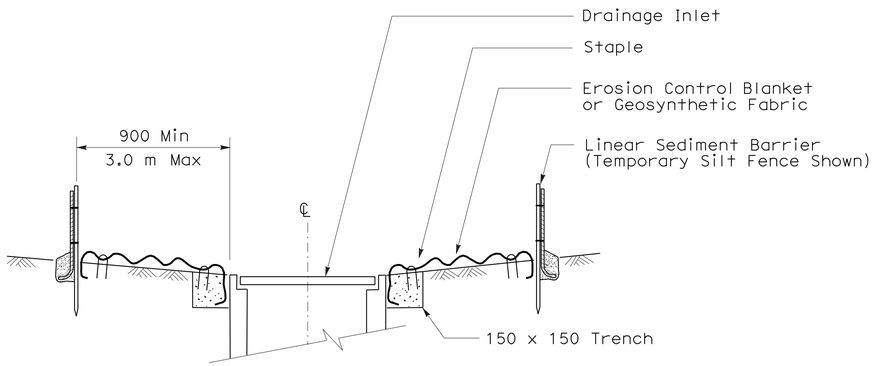

SECTION A-A

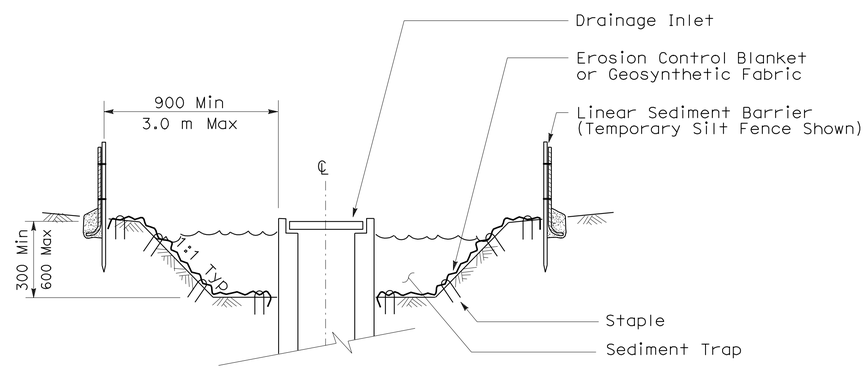

SECTION B-B

NOTES:

1. See Standard Plan T51 for Temporary Silt Fence.
2. Dimensions may vary to fit field conditions.

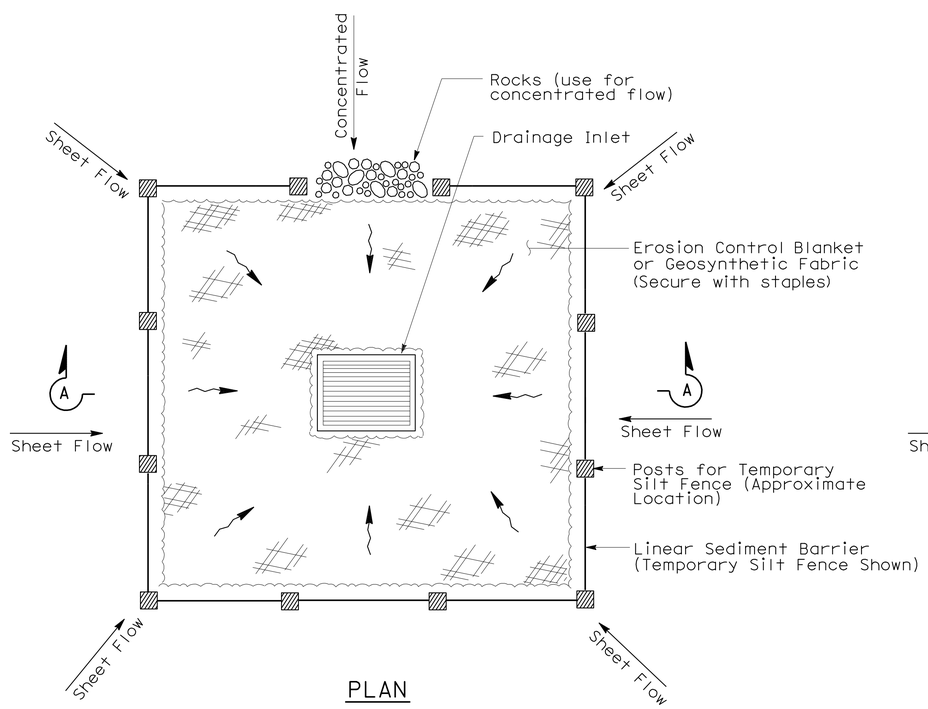

PLAN

TEMPORARY DRAINAGE
INLET PROTECTION (TYPE 1)

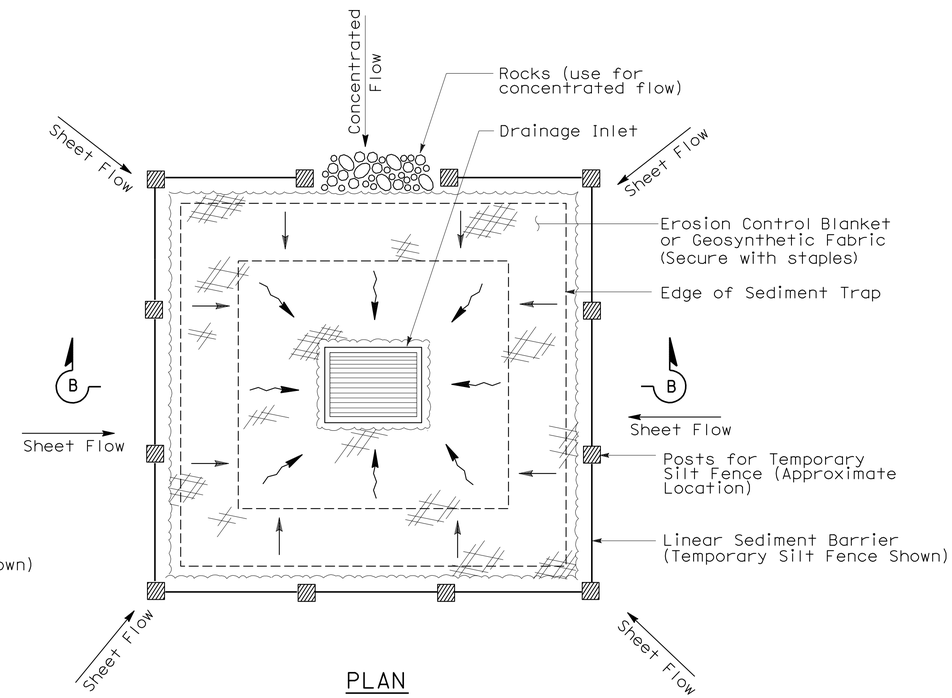

PLAN

TEMPORARY DRAINAGE
INLET PROTECTION (TYPE 2)
(EXCAVATED SEDIMENT TRAP)

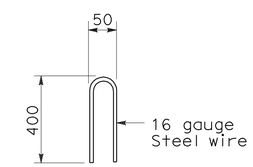

STAPLE DETAIL

ALL DIMENSIONS ARE IN MILLIMETERS
UNLESS OTHERWISE SHOWN

TEMPORARY WATER POLLUTION CONTROL DETAILS (TEMPORARY DRAINAGE INLET PROTECTION)

NO SCALE

WPCD-1

STATE OF CALIFORNIA - DEPARTMENT OF TRANSPORTATION
Caltrans® OFFICE OF DESIGN A

FUNCTIONAL SUPERVISOR: NGIM NANCY PE
CALCULATED-DESIGNED BY: WILL CARPIO
CHECKED BY: NGIM NANCY PE
REVISED BY
DATE REVISED

LAST REVISION 00-00-00
DATE PLOTTED => 23-JUN-2010
TIME PLOTTED => 10:33

Dist	COUNTY	ROUTE	POST MILES TOTAL PROJECT	SHEET No.	TOTAL SHEETS
07	LA	5	2.9/4.9	140	1082

REGISTERED CIVIL ENGINEER 12-23-09 DATE

6-21-10
PLANS APPROVAL DATE

REGISTERED PROFESSIONAL ENGINEER NGIM NANCY PE No. 58161 Exp. 6-30-10 CIVIL STATE OF CALIFORNIA

THE STATE OF CALIFORNIA OR ITS OFFICERS OR AGENTS SHALL NOT BE RESPONSIBLE FOR THE ACCURACY OR COMPLETENESS OF SCANNED COPIES OF THIS PLAN SHEET.

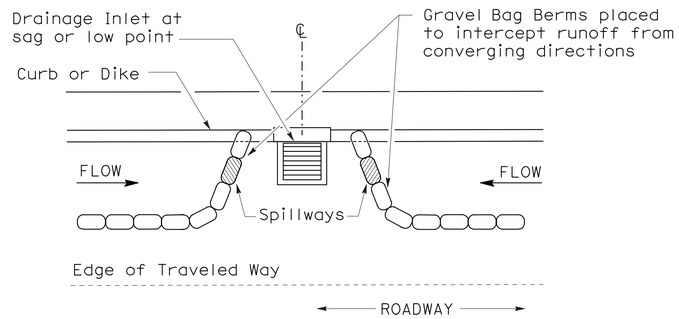

PLAN

CONFIGURATION FOR SAG POINT INLET (GRAVEL BAG BERM)

GRAVEL BAG BERM (TYPE 3A) SPACING TABLE

SLOPE OF ROADWAY (PERCENT)	1 to 3.9	4 to 5.9	6 to 7.9	8 to 10	10+
INTERVAL BETWEEN BERM	30.0 m	23.0 m	15.0 m	7.6 m	3.6 m

For slope of less than 1%, install barriers only if erosion/sediment is prevalent

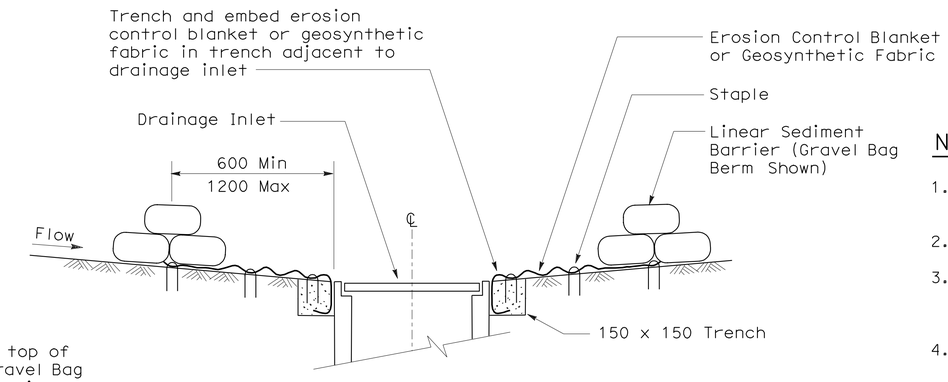

SECTION A-A

NOTES:

1. Place safety cones adjacent to drainage inlet protection.
2. Dimensions may vary to fit field conditions.
3. Install a minimum of 3 gravel bag berms upstream of each drainage inlet to be protected.
4. Position erosion control blanket or geosynthetic fabric at edge of concrete apron and secure in trench.
5. Erosion control blanket or geosynthetic fabric is not required if the area adjacent to the drainage inlet is vegetated or paved.

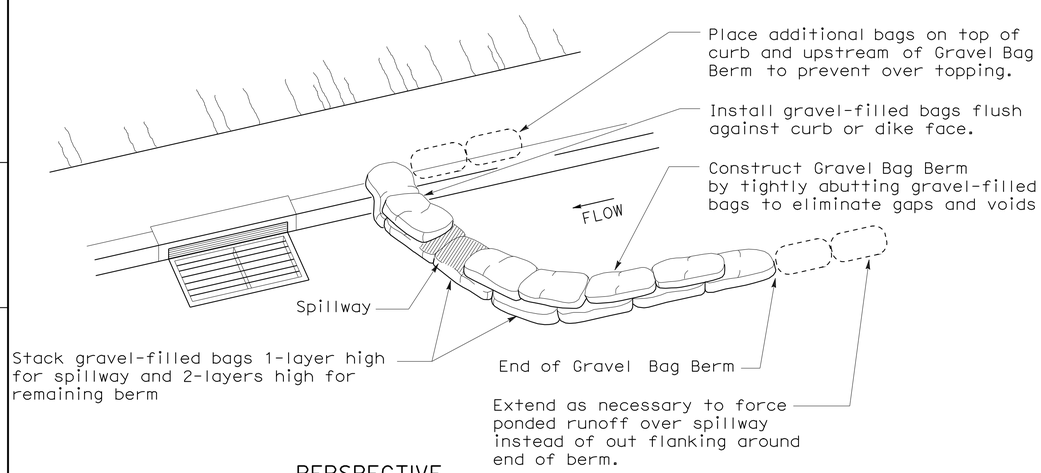

PERSPECTIVE

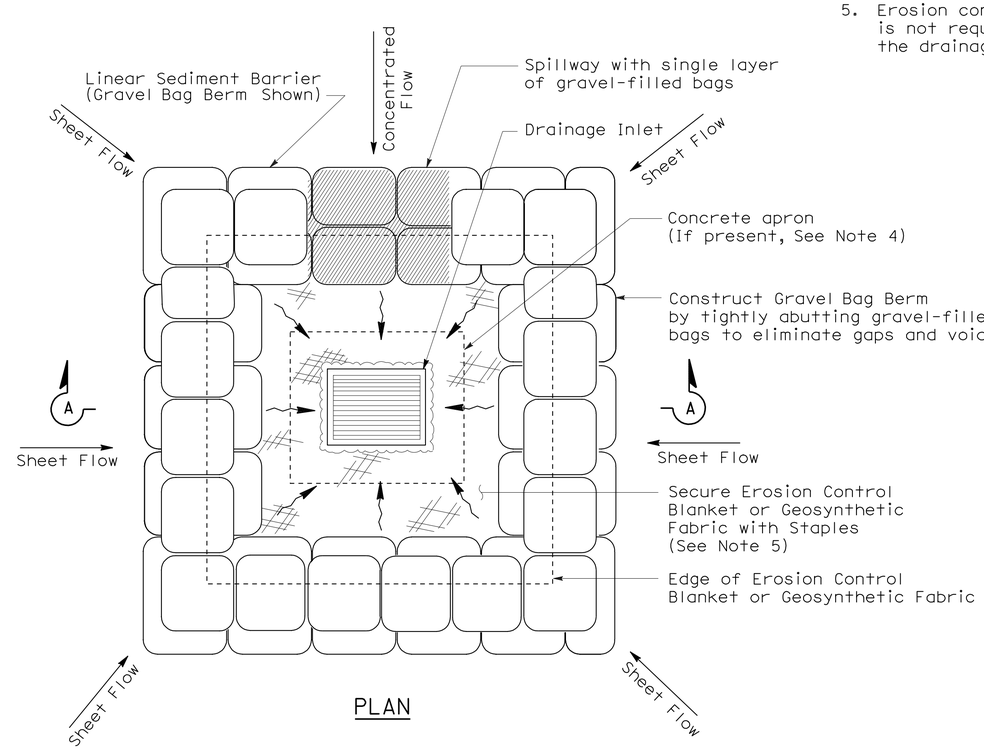

PLAN

TEMPORARY DRAINAGE INLET PROTECTION (TYPE 3B)

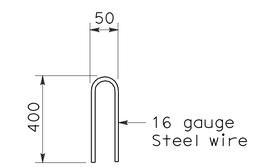

STAPLE DETAIL

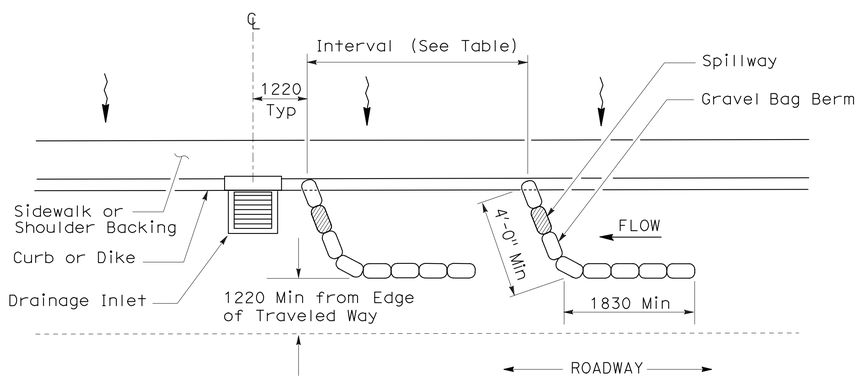

PLAN

TEMPORARY DRAINAGE INLET PROTECTION (TYPE 3A) (GRAVEL BAG BERM)

ALL DIMENSIONS ARE IN MILLIMETERS UNLESS OTHERWISE SHOWN

TEMPORARY WATER POLLUTION CONTROL DETAILS (TEMPORARY DRAINAGE INLET PROTECTION)

NO SCALE

WPCD-2

STATE OF CALIFORNIA - DEPARTMENT OF TRANSPORTATION
Caltrans® OFFICE OF DESIGN A

FUNCTIONAL SUPERVISOR: NGIM NANCY PE
CALCULATED-DESIGNED BY: WILL CARPIO | CHECKED BY: NGIM NANCY PE | REVISED BY | DATE REVISED

LAST REVISION 00-00-00 | DATE PLOTTED => 23-JUN-2010 | TIME PLOTTED => 10:33

Dist	COUNTY	ROUTE	POST MILES TOTAL PROJECT	SHEET No.	TOTAL SHEETS
07	LA	5	2.9/4.9	141	1082

REGISTERED CIVIL ENGINEER 12-23-09 DATE

6-21-10
PLANS APPROVAL DATE

REGISTERED PROFESSIONAL ENGINEER NGIM NANCY PE No. 58161 Exp. 6-30-10 CIVIL STATE OF CALIFORNIA

THE STATE OF CALIFORNIA OR ITS OFFICERS OR AGENTS SHALL NOT BE RESPONSIBLE FOR THE ACCURACY OR COMPLETENESS OF SCANNED COPIES OF THIS PLAN SHEET.

FLEXIBLE SEDIMENT BARRIER SPACING TABLE

SLOPE OF ROADWAY (PERCENT)	0 to 0.9	1 to 1.9	2 to 2.9	3 to 4	5+
INTERVAL BETWEEN BARRIERS	15 m	10.7 m	9 m	7.6 m	6 m
ANGLE FROM FACE OF CURB	70°	70°	70°	45°	45°
SUGGESTED BARRIER LENGTH	1.8 m	1.8 m	1.8 m	1.8 m	1.8 m

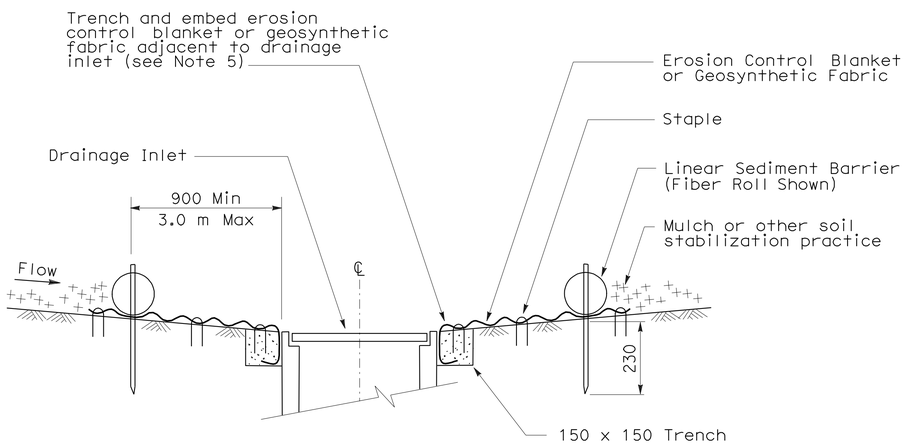

SECTION A-A

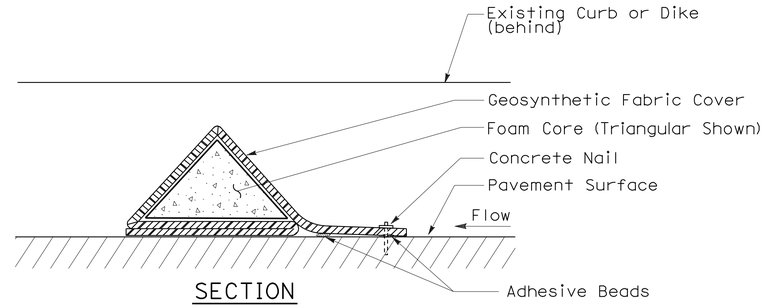

SECTION

FLEXIBLE SEDIMENT BARRIER DETAIL (FOAM BARRIER SHOWN)

NOTES:

1. See Standard Plan T51 for Temporary Silt Fence.
2. Dimensions may vary to fit field conditions.
3. Install a minimum of 3 flexible sediment barriers upstream of each drainage inlet to be protected.
4. Position erosion control blanket or geosynthetic fabric at edge of concrete apron and secure in trench.
5. Erosion control blanket or geosynthetic fabric is not required if the area adjacent to the drainage inlet is vegetated.

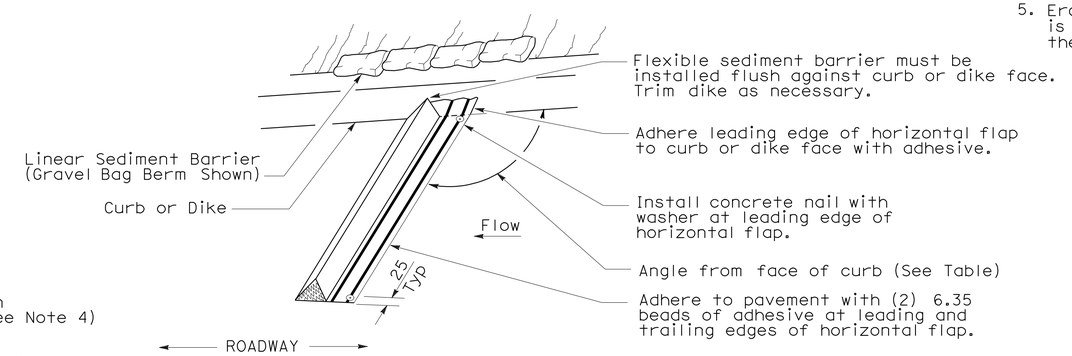

PERSPECTIVE

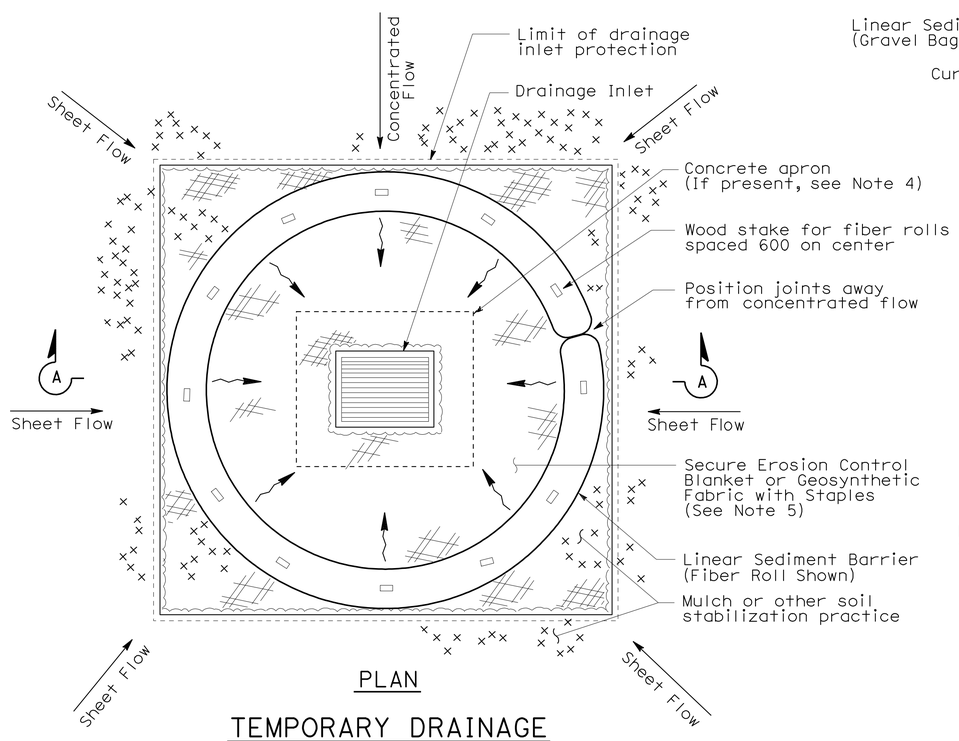

PLAN

TEMPORARY DRAINAGE INLET PROTECTION (TYPE 4A)

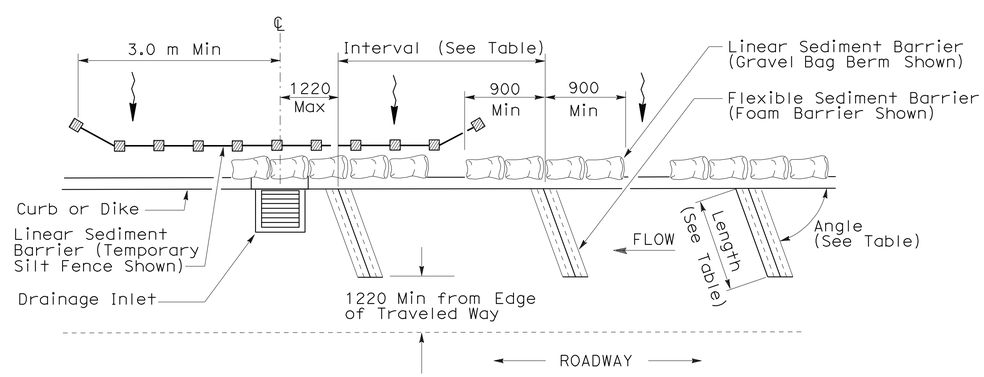

PLAN

TEMPORARY DRAINAGE INLET PROTECTION (TYPE 4B) FLEXIBLE SEDIMENT BARRIER

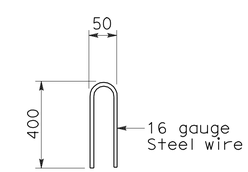

STAPLE DETAIL

ALL DIMENSIONS ARE IN MILLIMETERS UNLESS OTHERWISE SHOWN.

TEMPORARY WATER POLLUTION CONTROL DETAILS (TEMPORARY DRAINAGE INLET PROTECTION)

NO SCALE

WPCD-3

STATE OF CALIFORNIA - DEPARTMENT OF TRANSPORTATION
Caltrans® OFFICE OF DESIGN A

FUNCTIONAL SUPERVISOR: NGIM NANCY PE
CALCULATED-DESIGNED BY: WILL CARPIO
CHECKED BY: NGIM NANCY PE
REVISED BY
DATE REVISED

LAST REVISION 00-00-00 | DATE PLOTTED => 23-JUN-2010 | TIME PLOTTED => 10:33

Dist	COUNTY	ROUTE	POST MILES TOTAL PROJECT	SHEET No.	TOTAL SHEETS
07	LA	5	2.9/4.9	142	1082

REGISTERED CIVIL ENGINEER 12-23-09 DATE

6-21-10
PLANS APPROVAL DATE

REGISTERED PROFESSIONAL ENGINEER
NGIM NANCY PE
No. 58161
Exp. 6-30-10
CIVIL
STATE OF CALIFORNIA

THE STATE OF CALIFORNIA OR ITS OFFICERS OR AGENTS SHALL NOT BE RESPONSIBLE FOR THE ACCURACY OR COMPLETENESS OF SCANNED COPIES OF THIS PLAN SHEET.

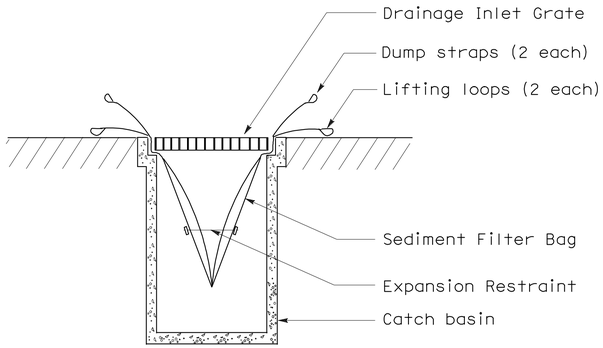

SECTION B-B

SEDIMENT FILTER BAG DETAIL

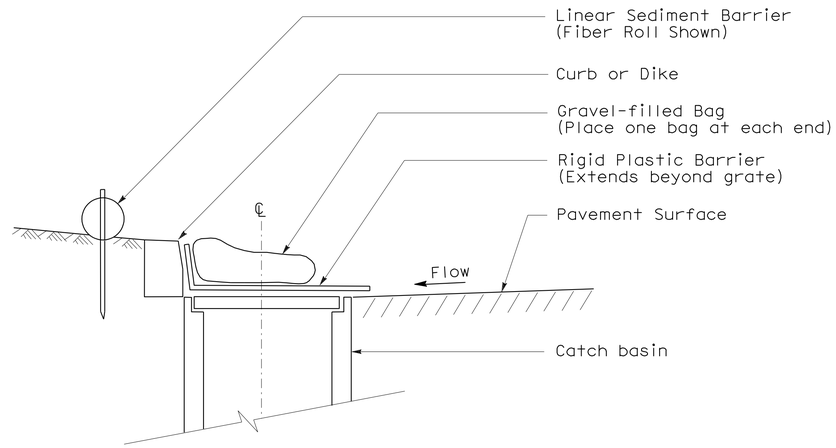

SECTION

TEMPORARY DRAINAGE INLET PROTECTION (TYPE 6A) (CATCH BASIN WITH GRATE)

NOTES:

1. See Standard Plan T51 for Temporary Silt Fence.
2. Dimensions may vary to fit field conditions.

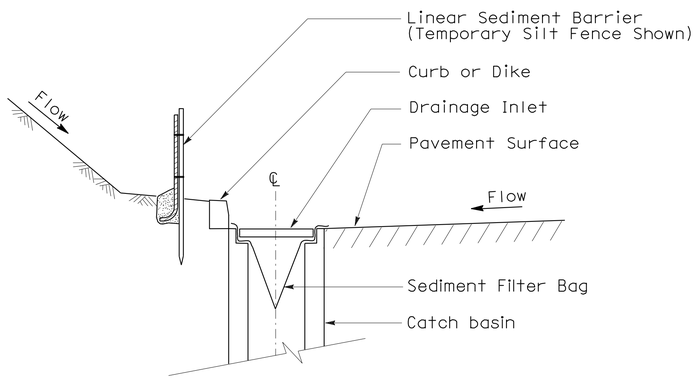

SECTION A-A

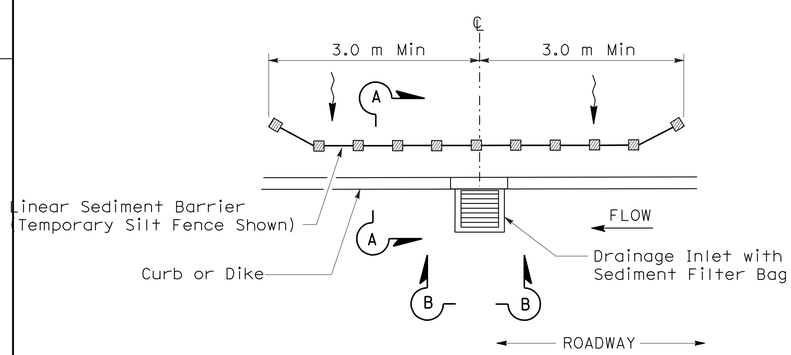

PLAN

TEMPORARY DRAINAGE INLET PROTECTION (TYPE 5) (SEDIMENT FILTER BAG)

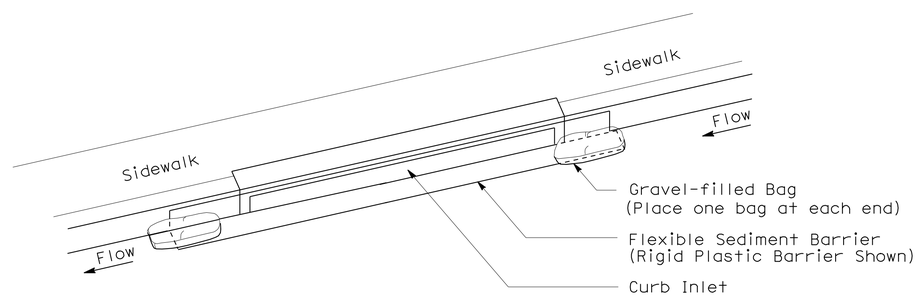

PERSPECTIVE

TEMPORARY DRAINAGE INLET PROTECTION (TYPE 6B) (CURB INLET WITHOUT GRATE)

ALL DIMENSIONS ARE IN MILLIMETERS
UNLESS OTHERWISE SHOWN

TEMPORARY WATER POLLUTION CONTROL DETAILS (TEMPORARY DRAINAGE INLET PROTECTION)

NO SCALE

WPCD-4

STATE OF CALIFORNIA - DEPARTMENT OF TRANSPORTATION
Caltrans® OFFICE OF DESIGN A

FUNCTIONAL SUPERVISOR: NGIM NANCY PE
CALCULATED-DESIGNED BY: WILL CARPIO
CHECKED BY: NGIM NANCY PE
REVISED BY
DATE REVISED

LAST REVISION 00-00-00
DATE PLOTTED => 23-JUN-2010
TIME PLOTTED => 10:33

Dist	COUNTY	ROUTE	KILOMETER POST TOTAL PROJECT	SHEET No.	TOTAL SHEETS
07	LA	5	2.9/4.9	143	1082

Ngim N. Pe 12-23-09
REGISTERED CIVIL ENGINEER DATE

6-21-10
PLANS APPROVAL DATE

REGISTERED PROFESSIONAL ENGINEER NGIM NANCY PE No. 58161 Exp. 6-30-10 CIVIL STATE OF CALIFORNIA

THE STATE OF CALIFORNIA OR ITS OFFICERS OR AGENTS SHALL NOT BE RESPONSIBLE FOR THE ACCURACY OR COMPLETENESS OF ELECTRONIC COPIES OF THIS PLAN SHEET.

Caltrans Metric

NOTE:

FOR ACCURATE RIGHT OF WAY AND ACCESS DATA, CONTACT RIGHT OF WAY ENGINEERING AT THE DISTRICT OFFICE.

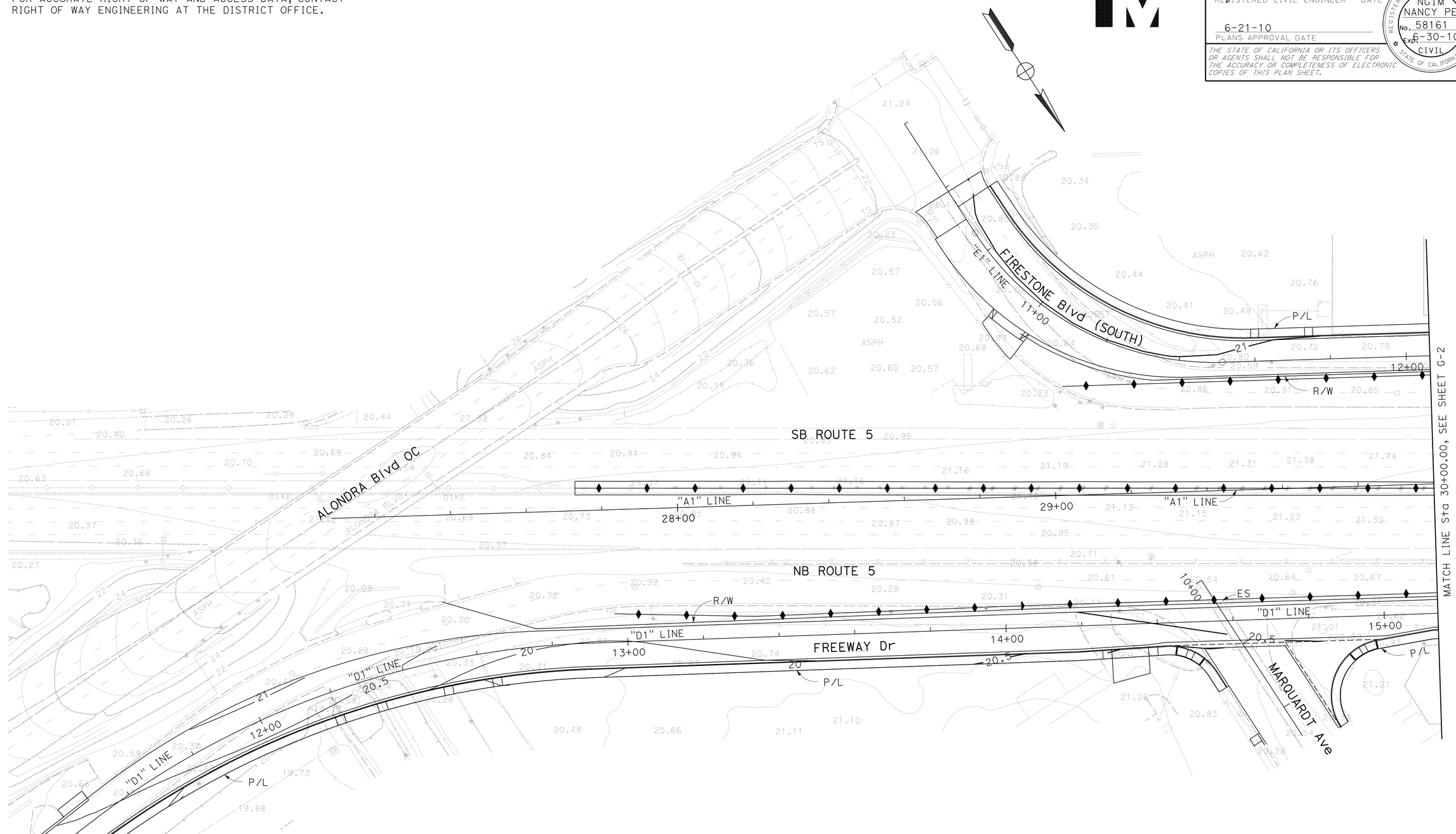

ALL DIMENSIONS ARE IN METERS UNLESS OTHERWISE SHOWN

CONTOUR GRADING

SCALE 1:500

G-1

THIS PLAN ACCURATE FOR CONTOUR GRADING WORK ONLY.

CALCULATED-DESIGNED BY	KEVIN Q. NGUYEN
CHECKED BY	NGIM NANCY PE
REVISED BY	KN
DATE REVISED	8/09
FUNCTIONAL SUPERVISOR	NGIM NANCY PE

STATE OF CALIFORNIA - DEPARTMENT OF TRANSPORTATION
Caltrans OFFICE OF DESIGN A

LAST REVISION 00-00-00 | DATE PLOTTED => 22-JUN-2010 | TIME PLOTTED => 13:33

Dist	COUNTY	ROUTE	KILOMETER POST TOTAL PROJECT	SHEET No.	TOTAL SHEETS
07	LA	5	2.9/4.9	144	1082

Ngim N. Pe 12-23-09
REGISTERED CIVIL ENGINEER DATE

6-21-10
PLANS APPROVAL DATE

REGISTERED PROFESSIONAL ENGINEER NGIM NANCY PE No. 58161 Exp. 6-30-10 CIVIL STATE OF CALIFORNIA

THE STATE OF CALIFORNIA OR ITS OFFICERS OR AGENTS SHALL NOT BE RESPONSIBLE FOR THE ACCURACY OR COMPLETENESS OF ELECTRONIC COPIES OF THIS PLAN SHEET.

Caltrans Metric

NOTE:

FOR ACCURATE RIGHT OF WAY AND ACCESS DATA,
CONTACT RIGHT OF WAY ENGINEERING AT THE DISTRICT OFFICE.

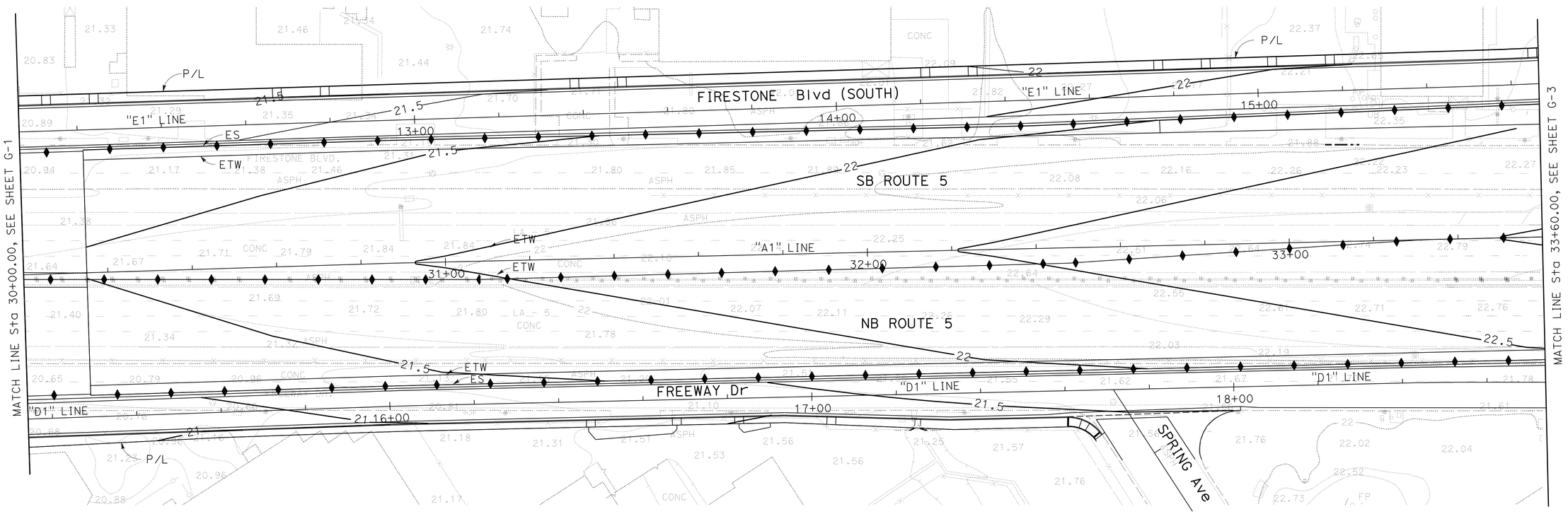

THIS PLAN ACCURATE FOR CONTOUR GRADING WORK ONLY.

ALL DIMENSIONS ARE IN METERS
UNLESS OTHERWISE SHOWN

CONTOUR GRADING

SCALE 1:500

G-2

CALCULATED-DESIGNED BY	KEVIN Q. NGUYEN	REVISED BY	
CHECKED BY	NGIM NANCY PE	DATE REVISED	8/09
FUNCTIONAL SUPERVISOR	NGIM NANCY PE		KN

STATE OF CALIFORNIA - DEPARTMENT OF TRANSPORTATION
Caltrans OFFICE OF DESIGN A

LAST REVISION 00-00-00 | DATE PLOTTED => 22-JUN-2010 | TIME PLOTTED => 13:33

Dist	COUNTY	ROUTE	KILOMETER POST TOTAL PROJECT	SHEET No.	TOTAL SHEETS
07	LA	5	2.9/4.9	145	1082

REGISTERED CIVIL ENGINEER 12-23-09 DATE

6-21-10
PLANS APPROVAL DATE

REGISTERED PROFESSIONAL ENGINEER NGIM NANCY PE No. 58161 Exp. 6-30-10 CIVIL STATE OF CALIFORNIA

THE STATE OF CALIFORNIA OR ITS OFFICERS OR AGENTS SHALL NOT BE RESPONSIBLE FOR THE ACCURACY OR COMPLETENESS OF ELECTRONIC COPIES OF THIS PLAN SHEET.

Caltrans Metric

NOTE:

FOR ACCURATE RIGHT OF WAY AND ACCESS DATA,
CONTACT RIGHT OF WAY ENGINEERING AT THE DISTRICT OFFICE.

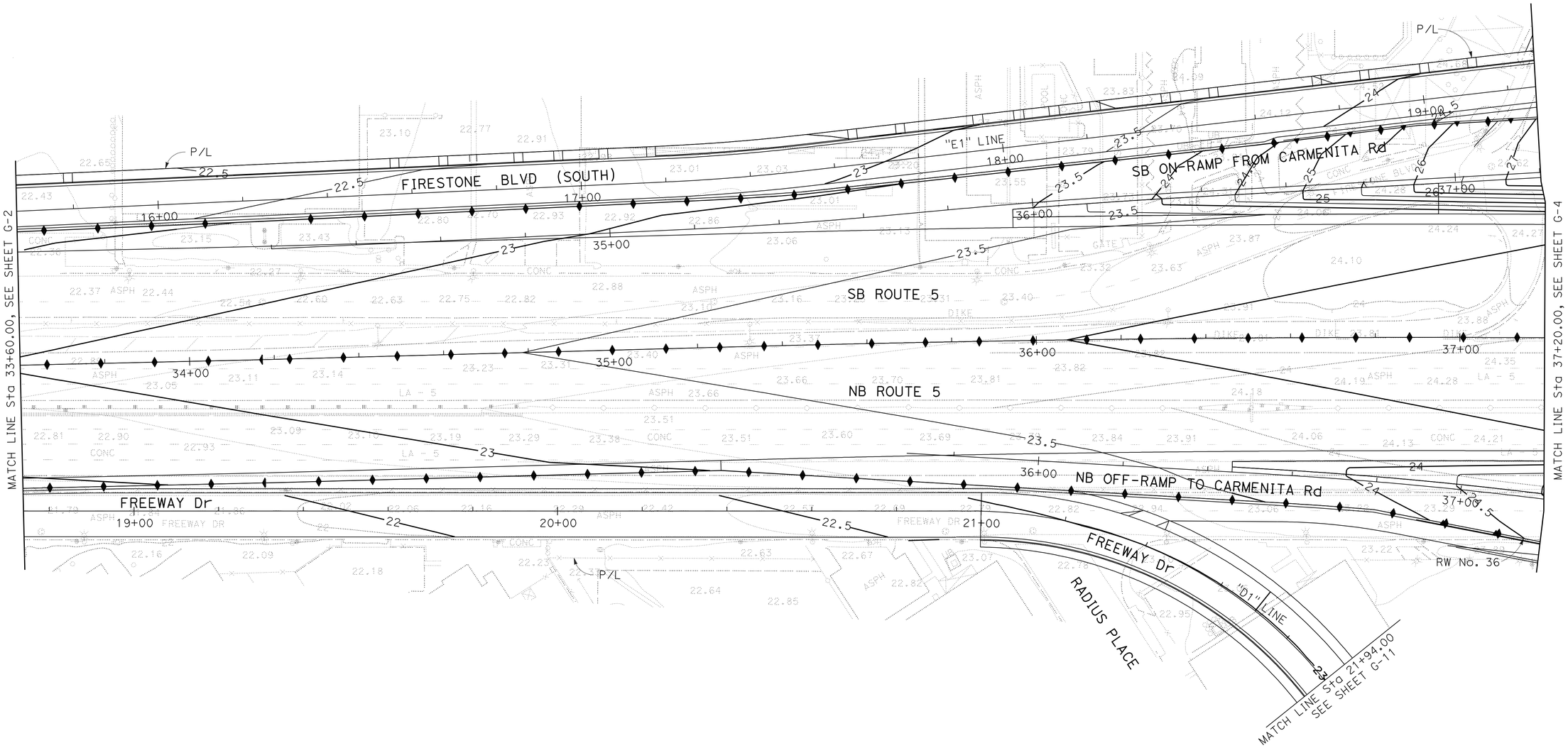

THIS PLAN ACCURATE FOR CONTOUR GRADING WORK ONLY.

ALL DIMENSIONS ARE IN METERS
UNLESS OTHERWISE SHOWN

CONTOUR GRADING

SCALE 1:500

G-3

STATE OF CALIFORNIA - DEPARTMENT OF TRANSPORTATION
Caltrans OFFICE OF DESIGN A

FUNCTIONAL SUPERVISOR: NGIM NANCY PE

CALCULATED-DESIGNED BY: KEVIN Q. NGUYEN
CHECKED BY: NGIM NANCY PE

REVISED BY: KN
DATE REVISED: 8/09

LAST REVISION 00-00-00
DATE PLOTTED => 22-JUN-2010
TIME PLOTTED => 13:33

Dist	COUNTY	ROUTE	KILOMETER POST TOTAL PROJECT	SHEET No.	TOTAL SHEETS
07	LA	5	2.9/4.9	146	1082

REGISTERED CIVIL ENGINEER 12-23-09 DATE

6-21-10
PLANS APPROVAL DATE

REGISTERED PROFESSIONAL ENGINEER NGIM NANCY PE No. 58161 Exp. 6-30-10 CIVIL STATE OF CALIFORNIA

THE STATE OF CALIFORNIA OR ITS OFFICERS OR AGENTS SHALL NOT BE RESPONSIBLE FOR THE ACCURACY OR COMPLETENESS OF ELECTRONIC COPIES OF THIS PLAN SHEET.

Caltrans Metric

NOTE:

FOR ACCURATE RIGHT OF WAY AND ACCESS DATA,
CONTACT RIGHT OF WAY ENGINEERING AT THE DISTRICT OFFICE.

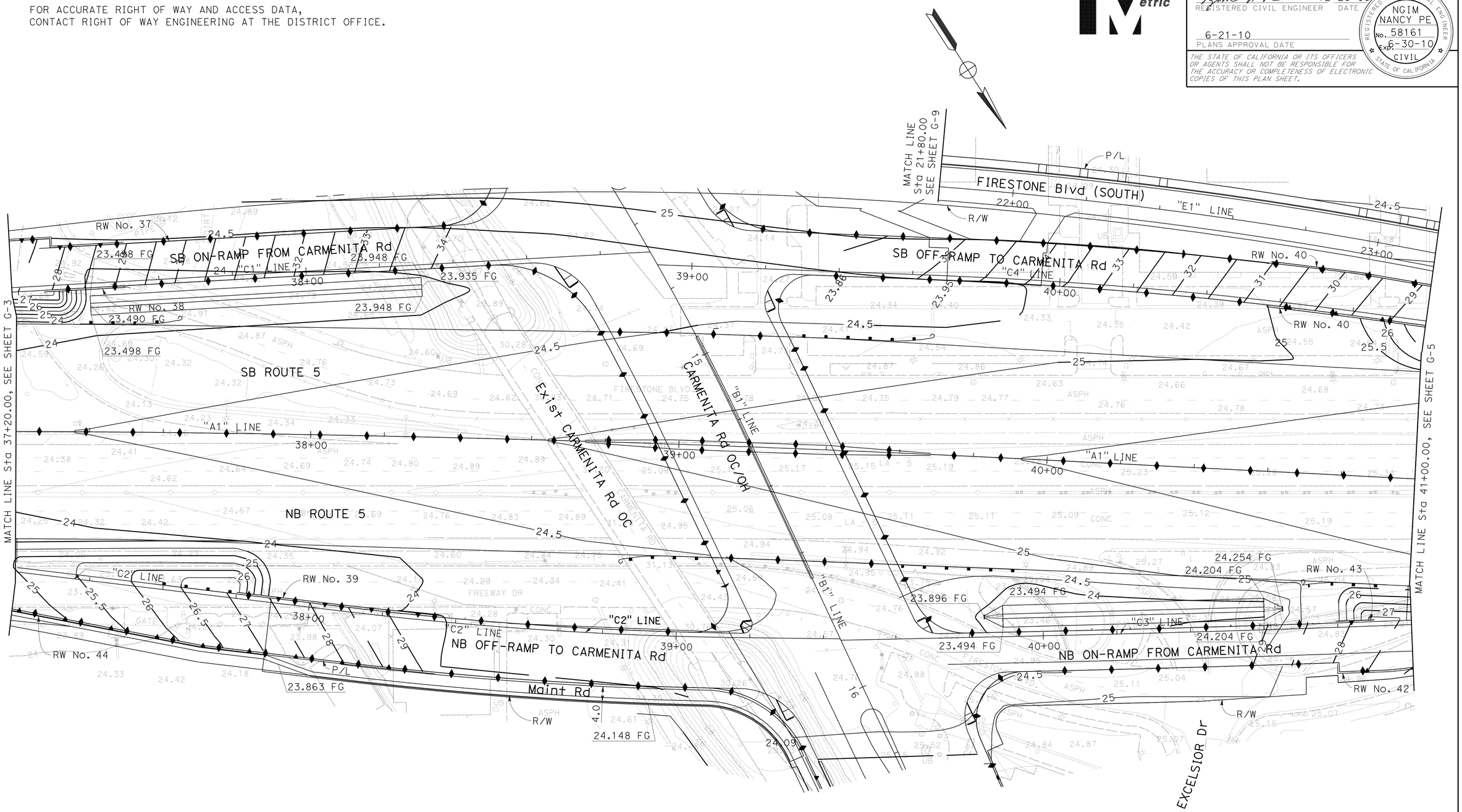

ALL DIMENSIONS ARE IN METERS
UNLESS OTHERWISE SHOWN

THIS PLAN ACCURATE FOR CONTOUR GRADING WORK ONLY.

CONTOUR GRADING

SCALE 1:500

G-4

STATE OF CALIFORNIA - DEPARTMENT OF TRANSPORTATION
Caltrans OFFICE OF DESIGN A

FUNCTIONAL SUPERVISOR: NGIM NANCY PE
CALCULATED-DESIGNED BY: KEVIN Q. NGUYEN
CHECKED BY: NGIM NANCY PE
REVISED BY: KN
DATE REVISED: 8/09

LAST REVISION 00-00-00
DATE PLOTTED => 22-JUN-2010
TIME PLOTTED => 13:33

Dist	COUNTY	ROUTE	KILOMETER POST TOTAL PROJECT	SHEET No.	TOTAL SHEETS
07	LA	5	2.9/4.9	147	1082

REGISTERED CIVIL ENGINEER 12-23-09 DATE

6-21-10
PLANS APPROVAL DATE

REGISTERED PROFESSIONAL ENGINEER NGIM NANCY PE No. 58161 Exp. 6-30-10 CIVIL STATE OF CALIFORNIA

THE STATE OF CALIFORNIA OR ITS OFFICERS OR AGENTS SHALL NOT BE RESPONSIBLE FOR THE ACCURACY OR COMPLETENESS OF ELECTRONIC COPIES OF THIS PLAN SHEET.

Caltrans Metric

NOTE:

FOR ACCURATE RIGHT OF WAY AND ACCESS DATA,
CONTACT RIGHT OF WAY ENGINEERING AT THE DISTRICT OFFICE.

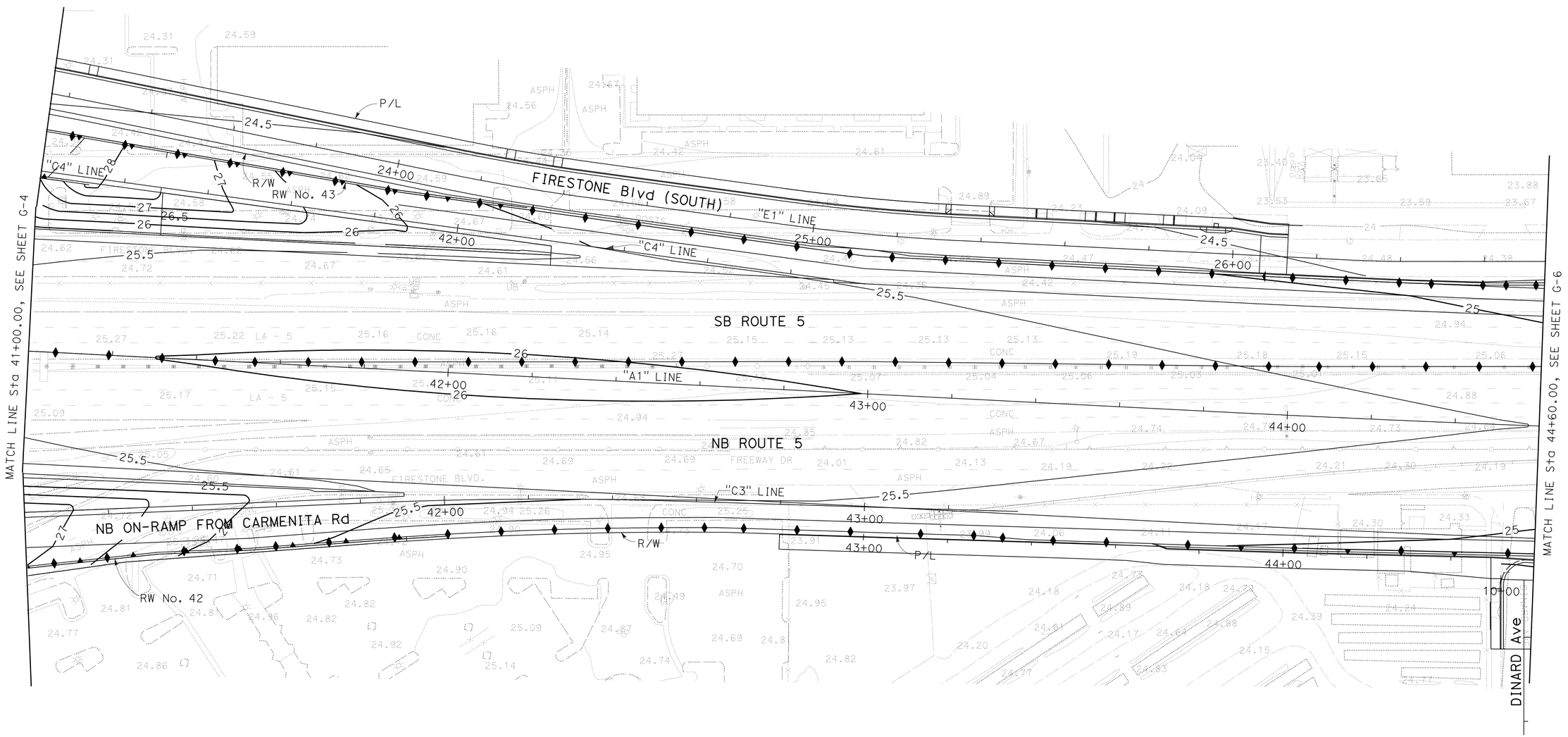

THIS PLAN ACCURATE FOR CONTOUR GRADING WORK ONLY.

ALL DIMENSIONS ARE IN METERS
UNLESS OTHERWISE SHOWN

CONTOUR GRADING

SCALE 1:500

G-5

KEVIN Q. NGUYEN	KN
NGIM NANCY PE	8/09
CALCULATED-DESIGNED BY	REVISED BY
CHECKED BY	DATE REVISED
FUNCTIONAL SUPERVISOR	
NGIM NANCY PE	

STATE OF CALIFORNIA - DEPARTMENT OF TRANSPORTATION
Caltrans OFFICE OF DESIGN A

LAST REVISION 00-00-00 DATE PLOTTED => 22-JUN-2010 TIME PLOTTED => 13:33

Dist	COUNTY	ROUTE	KILOMETER POST TOTAL PROJECT	SHEET No.	TOTAL SHEETS
07	LA	5	2.9/4.9	148	1082

REGISTERED CIVIL ENGINEER 12-23-09 DATE

6-21-10
PLANS APPROVAL DATE

REGISTERED PROFESSIONAL ENGINEER NGIM NANCY PE No. 58161 Exp. 6-30-10 CIVIL STATE OF CALIFORNIA

THE STATE OF CALIFORNIA OR ITS OFFICERS OR AGENTS SHALL NOT BE RESPONSIBLE FOR THE ACCURACY OR COMPLETENESS OF ELECTRONIC COPIES OF THIS PLAN SHEET.

Caltrans Metric

NOTE:

FOR ACCURATE RIGHT OF WAY AND ACCESS DATA,
CONTACT RIGHT OF WAY ENGINEERING AT THE DISTRICT OFFICE.

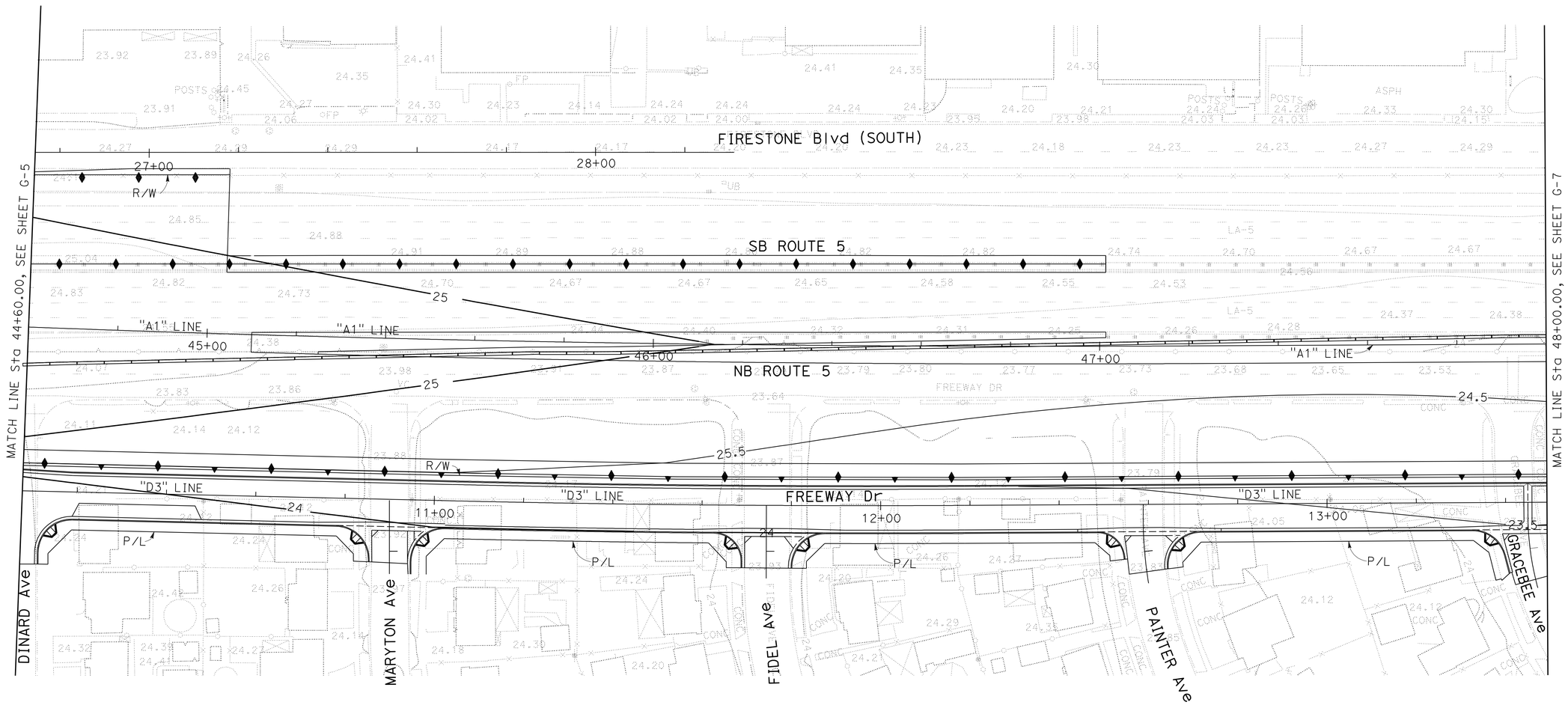

ALL DIMENSIONS ARE IN METERS
UNLESS OTHERWISE SHOWN

THIS PLAN ACCURATE FOR CONTOUR GRADING WORK ONLY.

CONTOUR GRADING

SCALE 1:500

G-6

STATE OF CALIFORNIA - DEPARTMENT OF TRANSPORTATION
Caltrans OFFICE OF DESIGN A

FUNCTIONAL SUPERVISOR: NGIM NANCY PE
CALCULATED-DESIGNED BY: KEVIN Q. NGUYEN
CHECKED BY: NGIM NANCY PE
REVISED BY: KN
DATE REVISED: 8/09

LAST REVISION 00-00-00
DATE PLOTTED => 22-JUN-2010
TIME PLOTTED => 13:34

Dist	COUNTY	ROUTE	KILOMETER POST TOTAL PROJECT	SHEET No.	TOTAL SHEETS
07	LA	5	2.9/4.9	149	1082

Nim N. Pe 12-23-09
REGISTERED CIVIL ENGINEER DATE

6-21-10
PLANS APPROVAL DATE

REGISTERED PROFESSIONAL ENGINEER NGIM NANCY PE No. 58161 Exp. 6-30-10 CIVIL STATE OF CALIFORNIA

THE STATE OF CALIFORNIA OR ITS OFFICERS OR AGENTS SHALL NOT BE RESPONSIBLE FOR THE ACCURACY OR COMPLETENESS OF ELECTRONIC COPIES OF THIS PLAN SHEET.

Caltrans Metric

NOTE:

FOR ACCURATE RIGHT OF WAY AND ACCESS DATA,
CONTACT RIGHT OF WAY ENGINEERING AT THE DISTRICT OFFICE.

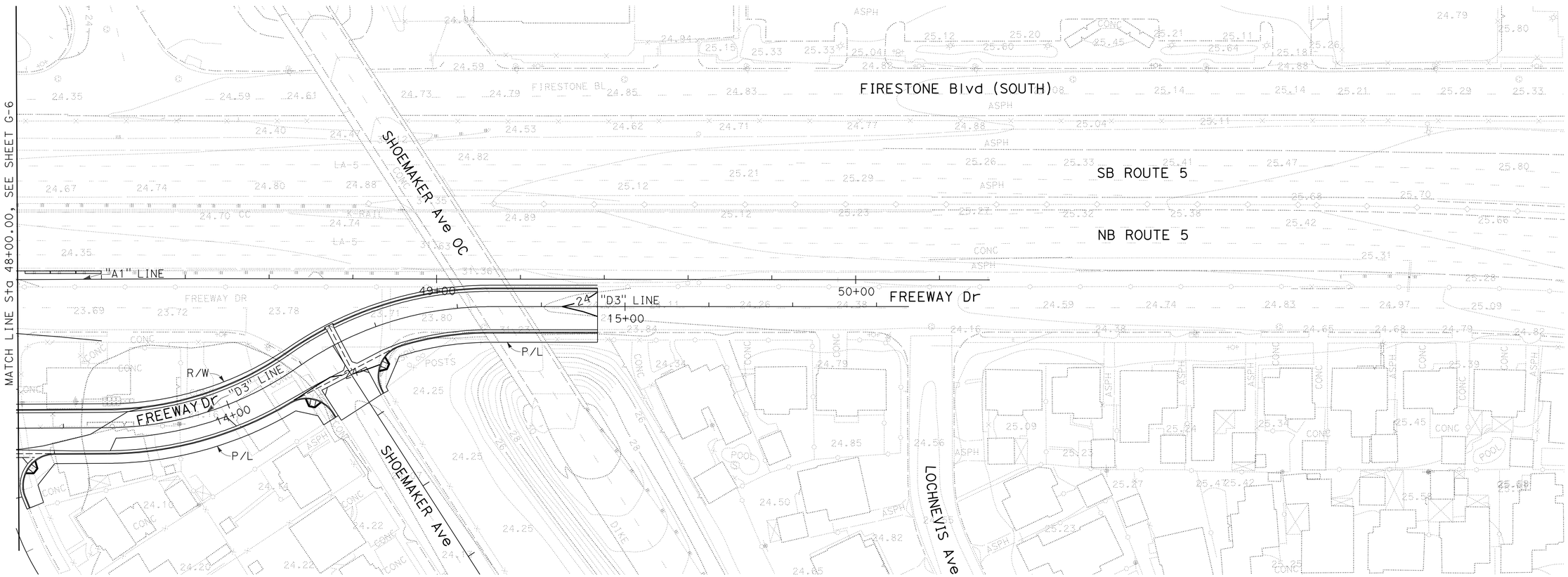

THIS PLAN ACCURATE FOR CONTOUR GRADING WORK ONLY.

ALL DIMENSIONS ARE IN METERS
UNLESS OTHERWISE SHOWN

CONTOUR GRADING

SCALE 1:500

G-7

KEVIN Q. NGUYEN	KN
NGIM NANCY PE	8/09
REVISED BY	DATE REVISED
CALCULATED-DESIGNED BY	
CHECKED BY	
FUNCTIONAL SUPERVISOR	
NGIM NANCY PE	

STATE OF CALIFORNIA - DEPARTMENT OF TRANSPORTATION
Caltrans OFFICE OF DESIGN A

LAST REVISION 00-00-00 | DATE PLOTTED => 22-JUN-2010 | TIME PLOTTED => 13:34

Dist	COUNTY	ROUTE	KILOMETER POST TOTAL PROJECT	SHEET No.	TOTAL SHEETS
07	LA	5	2.9/4.9	150	1082

REGISTERED CIVIL ENGINEER 12-23-09 DATE

6-21-10
PLANS APPROVAL DATE

REGISTERED PROFESSIONAL ENGINEER NGIM NANCY PE No. 58161 Exp. 6-30-10 CIVIL STATE OF CALIFORNIA

THE STATE OF CALIFORNIA OR ITS OFFICERS OR AGENTS SHALL NOT BE RESPONSIBLE FOR THE ACCURACY OR COMPLETENESS OF ELECTRONIC COPIES OF THIS PLAN SHEET.

Caltrans Metric

NOTE:

FOR ACCURATE RIGHT OF WAY AND ACCESS DATA,
CONTACT RIGHT OF WAY ENGINEERING AT THE DISTRICT OFFICE.

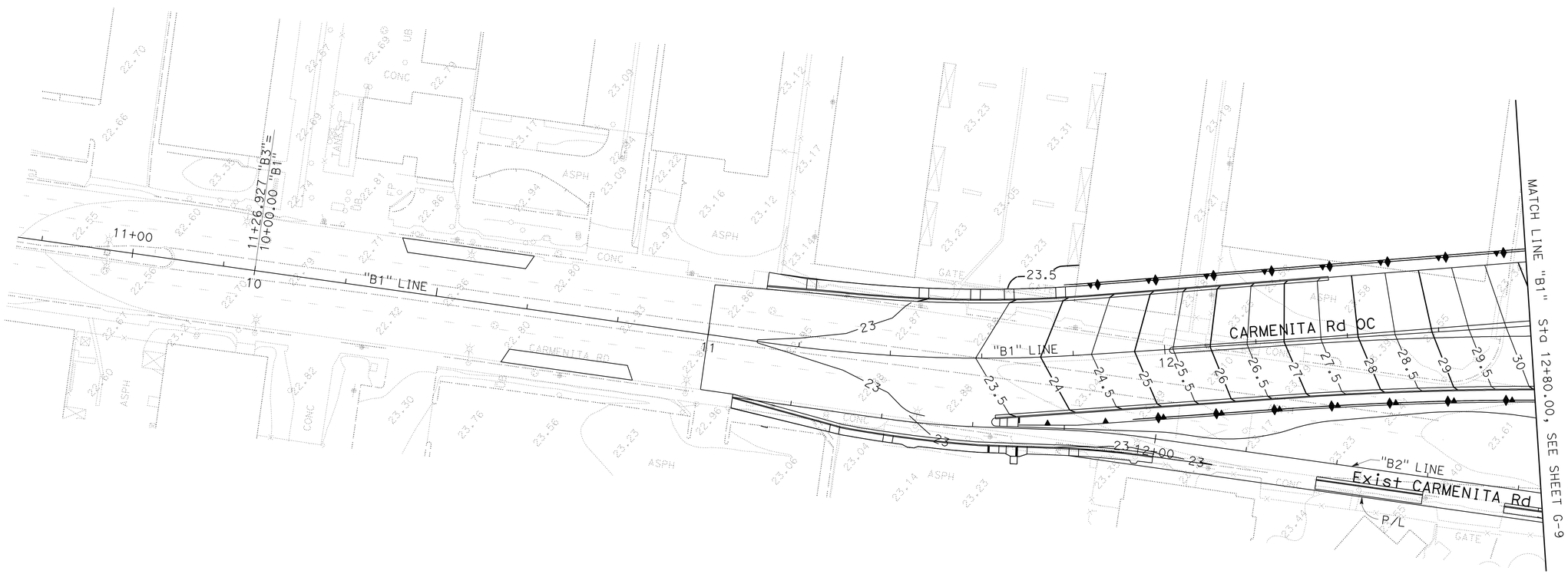

ALL DIMENSIONS ARE IN METERS
UNLESS OTHERWISE SHOWN

THIS PLAN ACCURATE FOR CONTOUR GRADING WORK ONLY.

CONTOUR GRADING

SCALE 1:500

G-8

CALCULATED-DESIGNED BY	KEVIN Q. NGUYEN	REVISED BY	KN
CHECKED BY	NGIM NANCY PE	DATE REVISED	8/09

FUNCTIONAL SUPERVISOR: NGIM NANCY PE

STATE OF CALIFORNIA - DEPARTMENT OF TRANSPORTATION
Caltrans OFFICE OF DESIGN A

LAST REVISION 00-00-00 | DATE PLOTTED => 22-JUN-2010 | TIME PLOTTED => 13:34

Dist	COUNTY	ROUTE	KILOMETER POST TOTAL PROJECT	SHEET No.	TOTAL SHEETS
07	LA	5	2.9/4.9	151	1082

REGISTERED CIVIL ENGINEER 12-23-09 DATE

6-21-10
PLANS APPROVAL DATE

REGISTERED PROFESSIONAL ENGINEER NGIM NANCY PE No. 58161 Exp. 6-30-10 CIVIL STATE OF CALIFORNIA

THE STATE OF CALIFORNIA OR ITS OFFICERS OR AGENTS SHALL NOT BE RESPONSIBLE FOR THE ACCURACY OR COMPLETENESS OF ELECTRONIC COPIES OF THIS PLAN SHEET.

Caltrans Metric

NOTE:

FOR ACCURATE RIGHT OF WAY AND ACCESS DATA, CONTACT RIGHT OF WAY ENGINEERING AT THE DISTRICT OFFICE.

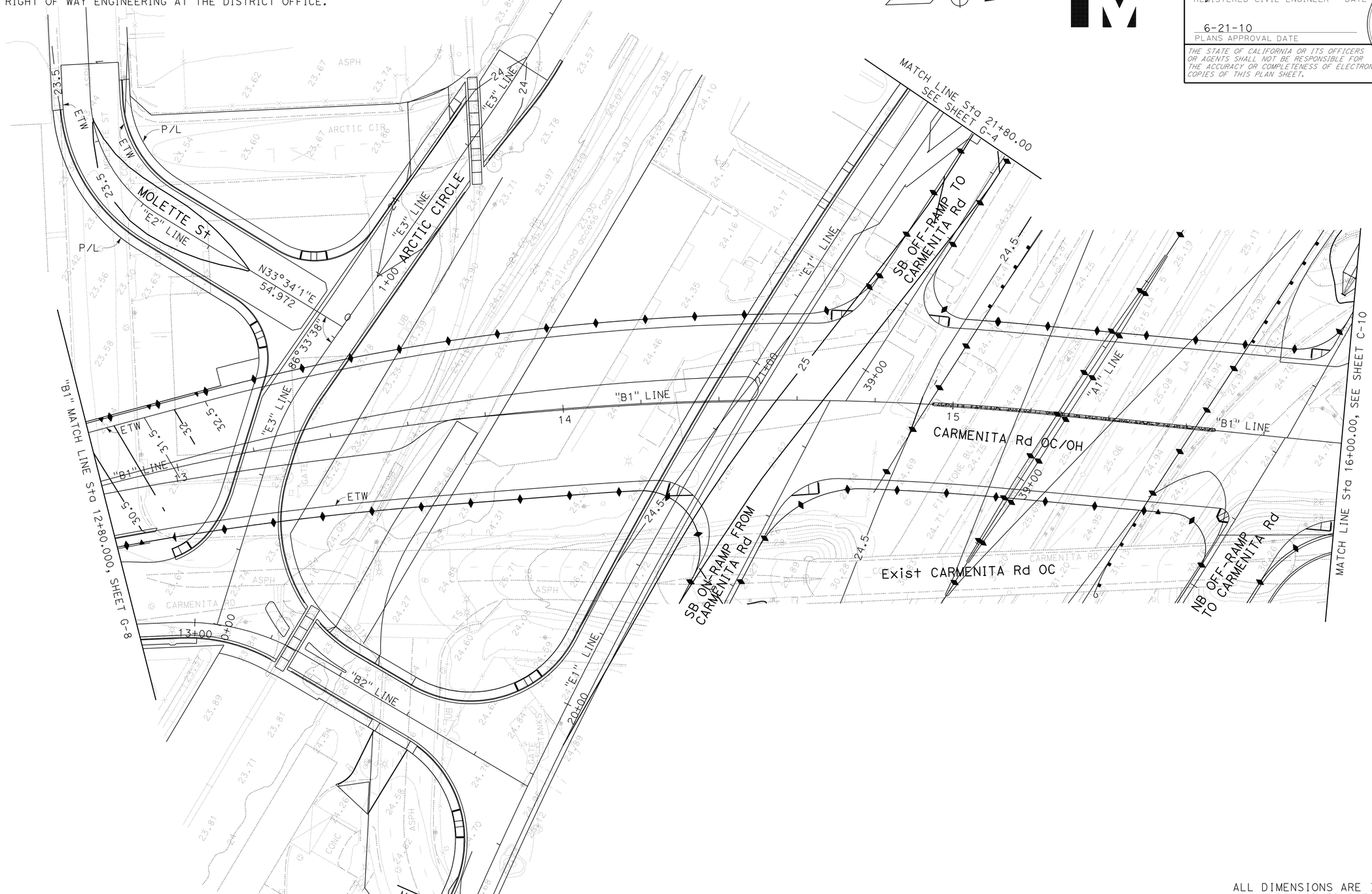

THIS PLAN ACCURATE FOR CONTOUR GRADING WORK ONLY.

ALL DIMENSIONS ARE IN METERS UNLESS OTHERWISE SHOWN

CONTOUR GRADING

SCALE 1:500

G-9

CALCULATED-DESIGNED BY	KEVIN Q. NGUYEN
CHECKED BY	NGIM NANCY PE
REVISED BY	KN
DATE REVISED	8/09
FUNCTIONAL SUPERVISOR	NGIM NANCY PE

STATE OF CALIFORNIA - DEPARTMENT OF TRANSPORTATION
Caltrans OFFICE OF DESIGN A

LAST REVISION 00-00-00 | DATE PLOTTED => 22-JUN-2010 | TIME PLOTTED => 13:34

Dist	COUNTY	ROUTE	KILOMETER POST TOTAL PROJECT	SHEET No.	TOTAL SHEETS
07	LA	5	2.9/4.9	152	1082

Ngim N. Pe 12-23-09
REGISTERED CIVIL ENGINEER DATE

6-21-10
PLANS APPROVAL DATE

REGISTERED PROFESSIONAL ENGINEER NGIM NANCY PE No. 58161 Exp. 6-30-10 CIVIL STATE OF CALIFORNIA

THE STATE OF CALIFORNIA OR ITS OFFICERS OR AGENTS SHALL NOT BE RESPONSIBLE FOR THE ACCURACY OR COMPLETENESS OF ELECTRONIC COPIES OF THIS PLAN SHEET.

Caltrans Metric

NOTE:

FOR ACCURATE RIGHT OF WAY AND ACCESS DATA,
CONTACT RIGHT OF WAY ENGINEERING AT THE DISTRICT OFFICE.

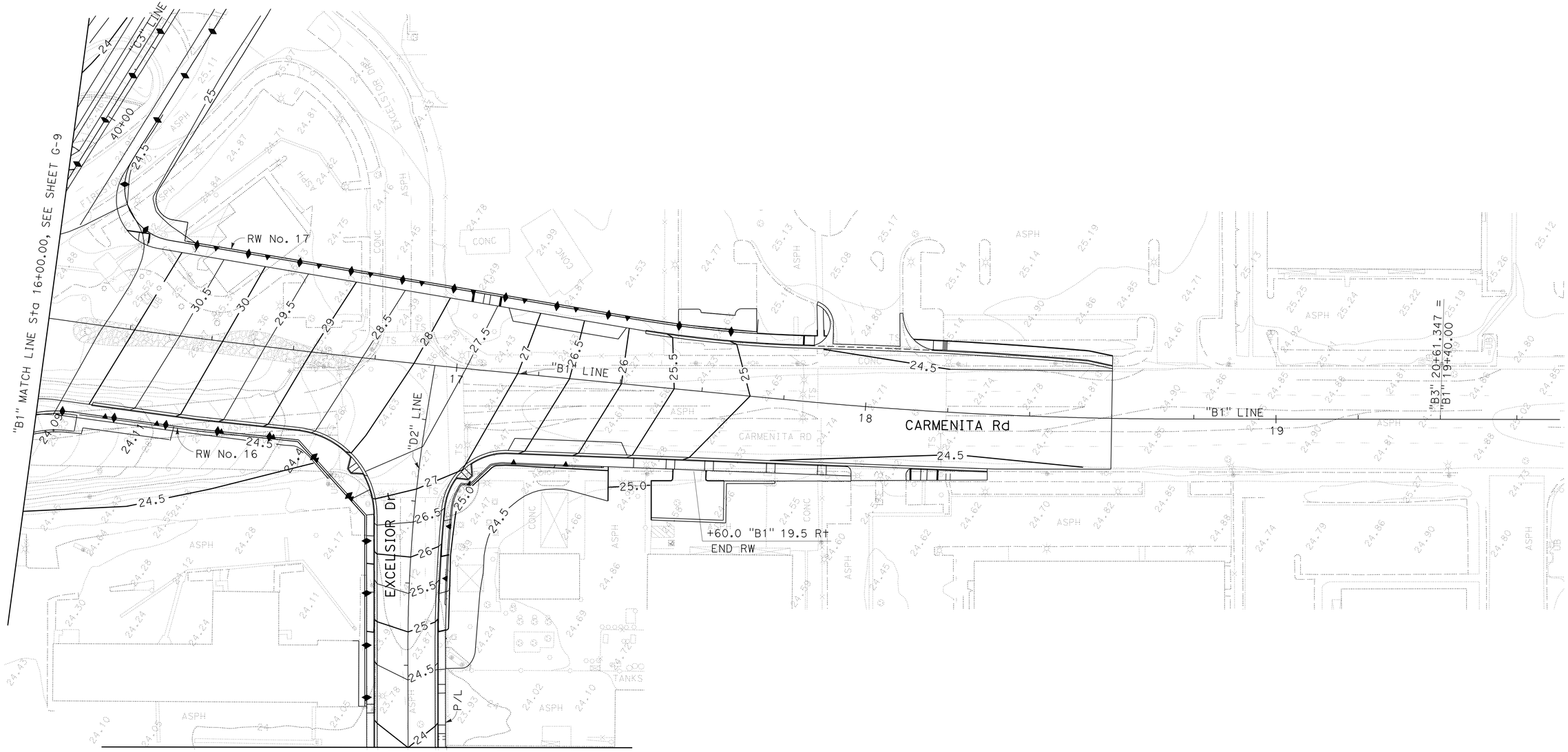

ALL DIMENSIONS ARE IN METERS
UNLESS OTHERWISE SHOWN

CONTOUR GRADING

SCALE 1:500

G-10

THIS PLAN ACCURATE FOR CONTOUR GRADING WORK ONLY.

STATE OF CALIFORNIA - DEPARTMENT OF TRANSPORTATION
Caltrans OFFICE OF DESIGN A

FUNCTIONAL SUPERVISOR: NGIM NANCY PE

CALCULATED-DESIGNED BY: KEVIN Q. NGUYEN
CHECKED BY: NGIM NANCY PE

REVISED BY: KN
DATE REVISED: 8/09

LAST REVISION 00-00-00
DATE PLOTTED => 22-JUN-2010
TIME PLOTTED => 13:34

Dist	COUNTY	ROUTE	KILOMETER POST TOTAL PROJECT	SHEET No.	TOTAL SHEETS
07	LA	5	2.9/4.9	153	1082

REGISTERED CIVIL ENGINEER 12-23-09 DATE

6-21-10
PLANS APPROVAL DATE

REGISTERED PROFESSIONAL ENGINEER NGIM NANCY PE No. 58161 Exp. 6-30-10 CIVIL STATE OF CALIFORNIA

THE STATE OF CALIFORNIA OR ITS OFFICERS OR AGENTS SHALL NOT BE RESPONSIBLE FOR THE ACCURACY OR COMPLETENESS OF ELECTRONIC COPIES OF THIS PLAN SHEET.

Caltrans Metric

NOTE:

FOR ACCURATE RIGHT OF WAY AND ACCESS DATA, CONTACT RIGHT OF WAY ENGINEERING AT THE DISTRICT OFFICE.

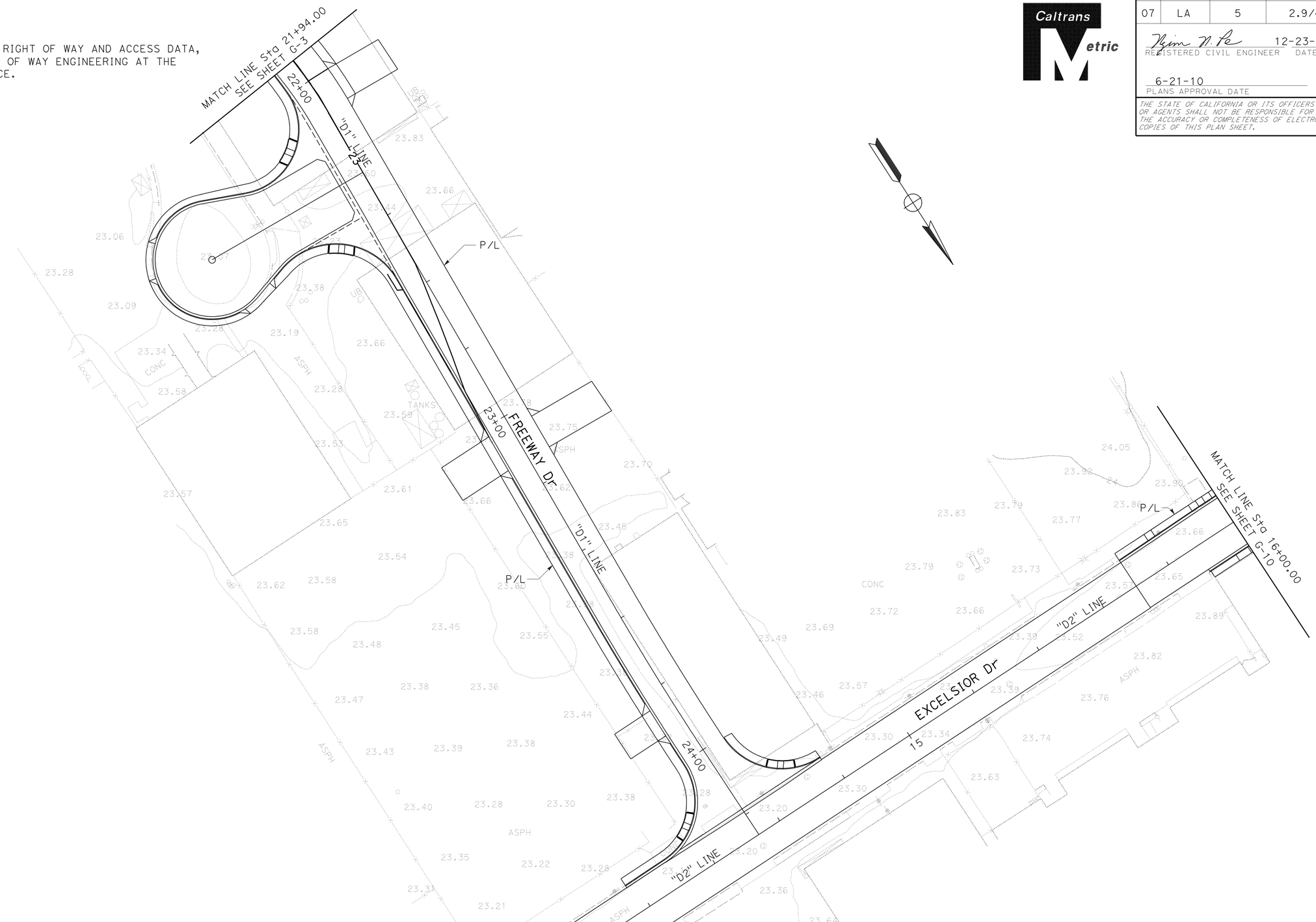

THIS PLAN ACCURATE FOR CONTOUR GRADING WORK ONLY.

ALL DIMENSIONS ARE IN METERS UNLESS OTHERWISE SHOWN

CONTOUR GRADING

SCALE 1:500

G-11

CALCULATED-DESIGNED BY	KEVIN Q. NGUYEN	REVISED BY	KN
CHECKED BY	NGIM NANCY PE	DATE REVISED	8/09
FUNCTIONAL SUPERVISOR	NGIM NANCY PE		

STATE OF CALIFORNIA - DEPARTMENT OF TRANSPORTATION
Caltrans OFFICE OF DESIGN A

LAST REVISION 00-00-00 | DATE PLOTTED => 22-JUN-2010 | TIME PLOTTED => 13:34

Dist	COUNTY	ROUTE	KILOMETER POST TOTAL PROJECT	SHEET No.	TOTAL SHEETS
07	LA	5	2.9/4.9	154	1082

Ralph M. Sasaki 12-23-09
REGISTERED CIVIL ENGINEER DATE

6-21-10
PLANS APPROVAL DATE

REGISTERED PROFESSIONAL ENGINEER RALPH M. SASAKI No. 30849 Exp. 3/31/10 CIVIL STATE OF CALIFORNIA

THE STATE OF CALIFORNIA OR ITS OFFICERS OR AGENTS SHALL NOT BE RESPONSIBLE FOR THE ACCURACY OR COMPLETENESS OF ELECTRONIC COPIES OF THIS PLAN SHEET.

Caltrans Metric

ABBREVIATIONS:

COCB	CURB OPENING CATCH BASIN
SPPWC	STANDARD PLANS FOR PUBLIC WORKS CONSTRUCTION
LD	LOCAL DEPRESSIONS
DSF	DELAWARE SAND FILTER
JC 3	JUNCTION CHAMBER No. 3
JC 3-C	JUNCTION CHAMBER No. 3-C
CMPA	CORRUGATED METAL PIPE ARCH
CSG	CASING
STL	STEEL
WTR	WATER
CPL	CHEVRON PIPE LINE
LACFCD	LOS ANGELES COUNTY FLOOD CONTROL DISTRICT
LACDPW	LOS ANGELES COUNTY DEPARTMENT OF PUBLIC WORK

LEGEND:

DRAINAGE SYSTEM No.

DRAINAGE UNIT

NOTE: THE CONTRACTOR SHALL VERIFY LOCATIONS AND ELEVATIONS OF EXISTING DRAINAGE SYSTEMS BEFORE COMMENCEMENT OF WORK.

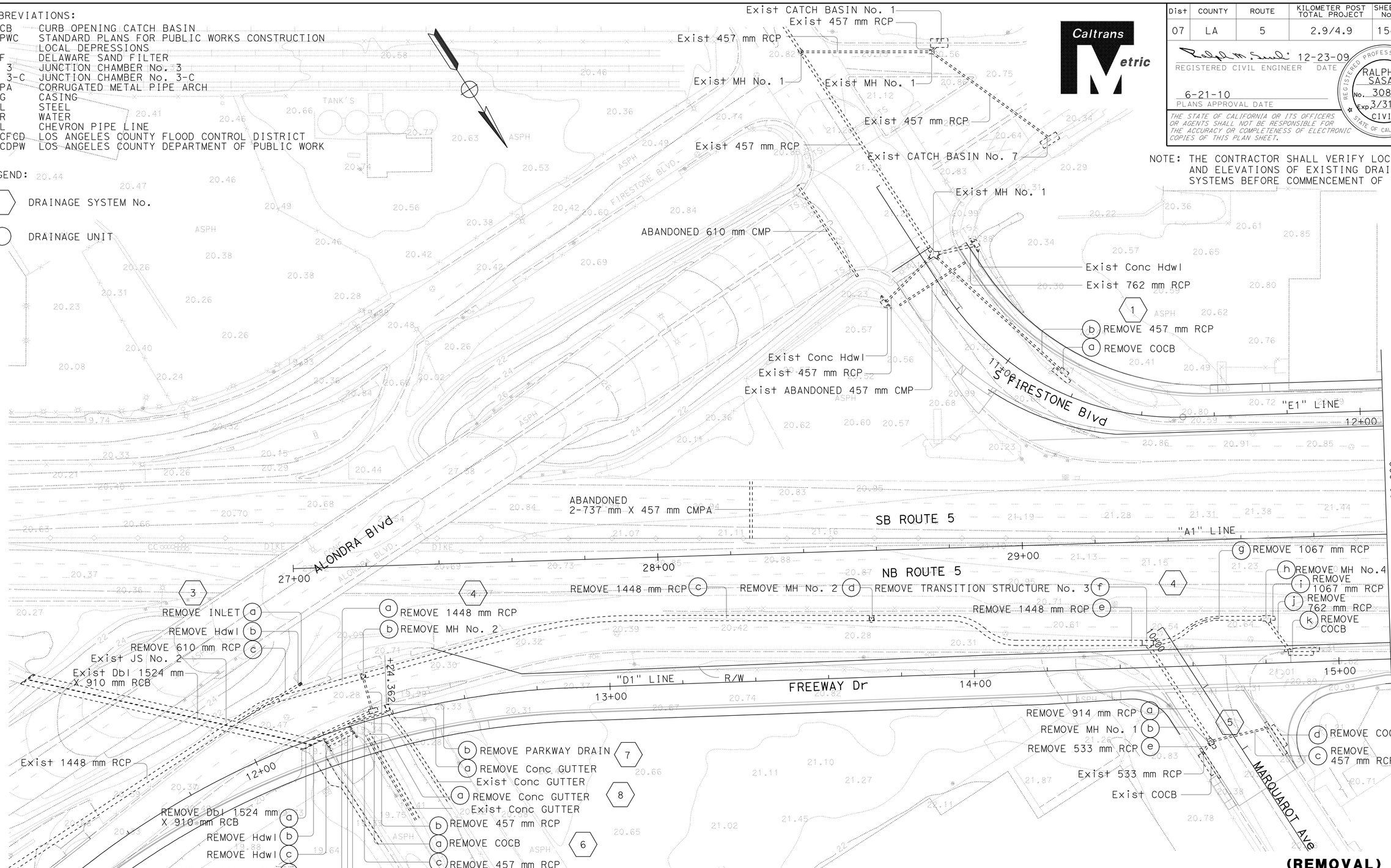

(REMOVAL)

ALL DIMENSIONS ARE IN METERS UNLESS OTHERWISE SHOWN

DRAINAGE PLAN

SCALE 1:500 **D-1**

THIS PLAN ACCURATE FOR DRAINAGE REMOVAL WORK ONLY.

REVISED BY	DATE REVISED

CALCULATED-DESIGNED BY: S. M. TAN, W. Y. LEE
CHECKED BY: R. M. SASAKI
FUNCTIONAL SUPERVISOR: RALPH M. SASAKI

STATE OF CALIFORNIA - DEPARTMENT OF TRANSPORTATION
Caltrans
HYDRAULICS

LAST REVISION 00-00-00 | DATE PLOTTED => 22-JUN-2010 | TIME PLOTTED => 1334

Dist	COUNTY	ROUTE	KILOMETER POST TOTAL PROJECT	SHEET No.	TOTAL SHEETS
07	LA	5	2.9/4.9	155	1082

Caltrans Metric

12-23-09
REGISTERED CIVIL ENGINEER DATE

6-21-10
PLANS APPROVAL DATE

REGISTERED PROFESSIONAL ENGINEER
RALPH M. SASAKI
No. 30849
Exp. 3/31/10
CIVIL
STATE OF CALIFORNIA

THE STATE OF CALIFORNIA OR ITS OFFICERS OR AGENTS SHALL NOT BE RESPONSIBLE FOR THE ACCURACY OR COMPLETENESS OF ELECTRONIC COPIES OF THIS PLAN SHEET.

NOTE: THE CONTRACTOR SHALL VERIFY LOCATIONS AND ELEVATIONS OF EXISTING DRAINAGE SYSTEMS BEFORE COMMENCEMENT OF WORK.

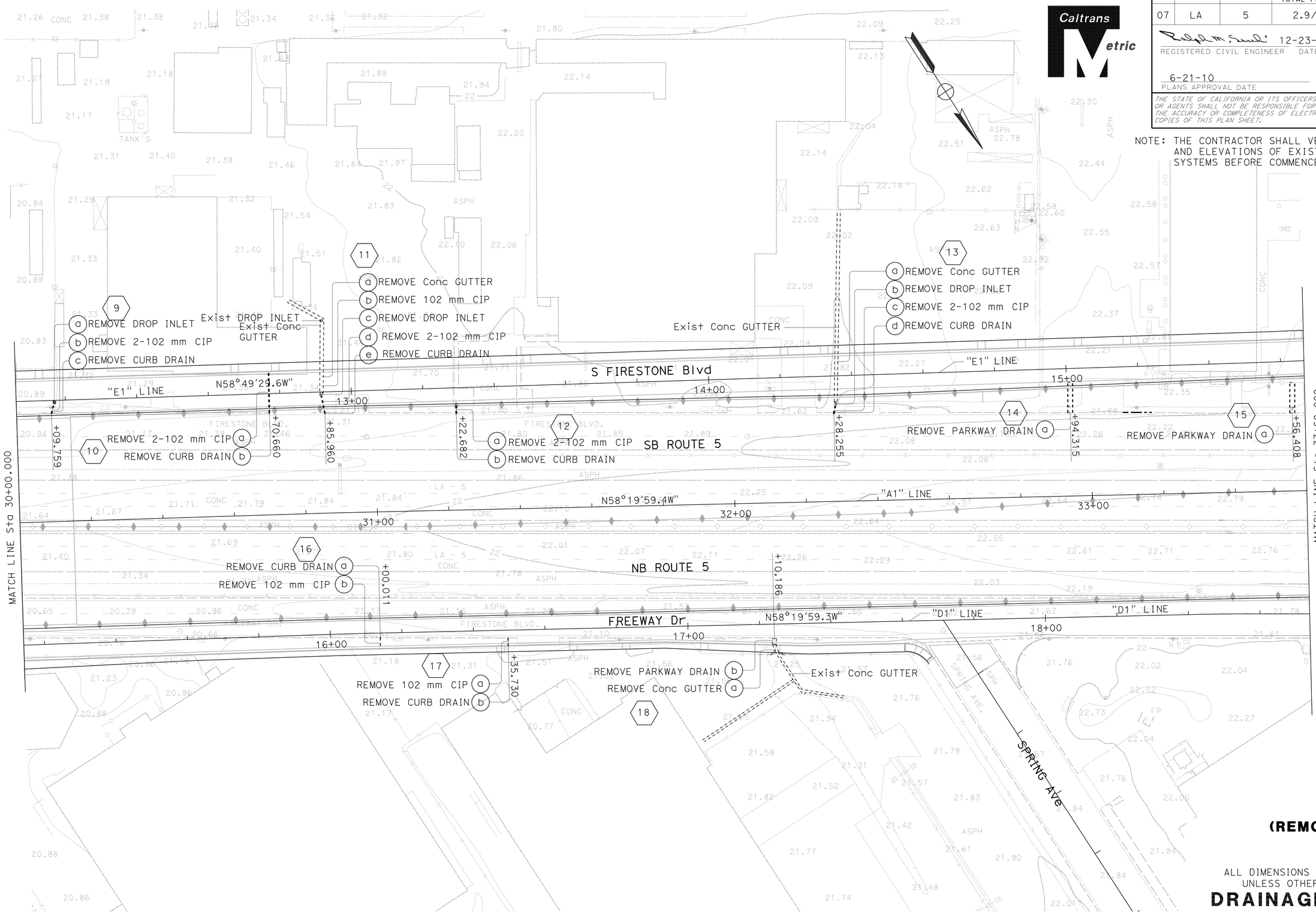

(REMOVAL)

ALL DIMENSIONS ARE IN METERS UNLESS OTHERWISE SHOWN

DRAINAGE PLAN

SCALE 1:500

D-2

THIS PLAN ACCURATE FOR DRAINAGE REMOVAL WORK ONLY.

REVISED BY	DATE REVISED

CALCULATED-DESIGNED BY: S. M. TAN, W. Y. LEE
CHECKED BY: R. M. SASAKI
FUNCTIONAL SUPERVISOR: RALPH M. SASAKI

STATE OF CALIFORNIA - DEPARTMENT OF TRANSPORTATION
Caltrans
HYDRAULICS

LAST REVISION 00-00-00
DATE PLOTTED => 22-JUN-2010
TIME PLOTTED => 13:35

Dist	COUNTY	ROUTE	KILOMETER POST TOTAL PROJECT	SHEET No.	TOTAL SHEETS
07	LA	5	2.9/4.9	156	1082

Ralph M. Sasaki 12-23-09
REGISTERED CIVIL ENGINEER DATE

6-21-10
PLANS APPROVAL DATE

REGISTERED PROFESSIONAL ENGINEER RALPH M. SASAKI No. 30849 Exp. 3/31/10 CIVIL STATE OF CALIFORNIA

THE STATE OF CALIFORNIA OR ITS OFFICERS OR AGENTS SHALL NOT BE RESPONSIBLE FOR THE ACCURACY OR COMPLETENESS OF ELECTRONIC COPIES OF THIS PLAN SHEET.

Caltrans Metric

NOTE: THE CONTRACTOR SHALL VERIFY LOCATIONS AND ELEVATIONS OF EXISTING DRAINAGE SYSTEMS BEFORE COMMENCEMENT OF WORK.

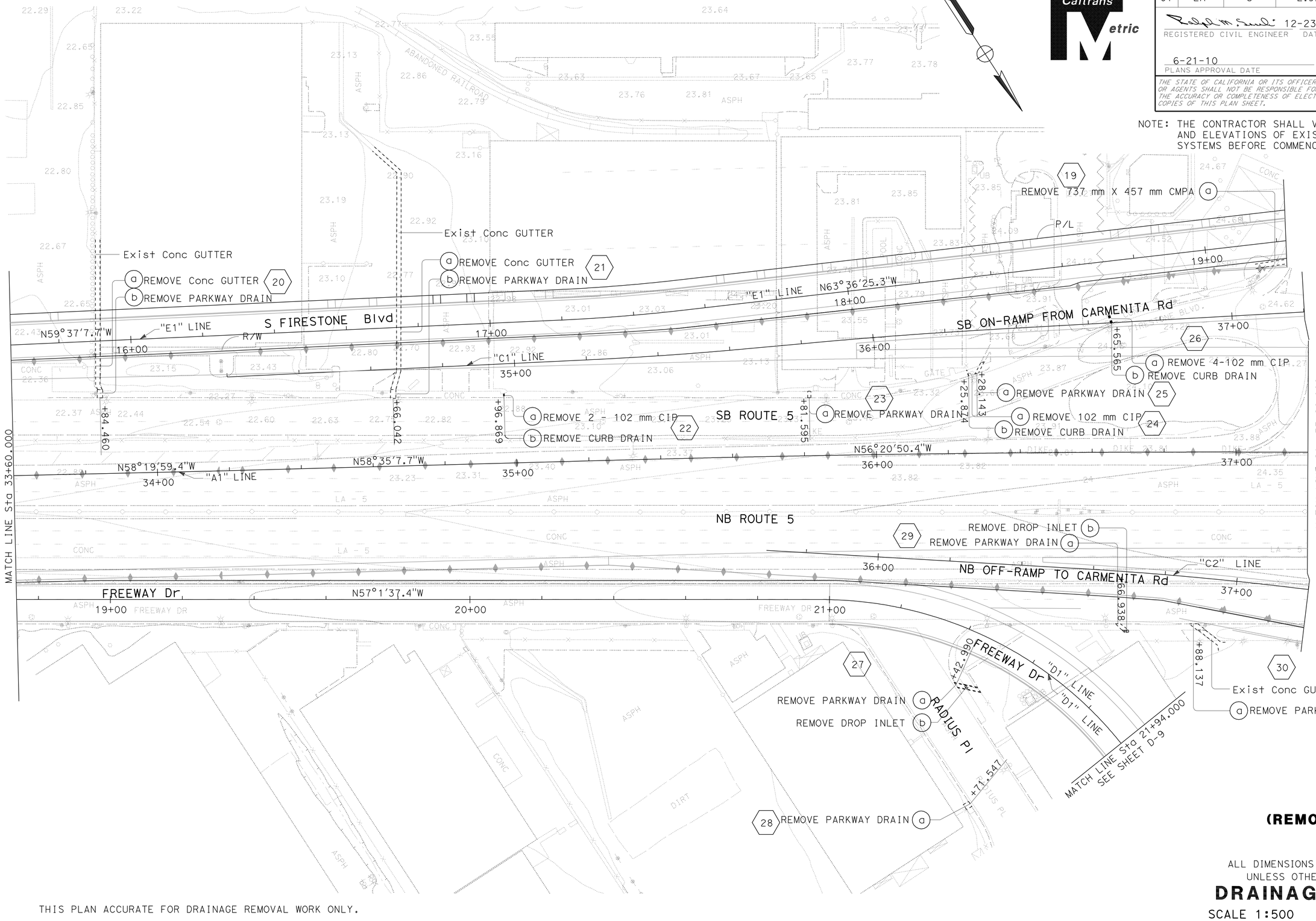

THIS PLAN ACCURATE FOR DRAINAGE REMOVAL WORK ONLY.

(REMOVAL)

ALL DIMENSIONS ARE IN METERS UNLESS OTHERWISE SHOWN

DRAINAGE PLAN

SCALE 1:500

D-3

REVISED BY	S. M. TAN W. Y. LEE
DATE REVISED	R. M. SASAKI
CALCULATED-DESIGNED BY	
CHECKED BY	
FUNCTIONAL SUPERVISOR	RALPH M. SASAKI

STATE OF CALIFORNIA - DEPARTMENT OF TRANSPORTATION

Caltrans **HYDRAULICS**

LAST REVISION 00-00-00 DATE PLOTTED => 22-JUN-2010 TIME PLOTTED => 13:35

Dist	COUNTY	ROUTE	KILOMETER POST TOTAL PROJECT	SHEET No.	TOTAL SHEETS
07	LA	5	2.9/4.9	157	1082

Caltrans Metric

12-23-09
REGISTERED CIVIL ENGINEER DATE

6-21-10
PLANS APPROVAL DATE

REGISTERED PROFESSIONAL ENGINEER RALPH M. SASAKI No. 30849 Exp. 3/31/10 CIVIL STATE OF CALIFORNIA

THE STATE OF CALIFORNIA OR ITS OFFICERS OR AGENTS SHALL NOT BE RESPONSIBLE FOR THE ACCURACY OR COMPLETENESS OF ELECTRONIC COPIES OF THIS PLAN SHEET.

NOTE: THE CONTRACTOR SHALL VERIFY LOCATIONS AND ELEVATIONS OF EXISTING DRAINAGE SYSTEMS BEFORE COMMENCEMENT OF WORK.

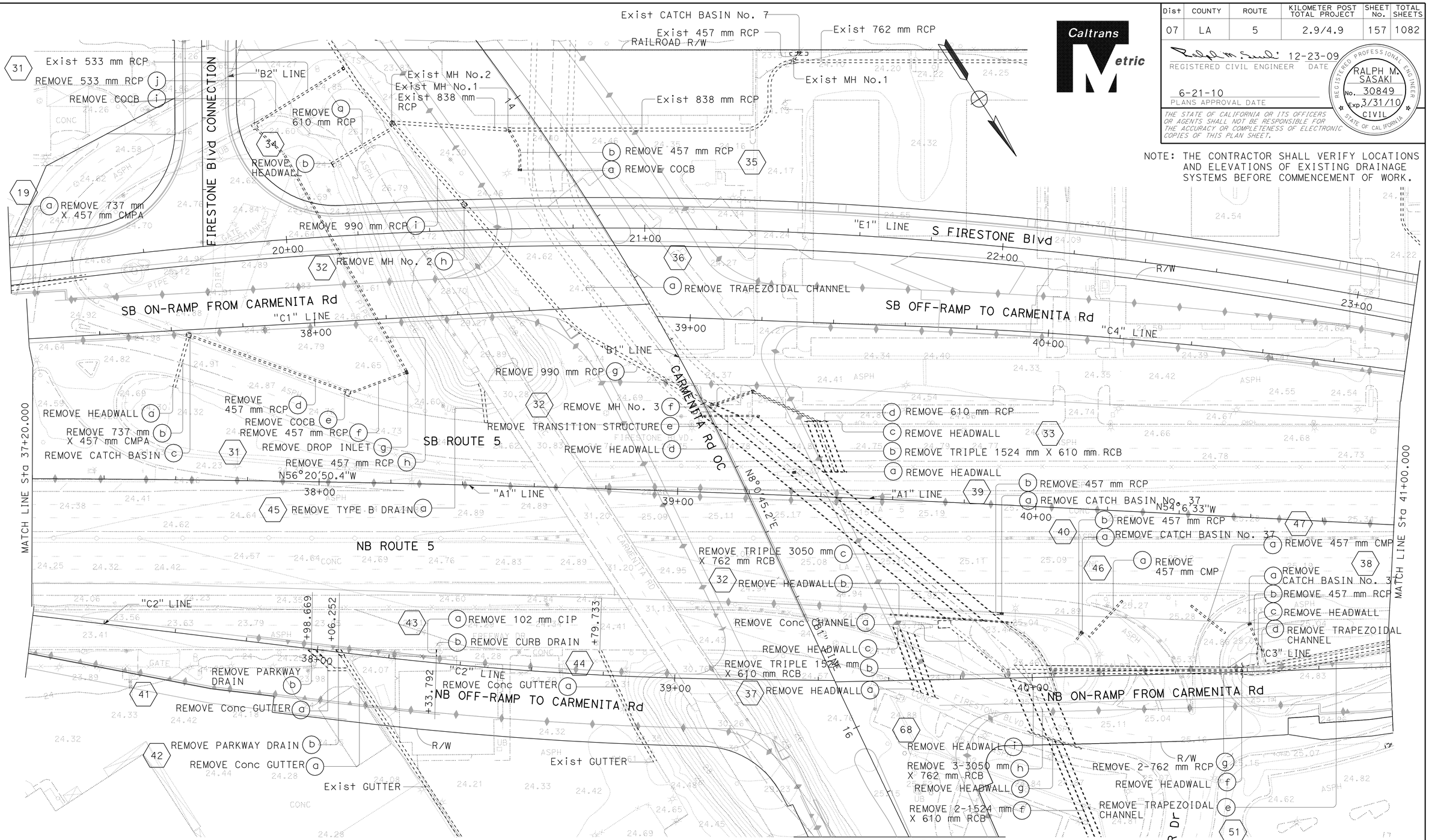

(REMOVAL)

ALL DIMENSIONS ARE IN METERS UNLESS OTHERWISE SHOWN

DRAINAGE PLAN

SCALE 1:500

D-4

THIS PLAN ACCURATE FOR DRAINAGE REMOVAL WORK ONLY.

STATE OF CALIFORNIA - DEPARTMENT OF TRANSPORTATION
Caltrans
HYDRAULICS

FUNCTIONAL SUPERVISOR: RALPH M. SASAKI
CALCULATED-DESIGNED BY: S. M. TAN, W. Y. LEE
CHECKED BY: R. M. SASAKI
REVISED BY / DATE REVISED

LAST REVISION 00-00-00
DATE PLOTTED => 22-JUN-2010
TIME PLOTTED => 13:35

Dist	COUNTY	ROUTE	KILOMETER POST TOTAL PROJECT	SHEET No.	TOTAL SHEETS
07	LA	5	2.9/4.9	158	1082

Ralph M. Sasaki 12-23-09
REGISTERED CIVIL ENGINEER DATE

6-21-10
PLANS APPROVAL DATE

REGISTERED PROFESSIONAL ENGINEER RALPH M. SASAKI No. 30849 Exp. 3/31/10 CIVIL STATE OF CALIFORNIA

THE STATE OF CALIFORNIA OR ITS OFFICERS OR AGENTS SHALL NOT BE RESPONSIBLE FOR THE ACCURACY OR COMPLETENESS OF ELECTRONIC COPIES OF THIS PLAN SHEET.

Caltrans Metric

NOTE: THE CONTRACTOR SHALL VERIFY LOCATIONS AND ELEVATIONS OF EXISTING DRAINAGE SYSTEMS BEFORE COMMENCEMENT OF WORK.

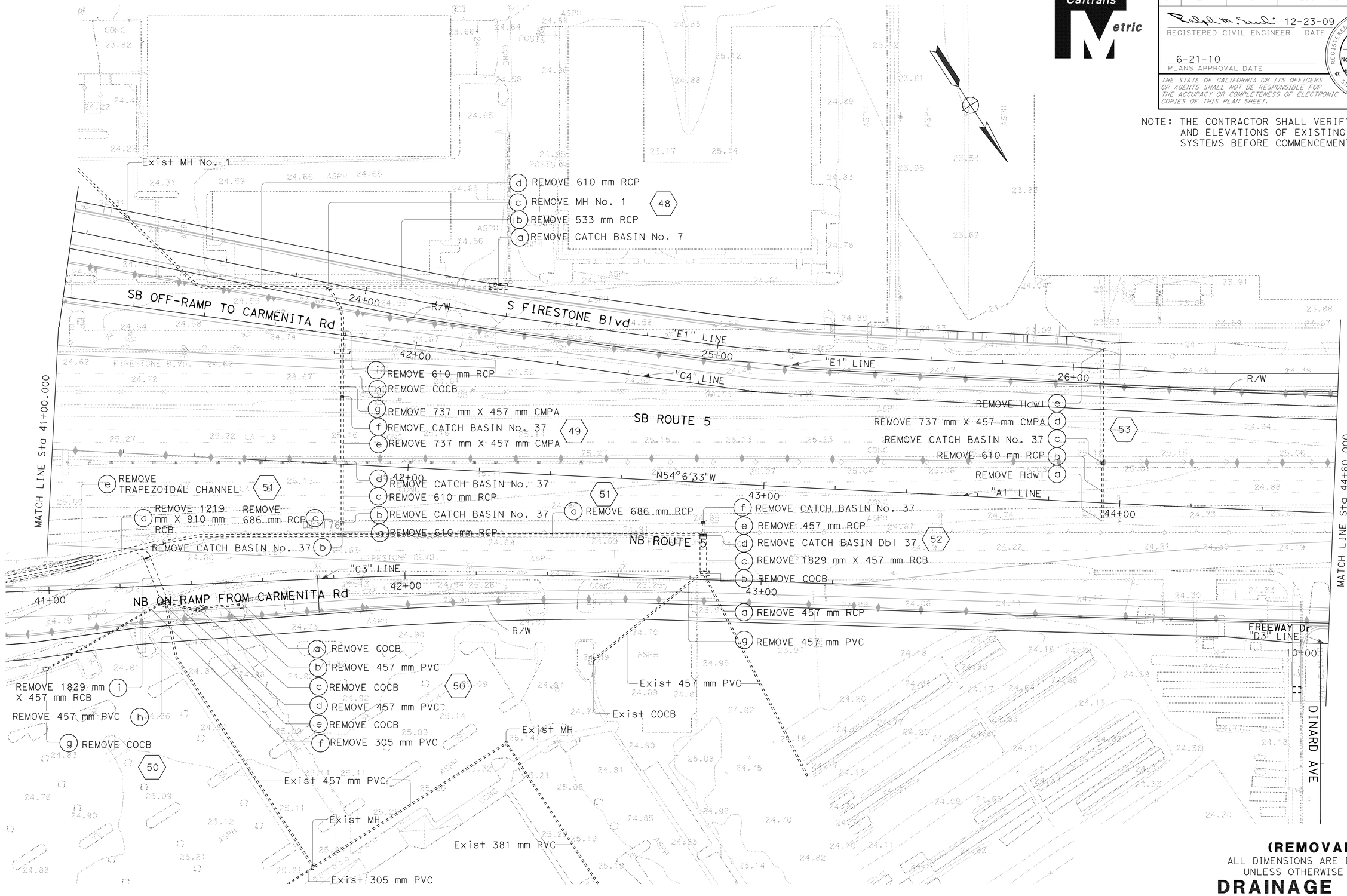

THIS PLAN ACCURATE FOR DRAINAGE REMOVAL WORK ONLY.

(REMOVAL)
ALL DIMENSIONS ARE IN METERS UNLESS OTHERWISE SHOWN

DRAINAGE PLAN

SCALE 1:500

D-5

REVISED BY	DATE REVISED

CALCULATED-DESIGNED BY: S. M. TAN, W. Y. LEE
CHECKED BY: R. M. SASAKI

FUNCTIONAL SUPERVISOR: RALPH M. SASAKI

STATE OF CALIFORNIA - DEPARTMENT OF TRANSPORTATION
Caltrans
HYDRAULICS

LAST REVISION 00-00-00
DATE PLOTTED => 22-JUN-2010
TIME PLOTTED => 13:35

Dist	COUNTY	ROUTE	KILOMETER POST TOTAL PROJECT	SHEET No.	TOTAL SHEETS
07	LA	5	2.9/4.9	159	1082

Ralph M. Sasaki 12-23-09
REGISTERED CIVIL ENGINEER DATE

6-21-10
PLANS APPROVAL DATE

REGISTERED PROFESSIONAL ENGINEER
RALPH M. SASAKI
No. 30849
Exp. 3/31/10
CIVIL
STATE OF CALIFORNIA

THE STATE OF CALIFORNIA OR ITS OFFICERS OR AGENTS SHALL NOT BE RESPONSIBLE FOR THE ACCURACY OR COMPLETENESS OF ELECTRONIC COPIES OF THIS PLAN SHEET.

Caltrans Metric

NOTE: THE CONTRACTOR SHALL VERIFY LOCATIONS AND ELEVATIONS OF EXISTING DRAINAGE SYSTEMS BEFORE COMMENCEMENT OF WORK.

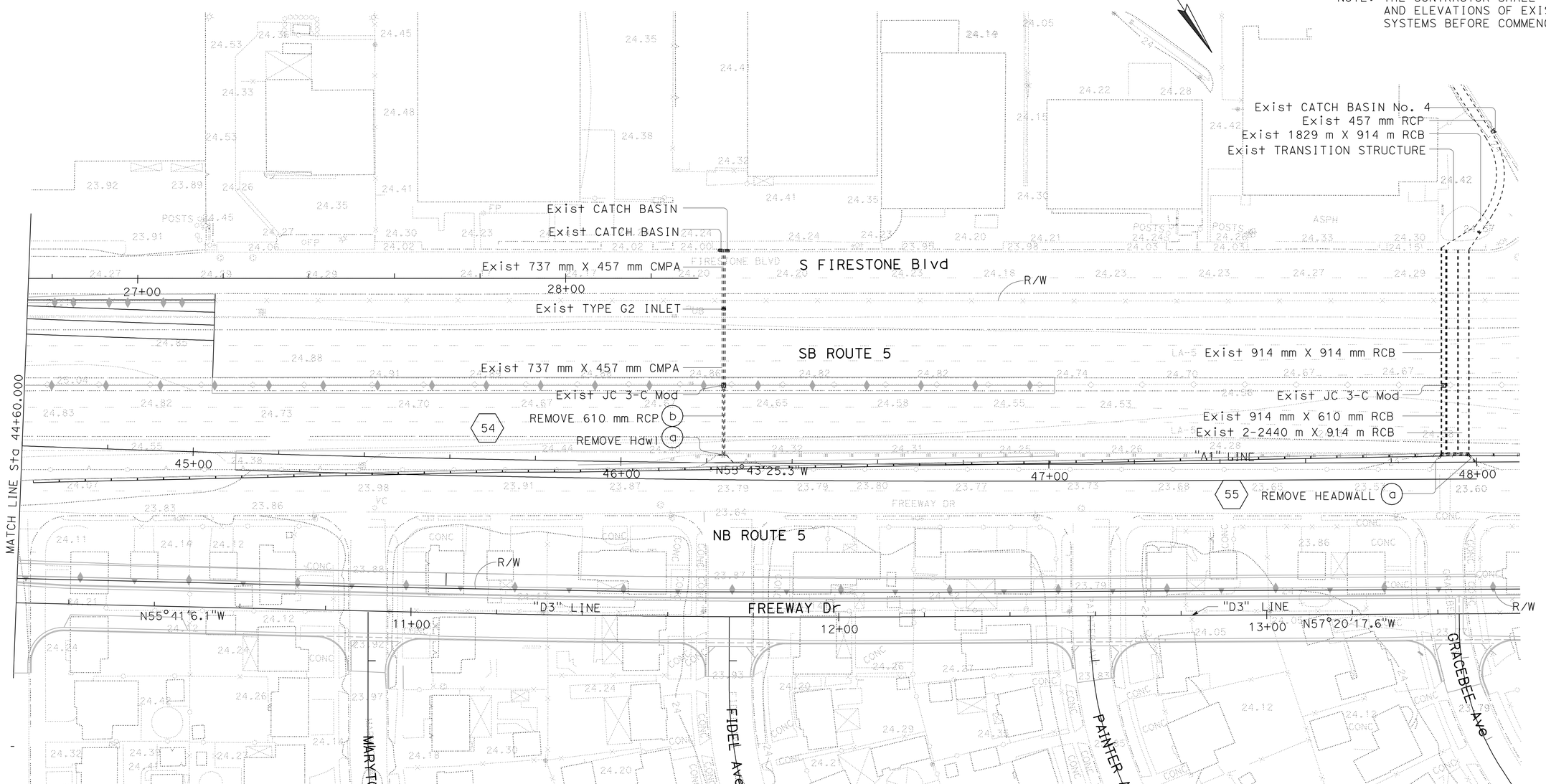

THIS PLAN ACCURATE FOR DRAINAGE REMOVAL WORK ONLY.

(REMOVAL)
ALL DIMENSIONS ARE IN METERS
UNLESS OTHERWISE SHOWN

DRAINAGE PLAN D-6

SCALE 1:500

STATE OF CALIFORNIA - DEPARTMENT OF TRANSPORTATION
Caltrans
HYDRAULICS

FUNCTIONAL SUPERVISOR: RALPH M. SASAKI
CALCULATED-DESIGNED BY: S. M. TAN
CHECKED BY: R. M. SASAKI
REVISED BY: W. Y. LEE
DATE REVISED:

LAST REVISION 00-00-00
DATE PLOTTED => 22-JUN-2010
TIME PLOTTED => 13:35

Dist	COUNTY	ROUTE	KILOMETER POST TOTAL PROJECT	SHEET No.	TOTAL SHEETS
07	LA	5	2.9/4.9	160	1082

REGISTERED CIVIL ENGINEER 12-23-09 DATE

6-21-10
PLANS APPROVAL DATE

REGISTERED PROFESSIONAL ENGINEER RALPH M. SASAKI No. 30849 Exp. 3/31/10 CIVIL STATE OF CALIFORNIA

THE STATE OF CALIFORNIA OR ITS OFFICERS OR AGENTS SHALL NOT BE RESPONSIBLE FOR THE ACCURACY OR COMPLETENESS OF ELECTRONIC COPIES OF THIS PLAN SHEET.

Caltrans Metric

NOTE: THE CONTRACTOR SHALL VERIFY LOCATIONS AND ELEVATIONS OF EXISTING DRAINAGE SYSTEMS BEFORE COMMENCEMENT OF WORK.

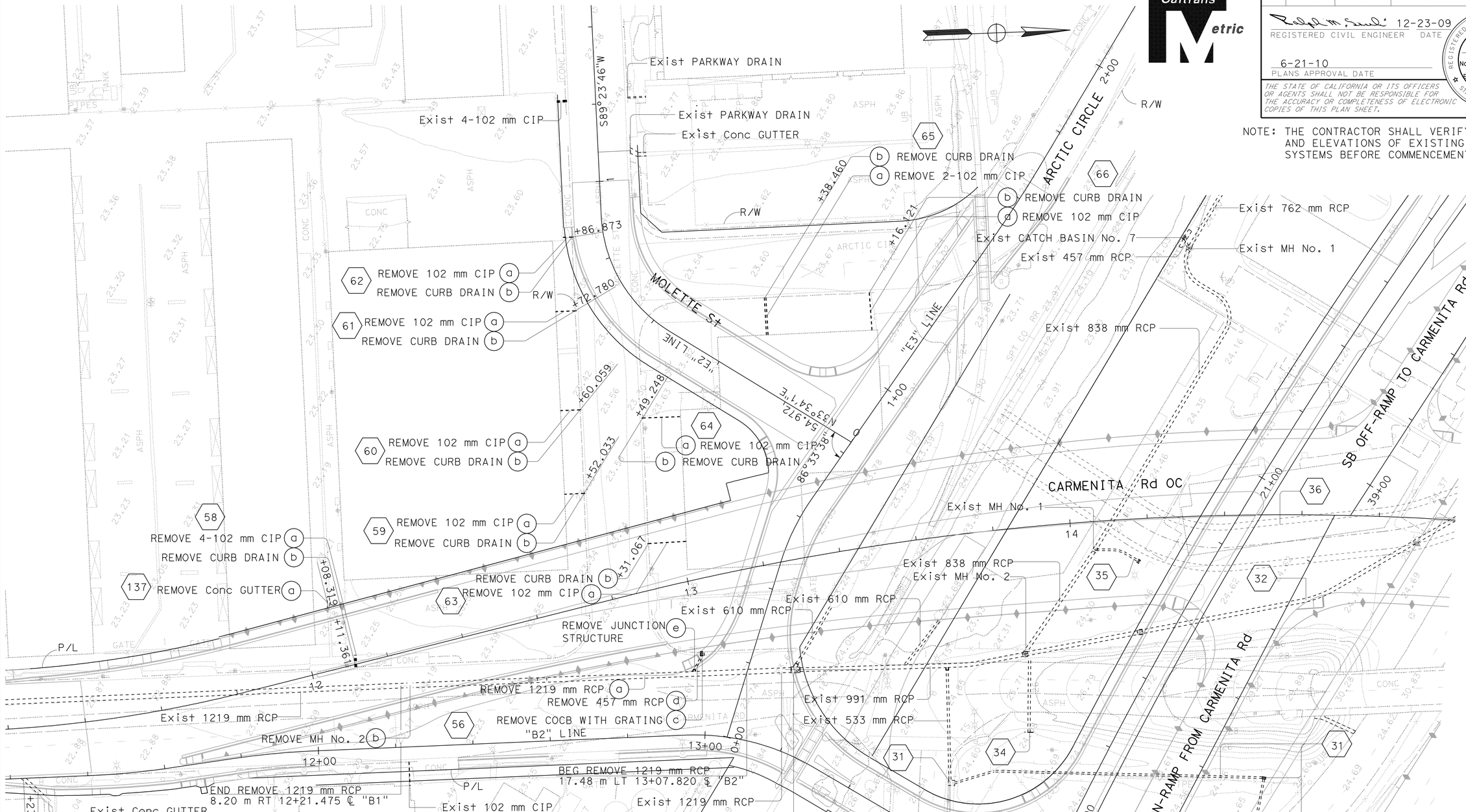

31 32 34 35 36 SEE DRAINAGE PLAN D-4

THIS PLAN ACCURATE FOR DRAINAGE REMOVAL WORK ONLY.

(REMOVAL)

ALL DIMENSIONS ARE IN METERS UNLESS OTHERWISE SHOWN

DRAINAGE PLAN

SCALE 1:500 **D-7**

STATE OF CALIFORNIA - DEPARTMENT OF TRANSPORTATION

Caltrans

HYDRAULICS

FUNCTIONAL SUPERVISOR: RALPH M. SASAKI

CALCULATED-DESIGNED BY: S. M. TAN W. Y. LEE

CHECKED BY: R. M. SASAKI

REVISED BY | DATE REVISED

LAST REVISION 00-00-00 | DATE PLOTTED => 22-JUN-2010 | TIME PLOTTED => 13:36

Dist	COUNTY	ROUTE	KILOMETER POST TOTAL PROJECT	SHEET No.	TOTAL SHEETS
07	LA	5	2.9/4.9	161	1082

Ralph M. Sasaki 12-23-09
REGISTERED CIVIL ENGINEER DATE

6-21-10
PLANS APPROVAL DATE

REGISTERED PROFESSIONAL ENGINEER RALPH M. SASAKI No. 30849 Exp. 3/31/10 CIVIL STATE OF CALIFORNIA

THE STATE OF CALIFORNIA OR ITS OFFICERS OR AGENTS SHALL NOT BE RESPONSIBLE FOR THE ACCURACY OR COMPLETENESS OF ELECTRONIC COPIES OF THIS PLAN SHEET.

Caltrans Metric

NOTE: THE CONTRACTOR SHALL VERIFY LOCATIONS AND ELEVATIONS OF EXISTING DRAINAGE SYSTEMS BEFORE COMMENCEMENT OF WORK.

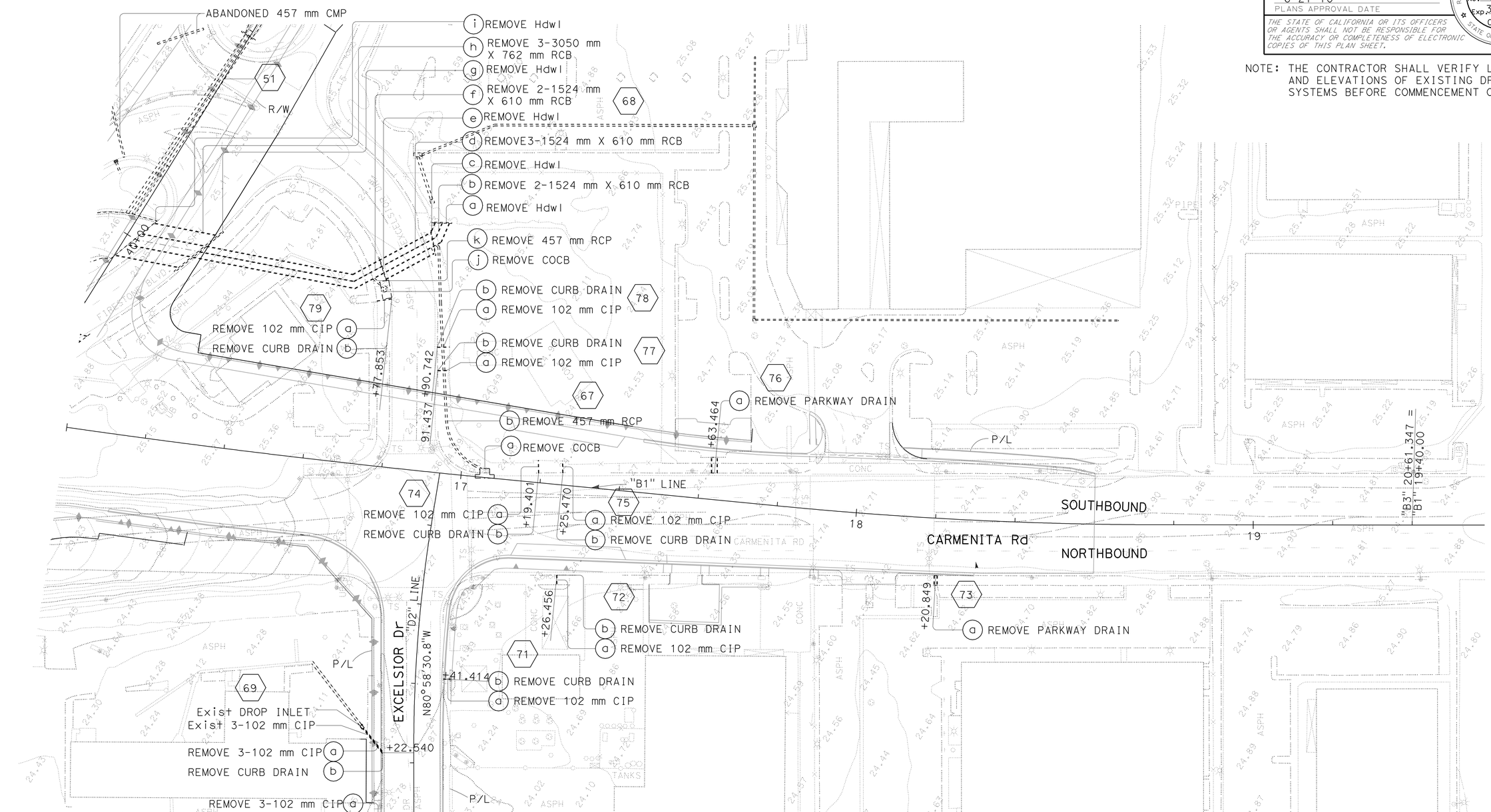

51 SEE DRAINAGE PLAN D-4 & D-5

THIS PLAN ACCURATE FOR DRAINAGE REMOVAL WORK ONLY

(REMOVAL)

ALL DIMENSIONS ARE IN METERS UNLESS OTHERWISE SHOWN

DRAINAGE PLAN

SCALE 1:500

D-8

STATE OF CALIFORNIA - DEPARTMENT OF TRANSPORTATION
Caltrans
HYDRAULICS

FUNCTIONAL SUPERVISOR: RALPH M. SASAKI
CALCULATED-DESIGNED BY: S. M. TAN W. Y. LEE
CHECKED BY: R. M. SASAKI
REVISED BY
DATE REVISED

LAST REVISION 00-00-00
DATE PLOTTED => 22-JUN-2010
TIME PLOTTED => 13:36

Dist	COUNTY	ROUTE	KILOMETER POST TOTAL PROJECT	SHEET No.	TOTAL SHEETS
07	LA	5	2.9/4.9	162	1082

Ralph M. Sasaki 12-23-09
REGISTERED CIVIL ENGINEER DATE

6-21-10
PLANS APPROVAL DATE

REGISTERED PROFESSIONAL ENGINEER RALPH M. SASAKI No. 30849 Exp. 3/31/10 CIVIL STATE OF CALIFORNIA

THE STATE OF CALIFORNIA OR ITS OFFICERS OR AGENTS SHALL NOT BE RESPONSIBLE FOR THE ACCURACY OR COMPLETENESS OF ELECTRONIC COPIES OF THIS PLAN SHEET.

NOTE: THE CONTRACTOR SHALL VERIFY LOCATIONS AND ELEVATIONS OF EXISTING DRAINAGE SYSTEMS BEFORE COMMENCEMENT OF WORK.

THIS PLAN ACCURATE FOR DRAINAGE REMOVAL WORK ONLY.

(REMOVAL)

ALL DIMENSIONS ARE IN METERS UNLESS OTHERWISE SHOWN

DRAINAGE PLAN

SCALE 1:500

D-9

STATE OF CALIFORNIA - DEPARTMENT OF TRANSPORTATION
Caltrans
HYDRAULICS

FUNCTIONAL SUPERVISOR: RALPH M. SASAKI
CALCULATED-DESIGNED BY: S. M. TAN, W. Y. LEE
CHECKED BY: R. M. SASAKI
REVISED BY
DATE REVISED

LAST REVISION 00-00-00 | DATE PLOTTED => 22-JUN-2010 | TIME PLOTTED => 13:36

Dist	COUNTY	ROUTE	KILOMETER POST TOTAL PROJECT	SHEET No.	TOTAL SHEETS
07	LA	5	2.9/4.9	163	1082

12-23-09
REGISTERED CIVIL ENGINEER DATE

6-21-10
PLANS APPROVAL DATE

REGISTERED PROFESSIONAL ENGINEER RALPH M. SASAKI No. 30849 Exp. 3/31/10 CIVIL STATE OF CALIFORNIA

THE STATE OF CALIFORNIA OR ITS OFFICERS OR AGENTS SHALL NOT BE RESPONSIBLE FOR THE ACCURACY OR COMPLETENESS OF ELECTRONIC COPIES OF THIS PLAN SHEET.

Caltrans Metric

NOTE: THE CONTRACTOR SHALL VERIFY LOCATIONS AND ELEVATIONS OF EXISTING DRAINAGE SYSTEMS BEFORE COMMENCEMENT OF WORK.

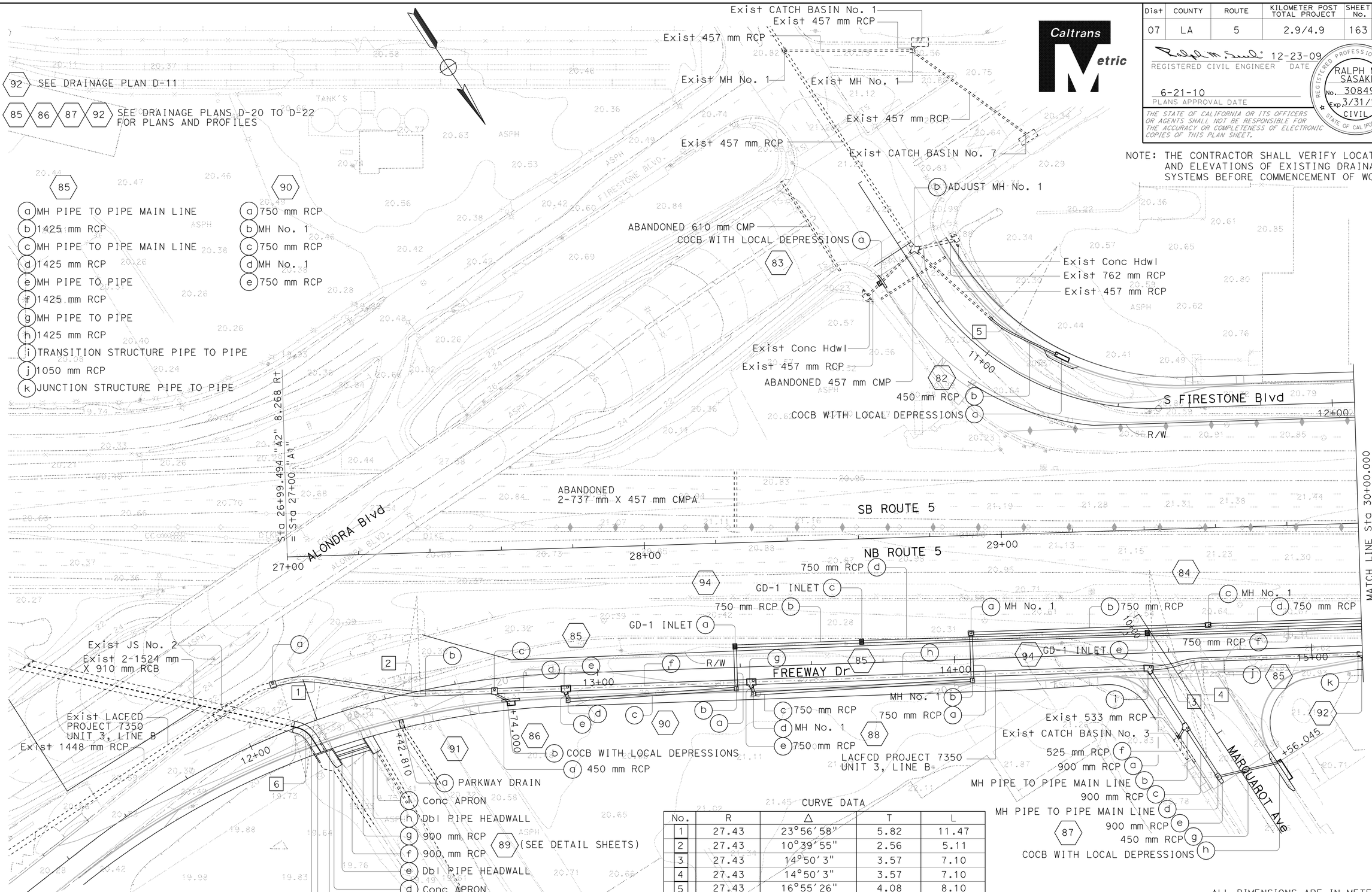

85

a MH PIPE TO PIPE MAIN LINE
b 1425 mm RCP
c MH PIPE TO PIPE MAIN LINE
d 1425 mm RCP
e MH PIPE TO PIPE
f 1425 mm RCP
g MH PIPE TO PIPE
h 1425 mm RCP
i TRANSITION STRUCTURE PIPE TO PIPE
j 1050 mm RCP
k JUNCTION STRUCTURE PIPE TO PIPE

90

a 750 mm RCP
b MH No. 1
c 750 mm RCP
d MH No. 1
e 750 mm RCP

CURVE DATA

No.	R	Δ	T	L
1	27.43	23°56′58"	5.82	11.47
2	27.43	10°39′55"	2.56	5.11
3	27.43	14°50′3"	3.57	7.10
4	27.43	14°50′3"	3.57	7.10
5	27.43	16°55′26"	4.08	8.10
6	6.86	44°12′36"	2.79	5.29

THIS PLAN ACCURATE FOR DRAINAGE WORK ONLY.

ALL DIMENSIONS ARE IN METERS UNLESS OTHERWISE SHOWN

DRAINAGE PLAN

SCALE 1:500 **D-10**

REVISED BY	DATE REVISED

CALCULATED-DESIGNED BY: S. M. TAN, W. Y. LEE
CHECKED BY: R. M. SASAKI
FUNCTIONAL SUPERVISOR: RALPH M. SASAKI

STATE OF CALIFORNIA - DEPARTMENT OF TRANSPORTATION
Caltrans
HYDRAULICS

LAST REVISION 00-00-00 | DATE PLOTTED => 22-JUN-2010 | TIME PLOTTED => 13:36

Dist	COUNTY	ROUTE	KILOMETER POST TOTAL PROJECT	SHEET No.	TOTAL SHEETS
07	LA	5	2.9/4.9	164	1082

Caltrans Metric

REGISTERED CIVIL ENGINEER 12-23-09 DATE

6-21-10
PLANS APPROVAL DATE

REGISTERED PROFESSIONAL ENGINEER RALPH M. SASAKI No. 30849 Exp. 3/31/10 CIVIL STATE OF CALIFORNIA

THE STATE OF CALIFORNIA OR ITS OFFICERS OR AGENTS SHALL NOT BE RESPONSIBLE FOR THE ACCURACY OR COMPLETENESS OF ELECTRONIC COPIES OF THIS PLAN SHEET.

NOTE: THE CONTRACTOR SHALL VERIFY LOCATIONS AND ELEVATIONS OF EXISTING DRAINAGE SYSTEMS BEFORE COMMENCEMENT OF WORK.

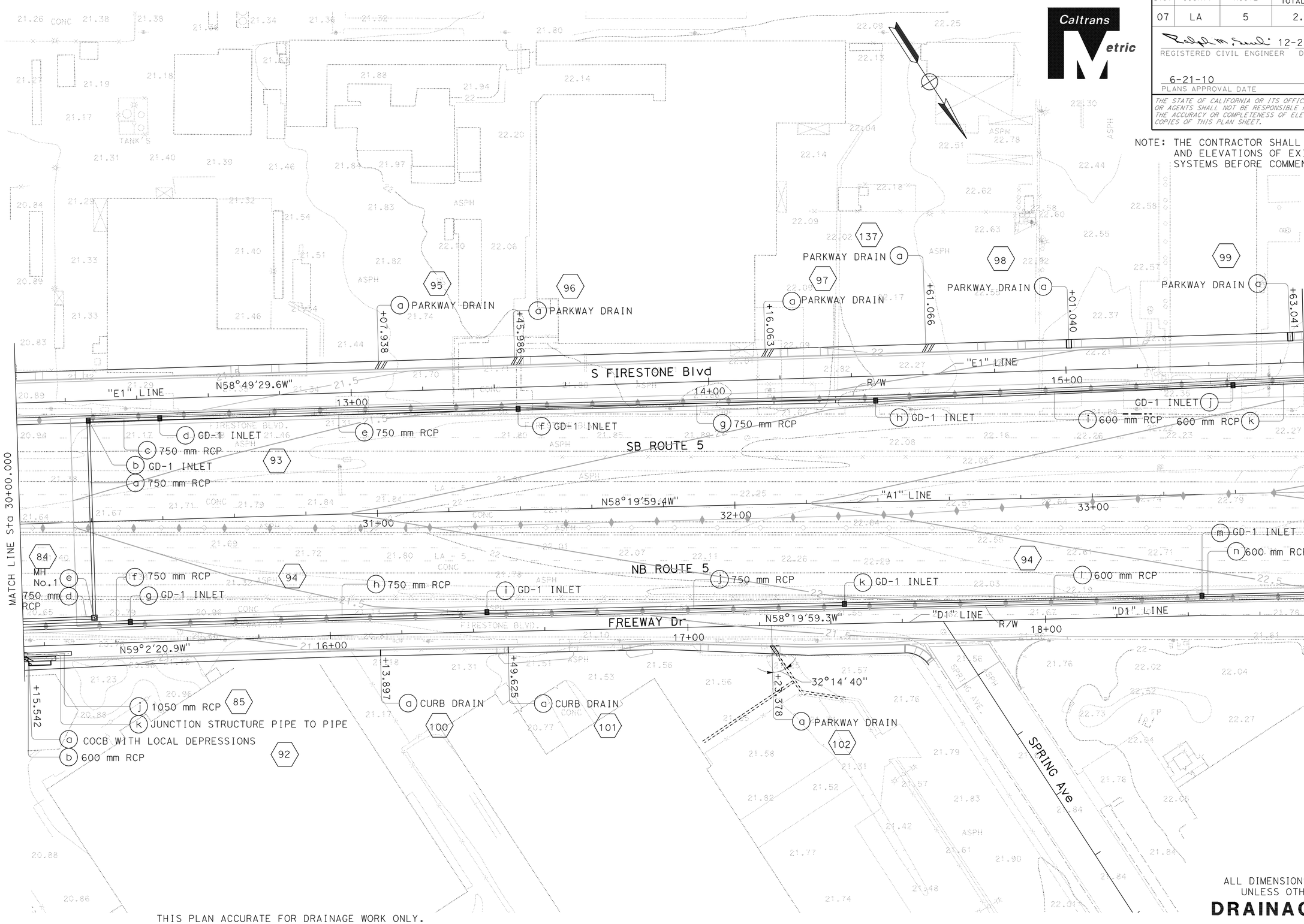

ALL DIMENSIONS ARE IN METERS UNLESS OTHERWISE SHOWN

THIS PLAN ACCURATE FOR DRAINAGE WORK ONLY.

DRAINAGE PLAN

SCALE 1:500

D-11

STATE OF CALIFORNIA - DEPARTMENT OF TRANSPORTATION

Caltrans

HYDRAULICS

FUNCTIONAL SUPERVISOR: RALPH M. SASAKI

CALCULATED-DESIGNED BY: S. M. TAN, W. Y. LEE

CHECKED BY: R. M. SASAKI

REVISED BY

DATE REVISED

LAST REVISION 00-00-00

DATE PLOTTED => 15-FEB-2011

TIME PLOTTED => 10:24

Dist	COUNTY	ROUTE	KILOMETER POST TOTAL PROJECT	SHEET No.	TOTAL SHEETS
07	LA	5	2.9/4.9	165	1082

REGISTERED CIVIL ENGINEER 12-23-09 DATE

6-21-10
PLANS APPROVAL DATE

REGISTERED PROFESSIONAL ENGINEER RALPH M. SASAKI No. 30849 Exp. 3/31/10 CIVIL STATE OF CALIFORNIA

THE STATE OF CALIFORNIA OR ITS OFFICERS OR AGENTS SHALL NOT BE RESPONSIBLE FOR THE ACCURACY OR COMPLETENESS OF ELECTRONIC COPIES OF THIS PLAN SHEET.

Caltrans Metric

NOTE: THE CONTRACTOR SHALL VERIFY LOCATIONS AND ELEVATIONS OF EXISTING DRAINAGE SYSTEMS BEFORE COMMENCEMENT OF WORK.

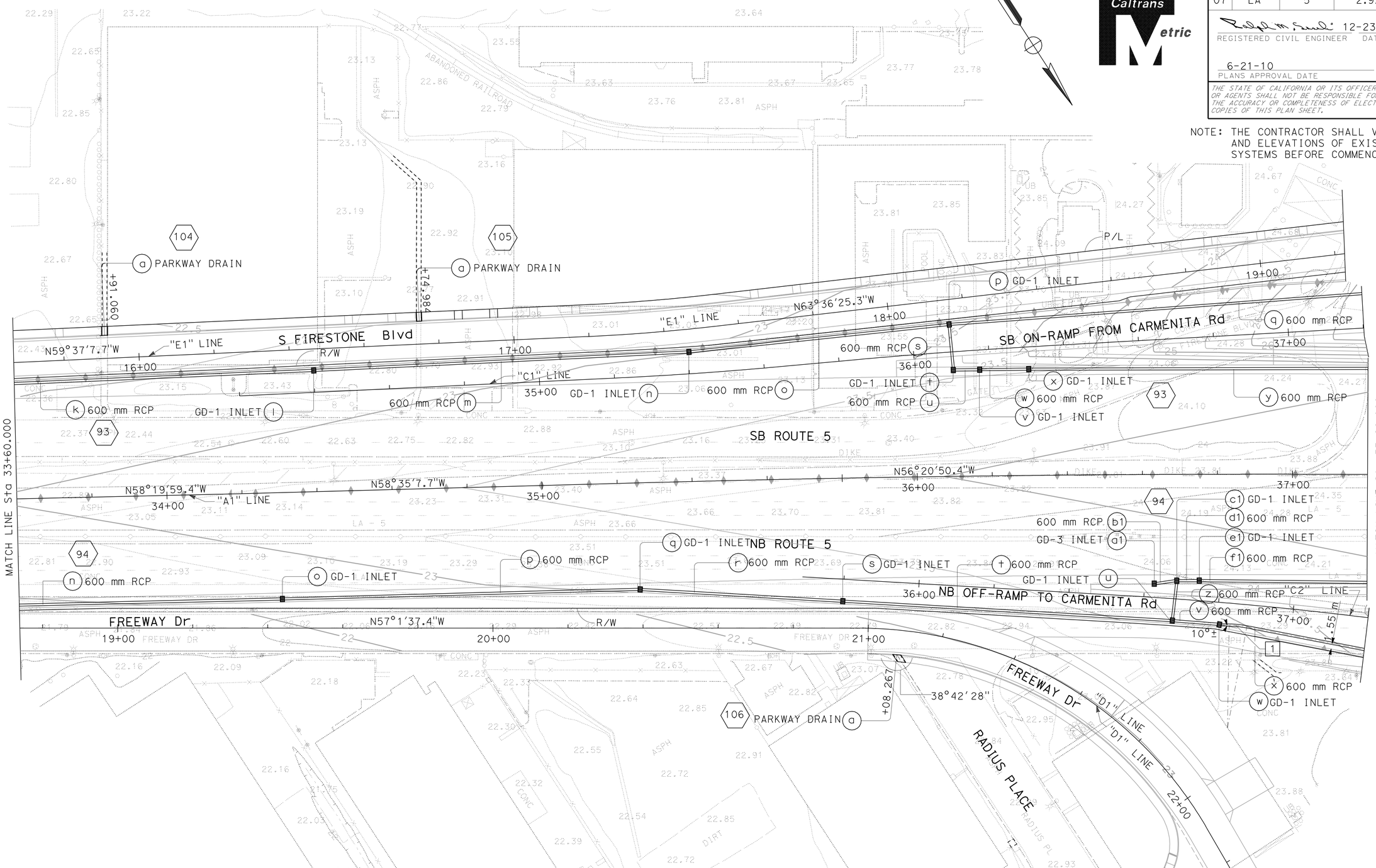

CURVE DATA

No.	R	Δ	T	L
1	27.43	9°59'26"	2.40	4.78

ALL DIMENSIONS ARE IN METERS UNLESS OTHERWISE SHOWN

DRAINAGE PLAN

SCALE 1:500

D-12

THIS PLAN ACCURATE FOR DRAINAGE WORK ONLY.

STATE OF CALIFORNIA - DEPARTMENT OF TRANSPORTATION
Caltrans
HYDRAULICS

FUNCTIONAL SUPERVISOR: RALPH M. SASAKI
CALCULATED-DESIGNED BY: S. M. TAN / W. Y. LEE
CHECKED BY: R. M. SASAKI
REVISED BY
DATE REVISED

LAST REVISION 00-00-00
DATE PLOTTED => 22-JUN-2010
TIME PLOTTED => 13:36

BORDER LAST REVISED 3/1/2007
RELATIVE BORDER SCALE IS IN MILLIMETERS 0 20 40 60 80
USERNAME => trpierce
DGN FILE => 72159cia012.dgn
CU 07312
EA 2159C1

Dist	COUNTY	ROUTE	KILOMETER POST TOTAL PROJECT	SHEET No.	TOTAL SHEETS
07	LA	5	2.9/4.9	166	1082

REGISTERED CIVIL ENGINEER 12-23-09 DATE

6-21-10
PLANS APPROVAL DATE

REGISTERED PROFESSIONAL ENGINEER RALPH M. SASAKI No. 30849 Exp. 3/31/10 CIVIL STATE OF CALIFORNIA

THE STATE OF CALIFORNIA OR ITS OFFICERS OR AGENTS SHALL NOT BE RESPONSIBLE FOR THE ACCURACY OR COMPLETENESS OF ELECTRONIC COPIES OF THIS PLAN SHEET.

NOTE: THE CONTRACTOR SHALL VERIFY LOCATIONS AND ELEVATIONS OF EXISTING DRAINAGE SYSTEMS BEFORE COMMENCEMENT OF WORK.

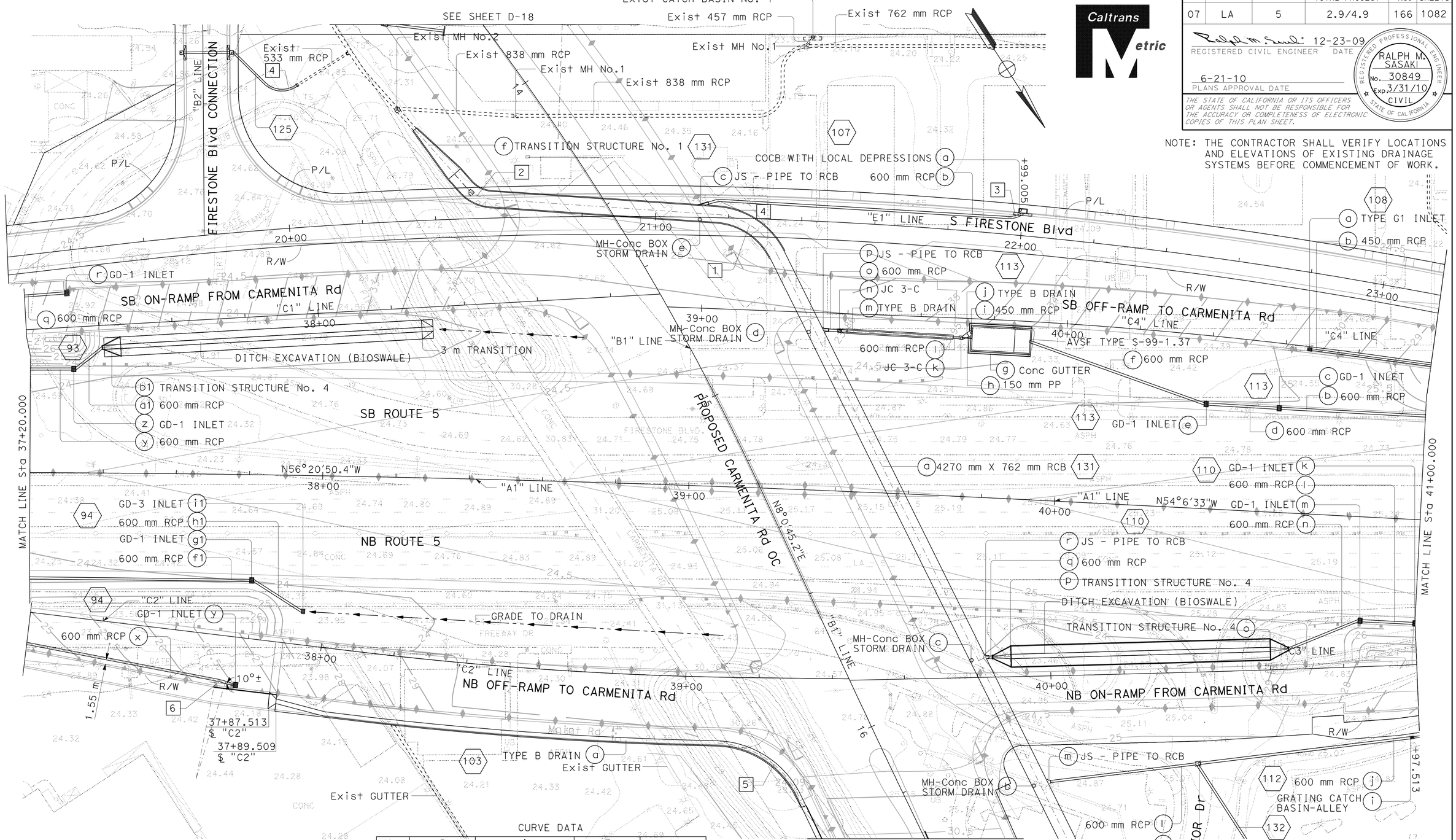

CURVE DATA

No.	R	Δ	T	L
1	20.00	59°43'43"	11.48	20.85
2	10.00	44°27'28"	4.09	7.76
3	6.86	37°01'45"	2.30	4.43
4	6.86	76°51'28"	5.44	9.20
5	25.81	63°13'24"	15.89	28.48
6	27.43	5°55'51"	1.42	2.84

125 SEE DRAINAGE PLAN D-18

132 SEE DRAINAGE PLAN D-19

THIS PLAN ACCURATE FOR DRAINAGE WORK ONLY.

ALL DIMENSIONS ARE IN METERS UNLESS OTHERWISE SHOWN

DRAINAGE PLAN

SCALE 1:500 **D-13**

STATE OF CALIFORNIA - DEPARTMENT OF TRANSPORTATION
Caltrans
HYDRAULICS

FUNCTIONAL SUPERVISOR: RALPH M. SASAKI
CALCULATED-DESIGNED BY: S. M. TAN W. Y. LEE
CHECKED BY: R. M. SASAKI
REVISED BY / DATE REVISED

LAST REVISION 00-00-00 | DATE PLOTTED => 29-JUN-2010 | TIME PLOTTED => 09:07

Dist	COUNTY	ROUTE	KILOMETER POST TOTAL PROJECT	SHEET No.	TOTAL SHEETS
07	LA	5	2.9/4.9	167	1082

Caltrans Metric

REGISTERED CIVIL ENGINEER DATE 12-23-09

PLANS APPROVAL DATE 6-21-10

REGISTERED PROFESSIONAL ENGINEER RALPH M. SASAKI No. 30849 Exp. 3/31/10 CIVIL STATE OF CALIFORNIA

THE STATE OF CALIFORNIA OR ITS OFFICERS OR AGENTS SHALL NOT BE RESPONSIBLE FOR THE ACCURACY OR COMPLETENESS OF ELECTRONIC COPIES OF THIS PLAN SHEET.

NOTE: THE CONTRACTOR SHALL VERIFY LOCATIONS AND ELEVATIONS OF EXISTING DRAINAGE SYSTEMS BEFORE COMMENCEMENT OF WORK.

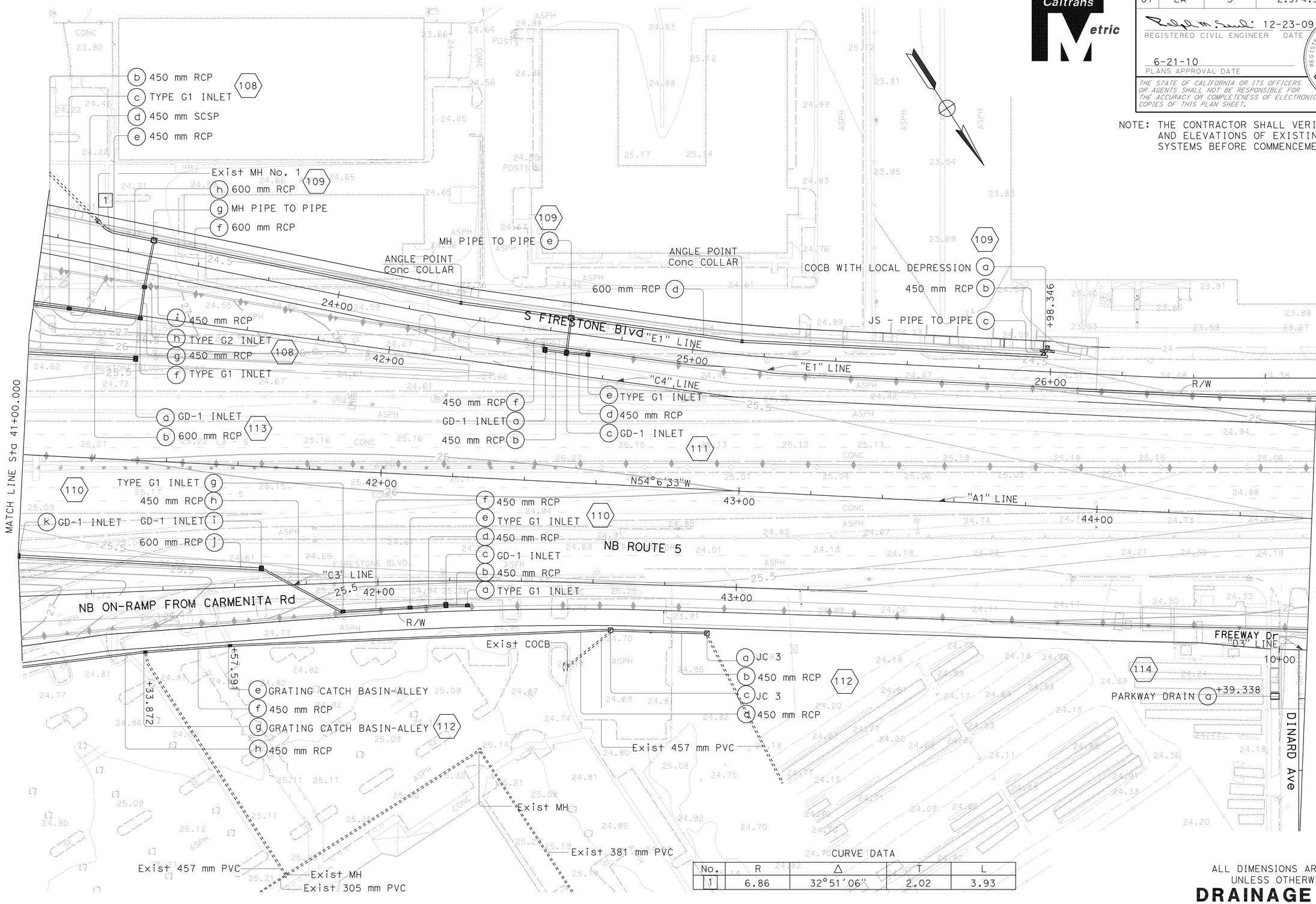

CURVE DATA

No.	R	Δ	T	L
1	6.86	32°51'06"	2.02	3.93

THIS PLAN ACCURATE FOR DRAINAGE WORK ONLY.

ALL DIMENSIONS ARE IN METERS UNLESS OTHERWISE SHOWN

DRAINAGE PLAN D-14

SCALE 1:500

REVISED BY	DATE REVISED

CALCULATED-DESIGNED BY S. M. TAN W. Y. LEE

CHECKED BY R. M. SASAKI

FUNCTIONAL SUPERVISOR RALPH M. SASAKI

STATE OF CALIFORNIA - DEPARTMENT OF TRANSPORTATION

Caltrans

HYDRAULICS

LAST REVISION 00-00-00 DATE PLOTTED => 22-JUN-2010 TIME PLOTTED => 13:37

Dist	COUNTY	ROUTE	KILOMETER POST TOTAL PROJECT	SHEET No.	TOTAL SHEETS
07	LA	5	2.9/4.9	168	1082

REGISTERED CIVIL ENGINEER 12-23-09 DATE

6-21-10
PLANS APPROVAL DATE

REGISTERED PROFESSIONAL ENGINEER RALPH M. SASAKI No. 30849 Exp. 3/31/10 CIVIL STATE OF CALIFORNIA

THE STATE OF CALIFORNIA OR ITS OFFICERS OR AGENTS SHALL NOT BE RESPONSIBLE FOR THE ACCURACY OR COMPLETENESS OF ELECTRONIC COPIES OF THIS PLAN SHEET.

Caltrans Metric

NOTE: THE CONTRACTOR SHALL VERIFY LOCATIONS AND ELEVATIONS OF EXISTING DRAINAGE SYSTEMS BEFORE COMMENCEMENT OF WORK.

115
- a TYPE B DRAIN
- b JC 3-C
- c 600 mm RCP
- d JUNCTION STRUCTURE No. 3

117
- a SIDEWALK CULVERT
- b 5 - 1520 mm X 760 mm RCB
- c WALL PLUG

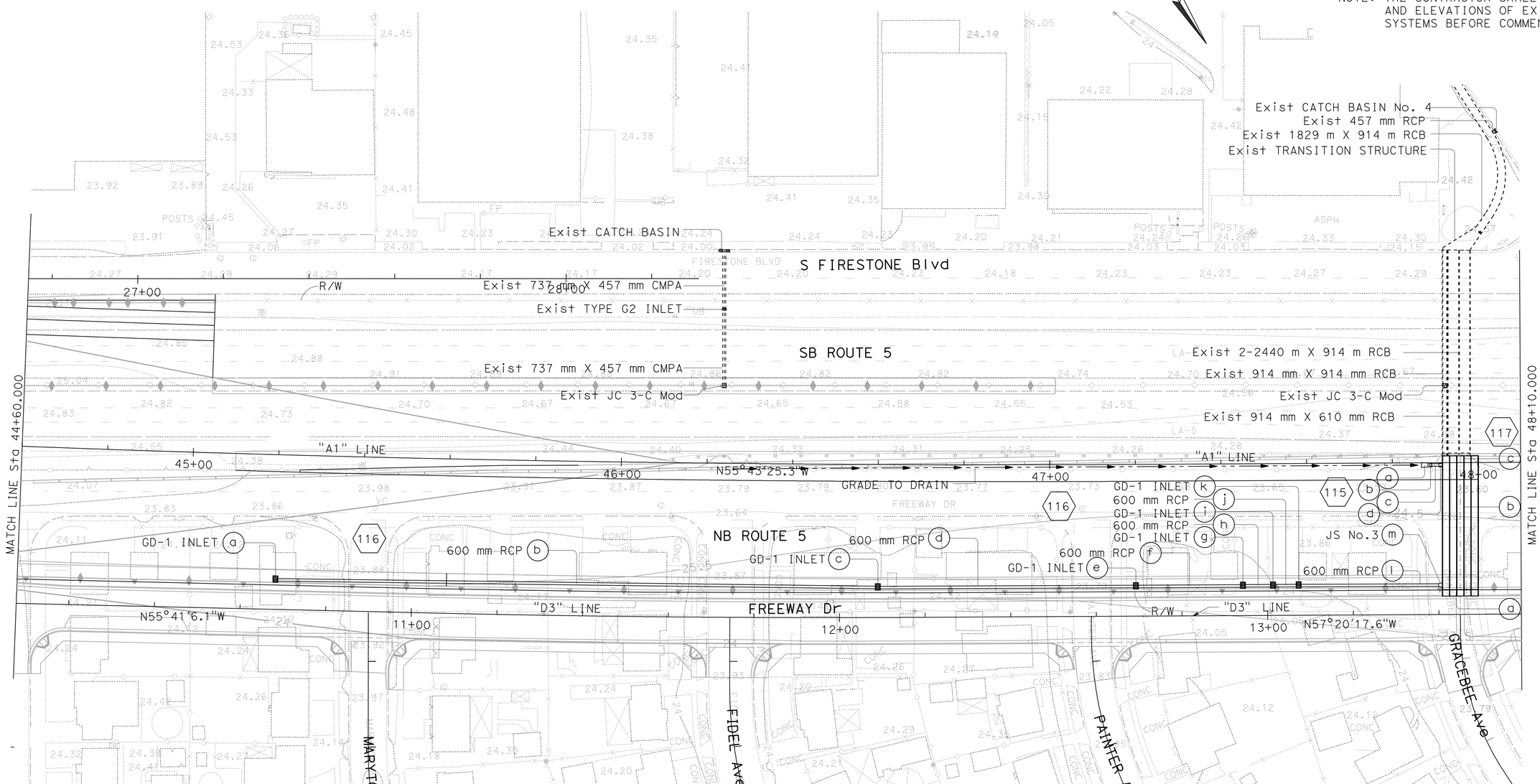

THIS PLAN ACCURATE FOR DRAINAGE WORK ONLY.

ALL DIMENSIONS ARE IN METERS UNLESS OTHERWISE SHOWN

DRAINAGE PLAN

SCALE 1:500

D-15

STATE OF CALIFORNIA - DEPARTMENT OF TRANSPORTATION

Caltrans

HYDRAULICS

FUNCTIONAL SUPERVISOR: RALPH M. SASAKI

CALCULATED-DESIGNED BY: S. M. TAN, W. Y. LEE

CHECKED BY: R. M. SASAKI

REVISED BY / DATE REVISED

LAST REVISION 00-00-00 | DATE PLOTTED => 22-JUN-2010 | TIME PLOTTED => 13:37

Dist	COUNTY	ROUTE	KILOMETER POST TOTAL PROJECT	SHEET No.	TOTAL SHEETS
07	LA	5	2.9/4.9	169	1082

Ralph M. Sasaki 12-23-09
REGISTERED CIVIL ENGINEER DATE

6-21-10
PLANS APPROVAL DATE

REGISTERED PROFESSIONAL ENGINEER
RALPH M. SASAKI
No. 30849
Exp. 3/31/10
CIVIL
STATE OF CALIFORNIA

THE STATE OF CALIFORNIA OR ITS OFFICERS OR AGENTS SHALL NOT BE RESPONSIBLE FOR THE ACCURACY OR COMPLETENESS OF ELECTRONIC COPIES OF THIS PLAN SHEET.

Caltrans Metric

NOTE: THE CONTRACTOR SHALL VERIFY LOCATIONS AND ELEVATIONS OF EXISTING DRAINAGE SYSTEMS BEFORE COMMENCEMENT OF WORK.

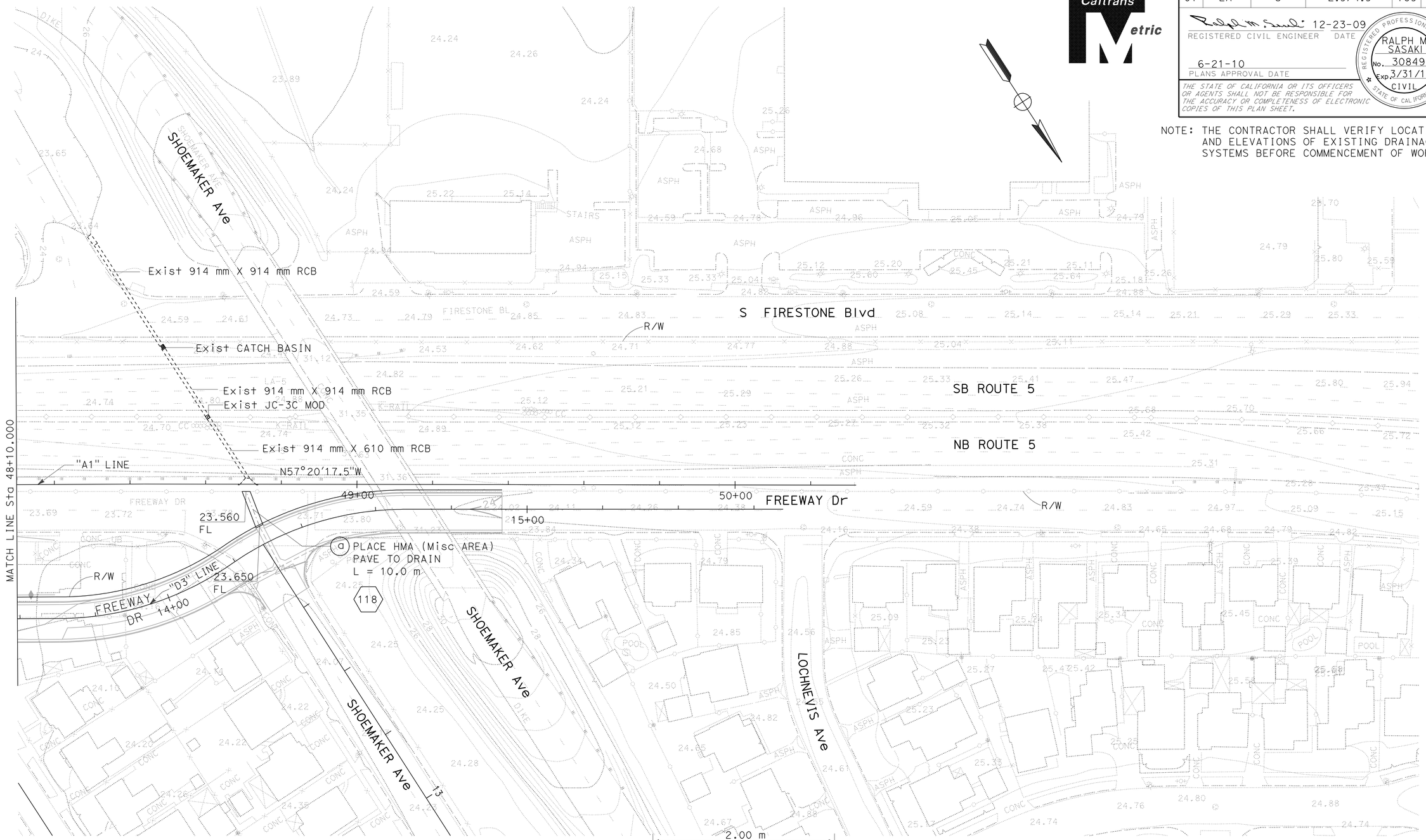

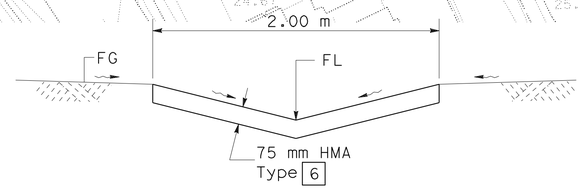

TYPICAL SECTION
PLACE HMA (Misc AREA) PAVE TO DRAIN

THIS PLAN ACCURATE FOR DRAINAGE WORK ONLY.

ALL DIMENSIONS ARE IN METERS UNLESS OTHERWISE SHOWN

DRAINAGE PLAN D-16

SCALE 1:500

CALCULATED-DESIGNED BY	S. M. TAN W. Y. LEE
CHECKED BY	R. M. SASAKI
FUNCTIONAL SUPERVISOR	RALPH M. SASAKI
REVISED BY	
DATE REVISED	

STATE OF CALIFORNIA - DEPARTMENT OF TRANSPORTATION
Caltrans
HYDRAULICS

LAST REVISION 00-00-00
DATE PLOTTED => 22-JUN-2010
TIME PLOTTED => 13:37

Dist	COUNTY	ROUTE	KILOMETER POST TOTAL PROJECT	SHEET No.	TOTAL SHEETS
07	LA	5	2.9/4.9	170	1082

Ralph M. Sasaki 12-23-09
REGISTERED CIVIL ENGINEER DATE

6-21-10
PLANS APPROVAL DATE

REGISTERED PROFESSIONAL ENGINEER RALPH M. SASAKI No. 30849 Exp. 3/31/10 CIVIL STATE OF CALIFORNIA

THE STATE OF CALIFORNIA OR ITS OFFICERS OR AGENTS SHALL NOT BE RESPONSIBLE FOR THE ACCURACY OR COMPLETENESS OF ELECTRONIC COPIES OF THIS PLAN SHEET.

Caltrans Metric

NOTE: THE CONTRACTOR SHALL VERIFY LOCATIONS AND ELEVATIONS OF EXISTING DRAINAGE SYSTEMS BEFORE COMMENCEMENT OF WORK.

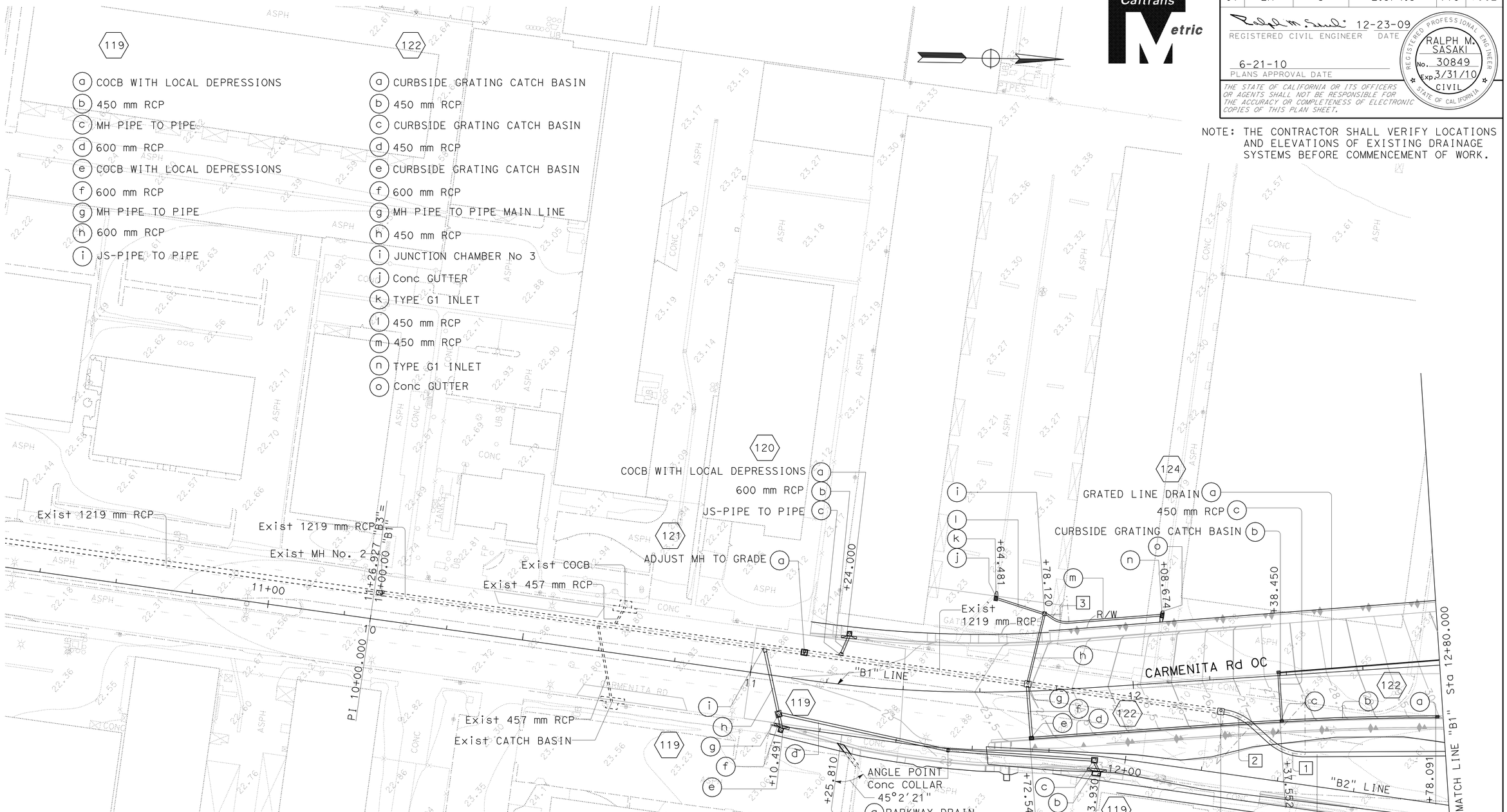

CURVE DATA

No.	R	Δ	T	L
1	13.72	42°25'12"	5.32	10.15
2	13.72	34°0'0"	4.19	8.14
3	6.86	38°50'40"	2.42	4.65

THIS PLAN ACCURATE FOR DRAINAGE WORK ONLY.

ALL DIMENSIONS ARE IN METERS UNLESS OTHERWISE SHOWN

DRAINAGE PLAN D-17

SCALE 1:500

STATE OF CALIFORNIA - DEPARTMENT OF TRANSPORTATION
Caltrans
HYDRAULICS

FUNCTIONAL SUPERVISOR: RALPH M. SASAKI
CALCULATED-DESIGNED BY: S. M. TAN
CHECKED BY: R. M. SASAKI
REVISED BY: W. Y. LEE
DATE REVISED:

LAST REVISION 00-00-00
DATE PLOTTED => 22-JUN-2010
TIME PLOTTED => 13:37

Dist	COUNTY	ROUTE	KILOMETER POST TOTAL PROJECT	SHEET No.	TOTAL SHEETS
07	LA	5	2.9/4.9	171	1082

Caltrans Metric

12-23-09
REGISTERED CIVIL ENGINEER DATE

6-21-10
PLANS APPROVAL DATE

REGISTERED PROFESSIONAL ENGINEER RALPH M. SASAKI No. 30849 Exp. 3/31/10 CIVIL STATE OF CALIFORNIA

THE STATE OF CALIFORNIA OR ITS OFFICERS OR AGENTS SHALL NOT BE RESPONSIBLE FOR THE ACCURACY OR COMPLETENESS OF ELECTRONIC COPIES OF THIS PLAN SHEET.

NOTE: THE CONTRACTOR SHALL VERIFY LOCATIONS AND ELEVATIONS OF EXISTING DRAINAGE SYSTEMS BEFORE COMMENCEMENT OF WORK.

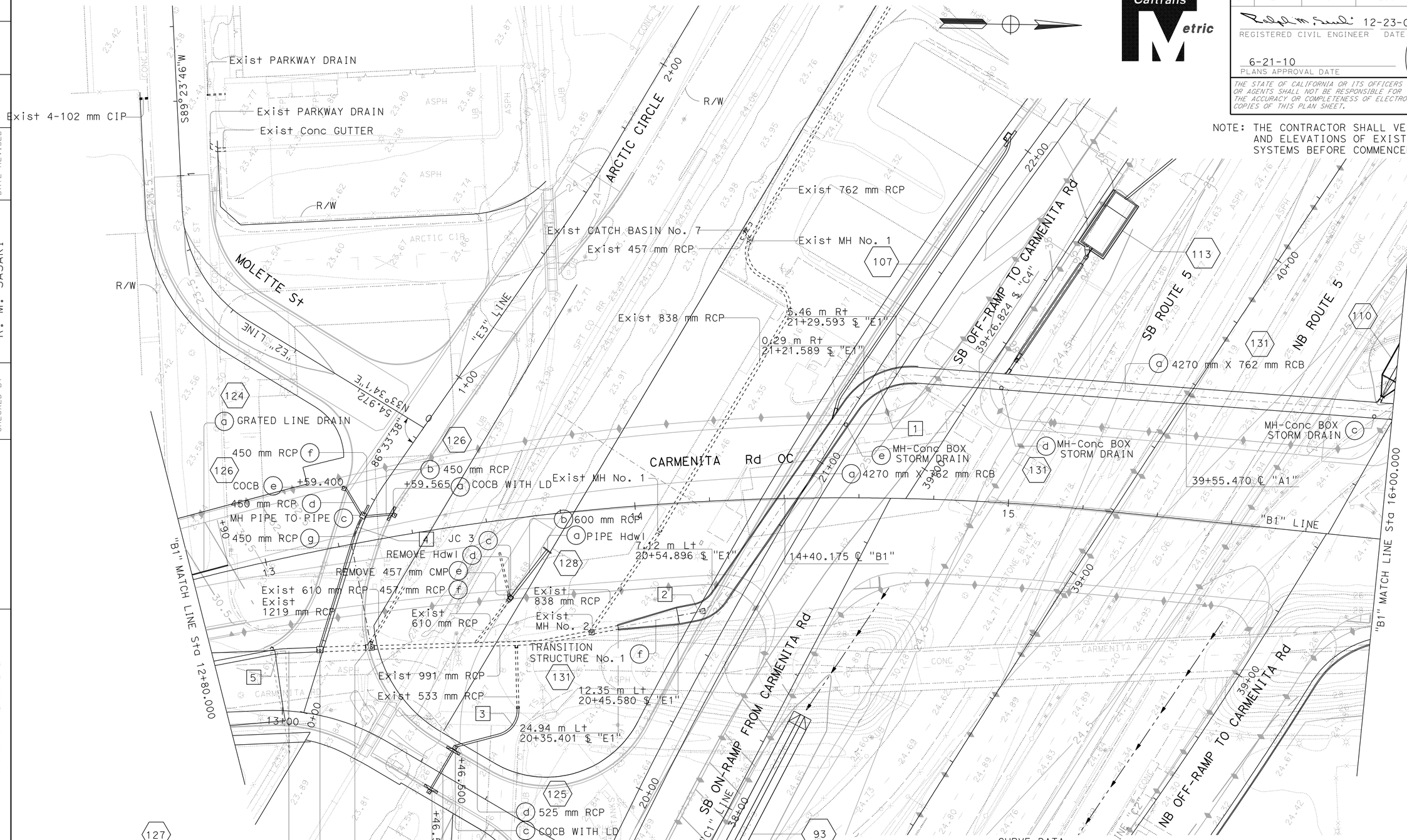

93 107 113 SEE DRAINAGE PLAN D-13

THIS PLAN ACCURATE FOR DRAINAGE WORK ONLY.

CURVE DATA

No.	R	Δ	T	L
1	10.00	56°48'26"	5.41	9.91
2	15.00	42°0'0"	5.76	11.00
3	6.86	76°51'28"	5.44	9.20
4	27.43	11°20'17"	2.72	5.43
5	27.43	8°30'00"	2.04	4.07

ALL DIMENSIONS ARE IN METERS UNLESS OTHERWISE SHOWN

DRAINAGE PLAN D-18

SCALE 1:500

STATE OF CALIFORNIA - DEPARTMENT OF TRANSPORTATION

Caltrans

HYDRAULICS

FUNCTIONAL SUPERVISOR: RALPH M. SASAKI

CALCULATED-DESIGNED BY: S. M. TAN W. Y. LEE

CHECKED BY: R. M. SASAKI

REVISED BY / DATE REVISED

LAST REVISION 00-00-00

DATE PLOTTED => 22-JUN-2010
TIME PLOTTED => 13:38

Dist	COUNTY	ROUTE	KILOMETER POST TOTAL PROJECT	SHEET No.	TOTAL SHEETS
07	LA	5	2.9/4.9	172	1082

Ralph M. Sasaki 12-23-09
REGISTERED CIVIL ENGINEER DATE

6-21-10
PLANS APPROVAL DATE

REGISTERED PROFESSIONAL ENGINEER RALPH M. SASAKI No. 30849 Exp. 3/31/10 CIVIL STATE OF CALIFORNIA

THE STATE OF CALIFORNIA OR ITS OFFICERS OR AGENTS SHALL NOT BE RESPONSIBLE FOR THE ACCURACY OR COMPLETENESS OF ELECTRONIC COPIES OF THIS PLAN SHEET.

Caltrans Metric

NOTE: THE CONTRACTOR SHALL VERIFY LOCATIONS AND ELEVATIONS OF EXISTING DRAINAGE SYSTEMS BEFORE COMMENCEMENT OF WORK.

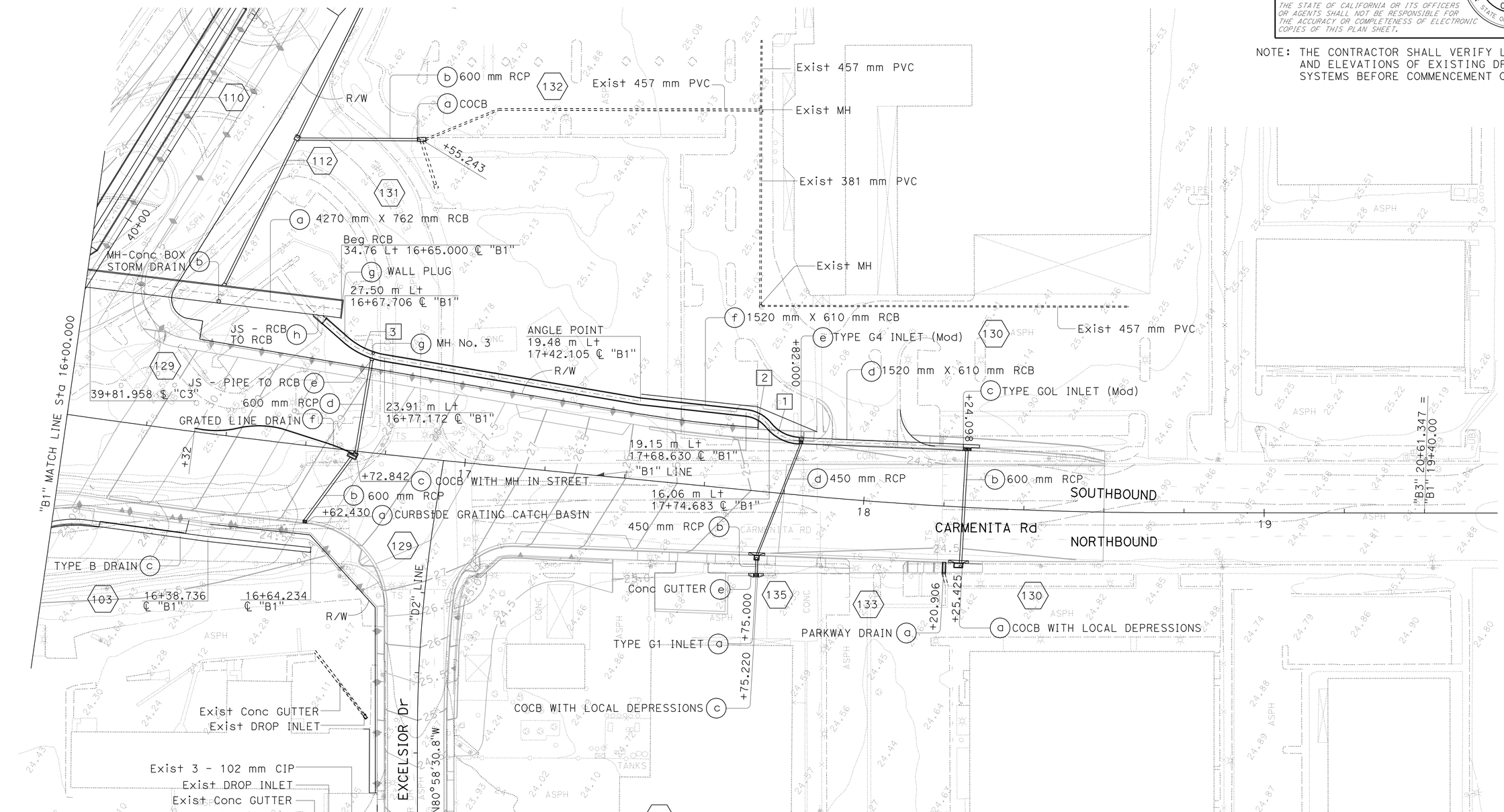

CURVE DATA

No.	R	Δ	T	L
1	10.31	48°7'14"	4.60	8.66
2	8.50	45°43'17"	3.58	6.78
3	20.00	31°48'6"	5.70	11.10

THIS PLAN ACCURATE FOR DRAINAGE WORK ONLY.

ALL DIMENSIONS ARE IN METERS UNLESS OTHERWISE SHOWN

DRAINAGE PLAN D-19

SCALE 1:500

STATE OF CALIFORNIA - DEPARTMENT OF TRANSPORTATION
Caltrans
HYDRAULICS

FUNCTIONAL SUPERVISOR: RALPH M. SASAKI
CALCULATED-DESIGNED BY: S. M. TAN W. Y. LEE
CHECKED BY: R. M. SASAKI
REVISED BY / DATE REVISED

LAST REVISION 00-00-00 DATE PLOTTED => 22-JUN-2010 TIME PLOTTED => 13:38

Dist	COUNTY	ROUTE	KILOMETER POST TOTAL PROJECT	SHEET No.	TOTAL SHEETS
07	LA	5	2.9/4.9	173	1082

Ralph M. Sasaki 12-23-09
REGISTERED CIVIL ENGINEER DATE

6-21-10
PLANS APPROVAL DATE

REGISTERED PROFESSIONAL ENGINEER RALPH M. SASAKI No. 30849 Exp. 3/31/10 CIVIL STATE OF CALIFORNIA

THE STATE OF CALIFORNIA OR ITS OFFICERS OR AGENTS SHALL NOT BE RESPONSIBLE FOR THE ACCURACY OR COMPLETENESS OF ELECTRONIC COPIES OF THIS PLAN SHEET.

Caltrans Metric

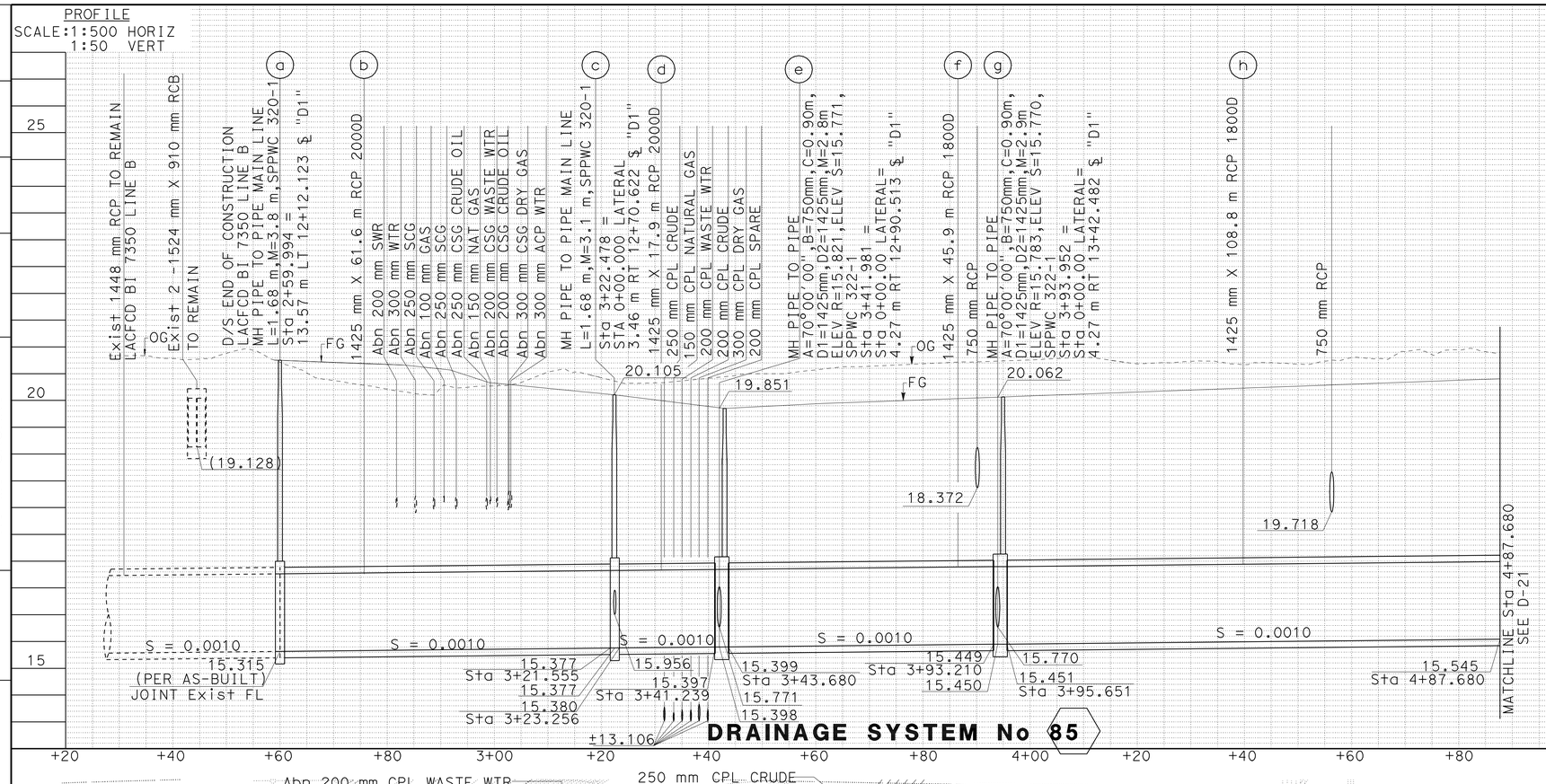

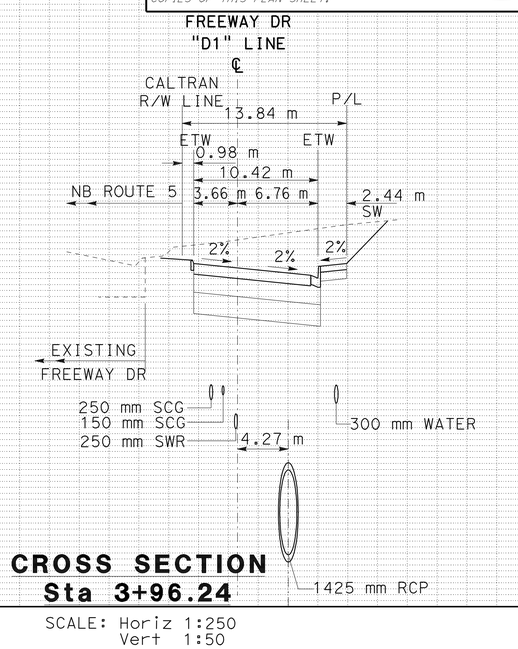

CROSS SECTION Sta 3+96.24

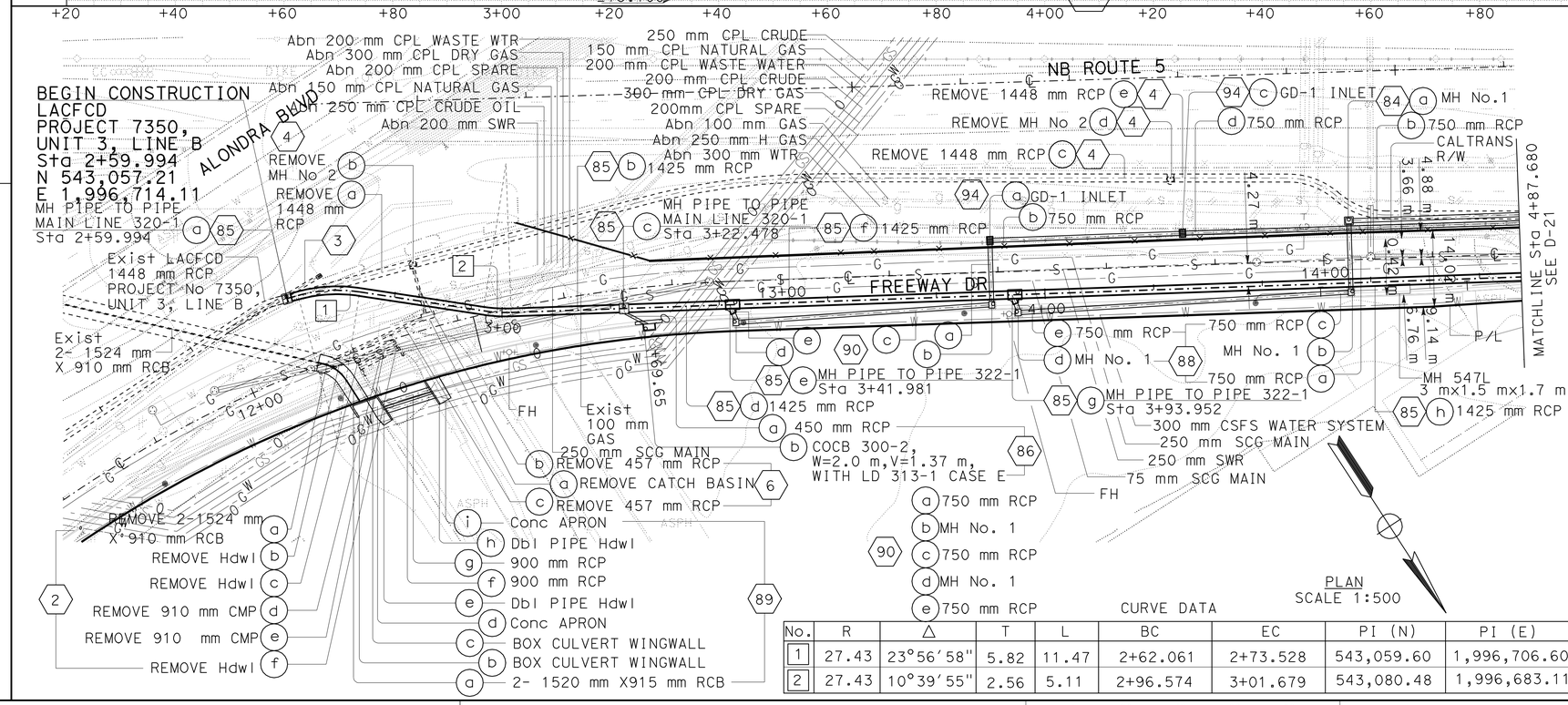

PLAN
SCALE 1:500

CURVE DATA

No.	R	Δ	T	L	BC	EC	PI (N)	PI (E)
1	27.43	23°56'58"	5.82	11.47	2+62.061	2+73.528	543,059.60	1,996,706.60
2	27.43	10°39'55"	2.56	5.11	2+96.574	3+01.679	543,080.48	1,996,683.11

SCALE: Horiz 1:250
Vert 1:50

NOTES:
1. THE CONTRACTOR SHALL VERIFY LOCATIONS AND ELEVATIONS OF EXISTING DRAINAGE SYSTEMS BEFORE COMMENCEMENT OF WORK
2. FOR DRAINAGE SYSTEMS (86) PROFILE SEE SHEET D-22
3. FOR DRAINAGE SYSTEMS (2)(3)(4)(6)(84)(88)(89)(90) SEE CALTRANS CONTRACT DRAINAGE PLANS & PROFILES
4. DRAINAGE SYSTEMS (84)(88)(90)(94) ARE MAINTAINED BY CALTRANS
5. DRAINAGE SYSTEMS (89) ARE MAINTAINED BY CITY OF SANTA FE SPRING
6. DRAINAGE SYSTEMS (85)(86)(87)(92) SHALL BE CONSTRUCTED PER SPPWC STANDARD PLANS AND/OR LACPDW STANDARD PLANS UNLESS OTHERWISE SHOWN
7. THE Vu (DEPTH AT THE UPSTREAM END OF THE CB SHALL BE A MINIMUM OF 750 mm.

UTILITIES:
NATURAL GAS LINES:...SOUTHERN CALIFORNIA GAS COMPANY (SCG)
TELEPHONE LINES:.....GENTERAL TELEPHONE COMPANY (GTE)
TELEPHONE LINES:.....VERIZON TELEPHONE COMPANY (VER)
WATER LINES:.....CITY OF SANTA FE SPRINGS (CSFS)
WATER LINES:.....METROPOLITAN WATER DISTRICT (MWD)
WATER LINES:.....PARK WATER COMPANY (PW)
POWER LINES:.....SOUTHERN CALIFORNIA EDISON COMPANY (SCE)
SANITARY SEWER LINES: LOS ANGELES COUNTY PUBLIC WORKS
CABLE LINES:.....CHARTER COMMUNICATIONS
OIL LINES:.....CHEVRON OIL COMPANY (CHEV)
OIL LINES:.....STANDARD OIL COMPANY (STD)

ALL DIMENSIONS ARE IN METERS UNLESS OTHERWISE SHOWN

DRAINAGE PLAN AND PROFILE
D-20

REVISED BY | DATE REVISED
S. M. TAN
W. Y. LEE
CALCULATED-DESIGNED BY
R. M. SASAKI
CHECKED BY
FUNCTIONAL SUPERVISOR
RALPH M. SASAKI

STATE OF CALIFORNIA - DEPARTMENT OF TRANSPORTATION
Caltrans
HYDRAULICS

LAST REVISION 00-00-00
DATE PLOTTED => 22-JUN-2010
TIME PLOTTED => 13:38

Dist	COUNTY	ROUTE	KILOMETER POST TOTAL PROJECT	SHEET No.	TOTAL SHEETS
07	LA	5	2.9/4.9	174	1082

REGISTERED CIVIL ENGINEER 12-23-09 DATE

6-21-10
PLANS APPROVAL DATE

REGISTERED PROFESSIONAL ENGINEER RALPH M. SASAKI No. 30849 Exp. 3/31/10 CIVIL STATE OF CALIFORNIA

THE STATE OF CALIFORNIA OR ITS OFFICERS OR AGENTS SHALL NOT BE RESPONSIBLE FOR THE ACCURACY OR COMPLETENESS OF ELECTRONIC COPIES OF THIS PLAN SHEET.

Caltrans Metric

PROFILE
SCALE: 1:500 HORIZ
1:50 VERT

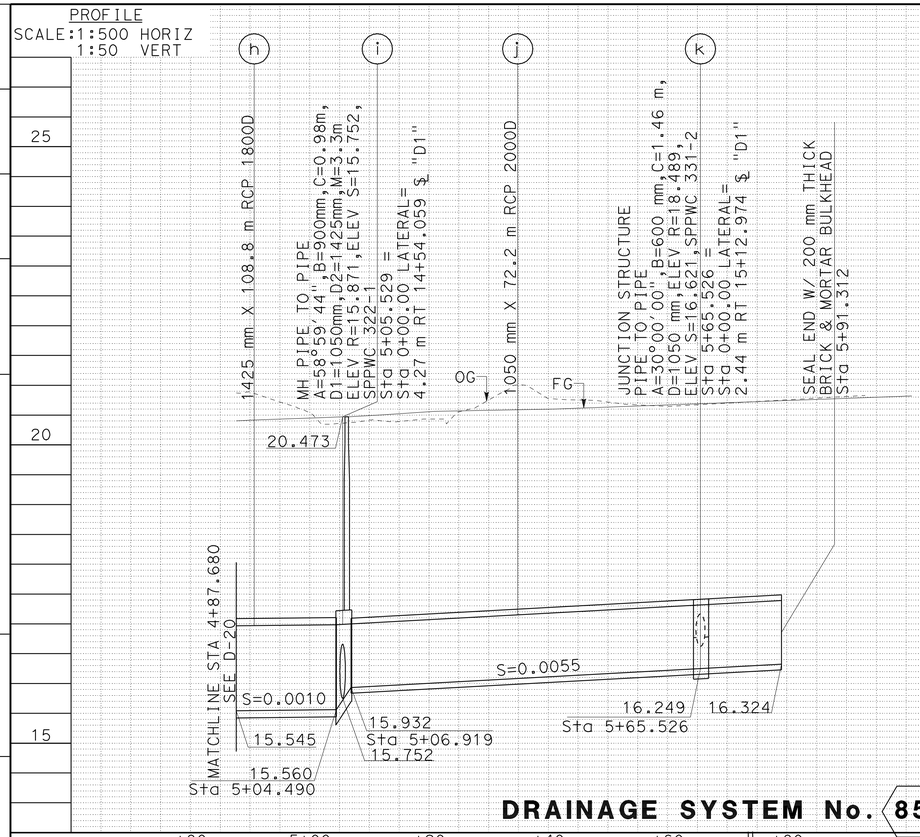

DRAINAGE SYSTEM No. 85

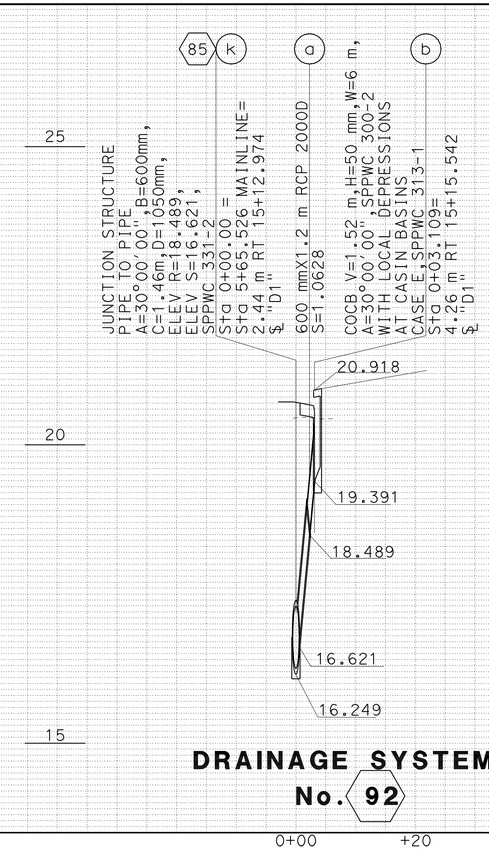

DRAINAGE SYSTEM No. 92

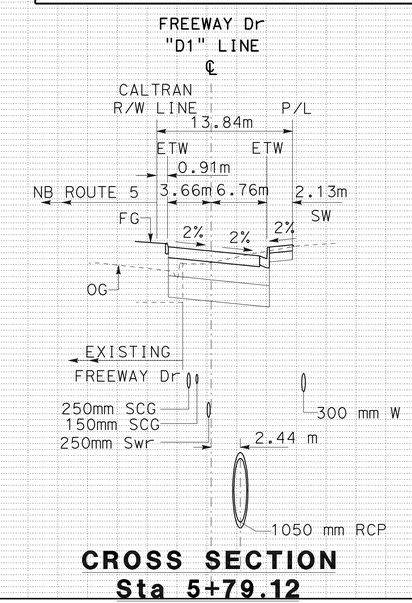

CROSS SECTION Sta 5+79.12

SCALE: Horiz 1:250
Vert 1:50

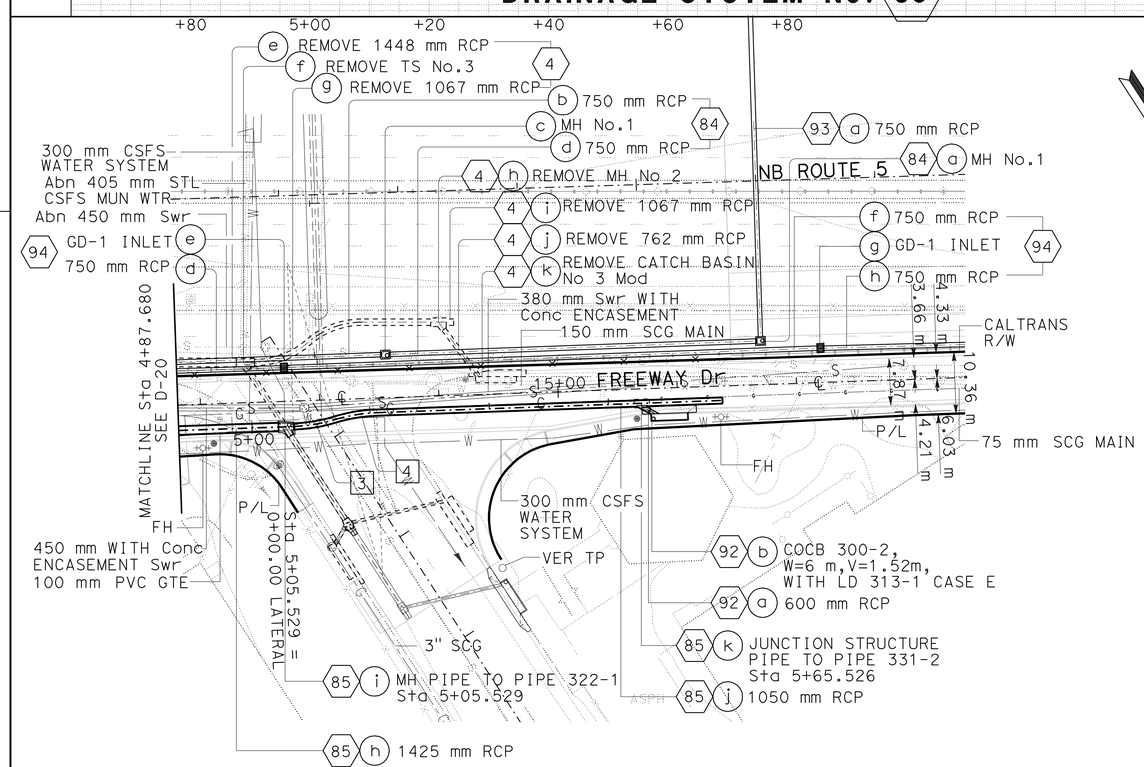

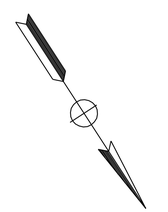

PLAN
SCALE 1:500

CURVE DATA

No.	R	Δ	T	L	BC	PRC	EC	PI (N)	PI (E)
3	27.43	14°50'00"	3.57	7.10	5+06.919	5+14.021		543,189.22	1,996,501.85
4	27.43	14°50'00"	3.57	7.10		5+21.123	5+21.123	543,191.20	1,996,494.99

NOTES:

1. THE CONTRACTOR SHALL VERIFY LOCATIONS AND ELEVATIONS OF EXISTING DRAINAGE SYSTEMS BEFORE COMMENCEMENT OF WORK
2. FOR DRAINAGE SYSTEMS 4 84 93 94 SEE CALTRANS CONTRACT DRAINAGE PLANS & PROFILES
3. DRAINAGE SYSTEMS 84 93 94 ARE MAINTAINED BY CALTRANS
4. DRAINAGE SYSTEMS 85 86 87 92 SHALL BE CONSTRUCTED PER SPPWC STANDARD PLANS AND/OR LACPDW STANDARD PLANS UNLESS OTHERWISE SHOWN
5. THE Vu (DEPTH AT THE UPSTREAM END OF THE CB) SHALL BE A MINIMUM OF 750 mm.

ALL DIMENSIONS ARE IN METERS UNLESS OTHERWISE SHOWN

DRAINAGE PLAN AND PROFILE

D-21

REVISED BY	DATE REVISED

CALCULATED-DESIGNED BY: S. M. TAN, W. Y. LEE
CHECKED BY: R. M. SASAKI
FUNCTIONAL SUPERVISOR: RALPH M. SASAKI

STATE OF CALIFORNIA - DEPARTMENT OF TRANSPORTATION
Caltrans HYDRAULICS

LAST REVISION 00-00-00 | DATE PLOTTED => 22-JUN-2010 | TIME PLOTTED => 13:38

Dist	COUNTY	ROUTE	KILOMETER POST TOTAL PROJECT	SHEET No.	TOTAL SHEETS
07	LA	5	2.9/4.9	175	1082

Caltrans Metric

Ralph M. Sasaki 12-23-09
REGISTERED CIVIL ENGINEER DATE

6-21-10
PLANS APPROVAL DATE

REGISTERED PROFESSIONAL ENGINEER RALPH M. SASAKI No. 30849 Exp. 3/31/10 CIVIL STATE OF CALIFORNIA

THE STATE OF CALIFORNIA OR ITS OFFICERS OR AGENTS SHALL NOT BE RESPONSIBLE FOR THE ACCURACY OR COMPLETENESS OF ELECTRONIC COPIES OF THIS PLAN SHEET.

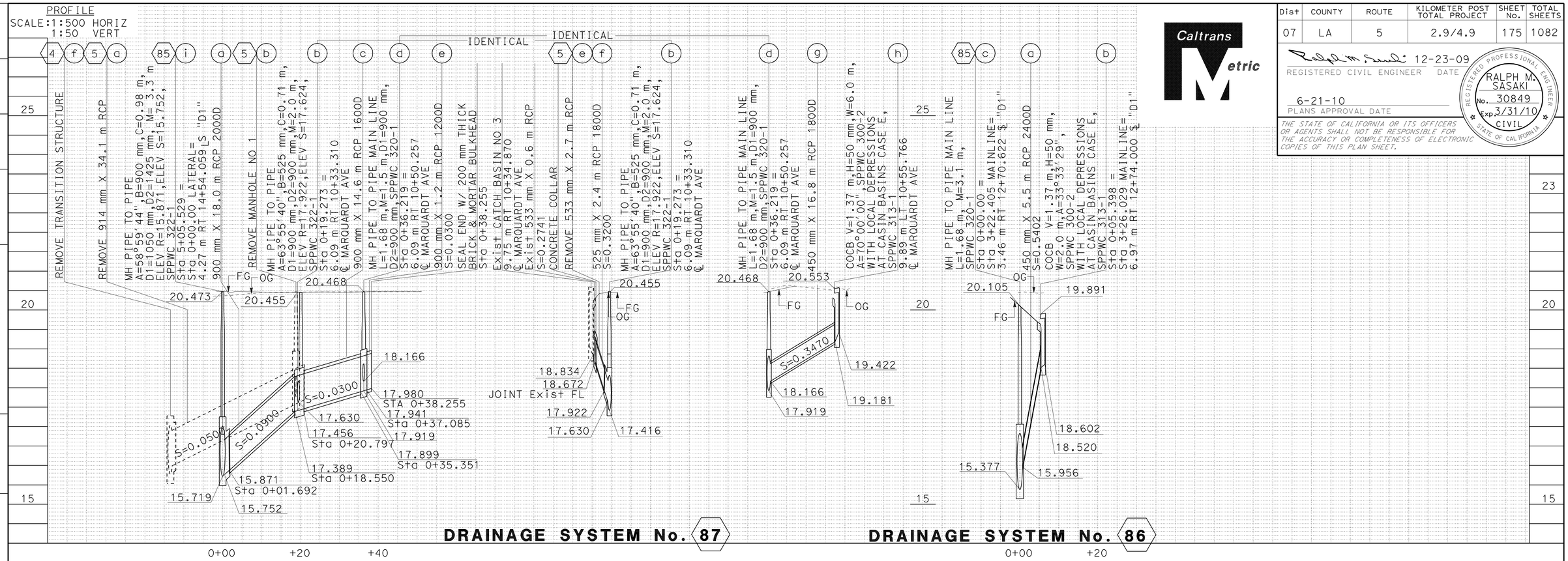

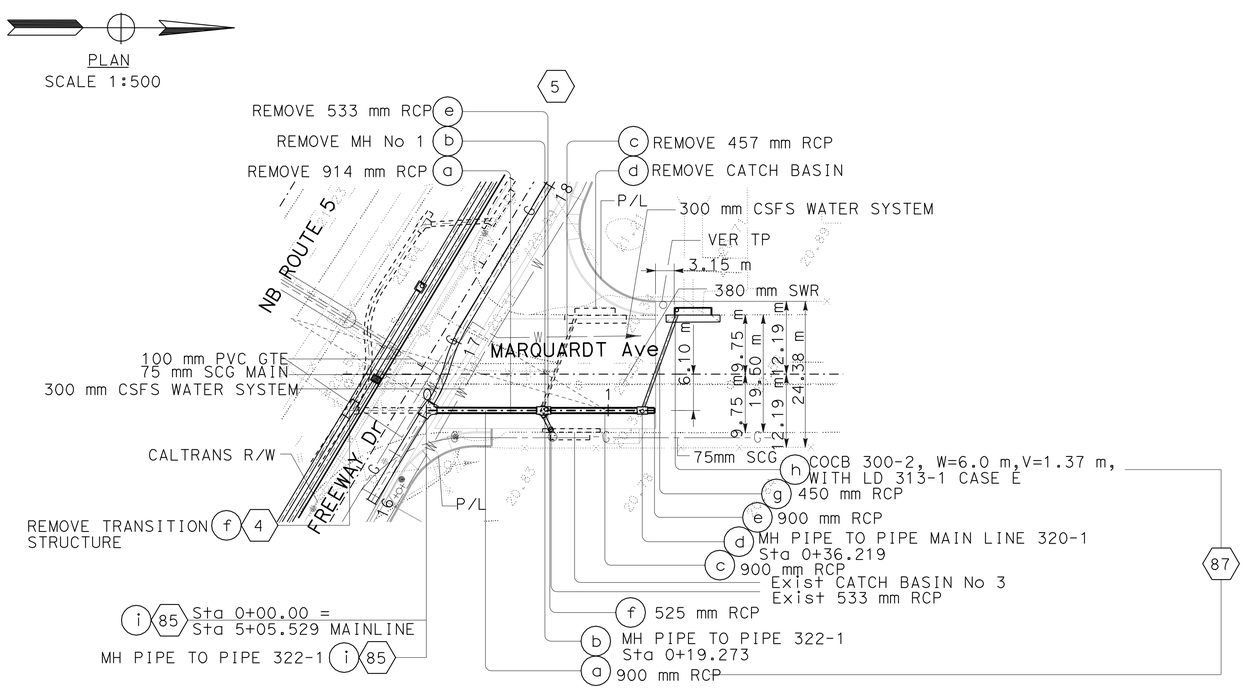

NOTES:

1. THE CONTRACTOR SHALL VERIFY LOCATIONS AND ELEVATIONS OF EXISTING DRAINAGE SYSTEMS BEFORE COMMENCEMENT OF WORK
2. FOR DRAINAGE SYSTEMS (85) SEE SHEET 20 AND 21
3. FOR DRAINAGE SYSTEMS (4)(5) SEE CALTRANS CONTRACT DRAINAGE PLANS & PROFILES
4. DRAINAGE SYSTEMS (85)(86)(87)(92) SHALL BE CONSTRUCTED PER SPPWC STANDARD PLANS AND/OR LACPDW STANDARD PLANS UNLESS OTHERWISE SHOWN
5. THE Vu (DEPTH AT THE UPSTREAM END OF THE CB) SHALL BE A MINIMUM OF 750 mm.

ALL DIMENSIONS ARE IN METERS UNLESS OTHERWISE SHOWN

DRAINAGE PLAN AND PROFILE

D-22

REVISED BY | DATE REVISED

S. M. TAN
W. Y. LEE
CALCULATED-DESIGNED BY

R. M. SASAKI
CHECKED BY

RALPH M. SASAKI
FUNCTIONAL SUPERVISOR

STATE OF CALIFORNIA - DEPARTMENT OF TRANSPORTATION
Caltrans
HYDRAULICS

LAST REVISION 00-00-00
DATE PLOTTED => 23-JUN-2010
TIME PLOTTED => 10:41

Dist	COUNTY	ROUTE	KILOMETER POST TOTAL PROJECT	SHEET No.	TOTAL SHEETS
07	LA	5	2.9/4.9	176	1082

Caltrans Metric

12-23-09
REGISTERED CIVIL ENGINEER DATE

6-21-10
PLANS APPROVAL DATE

REGISTERED PROFESSIONAL ENGINEER RALPH M. SASAKI No. 30849 Exp. 3/31/10 CIVIL STATE OF CALIFORNIA

THE STATE OF CALIFORNIA OR ITS OFFICERS OR AGENTS SHALL NOT BE RESPONSIBLE FOR THE ACCURACY OR COMPLETENESS OF ELECTRONIC COPIES OF THIS PLAN SHEET.

NOTE: THE CONTRACTOR SHALL VERIFY LOCATIONS AND ELEVATIONS OF EXISTING DRAINAGE SYSTEMS BEFORE COMMENCEMENT OF WORK.

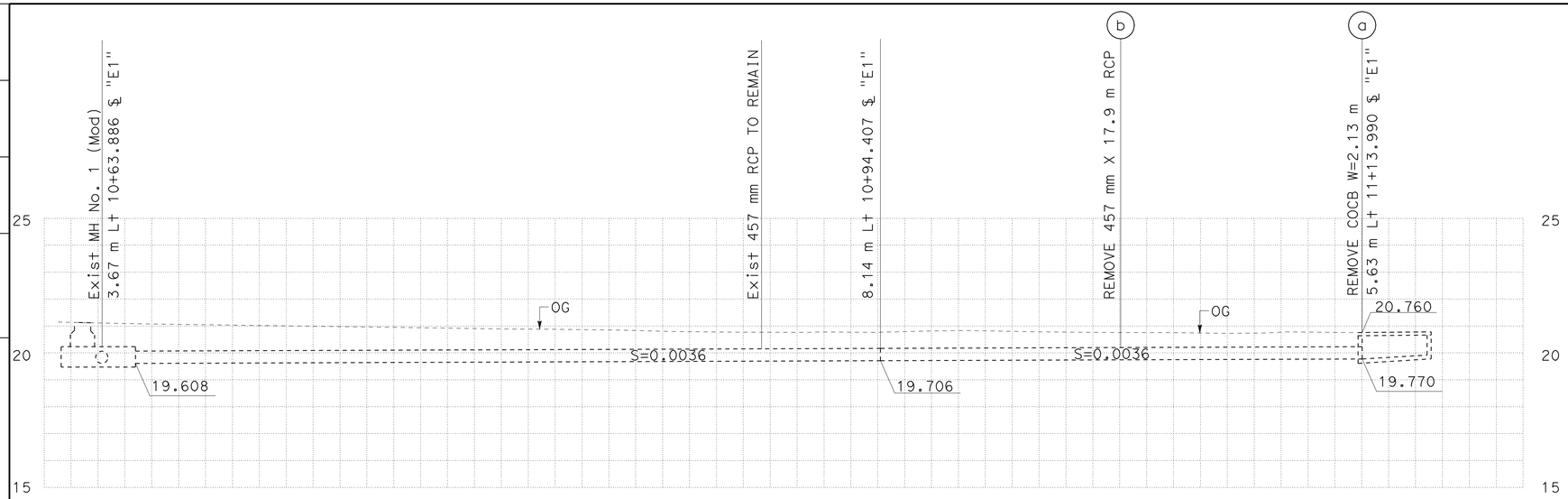

DRAINAGE SYSTEM No. 1

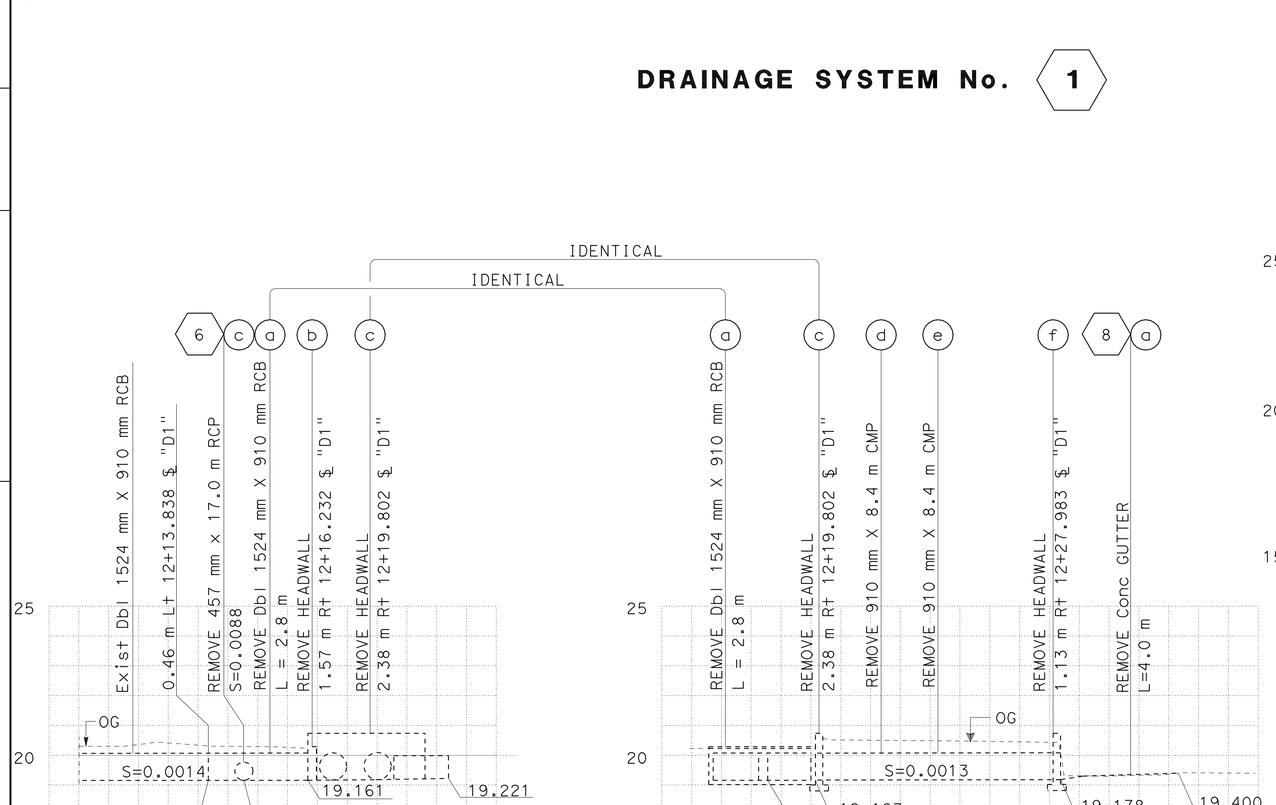

DRAINAGE SYSTEM No. 2

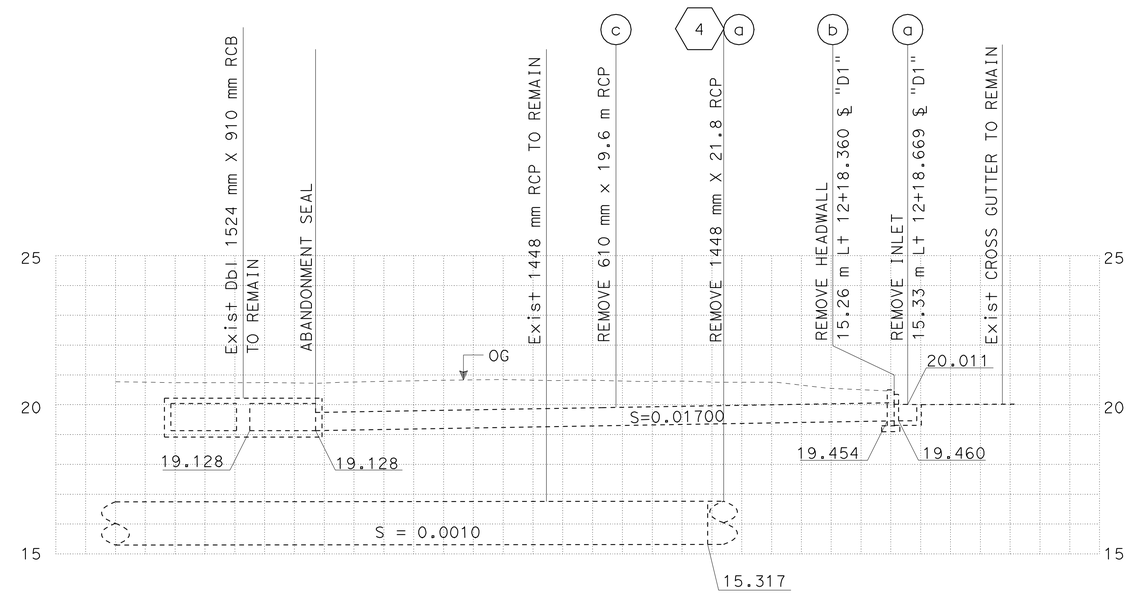

DRAINAGE SYSTEM No. 3

ALL DIMENSIONS ARE IN METERS UNLESS SHOWN OTHERWISE

DRAINAGE PROFILES

SCALE 1:100 Horiz
1:100 Vert

DP-1

STATE OF CALIFORNIA - DEPARTMENT OF TRANSPORTATION
Caltrans **HYDRAULICS**

FUNCTIONAL SUPERVISOR: RALPH M. SASAKI
CALCULATED-DESIGNED BY: S. M. TAN, W. Y. LEE
CHECKED BY: R. M. SASAKI
REVISED BY / DATE REVISED

LAST REVISION 00-00-00
DATE PLOTTED => 22-JUN-2010
TIME PLOTTED => 08:24

Dist	COUNTY	ROUTE	KILOMETER POST TOTAL PROJECT	SHEET No.	TOTAL SHEETS
07	LA	5	2.9/4.9	177	1082

REGISTERED CIVIL ENGINEER 12-23-09 DATE

6-21-10
PLANS APPROVAL DATE

REGISTERED PROFESSIONAL ENGINEER RALPH M. SASAKI No. 30849 Exp. 3/31/10 CIVIL STATE OF CALIFORNIA

THE STATE OF CALIFORNIA OR ITS OFFICERS OR AGENTS SHALL NOT BE RESPONSIBLE FOR THE ACCURACY OR COMPLETENESS OF ELECTRONIC COPIES OF THIS PLAN SHEET.

Caltrans Metric

NOTE: THE CONTRACTOR SHALL VERIFY LOCATIONS AND ELEVATIONS OF EXISTING DRAINAGE SYSTEMS BEFORE COMMENCEMENT OF WORK.

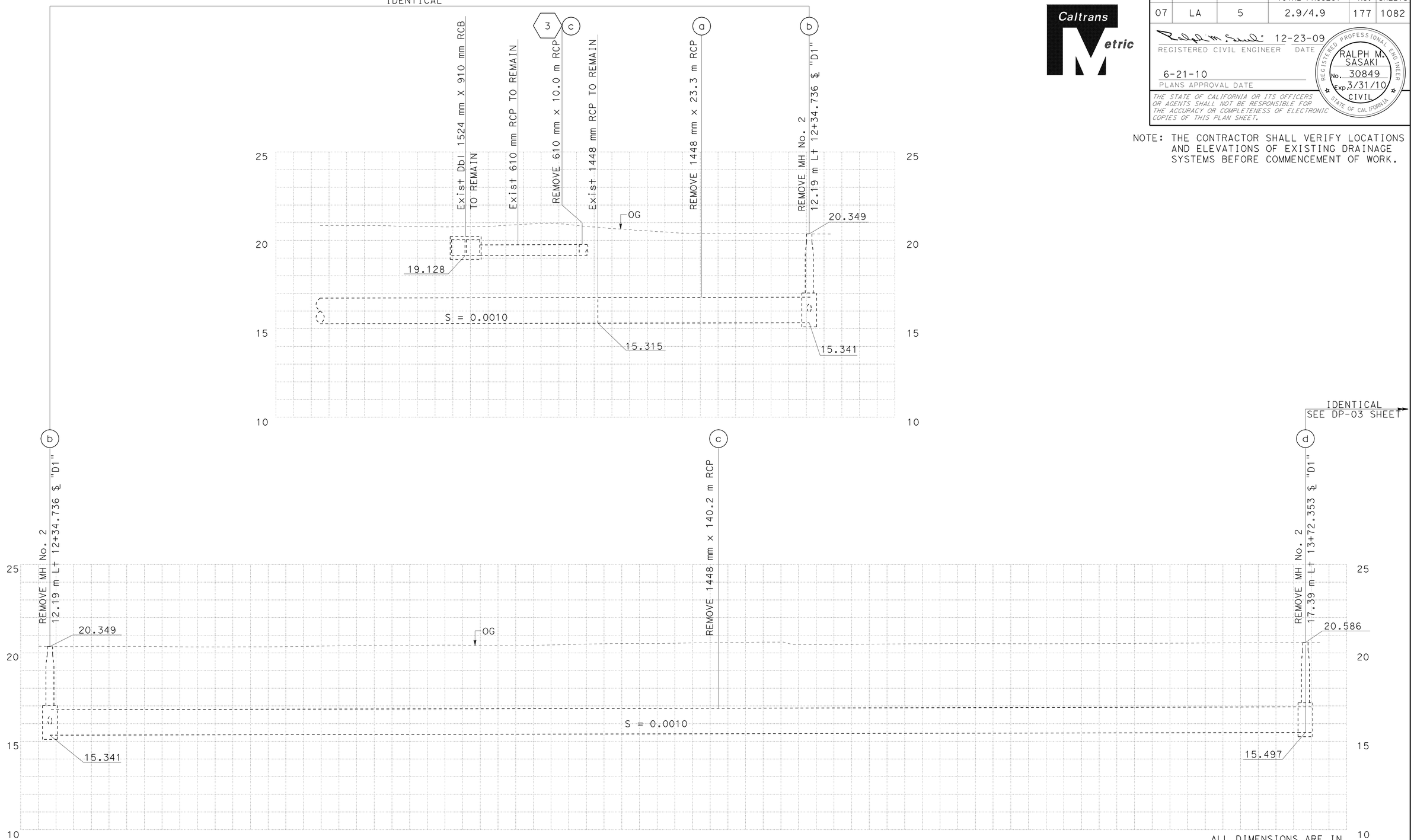

DRAINAGE SYSTEM No. 4

ALL DIMENSIONS ARE IN METERS UNLESS SHOWN OTHERWISE

DRAINAGE PROFILES

SCALE 1:200 Horiz
1:100 Vert

DP-2

STATE OF CALIFORNIA - DEPARTMENT OF TRANSPORTATION
Caltrans
HYDRAULICS

FUNCTIONAL SUPERVISOR: RALPH M. SASAKI
CALCULATED-DESIGNED BY: S. M. TAN, W. Y. LEE
CHECKED BY: R. M. SASAKI
REVISED BY / DATE REVISED

LAST REVISION 00-00-00
DATE PLOTTED => 22-JUN-2010
TIME PLOTTED => 08:24

Dist	COUNTY	ROUTE	KILOMETER POST TOTAL PROJECT	SHEET No.	TOTAL SHEETS
07	LA	5	2.9/4.9	178	1082

Ralph M. Sasaki 12-23-09
REGISTERED CIVIL ENGINEER DATE

6-21-10
PLANS APPROVAL DATE

REGISTERED PROFESSIONAL ENGINEER RALPH M. SASAKI No. 30849 Exp. 3/31/10 CIVIL STATE OF CALIFORNIA

THE STATE OF CALIFORNIA OR ITS OFFICERS OR AGENTS SHALL NOT BE RESPONSIBLE FOR THE ACCURACY OR COMPLETENESS OF ELECTRONIC COPIES OF THIS PLAN SHEET.

Caltrans Metric

NOTE: THE CONTRACTOR SHALL VERIFY LOCATIONS AND ELEVATIONS OF EXISTING DRAINAGE SYSTEMS BEFORE COMMENCEMENT OF WORK.

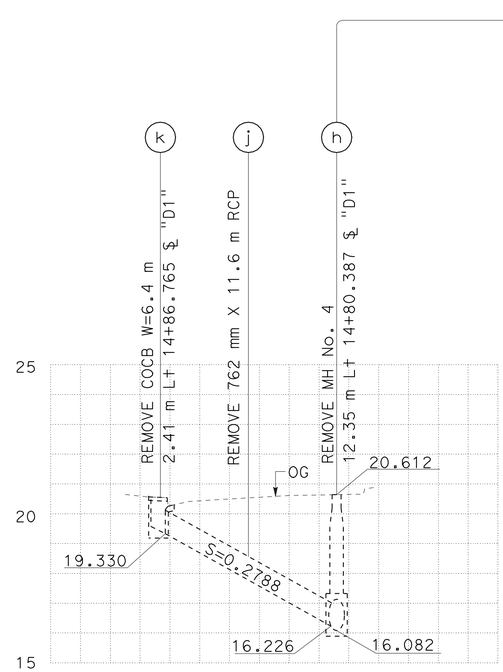

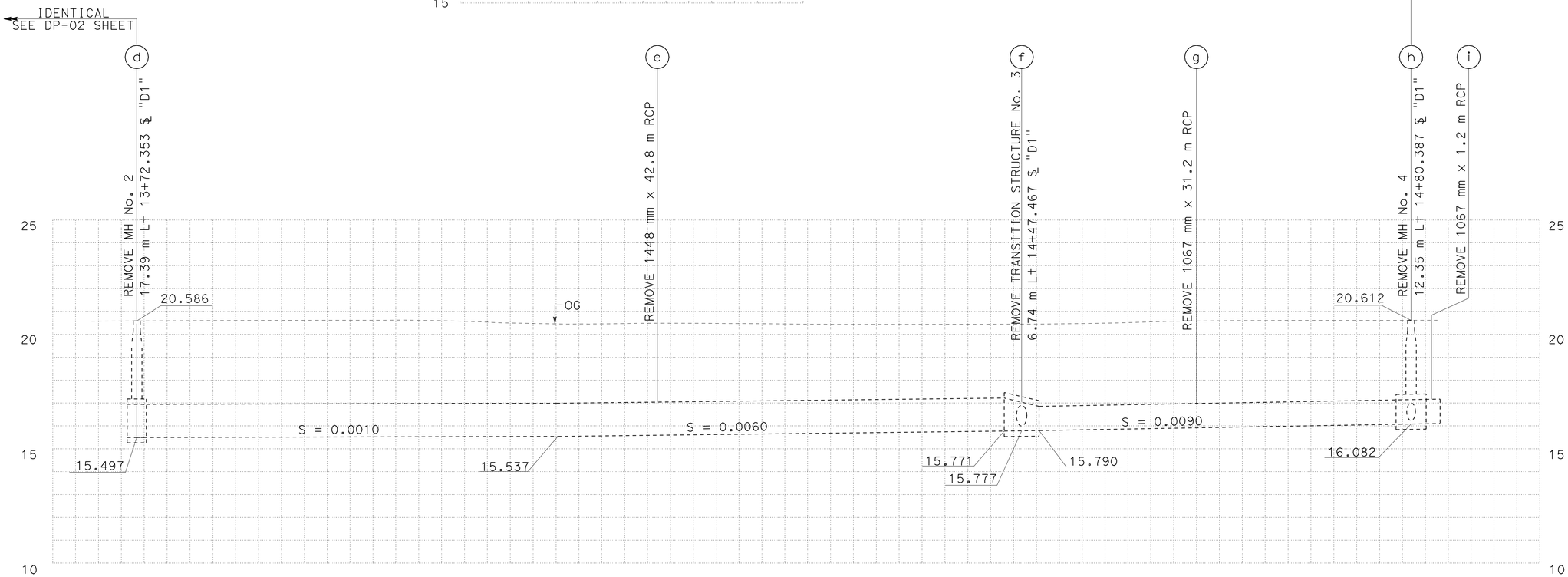

ALL DIMENSIONS ARE IN METERS UNLESS SHOWN OTHERWISE

DRAINAGE SYSTEM No. 4

DRAINAGE PROFILES

SCALE 1:200 Horiz
1:100 Vert

DP-3

STATE OF CALIFORNIA - DEPARTMENT OF TRANSPORTATION
Caltrans
HYDRAULICS

FUNCTIONAL SUPERVISOR: RALPH M. SASAKI
CALCULATED-DESIGNED BY: S. M. TAN, W. Y. LEE
CHECKED BY: R. M. SASAKI
REVISED BY
DATE REVISED

LAST REVISION 00-00-00
DATE PLOTTED => 22-JUN-2010
TIME PLOTTED => 08:24

Dist	COUNTY	ROUTE	KILOMETER POST TOTAL PROJECT	SHEET No.	TOTAL SHEETS
07	LA	5	2.9/4.9	179	1082

Ralph M. Sasaki 12-23-09
REGISTERED CIVIL ENGINEER DATE

6-21-10
PLANS APPROVAL DATE

REGISTERED PROFESSIONAL ENGINEER RALPH M. SASAKI No. 30849 Exp. 3/31/10 CIVIL STATE OF CALIFORNIA

THE STATE OF CALIFORNIA OR ITS OFFICERS OR AGENTS SHALL NOT BE RESPONSIBLE FOR THE ACCURACY OR COMPLETENESS OF ELECTRONIC COPIES OF THIS PLAN SHEET.

Caltrans Metric

NOTE: THE CONTRACTOR SHALL VERIFY LOCATIONS AND ELEVATIONS OF EXISTING DRAINAGE SYSTEMS BEFORE COMMENCEMENT OF WORK.

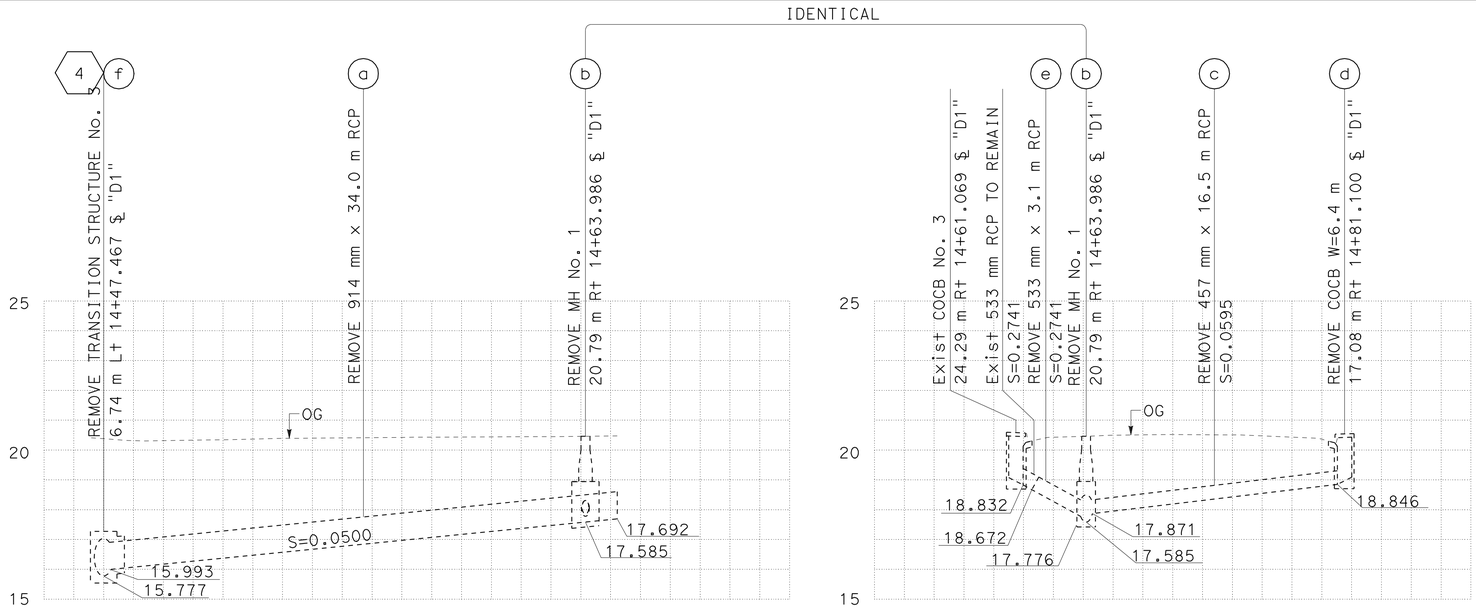

DRAINAGE SYSTEM No. 5

SCALE 1:200 Horiz
1:100 Vert

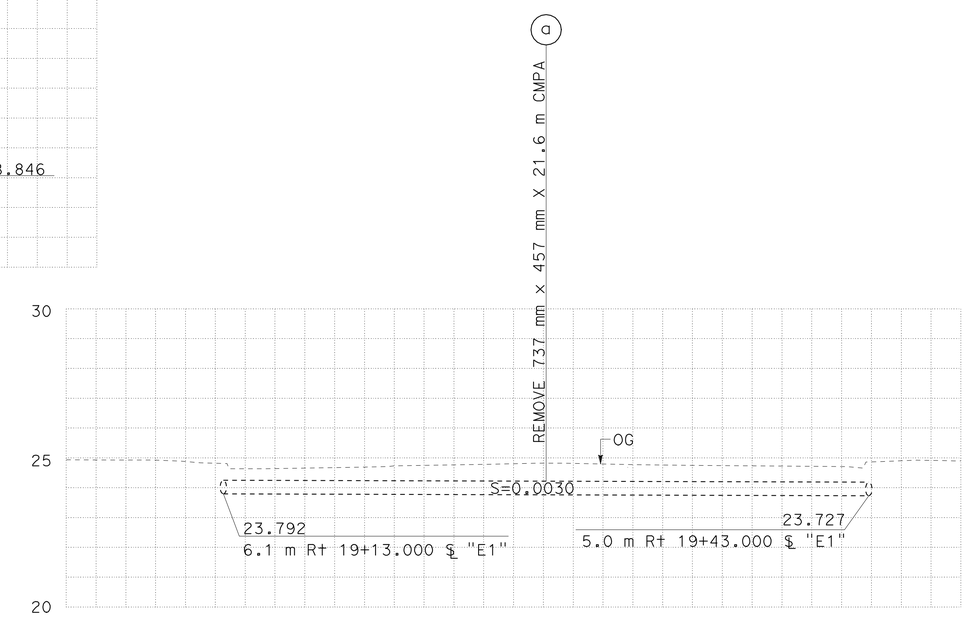

DRAINAGE SYSTEM No. 19

SCALE 1:100 Horiz
1:100 Vert

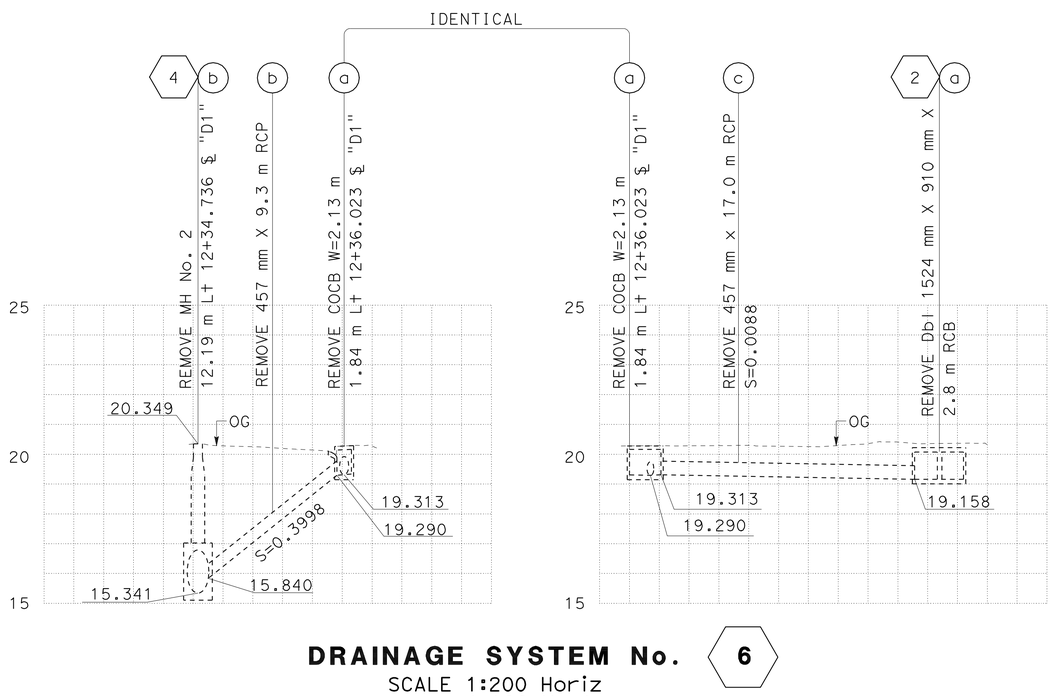

DRAINAGE SYSTEM No. 6

SCALE 1:200 Horiz
1:100 Vert

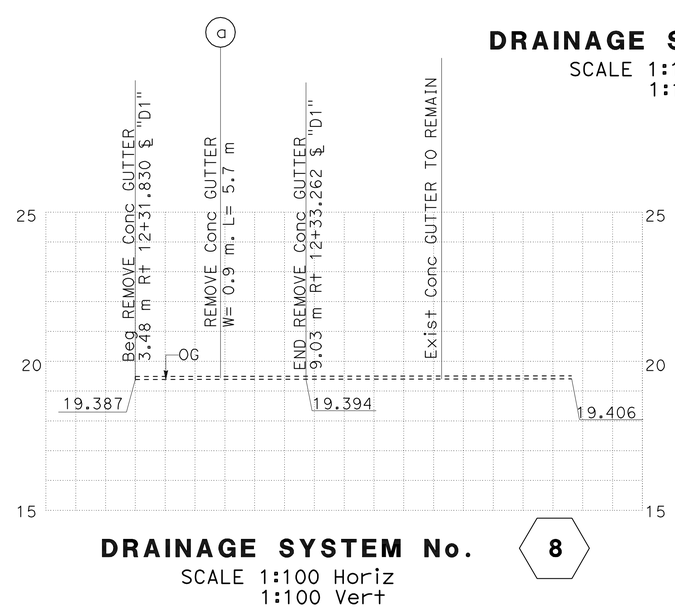

DRAINAGE SYSTEM No. 8

SCALE 1:100 Horiz
1:100 Vert

ALL DIMENSIONS ARE IN METERS UNLESS SHOWN OTHERWISE

DRAINAGE PROFILES

SCALE AS SHOWN

DP-4

STATE OF CALIFORNIA - DEPARTMENT OF TRANSPORTATION
Caltrans
HYDRAULICS

FUNCTIONAL SUPERVISOR: RALPH M. SASAKI
CALCULATED-DESIGNED BY: S. M. TAN / W. Y. LEE
CHECKED BY: R. M. SASAKI
REVISED BY
DATE REVISED

LAST REVISION 00-00-00
DATE PLOTTED => 22-JUN-2010
TIME PLOTTED => 08:25

Dist	COUNTY	ROUTE	KILOMETER POST TOTAL PROJECT	SHEET No.	TOTAL SHEETS
07	LA	5	2.9/4.9	180	1082

Ralph M. Sasaki 12-23-09
REGISTERED CIVIL ENGINEER DATE

6-21-10
PLANS APPROVAL DATE

REGISTERED PROFESSIONAL ENGINEER RALPH M. SASAKI No. 30849 Exp. 3/31/10 CIVIL STATE OF CALIFORNIA

THE STATE OF CALIFORNIA OR ITS OFFICERS OR AGENTS SHALL NOT BE RESPONSIBLE FOR THE ACCURACY OR COMPLETENESS OF ELECTRONIC COPIES OF THIS PLAN SHEET.

Caltrans Metric

NOTE: THE CONTRACTOR SHALL VERIFY LOCATIONS AND ELEVATIONS OF EXISTING DRAINAGE SYSTEMS BEFORE COMMENCEMENT OF WORK.

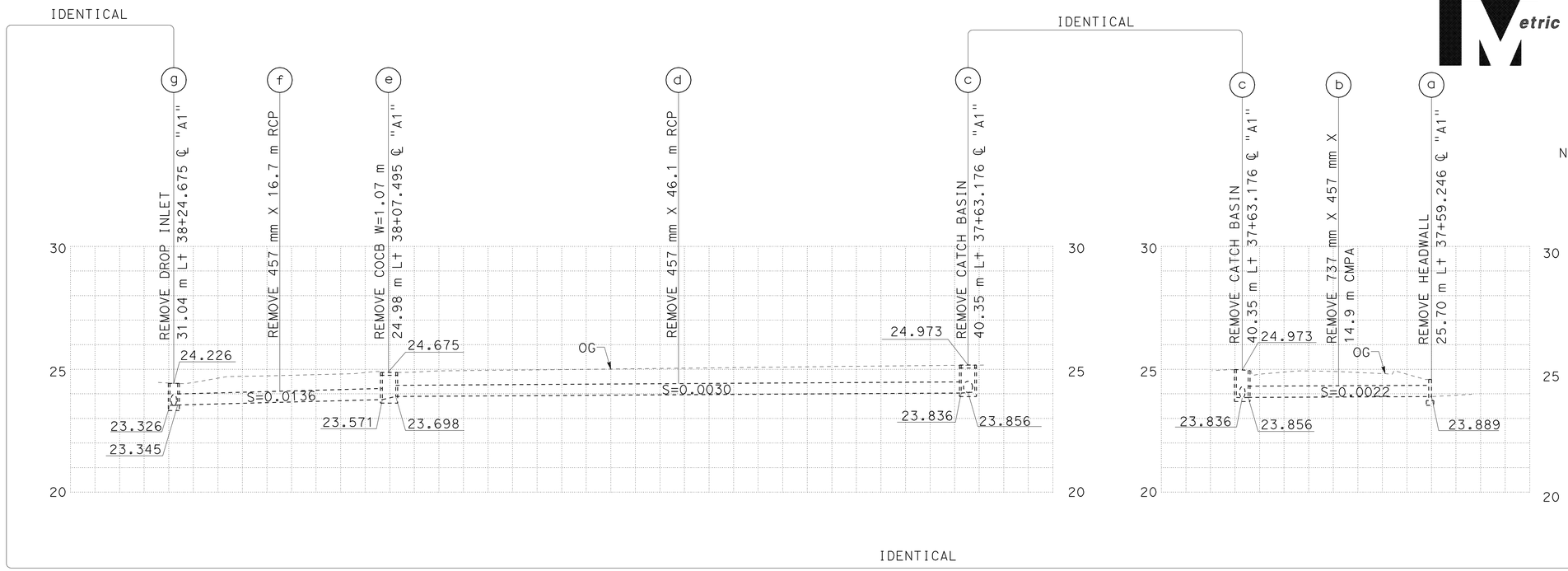

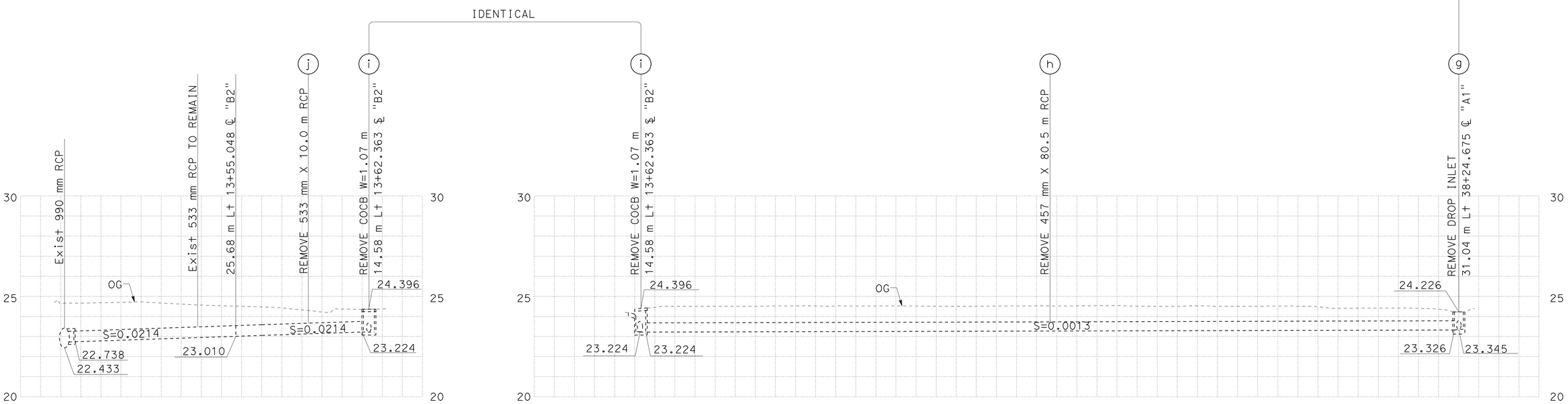

DRAINAGE SYSTEM No. 31

ALL DIMENSIONS ARE IN METERS UNLESS SHOWN OTHERWISE

DRAINAGE PROFILES

SCALE 1:200 Horiz
1:100 Vert

DP-5

STATE OF CALIFORNIA - DEPARTMENT OF TRANSPORTATION
Caltrans
HYDRAULICS

FUNCTIONAL SUPERVISOR: RALPH M. SASAKI
CALCULATED-DESIGNED BY: S. M. TAN W. Y. LEE
CHECKED BY: R. M. SASAKI
REVISED BY
DATE REVISED

LAST REVISION 00-00-00
DATE PLOTTED => 22-JUN-2010
TIME PLOTTED => 08:25

Dist	COUNTY	ROUTE	KILOMETER POST TOTAL PROJECT	SHEET No.	TOTAL SHEETS
07	LA	5	2.9/4.9	181	1082

Caltrans Metric

REGISTERED CIVIL ENGINEER DATE 12-23-09

PLANS APPROVAL DATE 6-21-10

REGISTERED PROFESSIONAL ENGINEER RALPH M. SASAKI No. 30849 Exp. 3/31/10 CIVIL STATE OF CALIFORNIA

THE STATE OF CALIFORNIA OR ITS OFFICERS OR AGENTS SHALL NOT BE RESPONSIBLE FOR THE ACCURACY OR COMPLETENESS OF ELECTRONIC COPIES OF THIS PLAN SHEET.

NOTE: THE CONTRACTOR SHALL VERIFY LOCATIONS AND ELEVATIONS OF EXISTING DRAINAGE SYSTEMS BEFORE COMMENCEMENT OF WORK.

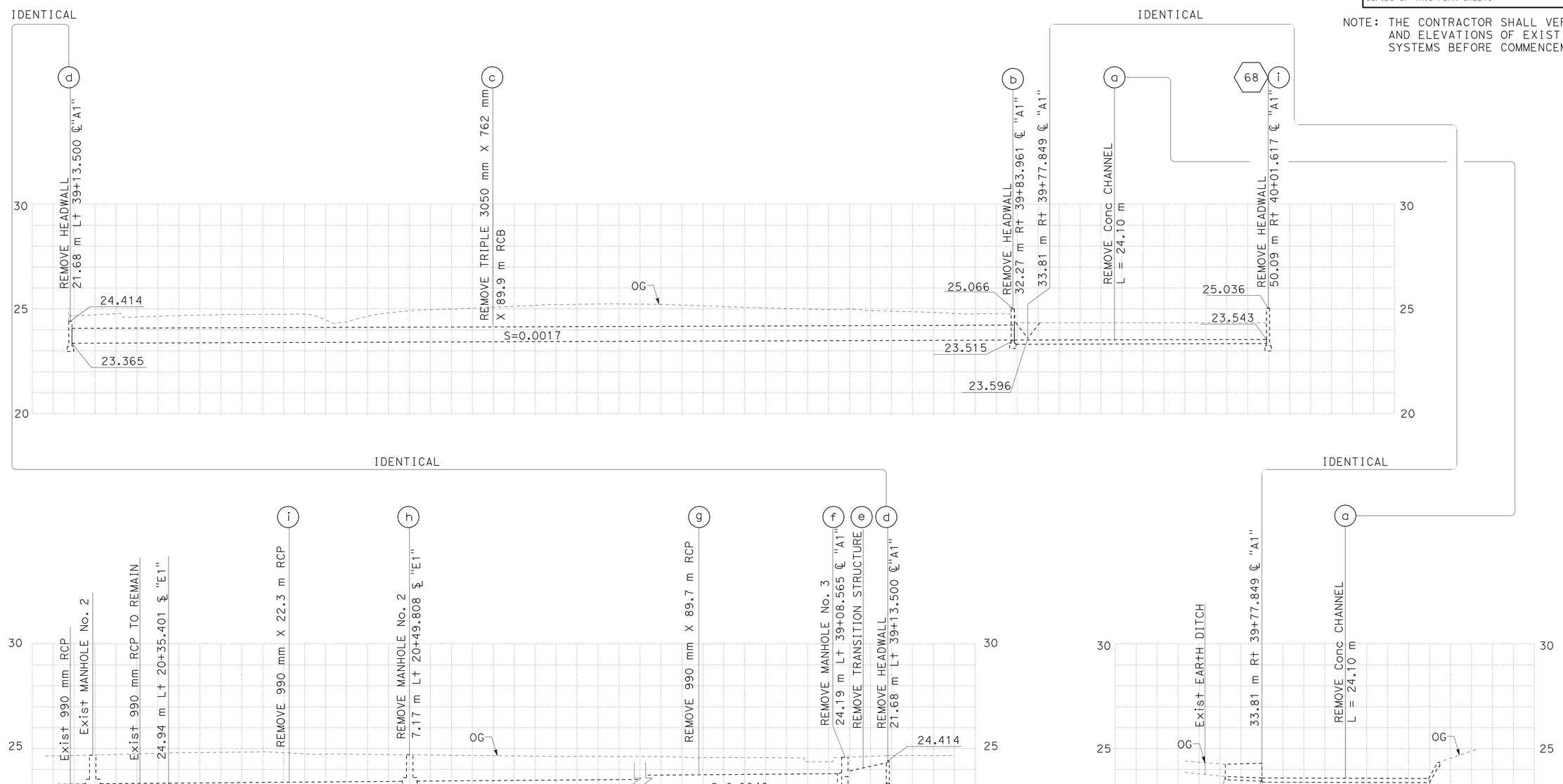

DRAINAGE SYSTEM No. 32

DRAINAGE PROFILES

SCALE 1:200 Horiz
1:100 Vert

ALL DIMENSIONS ARE IN METERS UNLESS SHOWN OTHERWISE

DP-6

STATE OF CALIFORNIA - DEPARTMENT OF TRANSPORTATION
Caltrans
HYDRAULICS

FUNCTIONAL SUPERVISOR: RALPH M. SASAKI
CALCULATED-DESIGNED BY: S. M. TAN / W. Y. LEE
CHECKED BY: R. M. SASAKI
REVISED BY
DATE REVISED

LAST REVISION 00-00-00
DATE PLOTTED => 22-JUN-2010
TIME PLOTTED => 08:25

Dist	COUNTY	ROUTE	KILOMETER POST TOTAL PROJECT	SHEET No.	TOTAL SHEETS
07	LA	5	2.9/4.9	182	1082

Caltrans Metric

REGISTERED CIVIL ENGINEER — DATE: 12-23-09

6-21-10
PLANS APPROVAL DATE

REGISTERED PROFESSIONAL ENGINEER — RALPH M. SASAKI — No. 30849 — Exp. 3/31/10 — CIVIL — STATE OF CALIFORNIA

THE STATE OF CALIFORNIA OR ITS OFFICERS OR AGENTS SHALL NOT BE RESPONSIBLE FOR THE ACCURACY OR COMPLETENESS OF ELECTRONIC COPIES OF THIS PLAN SHEET.

NOTE: THE CONTRACTOR SHALL VERIFY LOCATIONS AND ELEVATIONS OF EXISTING DRAINAGE SYSTEMS BEFORE COMMENCEMENT OF WORK.

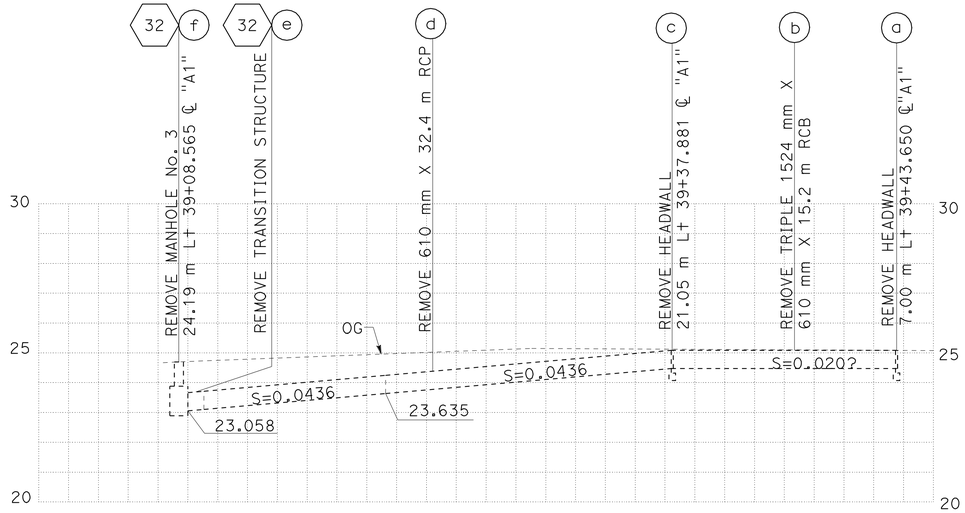

DRAINAGE SYSTEM No. 33

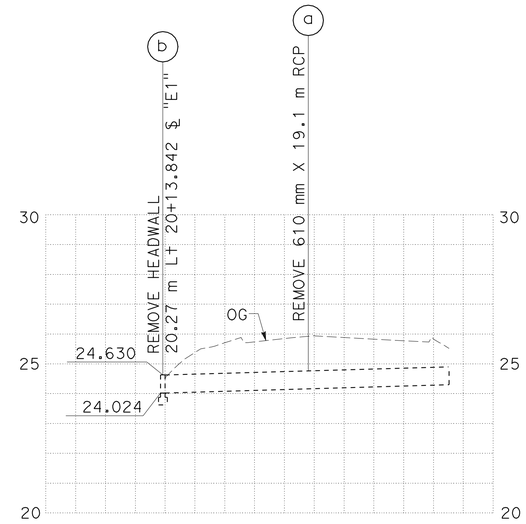

DRAINAGE SYSTEM No. 34

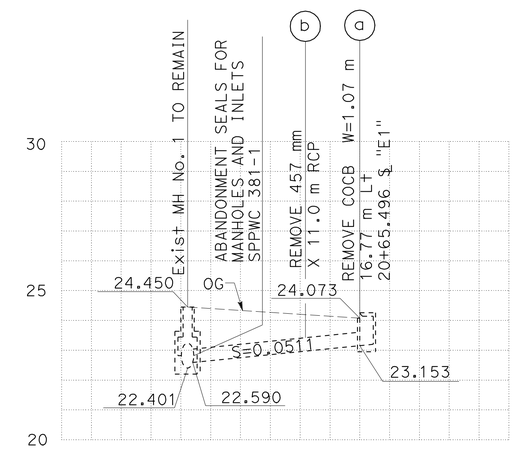

DRAINAGE SYSTEM No. 35

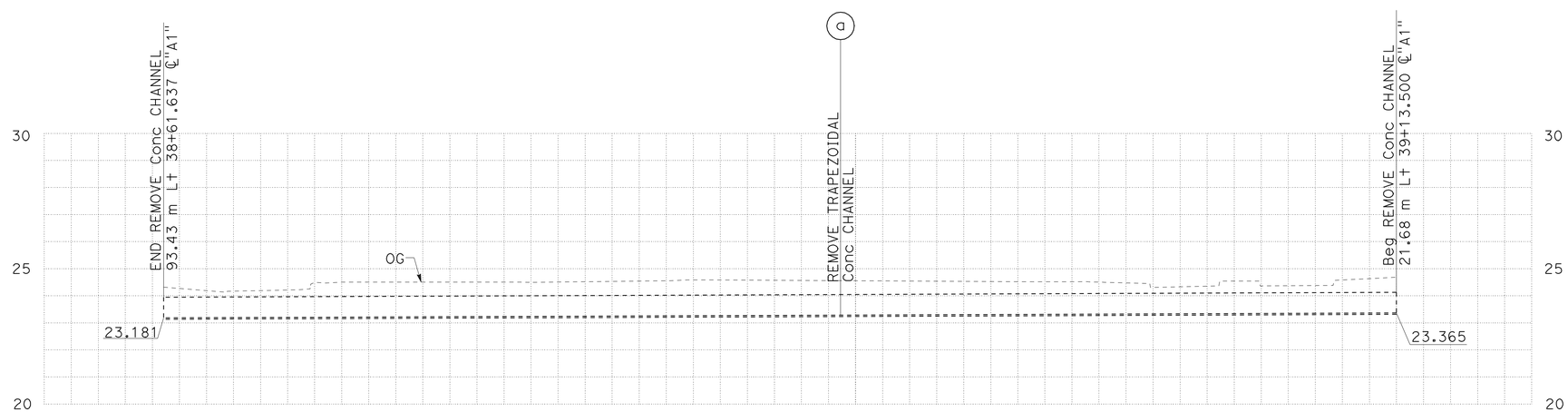

DRAINAGE SYSTEM No. 36

ALL DIMENSIONS ARE IN METERS UNLESS SHOWN OTHERWISE

DRAINAGE PROFILES

SCALE 1:200 Horiz
1:100 Vert

DP-7

STATE OF CALIFORNIA - DEPARTMENT OF TRANSPORTATION
Caltrans
HYDRAULICS

FUNCTIONAL SUPERVISOR: RALPH M. SASAKI
CALCULATED-DESIGNED BY: S. M. TAN / W. Y. LEE
CHECKED BY: R. M. SASAKI
REVISED BY / DATE REVISED

LAST REVISION 00-00-00 — DATE PLOTTED => 22-JUN-2010 — TIME PLOTTED => 08:25

Dist	COUNTY	ROUTE	KILOMETER POST TOTAL PROJECT	SHEET No.	TOTAL SHEETS
07	LA	5	2.9/4.9	183	1082

Ralph M. Sasaki 12-23-09
REGISTERED CIVIL ENGINEER DATE

6-21-10
PLANS APPROVAL DATE

REGISTERED PROFESSIONAL ENGINEER RALPH M. SASAKI No. 30849 Exp. 3/31/10 CIVIL STATE OF CALIFORNIA

THE STATE OF CALIFORNIA OR ITS OFFICERS OR AGENTS SHALL NOT BE RESPONSIBLE FOR THE ACCURACY OR COMPLETENESS OF ELECTRONIC COPIES OF THIS PLAN SHEET.

Caltrans Metric

NOTE: THE CONTRACTOR SHALL VERIFY LOCATIONS AND ELEVATIONS OF EXISTING DRAINAGE SYSTEMS BEFORE COMMENCEMENT OF WORK.

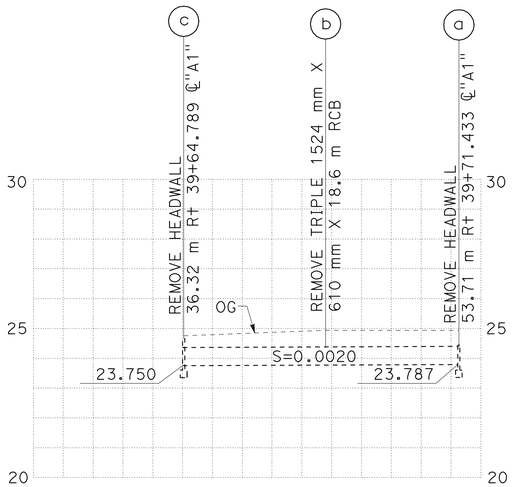

DRAINAGE SYSTEM No. 37

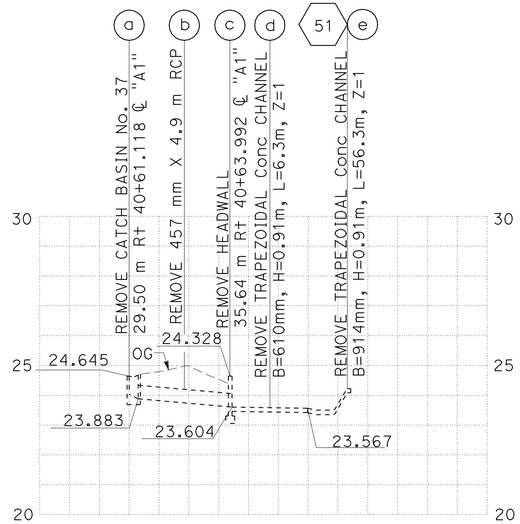

DRAINAGE SYSTEM No. 38

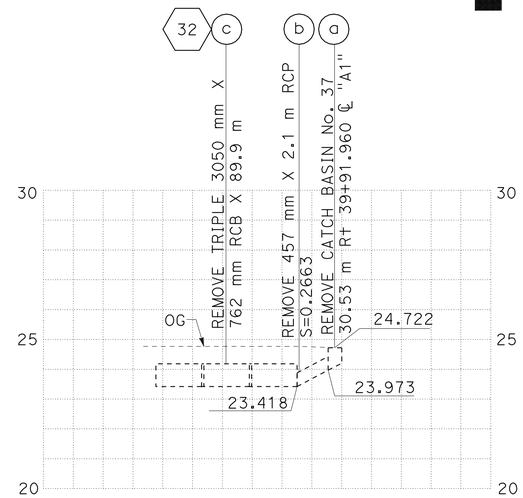

DRAINAGE SYSTEM No. 39

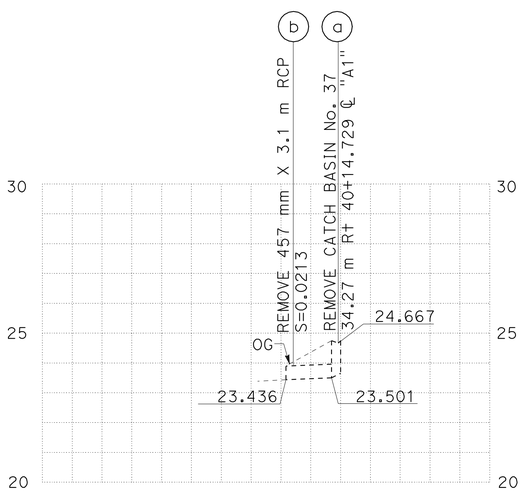

DRAINAGE SYSTEM No. 40

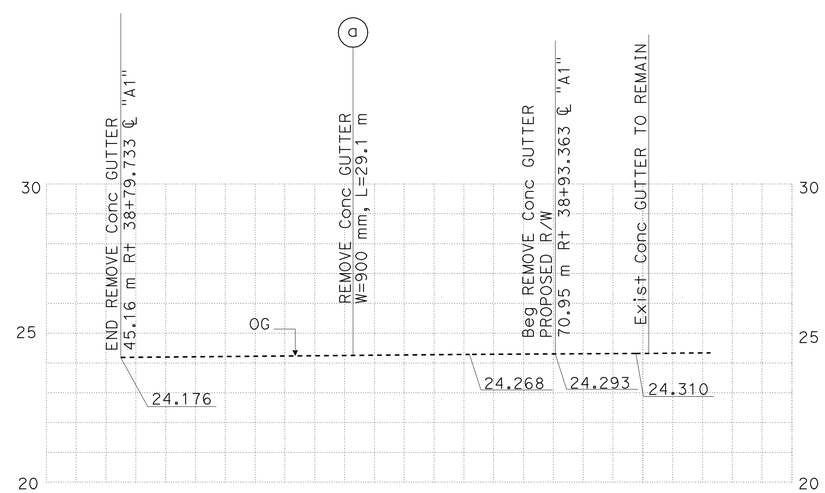

DRAINAGE SYSTEM No. 44

ALL DIMENSIONS ARE IN METERS UNLESS SHOWN OTHERWISE

DRAINAGE PROFILES

SCALE 1:200 Horiz
1:100 Vert

DP-8

STATE OF CALIFORNIA - DEPARTMENT OF TRANSPORTATION
Caltrans
HYDRAULICS

FUNCTIONAL SUPERVISOR: RALPH M. SASAKI
CALCULATED-DESIGNED BY: S. M. TAN, W. Y. LEE
CHECKED BY: R. M. SASAKI
REVISED BY
DATE REVISED

LAST REVISION 00-00-00
DATE PLOTTED => 22-JUN-2010
TIME PLOTTED => 08:25

Dist	COUNTY	ROUTE	KILOMETER POST TOTAL PROJECT	SHEET No.	TOTAL SHEETS
07	LA	5	2.9/4.9	184	1082

REGISTERED CIVIL ENGINEER 12-23-09 DATE

6-21-10
PLANS APPROVAL DATE

REGISTERED PROFESSIONAL ENGINEER RALPH M. SASAKI No. 30849 Exp. 3/31/10 CIVIL STATE OF CALIFORNIA

THE STATE OF CALIFORNIA OR ITS OFFICERS OR AGENTS SHALL NOT BE RESPONSIBLE FOR THE ACCURACY OR COMPLETENESS OF ELECTRONIC COPIES OF THIS PLAN SHEET.

Caltrans Metric

NOTE: THE CONTRACTOR SHALL VERIFY LOCATIONS AND ELEVATIONS OF EXISTING DRAINAGE SYSTEMS BEFORE COMMENCEMENT OF WORK.

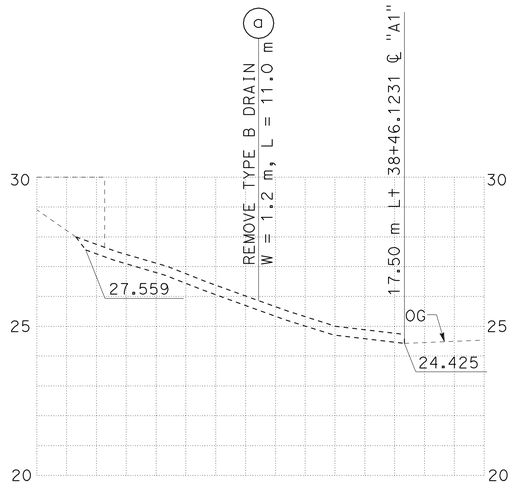

DRAINAGE SYSTEM No. 45
SCALE 1:100 Horiz
1:100 Vert

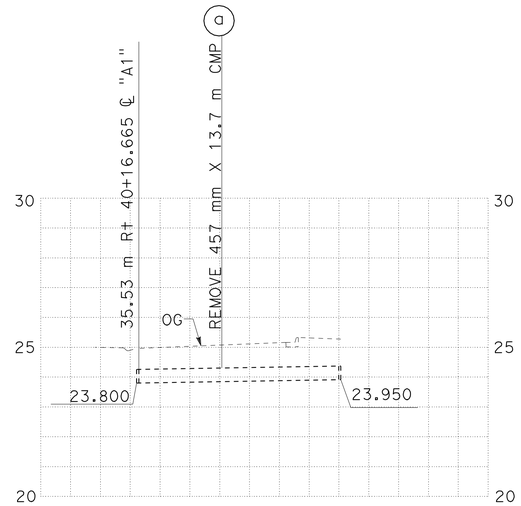

DRAINAGE SYSTEM No. 46
SCALE 1:200 Horiz
1:100 Vert

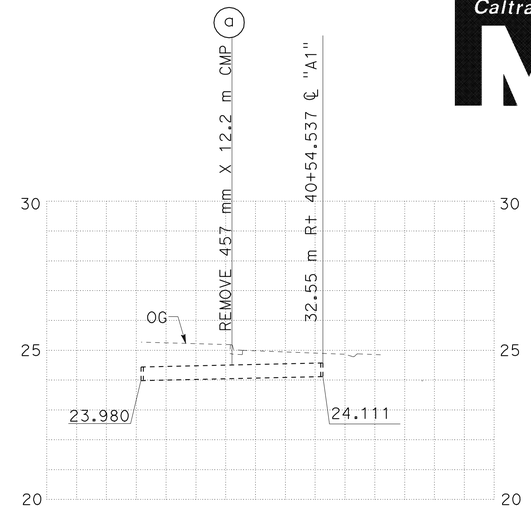

DRAINAGE SYSTEM No. 47
SCALE 1:200 Horiz
1:100 Vert

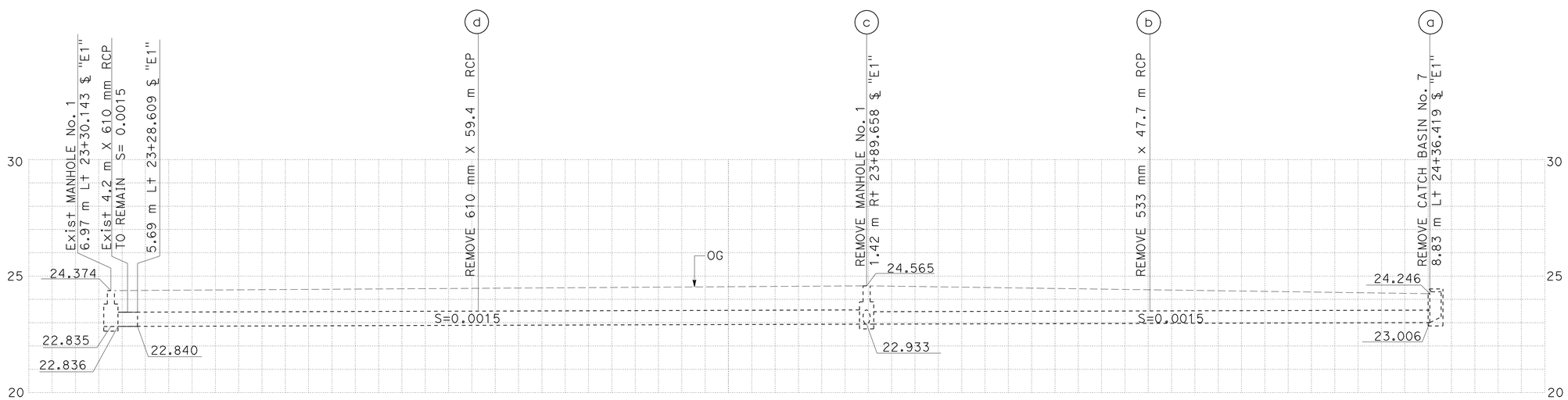

DRAINAGE SYSTEM No. 48
SCALE 1:200 Horiz
1:100 Vert

ALL DIMENSIONS ARE IN METERS UNLESS SHOWN OTHERWISE

DRAINAGE PROFILES

SCALE AS SHOWN

DP-9

STATE OF CALIFORNIA - DEPARTMENT OF TRANSPORTATION
Caltrans
HYDRAULICS

FUNCTIONAL SUPERVISOR: RALPH M. SASAKI
CALCULATED-DESIGNED BY: S. M. TAN, W. Y. LEE
CHECKED BY: R. M. SASAKI
REVISED BY
DATE REVISED

LAST REVISION 00-00-00
DATE PLOTTED => 22-JUN-2010
TIME PLOTTED => 08:25

Dist	COUNTY	ROUTE	KILOMETER POST TOTAL PROJECT	SHEET No.	TOTAL SHEETS
07	LA	5	2.9/4.9	185	1082

Ralph M. Sasaki 12-23-09
REGISTERED CIVIL ENGINEER DATE

6-21-10
PLANS APPROVAL DATE

REGISTERED PROFESSIONAL ENGINEER RALPH M. SASAKI No. 30849 Exp. 3/31/10 CIVIL STATE OF CALIFORNIA

THE STATE OF CALIFORNIA OR ITS OFFICERS OR AGENTS SHALL NOT BE RESPONSIBLE FOR THE ACCURACY OR COMPLETENESS OF ELECTRONIC COPIES OF THIS PLAN SHEET.

Caltrans Metric

NOTE: THE CONTRACTOR SHALL VERIFY LOCATIONS AND ELEVATIONS OF EXISTING DRAINAGE SYSTEMS BEFORE COMMENCEMENT OF WORK.

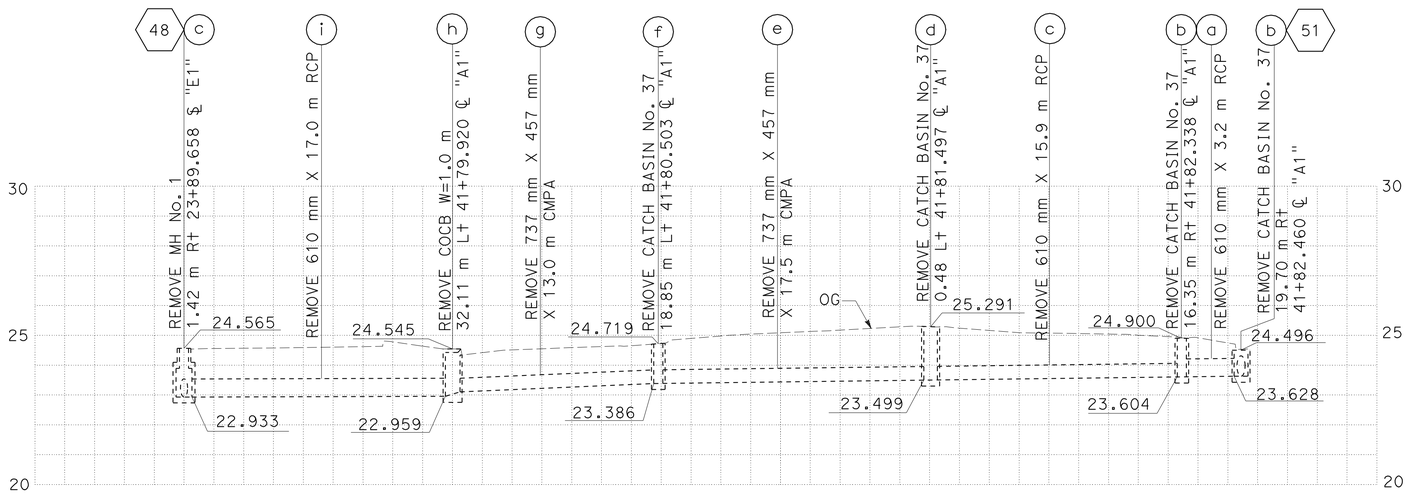

DRAINAGE SYSTEM No. 49

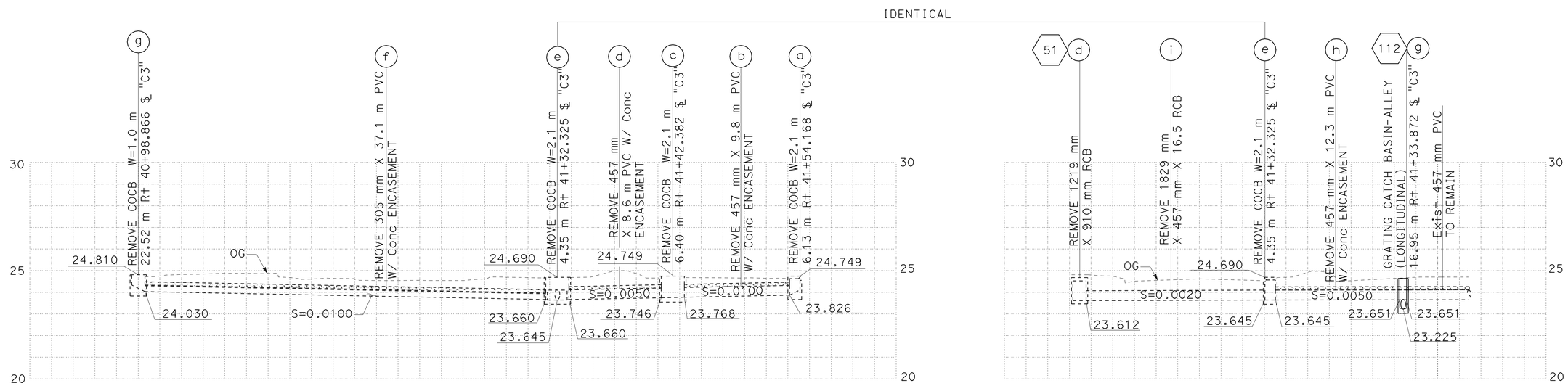

DRAINAGE SYSTEM No. 50

ALL DIMENSIONS ARE IN METERS UNLESS SHOWN OTHERWISE

DRAINAGE PROFILES

SCALE 1:200 Horiz
1:100 Vert

DP-10

STATE OF CALIFORNIA - DEPARTMENT OF TRANSPORTATION
Caltrans
HYDRAULICS

FUNCTIONAL SUPERVISOR: RALPH M. SASAKI
CALCULATED-DESIGNED BY: S. M. TAN / W. Y. LEE
CHECKED BY: R. M. SASAKI
REVISED BY / DATE REVISED

LAST REVISION 00-00-00
DATE PLOTTED => 22-JUN-2010
TIME PLOTTED => 08:25

Dist	COUNTY	ROUTE	KILOMETER POST TOTAL PROJECT	SHEET No.	TOTAL SHEETS
07	LA	5	2.9/4.9	186	1082

REGISTERED CIVIL ENGINEER 12-23-09 DATE

6-21-10
PLANS APPROVAL DATE

REGISTERED PROFESSIONAL ENGINEER RALPH M. SASAKI No. 30849 Exp. 3/31/10 CIVIL STATE OF CALIFORNIA

THE STATE OF CALIFORNIA OR ITS OFFICERS OR AGENTS SHALL NOT BE RESPONSIBLE FOR THE ACCURACY OR COMPLETENESS OF ELECTRONIC COPIES OF THIS PLAN SHEET.

NOTE: THE CONTRACTOR SHALL VERIFY LOCATIONS AND ELEVATIONS OF EXISTING DRAINAGE SYSTEMS BEFORE COMMENCEMENT OF WORK.

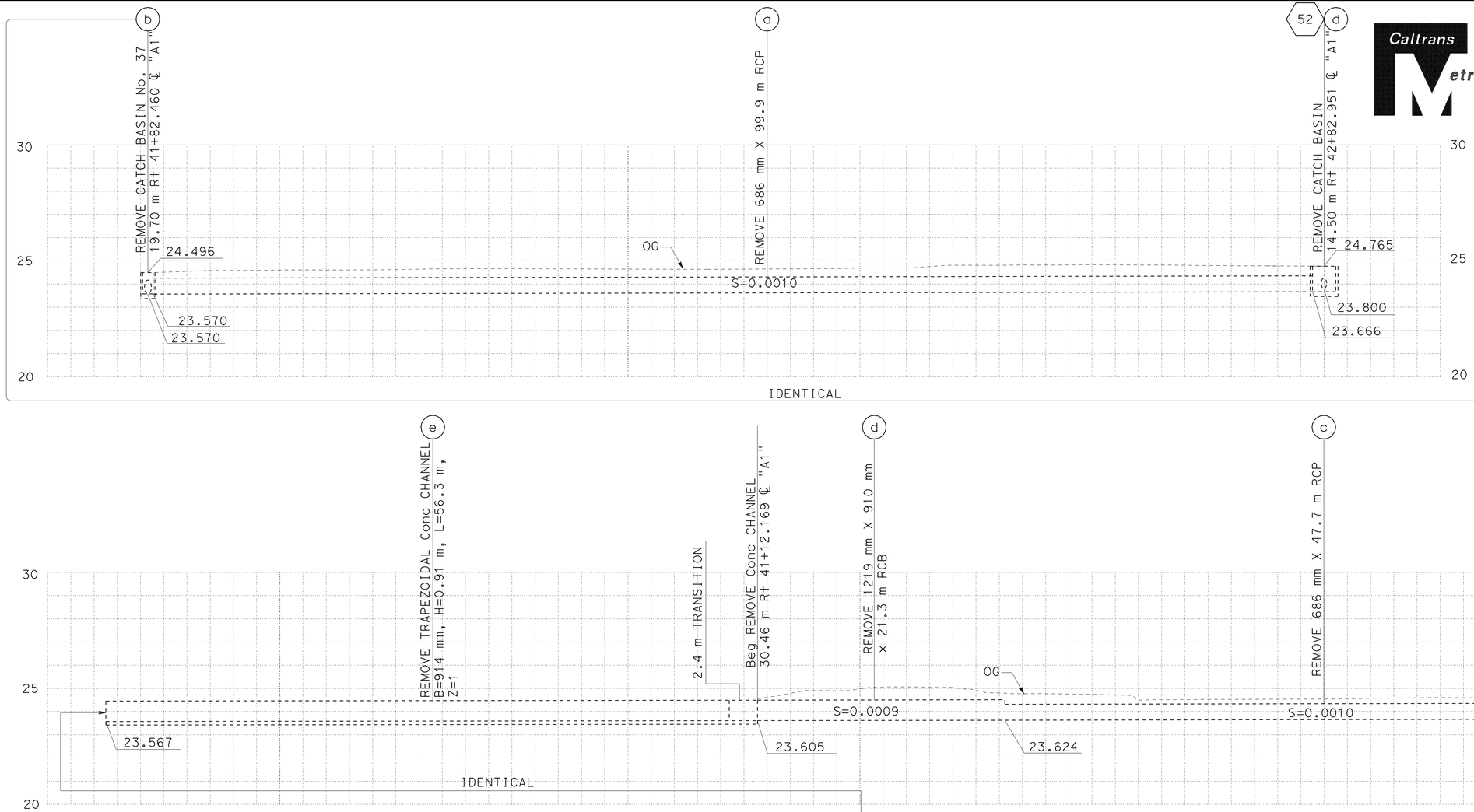

DRAINAGE SYSTEM No. 51

ALL DIMENSIONS ARE IN METERS UNLESS SHOWN OTHERWISE

DRAINAGE PROFILES

SCALE 1:200 Horiz
1:100 Vert

DP-11

STATE OF CALIFORNIA - DEPARTMENT OF TRANSPORTATION
Caltrans
HYDRAULICS

FUNCTIONAL SUPERVISOR: RALPH M. SASAKI
CALCULATED-DESIGNED BY: S. M. TAN, W. Y. LEE
CHECKED BY: R. M. SASAKI
REVISED BY
DATE REVISED

LAST REVISION 00-00-00
DATE PLOTTED => 22-JUN-2010
TIME PLOTTED => 08:25

Dist	COUNTY	ROUTE	KILOMETER POST TOTAL PROJECT	SHEET No.	TOTAL SHEETS
07	LA	5	2.9/4.9	187	1082

REGISTERED CIVIL ENGINEER 12-23-09 DATE

6-21-10
PLANS APPROVAL DATE

REGISTERED PROFESSIONAL ENGINEER RALPH M. SASAKI No. 30849 Exp. 3/31/10 CIVIL STATE OF CALIFORNIA

THE STATE OF CALIFORNIA OR ITS OFFICERS OR AGENTS SHALL NOT BE RESPONSIBLE FOR THE ACCURACY OR COMPLETENESS OF ELECTRONIC COPIES OF THIS PLAN SHEET.

Caltrans Metric

NOTE: THE CONTRACTOR SHALL VERIFY LOCATIONS AND ELEVATIONS OF EXISTING DRAINAGE SYSTEMS BEFORE COMMENCEMENT OF WORK.

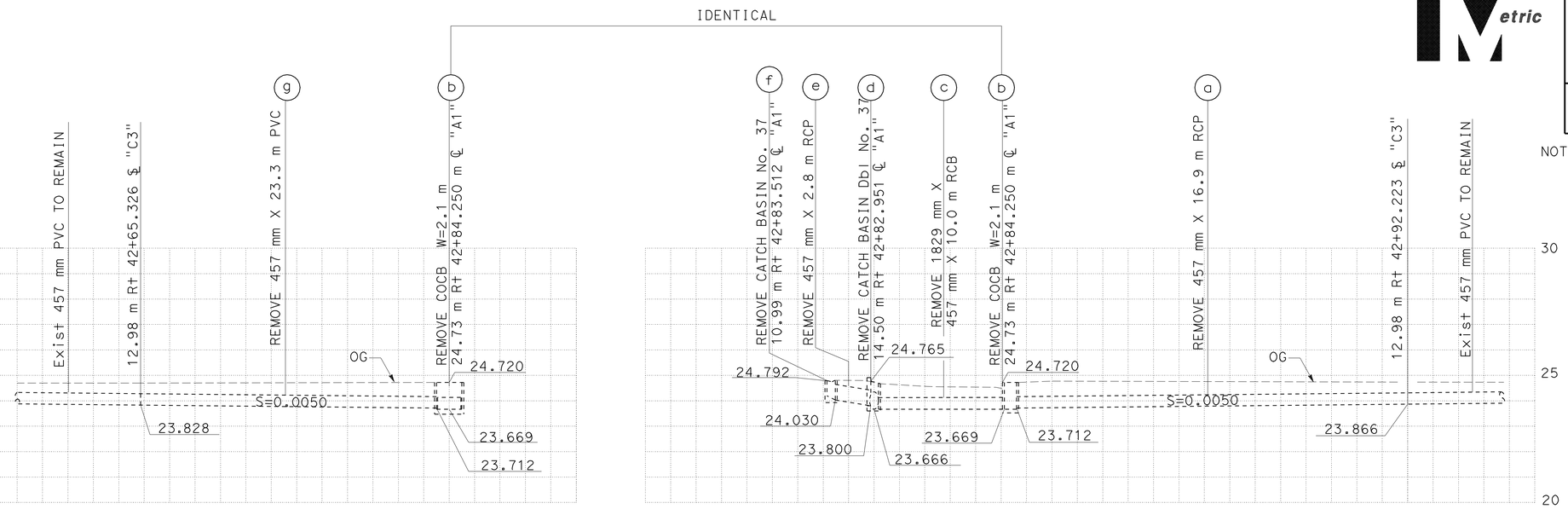

DRAINAGE SYSTEM No. 52

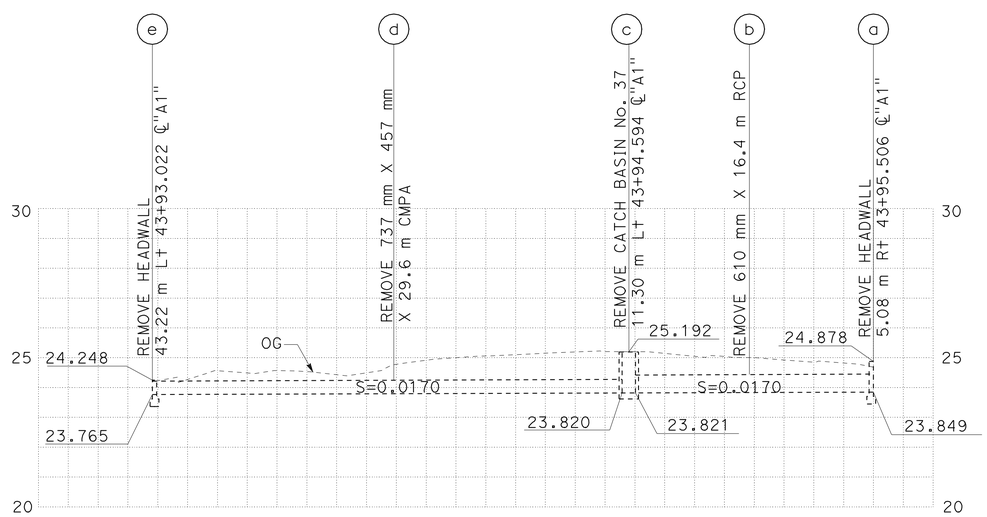

DRAINAGE SYSTEM No. 53

ALL DIMENSIONS ARE IN METERS UNLESS SHOWN OTHERWISE

DRAINAGE PROFILES

SCALE 1:200 Horiz
1:100 Vert

DP-12

STATE OF CALIFORNIA - DEPARTMENT OF TRANSPORTATION
Caltrans
HYDRAULICS

FUNCTIONAL SUPERVISOR: RALPH M. SASAKI
CALCULATED-DESIGNED BY: S. M. TAN, W. Y. LEE
CHECKED BY: R. M. SASAKI
REVISED BY
DATE REVISED

LAST REVISION 00-00-00
DATE PLOTTED => 22-JUN-2010
TIME PLOTTED => 08:26

Dist	COUNTY	ROUTE	KILOMETER POST TOTAL PROJECT	SHEET No.	TOTAL SHEETS
07	LA	5	2.9/4.9	188	1082

Ralph M. Sasaki 12-23-09
REGISTERED CIVIL ENGINEER DATE

6-21-10
PLANS APPROVAL DATE

REGISTERED PROFESSIONAL ENGINEER RALPH M. SASAKI No. 30849 Exp. 3/31/10 CIVIL STATE OF CALIFORNIA

THE STATE OF CALIFORNIA OR ITS OFFICERS OR AGENTS SHALL NOT BE RESPONSIBLE FOR THE ACCURACY OR COMPLETENESS OF ELECTRONIC COPIES OF THIS PLAN SHEET.

Caltrans Metric

NOTE: THE CONTRACTOR SHALL VERIFY LOCATIONS AND ELEVATIONS OF EXISTING DRAINAGE SYSTEMS BEFORE COMMENCEMENT OF WORK.

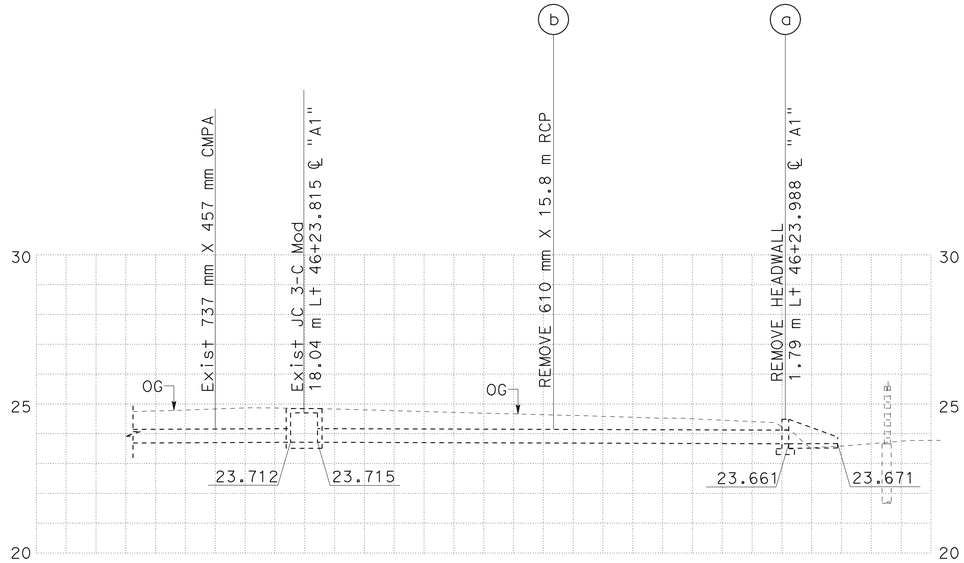

DRAINAGE SYSTEM No. 54
SCALE 1:100 Horiz
1:100 Vert

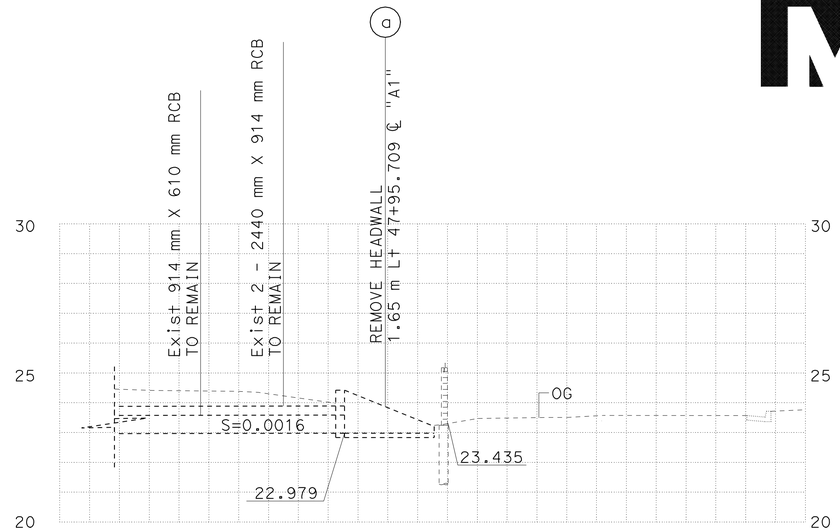

DRAINAGE SYSTEM No. 55
SCALE 1:100 Horiz
1:100 Vert

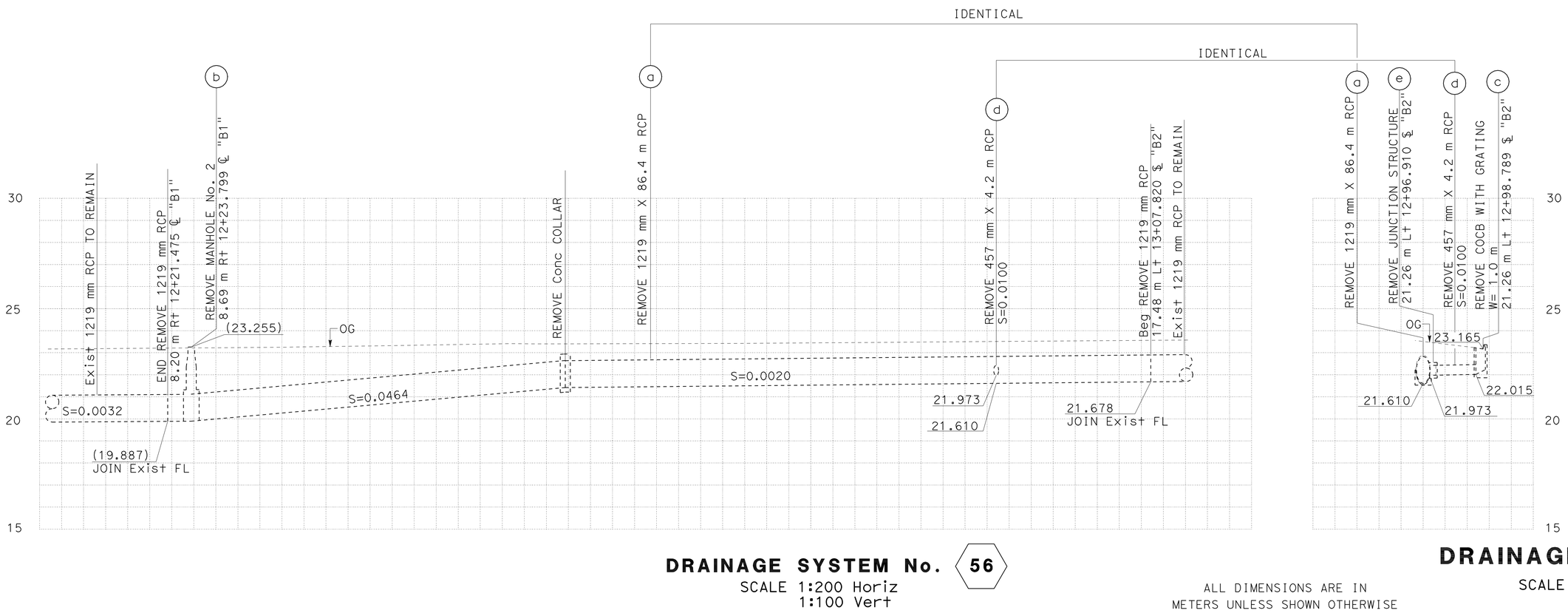

DRAINAGE SYSTEM No. 56
SCALE 1:200 Horiz
1:100 Vert

ALL DIMENSIONS ARE IN METERS UNLESS SHOWN OTHERWISE

DRAINAGE PROFILES
SCALE AS SHOWN
DP-13

STATE OF CALIFORNIA - DEPARTMENT OF TRANSPORTATION
Caltrans
HYDRAULICS

FUNCTIONAL SUPERVISOR: RALPH M. SASAKI
CALCULATED-DESIGNED BY: S. M. TAN / W. Y. LEE
CHECKED BY: R. M. SASAKI
REVISED BY / DATE REVISED

LAST REVISION 00-00-00
DATE PLOTTED => 22-JUN-2010
TIME PLOTTED => 08:26

Dist	COUNTY	ROUTE	KILOMETER POST TOTAL PROJECT	SHEET No.	TOTAL SHEETS
07	LA	5	2.9/4.9	189	1082

Caltrans Metric

REGISTERED CIVIL ENGINEER 12-23-09 DATE

6-21-10
PLANS APPROVAL DATE

REGISTERED PROFESSIONAL ENGINEER RALPH M. SASAKI No. 30849 Exp. 3/31/10 CIVIL STATE OF CALIFORNIA

THE STATE OF CALIFORNIA OR ITS OFFICERS OR AGENTS SHALL NOT BE RESPONSIBLE FOR THE ACCURACY OR COMPLETENESS OF ELECTRONIC COPIES OF THIS PLAN SHEET.

NOTE: THE CONTRACTOR SHALL VERIFY LOCATIONS AND ELEVATIONS OF EXISTING DRAINAGE SYSTEMS BEFORE COMMENCEMENT OF WORK.

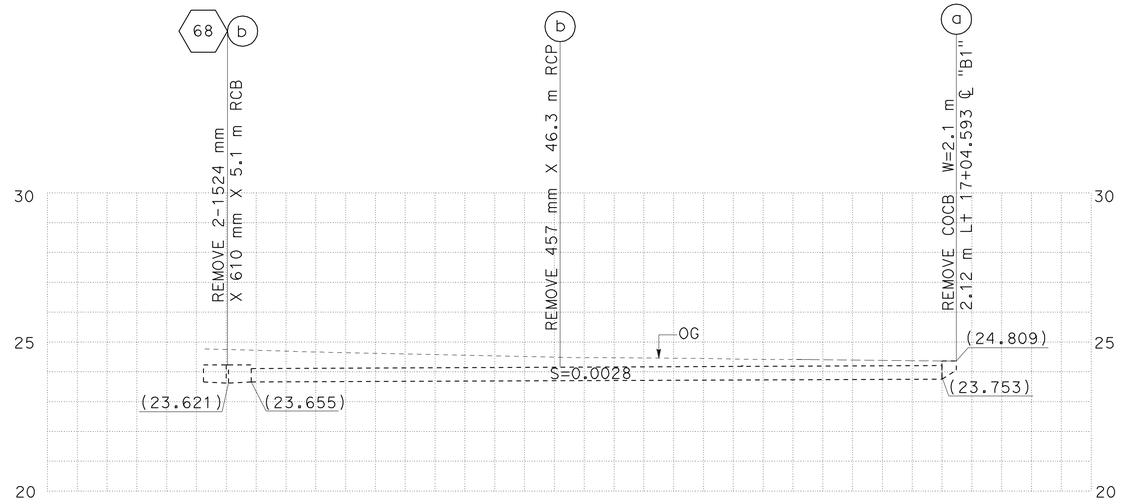

DRAINAGE SYSTEM No. 67

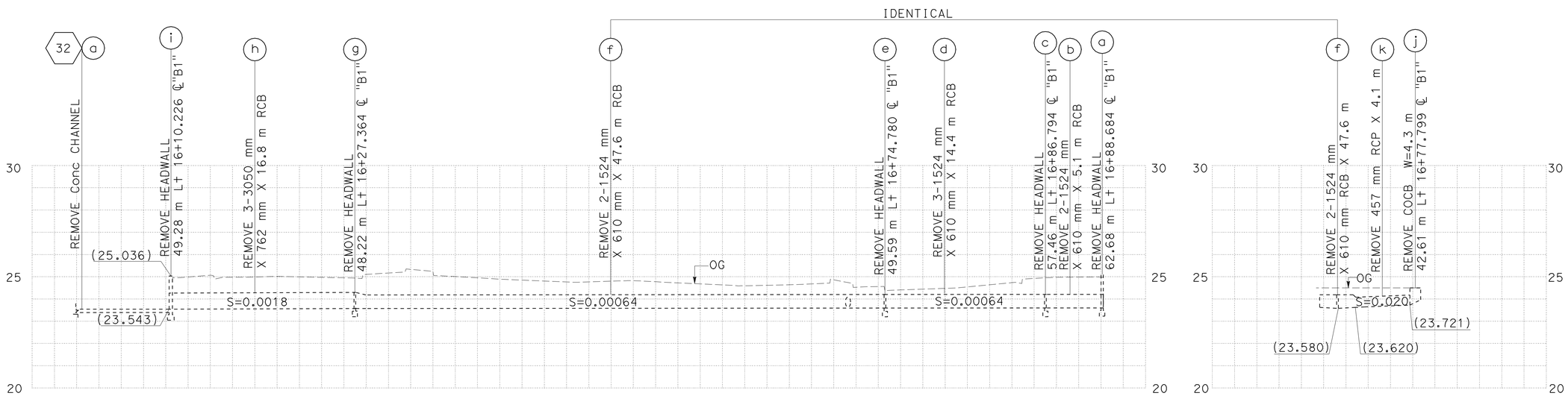

DRAINAGE SYSTEM No. 68

ALL DIMENSIONS ARE IN METERS UNLESS SHOWN OTHERWISE

DRAINAGE PROFILES

SCALE 1:200 Horiz
1:100 Vert

DP-14

STATE OF CALIFORNIA - DEPARTMENT OF TRANSPORTATION
Caltrans
HYDRAULICS

FUNCTIONAL SUPERVISOR: RALPH M. SASAKI
CALCULATED-DESIGNED BY: S. M. TAN, W. Y. LEE
CHECKED BY: R. M. SASAKI
REVISED BY
DATE REVISED

LAST REVISION 00-00-00
DATE PLOTTED => 22-JUN-2010
TIME PLOTTED => 08:26

Dist	COUNTY	ROUTE	KILOMETER POST TOTAL PROJECT	SHEET No.	TOTAL SHEETS
07	LA	5	2.9/4.9	190	1082

Ralph M. Sasaki 12-23-09
REGISTERED CIVIL ENGINEER DATE

6-21-10
PLANS APPROVAL DATE

REGISTERED PROFESSIONAL ENGINEER RALPH M. SASAKI No. 30849 Exp. 3/31/10 CIVIL STATE OF CALIFORNIA

THE STATE OF CALIFORNIA OR ITS OFFICERS OR AGENTS SHALL NOT BE RESPONSIBLE FOR THE ACCURACY OR COMPLETENESS OF ELECTRONIC COPIES OF THIS PLAN SHEET.

Caltrans Metric

NOTE: THE CONTRACTOR SHALL VERIFY LOCATIONS AND ELEVATIONS OF EXISTING DRAINAGE SYSTEMS BEFORE COMMENCEMENT OF WORK.

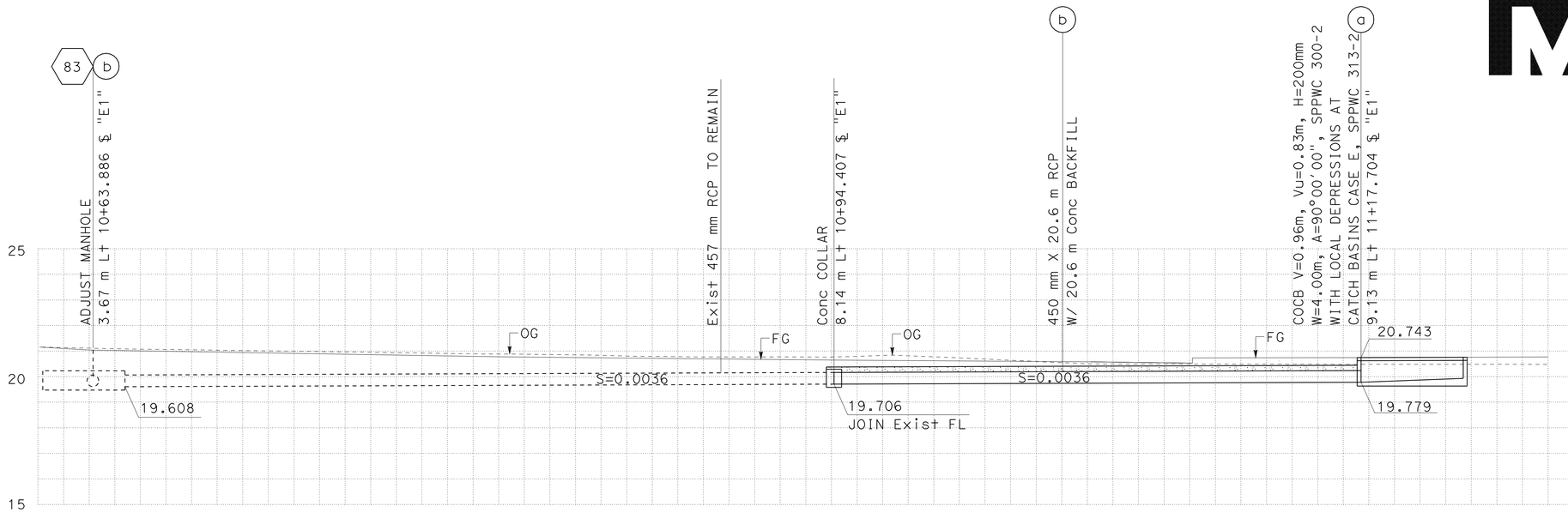

DRAINAGE SYSTEM No. 82

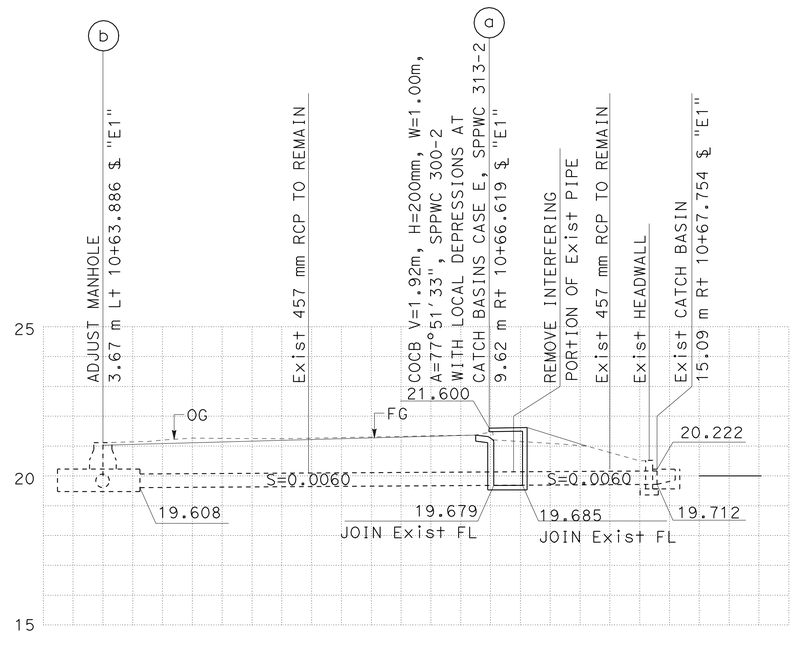

DRAINAGE SYSTEM No. 83

ALL DIMENSIONS ARE IN METERS UNLESS SHOWN OTHERWISE

DRAINAGE PROFILES

SCALE 1:100 Horiz
1:100 Vert

DP-15

STATE OF CALIFORNIA - DEPARTMENT OF TRANSPORTATION
Caltrans
HYDRAULICS

FUNCTIONAL SUPERVISOR: RALPH M. SASAKI
CALCULATED-DESIGNED BY: S. M. TAN / W. Y. LEE
CHECKED BY: R. M. SASAKI
REVISED BY / DATE REVISED

LAST REVISION 00-00-00
DATE PLOTTED => 22-JUN-2010
TIME PLOTTED => 08:26

Dist	COUNTY	ROUTE	KILOMETER POST TOTAL PROJECT	SHEET No.	TOTAL SHEETS
07	LA	5	2.9/4.9	191	1082

REGISTERED CIVIL ENGINEER DATE 12-23-09

PLANS APPROVAL DATE 6-21-10

REGISTERED PROFESSIONAL ENGINEER RALPH M. SASAKI No. 30849 Exp. 3/31/10 CIVIL STATE OF CALIFORNIA

THE STATE OF CALIFORNIA OR ITS OFFICERS OR AGENTS SHALL NOT BE RESPONSIBLE FOR THE ACCURACY OR COMPLETENESS OF ELECTRONIC COPIES OF THIS PLAN SHEET.

Caltrans Metric

NOTE:
THE CONTRACTOR SHALL VERIFY LOCATIONS AND ELEVATIONS OF EXISTING DRAINAGE SYSTEMS BEFORE COMMENCEMENT OF WORK.

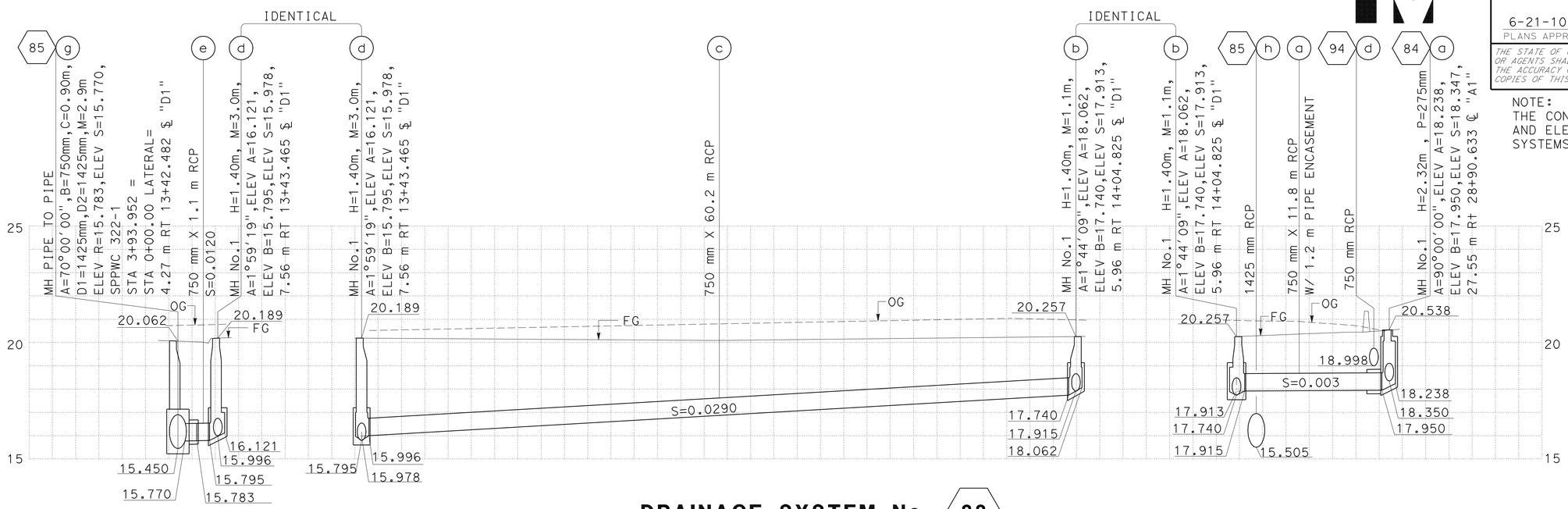

DRAINAGE SYSTEM No. 88

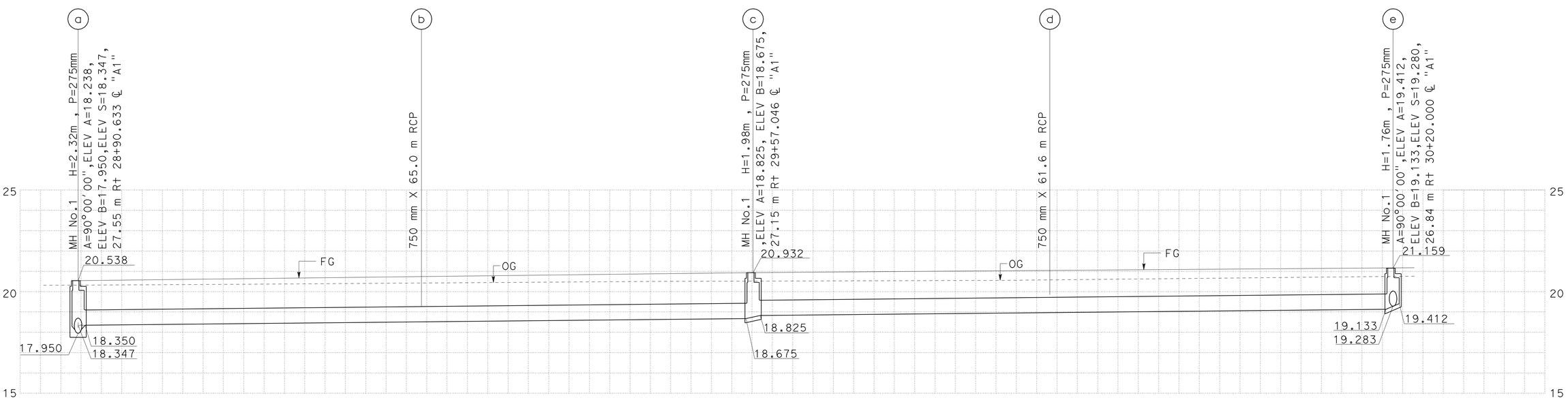

DRAINAGE SYSTEM No. 84

ALL DIMENSIONS ARE IN METERS UNLESS SHOWN OTHERWISE

DRAINAGE PROFILES

SCALE 1:200 Horiz
1:100 Vert

DP-16

CALCULATED-DESIGNED BY	S. M. TAN W. Y. LEE
CHECKED BY	R. M. SASAKI
REVISED BY	
DATE REVISED	
FUNCTIONAL SUPERVISOR	RALPH M. SASAKI

STATE OF CALIFORNIA - DEPARTMENT OF TRANSPORTATION
Caltrans
HYDRAULICS

LAST REVISION 00-00-00
DATE PLOTTED => 22-JUN-2010
TIME PLOTTED => 10:10

Dist	COUNTY	ROUTE	KILOMETER POST TOTAL PROJECT	SHEET No.	TOTAL SHEETS
07	LA	5	2.9/4.9	192	1082

Caltrans Metric

REGISTERED CIVIL ENGINEER 12-23-09 DATE

6-21-10
PLANS APPROVAL DATE

REGISTERED PROFESSIONAL ENGINEER RALPH M. SASAKI No. 30849 Exp. 3/31/10 CIVIL STATE OF CALIFORNIA

THE STATE OF CALIFORNIA OR ITS OFFICERS OR AGENTS SHALL NOT BE RESPONSIBLE FOR THE ACCURACY OR COMPLETENESS OF ELECTRONIC COPIES OF THIS PLAN SHEET.

NOTE: THE CONTRACTOR SHALL VERIFY LOCATIONS AND ELEVATIONS OF EXISTING DRAINAGE SYSTEMS BEFORE COMMENCEMENT OF WORK.

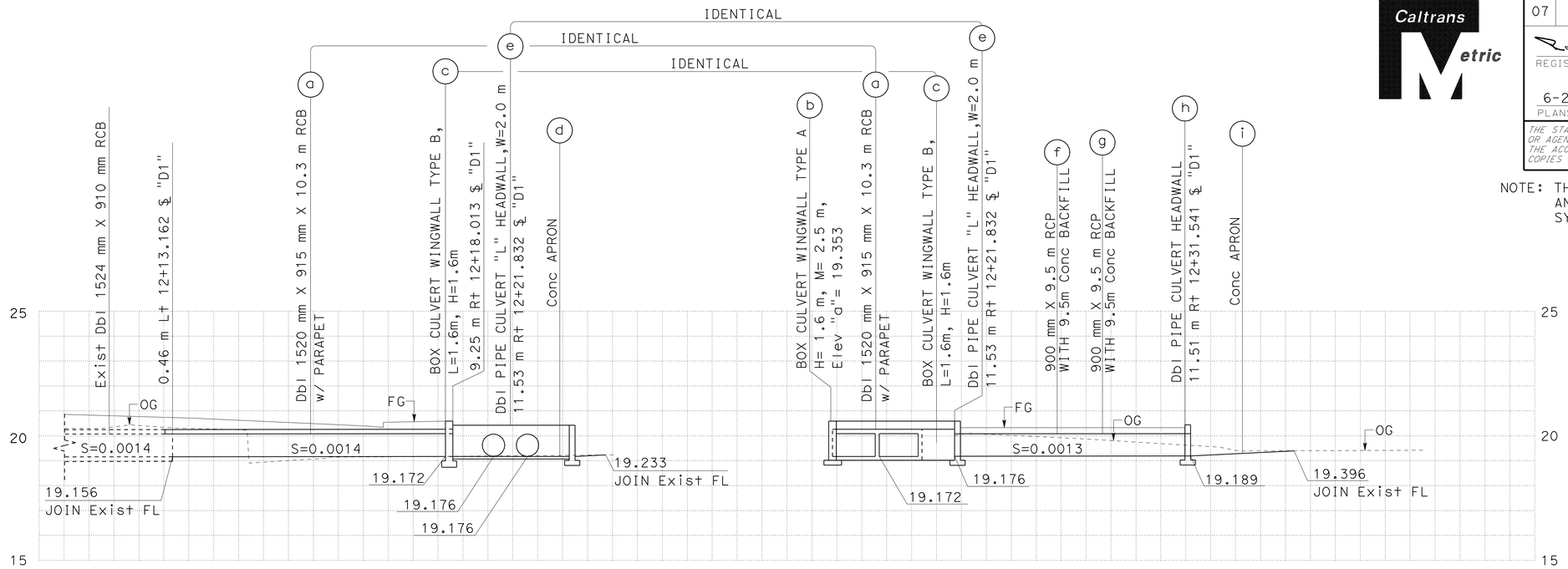

DRAINAGE SYSTEM No. 89

SCALE 1:100 Horiz
1:100 Vert

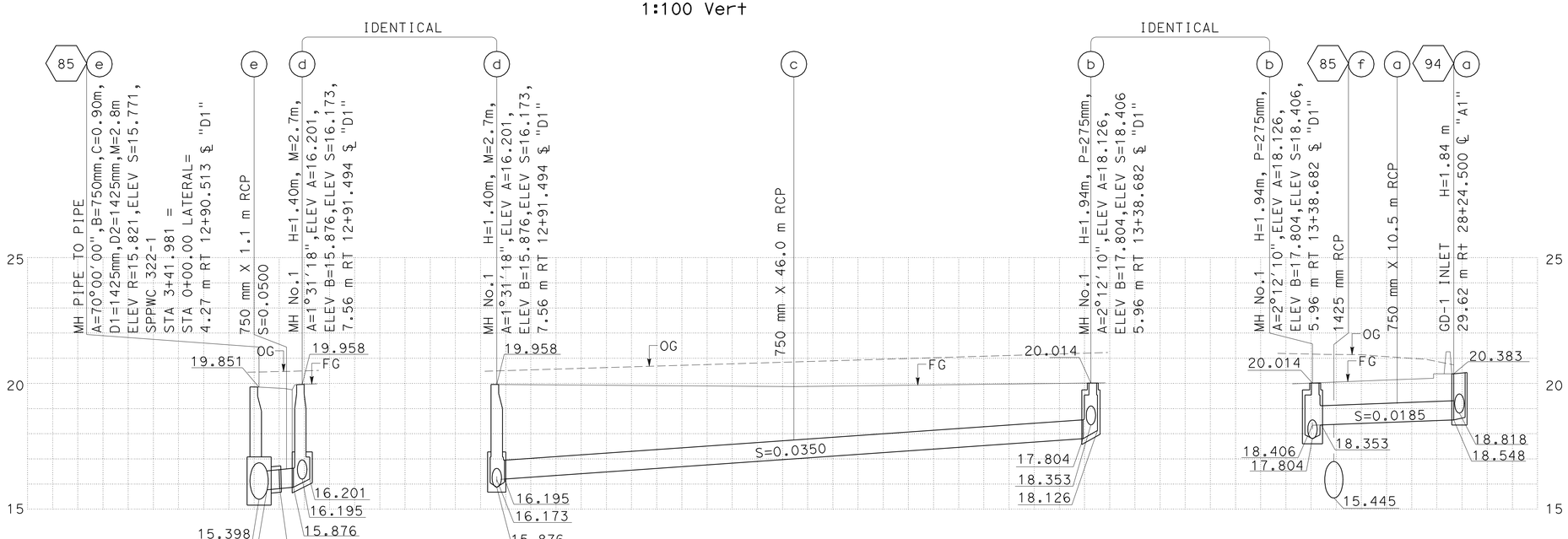

DRAINAGE SYSTEM No. 90

SCALE 1:200 Horiz
1:100 Vert

ALL DIMENSIONS ARE IN METERS UNLESS SHOWN OTHERWISE

DRAINAGE PROFILES

SCALE AS SHOWN

DP-17

STATE OF CALIFORNIA - DEPARTMENT OF TRANSPORTATION
Caltrans
HYDRAULICS

FUNCTIONAL SUPERVISOR: RALPH M. SASAKI
CALCULATED-DESIGNED BY: S. M. TAN, W. Y. LEE
CHECKED BY: R. M. SASAKI
REVISED BY
DATE REVISED

LAST REVISION 00-00-00
DATE PLOTTED => 01-FEB-2011
TIME PLOTTED => 11:38

Dist	COUNTY	ROUTE	KILOMETER POST TOTAL PROJECT	SHEET No.	TOTAL SHEETS
07	LA	5	2.9/4.9	193	1082

REGISTERED CIVIL ENGINEER 12-23-09 DATE

6-21-10
PLANS APPROVAL DATE

REGISTERED PROFESSIONAL ENGINEER RALPH M. SASAKI No. 30849 Exp. 3/31/10 CIVIL STATE OF CALIFORNIA

THE STATE OF CALIFORNIA OR ITS OFFICERS OR AGENTS SHALL NOT BE RESPONSIBLE FOR THE ACCURACY OR COMPLETENESS OF ELECTRONIC COPIES OF THIS PLAN SHEET.

NOTE: THE CONTRACTOR SHALL VERIFY LOCATIONS AND ELEVATIONS OF EXISTING DRAINAGE SYSTEMS BEFORE COMMENCEMENT OF WORK.

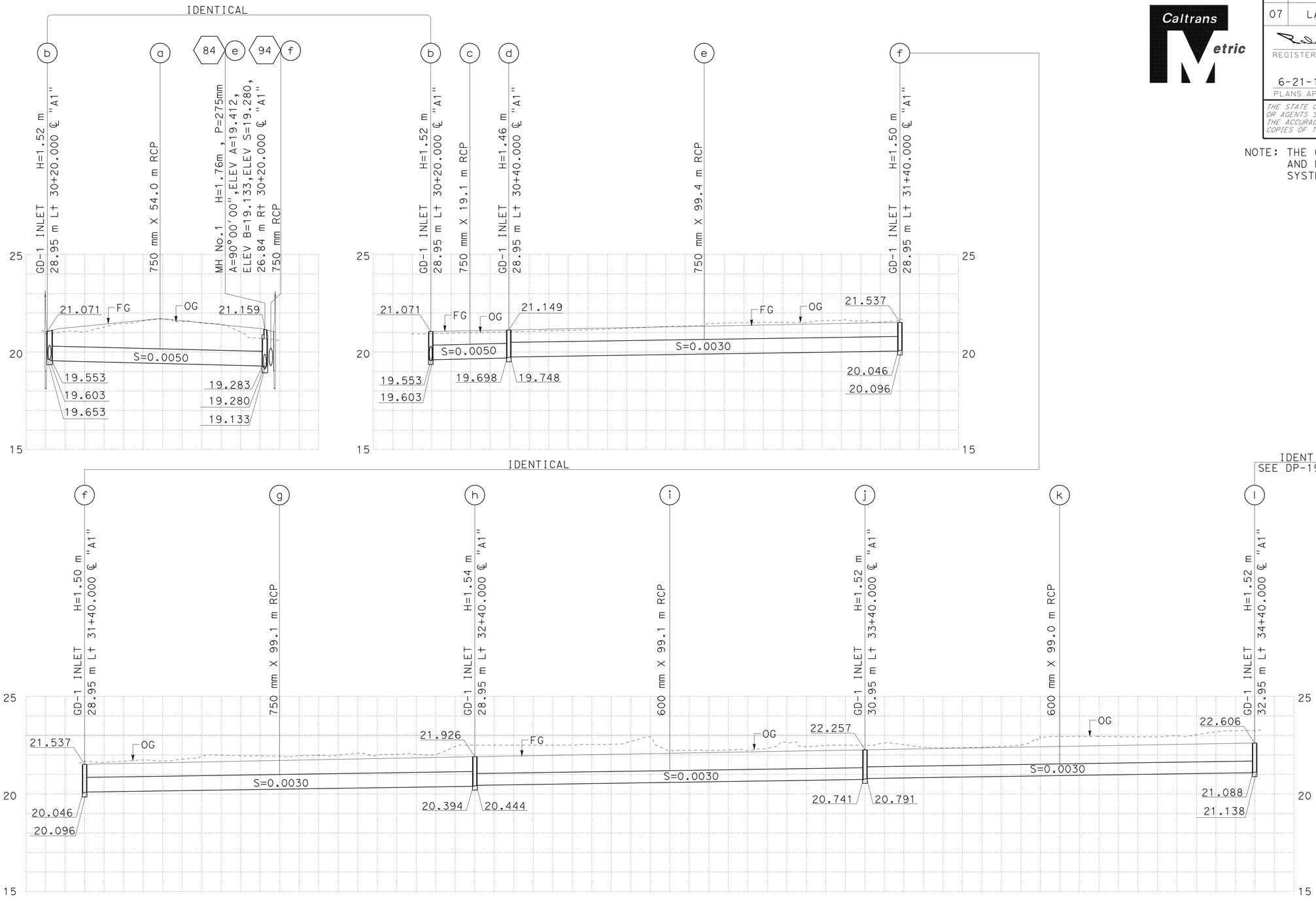

DRAINAGE SYSTEM No. 93

ALL DIMENSIONS ARE IN METERS UNLESS SHOWN OTHERWISE

DRAINAGE PROFILES

SCALE 1:500 Horiz
1:100 Vert

DP-18

STATE OF CALIFORNIA - DEPARTMENT OF TRANSPORTATION
Caltrans
HYDRAULICS

FUNCTIONAL SUPERVISOR: RALPH M. SASAKI
CALCULATED-DESIGNED BY: S. M. TAN, W. Y. LEE
CHECKED BY: R. M. SASAKI
REVISED BY / DATE REVISED

LAST REVISION 00-00-00 | DATE PLOTTED => 22-JUN-2010 | TIME PLOTTED => 10:10

Dist	COUNTY	ROUTE	KILOMETER POST TOTAL PROJECT	SHEET No.	TOTAL SHEETS
07	LA	5	2.9/4.9	194	1082

Ralph M. Sasaki 12-23-09
REGISTERED CIVIL ENGINEER DATE

6-21-10
PLANS APPROVAL DATE

REGISTERED PROFESSIONAL ENGINEER RALPH M. SASAKI No. 30849 Exp. 3/31/10 CIVIL STATE OF CALIFORNIA

THE STATE OF CALIFORNIA OR ITS OFFICERS OR AGENTS SHALL NOT BE RESPONSIBLE FOR THE ACCURACY OR COMPLETENESS OF ELECTRONIC COPIES OF THIS PLAN SHEET.

NOTE: THE CONTRACTOR SHALL VERIFY LOCATIONS AND ELEVATIONS OF EXISTING DRAINAGE SYSTEMS BEFORE COMMENCEMENT OF WORK.

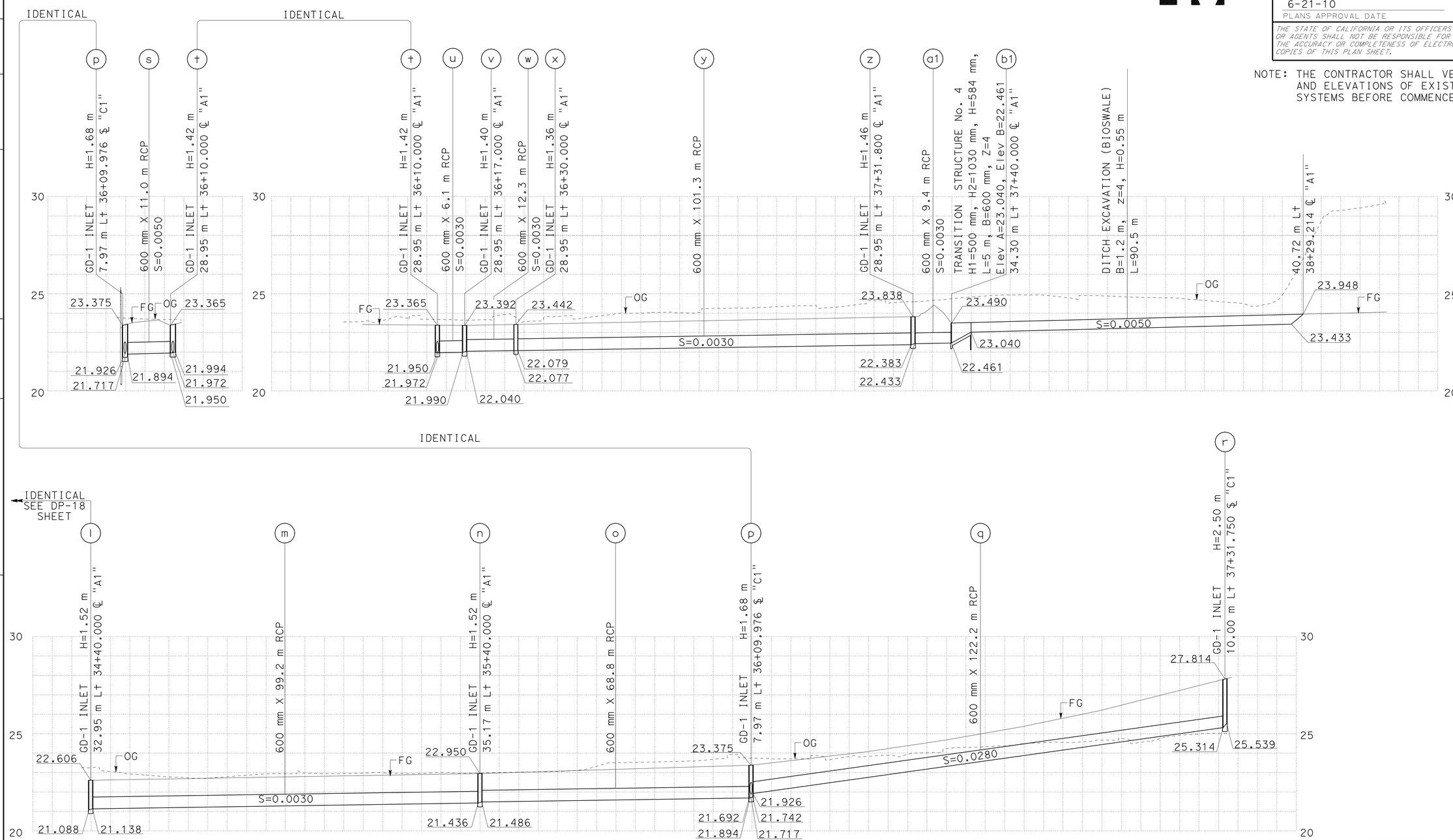

IDENTICAL

ALL DIMENSIONS ARE IN METERS UNLESS SHOWN OTHERWISE

DRAINAGE SYSTEM No. 93

DRAINAGE PROFILES

SCALE 1:500 Horiz
1:100 Vert

DP-19

STATE OF CALIFORNIA - DEPARTMENT OF TRANSPORTATION
Caltrans
HYDRAULICS

FUNCTIONAL SUPERVISOR: RALPH M. SASAKI
CALCULATED-DESIGNED BY: S. M. TAN, W. Y. LEE
CHECKED BY: R. M. SASAKI
REVISED BY / DATE REVISED

LAST REVISION 00-00-00
DATE PLOTTED => 29-JUN-2010
TIME PLOTTED => 09:07

Dist	COUNTY	ROUTE	KILOMETER POST TOTAL PROJECT	SHEET No.	TOTAL SHEETS
07	LA	5	2.9/4.9	195	1082

Caltrans Metric

12-23-09
REGISTERED CIVIL ENGINEER DATE

6-21-10
PLANS APPROVAL DATE

REGISTERED PROFESSIONAL ENGINEER
RALPH M. SASAKI
No. 30849
Exp. 3/31/10
CIVIL
STATE OF CALIFORNIA

THE STATE OF CALIFORNIA OR ITS OFFICERS OR AGENTS SHALL NOT BE RESPONSIBLE FOR THE ACCURACY OR COMPLETENESS OF ELECTRONIC COPIES OF THIS PLAN SHEET.

NOTE: THE CONTRACTOR SHALL VERIFY LOCATIONS AND ELEVATIONS OF EXISTING DRAINAGE SYSTEMS BEFORE COMMENCEMENT OF WORK.

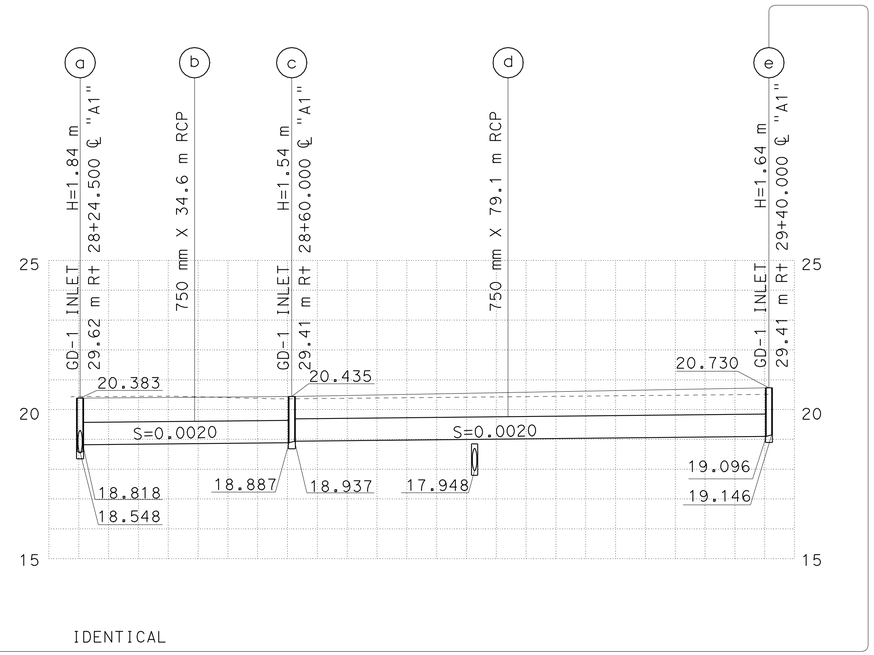

IDENTICAL

IDENTICAL
SEE DP-21 SHEET

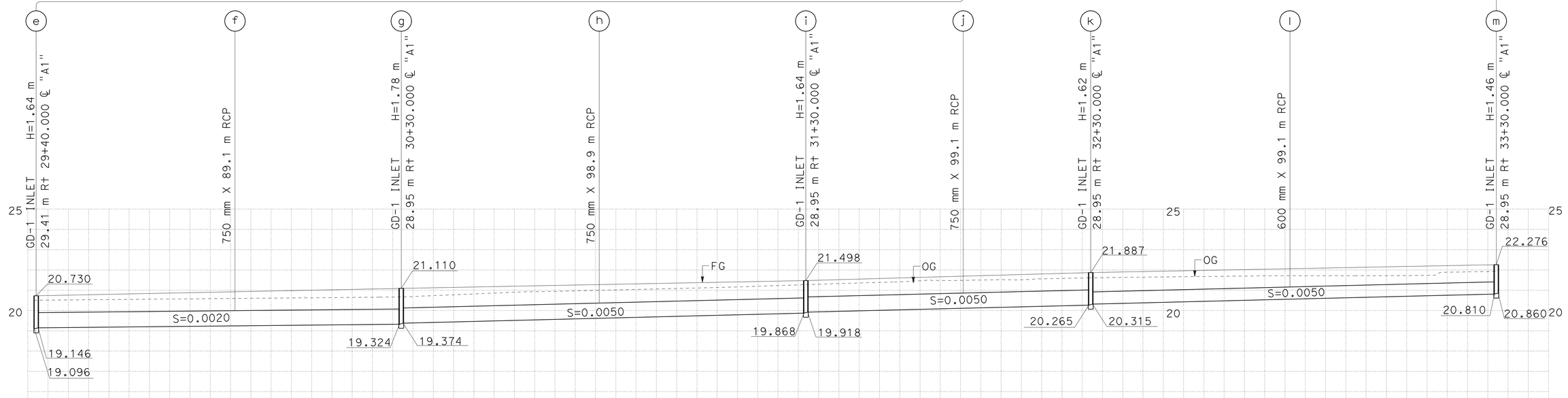

ALL DIMENSIONS ARE IN METERS UNLESS SHOWN OTHERWISE

DRAINAGE SYSTEM No. 94

DRAINAGE PROFILES

SCALE 1:500 Horiz
1:100 Vert

DP-20

STATE OF CALIFORNIA - DEPARTMENT OF TRANSPORTATION
Caltrans
HYDRAULICS

FUNCTIONAL SUPERVISOR: RALPH M. SASAKI
CALCULATED-DESIGNED BY: S. M. TAN, W. Y. LEE
CHECKED BY: R. M. SASAKI
REVISED BY / DATE REVISED

LAST REVISION 00-00-00
DATE PLOTTED => 22-JUN-2010
TIME PLOTTED => 10:11

BORDER LAST REVISED 3/1/2007
RELATIVE BORDER SCALE IS IN MILLIMETERS 0 20 40 60 80
USERNAME => trmikesl
DGN FILE => 72159cib020.dgn
CU 07312
EA 2159C1

Dist	COUNTY	ROUTE	KILOMETER POST TOTAL PROJECT	SHEET No.	TOTAL SHEETS
07	LA	5	2.9/4.9	196	1082

Caltrans Metric

REGISTERED CIVIL ENGINEER — DATE 12-23-09

PLANS APPROVAL DATE 6-21-10

REGISTERED PROFESSIONAL ENGINEER — RALPH M. SASAKI — No. 30849 — Exp. 3/31/10 — CIVIL — STATE OF CALIFORNIA

THE STATE OF CALIFORNIA OR ITS OFFICERS OR AGENTS SHALL NOT BE RESPONSIBLE FOR THE ACCURACY OR COMPLETENESS OF ELECTRONIC COPIES OF THIS PLAN SHEET.

NOTE: THE CONTRACTOR SHALL VERIFY LOCATIONS AND ELEVATIONS OF EXISTING DRAINAGE SYSTEMS BEFORE COMMENCEMENT OF WORK.

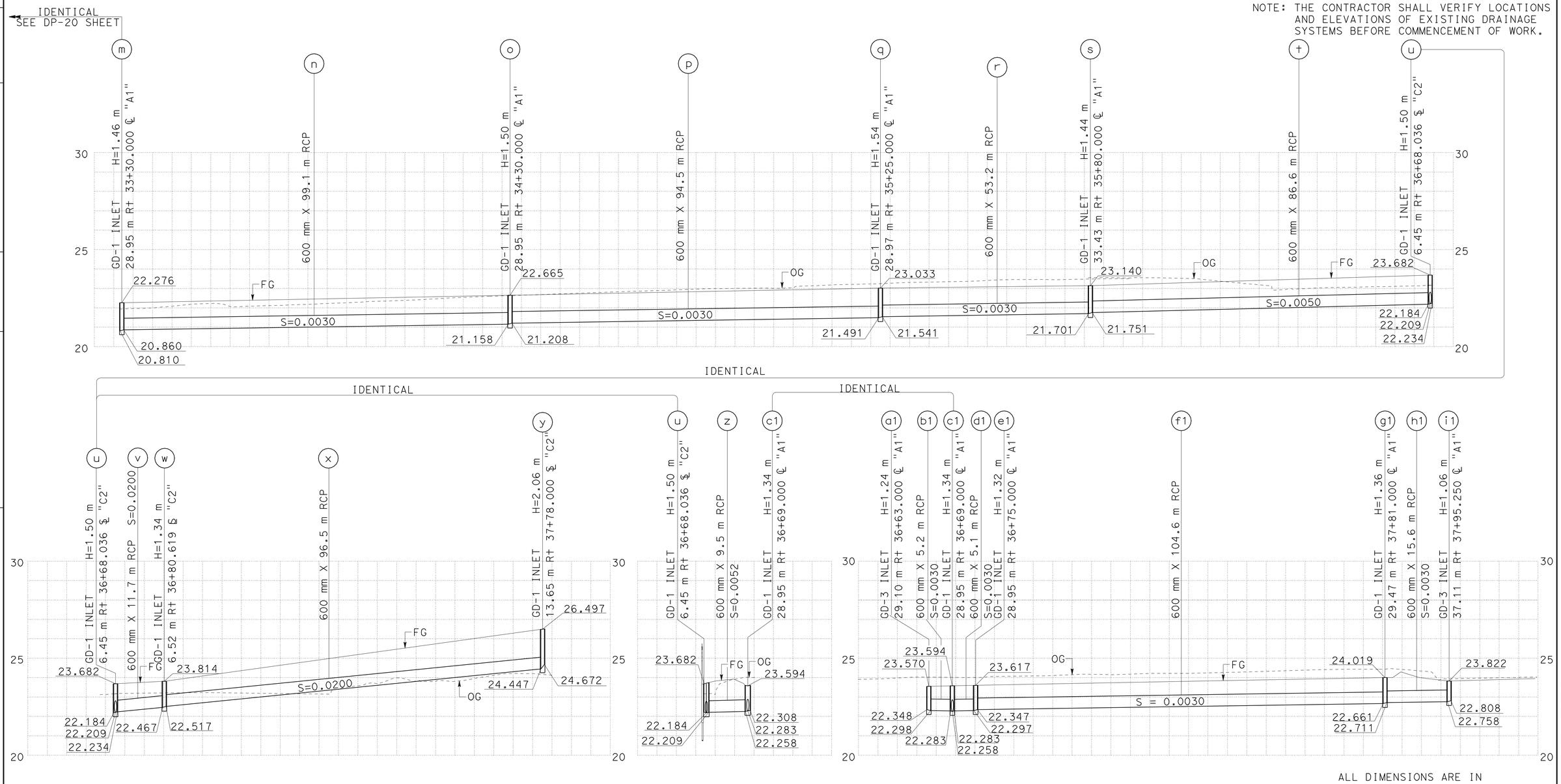

ALL DIMENSIONS ARE IN METERS UNLESS SHOWN OTHERWISE

DRAINAGE SYSTEM No. 94

DRAINAGE PROFILES

SCALE 1:500 Horiz
1:100 Vert

DP-21

REVISED BY	DATE REVISED

CALCULATED-DESIGNED BY: S. M. TAN, W. Y. LEE
CHECKED BY: R. M. SASAKI
FUNCTIONAL SUPERVISOR: RALPH M. SASAKI

STATE OF CALIFORNIA - DEPARTMENT OF TRANSPORTATION
Caltrans
HYDRAULICS

LAST REVISION 00-00-00 | DATE PLOTTED => 22-JUN-2010 | TIME PLOTTED => 10:11

Dist	COUNTY	ROUTE	KILOMETER POST TOTAL PROJECT	SHEET No.	TOTAL SHEETS
07	LA	5	2.9/4.9	197	1082

REGISTERED CIVIL ENGINEER DATE 12-23-09

6-21-10
PLANS APPROVAL DATE

REGISTERED PROFESSIONAL ENGINEER RALPH M. SASAKI No. 30849 Exp. 3/31/10 CIVIL STATE OF CALIFORNIA

THE STATE OF CALIFORNIA OR ITS OFFICERS OR AGENTS SHALL NOT BE RESPONSIBLE FOR THE ACCURACY OR COMPLETENESS OF ELECTRONIC COPIES OF THIS PLAN SHEET.

NOTE: THE CONTRACTOR SHALL VERIFY LOCATIONS AND ELEVATIONS OF EXISTING DRAINAGE SYSTEMS BEFORE COMMENCEMENT OF WORK.

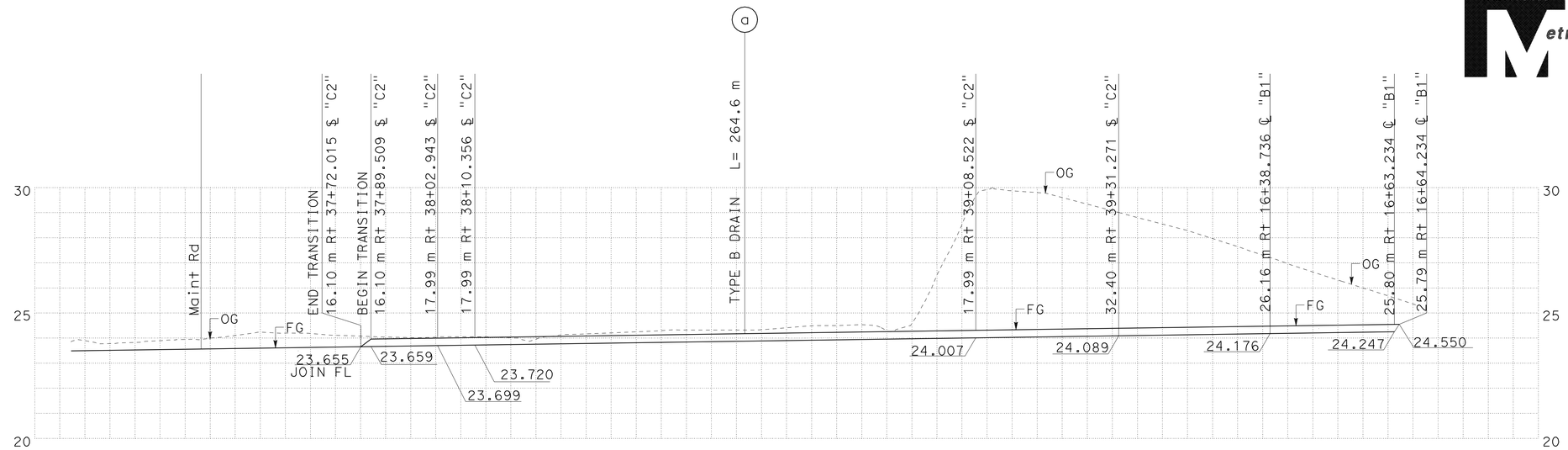

DRAINAGE SYSTEM No. 103

SCALE 1:500 Horiz
1:100 Vert

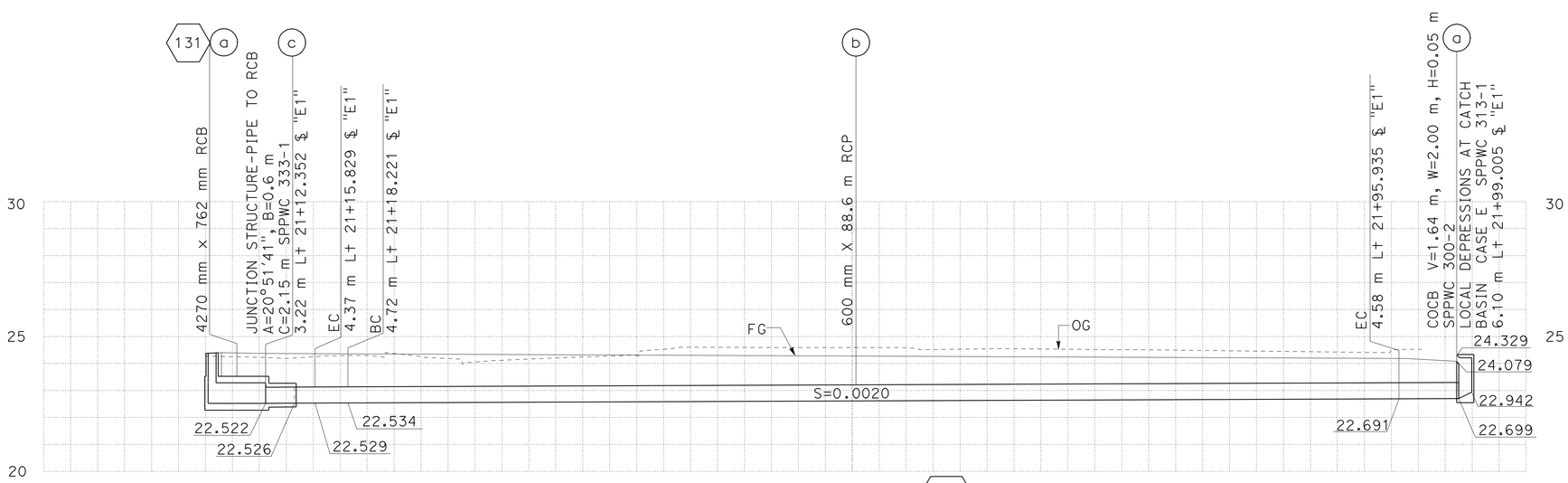

DRAINAGE SYSTEM No. 107

SCALE 1:200 Horiz
1:100 Vert

ALL DIMENSIONS ARE IN METERS UNLESS SHOWN OTHERWISE

DRAINAGE PROFILES

SCALE AS SHOWN

DP-22

STATE OF CALIFORNIA - DEPARTMENT OF TRANSPORTATION
Caltrans
HYDRAULICS

FUNCTIONAL SUPERVISOR: RALPH M. SASAKI
CALCULATED-DESIGNED BY: S. M. TAN, W. Y. LEE
CHECKED BY: R. M. SASAKI
REVISED BY
DATE REVISED

LAST REVISION 00-00-00 DATE PLOTTED => 22-JUN-2010 TIME PLOTTED => 10:11

Dist	COUNTY	ROUTE	KILOMETER POST TOTAL PROJECT	SHEET No.	TOTAL SHEETS
07	LA	5	2.9/4.9	198	1082

Caltrans Metric

REGISTERED CIVIL ENGINEER DATE 12-23-09

PLANS APPROVAL DATE 6-21-10

REGISTERED PROFESSIONAL ENGINEER RALPH M. SASAKI No. 30849 Exp. 3/31/10 CIVIL STATE OF CALIFORNIA

THE STATE OF CALIFORNIA OR ITS OFFICERS OR AGENTS SHALL NOT BE RESPONSIBLE FOR THE ACCURACY OR COMPLETENESS OF ELECTRONIC COPIES OF THIS PLAN SHEET.

NOTE: THE CONTRACTOR SHALL VERIFY LOCATIONS AND ELEVATIONS OF EXISTING DRAINAGE SYSTEMS BEFORE COMMENCEMENT OF WORK.

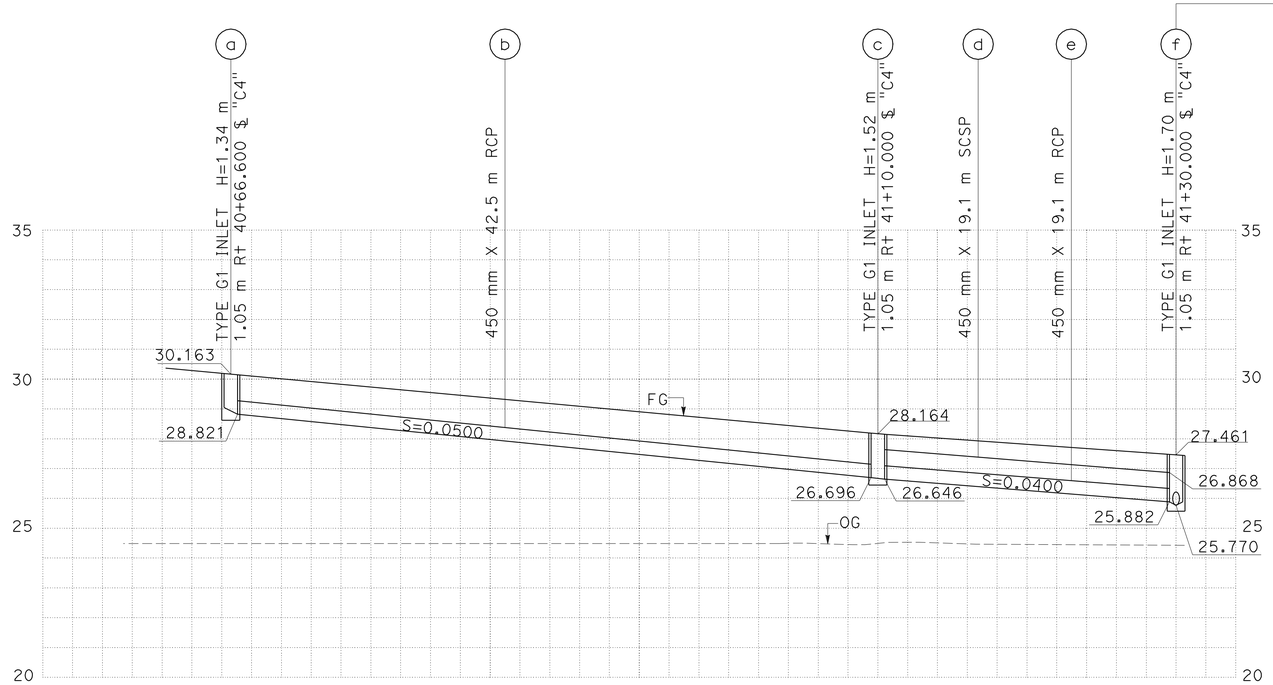

DRAINAGE SYSTEM No. 108

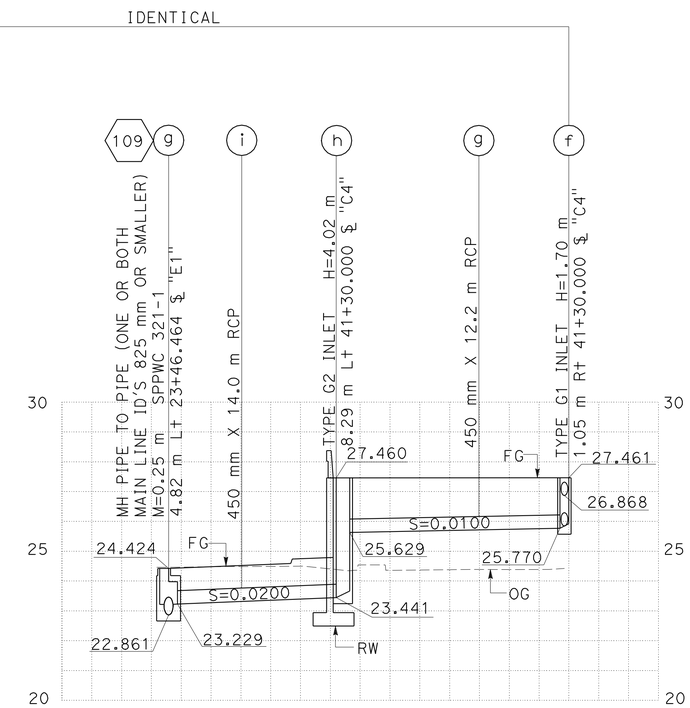

DRAINAGE SYSTEM No. 108

ALL DIMENSIONS ARE IN METERS UNLESS SHOWN OTHERWISE

DRAINAGE PROFILES

SCALE 1:200 Horiz
1:100 Vert

DP-23

STATE OF CALIFORNIA - DEPARTMENT OF TRANSPORTATION
Caltrans
HYDRAULICS

FUNCTIONAL SUPERVISOR: RALPH M. SASAKI

CALCULATED-DESIGNED BY: S. M. TAN / W. Y. LEE
CHECKED BY: R. M. SASAKI
REVISED BY
DATE REVISED

LAST REVISION 00-00-00
DATE PLOTTED => 22-JUN-2010
TIME PLOTTED => 10:11

Dist	COUNTY	ROUTE	KILOMETER POST TOTAL PROJECT	SHEET No.	TOTAL SHEETS
07	LA	5	2.9/4.9	199	1082

Ralph M. Sasaki 12-23-09
REGISTERED CIVIL ENGINEER DATE

6-21-10
PLANS APPROVAL DATE

REGISTERED PROFESSIONAL ENGINEER RALPH M. SASAKI No. 30849 Exp. 3/31/10 CIVIL STATE OF CALIFORNIA

THE STATE OF CALIFORNIA OR ITS OFFICERS OR AGENTS SHALL NOT BE RESPONSIBLE FOR THE ACCURACY OR COMPLETENESS OF ELECTRONIC COPIES OF THIS PLAN SHEET.

Caltrans Metric

NOTE: THE CONTRACTOR SHALL VERIFY LOCATIONS AND ELEVATIONS OF EXISTING DRAINAGE SYSTEMS BEFORE COMMENCEMENT OF WORK.

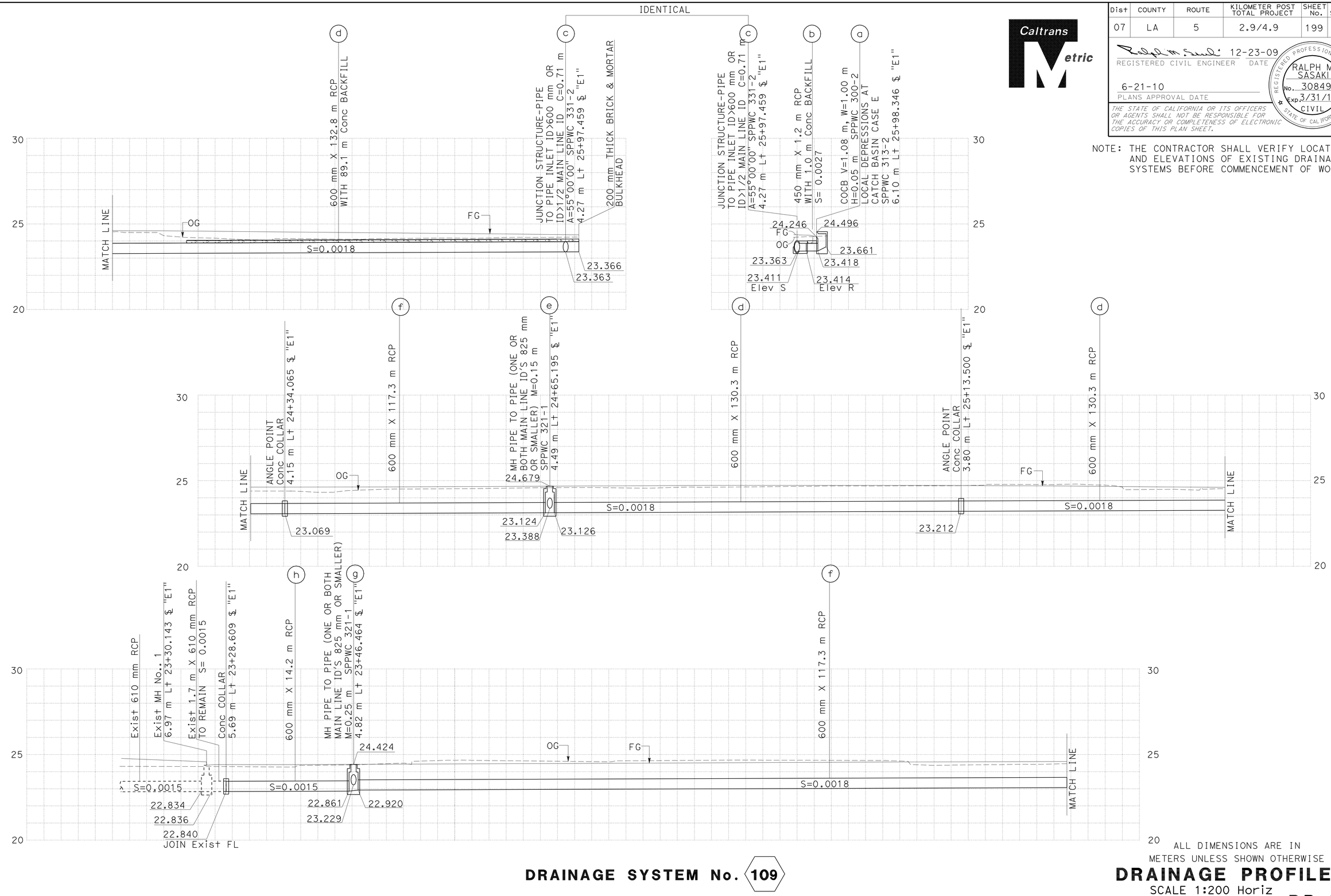

ALL DIMENSIONS ARE IN METERS UNLESS SHOWN OTHERWISE

DRAINAGE SYSTEM No. 109

DRAINAGE PROFILES

SCALE 1:200 Horiz
1:100 Vert

DP-24

STATE OF CALIFORNIA - DEPARTMENT OF TRANSPORTATION
Caltrans
HYDRAULICS

FUNCTIONAL SUPERVISOR: RALPH M. SASAKI
CALCULATED-DESIGNED BY: S. M. TAN, W. Y. LEE
CHECKED BY: R. M. SASAKI
REVISED BY
DATE REVISED

LAST REVISION 00-00-00
DATE PLOTTED => 22-JUN-2010
TIME PLOTTED => 10:11

Dist	COUNTY	ROUTE	KILOMETER POST TOTAL PROJECT	SHEET No.	TOTAL SHEETS
07	LA	5	2.9/4.9	200	1082

Caltrans Metric

12-23-09
REGISTERED CIVIL ENGINEER DATE

6-21-10
PLANS APPROVAL DATE

REGISTERED PROFESSIONAL ENGINEER RALPH M. SASAKI No. 30849 Exp. 3/31/10 CIVIL STATE OF CALIFORNIA

THE STATE OF CALIFORNIA OR ITS OFFICERS OR AGENTS SHALL NOT BE RESPONSIBLE FOR THE ACCURACY OR COMPLETENESS OF ELECTRONIC COPIES OF THIS PLAN SHEET.

NOTE: THE CONTRACTOR SHALL VERIFY LOCATIONS AND ELEVATIONS OF EXISTING DRAINAGE SYSTEMS BEFORE COMMENCEMENT OF WORK.

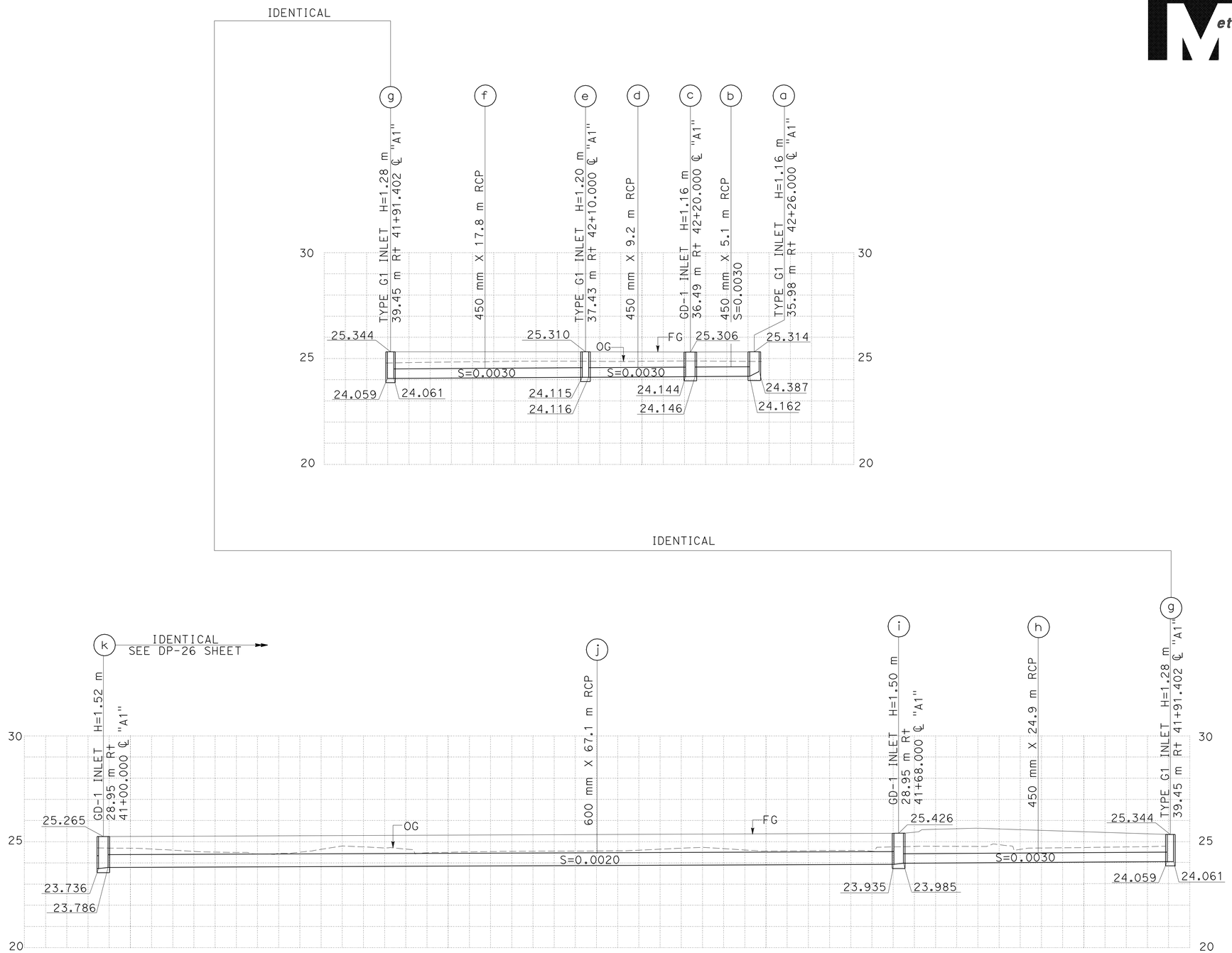

DRAINAGE SYSTEM No. 110

ALL DIMENSIONS ARE IN METERS UNLESS SHOWN OTHERWISE

DRAINAGE PROFILES

SCALE 1:200 Horiz
1:100 Vert

DP-25

STATE OF CALIFORNIA - DEPARTMENT OF TRANSPORTATION
Caltrans
HYDRAULICS

FUNCTIONAL SUPERVISOR: RALPH M. SASAKI
CALCULATED-DESIGNED BY: S. M. TAN, W. Y. LEE
CHECKED BY: R. M. SASAKI
REVISED BY / DATE REVISED

LAST REVISION 00-00-00
DATE PLOTTED => 22-JUN-2010
TIME PLOTTED => 10:11