DIST	COUNTY	ROUTE	POST MILES TOTAL PROJECT	SHEET No.	TOTAL SHEETS
07	LA	5	0.0/7.6	701	985

P. Vijitakula 12-28-12
REGISTERED CIVIL ENGINEER DATE

6-24-13
PLANS APPROVAL DATE

REGISTERED PROFESSIONAL ENGINEER P. VIJITAKULA No. C 54701 Exp. 12-31-13 CIVIL STATE OF CALIFORNIA

The State of California or its officers or agents shall not be responsible for the accuracy or completeness of electronic copies of this plan sheet.

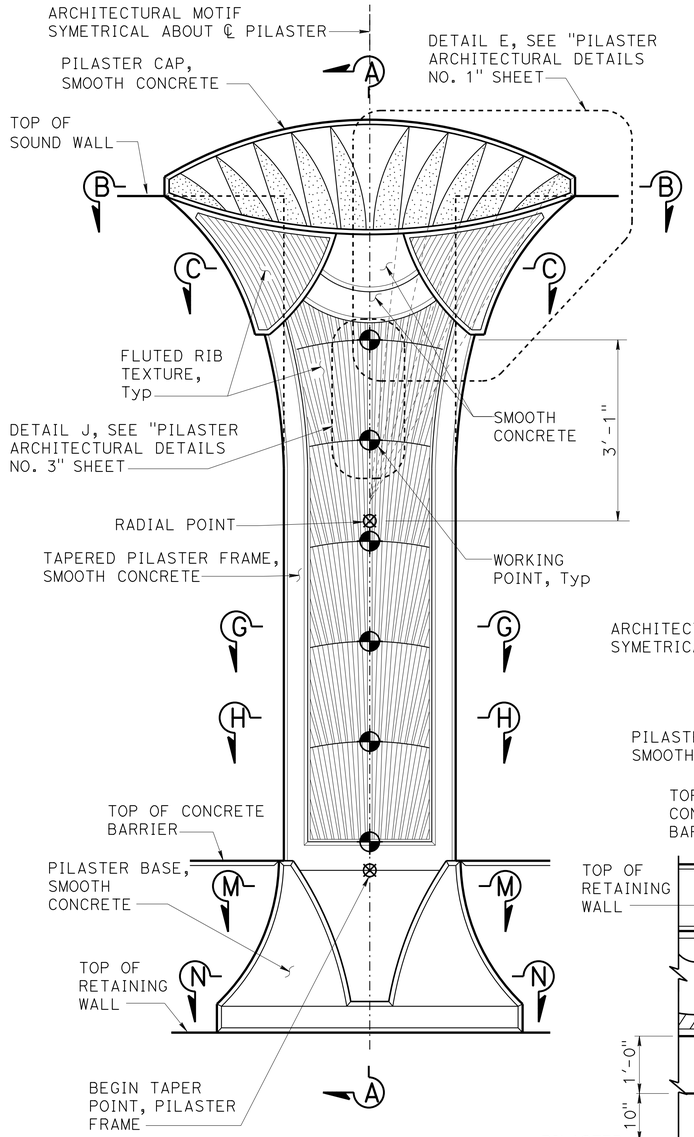

NOTE: For additional details not shown, see "14'-4" SOUND WALL - PILASTER ELEVATION" on "PILASTER ARCHITECTURAL DETAILS NO. 1" sheet.

FREEWAY SIDE

NOTES:

1. For "SECTION B-B", "SECTION C-C", "SECTION G-G","SECTION H-H" and "SECTION L-L", see "PILASTER ARCHITECTURAL DETAILS NO. 3" sheet.
2. For "SECTION M-M" and "SECTION N-N"' see "PILASTER ARCHITECTURAL DETAIL NO. 4" sheet.
3. All dimensions symetrical about ℄ pilaster.
4. Beveled edges are 45° unless otherwise noted.
5. All vertical dimensions are measured along the ℄ Pilaster (Pilaster shall be vertical).

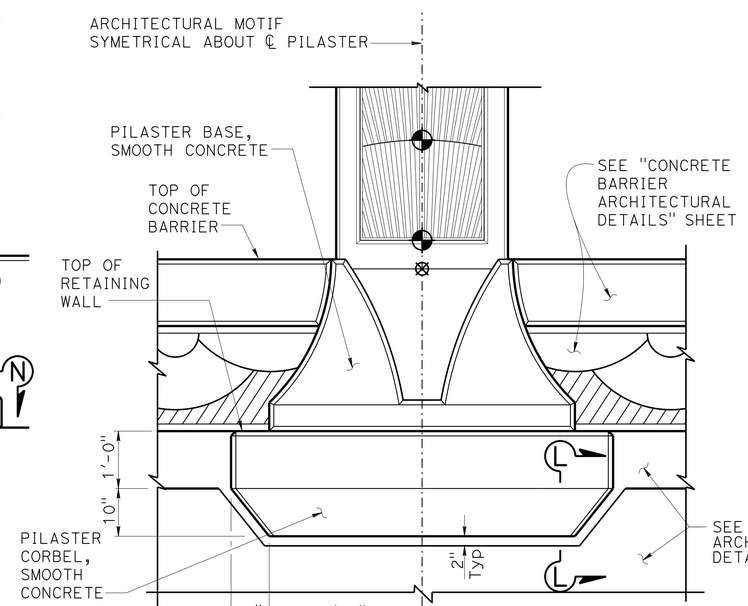

NOTE: For additional details not shown, see "FREEWAY SIDE" details.

BACK SIDE

PILASTER ARCHITECTURAL MOTIF

¾" = 1'-0"

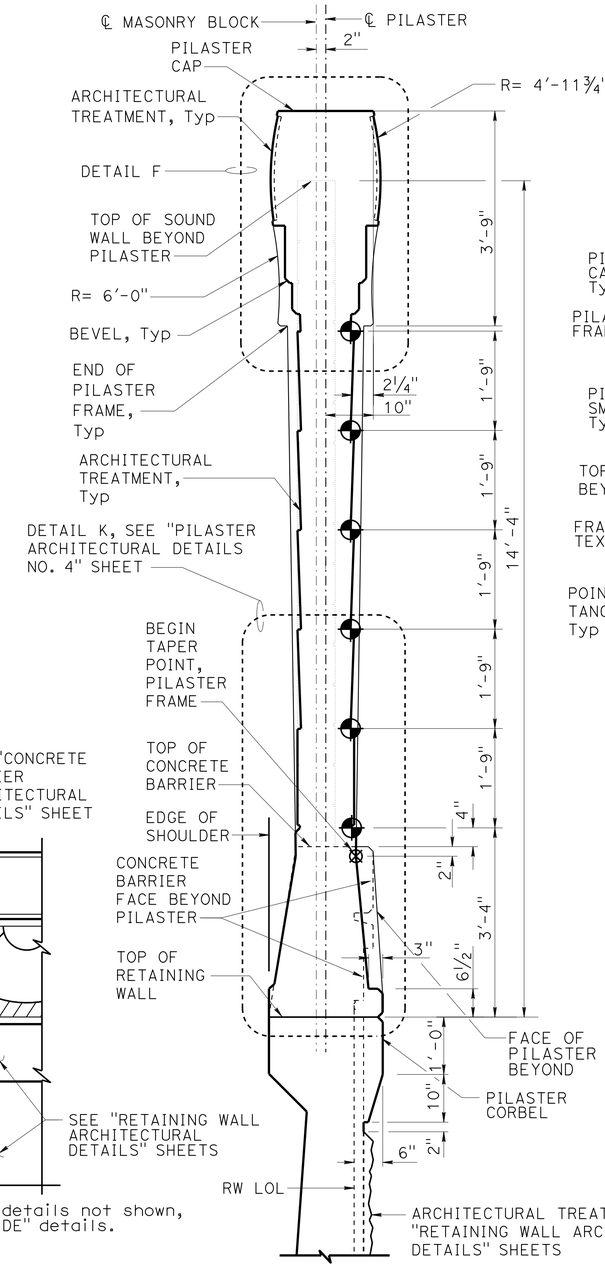

SECTION A-A

¾" = 1'-0"

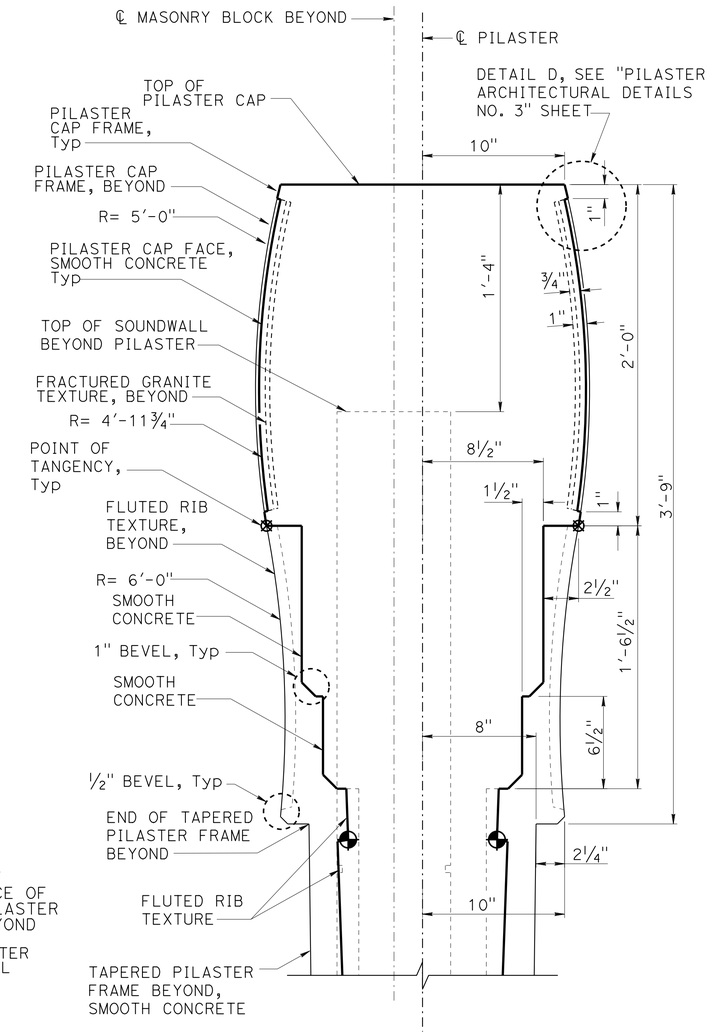

DETAIL F

NO SCALE

DESIGN	BY Isaac Tasabia	CHECKED Javier Chavez	
DETAILS	BY Jie Zhang / Jie Tang	CHECKED D. Sessions/P. Vijitakula	
QUANTITIES	BY Manode Kodsuntie	CHECKED Grant Schuster	

STATE OF CALIFORNIA
DEPARTMENT OF TRANSPORTATION

DIVISION OF ENGINEERING SERVICES
STRUCTURE DESIGN
DESIGN BRANCH 1

BRIDGE NO. 53-3063
POST MILE 5.92

ORR AND DAY ROAD OVERHEAD (REPLACE)
PILASTER ARCHITECTURAL DETAILS NO. 2

STRUCTURES DESIGN DETAIL SHEET (ENGLISH) (REV. 09-01-10)

ORIGINAL SCALE IN INCHES FOR REDUCED PLANS 0 1 2 3

UNIT: 3576
PROJECT NUMBER & PHASE: 07000018351
CONTRACT NO.: 07-215954

DISREGARD PRINTS BEARING EARLIER REVISION DATES

REVISION DATES 01/13/12 10/17/12 09/19/12

SHEET 30 OF 42

FILE => 53-3063-m-parch02.dgn

USERNAME => s124496 DATE PLOTTED => 26-JUN-2013 TIME PLOTTED => 16:16

DIST	COUNTY	ROUTE	POST MILES TOTAL PROJECT	SHEET No.	TOTAL SHEETS
07	LA	5	0.0/7.6	702	985

P. Vijitakula
REGISTERED CIVIL ENGINEER 12-28-12 DATE

6-24-13
PLANS APPROVAL DATE

REGISTERED PROFESSIONAL ENGINEER P. VIJITAKULA No. C 54701 Exp. 12-31-13 CIVIL STATE OF CALIFORNIA

The State of California or its officers or agents shall not be responsible for the accuracy or completeness of electronic copies of this plan sheet.

NOTES:

1. All notes and dimensions symetrical about ℄ pilaster.
2. Beveled edges are 45° unless otherwise noted.
3. For location of "DETAIL J", "DETAIL D" and "SECTION B-B", "SECTION C-C", "SECTION G-G", "SECTION H-H" and "SECTION L-L", see "PILASTER ARCHITECTURAL DETAILS NO. 2" sheet.
4. For retaining wall split slate texture, see "RETAINING WALL ARCHITECTURAL DETAILS" sheets.

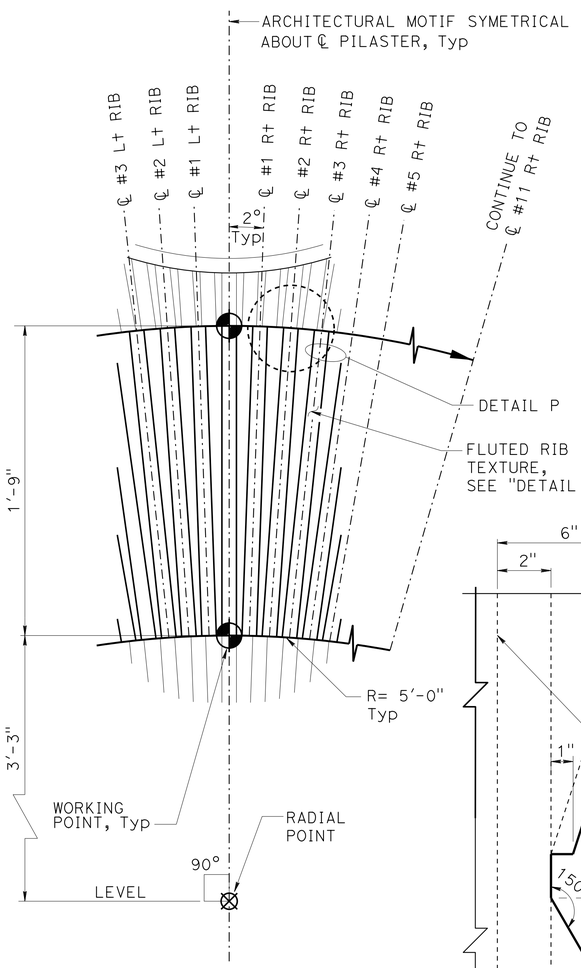

DETAIL J
NO SCALE

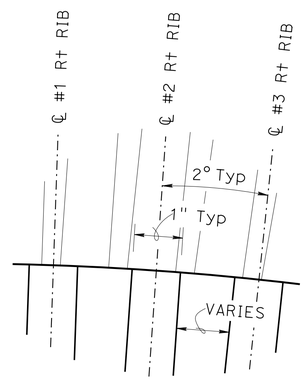

DETAIL P
NO SCALE

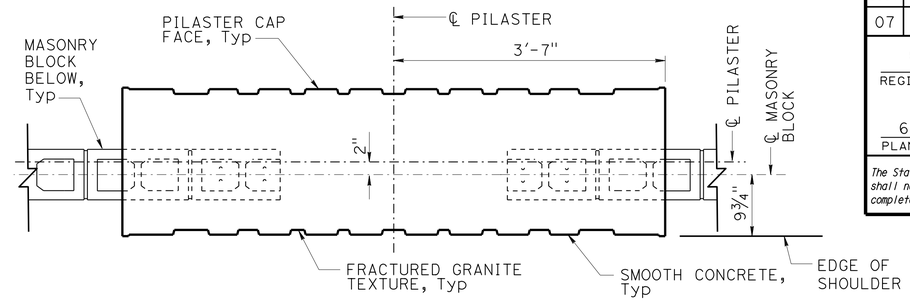

SECTION B-B
1" = 1'-0"

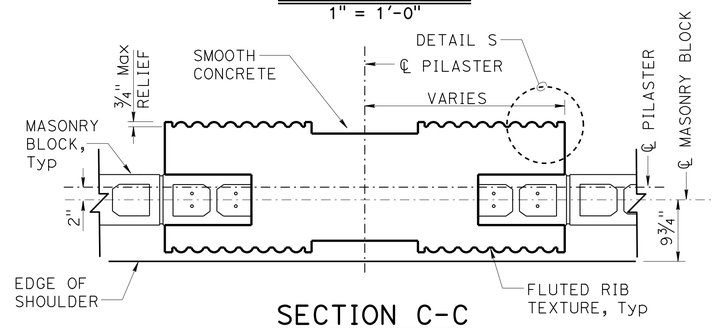

SECTION C-C
1" = 1'-0"

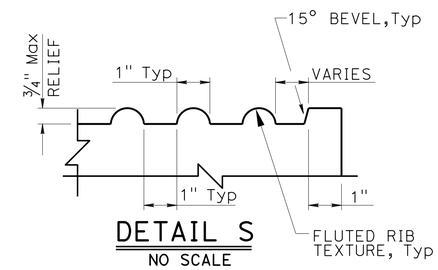

DETAIL S
NO SCALE

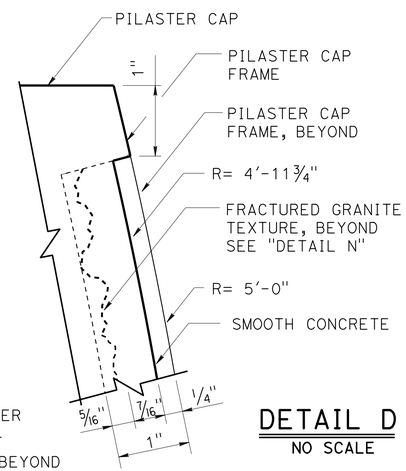

DETAIL D
NO SCALE

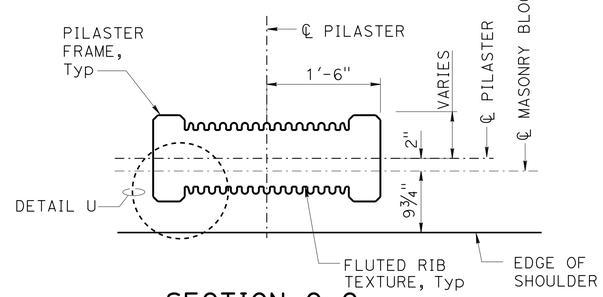

SECTION G-G
1" = 1'-0"

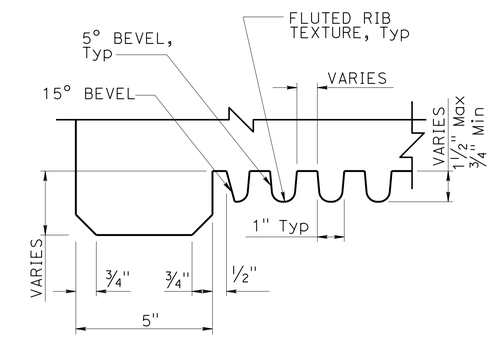

DETAIL U
NO SCALE

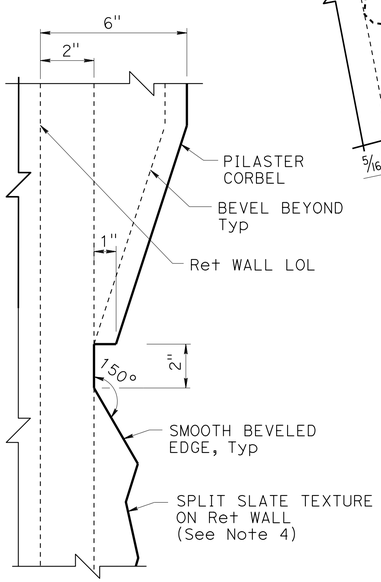

SECTION L-L
NO SCALE

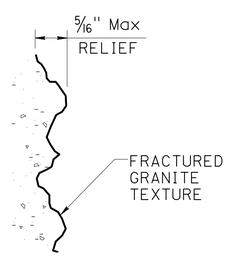

DETAIL N
NO SCALE

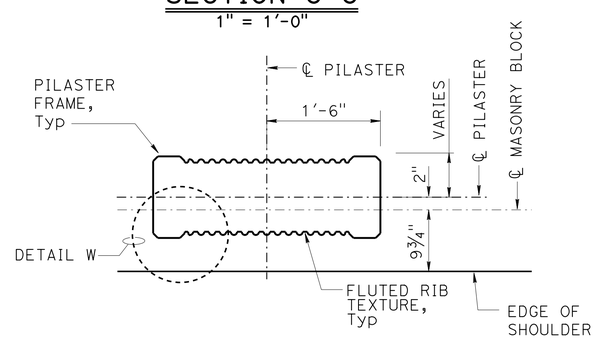

SECTION H-H
1" = 1'-0"

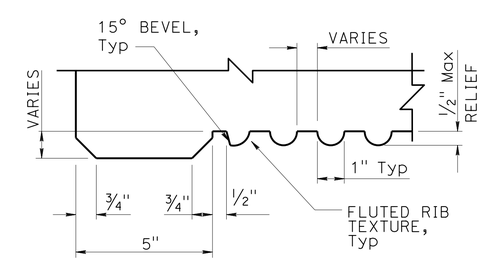

DETAIL W
NO SCALE

	BY	CHECKED
DESIGN	Isaac Tasabia	Javier Chavez
DETAILS	Jin Zhou / Jie Tang	D. Sessions/P. Vijitakula
QUANTITIES	Manode Kodsuntie	Grant Schuster

STATE OF CALIFORNIA
DEPARTMENT OF TRANSPORTATION

DIVISION OF ENGINEERING SERVICES
STRUCTURE DESIGN
DESIGN BRANCH 1

BRIDGE NO. 53-3063
POST MILE 5.92

ORR AND DAY ROAD OVERHEAD (REPLACE)
PILASTER ARCHITECTURAL DETAILS NO. 3

STRUCTURES DESIGN DETAIL SHEET (ENGLISH) (REV. 09-01-10)

ORIGINAL SCALE IN INCHES FOR REDUCED PLANS 0 1 2 3

UNIT: 3576
PROJECT NUMBER & PHASE: 07000018351
CONTRACT NO.: 07-215954

DISREGARD PRINTS BEARING EARLIER REVISION DATES

REVISION DATES 01/12/12 10/17/12 09/20/12

SHEET 31 OF 42

FILE => 53-3063-m-parch03.dgn

USERNAME => s124496 DATE PLOTTED => 26-JUN-2013 TIME PLOTTED => 16:16

DIST	COUNTY	ROUTE	POST MILES TOTAL PROJECT	SHEET No.	TOTAL SHEETS
07	LA	5	0.0/7.6	703	985

P. Vijitakula
REGISTERED CIVIL ENGINEER 12-28-12 DATE

6-24-13
PLANS APPROVAL DATE

REGISTERED PROFESSIONAL ENGINEER
P. VIJITAKULA
No. C 54701
Exp. 12-31-13
CIVIL
STATE OF CALIFORNIA

The State of California or its officers or agents shall not be responsible for the accuracy or completeness of electronic copies of this plan sheet.

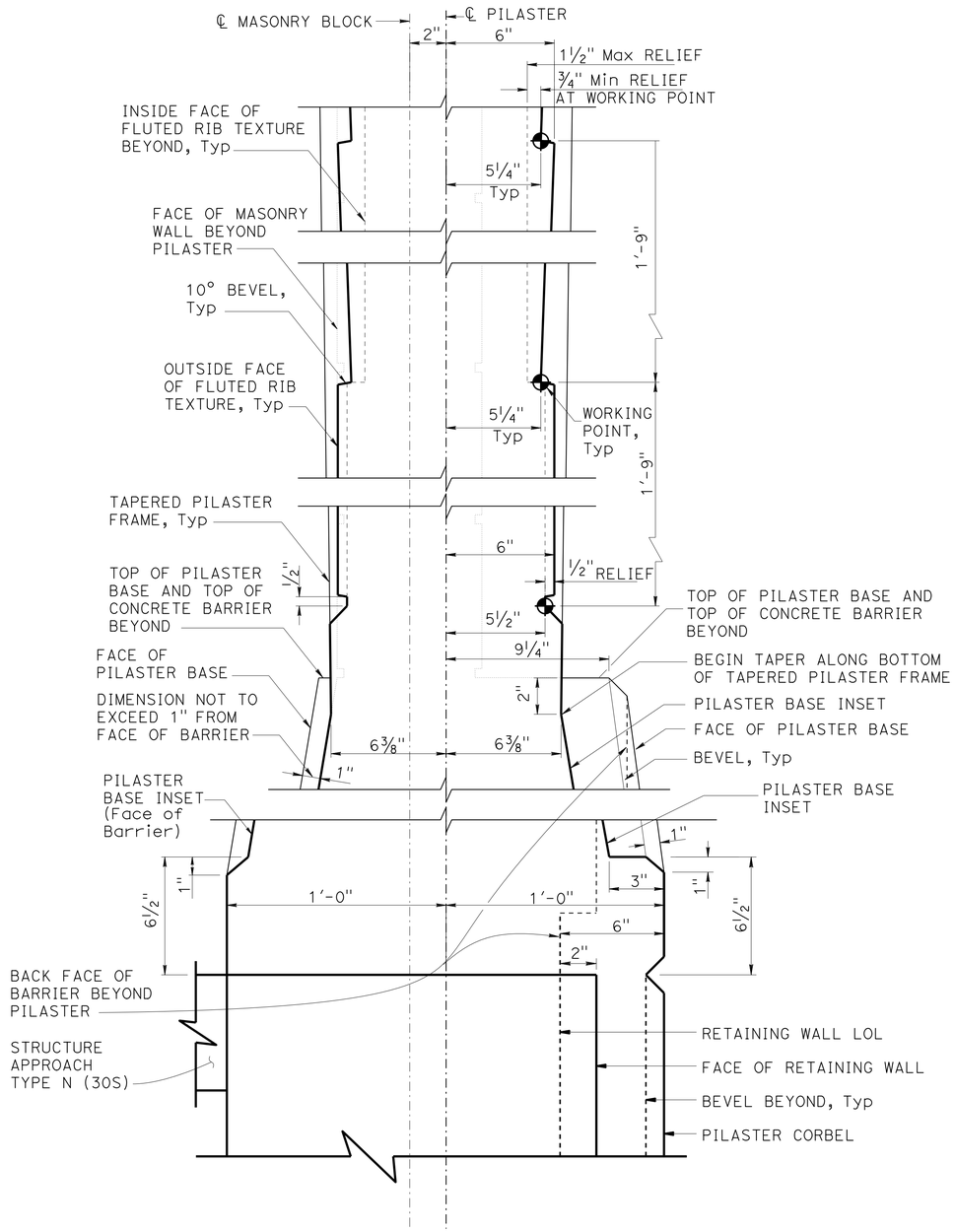

DETAIL K
NO SCALE

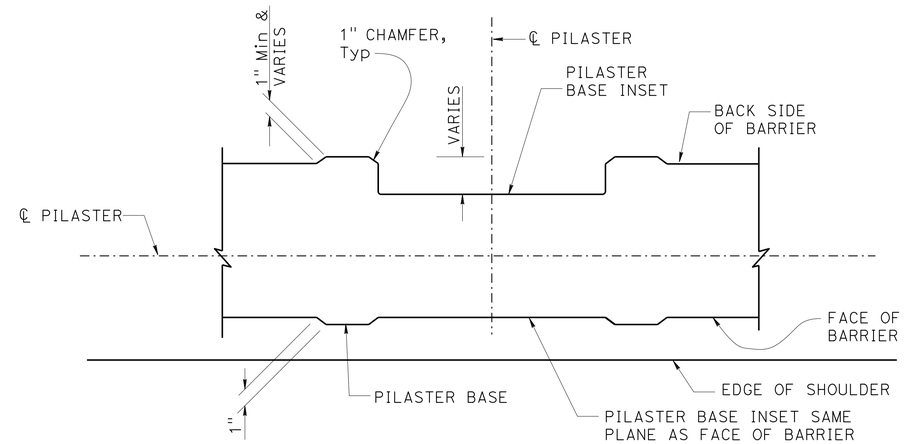

SECTION M-M
1½" = 1'-0"

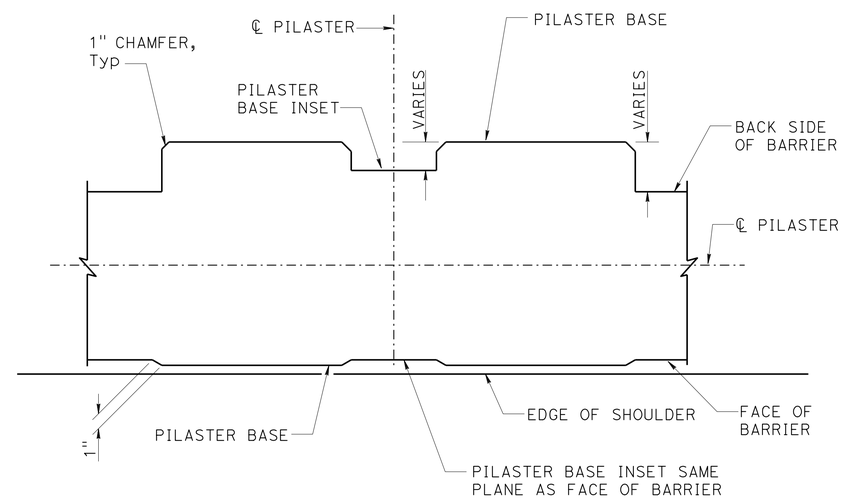

SECTION N-N
1½" = 1'-0"

NOTES:

1. For location of "SECTION M-M", "SECTION N-N" and "DETAIL K", see "PILASTER ARCHITECTURAL DETAILS NO. 2" sheet.
2. All dimensions symetrical about ℄ Pilaster.
3. All vertical dimension are measured along the ℄ Pilaster (Pilaster shall be vertical).

DESIGN	BY Isaac Tasabia	CHECKED Javier Chavez	
DETAILS	BY Jin Zhou / Jie Tang	CHECKED D. Sessions/P. Vijitakula	
QUANTITIES	BY Manode Kodsuntie	CHECKED Grant Schuster	

STATE OF CALIFORNIA
DEPARTMENT OF TRANSPORTATION

DIVISION OF ENGINEERING SERVICES
STRUCTURE DESIGN
DESIGN BRANCH 1

BRIDGE NO. 53-3063
POST MILE 5.92

ORR AND DAY ROAD OVERHEAD (REPLACE)
PILASTER ARCHITECTURAL DETAILS NO. 4

STRUCTURES DESIGN DETAIL SHEET (ENGLISH) (REV. 09-01-10)

ORIGINAL SCALE IN INCHES FOR REDUCED PLANS 0 1 2 3

UNIT: 3576
PROJECT NUMBER & PHASE: 07000018351
CONTRACT NO.: 07-215954

DISREGARD PRINTS BEARING EARLIER REVISION DATES

REVISION DATES 01/13/12 04/04/12 07/25/12 10/17/12

SHEET 32 OF 42

FILE => 53-3063-m-parch04.dgn

USERNAME => s124496 DATE PLOTTED => 26-JUN-2013 TIME PLOTTED => 16:16

DIST	COUNTY	ROUTE	POST MILES TOTAL PROJECT	SHEET No.	TOTAL SHEETS
07	LA	5	0.0/7.6	704	985

P. Vijitakula 12-28-12
REGISTERED CIVIL ENGINEER DATE

6-24-13
PLANS APPROVAL DATE

REGISTERED PROFESSIONAL ENGINEER
P. VIJITAKULA
No. C 54701
Exp. 12-31-13
CIVIL
STATE OF CALIFORNIA

The State of California or its officers or agents shall not be responsible for the accuracy or completeness of electronic copies of this plan sheet.

Note:

For "SECTION B-B", "SECTION C-C", "SECTION D-D" and "SECTION G-G", see "PILASTER STRUCTURAL DETAILS NO. 2" sheet.

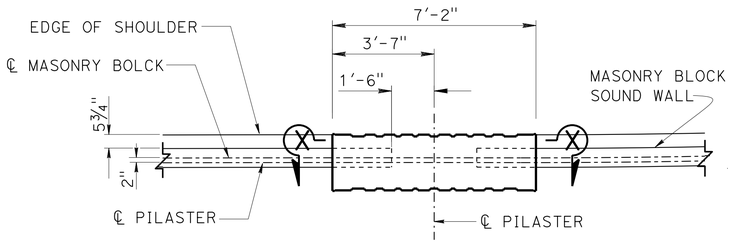

PILASTER

PART SOUND WALL PLAN

⅜" = 1'-0"

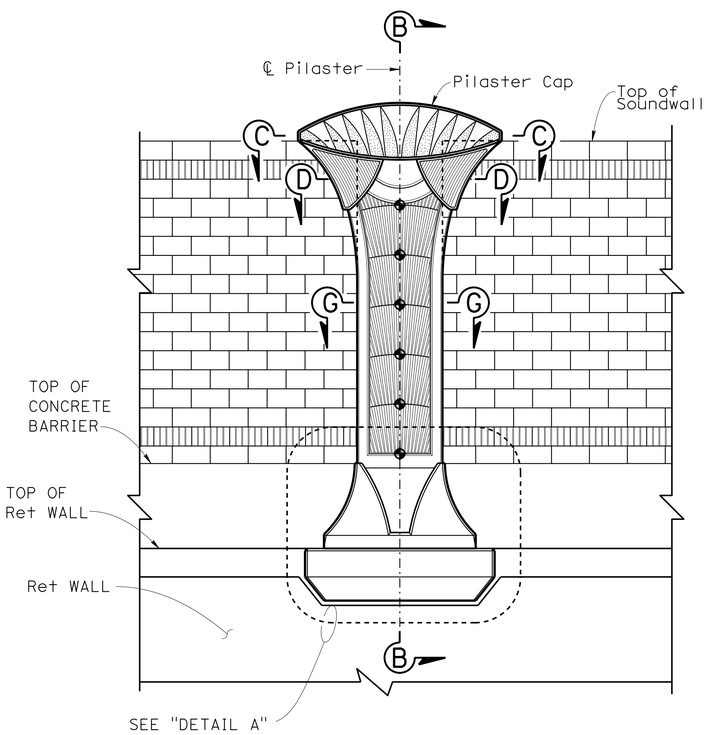

PART SOUND WALL ELEVATION

⅜" = 1'-0"

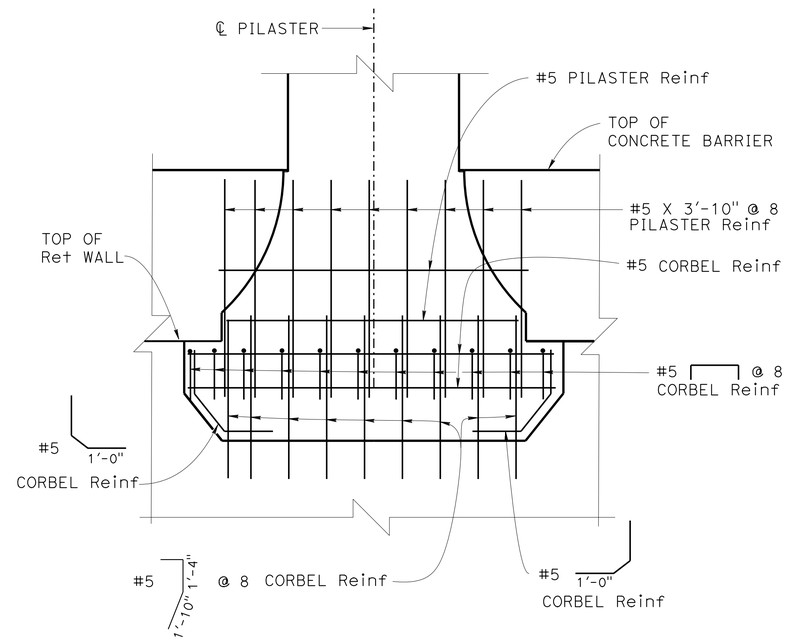

NOTE: Concrete Barrier/Ret Wall reinf not shown.

DETAIL A

¾" = 1'-0"

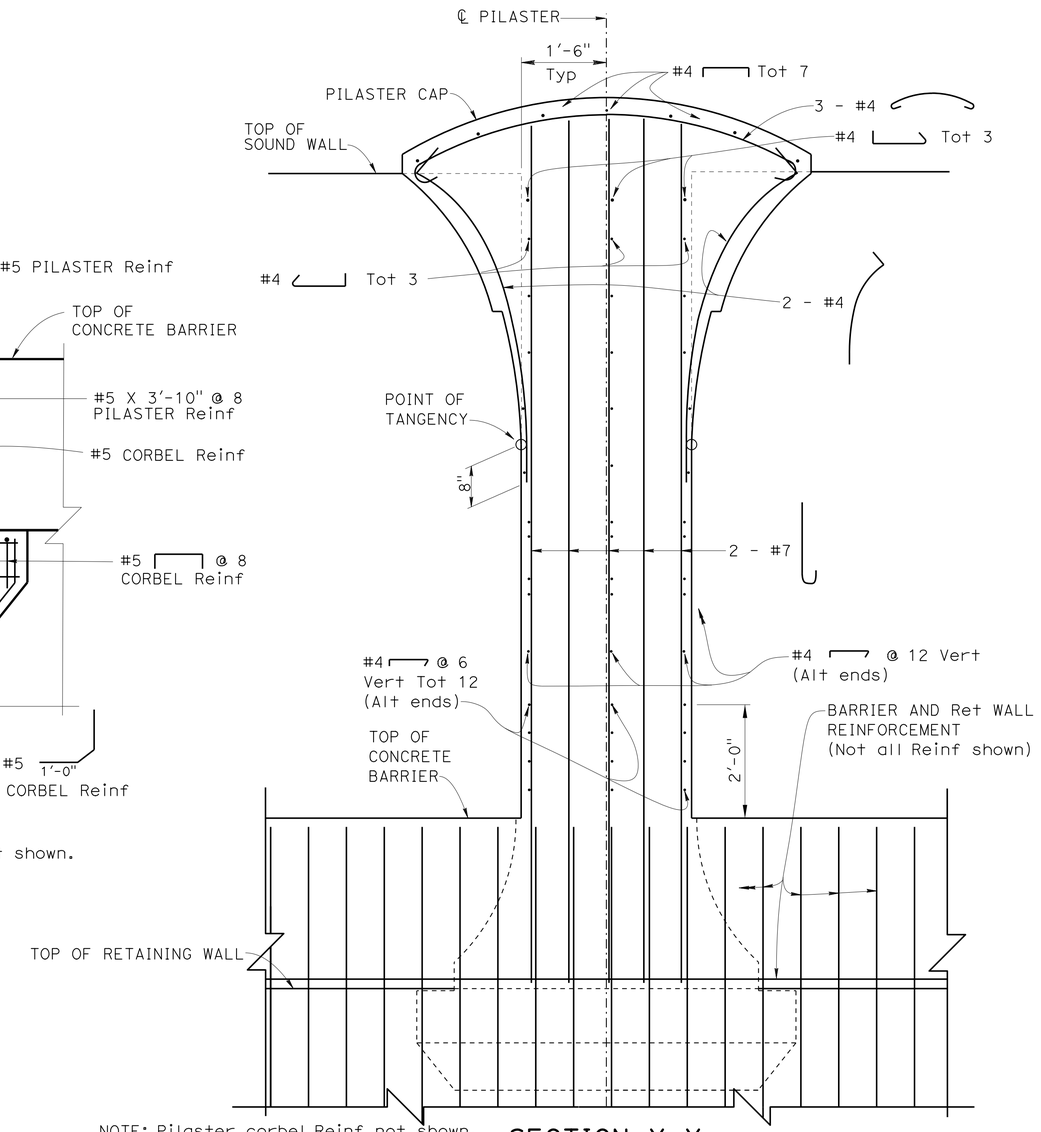

NOTE: Pilaster corbel Reinf not shown.

SECTION X-X

¾" = 1'-0"

DESIGN	BY Daniel Sessions	CHECKED Grant Schuster	
DETAILS	BY Jin Zhou / Jie Tang	CHECKED Grant Schuster	
QUANTITIES	BY Manode Kodsuntie	CHECKED Grant Schuster	

STATE OF CALIFORNIA
DEPARTMENT OF TRANSPORTATION

DIVISION OF ENGINEERING SERVICES
STRUCTURE DESIGN
DESIGN BRANCH 1

BRIDGE NO. 53-3063
POST MILE 5.92

ORR AND DAY ROAD OVERHEAD (REPLACE)
PILASTER STRUCTURAL DETAILS NO. 1

STRUCTURES DESIGN DETAIL SHEET (ENGLISH) (REV. 09-01-10)

ORIGINAL SCALE IN INCHES FOR REDUCED PLANS 0 1 2 3

UNIT: 3576
PROJECT NUMBER & PHASE: 07000018351
CONTRACT NO.: 07-215954

DISREGARD PRINTS BEARING EARLIER REVISION DATES

REVISION DATES 01/13/12 10/17/12 09/12/12

SHEET 33 OF 42

FILE => 53-3063-m-pstr01.dgn

USERNAME => s124496 DATE PLOTTED => 26-JUN-2013 TIME PLOTTED => 16:17

DIST	COUNTY	ROUTE	POST MILES TOTAL PROJECT	SHEET No.	TOTAL SHEETS
07	LA	5	0.0/7.6	705	985

P. Vijitakula 12-28-12
REGISTERED CIVIL ENGINEER DATE

6-24-13
PLANS APPROVAL DATE

REGISTERED PROFESSIONAL ENGINEER P. VIJITAKULA No. C 54701 Exp. 12-31-13 CIVIL STATE OF CALIFORNIA

The State of California or its officers or agents shall not be responsible for the accuracy or completeness of electronic copies of this plan sheet.

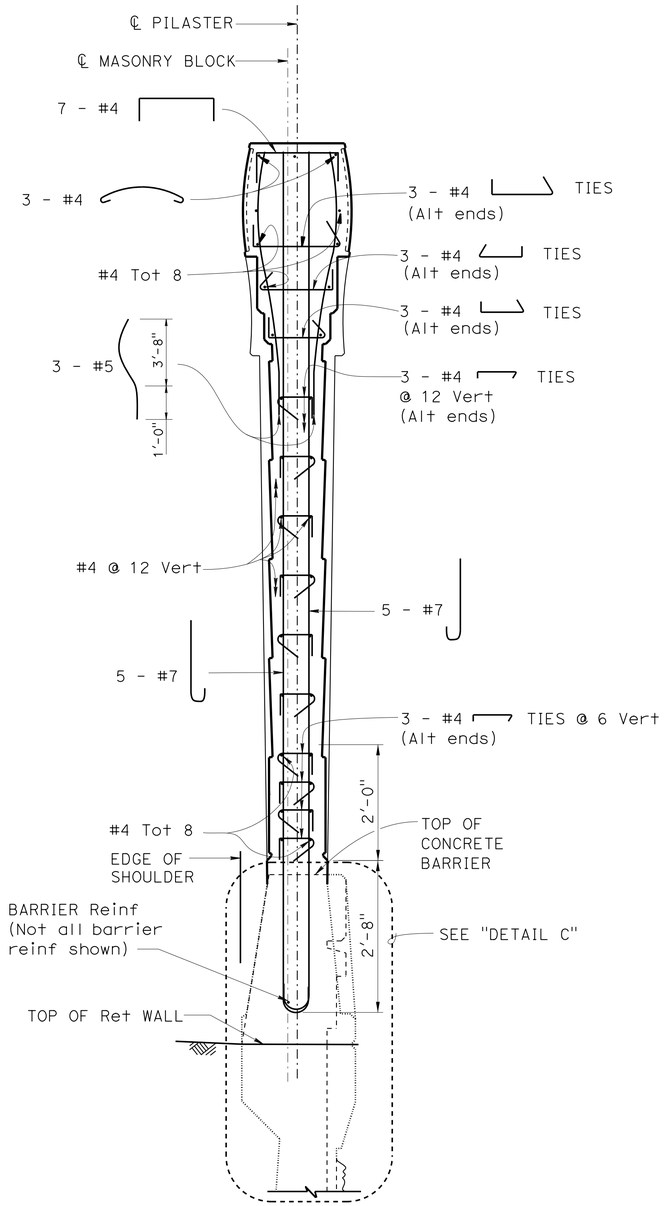

SECTION B-B
3/4" = 1'-0"

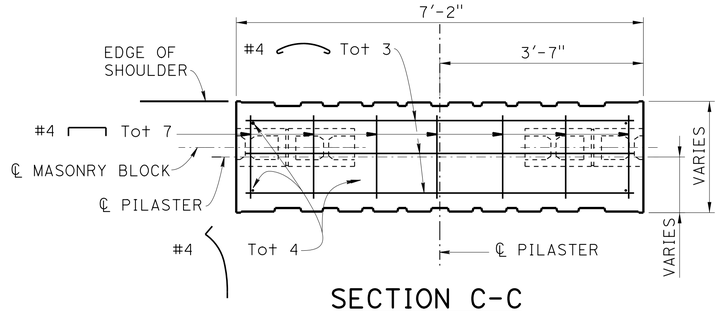

SECTION C-C
3/4" = 1'-0"

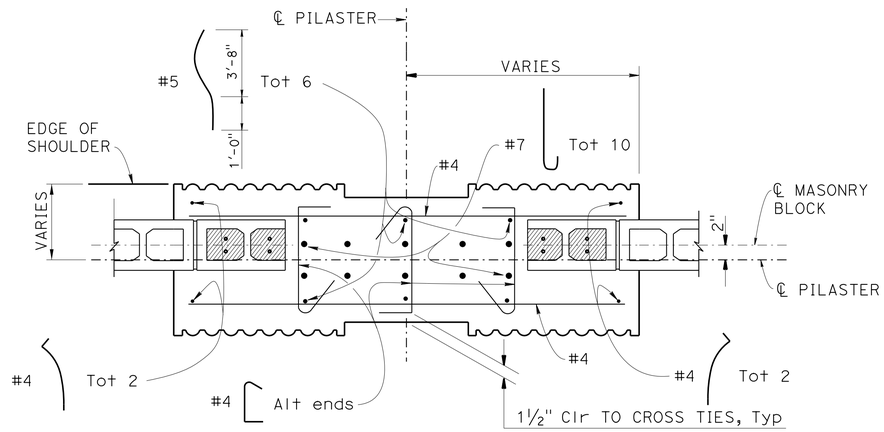

SECTION D-D
1" = 1'-0"

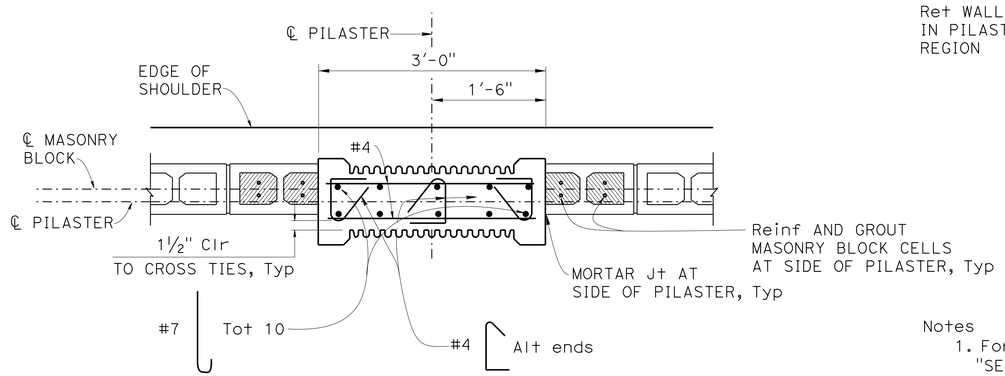

SECTION G-G
1" = 1'-0"

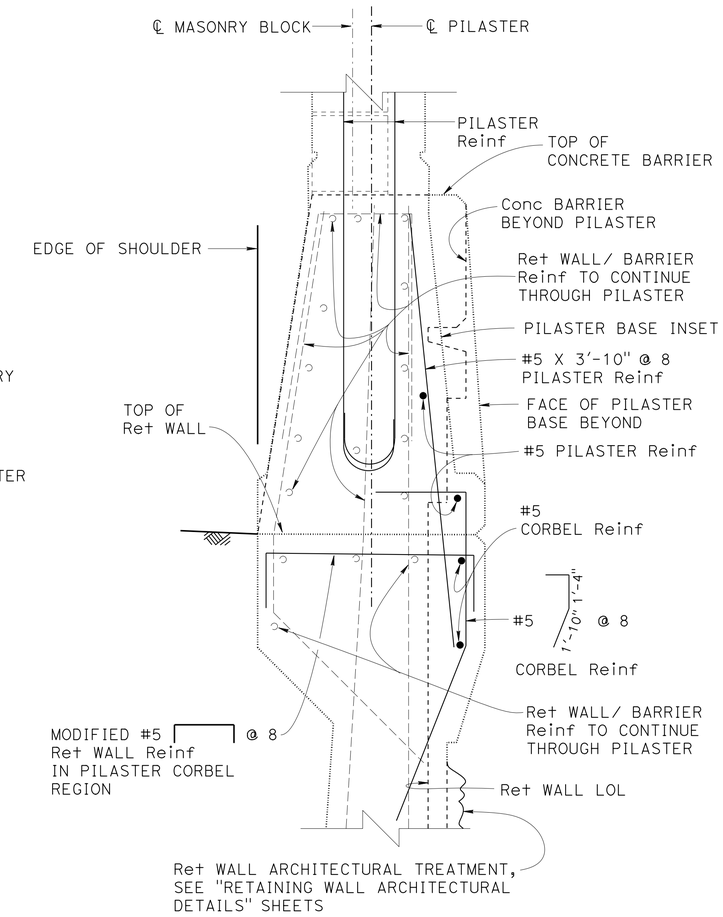

DETAIL C
1½" = 1'-0"

Notes
1. For location of "SECTION B-B", "SECTION C-C", "SECTION D-D" and "SECTION G-G", see "PILASTER STRUCTURAL DETAILS NO. 1" sheet.
2. For Pilaster geometry, dimensions and architectural treatments, see "PILASTER ARCHITECTURAL DETAILS" sheets

	BY	CHECKED
DESIGN	Daniel Sessions	Grant Schuster
DETAILS	Jin Zhou / Jie Tang	Grant Schuster
QUANTITIES	Manode Kodsuntie	Grant Schuster

STATE OF CALIFORNIA
DEPARTMENT OF TRANSPORTATION

DIVISION OF ENGINEERING SERVICES
STRUCTURE DESIGN
DESIGN BRANCH 1

BRIDGE NO. 53-3063
POST MILE 5.92

ORR AND DAY ROAD OVERHEAD (REPLACE)
PILASTER STRUCTURAL DETAILS NO. 2

STRUCTURES DESIGN DETAIL SHEET (ENGLISH) (REV. 09-01-10)

ORIGINAL SCALE IN INCHES FOR REDUCED PLANS 0 1 2 3

UNIT: 3576
PROJECT NUMBER & PHASE: 07000018351
CONTRACT NO.: 07-215954

DISREGARD PRINTS BEARING EARLIER REVISION DATES

REVISION DATES 01/11/12 04/05/12 07/25/12 10/17/12

SHEET 34 OF 42

FILE => 53-3063-m-pstr02.dgn

USERNAME => s124496 DATE PLOTTED => 26-JUN-2013 TIME PLOTTED => 16:17

DIST	COUNTY	ROUTE	POST MILES TOTAL PROJECT	SHEET No.	TOTAL SHEETS
07	LA	5	0.0/7.6	706	985

P. Vijitakula
REGISTERED CIVIL ENGINEER 12-28-12 DATE

6-24-13
PLANS APPROVAL DATE

REGISTERED PROFESSIONAL ENGINEER P. VIJITAKULA No. C 54701 Exp. 12-31-13 CIVIL STATE OF CALIFORNIA

The State of California or its officers or agents shall not be responsible for the accuracy or completeness of electronic copies of this plan sheet.

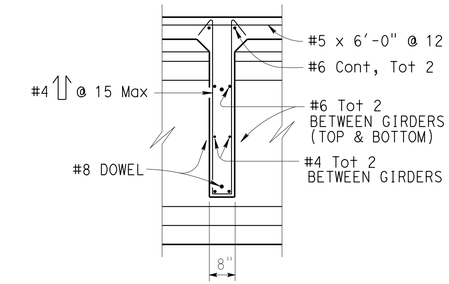

SECTION C-C

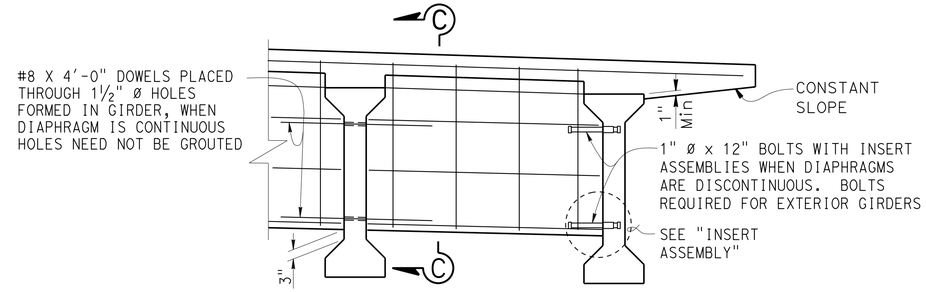

INTERMEDIATE DIAPHRAGM

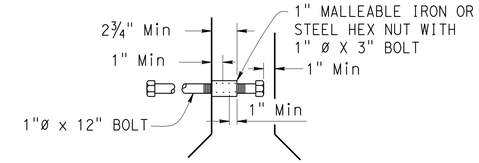

INSERT ASSEMBLY

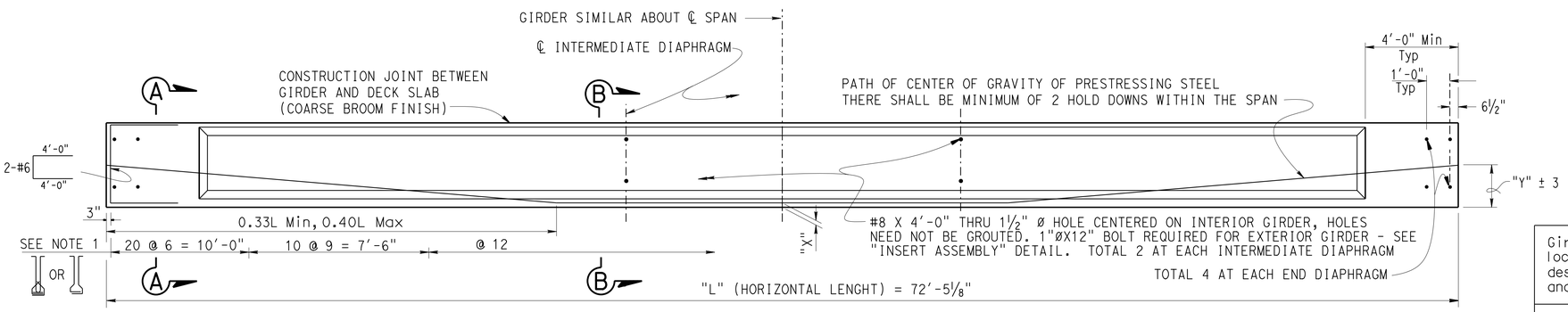

ELEVATION

NOTES:
1. Stirrups spacing shown, see sections B-B and C-C for bar size and configuration.
2. Contractor to assure underside of I - Girder's bearing surface to fully bear on Bearing Pads by taking into account roadway profile grade, girder camber and elevation differential between abutment to abutment.

GENERAL NOTES

JACKING FORCE (P): The jacking force required at the point of control along the span. The jacking force does not include any fabrication specific losses.

The maximum tensile stress in the prestressing steel upon release shall not exceed 75% of the specified minimum ultimate tensile strength of the prestressing steel.

The maximum temporary tensile stress (jacking stress) in the prestressing steel shall not exceed 80% of the specified minimum ultimate tensile strength of the prestressing steel.

CONCRETE STRENGTH: f'ci is at time of initial stressing
f'c is at 28 days

DEFLECTION COMPONENTS: Informational - to be used in setting screed line elevations

Screed line elevations for deck concrete will be determined by the Engineer.

Contractor may interpolate "P" and "X" values between limits shown, as approved by the Engineer.

Use epoxy coated reinforcement in Environmental Area III

Girder location or designation and length	Jacking Force (P) (Kips) "X"		"Y" (in)	Concrete Strength (ksi) f'ci	Concrete Strength (ksi) f'c	Midspan Dead Load Deflection (inches) Deck	Midspan Dead Load Deflection (inches) Rail
Ⓐ	4"	730	18	5.3	6.0	1⅛"	0"
	6"	800					
Ⓑ	4"	730	18	5.3	6.0	1"	⅜"
	6"	800					
Ⓒ	5"	890	15	6.3	6.3	1"	⅞"
	7"	990					

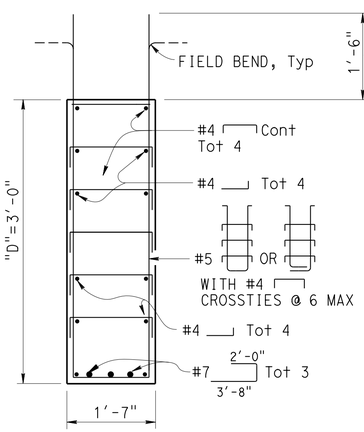

SECTION A-A

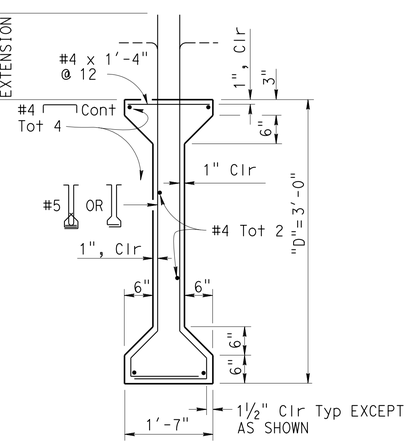

SECTION B-B

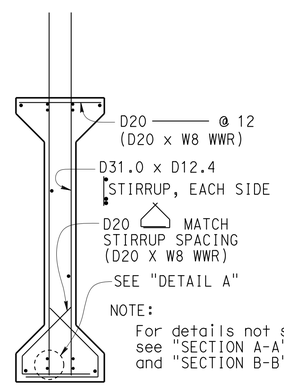

NOTE:
For details not shown, see "SECTION A-A" and "SECTION B-B"

OPTIONAL WELDED WIRE REINFORCEMENT (WWR) DETAIL

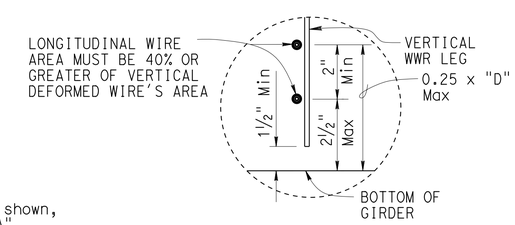

DETAIL A

WWR NOTE: MANUFACTURER'S SHOP DRAWING SHALL CONFORM TO THE REINFORCEMENT SHOWN ON THIS SHEET AS NOTED AND THE SPECIAL PROVISIONS

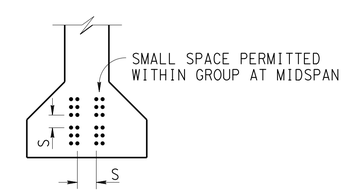

CLEARANCES FOR PRETENSIONED STRANDS

1. Strands may be bundled in groups consisting of 3 vertically, 2 horizontally and separated at the ends
2. The Min distance "S" between groups or individual strands is 1½" for ⅜" Ø strands, 1¾" for ½" Ø strands, 2" for 0.6" Ø strands
3. "S" is measured between centers of adjacent strands
4. Approval by the Engineer is required for deviation

NO SCALE

	BY	CHECKED
DESIGN	Daniel Sessions	G. Jones / M. Kodsuntie
DETAILS	Jie Tang	G. Jones / M. Kodsuntie
QUANTITIES	Manode Kodsuntie	Grant Schuster

STATE OF CALIFORNIA
DEPARTMENT OF TRANSPORTATION

DIVISION OF ENGINEERING SERVICES
STRUCTURE DESIGN
DESIGN BRANCH 1

BRIDGE NO. 53-3063
POST MILE 5.92

ORR AND DAY ROAD OVERHEAD (REPLACE)
PRECAST PRESTRESSED I GIRDER

STRUCTURES DESIGN DETAIL SHEET (ENGLISH) (REV. 09-01-10)

ORIGINAL SCALE IN INCHES FOR REDUCED PLANS 0 1 2 3

UNIT: 3576
PROJECT NUMBER & PHASE: 07000018351
CONTRACT NO.: 07-215954

DISREGARD PRINTS BEARING EARLIER REVISION DATES
REVISION DATES 01-30-12 12-14-12 12-13-12

SHEET 35 OF 42

FILE => 53-3063-p-ppig.dgn

USERNAME => s124496 DATE PLOTTED => 26-JUN-2013 TIME PLOTTED => 16:17

DIST	COUNTY	ROUTE	POST MILES TOTAL PROJECT	SHEET No.	TOTAL SHEETS
07	LA	5	0.0/7.6	707	985

P. Vijitakula 12-28-12
REGISTERED CIVIL ENGINEER DATE

6-24-13
PLANS APPROVAL DATE

REGISTERED PROFESSIONAL ENGINEER P. VIJITAKULA No. C 54701 Exp. 12-31-13 CIVIL STATE OF CALIFORNIA

The State of California or its officers or agents shall not be responsible for the accuracy or completeness of electronic copies of this plan sheet.

NOTES:

1. For details not shown, see Structure Plans. For MR ≤ 2", adjust bar reinforcement to clear a sawcut for sealed joint, when required
2. For drainage details, see "STRUCTURE APPROACH DRAINAGE DETAILS" sheet
3. Longitudinal construction joints, when permitted by the Engineer, shall be located on lane lines
4. End angle or plate at beginning of barrier transition, end of wingwall or end of structure approach as applicable
5. For transverse contact joint with new PCC paving, refer to Standard Plan P10
6. At the Contractor's option, approach slab transverse reinforcement may be placed parallel to paving notch. Spacing of transverse reinforcement is measured along ℄ roadway

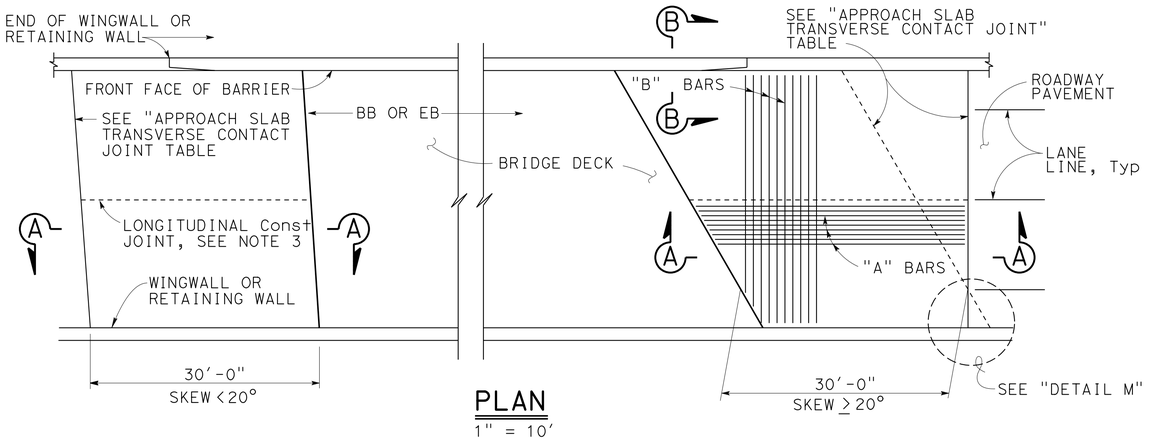

PLAN
1" = 10'

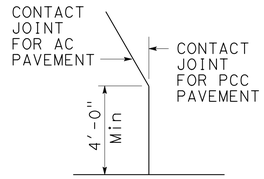

DETAIL M
No Scale

APPROACH SLAB TRANSVERSE CONTACT JOINT		
APPROACH SKEW	WITH AC ROADWAY PAVEMENT	WITH PCC ROADWAY PAVEMENT
< 20°	PARALLEL TO FACE OF PN	PARALLEL TO FACE OF PN
20° - 45°	PARALLEL TO FACE OF PN USE "DETAIL A"	STAGGER LINES 24' TO 36' APART
> 45°	PARALLEL TO FACE OF PN USE "DETAIL A"	STAGGER AT EACH LANE LINE

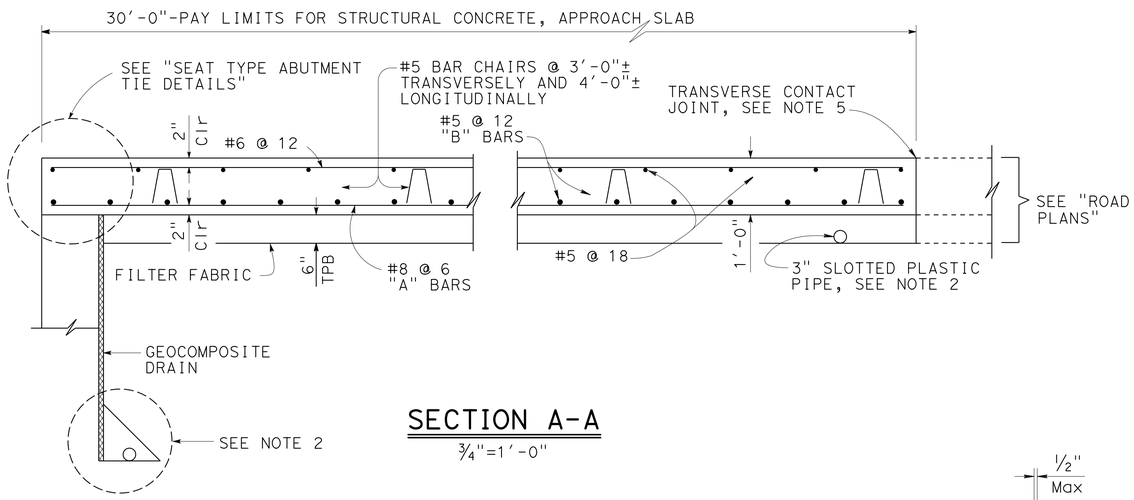

SECTION A-A
¾"=1'-0"

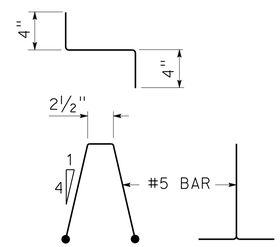

BAR CHAIR DETAIL
1½"=1'-0"

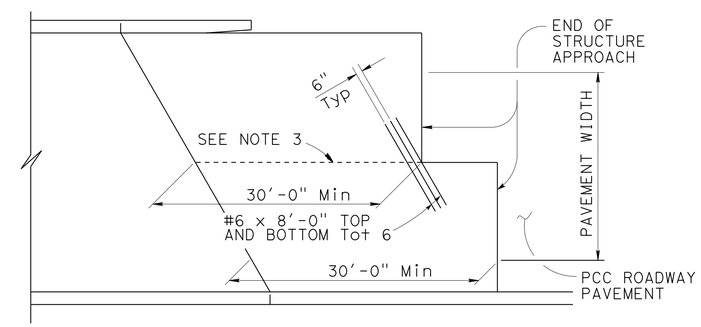

STRUCTURE APPROACH - END STAGGER DETAIL
No Scale

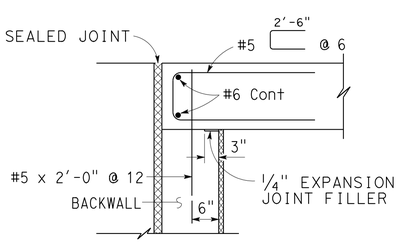

MR ≤ 2"

SEAT TYPE ABUTMENT TIE DETAILS (SEE NOTE 1)
¾"=1'-0"

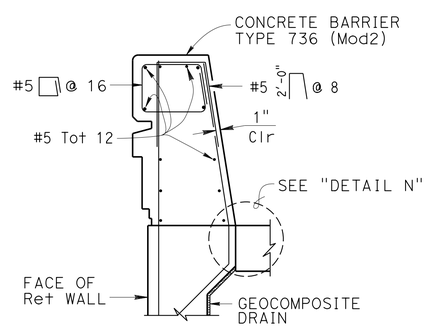

TYPE E-2

SECTION B-B
¾"=1'-0"

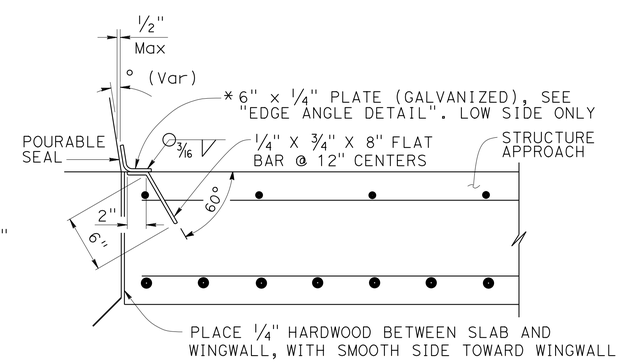

* (TO BE USED WITH CONCRETE BARRIER WITH SLOPING FACE)

DETAIL N
1½" = 1'-0"

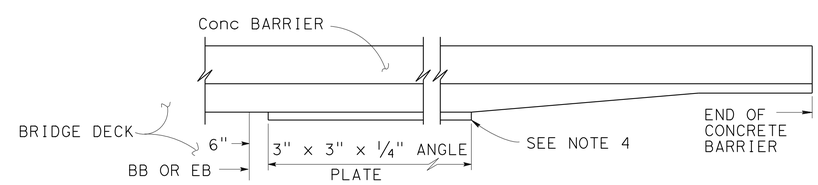

EDGE ANGLE DETAIL
½"=1'-0"

DESIGN	BY Daniel Sessions	CHECKED Greg Jones	
DETAILS	BY Jie Tang	CHECKED Greg Jones	
QUANTITIES	BY Manode Kodsuntie	CHECKED Grant Schuster	

STATE OF CALIFORNIA
DEPARTMENT OF TRANSPORTATION

DIVISION OF ENGINEERING SERVICES
STRUCTURE DESIGN
DESIGN BRANCH 1

BRIDGE NO. 53-3063
POST MILE 5.92

ORR AND DAY ROAD OVERHEAD (REPLACE)
STRUCTURE APPROACH TYPE N(30S)

STRUCTURES DESIGN DETAIL SHEET (ENGLISH) (REV. 09-01-10)

ORIGINAL SCALE IN INCHES FOR REDUCED PLANS 0 1 2 3

UNIT: 3576
PROJECT NUMBER & PHASE: 07000018351
CONTRACT NO.: 07-215954

DISREGARD PRINTS BEARING EARLIER REVISION DATES

REVISION DATES 01-10-12 12-12-12 12-13-12

SHEET 36 OF 42

FILE => 53-3063-p-satypen.dgn

USERNAME => s124496 DATE PLOTTED => 26-JUN-2013 TIME PLOTTED => 16:17

DIST	COUNTY	ROUTE	POST MILES TOTAL PROJECT	SHEET No.	TOTAL SHEETS
07	LA	5	0.0/7.6	708	985

P. Vijitakula 12-28-12
REGISTERED CIVIL ENGINEER DATE

6-24-13
PLANS APPROVAL DATE

REGISTERED PROFESSIONAL ENGINEER P. VIJITAKULA No. C 54701 Exp. 12-31-13 CIVIL STATE OF CALIFORNIA

The State of California or its officers or agents shall not be responsible for the accuracy or completeness of electronic copies of this plan sheet.

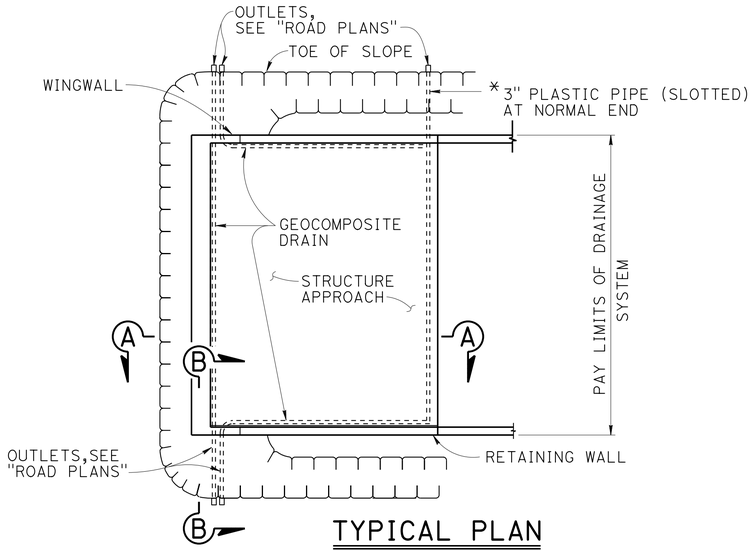

TYPICAL PLAN
1" = 10'

* FOR PIPE LAYOUT AT STAGGERED END, SEE "DETAIL M"

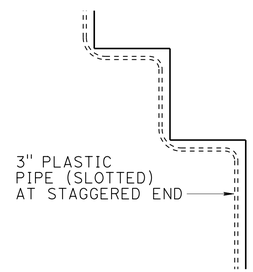

DETAIL M
No Scale

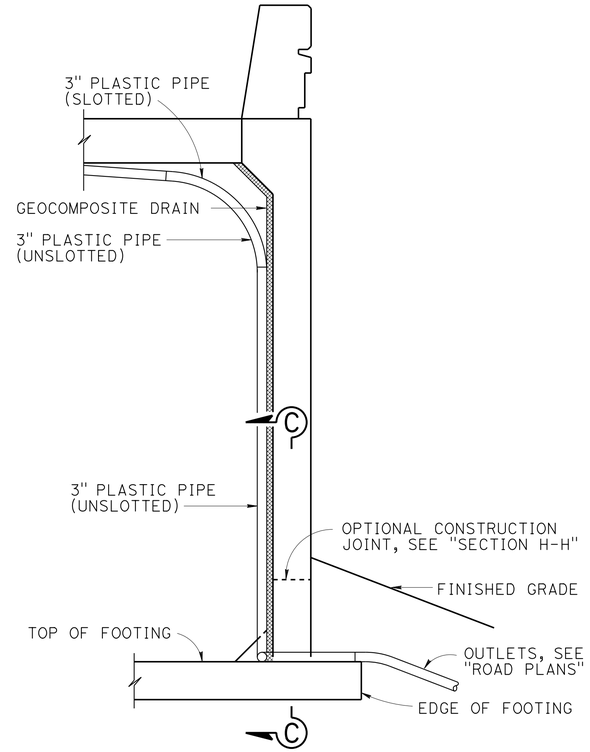

SECTION B-B
½" = 1'-0"

NOTE: Bends and junctions in 3" plastic pipe are 30" radius Min

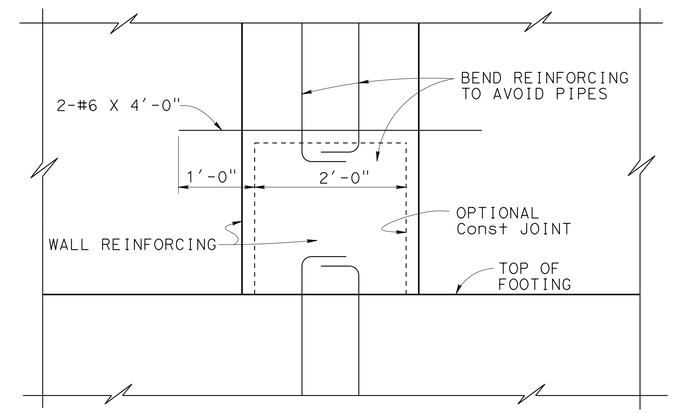

SECTION C-C
1" = 1'-0"

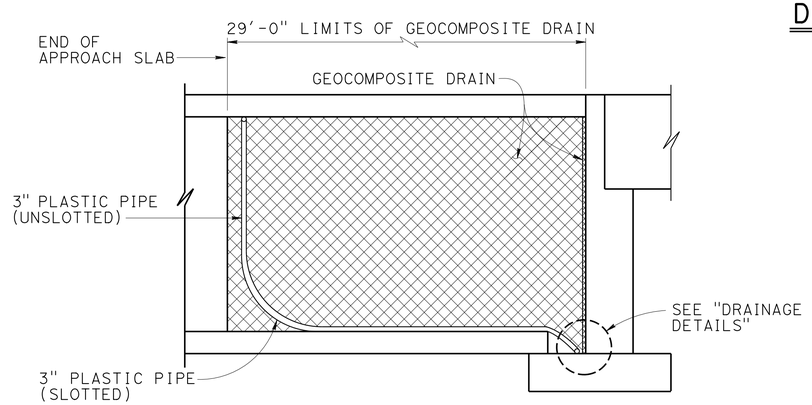

RETAINING WALL WINGWALL DRAINAGE DETAILS

SECTION A-A
¼" = 1'-0"

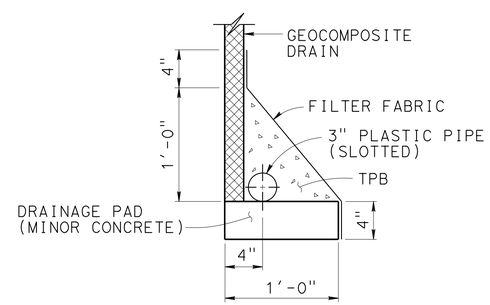

WITHOUT FOOTING

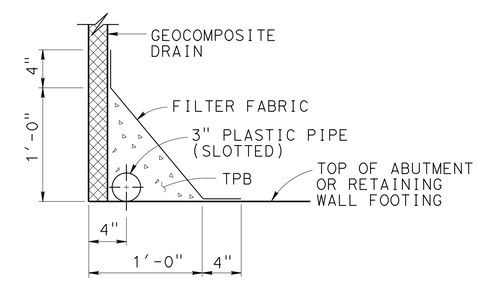

WITH FOOTING

DRAINAGE DETAILS
1½" = 1'-0"

DESIGN	BY Daniel Sessions	CHECKED Greg Jones	
DETAILS	BY Jie Tang	CHECKED Greg Jones	
QUANTITIES	BY Manode Kodsuntie	CHECKED Grant Schuster	

STATE OF CALIFORNIA
DEPARTMENT OF TRANSPORTATION

DIVISION OF ENGINEERING SERVICES
STRUCTURE DESIGN
DESIGN BRANCH 1

BRIDGE NO. 53-3063
POST MILE 5.92

ORR AND DAY ROAD OVERHEAD (REPLACE)
STRUCTURE APPROACH DRAINAGE DETAILS

STRUCTURES DESIGN DETAIL SHEET (ENGLISH) (REV. 09-01-10)

ORIGINAL SCALE IN INCHES FOR REDUCED PLANS 0 1 2 3

UNIT: 3576
PROJECT NUMBER & PHASE: 07000018351
CONTRACT NO.: 07-215954

DISREGARD PRINTS BEARING EARLIER REVISION DATES

REVISION DATES 01-10-12 12/13/12 12/24/12

SHEET 37 OF 42

FILE => 53-3063-q-saddet.dgn

USERNAME => s124496 DATE PLOTTED => 26-JUN-2013 TIME PLOTTED => 16:17

DIST	COUNTY	ROUTE	POST MILES TOTAL PROJECT	SHEET No.	TOTAL SHEETS
07	LA	5	0.0/7.6	709	985

P. Vijitakula 12-28-12
REGISTERED CIVIL ENGINEER DATE

6-24-13
PLANS APPROVAL DATE

REGISTERED PROFESSIONAL ENGINEER P. VIJITAKULA No. C 54701 Exp. 12-31-13 CIVIL STATE OF CALIFORNIA

The State of California or its officers or agents shall not be responsible for the accuracy or completeness of electronic copies of this plan sheet.

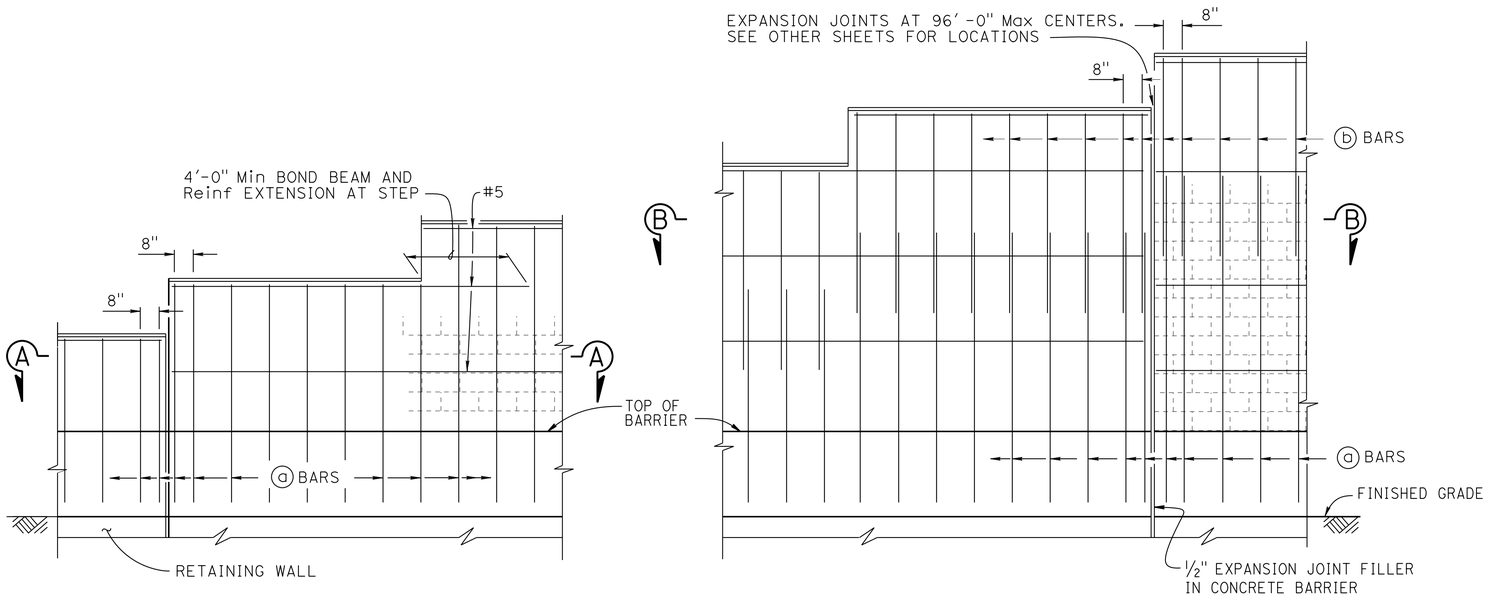

H=6'-4" THRU H=10'-4"

H=12'-4" THRU H=16'-4"

PART ELEVATION

SOUND WALL REINFORCEMENT TABLE

MAXIMUM "H"	ⓐ BARS @ 1'-4" Max	ⓑ BARS @ 1'-4" Max	"Y"	f'm (psi)	COMPRESSIVE STRENGTH OF CMU (psi)	MAXIMUM "H"
6'-4"	#4	———	———	1500	1900	6'-4"
8'-4"	#4	———	———	1500	1900	8'-4"
10'-4"	#4	———	———	1500	1900	10'-4"
12'-4"	#5	#4	5'-0"	1500	1900	12'-4"
14'-4"	#6	#4	7'-0"	1500	1900	14'-4"
16'-4"	#6	#4	9'-0"	2500	3700	16'-4"

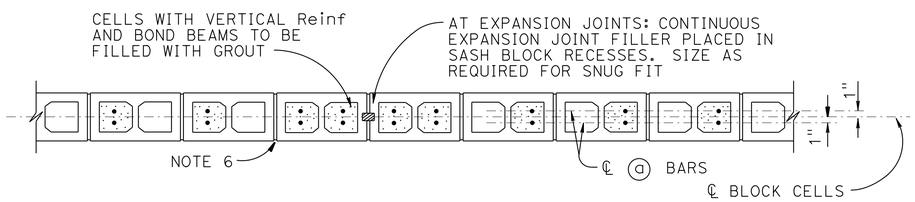

SECTION A-A

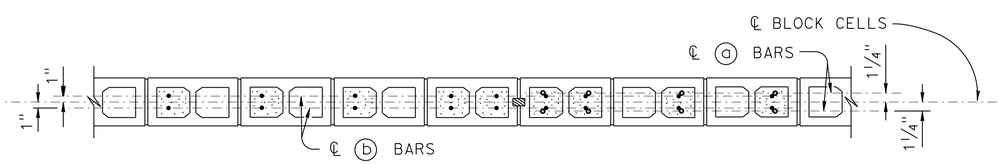

SECTION B-B

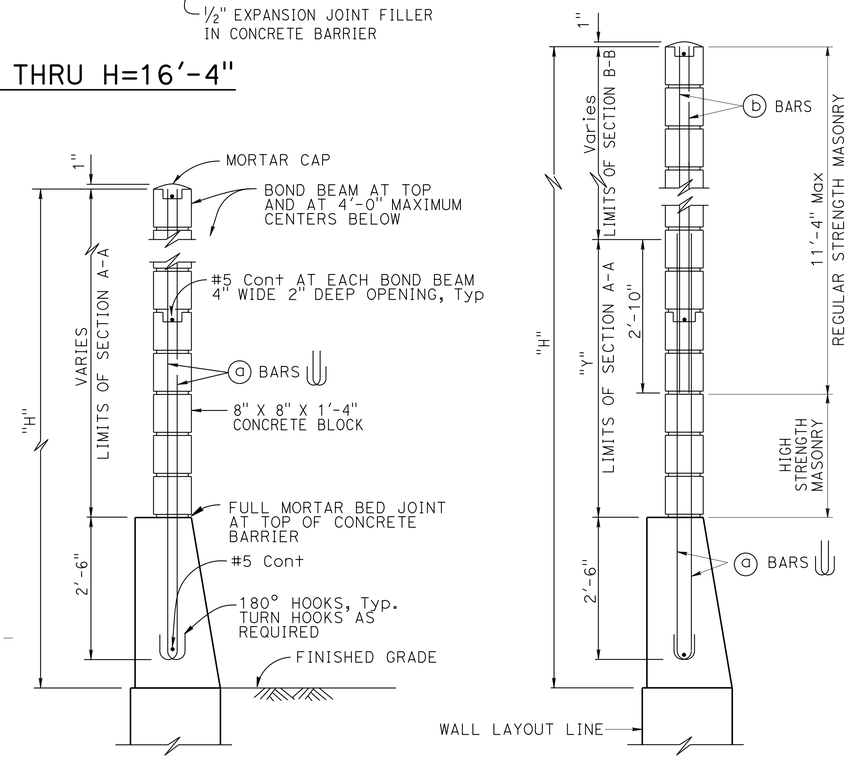

H=6'-4" THRU H=10'-4"
For details not shown, see H=12'-4" thru H=16'-4"

H=12'-4" THRU H=16'-4"
For details not shown, see H=6'-4" thru H=10'-4"

TYPICAL SECTION

NOTES:

1. For details not shown, see "MASONRY BLOCK SOUND WALL WITH BARRIER ON RETAINING WALL DETAILS NO. 2" sheet.
2. Slope ground at traffic side of barrier to drain. Maximum slope ±10%
3. See STANDARD PLANS B15-9 for other details.
4. For type of block and joint finish, see other sheets.
5. When blocks are laid in stacked bond, ladder type, galvanized joint reinforcement shall be provided. A minimum of 2-9 gauge wire continuous at 4'-0" maximum to be used. Locate reinforcement in joints that are at the approximate midpoint between bond beams.
6. Horizontal joints shall be tooled concave or may be weathered. Vertical joints shall be tooled concave or may be raked.
7. For intermediate wall heights that are between the "H's" given, use the tabular information for the next higher "H".
8. Masonry strengths are listed in "SOUND WALL REINFORCEMENT TABLE".
9. Concrete to be used for the barrier shall contain not less than 590 pounds of cementitious material per cubic yard.

SPECIAL DETAILS

STANDARD DRAWING
FILE NO. xs15-130-1
APPROVAL DATE July 2011

STATE OF CALIFORNIA
DEPARTMENT OF TRANSPORTATION

DIVISION OF ENGINEERING SERVICES
STRUCTURE DESIGN
DESIGN BRANCH 1

BRIDGE NO. 53-3063
POST MILE 5.92

ORR AND DAY ROAD OVERHEAD (REPLACE)
MASONRY BLOCK SOUND WALL WITH BARRIER ON RETAINING WALL DETAILS NO. 1

DS OSD 2147A (ENGLISH STANDARD DRAWING "XS" BORDER REV. (02-02-11)

ORIGINAL SCALE IN INCHES FOR REDUCED PLANS 0 1 2 3

UNIT: 3576
PROJECT NUMBER & PHASE: 07000018351
CONTRACT NO.: 07-215954

DISREGARD PRINTS BEARING EARLIER REVISION DATES
REVISION DATES 07-18-12 10-16-12
SHEET 38 OF 42

FILE => 53-3063-r-mbsw-det01.dgn

USERNAME => s121614 DATE PLOTTED => 26-SEP-2013 TIME PLOTTED => 07:57

DIST	COUNTY	ROUTE	POST MILES TOTAL PROJECT	SHEET No.	TOTAL SHEETS
07	LA	5	0.0/7.6	710	985

P. Vijitakula 12-28-12
REGISTERED CIVIL ENGINEER DATE

6-24-13
PLANS APPROVAL DATE

REGISTERED PROFESSIONAL ENGINEER
P. VIJITAKULA
No. C 54701
Exp. 12-31-13
CIVIL
STATE OF CALIFORNIA

The State of California or its officers or agents shall not be responsible for the accuracy or completeness of electronic copies of this plan sheet.

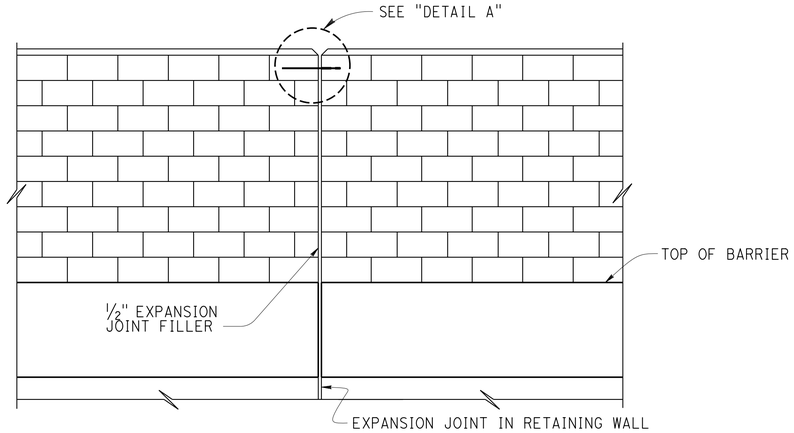

ALIGNMENT KEY DETAIL

NO SCALE

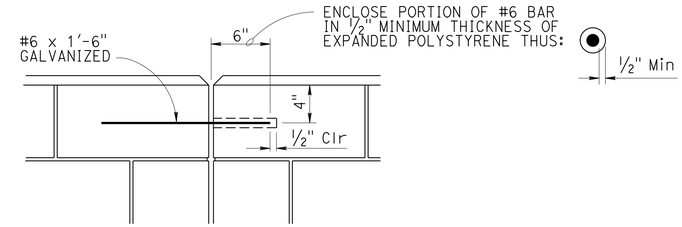

DETAIL A

NO SCALE

DESIGN NOTES

DESIGN

Uniform Building Code, 1997 Edition and the Bridge Design Specifications

DESIGN WIND LOAD

33 psf

DESIGN SEISMIC LOAD

0.57 Dead load

REINFORCED CONCRETE

f'c = 3600 psi
fy = 60 ksi

CONCRETE MASONRY

REGULAR STRENGTH	HIGH STRENGTH	
f'm = 1500 psi	f'm = 2000 psi	f'm = 2500 psi
fb = 495 psi	fb = 660 psi	fb = 830 psi
fs = 24,000 psi	fs = 24,000 psi	fs = 24,000 psi
n = 25.8	n = 19.3	n = 15.5

NOTES:

1. For details not shown, see STANDARD PLAN B15-6 and "RETAINING WALL DETAILS" sheet

2. Slope ground at traffic side of barrier to drain.
   Maximum slope ±10%
   See STANDARD PLAN B11-56, Note D

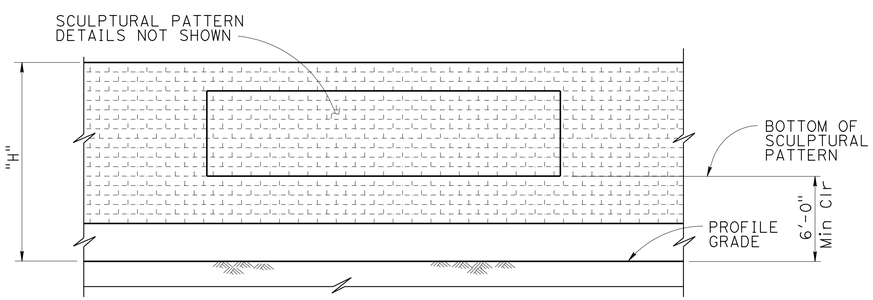

CLEARANCE DETAIL

NO SCALE

	BY	CHECKED
DESIGN	Daniel Sessions	Greg Jones
DETAILS	Jie Tang	Greg Jones
QUANTITIES	Manode Kodsuntie	Grant Schuster

STATE OF CALIFORNIA
DEPARTMENT OF TRANSPORTATION

DIVISION OF ENGINEERING SERVICES
STRUCTURE DESIGN
DESIGN BRANCH 1

BRIDGE NO. 53-3063
POST MILE 5.92

ORR AND DAY ROAD OVERHEAD (REPLACE)

MASONRY BLOCK SOUND WALL WITH BARRIER ON RETAINING WALL DETAILS NO. 2

STRUCTURES DESIGN DETAIL SHEET (ENGLISH) (REV. 09-01-10)

ORIGINAL SCALE IN INCHES FOR REDUCED PLANS 0 1 2 3

UNIT: 3576
PROJECT NUMBER & PHASE: 07000018351
CONTRACT NO.: 07-215954

DISREGARD PRINTS BEARING EARLIER REVISION DATES

REVISION DATES 07-19-12 10-16-12 12/12/12

SHEET 39 OF 42

FILE => 53-3063-r-mbsw-det02.dgn

USERNAME => s124496 DATE PLOTTED => 26-JUN-2013 TIME PLOTTED => 16:17

DIST	COUNTY	ROUTE	POST MILES TOTAL PROJECT	SHEET No.	TOTAL SHEETS
07	LA	5	0.0/7.6	711	985

REGISTERED CIVIL ENGINEER — DATE 6/2012

6-24-13
PLANS APPROVAL DATE

REGISTERED PROFESSIONAL ENGINEER — Nadeem Srour — No. 2801 — Exp. 12-31-2013 — GEOTECHNICAL — STATE OF CALIFORNIA

The State of California or its officers or agents shall not be responsible for the accuracy or completeness of electronic copies of this plan sheet.

This LOTB sheet was prepared in accordance with the Caltrans Soil & Rock Logging, Classification, & Presentation Manual (2010 Edition).

BENCH MARK

LA 5 PM 6.1, 1995 Elev. 126.778′
2.5" CADT Disk in Concrete Curb
Located at the nose of the southbound I-5
FWY Onramp Gore from Orr & Day Rd
N=1797387.8, E=6534371.3
VERTICAL NAVD88, 0405-CALIFORNIA 5 US Ft

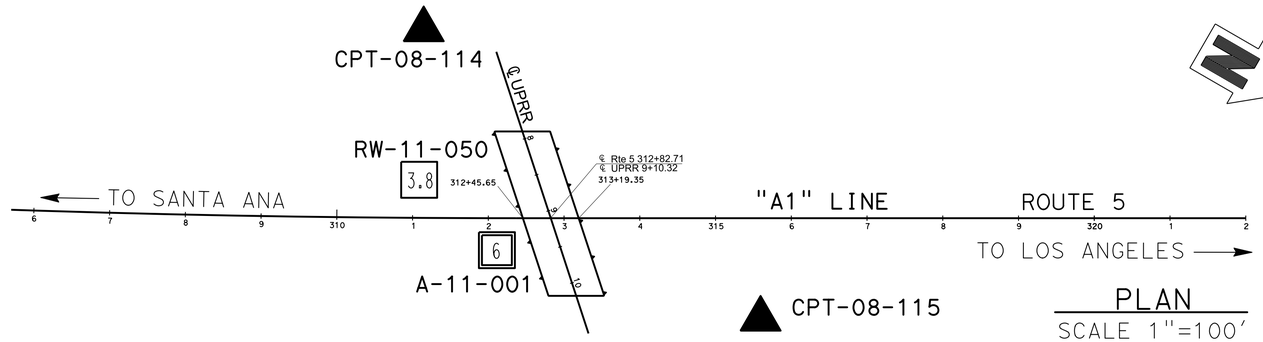

PLAN
SCALE 1"=100′

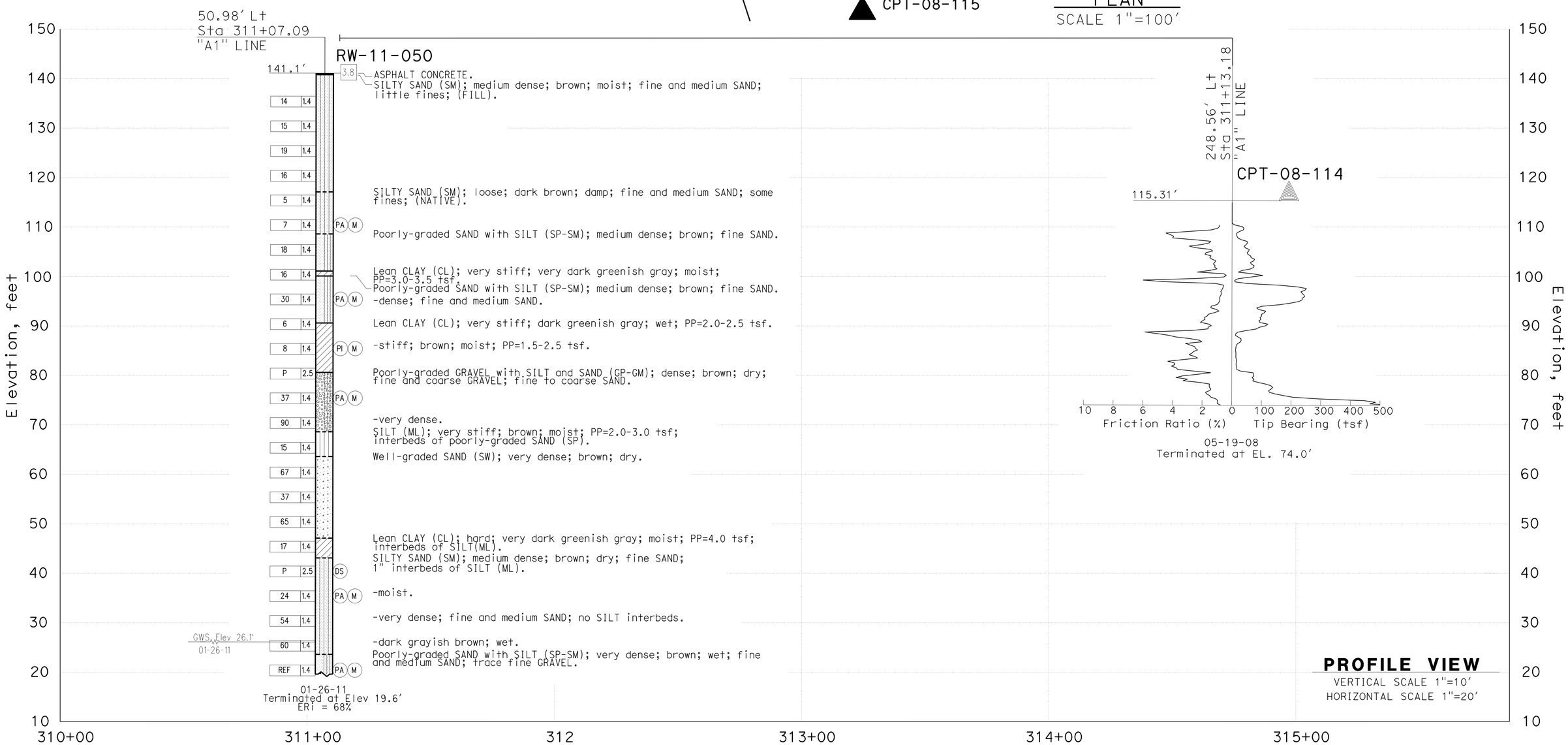

PROFILE VIEW
VERTICAL SCALE 1"=10′
HORIZONTAL SCALE 1"=20′

ENGINEERING SERVICES	MATERIALS AND GEOTECHNICAL SERVICES	STATE OF CALIFORNIA DEPARTMENT OF TRANSPORTATION	DIVISION OF ENGINEERING SERVICES STRUCTURE DESIGN DESIGN BRANCH 1	BRIDGE NO. 53-3063 / POST MILE 5.92	ORR AND DAY ROAD OVERHEAD (REPLACE)
FUNCTIONAL SUPERVISOR	DRAWN BY: T.PANAH (URS CORP)	FIELD INVESTIGATION BY:			LOG OF TEST BORINGS SHEET 1 OF 3
NAME: S.SUKIASIAN	CHECKED BY: N.SROUR/D.ORRIS	K.BARKER/P.MCDONALD			

OGS CIVIL LOG OF TEST BORINGS SHEET

ORIGINAL SCALE IN INCHES FOR REDUCED PLANS 0 1 2 3

UNIT: 3576
PROJECT NUMBER & PHASE: 07000018351 CONTRACT NO.: 07-215954

DISREGARD PRINTS BEARING EARLIER REVISION DATES — REVISION DATES 04/06/12 07/10/12 07/25/12 — SHEET 40 OF 42

FILE => 53-3063-z-ltb01.dgn

USERNAME => s124496 DATE PLOTTED => 26-JUN-2013 TIME PLOTTED => 16:17

DIST	COUNTY	ROUTE	POST MILES TOTAL PROJECT	SHEET No.	TOTAL SHEETS
07	LA	5	0.0/7.6	712	985

REGISTERED CIVIL ENGINEER 6/2012 DATE

6-24-13
PLANS APPROVAL DATE

REGISTERED PROFESSIONAL ENGINEER Nadeem Srour No. 2801 Exp. 12-31-2013 GEOTECHNICAL STATE OF CALIFORNIA

The State of California or its officers or agents shall not be responsible for the accuracy or completeness of electronic copies of this plan sheet.

This LOTB sheet was prepared in accordance with the Caltrans Soil & Rock Logging, Classification, & Presentation Manual (2010 Edition).

FOR PLAN VIEW, SEE
"LOG OF TEST BORINGS" 1 OF 3

ENGINEERING SERVICES	MATERIALS AND GEOTECHNICAL SERVICES	STATE OF CALIFORNIA DEPARTMENT OF TRANSPORTATION	DIVISION OF ENGINEERING SERVICES STRUCTURE DESIGN DESIGN BRANCH 1	BRIDGE NO. 53-3063 POST MILE 5.92	ORR AND DAY ROAD OVERHEAD (REPLACE)
FUNCTIONAL SUPERVISOR NAME: S.SUKIASIAN	DRAWN BY: T.PANAH (URS CORP) CHECKED BY: N.SROUR	FIELD INVESTIGATION BY: K.BARKER			LOG OF TEST BORINGS SHEET 2 OF 3

OGS CIVIL LOG OF TEST BORINGS SHEET

ORIGINAL SCALE IN INCHES FOR REDUCED PLANS 0 1 2 3

UNIT: 3576
PROJECT NUMBER & PHASE: 07000018351 CONTRACT NO.: 07-215954

DISREGARD PRINTS BEARING EARLIER REVISION DATES → 04/05/12 07/10/12 07/25/12

SHEET 41 OF 42

FILE => 53-3063-z-ltb02.dgn

USERNAME => s121614 DATE PLOTTED => 26-SEP-2013 TIME PLOTTED => 07:57

DIST	COUNTY	ROUTE	POST MILES TOTAL PROJECT	SHEET No.	TOTAL SHEETS
07	LA	5	0.0/7.6	713	985

REGISTERED CIVIL ENGINEER 12/2011 DATE

6-24-13
PLANS APPROVAL DATE

REGISTERED PROFESSIONAL ENGINEER MICHAEL G. SMITH No. 2229 Exp. 3-31-2012 GEOTECHNICAL STATE OF CALIFORNIA

The State of California or its officers or agents shall not be responsible for the accuracy or completeness of electronic copies of this plan sheet.

This LOTB sheet was prepared in accordance with the Caltrans Soil & Rock Logging, Classification, & Presentation Manual (2010 Edition).

FOR PLAN VIEW, SEE
"LOG OF TEST BORINGS" 1 OF 3

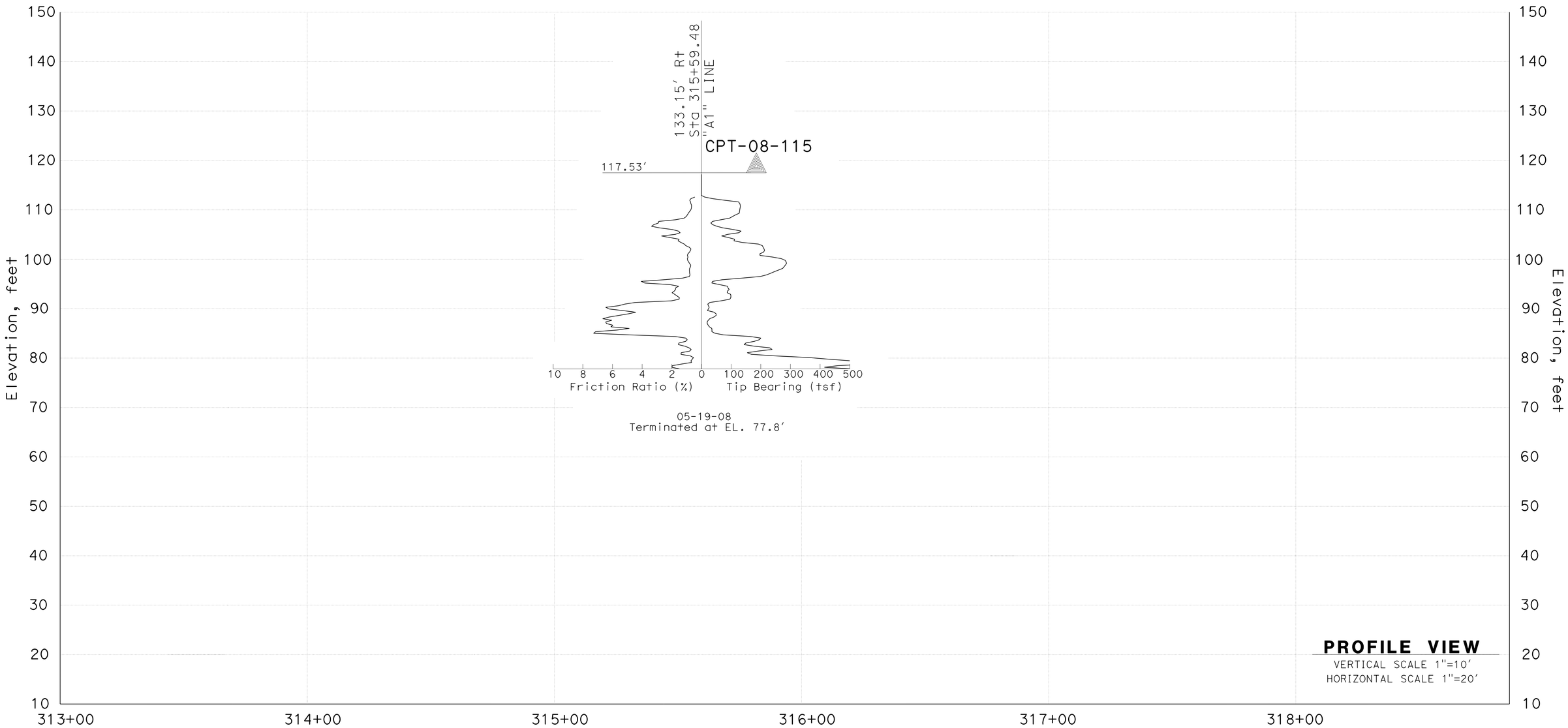

ENGINEERING SERVICES	MATERIALS AND GEOTECHNICAL SERVICES	STATE OF CALIFORNIA DEPARTMENT OF TRANSPORTATION	DIVISION OF ENGINEERING SERVICES STRUCTURE DESIGN DESIGN BRANCH 1	BRIDGE NO. 53-3063 POST MILE 5.92	ORR AND DAY ROAD OVERHEAD (REPLACE)
FUNCTIONAL SUPERVISOR NAME: M.SMITH	DRAWN BY: T.PANAH (URS CORP) CHECKED BY: D.ORRIS	FIELD INVESTIGATION BY: P.MCDONALD			LOG OF TEST BORINGS SHEET 3 OF 3

OGS CIVIL LOG OF TEST BORINGS SHEET

ORIGINAL SCALE IN INCHES FOR REDUCED PLANS 0 1 2 3

UNIT: 3576
PROJECT NUMBER & PHASE: 07000018351 CONTRACT NO.: 07-215954

DISREGARD PRINTS BEARING EARLIER REVISION DATES

REVISION DATES 04/06/12 07/10/12 07/25/12

SHEET 42 OF 42

FILE => 53-3063-z-ltb03.dgn

USERNAME => s124496 DATE PLOTTED => 26-JUN-2013 TIME PLOTTED => 16:17

DIST	COUNTY	ROUTE	POST MILES TOTAL PROJECT	SHEET No.	TOTAL SHEETS
07	LA	5	0.0/7.6	714	985

P. Vijitakula 12/31/12
REGISTERED CIVIL ENGINEER DATE

6-24-13
PLANS APPROVAL DATE

REGISTERED PROFESSIONAL ENGINEER
P. VIJITAKULA
No. 54701
Exp. 12/31/13
CIVIL
STATE OF CALIFORNIA

The State of California or its officers or agents shall not be responsible for the accuracy or completeness of electronic copies of this plan sheet.

NOTES:

1. For DESIGN NOTES, see "RETAINING WALL TYPE 1SWBP DETAILS NO. 1", STANDARD PLAN B3-4 and "MASONRY BLOCK SOUND WALL WITH BARRIER ON RETAINING WALL DETAILS NO. 2" sheets.
2. For Index to Plans, Standard Plan List and Quantities, see "Index To Plans" sheet.
3. For "PILE DATA TABLE", see "EXCAVATION AND BACKFILL DETAILS" sheet.
4. All piles not shown in "DEVELOPED ELEVATION".
5. Electrical systems (Type 1-A Ramp Meter) total 1, see "ROAD PLANS". For pedestal details, see "RAMP METER PEDESTAL DETAILS" sheet.

LEGEND

-·-·-·-·- Indicates existing structure

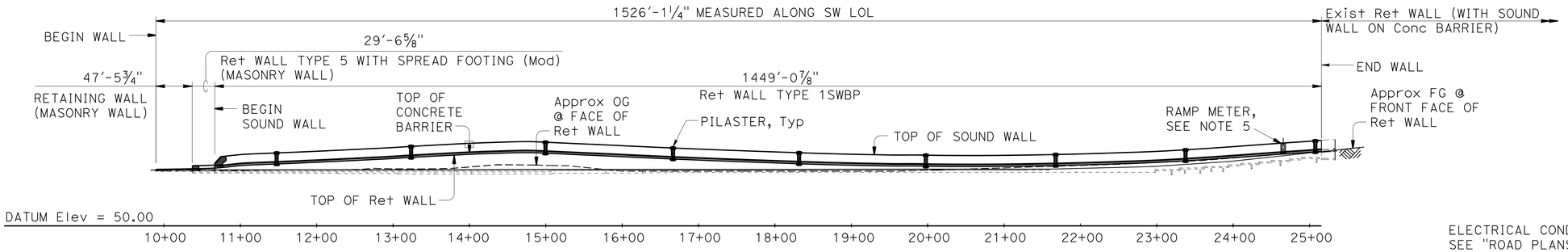

DEVELOPED ELEVATION

1" = 80'

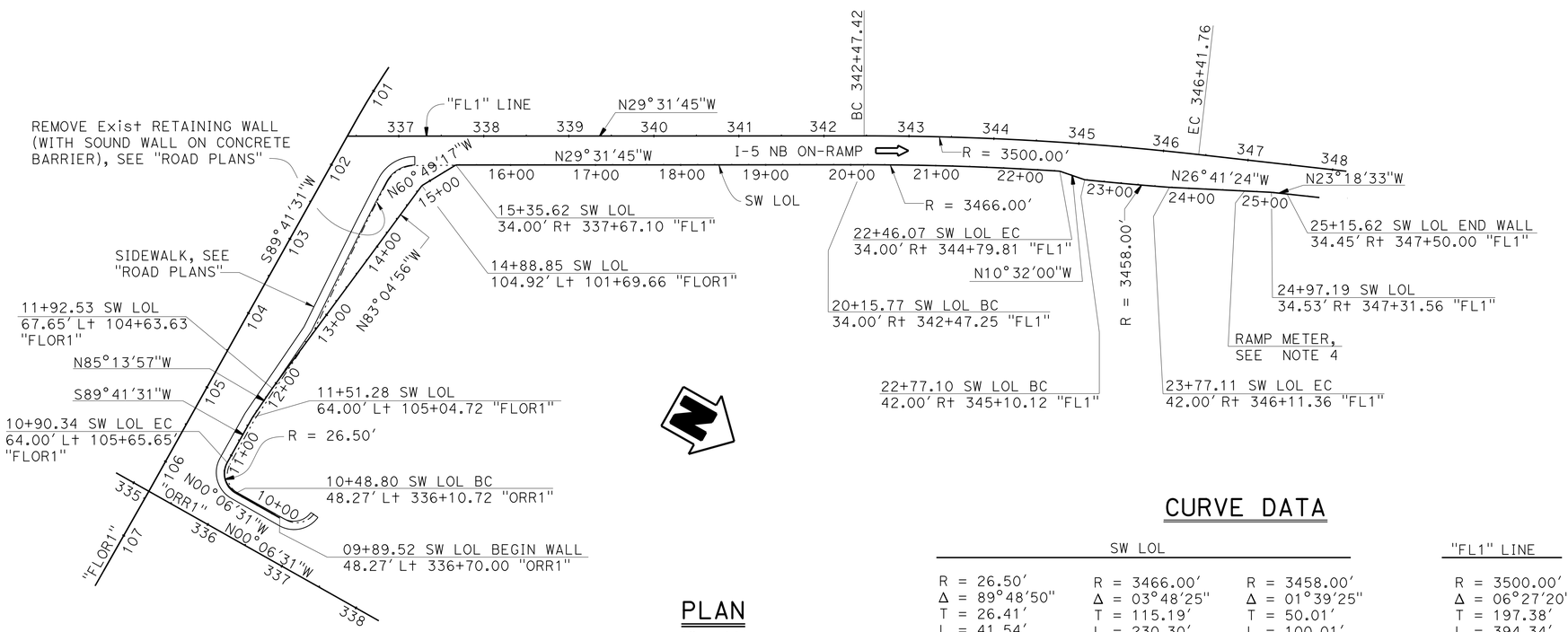

PLAN

1" = 80'

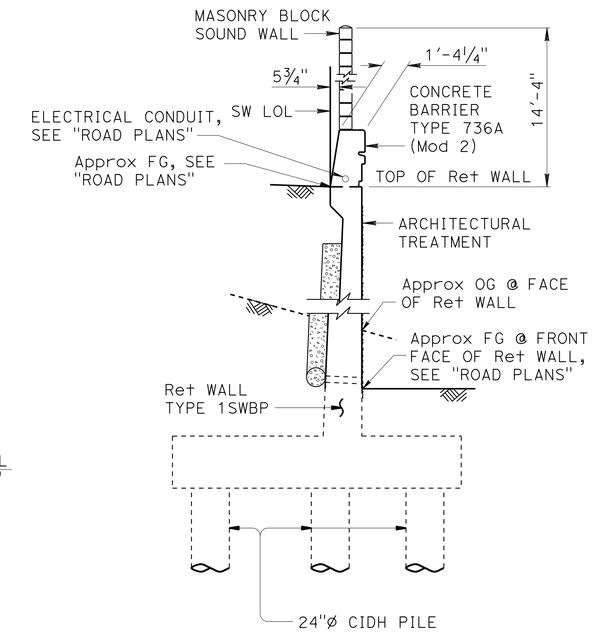

TYPICAL SECTION

¼" = 1'-0"

CURVE DATA

SW LOL			"FL1" LINE
R = 26.50'	R = 3466.00'	R = 3458.00'	R = 3500.00'
Δ = 89°48'50"	Δ = 03°48'25"	Δ = 01°39'25"	Δ = 06°27'20"
T = 26.41'	T = 115.19'	T = 50.01'	T = 197.38'
L = 41.54'	L = 230.30'	L = 100.01'	L = 394.34'

Jeff Sims
DESIGN ENGINEER

	BY	CHECKED		BY	CHECKED
DESIGN	Greg Thornton	Henry Fang	LOAD & RESISTANCE FACTOR DESIGN		
DETAILS	B. Huddleston / J. Zhou	Henry Fang	LAYOUT	Greg Thornton	Henry Fang
QUANTITIES	Paul Hayes	Nikki Tiongco	SPECIFICATIONS	Xiahong Li	PLANS AND SPECS COMPARED Xiahong Li

ORIGINAL SCALE IN INCHES FOR REDUCED PLANS 0 1 2 3

STATE OF CALIFORNIA
DEPARTMENT OF TRANSPORTATION

DIVISION OF ENGINEERING SERVICES
STRUCTURE DESIGN
DESIGN BRANCH 1

BRIDGE NO. 53E0211
POST MILE 6.35

SOUND WALL NO. 103
GENERAL PLAN

UNIT: 3576
PROJECT NUMBER & PHASE: 07000018351
CONTRACT NO.: 07-215954

DISREGARD PRINTS BEARING EARLIER REVISION DATES

REVISION DATES 12-26-12 05/22/13 05/24/13

SHEET 1 OF 40

STRUCTURES DESIGN GENERAL PLAN SHEET (ENGLISH) (REV.09-01-10)

FILE => sw103-a-gp_gp.dgn

USERNAME => s124496 DATE PLOTTED => 26-JUN-2013 TIME PLOTTED => 16:17

DIST	COUNTY	ROUTE	POST MILES TOTAL PROJECT	SHEET No.	TOTAL SHEETS
07	LA	5	0.0/7.6	715	985

P. Vijitakula 12/31/12
REGISTERED CIVIL ENGINEER DATE

6-24-13
PLANS APPROVAL DATE

REGISTERED PROFESSIONAL ENGINEER
P. VIJITAKULA
No. 54701
Exp. 12/31/13
CIVIL
STATE OF CALIFORNIA

The State of California or its officers or agents shall not be responsible for the accuracy or completeness of electronic copies of this plan sheet.

INDEX TO PLANS

SHEET No.	TITLE
1.	GENERAL PLAN
2.	INDEX TO PLANS
3.	EXCAVATION AND BACKFILL DETAILS
4.	STRUCTURE PLAN NO. 1
5.	STRUCTURE PLAN NO. 2
6.	STRUCTURE PLAN NO. 3
7.	STRUCTURE PLAN NO. 4
8.	STRUCTURE PLAN NO. 5
9.	STRUCTURE PLAN NO. 6
10.	FOUNDATION PLAN NO. 1
11.	FOUNDATION PLAN NO. 2
12.	FOUNDATION PLAN NO. 3
13.	FOUNDATION PLAN NO. 4
14.	RAMP METER PEDESTAL DETAILS
15.	RETAINING WALL ARCHITECTURAL TREATMENT NO. 1
16.	RETAINING WALL ARCHITECTURAL TREATMENT NO. 2
17.	RETAINING WALL ARCHITECTURAL TREATMENT NO. 3
18.	RETAINING WALL ARCHITECTURAL DETAILS NO. 1
19.	RETAINING WALL ARCHITECTURAL DETAILS NO. 2
20.	CONCRETE BARRIER TYPE 736A (MOD 2) DETAILS
21.	SOUND WALL ARCHITECTURAL DETAILS
22.	PILASTER ARCHITECTURAL DETAILS NO. 1
23.	PILASTER ARCHITECTURAL DETAILS NO. 2
24.	PILASTER ARCHITECTURAL DETAILS NO. 3
25.	PILASTER ARCHITECTURAL DETAILS NO. 4
26.	PILASTER STRUCTURAL DETAILS NO. 1
27.	PILASTER STRUCTURAL DETAILS NO. 2
28.	PILASTER STRUCTURAL DETAILS NO. 3
29.	RETAINING WALL TYPE 1SWBP - DETAILS NO. 1
30.	RETAINING WALL TYPE 1SWBP - DETAILS NO. 2
31.	MASONRY BLOCK SOUND WALL WITH BARRIER ON RETAINING WALL DETAILS NO. 1
32.	MASONRY BLOCK SOUND WALL WITH BARRIER ON RETAINING WALL DETAILS NO. 2
33.	LOG OF TEST BORINGS 1 OF 8
34.	LOG OF TEST BORINGS 2 OF 8
35.	LOG OF TEST BORINGS 3 OF 8
36.	LOG OF TEST BORINGS 4 OF 8
37.	LOG OF TEST BORINGS 5 OF 8
38.	LOG OF TEST BORINGS 6 OF 8
39.	LOG OF TEST BORINGS 7 OF 8
40.	LOG OF TEST BORINGS 8 OF 8

STANDARD PLANS DATED 2010

A10A	ABBREVIATIONS (SHEET 1 OF 2)
A10B	ABBREVIATIONS (SHEET 2 OF 2)
A10C	LINES AND SYMBOLS (SHEET 1 OF 3)
A10D	LINES AND SYMBOLS (SHEET 2 OF 3)
A10E	LINES AND SYMBOLS (SHEET 3 OF 3)
A10F	LEGEND - SOIL (SHEET 1 OF 2)
A10G	LEGEND - SOIL (SHEET 2 OF 2)
A10H	LEGEND - ROCK
A62B	LIMITS OF PAYMENT FOR EXCAVATION AND BACKFILL BRIDGE SURCHARGE AND WALL
B0-3	BRIDGE DETAILS
B2-3	16" AND 24" CAST-IN-DRILLED-HOLE CONCRETE PILE
RSP B3-4A	RETAINING WALL TYPE 5 (CASE 1)
RSP B3-5	RETAINING WALL DETAILS NO. 1
B11-56	CONCRETE BARRIER TYPE 736
B15-9	SOUND WALL MASONRY BLOCK MISCELLANEOUS DETAILS
ES-6B	ELECTRICAL SYSTEMS (ELECTROLIER ANCHORAGE AND GROUTING FOR TYPE 15 AND TYPE 21 BARRIER RAIL MOUNTED)
ES-7B	ELECTRICAL SYSTEMS (SIGNAL AND LIGHTING STANDARD, TYPE 1 AND EQUIPMENT NUMBERING)

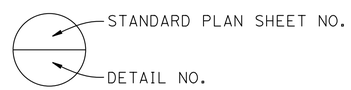

QUANTITIES

STRUCTURE EXCAVATION (RETAINING WALL)	2,675	CY
STRUCTURE EXCAVATION (TYPE Y-2) (AERIALLY DEPOSITED LEAD)	1,785	CY
STRUCTURE BACKFILL (RETAINING WALL)	5,685	CY
PERVIOUS BACKFILL MATERIAL (RETAINING WALL)	350	CY
RETAINING WALL (MASONRY WALL)	388	SQFT
24" CAST-IN-DRILLED-HOLE CONCRETE PILING	17,560	LF
STRUCTURAL CONCRETE, RETAINING WALL	2,330	CY
ARCHITECTURAL TREATMENT (SPLIT SLATE-FRACTURED RIB)	13,000	SQFT
PILASTER, SOUND WALL	18	CY
BAR REINFORCING STEEL (RETAINING WALL)	797,300	LB
SOUND WALL (MASONRY BLOCK)	16,500	SQFT
CONCRETE BARRIER (TYPE 736A MODIFIED)	1,450	LF

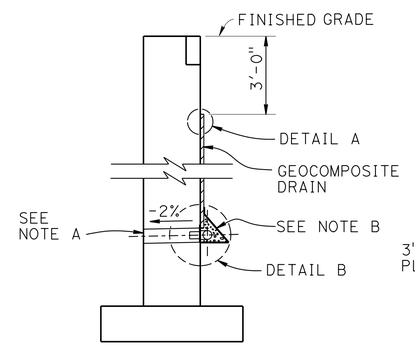

WALL SECTION

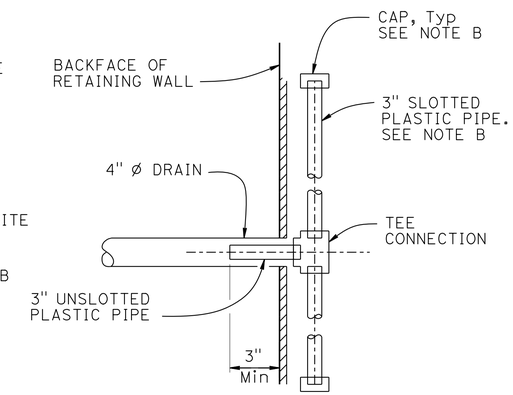

SECTION A-A

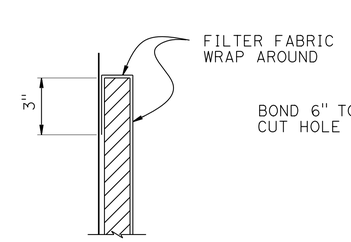

DETAIL A

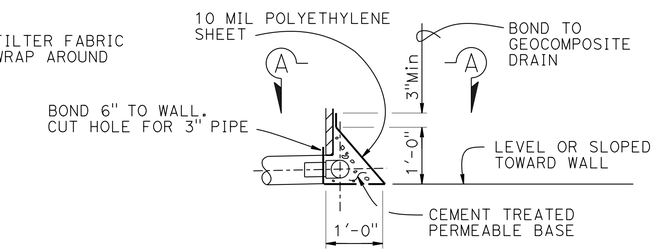

DETAIL B

WEEP HOLE AND GEOCOMPOSITE DRAIN

ALTERNATIVE TO BRIDGE DETAIL B0-3 / 3-1

NOTES:

A. 4" Ø drains at 25' max center to center. For walls adjacent to sidewalks or curbs, provide 4" cast iron or asbestos cement pipe under the sidewalk to discharge through curb face. Exposed wall drains shall be located 3"± above finished grade.

B. Geocomposite drain, cement treated permeable base, and 3"Ø slotted plastic pipe continuous behind retaining wall. Cap ends of pipe. Provide "Tee" connection at each 4" Ø drain.

	BY	CHECKED
DESIGN	Greg Thornton	Henry Fang
DETAILS	B. Huddleston / J. Zhou	Henry Fang
QUANTITIES	Paul Hayes	Nikki Tiongco

STATE OF CALIFORNIA
DEPARTMENT OF TRANSPORTATION

DIVISION OF ENGINEERING SERVICES
STRUCTURE DESIGN
DESIGN BRANCH 1

BRIDGE NO. 53E0211
POST MILE 6.35

SOUND WALL NO. 103
INDEX TO PLANS

STRUCTURES DESIGN DETAIL SHEET (ENGLISH) (REV. 09-01-10)

ORIGINAL SCALE IN INCHES FOR REDUCED PLANS 0 1 2 3

UNIT: 3576
PROJECT NUMBER & PHASE: 07000018351
CONTRACT NO.: 07-215954

DISREGARD PRINTS BEARING EARLIER REVISION DATES

REVISION DATES: 6-06-12 12/20/12 11-14-12

SHEET 2 OF 40

FILE => sw103-a-itp01.dgn

USERNAME => s135318 DATE PLOTTED => 23-JUL-2013 TIME PLOTTED => 11:38

DIST	COUNTY	ROUTE	POST MILES TOTAL PROJECT	SHEET No.	TOTAL SHEETS
07	LA	5	0.0/7.6	716	985

P. Vijitakula 12/31/12
REGISTERED CIVIL ENGINEER DATE

6-24-13
PLANS APPROVAL DATE

REGISTERED PROFESSIONAL ENGINEER
P. VIJITAKULA
No. 54701
Exp. 12/31/13
CIVIL
STATE OF CALIFORNIA

The State of California or its officers or agents shall not be responsible for the accuracy or completeness of electronic copies of this plan sheet.

PILE DATA TABLE

LOCATION	PILE TYPE (CIDH)	CUT-OFF ELIVATION (ft)	NOMINAL RESISTANCE (KIPS) COMPRESSION	NOMINAL RESISTANCE (KIPS) TENSION	DESIGN TIP ELIVATIONS (ft)	SPECIFIED TIP ELIVATION (ft)
Ret WALL TYPE 1SWBP SW LOL 10+66.55 to 11+38.55	24"	119.8	180	0	(a) = 85.0 (c) = 100.0 (d) = 92.0	85.0
Ret WALL TYPE 1SWBP SW LOL 11+38.55 to 11+86.55	24"	119.8	180	0	(a) = 83.0 (c) = 100.0 (d) = 92.0	83.0
Ret WALL TYPE 1SWBP SW LOL 11+86.55 to 12+26.55	24"	119.5	190	0	(a) = 85.0 (c) = 101.0 (d) = 92.0	85.0
Ret WALL TYPE 1SWBP SW LOL 12+26.55 to 12+66.55	24"	119.3	190	0	(a) = 85.0 (c) = 101.0 (d) = 92.0	85.0
Ret WALL TYPE 1SWBP SW LOL 12+66.55 to 13+06.55	24"	119.3	190	-10	(a) = 85.0 (c) = 101.0 (d) = 92.0	85.0
Ret WALL TYPE 1SWBP SW LOL 13+06.55 to 13+54.55	24"	118.8	220	-20	(a) = 82.0 (c) = 98.0 (d) = 91.0	82.0
Ret WALL TYPE 1SWBP SW LOL 13+54.55 to 15+06.55	24"	118.5	210	-40	(a) = 80.0 (c) = 101.0 (d) = 87.0	80.0
Ret WALL TYPE 1SWBP SW LOL 15+06.55 to 15+78.55	24"	119.0	210	-40	(a) = 81.0 (c) = 102.0 (d) = 88.0	81.0
Ret WALL TYPE 1SWBP SW LOL 15+78.55 to 16+26.55	24"	119.3	220	-20	(a) = 81.0 (c) = 101.0 (d) = 92.0	81.0
Ret WALL TYPE 1SWBP SW LOL 16+26.55 to 16+62.55	24"	119.8	190	-10	(a) = 84.0 (c) = 103.0 (d) = 93.0	84.0
Ret WALL TYPE 1SWBP SW LOL 16+62.55 to 16+98.55	24"	119.8	190	0	(a) = 88.0 (c) = 105.0 (d) = 93.0	88.0
Ret WALL TYPE 1SWBP SW LOL 16+98.55 to 18+18.55	24"	120.0	190	0	(a) = 90.0 (c) = 104.0 (d) = 93.0	90.0
Ret WALL TYPE 1SWBP SW LOL 18+18.55 to 21+94.55	24"	120.3	180	0	(a) = 87.0 (c) = 98.0 (d) = 93.0	87.0
Ret WALL TYPE 1SWBP SW LOL 21+94.55 to 22+98.55	24"	120.8	180	0	(a) = 92.0 (c) = 105.0 (d) = 93.0	92.0
Ret WALL TYPE 1SWBP SW LOL 22+98.55 to 23+30.55	24"	123.0	180	0	(a) = 91.0 (c) = 107.0 (d) = 95.0	91.0
Ret WALL TYPE 1SWBP SW LOL 23+30.55 to 23+62.55	24"	125.0	180	0	(a) = 85.0 (c) = 105.0 (d) = 97.0	85.0
Ret WALL TYPE 1SWBP SW LOL 23+62.55 to 23+94.55	24"	127.0	180	0	(a) = 87.0 (c) = 107.0 (d) = 99.0	87.0
Ret WALL TYPE 1SWBP SW LOL 23+94.55 to 24+10.55	24"	129.0	180	0	(a) = 89.0 (c) = 109.0 (d) = 101.0	89.0
Ret WALL TYPE 1SWBP SW LOL 24+10.55 to 24+34.55	24"	131.0	180	0	(a) = 91.0 (c) = 111.0 (d) = 103.0	91.0
Ret WALL TYPE 1SWBP SW LOL 24+34.55 to 24+50.55	24"	133.0	180	0	(a) = 88.0 (c) = 115.0 (d) = 105.0	88.0
Ret WALL TYPE 1SWBP SW LOL 24+50.55 to 24+74.55	24"	135.0	180	0	(a) = 90.0 (c) = 117.0 (d) = 107.0	90.0
Ret WALL TYPE 1SWBP SW LOL 24+74.55 to 24+90.55	24"	137.0	180	0	(a) = 92.0 (c) = 119.0 (d) = 109.0	92.0
Ret WALL TYPE 1SWBP SW LOL 24+90.55 to 25+15.62	24"	139.0	180	0	(a) = 94.0 (c) = 121.0 (d) = 111.0	94.0

NOTES:

1. Design tip elevations are controlled by: (a) Compression, (c) Settlement and (d) Lateral Load.
2. The specified tip elevation shall not be raised, unless directed by Engineer.

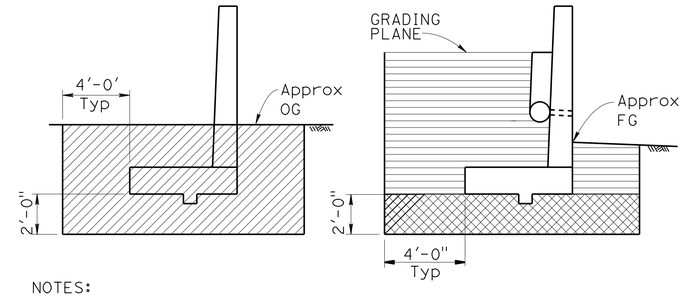

NOTES:

- For Retaining Wall Type 5 with spread footing foundation
- For other retaining walls that detail not shown, see Std Plan A62B.

LEGEND:

Structure excavation

Structure backfill

Structure backfill to be compacted to 95% relative compaction

LIMITS OF PAYMENT FOR EXCAVATION AND BACKFILL

No Scale

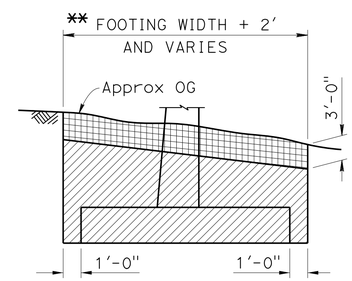

SW LOL 10+76.00 TO 25+15.62

** For Y-2 Structure Excavation only

LEGEND:

STRUCTURE EXCAVATION (TYPE Y-2)

STRUCTURE EXCAVATION

LIMITS OF PAYMENT FOR STRUCTURE EXCAVATION (TYPE Y-2) (AERIALLY DEPOSITED LEAD)

NO SCALE

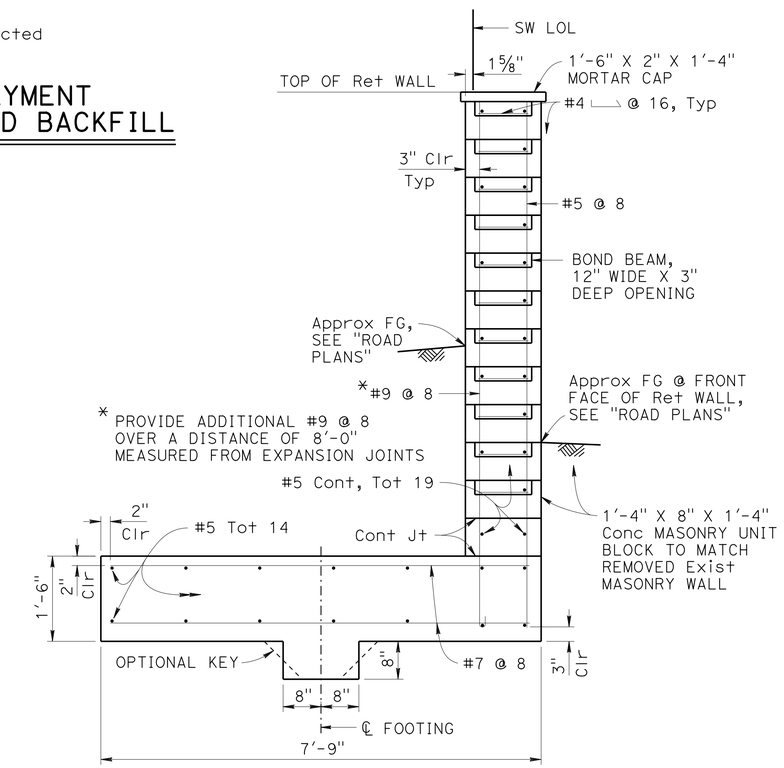

Ret WALL TYPE 5 WITH SPREAD FOOTING (Mod)

SECTION B-B

¾" = 1'-0"

NOTES:

1. For location of SECTION B-B, see "STRUCTURE PLAN NO. 1" sheet.
2. For details not shown, see Retaining Wall Type 5 (CASE 1) B3-4A .

DESIGN	BY Greg Thornton	CHECKED Henry Fang	
DETAILS	BY B. Huddleston / J. Zhou	CHECKED Henry Fang	
QUANTITIES	BY Paul Hayes	CHECKED Nikki Tiongco	

STATE OF CALIFORNIA
DEPARTMENT OF TRANSPORTATION

DIVISION OF ENGINEERING SERVICES
STRUCTURE DESIGN
DESIGN BRANCH 1

BRIDGE NO. 53E0211
POST MILE 6.35

SOUND WALL NO. 103
EXCAVATION AND BACKFILL DETAILS

STRUCTURES DESIGN DETAIL SHEET (ENGLISH) (REV. 09-01-10)

ORIGINAL SCALE IN INCHES FOR REDUCED PLANS 0 1 2 3

UNIT: 3576
PROJECT NUMBER & PHASE: 07000018351
CONTRACT NO.: 07-215954

DISREGARD PRINTS BEARING EARLIER REVISION DATES

REVISION DATES 6-06-12 05/22/13 05/04/13

SHEET 3 OF 40

FILE => sw103-a-itp02.dgn

USERNAME => s124496 DATE PLOTTED => 26-JUN-2013 TIME PLOTTED => 16:17

DIST	COUNTY	ROUTE	POST MILES TOTAL PROJECT	SHEET No.	TOTAL SHEETS
07	LA	5	0.0/7.6	717	985

P. Vijitakula 12/31/12
REGISTERED CIVIL ENGINEER DATE

6-24-13
PLANS APPROVAL DATE

REGISTERED PROFESSIONAL ENGINEER
P. VIJITAKULA
No. 54701
Exp. 12/31/13
CIVIL
STATE OF CALIFORNIA

The State of California or its officers or agents shall not be responsible for the accuracy or completeness of electronic copies of this plan sheet.

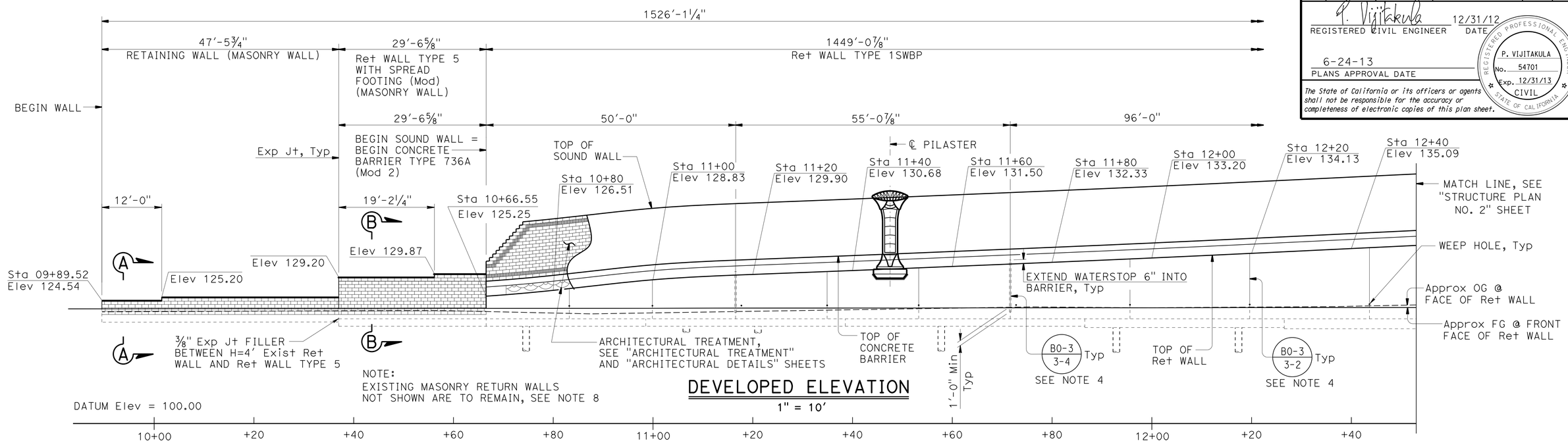

DEVELOPED ELEVATION

1" = 10'

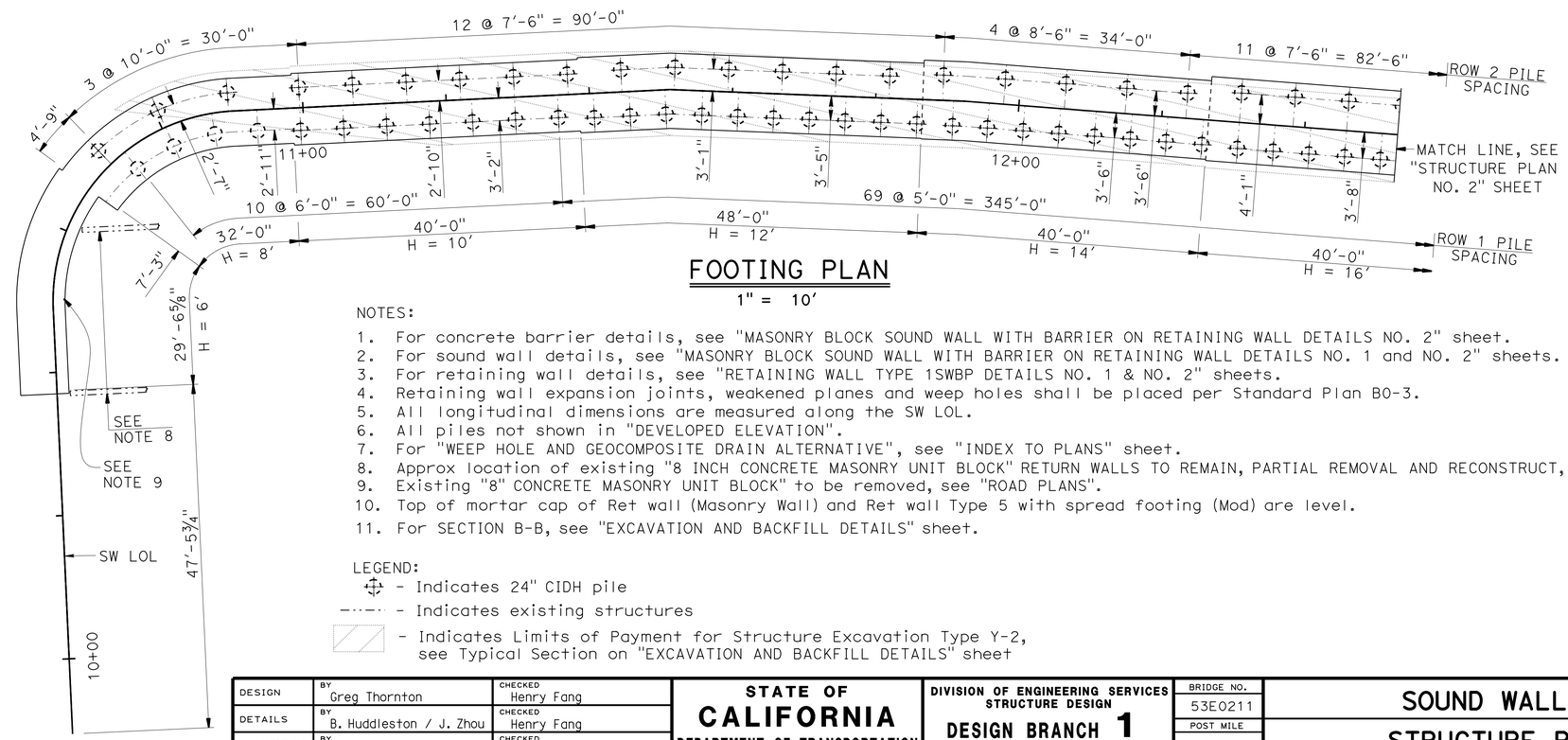

FOOTING PLAN

1" = 10'

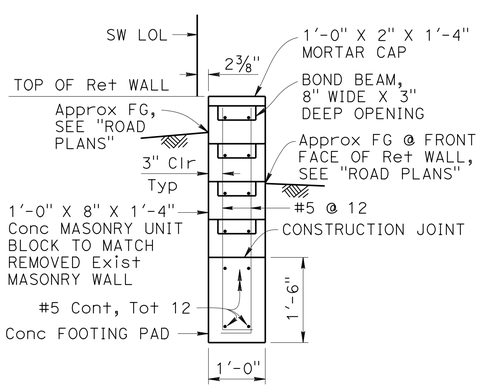

Ret WALL (MASONRY WALL)

SECTION A-A

¾" = 1'-0"

NOTES:

1. For concrete barrier details, see "MASONRY BLOCK SOUND WALL WITH BARRIER ON RETAINING WALL DETAILS NO. 2" sheet.
2. For sound wall details, see "MASONRY BLOCK SOUND WALL WITH BARRIER ON RETAINING WALL DETAILS NO. 1 and NO. 2" sheets.
3. For retaining wall details, see "RETAINING WALL TYPE 1SWBP DETAILS NO. 1 & NO. 2" sheets.
4. Retaining wall expansion joints, weakened planes and weep holes shall be placed per Standard Plan B0-3.
5. All longitudinal dimensions are measured along the SW LOL.
6. All piles not shown in "DEVELOPED ELEVATION".
7. For "WEEP HOLE AND GEOCOMPOSITE DRAIN ALTERNATIVE", see "INDEX TO PLANS" sheet.
8. Approx location of existing "8 INCH CONCRETE MASONRY UNIT BLOCK" RETURN WALLS TO REMAIN, PARTIAL REMOVAL AND RECONSTRUCT, see "ROAD PLANS".
9. Existing "8" CONCRETE MASONRY UNIT BLOCK" to be removed, see "ROAD PLANS".
10. Top of mortar cap of Ret wall (Masonry Wall) and Ret wall Type 5 with spread footing (Mod) are level.
11. For SECTION B-B, see "EXCAVATION AND BACKFILL DETAILS" sheet.

LEGEND:

- Indicates 24" CIDH pile
- Indicates existing structures
- Indicates Limits of Payment for Structure Excavation Type Y-2, see Typical Section on "EXCAVATION AND BACKFILL DETAILS" sheet

	BY	CHECKED
DESIGN	Greg Thornton	Henry Fang
DETAILS	B. Huddleston / J. Zhou	Henry Fang
QUANTITIES	Paul Hayes	Nikki Tiongco

STATE OF CALIFORNIA
DEPARTMENT OF TRANSPORTATION

DIVISION OF ENGINEERING SERVICES
STRUCTURE DESIGN
DESIGN BRANCH 1

BRIDGE NO. 53E0211
POST MILE 6.35

SOUND WALL NO. 103
STRUCTURE PLAN NO. 1

STRUCTURES DESIGN DETAIL SHEET (ENGLISH) (REV. 09-01-10)

ORIGINAL SCALE IN INCHES FOR REDUCED PLANS 0 1 2 3

UNIT: 3576
PROJECT NUMBER & PHASE: 07000018351
CONTRACT NO.: 07-215954

DISREGARD PRINTS BEARING EARLIER REVISION DATES

REVISION DATES 12-26-12 05/22/13 05/24/13

SHEET 4 OF 40

FILE => sw103-c-sp01.dgn

USERNAME => s124496 DATE PLOTTED => 26-JUN-2013 TIME PLOTTED => 16:17

DIST	COUNTY	ROUTE	POST MILES TOTAL PROJECT	SHEET No.	TOTAL SHEETS
07	LA	5	0.0/7.6	718	985

P. Vijitakula 12/31/12
REGISTERED CIVIL ENGINEER DATE

6-24-13
PLANS APPROVAL DATE

REGISTERED PROFESSIONAL ENGINEER
P. VIJITAKULA
No. 54701
Exp. 12/31/13
CIVIL
STATE OF CALIFORNIA

The State of California or its officers or agents shall not be responsible for the accuracy or completeness of electronic copies of this plan sheet.

For "NOTES" and "LEGEND", see "STRUCTURE PLAN NO. 1" sheet.

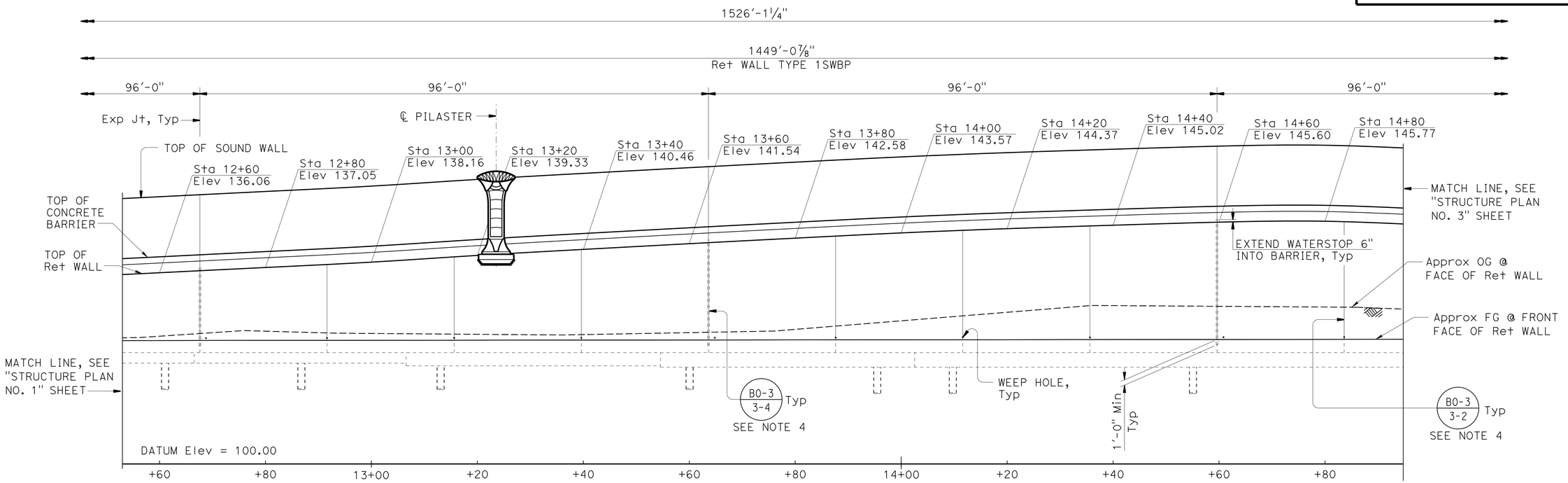

DEVELOPED ELEVATION

1" = 10'

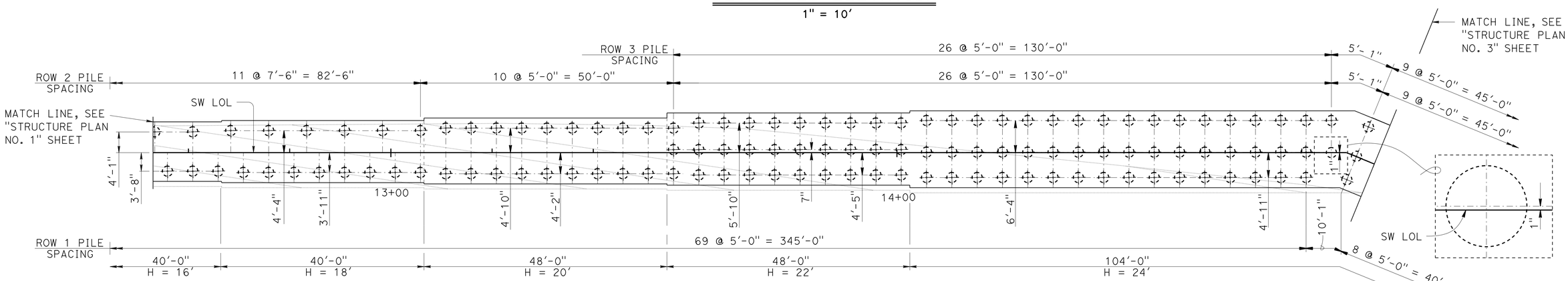

FOOTING PLAN

1" = 10'

DESIGN	BY Greg Thornton	CHECKED Henry Fang	
DETAILS	BY B. Huddleston / J. Zhou	CHECKED Henry Fang	
QUANTITIES	BY Paul Hayes	CHECKED Nikki Tiongco	

STATE OF CALIFORNIA
DEPARTMENT OF TRANSPORTATION

DIVISION OF ENGINEERING SERVICES
STRUCTURE DESIGN
DESIGN BRANCH 1

BRIDGE NO. 53E0211
POST MILE 6.35

SOUND WALL NO. 103
STRUCTURE PLAN NO. 2

STRUCTURES DESIGN DETAIL SHEET (ENGLISH) (REV. 09-01-10)

ORIGINAL SCALE IN INCHES FOR REDUCED PLANS 0 1 2 3

UNIT: 3576
PROJECT NUMBER & PHASE: 07000018351
CONTRACT NO.: 07-215954

DISREGARD PRINTS BEARING EARLIER REVISION DATES

REVISION DATES 3-28-12 05-03-13 05/07/13

SHEET 5 OF 40

FILE => sw103-c-sp02.dgn

USERNAME => s124496 DATE PLOTTED => 26-JUN-2013 TIME PLOTTED => 16:18

DIST	COUNTY	ROUTE	POST MILES TOTAL PROJECT	SHEET No.	TOTAL SHEETS
07	LA	5	0.0/7.6	719	985

P. Vijitakula 12/31/12
REGISTERED CIVIL ENGINEER DATE

6-24-13
PLANS APPROVAL DATE

REGISTERED PROFESSIONAL ENGINEER P. VIJITAKULA No. 54701 Exp. 12/31/13 CIVIL STATE OF CALIFORNIA

The State of California or its officers or agents shall not be responsible for the accuracy or completeness of electronic copies of this plan sheet.

NOTES:

1. Reinforcement replaces RW Type 1SWBP standard reinforcement.
2. Reinforcement placed in addition to RW Type 1SWBP standard reinforcement.
3. For all other "NOTES" and "LEGEND", see "STRUCTURAL PLAN NO. 1" sheet.
4. For "NOTE" and "LEGEND", see "STRUCTURE PLAN No. 1" sheet.

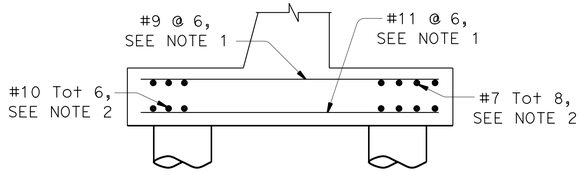

(SW LOL Sta 17+32 TO 17+73)

SECTION A-A

NO SCALE

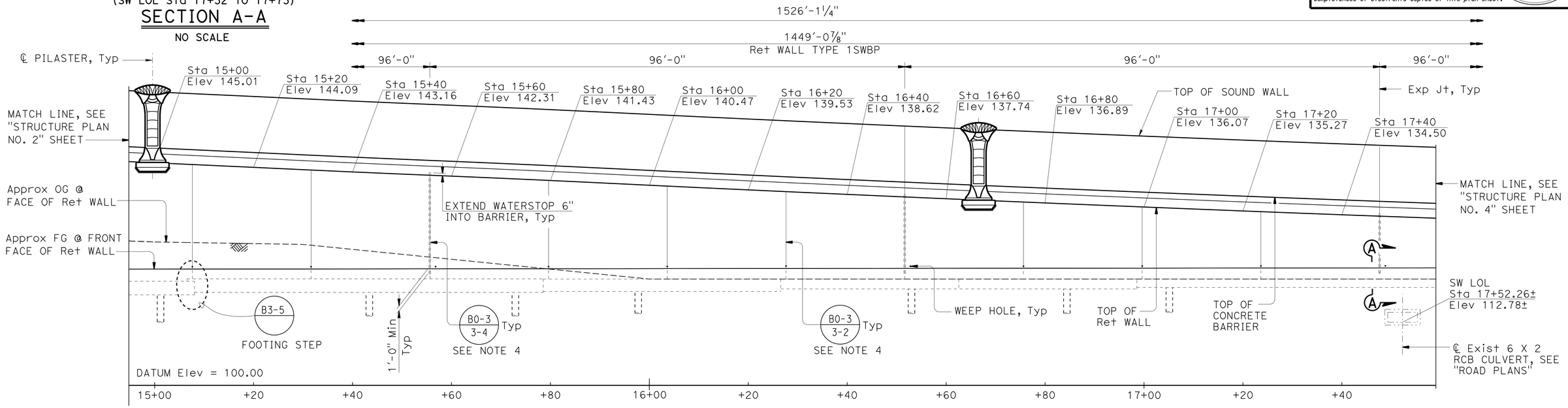

DEVELOPED ELEVATION

1" = 10'

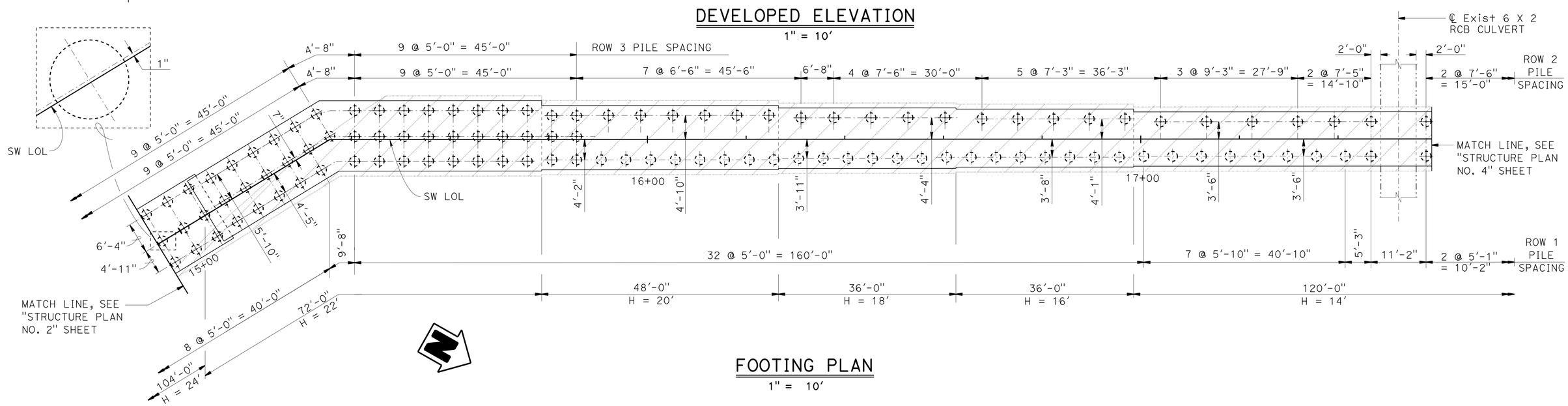

FOOTING PLAN

1" = 10'

	BY	CHECKED
DESIGN	Greg Thornton	Henry Fang
DETAILS	B. Huddleston / J. Zhou	Henry Fang
QUANTITIES	Paul Hayes	Nikki Tiongco

STATE OF CALIFORNIA
DEPARTMENT OF TRANSPORTATION

DIVISION OF ENGINEERING SERVICES
STRUCTURE DESIGN
DESIGN BRANCH 1

BRIDGE NO. 53E0211
POST MILE 6.35

SOUND WALL NO. 103
STRUCTURE PLAN NO. 3

STRUCTURES DESIGN DETAIL SHEET (ENGLISH) (REV. 09-01-10)

ORIGINAL SCALE IN INCHES FOR REDUCED PLANS 0 1 2 3

UNIT: 3576
PROJECT NUMBER & PHASE: 07000018351
CONTRACT NO.: 07-215954

DISREGARD PRINTS BEARING EARLIER REVISION DATES

REVISION DATES: 3-28-12 05/03/13 05/07/13

SHEET 6 OF 40

FILE => sw103-c-sp03.dgn

USERNAME => s124496 DATE PLOTTED => 26-JUN-2013 TIME PLOTTED => 16:18

DIST	COUNTY	ROUTE	POST MILES TOTAL PROJECT	SHEET No.	TOTAL SHEETS
07	LA	5	0.0/7.6	720	985

P. Vijitakula 12/31/12
REGISTERED CIVIL ENGINEER DATE

6-24-13
PLANS APPROVAL DATE

REGISTERED PROFESSIONAL ENGINEER P. VIJITAKULA No. 54701 Exp. 12/31/13 CIVIL STATE OF CALIFORNIA

The State of California or its officers or agents shall not be responsible for the accuracy or completeness of electronic copies of this plan sheet.

For "NOTES" and "LEGEND", see "STRUCTURE PLAN NO. 1" sheet.

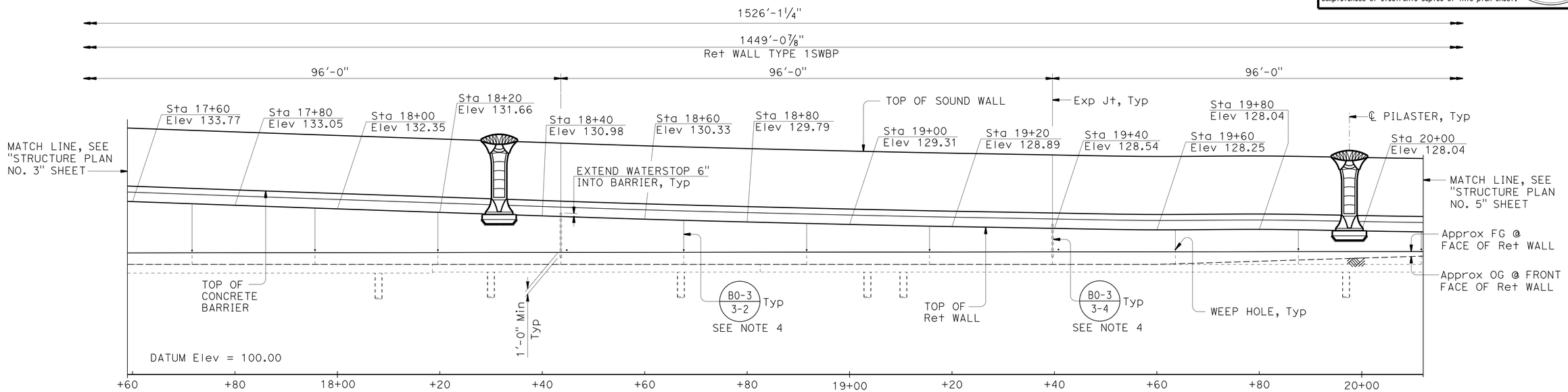

DEVELOPED ELEVATION

1" = 10'

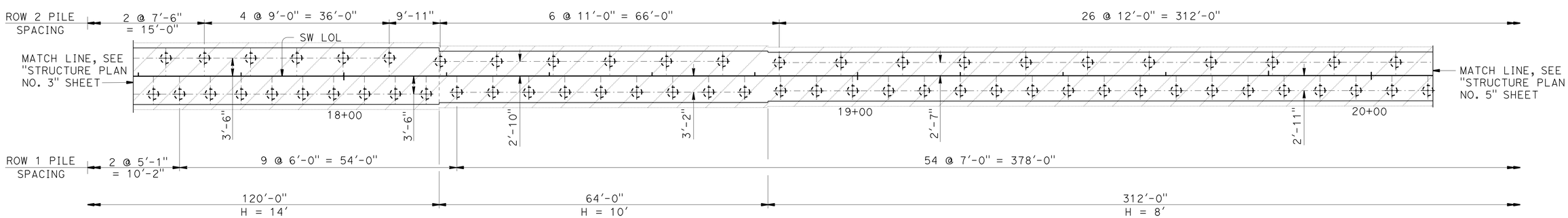

FOOTING PLAN

1" = 10'

DESIGN	BY Greg Thornton	CHECKED Henry Fang	
DETAILS	BY B. Huddleston / J. Zhou	CHECKED Henry Fang	
QUANTITIES	BY Paul Hayes	CHECKED Nikki Tiongco	

STATE OF CALIFORNIA
DEPARTMENT OF TRANSPORTATION

DIVISION OF ENGINEERING SERVICES
STRUCTURE DESIGN
DESIGN BRANCH 1

BRIDGE NO. 53E0211
POST MILE 6.35

SOUND WALL NO. 103
STRUCTURE PLAN NO. 4

STRUCTURES DESIGN DETAIL SHEET (ENGLISH) (REV. 09-01-10)

ORIGINAL SCALE IN INCHES FOR REDUCED PLANS 0 1 2 3

UNIT: 3576
PROJECT NUMBER & PHASE: 07000018351
CONTRACT NO.: 07-215954

DISREGARD PRINTS BEARING EARLIER REVISION DATES

REVISION DATES: 3-29-12 05-08-13 03-04-13

SHEET 7 OF 40

FILE => sw103-c-sp04.dgn

USERNAME => s124496 DATE PLOTTED => 26-JUN-2013 TIME PLOTTED => 16:18

DIST	COUNTY	ROUTE	POST MILES TOTAL PROJECT	SHEET No.	TOTAL SHEETS
07	LA	5	0.0/7.6	721	985

P. Vijitakula 12/31/12
REGISTERED CIVIL ENGINEER DATE

6-24-13
PLANS APPROVAL DATE

REGISTERED PROFESSIONAL ENGINEER
P. VIJITAKULA
No. 54701
Exp. 12/31/13
CIVIL
STATE OF CALIFORNIA

The State of California or its officers or agents shall not be responsible for the accuracy or completeness of electronic copies of this plan sheet.

For "NOTES" and "LEGEND", see "STRUCTURE PLAN NO. 1" sheet.

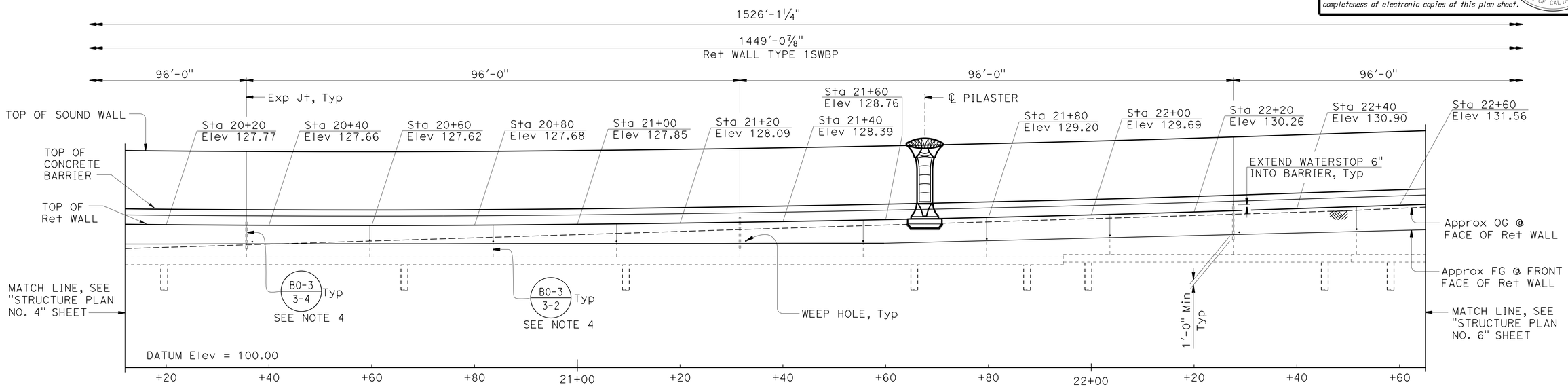

DEVELOPED ELEVATION

1" = 10'

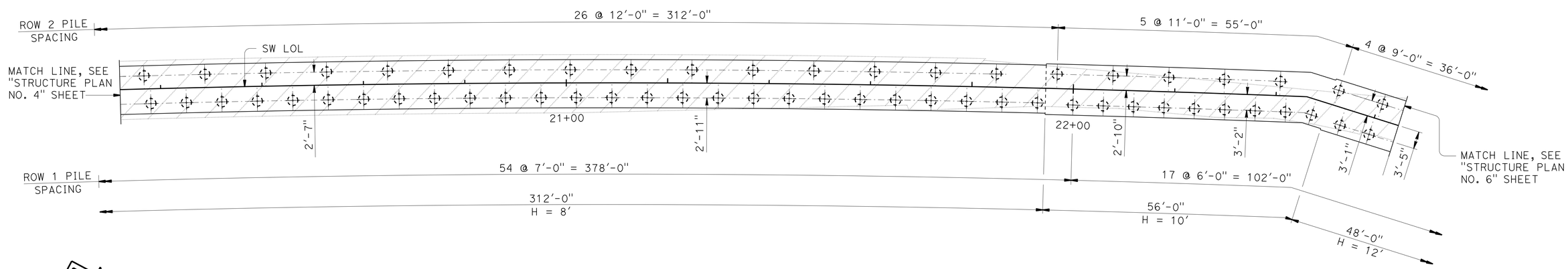

FOOTING PLAN

1" = 10'

DESIGN	BY Greg Thornton	CHECKED Henry Fang	
DETAILS	BY B. Huddleston / J. Zhou	CHECKED Henry Fang	
QUANTITIES	BY Paul Hayes	CHECKED Nikki Tiongco	

STATE OF CALIFORNIA
DEPARTMENT OF TRANSPORTATION

DIVISION OF ENGINEERING SERVICES
STRUCTURE DESIGN
DESIGN BRANCH 1

BRIDGE NO. 53E0211
POST MILE 6.35

SOUND WALL NO. 103
STRUCTURE PLAN NO. 5

STRUCTURES DESIGN DETAIL SHEET (ENGLISH) (REV. 09-01-10)

ORIGINAL SCALE IN INCHES FOR REDUCED PLANS 0 1 2 3

UNIT: 3576
PROJECT NUMBER & PHASE: 07000018351
CONTRACT NO.: 07-215954

DISREGARD PRINTS BEARING EARLIER REVISION DATES

REVISION DATES: 3-29-12 05-08-13 03/22/12

SHEET 8 OF 40

FILE => sw103-c-sp05.dgn

USERNAME => s124496 DATE PLOTTED => 26-JUN-2013 TIME PLOTTED => 16:18

DIST	COUNTY	ROUTE	POST MILES TOTAL PROJECT	SHEET No.	TOTAL SHEETS
07	LA	5	0.0/7.6	722	985

P. Vijitakula 12/31/12
REGISTERED CIVIL ENGINEER DATE

6-24-13
PLANS APPROVAL DATE

REGISTERED PROFESSIONAL ENGINEER
P. VIJITAKULA
No. 54701
Exp. 12/31/13
CIVIL
STATE OF CALIFORNIA

The State of California or its officers or agents shall not be responsible for the accuracy or completeness of electronic copies of this plan sheet.

For "NOTES" and "LEGEND", see "STRUCTURE PLAN NO. 1" sheet.

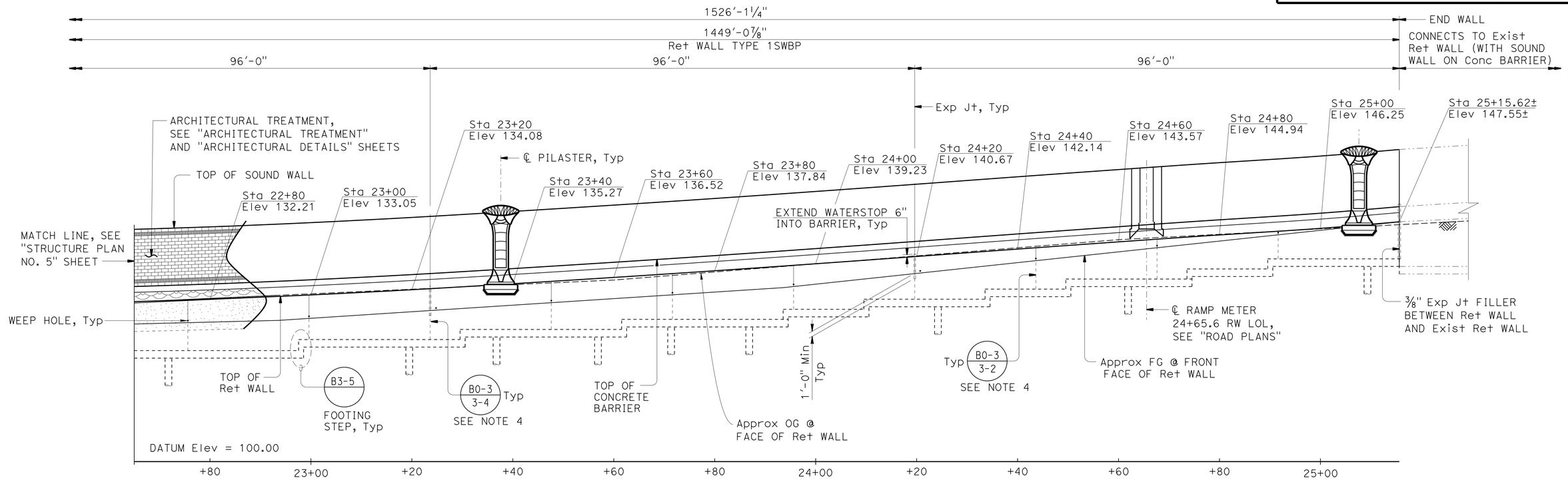

DEVELOPED ELEVATION

1" = 10'

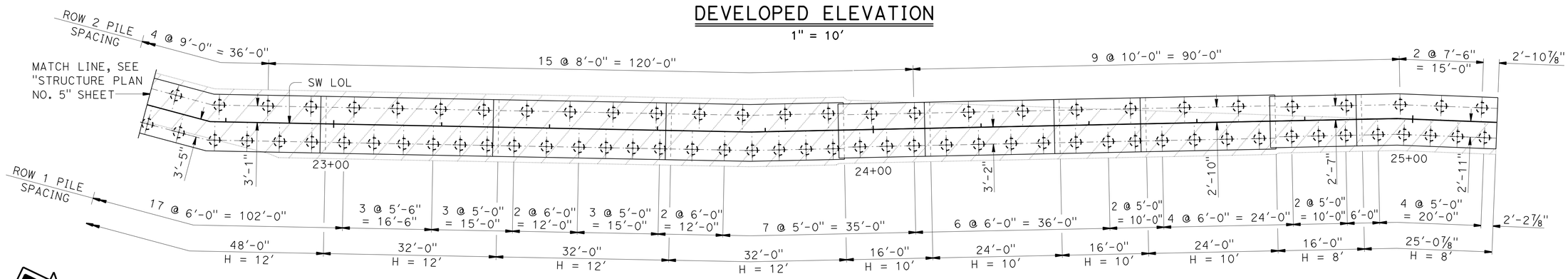

FOOTING PLAN

1" = 10'

DESIGN	BY Greg Thornton	CHECKED Henry Fang	
DETAILS	BY B. Huddleston / J. Zhou	CHECKED Henry Fang	
QUANTITIES	BY Paul Hayes	CHECKED Nikki Tiongco	

STATE OF CALIFORNIA
DEPARTMENT OF TRANSPORTATION

DIVISION OF ENGINEERING SERVICES
STRUCTURE DESIGN
DESIGN BRANCH 1

BRIDGE NO. 53E0211
POST MILE 6.35

SOUND WALL NO. 103
STRUCTURE PLAN NO. 6

STRUCTURES DESIGN DETAIL SHEET (ENGLISH) (REV. 09-01-10)

ORIGINAL SCALE IN INCHES FOR REDUCED PLANS 0 1 2 3

UNIT: 3576
PROJECT NUMBER & PHASE: 07000018351
CONTRACT NO.: 07-215954

DISREGARD PRINTS BEARING EARLIER REVISION DATES

REVISION DATES: 4-04-12 05/08/13 03/29/13

SHEET 9 OF 40

FILE => sw103-c-sp06.dgn

USERNAME => s124496 DATE PLOTTED => 26-JUN-2013 TIME PLOTTED => 16:18

DIST	COUNTY	ROUTE	POST MILES TOTAL PROJECT	SHEET No.	TOTAL SHEETS
07	LA	5	0.0/7.6	723	985

P. Vijitakula 12/31/12
REGISTERED CIVIL ENGINEER DATE

6-24-13
PLANS APPROVAL DATE

REGISTERED PROFESSIONAL ENGINEER
P. VIJITAKULA
No. 54701
Exp. 12/31/13
CIVIL
STATE OF CALIFORNIA

The State of California or its officers or agents shall not be responsible for the accuracy or completeness of electronic copies of this plan sheet.

CURVE DATA				
No.	R	Δ	T	L
(A)	26.50	89°48'50"	26.41	41.54

(1) Sta 106+40.12 "FLOR1" POT =
Sta 335+20.48 "ORD1" POT

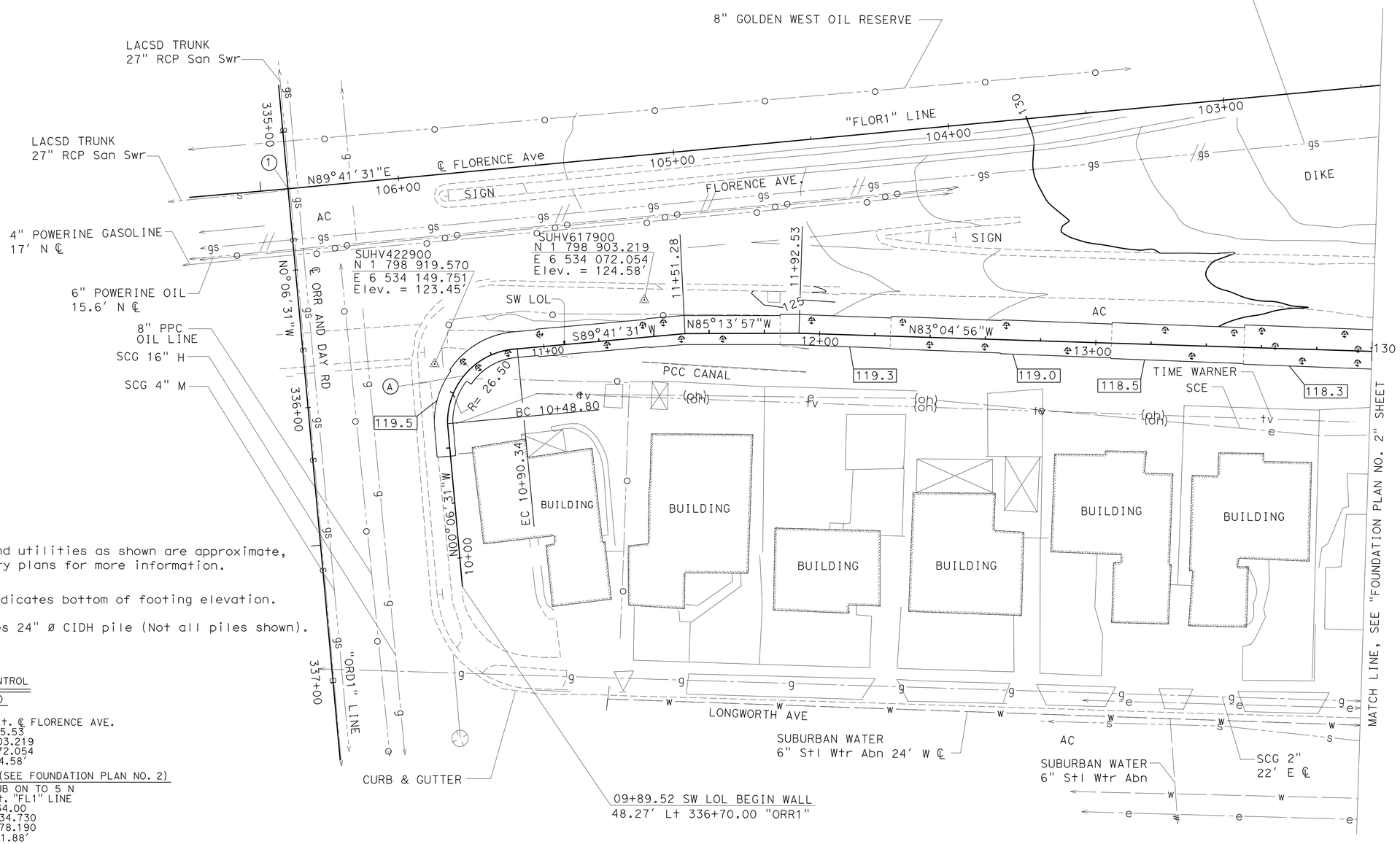

NOTES:

Underground utilities as shown are approximate, See utility plans for more information.

XXX.X - Indicates bottom of footing elevation.

⊕ - Indicates 24" ø CIDH pile (Not all piles shown).

SURVEY CONTROL

SUHV617900
FD. MN & W
52.22 FT Lt. ℄ FLORENCE AVE.
Sta. 105+15.53
N 1 798 903.219
E 6 534 072.054
Elev. = 124.58'

PRHV 934 (SEE FOUNDATION PLAN NO. 2)
FD. 1X2 HUB ON TO 5 N
7.24 FT Rt. "FL1" LINE
Sta. 337+34.00
N 1 798 934.730
E 6 533 678.190
Elev. = 131.88'

PRELIMINARY INVESTIGATION SECTION

SCALE 1"=20'	VERT.DATUM NAVD 88	PHOTOGRAMMETRY AS OF: X		
	HORZ.DATUM NAD 83 (1991.35)	SURVEYED	BY C.STEWART / T.PHUNG	CHECKED BY C. STEWART 9/2011
ALIGNMENT TIES Dist. Traverse Sheet		DRAFTED	BY S. ABASSY 10/2011	CHECKED BY S. ALIVIO 10/2011

DESIGN	BY Greg Thornton	CHECKED Henry Fang
DETAILS	BY B. Huddleston / J. Zhou	CHECKED Henry Fang
QUANTITIES	BY Paul Hayes	CHECKED Nikki Tiongco

STATE OF CALIFORNIA
DEPARTMENT OF TRANSPORTATION

DIVISION OF ENGINEERING SERVICES
STRUCTURE DESIGN
DESIGN BRANCH 1

BRIDGE NO. 53E0211
POST MILE 6.35

SOUND WALL NO. 103
FOUNDATION PLAN NO. 1

STRUCTURES FOUNDATION PLAN SHEET (ENGLISH) (REV. 09-01-10)

ORIGINAL SCALE IN INCHES FOR REDUCED PLANS 0 1 2 3

UNIT: 3576
PROJECT NUMBER & PHASE: 07000018351
CONTRACT NO.: 07-215954

DISREGARD PRINTS BEARING EARLIER REVISION DATES
REVISION DATES 10-13-11 03-09-13 03/22/13

SHEET 10 OF 40

FILE => sw103-e-fp101.dgn

USERNAME => s124496 DATE PLOTTED => 26-JUN-2013 TIME PLOTTED => 16:18

DIST	COUNTY	ROUTE	POST MILES TOTAL PROJECT	SHEET No.	TOTAL SHEETS
07	LA	5	0.0/7.6	724	985

P. Vijitakula 12/31/12
REGISTERED CIVIL ENGINEER DATE

6-24-13
PLANS APPROVAL DATE

REGISTERED PROFESSIONAL ENGINEER
P. VIJITAKULA
No. 54701
Exp. 12/31/13
CIVIL
STATE OF CALIFORNIA

The State of California or its officers or agents shall not be responsible for the accuracy or completeness of electronic copies of this plan sheet.

CURVE DATA				
No.	R	Δ	T	L
(B)	1000.00	31°41'30"	283.84	553.12

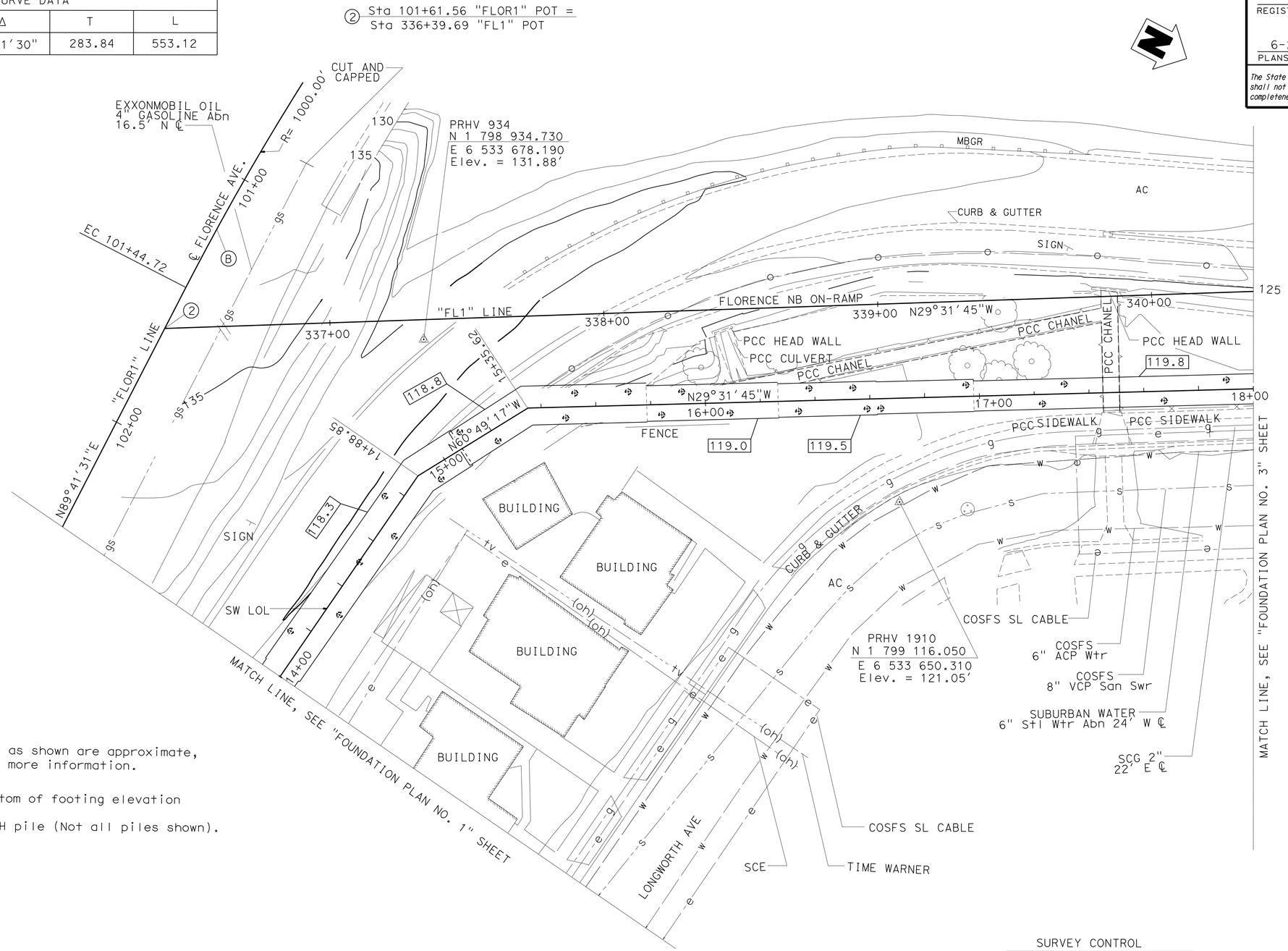

NOTES:

Underground utilities as shown are approximate, See utility plans for more information.

XXX.X - Indicates bottom of footing elevation

⊕ - Indicates 24" ø CIDH pile (Not all piles shown).

SURVEY CONTROL

SEE FOUNDATION PLAN NO. 1

PRELIMINARY INVESTIGATION SECTION

SCALE 1"=20'	VERT.DATUM NAVD 88	PHOTOGRAMMETRY AS OF: X		
	HORZ.DATUM NAD 83 (1991.35)	SURVEYED	BY C.STEWART / T.PHUNG	CHECKED BY C. STEWART 9/2011
ALIGNMENT TIES Dist. Traverse Sheet		DRAFTED	BY S. ABASSY 10/2011	CHECKED BY S. ALIVIO 10/2011

DESIGN	BY Greg Thornton	CHECKED Henry Fang
DETAILS	BY B. Huddleston / J. Zhou	CHECKED Henry Fang
QUANTITIES	BY Paul Hayes	CHECKED Nikki Tiongco

STATE OF CALIFORNIA
DEPARTMENT OF TRANSPORTATION

DIVISION OF ENGINEERING SERVICES
STRUCTURE DESIGN
DESIGN BRANCH 1

BRIDGE NO. 53E0211
POST MILE 6.35

SOUND WALL NO. 103
FOUNDATION PLAN NO. 2

STRUCTURES FOUNDATION PLAN SHEET (ENGLISH) (REV. 09-01-10)

ORIGINAL SCALE IN INCHES FOR REDUCED PLANS 0 1 2 3

UNIT: 3576
PROJECT NUMBER & PHASE: 07000018351
CONTRACT NO.: 07-215954

DISREGARD PRINTS BEARING EARLIER REVISION DATES

REVISION DATES 10-12-11 02-12-13 03/09/13

SHEET 11 OF 40

FILE => sw103-e-fp102.dgn

USERNAME => s124496 DATE PLOTTED => 26-JUN-2013 TIME PLOTTED => 16:18

DIST	COUNTY	ROUTE	POST MILES TOTAL PROJECT	SHEET No.	TOTAL SHEETS
07	LA	5	0.0/7.6	725	985

P. Vijitakula 12/31/12
REGISTERED CIVIL ENGINEER DATE

6-24-13
PLANS APPROVAL DATE

REGISTERED PROFESSIONAL ENGINEER
P. VIJITAKULA
No. 54701
Exp. 12/31/13
CIVIL
STATE OF CALIFORNIA

The State of California or its officers or agents shall not be responsible for the accuracy or completeness of electronic copies of this plan sheet.

CURVE DATA				
No.	R	Δ	T	L
Ⓒ	3466.00	03°48′25"	115.19	230.30
Ⓓ	3500.00	06°27′20"	197.38	394.34

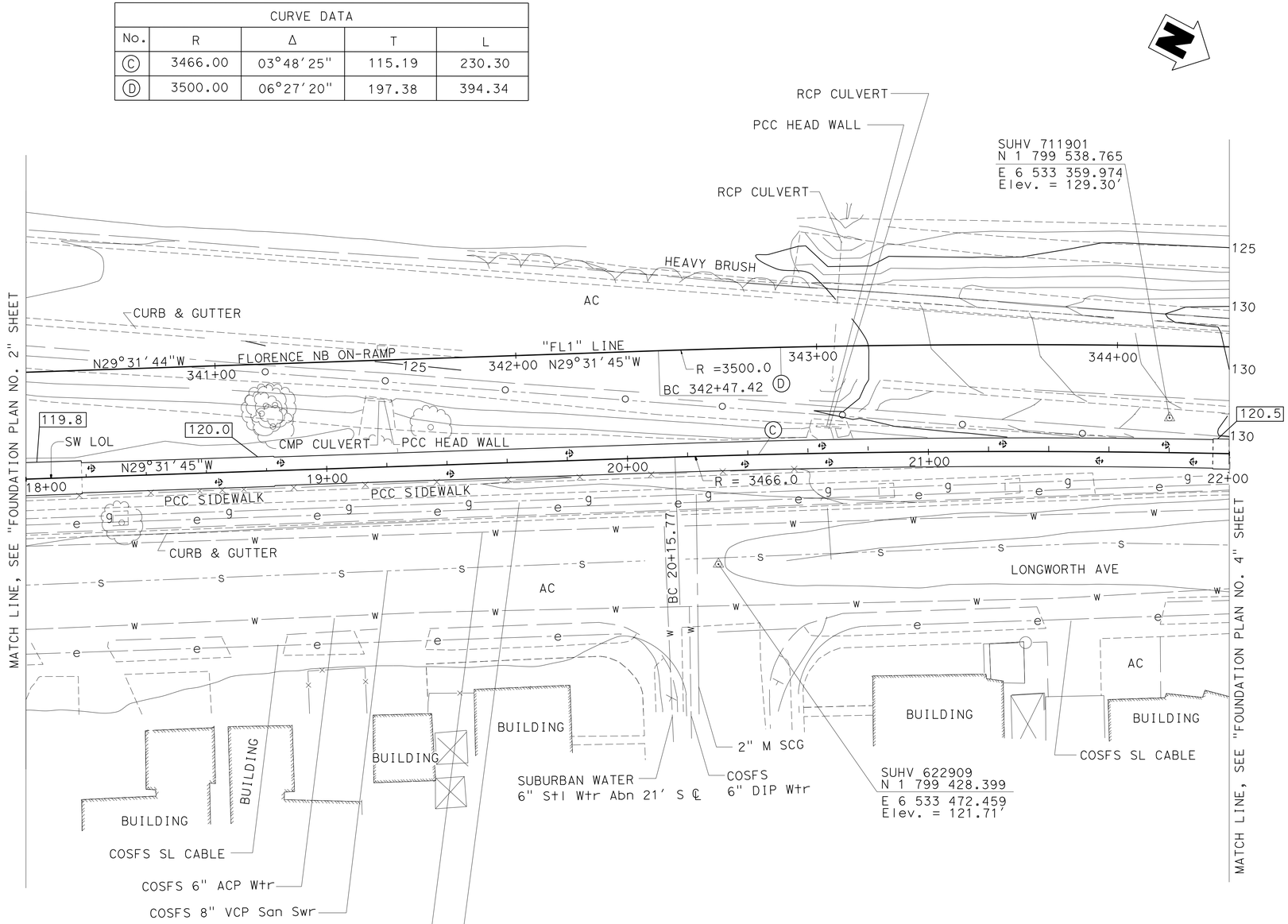

SURVEY CONTROL
SEE FOUNDATION PLAN NOS. 1 & 2

NOTES:

Underground utilities as shown are approximate, See utility plans for more information.

XXX.X - Indicates bottom of footing elevation

- Indicates 24" Ø CIDH pile (Not all piles shown).

PRELIMINARY INVESTIGATION SECTION					
SCALE 1"=20′	VERT.DATUM NAVD 88	PHOTOGRAMMETRY AS OF: X			
HORZ.DATUM NAD 83 (1991.35)		SURVEYED	BY C.STEWART / T.PHUNG	CHECKED	BY C. STEWART 9/2011
ALIGNMENT TIES Dist. Traverse Sheet		DRAFTED	BY S. ABASSY 10/2011	CHECKED	BY S. ALIVIO 10/2011

DESIGN	BY Greg Thornton	CHECKED Henry Fang	
DETAILS	BY B. Huddleston / J. Zhou	CHECKED Henry Fang	
QUANTITIES	BY Paul Hayes	CHECKED Nikki Tiongco	

STATE OF CALIFORNIA
DEPARTMENT OF TRANSPORTATION

DIVISION OF ENGINEERING SERVICES
STRUCTURE DESIGN
DESIGN BRANCH 1

BRIDGE NO. 53E0211
POST MILE 6.35

SOUND WALL NO. 103
FOUNDATION PLAN NO. 3

STRUCTURES FOUNDATION PLAN SHEET (ENGLISH) (REV. 09-01-10)

ORIGINAL SCALE IN INCHES FOR REDUCED PLANS 0 1 2 3

UNIT: 3576
PROJECT NUMBER & PHASE: 07000018351
CONTRACT NO.: 07-215954

DISREGARD PRINTS BEARING EARLIER REVISION DATES

REVISION DATES: 10-13-11 03-08-13 03/22/13

SHEET 12 OF 40

FILE => sw103-e-fp103.dgn

USERNAME => s124496 DATE PLOTTED => 26-JUN-2013 TIME PLOTTED => 16:18

DIST	COUNTY	ROUTE	POST MILES TOTAL PROJECT	SHEET No.	TOTAL SHEETS
07	LA	5	0.0/7.6	726	985

P. Vijitakula 12/31/12
REGISTERED CIVIL ENGINEER DATE

6-24-13
PLANS APPROVAL DATE

REGISTERED PROFESSIONAL ENGINEER
P. VIJITAKULA
No. 54701
Exp. 12/31/13
CIVIL
STATE OF CALIFORNIA

The State of California or its officers or agents shall not be responsible for the accuracy or completeness of electronic copies of this plan sheet.

CURVE DATA				
No.	R	Δ	T	L
Ⓒ	3466.00	03°48′25"	115.19	230.30
Ⓓ	3500.00	06°27′20"	197.38	394.34
Ⓕ	3458.00	01°39′25"	50.01	100.01

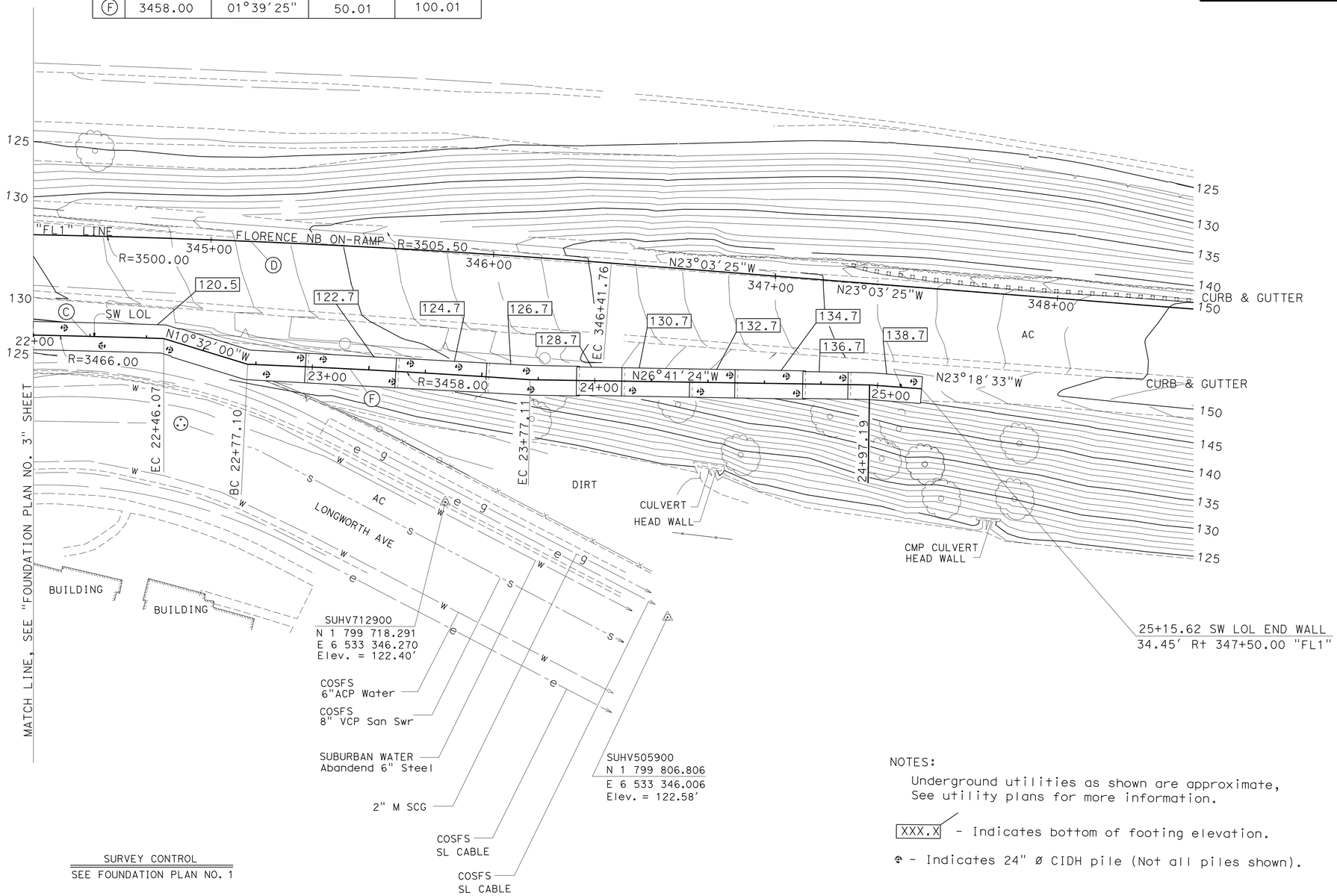

SURVEY CONTROL
SEE FOUNDATION PLAN NO. 1

NOTES:

Underground utilities as shown are approximate, See utility plans for more information.

XXX.X - Indicates bottom of footing elevation.

- Indicates 24" Ø CIDH pile (Not all piles shown).

PRELIMINARY INVESTIGATION SECTION					
SCALE 1"=20′	VERT.DATUM NAVD 88	PHOTOGRAMMETRY AS OF: X			
	HORZ.DATUM NAD 83 (1991.35)	SURVEYED	BY C.STEWART / T.PHUNG	CHECKED	BY C. STEWART 9/2011
ALIGNMENT TIES Dist. Traverse Sheet		DRAFTED	BY S. ABASSY 10/2011	CHECKED	BY S. ALIVIO 10/2011

	BY	CHECKED
DESIGN	Greg Thornton	Henry Fang
DETAILS	B. Huddleston / J. Zhou	Henry Fang
QUANTITIES	Paul Hayes	Nikki Tiongco

STATE OF CALIFORNIA
DEPARTMENT OF TRANSPORTATION

DIVISION OF ENGINEERING SERVICES
STRUCTURE DESIGN
DESIGN BRANCH 1

BRIDGE NO. 53E0211
POST MILE 6.35

SOUND WALL NO. 103
FOUNDATION PLAN NO. 4

STRUCTURES FOUNDATION PLAN SHEET (ENGLISH) (REV. 09-01-10)

ORIGINAL SCALE IN INCHES FOR REDUCED PLANS 0 1 2 3

UNIT: 3576
PROJECT NUMBER & PHASE: 07000018351
CONTRACT NO.: 07-215954

DISREGARD PRINTS BEARING EARLIER REVISION DATES

REVISION DATES 10/13/11 12/28/12 03/09/13

SHEET 13 OF 40

FILE => sw103-e-fp104.dgn

USERNAME => s124496 DATE PLOTTED => 26-JUN-2013 TIME PLOTTED => 17:36

DIST	COUNTY	ROUTE	POST MILES TOTAL PROJECT	SHEET No.	TOTAL SHEETS
07	LA	5	0.0/7.6	727	985

P. Vijitakula 12/31/12
REGISTERED CIVIL ENGINEER DATE

6-24-13
PLANS APPROVAL DATE

REGISTERED PROFESSIONAL ENGINEER P. VIJITAKULA No. 54701 Exp. 12/31/13 CIVIL STATE OF CALIFORNIA

The State of California or its officers or agents shall not be responsible for the accuracy or completeness of electronic copies of this plan sheet.

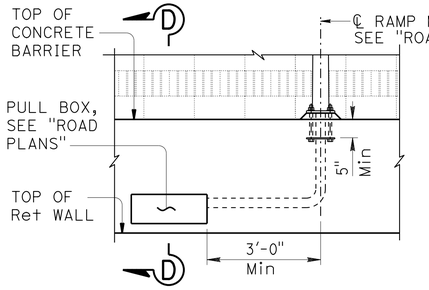

MIRRORED ELEVATION
½" = 1'-0"

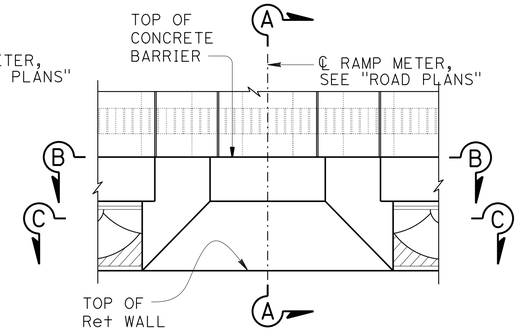

ELEVATION
½" = 1'-0"

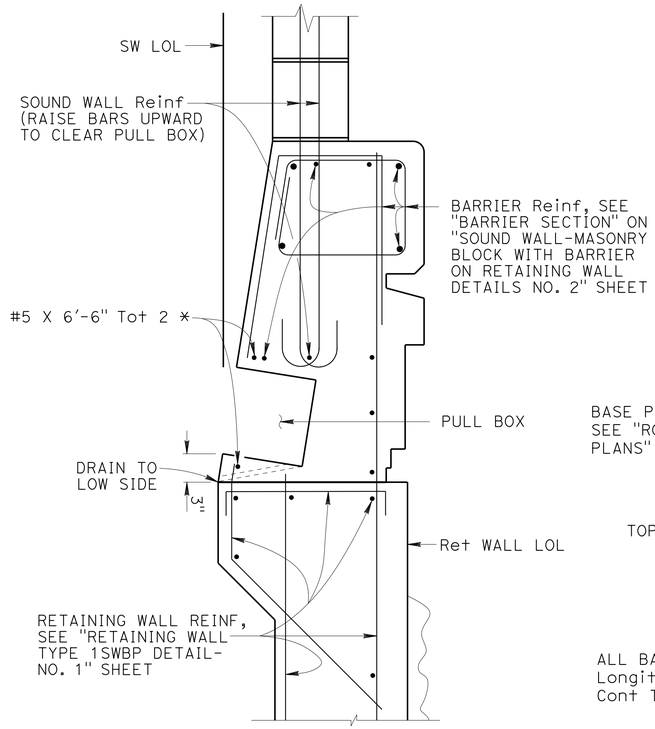

SECTION D-D
1½" = 1'-0"

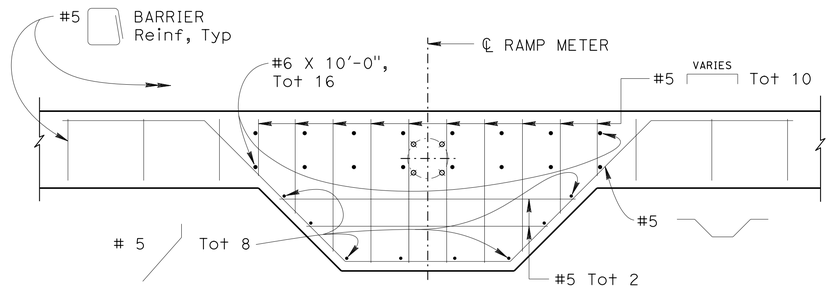

SECTION B-B
¾" = 1'-0"

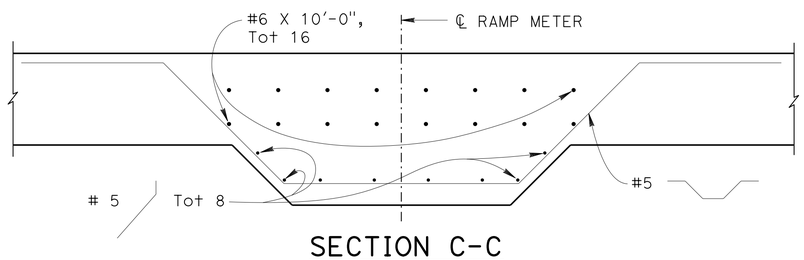

SECTION C-C
¾" = 1'-0"

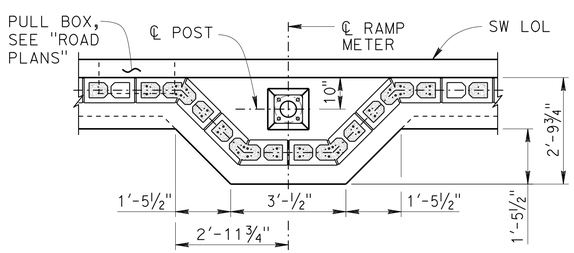

PLAN
½" = 1'-0"

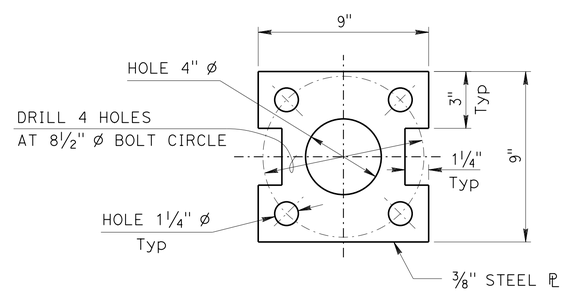

DETAIL X
3" = 1'-0"

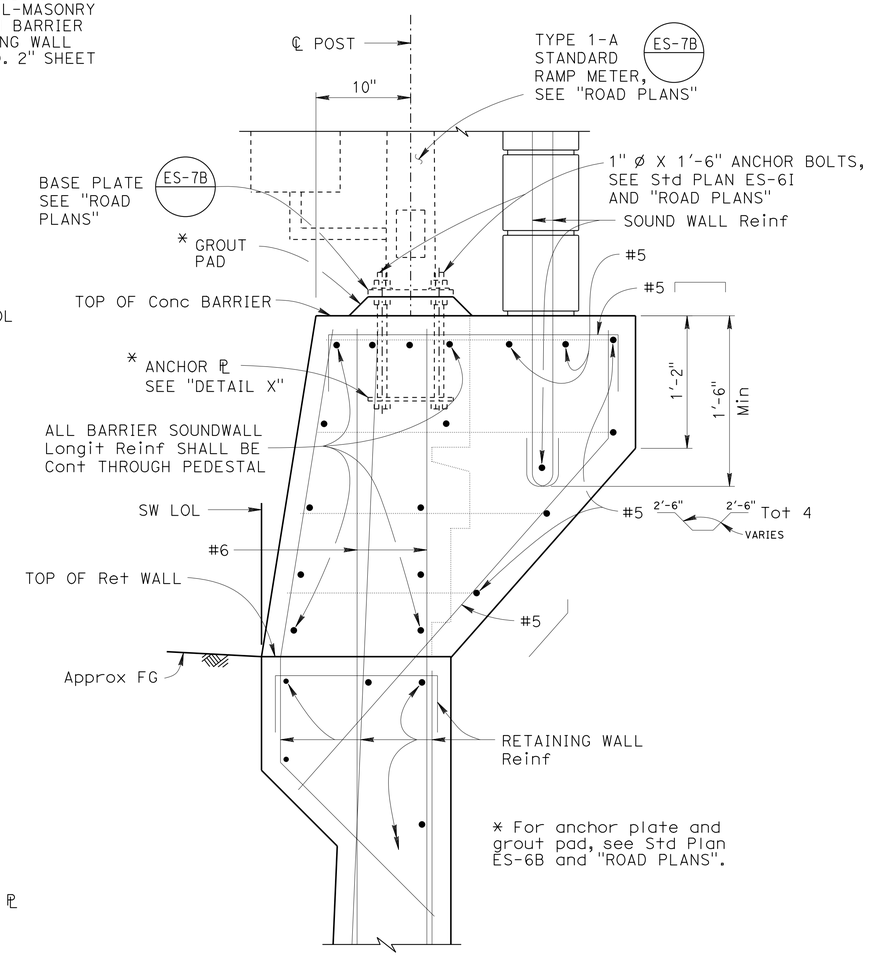

SECTION A-A
1½" = 1'-0"

NOTES:

1. For location of ramp meter, see "STRUCTURE PLAN NO. 6" sheet.
2. For ramp meter and electrical details, see "ROAD PLANS".
3. The maximum number of conduits in the barrier is limited to two 2" conduits along with one 3" conduit. When a 3" conduit is used, it is restricted to the base of the barrier.

	BY	CHECKED
DESIGN	E. Watson / G. Thornton	Henry Fang
DETAILS	J.Tang / B.Huddleston	Henry Fang
QUANTITIES	Paul Hayes	Nikki Tiongco

STATE OF CALIFORNIA
DEPARTMENT OF TRANSPORTATION

DIVISION OF ENGINEERING SERVICES
STRUCTURE DESIGN
DESIGN BRANCH 1

BRIDGE NO. 53E0211
POST MILE 6.35

SOUND WALL NO. 103
RAMP METER PEDESTAL DETAILS

STRUCTURES DESIGN DETAIL SHEET (ENGLISH) (REV. 09-01-10)

ORIGINAL SCALE IN INCHES FOR REDUCED PLANS 0 1 2 3

UNIT: 3576
PROJECT NUMBER & PHASE: 07000018351
CONTRACT NO.: 07-215954

DISREGARD PRINTS BEARING EARLIER REVISION DATES

REVISION DATES 11/08/11 12/21/12 12/28/12

SHEET 14 OF 40

FILE => sw103-e-rmpd.dgn

USERNAME => s124436 DATE PLOTTED => 26-JUN-2013 TIME PLOTTED => 17:36

NOTES

1. For "SECTION A-A", "SECTION B-B", "SECTION C-C" and "SECTION D-D", see "RETAINING WALL ARCHITECTURAL DETAILS NO. 2" sheet.
2. For barrier architectural details, see "CONCRETE BARRIER TYPE 736A (Mod 2) DETAILS" sheet.
3. For sound wall architectural details, see "SOUND WALL ARCHITECTURAL DETAILS" sheet.
4. For pilaster and corbel details, see "PILASTER ARCHITECTURAL DETAILS" and "PILASTER STRUCTURAL DETAILS" sheets.
5. All longitudinal dimensions are measured along SW LOL.

DIST	COUNTY	ROUTE	POST MILES TOTAL PROJECT	SHEET No.	TOTAL SHEETS
07	LA	5	0.0/7.6	728	985

P. Vijitakula 12/31/12
REGISTERED CIVIL ENGINEER DATE

6-24-13
PLANS APPROVAL DATE

REGISTERED PROFESSIONAL ENGINEER P. VIJITAKULA No. 54701 Exp. 12/31/13 CIVIL STATE OF CALIFORNIA

The State of California or its officers or agents shall not be responsible for the accuracy or completeness of electronic copies of this plan sheet.

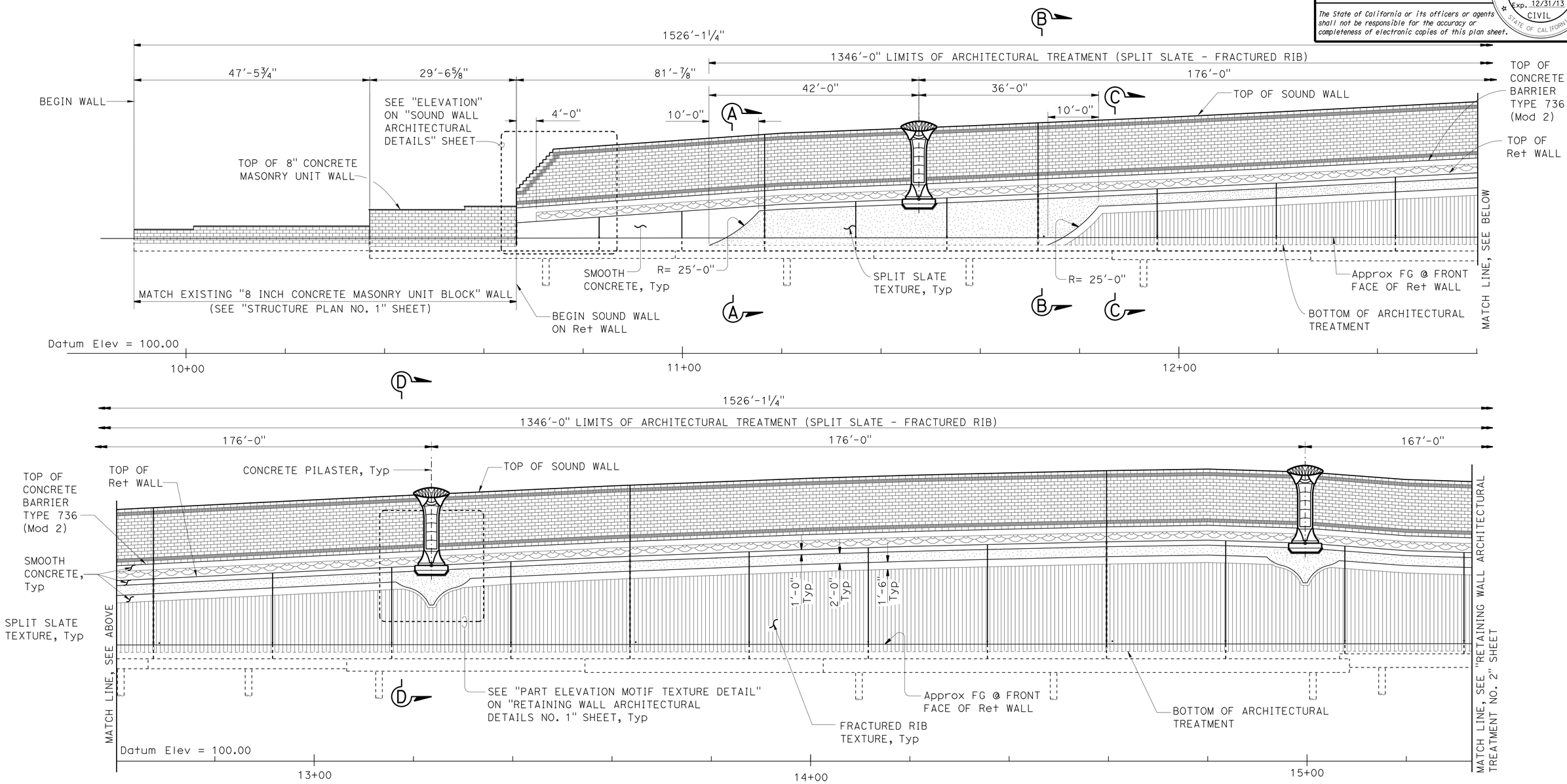

DEVELOPED ELEVATION

1" = 10'

DESIGN	BY Isaac Tasabia	CHECKED Javier Chavez	
DETAILS	BY B. Huddleston / J. Zhou	CHECKED G. Thornton / H. Fang	
QUANTITIES	BY Paul Hayes	CHECKED Nikki Tiongco	

STATE OF CALIFORNIA
DEPARTMENT OF TRANSPORTATION

DIVISION OF ENGINEERING SERVICES
STRUCTURE DESIGN
DESIGN BRANCH 1

BRIDGE NO. 53E0211
POST MILE 6.35

SOUND WALL NO. 103
RETAINING WALL ARCHITECTURAL TREATMENT NO. 1

STRUCTURES DESIGN DETAIL SHEET (ENGLISH) (REV. 09-01-10)

ORIGINAL SCALE IN INCHES FOR REDUCED PLANS 0 1 2 3

UNIT: 3576
PROJECT NUMBER & PHASE: 07000018351
CONTRACT NO.: 07-215954

DISREGARD PRINTS BEARING EARLIER REVISION DATES

REVISION DATES 07/01/12 12/28/12 03/22/13

SHEET 15 OF 40

FILE => sw103-e-lyt-arch01.dgn

USERNAME => s124496 DATE PLOTTED => 26-JUN-2013 TIME PLOTTED => 17:36

For "NOTES", see "RETAINING WALL ARCHITECTURAL TREATMENT NO. 1" sheet

DIST	COUNTY	ROUTE	POST MILES TOTAL PROJECT	SHEET No.	TOTAL SHEETS
07	LA	5	0.0/7.6	729	985

P. Vijitakula 12/31/12
REGISTERED CIVIL ENGINEER DATE

6-24-13
PLANS APPROVAL DATE

REGISTERED PROFESSIONAL ENGINEER
P. VIJITAKULA
No. 54701
Exp. 12/31/13
CIVIL
STATE OF CALIFORNIA

The State of California or its officers or agents shall not be responsible for the accuracy or completeness of electronic copies of this plan sheet.

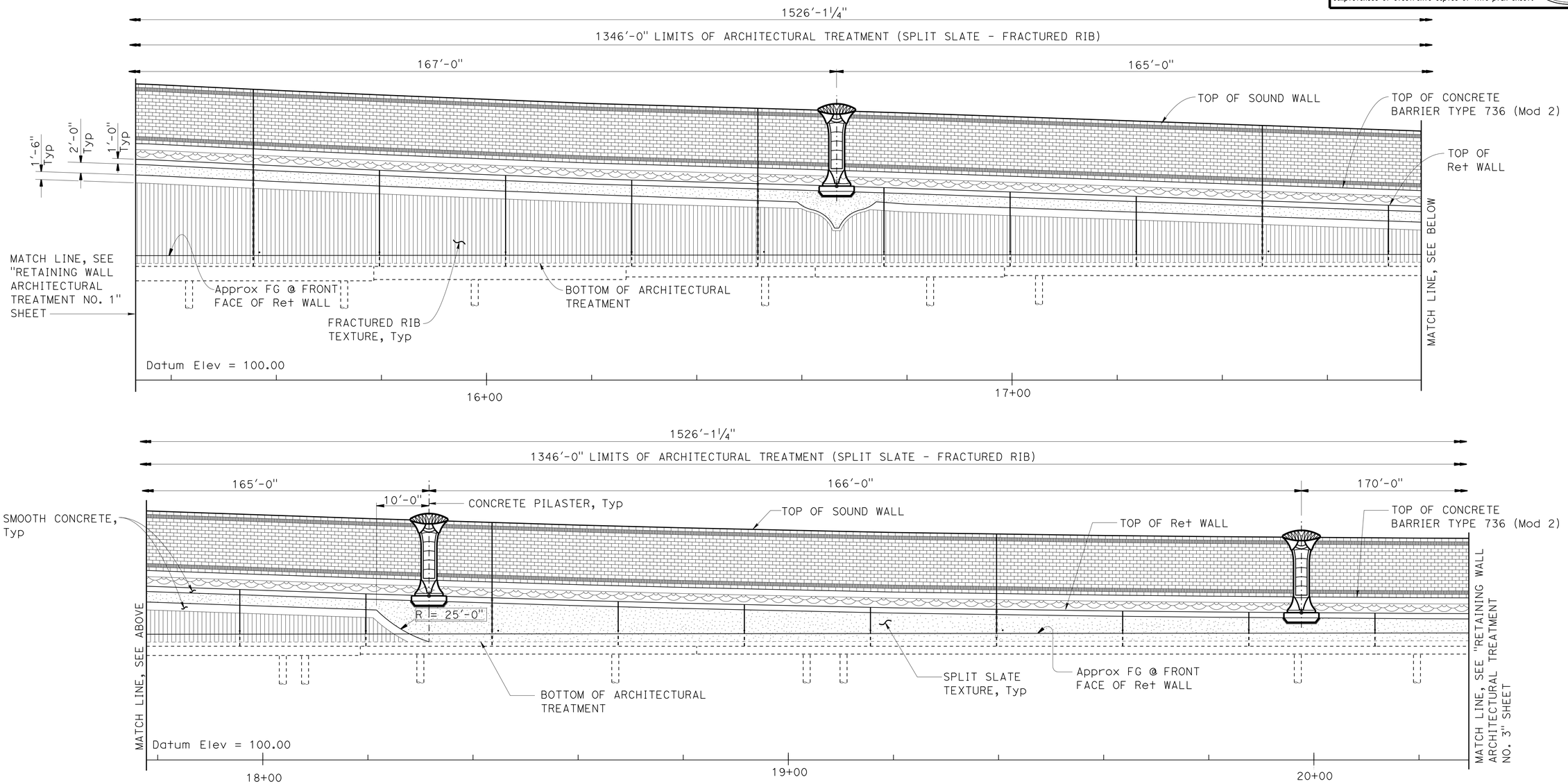

DEVELOPED ELEVATION

1" = 10'

	BY	CHECKED
DESIGN	Isaac Tasabia	Javier Chavez
DETAILS	B. Huddleston / J. Zhou	G. Thornton / H. Fang
QUANTITIES	Paul Hayes	Nikki Tiongco

STATE OF CALIFORNIA
DEPARTMENT OF TRANSPORTATION

DIVISION OF ENGINEERING SERVICES
STRUCTURE DESIGN
DESIGN BRANCH 1

BRIDGE NO. 53E0211
POST MILE 6.35

SOUND WALL NO. 103
RETAINING WALL ARCHITECTURAL TREATMENT NO. 2

STRUCTURES DESIGN DETAIL SHEET (ENGLISH) (REV. 09-01-10)

ORIGINAL SCALE IN INCHES FOR REDUCED PLANS 0 1 2 3

UNIT: 3576
PROJECT NUMBER & PHASE: 07000018351
CONTRACT NO.: 07-215954

DISREGARD PRINTS BEARING EARLIER REVISION DATES

REVISION DATES 6/07/12 03/22/13 12/14/12

SHEET 16 OF 40

FILE => sw103-e-lyt-arch02.dgn

USERNAME => s124496 DATE PLOTTED => 26-JUN-2013 TIME PLOTTED => 17:36

DIST	COUNTY	ROUTE	POST MILES TOTAL PROJECT	SHEET No.	TOTAL SHEETS
07	LA	5	0.0/7.6	730	985

P. Vijitakula 12/31/12
REGISTERED CIVIL ENGINEER DATE

6-24-13
PLANS APPROVAL DATE

REGISTERED PROFESSIONAL ENGINEER
P. VIJITAKULA
No. 54701
Exp. 12/31/13
CIVIL
STATE OF CALIFORNIA

The State of California or its officers or agents shall not be responsible for the accuracy or completeness of electronic copies of this plan sheet.

For "NOTES", see "RETAINING WALL ARCHITECTURAL TREATMENT NO. 1" sheet

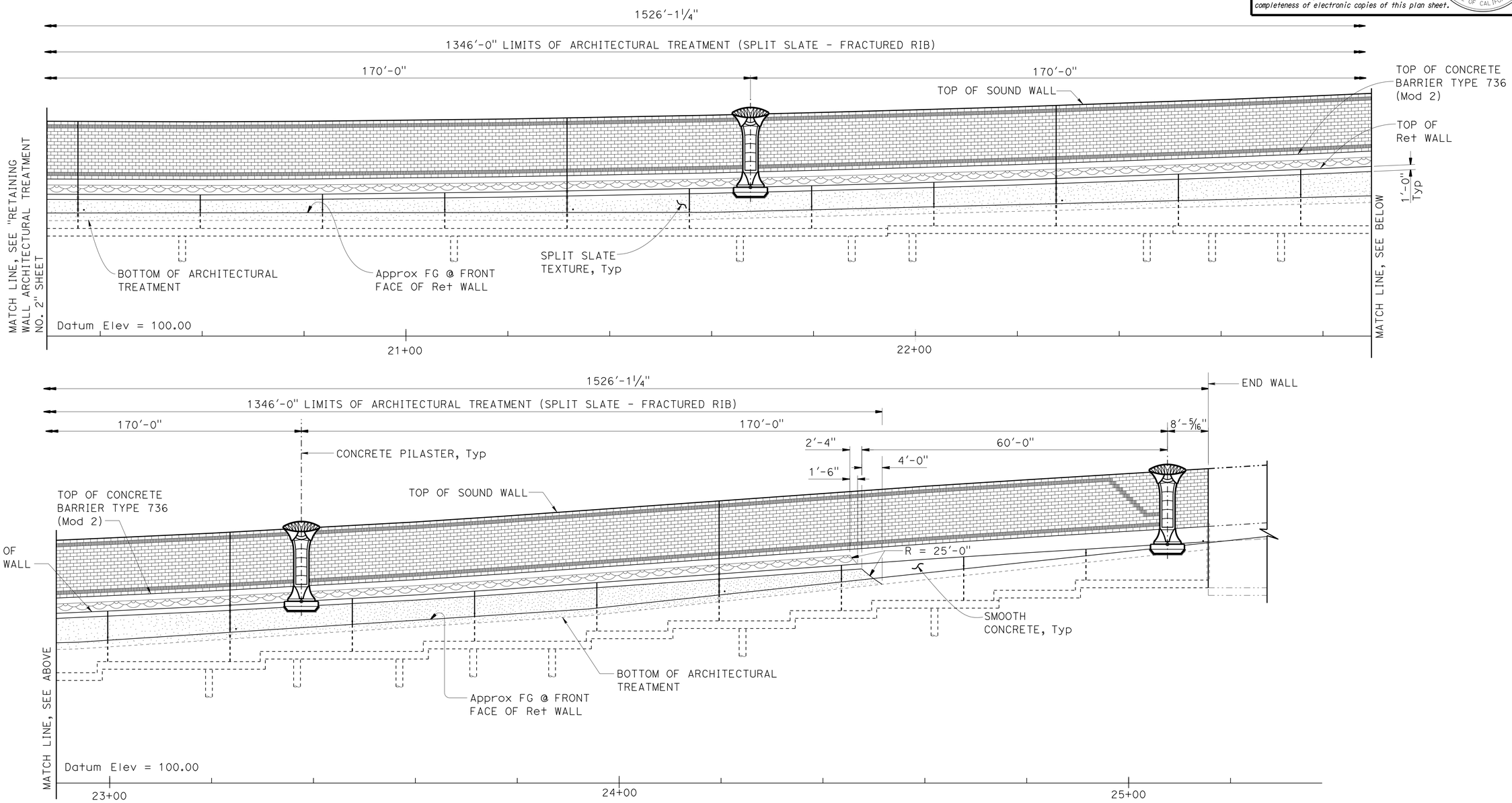

DEVELOPED ELEVATION

1" = 10'

DESIGN	BY Isaac Tasabia	CHECKED Javier Chavez	
DETAILS	BY B. Huddleston / J. Zhou	CHECKED G. Thornton / H. Fang	
QUANTITIES	BY Paul Hayes	CHECKED Nikki Tiongco	

STATE OF CALIFORNIA
DEPARTMENT OF TRANSPORTATION

DIVISION OF ENGINEERING SERVICES
STRUCTURE DESIGN
DESIGN BRANCH 1

BRIDGE NO. 53E0211
POST MILE 6.35

SOUND WALL NO. 103
RETAINING WALL ARCHITECTURAL TREATMENT NO. 3

STRUCTURES DESIGN DETAIL SHEET (ENGLISH) (REV. 09-01-10)

ORIGINAL SCALE IN INCHES FOR REDUCED PLANS 0 1 2 3

UNIT: 3576
PROJECT NUMBER & PHASE: 07000018351
CONTRACT NO.: 07-215954

DISREGARD PRINTS BEARING EARLIER REVISION DATES

REVISION DATES: 6/04/12 12/14/12 03/22/13

SHEET 17 OF 40

FILE => sw103-e-lyt-arch03.dgn

USERNAME => s124496 DATE PLOTTED => 26-JUN-2013 TIME PLOTTED => 17:36

DIST	COUNTY	ROUTE	POST MILES TOTAL PROJECT	SHEET No.	TOTAL SHEETS
07	LA	5	0.0/7.6	731	985

P. Vijitakula 12/31/12
REGISTERED CIVIL ENGINEER DATE

6-24-13
PLANS APPROVAL DATE

REGISTERED PROFESSIONAL ENGINEER P. VIJITAKULA No. 54701 Exp. 12/31/13 CIVIL STATE OF CALIFORNIA

The State of California or its officers or agents shall not be responsible for the accuracy or completeness of electronic copies of this plan sheet.

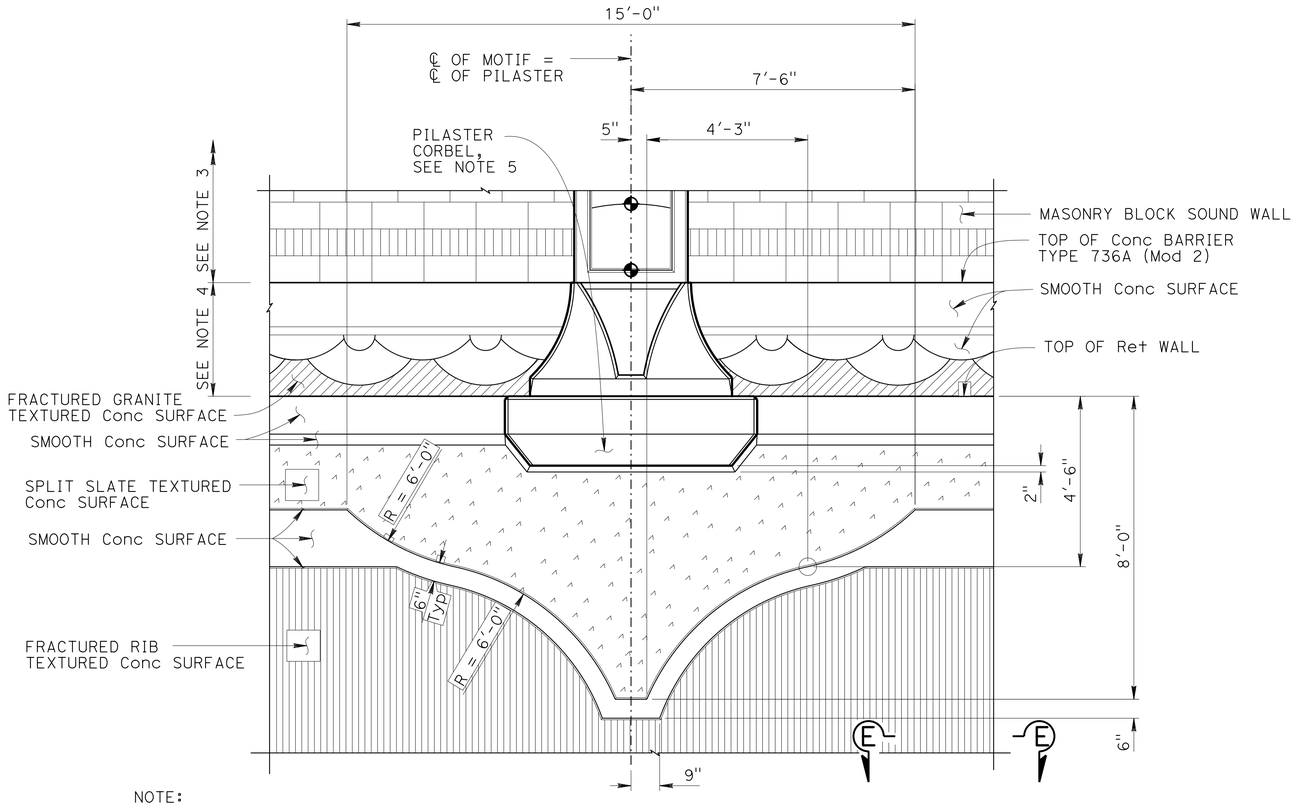

NOTE:
All dimensions symmetrical about ℄ of motif

PART ELEVATION
MOTIF TEXTURE DETAIL
½" = 1'-0"

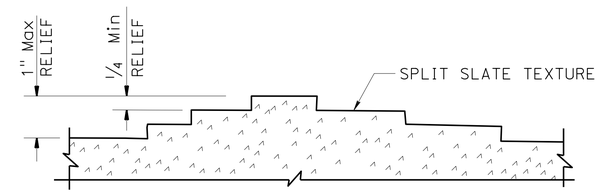

SPLIT SLATE DETAIL
NO SCALE

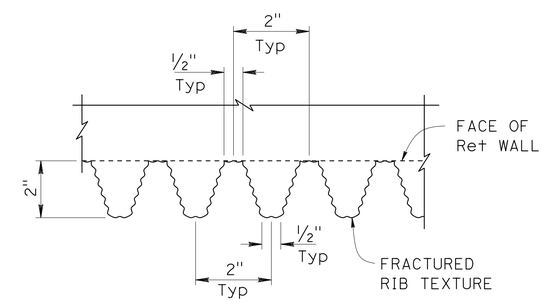

SECTION E-E
6" = 1'-0"

NOTES:

1. For locations of "MOTIF TEXTURE DETAIL", see "RETAINING WALL ARCHITECTURAL TREATMENT" sheets.
2. For other retaining wall architectural details not shown, see "RETAINING WALL ARCHITECTURAL DETAILS NO. 2" sheet.
3. For sound wall architectural treatment, see "SOUND WALL ARCHITECTURAL DETAILS" sheet.
4. For concrete barrier architectural details, see "CONCRETE BARRIER TYPE 736A (Mod 2) DETAILS" sheet.
5. For pilaster and corbel details, see "PILASTER ARCHITECTURAL DETAILS" and "PILASTER STRUCTURAL DETAILS" sheets.

	BY	CHECKED
DESIGN	Isaac Tasabia	Javier Chavez
DETAILS	Y. Feng / J. Zhou	G. Thornton / H. Fang
QUANTITIES	Paul Hayes	Nikki Tiongco

STATE OF CALIFORNIA
DEPARTMENT OF TRANSPORTATION

DIVISION OF ENGINEERING SERVICES
STRUCTURE DESIGN
DESIGN BRANCH 1

BRIDGE NO. 53E0211
POST MILE 6.35

SOUND WALL NO. 103
RETAINING WALL ARCHITECTURAL DETAILS NO. 1

STRUCTURES DESIGN DETAIL SHEET (ENGLISH) (REV. 09-01-10)

ORIGINAL SCALE IN INCHES FOR REDUCED PLANS 0 1 2 3

UNIT: 3576
PROJECT NUMBER & PHASE: 07000018351
CONTRACT NO.: 07-215954

DISREGARD PRINTS BEARING EARLIER REVISION DATES
REVISION DATES 11/29/11 02/14/13 11/29/12
SHEET 18 OF 40

FILE => sw103-e-ret-arch-dt011.dgn

USERNAME => s124496 DATE PLOTTED => 26-JUN-2013 TIME PLOTTED => 17:36

DIST	COUNTY	ROUTE	POST MILES TOTAL PROJECT	SHEET No.	TOTAL SHEETS
07	LA	5	0.0/7.6	732	985

REGISTERED CIVIL ENGINEER 12/31/12 DATE

6-24-13
PLANS APPROVAL DATE

REGISTERED PROFESSIONAL ENGINEER P. VIJITAKULA No. 54701 Exp. 12/31/13 CIVIL STATE OF CALIFORNIA

The State of California or its officers or agents shall not be responsible for the accuracy or completeness of electronic copies of this plan sheet.

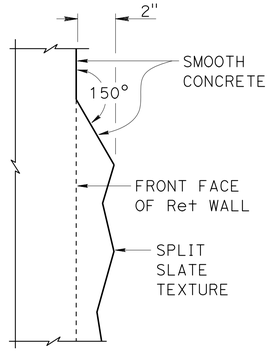

DETAIL A
3" = 1'-0"

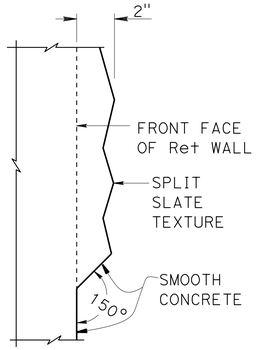

DETAIL B
3" = 1'-0"

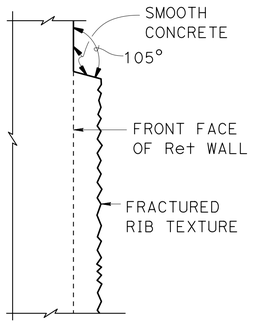

DETAIL C
3" = 1'-0"

NOTES:

1. For locations of SECTION A-A, SECTION B-B, SECTION C-C, and SECTION D-D, see "RETAINING WALL ARCHITECTURAL TREATMENT NO. 1" sheets.
2. For other retaining wall architectural details not shown, see "RETAINING WALL ARCHITECTURAL DETAILS NO. 1" sheet.
3. For sound wall architectural details, see "SOUND WALL ARCHITECTURAL DETAILS" sheet.
4. For concrete barrier architectural details, see "CONCRETE BARRIER TYPE 736A (Mod 2) DETAILS" sheet.
5. For pilaster and corbel details, see "PILASTER ARCHITECTURAL DETAILS" and "PILASTER STRUCTURAL DETAILS" sheets.

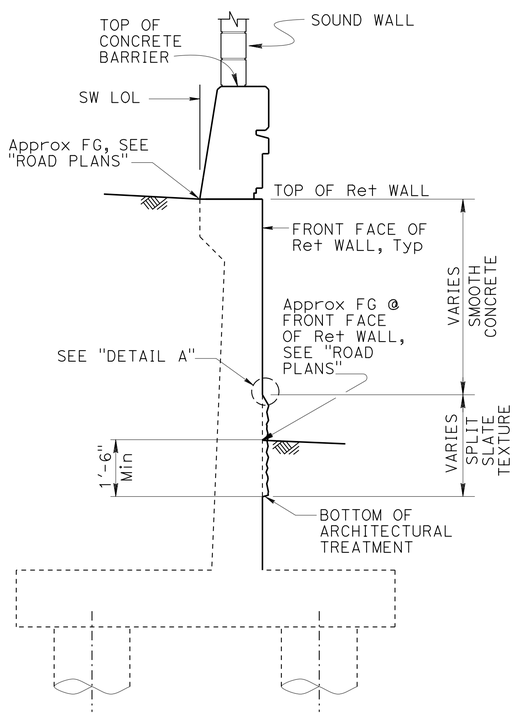

SECTION A-A
½" = 1'-0"

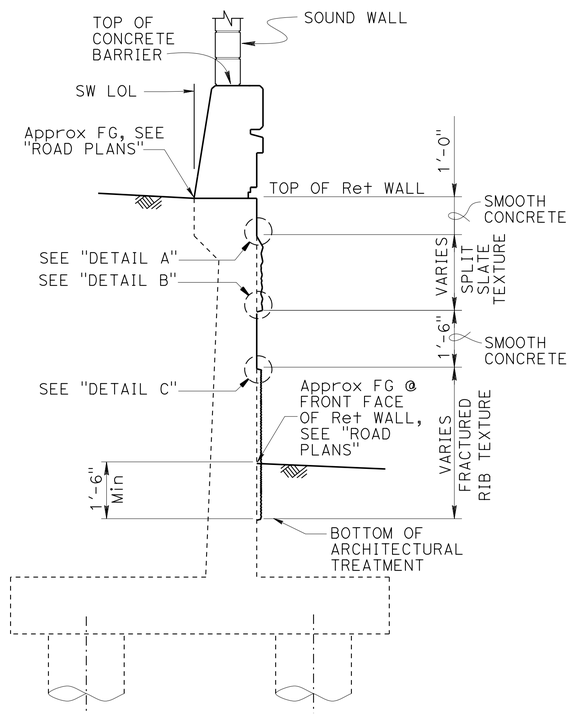

SECTION B-B
½" = 1'-0"

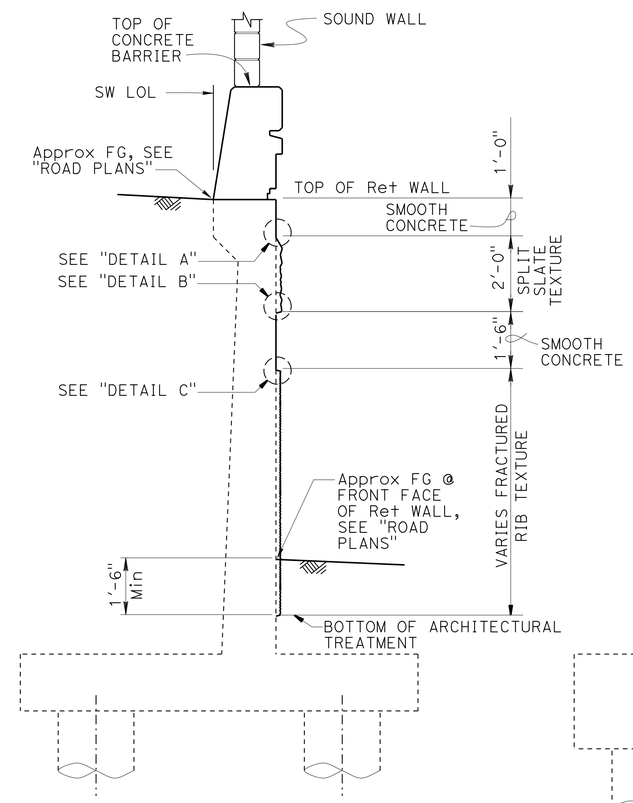

SECTION C-C
½" = 1'-0"

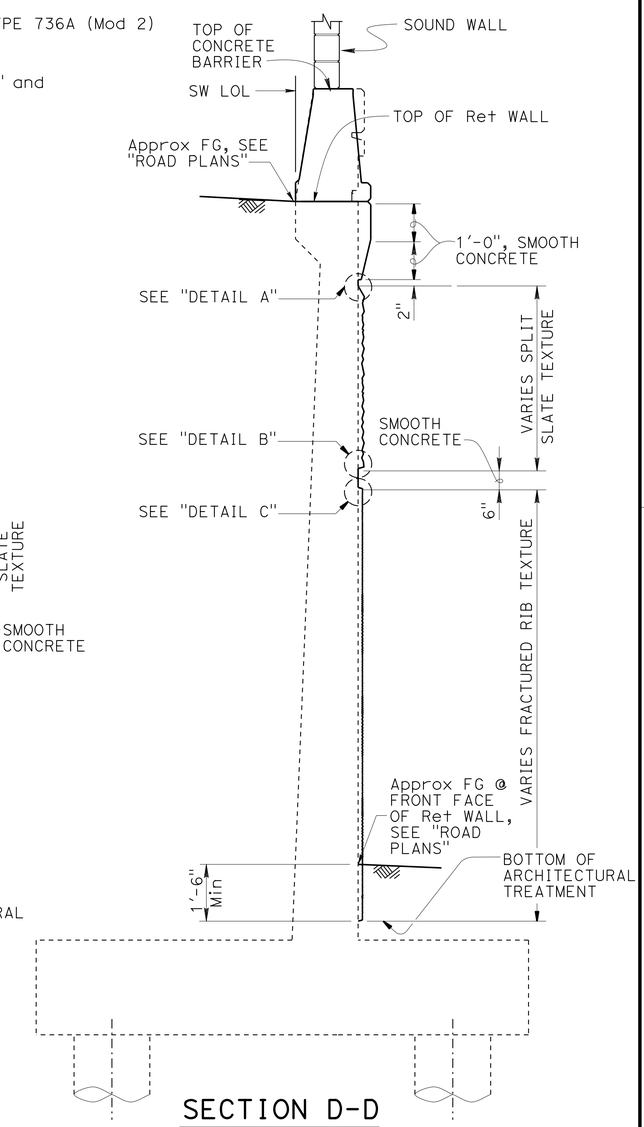

SECTION D-D
½" = 1'-0"

DESIGN	BY Isaac Tasabia	CHECKED Javier Chavez	
DETAILS	BY Jie Tang / Jin Zhou	CHECKED G. Thornton / H. Fang	
QUANTITIES	BY Paul Hayes	CHECKED Nikki Tiongco	

STATE OF CALIFORNIA
DEPARTMENT OF TRANSPORTATION

DIVISION OF ENGINEERING SERVICES
STRUCTURE DESIGN
DESIGN BRANCH 1

BRIDGE NO. 53E0211
POST MILE 6.35

SOUND WALL NO. 103
RETAINING WALL ARCHITECTURAL DETAILS NO. 2

STRUCTURES DESIGN DETAIL SHEET (ENGLISH) (REV. 09-01-10)

ORIGINAL SCALE IN INCHES FOR REDUCED PLANS 0 1 2 3

UNIT: 3576
PROJECT NUMBER & PHASE: 07000018351
CONTRACT NO.: 07-215954

DISREGARD PRINTS BEARING EARLIER REVISION DATES

REVISION DATES 03/13/12 02/14/13 03/09/13

SHEET 19 OF 40

FILE => sw103-e-ret-arch-dt021.dgn

USERNAME => s124496 DATE PLOTTED => 26-JUN-2013 TIME PLOTTED => 17:36

DIST	COUNTY	ROUTE	POST MILES TOTAL PROJECT	SHEET No.	TOTAL SHEETS
07	LA	5	0.0/7.6	733	985

P. Vijitakula 12/31/12
REGISTERED CIVIL ENGINEER DATE

6-24-13
PLANS APPROVAL DATE

REGISTERED PROFESSIONAL ENGINEER
P. VIJITAKULA
No. 54701
Exp. 12/31/13
CIVIL
STATE OF CALIFORNIA

The State of California or its officers or agents shall not be responsible for the accuracy or completeness of electronic copies of this plan sheet.

NOTES:

1. For Concrete Barrier Type 736A (Mod 2) details not shown, see "BARRIER SECTION" on "MASONRY BLOCK SOUND WALL WITH BARRIER ON RETAINING WALL DETAILS NO. 2" sheet.

2. For sound wall architectural details, see "SOUND WALL ARCHITECTURAL DETAILS" sheet.

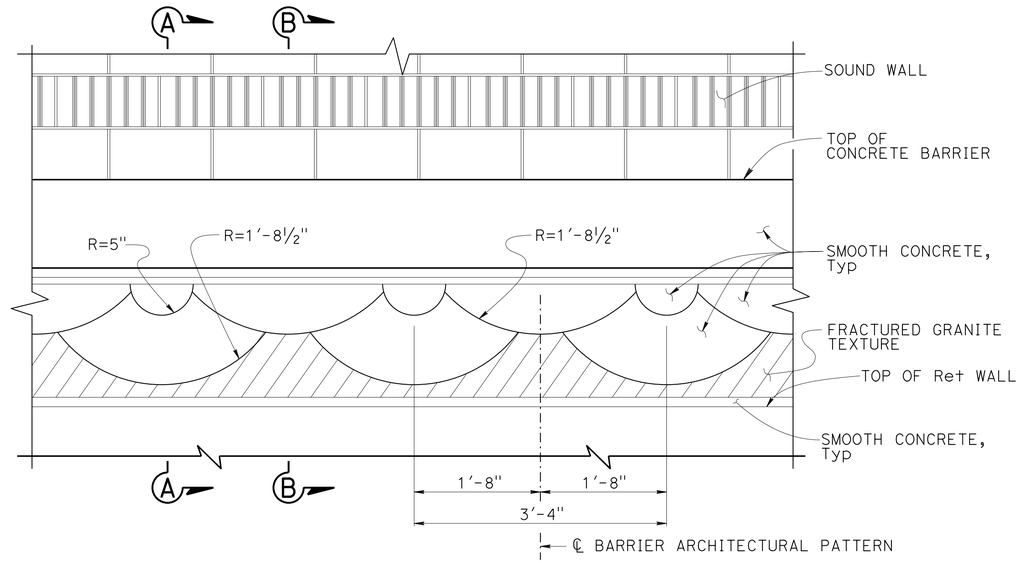

ELEVATION CONCRETE BARRIER TYPE 736A (MOD 2)

1" = 1'-0"

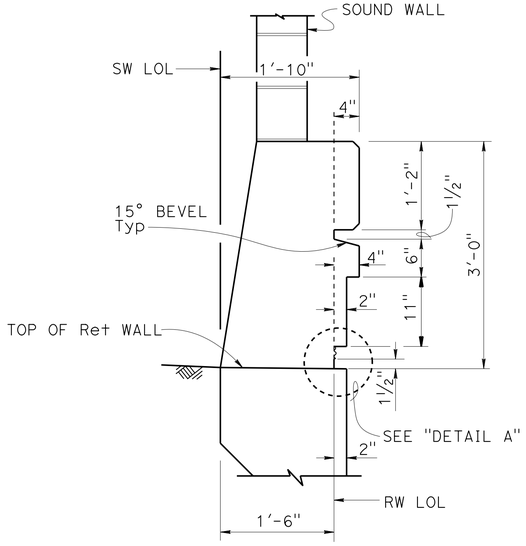

SECTION A-A

1" = 1'-0"

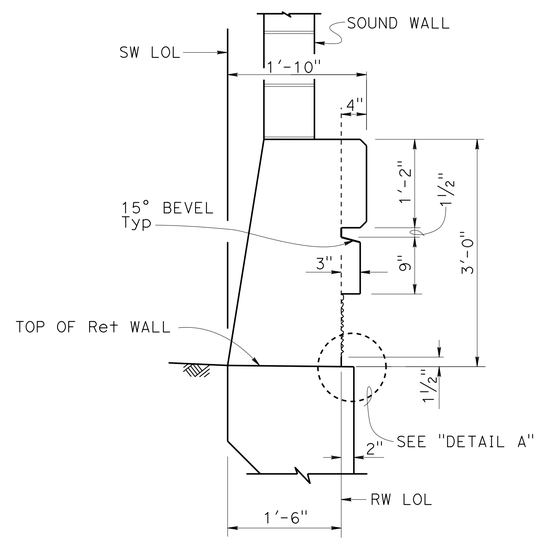

SECTION B-B

1" = 1'-0"

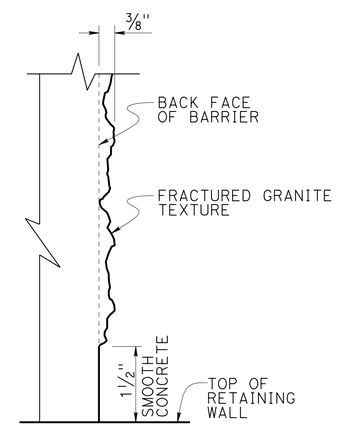

Note: Detail at "SECTION B-B" shown, "SECTION A-A" is similar.

DETAIL A

NO SCALE

	BY	CHECKED
DESIGN	Isaac Tasabia	Javier Chavez
DETAILS	Y. Feng / J. Zhou	G.Thornton / H. Fang
QUANTITIES	Paul Hayes	Nikki Tiongco

STATE OF CALIFORNIA
DEPARTMENT OF TRANSPORTATION

DIVISION OF ENGINEERING SERVICES
STRUCTURE DESIGN
DESIGN BRANCH 1

BRIDGE NO. 53E0211
POST MILE 6.35

SOUND WALL NO. 103

CONCRETE BARRIER TYPE 736A (MOD 2) DETAILS

STRUCTURES DESIGN DETAIL SHEET (ENGLISH) (REV. 09-01-10)

ORIGINAL SCALE IN INCHES FOR REDUCED PLANS 0 1 2 3

UNIT: 3576
PROJECT NUMBER & PHASE: 07000018351
CONTRACT NO.: 07-215954

DISREGARD PRINTS BEARING EARLIER REVISION DATES

REVISION DATES 11/29/10 02/14/13 04/04/13

SHEET 20 OF 40

FILE => sw103-f-barr01.dgn

USERNAME => s124436 DATE PLOTTED => 26-JUN-2013 TIME PLOTTED => 17:36

NOTES:

1. All masonry block shall be precision both sides, unless otherwise noted.
2. For "SECTION B-B", see "STRUCTURAL PLAN NO. 1" sheet.
3. Concrete Masonry Unit Return Curb not shown.

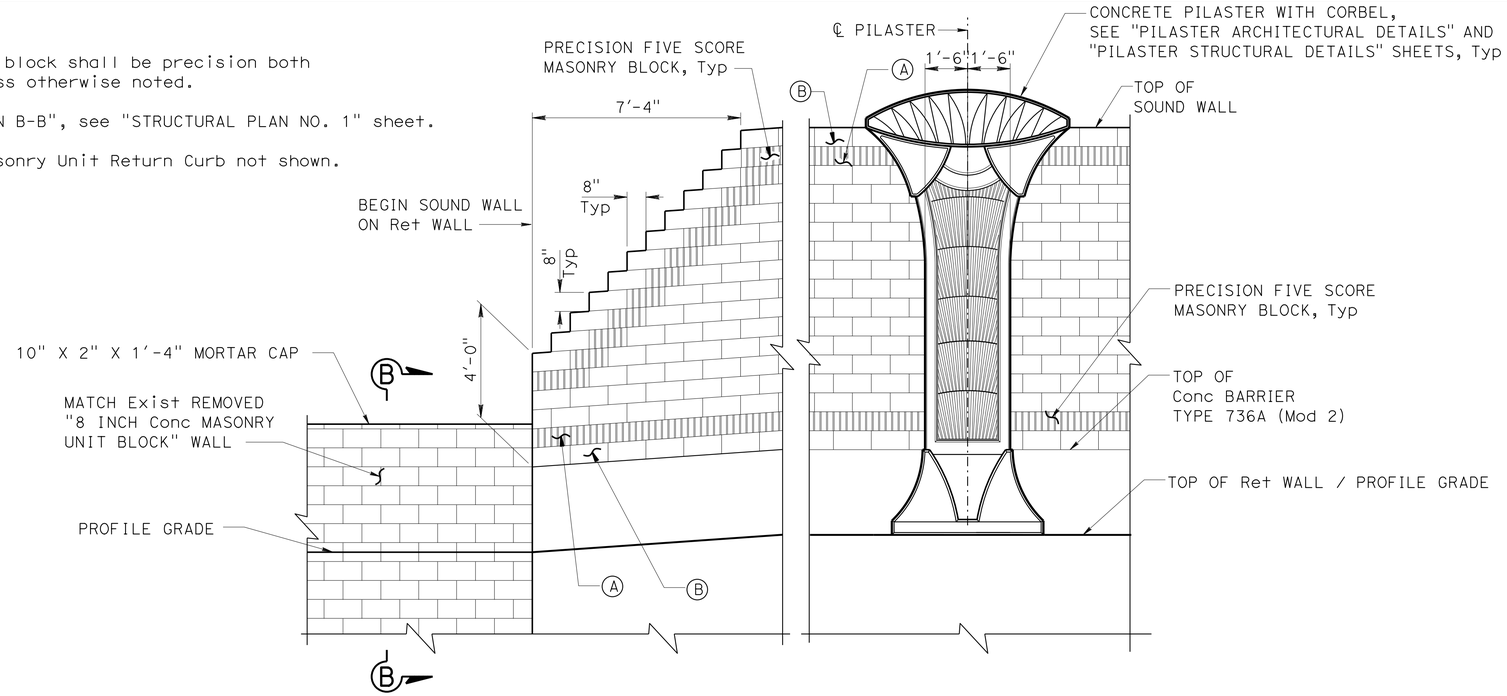

PART SOUND WALL ELEVATION - FREEWAY SIDE

3/8" = 1'-0"

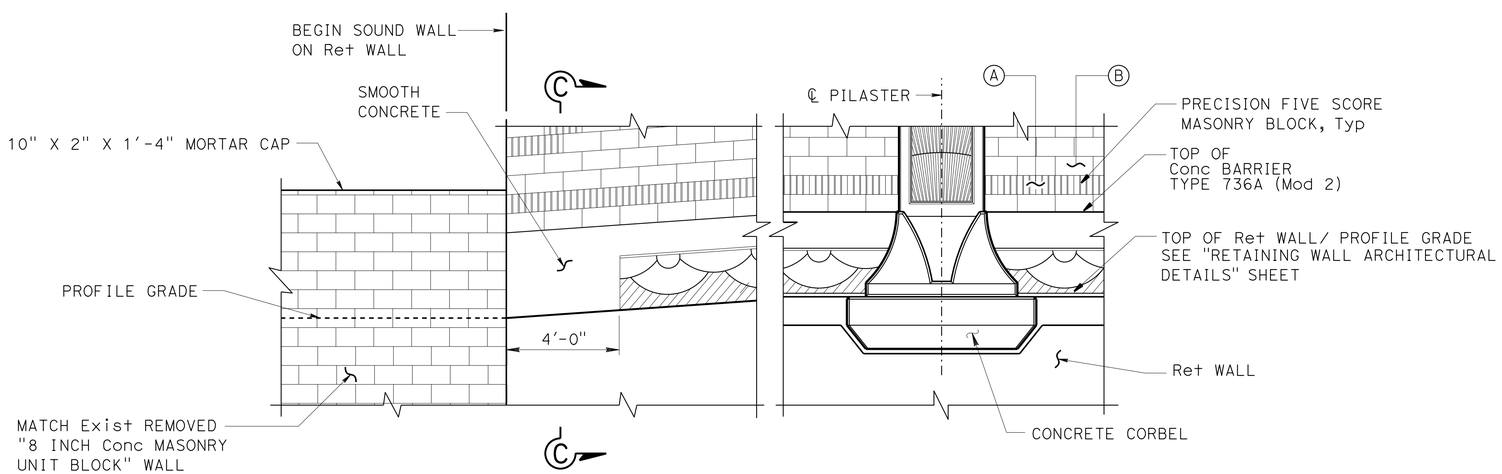

PART SOUND WALL MIRRORED ELEVATION - BACK SIDE

3/8" = 1'-0"

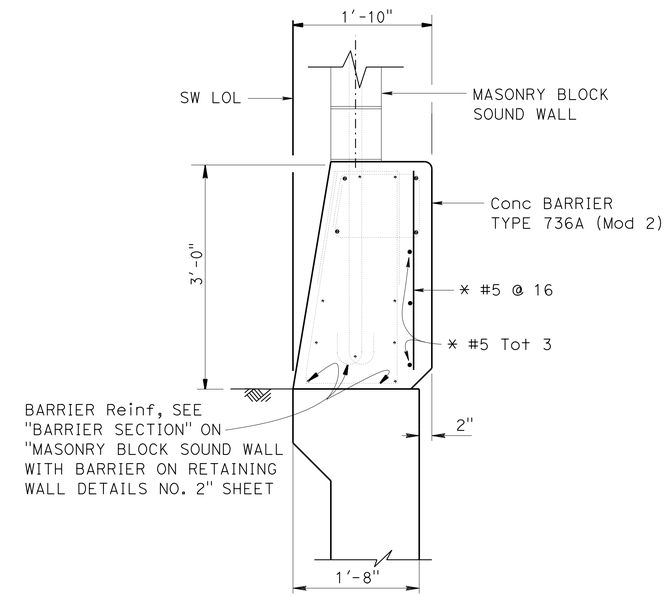

* - Indicates Reinf is additional to typical barrier Reinf

SECTION C-C

1" = 1'-0"

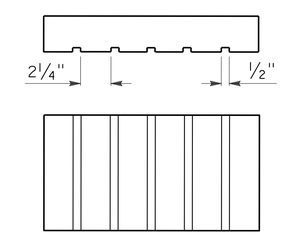

PRECISION 5 SCORE PLAIN

LEGEND

	SYMBOL	NOMINAL SIZE	TEXTURE	COLOR
A		8" x 8" x 16"	PRECISION 5 SCORE	TAN (FEDERAL COLOR #22648)
B		8" x 8" x 16"	PRECISION	TAN (FEDERAL COLOR #22648)

DIST	COUNTY	ROUTE	POST MILES TOTAL PROJECT	SHEET No.	TOTAL SHEETS
07	LA	5	0.0/7.6	734	985

P. Vijitakula 12/31/12
REGISTERED CIVIL ENGINEER DATE

6-24-13
PLANS APPROVAL DATE

REGISTERED PROFESSIONAL ENGINEER P. VIJITAKULA No. 54701 Exp. 12/31/13 CIVIL STATE OF CALIFORNIA

The State of California or its officers or agents shall not be responsible for the accuracy or completeness of electronic copies of this plan sheet.

DESIGN	BY Greg Thornton	CHECKED Henry Fang	
DETAILS	BY Jin Zhou	CHECKED Henry Fang	
QUANTITIES	BY Paul Hayes	CHECKED Nikki Tiongco	

STATE OF CALIFORNIA
DEPARTMENT OF TRANSPORTATION

DIVISION OF ENGINEERING SERVICES
STRUCTURE DESIGN
DESIGN BRANCH 1

BRIDGE NO. 53E0211
POST MILE 6.35

SOUND WALL NO. 103
SOUND WALL ARCHITECTURAL DETAILS

STRUCTURES DESIGN DETAIL SHEET (ENGLISH) (REV. 09-01-10)

ORIGINAL SCALE IN INCHES FOR REDUCED PLANS 0 1 2 3

UNIT: 3576
PROJECT NUMBER & PHASE: 07000018351
CONTRACT NO.: 07-215954

DISREGARD PRINTS BEARING EARLIER REVISION DATES

REVISION DATES 02/29/12 12/31/12 12/28/12

SHEET 21 OF 40

FILE => sw103-f-sou01.dgn

USERNAME => s124496 DATE PLOTTED => 26-JUN-2013 TIME PLOTTED => 17:36

DIST	COUNTY	ROUTE	POST MILES TOTAL PROJECT	SHEET No.	TOTAL SHEETS
07	LA	5	0.0/7.6	735	985

P. Vijitakula 12/31/12
REGISTERED CIVIL ENGINEER DATE

6-24-13
PLANS APPROVAL DATE

REGISTERED PROFESSIONAL ENGINEER
P. VIJITAKULA
No. 54701
Exp. 12/31/13
CIVIL
STATE OF CALIFORNIA

The State of California or its officers or agents shall not be responsible for the accuracy or completeness of electronic copies of this plan sheet.

NOTES:

1. All dimensions symmetrical about ℄ Pilaster.
2. For location of "DETAIL E", see "PILASTER ARCHITECTURAL DETAILS NO. 2" sheet.
3. Beveled edges are 45° unless otherwise noted.
4. All vertical dimensions are measured along the ℄ Pilaster (Pilaster shall be vertical).

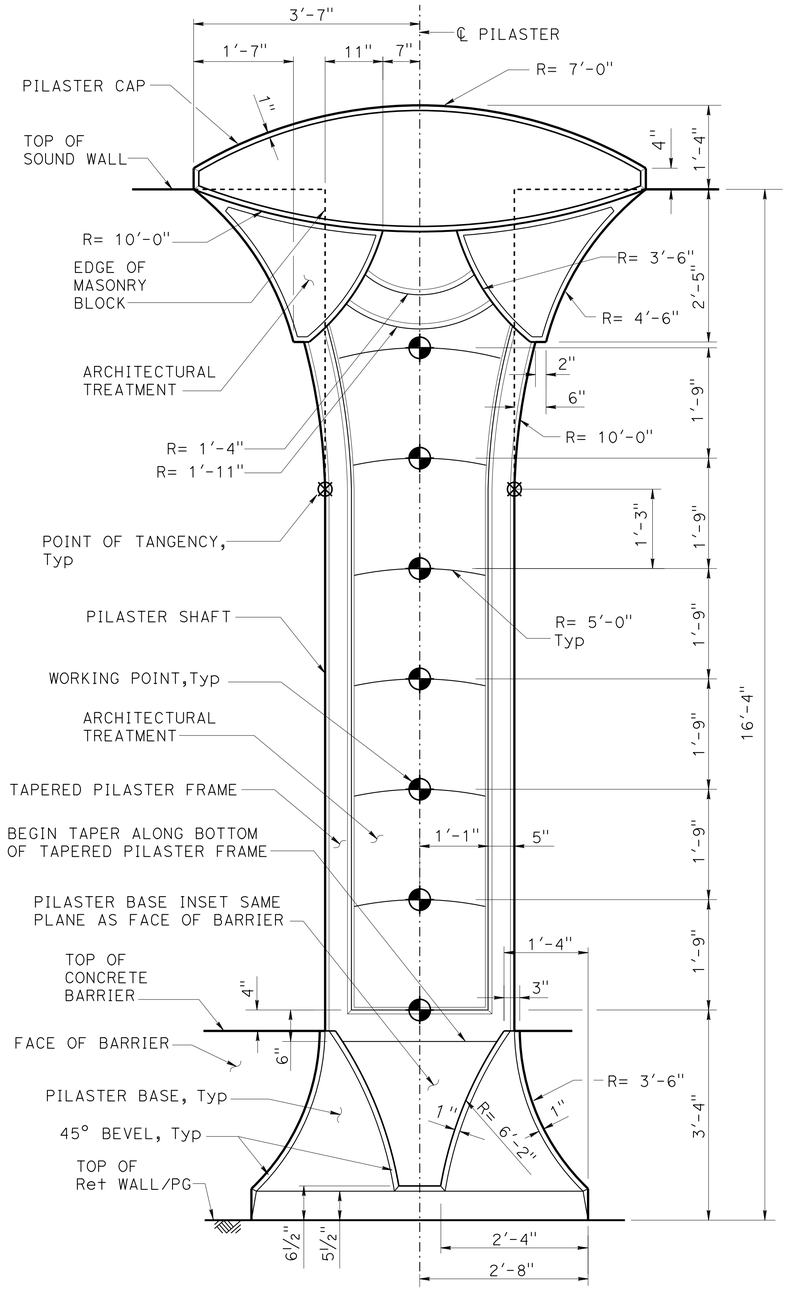

16'-4" SOUND WALL

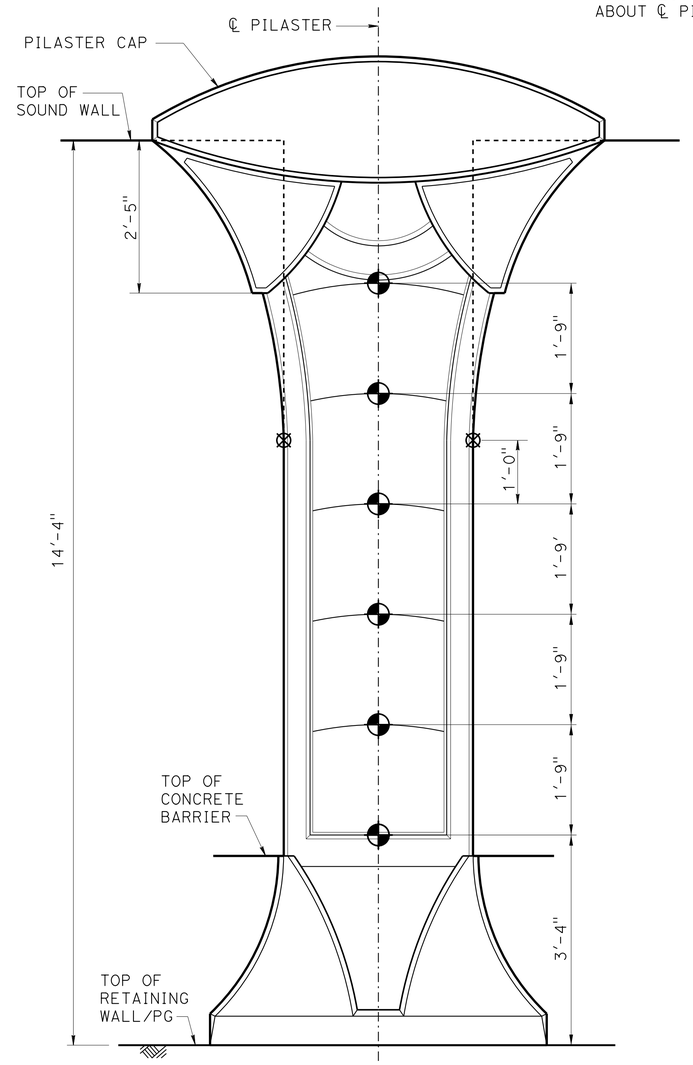

NOTE: For dimensions and details not shown, see "16'-4" SOUND WALL" details.

14'-4" SOUND WALL

PILASTER ELEVATION - FREEWAY SIDE

NO SCALE

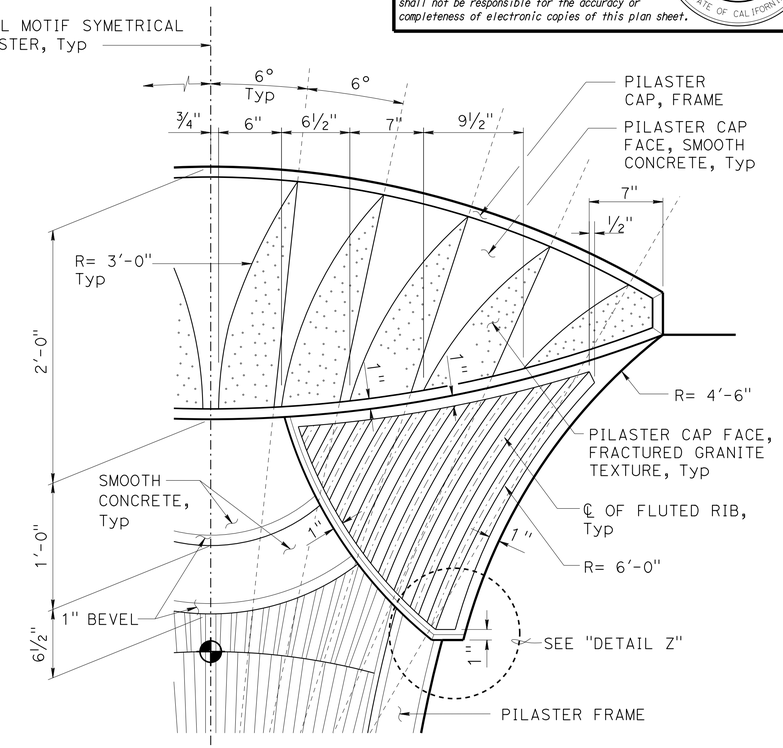

DETAIL E

NO SCALE

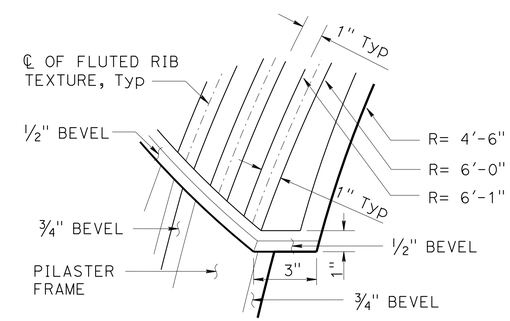

DETAIL Z

NO SCALE

	BY	CHECKED
DESIGN	Isaac Tasabia	Javier Chavez
DETAILS	Jie Tang	G. Thornton / H. Fang
QUANTITIES	Paul Hayes	Nikki Tiongco

STATE OF CALIFORNIA
DEPARTMENT OF TRANSPORTATION

DIVISION OF ENGINEERING SERVICES
STRUCTURE DESIGN
DESIGN BRANCH 1

BRIDGE NO. 53E0211
POST MILE 6.35

SOUND WALL NO. 103
PILASTER ARCHITECTURAL DETAILS NO. 1

STRUCTURES DESIGN DETAIL SHEET (ENGLISH) (REV. 09-01-10)

ORIGINAL SCALE IN INCHES FOR REDUCED PLANS 0 1 2 3

UNIT: 3576
PROJECT NUMBER & PHASE: 07000018351
CONTRACT NO.: 07-215954

DISREGARD PRINTS BEARING EARLIER REVISION DATES

REVISION DATES 02/22/12 11/13/12

SHEET 22 OF 40

FILE => sw103-g-pilaster01.dgn

USERNAME => s124496 DATE PLOTTED => 26-JUN-2013 TIME PLOTTED => 17:37

DIST	COUNTY	ROUTE	POST MILES TOTAL PROJECT	SHEET No.	TOTAL SHEETS
07	LA	5	0.0/7.6	736	985

P. Vijitakula 12/31/12
REGISTERED CIVIL ENGINEER DATE

6-24-13
PLANS APPROVAL DATE

REGISTERED PROFESSIONAL ENGINEER P. VIJITAKULA No. 54701 Exp. 12/31/13 CIVIL STATE OF CALIFORNIA

The State of California or its officers or agents shall not be responsible for the accuracy or completeness of electronic copies of this plan sheet.

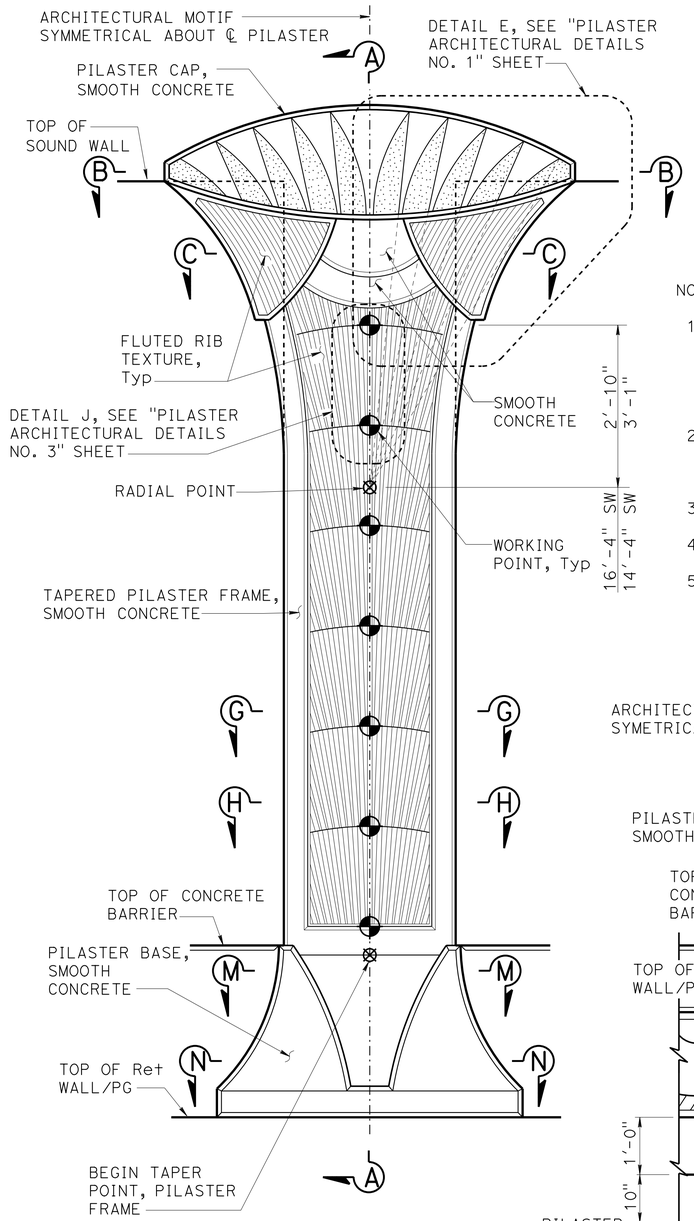

NOTES:

1. For "SECTION B-B", "SECTION C-C", "SECTION G-G","SECTION H-H" and "SECTION L-L", see "PILASTER ARCHITECTURAL DETAILS NO. 3" sheet.
2. For "SECTION M-M" and "SECTION N-N"' see "PILASTER ARCHITECTURAL DETAIL NO. 4" sheet.
3. All dimensions symmetrical about ℄ pilaster.
4. Beveled edges are 45° unless otherwise noted.
5. All vertical dimension are measured along the ℄ Pilaster (Pilaster shall be vertical).

NOTE: For additional details not shown, see "16'-4" SOUND WALL - PILASTER ELEVATION" on "PILASTER ARCHITECTURAL DETAILS NO. 1" sheet.

FREEWAY SIDE

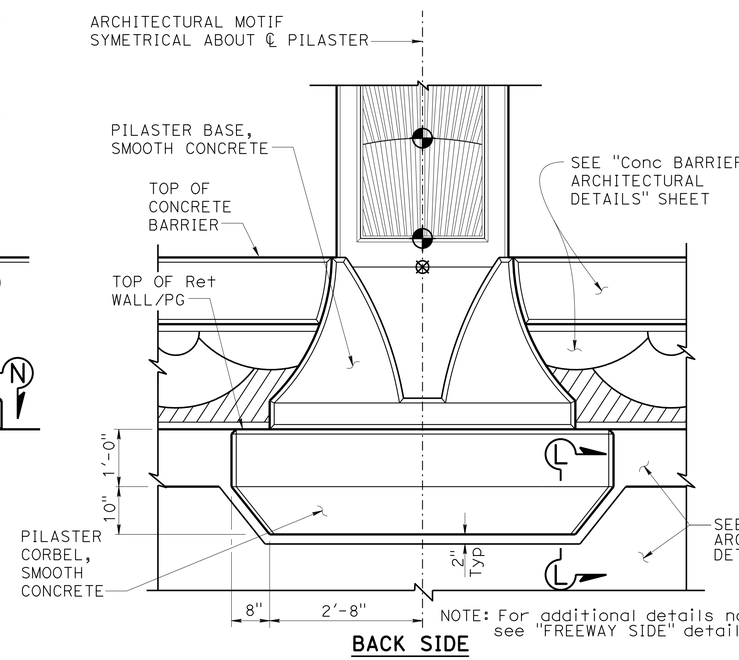

NOTE: For additional details not shown, see "FREEWAY SIDE" details.

BACK SIDE

PILASTER ARCHITECTURAL MOTIF

¾" = 1'-0"

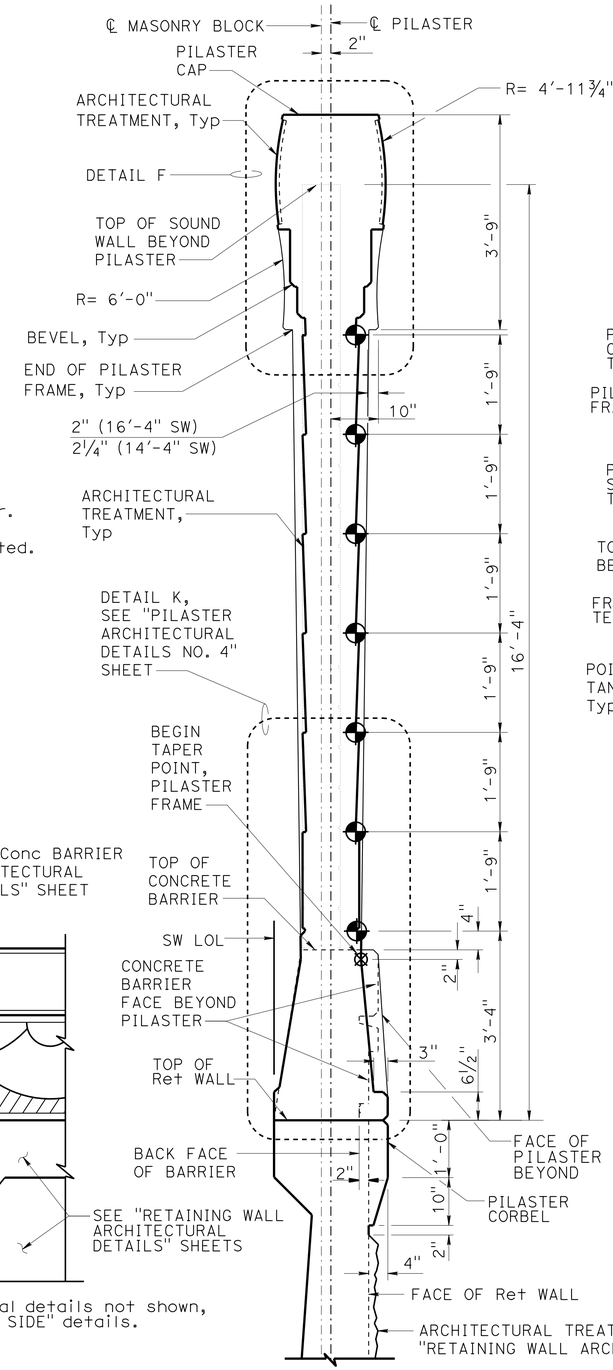

SECTION A-A

¾" = 1'-0"

NOTE: Pilaster for 16'-4" Sound Wall shown, Pilaster at 14'-4" Sound Wall similar.

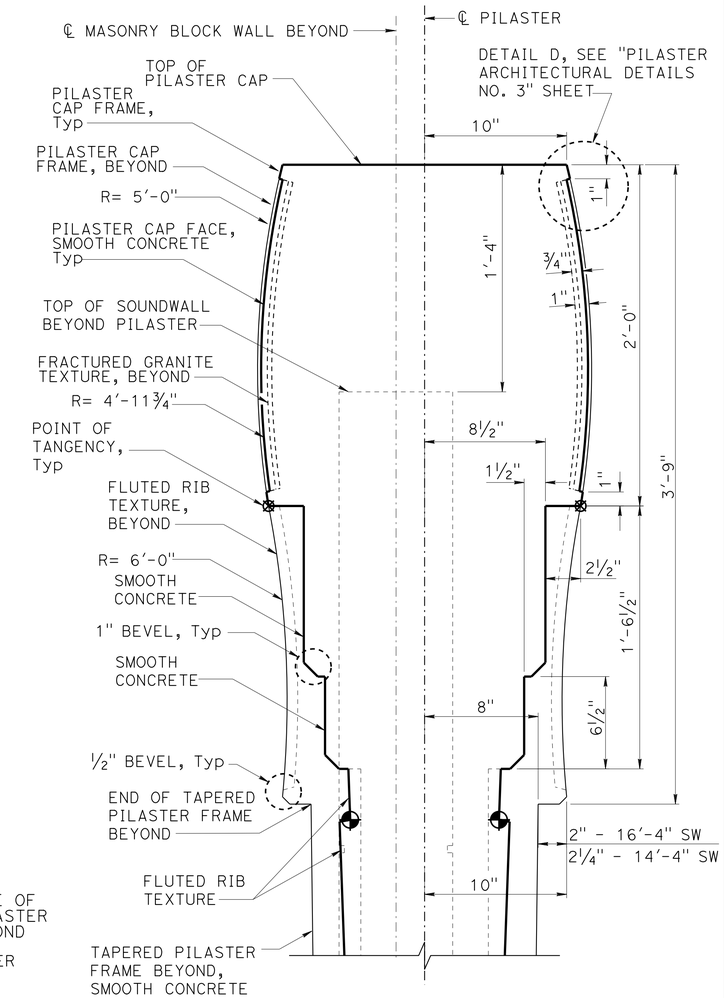

DETAIL F

NO SCALE

DESIGN	BY Isaac Tasabia	CHECKED Javier Chavez	
DETAILS	BY Jie Tang	CHECKED G.Thornton / H. Fang	
QUANTITIES	BY Paul Hayes	CHECKED Nikki Tiongco	

STATE OF CALIFORNIA
DEPARTMENT OF TRANSPORTATION

DIVISION OF ENGINEERING SERVICES
STRUCTURE DESIGN
DESIGN BRANCH 1

BRIDGE NO. 53E0211
POST MILE 6.35

SOUND WALL NO. 103
PILASTER ARCHITECTURAL DETAILS NO. 2

STRUCTURES DESIGN DETAIL SHEET (ENGLISH) (REV. 09-01-10)

ORIGINAL SCALE IN INCHES FOR REDUCED PLANS 0 1 2 3

UNIT: 3576
PROJECT NUMBER & PHASE: 07000018351
CONTRACT NO.: 07-215954

DISREGARD PRINTS BEARING EARLIER REVISION DATES

REVISION DATES: 02/02/12 05/08/12 11/13/12

SHEET 23 OF 40

FILE => sw103-g-pilaster02.dgn

USERNAME => s124496 DATE PLOTTED => 26-JUN-2013 TIME PLOTTED => 17:37

NOTES:

1. All notes and dimensions symetrical about ℄ pilaster.
2. Beveled edges are 45° unless otherwise noted.
3. For location of "DETAIL J", "DETAIL D" and "SECTION B-B", "SECTION C-C", "SECTION G-G", "SECTION H-H" and "SECTION L-L", see "PILASTER ARCHITECTURAL DETAILS NO. 2" sheet.
4. For Retaining Wall split slate texture, see "RETAINING WALL ARCHITECTURAL DETAILS" sheet.

DIST	COUNTY	ROUTE	POST MILES TOTAL PROJECT	SHEET No.	TOTAL SHEETS
07	LA	5	0.0/7.6	737	985

P. Vijitakula 12/31/12
REGISTERED CIVIL ENGINEER DATE

6-24-13
PLANS APPROVAL DATE

REGISTERED PROFESSIONAL ENGINEER P. VIJITAKULA No. 54701 Exp. 12/31/13 CIVIL STATE OF CALIFORNIA

The State of California or its officers or agents shall not be responsible for the accuracy or completeness of electronic copies of this plan sheet.

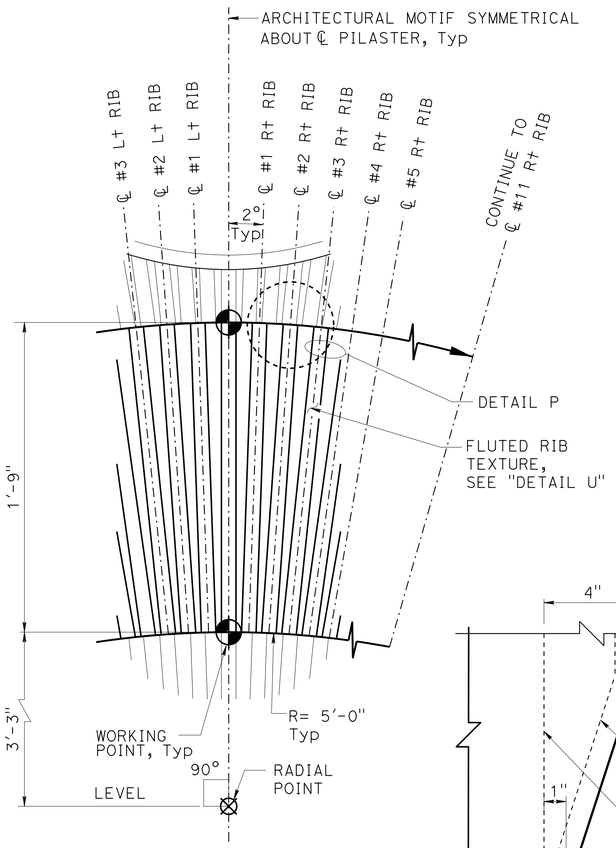

DETAIL J
NO SCALE

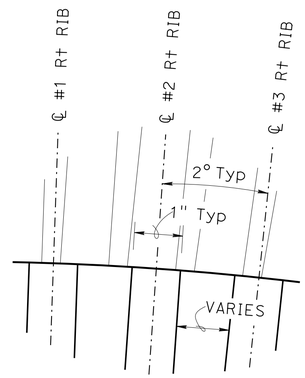

DETAIL P
NO SCALE

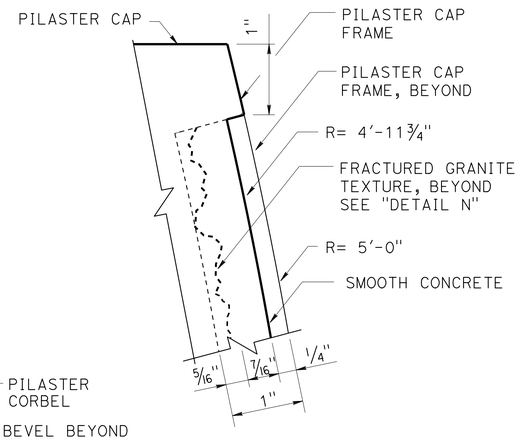

DETAIL D
NO SCALE

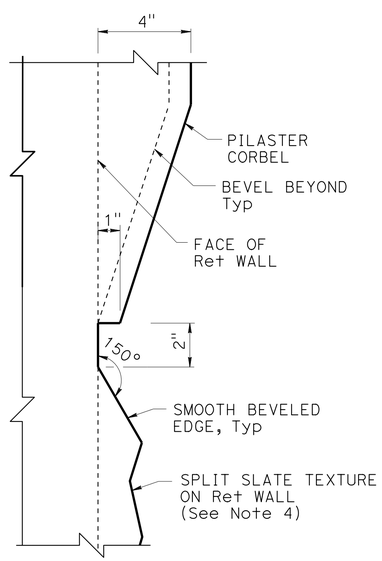

SECTION L-L
NO SCALE

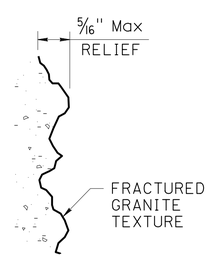

DETAIL N
NO SCALE

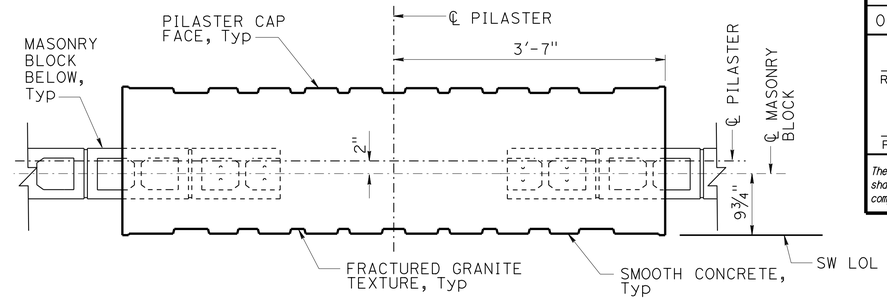

SECTION B-B
1" = 1'-0"

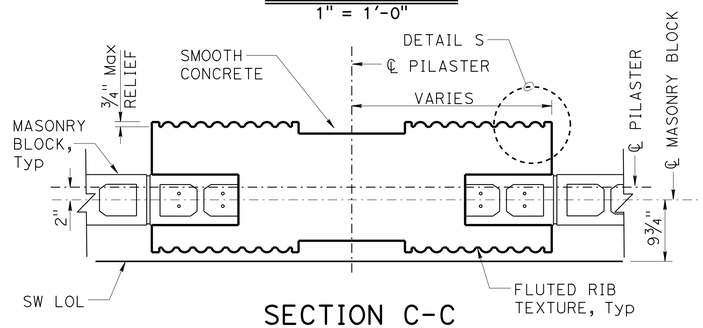

SECTION C-C
1" = 1'-0"

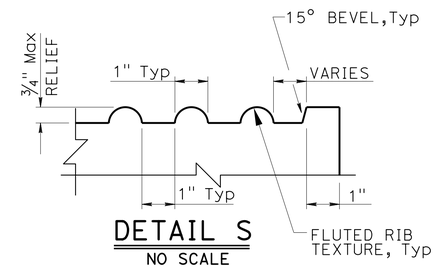

DETAIL S
NO SCALE

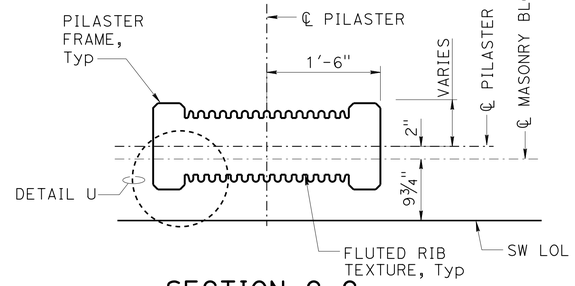

SECTION G-G
1" = 1'-0"

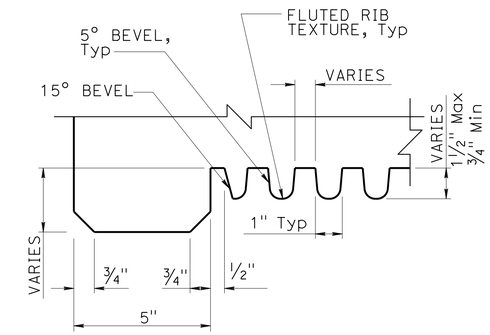

DETAIL U
NO SCALE

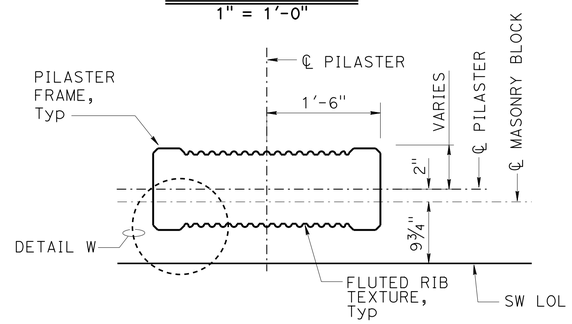

SECTION H-H
1" = 1'-0"

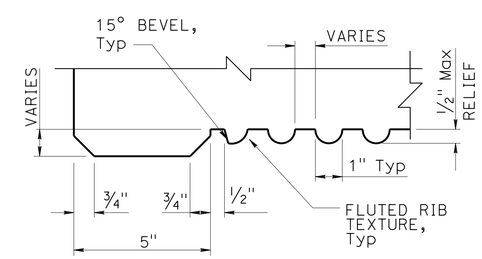

DETAIL W
NO SCALE

DESIGN	BY Isaac Tasabia	CHECKED Javier Chavez	
DETAILS	BY Jie Tang	CHECKED G.Thornton / H. Fang	
QUANTITIES	BY Paul Hayes	CHECKED Nikki Tiongco	

STATE OF CALIFORNIA
DEPARTMENT OF TRANSPORTATION

DIVISION OF ENGINEERING SERVICES
STRUCTURE DESIGN
DESIGN BRANCH 1

BRIDGE NO. 53E0211
POST MILE 6.35

SOUND WALL NO. 103
PILASTER ARCHITECTURAL DETAILS NO. 3

STRUCTURES DESIGN DETAIL SHEET (ENGLISH) (REV. 09-01-10)

ORIGINAL SCALE IN INCHES FOR REDUCED PLANS 0 1 2 3

UNIT: 3576
PROJECT NUMBER & PHASE: 07000018351
CONTRACT NO.: 07-215954

DISREGARD PRINTS BEARING EARLIER REVISION DATES

REVISION DATES 02/28/12 05/08/12 11/13/12

SHEET 24 OF 40

FILE => sw103-g-pilaster03.dgn

USERNAME => s124496 DATE PLOTTED => 26-JUN-2013 TIME PLOTTED => 17:37

DIST	COUNTY	ROUTE	POST MILES TOTAL PROJECT	SHEET No.	TOTAL SHEETS
07	LA	5	0.0/7.6	738	985

P. Vijitakula 12/31/12
REGISTERED CIVIL ENGINEER DATE

6-24-13
PLANS APPROVAL DATE

REGISTERED PROFESSIONAL ENGINEER P. VIJITAKULA No. 54701 Exp. 12/31/13 CIVIL STATE OF CALIFORNIA

The State of California or its officers or agents shall not be responsible for the accuracy or completeness of electronic copies of this plan sheet.

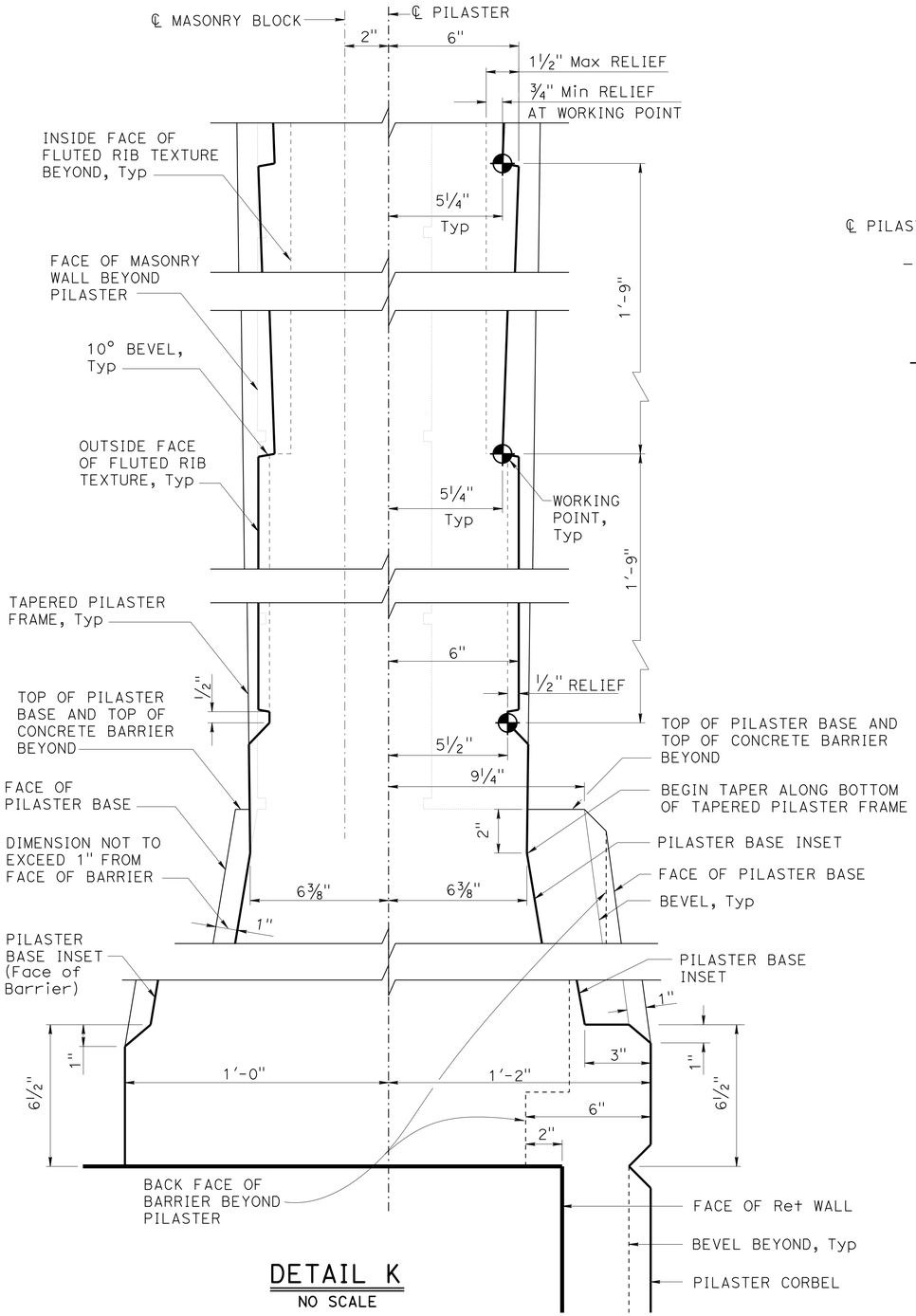

DETAIL K
NO SCALE

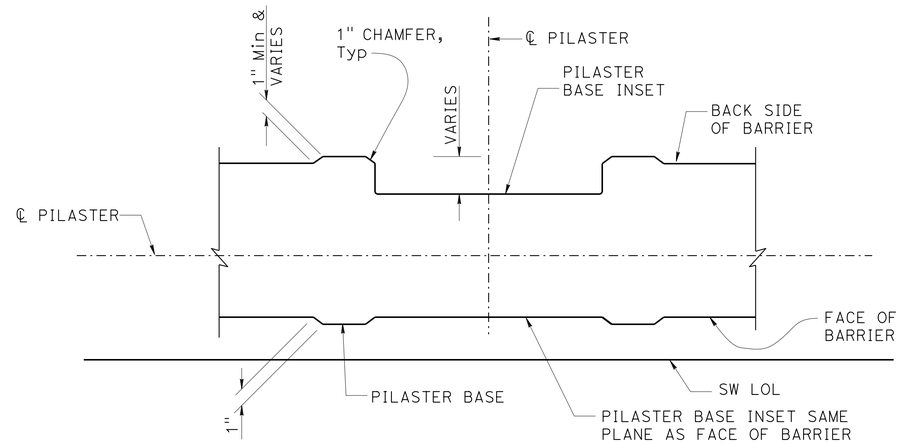

SECTION M-M
1½" = 1'-0"

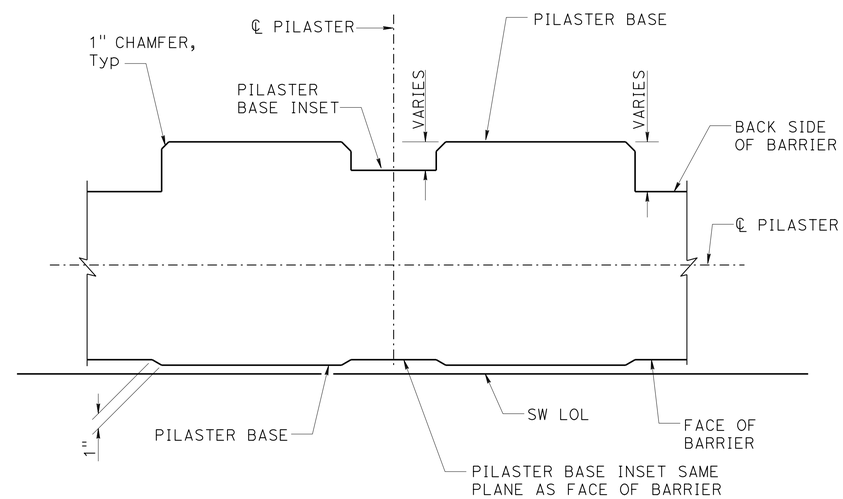

SECTION N-N
1½" = 1'-0"

NOTES:

1. For location of "SECTION M-M", "SECTION N-N" and "DETAIL K", see "PILASTER ARCHITECTURAL DETAILS NO. 2" sheet.
2. All dimensions symmetrical about ℄ Pilaster.
3. All vertical dimension are measured along the ℄ Pilaster (Pilaster shall be vertical).

	BY	CHECKED
DESIGN	Isaac Tasabia	Javier Chavez
DETAILS	Jie Tang	G.Thornton / H. Fang
QUANTITIES	Paul Hayes	Nikki Tiongco

STATE OF CALIFORNIA
DEPARTMENT OF TRANSPORTATION

DIVISION OF ENGINEERING SERVICES
STRUCTURE DESIGN
DESIGN BRANCH 1

BRIDGE NO. 53E0211
POST MILE 6.35

SOUND WALL NO. 103
PILASTER ARCHITECTURAL DETAILS NO. 4

STRUCTURES DESIGN DETAIL SHEET (ENGLISH) (REV. 09-01-10)

ORIGINAL SCALE IN INCHES FOR REDUCED PLANS 0 1 2 3

UNIT: 3576
PROJECT NUMBER & PHASE: 07000018351
CONTRACT NO.: 07-215954

DISREGARD PRINTS BEARING EARLIER REVISION DATES
REVISION DATES 02/29/12 05/09/12 11/13/12
SHEET 25 OF 40

FILE => sw103-g-pilaster04.dgn

USERNAME => s124496 DATE PLOTTED => 26-JUN-2013 TIME PLOTTED => 17:37

DIST	COUNTY	ROUTE	POST MILES TOTAL PROJECT	SHEET No.	TOTAL SHEETS
07	LA	5	0.0/7.6	739	985

P. Vijitakula 12/31/12
REGISTERED CIVIL ENGINEER DATE

6-24-13
PLANS APPROVAL DATE

REGISTERED PROFESSIONAL ENGINEER P. VIJITAKULA No. 54701 Exp. 12/31/13 CIVIL STATE OF CALIFORNIA

The State of California or its officers or agents shall not be responsible for the accuracy or completeness of electronic copies of this plan sheet.

NOTE:
For "SECTION B-B", "SECTION C-C", "SECTION D-D" and "SECTION G-G", see "PILASTER STRUCTURAL DETAILS NO. 2" sheet.

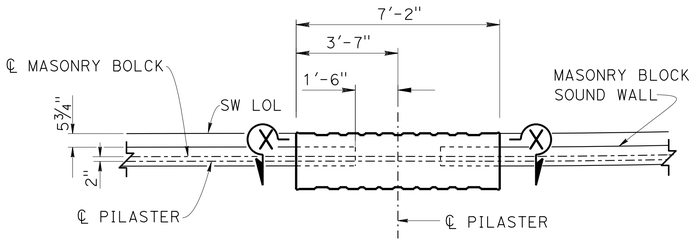

PART SOUND WALL PLAN

⅜" = 1'-0"

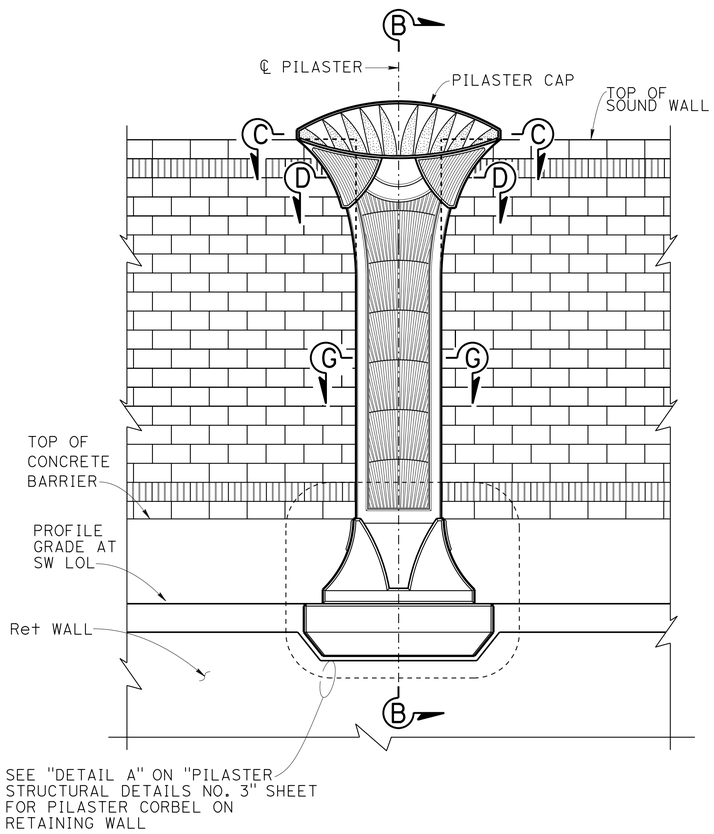

PART SOUND WALL ELEVATION

⅜" = 1'-0"

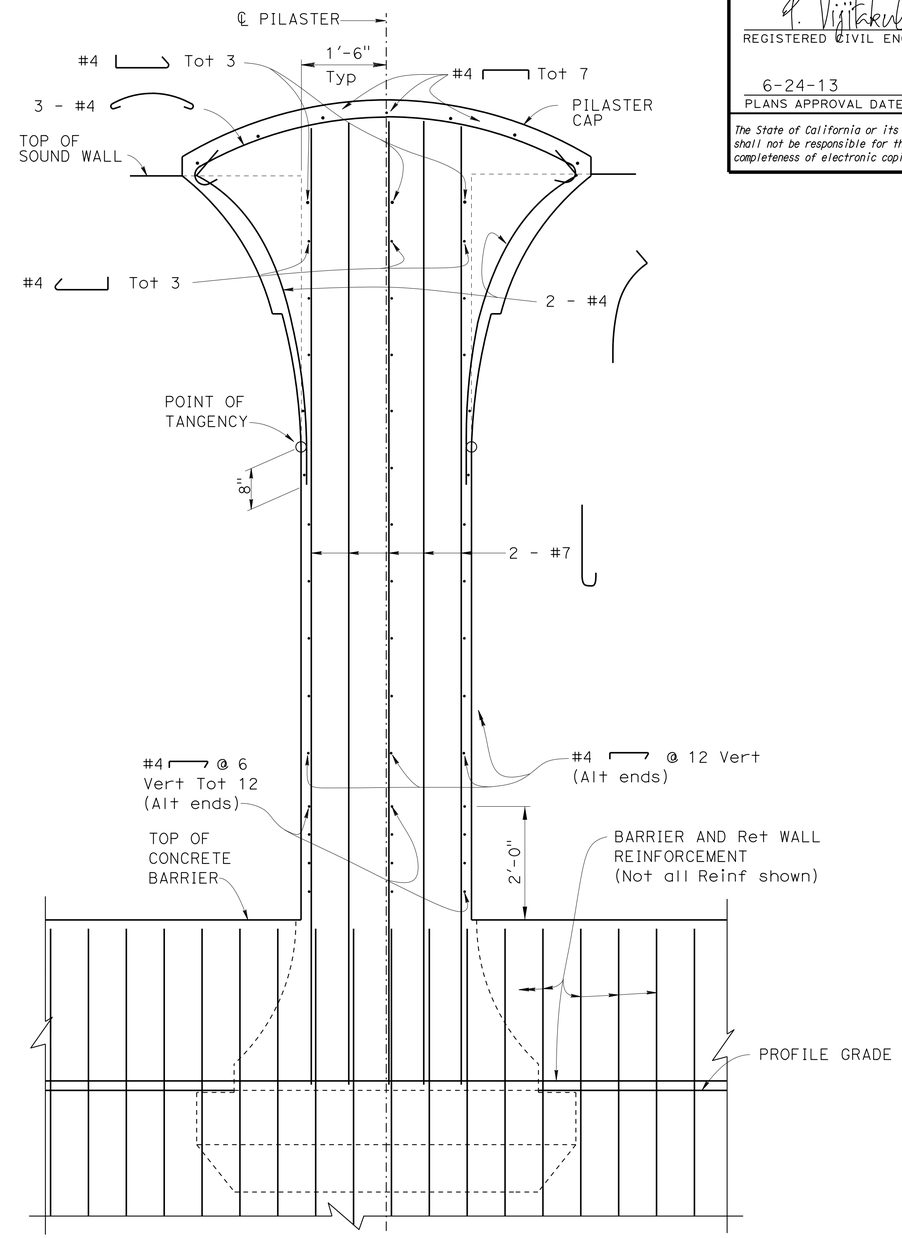

NOTE: Pilaster corbel reinf not shown.

SECTION X-X

¾" = 1'-0"

DESIGN	BY Greg Thornton	CHECKED Henry Fang	
DETAILS	BY Jie Tang	CHECKED Henry Fang	
QUANTITIES	BY Paul Hayes	CHECKED Nikki Tiongco	

STATE OF CALIFORNIA
DEPARTMENT OF TRANSPORTATION

DIVISION OF ENGINEERING SERVICES
STRUCTURE DESIGN
DESIGN BRANCH 1

BRIDGE NO. 53E0211
POST MILE 6.35

SOUND WALL NO. 103
PILASTER STRUCTURAL DETAILS NO. 1

STRUCTURES DESIGN DETAIL SHEET (ENGLISH) (REV. 09-01-10)

ORIGINAL SCALE IN INCHES FOR REDUCED PLANS 0 1 2 3

UNIT: 3576
PROJECT NUMBER & PHASE: 07000018351
CONTRACT NO.: 07-215954

DISREGARD PRINTS BEARING EARLIER REVISION DATES

REVISION DATES 02/22/12 05/04/12 11/13/12

SHEET 26 OF 40

FILE => sw103-h-pilaster01.dgn

USERNAME => s124496 DATE PLOTTED => 26-JUN-2013 TIME PLOTTED => 17:37

DIST	COUNTY	ROUTE	POST MILES TOTAL PROJECT	SHEET No.	TOTAL SHEETS
07	LA	5	0.0/7.6	740	985

P. Vijitakula 12/31/12
REGISTERED CIVIL ENGINEER DATE

6-24-13
PLANS APPROVAL DATE

REGISTERED PROFESSIONAL ENGINEER
P. VIJITAKULA
No. 54701
Exp. 12/31/13
CIVIL
STATE OF CALIFORNIA

The State of California or its officers or agents shall not be responsible for the accuracy or completeness of electronic copies of this plan sheet.

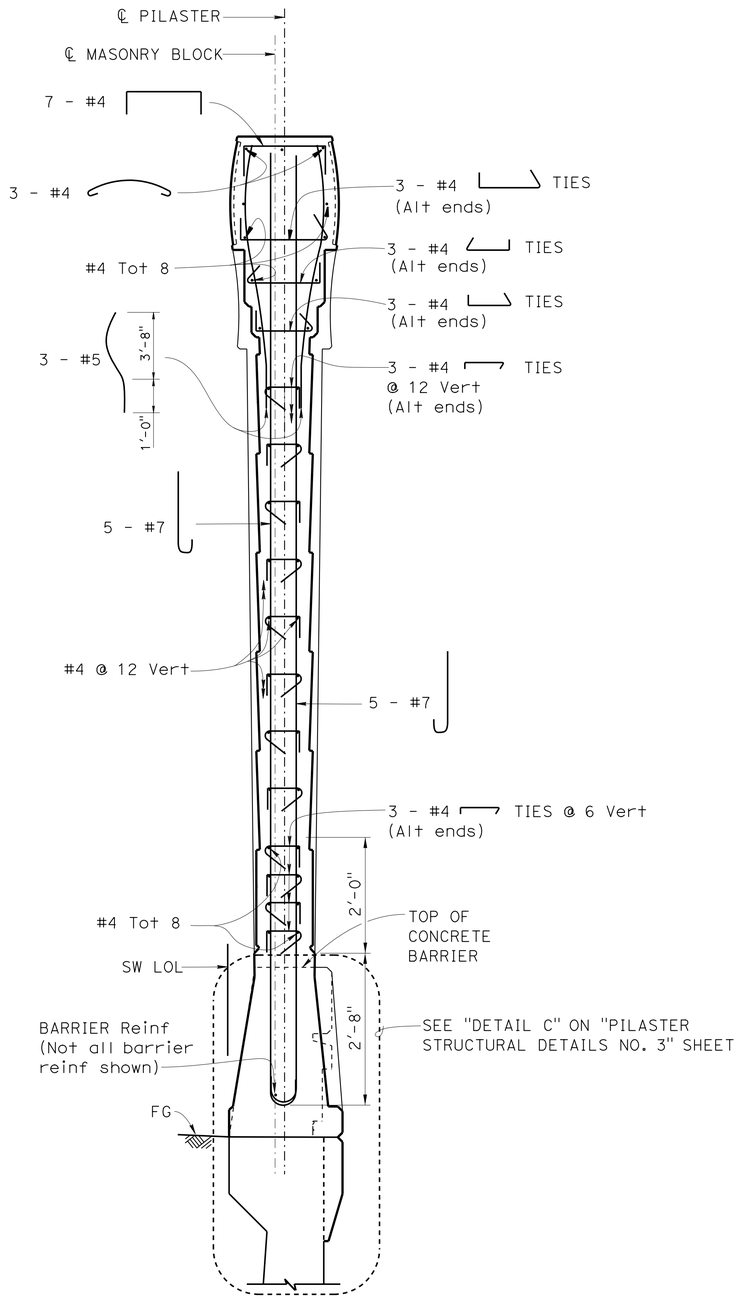

SECTION B-B
¾" = 1'-0"

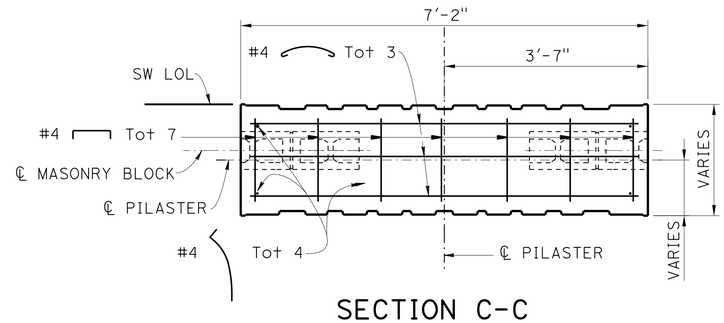

SECTION C-C
¾" = 1'-0"

NOTES:

1. For location of "SECTION B-B", "SECTION C-C", "SECTION D-D" and "SECTION G-G", see "PILASTER STRUCTURAL DETAILS NO. 1" sheet.

2. For Pilaster geometry, dimensions and architectural treatments, see "PILASTER ARCHITECTURAL DETAILS" sheets.

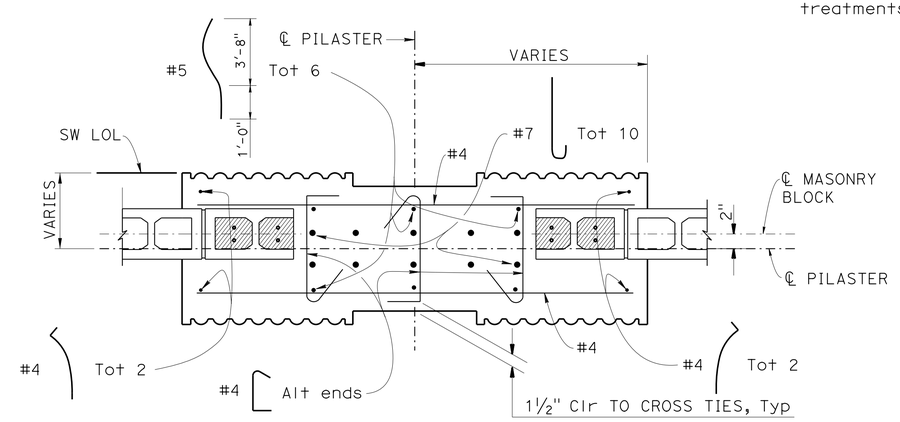

SECTION D-D
1" = 1'-0"

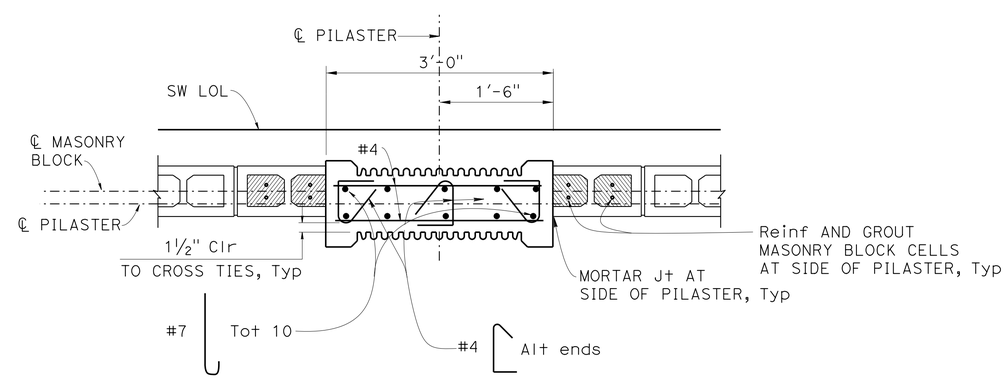

SECTION G-G
1" = 1'-0"

DESIGN	BY Greg Thornton	CHECKED Henry Fang	
DETAILS	BY Jie Tang	CHECKED Henry Fang	
QUANTITIES	BY Paul Hayes	CHECKED Nikki Tiongco	

STATE OF CALIFORNIA
DEPARTMENT OF TRANSPORTATION

DIVISION OF ENGINEERING SERVICES
STRUCTURE DESIGN
DESIGN BRANCH 1

BRIDGE NO. 53E0211
POST MILE 6.35

SOUND WALL NO. 103
PILASTER STRUCTURAL DETAILS NO. 2

STRUCTURES DESIGN DETAIL SHEET (ENGLISH) (REV. 09-01-10)

ORIGINAL SCALE IN INCHES FOR REDUCED PLANS 0 1 2 3

UNIT: 3576
PROJECT NUMBER & PHASE: 07000018351
CONTRACT NO.: 07-215954

DISREGARD PRINTS BEARING EARLIER REVISION DATES

REVISION DATES: 02/22/12 05/04/12 11/13/12

SHEET 27 OF 40

FILE => sw103-h-pilaster02.dgn

USERNAME => s124496 DATE PLOTTED => 26-JUN-2013 TIME PLOTTED => 17:37

DIST	COUNTY	ROUTE	POST MILES TOTAL PROJECT	SHEET No.	TOTAL SHEETS
07	LA	5	0.0/7.6	741	985

P. Vijitakula 12/31/12
REGISTERED CIVIL ENGINEER DATE

6-24-13
PLANS APPROVAL DATE

REGISTERED PROFESSIONAL ENGINEER
P. VIJITAKULA
No. 54701
Exp. 12/31/13
CIVIL
STATE OF CALIFORNIA

The State of California or its officers or agents shall not be responsible for the accuracy or completeness of electronic copies of this plan sheet.

NOTES:

1. For location of "DETAIL A", see "PILASTER STRUCTURAL DETAILS NO. 1" sheet.
2. For location of "DETAIL C", see "PILASTER STRUCTURAL DETAILS NO. 2" sheet.

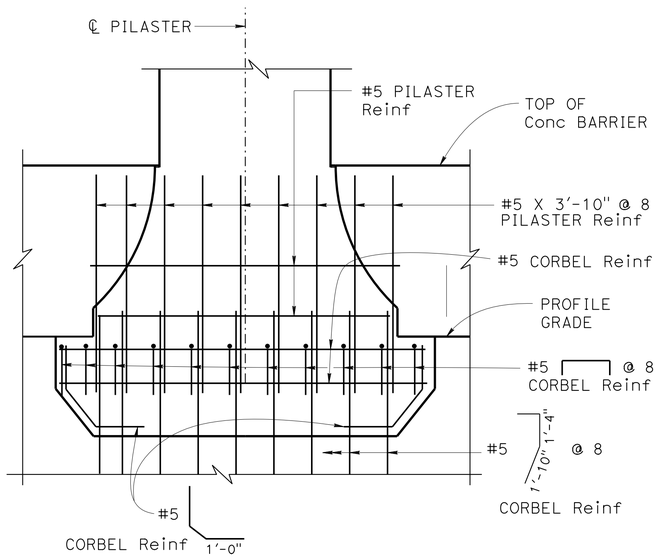

NOTE: Concrete Barrier/Ret Wall reinforcement not shown.

DETAIL A

¾" = 1'-0"

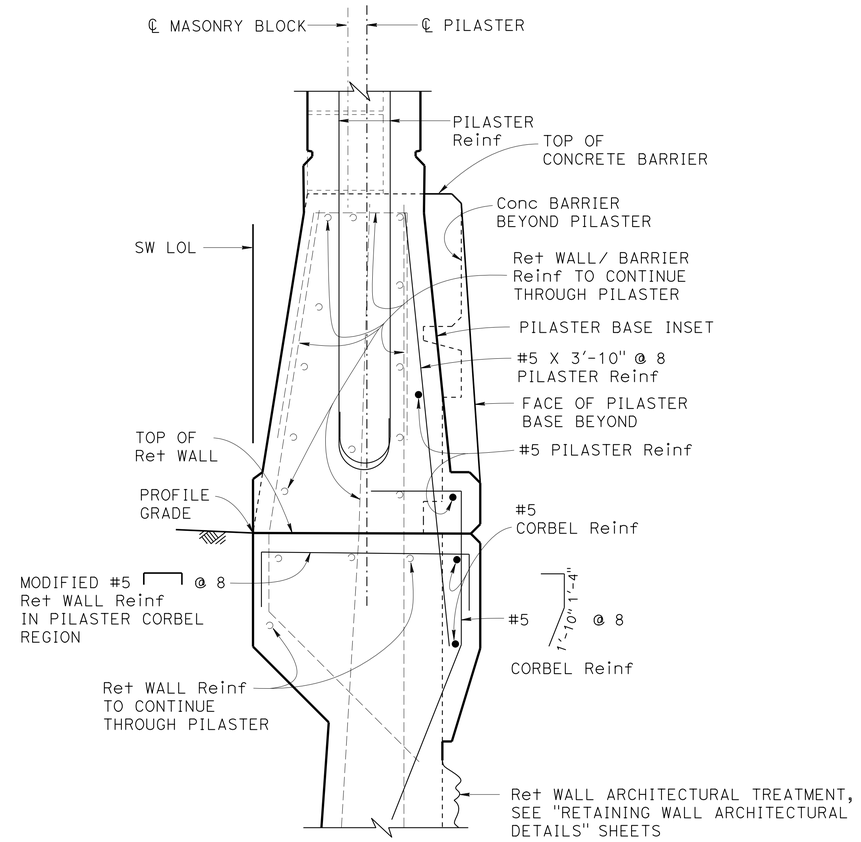

DETAIL C

1½" = 1'-0"

DESIGN	BY Greg Thornton	CHECKED Henry Fang	
DETAILS	BY Jie Tang / Jin Zhou	CHECKED Henry Fang	
QUANTITIES	BY Paul Hayes	CHECKED Nikki Tiongco	

STATE OF CALIFORNIA
DEPARTMENT OF TRANSPORTATION

DIVISION OF ENGINEERING SERVICES
STRUCTURE DESIGN
DESIGN BRANCH 1

BRIDGE NO. 53E0211
POST MILE 6.35

SOUND WALL NO. 103
PILASTER STRUCTURAL DETAILS NO. 3

STRUCTURES DESIGN DETAIL SHEET (ENGLISH) (REV. 09-01-10)

ORIGINAL SCALE IN INCHES FOR REDUCED PLANS 0 1 2 3

UNIT: 3576
PROJECT NUMBER & PHASE: 07000018351
CONTRACT NO.: 07-215954

DISREGARD PRINTS BEARING EARLIER REVISION DATES

REVISION DATES: 02/29/12 05/04/12 11/13/12

SHEET 28 OF 40

FILE => sw103-h-pilaster03.dgn

USERNAME => s124496 DATE PLOTTED => 26-JUN-2013 TIME PLOTTED => 17:37

DIST	COUNTY	ROUTE	POST MILES TOTAL PROJECT	SHEET No.	TOTAL SHEETS
07	LA	5	0.0/7.6	742	985

P. Vijitakula 12/31/12
REGISTERED CIVIL ENGINEER DATE

6-24-13
PLANS APPROVAL DATE

REGISTERED PROFESSIONAL ENGINEER P. VIJITAKULA No. 54701 Exp. 12/31/13 CIVIL STATE OF CALIFORNIA

The State of California or its officers or agents shall not be responsible for the accuracy or completeness of electronic copies of this plan sheet.

TABLE 1: TABLE OF REINFORCING STEEL DIMENSIONS AND DATA

DESIGN H	6′	8′	10′	12′	14′	16′	18′	20′	22′	24′	26′	28′
W	8′- 3"	8′- 6"	9′- 0"	9′- 6"	10′- 0"	10′- 9"	11′- 3"	12′- 0"	13′- 3"	14′- 3"	15′- 9"	16′- 9"
C	2′- 9"	2′- 9"	3′- 0"	3′- 3"	3′- 4"	3′- 6"	3′- 9"	4′- 0"	4′- 3"	4′- 9"	5′- 3"	5′- 6"
B	5′- 6"	5′- 9"	6′- 0"	6′- 3"	6′- 8"	7′- 3"	7′- 6"	8′- 0"	9′- 0"	9′- 6"	10′- 6"	11′- 3"
F PILE FOOTING	1′- 6"	1′- 6"	1′- 6"	1′- 6"	1′- 9"	2′- 0"	2′- 0"	2′- 6"	2′- 9"	2′- 9"	3′- 0"	3′- 3"
ROW 1 SPACING	12′- 3"	10′- 3"	8′- 9"	7′- 6"	6′- 3"	5′- 3"	5′- 0"	5′- 0"	5′- 0"	5′- 0"	5′- 0"	5′- 0"
ROW 2 SPACING	14′- 0"	12′- 9"	11′- 6"	10′- 3"	9′- 3"	8′- 3"	7′- 9"	6′- 6"	7′- 6"	6′- 0"	5′- 0"	5′- 0"
ROW 3 SPACING									6′- 0"	5′- 3"	5′- 0"	5′- 0"
STEM WITH HAUNCH, BATTER	0	1/2:12	1/2:12	1/2:12	1/2:12	1/2:12	1/2:12	1/2:12	1/2:12	5/8:12	3/4:12	7/8:12
STEM WITHOUT HAUNCH, BATTER	0	0	0	0	0	0	0	0	1/4:12	1/4:12	1/2:12	3/4:12
ⓐ BARS						#7 @ 15	#7 @ 12	#7 @ 12	#8 @ 12	#6 @ 6	#6 @ 6	#6 @ 6
ⓑ BARS	#8 @ 12	#7 @ 9	#7 @ 6	#7 @ 6	#7 @ 6	#9 @ 7.5	#9 @ 6	#10 @ 6	#10 @ 6	#8 @ 6ȣ	#8 @ 6ȣ	#8 @ 6ȣ
ha			5′- 0"	6′- 0"	7′- 0"	7′- 0"	6′- 0"	7′- 0"	7′- 0"	7′- 6"	8′- 6"	9′- 3"
hb						11′- 6"	12′- 0"	13′- 3"	16′- 0"	15′- 6"	17′- 6"	18′- 9"
ⓒ BARS	#6 @ 12	#6 @ 9	#6 @ 6	#6 @ 6	#6 @ 6	#8 @ 7.5	#8 @ 6	#9 @ 6	#9 @ 6	#10 @ 6	#10 @ 6	#11 @ 6
ⓓ BARS	#5 @ 12	#5 @ 9	#5 @ 12	#5 @ 12	#5 @ 12	#6 @ 15	#5 @ 12	#5 @ 12	#6 @ 12	#6 @ 12	#6 @ 12	#7 @ 12
ⓔ BARS	10-#7 @ 6	8-#7 @ 7	10-#6 @ 6	8-#6 @ 6	6-#6 @ 12	6-#5 @ 12	6-#5 @ 12	6-#5 @ 15	#5 @ 18	#5 @ 18	#5 @ 18	#5 @ 18
ⓕ BARS	10-#8 @ 7	10-#8 @ 6	10-#7 @ 8	12-#6 @ 7	8-#7 @ 11	7-#6 @ 13	8-#6 @ 12	8-#5 @ 15	#5 @ 18	#5 @ 18	#5 @ 18	#5 @ 18

NOTE:

Total ⓔ bars and ⓕ bars shown are total number of top and bottom bars combined.

LEGEND:

ȣ : 2 bar bundle

NOTES:

1. All piles are CIDH concrete piles.
2. Minimum distance between center pile and edge of footing is 2′-0".
3. Lateral resistance of each pile varies.
4. Maximum spacing between piles is shown in the table. Reduce to suit the length of footing.
5. Minimum distance between any two piles is 5′-0".
6. For sound wall and retaining wall architectural finish or texture, see details elsewhere in project plans.
7. For details not shown and drainage notes, see B3-5
8. Footing cover, 1′-6" minimum.
9. For sound wall and barrier reinforcements see "MASONRY BLOCK SOUND WALL WITH BARRIER ON RETAINING WALL NO. 1 and NO. 2" sheets.
10. For H=6′ through 14′, extend ⓑ bars into barrier for stem with haunch.
11. For H≥16′, extend ⓐ bars into barrier for stem with haunch.

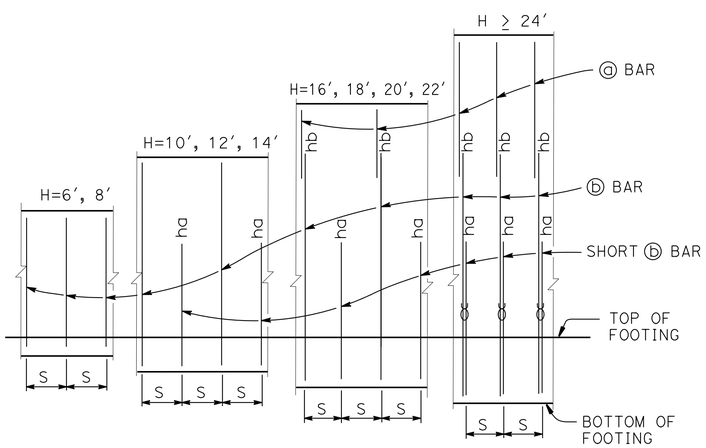

ELEVATION

No Scale

NOTES:

1. "ha" and "hb" above ⓑ bars indicate distance from top of footing to upper end of ⓑ bars, see table.
2. "S" is ⓑ bar spacing, see table.

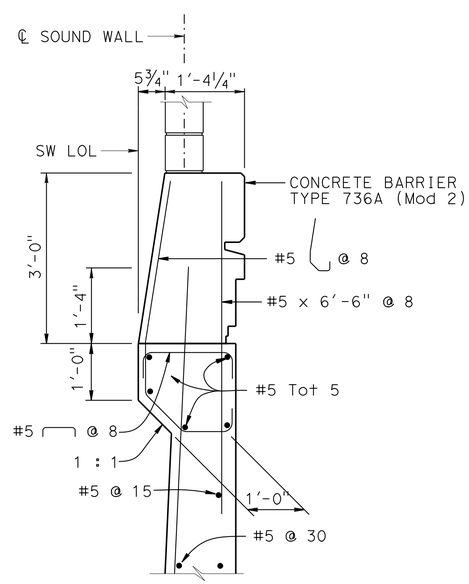

DETAIL A

¾ = 1′-0"

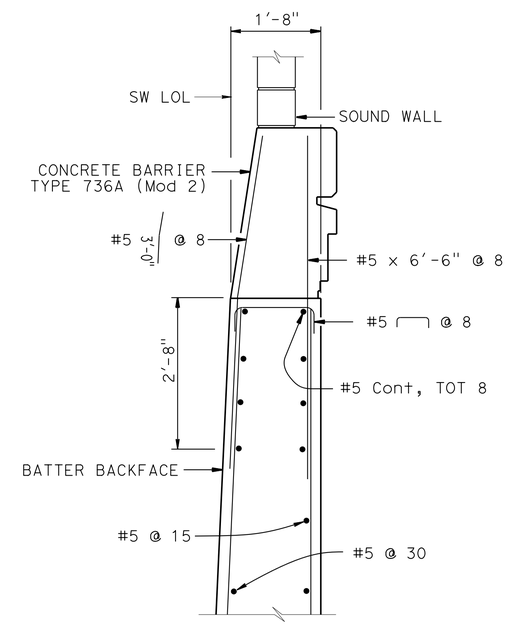

OPTIONAL DETAIL A

¾ = 1′-0"

For details not shown, see "DETAIL A".

DESIGN DATA

Design: AASHTO LRFD Bridge Design Specifications 4th edition with California Amendments

WS: 33 psf on Sound Wall and Barrier

LS: Varied surcharge on level ground surface

CT: 54 kip maximum traffic impact loading evenly distributed over 10 feet at top of the barrier and 1:1 distribution down and outward

EQD/EQE: Mononabe-Okabe Method
K_h = PGA/3
K_v = 0.0

Soil: ϕ = 35°
γ = 130 pcf

Reinforced Concrete: f′c = 3600 psi
fy = 60,000 psi

Load Combinations and Limit States:

Service I Q=1.00DC+1.00EV+1.00EH+1.00LS+0.30WS

Strength I Q=αDC+βEV+∝EH+1.75LS

Strength V Q=αDC+βEV+∝EH+1.35LS+0.40WS

Extreme I Q=1.00DC+1.00EV+1.00EH+1.00EQD+1.00EQE

Extreme II Q=1.00DC+1.00EV+1.00EH+1.00CT+0.5LS

Where:

Q: Force effects
α: 1.25 or 0.90, which ever controls design
β: 1.35 or 1.00, which ever controls design
∝: 1.50 or 0.90, which ever controls design
DC: Dead load of structure components
EV: Vertical earth fill pressure
LS: Live load surcharge
EQE: Seismic earth pressure
EQD: Soil and structure components inertia (Soil inertia ignored for stem design)
WS: Wind load on sound wall and barrier
CT: Vehicular collision force

	BY	CHECKED
DESIGN	Greg Thornton	Henry Fang
DETAILS	B. Huddleston / J. Zhou	Henry Fang
QUANTITIES	Paul Hayes	Nikki Tiongco

STATE OF CALIFORNIA DEPARTMENT OF TRANSPORTATION

DIVISION OF ENGINEERING SERVICES STRUCTURE DESIGN DESIGN BRANCH 1

BRIDGE NO. 53E0211
POST MILE 6.35

SOUND WALL NO. 103
RETAINING WALL TYPE 1SWBP-DETAILS NO. 1

STRUCTURES DESIGN DETAIL SHEET (ENGLISH) (REV. 09-01-10)

ORIGINAL SCALE IN INCHES FOR REDUCED PLANS 0 1 2 3

UNIT: 3576
PROJECT NUMBER & PHASE: 07000018351
CONTRACT NO.: 07-215954

DISREGARD PRINTS BEARING EARLIER REVISION DATES

REVISION DATES 8-02-12 8-06-12 8-09-12 11/14/12

SHEET 29 OF 40

FILE => sw103-i-rwdt01.dgn

USERNAME => s124496 DATE PLOTTED => 26-JUN-2013 TIME PLOTTED => 17:37

DIST	COUNTY	ROUTE	POST MILES TOTAL PROJECT	SHEET No.	TOTAL SHEETS
07	LA	5	0.0/7.6	743	985

P. Vijitakula 12/31/12
REGISTERED CIVIL ENGINEER DATE

6-24-13
PLANS APPROVAL DATE

REGISTERED PROFESSIONAL ENGINEER
P. VIJITAKULA
No. 54701
Exp. 12/31/13
CIVIL
STATE OF CALIFORNIA

The State of California or its officers or agents shall not be responsible for the accuracy or completeness of electronic copies of this plan sheet.

NOTES:

1. For pile details not shown, see STANDARD PLAN B2-3.
2. For all other "NOTES", see "RETAINING WALL TYPE 1SWBP-DETAILS NO. 1" sheet.

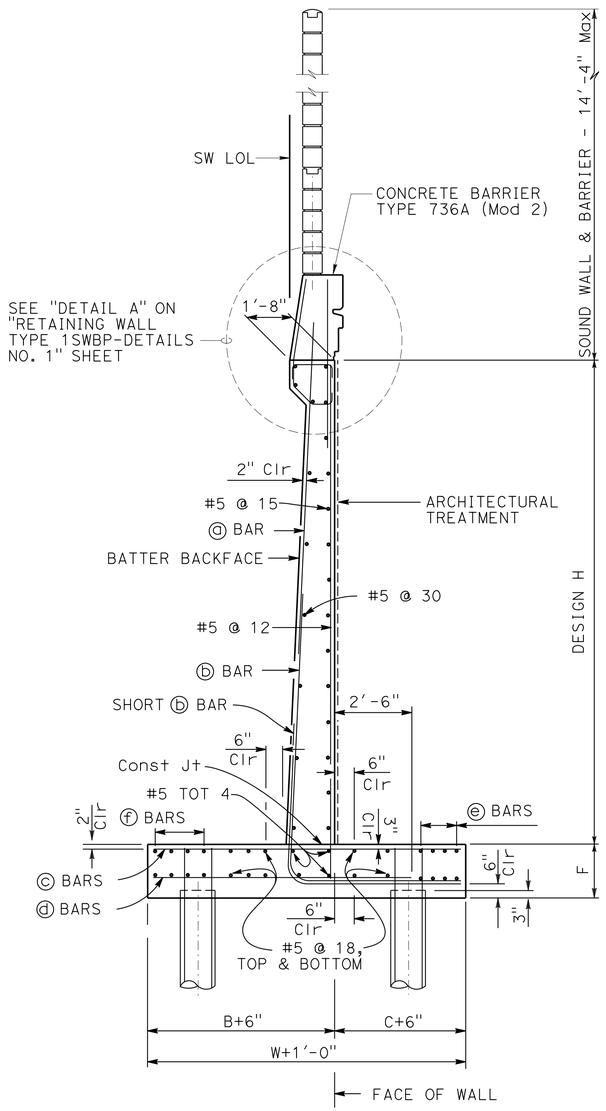

PILE FOOTING SECTION

No scale
All piles not shown

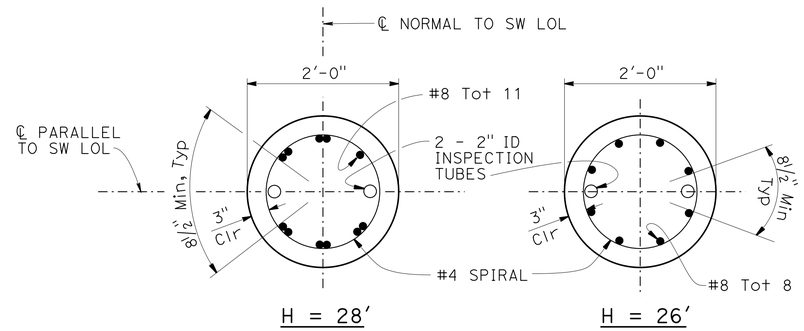

SECTION A-A

1" = 1'-0"

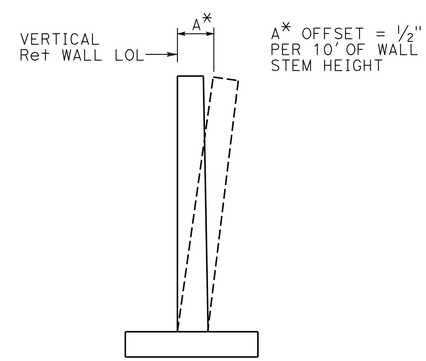

WALL OFFSET

No scale

Values for offsetting forms to be determined by the engineer

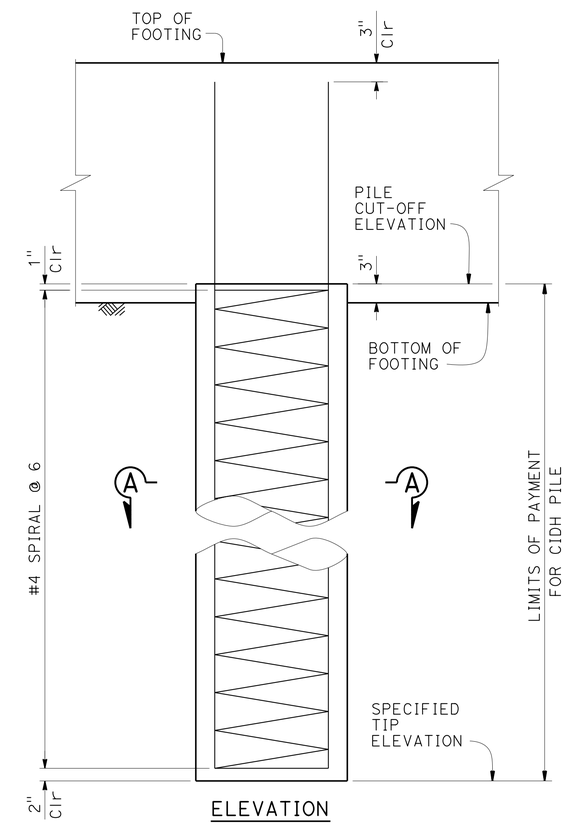

ELEVATION

24" CIDH CONCRETE PILE

1" = 1'-0"

DESIGN	BY Greg Thornton	CHECKED Henry Fang	
DETAILS	BY B. Huddleston / J. Zhou	CHECKED Henry Fang	
QUANTITIES	BY Paul Hayes	CHECKED Nikki Tiongco	

STATE OF CALIFORNIA
DEPARTMENT OF TRANSPORTATION

DIVISION OF ENGINEERING SERVICES
STRUCTURE DESIGN
DESIGN BRANCH 1

BRIDGE NO. 53E0211
POST MILE 6.35

SOUND WALL NO. 103
RETAINING WALL TYPE 1SWBP-DETAILS NO. 2

STRUCTURES DESIGN DETAIL SHEET (ENGLISH) (REV. 09-01-10)

ORIGINAL SCALE IN INCHES FOR REDUCED PLANS 0 1 2 3

UNIT: 3576
PROJECT NUMBER & PHASE: 07000018351
CONTRACT NO.: 07-215954

DISREGARD PRINTS BEARING EARLIER REVISION DATES

REVISION DATES: 8-02-12 8-08-12 11-14-12 03/22/13

SHEET 30 OF 40

FILE => sw103-i-rwdt02.dgn

USERNAME => s124096 DATE PLOTTED => 26-JUN-2013 TIME PLOTTED => 17:37

DIST	COUNTY	ROUTE	POST MILES TOTAL PROJECT	SHEET No.	TOTAL SHEETS
07	LA	5	0.0/7.6	744	985

P. Vijitakula 12/31/12
REGISTERED CIVIL ENGINEER DATE

6-24-13
PLANS APPROVAL DATE

REGISTERED PROFESSIONAL ENGINEER P. VIJITAKULA No. 54701 Exp. 12/31/13 CIVIL STATE OF CALIFORNIA

The State of California or its officers or agents shall not be responsible for the accuracy or completeness of electronic copies of this plan sheet.

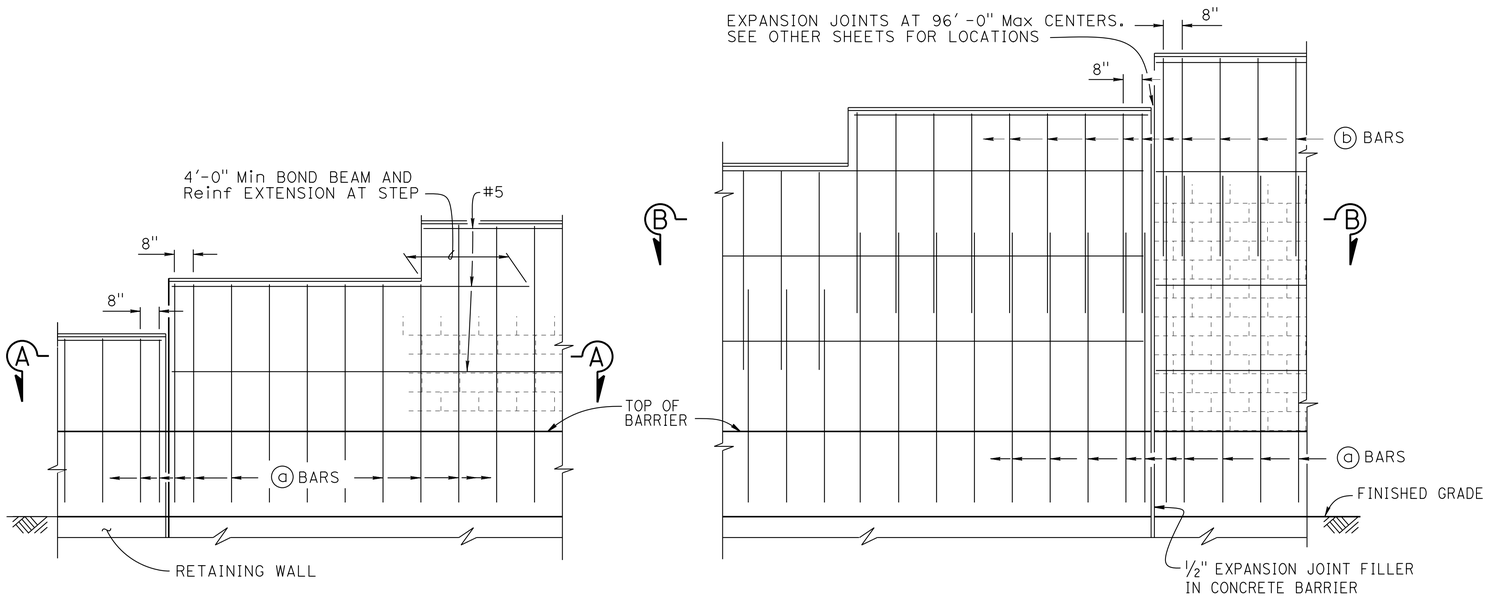

H=6'-4" THRU H=10'-4"

H=12'-4" THRU H=16'-4"

PART ELEVATION

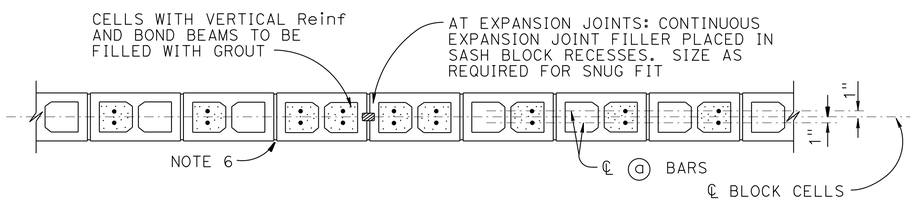

SECTION A-A

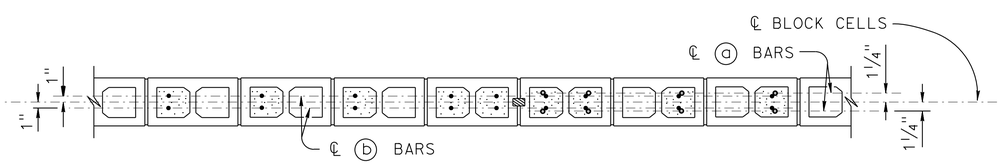

SECTION B-B

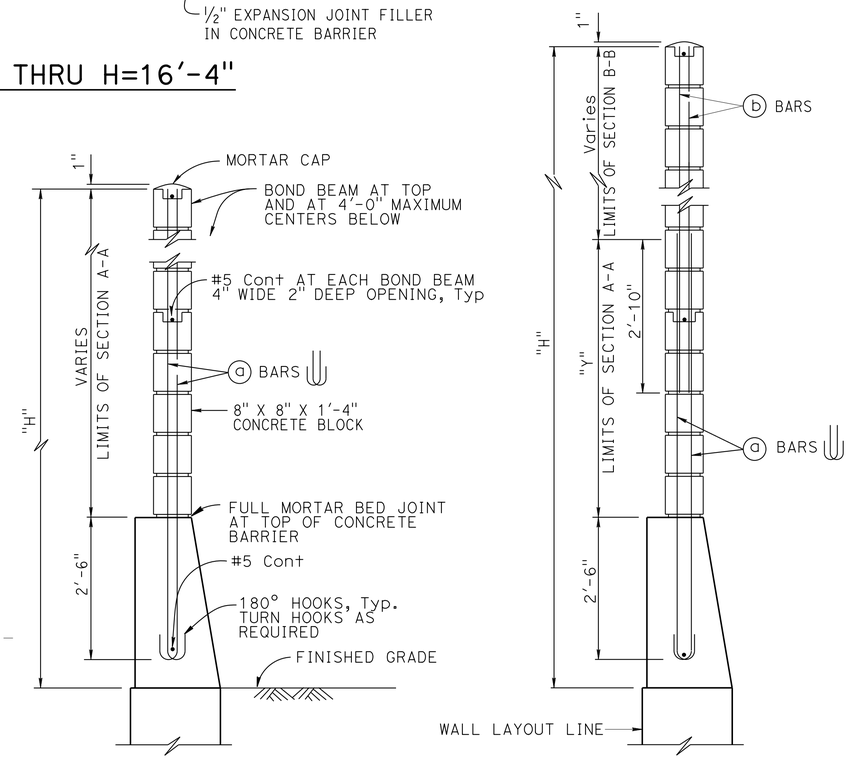

H=6'-4" THRU H=10'-4"
For details not shown, see H=12'-4" thru H=16'-4"

H=12'-4" THRU H=16'-4"
For details not shown, see H=6'-4" thru H=10'-4"

TYPICAL SECTION

SOUND WALL REINFORCEMENT TABLE						
MAXIMUM "H"	ⓐ BARS @ 1'-4" Max	ⓑ BARS @ 1'-4" Max	"Y"	f'm (psi)	COMPRESSIVE STRENGTH OF CMU (psi)	MAXIMUM "H"
6'-4"	#4	———	———	1500	1900	6'-4"
8'-4"	#4	———	———	1500	1900	8'-4"
10'-4"	#4	———	———	1500	1900	10'-4"
12'-4"	#5	#4	5'-0"	1500	1900	12'-4"
14'-4"	#6	#4	7'-0"	1500	1900	14'-4"
16'-4"	#6	#4	9'-0"	2500	3700	16'-4"

NOTES:

1. For details not shown, see "MASONRY BLOCK SOUND WALL WITH BARRIER ON RETAINING WALL - DETAILS NO. 2" sheet.
2. Slope ground at traffic side of barrier to drain. Maximum slope ±10%.
3. See STANDARD PLAN B15-9 for other details.
4. For type of block and joint finish, see other sheets.
5. When blocks are laid in stacked bond, ladder type, galvanized joint reinforcement shall be provided. A minimum of 2-9 gauge wire continuous at 4'-0" maximum to be used. Locate reinforcement in joints that are at the approximate midpoint between bond beams.
6. Horizontal joints shall be tooled concave or may be weathered. Vertical joints shall be tooled concave or may be raked.
7. For intermediate wall heights that are between the "H's" given, use the tabular information for the next higher "H".
8. Masonry strengths are listed in "SOUND WALL REINFORCEMENT TABLE".
9. Concrete to be used for the barrier shall contain not less than 590 pounds of cementitious material per cubic yard.

NO SCALE

STANDARD DRAWING
FILE NO. xs15-130-1
APPROVAL DATE July 2011

STATE OF CALIFORNIA
DEPARTMENT OF TRANSPORTATION

DIVISION OF ENGINEERING SERVICES
STRUCTURE DESIGN
DESIGN BRANCH 1

BRIDGE NO. 53E0211
POST MILE 6.35

SOUND WALL NO. 103

MASONRY BLOCK SOUND WALL WITH BARRIER ON RETAINING WALL DETAILS NO. 1

DS OSD 2147A (ENGLISH STANDARD DRAWING "XS" BORDER REV. (02-02-11)

ORIGINAL SCALE IN INCHES FOR REDUCED PLANS 0 1 2 3

UNIT: 3576
PROJECT NUMBER & PHASE: 07000018351
CONTRACT NO.: 07-215954

DISREGARD PRINTS BEARING EARLIER REVISION DATES
REVISION DATES 02/28/12 05/04/12 11/14/12

SHEET 31 OF 40

FILE => sw103-k-mbswdt01.dgn

USERNAME => s124496 DATE PLOTTED => 26-JUN-2013 TIME PLOTTED => 17:37

DIST	COUNTY	ROUTE	POST MILES TOTAL PROJECT	SHEET No.	TOTAL SHEETS
07	LA	5	0.0/7.6	745	985

P. Vijitakula 12/31/12
REGISTERED CIVIL ENGINEER DATE

6-24-13
PLANS APPROVAL DATE

REGISTERED PROFESSIONAL ENGINEER
P. VIJITAKULA
No. 54701
Exp. 12/31/13
CIVIL
STATE OF CALIFORNIA

The State of California or its officers or agents shall not be responsible for the accuracy or completeness of electronic copies of this plan sheet.

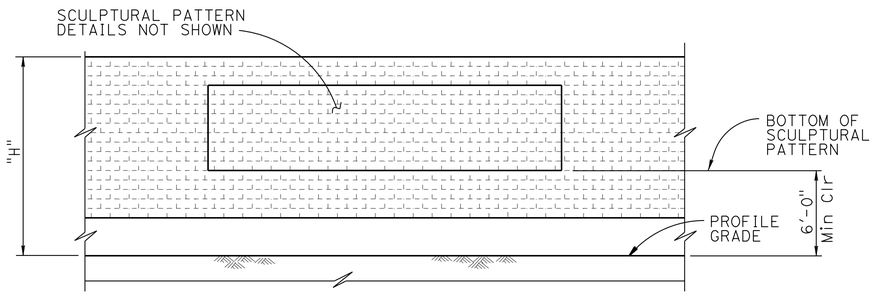

CLEARANCE DETAIL

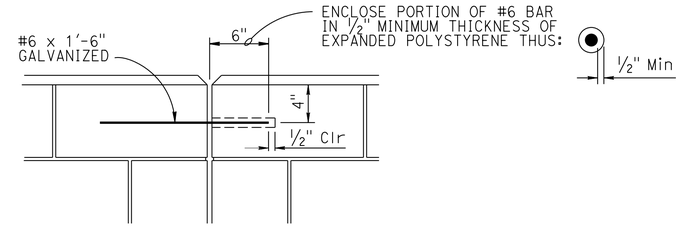

DETAIL A

NO SCALE

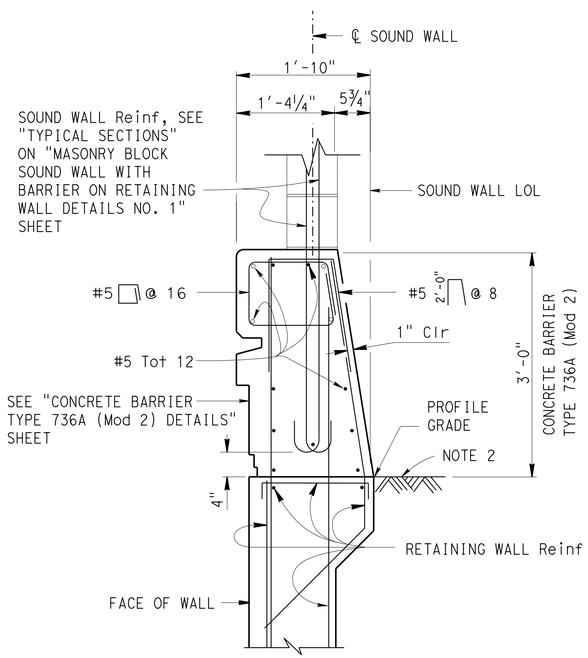

BARRIER SECTION

NO SCALE

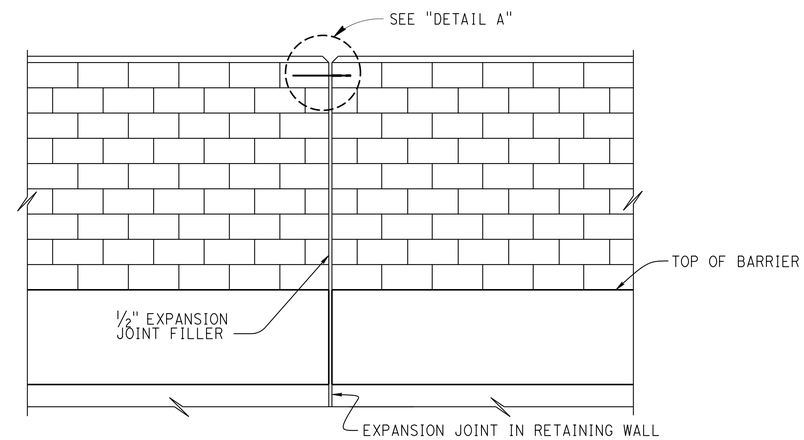

ALIGNMENT KEY DETAIL

NO SCALE

DESIGN NOTES

DESIGN
Uniform Building Code, 1997 Edition and the Bridge Design Specifications

DESIGN WIND LOAD
33 psf

DESIGN SEISMIC LOAD
0.57 Dead load

REINFORCED CONCRETE
f'c = 3600 psi
fy = 60 ksi

CONCRETE MASONRY

REGULAR STRENGTH	HIGH STRENGTH	
f'm = 1500 psi	f'm = 2000 psi	f'm = 2500 psi
fb = 495 psi	fb = 660 psi	fb = 830 psi
fs = 24,000 psi	fs = 24,000 psi	fs = 24,000 psi
n = 25.8	n = 19.3	n = 15.5

NOTES:

1. For details not shown, see "STANDARD PLAN B15-6".
2. Slope ground at traffic side of barrier to drain.
   Maximum slope ±10%
   See "STANDARD PLAN B11-56", Note D.

	BY	CHECKED
DESIGN	Greg Thornton	Henry Fang
DETAILS	Jin Zhou	Henry Fang
QUANTITIES	Paul Hayes	Nikki Tiongco

STATE OF CALIFORNIA
DEPARTMENT OF TRANSPORTATION

DIVISION OF ENGINEERING SERVICES
STRUCTURE DESIGN
DESIGN BRANCH 1

BRIDGE NO. 53E0211
POST MILE 6.35

SOUND WALL NO. 103
MASONRY BLOCK SOUND WALL WITH BARRIER ON RETAINING WALL DETAILS NO. 2

STRUCTURES DESIGN DETAIL SHEET (ENGLISH) (REV. 09-01-10)

ORIGINAL SCALE IN INCHES FOR REDUCED PLANS 0 1 2 3

UNIT: 3576
PROJECT NUMBER & PHASE: 07000018351
CONTRACT NO.: 07-215954

DISREGARD PRINTS BEARING EARLIER REVISION DATES

REVISION DATES: 02/28/12 05/04/12 11/14/12

SHEET 32 OF 40

FILE => sw103-k-mbswdt02.dgn

USERNAME => s124496 DATE PLOTTED => 26-JUN-2013 TIME PLOTTED => 17:37

DIST	COUNTY	ROUTE	POST MILES TOTAL PROJECT	SHEET No.	TOTAL SHEETS
07	LA	5	0.0/7.6	746	985

REGISTERED CIVIL ENGINEER — DATE 6/2012

6-24-13
PLANS APPROVAL DATE

REGISTERED PROFESSIONAL ENGINEER — Nadeem Srour No. 2801 Exp. 12-31-2013 GEOTECHNICAL — STATE OF CALIFORNIA

The State of California or its officers or agents shall not be responsible for the accuracy or completeness of electronic copies of this plan sheet.

This LOTB sheet was prepared in accordance with the Caltrans Soil & Rock Logging, Classification, & Presentation Manual (2010 Edition).

BENCH MARKS

LA 5 PM 6.4, 1995 Elev. Not shown
2.5" CADT Disk in Asphalt
Located along the northbound shoulder of I-5 FWY, 150 ft north of the Florence Avenue Overcrossing
N=1799072.3, E=6533513.4
VERTICAL NAVD88, 0405-CALIFORNIA 5 US Ft

LA 5 PM 6.7, 1995 Elev. 135.089′
2.5" CADT Disk in Concrete Curb
Located on the southbound I-5 transition ramp to the northbound 605 FWY. It is on the south curb between the north and the southbound lanes of the 605.
N=1800522.8, E=6532535.7
VERTICAL NAVD88, 0405-CALIFORNIA 5 US Feet

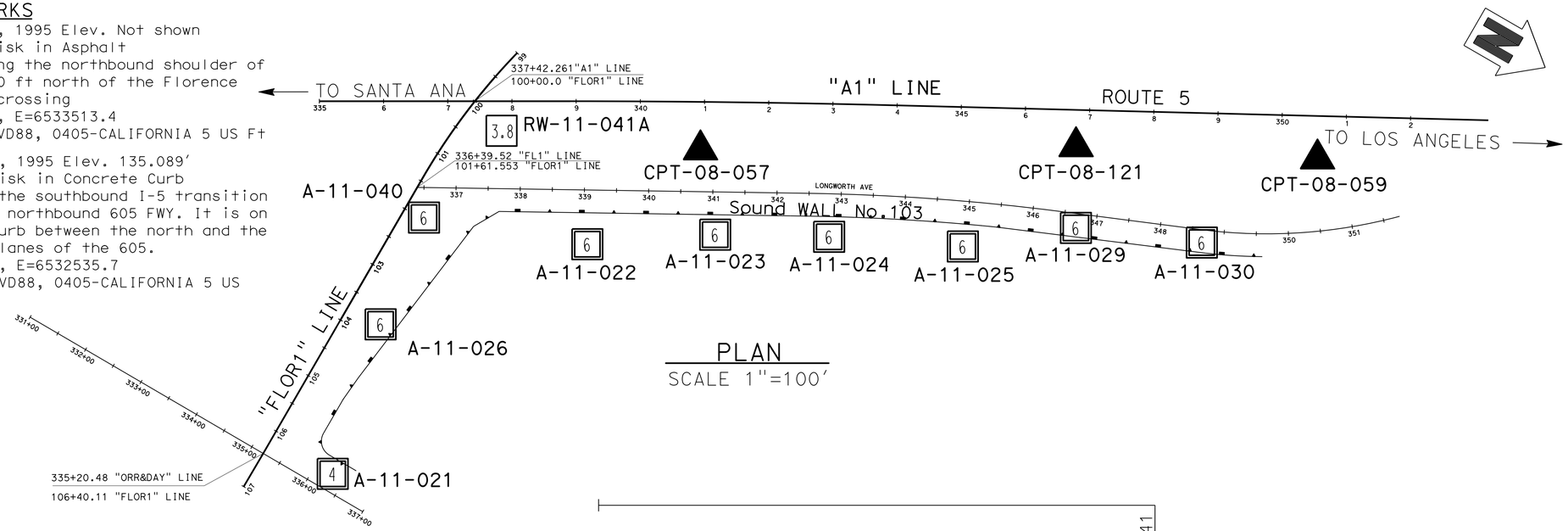

PLAN
SCALE 1"=100′

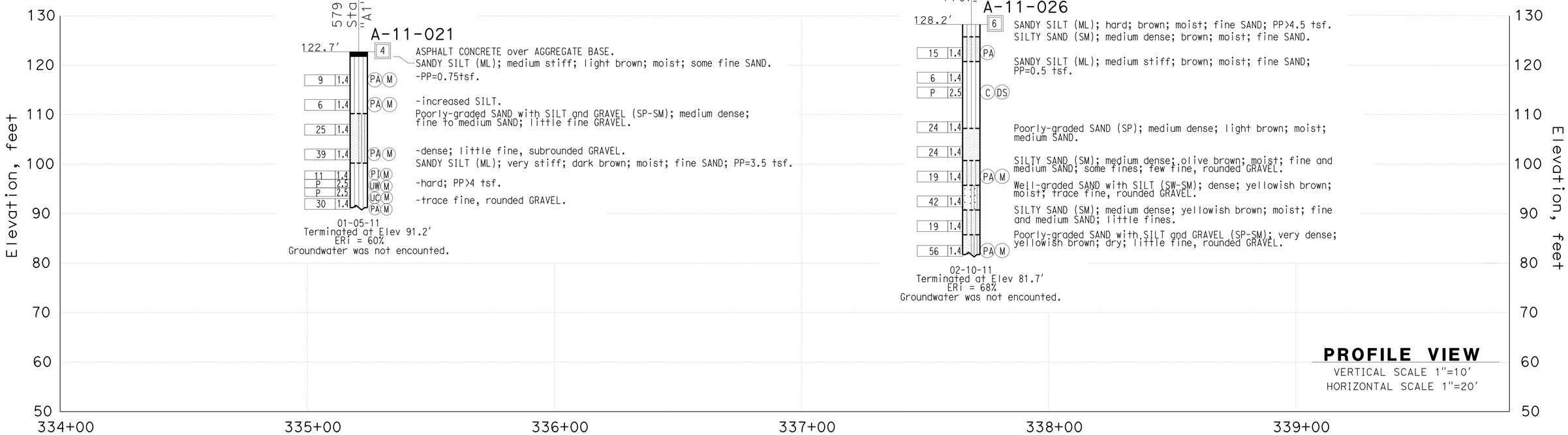

PROFILE VIEW
VERTICAL SCALE 1"=10′
HORIZONTAL SCALE 1"=20′

ENGINEERING SERVICES	MATERIALS AND GEOTECHNICAL SERVICES	STATE OF CALIFORNIA DEPARTMENT OF TRANSPORTATION	DIVISION OF ENGINEERING SERVICES STRUCTURE DESIGN DESIGN BRANCH 1	BRIDGE NO. 53E0211 / POST MILE 6.35	SOUND WALL NO. 103
FUNCTIONAL SUPERVISOR NAME: S.SUKIASIAN	DRAWN BY: T.PANAH (URS CORP) / CHECKED BY: K.BARKER	FIELD INVESTIGATION BY: N.SROUR			LOG OF TEST BORINGS SHEET 1 OF 8

OGS CIVIL LOG OF TEST BORINGS SHEET

ORIGINAL SCALE IN INCHES FOR REDUCED PLANS 0 1 2 3

UNIT: 3576
PROJECT NUMBER & PHASE: 07000018351 CONTRACT NO.: 07-215954

DISREGARD PRINTS BEARING EARLIER REVISION DATES

REVISION DATES — SHEET 33 OF 40

FILE => sw103-z-ltb01.dgn

USERNAME => s124496 DATE PLOTTED => 26-JUN-2013 TIME PLOTTED => 17:37

DIST	COUNTY	ROUTE	POST MILES TOTAL PROJECT	SHEET No.	TOTAL SHEETS
07	LA	5	0.0/7.6	747	985

REGISTERED CIVIL ENGINEER — DATE 6/2012

6-24-13
PLANS APPROVAL DATE

REGISTERED PROFESSIONAL ENGINEER — Nadeem Srour — No. 2801 — Exp. 12-31-2013 — GEOTECHNICAL — STATE OF CALIFORNIA

The State of California or its officers or agents shall not be responsible for the accuracy or completeness of electronic copies of this plan sheet.

This LOTB sheet was prepared in accordance with the Caltrans Soil & Rock Logging, Classification, & Presentation Manual (2010 Edition).

FOR PLAN VIEW, SEE
"LOG OF TEST BORINGS" 1 OF 8

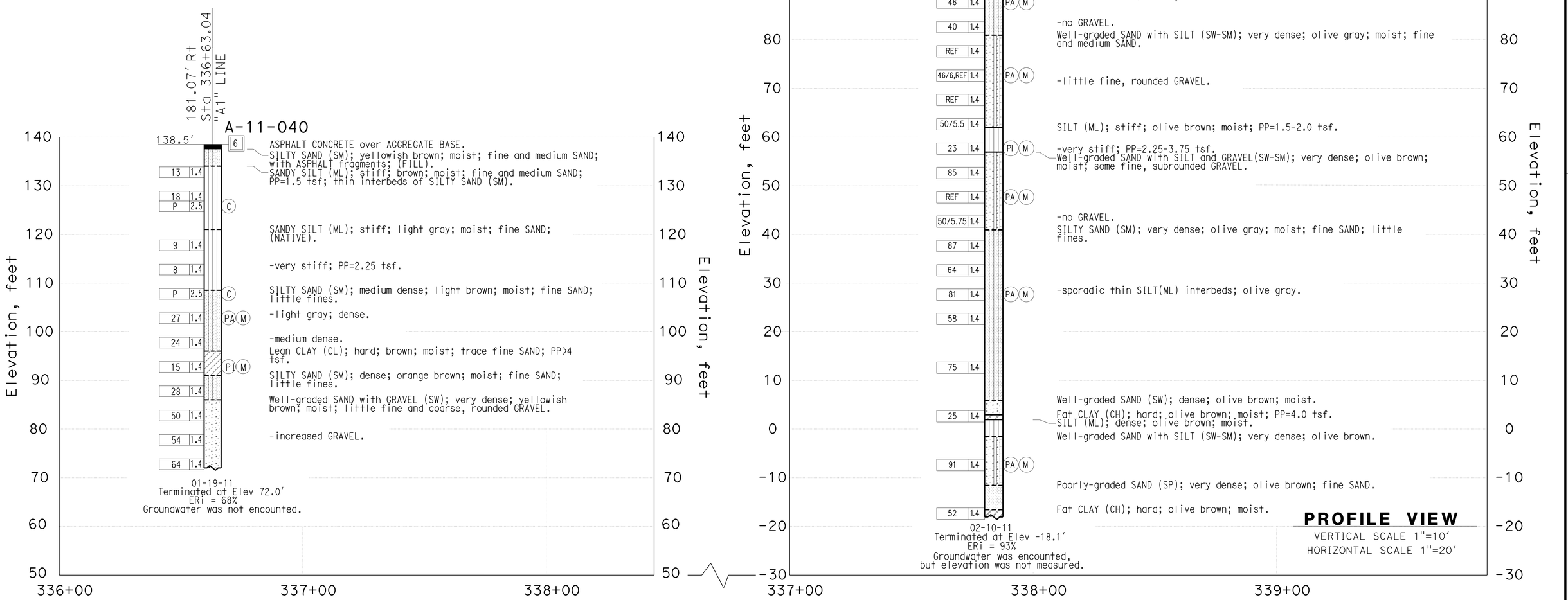

ENGINEERING SERVICES	MATERIALS AND GEOTECHNICAL SERVICES	STATE OF CALIFORNIA DEPARTMENT OF TRANSPORTATION	DIVISION OF ENGINEERING SERVICES STRUCTURE DESIGN DESIGN BRANCH 1	BRIDGE NO. 53E0211 / POST MILE 6.35	SOUND WALL NO. 103
FUNCTIONAL SUPERVISOR	DRAWN BY: T.PANAH (URS CORP)	FIELD INVESTIGATION BY:			LOG OF TEST BORINGS SHEET 2 OF 8
NAME: S.SUKIASIAN	CHECKED BY: M.AHMED	K.BARKER/N.SROUR			

OGS CIVIL LOG OF TEST BORINGS SHEET

ORIGINAL SCALE IN INCHES FOR REDUCED PLANS 0 1 2 3

UNIT: 3576
PROJECT NUMBER & PHASE: 07000018351
CONTRACT NO.: 07-215954

DISREGARD PRINTS BEARING EARLIER REVISION DATES

REVISION DATES

SHEET 34 OF 40

FILE => sw103-z-ltb02.dgn

USERNAME => s124496 DATE PLOTTED => 26-JUN-2013 TIME PLOTTED => 17:37

DIST	COUNTY	ROUTE	POST MILES TOTAL PROJECT	SHEET No.	TOTAL SHEETS
07	LA	5	0.0/7.6	748	985

REGISTERED CIVIL ENGINEER — DATE 6/2012

6-24-13
PLANS APPROVAL DATE

REGISTERED PROFESSIONAL ENGINEER — Nadeem Srour — No. 2801 — Exp. 12-31-2013 — GEOTECHNICAL — STATE OF CALIFORNIA

The State of California or its officers or agents shall not be responsible for the accuracy or completeness of electronic copies of this plan sheet.

This LOTB sheet was prepared in accordance with the Caltrans Soil & Rock Logging, Classification, & Presentation Manual (2010 Edition).

FOR PLAN VIEW, SEE
"LOG OF TEST BORINGS" 1 OF 8

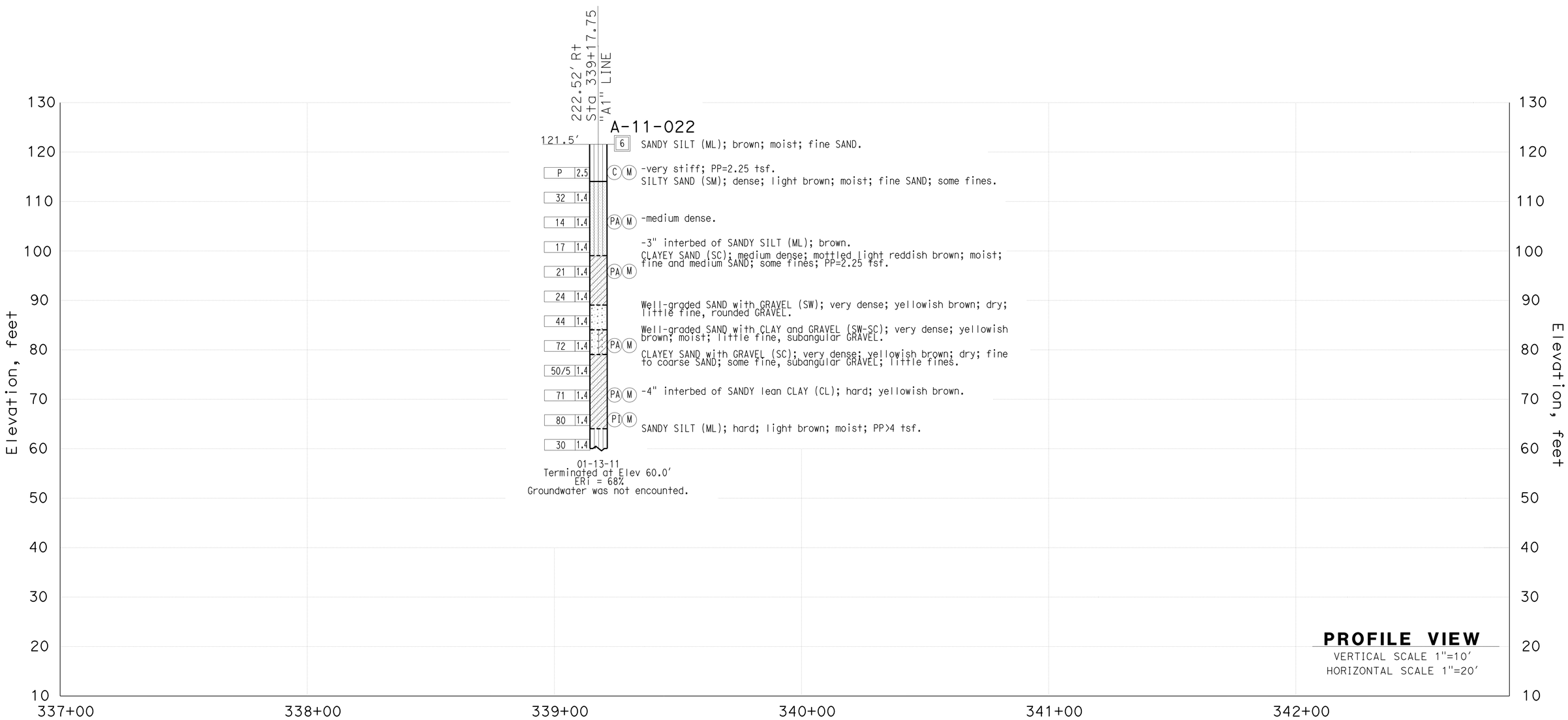

ENGINEERING SERVICES	MATERIALS AND GEOTECHNICAL SERVICES	STATE OF CALIFORNIA DEPARTMENT OF TRANSPORTATION	DIVISION OF ENGINEERING SERVICES STRUCTURE DESIGN DESIGN BRANCH 1	BRIDGE NO. 53E0211 POST MILE 6.35	SOUND WALL NO. 103
FUNCTIONAL SUPERVISOR NAME: S.SUKIASIAN	DRAWN BY: T.PANAH (URS CORP) CHECKED BY: M.AHMED	FIELD INVESTIGATION BY: N.SROUR			LOG OF TEST BORINGS SHEET 3 OF 8

OGS CIVIL LOG OF TEST BORINGS SHEET

ORIGINAL SCALE IN INCHES FOR REDUCED PLANS 0 1 2 3

UNIT: 3576
PROJECT NUMBER & PHASE: 07000018351 CONTRACT NO.: 07-215954

DISREGARD PRINTS BEARING EARLIER REVISION DATES → REVISION DATES

SHEET 35 OF 40

FILE => sw103-z-ltb03.dgn

USERNAME => s124496 DATE PLOTTED => 26-JUN-2013 TIME PLOTTED => 17:38

DIST	COUNTY	ROUTE	POST MILES TOTAL PROJECT	SHEET No.	TOTAL SHEETS
07	LA	5	0.0/7.6	749	985

REGISTERED CIVIL ENGINEER — DATE 12/2011

6-24-13
PLANS APPROVAL DATE

REGISTERED PROFESSIONAL ENGINEER — MICHAEL G. SMITH — No. 2229 — EXP. 3-31-2012 — GEOTECHNICAL — STATE OF CALIFORNIA

The State of California or its officers or agents shall not be responsible for the accuracy or completeness of electronic copies of this plan sheet.

This LOTB sheet was prepared in accordance with the Caltrans Soil & Rock Logging, Classification, & Presentation Manual (2010 Edition).

FOR PLAN VIEW, SEE
"LOG OF TEST BORINGS" 1 OF 8

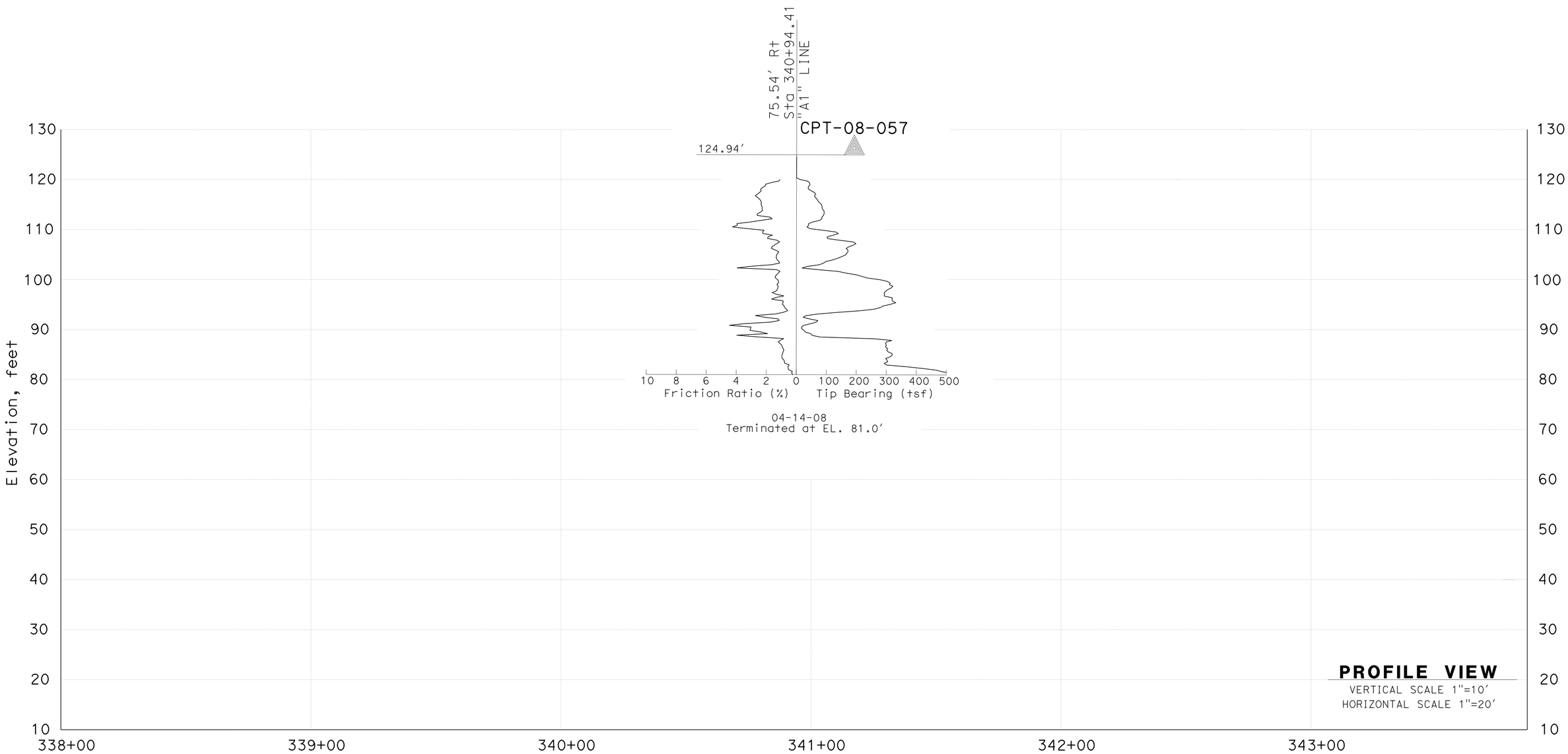

ENGINEERING SERVICES	MATERIALS AND GEOTECHNICAL SERVICES	STATE OF CALIFORNIA DEPARTMENT OF TRANSPORTATION	DIVISION OF ENGINEERING SERVICES STRUCTURE DESIGN DESIGN BRANCH 1	BRIDGE NO. 53E0211 POST MILE 6.35	SOUND WALL NO. 103
FUNCTIONAL SUPERVISOR NAME: M.SMITH	DRAWN BY: T.PANAH (URS CORP) CHECKED BY: D.ORRIS	FIELD INVESTIGATION BY: P.MCDONALD			LOG OF TEST BORINGS SHEET 4 OF 8

OGS CIVIL LOG OF TEST BORINGS SHEET

ORIGINAL SCALE IN INCHES FOR REDUCED PLANS 0 1 2 3

UNIT: 3576
PROJECT NUMBER & PHASE: 07000018351
CONTRACT NO.: 07-215954

DISREGARD PRINTS BEARING EARLIER REVISION DATES

REVISION DATES

SHEET 36 OF 40

FILE => sw103-z-ltb04.dgn

USERNAME => s124496 DATE PLOTTED => 26-JUN-2013 TIME PLOTTED => 17:38

DIST	COUNTY	ROUTE	POST MILES TOTAL PROJECT	SHEET No.	TOTAL SHEETS
07	LA	5	0.0/7.6	750	985

REGISTERED CIVIL ENGINEER — DATE 6/2012

6-24-13
PLANS APPROVAL DATE

REGISTERED PROFESSIONAL ENGINEER — Nadeem Srour — No. 2801 — Exp. 12-31-2013 — GEOTECHNICAL — STATE OF CALIFORNIA

The State of California or its officers or agents shall not be responsible for the accuracy or completeness of electronic copies of this plan sheet.

This LOTB sheet was prepared in accordance with the Caltrans Soil & Rock Logging, Classification, & Presentation Manual (2010 Edition).

FOR PLAN VIEW, SEE
"LOG OF TEST BORINGS" 1 OF 8

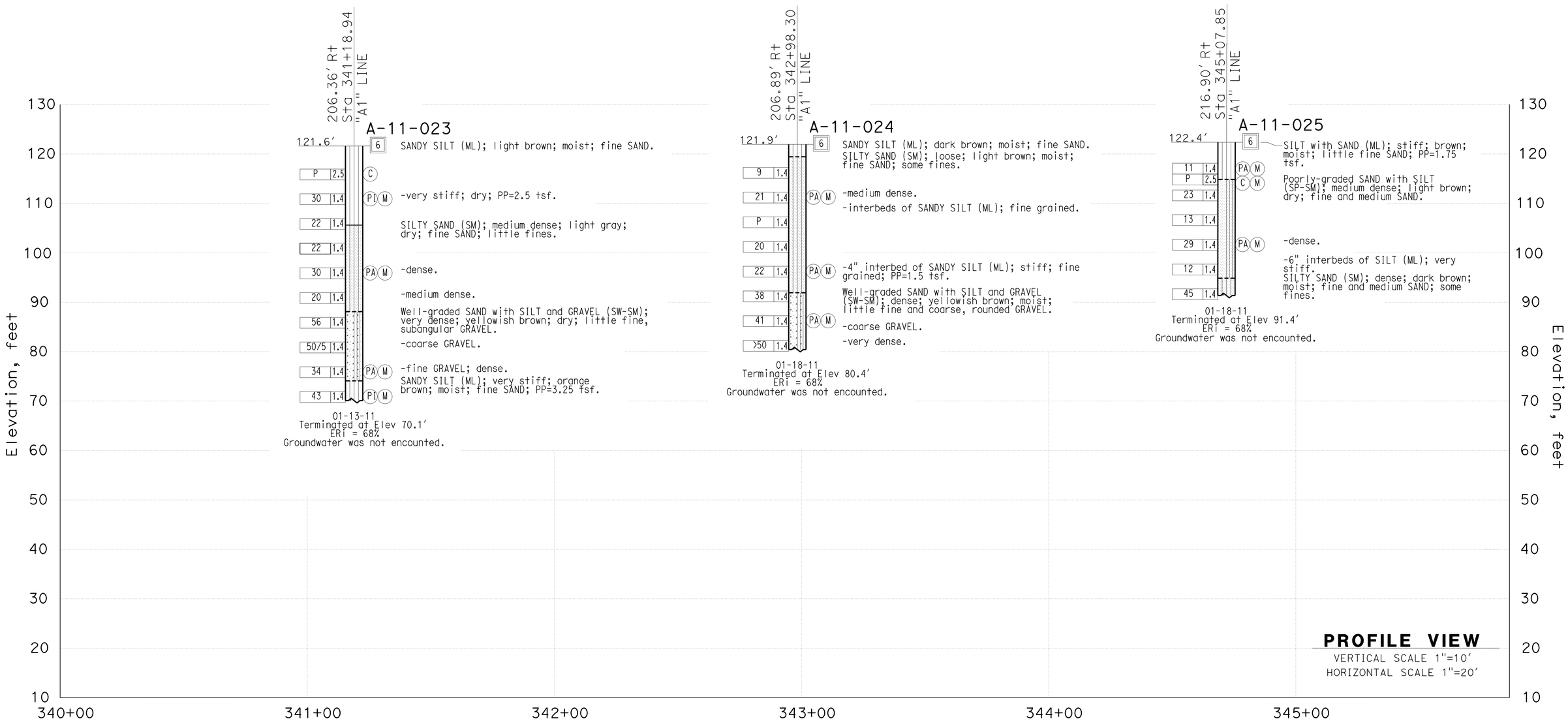

ENGINEERING SERVICES	MATERIALS AND GEOTECHNICAL SERVICES	STATE OF CALIFORNIA DEPARTMENT OF TRANSPORTATION	DIVISION OF ENGINEERING SERVICES STRUCTURE DESIGN DESIGN BRANCH 1	BRIDGE NO. 53E0211 POST MILE 6.35	SOUND WALL NO. 103
FUNCTIONAL SUPERVISOR NAME: S.SUKIASIAN	DRAWN BY: T.PANAH (URS CORP) CHECKED BY: M.AHEMD	FIELD INVESTIGATION BY: N.SROUR			LOG OF TEST BORINGS SHEET 5 OF 8

OGS CIVIL LOG OF TEST BORINGS SHEET

ORIGINAL SCALE IN INCHES FOR REDUCED PLANS 0 1 2 3

UNIT: 3576
PROJECT NUMBER & PHASE: 07000018351
CONTRACT NO.: 07-215954

DISREGARD PRINTS BEARING EARLIER REVISION DATES

REVISION DATES

SHEET 37 OF 40

FILE => sw103-z-ltb05.dgn

USERNAME => s124496 DATE PLOTTED => 26-JUN-2013 TIME PLOTTED => 17:38

DIST	COUNTY	ROUTE	POST MILES TOTAL PROJECT	SHEET No.	TOTAL SHEETS
07	LA	5	0.0/7.6	751	985

REGISTERED CIVIL ENGINEER 12/2011 DATE

6-24-13
PLANS APPROVAL DATE

REGISTERED PROFESSIONAL ENGINEER MICHAEL G. SMITH No. 2229 Exp. 3-31-2012 GEOTECHNICAL STATE OF CALIFORNIA

The State of California or its officers or agents shall not be responsible for the accuracy or completeness of electronic copies of this plan sheet.

This LOTB sheet was prepared in accordance with the Caltrans Soil & Rock Logging, Classification, & Presentation Manual (2010 Edition).

FOR PLAN VIEW, SEE
"LOG OF TEST BORINGS" 1 OF 8

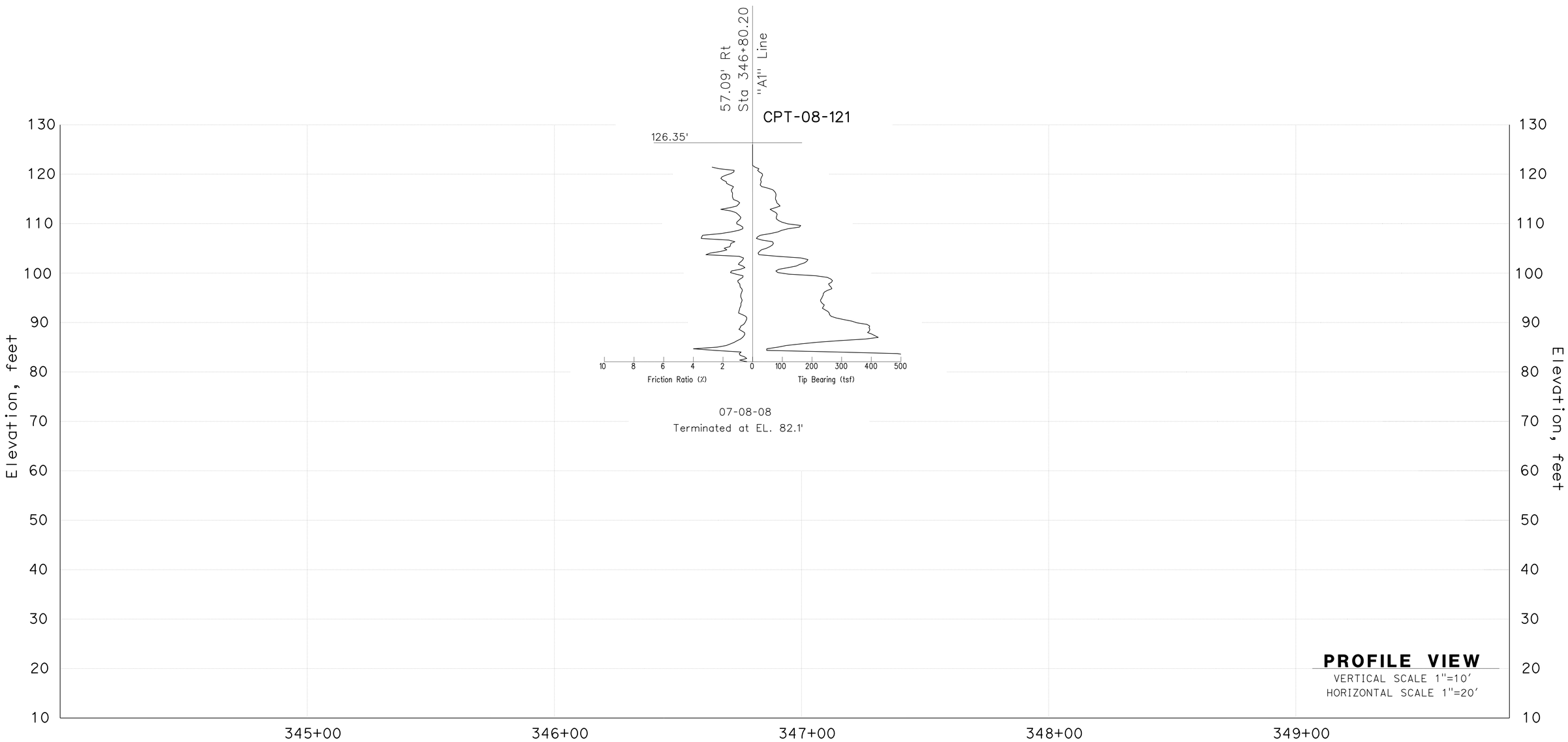

ENGINEERING SERVICES	MATERIALS AND GEOTECHNICAL SERVICES	STATE OF CALIFORNIA DEPARTMENT OF TRANSPORTATION	DIVISION OF ENGINEERING SERVICES STRUCTURE DESIGN DESIGN BRANCH 11	BRIDGE NO. 53E0211 POST MILE 6.35	SOUND WALL NO. 103
FUNCTIONAL SUPERVISOR NAME: M.SMITH	DRAWN BY: T.PANAH (URS CORP) CHECKED BY: D.ORRIS	FIELD INVESTIGATION BY: P.MCDONALD			LOG OF TEST BORINGS SHEET 6 OF 8

OGS CIVIL LOG OF TEST BORINGS SHEET

ORIGINAL SCALE IN INCHES FOR REDUCED PLANS 0 1 2 3

UNIT: 3576
PROJECT NUMBER & PHASE: 07000018351 CONTRACT NO.: 07-215954

DISREGARD PRINTS BEARING EARLIER REVISION DATES

REVISION DATES | SHEET 38 | OF 40

FILE => sw103-z-ltb06.dgn

USERNAME => s124496 DATE PLOTTED => 26-JUN-2013 TIME PLOTTED => 18:11

DIST	COUNTY	ROUTE	POST MILES TOTAL PROJECT	SHEET No.	TOTAL SHEETS
07	LA	5	0.0/7.6	752	985

REGISTERED CIVIL ENGINEER — DATE 6/2012

6-24-13
PLANS APPROVAL DATE

REGISTERED PROFESSIONAL ENGINEER — Nadeem Srour — No. 2801 — Exp. 12-31-2013 — GEOTECHNICAL — STATE OF CALIFORNIA

The State of California or its officers or agents shall not be responsible for the accuracy or completeness of electronic copies of this plan sheet.

This LOTB sheet was prepared in accordance with the Caltrans Soil & Rock Logging, Classification, & Presentation Manual (2010 Edition).

FOR PLAN VIEW, SEE
"LOG OF TEST BORINGS" 1 OF 8

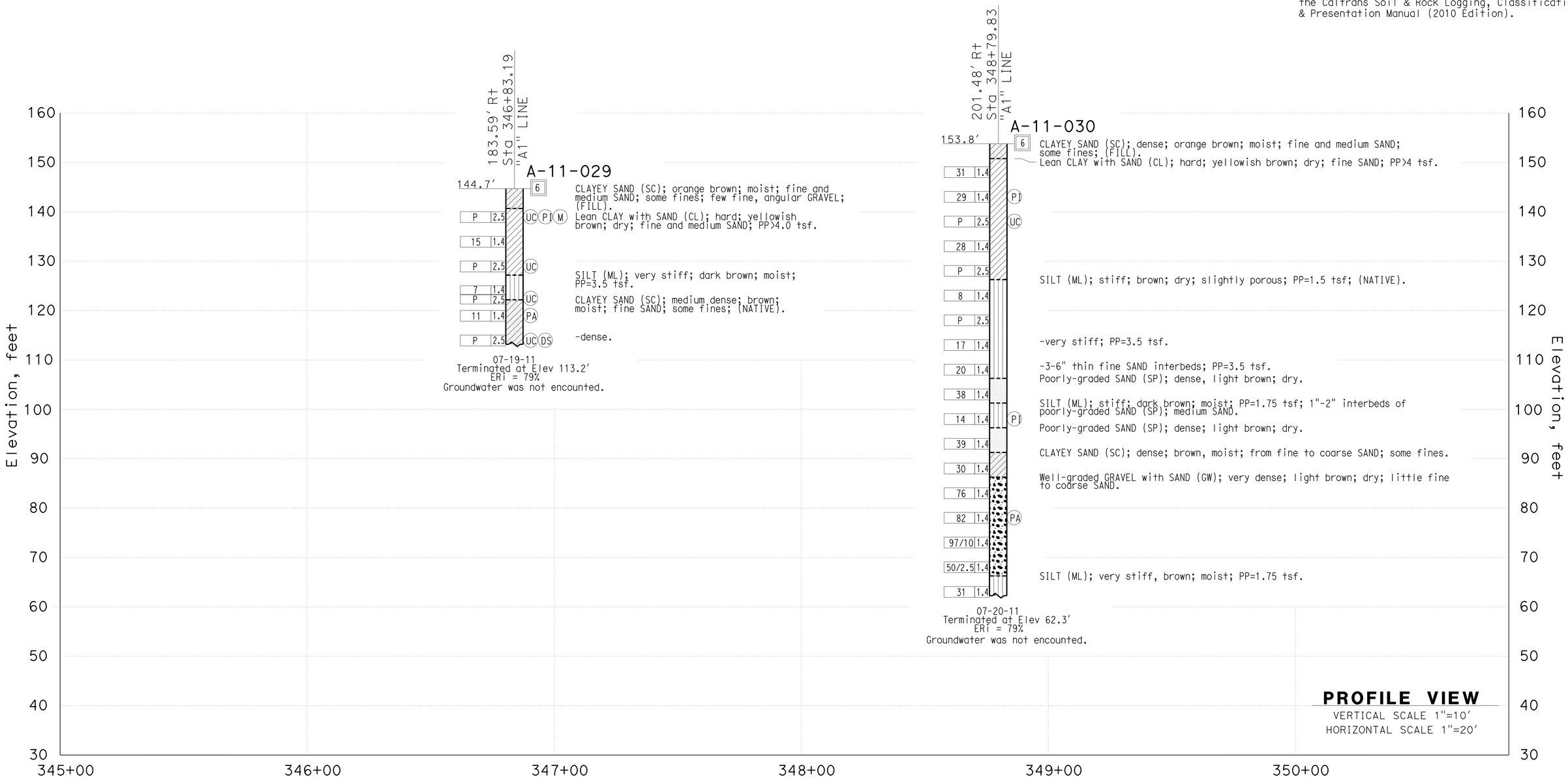

ENGINEERING SERVICES	MATERIALS AND GEOTECHNICAL SERVICES	STATE OF CALIFORNIA DEPARTMENT OF TRANSPORTATION	DIVISION OF ENGINEERING SERVICES STRUCTURE DESIGN DESIGN BRANCH 1	BRIDGE NO. 53E0211 / POST MILE 6.35	SOUND WALL NO. 103
FUNCTIONAL SUPERVISOR NAME: S.SUKIASIAN	DRAWN BY: T.PANAH (URS CORP) / CHECKED BY: M.AHMED	FIELD INVESTIGATION BY: N.SROUR			LOG OF TEST BORINGS SHEET 7 OF 8

OGS CIVIL LOG OF TEST BORINGS SHEET

ORIGINAL SCALE IN INCHES FOR REDUCED PLANS 0 1 2 3

UNIT: 3576
PROJECT NUMBER & PHASE: 07000018351
CONTRACT NO.: 07-215954

DISREGARD PRINTS BEARING EARLIER REVISION DATES

REVISION DATES

SHEET 39 OF 40

FILE => sw103-z-ltb07.dgn

USERNAME => s124496 DATE PLOTTED => 26-JUN-2013 TIME PLOTTED => 18:11

DIST	COUNTY	ROUTE	POST MILES TOTAL PROJECT	SHEET No.	TOTAL SHEETS
07	LA	5	0.0/7.6	753	985

REGISTERED CIVIL ENGINEER 12/2011 DATE

6-24-13
PLANS APPROVAL DATE

REGISTERED PROFESSIONAL ENGINEER MICHAEL G. SMITH No. 2229 Exp. 3-31-2012 GEOTECHNICAL STATE OF CALIFORNIA

The State of California or its officers or agents shall not be responsible for the accuracy or completeness of electronic copies of this plan sheet.

This LOTB sheet was prepared in accordance with the Caltrans Soil & Rock Logging, Classification, & Presentation Manual (2010 Edition).

FOR PLAN VIEW, SEE
"LOG OF TEST BORINGS" 1 OF 8

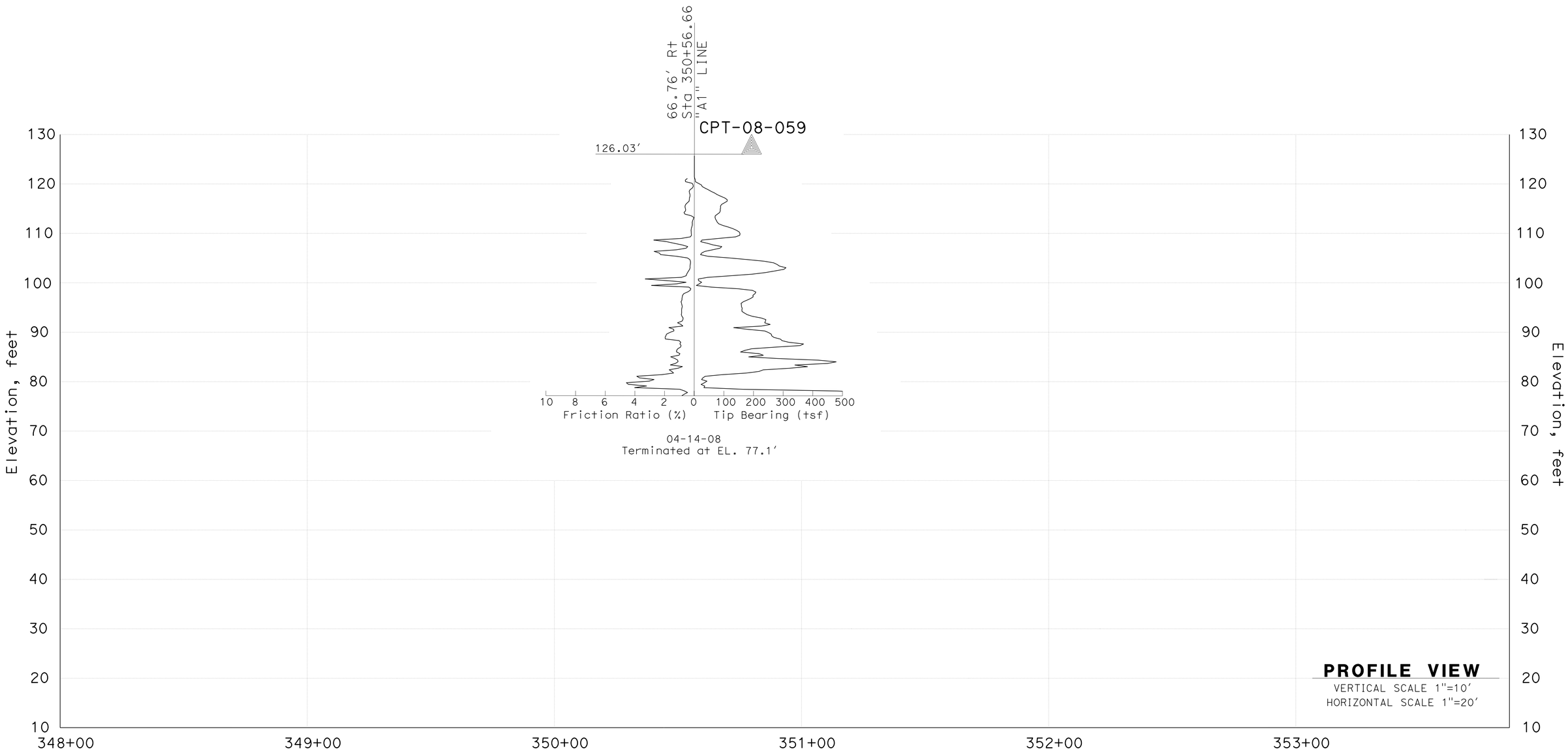

ENGINEERING SERVICES	MATERIALS AND GEOTECHNICAL SERVICES	STATE OF CALIFORNIA DEPARTMENT OF TRANSPORTATION	DIVISION OF ENGINEERING SERVICES STRUCTURE DESIGN DESIGN BRANCH 1	BRIDGE NO. 53E0211 POST MILE 6.35	SOUND WALL NO. 103
FUNCTIONAL SUPERVISOR NAME: M.SMITH	DRAWN BY: T.PANAH (URS CORP) CHECKED BY: D.ORRIS	FIELD INVESTIGATION BY: P.MCDONALD			LOG OF TEST BORINGS SHEET 8 OF 8

OGS CIVIL LOG OF TEST BORINGS SHEET

ORIGINAL SCALE IN INCHES FOR REDUCED PLANS 0 1 2 3

UNIT: 3576
PROJECT NUMBER & PHASE: 07000018351 CONTRACT NO.: 07-215954

DISREGARD PRINTS BEARING EARLIER REVISION DATES

REVISION DATES | SHEET 40 OF 40

FILE => sw103-z-ltb08.dgn

USERNAME => s124496 DATE PLOTTED => 26-JUN-2013 TIME PLOTTED => 18:11

NOTES:

1. For "DESIGN NOTES", see "RETAINING WALL TYPE 1SWBP - DETAIL NO. 1", STANDARD PLAN B15-7, and "MASONRY BLOCK SOUND WALL WITH BARRIER ON RETAINING WALL DETAILS NO. 2" sheets.
2. All piles not shown in "DEVELOPED MIRRORED ELEVATION". For "PILE DATA TABLE", see "INDEX TO PLANS" sheet.
3. For "TYPICAL SECTION A-A", see "GENERAL PLAN NO. 2" sheet.
4. Electrical System (Lighting Standard Type 15 and 21) total 13. see "ROAD PLANS". For pedestal details, see "ELECTROLIER PEDESTAL DETAILS" sheet.
5. For Overhead Sign Structure 2A, see "ROAD PLANS".

QUANTITIES

STRUCTURE EXCAVATION (RETAINING WALL)	4,410	CY
STRUCTURE EXCAVATION (TYPE Y-2) (AERIALLY DEPOSITED LEAD)	845	CY
STRUCTURE BACKFILL (RETAINING WALL)	7,715	CY
PERVIOUS BACKFILL MATERIAL (RETAINING WALL)	645	CY
16" CAST-IN-DRILLED-HOLE CONCRETE PILING	4,425	LF
24" CAST-IN-DRILLED-HOLE CONCRETE PILING	21,730	LF
STRUCTURAL CONCRETE, RETAINING WALL	3,040	CY
ARCHITECTURAL TREATMENT (SPLIT SLATE-FRACTURED RIB)	19,460	SQFT
PILASTER, SOUND WALL	33	CY
BAR REINFORCING STEEL (RETAINING WALL)	1,017,500	LB
SOUND WALL (MASONRY BLOCK)	33,830	SQFT
CONCRETE BARRIER (TYPE 736A MODIFIED)	1,256	LF
CONCRETE BARRIER (TYPE 736SV MODIFIED)	1,305	LF

DIST	COUNTY	ROUTE	POST MILES TOTAL PROJECT	SHEET No.	TOTAL SHEETS
07	LA	5	0.0/7.6	754	985

P. Vijitakula 12/28/12
REGISTERED CIVIL ENGINEER DATE

6-24-13
PLANS APPROVAL DATE

REGISTERED PROFESSIONAL ENGINEER P. VIJITAKULA No. C 54701 Exp. 12-31-13 CIVIL STATE OF CALIFORNIA

The State of California or its officers or agents shall not be responsible for the accuracy or completeness of electronic copies of this plan sheet.

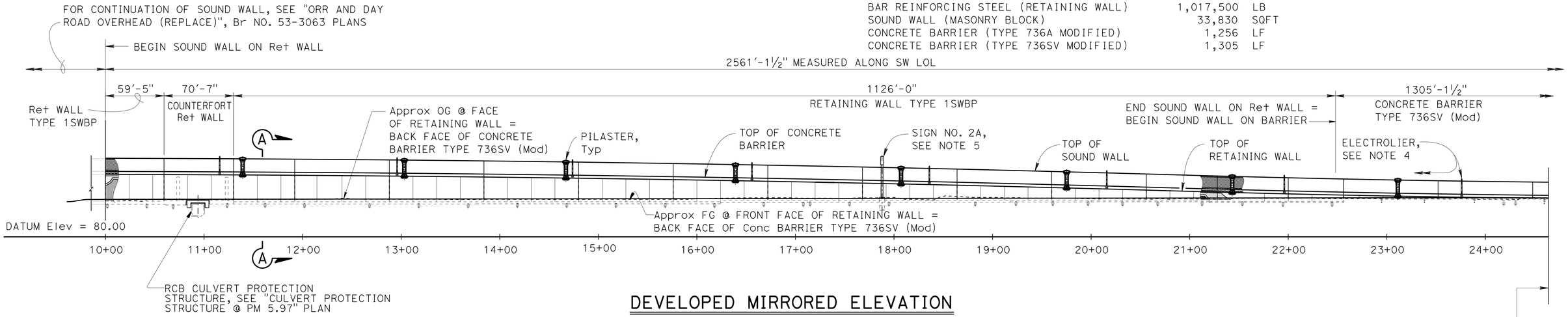

DEVELOPED MIRRORED ELEVATION

1" = 50'

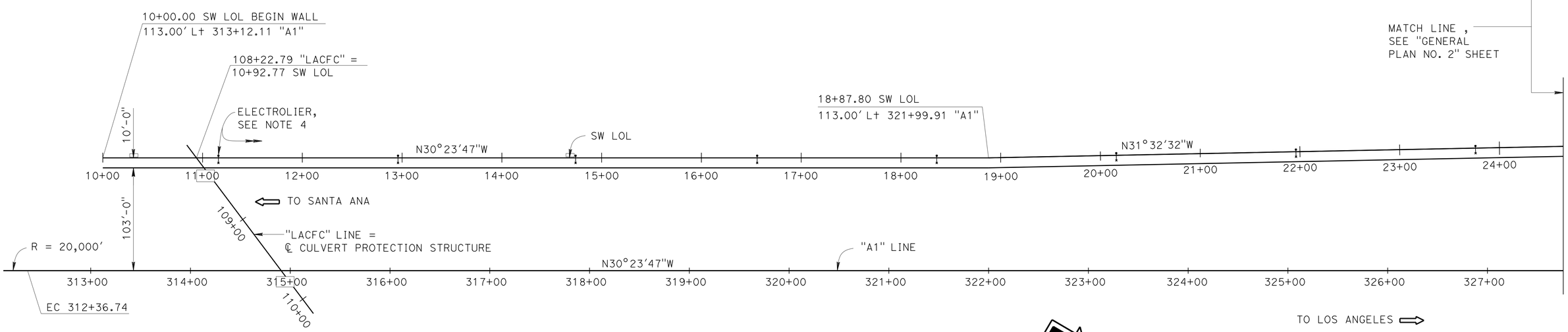

PLAN

1" = 50'

CURVE DATA

"A1" LINE

R = 20,000.00
Δ = 1°54'36"
T = 333.38
L = 666.70

DESIGN	BY Daniel Sessions	CHECKED Eric Watson	LOAD & RESISTANCE FACTOR DESIGN		
DETAILS	BY J. Tang / J. Zhou	CHECKED Eric Watson	LAYOUT	BY Daniel Sessions	CHECKED J. Sims / E. Watson
QUANTITIES	BY Keith Stillmunkes	CHECKED Wendy Hou	SPECIFICATIONS	BY Xiahong Li	PLANS AND SPECS COMPARED Xiahong Li

Jeff Sims
DESIGN ENGINEER

ORIGINAL SCALE IN INCHES FOR REDUCED PLANS 0 1 2 3

STATE OF CALIFORNIA
DEPARTMENT OF TRANSPORTATION

DIVISION OF ENGINEERING SERVICES
STRUCTURE DESIGN
DESIGN BRANCH 1

BRIDGE NO. 53E0212
POST MILE 5.93

SOUND WALL NO. 313
GENERAL PLAN NO. 1

UNIT: 3576
PROJECT NUMBER & PHASE: 07000018351
CONTRACT NO.: 07-215954

DISREGARD PRINTS BEARING EARLIER REVISION DATES

REVISION DATES: 02/29/12 05/02/13 05/28/13

SHEET 1 OF 48

STRUCTURES DESIGN GENERAL PLAN SHEET (ENGLISH) (REV.09-01-10)

FILE => sw313-a-gp01.dgn

USERNAME => s133318 DATE PLOTTED => 23-JUL-2013 TIME PLOTTED => 11:38

DIST	COUNTY	ROUTE	POST MILES TOTAL PROJECT	SHEET No.	TOTAL SHEETS
07	LA	5	0.0/7.6	755	985

P. Vijitakula 12/28/12
REGISTERED CIVIL ENGINEER DATE

6-24-13
PLANS APPROVAL DATE

REGISTERED PROFESSIONAL ENGINEER
P. VIJITAKULA
No. C 54701
Exp. 12-31-13
CIVIL
STATE OF CALIFORNIA

The State of California or its officers or agents shall not be responsible for the accuracy or completeness of electronic copies of this plan sheet.

NOTES:

1. For location of "TYPICAL SECTION A-A", see "GENERAL PLAN NO. 1" sheet.
2. Electrical System (Type 1-A Ramp Meter) total 1, see "ROAD PLANS" . For pedestal details, see "RAMP METER PEDESTAL DETAILS" sheet.
3. For all other "NOTES", see "GENERAL PLAN NO. 1" sheet.

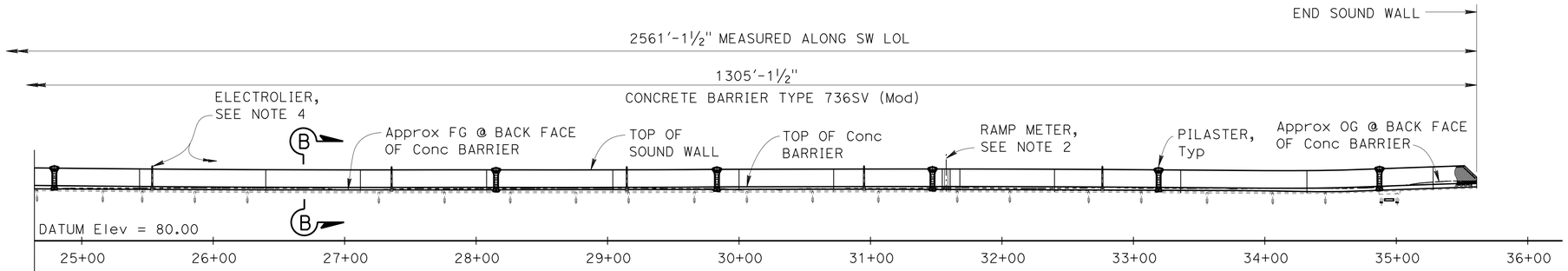

DEVELOPED MIRRORED ELEVATION

1" = 50'

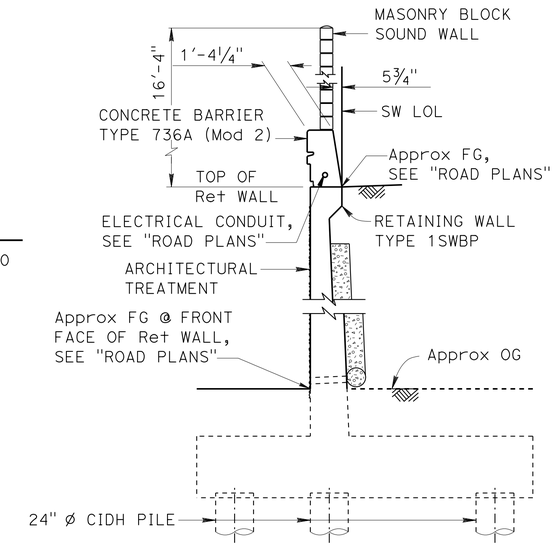

TYPICAL SECTION A-A

¼" = 1'-0"

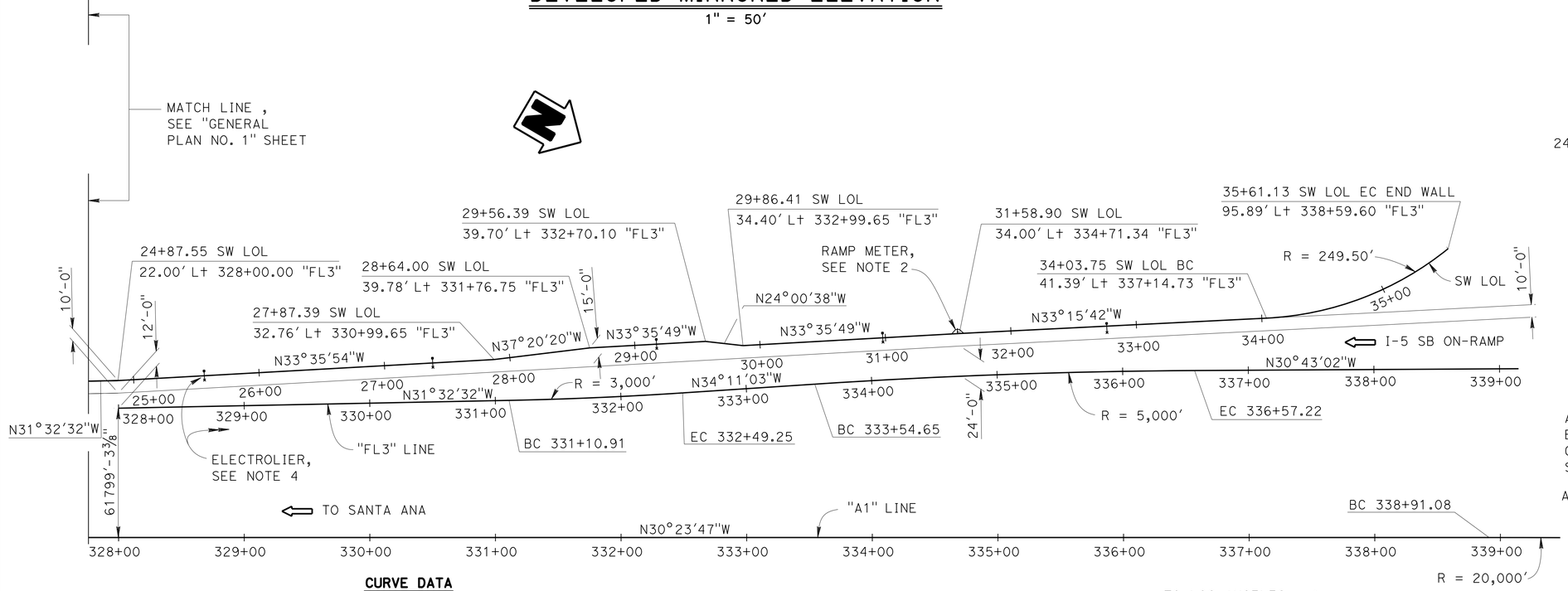

PLAN

1" = 50'

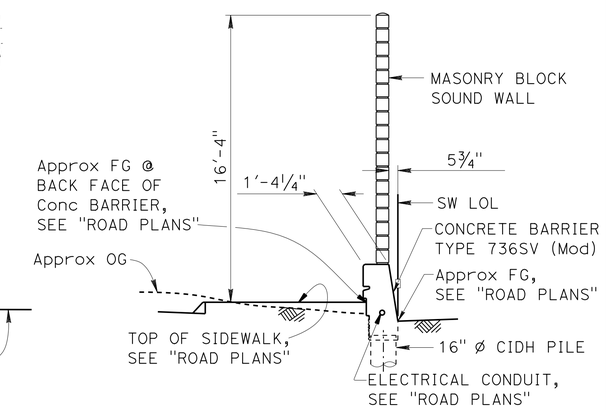

TYPICAL SECTION B-B

¼" = 1'-0"

CURVE DATA

"A1" LINE	"FL3" LINE		SW LOL
R = 20,000.00	R = 3,000.00	R = 5,000.00	R = 249.50
Δ = 1°26'31"	Δ = -2°38'31"	Δ = 3°28'02"	Δ = 36°08'34"
T = 251.67	T = 69.18	T = 151.33	T = 81.41
L = 503.32	L = 138.33	L = 302.56	L = 157.38

Jeff Sims, DESIGN ENGINEER	DESIGN	BY Daniel Sessions	CHECKED Eric Watson	LOAD & RESISTANCE FACTOR DESIGN	
	DETAILS	BY Jie Tang	CHECKED Eric Watson	LAYOUT: BY Daniel Sessions	CHECKED J. Sims / E. Watson
	QUANTITIES	BY Keith Stillmunkes	CHECKED Wendy Hou	SPECIFICATIONS: BY Xiahong Li	PLANS AND SPECS COMPARED Xiahong Li

ORIGINAL SCALE IN INCHES FOR REDUCED PLANS 0 1 2 3

STATE OF CALIFORNIA
DEPARTMENT OF TRANSPORTATION

DIVISION OF ENGINEERING SERVICES
STRUCTURE DESIGN
DESIGN BRANCH 1

BRIDGE NO. 53E0212
POST MILE 5.93

SOUND WALL NO. 313
GENERAL PLAN NO. 2

UNIT: 3576
PROJECT NUMBER & PHASE: 07000018351
CONTRACT NO.: 07-215954

DISREGARD PRINTS BEARING EARLIER REVISION DATES
REVISION DATES 02/10/12 02/20/13 12/11/12

SHEET 2 OF 48

STRUCTURES DESIGN GENERAL PLAN SHEET (ENGLISH) (REV.09-01-10)

FILE => sw313-a-gp02.dgn

USERNAME => s124496 DATE PLOTTED => 26-JUN-2013 TIME PLOTTED => 18:11

DIST	COUNTY	ROUTE	POST MILES TOTAL PROJECT	SHEET No.	TOTAL SHEETS
07	LA	5	0.0/7.6	756	985

P. Vijitakula 12/28/12
REGISTERED CIVIL ENGINEER DATE

6-24-13
PLANS APPROVAL DATE

REGISTERED PROFESSIONAL ENGINEER P. VIJITAKULA No. C 54701 Exp. 12-31-13 CIVIL STATE OF CALIFORNIA

The State of California or its officers or agents shall not be responsible for the accuracy or completeness of electronic copies of this plan sheet.

INDEX TO PLANS

SHEET NO.	TITLE
1.	GENERAL PLAN NO. 1
2.	GENERAL PLAN NO. 2
3.	INDEX TO PLANS
4.	STRUCTURE PLAN NO. 1
5.	STRUCTURE PLAN NO. 2
6.	STRUCTURE PLAN NO. 3
7.	STRUCTURE PLAN NO. 4
8.	STRUCTURE PLAN NO. 5
9.	STRUCTURE PLAN NO. 6
10.	STRUCTURE PLAN NO. 7
11.	FOUNDATION PLAN NO. 1
12.	FOUNDATION PLAN NO. 2
13.	FOUNDATION PLAN NO. 3
14.	FOUNDATION PLAN NO. 4
15.	FOUNDATION PLAN NO. 5
16.	COUNTERFORT DETAILS NO. 1
17.	COUNTERFORT DETAILS NO. 2
18.	ELECTROLIER PEDESTAL DETAILS
19.	RAMP METER PEDESTAL DETAILS
20.	RETAINING WALL ARCHITECTURAL TREATMENT NO. 1
21.	RETAINING WALL ARCHITECTURAL TREATMENT NO. 2
22.	RETAINING WALL ARCHITECTURAL TREATMENT NO. 3
23.	RETAINING WALL ARCHITECTURAL TREATMENT NO. 4
24.	RETAINING WALL ARCHITECTURAL TREATMENT NO. 5
25.	RETAINING WALL ARCHITECTURAL DETAILS NO. 1
26.	RETAINING WALL ARCHITECTURAL DETAILS NO. 2
27.	CONCRETE BARRIER ARCHITECTURAL DETAILS
28.	SOUND WALL ARCHITECTURAL DETAILS
29.	PILASTER ARCHITECTURAL DETAILS NO. 1
30.	PILASTER ARCHITECTURAL DETAILS NO. 2
31.	PILASTER ARCHITECTURAL DETAILS NO. 3
32.	PILASTER ARCHITECTURAL DETAILS NO. 4
33.	PILASTER STRUCTURAL DETAILS NO. 1
34.	PILASTER STRUCTURAL DETAILS NO. 2
35.	PILASTER STRUCTURAL DETAILS NO. 3
36.	RETAINING WALL TYPE 1SWBP - DETAIL NO. 1
37.	RETAINING WALL TYPE 1SWBP - DETAIL NO. 2
38.	MASONRY BLOCK SOUND WALL WITH BARRIER ON RETAINING WALL DETAILS NO. 1
39.	MASONRY BLOCK SOUND WALL WITH BARRIER ON RETAINING WALL DETAILS NO. 2
40.	LOG OF TEST BORINGS 1 OF 9
41.	LOG OF TEST BORINGS 2 OF 9
42.	LOG OF TEST BORINGS 3 OF 9
43.	LOG OF TEST BORINGS 4 OF 9
44.	LOG OF TEST BORINGS 5 OF 9
45.	LOG OF TEST BORINGS 6 OF 9
46.	LOG OF TEST BORINGS 7 OF 9
47.	LOG OF TEST BORINGS 8 OF 9
48.	LOG OF TEST BORINGS 9 OF 9

STANDARD PLANS DATED MAY 2010

	A10A	ABBREVIATIONS (SHEET 1 OF 2)
	A10B	ABBREVIATIONS (SHEET 2 OF 2)
	A10C	LINES SYMBOLS (SHEET 1 OF 3)
	A10D	LINES SYMBOLS (SHEET 2 OF 3)
	A10E	LINES SYMBOLS (SHEET 3 OF 3)
	A62B	LIMITS OF PAYMENT FOR EXCAVATION AND BACKFILL - BRIDGE SURCHARGE AND WALL
	B0-3	BRIDGE DETAILS
	B0-13	BRIDGE DETAILS
	B2-3	16" AND 24" CAST-IN-DRILLED-HOLE CONCRETE PILE
RSP	B3-5	RETAINING WALL DETAILS No. 1
	B11-56	CONCRETE BARRIER TYPE 736
RSP	B15-6	SOUND WALL MASONRY BLOCK ON TYPE 736S/SV BARRIER DETAILS (1)
	B15-7	SOUND WALL MASONRY BLOCK ON TYPE 736S/SV BARRIER DETAILS (2)
	B15-8	SOUND WALL MASONRY BLOCK ON TYPE 736S/SV BARRIER DETAILS (3)
	B15-9	SOUND WALL MASONRY BLOCK MISCELLANEOUS DETAILS
	ES-6B	ELECTRICAL SYSTEMS (ELECTROLIER ANCHORAGE AND GROUTING FOR TYPE 15 AND TYPE 21 BARRIER RAIL MOUNTED)
	ES-7B	ELECTRICAL SYSTEMS (SIGNAL AND LIGHTING STANDARD, TYPE 1 AND EQUIPMENT NUMBERING)

STANDARD PLAN SHEET NO.

DETAIL NO.

NOTE:

For Barrier and Sound Wall dimensions and Reinf not shown, see "BARRIER SECTIONS", " CASE 1" on B15-6

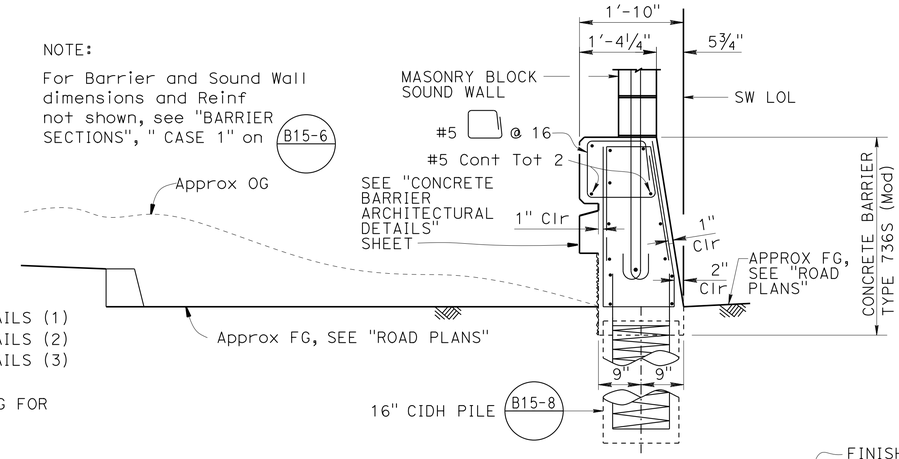

CONCRETE BARRIER TYPE 736S (MOD)

¾" = 1'-0"

PILE DATA TABLE

LOCATION	PILE TYPE (CIDH)	CUT-OFF ELEV (ft)	NOMINAL RESISTANCE (KIPS) COMPRESSION	NOMINAL RESISTANCE (KIPS) TENSION	DESIGN TIP ELEVATION	SPECIFIED TIP ELEVATION
Ret WALL TYPE 1SWBP SW LOL 10+00.00 to 10+59.33	24"	112.0	250	-42	(a)68.0 (c)88.0 (d)71.0	68.0
COUNTERFORT Ret WALL	24"	112.5	370	-87	(a)55.0 (c)84.0 (d)72.0	55.0
Ret WALL TYPE 1SWBP SW LOL 11+30.00 to 12+16.00	24"	112.5	250	-42	(a)69.0 (c)89.0 (d)72.0	69.0
Ret WALL TYPE 1SWBP SW LOL 12+16.00 to 14+16.00	24"	113.0	230	-38	(a)72.0 (c)90.0 (d)74.0	72.0
Ret WALL TYPE 1SWBP SW LOL 14+16.00 to 15+60.00	24"	113.3	220	-39	(a)73.0 (c)90.0 (d)82.0	73.0
Ret WALL TYPE 1SWBP SW LOL 15+60.00 to 16+25.00	24"	113.3	210	-37	(a)77.0 (c)90.0 (d)80.0	77.0
Ret WALL TYPE 1SWBP SW LOL 16+25.00 to 17+12.00	24"	114.8	220	-13	(a)75.0 (c)92.0 (d)87.0	75.0
Ret WALL TYPE 1SWBP SW LOL 17+12.00 to 18+25.00	24"	115.3	200	-6	(a)74.0 (c)98.0 (d)85.0	74.0
Ret WALL TYPE 1SWBP SW LOL 18+25.00 to 19+20.00	24"	115.8	190	0	(a)75.0 (c)98.0 (d)85.0	75.0
Ret WALL TYPE 1SWBP SW LOL 19+20.00 to 20+00.00	24"	116.0	200	0	(a)81.0 (c)98.0 (d)84.0	81.0
Ret WALL TYPE 1SWBP SW LOL 20+00.00 to 20+71.00	24"	115.4	200	0	(a)81.0 (c)98.0 (d)85.0	81.0
Ret WALL TYPE 1SWBP SW LOL 20+71.00 to 21+51.00	24"	111.5	190	0	(a)79.0 (c)94.0 (d)81.0	79.0
Ret WALL TYPE 1SWBP SW LOL 21+51.00 to 21+92.00	24"	110.0	190	0	(a)77.0 (c)92.0 (d)80.0	77.0
Ret WALL TYPE 1SWBP SW LOL 21+92.00 to 22+47.00	24"	110.3	190	0	(a)77.0 (c)93.0 (d)80.0	77.0
Ret WALL TYPE 1SWBP SW LOL 22+47.00 to 23+43.00	24"	108.8	190	0	(a)75.0 (c)91.0 (d)81.0	75.0
Ret WALL TYPE 1SWBP SW LOL 23+43.00 to 24+64.00	24"	107.0	190	0	(a)73.0 (c)89.0 (d)79.0	73.0
Conc BARRIER TYPE 736S (Mod) SW LOL 24+64.00 to 35+61.13	16" (Std PLAN B15-8)	N/A	N/A	N/A	N/A	N/A

NOTES: 1. Design tips elevations are controlled by: (a) Compression, (c) Settlement and (d) Lateral load.
2. The specified tip elevations shall not be raised, unless directed by Engineer.

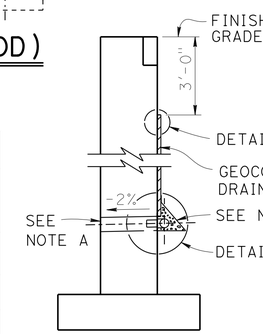

WALL SECTION

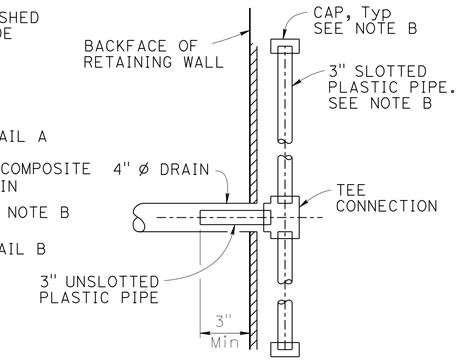

SECTION A-A

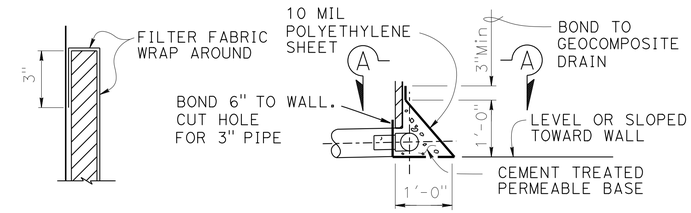

DETAIL A

DETAIL B

WEEP HOLE AND GEOCOMPOSITE DRAIN

ALTERNATIVE TO BRIDGE DETAIL B0-3 / 3-1

NOTES:

A. 4" Ø drains at 25' max center to center. For walls adjacent to sidewalks or curbs, provide 4" cast iron or asbestos cement pipe under the sidewalk to discharge through curb face. Exposed wall drains shall be located 3"± above finished grade.

B. Geocomposite drain, cement treated permeable base, and 3" Ø slotted plastic pipe continuous behind retaining wall. Cap ends of pipe. Provide "Tee" connection at each 4" Ø drain.

DESIGN	BY Daniel Sessions	CHECKED Eric Watson	
DETAILS	BY Jie Tang	CHECKED Eric Watson	
QUANTITIES	BY Keith Stillmunkes	CHECKED Wendy Hou	

STATE OF CALIFORNIA
DEPARTMENT OF TRANSPORTATION

DIVISION OF ENGINEERING SERVICES
STRUCTURE DESIGN
DESIGN BRANCH 1

BRIDGE NO. 53E0212
POST MILE 5.93

SOUND WALL NO. 313
INDEX TO PLANS

STRUCTURES DESIGN DETAIL SHEET (ENGLISH) (REV. 09-01-10)

ORIGINAL SCALE IN INCHES FOR REDUCED PLANS 0 1 2 3

UNIT: 3576
PROJECT NUMBER & PHASE: 07000018351
CONTRACT NO.: 07-215951

DISREGARD PRINTS BEARING EARLIER REVISION DATES

REVISION DATES 02/28/12 04/13/12

SHEET 3 OF 48

FILE => sw313-a-itp.dgn

USERNAME => s124036 DATE PLOTTED => 26-JUN-2013 TIME PLOTTED => 18:11

NOTES:
1. For concrete barrier details, see "BARRIER SECTION" on "MASONRY BLOCK SOUND WALL WITH BARRIER ON RETAINING WALL DETAILS NO. 2" sheet.
2. For sound wall details, see "MASONRY BLOCK SOUND WALL WITH BARRIER ON RETAINING WALL DETAILS NO. 1 and NO. 2" sheets.
3. For retaining wall details, see "RETAINING WALL TYPE 1SWBP - DETAIL NO. 1 and NO. 2" sheets.
4. Retaining wall expansion joints, weakened planes and weep holes shall be placed per Std Plan (B0-3 / 3-3).
5. All longitudinal dimensions are measured along the SW LOL.
6. Not all piles shown in "DEVELOPED MIRRORED ELEVATION".
7. For "WEEP HOLE AND GEOCOMPOSITE DRAIN" alternative, see "INDEX TO PLANS" sheet.
8. Pile data for sound wall masonry block on Type 736SV (Mod) Barrier shall be from tabular values "CASE 2", with ø = 30° on (B15-8) and (B15-15).
9. Contractor shall locate all utilities prior to footing excavation and drilling piles. Utilities shown are to be relocated or abandoned, see "ROAD PLANS".
10. Pile spacing shown may be adjusted up to 1'-0" to avoid proposed and existing utilites which are to remain and be protected.

LEGEND:
- Indicates 24" ø CIDH Pile
- Indicates existing structures
- Indicates Limits of Payment for Structure Excavation Type Y-2, see "TYPICAL SECTION" on "FOUNDATION PLAN NO. 1".

DIST	COUNTY	ROUTE	POST MILES TOTAL PROJECT	SHEET No.	TOTAL SHEETS
07	LA	5	0.0/7.6	757	985

P. Vijitakula 12/28/12
REGISTERED CIVIL ENGINEER DATE

6-24-13
PLANS APPROVAL DATE

REGISTERED PROFESSIONAL ENGINEER P. VIJITAKULA No. C 54701 Exp. 12-31-13 CIVIL STATE OF CALIFORNIA

The State of California or its officers or agents shall not be responsible for the accuracy or completeness of electronic copies of this plan sheet.

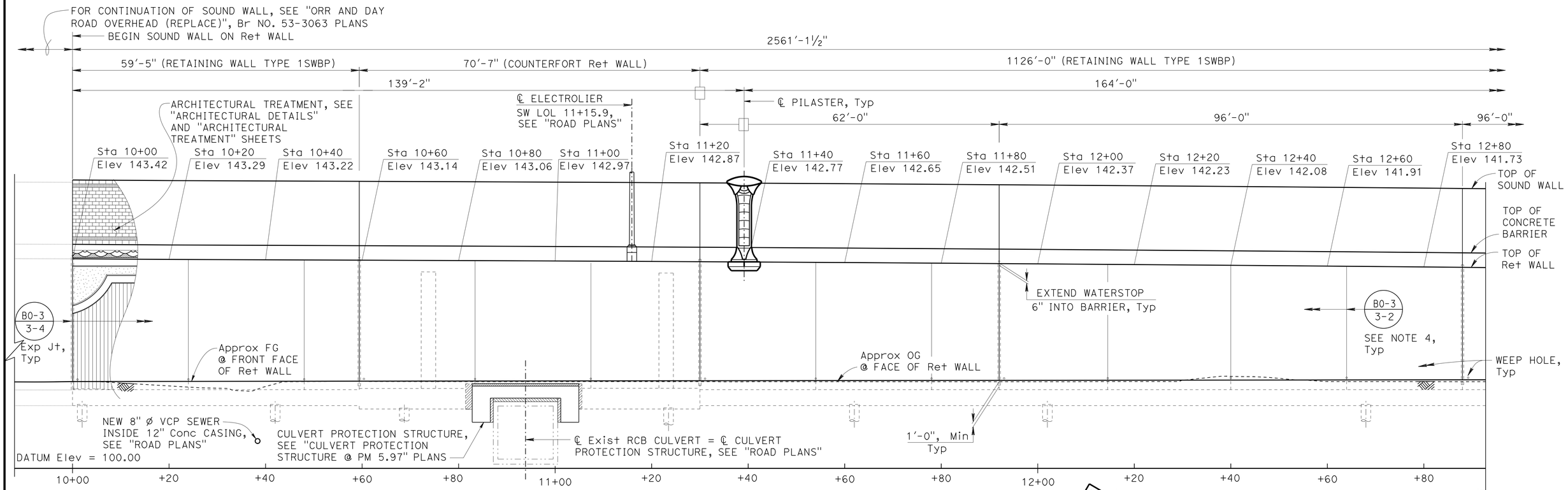

DEVELOPED MIRRORED ELEVATION
1" = 10'

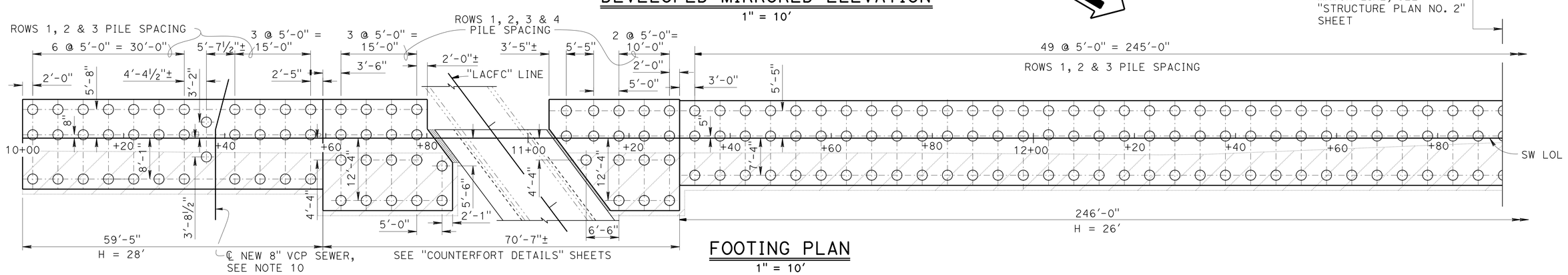

FOOTING PLAN
1" = 10'

DESIGN	BY Daniel Sessions	CHECKED Eric Watson	
DETAILS	BY J.Tang / J. Zhou	CHECKED Eric Watson	
QUANTITIES	BY Keith Stillmunkes	CHECKED Wendy Hou	

STATE OF CALIFORNIA
DEPARTMENT OF TRANSPORTATION

DIVISION OF ENGINEERING SERVICES
STRUCTURE DESIGN
DESIGN BRANCH 1

BRIDGE NO. 53E0212
POST MILE 5.93

SOUND WALL NO. 313
STRUCTURE PLAN NO. 1

STRUCTURES DESIGN DETAIL SHEET (ENGLISH) (REV. 09-01-10)

ORIGINAL SCALE IN INCHES FOR REDUCED PLANS 0 1 2 3

UNIT: 3576
PROJECT NUMBER & PHASE: 07000018351
CONTRACT NO.: 07-215954

DISREGARD PRINTS BEARING EARLIER REVISION DATES

REVISION DATES 02/14/12 12/13/12 03/04/13

SHEET 4 OF 48

FILE => sw313-c-sp01.dgn

USERNAME => s124496 DATE PLOTTED => 26-JUN-2013 TIME PLOTTED => 18:11

DIST	COUNTY	ROUTE	POST MILES TOTAL PROJECT	SHEET No.	TOTAL SHEETS
07	LA	5	0.0/7.6	758	985

P. Vijitakula 12/28/12
REGISTERED CIVIL ENGINEER DATE

6-24-13
PLANS APPROVAL DATE

REGISTERED PROFESSIONAL ENGINEER
P. VIJITAKULA
No. C 54701
Exp. 12-31-13
CIVIL
STATE OF CALIFORNIA

The State of California or its officers or agents shall not be responsible for the accuracy or completeness of electronic copies of this plan sheet.

For "NOTES" and LEGEND, see "STRUCTURE PLAN NO. 1" sheet

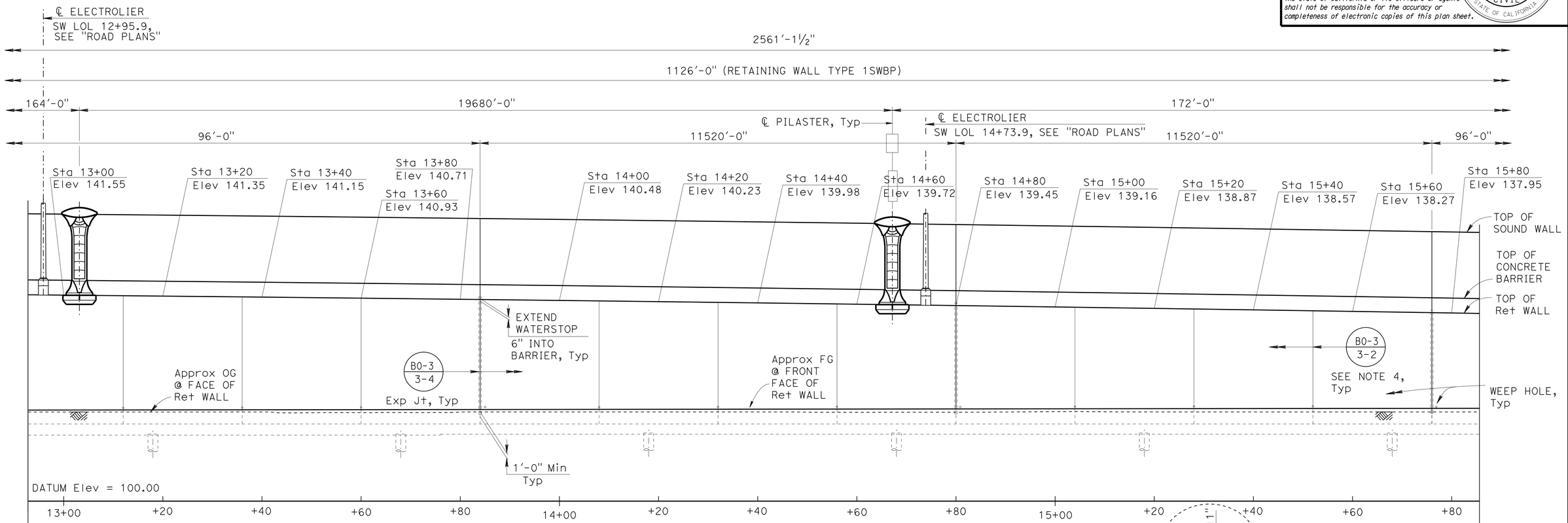

DEVELOPED MIRRORED ELEVATION

1" = 10'

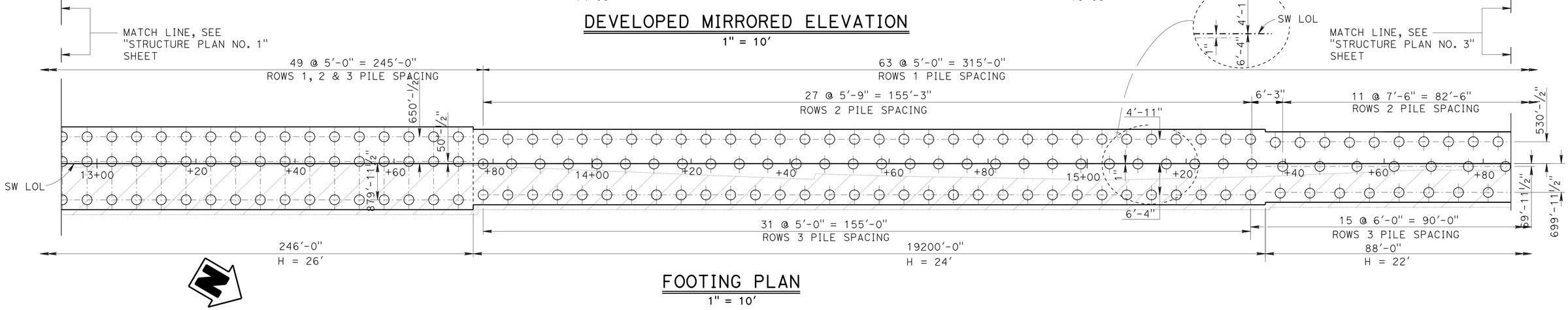

FOOTING PLAN

1" = 10'

DESIGN	BY Daniel Sessions	CHECKED Eric Watson	
DETAILS	BY J. Tang / J. Zhou	CHECKED Eric Watson	
QUANTITIES	BY Keith Stillmunkes	CHECKED Wendy Hou	

STATE OF CALIFORNIA
DEPARTMENT OF TRANSPORTATION

DIVISION OF ENGINEERING SERVICES
STRUCTURE DESIGN
DESIGN BRANCH 1

BRIDGE NO. 53E0212
POST MILE 5.93

SOUND WALL NO. 313
STRUCTURE PLAN NO. 2

STRUCTURES DESIGN DETAIL SHEET (ENGLISH) (REV. 09-01-10)

ORIGINAL SCALE IN INCHES FOR REDUCED PLANS 0 1 2 3

UNIT: 3576
PROJECT NUMBER & PHASE: 07000018351
CONTRACT NO.: 07-215954

DISREGARD PRINTS BEARING EARLIER REVISION DATES

REVISION DATES 02/16/12 03/04/13 02/24/13

SHEET 5 OF 48

FILE => sw313-c-sp02.dgn

USERNAME => s124496 DATE PLOTTED => 26-JUN-2013 TIME PLOTTED => 18:11

DIST	COUNTY	ROUTE	POST MILES TOTAL PROJECT	SHEET No.	TOTAL SHEETS
07	LA	5	0.0/7.6	759	985

P. Vijitakula 12/28/12
REGISTERED CIVIL ENGINEER DATE

6-24-13
PLANS APPROVAL DATE

REGISTERED PROFESSIONAL ENGINEER
P. VIJITAKULA
No. C 54701
Exp. 12-31-13
CIVIL
STATE OF CALIFORNIA

The State of California or its officers or agents shall not be responsible for the accuracy or completeness of electronic copies of this plan sheet.

For "NOTES" and "LEGEND", see "STRUCTURE PLAN NO. 1" sheet

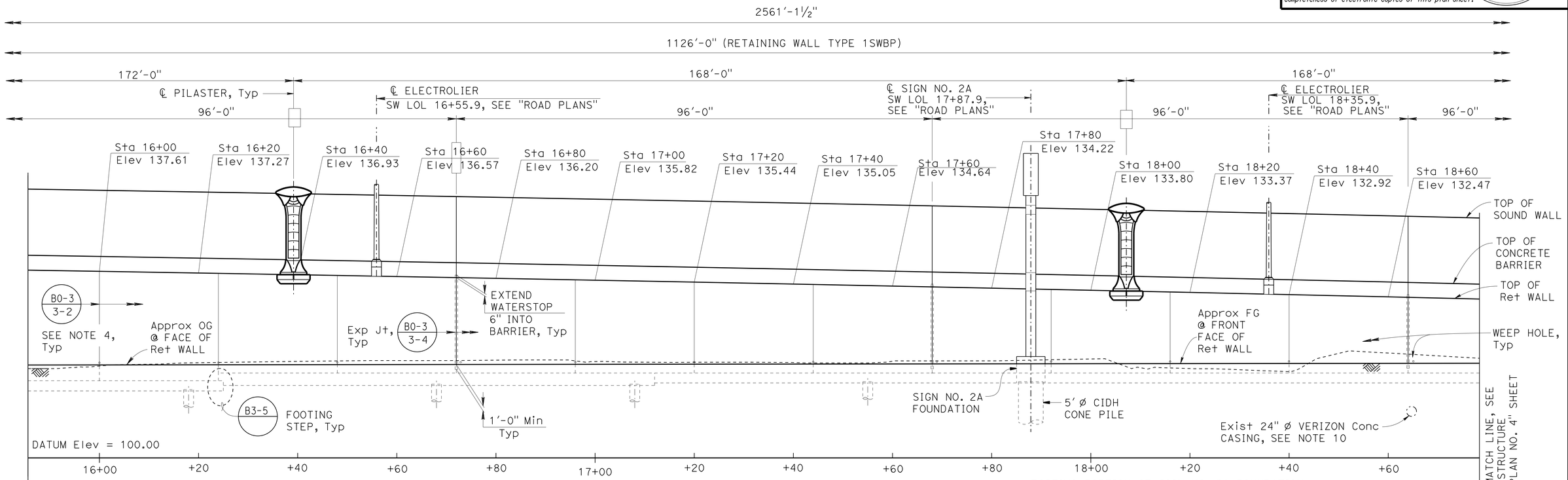

DEVELOPED MIRRORED ELEVATION

1" = 10'

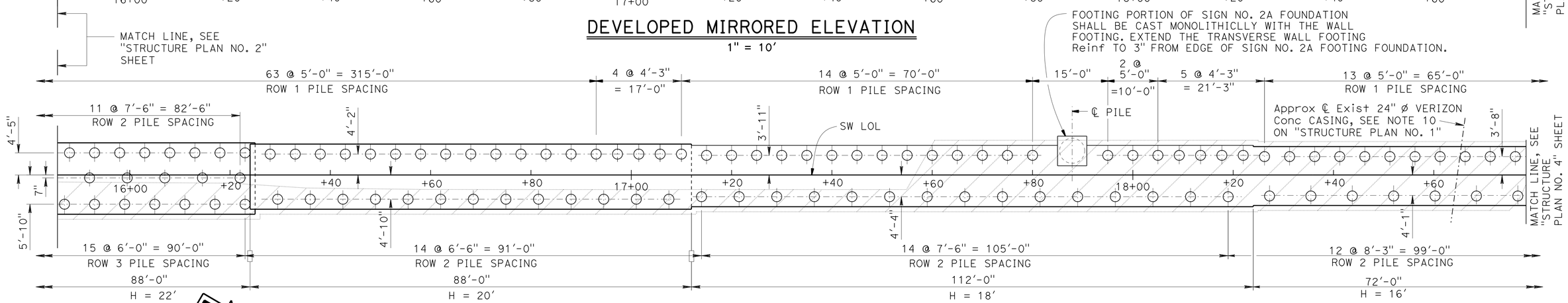

FOOTING PLAN

1" = 10'

NOTE: For details of Sign No. 2A foundation with 5' ø CIDH cone pile, see "ROAD PLANS".

	BY	CHECKED
DESIGN	Daniel Sessions	Eric Watson
DETAILS	J. Tang / J. Zhou	Eric Watson
QUANTITIES	Keith Stillmunkes	Wendy Hou

STATE OF CALIFORNIA
DEPARTMENT OF TRANSPORTATION

DIVISION OF ENGINEERING SERVICES
STRUCTURE DESIGN
DESIGN BRANCH 1

BRIDGE NO. 53E0212
POST MILE 5.93

SOUND WALL NO. 313
STRUCTURE PLAN NO. 3

STRUCTURES DESIGN DETAIL SHEET (ENGLISH) (REV. 09-01-10)

ORIGINAL SCALE IN INCHES FOR REDUCED PLANS 0 1 2 3

UNIT: 3576
PROJECT NUMBER & PHASE: 07000018351
CONTRACT NO.: 07-215954

DISREGARD PRINTS BEARING EARLIER REVISION DATES

REVISION DATES 02/16/12 04/18/12 02/24/13 03/04/13

SHEET 6 OF 48

FILE => sw313-c-sp03.dgn

USERNAME => s124436 DATE PLOTTED => 26-JUN-2013 TIME PLOTTED => 18:12

DIST	COUNTY	ROUTE	POST MILES TOTAL PROJECT	SHEET No.	TOTAL SHEETS
07	LA	5	0.0/7.6	760	985

P. Vijitakula 12/28/12
REGISTERED CIVIL ENGINEER DATE

6-24-13
PLANS APPROVAL DATE

REGISTERED PROFESSIONAL ENGINEER
P. VIJITAKULA
No. C 54701
Exp. 12-31-13
CIVIL
STATE OF CALIFORNIA

The State of California or its officers or agents shall not be responsible for the accuracy or completeness of electronic copies of this plan sheet.

For "NOTES" and "LEGEND", see "STRUCTURE PLAN NO. 1" sheet

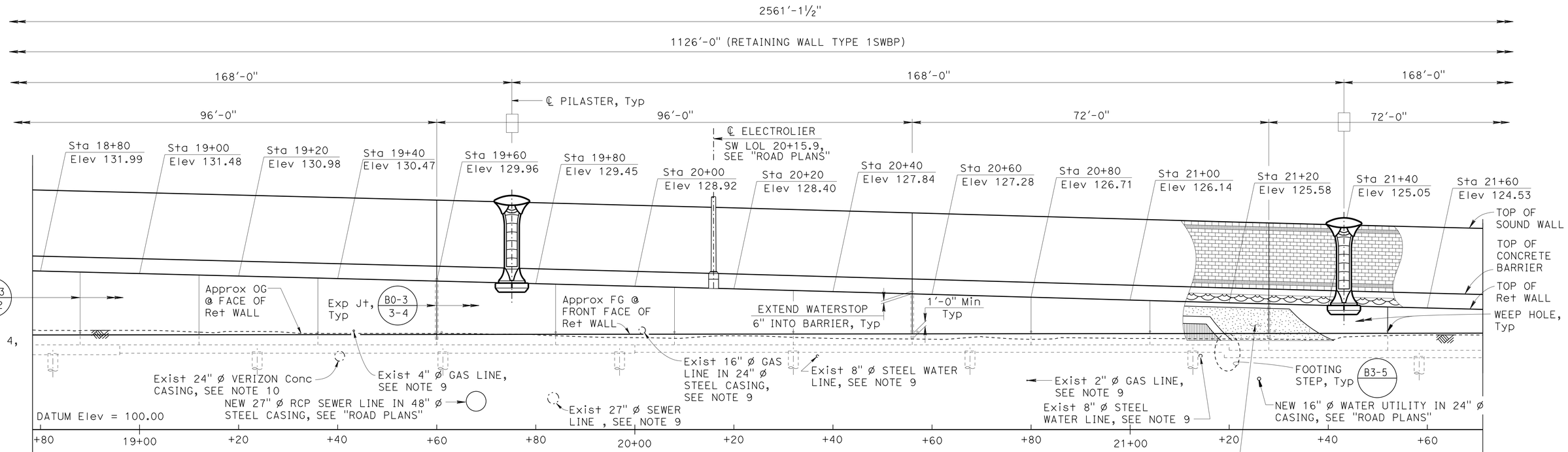

DEVELOPED MIRRORED ELEVATION

1" = 10'

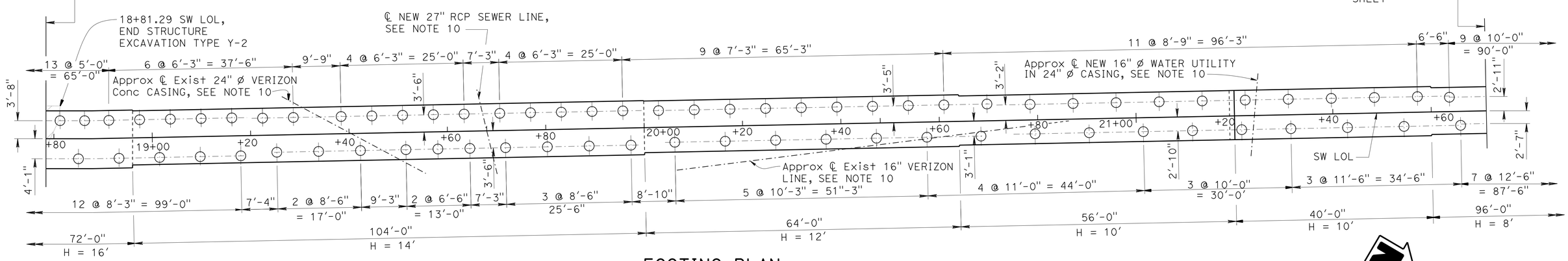

FOOTING PLAN

1" = 10'

	BY	CHECKED
DESIGN	Daniel Sessions	Eric Watson
DETAILS	J. Tang / J. Zhou	Eric Watson
QUANTITIES	Keith Stillmunkes	Wendy Hou

STATE OF CALIFORNIA
DEPARTMENT OF TRANSPORTATION

DIVISION OF ENGINEERING SERVICES
STRUCTURE DESIGN
DESIGN BRANCH 1

BRIDGE NO. 53E0212
POST MILE 5.93

SOUND WALL NO. 313
STRUCTURE PLAN NO. 4

STRUCTURES DESIGN DETAIL SHEET (ENGLISH) (REV. 09-01-10)

ORIGINAL SCALE IN INCHES FOR REDUCED PLANS 0 1 2 3

UNIT: 3576
PROJECT NUMBER & PHASE: 07000018351
CONTRACT NO.: 07-215954

DISREGARD PRINTS BEARING EARLIER REVISION DATES
REVISION DATES 02/14/12 03/21/13 03/04/13

SHEET 7 OF 48

FILE => sw313-c-sp04.dgn

USERNAME => s124496 DATE PLOTTED => 26-JUN-2013 TIME PLOTTED => 18:12

DIST	COUNTY	ROUTE	POST MILES TOTAL PROJECT	SHEET No.	TOTAL SHEETS
07	LA	5	0.0/7.6	761	985

REGISTERED CIVIL ENGINEER 12/28/12 DATE

6-24-13
PLANS APPROVAL DATE

REGISTERED PROFESSIONAL ENGINEER P. VIJITAKULA No. C 54701 Exp. 12-31-13 CIVIL STATE OF CALIFORNIA

The State of California or its officers or agents shall not be responsible for the accuracy or completeness of electronic copies of this plan sheet.

NOTES:

1. For exact location of New Recycled Water Utility, see "ROAD PLANS". Pile spacing shall not be adjusted unless approved by Engineer.
2. For all other "NOTES", see "STRUCTURE PLAN NO. 1" sheet.

LEGEND:

- Indicates 24" ø CIDH pile
- Indicates 16" ø CIDH pile

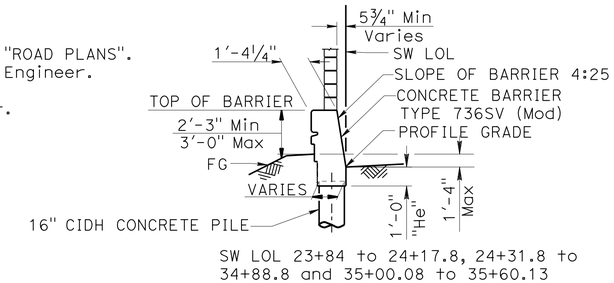

SECTION C-C (B15-6)
¼" = 1'-0"

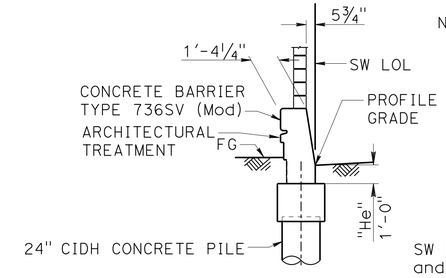

SECTION D-D (B15-15)
¼" = 1'-0"

NOTE:
For barrier and sound wall dimensions and reinforcement not shown, see "BARRIER SECTIONS", "CASE 2" (736SV) on (B15-6) and (B15-15).

For other details not shown, see "SECTION C- C".

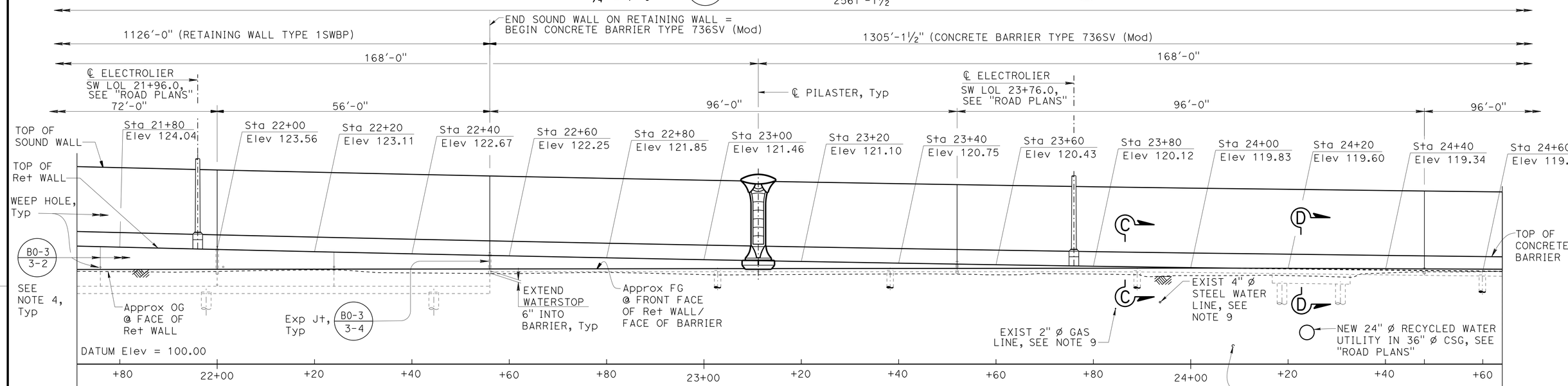

DEVELOPED MIRRORED ELEVATION (B15-6)
1" = 10'

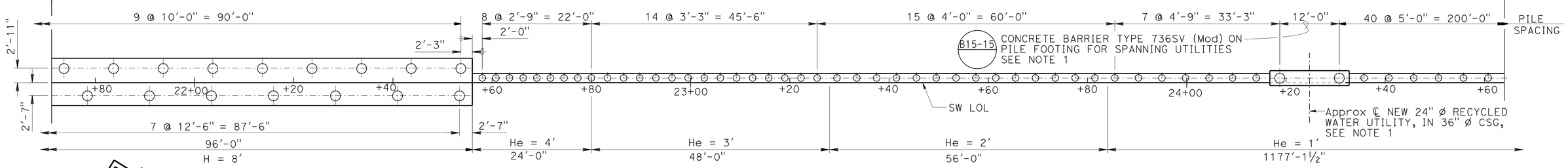

FOOTING PLAN (B15-6) (B15-15)
1" = 10'

DESIGN	BY Daniel Sessions	CHECKED Eric Watson	
DETAILS	BY J.Tang / J. Zhou	CHECKED Eric Watson	
QUANTITIES	BY Keith Stillmunkes	CHECKED Wendy Hou	

STATE OF CALIFORNIA
DEPARTMENT OF TRANSPORTATION

DIVISION OF ENGINEERING SERVICES
STRUCTURE DESIGN
DESIGN BRANCH 1

BRIDGE NO. 53E0212
POST MILE 5.93

SOUND WALL NO. 313
STRUCTURE PLAN NO. 5

STRUCTURES DESIGN DETAIL SHEET (ENGLISH) (REV. 09-01-10)

ORIGINAL SCALE IN INCHES FOR REDUCED PLANS 0 1 2 3

UNIT: 3576
PROJECT NUMBER & PHASE: 07000018351
CONTRACT NO.: 07-215954

DISREGARD PRINTS BEARING EARLIER REVISION DATES

REVISION DATES 02/14/12 11/28/12 02/22/13 03/04/13

SHEET 8 OF 48

FILE => sw313-c-sp05.dgn

USERNAME => s124496 DATE PLOTTED => 26-JUN-2013 TIME PLOTTED => 18:12

DIST	COUNTY	ROUTE	POST MILES TOTAL PROJECT	SHEET No.	TOTAL SHEETS
07	LA	5	0.0/7.6	762	985

P. Vijitakula 12/28/12
REGISTERED CIVIL ENGINEER DATE

6-24-13
PLANS APPROVAL DATE

REGISTERED PROFESSIONAL ENGINEER P. VIJITAKULA No. C 54701 Exp. 12-31-13 CIVIL STATE OF CALIFORNIA

The State of California or its officers or agents shall not be responsible for the accuracy or completeness of electronic copies of this plan sheet.

For "NOTES", see "STRUCTURE PLAN NO. 1" sheet

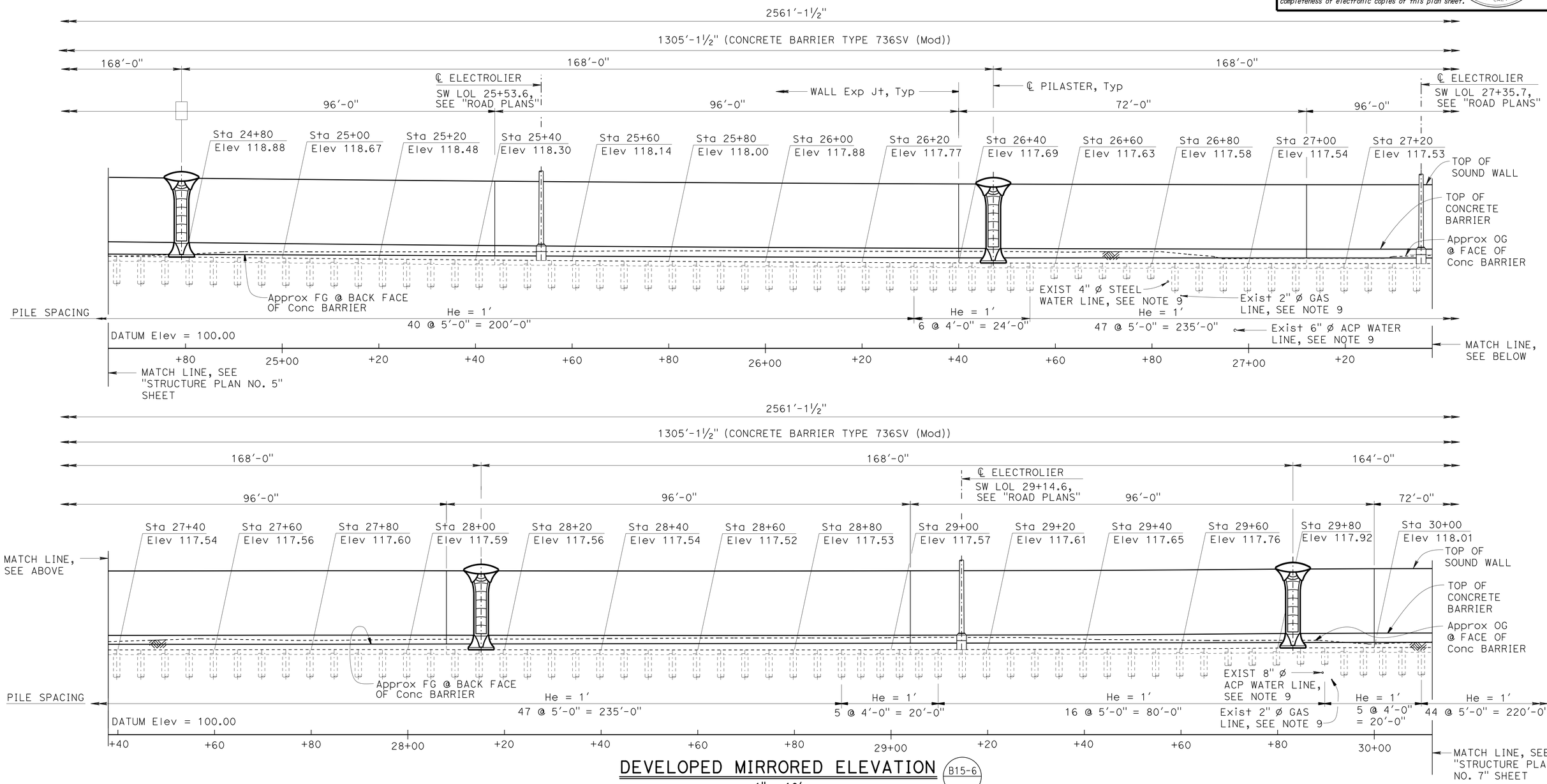

DEVELOPED MIRRORED ELEVATION (B15-6)

1" = 10'

DESIGN	BY Daniel Sessions	CHECKED Eric Watson	
DETAILS	BY J. Tang / J. Zhou	CHECKED Eric Watson	
QUANTITIES	BY Keith Stillmunkes	CHECKED Wendy Hou	

STATE OF CALIFORNIA
DEPARTMENT OF TRANSPORTATION

DIVISION OF ENGINEERING SERVICES
STRUCTURE DESIGN
DESIGN BRANCH 1

BRIDGE NO. 53E0212
POST MILE 5.93

SOUND WALL NO. 313
STRUCTURE PLAN NO. 6

STRUCTURES DESIGN DETAIL SHEET (ENGLISH) (REV. 09-01-10)

ORIGINAL SCALE IN INCHES FOR REDUCED PLANS 0 1 2 3

UNIT: 3576
PROJECT NUMBER & PHASE: 07000018351
CONTRACT NO.: 07-215954

DISREGARD PRINTS BEARING EARLIER REVISION DATES

REVISION DATES 02/24/12 03/04/13 02/25/13

SHEET 9 OF 48

FILE => sw313-c-sp06.dgn

USERNAME => s124496 DATE PLOTTED => 26-JUN-2013 TIME PLOTTED => 18:12

DIST	COUNTY	ROUTE	POST MILES TOTAL PROJECT	SHEET No.	TOTAL SHEETS
07	LA	5	0.0/7.6	763	985

P. Vijitakula 12/28/12
REGISTERED CIVIL ENGINEER DATE

6-24-13
PLANS APPROVAL DATE

REGISTERED PROFESSIONAL ENGINEER P. VIJITAKULA No. C 54701 Exp. 12-31-13 CIVIL STATE OF CALIFORNIA

The State of California or its officers or agents shall not be responsible for the accuracy or completeness of electronic copies of this plan sheet.

NOTES:

1. Contractor shall locate 24" DIP water line (not shown), 4" and 6" Lakeland oil lines (not shown) and 10" Exxon gasoline line (not shown) prior to excavation and drilling piles. Utilities begin approximately at SW LOL 34+00 and continue to end of wall. These utilities are to be abandoned or relocated. Pile spacing may not be adjusted unless approved by Engineer.
2. For "SECTION D-D", see "STRUCTURE PLAN NO. 5" sheet. Contractor shall locate existing RCB prior to excavation and drilling piles. For exact location of new RCB, see "ROAD PLANS". Pile spacing shall not be adjusted unless approved by Engineer.
3. For all other "NOTES" and "LEGEND", see "STRUCTURE PLAN NO. 1" sheet

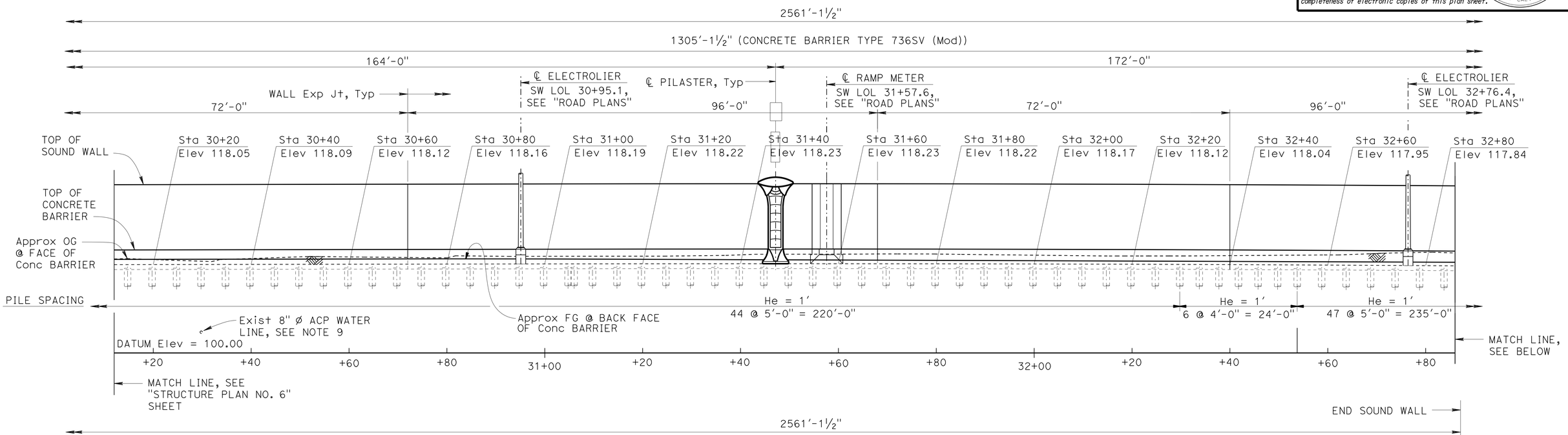

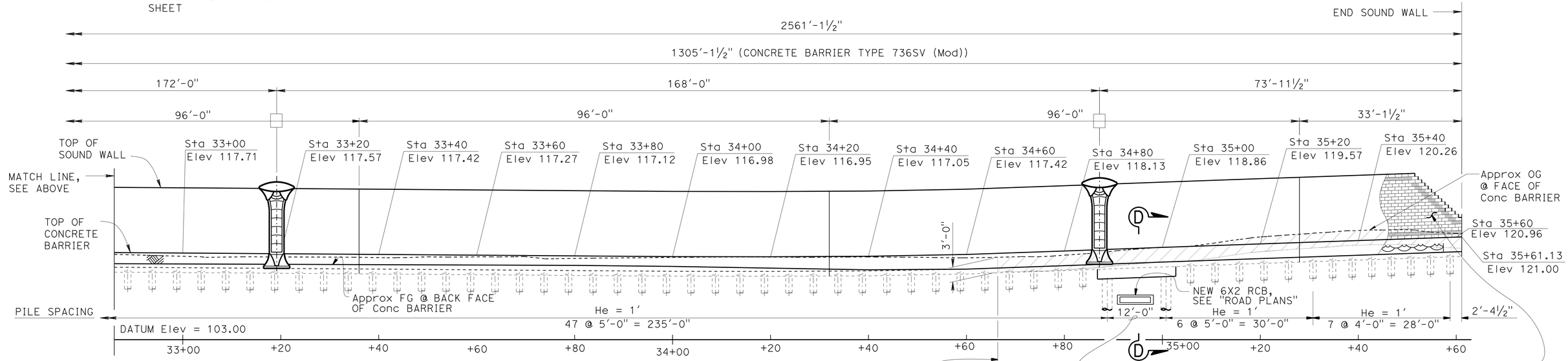

DEVELOPED MIRRORED ELEVATION (B15-6)

1" = 10'

DESIGN	BY Daniel Sessions	CHECKED Eric Watson	
DETAILS	BY J. Tang / J. Zhou	CHECKED Eric Watson	
QUANTITIES	BY Keith Stillmunkes	CHECKED Wendy Hou	

STATE OF CALIFORNIA
DEPARTMENT OF TRANSPORTATION

DIVISION OF ENGINEERING SERVICES
STRUCTURE DESIGN
DESIGN BRANCH 1

BRIDGE NO. 53E0212
POST MILE 5.93

SOUND WALL NO. 313
STRUCTURE PLAN NO. 7

STRUCTURES DESIGN DETAIL SHEET (ENGLISH) (REV. 09-01-10)

ORIGINAL SCALE IN INCHES FOR REDUCED PLANS 0 1 2 3

UNIT: 3576
PROJECT NUMBER & PHASE: 07000018351
CONTRACT NO.: 07-215954

DISREGARD PRINTS BEARING EARLIER REVISION DATES

REVISION DATES 02/22/12 03/04/13 12/27/12

SHEET 10 OF 48

FILE => sw313-c-sp07.dgn

USERNAME => s124496 DATE PLOTTED => 26-JUN-2013 TIME PLOTTED => 18:12

DIST	COUNTY	ROUTE	POST MILES TOTAL PROJECT	SHEET No.	TOTAL SHEETS
07	LA	5	0.0/7.6	764	985

P. Vijitakula 12/28/12
REGISTERED CIVIL ENGINEER DATE

6-24-13
PLANS APPROVAL DATE

REGISTERED PROFESSIONAL ENGINEER P. VIJITAKULA No. C 54701 Exp. 12-31-13 CIVIL STATE OF CALIFORNIA

The State of California or its officers or agents shall not be responsible for the accuracy or completeness of electronic copies of this plan sheet.

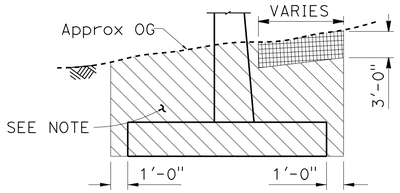

SW LOL 10+00 TO 17+60

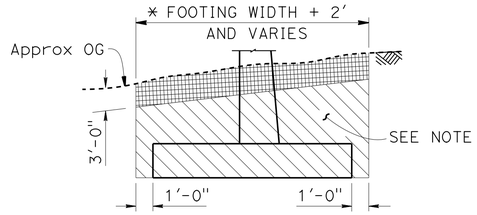

SW LOL 17+60 TO 18+81
* FOR STRUCTURE EXCAVATION TYPE Y-2 ONLY

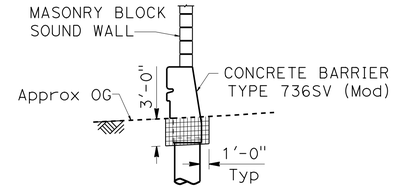

SW LOL 34+66.38 TO 35+61.13

LEGEND:

Structure excavation (TYPE Y-2)

Structure excavation

NOTE:
For pile footing details not shown, see Std Plan A76B.

LIMITS OF PAYMENT FOR STRUCTURE EXCAVATION (TYPE Y-2) (AERIALLY DEPOSITED LEAD)

NO SCALE

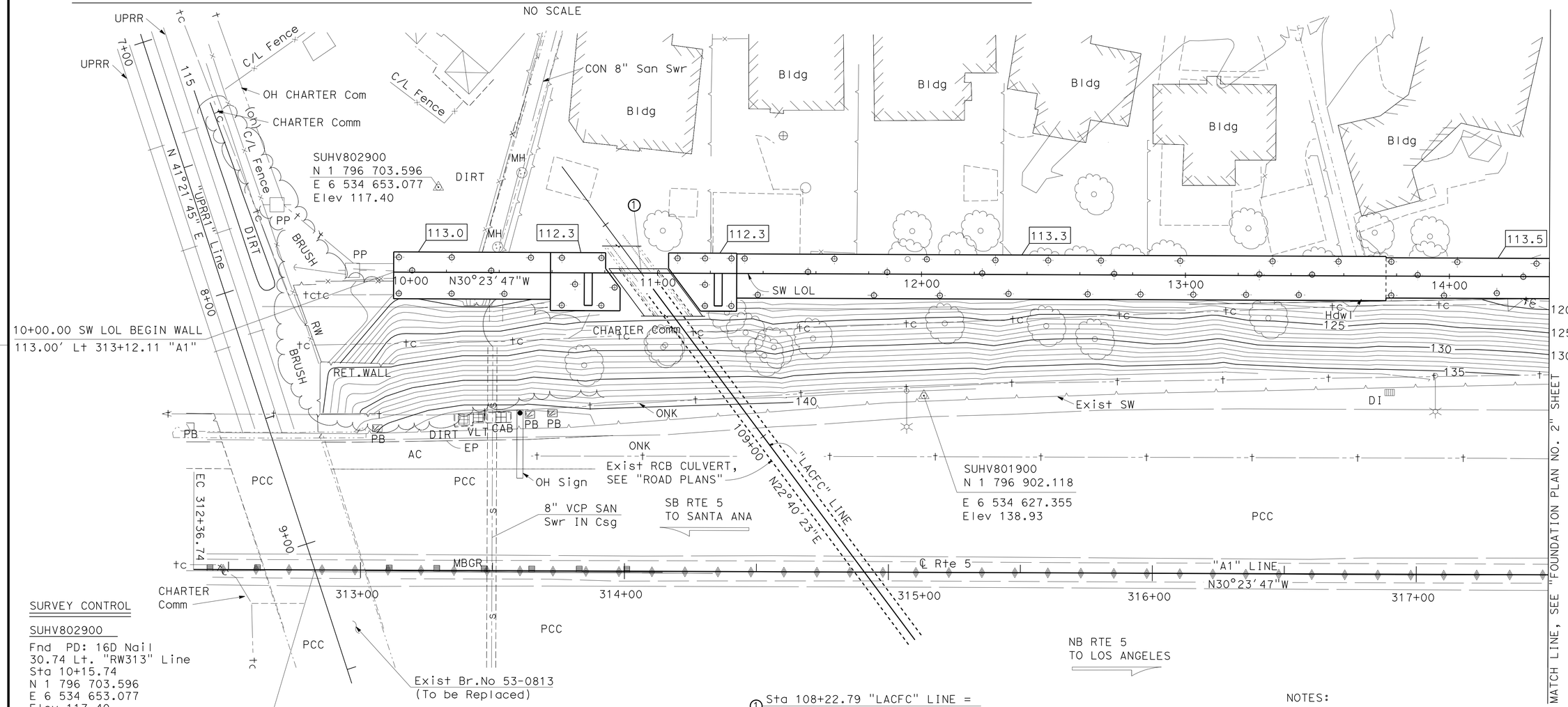

SURVEY CONTROL

SUHV802900
Fnd PD: 16D Nail
30.74 Lt. "RW313" Line
Sta 10+15.74
N 1 796 703.596
E 6 534 653.077
Elev 117.40

SUHV801900
Fnd PD: REBAR & CAP
47.52 Rt."RW313" Line
Sta 11+99.99
N 1 796 902.118
E 6 534 627.355
Elev 138.93

① Sta 108+22.79 "LACFC" LINE =
Sta 10+92.77 SW LOL

NOTES:

Underground utilities as shown are approximate.
See utility plans for more information.

⊕ - Indicates 24" ø CIDH Piles (Not all piles shown).

XXX.X - Indicates bottom of Ftg Elevation.

PRELIMINARY INVESTIGATION SECTION							
SCALE 1"=20'	VERT.DATUM NAVD83	PHOTOGRAMMETRY AS OF: X					
	HORZ.DATUM NAD88	SURVEYED	BY T. Phung	CHECKED	BY C. Stewart		
ALIGNMENT TIES Dist. Traverse Sheet		DRAFTED	BY C. Pham	CHECKED	BY S. Alivio		

DESIGN	BY Daniel Sessions	CHECKED Eric Watson	
DETAILS	BY J. Tang / J. Zhou	CHECKED Eric Watson	
QUANTITIES	BY Keith Stillmunkes	CHECKED Wendy Hou	

STATE OF CALIFORNIA
DEPARTMENT OF TRANSPORTATION

DIVISION OF ENGINEERING SERVICES
STRUCTURE DESIGN
DESIGN BRANCH 1

BRIDGE NO. 53E0212
POST MILE 5.93

SOUND WALL NO. 313
FOUNDATION PLAN NO. 1

STRUCTURES FOUNDATION PLAN SHEET (ENGLISH) (REV. 09-01-10)

ORIGINAL SCALE IN INCHES FOR REDUCED PLANS 0 1 2 3

UNIT: 3576
PROJECT NUMBER & PHASE: 07000018351
CONTRACT NO.: 07-215954

DISREGARD PRINTS BEARING EARLIER REVISION DATES

REVISION DATES 10/28/11 03/04/13 04/24/13

SHEET 11 OF 48

FILE => sw313-e-fdpl01.dgn

USERNAME => s124496 DATE PLOTTED => 26-JUN-2013 TIME PLOTTED => 18:12

DIST	COUNTY	ROUTE	POST MILES TOTAL PROJECT	SHEET No.	TOTAL SHEETS
07	LA	5	0.0/7.6	765	985

P. Vijitakula 12/28/12
REGISTERED CIVIL ENGINEER DATE

6-24-13
PLANS APPROVAL DATE

REGISTERED PROFESSIONAL ENGINEER
P. VIJITAKULA
No. C 54701
Exp. 12-31-13
CIVIL
STATE OF CALIFORNIA

The State of California or its officers or agents shall not be responsible for the accuracy or completeness of electronic copies of this plan sheet.

No.	R	Δ	T	L
A	35,000.00	31°30′41"	9.88	19.25

NOTES:

Underground utilities as shown are approximate. See utility plans for more information.

⊕ - Indicates 24" ø CIDH piles (Not all piles shown)

XXX.X - Indicates bottom of Ftg Elevation

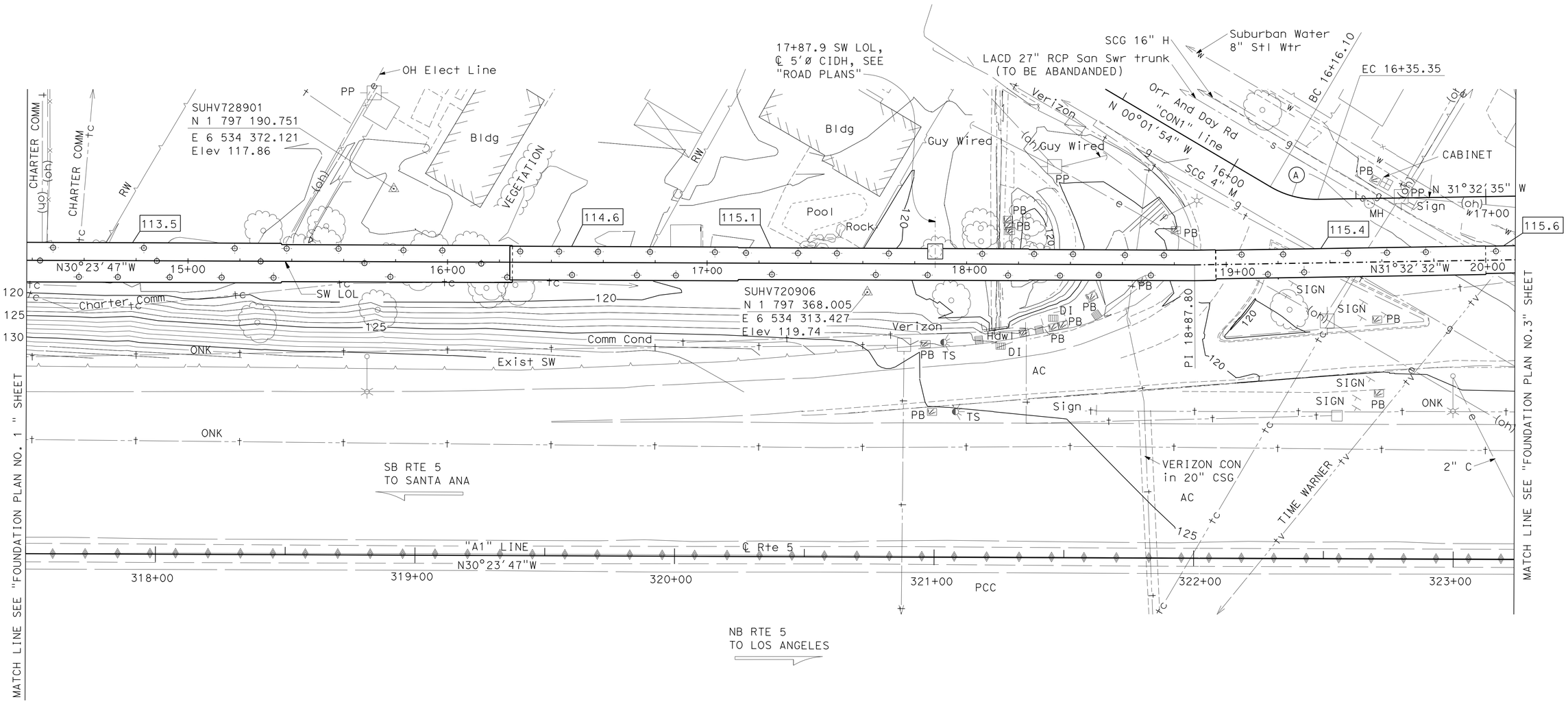

SURVEY CONTROL

SEE "FOUNDATION PLAN NO. 1"

PRELIMINARY INVESTIGATION SECTION

SCALE 1"=20′	VERT.DATUM NAVD88	PHOTOGRAMMETRY AS OF: X		
	HORZ.DATUM NAD83	SURVEYED	BY T. Phung	CHECKED BY C. Stewart
	ALIGNMENT TIES Dist. Traverse Sheet	DRAFTED	BY C. Pham	CHECKED BY S. Alivio

DESIGN	BY Daniel Sessions	CHECKED Eric Watson
DETAILS	BY J.Tang / J. Zhou	CHECKED Eric Watson
QUANTITIES	BY Keith Stillmunkes	CHECKED Wendy Hou

STATE OF CALIFORNIA
DEPARTMENT OF TRANSPORTATION

DIVISION OF ENGINEERING SERVICES
STRUCTURE DESIGN
DESIGN BRANCH 1

BRIDGE NO. 53E0212
POST MILE 5.93

SOUND WALL NO. 313
FOUNDATION PLAN NO. 2

STRUCTURES FOUNDATION PLAN SHEET (ENGLISH) (REV. 09-01-10)

ORIGINAL SCALE IN INCHES FOR REDUCED PLANS 0 1 2 3

UNIT: 3576
PROJECT NUMBER & PHASE: 07000018351
CONTRACT NO.: 07-215954

DISREGARD PRINTS BEARING EARLIER REVISION DATES

REVISION DATES 10/28/11 04/24/13 05/04/13

SHEET 12 OF 48

FILE => sw313-e-fdp102.dgn

USERNAME => s124496 DATE PLOTTED => 26-JUN-2013 TIME PLOTTED => 18:12

DIST	COUNTY	ROUTE	POST MILES TOTAL PROJECT	SHEET No.	TOTAL SHEETS
07	LA	5	0.0/7.6	766	985

P. Vijitakula 12/28/12
REGISTERED CIVIL ENGINEER DATE

6-24-13
PLANS APPROVAL DATE

REGISTERED PROFESSIONAL ENGINEER P. VIJITAKULA No. C 54701 Exp. 12-31-13 CIVIL STATE OF CALIFORNIA

The State of California or its officers or agents shall not be responsible for the accuracy or completeness of electronic copies of this plan sheet.

No.	R	Δ	T	L
(B)	53,000.00	58°39'33"	29.78	54.26

NOTES:

Underground utilities as shown are approximate. See utility plans for more information.

⊕ - Indicates 16" ø CIDH piles (Not all piles shown)

⊕ - Indicates 24" ø CIDH piles (Not all piles shown)

* - Utilities shown to be abandoned / relocated.

XXX.X - Indicates bottom of Ftg Elevation

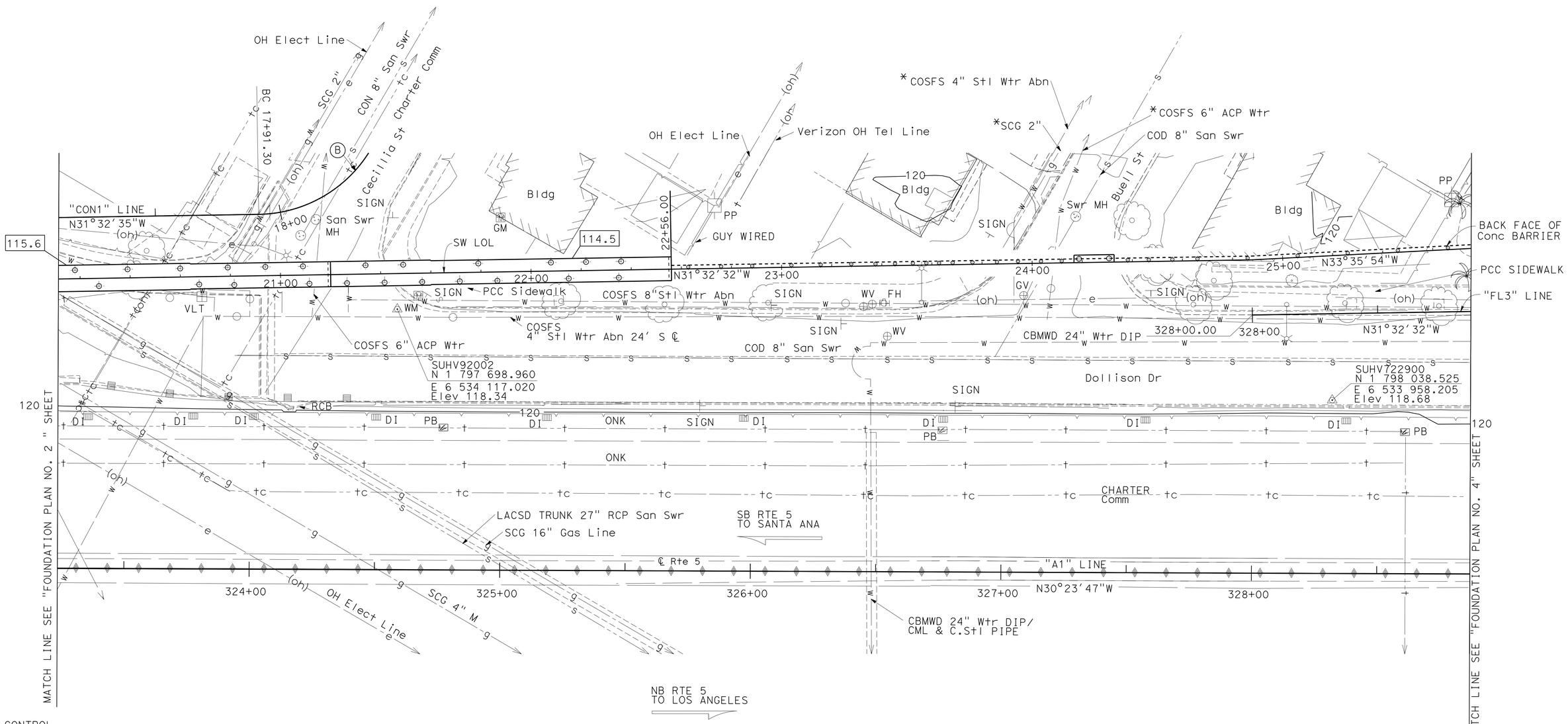

SURVEY CONTROL

SEE "FOUNDATION PLAN NO. 1"

PRELIMINARY INVESTIGATION SECTION

SCALE 1"=20'	VERT.DATUM NAVD88	PHOTOGRAMMETRY AS OF: X		
	HORZ.DATUM NAD83	SURVEYED	BY T. Phung	CHECKED BY C. Stewart
ALIGNMENT TIES Dist. Traverse Sheet		DRAFTED	BY C. Pham	CHECKED BY S. Alivio

DESIGN	BY Daniel Sessions	CHECKED Eric Watson
DETAILS	BY J. Tang / J. Zhou	CHECKED Eric Watson
QUANTITIES	BY Keith Stillmunkes	CHECKED Wendy Hou

STATE OF CALIFORNIA
DEPARTMENT OF TRANSPORTATION

DIVISION OF ENGINEERING SERVICES
STRUCTURE DESIGN
DESIGN BRANCH 1

BRIDGE NO. 53E0212
POST MILE 5.93

SOUND WALL NO. 313
FOUNDATION PLAN NO. 3

STRUCTURES FOUNDATION PLAN SHEET (ENGLISH) (REV. 09-01-10)

ORIGINAL SCALE IN INCHES FOR REDUCED PLANS 0 1 2 3

UNIT: 3576
PROJECT NUMBER & PHASE: 07000018351
CONTRACT NO.: 07-215954

DISREGARD PRINTS BEARING EARLIER REVISION DATES

REVISION DATES 10/28/11 01/30/12 04/24/13

SHEET 13 OF 48

FILE => sw313-e-fdp103.dgn

USERNAME => s124436 DATE PLOTTED => 26-JUN-2013 TIME PLOTTED => 18:12

DIST	COUNTY	ROUTE	POST MILES TOTAL PROJECT	SHEET No.	TOTAL SHEETS
07	LA	5	0.0/7.6	767	985

P. Vijitakula 12/28/12
REGISTERED CIVIL ENGINEER DATE

6-24-13
PLANS APPROVAL DATE

REGISTERED PROFESSIONAL ENGINEER
P. VIJITAKULA
No. C 54701
Exp. 12-31-13
CIVIL
STATE OF CALIFORNIA

The State of California or its officers or agents shall not be responsible for the accuracy or completeness of electronic copies of this plan sheet.

No.	R	Δ	T	L
C	3.000.00	-2°38′31"	69.18	138.33
D	5.000.00	3°28′02"	151.33	302.56

NOTE: Underground utilities as shown are approximate. See utility plans for more information.
◊ - Indicates 16" Ø CIDH piles (Not all piles shown).
* - Utilities shown to be abandoned or relocated.

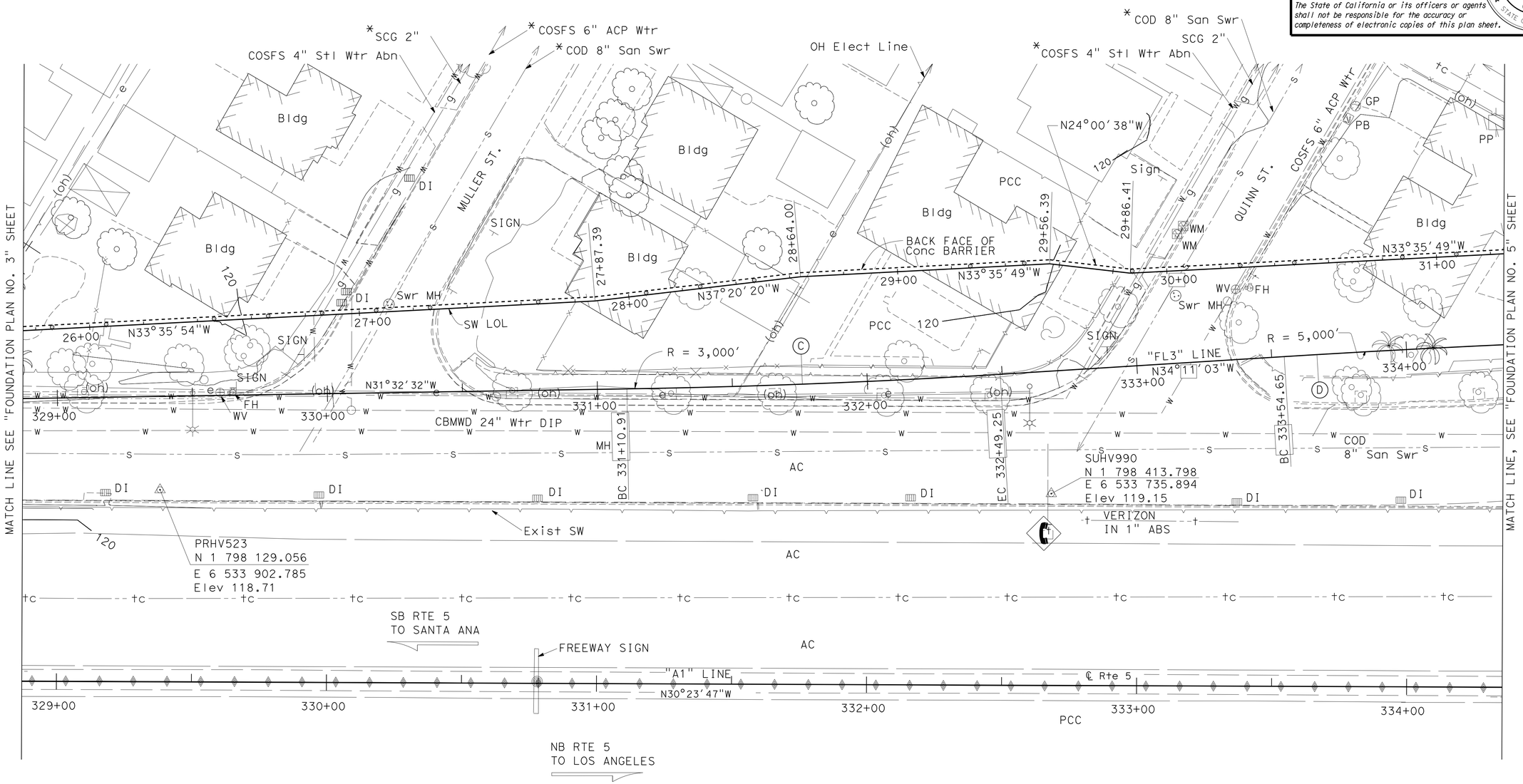

SURVEY CONTROL

SEE "FOUNDATION PLAN NO. 1"

PRELIMINARY INVESTIGATION SECTION							
SCALE 1"=20′	VERT.DATUM NAVD88	PHOTOGRAMMETRY AS OF: X					
	HORZ.DATUM NAD83	SURVEYED	BY T. Phung	CHECKED	BY C. Stewart		
ALIGNMENT TIES Dist. Traverse Sheet		DRAFTED	BY C. Pham	CHECKED	BY S. Alivio		

DESIGN	BY Daniel Sessions	CHECKED Eric Watson	
DETAILS	BY Jie Tang	CHECKED Eric Watson	
QUANTITIES	BY Keith Stillmunkes	CHECKED Wendy Hou	

STATE OF CALIFORNIA
DEPARTMENT OF TRANSPORTATION

DIVISION OF ENGINEERING SERVICES
STRUCTURE DESIGN
DESIGN BRANCH 1

BRIDGE NO. 53E0212
POST MILE 5.93

SOUND WALL NO. 313
FOUNDATION PLAN NO. 4

STRUCTURES FOUNDATION PLAN SHEET (ENGLISH) (REV. 09-01-10)

ORIGINAL SCALE IN INCHES FOR REDUCED PLANS 0 1 2 3

UNIT: 3576
PROJECT NUMBER & PHASE: 07000018351
CONTRACT NO.: 07-215954

DISREGARD PRINTS BEARING EARLIER REVISION DATES

REVISION DATES 10/28/11 03/06/12 04/30/12

SHEET 14 OF 48

FILE => sw313-e-fdp104.dgn

USERNAME => s124436 DATE PLOTTED => 26-JUN-2013 TIME PLOTTED => 18:12

DIST	COUNTY	ROUTE	POST MILES TOTAL PROJECT	SHEET No.	TOTAL SHEETS
07	LA	5	0.0/7.6	768	985

P. Vijitakula 12/28/12
REGISTERED CIVIL ENGINEER DATE

6-24-13
PLANS APPROVAL DATE

REGISTERED PROFESSIONAL ENGINEER P. VIJITAKULA No. C 54701 Exp. 12-31-13 CIVIL STATE OF CALIFORNIA

The State of California or its officers or agents shall not be responsible for the accuracy or completeness of electronic copies of this plan sheet.

No.	R	Δ	T	L
D	5000.00	3°28′02"	151.33	302.56
E	20000.00	01°26′31"	251.67	503.32
F	1000.00	31°41′30"	283.84	553.13
G	1111.10	9°26′09"	91.70	182.98
H	249.50	36°08′34"	81.41	157.38

NOTE: Underground utilities as shown are approximate. See utility plans for more information.

⌖ - Indicates 16′ ø CIDH piles (Not all piles shown).

✱ - Utilites shown to be abandoned / relocation.

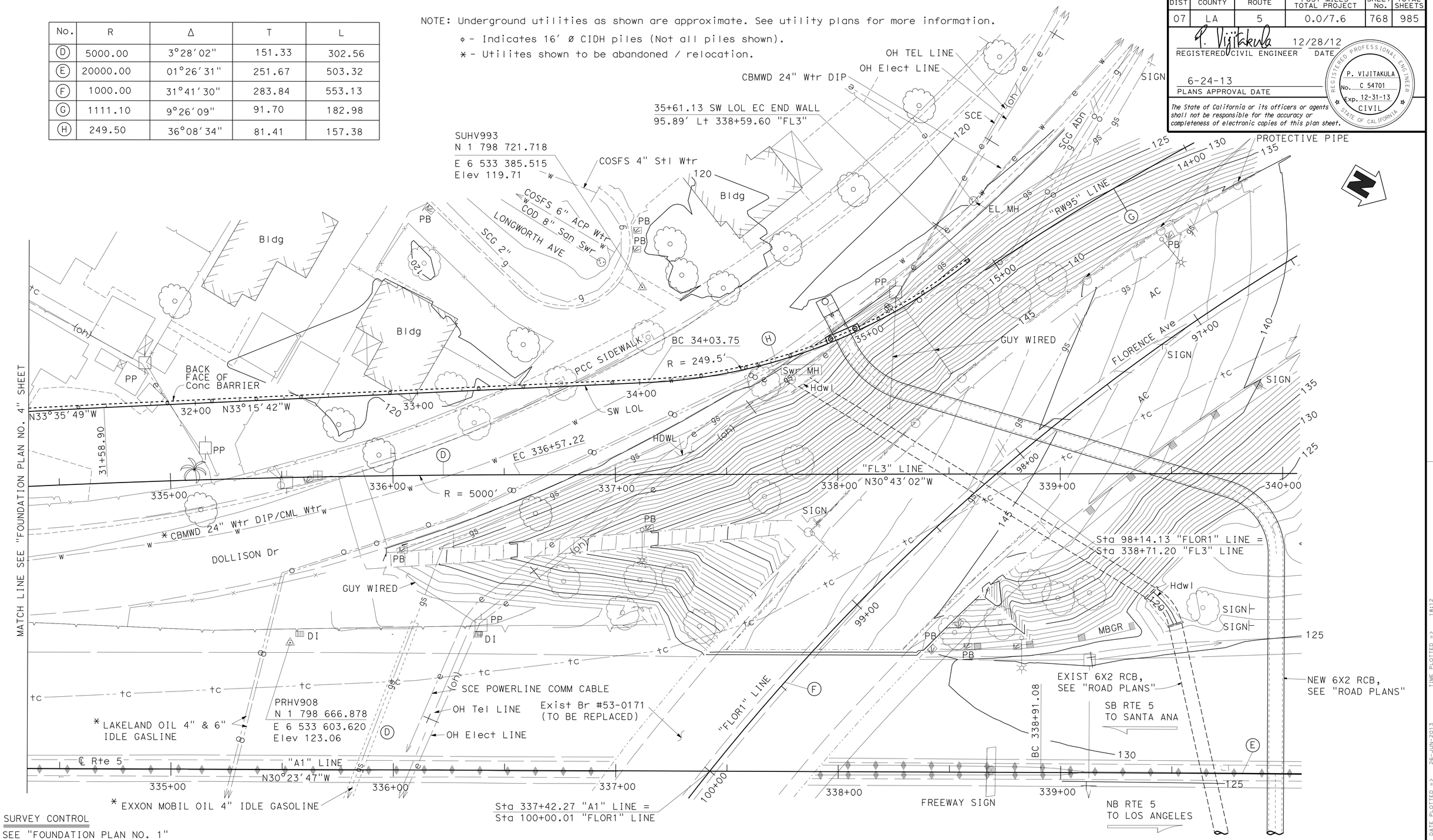

SURVEY CONTROL

SEE "FOUNDATION PLAN NO. 1"

PRELIMINARY INVESTIGATION SECTION					
SCALE 1"=20′	VERT.DATUM NAVD88	PHOTOGRAMMETRY AS OF: X			
	HORZ.DATUM NAD83	SURVEYED	BY T. Phung	CHECKED	BY C. Stewart
ALIGNMENT TIES Dist. Traverse Sheet		DRAFTED	BY C. Pham	CHECKED	BY S. Alivio

	BY	CHECKED
DESIGN	Daniel Sessions	Eric Watson
DETAILS	J. Tang / J. Zhou	Eric Watson
QUANTITIES	Keith Stillmunkes	Wendy Hou

STATE OF CALIFORNIA
DEPARTMENT OF TRANSPORTATION

DIVISION OF ENGINEERING SERVICES
STRUCTURE DESIGN
DESIGN BRANCH 1

BRIDGE NO. 53E0212
POST MILE 5.93

SOUND WALL NO. 313
FOUNDATION PLAN NO. 5

STRUCTURES FOUNDATION PLAN SHEET (ENGLISH) (REV. 09-01-10)

ORIGINAL SCALE IN INCHES FOR REDUCED PLANS 0 1 2 3

UNIT: 3576
PROJECT NUMBER & PHASE: 07000018351
CONTRACT NO.: 07-215954

DISREGARD PRINTS BEARING EARLIER REVISION DATES

REVISION DATES 10/28/11 03/09/12 04/30/12 03/04/13

SHEET 15 OF 48

FILE => sw313-e-fdpl05.dgn

USERNAME => s124496 DATE PLOTTED => 26-JUN-2013 TIME PLOTTED => 18:12

DIST	COUNTY	ROUTE	POST MILES TOTAL PROJECT	SHEET No.	TOTAL SHEETS
07	LA	5	0.0/7.6	769	985

P. Vijitakula 12/28/12
REGISTERED CIVIL ENGINEER DATE

6-24-13
PLANS APPROVAL DATE

REGISTERED PROFESSIONAL ENGINEER
P. VIJITAKULA
No. C 54701
Exp. 12-31-13
CIVIL
STATE OF CALIFORNIA

The State of California or its officers or agents shall not be responsible for the accuracy or completeness of electronic copies of this plan sheet.

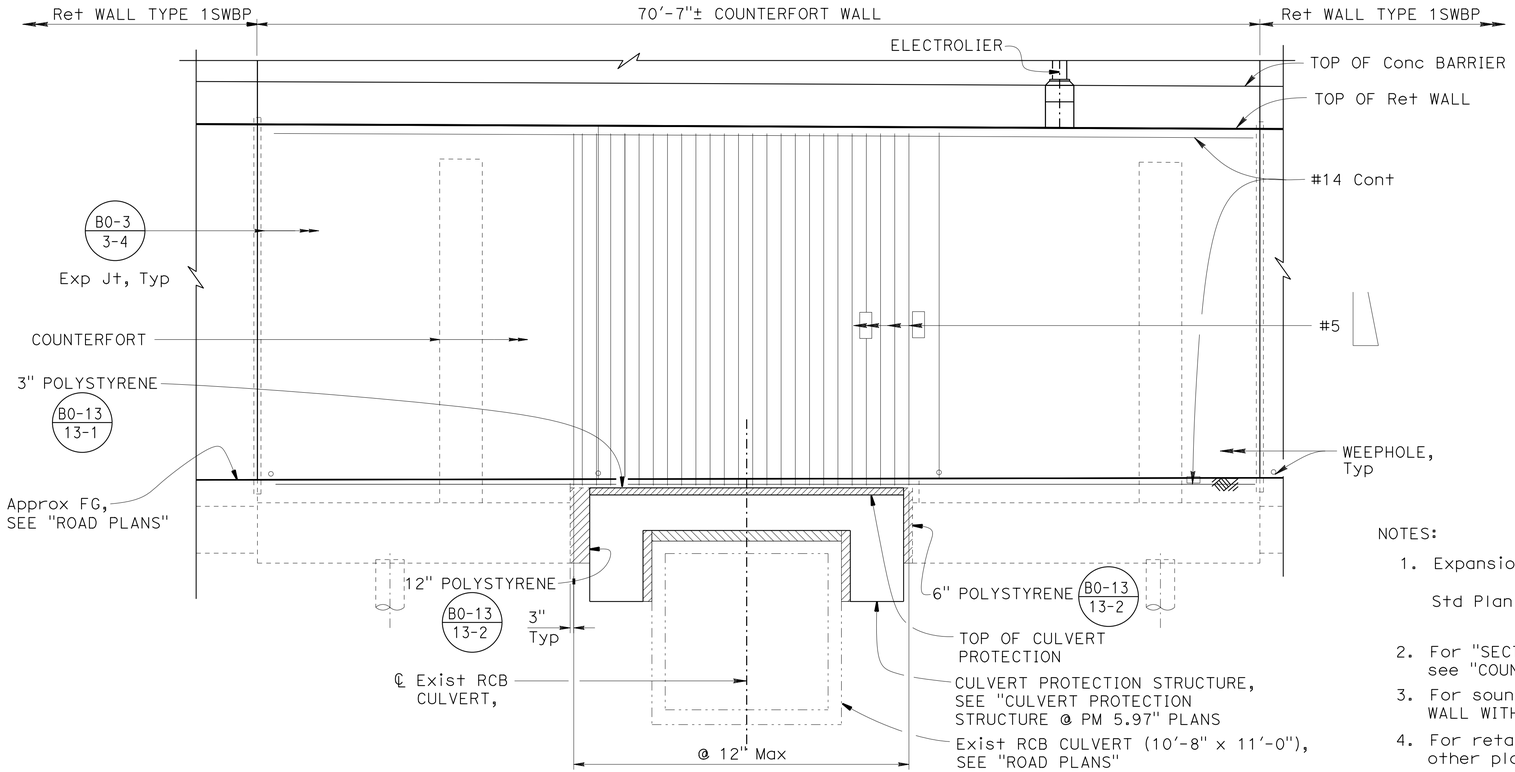

DEVELOPED MIRRORED ELEVATION

3/16" = 1'-0"

NOTES:

1. Expansion joints, weaken planes and weepholes shall be placed per Std Plan B0-3 / 3-3. Waterstop shall be extended 6" into concrete barrier.
2. For "SECTION A-A", "SECTION B-B" & "VIEW C-C", see "COUNTERFORT DETAILS NO. 2" sheet.
3. For sound wall and barrier details not shown, see "MASONRY BLOCK SOUND WALL WITH BARRIER ON RETAINING WALL DETAILS NO. 1 and NO. 2" sheets.
4. For retaining wall, sound wall and barrier architectural details, see other plan sheets.
5. For pile reinforcement details, see "RETAINING WALL TYPE 1SWBP - DETAILS NO. 2" sheet.
6. All longitudinal dimensions measured along SW LOL.
7. Location of counterfort footing and culvert protection structure to be verified in the field. Adjustments may be made as directed by the Engineer.

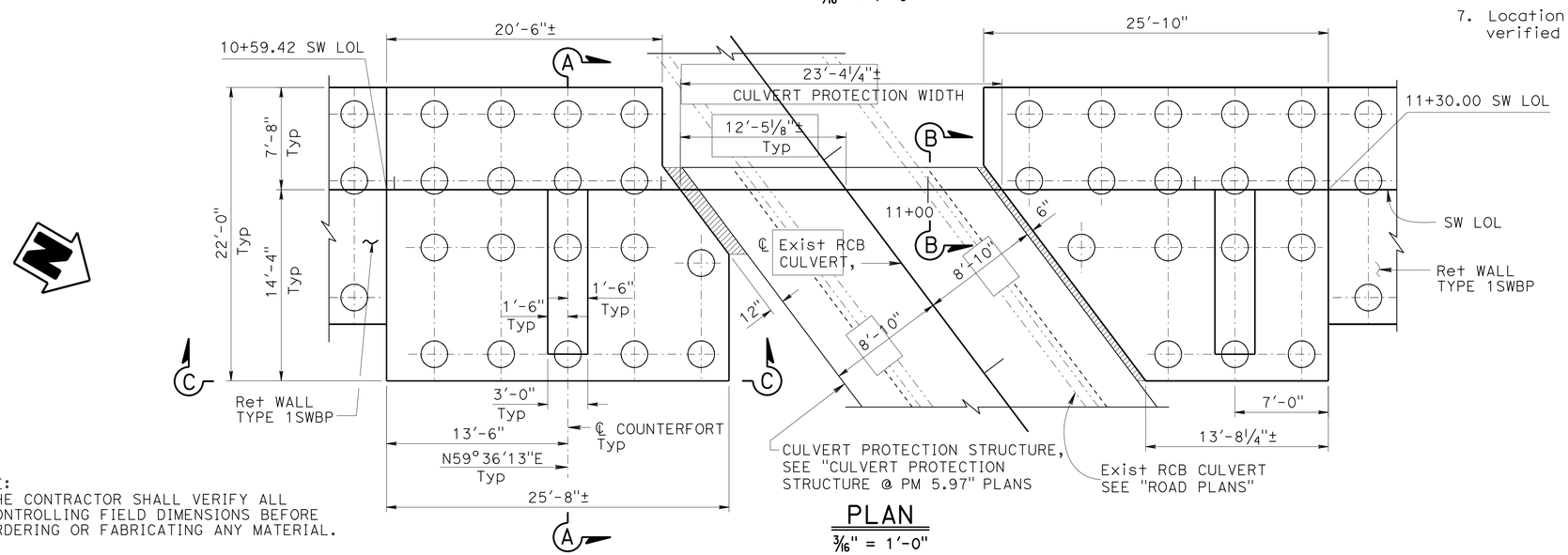

PLAN

3/16" = 1'-0"

LEGEND:

- Indicates 24" CIDH pile

NOTE:
THE CONTRACTOR SHALL VERIFY ALL CONTROLLING FIELD DIMENSIONS BEFORE ORDERING OR FABRICATING ANY MATERIAL.

	BY	CHECKED
DESIGN	Daniel Sessions	Eric Watson
DETAILS	J.Tang / J. Zhou	Eric Watson
QUANTITIES	Keith Stillmunkes	Wendy Hou

STATE OF CALIFORNIA
DEPARTMENT OF TRANSPORTATION

DIVISION OF ENGINEERING SERVICES
STRUCTURE DESIGN
DESIGN BRANCH 1

BRIDGE NO. 53E0212
POST MILE 5.93

SOUND WALL NO. 313
COUNTERFORT DETAILS NO. 1

STRUCTURES DESIGN DETAIL SHEET (ENGLISH) (REV. 09-01-10)

ORIGINAL SCALE IN INCHES FOR REDUCED PLANS 0 1 2 3

UNIT: 3576
PROJECT NUMBER & PHASE: 07000018351
CONTRACT NO.: 07-215954

DISREGARD PRINTS BEARING EARLIER REVISION DATES

REVISION DATES 05/24/12 03/04/13

SHEET 16 OF 48

FILE => sw313-e-o-crwdet01.dgn

USERNAME => s124496 DATE PLOTTED => 26-JUN-2013 TIME PLOTTED => 18:12

DIST	COUNTY	ROUTE	POST MILES TOTAL PROJECT	SHEET No.	TOTAL SHEETS
07	LA	5	0.0/7.6	770	985

P. Vijitakula 12/28/12
REGISTERED CIVIL ENGINEER DATE

6-24-13
PLANS APPROVAL DATE

REGISTERED PROFESSIONAL ENGINEER
P. VIJITAKULA
No. C 54701
Exp. 12-31-13
CIVIL
STATE OF CALIFORNIA

The State of California or its officers or agents shall not be responsible for the accuracy or completeness of electronic copies of this plan sheet.

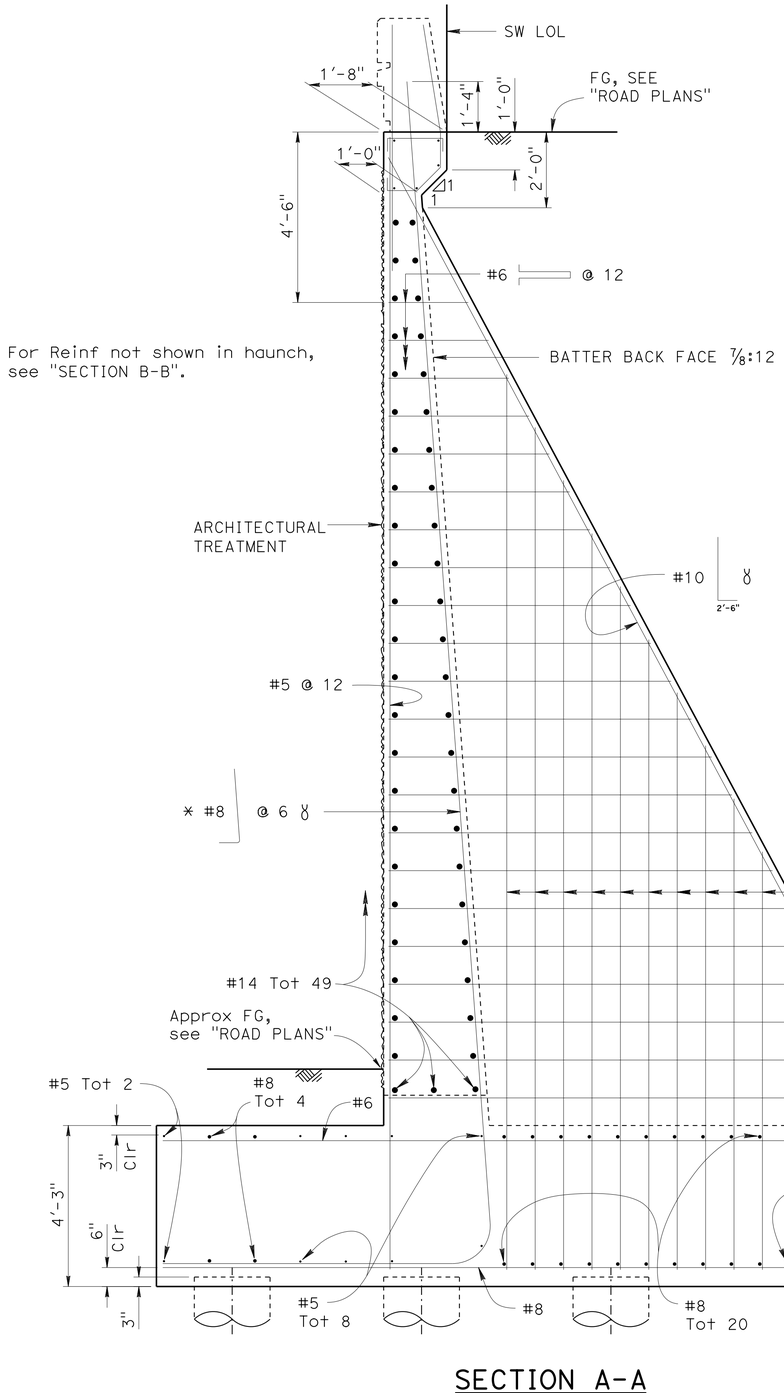

SECTION A-A
1/2" = 1'-0"

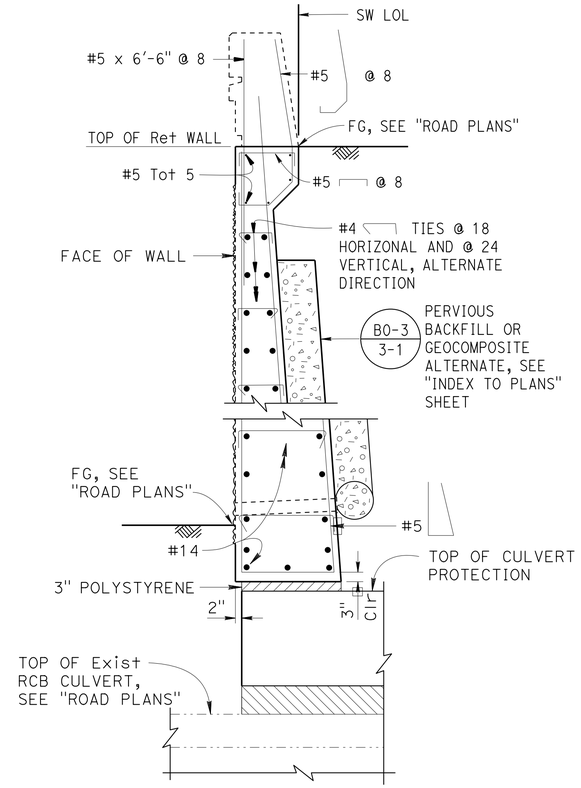

SECTION B-B
1/2" = 1'-0"

NOTES:

1. For location of "SECTION A-A", "SECTION B-B" & "VIEW C-C", see "COUNTERFORT DETAILS NO. 1" sheet.
2. For all other "NOTES", see "COUNTERFORT DETAILS NO. 1" sheet.
3. Footing details shwn for "SECTION A-A" and "VIEW C-C" are typical for both sides of culvert.

LEGEND:

ɣ - Indicates bundled bar

* - Only within limits of footing

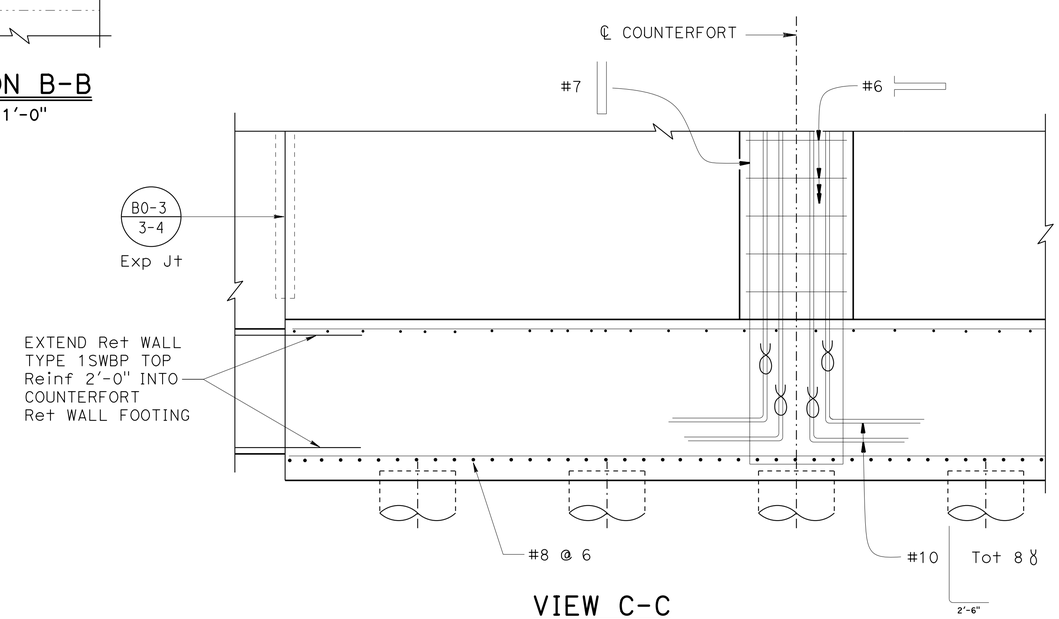

VIEW C-C
1/2" = 1'-0"

DESIGN	BY Daniel Sessions	CHECKED Eric Watson	
DETAILS	BY J.Tang / J. Zhou	CHECKED Eric Watson	
QUANTITIES	BY Keith Stillmunkes	CHECKED Wendy Hou	

STATE OF CALIFORNIA
DEPARTMENT OF TRANSPORTATION

DIVISION OF ENGINEERING SERVICES
STRUCTURE DESIGN
DESIGN BRANCH 1

BRIDGE NO. 53E0212
POST MILE 5.93

SOUND WALL NO. 313
COUNTERFORT DETAILS NO. 2

STRUCTURES DESIGN DETAIL SHEET (ENGLISH) (REV. 09-01-10)

ORIGINAL SCALE IN INCHES FOR REDUCED PLANS 0 1 2 3

UNIT: 3576
PROJECT NUMBER & PHASE: 07000018351
CONTRACT NO.: 07-215954

DISREGARD PRINTS BEARING EARLIER REVISION DATES

REVISION DATES 05/09/12 07/24/12 03/05/13

SHEET 17 OF 48

FILE => sw313-e-o-crwdet02.dgn

USERNAME => s124496 DATE PLOTTED => 26-JUN-2013 TIME PLOTTED => 18:12

DIST	COUNTY	ROUTE	POST MILES TOTAL PROJECT	SHEET No.	TOTAL SHEETS
07	LA	5	0.0/7.6	771	985

P. Vijitakula 12/28/12
REGISTERED CIVIL ENGINEER DATE

6-24-13
PLANS APPROVAL DATE

REGISTERED PROFESSIONAL ENGINEER P. VIJITAKULA No. C 54701 Exp. 12-31-13 CIVIL STATE OF CALIFORNIA

The State of California or its officers or agents shall not be responsible for the accuracy or completeness of electronic copies of this plan sheet.

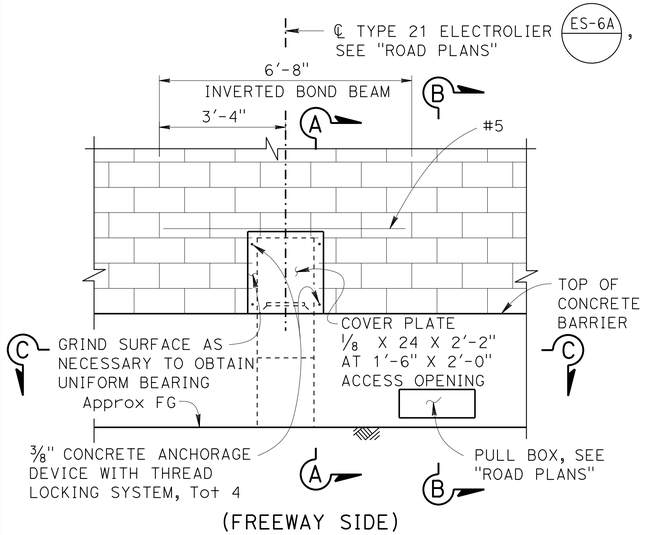

ELEVATION
½" = 1'-0"

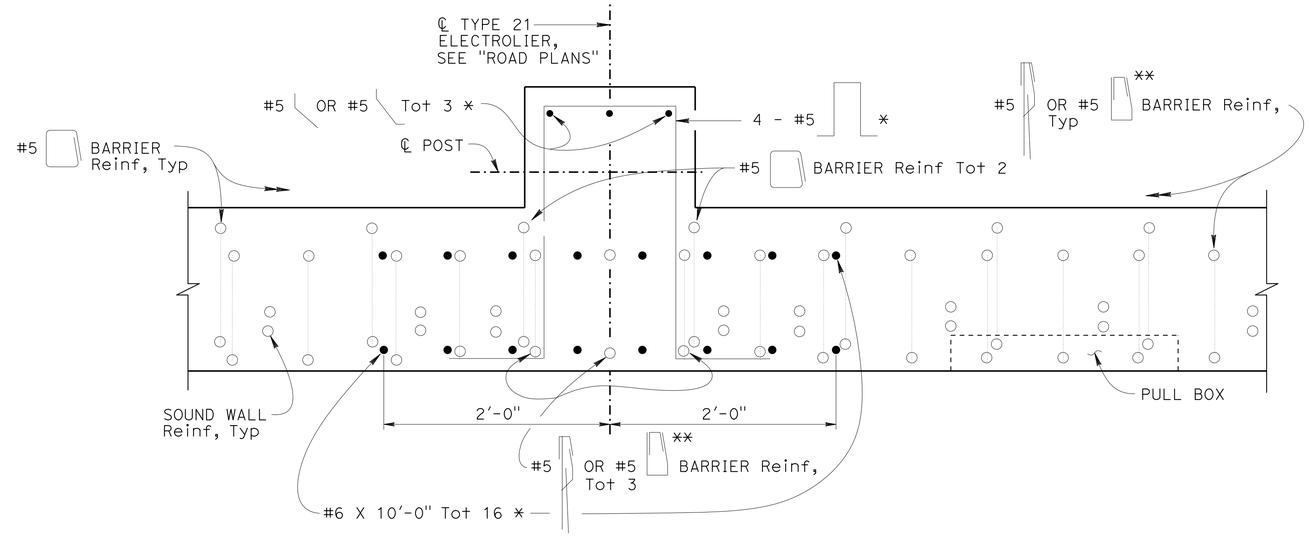

SECTION C-C
1½" = 1'-0"

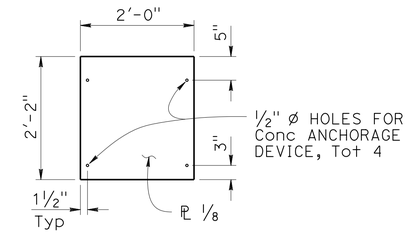

NOTE: Paint cover ℗ to match color of masonry blocks

COVER PLATE
¾" = 1'-0"

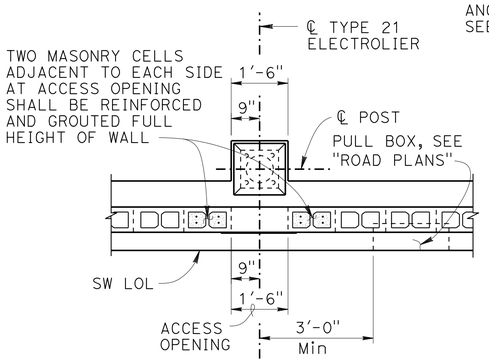

PLAN
½" = 1'-0"

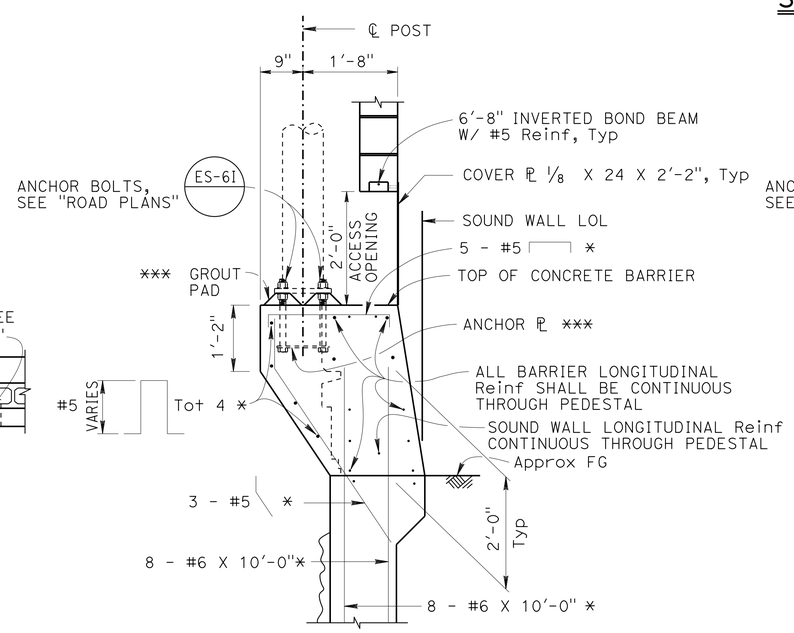

RETAINING WALL

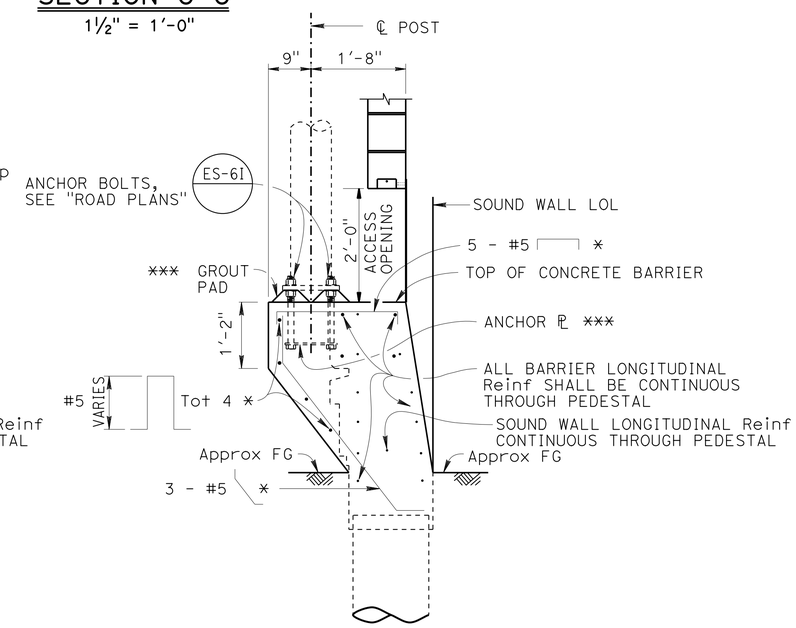

BARRIER TYPE 736SV

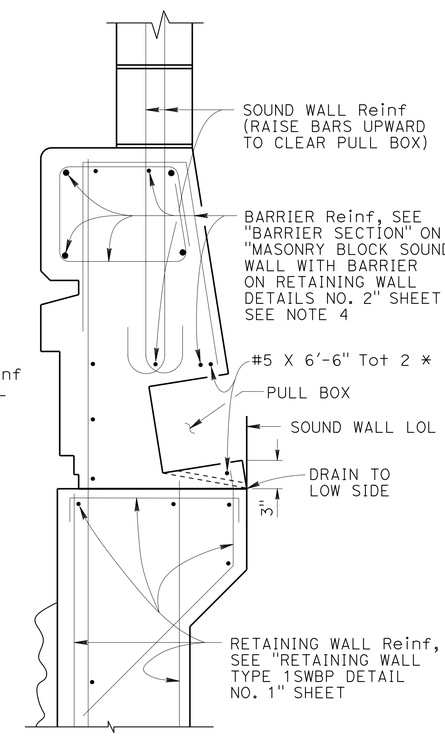

NOTE: Section on Ret Wall shown, Pull Box section on Type 736SV (Mod) similar.

SECTION B-B
1½" = 1'-0"

NOTES:

1. For locations of electroliers, see "STRUCTURE PLAN" sheets.
2. For electrolier and electrical details, see "ROAD PLANS".
3. The maximum number of conduits in the barrier is limited to (2) 2" conduits along with (1) 3" conduit.
4. Concrete barrier on retaining wall shown, concrete barrier type 736S similar. For barrier reinforcement, see "CONCRETE BARRIER TYPE 736S (Mod)" on "INDEX TO PLANS" sheet.

SECTION A-A
¾" = 1'-0"

NOTES:

* - Indicates Reinf is additional to typical barrier and retaining wall Reinf.

** - Barrier Reinf for Concrete Barrier Type 736SV shown shall be spaced at 8" between piles if electrolier pedestal is placed between piles, per approval by Engineer.

*** - For anchor plate and grout pad, see Std Plan ES-6B and "ROAD PLANS".

	BY	CHECKED
DESIGN	Daniel Sessions	Eric Watson
DETAILS	Jie Tang	Eric Watson
QUANTITIES	Keith Stillmunkes	Wendy Hou

STATE OF CALIFORNIA
DEPARTMENT OF TRANSPORTATION

DIVISION OF ENGINEERING SERVICES
STRUCTURE DESIGN
DESIGN BRANCH 1

BRIDGE NO. 53E0212
POST MILE 5.93

SOUND WALL NO. 313
ELECTROLIER PEDESTAL DETAILS

STRUCTURES DESIGN DETAIL SHEET (ENGLISH) (REV. 09-01-10)

ORIGINAL SCALE IN INCHES FOR REDUCED PLANS 0 1 2 3

UNIT: 3576
PROJECT NUMBER & PHASE: 07000018351
CONTRACT NO.: 07-215954

DISREGARD PRINTS BEARING EARLIER REVISION DATES

REVISION DATES 03/12/12 05/01/12 12/19/12 02/26/13

SHEET 18 OF 48

FILE => sw313-e-o-epd.dgn

USERNAME => s124496 DATE PLOTTED => 27-JUN-2013 TIME PLOTTED => 07:04

DIST	COUNTY	ROUTE	POST MILES TOTAL PROJECT	SHEET No.	TOTAL SHEETS
07	LA	5	0.0/7.6	772	985

P. Vijitakula 12/28/12
REGISTERED CIVIL ENGINEER DATE

6-24-13
PLANS APPROVAL DATE

REGISTERED PROFESSIONAL ENGINEER P. VIJITAKULA No. C 54701 Exp. 12-31-13 CIVIL STATE OF CALIFORNIA

The State of California or its officers or agents shall not be responsible for the accuracy or completeness of electronic copies of this plan sheet.

NOTES:

1. For location of ramp meter, see "STRUCTURE PLAN NO 7" sheet.
2. For ramp meter and electrical details, see "ROAD PLANS".
3. For reinforcement details not shown at pull box, see "SECTION B-B" on "ELECTROLIER PEDESTAL DETAILS" sheet.
4. The maximum number of conduits in the barrier is limited to (2) 2" conduits along with (1) 3" conduit.

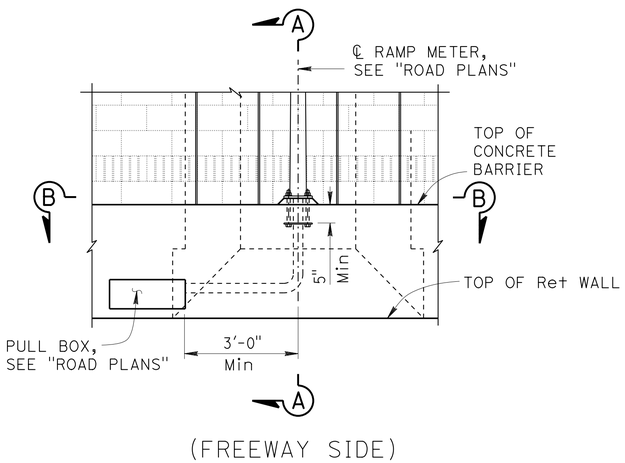

ELEVATION
½" = 1'-0"

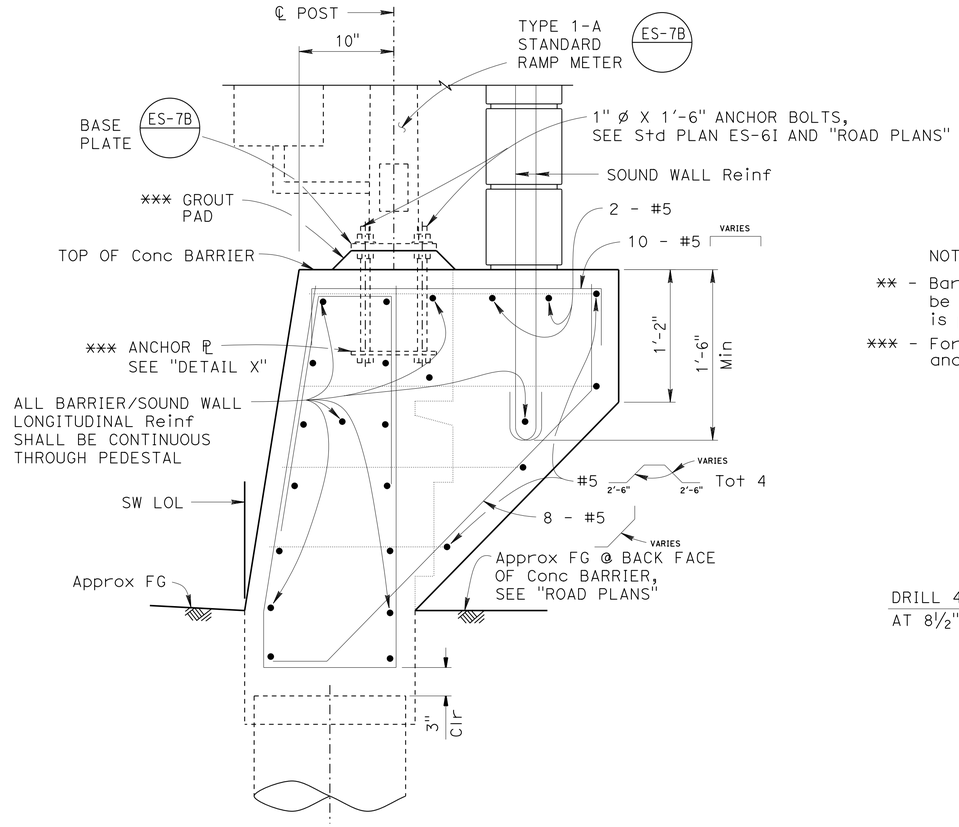

SECTION A-A
1½" = 1'-0"

NOTES:

** - Barrier Reinf for Concrete Barrier Type 736SV shown shall be spaced at 8" between piles if ramp meter pedestal is placed between piles, per approval by Engineer.

*** - For anchor plate and grout pad, see Std Plan ES-6B and "ROAD PLANS".

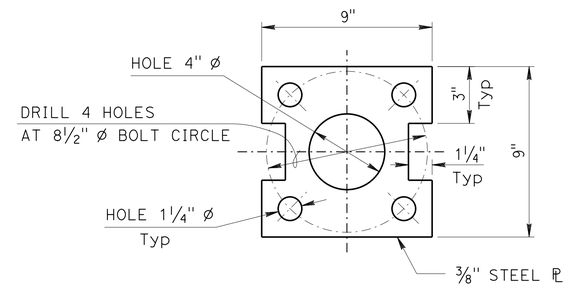

DETAIL X
3" = 1'-0"

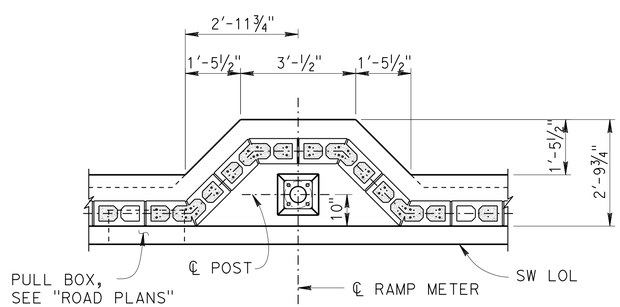

PLAN
½" = 1'-0"

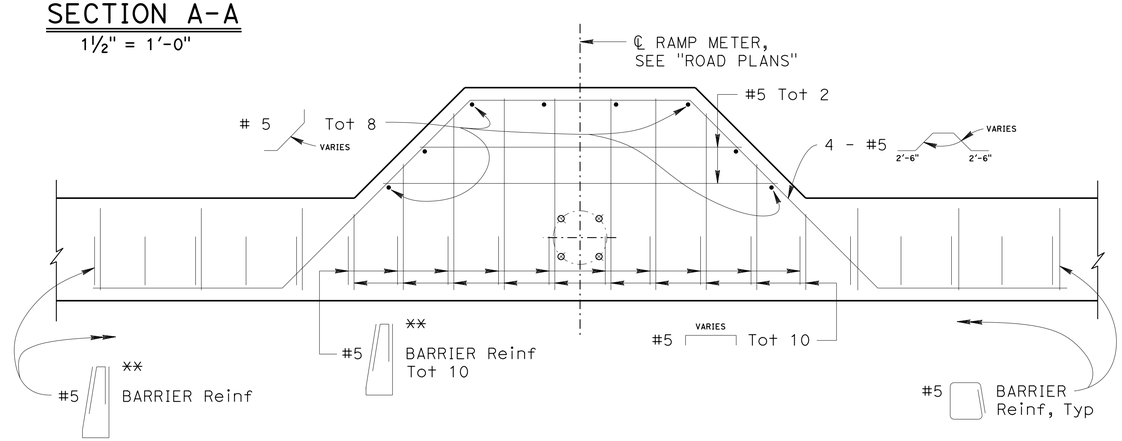

SECTION B-B
1" = 1'-0"

DESIGN	BY Daniel Sessions	CHECKED Eric Watson	
DETAILS	BY J.Tang / J. Zhou	CHECKED Eric Watson	
QUANTITIES	BY Keith Stillmunkes	CHECKED Wendy Hou	

STATE OF CALIFORNIA
DEPARTMENT OF TRANSPORTATION

DIVISION OF ENGINEERING SERVICES
STRUCTURE DESIGN
DESIGN BRANCH 1

BRIDGE NO. 53E0212
POST MILE 5.93

SOUND WALL NO. 313
RAMP METER PEDESTAL DETAILS

STRUCTURES DESIGN DETAIL SHEET (ENGLISH) (REV. 09-01-10)

ORIGINAL SCALE IN INCHES FOR REDUCED PLANS 0 1 2 3

UNIT: 3576
PROJECT NUMBER & PHASE: 07000018351
CONTRACT NO.: 07-215954

DISREGARD PRINTS BEARING EARLIER REVISION DATES

REVISION DATES 05/31/12 03/05/13 02/26/13

SHEET 19 OF 48

FILE => sw313-e-o-rmpd.dgn

USERNAME => s124496 DATE PLOTTED => 26-JUN-2013 TIME PLOTTED => 18:13

NOTES:
1. For "SECTION A-A", "SECTION B-B" and "SECTION C-C", see "RETAINING WALL ARCHITECTURAL DETAILS NO. 2" sheet.
2. For barrier architectural details, see "CONCRETE BARRIER ARCHITECTURAL DETAILS" sheet.
3. For sound wall architectural details, see "SOUND WALL ARCHITECTURAL DETAILS" sheet.
4. For pilaster and corbel details, see "PILASTER ARCHITECTURAL DETAILS" and "PILASTER STRUCTURAL DETAILS" sheets.
5. All longitudinal dimensions are measured along SW LOL.

DIST	COUNTY	ROUTE	POST MILES TOTAL PROJECT	SHEET No.	TOTAL SHEETS
07	LA	5	0.0/7.6	773	985

P. Vijitakula 12/28/12
REGISTERED CIVIL ENGINEER DATE

6-24-13
PLANS APPROVAL DATE

REGISTERED PROFESSIONAL ENGINEER P. VIJITAKULA No. C 54701 Exp. 12-31-13 CIVIL STATE OF CALIFORNIA

The State of California or its officers or agents shall not be responsible for the accuracy or completeness of electronic copies of this plan sheet.

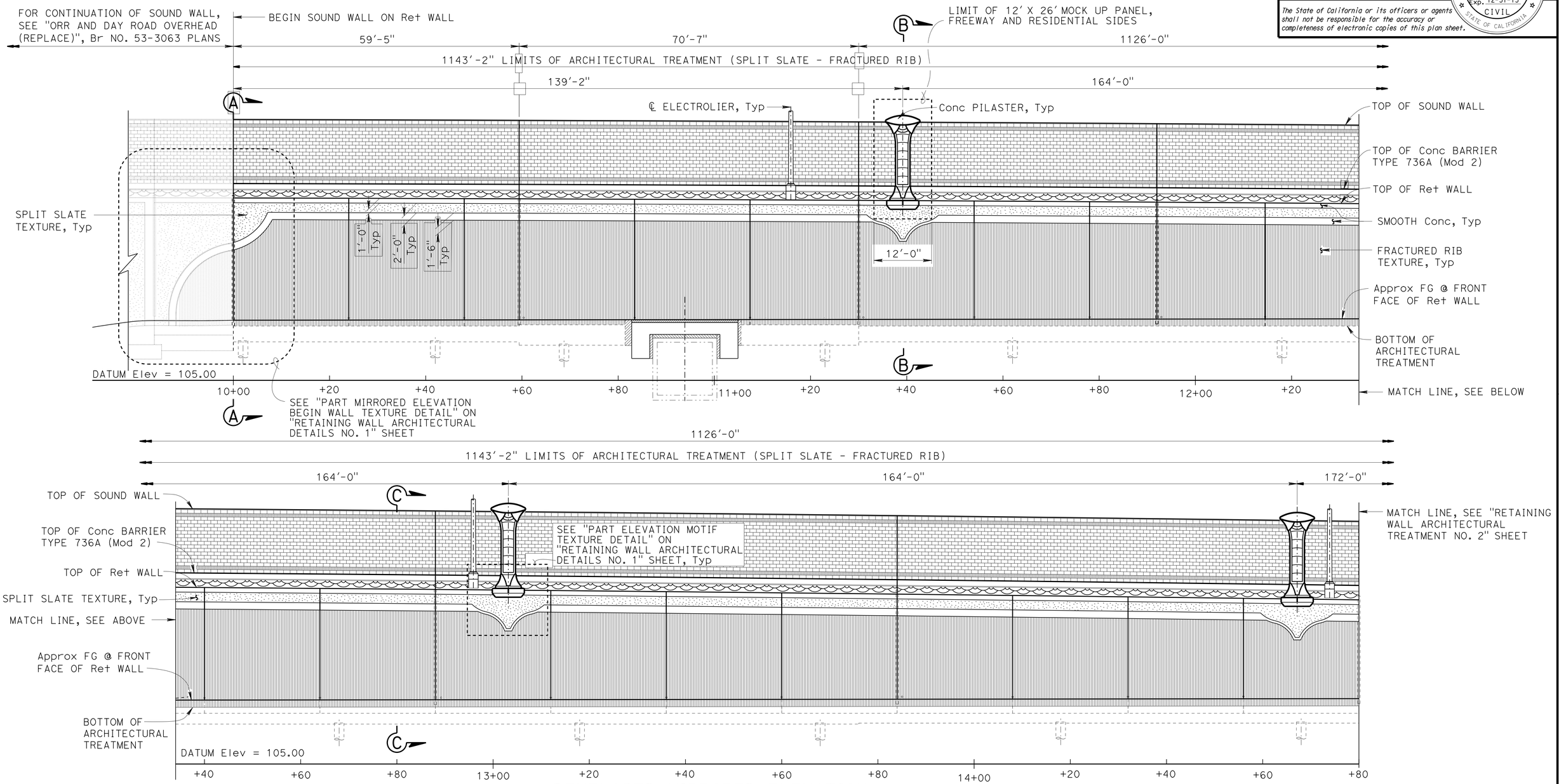

DEVELOPED MIRRORED ELEVATION

1" = 10'

	BY	CHECKED
DESIGN	Isaac Tasabia	Javier Chavez
DETAILS	J.Tang / J. Zhou	D. Sessions / E. Watson
QUANTITIES	Keith Stillmunkes	Wendy Hou

STATE OF CALIFORNIA
DEPARTMENT OF TRANSPORTATION

DIVISION OF ENGINEERING SERVICES
STRUCTURE DESIGN
DESIGN BRANCH 1

BRIDGE NO. 53E0212
POST MILE 5.93

SOUND WALL NO. 313
RETAINING WALL ARCHITECTURAL TREATMENT NO. 1

STRUCTURES DESIGN DETAIL SHEET (ENGLISH) (REV. 09-01-10)

ORIGINAL SCALE IN INCHES FOR REDUCED PLANS 0 1 2 3

UNIT: 3576
PROJECT NUMBER & PHASE: 07000018351
CONTRACT NO.: 07-215954

DISREGARD PRINTS BEARING EARLIER REVISION DATES

REVISION DATES: 02/29/12 05/22/13 03/06/13

SHEET 20 OF 48

FILE => sw313-e-ret-arch01.dgn

USERNAME => s124496 DATE PLOTTED => 26-JUN-2013 TIME PLOTTED => 18:13

DIST	COUNTY	ROUTE	POST MILES TOTAL PROJECT	SHEET No.	TOTAL SHEETS
07	LA	5	0.0/7.6	774	985

P. Vijitakula 12/28/12
REGISTERED CIVIL ENGINEER DATE

6-24-13
PLANS APPROVAL DATE

REGISTERED PROFESSIONAL ENGINEER
P. VIJITAKULA
No. C 54701
Exp. 12-31-13
CIVIL
STATE OF CALIFORNIA

The State of California or its officers or agents shall not be responsible for the accuracy or completeness of electronic copies of this plan sheet.

For "NOTES", see "RETAINING WALL ARCHITECTURAL TREATMENT NO. 1" sheet.

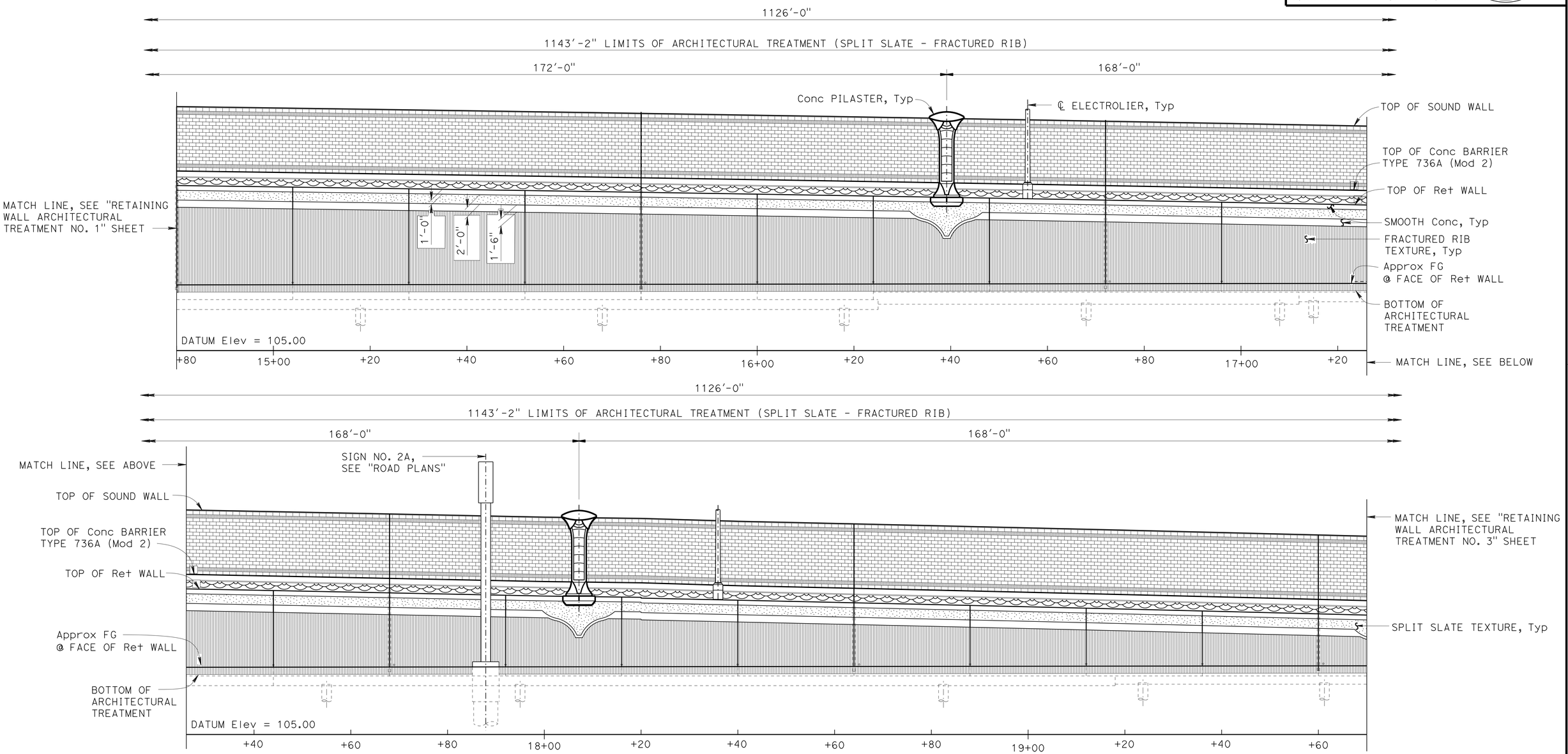

DEVELOPED MIRRORED ELEVATION

1" = 10'

	BY	CHECKED
DESIGN	Isaac Tasabia	Javier Chavez
DETAILS	J. Tang / J. Zhou	D.Sessions / E. Watson
QUANTITIES	Keith Stillmunkes	Wendy Hou

STATE OF CALIFORNIA
DEPARTMENT OF TRANSPORTATION

DIVISION OF ENGINEERING SERVICES
STRUCTURE DESIGN
DESIGN BRANCH 1

BRIDGE NO. 53E0212
POST MILE 5.93

SOUND WALL NO. 313

RETAINING WALL ARCHITECTURAL TREATMENT NO. 2

STRUCTURES DESIGN DETAIL SHEET (ENGLISH) (REV. 09-01-10)

ORIGINAL SCALE IN INCHES FOR REDUCED PLANS 0 1 2 3

UNIT: 3576
PROJECT NUMBER & PHASE: 07000018351
CONTRACT NO.: 07-215954

DISREGARD PRINTS BEARING EARLIER REVISION DATES

REVISION DATES: 03/04/12 03/05/13 02/26/13

SHEET 21 OF 48

FILE => sw313-e-ret-arch02.dgn

USERNAME => s124496 DATE PLOTTED => 26-JUN-2013 TIME PLOTTED => 18:13

DIST	COUNTY	ROUTE	POST MILES TOTAL PROJECT	SHEET No.	TOTAL SHEETS
07	LA	5	0.0/7.6	775	985

P. Vijitakula 12/28/12
REGISTERED CIVIL ENGINEER DATE

6-24-13
PLANS APPROVAL DATE

REGISTERED PROFESSIONAL ENGINEER
P. VIJITAKULA
No. C 54701
Exp. 12-31-13
CIVIL
STATE OF CALIFORNIA

The State of California or its officers or agents shall not be responsible for the accuracy or completeness of electronic copies of this plan sheet.

NOTES:

1. For "SECTION D-D", see "RETAINING WALL ARCHITECTURAL DETAILS NO. 2" sheet.
2. For all other "NOTES", see "RETAINING WALL ARCHITECTURAL TREATMENT NO. 1" sheet.

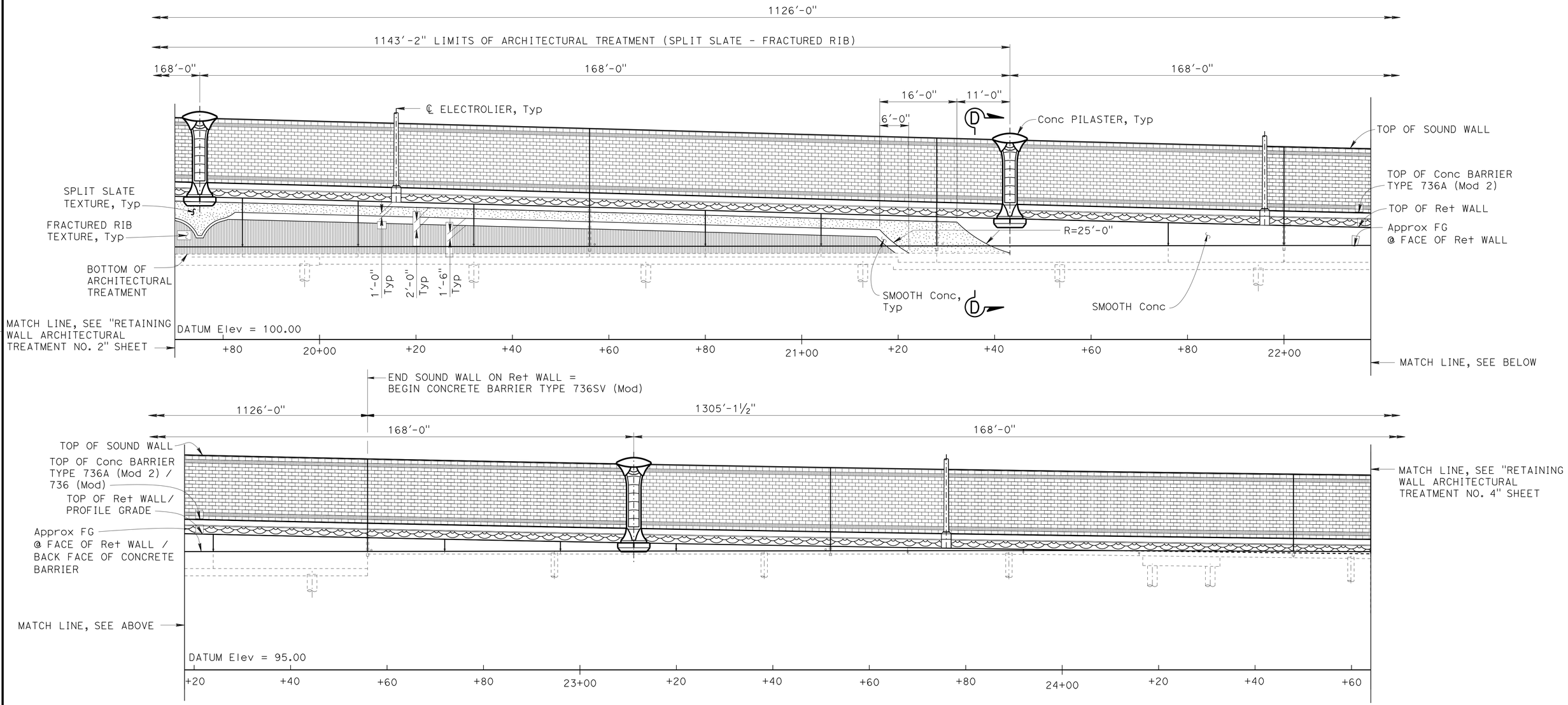

DEVELOPED MIRRORED ELEVATION

1" = 10'

	BY	CHECKED
DESIGN	Isaac Tasabia	Javier Chavez
DETAILS	J. Tang / J. Zhou	D. Sessions / E. Watson
QUANTITIES	Keith Stillmunkes	Wendy Hou

STATE OF CALIFORNIA
DEPARTMENT OF TRANSPORTATION

DIVISION OF ENGINEERING SERVICES
STRUCTURE DESIGN
DESIGN BRANCH 1

BRIDGE NO. 53E0212
POST MILE 5.93

SOUND WALL NO. 313

RETAINING WALL ARCHITECTURAL TREATMENT NO. 3

STRUCTURES DESIGN DETAIL SHEET (ENGLISH) (REV. 09-01-10)

ORIGINAL SCALE IN INCHES FOR REDUCED PLANS 0 1 2 3

UNIT: 3576
PROJECT NUMBER & PHASE: 07000018351
CONTRACT NO.: 07-215954

DISREGARD PRINTS BEARING EARLIER REVISION DATES

REVISION DATES: 03/06/12 03/05/13 03/26/13

SHEET 22 OF 48

FILE => sw313-e-ret-arch03.dgn

USERNAME => s124496 DATE PLOTTED => 26-JUN-2013 TIME PLOTTED => 18:13

DIST	COUNTY	ROUTE	POST MILES TOTAL PROJECT	SHEET No.	TOTAL SHEETS
07	LA	5	0.0/7.6	776	985

P. Vijitakula 12/28/12
REGISTERED CIVIL ENGINEER DATE

6-24-13
PLANS APPROVAL DATE

REGISTERED PROFESSIONAL ENGINEER
P. VIJITAKULA
No. C 54701
Exp. 12-31-13
CIVIL
STATE OF CALIFORNIA

The State of California or its officers or agents shall not be responsible for the accuracy or completeness of electronic copies of this plan sheet.

For "NOTES", see "RETAINING WALL ARCHITECTURAL TREATMENT NO. 1" sheet.

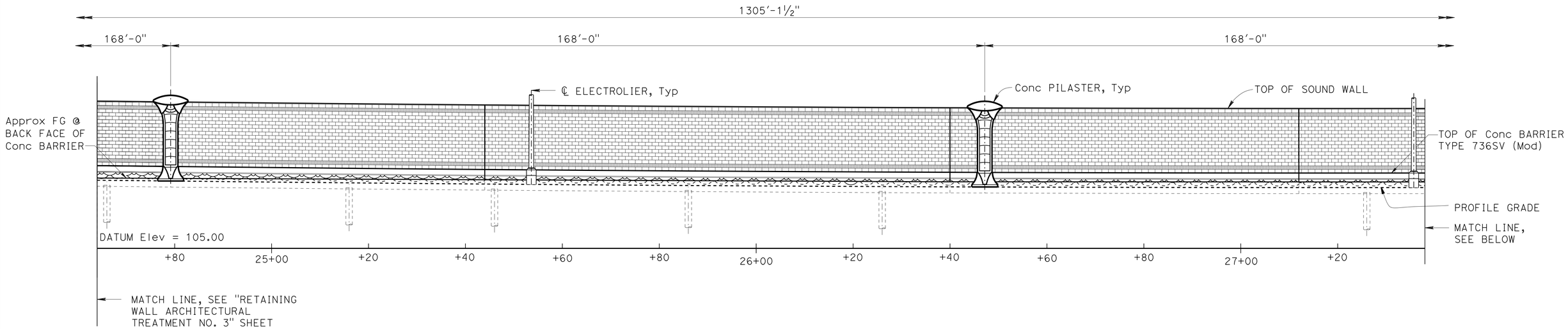

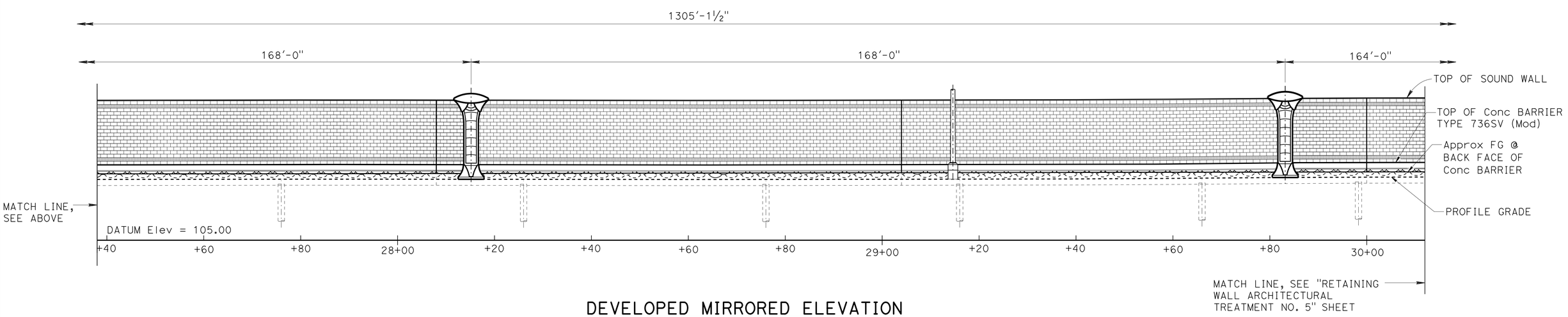

DEVELOPED MIRRORED ELEVATION

1" = 10'

DESIGN	BY Isaac Tasabia	CHECKED Javier Chavez	
DETAILS	BY J. Tang / J. Zhou	CHECKED D. Sessions / E. Watson	
QUANTITIES	BY Keith Stillmunkes	CHECKED Wendy Hou	

STATE OF CALIFORNIA
DEPARTMENT OF TRANSPORTATION

DIVISION OF ENGINEERING SERVICES
STRUCTURE DESIGN
DESIGN BRANCH 1

BRIDGE NO. 53E0212
POST MILE 5.93

SOUND WALL NO. 313
RETAINING WALL ARCHITECTURAL TREATMENT NO. 4

STRUCTURES DESIGN DETAIL SHEET (ENGLISH) (REV. 09-01-10)

ORIGINAL SCALE IN INCHES FOR REDUCED PLANS 0 1 2 3

UNIT: 3576
PROJECT NUMBER & PHASE: 07000018351
CONTRACT NO.: 07-215954

DISREGARD PRINTS BEARING EARLIER REVISION DATES

REVISION DATES: 03/08/12 03/05/13 03/08/13

SHEET 23 OF 48

FILE => sw313-e-ret-arch04.dgn

USERNAME => s124496 DATE PLOTTED => 26-JUN-2013 TIME PLOTTED => 18:25

DIST	COUNTY	ROUTE	POST MILES TOTAL PROJECT	SHEET No.	TOTAL SHEETS
07	LA	5	0.0/7.6	777	985

P. Vijitakula 12/28/12
REGISTERED CIVIL ENGINEER DATE

6-24-13
PLANS APPROVAL DATE

REGISTERED PROFESSIONAL ENGINEER
P. VIJITAKULA
No. C 54701
Exp. 12-31-13
CIVIL
STATE OF CALIFORNIA

The State of California or its officers or agents shall not be responsible for the accuracy or completeness of electronic copies of this plan sheet.

For "NOTES", see "RETAINING WALL ARCHITECTURAL TREATMENT NO. 1" sheet.

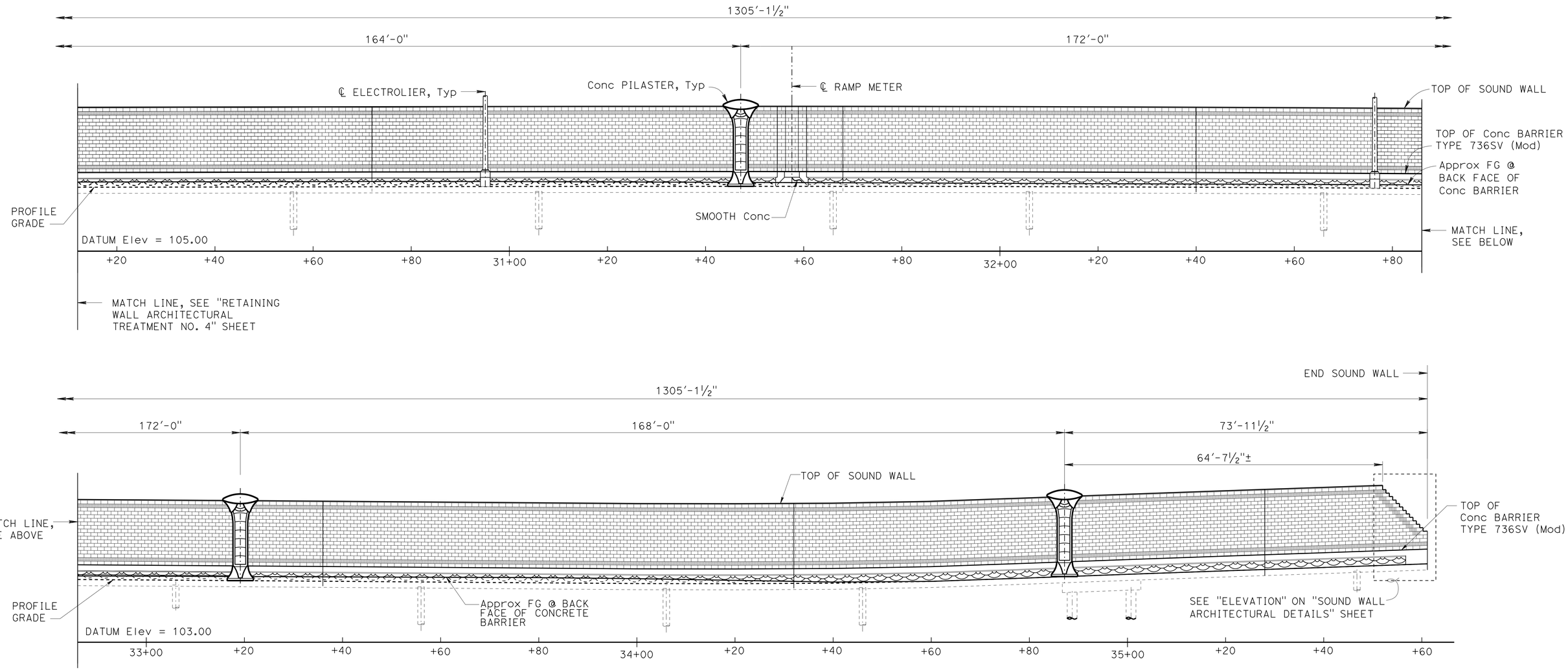

DEVELOPED MIRRORED ELEVATION

1" = 10'

	BY	CHECKED
DESIGN	Isaac Tasabia	Javier Chavez
DETAILS	J. Tang / J. Zhou	D. Sessions / E. Watson
QUANTITIES	Keith Stillmunkes	Wendy Hou

STATE OF CALIFORNIA
DEPARTMENT OF TRANSPORTATION

DIVISION OF ENGINEERING SERVICES
STRUCTURE DESIGN
DESIGN BRANCH 1

BRIDGE NO. 53E0212
POST MILE 5.93

SOUND WALL NO. 313
RETAINING WALL ARCHITECTURAL TREATMENT NO. 5

STRUCTURES DESIGN DETAIL SHEET (ENGLISH) (REV. 09-01-10)

ORIGINAL SCALE IN INCHES FOR REDUCED PLANS 0 1 2 3

UNIT: 3576
PROJECT NUMBER & PHASE: 07000018351
CONTRACT NO.: 07-215954

DISREGARD PRINTS BEARING EARLIER REVISION DATES

REVISION DATES: 03/02/12 03/05/13 02/24/13

SHEET 24 OF 48

FILE => sw313-e-ret-arch05.dgn

USERNAME => s124496 DATE PLOTTED => 27-JUN-2013 TIME PLOTTED => 07:04

DIST	COUNTY	ROUTE	POST MILES TOTAL PROJECT	SHEET No.	TOTAL SHEETS
07	LA	5	0.0/7.6	778	985

P. Vijitakula 12/28/12
REGISTERED CIVIL ENGINEER DATE

6-24-13
PLANS APPROVAL DATE

REGISTERED PROFESSIONAL ENGINEER P. VIJITAKULA No. C 54701 Exp. 12-31-13 CIVIL STATE OF CALIFORNIA

The State of California or its officers or agents shall not be responsible for the accuracy or completeness of electronic copies of this plan sheet.

NOTES:

1. For locations of "MOTIF TEXTURE DETAIL" and "BEGIN WALL TEXTURE DETAIL", see "RETAINING WALL ARCHITECTURAL TREATMENT" sheets.
2. For "DETAIL B", "DETAIL C" and other retaining wall architectural details not shown see, "RETAINING WALL ARCHITECTURAL DETAILS NO. 2" sheet.
3. For sound wall architectural treatment, see "SOUND WALL ARCHITECTURAL DETAILS" sheet.
4. For concrete barrier architectural details, see "CONCRETE BARRIER ARCHITECTURAL DETAILS" sheet.
5. For pilaster and corbel details, see "PILASTER ARCHITECTURAL DETAILS" and "PILASTER STRUCTURAL DETAILS" sheets.

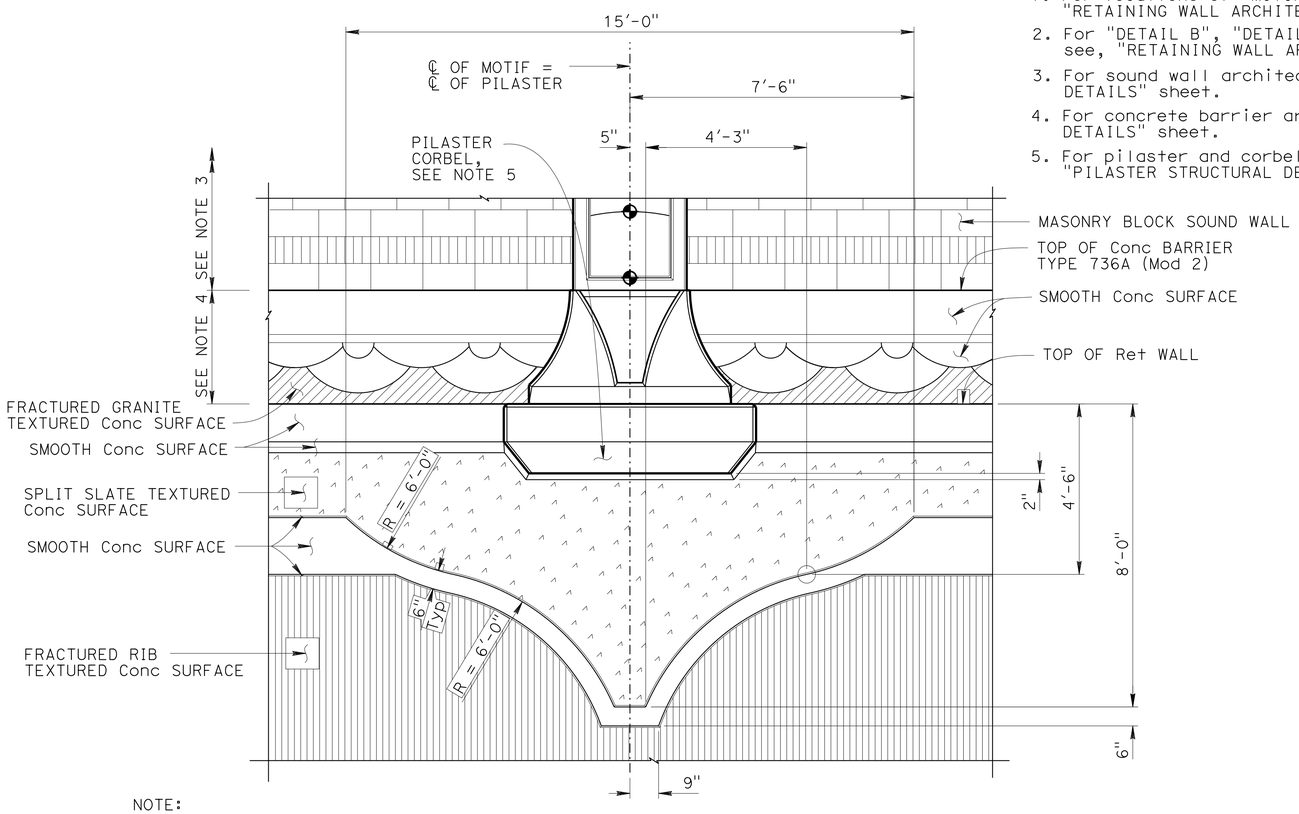

NOTE:
All dimensions symmetrical about ℄ of motif

PART ELEVATION
MOTIF TEXTURE DETAIL

½" = 1'-0"

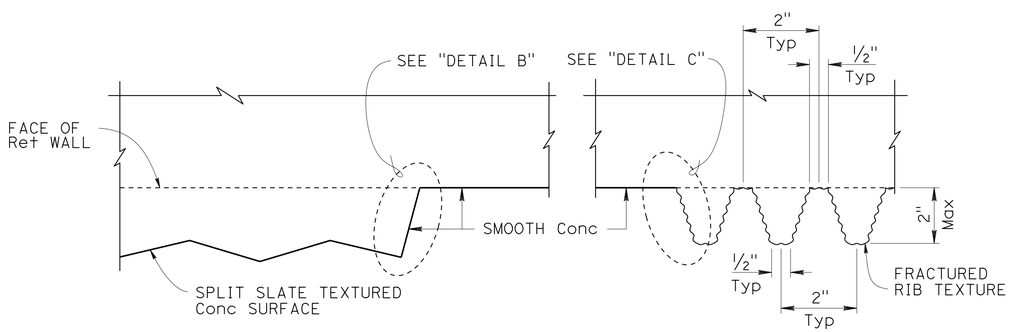

SECTION E-E

6" = 1'-0"

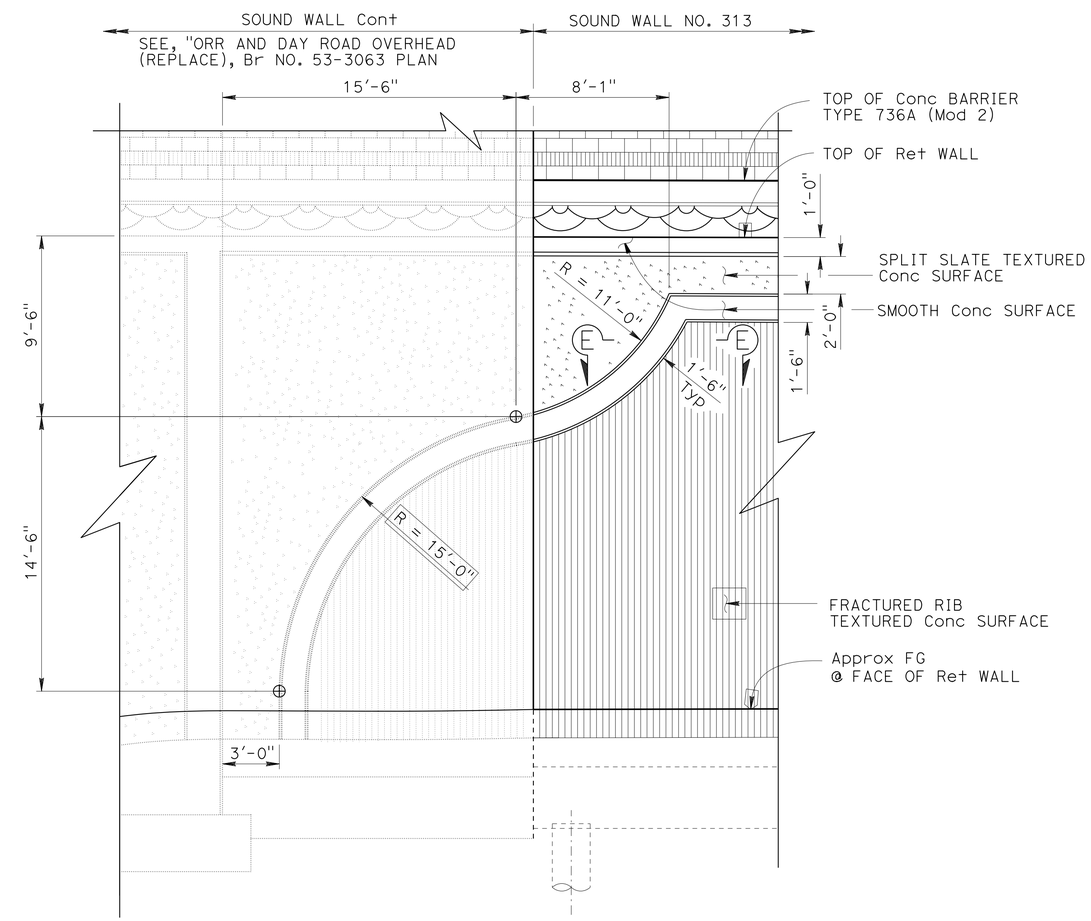

PART MIRRORED ELEVATION
BEGIN WALL TEXTURE DETAIL

¼" = 1'-0"

DESIGN	BY Isaac Tasabia	CHECKED Javier Chavez	
DETAILS	BY J. Tang / J. Zhou	CHECKED D. Sessions / E. Watson	
QUANTITIES	BY Keith Stillmunkes	CHECKED Wendy Hou	

STATE OF CALIFORNIA
DEPARTMENT OF TRANSPORTATION

DIVISION OF ENGINEERING SERVICES
STRUCTURE DESIGN
DESIGN BRANCH 1

BRIDGE NO. 53E0212
POST MILE 5.93

SOUND WALL NO. 313
RETAINING WALL ARCHITECTURAL DETAILS NO. 1

STRUCTURES DESIGN DETAIL SHEET (ENGLISH) (REV. 09-01-10)

ORIGINAL SCALE IN INCHES FOR REDUCED PLANS 0 1 2 3

UNIT: 3576
PROJECT NUMBER & PHASE: 07000018351 CONTRACT NO.: 07-215954

DISREGARD PRINTS BEARING EARLIER REVISION DATES

REVISION DATES: 03/02/12 03/06/13 02/28/13

SHEET 25 OF 48

FILE => sw313-e-ret-arch-dt01.dgn

USERNAME => s124496 DATE PLOTTED => 26-JUN-2013 TIME PLOTTED => 18:25

DIST	COUNTY	ROUTE	POST MILES TOTAL PROJECT	SHEET No.	TOTAL SHEETS
07	LA	5	0.0/7.6	779	985

P. Vijitakula 12/28/12
REGISTERED CIVIL ENGINEER DATE

6-24-13
PLANS APPROVAL DATE

REGISTERED PROFESSIONAL ENGINEER P. VIJITAKULA No. C 54701 Exp. 12-31-13 CIVIL STATE OF CALIFORNIA

The State of California or its officers or agents shall not be responsible for the accuracy or completeness of electronic copies of this plan sheet.

NOTES:

1. For locations of "SECTION A-A", "SECTION B-B" and "SECTION C-C", see "RETAINING WALL ARCHITECTURAL TREATMENT NO. 1" sheet.
2. For locations of "SECTION D-D", see "RETAINING WALL ARCHITECTURAL TREATMENT NO. 3" sheet.
3. For other retaining architectural details not shown, see "RETAINING WALL ARCHITECTURAL DETAILS NO. 1" sheet.
4. For sound wall architectural details, see "SOUND WALL ARCHITECTURAL DETAILS" sheet.
5. For concrete barrier architectural details, see "CONCRETE BARRIER ARCHITECTURAL DETAILS" sheet.
6. For pilaster and corbel details, see "PILASTER ARCHITECTURAL DETAILS" and "PILASTER STRUCTURAL DETAILS" sheets.

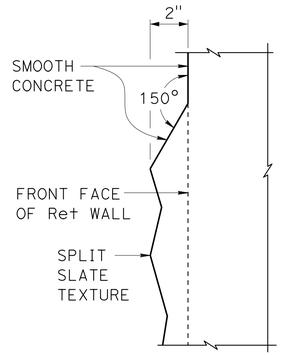

DETAIL A
3" = 1'-0"

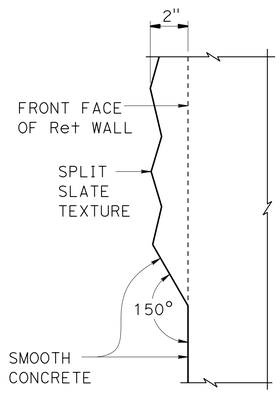

DETAIL B
3" = 1'-0"

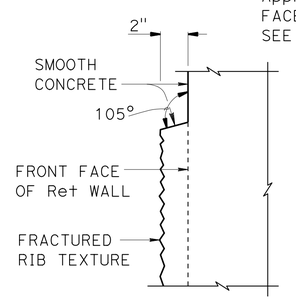

DETAIL C
3" = 1'-0"

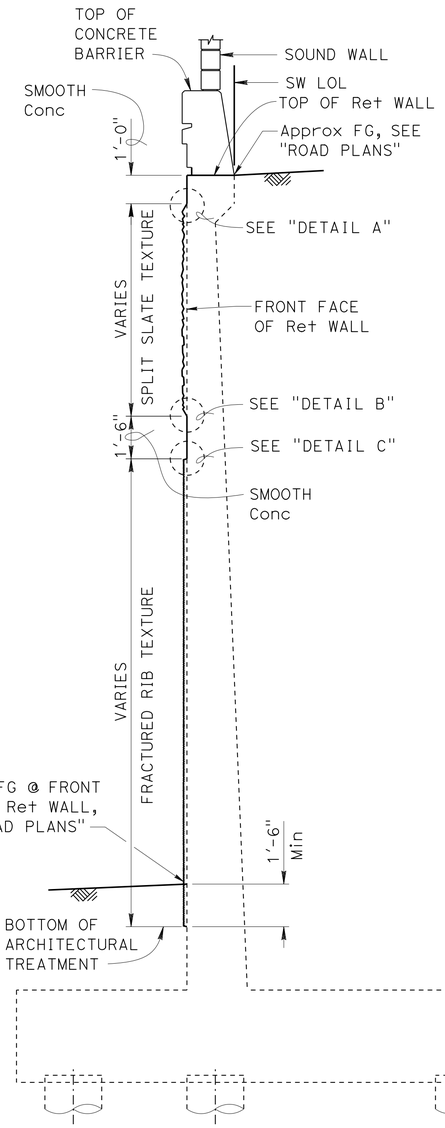

SECTION A-A
3/8" = 1'-0"

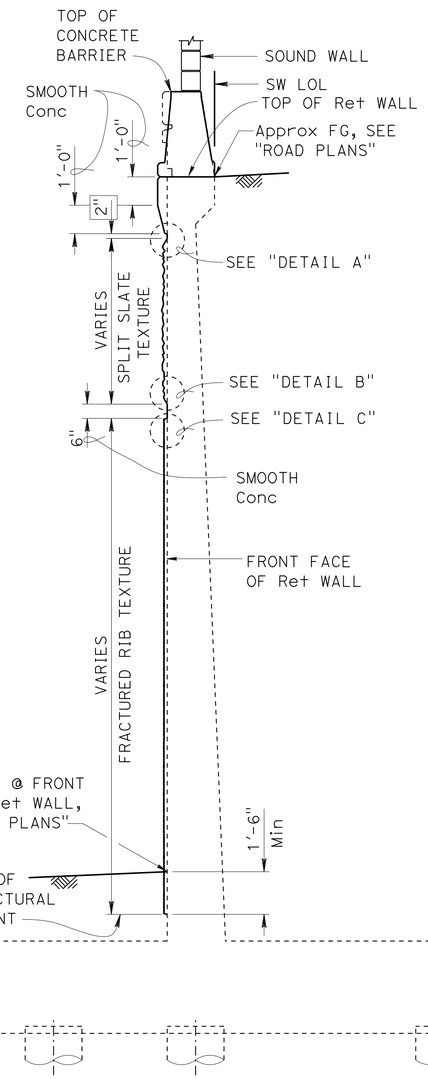

SECTION B-B
3/8" = 1'-0"

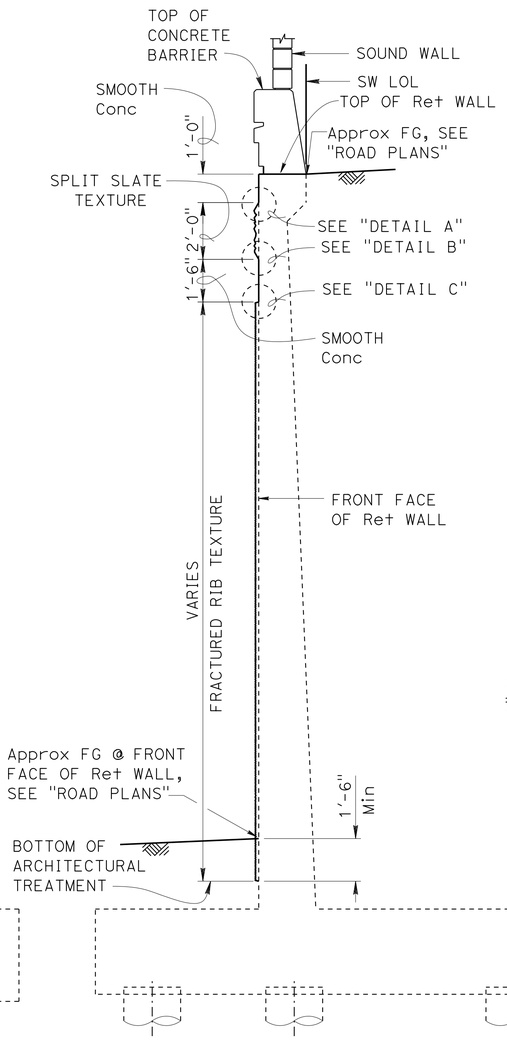

SECTION C-C
3/8" = 1'-0"

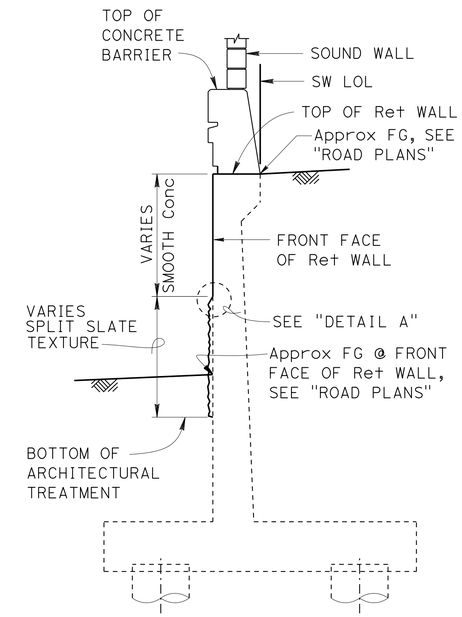

SECTION D-D
3/8" = 1'-0"

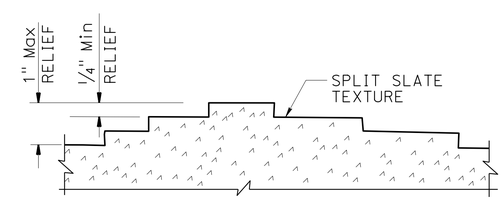

SPLIT SLATE DETAIL
NO SCALE

DESIGN	BY Isaac Tasabia	CHECKED Javier Chavez	
DETAILS	BY J. Tang / J. Zhou	CHECKED D. Sessions / E. Watson	
QUANTITIES	BY Keith Stillmunkes	CHECKED Wendy Hou	

STATE OF CALIFORNIA
DEPARTMENT OF TRANSPORTATION

DIVISION OF ENGINEERING SERVICES
STRUCTURE DESIGN
DESIGN BRANCH 1

BRIDGE NO. 53E0212
POST MILE 5.93

SOUND WALL NO. 313
RETAINING WALL ARCHITECTURAL DETAILS NO. 2

STRUCTURES DESIGN DETAIL SHEET (ENGLISH) (REV. 09-01-10)

ORIGINAL SCALE IN INCHES FOR REDUCED PLANS 0 1 2 3

UNIT: 3576
PROJECT NUMBER & PHASE: 07000018351
CONTRACT NO.: 07-215954

DISREGARD PRINTS BEARING EARLIER REVISION DATES

REVISION DATES 03/13/12 03/06/13 02/28/13

SHEET 26 OF 48

FILE => sw313-e-ret-arch-dt02.dgn

USERNAME => s124496 DATE PLOTTED => 26-JUN-2013 TIME PLOTTED => 18:25

DIST	COUNTY	ROUTE	POST MILES TOTAL PROJECT	SHEET No.	TOTAL SHEETS
07	LA	5	0.0/7.6	780	985

P. Vijitakula 12/28/12
REGISTERED CIVIL ENGINEER DATE

6-24-13
PLANS APPROVAL DATE

REGISTERED PROFESSIONAL ENGINEER
P. VIJITAKULA
No. C 54701
Exp. 12-31-13
CIVIL
STATE OF CALIFORNIA

The State of California or its officers or agents shall not be responsible for the accuracy or completeness of electronic copies of this plan sheet.

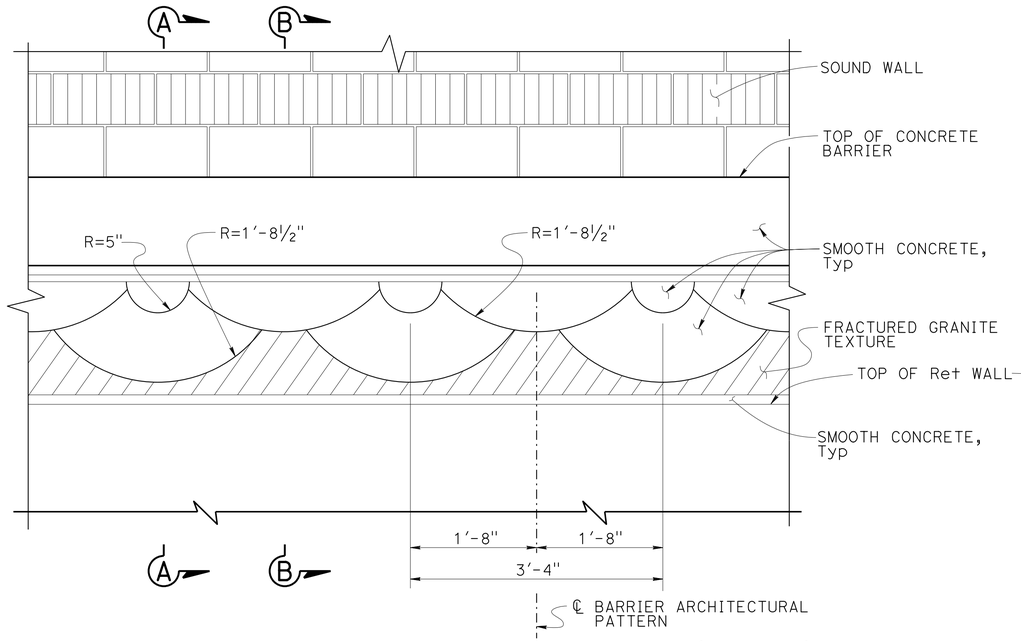

ELEVATION CONCRETE BARRIER TYPE 736A (MOD 2)

1" = 1'-0"

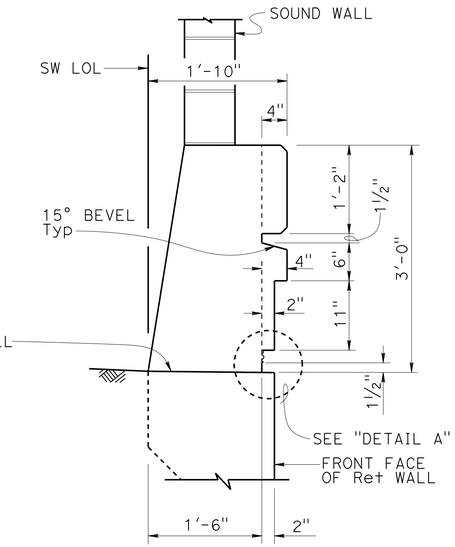

SECTION A-A

1" = 1'-0"

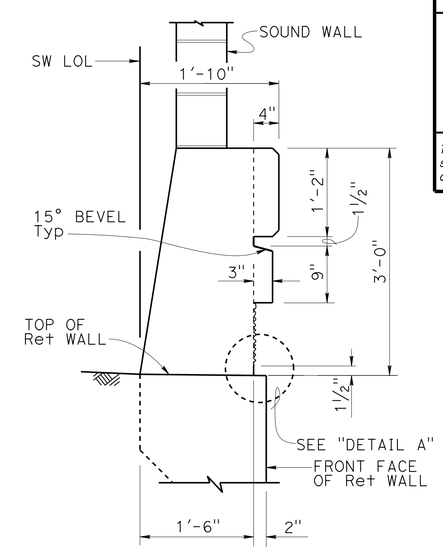

SECTION B-B

1" = 1'-0"

NOTES:

1. For Concrete Barrier Type 736A (Mod 2) details not shown, see "BARRIER SECTION" on "SOUND WALL - MASONRY BLOCK WITH BARRIER ON RETAINING WALL DETAILS NO. 2" sheet.
2. For Concrete Barrier Type 736SV (Mod) details not shown, see "CONCRETE BARRIER TYPE 736SV (Mod)" on "INDEX TO PLANS" sheet.
3. For sound wall architectural details, see "SOUND WALL ARCHITECTURAL DETAILS" sheet.

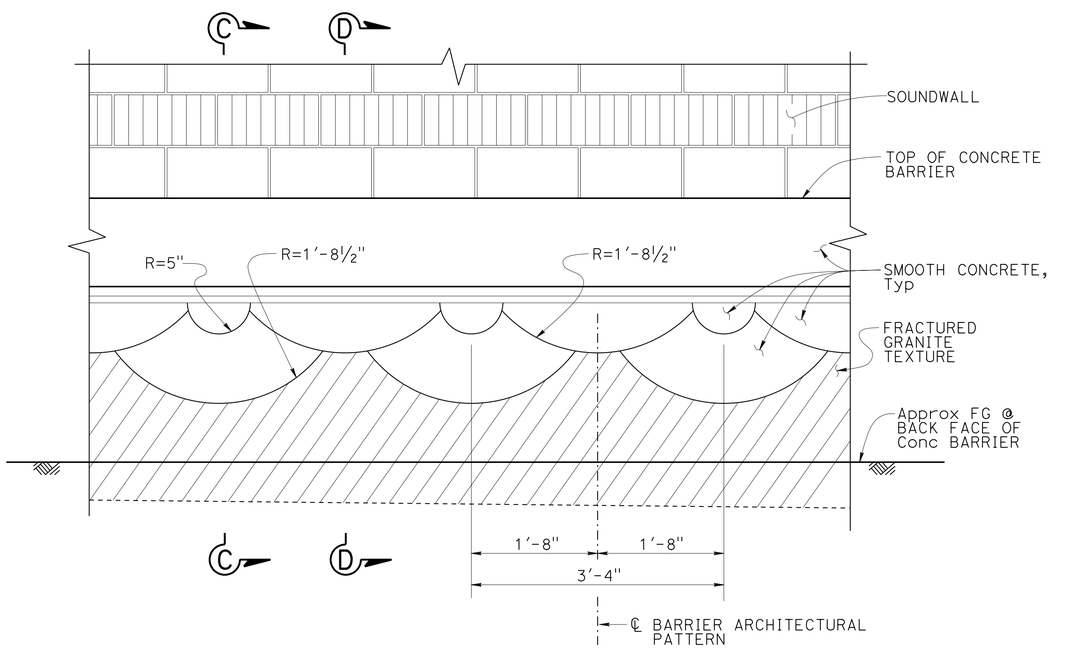

ELEVATION CONCRETE BARRIER TYPE 736SV (MOD)

1" = 1'-0"

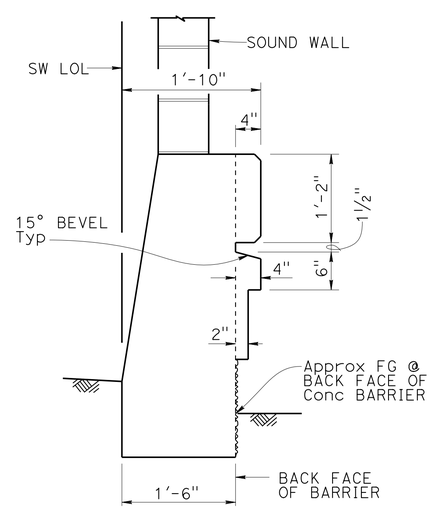

SECTION C-C

1" = 1'-0"

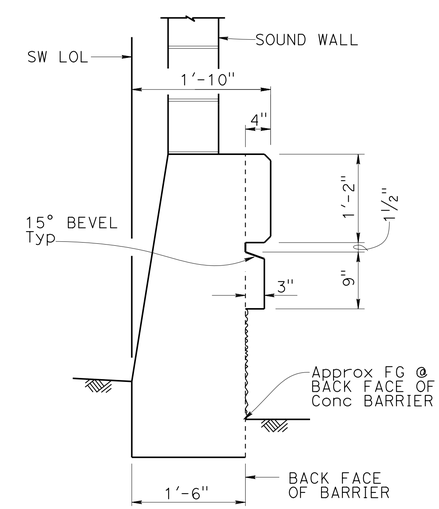

SECTION D-D

1" = 1'-0"

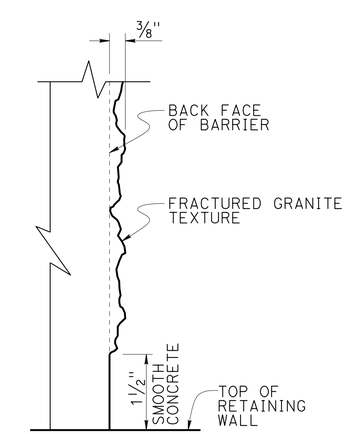

Note: Detail at "SECTION B-B" shown, other locations similar.

DETAIL A

NO SCALE

DESIGN	BY Isaac Tasabia	CHECKED Javier Chavez
DETAILS	BY Jie Tang	CHECKED D.Sessions / E. Watson
QUANTITIES	BY Keith Stillmunkes	CHECKED Wendy Hou

STATE OF CALIFORNIA
DEPARTMENT OF TRANSPORTATION

DIVISION OF ENGINEERING SERVICES
STRUCTURE DESIGN
DESIGN BRANCH 1

BRIDGE NO. 53E0212
POST MILE 5.93

SOUND WALL NO. 313
CONCRETE BARRIER ARCHITECTURAL DETAILS

STRUCTURES DESIGN DETAIL SHEET (ENGLISH) (REV. 09-01-10)

ORIGINAL SCALE IN INCHES FOR REDUCED PLANS 0 1 2 3

UNIT: 3576
PROJECT NUMBER & PHASE: 07000018351
CONTRACT NO.: 07-215954

DISREGARD PRINTS BEARING EARLIER REVISION DATES

REVISION DATES 02/24/12 05/08/12 02/28/13

SHEET 27 OF 48

FILE => sw313-f-barr01.dgn

USERNAME => s124496 DATE PLOTTED => 26-JUN-2013 TIME PLOTTED => 18:25

DIST	COUNTY	ROUTE	POST MILES TOTAL PROJECT	SHEET No.	TOTAL SHEETS
07	LA	5	0.0/7.6	781	985

P. Vijitakula 12/28/12
REGISTERED CIVIL ENGINEER DATE

6-24-13
PLANS APPROVAL DATE

REGISTERED PROFESSIONAL ENGINEER P. VIJITAKULA No. C 54701 Exp. 12-31-13 CIVIL STATE OF CALIFORNIA

The State of California or its officers or agents shall not be responsible for the accuracy or completeness of electronic copies of this plan sheet.

NOTE:

1. All masonry block shall be precision both sides, unless otherwise noted.

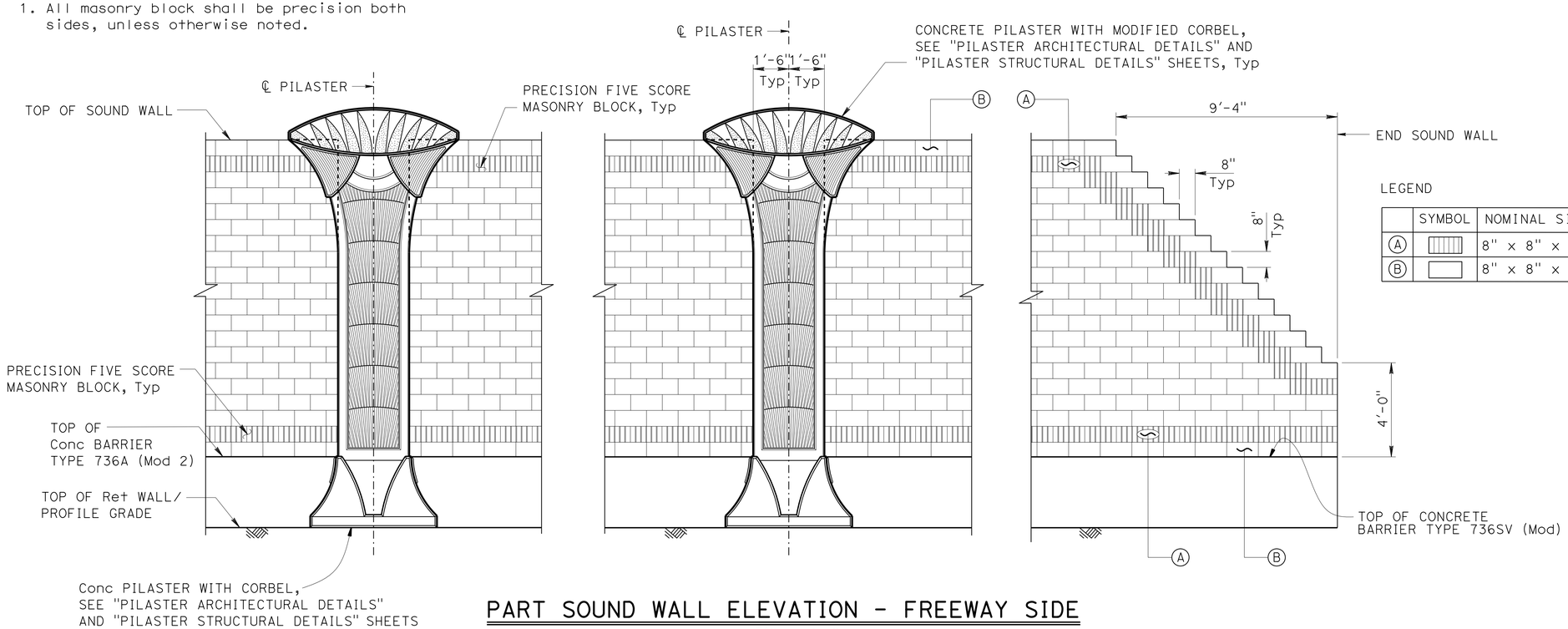

PART SOUND WALL ELEVATION - FREEWAY SIDE

3/8" = 1'-0"

LEGEND

	SYMBOL	NOMINAL SIZE	TEXTURE	COLOR
A		8" x 8" x 16"	PRECISION 5 SCORE	TAN (FEDERAL COLOR #22648)
B		8" x 8" x 16"	PRECISION	TAN (FEDERAL COLOR #22648)

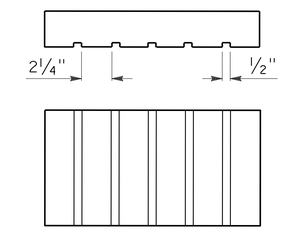

PRECISION 5 SCORE PLAIN

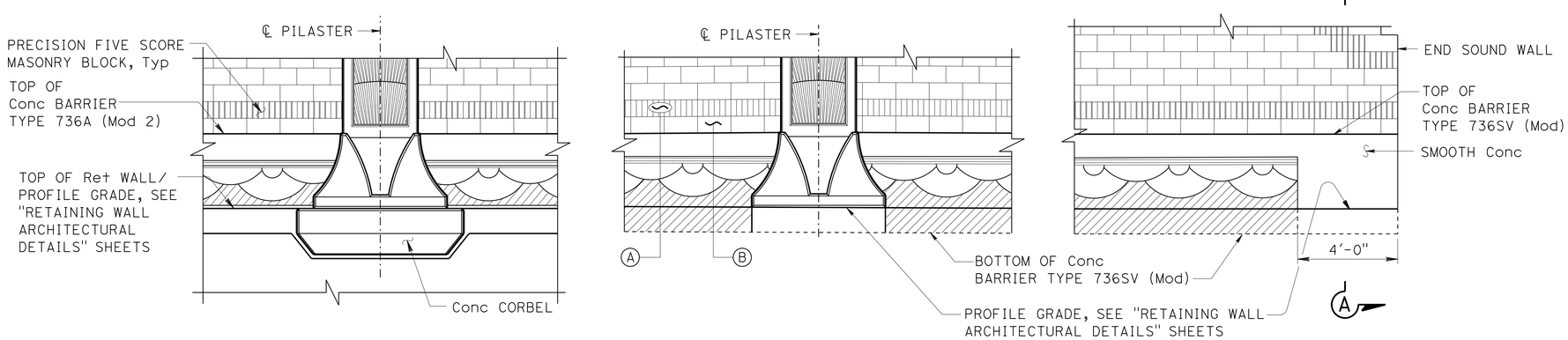

PART SOUND WALL MIRRORED ELEVATION - BACK SIDE

3/8" = 1'-0"

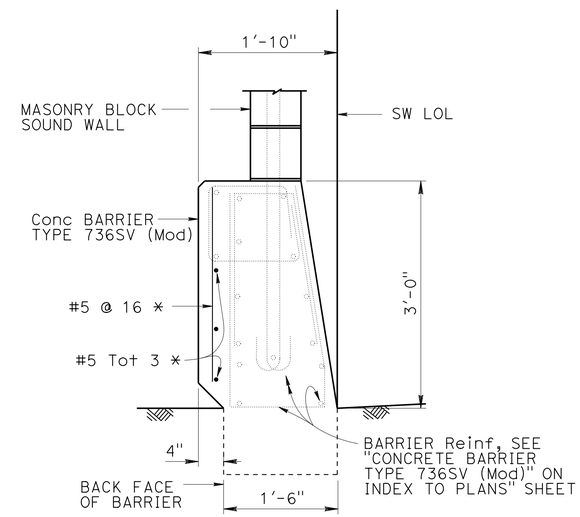

* - Indicates Reinf is additional to typical barrier Reinf

SECTION A-A

1" = 1'-0"

	BY	CHECKED
DESIGN	Daniel Sessions	Eric Watson
DETAILS	J. Tang / J. Zhou	Eric Watson
QUANTITIES	Keith Stillmunkes	Wendy Hou

STATE OF CALIFORNIA
DEPARTMENT OF TRANSPORTATION

DIVISION OF ENGINEERING SERVICES
STRUCTURE DESIGN
DESIGN BRANCH 1

BRIDGE NO. 53E0212
POST MILE 5.93

SOUND WALL NO. 313
SOUND WALL ARCHITECTURAL DETAILS

STRUCTURES DESIGN DETAIL SHEET (ENGLISH) (REV. 09-01-10)

ORIGINAL SCALE IN INCHES FOR REDUCED PLANS 0 1 2 3

UNIT: 3576
PROJECT NUMBER & PHASE: 07000018351
CONTRACT NO.: 07-215954

DISREGARD PRINTS BEARING EARLIER REVISION DATES

REVISION DATES 02/22/12 05/10/12

SHEET 28 OF 48

FILE => sw313-f-sou01.dgn

USERNAME => s124496 DATE PLOTTED => 26-JUN-2013 TIME PLOTTED => 18:25

DIST	COUNTY	ROUTE	POST MILES TOTAL PROJECT	SHEET No.	TOTAL SHEETS
07	LA	5	0.0/7.6	782	985

P. Vijitakula 12/28/12
REGISTERED CIVIL ENGINEER DATE

6-24-13
PLANS APPROVAL DATE

REGISTERED PROFESSIONAL ENGINEER
P. VIJITAKULA
No. C 54701
Exp. 12-31-13
CIVIL
STATE OF CALIFORNIA

The State of California or its officers or agents shall not be responsible for the accuracy or completeness of electronic copies of this plan sheet.

NOTES:

1. All dimensions symmetrical about ℄ Pilaster.
2. For location of "DETAIL E", see "PILASTER ARCHITECTURAL DETAILS NO. 2" sheet.
3. Beveled edges are 45° unless otherwise noted.
4. All vertical dimensions are measured along the ℄ Pilaster (Pilaster shall be vertical).

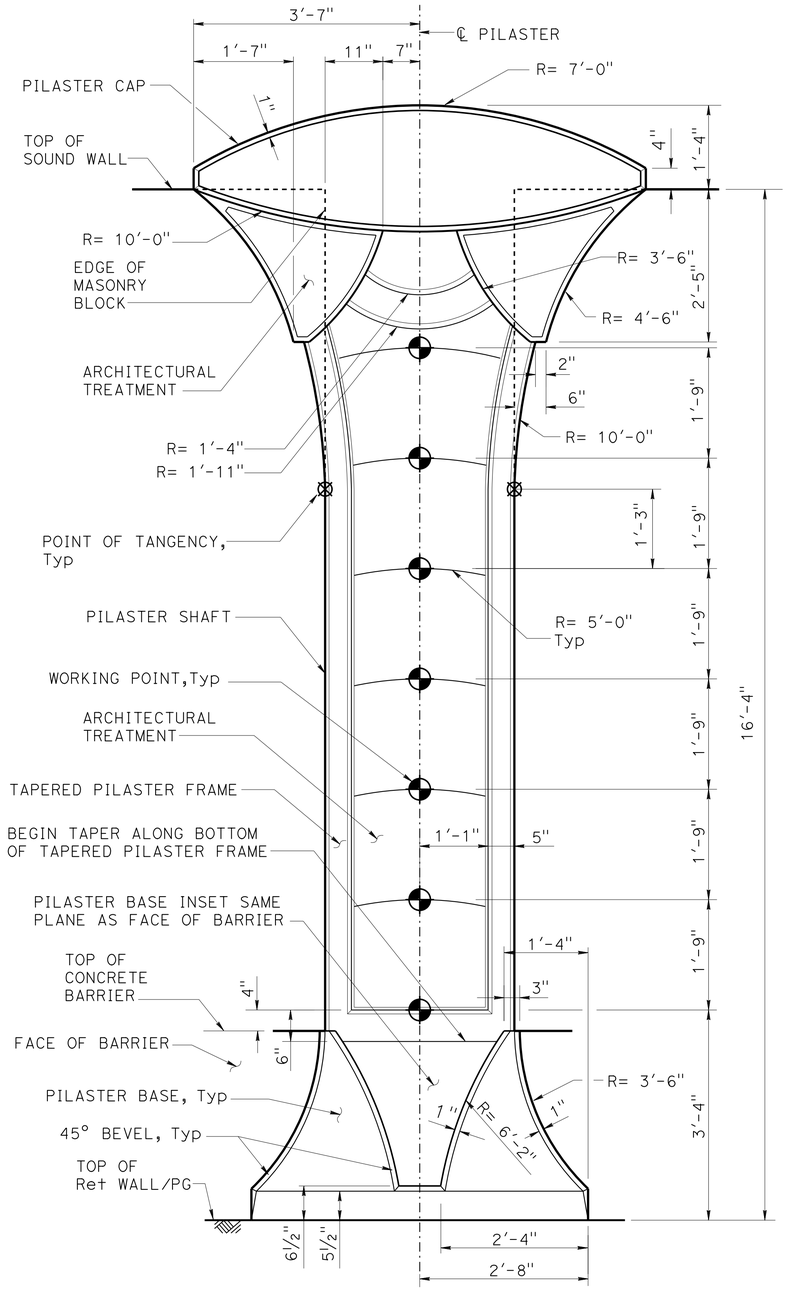

16'-4" SOUND WALL

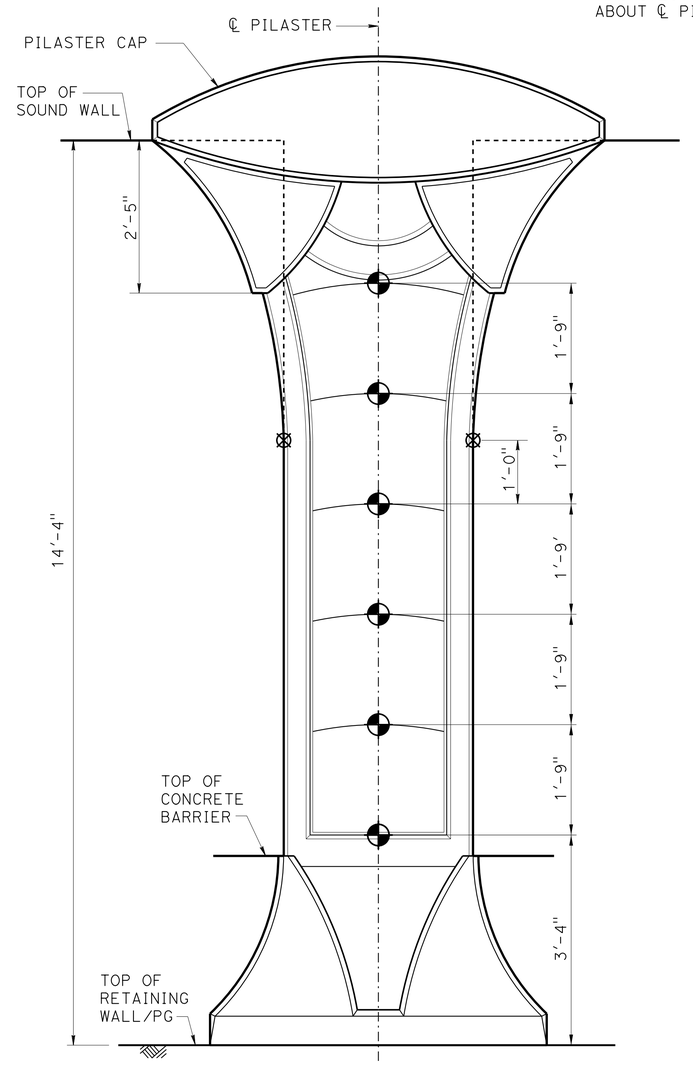

NOTE: For dimensions and details not shown, see "16'-4" SOUND WALL" details.

14'-4" SOUND WALL

PILASTER ELEVATION - FREEWAY SIDE

NO SCALE

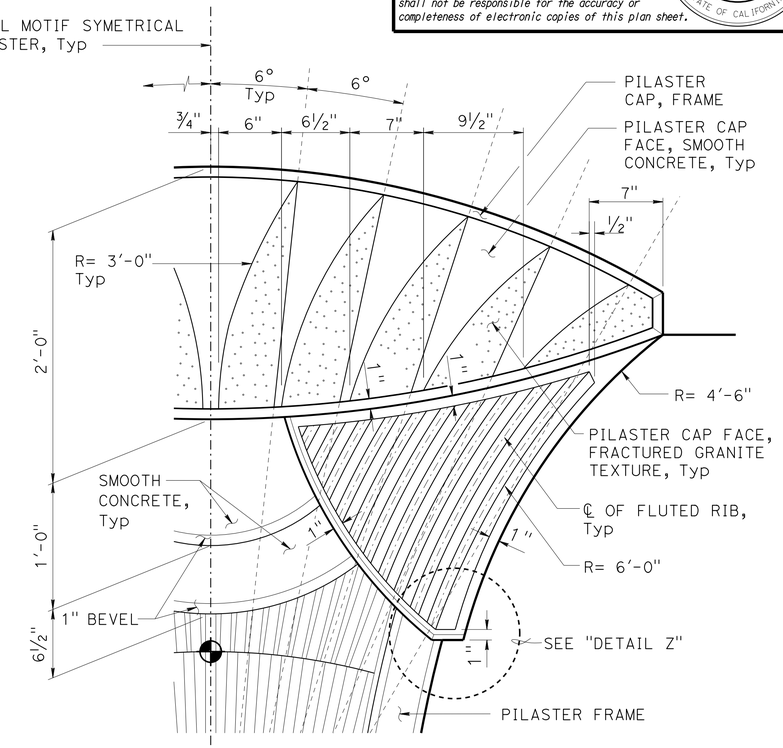

DETAIL E

NO SCALE

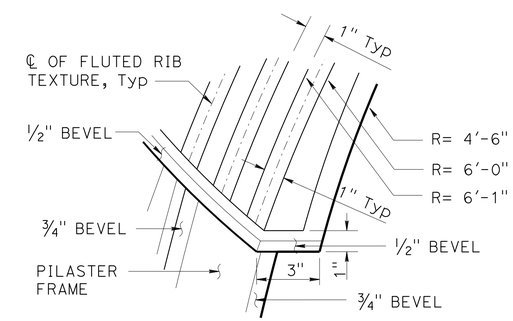

DETAIL Z

NO SCALE

DESIGN	BY Isaac Tasabia	CHECKED Javier Chavez	
DETAILS	BY Jie Tang	CHECKED D. Sessions / E. Watson	
QUANTITIES	BY Keith Stillmunkes	CHECKED Wendy Hou	

STATE OF CALIFORNIA
DEPARTMENT OF TRANSPORTATION

DIVISION OF ENGINEERING SERVICES
STRUCTURE DESIGN
DESIGN BRANCH 1

BRIDGE NO. 53E0212
POST MILE 5.93

SOUND WALL NO. 313
PILASTER ARCHITECTURAL DETAILS NO. 1

STRUCTURES DESIGN DETAIL SHEET (ENGLISH) (REV. 09-01-10)

ORIGINAL SCALE IN INCHES FOR REDUCED PLANS 0 1 2 3

UNIT: 3576
PROJECT NUMBER & PHASE: 07000018351
CONTRACT NO.: 07-215954

DISREGARD PRINTS BEARING EARLIER REVISION DATES

REVISION DATES 02/22/12

SHEET 29 OF 48

FILE => sw313-g-pilaster01.dgn

USERNAME => s124496 DATE PLOTTED => 26-JUN-2013 TIME PLOTTED => 18:25

DIST	COUNTY	ROUTE	POST MILES TOTAL PROJECT	SHEET No.	TOTAL SHEETS
07	LA	5	0.0/7.6	783	985

P. Vijitakula 12/28/12
REGISTERED CIVIL ENGINEER DATE

6-24-13
PLANS APPROVAL DATE

REGISTERED PROFESSIONAL ENGINEER P. VIJITAKULA No. C 54701 Exp. 12-31-13 CIVIL STATE OF CALIFORNIA

The State of California or its officers or agents shall not be responsible for the accuracy or completeness of electronic copies of this plan sheet.

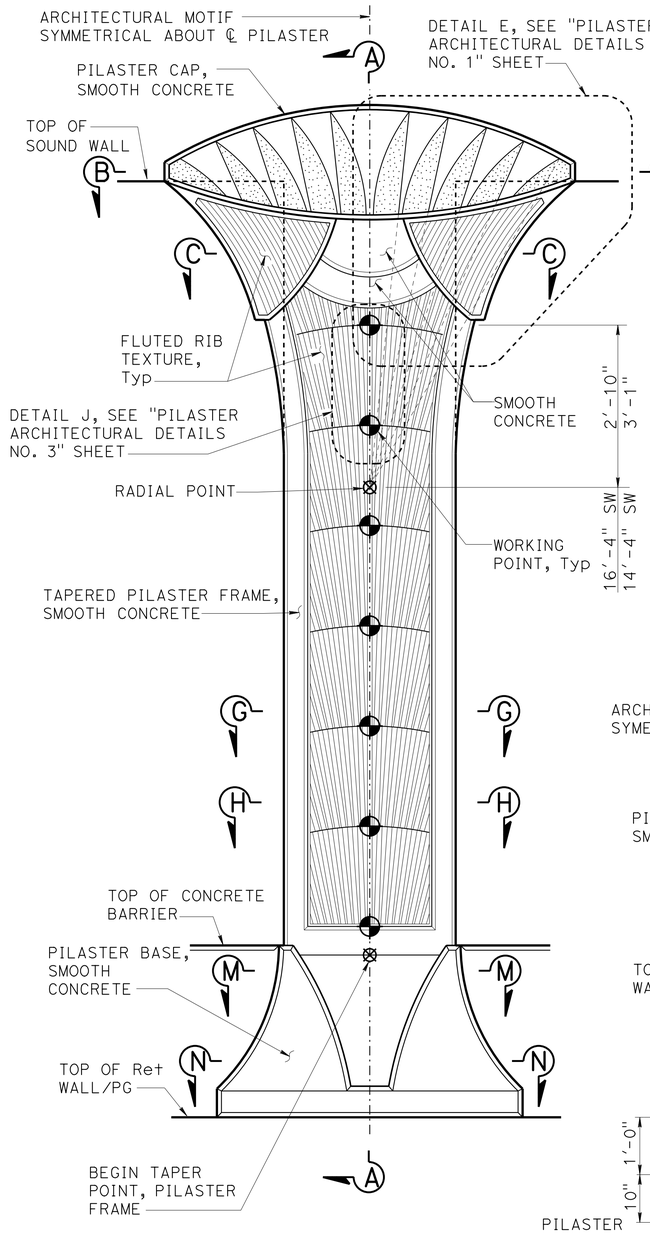

NOTE: For additional details not shown, see "16'-4" SOUND WALL - PILASTER ELEVATION" on "PILASTER ARCHITECTURAL DETAILS NO. 1" sheet.

FREEWAY SIDE

NOTES:

1. For "SECTION B-B", "SECTION C-C", "SECTION G-G","SECTION H-H" and "SECTION L-L", see "PILASTER ARCHITECTURAL DETAILS NO. 3" sheet.
2. For "SECTION M-M" and "SECTION N-N"' see "PILASTER ARCHITECTURAL DETAIL NO. 4" sheet.
3. Pilaster Sections on Retaining Wall shown, for Pilaster on Barrier Type 736SV (Mod), see "PILASTER SECTION ON TYPE 736SV (Mod) BARRIER" on "PILASTER ARCHITECTURAL DETAILS NO. 4" sheet.
4. All dimensions symmetrical about ℄ pilaster.
5. Beveled edges are 45° unless otherwise noted.
6. All vertical dimension are measured along the ℄ Pilaster (Pilaster shall be vertical).

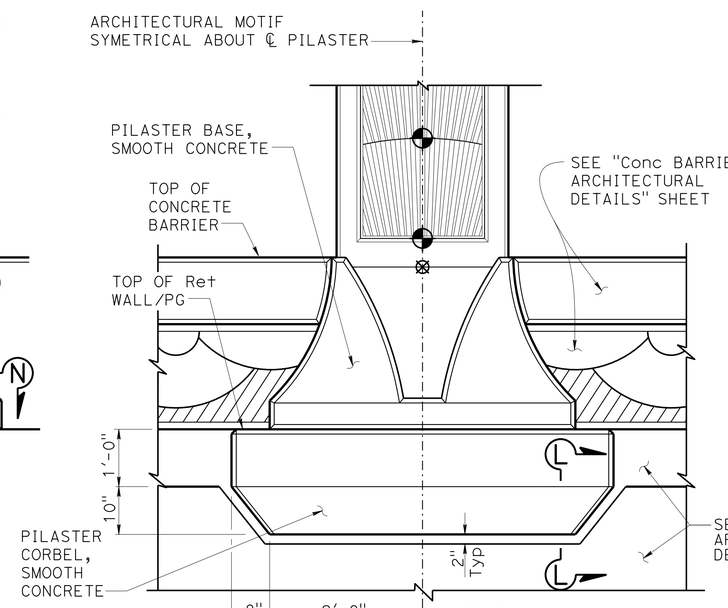

NOTE: For additional details not shown, see "FREEWAY SIDE" details.

BACK SIDE

PILASTER ARCHITECTURAL MOTIF

¾" = 1'-0"

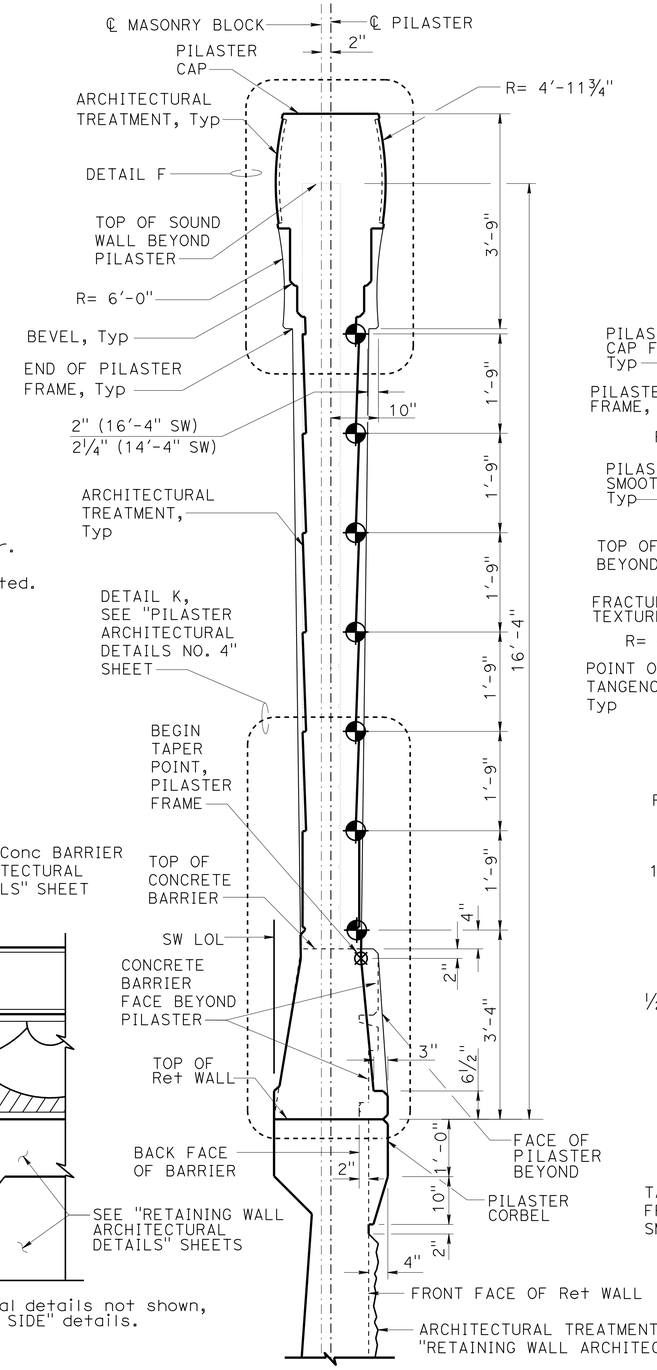

SECTION A-A

¾" = 1'-0"

NOTE: Pilaster for 16'-4" Sound Wall shown, Pilaster at 14'-4" Sound Wall similar.

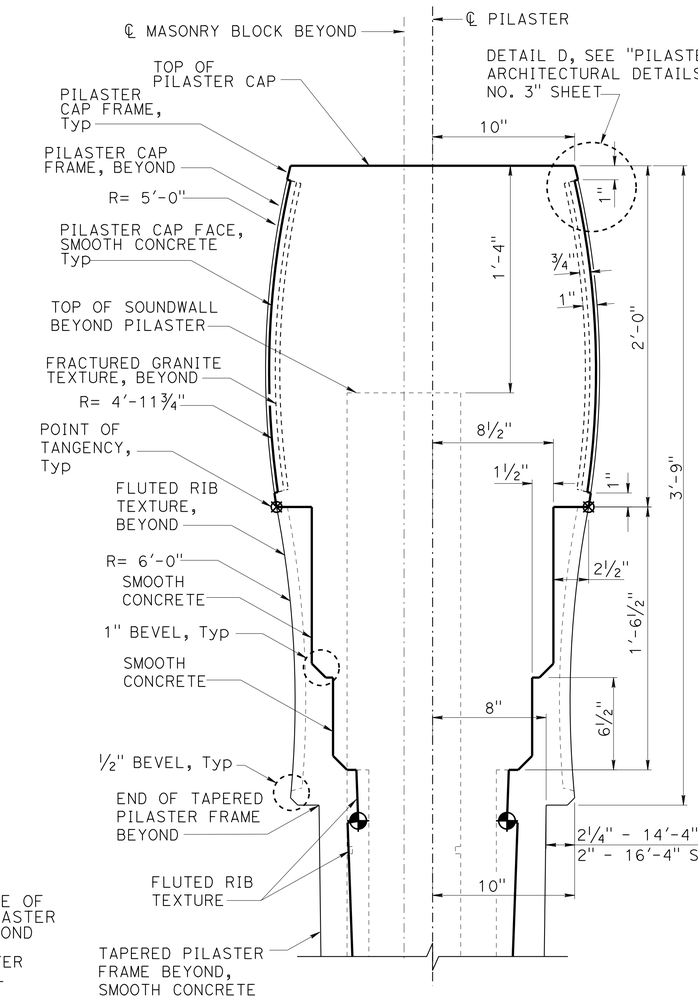

DETAIL F

NO SCALE

DESIGN	BY Isaac Tasabia	CHECKED Javier Chavez	
DETAILS	BY Jie Tang	CHECKED D. Sessions / E. Watson	
QUANTITIES	BY Keith Stillmunkes	CHECKED Wendy Hou	

STATE OF CALIFORNIA
DEPARTMENT OF TRANSPORTATION

DIVISION OF ENGINEERING SERVICES
STRUCTURE DESIGN
DESIGN BRANCH 1

BRIDGE NO. 53E0212
POST MILE 5.93

SOUND WALL NO. 313
PILASTER ARCHITECTURAL DETAILS NO. 2

STRUCTURES DESIGN DETAIL SHEET (ENGLISH) (REV. 09-01-10)

ORIGINAL SCALE IN INCHES FOR REDUCED PLANS 0 1 2 3

UNIT: 3576
PROJECT NUMBER & PHASE: 07000018351
CONTRACT NO.: 07-215954

DISREGARD PRINTS BEARING EARLIER REVISION DATES

REVISION DATES 02/02/12 05/02/12 03/28/13

SHEET 30 OF 48

FILE => sw313-g-pilaster02.dgn

USERNAME => s124496 DATE PLOTTED => 26-JUN-2013 TIME PLOTTED => 18:25

NOTES:

1. All notes and dimensions symetrical about ℄ pilaster.
2. Beveled edges are 45° unless otherwise noted.
3. For location of "DETAIL J", "DETAIL D" and "SECTION B-B", "SECTION C-C", "SECTION G-G", "SECTION H-H" and "SECTION L-L", see "PILASTER ARCHITECTURAL DETAILS NO. 2" sheet.
4. For Retaining Wall split slate texture, see "RETAINING WALL ARCHITECTURAL DETAILS" sheet.

DIST	COUNTY	ROUTE	POST MILES TOTAL PROJECT	SHEET No.	TOTAL SHEETS
07	LA	5	0.0/7.6	784	985

P. Vijitakula 12/28/12
REGISTERED CIVIL ENGINEER DATE

6-24-13
PLANS APPROVAL DATE

REGISTERED PROFESSIONAL ENGINEER P. VIJITAKULA No. C 54701 Exp. 12-31-13 CIVIL STATE OF CALIFORNIA

The State of California or its officers or agents shall not be responsible for the accuracy or completeness of electronic copies of this plan sheet.

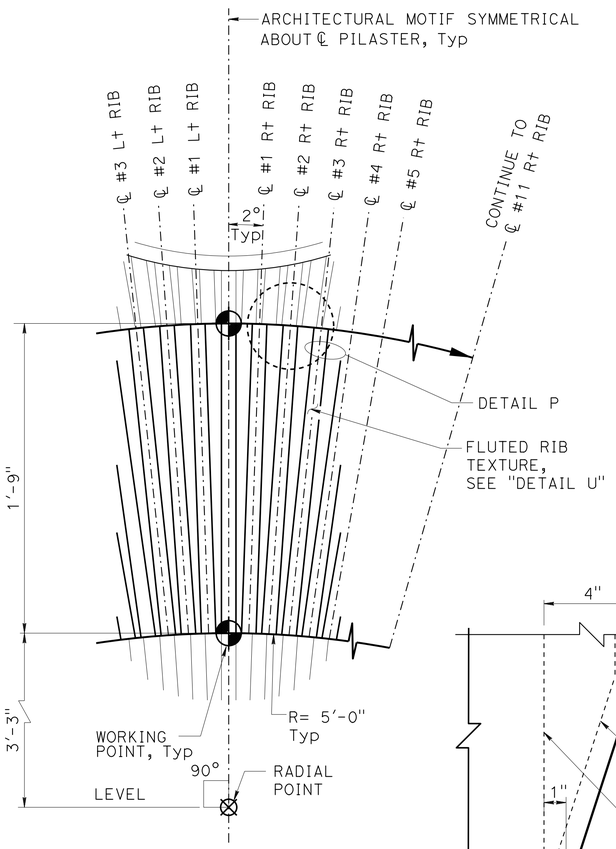

DETAIL J
NO SCALE

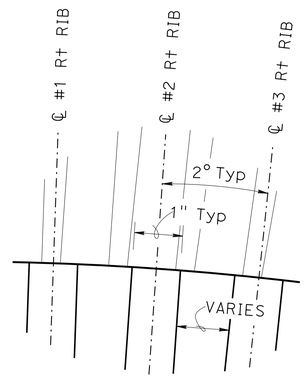

DETAIL P
NO SCALE

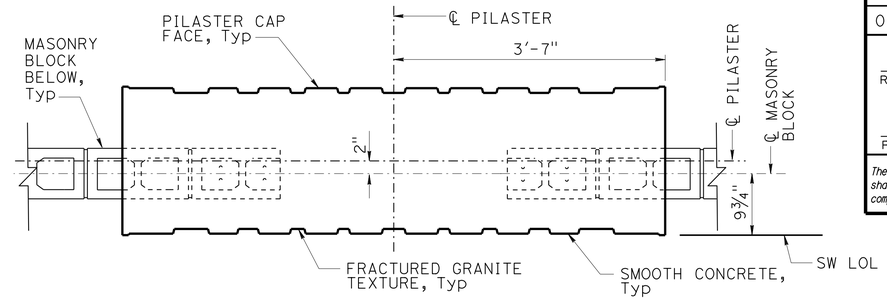

SECTION B-B
1" = 1'-0"

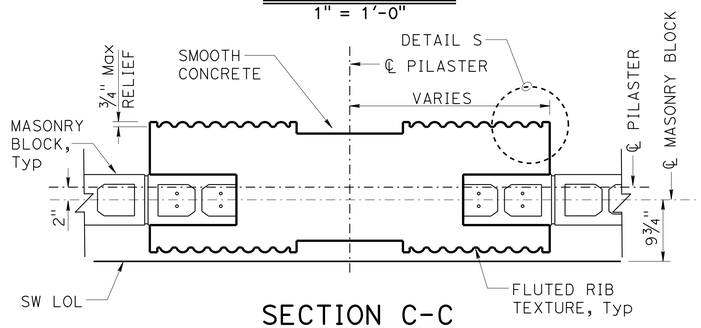

SECTION C-C
1" = 1'-0"

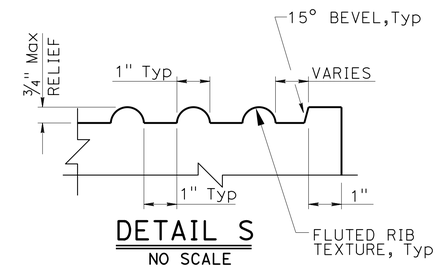

DETAIL S
NO SCALE

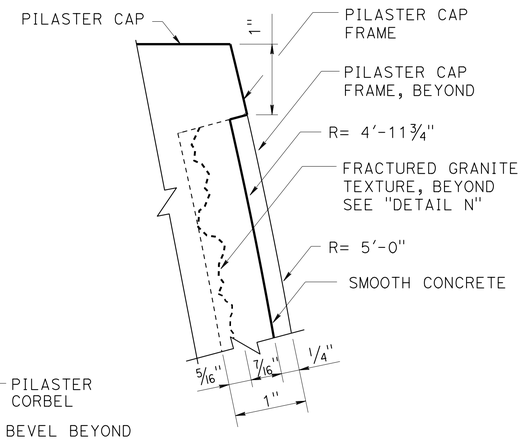

DETAIL D
NO SCALE

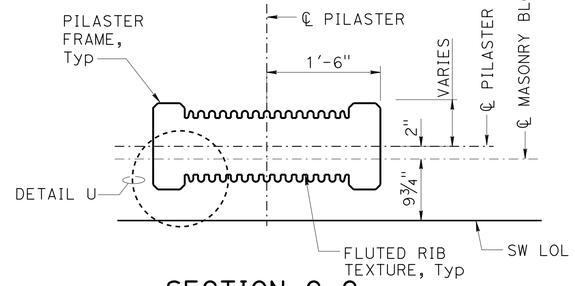

SECTION G-G
1" = 1'-0"

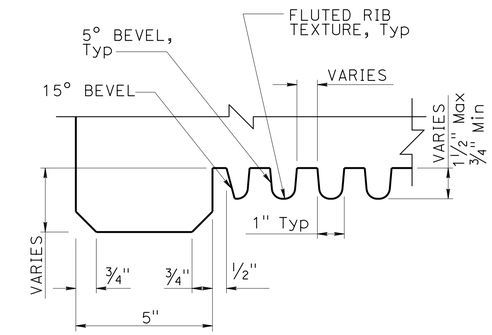

DETAIL U
NO SCALE

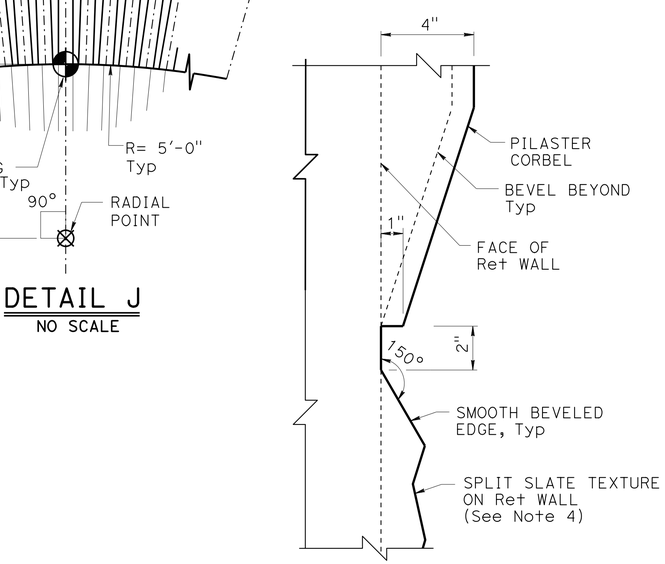

SECTION L-L
NO SCALE

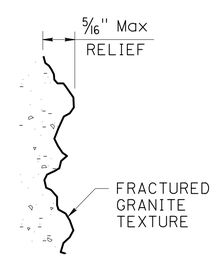

DETAIL N
NO SCALE

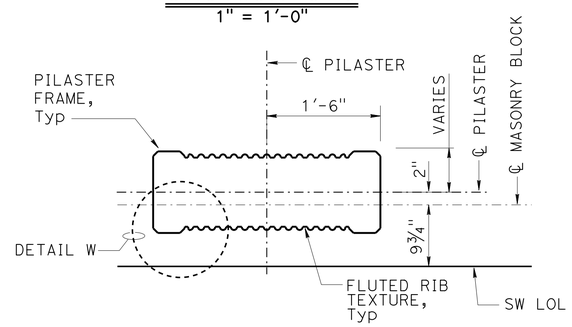

SECTION H-H
1" = 1'-0"

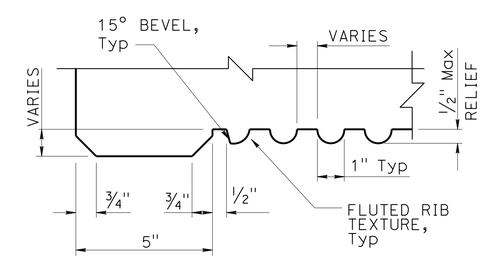

DETAIL W
NO SCALE

DESIGN	BY Isaac Tasabia	CHECKED Javier Chavez	
DETAILS	BY Jie Tang	CHECKED D. Sessions / E. Watson	
QUANTITIES	BY Keith Stillmunkes	CHECKED Wendy Hou	

STATE OF CALIFORNIA
DEPARTMENT OF TRANSPORTATION

DIVISION OF ENGINEERING SERVICES
STRUCTURE DESIGN
DESIGN BRANCH 1

BRIDGE NO. 53E0212
POST MILE 5.93

SOUND WALL NO. 313
PILASTER ARCHITECTURAL DETAILS NO. 3

STRUCTURES DESIGN DETAIL SHEET (ENGLISH) (REV. 09-01-10)

ORIGINAL SCALE IN INCHES FOR REDUCED PLANS 0 1 2 3

UNIT: 3576
PROJECT NUMBER & PHASE: 07000018351
CONTRACT NO.: 07-215954

DISREGARD PRINTS BEARING EARLIER REVISION DATES

REVISION DATES 02/28/12 05/03/12

SHEET 31 OF 48

FILE => sw313-g-pilaster03.dgn

USERNAME => s124496 DATE PLOTTED => 26-JUN-2013 TIME PLOTTED => 18:25

DIST	COUNTY	ROUTE	POST MILES TOTAL PROJECT	SHEET No.	TOTAL SHEETS
07	LA	5	0.0/7.6	785	985

P. Vijitakula 12/28/12
REGISTERED CIVIL ENGINEER DATE

6-24-13
PLANS APPROVAL DATE

REGISTERED PROFESSIONAL ENGINEER P. VIJITAKULA No. C 54701 Exp. 12-31-13 CIVIL STATE OF CALIFORNIA

The State of California or its officers or agents shall not be responsible for the accuracy or completeness of electronic copies of this plan sheet.

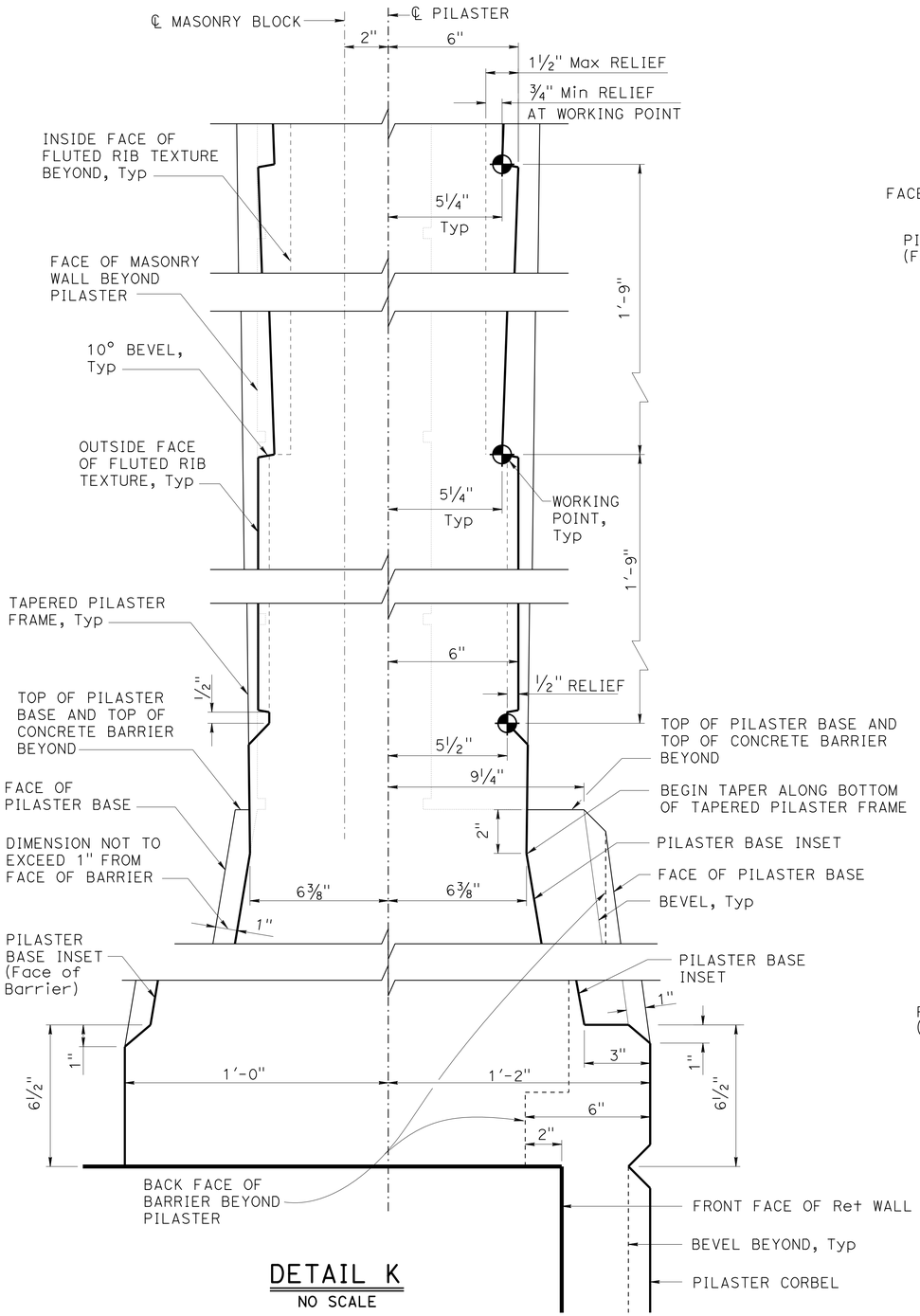

DETAIL K
NO SCALE

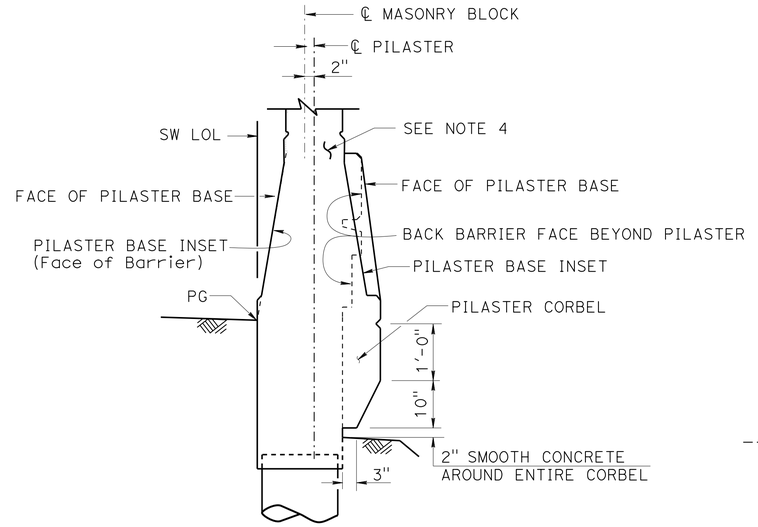

PILASTER SECTION ON TYPE 736SV (MOD) BARRIER SW LOL 23+11.17
¾" = 1'-0"

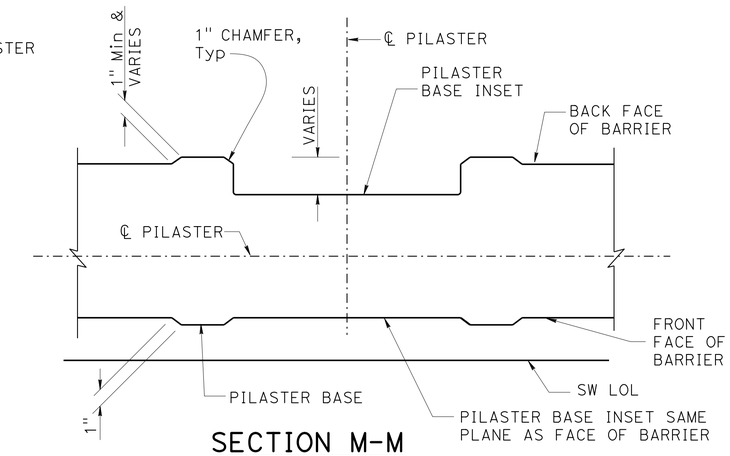

SECTION M-M
1½" = 1'-0"

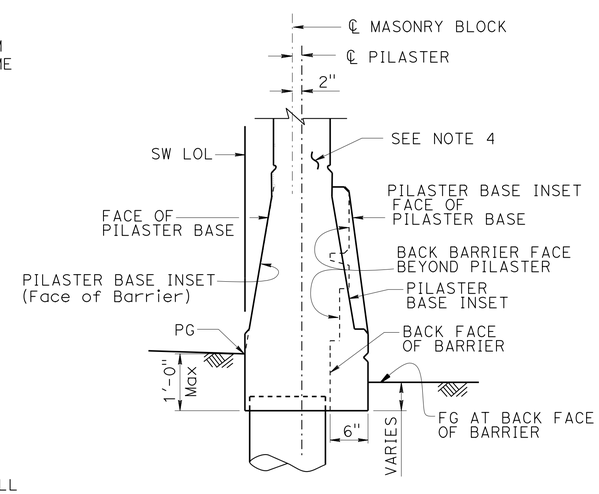

PILASTER WITHOUT CORBEL SECTION ON TYPE 736SV (MOD) BARRIER
¾" = 1'-0"

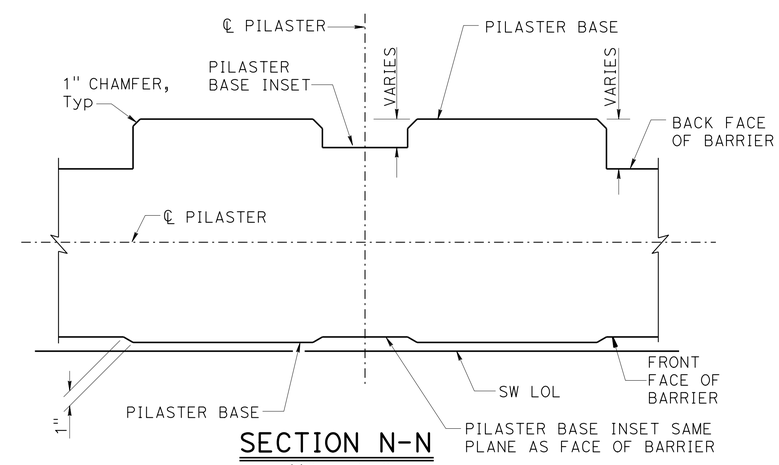

SECTION N-N
1½" = 1'-0"

NOTES:

1. For location of "SECTION M-M", "SECTION N-N" and "DETAIL K", see "PILASTER ARCHITECTURAL DETAILS NO. 2" sheet.
2. All dimensions symmetrical about ℄ Pilaster.
3. All vertical dimension are measured along the ℄ Pilaster (Pilaster shall be vertical).
4. For pilaster details not shown, see "SECTION A-A" on "PILASTER ARCHITECTURAL DETAILS NO. 2" sheet.

	BY	CHECKED
DESIGN	Isaac Tasabia	Javier Chavez
DETAILS	J.Tang / J. Zhou	D. Sessions / E. Watson
QUANTITIES	Keith Stillmunkes	Wendy Hou

STATE OF CALIFORNIA
DEPARTMENT OF TRANSPORTATION

DIVISION OF ENGINEERING SERVICES
STRUCTURE DESIGN
DESIGN BRANCH 1

BRIDGE NO. 53E0212
POST MILE 5.93

SOUND WALL NO. 313
PILASTER ARCHITECTURAL DETAILS NO. 4

STRUCTURES DESIGN DETAIL SHEET (ENGLISH) (REV. 09-01-10)

ORIGINAL SCALE IN INCHES FOR REDUCED PLANS 0 1 2 3

UNIT: 3576
PROJECT NUMBER & PHASE: 07000018351
CONTRACT NO.: 07-215954

DISREGARD PRINTS BEARING EARLIER REVISION DATES

REVISION DATES 02/22/12 05/04/12 02/28/13 03/06/13

SHEET 32 OF 48

FILE => sw313-g-pilaster04.dgn

USERNAME => s124036 DATE PLOTTED => 26-JUN-2013 TIME PLOTTED => 18:25

DIST	COUNTY	ROUTE	POST MILES TOTAL PROJECT	SHEET No.	TOTAL SHEETS
07	LA	5	0.0/7.6	786	985

P. Vijitakula 12/28/12
REGISTERED CIVIL ENGINEER DATE

6-24-13
PLANS APPROVAL DATE

REGISTERED PROFESSIONAL ENGINEER P. VIJITAKULA No. C 54701 Exp. 12-31-13 CIVIL STATE OF CALIFORNIA

The State of California or its officers or agents shall not be responsible for the accuracy or completeness of electronic copies of this plan sheet.

NOTE:
For "SECTION B-B", "SECTION C-C", "SECTION D-D" and "SECTION G-G", see "PILASTER STRUCTURAL DETAILS NO. 2" sheet.

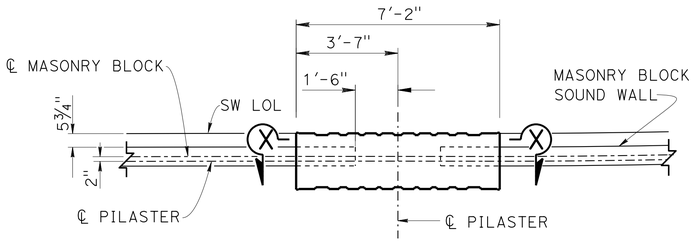

PART SOUND WALL PLAN

3/8" = 1'-0"

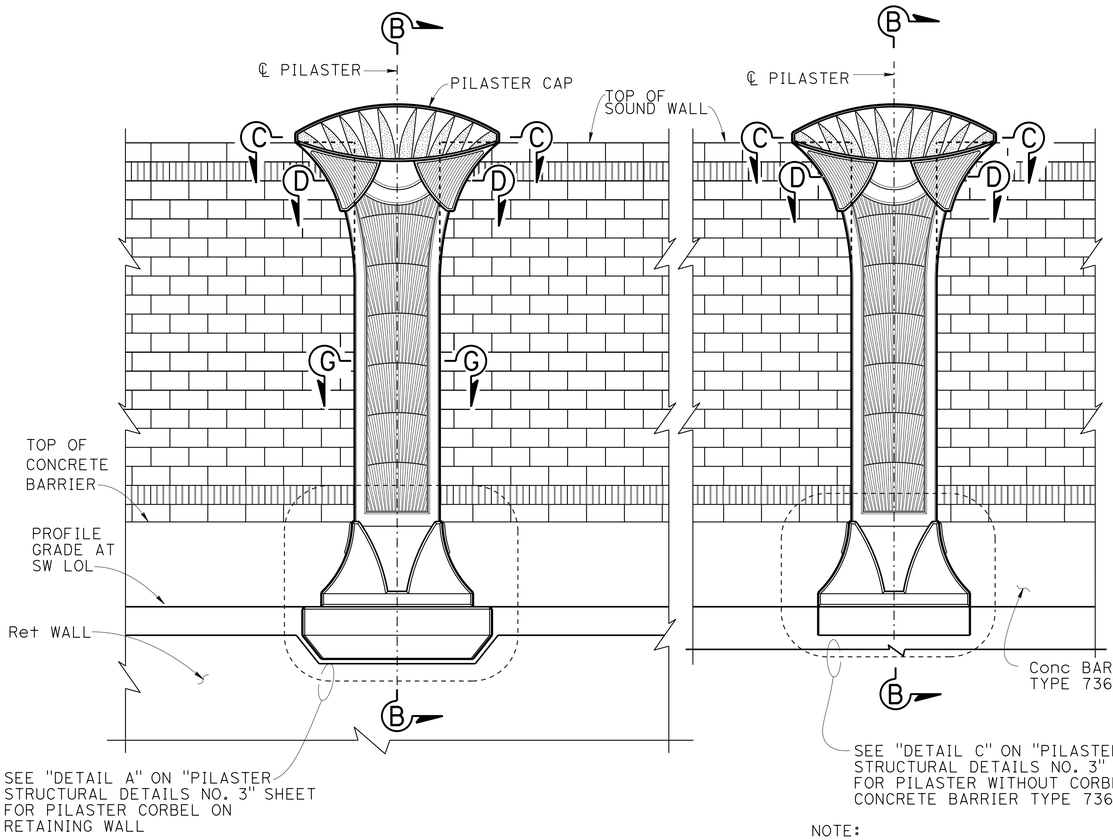

PART SOUND WALL ELEVATION

3/8" = 1'-0"

NOTE:
Pilaster on Ret Wall shown. Pilaster on Type 736SV (Mod) Barrier at SW LOL 23+11.17 similar, see"DETAIL B" on "PILASTER STRUCTURAL DETAILS NO. 3" sheet.

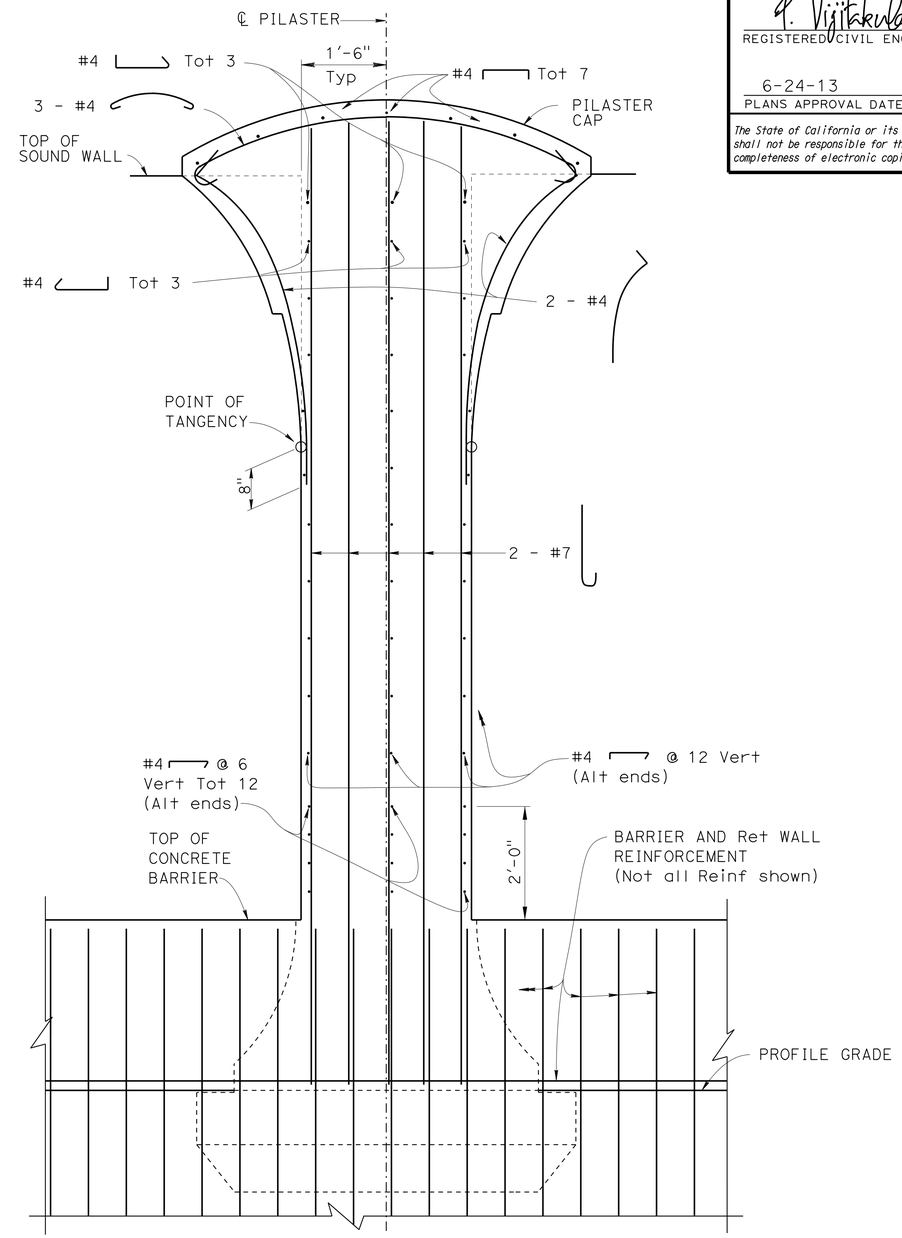

NOTE: Pilaster corbel reinf not shown.

SECTION X-X

3/4" = 1'-0"

DESIGN	BY Daniel Sessions	CHECKED Eric Watson	
DETAILS	BY Jie Tang	CHECKED Eric Watson	
QUANTITIES	BY Keith Stillmunkes	CHECKED Wendy Hou	

STATE OF CALIFORNIA
DEPARTMENT OF TRANSPORTATION

DIVISION OF ENGINEERING SERVICES
STRUCTURE DESIGN
DESIGN BRANCH 1

BRIDGE NO. 53E0212
POST MILE 5.93

SOUND WALL NO. 313
PILASTER STRUCTURAL DETAILS NO. 1

STRUCTURES DESIGN DETAIL SHEET (ENGLISH) (REV. 09-01-10)

ORIGINAL SCALE IN INCHES FOR REDUCED PLANS 0 1 2 3

UNIT: 3576
PROJECT NUMBER & PHASE: 07000018351
CONTRACT NO.: 07-215954

DISREGARD PRINTS BEARING EARLIER REVISION DATES

REVISION DATES 02/22/12 05/04/12 02/28/13

SHEET 33 OF 48

FILE => sw313-h-pilaster01.dgn

USERNAME => s124496 DATE PLOTTED => 26-JUN-2013 TIME PLOTTED => 18:26

DIST	COUNTY	ROUTE	POST MILES TOTAL PROJECT	SHEET No.	TOTAL SHEETS
07	LA	5	0.0/7.6	787	985

P. Vijitakula 12/28/12
REGISTERED CIVIL ENGINEER DATE

6-24-13
PLANS APPROVAL DATE

REGISTERED PROFESSIONAL ENGINEER
P. VIJITAKULA
No. C 54701
Exp. 12-31-13
CIVIL
STATE OF CALIFORNIA

The State of California or its officers or agents shall not be responsible for the accuracy or completeness of electronic copies of this plan sheet.

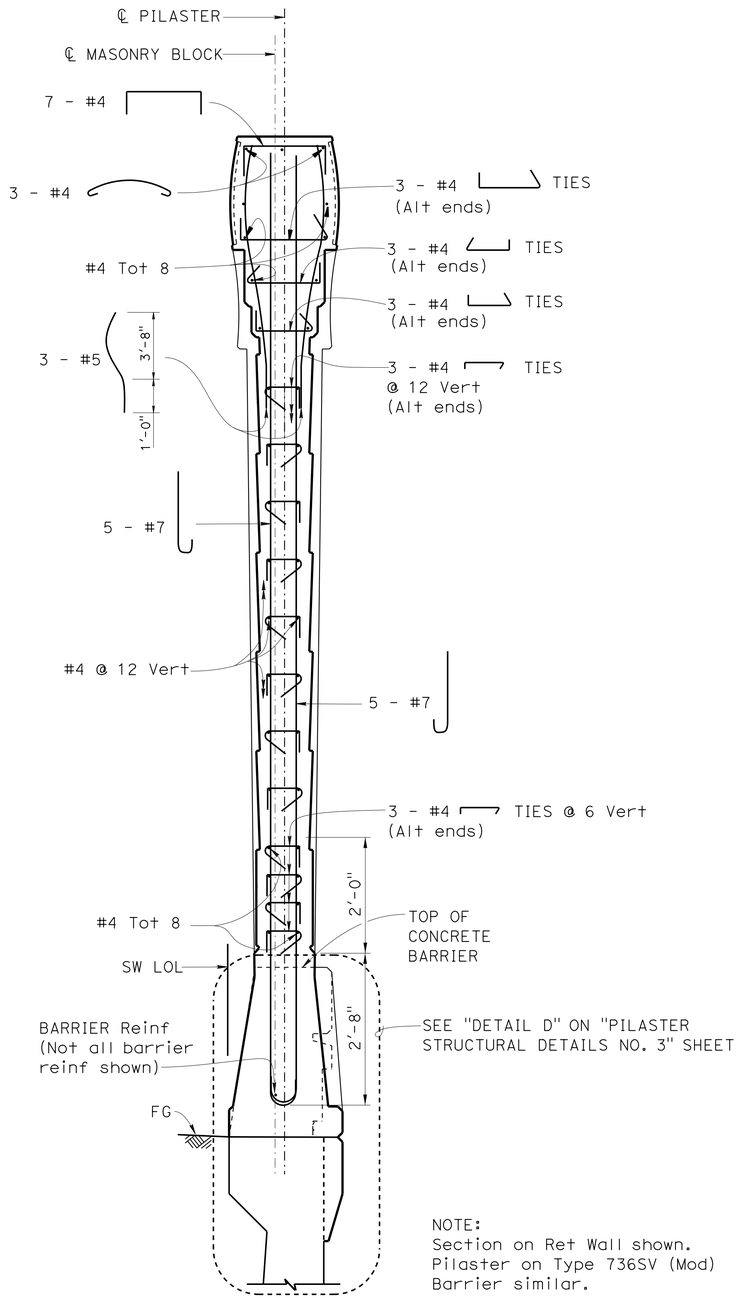

NOTE:
Section on Ret Wall shown.
Pilaster on Type 736SV (Mod)
Barrier similar.

SECTION B-B
¾" = 1'-0"

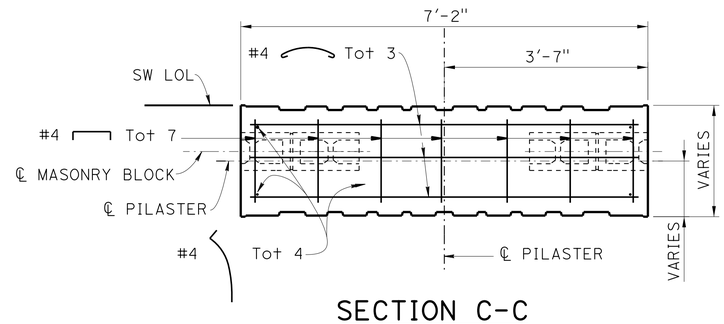

SECTION C-C
¾" = 1'-0"

NOTES:

1. For location of "SECTION B-B", "SECTION C-C", "SECTION D-D" and "SECTION G-G", see "PILASTER STRUCTURAL DETAILS NO. 1" sheet.
2. For Pilaster geometry, dimensions and architectural treatments, see "PILASTER ARCHITECTURAL DETAILS" sheets.

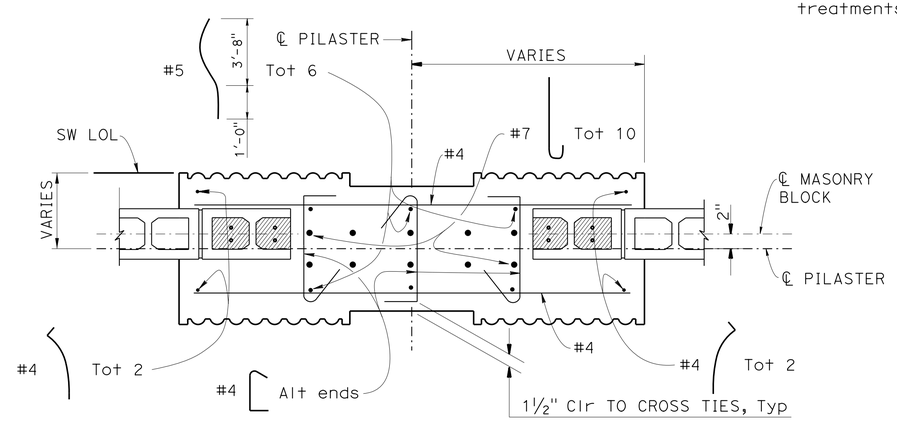

SECTION D-D
1" = 1'-0"

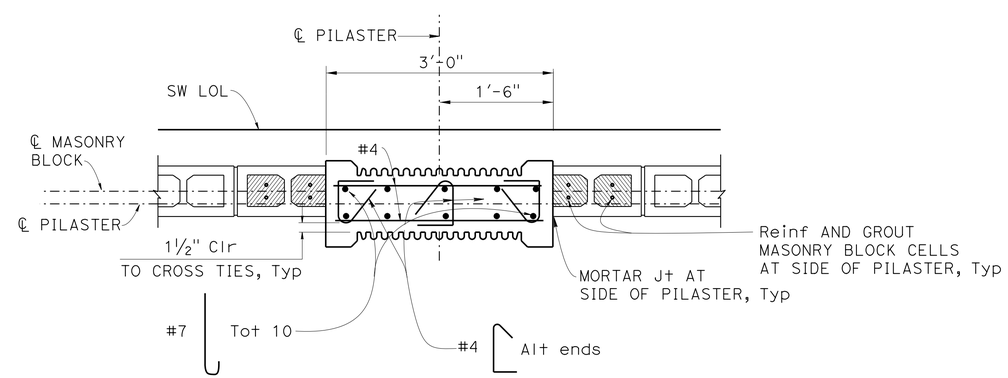

SECTION G-G
1" = 1'-0"

DESIGN	BY Daniel Sessions	CHECKED Eric Watson	
DETAILS	BY Jie Tang	CHECKED Eric Watson	
QUANTITIES	BY Keith Stillmunkes	CHECKED Wendy Hou	

STATE OF CALIFORNIA
DEPARTMENT OF TRANSPORTATION

DIVISION OF ENGINEERING SERVICES
STRUCTURE DESIGN
DESIGN BRANCH 1

BRIDGE NO. 53E0212
POST MILE 5.93

SOUND WALL NO. 313
PILASTER STRUCTURAL DETAILS NO. 2

STRUCTURES DESIGN DETAIL SHEET (ENGLISH) (REV. 09-01-10)

ORIGINAL SCALE IN INCHES FOR REDUCED PLANS 0 1 2 3

UNIT: 3576
PROJECT NUMBER & PHASE: 07000018351
CONTRACT NO.: 07-215954

DISREGARD PRINTS BEARING EARLIER REVISION DATES

REVISION DATES: 02/29/12 05/09/12 02/28/13

SHEET 34 OF 48

FILE => sw313-h-pilaster02.dgn

USERNAME => s124496 DATE PLOTTED => 26-JUN-2013 TIME PLOTTED => 18:26

DIST	COUNTY	ROUTE	POST MILES TOTAL PROJECT	SHEET No.	TOTAL SHEETS
07	LA	5	0.0/7.6	788	985

P. Vijitakula 12/28/12
REGISTERED CIVIL ENGINEER DATE

6-24-13
PLANS APPROVAL DATE

REGISTERED PROFESSIONAL ENGINEER P. VIJITAKULA No. C 54701 Exp. 12-31-13 CIVIL STATE OF CALIFORNIA

The State of California or its officers or agents shall not be responsible for the accuracy or completeness of electronic copies of this plan sheet.

NOTES:

1. For location of "DETAIL A", "DETAIL B" and "DETAIL C", see "PILASTER STRUCTURAL DETAILS NO. 1" sheet.
2. For location of "DETAIL D", see "PILASTER STRUCTURAL DETAILS NO. 2" sheet.

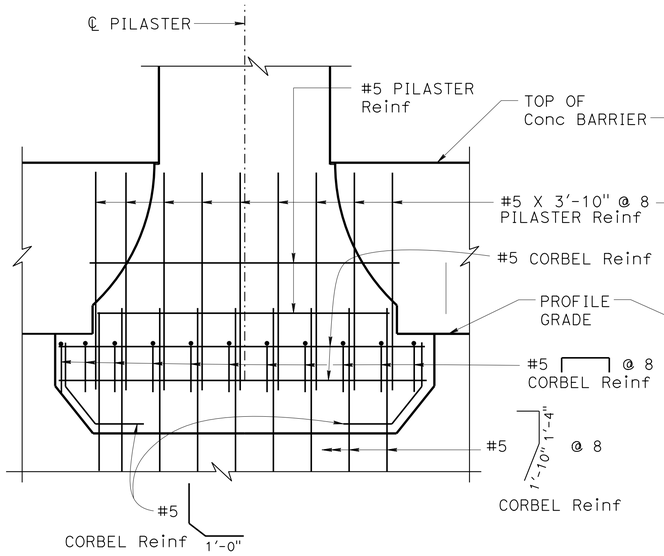

NOTE: Concrete Barrier/Ret Wall reinf not shown.

DETAIL A
¾" = 1'-0"

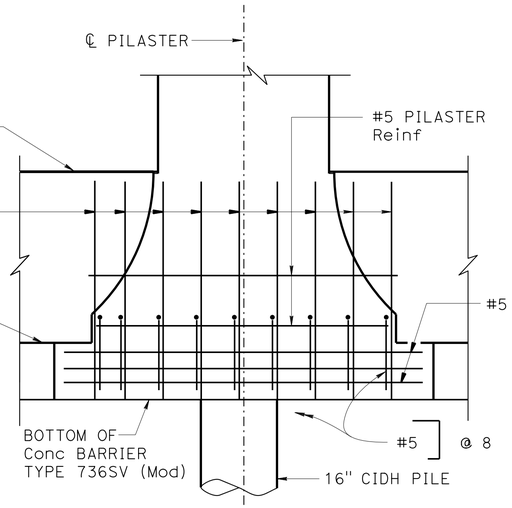

NOTE: Concrete barrier reinf not shown.

DETAIL C
¾" = 1'-0"

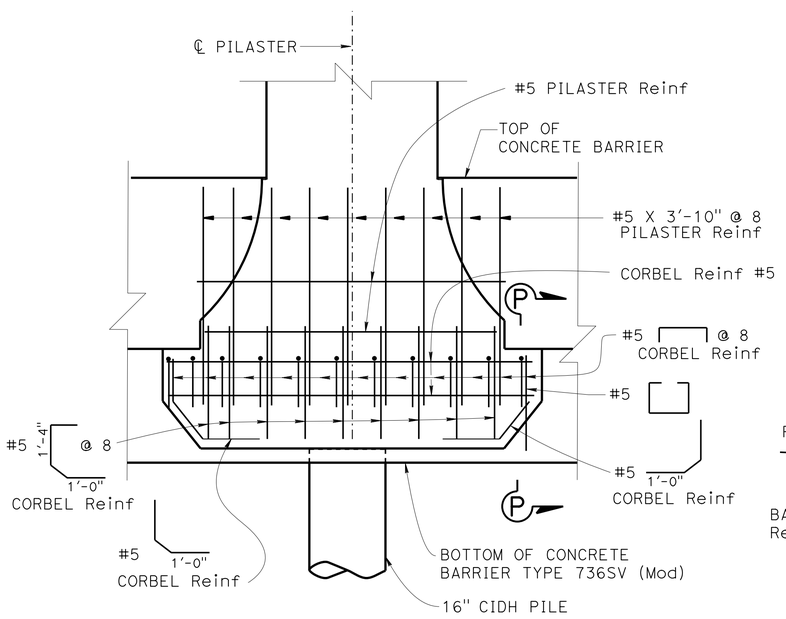

NOTE: Concrete barrier reinf not shown

DETAIL B
¾" = 1'-0"

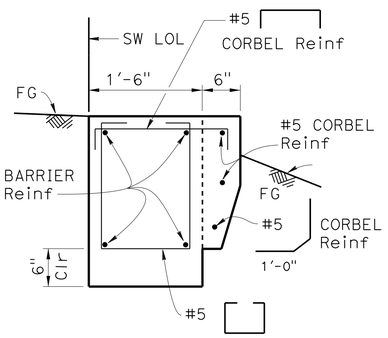

SECTION P-P
1" = 1'-0"

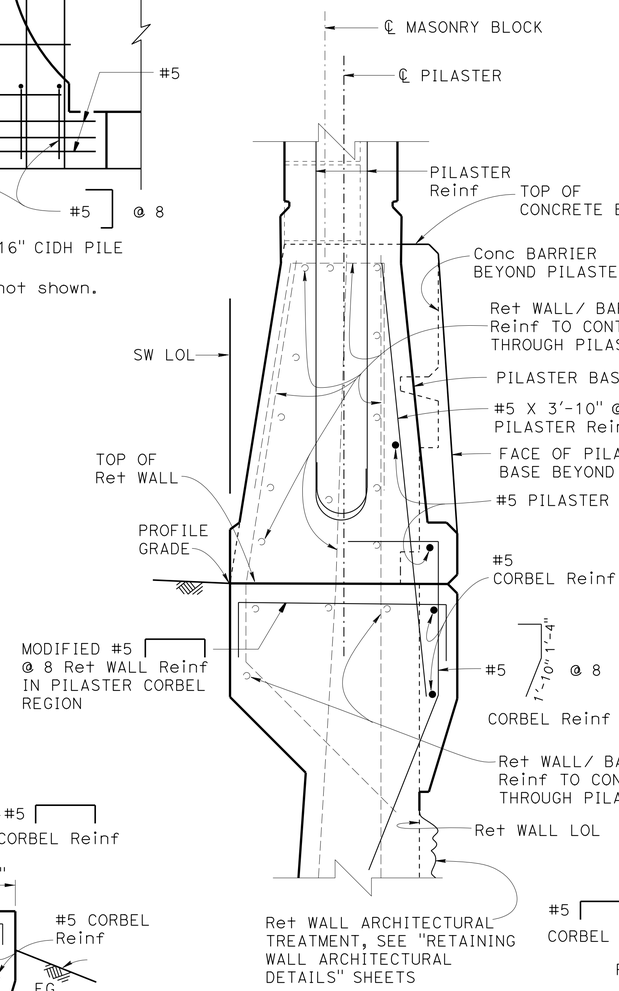

PILASTER CORBEL ON RETAINING WALL

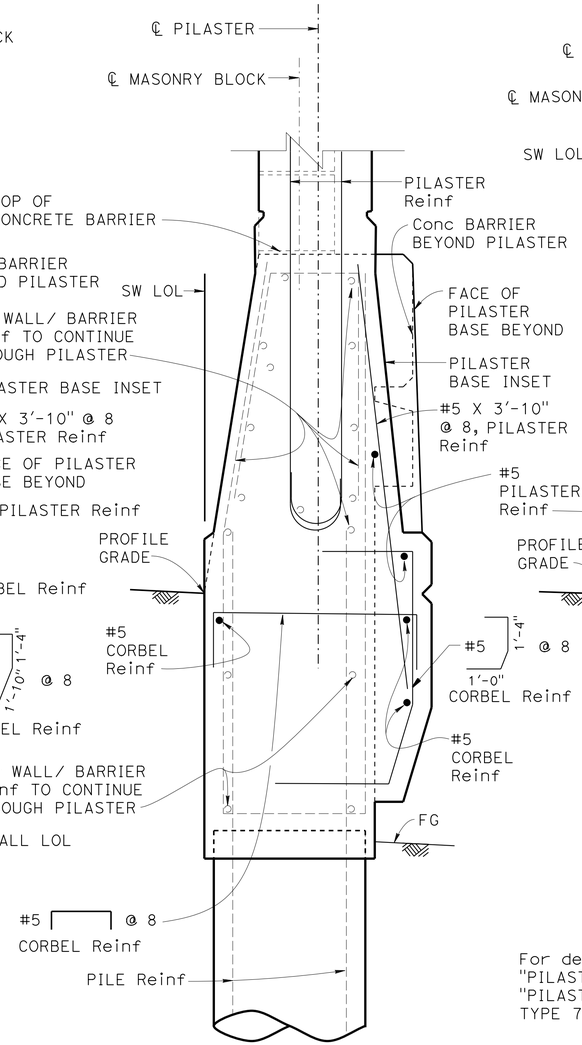

PILASTER CORBEL ON CONCRETE BARRIER TYPE 736SV (MOD)

DETAIL D
1½" = 1'-0"

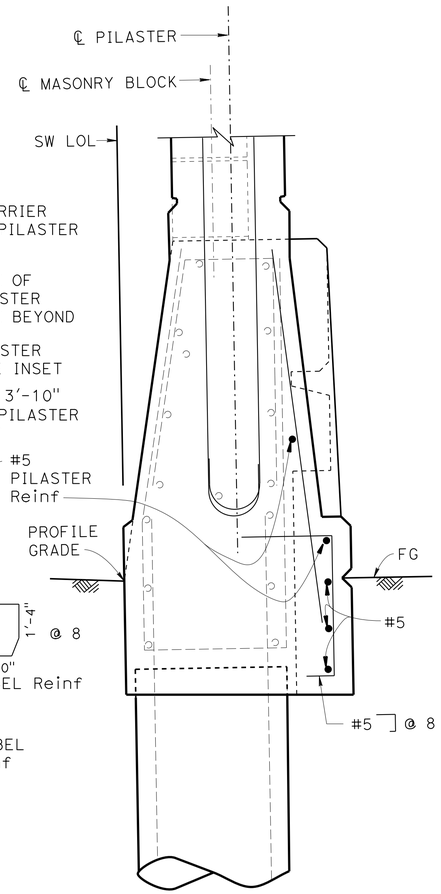

For details not shown, see "PILASTER CORBEL ON RETAINING WALL" and "PILASTER CORBEL ON CONCRETE BARRIER TYPE 736SV (Mod)" details.

PILASTER WITHOUT CORBEL ON CONCRETE BARRIER TYPE 736SV (Mod)

	BY	CHECKED
DESIGN	Daniel Sessions	Eric Watson
DETAILS	J. Tang / J. Zhou	Eric Watson
QUANTITIES	Keith Stillmunkes	Wendy Hou

STATE OF CALIFORNIA
DEPARTMENT OF TRANSPORTATION

DIVISION OF ENGINEERING SERVICES
STRUCTURE DESIGN
DESIGN BRANCH 1

BRIDGE NO. 53E0212
POST MILE 5.93

SOUND WALL NO. 313
PILASTER STRUCTURAL DETAILS NO. 3

STRUCTURES DESIGN DETAIL SHEET (ENGLISH) (REV. 09-01-10)

ORIGINAL SCALE IN INCHES FOR REDUCED PLANS 0 1 2 3

UNIT: 3576
PROJECT NUMBER & PHASE: 07000018351
CONTRACT NO.: 07-215954

DISREGARD PRINTS BEARING EARLIER REVISION DATES

REVISION DATES 02/22/12 05/04/12 02/28/13 03/06/13

SHEET 35 OF 48

FILE => sw313-h-pilaster03.dgn

USERNAME => s124496 DATE PLOTTED => 26-JUN-2013 TIME PLOTTED => 18:26

DIST	COUNTY	ROUTE	POST MILES TOTAL PROJECT	SHEET No.	TOTAL SHEETS
07	LA	5	0.0/7.6	789	985

P. Vijitakula 12/28/12
REGISTERED CIVIL ENGINEER DATE

6-24-13
PLANS APPROVAL DATE

REGISTERED PROFESSIONAL ENGINEER P. VIJITAKULA No. C 54701 Exp. 12-31-13 CIVIL STATE OF CALIFORNIA

The State of California or its officers or agents shall not be responsible for the accuracy or completeness of electronic copies of this plan sheet.

TABLE 1: TABLE OF REINFORCING STEEL DIMENSIONS AND DATA

DESIGN H	6′	8′	10′	12′	14′	16′	18′	20′	22′	24′	26′	28′	30′	32′
W	8′- 3"	8′- 6"	9′- 0"	9′- 6"	10′- 0"	10′- 9"	11′- 3"	12′- 0"	13′- 3"	14′- 3"	15′- 9"	16′- 9"	18′- 0"	19′- 9"
C	2′- 9"	2′- 9"	3′- 0"	3′- 3"	3′- 4"	3′- 6"	3′- 9"	4′- 0"	4′- 3"	4′- 9"	5′- 3"	5′- 6"	5′- 9"	6′- 7"
B	5′- 6"	5′- 9"	6′- 0"	6′- 3"	6′- 8"	7′- 3"	7′- 6"	8′- 0"	9′- 0"	9′- 6"	10′- 6"	11′- 3"	12′- 3"	13′- 2"
F PILE FOOTING	1′- 6"	1′- 6"	1′- 6"	1′- 6"	1′- 9"	2′- 0"	2′- 0"	2′- 6"	2′- 9"	2′- 9"	3′- 0"	3′- 3"	3′- 9"	4′- 0"
ROW 1 SPACING	12′- 3"	10′- 3"	8′- 9"	7′- 6"	6′- 3"	5′- 3"	5′- 0"	5′- 0"	5′- 0"	5′- 0"	5′- 0"	5′- 0"		
ROW 2 SPACING	14′- 0"	12′- 9"	11′- 6"	10′- 3"	9′- 3"	8′- 3"	7′- 9"	6′- 6"	7′- 6"	6′- 0"	5′- 0"	5′- 0"		
ROW 3 SPACING									6′- 0"	5′- 3"	5′- 0"	5′- 0"		
STEM WITH HAUNCH, BATTER	0	1/2:12	1/2:12	1/2:12	1/2:12	1/2:12	1/2:12	1/2:12	1/2:12	5/8:12	3/4:12	7/8:12	1:12	1:12
STEM WITHOUT HAUNCH, BATTER	0	0	0	0	0	0	0	0	1/4:12	1/4:12	1/2:12	3/4:12	3/4:12	3/4:12
ⓐ BARS						#7 @ 15	#7 @ 12	#7 @ 12	#8 @ 12	#6 @ 6	#6 @ 6	#6 @ 6	#8 @ 9	#9 @ 9
ⓑ BARS	#8 @ 12	#7 @ 9	#7 @ 6	#7 @ 6	#7 @ 6	#9 @ 7.5	#9 @ 6	#10 @ 6	#10 @ 6	#8 @ 6ϋ	#8 @ 6ϋ	#8 @ 6ϋ	#10 @ 9ϋ	#11 @ 9ϋ
ha			5′- 0"	6′- 0"	7′- 0"	7′- 0"	6′- 0"	7′- 0"	7′- 0"	7′- 6"	8′- 6"	9′- 3"	15′- 0"	11′- 3"
hb						11′- 6"	12′- 0"	13′- 3"	16′- 0"	15′- 6"	17′- 6"	18′- 9"	21′- 0"	20′- 9"
ⓒ BARS	#6 @ 12	#6 @ 9	#6 @ 6	#6 @ 6	#6 @ 6	#8 @ 7.5	#8 @ 6	#9 @ 6	#9 @ 6	#10 @ 6	#10 @ 6	#11 @ 6	#10 @ 9ϋ	#10 @ 9ϋ
ⓓ BARS	#5 @ 12	#5 @ 9	#5 @ 12	#5 @ 12	#5 @ 12	#6 @ 15	#5 @ 12	#5 @ 12	#6 @ 12	#6 @ 12	#6 @ 12	#7 @ 12	#6 @ 9	#9 @ 9
ⓔ BARS	10-#7 @ 6	8-#7 @ 7	10-#6 @ 6	8-#6 @ 6	6-#6 @ 12	6-#5 @ 12	6-#5 @ 12	6-#5 @ 15	#5 @ 18	#5 @ 18	#5 @ 18	#5 @ 18	#5 @ 18	#5 @ 18
ⓕ BARS	10-#8 @ 7	10-#8 @ 6	10-#7 @ 8	12-#6 @ 7	8-#7 @ 11	7-#6 @ 13	8-#6 @ 12	8-#5 @ 15	#5 @ 18	#5 @ 18	#5 @ 18	#5 @ 18	#5 @ 18	#5 @ 18

NOTE:

Total ⓔ bars and ⓕ bars shown are total number of top and bottom bars combined.

LEGEND:

ϋ : 2 bar bundle

NOTES:

1. All piles are CIDH concrete piles.
2. Minimum distance between center pile and edge of footing is 2′-0".
3. Lateral resistance of each pile varies.
4. Maximum spacing between piles is shown in the table. Reduce to suit the length of footing.
5. Minimum distance between any two piles is 5′-0".
6. For sound wall and retaining wall architectural finish or texture, see details elsewhere in project plans.
7. For details not shown and drainage notes, see B3-5.
8. Footing cover, 1′-6" minimum.
9. For sound wall and barrier reinforcements see "MASONRY BLOCK SOUND WALL WITH BARRIER ON RETAINING WALL DETAILS NO. 1 and NO. 2" sheets.
10. For H=6′ through 14′, extend ⓑ bars into barrier for stem with haunch.
11. For H≥16′, extend ⓐ bars into barrier for stem with haunch.

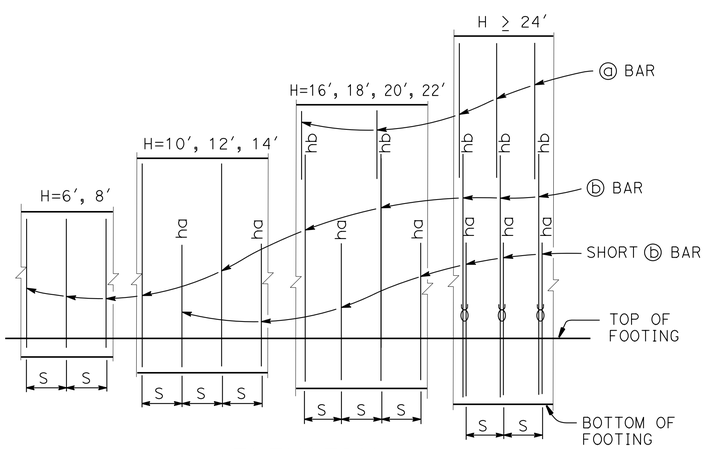

ELEVATION

No Scale

NOTES:

1. "ha" and "hb" above ⓑ bars indicate distance from top of footing to upper end of ⓑ bars, see table.
2. "S" is ⓑ bar spacing, see table.

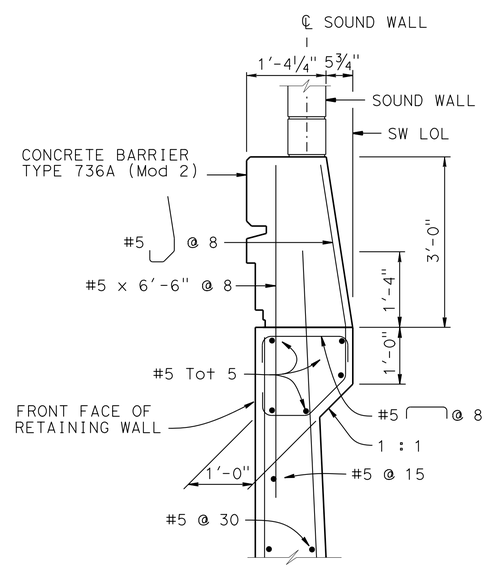

DETAIL A

¾ = 1′-0"

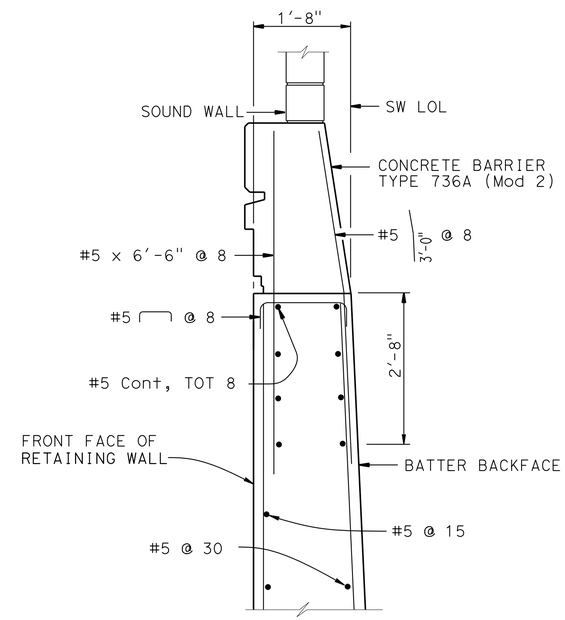

OPTIONAL DETAIL A

¾ = 1′-0"

For details not shown, see "DETAIL A".

DESIGN DATA

DESIGN: AASHTO LRFD Bridge Design Specifications 4th edition with California Amendments

WS: 33 psf on Sound Wall and Barrier

LS: Varied surcharge on level ground surface

CT: 54 kip maximum traffic impact loading evenly distributed over 10 feet at top of the barrier and 1:1 distribution down and outward

EQE/ EQD: Mononobe-Okabe Method
K_h = PGA/3
K_v = 0.0

SOIL: ø = 35°
γ = 130 pcf

REINFORCED CONCRETE: f′c = 3600 psi
fy = 60,000 psi

LOAD COMBINATIONS AND LIMIT STATES

SERVICE I	Q=1.00DC+1.00EV+1.00EH+1.00LS+0.30WS
STRENGTH I	Q=aDC+BEV+∝EH+1.75LS
STRENGTH V	Q=aDC+BEV+∝EH+1.35LS+0.40WS
EXTREME I	Q=1.00DC+1.00EV+1.00EH+1.00EQD+1.00EQE
EXTREME II	Q=1.00DC+1.00EV+1.00EH+1.00CT+0.5LS

WHERE:

Q: Force effects
a: 1.25 or 0.90, which ever controls design
β: 1.35 or 1.00, which ever controls design
∝: 1.50 or 0.90, which ever controls design
DC: Dead load of structure components
EV: Vertical earth fill pressure
LS: Live load surcharge
EQE: Seismic earth pressure
EQD: Soil and structure components inertia. Soil inertia ignored for stem design
WS: Wind load on sound wall and barrier
CT: Vehicular collision force

	BY	CHECKED
DESIGN	Daniel Sessions	Eric Watson
DETAILS	J.Tang / B.Huddleston	Eric Watson
QUANTITIES	Keith Stillmunkes	Wendy Hou

STATE OF CALIFORNIA DEPARTMENT OF TRANSPORTATION

DIVISION OF ENGINEERING SERVICES STRUCTURE DESIGN DESIGN BRANCH 1

BRIDGE NO. 53E0212
POST MILE 5.93

SOUND WALL NO. 313
RETAINING WALL TYPE 1SWBP-DETAILS NO. 1

STRUCTURES DESIGN DETAIL SHEET (ENGLISH) (REV. 09-01-10)

ORIGINAL SCALE IN INCHES FOR REDUCED PLANS 0 1 2 3

UNIT: 3576
PROJECT NUMBER & PHASE: 07000018351
CONTRACT NO.: 07-215954

DISREGARD PRINTS BEARING EARLIER REVISION DATES

REVISION DATES 8-02-12

SHEET 36 OF 48

FILE => sw313-1-rwdt01.dgn

USERNAME => s124496 DATE PLOTTED => 26-JUN-2013 TIME PLOTTED => 18:26

DIST	COUNTY	ROUTE	POST MILES TOTAL PROJECT	SHEET No.	TOTAL SHEETS
07	LA	5	0.0/7.6	790	985

P. Vijitakula 12/28/12
REGISTERED CIVIL ENGINEER DATE

6-24-13
PLANS APPROVAL DATE

REGISTERED PROFESSIONAL ENGINEER
P. VIJITAKULA
No. C 54701
Exp. 12-31-13
CIVIL
STATE OF CALIFORNIA

The State of California or its officers or agents shall not be responsible for the accuracy or completeness of electronic copies of this plan sheet.

NOTES:

1. For pile details not shown, see STANDARD PLAN B2-3.
2. For all other "NOTES", see "RETAINING WALL TYPE 1SWBP - DETAILS NO. 1" sheet.

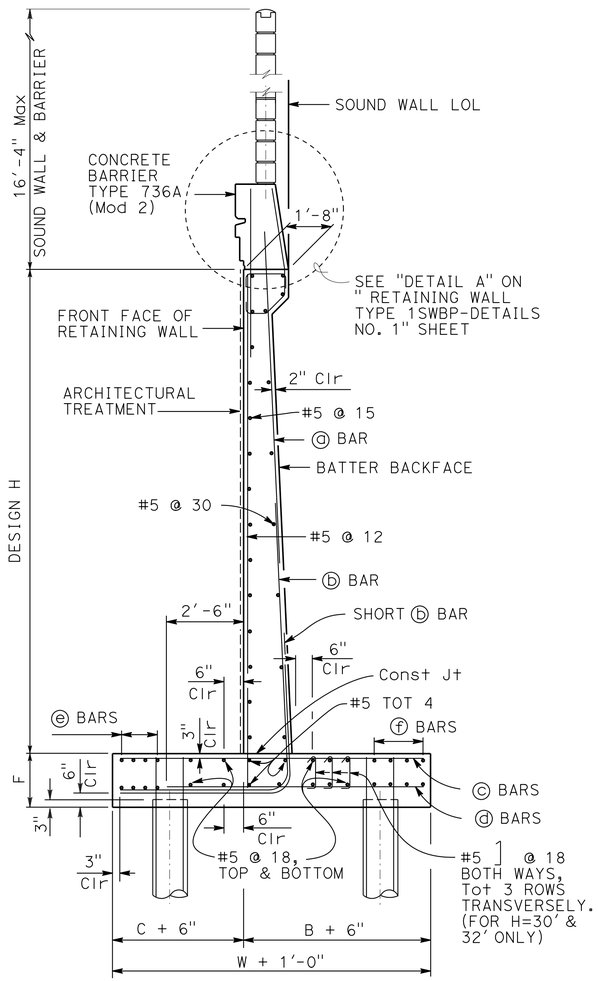

PILE FOOTING SECTION

No scale
All piles not shown

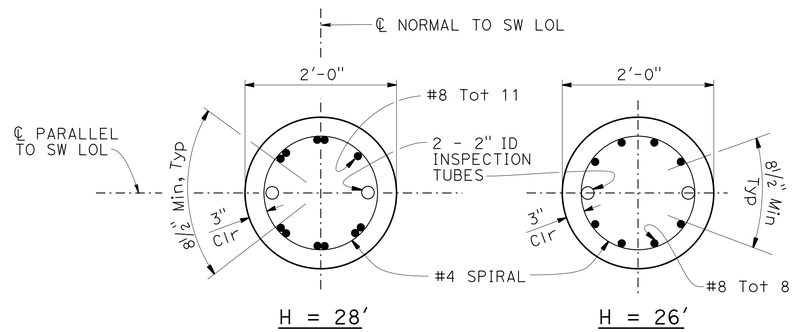

SECTION A-A

1" = 1'-0"

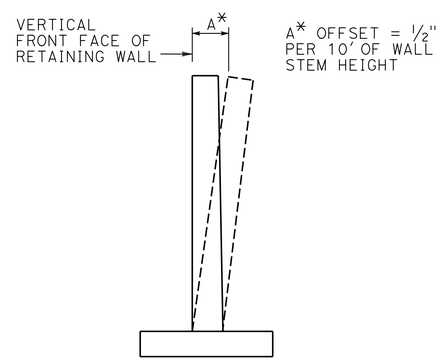

WALL OFFSET

No scale

Values for offsetting forms to be determined by the engineer

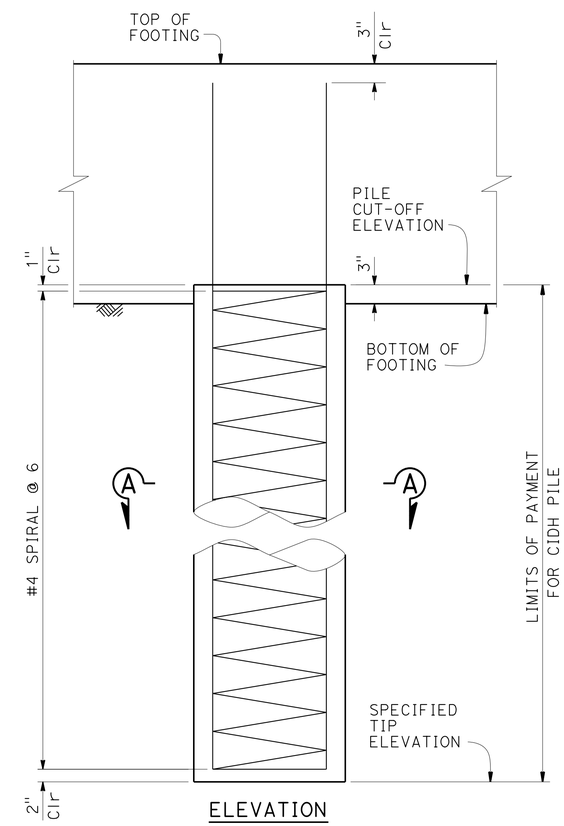

ELEVATION

24" CIDH CONCRETE PILE

1" = 1'-0"

DESIGN	BY Daniel Sessions	CHECKED Eric Watson	
DETAILS	BY J.Tang / B. Huddleston	CHECKED Eric Watson	
QUANTITIES	BY Keith Stillmunkes	CHECKED Wendy Hou	

STATE OF CALIFORNIA
DEPARTMENT OF TRANSPORTATION

DIVISION OF ENGINEERING SERVICES
STRUCTURE DESIGN
DESIGN BRANCH 1

BRIDGE NO. 53E0212
POST MILE 5.93

SOUND WALL NO. 313
RETAINING WALL TYPE 1SWBP-DETAILS NO. 2

STRUCTURES DESIGN DETAIL SHEET (ENGLISH) (REV. 09-01-10)

ORIGINAL SCALE IN INCHES FOR REDUCED PLANS 0 1 2 3

UNIT: 3576
PROJECT NUMBER & PHASE: 07000018351
CONTRACT NO.: 07-215954

DISREGARD PRINTS BEARING EARLIER REVISION DATES

REVISION DATES 8-02-12

SHEET 37 OF 48

FILE => sw313-i-rwdt02.dgn

USERNAME => s121614 DATE PLOTTED => 27-JUN-2013 TIME PLOTTED => 13:43

DIST	COUNTY	ROUTE	POST MILES TOTAL PROJECT	SHEET No.	TOTAL SHEETS
07	LA	5	0.0/7.6	791	985

P. Vijitakula 12/28/12
REGISTERED CIVIL ENGINEER DATE

6-24-13
PLANS APPROVAL DATE

REGISTERED PROFESSIONAL ENGINEER
P. VIJITAKULA
No. C 54701
Exp. 12-31-13
CIVIL
STATE OF CALIFORNIA

The State of California or its officers or agents shall not be responsible for the accuracy or completeness of electronic copies of this plan sheet.

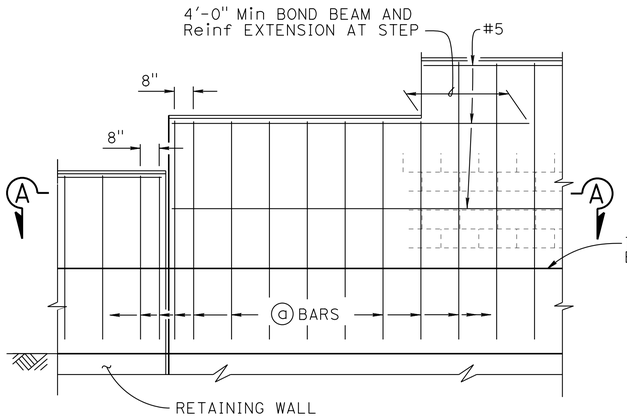

H=6'-4" THRU H=10'-4"

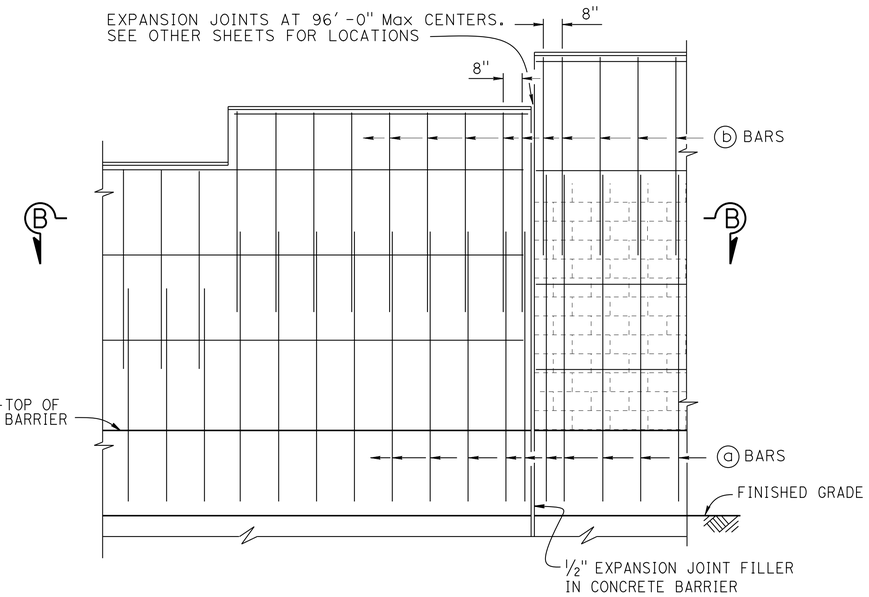

H=12'-4" THRU H=16'-4"

PART ELEVATION

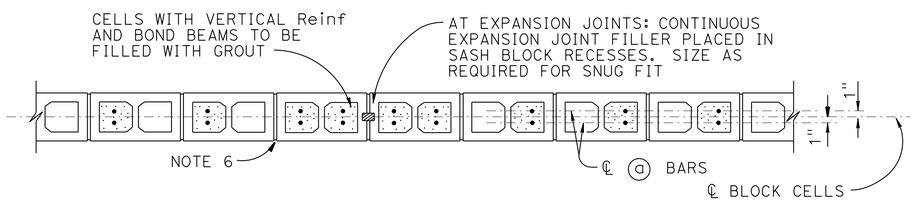

SECTION A-A

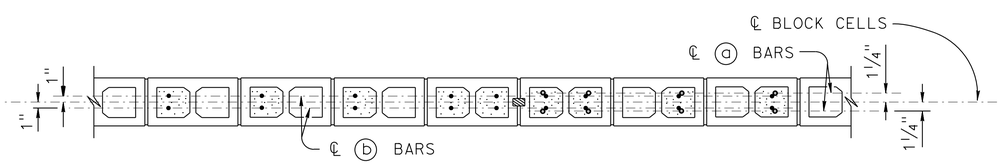

SECTION B-B

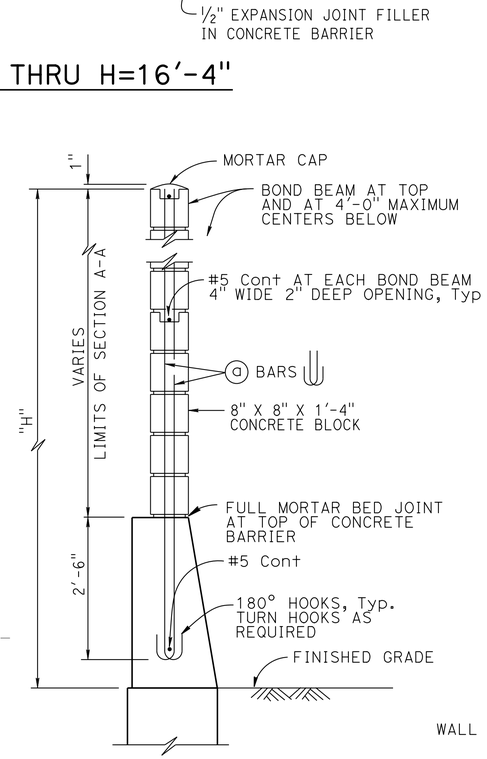

H=6'-4" THRU H=10'-4"

For details not shown, see H=12'-4" thru H=16'-4"

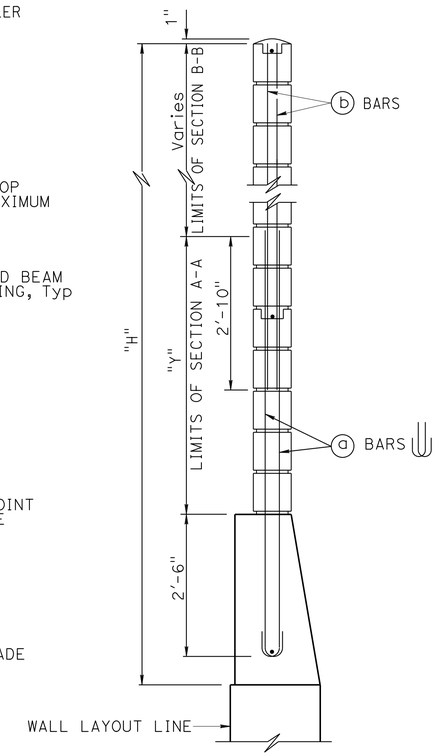

H=12'-4" THRU H=16'-4"

For details not shown, see H=6'-4" thru H=10'-4"

TYPICAL SECTION

NO SCALE

SOUND WALL REINFORCEMENT TABLE

MAXIMUM "H"	ⓐ BARS @ 1'-4" Max	ⓑ BARS @ 1'-4" Max	"Y"	f'm (psi)	COMPRESSIVE STRENGTH OF CMU (psi)	MAXIMUM "H"
6'-4"	#4	———	———	1500	1900	6'-4"
8'-4"	#4	———	———	1500	1900	8'-4"
10'-4"	#4	———	———	1500	1900	10'-4"
12'-4"	#5	#4	5'-0"	1500	1900	12'-4"
14'-4"	#6	#4	7'-0"	1500	1900	14'-4"
16'-4"	#6	#4	9'-0"	2500	3700	16'-4"

NOTES:

1. For details not shown, see "MASONRY BLOCK SOUND WALL WITH BARRIER ON RETAINING WALL - DETAILS NO. 2" sheet.
2. Slope ground at traffic side of barrier to drain. Maximum slope ±10%.
3. See STANDARD PLAN B15-9 for other details.
4. For type of block and joint finish, see other sheets.
5. When blocks are laid in stacked bond, ladder type, galvanized joint reinforcement shall be provided. A minimum of 2-9 gauge wire continuous at 4'-0" maximum to be used. Locate reinforcement in joints that are at the approximate midpoint between bond beams.
6. Horizontal joints shall be tooled concave or may be weathered. Vertical joints shall be tooled concave or may be raked.
7. For intermediate wall heights that are between the "H's" given, use the tabular information for the next higher "H".
8. Masonry strengths are listed in "SOUND WALL REINFORCEMENT TABLE".
9. Concrete to be used for the barrier shall contain not less than 590 pounds of cementitious material per cubic yard.

STANDARD DRAWING
FILE NO. xs15-130-1
APPROVAL DATE July 2011

STATE OF CALIFORNIA
DEPARTMENT OF TRANSPORTATION

DIVISION OF ENGINEERING SERVICES
STRUCTURE DESIGN
DESIGN BRANCH 1

BRIDGE NO. 53E0212
POST MILE 5.93

SOUND WALL NO. 313

MASONRY BLOCK SOUND WALL WITH BARRIER ON RETAINING WALL DETAILS NO. 1

DS OSD 2147A (ENGLISH STANDARD DRAWING "XS" BORDER REV. (02-02-11)

ORIGINAL SCALE IN INCHES FOR REDUCED PLANS 0 1 2 3

UNIT: 3576
PROJECT NUMBER & PHASE: 07000018351
CONTRACT NO.: 07-215954

DISREGARD PRINTS BEARING EARLIER REVISION DATES
REVISION DATES 02/28/12 05/04/12
SHEET 38 OF 48

FILE => sw313-k-mbswdt01.dgn

USERNAME => s124496 DATE PLOTTED => 26-JUN-2013 TIME PLOTTED => 18:26

DIST	COUNTY	ROUTE	POST MILES TOTAL PROJECT	SHEET No.	TOTAL SHEETS
07	LA	5	0.0/7.6	792	985

P. Vijitakula 12/28/12
REGISTERED CIVIL ENGINEER DATE

6-24-13
PLANS APPROVAL DATE

REGISTERED PROFESSIONAL ENGINEER
P. VIJITAKULA
No. C 54701
Exp. 12-31-13
CIVIL
STATE OF CALIFORNIA

The State of California or its officers or agents shall not be responsible for the accuracy or completeness of electronic copies of this plan sheet.

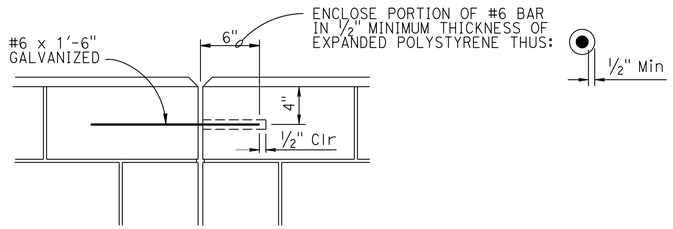

DETAIL A

NO SCALE

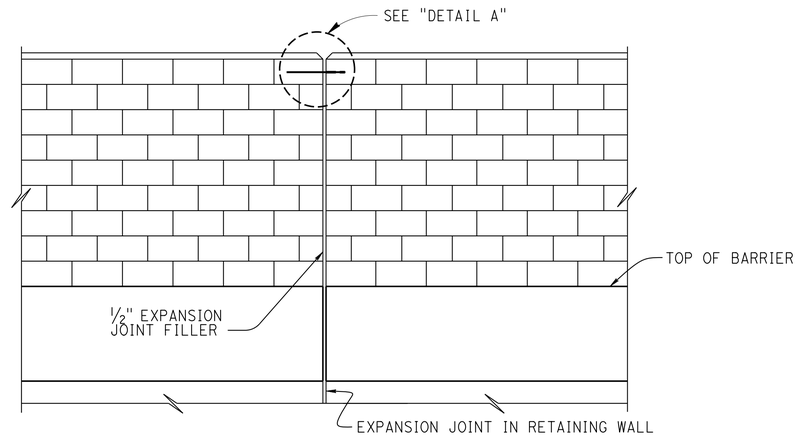

ALIGNMENT KEY DETAIL

NO SCALE

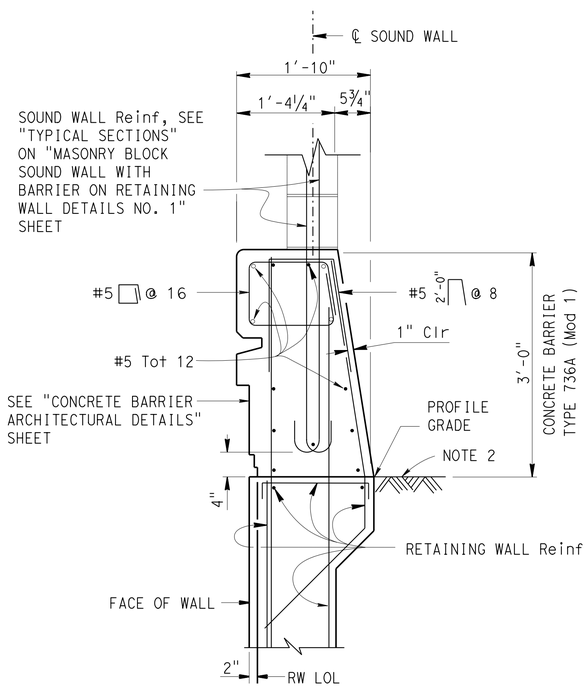

BARRIER SECTION

NO SCALE

DESIGN NOTES

DESIGN

Uniform Building Code, 1997 Edition and the Bridge Design Specifications

DESIGN WIND LOAD

33 psf

DESIGN SEISMIC LOAD

0.57 Dead load

REINFORCED CONCRETE

f'c = 3600 psi
fy = 60 ksi

CONCRETE MASONRY

REGULAR STRENGTH	HIGH STRENGTH	
f'm = 1500 psi	f'm = 2000 psi	f'm = 2500 psi
fb = 495 psi	fb = 660 psi	fb = 830 psi
fs = 24,000 psi	fs = 24,000 psi	fs = 24,000 psi
n = 25.8	n = 19.3	n = 15.5

NOTES:

1. For details not shown, see "STANDARD PLAN B15-6".
2. Slope ground at traffic side of barrier to drain.
   Maximum slope ±10%
   See "STANDARD PLAN B11-56", Note D.

	BY	CHECKED
DESIGN	Daniel Sessions	Eric Watson
DETAILS	Bob Huddleston	Eric Watson
QUANTITIES	Keith Stillmunkes	Wendy Hou

STATE OF CALIFORNIA
DEPARTMENT OF TRANSPORTATION

DIVISION OF ENGINEERING SERVICES
STRUCTURE DESIGN
DESIGN BRANCH 1

BRIDGE NO. 53E0212
POST MILE 5.93

SOUND WALL NO. 313

MASONRY BLOCK SOUND WALL WITH BARRIER ON RETAINING WALL DETAILS NO. 2

STRUCTURES DESIGN DETAIL SHEET (ENGLISH) (REV. 09-01-10)

ORIGINAL SCALE IN INCHES FOR REDUCED PLANS 0 1 2 3

UNIT: 3576
PROJECT NUMBER & PHASE: 07000018351
CONTRACT NO.: 07-215954

DISREGARD PRINTS BEARING EARLIER REVISION DATES

REVISION DATES: 02/28/12 11/30/12

SHEET 39 OF 48

FILE => sw313-k-mbswdt02.dgn

USERNAME => s124496 DATE PLOTTED => 26-JUN-2013 TIME PLOTTED => 18:26

DIST	COUNTY	ROUTE	POST MILES TOTAL PROJECT	SHEET No.	TOTAL SHEETS
07	LA	5	0.0/7.6	793	985

REGISTERED CIVIL ENGINEER — DATE 6/2012

6-24-13
PLANS APPROVAL DATE

REGISTERED PROFESSIONAL ENGINEER — Nadeem Srour — No. 2801 — Exp. 12-31-2013 — GEOTECHNICAL — STATE OF CALIFORNIA

The State of California or its officers or agents shall not be responsible for the accuracy or completeness of electronic copies of this plan sheet.

This LOTB sheet was prepared in accordance with the Caltrans Soil & Rock Logging, Classification, & Presentation Manual (2010 Edition).

BENCH MARKS

LA 5 PM 6.1, 1995 Elev. 126.778′
2.5" CADT Disk in Concrete Curb
Located at the nose of the southbound I-5 FWY Onramp Gore from Orr & Day Rd
N=1797387.8, E=6534371.3
VERTICAL NAVD88, 0405-CALIFORNIA 5 US Ft

LA 5 PM 6.4, 1995 Elev. Not shown
2.5" CADT Disk in Asphalt
Located along the northbound shoulder of I-5 FWY, 150 ft north of the Florence Avenue Overcrossing
N=1799072.3, E=6533513.4
VERTICAL NAVD88, 0405-CALIFORNIA 5 US Ft

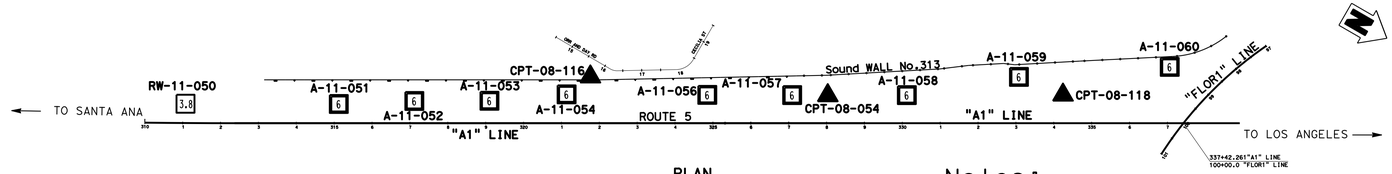

PLAN
SCALE 1"=200′

Notes:

Perched water was encountered in RW-11-050 at elevation 91 feet.

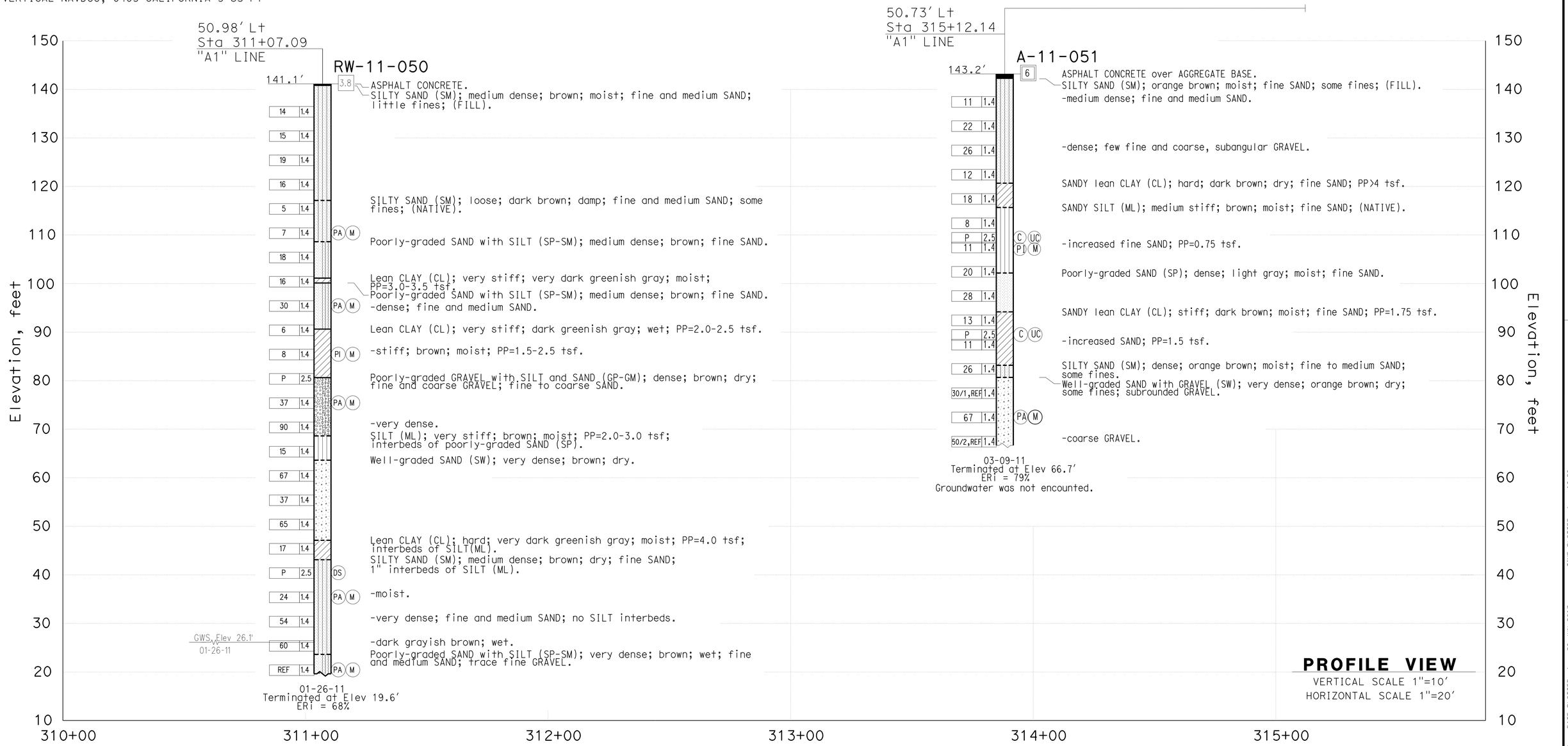

ENGINEERING SERVICES	MATERIALS AND GEOTECHNICAL SERVICES	STATE OF CALIFORNIA DEPARTMENT OF TRANSPORTATION	DIVISION OF ENGINEERING SERVICES STRUCTURE DESIGN DESIGN BRANCH 1	BRIDGE NO. 53E0212 POST MILE 5.93	SOUND WALL NO. 313
FUNCTIONAL SUPERVISOR NAME: S.SUKIASIAN	DRAWN BY: T.PANAH (URS CORP) CHECKED BY: K.BARKER	FIELD INVESTIGATION BY: K.BARKER/N.SROUR			LOG OF TEST BORINGS SHEET 1 OF 9

OGS CIVIL LOG OF TEST BORINGS SHEET — ORIGINAL SCALE IN INCHES FOR REDUCED PLANS 0 1 2 3

UNIT: 3576
PROJECT NUMBER & PHASE: 07000018351 — CONTRACT NO.: 07-215954

DISREGARD PRINTS BEARING EARLIER REVISION DATES → 03/13/12 04/10/13

SHEET 40 OF 48

FILE => sw313-z-ltb01.dgn

USERNAME => s124096 — DATE PLOTTED => 26-JUN-2013 — TIME PLOTTED => 18:26

DIST	COUNTY	ROUTE	POST MILES TOTAL PROJECT	SHEET No.	TOTAL SHEETS
07	LA	5	0.0/7.6	794	985

REGISTERED CIVIL ENGINEER 6/2012 DATE

6-24-13
PLANS APPROVAL DATE

REGISTERED PROFESSIONAL ENGINEER Nadeem Srour No. 2801 Exp. 12-31-2013 GEOTECHNICAL STATE OF CALIFORNIA

The State of California or its officers or agents shall not be responsible for the accuracy or completeness of electronic copies of this plan sheet.

This LOTB sheet was prepared in accordance with the Caltrans Soil & Rock Logging, Classification, & Presentation Manual (2010 Edition).

FOR PLAN VIEW, SEE
"LOG OF TEST BORINGS" 1 OF 9

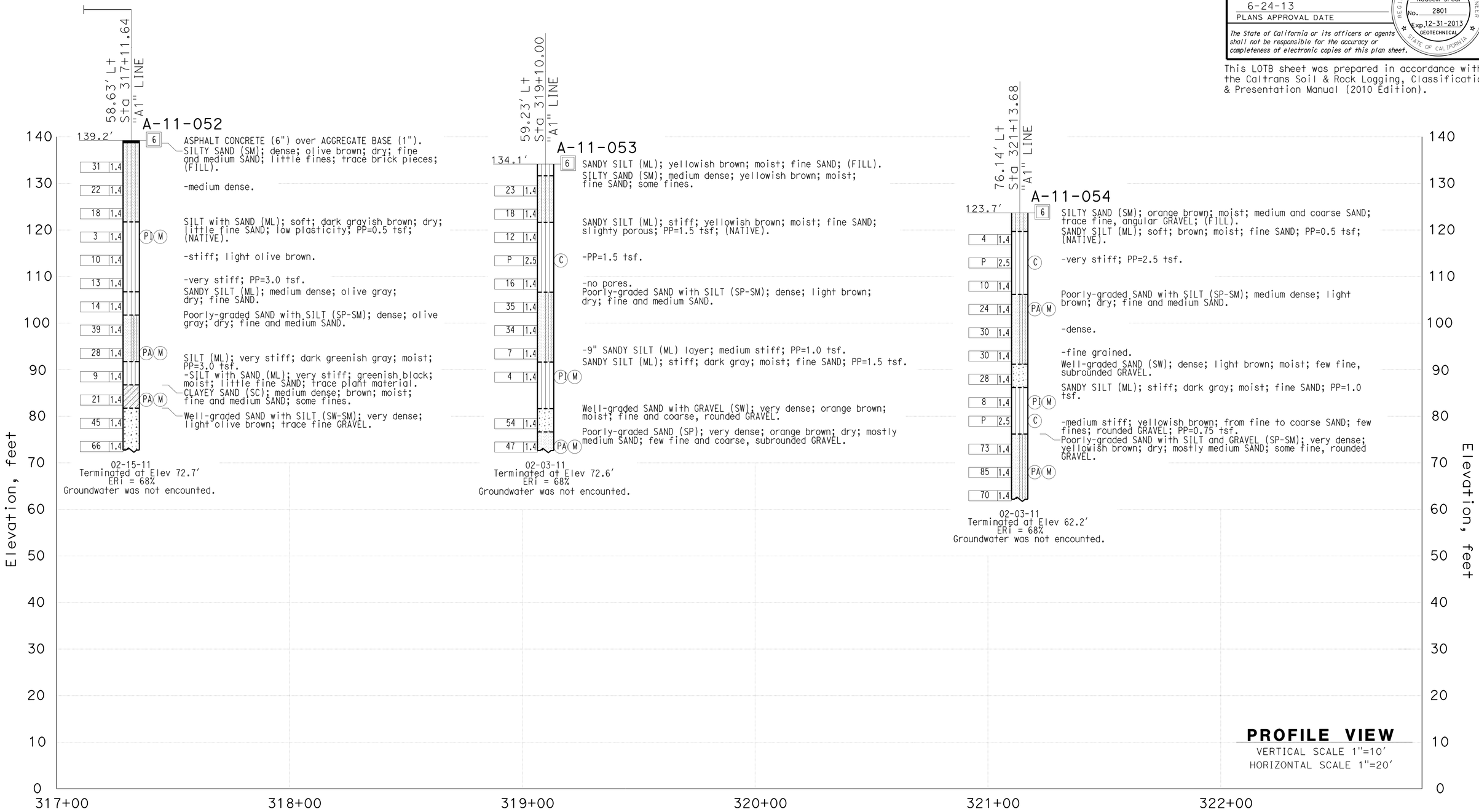

ENGINEERING SERVICES	MATERIALS AND GEOTECHNICAL SERVICES	STATE OF CALIFORNIA DEPARTMENT OF TRANSPORTATION	DIVISION OF ENGINEERING SERVICES STRUCTURE DESIGN DESIGN BRANCH 1	BRIDGE NO. 53E0212 POST MILE 5.93	SOUND WALL NO. 313
FUNCTIONAL SUPERVISOR NAME: S.SUKIASIAN	DRAWN BY: T.PANAH (URS CORP) CHECKED BY: K.BARKER	FIELD INVESTIGATION BY: K.BARKER/N.SROUR			LOG OF TEST BORINGS SHEET 2 OF 9

OGS CIVIL LOG OF TEST BORINGS SHEET

ORIGINAL SCALE IN INCHES FOR REDUCED PLANS 0 1 2 3

UNIT: 3576
PROJECT NUMBER & PHASE: 07000018351 CONTRACT NO.: 07-215954

DISREGARD PRINTS BEARING EARLIER REVISION DATES 03/13/12

REVISION DATES | SHEET 41 | OF 48

FILE => sw313-z-ltb02.dgn

USERNAME => s124496 DATE PLOTTED => 26-JUN-2013 TIME PLOTTED => 18:26

DIST	COUNTY	ROUTE	POST MILES TOTAL PROJECT	SHEET No.	TOTAL SHEETS
07	LA	5	0.0/7.6	795	985

REGISTERED CIVIL ENGINEER 12/2011 DATE

6-24-13
PLANS APPROVAL DATE

REGISTERED PROFESSIONAL ENGINEER MICHAEL G. SMITH No. 2229 Exp. 3-31-2012 GEOTECHNICAL STATE OF CALIFORNIA

The State of California or its officers or agents shall not be responsible for the accuracy or completeness of electronic copies of this plan sheet.

This LOTB sheet was prepared in accordance with the Caltrans Soil & Rock Logging, Classification, & Presentation Manual (2010 Edition).

FOR PLAN VIEW, SEE
"LOG OF TEST BORINGS" 1 OF 9

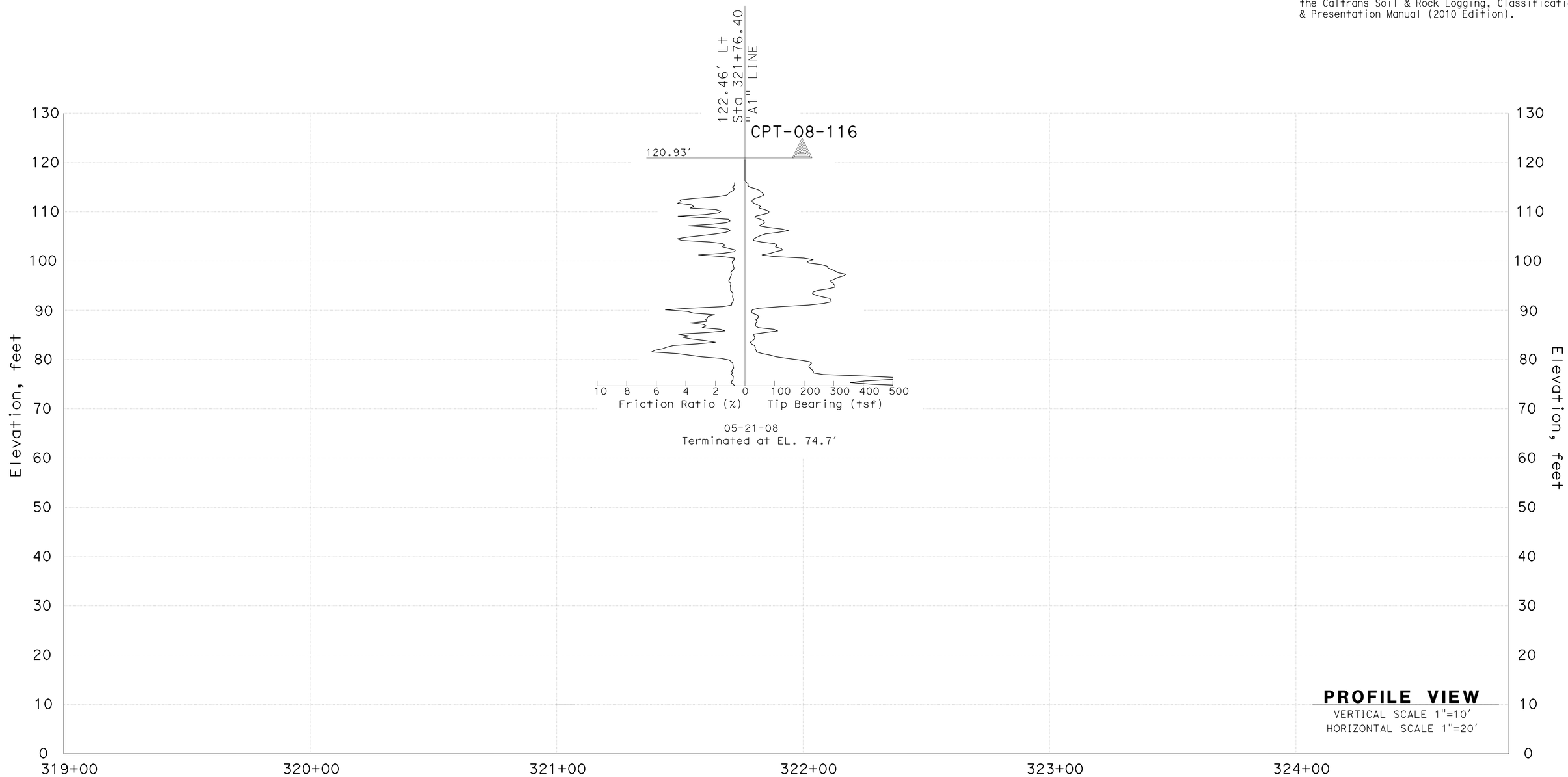

ENGINEERING SERVICES		MATERIALS AND GEOTECHNICAL SERVICES	STATE OF CALIFORNIA DEPARTMENT OF TRANSPORTATION	DIVISION OF ENGINEERING SERVICES STRUCTURE DESIGN DESIGN BRANCH 1	BRIDGE NO. 53E0212 POST MILE 5.93	SOUND WALL NO. 313
FUNCTIONAL SUPERVISOR NAME: M.SMITH	DRAWN BY: T.PANAH (URS CORP) CHECKED BY: D.ORRIS	FIELD INVESTIGATION BY: P.MCDONALD				LOG OF TEST BORINGS SHEET 3 OF 9

OGS CIVIL LOG OF TEST BORINGS SHEET

ORIGINAL SCALE IN INCHES FOR REDUCED PLANS 0 1 2 3

UNIT: 3576
PROJECT NUMBER & PHASE: 07000018351 CONTRACT NO.: 07-215954

DISREGARD PRINTS BEARING EARLIER REVISION DATES

REVISION DATES 03/13/12 SHEET 42 OF 48

FILE => sw313-z-ltb03.dgn

USERNAME => s124496 DATE PLOTTED => 26-JUN-2013 TIME PLOTTED => 18:26

DIST	COUNTY	ROUTE	POST MILES TOTAL PROJECT	SHEET No.	TOTAL SHEETS
07	LA	5	0.0/7.6	796	985

REGISTERED CIVIL ENGINEER 6/2012 DATE

6-24-13
PLANS APPROVAL DATE

REGISTERED PROFESSIONAL ENGINEER Nadeem Srour No. 2801 Exp. 12-31-2013 GEOTECHNICAL STATE OF CALIFORNIA

The State of California or its officers or agents shall not be responsible for the accuracy or completeness of electronic copies of this plan sheet.

This LOTB sheet was prepared in accordance with the Caltrans Soil & Rock Logging, Classification, & Presentation Manual (2010 Edition).

FOR PLAN VIEW, SEE
"LOG OF TEST BORINGS" 1 OF 9

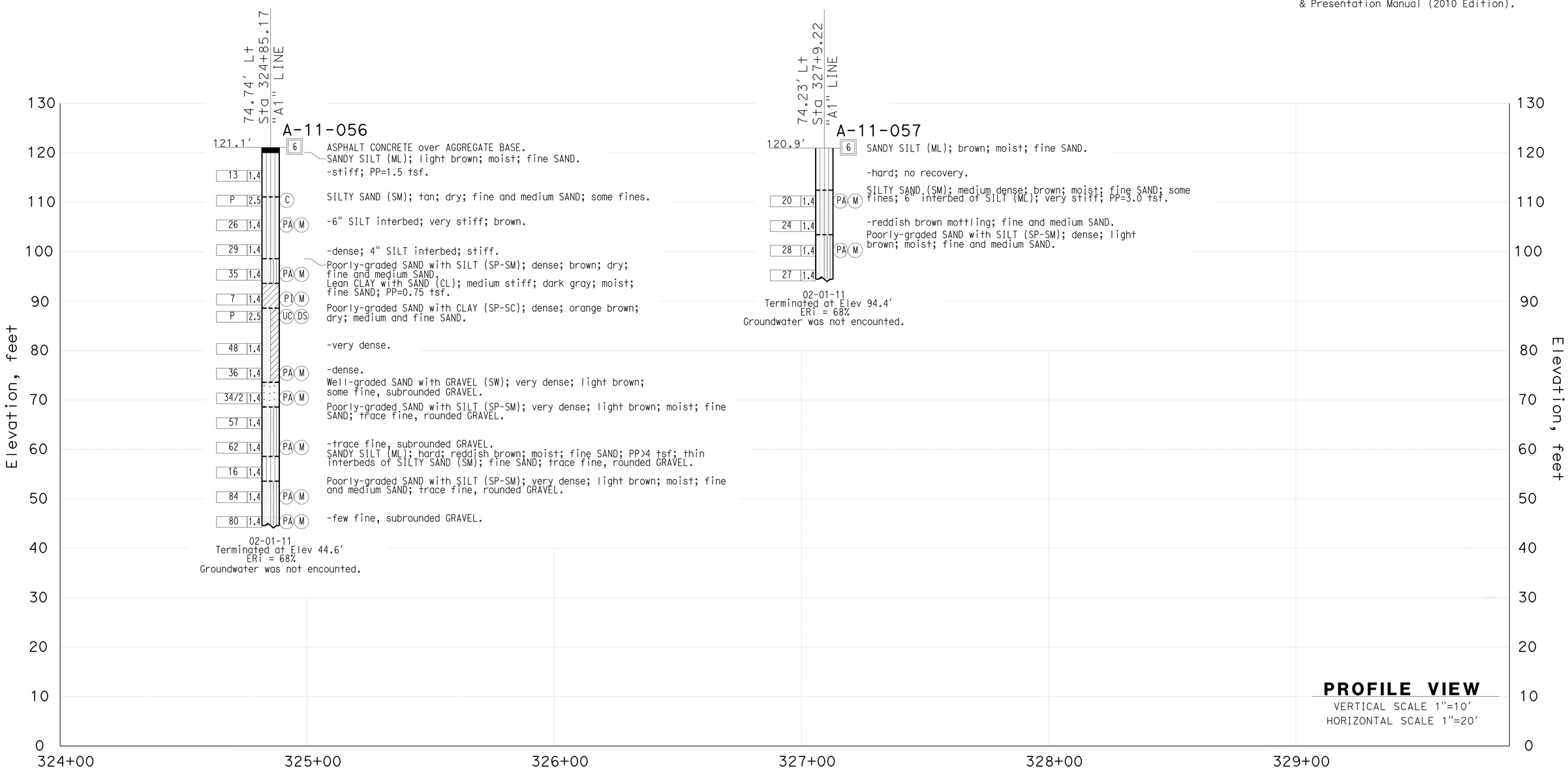

ENGINEERING SERVICES	MATERIALS AND GEOTECHNICAL SERVICES	STATE OF CALIFORNIA DEPARTMENT OF TRANSPORTATION	DIVISION OF ENGINEERING SERVICES STRUCTURE DESIGN DESIGN BRANCH 1	BRIDGE NO. 53E0212 POST MILE 5.93	SOUND WALL NO. 313
FUNCTIONAL SUPERVISOR NAME: S.SUKIASIAN	DRAWN BY: T.PANAH (URS CORP) CHECKED BY: K.BARKER	FIELD INVESTIGATION BY: N.SROUR			LOG OF TEST BORINGS SHEET 4 OF 9

OGS CIVIL LOG OF TEST BORINGS SHEET

ORIGINAL SCALE IN INCHES FOR REDUCED PLANS 0 1 2 3

UNIT: 3576
PROJECT NUMBER & PHASE: 07000018351 CONTRACT NO.: 07-215954

DISREGARD PRINTS BEARING EARLIER REVISION DATES 03/13/12

REVISION DATES | SHEET 43 | OF 48

FILE => sw313-z-ltb04.dgn

USERNAME => s124496 DATE PLOTTED => 26-JUN-2013 TIME PLOTTED => 18:26

DIST	COUNTY	ROUTE	POST MILES TOTAL PROJECT	SHEET No.	TOTAL SHEETS
07	LA	5	0.0/7.6	797	985

REGISTERED CIVIL ENGINEER 12/2011 DATE

6-24-13
PLANS APPROVAL DATE

REGISTERED PROFESSIONAL ENGINEER MICHAEL G. SMITH No. 2229 Exp. 3-31-2012 GEOTECHNICAL STATE OF CALIFORNIA

The State of California or its officers or agents shall not be responsible for the accuracy or completeness of electronic copies of this plan sheet.

This LOTB sheet was prepared in accordance with the Caltrans Soil & Rock Logging, Classification, & Presentation Manual (2010 Edition).

FOR PLAN VIEW, SEE
"LOG OF TEST BORINGS" 1 OF 9

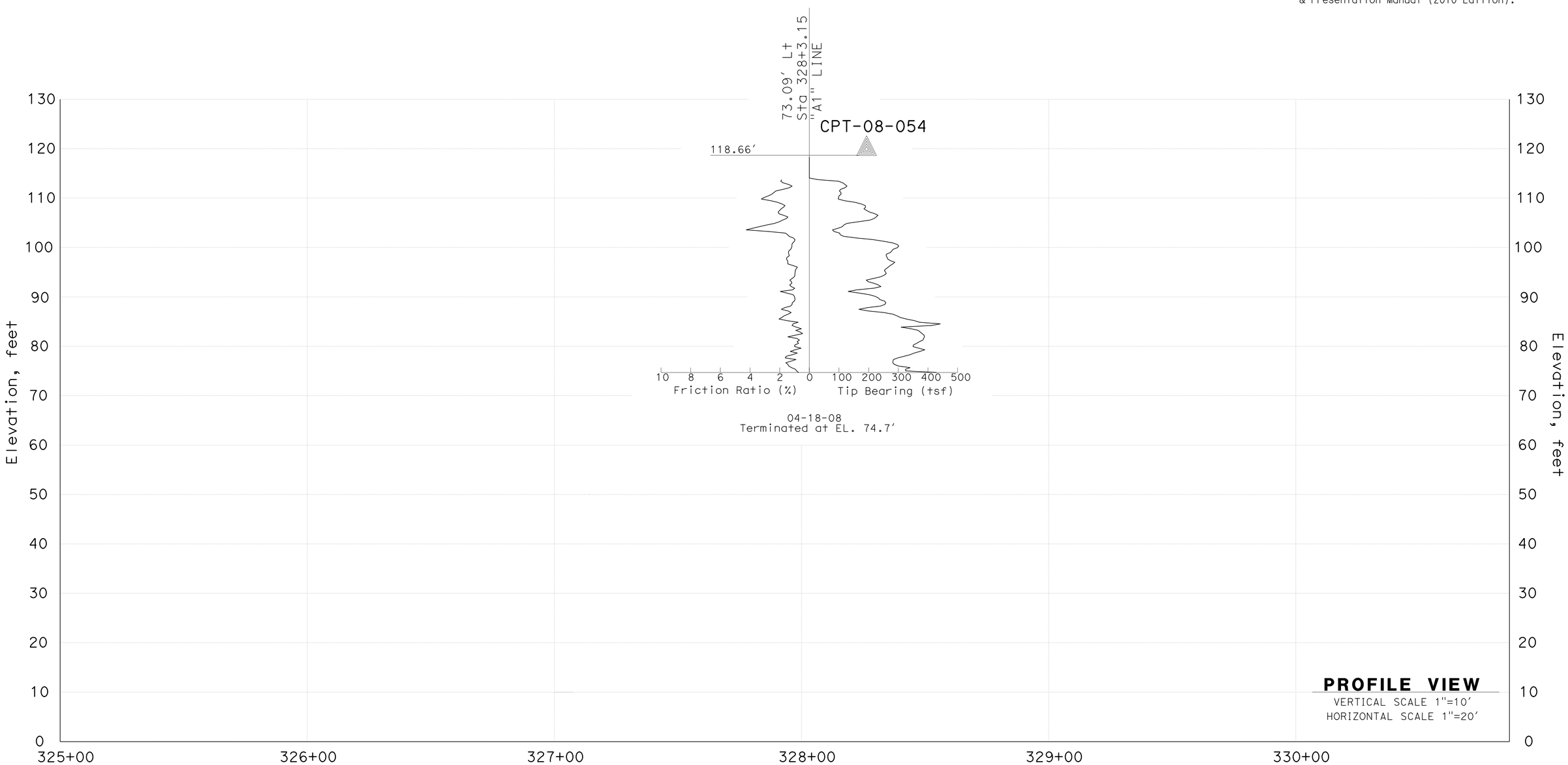

ENGINEERING SERVICES	MATERIALS AND GEOTECHNICAL SERVICES	STATE OF CALIFORNIA DEPARTMENT OF TRANSPORTATION	DIVISION OF ENGINEERING SERVICES STRUCTURE DESIGN DESIGN BRANCH 1	BRIDGE NO. 53E0212 POST MILE 5.93	SOUND WALL NO. 313
FUNCTIONAL SUPERVISOR NAME: M.SMITH	DRAWN BY: T.PANAH (URS CORP) CHECKED BY: D.ORRIS	FIELD INVESTIGATION BY: P.MCDONALD			LOG OF TEST BORINGS SHEET 5 OF 9

OGS CIVIL LOG OF TEST BORINGS SHEET

ORIGINAL SCALE IN INCHES FOR REDUCED PLANS 0 1 2 3

UNIT: 3576
PROJECT NUMBER & PHASE: 07000018351 CONTRACT NO.: 07-215954

DISREGARD PRINTS BEARING EARLIER REVISION DATES

REVISION DATES 03/14/12

SHEET 44 OF 48

FILE => sw313-z-ltb05.dgn

USERNAME => s124496 DATE PLOTTED => 26-JUN-2013 TIME PLOTTED => 18:26

DIST	COUNTY	ROUTE	POST MILES TOTAL PROJECT	SHEET No.	TOTAL SHEETS
07	LA	5	0.0/7.6	798	985

REGISTERED CIVIL ENGINEER 6/2012 DATE

6-24-13
PLANS APPROVAL DATE

REGISTERED PROFESSIONAL ENGINEER Nadeem Srour No. 2801 Exp. 12-31-2013 GEOTECHNICAL STATE OF CALIFORNIA

The State of California or its officers or agents shall not be responsible for the accuracy or completeness of electronic copies of this plan sheet.

This LOTB sheet was prepared in accordance with the Caltrans Soil & Rock Logging, Classification, & Presentation Manual (2010 Edition).

FOR PLAN VIEW, SEE
"LOG OF TEST BORINGS" 1 OF 9

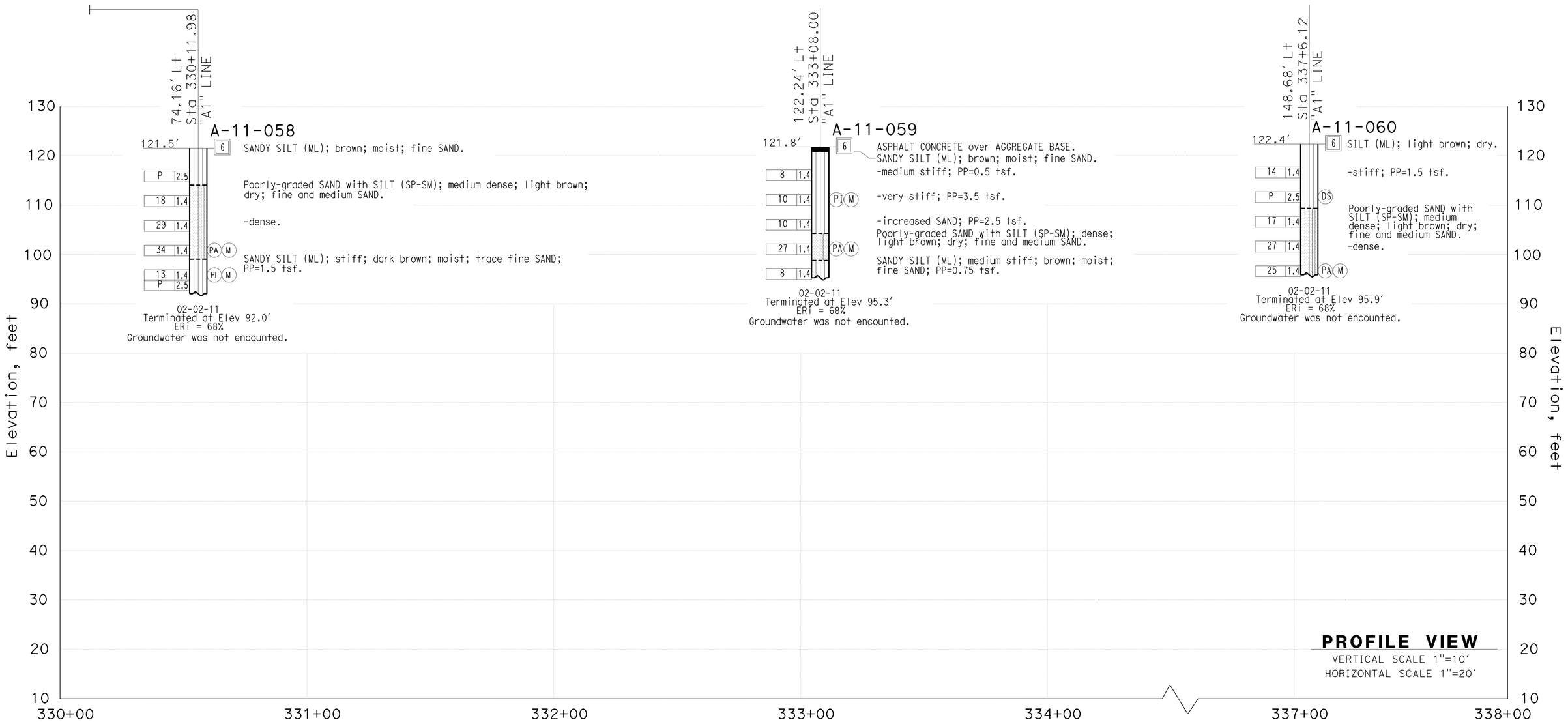

ENGINEERING SERVICES	MATERIALS AND GEOTECHNICAL SERVICES	STATE OF CALIFORNIA DEPARTMENT OF TRANSPORTATION	DIVISION OF ENGINEERING SERVICES STRUCTURE DESIGN DESIGN BRANCH 1	BRIDGE NO. 53E0212 POST MILE 5.93	SOUND WALL NO. 313
FUNCTIONAL SUPERVISOR NAME: S.SUKIASIAN	DRAWN BY: T.PANAH (URS CORP) CHECKED BY: K.BARKER	FIELD INVESTIGATION BY: N.SROUR			LOG OF TEST BORINGS SHEET 6 OF 9

OGS CIVIL LOG OF TEST BORINGS SHEET

ORIGINAL SCALE IN INCHES FOR REDUCED PLANS 0 1 2 3

UNIT: 3576
PROJECT NUMBER & PHASE: 07000018351 CONTRACT NO.: 07-215954

DISREGARD PRINTS BEARING EARLIER REVISION DATES

REVISION DATES 03/14/12

SHEET 45 OF 48

FILE => sw313-z-ltb06.dgn

USERNAME => s124496 DATE PLOTTED => 26-JUN-2013 TIME PLOTTED => 18:26

DIST	COUNTY	ROUTE	POST MILES TOTAL PROJECT	SHEET No.	TOTAL SHEETS
07	LA	5	0.0/7.6	799	985

REGISTERED CIVIL ENGINEER 12/2011 DATE

6-24-13
PLANS APPROVAL DATE

REGISTERED PROFESSIONAL ENGINEER MICHAEL G. SMITH No. 2229 Exp. 3-31-2012 GEOTECHNICAL STATE OF CALIFORNIA

The State of California or its officers or agents shall not be responsible for the accuracy or completeness of electronic copies of this plan sheet.

This LOTB sheet was prepared in accordance with the Caltrans Soil & Rock Logging, Classification, & Presentation Manual (2010 Edition).

FOR PLAN VIEW, SEE
"LOG OF TEST BORINGS" 1 OF 9

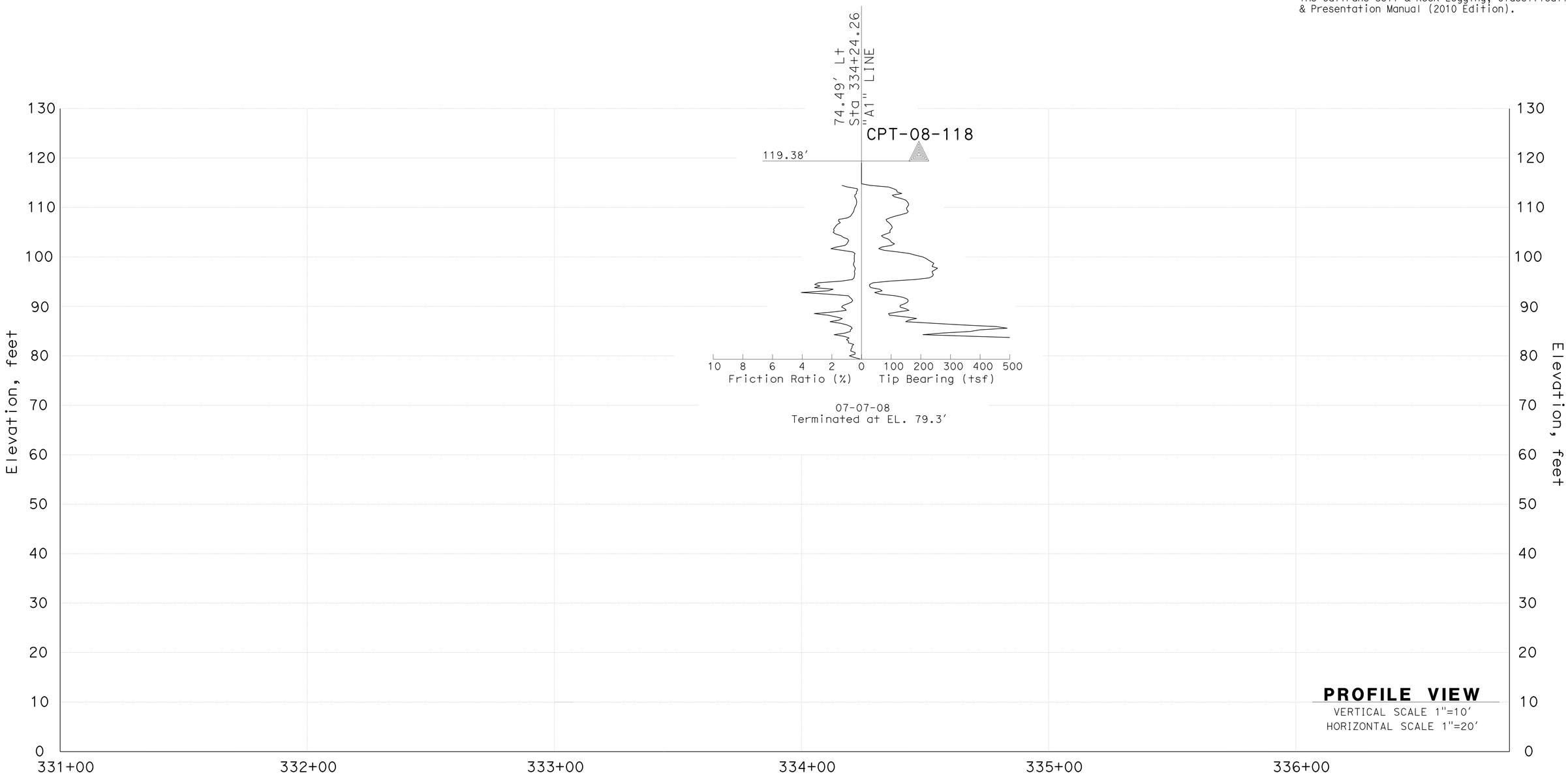

ENGINEERING SERVICES	MATERIALS AND GEOTECHNICAL SERVICES	STATE OF CALIFORNIA DEPARTMENT OF TRANSPORTATION	DIVISION OF ENGINEERING SERVICES STRUCTURE DESIGN DESIGN BRANCH 1	BRIDGE NO. 53E0212 POST MILE 5.93	SOUND WALL NO. 313
FUNCTIONAL SUPERVISOR NAME: M.SMITH	DRAWN BY: T.PANAH (URS CORP) CHECKED BY: D.ORRIS	FIELD INVESTIGATION BY: P.MCDONALD			LOG OF TEST BORINGS SHEET 7 OF 9

OGS CIVIL LOG OF TEST BORINGS SHEET

ORIGINAL SCALE IN INCHES FOR REDUCED PLANS 0 1 2 3

UNIT: 3576
PROJECT NUMBER & PHASE: 07000018351 CONTRACT NO.: 07-215954

DISREGARD PRINTS BEARING EARLIER REVISION DATES

REVISION DATES 03/14/12 SHEET 46 OF 48

FILE => sw313-z-ltb07.dgn

USERNAME => s124496 DATE PLOTTED => 26-JUN-2013 TIME PLOTTED => 18:27

REFERENCE: CALTRANS SOIL & ROCK LOGGING, CLASSIFICATION, AND PRESENTATION MANUAL (2010)

DIST	COUNTY	ROUTE	POST MILES TOTAL PROJECT	SHEET No.	TOTAL SHEETS
07	LA	5	0.0/7.6	800	985

REGISTERED CIVIL ENGINEER — DATE 6/2012

6-24-13
PLANS APPROVAL DATE

REGISTERED PROFESSIONAL ENGINEER — Nadeem Srour — No. 2801 — Exp. 12-31-2013 — GEOTECHNICAL — STATE OF CALIFORNIA

The State of California or its officers or agents shall not be responsible for the accuracy or completeness of electronic copies of this plan sheet.

This LOTB sheet was prepared in accordance with the Caltrans Soil & Rock Logging, Classification, & Presentation Manual (2010 Edition).

CEMENTATION

Description	Criteria
Weak	Crumbles or breaks with handling or little finger pressure.
Moderate	Crumbles or breaks with considerable finger pressure.
Strong	Will not crumble or break with finger pressure.

BOREHOLE IDENTIFICATION

Symbol	Hole Type	Description
Size	A	Auger Boring (hollow or solid stem bucket)
Size	R RW RC P	Rotary drilled boring (conventional) Rotary drilled with self-casing wire-line Rotary core with continuously-sampled, self-casing wire-line Rotary percussion boring (air)
Size	R	Rotary drilled diamond core
Size	HD HA	Hand driven (1-inch soil tube) Hand Auger
●	D	Dynamic Cone Penetration Boring
▲	CPT	Cone Penetration Test (ASTM D 5778)
⬚	O	Other (note on LOTB)

Note: Size in inches.

CONSISTENCY OF COHESIVE SOILS

Description	Shear Strength (tsf)	Pocket Penetrometer Measurement, PP, (tsf)	Torvane Measurement, TV, (tsf)	Vane Shear Measurement, VS, (tsf)
Very Soft	Less than 0.12	Less than 0.25	Less than 0.12	Less than 0.12
Soft	0.12 - 0.25	0.25 - 0.5	0.12 - 0.25	0.12 - 0.25
Medium Stiff	0.25 - 0.5	0.5 - 1	0.25 - 0.5	0.25 - 0.5
Stiff	0.5 - 1	1 - 2	0.5 - 1	0.5 - 1
Very Stiff	1 - 2	2 - 4	1 - 2	1 - 2
Hard	Greater than 2	Greater than 4	Greater than 2	Greater than 2

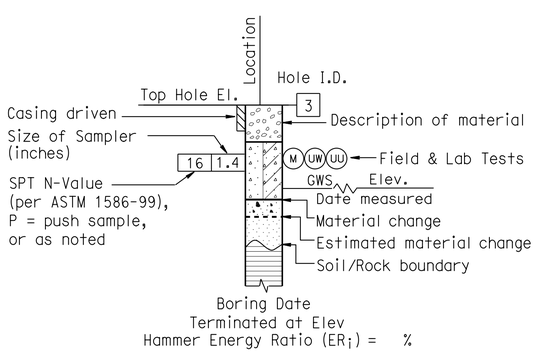

ROTARY BORING

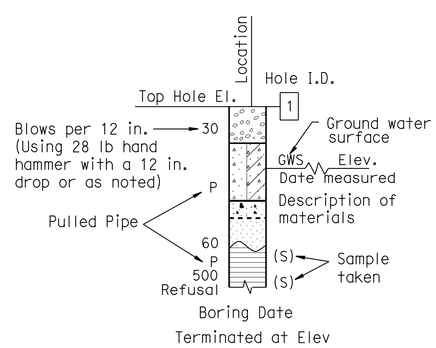

HAND BORING

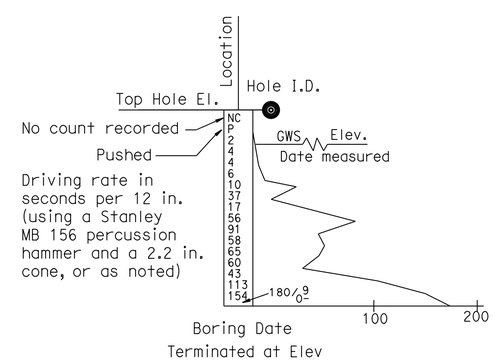

DYNAMIC CONE PENETRATION BORING

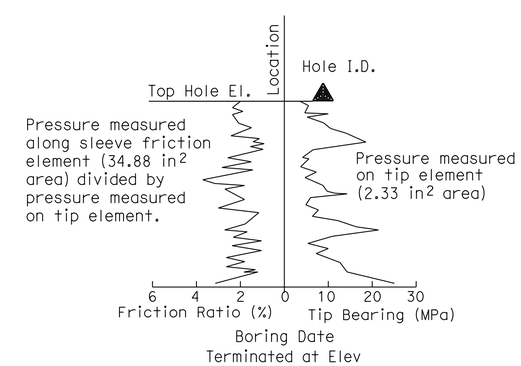

CONE PENETRATION TEST (CPT) BORING

ENGINEERING SERVICES	MATERIALS AND GEOTECHNICAL SERVICES	STATE OF CALIFORNIA DEPARTMENT OF TRANSPORTATION	DIVISION OF ENGINEERING SERVICES STRUCTURE DESIGN DESIGN BRANCH 1	BRIDGE NO. 53E0212 / POST MILE 5.93	SOUND WALL NO. 313
FUNCTIONAL SUPERVISOR	DRAWN BY: T.PANAH (URS CORP)	FIELD INVESTIGATION BY:			LOG OF TEST BORINGS SHEET 8 OF 9
NAME: S.SUKIASIAN	CHECKED BY: K.BARKER	K.BARKER/N.SROUR/P.MCDONALD			

OGS CIVIL LOG OF TEST BORINGS SHEET

ORIGINAL SCALE IN INCHES FOR REDUCED PLANS 0 1 2 3

UNIT: 3576
PROJECT NUMBER & PHASE: 07000018351 CONTRACT NO.: 07-215954

DISREGARD PRINTS BEARING EARLIER REVISION DATES 03/14/12

REVISION DATES | SHEET 47 OF 48

FILE => sw313-z-ltb08.dgn

USERNAME => s124496 DATE PLOTTED => 26-JUN-2013 TIME PLOTTED => 18:50