STATE OF CALIFORNIA

DEPARTMENT OF TRANSPORTATION

CMLN-6207(068)N

Dist	COUNTY	ROUTE	POST MILES TOTAL PROJECT	SHEET No.	TOTAL SHEETS
07	LA	5	0.0/7.6	1	985

PROJECT PLANS FOR CONSTRUCTION ON

STATE HIGHWAY

IN LOS ANGELES COUNTY

IN LA MIRADA, SANTA FE SPRINGS, NORWALK, AND DOWNEY FROM ORANGE COUNTY/LOS ANGELES COUNTY LIMIT LINES TO 0.7 MILE NORTH OF ROUTE 605

TO BE SUPPLEMENTED BY STANDARD PLANS DATED MAY 2010

INDEX OF PLANS

SHEET No.	DESCRIPTION
1	TITLE AND LOCATION MAP
2-11	TYPICAL CROSS SECTIONS
12-20	LAYOUTS
21-37	PROFILES AND SUPERELEVATION DIAGRAMS
38-83	CONSTRUCTION DETAILS
84-94	WATER POLLUTION CONTROL PLANS, DETAILS AND QUANTITIES
95-102	GRADING PLANS
103-187	DRAINAGE PLANS, PROFILES, DETAILS AND QUANTITIES
188-213	SANITARY SEWER PLANS, PROFILES, DETAILS AND QUANTITIES
214-228	UTILITY PLANS
229-230	CONSTRUCTION AREA SIGNS
231-246	MOTORIST INFORMATION PLANS, DETAILS AND QUANTITIES
247-331	STAGE CONSTRUCTION PLANS
332-340	TRAFFIC HANDLING PLANS, DETAILS AND QUANTITIES
341-382	PAVEMENT DELINEATION PLANS, DETAILS AND QUANTITIES
383-432	SIGN PLANS, DETAILS AND QUANTITIES
433-436	SUMMARY OF QUANTITIES
437-440	RETAINING WALL PLANS, DETAILS AND QUANTITIES
441-453	IRRIGATION PLANS, DETAILS AND QUANTITIES
454-468	PLANTING PLANS, LANDSCAPE DETAILS AND QUANTITIES
469-582	ELECTRICAL PLANS
583-615	REVISED STANDARD PLANS

STRUCTURE PLANS

616-671	FLORENCE AVENUE OC (REPLACE)
672-713	ORR AND DAY ROAD OVERHEAD (REPLACE)
714-753	SOUND WALL No. 103
754-801	SOUND WALL No. 313
802-858	RETAINING WALL No. 314
859-872	RETAINING WALL No. 330
873-880	RETAINING WALL No. 91
881-892	RETAINING WALL No. 94
893-906	RETAINING WALL No. 95
907-936	RETAINING WALL No. 341
937-944	CULVERT PROTECTION STRUCTURE AT PM 5.97
945-951	RETAINING WALL No. 90
952-985	ROUTE 5/605 PUMPING PLANT

THE STANDARD PLANS LIST APPLICABLE TO THIS CONTRACT IS INCLUDED IN THE NOTICE TO BIDDERS AND SPECIAL PROVISIONS BOOK.

HUB AND TMC BUILDING LOCATIONS

LOCATION	DESCRIPTION
Rte 2/134 SEPARATION	LOS ANGELES REGIONAL TRANSPORTATION MANAGEMENT CENTER (LARTMC)
Rte 5/605 SEPARATION	NORWALK HUB

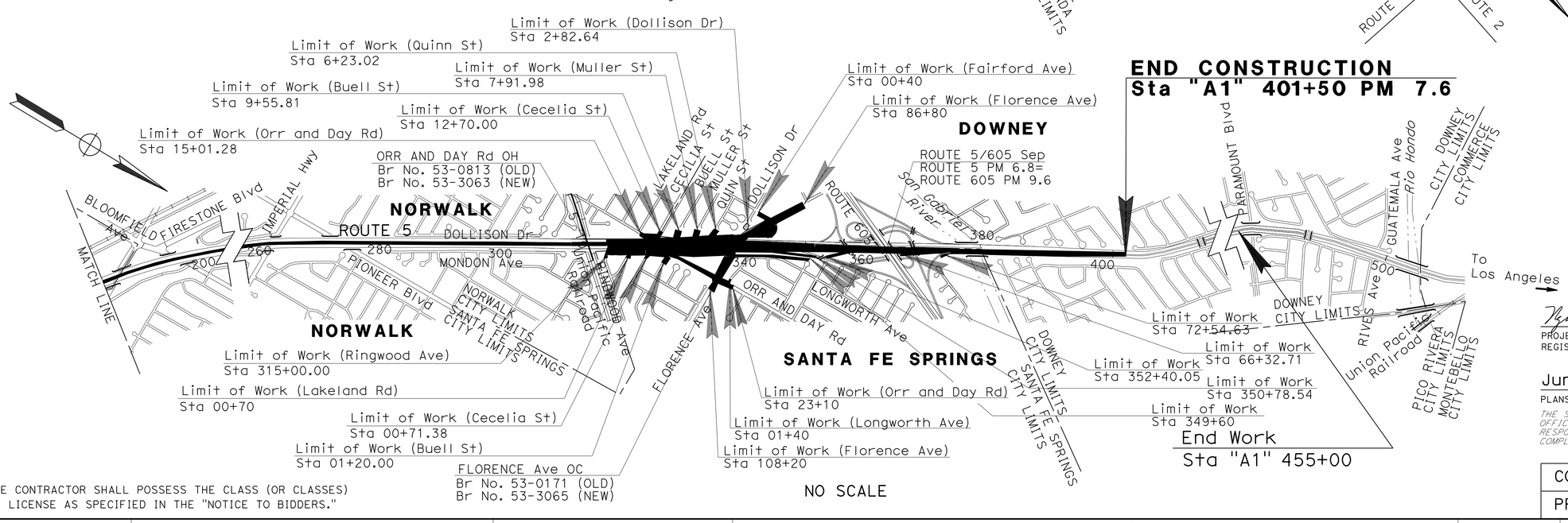

THE CONTRACTOR SHALL POSSESS THE CLASS (OR CLASSES) OF LICENSE AS SPECIFIED IN THE "NOTICE TO BIDDERS."

PROJECT MANAGER: SYED HUQ

DESIGN ENGINEER: NGIM NANCY PE

Ngim N. Pe 10-11-12
PROJECT ENGINEER REGISTERED CIVIL ENGINEER — DATE

June 24, 2013
PLANS APPROVAL DATE

REGISTERED PROFESSIONAL ENGINEER — NGIM NANCY PE No. 58161 Exp. 6-30-14 CIVIL — STATE OF CALIFORNIA

THE STATE OF CALIFORNIA OR ITS OFFICERS OR AGENTS SHALL NOT BE RESPONSIBLE FOR THE ACCURACY OR COMPLETENESS OF SCANNED COPIES OF THIS PLAN SHEET.

CONTRACT No.	07-215954
PROJECT ID	0700001835

LAST REVISION 00-00-00 — DATE PLOTTED => 25-SEP-2013 — TIME PLOTTED => 05:40

Dist	COUNTY	ROUTE	POST MILES TOTAL PROJECT	SHEET No.	TOTAL SHEETS
07	LA	5	0.0/7.6	2	985

REGISTERED CIVIL ENGINEER 10-11-12 DATE

6-24-13
PLANS APPROVAL DATE

REGISTERED PROFESSIONAL ENGINEER NGIM NANCY PE No. 58161 Exp. 6/30/14 CIVIL STATE OF CALIFORNIA

THE STATE OF CALIFORNIA OR ITS OFFICERS OR AGENTS SHALL NOT BE RESPONSIBLE FOR THE ACCURACY OR COMPLETENESS OF SCANNED COPIES OF THIS PLAN SHEET.

NOTES:

1. DIMENSIONS OF THE PAVEMENT STRUCTURES (STRUCTURAL SECTIONS) ARE SUBJECT TO TOLERANCES SPECIFIED IN THE STANDARD SPECIFICATIONS.
2. SUPERELEVATIONS ARE SHOWN ON THE SUPERELEVATION DIAGRAMS.
3. FOR DIKES, CURBS, GUARD RAILING, AND CONCRETE BARRIERS SEE LAYOUT AND STRUCTURE PLANS.
4. FOR RETAINING WALLS AND SOUND WALLS SEE STRUCTURE PLANS.

ABBREVIATIONS:

DEWS - DESIGN EDGE OF WIDENED SLAB
TCE - TEMPORARY CONSTRUCTION EASEMENT

EXISTING STRUCTURAL SECTIONS

A
- 0.15′ RUBBERIZED ASPHALT CONCRETE (TYPE G)
- 0.52′ PORTLAND CEMENT CONCRETE
- 0.33′ CEMENT TREATED BASE
- 0.67′ IMPORTED BASE MATERIAL

B
- 0.67′ RAPID STRENGTH CONCRETE
- 0.33′ CEMENT TREATED BASE
- 0.67′ IMPORTED BASE MATERIAL

C
- 0.15′ RUBBERIZED ASPHALT CONCRETE (TYPE G)
- 0.46′ ASPHALT CONCRETE
- 0.60′ LEAN CONCRETE BASE

D
- 0.33′ ASPHALT CONCRETE
- 0.67′ UNTREATED ROCK BASE
- 0.67′ IMPORTED SUBBASE MATERIAL

E
- 0.25′ ASPHALT CONCRETE
- 0.50′ UNTREATED ROCK BASE

F
- 0.33′ ASPHALT CONCRETE
- 0.67′ UNTREATED ROCK BASE

G
- 0.25′ ASPHALT CONCRETE
- 0.50′ CLASS 2 AGGREGATE BASE
- Var THICKNESS CLASS 2 AGGREGATE SUBBASE

H
- 0.17′ ASPHALT CONCRETE
- Var THICKNESS CLASS 2 AGGREGATE SUBBASE

I
- 0.33′ ASPHALT CONCRETE
- 0.67′ UNTREATED ROCK BASE

PROPOSED STRUCTURAL SECTIONS

1
- 1.05′ JPCP
- 0.50′ LCB
- 0.70′ CLASS 3 AB

2
- 0.80′ JPCP
- 0.40′ LCB
- 0.60′ CLASS 3 AB

3
- 0.95′ JPCP
- 0.50′ LCB
- 0.70′ CLASS 3 AB

4
- 0.70′ HMA (TYPE A)
- 0.70′ LCB
- 1.30′ CLASS 3 AB

5
- 0.70′ HMA (TYPE A)
- 0.7 CLASS 2 AB
- 1.00′ CLASS 3 AB

6
- 0.50′ Conc Pvmt
- 0.50′ CLASS 3 AB

7
- 0.35′ Conc Pvmt
- 0.50′ CLASS 3 AB

8
- 0.40′ HMA (TYPE A)
- GEOSYNTHETIC Pvmt INTERLAYER
- 0.30′ HMA (TYPE A)
- 0.70′ LCB
- 1.30′ CLASS 3 AB

9
- 0.17′ - 0.50′ HMA (TYPE A) OVERLAY

10
- 0.7′ JPCP (RSC)
- 0.5′ CLASS 3 ABB

11
- 0.50′ HMA (TYPE A)
- 0.60′ CLASS 2 AB

12
- 0.60′ HMA (TYPE A)
- 1.00′ CLASS 2 AB
- 1.10′ CLASS 4 ASB

13
- 0.60′ HMA (TYPE A)
- 0.70′ CLASS 3 AB

14
- 0.70′ HMA (TYPE A)
- 0.50′ CLASS 3 AB

DESIGN DESIGNATION

ADT (2005) 171,000
ADT (2030) 281,000
V = 70 mph
TI_{40} = 16

PAVEMENT CLIMATE REGION

SOUTH COAST

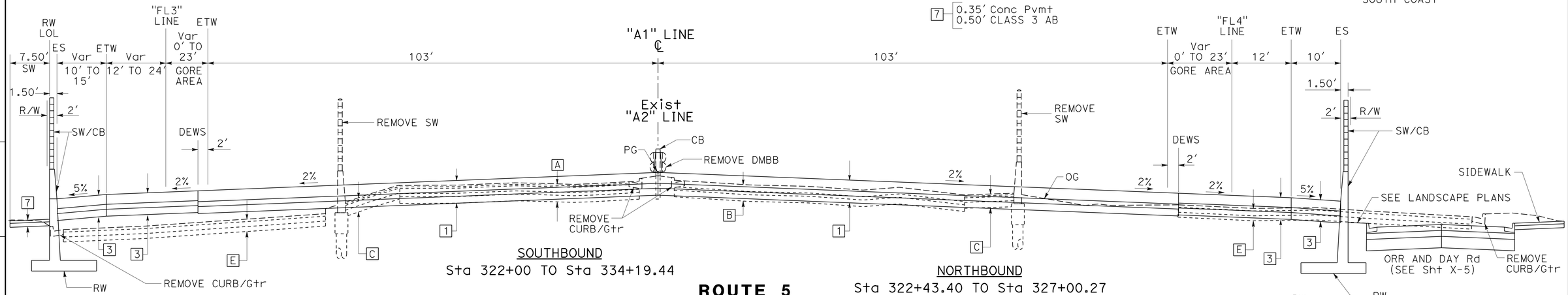

SOUTHBOUND
Sta 322+00 TO Sta 334+19.44

NORTHBOUND
Sta 322+43.40 TO Sta 327+00.27

ROUTE 5

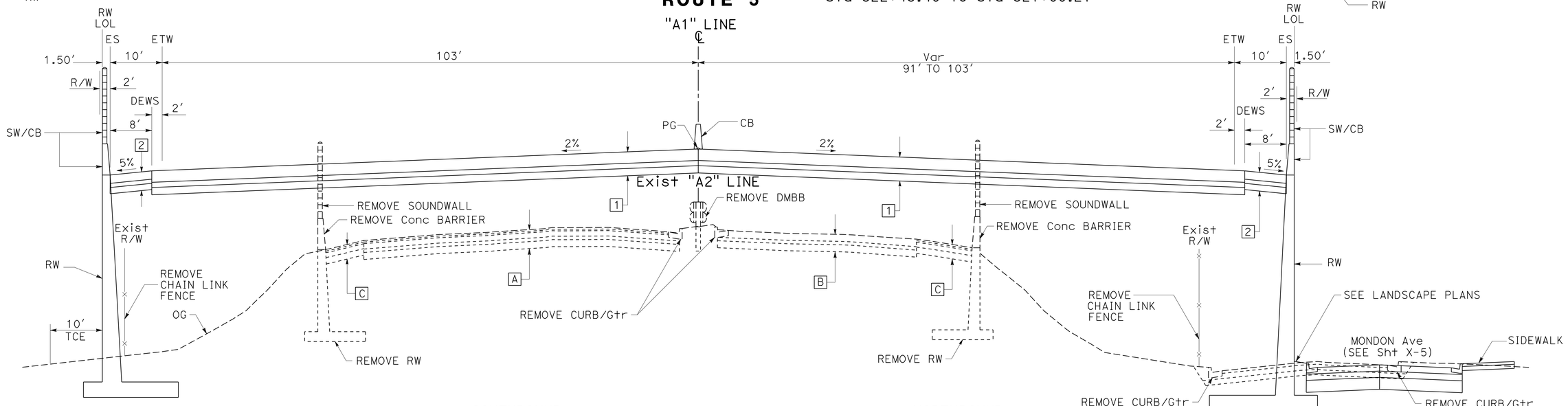

SOUTHBOUND
Sta 313+49.81 TO Sta 322+00

NORTHBOUND
Sta 313+49.81 TO Sta 322+43.40

ROUTE 5

TYPICAL CROSS SECTIONS

NO SCALE

X-1

STATE OF CALIFORNIA - DEPARTMENT OF TRANSPORTATION
Caltrans® OFFICE OF DESIGN A

FUNCTIONAL SUPERVISOR: NGIM NANCY PE
CALCULATED-DESIGNED BY: STEVEN TRIEU
CHECKED BY: NGIM NANCY PE
REVISED BY: A LY
DATE REVISED: 5/14/12

S:\projects\215951\721595ca001.dgn

LAST REVISION 00-00-00
DATE PLOTTED => 26-JUN-2013
TIME PLOTTED => 14:45

Dist	COUNTY	ROUTE	POST MILES TOTAL PROJECT	SHEET No.	TOTAL SHEETS
07	LA	5	0.0/7.6	3	985

REGISTERED CIVIL ENGINEER 10-11-12 DATE

6-24-13
PLANS APPROVAL DATE

REGISTERED PROFESSIONAL ENGINEER NGIM NANCY PE No. 58161 Exp. 6/30/14 CIVIL STATE OF CALIFORNIA

THE STATE OF CALIFORNIA OR ITS OFFICERS OR AGENTS SHALL NOT BE RESPONSIBLE FOR THE ACCURACY OR COMPLETENESS OF SCANNED COPIES OF THIS PLAN SHEET.

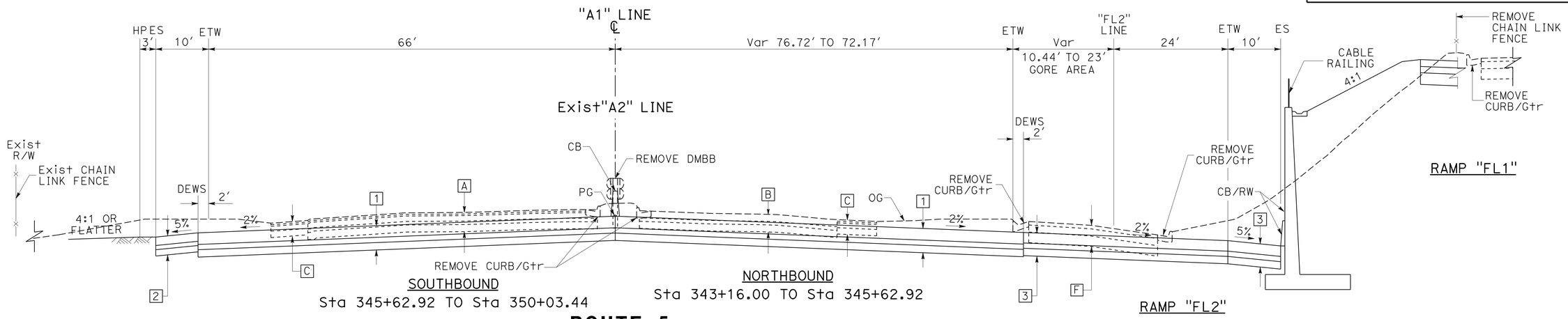

SOUTHBOUND
Sta 345+62.92 TO Sta 350+03.44

NORTHBOUND
Sta 343+16.00 TO Sta 345+62.92

ROUTE 5

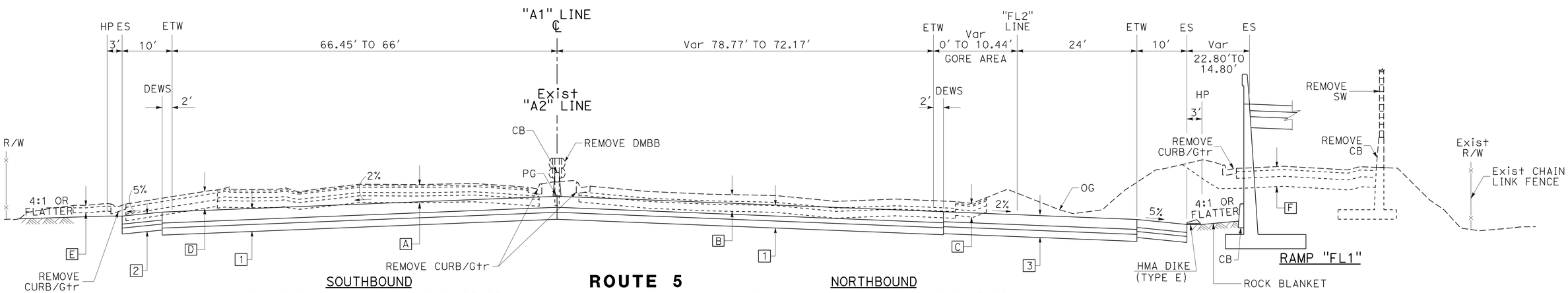

SOUTHBOUND
Sta 343+70.00 TO Sta 345+62.92

ROUTE 5

NORTHBOUND
Sta 341+10.00 TO Sta 343+16.00

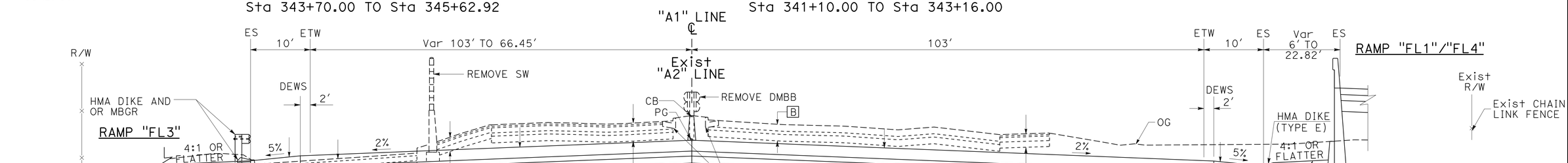

SOUTHBOUND
Sta 334+19.44 TO Sta 343+70.00

ROUTE 5

NORTHBOUND
Sta 327+00.27 TO Sta 341+10.04

TYPICAL CROSS SECTIONS
NO SCALE

X-2

REVISED BY	DATE REVISED
A LY	5/15/12

STEVEN TRIEU — NGIM NANCY PE — CALCULATED-DESIGNED BY — CHECKED BY

FUNCTIONAL SUPERVISOR — NGIM NANCY PE

STATE OF CALIFORNIA - DEPARTMENT OF TRANSPORTATION
Caltrans® OFFICE OF DESIGN A

S:\projects\21595\721595ca002.dgn

LAST REVISION 00-00-00 — DATE PLOTTED => 26-JUN-2013 — TIME PLOTTED => 14:45

Dist	COUNTY	ROUTE	POST MILES TOTAL PROJECT	SHEET No.	TOTAL SHEETS
07	LA	5	0.0/7.6	4	985

REGISTERED CIVIL ENGINEER 10-11-12 DATE

6-24-13
PLANS APPROVAL DATE

REGISTERED PROFESSIONAL ENGINEER NGIM NANCY PE No. 58161 Exp. 6/30/14 CIVIL STATE OF CALIFORNIA

THE STATE OF CALIFORNIA OR ITS OFFICERS OR AGENTS SHALL NOT BE RESPONSIBLE FOR THE ACCURACY OR COMPLETENESS OF SCANNED COPIES OF THIS PLAN SHEET.

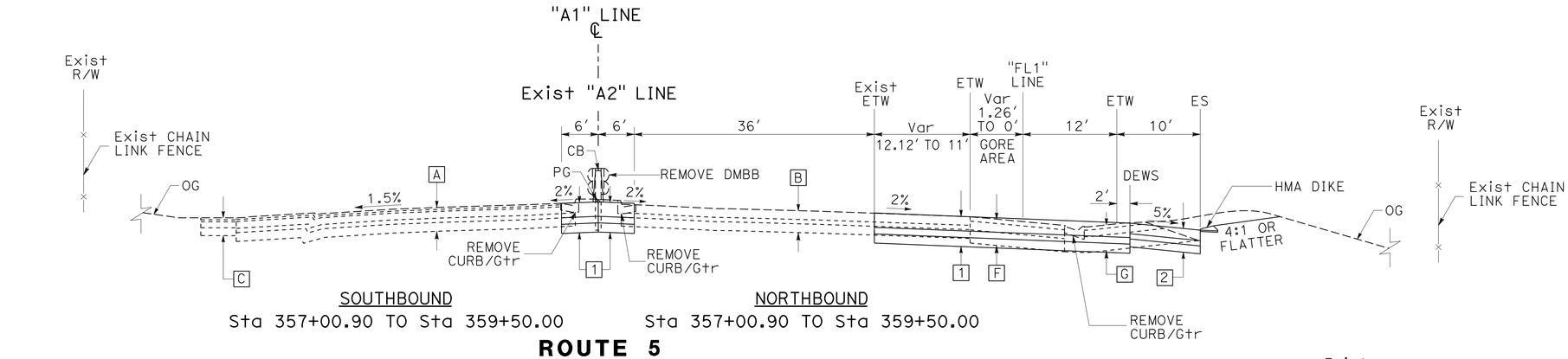

ROUTE 5

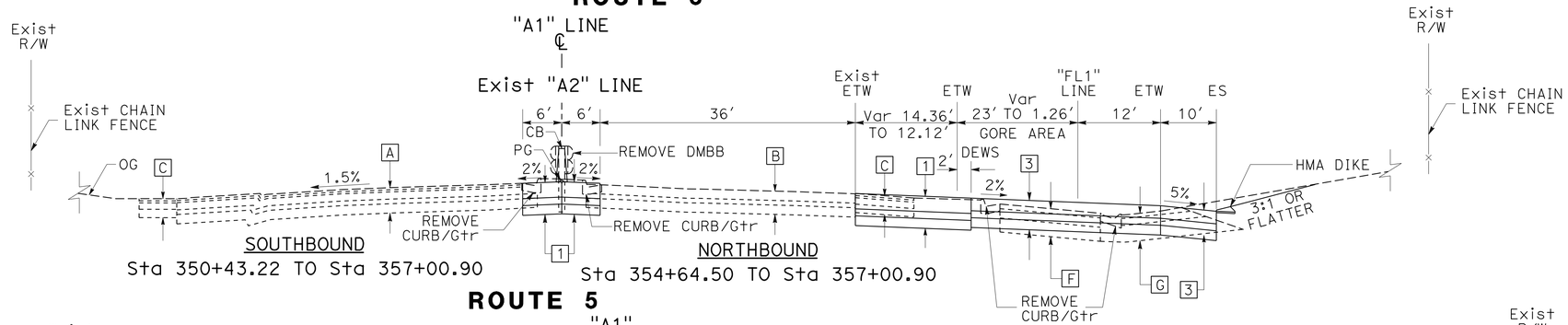

ROUTE 5

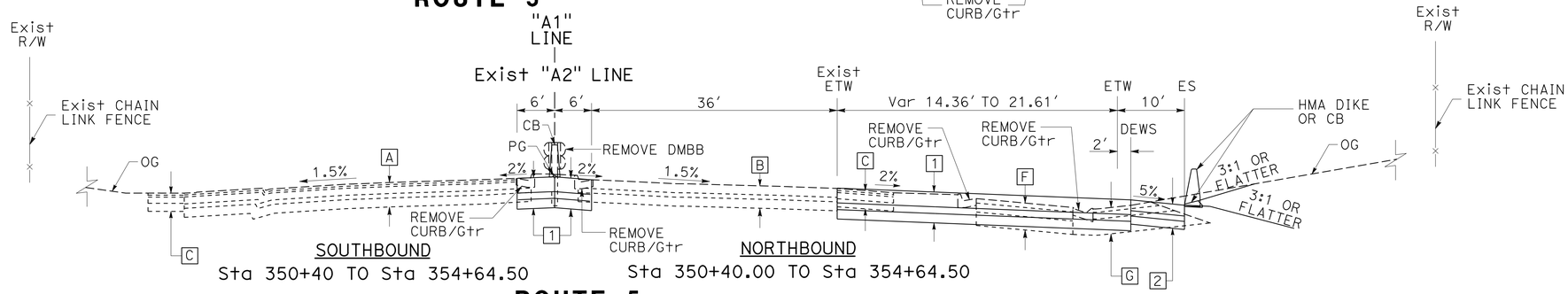

ROUTE 5

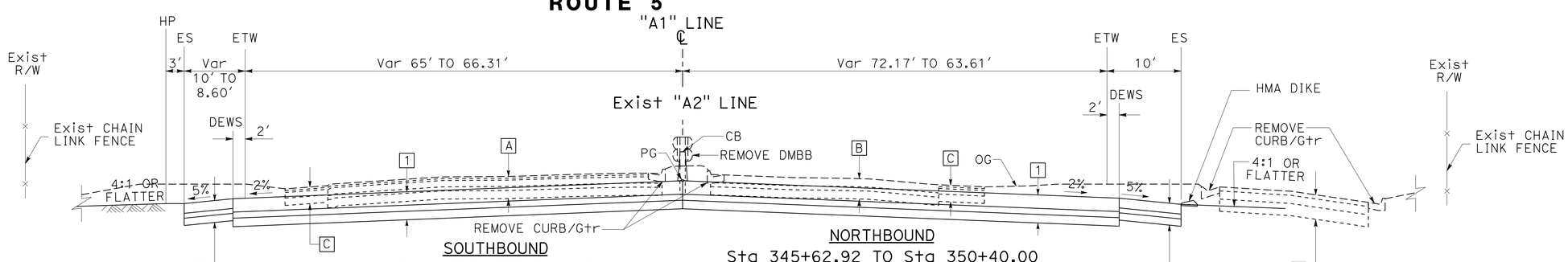

ROUTE 5

TYPICAL CROSS SECTIONS

NO SCALE

X-3

STATE OF CALIFORNIA - DEPARTMENT OF TRANSPORTATION
Caltrans® OFFICE OF DESIGN A

FUNCTIONAL SUPERVISOR: NGIM NANCY PE
CALCULATED-DESIGNED BY / CHECKED BY
REVISED BY: A LY — DATE REVISED: 5/16/12

S:\projects\215951\721595ca003.dgn

LAST REVISION 00-00-00 | DATE PLOTTED => 26-JUN-2013 | TIME PLOTTED => 14:45

BORDER LAST REVISED 7/2/2010 | USERNAME => s119571 | DGN FILE => 721595ca003.dgn | RELATIVE BORDER SCALE IS IN INCHES 0 1 2 3 | UNIT 1797 | PROJECT NUMBER & PHASE 07000018351

Dist	COUNTY	ROUTE	POST MILES TOTAL PROJECT	SHEET No.	TOTAL SHEETS
07	LA	5	0.0/7.6	5	985

REGISTERED CIVIL ENGINEER 10-11-12 DATE

6-24-13
PLANS APPROVAL DATE

REGISTERED PROFESSIONAL ENGINEER NGIM NANCY PE No. 58161 Exp. 6/30/14 CIVIL STATE OF CALIFORNIA

THE STATE OF CALIFORNIA OR ITS OFFICERS OR AGENTS SHALL NOT BE RESPONSIBLE FOR THE ACCURACY OR COMPLETENESS OF SCANNED COPIES OF THIS PLAN SHEET.

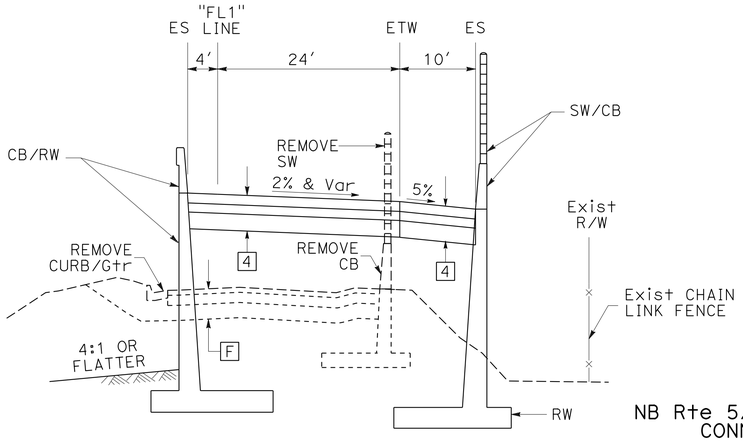

RAMP "FL1"
Sta 338+00.00 TO Sta 343+00.00

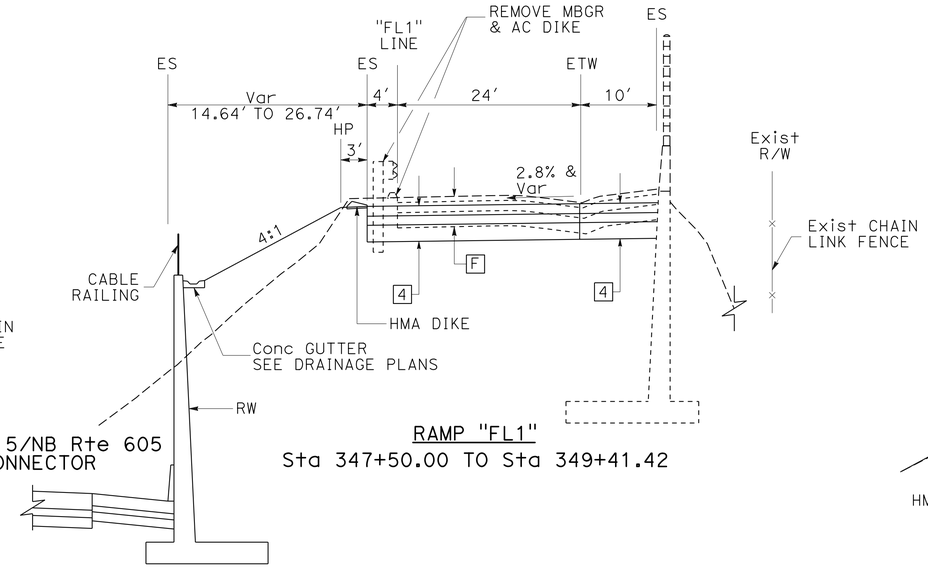

NB Rte 5/NB Rte 605
CONNECTOR

RAMP "FL1"
Sta 347+50.00 TO Sta 349+41.42

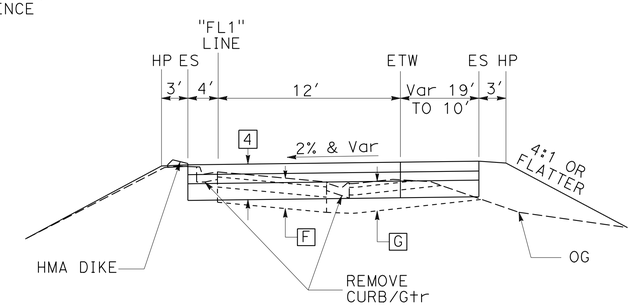

RAMP "FL1"
Sta 352+40.00 TO Sta 354+64

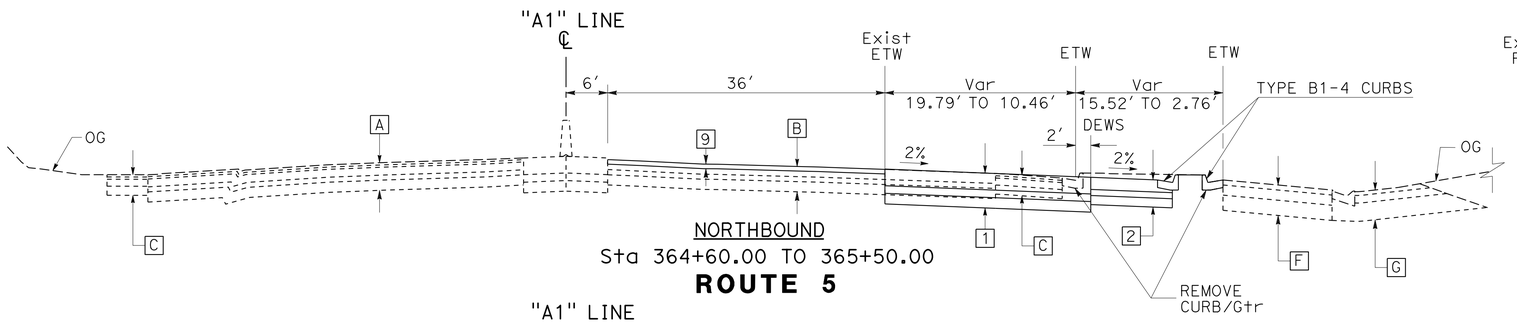

NORTHBOUND
Sta 364+60.00 TO 365+50.00
ROUTE 5

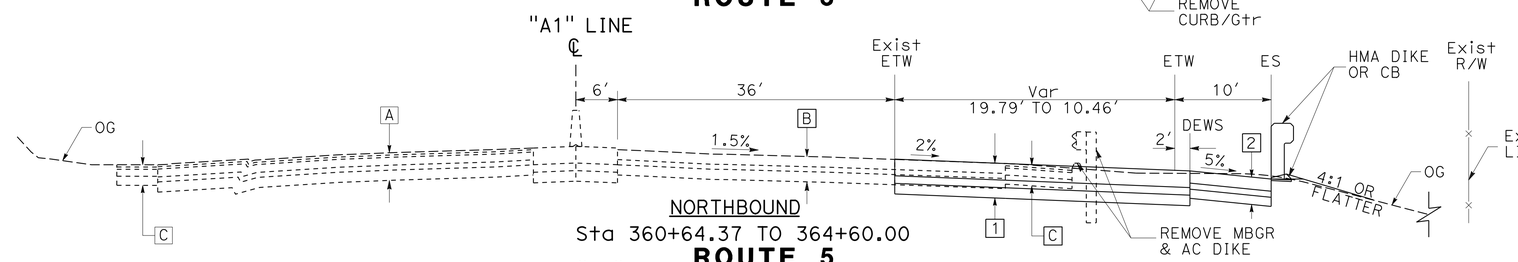

NORTHBOUND
Sta 360+64.37 TO 364+60.00
ROUTE 5

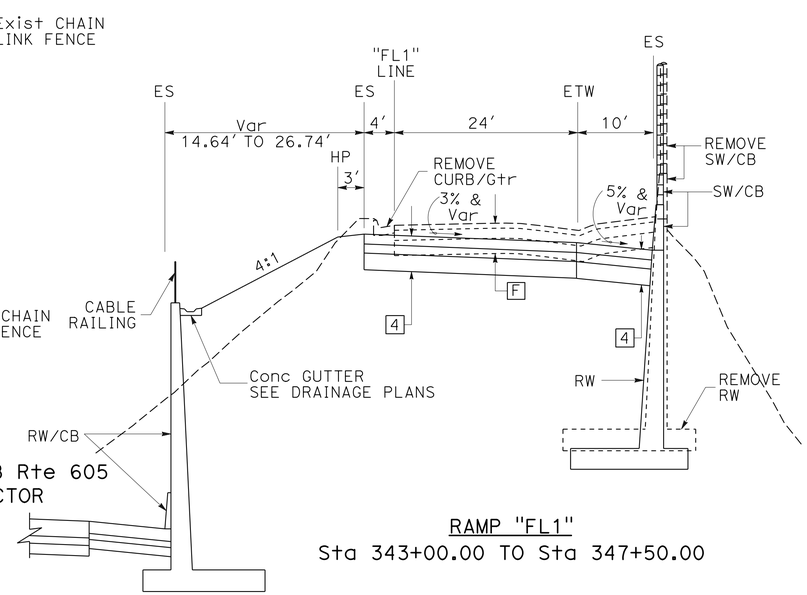

NB Rte 5/NB Rte 605
CONNECTOR

RAMP "FL1"
Sta 343+00.00 TO Sta 347+50.00

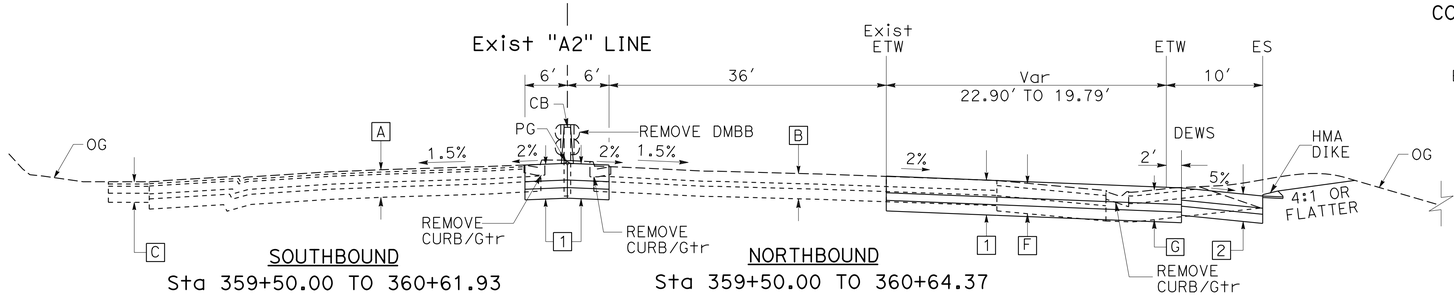

SOUTHBOUND
Sta 359+50.00 TO 360+61.93

NORTHBOUND
Sta 359+50.00 TO 360+64.37

ROUTE 5

TYPICAL CROSS SECTIONS

NO SCALE

X-4

REVISED BY	DATE REVISED
A LY	5/17/12

CALCULATED-DESIGNED BY: STEVEN TRIEU
CHECKED BY: NGIM NANCY PE
FUNCTIONAL SUPERVISOR: NGIM NANCY PE

STATE OF CALIFORNIA - DEPARTMENT OF TRANSPORTATION
Caltrans® OFFICE OF DESIGN A

S:\projects\21595\721595ca004.dgn

LAST REVISION 00-00-00
DATE PLOTTED => 26-JUN-2013
TIME PLOTTED => 14:45

Dist	COUNTY	ROUTE	POST MILES TOTAL PROJECT	SHEET No.	TOTAL SHEETS
07	LA	5	0.0/7.6	6	985

REGISTERED CIVIL ENGINEER 10-11-12 DATE

6-24-13
PLANS APPROVAL DATE

REGISTERED PROFESSIONAL ENGINEER NGIM NANCY PE No. 58161 Exp. 6/30/14 CIVIL STATE OF CALIFORNIA

THE STATE OF CALIFORNIA OR ITS OFFICERS OR AGENTS SHALL NOT BE RESPONSIBLE FOR THE ACCURACY OR COMPLETENESS OF SCANNED COPIES OF THIS PLAN SHEET.

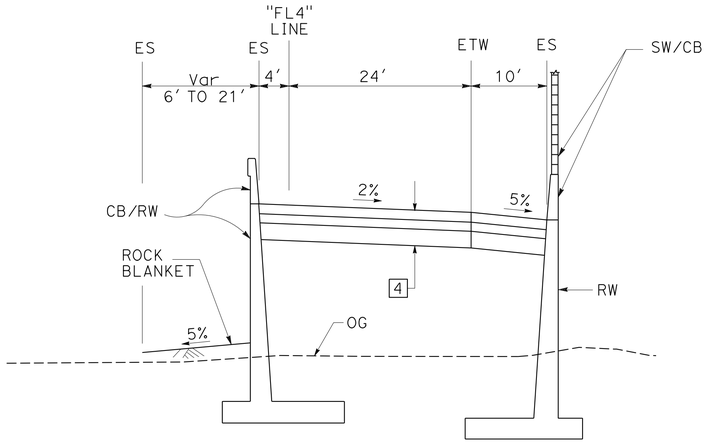

RAMP FL4
Sta 327+00.00 TO Sta 335+00.00

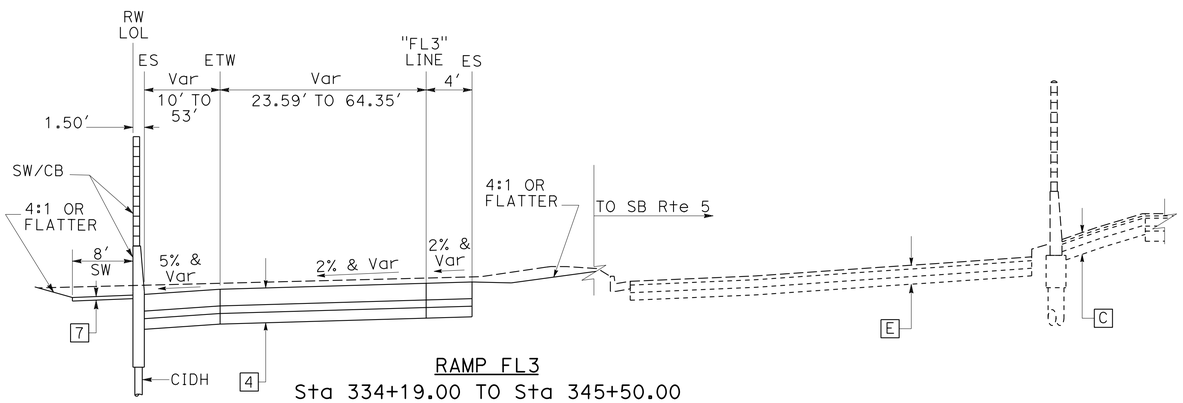

RAMP FL3
Sta 334+19.00 TO Sta 345+50.00

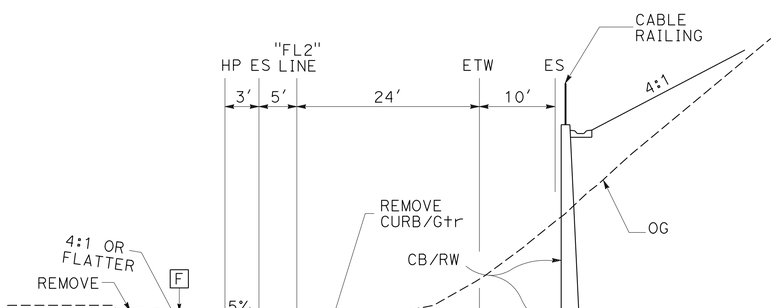

RAMP "FL2"
Sta 345+62.00 TO Sta 350+78.00

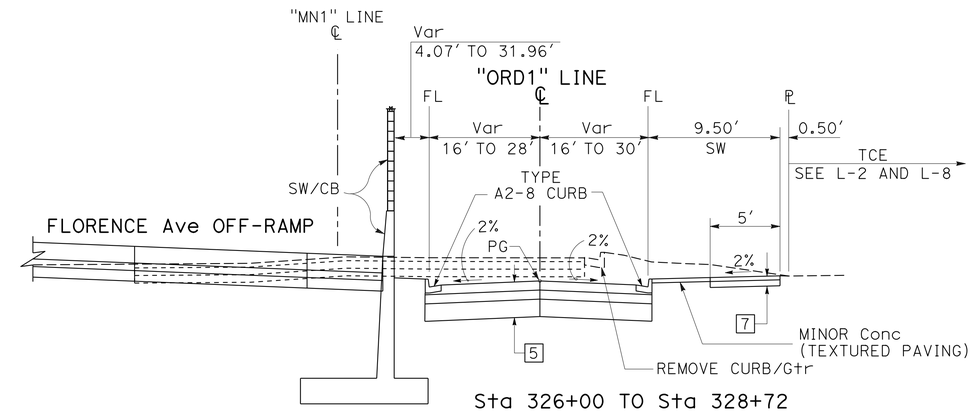

Sta 326+00 TO Sta 328+72
ORR AND DAY Rd

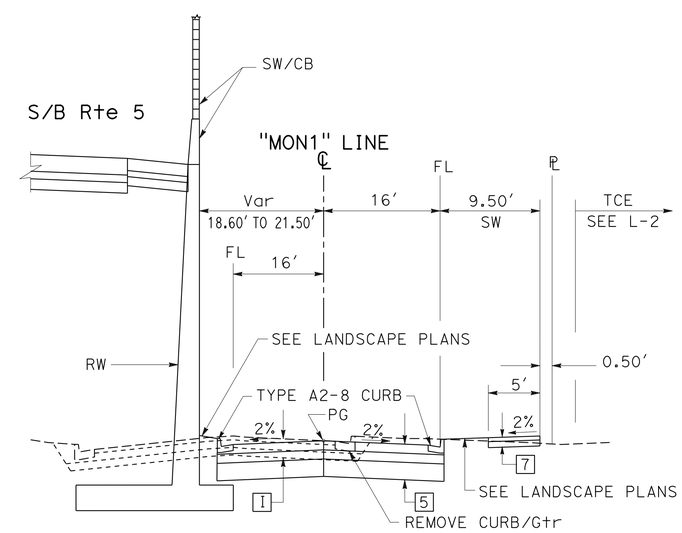

Sta 315+20.00 TO Sta 326+00.00
MONDON Ave

TYPICAL CROSS SECTIONS
NO SCALE

X-5

CALCULATED-DESIGNED BY	CHECKED BY	REVISED BY	DATE REVISED	FUNCTIONAL SUPERVISOR
STEVEN TRIEU	NGIM NANCY PE	A LY	5/18/12	NGIM NANCY PE

STATE OF CALIFORNIA - DEPARTMENT OF TRANSPORTATION
Caltrans® OFFICE OF DESIGN A

S:\projects\215951\721595ca005.dgn

LAST REVISION 00-00-00 | DATE PLOTTED => 26-JUN-2013 | TIME PLOTTED => 14:45

Dist	COUNTY	ROUTE	POST MILES TOTAL PROJECT	SHEET No.	TOTAL SHEETS
07	LA	5	0.0/7.6	7	985

REGISTERED CIVIL ENGINEER 10-11-12 DATE

6-24-13
PLANS APPROVAL DATE

REGISTERED PROFESSIONAL ENGINEER NGIM NANCY PE No. 58161 Exp. 6/30/14 CIVIL STATE OF CALIFORNIA

THE STATE OF CALIFORNIA OR ITS OFFICERS OR AGENTS SHALL NOT BE RESPONSIBLE FOR THE ACCURACY OR COMPLETENESS OF SCANNED COPIES OF THIS PLAN SHEET.

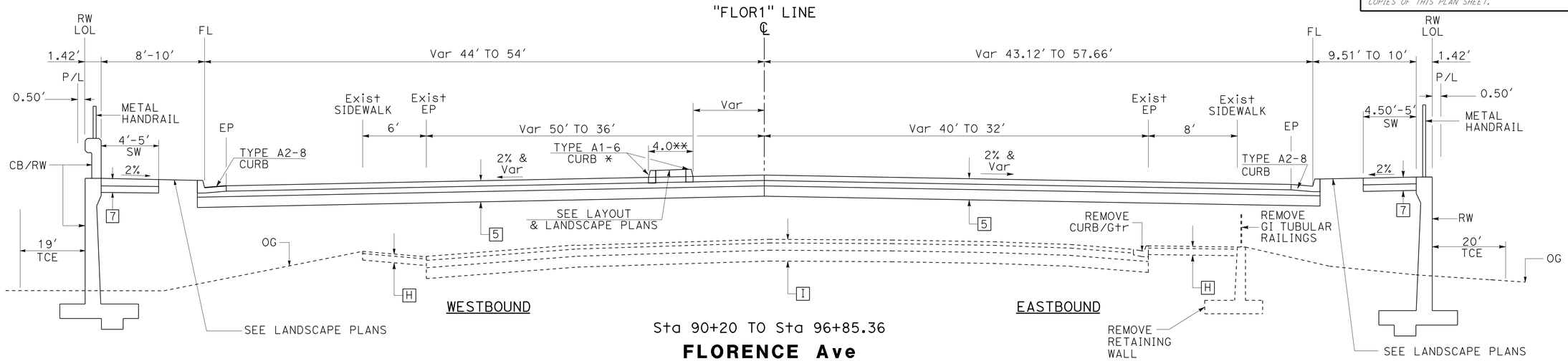

Sta 90+20 TO Sta 96+85.36

FLORENCE Ave

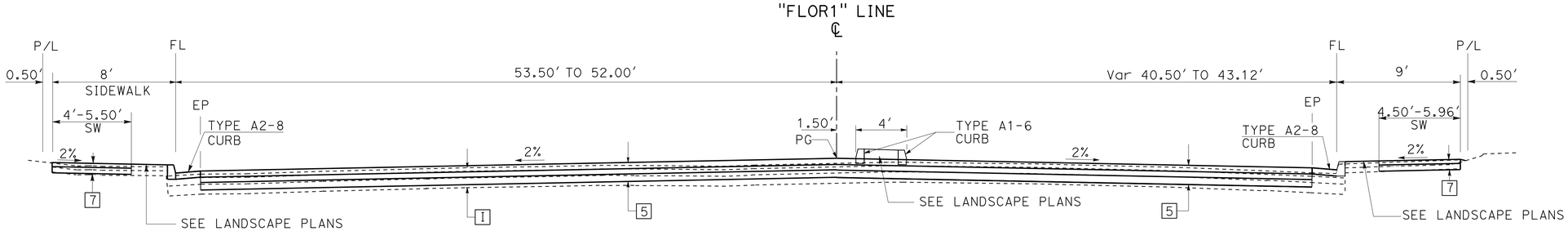

Sta 88+00 TO Sta 90+20

FLORENCE Ave

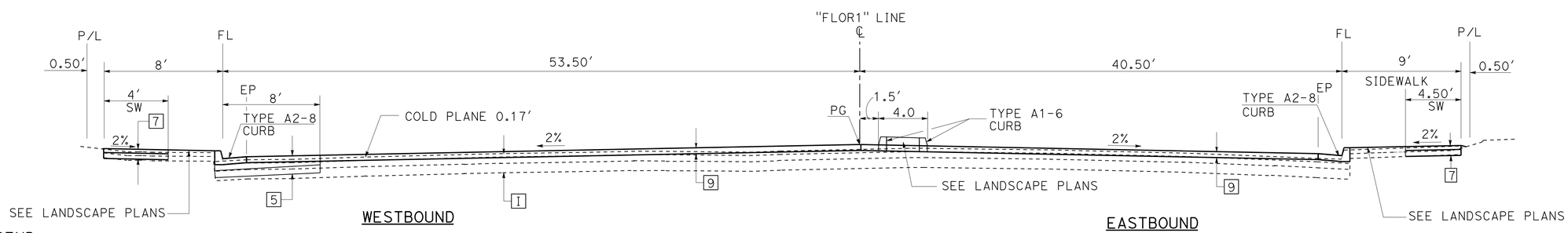

Sta 86+78.45 TO Sta 88+00.00

FLORENCE Ave

LEGEND:

* = FROM STATION 93+63.33 TO 95+22.17
THE ISLAND IS ON THE Rt OF "FLOR1" LINE

** = FROM STATION 93+63.33 TO 96+27+15 THE WIDTH OF THE ISLAND VARIOUS FROM 4′ TO 20.60′

TYPICAL CROSS SECTIONS

NO SCALE

X-6

REVISED BY	DATE REVISED
A LY	5/23/12

STEVEN TRIEU — NGIM NANCY PE
CALCULATED-DESIGNED BY — CHECKED BY
FUNCTIONAL SUPERVISOR — NGIM NANCY PE

STATE OF CALIFORNIA - DEPARTMENT OF TRANSPORTATION
Caltrans® OFFICE OF DESIGN A

S:\projects\215951\721595ca006.dgn

LAST REVISION 00-00-00 | DATE PLOTTED => 14-AUG-2013 | TIME PLOTTED => 10:50

Dist	COUNTY	ROUTE	POST MILES TOTAL PROJECT	SHEET No.	TOTAL SHEETS
07	LA	5	0.0/7.6	8	985

REGISTERED CIVIL ENGINEER 10-11-12 DATE

6-24-13
PLANS APPROVAL DATE

REGISTERED PROFESSIONAL ENGINEER NGIM NANCY PE No. 58161 Exp. 6/30/14 CIVIL STATE OF CALIFORNIA

THE STATE OF CALIFORNIA OR ITS OFFICERS OR AGENTS SHALL NOT BE RESPONSIBLE FOR THE ACCURACY OR COMPLETENESS OF SCANNED COPIES OF THIS PLAN SHEET.

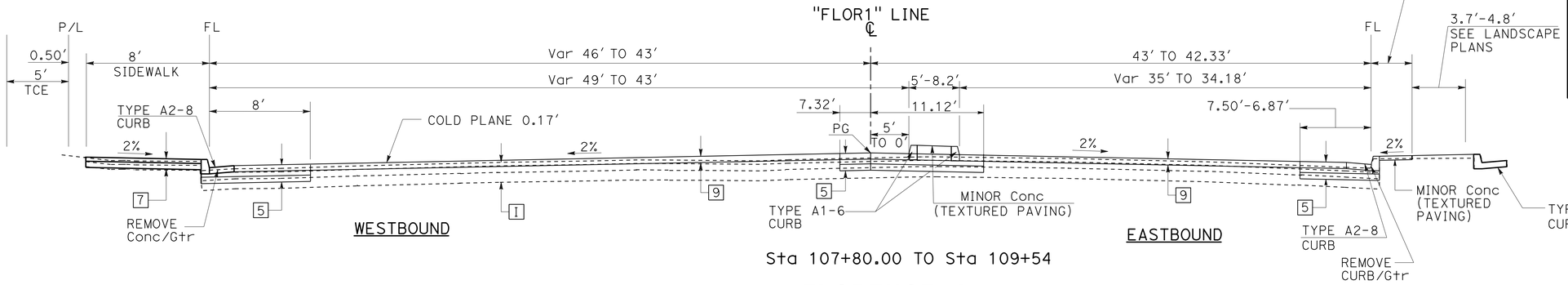

Sta 107+80.00 TO Sta 109+54

FLORENCE Ave

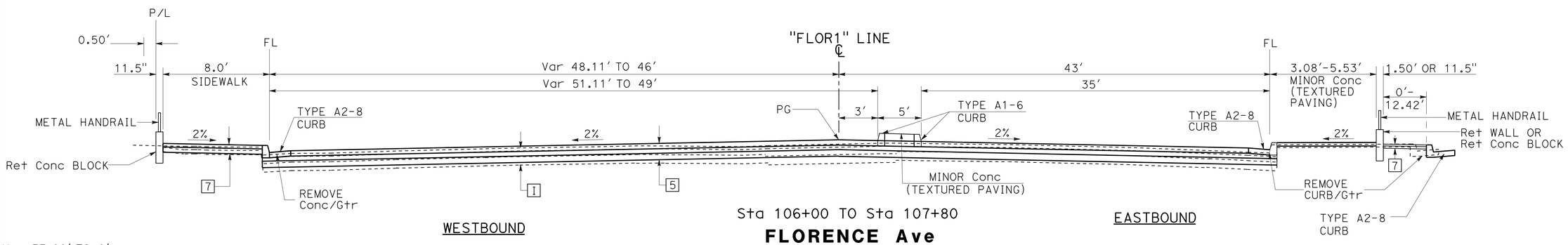

Sta 106+00 TO Sta 107+80

FLORENCE Ave

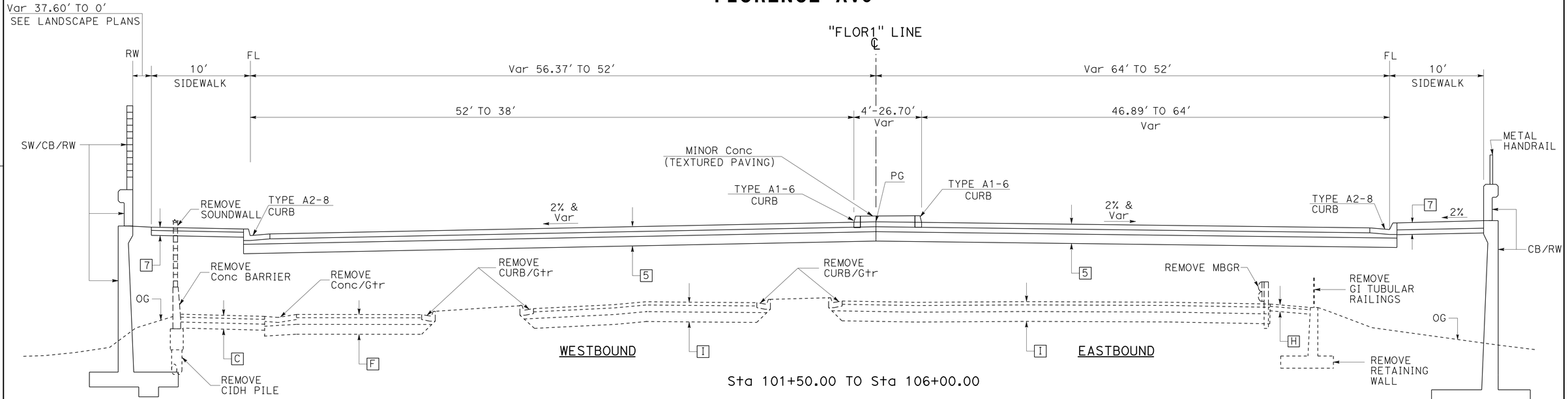

Sta 101+50.00 TO Sta 106+00.00

FLORENCE Ave

TYPICAL CROSS SECTIONS

NO SCALE

X-7

STATE OF CALIFORNIA - DEPARTMENT OF TRANSPORTATION
Caltrans® OFFICE OF DESIGN A

FUNCTIONAL SUPERVISOR: NGIM NANCY PE
REVISED BY: A LY — DATE REVISED: 5/25/12
STEVEN TRIEU — NGIM NANCY PE
CALCULATED-DESIGNED BY — CHECKED BY

S:\projects\215951\721595ca007.dgn

LAST REVISION 00-00-00 — DATE PLOTTED => 26-JUN-2013 — TIME PLOTTED => 14:45

Dist	COUNTY	ROUTE	POST MILES TOTAL PROJECT	SHEET No.	TOTAL SHEETS
07	LA	5	0.0/7.6	9	985

REGISTERED CIVIL ENGINEER 10-11-12 DATE

6-24-13
PLANS APPROVAL DATE

REGISTERED PROFESSIONAL ENGINEER NGIM NANCY PE No. 58161 Exp. 6/30/14 CIVIL STATE OF CALIFORNIA

THE STATE OF CALIFORNIA OR ITS OFFICERS OR AGENTS SHALL NOT BE RESPONSIBLE FOR THE ACCURACY OR COMPLETENESS OF SCANNED COPIES OF THIS PLAN SHEET.

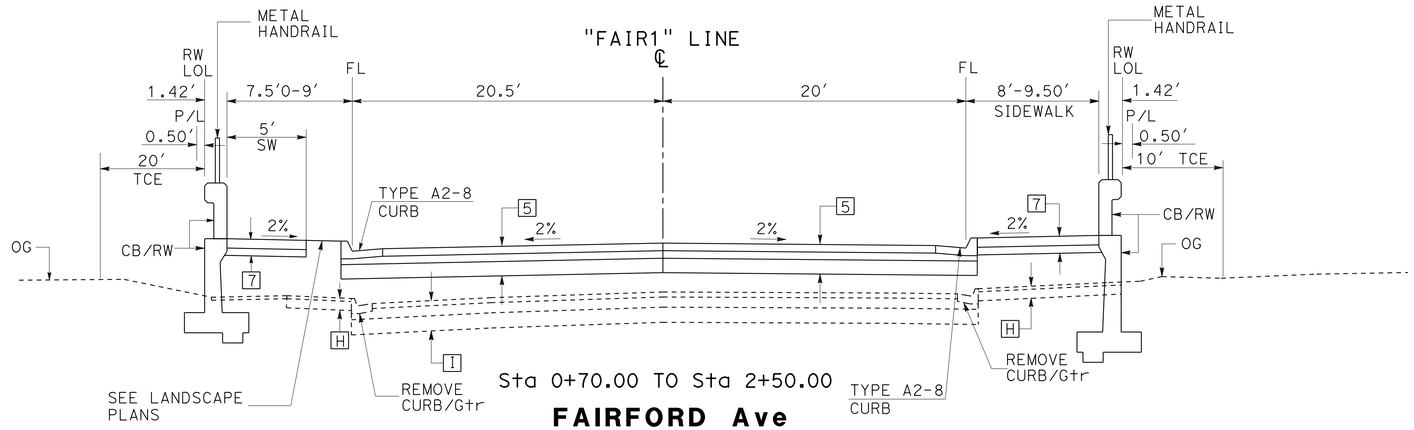

Sta 0+70.00 TO Sta 2+50.00

FAIRFORD Ave

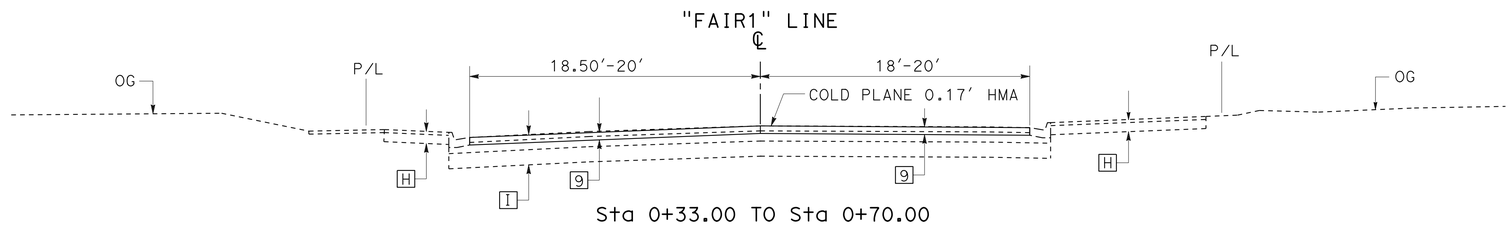

Sta 0+33.00 TO Sta 0+70.00

FAIRFORD Ave

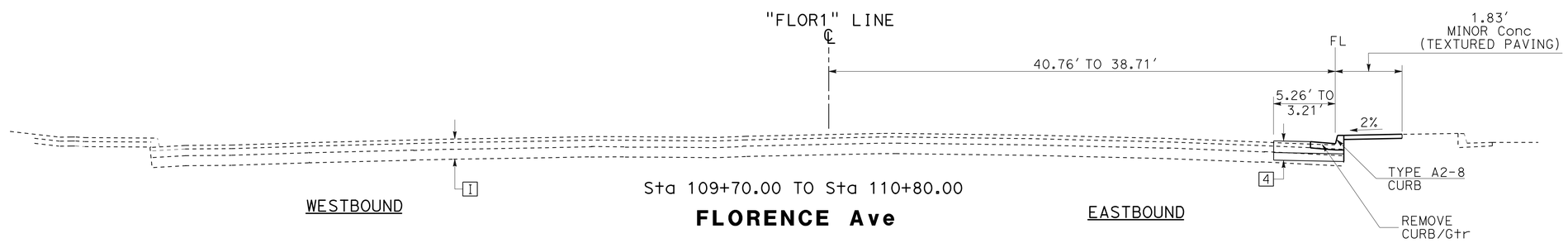

Sta 109+70.00 TO Sta 110+80.00

FLORENCE Ave

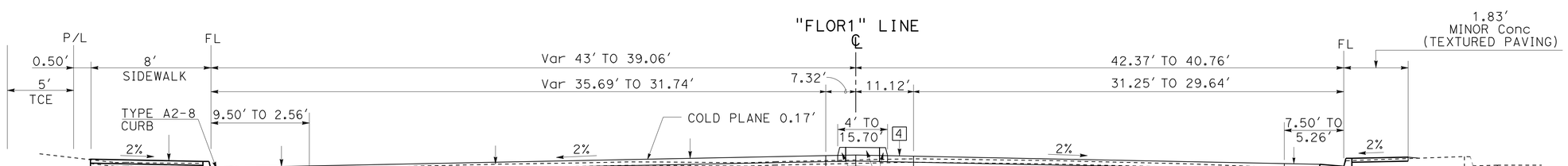

Sta 108+83.61 TO Sta 109+70.00

FLORENCE Ave

TYPICAL CROSS SECTIONS

NO SCALE

X-8

STATE OF CALIFORNIA - DEPARTMENT OF TRANSPORTATION
Caltrans® OFFICE OF DESIGN A

FUNCTIONAL SUPERVISOR: NGIM NANCY PE
CALCULATED-DESIGNED BY: STEVEN TRIEU
CHECKED BY: NGIM NANCY PE
REVISED BY: A LY
DATE REVISED: 5/28/12

S:\projects\215951\721595ca008.dgn

LAST REVISION 00-00-00
DATE PLOTTED => 26-JUN-2013
TIME PLOTTED => 14:45

BORDER LAST REVISED 7/2/2010
USERNAME => s119571
DGN FILE => 721595ca008.dgn
RELATIVE BORDER SCALE IS IN INCHES 0 1 2 3
UNIT 1797
PROJECT NUMBER & PHASE 07000018351

Dist	COUNTY	ROUTE	POST MILES TOTAL PROJECT	SHEET No.	TOTAL SHEETS
07	LA	5	0.0/7.6	10	985

REGISTERED CIVIL ENGINEER 10-11-12 DATE

6-24-13
PLANS APPROVAL DATE

REGISTERED PROFESSIONAL ENGINEER NGIM NANCY PE No. 58161 Exp. 6/30/14 CIVIL STATE OF CALIFORNIA

THE STATE OF CALIFORNIA OR ITS OFFICERS OR AGENTS SHALL NOT BE RESPONSIBLE FOR THE ACCURACY OR COMPLETENESS OF SCANNED COPIES OF THIS PLAN SHEET.

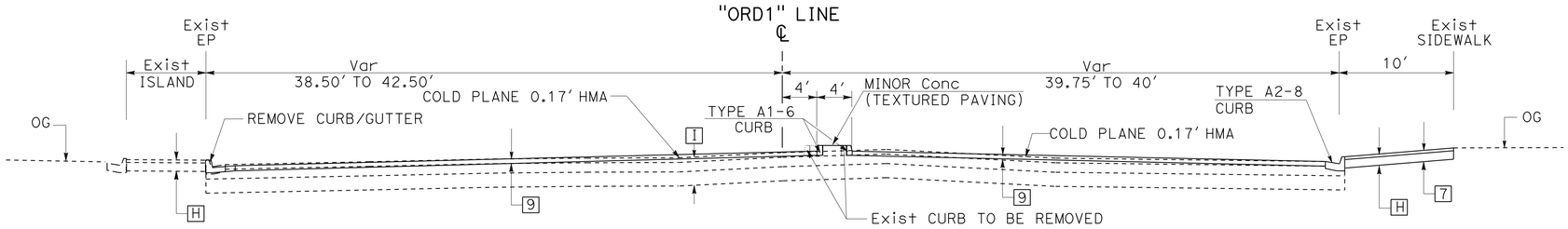

Sta 336+80 TO Sta 337+60

ORR AND DAY Rd

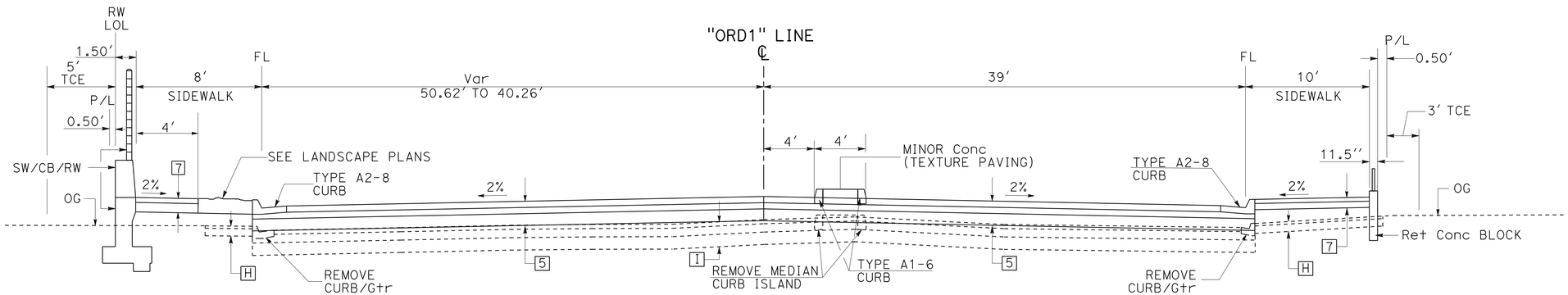

Sta 335+70 TO Sta 336+80

ORR AND DAY Rd

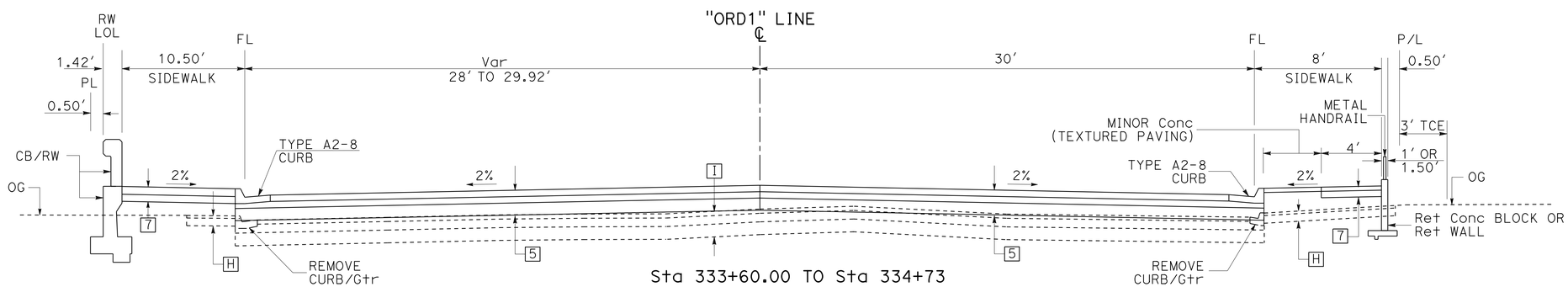

Sta 333+60.00 TO Sta 334+73

ORR AND DAY Rd

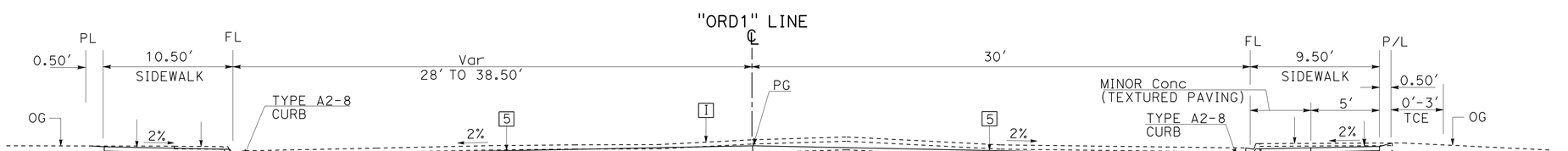

Sta 328+72.90 TO Sta 333+60.00

ORR AND DAY Rd

TYPICAL CROSS SECTIONS

NO SCALE

X-9

REVISED BY	DATE REVISED
A LY	5/29/12

STEVEN TRIEU — NGIM NANCY PE — CALCULATED-DESIGNED BY — CHECKED BY

FUNCTIONAL SUPERVISOR: NGIM NANCY PE

STATE OF CALIFORNIA - DEPARTMENT OF TRANSPORTATION — Caltrans® OFFICE OF DESIGN A

S:\projects\215951\721595ca009.dgn

LAST REVISION 00-00-00 | DATE PLOTTED => 26-JUN-2013 | TIME PLOTTED => 14:45

Dist	COUNTY	ROUTE	POST MILES TOTAL PROJECT	SHEET No.	TOTAL SHEETS
07	LA	5	0.0/7.6	11	985

REGISTERED CIVIL ENGINEER 10-11-12 DATE

6-24-13
PLANS APPROVAL DATE

REGISTERED PROFESSIONAL ENGINEER NGIM NANCY PE No. 58161 Exp. 6/30/14 CIVIL STATE OF CALIFORNIA

THE STATE OF CALIFORNIA OR ITS OFFICERS OR AGENTS SHALL NOT BE RESPONSIBLE FOR THE ACCURACY OR COMPLETENESS OF SCANNED COPIES OF THIS PLAN SHEET.

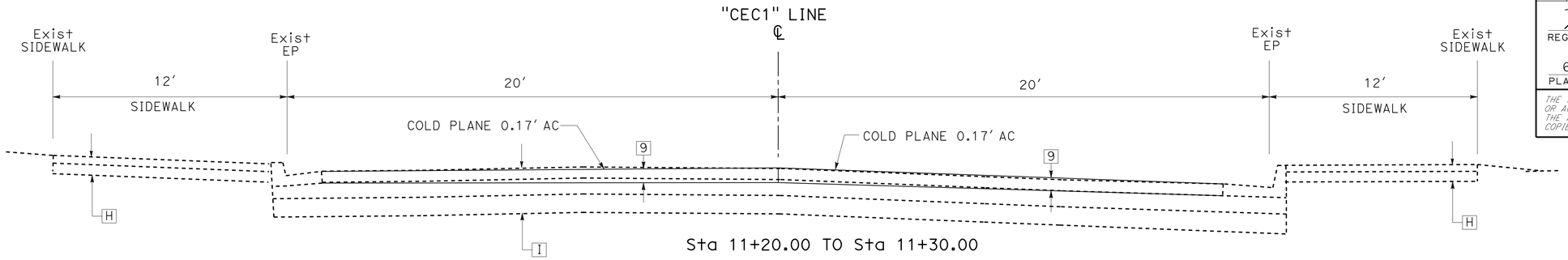

Sta 11+20.00 TO Sta 11+30.00
Sta 15+00.00 TO Sta 15+10.00

CECILIA St

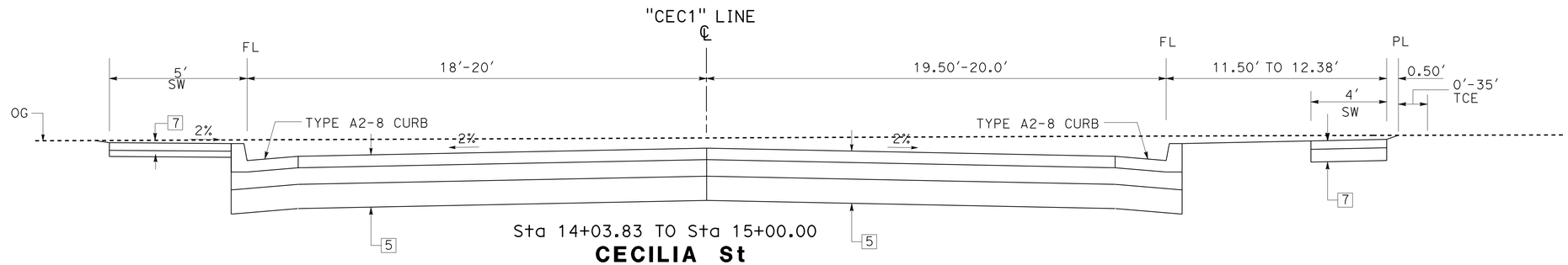

Sta 14+03.83 TO Sta 15+00.00

CECILIA St

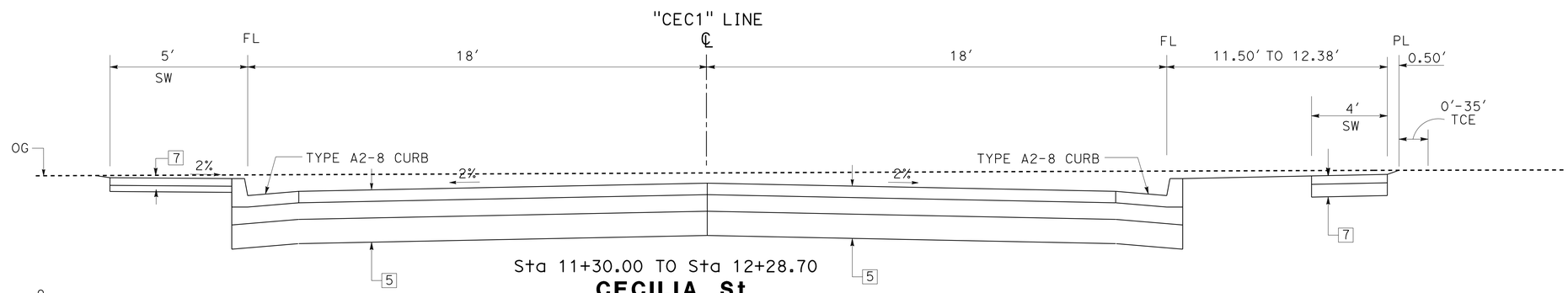

Sta 11+30.00 TO Sta 12+28.70

CECILIA St

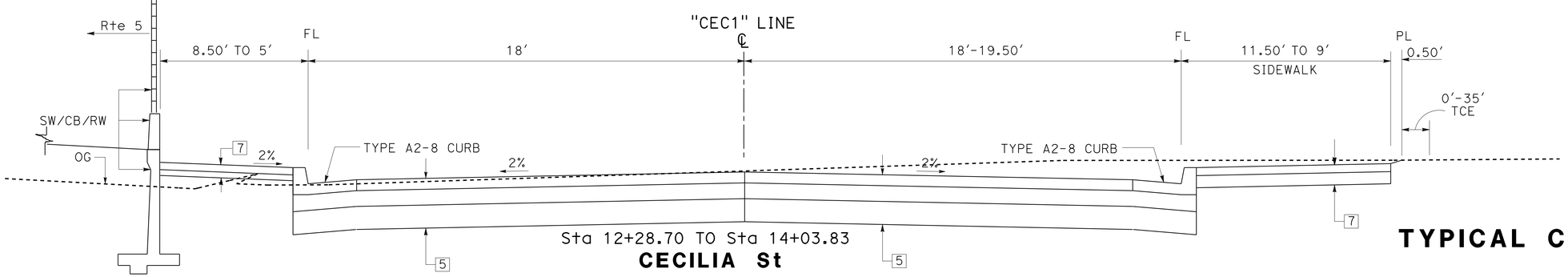

Sta 12+28.70 TO Sta 14+03.83

CECILIA St

TYPICAL CROSS SECTIONS

NO SCALE

X-10

REVISED BY	DATE REVISED
A LY	5/29/12

STEVEN TRIEU — NGIM NANCY PE
CALCULATED-DESIGNED BY — CHECKED BY
FUNCTIONAL SUPERVISOR — NGIM NANCY PE

STATE OF CALIFORNIA - DEPARTMENT OF TRANSPORTATION
Caltrans® OFFICE OF DESIGN A

S:\projects\215951\721595ca010.dgn

LAST REVISION 00-00-00 | DATE PLOTTED => 26-JUN-2013 | TIME PLOTTED => 14:45

Dist	COUNTY	ROUTE	POST MILES TOTAL PROJECT	SHEET No.	TOTAL SHEETS
07	LA	5	0.0/7.6	12	985

REGISTERED CIVIL ENGINEER 10-11-12 DATE

6-24-13
PLANS APPROVAL DATE

REGISTERED PROFESSIONAL ENGINEER NGIM NANCY PE No. 58161 Exp. 6/30/14 CIVIL STATE OF CALIFORNIA

THE STATE OF CALIFORNIA OR ITS OFFICERS OR AGENTS SHALL NOT BE RESPONSIBLE FOR THE ACCURACY OR COMPLETENESS OF SCANNED COPIES OF THIS PLAN SHEET.

NOTE:

1. FOR ACCURATE RIGHT OF WAY DATA, CONTACT RIGHT OF WAY ENGINEERING AT THE DISTRICT OFFICE.
2. FOR IRRIGATION CROSSOVER, SEE LANDSCAPE PLANS.

LEGEND:

(A1) - CHAIN LINK FENCE (SEE CONSTRUCTION DETAILS)
(B1) - MASONRY BLOCK WALL (SEE CONSTRUCTION DETAILS)
- ROCK SLOPE BLANKET
- MINOR Conc (TEXTURED PAVING)
- INTERLOCKING PAVER

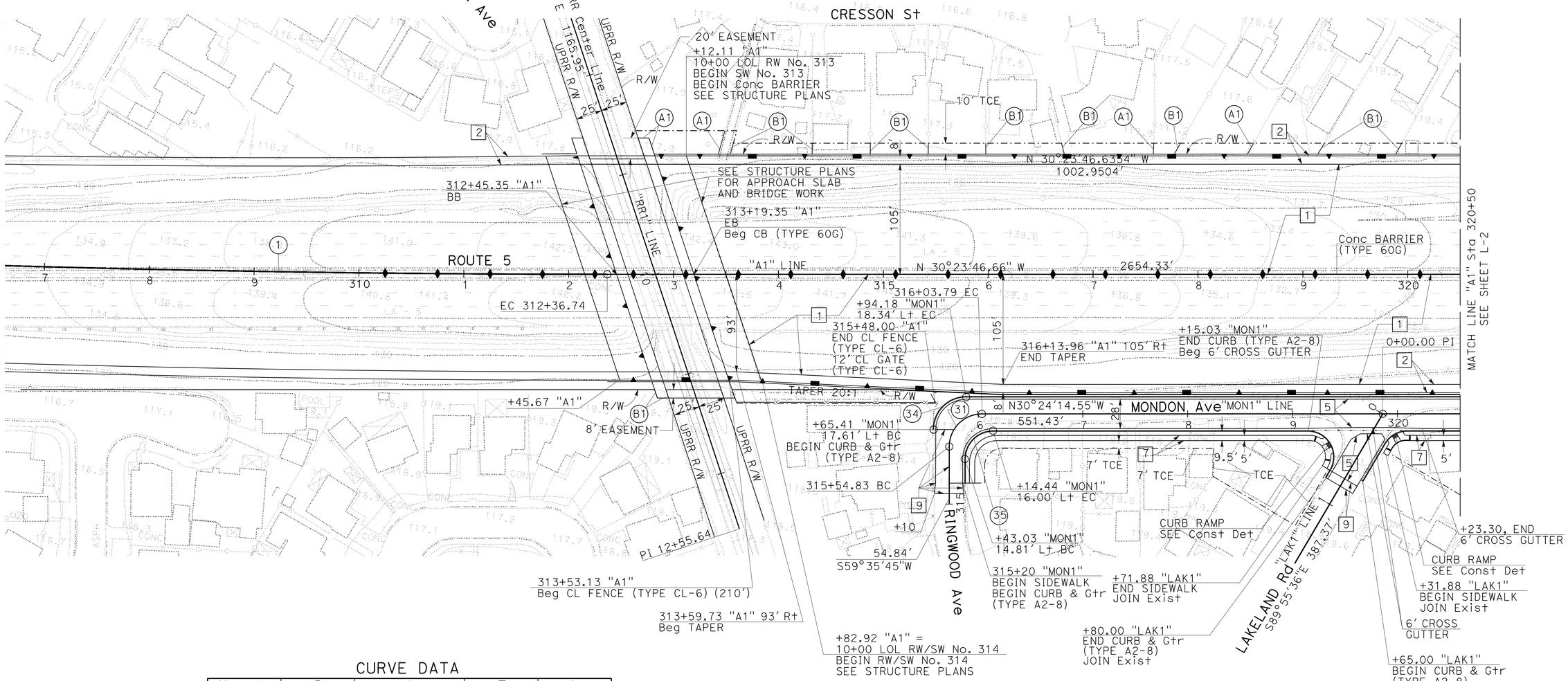

CURVE DATA

No. (#)	R	Δ	T	L
1	20000.00'	1°54'36"	333.38'	666.70'
31	31.17'	90°0'01"	31.17'	48.96'
34	31.00'	89°52'20"	30.93'	48.63'
35	27.00'	89°56'47"	26.98'	42.39'

LAYOUT

SCALE: 1" = 50'

L-1

REVISED BY | DATE REVISED
KEVIN Q NGUYEN | NGIM NANCY PE
CALCULATED-DESIGNED BY | CHECKED BY
FUNCTIONAL SUPERVISOR | NGIM NANCY PE

STATE OF CALIFORNIA - DEPARTMENT OF TRANSPORTATION
Caltrans OFFICE OF DESIGN A

S:\projects\21595\RESUBMIT-3\721595ea001.dgn

LAST REVISION 00-00-00 | DATE PLOTTED => 26-JUN-2013 | TIME PLOTTED => 14:45

Dist	COUNTY	ROUTE	POST MILES TOTAL PROJECT	SHEET No.	TOTAL SHEETS
07	LA	5	0.0/7.6	13	985

REGISTERED CIVIL ENGINEER 10-11-12 DATE

6-24-13
PLANS APPROVAL DATE

REGISTERED PROFESSIONAL ENGINEER NGIM NANCY PE No. 58161 Exp. 6/30/14 CIVIL STATE OF CALIFORNIA

THE STATE OF CALIFORNIA OR ITS OFFICERS OR AGENTS SHALL NOT BE RESPONSIBLE FOR THE ACCURACY OR COMPLETENESS OF SCANNED COPIES OF THIS PLAN SHEET.

NOTES:

1. FOR ACCURATE RIGHT OF WAY DATA, CONTACT RIGHT OF WAY ENGINEERING AT THE DISTRICT OFFICE.
2. SEE CONSTRUCTION DETAILS SHEETS FOR CUL-DE-SAC AND INTERSECTION DESIGN.
3. USE STRUCTURAL SECTION [6] FOR DRIVEWAY.
4. FOR IRRIGATION CROSSOVER, SEE LANDSCAPE PLAN.

CURVE DATA

No. ⓗ	R	Δ	T	L
5	3000.00′	2°38′31"	69.18′	138.33′
10	3500.00′	7°4′23"	216.31′	432.07′
25	53.00′	58°39′34"	29.78′	54.26′
26	25.00′	31°30′41"	7.05′	13.75′
27	71.00′	31°30′41"	20.03′	39.05′
32	1500.00′	4°24′09"	57.66′	115.26′
33	425.00′	25°53′43"	97.71′	192.08′
36	344.00′	25°53′43"	79.09′	155.47′
37	500.00′	25°53′43"	114.95′	225.98′
38	35.00′	31°30′41"	9.87′	19.25′

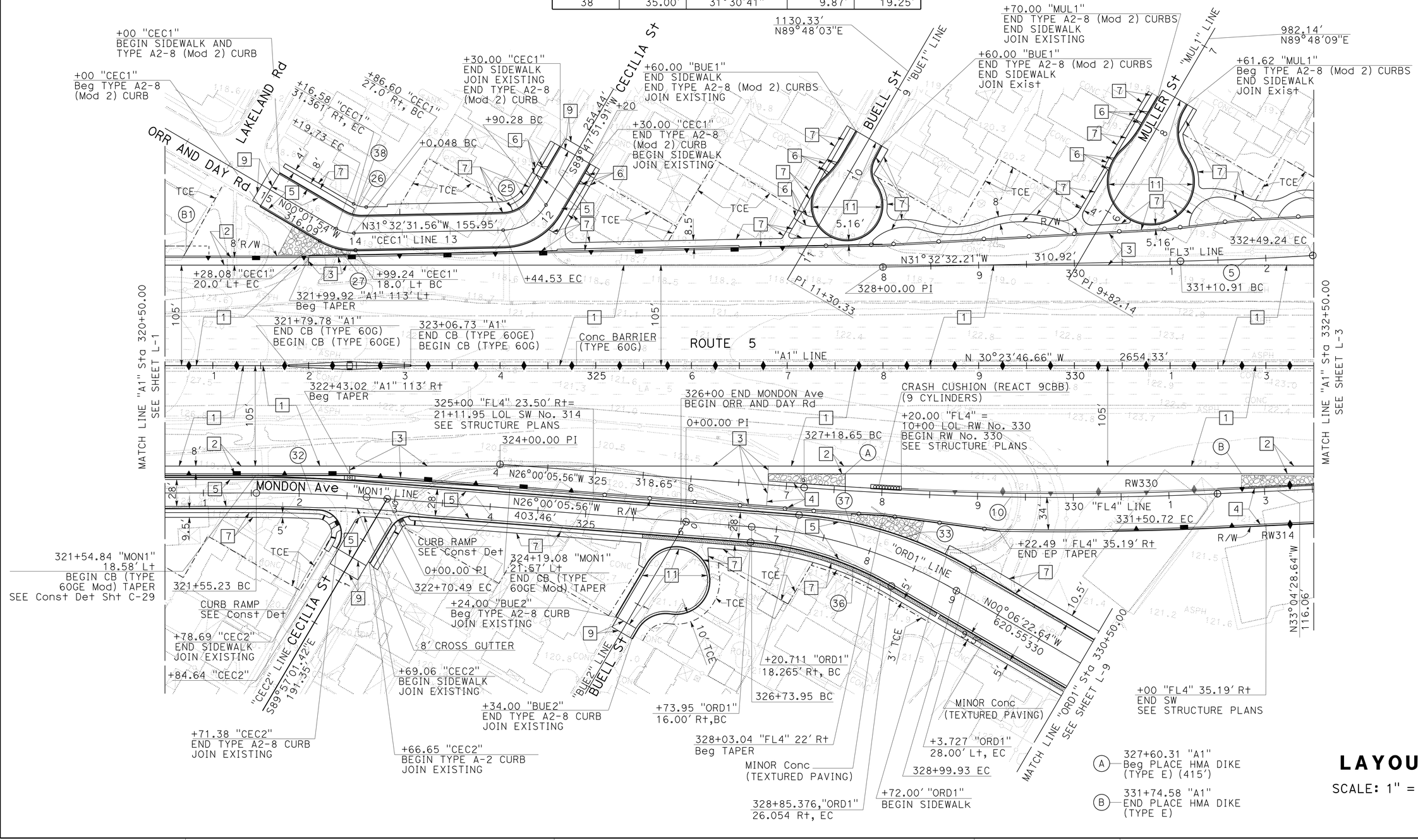

LAYOUT

SCALE: 1" = 50′

L-2

STATE OF CALIFORNIA - DEPARTMENT OF TRANSPORTATION
Caltrans® OFFICE OF DESIGN A

FUNCTIONAL SUPERVISOR: NGIM NANCY PE
CALCULATED-DESIGNED BY: STEVEN TRIEU
CHECKED BY: NGIM NANCY PE
REVISED BY / DATE REVISED

S:\projects\215951\RESUBMIT-3\721595ea002.dgn

LAST REVISION 00-00-00 | DATE PLOTTED => 26-JUN-2013 | TIME PLOTTED => 14:45

Dist	COUNTY	ROUTE	POST MILES TOTAL PROJECT	SHEET No.	TOTAL SHEETS
07	LA	5	0.0/7.6	14	985

REGISTERED CIVIL ENGINEER 10-11-12 DATE

6-24-13
PLANS APPROVAL DATE

REGISTERED PROFESSIONAL ENGINEER NGIM NANCY PE No. 58161 Exp. 6/30/14 CIVIL STATE OF CALIFORNIA

THE STATE OF CALIFORNIA OR ITS OFFICERS OR AGENTS SHALL NOT BE RESPONSIBLE FOR THE ACCURACY OR COMPLETENESS OF SCANNED COPIES OF THIS PLAN SHEET.

NOTE:

1. FOR ACCURATE RIGHT OF WAY DATA, CONTACT RIGHT OF WAY ENGINEERING AT THE DISTRICT OFFICE.
2. FOR IRRIGATION CROSSOVER, SEE LANDSCAPE PLANS.

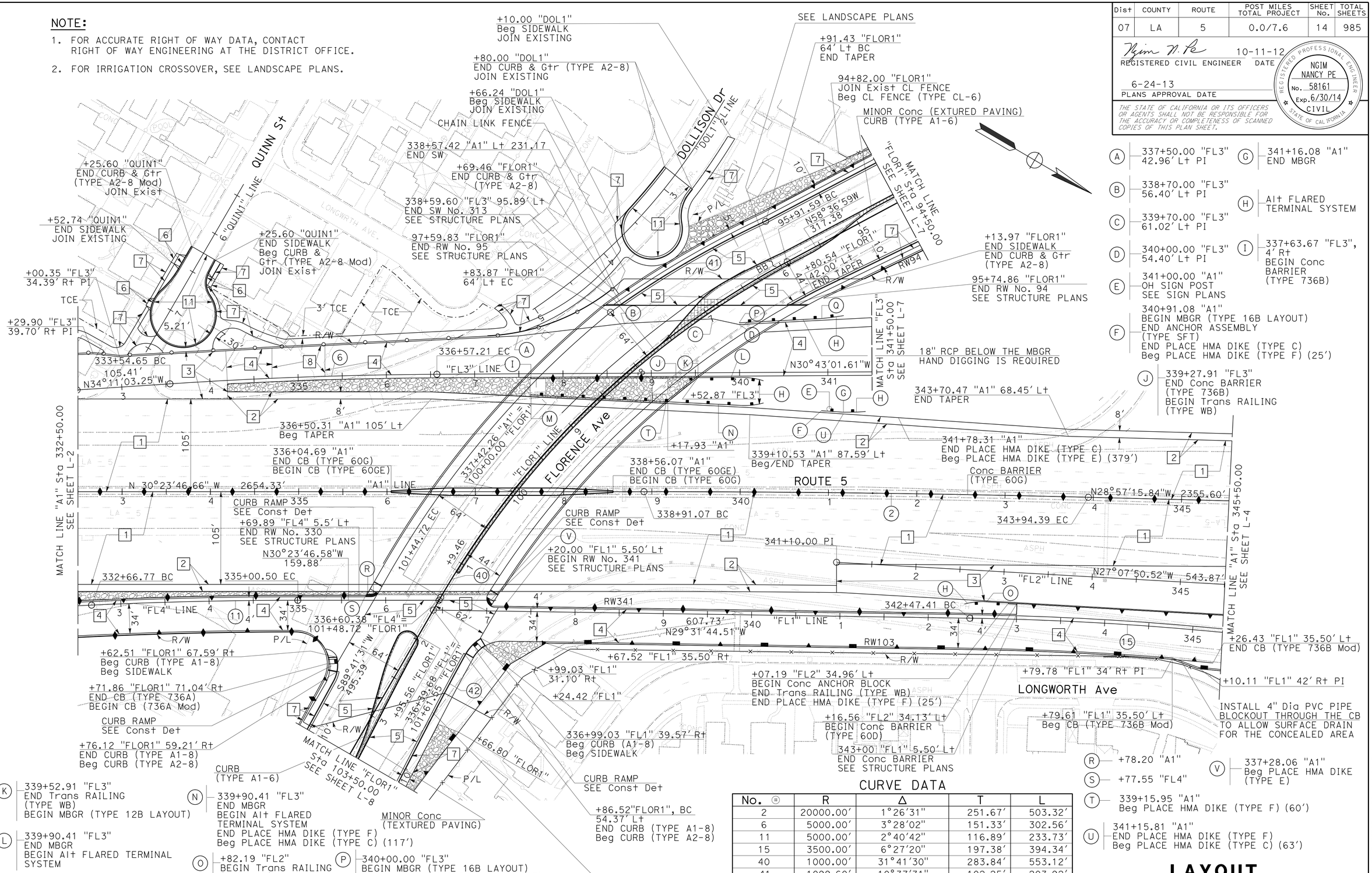

CURVE DATA

No. (H)	R	Δ	T	L
2	20000.00'	1°26'31"	251.67'	503.32'
6	5000.00'	3°28'02"	151.33'	302.56'
11	5000.00'	2°40'42"	116.89'	233.73'
15	3500.00'	6°27'20"	197.38'	394.34'
40	1000.00'	31°41'30"	283.84'	553.12'
41	1099.60'	10°37'31"	102.25'	203.92'
42	2351.48'	1°48'13"	37.02'	74.03'

LAYOUT

SCALE: 1" = 50'

L-3

STATE OF CALIFORNIA - DEPARTMENT OF TRANSPORTATION
OFFICE OF DESIGN A
Caltrans
FUNCTIONAL SUPERVISOR: NGIM NANCY PE
CALCULATED-DESIGNED BY: STEVEN TRIEU
CHECKED BY: NGIM NANCY PE
REVISED BY / DATE REVISED
S:\projects\215951\RESUBMIT-3\721595ea003.dgn
DATE PLOTTED => 26-JUN-2013
TIME PLOTTED => 14:46
LAST REVISION 00-00-00

Dist	COUNTY	ROUTE	POST MILES TOTAL PROJECT	SHEET No.	TOTAL SHEETS
07	LA	5	0.0/7.6	15	985

REGISTERED CIVIL ENGINEER 10-11-12 DATE

6-24-13
PLANS APPROVAL DATE

REGISTERED PROFESSIONAL ENGINEER NGIM NANCY PE No. 58161 Exp. 6/30/14 CIVIL STATE OF CALIFORNIA

THE STATE OF CALIFORNIA OR ITS OFFICERS OR AGENTS SHALL NOT BE RESPONSIBLE FOR THE ACCURACY OR COMPLETENESS OF SCANNED COPIES OF THIS PLAN SHEET.

NOTE:

1. FOR ACCURATE RIGHT OF WAY DATA, CONTACT RIGHT OF WAY ENGINEERING AT THE DISTRICT OFFICE.
2. FOR IRRIGATION CROSSOVER, SEE LANDSCAPE PLANS.

CURVE DATA

No. ⊕	R	Δ	T	L
15	3500.00′	6°27′20"	197.38′	394.34′
16	800.05′	22°4′45"	156.09′	308.30′
17	1500.00′	15°55′38"	209.84′	416.98′
18	834.05′	4°35′51"	33.48′	66.92′
19	990.00′	11°57′44"	103.72′	206.69′
20	2000.00′	11°52′46"	208.08′	414.67′

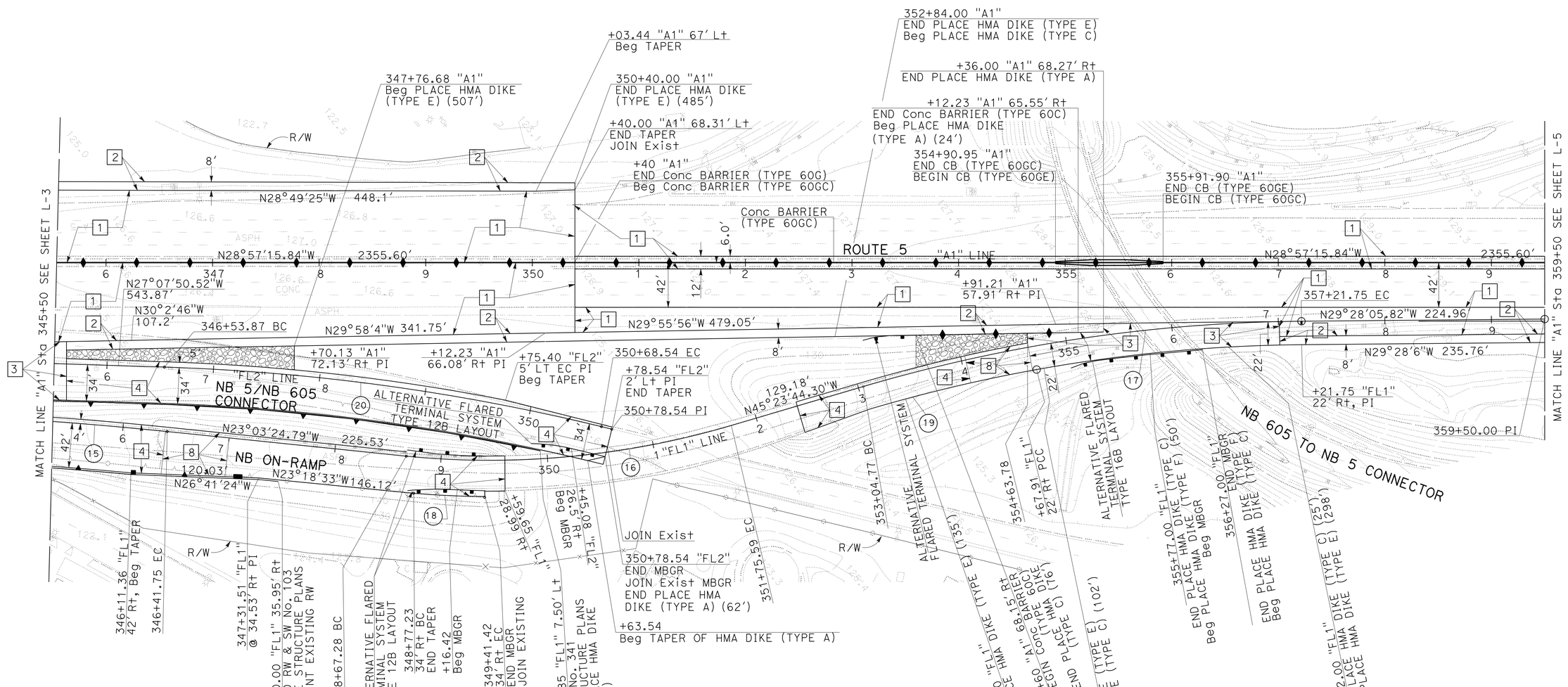

LAYOUT
SCALE: 1" = 50′

L-4

STATE OF CALIFORNIA - DEPARTMENT OF TRANSPORTATION
Caltrans® OFFICE OF DESIGN A

REVISED BY | DATE REVISED
STEVEN TRIEU | NGIM NANCY PE
CALCULATED-DESIGNED BY | CHECKED BY
FUNCTIONAL SUPERVISOR | NGIM NANCY PE

S:\projects\215951\RESUBMIT-3\721595ea004.dgn

LAST REVISION 00-00-00 | DATE PLOTTED => 26-JUN-2013 | TIME PLOTTED => 14:46

BORDER LAST REVISED 7/2/2010 | USERNAME => s119571 | DGN FILE => 721595ea004.dgn | RELATIVE BORDER SCALE IS IN INCHES 0 1 2 3 | UNIT 1797 | PROJECT NUMBER & PHASE 07000018351

Dist	COUNTY	ROUTE	POST MILES TOTAL PROJECT	SHEET No.	TOTAL SHEETS
07	LA	5	0.0/7.6	16	985

REGISTERED CIVIL ENGINEER 10-11-12 DATE

6-24-13
PLANS APPROVAL DATE

REGISTERED PROFESSIONAL ENGINEER NGIM NANCY PE No. 58161 Exp. 6/30/14 CIVIL STATE OF CALIFORNIA

THE STATE OF CALIFORNIA OR ITS OFFICERS OR AGENTS SHALL NOT BE RESPONSIBLE FOR THE ACCURACY OR COMPLETENESS OF SCANNED COPIES OF THIS PLAN SHEET.

NOTE:

1. FOR ACCURATE RIGHT OF WAY DATA, CONTACT RIGHT OF WAY ENGINEERING AT THE DISTRICT OFFICE.
2. FOR IRRIGATION CROSSOVER, SEE LANDSCAPE PLANS.

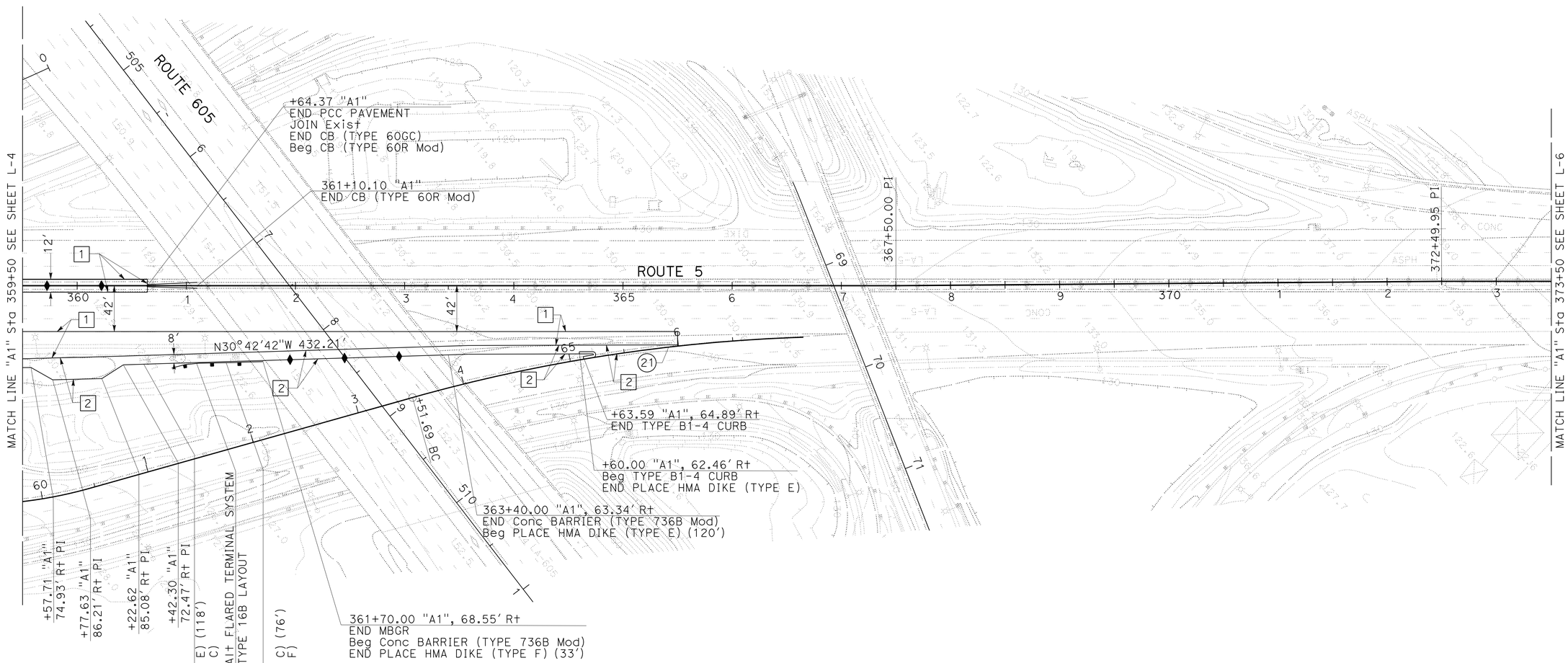

CURVE DATA

No. ⊕	R	Δ	T	L
21	1500.04'	4°35'47"	60.20'	120.34'

LAYOUT

SCALE: 1" = 50'

L-5

REVISED BY | DATE REVISED

KEVIN Q NGUYEN | NGIM NANCY PE

CALCULATED-DESIGNED BY | CHECKED BY

FUNCTIONAL SUPERVISOR | NGIM NANCY PE

STATE OF CALIFORNIA - DEPARTMENT OF TRANSPORTATION

Caltrans® OFFICE OF DESIGN A

S:\projects\215951\RESUBMIT-3\721595ea005.dgn

LAST REVISION 00-00-00 | DATE PLOTTED => 26-JUN-2013 | TIME PLOTTED => 14:46

BORDER LAST REVISED 7/2/2010 | USERNAME => s119571 | DGN FILE => 721595ea005.dgn | RELATIVE BORDER SCALE IS IN INCHES 0 1 2 3 | UNIT 1797 | PROJECT NUMBER & PHASE 07000018351

Dist	COUNTY	ROUTE	POST MILES TOTAL PROJECT	SHEET No.	TOTAL SHEETS
07	LA	5	0.0/7.6	17	985

REGISTERED CIVIL ENGINEER 10-11-12 DATE

6-24-13
PLANS APPROVAL DATE

REGISTERED PROFESSIONAL ENGINEER NGIM NANCY PE No. 58161 Exp. 6/30/14 CIVIL STATE OF CALIFORNIA

THE STATE OF CALIFORNIA OR ITS OFFICERS OR AGENTS SHALL NOT BE RESPONSIBLE FOR THE ACCURACY OR COMPLETENESS OF SCANNED COPIES OF THIS PLAN SHEET.

NOTE:

1. FOR ACCURATE RIGHT OF WAY DATA, CONTACT RIGHT OF WAY ENGINEERING AT THE DISTRICT OFFICE.
2. FOR IRRIGATION CROSSOVER, SEE LANDSCAPE PLANS.

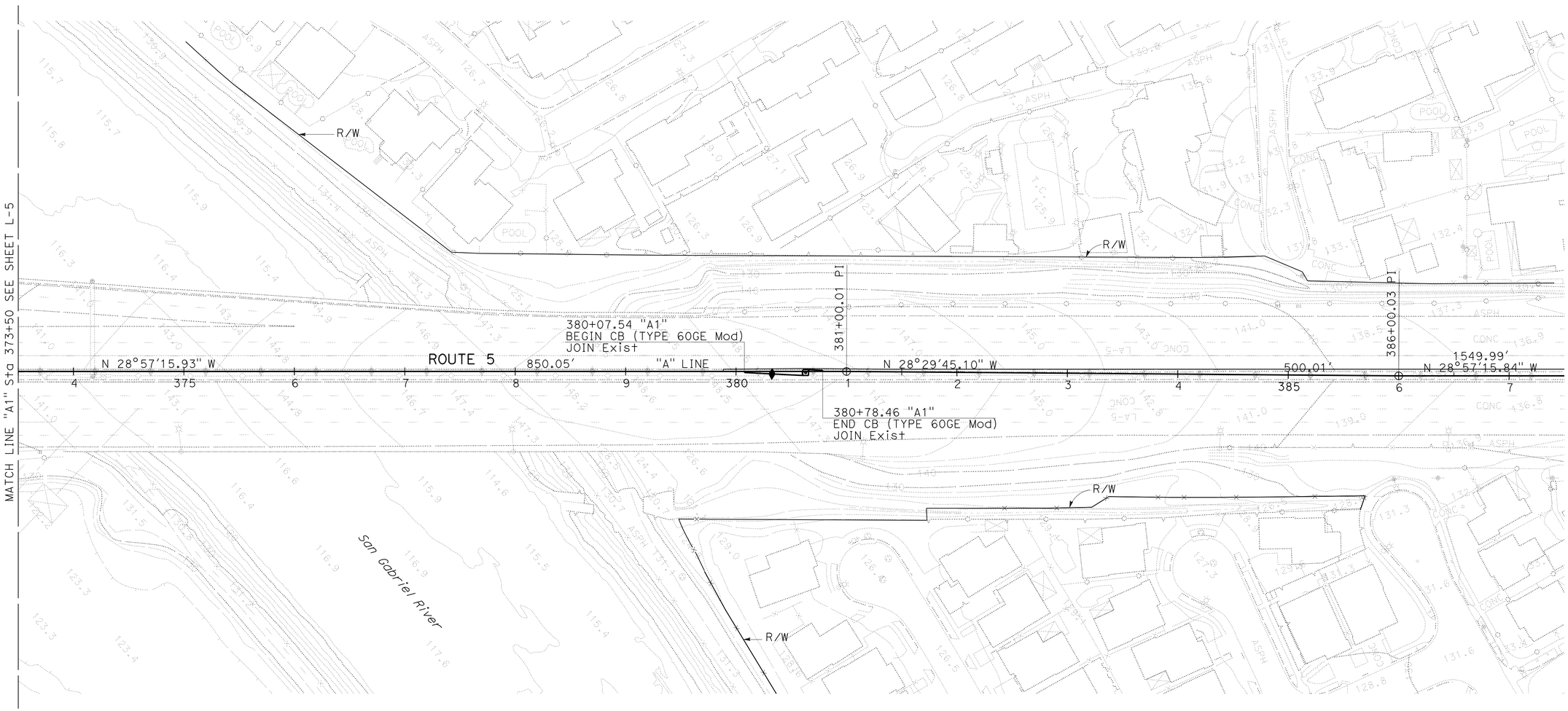

LAYOUT

SCALE: 1" = 50'

L-6

STATE OF CALIFORNIA - DEPARTMENT OF TRANSPORTATION
Caltrans OFFICE OF DESIGN A

FUNCTIONAL SUPERVISOR: NGIM NANCY PE
CALCULATED-DESIGNED BY / CHECKED BY
STEVEN TRIEU / NGIM NANCY PE
REVISED BY / DATE REVISED

S:\projects\215951\RESUBMIT-3\721595ea006.dgn

LAST REVISION 00-00-00 | DATE PLOTTED => 26-JUN-2013 | TIME PLOTTED => 14:46

BORDER LAST REVISED 7/2/2010 | USERNAME => s119571 | DGN FILE => 721595ea006.dgn | RELATIVE BORDER SCALE IS IN INCHES 0 1 2 3 | UNIT 1797 | PROJECT NUMBER & PHASE 07000018351

Dist	COUNTY	ROUTE	POST MILES TOTAL PROJECT	SHEET No.	TOTAL SHEETS
07	LA	5	0.0/7.6	18	985

REGISTERED CIVIL ENGINEER 10-11-12 DATE

6-24-13
PLANS APPROVAL DATE

REGISTERED PROFESSIONAL ENGINEER NGIM NANCY PE No. 58161 Exp. 6/30/14 CIVIL STATE OF CALIFORNIA

THE STATE OF CALIFORNIA OR ITS OFFICERS OR AGENTS SHALL NOT BE RESPONSIBLE FOR THE ACCURACY OR COMPLETENESS OF SCANNED COPIES OF THIS PLAN SHEET.

NOTE:

1. FOR ACCURATE RIGHT OF WAY DATA, CONTACT RIGHT OF WAY ENGINEERING AT THE DISTRICT OFFICE.
2. FOR IRRIGATION CROSSOVER, SEE LANDSCAPE PLANS.

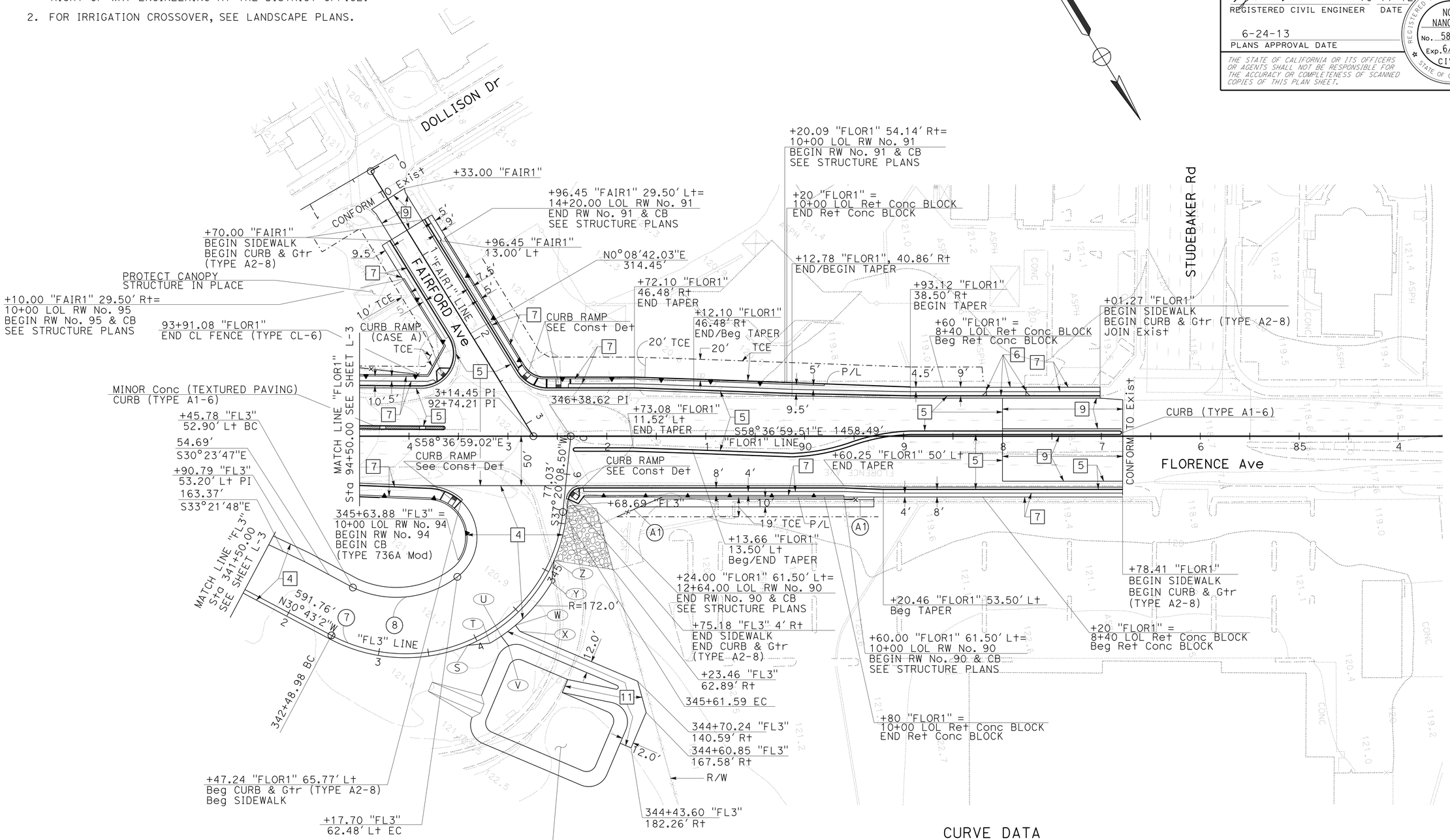

(S) 343+89.96 "FL3" 4.0' Rt
(T) 344+09.96 "FL3" 12.0' Rt
(U) 344+22.52 "FL3" 12.0' Rt
(V) 344+23.08 "FL3" 24.33' Rt
(W) 344+39.26 "FL3" 12.0' Rt
(X) 344+38.91 "FL3" 19.50' Rt
(Y) 344+92.28 "FL3" 12.0' Rt
(Z) 345+12.28 "FL3" 4.0' Rt

CURVE DATA

No. ⊕	R	Δ	T	L
7	160.00'	111°56'50"	236.97'	312.62'
8	102.26'	62°33'14"	62.12'	111.65'

LAYOUT

SCALE: 1" = 50'

L-7

STATE OF CALIFORNIA - DEPARTMENT OF TRANSPORTATION
OFFICE OF DESIGN A
FUNCTIONAL SUPERVISOR: NGIM NANCY PE
CALCULATED-DESIGNED BY: STEVEN TRIEU
CHECKED BY: NGIM NANCY PE
REVISED BY / DATE REVISED

S:\projects\215951\RESUBMIT-3\721595ea007.dgn

LAST REVISION 00-00-00
DATE PLOTTED => 26-JUN-2013
TIME PLOTTED => 14:46

Dist	COUNTY	ROUTE	POST MILES TOTAL PROJECT	SHEET No.	TOTAL SHEETS
07	LA	5	0.0/7.6	19	985

REGISTERED CIVIL ENGINEER 10-11-12 DATE

6-24-13
PLANS APPROVAL DATE

REGISTERED PROFESSIONAL ENGINEER NGIM NANCY PE No. 58161 Exp. 6/30/14 CIVIL STATE OF CALIFORNIA

THE STATE OF CALIFORNIA OR ITS OFFICERS OR AGENTS SHALL NOT BE RESPONSIBLE FOR THE ACCURACY OR COMPLETENESS OF SCANNED COPIES OF THIS PLAN SHEET.

NOTE:

1. FOR ACCURATE RIGHT OF WAY DATA, CONTACT RIGHT OF WAY ENGINEERING AT THE DISTRICT OFFICE.
2. FOR IRRIGATION CROSSOVER, SEE LANDSCAPE PLANS.

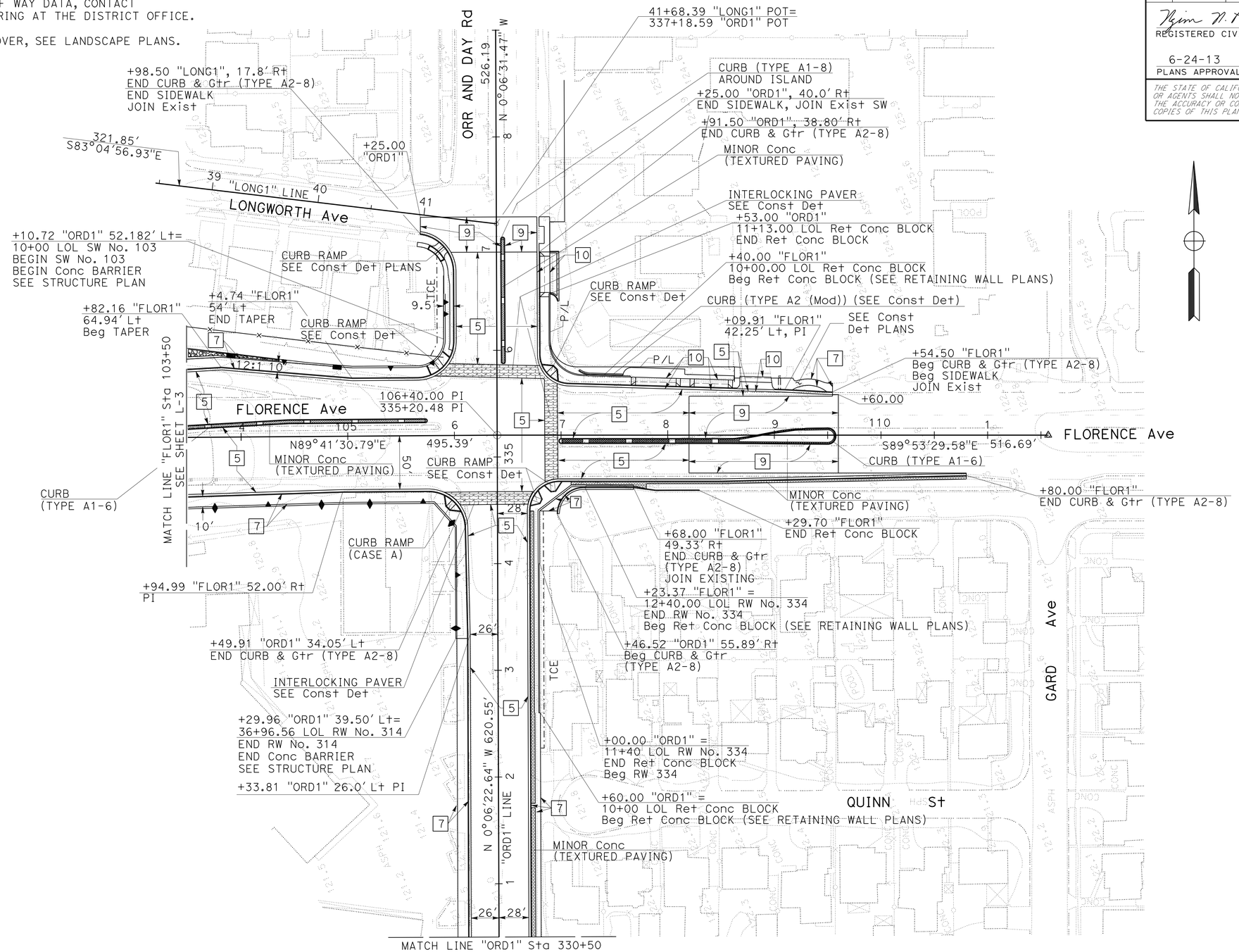

LAYOUT

SCALE: 1" = 50'

L-8

STATE OF CALIFORNIA - DEPARTMENT OF TRANSPORTATION
Caltrans® OFFICE OF DESIGN A

FUNCTIONAL SUPERVISOR: NGIM NANCY PE
CALCULATED-DESIGNED BY: STEVEN TRIEU
CHECKED BY: NGIM NANCY PE
REVISED BY
DATE REVISED

S:\projects\215951\RESUBMIT-3\721595ea008.dgn

LAST REVISION 00-00-00
DATE PLOTTED => 26-JUN-2013
TIME PLOTTED => 14:46

Dist	COUNTY	ROUTE	POST MILES TOTAL PROJECT	SHEET No.	TOTAL SHEETS
07	LA	5	0.0/7.6	20	985

REGISTERED CIVIL ENGINEER 10-11-12 DATE

6-24-13
PLANS APPROVAL DATE

REGISTERED PROFESSIONAL ENGINEER NGIM NANCY PE No. 58161 Exp. 6/30/14 CIVIL STATE OF CALIFORNIA

THE STATE OF CALIFORNIA OR ITS OFFICERS OR AGENTS SHALL NOT BE RESPONSIBLE FOR THE ACCURACY OR COMPLETENESS OF SCANNED COPIES OF THIS PLAN SHEET.

NOTES:

1. FOR ACCURATE RIGHT OF WAY DATA, CONTACT RIGHT OF WAY ENGINEERING AT THE DISTRICT OFFICE.
2. SEE C-27 FOR DETENTION BASIN ACCESS ROAD LAYOUT.
3. FOR IRRIGATION CROSSOVER, SEE LANDSCAPE PLANS.

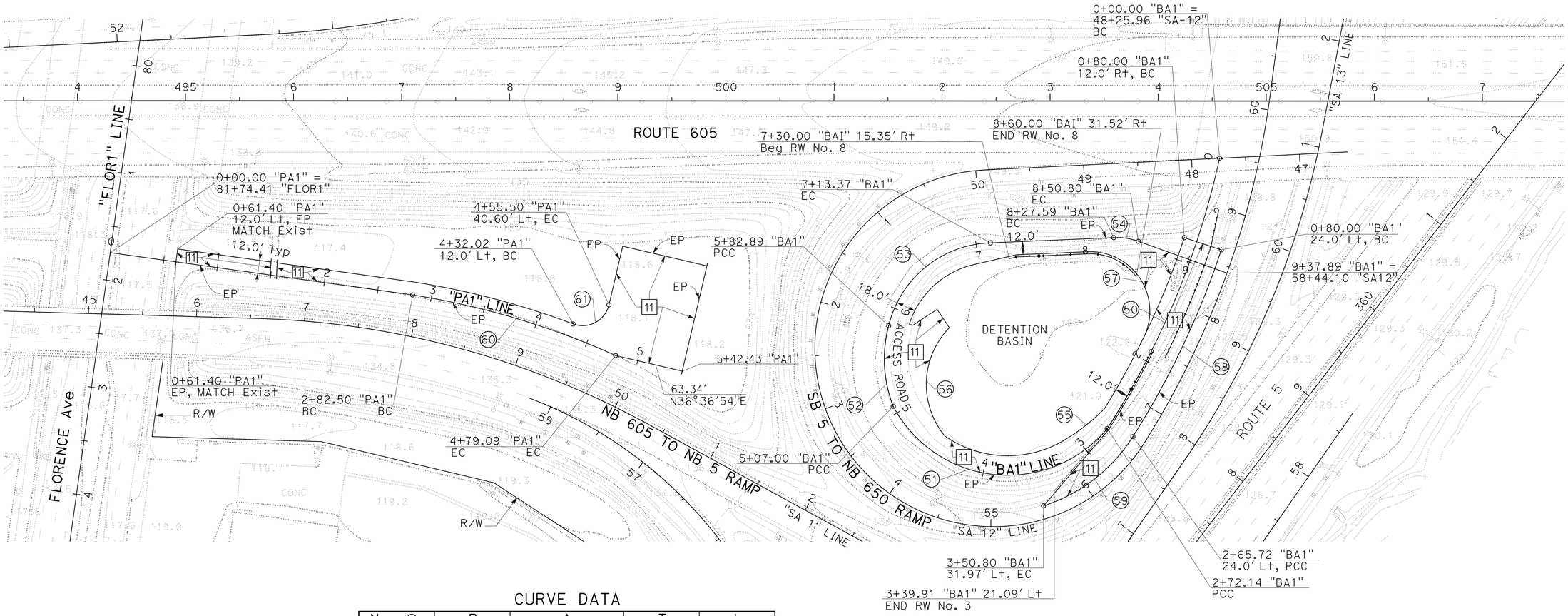

CURVE DATA

No.	R	Δ	T	L
50	763.97'	20°24'37"	137.53'	272.15'
51	120.00'	112°8'04"	178.36'	234.85'
52	120.00'	36°14'00"	39.26'	75.89'
53	100.00'	74°45'32"	76.40'	130.48'
54	60.00'	22°9'50"	11.75'	23.21'
55	178.18'	14°55'45"	23.35'	46.43'
56	75.00'	83°54'11"	67.42'	109.83'
57	55.00'	118°24'04"	92.27'	113.66'
58	787.97'	13°55'50"	96.27'	191.58'
59	153.00'	39°58'53"	55.66'	106.76'
60	734.58'	15°20'02"	98.89'	196.59'
61	25.00'	97°26'01"	28.47'	42.51'

LAYOUT

SCALE: 1" = 50'

L-9

REVISED BY | DATE REVISED
MARK MAI | NGIM NANCY PE
CALCULATED-DESIGNED BY | CHECKED BY
FUNCTIONAL SUPERVISOR | NGIM NANCY PE

STATE OF CALIFORNIA - DEPARTMENT OF TRANSPORTATION
Caltrans OFFICE OF DESIGN A

S:\projects\215951\RESUBMIT-3\721595ea009.dgn

LAST REVISION 00-00-00 | DATE PLOTTED => 26-JUN-2013 | TIME PLOTTED => 14:46

Dist	COUNTY	ROUTE	POST MILES TOTAL PROJECT	SHEET No.	TOTAL SHEETS
07	LA	5	0.0/7.6	21	985

REGISTERED CIVIL ENGINEER 10-11-12 DATE

6-24-13
PLANS APPROVAL DATE

REGISTERED PROFESSIONAL ENGINEER
NGIM NANCY PE
No. 58161
Exp 6-30-14
CIVIL
STATE OF CALIFORNIA

THE STATE OF CALIFORNIA OR ITS OFFICERS OR AGENTS SHALL NOT BE RESPONSIBLE FOR THE ACCURACY OR COMPLETENESS OF SCANNED COPIES OF THIS PLAN SHEET.

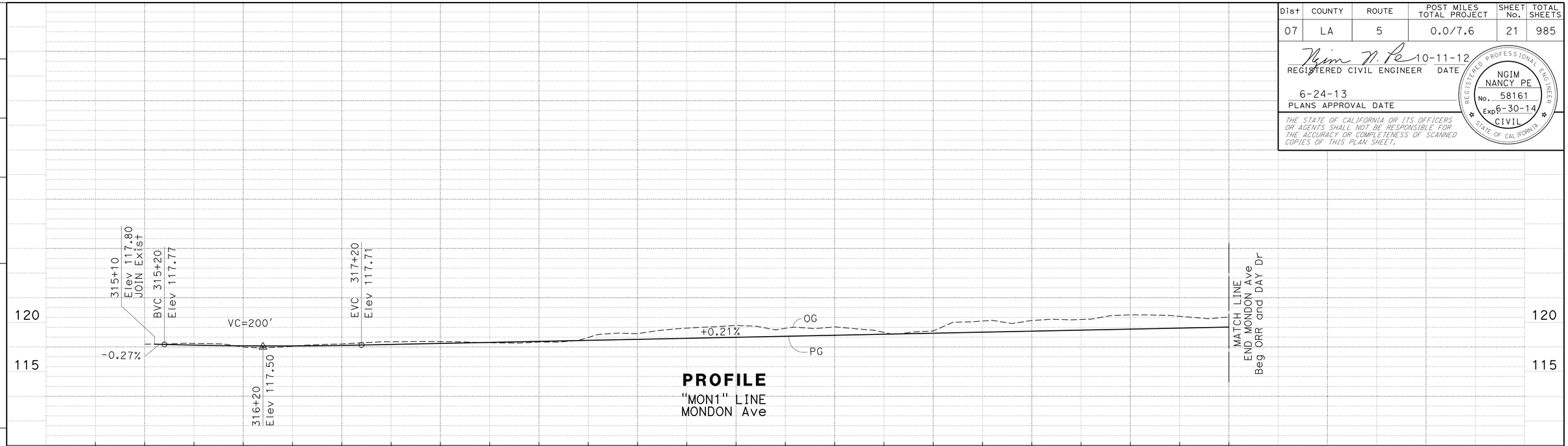

PROFILE
"MON1" LINE
MONDON Ave

STATION	315+00	316+00	317+00	318+00	319+00	320+00	321+00	322+00	323+00	324+00	325+00	326+00	TOTAL
CY Exc	4,592												
CY Emb	0												

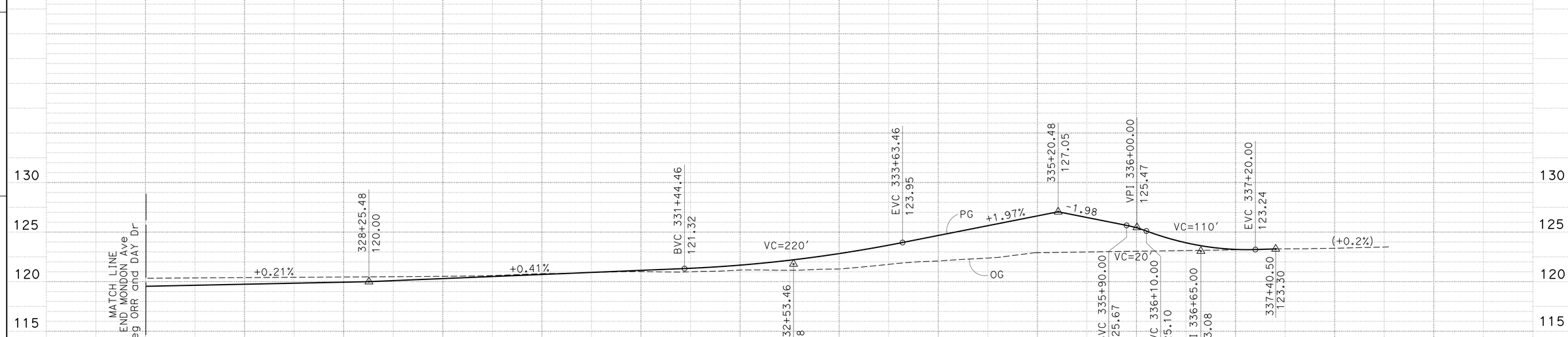

PROFILE
"ORD1" LINE
ORR and DAY ROAD

PROFILE
SCALE: Horiz 1" = 50'
Vert 1" = 5'

P-1

STATION	326+00	327+00	328+00	329+00	330+00	331+00	332+00	333+00	334+00	335+00	336+00	337+00	338+00	TOTAL
CY Exc	4,705													
CY Emb	261													

REVISED BY | DATE REVISED
KEVIN Q NGUYEN | NGIM NANCY PE
CALCULATED-DESIGNED BY | CHECKED BY
FUNCTIONAL SUPERVISOR | NGIM NANCY PE

STATE OF CALIFORNIA - DEPARTMENT OF TRANSPORTATION
Caltrans® OFFICE OF DESIGN A

S:\projects\215951\721595fa001.dgn

LAST REVISION 09-19-12 | DATE PLOTTED => 27-JUN-2013 | TIME PLOTTED => 10:49

BORDER LAST REVISED 7/2/2010 | USERNAME => s121614 | DGN FILE => 721595fa001.dgn | RELATIVE BORDER SCALE IS IN INCHES 0 1 2 3 | UNIT 1797 | PROJECT NUMBER & PHASE 07000018351

Dist	COUNTY	ROUTE	POST MILES TOTAL PROJECT	SHEET No.	TOTAL SHEETS
07	LA	5	0.0/7.6	22	985

REGISTERED CIVIL ENGINEER 10-11-12 DATE

6-24-13
PLANS APPROVAL DATE

REGISTERED PROFESSIONAL ENGINEER
NGIM NANCY PE
No. 58161
Exp 6-30-14
CIVIL
STATE OF CALIFORNIA

THE STATE OF CALIFORNIA OR ITS OFFICERS OR AGENTS SHALL NOT BE RESPONSIBLE FOR THE ACCURACY OR COMPLETENESS OF SCANNED COPIES OF THIS PLAN SHEET.

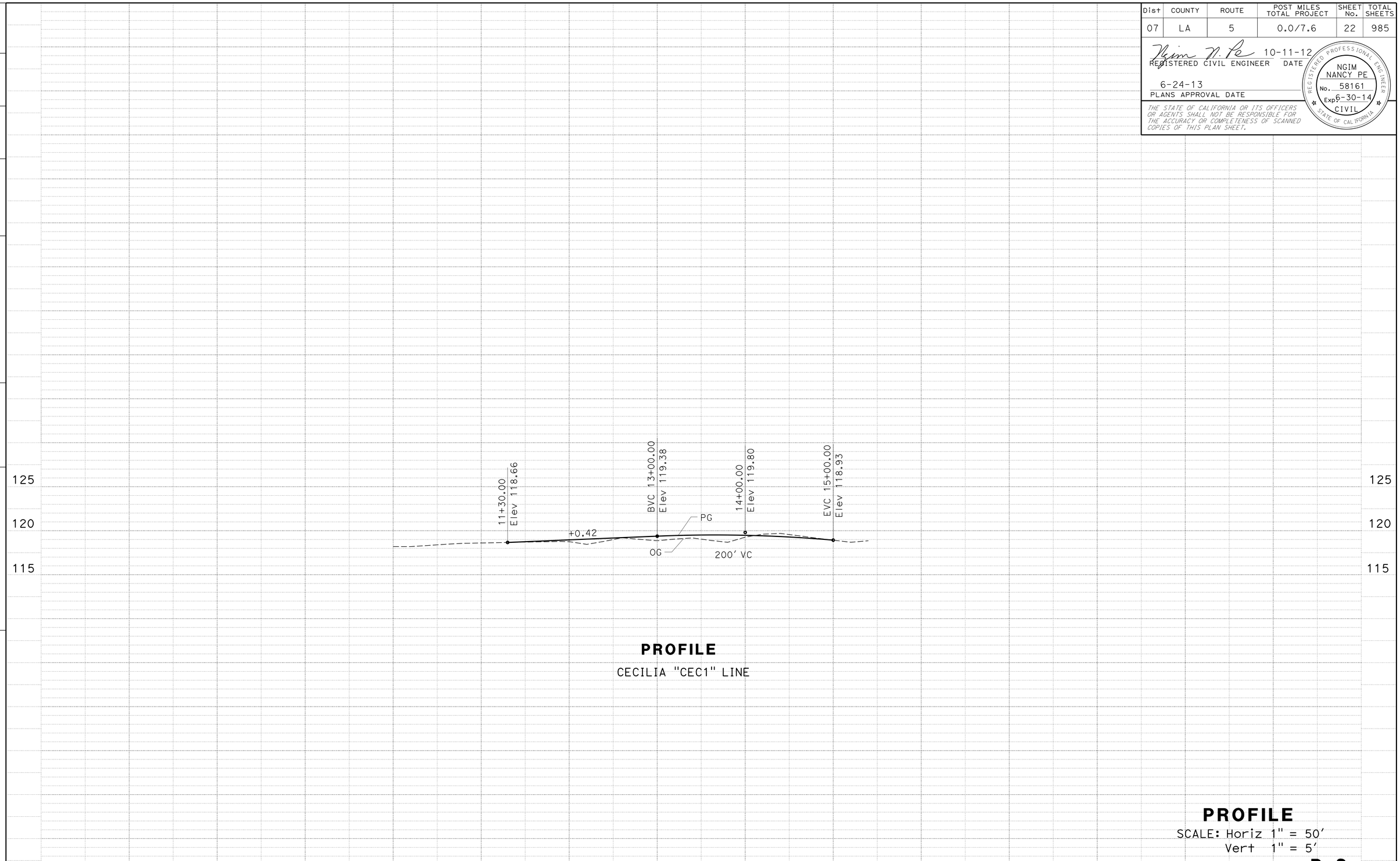

PROFILE

CECILIA "CEC1" LINE

PROFILE

SCALE: Horiz 1" = 50'
Vert 1" = 5'

P-2

REVISED BY
DATE REVISED

KEVIN Q NGUYEN
NGIM NANCY PE

CALCULATED-DESIGNED BY
CHECKED BY

FUNCTIONAL SUPERVISOR
NGIM NANCY PE

STATE OF CALIFORNIA - DEPARTMENT OF TRANSPORTATION
Caltrans® OFFICE OF DESIGN A

S:\projects\215951\721595fa002.dgn

LAST REVISION DATE PLOTTED => 26-JUN-2013
09-19-12 TIME PLOTTED => 16:26

Dist	COUNTY	ROUTE	POST MILES TOTAL PROJECT	SHEET No.	TOTAL SHEETS
07	LA	5	0.0/7.6	23	985

REGISTERED CIVIL ENGINEER 10-11-12 DATE

6-24-13
PLANS APPROVAL DATE

REGISTERED PROFESSIONAL ENGINEER NGIM NANCY PE No. 58161 Exp 6-30-14 CIVIL STATE OF CALIFORNIA

THE STATE OF CALIFORNIA OR ITS OFFICERS OR AGENTS SHALL NOT BE RESPONSIBLE FOR THE ACCURACY OR COMPLETENESS OF SCANNED COPIES OF THIS PLAN SHEET.

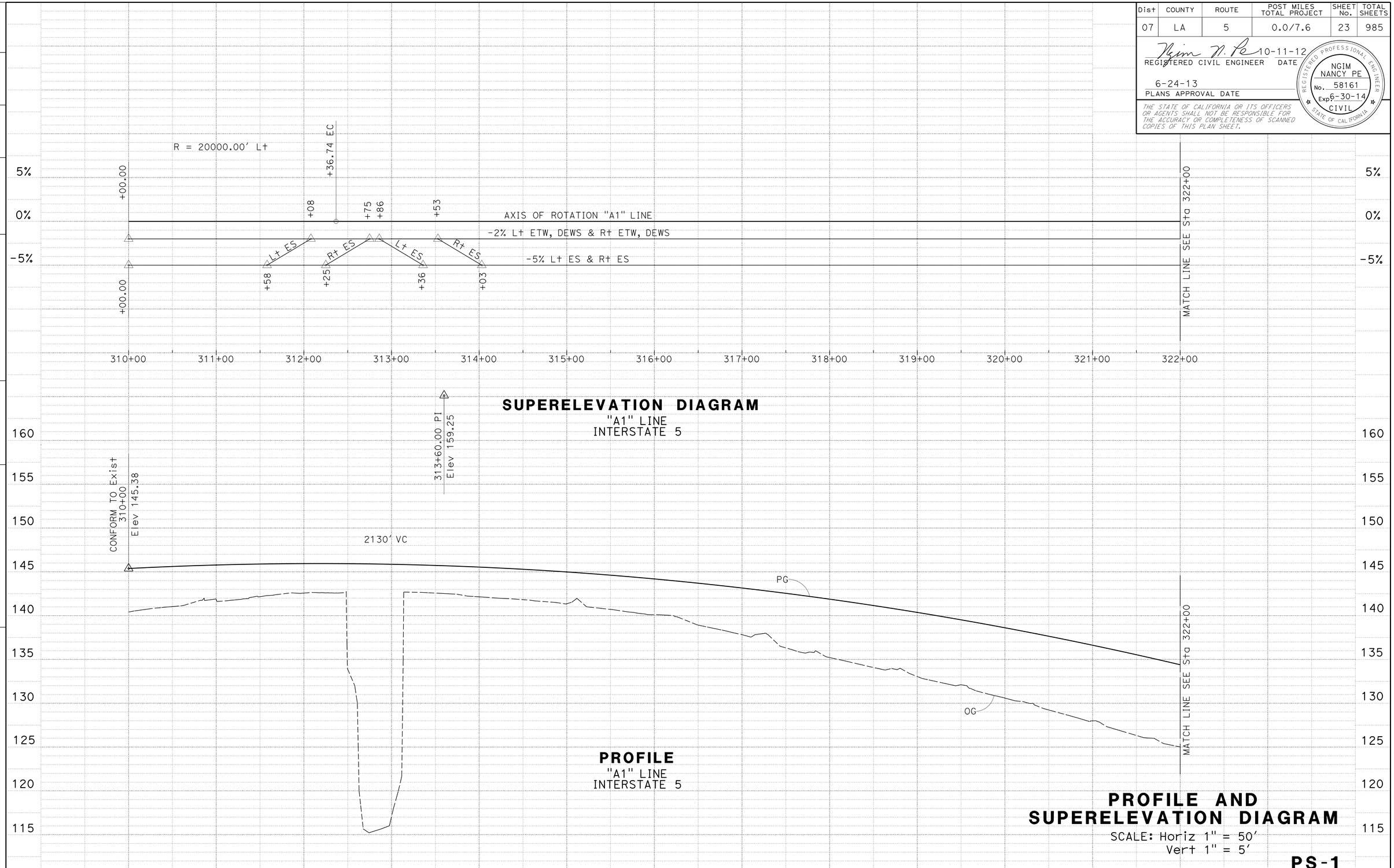

PROFILE AND SUPERELEVATION DIAGRAM

SCALE: Horiz 1" = 50'
Vert 1" = 5'

PS-1

STATION		310+00	311+00	312+00	313+00	314+00	315+00	316+00	317+00	318+00	319+00	320+00	321+00	322+00	TOTAL
CY	Exc	0													
	Emb	47,860													

REVISED BY | DATE REVISED
KEVIN Q NGUYEN | NGIM NANCY PE
CALCULATED-DESIGNED BY | CHECKED BY
FUNCTIONAL SUPERVISOR | NGIM NANCY PE

STATE OF CALIFORNIA - DEPARTMENT OF TRANSPORTATION
Caltrans OFFICE OF DESIGN A

S:\projects\21595\721595fb001.dgn

LAST REVISION 09-18-12 | DATE PLOTTED => 26-JUN-2013 | TIME PLOTTED => 16:26

Dist	COUNTY	ROUTE	POST MILES TOTAL PROJECT	SHEET No.	TOTAL SHEETS
07	LA	5	0.0/7.6	24	985

REGISTERED CIVIL ENGINEER 10-11-12 DATE

6-24-13
PLANS APPROVAL DATE

REGISTERED PROFESSIONAL ENGINEER
NGIM NANCY PE
No. 58161
Exp 6-30-14
CIVIL
STATE OF CALIFORNIA

THE STATE OF CALIFORNIA OR ITS OFFICERS OR AGENTS SHALL NOT BE RESPONSIBLE FOR THE ACCURACY OR COMPLETENESS OF SCANNED COPIES OF THIS PLAN SHEET.

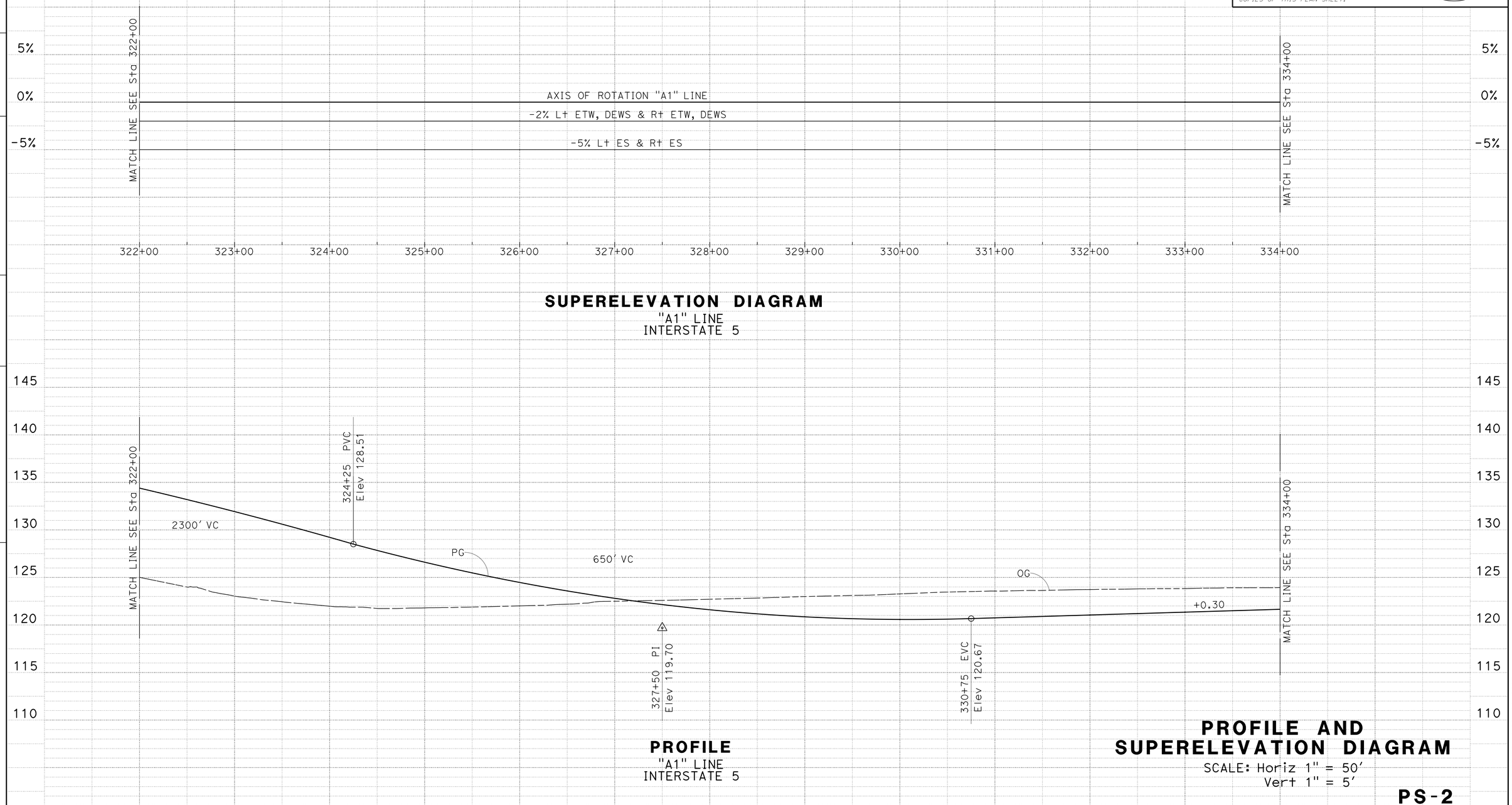

SUPERELEVATION DIAGRAM
"A1" LINE
INTERSTATE 5

PROFILE
"A1" LINE
INTERSTATE 5

PROFILE AND SUPERELEVATION DIAGRAM
SCALE: Horiz 1" = 50'
Vert 1" = 5'

PS-2

STATION		322+00	323+00	324+00	325+00	326+00	327+00	328+00	329+00	330+00	331+00	332+00	333+00	334+00	TOTAL
CY	Exc	25,454													
	Emb	16,755													

REVISED BY | DATE REVISED
KEVIN Q NGUYEN | NGIM NANCY PE
CALCULATED-DESIGNED BY | CHECKED BY
FUNCTIONAL SUPERVISOR | NGIM NANCY PE

STATE OF CALIFORNIA - DEPARTMENT OF TRANSPORTATION
Caltrans® OFFICE OF DESIGN A

S:\projects\215951\721595fb002.dgn

LAST REVISION 09-18-12 | DATE PLOTTED => 26-JUN-2013 | TIME PLOTTED => 16:26

Dist	COUNTY	ROUTE	POST MILES TOTAL PROJECT	SHEET No.	TOTAL SHEETS
07	LA	5	0.0/7.6	25	985

REGISTERED CIVIL ENGINEER 10-11-12 DATE

6-24-13
PLANS APPROVAL DATE

REGISTERED PROFESSIONAL ENGINEER
NGIM NANCY PE
No. 58161
Exp 6-30-14
CIVIL
STATE OF CALIFORNIA

THE STATE OF CALIFORNIA OR ITS OFFICERS OR AGENTS SHALL NOT BE RESPONSIBLE FOR THE ACCURACY OR COMPLETENESS OF SCANNED COPIES OF THIS PLAN SHEET.

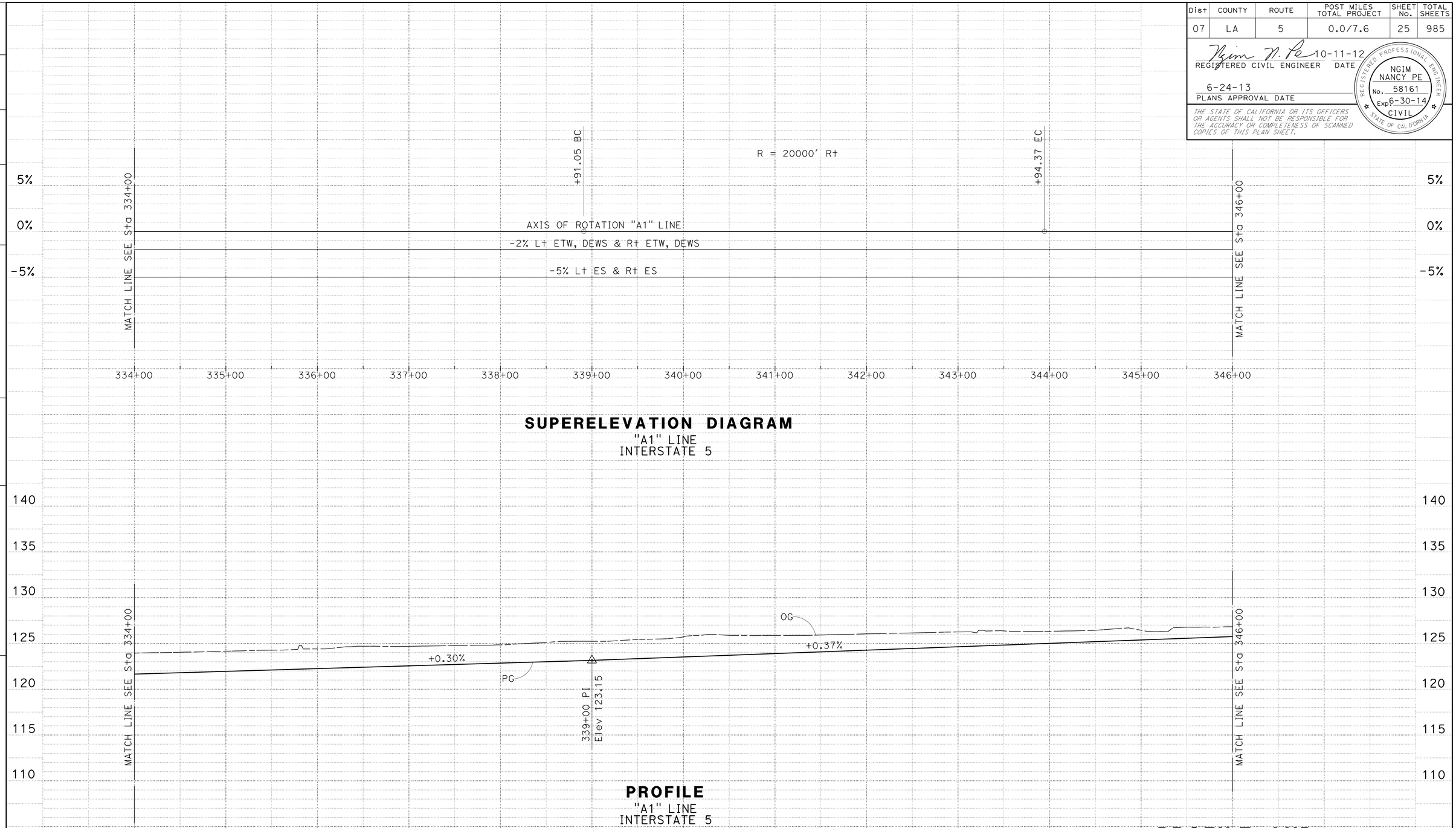

PROFILE AND SUPERELEVATION DIAGRAM

SCALE: Horiz 1" = 50'
Vert 1" = 5'

PS-3

STATION		334+00	335+00	336+00	337+00	338+00	339+00	340+00	341+00	342+00	343+00	344+00	345+00	346+00	TOTAL
CY	Exc	53,819													
	Emb	0													

REVISED BY | DATE REVISED
KEVIN Q NGUYEN | NGIM NANCY PE
CALCULATED-DESIGNED BY | CHECKED BY
FUNCTIONAL SUPERVISOR | NGIM NANCY PE

STATE OF CALIFORNIA - DEPARTMENT OF TRANSPORTATION
Caltrans® OFFICE OF DESIGN A

S:\projects\215951\721595fb003.dgn

LAST REVISION 09-18-12 | DATE PLOTTED => 26-JUN-2013 | TIME PLOTTED => 16:26

Dist	COUNTY	ROUTE	POST MILES TOTAL PROJECT	SHEET No.	TOTAL SHEETS
07	LA	5	0.0/7.6	26	985

REGISTERED CIVIL ENGINEER 10-11-12 DATE

6-24-13
PLANS APPROVAL DATE

REGISTERED PROFESSIONAL ENGINEER NGIM NANCY PE No. 58161 Exp 6-30-14 CIVIL STATE OF CALIFORNIA

THE STATE OF CALIFORNIA OR ITS OFFICERS OR AGENTS SHALL NOT BE RESPONSIBLE FOR THE ACCURACY OR COMPLETENESS OF SCANNED COPIES OF THIS PLAN SHEET.

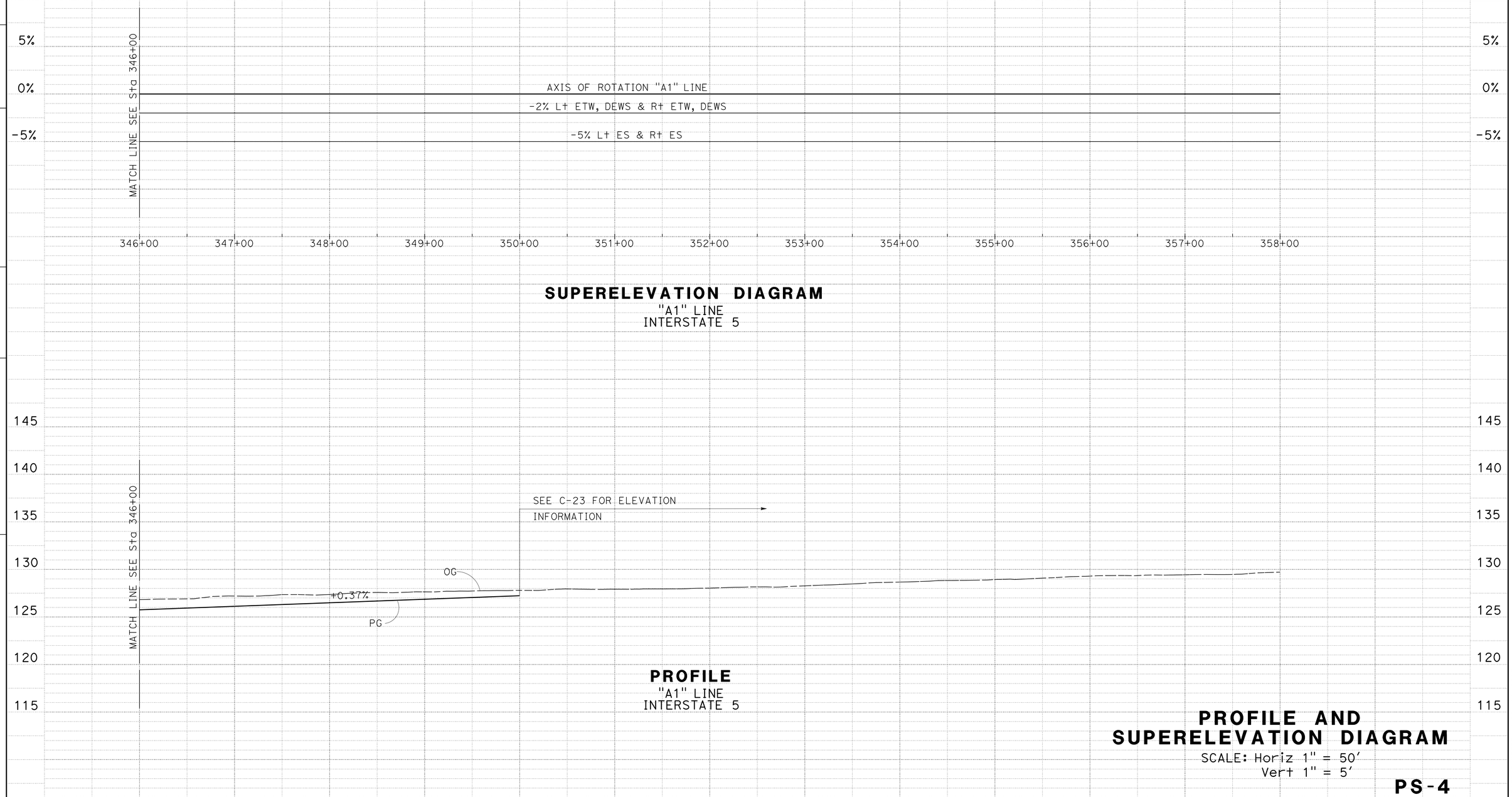

SUPERELEVATION DIAGRAM
"A1" LINE
INTERSTATE 5

PROFILE
"A1" LINE
INTERSTATE 5

PROFILE AND SUPERELEVATION DIAGRAM
SCALE: Horiz 1" = 50'
Vert 1" = 5'

PS-4

STATION		346+00	347+00	348+00	349+00	350+00	351+00	352+00	353+00	354+00	355+00	356+00	357+00	358+00	TOTAL
CY	Exc	12,200													
	Emb	113													

REVISED BY | DATE REVISED
KEVIN Q NGUYEN | NGIM NANCY PE
CALCULATED-DESIGNED BY | CHECKED BY
FUNCTIONAL SUPERVISOR | NGIM NANCY PE

STATE OF CALIFORNIA - DEPARTMENT OF TRANSPORTATION
Caltrans® OFFICE OF DESIGN A

S:\projects\215951\721595fb004.dgn

LAST REVISION 09-18-12 | DATE PLOTTED => 26-JUN-2013 | TIME PLOTTED => 16:26

Dist	COUNTY	ROUTE	POST MILES TOTAL PROJECT	SHEET No.	TOTAL SHEETS
07	LA	5	0.0/7.6	27	985

REGISTERED CIVIL ENGINEER 10-11-12 DATE

6-24-13
PLANS APPROVAL DATE

REGISTERED PROFESSIONAL ENGINEER NGIM NANCY PE No. 58161 Exp 6-30-14 CIVIL STATE OF CALIFORNIA

THE STATE OF CALIFORNIA OR ITS OFFICERS OR AGENTS SHALL NOT BE RESPONSIBLE FOR THE ACCURACY OR COMPLETENESS OF SCANNED COPIES OF THIS PLAN SHEET.

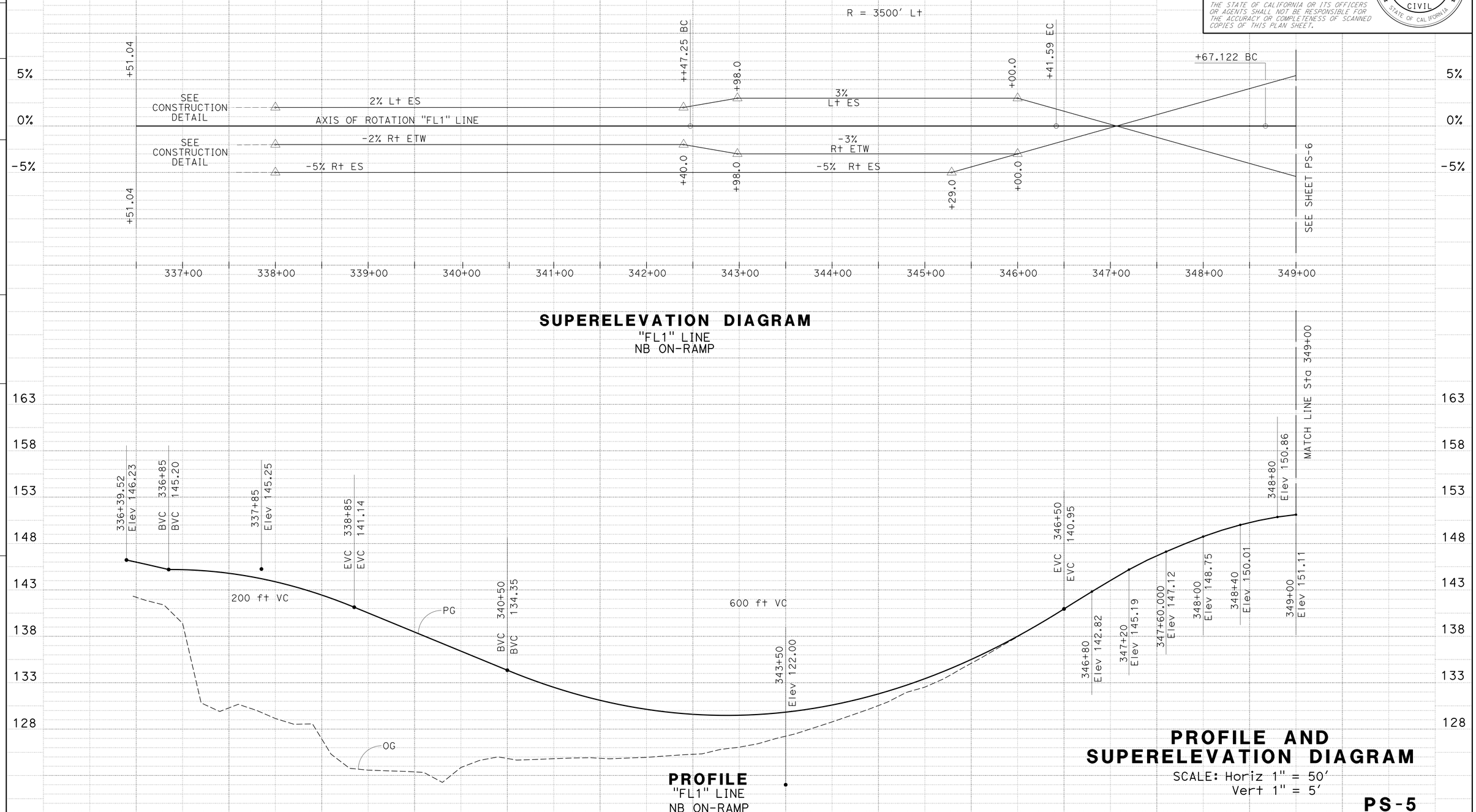

STATION		337+00	338+00	339+00	340+00	341+00	342+00	343+00	344+00	345+00	346+00	347+00	348+00	349+00	TOTAL
CY	Exc	90													
	Emb	6,325													

REVISED BY | DATE REVISED
KEVIN Q NGUYEN | NGIM NANCY PE
CALCULATED-DESIGNED BY | CHECKED BY
FUNCTIONAL SUPERVISOR | NGIM NANCY PE

STATE OF CALIFORNIA - DEPARTMENT OF TRANSPORTATION
Caltrans® OFFICE OF DESIGN A

S:\projects\215951\721595fb005.dgn

LAST REVISION 09-18-12
DATE PLOTTED => 26-JUN-2013
TIME PLOTTED => 16:26

Dist	COUNTY	ROUTE	POST MILES TOTAL PROJECT	SHEET No.	TOTAL SHEETS
07	LA	5	0.0/7.6	28	985

REGISTERED CIVIL ENGINEER 10-11-12 DATE

6-24-13
PLANS APPROVAL DATE

REGISTERED PROFESSIONAL ENGINEER NGIM NANCY PE No. 58161 Exp 6-30-14 CIVIL STATE OF CALIFORNIA

THE STATE OF CALIFORNIA OR ITS OFFICERS OR AGENTS SHALL NOT BE RESPONSIBLE FOR THE ACCURACY OR COMPLETENESS OF SCANNED COPIES OF THIS PLAN SHEET.

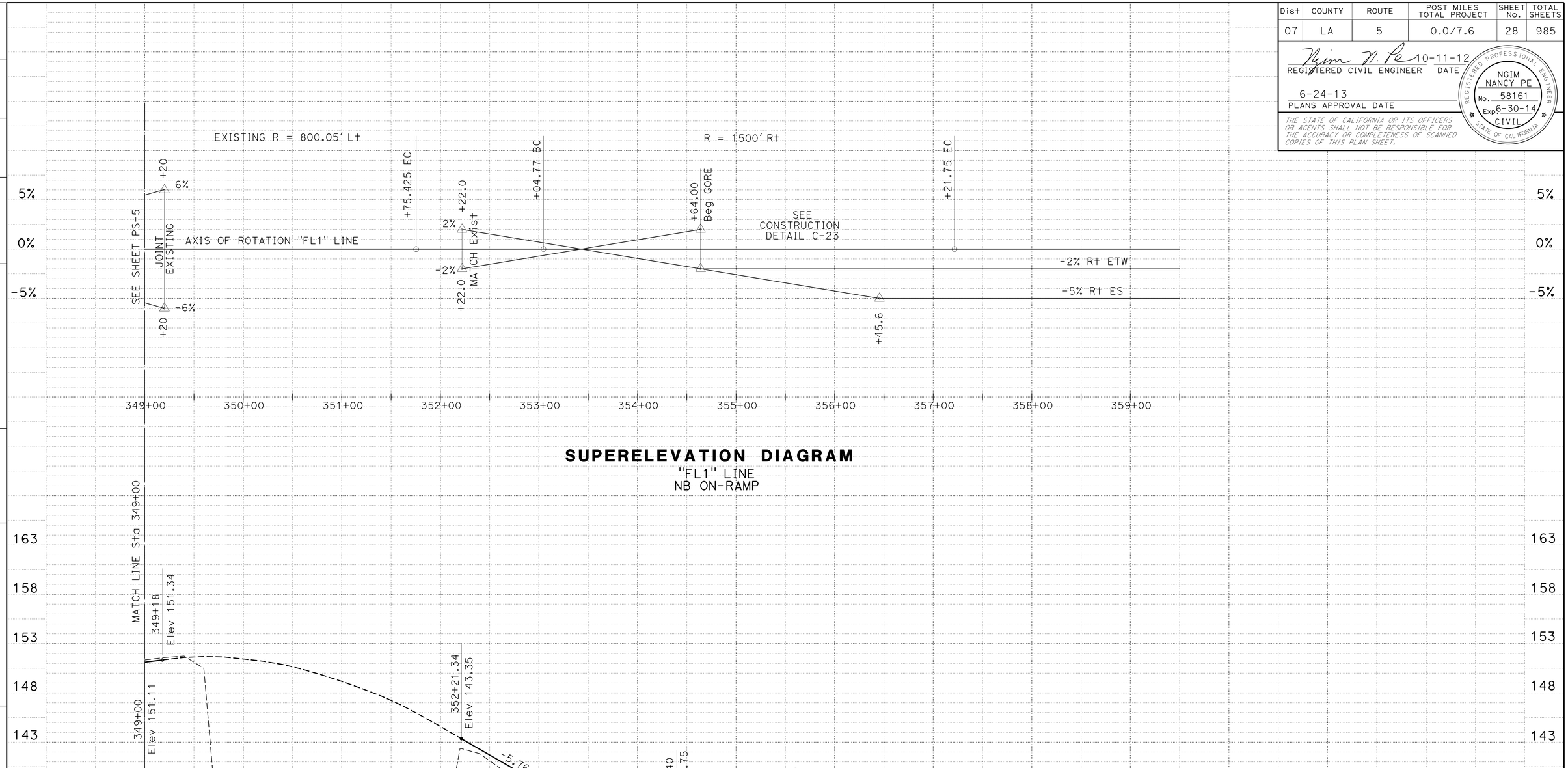

PROFILE AND SUPERELEVATION DIAGRAM

SCALE: Horiz 1" = 50'
Vert 1" = 5'

PS-6

STATION	349	350	351	352	353	354	355	356	357	358	359	TOTAL
CY Exc	10											
CY Emb	1,091											

REVISED BY | DATE REVISED
KEVIN Q NGUYEN | NGIM NANCY PE
CALCULATED-DESIGNED BY | CHECKED BY
FUNCTIONAL SUPERVISOR | NGIM NANCY PE

STATE OF CALIFORNIA - DEPARTMENT OF TRANSPORTATION
Caltrans® OFFICE OF DESIGN A

S:\projects\215951\721595fb006.dgn

LAST REVISION 09-18-12 | DATE PLOTTED => 26-JUN-2013 | TIME PLOTTED => 16:26

Dist	COUNTY	ROUTE	POST MILES TOTAL PROJECT	SHEET No.	TOTAL SHEETS
07	LA	5	0.0/7.6	29	985

REGISTERED CIVIL ENGINEER 10-11-12 DATE

6-24-13
PLANS APPROVAL DATE

REGISTERED PROFESSIONAL ENGINEER NGIM NANCY PE No. 58161 Exp 6-30-14 CIVIL STATE OF CALIFORNIA

THE STATE OF CALIFORNIA OR ITS OFFICERS OR AGENTS SHALL NOT BE RESPONSIBLE FOR THE ACCURACY OR COMPLETENESS OF SCANNED COPIES OF THIS PLAN SHEET.

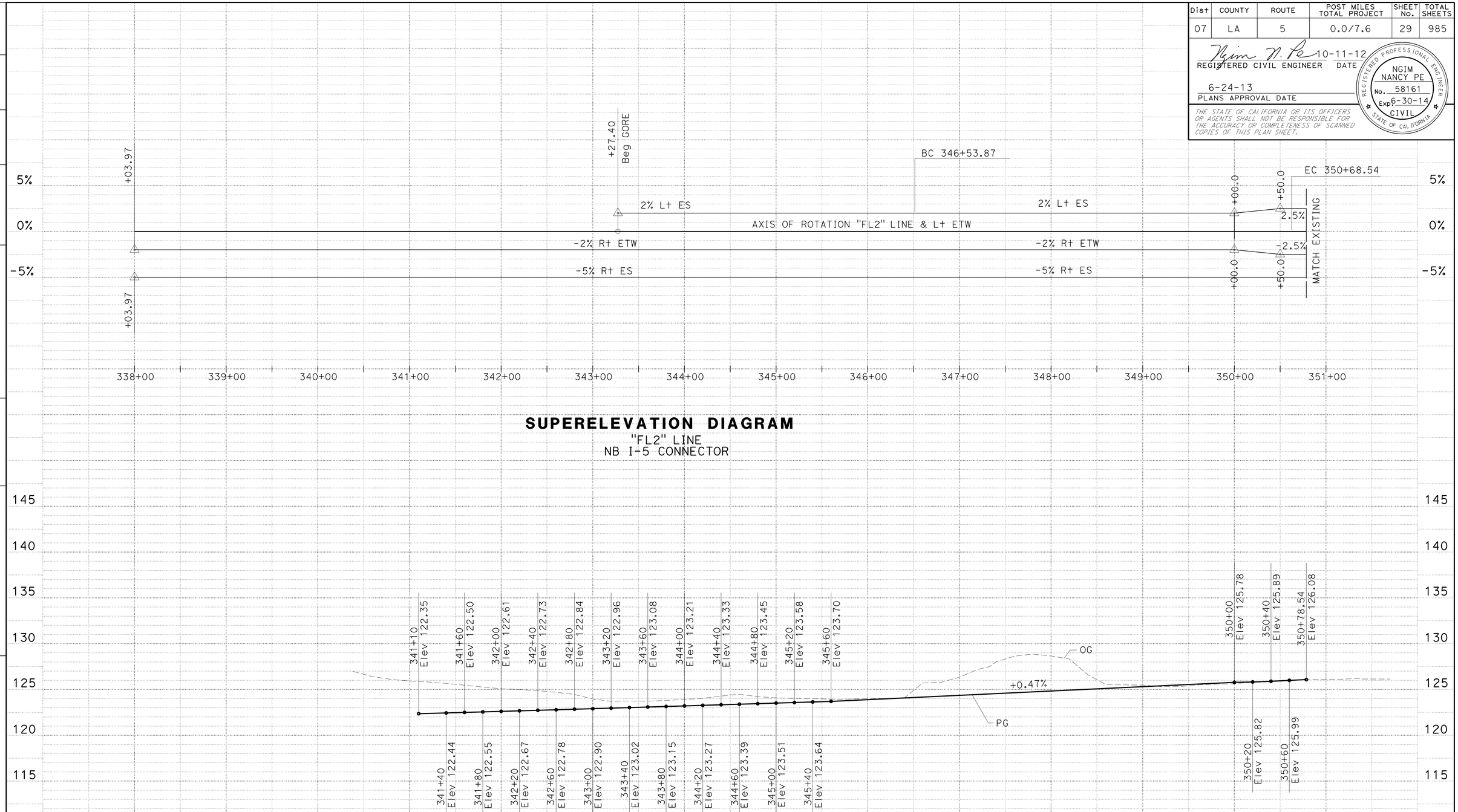

SUPERELEVATION DIAGRAM
"FL2" LINE
NB I-5 CONNECTOR

PROFILE
"FL2" LINE
NB I-5 TO 605 CONNECTOR

PROFILE AND SUPERELEVATION DIAGRAM
SCALE: Horiz 1" = 50'
Vert 1" = 5'

PS-7

STATION		338+00	339+00	340+00	341+00	342+00	343+00	344+00	345+00	346+00	347+00	348+00	349+00	350+00	351+00	TOTAL
CY	Exc	3,160														
	Emb	0														

REVISED BY | DATE REVISED
KEVIN Q NGUYEN | NGIM NANCY PE
CALCULATED-DESIGNED BY | CHECKED BY
FUNCTIONAL SUPERVISOR | NGIM NANCY PE

STATE OF CALIFORNIA - DEPARTMENT OF TRANSPORTATION
Caltrans® OFFICE OF DESIGN A

S:\projects\215951\721595fb007.dgn

LAST REVISION 09-18-12 | DATE PLOTTED => 27-JUN-2013 | TIME PLOTTED => 07:25

Dist	COUNTY	ROUTE	POST MILES TOTAL PROJECT	SHEET No.	TOTAL SHEETS
07	LA	5	0.0/7.6	30	985

REGISTERED CIVIL ENGINEER 10-11-12 DATE

6-24-13
PLANS APPROVAL DATE

REGISTERED PROFESSIONAL ENGINEER
NGIM NANCY PE
No. 58161
Exp 6-30-14
CIVIL
STATE OF CALIFORNIA

THE STATE OF CALIFORNIA OR ITS OFFICERS OR AGENTS SHALL NOT BE RESPONSIBLE FOR THE ACCURACY OR COMPLETENESS OF SCANNED COPIES OF THIS PLAN SHEET.

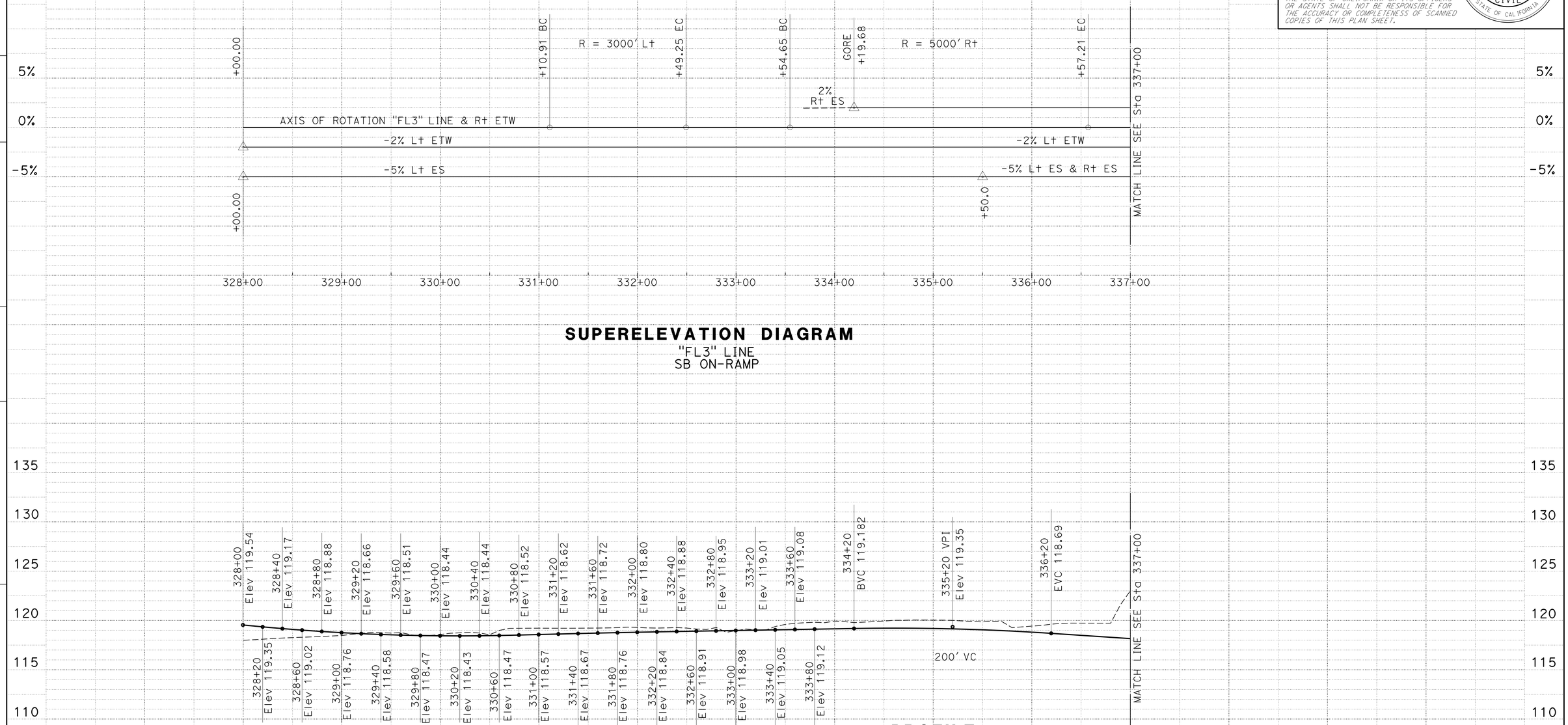

SUPERELEVATION DIAGRAM
"FL3" LINE
SB ON-RAMP

PROFILE
"FL3" LINE
SB ON-RAMP

PROFILE AND SUPERELEVATION DIAGRAM
SCALE: Horiz 1" = 50'
Vert 1" = 5'

PS-8

STATION		328+00	329+00	330+00	331+00	332+00	333+00	334+00	335+00	336+00	337+00	TOTAL
CY	Exc	1,858										
	Emb	0										

REVISED BY | DATE REVISED
KEVIN Q NGUYEN | NGIM NANCY PE
CALCULATED-DESIGNED BY | CHECKED BY
FUNCTIONAL SUPERVISOR | NGIM NANCY PE

STATE OF CALIFORNIA - DEPARTMENT OF TRANSPORTATION
Caltrans® OFFICE OF DESIGN A

S:\projects\215951\721595fb008.dgn

LAST REVISION 09-18-12 | DATE PLOTTED => 26-JUN-2013 | TIME PLOTTED => 16:26

Dist	COUNTY	ROUTE	POST MILES TOTAL PROJECT	SHEET No.	TOTAL SHEETS
07	LA	5	0.0/7.6	31	985

REGISTERED CIVIL ENGINEER 10-11-12 DATE

6-24-13
PLANS APPROVAL DATE

REGISTERED PROFESSIONAL ENGINEER NGIM NANCY PE No. 58161 Exp 6-30-14 CIVIL STATE OF CALIFORNIA

THE STATE OF CALIFORNIA OR ITS OFFICERS OR AGENTS SHALL NOT BE RESPONSIBLE FOR THE ACCURACY OR COMPLETENESS OF SCANNED COPIES OF THIS PLAN SHEET.

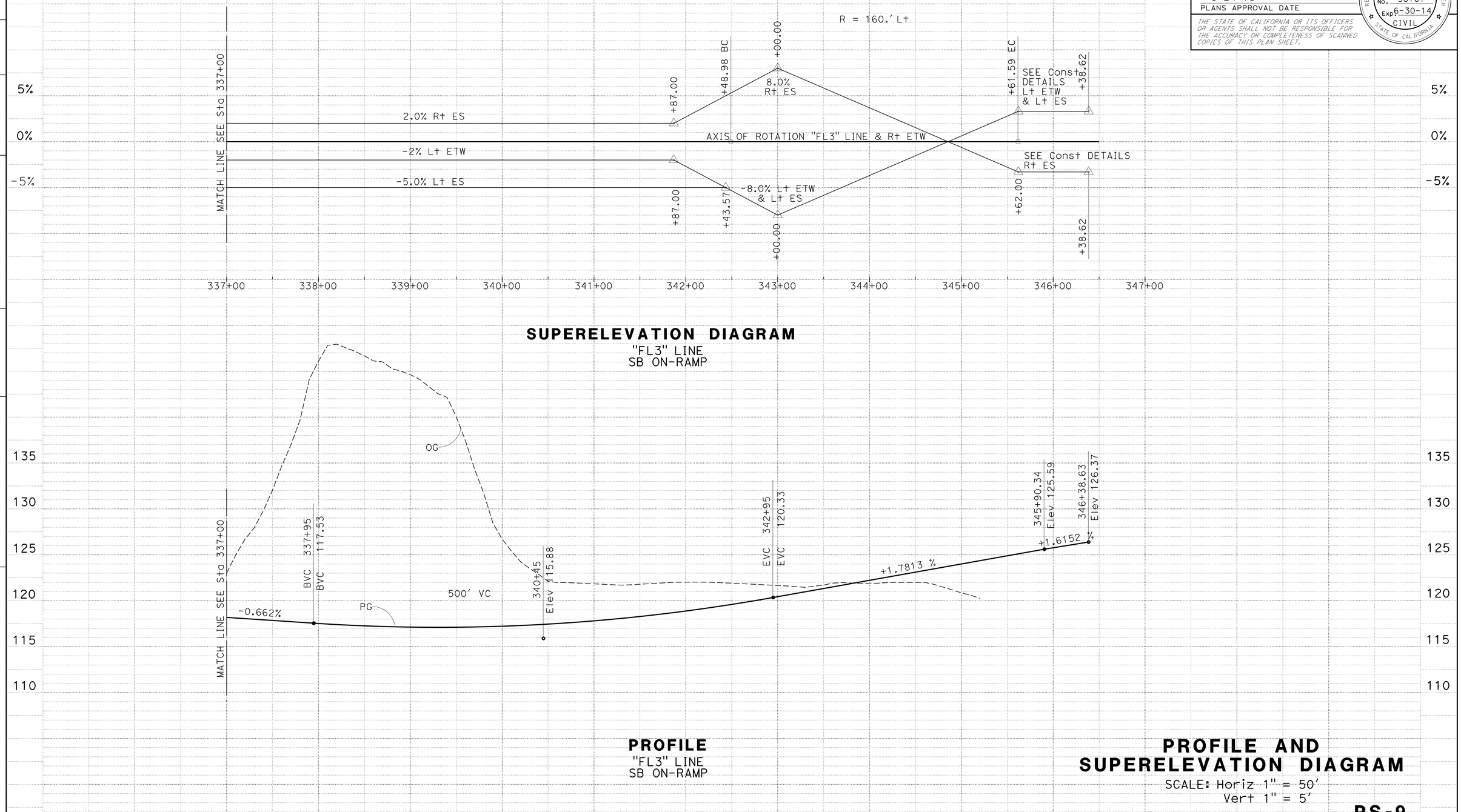

STATION		337+00	338+00	339+00	340+00	341+00	342+00	343+00	344+00	345+00	346+00	347+00	TOTAL
CY	Exc	37,986											
	Emb	110											

REVISED BY | DATE REVISED
KEVIN Q NGUYEN | NGIM NANCY PE
CALCULATED-DESIGNED BY | CHECKED BY
FUNCTIONAL SUPERVISOR | NGIM NANCY PE

STATE OF CALIFORNIA - DEPARTMENT OF TRANSPORTATION
Caltrans® OFFICE OF DESIGN A

S:\projects\21595\721595fb009.dgn

LAST REVISION 09-18-12
DATE PLOTTED => 26-JUN-2013
TIME PLOTTED => 16:26

Dist	COUNTY	ROUTE	POST MILES TOTAL PROJECT	SHEET No.	TOTAL SHEETS
07	LA	5	0.0/7.6	32	985

REGISTERED CIVIL ENGINEER 10-11-12 DATE

6-24-13
PLANS APPROVAL DATE

REGISTERED PROFESSIONAL ENGINEER NGIM NANCY PE No. 58161 Exp 6-30-14 CIVIL STATE OF CALIFORNIA

THE STATE OF CALIFORNIA OR ITS OFFICERS OR AGENTS SHALL NOT BE RESPONSIBLE FOR THE ACCURACY OR COMPLETENESS OF SCANNED COPIES OF THIS PLAN SHEET.

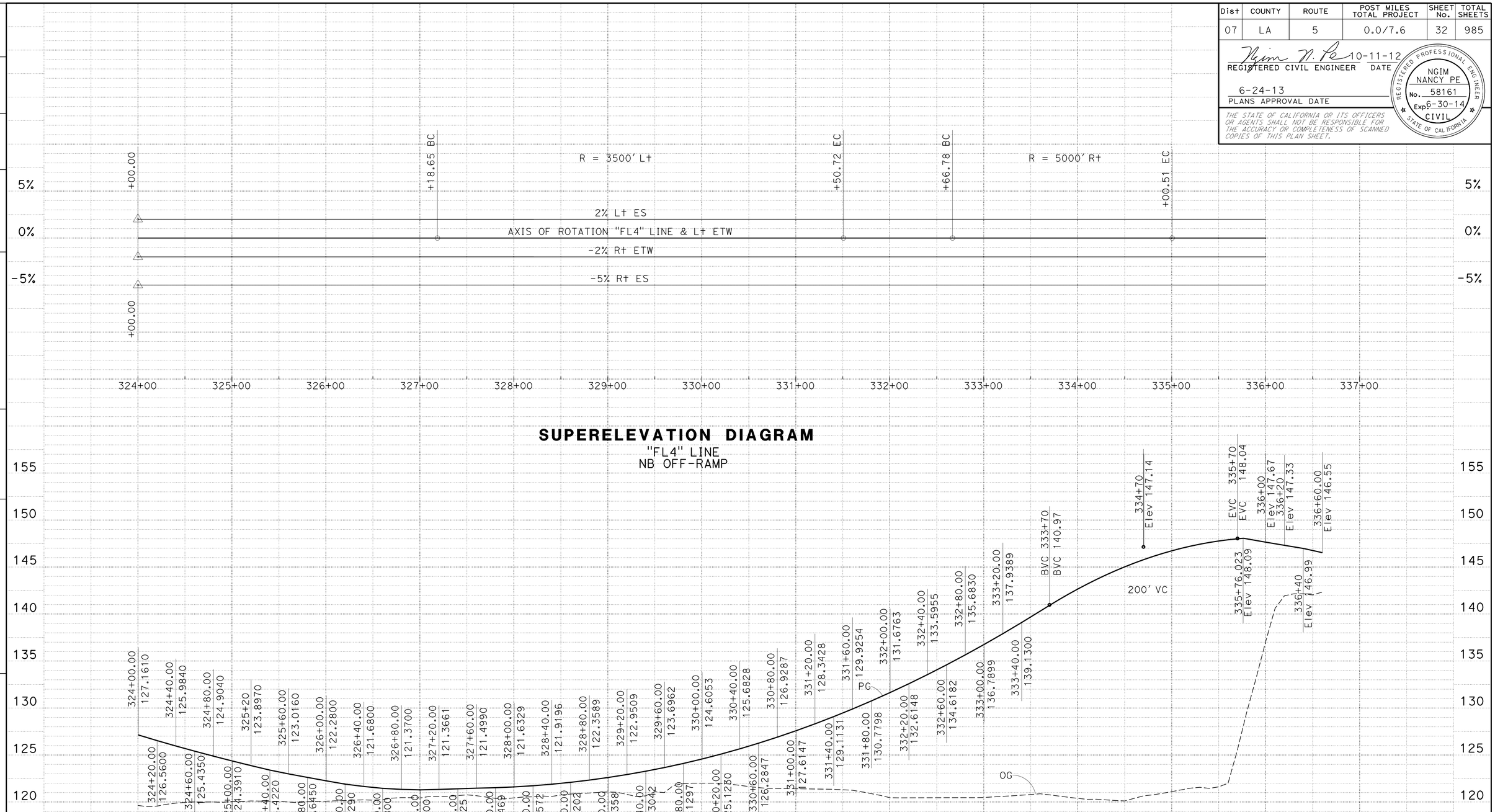

STATION		324+00	325+00	326+00	327+00	328+00	329+00	330+00	331+00	332+00	333+00	334+00	335+00	336+00	337+00	TOTAL
CY	Exc	604														
	Emb	4,842														

REVISED BY | DATE REVISED

KEVIN Q NGUYEN | NGIM NANCY PE

CALCULATED-DESIGNED BY | CHECKED BY

FUNCTIONAL SUPERVISOR: NGIM NANCY PE

STATE OF CALIFORNIA - DEPARTMENT OF TRANSPORTATION
Caltrans OFFICE OF DESIGN A

S:\projects\215951\721595fb010.dgn

LAST REVISION 09-18-12 | DATE PLOTTED => 26-JUN-2013 | TIME PLOTTED => 16:26

Dist	COUNTY	ROUTE	POST MILES TOTAL PROJECT	SHEET No.	TOTAL SHEETS
07	LA	5	0.0/7.6	33	985

REGISTERED CIVIL ENGINEER 10-11-12 DATE

6-24-13
PLANS APPROVAL DATE

REGISTERED PROFESSIONAL ENGINEER NGIM NANCY PE No. 58161 Exp 6-30-14 CIVIL STATE OF CALIFORNIA

THE STATE OF CALIFORNIA OR ITS OFFICERS OR AGENTS SHALL NOT BE RESPONSIBLE FOR THE ACCURACY OR COMPLETENESS OF SCANNED COPIES OF THIS PLAN SHEET.

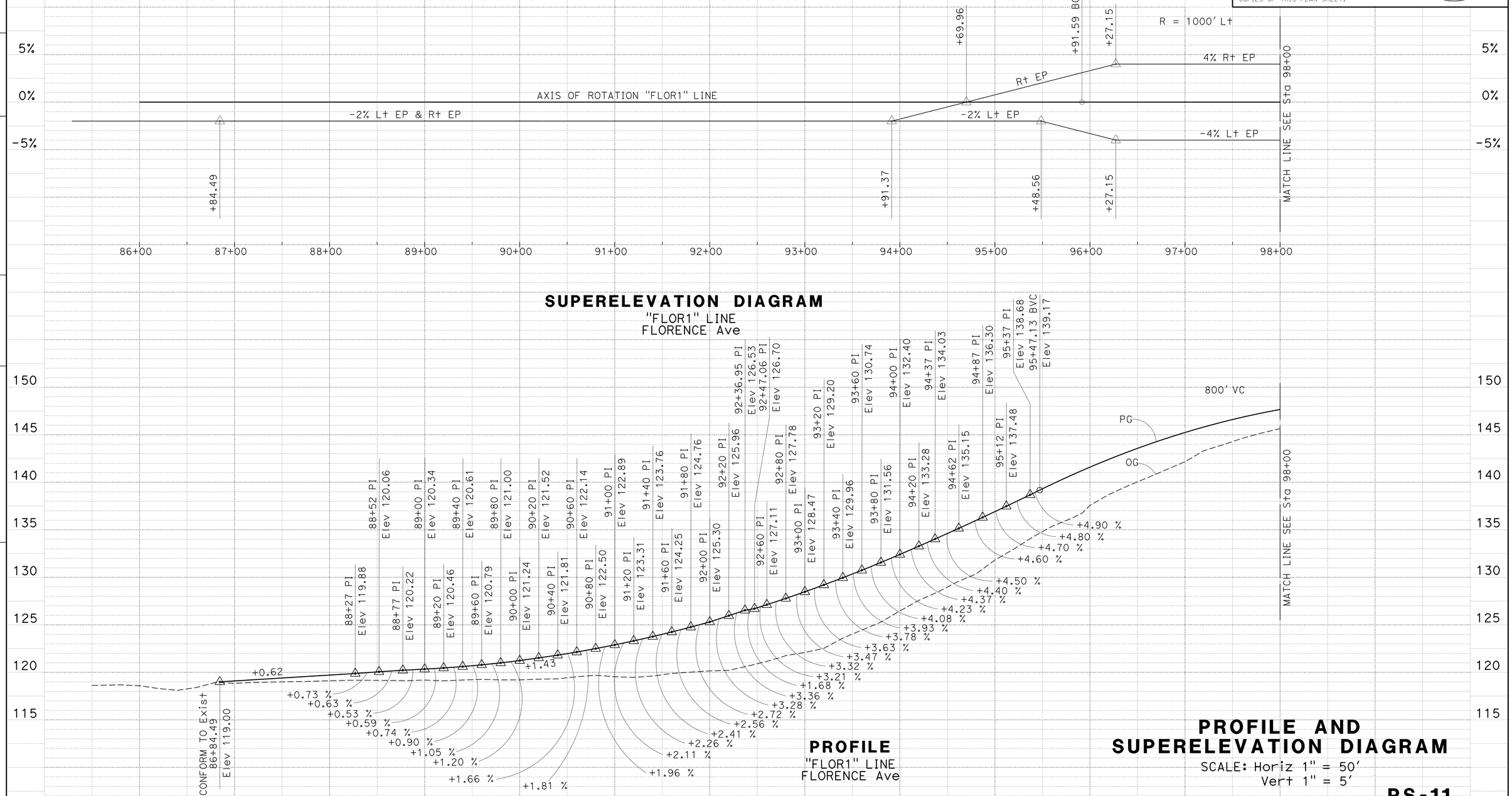

STATION		86+00	87+00	88+00	89+00	90+00	91+00	92+00	93+00	94+00	95+00	96+00	97+00	98+00	TOTAL
CY	Exc	1,383													
	Emb	8,652													

REVISED BY | DATE REVISED
KEVIN Q NGUYEN | NGIM NANCY PE
CALCULATED-DESIGNED BY | CHECKED BY
FUNCTIONAL SUPERVISOR | NGIM NANCY PE

STATE OF CALIFORNIA - DEPARTMENT OF TRANSPORTATION
Caltrans® OFFICE OF DESIGN A

S:\projects\21595\721595fb011.dgn

LAST REVISION 09-11-12
DATE PLOTTED => 26-JUN-2013
TIME PLOTTED => 16:26

Dist	COUNTY	ROUTE	POST MILES TOTAL PROJECT	SHEET No.	TOTAL SHEETS
07	LA	5	0.0/7.6	34	985

REGISTERED CIVIL ENGINEER 10-11-12 DATE

6-24-13
PLANS APPROVAL DATE

REGISTERED PROFESSIONAL ENGINEER NGIM NANCY PE No. 58161 Exp 6-30-14 CIVIL STATE OF CALIFORNIA

THE STATE OF CALIFORNIA OR ITS OFFICERS OR AGENTS SHALL NOT BE RESPONSIBLE FOR THE ACCURACY OR COMPLETENESS OF SCANNED COPIES OF THIS PLAN SHEET.

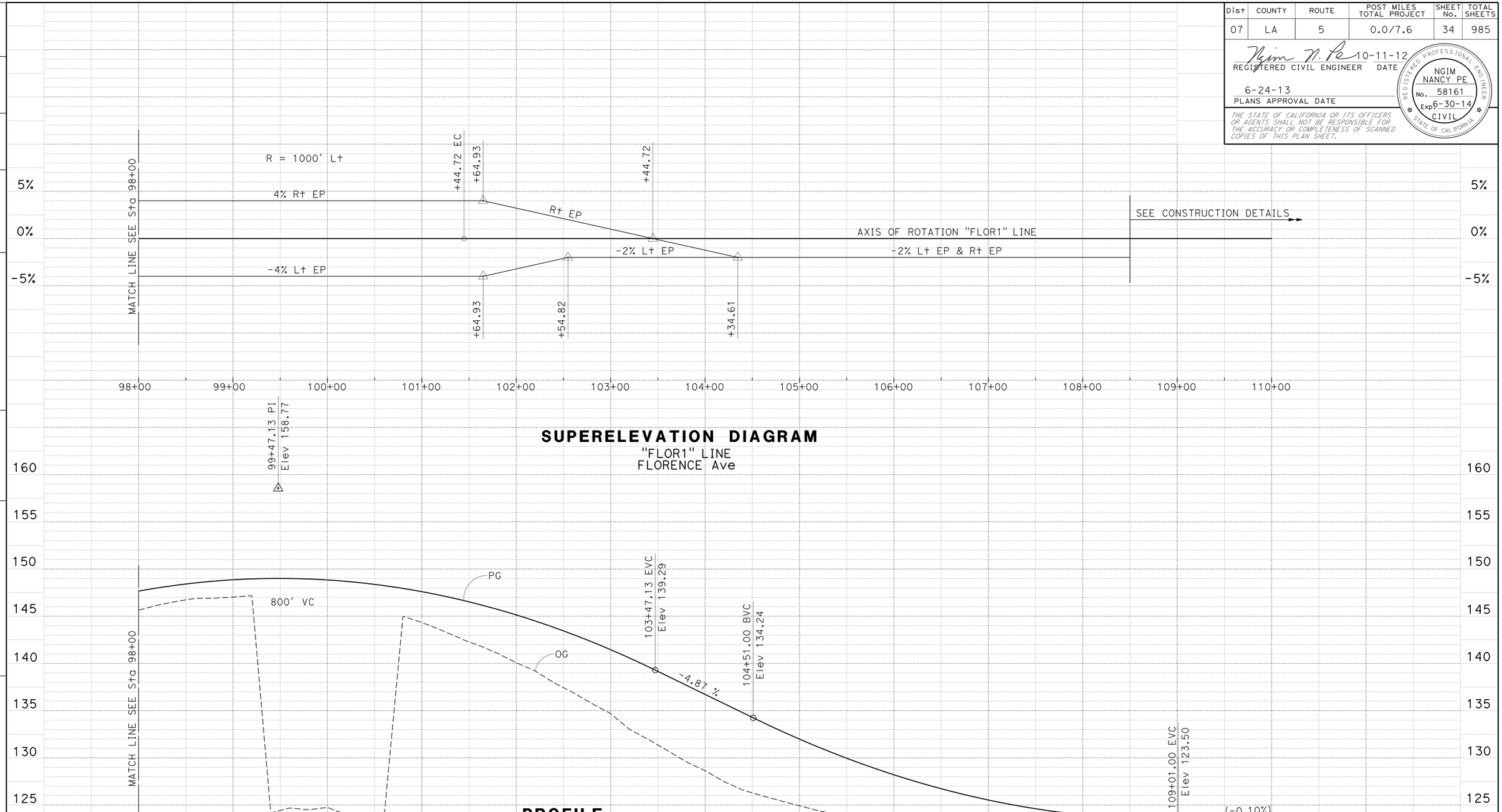

STATION		98+00	99+00	100+00	101+00	102+00	103+00	104+00	105+00	106+00	107+00	108+00	109+00	110+00	TOTAL
CY	Exc	663													
	Emb	12,908													

REVISED BY | DATE REVISED
KEVIN Q NGUYEN | NGIM NANCY PE
CALCULATED-DESIGNED BY | CHECKED BY
FUNCTIONAL SUPERVISOR | NGIM NANCY PE

STATE OF CALIFORNIA - DEPARTMENT OF TRANSPORTATION
Caltrans® OFFICE OF DESIGN A

S:\projects\215951\721595fb012.dgn

LAST REVISION 09-11-12 | DATE PLOTTED => 14-AUG-2013 | TIME PLOTTED => 10:50

BORDER LAST REVISED 7/2/2010 | USERNAME => s135318 | DGN FILE => 721595fb012.dgn | RELATIVE BORDER SCALE IS IN INCHES 0 1 2 3 | UNIT 1797 | PROJECT NUMBER & PHASE 07000018351

Dist	COUNTY	ROUTE	POST MILES TOTAL PROJECT	SHEET No.	TOTAL SHEETS
07	LA	5	0.0/7.6	35	985

REGISTERED CIVIL ENGINEER 10-11-12 DATE

6-24-13
PLANS APPROVAL DATE

REGISTERED PROFESSIONAL ENGINEER
NGIM NANCY PE
No. 58161
Exp 6-30-14
CIVIL
STATE OF CALIFORNIA

THE STATE OF CALIFORNIA OR ITS OFFICERS OR AGENTS SHALL NOT BE RESPONSIBLE FOR THE ACCURACY OR COMPLETENESS OF SCANNED COPIES OF THIS PLAN SHEET.

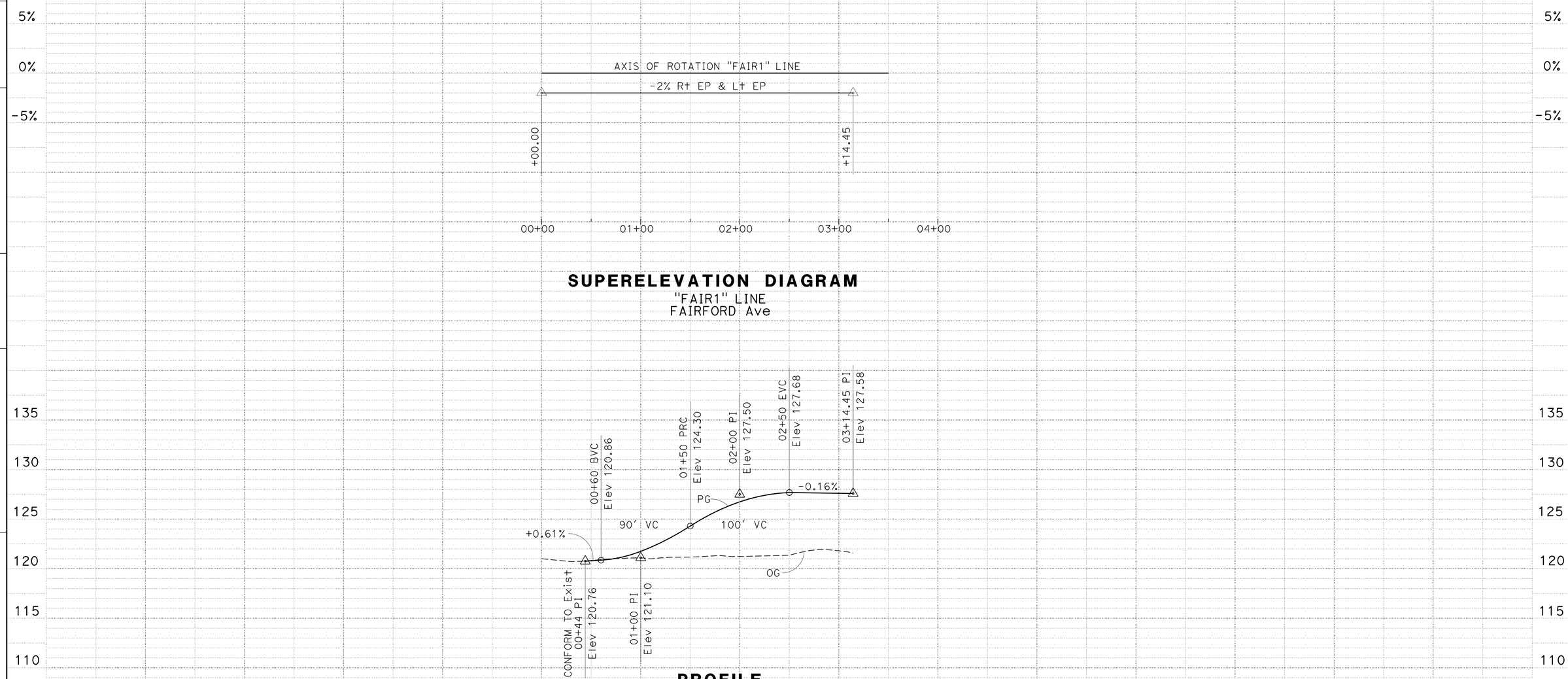

PROFILE AND SUPERELEVATION DIAGRAM

SCALE: Horiz 1" = 50'
Vert 1" = 5'

PS-13

STATION		00+00	01+00	02+00	03+00	04+00	TOTAL
CY	Exc	217					
	Emb	370					

REVISED BY | DATE REVISED
KEVIN Q NGUYEN | NGIM NANCY PE
CALCULATED-DESIGNED BY | CHECKED BY
FUNCTIONAL SUPERVISOR | NGIM NANCY PE

STATE OF CALIFORNIA - DEPARTMENT OF TRANSPORTATION
Caltrans® OFFICE OF DESIGN A

S:\projects\215951\721595fb013.dgn

LAST REVISION 09-18-12 | DATE PLOTTED => 26-JUN-2013 | TIME PLOTTED => 16:26

Dist	COUNTY	ROUTE	POST MILES TOTAL PROJECT	SHEET No.	TOTAL SHEETS
07	LA	5	0.0/7.6	36	985

REGISTERED CIVIL ENGINEER 10-11-12 DATE

6-24-13
PLANS APPROVAL DATE

REGISTERED PROFESSIONAL ENGINEER NGIM NANCY PE No. 58161 Exp. 6-30-14 CIVIL STATE OF CALIFORNIA

THE STATE OF CALIFORNIA OR ITS OFFICERS OR AGENTS SHALL NOT BE RESPONSIBLE FOR THE ACCURACY OR COMPLETENESS OF SCANNED COPIES OF THIS PLAN SHEET.

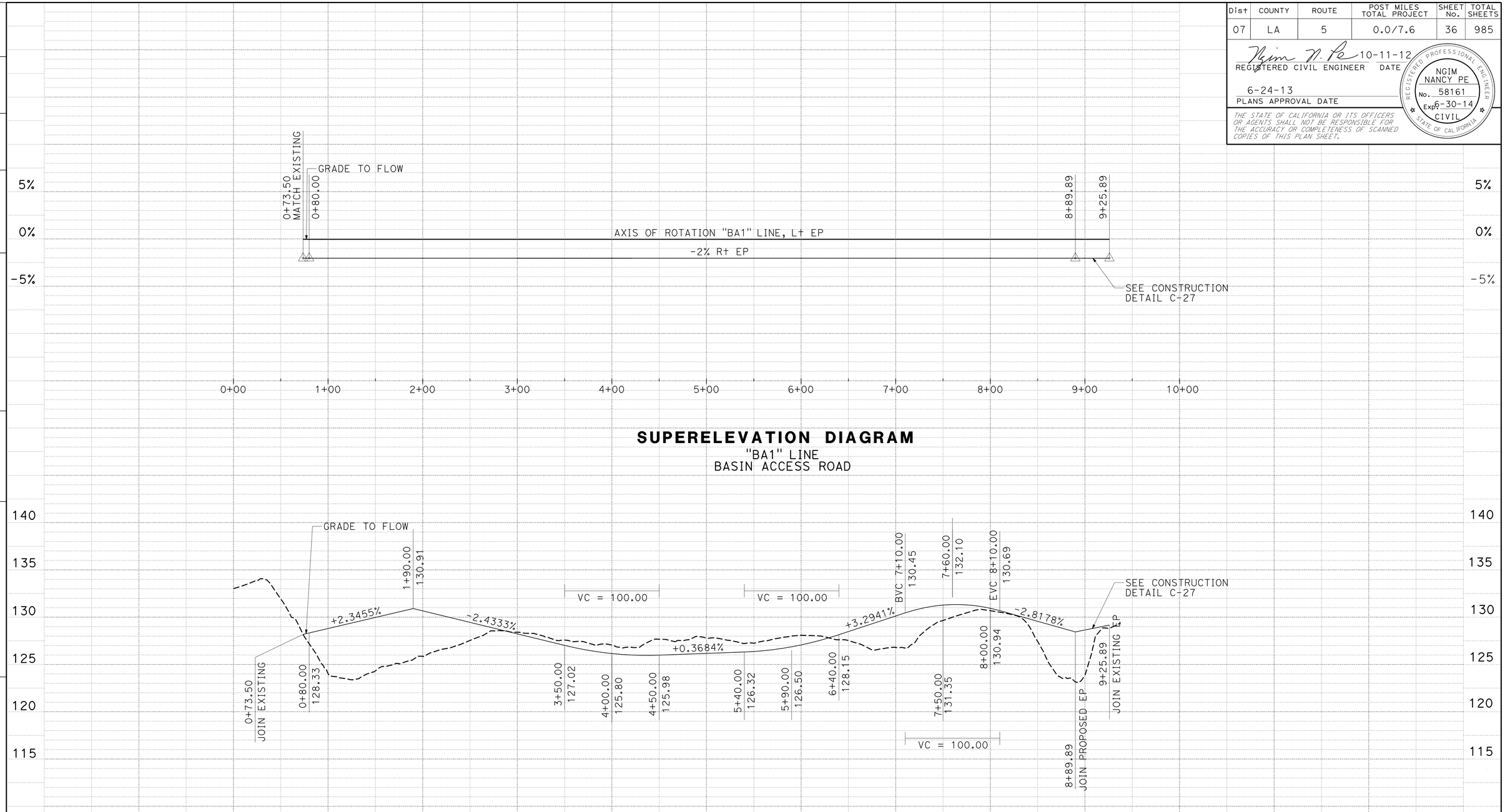

SUPERELEVATION DIAGRAM
"BA1" LINE
BASIN ACCESS ROAD

PROFILE
"BA1" LINE
BASIN ACCESS ROAD

PROFILE AND SUPERELEVATION DIAGRAM
SCALE: Horiz 1" = 50'
Vert 1" = 5'

PS-14

STATION			TOTAL
CY	Exc	727	727
	Emb	2450	2450

REVISED BY | DATE REVISED
MARK MAI | NGIM NANCY PE
CALCULATED-DESIGNED BY | CHECKED BY
FUNCTIONAL SUPERVISOR | NGIM NANCY PE

STATE OF CALIFORNIA - DEPARTMENT OF TRANSPORTATION
Caltrans® OFFICE OF DESIGN A

S:\projects\215951\721595fb014.dgn

LAST REVISION 00-00-00 | DATE PLOTTED => 26-JUN-2013 | TIME PLOTTED => 16:27

BORDER LAST REVISED 7/2/2010 | USERNAME => s109858 | DGN FILE => 721595fb014.dgn | RELATIVE BORDER SCALE IS IN INCHES 0 1 2 3 | UNIT 1797 | PROJECT NUMBER & PHASE 07000018351

Dist	COUNTY	ROUTE	POST MILES TOTAL PROJECT	SHEET No.	TOTAL SHEETS
07	LA	5	0.0/7.6	37	985

REGISTERED CIVIL ENGINEER 10-11-12 DATE

6-24-13
PLANS APPROVAL DATE

REGISTERED PROFESSIONAL ENGINEER
NGIM NANCY PE
No. 58161
Exp. 6-30-14
CIVIL
STATE OF CALIFORNIA

THE STATE OF CALIFORNIA OR ITS OFFICERS OR AGENTS SHALL NOT BE RESPONSIBLE FOR THE ACCURACY OR COMPLETENESS OF SCANNED COPIES OF THIS PLAN SHEET.

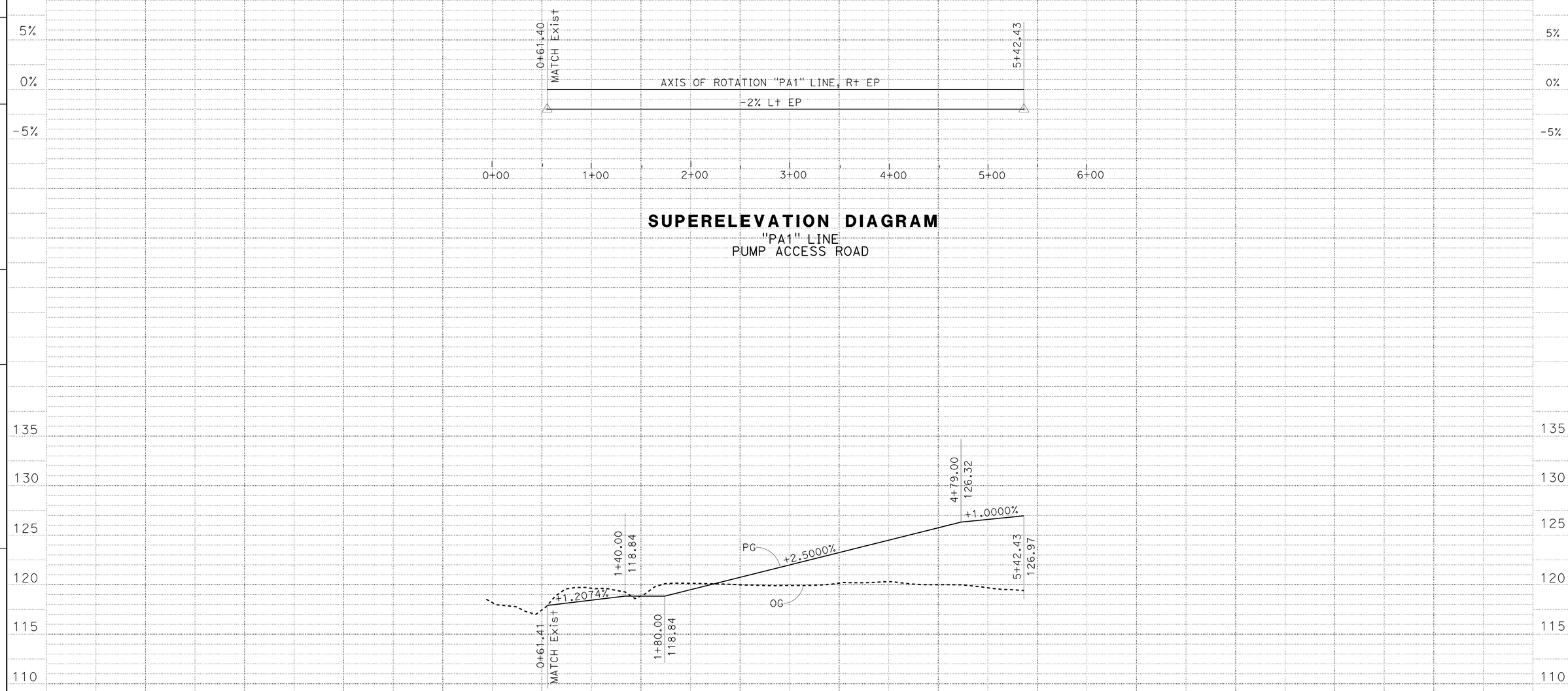

PROFILE AND SUPERELEVATION DIAGRAM

SCALE: Horiz 1" = 50'
Vert 1" = 5'

PS-15

STATION		0+00	1+00	2+00	3+00	4+00	5+00	6+00	TOTAL
CY	Exc	128							128
	Emb	2937							2937

REVISED BY | DATE REVISED
MARK MAI | NGIM NANCY PE
CALCULATED-DESIGNED BY | CHECKED BY
FUNCTIONAL SUPERVISOR | NGIM NANCY PE

STATE OF CALIFORNIA - DEPARTMENT OF TRANSPORTATION
Caltrans® OFFICE OF DESIGN A

S:\projects\215951\721595fb015.dgn

LAST REVISION 00-00-00 | DATE PLOTTED => 26-JUN-2013 | TIME PLOTTED => 16:27

BORDER LAST REVISED 7/2/2010 | USERNAME => s109858 | DGN FILE => 721595fb015.dgn | RELATIVE BORDER SCALE IS IN INCHES 0 1 2 3 | UNIT 1797 | PROJECT NUMBER & PHASE 07000018351

Dist	COUNTY	ROUTE	POST MILES TOTAL PROJECT	SHEET No.	TOTAL SHEETS
07	LA	5	0.0/7.6	38	985

REGISTERED CIVIL ENGINEER 10-11-12 DATE

6-24-13
PLANS APPROVAL DATE

REGISTERED PROFESSIONAL ENGINEER NGIM NANCY PE No. 58161 Exp. 6-30-14 CIVIL STATE OF CALIFORNIA

THE STATE OF CALIFORNIA OR ITS OFFICERS OR AGENTS SHALL NOT BE RESPONSIBLE FOR THE ACCURACY OR COMPLETENESS OF SCANNED COPIES OF THIS PLAN SHEET.

NOTE:

1. FOR ACCURATE RIGHT OF WAY DATA, CONTACT RIGHT OF WAY ENGINEERING AT THE DISTRICT OFFICE.

LEGEND:

- REMOVE CONCRETE (SIDEWALK & DRIVEWAY)
- REMOVE CONCRETE PAVEMENT
- REMOVE BASE AND SURFACING
- CRACK EXISTING Conc Pvmt
- OBLITERATE SURFACING
- REMOVE INTERLOCK PAVER

CONSTRUCTION DETAILS
(REMOVAL PLAN)

SCALE: 1" = 50'

C-1

REVISED BY	DATE REVISED
MARK MAI	08/06/12

JANE YU — NGIM NANCY PE

CALCULATED-DESIGNED BY — CHECKED BY

FUNCTIONAL SUPERVISOR — NGIM NANCY PE

STATE OF CALIFORNIA - DEPARTMENT OF TRANSPORTATION
Caltrans® OFFICE OF DESIGN A

S:\projects\215951\721595ga001.dgn

LAST REVISION 00-00-00 | DATE PLOTTED => 26-JUN-2013 | TIME PLOTTED => 16:27

Dist	COUNTY	ROUTE	POST MILES TOTAL PROJECT	SHEET No.	TOTAL SHEETS
07	LA	5	0.0/7.6	39	985

REGISTERED CIVIL ENGINEER — DATE 10-11-12

6-24-13
PLANS APPROVAL DATE

REGISTERED PROFESSIONAL ENGINEER — NGIM NANCY PE No. 58161 Exp. 6-30-14 CIVIL — STATE OF CALIFORNIA

THE STATE OF CALIFORNIA OR ITS OFFICERS OR AGENTS SHALL NOT BE RESPONSIBLE FOR THE ACCURACY OR COMPLETENESS OF SCANNED COPIES OF THIS PLAN SHEET.

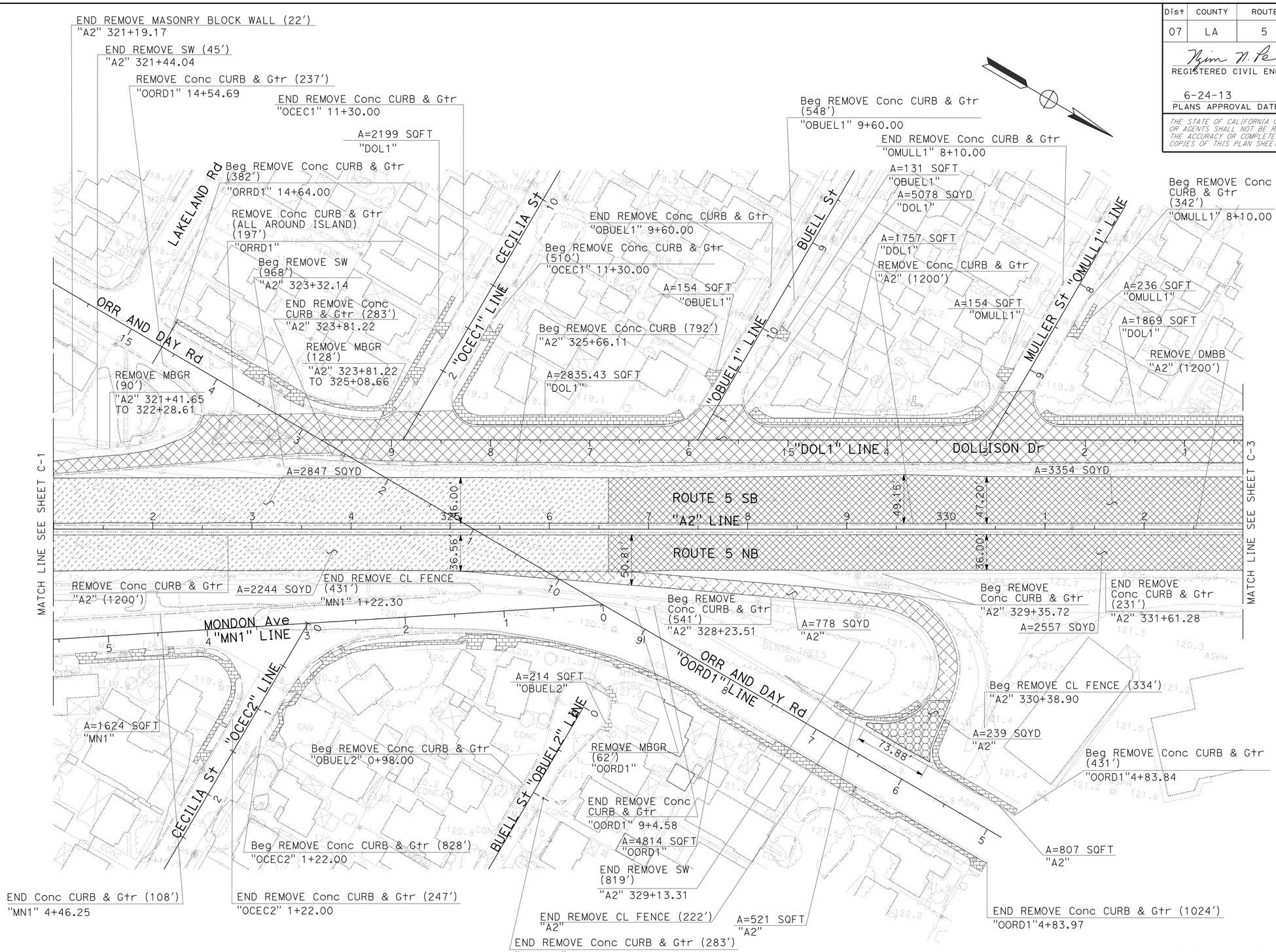

CONSTRUCTION DETAIL
(REMOVAL PLAN)

SCALE: 1" = 50'

C-2

REVISED BY	DATE REVISED
MARK MAI	08/06/12

CALCULATED-DESIGNED BY: MARK MAI
CHECKED BY: NGIM NANCY PE
FUNCTIONAL SUPERVISOR: NGIM NANCY PE

STATE OF CALIFORNIA - DEPARTMENT OF TRANSPORTATION
Caltrans® OFFICE OF DESIGN A

S:\projects\21595\721595ga002.dgn

LAST REVISION 00-00-00 | DATE PLOTTED => 26-JUN-2013 | TIME PLOTTED => 16:27

BORDER LAST REVISED 7/2/2010 | USERNAME => s109858 | DGN FILE => 721595ga002.dgn | RELATIVE BORDER SCALE IS IN INCHES 0 1 2 3 | UNIT 1797 | PROJECT NUMBER & PHASE 07000018351

Dist	COUNTY	ROUTE	POST MILES TOTAL PROJECT	SHEET No.	TOTAL SHEETS
07	LA	5	0.0/7.6	40	985

REGISTERED CIVIL ENGINEER 10-11-12 DATE

6-24-13
PLANS APPROVAL DATE

REGISTERED PROFESSIONAL ENGINEER NGIM NANCY PE No. 58161 Exp. 6-30-14 CIVIL STATE OF CALIFORNIA

THE STATE OF CALIFORNIA OR ITS OFFICERS OR AGENTS SHALL NOT BE RESPONSIBLE FOR THE ACCURACY OR COMPLETENESS OF SCANNED COPIES OF THIS PLAN SHEET.

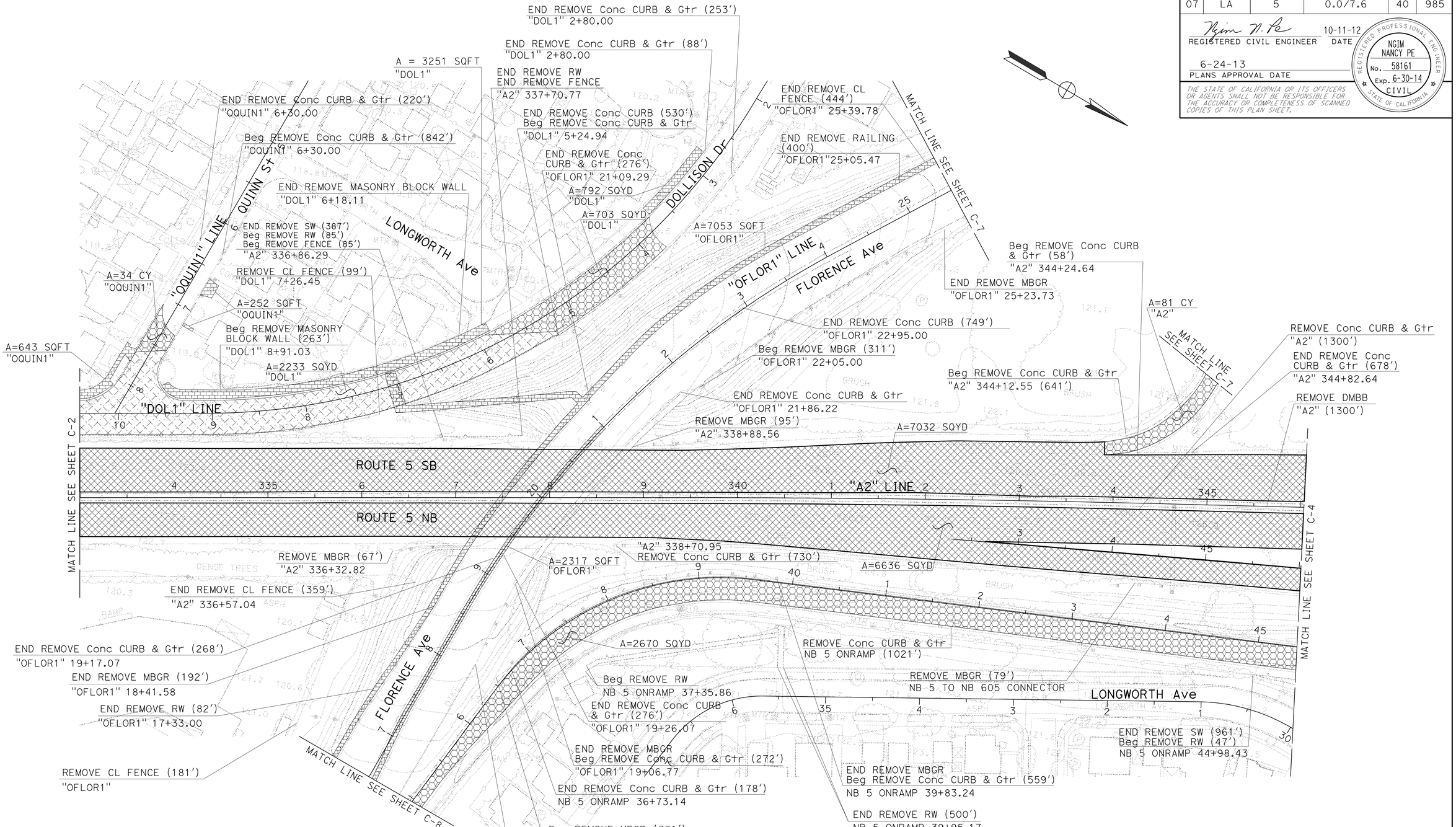

CONSTRUCTION DETAIL
(REMOVAL PLAN)
SCALE: 1" = 50'

C-3

REVISED BY	DATE REVISED
MARK MAI	08/06/12

CALCULATED-DESIGNED BY: MARK MAI
CHECKED BY: NGIM NANCY PE
FUNCTIONAL SUPERVISOR: NGIM NANCY PE

STATE OF CALIFORNIA - DEPARTMENT OF TRANSPORTATION
Caltrans® OFFICE OF DESIGN A

S:\projects\215951\721595ga003.dgn

LAST REVISION 00-00-00
DATE PLOTTED => 27-JUN-2013
TIME PLOTTED => 12:20

Dist	COUNTY	ROUTE	POST MILES TOTAL PROJECT	SHEET No.	TOTAL SHEETS
07	LA	5	0.0/7.6	41	985

REGISTERED CIVIL ENGINEER 10-11-12 DATE

6-24-13
PLANS APPROVAL DATE

REGISTERED PROFESSIONAL ENGINEER NGIM NANCY PE No. 58161 Exp. 6-30-14 CIVIL STATE OF CALIFORNIA

THE STATE OF CALIFORNIA OR ITS OFFICERS OR AGENTS SHALL NOT BE RESPONSIBLE FOR THE ACCURACY OR COMPLETENESS OF SCANNED COPIES OF THIS PLAN SHEET.

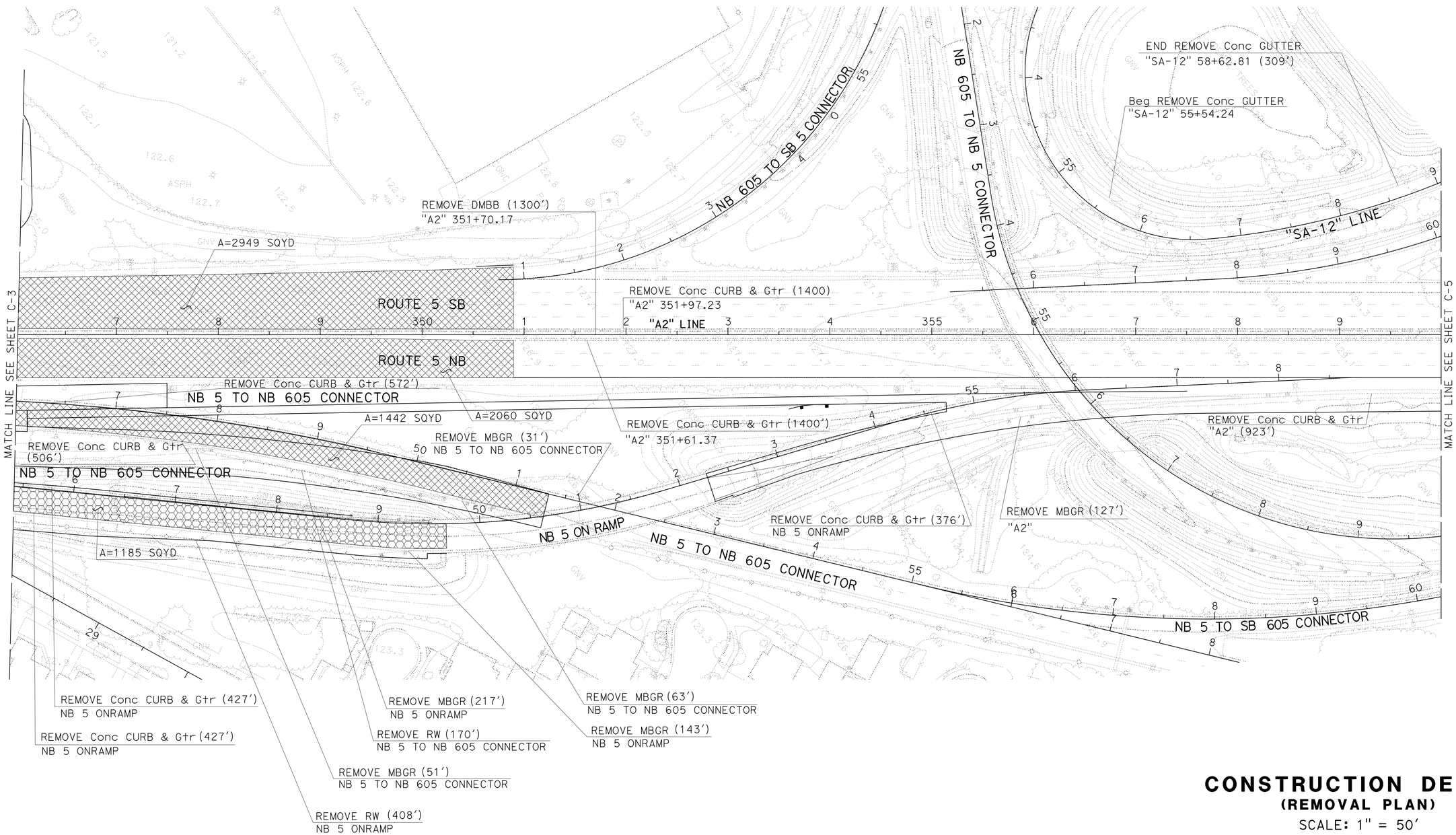

CONSTRUCTION DETAIL
(REMOVAL PLAN)

SCALE: 1" = 50'

C-4

REVISED BY	DATE REVISED
MARK MAI	08/06/12

CALCULATED-DESIGNED BY: MARK MAI
CHECKED BY: NGIM NANCY PE
FUNCTIONAL SUPERVISOR: NGIM NANCY PE

STATE OF CALIFORNIA - DEPARTMENT OF TRANSPORTATION
Caltrans® OFFICE OF DESIGN A

S:\projects\215951\721595ga004.dgn

LAST REVISION 00-00-00
DATE PLOTTED => 26-JUN-2013
TIME PLOTTED => 16:27

Dist	COUNTY	ROUTE	POST MILES TOTAL PROJECT	SHEET No.	TOTAL SHEETS
07	LA	5	0.0/7.6	42	985

REGISTERED CIVIL ENGINEER — DATE 10-11-12

6-24-13
PLANS APPROVAL DATE

REGISTERED PROFESSIONAL ENGINEER — NGIM NANCY PE No. 58161 Exp. 6-30-14 CIVIL — STATE OF CALIFORNIA

THE STATE OF CALIFORNIA OR ITS OFFICERS OR AGENTS SHALL NOT BE RESPONSIBLE FOR THE ACCURACY OR COMPLETENESS OF SCANNED COPIES OF THIS PLAN SHEET.

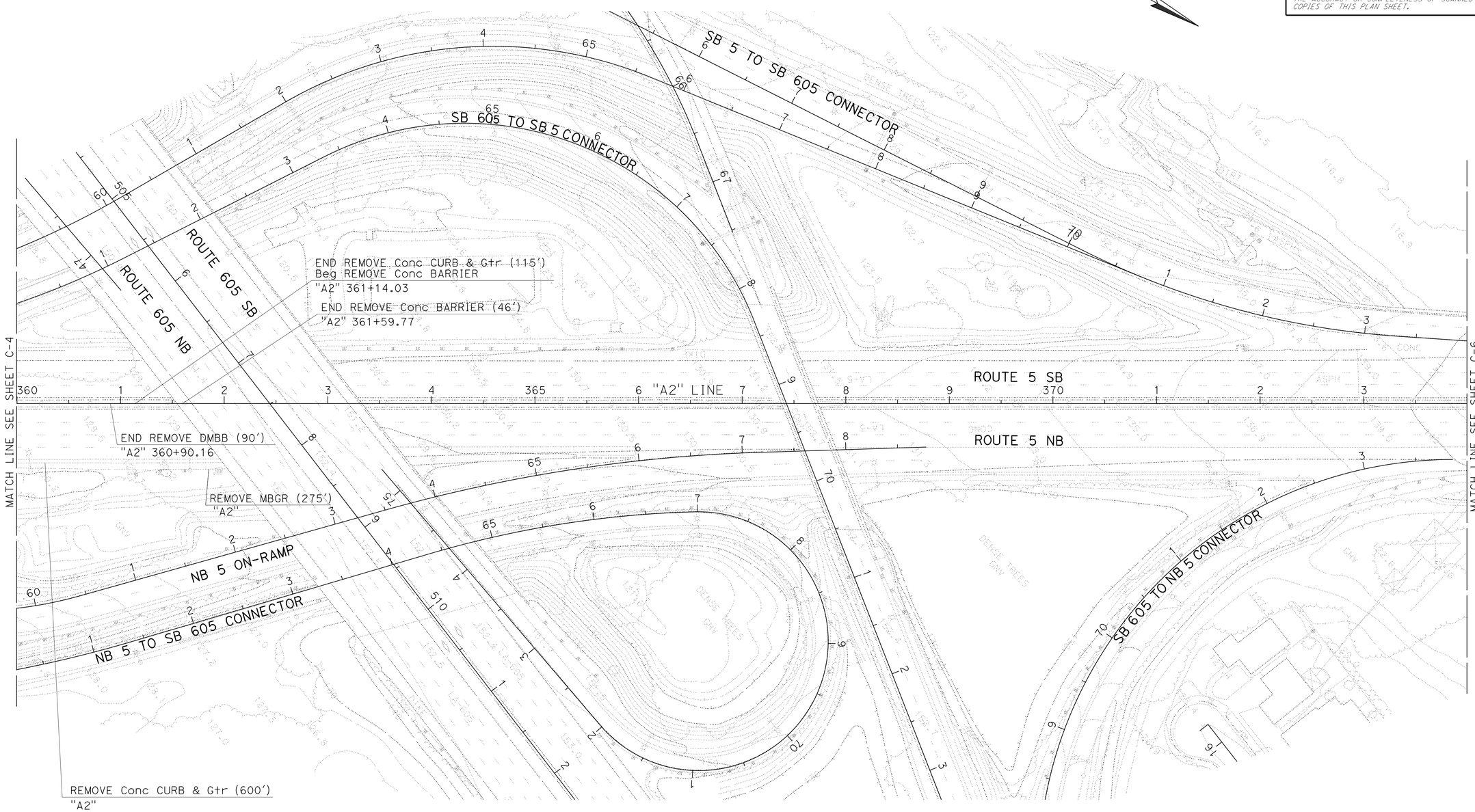

CONSTRUCTION DETAIL
(REMOVAL PLAN)

SCALE: 1" = 50'

C-5

REVISED BY	DATE REVISED
MARK MAI	08/06/12

CALCULATED-DESIGNED BY: MARK MAI — NGIM NANCY PE
CHECKED BY: NGIM NANCY PE
FUNCTIONAL SUPERVISOR: NGIM NANCY PE

STATE OF CALIFORNIA - DEPARTMENT OF TRANSPORTATION
Caltrans® OFFICE OF DESIGN A

S:\projects\215951\721595ga005.dgn

LAST REVISION 00-00-00 — DATE PLOTTED => 26-JUN-2013 — TIME PLOTTED => 16:27

Dist	COUNTY	ROUTE	POST MILES TOTAL PROJECT	SHEET No.	TOTAL SHEETS
07	LA	5	0.0/7.6	43	985

REGISTERED CIVIL ENGINEER 10-11-12 DATE

6-24-13
PLANS APPROVAL DATE

REGISTERED PROFESSIONAL ENGINEER
NGIM
NANCY PE
No. 58161
Exp. 6-30-2014
CIVIL
STATE OF CALIFORNIA

THE STATE OF CALIFORNIA OR ITS OFFICERS OR AGENTS SHALL NOT BE RESPONSIBLE FOR THE ACCURACY OR COMPLETENESS OF SCANNED COPIES OF THIS PLAN SHEET.

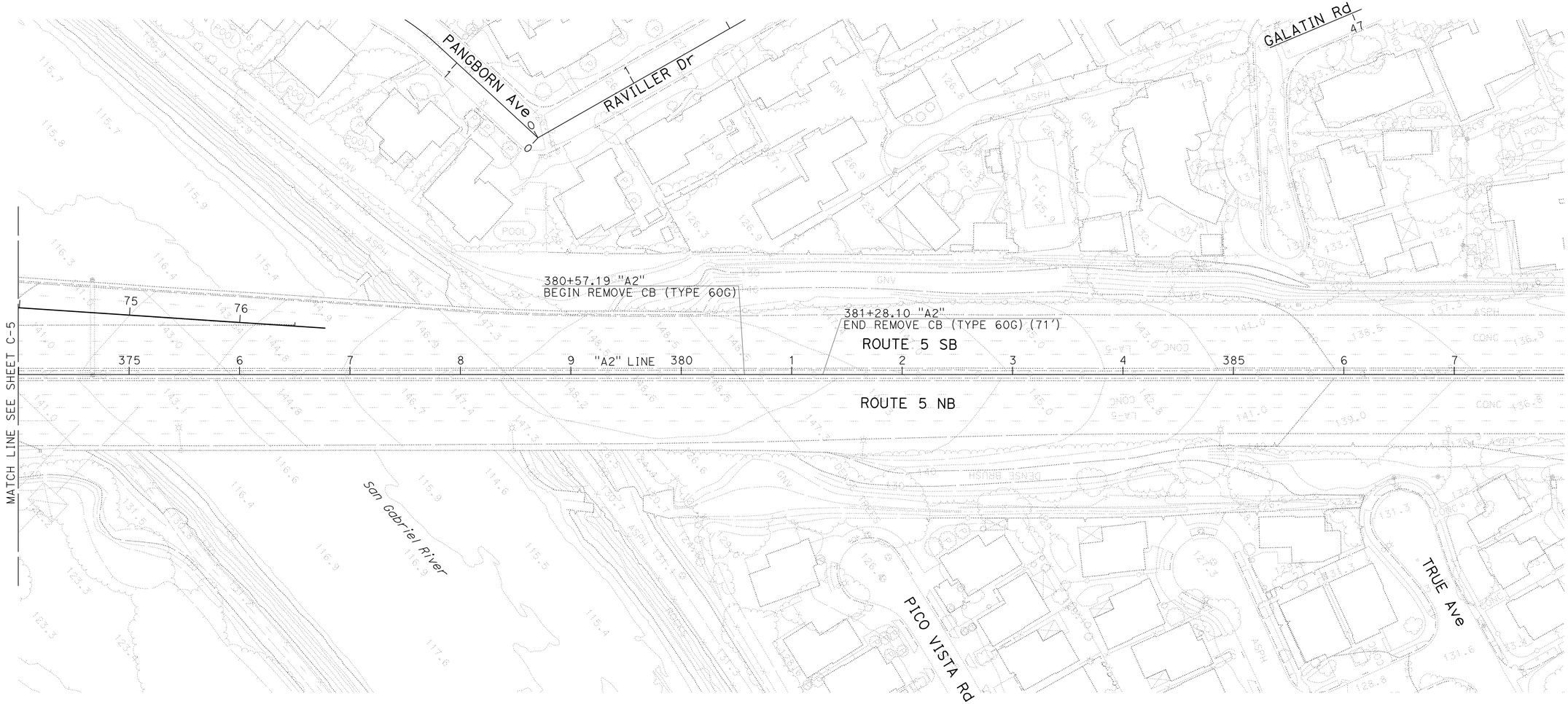

CONSTRUCTION DETAIL
(REMOVAL PLAN)

SCALE: 1" = 50'

C-6

REVISED BY	MARK MAI
DATE REVISED	08/06/12
CALCULATED-DESIGNED BY	MARK MAI
CHECKED BY	NGIM NANCY PE
FUNCTIONAL SUPERVISOR	NGIM NANCY PE

STATE OF CALIFORNIA - DEPARTMENT OF TRANSPORTATION
Caltrans® OFFICE OF DESIGN A

S:\projects\215951\721595ga006.dgn

LAST REVISION 00-00-00
DATE PLOTTED => 26-JUN-2013
TIME PLOTTED => 16:27

Dist	COUNTY	ROUTE	POST MILES TOTAL PROJECT	SHEET No.	TOTAL SHEETS
07	LA	5	0.0/7.6	44	985

REGISTERED CIVIL ENGINEER 10-11-12 DATE

6-24-13
PLANS APPROVAL DATE

REGISTERED PROFESSIONAL ENGINEER
NGIM NANCY PE
No. 58161
Exp. 6-30-14
CIVIL
STATE OF CALIFORNIA

THE STATE OF CALIFORNIA OR ITS OFFICERS OR AGENTS SHALL NOT BE RESPONSIBLE FOR THE ACCURACY OR COMPLETENESS OF SCANNED COPIES OF THIS PLAN SHEET.

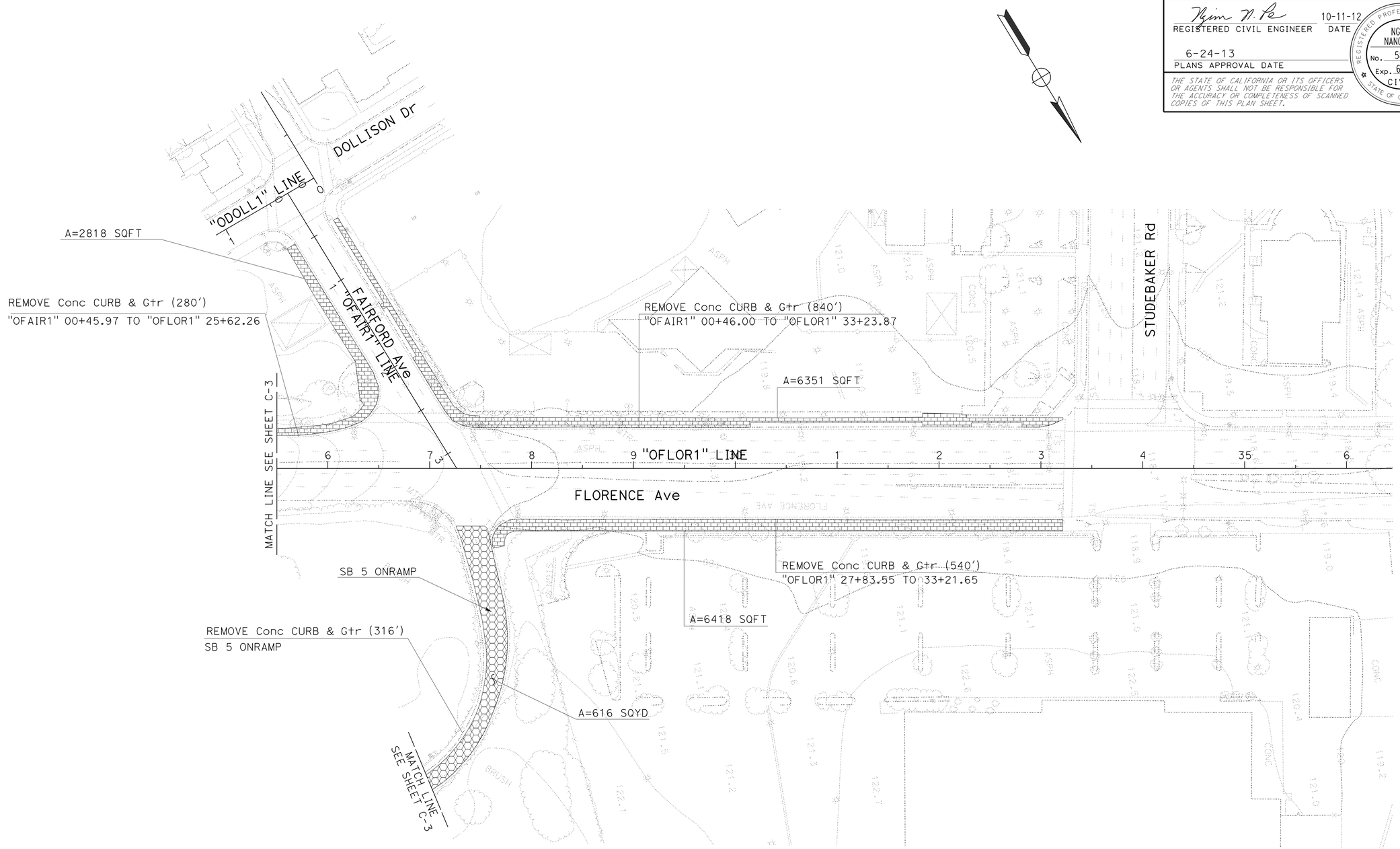

CONSTRUCTION DETAIL
(REMOVAL PLAN)
SCALE: 1" = 50'

C-7

REVISED BY MARK MAI
DATE REVISED 08/06/12
CALCULATED-DESIGNED BY MARK MAI NGIM NANCY PE
CHECKED BY
FUNCTIONAL SUPERVISOR NGIM NANCY PE

STATE OF CALIFORNIA - DEPARTMENT OF TRANSPORTATION
Caltrans® OFFICE OF DESIGN A

S:\projects\215951\721595ga007.dgn

LAST REVISION 00-00-00 DATE PLOTTED => 26-JUN-2013 TIME PLOTTED => 16:27

BORDER LAST REVISED 7/2/2010 | USERNAME => s109858 DGN FILE => 721595ga007.dgn | RELATIVE BORDER SCALE IS IN INCHES 0 1 2 3 | UNIT 1797 | PROJECT NUMBER & PHASE 07000018351

Dist	COUNTY	ROUTE	POST MILES TOTAL PROJECT	SHEET No.	TOTAL SHEETS
07	LA	5	0.0/7.6	45	985

REGISTERED CIVIL ENGINEER — DATE: 10-11-12

PLANS APPROVAL DATE: 6-24-13

REGISTERED PROFESSIONAL ENGINEER — NGIM NANCY PE — No. 58161 — Exp. 6-30-14 — CIVIL — STATE OF CALIFORNIA

THE STATE OF CALIFORNIA OR ITS OFFICERS OR AGENTS SHALL NOT BE RESPONSIBLE FOR THE ACCURACY OR COMPLETENESS OF SCANNED COPIES OF THIS PLAN SHEET.

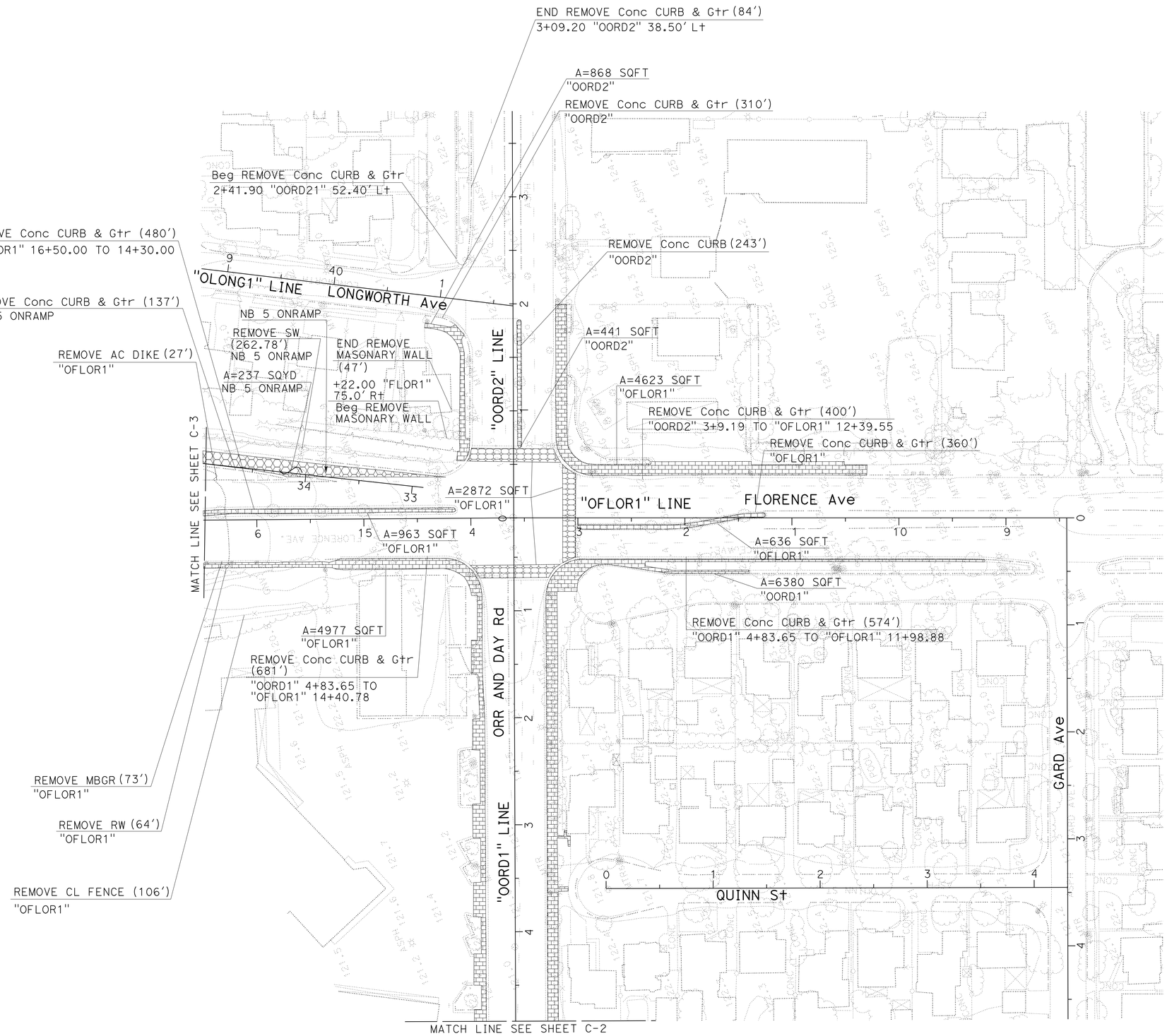

CONSTRUCTION DETAIL
(REMOVAL PLAN)

SCALE: 1" = 50'

C-8

REVISED BY	MARK MAI
DATE REVISED	08/06/12
CALCULATED-DESIGNED BY	MARK MAI
CHECKED BY	NGIM NANCY PE
FUNCTIONAL SUPERVISOR	NGIM NANCY PE

STATE OF CALIFORNIA - DEPARTMENT OF TRANSPORTATION

Caltrans® OFFICE OF DESIGN A

S:\projects\215951\721595ga008.dgn

LAST REVISION 00-00-00 | DATE PLOTTED => 26-JUN-2013 | TIME PLOTTED => 16:27

Dist	COUNTY	ROUTE	POST MILES TOTAL PROJECT	SHEET No.	TOTAL SHEETS
07	LA	5	0.0/7.6	46	985

REGISTERED CIVIL ENGINEER 10-11-12 DATE

6-24-13
PLANS APPROVAL DATE

REGISTERED PROFESSIONAL ENGINEER NGIM NANCY PE No. 58161 Exp. 6-30-14 CIVIL STATE OF CALIFORNIA

THE STATE OF CALIFORNIA OR ITS OFFICERS OR AGENTS SHALL NOT BE RESPONSIBLE FOR THE ACCURACY OR COMPLETENESS OF SCANNED COPIES OF THIS PLAN SHEET.

LEGEND:

COLD PLANE 0.17' AC
OVERLAY 0.16'-0.5' HMA (TYPE A)

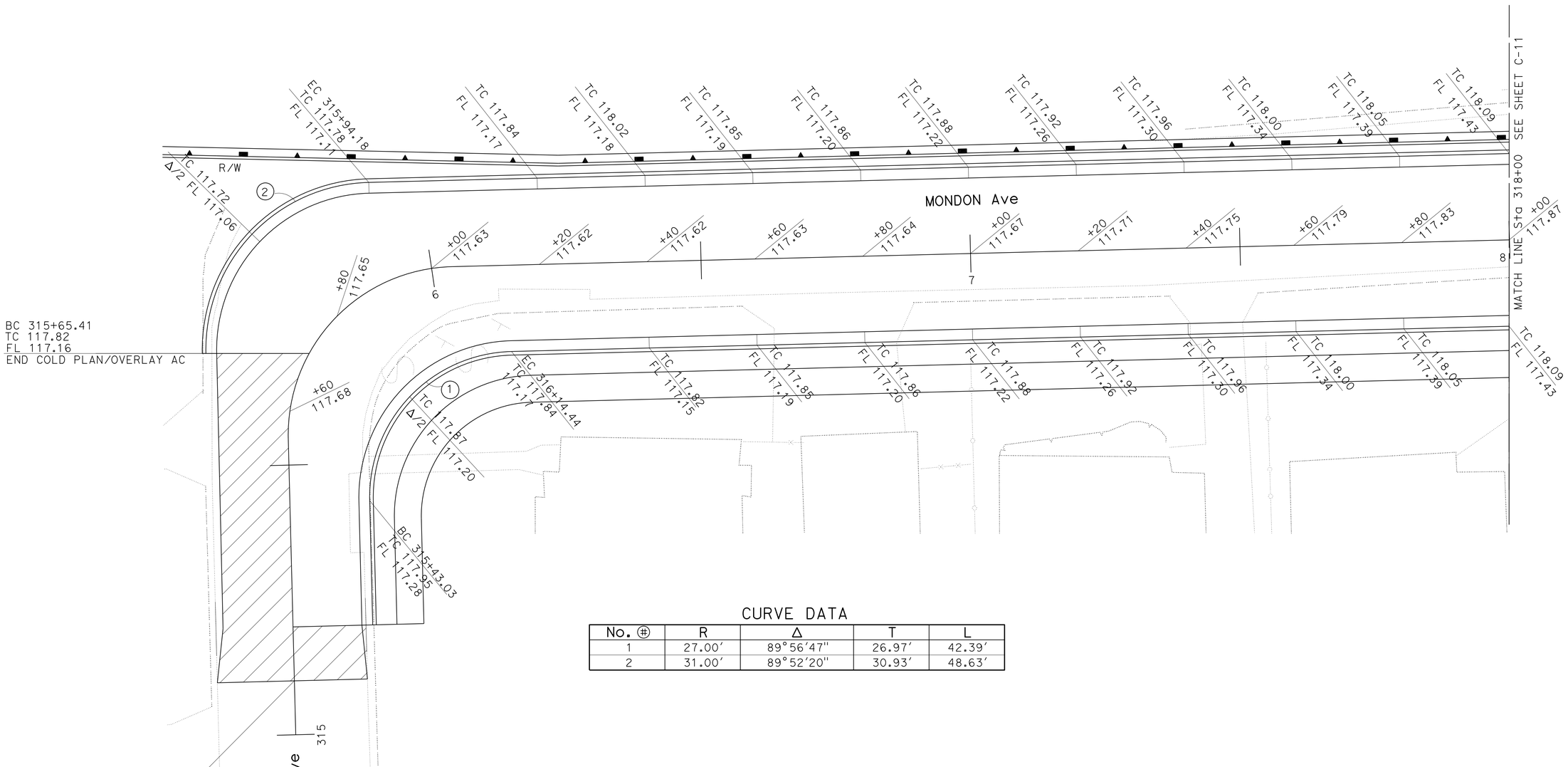

CURVE DATA

No. ⊕	R	Δ	T	L
1	27.00'	89°56'47"	26.97'	42.39'
2	31.00'	89°52'20"	30.93'	48.63'

CONSTRUCTION DETAILS

SCALE: 1" = 10'

C-9

STATE OF CALIFORNIA - DEPARTMENT OF TRANSPORTATION
Caltrans OFFICE OF DESIGN A

FUNCTIONAL SUPERVISOR: NGIM NANCY PE
CALCULATED-DESIGNED BY: KEVIN Q. NGUYEN
CHECKED BY: WILL CARPIO
REVISED BY
DATE REVISED

LAST REVISION 10-15-12
DATE PLOTTED => 27-JUN-2013
TIME PLOTTED => 12:20

Dist	COUNTY	ROUTE	POST MILES TOTAL PROJECT	SHEET No.	TOTAL SHEETS
07	LA	5	0.0/7.6	47	985

REGISTERED CIVIL ENGINEER 10-11-12 DATE

6-24-13
PLANS APPROVAL DATE

REGISTERED PROFESSIONAL ENGINEER NGIM NANCY PE No. 58161 Exp. 6-30-14 CIVIL STATE OF CALIFORNIA

THE STATE OF CALIFORNIA OR ITS OFFICERS OR AGENTS SHALL NOT BE RESPONSIBLE FOR THE ACCURACY OR COMPLETENESS OF SCANNED COPIES OF THIS PLAN SHEET.

LEGEND:

COLD PLANE OVERLAY 0.16'-0.5' HMA (TYPE A)

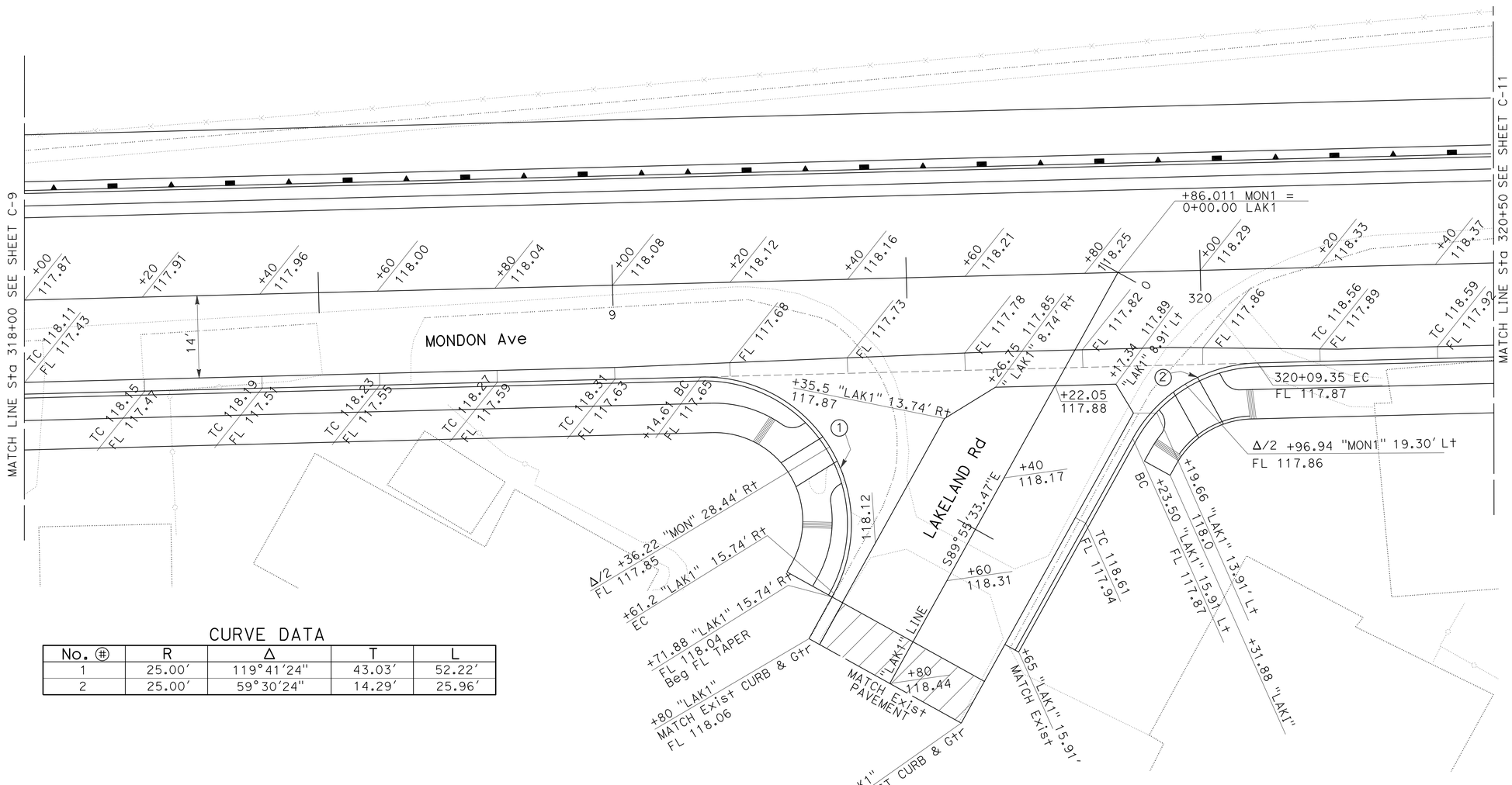

CURVE DATA

No. (#)	R	Δ	T	L
1	25.00'	119°41'24"	43.03'	52.22'
2	25.00'	59°30'24"	14.29'	25.96'

CONSTRUCTION DETAILS

SCALE: 1" = 10'

C-10

STATE OF CALIFORNIA - DEPARTMENT OF TRANSPORTATION
Caltrans OFFICE OF DESIGN A

FUNCTIONAL SUPERVISOR: NGIM NANCY PE

CALCULATED-DESIGNED BY: KEVIN Q. NGUYEN
CHECKED BY: WILL CARPIO

REVISED BY | DATE REVISED

LAST REVISION 10-15-12 | DATE PLOTTED => 27-JUN-2013 | TIME PLOTTED => 12:20

Dist	COUNTY	ROUTE	POST MILES TOTAL PROJECT	SHEET No.	TOTAL SHEETS
07	LA	5	0.0/7.6	48	985

REGISTERED CIVIL ENGINEER 10-11-12 DATE

6-24-13
PLANS APPROVAL DATE

REGISTERED PROFESSIONAL ENGINEER NGIM NANCY PE No. 58161 Exp. 6-30-14 CIVIL STATE OF CALIFORNIA

THE STATE OF CALIFORNIA OR ITS OFFICERS OR AGENTS SHALL NOT BE RESPONSIBLE FOR THE ACCURACY OR COMPLETENESS OF SCANNED COPIES OF THIS PLAN SHEET.

LEGEND:

COLD PLANE OVERLAY 0.16'-0.5' HMA (TYPE A)

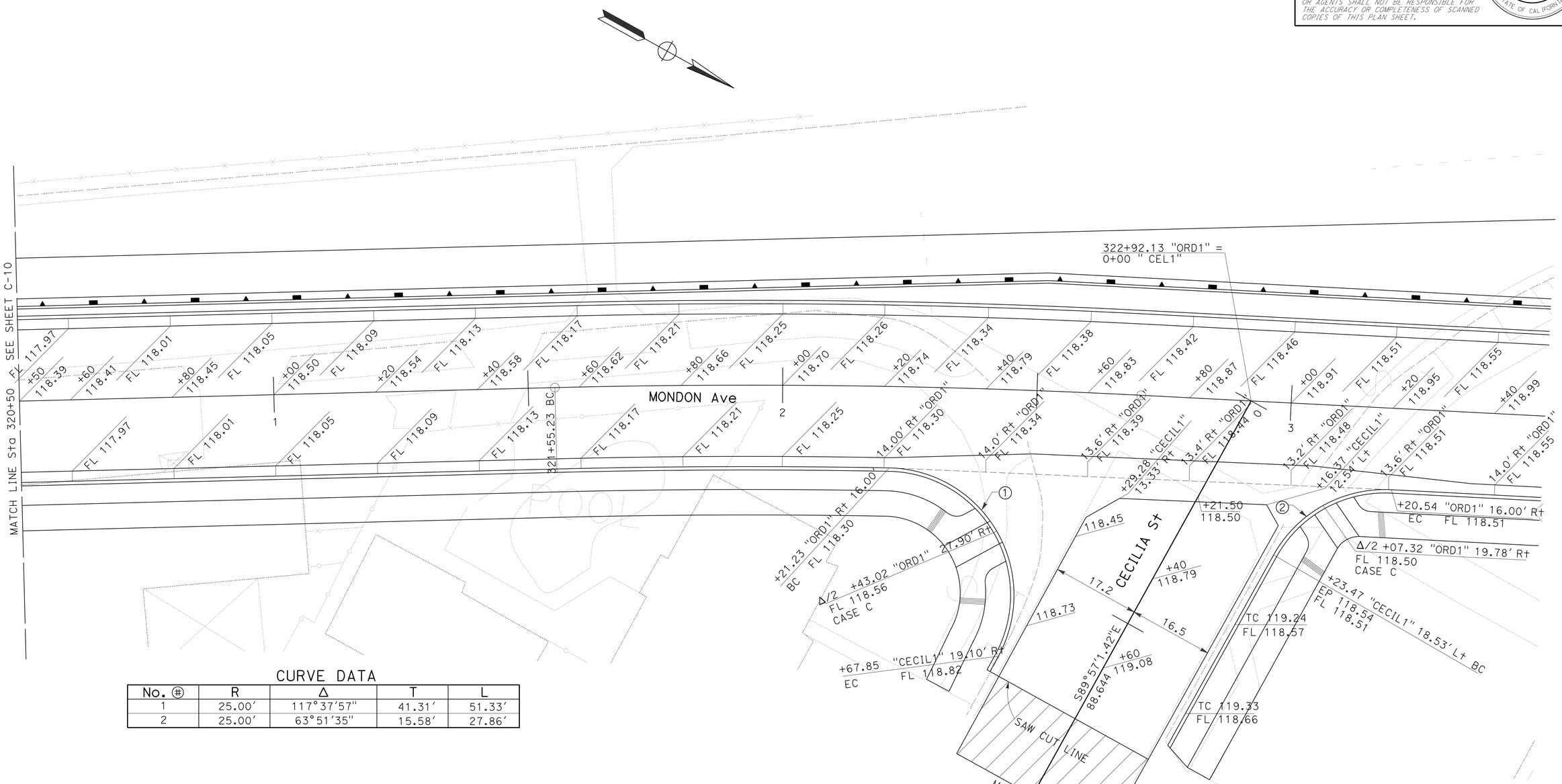

CURVE DATA

No. ⊕	R	Δ	T	L
1	25.00'	117°37'57"	41.31'	51.33'
2	25.00'	63°51'35"	15.58'	27.86'

CONSTRUCTION DETAILS

SCALE: 1" = 10'

C-11

STATE OF CALIFORNIA - DEPARTMENT OF TRANSPORTATION
Caltrans® OFFICE OF DESIGN A

FUNCTIONAL SUPERVISOR: NGIM NANCY PE
CALCULATED-DESIGNED BY: KEVIN Q. NGUYEN
CHECKED BY: WILL CARPIO
REVISED BY
DATE REVISED

LAST REVISION 10-15-12
DATE PLOTTED => 27-JUN-2013
TIME PLOTTED => 12:20

Dist	COUNTY	ROUTE	POST MILES TOTAL PROJECT	SHEET No.	TOTAL SHEETS
07	LA	5	0.0/7.6	49	985

REGISTERED CIVIL ENGINEER 10-11-12 DATE

6-24-13
PLANS APPROVAL DATE

REGISTERED PROFESSIONAL ENGINEER NGIM NANCY PE No. 58161 Exp. 6-30-14 CIVIL STATE OF CALIFORNIA

THE STATE OF CALIFORNIA OR ITS OFFICERS OR AGENTS SHALL NOT BE RESPONSIBLE FOR THE ACCURACY OR COMPLETENESS OF SCANNED COPIES OF THIS PLAN SHEET.

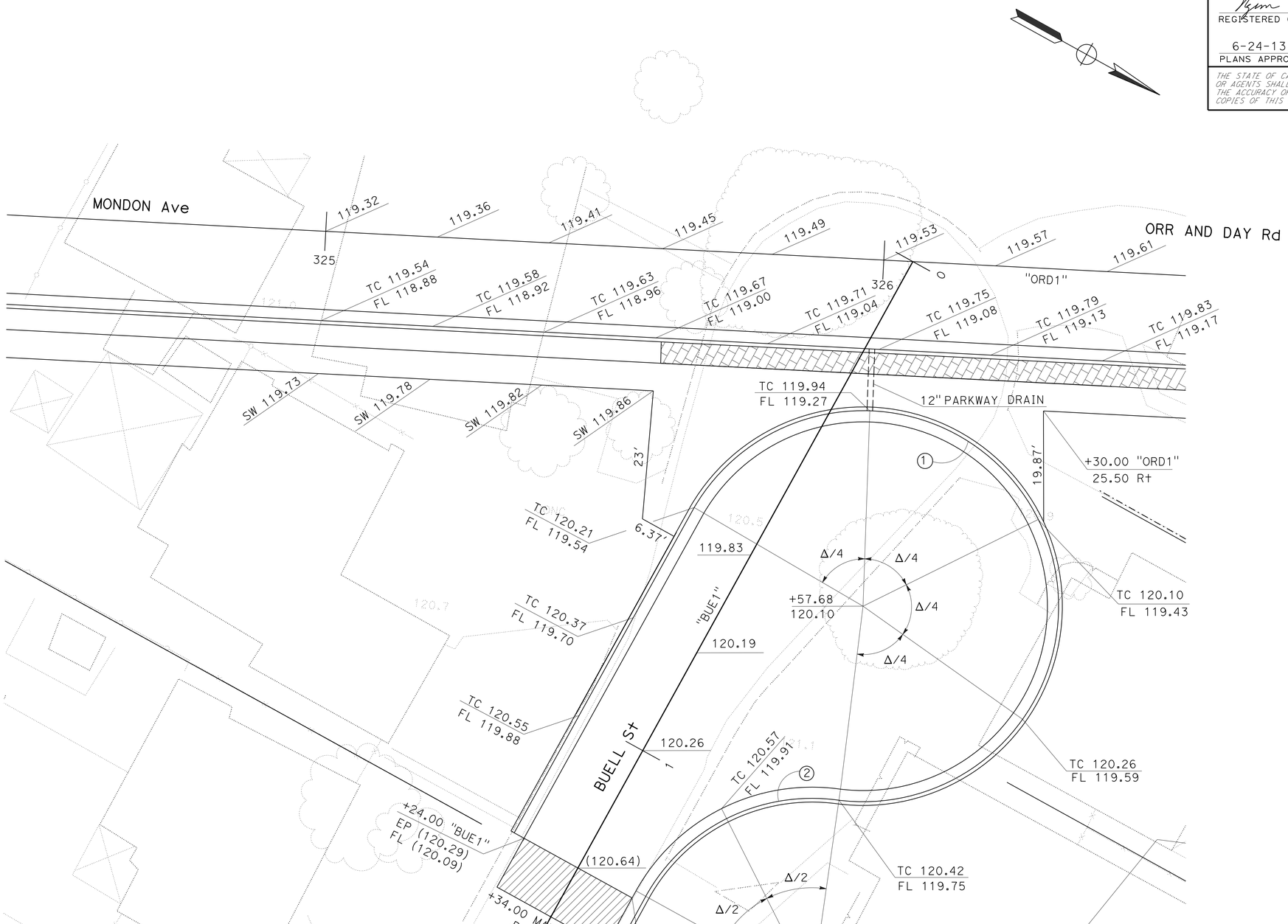

CURVE DATA

No. ⊕	R	Δ	T	L
1	35.00′	247°17′44"	52.58′	151.06′
2	34.00′	68°39′00"	23.21′	40.74′

CONSTRUCTION DETAILS

SCALE: 1" = 10′

C-12

STATE OF CALIFORNIA - DEPARTMENT OF TRANSPORTATION
Caltrans® OFFICE OF DESIGN A

FUNCTIONAL SUPERVISOR: NGIM NANCY PE
CALCULATED-DESIGNED BY: KEVIN Q. NGUYEN
CHECKED BY: WILL CARPIO
REVISED BY
DATE REVISED

LAST REVISION 10-15-12
DATE PLOTTED => 26-JUN-2013
TIME PLOTTED => 16:28

Dist	COUNTY	ROUTE	POST MILES TOTAL PROJECT	SHEET No.	TOTAL SHEETS
07	LA	5	0.0/7.6	50	985

REGISTERED CIVIL ENGINEER 10-11-12 DATE

6-24-13
PLANS APPROVAL DATE

REGISTERED PROFESSIONAL ENGINEER NGIM NANCY PE No. 58161 Exp. 6-30-14 CIVIL STATE OF CALIFORNIA

THE STATE OF CALIFORNIA OR ITS OFFICERS OR AGENTS SHALL NOT BE RESPONSIBLE FOR THE ACCURACY OR COMPLETENESS OF SCANNED COPIES OF THIS PLAN SHEET.

ABBREVIATION:

BSW - BACK OF SIDEWALK

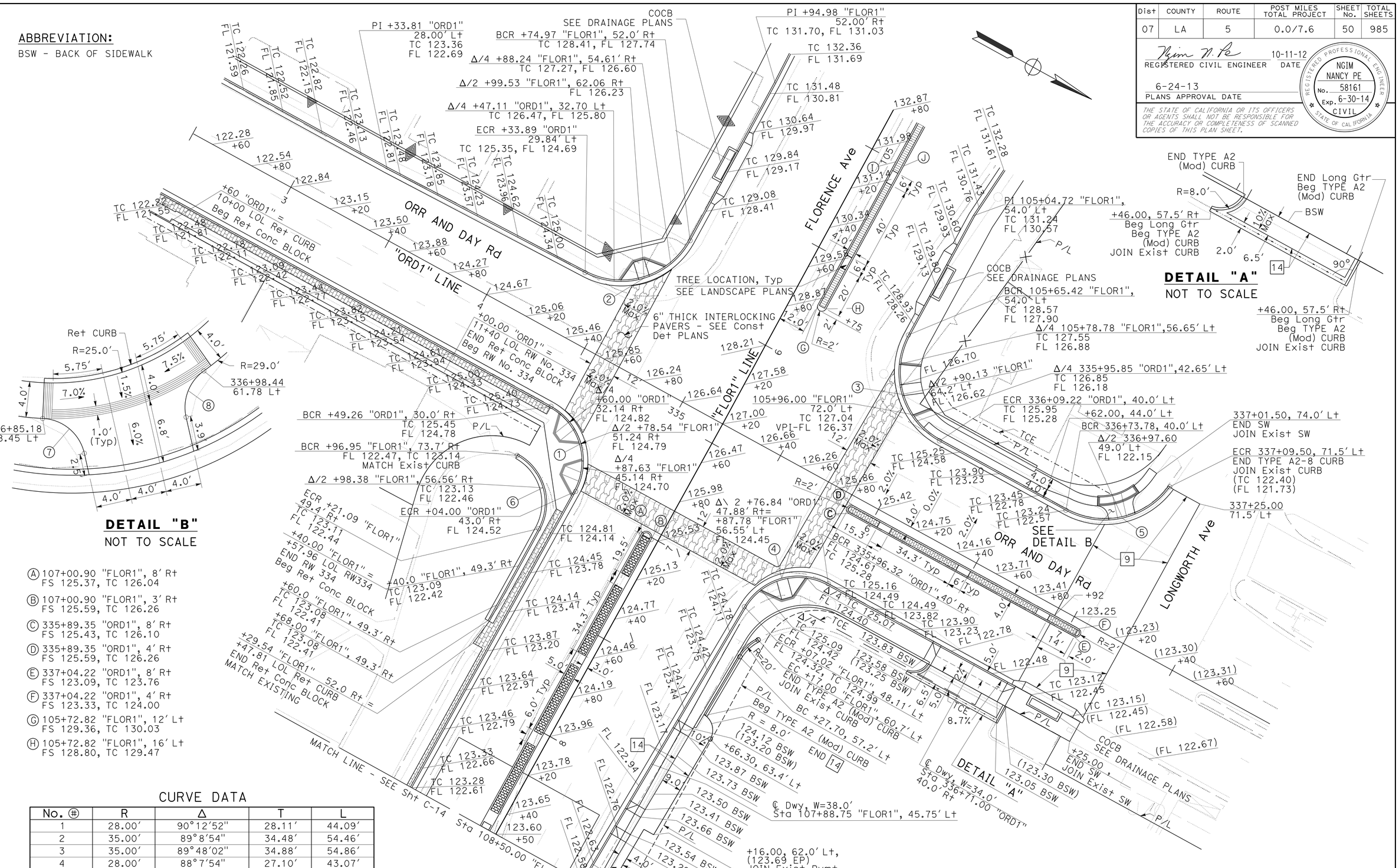

DETAIL "B"

NOT TO SCALE

DETAIL "A"

NOT TO SCALE

Ⓐ 107+00.90 "FLOR1", 8' Rt
FS 125.37, TC 126.04

Ⓑ 107+00.90 "FLOR1", 3' Rt
FS 125.59, TC 126.26

Ⓒ 335+89.35 "ORD1", 8' Rt
FS 125.43, TC 126.10

Ⓓ 335+89.35 "ORD1", 4' Rt
FS 125.59, TC 126.26

Ⓔ 337+04.22 "ORD1", 8' Rt
FS 123.09, TC 123.76

Ⓕ 337+04.22 "ORD1", 4' Rt
FS 123.33, TC 124.00

Ⓖ 105+72.82 "FLOR1", 12' Lt
FS 129.36, TC 130.03

Ⓗ 105+72.82 "FLOR1", 16' Lt
FS 128.80, TC 129.47

CURVE DATA

No. ⊛	R	Δ	T	L
1	28.00'	90°12'52"	28.11'	44.09'
2	35.00'	89°8'54"	34.48'	54.46'
3	35.00'	89°48'02"	34.88'	54.86'
4	28.00'	88°7'54"	27.10'	43.07'
5	36.00'	82°51'46"	31.77'	52.06'
6	24.29'	89°41'50"	24.16'	38.03'
7	5.00'	74°49'07"	3.82'	6.53'
8	5.00'	67°20'42"	3.33'	5.88'

CONSTRUCTION DETAILS

SCALE: 1" = 20'

C-13

STATE OF CALIFORNIA - DEPARTMENT OF TRANSPORTATION
Caltrans® OFFICE OF DESIGN A

FUNCTIONAL SUPERVISOR: NGIM NANCY PE
CALCULATED-DESIGNED BY: KEVIN Q. NGUYEN
CHECKED BY: WILL CARPIO
REVISED BY / DATE REVISED

LAST REVISION 00-00-00 | DATE PLOTTED => 26-JUN-2013 | TIME PLOTTED => 16:28

Dist	COUNTY	ROUTE	POST MILES TOTAL PROJECT	SHEET No.	TOTAL SHEETS
07	LA	5	0.0/7.6	51	985

REGISTERED CIVIL ENGINEER 10-11-12 DATE

6-24-13
PLANS APPROVAL DATE

REGISTERED PROFESSIONAL ENGINEER NGIM NANCY PE No. 58161 Exp. 6-30-14 CIVIL STATE OF CALIFORNIA

THE STATE OF CALIFORNIA OR ITS OFFICERS OR AGENTS SHALL NOT BE RESPONSIBLE FOR THE ACCURACY OR COMPLETENESS OF SCANNED COPIES OF THIS PLAN SHEET.

ABBREVIATIONS:
BSW - BACK OF SIDEWALK

Ⓐ Sta 109+50.00 "FLOR1", 8.74′ Rt, BC 123.30 FS, 123.97 TC
Ⓑ Sta 108+60.00 "FLOR1", 8.00′ Rt 123.40 FS, 124.07 TC
Ⓓ Sta 108+74.98 "FLOR1", 0.79′ Rt EC 123.53 FS, 124.20 TC
Ⓔ Sta 109+02.54 "FLOR1", 4.42′ Lt BC 123.40 FS, 124.07 TC
Ⓕ Sta 109+30.00 "FLOR1", 6.63′ Lt EC 123.30 FS, 123.97 TC
Ⓖ Sta 109+49.88 "FLOR1", 6.96′ Lt EC 123.37 FS, 124.04 TC
Ⓘ Sta 109+49.00 "FLOR1", 40.84′ Lt
Ⓙ Sta 109+51.94 "FLOR1", 48.67′ Lt
Ⓚ Sta 109+45.00 "FLOR1", 50.00′ Lt
Ⓛ Sta 109+20.95 "FLOR1", 51.00′ Lt
Ⓜ Sta 109+17.66 "FLOR1", 53.45′ Lt
Ⓝ Sta 109+17.00 "FLOR1", 42.54′ Lt
Ⓞ Sta 109+02.83 "FLOR1", 42.45′ Lt
Ⓟ Sta 108+98.00 "FLOR1", 46.69′ Lt
Ⓠ Sta 108+96.86 "FLOR1", 54.30′ Lt
Ⓡ Sta 108+67.69 "FLOR1", 55.14′ Lt
Ⓢ Sta 108+67.64 "FLOR1", 48.57′ Lt
Ⓣ Sta 108+62.48 "FLOR1", 43.61′ Lt

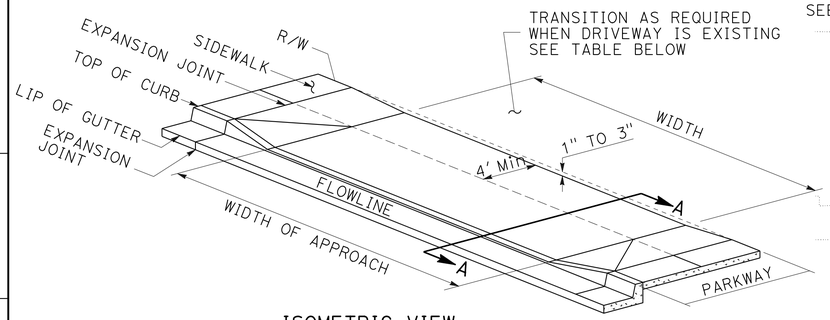

ISOMETRIC VIEW
NO SCALE

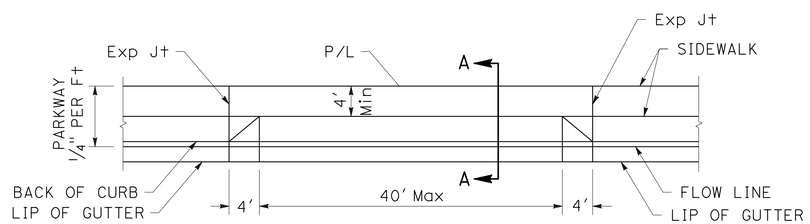

PLAN VIEW
NO SCALE

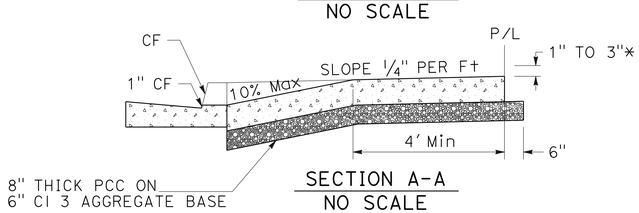

SECTION A-A
NO SCALE

COMMERCIAL DRIVEWAY DETAIL
NO SCALE

PARKWAY WIDTH	8" CURB FACE *	6" CURB FACE *
12′	1"	0"
10′	2"	0"
8′	3"	1"

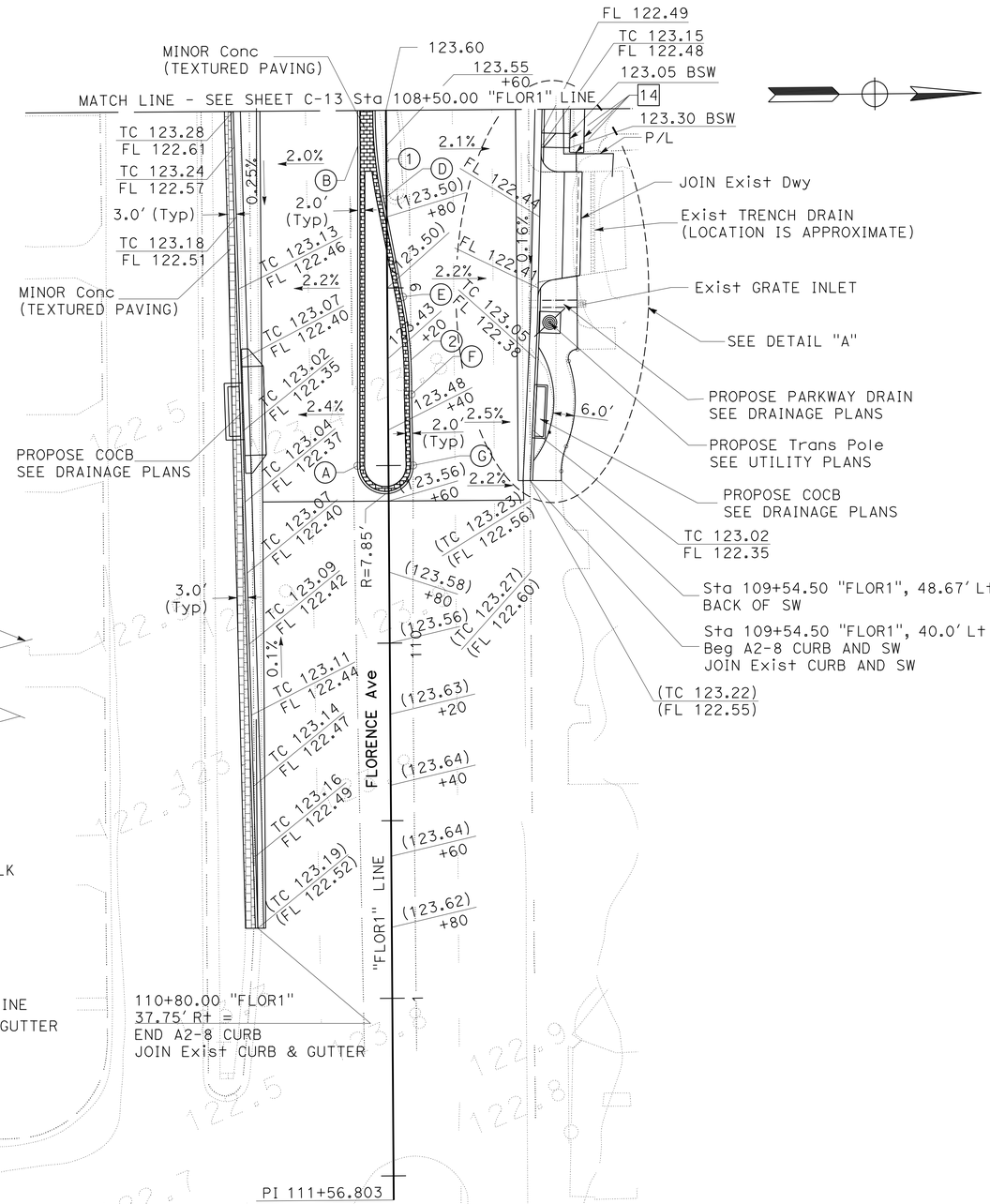

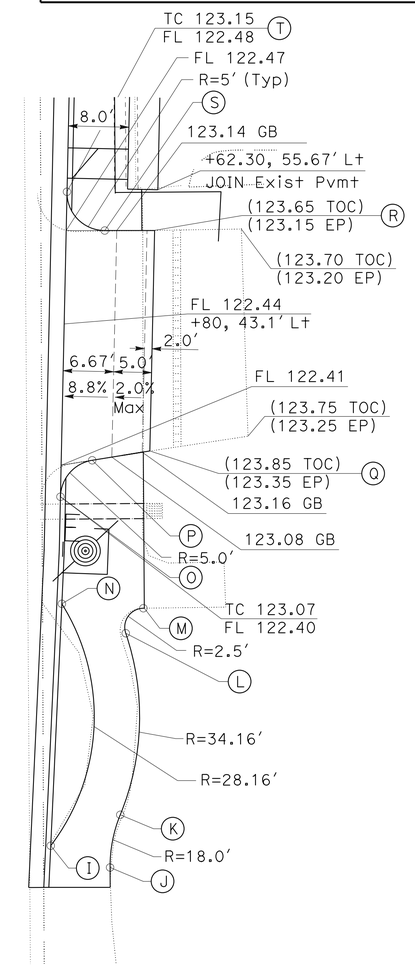

DETAIL "A"
NO SCALE

CURVE DATA

No. ⊕	R	Δ	T	L
1	127.29′	12°25′35"	13.86′	27.61′
2	127.30′	12°25′32"	13.86′	27.61′

CONSTRUCTION DETAILS
SCALE: 1" = 20′

C-14

STATE OF CALIFORNIA - DEPARTMENT OF TRANSPORTATION
Caltrans OFFICE OF DESIGN A
FUNCTIONAL SUPERVISOR: NGIM NANCY PE
CALCULATED-DESIGNED BY: KEVIN Q. NGUYEN
CHECKED BY: WILL CARPIO
REVISED BY
DATE REVISED

LAST REVISION 00-00-00
DATE PLOTTED => 26-JUN-2013
TIME PLOTTED => 16:28

Dist	COUNTY	ROUTE	POST MILES TOTAL PROJECT	SHEET No.	TOTAL SHEETS
07	LA	5	0.0/7.6	52	985

REGISTERED CIVIL ENGINEER 10-11-12 DATE

6-24-13
PLANS APPROVAL DATE

REGISTERED PROFESSIONAL ENGINEER NGIM NANCY PE No. 58161 Exp. 6-30-14 CIVIL STATE OF CALIFORNIA

THE STATE OF CALIFORNIA OR ITS OFFICERS OR AGENTS SHALL NOT BE RESPONSIBLE FOR THE ACCURACY OR COMPLETENESS OF SCANNED COPIES OF THIS PLAN SHEET.

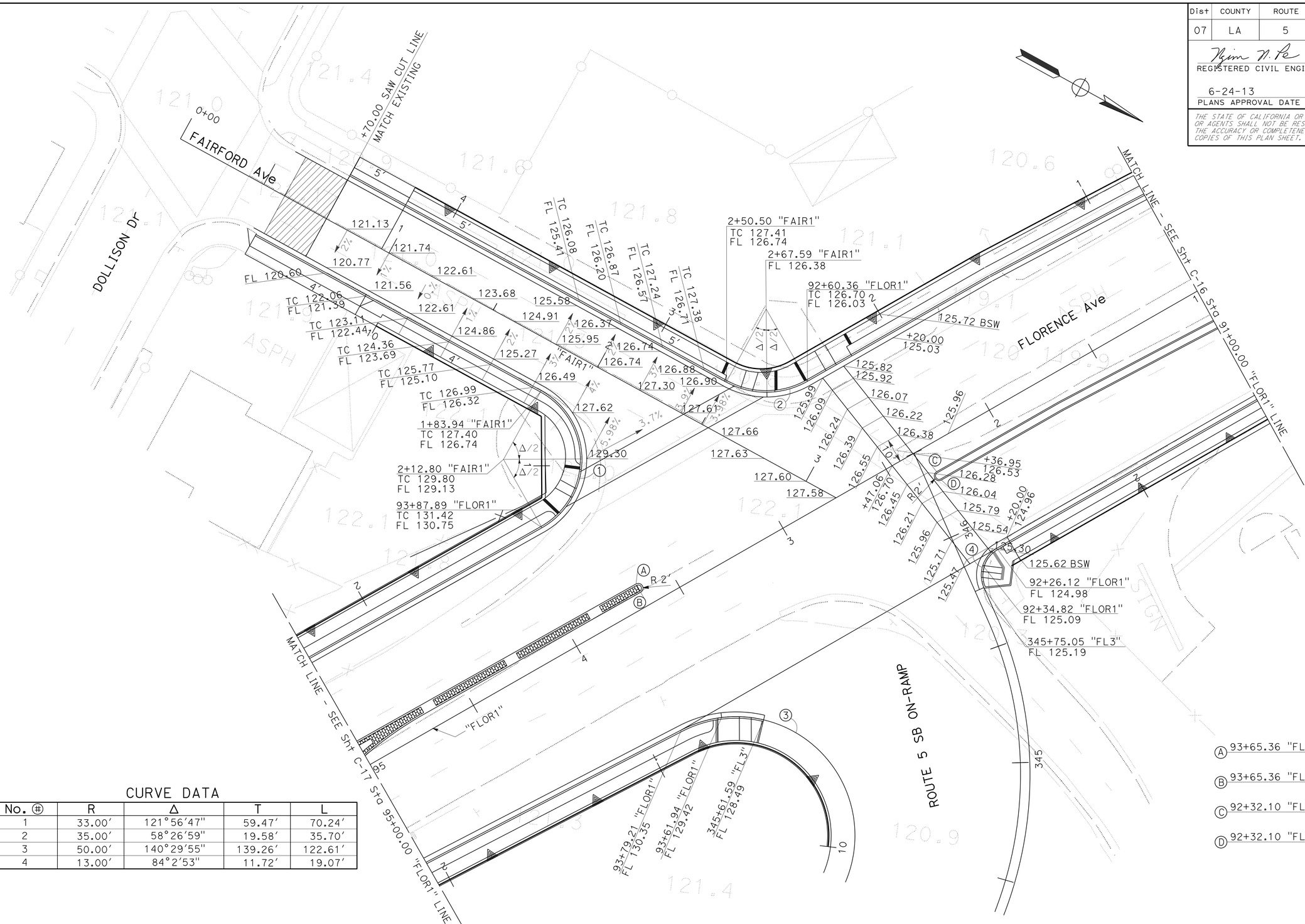

CURVE DATA

No. ⊕	R	Δ	T	L
1	33.00′	121°56′47"	59.47′	70.24′
2	35.00′	58°26′59"	19.58′	35.70′
3	50.00′	140°29′55"	139.26′	122.61′
4	13.00′	84°2′53"	11.72′	19.07′

CONSTRUCTION DETAILS

SCALE: 1" = 20′

C-15

STATE OF CALIFORNIA - DEPARTMENT OF TRANSPORTATION
Caltrans® OFFICE OF DESIGN A

FUNCTIONAL SUPERVISOR: NGIM NANCY PE
CALCULATED-DESIGNED BY: KEVIN Q. NGUYEN
CHECKED BY: WILL CARPIO
REVISED BY
DATE REVISED

LAST REVISION 00-00-00
DATE PLOTTED => 26-JUN-2013
TIME PLOTTED => 16:28

Dist	COUNTY	ROUTE	POST MILES TOTAL PROJECT	SHEET No.	TOTAL SHEETS
07	LA	5	0.0/7.6	53	985

REGISTERED CIVIL ENGINEER 10-11-12 DATE

6-24-13
PLANS APPROVAL DATE

REGISTERED PROFESSIONAL ENGINEER
NGIM NANCY PE
No. 58161
Exp. 6-30-14
CIVIL
STATE OF CALIFORNIA

THE STATE OF CALIFORNIA OR ITS OFFICERS OR AGENTS SHALL NOT BE RESPONSIBLE FOR THE ACCURACY OR COMPLETENESS OF SCANNED COPIES OF THIS PLAN SHEET.

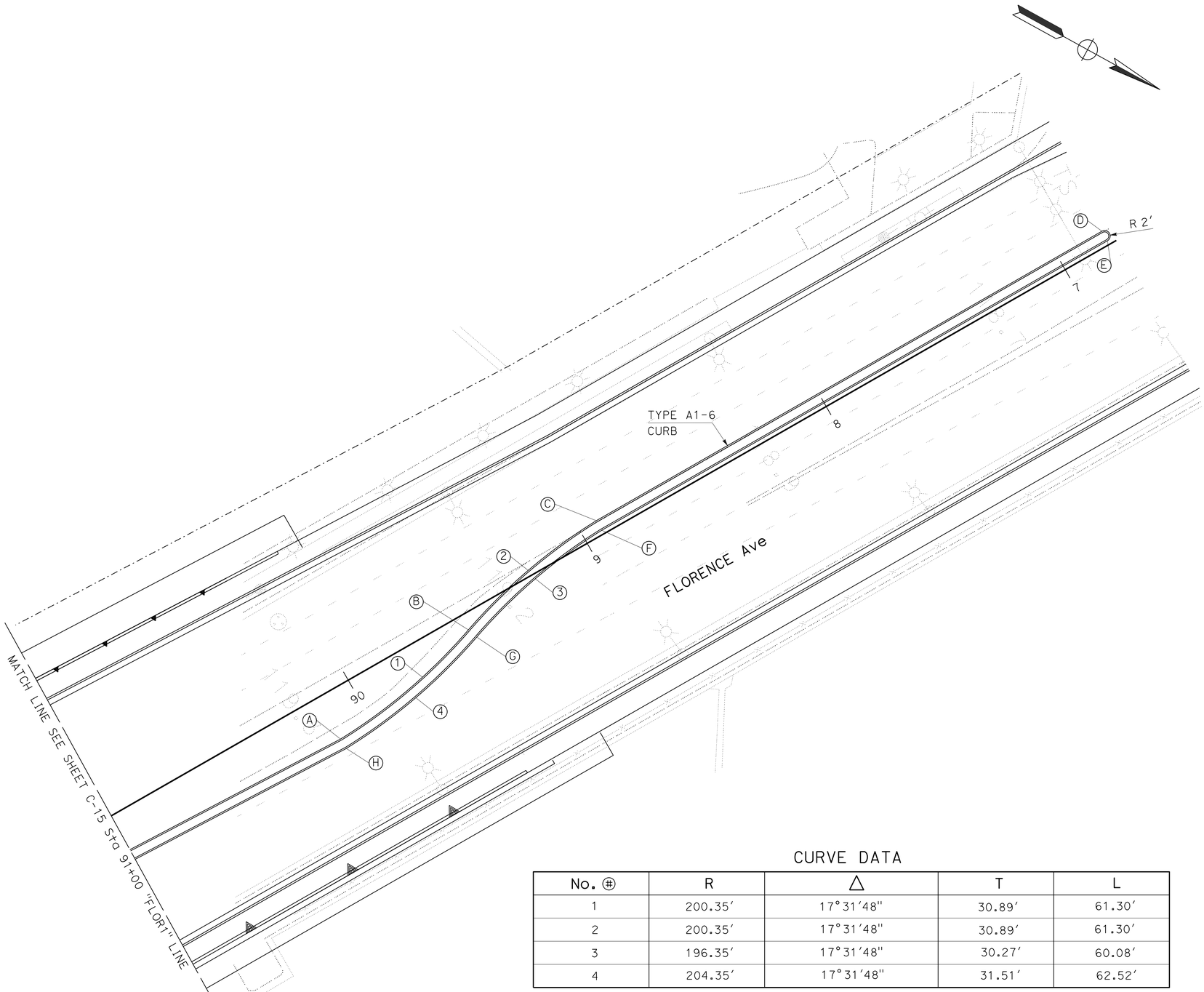

Ⓐ 90+13.05 "FLOR", 17.17' L+

Ⓑ 89+53.05 "FLOR1", 5.84' L+

Ⓒ 88+93.05 "FLOR1", 5.50' R+

Ⓓ 86+81.48 "FLOR1", 5.50' R+

Ⓔ 86+81.48 "FLOR", 1.50' R+

Ⓕ 88+93.05 "FLOR1", 1.50' R+

Ⓖ 89+51.74 "FLOR1", 9.61' L+

Ⓗ 90+12.91 "FLOR1", 21.17' L+

CURVE DATA

No. ⊛	R	△	T	L
1	200.35'	17°31'48"	30.89'	61.30'
2	200.35'	17°31'48"	30.89'	61.30'
3	196.35'	17°31'48"	30.27'	60.08'
4	204.35'	17°31'48"	31.51'	62.52'

CONSTRUCTION DETAILS

SCALE: 1" = 20'

C-16

STATE OF CALIFORNIA - DEPARTMENT OF TRANSPORTATION
Caltrans® OFFICE OF DESIGN A

FUNCTIONAL SUPERVISOR: NGIM NANCY PE
CALCULATED-DESIGNED BY: KEVIN Q. NGUYEN
CHECKED BY: WILL CARPIO
REVISED BY
DATE REVISED

LAST REVISION 10-15-12 | DATE PLOTTED => 26-JUN-2013 | TIME PLOTTED => 16:28

Dist	COUNTY	ROUTE	POST MILES TOTAL PROJECT	SHEET No.	TOTAL SHEETS
07	LA	5	0.0/7.6	54	985

REGISTERED CIVIL ENGINEER DATE 10-11-12

6-24-13
PLANS APPROVAL DATE

REGISTERED PROFESSIONAL ENGINEER
NGIM NANCY PE
No. 58161
Exp. 6-30-14
CIVIL
STATE OF CALIFORNIA

THE STATE OF CALIFORNIA OR ITS OFFICERS OR AGENTS SHALL NOT BE RESPONSIBLE FOR THE ACCURACY OR COMPLETENESS OF SCANNED COPIES OF THIS PLAN SHEET.

CURVE DATA

No. ⊛	R	Δ	T	L
1	150.79′	11°50′58"	15.65′	31.19′
2	120.76′	19°13′35"	20.45′	40.52′
3	1000.00′	29°40′14"	264.87′	517.85′
4	996.00′	29°40′34"	263.86′	515.87′
5	1046.77′	03°52′45"	35.52′	71.00′
6	594.08′	02°54′29"	15.08′	30.15′

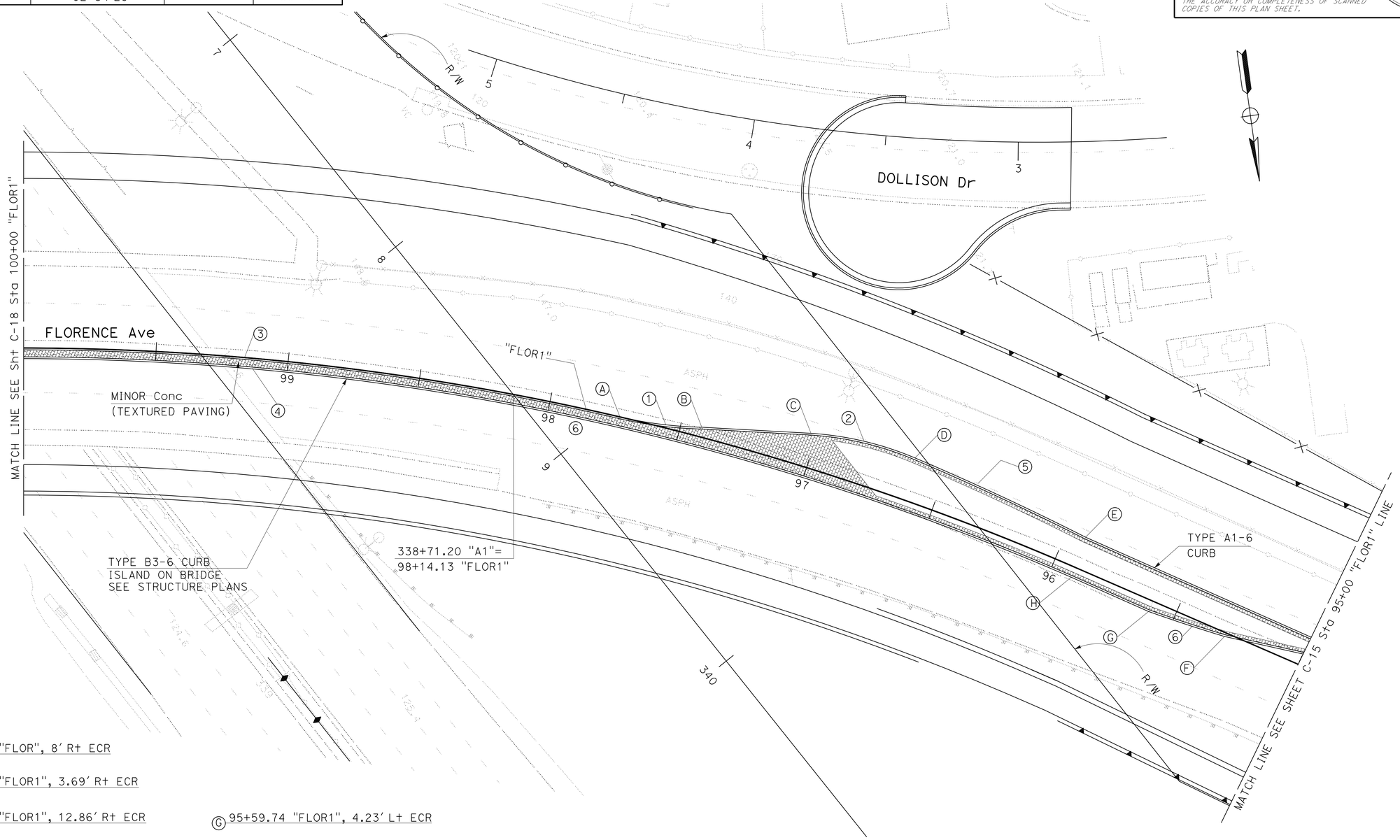

Ⓐ 97+22.98 "FLOR", 8′ Rt ECR

Ⓑ 97+42.12 "FLOR1", 3.69′ Rt ECR

Ⓒ 97+02.20 "FLOR1", 12.86′ Rt ECR

Ⓓ 96+62.60 "FLOR1", 16.35′ Rt ECR

Ⓔ 95+92.72 "FLOR1", 12.01′ Rt ECR

Ⓕ 95+29.69 "FLOR1", 1.45′ Lt ECR

Ⓖ 95+59.74 "FLOR1", 4.23′ Lt ECR

Ⓗ 95+91.65 "FLOR1", 4′ Lt ECR

CONSTRUCTION DETAILS

SCALE: 1" = 20′

C-17

STATE OF CALIFORNIA - DEPARTMENT OF TRANSPORTATION
Caltrans® OFFICE OF DESIGN A

FUNCTIONAL SUPERVISOR: NGIM NANCY PE
CALCULATED-DESIGNED BY: STEVEN TRIEU
CHECKED BY: NGIM NANCY PE
REVISED BY
DATE REVISED

LAST REVISION 10-15-12
DATE PLOTTED => 26-JUN-2013
TIME PLOTTED => 16:28

Dist	COUNTY	ROUTE	POST MILES TOTAL PROJECT	SHEET No.	TOTAL SHEETS
07	LA	5	0.0/7.6	55	985

REGISTERED CIVIL ENGINEER — DATE 10-11-12

6-24-13
PLANS APPROVAL DATE

REGISTERED PROFESSIONAL ENGINEER — NGIM NANCY PE No. 58161 Exp. 6-30-14 CIVIL — STATE OF CALIFORNIA

THE STATE OF CALIFORNIA OR ITS OFFICERS OR AGENTS SHALL NOT BE RESPONSIBLE FOR THE ACCURACY OR COMPLETENESS OF SCANNED COPIES OF THIS PLAN SHEET.

CURVE DATA

No. (#)	R	Δ	T	L
1	250.89′	11°29′44"	25.25′	50.34′
2	252.92′	11°07′34"	24.64′	49.12′
3	1000.00′	29°40′14"	264.87′	517.85′
4	996.00′	29°40′34"	263.86′	515.87′

(A) 104+44.82 "FLOR", 12.00′ R+ PI
(B) 103+55.24 "FLOR1", 7.52′ R+ BCR
(C) 103+05.55" FLOR1", 0.02′ R+ ECR
(D) 102+56.12 "FLOR1", 12.59′ R+ BCR
(E) 102+07.65 "FLOR1", 20.06′ R+ ECR
(F) 102+07.00 "FLOR1", 4.81′ L+ ECR
(G) 102+64.64 "FLOR1", 7.00′ L+ BCR
(H) 104+44.72 "FLOR1", 16.00′ L+ PI
(I) 101+09.44 "FLOR1", 0.00′ ECR
(J) 101+09.52 "FLOR1", 4.00′ L+ ECR
(K) 102+62.04 "FLOR1", 58.93′ L+ BC
(L) 101+86.53 "FLOR1", 56.37′ L+ EC/BCR
(M) 101+56.78 "FLOR1", 66.03′ L+ ECR
(N) 102+87.82 "FLOR1", 57.07′ R+ BCR
(O) 102+62.14 "FLOR1", 67.93′ R+ ECR
(P) 335+83.47 "FL4", 4.00′ L+ ECR
(Q) 101+76.88 "FLOR1", 63.57′ R+ BCR
(R) 101+13.35 "FLOR1", 44.00′ L+ BCR
(S) 337+09.76 "FL1", 4.00′ L+ ECR

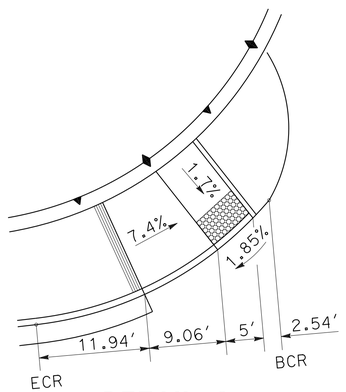

DETAIL C
CASE C Mod
NO SCALE

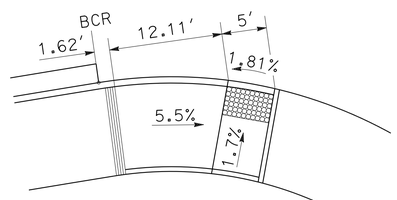

DETAIL D
CASE C Mod
NO SCALE

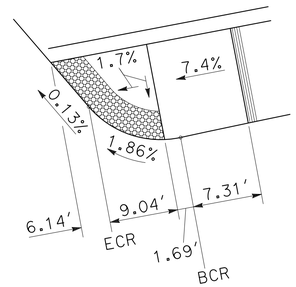

DETAIL B
CASE CM
NO SCALE

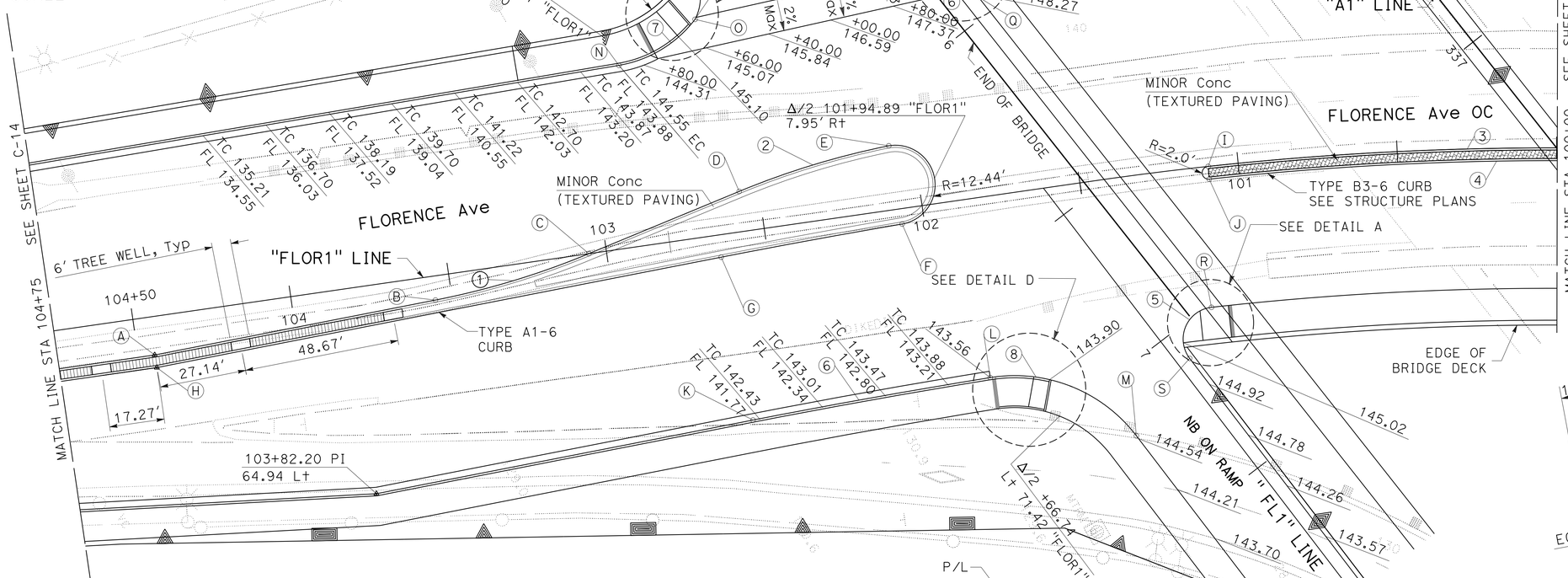

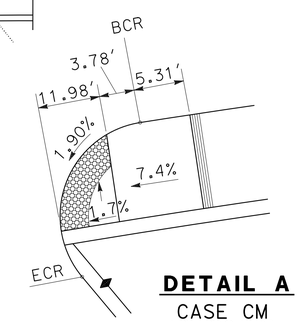

DETAIL A
CASE CM
NO SCALE

CURVE DATA

No. (#)	BC	EC	R	Δ	T	L
5	102+13.35 "FLOR1" 44.00′ L+	337+09.76 "FL1" 4.00′ L+	10.00′	121°01′06.07"	17.68′	21.12′
6	101+74.88 "FLOR1" 63.57′ R+	335+83.47 "FL4" 4.00′ L+	10.00′	61°32′10.31"	5.95′	10.74′
7	102+62.14 "FLOR1" 67.93′ R+	102+87.82 "FLOR1" 50.07′ R+	38.00′	43°02′43.10"	14.99′	28.55′
8	101+86.53 "FLOR1" 56.37′ L+	337+18.83 "FL1" 24.00′ R+	48.00′	61°47′55.41"	28.73′	51.78′

CONSTRUCTION DETAILS

SCALE: 1" = 20′

C-18

STATE OF CALIFORNIA - DEPARTMENT OF TRANSPORTATION
Caltrans® OFFICE OF DESIGN A

FUNCTIONAL SUPERVISOR: NGIM NANCY PE
CALCULATED-DESIGNED BY: STEVEN TRIEU
CHECKED BY: WILL CARPIO
REVISED BY / DATE REVISED

LAST REVISION 00-00-00 | DATE PLOTTED => 26-JUN-2013 | TIME PLOTTED => 16:28

Dist	COUNTY	ROUTE	POST MILES TOTAL PROJECT	SHEET No.	TOTAL SHEETS
07	LA	5	0.0/7.6	56	985

REGISTERED CIVIL ENGINEER 10-11-12 DATE

6-24-13
PLANS APPROVAL DATE

REGISTERED PROFESSIONAL ENGINEER NGIM NANCY PE No. 58161 Exp. 6-30-14 CIVIL STATE OF CALIFORNIA

THE STATE OF CALIFORNIA OR ITS OFFICERS OR AGENTS SHALL NOT BE RESPONSIBLE FOR THE ACCURACY OR COMPLETENESS OF SCANNED COPIES OF THIS PLAN SHEET.

LEGEND:

COLD PLANE
OVERLAY 0.17'-0.5' HMA (TYPE A), STRUCTURAL SECTION 9

CURVE DATA

No. ⊕	R	Δ	T	L
A	15.78′	63°35′49"	9.78′	17.51′
B	25.78′	63°06′39"	15.83′	28.39′
C	3.00′	122°00′47"	5.41′	6.39′
D	3.00′	138°32′23"	7.93′	7.25′
E	50.00′	54°38′19"	25.83′	47.68′
F	100.00′	05°00′27"	4.37′	8.74′
G	100.00′	38°29′18"	34.91′	67.17′
H	100.00′	23°31′05"	20.82′	41.05′
I	108.00′	23°16′01"	22.23′	43.86′
J	92.00′	38°29′18"	32.12′	61.80′
K	108.00′	05°00′27"	4.72′	9.44′
L	58.00′	19°20′22"	9.88′	19.58′
M	10.00′	99°19′31"	11.78′	17.34′
N	41.00′	29°51′01"	10.93′	21.36′

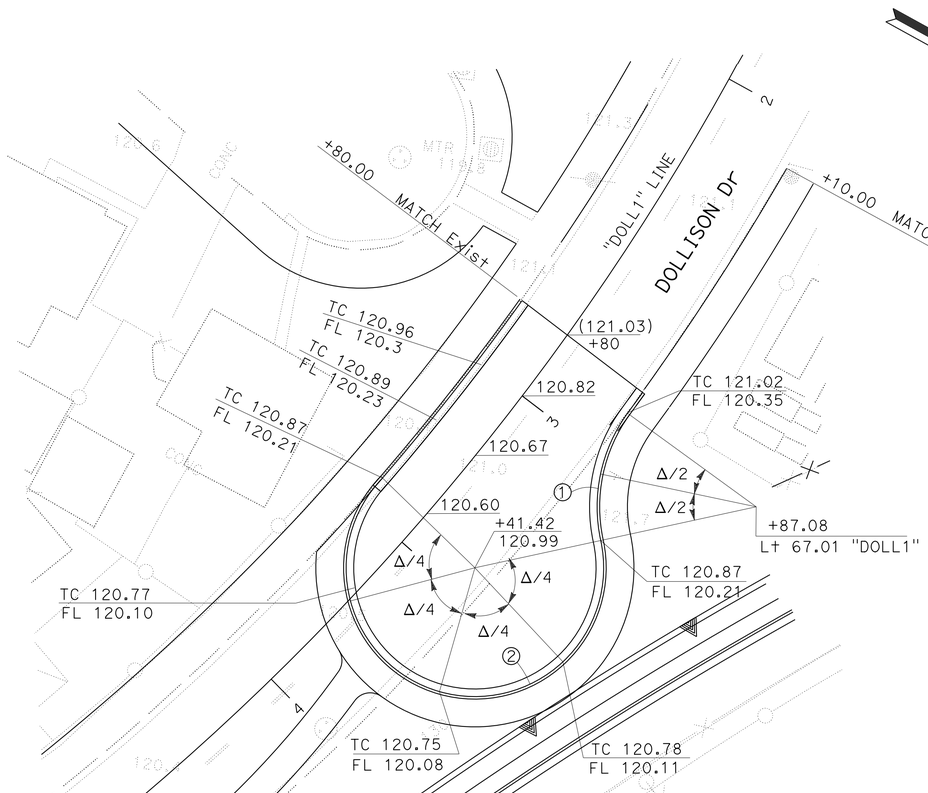

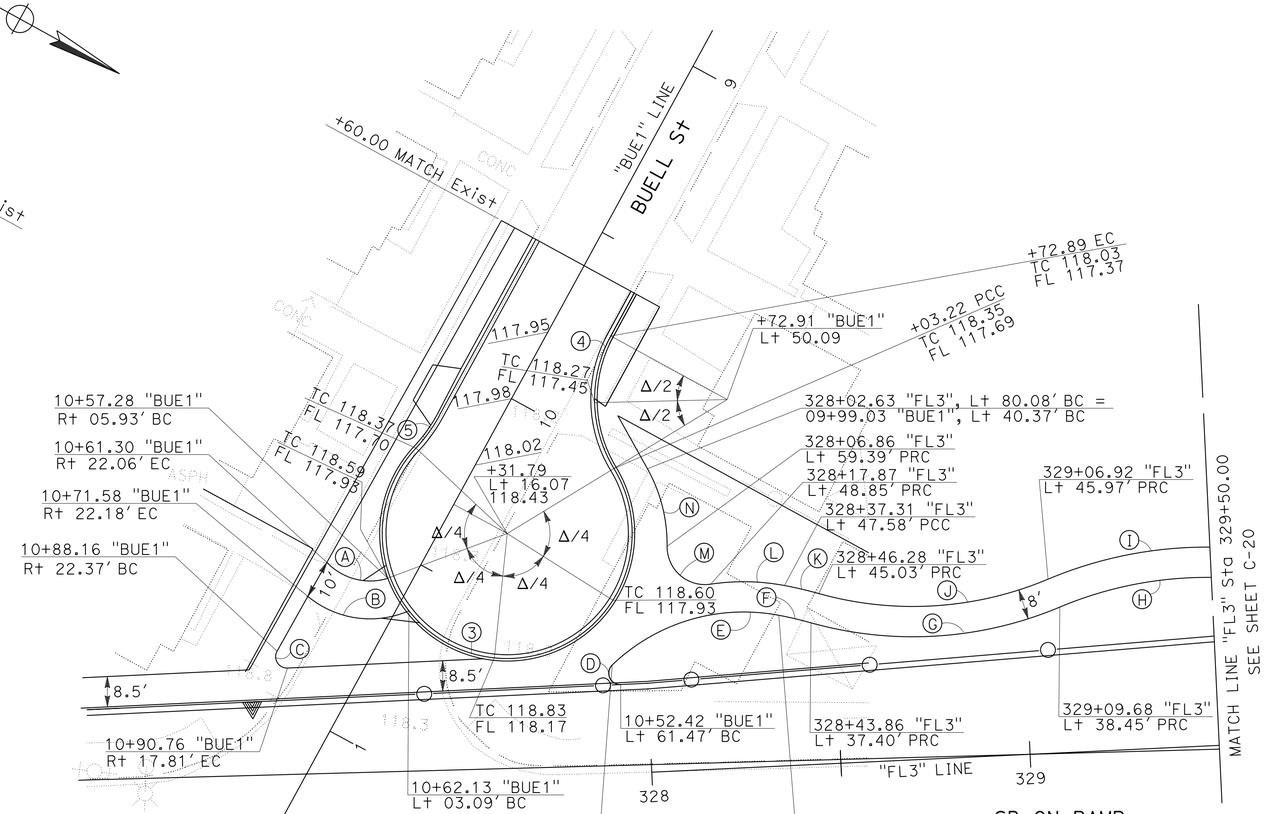

CURVE DATA

No. ⊕	R	Δ	T	L
1	42.00′	48°15′13"	18.81′	35.37′
2	34.00′	236°24′38"	63.40′	140.29′
3	33.00′	254°28′38"	43.42′	146.57′
4	35.00′	59°59′07"	20.20′	36.64′
5	42.00′	14°19′52"	5.28′	10.51′

CONSTRUCTION DETAILS

SCALE: 1" = 20′

C-19

STATE OF CALIFORNIA - DEPARTMENT OF TRANSPORTATION
Caltrans® OFFICE OF DESIGN A

FUNCTIONAL SUPERVISOR: NGIM NANCY PE
CALCULATED-DESIGNED BY: KEVIN Q. NGUYEN
CHECKED BY: WILL CARPIO
REVISED BY
DATE REVISED

LAST REVISION 00-00-00
DATE PLOTTED => 27-JUN-2013
TIME PLOTTED => 09:12

Dist	COUNTY	ROUTE	POST MILES TOTAL PROJECT	SHEET No.	TOTAL SHEETS
07	LA	5	0.0/7.6	57	985

REGISTERED CIVIL ENGINEER 10-11-12 DATE

6-24-13
PLANS APPROVAL DATE

REGISTERED PROFESSIONAL ENGINEER NGIM NANCY PE No. 58161 Exp. 6-30-14 CIVIL STATE OF CALIFORNIA

THE STATE OF CALIFORNIA OR ITS OFFICERS OR AGENTS SHALL NOT BE RESPONSIBLE FOR THE ACCURACY OR COMPLETENESS OF SCANNED COPIES OF THIS PLAN SHEET.

CURVE DATA

No. ⊕	R	Δ	T	L
H	100.00′	27°21′26"	24.34′	47.75′
I	108.00′	17°21′01"	16.48′	32.70′
O	20.00′	78°52′49"	16.45′	27.53′
P	10.00′	123°25′27"	18.58′	21.54′
Q	2.00′	147°23′20"	6.84′	5.14′
R	40.00′	31°44′44"	11.37′	22.16′
S	50.00′	38°04′46"	17.26′	33.23′
T	5.00′	96°52′38"	5.64′	8.45′
U	82.58′	29°07′00"	21.45′	41.97′
V	50.00′	56°22′19"	26.79′	49.19′
W	40.00′	58°34′23"	22.43′	40.89′

CURVE DATA

No. ⊕	R	Δ	T	L
X	30.51′	95°32′17"	33.61′	50.87′
Y	74.58′	37°23′41"	25.24′	48.68′
Z	32.00′	99°00′43"	37.48′	55.30′
AA	12.50′	88°37′03"	12.20′	19.33′
BB	2.00′	153°13′21"	8.40′	5.35′
CC	23.32′	121°55′11"	42.01′	49.63′
DD	16.35′	90°47′16"	16.57′	25.90′
EE	20.00′	21°43′25"	3.84′	7.58′
FF	42.00′	36°05′27"	13.68′	26.46′
GG	5.00′	83°53′35"	4.49′	7.32′
HH	30.07′	22°22′20"	5.95′	11.74′
II	174.21′	15°46′36"	24.14′	47.97′
JJ	22.00′	127°11′10"	44.31′	48.84′
KK	182.21′	16°07′52"	25.82′	51.30′

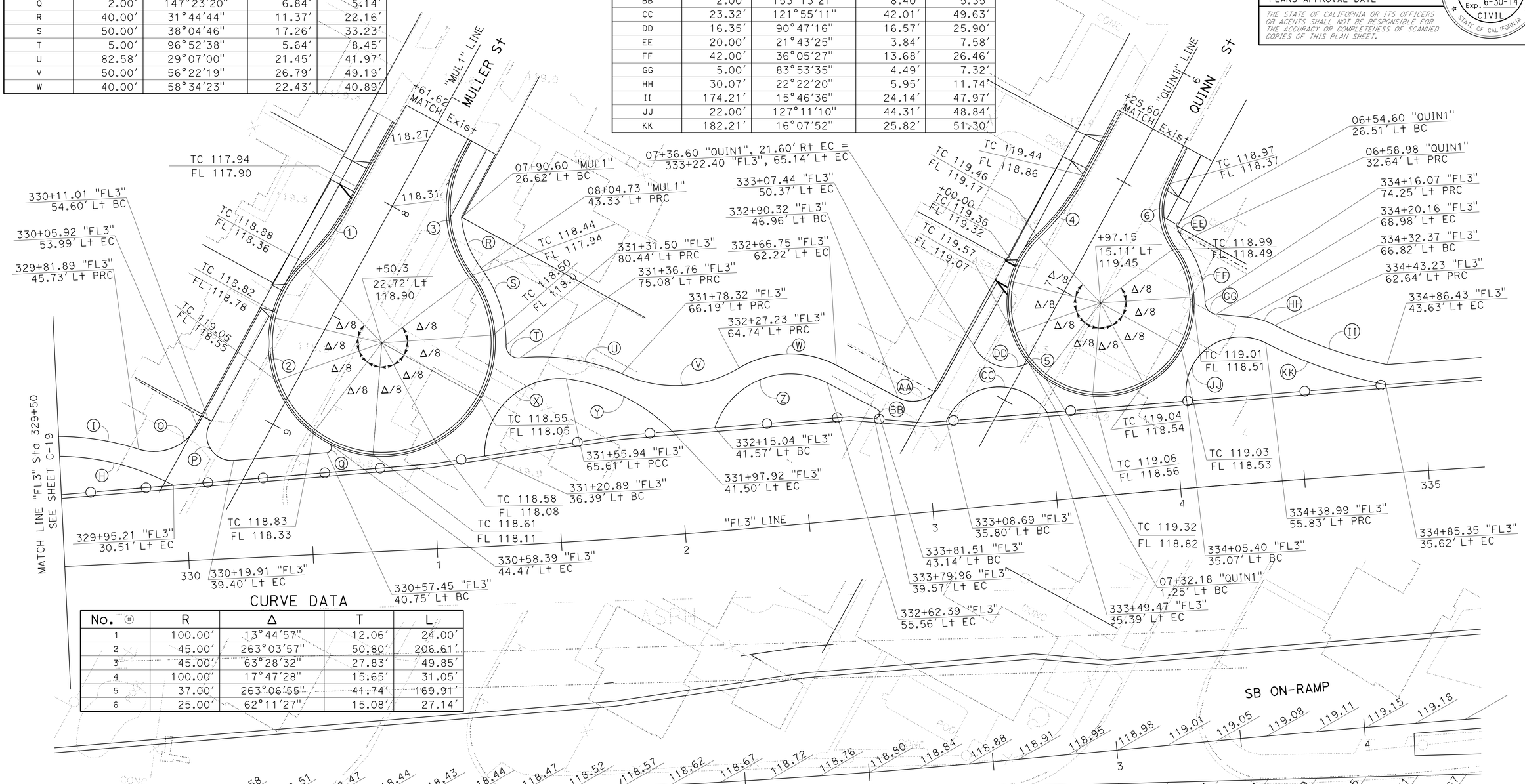

CURVE DATA

No. ⊕	R	Δ	T	L
1	100.00′	13°44′57"	12.06′	24.00′
2	45.00′	263°03′57"	50.80′	206.61′
3	45.00′	63°28′32"	27.83′	49.85′
4	100.00′	17°47′28"	15.65′	31.05′
5	37.00′	263°06′55"	41.74′	169.91′
6	25.00′	62°11′27"	15.08′	27.14′

CONSTRUCTION DETAILS

SCALE: 1" = 20′

C-20

STATE OF CALIFORNIA - DEPARTMENT OF TRANSPORTATION
Caltrans® OFFICE OF DESIGN A

FUNCTIONAL SUPERVISOR: NGIM NANCY PE
CALCULATED-DESIGNED BY: ANDREW LY
CHECKED BY: KEVIN Q. NGUYEN
REVISED BY
DATE REVISED

LAST REVISION 00-00-00
DATE PLOTTED => 27-JUN-2013
TIME PLOTTED => 09:12

Dist	COUNTY	ROUTE	POST MILES TOTAL PROJECT	SHEET No.	TOTAL SHEETS
07	LA	5	0.0/7.6	58	985

REGISTERED CIVIL ENGINEER DATE 10-11-12

6-24-13
PLANS APPROVAL DATE

REGISTERED PROFESSIONAL ENGINEER NGIM NANCY PE No. 58161 Exp. 6-30-14 CIVIL STATE OF CALIFORNIA

THE STATE OF CALIFORNIA OR ITS OFFICERS OR AGENTS SHALL NOT BE RESPONSIBLE FOR THE ACCURACY OR COMPLETENESS OF SCANNED COPIES OF THIS PLAN SHEET.

LEGEND:

COLD PLANE OVERLAY 0.16'-0.5' HMA (TYPE A)

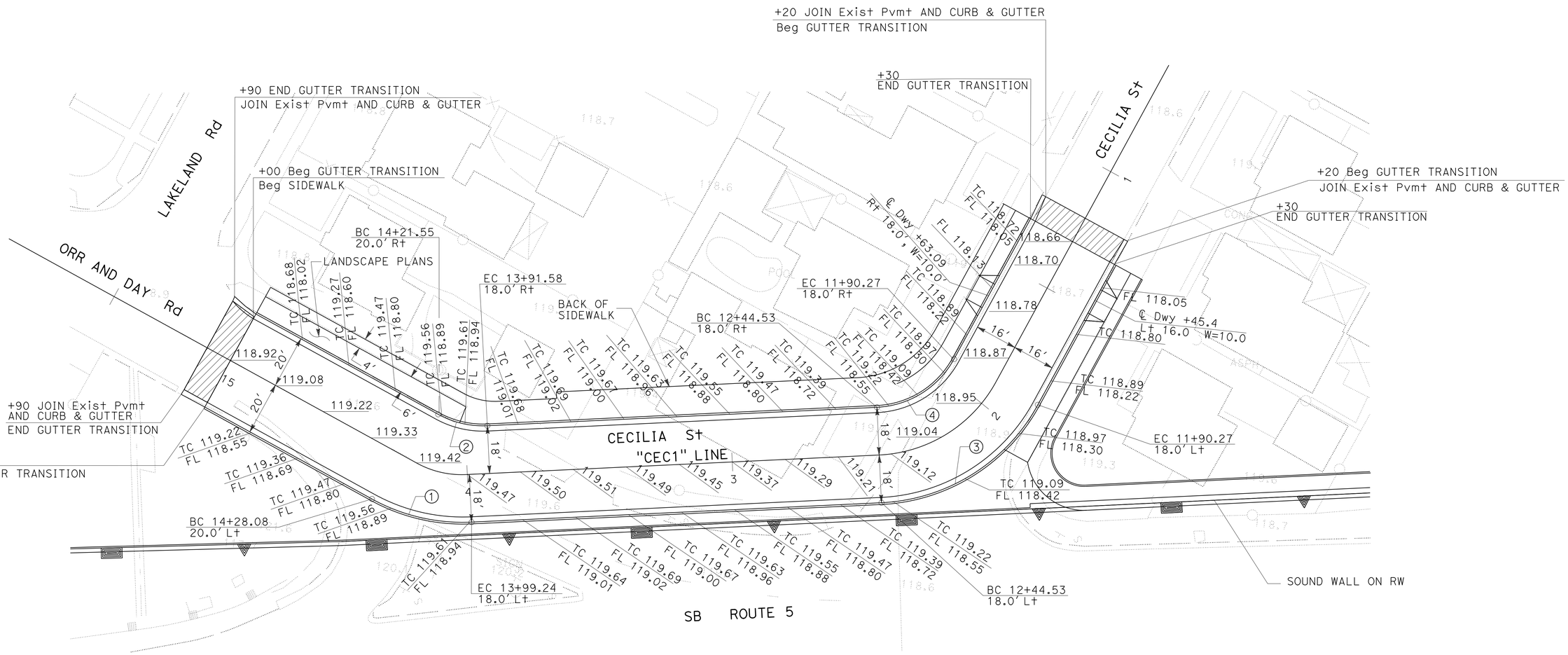

CURVE DATA

No. ⓝ	R	Δ	T	L
1	71.00'	31°30'41"	20.03'	39.05'
2	35.00'	31°30'41"	9.87'	19.25'
3	71.00'	58°39'33"	39.89'	72.69'
4	35.00'	58°39'33"	19.66'	35.83'

CONSTRUCTION DETAILS

SCALE: 1" = 20'

C-21

STATE OF CALIFORNIA - DEPARTMENT OF TRANSPORTATION
Caltrans® OFFICE OF DESIGN A

FUNCTIONAL SUPERVISOR: NGIM NANCY PE
CALCULATED-DESIGNED BY: KEVIN Q. NGUYEN
CHECKED BY: WILL CARPIO
REVISED BY
DATE REVISED

LAST REVISION 00-00-00
DATE PLOTTED => 27-JUN-2013
TIME PLOTTED => 09:23

Dist	COUNTY	ROUTE	POST MILES TOTAL PROJECT	SHEET No.	TOTAL SHEETS
07	LA	5	0.0/7.6	59	985

REGISTERED CIVIL ENGINEER 10-11-12 DATE

6-24-13
PLANS APPROVAL DATE

REGISTERED PROFESSIONAL ENGINEER
NGIM
NANCY PE
No. 58161
Exp. 6-30-14
CIVIL
STATE OF CALIFORNIA

THE STATE OF CALIFORNIA OR ITS OFFICERS OR AGENTS SHALL NOT BE RESPONSIBLE FOR THE ACCURACY OR COMPLETENESS OF SCANNED COPIES OF THIS PLAN SHEET.

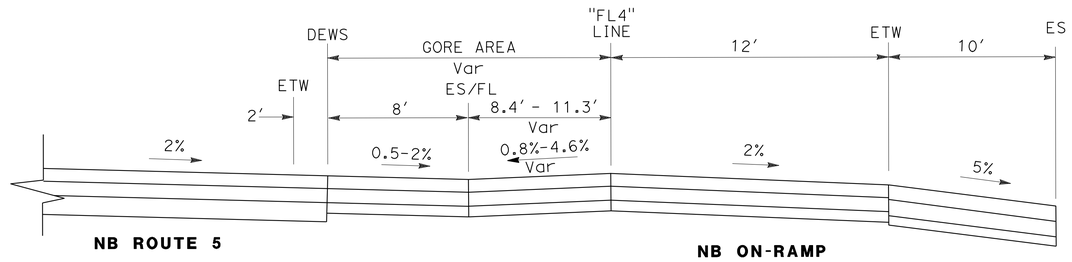

TYPICAL CROSS SECTION
Sta 325+00 to 326+80
NO SCALE

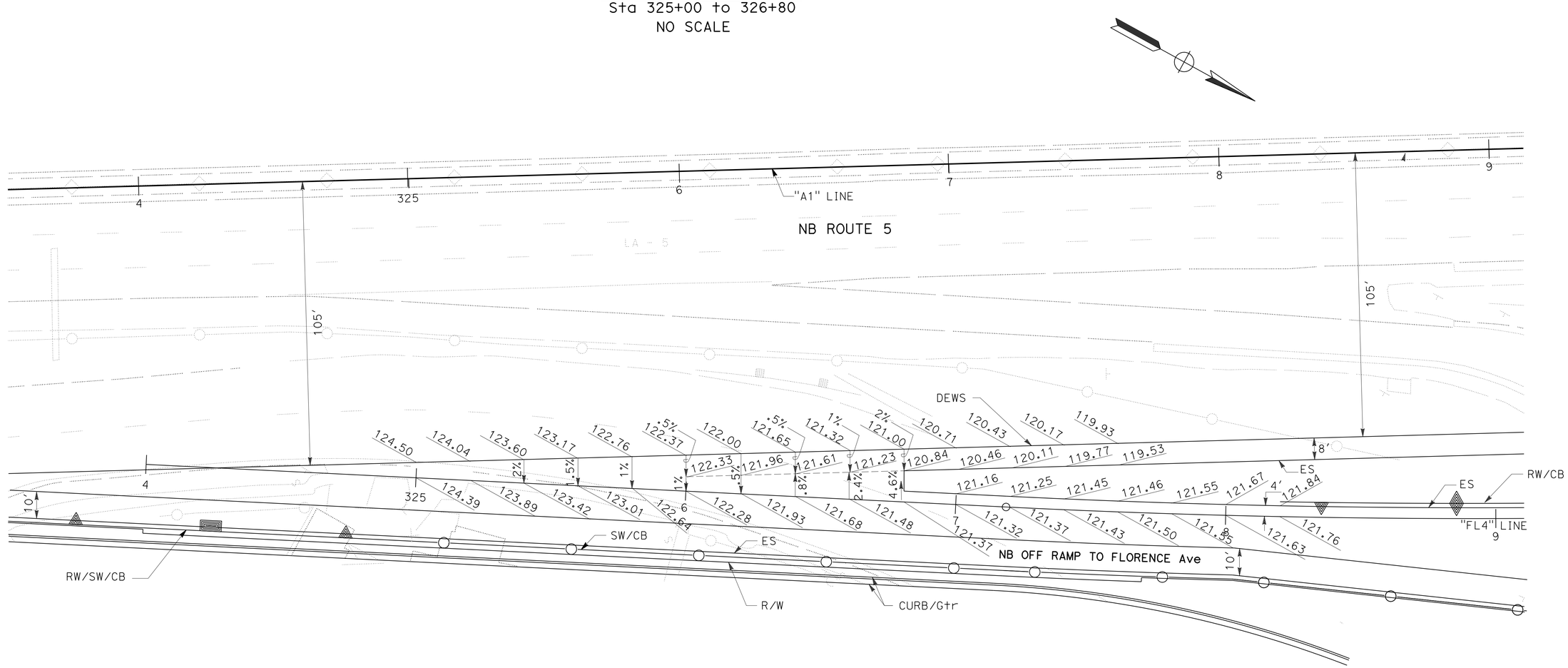

CONSTRUCTION DETAILS

SCALE: 1" = 20'

C-22

STATE OF CALIFORNIA - DEPARTMENT OF TRANSPORTATION
Caltrans® OFFICE OF DESIGN A

FUNCTIONAL SUPERVISOR: NGIM NANCY PE
CALCULATED-DESIGNED BY: KEVIN Q. NGUYEN
CHECKED BY: WILL CARPIO
REVISED BY
DATE REVISED

LAST REVISION 00-00-00
DATE PLOTTED => 26-JUN-2013
TIME PLOTTED => 16:29

Dist	COUNTY	ROUTE	POST MILES TOTAL PROJECT	SHEET No.	TOTAL SHEETS
07	LA	5	0.0/7.6	60	985

REGISTERED CIVIL ENGINEER 10-11-12 DATE

6-24-13
PLANS APPROVAL DATE

REGISTERED PROFESSIONAL ENGINEER NGIM NANCY PE No. 58161 Exp. 6-30-14 CIVIL STATE OF CALIFORNIA

THE STATE OF CALIFORNIA OR ITS OFFICERS OR AGENTS SHALL NOT BE RESPONSIBLE FOR THE ACCURACY OR COMPLETENESS OF SCANNED COPIES OF THIS PLAN SHEET.

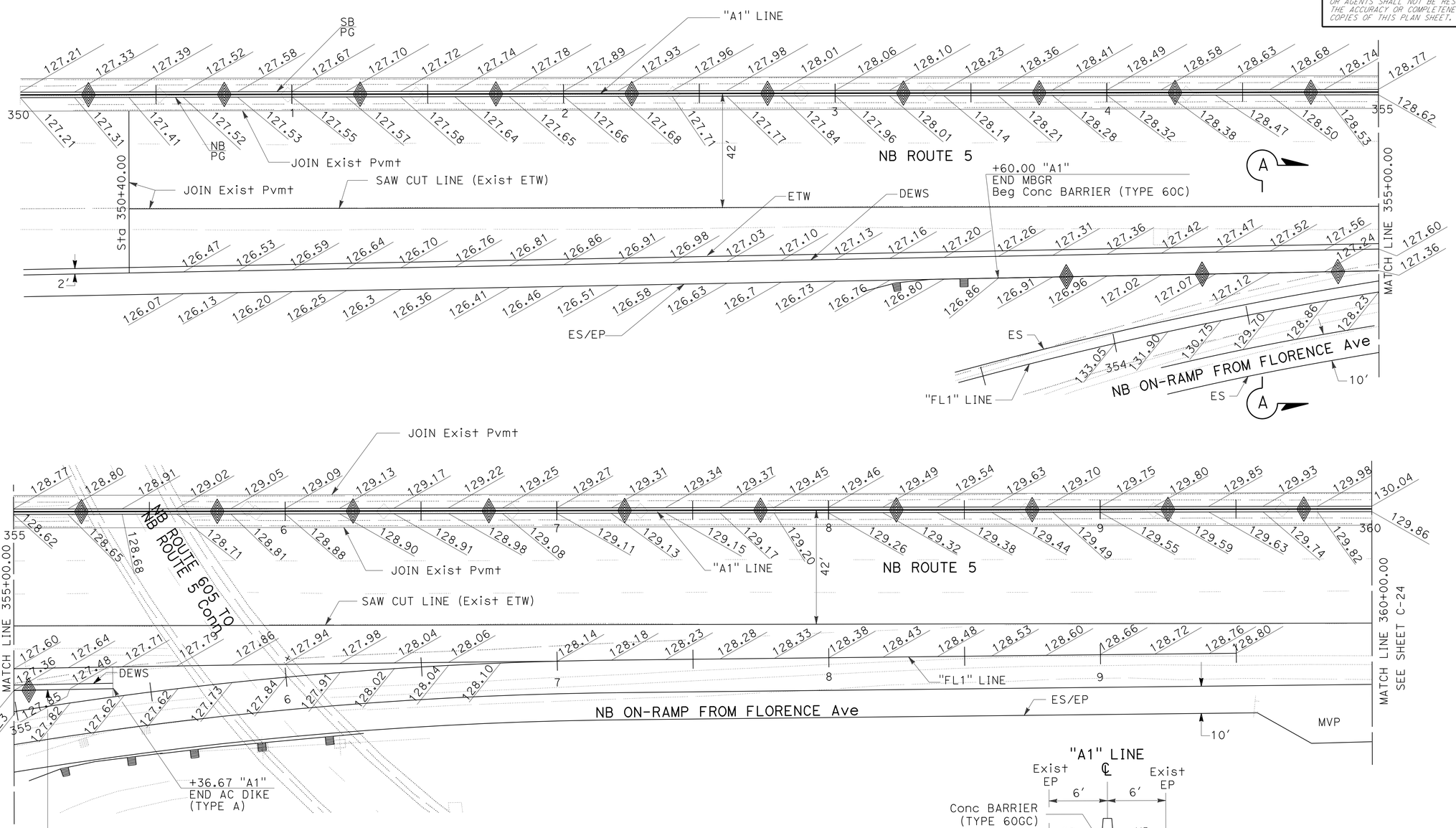

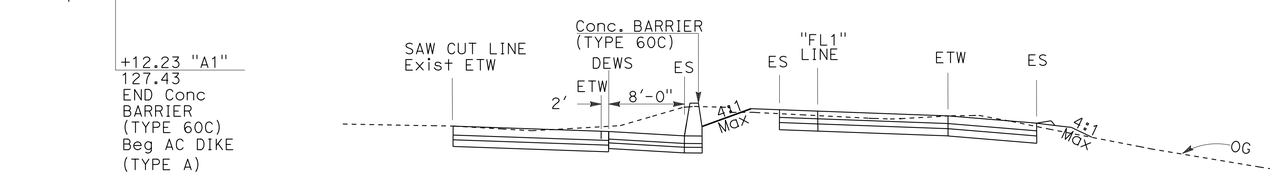

SECTION A-A
NO SCALE

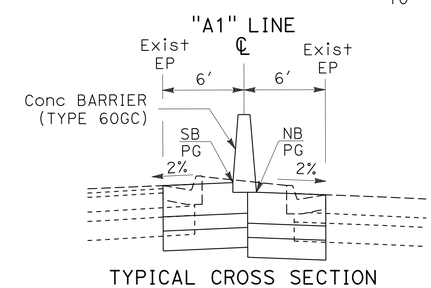

TYPICAL CROSS SECTION
NO SCALE

CONSTRUCTION DETAILS

SCALE: 1" = 20'

C-23

STATE OF CALIFORNIA - DEPARTMENT OF TRANSPORTATION
Caltrans® OFFICE OF DESIGN A

FUNCTIONAL SUPERVISOR: NGIM NANCY PE
CALCULATED-DESIGNED BY: KEVIN Q. NGUYEN
CHECKED BY: WILL CARPIO
REVISED BY
DATE REVISED

LAST REVISION 00-00-00
DATE PLOTTED => 26-JUN-2013
TIME PLOTTED => 16:29

Dist	COUNTY	ROUTE	POST MILES TOTAL PROJECT	SHEET No.	TOTAL SHEETS
07	LA	5	0.0/7.6	61	985

REGISTERED CIVIL ENGINEER DATE 10-11-12

PLANS APPROVAL DATE 6-24-13

REGISTERED PROFESSIONAL ENGINEER NGIM NANCY PE No. 58161 Exp. 6-30-14 CIVIL STATE OF CALIFORNIA

THE STATE OF CALIFORNIA OR ITS OFFICERS OR AGENTS SHALL NOT BE RESPONSIBLE FOR THE ACCURACY OR COMPLETENESS OF SCANNED COPIES OF THIS PLAN SHEET.

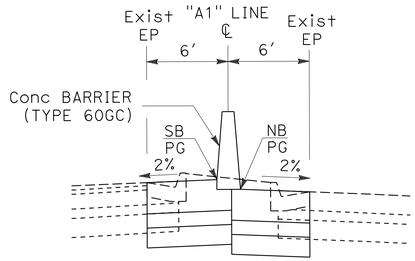

TYPICAL CROSS SECTION
NO SCALE

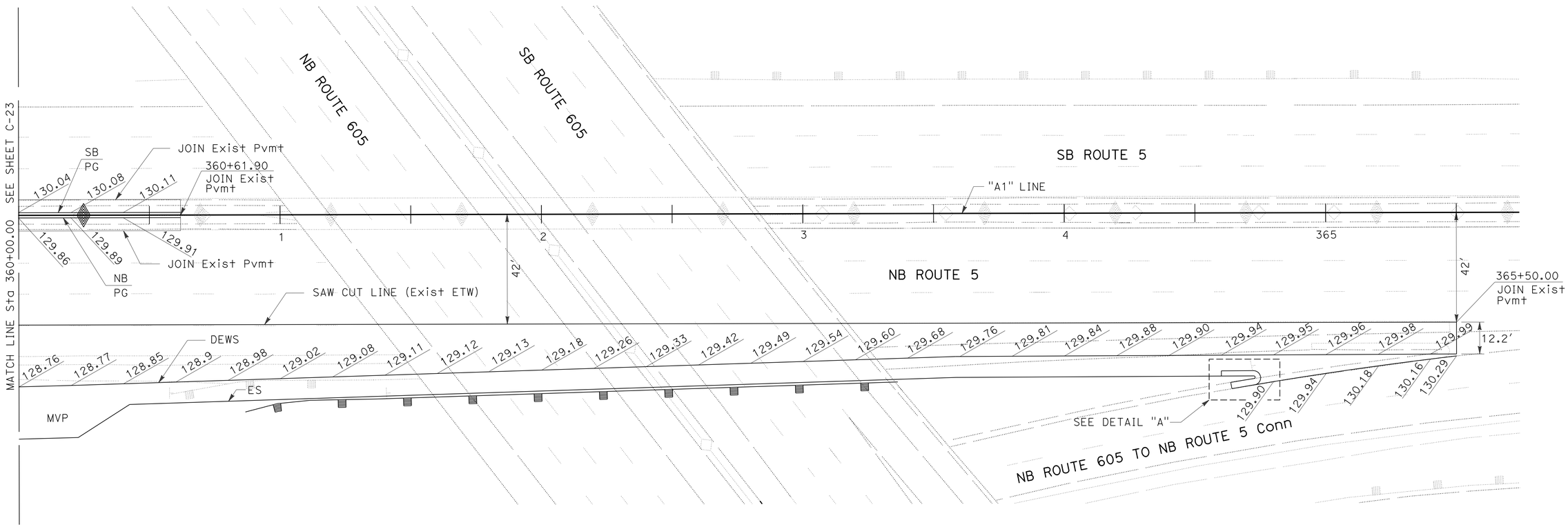

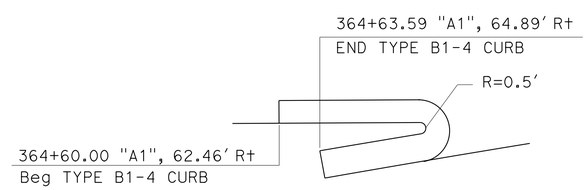

DETAIL "A"
NO SCALE

CONSTRUCTION DETAILS

SCALE: 1" = 20′

C-24

STATE OF CALIFORNIA - DEPARTMENT OF TRANSPORTATION
Caltrans® OFFICE OF DESIGN A

FUNCTIONAL SUPERVISOR: NGIM NANCY PE
CALCULATED-DESIGNED BY: KEVIN Q. NGUYEN
CHECKED BY: WILL CARPIO
REVISED BY
DATE REVISED

LAST REVISION 00-00-00
DATE PLOTTED => 26-JUN-2013
TIME PLOTTED => 16:29

Dist	COUNTY	ROUTE	POST MILES TOTAL PROJECT	SHEET No.	TOTAL SHEETS
07	LA	5	0.0/7.6	62	985

REGISTERED CIVIL ENGINEER 10-11-12 DATE

6-24-13
PLANS APPROVAL DATE

REGISTERED PROFESSIONAL ENGINEER NGIM NANCY PE No. 58161 Exp. 6-30-14 CIVIL STATE OF CALIFORNIA

THE STATE OF CALIFORNIA OR ITS OFFICERS OR AGENTS SHALL NOT BE RESPONSIBLE FOR THE ACCURACY OR COMPLETENESS OF SCANNED COPIES OF THIS PLAN SHEET.

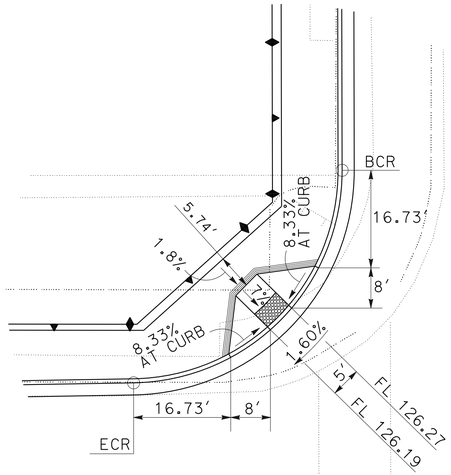

DETAIL B
CASE A

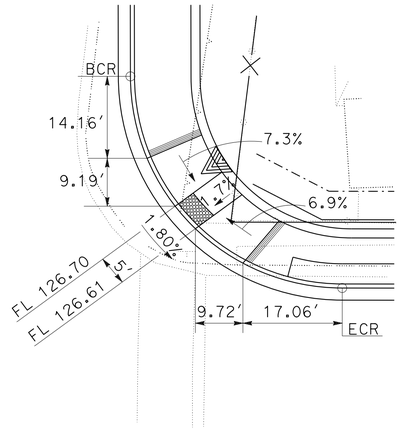

DETAIL A
CASE C

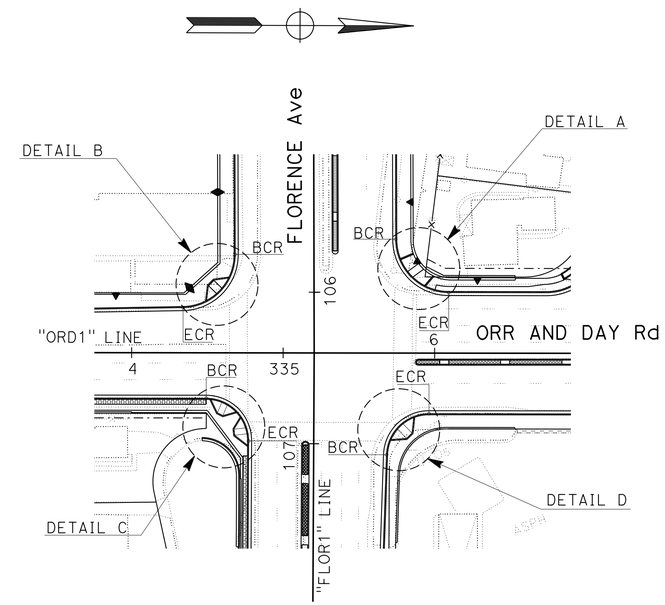

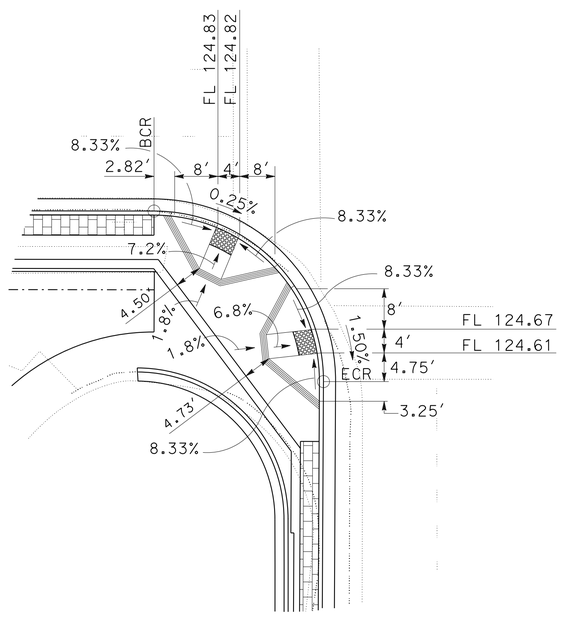

DETAIL C
CASE A

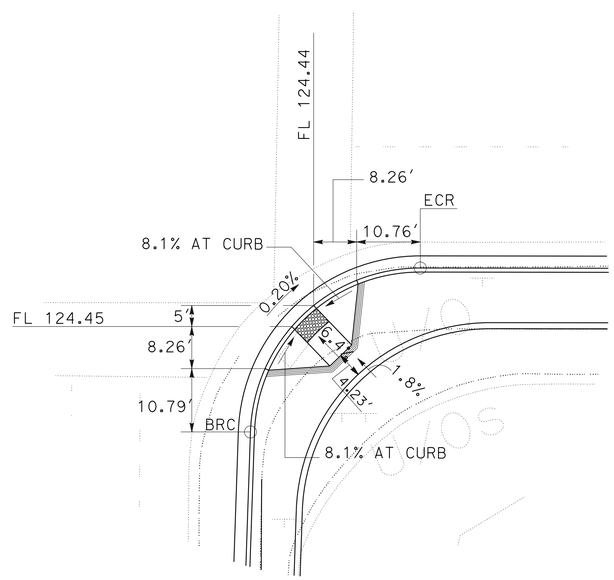

DETAIL D
CASE A

CONSTRUCTION DETAILS
NO SCALE

C-25

STATE OF CALIFORNIA - DEPARTMENT OF TRANSPORTATION
Caltrans® OFFICE OF DESIGN A

FUNCTIONAL SUPERVISOR: NGIM NANCY PE
CALCULATED-DESIGNED BY: KEVIN Q. NGUYEN
CHECKED BY: WILL CARPIO
REVISED BY
DATE REVISED

LAST REVISION 00-00-00
DATE PLOTTED => 26-JUN-2013
TIME PLOTTED => 16:29

Dist	COUNTY	ROUTE	POST MILES TOTAL PROJECT	SHEET No.	TOTAL SHEETS
07	LA	5	0.0/7.6	63	985

REGISTERED CIVIL ENGINEER 10-11-12 DATE

6-24-13
PLANS APPROVAL DATE

REGISTERED PROFESSIONAL ENGINEER NGIM NANCY PE No. 58161 Exp. 6-30-14 CIVIL STATE OF CALIFORNIA

THE STATE OF CALIFORNIA OR ITS OFFICERS OR AGENTS SHALL NOT BE RESPONSIBLE FOR THE ACCURACY OR COMPLETENESS OF SCANNED COPIES OF THIS PLAN SHEET.

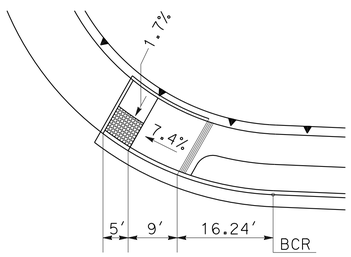

DETAIL A
CASE C Mod

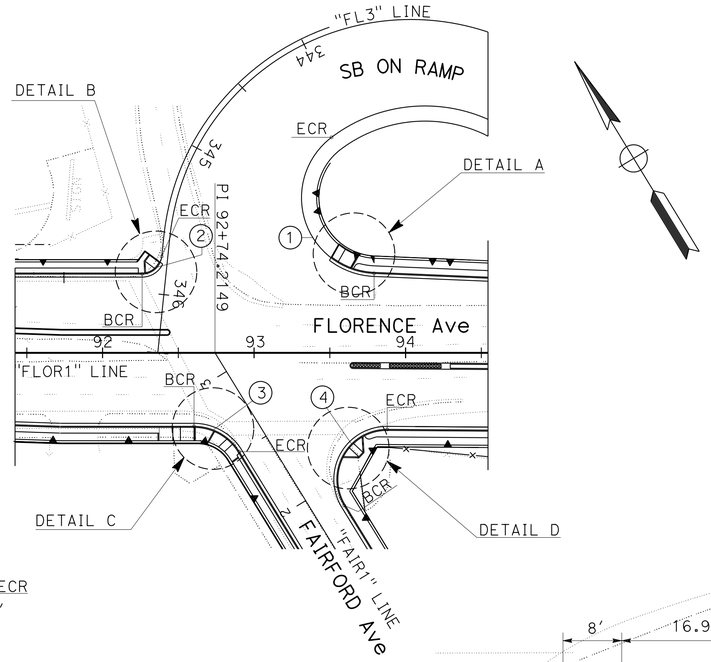

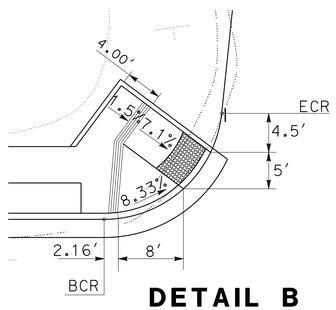

DETAIL B
CASE G Mod

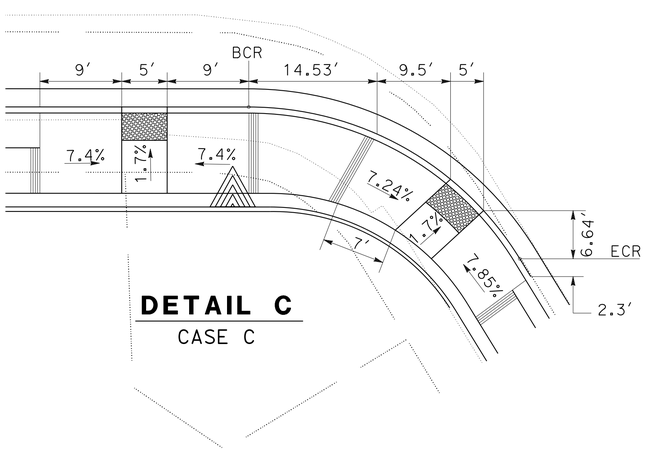

DETAIL C
CASE C

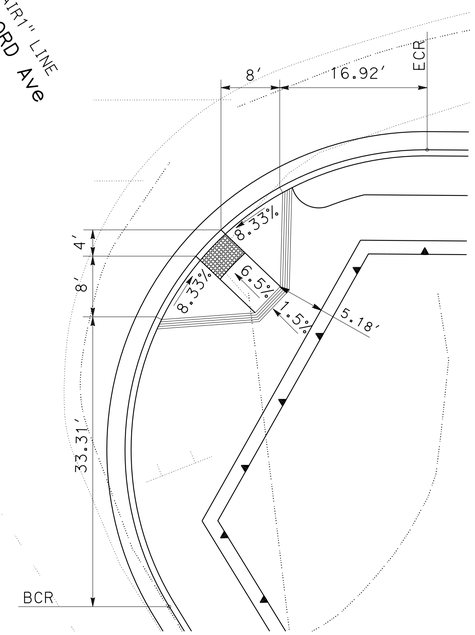

DETAIL D
CASE A

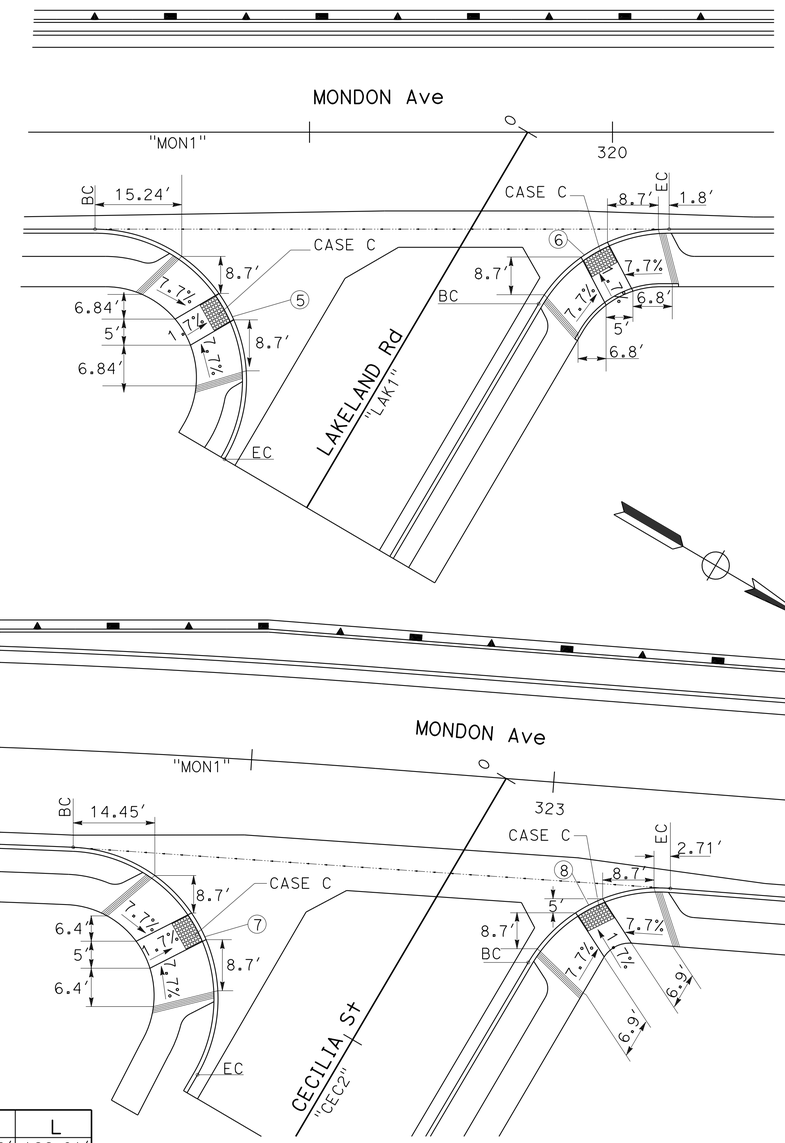

CURVE DATA

No. ⊕	BCR	ECR	R	Δ	T	L
1	93+79.21 "FLOR1" 52.42' L†	344+17.70 "FL3" 62.48' L†	50.00'	140°29'55.09"	139.26'	122.61'
2	92+26.12 "FLOR1" 52.00' L†	345+75.05 "FL3" 4.00' R†	13.00'	84°02'52.48"	11.72'	19.07'
3	92+60.35 "FLOR1" 48.51' R†	2+50.51 "FAIR1" 20.51' L†	35.00'	58°26'59.09"	19.58'	35.70'
4	1+83.94 "FAIR1" 20.00' R†	93+87.87 "FLOR1" 50.51' R†	33.00'	121°56'47.05"	59.47'	70.24'
5	319+14.61 "MON1" 16.00' R†	0+71.89 "LAK1" 15.74' L†	25.00'	121°15'25.22"	44.42'	52.91'
6	0+23.49 "LAK1" 15.91' L†	320+09.35 "MON1" 16.00' R†	25.00'	59°30'23.89"	14.29'	25.96'
7	322+21.23 "MON1" 16.00' R†	0+67.95 "CEC2" 19.13' R†	25.00'	117°37'56.62"	41.31'	51.33'
8	0+24.32 "CEC2" 18.53' L†	323+20.54 "MON1" 16.00' R†	25.00'	63°51'34.66"	15.58'	27.86'

CONSTRUCTION DETAILS
NO SCALE

C-26

STATE OF CALIFORNIA - DEPARTMENT OF TRANSPORTATION
Caltrans® OFFICE OF DESIGN A

FUNCTIONAL SUPERVISOR: NGIM NANCY PE
CALCULATED-DESIGNED BY: KEVIN Q. NGUYEN
CHECKED BY: WILL CARPIO
REVISED BY
DATE REVISED

LAST REVISION 00-00-00
DATE PLOTTED => 26-JUN-2013
TIME PLOTTED => 16:29

Dist	COUNTY	ROUTE	POST MILES TOTAL PROJECT	SHEET No.	TOTAL SHEETS
07	LA	5	0.0/7.6	64	985

REGISTERED CIVIL ENGINEER 10-11-12 DATE

6-24-13
PLANS APPROVAL DATE

REGISTERED PROFESSIONAL ENGINEER NGIM NANCY PE No. 58161 Exp. 6-30-2014 CIVIL STATE OF CALIFORNIA

THE STATE OF CALIFORNIA OR ITS OFFICERS OR AGENTS SHALL NOT BE RESPONSIBLE FOR THE ACCURACY OR COMPLETENESS OF SCANNED COPIES OF THIS PLAN SHEET.

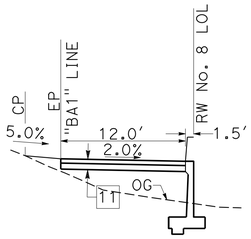

TYPICAL
CROSS-SECTION
Sta 7+30.00 TO 8+60.00 "BA1"
NO SCALE

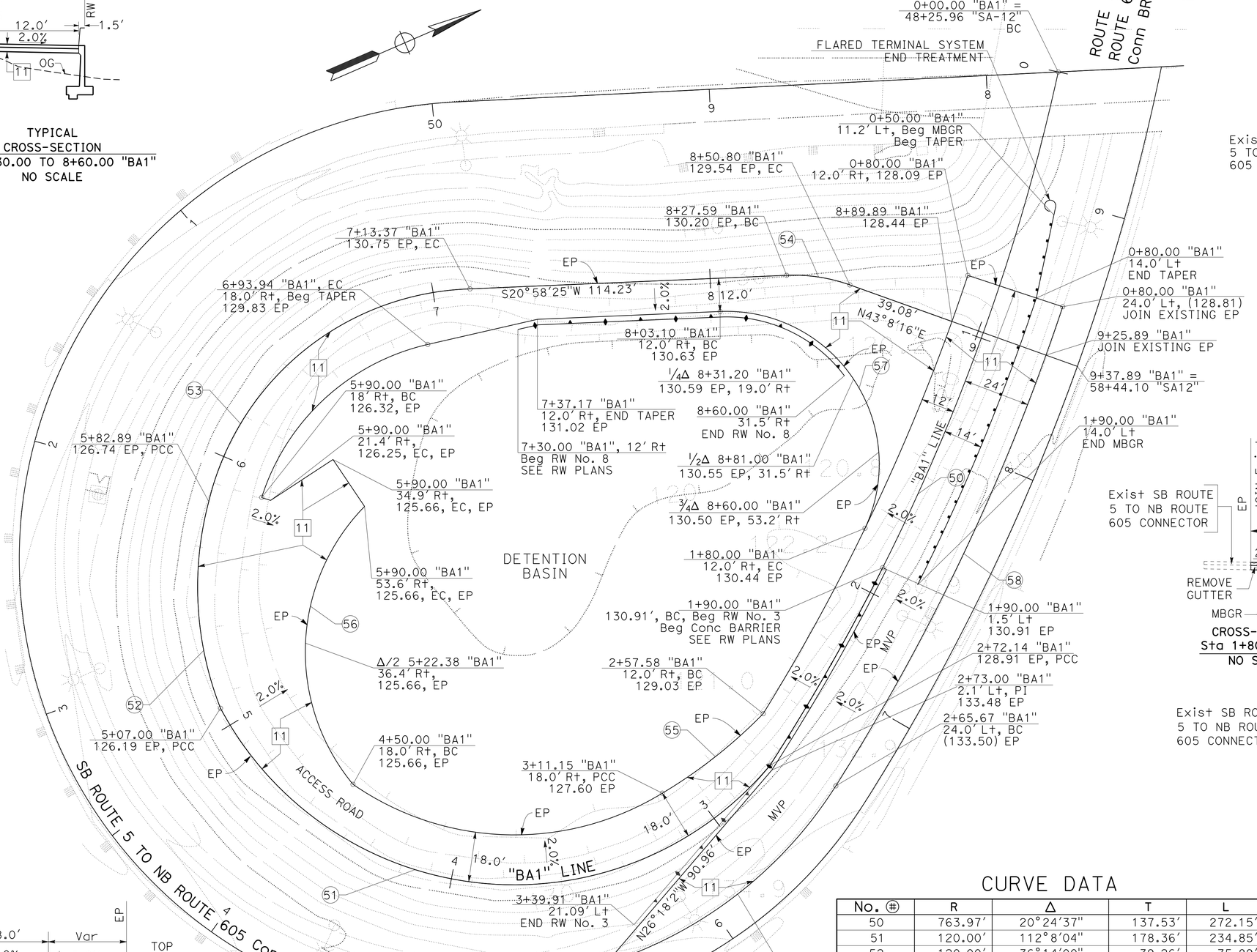

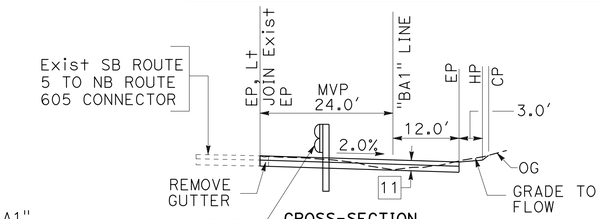

CROSS-SECTION
Sta 0+80.00 "BA1"
NO SCALE

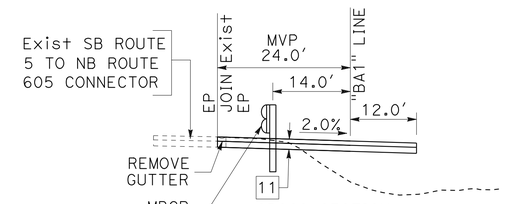

CROSS-SECTION
Sta 1+00.00 TO 1+70.00 "BA1"
NO SCALE

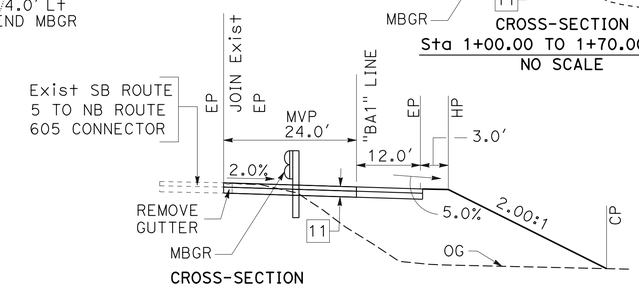

CROSS-SECTION
Sta 1+80.00 "BA1"
NO SCALE

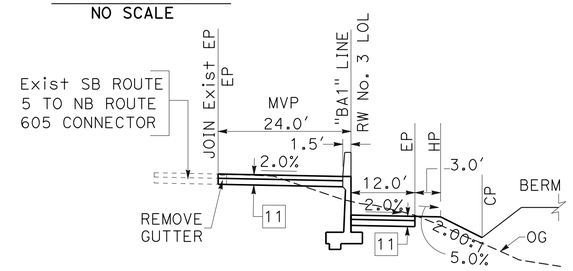

TYPICAL
CROSS-SECTION
Sta 1+90.00 TO 2+72.00 "BA1"
NO SCALE

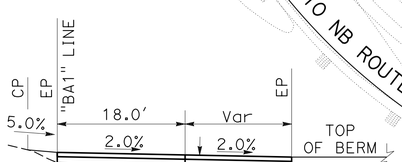

TYPICAL
CROSS-SECTION
Sta 4+50.00 TO 5+90.00 "BA1"
NO SCALE

CURVE DATA

No. (#)	R	Δ	T	L
50	763.97'	20°24'37"	137.53'	272.15'
51	120.00'	112°8'04"	178.36'	234.85'
52	120.00'	36°14'00"	39.26'	75.89'
53	100.00'	74°45'32"	76.40'	130.48'
54	60.00'	22°9'50"	11.75'	23.21'
55	178.18'	14°55'45"	23.35'	46.43'
56	75.00'	83°54'11"	67.42'	109.83'
57	55.00'	118°24'04"	92.27'	113.66'
58	787.97'	13°55'50"	96.27'	191.58'
59	153.00'	39°58'53"	55.66'	106.76'

CONSTRUCTION DETAILS

SCALE: 1" = 20'

C-27

REVISED BY | DATE REVISED
MARK MAI | NGIM NANCY PE
CALCULATED-DESIGNED BY | CHECKED BY
FUNCTIONAL SUPERVISOR | NGIM NANCY PE

STATE OF CALIFORNIA - DEPARTMENT OF TRANSPORTATION
Caltrans® OFFICE OF DESIGN A

S:\projects\215951\721595ga027.dgn

LAST REVISION 00-00-00 | DATE PLOTTED => 26-JUN-2013 | TIME PLOTTED => 16:29

BORDER LAST REVISED 7/2/2010 | USERNAME => s109858 | DGN FILE => 721595ga027.dgn | RELATIVE BORDER SCALE IS IN INCHES 0 1 2 3 | UNIT 1797 | PROJECT NUMBER & PHASE 07000018351

Dist	COUNTY	ROUTE	POST MILES TOTAL PROJECT	SHEET No.	TOTAL SHEETS
07	LA	5	0.0/7.6	65	985

REGISTERED CIVIL ENGINEER 10-11-12 DATE

6-24-13
PLANS APPROVAL DATE

REGISTERED PROFESSIONAL ENGINEER NGIM NANCY PE No. 58161 Exp. 6/30/14 CIVIL STATE OF CALIFORNIA

THE STATE OF CALIFORNIA OR ITS OFFICERS OR AGENTS SHALL NOT BE RESPONSIBLE FOR THE ACCURACY OR COMPLETENESS OF SCANNED COPIES OF THIS PLAN SHEET.

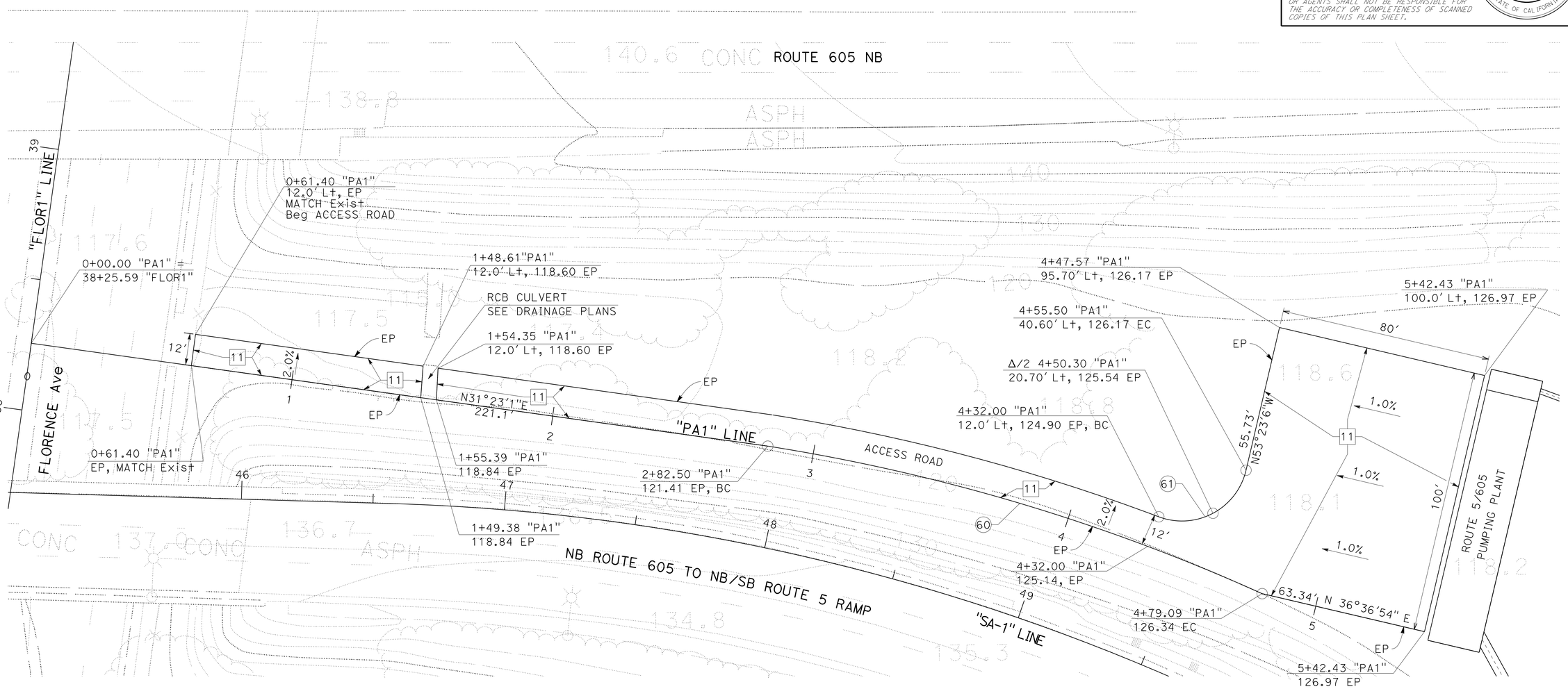

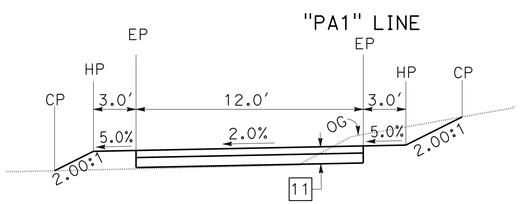

TYPICAL
CROSS-SECTION
NO SCALE

CURVE DATA

No. ⊕	R	Δ	T	L
60	734.58'	15°20'02"	98.89'	196.59'
61	25.00'	97°26'01"	28.47'	42.51'

CONSTRUCTION DETAILS

SCALE: 1" = 20'

C-28

STATE OF CALIFORNIA - DEPARTMENT OF TRANSPORTATION
Caltrans® OFFICE OF DESIGN A

FUNCTIONAL SUPERVISOR: NGIM NANCY PE
CALCULATED-DESIGNED BY: MARK MAI
CHECKED BY: NGIM NANCY PE
REVISED BY
DATE REVISED

S:\projects\21595\721595ga028.dgn

LAST REVISION 00-00-00
DATE PLOTTED => 26-JUN-2013
TIME PLOTTED => 16:29

Dist	COUNTY	ROUTE	POST MILES TOTAL PROJECT	SHEET No.	TOTAL SHEETS
07	LA	5	0.0/7.6	66	985

REGISTERED CIVIL ENGINEER 12-19-11 DATE

6-24-13
PLANS APPROVAL DATE

REGISTERED PROFESSIONAL ENGINEER
NGIM NANCY PE
No. 58161
Exp. 6-30-2014
CIVIL
STATE OF CALIFORNIA

THE STATE OF CALIFORNIA OR ITS OFFICERS OR AGENTS SHALL NOT BE RESPONSIBLE FOR THE ACCURACY OR COMPLETENESS OF SCANNED COPIES OF THIS PLAN SHEET.

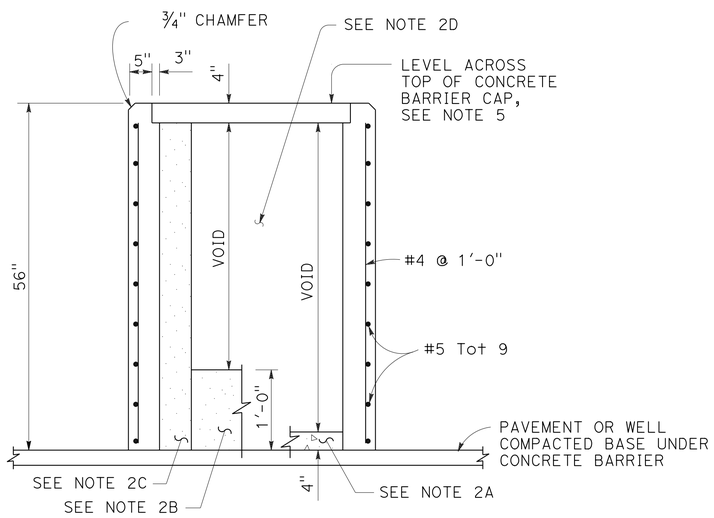

SECTION A-A

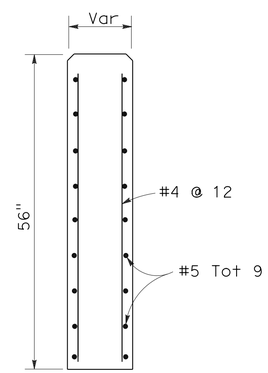

SECTION B-B

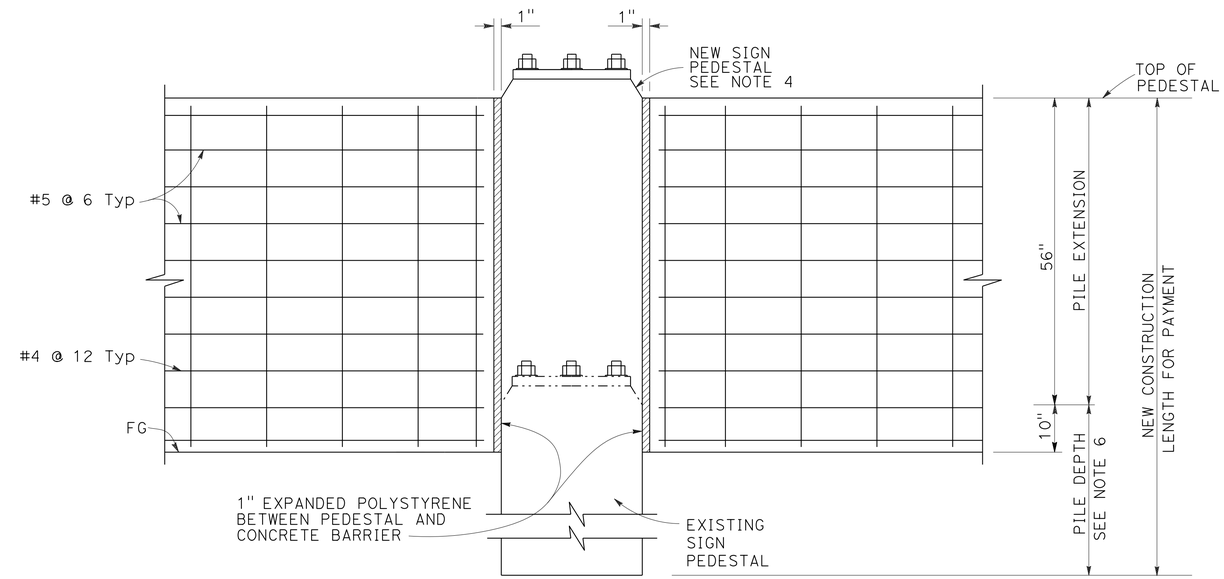

SECTION C-C

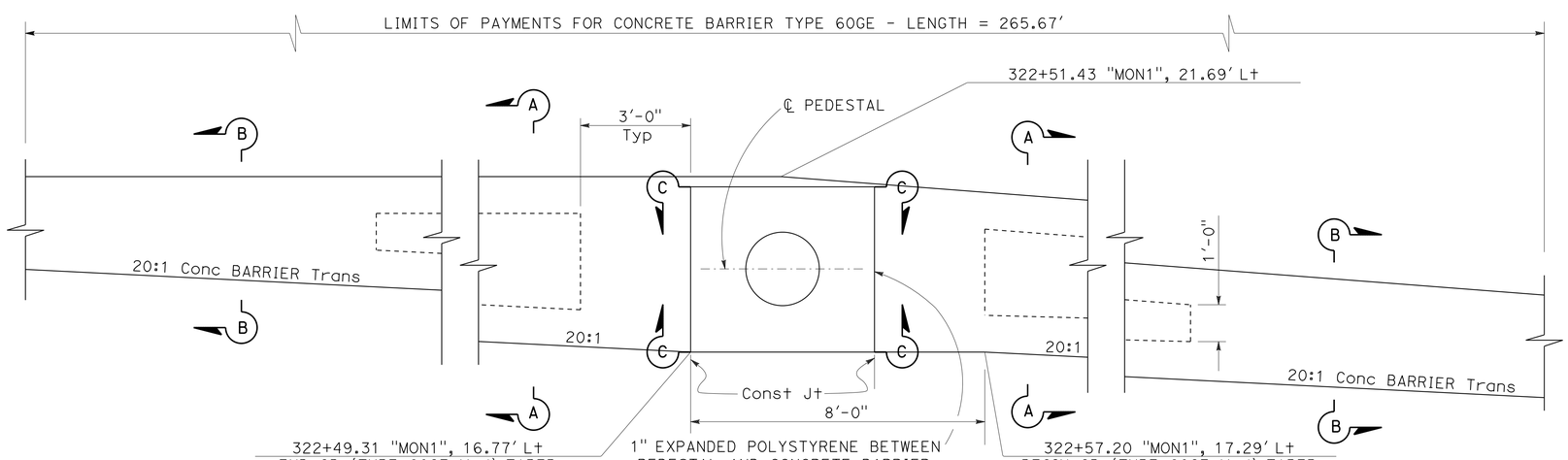

TRANSITION AT SIGN PEDESTAL

CONCRETE BARRIER TYPE 60GE Mod

NOTES:

1. SEE STANDARD PLAN A76D FOR CONCRETE BARRIER TYPE 60G.
2. CONTRACTOR OPTIONS FOR FILL BETWEEN CONCRETE BARRIER WALLS:
   A. PLACE 4" PCC AT BASE BETWEEN CONCRETE BARRIER WALLS.
   B. PLACE 1'-0" OF GRANULAR MATERIAL AT BASE BETWEEN WALLS.
   C. PLACE GRANULAR MATERIAL FROM BASE TO BOTTOM OF 4" CAP.
   D. MONOLITHIC CONCRETE WITH FOAM BLOCKOUTS IS NOT PERMITTED.
3. REINFORCING STEEL SHALL EXTEND CONTINUOUS THROUGH CONSTRUCTION JOINTS.
4. SEE "OVERHEAD SIGN" PLANS FOR SIGN PEDESTAL ELEVATIONS ON NEW CONSTRUCTION.
5. ADJUST HEIGHT OF CONCRETE BARRIER WALL ON LOW SIDE OF OFFSET OR SUPERELEVATED ROADWAYS TO PROVIDE LEVEL GRADE ACROSS TOP OF CONCRETE BARRIER CAP.
6. SEE OVERHEAD SIGNS STANDARD PLAN PILE FOUNDATION TABLES.

CONSTRUCTION DETAILS

CONCRETE BARRIER MODIFICATION AND TRANSITION AT SIGN 2C

NO SCALE

C-29

REVISED BY | DATE REVISED
MARK MAI | NGIM NANCY PE
CALCULATED-DESIGNED BY | CHECKED BY
FUNCTIONAL SUPERVISOR | NGIM NANCY PE

STATE OF CALIFORNIA - DEPARTMENT OF TRANSPORTATION
Caltrans OFFICE OF DESIGN A

S:\projects\21595\RESUBMIT-3\721595ga029.dgn

LAST REVISION 00-00-00 | DATE PLOTTED => 26-JUN-2013 | TIME PLOTTED => 16:29

Dist	COUNTY	ROUTE	POST MILES TOTAL PROJECT	SHEET No.	TOTAL SHEETS
07	LA	5	0.0/7.6	67	985

REGISTERED CIVIL ENGINEER 10-11-12 DATE

6-24-13
PLANS APPROVAL DATE

REGISTERED PROFESSIONAL ENGINEER NGIM NANCY PE No. 58161 Exp. 6-30-2014 CIVIL STATE OF CALIFORNIA

THE STATE OF CALIFORNIA OR ITS OFFICERS OR AGENTS SHALL NOT BE RESPONSIBLE FOR THE ACCURACY OR COMPLETENESS OF SCANNED COPIES OF THIS PLAN SHEET.

NOTES:

1. WEAKENED PLANE AND/OR CONTACT JOINTS SHALL BE PLACED IN CURB AND GUTTER AT LOCATIONS SHOWN ON THE TYPICAL JOINT PLAN HEREON.
2. WEAKENED PLANE JOINTS SHALL BE PLASTIC CONTROL JOINTS OR 1½" DEEP SAW CUTS. CONCRETE SAWING SHALL TAKE PLACE WITHIN 24 HOURS AFTER CONCRETE IS PLACED.
3. DOWELS FOR CONTACT JOINTS SHALL BE #4 BARS 1'-6" LONG.
4. PLACE A WEAKENED PLANE OR CONTACT JOINT WHERE LONGITUDINAL ALLEY GUTTER JOINS CONCRETE ALLEY INTERSECTION.
5. ALL EXPOSED CORNERS ON PCC GUTTERS SHALL BE ROUNDED WITH ½" RADIUS.
6. CONCRETE SHALL BE INTEGRAL WITH CURB UNLESS OTHERWISE SPECIFIED.
7. SIDEWALK OR RAMP THICKNESS "T", SHALL BE 4" MINIMUM.
8. FOR DETAILS AND NOTES NOT SHOWN, SEE STANDARD PLANS RSP A87A AND RSP A88A.

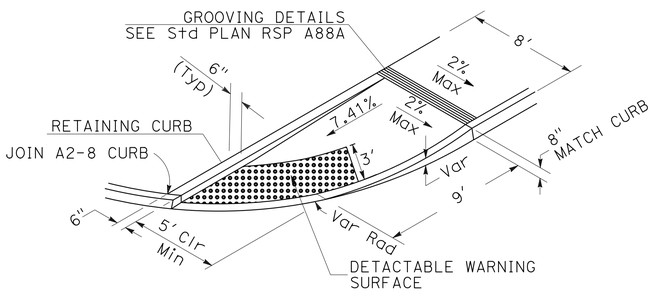

CURB RAMP (CASE CM Mod)

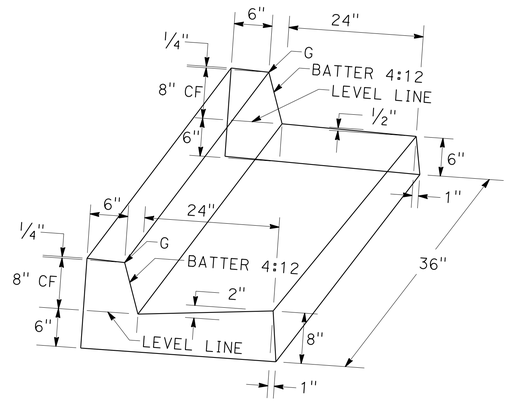

CURB TRANSITION A2-8 TO A2-8 (Mod)

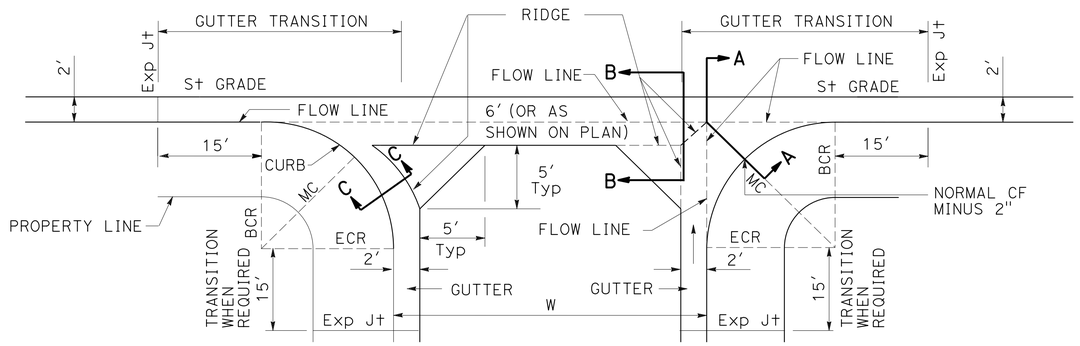

TYPICAL CROSS GUTTER PLAN

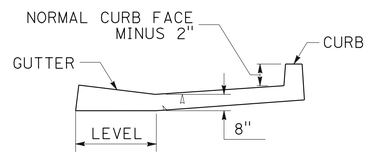

SECTION A-A

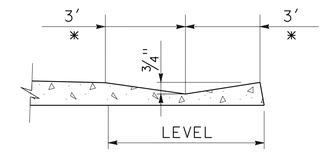

* OR AS SHOWN ON PLAN

SECTION B-B

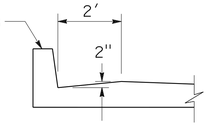

SECTION C-C

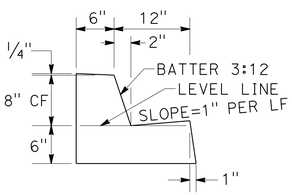

A2-8 (Mod 2) CURB

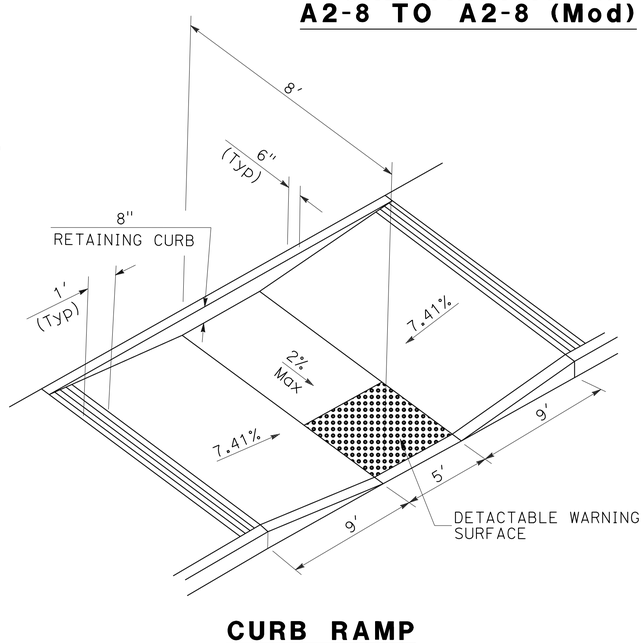

CURB RAMP CASE C (Mod)

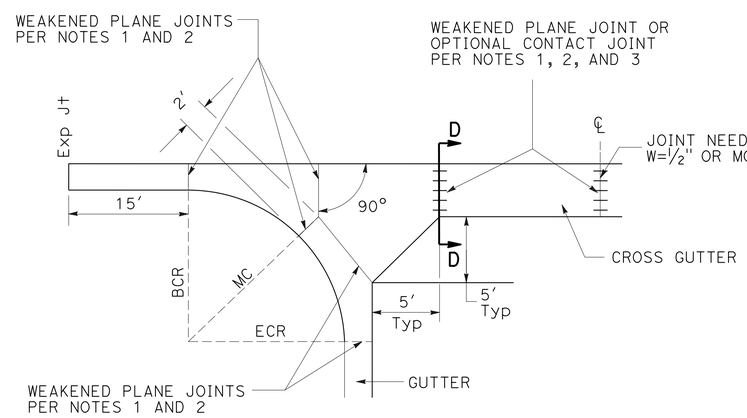

TYPICAL JOINT PLAN

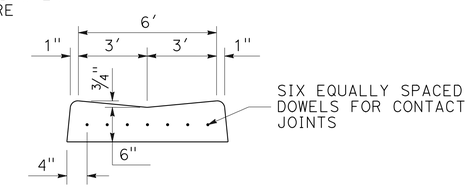

SECTION D-D

CONSTRUCTION DETAILS

CURBS, CURB RAMPS AND CROSS GUTTER

NO SCALE

C-30

REVISED BY	DATE REVISED

CALCULATED-DESIGNED BY	CHECKED BY
JANE YU	NGIM NANCY PE

FUNCTIONAL SUPERVISOR
NGIM NANCY PE

STATE OF CALIFORNIA - DEPARTMENT OF TRANSPORTATION
Caltrans OFFICE OF DESIGN A

S:\projects\215951\721595ga030.dgn

LAST REVISION 00-00-00 | DATE PLOTTED => 26-JUN-2013 | TIME PLOTTED => 16:29

Dist	COUNTY	ROUTE	POST MILES TOTAL PROJECT	SHEET No.	TOTAL SHEETS
07	LA	5	0.0/7.6	68	985

REGISTERED CIVIL ENGINEER — DATE 10-11-12

6-24-13
PLANS APPROVAL DATE

REGISTERED PROFESSIONAL ENGINEER — NGIM NANCY PE — No. 58161 — Exp. 6-30-14 — CIVIL — STATE OF CALIFORNIA

THE STATE OF CALIFORNIA OR ITS OFFICERS OR AGENTS SHALL NOT BE RESPONSIBLE FOR THE ACCURACY OR COMPLETENESS OF SCANNED COPIES OF THIS PLAN SHEET.

NOTE:

AERIALLY DEPOSITED LEAD (ADL) MATERIAL EXIST IN THE TOP 3 FEET WITHIN THE DEFINED AREA, AS SHOWN ON THE PLANS.

LEGEND:

- AREA WITH (TYPE Y-2) AERIALLY DEPOSITED LEAD (ADL)
- ROAD EXCAVATION (TYPE Y-2) AERIALLY DEPOSITED LEAD (ADL)
- STRUCTURE EXCAVATION (TYPE Y-2) AERIALLY DEPOSITED LEAD (ADL)

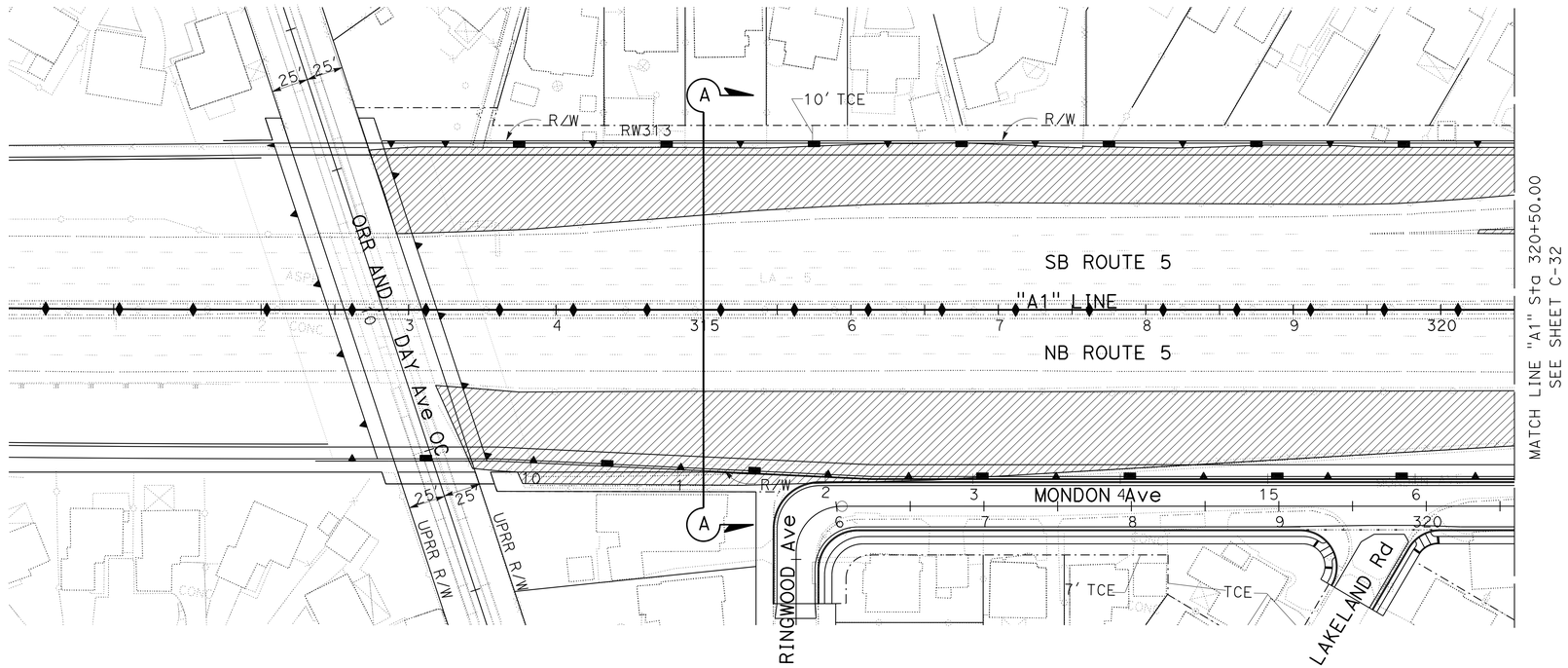

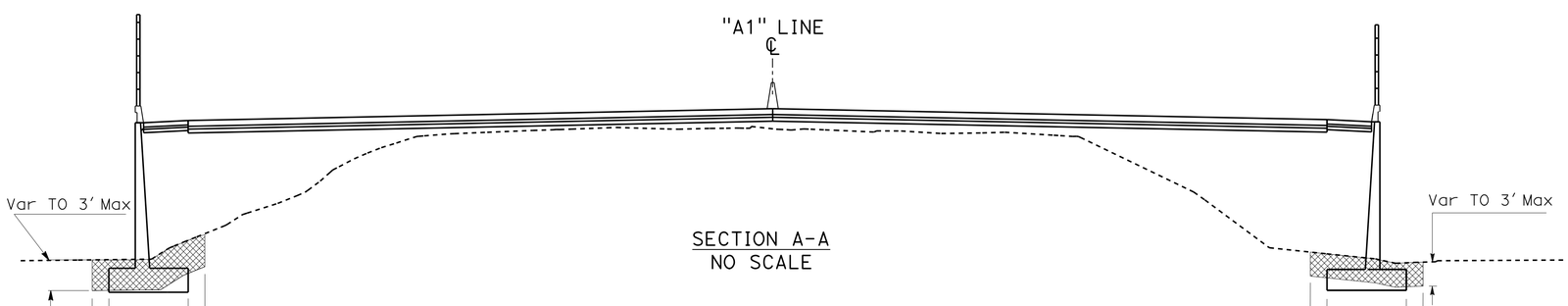

SECTION A-A
NO SCALE

CONSTRUCTION DETAILS
AERIALLY DEPOSITED LEAD

SCALE: 1" = 50'

C-31

STATE OF CALIFORNIA - DEPARTMENT OF TRANSPORTATION
Caltrans® OFFICE OF DESIGN A

FUNCTIONAL SUPERVISOR: NGIM NANCY PE
CALCULATED-DESIGNED BY: KEVIN Q. NGUYEN
CHECKED BY: NGIM NANCY PE
REVISED BY: MARK MAI
DATE REVISED: 09/10/12

S:\projects\215951\721595ga031.dgn

LAST REVISION 00-00-00
DATE PLOTTED => 26-JUN-2013
TIME PLOTTED => 16:29

Dist	COUNTY	ROUTE	POST MILES TOTAL PROJECT	SHEET No.	TOTAL SHEETS
07	LA	5	0.0/7.6	69	985

REGISTERED CIVIL ENGINEER — DATE 10-11-12

6-24-13
PLANS APPROVAL DATE

REGISTERED PROFESSIONAL ENGINEER — NGIM NANCY PE — No. 58161 — Exp. 6-30-14 — CIVIL — STATE OF CALIFORNIA

THE STATE OF CALIFORNIA OR ITS OFFICERS OR AGENTS SHALL NOT BE RESPONSIBLE FOR THE ACCURACY OR COMPLETENESS OF SCANNED COPIES OF THIS PLAN SHEET.

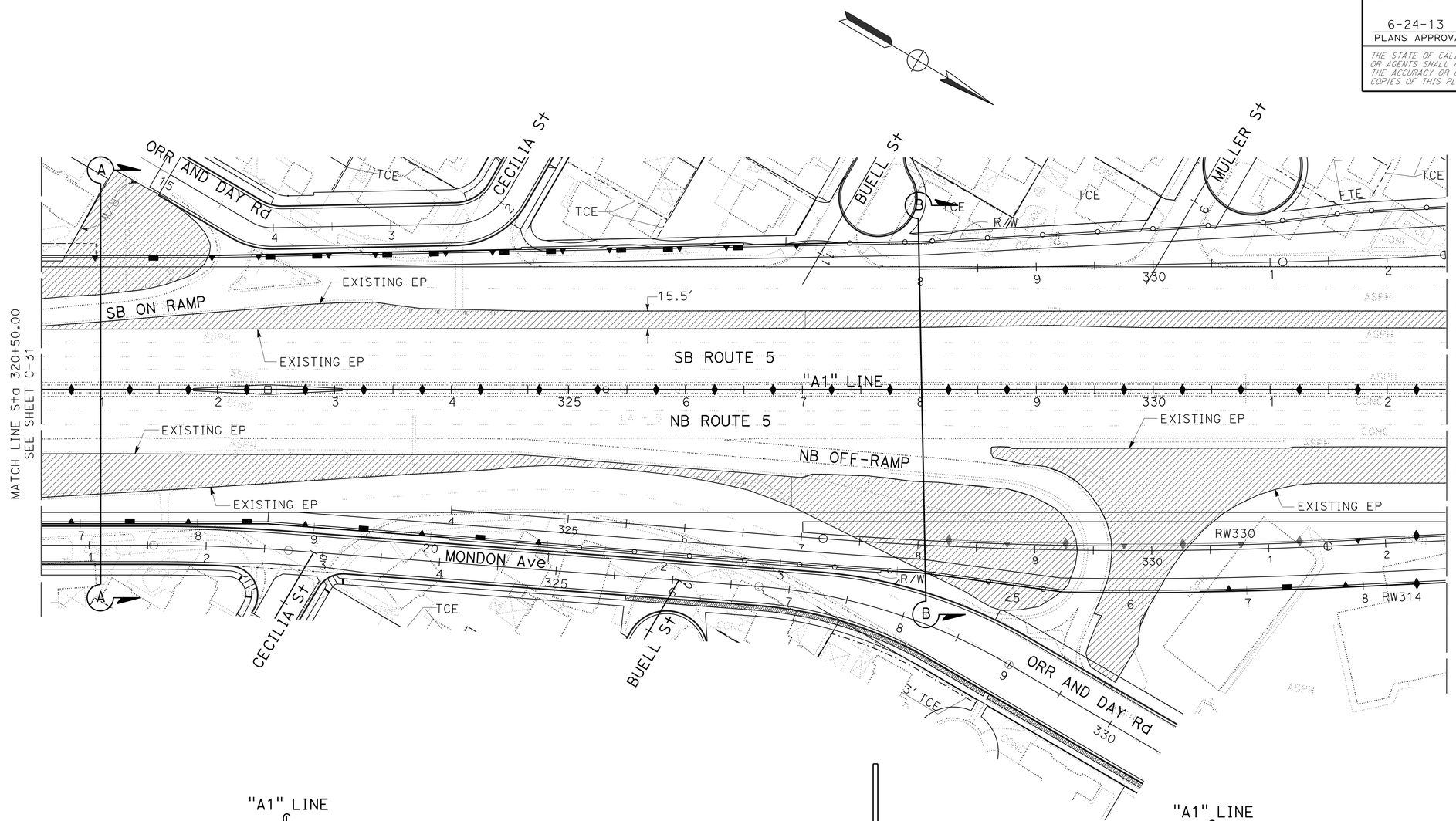

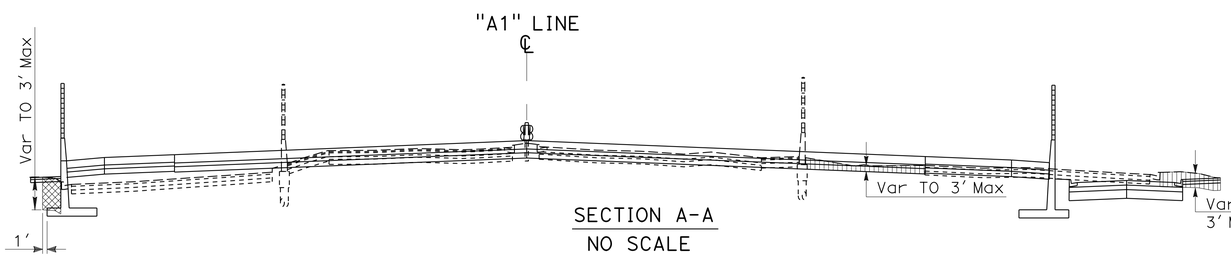

SECTION A-A
NO SCALE

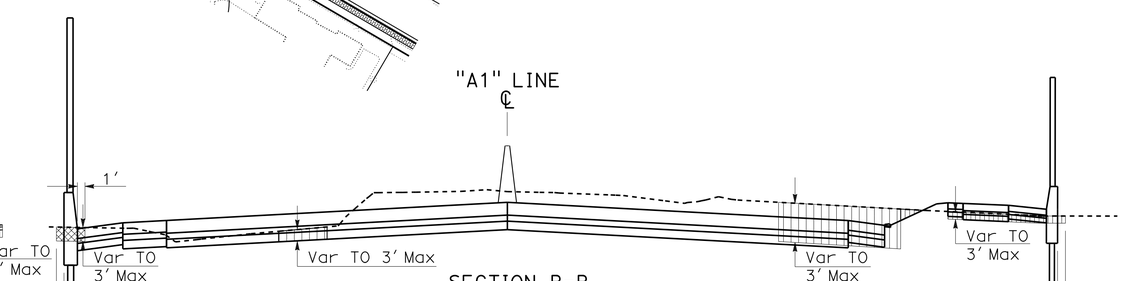

SECTION B-B
NO SCALE

CONSTRUCTION DETAILS

AERIALLY DEPOSITED LEAD

SCALE: 1" = 50'

C-32

REVISED BY	DATE REVISED
MARK MAI	09/10/12

KEVIN Q. NGUYEN — NGIM NANCY PE — CALCULATED-DESIGNED BY — CHECKED BY

FUNCTIONAL SUPERVISOR: NGIM NANCY PE

STATE OF CALIFORNIA - DEPARTMENT OF TRANSPORTATION — Caltrans® OFFICE OF DESIGN A

S:\projects\215951\721595ga032.dgn

LAST REVISION 00-00-00 — DATE PLOTTED => 26-JUN-2013 — TIME PLOTTED => 16:29

Dist	COUNTY	ROUTE	POST MILES TOTAL PROJECT	SHEET No.	TOTAL SHEETS
07	LA	5	0.0/7.6	70	985

REGISTERED CIVIL ENGINEER 10-11-12 DATE

6-24-13
PLANS APPROVAL DATE

REGISTERED PROFESSIONAL ENGINEER NGIM NANCY PE No. 58161 Exp. 6-30-14 CIVIL STATE OF CALIFORNIA

THE STATE OF CALIFORNIA OR ITS OFFICERS OR AGENTS SHALL NOT BE RESPONSIBLE FOR THE ACCURACY OR COMPLETENESS OF SCANNED COPIES OF THIS PLAN SHEET.

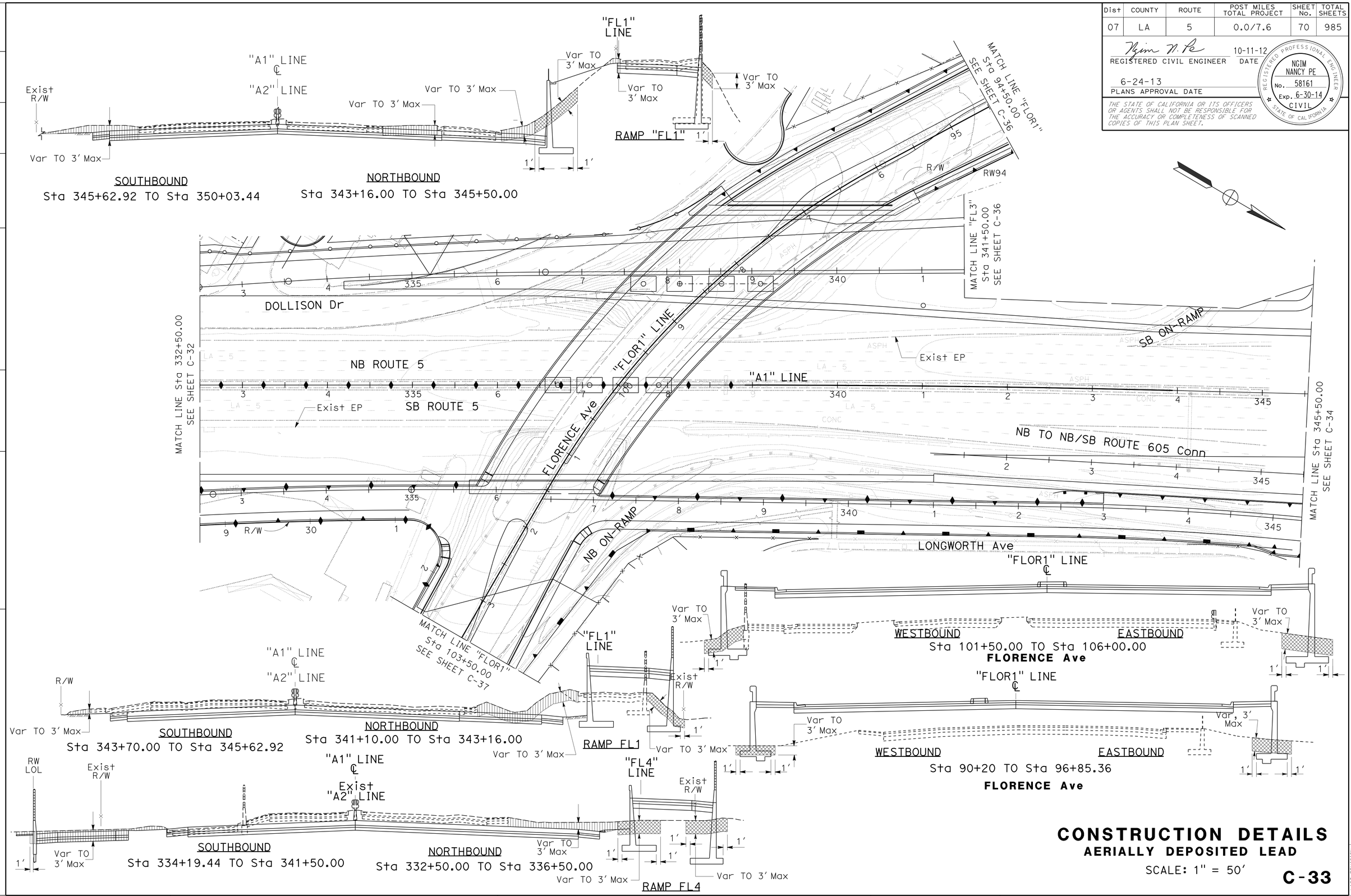

CONSTRUCTION DETAILS

AERIALLY DEPOSITED LEAD

SCALE: 1" = 50'

C-33

REVISED BY	DATE REVISED
MARK MAI	09/10/12

CALCULATED- DESIGNED BY: KEVIN Q. NGUYEN
CHECKED BY: NGIM NANCY PE
FUNCTIONAL SUPERVISOR: NGIM NANCY PE

STATE OF CALIFORNIA - DEPARTMENT OF TRANSPORTATION
Caltrans® OFFICE OF DESIGN A

S:\projects\215951\721595ga033.dgn

LAST REVISION 00-00-00 | DATE PLOTTED => 26-JUN-2013 | TIME PLOTTED => 16:29

BORDER LAST REVISED 7/2/2010 | USERNAME => s109858 | DGN FILE => 721595ga033.dgn | RELATIVE BORDER SCALE IS IN INCHES 0 1 2 3 | UNIT 1797 | PROJECT NUMBER & PHASE 07000018351

Dist	COUNTY	ROUTE	POST MILES TOTAL PROJECT	SHEET No.	TOTAL SHEETS
07	LA	5	0.0/7.6	71	985

REGISTERED CIVIL ENGINEER 10-11-12 DATE

6-24-13
PLANS APPROVAL DATE

REGISTERED PROFESSIONAL ENGINEER NGIM NANCY PE No. 58161 Exp. 6-30-14 CIVIL STATE OF CALIFORNIA

THE STATE OF CALIFORNIA OR ITS OFFICERS OR AGENTS SHALL NOT BE RESPONSIBLE FOR THE ACCURACY OR COMPLETENESS OF SCANNED COPIES OF THIS PLAN SHEET.

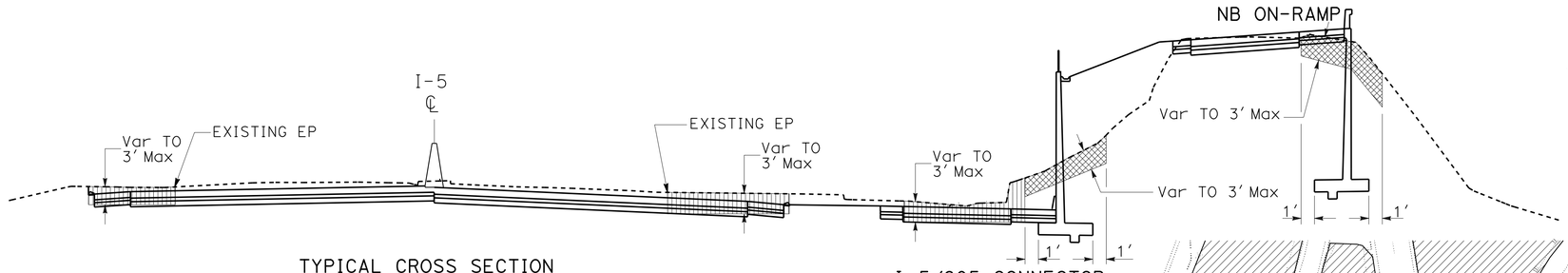

TYPICAL CROSS SECTION
NO SCALE

I-5/605 CONNECTOR

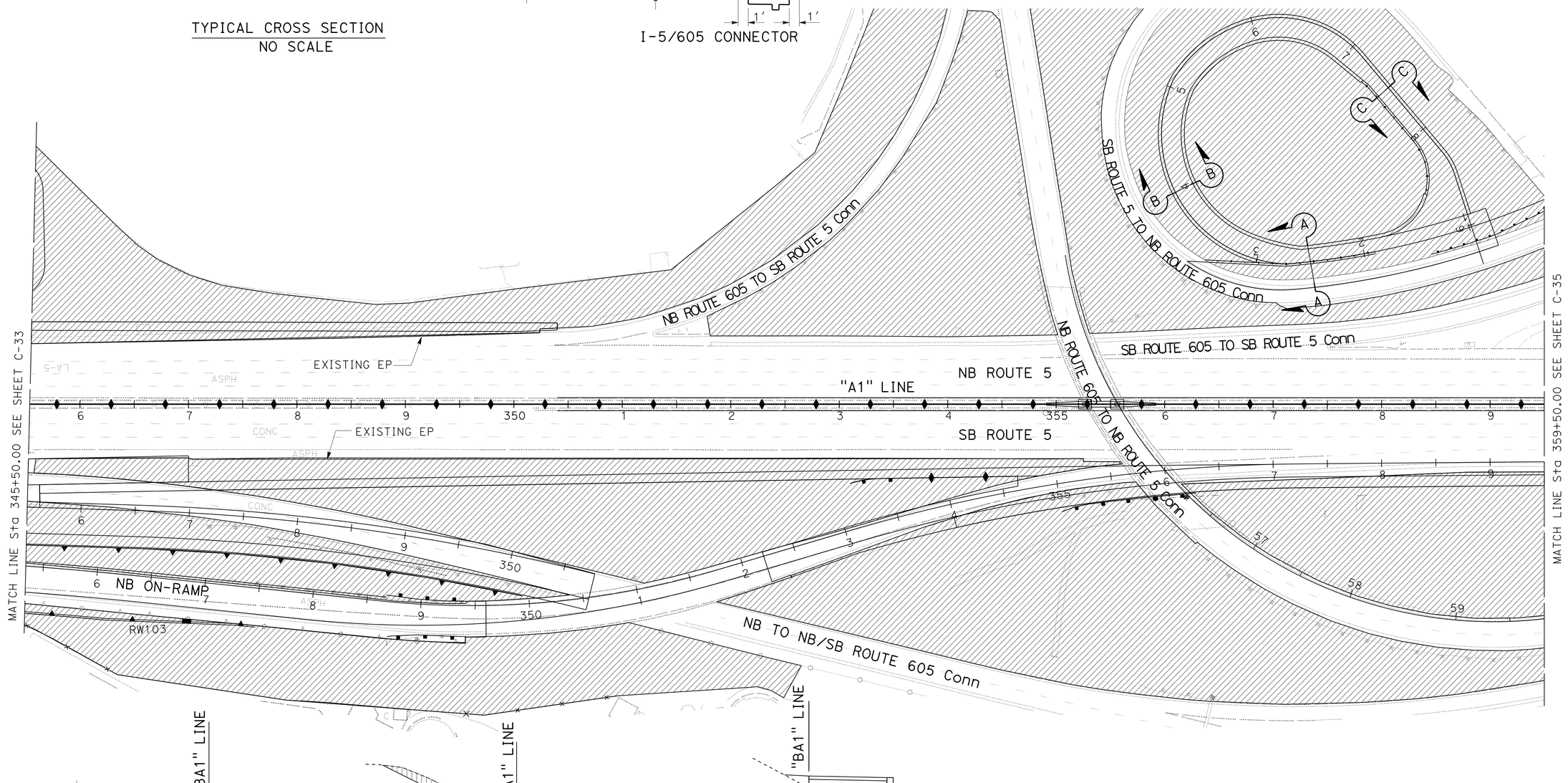

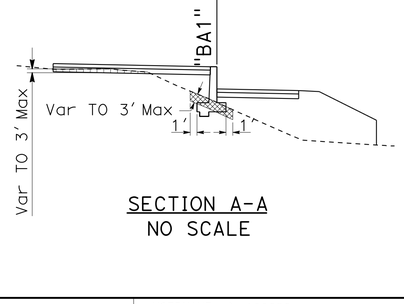

SECTION A-A
NO SCALE

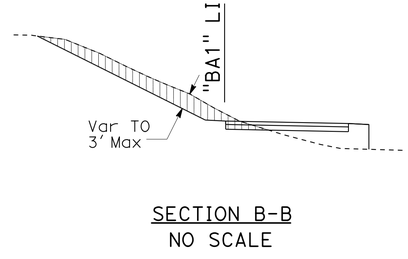

SECTION B-B
NO SCALE

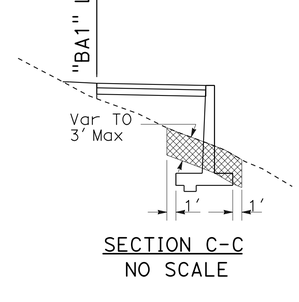

SECTION C-C
NO SCALE

CONSTRUCTION DETAILS
AERIALLY DEPOSITED LEAD
SCALE: 1" = 50'

C-34

REVISED BY	DATE REVISED
MARK MAI	09/10/12

CALCULATED-DESIGNED BY	CHECKED BY
KEVIN Q. NGUYEN	NGIM NANCY PE

FUNCTIONAL SUPERVISOR: NGIM NANCY PE

STATE OF CALIFORNIA - DEPARTMENT OF TRANSPORTATION
Caltrans® OFFICE OF DESIGN A

S:\projects\215951\721595ga034.dgn

LAST REVISION 00-00-00 | DATE PLOTTED => 26-JUN-2013 | TIME PLOTTED => 16:29

Dist	COUNTY	ROUTE	POST MILES TOTAL PROJECT	SHEET No.	TOTAL SHEETS
07	LA	5	0.0/7.6	72	985

REGISTERED CIVIL ENGINEER — DATE: 10-11-12

6-24-13
PLANS APPROVAL DATE

REGISTERED PROFESSIONAL ENGINEER — NGIM NANCY PE — No. 58161 — Exp. 6-30-14 — CIVIL — STATE OF CALIFORNIA

THE STATE OF CALIFORNIA OR ITS OFFICERS OR AGENTS SHALL NOT BE RESPONSIBLE FOR THE ACCURACY OR COMPLETENESS OF SCANNED COPIES OF THIS PLAN SHEET.

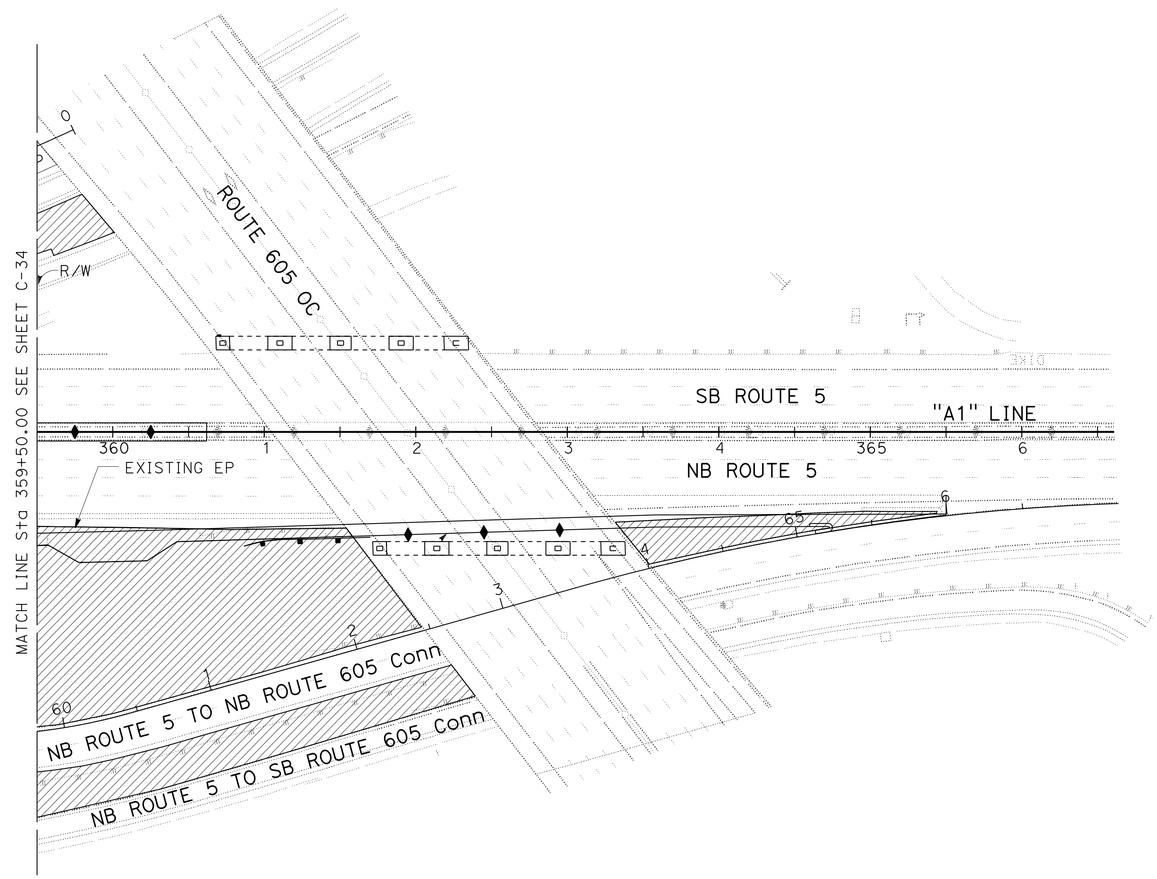

TYPICAL CROSS SECTION

NO SCALE

CONSTRUCTION DETAILS

AERIALLY DEPOSITED LEAD

SCALE: 1" = 50'

C-35

STATE OF CALIFORNIA - DEPARTMENT OF TRANSPORTATION
Caltrans® OFFICE OF DESIGN A

FUNCTIONAL SUPERVISOR: NGIM NANCY PE
CALCULATED-DESIGNED BY: KEVIN Q. NGUYEN
CHECKED BY: NGIM NANCY PE
REVISED BY: MARK MAI
DATE REVISED: 09/10/12

S:\projects\215951\721595ga035.dgn

LAST REVISION 00-00-00
DATE PLOTTED => 26-JUN-2013
TIME PLOTTED => 16:30

Dist	COUNTY	ROUTE	POST MILES TOTAL PROJECT	SHEET No.	TOTAL SHEETS
07	LA	5	0.0/7.6	73	985

REGISTERED CIVIL ENGINEER — DATE 10-11-12

6-24-13
PLANS APPROVAL DATE

REGISTERED PROFESSIONAL ENGINEER — NGIM NANCY PE — No. 58161 — Exp. 6-30-14 — CIVIL — STATE OF CALIFORNIA

THE STATE OF CALIFORNIA OR ITS OFFICERS OR AGENTS SHALL NOT BE RESPONSIBLE FOR THE ACCURACY OR COMPLETENESS OF SCANNED COPIES OF THIS PLAN SHEET.

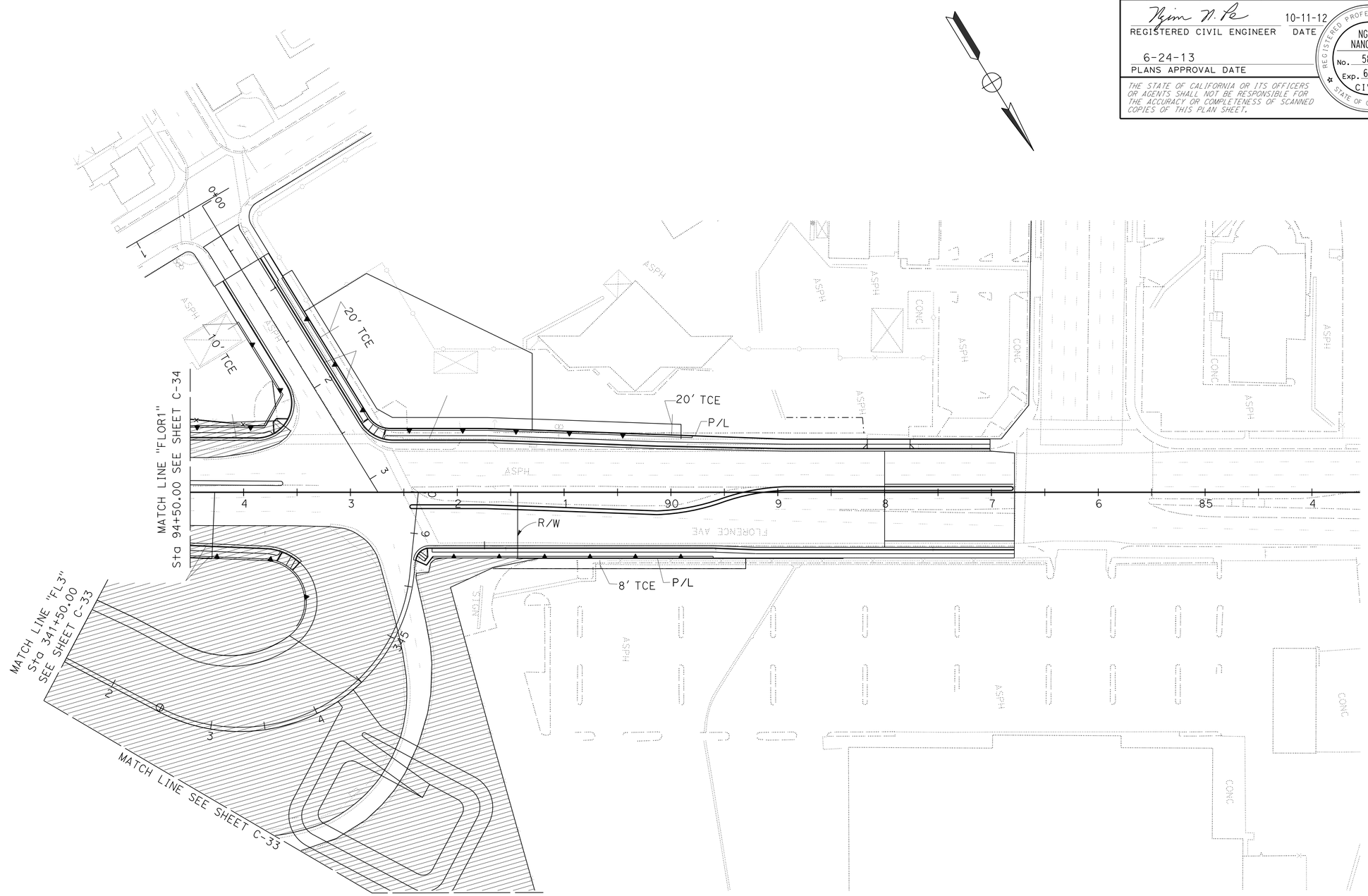

TYPICAL CROSS SECTION
NO SCALE

SB ON-RAMP

CONSTRUCTION DETAILS
AERIALLY DEPOSITED LEAD
SCALE: 1" = 50'

C-36

STATE OF CALIFORNIA - DEPARTMENT OF TRANSPORTATION
Caltrans® OFFICE OF DESIGN A

FUNCTIONAL SUPERVISOR: NGIM NANCY PE
REVISED BY: MARK MAI — DATE REVISED: 09/10/12
KEVIN Q. NGUYEN — NGIM NANCY PE
CALCULATED-DESIGNED BY — CHECKED BY

S:\projects\215951\721595ga036.dgn

LAST REVISION 00-00-00 — DATE PLOTTED => 26-JUN-2013 — TIME PLOTTED => 16:30

BORDER LAST REVISED 7/2/2010 | USERNAME => s109858 | DGN FILE => 721595ga036.dgn | RELATIVE BORDER SCALE IS IN INCHES 0 1 2 3 | UNIT 1797 | PROJECT NUMBER & PHASE 07000018351

Dist	COUNTY	ROUTE	POST MILES TOTAL PROJECT	SHEET No.	TOTAL SHEETS
07	LA	5	0.0/7.6	74	985

REGISTERED CIVIL ENGINEER 10-11-12 DATE

6-24-13
PLANS APPROVAL DATE

REGISTERED PROFESSIONAL ENGINEER
NGIM NANCY PE
No. 58161
Exp. 6-30-14
CIVIL
STATE OF CALIFORNIA

THE STATE OF CALIFORNIA OR ITS OFFICERS OR AGENTS SHALL NOT BE RESPONSIBLE FOR THE ACCURACY OR COMPLETENESS OF SCANNED COPIES OF THIS PLAN SHEET.

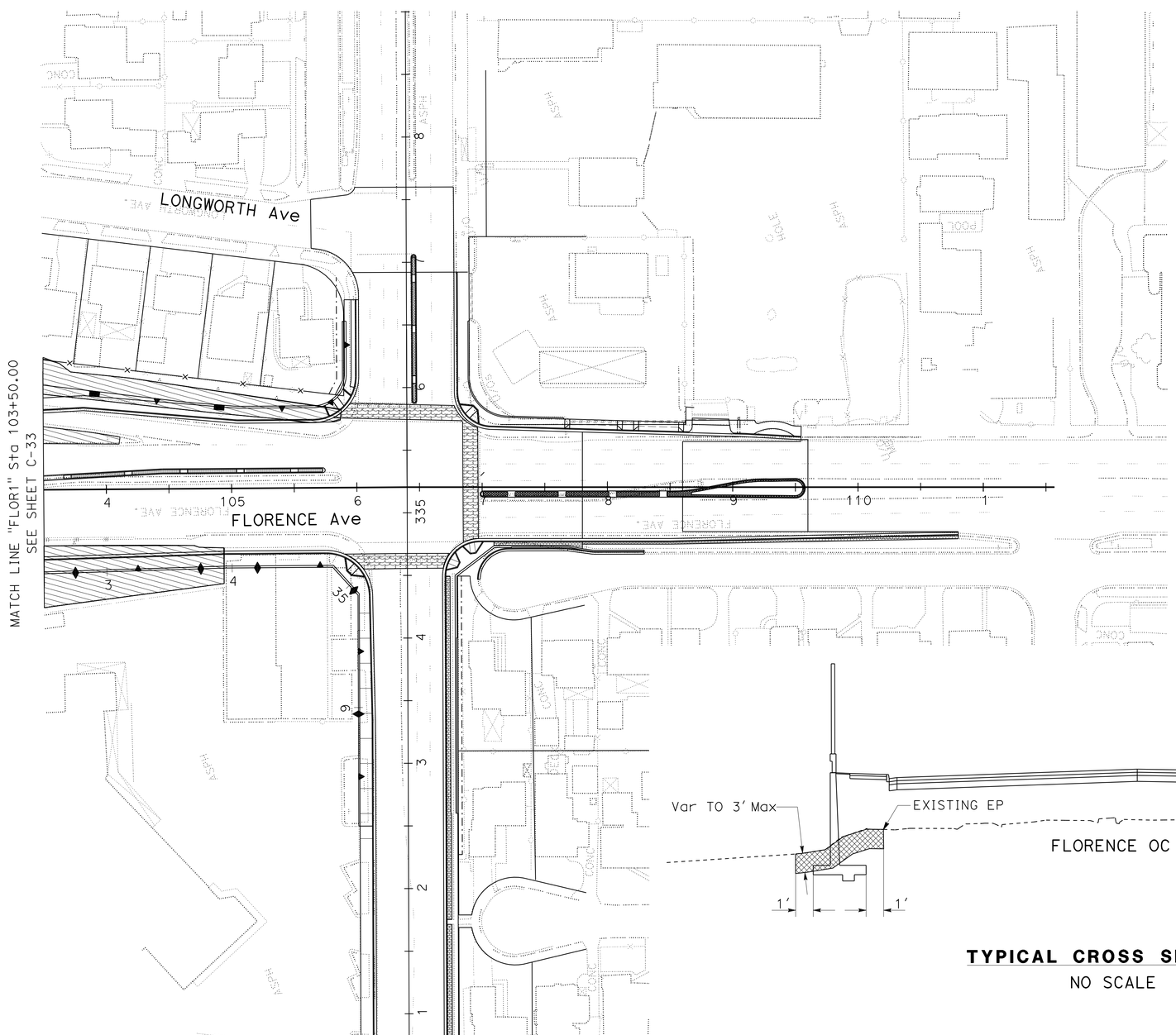

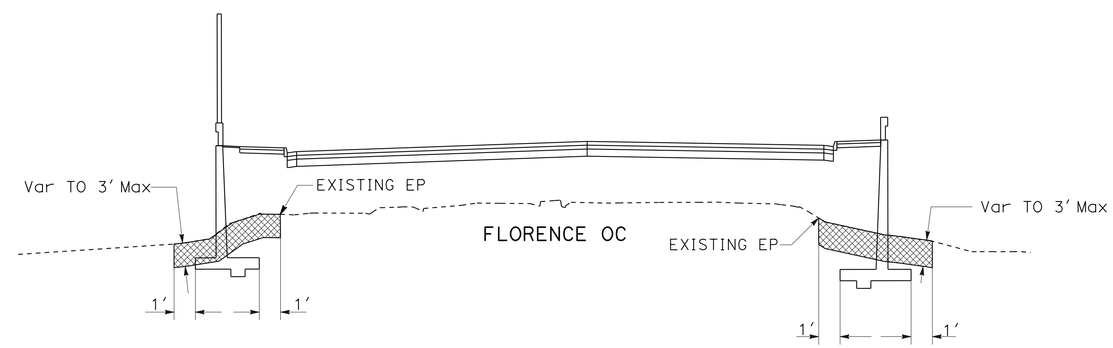

TYPICAL CROSS SECTION
NO SCALE

CONSTRUCTION DETAILS
AERIALLY DEPOSITED LEAD
SCALE: 1" = 50'

C-37

REVISED BY	MARK MAI
DATE REVISED	09/10/12
CALCULATED-DESIGNED BY	KEVIN Q. NGUYEN
CHECKED BY	NGIM NANCY PE
FUNCTIONAL SUPERVISOR	NGIM NANCY PE

STATE OF CALIFORNIA - DEPARTMENT OF TRANSPORTATION
Caltrans® OFFICE OF DESIGN A

S:\projects\215951\721595ga037.dgn

LAST REVISION 00-00-00
DATE PLOTTED => 26-JUN-2013
TIME PLOTTED => 16:30

Dist	COUNTY	ROUTE	POST MILES TOTAL PROJECT	SHEET No.	TOTAL SHEETS
07	LA	5	0.0/7.6	75	985

REGISTERED CIVIL ENGINEER 10-11-12 DATE

6-24-13
PLANS APPROVAL DATE

REGISTERED PROFESSIONAL ENGINEER NGIM NANCY PE No. 58161 Exp. 6-30-14 CIVIL STATE OF CALIFORNIA

THE STATE OF CALIFORNIA OR ITS OFFICERS OR AGENTS SHALL NOT BE RESPONSIBLE FOR THE ACCURACY OR COMPLETENESS OF SCANNED COPIES OF THIS PLAN SHEET.

NOTES:

1. THIS PLAN ACCURATE FOR ROADWAY EMBANKMENT TYPE Y-2 ADL REUSE ONLY.
2. TOTAL VOLUME OF ROADWAY EMBANKMENT FOR TYPE Y-2 ADL REUSE IS 38559 CY.

ABBREVIATION:

ADL AERIALLY DEPOSITED LEAD

LEGEND:

ROADWAY EMBANKMENT FOR TYPE Y-2 ADL REUSE.

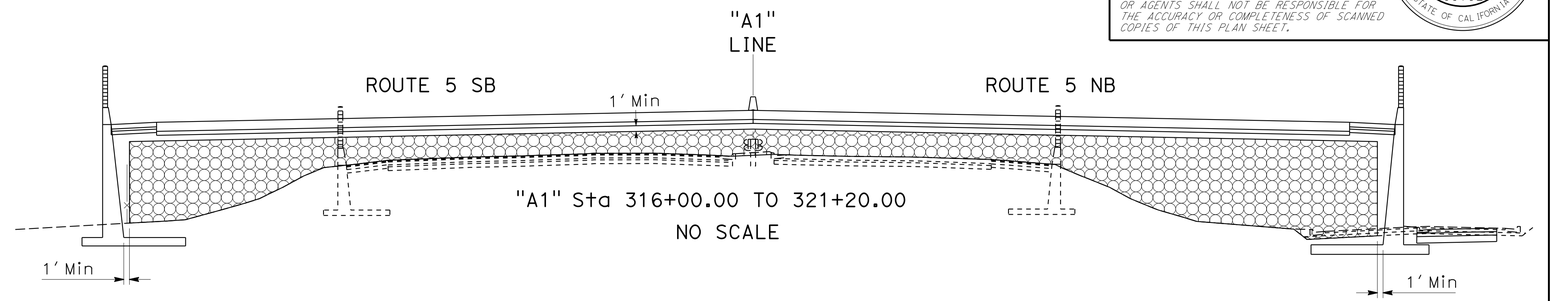

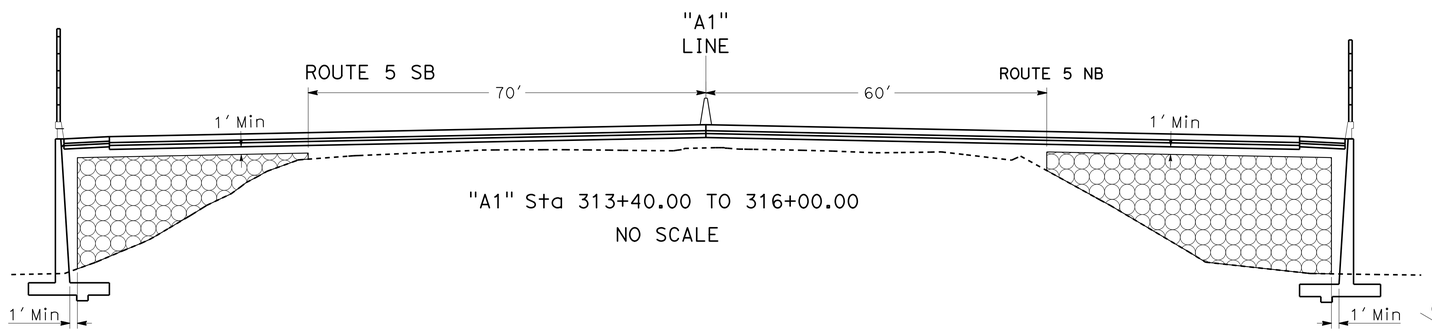

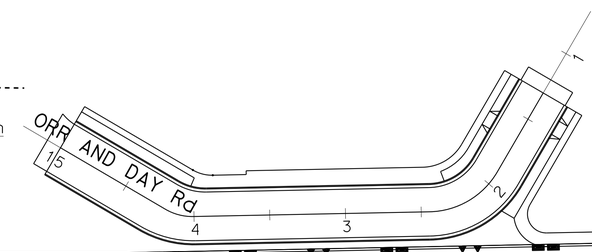

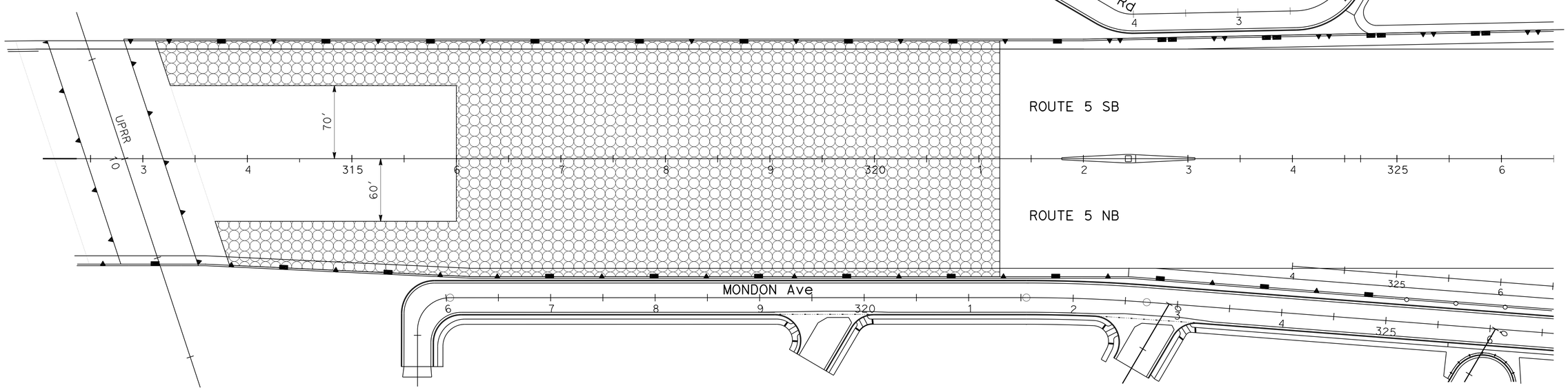

CONSTRUCTION DETAILS
AERIALLY DEPOSITED LEAD REUSE

SCALE: 1" = 50'

C-38

STATE OF CALIFORNIA - DEPARTMENT OF TRANSPORTATION
Caltrans® OFFICE OF DESIGN A

FUNCTIONAL SUPERVISOR: NGIM NANCY PE
CALCULATED-DESIGNED BY: MARK MAI
CHECKED BY: NGIM NANCY PE
REVISED BY
DATE REVISED

S:\projects\21595\721595ga038.dgn

LAST REVISION 00-00-00
DATE PLOTTED => 26-JUN-2013
TIME PLOTTED => 16:30

Dist	COUNTY	ROUTE	POST MILES TOTAL PROJECT	SHEET No.	TOTAL SHEETS
07	LA	5	0.0/7.6	76	985

REGISTERED CIVIL ENGINEER — DATE 10-11-12

6-24-13
PLANS APPROVAL DATE

REGISTERED PROFESSIONAL ENGINEER — NGIM NANCY PE No. 58161 Exp. 6-30-2014 CIVIL — STATE OF CALIFORNIA

THE STATE OF CALIFORNIA OR ITS OFFICERS OR AGENTS SHALL NOT BE RESPONSIBLE FOR THE ACCURACY OR COMPLETENESS OF SCANNED COPIES OF THIS PLAN SHEET.

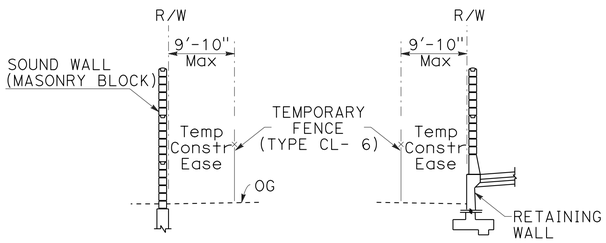

TYPICAL X-SECTIONS
TEMPORARY FENCE

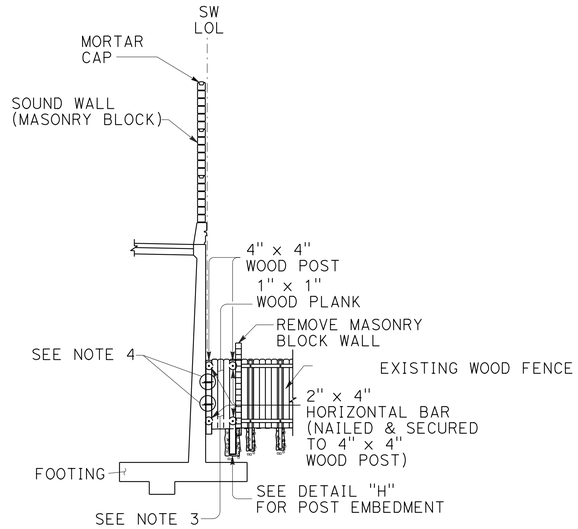

DETAIL "B"

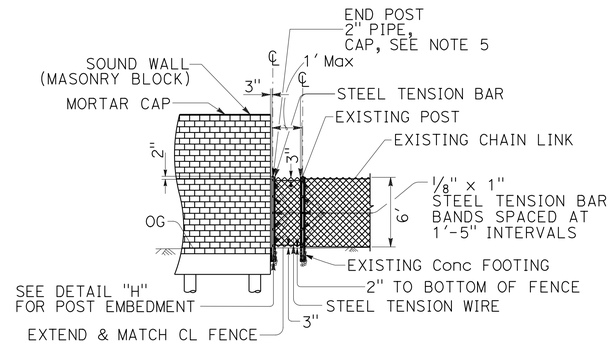

DETAIL "I"

NOTES:

1. BLOCKS WHICH HAVE A CUT SURFACE SHALL HAVE CELLS FILLED WITH GROUT.
2. THE EXTENDED MASONRY BLOCK WALL SHALL MATCH THE EXISTING MASONRY BLOCK WALL IN MATERIAL, SIZE, AND COLOR.
3. THE EXTENDED WOOD FENCE SHALL MATCH THE EXISTING WOOD FENCE IN MATERIAL, COLOR AND DESIGN.
4. THE END POST OF THE WOOD FENCE OR END TUBE OF THE IRON FENCE SHALL BE SECURED TO THE NEW SOUND WALL (MASONRY BLOCK) OR RETAINING WALL WITH 3/8" Dia STUDS WITH EXPANSION ANCHORS, 1-1/4" Dia CUT WASHERS, LOCK WASHERS AND Hex NUTS (Typ).
5. DRIVE FIT GALVANIZED CAP TO POST WITH 1-1/4" ROUND HEAD RIVET.

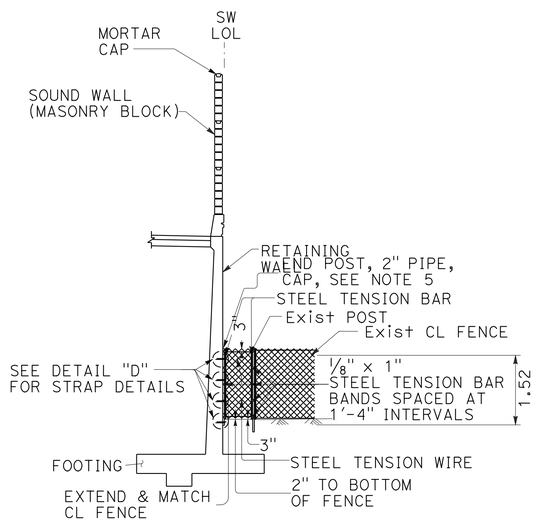

DETAIL "C"

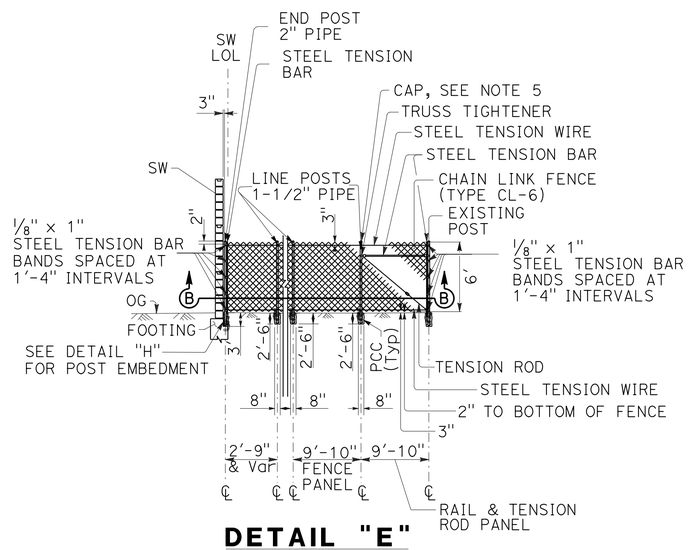

DETAIL "E"

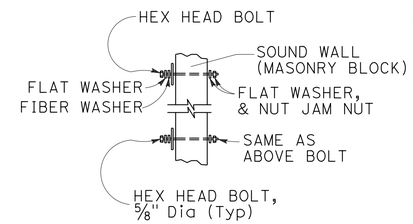

DETAIL "F"
STRAP ANCHOR

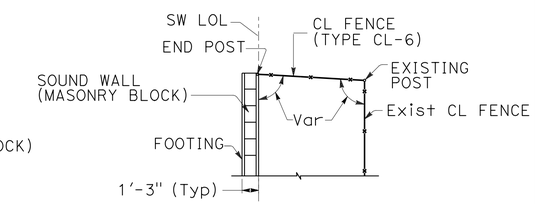

SECTION B-B

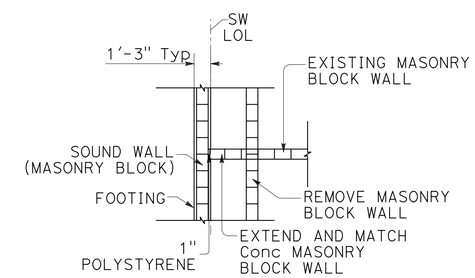

SECTION A-A

DETAIL "A"

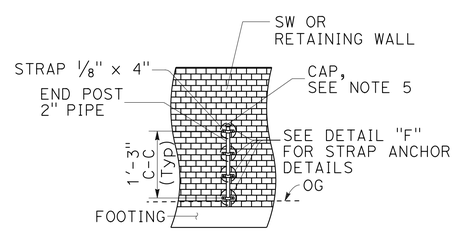

DETAIL "D"
STRAP DETAIL

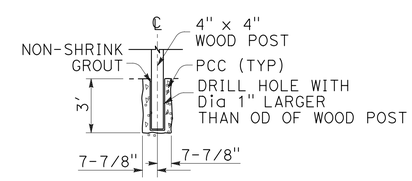

DETAIL "H"
POST EMBEDMENT

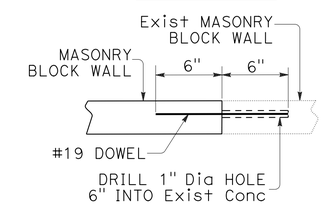

DETAIL "G"
DRILL AND GROUT DOWEL

CONSTRUCTION DETAILS
NO SCALE

C-39

REVISED BY	DATE REVISED

MARK MAI — NGIM NANCY PE
CALCULATED-DESIGNED BY — CHECKED BY
FUNCTIONAL SUPERVISOR — NGIM NANCY PE

STATE OF CALIFORNIA - DEPARTMENT OF TRANSPORTATION — OFFICE OF DESIGN A

S:\projects\215951\RESUBMIT-1\721595ga039.dgn

LAST REVISION 00-00-00 — DATE PLOTTED => 26-JUN-2013 — TIME PLOTTED => 16:30

Dist	COUNTY	ROUTE	POST MILES TOTAL PROJECT	SHEET No.	TOTAL SHEETS
07	LA	5	0.0/7.6	77	985

George Olguin
LICENSED LANDSCAPE ARCHITECT

6-24-13
PLANS APPROVAL DATE

LICENSED LANDSCAPE ARCHITECT GEORGE OLGUIN NO. 4333 George Olguin 08-31-14 Renewal Date 11-10-12 Date STATE OF CALIFORNIA

THE STATE OF CALIFORNIA OR ITS OFFICERS OR AGENTS SHALL NOT BE RESPONSIBLE FOR THE ACCURACY OR COMPLETENESS OF SCANNED COPIES OF THIS PLAN SHEET.

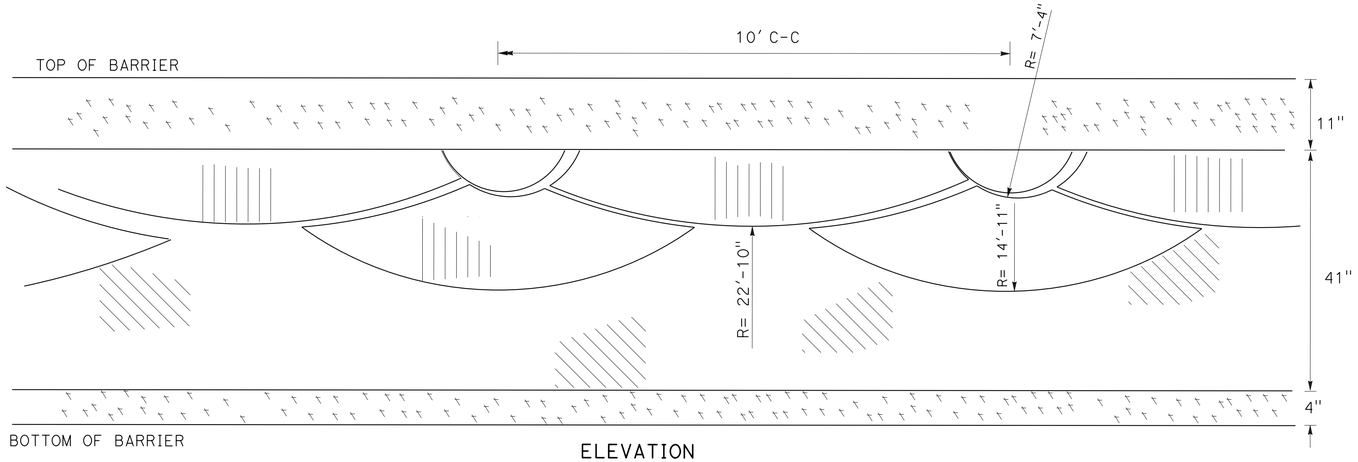

ELEVATION

CONCRETE BARRIER
ARCHITECTURAL SURFACE TREATMENT
(SCALLOP WALL PATTERN)

NOTE:

1. PATTERN IS PERPENDICULAR TO CROSSWALK.

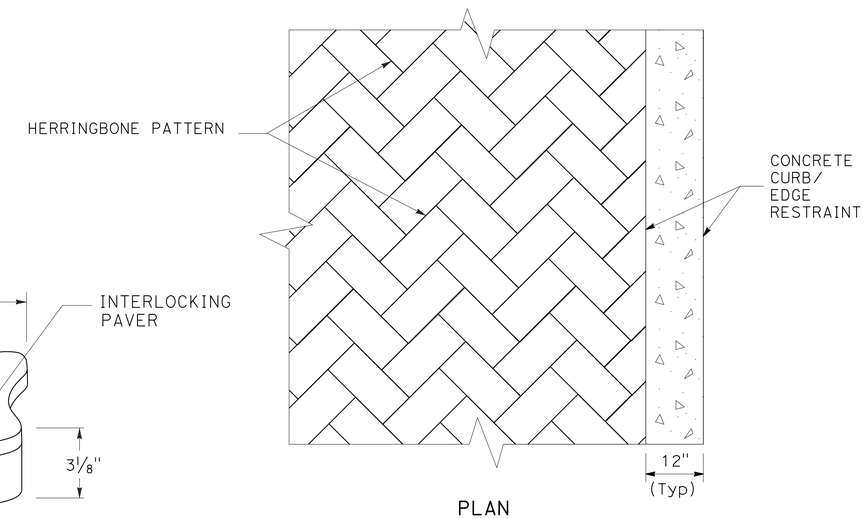

PLAN

INTERLOCKING PAVER

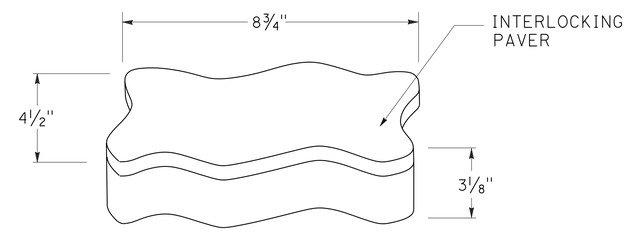

PERSPECTIVE

INTERLOCKING PAVER

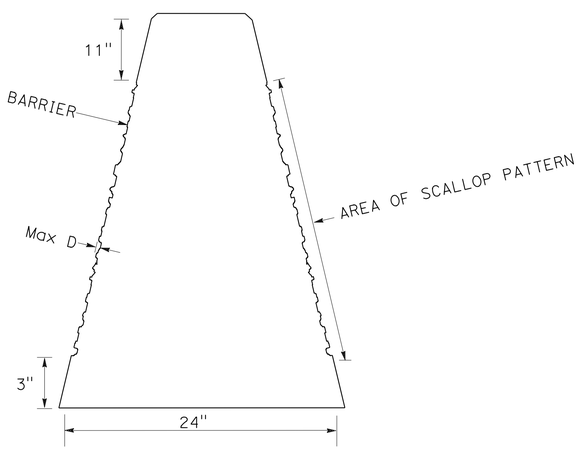

SECTION

CONCRETE BARRIER (TYPE 60G & 60GE)
(SCALLOP PATTERN DIFFERENTIAL)

SURFACE TEXTURES AND FINISHES:

- SMOOTH FINISH
- LIGHT FRACTURED GRANITE FINISH Max D ¼"-½"
- HEAVY FRACTURED GRANITE FINISH Max D ¾"-1"

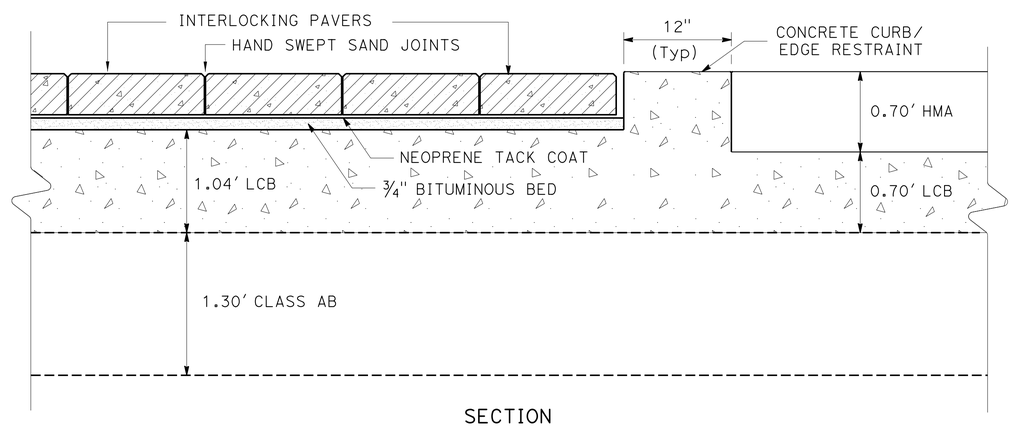

SECTION

INTERLOCKING PAVER

CONSTRUCTION DETAILS

NO SCALE

C-40

REVISED BY	DATE REVISED
XUAN WU	GEORGE OLGUIN
CALCULATED-DESIGNED BY	CHECKED BY
SENIOR LANDSCAPE ARCHITECT	JENNIFER TAIRA

STATE OF CALIFORNIA - DEPARTMENT OF TRANSPORTATION
Caltrans® LANDSCAPE ARCHITECTURE

LAST REVISION 00-00-00 | DATE PLOTTED => 26-JUN-2013 | TIME PLOTTED => 16:30

Dist	COUNTY	ROUTE	POST MILES TOTAL PROJECT	SHEET No.	TOTAL SHEETS
07	LA	5	0.0/7.6	78	985

George Olguin
LICENSED LANDSCAPE ARCHITECT

6-24-13
PLANS APPROVAL DATE

LICENSED LANDSCAPE ARCHITECT GEORGE OLGUIN NO. 4333 George Olguin 08-31-14 Renewal Date 11-10-12 Date STATE OF CALIFORNIA

THE STATE OF CALIFORNIA OR ITS OFFICERS OR AGENTS SHALL NOT BE RESPONSIBLE FOR THE ACCURACY OR COMPLETENESS OF SCANNED COPIES OF THIS PLAN SHEET.

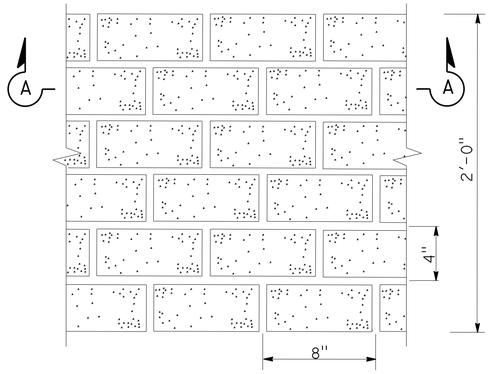

PLAN

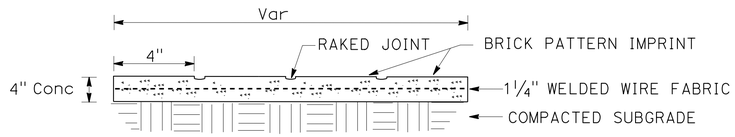

SECTION A-A

NOTES: (CITY MEDIANS)

1. BRICK IMPRINT 4" WIDE x 8" LONG.
2. BRICK COLOR SHALL BE TAN FEDERAL STANDARD NUMBER 32356.
3. JOINT FILLER COLOR SHALL MATCH BRICK COLOR.
4. INSIDE JOINTS SHALL HAVE RAKED APPEARANCE, ROUGH SANDY GROUTED JOINT.
5. JOINTS SHALL BE ½" WIDE AND ½" DEEP.
6. TOOL EDGES SHALL HAVE AN OUTSIDE JOINT, ½" WIDE ON SELECTED SIDES, MATCH THE INSIDE JOINTS WHEN TOOL JOINTS ARE REQUIRED.
7. REMOVE EXISTING HMA OR DEBRIS.
8. BRICK IMPRINT PERPENDICULAR TO ROADWAY

MINOR CONCRETE (TEXTURED PAVING)

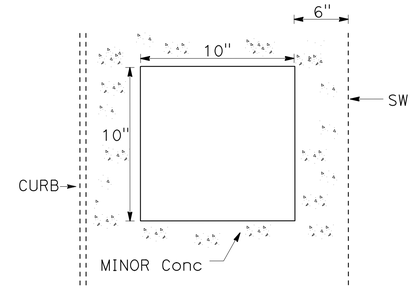

PLAN

VINE POCKET

NOTES:

1. INSIDE SQUARE FOR VINE POCKET SHALL BE 10" X 10"
2. VINE POCKETS ARE 10' O/C UNLESS OTHERWISE NOTED.

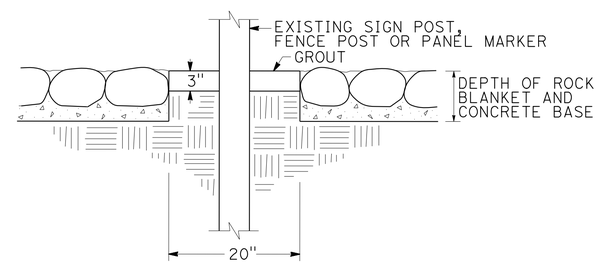

SECTION A-A

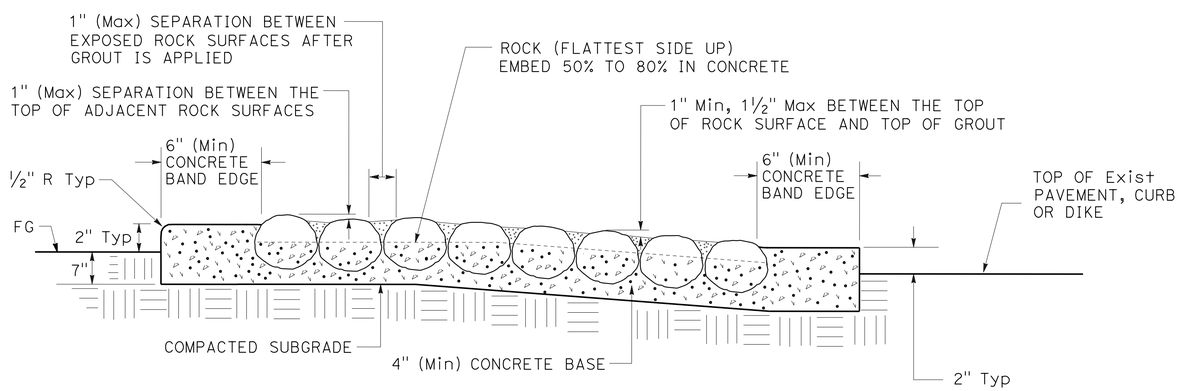

SECTION

ROCK BLANKET

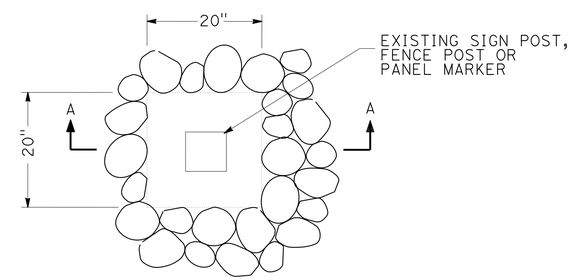

PLAN
POST TREATMENT

CONSTRUCTION DETAILS
ROCK BLANKET AND VINE POCKET

NO SCALE

C-41

STATE OF CALIFORNIA - DEPARTMENT OF TRANSPORTATION
Caltrans LANDSCAPE ARCHITECTURE

SENIOR LANDSCAPE ARCHITECT: JENNIFER TAIRA
CALCULATED-DESIGNED BY: XUAN WU
CHECKED BY: GEORGE OLGUIN
REVISED BY
DATE REVISED

LAST REVISION 00-00-00
DATE PLOTTED => 26-JUN-2013
TIME PLOTTED => 16:30

Dist	COUNTY	ROUTE	POST MILES TOTAL PROJECT	SHEET No.	TOTAL SHEETS
07	LA	5	0.0/7.6	79	985

REGISTERED CIVIL ENGINEER 10-11-12 DATE

6-24-13
PLANS APPROVAL DATE

REGISTERED PROFESSIONAL ENGINEER NGIM NANCY PE No. 58161 Exp. 6-30-2014 CIVIL STATE OF CALIFORNIA

THE STATE OF CALIFORNIA OR ITS OFFICERS OR AGENTS SHALL NOT BE RESPONSIBLE FOR THE ACCURACY OR COMPLETENESS OF SCANNED COPIES OF THIS PLAN SHEET.

NOTES:

1. FOR ADDITIONAL DETAILS TEMPORARY OF CRASH CUSHION (TYPE ADIEM), REFER TO THE MANUFACTURER'S INSTALLATION INSTRUCTIONS.
2. TEMPORARY CRASH CUSHION (TYPE ADIEM) MAY BE USED AT SITES WHERE THE SIDES OF THE CRASH CUSHION WOULD BE EXPOSED TO OPPOSING DIRECTIONS OF TRAVEL (BIDIRECTIONAL TRAFFIC) OR THE SAME DIRECTION OF TRAVEL (UNIDIRECTIONAL TRAFFIC).
3. THE CRASH CUSHION CONCRETE BASE SHALL BE PLACED ON A SMOOTH SURFACE (PAVEMENT OR WELL COMPACTED SOIL BASE) ON THE SAME HORIZONTAL PLANE AS THE BARRIER OR RAILING IT IS TO BE ATTACHED TO.
4. INSTALLATION OF THE CRASH CUSHION CONCRETE BASE SHALL BE ACCOMPLISHED BY DRIVING THE ANCHOR RODS IN WELL COMPACTED SOIL BASE OR SOFTASPHALT CONCRETE OR BY DRIVING THE ANCHOR RODS IN DRILLED HOLES IN HARD ASPHALT CONCRETE OR PORTLAND CEMENT CONCRETE. SEE TABLE A FOR THE LOCATION AND LENGTHS OF ANCHOR ROD TO BE USED.
5. ATTACH THE CRASH CUSHION TO THE BARRIER OR RAILING BY BOLTING THE SPLICE ANGLE PLATES TO THE CRASH CUSHION AND THE BARRIER OR RAILING.
6. LUBRICATE THE CRASH CUSHION BASE TRACK AND SLIDE THE MODULES ALONG THE TRACK TO THE POSITIONS SHOWN.
7. YELLOW RETROREFLECTIVE SHEETING, AS PROVIDED BY THE CRASH CUSHION MANUFACTURER, SHALL BE ADHERED TO THE FIRST MODULE FACING APPROCACHING TRAFFIC. THIS SHEETING SHALL BE CONSISTENT WITH THE DESIGN PATTERN AND COLORS OF A TYPE P OBJECT MARKER PANEL FOR UNIDIRECTIONAL TRAFFIC AND THAT OF THE TYPE R OBJECT MARKER PANEL FOR BIDIRECTIONAL TRAFFIC.
8. FOR THE LENGTH AND TYPE OF BARRIER OR RAILING THE CRASH CUSHION IS TO BE ATTACHED TO, SEE THE PROJECT PLANS.

TABLE A

BASE ANCHOR RODS AND LOCATIONS	PORTLAND CEMENT CONCRETE PAVEMENT	ASPHALT CONCRETE PAVEMENT	WELL COMPACTED BASE
	ROD LENGTH	ROD LENGTH	ROD LENGTH
2 AT LOCATION No.1	1'-6"	2'-0"	2'-6"
2 AT LOCATION No.2	1'-6"	2'-0"	2'-6"
2 AT LOCATION No.3	2'-0"	2'-6"	3'-0"
2 AT LOCATION No.4	2'-0"	2'-6"	3'-0"
2 AT LOCATION No.5	3'-0"	3'-10"	4'-0"
2 AT LOCATION No.6	3'-0"	3'-10"	4'-0"

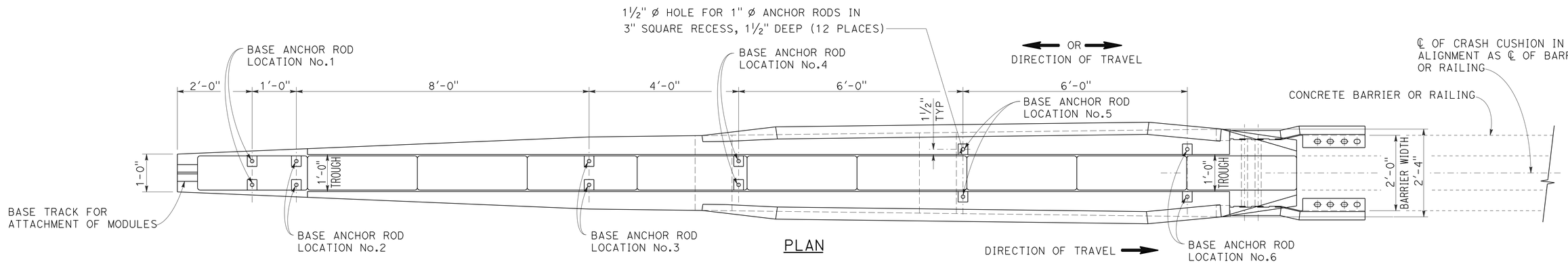

PLAN

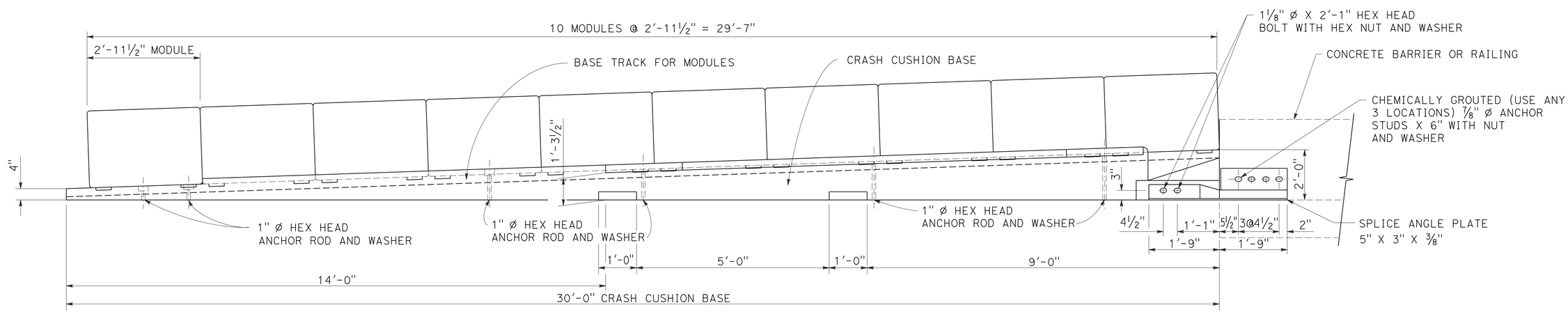

ELEVATION

TEMPORARY CRASH CUSHION (TYPE ADIEM)

SEE NOTE 3

CONSTRUCTION DETAILS

TEMPORARY CRASH CUSHION (TYPE ADIEM)

NO SCALE

C-42

REVISED BY | DATE REVISED
JANE YU | NGIM NANCY PE
CALCULATED-DESIGNED BY | CHECKED BY
FUNCTIONAL SUPERVISOR | NGIM NANCY PE
STATE OF CALIFORNIA - DEPARTMENT OF TRANSPORTATION
Caltrans® OFFICE OF DESIGN A

S:\projects\215951\721595ga042.dgn

LAST REVISION 00-00-00 | DATE PLOTTED => 26-JUN-2013 | TIME PLOTTED => 16:30

Dist	COUNTY	ROUTE	POST MILES TOTAL PROJECT	SHEET No.	TOTAL SHEETS
07	LA	5	0.0/7.6	80	985

REGISTERED CIVIL ENGINEER 10-11-12 DATE

6-24-13
PLANS APPROVAL DATE

REGISTERED PROFESSIONAL ENGINEER NGIM NANCY PE No. 58161 Exp. 6-30-2014 CIVIL STATE OF CALIFORNIA

THE STATE OF CALIFORNIA OR ITS OFFICERS OR AGENTS SHALL NOT BE RESPONSIBLE FOR THE ACCURACY OR COMPLETENESS OF SCANNED COPIES OF THIS PLAN SHEET.

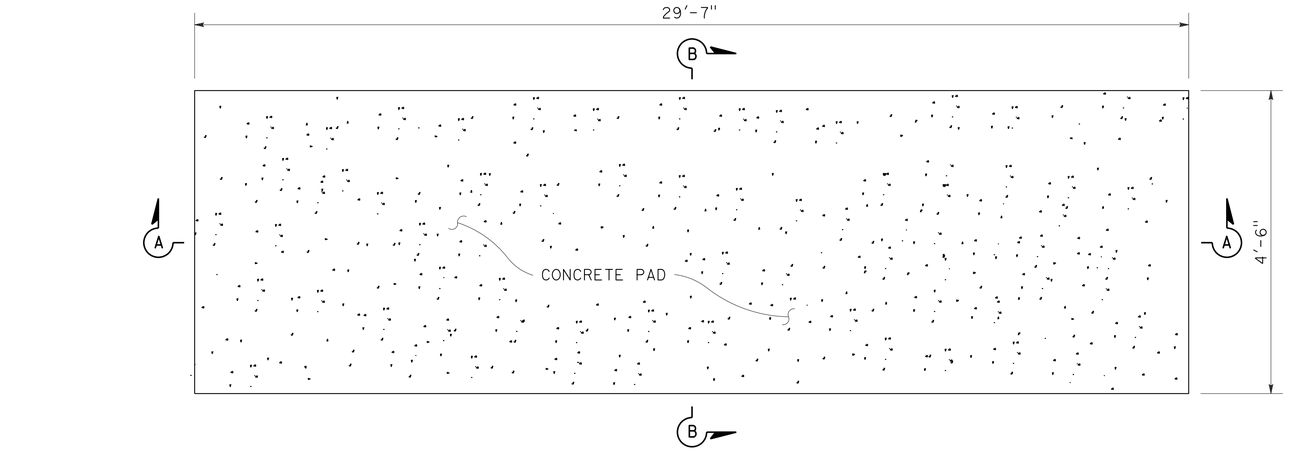

PLAN VIEW

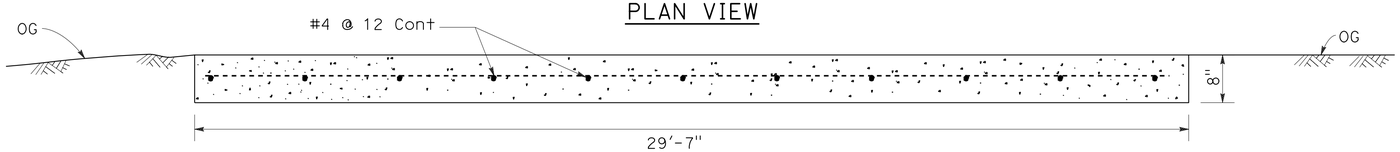

SECTION A-A

CONCRETE ANCHOR SLAB

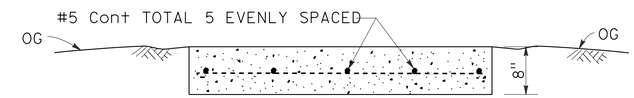

SECTION B-B

NOTES:

1. FOR ADDITIONAL DETAILS OF THIS CRASH CUSHION, REFER TO MANUFACTURER'S INSTALLATION INSTRUCTIONS.
2. THE BASE TRACK FRAME WITH CYLINDERS ATTACHED COMES FROM THE MANUFACTURER AS A COMPLETELY PRE-ASSEMBLED UNIT.
3. PLACE THE CRASH CUSHION UNIT ON THE CURED CONCRETE ANCHOR SLAB AND USE THE BASE TRACK FRAME OF THE CRASH CUSHION AS A TEMPLATE FOR DRILLING ANCHOR BOLT HOLES. DRILL HOLES IN SLAB AND ATTACH CRASH CUSHION WITH WEDGE ANCHOR BOLTS SUPPLIED BY THE MANUFACTURER.
4. ATTACH LAST CYLINDER TO CONCRETE BACKUP BLOCK WITH MANUFACTURER SUPPLIED FASTENER IN SUCH MANNER AS RECOMMENDED BY THE MANUFACTURER.
5. ATTACH THE MANUFACTURER SUPPLIED SIDE CABLE ANCHOR PLATES TO THE CURED CONCRETE BACKUP BLOCK WITH THE MANUFACTURER SUPPLIED BOLTS IN SUCH MANNER AS RECOMMENDED BY THE MANUFACTURER.
6. PLACE MANUFACTURER SUPPLIED COVER OVER CYLINDERS AND ATTACH COVER TO CYLINDERS WITH MANUFACTURER SUPPLIED FASTENERS.

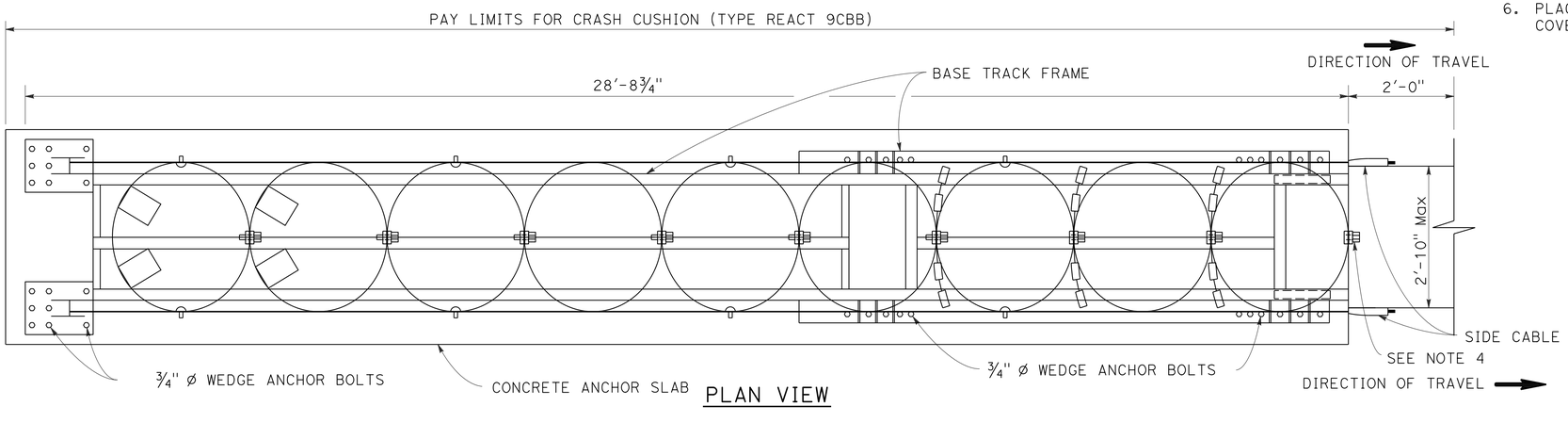

PLAN VIEW

LEGEND:

9CBB = 9 CYLINDER CUSHION WITH CONCRETE BACKUP BLOCK

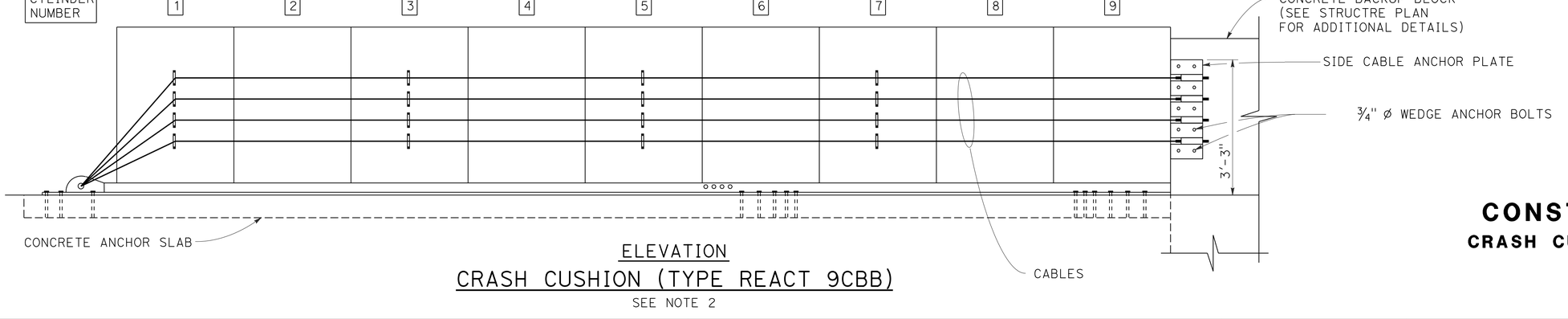

ELEVATION

CRASH CUSHION (TYPE REACT 9CBB)

SEE NOTE 2

CONSTRUCTION DETAILS

CRASH CUSHION (TYPE REACT 9CBB)

NO SCALE

C-43

REVISED BY | DATE REVISED
JANE YU | NGIM NANCY PE
CALCULATED-DESIGNED BY | CHECKED BY
FUNCTIONAL SUPERVISOR | NGIM NANCY PE

STATE OF CALIFORNIA - DEPARTMENT OF TRANSPORTATION
Caltrans® OFFICE OF DESIGN A

S:\projects\215951\RESUBMIT-2\721595ga043.dgn

LAST REVISION 00-00-00 | DATE PLOTTED => 26-JUN-2013 | TIME PLOTTED => 16:30

Dist	COUNTY	ROUTE	POST MILES TOTAL PROJECT	SHEET No.	TOTAL SHEETS
07	LA	5	0.0/7.6	81	985

REGISTERED CIVIL ENGINEER 10-11-12 DATE

6-24-13
PLANS APPROVAL DATE

REGISTERED PROFESSIONAL ENGINEER
NGIM NANCY PE
No. 58161
Exp. 6-30-2014
CIVIL
STATE OF CALIFORNIA

THE STATE OF CALIFORNIA OR ITS OFFICERS OR AGENTS SHALL NOT BE RESPONSIBLE FOR THE ACCURACY OR COMPLETENESS OF SCANNED COPIES OF THIS PLAN SHEET.

NOTES:

1. FOR ADDITIONAL DETAILS OF CRASH CUSHION (TYPE REACT 9CBB), SEE CONSTRUCTION DETAIL C-43.
2. FOR TRANSITION DETAILS OF FIXED OBJECT TO BACKUP BLOCK, SEE STRUCTURE PLANS.

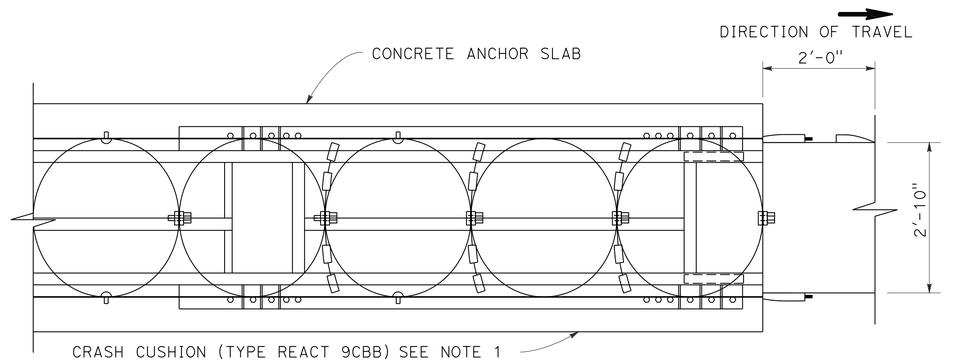

PLAN VIEW

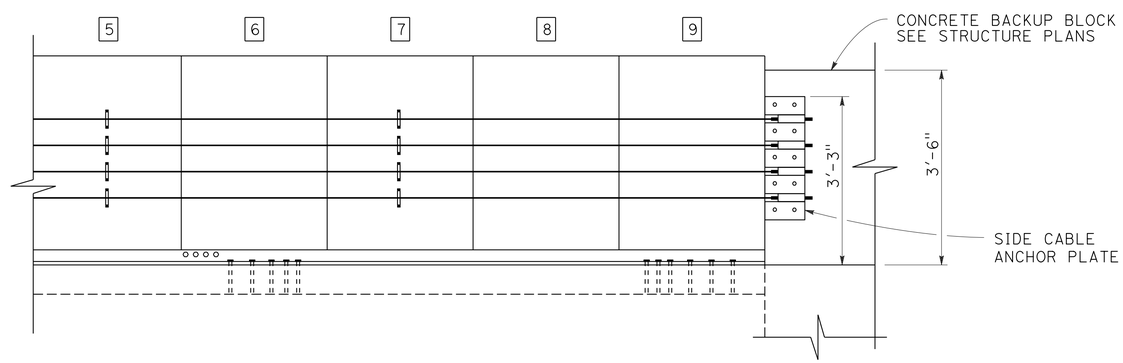

ELEVATION

CONSTRUCTION DETAILS

CRASH CUSHION (TYPE REACT 9CBB) BACKUP BLOCK DETAILS

NO SCALE

C-44

REVISED BY | DATE REVISED
JANE YU | NGIM NANCY PE
CALCULATED-DESIGNED BY | CHECKED BY
FUNCTIONAL SUPERVISOR | NGIM NANCY PE
STATE OF CALIFORNIA - DEPARTMENT OF TRANSPORTATION
Caltrans® OFFICE OF DESIGN A

S:\projects\215951\RESUBMIT-2\721595ga044.dgn

LAST REVISION 00-00-00 | DATE PLOTTED => 26-JUN-2013 | TIME PLOTTED => 16:30

Dist	COUNTY	ROUTE	POST MILES TOTAL PROJECT	SHEET No.	TOTAL SHEETS
07	LA	5	0.0/7.6	82	985

REGISTERED CIVIL ENGINEER 10-11-12 DATE

6-24-13
PLANS APPROVAL DATE

REGISTERED PROFESSIONAL ENGINEER
NGIM NANCY PE
No. 58161
Exp. 6-30-2014
CIVIL
STATE OF CALIFORNIA

THE STATE OF CALIFORNIA OR ITS OFFICERS OR AGENTS SHALL NOT BE RESPONSIBLE FOR THE ACCURACY OR COMPLETENESS OF SCANNED COPIES OF THIS PLAN SHEET.

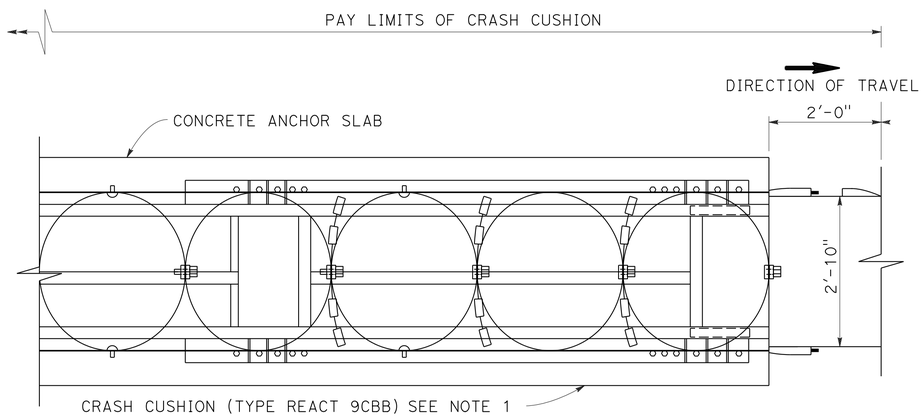

PLAN VIEW

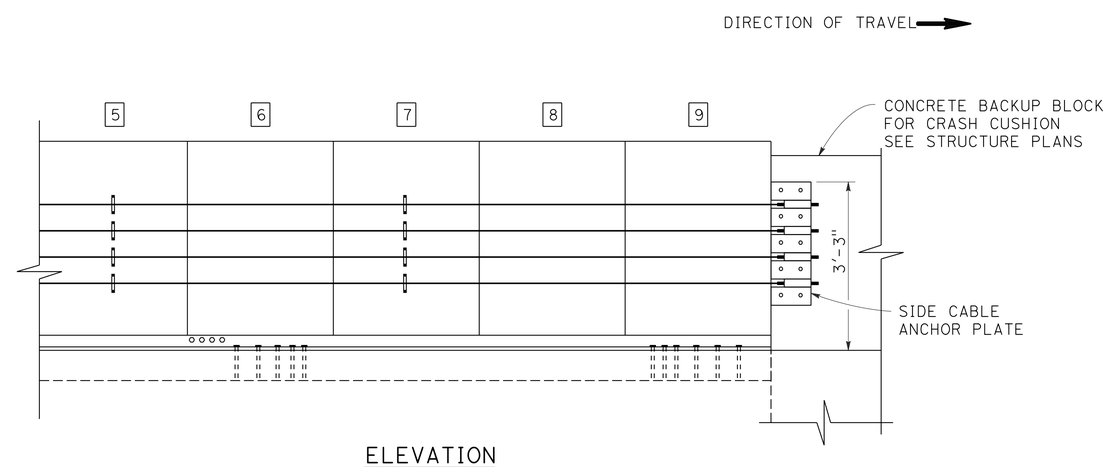

ELEVATION

NOTES:

1. FOR ADDITIONAL DETAILS OF CRASH CUSHION (TYPE REACT 9CBB), SEE CONSTRUCTION DETAIL C-43.
2. FOR ADDITIONAL DETAILS OF THE CONCRETE BACKUP BLOCK, SEE STRUCTURE PLANS.

CONSTRUCTION DETAILS

CRASH CUSHION (TYPE REACT 9CBB) CONCRETE BARRIER TRANSITION DETAILS

NO SCALE

C-45

REVISED BY | DATE REVISED
JANE YU | NGIM NANCY PE
CALCULATED-DESIGNED BY | CHECKED BY
FUNCTIONAL SUPERVISOR | NGIM NANCY PE

STATE OF CALIFORNIA - DEPARTMENT OF TRANSPORTATION
Caltrans® OFFICE OF DESIGN A

S:\projects\215951\RESUBMIT-2\721595ga045.dgn

LAST REVISION 00-00-00 | DATE PLOTTED => 26-JUN-2013 | TIME PLOTTED => 16:30

Dist	COUNTY	ROUTE	POST MILES TOTAL PROJECT	SHEET No.	TOTAL SHEETS
07	LA	5	0.0/7.6	83	985

REGISTERED CIVIL ENGINEER 10-11-12 DATE

6-24-13
PLANS APPROVAL DATE

REGISTERED PROFESSIONAL ENGINEER NGIM NANCY PE No. 58161 Exp. 6-30-2014 CIVIL STATE OF CALIFORNIA

THE STATE OF CALIFORNIA OR ITS OFFICERS OR AGENTS SHALL NOT BE RESPONSIBLE FOR THE ACCURACY OR COMPLETENESS OF SCANNED COPIES OF THIS PLAN SHEET.

TABLE A

POST OFFSET DIMENSIONS		
POST NO.	3'-0" SYSTEM END OFFSET	3'-6" SYSTEM END OFFSET
1	36"	42"
2	22¼"	27¾"
3	11¾"	16¼"
4	6¾"	10⅝"
5	3"	6"
6	¾"	2¾"
7	0"	¾"
8	0"	0"

SEE NOTE 12

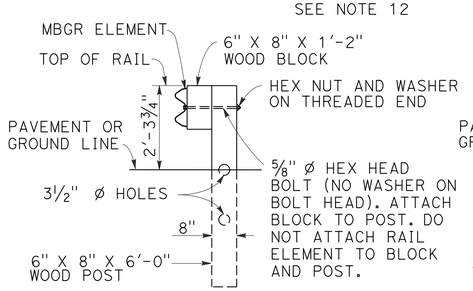

SECTION A-A

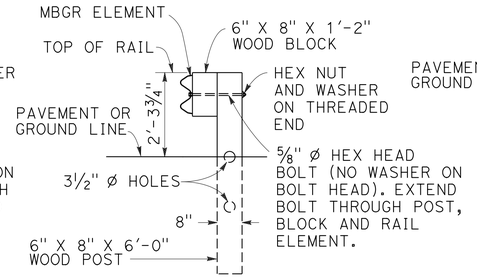

SECTION B-B

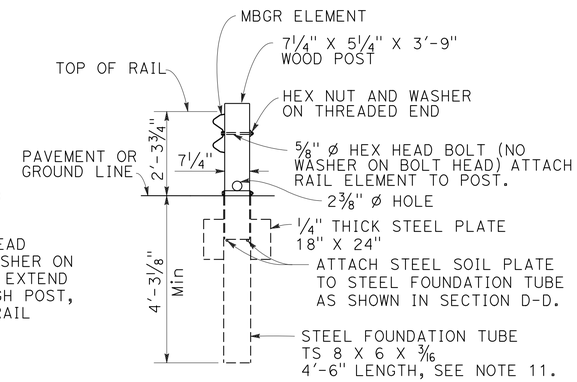

SECTION C-C

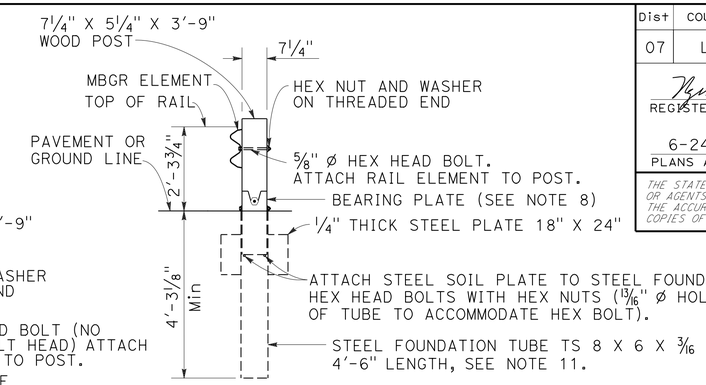

SECTION D-D

(TERMINAL SECTION NOT SHOWN)

NOTES:

1. FOR ADDITIONAL DETAILS OF TERMINAL SYSTEM (TYPE SRT), REFER TO THE MANUFACTURER'S INSTALLATION INSTRUCTIONS.
2. THE POST OFFSET DIMENSIONS ARE GIVEN TO THE CENTER OF THE TRAFFIC FACE OF THE BLOCK, EXCEPT AT THE FIRST TWO POSTS, WHERE THE DIMENSION IS TO THE CENTER OF THE TRAFFIC FACE OF THE POST. OFFSET POINTS ARE TO BE LOCATED BY CHORD MEASUREMENTS AT THE BACK OF THE RAIL EQUAL TO THE NOMINAL POST SPACINGS SHOWN. POSTS ARE TO BE SET APPROXIMATELY RADIAL TO THE RAILING AT EACH POST LOCATIONS.
3. DO NOT ATTACH RAIL ELEMENTS TO POSTS 7 AND 8.
4. ATTACH STRUT TO POST Nos. 1 AND 2 FOUNDATION TUBES WITH ⅝" Ø HEX HEAD BOLTS, WASHERS AND HEX NUTS. BOLTS EXTEND THROUGH THE STRUT, STEEL FOUNDATION TUBE, AND WOOD POSTS.
5. FOR THE LENGTH AND TYPE OF METAL BEAM GUARD RAILING OR METAL BARRIER RAILING THE TERMINAL SYSTEM IS ATTACHED TO, SEE THE PROJECT PLANS.
6. ATTACH RAIL ELEMENT TO THIS POST AND BLOCK. PAYMENT FOR THIS POST, BLOCK AND HARDWARE IS INCLUDED IN PAYMENT FOR THE TYPE OF RAILING OR BARRIER THE TERMINAL SYSTEM IS ATTACHED TO, NOT PART OF PAYMENT FOR TERMINAL SYSTEM (TYPE SRT).
7. THE DEFLECTOR ANGLE OF THE SLOT GUARD IS TO BE POSITIONED IMMEDIATELY DOWNSTREAM OF THE SLOTS.
8. FOR BEARING PLATE ORIENTATION, REFER TO THE MANUFACTURER'S INSTALLATION INSTRUCTIONS.
9. FOR TYPICAL USE OF THIS TERMINAL SYSTEM WITH GUARD RAILING, SEE THE A77E, A77F AND A77G SERIES OF STANDARD PLANS. SEE STANDARD PLAN A78E FOR TYPICAL USE OF THIS TERMINAL SYSTEM WITH SINGLE THRIE BEAM BARRIER.
10. A COMPLETE WRAP AROUND END SECTION MAY CONTINUED TO BE USED IN EXISTING INSTALLATIONS. NEW INSTALLATIONS SHALL BE CONSTRUCTED WITH THE ¾ WRAP END SECTION SHOWN.
11. A 6'-0" LENGTH STEEL FOUNDATION TUBE, TS 8 X 6 X 3/16 WITHOUT A SOIL PLATE, MAY BE FURNISHED AND INSTALLED IN PLACE OF THE 4'-6" LENGTH STEEL FOUNDATION TUBE AND SOIL PLATE SHOWN. MINIMUM EMBEDMENT OF THE 6'-0" LENGTH TUBE SHALL BE 5'-9". A ⅝" Ø HEX HEAD BOLT AND NUT SHALL BE INSTALLED IN THE HOLE IN 6'-0" LENGTH TUBE TO KEEP THE WOOD POST FROM DROPPING INTO THE TUBE.
12. WHERE SITE CONDITIONS WILL NOT ACCOMMODATE USE OF THE STANDARD 4'-0" SYSTEM END OFFSET, 3'-6" OR 3'-0" SYSTEM END OFFSETS, AS APPLICABLE, MAY BE USED. SEE TABLE A FOR POST OFFSET DIMENSIONS FOR 3'-6" AND 3'-0" SYSTEM END OFFSETS.

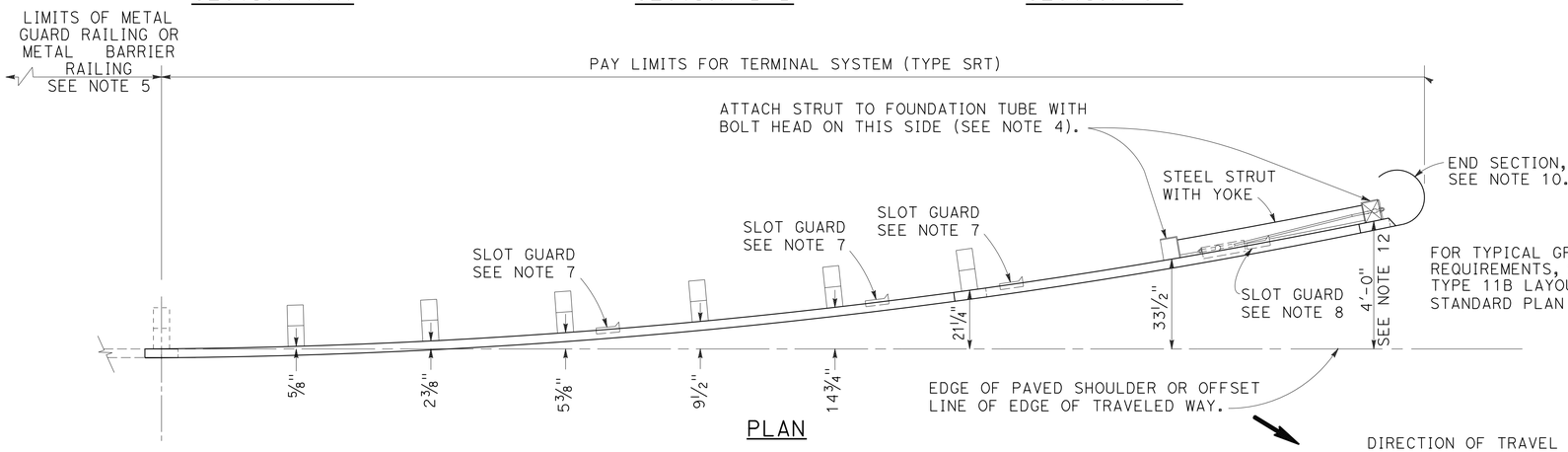

PLAN

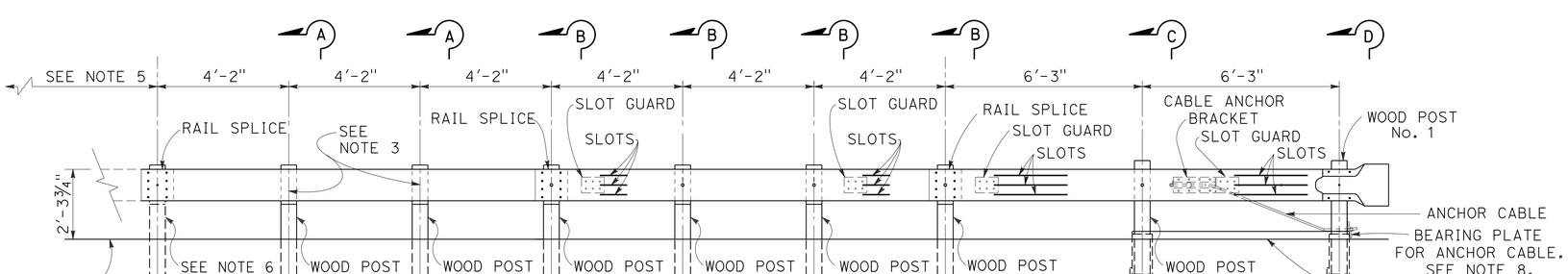

ELEVATION

TERMINAL SYSTEM (TYPE SRT)

(8 POST SYSTEM)
SEE NOTE 9

CONSTRUCTION DETAILS

METAL BEAM RAILING TERMINAL SYSTEM (TYPE SRT)

NO SCALE

C-46

REVISED BY | DATE REVISED
JANE YU | NGIM NANCY PE
CALCULATED-DESIGNED BY | CHECKED BY
FUNCTIONAL SUPERVISOR | NGIM NANCY PE

STATE OF CALIFORNIA - DEPARTMENT OF TRANSPORTATION
Caltrans® OFFICE OF DESIGN A

S:\projects\21595\721595ga046.dgn

LAST REVISION 00-00-00 | DATE PLOTTED => 26-JUN-2013 | TIME PLOTTED => 16:30

Dist	COUNTY	ROUTE	POST MILES TOTAL PROJECT	SHEET No.	TOTAL SHEETS
07	LA	5	0.0/7.6	84	985

REGISTERED CIVIL ENGINEER 10-11-12 DATE

6-24-13
PLANS APPROVAL DATE

REGISTERED PROFESSIONAL ENGINEER DAVE BHALLA No. 34350 Exp. 9/30/13 CIVIL STATE OF CALIFORNIA

THE STATE OF CALIFORNIA OR ITS OFFICERS OR AGENTS SHALL NOT BE RESPONSIBLE FOR THE ACCURACY OR COMPLETENESS OF SCANNED COPIES OF THIS PLAN SHEET.

1
- (a) 18" RCP
- (b) JUNCTION CHAMBER No. 3-C
- (c) CONCRETE DRAIN
- (d) TYPE B DRAIN (L=150.0')
- (e) RSP, No. 1 METHOD B

2
- (a) JUNCTION STRUCTURE No. 3
- (b) 18"x19.0' RCP
- (c) JUNCTION CHAMBER No 3-C AND Conc DRAIN
- (d) RSP
- (e) BIOFILTRATION SWALE

3
- (a) OVERFLOW SPILLWAY
- (b) 8" PLASTIC PIPE
- (c) MAINTENANCE DRAIN VALVE
- (d) 8" PLASTIC PIPE
- (e) INFILTRATION BASIN (79.0'x 120.0')
- (f) RSP
- (g) CONCRETE FES
- (h) 24" RCP (FOR CONTINUATION, REFER SHEET D-4)
- (i) MANHOLE No. 1
- (j) 24" RCP
- (k) GD-1 INLET

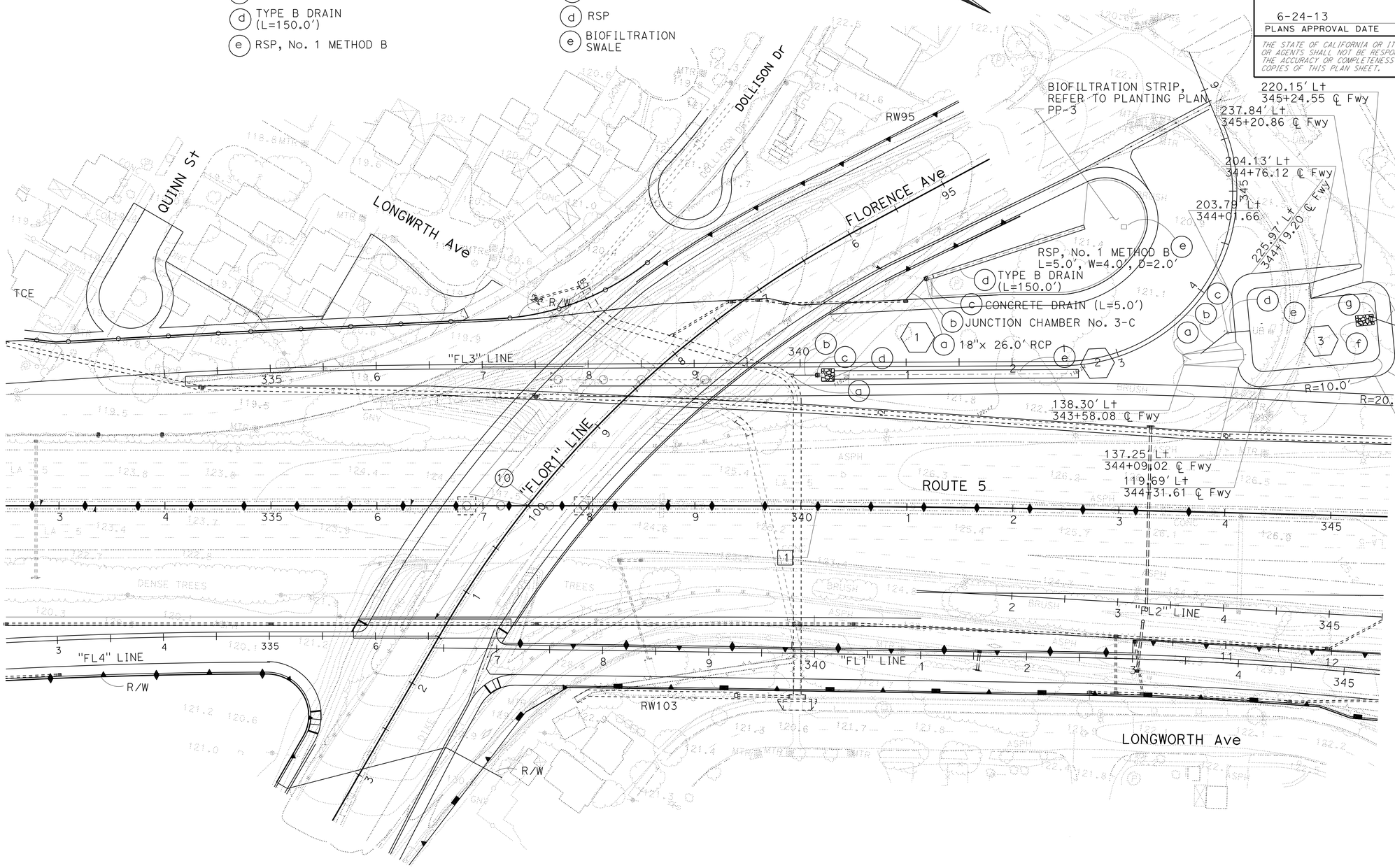

WATER POLLUTION CONTROL PLAN

SCALE: 1" = 50'

W-1

APPROVED FOR DRAINAGE WORK ONLY

STATE OF CALIFORNIA - DEPARTMENT OF TRANSPORTATION
Caltrans
HYDRAULICS

FUNCTIONAL SUPERVISOR: DAVE BHALLA
CALCULATED-DESIGNED BY: C.P. NGUYEN
CHECKED BY: D. BHALLA
REVISED BY
DATE REVISED

LAST REVISION 08-31-10
DATE PLOTTED => 26-JUN-2013
TIME PLOTTED => 16:30

Dist	COUNTY	ROUTE	POST MILES TOTAL PROJECT	SHEET No.	TOTAL SHEETS
07	LA	5	0.0/7.6	85	985

REGISTERED CIVIL ENGINEER DATE 10-11-12

PLANS APPROVAL DATE 6-24-13

REGISTERED PROFESSIONAL ENGINEER DAVE BHALLA No. 34350 Exp. 9/30/13 CIVIL STATE OF CALIFORNIA

THE STATE OF CALIFORNIA OR ITS OFFICERS OR AGENTS SHALL NOT BE RESPONSIBLE FOR THE ACCURACY OR COMPLETENESS OF SCANNED COPIES OF THIS PLAN SHEET.

1	21.00′ Rt Sta 5+89.43 LINE "BA1"	10	57.52′ Rt Sta 6+90.20 LINE "BA1"	19	52.41′ Rt Sta 2+47.94 LINE "BA1"
2	34.95′ Rt Sta 6+22.61	11	60.14′ Rt Sta 7+29.73	20	55.73′ Rt Sta 1+93.53
3	38.62′ Rt Sta 6+65.18	12	72.12′ Rt Sta 7+29.00	21	63.12′ Rt Sta 1+83.30
4	40.94′ Rt Sta 6+91.80	13	61.54′ Rt Sta 6+45.87	22	68.74′ Rt Sta 1+81.60
5	28.10′ Rt Sta 7+71.87	14	53.61′ Rt Sta 6+07.64	23	65.53′ Rt Sta 1+68.92
6	35.06′ Rt Sta 7+81.74	15	55.67′ Rt Sta 5+73.26	24	56.95′ Rt Sta 1+71.69
7	44.48′ Rt Sta 7+74.27	16	60.15′ Rt Sta 4+88.69	25	43.82′ Rt Sta 1+90.00
8	40.60′ Rt Sta 7+68.77	17	62.93′ Rt Sta 4+35.73	26	21.00′ Rt Sta 3+19.47
9	52.61′ Rt Sta 6+91.80	18	59.66′ Rt Sta 2+77.63		

(a) JACKED 24"x 229.0′ RCP
(b) ROCK SLOPE PROTECTION METHOD B No. 1 BACKING
(c) DETENTION BASIN
(d) LOW FLOW CHANNEL - TYPE A
(e) WATER QUALITY OUTLET RISER - TYPE 3
(f) OVERFLOW SPILLWAY
(g) CONCRETE COLLAR
(h) 12"x 100.0′ RCP
(i) JUCTION STRUCTURE No 3
(j) ROCK SLOPE PROTECTION METHOD B No. 1 BACKING

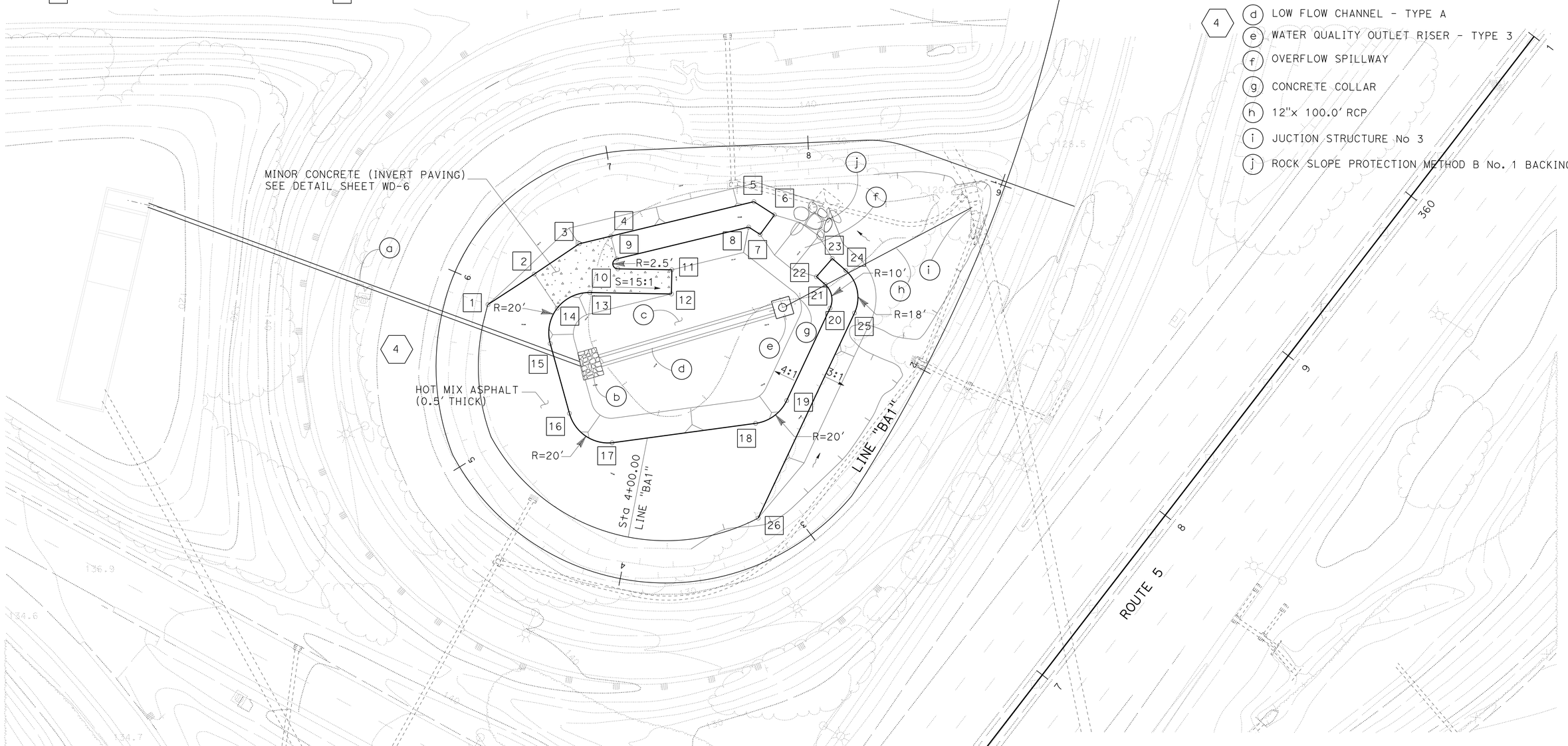

WATER POLLUTION CONTROL PLAN

SCALE: 1" = 25′

W-2

APPROVED FOR DRAINAGE WORK ONLY

STATE OF CALIFORNIA - DEPARTMENT OF TRANSPORTATION

Caltrans

HYDRAULICS

FUNCTIONAL SUPERVISOR: DAVE BHALLA

CALCULATED-DESIGNED BY: VIC T. VALIDO

CHECKED BY: D. BHALLA

REVISED BY

DATE REVISED

LAST REVISION DATE PLOTTED => 26-JUN-2013
TIME PLOTTED => 16:31

08-31-10

Dist	COUNTY	ROUTE	POST MILES TOTAL PROJECT	SHEET No.	TOTAL SHEETS
07	LA	5	0.0/7.6	86	985

REGISTERED CIVIL ENGINEER 10-11-12 DATE

6-24-13
PLANS APPROVAL DATE

REGISTERED PROFESSIONAL ENGINEER DAVE BHALLA No. 34350 Exp. 9/30/13 CIVIL STATE OF CALIFORNIA

THE STATE OF CALIFORNIA OR ITS OFFICERS OR AGENTS SHALL NOT BE RESPONSIBLE FOR THE ACCURACY OR COMPLETENESS OF SCANNED COPIES OF THIS PLAN SHEET.

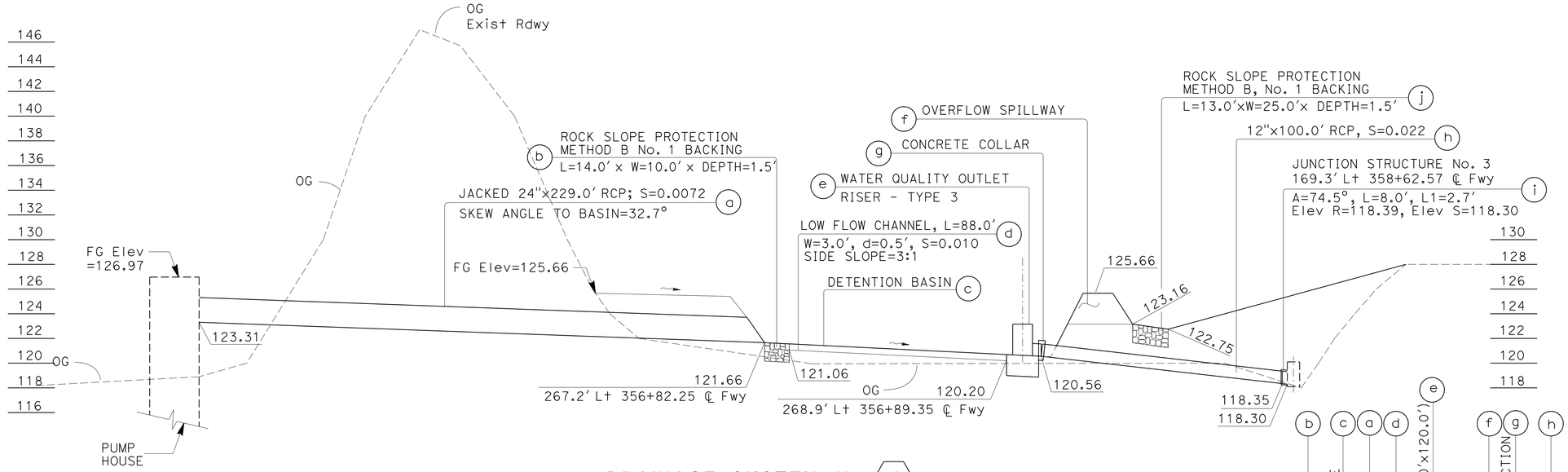

DRAINAGE SYSTEM No. 4

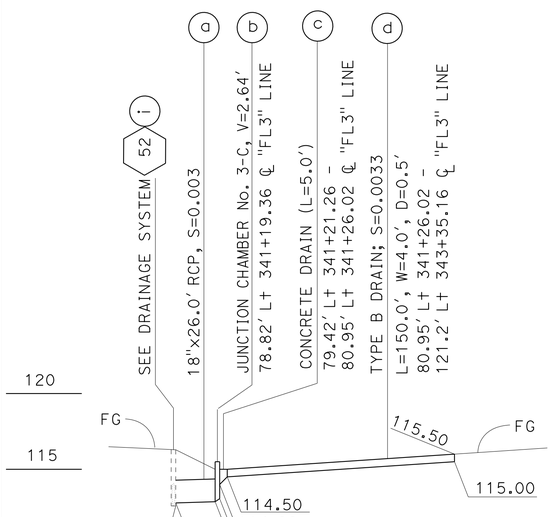

DRAINAGE SYSTEM No. 1

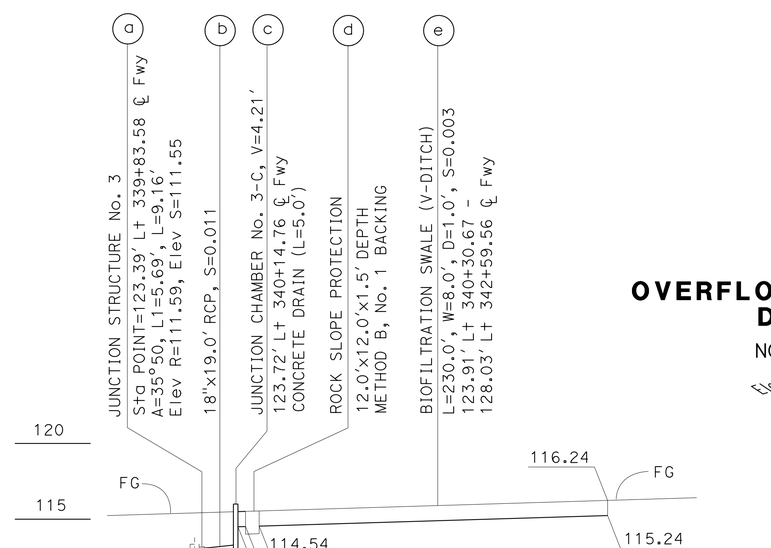

DRAINAGE SYSTEM No. 2

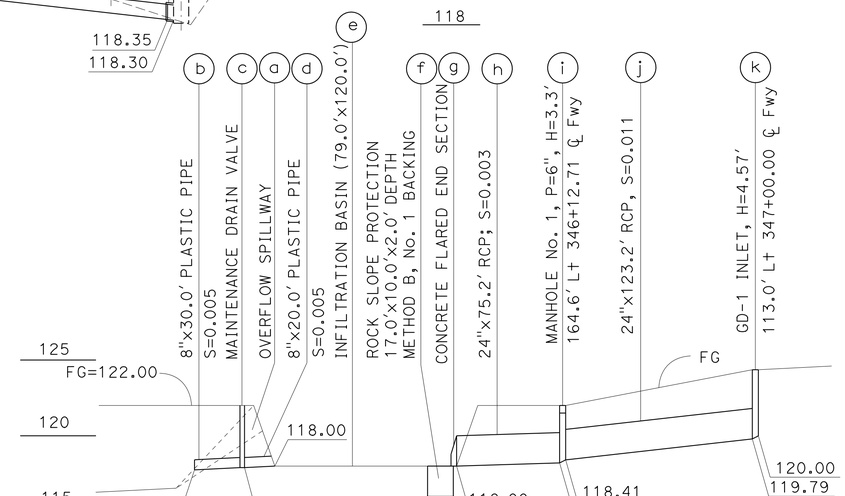

DRAINAGE SYSTEM No. 3

OVERFLOW SPILLWAY DETAIL

NO SCALE

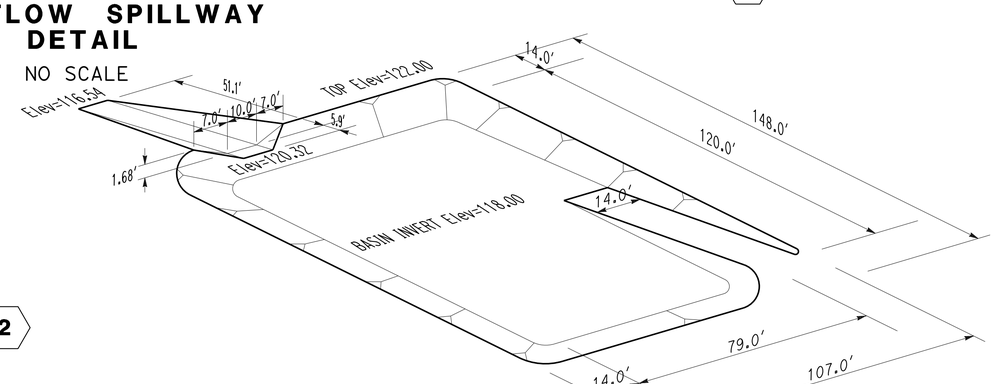

WATER POLLUTION CONTROL PROFILES

SCALE: 1" = 50' Horiz
1" = 5' Vert

WP-1

APPROVED FOR DRAINAGE WORK ONLY

STATE OF CALIFORNIA - DEPARTMENT OF TRANSPORTATION
Caltrans
HYDRAULICS

FUNCTIONAL SUPERVISOR: DAVE BHALLA
CALCULATED-DESIGNED BY: C.P. NGUYEN
CHECKED BY: D. BHALLA
REVISED BY
DATE REVISED

LAST REVISION 08-31-10
DATE PLOTTED => 26-JUN-2013
TIME PLOTTED => 14:54

Dist	COUNTY	ROUTE	POST MILES TOTAL PROJECT	SHEET No.	TOTAL SHEETS
07	LA	5	0.0/7.6	87	985

REGISTERED CIVIL ENGINEER 10-11-12 DATE

6-24-13
PLANS APPROVAL DATE

REGISTERED PROFESSIONAL ENGINEER DAVE BHALLA No. 34350 Exp. 9-30-13 CIVIL STATE OF CALIFORNIA

THE STATE OF CALIFORNIA OR ITS OFFICERS OR AGENTS SHALL NOT BE RESPONSIBLE FOR THE ACCURACY OR COMPLETENESS OF SCANNED COPIES OF THIS PLAN SHEET.

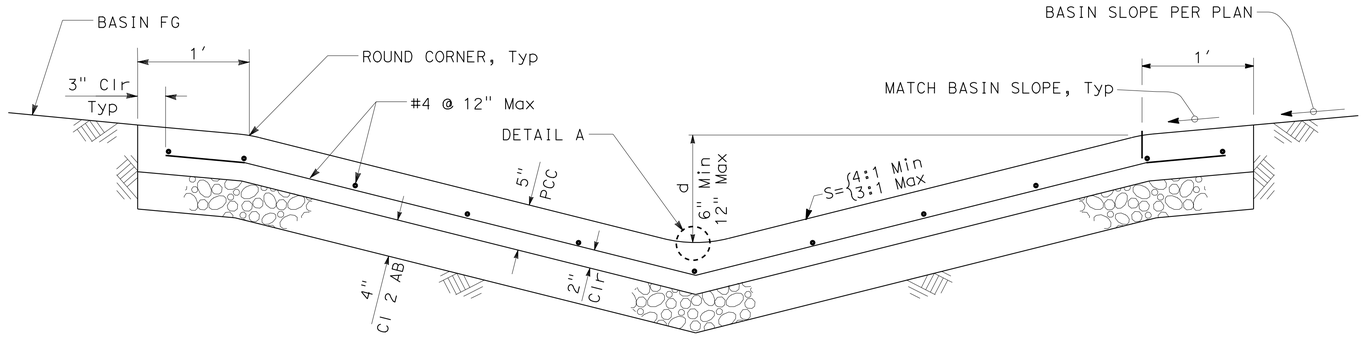

TYPE A CHANNEL

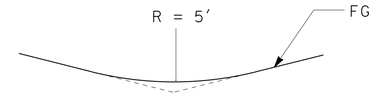

DETAIL A

NOTES:

1. SUBGRADE MATERIAL BELOW LOW FLOW CHANNEL SHALL OBTAIN RELATIVE COMPACTION OF NOT LESS THAN 90%.
2. 100 Ft MAXIMUM EXPANSION JOINT SPACING.

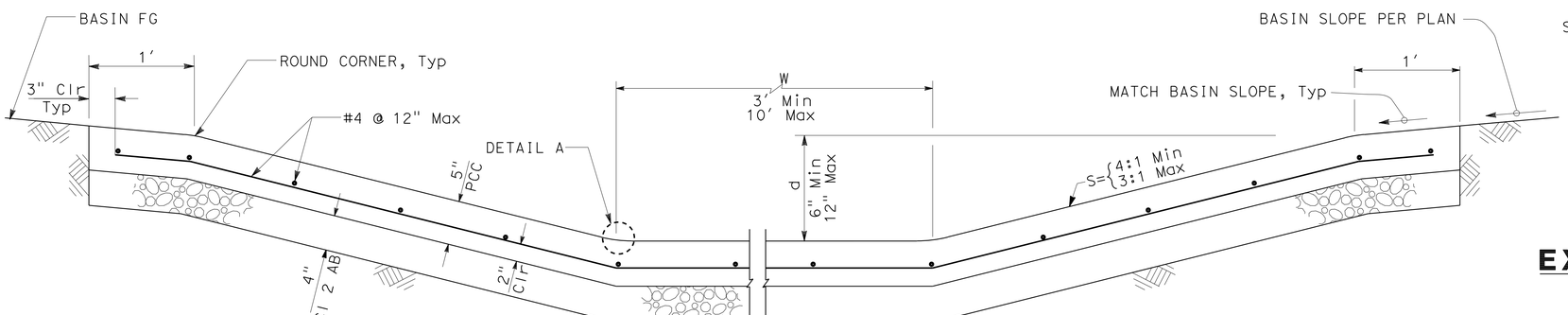

TYPE B CHANNEL

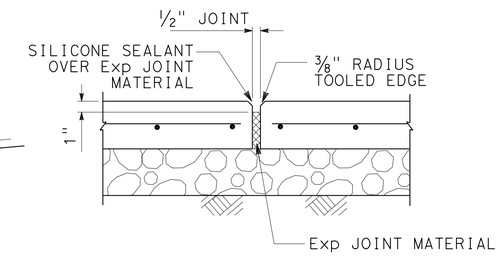

EXPANSION JOINT DETAIL

QUANTITIES-TYPE A CHANNEL			
DEPTH (d)	SIDE SLOPE	MINOR CONCRETE (INVERT PAVING) CY/LF	CLASS 2 AB CY/LF
6"	3:1	.08	.07
	4:1	.10	.08
12"	3:1	.13	.10
	4:1	.16	.13

QUANTITIES-TYPE B CHANNEL									
DEPTH (d)	SIDE SLOPE	CHANNEL WIDTH W (Ft)							
		3	4	5	6	7	8	9	10
		MINOR CONCRETE (CY/LF) / CLASS 2 AB (CY/LF)							
6"	3:1	.13 / .10	.15 / .12	.16 / .13	.18 / .14	.20 / .16	.21 / .17	.23 / .18	.25 / .20
	4:1	.15 / .12	.16 / .13	.18 / .14	.19 / .15	.21 / .17	.22 / .18	.24 / .19	.26 / .21
12"	3:1	.18 / .15	.20 / .16	.21 / .17	.23 / .18	.25 / .20	.26 / .21	.28 / .22	.29 / .24
	4:1	.21 / .17	.22 / .18	.24 / .19	.26 / .20	.27 / .22	.29 / .23	.30 / .24	.32 / .26

DESIGN DATA:

REINFORCED CONCRETE:
MINOR CONCRETE
F_y= 60,000 PSI

LOW FLOW CHANNEL WATER POLLUTION CONTROL DETAILS

NO SCALE

WD-1

APPROVED FOR DRAINAGE WORK ONLY

STATE OF CALIFORNIA - DEPARTMENT OF TRANSPORTATION
Caltrans HYDRAULICS

FUNCTIONAL SUPERVISOR: DAVE BHALLA
CALCULATED-DESIGNED BY: C.P. NGUYEN
CHECKED BY: D. BHALLA
REVISED BY
DATE REVISED

LAST REVISION 10-27-12
DATE PLOTTED => 26-JUN-2013
TIME PLOTTED => 14:54

Dist	COUNTY	ROUTE	POST MILES TOTAL PROJECT	SHEET No.	TOTAL SHEETS
07	LA	5	0.0/7.6	88	985

REGISTERED CIVIL ENGINEER 10-11-12 DATE

6-24-13
PLANS APPROVAL DATE

REGISTERED PROFESSIONAL ENGINEER
DAVE BHALLA
No. 34350
Exp. 9-30-13
CIVIL
STATE OF CALIFORNIA

THE STATE OF CALIFORNIA OR ITS OFFICERS OR AGENTS SHALL NOT BE RESPONSIBLE FOR THE ACCURACY OR COMPLETENESS OF SCANNED COPIES OF THIS PLAN SHEET.

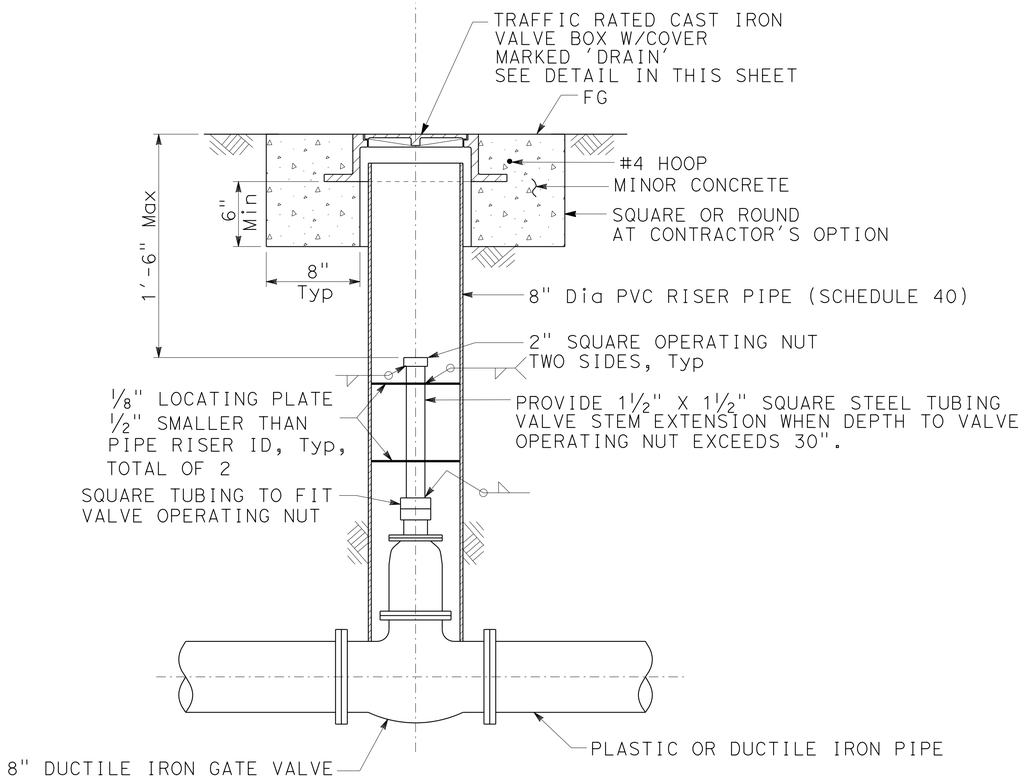

MAINTENANCE DRAIN VALVE DETAIL

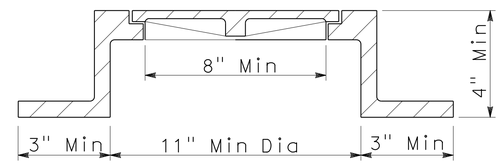

VALVE BOX AND COVER DETAIL

WATER POLLUTION CONTROL DETAILS

NO SCALE

WD-2

APPROVED FOR DRAINAGE WORK ONLY

STATE OF CALIFORNIA - DEPARTMENT OF TRANSPORTATION
Caltrans
HYDRAULICS

FUNCTIONAL SUPERVISOR: DAVE BHALLA
CALCULATED-DESIGNED BY: C.P. NGUYEN
CHECKED BY: D. BHALLA
REVISED BY
DATE REVISED

LAST REVISION 10-27-12
DATE PLOTTED => 26-JUN-2013
TIME PLOTTED => 14:54

Dist	COUNTY	ROUTE	POST MILES TOTAL PROJECT	SHEET No.	TOTAL SHEETS
07	LA	5	0.0/7.6	89	985

REGISTERED CIVIL ENGINEER 10-11-12 DATE

6-24-13
PLANS APPROVAL DATE

REGISTERED PROFESSIONAL ENGINEER DAVE BHALLA No. 34350 Exp. 9-30-13 CIVIL STATE OF CALIFORNIA

THE STATE OF CALIFORNIA OR ITS OFFICERS OR AGENTS SHALL NOT BE RESPONSIBLE FOR THE ACCURACY OR COMPLETENESS OF SCANNED COPIES OF THIS PLAN SHEET.

NOTE:

1. SEAL BOLT HOLES AND COAT CONNECTION STEEL WITH ASPHALT MASTIC (ASTM A491). TROWEL ASPHALT MASTIC A MINIMUM OF ½" THICK ON AND AROUND CONNECTION STEEL. USE MASTIC TO FILL CORRUGATIONS BEHIND WASHER PLATES.

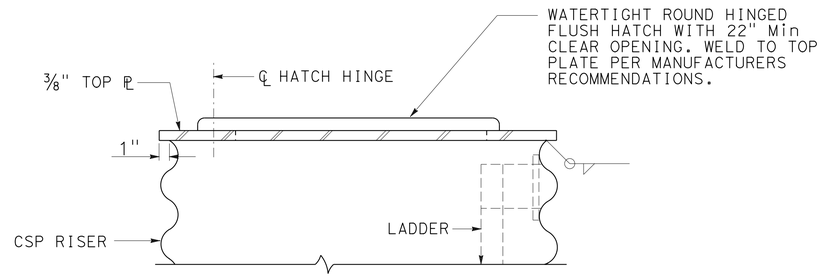

RISER CAP DETAIL

QUANTITIES:

MINOR CONCRETE (WATER QUALITY OUTLET RISER) 5.1 CY
12" CSP (.079" THICK) 3.5 LF
MISCELLANEOUS METAL (OVERFLOW RISER):

LADDER	10 LB/LF
RISER CAP	215 LB
ANCHOR BOLTS	9 LB
WIRE MESH & SUPPORT FRAME	101 LB
GUIDE ANGLES	9 LB
BAND CLAMP	9 LB

DESIGN DATA:

REINFORCED CONCRETE:
MINOR CONCRETE
Fy= 60,000 PSI

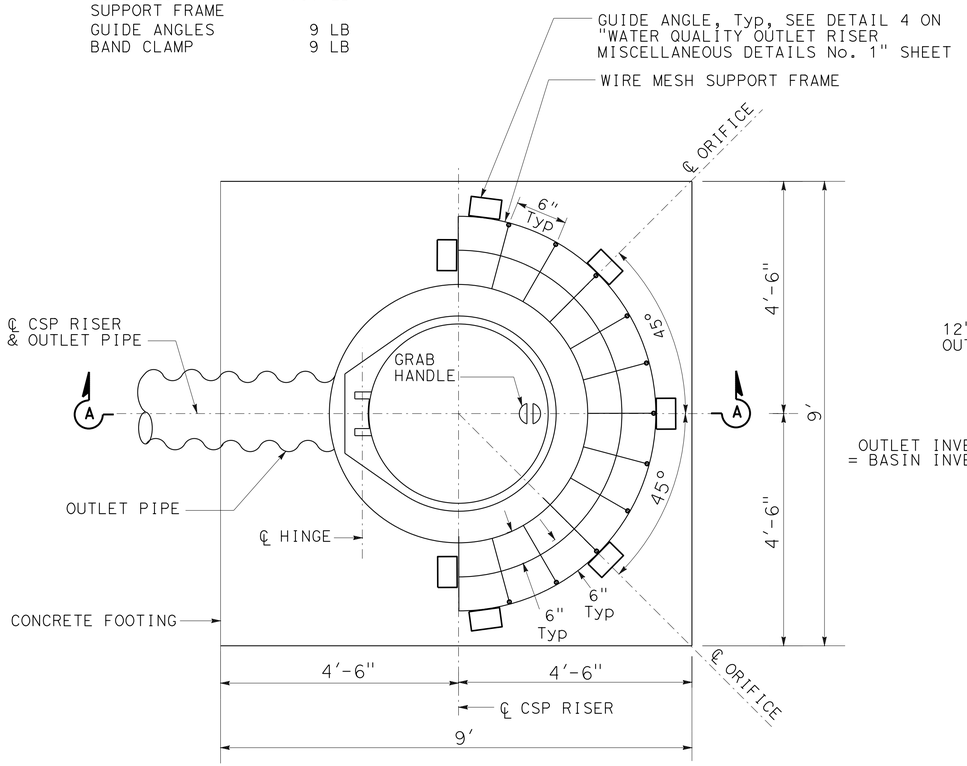

PLAN

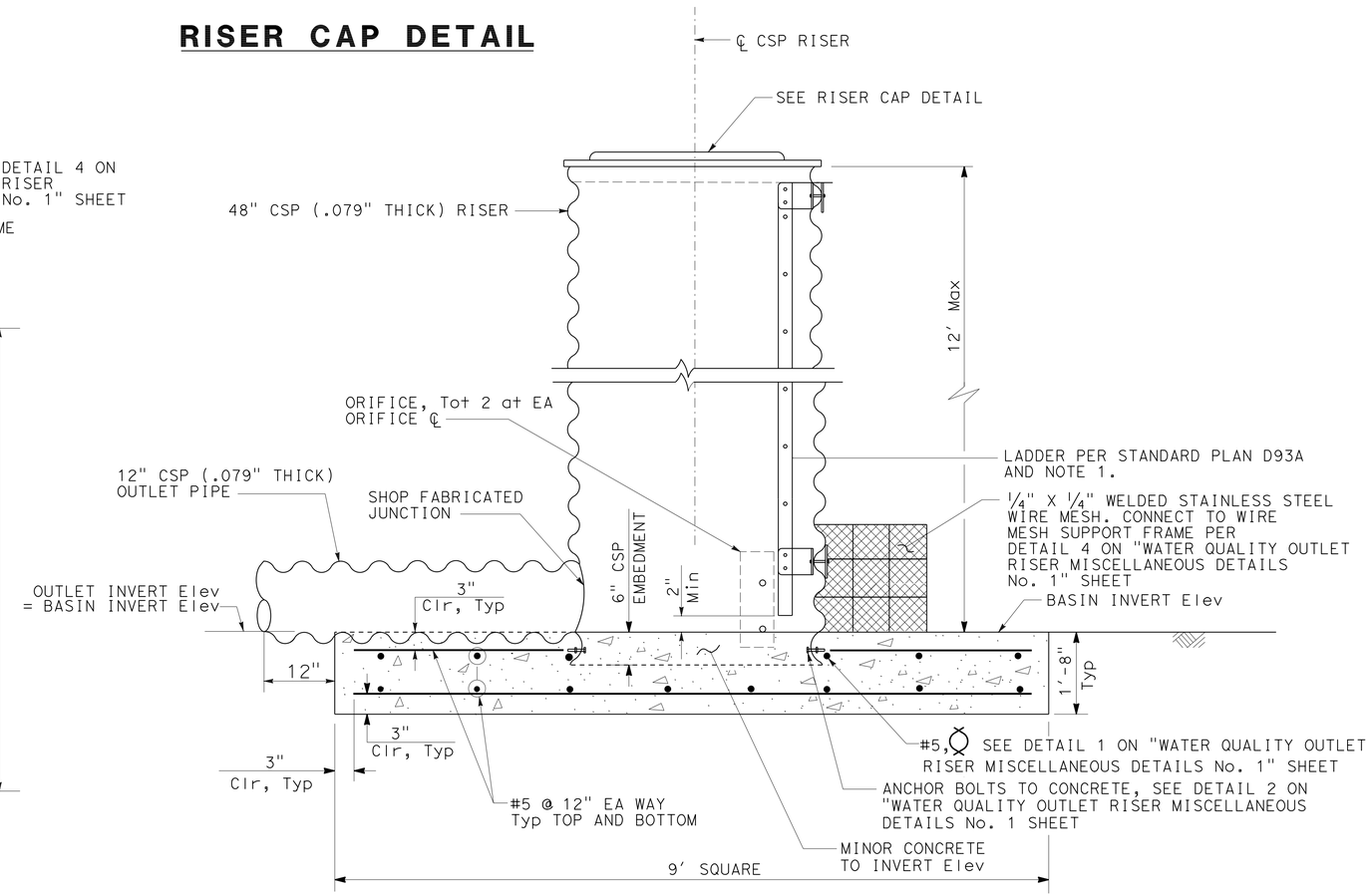

SECTION A-A

WATER QUALITY OUTLET RISER-TYPE 3
WATER POLLUTION CONTROL DETAILS

NO SCALE

WD-3

STATE OF CALIFORNIA - DEPARTMENT OF TRANSPORTATION
Caltrans
HYDRAULICS

FUNCTIONAL SUPERVISOR: DAVE BHALLA
CALCULATED-DESIGNED BY: C.P. NGUYEN
CHECKED BY: D. BHALLA
REVISED BY
DATE REVISED

LAST REVISION
DATE PLOTTED => 26-JUN-2013
TIME PLOTTED => 14:55

Dist	COUNTY	ROUTE	POST MILES TOTAL PROJECT	SHEET No.	TOTAL SHEETS
07	LA	5	0.0/7.6	90	985

REGISTERED CIVIL ENGINEER 10-11-12 DATE

6-24-13
PLANS APPROVAL DATE

REGISTERED PROFESSIONAL ENGINEER DAVE BHALLA No. 34350 Exp. 9-30-13 CIVIL STATE OF CALIFORNIA

THE STATE OF CALIFORNIA OR ITS OFFICERS OR AGENTS SHALL NOT BE RESPONSIBLE FOR THE ACCURACY OR COMPLETENESS OF SCANNED COPIES OF THIS PLAN SHEET.

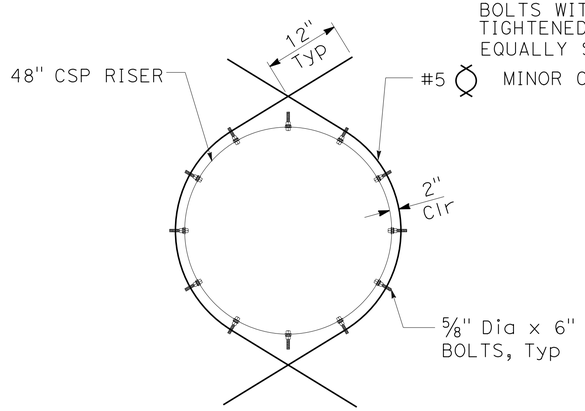

DETAIL 1

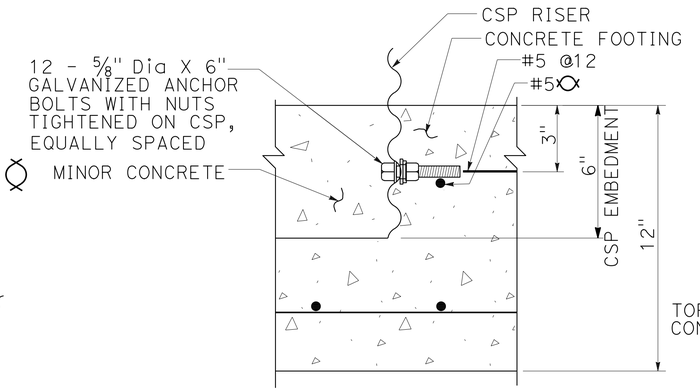

DETAIL 2

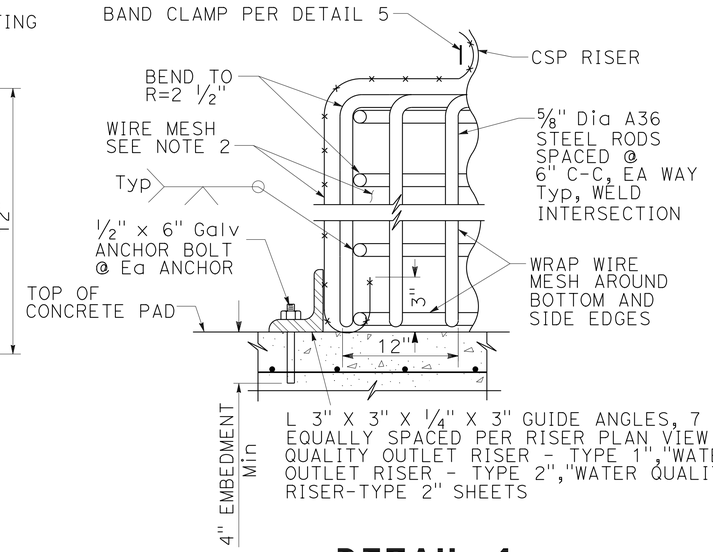

DETAIL 4
WIRE MESH SUPPORT FRAME

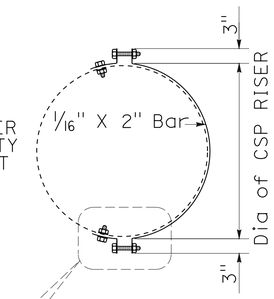

DETAIL 5
BAND CLAMP

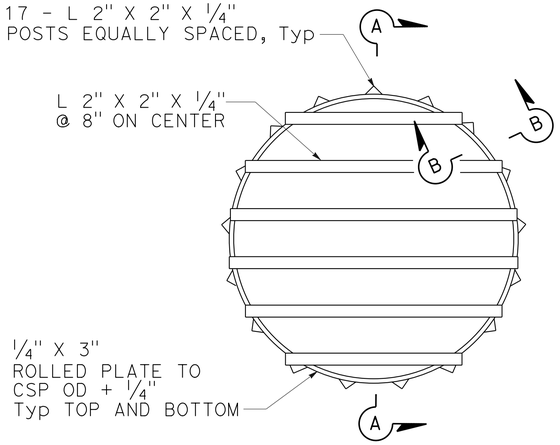

PLAN

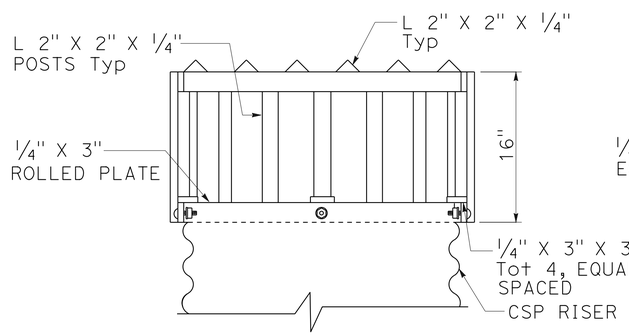

SECTION A-A

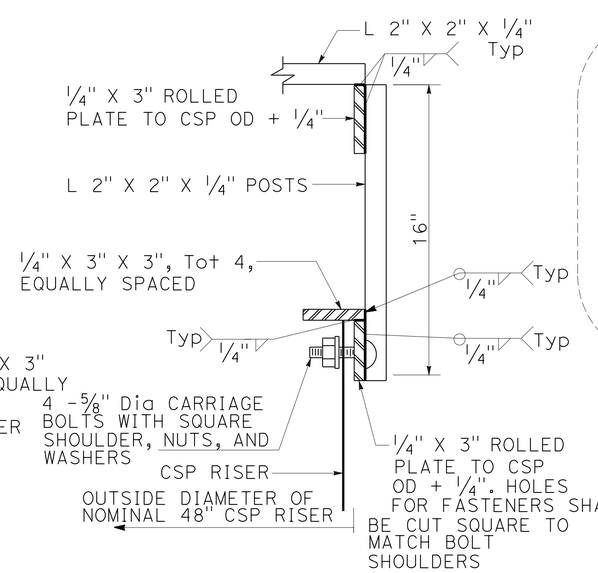

SECTION B-B

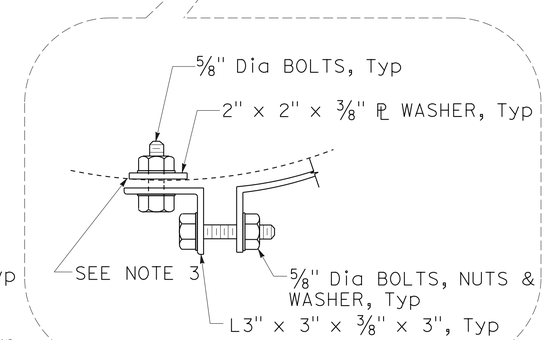

NOTES:

1. ALL HARDWARE AND FABRICATION MATERIALS SHALL BE GALVANIZED EXCEPT AS NOTED.
2. 1/4" X 1/4" (4 MESH PER 1") .032" WIRE Dia, TYPE 304 STAINLESS STEEL.
3. SEAL BOLT HOLES AND COAT CONNECTION STEEL WITH ASPHALT MASTIC (ASTM A491). TROWEL ASPHALT MASTIC A MINIMUM OF 1/2" THICK ON AND AROUND CONNECTION STEEL. USE MASTIC TO FILL CORRUGATIONS BEHIND WASHER PLATES.

DETAIL 3
DEBRIS RACK CAGE

APPROVED FOR DRAINAGE WORK ONLY

WATER QUALITY OUTLET RISER MISCELLANEOUS DETAILS No. 1 WATER POLLUTION CONTROL DETAILS

NO SCALE

WD-4

STATE OF CALIFORNIA - DEPARTMENT OF TRANSPORTATION
Caltrans HYDRAULICS

FUNCTIONAL SUPERVISOR: DAVE BHALLA

CALCULATED-DESIGNED BY: C.P. NGUYEN
CHECKED BY: D. BHALLA
REVISED BY
DATE REVISED

LAST REVISION 10-27-12
DATE PLOTTED => 26-JUN-2013
TIME PLOTTED => 14:55

Dist	COUNTY	ROUTE	POST MILES TOTAL PROJECT	SHEET No.	TOTAL SHEETS
07	LA	5	0.0/7.6	91	985

REGISTERED CIVIL ENGINEER 10-11-12 DATE

6-24-13
PLANS APPROVAL DATE

REGISTERED PROFESSIONAL ENGINEER DAVE BHALLA No. 34350 Exp. 9-30-13 CIVIL STATE OF CALIFORNIA

THE STATE OF CALIFORNIA OR ITS OFFICERS OR AGENTS SHALL NOT BE RESPONSIBLE FOR THE ACCURACY OR COMPLETENESS OF SCANNED COPIES OF THIS PLAN SHEET.

DESIGN DATA:

REINFORCED CONCRETE:
MINOR CONCRETE
Fy= 60,000 PSI

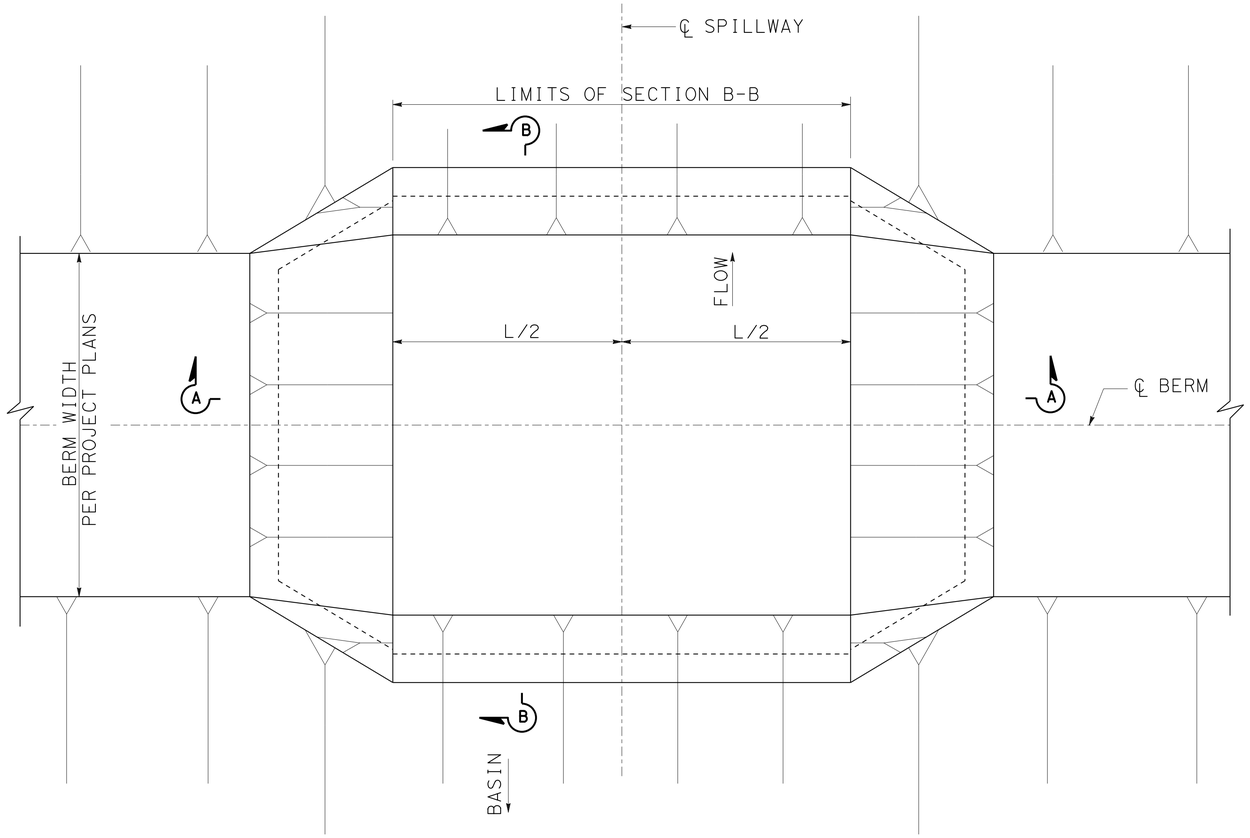

PLAN

Q DESIGN FLOW (CFS)	L (Ft)		
	H=1.5 Ft	H=2 Ft	H=2.5 Ft
10	11	4	3
15	17	6	4
20	22	8	5
25	27	10	6
30	33	12	7
35	38	14	8
40	44	15	9
45	49	17	10
50	54	19	11
60	65	23	13
70	76	27	15
80	87	30	17
90	98	34	19
100	108	38	21
110	119	42	23
120	130	45	25
130	141	49	27
140	152	53	29
150	162	56	31
175	189	66	36
200	216	75	42
225	243	84	47
250	270	94	52
275	297	103	57
300	324	112	62

NOTE:

"H" IS MEASURED FROM WEIR INVERT TO TOP OF EMBANKMENT.

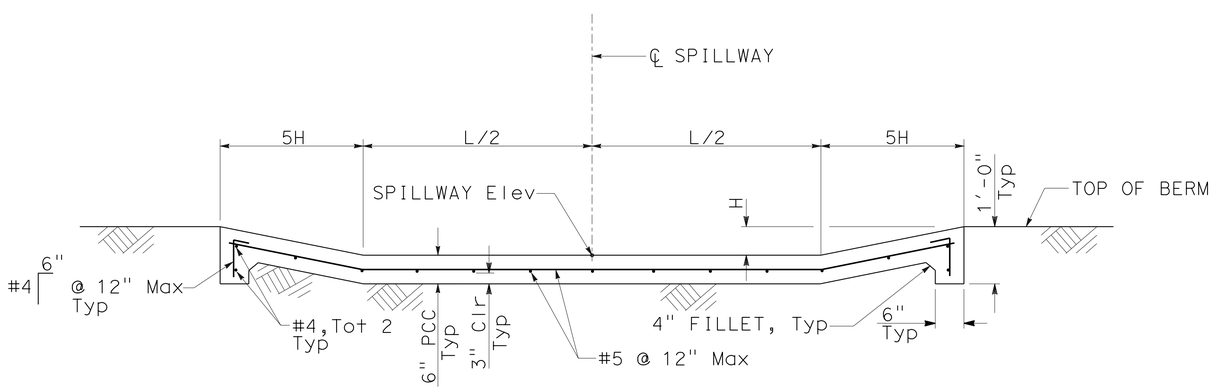

SECTION A-A

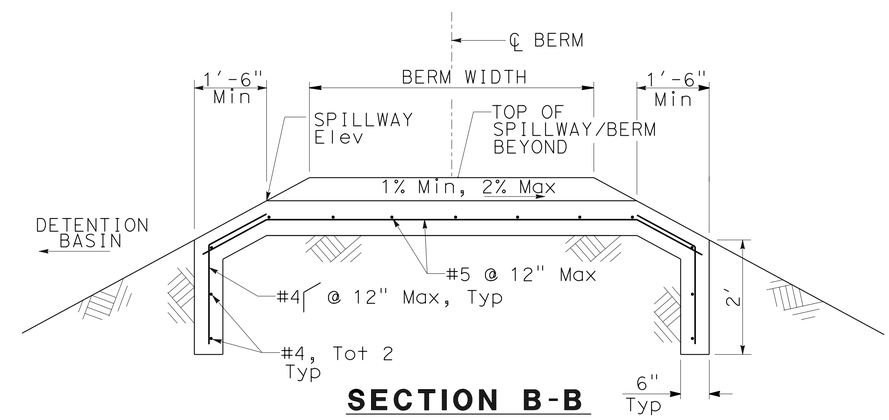

SECTION B-B

OVERFLOW SPILLWAY
WATER POLLUTION CONTROL DETAILS

NO SCALE

WD-5

APPROVED FOR DRAINAGE WORK ONLY

STATE OF CALIFORNIA - DEPARTMENT OF TRANSPORTATION
Caltrans
HYDRAULICS

FUNCTIONAL SUPERVISOR: DAVE BHALLA
CALCULATED-DESIGNED BY: C.P. NGUYEN
CHECKED BY: D. BHALLA
REVISED BY
DATE REVISED

LAST REVISION 10-27-12
DATE PLOTTED => 26-JUN-2013
TIME PLOTTED => 14:55

Dist	COUNTY	ROUTE	POST MILES TOTAL PROJECT	SHEET No.	TOTAL SHEETS
07	LA	5	0.0/7.6	92	985

REGISTERED CIVIL ENGINEER 10-11-12 DATE

6-24-13
PLANS APPROVAL DATE

REGISTERED PROFESSIONAL ENGINEER DAVE BHALLA No. 34350 Exp. 9/30/13 CIVIL STATE OF CALIFORNIA

THE STATE OF CALIFORNIA OR ITS OFFICERS OR AGENTS SHALL NOT BE RESPONSIBLE FOR THE ACCURACY OR COMPLETENESS OF SCANNED COPIES OF THIS PLAN SHEET.

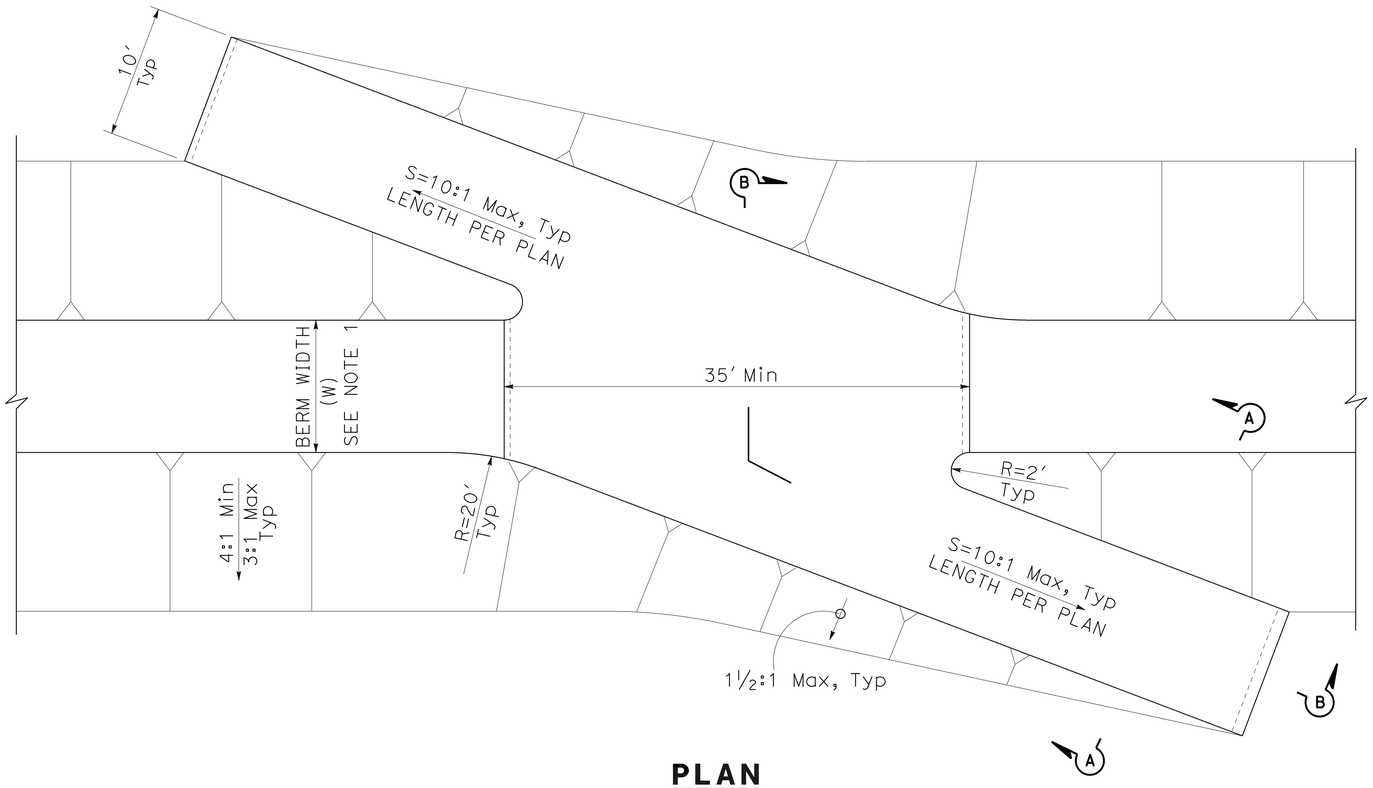

PLAN

DESIGN DATA:
REINFORCED CONCRETE:
MINOR CONCRETE:
Fy= 60,000 PSI

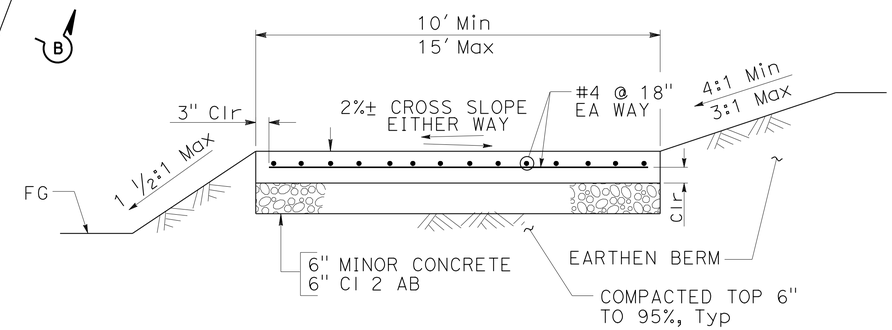

SECTION A-A

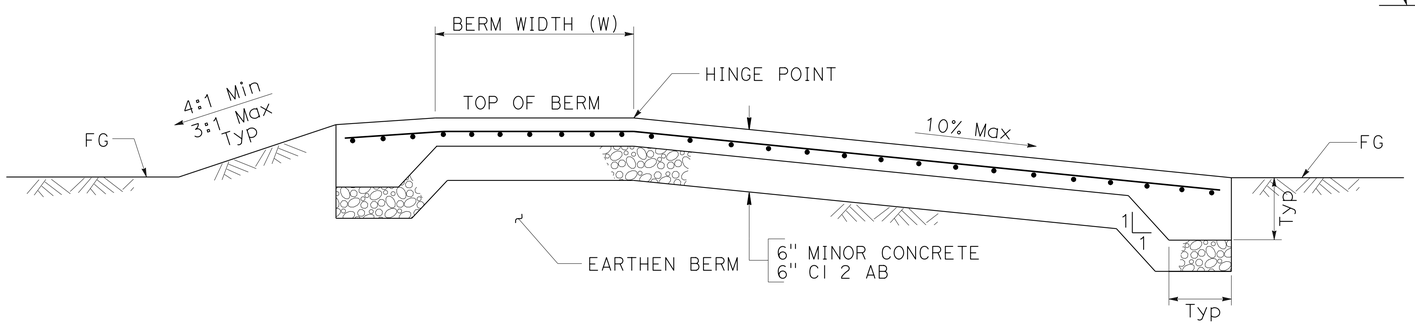

SECTION B-B

NOTE:
1. SEE PROJECT PLANS FOR BERM WIDTH (W).

MAINTENANCE VEHICLE RAMP (DETENTION BASIN) WATER POLLUTION CONTROL DETAILS

NO SCALE

WD-6

APPROVED FOR DRAINAGE WORK ONLY

STATE OF CALIFORNIA - DEPARTMENT OF TRANSPORTATION
Caltrans
HYDRAULICS

FUNCTIONAL SUPERVISOR: DAVE BHALLA
CALCULATED-DESIGNED BY: C.P. NGUYEN
CHECKED BY: D. BHALLA
REVISED BY
DATE REVISED

LAST REVISION 10-27-12
DATE PLOTTED => 26-JUN-2013
TIME PLOTTED => 14:55

NOTES: PIPE JOINTS ARE STANDARD OR AS NOTED ON PLANS

(N) NOT A SEPARATE PAY ITEM, FOR INFORMATION ONLY

(*) ROADWAY ITEM, SEE ADDITIONAL QUANTITES IN ROADWAY QUANTITY SHEET.

(**) DRAINAGE ITEM, SEE ADDITIONAL QUANTITIES ON DRAINAGE QUANTITIES SHEET, DQ-18

Dist	COUNTY	ROUTE	POST MILES TOTAL PROJECT	SHEET No.	TOTAL SHEETS
07	LA	5	0.0/7.6	93	985

REGISTERED CIVIL ENGINEER 10-11-12 DATE

6-24-13
PLANS APPROVAL DATE

REGISTERED PROFESSIONAL ENGINEER DAVE BHALLA No. 34350 Exp. 9/30/13 CIVIL STATE OF CALIFORNIA

THE STATE OF CALIFORNIA OR ITS OFFICERS OR AGENTS SHALL NOT BE RESPONSIBLE FOR THE ACCURACY OR COMPLETENESS OF SCANNED COPIES OF THIS PLAN SHEET.

DRAINAGE SHEET No.	DRAINAGE SYSTEM No. ⬡	DRAINAGE UNIT ◯	HEIGHT OF INLET H OR V F†	MINOR CONCRETE (MINOR STRUCTURE) (**) CY	MISCELLANEOUS IRON AND STEEL (**) LB	DITCH EXCAVATION CY	8" PLASTIC PIPE (SCHEDULE 40) (SUPPLY LINE) LF	12" CORRUGATED STEEL PIPE (0.079" THICK) LF	48" CORRUGATED STEEL PIPE (0.079" THICK) LF	12" REINFORCED CONCRETE PIPE LF	18" REINFORCED CONCRETE PIPE (**) LF	24" REINFORCED CONCRETE PIPE (**) LF	ROCK SLOPE PROTECTION (No.1, METHOD B) CY	ROCK SLOPE PROTECTION FABRIC (CLASS 8) SQYD	TYPE 24-12 FRAME AND GRATE (N) EA	MANHOLE FRAME AND COVER (N) EA	BIOFILTRATION SWALE (N) EA	BIOFILTRATION STRIP (N) EA	CHANNEL EXCAVATION CY	MAINTENANCE DRAIN VALVE EA	JACKED 24" REINFORCED CONCRETE PIPE (CLASS V) LF	CLASS 2 AGGREGATE BASE (*) CY	MISCELLANEOUS METAL LB	MAXIMUM COVER (N) F†	HOT MIX ASPHALT (TYPE B) (*) TON	PLACE HOT MIX ASPHALT (MISCELLANEOUS AREA) (*) SQYD	IMPORTED BORROW (*) CY	DESCRIPTION	STATION	DRAINAGE SHEET No.	DRAINAGE SYSTEM No. ⬡	DRAINAGE UNIT ◯
W-1	1	a									26.0													3.5				18" RCP		W-1	1	a
		b	2.64	1.1	235											1												JUNCTION CHAMBER No. 3-C	78.82′ L† 341+19.36 ℄ "FL3" LINE			b
		c		0.3																								CONCRETE DRAIN, L=5.0′	79.42′ L† 341+21.26 - 80.95′ L† 341+26.06 ℄ "FL3" LINE			c
		d		8.3		11.1												1										TYPE B DRAIN, L=150.0′	80.95′ L† 341+26.02 - 121.20′ L† 343+35.16 ℄ "FL3" LINE			d
		e											1.5	8.0														ROCK SLOPE PROTECTION (5.0′x4.0′x2.0′) METHOD B, No 1 BACKING	93.65′ L† 344+16.00 ℄ "FL3" LINE			e
W-1	2	a		0.3																								JUNCTION STRUCTURE No. 3	Sta POINT=123.39′ L† 339+83.56 ℄ Fwy	W-1	2	a
		b									19.0																	18" RCP				b
		c	4.21	1.9	235											1												JUNCTION CHAMBER No. 3-C AND CONCRETE DRAIN (L=5.0′)	123.72′ L† 340+14.76 ℄ Fwy			c
		d											8.0	25.0														ROCK SLOPE PROTECTION (12.0′x12.0′x1.5′) METHOD B, No. 1 BACKING				d
		e				34.1											1											BIOFILTRATION SWALE (V-DITCH) L=230.0′	123.91′ L† 340+30.67 - 128.03′ L† 342+59.56 ℄ Fwy			e
W-1	3	a																	65.6									OVERFLOW SPILLWAY	143.3′ L† 343+57.51 - 149.8′ L† 344+13.86 ℄ Fwy	W-1	3	a
		b					30.0																	5.5				8" PLASTIC PIPE	150.3′ L† 344+74.96 - 169.7′ L† 344+98.49 ℄ Fwy			b
		c					4.0													1								MAINTENANCE DRAIN VALVE	169.7′ L† 344+98.49 ℄ Fwy			c
		d					20.0																	4.0				8" PLASTIC PIPE	169.7′ L† 344+98.49 - 172.1′ L† 344+19.45 ℄ Fwy			d
		e																	1817									INFILTRATION BASIN				e
		f											12.6	32.7														ROCK SLOPE PROTECTION (17.0′x10.0′x2.0′) METHOD B, No. 1 BACKING				f
		g		0.7																								CONCRETE FLARED END SECTION				g
		h										75.2												3.8				24" RCP	186.1′ L† 345+38.64 - 164.6′ L† 346+12.71 ℄ Fwy			h
		i	3.3	2.8	435											1												MANHOLE No. 1	164.6′ L† 346+12.71 ℄ Fwy			i
		j										123.2												4.6				24" RCP				j
		k	4.57	1.8	435										2													GD-1 INLET	113.0′ L† 347+00.00 ℄ Fwy			k
SHEET TOTAL				17.2	1340	45.2	54.0				45.0	198.4	22.1	65.7	2	3	1	1	1882.6	1												

WATER POLLUTION CONTROL QUANTITIES
WQ-1

STATE OF CALIFORNIA - DEPARTMENT OF TRANSPORTATION
Caltrans® HYDRAULICS

FUNCTIONAL SUPERVISOR: DAVE BHALLA

CALCULATED-DESIGNED BY: C.P. NGUYEN
CHECKED BY: D. BHALLA

REVISED BY
DATE REVISED

LAST REVISION 08-17-11
DATE PLOTTED => 26-JUN-2013
TIME PLOTTED => 14:55

NOTES: PIPE JOINTS ARE STANDARD OR AS NOTED ON PLANS

(N) NOT A SEPARATE PAY ITEM, FOR INFORMATION ONLY.
(*) ROADWAY ITEM, SEE ADDITIONAL QUANTITIES IN ROADWAY QUANTITY SHEET.

(**) DRAINAGE ITEM, SEE ADDITIONAL QUANTITIES ON DRAINAGE QUANTITIES SHEET, DQ-18.

Dist	COUNTY	ROUTE	POST MILES TOTAL PROJECT	SHEET No.	TOTAL SHEETS
07	LA	5	0.0/7.6	94	985

REGISTERED CIVIL ENGINEER 10-11-12 DATE

6-24-13
PLANS APPROVAL DATE

REGISTERED PROFESSIONAL ENGINEER DAVE BHALLA No. 34350 Exp. 9/30/13 CIVIL STATE OF CALIFORNIA

THE STATE OF CALIFORNIA OR ITS OFFICERS OR AGENTS SHALL NOT BE RESPONSIBLE FOR THE ACCURACY OR COMPLETENESS OF SCANNED COPIES OF THIS PLAN SHEET.

DRAINAGE SHEET No.	DRAINAGE SYSTEM No. ⬡	DRAINAGE UNIT ◯	HEIGHT OF INLET H OR V (F†)	(**) MINOR CONCRETE (MINOR STRUCTURE) (CY)	(**) MISCELLANEOUS IRON AND STEEL (LB)	DITCH EXCAVATION (CY)	8" PLASTIC PIPE (SCHEDULE 40) (SUPPLY LINE) (LF)	12" CORRUGATED STEEL PIPE (0.079" THICK) (LF)	48" CORRUGATED STEEL PIPE (0.079" THICK) (LF)	12" REINFORCED CONCRETE PIPE (LF)	(**) 18" REINFORCED CONCRETE PIPE (LF)	(**) 24" REINFORCED CONCRETE PIPE (LF)	ROCK SLOPE PROTECTION (No. 1, METHOD B) (CY)	ROCK SLOPE PROTECTION FABRIC (CLASS 8) (SQYD)	(N) TYPE 24-12 FRAME AND GRATE (EA)	(N) MANHOLE FRAME AND COVER (EA)	(N) BIOFILTRATION SWALE (EA)	(N) BIOFILTRATION STRIP (EA)	CHANNEL EXCAVATION (CY)	MAINTENANCE DRAIN VALVE (EA)	JACKED 24" REINFORCED CONCRETE PIPE (CLASS V) (LF)	(*) CLASS 2 AGGREGATE BASE (CY)	MISCELLANEOUS METAL (LB)	(N) MAXIMUM COVER (F†)	(*) HOT MIX ASPHALT (TYPE B) (TON)	(*) PLACE HOT MIX ASPHALT (MISCELLANEOUS AREA) (SQYD)	(*) IMPORTED BORROW (CY)	DESCRIPTION	STATION	DRAINAGE SHEET No.	DRAINAGE SYSTEM No. ⬡	DRAINAGE UNIT ◯
W-2	4	a																			229.0							JACKED 24" RCP	276.2' L† 356+82.25 ℄ Fwy	W-2	4	a
		b											7.8	24.6														ROCK SLOPE PROTECTION (14.0'x10.0'x1.5') METHOD B, No. 1 BACKING				b
		c		22.4																		22.4			101	570	3501	DETENTION BASIN & Maint VEHICLE RAMP	4+00.00 - 7+00.00 ⅊ LINE "BA1" 7+00.00 - 8+19.41 ⅊ LINE "BA1"			c
		d		11.7																		9.0						LOW FLOW CHANNEL - TYPE A	268.9' L† 356+89.35 - 216.0' L† 357+62.07 ℄ Fwy			d
		e		5.1				3.5	2.5														368					WATER QUALITY OUTLET RISER - TYPE 3				e
		f		14.0															58.6									OVERFLOW SPILLWAY	244.6' L† 357+93.67 - 209.1' L† 357+94.08 ℄ Fwy			f
		g		0.1																								CONCRETE COLLAR				g
		h								100.0														4.0				12" X 100.0' RCP				h
		i		0.4																								JUNCTION STRUCTURE No. 3	169.3' L† 358+62.57 ℄ Fwy			i
		j											18.1	49.8														ROCK SLOPE PROTECTION (13.0' x 25.0' x 1.5') METHOD B, No. 1 BACKING				j
SHEET TOTAL				53.7				3.5	2.5	100.0			25.9	74.4					58.6		229.0	31.4	368		101	570	3501					
TOTAL WQ1 + WQ2				70.9	1340	45.2	54.0	3.5	2.5	100.0	45.0	198.4	48.0	140.1	2	3	1	1	1941.2	1	229.0	31.4	368		101	570	3501					

WATER POLLUTION CONTROL QUANTITIES
WQ-2

STATE OF CALIFORNIA - DEPARTMENT OF TRANSPORTATION
Caltrans HYDRAULICS

FUNCTIONAL SUPERVISOR: DAVE BHALLA
CALCULATED-DESIGNED BY: C.P. NGUYEN
CHECKED BY: D. BHALLA
REVISED BY
DATE REVISED

LAST REVISION 08-17-11
DATE PLOTTED => 26-JUN-2013
TIME PLOTTED => 14:55

Dist	COUNTY	ROUTE	POST MILES TOTAL PROJECT	SHEET No.	TOTAL SHEETS
07	LA	5	0.0/7.6	95	985

REGISTERED CIVIL ENGINEER 10-11-12 DATE

6-24-13
PLANS APPROVAL DATE

REGISTERED PROFESSIONAL ENGINEER
NGIM NANCY PE
No. 58161
Exp 6-30-14
CIVIL
STATE OF CALIFORNIA

THE STATE OF CALIFORNIA OR ITS OFFICERS OR AGENTS SHALL NOT BE RESPONSIBLE FOR THE ACCURACY OR COMPLETENESS OF SCANNED COPIES OF THIS PLAN SHEET.

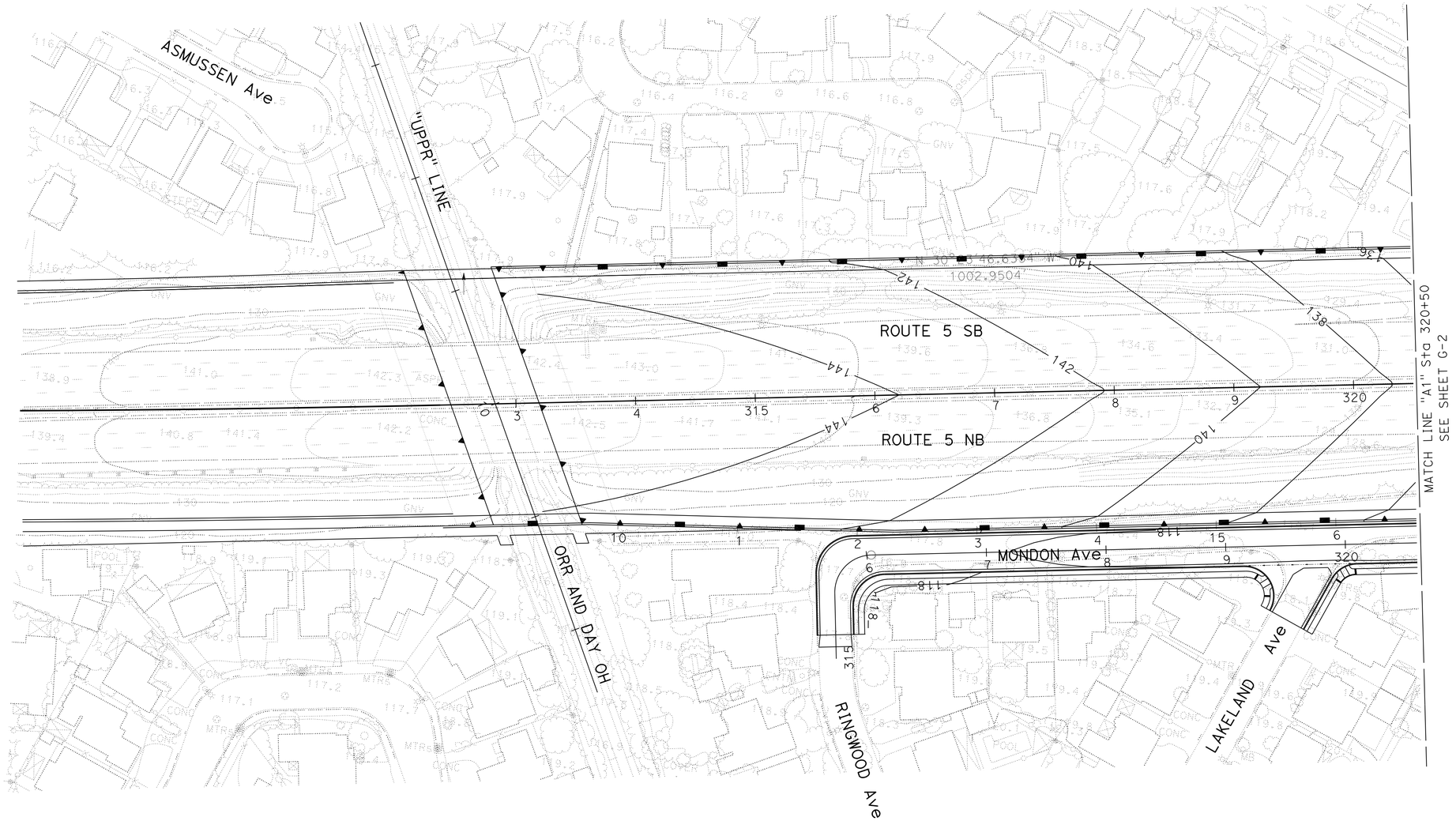

GRADING PLAN

SCALE: 1" = 50'

G-1

APPROVED FOR CONTOUR GRADING WORK ONLY

REVISED BY: MARK MAI — DATE REVISED: 10-15-12

KEVIN Q NGUYEN — NGIM NANCY PE

CALCULATED-DESIGNED BY — CHECKED BY

FUNCTIONAL SUPERVISOR: NGIM NANCY PE

STATE OF CALIFORNIA - DEPARTMENT OF TRANSPORTATION
Caltrans® OFFICE OF DESIGN A

S:\projects\215951\721595ha001.dgn

LAST REVISION 10-19-12 | DATE PLOTTED => 26-JUN-2013 | TIME PLOTTED => 15:27

Dist	COUNTY	ROUTE	POST MILES TOTAL PROJECT	SHEET No.	TOTAL SHEETS
07	LA	5	0.0/7.6	96	985

REGISTERED CIVIL ENGINEER 10-11-12 DATE

6-24-13
PLANS APPROVAL DATE

REGISTERED PROFESSIONAL ENGINEER
NGIM NANCY PE
No. 58161
Exp 6-30-14
CIVIL
STATE OF CALIFORNIA

THE STATE OF CALIFORNIA OR ITS OFFICERS OR AGENTS SHALL NOT BE RESPONSIBLE FOR THE ACCURACY OR COMPLETENESS OF SCANNED COPIES OF THIS PLAN SHEET.

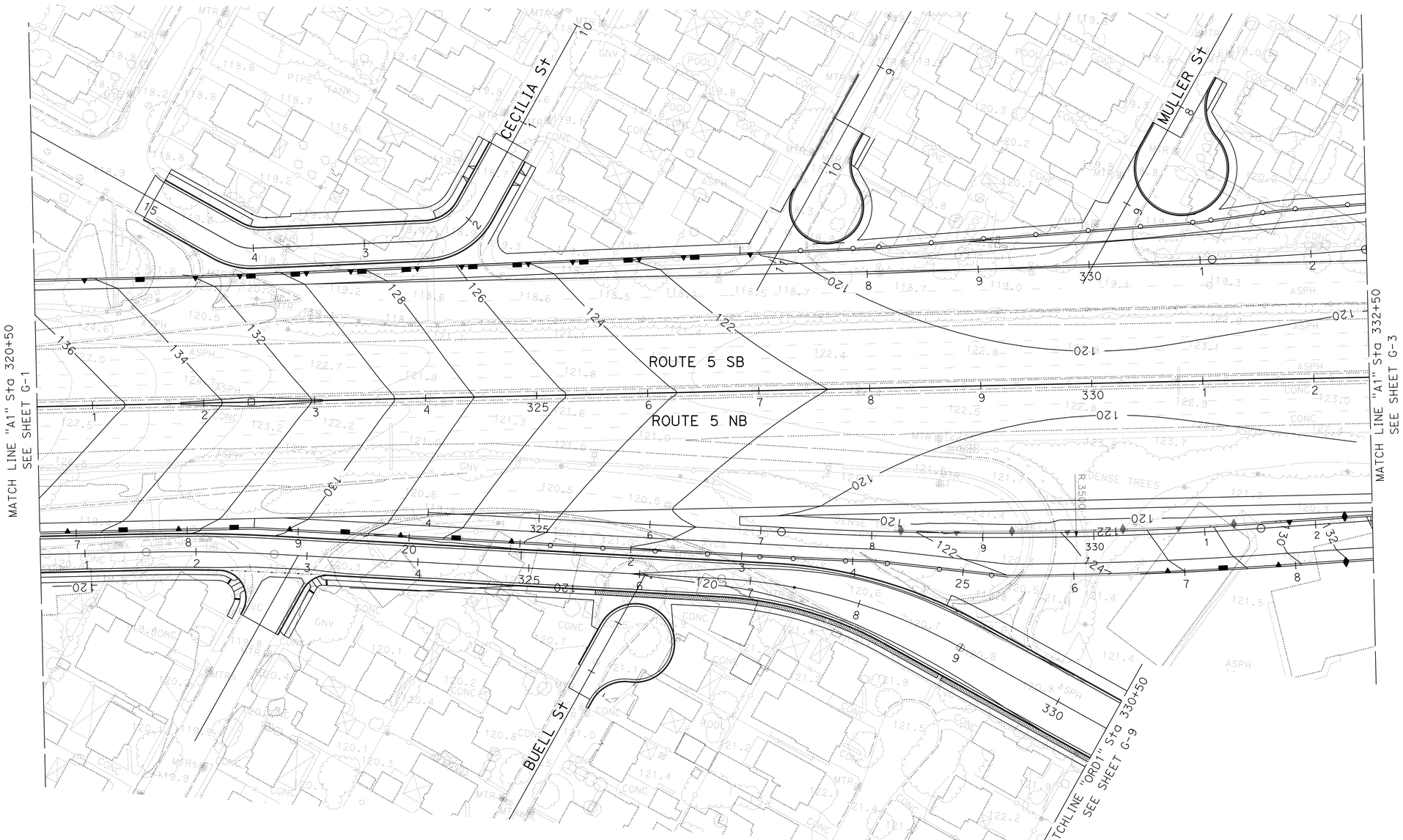

GRADING PLAN

SCALE: 1" = 50'

G-2

APPROVED FOR CONTOUR GRADING WORK ONLY

REVISED BY	MARK MAI
DATE REVISED	10-15-12
CALCULATED-DESIGNED BY	KEVIN Q NGUYEN
CHECKED BY	NGIM NANCY PE
FUNCTIONAL SUPERVISOR	NGIM NANCY PE

STATE OF CALIFORNIA - DEPARTMENT OF TRANSPORTATION
Caltrans® OFFICE OF DESIGN A

S:\projects\215951\721595ha002.dgn

LAST REVISION 10-19-12 | DATE PLOTTED => 26-JUN-2013 | TIME PLOTTED => 15:27

BORDER LAST REVISED 7/2/2010 | USERNAME => s117606 | DGN FILE => 721595ha002.dgn | RELATIVE BORDER SCALE IS IN INCHES 0 1 2 3 | UNIT 1797 | PROJECT NUMBER & PHASE 07000018351

Dist	COUNTY	ROUTE	POST MILES TOTAL PROJECT	SHEET No.	TOTAL SHEETS
07	LA	5	0.0/7.6	97	985

REGISTERED CIVIL ENGINEER 10-11-12 DATE

6-24-13
PLANS APPROVAL DATE

REGISTERED PROFESSIONAL ENGINEER
NGIM NANCY PE
No. 58161
Exp 6-30-14
CIVIL
STATE OF CALIFORNIA

THE STATE OF CALIFORNIA OR ITS OFFICERS OR AGENTS SHALL NOT BE RESPONSIBLE FOR THE ACCURACY OR COMPLETENESS OF SCANNED COPIES OF THIS PLAN SHEET.

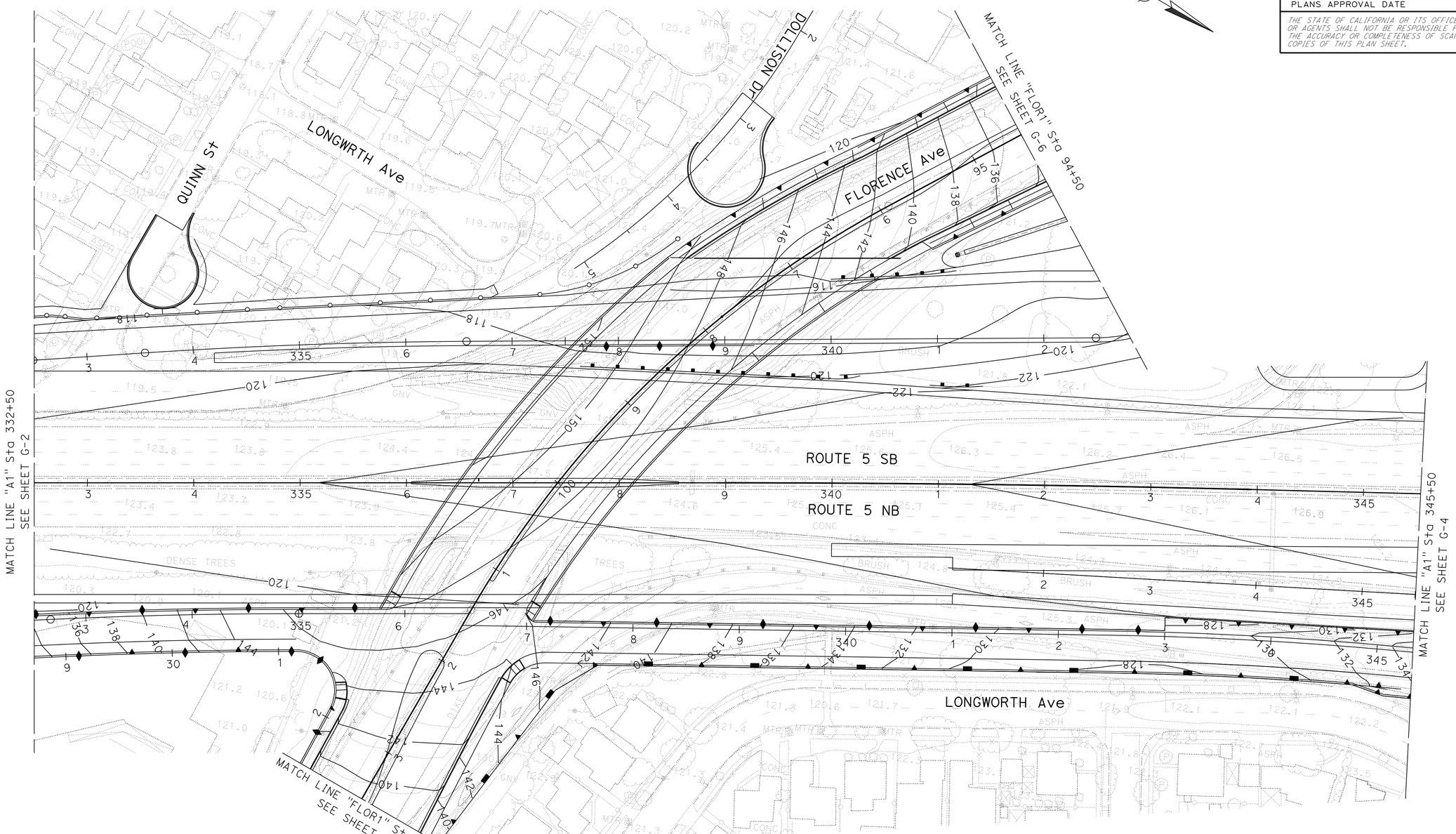

GRADING PLAN

SCALE: 1" = 50'

G-3

APPROVED FOR CONTOUR GRADING WORK ONLY

CALCULATED-DESIGNED BY	KEVIN Q NGUYEN
CHECKED BY	NGIM NANCY PE
REVISED BY	MARK MAI
DATE REVISED	10-15-12
FUNCTIONAL SUPERVISOR	NGIM NANCY PE

STATE OF CALIFORNIA - DEPARTMENT OF TRANSPORTATION
Caltrans® OFFICE OF DESIGN A

S:\projects\215951\721595ha003.dgn

LAST REVISION 10-19-12
DATE PLOTTED => 26-JUN-2013
TIME PLOTTED => 15:27

Dist	COUNTY	ROUTE	POST MILES TOTAL PROJECT	SHEET No.	TOTAL SHEETS
07	LA	5	0.0/7.6	98	985

REGISTERED CIVIL ENGINEER 10-11-12 DATE

6-24-13
PLANS APPROVAL DATE

REGISTERED PROFESSIONAL ENGINEER
NGIM NANCY PE
No. 58161
Exp 6-30-14
CIVIL
STATE OF CALIFORNIA

THE STATE OF CALIFORNIA OR ITS OFFICERS OR AGENTS SHALL NOT BE RESPONSIBLE FOR THE ACCURACY OR COMPLETENESS OF SCANNED COPIES OF THIS PLAN SHEET.

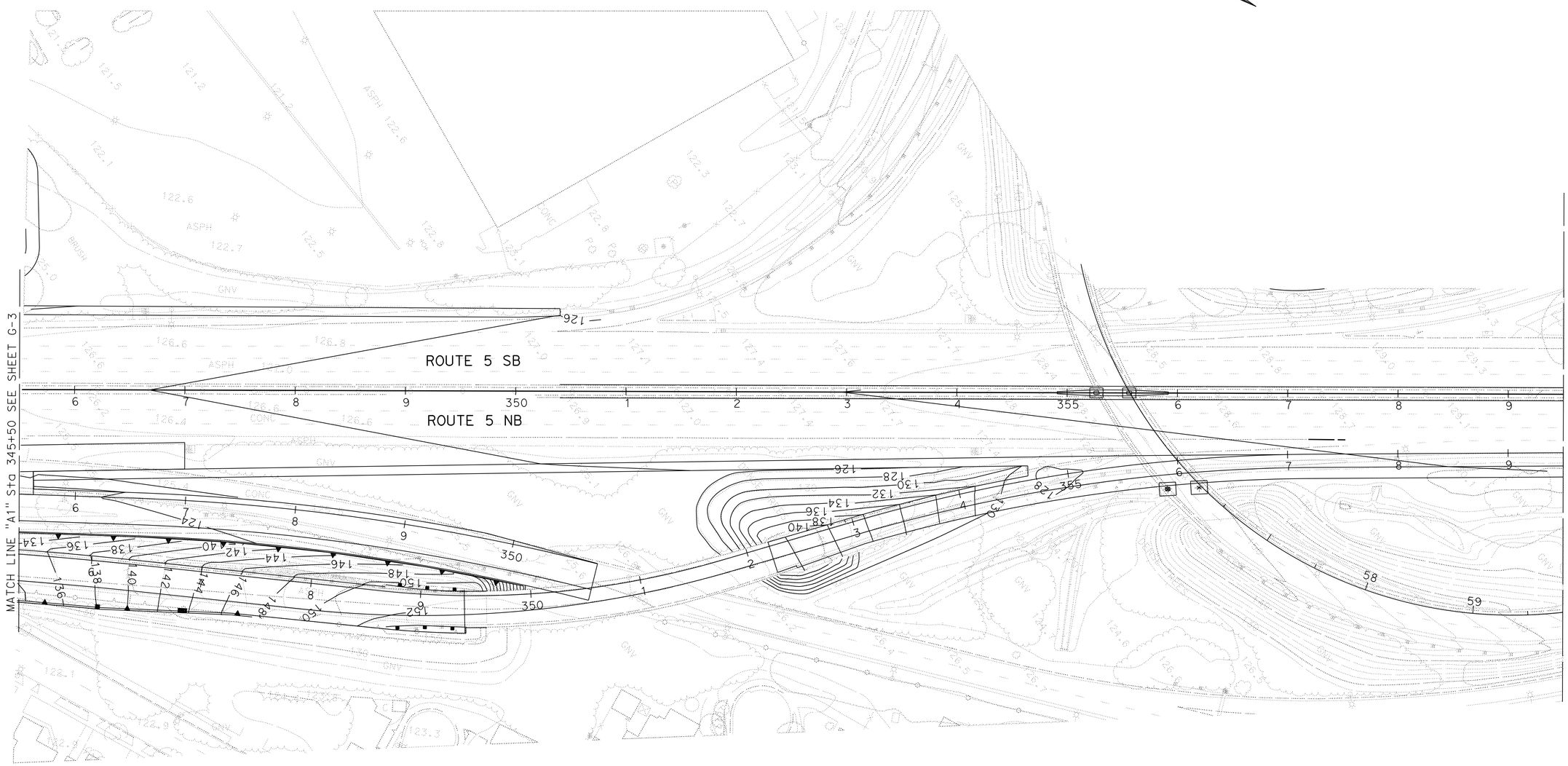

GRADING PLAN

SCALE: 1" = 50'

APPROVED FOR CONTOUR GRADING WORK ONLY

G-4

CALCULATED-DESIGNED BY	KEVIN Q NGUYEN	REVISED BY	MARK MAI
CHECKED BY	NGIM NANCY PE	DATE REVISED	10-15-12
FUNCTIONAL SUPERVISOR	NGIM NANCY PE		

STATE OF CALIFORNIA - DEPARTMENT OF TRANSPORTATION
Caltrans OFFICE OF DESIGN A

S:\projects\215951\721595ha004.dgn

LAST REVISION 10-19-12 | DATE PLOTTED => 26-JUN-2013 | TIME PLOTTED => 15:27

Dist	COUNTY	ROUTE	POST MILES TOTAL PROJECT	SHEET No.	TOTAL SHEETS
07	LA	5	0.0/7.6	99	985

REGISTERED CIVIL ENGINEER 10-11-12 DATE

6-24-13
PLANS APPROVAL DATE

REGISTERED PROFESSIONAL ENGINEER
NGIM NANCY PE
No. 58161
Exp 6-30-14
CIVIL
STATE OF CALIFORNIA

THE STATE OF CALIFORNIA OR ITS OFFICERS OR AGENTS SHALL NOT BE RESPONSIBLE FOR THE ACCURACY OR COMPLETENESS OF SCANNED COPIES OF THIS PLAN SHEET.

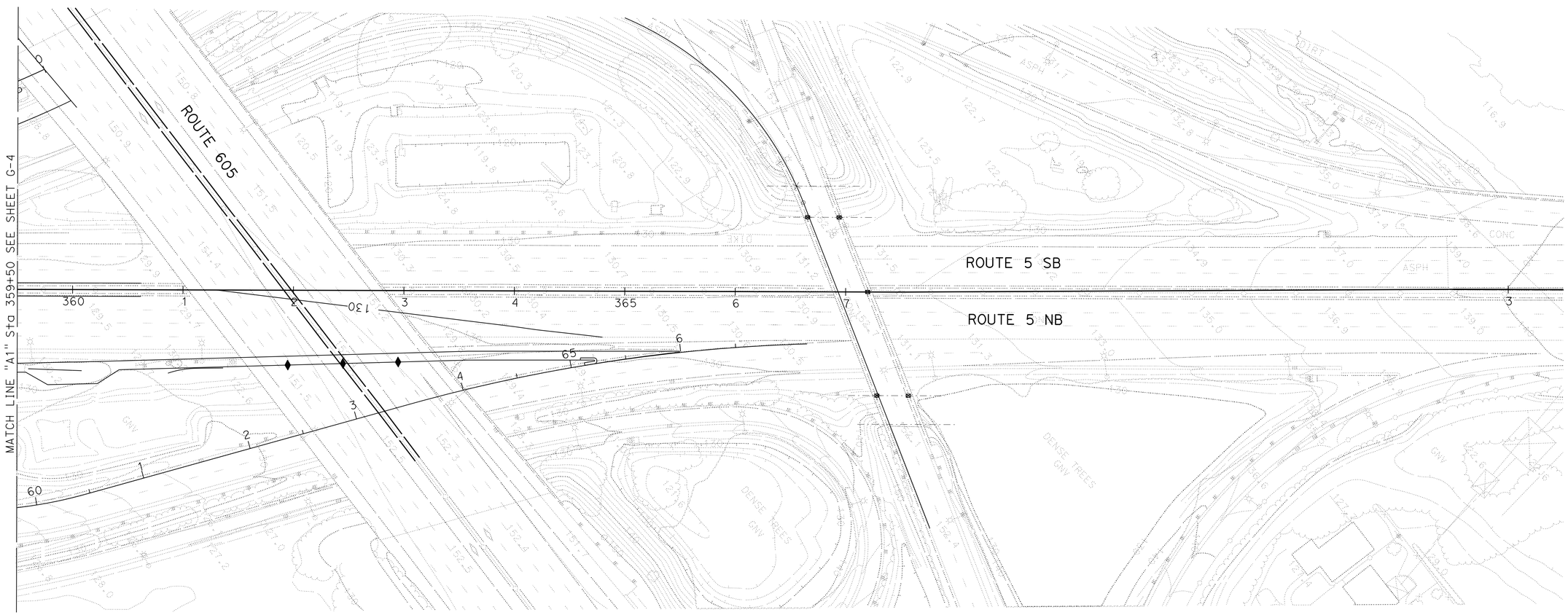

GRADING PLAN

SCALE: 1" = 50'

G-5

APPROVED FOR CONTOUR GRADING WORK ONLY

REVISED BY	MARK MAI
DATE REVISED	10-15-12
CALCULATED-DESIGNED BY	KEVIN Q NGUYEN
CHECKED BY	NGIM NANCY PE
FUNCTIONAL SUPERVISOR	NGIM NANCY PE

STATE OF CALIFORNIA - DEPARTMENT OF TRANSPORTATION
Caltrans® OFFICE OF DESIGN A

S:\projects\215951\721595ha005.dgn

LAST REVISION 10-19-12
DATE PLOTTED => 26-JUN-2013
TIME PLOTTED => 15:27

Dist	COUNTY	ROUTE	POST MILES TOTAL PROJECT	SHEET No.	TOTAL SHEETS
07	LA	5	0.0/7.6	100	985

REGISTERED CIVIL ENGINEER DATE 10-11-12

6-24-13
PLANS APPROVAL DATE

REGISTERED PROFESSIONAL ENGINEER
NGIM
NANCY PE
No. 58161
Exp 6-30-14
CIVIL
STATE OF CALIFORNIA

THE STATE OF CALIFORNIA OR ITS OFFICERS OR AGENTS SHALL NOT BE RESPONSIBLE FOR THE ACCURACY OR COMPLETENESS OF SCANNED COPIES OF THIS PLAN SHEET.

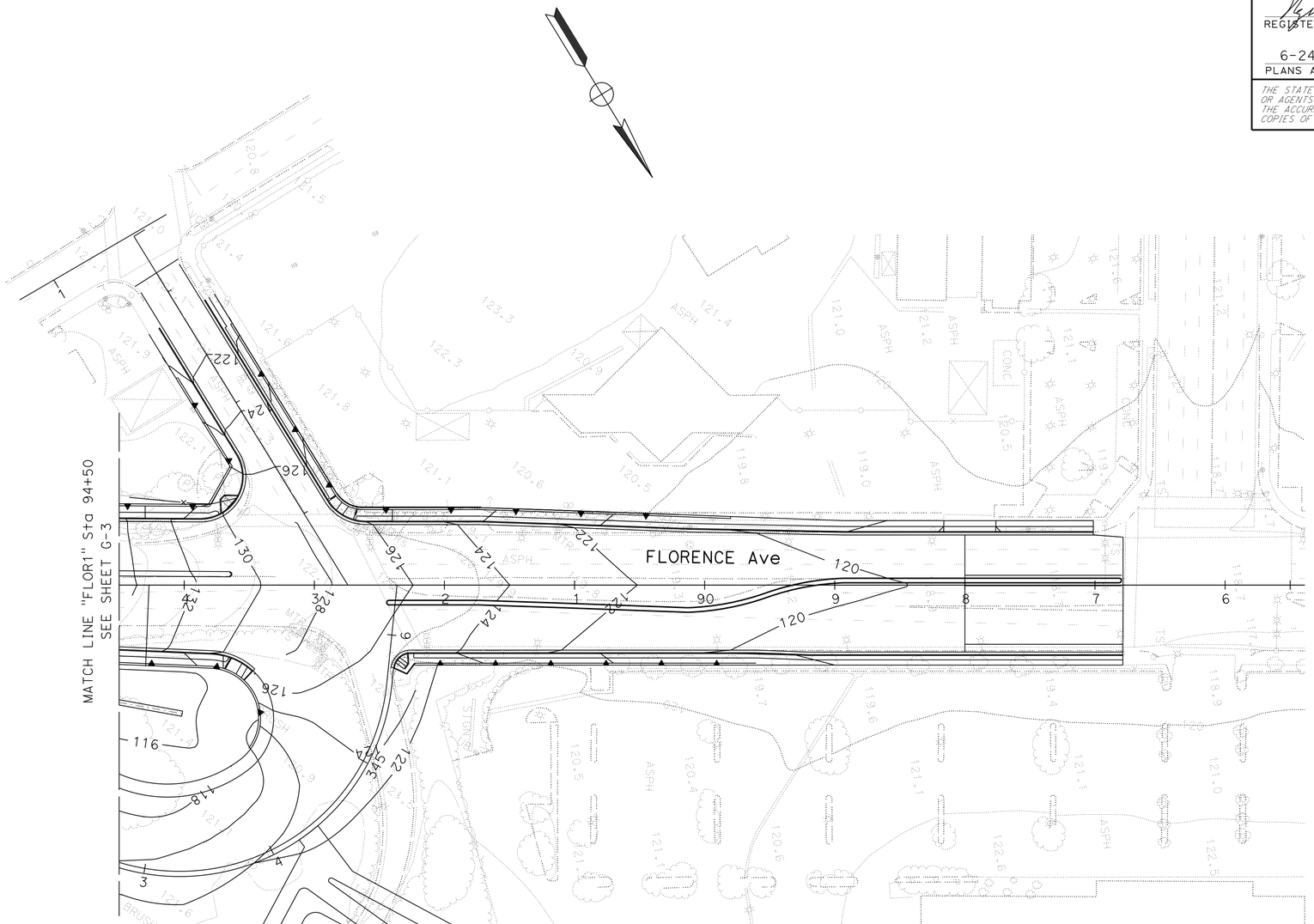

GRADING PLAN

SCALE: 1" = 50'

G-6

APPROVED FOR CONTOUR GRADING WORK ONLY

REVISED BY	MARK MAI
DATE REVISED	10-15-12
CALCULATED-DESIGNED BY	KEVIN Q NGUYEN
CHECKED BY	NGIM NANCY PE
FUNCTIONAL SUPERVISOR	NGIM NANCY PE

STATE OF CALIFORNIA - DEPARTMENT OF TRANSPORTATION
Caltrans® OFFICE OF DESIGN A

S:\projects\215951\721595ha006.dgn

LAST REVISION 10-19-12 | DATE PLOTTED => 26-JUN-2013 | TIME PLOTTED => 15:27