Dist	COUNTY	ROUTE	POST MILES TOTAL PROJECT	SHEET No.	TOTAL SHEETS
07	LA	5	0.0/7.6	14	985

REGISTERED CIVIL ENGINEER 10-11-12 DATE

6-24-13
PLANS APPROVAL DATE

REGISTERED PROFESSIONAL ENGINEER NGIM NANCY PE No. 58161 Exp. 6/30/14 CIVIL STATE OF CALIFORNIA

THE STATE OF CALIFORNIA OR ITS OFFICERS OR AGENTS SHALL NOT BE RESPONSIBLE FOR THE ACCURACY OR COMPLETENESS OF SCANNED COPIES OF THIS PLAN SHEET.

NOTE:

1. FOR ACCURATE RIGHT OF WAY DATA, CONTACT RIGHT OF WAY ENGINEERING AT THE DISTRICT OFFICE.
2. FOR IRRIGATION CROSSOVER, SEE LANDSCAPE PLANS.

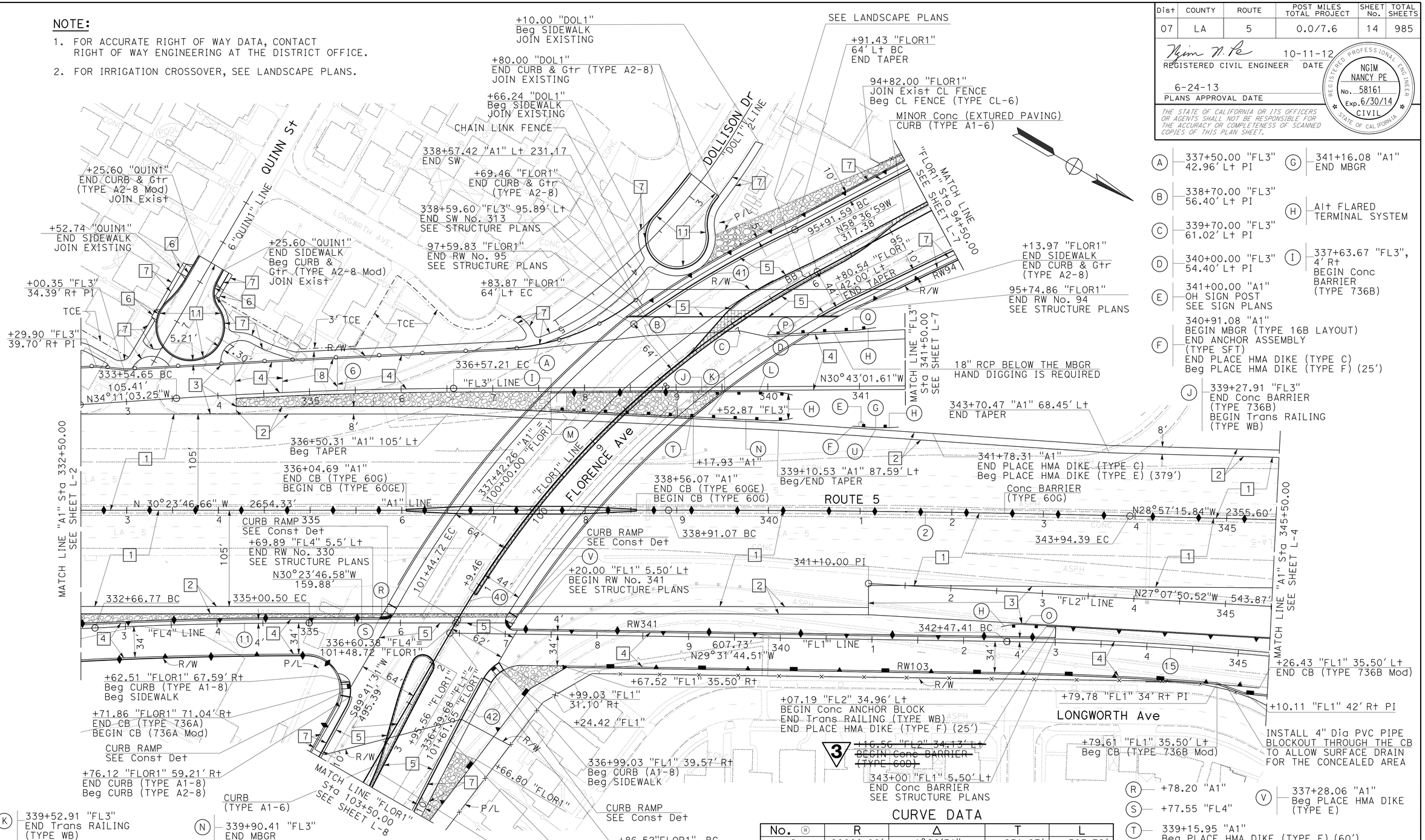

CURVE DATA

No. ⊕	R	Δ	T	L
2	20000.00'	1°26'31"	251.67'	503.32'
6	5000.00'	3°28'02"	151.33'	302.56'
11	5000.00'	2°40'42"	116.89'	233.73'
15	3500.00'	6°27'20"	197.38'	394.34'
40	1000.00'	31°41'30"	283.84'	553.12'
41	1099.60'	10°37'31"	102.25'	203.92'
42	2351.48'	1°48'13"	37.02'	74.03'

LAYOUT

SCALE: 1" = 50'

3 REPLACED PER ADDENDUM No. 3 DATED DECEMBER 20, 2013

L-3

STATE OF CALIFORNIA - DEPARTMENT OF TRANSPORTATION
Caltrans OFFICE OF DESIGN A

FUNCTIONAL SUPERVISOR: NGIM NANCY PE
CALCULATED-DESIGNED BY: STEVEN TRIEU
CHECKED BY: NGIM NANCY PE
REVISED BY / DATE REVISED

LAST REVISION 00-00-00
DATE PLOTTED => 19-DEC-2013
TIME PLOTTED => 11:21

721595ea003.add

Dist	COUNTY	ROUTE	POST MILES TOTAL PROJECT	SHEET No.	TOTAL SHEETS
07	LA	5	0.0/7.6	15	985

REGISTERED CIVIL ENGINEER 10-11-12 DATE

6-24-13
PLANS APPROVAL DATE

REGISTERED PROFESSIONAL ENGINEER NGIM NANCY PE No. 58161 Exp. 6/30/14 CIVIL STATE OF CALIFORNIA

THE STATE OF CALIFORNIA OR ITS OFFICERS OR AGENTS SHALL NOT BE RESPONSIBLE FOR THE ACCURACY OR COMPLETENESS OF SCANNED COPIES OF THIS PLAN SHEET.

NOTE:

1. FOR ACCURATE RIGHT OF WAY DATA, CONTACT RIGHT OF WAY ENGINEERING AT THE DISTRICT OFFICE.
2. FOR IRRIGATION CROSSOVER, SEE LANDSCAPE PLANS.

CURVE DATA

No. ⊕	R	Δ	T	L
15	3500.00′	6°27′20"	197.38′	394.34′
16	800.05′	22°4′45"	156.09′	308.30′
17	1500.00′	15°55′38"	209.84′	416.98′
18	834.05′	4°35′51"	33.48′	66.92′
19	990.00′	11°57′44"	103.72′	206.69′
20	2000.00′	11°52′46"	208.08′	414.67′

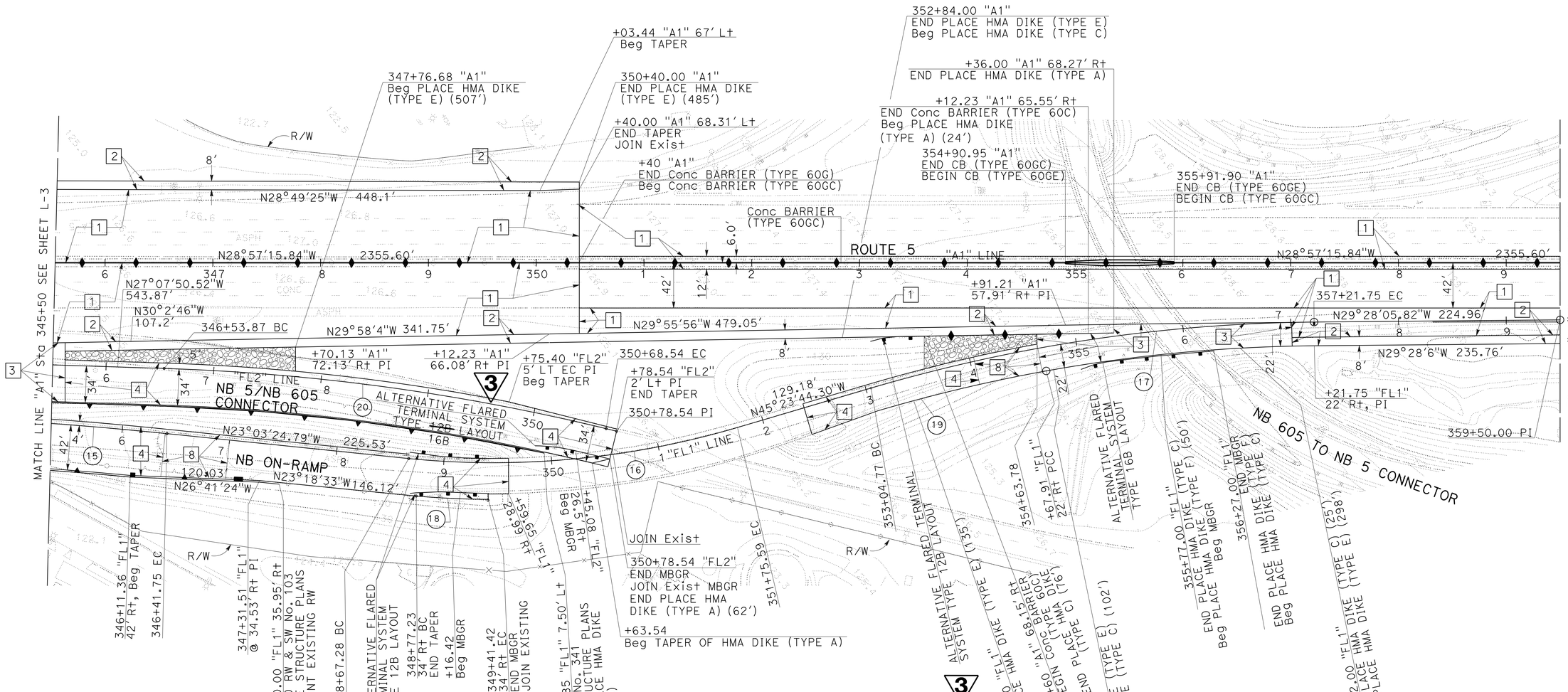

LAYOUT
SCALE: 1" = 50′

3 **REPLACED PER ADDENDUM No. 3 DATED DECEMBER 20, 2013**

L-4

REVISED BY | DATE REVISED
STEVEN TRIEU | NGIM NANCY PE
CALCULATED-DESIGNED BY | CHECKED BY
FUNCTIONAL SUPERVISOR | NGIM NANCY PE
STATE OF CALIFORNIA - DEPARTMENT OF TRANSPORTATION
Caltrans® OFFICE OF DESIGN A

LAST REVISION 00-00-00 | DATE PLOTTED => 20-DEC-2013 | TIME PLOTTED => 06:30

721595ea004.add

BORDER LAST REVISED 7/2/2010 | USERNAME => s121614 | DGN FILE => 721595ea004.add | RELATIVE BORDER SCALE IS IN INCHES 0 1 2 3 | UNIT 1797 | PROJECT NUMBER & PHASE 07000018351

Dist	COUNTY	ROUTE	POST MILES TOTAL PROJECT	SHEET No.	TOTAL SHEETS
07	LA	5	0.0/7.6	16	985

REGISTERED CIVIL ENGINEER 10-11-12 DATE

6-24-13
PLANS APPROVAL DATE

REGISTERED PROFESSIONAL ENGINEER NGIM NANCY PE No. 58161 Exp. 6/30/14 CIVIL STATE OF CALIFORNIA

THE STATE OF CALIFORNIA OR ITS OFFICERS OR AGENTS SHALL NOT BE RESPONSIBLE FOR THE ACCURACY OR COMPLETENESS OF SCANNED COPIES OF THIS PLAN SHEET.

NOTE:

1. FOR ACCURATE RIGHT OF WAY DATA, CONTACT RIGHT OF WAY ENGINEERING AT THE DISTRICT OFFICE.
2. FOR IRRIGATION CROSSOVER, SEE LANDSCAPE PLANS.

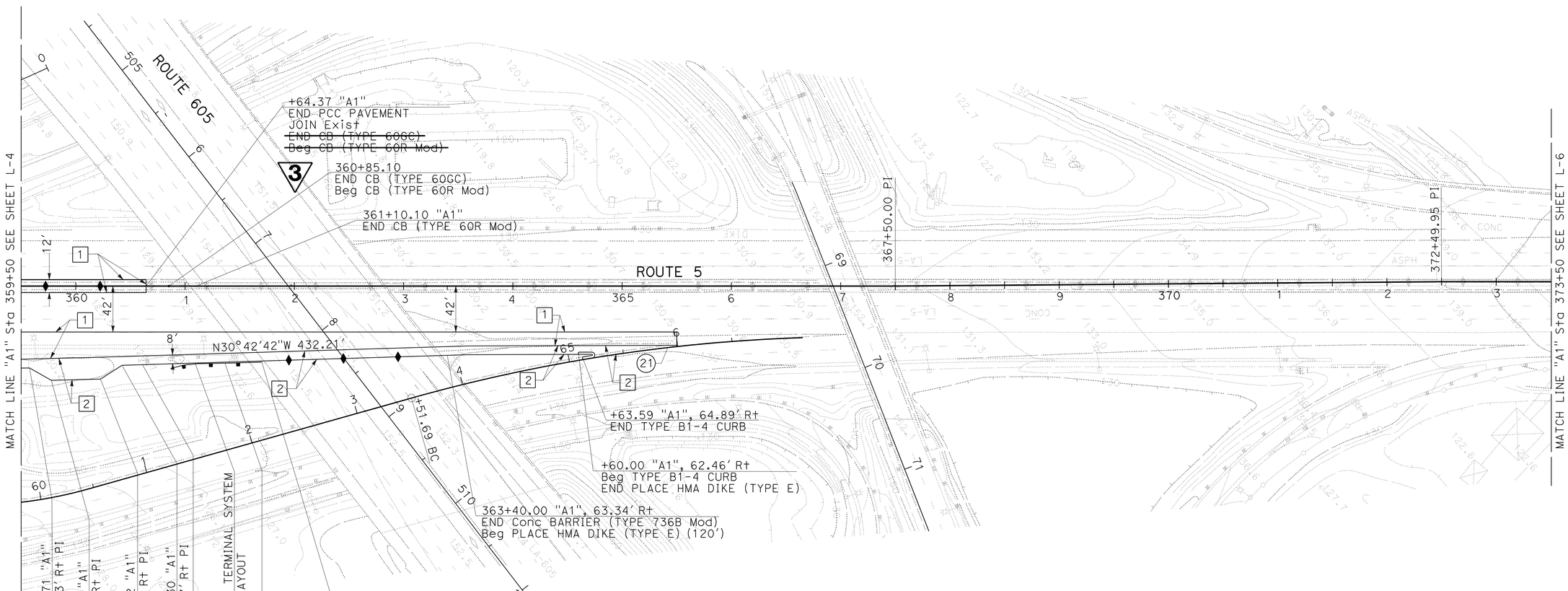

CURVE DATA

No. ⊕	R	Δ	T	L
21	1500.04'	4°35'47"	60.20'	120.34'

3 REPLACED PER ADDENDUM No. 3 DATED DECEMBER 20, 2013

LAYOUT
SCALE: 1" = 50'

L-5

STATE OF CALIFORNIA - DEPARTMENT OF TRANSPORTATION
Caltrans® OFFICE OF DESIGN A

FUNCTIONAL SUPERVISOR: NGIM NANCY PE
CALCULATED-DESIGNED BY: KEVIN Q NGUYEN
CHECKED BY: NGIM NANCY PE
REVISED BY
DATE REVISED

721595ea005.add

BORDER LAST REVISED 7/2/2010
USERNAME => s121614
DGN FILE => 721595ea005.add
RELATIVE BORDER SCALE IS IN INCHES 0 1 2 3
UNIT 1797
PROJECT NUMBER & PHASE 07000018351
LAST REVISION 00-00-00
DATE PLOTTED => 20-DEC-2013
TIME PLOTTED => 07:23

Dist	COUNTY	ROUTE	POST MILES TOTAL PROJECT	SHEET No.	TOTAL SHEETS
07	LA	5	0.0/7.6	66A	985

REGISTERED CIVIL ENGINEER 10-11-12 DATE

6-24-13
PLANS APPROVAL DATE

REGISTERED PROFESSIONAL ENGINEER NGIM NANCY PE No. 58161 Exp. 6-30-14 CIVIL STATE OF CALIFORNIA

THE STATE OF CALIFORNIA OR ITS OFFICERS OR AGENTS SHALL NOT BE RESPONSIBLE FOR THE ACCURACY OR COMPLETENESS OF SCANNED COPIES OF THIS PLAN SHEET.

3

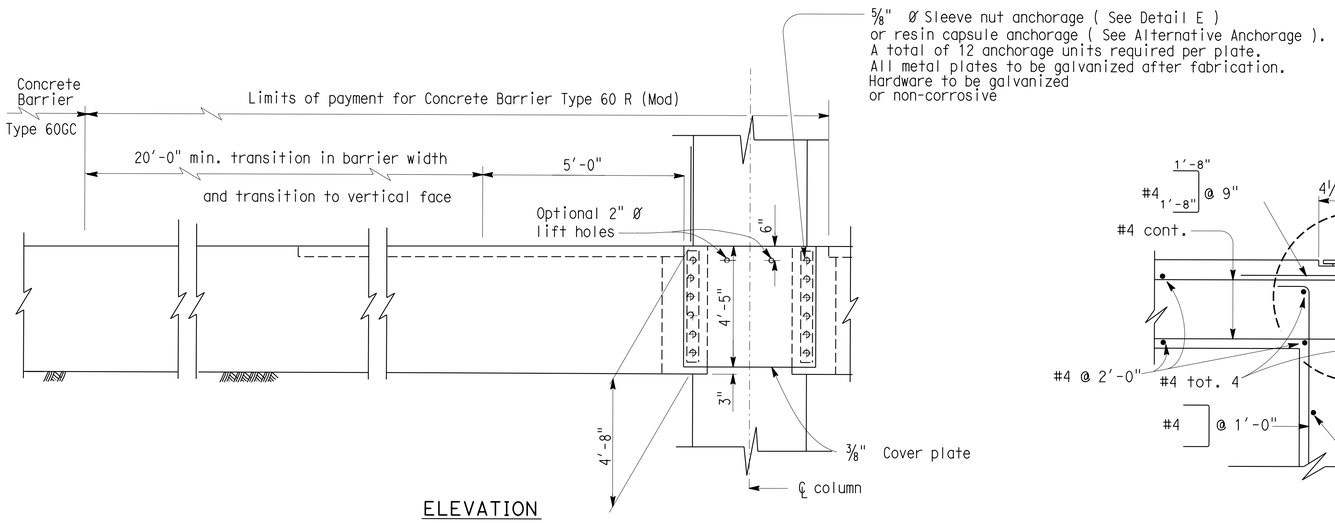

ELEVATION

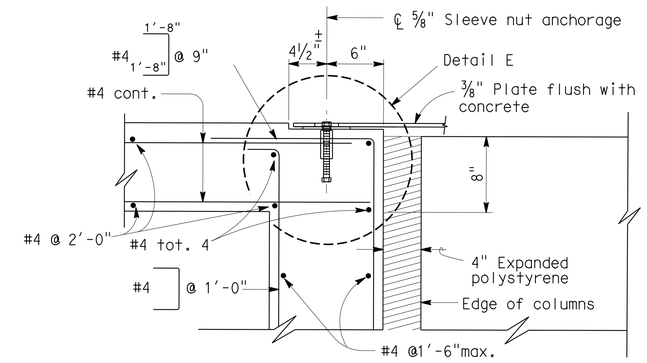

DETAIL D

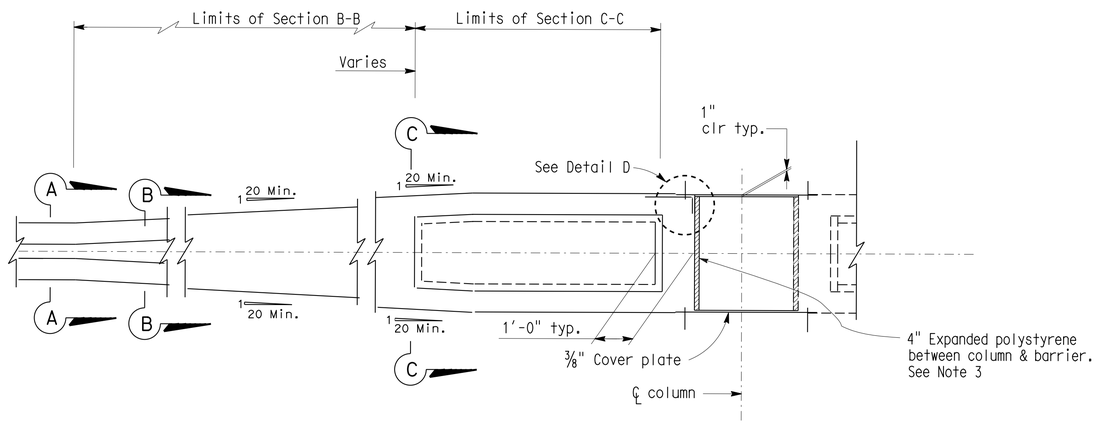

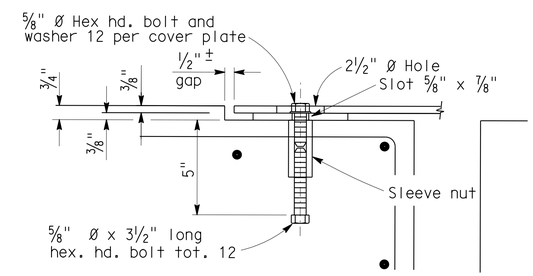

DETAIL E

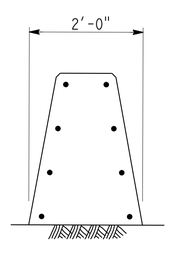

SECTION A-A

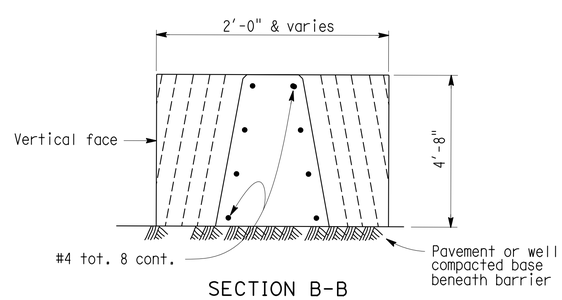

SECTION B-B

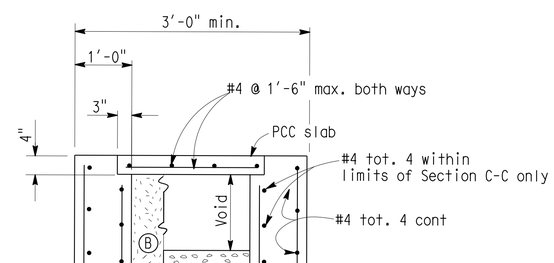

SECTION C-C

NOTES:

1. Contractor options for fill between barrier walls.
   - (A) Place 2'-0" PCC at base between barrier walls.
   - (B) Place granular material from base to bottom of 4" cap.
2. Forming material for 4" cap may remain in place.
3. Enclose column with 4" expanded polystyrene at locations where concrete or cement treated base encases the column.

CONSTRUCTION DETAILS

NO SCALE

C-29A

3 **ADDED PER ADDENDUM No. 3 DATED DECEMBER 20, 2013**

STATE OF CALIFORNIA - DEPARTMENT OF TRANSPORTATION
Caltrans® OFFICE OF DESIGN A

FUNCTIONAL SUPERVISOR: NGIM NANCY PE
CALCULATED-DESIGNED BY: KEVIN Q. NGUYEN
CHECKED BY: NGIM NANCY PE
REVISED BY
DATE REVISED

LAST REVISION 00-00-00
DATE PLOTTED => 19-DEC-2013
TIME PLOTTED => 12:08

Dist	COUNTY	ROUTE	POST MILES TOTAL PROJECT	SHEET No.	TOTAL SHEETS
07	LA	5	0.0/7.6	67A	985

3

REGISTERED CIVIL ENGINEER 10-11-12 DATE

6-24-13
PLANS APPROVAL DATE

REGISTERED PROFESSIONAL ENGINEER NGIM NANCY PE No. 58161 Exp. 6-30-2014 CIVIL STATE OF CALIFORNIA

THE STATE OF CALIFORNIA OR ITS OFFICERS OR AGENTS SHALL NOT BE RESPONSIBLE FOR THE ACCURACY OR COMPLETENESS OF SCANNED COPIES OF THIS PLAN SHEET.

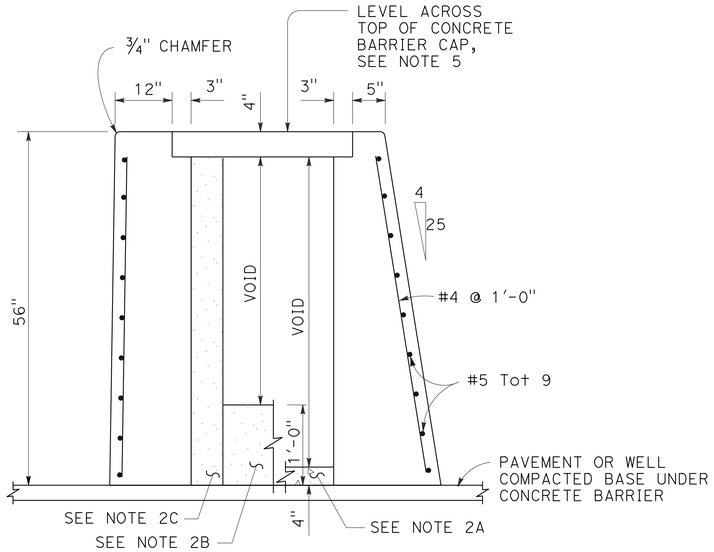

SECTION A-A

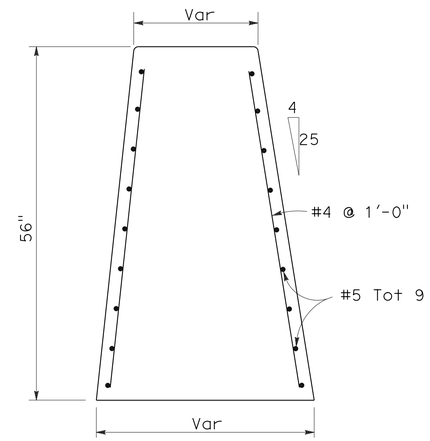

SECTION B-B

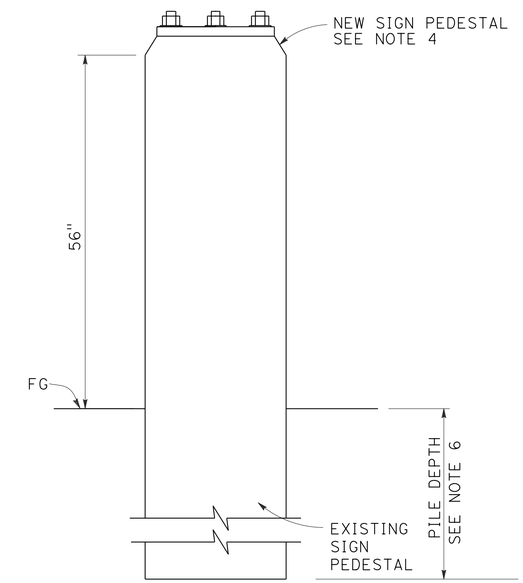

SECTION C-C

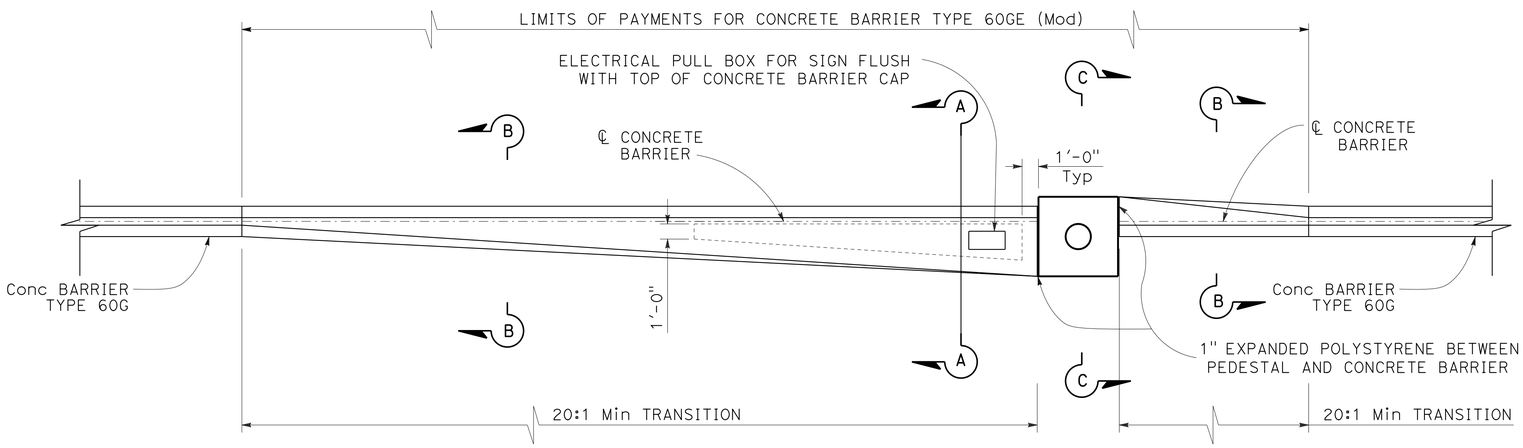

PLAN

TRANSITION AT SIGN PEDESTAL

Concrete Barrier Type 60GE

NOTES:

1. See Standard Plan A76D for Concrete Barrier Type 60G.
2. Contractor options for fill between concrete barrier walls:
   A. Place 4" PCC at base between concrete barrier walls.
   B. Place 1'-0" of granular material at base between walls.
   C. Place granular material from base to bottom of 4" cap.
   D. Monolithic concrete with foam blockouts is not permitted.
3. Reinforcing steel shall extend continuous through construction joints.
4. See "Overhead Sign" plans for sign pedestal elevations on new construction.
5. Adjust height of concrete barrier wall on low side of offset or superelevated roadways to provide level grade across top of concrete barrier cap.
6. See Overhead Signs Standard Plan Pile Foundation Tables.
7. See Standard Plan A76E for concrete barrier transitions.
7. See Standard Plan A76F for information not shown.

3 **ADDED PER ADDENDUM No. 3 DATED DECEMBER 20, 2013**

CONSTRUCTION DETAILS

CONCRETE BARRIER TYPE 60GE (Mod)

NO SCALE

C-30A

REVISED BY | DATE REVISED
STEVEN TRIEU | NGIM NANCY PE
CALCULATED-DESIGNED BY | CHECKED BY
FUNCTIONAL SUPERVISOR | NGIM NANCY PE
STATE OF CALIFORNIA - DEPARTMENT OF TRANSPORTATION
Caltrans OFFICE OF DESIGN A
S:\projects\215951\addendum-2\721595ga030A.add

LAST REVISION 00-00-00 | DATE PLOTTED => 19-DEC-2013 | TIME PLOTTED => 12:09

Dist	COUNTY	ROUTE	POST MILES TOTAL PROJECT	SHEET No.	TOTAL SHEETS
07	LA	5	0.0/7.6	434	985

REGISTERED CIVIL ENGINEER 10-11-12 DATE

6-24-13
PLANS APPROVAL DATE

REGISTERED PROFESSIONAL ENGINEER NGIM NANCY PE No. 58161 Exp. 6/30/14 CIVIL STATE OF CALIFORNIA

THE STATE OF CALIFORNIA OR ITS OFFICERS OR AGENTS SHALL NOT BE RESPONSIBLE FOR THE ACCURACY OR COMPLETENESS OF SCANNED COPIES OF THIS PLAN SHEET.

3

ROADWAY QUANTITIES

SHEET No.	DIRECTION	ALIGNMENT	LOCATION	ROADWAY EXCAVATION	(N) EMBANKMENT	PLACE HMA DIKE (TYPE A)	PLACE HMA DIKE (TYPE C)	PLACE HMA DIKE (TYPE E)	PLACE HMA DIKE (TYPE F)	IMPORTED BORROW	SEAL ISOLATION JOINT	ROADWAY EXCAVATION (TYPE Y-2) (AERIALLY DEPOSITED LEAD)	METAL BEAM GUARD RAILING (WOOD POST)	Alt FLARED TERMINAL SYSTEM	CONCRETE BARRIER (TYPE 736B Mod)	CONCRETE BARRIER (TYPE 60C)	CONCRETE BARRIER (TYPE 60GE)	CONCRETE BARRIER (TYPE 60G)	CONCRETE BARRIER (TYPE 60GC)	CONCRETE BARRIER (TYPE 60R Mod)	MASONRY BLOCK WALL	DETECTABLE WARNING SURFACE	MINOR CONCRETE (CURB RAMP)	MINOR CONCRETE (CURB, GUTTER, SIDEWALK AND DRIVEWAY)	INTERLOCKING PAVER	GEOSYNTHETIC PAVEMENT INTERLAYER (PAVING FABRIC)	CHAIN LINK FENCE (TYPE CL-6)	12' CHAIN LINK GATE (TYPE CL-6)	CLASS 2 AGGREGATE BASE	CLASS 3 AGGREGATE BASE	CLASS 4 AGGREGATE SUBBASE	JOINTED PLAIN CONCRETE PAVEMENT	ROCK BLANKET	MINOR CONCRETE (TEXTURED PAVING)	CONCRETE (RAPID SETTING)	LEAN CONCRETE BASE	COLD PLANE ASPHALT CONCRETE PAVEMENT	HOT MIX ASPHALT (TYPE A)	TACK COAT	PLACE HOT MIX ASPHALT (Misc AREA)	SEAL PAVEMENT JOINT	CRASH CUSHION (REACT 9CBB)	END ANCHOR ASSEMBLY (TYPE SFT)	END CAP (TYPE TC)	TRANSITION RAILING (TYPE WB)
				CY	CY	LF	LF	LF	LF	CY	LF	CY	LF	EA	LF	LF	LF	LF	LF	LF	SQFT	SQFT	CY	CY	SQFT	SQYD	LF	EA	CY	CY	CY	CY	SQYD	CY	CY	CY	SQYD	TON	TON	SQYD	LF	EA	EA	EA	EA
L-1	SB	"A1"	312+00.00 TO 320+50.00	1	15206					5000	820							731			100						75			2085		3105				1483			0.07		12407				
	NB	"A1"	312+00.00 TO 320+50.00		22033					10000																				1944		2897				1383			0.07		12002				
		"MON1"	315+25.00 TO 320+59.80	1976							808										30	30	5	127			210	1	413	639							131	866	0.2						
L-2	SB	"A1"	320+50.00 TO 332+50.00	8386	13246					6000	1200	860					127	1073			10			209					394	4133		5767	119			2789	25	670	0.07		24095				
		"CEC1"	15+34.62 TO 19+05.64	1356	23																			129					335	597							79	697	0.31						
		"MON1"	320+59.80 TO 326+00.00																			30	5	48					430	632							64	886	0.07						
	NB	"A1"	320+50.00 TO 332+50.00	8175	13398			415		10000	1200	2487																		3683		5462	307			2624			0.4		21891	1			
		"FL4"	327+00.95 TO 332+51.37	298	1285							272																		938						505		1023	0.35						
		"ORD1"	320+59.80 TO 330+50.00	6456	10																			187					503	834				23				1019	0.4						
L-3	SB	"A1"	332+50.00 TO 345+50.00	23173			180	379	85		1300	4032	252	2			251	1049						55					222	3271		4828	1004			2305		374	0.22		21392				
		"FL3"	332+50.22 TO 339+43.65	29658								1909	38	1	165									79		255				2142		302				1128		1963	0.53						
	NB	"A1"	332+50.00 TO 345+50.00	25877				552	25		1300	5848																		3388		5057	248			2413			0.07		23546		2		
		"FL2"	338+42.91 TO 345+49.28											1																493		669				352			0.22						1
		"FL4"	332+51.37 TO 335+38.18	34	3557																									642						346		700	0.16						
		"FL1"	337+00.00 TO 345+43.59	74	5630							6			47															1538						828		1677	0.38						1
		"FLOR1"	94+50.00 TO 103+50.00	132	9588							128										30	5	133			40		1074	1621			665	16				2175	0.27						
L-4	SB	"A1"	345+50.00 TO 359+50.00	3917				485			2385	1440					101	490	810											1077		1601				765			0.05		5662				
	NB	"A1"	345+50.00 TO 359+50.00	4999	114	24	76	507			3262	2343	10	1		152														1720		2544	557			1218			0.08		9870			1	1
		"FL1"	345+43.59 TO 357+00.89	20	1788		227	433	50			499	100	3												455				1283		226				720		1218	0.38				1	2	2
		"FL2"	345+49.28 TO 352+14.51	1838		62						1633	33	1																970		23				525		1040	0.24						
L-5	SB	"A1"	359+50.00 TO 373+50.00	59							235		200	1	170				135	29										18		27				13								1	1
	NB	"A1"	359+50.00 TO 373+50.00	723	7		76	238	33		926	617																		400		581				280			0.07		2115				
L-6	SB	"A1"	373+50.00 TO 387+50.00														71																													
	NB	"A1"	373+50.00 TO 387+50.00																																											
L-7		"FL3"	341+50.00 to 345+87.77	6352	453							5662																	80	1375			279			740		1635	0.33						
		"FLOR1"	86+78.40 to 94+50.00	1933	5360																	75	9	267			140		1561	2347				2			1031	3578	0.83						
		"FAIR1"	00+44.00 to 02+59.42	274																				52					205	332							151	432	0.11						
			SUB-TOTAL	125711	91698	86	559	3009	193	31000	13436	27736	633	10	382	152	550	3343	945	29	140	165	24	1286	0	710	465	1	5217	38102	0	33089	3179	41	0	20417	1481	19953	5.9	0	132980	1	3	4	6

(N) - NOT A SEPARATE PAY ITEM, FOR INFORMATION ONLY

3 **REPLACED PER ADDENDUM No. 3 DATED DECEMBER 20, 2013**

SUMMARY OF QUANTITIES

Q-2

ANDREW LY — REVISED BY
NGIM NANCY PE — DATE REVISED
CALCULATED-DESIGNED BY
CHECKED BY
FUNCTIONAL SUPERVISOR
NGIM NANCY PE

STATE OF CALIFORNIA - DEPARTMENT OF TRANSPORTATION
Caltrans® OFFICE OF DESIGN A

721595pa002.add

LAST REVISION 00-00-00
DATE PLOTTED => 20-DEC-2013
TIME PLOTTED => 07:28

Dist	COUNTY	ROUTE	POST MILES TOTAL PROJECT	SHEET No.	TOTAL SHEETS
07	LA	05	0.0/7.6	435	985

2 — Ngim N. Pe 10-11-12
REGISTERED CIVIL ENGINEER DATE

3 — 6-24-13
PLANS APPROVAL DATE

REGISTERED PROFESSIONAL ENGINEER — NGIM NANCY PE No. 58161 Exp. 6/30/14 CIVIL — STATE OF CALIFORNIA

THE STATE OF CALIFORNIA OR ITS OFFICERS OR AGENTS SHALL NOT BE RESPONSIBLE FOR THE ACCURACY OR COMPLETENESS OF SCANNED COPIES OF THIS PLAN SHEET.

ROADWAY QUANTITIES

SHEET No.	DIRECTION	ALIGNMENT	LOCATION	ROADWAY EXCAVATION	EMBANKMENT(N)	PLACE HMA DIKE (TYPE A)	PLACE HMA DIKE (TYPE C)	PLACE HMA DIKE (TYPE E)	PLACE HMA DIKE (TYPE F)	IMPORTED BORROW	SEAL ISOLATION JOINT	ROADWAY EXCAVATION (TYPE Y-2) (AERIALLY DEPOSITED LEAD)	METAL BEAM GUARD RAILING (WOOD POST)	Alt FLARED TERMINAL SYSTEM	CONCRETE BARRIER (TYPE 736B Mod)	CONCRETE BARRIER (TYPE 60C)	CONCRETE BARRIER (TYPE 60GE)	CONCRETE BARRIER (TYPE 60G)	CONCRETE BARRIER (TYPE 60GC)	CONCRETE BARRIER (TYPE 60R Mod)	MASONRY BLOCK WALL	DETECTABLE WARNING SURFACE	MINOR CONCRETE (CURB RAMP)	MINOR CONCRETE (CURB, GUTTER, SIDEWALK AND DRIVEWAY)	INTERLOCKING PAVER	GEOSYNTHETIC PAVEMENT INTERLAYER (PAVING FABRIC)	CHAIN LINK FENCE (TYPE CL-6)	12' CHAIN LINK GATE (TYPE CL-6)	CLASS 2 AGGREGATE BASE	CLASS 3 AGGREGATE BASE	CLASS 4 AGGREGATE SUBBASE	JOINTED PLAIN CONCRETE PAVEMENT	ROCK BLANKET	MINOR CONCRETE (TEXTURED PAVING)	CONCRETE (RAPID SETTING)	LEAN CONCRETE BASE	COLD PLANE ASPHALT CONCRETE PAVEMENT	HOT MIX ASPHALT (TYPE A)	TACK COAT	PLACE HOT MIX ASPHALT (Misc AREA)	SEAL PAVEMENT JOINT	CRASH CUSHION (REACT 9SCBS)	END ANCHOR ASSEMBLY (TYPE SFT)	END CAP (TYPE TC)	TRANSITION RAILING (TYPE WB)	GUARD POST
				CY	CY	LF	LF	LF	LF	CY	LF	CY	LF	EA	LF	LF	LF	LF	LF	LF	SQFT	SQFT	CY	CY	SQFT	SQYD	LF	EA	CY	CY	CY	CY	SQYD	CY	CY	CY	SQYD	TON	TON	SQYD	LF	EA	EA	EA	EA	EA
L-8		"FLOR1"	103+50.00 to 108+15.63	837	6212																	71	8	249	1138				1205	1871			27	27	25		976	2871	0.66							
		"ORD1"	330+50.00 to 338+29.67	2012	251																	12	2	170	1978				772	1239				21	9		353	1656	0.47							
L-9		"PA1"	0+00.00 to 5+42.43	129	8018																								474									484								
		"BA1"	0+00.00 to 9+37.89	698	2250								143	1															287									799					1			
	SC-12A																					39	3	11															0.65							
	SC-19																							14																						5
			SUB-TOTAL	3676	16731								143	1								122	13	444	3116				2738	3110			27	48	34		1329	5810	1.8				1			5
			SUB-TOTAL FROM SHEET DQ-18								496.2																																			
			SUB-TOTAL FROM SHEET WQ-2							3501																			32									101		570						
			SUB-TOTAL FROM SHEET SCQ-3	20145																		146	14	4					7145		7786							8729								
			SUB-TOTAL FROM SHEET Q-2	125711	91698	86	559	3009	193	31000	13436	27736	633	10	382	152	550	3343	945	29	140	165	24	1286		710	465	1	5217	38102		33089	3179	41		20417	1481	19953	5.9		132980	1	3	4	6	
			TOTAL	149532	108429	86	559	3009	193	34501	13932.2	27736	776	11	382	152	550	3343	945	29	140	433	51	1734	3116	710	465	1	15132	41212	7786	33089	3206	89	34	20417	2810	34593	8.0	570	132980	1	4	4	6	5

(N) - NOT A SEPARATE PAY ITEM, FOR INFORMATION ONLY

3 **REPLACED PER ADDENDUM No. 3 DATED DECEMBER 20, 2013**

2 **REPLACED PER ADDENDUM No. 2 DATED DECEMBER 5, 2013**

SUMMARY OF QUANTITIES

Q-3

JANE YU	K NGUYEN	NGIM NANCY PE	NGIM NANCY PE
CALCULATED-DESIGNED BY	REVISED BY	FUNCTIONAL SUPERVISOR	
CHECKED BY	DATE REVISED NOV 2013		

STATE OF CALIFORNIA - DEPARTMENT OF TRANSPORTATION
Caltrans® OFFICE OF DESIGN A

S:\desig\910076\Tpderou\21595\721595pa003.dgn

LAST REVISION 00-00-00 | DATE PLOTTED => 19-DEC-2013 | TIME PLOTTED => 11:46

Dist	COUNTY	ROUTE	POST MILES TOTAL PROJECT	SHEET No.	TOTAL SHEETS
07	LA	5	0.0/7.6	437	985

REGISTERED CIVIL ENGINEER 10-11-12 DATE

6-24-13
PLANS APPROVAL DATE

REGISTERED PROFESSIONAL ENGINEER NGIM NANCY PE No. 58161 Exp. 6-30-14 CIVIL STATE OF CALIFORNIA

THE STATE OF CALIFORNIA OR ITS OFFICERS OR AGENTS SHALL NOT BE RESPONSIBLE FOR THE ACCURACY OR COMPLETENESS OF SCANNED COPIES OF THIS PLAN SHEET.

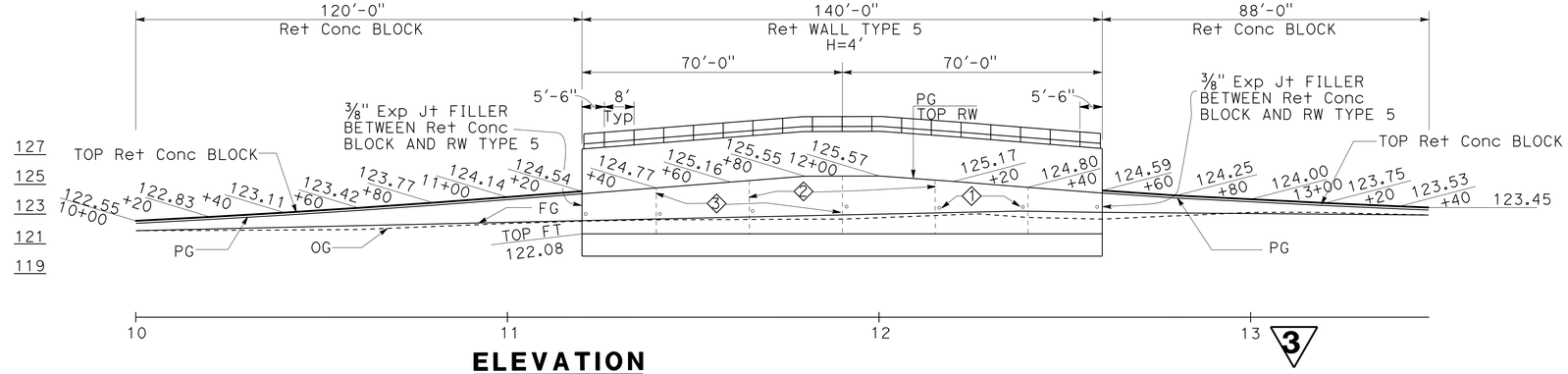

ELEVATION
Ret Conc BLOCK/RW No. 334
SCALE: Horiz 1" = 20'
Vert 1" = 5'

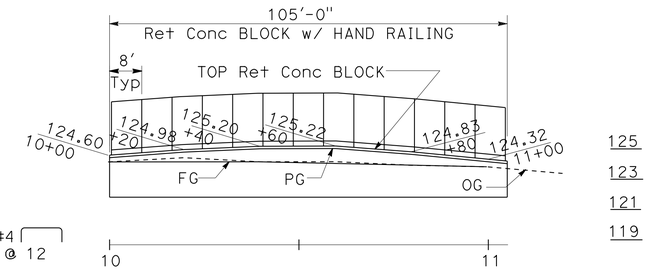

ELEVATION
Ret Conc BLOCK W/ HAND RAILING
SCALE: Horiz 1" = 20'
Vert 1" = 5'

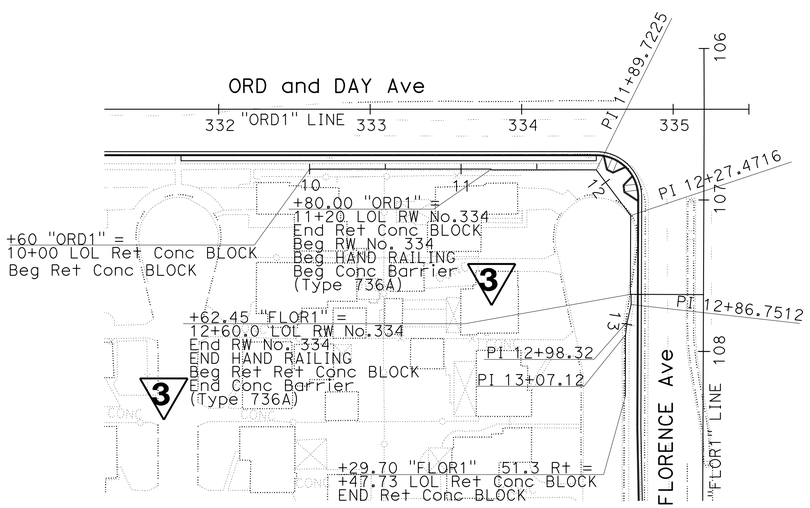

PLAN
Ret Conc BLOCK/RW No. 334
SCALE 1" = 50'

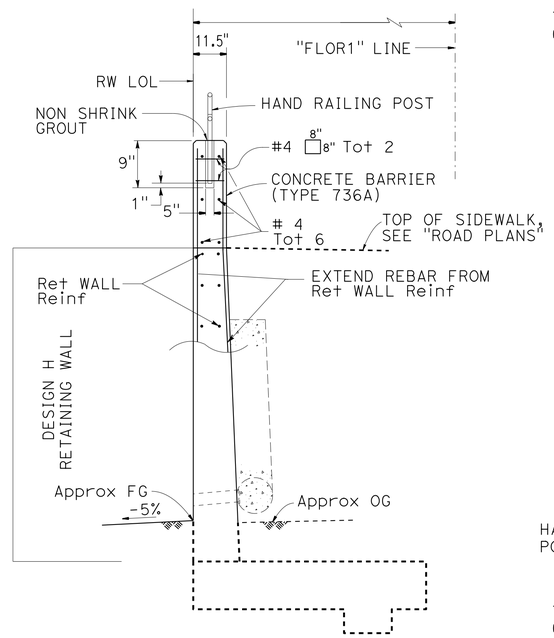

TYPICAL SECTION
RETAINING WALL TYPE 5
NO SCALE

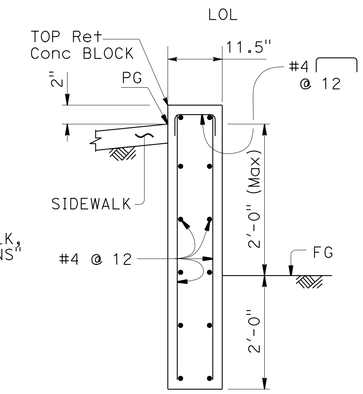

TYPICAL SECTION
Ret Conc BLOCK
NO SCALE

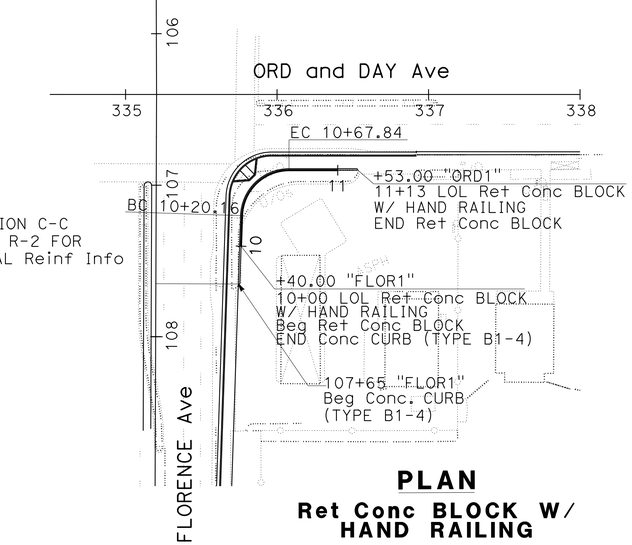

PLAN
Ret Conc BLOCK W/ HAND RAILING
SCALE 1" = 50'

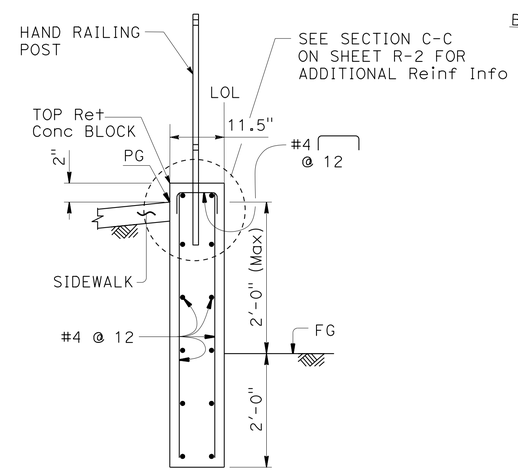

TYPICAL SECTION
Ret Conc BLOCK w/ HAND RAILING
NO SCALE

RETAINING WALL No. 334 / RETAINING Conc BLOCK QUANTITIES

STRUCTURE EXCAVATION (RETAINING WALL)	STRUCTURE BACKFILL (RETAINING WALL)	STRUCTURAL CONCRETE (RETAINING WALL)	PERVIOUS BACKFILL MATERIAL (RETAINING WALL)	BAR REINFORCING STEEL (RETAINING WALL)	HAND RAILING	CONC BARRIER (Type 736A) 3
CY	CY	CY	CY	LB	LF	LF
145	96	117	9	6277	245	140

TYPYCAL RETAINING WALL DETAILS

1. WEEP HOLE (Typ) B0-3 / 3-1
2. WEAKENED PLANE (Typ) B0-3 / 3-2
3. WALL EXPANSION JOINT B0-3 / 3-4

Std PLAN SHEET No.
DETAIL No.

ALL DIMENSIONS ARE IN FEET UNLESS OTHERWISE SHOWN

APPROVED FOR RETAINING WALL ONLY

3 **REPLACED PER ADDENDUM No. 3 DATED DECEMBER 20, 2013**

RETAINING WALL PLAN
RETAINING WALL No. 334/ RETAINING Conc BLOCK
R-1

REVISED BY | DATE REVISED
ANDREW LY | NGIM NANCY PE
CALCULATED-DESIGNED BY | CHECKED BY
FUNCTIONAL SUPERVISOR | NGIN NANCY PE

STATE OF CALIFORNIA - DEPARTMENT OF TRANSPORTATION
Caltrans® OFFICE OF DESIGN A

LAST REVISION 08-31-10 | DATE PLOTTED => 20-DEC-2013 | TIME PLOTTED => 07:33

Dist	COUNTY	ROUTE	POST MILES TOTAL PROJECT	SHEET No.	TOTAL SHEETS
07	LA	5	0.0/7.6	444	985

George Olguin
LICENSED LANDSCAPE ARCHITECT

6-24-13
PLANS APPROVAL DATE

LICENSED LANDSCAPE ARCHITECT
GEORGE OLGUIN
NO. 4333
George Olguin
Signature
08-31-14
Renewal Date
11-10-12
Date
STATE OF CALIFORNIA

THE STATE OF CALIFORNIA OR ITS OFFICERS OR AGENTS SHALL NOT BE RESPONSIBLE FOR THE ACCURACY OR COMPLETENESS OF SCANNED COPIES OF THIS PLAN SHEET.

NOTE:

FOR ACCURATE RIGHT OF WAY AND ACCESS DATA,
CONTACT RIGHT OF WAY ENGINEERING AT THE DISTRICT OFFICE.

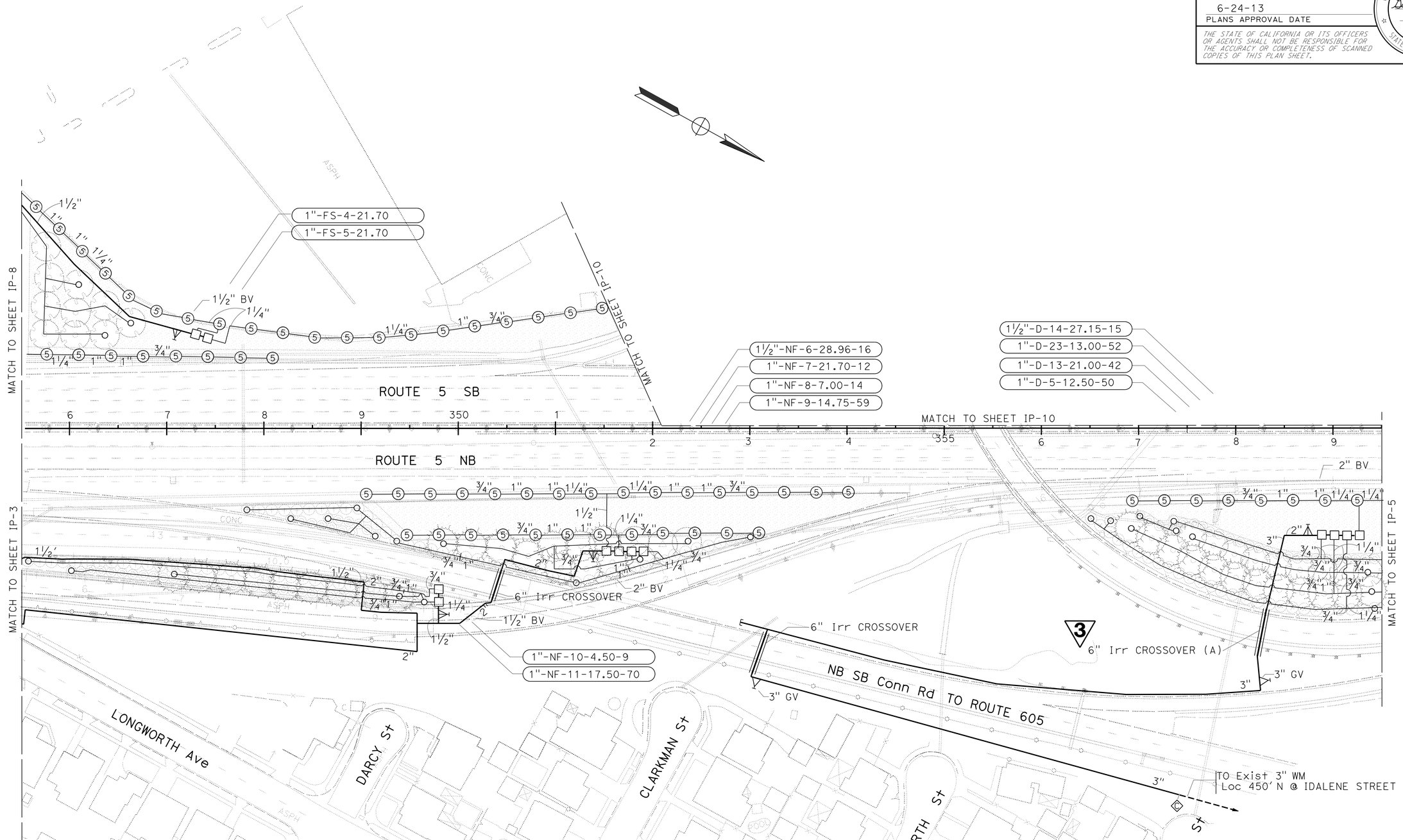

3 **REPLACED PER ADDENDUM No. 3**
DATED DECEMBER 20, 2013

APPROVED FOR IRRIGATION WORK ONLY

IRRIGATION PLAN

SCALE: 1" = 50'

IP-4

STATE OF CALIFORNIA - DEPARTMENT OF TRANSPORTATION
Caltrans® LANDSCAPE ARCHITECTURE

SENIOR LANDSCAPE ARCHITECT: JENNIFER TAIRA

CALCULATED-DESIGNED BY: YI SU
CHECKED BY: GEORGE OLGUIN

REVISED BY / DATE REVISED

LAST REVISION 10-29-12
DATE PLOTTED => 20-DEC-2013
TIME PLOTTED => 07:39

3 REPLACED PER ADDENDUM No. 3 DATED DECEMBER 20, 2013

Dist	COUNTY	ROUTE	POST MILES TOTAL PROJECT	SHEET No.	TOTAL SHEETS
07	LA	5	0.0/7.6	454	985

George Olguin
LICENSED LANDSCAPE ARCHITECT

6-24-13
PLANS APPROVAL DATE

LICENSED LANDSCAPE ARCHITECT
GEORGE OLGUIN No. 4335
George Olguin
08-31-14 Renewal Date
11-10-12 Date
STATE OF CALIFORNIA

THE STATE OF CALIFORNIA OR ITS OFFICERS OR AGENTS SHALL NOT BE RESPONSIBLE FOR THE ACCURACY OR COMPLETENESS OF SCANNED COPIES OF THIS PLAN SHEET.

PLANT LIST AND PLANTING SPECIFICATIONS

PLANT GROUP	PLANT No.	SYMBOL	BOTANICAL NAME	COMMON NAME	SIZE	QUANTITY EACH	HOLE SIZE (INCH) Dia	HOLE SIZE (INCH) DEPTH	BASIN TYPE	IRON SULFATE ①	SOIL AMEND ①	COMMERCIAL FERTILIZER ① PLANTING	COMMERCIAL FERTILIZER ① PLT ESTB	BASIN MULCH (CY)	STAKING	PLANTING LIMITS MINIMUM DISTANCE (ft) FROM ETW	Pvmt	FENCE	WALL	PAVED DITCH	EARTH DITCH	ON CENTER (ft)	REMARKS
A	1	⊕	ACACIA REDOLENS	DESERT CARPET	No. 1	466	③	③	I	—	—	0.5 Oz	0.5 Oz	0.05 CY	—	—	20	20	20	20	22	⑦	SHRUB
	2		DISTICTIS BUCCINATORIA	BLOOD RED TRUMPET VINE	No. 1	166	③	③	I I I	—	—	0.5 Oz	0.5 Oz	0.05 CY	—	—	—	—	—	8	10	20	VINE
	3		PARTHENOCISSUS TRICUSPIDATA	BOSTON IVY	No. 1	333	③	③	I I I	—	—	0.5 Oz	0.5 Oz	—	④	—	—	—	—	4	15	10	VINE
	4		PLUMBAGO AURICULATA 'IMPERIAL BLUE'	NO COMMON NAME	No. 1	216	③	③	I	—	—	0.5 Oz	0.5 Oz	0.05 CY	—	—	15	15	15	15	17	10	SHRUB
	5		RHAPHIOLEPIS INDICA 'BALLERINA'	NO COMMON NAME	No. 1	13	③	③	I	—	—	0.5 Oz	0.5 Oz	0.05 CY	—	—	3	3	3	6	6	3	SHRUB
H	6		CARISSA MACROCARPA 'GREEN CARPET'	NATAL PLUM	CUTTING	2,019	③	③	—	—	1.5 CY/ 1,000 SQFT	6.6 LB/ 1,000 SQFT	6.6 LB/ 1,000 SQFT	—	—	—	—	—	—	—	—	1.5	GROUND COVER
	7		CARPOBROTUS EDULIS	HOTTENTOT FIG	CUTTING	90,670	③	③	I	—	1.5 CY/ 1,000 SQFT	6.6 LB/ 1,000 SQFT	6.6 LB/ 1,000 SQFT	—	—	—	—	—	—	—	—	1.5	GROUND COVER
	8		GAZANIA LINEARIS	NO COMMON NAME	CUTTING	4,043	③	③	I	—	1.5 CY/ 1,000 SQFT	6.6 LB/ 1,000 SQFT	6.6 LB/ 1,000 SQFT	—	—	—	—	—	—	—	—	1.5	GROUND COVER
	9		HEMEROCALLIS BITSY	BITSY DAYLILY	CUTTING	584	③	③	I	—	1.5 CY/ 1,000 SQFT	6.6 LB/ 1,000 SQFT	6.6 LB/ 1,000 SQFT	—	—	—	—	—	—	—	—	1.5	GROUND COVER
	10		TRACHELOSPERUM JASMINOIDES	STAR JASMINE	CUTTING	3,863	③	③	I	—	1.5 CY/ 1,000 SQFT	6.6 LB/ 1,000 SQFT	6.6 LB/ 1,000 SQFT		—	—	—	—	—	—	—	1.5	GROUND COVER
I	11		FESTUCA CALIFORNIA	CALFORNIA FESCUE	POT	2,467	③	③	I	—	1.5 CY/ 1,000 SQFT	6.6 LB/ 1,000 SQFT	6.6 LB/ 1,000 SQFT	—	—	—	—	—	—	—	—	1.5	GROUND COVER 2.5"x 2.5"x6"
	12		MUHLENBERGIA RIGENS	DEER GRASS	POT	4,797	③	③	I	—	1.5 CY/ 1,000 SQFT	6.6 LB/ 1,000 SQFT	6.6 LB/ 1,000 SQFT	—	—	—	—	—	—	—	—	1.5	GROUND COVER 2.5"x 2.5"x6"
T	13		TURF -SOD	NO COMMON NAME	SOD	17,828 SQFT	—	—	—	—	3 CY/ 1,000 SQFT	6.6 LB/ 1,000 SQFT	6.6 LB/ 1,000 SQFT	—	—	—	—	—	—	—	—	—	TURF
U	14		ALNUS RHOMBIFOLIA	WHITE ALDER	No. 15	35	③	③	I	—	—	5 Oz	5 Oz	0.15 CY	④	30	—	20	20	10	12	—	TREE
	15		LAGERSTROEMIA INDICA 'CHEROKEE'	DARK PINK CRAPE MYRTLE	No. 15	70	③	③	I	—	—	5 Oz	5 Oz	0.15 CY	④	30	—	15	15	15	17	—	TREE
	16		PLATANUS RACEMOSA	CALIFORNIA SYCAMORE	No. 15	96	③	③	I	—	—	5 Oz	5 Oz	0.15 CY	④	40	—	20	20	10	12	—	TREE
Z	17		ARCHONTOPHOENIX CUNNINGHAMIANA	KING PALM 20'⑬	B & B ~~33 ⑥~~	69	③	③	I	—	—	5 Oz	5 Oz	0.15 CY	—	—	—	—	—	—	—	—	TREE
	18		SYAGRUS ROMANZOFFIANA	QUEEN PALM 20'⑬	B & B ~~33 ⑥~~	19	③	③	I	—	—	5 Oz	5 Oz	0.15 CY	—	—	—	—	—	—	—	—	TREE
	19		WASHINGTONIA ROBUSTA	MEXICAN FAN PALM 33'⑬	B & B ~~33 ⑥~~	11	③	③	I	—	—	5 Oz	5 Oz	0.15 CY	—	42	—	10	10	15	17	—	TREE

3

APPLICABLE WHEN CIRCLED:

① - QUANTITIES SHOWN ARE "PER PLANT" UNLESS SHOWN AS SQFT OR SQYD APPLICATION RATES
2 - BASIN MULCH IS INCLUDED WITH MULCH QUANTITIES SHOWN ON PLANTING PLAN
③ - SUFFICIENT TO RECEIVE ROOT BALL AND AMENDMENTS IF REQUIRED
④ - SEE DETAIL
5 - SEE SPECIAL PROVISIONS

3 6 ~~⑥~~ - SEE STANDARD SPECIFICATIONS
⑦ - AS SHOWN ON PLANS
8 - UNLESS OTHERWISE SHOWN ON PLANS
9 - FOLIAGE PROTECTOR REQUIRED
10 - ROOT PROTECTOR REQUIRED
11 - ROOT BARRIER REQUIRED
12 - STATE-FURNISHED
3 ⑬ - HEIGHT OF PALM TREES SHALL BE FROM THE TOP OF THE ROOT BALL TO THE BOTTOM OF THE FIRST FROND

NOTE:

1. UNDERLINED PORTIONS OF BOTANICAL NAME INDICATE ABBREVIATIONS USED ON PLANTING PLANS.
2. MULCH MUST BE WOOD CHIPS.

LEGEND:

ROCK BLANKET
MULCH
EROSION CONTROL (TYPE I)
RC ROADSIDE CLEARING (Remove Exist plants except trees) (Unless otherwise noted.)

PLANT LIST
PL-1

REVISED BY | DATE REVISED
Y1 SU | GEORGE OLGUIN
CALCULATED-DESIGNED BY | CHECKED BY
SENIOR LANDSCAPE ARCHITECT | JENNIFER TAIRA
STATE OF CALIFORNIA - DEPARTMENT OF TRANSPORTATION
Caltrans LANDSCAPE ARCHITECTURE

LAST REVISION 00-00-00 | DATE PLOTTED => 20-DEC-2013 | TIME PLOTTED => 07:42

Dist	COUNTY	ROUTE	POST MILES TOTAL PROJECT	SHEET No.	TOTAL SHEETS
07	LA	5	0.0/7.6	466	985

George Olguin
LICENSED LANDSCAPE ARCHITECT

6-24-13
PLANS APPROVAL DATE

LICENSED LANDSCAPE ARCHITECT GEORGE OLGUIN NO. 4333 STATE OF CALIFORNIA
George Olguin 07-01-13
08-31-14 Renewal Date
11-10-12 Date

THE STATE OF CALIFORNIA OR ITS OFFICERS OR AGENTS SHALL NOT BE RESPONSIBLE FOR THE ACCURACY OR COMPLETENESS OF SCANNED COPIES OF THIS PLAN SHEET.

3

IRRIGATION CROSSOVERS

LOCATION (7)		SIDE		CONDUIT TYPE (1)		CONDUIT TYPE (5)		(N) WATER LINE CROSSOVER	(N) SPRINKLER CONTROL CROSSOVER
				SIZE (INCH)		SIZE (INCH)			
LINE	STATION	L+	R+	6		6			
				LENGTH (LF)		LENGTH (LF)		SIZE (INCH)	SIZE (INCH)
FL4 LINE	327+25	X	X	30	—	—	—	1¼"	1¼"
FL3 LINE	345+30	X	X	100	—	—	—	1½"	1½"
FL2 LINE	350+20	X	X	—	—	30	—	2"	2"
FL2 LINE	353+00	X	X	—	—	40	—	3"	2"
SA 1 LINE	58+75	X	X	—	—	52	—		
ORD1 LINE	335+12	X	X	—	—	330	—	1"	2"
FL3 LINE	346+25	X	X	—	—	125	—	2"	2"
FLOR1 LINE	91+80	X	X	—	—	102	—	2"	2"
FLOR1 LINE	94+16	X	X	—	—	102	—	2"	2"
SA 1 LINE	(6)	X	X	—	—	40	—	3"	2"
		TOTAL		130		821			

(N) - NOT A SEPARATE PAY ITEM FOR INFORMATION ONLY
X - DENOTES REQUIREMENT

CONDUIT TYPE:
(APPLICABLE WHEN CIRCLED BELOW AND SHOWN UNDER THE 'CONDUIT TYPE' COLUMN HEADING)

(1) BITUMINOUS COATED CORRUGATED STEEL PIPE (0.064 INCH THICK)
2 CORRUGATED STEEL PIPE (0.064 INCH THICK)
3 CORRUGATED HIGH DENSITY POLYETHYLENE PIPE
4 ALTERNATIVE CONDUIT
(5) WELDED STEEL PIPE
(6) SEE IP-4 CROSSOVER (A)
(7) SEE IP SHEETS

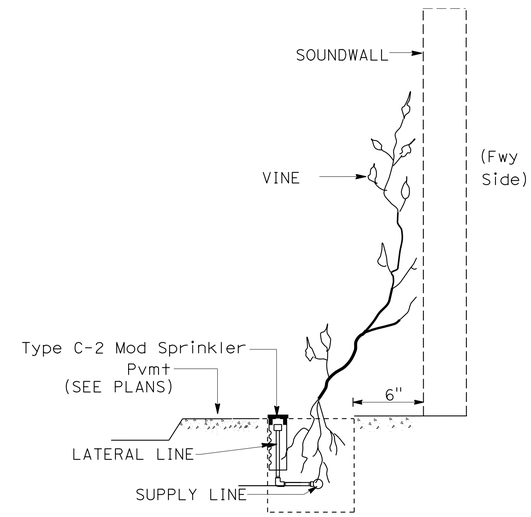

ELEVATION
VINE POCKET

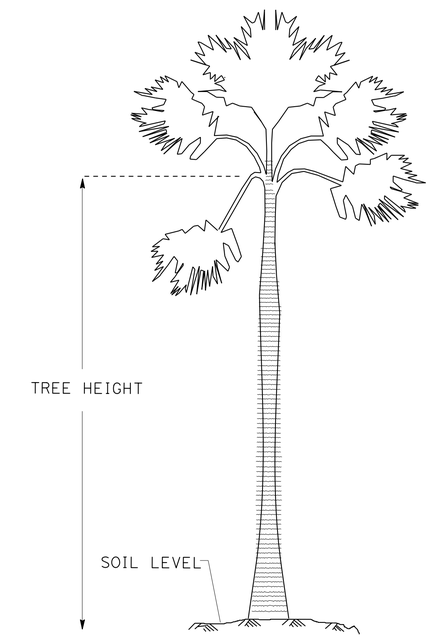

ELEVATION
TREE PALM

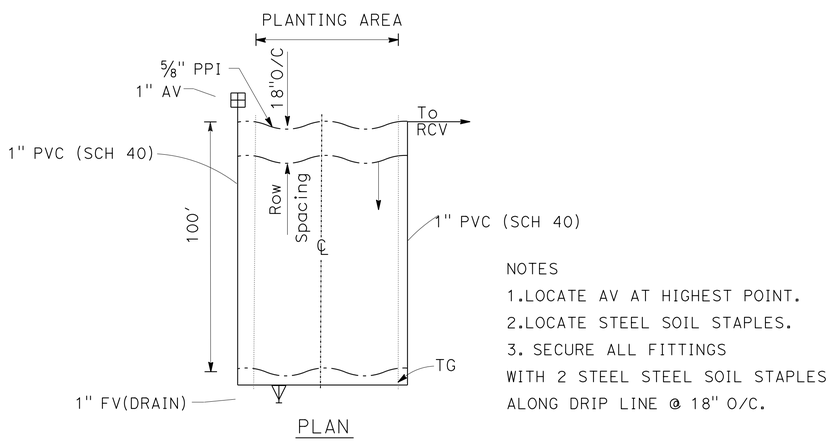

PLAN

NOTES
1.LOCATE AV AT HIGHEST POINT.
2.LOCATE STEEL SOIL STAPLES.
3. SECURE ALL FITTINGS WITH 2 STEEL STEEL SOIL STAPLES ALONG DRIP LINE @ 18" O/C.

IRRIGATION SYSTEM (PARKWAYS AND MEDIANS)

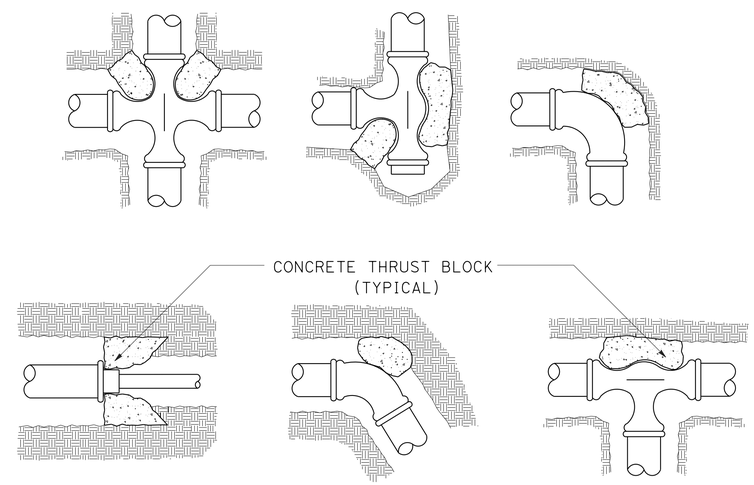

THRUST BLOCKS

3 **REPLACED PER ADDENDUM No. 3 DATED DECEMBER 20, 2013**

LANDSCAPE DETAILS

NO SCALE

LD-2

STATE OF CALIFORNIA - DEPARTMENT OF TRANSPORTATION
Caltrans® LANDSCAPE ARCHITECTURE
SENIOR LANDSCAPE ARCHITECT: JENNIFER TAIRA
CALCULATED-DESIGNED BY: GEORGE OLGUIN
CHECKED BY: XUAN WU
REVISED BY
DATE REVISED

LAST REVISION 00-00-00
DATE PLOTTED => 20-DEC-2013
TIME PLOTTED => 07:46

DIST	COUNTY	ROUTE	POST MILES TOTAL PROJECT	SHEET No.	TOTAL SHEETS
07	LA	5	0.0/7.6	616	985

P. Vijitakula 12-28-12
REGISTERED CIVIL ENGINEER DATE

6-24-13
PLANS APPROVAL DATE

REGISTERED PROFESSIONAL ENGINEER P. VIJITAKULA No. C 54701 Exp. 12-31-13 CIVIL STATE OF CALIFORNIA

The State of California or its officers or agents shall not be responsible for the accuracy or completeness of electronic copies of this plan sheet.

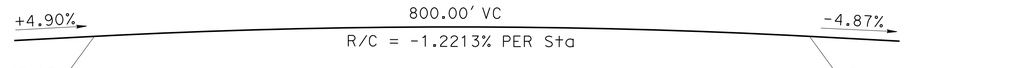

PROFILE GRADE

NO SCALE

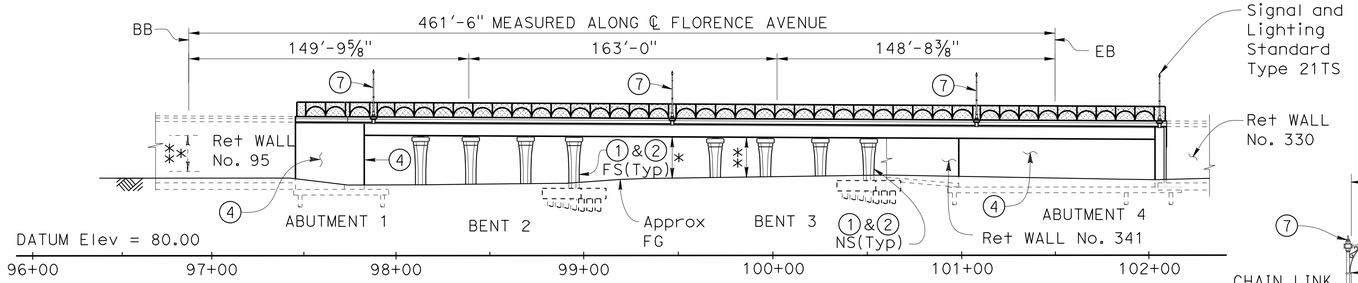

ELEVATION

1" = 40'

LEGEND:

- * 17'-8" SB MINIMUM VERTICAL CLEARANCE
- ** 17'-8⅝" NB MINIMUM VERTICAL CLEARANCE
- *** 19'-0" SB ON-RAMP MINIMUM VERTICAL CLEARANCE
- Indicates point of minimum vertical clearance
- Indicates existing structure

3 REPLACED PER ADDENDUM No. 3 DATED DECEMBER 20, 2013

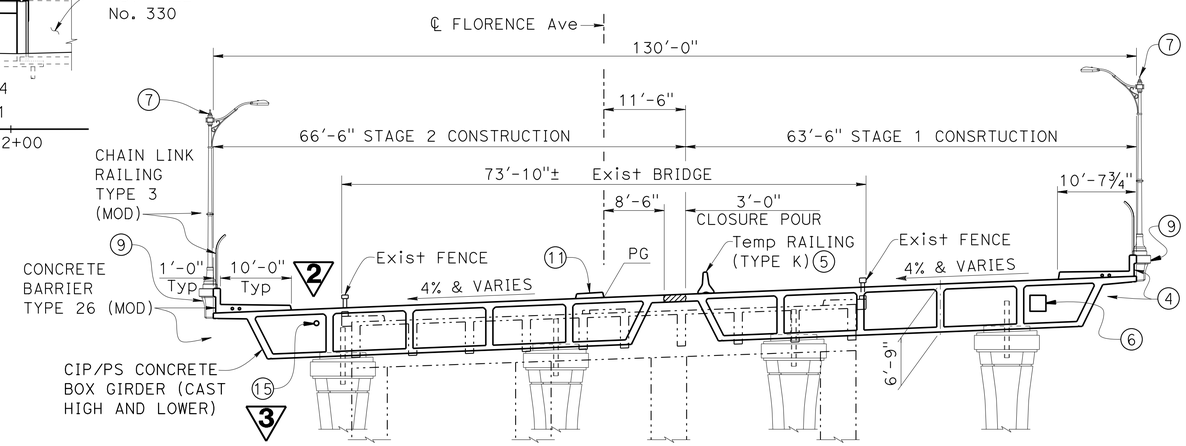

TYPICAL SECTION

3/32" = 1'

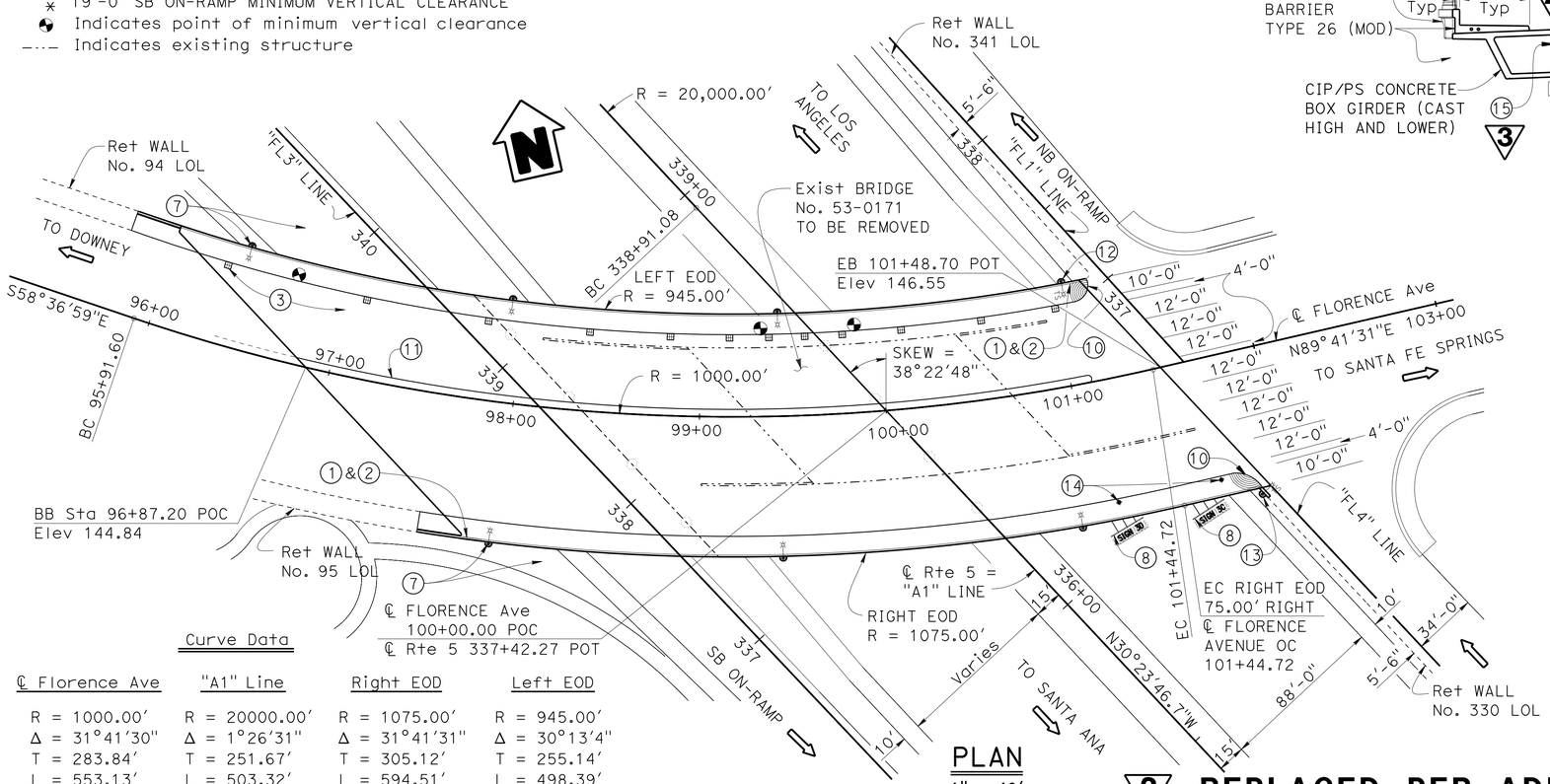

Curve Data

℄ Florence Ave	"A1" Line	Right EOD	Left EOD
R = 1000.00'	R = 20000.00'	R = 1075.00'	R = 945.00'
Δ = 31°41'30"	Δ = 1°26'31"	Δ = 31°41'31"	Δ = 30°13'4"
T = 283.84'	T = 251.67'	T = 305.12'	T = 255.14'
L = 553.13'	L = 503.32'	L = 594.51'	L = 498.39'

PLAN

1" = 40'

Notes:

1. Paint "Bridge No. 53-3065
2. Paint "Florence Avenue OC"
3. Deck Drain Type D-1 Total 12, see "Deck Details" sheet
4. Architectural Treatment
5. Temporary Railing Type K (Bolted to concrete deck), See "Bridge Details" sheet and "Road Plans"
6. Future Utility Opening See, "Typical Section Stage 1" sheet for location)
7. Decorative City Lighting Standard (Total 6), see "Road Plans"
8. Sign and Overhead Structure, see "Road Plans"
9. Luminaire Pedestal total 6, see "Luminaire Pedestal Details No. 1" and "Luminaire Pedestal Details No. 2" sheets
10. Curb Ramp, see "Road Plans"
11. Median, see "Deck Details" sheet
12. Pedestal for Signal and Lighting Standard Type 26A-4-100 (total 1), see "Signal And Lighting Pedestal Details No. 3" and "Signal And Lighting Pedestal Details No. 4" sheets
13. Pedestal for Signal and Lighting Standard Type 21TS (total 1), see "Signal And Lighting Pedestal Details No. 1" and "Signal And Lighting Pedestal Details No. 2" sheets
14. Electrical Systems (Signal and Lighting Standard, Type 1 and Equipment Numbering) (total 2), see Standard Plan ES-7B and "Road Plans"
15. 8" Ø x 0.148" Deck Drainage Galv WSP, see "Deck Details" sheet.

For Index to Plans, Standard Plan List, see "Index To Plans" sheet.
For General Notes, Quantities and Pile Data Table, see "General Notes" sheet.

2 REPLACED PER ADDENDUM No. 2 DATED DECEMBER 5, 2013

Jeff Sims
DESIGN ENGINEER

	BY	CHECKED
DESIGN	P. Vijitakula	Vadim Shostak
DETAILS	Bob Huddleston/C. Figuerres	Vadim Shostak
QUANTITIES	Art Herrera	Mike Bergman

LOAD & RESISTANCE FACTOR DESIGN — LIVE LOADING: HL93 W/"LOW-BOY" AND PERMIT DESIGN VEHICLE

	BY	CHECKED
LAYOUT	P. Vijitakula	Vadim Shostak
SPECIFICATIONS	Xiahong Li	PLANS AND SPECS COMPARED Xiahong Li

ORIGINAL SCALE IN INCHES FOR REDUCED PLANS 0 1 2 3

STATE OF CALIFORNIA
DEPARTMENT OF TRANSPORTATION

DIVISION OF ENGINEERING SERVICES
STRUCTURE DESIGN
DESIGN BRANCH 1

BRIDGE NO. 53-3065
POST MILE 6.38

FLORENCE AVENUE OC (REPLACE)
GENERAL PLAN

UNIT: 3576
PROJECT NUMBER & PHASE: 07000018351
CONTRACT NO.: 07-215954

DISREGARD PRINTS BEARING EARLIER REVISION DATES

REVISION DATES: 03-01-11 | 09-28-12 | 03/29/13

SHEET 1 OF 56

USERNAME => s119571 DATE PLOTTED => 19-DEC-2013 TIME PLOTTED => 12:54

FILE => 53-3065-a-01-gp.add

DIST	COUNTY	ROUTE	POST MILES TOTAL PROJECT	SHEET No.	TOTAL SHEETS
07	LA	5	0.0/7.6	617	985

P. Vijitakula 12-28-12
REGISTERED CIVIL ENGINEER DATE

6-24-13
PLANS APPROVAL DATE

REGISTERED PROFESSIONAL ENGINEER P. VIJITAKULA No. C 54701 Exp. 12-31-13 CIVIL STATE OF CALIFORNIA

The State of California or its officers or agents shall not be responsible for the accuracy or completeness of electronic copies of this plan sheet.

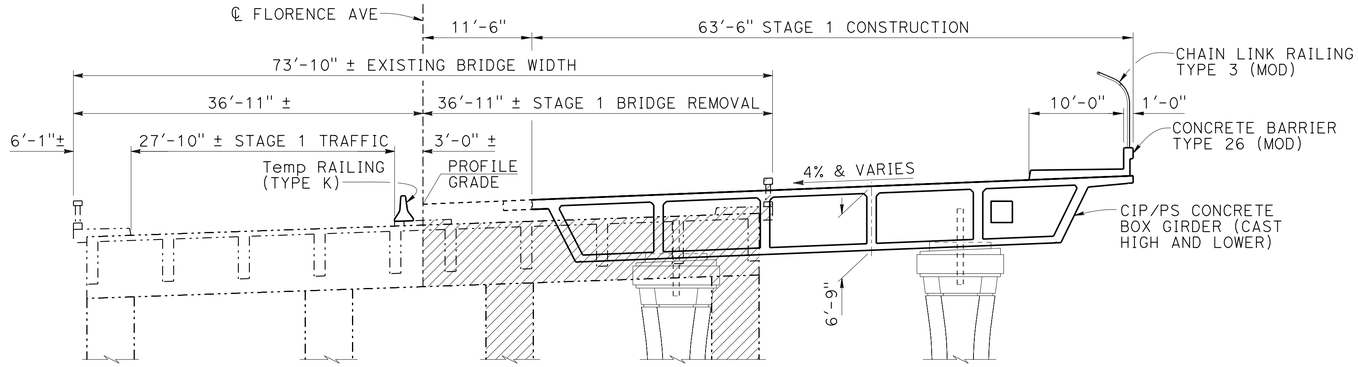

STAGE 1 CONSTRUCTION 2

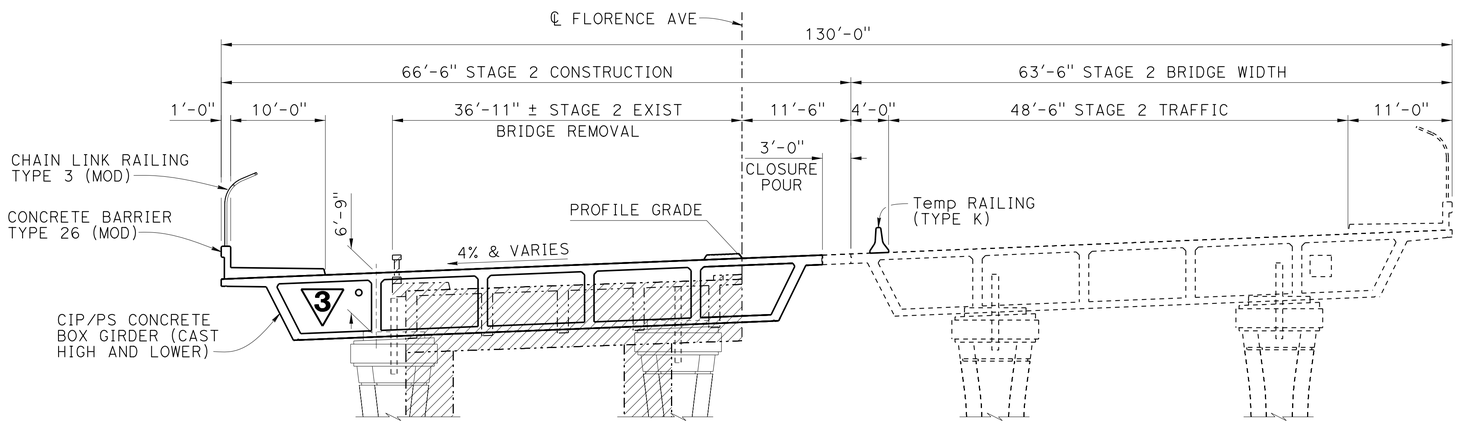

STAGE 2 CONSTRUCTION

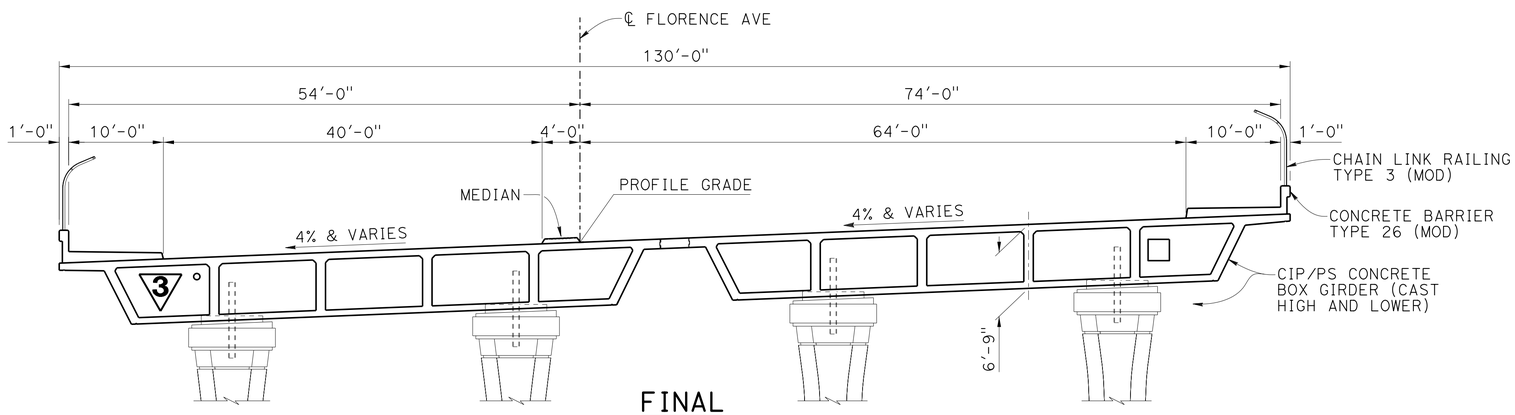

FINAL

TYPICAL SECTION

1/8" = 1'-0"

LEGEND:

- - - - - INDICATES EXISTING STRUCTURE

BRIDGE REMOVAL

Notes:

- Existing structure at bent cap overhang portion may require a shoring system after stage 1 bridge removal as determined by the Engineer.
- Stage traffic and construction shown shall apply to bridge work only. For additional details, see "ROAD PLANS".

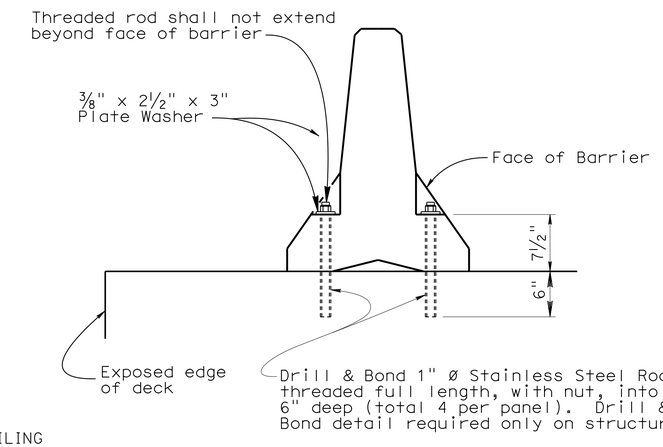

Note:

- For more details, see "Standard Plan T3A" and "Road Plans"

STAGE 2 TRAFFIC

TYPE K RAILING ATTACHMENT DETAILS

NO SCALE

3 REPLACED PER ADDENDUM No. 3 DATED DECEMBER 20, 2013

2 REPLACED PER ADDENDUM No. 2 DATED DECEMBER 5, 2013

	BY	CHECKED
DESIGN	P. Vijitakula	Vadim Shostak
DETAILS	Bob Huddleston/C. Figuerres	Vadim Shostak
QUANTITIES	Art Herrera	Mike Bergman

STATE OF CALIFORNIA DEPARTMENT OF TRANSPORTATION

DIVISION OF ENGINEERING SERVICES STRUCTURE DESIGN DESIGN BRANCH 1

BRIDGE NO. 53-3065
POST MILE 6.38

FLORENCE AVENUE OC (REPLACE)
BRIDGE DETAILS

STRUCTURES DESIGN DETAIL SHEET (ENGLISH) (REV. 09-01-10)

ORIGINAL SCALE IN INCHES FOR REDUCED PLANS 0 1 2 3

UNIT: 3576
PROJECT NUMBER & PHASE: 07000018351
CONTRACT NO.: 07-215954

DISREGARD PRINTS BEARING EARLIER REVISION DATES

REVISION DATES 03-02-11 09-24-12 03/29/13

SHEET 2 OF 56

FILE => 53-3065-a-02-bridgedet.dgn

USERNAME => s121614 DATE PLOTTED => 20-DEC-2013 TIME PLOTTED => 07:57

DIST	COUNTY	ROUTE	POST MILES TOTAL PROJECT	SHEET No.	TOTAL SHEETS
07	LA	5	0.0/7.6	619	985

P. Vijitakula 12-28-12
REGISTERED CIVIL ENGINEER DATE

6-24-13
PLANS APPROVAL DATE

REGISTERED PROFESSIONAL ENGINEER P. VIJITAKULA No. C 54701 Exp. 12-31-13 CIVIL STATE OF CALIFORNIA

The State of California or its officers or agents shall not be responsible for the accuracy or completeness of electronic copies of this plan sheet.

GENERAL NOTES
LOAD AND RESISTANCE FACTOR DESIGN

DESIGN: AASHTO LRFD Bridge Design Specifications, 4th edition and the California Amendments, preface date December 2008

SEISMIC DESIGN: Caltrans Seismic Design Criteria (SDC), Version 1.6, dated November 2010

DEAD LOAD: Includes 35 psf for future wearing surface.

LIVE LOADING: HL93 and permit design load.

SEISMIC LOADING: Site specific Acceleration Response Spectra (ARS) Curve

Soil Profile: Type D, V_{S30} = 1092.5 ft/sec (333 m/sec)
Moment Magnitude: M_{Max} = 7.3
Peak Ground Acceleration (PGA) = 0.7g

CONCRETE: f_y = 60 ksi
f'_c = 3.6 ksi
n = 8
See prestressing notes.

2

~~STRUCTURAL STEEL: f_y = ASTM A709 Grade 50~~

Structural Concrete, Bridge (3600 psi @ 28 days)
Structural Concrete, Bridge (4500 psi at 28 days)
Structural Concrete, Bridge Footing (3600 psi @ 28 days)

CONCRETE STRENGTH AND TYPE LIMITS
No Scale

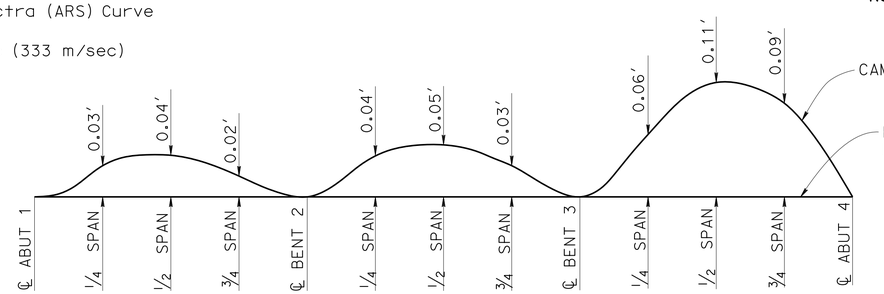

NOTE: Does not include allowance for falsework settlement

CAMBER DIAGRAM - STAGE 1
No Scale

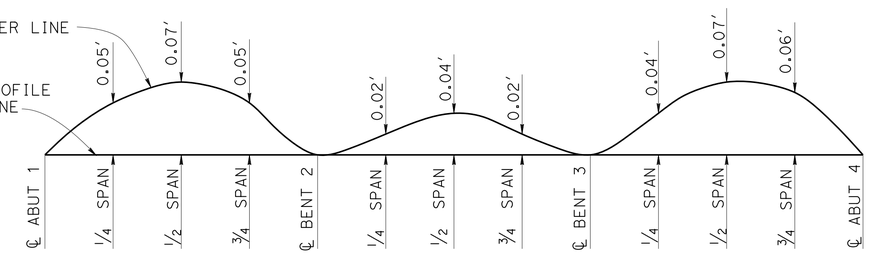

NOTE: Does not include allowance for falsework settlement

CAMBER DIAGRAM - STAGE 2
No Scale

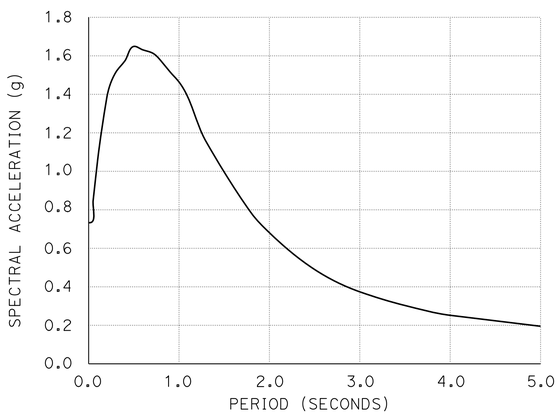

SITE SPECIFIC ARS CURVE
NO SCALE

QUANTITIES

BRIDGE REMOVAL, LOCATION A	LUMP	SUM
STRUCTURE EXCAVATION (BRIDGE)	7,790	CY
STRUCTURE EXCAVATION (TYPE Y-2) (AERIALLY DEPOSITED LEAD)	565	CY
STRUCTURE BACKFILL (BRIDGE)	4,030	CY
PERVIOUS BACKFILL MATERIAL	395	CY
JACKING SUPERSTRUCTURE	LUMP	SUM
FURNISH STEEL PILING (HP 14 X 89)	12,100	LF
DRIVE STEEL PILE (HP 14 X 89)	310	EA
36" CAST-IN-DRILLED-HOLE CONCRETE PILING	8,970	LF
PRESTRESSING CAST-IN-PLACE CONCRETE	LUMP	SUM
STRUCTURAL CONCRETE, BRIDGE FOOTING	1,675	CY
STRUCTURAL CONCRETE, BRIDGE	7,410	CY
ARCHITECTURAL TREATMENT (SPLIT SLATE)	1,320	SQFT
ARCHITECTURAL TREATMENT (SUNRAY-SPLIT SLATE)	6,590	SQFT
JOINT SEAL (MR 2")	383	LF
BAR REINFORCING STEEL (BRIDGE)	2,973,600	LB
2 ~~STRUCTURAL STEEL (BRIDGE)~~	~~5,410~~	~~LB~~
WELDED STEEL PIPE CASING (BRIDGE)	53	LF
MINOR CONCRETE (MEDIAN CURB)	30	CY
MISCELLANEOUS METAL (BRIDGE)	7,995 ~~2,115~~	LB
BRIDGE DECK DRAINAGE SYSTEM	10,220 ~~1,740~~	~~LB~~
CHAIN LINK RAILING (TYPE 3 MODIFIED)	975	LF
CONCRETE BARRIER (TYPE 26 MODIFIED)	975	LF
CONCRETE BARRIER (TYPE 60D MODIFIED)	390	LF
CONCRETE BARRIER (TYPE ~~736~~ 736A MODIFIED)	12	LF

2 3

FALSEWORK RELEASE

3 **REPLACED PER ADDENDUM No. 3 DATED DECEMBER 20, 2013**

Alternative 1:

Falsework shall be released as soon as permitted by the specifications.
Closure pour shall not be placed sooner than 60 days after the falsework had been released.

Alternative 2:

Falsework shall not be released less than 28 days after the last concrete has been placed.
Closure pour shall not be placed sooner than 14 days after the falsework has been released.

When Falsework Release Alternative 2 is used, camber values are 0.75 times those shown.

PILE DATA TABLE

LOCATION	PILE TYPE	CUT-OFF ELEVATION (ft)	NOMINAL RESISTANCE(Kips) COMPRESSION	NOMINAL RESISTANCE(Kips) TENSION	DESIGN TIP ELEVATION (ft)	SPECIFIED TIP ELEVATION (ft)	NOMINAL DRIVING RESISTANCE (Kips)
ABUT 1	HP 14X89	111.92	400	N/A	(a) 74, (c) 84, (d) 81	74.0	400
BENT 2	36" CIDH	109.25	760	0	(a) 35, (b) N/A, (c) 77, (d) 70	35.0	N/A
BENT 3	36" CIDH	114.25	760	0	(a) 39, (b) N/A, (c) 68, (d) 74	39.0	N/A
ABUT 4	HP 14X89	113.42	400	N/A	(a) 76, (c) 86, (d) 81	76.0	400

NOTES: 1. Design tip elevations for abutments are controlled by: (a) Compression, (c) Settlement, and (d) Lateral load.
2. Design tip elevation for bents are controlled by: (a) Compression, (b) Tension, (c) Settlement, and (d) Lateral load.

2 **REPLACED PER ADDENDUM No. 2 DATED DECEMBER 5, 2013**

	BY	CHECKED
DESIGN	P. Vijitakula	Vadim Shostak
DETAILS	Jin Zhou	Vadim Shostak
QUANTITIES	Art Herrera	Mike Bergman

STATE OF CALIFORNIA
DEPARTMENT OF TRANSPORTATION

DIVISION OF ENGINEERING SERVICES
STRUCTURE DESIGN
DESIGN BRANCH 1

BRIDGE NO. 53-3065
POST MILE 6.38

FLORENCE AVENUE OC (REPLACE)
GENERAL NOTES

STRUCTURES DESIGN DETAIL SHEET (ENGLISH) (REV. 09-01-10)

ORIGINAL SCALE IN INCHES FOR REDUCED PLANS 0 1 2 3

UNIT: 3576
PROJECT NUMBER & PHASE: 07000018351
CONTRACT NO.: 07-215954

DISREGARD PRINTS BEARING EARLIER REVISION DATES

REVISION DATES 11-02-11 03/29/13 12/27/12

SHEET 4 OF 56

FILE => 53-3065-a-04-generalnotes.dgn

USERNAME => s119571 DATE PLOTTED => 19-DEC-2013 TIME PLOTTED => 13:04

DIST	COUNTY	ROUTE	POST MILES TOTAL PROJECT	SHEET No.	TOTAL SHEETS
07	LA	5	0.0/7.6	639	985

P. Vijitakula 12-28-12
REGISTERED CIVIL ENGINEER DATE

6-24-13
PLANS APPROVAL DATE

REGISTERED PROFESSIONAL ENGINEER P. VIJITAKULA No. C 54701 Exp. 12-31-13 CIVIL STATE OF CALIFORNIA

The State of California or its officers or agents shall not be responsible for the accuracy or completeness of electronic copies of this plan sheet.

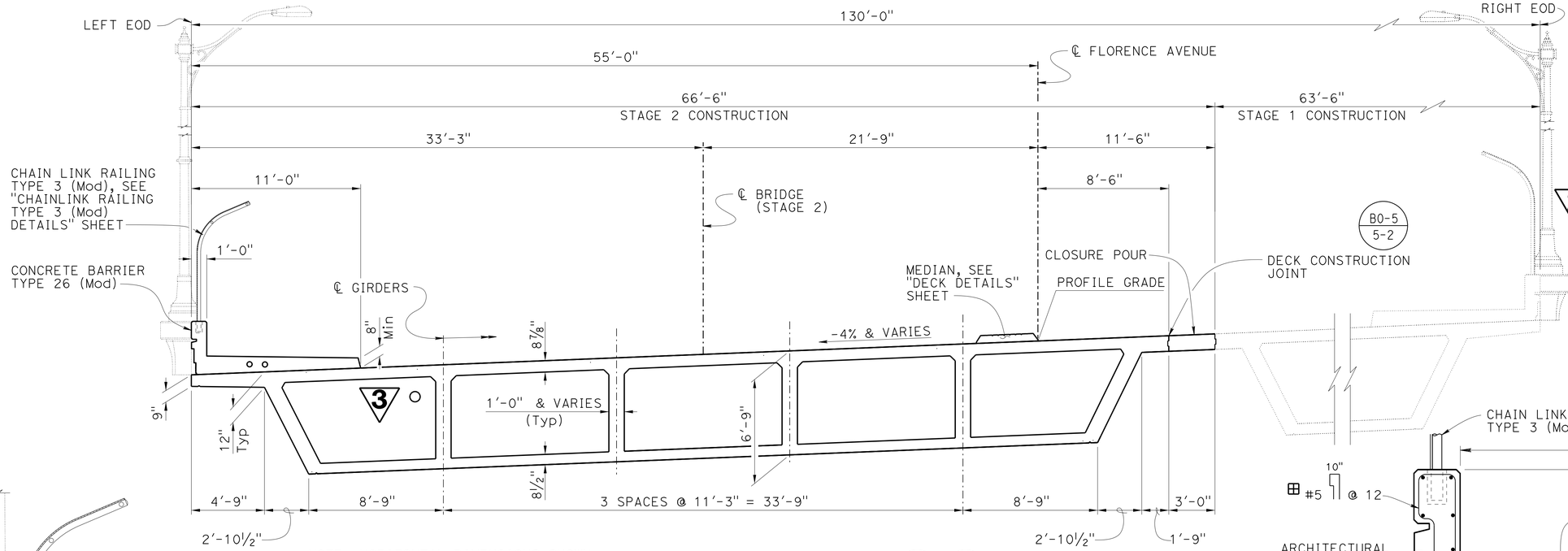

NOTE: HORIZONTAL DIMENSIONS SHOWN ARE RADIAL TO ℄ FLORENCE AVENUE.

TYPICAL SECTION (B7-1 / B8-5)

1/4" = 1'-0"

2 Legend:

- ⊕ TO BE PLACED BEFORE DECK CONCRETE POUR
- ⊞ MODIFIED STANDARD PLAN REINFORCEMENT
- ⊛ DISTRIBUTION REINFORCEMENT (Typ)
- ⊠ LAP SPLICE TOP TWO #5 BARS WITH #11, SEE "GIRDER REINFORCEMENT NO. 1 & 2" SHEETS

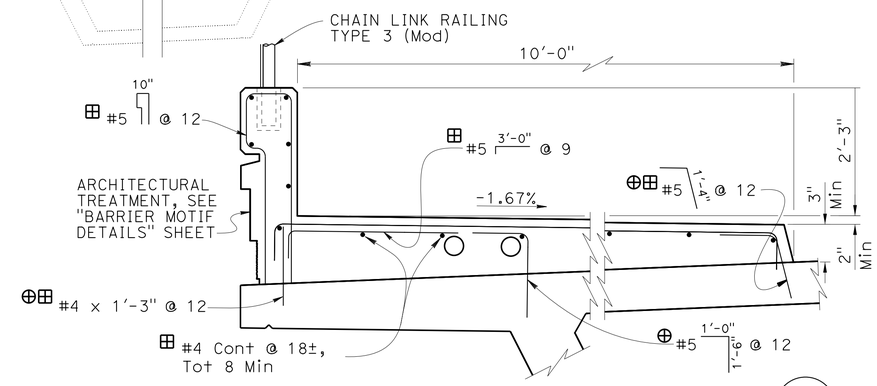

Notes:
- For Details and Reinf not shown see B11-54
- Luminaire Pedestal not shown
- Left EOD shown, Right EOD similar but opposite hand

BARRIER TYPE 26 (MOD)

No Scale

3 REPLACED PER ADDENDUM No. 3 DATED DECEMBER 20, 2013

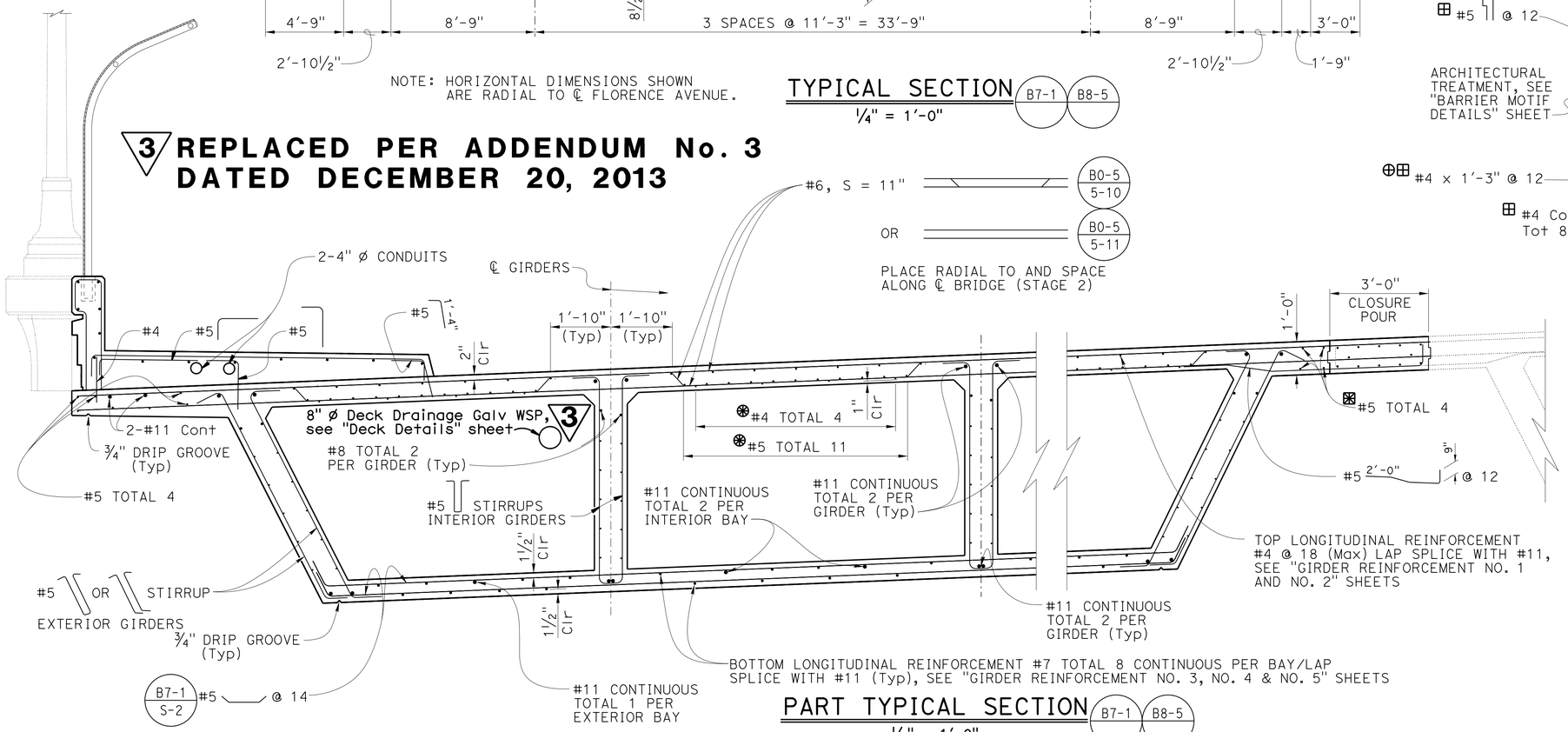

PART TYPICAL SECTION (B7-1 / B8-5)

1/2" = 1'-0"

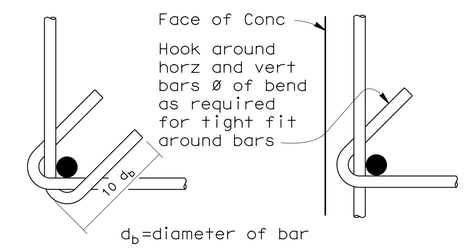

Note: Detail is Typical to all locations

TIE BAR DETAIL

No Scale

2 REPLACED PER ADDENDUM No. 2 DATED DECEMBER 5, 2013

	BY	CHECKED
DESIGN	P. Vijitakula	Vadim Shostak
DETAILS	G. M. Souza	Vadim Shostak
QUANTITIES	Art Herrera	Mike Bergman

STATE OF CALIFORNIA
DEPARTMENT OF TRANSPORTATION

DIVISION OF ENGINEERING SERVICES
STRUCTURE DESIGN
DESIGN BRANCH 1

BRIDGE NO. 53-3065
POST MILE 6.38

FLORENCE AVENUE OC (REPLACE)
TYPICAL SECTION STAGE 2

STRUCTURES DESIGN DETAIL SHEET (ENGLISH) (REV. 09-01-10)

ORIGINAL SCALE IN INCHES FOR REDUCED PLANS 0 1 2 3

UNIT: 3576
PROJECT NUMBER & PHASE: 07000018351
CONTRACT NO.: 07-215954

DISREGARD PRINTS BEARING EARLIER REVISION DATES

REVISION DATES 11-04-11 03-26-13 04/02/13

SHEET 24 OF 56

FILE => 53-3065-k-24-typ-sec-stg-02.dgn

USERNAME => s139571 DATE PLOTTED => 19-DEC-2013 TIME PLOTTED => 12:54

DIST	COUNTY	ROUTE	POST MILES TOTAL PROJECT	SHEET No.	TOTAL SHEETS
07	LA	5	0.0/7.6	647	985

P. Vijitakula 12-28-12
REGISTERED CIVIL ENGINEER DATE

6-24-13
PLANS APPROVAL DATE

REGISTERED PROFESSIONAL ENGINEER P. VIJITAKULA No. C 54701 Exp. 12-31-13 CIVIL STATE OF CALIFORNIA

The State of California or its officers or agents shall not be responsible for the accuracy or completeness of electronic copies of this plan sheet.

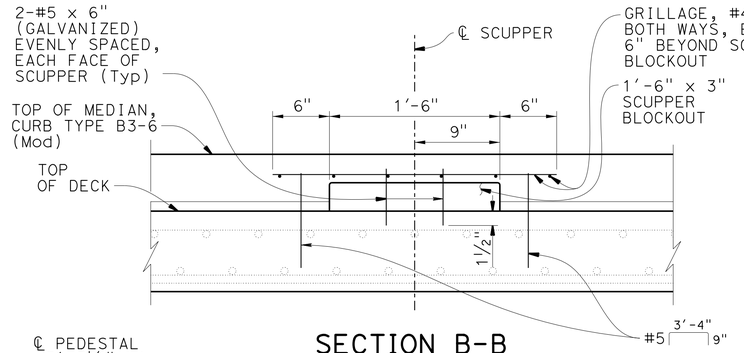

SECTION B-B
1½" = 1'-0"

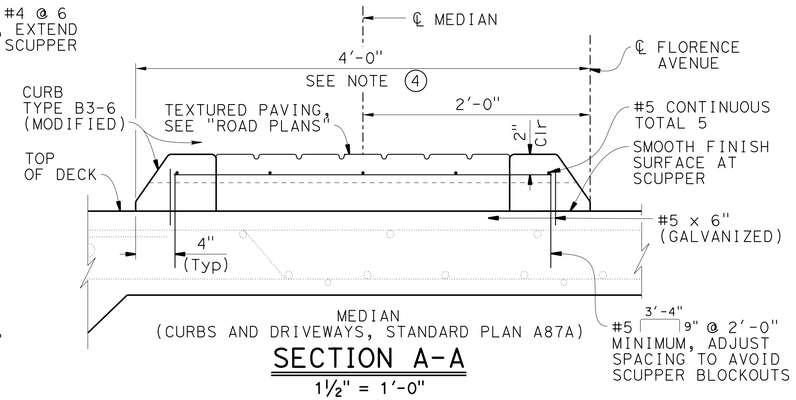

SECTION A-A
1½" = 1'-0"

SIDEWALK ACCESS OPENING (MANHOLE)

B7-11 U-42 | B7-11 U-46

LOCATION	OFFSET DISTANCE AND STATION FROM ℄ FLORENCE AVENUE	
℄ MANHOLE A	66'-0" RIGHT	Sta 98+15.00
℄ MANHOLE B	66'-0" RIGHT	Sta 98+38.00
℄ MANHOLE C	66'-0" RIGHT	Sta 98+55.00
℄ MANHOLE D	66'-0" RIGHT	Sta 99+57.00
℄ MANHOLE E	66'-0" RIGHT	Sta 99+75.00
℄ MANHOLE F	66'-0" RIGHT	Sta 99+93.00
℄ MANHOLE G	66'-0" RIGHT	Sta 101+00.00
℄ MANHOLE H	66'-0" RIGHT	Sta 101+20.00
℄ MANHOLE I	66'-0" RIGHT	Sta 101+32.00

Notes:

1. 8" ø X 0.148" (NPS 8) Deck Drainage Galvanized Welded Steel Pipe. Radius of pipe bend shall be 2'-0" Minimum. The NPS 8 pipe shall be installed on longitudinal slope that is not less than 2 %. For more details, see Standard Plan B7-6.
2. Drain outlet location, see "Road Plans"
3. See Sidewalk Access Opening Table on this sheet
4. Limit of median curb

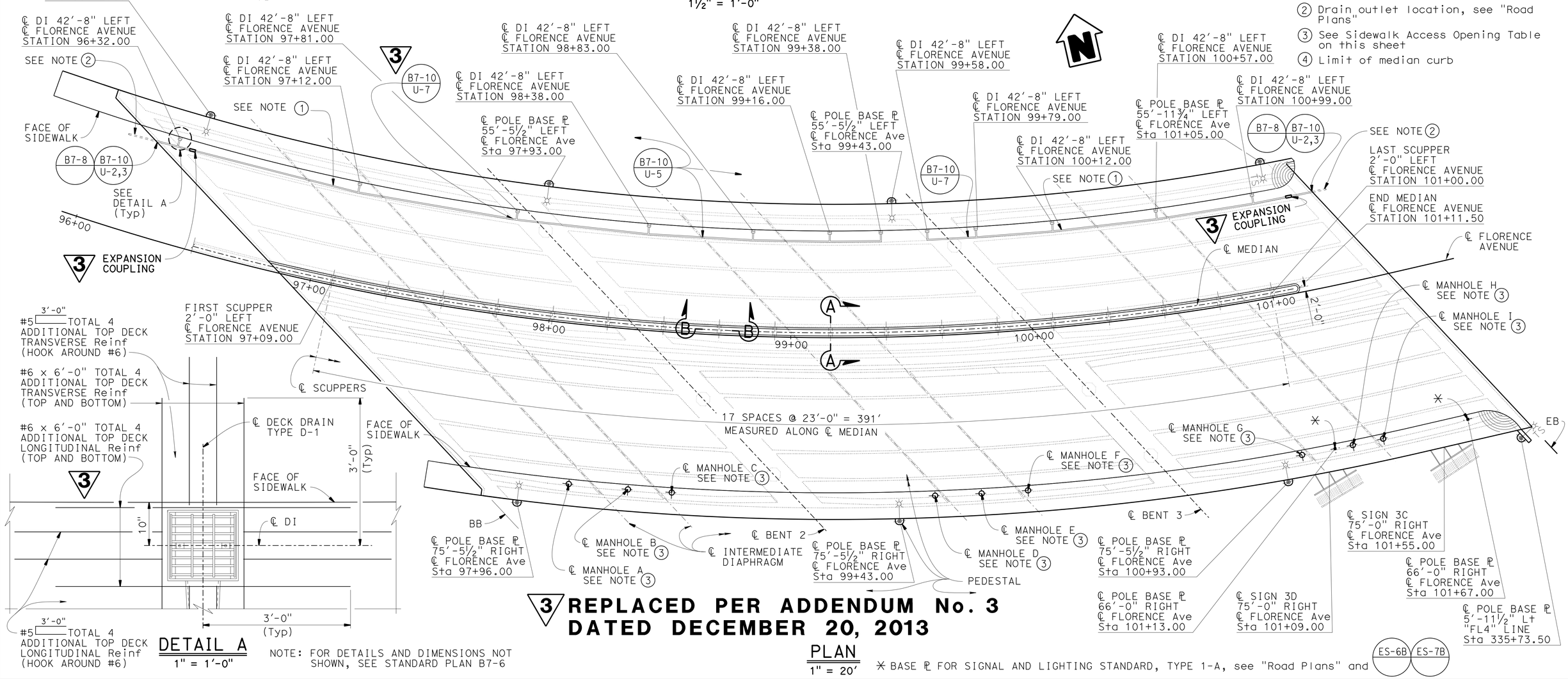

DETAIL A
1" = 1'-0"

NOTE: FOR DETAILS AND DIMENSIONS NOT SHOWN, SEE STANDARD PLAN B7-6

3 REPLACED PER ADDENDUM No. 3 DATED DECEMBER 20, 2013

PLAN
1" = 20'

✳ BASE ℙ FOR SIGNAL AND LIGHTING STANDARD, TYPE 1-A, see "Road Plans" and

	BY	CHECKED
DESIGN	P. Vijitakula/D. Sessions	H. Fang / V. Shostak
DETAILS	Gary Souza	H. Fang / V. Shostak
QUANTITIES	Art Herrera	Mike Bergman

STATE OF CALIFORNIA
DEPARTMENT OF TRANSPORTATION

DIVISION OF ENGINEERING SERVICES
STRUCTURE DESIGN
DESIGN BRANCH 1

BRIDGE NO. 53-3065
POST MILE 6.38

FLORENCE AVENUE OC (REPLACE)
DECK DETAILS

STRUCTURES DESIGN DETAIL SHEET (ENGLISH) (REV. 09-01-10)

ORIGINAL SCALE IN INCHES FOR REDUCED PLANS 0 1 2 3

UNIT: 3576
PROJECT NUMBER & PHASE: 07000018351
CONTRACT NO.: 07-215954

DISREGARD PRINTS BEARING EARLIER REVISION DATES

REVISION DATES 07-10-12 12-19-12 04-03-13

SHEET 32 OF 56

FILE => 53-3065-q-32-deck-det.dgn

USERNAME => s114937 DATE PLOTTED => 19-DEC-2013 TIME PLOTTED => 11:32

DIST	COUNTY	ROUTE	POST MILES TOTAL PROJECT	SHEET No.	TOTAL SHEETS
07	LA	5	0.0/7.6	672	985

P. Vijitakula
REGISTERED CIVIL ENGINEER 12-28-12 DATE

6-24-13
PLANS APPROVAL DATE

REGISTERED PROFESSIONAL ENGINEER P. VIJITAKULA No. C 54701 Exp. 12-31-13 CIVIL STATE OF CALIFORNIA

The State of California or its officers or agents shall not be responsible for the accuracy or completeness of electronic copies of this plan sheet.

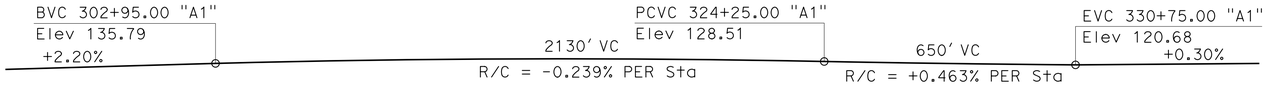

PROFILE GRADE

NO SCALE

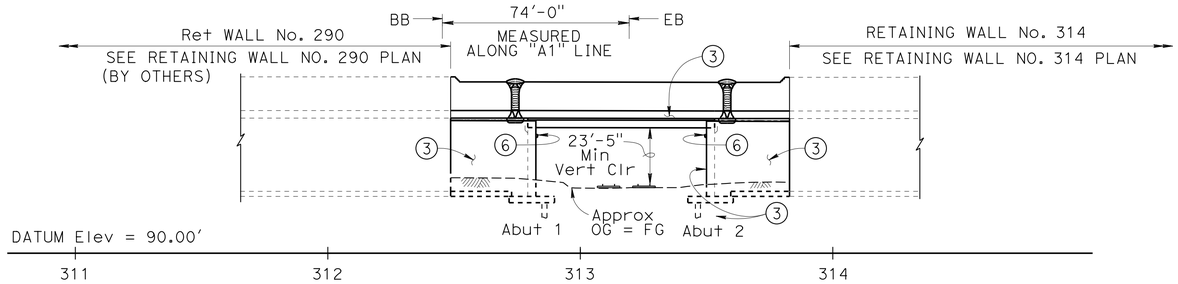

ELEVATION

1" = 30'

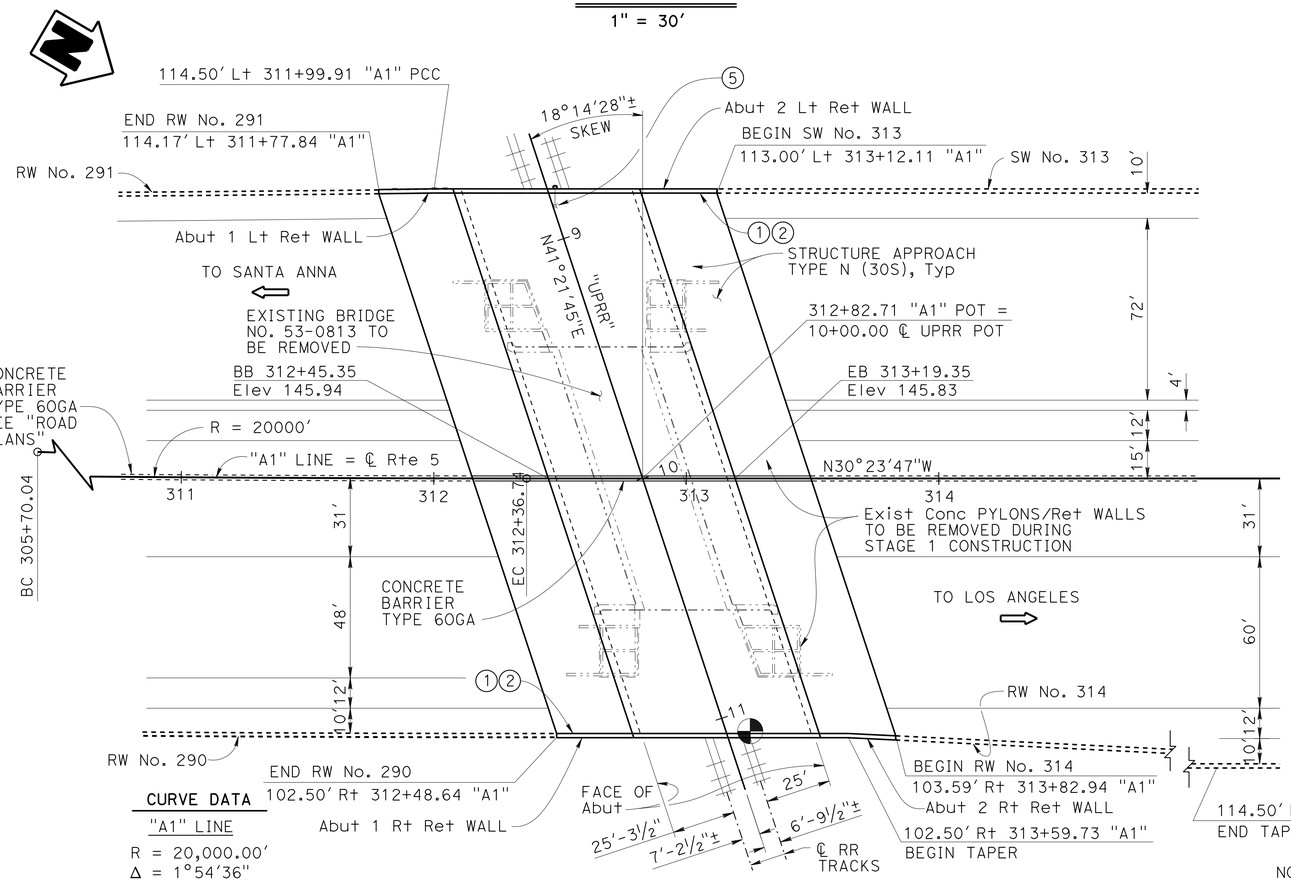

CURVE DATA

"A1" LINE

R = 20,000.00'
Δ = 1°54'36"
T = 333.38'
L = 666.70'

PLAN

1" = 30'

3 **REPLACED PER ADDENDUM No. 3 DATED DECEMBER 20, 2013** 3

LEGEND:

- Indicates existing structure
- Indicates bridge removal
- Indicates point of minimum vertical clearance at top of right rail

NOTES:

1. Paint "Bridge No. 53-3063"
2. Paint "ORR AND DAY ROAD OH"
3. Architectural texture and details, see "ARCHITECTURAL DETAILS" sheets.
4. Communication conduit with support hangers, see "MISCELLANEOUS DETAILS" sheet and "ROAD PLANS".
5. Electrolier, see "ELECTROLIER PEDESTAL DETAILS" sheet and "ROAD PLANS" for location.
6. Wall mounted Luminaire, see "ROAD PLANS"

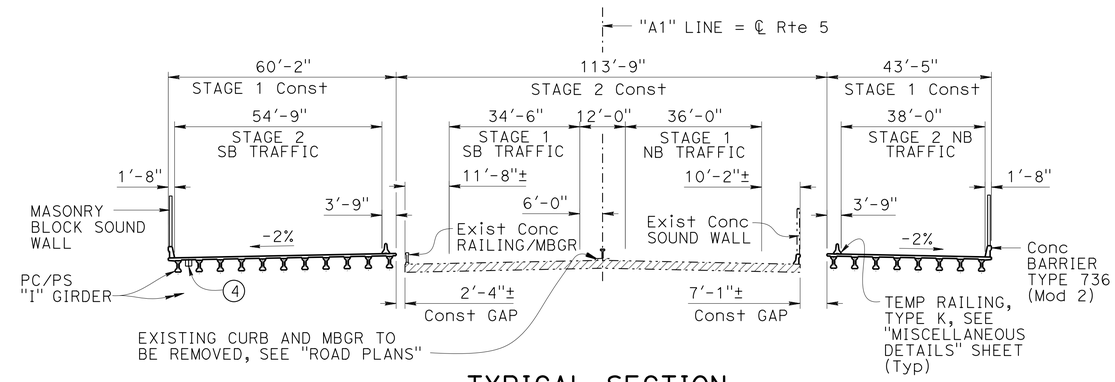

TYPICAL SECTION CONSTRUCTIONS STAGING

1" = 20'

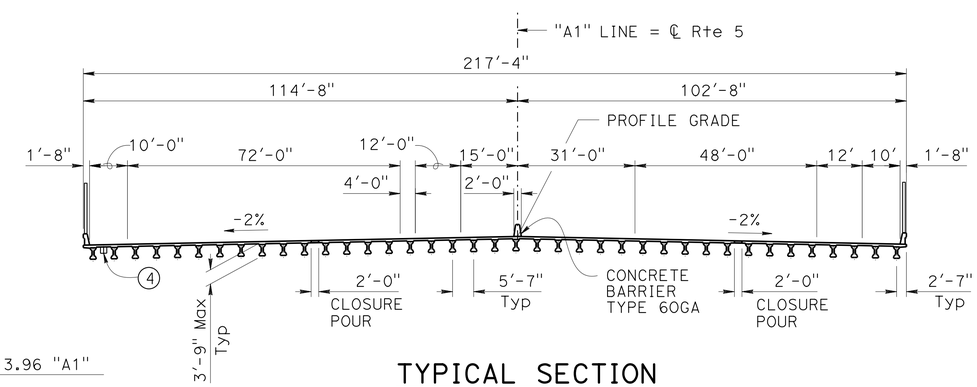

TYPICAL SECTION

1" = 20'

NOTES:

1. For "GENERAL NOTES" , "INDEX TO PLANS", "QUANTITIES" and "PILE DATE TABLE", see "INDEX TO PLANS" sheet.
2. Stage traffic and construction shown shall apply to bridge work only. For additional details, see "ROAD PLANS".
3. Existing Bridge and Pylons are not shown in "ELEVATION" for clarity.
4. Dimensions shown in "TYPICAL SECTION" are to edge of deck.

Jeff Sims, DESIGN ENGINEER	DESIGN	BY Daniel Sessions	CHECKED Greg Jones	LOAD & RESISTANCE FACTOR DESIGN	LIVE LOADING: HL93 W/"LOW-BOY"; PERMIT DESIGN VEHICLE
	DETAILS	BY S. Jiang / J. Tang	CHECKED Greg Jones	LAYOUT: BY Daniel Sessions	CHECKED Greg Jones
	QUANTITIES	BY Manode Kodsuntie	CHECKED Grant Schuster	SPECIFICATIONS: BY Xiahong Li	PLANS AND SPECS COMPARED Xiahong Li

ORIGINAL SCALE IN INCHES FOR REDUCED PLANS 0 1 2 3

STATE OF CALIFORNIA
DEPARTMENT OF TRANSPORTATION

DIVISION OF ENGINEERING SERVICES
STRUCTURE DESIGN
DESIGN BRANCH 1

UNIT: 3576
PROJECT NUMBER & PHASE: 07000018351
CONTRACT NO.: 07-215954

BRIDGE NO. 53-3063
POST MILE 5.92

ORR AND DAY ROAD OVERHEAD (REPLACE)

GENERAL PLAN

DISREGARD PRINTS BEARING EARLIER REVISION DATES

REVISION DATES: 9-21-10 12-28-10 02/04/13

SHEET 1 OF 42

STRUCTURES DESIGN GENERAL PLAN SHEET (ENGLISH) (REV.09-01-10)

FILE => 53-3063-a-gp01_gp.dgn

USERNAME => s121614 DATE PLOTTED => 20-DEC-2013 TIME PLOTTED => 08:13

DIST	COUNTY	ROUTE	POST MILES TOTAL PROJECT	SHEET No.	TOTAL SHEETS
07	LA	5	0.0/7.6	673	985

P. Vijitakula 12-28-12
REGISTERED CIVIL ENGINEER DATE

6-24-13
PLANS APPROVAL DATE

REGISTERED PROFESSIONAL ENGINEER P. VIJITAKULA No. C 54701 Exp. 12-31-13 CIVIL STATE OF CALIFORNIA

The State of California or its officers or agents shall not be responsible for the accuracy or completeness of electronic copies of this plan sheet.

INDEX TO PLANS

SHEET NO.	TITLE
1.	GENERAL PLAN
2.	INDEX TO PLANS
3.	DECK CONTOURS
4.	FOUNDATION PLAN
5.	ABUTMENT 1 RIGHT STAGE 1 LAYOUT
6.	ABUTMENT 1 LEFT STAGE 1 LAYOUT
7.	ABUTMENT 1 STAGE 2 LAYOUT
8.	ABUTMENT 2 RIGHT STAGE 1 LAYOUT
9.	ABUTMENT 2 LEFT STAGE 1 LAYOUT
10.	ABUTMENT FOOTING LAYOUT
11.	ABUTMENT 2 STAGE 2 LAYOUT
12.	ABUTMENT RETAINING WALL ELEVATIONS
13.	RETAINING WALL DETAILS
14.	ABUTMENT DETAILS NO. 1
15.	ABUTMENT DETAILS NO. 2
16.	ABUTMENT DETAILS NO. 3
17.	ABUTMENT DETAILS NO. 4
18.	ABUTMENT DETAILS NO. 5
19.	TYPICAL SECTION
20.	GIRDER LAYOUT
21.	MISCELLANEOUS DETAILS
22.	ELECTROLIER PEDESTAL DETAILS
23.	SOUND WALL - MASONRY BLOCK ON BRIDGE
24.	RETAINING WALL ARCHITECTURAL DETAILS NO. 1
25.	RETAINING WALL ARCHITECTURAL DETAILS NO. 2
26.	ABUTMENT ARCHITECTURAL DETAILS
27.	CONCRETE BARRIER ARCHITECTURAL DETAILS
28.	SOUND WALL ARCHITECTURAL DETAILS
29.	PILASTER ARCHITECTURAL DETAILS NO. 1
30.	PILASTER ARCHITECTURAL DETAILS NO. 2
31.	PILASTER ARCHITECTURAL DETAILS NO. 3
32.	PILASTER ARCHITECTURAL DETAILS NO. 4
33.	PILASTER STRUCTURAL DETAILS NO. 1
34.	PILASTER STRUCTURAL DETAILS NO. 2
35.	PRECAST PRESTRESSED I GIRDER
36.	STRUCTURE APPROACH TYPE N (30S)
37.	STRUCTURE APPROACH DRAINAGE DETAILS
38.	MASONRY BLOCK SOUND WALL WITH BARRIER ON RETAINING WALL DETAILS NO. 1
39.	MASONRY BLOCK SOUND WALL WITH BARRIER ON RETAINING WALL DETAILS NO. 2
40.	LOG OF TEST BORINGS 1 OF 3
41.	LOG OF TEST BORINGS 2 OF 3
42.	LOG OF TEST BORINGS 3 OF 3

STANDARD PLANS DATED MAY 2010

	A10A	ABBREVIATIONS (SHEET 1 OF 2)
	A10B	ABBREVIATIONS (SHEET 2 OF 2)
	A10C	LINES AND SYMBOLS (SHEET 1 OF 3)
	A10D	LINES AND SYMBOLS (SHEET 2 OF 3)
	A10E	LINES AND SYMBOLS (SHEET 3 OF 3)
	A10F	LEGEND - SOIL (SHEET 1 OF 2)
	A10G	LEGEND - SOIL (SHEET 2 OF 2)
	A10H	LEGEND - ROCK
	A62B	LIMITS OF PAYMENT FOR EXCAVATION AND BACKFILL BRIDGE SURCHARGE AND WALL
	A62C	LIMITS OF PAYMENT FOR EXCAVATION AND BACKFILL BRIDGE
	A76D	CONCRETE BARRIER TYPE 60G
	B0-3	BRIDGE DETAILS
	B0-5	BRIDGE DETAILS
	B0-13	BRIDGE DETAILS
	B2-3	16" AND 24" CAST-IN-DRILLED-HOLE CONCRETE PILE
RSP	B3-5	RETAINING WALL DETAILS No. 1
	B6-10	UTILITY OPENINGS, TBEAM
	B6-21	JOINT SEALS (MAXIMUM MOVEMENT RATING = 2")
	B11-56	CONCRETE BARRIER TYPE 736
	B15-9	SOUND WALL MASONRY BLOCK MISCELLANEOUS DETAILS
	ES-6B	ELECTRICAL SYSTEMS (ELECTROLIER ANCHORAGE AND GROUTING FOR TYPE 15 AND TYPE 21 BARRIER RAIL MOUNTED)
	ES-9E	ELECTRICAL SYSTEMS (FLUSH SOFFIT, PENDANT SOFFIT AND WALL LUMINAIRE STRUCTURE INSTALLATIONS)
	T3A	TEMPORARY RAILING (TYPE K)

STANDARD PLAN SHEET NO.

DETAIL NO.

QUANTITIES

BRIDGE REMOVAL, LOCATION B	LUMP SUM
STRUCTURE EXCAVATION (BRIDGE)	8,210 CY
STRUCTURE EXCAVATION (RETAINING WALL)	280 CY
STRUCTURE EXCAVATION (TYPE Y-2)(AERIALLY DEPOSITED LEAD)	800 CY
STRUCTURE BACKFILL (BRIDGE)	5,660 CY
STRUCTURE BACKFILL (RETAINING WALL)	890 CY
24" CAST-IN-DRILLED-HOLE CONCRETE PILING	19,450 LF
STRUCTURAL CONCRETE, BRIDGE FOOTING	1,135 CY
STRUCTURAL CONCRETE, BRIDGE	2,335 CY
STRUCTURAL CONCRETE, RETAINING WALL	315 CY
STRUCTURAL CONCRETE, APPROACH SLAB (TYPE N)	476 CY
ARCHITECTURAL TREATMENT (SPLIT SLATE-FRACTURED RIB)	13,700 SQFT
FURNISH PRECAST PRESTRESSED CONCRETE GIRDER (70'-80')	39 EA
ERECT PRECAST PRESTRESSED CONCRETE GIRDER	39 EA
PILASTER, SOUND WALL	8 CY
JOINT SEAL (MR 1")	460 LF
BAR REINFORCING STEEL (BRIDGE)	1,215,000 LB
BAR REINFORCING STEEL (RETAINING WALL)	121,000 LB
SOUND WALL (MASONRY BLOCK)	2,960 ~~3,050~~ SQFT
CONCRETE BARRIER (TYPE 60GA)	136 LF
CONCRETE BARRIER (TYPE 736 MODIFIED)	268 LF

3

GENERAL NOTES
LOAD AND RESISTANCE FACTOR DESIGN

DESIGN: AASHTO LRFD Bridge Design Specifications, Fourth Edition and the California Amendments preface dated November 2011

SEISMIC DESIGN: Caltrans Seismic Design Criteria (SDC), Version 1.6, November 2010

DEAD LOAD: Includes 35 psf for initial and future wearing surface

The deck dead load between the girders has been increased by a factor of 10% to allow for the use of steel deck forms.

The sound wall dead load is distributed on the left and right side of the bridge with 75% of the moment and 75% of the shear forces to the exterior girder, and 25% of the moment and 25% of the shear to the first interior girder.

LIVE LOADING: HL 93 and permit design vehicle

SEISMIC LOADING: Site specific Acceleration Response Spectra (ARS) Curve

Soil Profile: Type D, V_{S30} = 1100ft/sec
Moment Magnatude: M_{Max} = 7.3
Peak Ground Acceleration = 0.7g

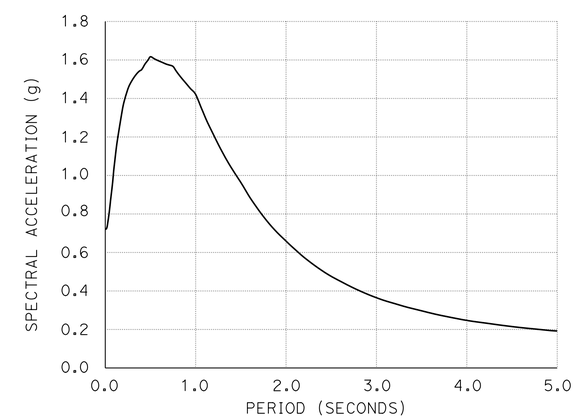

SITE SPECIFIC ARS CURVE
NO SCALE

CONCRETE: f_y = 60 ksi
f'_c = 3.6 ksi

See "PRECAST PRESTRESSED I GIRDER (LRFD)" sheet

PILE DATA TABLE

LOCATION	PILE TYPE	DESIGN LOAD (kips)	NOMINAL RESISTANCE		DESIGN TIP ELEVATION (ft)	SPECIFIED TIP ELEVATION (ft)
			COMPRESSION (kips)	TENSION (kips)		
Abut 1	24" CIDH	150	300	0	55.0 ① 84.0 ② 70.0 ③	55.0
Abut 2	24" CIDH	150	300	0	55.0 ① 84.0 ② 70.0 ③	55.0
Abut 1 Lt & Rt RETAINING WALLS	24" CIDH	125	250	-42	61.0 ① 88.0 ② 83.0 ③	61.0
Abut 2 Lt & Rt RETAINING WALLS	24" CIDH	125	250	-42	61.0 ① 88.0 ② 83.0 ③	61.0

NOTES: 1. Design tip elevations are controlled by: ① Compression, ② Settlement and ③ Lateral load.
2. The CIDH specified tip elevations shall not be raised, unless directed by Engineer.

3 **REPLACED PER ADDENDUM No. 3 DATED DECEMBER 20, 2013**

	BY	CHECKED
DESIGN	Daniel Sessions	Greg Jones
DETAILS	Jie Tang	Greg Jones
QUANTITIES	Manode Kodsuntie	Grant Schuster

STATE OF CALIFORNIA
DEPARTMENT OF TRANSPORTATION

DIVISION OF ENGINEERING SERVICES
STRUCTURE DESIGN
DESIGN BRANCH 1

BRIDGE NO. 53-3063
POST MILE 5.92

ORR AND DAY ROAD OVERHEAD (REPLACE)
INDEX TO PLANS

STRUCTURES DESIGN DETAIL SHEET (ENGLISH) (REV. 09-01-10)

ORIGINAL SCALE IN INCHES FOR REDUCED PLANS 0 1 2 3

UNIT: 3576
PROJECT NUMBER & PHASE: 07000018351
CONTRACT NO.: 07-215954

DISREGARD PRINTS BEARING EARLIER REVISION DATES

REVISION DATES: 09/23/11 10/08/12 11/14/12

SHEET 2 OF 42

FILE => 53-3063-a-itp.add

USERNAME => s121614 DATE PLOTTED => 20-DEC-2013 TIME PLOTTED => 10:20

DIST	COUNTY	ROUTE	POST MILES TOTAL PROJECT	SHEET No.	TOTAL SHEETS
07	LA	5	0.0/7.6	682	985

P. Vijitakula 12-28-12
REGISTERED CIVIL ENGINEER DATE

6-24-13
PLANS APPROVAL DATE

REGISTERED PROFESSIONAL ENGINEER P. VIJITAKULA No. C 54701 Exp. 12-31-13 CIVIL STATE OF CALIFORNIA

The State of California or its officers or agents shall not be responsible for the accuracy or completeness of electronic copies of this plan sheet.

3 **REPLACED PER ADDENDUM No. 3 DATED DECEMBER 20, 2013**

NOTES:

1. Limits of piles to be placed during stage 1 construction.
2. ℄ Pile to edge of footing = 2'-0", Typ
3. Abutment 1 pile layout shown, Abutment 2 pile layout is simialr except otherwise noted.

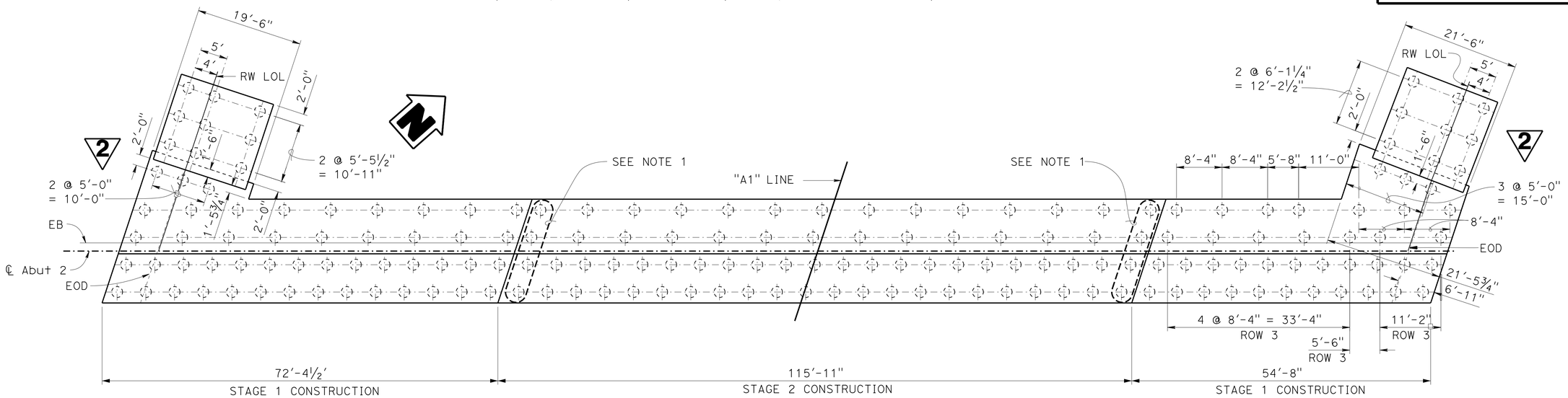

ABUTMENT 2 PILE LAYOUT

1" = 10'

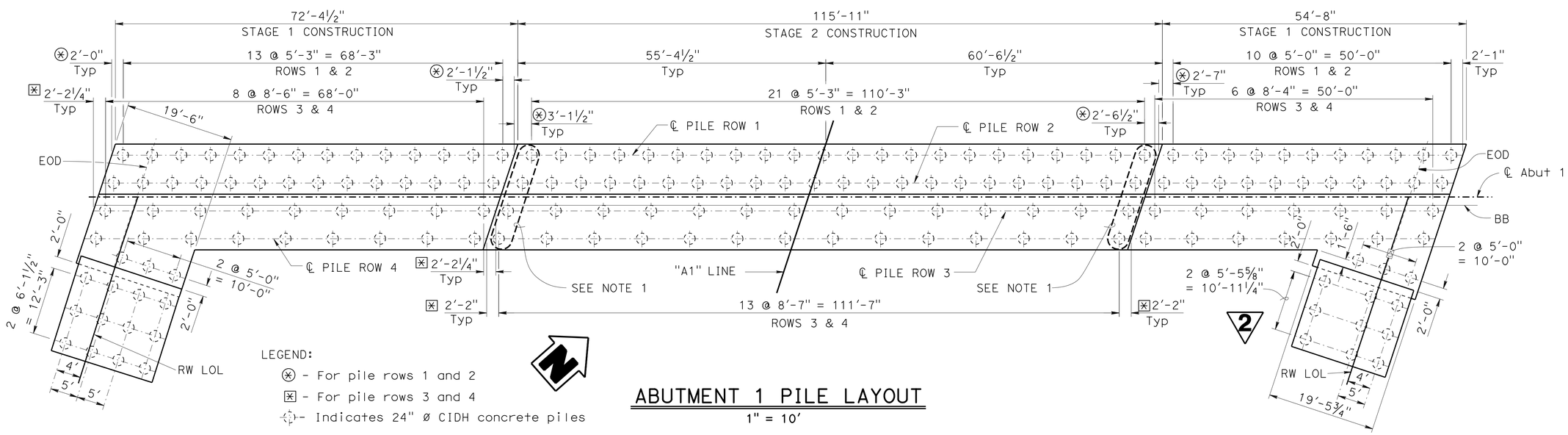

LEGEND:

⊛ - For pile rows 1 and 2

⊠ - For pile rows 3 and 4

-⊕- Indicates 24" Ø CIDH concrete piles

ABUTMENT 1 PILE LAYOUT

1" = 10'

2 **REPLACED PER ADDENDUM No. 2 DATED DECEMBER 5, 2013**

	BY	CHECKED
DESIGN	Daniel Sessions	Grant Schuster
DETAILS	Jie Tang	Grant Schuster
QUANTITIES	Manode Kodsuntie	Grant Schuster

STATE OF CALIFORNIA
DEPARTMENT OF TRANSPORTATION

DIVISION OF ENGINEERING SERVICES
STRUCTURE DESIGN
DESIGN BRANCH 1

BRIDGE NO. 53-3063
POST MILE 5.92

ORR AND DAY ROAD OVERHEAD (REPLACE)
ABUTMENT FOOTING LAYOUT

STRUCTURES DESIGN DETAIL SHEET (ENGLISH) (REV. 09-01-10)

ORIGINAL SCALE IN INCHES FOR REDUCED PLANS 0 1 2 3

UNIT: 3576
PROJECT NUMBER & PHASE: 07000018351
CONTRACT NO.: 07-215954

DISREGARD PRINTS BEARING EARLIER REVISION DATES

REVISION DATES 12/14/11 02/06/13 10/04/13

SHEET 11 OF 42

FILE => 53-3063-f-atftlo.dgn

USERNAME => s113571 DATE PLOTTED => 19-DEC-2013 TIME PLOTTED => 12:55

DIST	COUNTY	ROUTE	POST MILES TOTAL PROJECT	SHEET No.	TOTAL SHEETS
07	LA	5	0.0/7.6	694	985

P. Vijitakula 12-28-12
REGISTERED CIVIL ENGINEER DATE

6-24-13
PLANS APPROVAL DATE

REGISTERED PROFESSIONAL ENGINEER P. VIJITAKULA No. C 54701 Exp. 12-31-13 CIVIL STATE OF CALIFORNIA

The State of California or its officers or agents shall not be responsible for the accuracy or completeness of electronic copies of this plan sheet.

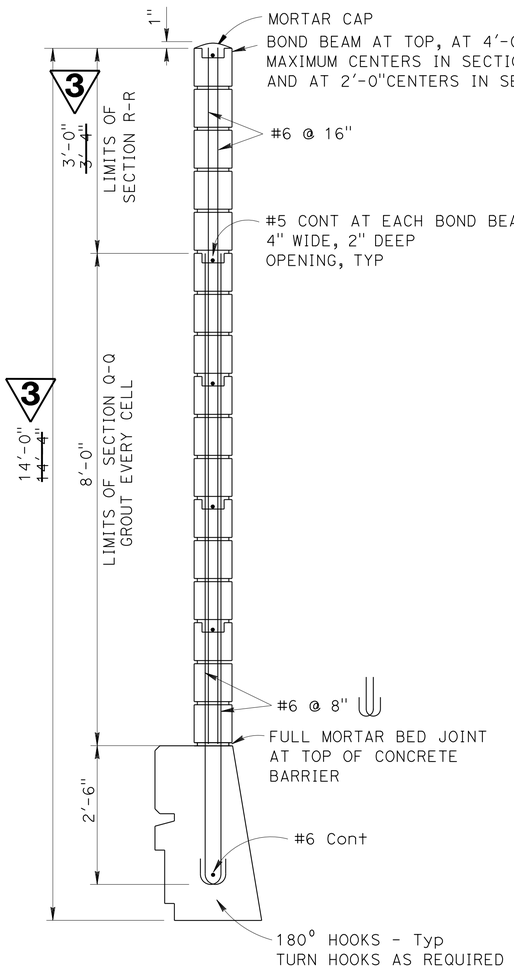

SOUND WALL SECTION
No Scale

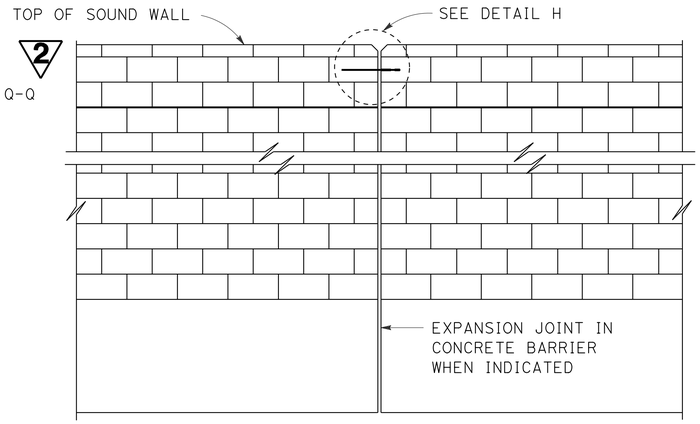

ALIGNMENT KEY DETAIL
No Scale

NOTES:

1. For type of block, see "Soundwall Architectural Details" sheet. For type of block bond and joint finish, see "Road Plans".
2. When blocks are laid in stacked bond, ladder type, galvanized joint reinforcement shall be provided. A minimum of 2 - 12 gauge wires continuous at 4'-0" maximum to be used. Locate reinforcement in joints that are at the approximate midpoint between bond beams.
3. Horizontal joints shall be tooled concave or may be weathered. Vertical joints shall be tooled concave or may be raked.
4. All masonry to be high strength unless otherwise noted.
5. Concrete to be used for the barrier shall contain not less than 590 pounds of cementitious material per cubic yard.
6. Expansion joints in concrete barrier and masonry block to match deck joints and at ends of wing walls.
7. Expansion joints in Sound Wall (Masonry Block) shall be at each support, center of span, and at ends of each wingwall.

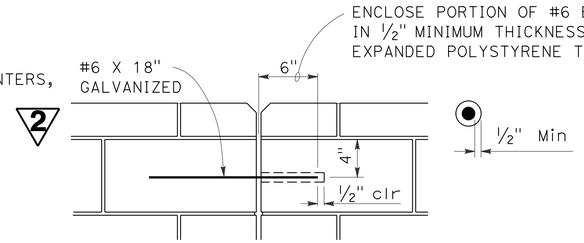

DETAIL H
No Scale

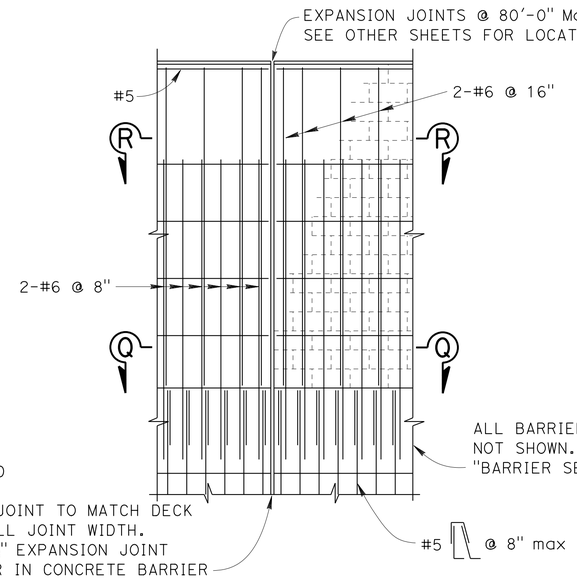

DECK AND WALL JOINT ELEVATION
No Scale

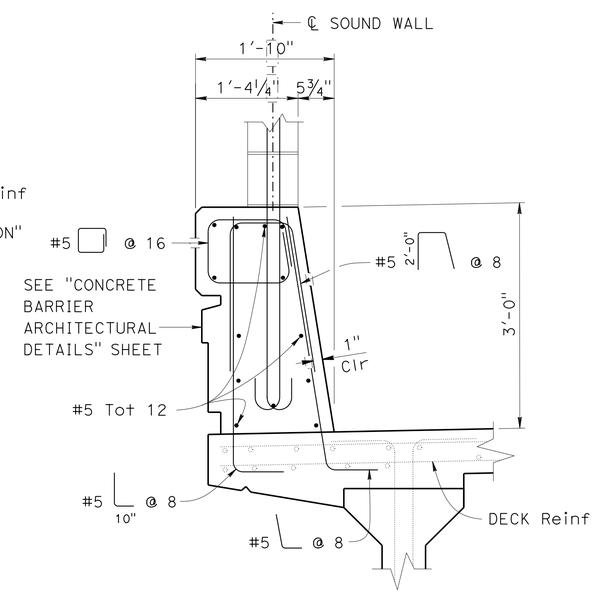

BARRIER SECTION (BRIDGE)
1" = 1'-0"

DESIGN NOTES

DESIGN
Uniform Building Code,1997 Edition and the Bridge Design Specifications.

DESIGN WIND LOAD
37 psf

DESIGN SEISMIC LOAD
2.0 Dead load

REINFORCED CONCRETE
f'c = 3.6 ksi
fy = 60 ksi

CONCRETE MASONRY HIGH STRENGTH
f'm = 2500 psi
fy = 60 ksi

LOAD FACTORS AND LOAD COMBINATIONS

Load Factor Design (LFD)

Group A: βD +1.7 E + 1.7 SC
Group B: βD +1.7 E + 1.3 W
Group C: βD +1.3 E + 1.0 EQE
Group D: βD +1.3 E + 1.0 EQD
Group E: βD +1.1 E + 0.85 (EQE + EQD)

Where : β = 0.9 or 1.2, whichever controls in design
D = Dead load
E = Lateral earth pressure
SC = Live load surcharge
W = Wind load
EQD = Seismic dead load
EQE = Seismic earth load

STRENGTH REDUCTION FACTORS, Ø

Reinforced Concrete :
For flexure ..... Ø = 0.90
For shear ..... Ø = 0.85

Concrete masonry:
For flexure ..... Ø = 0.80
For shear ..... Ø = 0.60

Note 1:
Barrier, Deck and Concrete Masonry are designed by the Strength Design Method.

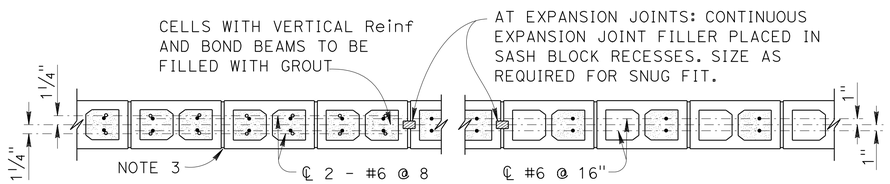

SECTION Q-Q
No Scale

SECTION R-R
No Scale

NOTE:
For dimensions and reinforcement not shown, see Standard Plan B11-56 and "CONCRETE BARRIER ARCHITECTURAL DETAILS" sheet.

3 REPLACED PER ADDENDUM No. 3 DATED DECEMBER 20, 2013

2 REPLACED PER ADDENDUM No. 2 DATED DECEMBER 5, 2013

	BY	CHECKED
DESIGN	Daniel Sessions	Greg Jones
DETAILS	Jie Tang	Greg Jones
QUANTITIES	Manode Kodsuntie	Grant Schuster

STATE OF CALIFORNIA
DEPARTMENT OF TRANSPORTATION

DIVISION OF ENGINEERING SERVICES
STRUCTURE DESIGN
DESIGN BRANCH 1

BRIDGE NO. 53-3063
POST MILE 5.92

ORR AND DAY ROAD OVERHEAD (REPLACE)
SOUND WALL - MASONRY BLOCK ON BRIDGE

STRUCTURES DESIGN DETAIL SHEET (ENGLISH) (REV. 09-01-10)

ORIGINAL SCALE IN INCHES FOR REDUCED PLANS 0 1 2 3

UNIT: 3576
PROJECT NUMBER & PHASE: 07000018351
CONTRACT NO.: 07-215954

DISREGARD PRINTS BEARING EARLIER REVISION DATES

REVISION DATES 04/10/12 10/12/12 05/24/13

SHEET 23 OF 42

FILE => 53-3063-j-swob.add

USERNAME => s121614 DATE PLOTTED => 20-DEC-2013 TIME PLOTTED => 10:20

DIST	COUNTY	ROUTE	POST MILES TOTAL PROJECT	SHEET No.	TOTAL SHEETS
07	LA	5	0.0/7.6	707	985

P. Vijitakula 12-28-12
REGISTERED CIVIL ENGINEER DATE

6-24-13
PLANS APPROVAL DATE

REGISTERED PROFESSIONAL ENGINEER P. VIJITAKULA No. C 54701 Exp. 12-31-13 CIVIL STATE OF CALIFORNIA

The State of California or its officers or agents shall not be responsible for the accuracy or completeness of electronic copies of this plan sheet.

NOTES:

1. For details not shown, see Structure Plans. For MR ≤ 2", adjust bar reinforcement to clear a sawcut for sealed joint, when required
2. For drainage details, see "STRUCTURE APPROACH DRAINAGE DETAILS" sheet
3. Longitudinal construction joints, when permitted by the Engineer, shall be located on lane lines
4. End angle or plate at beginning of barrier transition, end of wingwall or end of structure approach as applicable
5. For transverse contact joint with new PCC paving, refer to Standard Plan P10
6. At the Contractor's option, approach slab transverse reinforcement may be placed parallel to paving notch. Spacing of transverse reinforcement is measured along ℄ roadway

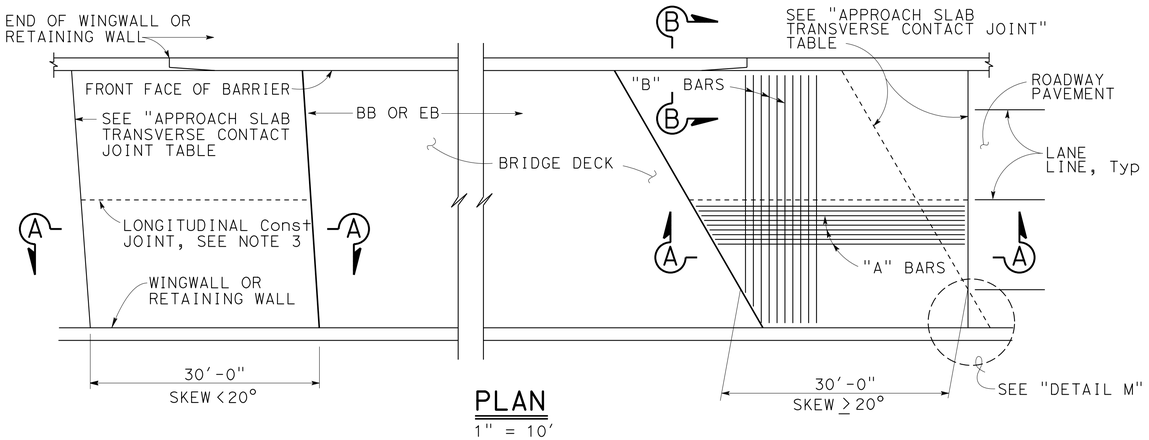

PLAN
1" = 10'

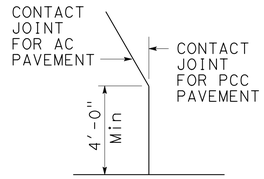

DETAIL M
No Scale

APPROACH SLAB TRANSVERSE CONTACT JOINT		
APPROACH SKEW	WITH AC ROADWAY PAVEMENT	WITH PCC ROADWAY PAVEMENT
< 20°	PARALLEL TO FACE OF PN	PARALLEL TO FACE OF PN
20° - 45°	PARALLEL TO FACE OF PN USE "DETAIL A"	STAGGER LINES 24' TO 36' APART
> 45°	PARALLEL TO FACE OF PN USE "DETAIL A"	STAGGER AT EACH LANE LINE

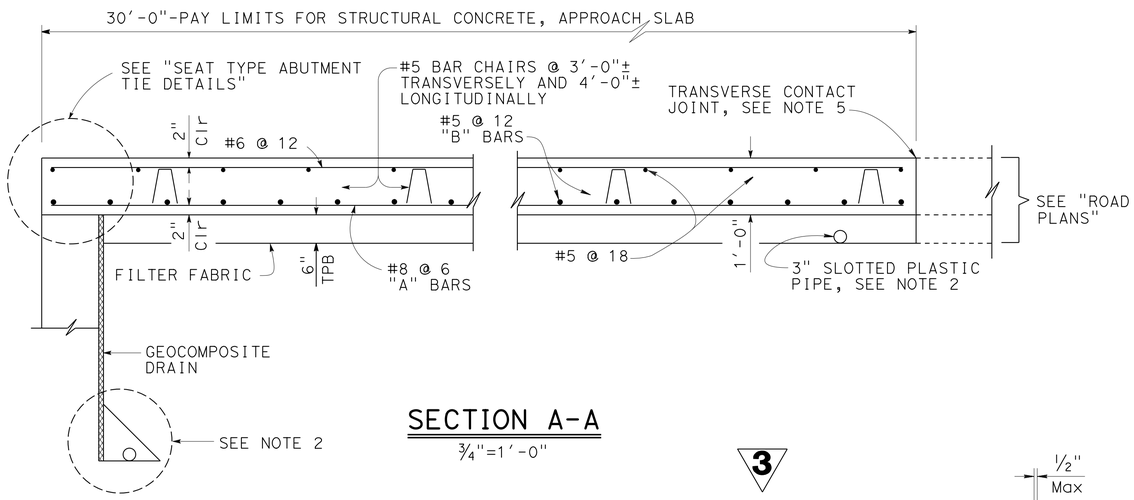

SECTION A-A
¾"=1'-0"

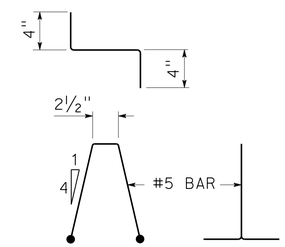

BAR CHAIR DETAIL
1½"=1'-0"

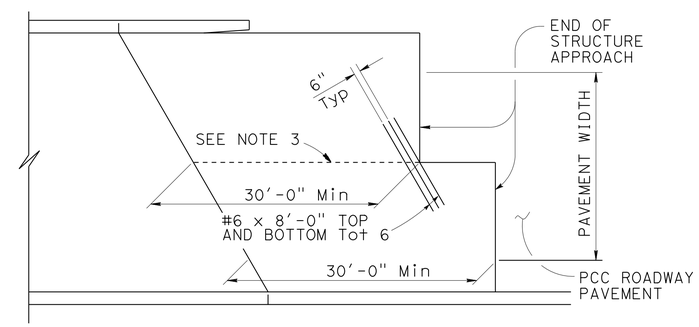

STRUCTURE APPROACH - END STAGGER DETAIL
No Scale

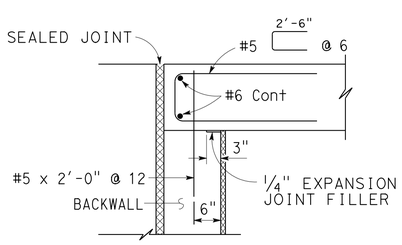

MR ≤ 2"

SEAT TYPE ABUTMENT TIE DETAILS (SEE NOTE 1)
¾"=1'-0"

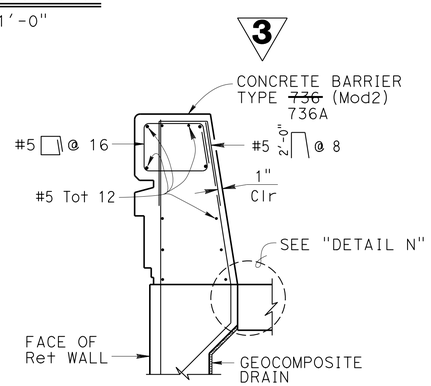

TYPE E-2

SECTION B-B
¾"=1'-0"

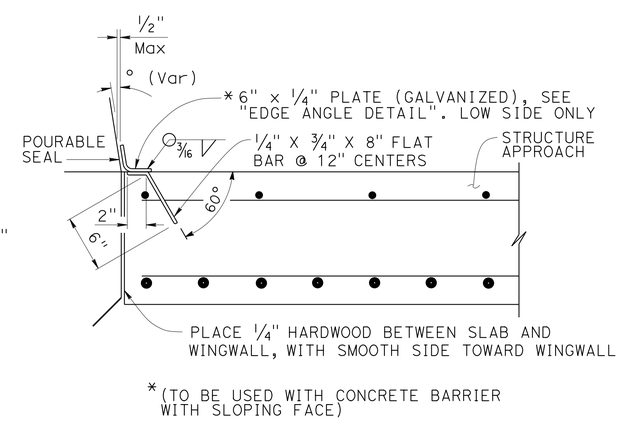

* (TO BE USED WITH CONCRETE BARRIER WITH SLOPING FACE)

DETAIL N
1½" = 1'-0"

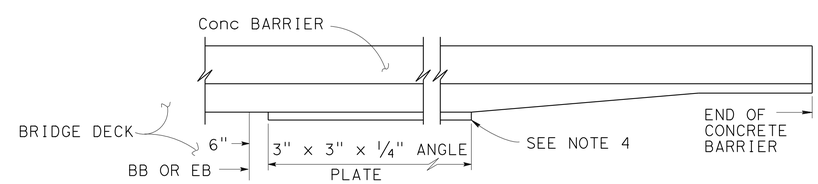

EDGE ANGLE DETAIL
½"=1'-0"

3 **REPLACED PER ADDENDUM No. 3 DATED DECEMBER 20, 2013**

	BY	CHECKED
DESIGN	Daniel Sessions	Greg Jones
DETAILS	Jie Tang	Greg Jones
QUANTITIES	Manode Kodsuntie	Grant Schuster

STATE OF CALIFORNIA DEPARTMENT OF TRANSPORTATION

DIVISION OF ENGINEERING SERVICES STRUCTURE DESIGN DESIGN BRANCH 1

BRIDGE NO. 53-3063 POST MILE 5.92

ORR AND DAY ROAD OVERHEAD (REPLACE)
STRUCTURE APPROACH TYPE N(30S)

STRUCTURES DESIGN DETAIL SHEET (ENGLISH) (REV. 09-01-10)

ORIGINAL SCALE IN INCHES FOR REDUCED PLANS 0 1 2 3

UNIT: 3576
PROJECT NUMBER & PHASE: 07000018351 CONTRACT NO.: 07-215954

DISREGARD PRINTS BEARING EARLIER REVISION DATES

REVISION DATES 01-10-12 12-12-12 12-13-12

SHEET 36 OF 42

FILE => 53-3063-p-satypen.dgn

USERNAME => s1216114 DATE PLOTTED => 20-DEC-2013 TIME PLOTTED => 08:03

DIST	COUNTY	ROUTE	POST MILES TOTAL PROJECT	SHEET No.	TOTAL SHEETS
07	LA	5	0.0/7.6	709	985

P. Vijitakula 12-28-12
REGISTERED CIVIL ENGINEER DATE

6-24-13
PLANS APPROVAL DATE

REGISTERED PROFESSIONAL ENGINEER P. VIJITAKULA No. C 54701 Exp. 12-31-13 CIVIL STATE OF CALIFORNIA

The State of California or its officers or agents shall not be responsible for the accuracy or completeness of electronic copies of this plan sheet.

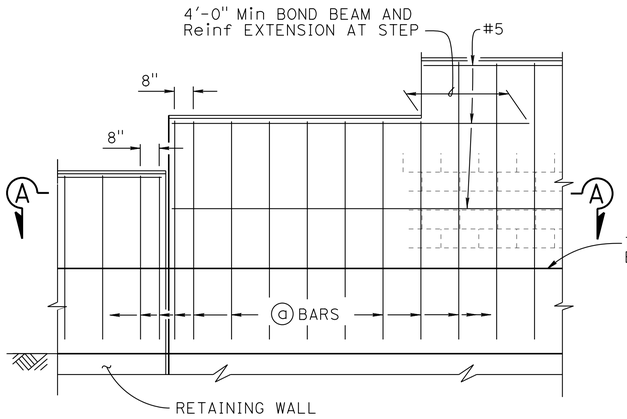

H=6'-4" THRU H=10'-4"

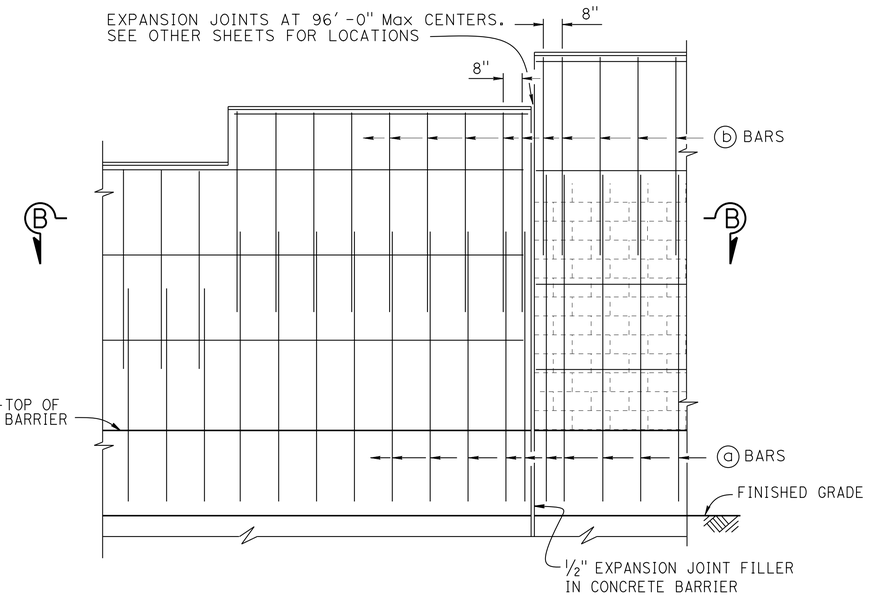

H=12'-4" THRU H=16'-4"

PART ELEVATION

NO SCALE

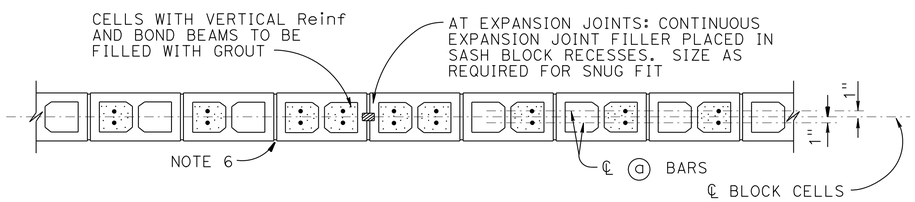

SECTION A-A

NO SCALE

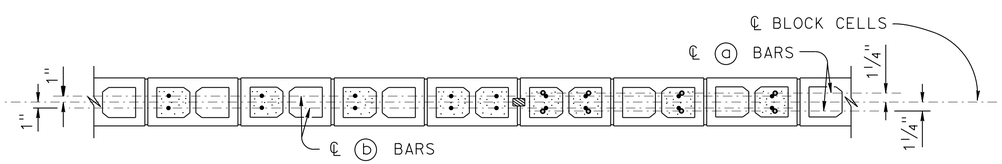

SECTION B-B

NO SCALE

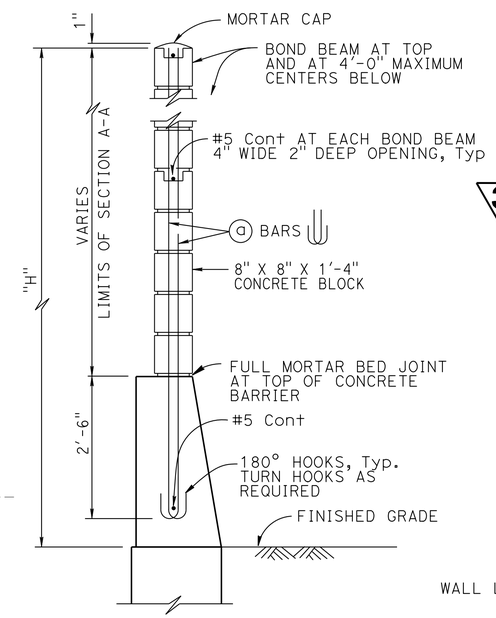

H=6'-4" THRU H=10'-4"

For details not shown, see H=12'-4" thru H=16'-4"

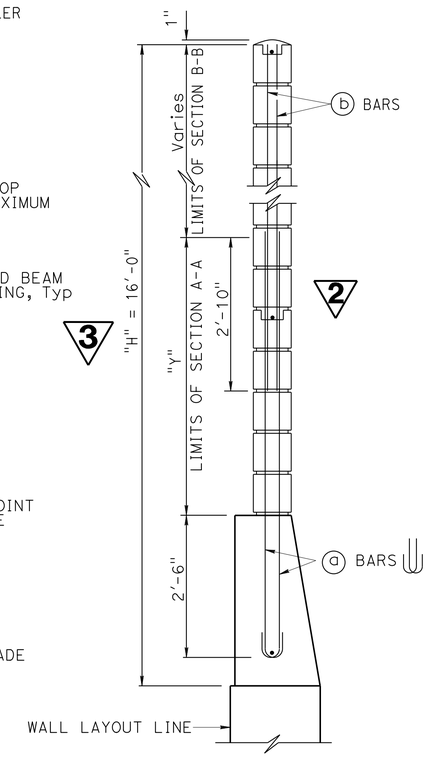

H=12'-4" THRU H=16'-4"

For details not shown, see H=6'-4" thru H=10'-4"

TYPICAL SECTION

NO SCALE

SOUND WALL REINFORCEMENT TABLE

MAXIMUM "H"	ⓐ BARS @ 1'-4" Max	ⓑ BARS @ 1'-4" Max	"Y"	f'm (psi)	COMPRESSIVE STRENGTH OF CMU (psi)	MAXIMUM "H"
6'-4"	#4	———	———	1500	1900	6'-4"
8'-4"	#4	———	———	1500	1900	8'-4"
10'-4"	#4	———	———	1500	1900	10'-4"
12'-4"	#5	#4	5'-0"	1500	1900	12'-4"
14'-4"	#6	#4	7'-0"	1500	1900	14'-4"
16'-4"	#6	#4	9'-0"	2500	3700	16'-4"

NOTES:

1. For details not shown, see "MASONRY BLOCK SOUND WALL WITH BARRIER ON RETAINING WALL DETAILS NO. 2" sheet.
2. Slope ground at traffic side of barrier to drain. Maximum slope ±10%
3. See STANDARD PLANS B15-9 for other details.
4. For type of block and joint finish, see other sheets.
5. When blocks are laid in stacked bond, ladder type, galvanized joint reinforcement shall be provided. A minimum of 2-9 gauge wire continuous at 4'-0" maximum to be used. Locate reinforcement in joints that are at the approximate midpoint between bond beams.
6. Horizontal joints shall be tooled concave or may be weathered. Vertical joints shall be tooled concave or may be raked.
7. For intermediate wall heights that are between the "H's" given, use the tabular information for the next higher "H".
8. Masonry strengths are listed in "SOUND WALL REINFORCEMENT TABLE".
9. Concrete to be used for the barrier shall contain not less than 590 pounds of cementitious material per cubic yard.

SPECIAL DETAILS

3 REPLACED PER ADDENDUM No. 3 DATED DECEMBER 20, 2013

2 REPLACED PER ADDENDUM No. 2 DATED DECEMBER 5, 2013

REVISED STANDARD DRAWING

FILE NO. xs15-130-1

APPROVAL DATE July 2011

STATE OF CALIFORNIA DEPARTMENT OF TRANSPORTATION

DIVISION OF ENGINEERING SERVICES STRUCTURE DESIGN DESIGN BRANCH 1

BRIDGE NO. 53-3063

POST MILE 5.92

ORR AND DAY ROAD OVERHEAD (REPLACE)

MASONRY BLOCK SOUND WALL WITH BARRIER ON RETAINING WALL DETAILS NO. 1

DS OSD 2147A (ENGLISH STANDARD DRAWING "XS" BORDER REV. (02-02-11)

ORIGINAL SCALE IN INCHES FOR REDUCED PLANS 0 1 2 3

UNIT: 3576

PROJECT NUMBER & PHASE: 07000018351

CONTRACT NO.: 07-215954

DISREGARD PRINTS BEARING EARLIER REVISION DATES

REVISION DATES 07-19-12 10-16-12

SHEET 38 OF 42

FILE => 53-3063-r-mbsw-det01.add

USERNAME => s121614 DATE PLOTTED => 20-DEC-2013 TIME PLOTTED => 10:21

DIST	COUNTY	ROUTE	POST MILES TOTAL PROJECT	SHEET No.	TOTAL SHEETS
07	LA	5	0.0/7.6	714	985

P. Vijitakula 12/31/12
REGISTERED CIVIL ENGINEER DATE

6-24-13
PLANS APPROVAL DATE

REGISTERED PROFESSIONAL ENGINEER
P. VIJITAKULA
No. 54701
Exp. 12/31/13
CIVIL
STATE OF CALIFORNIA

The State of California or its officers or agents shall not be responsible for the accuracy or completeness of electronic copies of this plan sheet.

NOTES:

1. For DESIGN NOTES, see "RETAINING WALL TYPE 1SWBP DETAILS NO. 1", STANDARD PLAN B3-4 and "MASONRY BLOCK SOUND WALL WITH BARRIER ON RETAINING WALL DETAILS NO. 2" sheets.
2. For Index to Plans, Standard Plan List and Quantities, see "Index To Plans" sheet.
3. For "PILE DATA TABLE", see "EXCAVATION AND BACKFILL DETAILS" sheet.
4. All piles not shown in "DEVELOPED ELEVATION".
5. Electrical systems (Type 1-A Ramp Meter) total 1, see "ROAD PLANS". For pedestal details, see "RAMP METER PEDESTAL DETAILS" sheet.

LEGEND

-·-·-·-·- Indicates existing structure

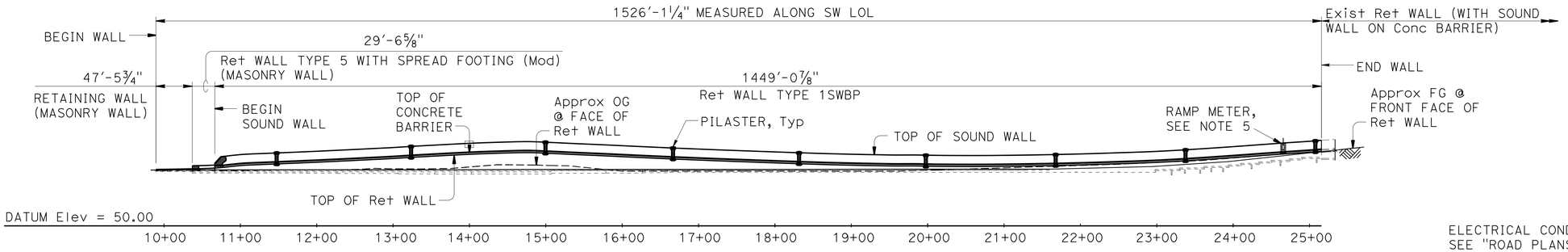

DEVELOPED ELEVATION

1" = 80'

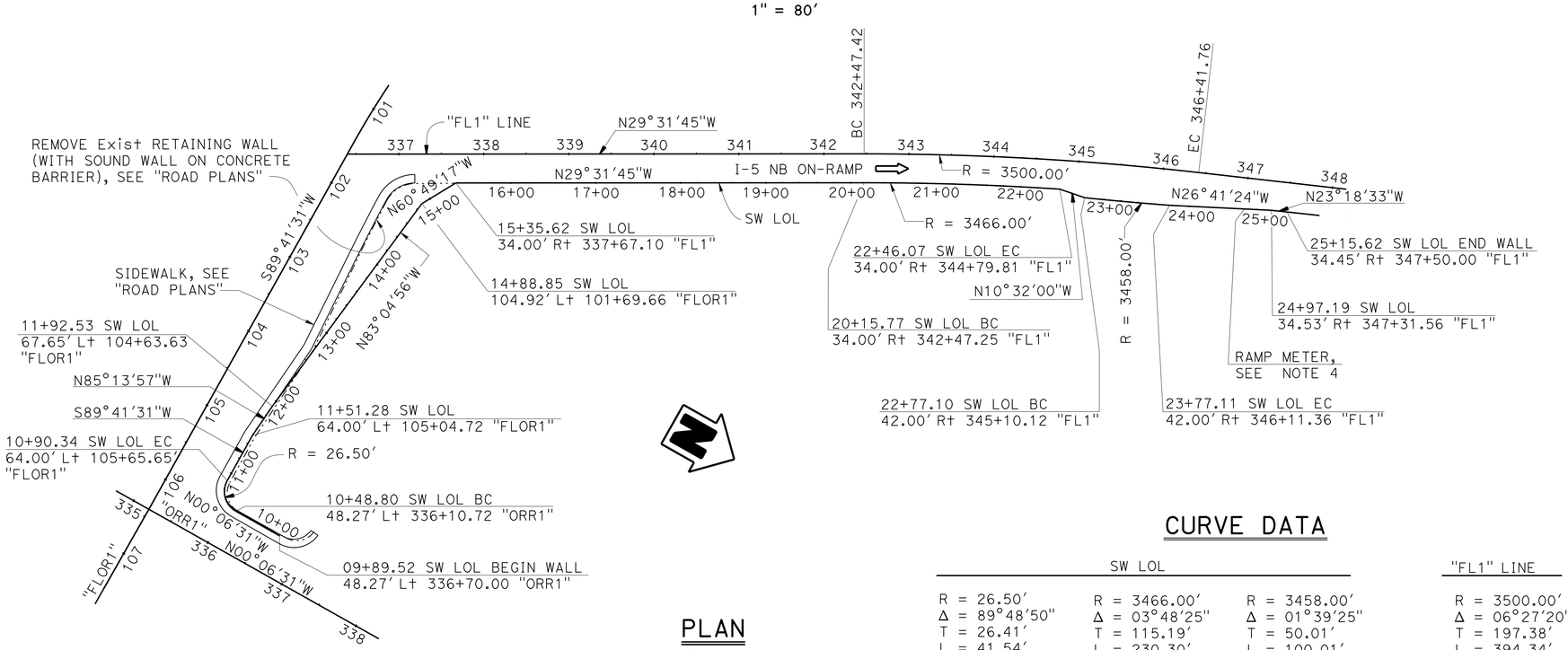

PLAN

1" = 80'

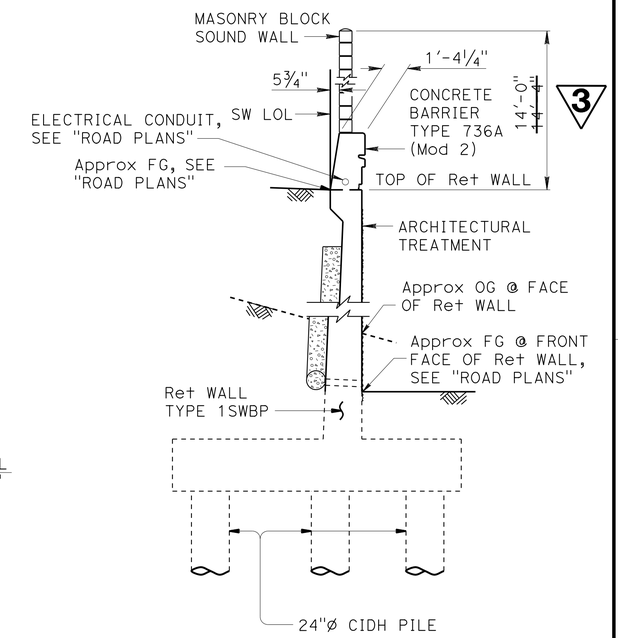

TYPICAL SECTION

¼" = 1'-0"

CURVE DATA

SW LOL			"FL1" LINE
R = 26.50'	R = 3466.00'	R = 3458.00'	R = 3500.00'
Δ = 89°48'50"	Δ = 03°48'25"	Δ = 01°39'25"	Δ = 06°27'20"
T = 26.41'	T = 115.19'	T = 50.01'	T = 197.38'
L = 41.54'	L = 230.30'	L = 100.01'	L = 394.34'

3 REPLACED PER ADDENDUM No. 3 DATED DECEMBER 20, 2013

Jeff Sims DESIGN ENGINEER	DESIGN	BY Greg Thornton	CHECKED Henry Fang	LOAD & RESISTANCE FACTOR DESIGN	
	DETAILS	BY B. Huddleston / J. Zhou	CHECKED Henry Fang	LAYOUT BY Greg Thornton	CHECKED Henry Fang
	QUANTITIES	BY Paul Hayes	CHECKED Nikki Tiongco	SPECIFICATIONS BY Xiahong Li	PLANS AND SPECS COMPARED Xiahong Li

ORIGINAL SCALE IN INCHES FOR REDUCED PLANS 0 1 2 3

STATE OF CALIFORNIA
DEPARTMENT OF TRANSPORTATION

DIVISION OF ENGINEERING SERVICES
STRUCTURE DESIGN
DESIGN BRANCH 1

BRIDGE NO. 53E0211
POST MILE 6.35

SOUND WALL NO. 103
GENERAL PLAN

UNIT: 3576
PROJECT NUMBER & PHASE: 07000018351
CONTRACT NO.: 07-215954

DISREGARD PRINTS BEARING EARLIER REVISION DATES

REVISION DATES 12-26-12 05/22/13 05/01/13

SHEET 1 OF 40

STRUCTURES DESIGN GENERAL PLAN SHEET (ENGLISH) (REV.09-01-10)

FILE => sw103-a-gp_gp.dgn

USERNAME => s121614 DATE PLOTTED => 20-DEC-2013 TIME PLOTTED => 10:21

DIST	COUNTY	ROUTE	POST MILES TOTAL PROJECT	SHEET No.	TOTAL SHEETS
07	LA	5	0.0/7.6	715	985

P. Vijitakula 12/31/12
REGISTERED CIVIL ENGINEER DATE

6-24-13
PLANS APPROVAL DATE

REGISTERED PROFESSIONAL ENGINEER
P. VIJITAKULA
No. 54701
Exp. 12/31/13
CIVIL
STATE OF CALIFORNIA

The State of California or its officers or agents shall not be responsible for the accuracy or completeness of electronic copies of this plan sheet.

INDEX TO PLANS

SHEET No.	TITLE
1.	GENERAL PLAN
2.	INDEX TO PLANS
3.	EXCAVATION AND BACKFILL DETAILS
4.	STRUCTURE PLAN NO. 1
5.	STRUCTURE PLAN NO. 2
6.	STRUCTURE PLAN NO. 3
7.	STRUCTURE PLAN NO. 4
8.	STRUCTURE PLAN NO. 5
9.	STRUCTURE PLAN NO. 6
10.	FOUNDATION PLAN NO. 1
11.	FOUNDATION PLAN NO. 2
12.	FOUNDATION PLAN NO. 3
13.	FOUNDATION PLAN NO. 4
14.	RAMP METER PEDESTAL DETAILS
15.	RETAINING WALL ARCHITECTURAL TREATMENT NO. 1
16.	RETAINING WALL ARCHITECTURAL TREATMENT NO. 2
17.	RETAINING WALL ARCHITECTURAL TREATMENT NO. 3
18.	RETAINING WALL ARCHITECTURAL DETAILS NO. 1
19.	RETAINING WALL ARCHITECTURAL DETAILS NO. 2
20.	CONCRETE BARRIER TYPE 736A (MOD 2) DETAILS
21.	SOUND WALL ARCHITECTURAL DETAILS
22.	PILASTER ARCHITECTURAL DETAILS NO. 1
23.	PILASTER ARCHITECTURAL DETAILS NO. 2
24.	PILASTER ARCHITECTURAL DETAILS NO. 3
25.	PILASTER ARCHITECTURAL DETAILS NO. 4
26.	PILASTER STRUCTURAL DETAILS NO. 1
27.	PILASTER STRUCTURAL DETAILS NO. 2
28.	PILASTER STRUCTURAL DETAILS NO. 3
29.	RETAINING WALL TYPE 1SWBP - DETAILS NO. 1
30.	RETAINING WALL TYPE 1SWBP - DETAILS NO. 2
31.	MASONRY BLOCK SOUND WALL WITH BARRIER ON RETAINING WALL DETAILS NO. 1
32.	MASONRY BLOCK SOUND WALL WITH BARRIER ON RETAINING WALL DETAILS NO. 2
33.	LOG OF TEST BORINGS 1 OF 8
34.	LOG OF TEST BORINGS 2 OF 8
35.	LOG OF TEST BORINGS 3 OF 8
36.	LOG OF TEST BORINGS 4 OF 8
37.	LOG OF TEST BORINGS 5 OF 8
38.	LOG OF TEST BORINGS 6 OF 8
39.	LOG OF TEST BORINGS 7 OF 8
40.	LOG OF TEST BORINGS 8 OF 8

STANDARD PLANS DATED 2010

A10A	ABBREVIATIONS (SHEET 1 OF 2)
A10B	ABBREVIATIONS (SHEET 2 OF 2)
A10C	LINES AND SYMBOLS (SHEET 1 OF 3)
A10D	LINES AND SYMBOLS (SHEET 2 OF 3)
A10E	LINES AND SYMBOLS (SHEET 3 OF 3)
A10F	LEGEND - SOIL (SHEET 1 OF 2)
A10G	LEGEND - SOIL (SHEET 2 OF 2)
A10H	LEGEND - ROCK
A62B	LIMITS OF PAYMENT FOR EXCAVATION AND BACKFILL BRIDGE SURCHARGE AND WALL
B0-3	BRIDGE DETAILS
B2-3	16" AND 24" CAST-IN-DRILLED-HOLE CONCRETE PILE
RSP B3-4A	RETAINING WALL TYPE 5 (CASE 1)
RSP B3-5	RETAINING WALL DETAILS NO. 1
B11-56	CONCRETE BARRIER TYPE 736
B15-9	SOUND WALL MASONRY BLOCK MISCELLANEOUS DETAILS
ES-6B	ELECTRICAL SYSTEMS (ELECTROLIER ANCHORAGE AND GROUTING FOR TYPE 15 AND TYPE 21 BARRIER RAIL MOUNTED)
ES-7B	ELECTRICAL SYSTEMS (SIGNAL AND LIGHTING STANDARD, TYPE 1 AND EQUIPMENT NUMBERING)

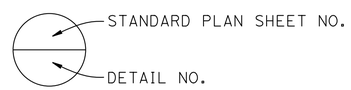

QUANTITIES

STRUCTURE EXCAVATION (RETAINING WALL)		2,675	CY
STRUCTURE EXCAVATION (TYPE Y-2)		1,785	CY
(AERIALLY DEPOSITED LEAD)			
STRUCTURE BACKFILL (RETAINING WALL)		5,685	CY
PERVIOUS BACKFILL MATERIAL (RETAINING WALL)		350	CY
RETAINING WALL (MASONRY WALL)		388	SQFT
24" CAST-IN-DRILLED-HOLE CONCRETE PILING		17,560	LF
STRUCTURAL CONCRETE, RETAINING WALL		2,330	CY
ARCHITECTURAL TREATMENT (SPLIT SLATE-FRACTURED RIB)		13,000	SQFT
PILASTER, SOUND WALL		18	CY
BAR REINFORCING STEEL (RETAINING WALL)		797,300	LB
SOUND WALL (MASONRY BLOCK)	16,030	~~16,500~~	SQFT
CONCRETE BARRIER (TYPE 736A MODIFIED)		1,450	LF

3

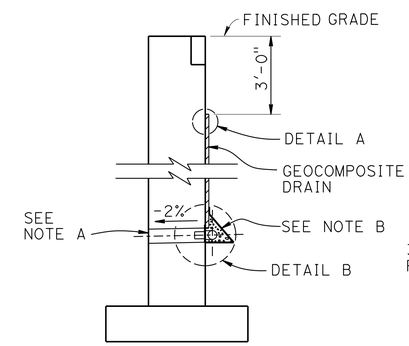

WALL SECTION

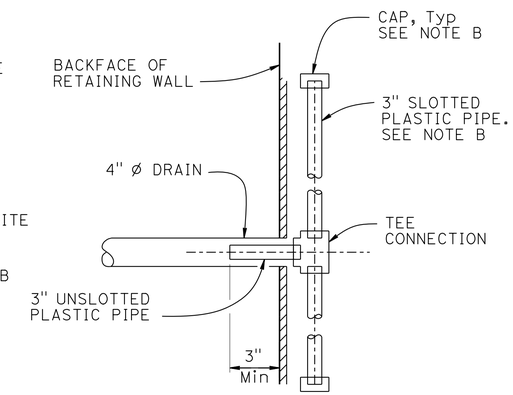

SECTION A-A

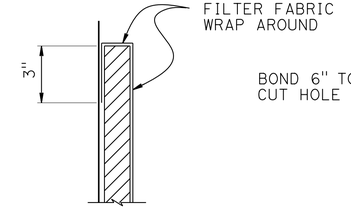

DETAIL A

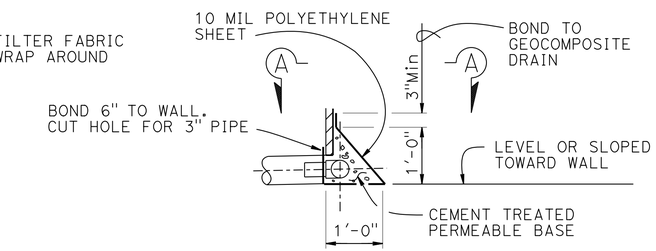

DETAIL B

WEEP HOLE AND GEOCOMPOSITE DRAIN

ALTERNATIVE TO BRIDGE DETAIL B0-3 / 3-1

NOTES:

A. 4" Ø drains at 25' max center to center. For walls adjacent to sidewalks or curbs, provide 4" cast iron or asbestos cement pipe under the sidewalk to discharge through curb face. Exposed wall drains shall be located 3"± above finished grade.

B. Geocomposite drain, cement treated permeable base, and 3"Ø slotted plastic pipe continuous behind retaining wall. Cap ends of pipe. Provide "Tee" connection at each 4" Ø drain.

3 **REPLACED PER ADDENDUM No. 3 DATED DECEMBER 20, 2013**

	BY	CHECKED
DESIGN	Greg Thornton	Henry Fang
DETAILS	B. Huddleston / J. Zhou	Henry Fang
QUANTITIES	Paul Hayes	Nikki Tiongco

STATE OF CALIFORNIA
DEPARTMENT OF TRANSPORTATION

DIVISION OF ENGINEERING SERVICES
STRUCTURE DESIGN
DESIGN BRANCH 1

BRIDGE NO. 53E0211
POST MILE 6.35

SOUND WALL NO. 103
INDEX TO PLANS

STRUCTURES DESIGN DETAIL SHEET (ENGLISH) (REV. 09-01-10)

ORIGINAL SCALE IN INCHES FOR REDUCED PLANS 0 1 2 3

UNIT: 3576
PROJECT NUMBER & PHASE: 07000018351
CONTRACT NO.: 07-215954

DISREGARD PRINTS BEARING EARLIER REVISION DATES

REVISION DATES: 6-06-12 12/20/12 11-15-12

SHEET 2 OF 40

FILE => sw103-a-itp01.dgn

USERNAME => s113946 DATE PLOTTED => 20-DEC-2013 TIME PLOTTED => 11:19

DIST	COUNTY	ROUTE	POST MILES TOTAL PROJECT	SHEET No.	TOTAL SHEETS
07	LA	5	0.0/7.6	754	985

P. Vijitakula 12/28/12
REGISTERED CIVIL ENGINEER DATE

6-24-13
PLANS APPROVAL DATE

REGISTERED PROFESSIONAL ENGINEER P. VIJITAKULA No. C 54701 Exp. 12-31-13 CIVIL STATE OF CALIFORNIA

The State of California or its officers or agents shall not be responsible for the accuracy or completeness of electronic copies of this plan sheet.

NOTES:

1. For "DESIGN NOTES", see "RETAINING WALL TYPE 1SWBP - DETAIL NO. 1", STANDARD PLAN B15-7, and "MASONRY BLOCK SOUND WALL WITH BARRIER ON RETAINING WALL DETAILS NO. 2" sheets.
2. All piles not shown in "DEVELOPED MIRRORED ELEVATION". For "PILE DATA TABLE", see "INDEX TO PLANS" sheet.
3. For "TYPICAL SECTION A-A", see "GENERAL PLAN NO. 2" sheet.
4. Electrical System (Lighting Standard Type 15 and 21) total 13. see "ROAD PLANS". For pedestal details, see "ELECTROLIER PEDESTAL DETAILS" sheet.
5. For Overhead Sign Structure 2A, see "ROAD PLANS".

QUANTITIES

STRUCTURE EXCAVATION (RETAINING WALL)	4,410	CY
STRUCTURE EXCAVATION (TYPE Y-2) (AERIALLY DEPOSITED LEAD)	845	CY
STRUCTURE BACKFILL (RETAINING WALL)	7,715	CY
PERVIOUS BACKFILL MATERIAL (RETAINING WALL)	645	CY
16" CAST-IN-DRILLED-HOLE CONCRETE PILING	4,425	LF
24" CAST-IN-DRILLED-HOLE CONCRETE PILING	21,730	LF
STRUCTURAL CONCRETE, RETAINING WALL	3,040	CY
ARCHITECTURAL TREATMENT (SPLIT SLATE-FRACTURED RIB)	19,460	SQFT
PILASTER, SOUND WALL	33	CY
BAR REINFORCING STEEL (RETAINING WALL)	1,017,500	LB
SOUND WALL (MASONRY BLOCK)	32,995 ~~33,830~~	SQFT
CONCRETE BARRIER (TYPE 736A MODIFIED)	1,256	LF
CONCRETE BARRIER (TYPE 736SV MODIFIED)	1,305	LF

3

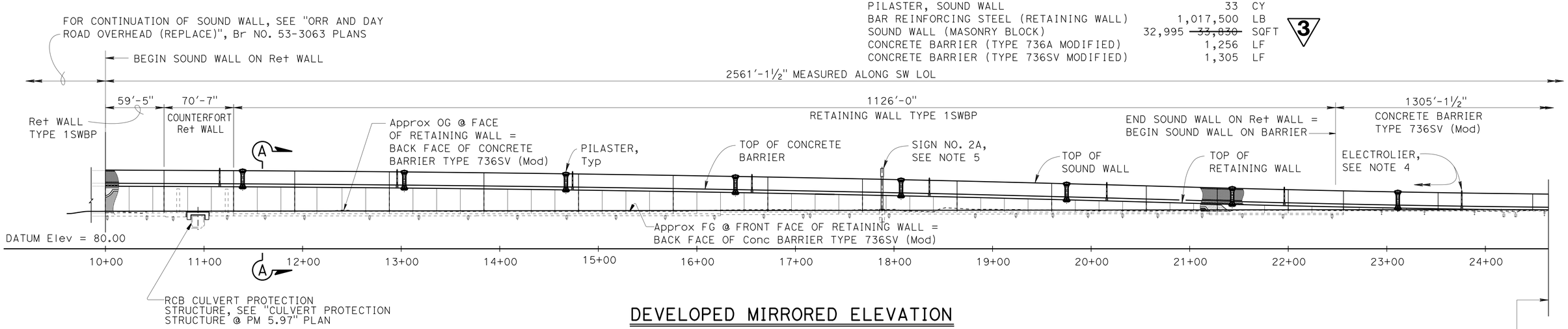

DEVELOPED MIRRORED ELEVATION

1" = 50'

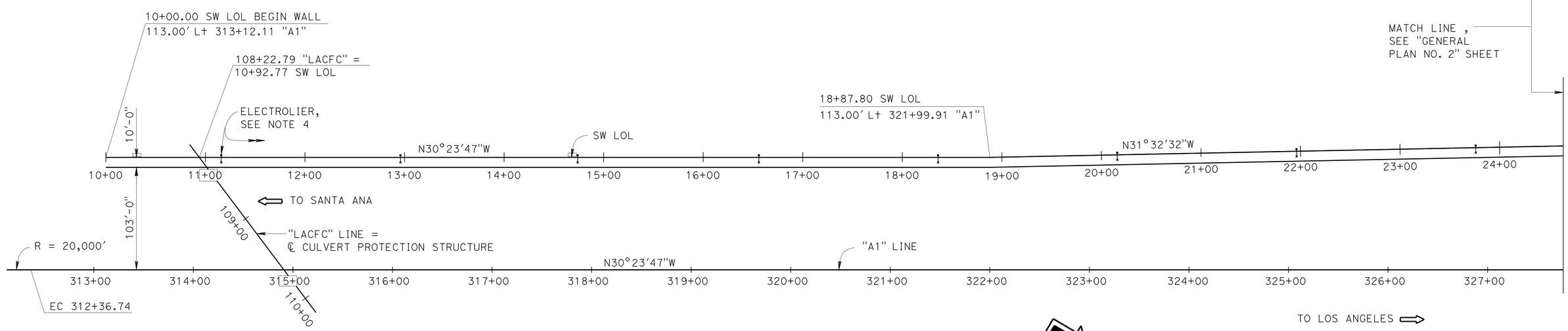

CURVE DATA

"A1" LINE

R = 20,000.00
Δ = 1°54'36"
T = 333.38
L = 666.70

PLAN

1" = 50'

3 **REPLACED PER ADDENDUM No. 3 DATED DECEMBER 20, 2013**

Jeff Sims, DESIGN ENGINEER	DESIGN	BY Daniel Sessions	CHECKED Eric Watson	LOAD & RESISTANCE FACTOR DESIGN		
	DETAILS	BY J. Tang / J. Zhou	CHECKED Eric Watson	LAYOUT	BY Daniel Sessions	CHECKED J. Sims / E. Watson
	QUANTITIES	BY Keith Stillmunkes	CHECKED Wendy Hou	SPECIFICATIONS	BY Xiahong Li	PLANS AND SPECS COMPARED Xiahong Li

ORIGINAL SCALE IN INCHES FOR REDUCED PLANS 0 1 2 3

STATE OF CALIFORNIA DEPARTMENT OF TRANSPORTATION

DIVISION OF ENGINEERING SERVICES STRUCTURE DESIGN DESIGN BRANCH 1

BRIDGE NO. 53E0212
POST MILE 5.93

SOUND WALL NO. 313
GENERAL PLAN NO. 1

UNIT: 3576
PROJECT NUMBER & PHASE: 07000018351
CONTRACT NO.: 07-215954

DISREGARD PRINTS BEARING EARLIER REVISION DATES

REVISION DATES: 02/29/12 05/02/13 05/28/13

SHEET 1 OF 48

FILE => sw313-a-gp01.add

STRUCTURES DESIGN GENERAL PLAN SHEET (ENGLISH) (REV.09-01-10)

USERNAME => s113946 DATE PLOTTED => 20-DEC-2013 TIME PLOTTED => 11:19

DIST	COUNTY	ROUTE	POST MILES TOTAL PROJECT	SHEET No.	TOTAL SHEETS
07	LA	5	0.0/7.6	755	985

P. Vijitakula 12/28/12
REGISTERED CIVIL ENGINEER DATE

6-24-13
PLANS APPROVAL DATE

REGISTERED PROFESSIONAL ENGINEER
P. VIJITAKULA
No. C 54701
Exp. 12-31-13
CIVIL
STATE OF CALIFORNIA

The State of California or its officers or agents shall not be responsible for the accuracy or completeness of electronic copies of this plan sheet.

NOTES:

1. For location of "TYPICAL SECTION A-A", see "GENERAL PLAN NO. 1" sheet.
2. Electrical System (Type 1-A Ramp Meter) total 1, see "ROAD PLANS" . For pedestal details, see "RAMP METER PEDESTAL DETAILS" sheet.
3. For all other "NOTES", see "GENERAL PLAN NO. 1" sheet.

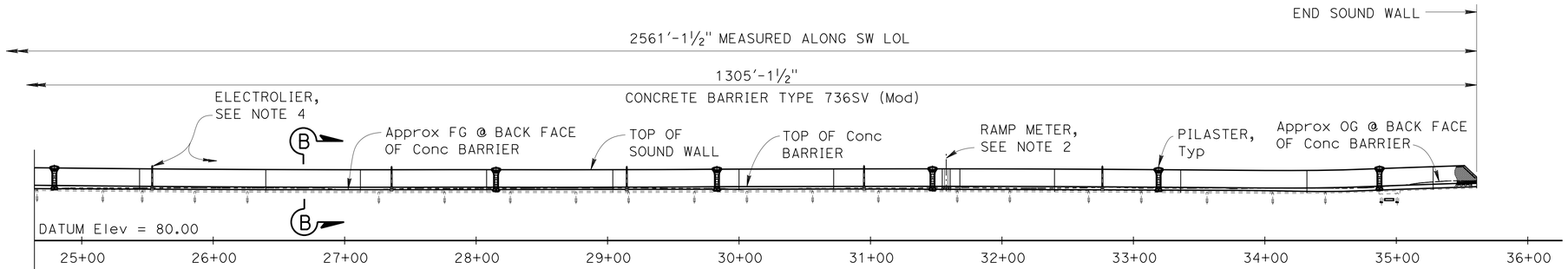

DEVELOPED MIRRORED ELEVATION

1" = 50'

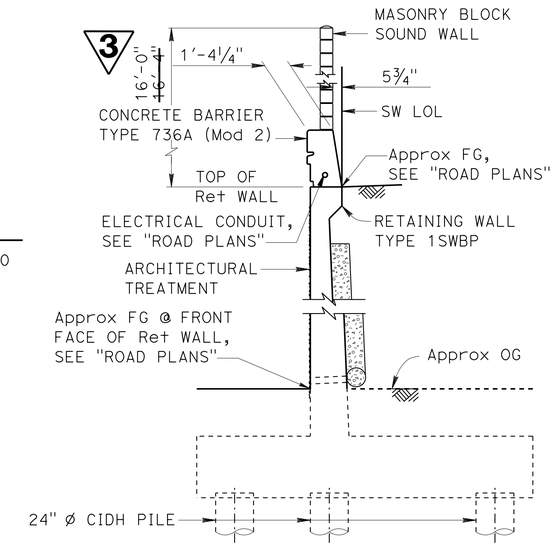

TYPICAL SECTION A-A

¼" = 1'-0"

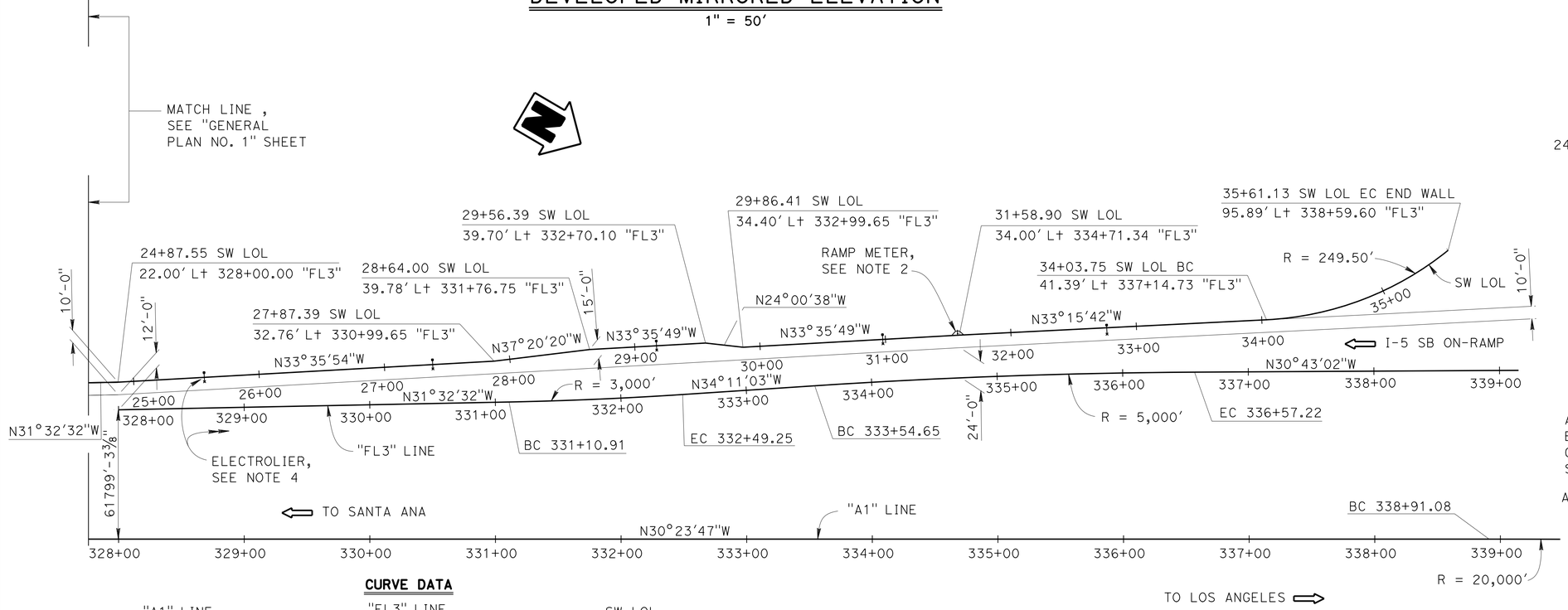

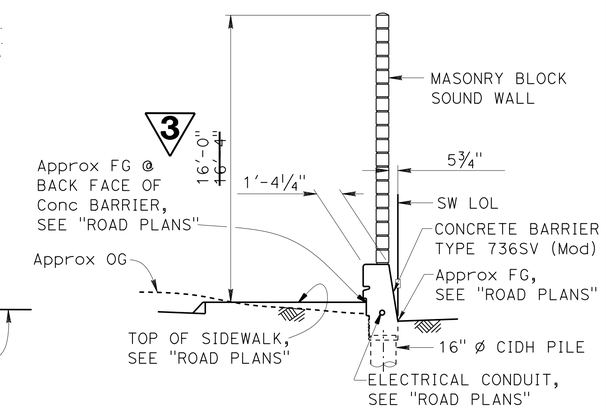

TYPICAL SECTION B-B

¼" = 1'-0"

CURVE DATA

"A1" LINE	"FL3" LINE		SW LOL
R = 20,000.00	R = 3,000.00	R = 5,000.00	R = 249.50
Δ = 1°26'31"	Δ = -2°38'31"	Δ = 3°28'02"	Δ = 36°08'34"
T = 251.67	T = 69.18	T = 151.33	T = 81.41
L = 503.32	L = 138.33	L = 302.56	L = 157.38

PLAN

1" = 50'

3 **REPLACED PER ADDENDUM No. 3 DATED DECEMBER 20, 2013**

Jeff Sims, DESIGN ENGINEER	DESIGN	BY Daniel Sessions	CHECKED Eric Watson	LOAD & RESISTANCE FACTOR DESIGN		
	DETAILS	BY Jie Tang	CHECKED Eric Watson	LAYOUT	BY Daniel Sessions	CHECKED J. Sims / E. Watson
	QUANTITIES	BY Keith Stillmunkes	CHECKED Wendy Hou	SPECIFICATIONS	BY Xiahong Li	PLANS AND SPECS COMPARED Xiahong Li

ORIGINAL SCALE IN INCHES FOR REDUCED PLANS 0 1 2 3

STATE OF CALIFORNIA
DEPARTMENT OF TRANSPORTATION

DIVISION OF ENGINEERING SERVICES
STRUCTURE DESIGN
DESIGN BRANCH 1

BRIDGE NO. 53E0212
POST MILE 5.93

SOUND WALL NO. 313
GENERAL PLAN NO. 2

UNIT: 3576
PROJECT NUMBER & PHASE: 07000018351
CONTRACT NO.: 07-215954

DISREGARD PRINTS BEARING EARLIER REVISION DATES

REVISION DATES: 02/10/12 02/20/13 12/11/12

SHEET 2 OF 48

USERNAME => s113946 DATE PLOTTED => 20-DEC-2013 TIME PLOTTED => 11:19

STRUCTURES DESIGN GENERAL PLAN SHEET (ENGLISH) (REV.09-01-10)

FILE => sw313-a-gp02.add

DIST	COUNTY	ROUTE	POST MILES TOTAL PROJECT	SHEET No.	TOTAL SHEETS
07	LA	5	0.0/7.6	756	985

P. Vijitakula 12/28/12
REGISTERED CIVIL ENGINEER DATE

6-24-13
PLANS APPROVAL DATE

REGISTERED PROFESSIONAL ENGINEER P. VIJITAKULA No. C 54701 Exp. 12-31-13 CIVIL STATE OF CALIFORNIA

The State of California or its officers or agents shall not be responsible for the accuracy or completeness of electronic copies of this plan sheet.

INDEX TO PLANS

SHEET NO.	TITLE
1.	GENERAL PLAN NO. 1
2.	GENERAL PLAN NO. 2
3.	INDEX TO PLANS
4.	STRUCTURE PLAN NO. 1
5.	STRUCTURE PLAN NO. 2
6.	STRUCTURE PLAN NO. 3
7.	STRUCTURE PLAN NO. 4
8.	STRUCTURE PLAN NO. 5
9.	STRUCTURE PLAN NO. 6
10.	STRUCTURE PLAN NO. 7
11.	FOUNDATION PLAN NO. 1
12.	FOUNDATION PLAN NO. 2
13.	FOUNDATION PLAN NO. 3
14.	FOUNDATION PLAN NO. 4
15.	FOUNDATION PLAN NO. 5
16.	COUNTERFORT DETAILS NO. 1
17.	COUNTERFORT DETAILS NO. 2
18.	ELECTROLIER PEDESTAL DETAILS
19.	RAMP METER PEDESTAL DETAILS
20.	RETAINING WALL ARCHITECTURAL TREATMENT NO. 1
21.	RETAINING WALL ARCHITECTURAL TREATMENT NO. 2
22.	RETAINING WALL ARCHITECTURAL TREATMENT NO. 3
23.	RETAINING WALL ARCHITECTURAL TREATMENT NO. 4
24.	RETAINING WALL ARCHITECTURAL TREATMENT NO. 5
25.	RETAINING WALL ARCHITECTURAL DETAILS NO. 1
26.	RETAINING WALL ARCHITECTURAL DETAILS NO. 2
27.	CONCRETE BARRIER ARCHITECTURAL DETAILS
28.	SOUND WALL ARCHITECTURAL DETAILS
29.	PILASTER ARCHITECTURAL DETAILS NO. 1
30.	PILASTER ARCHITECTURAL DETAILS NO. 2
31.	PILASTER ARCHITECTURAL DETAILS NO. 3
32.	PILASTER ARCHITECTURAL DETAILS NO. 4
33.	PILASTER STRUCTURAL DETAILS NO. 1
34.	PILASTER STRUCTURAL DETAILS NO. 2
35.	PILASTER STRUCTURAL DETAILS NO. 3
36.	RETAINING WALL TYPE 1SWBP - DETAIL NO. 1
37.	RETAINING WALL TYPE 1SWBP - DETAIL NO. 2
38.	MASONRY BLOCK SOUND WALL WITH BARRIER ON RETAINING WALL DETAILS NO. 1
39.	MASONRY BLOCK SOUND WALL WITH BARRIER ON RETAINING WALL DETAILS NO. 2
40.	LOG OF TEST BORINGS 1 OF 9
41.	LOG OF TEST BORINGS 2 OF 9
42.	LOG OF TEST BORINGS 3 OF 9
43.	LOG OF TEST BORINGS 4 OF 9
44.	LOG OF TEST BORINGS 5 OF 9
45.	LOG OF TEST BORINGS 6 OF 9
46.	LOG OF TEST BORINGS 7 OF 9
47.	LOG OF TEST BORINGS 8 OF 9
48.	LOG OF TEST BORINGS 9 OF 9

STANDARD PLANS DATED MAY 2010

	A10A	ABBREVIATIONS (SHEET 1 OF 2)
	A10B	ABBREVIATIONS (SHEET 2 OF 2)
	A10C	LINES SYMBOLS (SHEET 1 OF 3)
	A10D	LINES SYMBOLS (SHEET 2 OF 3)
	A10E	LINES SYMBOLS (SHEET 3 OF 3)
	A62B	LIMITS OF PAYMENT FOR EXCAVATION AND BACKFILL - BRIDGE SURCHARGE AND WALL
	B0-3	BRIDGE DETAILS
	B0-13	BRIDGE DETAILS
	B2-3	16" AND 24" CAST-IN-DRILLED-HOLE CONCRETE PILE
RSP	B3-5	RETAINING WALL DETAILS No. 1
	B11-56	CONCRETE BARRIER TYPE 736
RSP	B15-6	SOUND WALL MASONRY BLOCK ON TYPE 736S/SV BARRIER DETAILS (1)
	B15-7	SOUND WALL MASONRY BLOCK ON TYPE 736S/SV BARRIER DETAILS (2)
	B15-8	SOUND WALL MASONRY BLOCK ON TYPE 736S/SV BARRIER DETAILS (3)
	B15-9	SOUND WALL MASONRY BLOCK MISCELLANEOUS DETAILS
	ES-6B	ELECTRICAL SYSTEMS (ELECTROLIER ANCHORAGE AND GROUTING FOR TYPE 15 AND TYPE 21 BARRIER RAIL MOUNTED)
	ES-7B	ELECTRICAL SYSTEMS (SIGNAL AND LIGHTING STANDARD, TYPE 1 AND EQUIPMENT NUMBERING)

STANDARD PLAN SHEET NO.
DETAIL NO.

NOTE:
For Barrier and Sound Wall dimensions and Reinf not shown, see "BARRIER SECTIONS", " CASE 1" on B15-6

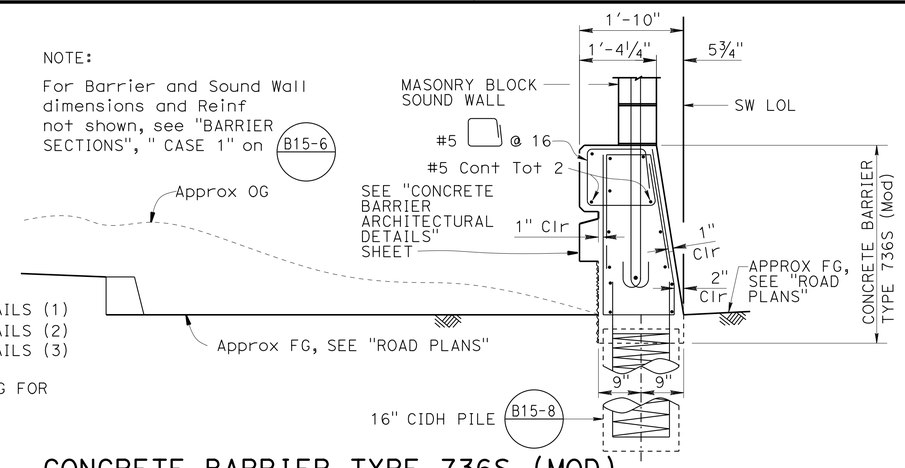

CONCRETE BARRIER TYPE 736S (MOD)

¾" = 1'-0"

3 PILE DATA TABLE

LOCATION	PILE TYPE (CIDH)	CUT-OFF ELEV (ft)	NOMINAL RESISTANCE (KIPS) COMPRESSION	NOMINAL RESISTANCE (KIPS) TENSION	DESIGN TIP ELEVATION	SPECIFIED TIP ELEVATION
Ret WALL TYPE 1SWBP SW LOL 10+00.00 to 10+59.42	24"	113.2	250	-42	(a)68.0 (c)88.0 (d)71.0	68.0
COUNTERFORT Ret WALL	24"	112.5	370	-87	(a)55.0 (c)84.0 (d)72.0	55.0
Ret WALL TYPE 1SWBP SW LOL 11+30.00 to 12+16.00	24"	113.5	250	-42	(a)69.0 (c)89.0 (d)72.0	69.0
Ret WALL TYPE 1SWBP SW LOL 12+16.00 to 13+76.00	24"	113.5	230	-38	(a)72.0 (c)90.0 (d)74.0	72.0
Ret WALL TYPE 1SWBP SW LOL 13+76.00 to 14+16.00	24"	113.7	230	-38	(a)72.0 (c)90.0 (d)74.0	72.0
Ret WALL TYPE 1SWBP SW LOL 14+16.00 to 15+60.00	24"	113.7	220	-39	(a)73.0 (c)90.0 (d)82.0	73.0
Ret WALL TYPE 1SWBP SW LOL 15+60.00 to 16+24.00	24"	113.7	210	-37	(a)77.0 (c)90.0 (d)80.0	77.0
Ret WALL TYPE 1SWBP SW LOL 16+24.00 to 17+12.00	24"	114.8	220	-13	(a)75.0 (c)92.0 (d)87.0	75.0
Ret WALL TYPE 1SWBP SW LOL 17+12.00 to 18+24.00	24"	115.3	200	-6	(a)74.0 (c)98.0 (d)85.0	74.0
Ret WALL TYPE 1SWBP SW LOL 18+24.00 to 18+96.00	24"	115.3	190	0	(a)75.0 (c)98.0 (d)85.0	75.0
Ret WALL TYPE 1SWBP SW LOL 18+96.00 to 19+20.00	24"	115.6	190	0	(a)75.0 (c)98.0 (d)85.0	75.0
Ret WALL TYPE 1SWBP SW LOL 19+20.00 to 20+00.00	24"	115.6	200	0	(a)81.0 (c)98.0 (d)84.0	81.0
Ret WALL TYPE 1SWBP SW LOL 20+00.00 to 20+71.00	24"	115.8	200	0	(a)81.0 (c)98.0 (d)85.0	81.0
Ret WALL TYPE 1SWBP SW LOL 20+71.00 to 21+20.00	24"	115.8	190	0	(a)79.0 (c)94.0 (d)81.0	79.0
Ret WALL TYPE 1SWBP SW LOL 21+20.00 to 21+51.00	24"	114.7	190	0	(a)79.0 (c)94.0 (d)81.0	79.0
Ret WALL TYPE 1SWBP SW LOL 21+51.00 to 21+92.00	24"	114.7	190	0	(a)77.0 (c)92.0 (d)80.0	77.0
Ret WALL TYPE 1SWBP SW LOL 21+92.00 to 22+56.00	24"	114.7	190	0	(a)77.0 (c)93.0 (d)80.0	77.0
Conc BARRIER TYPE 736S (Mod) SW LOL 22+56.00 to 35+61.13	16"/24" (Std PLAN B15-8/ B15-15)	N/A	N/A	N/A	N/A	N/A

NOTES: 1. Design tips elevations are controlled by: (a) Compression, (c) Settlement and (d) Lateral load.
2. The specified tip elevations shall not be raised, unless directed by Engineer.

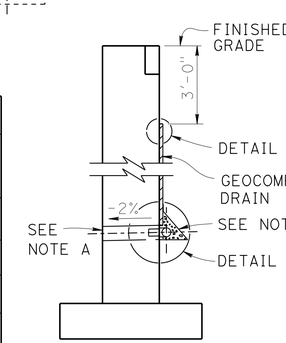

WALL SECTION

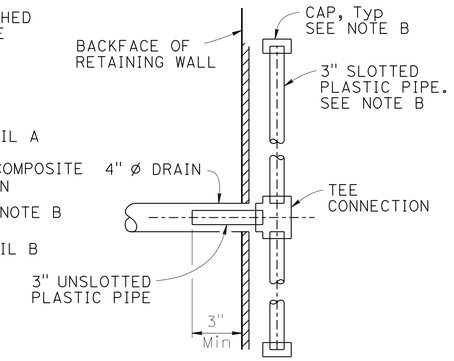

SECTION A-A

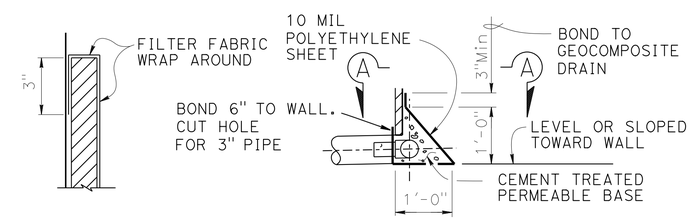

DETAIL A DETAIL B

WEEP HOLE AND GEOCOMPOSITE DRAIN

ALTERNATIVE TO BRIDGE DETAIL B0-3 / 3-1

NOTES:

A. 4" ø drains at 25' max center to center. For walls adjacent to sidewalks or curbs, provide 4" cast iron or asbestos cement pipe under the sidewalk to discharge through curb face. Exposed wall drains shall be located 3"± above finished grade.

B. Geocomposite drain, cement treated permeable base, and 3" ø slotted plastic pipe continuous behind retaining wall. Cap ends of pipe. Provide "Tee" connection at each 4" ø drain.

3 REPLACED PER ADDENDUM No. 3 DATED DECEMBER 20, 2013

	BY	CHECKED
DESIGN	Daniel Sessions	Eric Watson
DETAILS	Jie Tang	Eric Watson
QUANTITIES	Keith Stillmunkes	Wendy Hou

STATE OF CALIFORNIA DEPARTMENT OF TRANSPORTATION

DIVISION OF ENGINEERING SERVICES STRUCTURE DESIGN DESIGN BRANCH 1

BRIDGE NO. 53E0212
POST MILE 5.93

SOUND WALL NO. 313
INDEX TO PLANS

STRUCTURES DESIGN DETAIL SHEET (ENGLISH) (REV. 09-01-10)

ORIGINAL SCALE IN INCHES FOR REDUCED PLANS 0 1 2 3

UNIT: 3576
PROJECT NUMBER & PHASE: 07000018351 CONTRACT NO.: 07-215951

DISREGARD PRINTS BEARING EARLIER REVISION DATES 02/28/12 04/13/12

SHEET 3 OF 48

FILE => sw313-a-itp.dgn

USERNAME => s121614 DATE PLOTTED => 20-DEC-2013 TIME PLOTTED => 08:06

DIST	COUNTY	ROUTE	POST MILES TOTAL PROJECT	SHEET No.	TOTAL SHEETS
07	LA	5	0.0/7.6	758	985

P. Vijitakula 12/28/12
REGISTERED CIVIL ENGINEER DATE

6-24-13
PLANS APPROVAL DATE

REGISTERED PROFESSIONAL ENGINEER
P. VIJITAKULA
No. C 54701
Exp. 12-31-13
CIVIL
STATE OF CALIFORNIA

The State of California or its officers or agents shall not be responsible for the accuracy or completeness of electronic copies of this plan sheet.

3

For "NOTES" and LEGEND, see "STRUCTURE PLAN NO. 1" sheet

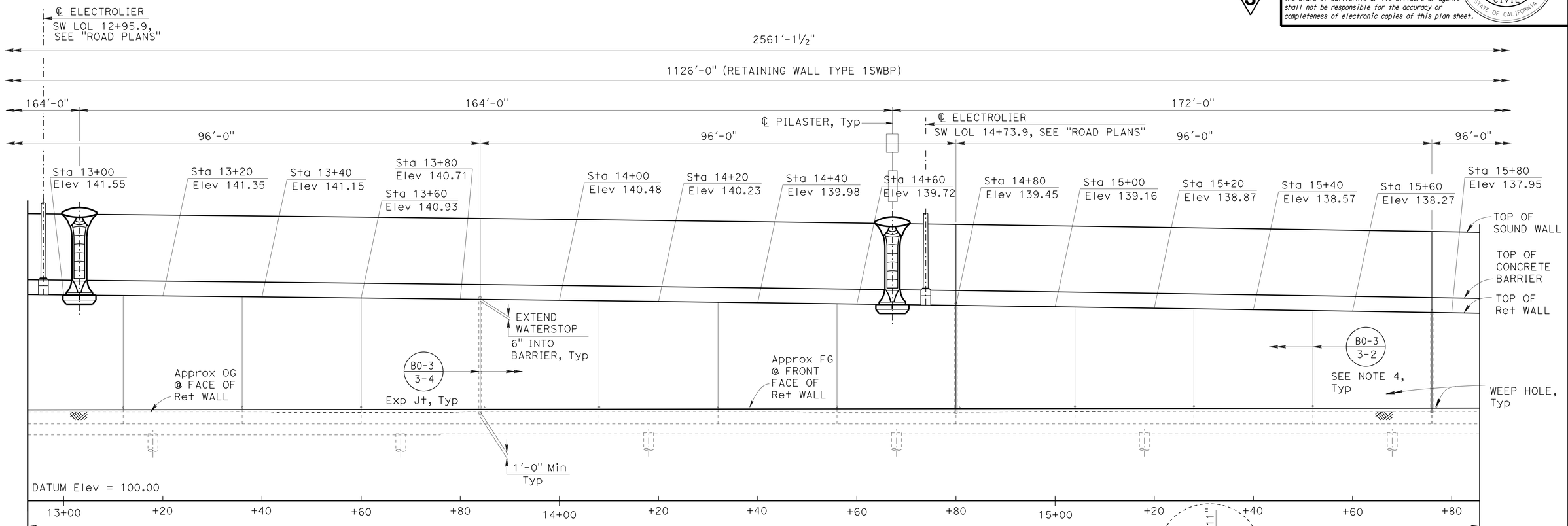

DEVELOPED MIRRORED ELEVATION

1" = 10'

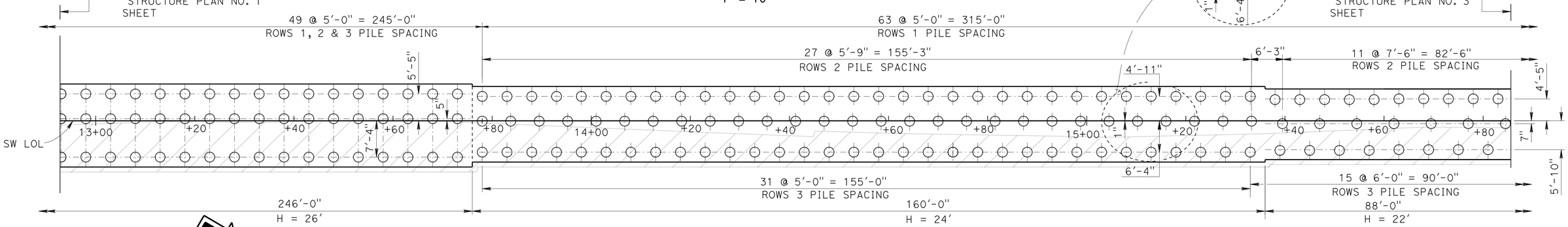

FOOTING PLAN

1" = 10'

3 **REPLACED PER ADDENDUM No. 3 DATED DECEMBER 20, 2013**

DESIGN	BY Daniel Sessions	CHECKED Eric Watson	
DETAILS	BY J. Tang / J. Zhou	CHECKED Eric Watson	
QUANTITIES	BY Keith Stillmunkes	CHECKED Wendy Hou	

STATE OF CALIFORNIA
DEPARTMENT OF TRANSPORTATION

DIVISION OF ENGINEERING SERVICES
STRUCTURE DESIGN
DESIGN BRANCH 1

BRIDGE NO. 53E0212
POST MILE 5.93

SOUND WALL NO. 313
STRUCTURE PLAN NO. 2

STRUCTURES DESIGN DETAIL SHEET (ENGLISH) (REV. 09-01-10)

ORIGINAL SCALE IN INCHES FOR REDUCED PLANS 0 1 2 3

UNIT: 3576
PROJECT NUMBER & PHASE: 07000018351
CONTRACT NO.: 07-215954

DISREGARD PRINTS BEARING EARLIER REVISION DATES

REVISION DATES 02/16/12 03/04/13 02/24/13

SHEET 5 OF 48

FILE => sw313-c-sp02.dgn

USERNAME => s119571 DATE PLOTTED => 19-DEC-2013 TIME PLOTTED => 12:55

DIST	COUNTY	ROUTE	POST MILES TOTAL PROJECT	SHEET No.	TOTAL SHEETS
07	LA	5	0.0/7.6	791	985

P. Vijitakula 12/28/12
REGISTERED CIVIL ENGINEER DATE

6-24-13
PLANS APPROVAL DATE

REGISTERED PROFESSIONAL ENGINEER
P. VIJITAKULA
No. C 54701
Exp. 12-31-13
CIVIL
STATE OF CALIFORNIA

The State of California or its officers or agents shall not be responsible for the accuracy or completeness of electronic copies of this plan sheet.

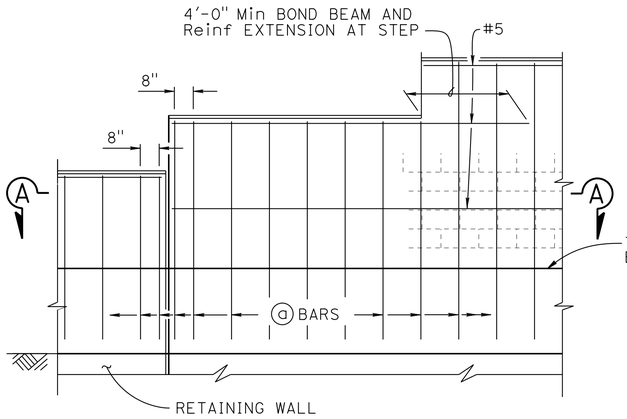

H=6'-4" THRU H=10'-4"

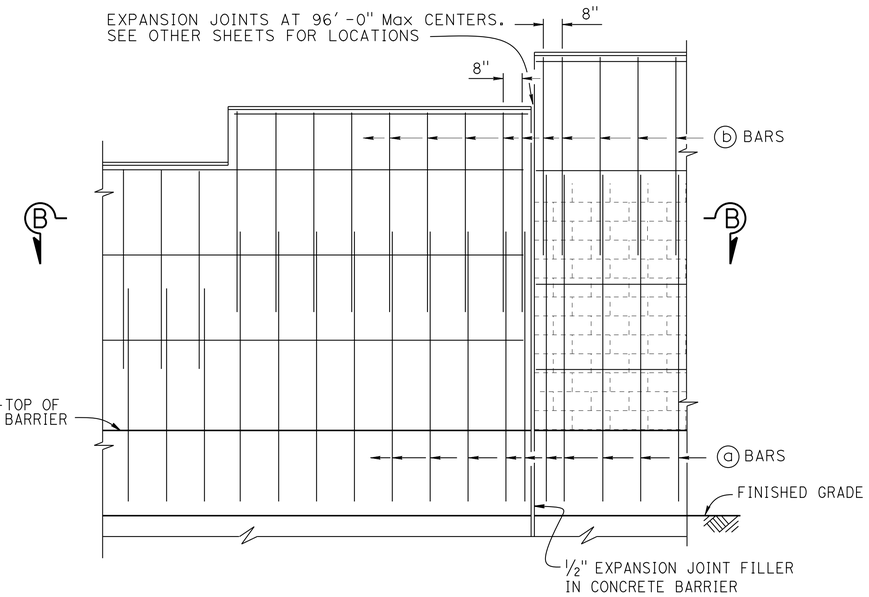

H=12'-4" THRU H=16'-4"

PART ELEVATION

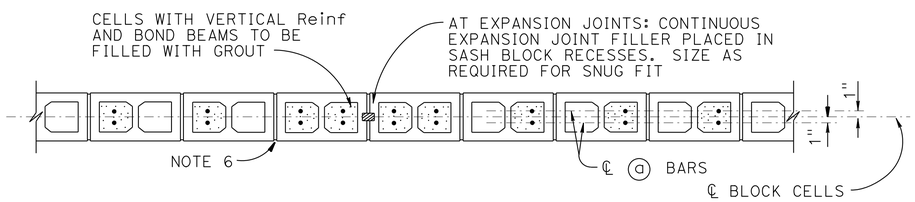

SECTION A-A

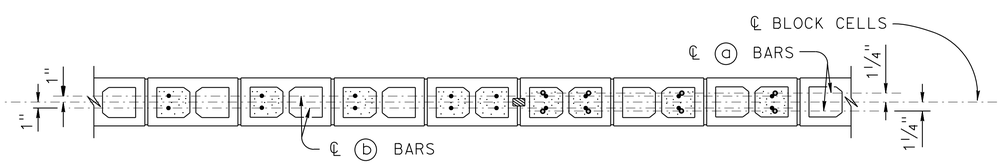

SECTION B-B

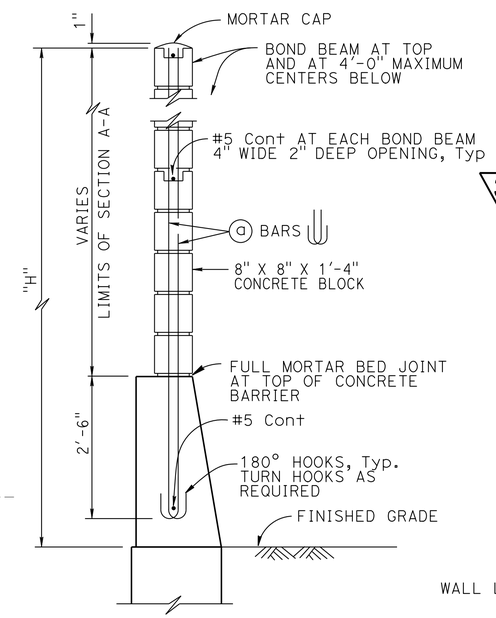

H=6'-4" THRU H=10'-4"

For details not shown, see H=12'-4" thru H=16'-4"

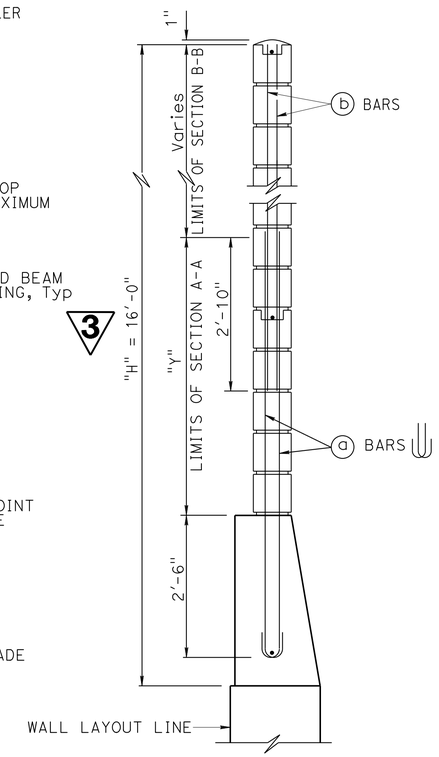

H=12'-4" THRU H=16'-4"

For details not shown, see H=6'-4" thru H=10'-4"

TYPICAL SECTION

NO SCALE

SOUND WALL REINFORCEMENT TABLE

MAXIMUM "H"	ⓐ BARS @ 1'-4" Max	ⓑ BARS @ 1'-4" Max	"Y"	f'm (psi)	COMPRESSIVE STRENGTH OF CMU (psi)	MAXIMUM "H"
6'-4"	#4	———	———	1500	1900	6'-4"
8'-4"	#4	———	———	1500	1900	8'-4"
10'-4"	#4	———	———	1500	1900	10'-4"
12'-4"	#5	#4	5'-0"	1500	1900	12'-4"
14'-4"	#6	#4	7'-0"	1500	1900	14'-4"
16'-4"	#6	#4	9'-0"	2500	3700	16'-4"

NOTES:

1. For details not shown, see "MASONRY BLOCK SOUND WALL WITH BARRIER ON RETAINING WALL - DETAILS NO. 2" sheet.
2. Slope ground at traffic side of barrier to drain. Maximum slope ±10%.
3. See STANDARD PLAN B15-9 for other details.
4. For type of block and joint finish, see other sheets.
5. When blocks are laid in stacked bond, ladder type, galvanized joint reinforcement shall be provided. A minimum of 2-9 gauge wire continuous at 4'-0" maximum to be used. Locate reinforcement in joints that are at the approximate midpoint between bond beams.
6. Horizontal joints shall be tooled concave or may be weathered. Vertical joints shall be tooled concave or may be raked.
7. For intermediate wall heights that are between the "H's" given, use the tabular information for the next higher "H".
8. Masonry strengths are listed in "SOUND WALL REINFORCEMENT TABLE".
9. Concrete to be used for the barrier shall contain not less than 590 pounds of cementitious material per cubic yard.

3 **REPLACED PER ADDENDUM No. 3 DATED DECEMBER 20, 2013**

STANDARD DRAWING
FILE NO. xs15-130-1
APPROVAL DATE July 2011

STATE OF CALIFORNIA
DEPARTMENT OF TRANSPORTATION

DIVISION OF ENGINEERING SERVICES
STRUCTURE DESIGN
DESIGN BRANCH 1

BRIDGE NO. 53E0212
POST MILE 5.93

SOUND WALL NO. 313

MASONRY BLOCK SOUND WALL WITH BARRIER ON RETAINING WALL DETAILS NO. 1

DS OSD 2147A (ENGLISH STANDARD DRAWING "XS" BORDER REV. (02-02-11)

ORIGINAL SCALE IN INCHES FOR REDUCED PLANS 0 1 2 3

UNIT: 3576
PROJECT NUMBER & PHASE: 07000018351
CONTRACT NO.: 07-215954

DISREGARD PRINTS BEARING EARLIER REVISION DATES
REVISION DATES 02/28/12 05/04/12
SHEET 38 OF 48

FILE => sw313-k-mbswdt01.dgn

USERNAME => s113946 DATE PLOTTED => 20-DEC-2013 TIME PLOTTED => 11:19

DIST	COUNTY	ROUTE	POST MILES TOTAL PROJECT	SHEET No.	TOTAL SHEETS
07	LA	5	0.0/7.6	803	985

P. Vijitakula 12/28/12
REGISTERED CIVIL ENGINEER DATE

6-24-13
PLANS APPROVAL DATE

REGISTERED PROFESSIONAL ENGINEER P. VIJITAKULA No. C 54701 Exp. 12-31-13 CIVIL STATE OF CALIFORNIA

The State of California or its officers or agents shall not be responsible for the accuracy or completeness of electronic copies of this plan sheet.

INDEX TO PLANS

SHEET NO.	TITLE
1.	GENERAL PLAN
2.	INDEX TO PLANS
3.	STRUCTURE PLAN NO. 1
4.	STRUCTURE PLAN NO. 2
5.	STRUCTURE PLAN NO. 3
6.	STRUCTURE PLAN NO. 4
7.	STRUCTURE PLAN NO. 5
8.	STRUCTURE PLAN NO. 6
9.	STRUCTURE PLAN NO. 7
10.	STRUCTURE PLAN NO. 8
11.	STRUCTURE PLAN NO. 9
12.	STRUCTURE PLAN NO. 10
13.	FOUNDATION PLAN NO. 1
14.	FOUNDATION PLAN NO. 2
15.	FOUNDATION PLAN NO. 3
16.	FOUNDATION PLAN NO. 4
17.	FOUNDATION PLAN NO. 5
18.	WALL DETAILS
19.	COUNTERFORT RETAINING WALL DETAILS NO. 1
20.	COUNTERFORT RETAINING WALL DETAILS NO. 2
21.	COUNTERFORT RETAINING WALL DETAILS NO. 3
22.	ELECTROLIER PEDESTAL DETAILS
23.	LUMINAIRE PEDESTAL DETAILS NO. 1
24.	LUMINAIRE PEDESTAL DETAILS NO. 2
25.	RETAINING WALL ARCHITECTURAL TREATMENT NO. 1
26.	RETAINING WALL ARCHITECTURAL TREATMENT NO. 2
27.	RETAINING WALL ARCHITECTURAL TREATMENT NO. 3
28.	RETAINING WALL ARCHITECTURAL TREATMENT NO. 4
29.	RETAINING WALL ARCHITECTURAL TREATMENT NO. 5
30.	RETAINING WALL ARCHITECTURAL DETAILS NO. 1
31.	RETAINING WALL ARCHITECTURAL DETAILS NO. 2
32.	CONCRETE BARRIER ARCHITECTURAL DETAILS
33.	SOUND WALL ARCHITECTURAL DETAILS
34.	PILASTER ARCHITECTURAL DETAILS NO. 1
35.	PILASTER ARCHITECTURAL DETAILS NO. 2
36.	PILASTER ARCHITECTURAL DETAILS NO. 3
37.	PILASTER ARCHITECTURAL DETAILS NO. 4
38.	PILASTER STRUCTURAL DETAILS NO. 1
39.	PILASTER STRUCTURAL DETAILS NO. 2
40.	PILASTER STRUCTURAL DETAILS NO. 3
41.	RETAINING WALL TYPE 1SWBP (CIDH) PILES NO. 1
42.	RETAINING WALL TYPE 1SWBP (CIDH) PILES NO. 2
43.	RETAINING WALL TYPE 1SWBP (CLASS 90 PILES)
44.	RETAINING WALL DETAILS
45.	MASONRY BLOCK SOUND WALL WITH BARRIER ON RETAINING WALL DETAILS NO. 1
46.	MASONRY BLOCK SOUND WALL WITH BARRIER ON RETAINING WALL DETAILS NO. 2
47.	LOG OF TEST BORINGS 1 OF 11
48.	LOG OF TEST BORINGS 2 OF 11
49.	LOG OF TEST BORINGS 3 OF 11
50.	LOG OF TEST BORINGS 4 OF 11
51.	LOG OF TEST BORINGS 5 OF 11
52.	LOG OF TEST BORINGS 6 OF 11
53.	LOG OF TEST BORINGS 7 OF 11
54.	LOG OF TEST BORINGS 8 OF 11
55.	LOG OF TEST BORINGS 9 OF 11
56.	LOG OF TEST BORINGS 10 OF 11
57.	LOG OF TEST BORINGS 11 OF 11

QUANTITIES

STRUCTURE EXCAVATION (RETAINING WALL)	4,630	CY
STRUCTURE EXCAVATION (TYPE Y-2) (AERIALLY DEPOSITED LEAD)	1,215	CY
STRUCTURE BACKFILL (RETAINING WALL)	12,300	CY
PERVIOUS BACKFILL MATERIAL (RETAINING WALL)	945	CY
16" CAST-IN-DRILLED-HOLE CONCRETE PILING	1,830	LF
24" CAST-IN-DRILLED-HOLE CONCRETE PILING	20,490	LF
FURNISH PILING (CLASS 90) (ALTERNATIVE X)	12,155	LF
DRIVE PILE (CLASS 90) (ALTERNATIVE X)	380	EA
STRUCTURAL CONCRETE, RETAINING WALL	4,490	CY
ARCHITECTURAL TREATMENT (SPLIT SLATE-FRACTURED RIB)	28,500	SQFT
PILASTER, SOUND WALL	24	CY
BAR REINFORCING STEEL (RETAINING WALL)	1,315,400	LB
SOUND WALL (MASONRY BLOCK)	23,900 ~~24,500~~	SQFT 3
TUBULAR HANDRAILING	533	LF
CONCRETE BARRIER (TYPE 736A MODIFIED)	2,215	LF
CONCRETE BARRIER (TYPE 736SV MODIFIED)	480	LF

STANDARD PLANS DATED MAY 2010

A10A	ABBREVIATIONS (SHEET 1 OF 2)
A10B	ABBREVIATIONS (SHEET 2 OF 2)
A10C	LINES SYMBOLS (SHEET 1 OF 3)
A10D	LINES SYMBOLS (SHEET 2 OF 3)
A10E	LINES SYMBOLS (SHEET 3 OF 3)
A62B	LIMITS OF PAYMENT FOR EXCAVATION AND BACKFILL
	BRIDGE SURCHARGE AND WALL
B0-3	BRIDGE DETAILS
B0-13	BRIDGE DETAILS
B2-3	16" AND 24" CAST-IN-DRILLED-HOLE CONCRETE PILE
B2-5	PILE DETAILS CALSS 90 AND CALSS 140
RSP B3-1A	RETAINING WALL TYPE 1 (CASE 1)
RSP B3-5	RETAINING WALL DETAILS No. 1
B11-51	TUBULAR HAND RAILING
B11-56	CONCRETE BARRIER TYPE 736
RSP B15-6	SOUND WALL MASONRY BLOCK ON TYPE 736S/SV BARRIER DETAILS (1)
B15-7	SOUND WALL MASONRY BLOCK ON TYPE 736S/SV BARRIER DETAILS (2)
B15-8	SOUND WALL MASONRY BLOCK ON TYPE 736S/SV BARRIER DETAILS (3)
B15-9	SOUND WALL MASONRY BLOCK MISCELLANEOUS DETAILS
B15-15	SOUND WALL MASONRY BLOCK ON TYPE 736S/SV BARRIER ON PILE FOOTING FOR SPANNING UTILITIES
ES-6A	ELECTRICAL SYSTEMS (LIGHTING STANDARD, TYPE 15 AND TYPE 21)

STANDARD PLAN SHEET NO.

DETAIL NO.

PILE DATA TABLE

LOCATION	PILE TYPE	NOMINAL RESISTANCE (KIPS) COMPRESSION	NOMINAL RESISTANCE (KIPS) TENSION	DESIGN TIP ELEVATION	SPECIFIED TIP ELEVATION
RW LOL 10+00.00 to 11+55.00	24" CIDH	230	-40	(a)71.0 (c)93.0 (d)81.0	71.0
COUNTERFORT Ret WALL RW LOL 11+55.00 to 12+24.50	24" CIDH	360	-40	(a)57.0 (c)86.0 (d)81.0	57.0
RW LOL 12+24.50 to 13+20.00	24" CIDH	230	-40	(a)73.0 (c)91.0 (d)81.0	73.0
RW LOL 13+20.00 to 14+70.00	24" CIDH	220	-40	(a)74.0 (c)91.0 (d)81.0	74.0
RW LOL 14+70.00 to 15+90.00	24" CIDH	210	-20	(a)71.0 (c)88.0 (d)81.0	71.0
RW LOL 15+90.00 to 16+80.00	24" CIDH	220	0	(a)71.0 (c)89.0 (d)82.0	71.0
RW LOL 16+80.00 to 17+70.00	24" CIDH	190	0	(a)74.0 (c)92.0 (d)82.0	74.0
RW LOL 17+70.00 to 18+30.00	24" CIDH	190	0	(a)74.0 (c)93.0 (d)83.0	74.0
RW LOL 18+30.00 to 18+90.00	24" CIDH	190	0	(a)77.0 (c)93.0 (d)83.0	77.0
RW LOL 18+90.00 to 19+70.00	24" CIDH	190	0	(a)82.0 (c)101.0 (d)84.0	82.0
RW LOL 19+70.00 to 20+90.00	24" CIDH	190	0	(a)81.0 (c)94.0 (d)84.0	81.0
RW LOL 20+90.00 to 21+70.00	24" CIDH	210	0	(a)81.0 (c)94.0 (d)84.0	81.0
Conc BARRIER TYPE 736 SV (Mod) RW LOL 21+70.00 to 26+50.00	16" / 24" CIDH	N/A	N/A	N/A	N/A
RW LOL 26+50.00 to 27+11.00	CLASS 90	180	0	(a)89.0 (c)97.0	89.0
RW LOL 27+11.00 to 28+10.00	CLASS 90	180	0	(a)88.0 (c)97.0	88.0
RW LOL 28+10.00 to 28+40.00	CLASS 90	180	0	(a)89.0 (c)97.0	89.0
RW LOL 28+40.00 to 29+70.00	CLASS 90	180	0	(a)88.0 (c)97.0	88.0
RW LOL 29+70.00 to 30+05.00	CLASS 90	180	0	(a)85.0 (c)89.0	85.0
RW LOL 30+05.00 to 32+20.00	CLASS 90	180	0	(a)84.0 (c)89.0	84.0
RW LOL 32+20.00 to 32+80.00	CLASS 90	180	0	(a)87.0 (c)96.0	87.0
RW LOL 32+80.00 to 33+40.00	CLASS 90	180	0	(a)89.0 (c)96.0	89.0
RW LOL 33+40.00 to 34+70.00	CLASS 90	180	0	(a)91.0 (c)96.0	91.0

NOTES:
1. Design tips elevations are controlled by: (a) Compression, (c) Settlement and (d) lateral load.
2. The specified tip elevations shall not be raised, unless directed by Engineer.
3. Class 90 shall be the Alternative "X" piles which shall not have a dimension "T" less than 14 inchs.

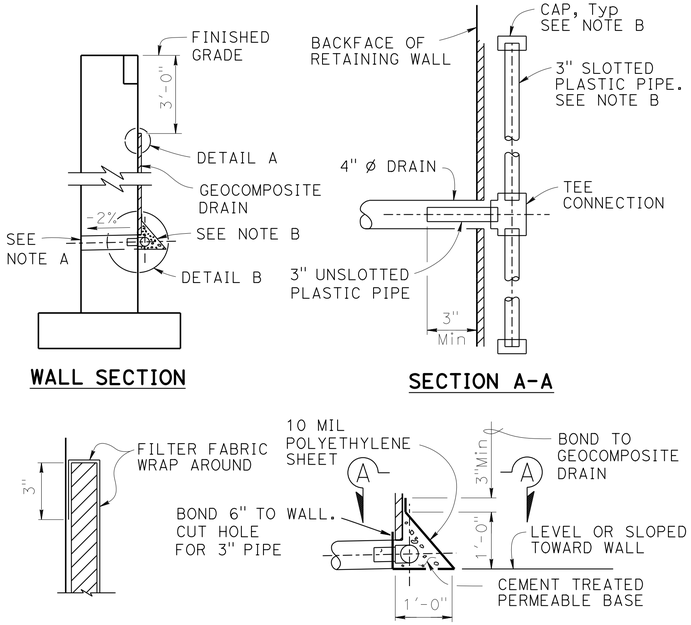

WEEP HOLE AND GEOCOMPOSITE DRAIN

ALTERNATIVE TO BRIDGE DETAIL BO-3 / 3-1

NOTES:

A. 4" Ø drains at 25' max center to center. For walls adjacent to sidewalks or curbs, provide 4" cast iron or asbestos cement pipe under the sidewalk to discharge through curb face. Exposed wall drains shall be located 3"± above finished grade.

B. Geocomposite drain, cement treated permeable base, and 3" Ø slotted plastic pipe continuous behind retaining wall Cap ends of pipe. Provide "Tee" connection at each 4" Ø drain.

3 REPLACED PER ADDENDUM No. 3 DATED DECEMBER 20, 2013

	BY	CHECKED
	Kyoung Lee	Eric Watson
DETAILS	Jie Tang	Eric Watson
QUANTITIES	G. Thornton / V. Shostak	S. Moradi / C. Chen

STATE OF CALIFORNIA
DEPARTMENT OF TRANSPORTATION

DIVISION OF ENGINEERING SERVICES
STRUCTURE DESIGN
DESIGN BRANCH 1

BRIDGE NO. 53E0213
POST MILE 5.94

RETAINING WALL NO. 314
INDEX TO PLANS

STRUCTURES DESIGN DETAIL SHEET (ENGLISH) (REV. 09-01-10)

ORIGINAL SCALE IN INCHES FOR REDUCED PLANS 0 1 2 3

UNIT: 3576
PROJECT NUMBER & PHASE: 07000018351
CONTRACT NO.: 07-215954

DISREGARD PRINTS BEARING EARLIER REVISION DATES 09/01/12 05/08/13 05/28/13

SHEET 2 OF 57

FILE => rw314-a-itp.add

USERNAME => s113946 DATE PLOTTED => 20-DEC-2013 TIME PLOTTED => 11:19

DIST	COUNTY	ROUTE	POST MILES TOTAL PROJECT	SHEET No.	TOTAL SHEETS
07	LA	5	0.0/7.6	819	985

P. Vijitakula 12/28/12
REGISTERED CIVIL ENGINEER DATE

6-24-13
PLANS APPROVAL DATE

REGISTERED PROFESSIONAL ENGINEER P. VIJITAKULA No. C 54701 Exp. 12-31-13 CIVIL STATE OF CALIFORNIA

The State of California or its officers or agents shall not be responsible for the accuracy or completeness of electronic copies of this plan sheet.

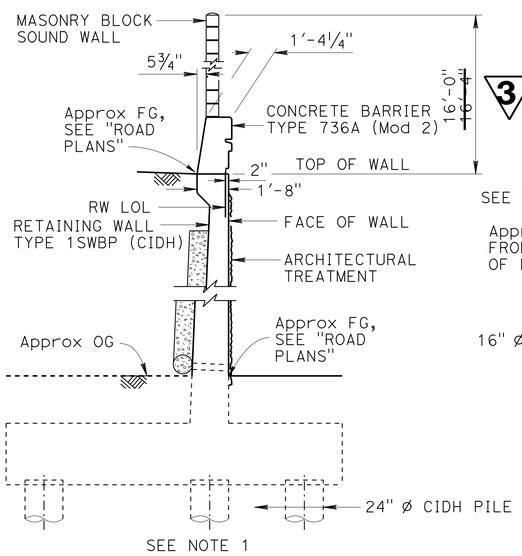

SECTION A-A
¼" = 1'-0"

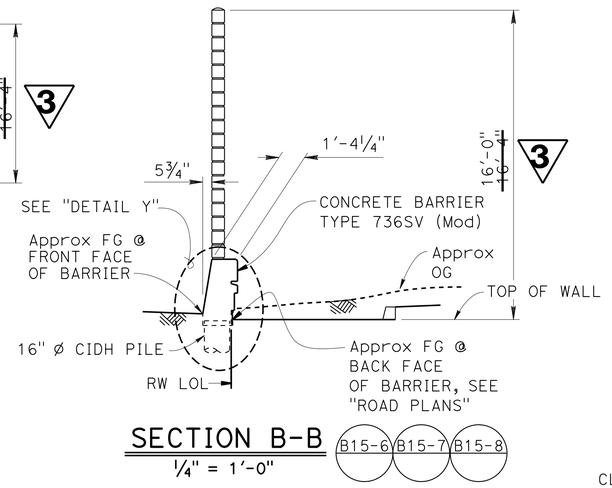

SECTION B-B
¼" = 1'-0"

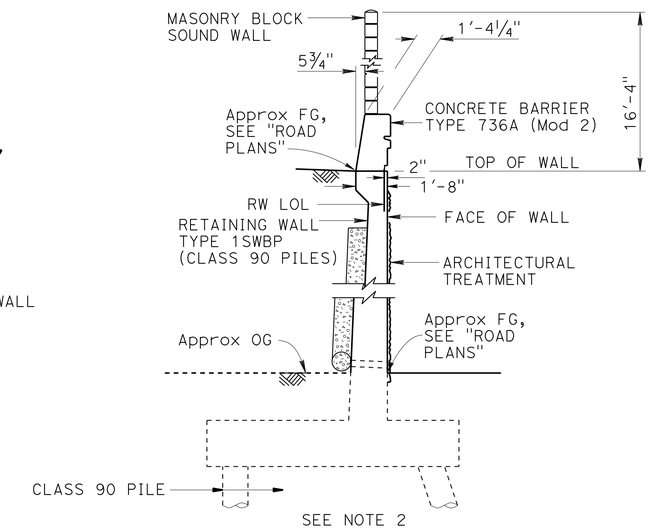

SECTION C-C
¼" = 1'-0"

NOTES:

1. See "RETAINING WALL TYPE 1SWBP (CIDH PILES)" sheets.
2. See "RETAINING WALL TYPE 1SWBP (CLASS 90 PILES)" sheets.
3. See "RETAINING WALL DETAILS" sheet and STANDARD PLAN B3-1A.
4. Transition from "CONCRETE BARRIER TYPE 736A (Mod 2)" to "CONCRETE BARRIER TYPE 736A (Mod 1)" starts at RW LOL Sta 28+40.00, 7'-0" Min transition length required.
5. Transition from "CONCRETE BARRIER TYPE 736A (Mod 1)" to "CONCRETE BARRIER TYPE 736A (Mod)" starts at RW LOL Sta 31+67.50, 10'-0" Min transition length required.
6. For locations of "SECTION A-A, B-B, C-C, D-D, E-E & F-F", see "STRUCTURE PLAN" sheets.

3 REPLACED PER ADDENDUM No. 3 DATED DECEMBER 20, 2013

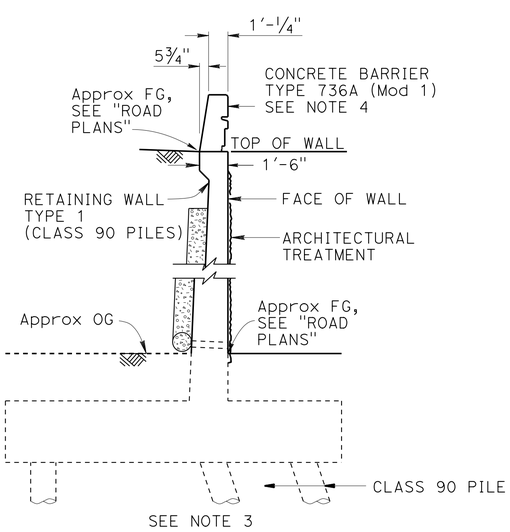

SECTION D-D
¼" = 1'-0"

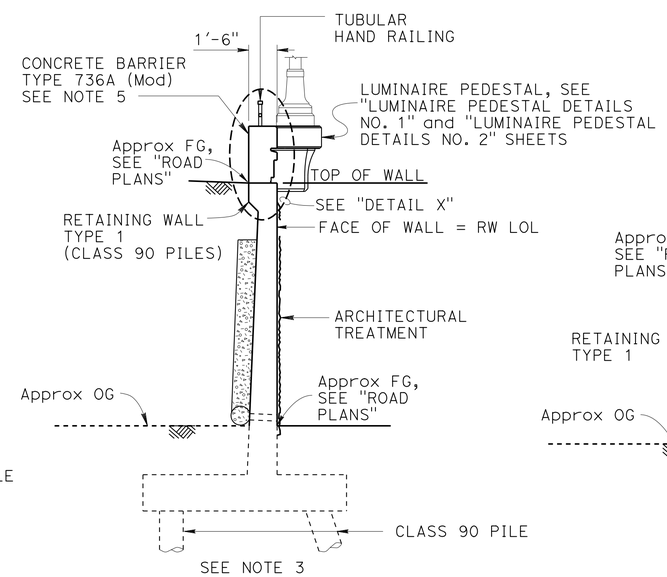

SECTION E-E
¼" = 1'-0"

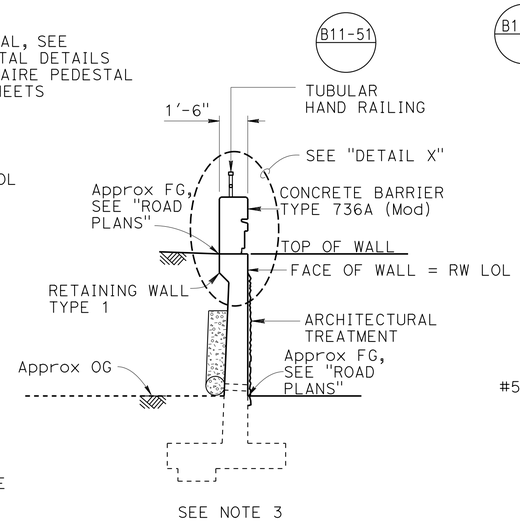

SECTION F-F
¼" = 1'-0"

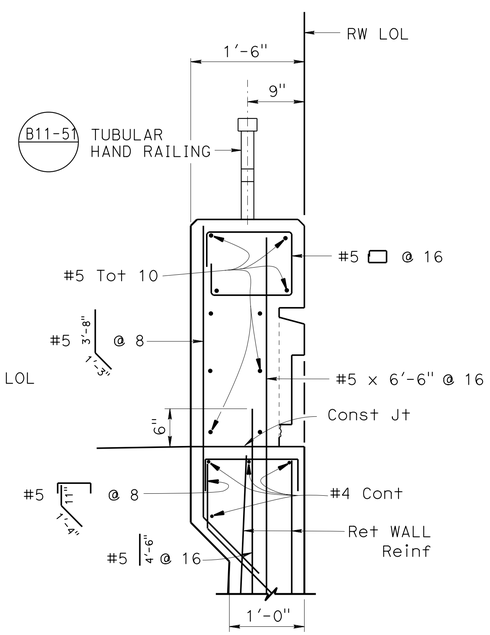

DETAIL X
1" = 1'-0"

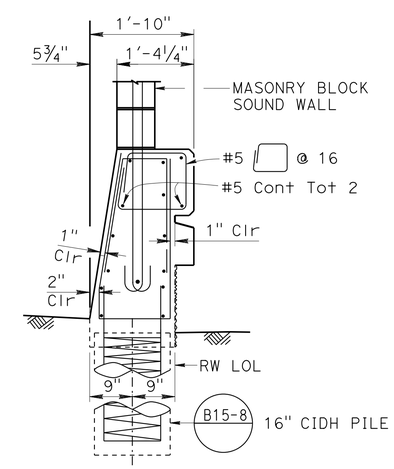

DETAIL Y
¾" = 1'-0"

	BY	CHECKED
DESIGN	Kyoung Lee	Eric Watson
DETAILS	Bob Huddleston/Jie Tang	Eric Watson
QUANTITIES	G. Thornton / V. Shostak	S. Moradi / C. Chen

STATE OF CALIFORNIA
DEPARTMENT OF TRANSPORTATION

DIVISION OF ENGINEERING SERVICES
STRUCTURE DESIGN
DESIGN BRANCH 1

BRIDGE NO. 53E0213
POST MILE 5.94

RETAINING WALL NO. 314
WALL DETAILS

STRUCTURES DESIGN DETAIL SHEET (ENGLISH) (REV. 09-01-10)

ORIGINAL SCALE IN INCHES FOR REDUCED PLANS 0 1 2 3

UNIT: 3576
PROJECT NUMBER & PHASE: 07000018351
CONTRACT NO.: 07-215954

DISREGARD PRINTS BEARING EARLIER REVISION DATES

REVISION DATES: 5-03-12 12-26-12 9-18-12 09/04/12

SHEET 18 OF 57

FILE => rw314-e-m-wdet.add

USERNAME => s109858 DATE PLOTTED => 20-DEC-2013 TIME PLOTTED => 10:45

DIST	COUNTY	ROUTE	POST MILES TOTAL PROJECT	SHEET No.	TOTAL SHEETS
07	LA	5	0.0/7.6	828	985

P. Vijitakula 12/28/12
REGISTERED CIVIL ENGINEER DATE

6-24-13
PLANS APPROVAL DATE

REGISTERED PROFESSIONAL ENGINEER
P. VIJITAKULA
No. C 54701
Exp. 12-31-13
CIVIL
STATE OF CALIFORNIA

The State of California or its officers or agents shall not be responsible for the accuracy or completeness of electronic copies of this plan sheet.

3

For "NOTES", see "RETAINING WALL ARCHITECTURAL TREATMENT NO. 1" sheet.

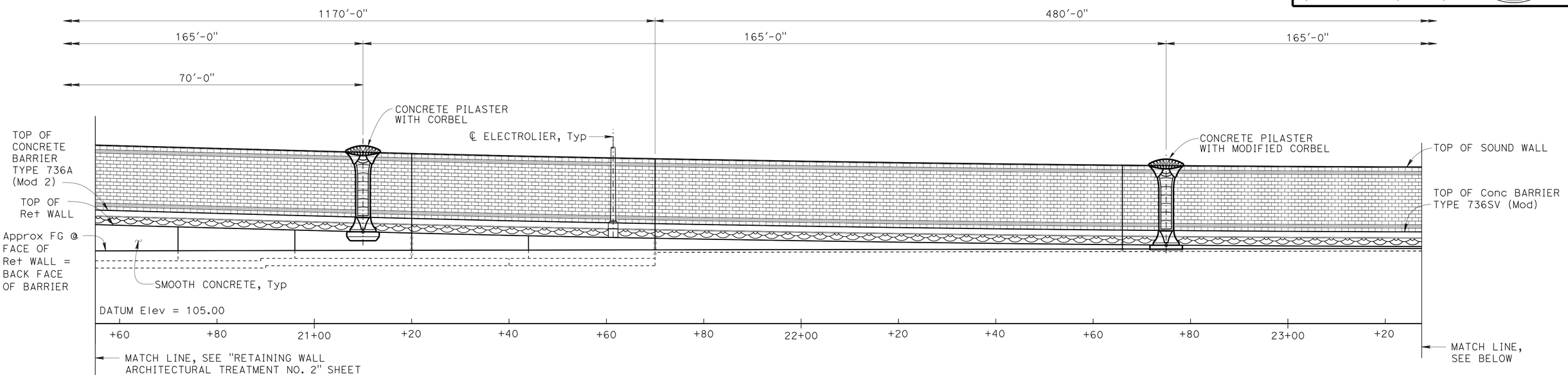

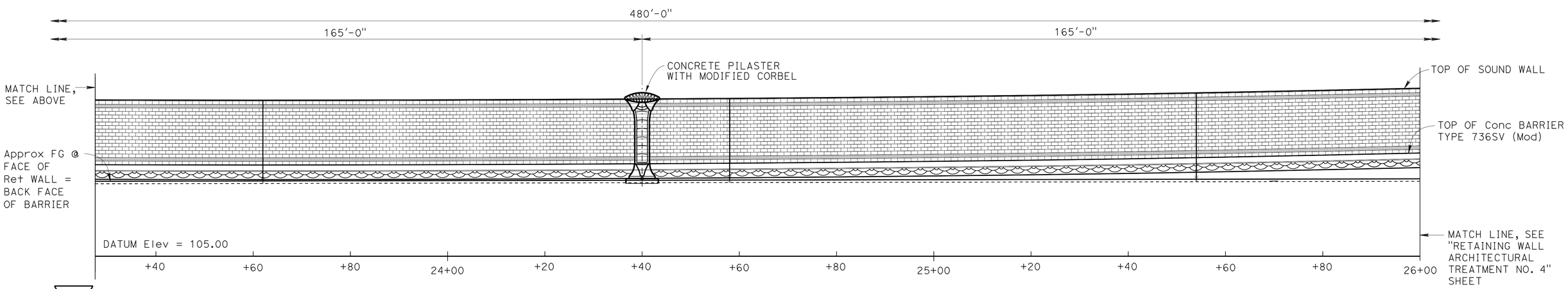

3 **REPLACED PER ADDENDUM No. 3 DATED DECEMBER 20, 2013**

DEVELOPED ELEVATION

1" = 10'

DESIGN	BY Isaac Tasabia	CHECKED Javier Chavez	
	BY Jie Tang	CHECKED K. Lee / E. Watson	
	BY Vadim Shostak	CHECKED Stan Cholda	

STATE OF CALIFORNIA
DEPARTMENT OF TRANSPORTATION

DIVISION OF ENGINEERING SERVICES
STRUCTURE DESIGN
DESIGN BRANCH 1

BRIDGE NO. 53E0213
POST MILE 5.94

RETAINING WALL NO. 314

RETAINING WALL ARCHITECTURAL TREATMENT NO. 3

STRUCTURES DESIGN DETAIL SHEET (ENGLISH) (REV. 09-01-10)

ORIGINAL SCALE IN INCHES FOR REDUCED PLANS 0 1 2 3

UNIT: 3576
PROJECT NUMBER & PHASE: 07000018351
CONTRACT NO.: 07-215954

DISREGARD PRINTS BEARING EARLIER REVISION DATES

REVISION DATES 08/13/12 08/24/12 12/04/12

SHEET 27 OF 57

FILE => rw314-e-ret-arch03.add

USERNAME => s109858 DATE PLOTTED => 20-DEC-2013 TIME PLOTTED => 10:45

DIST	COUNTY	ROUTE	POST MILES TOTAL PROJECT	SHEET No.	TOTAL SHEETS
07	LA	5	0.0/7.6	829	985

P. Vijitakula 12/28/12
REGISTERED CIVIL ENGINEER DATE

6-24-13
PLANS APPROVAL DATE

REGISTERED PROFESSIONAL ENGINEER P. VIJITAKULA No. C 54701 Exp. 12-31-13 CIVIL STATE OF CALIFORNIA

The State of California or its officers or agents shall not be responsible for the accuracy or completeness of electronic copies of this plan sheet.

3

For "NOTES", see "RETAINING WALL ARCHITECTURAL TREATMENT NO. 1" sheet.

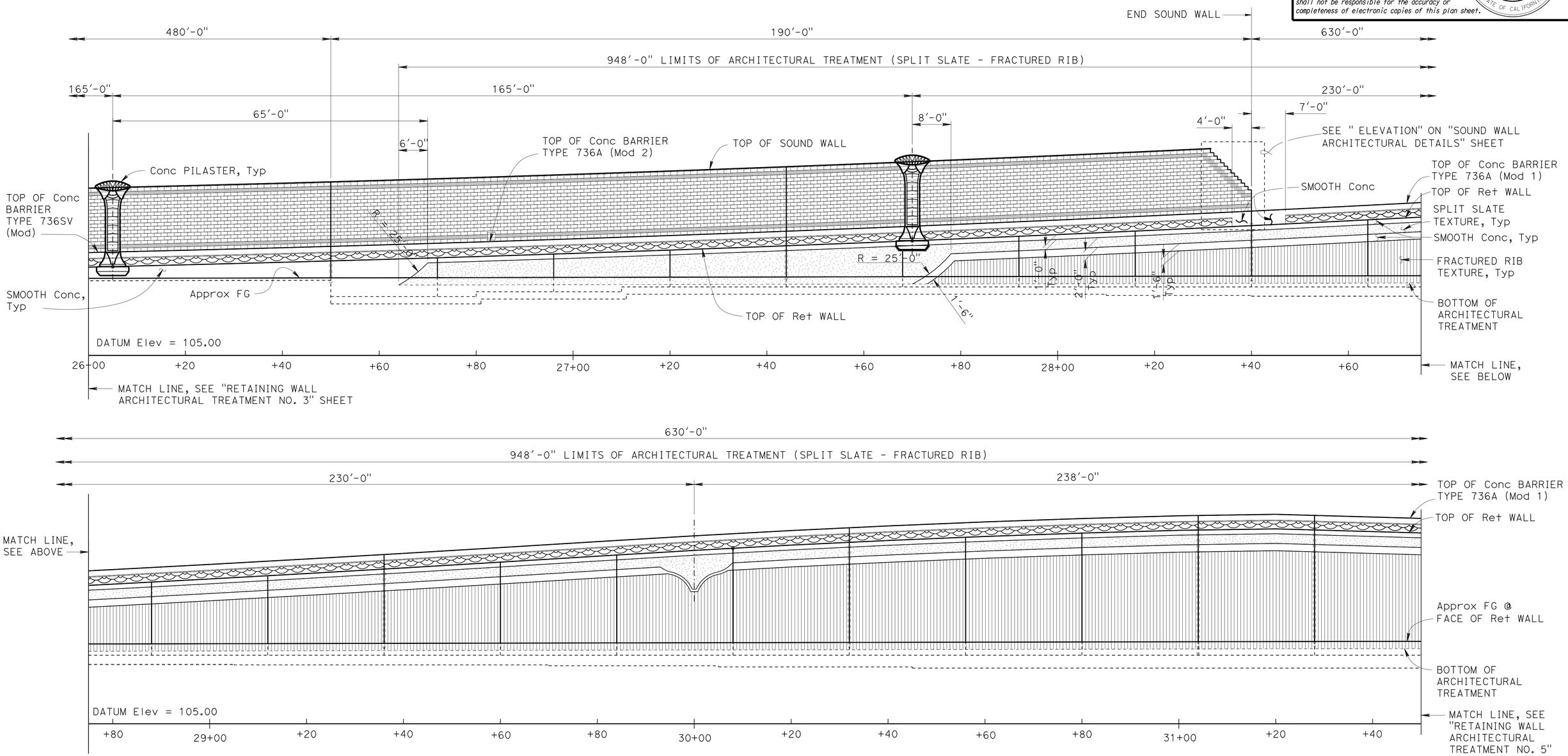

3 **REPLACED PER ADDENDUM No. 3 DATED DECEMBER 20, 2013**

DEVELOPED ELEVATION

1" = 10'

DESIGN	BY Isaac Tasabia	CHECKED Javier Chavez	
	BY Jie Tang	CHECKED K. Lee / E. Watson	
	BY Vadim Shostak	CHECKED Stan Cholda	

STATE OF CALIFORNIA
DEPARTMENT OF TRANSPORTATION

DIVISION OF ENGINEERING SERVICES
STRUCTURE DESIGN
DESIGN BRANCH 1

BRIDGE NO. 53E0213
POST MILE 5.94

RETAINING WALL NO. 314

RETAINING WALL ARCHITECTURAL TREATMENT NO. 4

STRUCTURES DESIGN DETAIL SHEET (ENGLISH) (REV. 09-01-10)

ORIGINAL SCALE IN INCHES FOR REDUCED PLANS 0 1 2 3

UNIT: 3576
PROJECT NUMBER & PHASE: 07000018351
CONTRACT NO.: 07-215954

DISREGARD PRINTS BEARING EARLIER REVISION DATES

REVISION DATES 08/14/12 08/31/12 12/07/12

SHEET 28 OF 57

FILE => rw314-e-ret-arch04.dgn

USERNAME => s109858 DATE PLOTTED => 20-DEC-2013 TIME PLOTTED => 10:45

DIST	COUNTY	ROUTE	POST MILES TOTAL PROJECT	SHEET No.	TOTAL SHEETS
07	LA	5	0.0/7.6	830	985

P. Vijitakula 12/28/12
REGISTERED CIVIL ENGINEER DATE

6-24-13
PLANS APPROVAL DATE

REGISTERED PROFESSIONAL ENGINEER
P. VIJITAKULA
No. C 54701
Exp. 12-31-13
CIVIL
STATE OF CALIFORNIA

The State of California or its officers or agents shall not be responsible for the accuracy or completeness of electronic copies of this plan sheet.

3

For "NOTES", see "RETAINING WALL ARCHITECTURAL TREATMENT NO. 1" sheet.

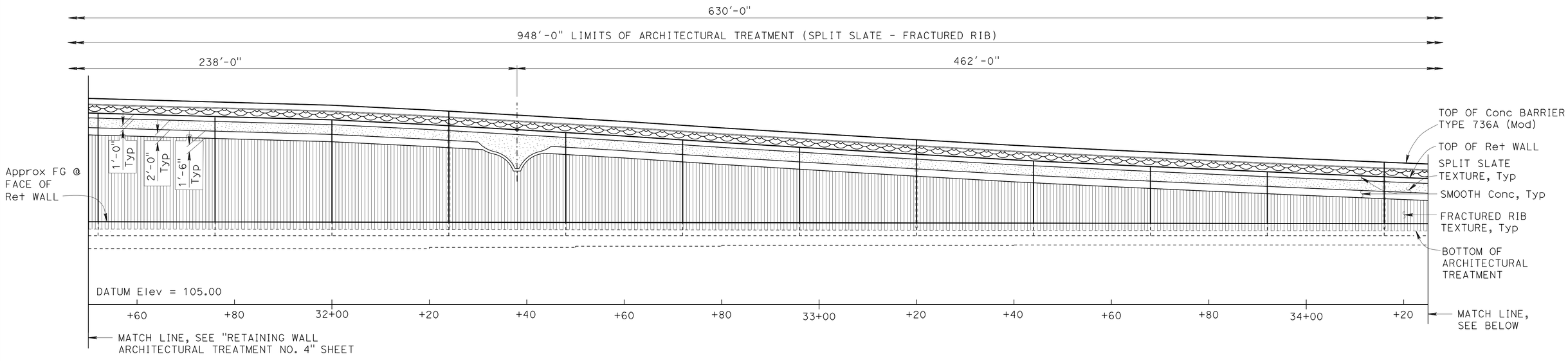

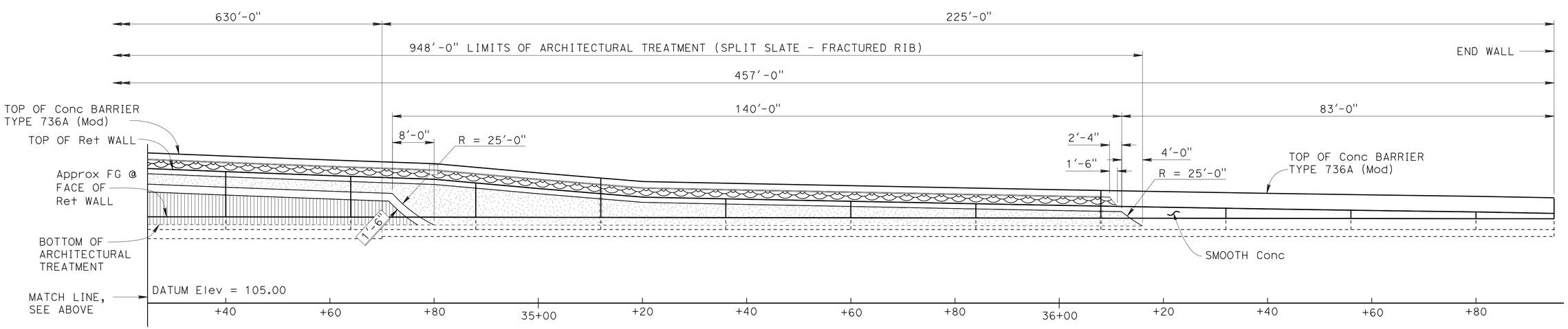

DEVELOPED ELEVATION

1" = 10'

3 **REPLACED PER ADDENDUM No. 3 DATED DECEMBER 20, 2013**

DESIGN	BY	CHECKED
	Isaac Tasabia	Javier Chavez
	Jie Tang	K. Lee / E. Watson
	Vadim Shostak	Stan Cholda

STATE OF CALIFORNIA
DEPARTMENT OF TRANSPORTATION

DIVISION OF ENGINEERING SERVICES
STRUCTURE DESIGN
DESIGN BRANCH 1

BRIDGE NO. 53E0213
POST MILE 5.94

RETAINING WALL NO. 314

RETAINING WALL ARCHITECTURAL TREATMENT NO. 5

STRUCTURES DESIGN DETAIL SHEET (ENGLISH) (REV. 09-01-10)

ORIGINAL SCALE IN INCHES FOR REDUCED PLANS 0 1 2 3

UNIT: 3576
PROJECT NUMBER & PHASE: 07000018351
CONTRACT NO.: 07-215954

DISREGARD PRINTS BEARING EARLIER REVISION DATES

REVISION DATES: 08/16/12 02/25/13 12/03/12

SHEET 29 OF 57

FILE => rw314-e-ret-arch05.add

USERNAME => s179571 DATE PLOTTED => 20-DEC-2013 TIME PLOTTED => 11:05

DIST	COUNTY	ROUTE	POST MILES TOTAL PROJECT	SHEET No.	TOTAL SHEETS
07	LA	5	0.0/7.6	843	985

P. Vijitakula 12/28/12
REGISTERED CIVIL ENGINEER DATE

6-24-13
PLANS APPROVAL DATE

REGISTERED PROFESSIONAL ENGINEER P. VIJITAKULA No. 54701 Exp. 12-31-13 CIVIL STATE OF CALIFORNIA

The State of California or its officers or agents shall not be responsible for the accuracy or completeness of scanned copies of this plan sheet.

NOTES:

1. For pile details not shown, see STANDARD PLAN B2-3.
2. For all other "NOTES" see "RETAINING WALL TYPE 1SWBP (CIDH PILES) NO. 1" sheet.

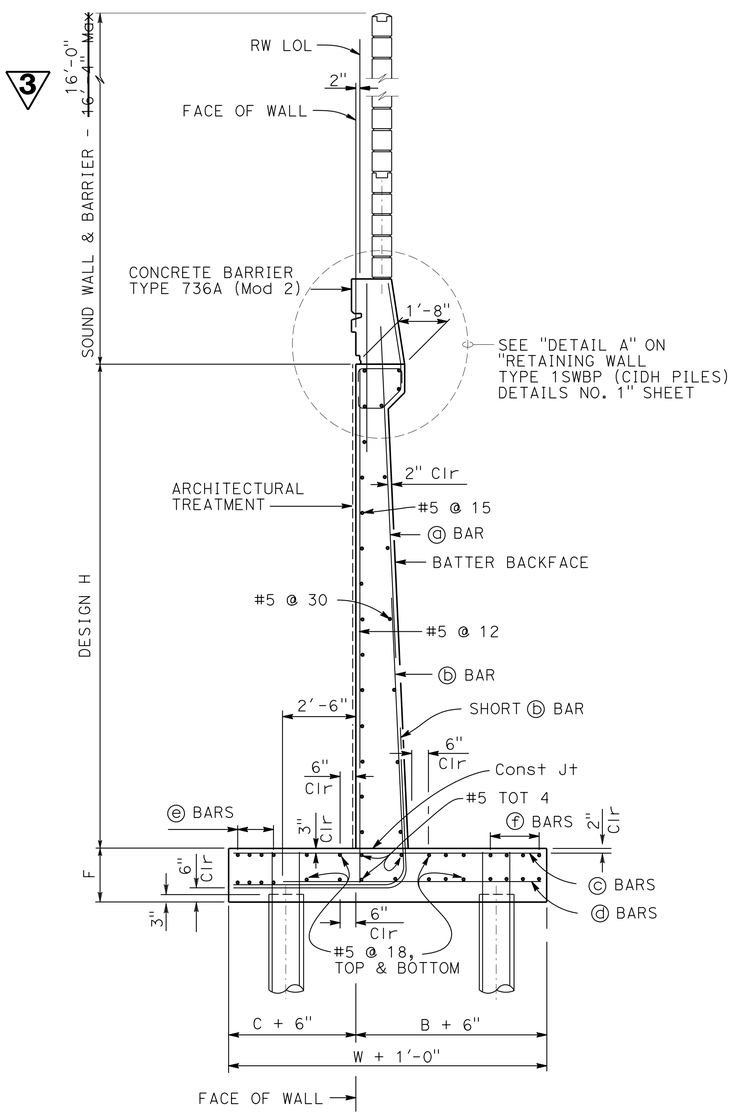

PILE FOOTING SECTION

No scale
All piles not shown

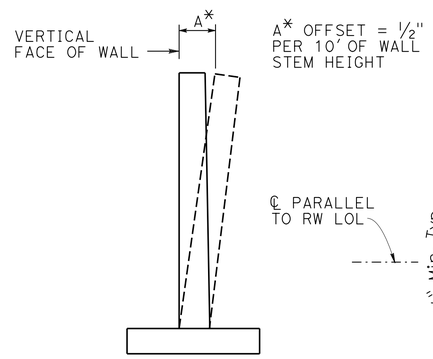

WALL OFFSET

No scale
Values for offsetting forms to be determined by the engineer

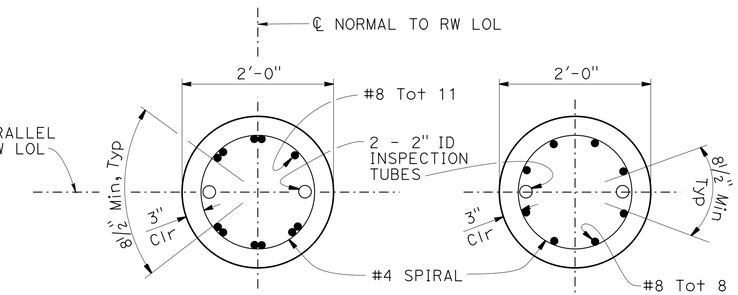

SECTION A-A

1" = 1'-0"

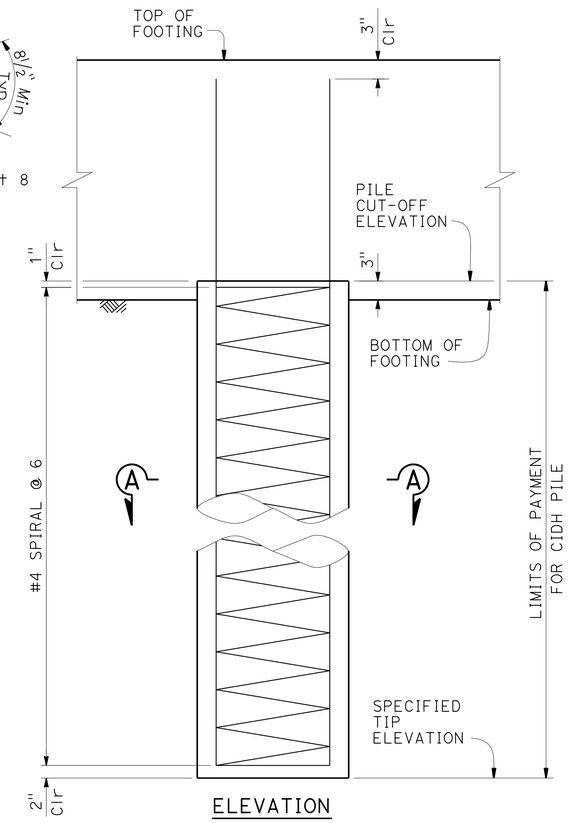

ELEVATION

24" CIDH CONCRETE PILE

1" = 1'-0"

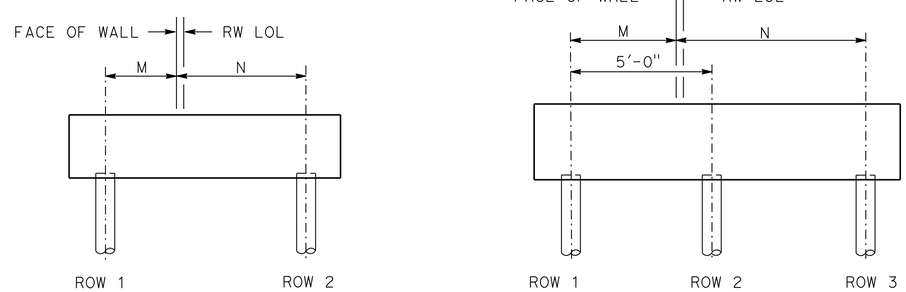

H = 6' THROUGH 20'

H = 22' THROUGH 28'

PILE PATTERN

No scale

3 **REPLACED PER ADDENDUM No. 3 DATED DECEMBER 20, 2013**

	BY	CHECKED
DESIGN	Kyoung Lee	Eric Watson
DETAILS	Bob Huddleston	Eric Watson
QUANTITIES	G. Thornton / V. Shostak	S. Moradi / C. Chen

STATE OF CALIFORNIA DEPARTMENT OF TRANSPORTATION

DIVISION OF ENGINEERING SERVICES STRUCTURE DESIGN DESIGN BRANCH 1

BRIDGE NO. 53E0213
POST MILE 5.94

RETAINING WALL NO. 314
RETAINING WALL TYPE 1SWBP (CIDH PILES) NO. 2

STRUCTURES DESIGN DETAIL SHEET (ENGLISH) (REV. 09-01-10)

ORIGINAL SCALE IN INCHES FOR REDUCED PLANS 0 1 2 3

UNIT: 3576
PROJECT NUMBER & PHASE: 07000018351
CONTRACT NO.: 07-215954

DISREGARD PRINTS BEARING EARLIER REVISION DATES

REVISION DATES 8-29-12

SHEET 42 OF 57

FILE => rw314-1-rwdt02.dgn

USERNAME => s121614 DATE PLOTTED => 20-DEC-2013 TIME PLOTTED => 11:21

DIST	COUNTY	ROUTE	POST MILES TOTAL PROJECT	SHEET No.	TOTAL SHEETS
07	LA	5	0.0/7.6	844	985

P. Vijitakula 12/28/12
REGISTERED CIVIL ENGINEER DATE

6-24-13
PLANS APPROVAL DATE

REGISTERED PROFESSIONAL ENGINEER P. VIJITAKULA No. 54701 Exp. 12-31-13 CIVIL STATE OF CALIFORNIA

The State of California or its officers or agents shall not be responsible for the accuracy or completeness of scanned copies of this plan sheet.

TABLE OF REINFORCING STEEL DIMENSIONS AND DATA					
DESIGN H	6′	8′	10′	12′	14′
W	8′- 3"	8′- 6"	9′- 0"	9′- 6"	10′- 0"
C	2′- 9"	2′- 9"	3′- 0"	3′- 3"	3′- 4"
B	5′- 6"	5′- 9"	6′- 0"	6′- 3"	6′- 8"
F PILE FOOTING	1′- 6"	1′- 6"	1′- 6"	1′- 6"	1′- 9"
ROW 1 SPACING	12′- 3"	10′- 3"	8′- 9"	7′- 6"	6′- 3"
ROW 2 SPACING	14′- 0"	12′- 9"	11′- 6"	10′- 3"	9′- 3"
STEM WITH HAUNCH, BATTER	0	½:12	½:12	½:12	½:12
STEM WITHOUT HAUNCH, BATTER	0	0	0	0	0
ⓐ BARS	-	-	-	-	-
ⓑ BARS	#8 @ 12	#7 @ 9	#7 @ 6	#7 @ 6	#7 @ 6
ha			5′- 0"	6′- 0"	7′- 0"
ⓒ BARS	#6 @ 12	#6 @ 9	#6 @ 6	#6 @ 6	#6 @ 6
ⓓ BARS	#5 @ 12	#5 @ 9	#5 @ 12	#5 @ 12	#5 @ 12
ⓔ BARS	10-#7 @ 6	8-#7 @ 7	10-#6 @ 6	8-#6 @ 6	6-#6 @ 12
ⓕ BARS	10-#8 @ 7	10-#8 @ 6	10-#7 @ 8	12-#6 @ 7	8-#7 @ 11

NOTE:

Total ⓔ bars and ⓕ bars shown are total number of top and bottom bars combined.

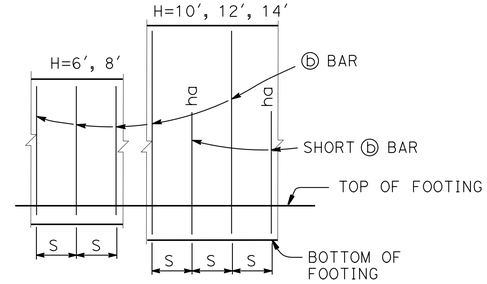

ELEVATION

No Scale

NOTES:

1. "ha" indicates distance from top of footing to upper end of ⓑ bars, see table.
2. "S" is ⓑ bar spacing, see table.

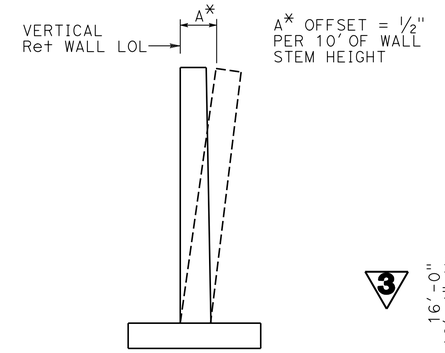

WALL OFFSET

No scale

Values for offsetting forms to be determined by the engineer

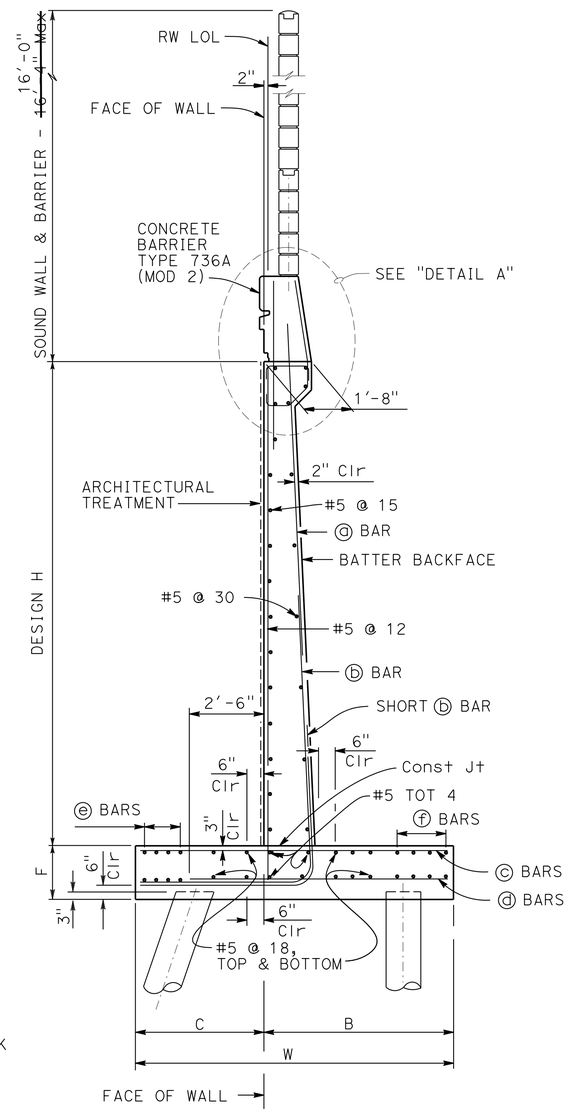

PILE FOOTING SECTION

No scale

DESIGN DATA

Design: AASHTO LRFD Bridge Design Specifications 4th edition with California Amendments

WS: 33 psf on Sound Wall and Barrier

LS: Varied surcharge on level ground surface

CT: 54 kip maximum traffic impact loading evenly distributed over 10 feet at top of the barrier and 1:1 distribution down and outward

EQD: Mononobe-Okabe Method
K_h = PGA/3
K_v = 0.0

Soil: Ø = 35°
γ = 130 pcf

Reinforced Concrete: f′c = 3600 psi
fy = 60,000 psi

Load Combinations and Limit States

Service I Q=1.00DC+1.00EV+1.00EH+1.00LS+0.30WS

Strength I Q=αDC+βEV+1.50EH+1.75LS

Strength V Q=αDC+βEV+1.50EH+1.35LS+0.40WS

Extreme I Q=1.00DC+1.00EV+1.00EH+1.00EQD+1.00EQE

Where:

Q: Force Effects
α: 1.25 or 0.90, Which ever Controls Design
β: 1.35 or 1.00, which ever Controls Design
DC: Dead Load of Structure Components
EV: Vertical Earth Fill Pressure
LS: Live Load Surcharge
EQE: Seismic Earth Pressure
EQD: Soil and Structure Components Inertia (Soil inertia ignored for stem design)
WS: Wind Load on Sound Wall and Barrier
CT: Vehicular Collision Force

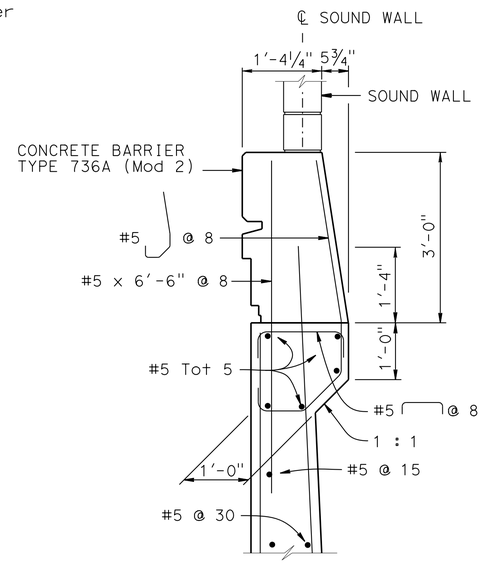

DETAIL A

¾ = 1′-0"

NOTES:

1. All piles are class 90 concrete piles, see B2-5
2. Pile batter shown are 1:3.
3. Minimum distance between center pile and edge of footing is 1′-6".
4. Lateral resistance of each pile:
   30 kip for strength limit states.
   40 kip for extreme limit states.
5. Maximum spacing between piles is shown in the table.
6. Minimum distance between any two piles is 3′-0".
7. For sound wall and retaining wall architectural finish or texture, see details elsewhere in project plans.
8. For details not shown and drainage notes, see B3-5
9. Footing cover, 1′-6" minimum.
10. For sound wall and barrier reinforcements see "MASONRY BLOCK SOUND WALL WITH BARRIER ON RETAINING WALL" sheets.
11. For H=6′ through 14′, extend ⓑ bars into Barrier for stem with haunch.
12. For H≥16′, extend ⓐ bars into Barrier for stem with haunch.

3 **REPLACED PER ADDENDUM No. 3 DATED DECEMBER 20, 2013**

	BY	CHECKED
DESIGN	Kyoung Lee	Eric Watson
DETAILS	Bob Huddleston	Eric Watson
QUANTITIES	G. Thornton / V. Shostak	S. Moradi / C. Chen

STATE OF CALIFORNIA DEPARTMENT OF TRANSPORTATION

DIVISION OF ENGINEERING SERVICES STRUCTURE DESIGN DESIGN BRANCH 1

BRIDGE NO. 53E0213
POST MILE 5.94

RETAINING WALL NO. 314
RETAINING WALL TYPE 1SWBP (CLASS 90 PILES)

STRUCTURES DESIGN DETAIL SHEET (ENGLISH) (REV. 09-01-10)

ORIGINAL SCALE IN INCHES FOR REDUCED PLANS 0 1 2 3

UNIT: 3576
PROJECT NUMBER & PHASE: 07000018351 CONTRACT NO.: 07-215954

DISREGARD PRINTS BEARING EARLIER REVISION DATES

REVISION DATES 8-29-12 9-10-12

SHEET 43 OF 57

FILE => rw314-1-rwdt03.add

USERNAME => s121614 DATE PLOTTED => 20-DEC-2013 TIME PLOTTED => 11:21

DIST	COUNTY	ROUTE	POST MILES TOTAL PROJECT	SHEET No.	TOTAL SHEETS
07	LA	5	0.0/7.6	846	985

P. Vijitakula 12/28/12
REGISTERED CIVIL ENGINEER DATE

6-24-13
PLANS APPROVAL DATE

REGISTERED PROFESSIONAL ENGINEER
P. VIJITAKULA
No. C 54701
Exp. 12-31-13
CIVIL
STATE OF CALIFORNIA

The State of California or its officers or agents shall not be responsible for the accuracy or completeness of scanned copies of this plan sheet.

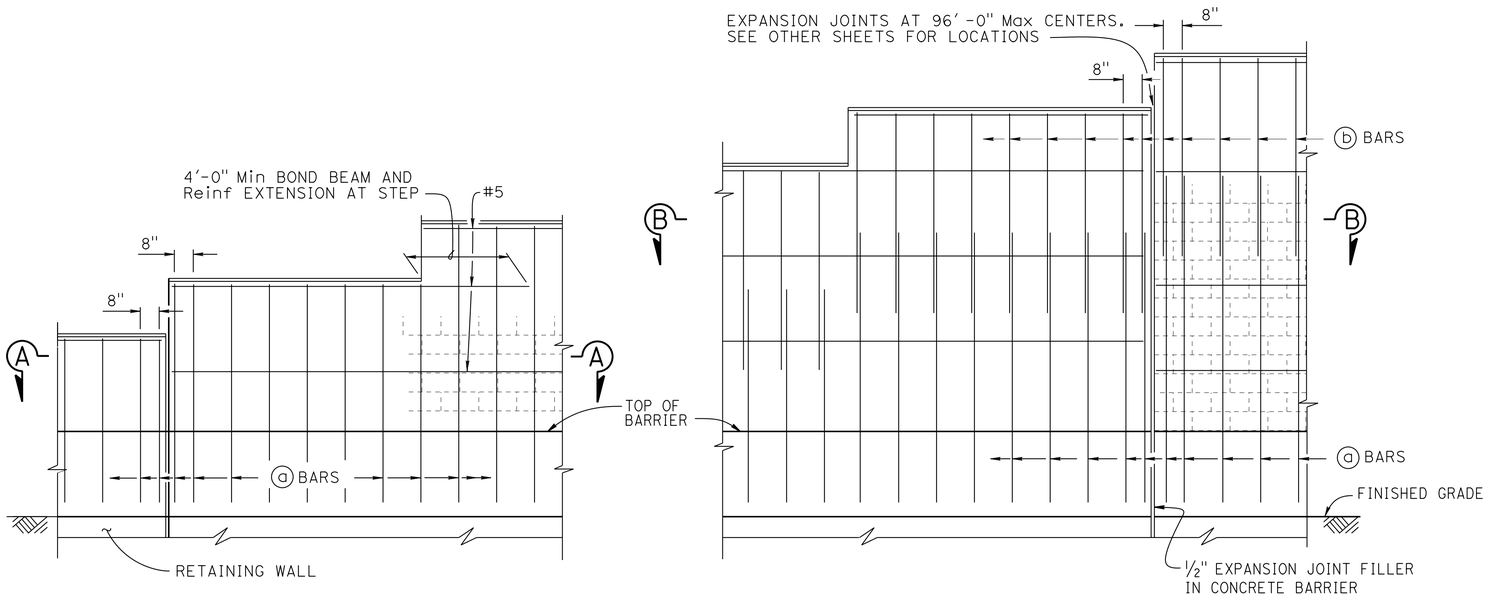

H=6'-4" THRU H=10'-4"

H=12'-4" THRU H=16'-4"

PART ELEVATION

NO SCALE

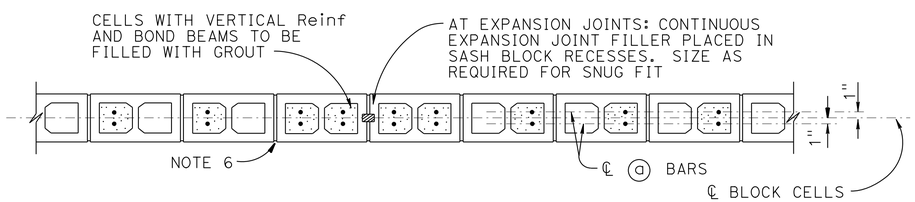

SECTION A-A

NO SCALE

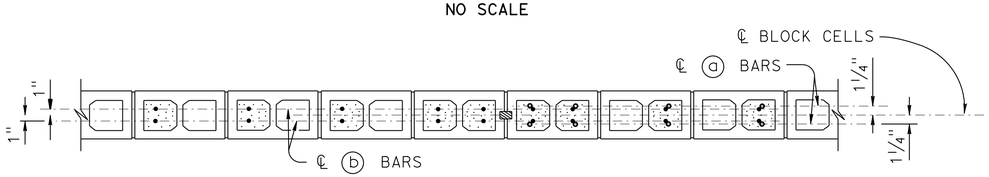

SECTION B-B

NO SCALE

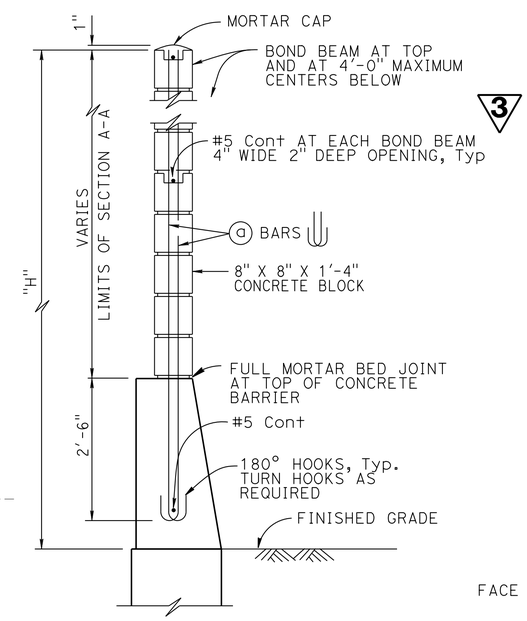

H=6'-4" THRU H=10'-4"

For details not shown, see H=12'-4" thru H=16'-4"

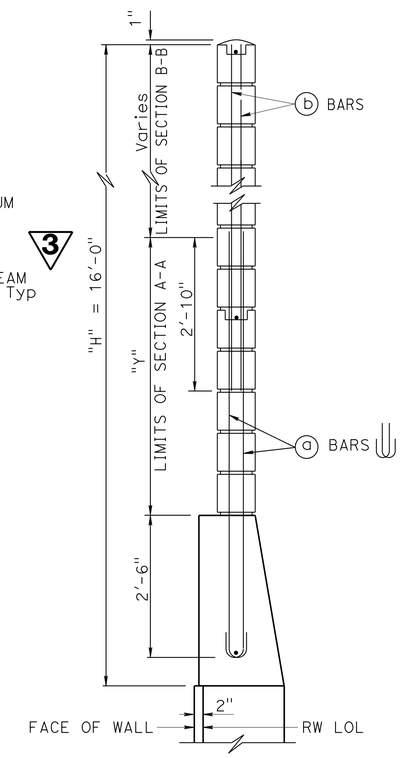

H=12'-4" THRU H=16'-4"

For details not shown, see H=6'-4" thru H=10'-4"

TYPICAL SECTION

NO SCALE

SOUND WALL REINFORCEMENT TABLE

MAXIMUM "H"	ⓐ BARS @ 1'-4" Max	ⓑ BARS @ 1'-4" Max	"Y"	f'm (psi)	COMPRESSIVE STRENGTH OF CMU (psi)	MAXIMUM "H"
6'-4"	#4	———	———	1500	1900	6'-4"
8'-4"	#4	———	———	1500	1900	8'-4"
10'-4"	#4	———	———	1500	1900	10'-4"
12'-4"	#5	#4	5'-0"	1500	1900	12'-4"
14'-4"	#6	#4	7'-0"	1500	1900	14'-4"
16'-4"	#6	#4	9'-0"	2500	3700	16'-4"

NOTES:

1. For details not shown, see "MASONRY BLOCK SOUND WALL WITH BARRIER ON RETAINING WALL - DETAILS NO. 2" sheet.
2. Slope ground at traffic side of barrier to drain. Maximum slope ±10%
3. See STANDARD PLAN B15-9 for other detail.
4. For type of block and joint finish, see other sheets.
5. When blocks are laid in stacked bond, ladder type, galvanized joint reinforcement shall be provided. A minimum of 2-9 gauge wire continuous at 4'-0" maximum to be used. Locate reinforcement in joints that are at the approximate midpoint between bond beams.
6. Horizontal joints shall be tooled concave or may be weathered. Vertical joints shall be tooled concave or may be raked.
7. For intermediate wall heights that are between the "H's" given, use the tabular information for the next higher "H".
8. Masonry strengths are listed in "SOUND WALL REINFORCEMENT TABLE".
9. Concrete to be used for the barrier shall contain not less than 590 pounds of cementitious material per cubic yard.

3 **REPLACED PER ADDENDUM No. 3 DATED DECEMBER 20, 2013**

	BY	CHECKED
DESIGN	Kyoung Lee	Eric Watson
DETAILS	Bob Huddleston	Eric Watson
QUANTITIES	G. Thornton / V. Shostak	S. Moradi / C. Chen

STATE OF CALIFORNIA
DEPARTMENT OF TRANSPORTATION

DIVISION OF ENGINEERING SERVICES
STRUCTURE DESIGN
DESIGN BRANCH 1

BRIDGE NO. 53E0213
POST MILE 5.94

RETAINING WALL NO. 314

MASONRY BLOCK SOUND WALL WITH BARRIER ON RETAINING WALL DETAILS NO. 1

STRUCTURES DESIGN DETAIL SHEET (ENGLISH) (REV. 09-01-10)

ORIGINAL SCALE IN INCHES FOR REDUCED PLANS 0 1 2 3

UNIT: 3576
PROJECT NUMBER & PHASE: 07000018351
CONTRACT NO.:07-215954

DISREGARD PRINTS BEARING EARLIER REVISION DATES → 12/28/12

REVISION DATES

SHEET 45 OF 57

FILE => rw314-u-mbswd+01.add

USERNAME => s119571 DATE PLOTTED => 20-DEC-2013 TIME PLOTTED => 11:06