REFERENCE: CALTRANS SOIL & ROCK LOGGING, CLASSIFICATION, AND PRESENTATION MANUAL (2010)

DIST	COUNTY	ROUTE	POST MILES TOTAL PROJECT	SHEET No.	TOTAL SHEETS
07	LA	5	4.0/5.9	1001	1597

REGISTERED CIVIL ENGINEER — DATE 12-09-11

4-9-12
PLANS APPROVAL DATE

REGISTERED PROFESSIONAL ENGINEER — Amare Tsegie — No. C67529 — Exp. 6-30-13 — CIVIL — STATE OF CALIFORNIA

The State of California or its officers or agents shall not be responsible for the accuracy or completeness of electronic copies of this plan sheet.

This LOTB sheet was prepared in accordance with the Caltrans Soil & Rock Logging, Classification, & Presentation Manual (2010 Edition).

CEMENTATION

Description	Criteria
Weak	Crumbles or breaks with handling or little finger pressure.
Moderate	Crumbles or breaks with considerable finger pressure.
Strong	Will not crumble or break with finger pressure.

BOREHOLE IDENTIFICATION

Symbol	Hole Type	Description
Size	A	Auger Boring (hollow or solid stem bucket)
Size	R RW RC P	Rotary drilled boring (conventional) Rotary drilled with self-casing wire-line Rotary core with continuously-sampled, self-casing wire-line Rotary percussion boring (air)
Size	R	Rotary drilled diamond core
Size	HD HA	Hand driven (1-inch soil tube) Hand Auger
●	D	Dynamic Cone Penetration Boring
▲	CPT	Cone Penetration Test (ASTM D 5778)
⬚	O	Other (note on LOTB)

Note: Size in inches.

CONSISTENCY OF COHESIVE SOILS

Description	Shear Strength (tsf)	Pocket Penetrometer Measurement, PP, (tsf)	Torvane Measurement, TV, (tsf)	Vane Shear Measurement, VS, (tsf)
Very Soft	Less than 0.12	Less than 0.25	Less than 0.12	Less than 0.12
Soft	0.12 - 0.25	0.25 - 0.5	0.12 - 0.25	0.12 - 0.25
Medium Stiff	0.25 - 0.5	0.5 - 1	0.25 - 0.5	0.25 - 0.5
Stiff	0.5 - 1	1 - 2	0.5 - 1	0.5 - 1
Very Stiff	1 - 2	2 - 4	1 - 2	1 - 2
Hard	Greater than 2	Greater than 4	Greater than 2	Greater than 2

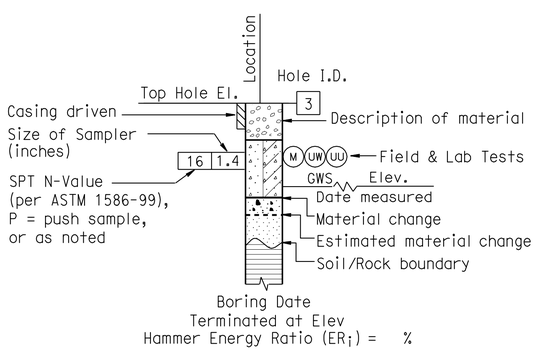

ROTARY BORING

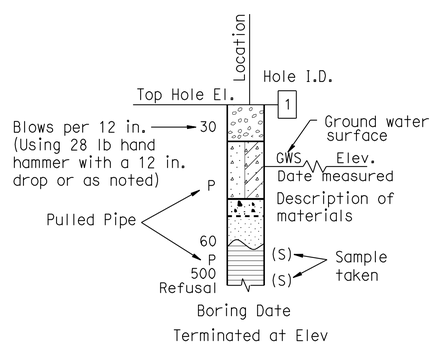

HAND BORING

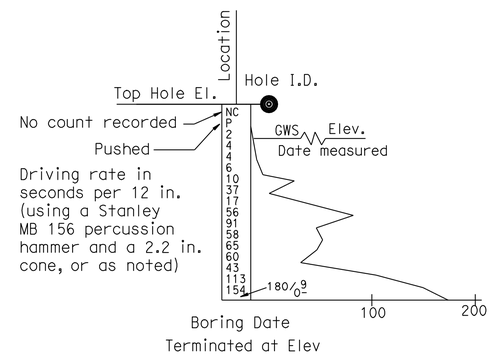

DYNAMIC CONE PENETRATION BORING

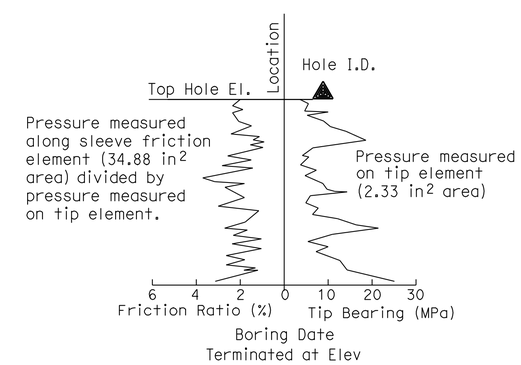

CONE PENETRATION TEST (CPT) BORING

ENGINEERING SERVICES	MATERIALS AND GEOTECHNICAL SERVICES	STATE OF CALIFORNIA DEPARTMENT OF TRANSPORTATION	DIVISION OF ENGINEERING SERVICES STRUCTURE DESIGN DESIGN BRANCH 21	BRIDGE NO. 53-3060 / POST MILE 4.41	SAN ANTONIO DRIVE UC (REPLACE)
FUNCTIONAL SUPERVISOR	DRAWN BY: P.QUACH / T.Panah (URS CORP)	FIELD INVESTIGATION BY:			LOG OF TEST BORINGS 3 OF 6
NAME: CHI-TSENG LIU	CHECKED BY: F.GERAMI	A.TSEGIE/M.ISLAM			

OGS CIVIL LOG OF TEST BORINGS SHEET — ORIGINAL SCALE IN INCHES FOR REDUCED PLANS 0 1 2 3 — UNIT: 3658 — PROJECT NUMBER & PHASE: 07000018341 — CONTRACT NO.: 07-215941 — DISREGARD PRINTS BEARING EARLIER REVISION DATES 12-09-11 — SHEET 43 OF 46

FILE => 53-3060-z-lotb_03.dgn

USERNAME => s109858 DATE PLOTTED => 15-APR-2012 TIME PLOTTED => 07:05

REFERENCE: CALTRANS SOIL & ROCK LOGGING, CLASSIFICATION, AND PRESENTATION MANUAL (2010)

GROUP SYMBOLS AND NAMES

Graphic/Symbol	Group Names	Graphic/Symbol	Group Names
GW	Well-graded GRAVEL Well-graded GRAVEL with SAND	CL	Lean CLAY Lean CLAY with SAND Lean CLAY with GRAVEL SANDY lean CLAY SANDY lean CLAY with GRAVEL GRAVELLY lean CLAY GRAVELLY lean CLAY with SAND
GP	Poorly-graded GRAVEL Poorly-graded GRAVEL with SAND		
GW-GM	Well-graded GRAVEL with SILT Well-graded GRAVEL with SILT and SAND	CL-ML	SILTY CLAY SILTY CLAY with SAND SILTY CLAY with GRAVEL SANDY SILTY CLAY SANDY SILTY CLAY with GRAVEL GRAVELLY SILTY CLAY GRAVELLY SILTY CLAY with SAND
GW-GC	Well-graded GRAVEL with CLAY (or SILTY CLAY) Well-graded GRAVEL with CLAY and SAND (or SILTY CLAY and SAND)		
GP-GM	Poorly-graded GRAVEL with SILT Poorly-graded GRAVEL with SILT and SAND	ML	SILT SILT with SAND SILT with GRAVEL SANDY SILT SANDY SILT with GRAVEL GRAVELLY SILT GRAVELLY SILT with SAND
GP-GC	Poorly-graded GRAVEL with CLAY (or SILTY CLAY) Poorly-graded GRAVEL with CLAY and SAND (or SILTY CLAY and SAND)		
GM	SILTY GRAVEL SILTY GRAVEL with SAND	OL	ORGANIC lean CLAY ORGANIC lean CLAY with SAND ORGANIC lean CLAY with GRAVEL SANDY ORGANIC lean CLAY SANDY ORGANIC lean CLAY with GRAVEL GRAVELLY ORGANIC lean CLAY GRAVELLY ORGANIC lean CLAY with SAND
GC	CLAYEY GRAVEL CLAYEY GRAVEL with SAND		
GC-GM	SILTY, CLAYEY GRAVEL SILTY, CLAYEY GRAVEL with SAND	OL	ORGANIC SILT ORGANIC SILT with SAND ORGANIC SILT with GRAVEL SANDY ORGANIC SILT SANDY ORGANIC SILT with GRAVEL GRAVELLY ORGANIC SILT GRAVELLY ORGANIC SILT with SAND
SW	Well-graded SAND Well-graded SAND with GRAVEL		
SP	Poorly-graded SAND Poorly-graded SAND with GRAVEL	CH	Fat CLAY Fat CLAY with SAND Fat CLAY with GRAVEL SANDY fat CLAY SANDY fat CLAY with GRAVEL GRAVELLY fat CLAY GRAVELLY fat CLAY with SAND
SW-SM	Well-graded SAND with SILT Well-graded SAND with SILT and GRAVEL		
SW-SC	Well-graded SAND with CLAY (or SILTY CLAY) Well-graded SAND with CLAY and GRAVEL (or SILTY CLAY and GRAVEL)	MH	Elastic SILT Elastic SILT with SAND Elastic SILT with GRAVEL SANDY elastic SILT SANDY elastic SILT with GRAVEL GRAVELLY elastic SILT GRAVELLY elastic SILT with SAND
SP-SM	Poorly-graded SAND with SILT Poorly-graded SAND with SILT and GRAVEL		
SP-SC	Poorly-graded SAND with CLAY (or SILTY CLAY) Poorly-graded SAND with CLAY and GRAVEL (or SILTY CLAY and GRAVEL)	OH	ORGANIC fat CLAY ORGANIC fat CLAY with SAND ORGANIC fat CLAY with GRAVEL SANDY ORGANIC fat CLAY SANDY ORGANIC fat CLAY with GRAVEL GRAVELLY ORGANIC fat CLAY GRAVELLY ORGANIC fat CLAY with SAND
SM	SILTY SAND SILTY SAND with GRAVEL		
SC	CLAYEY SAND CLAYEY SAND with GRAVEL	OH	ORGANIC elastic SILT ORGANIC elastic SILT with SAND ORGANIC elastic SILT with GRAVEL SANDY ORGANIC elastic SILT SANDY ORGANIC elastic SILT with GRAVEL GRAVELLY ORGANIC elastic SILT GRAVELLY ORGANIC elastic SILT with SAND
SC-SM	SILTY, CLAYEY SAND SILTY, CLAYEY SAND with GRAVEL		
PT	PEAT	OL/OH	ORGANIC SOIL ORGANIC SOIL with SAND ORGANIC SOIL with GRAVEL SANDY ORGANIC SOIL SANDY ORGANIC SOIL with GRAVEL GRAVELLY ORGANIC SOIL GRAVELLY ORGANIC SOIL with SAND
	COBBLES COBBLES and BOULDERS BOULDERS		

FIELD AND LABORATORY TESTING

- (C) Consolidation (ASTM D 2435)
- (CL) Collapse Potential (ASTM D 5333)
- (CP) Compaction Curve (CTM 216)
- (CR) Corrosivity Testing (CTM 643, CTM 422, CTM 417)
- (CU) Consolidated Undrained Triaxial (ASTM D 4767)
- (DS) Direct Shear (ASTM D 3080)
- (EI) Expansion Index (ASTM D 4829)
- (M) Moisture Content (ASTM D 2216)
- (OC) Organic Content-% (ASTM D 2974)
- (P) Permeability (CTM 220)
- (PA) Particle Size Analysis (ASTM D 422)
- (PI) Plasticity Index (AASHTO T 90) Liquid Limit (AASHTO T 89)
- (PL) Point Load Index (ASTM D 5731)
- (PM) Pressure Meter
- (R) R-Value (CTM 301)
- (SE) Sand Equivalent (CTM 217)
- (SG) Specific Gravity (AASHTO T 100)
- (SL) Shrinkage Limit (ASTM D 427)
- (SW) Swell Potential (ASTM D 4546)
- (UC) Unconfined Compression-Soil (ASTM D 2166) Unconfined Compression-Rock (ASTM D 2938)
- (UU) Unconsolidated Undrained Triaxial (ASTM D 2850)
- (UW) Unit Weight (ASTM D 4767)

DIST	COUNTY	ROUTE	POST MILES TOTAL PROJECT	SHEET No.	TOTAL SHEETS
07	LA	5	4.0/5.9	1002	1597

REGISTERED CIVIL ENGINEER — DATE 12-09-11

4-9-12
PLANS APPROVAL DATE

REGISTERED PROFESSIONAL ENGINEER — Amare Tsegie No. C67529 Exp. 6-30-13 CIVIL — STATE OF CALIFORNIA

The State of California or its officers or agents shall not be responsible for the accuracy or completeness of electronic copies of this plan sheet.

This LOTB sheet was prepared in accordance with the Caltrans Soil & Rock Logging, Classification, & Presentation Manual (2010 Edition).

APPARENT DENSITY OF COHESIONLESS SOILS

Description	SPT N_{60} (Blows / 12 in.)
Very Loose	0 - 5
Loose	5 - 10
Medium Dense	10 - 30
Dense	30 - 50
Very Dense	Greater than 50

MOISTURE

Description	Criteria
Dry	No discernable moisture
Moist	Moisture present, but no free water
Wet	Visible free water

PERCENT OR PROPORTION OF SOILS

Description	Criteria
Trace	Particles are present but estimated to be less than 5%
Few	5% - 10%
Little	15% - 25%
Some	30% - 45%
Mostly	50% - 100%

PARTICLE SIZE

Description		Size (in.)
Boulder		Greater than 12
Cobble		3 - 12
Gravel	Coarse	3/4 - 3
	Fine	1/5 - 3/4
Sand	Coarse	1/16 - 1/5
	Medium	1/64 - 1/16
	Fine	1/300 - 1/64
Silt and Clay		Less than 1/300

ENGINEERING SERVICES — MATERIALS AND GEOTECHNICAL SERVICES

FUNCTIONAL SUPERVISOR
NAME: CHI-TSENG LIU

DRAWN BY: P.QUACH / T.Panah (URS CORP)
CHECKED BY: F.GERAMI

FIELD INVESTIGATION BY:
A.TSEGIE/M.ISLAM

STATE OF CALIFORNIA
DEPARTMENT OF TRANSPORTATION

DIVISION OF ENGINEERING SERVICES
STRUCTURE DESIGN
DESIGN BRANCH 21

BRIDGE NO. 53-3060
POST MILE 4.41

SAN ANTONIO DRIVE UC (REPLACE)
LOG OF TEST BORINGS 4 OF 6

OGS CIVIL LOG OF TEST BORINGS SHEET

ORIGINAL SCALE IN INCHES FOR REDUCED PLANS 0 1 2 3

UNIT: 3658
PROJECT NUMBER & PHASE: 07000018341
CONTRACT NO.: 07-215941

DISREGARD PRINTS BEARING EARLIER REVISION DATES 12-09-11

SHEET 44 OF 46

FILE => 53-3060-z-lotb_04.dgn

USERNAME => s103858 DATE PLOTTED => 15-APR-2012 TIME PLOTTED => 07:05

FED. ROAD DIV. No.	STATE	PROJ. No.	FISCAL YEAR	SHEET No.	TOTAL SHEETS
7	CAL.	I-405(9)	13	43	43

DIST.	COUNTY	ROUTE	SECTION	SHEET No.	TOTAL SHEETS
VII	LA	~~405~~ 5	A	6	6

BRIDGE ENGINEER — CHIEF BRIDGE ENGINEER — CALIFORNIA LICENSE 33585

DATE APPROVED MARCH 1, 1957

DIVISION OF ENGINEERING SERVICES - MATERIALS AND GEOTECHNICAL SERVICES

As-Built Log of Test Borings sheet is considered an informational document only. As such, the State of California registration seal with signature, license number and registration certificate expiration date confirm that this is a true and accurate copy of the original document. It does not attest to the accuracy or validity of the information contained in the original document. This drawing is available and presented only for the convenience of any bidder, contractor or other interested party.

DIST.	COUNTY	ROUTE	POST MILE-TOTAL PROJECT	Sheet No.	Total Sheets
07	LA	5	4.0/5.9	1003	1597

Amore Tsegie — 12-09-11
REGISTERED CIVIL ENGINEER — DATE

SAN ANTONIO DRIVE UC (REPLACE)

LOG OF TEST BORINGS 5 OF 6

UNIT: ENGLISH — CONTRACT No. — BRIDGE No.
PROJECT NUMBER & PHASE: EA 215941 — CU 59A0590 — 53-3060

NOTE: A COPY OF THIS LOG OF TEST BORINGS IS AVAILABLE AT OFFICE OF STRUCTURE MAINTENANCE AND INVESTIGATIONS, SACRAMENTO, CALIFORNIA — Sheet 45 of 46

REGISTERED PROFESSIONAL ENGINEER — Amore Tsegie — No. C67529 — Exp. 6-30-13 — CIVIL — STATE OF CALIFORNIA

TO ACCOMPANY PLANS DATED 4-9-12

Notes

1. As-Built Vertical Datum = NGVD29
2. Datum Conversion
   NAVD88 = NGVD29+2.408 ft

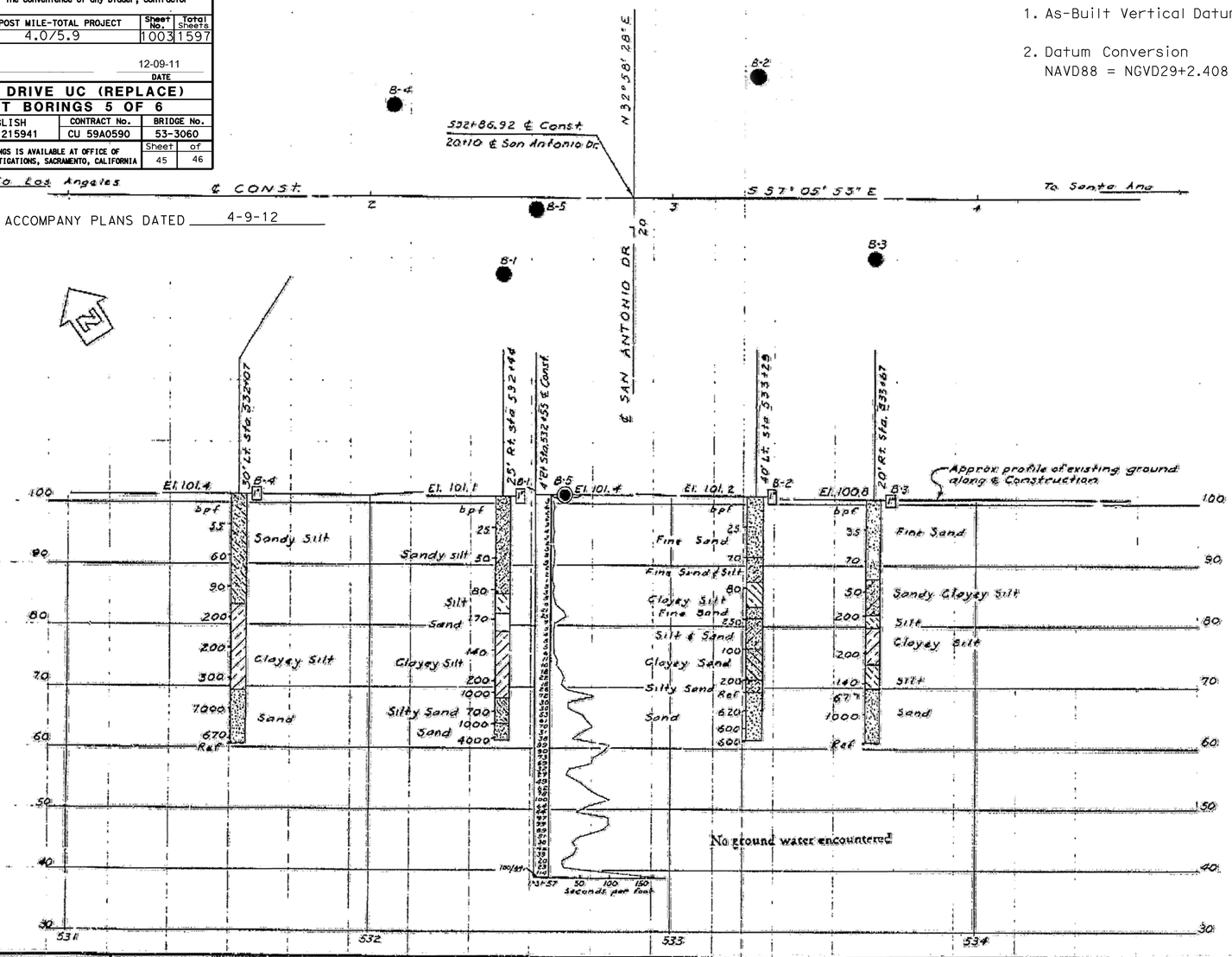

Pile Data

No Test Pile Specified
Type pile - Cast-in-drilled-hole - Alternative "V"
Diameter - 15½" Min.
Specified Tip Elev. - 60.0
Specified Cut-off Elev. - 95.25
Design Pile Loading - 45 Tons
Lineal Feet Piles "As Built" - 837
Lineal Feet Piles called for on Plans - 840
Total No. Piles - 24

Location	Min. Tip Elev.	Max. Tip Elev.	Aver. Tip Elev.
Bent #2 Rt. Ftg.	60.15	62.15	61.38
Bent #2 Lt. Ftg.	59.35	60.45	59.87
Bent #3 Rt. Ftg.	58.55	60.55	60.00
Bent #3 Lt. Ftg.	59.95	60.45	60.23

BENCH MARKS

B.M. #50 Elev. 100.38
Lead & conc. nail in W. curb of San Antonio Dr at Union St. 3' S. of E.C.R. on S.W. cor. 200' Rt of sta 532+62
B.M. #49 Elev. 99.356
Lead & conc. nail in S' curb Union St 11' E of B.C.R. S.E. cor Poddison St & Union St.

B.M. Spike in power pole near ground line Elev. 104.56

AS BUILT PLANS
Contract No. 58-7VC12
Date Completed
Document No. 7000 2070

AS BUILT
CONTRACT NO. 58-7VC12-FE
RESIDENT ENGR. D. A. Wu
DATE 2-7-58

ORIGINAL
BRIDGE DEPARTMENT

FIELD STUDY — K. Sagen 1-31-57
DRAWN — R. Reyes 1-31-57
CHECKED — J. Ramos
Approved Recommended by — Robert E. Fletcher, Senior Bridge Engineer

Classification of Material Based on Standard Grade Size Limits

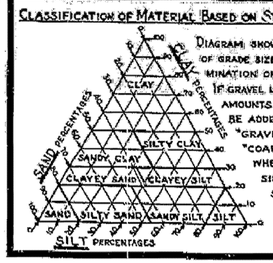

Diagram showing the basis for estimates of grade size distribution used in determination of class names. If gravel is present in appreciable amounts the term "gravelly" may be added to the class name, viz. "gravelly sand". The terms "coarse", "medium" and "fine" when used to describe sand, silt and gravel refer to standard grade size limits.

Legend of Earth Materials

- Gravel
- Sand
- Silt
- Clay
- Sandy Clay or Clayey Sand
- Sandy Silt or Silty Sand
- Silty Clay or Clayey Silt
- Peat and/or Organic Matter
- Fill Material
- Igneous Rock
- Sedimentary Rock
- Metamorphic Rock

Legend of Boring Operations

- Plan of any boring
- Penetrometer
- 2¼" Cone Penetrometer
- Sampler boring (DRY)
- Rotary boring (WET)
- Auger boring (DRY)
- Jet boring
- Core boring
- Test pit

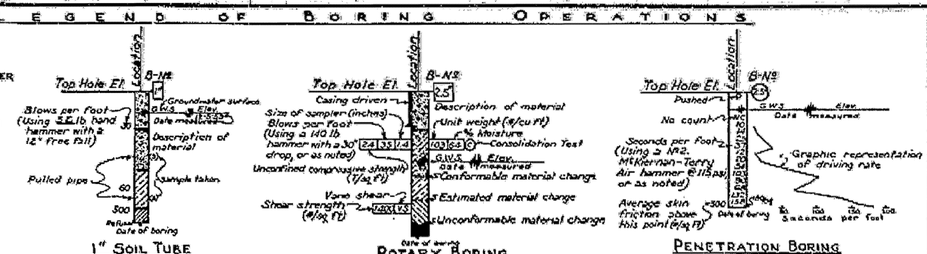

NOTES

The contractor's attention is directed to Section 2, Article (c) of the Standard Specifications and to the Special Provisions accompanying this set of plans.
Classification of earth material as shown on this sheet is based upon field inspection and is not to be construed to imply mechanical analysis.

STATE OF CALIFORNIA
DEPARTMENT OF PUBLIC WORKS
DIVISION OF HIGHWAYS

~~ROUTE 166-170 SEPARATION~~

~~LOG OF TEST BORINGS~~

Vert. 1"=10' Horiz. 1"=20' — BRIDGE 53-594 — FILE E-5 — DRAWING C-2587-26

I HEREBY CERTIFY THAT THIS IS A TRUE AND ACCURATE COPY OF THE ABOVE DOCUMENT TAKEN UNDER MY DIRECTION AND CONTROL ON THIS DATE IN SACRAMENTO, CALIFORNIA PURSUANT TO AUTHORIZATION BY THE DIRECTOR OF PUBLIC WORKS.

DATE 8/13/57 SIGNATURE H. B. Kf TITLE AAC II

2-087

DIST NO.	STATE	PROJ. NO.	YEAR	NO.	SHEETS
2	CAL.			84	125

FI-405(8)

DIST.	COUNTY	ROUTE	SECTION	SHEET NO.	TOTAL SHEETS
VII	LA	~~135~~ 5A		4	12

Stewart Mitchell
CHIEF BRIDGE ENGINEER
OCTOBER 2, 1951

Notes

1. As-Built Vertical Datum = NGVD29
2. Datum Conversion
   NAVD88 = NGVD29+2.408 ft

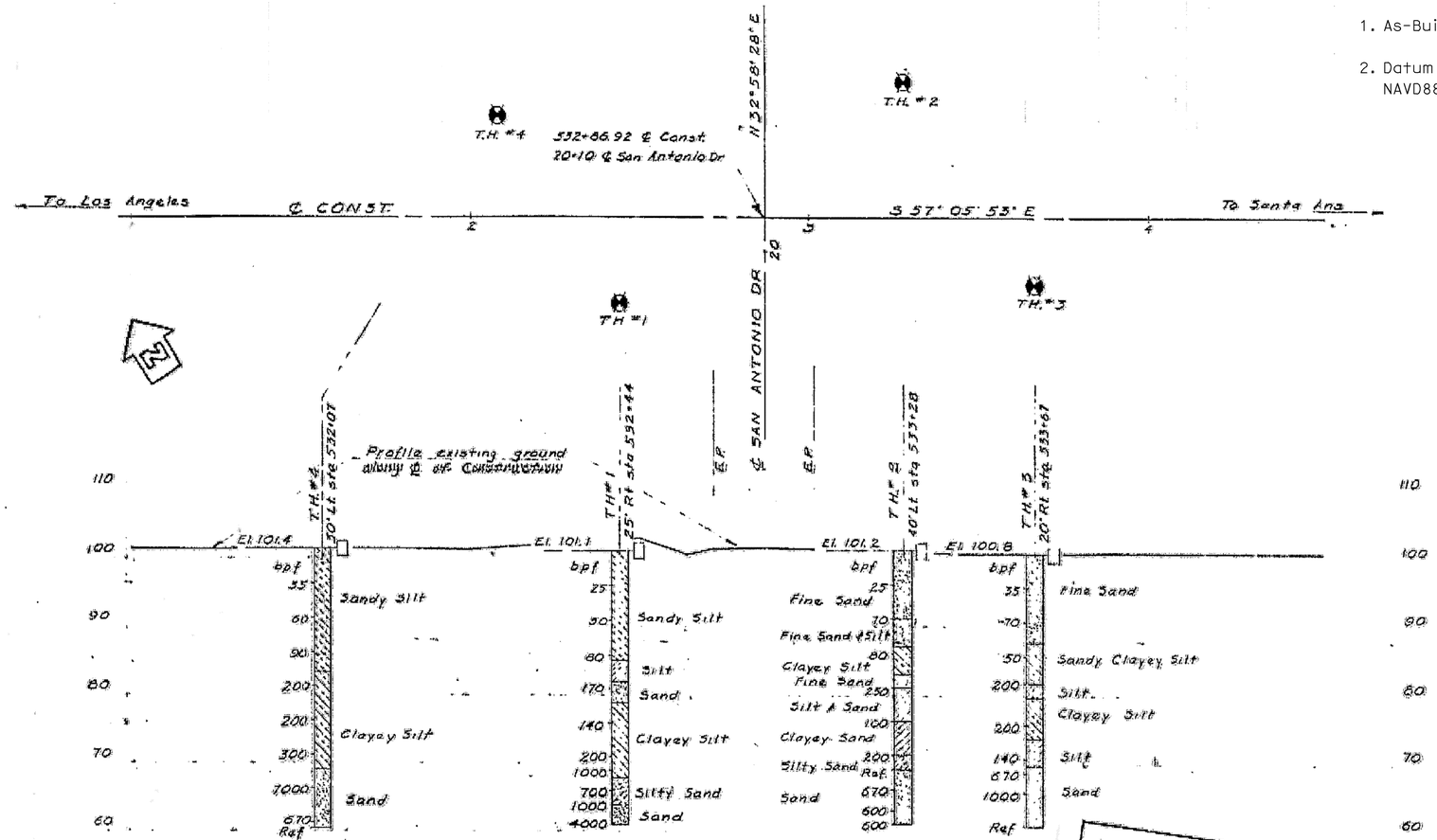

No ground water encountered

NOTE: Blows per foot are blows required to drive a one inch test pipe one foot with a 32" hand drop weight falling free one foot.

Test Boring By Bridge Dept.
Nov. 1950

Core Drill _____

All test holes made with a one inch soil sampler.

BENCH MARKS
B.M. #50 Elev. 100.38
Lead & conc. nail in W curb of San Antonio Dr. at Union St. 3' S of E.C.R. on SW cor. 200' Rt of sta. 532+52.
B.M. #49 Elev. 99.566
Lead & conc. nail in S. curb Union St. 11' E of B.C.R. S.E. cor Paddison St & Union St.

TO ACCOMPANY PLANS DATED 4-9-12

DIVISION OF ENGINEERING SERVICES - MATERIALS AND GEOTECHNICAL SERVICES

As-Built Log of Test Borings sheet is considered an informational document only. As such, the State of California registration seal with signature, license number and registration certificate expiration date confirm that this is a true and accurate copy of the original document. It does not attest to the accuracy or validity of the information contained in the original document. This drawing is available and presented only for the convenience of any bidder, contractor or other interested party.

DIST.	COUNTY	ROUTE	POST MILE-TOTAL PROJECT	Sheet No.	Total Sheets
07	LA	5	4.0/5.9	1004	1597

Amare 12-09-11
REGISTERED CIVIL ENGINEER DATE

SAN ANTONIO DRIVE UC (REPLACE)
LOG OF TEST BORINGS 6 OF 6

UNIT: ENGLISH	CONTRACT No.	BRIDGE No.
PROJECT NUMBER & PHASE: EA 215941	CU 59A0590	53-3060

NOTE: A COPY OF THIS LOG OF TEST BORINGS IS AVAILABLE AT OFFICE OF STRUCTURE MAINTENANCE AND INVESTIGATIONS, SACRAMENTO, CALIFORNIA

Sheet 46 of 46

REGISTERED PROFESSIONAL ENGINEER
Amare Tsegle
No. C67529
Exp. 6-30-13
CIVIL
STATE OF CALIFORNIA

AS BUILT PLANS
Contract No. 53-7vc38
Date Completed _____
Document No. 7000 2015

Classification of Material Based on Standard Grade Size Limits

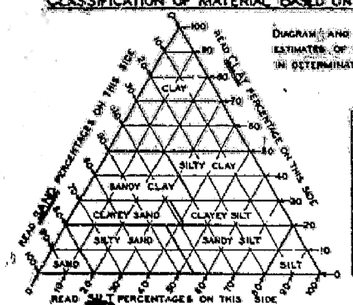

Diagram and table showing the basis for estimates of grade size distribution used in determination of class names.

Grouping Used in Triangular Classification			
Class Name	Percentage of Sizes Present*		
	Sand	Silt	Clay
Sand	80-100	0-20	0-20
Silty Sand	45-80	0-55	0-20
Sandy Silt	0-45	55-80	0-20
Silt	0-20	80-100	0-20
Clayey Sand	45-80	0-45	20-55
Clayey Silt	0-45	55-80	20-55
Sandy Clay	45-70	0-40	30-55
Silty Clay	0-45	20-70	30-55
Clay	0-30	0-50	55-100

* If gravel is present in appreciable amounts the term "Gravelly" may be added to the class name, viz. "Gravelly sand." The terms "Coarse," "Medium" and "Fine" when used to describe Gravel, Sand and Silt refer to Standard Grade Size Limits.

Legend of Boring Operations

- Plan of any boring
- 1" Sampler boring
- Rotary wash boring
- 1" Osgood sampler driven
- Core boring
- 2½" Penetrometer driven
- 2" Sampler boring
- 2" to 5" Auger boring
- 8" to 20" Auger boring
- Casing driven
- Jet boring
- (S) Sample taken

The appropriate boring symbols designating the method of operation are shown at the upper right-hand corner of the respective boring. Where tool changes were made during the boring operation symbols are shown at the point of change.

Legend of Earth Materials

- Gravel—G
- Sand—S
- Silt—Si
- Clay—C
- Silty Sand—Si S
- Clayey Sand—C S
- Sandy Silt—S Si
- Clayey Silt—C Si
- Sandy Clay—SC
- Silty Clay—Si C
- Peat and/or Organic Clay—O
- Sandstone—SS
- Shale—Sh
- Broken Rock (Fragments)—Br
- Rock—R

Abbreviations

El. 69.4	Elevation of ground at test hole
b.p.f.	Blows per foot—(see note above)
P	Pulled pipe
M	Moisture as % dry weight
E. 54.3, 6-12-49	Elevation of ground water and date

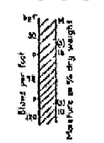

Notes

The contractor's attention is directed to Section 2, Article (c) of the Standard Specifications and to the Special Provisions accompanying this set of plans.

Classification of earth material as shown on this sheet is based upon field inspection and is not to be construed to imply mechanical analysis.

AS BUILT — The structure conforms to the details on this sheet
Corrections by _____
Date _____

~~Route 166-170 Separation~~
~~LOG OF TEST BORINGS~~

Scale	Vert. 1"=10' Horiz. 1"=20'	File No. E-53
Bridge No. ~~53-594~~		Drawing No. ~~C-2587-11~~

PREL. DRAWING No. R-2587 .44

I HEREBY CERTIFY THAT THIS IS A TRUE AND ACCURATE COPY OF THE ABOVE DOCUMENT TAKEN UNDER MY DIRECTION AND CONTROL ON THIS DATE IN SACRAMENTO, CALIFORNIA PURSUANT TO AUTHORIZATION BY THE DIRECTOR OF PUBLIC WORKS.

DATE May 1, 1951 SIGNATURE _____ TITLE Highway Illumination Engineer

DIST	COUNTY	ROUTE	POST MILES TOTAL PROJECT	SHEET No.	TOTAL SHEETS
07	LA	5	4.0/5.9	1005	1597

José L. Higareda — 12-12-11
REGISTERED CIVIL ENGINEER — DATE

4-9-12
PLANS APPROVAL DATE

REGISTERED PROFESSIONAL ENGINEER — JOSE L. HIGAREDA — No. 62338 — Exp. 9-30-13 — CIVIL — STATE OF CALIFORNIA

The State of California or its officers or agents shall not be responsible for the accuracy or completeness of electronic copies of this plan sheet.

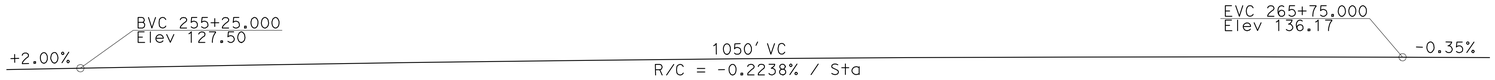

PROFILE GRADE
1" = 30'

NOTE:
THE CONTRACTOR SHALL VERIFY ALL CONTROLLING FIELD DIMENSIONS BEFORE ORDERING OR FABRICATING ANY MATERIAL.

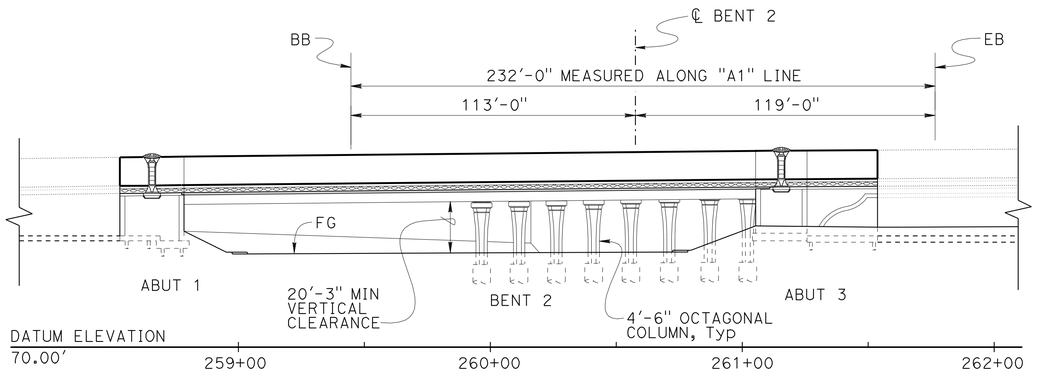

ELEVATION
1" = 30'

NOTES:
1. Paint "IMPERIAL HWY UC"
2. Paint "BRIDGE NO. 53-3061"
3. Structure Approach Type N (30S)
4. Temporary railing (Type K), see "ROAD PLANS" for railing on freeway
5. Existing bridge 53-0593 to be removed

LEGEND:
- Indicates Existing Structure to be removed
- Denotes location of minimum vertical clearance

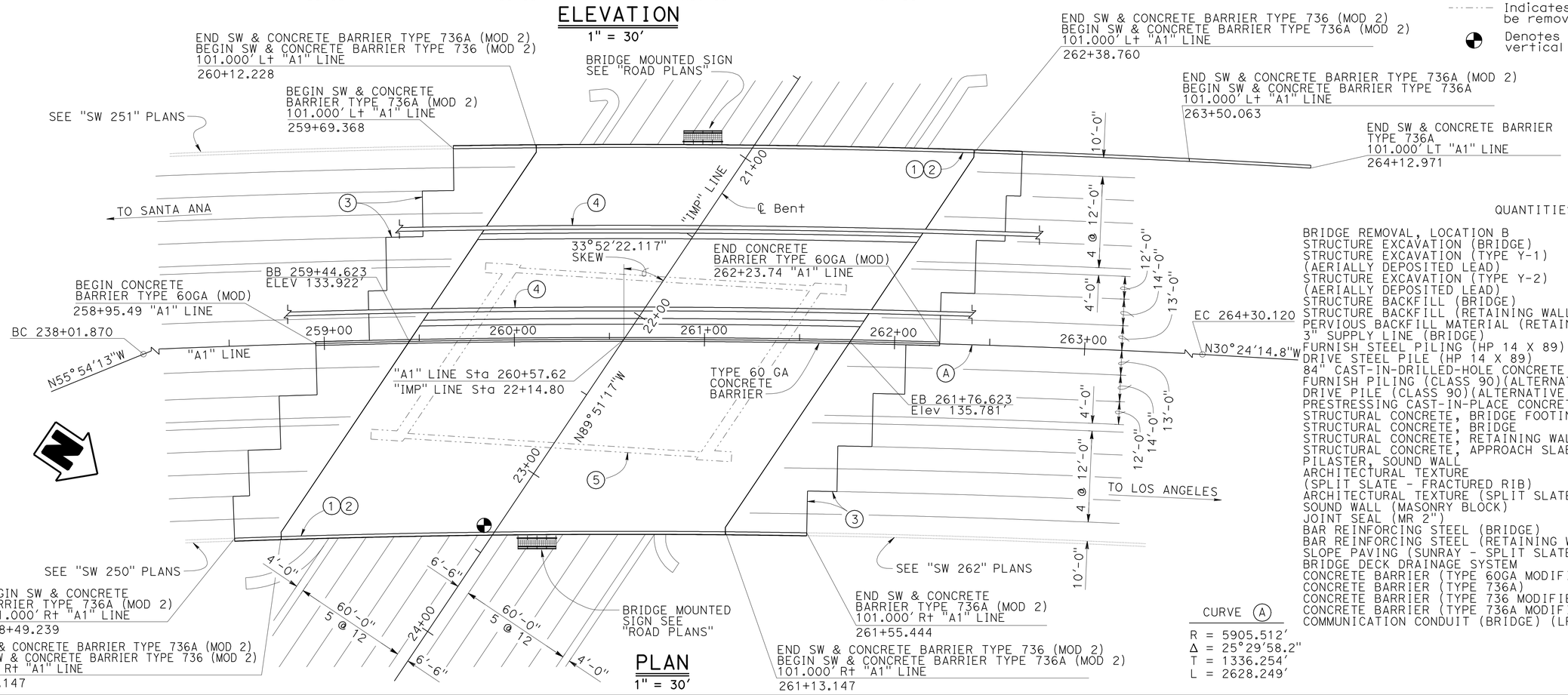

PLAN
1" = 30'

CURVE (A)
R = 5905.512'
Δ = 25°29'58.2"
T = 1336.254'
L = 2628.249'

QUANTITIES

BRIDGE REMOVAL, LOCATION B	LUMP	SUM
STRUCTURE EXCAVATION (BRIDGE)	3,160	CY
STRUCTURE EXCAVATION (TYPE Y-1) (AERIALLY DEPOSITED LEAD)	155	CY
STRUCTURE EXCAVATION (TYPE Y-2) (AERIALLY DEPOSITED LEAD)	160	CY
STRUCTURE BACKFILL (BRIDGE)	7,100	CY
STRUCTURE BACKFILL (RETAINING WALL)	1,950	CY
PERVIOUS BACKFILL MATERIAL (RETAINING WALL)	65	CY
3" SUPPLY LINE (BRIDGE)	310	LF
FURNISH STEEL PILING (HP 14 X 89)	17,375	LF
DRIVE STEEL PILE (HP 14 X 89)	262	EA
84" CAST-IN-DRILLED-HOLE CONCRETE PILING	981	LF
FURNISH PILING (CLASS 90)(ALTERNATIVE X)	2,291	LF
DRIVE PILE (CLASS 90)(ALTERNATIVE X)	54	EA
PRESTRESSING CAST-IN-PLACE CONCRETE	LUMP	SUM
STRUCTURAL CONCRETE, BRIDGE FOOTING	870	CY
STRUCTURAL CONCRETE, BRIDGE	4,600	CY
STRUCTURAL CONCRETE, RETAINING WALL	275	CY
STRUCTURAL CONCRETE, APPROACH SLAB (TYPE N)	590	CY
PILASTER, SOUND WALL	9	CY
ARCHITECTURAL TEXTURE (SPLIT SLATE - FRACTURED RIB)	2,060	SQFT
ARCHITECTURAL TEXTURE (SPLIT SLATE)	8,180	SQFT
SOUND WALL (MASONRY BLOCK)	7,260	SQFT
JOINT SEAL (MR 2")	492	LF
BAR REINFORCING STEEL (BRIDGE)	1,390,000	LB
BAR REINFORCING STEEL (RETAINING WALL)	43,900	LB
SLOPE PAVING (SUNRAY - SPLIT SLATE)	12,400	SQFT
BRIDGE DECK DRAINAGE SYSTEM	11,000	LB
CONCRETE BARRIER (TYPE 60GA MODIFIED)	328	LF
CONCRETE BARRIER (TYPE 736A)	64	LF
CONCRETE BARRIER (TYPE 736 MODIFIED 2)	464	LF
CONCRETE BARRIER (TYPE 736A MODIFIED 2)	224	LF
COMMUNICATION CONDUIT (BRIDGE) (LF)	620	LF

TRACI MENARD
DESIGN ENGINEER

	BY	CHECKED
DESIGN	J. HIGAREDA	J. JAUREGUI
DETAILS	T. TREFZ	J. JAUREGUI
QUANTITIES	J. HIGAREDA	G. GALO / S. MORADI

LOAD & RESISTANCE FACTOR DESIGN — LIVE LOADING: HL93 W/"LOW-BOY"; PERMIT DESIGN VEHICLE
LAYOUT — BY J. HIGAREDA — CHECKED J. JAUREGUI
SPECIFICATIONS — BY J. JIANG — PLANS AND SPECS COMPARED V. RENGANATHAN

ORIGINAL SCALE IN INCHES FOR REDUCED PLANS 0 1 2 3

STATE OF CALIFORNIA
DEPARTMENT OF TRANSPORTATION

DIVISION OF ENGINEERING SERVICES
STRUCTURE DESIGN
DESIGN BRANCH 15

BRIDGE NO. 53-3061
POST MILE 4.91

IMPERIAL HIGHWAY UC (REPLACE)
GENERAL PLAN NO. 1

UNIT: 3604
PROJECT NUMBER & PHASE: 0700001834 1
CONTRACT NO.: 07-215941

DISREGARD PRINTS BEARING EARLIER REVISION DATES
REVISION DATES: 06-12-11 10-11-11 12-07-11
SHEET 1 OF 76

USERNAME => s103858 DATE PLOTTED => 15-APR-2012 TIME PLOTTED => 07:05

DIST	COUNTY	ROUTE	POST MILES TOTAL PROJECT	SHEET No.	TOTAL SHEETS
07	LA	5	4.0/5.9	1006	1597

José L. Higareda 12-12-11
REGISTERED CIVIL ENGINEER DATE

4-9-12
PLANS APPROVAL DATE

REGISTERED PROFESSIONAL ENGINEER
JOSE L. HIGAREDA
No. 62338
Exp. 9-30-13
CIVIL
STATE OF CALIFORNIA

The State of California or its officers or agents shall not be responsible for the accuracy or completeness of electronic copies of this plan sheet.

NOTES:

1. Temporary Railing (TYPE K), see "ROAD PLANS"
2. Concrete Barrier TYPE 60GA (MOD) See "ARCHITECTURAL DETAILS NO. 20" sheet
3. Medium weight, high strength, reinforced, Masonry block soundwall, see "SOUNDWALL-ON BRIDGE DETAILS" sheet
4. Concrete Barrier TYPE 736 (MOD-2)
5. 3" Water supply line
6. 2-3½" Communication conduit
7. 8" Pipe Drain, see "DECK DRAIN LAYOUT" sheet
8. Paint "IMPERIAL HWY UC"
9. Paint "BRIDGE NO. 53-3061"
10. 2-2" ø Electrical Conduit for sprinkler control & sign illumination, See "ROAD PLANS"
11. 2" ø Electrical Conduit for sign illumination, See "ROAD PLANS"

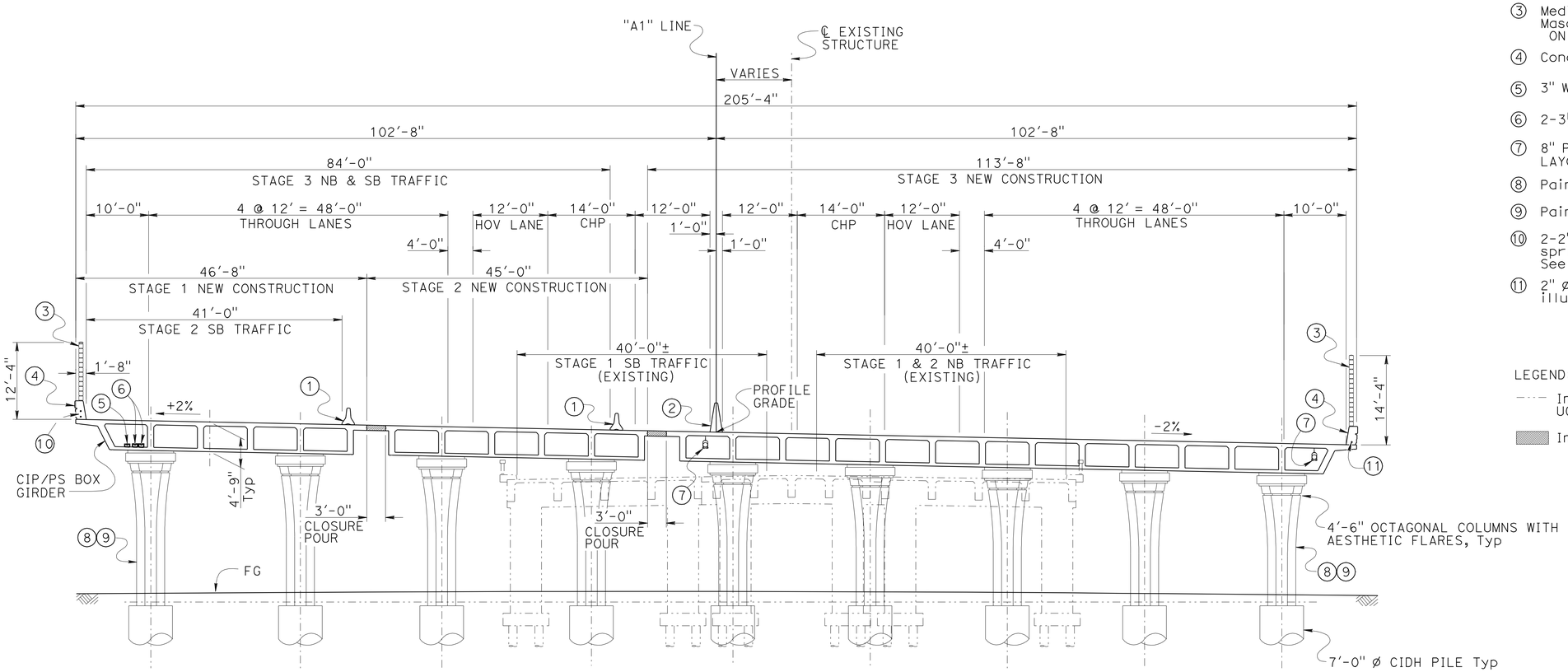

TYPICAL SECTION

1" = 10'

LEGEND:

---- Indicates existing Imperial Highway UC, Br. No. 53-0593, to be removed.

▨ Indicates Closure Pour

NOTE:
THE CONTRACTOR SHALL VERIFY ALL CONTROLLING FIELD DIMENSIONS BEFORE ORDERING OR FABRICATING ANY MATERIAL.

TRACI MENARD DESIGN ENGINEER	DESIGN	BY J. HIGAREDA	CHECKED J. JAUREGUI	LOAD & RESISTANCE FACTOR DESIGN	LIVE LOADING: HL93 W/"LOW-BOY": PERMIT DESIGN VEHICLE
	DETAILS	BY T. TREFZ	CHECKED J. JAUREGUI	LAYOUT	BY J. HIGAREDA / CHECKED J. JAUREGUI
	QUANTITIES	BY J. HIGAREDA	CHECKED G. GALO / S. MORADI	SPECIFICATIONS	BY J. JIANG / PLANS AND SPECS COMPARED V. RENGANATHAN

ORIGINAL SCALE IN INCHES FOR REDUCED PLANS 0 1 2 3

STATE OF CALIFORNIA
DEPARTMENT OF TRANSPORTATION

DIVISION OF ENGINEERING SERVICES
STRUCTURE DESIGN
DESIGN BRANCH 15

BRIDGE NO. 53-3061
POST MILE 4.91

IMPERIAL HIGHWAY UC (REPLACE)
GENERAL PLAN NO. 2

UNIT: 3604
PROJECT NUMBER & PHASE: 0700001834 1
CONTRACT NO.: 07-215941

DISREGARD PRINTS BEARING EARLIER REVISION DATES

REVISION DATES: 06-13-11

SHEET 2 OF 76

USERNAME => s103858 DATE PLOTTED => 15-APR-2012 TIME PLOTTED => 07:05

DIST	COUNTY	ROUTE	POST MILES TOTAL PROJECT	SHEET No.	TOTAL SHEETS
07	LA	5	4.0/5.9	1007	1597

José L. Higareda 12-12-11
REGISTERED CIVIL ENGINEER DATE

4-9-12
PLANS APPROVAL DATE

REGISTERED PROFESSIONAL ENGINEER JOSE L. HIGAREDA No. 62338 Exp. 9-30-13 CIVIL STATE OF CALIFORNIA

The State of California or its officers or agents shall not be responsible for the accuracy or completeness of electronic copies of this plan sheet.

INDEX TO PLANS

SHEET NO.	TITLE
1	GENERAL PLAN NO. 1
2	GENERAL PLAN NO. 2
3	INDEX TO PLANS
4	DEMOLITION PLAN
5	DECK CONTOUR PLAN
6	FOUNDATION PLAN NO. 1 OF 2
7	FOUNDATION PLAN NO. 2 OF 2
8	PILE & FOOTING DATA TABLES
9	ABUTMENT 1 LAYOUT STAGE 1
10	ABUTMENT 1 LAYOUT STAGE 2
11	ABUTMENT 1 LAYOUT STAGE 3
12	ABUTMENT 3 LAYOUT STAGE 1
13	ABUTMENT 3 LAYOUT STAGE 2
14	ABUTMENT 3 LAYOUT STAGE 3
15	WINGWALL LAYOUT NO. 1
16	WINGWALL LAYOUT NO. 2
17	WINGWALL LAYOUT NO. 3
18	ABUTMENT DETAILS NO. 1
19	ABUTMENT DETAILS NO. 2
20	ABUTMENT DETAILS NO. 3
21	ABUTMENT DETAILS NO. 4
22	ABUTMENT DETAILS NO. 5
23	ABUTMENT DETAILS NO. 6
24	BENT DETAILS NO. 1
25	BENT DETAILS NO. 2
26	BENT DETAILS NO. 3
27	BENT DETAILS NO. 4
28	COLUMN GEOMETRY
29	TYPICAL SECTION
30	PARTIAL TYPICAL SECTION STAGE 1
31	PARTIAL TYPICAL SECTION STAGE 2
32	PARTIAL TYPICAL SECTION STAGE 3
33	GIRDER LAYOUT STAGE 1
34	GIRDER LAYOUT STAGE 2
35	GIRDER LAYOUT STAGE 3
36	ADDITIONAL GIRDER REINF STAGE 1
37	ADDITIONAL GIRDER REINF STAGE 2
38	ADDITIONAL GIRDER REINF STAGE 3
39	DECK REINFORCEMENT DETAILS
40	DECK DRAIN LAYOUT
41	DECK DRAIN DETAILS
42	DECK DRAIN TYPE C
43	SOUNDWALL - MASONRY BLOCK ON BRIDGE
44	SOUNDWALL-MASONRY BLOCK WITH BARRIER ON RW DETAILS NO. 1
45	SOUNDWALL-MASONRY BLOCK WITH BARRIER ON RW DETAILS NO. 2
46	RETAINING WALL TYPE 1SWBP DETAILS NO. 1
47	RETAINING WALL TYPE 1SWBP DETAILS NO. 2
48	ARCHITECTURAL DETAILS NO. 1
49	ARCHITECTURAL DETAILS NO. 2
50	ARCHITECTURAL DETAILS NO. 3
51	ARCHITECTURAL DETAILS NO. 4
52	ARCHITECTURAL DETAILS NO. 5
53	ARCHITECTURAL DETAILS NO. 6
54	ARCHITECTURAL DETAILS NO. 7
55	ARCHITECTURAL DETAILS NO. 8
56	ARCHITECTURAL DETAILS NO. 9
57	ARCHITECTURAL DETAILS NO. 10
58	ARCHITECTURAL DETAILS NO. 11
59	ARCHITECTURAL DETAILS NO. 12
60	ARCHITECTURAL DETAILS NO. 13
61	ARCHITECTURAL DETAILS NO. 14
62	ARCHITECTURAL DETAILS NO. 15
63	ARCHITECTURAL DETAILS NO. 16
64	ARCHITECTURAL DETAILS NO. 17
65	ARCHITECTURAL DETAILS NO. 18
66	ARCHITECTURAL DETAILS NO. 19
67	ARCHITECTURAL DETAILS NO. 20
68	STRUCTURE APPROACH TYPE N(30S)
69	STRUCTURE APPROACH DRAINAGE DETAILS
70	SLOPE PAVING
71	LOG OF TEST BORINGS SHEET 1 OF 6
72	LOG OF TEST BORINGS SHEET 2 OF 6
73	LOG OF TEST BORINGS SHEET 3 OF 6
74	LOG OF TEST BORINGS SHEET 4 OF 6
75	LOG OF TEST BORINGS SHEET 5 OF 6
76	LOG OF TEST BORINGS SHEET 6 OF 6

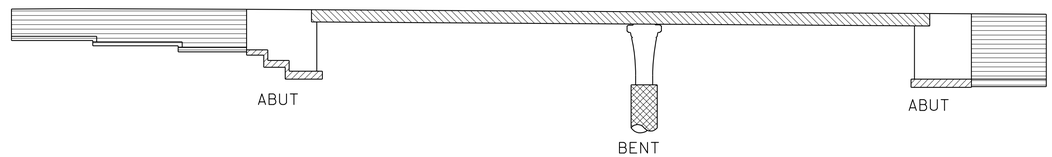

CIDH Pile Concrete
Structural Concrete, Bridge
Structural Concrete, Bridge, (4.0 Ksi @ 28 days)
Structural Concrete, Bridge Footing
Structural Concrete, Retaining Wall

CONCRETE STRENGTH AND TYPE LIMITS

NO SCALE

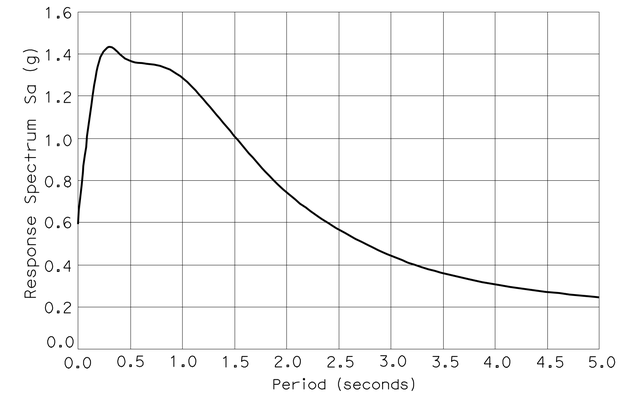

SITE SPECIFIC ACCELERATION RESPONSE SPECTRUM

STANDARD PLANS DATED MAY 2006

A10A	ACRONYMS AND ABBREVIATIONS (A-L)
A10B	ACRONYMS AND ABBREVIATIONS (M-Z)
A62C	LIMITS OF PAYMENT FOR EXCAVATION AND BACKFILL BRIDGE
A76D	CONCRETE BARRIER TYPE 60G
T3	TEMPORARY RAILING (TYPE K)
B0-1	BRIDGE DETAILS
B0-3	BRIDGE DETAILS
B0-5	BRIDGE DETAILS
B0-13	BRIDGE DETAILS
B2-5	PILE DETAILS CLASS 90 AND CLASS 140
B3-1	RETAINING WALL TYPE 1 H=4′ THROUGH 30′
B3-8	RETAINING WALL DETAILS NO. 1
B3-9	RETAINING WALL DETAILS NO. 2
RSP B6-21	JOINT SEALS (MAXIMUM MOVEMENT RATING = 2")
B7-1	BOX GIRDER DETAILS
B7-6	DECK DRAINS TYPE D-1 AND D-2
B7-8	DECK DRAINAGE DETAILS
B7-10	UTILITY OPENING BOX GIRDER
B8-5	CAST-IN-PLACE PRESTRESSED GIRDER DETAILS
B11-56	CONCRETE BARRIER TYPE 736
B14-3	COMMUNICATION AND SPRINKLER CONTROL CONDUITS
B14-4	WATER SUPPLY LINE (BRIDGE) (PIPE SIZES LESS THAN 4")
B14-5	WATER SUPPLY LINE (DETAILS) (PIPE SIZES LESS THAN 4")
B15-9	SOUND WALL MASONRY BLOCK MISCELLANEOUS DETAILS
RSP P10	CONCRETE PAVEMENT - DOWEL BAR DETAILS

STANDARD PLAN SHEET NO.

DETAIL NO.

GENERAL NOTES
LOAD AND RESISTANCE FACTOR DESIGN

DESIGN: AASHTO LRFD BRIDGE DESIGN SPECIFICATIONS, 4TH edition and the Caltrans Amendments, preface dated September 2010, except that Standard Plan retaining walls, bridge barriers and approach slabs are designed using Bridge Design Specifications ('96 AASHTO w/Revisions by Caltrans).

SEISMIC DESIGN: CALTRANS SEISMIC DESIGN CRITERIA (SDC) Version 1.5 dated September 2009

DEAD LOAD: Includes 35 psf for future wearing surface. The soundwall dead load is distributed on the left/right side of the bridge with 60% of the moment and 100% of the shear forces to the exterior girder, and 17% of the moment and 17% of the shear to the first interior girder.

LIVE LOADING: HL93 with "Low-Boy" and Permit Design Vehicle.

SEISMIC LOADING: Soil profile: Average Shear Wave Velocity for upper 100ft, V_s30 = 778ft/sec (240m/sec)
Moment Magnitude: 7.3
Peak Ground Acceleration: 0.67g

REINFORCED CONCRETE:
f_y = 60.0 ksi
f'_c = 3.6 Ksi
n = 8

PRESTRESSED CONCRETE: See "PRESTRESSING NOTES" on "GIRDER LAYOUT" sheets.

	BY	CHECKED
DESIGN	J. HIGAREDA	J. JAUREGUI
DETAILS	T. TREFZ	J. JAUREGUI
QUANTITIES	J. HIGAREDA	G. GALO / S. MORADI

STATE OF CALIFORNIA
DEPARTMENT OF TRANSPORTATION

DIVISION OF ENGINEERING SERVICES
STRUCTURE DESIGN
DESIGN BRANCH 15

BRIDGE NO. 53-3061
POST MILE 4.91

IMPERIAL HIGHWAY UC (REPLACE)
INDEX TO PLANS

STRUCTURES DESIGN DETAIL SHEET (ENGLISH) (REV. 09-01-10)

ORIGINAL SCALE IN INCHES FOR REDUCED PLANS 0 1 2 3

UNIT: 3604
PROJECT NUMBER & PHASE: 0700001834 1
CONTRACT NO.: 07-215941

DISREGARD PRINTS BEARING EARLIER REVISION DATES

REVISION DATES: 03-21-12 09-24-11 10-10-11 12-12-11

SHEET 3 OF 76

FILE => 53-3061-a-itp.dgn

USERNAME => s109858 DATE PLOTTED => 15-APR-2012 TIME PLOTTED => 07:05

DIST	COUNTY	ROUTE	POST MILES TOTAL PROJECT	SHEET No.	TOTAL SHEETS
07	LA	5	4.0/5.9	1008	1597

José L. Higareda — REGISTERED CIVIL ENGINEER — 12-12-11 DATE

4-9-12 PLANS APPROVAL DATE

REGISTERED PROFESSIONAL ENGINEER — JOSE L. HIGAREDA — No. 62338 — Exp. 9-30-13 — CIVIL — STATE OF CALIFORNIA

The State of California or its officers or agents shall not be responsible for the accuracy or completeness of electronic copies of this plan sheet.

LEGEND:

- Indicates existing Imperial Highway UC, Br. No. 53-0593, to be removed.
- Indicates limits of STAGE 2 existing bridge removal
- Indicates limits of STAGE 3 existing bridge removal
- ● Indicates existing piles to be removed.

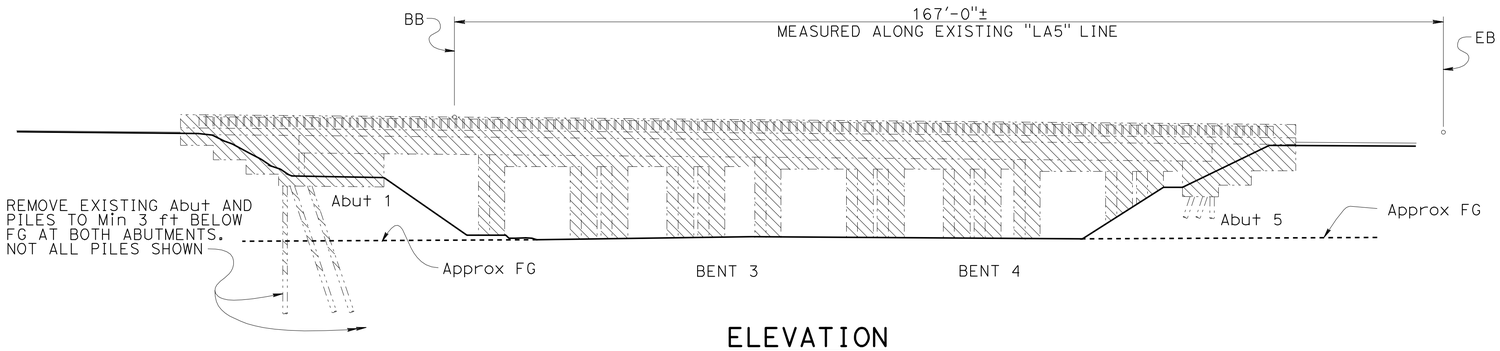

ELEVATION
NO SCALE

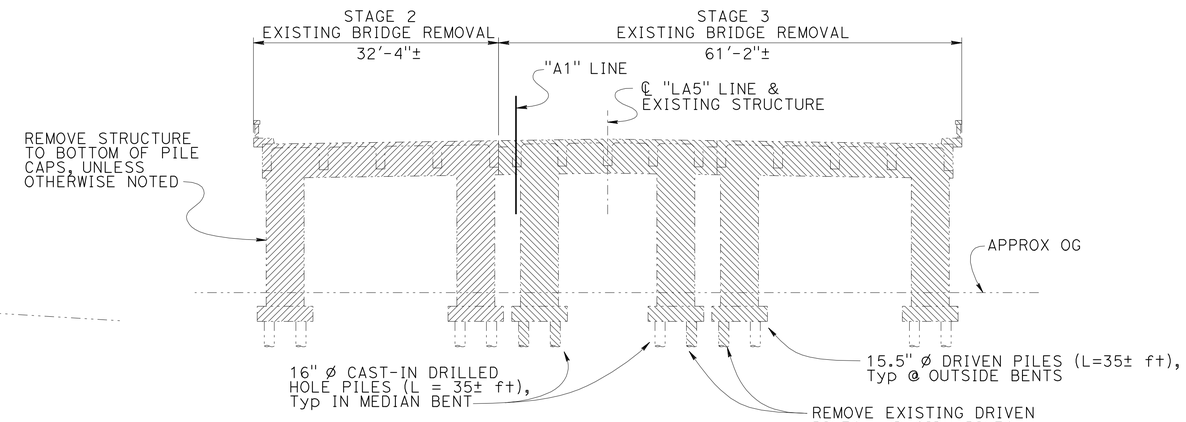

NOTE:
VIEWED LOOKING NORTHERLY

EXISTING STRUCTURE
1" = 10'
@ BENT 2

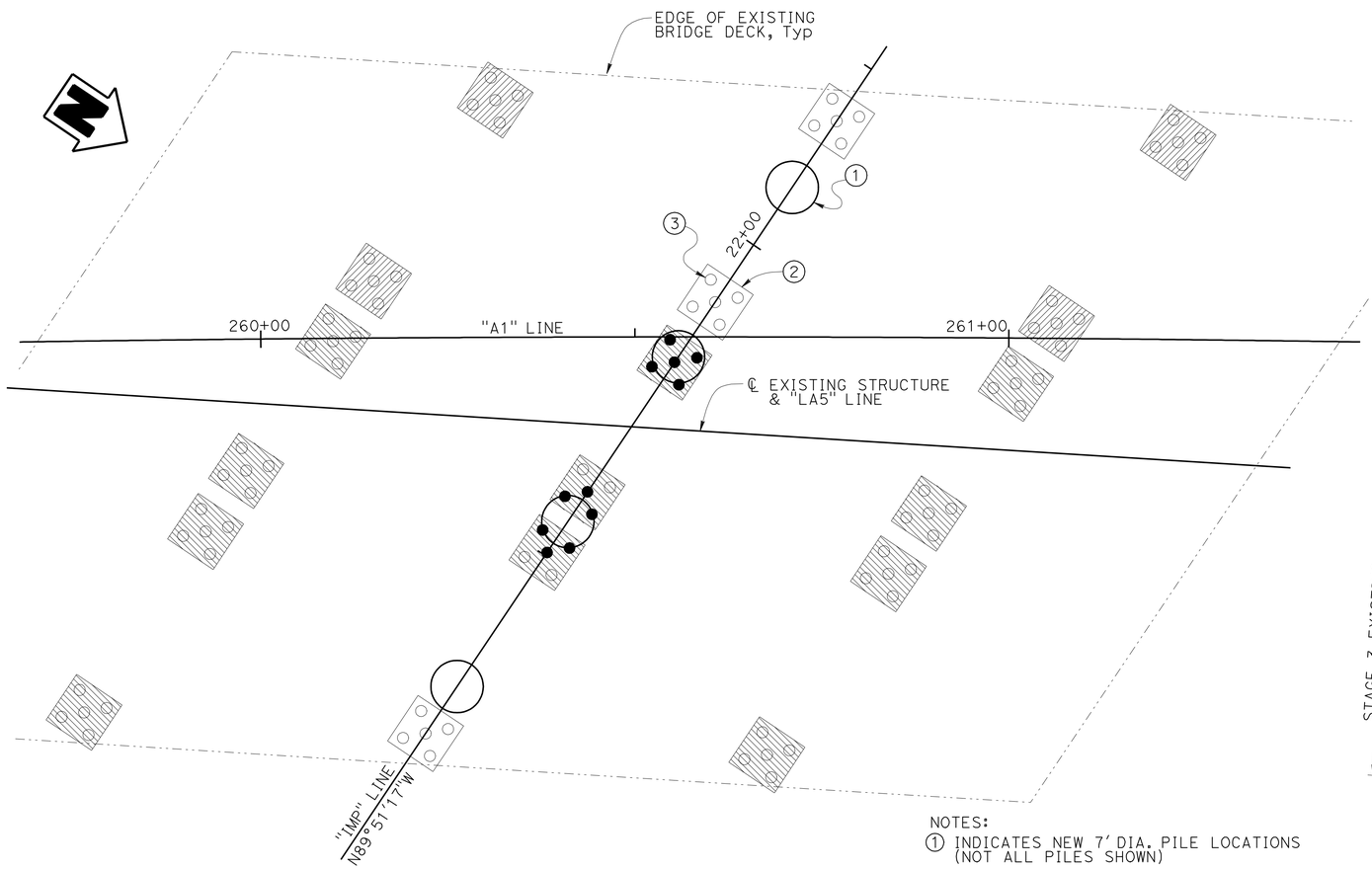

NOTE:
THE CONTRACTOR SHALL VERIFY ALL CONTROLLING FIELD DIMENSIONS BEFORE ORDERING OR FABRICATING ANY MATERIAL.

EXISTING FOOTING & PILE PLAN
1" = 10'

NOTES:
1. INDICATES NEW 7' DIA. PILE LOCATIONS (NOT ALL PILES SHOWN)
2. INDICATES EXISTING PILE CAP, Typ
3. INDICATES EXISTING PILE, Typ

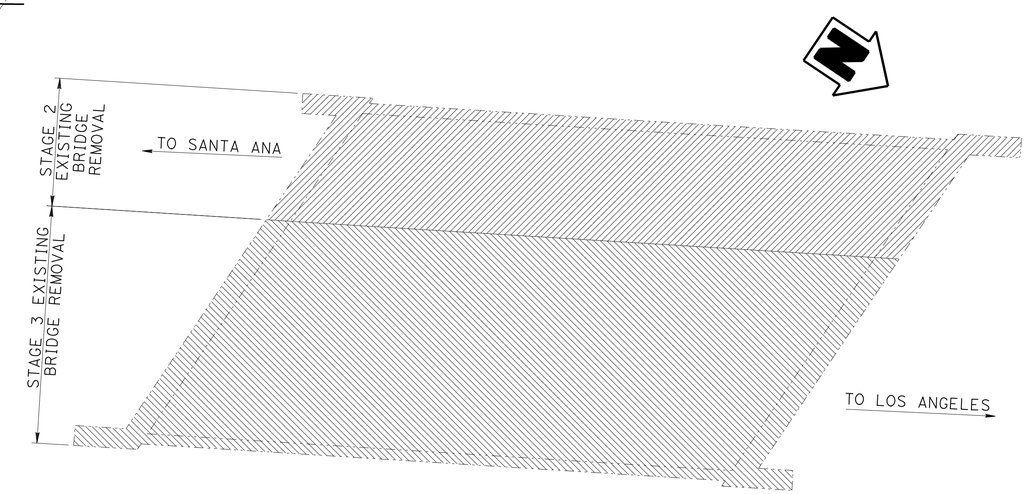

EXISTING BRIDGE PLAN
1" = 20'

DESIGN	BY J. HIGAREDA	CHECKED J. JAUREGUI	
DETAILS	BY T. TREFZ	CHECKED J. JAUREGUI	
QUANTITIES	BY S. YIP	CHECKED G. GALO	

STATE OF CALIFORNIA
DEPARTMENT OF TRANSPORTATION

DIVISION OF ENGINEERING SERVICES
STRUCTURE DESIGN
DESIGN BRANCH 15

BRIDGE NO. 53-3061
POST MILE 4.91

IMPERIAL HIGHWAY UC (REPLACE)
DEMOLITION PLAN

STRUCTURES DESIGN DETAIL SHEET (ENGLISH) (REV. 09-01-10)

ORIGINAL SCALE IN INCHES FOR REDUCED PLANS 0 1 2 3

UNIT: 3604
PROJECT NUMBER & PHASE: 0700001834 1
CONTRACT NO.: 07-215941

DISREGARD PRINTS BEARING EARLIER REVISION DATES

REVISION DATES: 11-07-11 12-10-11

SHEET 4 OF 76

FILE => 53-3061-b-demo.dgn

USERNAME => 8109858 DATE PLOTTED => 15-APR-2012 TIME PLOTTED => 07:06

DIST	COUNTY	ROUTE	POST MILES TOTAL PROJECT	SHEET No.	TOTAL SHEETS
07	LA	5	4.0/5.9	1009	1597

José L. Higareda 12-12-11
REGISTERED CIVIL ENGINEER DATE

4-9-12
PLANS APPROVAL DATE

REGISTERED PROFESSIONAL ENGINEER
JOSE L. HIGAREDA
No. 62338
Exp. 9-30-13
CIVIL
STATE OF CALIFORNIA

The State of California or its officers or agents shall not be responsible for the accuracy or completeness of electronic copies of this plan sheet.

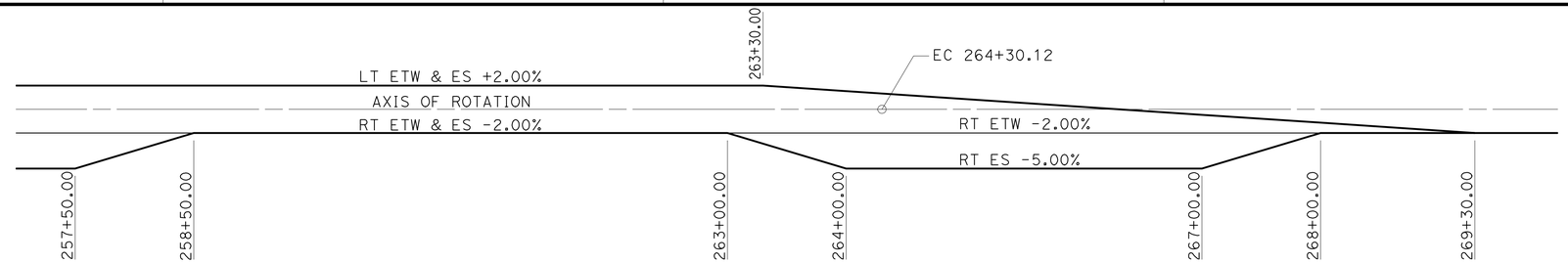

SUPERELEVATION DIAGRAM

NO SCALE

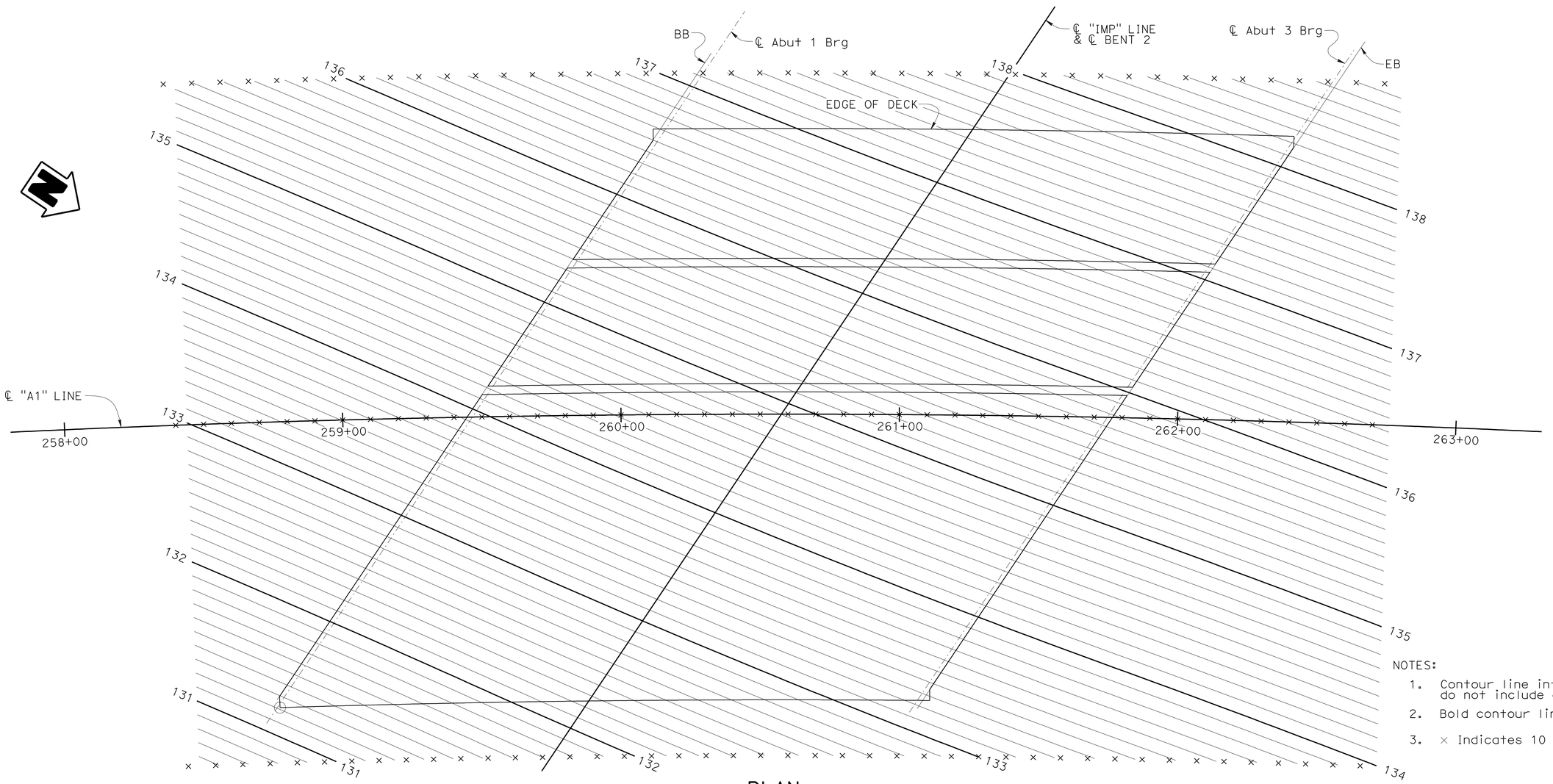

NOTES:

1. Contour line interval = 0.1 foot (Contours do not include camber)
2. Bold contour lines indicate 1.0 foot elevations
3. × Indicates 10 foot intervals

PLAN

1" = 20'

DESIGN	BY J. HIGAREDA	CHECKED J. JAUREGUI	
DETAILS	BY T. TREFZ	CHECKED J. JAUREGUI	
QUANTITIES	BY J. HIGAREDA	CHECKED G. GALO / S. MORADI	

STATE OF CALIFORNIA
DEPARTMENT OF TRANSPORTATION

DIVISION OF ENGINEERING SERVICES
STRUCTURE DESIGN
DESIGN BRANCH 15

BRIDGE NO. 53-3061
POST MILE 4.91

IMPERIAL HIGHWAY UC (REPLACE)

DECK CONTOUR PLAN

STRUCTURES DESIGN DETAIL SHEET (ENGLISH) (REV. 09-01-10)

ORIGINAL SCALE IN INCHES FOR REDUCED PLANS 0 1 2 3

UNIT: 3604
PROJECT NUMBER & PHASE: 0700001834 1
CONTRACT NO.: 07-215941

DISREGARD PRINTS BEARING EARLIER REVISION DATES

REVISION DATES 08-12-11 03-07-12

SHEET 5 OF 76

FILE => 53-3061-d-dc.dgn

USERNAME => s109858 DATE PLOTTED => 15-APR-2012 TIME PLOTTED => 07:06

DIST	COUNTY	ROUTE	POST MILES TOTAL PROJECT	SHEET No.	TOTAL SHEETS
07	LA	5	4.0/5.9	1010	1597

José L. Higareda 12-12-11
REGISTERED CIVIL ENGINEER DATE

4-9-12
PLANS APPROVAL DATE

REGISTERED PROFESSIONAL ENGINEER JOSE L. HIGAREDA No. 62338 Exp. 9-30-13 CIVIL STATE OF CALIFORNIA

The State of California or its officers or agents shall not be responsible for the accuracy or completeness of electronic copies of this plan sheet.

Bridge Location

1 - 35.140 Lt. ℄ Rte 5, Sta 259+96.059, Elev 125.444
2 - 2.540 Rt. ℄ Rte 5, Sta 259+70.145, Elev 125.663
3 - 10.410 Rt. ℄ Rte 5, Sta 259+64.838, Elev 125.628
4 - 48.350 Rt. ℄ Rte 5, Sta 259+38.329, Elev 124.521

A 20+38.178 ℄ Imperial Hwy = 61+41.580 Imperial SB Off-Ramp

B 22+14.803 ℄ Imperial Hwy = 260+57.623 ℄ Rte 5

C 23+80.991 ℄ Imperial Hwy = 59+71.280 Imperial NB On-Ramp

No.	R	Δ	T	L
9	5905.512	25°29′58"	1336.250	2628.250
10	1000.000	07°47′44"	68.130	136.060
11	1000.000	08°03′16"	70.403	140.574

NOTE:
Underground utilities as shown are approximate
See "ROAD PLANS" for additional information

LEGEND:

XX.X Indicates bottom of footing elevation

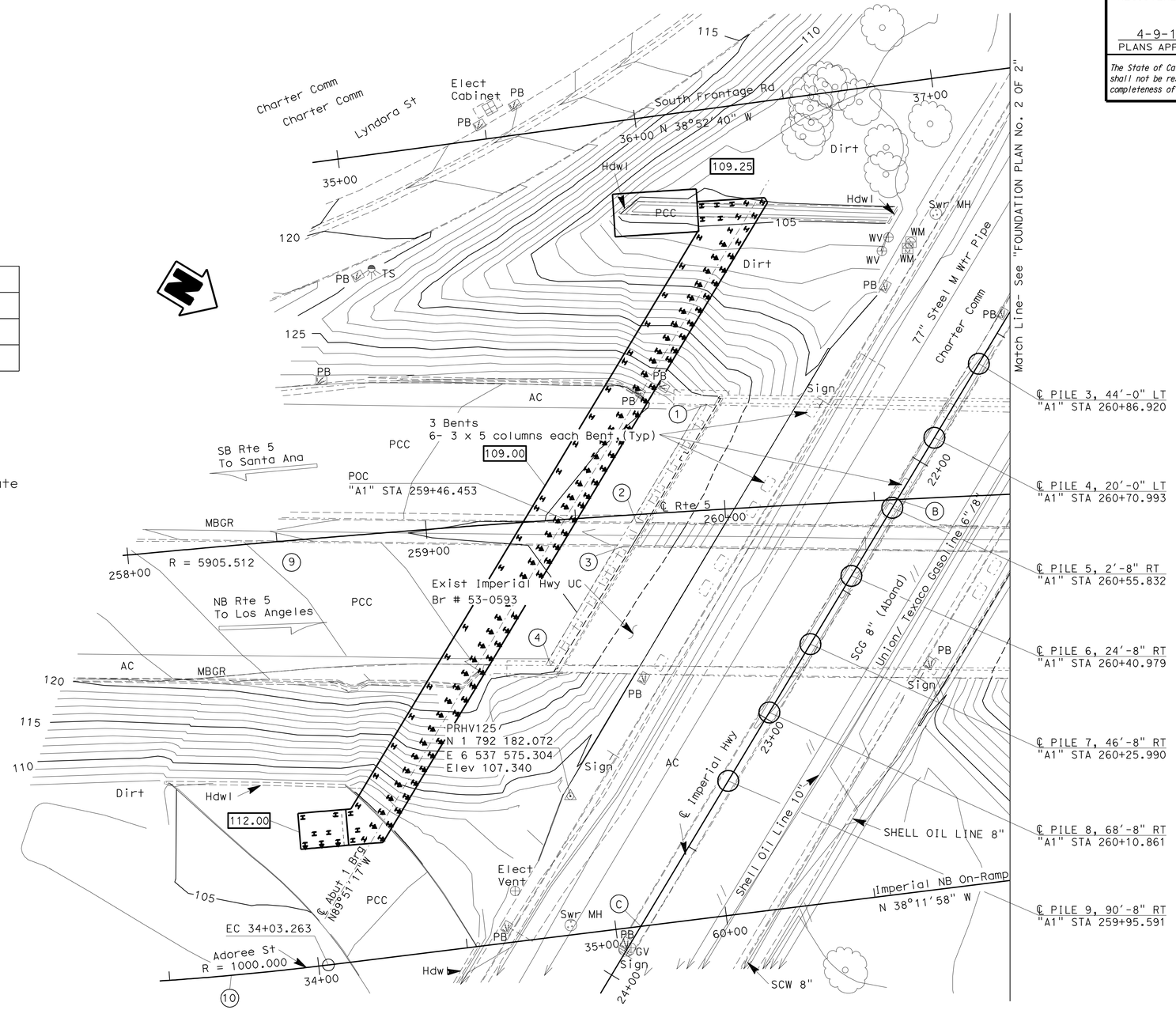

SURVEY CONTROL

PRHV123
Fnd: PD: Chzl "X" in median Imperial
0.180 Rt. ℄ Imperial Hwy
Sta 20.05.602
N 1 792 223.561
E 6 537 224.922
Elev 108.230

PRHV125
Fnd PD: Chzl "X" Sidewalk Imperial
42.550 Rt. ℄ Imperial
Sta 23+55.878
N 1 792 182.072
E 6 537 575.304
Elev 107.340

PRELIMINARY INVESTIGATION SECTION							
SCALE 1"=20′	VERT.DATUM NAVD88	PHOTOGRAMMETRY AS OF: X					
	HORZ.DATUM NAD83	SURVEYED	BY D7	CHECKED	BY T. Phung		
	ALIGNMENT TIES Dist. Traverse Sheet	DRAFTED	BY C. Pham	CHECKED	BY E. Vigjar		

DESIGN	BY J. HIGAREDA	CHECKED J. JAUREGUI	
DETAILS	BY T. TREFZ	CHECKED J. JAUREGUI	
QUANTITIES	BY G. GALO	CHECKED T. MENARD	

STATE OF CALIFORNIA
DEPARTMENT OF TRANSPORTATION

DIVISION OF ENGINEERING SERVICES
STRUCTURE DESIGN
DESIGN BRANCH 15

BRIDGE NO. 53-3061
POST MILE 4.91

IMPERIAL HIGHWAY UC (REPLACE)
FOUNDATION PLAN No. 1 OF 2

STRUCTURES FOUNDATION PLAN SHEET (ENGLISH) (REV. 09-01-10)

ORIGINAL SCALE IN INCHES FOR REDUCED PLANS 0 1 2 3

UNIT: 3604
PROJECT NUMBER & PHASE: 0700001834 1
CONTRACT NO.: 07-215941

DISREGARD PRINTS BEARING EARLIER REVISION DATES
REVISION DATES 09-30-11 10-03-11

SHEET 6 OF 76

FILE => 53-3061-e-fdp101.dgn

USERNAME => s103858 DATE PLOTTED => 15-APR-2012 TIME PLOTTED => 07:06

DIST	COUNTY	ROUTE	POST MILES TOTAL PROJECT	SHEET No.	TOTAL SHEETS
07	LA	5	4.0/5.9	1011	1597

REGISTERED CIVIL ENGINEER 12-12-11 DATE

4-9-12
PLANS APPROVAL DATE

REGISTERED PROFESSIONAL ENGINEER JOSE L. HIGAREDA No. 62338 Exp. 9-30-13 CIVIL STATE OF CALIFORNIA

The State of California or its officers or agents shall not be responsible for the accuracy or completeness of electronic copies of this plan sheet.

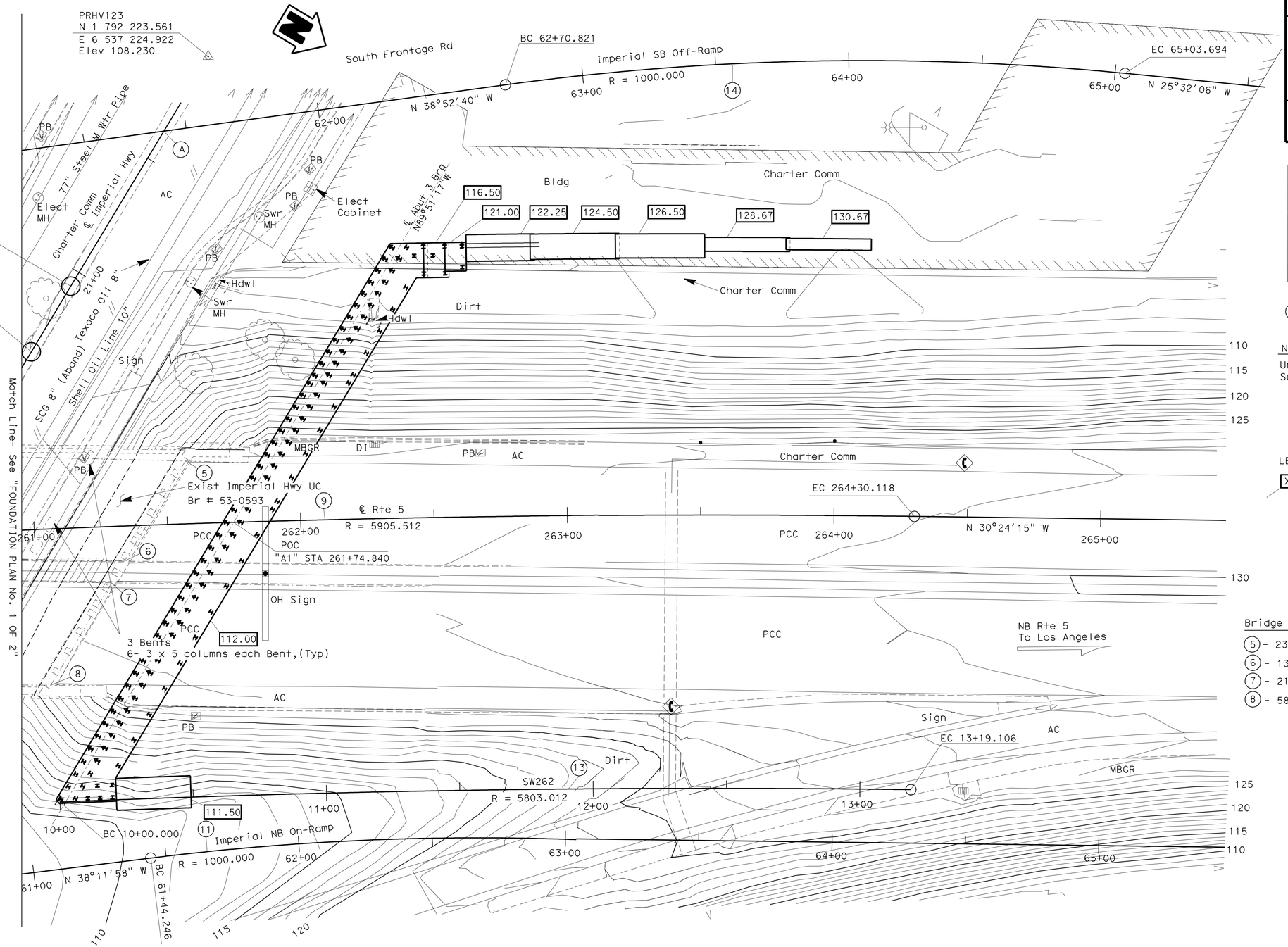

No.	R	Δ	T	L
9	5905.512	25°29'58"	1336.250	2628.250
11	1000.000	08°03'16"	70.403	140.574
13	5803.012	03°09'02"	159.593	319.106
14	1000.000	13°20'33"	116.966	232.873

(A) 20+38.178 ℄ Imperial Hwy = 61+41.580 Imperial SB Off-Ramp

NOTE:
Underground utilities as shown are approximate. See "ROAD PLANS" for additional information

LEGEND:
XX.X Indicates bottom of footing elevation

Bridge Location
(5) - 23.540 Lt. ℄ Rte 5, Sta 261.57.543, Elev 127.009
(6) - 13.060 Rt. ℄ Rte 5, Sta 261+33.454, Elev 127.517
(7) - 21.120 Rt. ℄ Rte 5, Sta 261+28.253, Elev 127.451
(8) - 58.560 Rt. ℄ Rte 5, Sta 261+03.694, Elev 126.718

SURVEY CONTROL
See "FOUNDATION No. 1 OF 2"

PRELIMINARY INVESTIGATION SECTION

SCALE 1"=20'	VERT.DATUM NAVD88	PHOTOGRAMMETRY AS OF: X		
	HORZ.DATUM NAD83	SURVEYED	BY D7	CHECKED BY T. Phung
ALIGNMENT TIES Dist. Traverse Sheet		DRAFTED	BY C. Pham	CHECKED BY E. Vigjar

DESIGN	BY J. HIGAREDA	CHECKED J. JAUREGUI
DETAILS	BY T. TREFZ	CHECKED J. JAUREGUI
QUANTITIES	BY G. GALO	CHECKED T. MENARD

STATE OF CALIFORNIA
DEPARTMENT OF TRANSPORTATION

DIVISION OF ENGINEERING SERVICES
STRUCTURE DESIGN
DESIGN BRANCH 15

BRIDGE NO. 53-3061
POST MILE 4.91

IMPERIAL HIGHWAY UC (REPLACE)
FOUNDATION PLAN No. 2 OF 2

STRUCTURES FOUNDATION PLAN SHEET (ENGLISH) (REV. 09-01-10)

ORIGINAL SCALE IN INCHES FOR REDUCED PLANS 0 1 2 3

UNIT: 3604
PROJECT NUMBER & PHASE: 0700001834 1
CONTRACT NO.: 07-215941

DISREGARD PRINTS BEARING EARLIER REVISION DATES

REVISION DATES 09-30-11 10-03-11

SHEET 7 OF 76

FILE => 53-3061-e-fdp102.dgn

USERNAME => s109858 DATE PLOTTED => 15-APR-2012 TIME PLOTTED => 07:06

DIST	COUNTY	ROUTE	POST MILES TOTAL PROJECT	SHEET No.	TOTAL SHEETS
07	LA	5	4.0/5.9	1012	1597

José L. Higareda 12-12-11
REGISTERED CIVIL ENGINEER DATE

4-9-12
PLANS APPROVAL DATE

REGISTERED PROFESSIONAL ENGINEER JOSE L. HIGAREDA No. 62338 Exp. 9-30-13 CIVIL STATE OF CALIFORNIA

The State of California or its officers or agents shall not be responsible for the accuracy or completeness of electronic copies of this plan sheet.

BRIDGE

LOCATION	PILE TYPE	NOMINAL RESISTANCE COMPRESSION (kips)	NOMINAL RESISTANCE TENSION (kips)	DESIGN TIP ELEVATIONS (Ft)	SPECIFIED TIP ELEVATION (Ft)	NOMINAL DRIVING RESISTANCE (kips)
ABUTMENT 1	HP 14x89	400	0	(a) +48.00 (c) +70.00	+48.00	400
ABUT 1/Rt, RETURN WALL, STEP	HP 14x89	400	0	(a) +51.00	+51.00	400
BENT 2	84" CIDH	4020	0	(a) -2.00 (c) +51.00 (d) +35.00	-2.00	N/A
ABUTMENT 3	HP 14x89	400	0	(a) +46.00 (c) +72.00	+46.00	400
ABUT 3/Lt, RETURN WALL, STEP 1	HP 14x89	400	0	(a) +48.00	+48.00	400
ABUT 3/Lt, RETURN WALL, STEP 2	HP 14x89	400	0	(a) +50.00	+50.00	400

TYPE 1SWBP RETAINING WALLS

LOCATION	DESIGN "H"	PILE TYPE	NOMINAL RESISTANCE COMPRESSION (kips)	DESIGN TIP ELEVATIONS (Ft)	SPECIFIED TIP ELEVATION (Ft)	NOMINAL DRIVING RESISTANCE (kips)
ABUTMENT 1, Lt	24′	CLASS 90 ALT "X" T=14"	180	(a) +71.00	+71.00	180
ABUTMENT 3, Lt	10′	CLASS 90 ALT "X" T=14"	180	(a) +79.00	+79.00	180
ABUTMENT 3, Lt	12	CLASS 90 ALT "X" T=14"	180	(a) +79.00	+79.00	180
ABUTMENT 3, Lt	14′	CLASS 90 ALT "X" T=14"	180	(a) +79.00	+79.00	180
ABUTMENT 3, Rt	20′	CLASS 90 ALT "X" T=14"	180	(a) +75.00	+75.00	180

NOTES:

1. Design tip elevations for Abutments are controlled by:
   (a) Compression, (c) Settlement
2. Design tip elevations for Bents are controlled by:
   (a) Compression
   (c) Settlement, (d) Lateral Load, respectively.
3. The specified tip elevation shall not be raised above the design tip elevations for lateral load, and tolerable settlement
4. Concrete piles AltX, T=14" are being used for lateral load requirements and shall not be substituded.
5. For Bent 2 pile cut-off elevation see "BENT DETAILS NO. 3" sheet

PILE DATA TABLES

TYPE 1 RETAINING WALL

LOCATION	DESIGN "H"	MINIMUM FOOTING WIDTH (Ft)	BOTTOM OF FOOTING ELEVATION (Ft)	ASD GROSS ALLOWABLE SOIL BEARING PRESSURE (q_{ALL})
ABUTMENT 3, Lt	6′	4.25	130.67	2.6 ksf
ABUTMENT 3, Lt	8′	5.25	128.67	2.6 ksf

SPREAD FOOTING DATA TABLE

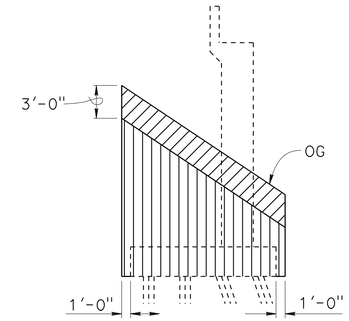

ABUTMENTS 1 AND 3 (STAGES 1 & 2)

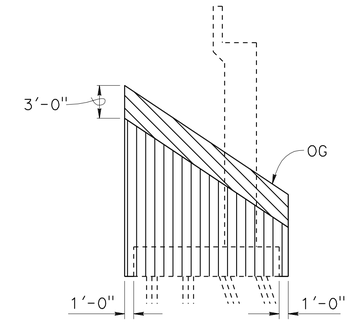

ABUTMENTS 1 AND 3 (STAGE 3)

STRUCTURE EXCAVATION (TYPE Y-1, AERIALLY DEPOSITED LEAD)
STRUCTURE EXCAVATION (TYPE Y-2, AERIALLY DEPOSITED LEAD)
STRUCTURE EXCAVATION ABUTMENT

EXCAVATION
No Scale

DESIGN	BY J. HIGAREDA	CHECKED J. JAUREGUI	
DETAILS	BY T. TREFZ	CHECKED J. JAUREGUI	
QUANTITIES	BY J. HIGAREDA	CHECKED G. GALO / S. MORADI	

STATE OF CALIFORNIA
DEPARTMENT OF TRANSPORTATION

DIVISION OF ENGINEERING SERVICES
STRUCTURE DESIGN
DESIGN BRANCH 15

BRIDGE NO. 53-3061
POST MILE 4.91

IMPERIAL HIGHWAY UC (REPLACE)
PILE & FOOTING DATA TABLES

STRUCTURES DESIGN DETAIL SHEET (ENGLISH) (REV. 09-01-10)

ORIGINAL SCALE IN INCHES FOR REDUCED PLANS 0 1 2 3

UNIT: 3604
PROJECT NUMBER & PHASE: 0700001834 1 CONTRACT NO.: 07-215941

DISREGARD PRINTS BEARING EARLIER REVISION DATES

REVISION DATES 12-08-11

SHEET 8 OF 76

FILE => 53-3061-e-ltp.dgn

USERNAME => s109858 DATE PLOTTED => 15-APR-2012 TIME PLOTTED => 07:06

DIST	COUNTY	ROUTE	POST MILES TOTAL PROJECT	SHEET No.	TOTAL SHEETS
07	LA	5	4.0/5.9	1013	1597

José L. Higareda
REGISTERED CIVIL ENGINEER 12-12-11
DATE

4-9-12
PLANS APPROVAL DATE

REGISTERED PROFESSIONAL ENGINEER
JOSE L. HIGAREDA
No. 62338
Exp. 9-30-13
CIVIL
STATE OF CALIFORNIA

The State of California or its officers or agents shall not be responsible for the accuracy or completeness of electronic copies of this plan sheet.

NOTES:

1. See "PILE & FOOTING DATA TABLE" sheet for additional information.
2. See "SECTION A-A", "SECTION C-C" & "SECTION D-D" on "ABUTMENT DETAILS NO. 1" sheet for additional information.
3. See "SECTION F-F", "SECTION G-G" & "SECTION H-H" on "ABUTMENT DETAILS NO. 2" sheet for additional information.
4. ℄ Brg pad = ℄ interior girder. Provide additional brg pads equally spaced between girders, Typ.

LEGEND:

Indicates 1:3 Battered Pile

Indicates vertical Pile

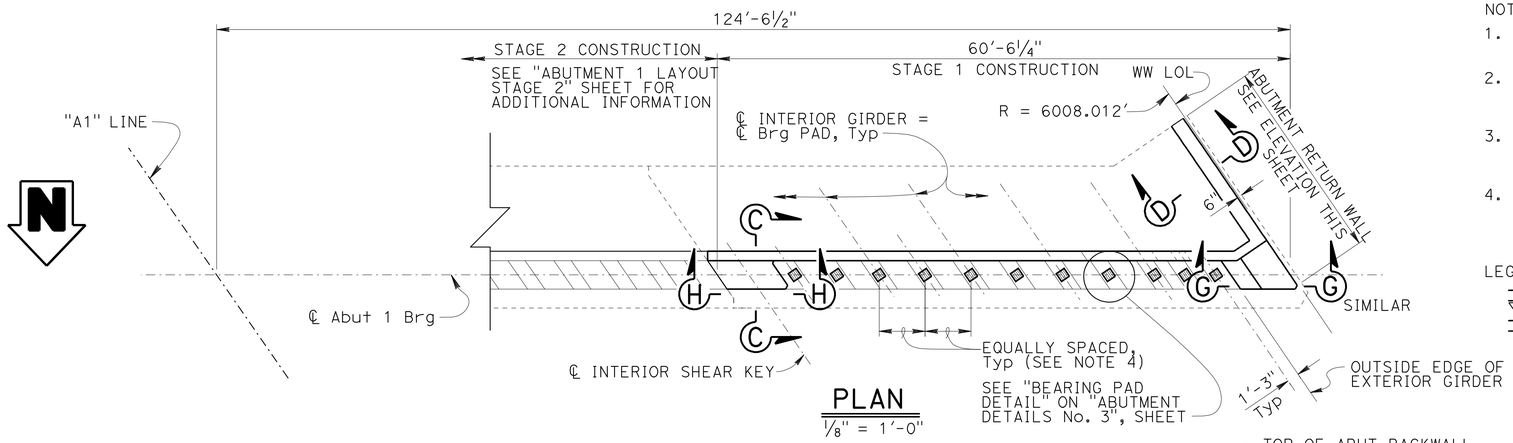

PLAN
⅛" = 1'-0"

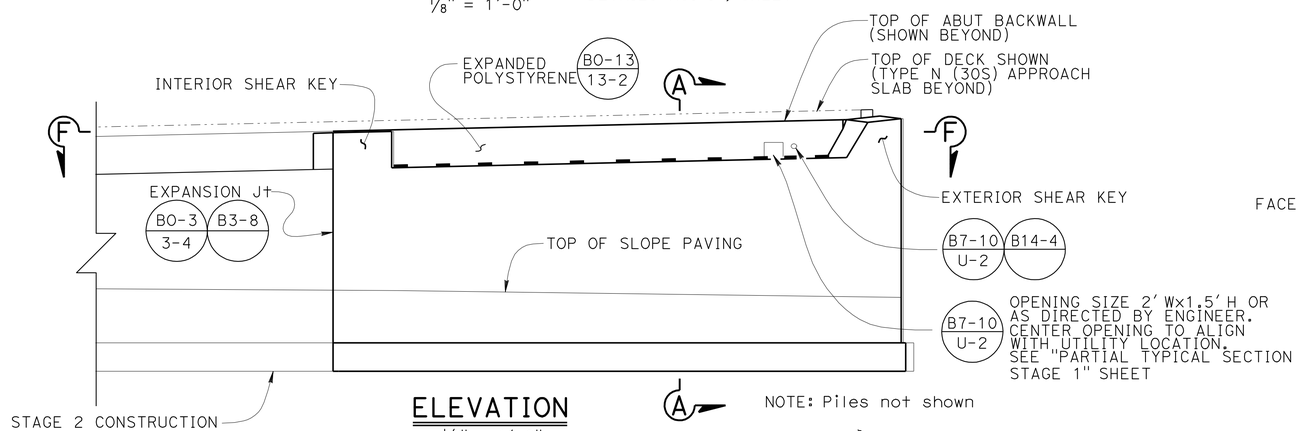

ELEVATION
⅛" = 1'-0"

NOTE: Piles not shown

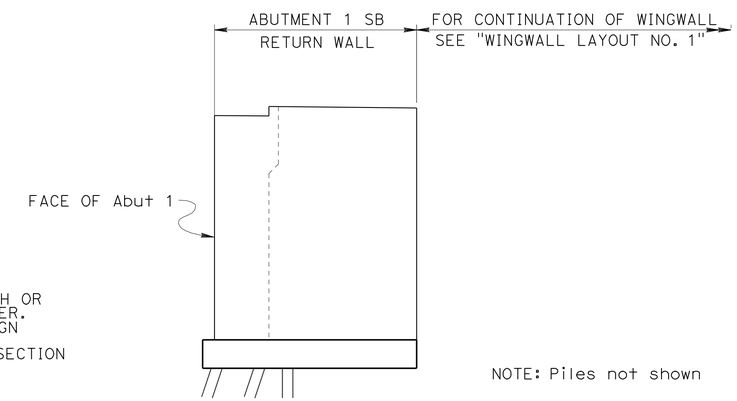

NOTE: Piles not shown

RETURN WALL ELEVATION
⅛" = 1'-0"

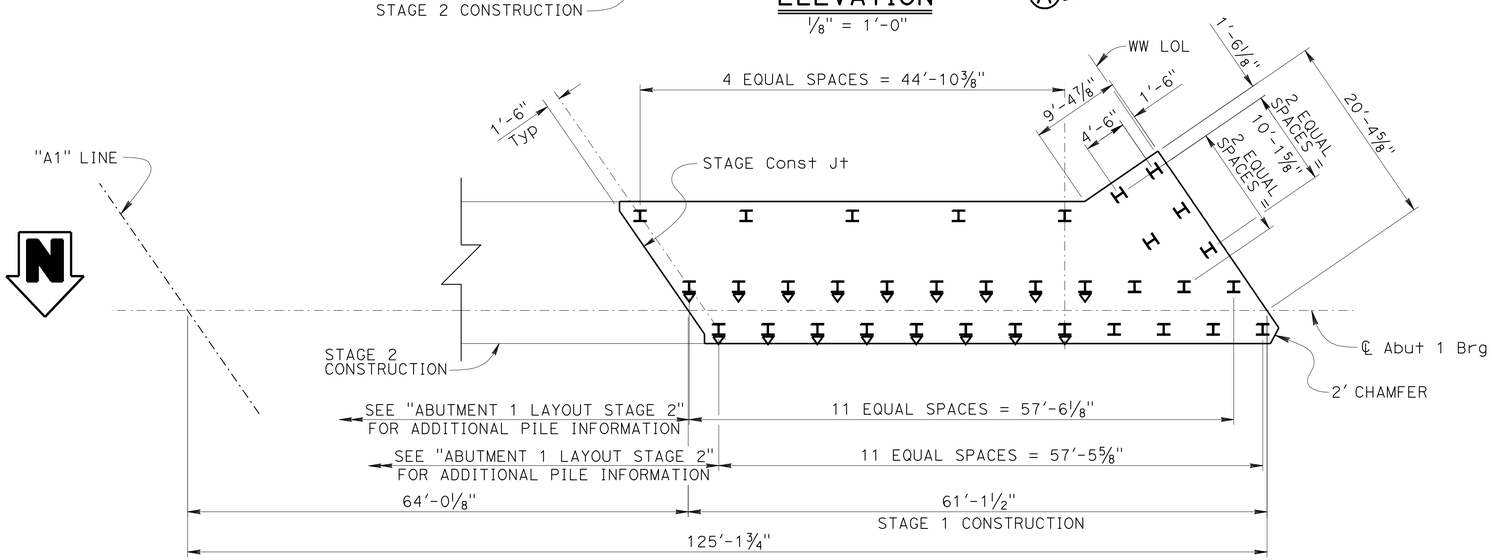

FOOTING & PILE PLAN
⅛" = 1'-0"

	BY	CHECKED
DESIGN	J. HIGAREDA	J. JAUREGUI
DETAILS	T. TREFZ	J. JAUREGUI
QUANTITIES	J. HIGAREDA	G. GALO

STATE OF CALIFORNIA
DEPARTMENT OF TRANSPORTATION

DIVISION OF ENGINEERING SERVICES
STRUCTURE DESIGN
DESIGN BRANCH 15

BRIDGE NO. 53-3061
POST MILE 4.91

IMPERIAL HIGHWAY UC (REPLACE)
ABUTMENT 1 LAYOUT STAGE 1

STRUCTURES DESIGN DETAIL SHEET (ENGLISH) (REV. 09-01-10)

ORIGINAL SCALE IN INCHES FOR REDUCED PLANS 0 1 2 3

UNIT: 3604
PROJECT NUMBER & PHASE: 0700001834 1
CONTRACT NO.: 07-215941

DISREGARD PRINTS BEARING EARLIER REVISION DATES

REVISION DATES: 08-16-11 11-16-11

SHEET 9 OF 76

FILE => 53-3061-f-a01_lo1.dgn

USERNAME => s109858 DATE PLOTTED => 15-APR-2012 TIME PLOTTED => 07:06

DIST	COUNTY	ROUTE	POST MILES TOTAL PROJECT	SHEET No.	TOTAL SHEETS
07	LA	5	4.0/5.9	1014	1597

José L. Higareda 12-12-11
REGISTERED CIVIL ENGINEER DATE

4-9-12
PLANS APPROVAL DATE

REGISTERED PROFESSIONAL ENGINEER JOSE L. HIGAREDA No. 62338 Exp. 9-30-13 CIVIL STATE OF CALIFORNIA

The State of California or its officers or agents shall not be responsible for the accuracy or completeness of electronic copies of this plan sheet.

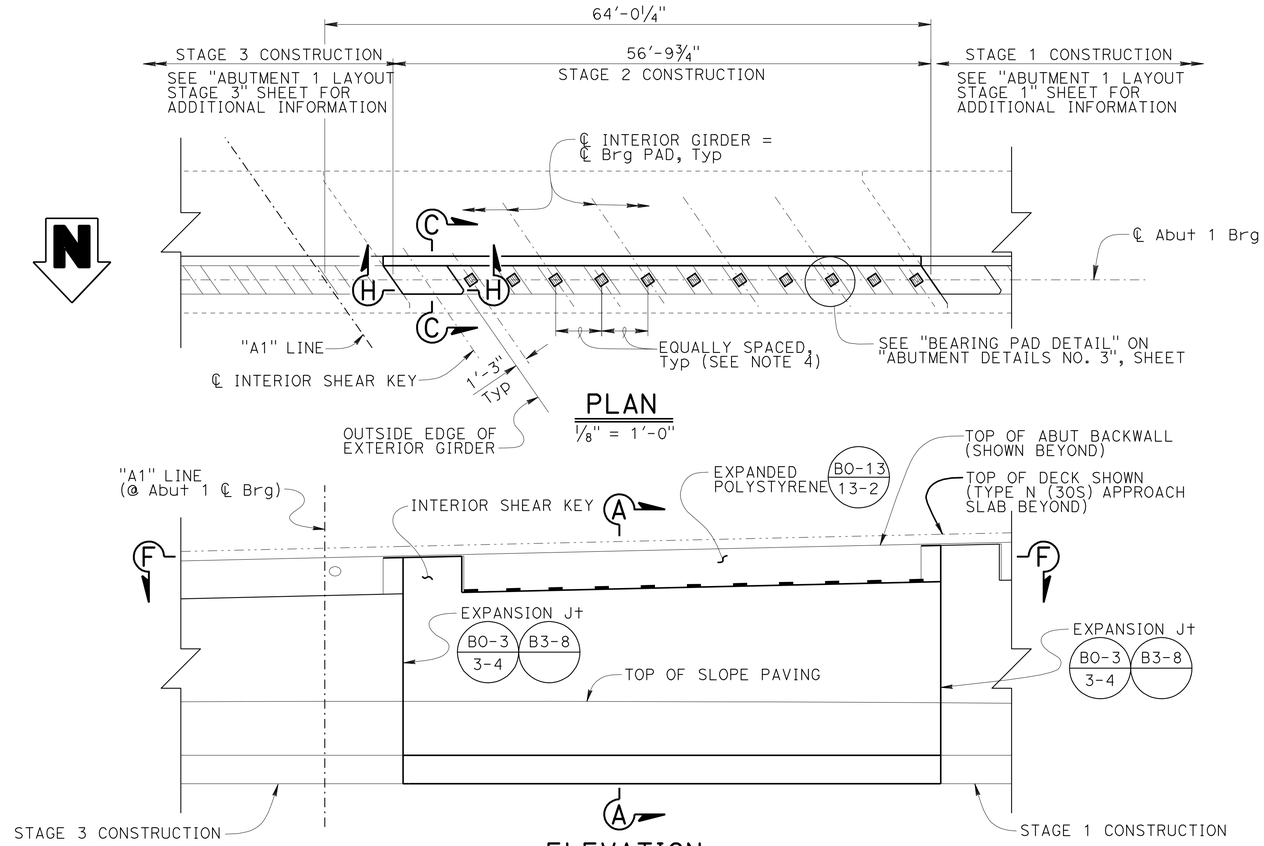

NOTES:

1. See "PILE & FOOTING DATA TABLE" sheet for additional information.
2. See "SECTION A-A" & "SECTION C-C" on "ABUTMENT DETAILS NO. 1" sheet for additional information.
3. See "SECTION F-F" & "SECTION H-H" on "ABUTMENT DETAILS NO. 2" sheet for additional information.
4. ℄ Brg pad = ℄ interior girder. Provide additional brg pads equally spaced between girders, Typ.

LEGEND:

Indicates 1:3 Battered Pile

Indicates vertical Pile

	BY	CHECKED
DESIGN	J. HIGAREDA	J. JAUREGUI
DETAILS	T. TREFZ	J. JAUREGUI
QUANTITIES	J. HIGAREDA	G. GALO

STATE OF CALIFORNIA
DEPARTMENT OF TRANSPORTATION

DIVISION OF ENGINEERING SERVICES
STRUCTURE DESIGN
DESIGN BRANCH 15

BRIDGE NO. 53-3061
POST MILE 4.91

IMPERIAL HIGHWAY UC (REPLACE)
ABUTMENT 1 LAYOUT STAGE 2

STRUCTURES DESIGN DETAIL SHEET (ENGLISH) (REV. 09-01-10)

ORIGINAL SCALE IN INCHES FOR REDUCED PLANS 0 1 2 3

UNIT: 3604
PROJECT NUMBER & PHASE: 0700001834 1
CONTRACT NO.: 07-215941

DISREGARD PRINTS BEARING EARLIER REVISION DATES

REVISION DATES 08-16-11 12-12-11

SHEET 10 OF 76

FILE => 53-3061-f-a01_lo2.dgn

USERNAME => s109858 DATE PLOTTED => 15-APR-2012 TIME PLOTTED => 07:07

DIST	COUNTY	ROUTE	POST MILES TOTAL PROJECT	SHEET No.	TOTAL SHEETS
07	LA	5	4.0/5.9	1015	1597

REGISTERED CIVIL ENGINEER — DATE 12-12-11

PLANS APPROVAL DATE 4-9-12

REGISTERED PROFESSIONAL ENGINEER — JOSE L. HIGAREDA — No. 62338 — Exp. 9-30-13 — CIVIL — STATE OF CALIFORNIA

The State of California or its officers or agents shall not be responsible for the accuracy or completeness of electronic copies of this plan sheet.

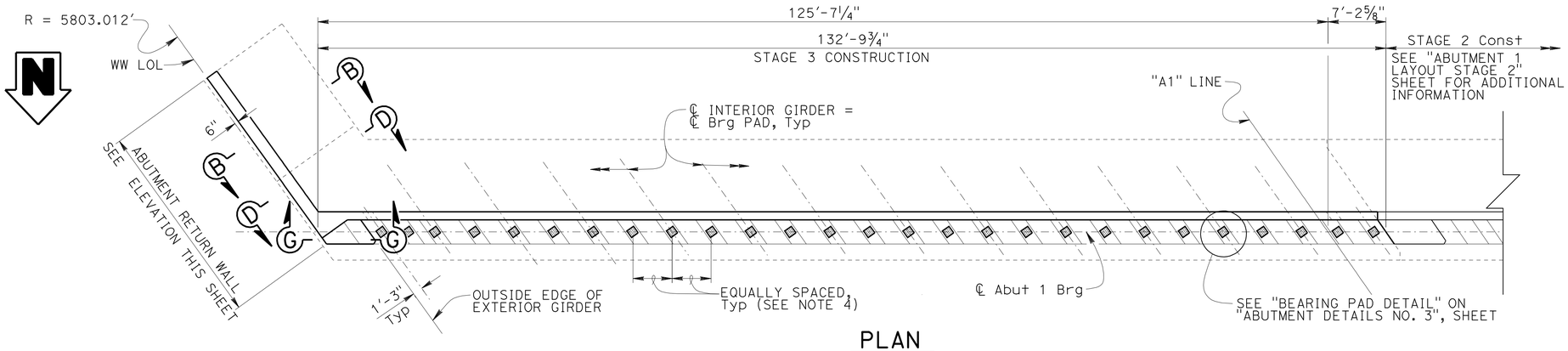

PLAN

⅛" = 1'-0"

NOTES:

1. See "PILE & FOOTING DATA TABLE" sheet for additional information.
2. See "SECTION A-A", "SECTION B-B" & "SECTION D-D" on "ABUTMENT DETAILS NO. 1" sheet for additional information.
3. See "SECTION F-F" & "SECTION G-G" on "ABUTMENT DETAILS NO. 2" sheet for additional information.
4. ℄ Brg pad = ℄ interior girder. Provide additional brg pads equally spaced between girders, Typ.

LEGEND:

Indicates 1:3 Battered Pile

Indicates vertical Pile

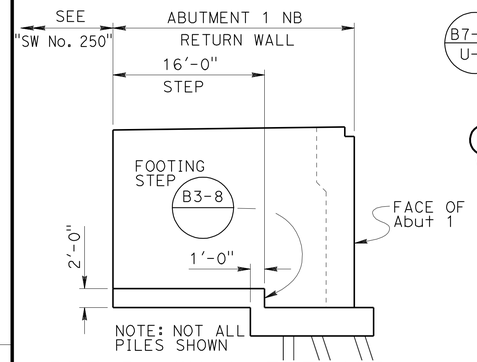

RETURN WALL ELEVATION

⅛" = 1'-0"

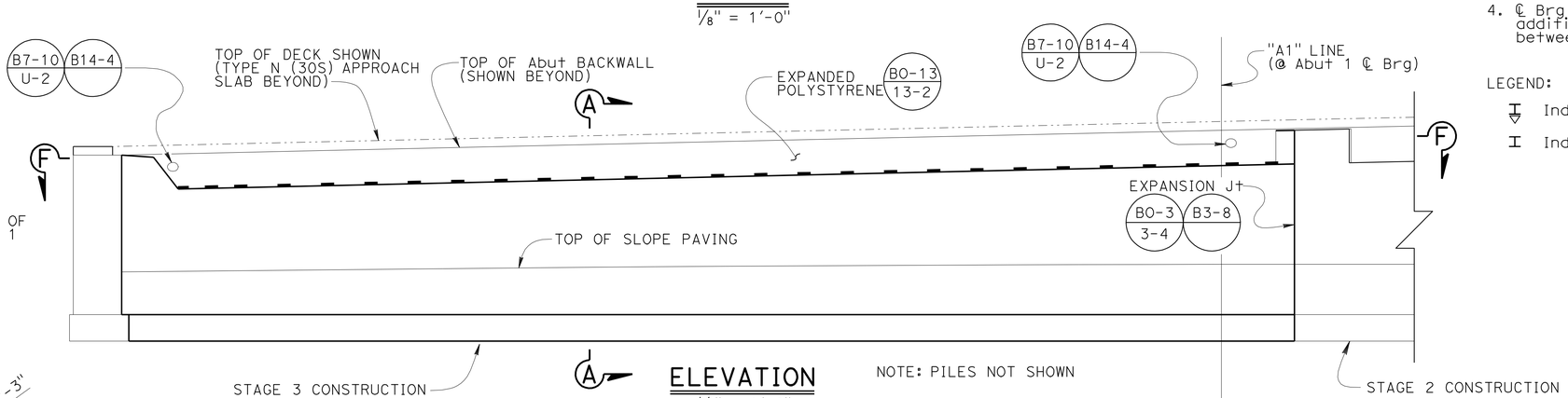

ELEVATION

⅛" = 1'-0"

NOTE: PILES NOT SHOWN

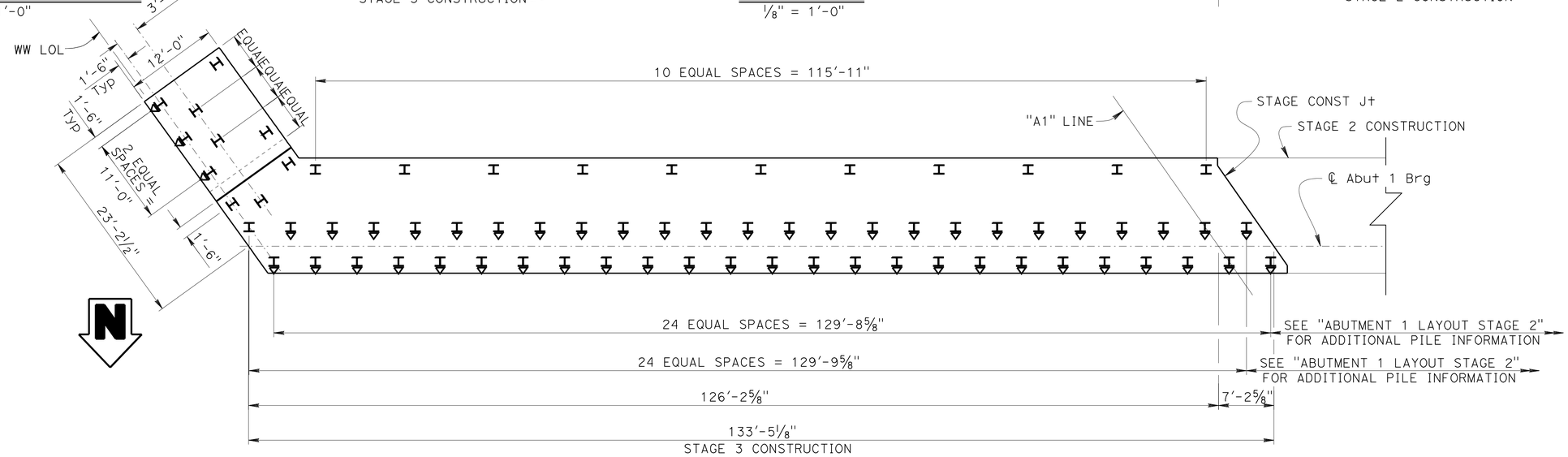

FOOTING & PILE PLAN

⅛" = 1'-0"

	BY	CHECKED
DESIGN	J. HIGAREDA	J. JAUREGUI
DETAILS	T. TREFZ	J. JAUREGUI
QUANTITIES	J. HIGAREDA	G. GALO

STATE OF CALIFORNIA DEPARTMENT OF TRANSPORTATION

DIVISION OF ENGINEERING SERVICES STRUCTURE DESIGN DESIGN BRANCH 15

BRIDGE NO. 53-3061 — POST MILE 4.91

IMPERIAL HIGHWAY UC (REPLACE)

ABUTMENT 1 LAYOUT STAGE 3

STRUCTURES DESIGN DETAIL SHEET (ENGLISH) (REV. 09-01-10)

ORIGINAL SCALE IN INCHES FOR REDUCED PLANS 0 1 2 3

UNIT: 3604

PROJECT NUMBER & PHASE: 0700001834 1 — CONTRACT NO.: 07-215941

DISREGARD PRINTS BEARING EARLIER REVISION DATES — REVISION DATES 08-18-11 11-11-11 12-12-11

SHEET 11 OF 76

FILE => 53-3061-f-a01_lo3.dgn

USERNAME => s109858 — DATE PLOTTED => 15-APR-2012 — TIME PLOTTED => 07:07

DIST	COUNTY	ROUTE	POST MILES TOTAL PROJECT	SHEET No.	TOTAL SHEETS
07	LA	5	4.0/5.9	1016	1597

José L. Higareda — 12-12-11
REGISTERED CIVIL ENGINEER — DATE

4-9-12
PLANS APPROVAL DATE

REGISTERED PROFESSIONAL ENGINEER — JOSE L. HIGAREDA — No. 62338 — Exp. 9-30-13 — CIVIL — STATE OF CALIFORNIA

The State of California or its officers or agents shall not be responsible for the accuracy or completeness of electronic copies of this plan sheet.

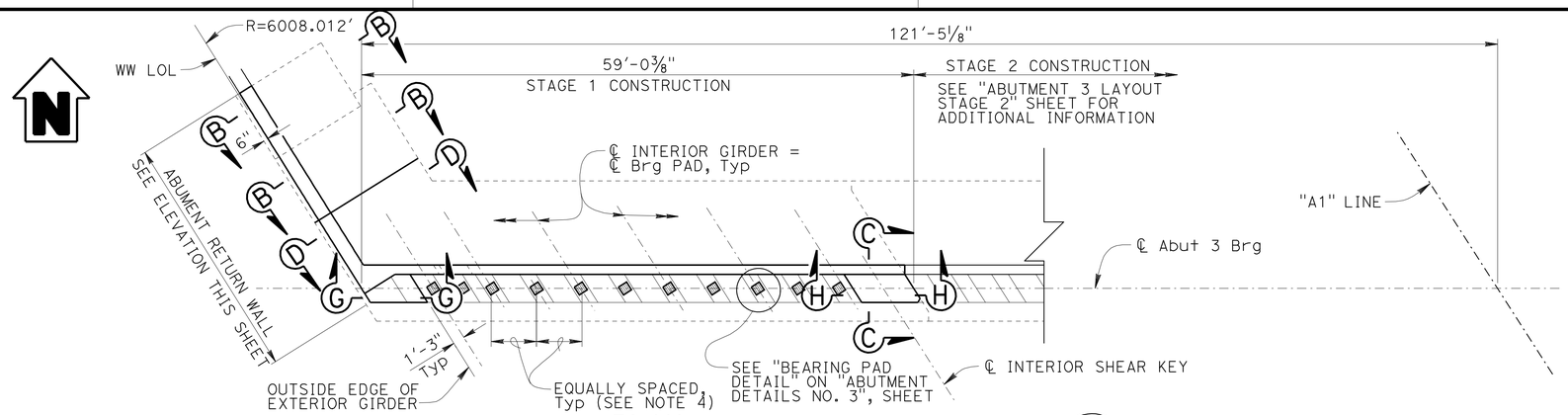

PLAN
1/8" = 1'-0"

NOTES:

1. See "PILE & FOOTING DATA TABLE" sheet for additional information.
2. See "SECTION A-A", "SECTION B-B", "SECTION C-C" & "SECTION D-D" on "ABUTMENT DETAILS NO. 1" sheet for additional information.
3. See "SECTION F-F", "SECTION G-G" & "SECTION H-H" on "ABUTMENT DETAILS NO. 2" sheet for additional information.
4. ℄ Brg pad = ℄ interior girder. Provide additional brg pads equally spaced between girders, Typ.

LEGEND:

Indicates 1:3 Battered Pile

Indicates vertical Pile

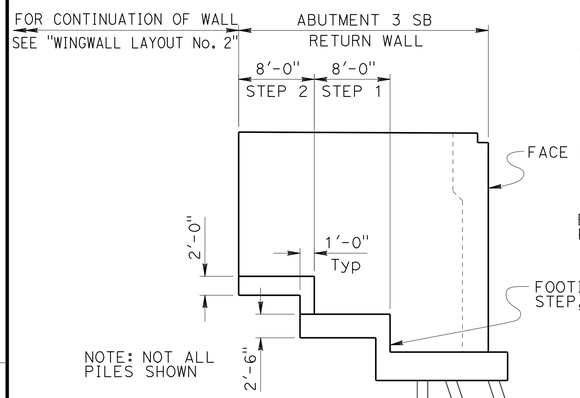

RETURN WALL ELEVATION
1/8" = 1'-0"

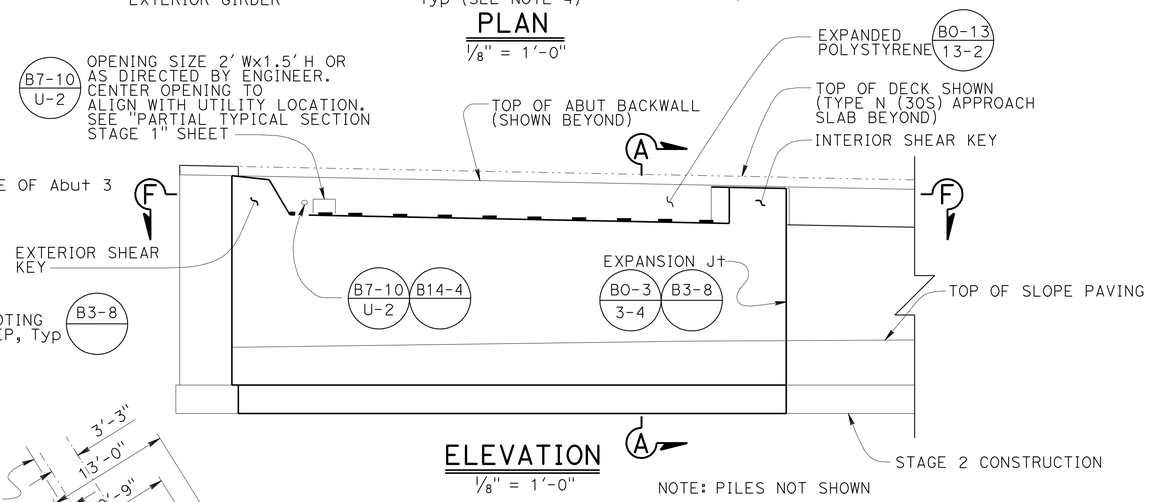

ELEVATION
1/8" = 1'-0"

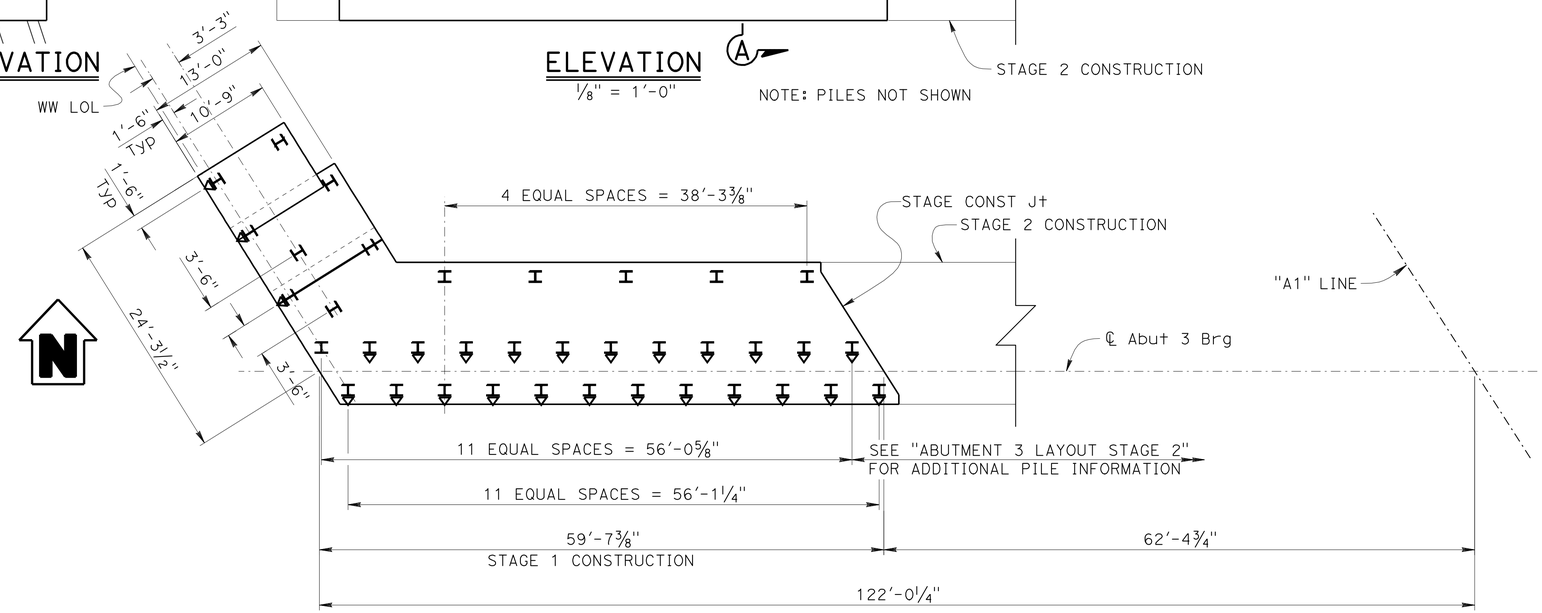

FOOTING & PILE PLAN
1/8" = 1'-0"

	BY	CHECKED
DESIGN	J. HIGAREDA	J. JAUREGUI
DETAILS	T. TREFZ	J. JAUREGUI
QUANTITIES	J. HIGAREDA	G. GALO

STATE OF CALIFORNIA
DEPARTMENT OF TRANSPORTATION

DIVISION OF ENGINEERING SERVICES
STRUCTURE DESIGN
DESIGN BRANCH 15

BRIDGE NO. 53-3061
POST MILE 4.91

IMPERIAL HIGHWAY UC (REPLACE)
ABUTMENT 3 LAYOUT STAGE 1

STRUCTURES DESIGN DETAIL SHEET (ENGLISH) (REV. 09-01-10)

ORIGINAL SCALE IN INCHES FOR REDUCED PLANS 0 1 2 3

UNIT: 3604
PROJECT NUMBER & PHASE: 0700001834 1
CONTRACT NO.: 07-215941

DISREGARD PRINTS BEARING EARLIER REVISION DATES

REVISION DATES 08-11-11 11-17-11 12-12-11

SHEET 12 OF 76

FILE => 53-3061-f-a03_lo1.dgn

USERNAME => s103858 DATE PLOTTED => 15-APR-2012 TIME PLOTTED => 07:07

DIST	COUNTY	ROUTE	POST MILES TOTAL PROJECT	SHEET No.	TOTAL SHEETS
07	LA	5	4.0/5.9	1017	1597

José L. Higareda — REGISTERED CIVIL ENGINEER — 12-12-11 DATE

4-9-12 PLANS APPROVAL DATE

REGISTERED PROFESSIONAL ENGINEER — JOSE L. HIGAREDA — No. 62338 — Exp. 9-30-13 — CIVIL — STATE OF CALIFORNIA

The State of California or its officers or agents shall not be responsible for the accuracy or completeness of electronic copies of this plan sheet.

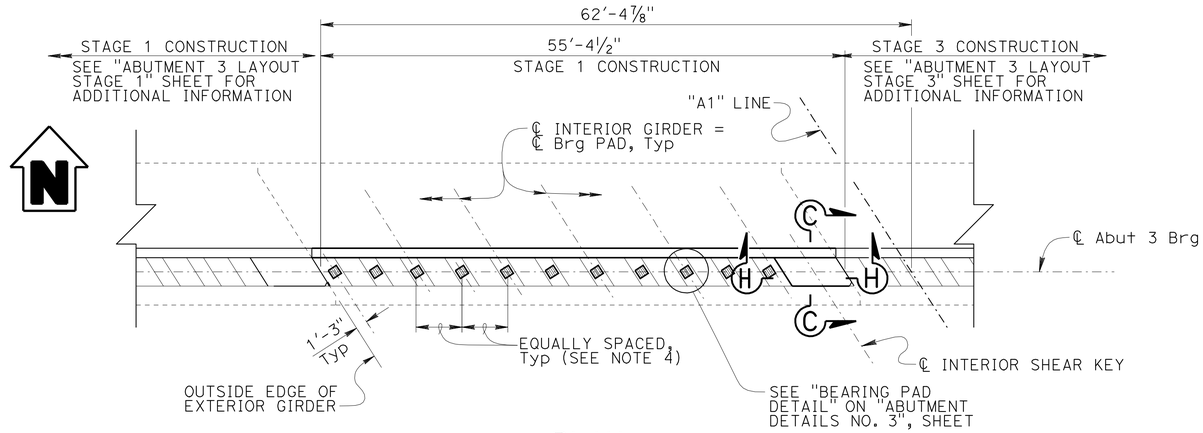

PLAN

1/8" = 1'-0"

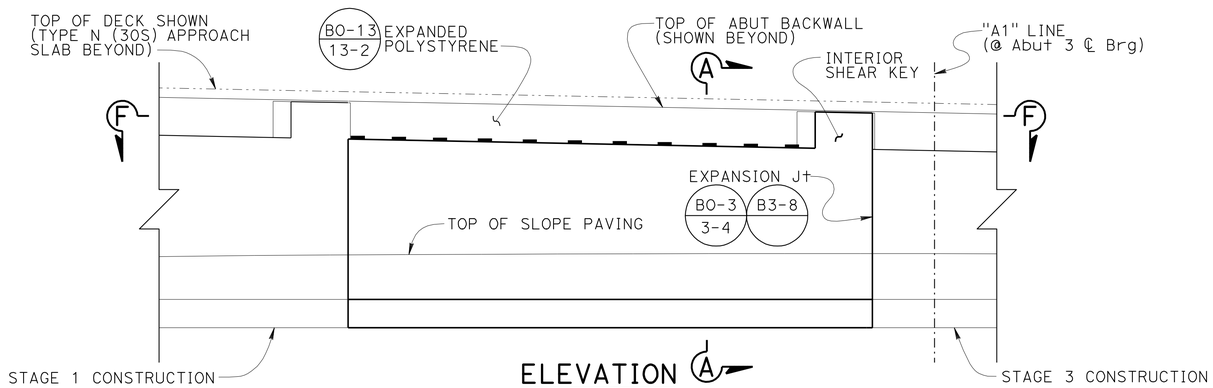

ELEVATION

1/8" = 1'-0"

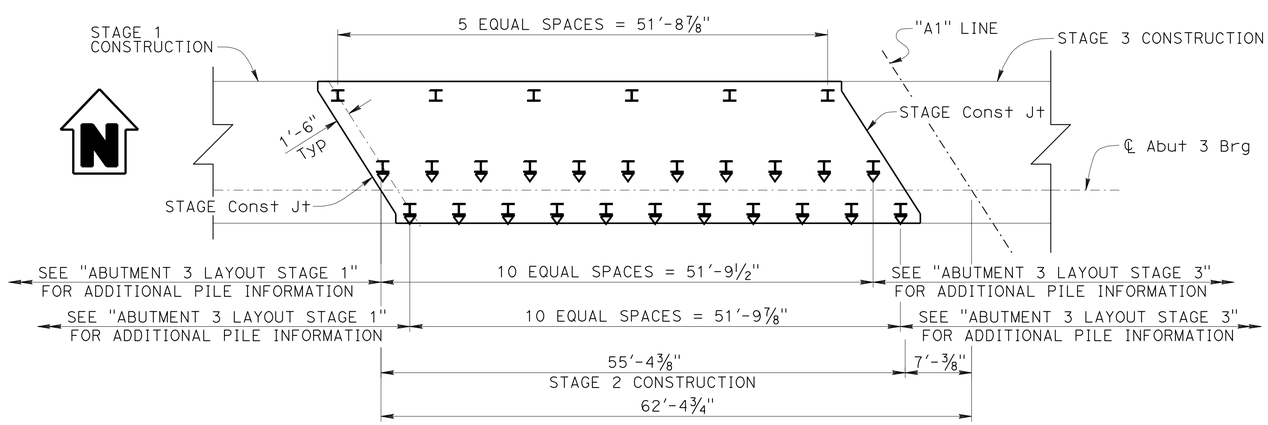

FOOTING & PILE PLAN

1/8" = 1'-0"

NOTES:

1. See "PILE & FOOTING DATA TABLE" sheet for additional information.
2. See "SECTION A-A" & "SECTION C-C" on "ABUTMENT DETAILS NO. 1" sheet for additional information.
3. See "SECTION F-F" & "SECTION H-H" on "ABUTMENT DETAILS NO. 2" sheet for additional information.
4. ℄ Brg pad = ℄ interior girder. Provide additional brg pads equally spaced between girders, Typ.

LEGEND:

Indicates 1:3 Battered Pile

Indicates vertical Pile

	BY	CHECKED
DESIGN	J. HIGAREDA	J. JAUREGUI
DETAILS	T. TREFZ	J. JAUREGUI
QUANTITIES	J. HIGAREDA	G. GALO

STATE OF CALIFORNIA DEPARTMENT OF TRANSPORTATION

DIVISION OF ENGINEERING SERVICES STRUCTURE DESIGN — DESIGN BRANCH 15

BRIDGE NO. 53-3061 — POST MILE 4.91

IMPERIAL HIGHWAY UC (REPLACE)

ABUTMENT 3 LAYOUT STAGE 2

STRUCTURES DESIGN DETAIL SHEET (ENGLISH) (REV. 09-01-10)

ORIGINAL SCALE IN INCHES FOR REDUCED PLANS 0 1 2 3

UNIT: 3604
PROJECT NUMBER & PHASE: 0700001834 1
CONTRACT NO.: 07-215941

DISREGARD PRINTS BEARING EARLIER REVISION DATES — REVISION DATES 08-15-22 12-12-11

SHEET 13 OF 76

FILE => 53-3061-f-a03_lo2.dgn

USERNAME => s109858 DATE PLOTTED => 15-APR-2012 TIME PLOTTED => 07:07

DIST	COUNTY	ROUTE	POST MILES TOTAL PROJECT	SHEET No.	TOTAL SHEETS
07	LA	5	4.0/5.9	1018	1597

José L. Higareda — REGISTERED CIVIL ENGINEER — 12-12-11 DATE

4-9-12 PLANS APPROVAL DATE

REGISTERED PROFESSIONAL ENGINEER — JOSE L. HIGAREDA — No. 62338 — Exp. 9-30-13 — CIVIL — STATE OF CALIFORNIA

The State of California or its officers or agents shall not be responsible for the accuracy or completeness of electronic copies of this plan sheet.

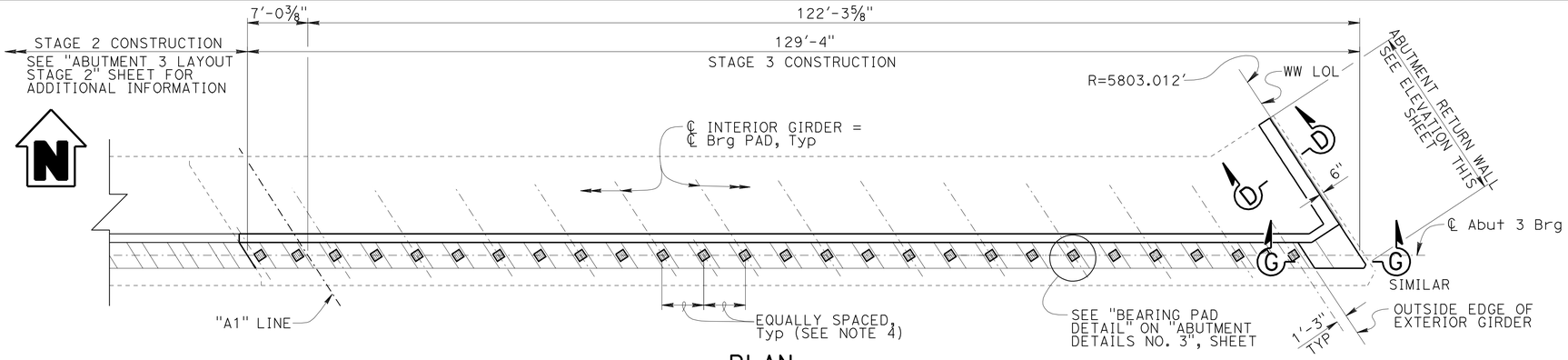

PLAN

1/8" = 1'-0"

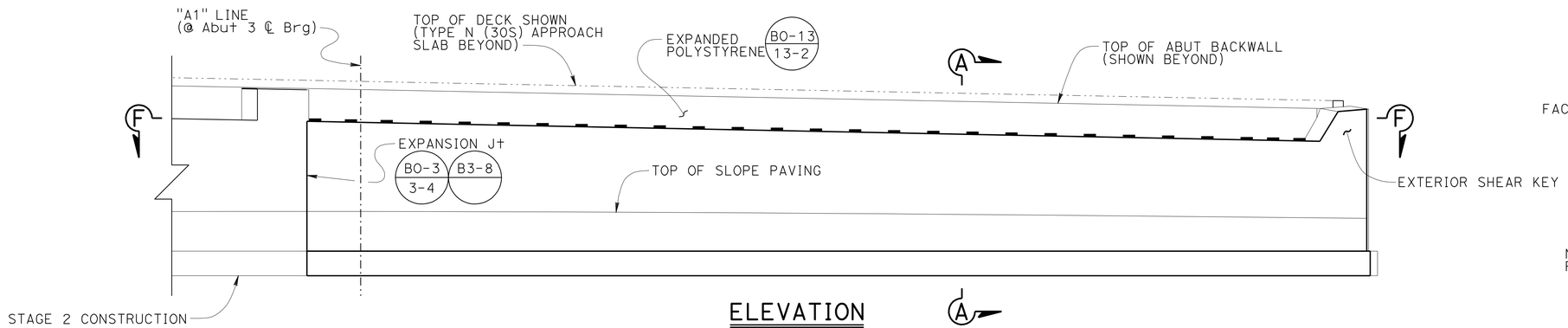

ELEVATION

1/8" = 1'-0"

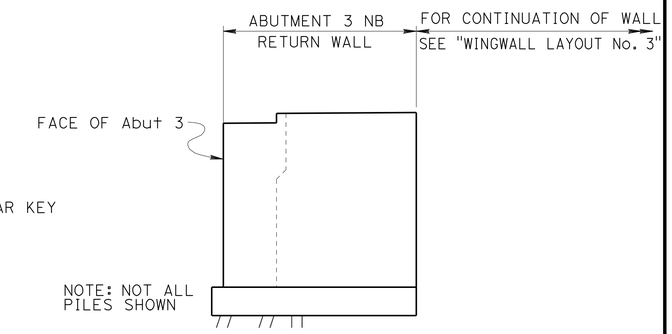

RETURN WALL ELEVATION

1/8" = 1'-0"

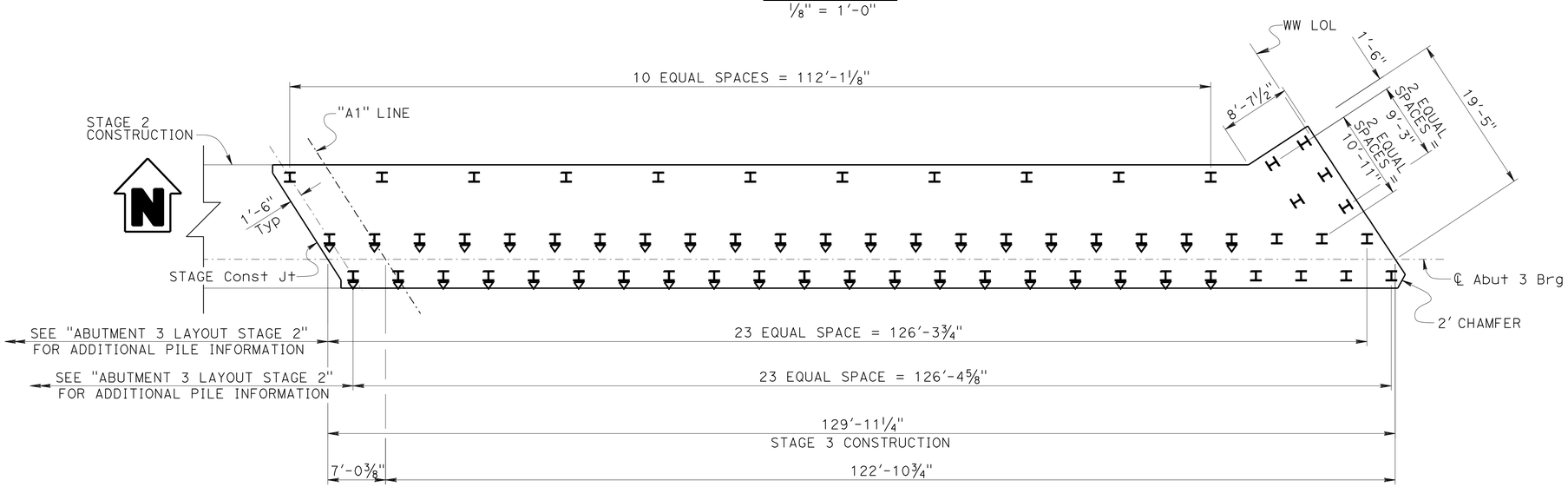

FOOTING & PILE PLAN

1/8" = 1'-0"

NOTES:

1. See "PILE & FOOTING DATA TABLE" sheet for additional information.
2. See "SECTION A-A" & "SECTION D-D" on "ABUTMENT DETAILS NO. 1" sheet for additional information.
3. See "SECTION F-F" & "SECTION G-G" on "ABUTMENT DETAILS No. 2" sheet for additional information.
4. ℄ Brg pad = ℄ interior girder. Provide additional Brg pads equally spaced between girders, Typ.

LEGEND:

Indicates 1:3 Battered Pile

Indicates vertical Pile

	BY	CHECKED
DESIGN	J. HIGAREDA	J. JAUREGUI
DETAILS	T. TREFZ	J. JAUREGUI
QUANTITIES	J. HIGAREDA	G. GALO

STATE OF CALIFORNIA DEPARTMENT OF TRANSPORTATION

DIVISION OF ENGINEERING SERVICES STRUCTURE DESIGN — DESIGN BRANCH 15

BRIDGE NO. 53-3061 — POST MILE 4.91

IMPERIAL HIGHWAY UC (REPLACE)

ABUTMENT 3 LAYOUT STAGE 3

STRUCTURES DESIGN DETAIL SHEET (ENGLISH) (REV. 09-01-10)

ORIGINAL SCALE IN INCHES FOR REDUCED PLANS 0 1 2 3

UNIT: 3604
PROJECT NUMBER & PHASE: 0700001834 1
CONTRACT NO.: 07-215941

DISREGARD PRINTS BEARING EARLIER REVISION DATES

REVISION DATES: 08-22-11 12-12-11

SHEET 14 OF 76

FILE => 53-3061-f-a03_1o3.dgn

USERNAME => s109858 DATE PLOTTED => 15-APR-2012 TIME PLOTTED => 07:07

DIST	COUNTY	ROUTE	POST MILES TOTAL PROJECT	SHEET No.	TOTAL SHEETS
07	LA	5	4.0/5.9	1019	1597

José L. Higareda 12-12-11
REGISTERED CIVIL ENGINEER DATE

4-9-12
PLANS APPROVAL DATE

REGISTERED PROFESSIONAL ENGINEER
JOSE L. HIGAREDA
No. 62338
Exp. 9-30-13
CIVIL
STATE OF CALIFORNIA

The State of California or its officers or agents shall not be responsible for the accuracy or completeness of electronic copies of this plan sheet.

NOTES:

1. See "PILE & FOOTING DATA TABLES" sheet for Pile Data Table.

LEGEND:

- Denotes Vertical Pile
- Denotes Battered Pile
- * Measured along WW LOL

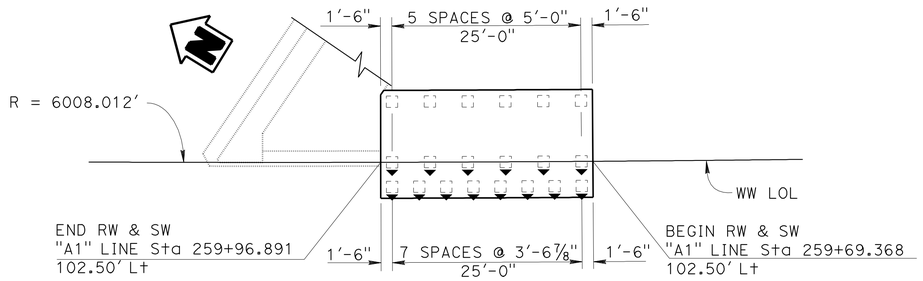

PLAN
ABUTMENT 1 LEFT
1" = 10'

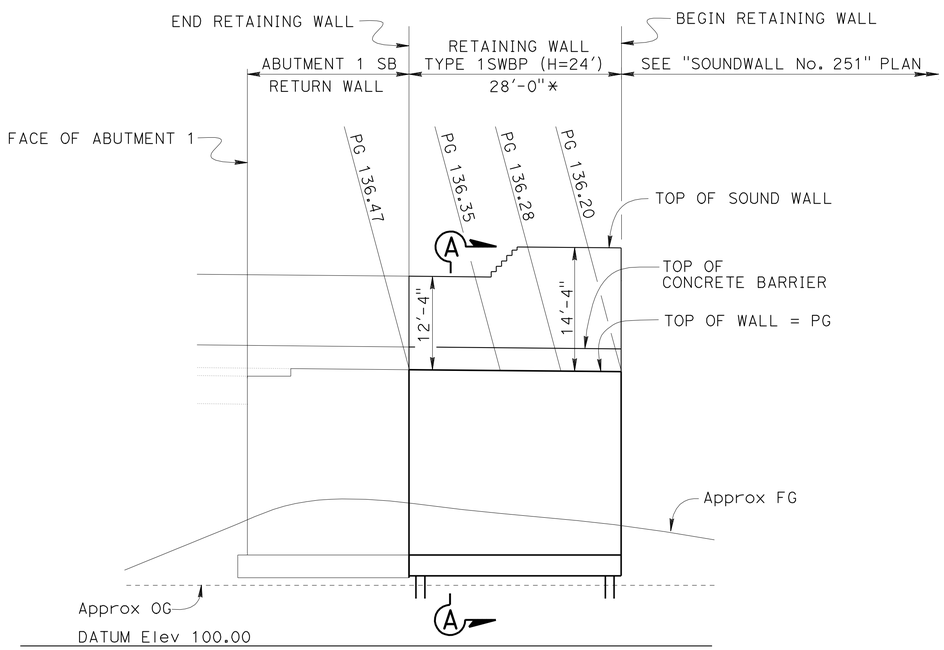

ELEVATION
ABUTMENT 1 LEFT
1" = 10'

NOTES:

1. All Piles not shown for clarity.
2. Architectural treatment not shown for clarity. See "ARCHITECTURAL DETAILS" sheets for additional information.

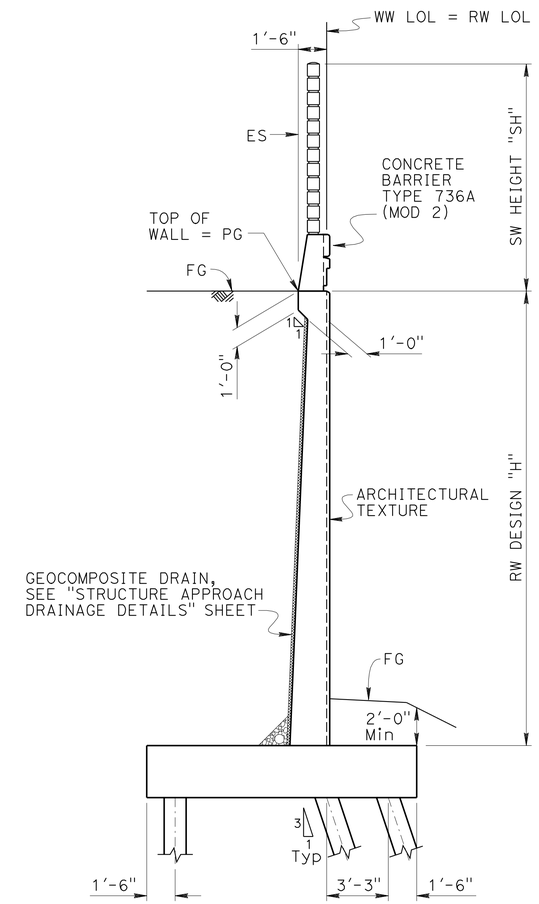

SECTION A-A
NO SCALE

DESIGN	BY J. HIGAREDA	CHECKED J. JAUREGUI	
DETAILS	BY G. DICKERSON	CHECKED J. JAUREGUI	
QUANTITIES	BY J. HIGAREDA	CHECKED G. GALO	

STATE OF CALIFORNIA
DEPARTMENT OF TRANSPORTATION

DIVISION OF ENGINEERING SERVICES
STRUCTURE DESIGN
DESIGN BRANCH 15

BRIDGE NO. 53-3061
POST MILE 4.91

IMPERIAL HIGHWAY UC (REPLACE)
WINGWALL LAYOUT NO. 1

STRUCTURES DESIGN DETAIL SHEET (ENGLISH) (REV. 09-01-10)

ORIGINAL SCALE IN INCHES FOR REDUCED PLANS 0 1 2 3

UNIT: 3604
PROJECT NO. & PHASE: 0700001834 1
CONTRACT NO.: 07-215941

DISREGARD PRINTS BEARING EARLIER REVISION DATES

REVISION DATES 8-26-11 11-22-11 12-12-11

SHEET 15 OF 76

FILE => 53-3061-g-ww_la1.dgn

USERNAME => s103858 DATE PLOTTED => 15-APR-2012 TIME PLOTTED => 07:07

DIST	COUNTY	ROUTE	POST MILES TOTAL PROJECT	SHEET No.	TOTAL SHEETS
07	LA	5	4.0/5.9	1020	1597

José L. Higareda — REGISTERED CIVIL ENGINEER — 12-12-11 DATE

4-9-12 PLANS APPROVAL DATE

REGISTERED PROFESSIONAL ENGINEER — JOSE L. HIGAREDA — No. 62338 — Exp. 9-30-13 — CIVIL — STATE OF CALIFORNIA

The State of California or its officers or agents shall not be responsible for the accuracy or completeness of electronic copies of this plan sheet.

NOTES:

1. See "PILE & FOOTING DATA TABLES" sheet for Pile Data Table.

LEGEND:

- Denotes Vertical Pile
- Denotes Battered Pile
- * Measured along WW LOL

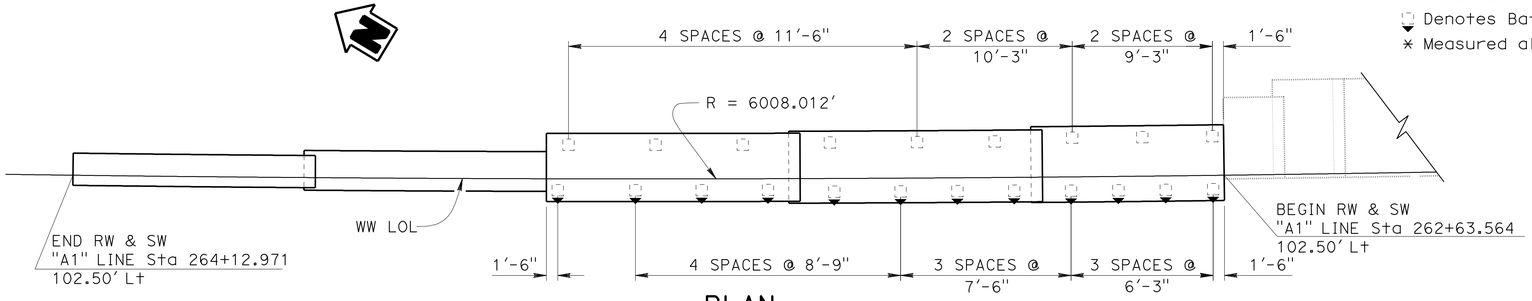

PLAN
ABUTMENT 3 LEFT
1" = 10'

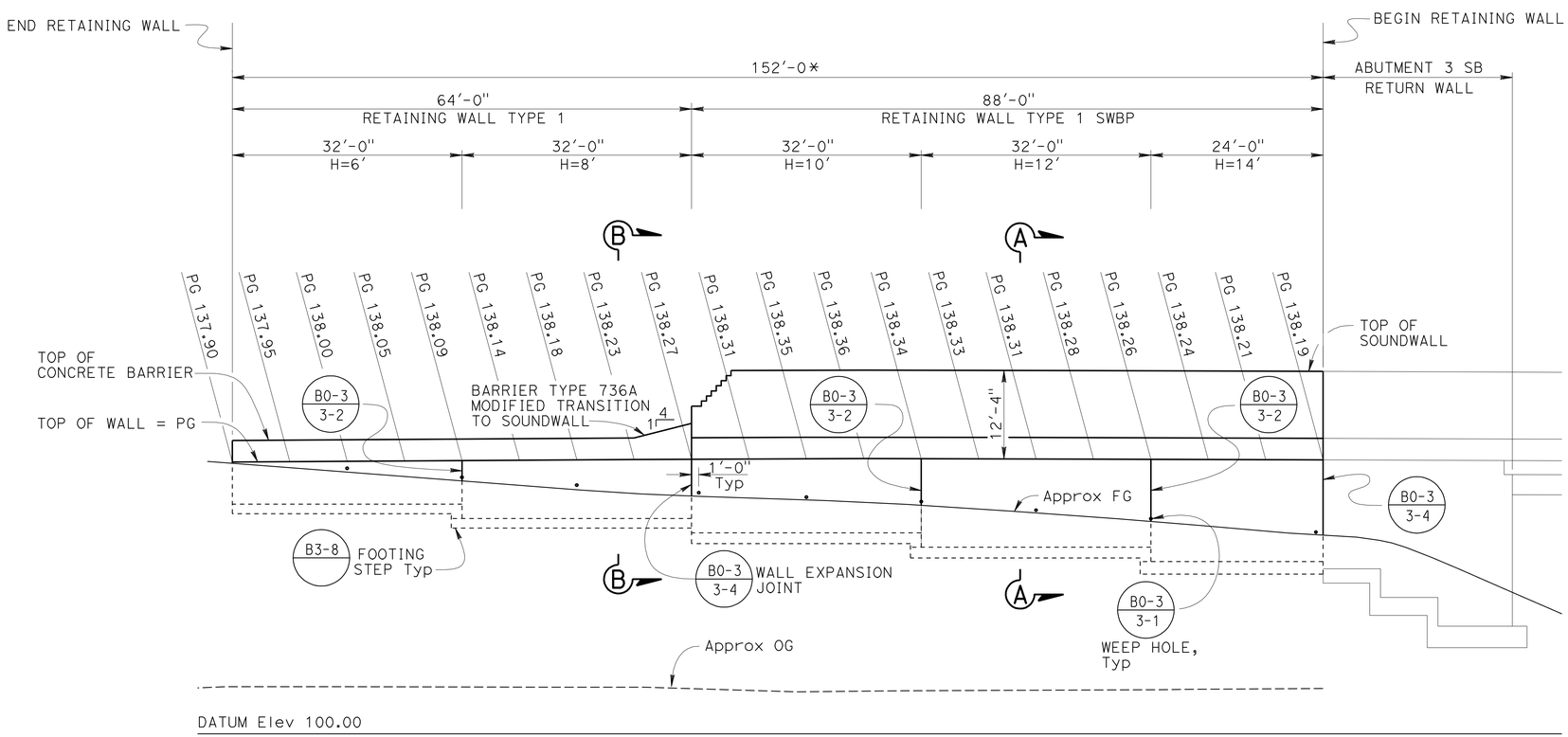

ELEVATION
ABUTMENT 3 LEFT
1" = 10'

NOTES:

1. All Piles not shown for clarity.
2. Architectural treatment not shown for clarity. See "ARCHITECTURAL DETAILS" sheets for additional information.

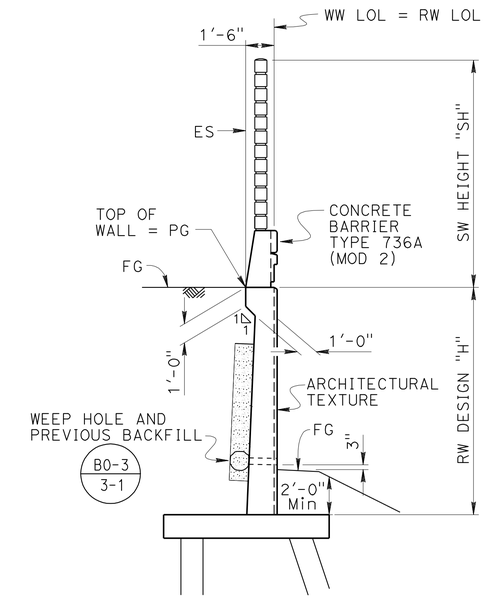

SECTION A-A
NO SCALE

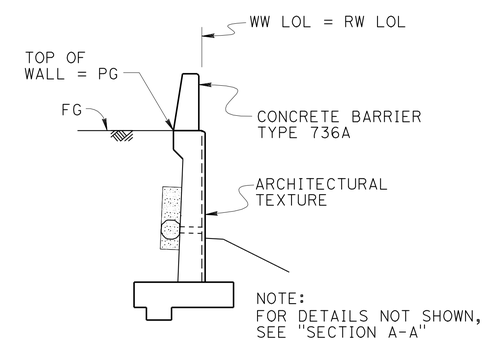

SECTION B-B
NO SCALE

DESIGN	BY J. HIGAREDA	CHECKED J. JAUREGUI	
DETAILS	BY G. DICKERSON	CHECKED J. JAUREGUI	
QUANTITIES	BY J. HIGAREDA	CHECKED G. GALO	

STATE OF CALIFORNIA
DEPARTMENT OF TRANSPORTATION

DIVISION OF ENGINEERING SERVICES
STRUCTURE DESIGN
DESIGN BRANCH 15

BRIDGE NO. 53-3061
POST MILE 4.91

IMPERIAL HIGHWAY UC (REPLACE)
WINGWALL LAYOUT NO. 2

STRUCTURES DESIGN DETAIL SHEET (ENGLISH) (REV. 09-01-10)

ORIGINAL SCALE IN INCHES FOR REDUCED PLANS 0 1 2 3

UNIT: 3604
PROJECT NO. & PHASE: 0700001834 1
CONTRACT NO.: 07-215941

DISREGARD PRINTS BEARING EARLIER REVISION DATES

REVISION DATES 08-08-11 11-15-11 12-12-11

SHEET 16 OF 76

FILE => 53-3061-g-ww_lo2.dgn

USERNAME => s109858 DATE PLOTTED => 15-APR-2012 TIME PLOTTED => 07:07

DIST	COUNTY	ROUTE	POST MILES TOTAL PROJECT	SHEET No.	TOTAL SHEETS
07	LA	5	4.0/5.9	1021	1597

José L. Higareda 12-12-11
REGISTERED CIVIL ENGINEER DATE

4-9-12
PLANS APPROVAL DATE

REGISTERED PROFESSIONAL ENGINEER JOSE L. HIGAREDA No. 62338 Exp. 9-30-13 CIVIL STATE OF CALIFORNIA

The State of California or its officers or agents shall not be responsible for the accuracy or completeness of electronic copies of this plan sheet.

NOTES:

1. See "PILE & FOOTING DATA TABLES" sheet for Pile Data Table.

LEGEND:

- Denotes Vertical Pile
- Denotes Battered Pile
- * Measured along WW LOL

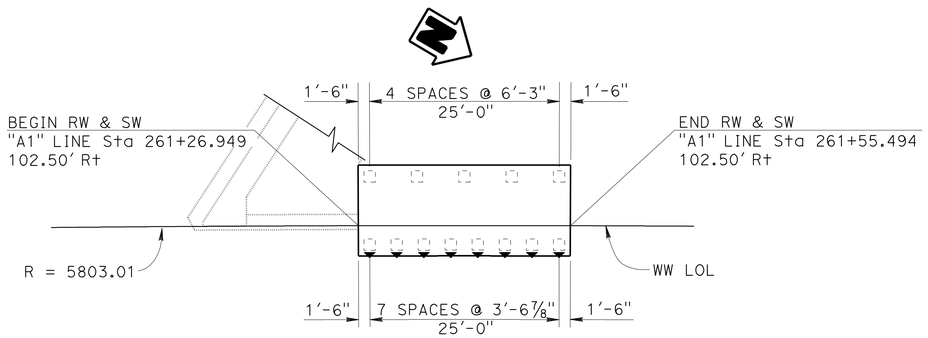

PLAN
ABUTMENT 3 RIGHT
1" = 10'

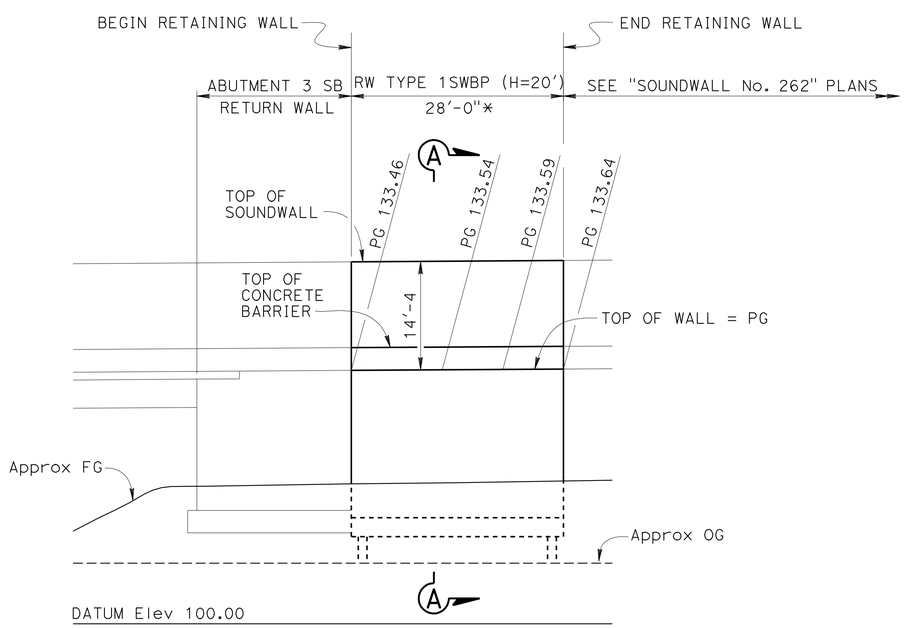

* ALL PILES NOT SHOWN

ELEVATION
ABUTMENT 3 RIGHT
1" = 10'

NOTES:

1. All Piles not shown for clarity.
2. Architectural treatment not shown for clarity. See "ARCHITECTURAL DETAILS" sheets for additional information.

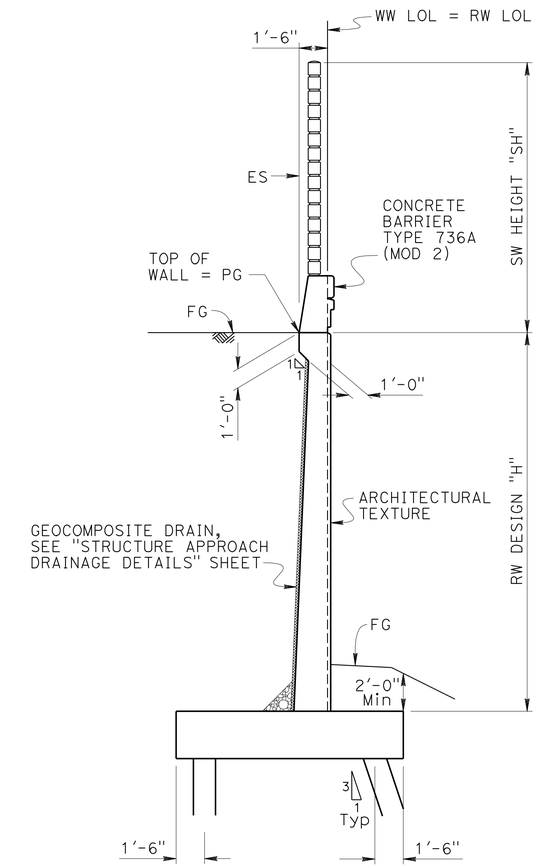

SECTION A-A
NO SCALE

DESIGN	BY J. HIGAREDA	CHECKED J. JAUREGUI	
DETAILS	BY G. DICKERSON	CHECKED J. JAUREGUI	
QUANTITIES	BY J. HIGAREDA	CHECKED G. GALO	

STATE OF CALIFORNIA
DEPARTMENT OF TRANSPORTATION

DIVISION OF ENGINEERING SERVICES
STRUCTURE DESIGN
DESIGN BRANCH 15

BRIDGE NO. 53-3061
POST MILE 4.91

IMPERIAL HIGHWAY UC (REPLACE)
WINGWALL LAYOUT NO. 3

STRUCTURES DESIGN DETAIL SHEET (ENGLISH) (REV. 09-01-10)

ORIGINAL SCALE IN INCHES FOR REDUCED PLANS 0 1 2 3

UNIT: 3604
PROJECT NO. & PHASE: 0700001834 1 CONTRACT NO.: 07-215941

DISREGARD PRINTS BEARING EARLIER REVISION DATES

REVISION DATES 8-26-11 11-17-11 12-12-11

SHEET 17 OF 76

FILE => 53-3061-g-ww_lo3.dgn

USERNAME => s109858 DATE PLOTTED => 15-APR-2012 TIME PLOTTED => 07:07

DIST	COUNTY	ROUTE	POST MILES TOTAL PROJECT	SHEET No.	TOTAL SHEETS
07	LA	5	4.0/5.9	1022	1597

José L. Higareda
REGISTERED CIVIL ENGINEER 12-12-11
DATE

4-9-12
PLANS APPROVAL DATE

REGISTERED PROFESSIONAL ENGINEER JOSE L. HIGAREDA No. 62338 Exp. 9-30-13 CIVIL STATE OF CALIFORNIA

The State of California or its officers or agents shall not be responsible for the accuracy or completeness of electronic copies of this plan sheet.

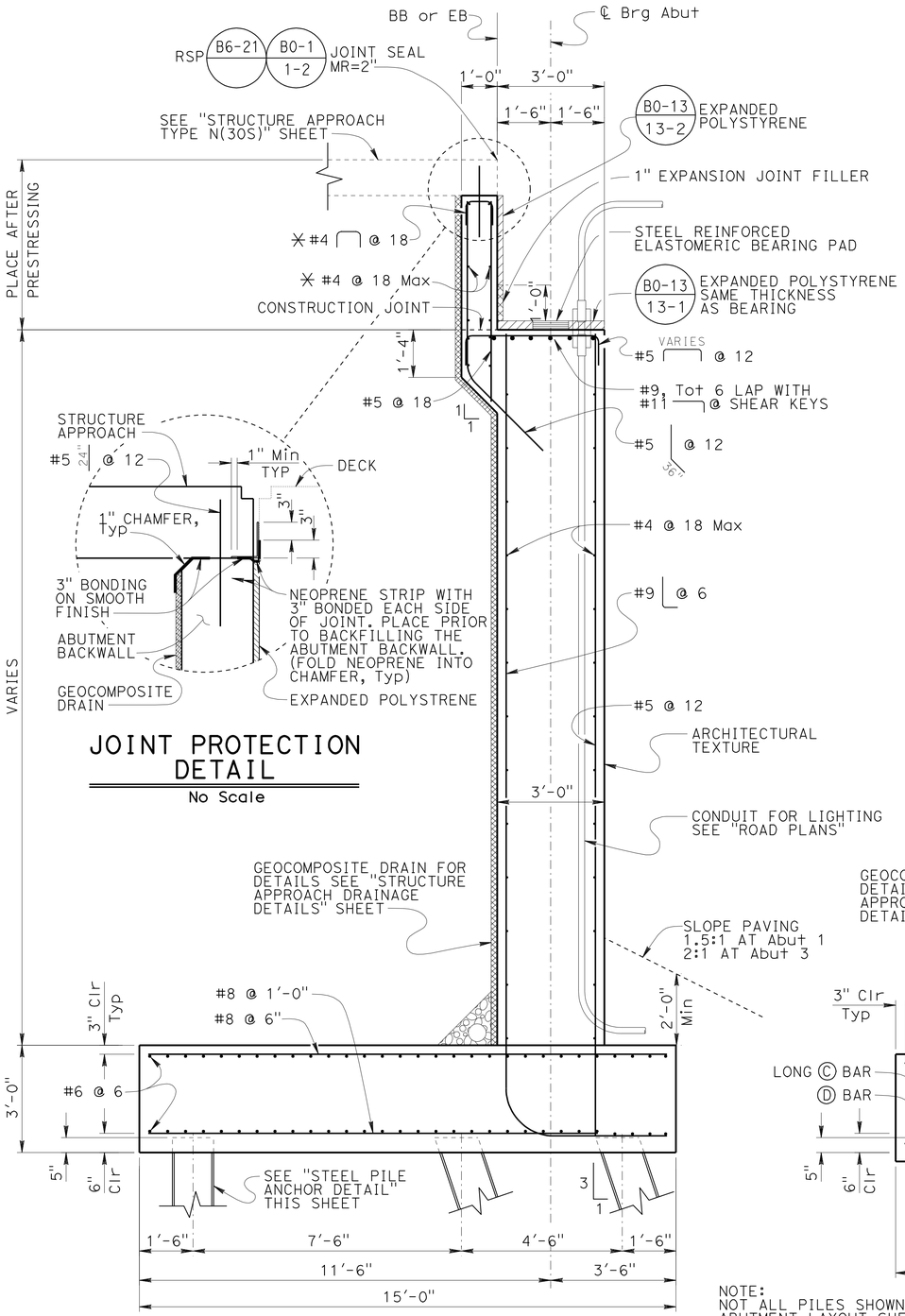

JOINT PROTECTION DETAIL

No Scale

✳ DENOTES CONDITION BETWEEN SHEAR KEYS ONLY

SECTION A-A

½" = 1'-0"

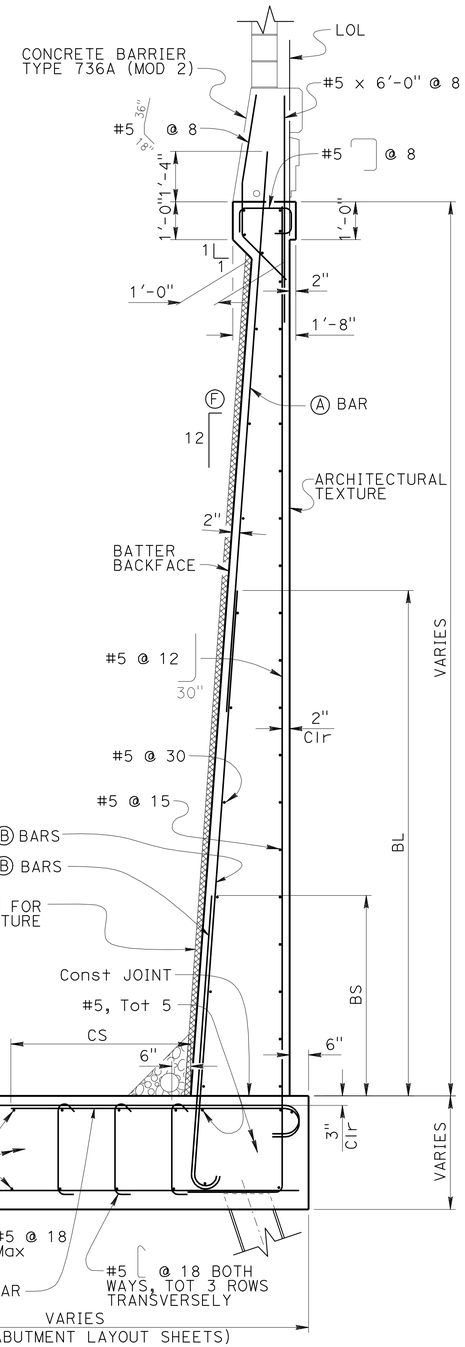

NOTE:
NOT ALL PILES SHOWN. SEE ABUTMENT LAYOUT SHEETS FOR SPECIFIC LOCATIONS AND ORIENTATION.

SECTION B-B

½" = 1'-0"

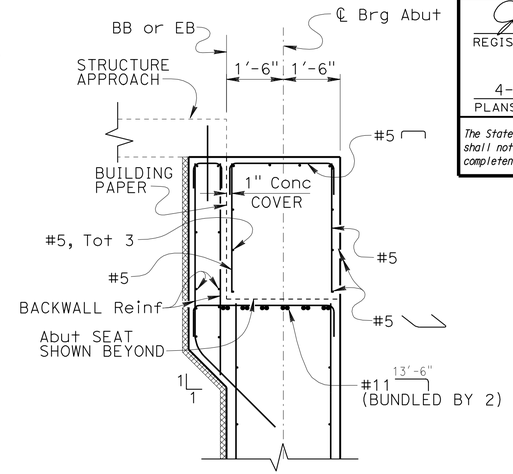

INTERIOR SHEAR KEY

SECTION C-C

½" = 1'-0"

REINFORCEMENT TABLE

	SECTION B-B	SECTION D-D
Ⓐ BARS	#7@12	#6@6
Ⓑ BARS	#10@6	#8@6 ✳✳
BS	7'-0"	7'-6"
BL	13'-3"	15'-6"
Ⓒ BARS	#9@6 ✳✳	#10@6 ✳✳
CS	5'-6"	7'-6"
Ⓓ BARS	#5@12	#8@6
Ⓔ BARS	#5@18	N/A
Ⓕ	½"	⅝"

✳✳ INDICATES 2 BAR BUNDLE

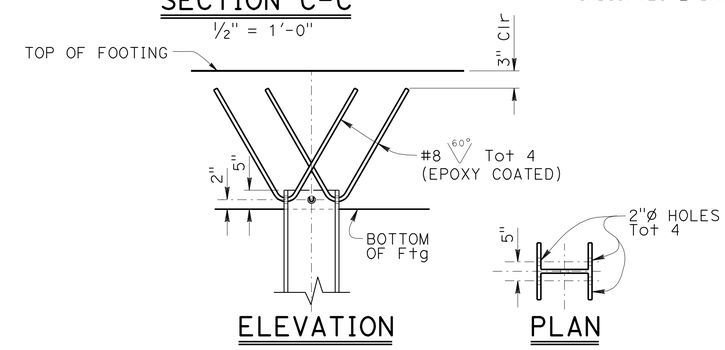

ELEVATION PLAN

STEEL PILE ANCHOR

NO SCALE

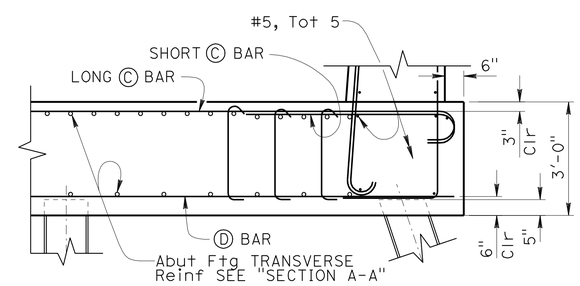

NOTE:
FOR ADDITIONAL Reinf OR DETAILS NOT SHOWN SEE "SECTION B-B" ON THIS SHEET

SECTION D-D

½" = 1'-0"

	BY	CHECKED
DESIGN	J. HIGAREDA	J. JAUREGUI
DETAILS	T. TREFZ	J. JAUREGUI
QUANTITIES	J. HIGAREDA	G. GALO

STATE OF CALIFORNIA
DEPARTMENT OF TRANSPORTATION

DIVISION OF ENGINEERING SERVICES
STRUCTURE DESIGN
DESIGN BRANCH 15

BRIDGE NO. 53-3061
POST MILE 4.91

IMPERIAL HIGHWAY UC (REPLACE)

ABUTMENT DETAILS NO. 1

STRUCTURES DESIGN DETAIL SHEET (ENGLISH) (REV. 09-01-10)

ORIGINAL SCALE IN INCHES FOR REDUCED PLANS 0 1 2 3

UNIT: 3604
PROJECT NUMBER & PHASE: 0700001834 1
CONTRACT NO.: 07-215941

DISREGARD PRINTS BEARING EARLIER REVISION DATES

REVISION DATES 12-10-11 09-03-11 11-28-11

SHEET 18 OF 76

FILE => 53-3061-h-abut_dt01.dgn

USERNAME => s108858 DATE PLOTTED => 15-APR-2012 TIME PLOTTED => 07:08

DIST	COUNTY	ROUTE	POST MILES TOTAL PROJECT	SHEET No.	TOTAL SHEETS
07	LA	5	4.0/5.9	1023	1597

José L. Higareda 12-12-11
REGISTERED CIVIL ENGINEER DATE

4-9-12
PLANS APPROVAL DATE

REGISTERED PROFESSIONAL ENGINEER JOSE L. HIGAREDA No. 62338 Exp. 9-30-13 CIVIL STATE OF CALIFORNIA

The State of California or its officers or agents shall not be responsible for the accuracy or completeness of electronic copies of this plan sheet.

NOTES:

1. See "SECTION A-A" & "SECTION B-B" on "ABUTMENT DETAILS No. 1" sheet for additional information not shown or noted.

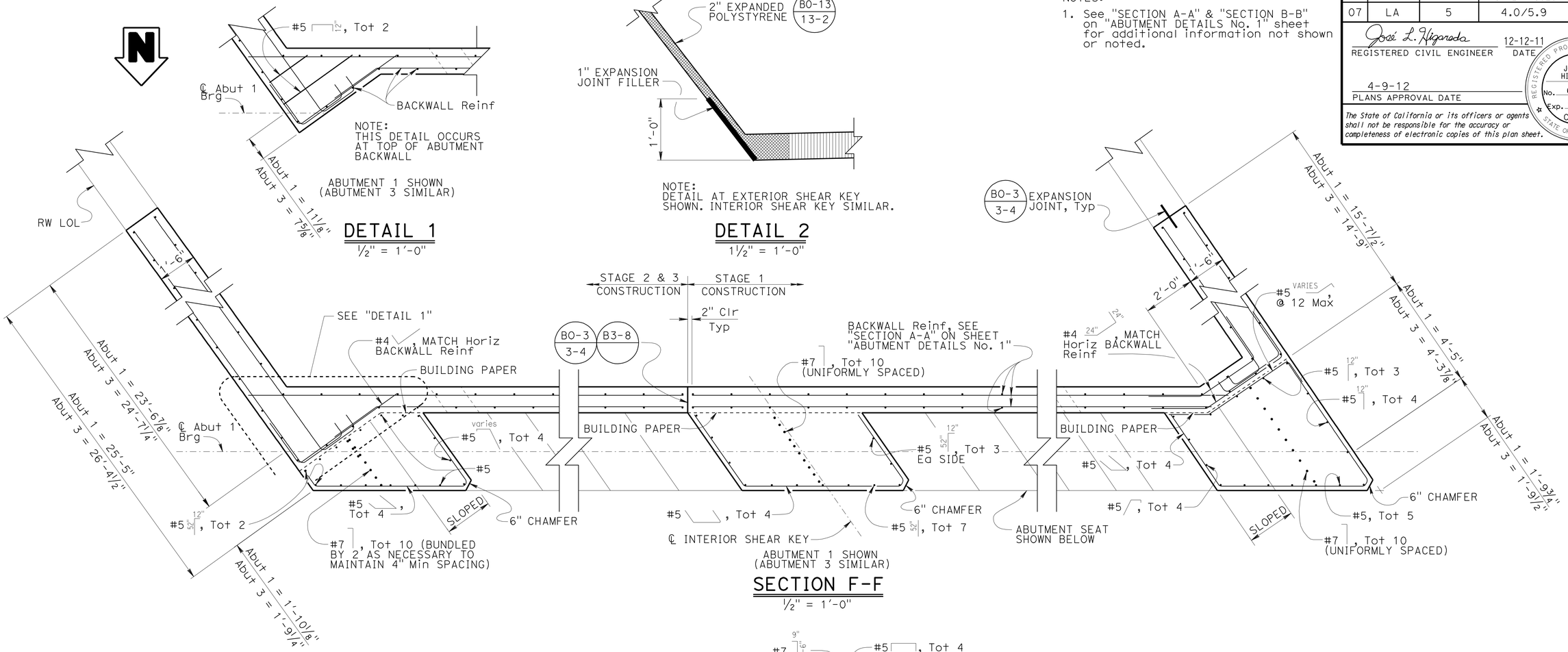

DESIGN	BY J. HIGAREDA	CHECKED J. JAUREGUI	
DETAILS	BY T. TREFZ	CHECKED J. JAUREGUI	
QUANTITIES	BY J. HIGAREDA	CHECKED G. GALO	

STATE OF CALIFORNIA
DEPARTMENT OF TRANSPORTATION

DIVISION OF ENGINEERING SERVICES
STRUCTURE DESIGN
DESIGN BRANCH 15

BRIDGE NO. 53-3061
POST MILE 4.91

IMPERIAL HIGHWAY UC (REPLACE)
ABUTMENT DETAILS NO. 2

STRUCTURES DESIGN DETAIL SHEET (ENGLISH) (REV. 09-01-10)

ORIGINAL SCALE IN INCHES FOR REDUCED PLANS 0 1 2 3

UNIT: 3604
PROJECT NUMBER & PHASE: 0700001834 1
CONTRACT NO.: 07-215941

DISREGARD PRINTS BEARING EARLIER REVISION DATES

REVISION DATES: 08-31-11 12-12-11

SHEET 19 OF 76

FILE => 53-3061-h-abut_dt02.dgn

USERNAME => s109858 DATE PLOTTED => 15-APR-2012 TIME PLOTTED => 07:08

DIST	COUNTY	ROUTE	POST MILES TOTAL PROJECT	SHEET No.	TOTAL SHEETS
07	LA	5	4.0/5.9	1024	1597

José L. Higareda — 12-12-11
REGISTERED CIVIL ENGINEER — DATE

4-9-12
PLANS APPROVAL DATE

REGISTERED PROFESSIONAL ENGINEER — JOSE L. HIGAREDA — No. 62338 — Exp. 9-30-13 — CIVIL — STATE OF CALIFORNIA

The State of California or its officers or agents shall not be responsible for the accuracy or completeness of electronic copies of this plan sheet.

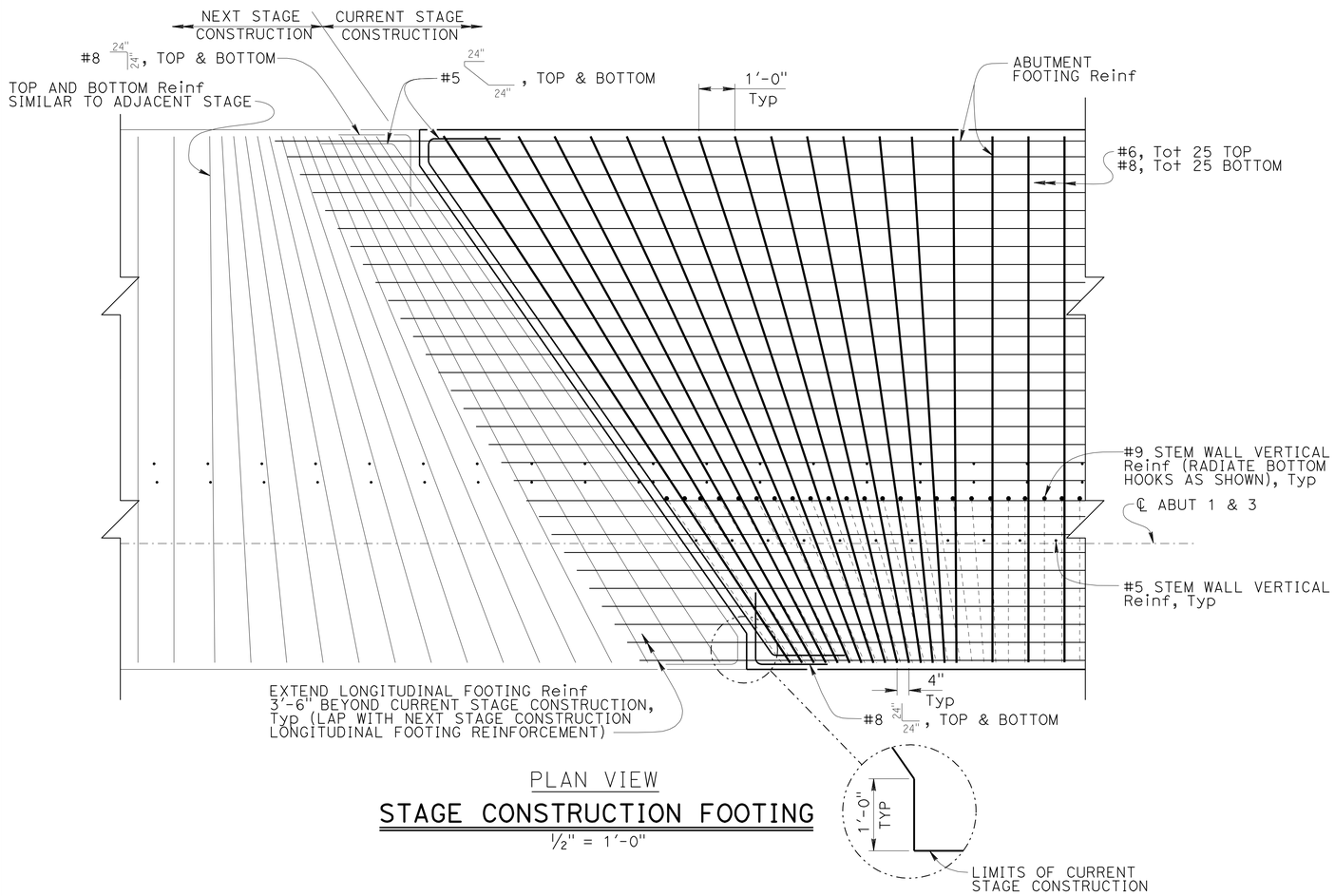

PLAN VIEW

STAGE CONSTRUCTION FOOTING

½" = 1'-0"

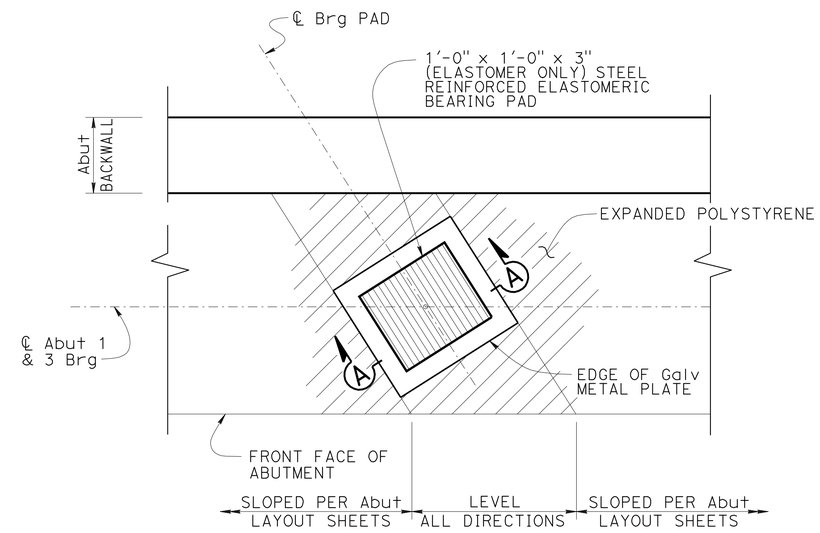

BEARING PAD DETAIL

1" = 1'-0"

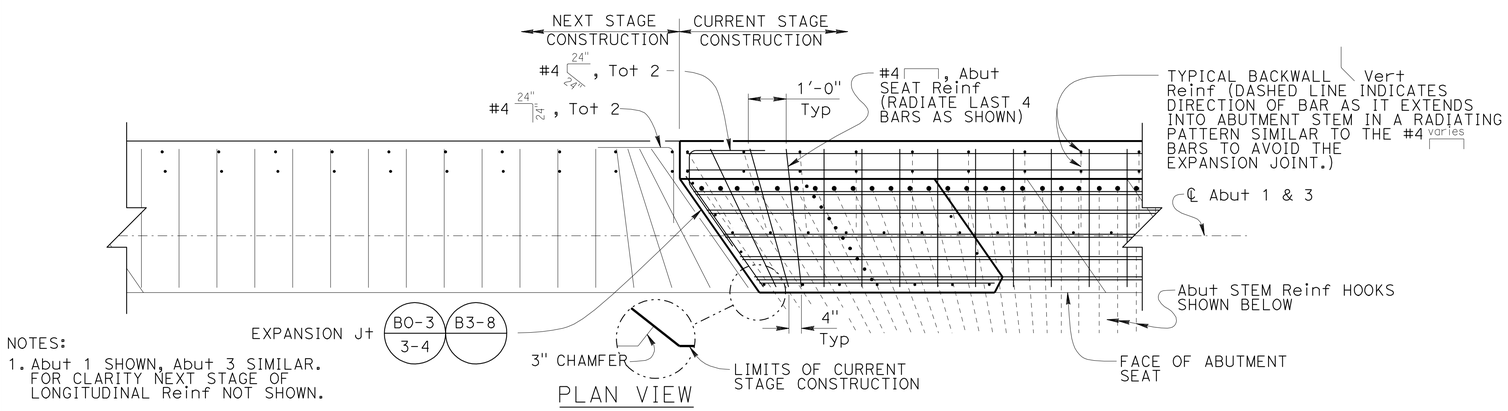

PLAN VIEW

STAGE CONSTRUCTION ABUTMENT STEM WALL

½" = 1'-0"

NOTES:

1. Abut 1 SHOWN, Abut 3 SIMILAR. FOR CLARITY NEXT STAGE OF LONGITUDINAL Reinf NOT SHOWN.
2. INTERTIOR SHEAR KEY Reinf NOT SHOWN

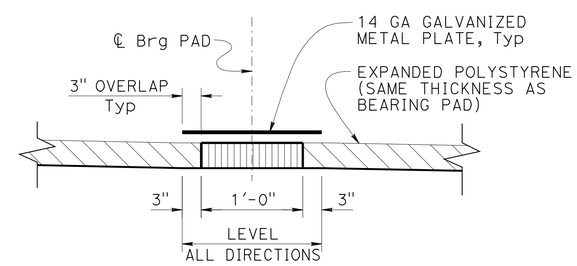

NOTE:
COAT TOP OF BEARING PAD WITH SILICONE GREASE PRIOR TO PLACING GALVANIZED METAL PLATE.

SECTION A-A

1" = 1'-0"

	BY	CHECKED
DESIGN	J. HIGAREDA	J. JAUREGUI
DETAILS	T. TREFZ	J. JAUREGUI
QUANTITIES	J. HIGAREDA	G. GALO

STATE OF CALIFORNIA
DEPARTMENT OF TRANSPORTATION

DIVISION OF ENGINEERING SERVICES
STRUCTURE DESIGN
DESIGN BRANCH 15

BRIDGE NO. 53-3061
POST MILE 4.91

IMPERIAL HIGHWAY UC (REPLACE)
ABUTMENT DETAILS NO. 3

STRUCTURES DESIGN DETAIL SHEET (ENGLISH) (REV. 09-01-10)

ORIGINAL SCALE IN INCHES FOR REDUCED PLANS 0 1 2 3

UNIT: 3604
PROJECT NUMBER & PHASE: 0700001834 1
CONTRACT NO.: 07-215941

DISREGARD PRINTS BEARING EARLIER REVISION DATES

REVISION DATES: 08-02-11 12-12-11

SHEET 20 OF 76

FILE => 53-3061-h-abut_dt03.dgn

USERNAME => s108858 DATE PLOTTED => 15-APR-2012 TIME PLOTTED => 07:08

DIST	COUNTY	ROUTE	POST MILES TOTAL PROJECT	SHEET No.	TOTAL SHEETS
07	LA	5	4.0/5.9	1025	1597

José L. Higareda 12-12-11
REGISTERED CIVIL ENGINEER DATE

4-9-12
PLANS APPROVAL DATE

REGISTERED PROFESSIONAL ENGINEER JOSE L. HIGAREDA No. 62338 Exp. 9-30-13 CIVIL STATE OF CALIFORNIA

The State of California or its officers or agents shall not be responsible for the accuracy or completeness of electronic copies of this plan sheet.

NOTE:

1. See "SECTION A-A", "SECTION B-B" and "SECTION D-D" on "ABUTMENT DETAILS No. 1" sheet for additional information.

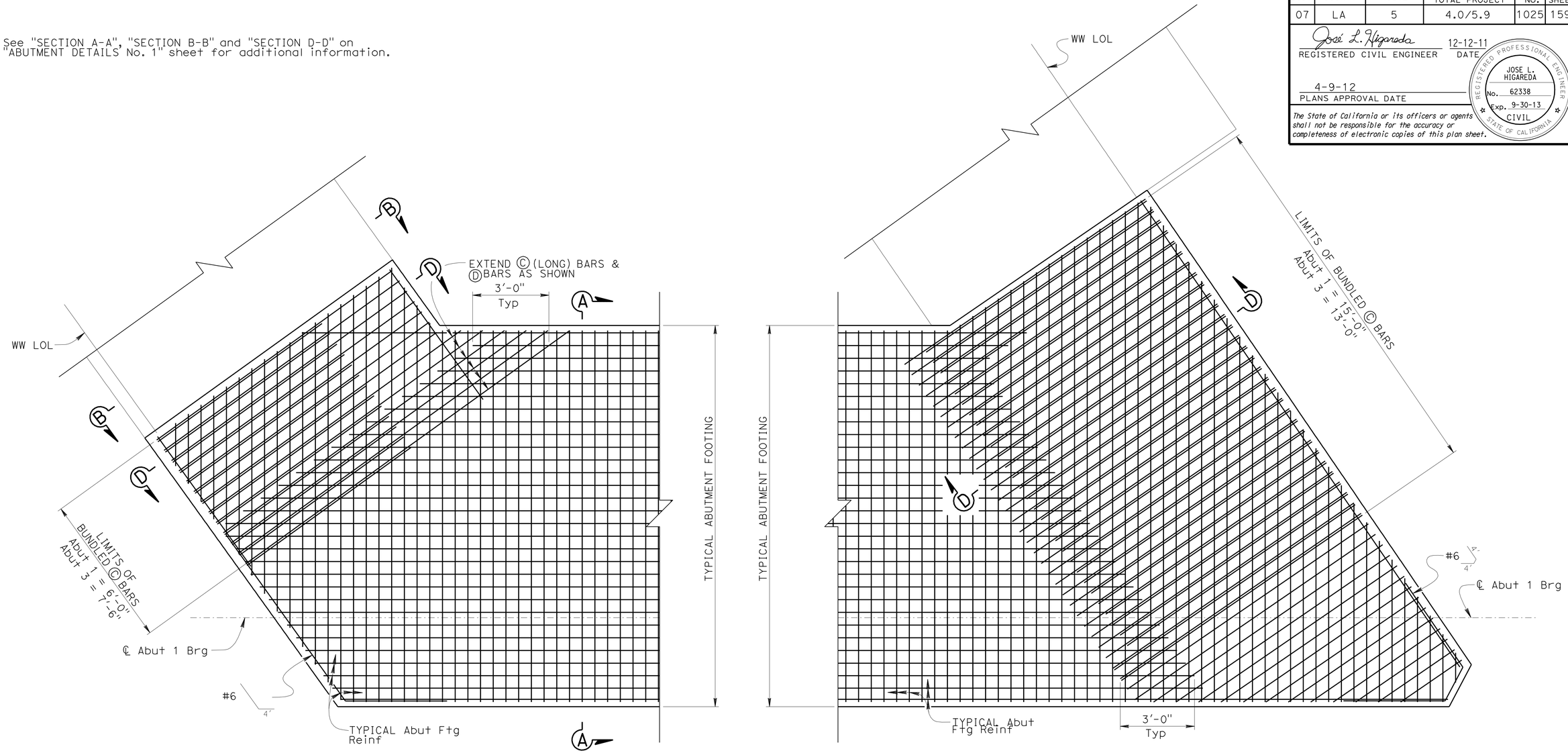

RIGHT

ABUTMENT 1 SHOWN, ABUTMENT 3 SIMILAR

LEFT

ABUTMENT 1 FOOTING TOP REINFORCEMENT PLAN

1/2" = 1'-0"

DESIGN	BY J. HIGAREDA	CHECKED J. JAUREGUI	
DETAILS	BY T. TREFZ	CHECKED J. JAUREGUI	
QUANTITIES	BY J. HIGAREDA	CHECKED G. GALO	

STATE OF CALIFORNIA
DEPARTMENT OF TRANSPORTATION

DIVISION OF ENGINEERING SERVICES
STRUCTURE DESIGN
DESIGN BRANCH 15

BRIDGE NO. 53-3061
POST MILE 4.91

IMPERIAL HIGHWAY UC (REPLACE)
ABUTMENT DETAILS NO. 4

STRUCTURES DESIGN DETAIL SHEET (ENGLISH) (REV. 09-01-10)

ORIGINAL SCALE IN INCHES FOR REDUCED PLANS 0 1 2 3

UNIT: 3604
PROJECT NUMBER & PHASE: 0700001834 1
CONTRACT NO.: 07-215941

DISREGARD PRINTS BEARING EARLIER REVISION DATES

REVISION DATES: 08-02-11 12-12-11

SHEET 21 OF 76

FILE => 53-3061-h-abut_dt04.dgn

USERNAME => s109858 DATE PLOTTED => 15-APR-2012 TIME PLOTTED => 07:08

DIST	COUNTY	ROUTE	POST MILES TOTAL PROJECT	SHEET No.	TOTAL SHEETS
07	LA	5	4.0/5.9	1026	1597

José L. Higareda 12-12-11
REGISTERED CIVIL ENGINEER DATE

4-9-12
PLANS APPROVAL DATE

REGISTERED PROFESSIONAL ENGINEER
JOSE L. HIGAREDA
No. 62338
Exp. 9-30-13
CIVIL
STATE OF CALIFORNIA

The State of California or its officers or agents shall not be responsible for the accuracy or completeness of electronic copies of this plan sheet.

NOTE:

1. See "SECTION A-A", "SECTION B-B" and "SECTION D-D" on "ABUTMENT DETAILS No. 1" sheet for additional information.

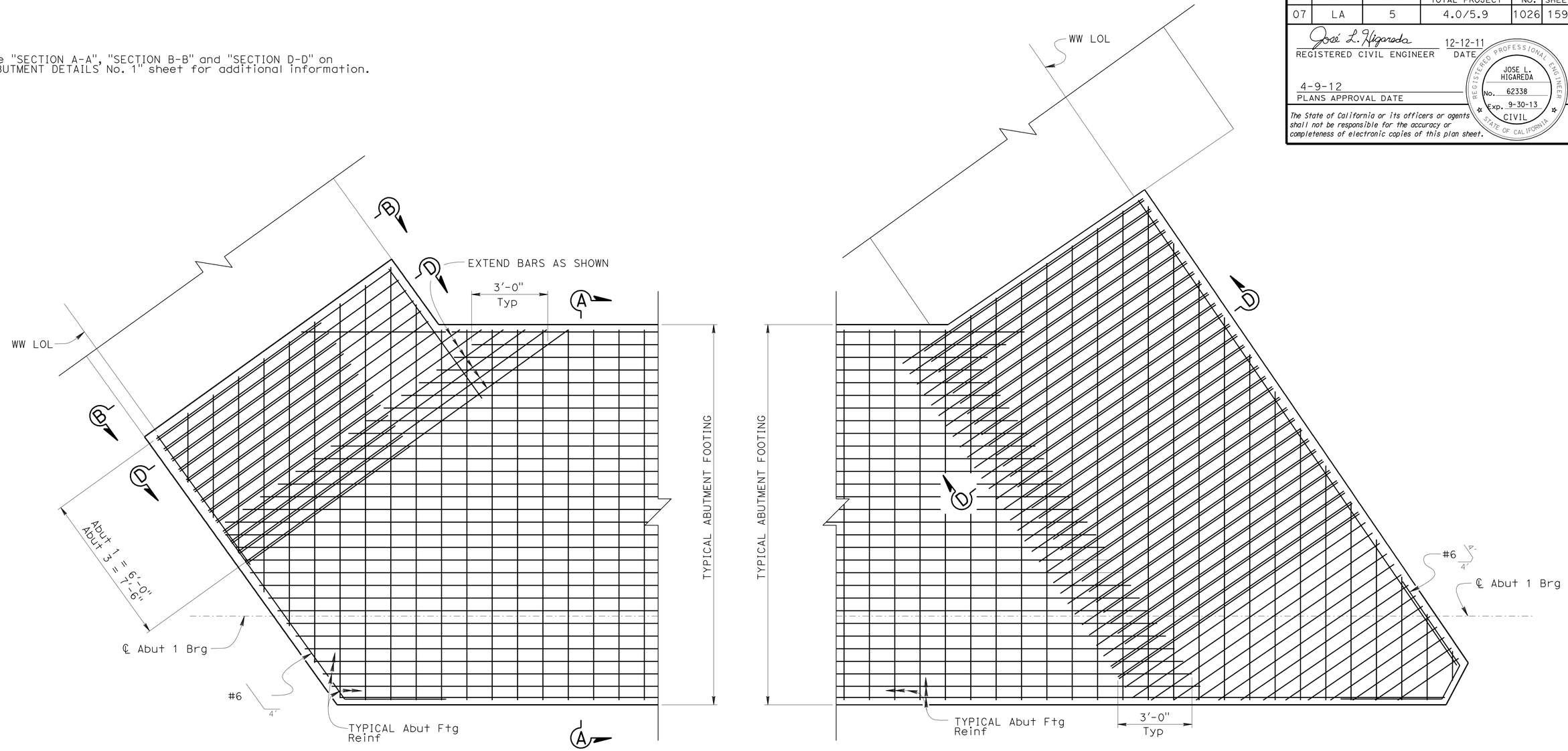

RIGHT

ABUTMENT 1 SHOWN, ABUTMENT 3 SIMILAR

LEFT

ABUTMENT 1 FOOTING BOTTOM REINFORCEMENT PLAN

½" = 1'-0"

	BY	CHECKED
DESIGN	J. HIGAREDA	J. JAUREGUI
DETAILS	T. TREFZ	J. JAUREGUI
QUANTITIES	J. HIGAREDA	G. GALO

STATE OF CALIFORNIA
DEPARTMENT OF TRANSPORTATION

DIVISION OF ENGINEERING SERVICES
STRUCTURE DESIGN
DESIGN BRANCH 15

BRIDGE NO. 53-3061
POST MILE 4.91

IMPERIAL HIGHWAY UC (REPLACE)
ABUTMENT DETAILS NO. 5

STRUCTURES DESIGN DETAIL SHEET (ENGLISH) (REV. 09-01-10)

ORIGINAL SCALE IN INCHES FOR REDUCED PLANS 0 1 2 3

UNIT: 3604
PROJECT NUMBER & PHASE: 0700001834 1
CONTRACT NO.: 07-215941

DISREGARD PRINTS BEARING EARLIER REVISION DATES

REVISION DATES: ~~09-02-11~~ 12-12-11

SHEET 22 OF 76

FILE => 53-3061-h-abut_dt05.dgn

USERNAME => s117606 DATE PLOTTED => 14-APR-2012 TIME PLOTTED => 10:28

DIST	COUNTY	ROUTE	POST MILES TOTAL PROJECT	SHEET No.	TOTAL SHEETS
07	LA	5	4.0/5.9	1027	1597

José L. Higareda 12-12-11
REGISTERED CIVIL ENGINEER DATE

4-9-12
PLANS APPROVAL DATE

REGISTERED PROFESSIONAL ENGINEER
JOSE L. HIGAREDA
No. 62338
Exp. 9-30-13
CIVIL
STATE OF CALIFORNIA

The State of California or its officers or agents shall not be responsible for the accuracy or completeness of electronic copies of this plan sheet.

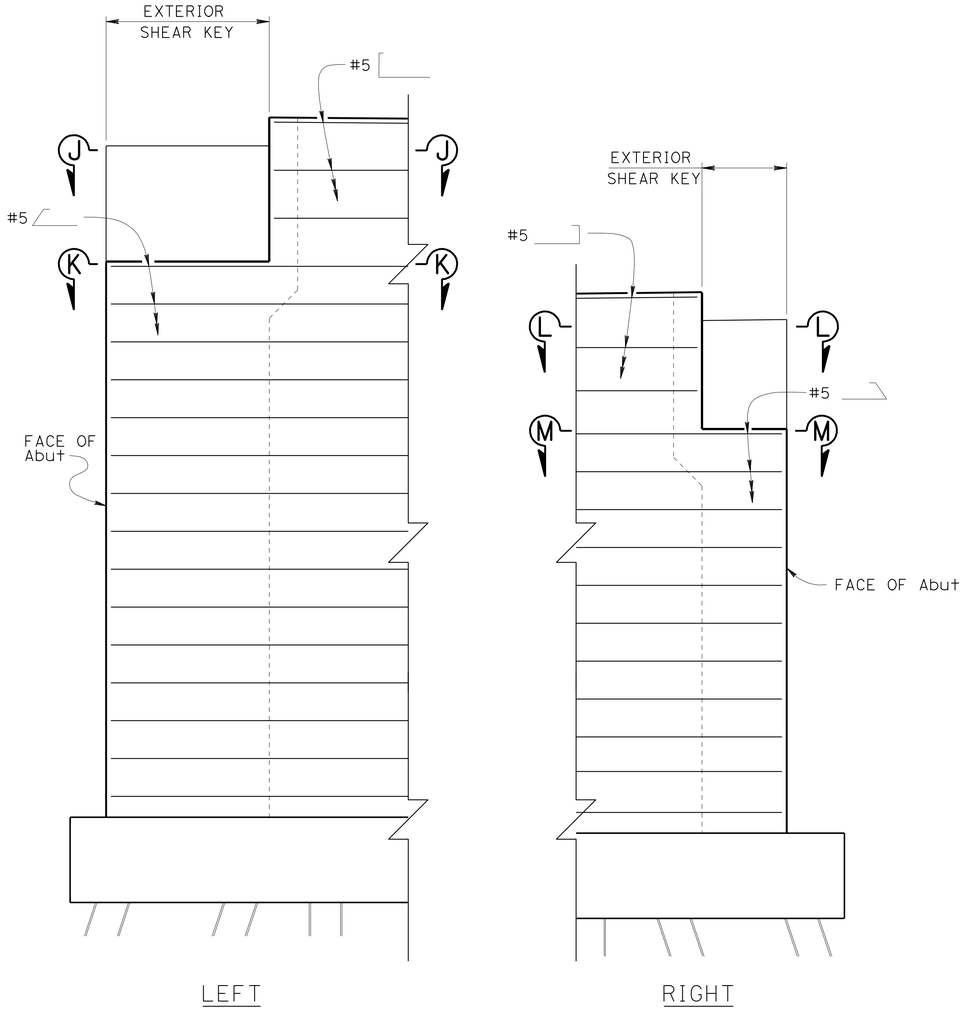

LEFT RIGHT

ABUTMENT 1 RETURN WALL ELEVATIONS

3/8" = 1'-0"

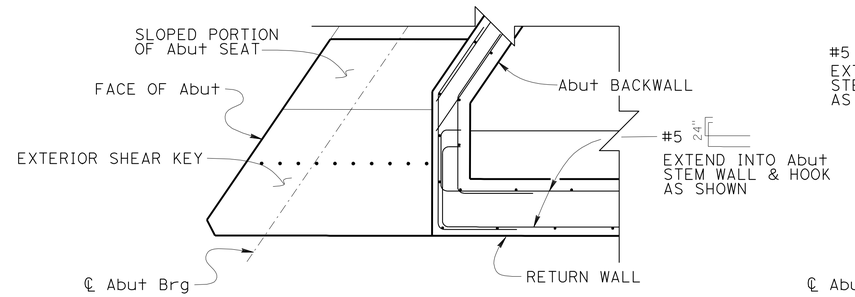

ABUTMENT 1 SHOWN (ABUTMENT 3 SIMILAR)

SECTION J-J

1/2" = 1'-0"

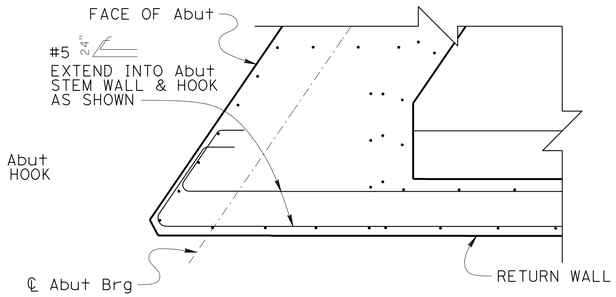

ABUTMENT 1 SHOWN (ABUTMENT 3 SIMILAR)

SECTION K-K

1/2" = 1'-0"

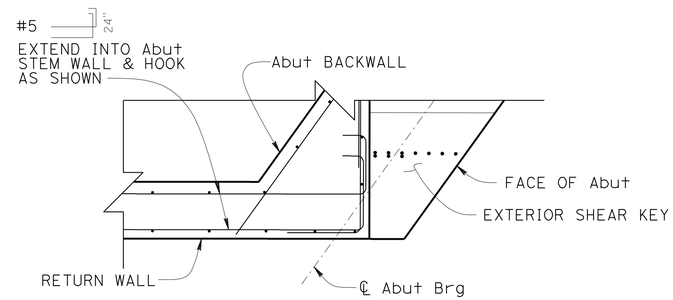

ABUTMENT 1 SHOWN (ABUTMENT 3 SIMILAR)

SECTION L-L

1/2" = 1'-0"

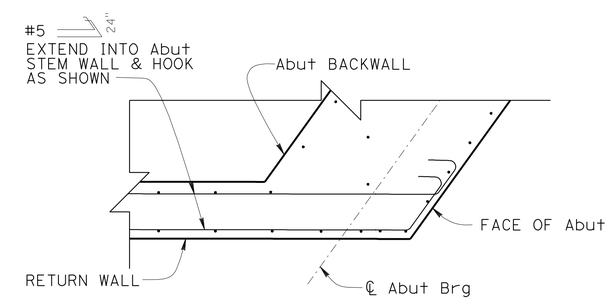

ABUTMENT 1 SHOWN (ABUTMENT 3 SIMILAR)

SECTION M-M

1/2" = 1'-0"

DESIGN	BY J. HIGAREDA	CHECKED J. JAUREGUI
DETAILS	BY T. TREFZ	CHECKED J. JAUREGUI
QUANTITIES	BY J. HIGAREDA	CHECKED G. GALO

STATE OF CALIFORNIA
DEPARTMENT OF TRANSPORTATION

DIVISION OF ENGINEERING SERVICES
STRUCTURE DESIGN
DESIGN BRANCH 15

BRIDGE NO. 53-3061
POST MILE 4.91

IMPERIAL HIGHWAY UC (REPLACE)
ABUTMENT DETAILS NO. 6

STRUCTURES DESIGN DETAIL SHEET (ENGLISH) (REV. 09-01-10)

ORIGINAL SCALE IN INCHES FOR REDUCED PLANS 0 1 2 3

UNIT: 3604
PROJECT NUMBER & PHASE: 0700001834 1
CONTRACT NO.: 07-215941

DISREGARD PRINTS BEARING EARLIER REVISION DATES

REVISION DATES 11-21-11 12-12-11

SHEET 23 OF 76

FILE => 53-3061-h-abut_dt06.dgn

USERNAME => s117606 DATE PLOTTED => 14-APR-2012 TIME PLOTTED => 10:28

DIST	COUNTY	ROUTE	POST MILES TOTAL PROJECT	SHEET No.	TOTAL SHEETS
07	LA	5	4.0/5.9	1028	1597

José L. Higareda 12-12-11
REGISTERED CIVIL ENGINEER DATE

4-9-12
PLANS APPROVAL DATE

REGISTERED PROFESSIONAL ENGINEER JOSE L. HIGAREDA No. 62338 Exp. 9-30-13 CIVIL STATE OF CALIFORNIA

The State of California or its officers or agents shall not be responsible for the accuracy or completeness of electronic copies of this plan sheet.

NOTES:

1. See "PARTIAL TYPICAL SECTION STAGE 1", "PARTIAL TYPICAL SECTION STAGE 2" & "PARTIAL TYPICAL SECTION STAGE 3" sheets for additional information.
2. See "BENT DETAILS NO. 2" sheet for additional information.
3. Utility Opening size to match those of Abutment Backwall or as directed by Engineer.

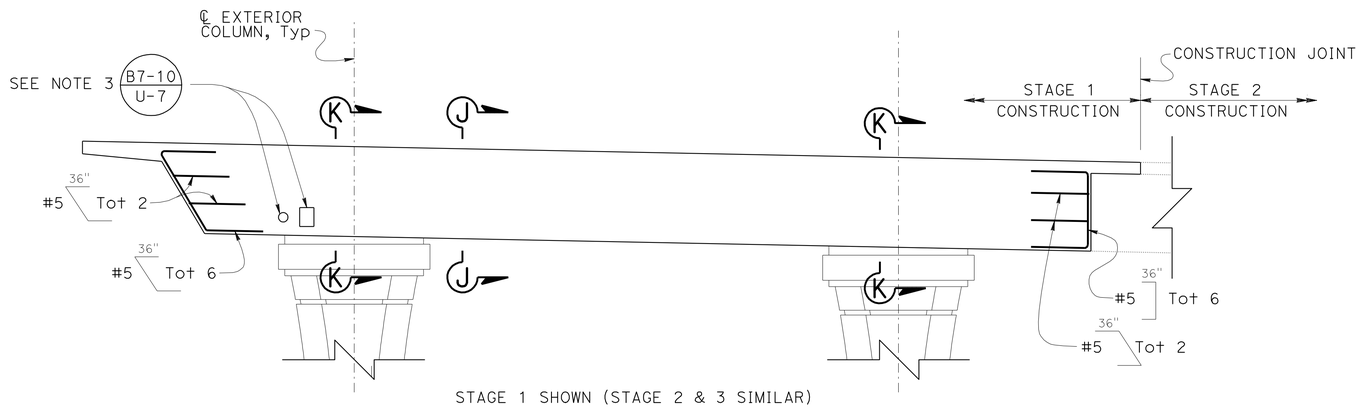

STAGE 1 SHOWN (STAGE 2 & 3 SIMILAR)

DEVELOPED ELEVATION

1/4" = 1'-0"

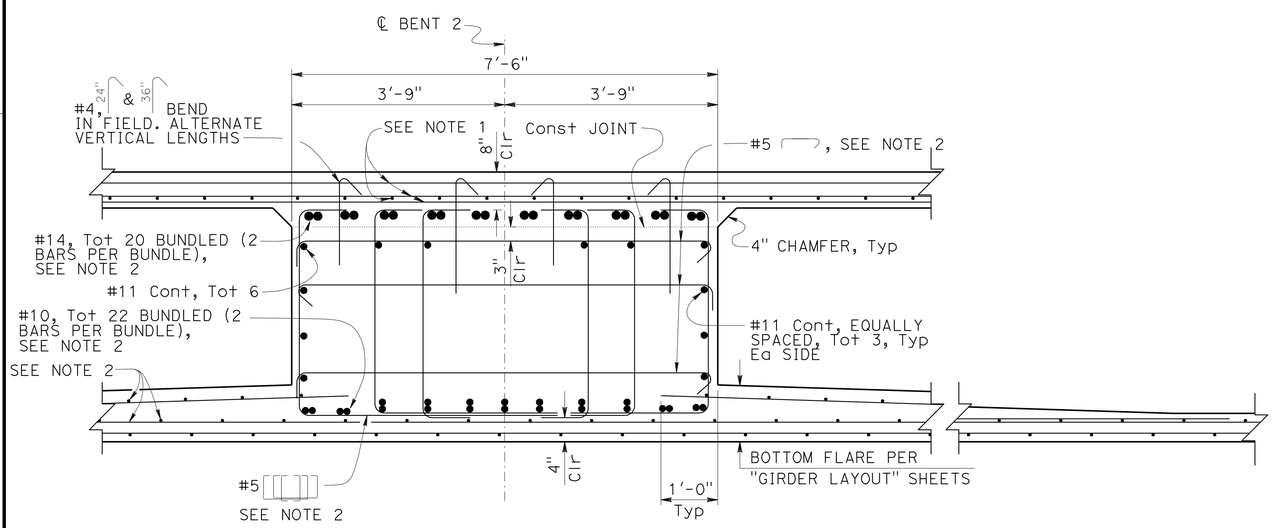

SECTION J-J

3/4" = 1'-0"

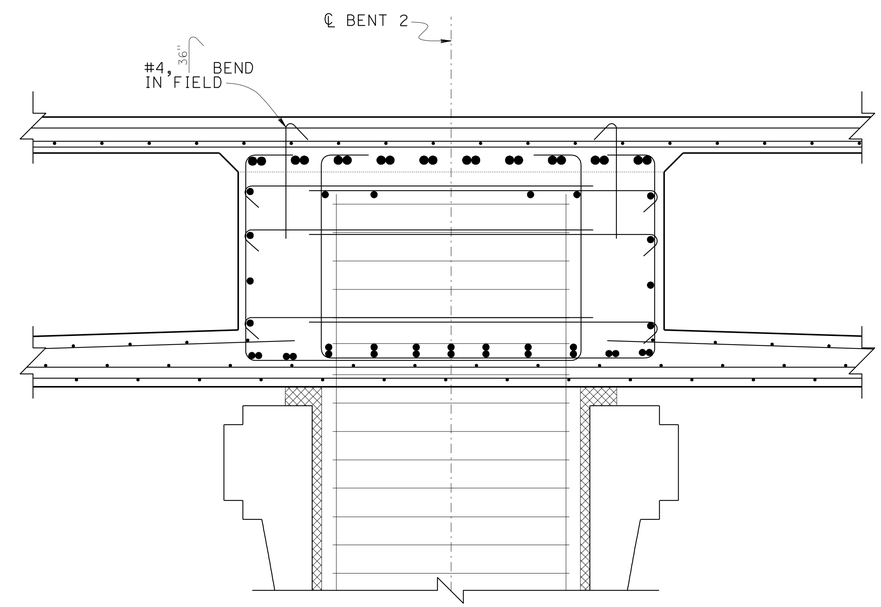

SECTION K-K

3/4" = 1'-0"

DESIGN	BY J. HIGAREDA	CHECKED J. JAUREGUI	
DETAILS	BY T. TREFZ	CHECKED J. JAUREGUI	
QUANTITIES	BY J. HIGAREDA	CHECKED S. MORADI	

STATE OF CALIFORNIA
DEPARTMENT OF TRANSPORTATION

DIVISION OF ENGINEERING SERVICES
STRUCTURE DESIGN
DESIGN BRANCH 15

BRIDGE NO. 53-3061
POST MILE 4.91

IMPERIAL HIGHWAY UC (REPLACE)

BENT DETAILS NO. 1

STRUCTURES DESIGN DETAIL SHEET (ENGLISH) (REV. 09-01-10)

ORIGINAL SCALE IN INCHES FOR REDUCED PLANS 0 1 2 3

UNIT: 3604
PROJECT NUMBER & PHASE: 0700001834 1
CONTRACT NO.: 07-215941

DISREGARD PRINTS BEARING EARLIER REVISION DATES

REVISION DATES 08-04-11 08-26-11 12-10-11

SHEET 24 OF 76

FILE => 53-3061-1-b02_dt01.dgn

USERNAME => s117606 DATE PLOTTED => 14-APR-2012 TIME PLOTTED => 10:28

DIST	COUNTY	ROUTE	POST MILES TOTAL PROJECT	SHEET No.	TOTAL SHEETS
07	LA	5	4.0/5.9	1029	1597

José L. Higareda 12-12-11
REGISTERED CIVIL ENGINEER DATE

4-9-12
PLANS APPROVAL DATE

REGISTERED PROFESSIONAL ENGINEER JOSE L. HIGAREDA No. 62338 Exp. 9-30-13 CIVIL STATE OF CALIFORNIA

The State of California or its officers or agents shall not be responsible for the accuracy or completeness of electronic copies of this plan sheet.

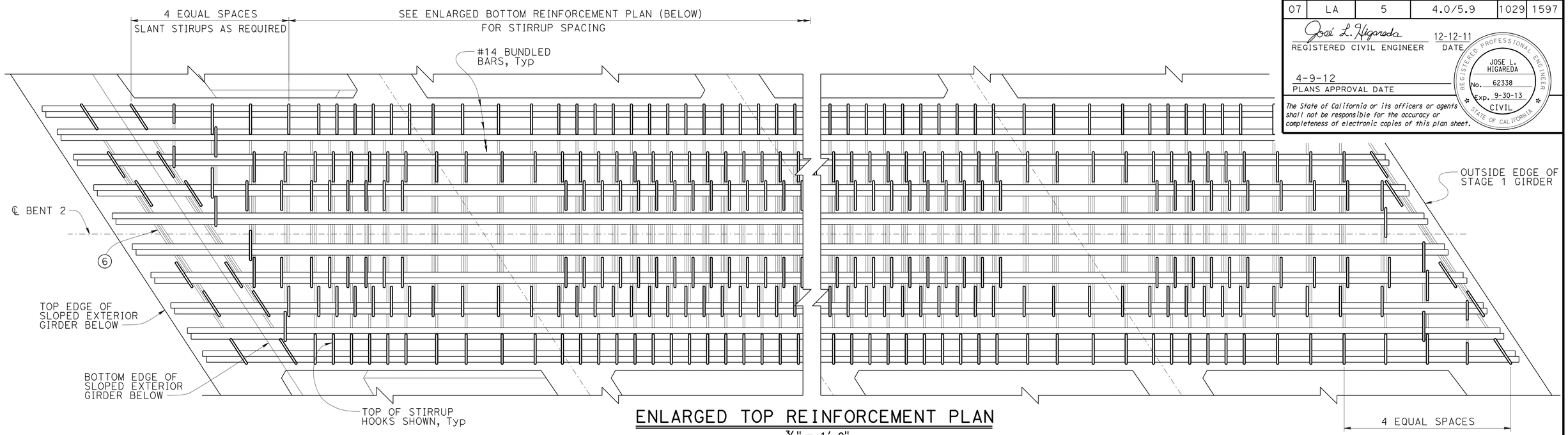

ENLARGED TOP REINFORCEMENT PLAN

¾" = 1'-0"

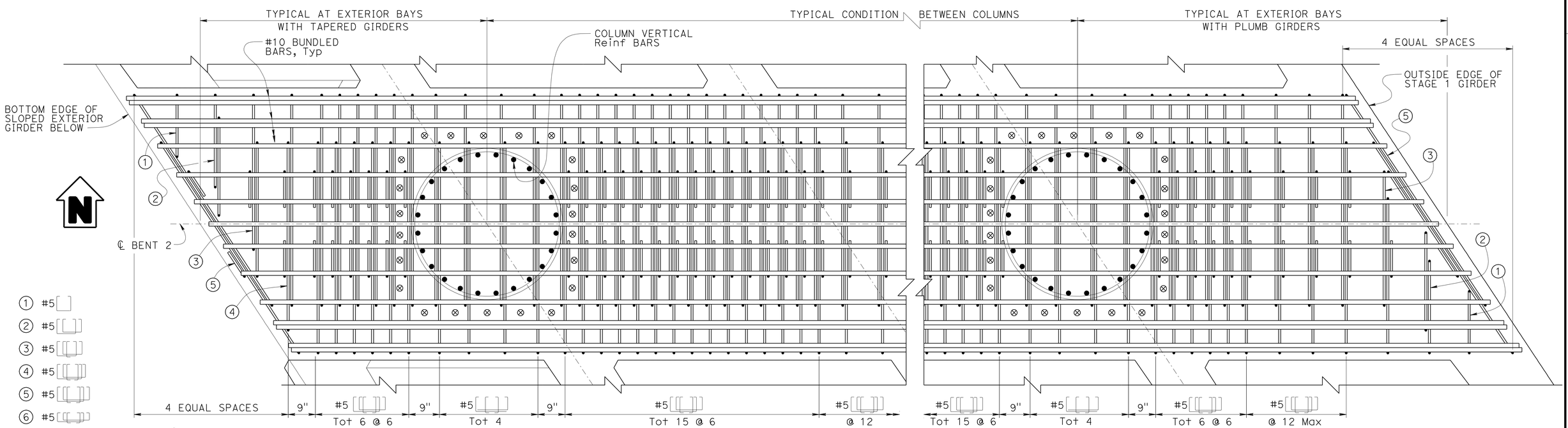

ENLARGED BOTTOM REINFORCEMENT PLAN

¾" = 1'-0"

DESIGN	BY J. HIGAREDA	CHECKED J. JAUREGUI	
DETAILS	BY T. TREFZ	CHECKED J. JAUREGUI	
QUANTITIES	BY J. HIGAREDA	CHECKED S. MORADI	

STATE OF CALIFORNIA
DEPARTMENT OF TRANSPORTATION

DIVISION OF ENGINEERING SERVICES
STRUCTURE DESIGN
DESIGN BRANCH 15

BRIDGE NO. 53-3061
POST MILE 4.91

IMPERIAL HIGHWAY UC (REPLACE)

BENT DETAILS NO. 2

STRUCTURES DESIGN DETAIL SHEET (ENGLISH) (REV. 09-01-10)

ORIGINAL SCALE IN INCHES FOR REDUCED PLANS 0 1 2 3

UNIT: 3604
PROJECT NUMBER & PHASE: 0700001834 1
CONTRACT NO.: 07-215941

DISREGARD PRINTS BEARING EARLIER REVISION DATES

REVISION DATES 09-26-11 09-29-11 12-12-11

SHEET 25 OF 76

FILE => 53-3061-1-b02_dt02.dgn

USERNAME => s117606 DATE PLOTTED => 14-APR-2012 TIME PLOTTED => 10:28

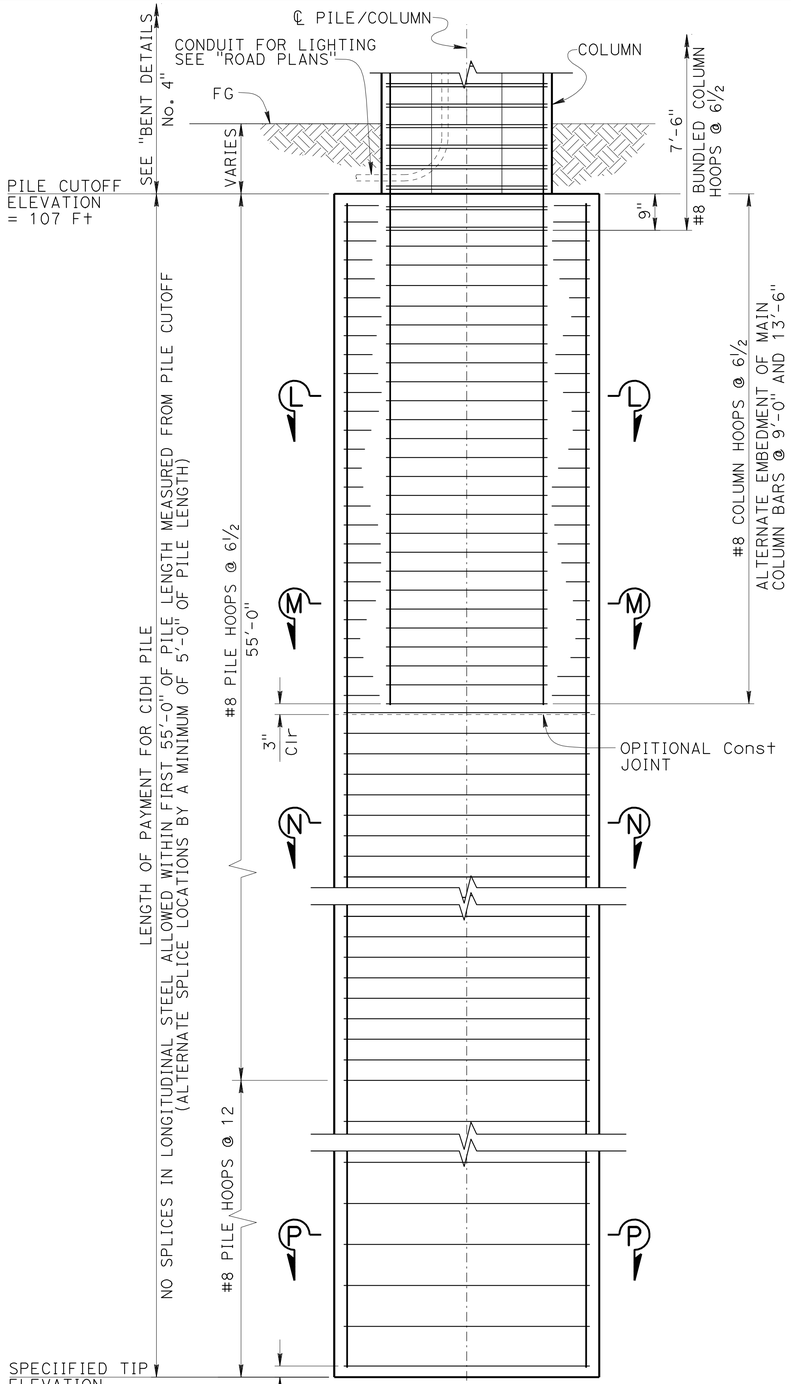

TYPICAL ELEVATION
½" = 1'-0"

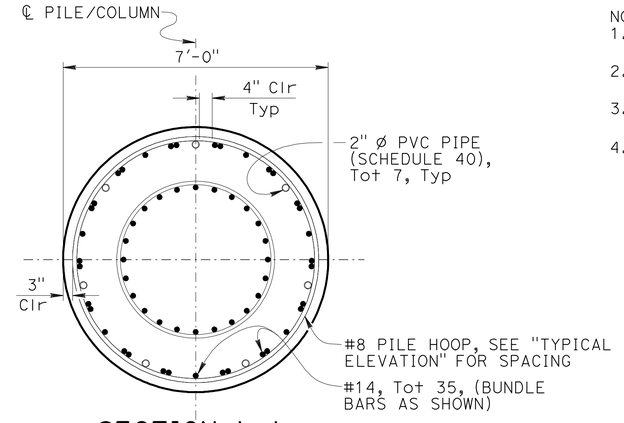

SECTION L-L
½" = 1'-0"

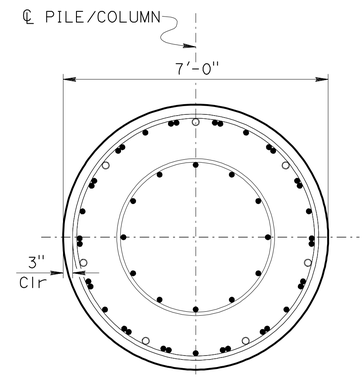

SECTION M-M
½" = 1'-0"

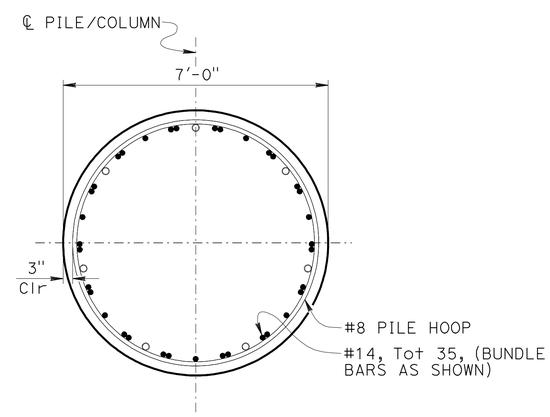

SECTION N-N
½" = 1'-0"

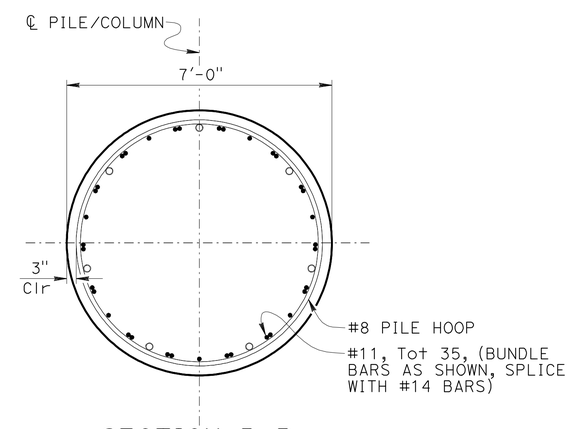

SECTION P-P

NOTES:
1. For Column reinf see "BENT DETAILS NO. 4" sheet for additional information.
2. Column and Pile hoops to be made continuous with ultimate splice (stagger splices)
3. Splices in Column and Pile reinf shall conform to Ultimate Splice Specifications.
4. For specified pile tip elevation see "PILE DATA TABLES" on "PILE & FOOTING DATA TABLES" sheet

DIST	COUNTY	ROUTE	POST MILES TOTAL PROJECT	SHEET No.	TOTAL SHEETS
07	LA	5	4.0/5.9	1030	1597

José L. Higareda 12-12-11
REGISTERED CIVIL ENGINEER DATE

4-9-12
PLANS APPROVAL DATE

REGISTERED PROFESSIONAL ENGINEER JOSE L. HIGAREDA No. 62338 Exp. 9-30-13 CIVIL STATE OF CALIFORNIA

The State of California or its officers or agents shall not be responsible for the accuracy or completeness of electronic copies of this plan sheet.

	BY	CHECKED
DESIGN	J. HIGAREDA	J. JAUREGUI
DETAILS	T. TREFZ	J. JAUREGUI
QUANTITIES	J. HIGAREDA	S. MORADI

STATE OF CALIFORNIA
DEPARTMENT OF TRANSPORTATION

DIVISION OF ENGINEERING SERVICES
STRUCTURE DESIGN
DESIGN BRANCH 15

BRIDGE NO. 53-3061
POST MILE 4.91

IMPERIAL HIGHWAY UC (REPLACE)
BENT DETAILS NO. 3

STRUCTURES DESIGN DETAIL SHEET (ENGLISH) (REV. 09-01-10)

ORIGINAL SCALE IN INCHES FOR REDUCED PLANS 0 1 2 3

UNIT: 3604
PROJECT NUMBER & PHASE: 0700001834 1
CONTRACT NO.: 07-215941

DISREGARD PRINTS BEARING EARLIER REVISION DATES → 09-23-11 12-10-11

SHEET 26 OF 76

FILE => 53-3061-1-b02_d+03.dgn

USERNAME => s117606 DATE PLOTTED => 14-APR-2012 TIME PLOTTED => 10:29

DIST	COUNTY	ROUTE	POST MILES TOTAL PROJECT	SHEET No.	TOTAL SHEETS
07	LA	5	4.0/5.9	1031	1597

José L. Higareda 12-12-11
REGISTERED CIVIL ENGINEER DATE

4-9-12
PLANS APPROVAL DATE

REGISTERED PROFESSIONAL ENGINEER JOSE L. HIGAREDA No. 62338 Exp. 9-30-13 CIVIL STATE OF CALIFORNIA

The State of California or its officers or agents shall not be responsible for the accuracy or completeness of electronic copies of this plan sheet.

NOTES:

1. See "COLUMN GEOMETRY" sheet for additional column dimensions.
2. Column reinforcement shall be symmetrical about ℄ column & ℄ Bent
3. For Pile reinf see "BENT DETAILS No. 3" sheet
4. Column and pile hoops to be made continuous with Ultimate splice (stagger splices)
5. Splices in main Column and Pile reinf shall conform to Ultimate Splice Specifications.
6. Select longitudinal bars may be trimmed and hoop spacing adjusted to allow placement of prestressing ducts as directed by engineer. Minimum embedment of 40 inches into cap shall be maintained.

LEGEND:

Indicates Expanded Polystyrene

REINFORCEMENT TABLE

ID	DIA.	SHAPE	TOTAL
A	#6	8'-9"	16
B	#4	x	5
C	#6	4'-7"	12
D	#4	12" 24"	20
E	#4	18" 16"	24
F	#4	20" 11"	24
G	#4	**	4
H	#4	**	6

* Stagger mechanical couplers
** 2'-0" Lap splice, Typ

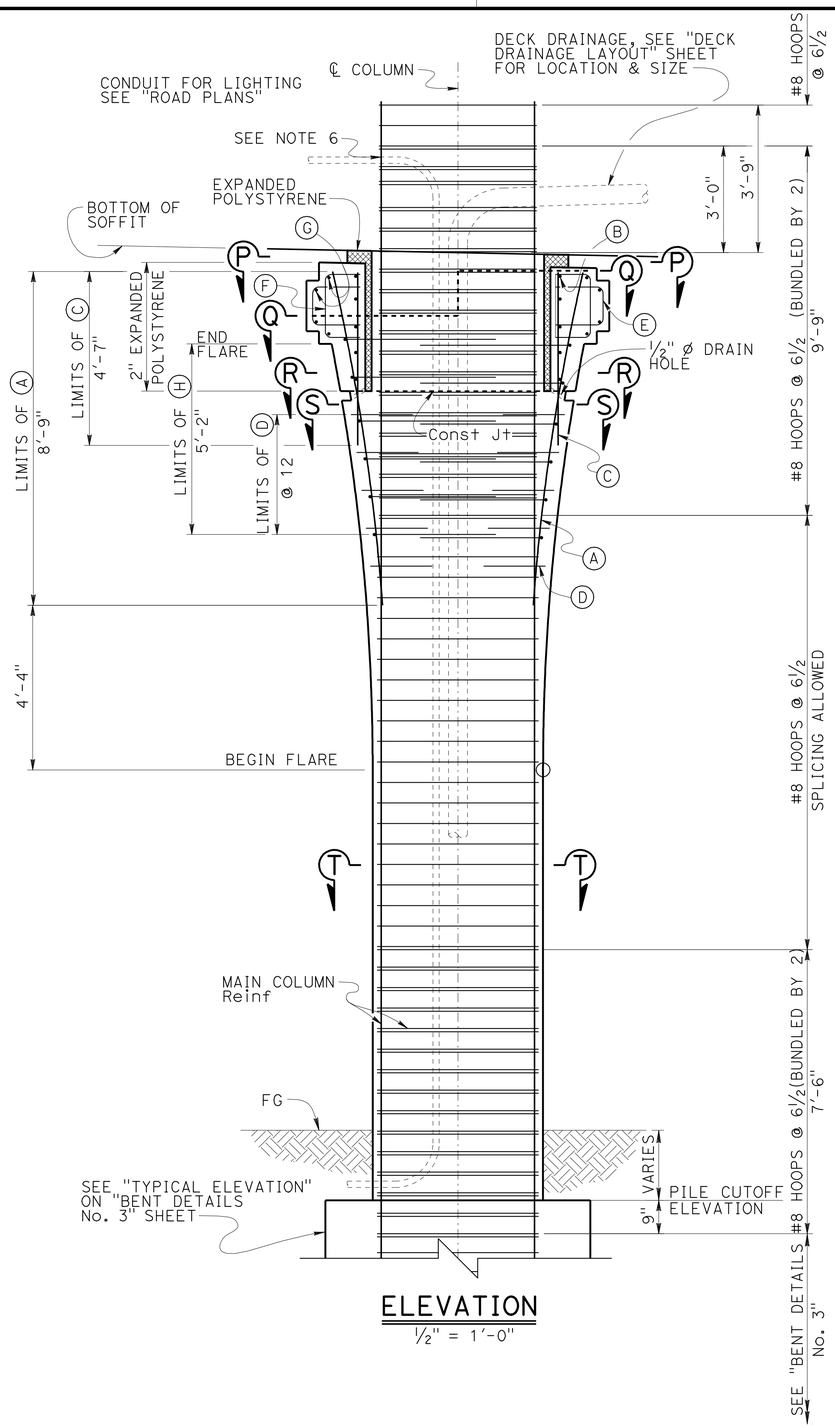

ELEVATION
½" = 1'-0"

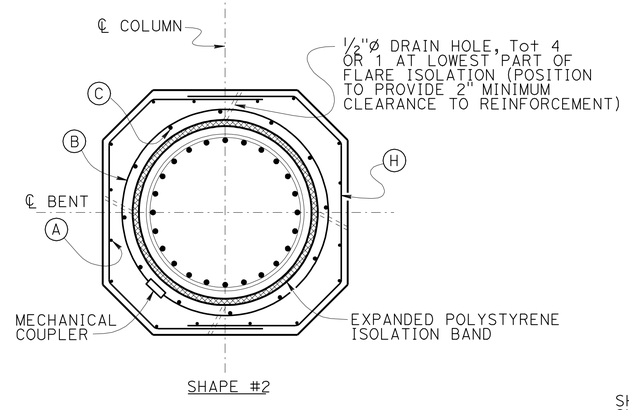

SHAPE #2

SECTION R-R
½" = 1'-0"

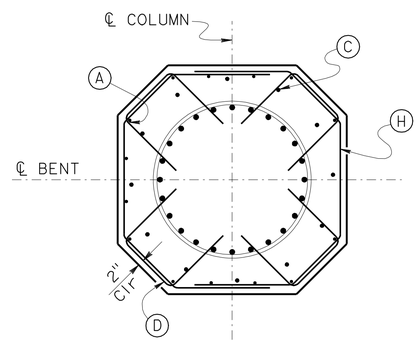

SHAPE #2

SECTION S-S
½" = 1'-0"

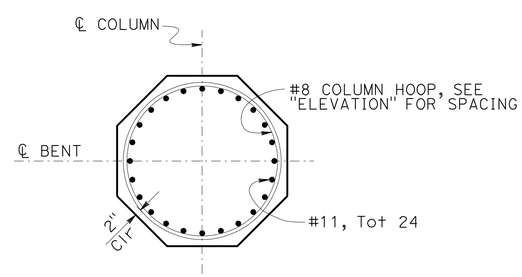

SHAPE #1

SECTION T-T
½" = 1'-0"

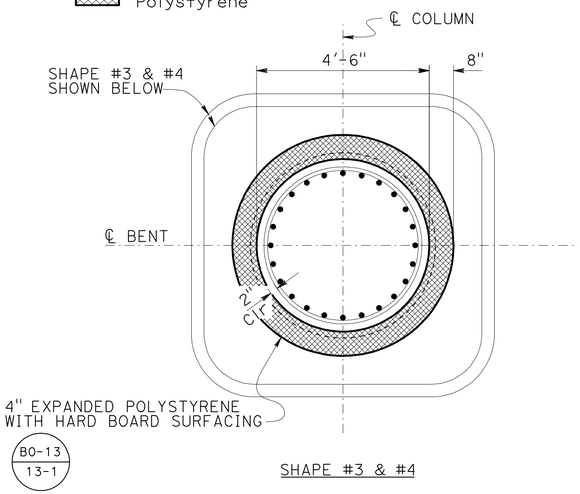

SHAPE #3 & #4

SECTION P-P
½" = 1'-0"

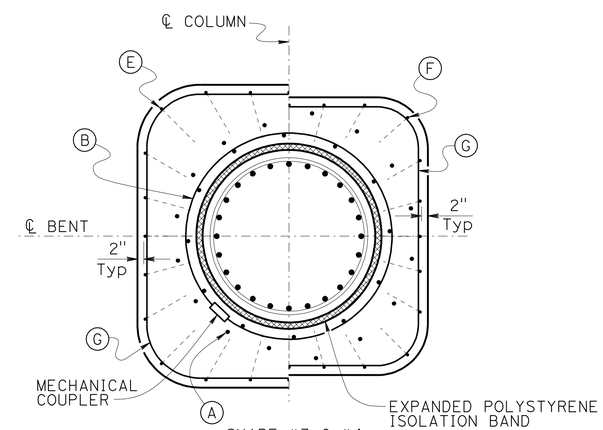

SHAPE #3 & #4

SECTION Q-Q
½" = 1'-0"

DESIGN	BY J. HIGAREDA	CHECKED J. JAUREGUI	
DETAILS	BY T. TREFZ	CHECKED J. JAUREGUI	
QUANTITIES	BY J. HIGAREDA	CHECKED S. MORADI	

STATE OF CALIFORNIA
DEPARTMENT OF TRANSPORTATION

DIVISION OF ENGINEERING SERVICES
STRUCTURE DESIGN
DESIGN BRANCH 15

BRIDGE NO. 53-3061
POST MILE 4.91

IMPERIAL HIGHWAY UC (REPLACE)
BENT DETAILS NO. 4

STRUCTURES DESIGN DETAIL SHEET (ENGLISH) (REV. 09-01-10)

ORIGINAL SCALE IN INCHES FOR REDUCED PLANS 0 1 2 3

UNIT: 3604
PROJECT NUMBER & PHASE: 0700001834 1
CONTRACT NO.: 07-215941

DISREGARD PRINTS BEARING EARLIER REVISION DATES

REVISION DATES 07-26-11 12-10-11

SHEET 27 OF 76

FILE => 53-3061-1-b02_dt04.dgn

USERNAME => s117606 DATE PLOTTED => 14-APR-2012 TIME PLOTTED => 10:29

DIST	COUNTY	ROUTE	POST MILES TOTAL PROJECT	SHEET No.	TOTAL SHEETS
07	LA	5	4.0/5.9	1032	1597

José L. Higareda 12-12-11
REGISTERED CIVIL ENGINEER DATE

4-9-12
PLANS APPROVAL DATE

REGISTERED PROFESSIONAL ENGINEER
JOSE L. HIGAREDA
No. 62338
Exp. 9-30-13
CIVIL
STATE OF CALIFORNIA

The State of California or its officers or agents shall not be responsible for the accuracy or completeness of electronic copies of this plan sheet.

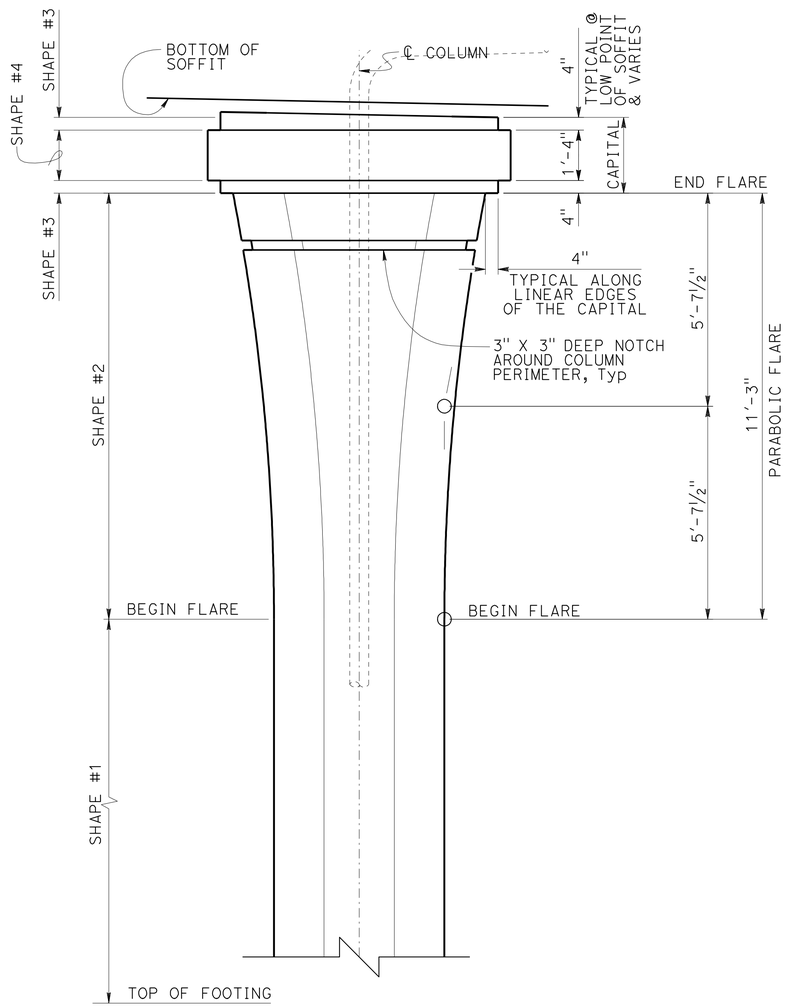

COLUMN GEOMETRY
½" = 1'-0"

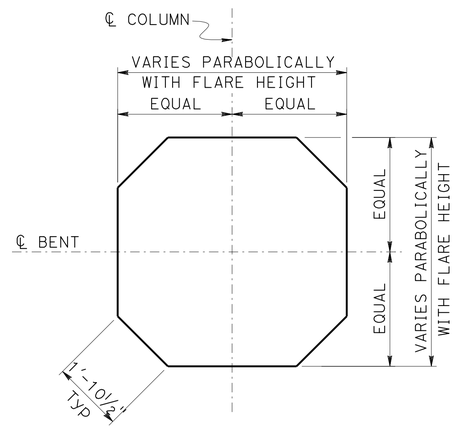

SHAPE #2
½" = 1'-0"

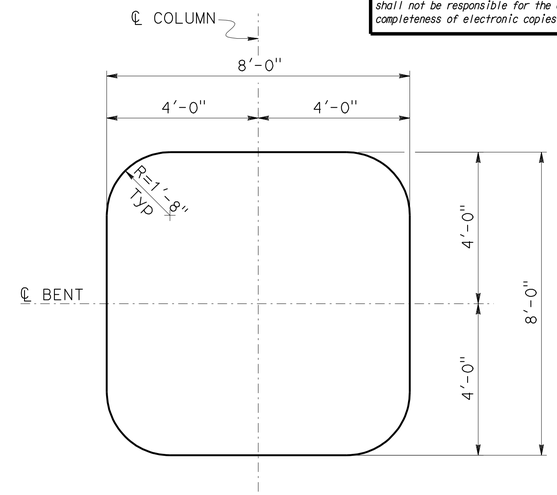

SHAPE #4
½" = 1'-0"

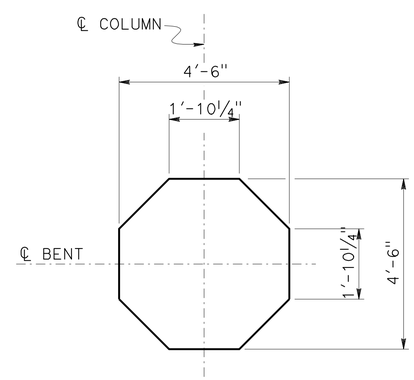

SHAPE #1
½" = 1'-0"

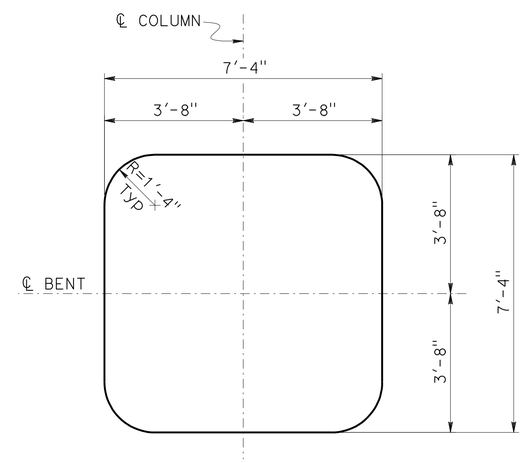

SHAPE #3
½" = 1'-0"

DESIGN	BY J. HIGAREDA	CHECKED J. JAUREGUI	
DETAILS	BY T. TREFZ	CHECKED J. JAUREGUI	
QUANTITIES	BY J. HIGAREDA	CHECKED S. MORADI	

STATE OF CALIFORNIA
DEPARTMENT OF TRANSPORTATION

DIVISION OF ENGINEERING SERVICES
STRUCTURE DESIGN
DESIGN BRANCH 15

BRIDGE NO. 53-3061
POST MILE 4.91

IMPERIAL HIGHWAY UC (REPLACE)
COLUMN GEOMENTRY

STRUCTURES DESIGN DETAIL SHEET (ENGLISH) (REV. 09-01-10)

ORIGINAL SCALE IN INCHES FOR REDUCED PLANS 0 1 2 3

UNIT: 3604
PROJECT NUMBER & PHASE: 0700001834 1
CONTRACT NO.: 07-215941

DISREGARD PRINTS BEARING EARLIER REVISION DATES

REVISION DATES: 07-25-11 12-12-11

SHEET 28 OF 76

FILE => 53-3061-j-col_dt.dgn

USERNAME => s117606 DATE PLOTTED => 14-APR-2012 TIME PLOTTED => 10:29

DIST	COUNTY	ROUTE	POST MILES TOTAL PROJECT	SHEET No.	TOTAL SHEETS
07	LA	5	4.0/5.9	1033	1597

José L. Higareda 12-12-11
REGISTERED CIVIL ENGINEER DATE

4-9-12
PLANS APPROVAL DATE

REGISTERED PROFESSIONAL ENGINEER JOSE L. HIGAREDA No. 62338 Exp. 9-30-13 CIVIL STATE OF CALIFORNIA

The State of California or its officers or agents shall not be responsible for the accuracy or completeness of electronic copies of this plan sheet.

LEGEND:

Indicates deck closure pour

○ Indicates additional reinforcement. See "ADDITIONAL GIRDER REINFORCEMENT" sheet

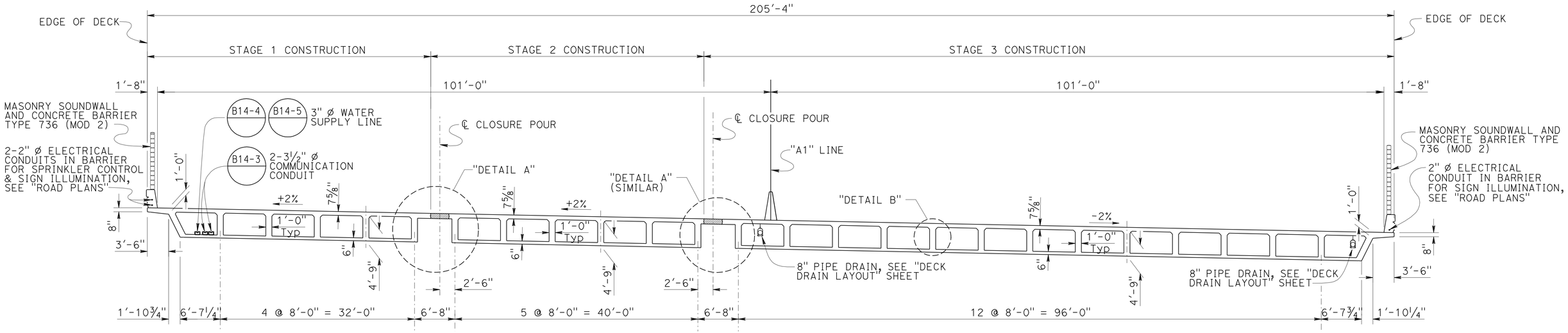

TYPICAL SECTION

1" = 5'

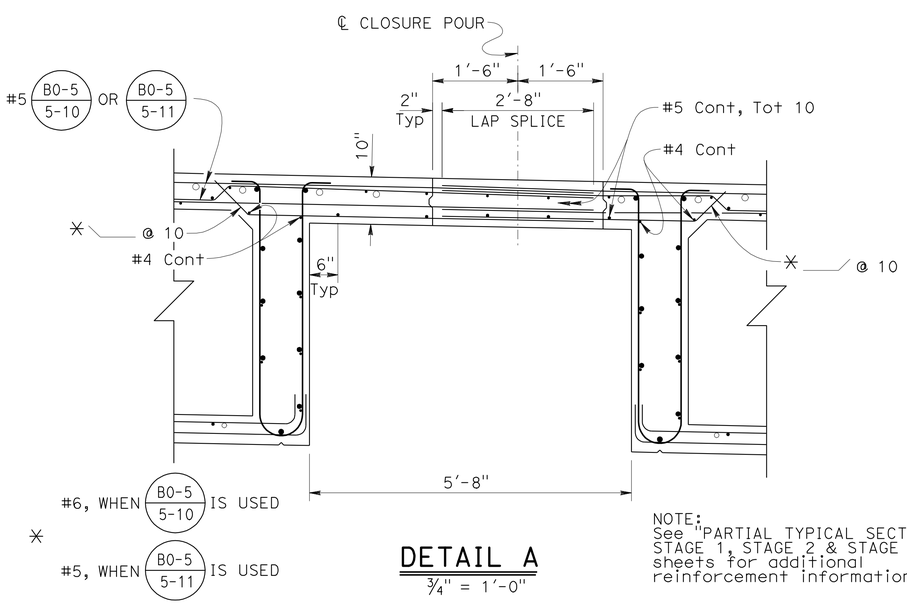

DETAIL A

¾" = 1'-0"

NOTE:
See "PARTIAL TYPICAL SECTION, STAGE 1, STAGE 2 & STAGE 3" sheets for additional reinforcement information.

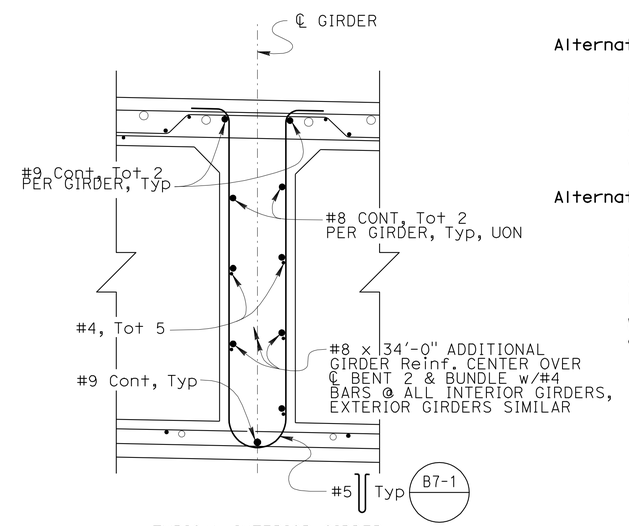

TYPICAL INTERIOR GIRDER

DETAIL B

1" = 1'-0"

FALSEWORK RELEASE

Alternative 1:

Falsework shall be released as soon as permitted by the specifications. Closure pour shall not be placed sooner than 60 days after the falsework had been released.

Alternative 2:

Falsework shall not be released less than 28 days after the last concrete has been placed. Closure pour shall not be placed sooner than 14 days after the falsework has been released.

When Falsework Release Alternative 2 is used, camber values are 0.75 times those shown.

	BY	CHECKED
DESIGN	J. HIGAREDA	J. JAUREGUI
DETAILS	T. TREFZ	J. JAUREGUI
QUANTITIES	J. HIGAREDA	S. MORADI

STATE OF CALIFORNIA
DEPARTMENT OF TRANSPORTATION

DIVISION OF ENGINEERING SERVICES
STRUCTURE DESIGN
DESIGN BRANCH 15

BRIDGE NO. 53-3061
POST MILE 4.91

IMPERIAL HIGHWAY UC (REPLACE)

TYPICAL SECTION

STRUCTURES DESIGN DETAIL SHEET (ENGLISH) (REV. 09-01-10)

ORIGINAL SCALE IN INCHES FOR REDUCED PLANS 0 1 2 3

UNIT: 3604
PROJECT NUMBER & PHASE: 0700001834 1
CONTRACT NO.: 07-215941

DISREGARD PRINTS BEARING EARLIER REVISION DATES

REVISION DATES 08-16-11 08-27-11 12-10-11

SHEET 29 OF 76

FILE => 53-3061-k-ts.dgn

USERNAME => s117606 DATE PLOTTED => 14-APR-2012 TIME PLOTTED => 10:29

DIST	COUNTY	ROUTE	POST MILES TOTAL PROJECT	SHEET No.	TOTAL SHEETS
07	LA	5	4.0/5.9	1034	1597

José L. Higareda
REGISTERED CIVIL ENGINEER 12-12-11
DATE

4-9-12
PLANS APPROVAL DATE

REGISTERED PROFESSIONAL ENGINEER
JOSE L. HIGAREDA
No. 62338
Exp. 9-30-13
CIVIL
STATE OF CALIFORNIA

The State of California or its officers or agents shall not be responsible for the accuracy or completeness of electronic copies of this plan sheet.

LEGEND:

Indicates Deck closure pour

○ Indicates additional reinforcement. See "ADDITIONAL GIRDER REINFORCEMENT" sheet

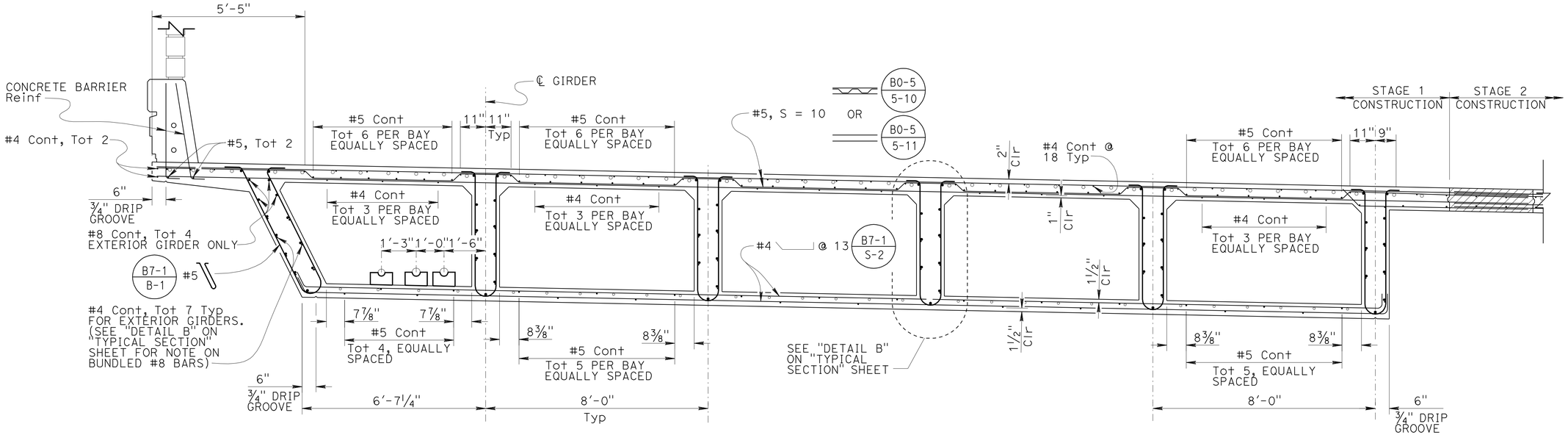

PART SECTION

1/2" = 1'-0"

B0-5 B7-1 B8-5 B11-56

DESIGN	BY J. HIGAREDA	CHECKED J. JAUREGUI	
DETAILS	BY T. TREFZ	CHECKED J. JAUREGUI	
QUANTITIES	BY J. HIGAREDA	CHECKED S. MORADI	

STATE OF CALIFORNIA
DEPARTMENT OF TRANSPORTATION

DIVISION OF ENGINEERING SERVICES
STRUCTURE DESIGN
DESIGN BRANCH 15

BRIDGE NO. 53-3061
POST MILE 4.91

IMPERIAL HIGHWAY UC (REPLACE)

PARTIAL TYPICAL SECTION STAGE 1

STRUCTURES DESIGN DETAIL SHEET (ENGLISH) (REV. 09-01-10)

ORIGINAL SCALE IN INCHES FOR REDUCED PLANS 0 1 2 3

UNIT: 3604
PROJECT NUMBER & PHASE: 0700001834 1
CONTRACT NO.: 07-215941

DISREGARD PRINTS BEARING EARLIER REVISION DATES

REVISION DATES 09-21-11 12-12-11 03-13-12

SHEET 30 OF 76

FILE => 53-3061-k-tsp01.dgn

USERNAME => s117606 DATE PLOTTED => 14-APR-2012 TIME PLOTTED => 10:29

LEGEND:

Indicates Deck closure pour

○ Indicates additional reinforcement. See "ADDITIONAL GIRDER REINFORCEMENT" sheet

NOTES:

1. For Concrete Closure pour see "DETAIL A" on "TYPICAL SECTION" sheet.
2. For limits of top transverse deck reinforcement see "GIRDER LAYOUT, STAGE 2" sheet.
3. For typical interior girder reinforcement see "DETAIL B" on "TYPICAL SECTION" sheet.

DIST	COUNTY	ROUTE	POST MILES TOTAL PROJECT	SHEET No.	TOTAL SHEETS
07	LA	5	4.0/5.9	1035	1597

José L. Higareda 12-12-11
REGISTERED CIVIL ENGINEER DATE

4-9-12
PLANS APPROVAL DATE

REGISTERED PROFESSIONAL ENGINEER JOSE L. HIGAREDA No. 62338 Exp. 9-30-13 CIVIL STATE OF CALIFORNIA

The State of California or its officers or agents shall not be responsible for the accuracy or completeness of electronic copies of this plan sheet.

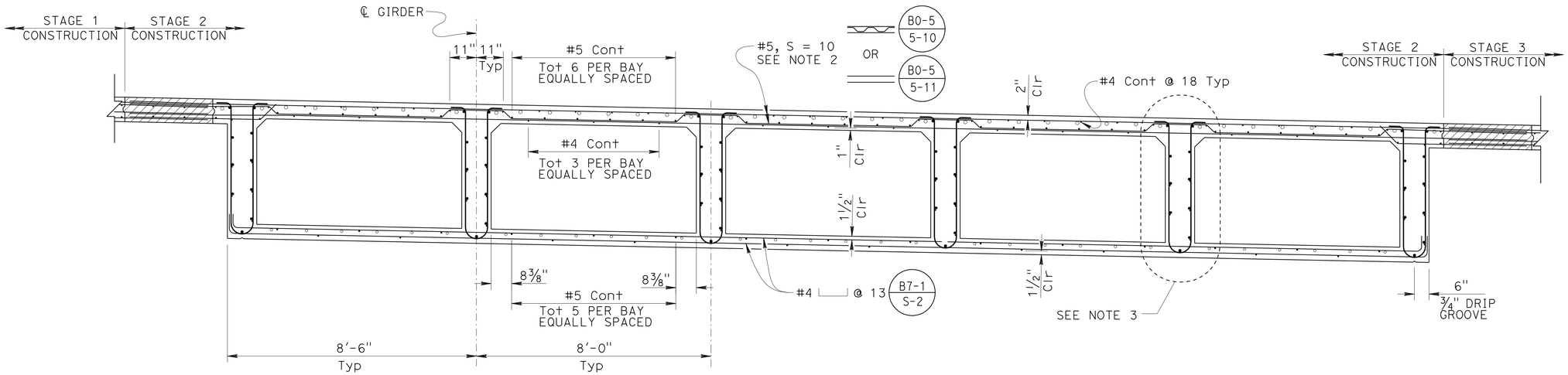

PART SECTION
½" = 1'-0"

B0-5 B7-1 B8-5 B11-56

DESIGN	BY J. HIGAREDA	CHECKED J. JAUREGUI	
DETAILS	BY T. TREFZ	CHECKED J. JAUREGUI	
QUANTITIES	BY J. HIGAREDA	CHECKED S. MORADI	

STATE OF CALIFORNIA
DEPARTMENT OF TRANSPORTATION

DIVISION OF ENGINEERING SERVICES
STRUCTURE DESIGN
DESIGN BRANCH 15

BRIDGE NO. 53-3061
POST MILE 4.91

IMPERIAL HIGHWAY UC (REPLACE)
PARTIAL TYPICAL SECTION STAGE 2

STRUCTURES DESIGN DETAIL SHEET (ENGLISH) (REV. 09-01-10)

ORIGINAL SCALE IN INCHES FOR REDUCED PLANS 0 1 2 3

UNIT: 3604
PROJECT NUMBER & PHASE: 0700001834 1
CONTRACT NO.: 07-215941

DISREGARD PRINTS BEARING EARLIER REVISION DATES

REVISION DATES: 09-21-11 12-12-11

SHEET 31 OF 76

FILE => 53-3061-k-tsp02.dgn

USERNAME => s117606 DATE PLOTTED => 14-APR-2012 TIME PLOTTED => 10:29

DIST	COUNTY	ROUTE	POST MILES TOTAL PROJECT	SHEET No.	TOTAL SHEETS
07	LA	5	4.0/5.9	1036	1597

REGISTERED CIVIL ENGINEER 12-12-11 DATE

4-9-12
PLANS APPROVAL DATE

REGISTERED PROFESSIONAL ENGINEER JOSE L. HIGAREDA No. 62338 Exp. 9-30-13 CIVIL STATE OF CALIFORNIA

The State of California or its officers or agents shall not be responsible for the accuracy or completeness of electronic copies of this plan sheet.

LEGEND:

Indicates Deck closure pour

○ Indicates additional reinforcement. See "ADDITIONAL GIRDER REINFORCEMENT" sheet

NOTES:

1. For Concrete Closure pour see "DETAIL A" on "TYPICAL SECTION" sheet.
2. For limits of top transverse deck reinforcement see "GIRDER LAYOUT, STAGE 3" sheet.
3. For typical interior girder reinforcement see "DETAIL B" on "TYPICAL SECTION" sheet.
4. For Concrete Barrier (Type 736 Mod 2) details see "SOUNDWALL ON BRIDGE DETAILS" sheet
5. For asthectic details on Concrete Barrier (Type 60GA Mod) see "ARCHITECTURAL DETAILS No. 20" sheet

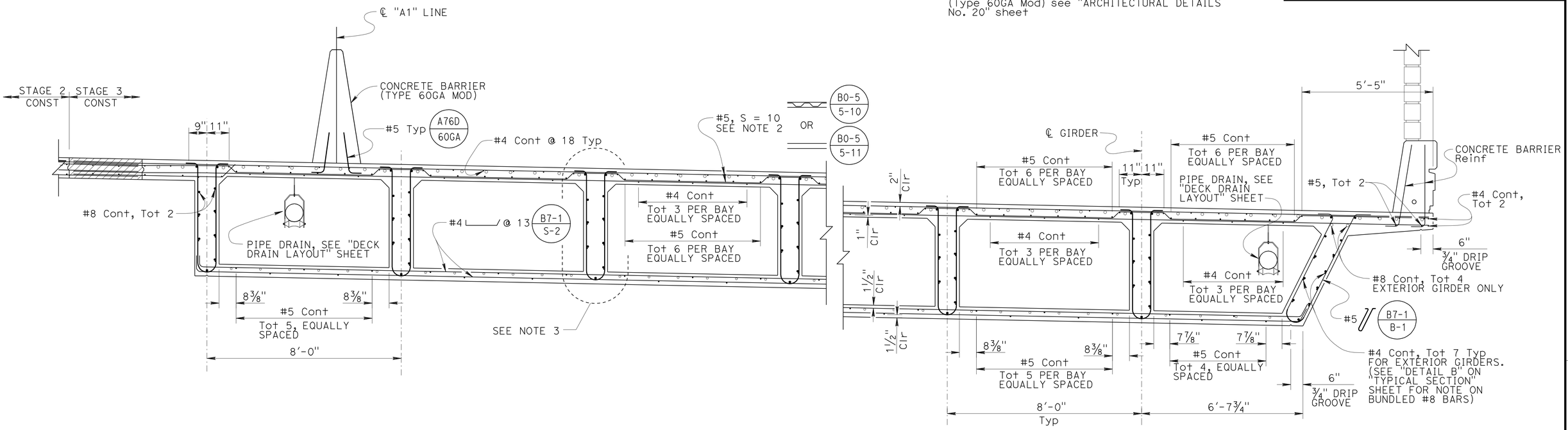

PART SECTION

1/2" = 1'-0"

B0-5 B7-1 B8-5 B11-56

DESIGN	BY J. HIGAREDA	CHECKED J. JAUREGUI	
DETAILS	BY T. TREFZ	CHECKED J. JAUREGUI	
QUANTITIES	BY J. HIGAREDA	CHECKED S. MORADI	

STATE OF CALIFORNIA
DEPARTMENT OF TRANSPORTATION

DIVISION OF ENGINEERING SERVICES
STRUCTURE DESIGN
DESIGN BRANCH 15

BRIDGE NO. 53-3061
POST MILE 4.91

IMPERIAL HIGHWAY UC (REPLACE)
PARTIAL TYPICAL SECTION STAGE 3

STRUCTURES DESIGN DETAIL SHEET (ENGLISH) (REV. 09-01-10)

ORIGINAL SCALE IN INCHES FOR REDUCED PLANS 0 1 2 3

UNIT: 3604
PROJECT NUMBER & PHASE: 0700001834 1
CONTRACT NO.: 07-215941

DISREGARD PRINTS BEARING EARLIER REVISION DATES

REVISION DATES 08-21-11 12-12-11

SHEET 32 OF 76

FILE => 53-3061-k-tsp03.dgn

USERNAME => s117606 DATE PLOTTED => 14-APR-2012 TIME PLOTTED => 10:29

DIST	COUNTY	ROUTE	POST MILES TOTAL PROJECT	SHEET No.	TOTAL SHEETS
07	LA	5	4.0/5.9	1037	1597

José L. Higareda — REGISTERED CIVIL ENGINEER — 12-12-11 DATE

4-9-12 PLANS APPROVAL DATE

REGISTERED PROFESSIONAL ENGINEER — JOSE L. HIGAREDA — No. 62338 — Exp. 9-30-13 — CIVIL — STATE OF CALIFORNIA

The State of California or its officers or agents shall not be responsible for the accuracy or completeness of electronic copies of this plan sheet.

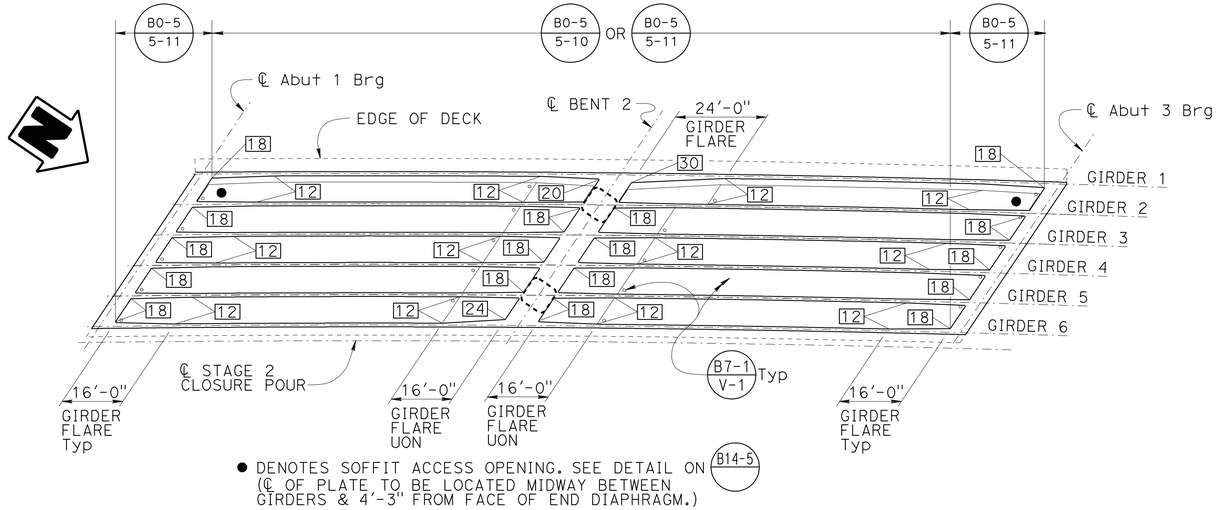

● DENOTES SOFFIT ACCESS OPENING. SEE DETAIL ON B14-5 (℄ OF PLATE TO BE LOCATED MIDWAY BETWEEN GIRDERS & 4'-3" FROM FACE OF END DIAPHRAGM.)

PLAN
1" = 20' B7-1 B7-10 B8-5

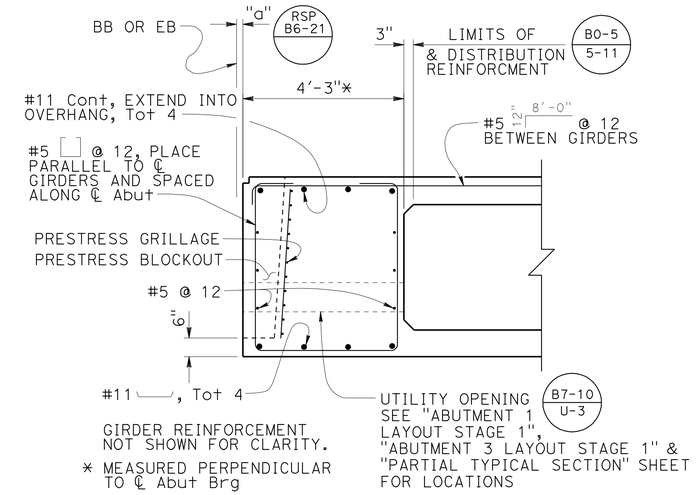

GIRDER REINFORCEMENT NOT SHOWN FOR CLARITY.

* MEASURED PERPENDICULAR TO ℄ Abut Brg

END DIAPHRAGM
½" = 1'-0" B8-5

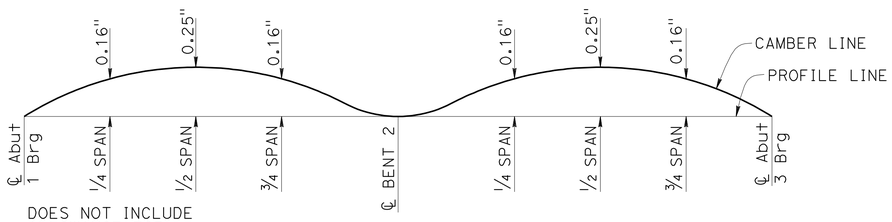

DOES NOT INCLUDE ALLOWANCE FOR FALSEWORK SETTLEMENT

CAMBER DIAGRAM
NO SCALE

PRESTRESSING NOTES
STAGE 1 CONSTRUCTION

270 Ksi Low Relaxation Strand:

P_{jack} = 10,546 kips

Anchor Set = 0.37 in

Total Number of Girders = 6

Distribution of prestress force (Pjack) between girders shall not exceed the ratio of 3:2. Maximum final force variation between girders shall not exceed 720 Kips.

Concrete: f'_c = 4,000 psi @ 28 days

f'_{ci} = 4,000 psi @ time of stressing

Contractor shall submit elongation calculations based on initial stress at ☒ = 0.896 Times jacking stress.

One end stressing shall be performed from Abutment 3.

LEGEND:

▭ Indicates girder stem width, shown in inches.

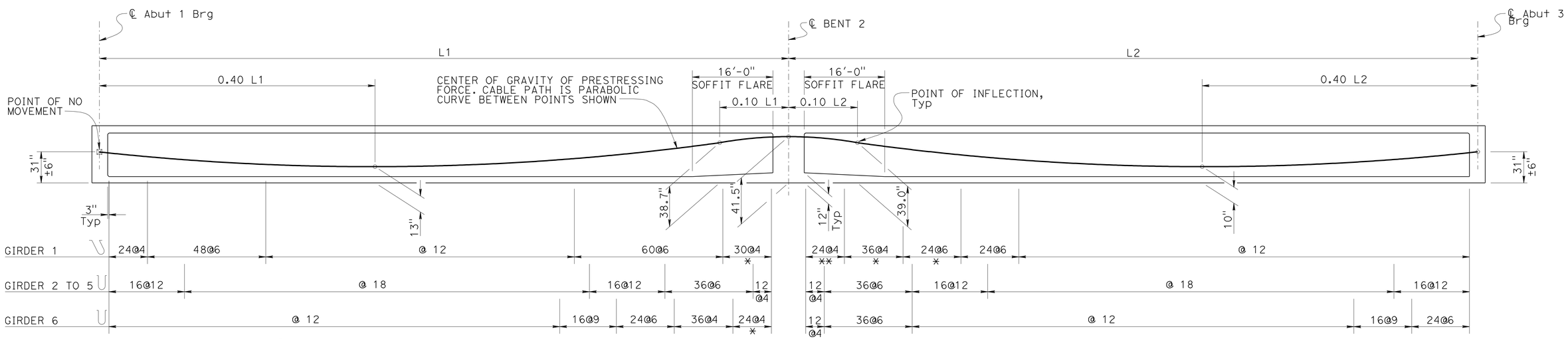

* THREE STIRRUPS LEGS, THUS

** FOUR STIRRUP LEGS, THUS

LONGITUDINAL SECTION
NO SCALE

	BY	CHECKED
DESIGN	J. HIGAREDA	J. JAUREGUI
DETAILS	T. TREFZ	J. JAUREGUI
QUANTITIES	J. HIGAREDA	S. MORADI

STATE OF CALIFORNIA DEPARTMENT OF TRANSPORTATION

DIVISION OF ENGINEERING SERVICES STRUCTURE DESIGN — DESIGN BRANCH 15

BRIDGE NO. 53-3061 — POST MILE 4.91

IMPERIAL HIGHWAY UC (REPLACE)
GIRDER LAYOUT STAGE 1

STRUCTURES DESIGN DETAIL SHEET (ENGLISH) (REV. 09-01-10)

ORIGINAL SCALE IN INCHES FOR REDUCED PLANS 0 1 2 3

UNIT: 3604
PROJECT NUMBER & PHASE: 0700001834 1 CONTRACT NO.: 07-215941

DISREGARD PRINTS BEARING EARLIER REVISION DATES → 09-30-11 12-10-11

SHEET 33 OF 76

FILE => 53-3061-1-g_lo1.dgn

USERNAME => s117606 DATE PLOTTED => 14-APR-2012 TIME PLOTTED => 10:30

DIST	COUNTY	ROUTE	POST MILES TOTAL PROJECT	SHEET No.	TOTAL SHEETS
07	LA	5	4.0/5.9	1038	1597

José L. Higareda 12-12-11
REGISTERED CIVIL ENGINEER DATE

4-9-12
PLANS APPROVAL DATE

REGISTERED PROFESSIONAL ENGINEER JOSE L. HIGAREDA No. 62338 Exp. 9-30-13 CIVIL STATE OF CALIFORNIA

The State of California or its officers or agents shall not be responsible for the accuracy or completeness of electronic copies of this plan sheet.

NOTE:
See "GIRDER LAYOUT STAGE 1" sheet for "TYPICAL END DIAPHRAGM" detail.

LEGEND:
Indicates girder stem width, shown in inches.

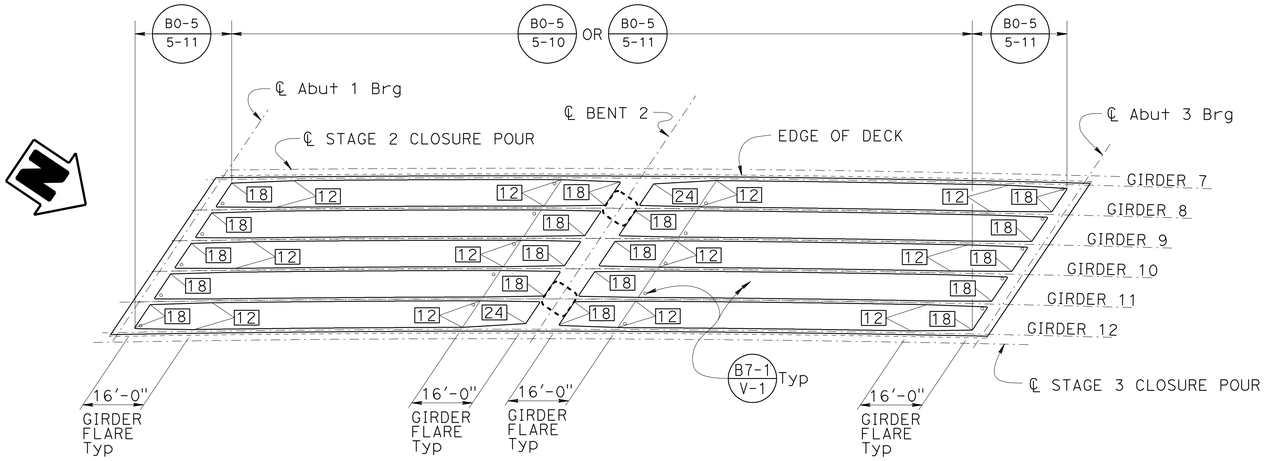

PLAN
1" = 20'

B7-1 B7-10 B8-5

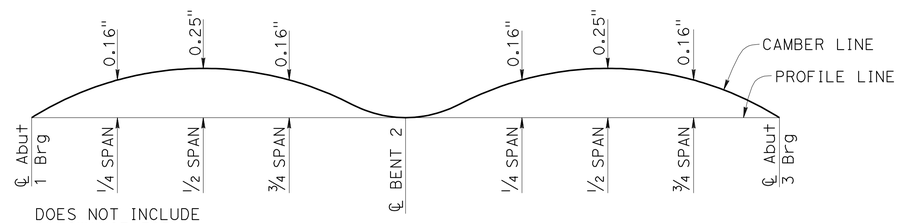

DOES NOT INCLUDE ALLOWANCE FOR FALSEWORK SETTLEMENT

CAMBER DIAGRAM
NO SCALE

PRESTRESSING NOTES
STAGE 2 CONSTRUCTION

270 Ksi Low Relaxation Strand:
P_{jack} = 10,546 kips
Anchor Set = 0.37 in
Total Number of Girders = 6

Distribution of prestress force (Pjack) between girders shall not exceed the ratio of 3:2. Maximum final force variation between girders shall not exceed 720 Kips.

Concrete: f'_c = 4,000 psi @ 28 days
f'_{ci} = 4,000 psi @ time of stressing

Contractor shall submit elongation calculations based on initial stress at ☒ = 0.896 Times jacking stress.

One end stressing shall be performed from Abutment 3.

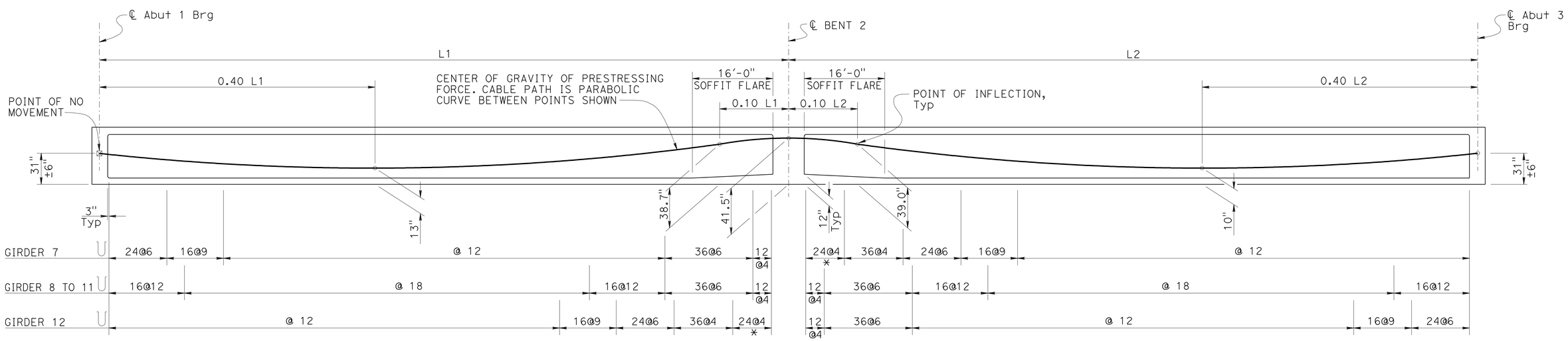

* THREE STIRRUP LEGS, THUS

LONGITUDINAL SECTION
NO SCALE

DESIGN	BY J. HIGAREDA	CHECKED J. JAUREGUI	
DETAILS	BY T. TREFZ	CHECKED J. JAUREGUI	
QUANTITIES	BY J. HIGAREDA	CHECKED S. MORADI	

STATE OF CALIFORNIA
DEPARTMENT OF TRANSPORTATION

DIVISION OF ENGINEERING SERVICES
STRUCTURE DESIGN
DESIGN BRANCH 15

BRIDGE NO. 53-3061
POST MILE 4.91

IMPERIAL HIGHWAY UC (REPLACE)
GIRDER LAYOUT STAGE 2

STRUCTURES DESIGN DETAIL SHEET (ENGLISH) (REV. 09-01-10)

ORIGINAL SCALE IN INCHES FOR REDUCED PLANS 0 1 2 3

UNIT: 3604
PROJECT NUMBER & PHASE: 0700001834 1
CONTRACT NO.: 07-215941

DISREGARD PRINTS BEARING EARLIER REVISION DATES

REVISION DATES 09-30-11 12-10-11

SHEET 34 OF 76

FILE => 53-3061-1-g_102.dgn

USERNAME => s117606 DATE PLOTTED => 14-APR-2012 TIME PLOTTED => 10:30

DIST	COUNTY	ROUTE	POST MILES TOTAL PROJECT	SHEET No.	TOTAL SHEETS
07	LA	5	4.0/5.9	1039	1597

José L. Higareda
REGISTERED CIVIL ENGINEER — DATE 12-12-11

4-9-12
PLANS APPROVAL DATE

REGISTERED PROFESSIONAL ENGINEER — JOSE L. HIGAREDA — No. 62338 — Exp. 9-30-13 — CIVIL — STATE OF CALIFORNIA

The State of California or its officers or agents shall not be responsible for the accuracy or completeness of electronic copies of this plan sheet.

NOTE:
1. See "GIRDER LAYOUT STAGE 1" sheet for "TYPICAL END DIAPHRAGM" detail.

LEGEND:
Indicates girder stem width, shown in inches.

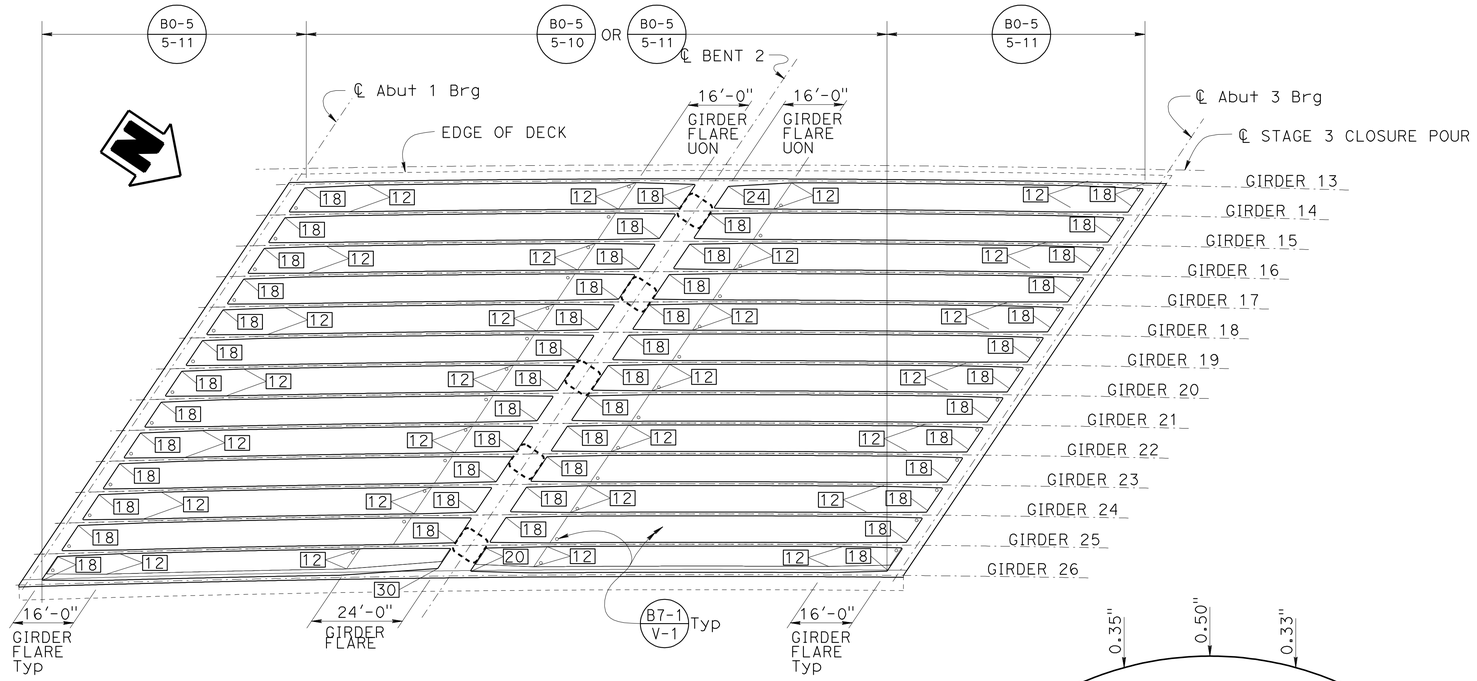

PLAN
1" = 20'
B7-1 B7-10 B8-5

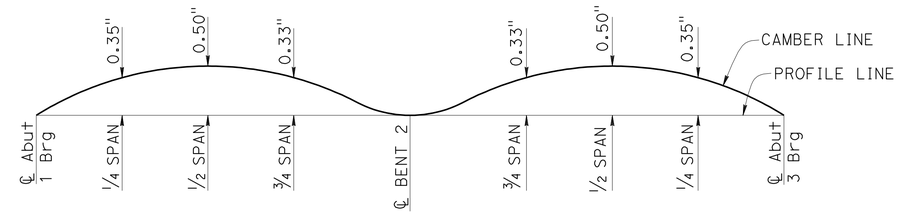

CAMBER DIAGRAM
NO SCALE

DOES NOT INCLUDE ALLOWANCE FOR FALSEWORK SETTLEMENT

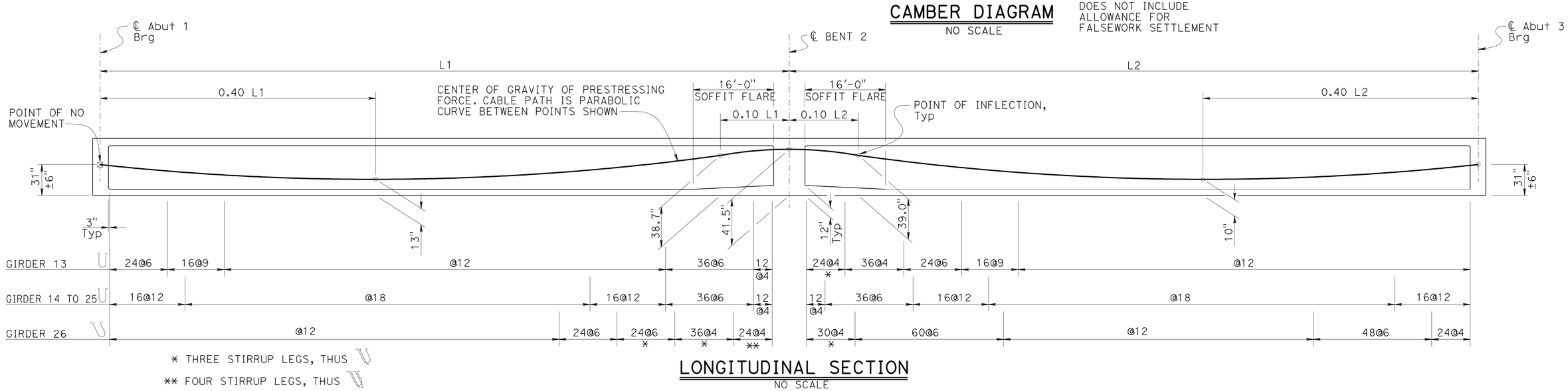

LONGITUDINAL SECTION
NO SCALE

PRESTRESSING NOTES
STAGE 3 CONSTRUCTION

270 Ksi Low Relaxation Strand:

P_{jack} = 22,147 kips
Anchor Set = 0.37 in
Total Number of Girders = 14

Distribution of prestress force (Pjack) between girders shall not exceed the ratio of 3:2. Maximum final force variation between girders shall not exceed 720 Kips.

Concrete: f'_c = 4,000 psi @ 28 days
f'_{ci} = 4,000 psi @ time of stressing

Contractor shall submit elongation calculations based on initial stress at X = 0.896 Times jacking stress.

One end stressing shall be performed from Abutment 3.

DESIGN	BY J. HIGAREDA	CHECKED J. JAUREGUI	
DETAILS	BY T. TREFZ	CHECKED J. JAUREGUI	
QUANTITIES	BY J. HIGAREDA	CHECKED S. MORADI	

STATE OF CALIFORNIA
DEPARTMENT OF TRANSPORTATION

DIVISION OF ENGINEERING SERVICES
STRUCTURE DESIGN
DESIGN BRANCH 15

BRIDGE NO. 53-3061
POST MILE 4.91

IMPERIAL HIGHWAY UC (REPLACE)
GIRDER LAYOUT STAGE 3

STRUCTURES DESIGN DETAIL SHEET (ENGLISH) (REV. 09-01-10)

ORIGINAL SCALE IN INCHES FOR REDUCED PLANS 0 1 2 3

UNIT: 3604
PROJECT NUMBER & PHASE: 0700001834 1
CONTRACT NO.: 07-215941

DISREGARD PRINTS BEARING EARLIER REVISION DATES
REVISION DATES: 08-10-11 12-10-11

SHEET 35 OF 76

FILE => 53-3061-1-g_1o3.dgn

USERNAME => s117606 DATE PLOTTED => 14-APR-2012 TIME PLOTTED => 10:30

DIST	COUNTY	ROUTE	POST MILES TOTAL PROJECT	SHEET No.	TOTAL SHEETS
07	LA	5	4.0/5.9	1040	1597

José L. Higareda 12-12-11
REGISTERED CIVIL ENGINEER DATE

4-9-12
PLANS APPROVAL DATE

REGISTERED PROFESSIONAL ENGINEER JOSE L. HIGAREDA No. 62338 Exp. 9-30-13 CIVIL STATE OF CALIFORNIA

The State of California or its officers or agents shall not be responsible for the accuracy or completeness of electronic copies of this plan sheet.

NOTE:
For deck corner reinforcement see "DECK REINFORCEMENT DETAILS" sheet.

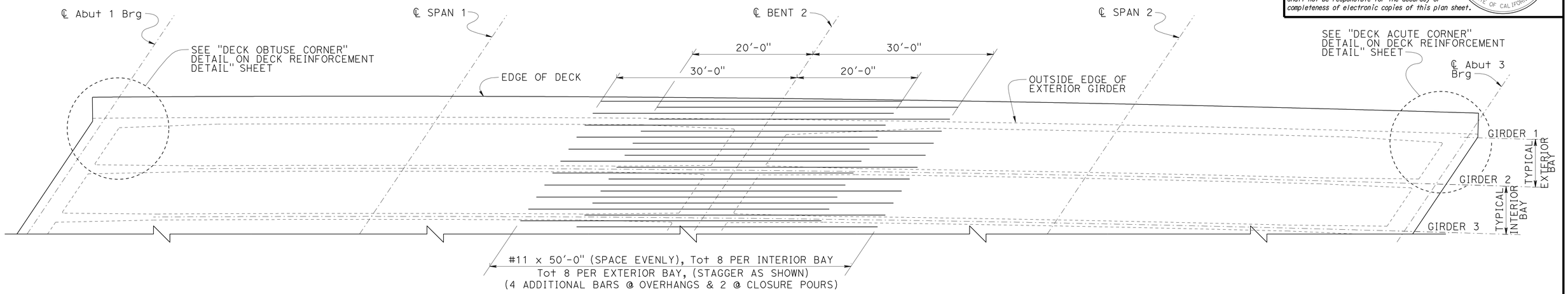

TOP REINFORCING

1/8" = 1'-0"

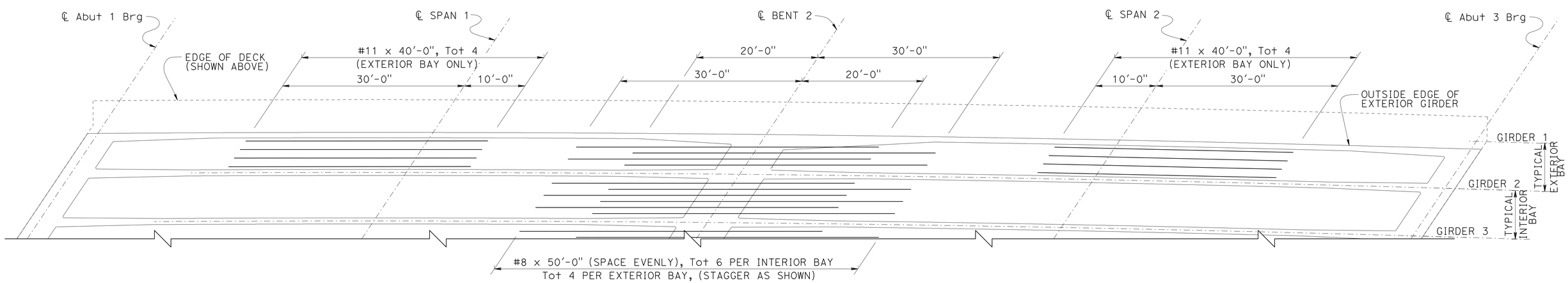

BOTTOM REINFORCING

1/8" = 1'-0"

	BY	CHECKED
DESIGN	J. HIGAREDA	J. JAUREGUI
DETAILS	T. TREFZ	J. JAUREGUI
QUANTITIES	J. HIGAREDA	S. MORADI

STATE OF CALIFORNIA
DEPARTMENT OF TRANSPORTATION

DIVISION OF ENGINEERING SERVICES
STRUCTURE DESIGN
DESIGN BRANCH 15

BRIDGE NO. 53-3061
POST MILE 4.91

IMPERIAL HIGHWAY UC (REPLACE)
ADDITIONAL GIRDER REINF STAGE 1

STRUCTURES DESIGN DETAIL SHEET (ENGLISH) (REV. 09-01-10)

ORIGINAL SCALE IN INCHES FOR REDUCED PLANS 0 1 2 3

UNIT: 3604
PROJECT NUMBER & PHASE: 0700001834 1
CONTRACT NO.: 07-215941

DISREGARD PRINTS BEARING EARLIER REVISION DATES

REVISION DATES 08-11-11 09-16-11 12-12-11

SHEET 36 OF 76

FILE => 53-3061-1-gr_to1.dgn

USERNAME => s117606 DATE PLOTTED => 14-APR-2012 TIME PLOTTED => 10:30

DIST	COUNTY	ROUTE	POST MILES TOTAL PROJECT	SHEET No.	TOTAL SHEETS
07	LA	5	4.0/5.9	1041	1597

José L. Higareda 12-12-11
REGISTERED CIVIL ENGINEER DATE

4-9-12
PLANS APPROVAL DATE

REGISTERED PROFESSIONAL ENGINEER
JOSE L. HIGAREDA
No. 62338
Exp. 9-30-13
CIVIL
STATE OF CALIFORNIA

The State of California or its officers or agents shall not be responsible for the accuracy or completeness of electronic copies of this plan sheet.

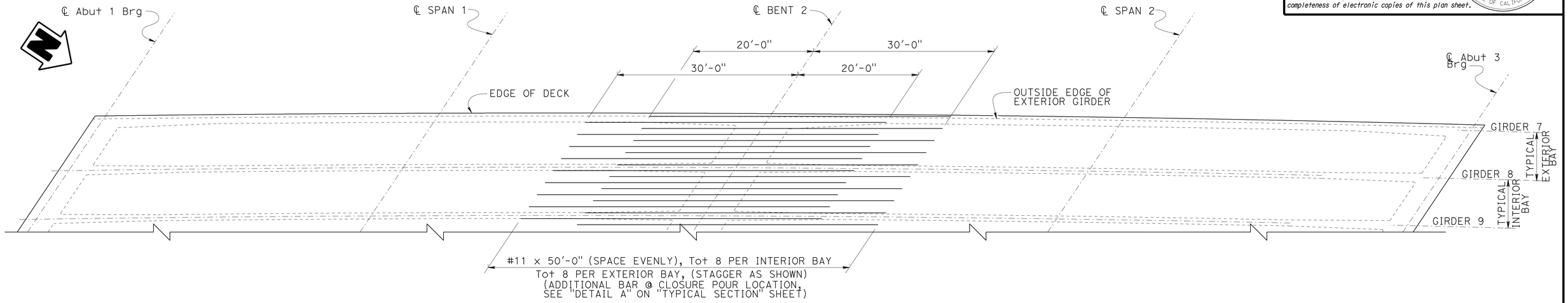

TOP REINFORCING

1/8" = 1'-0"

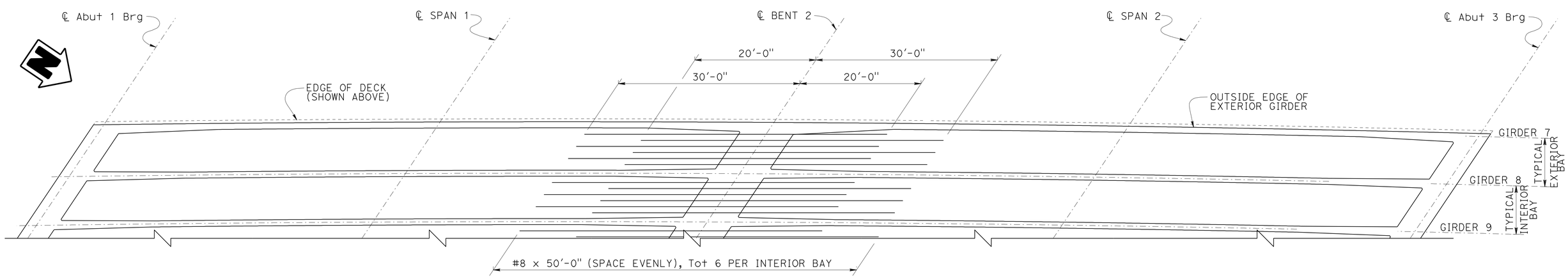

BOTTOM REINFORCING

1/8" = 1'-0"

	BY	CHECKED
DESIGN	J. HIGAREDA	J. JAUREGUI
DETAILS	T. TREFZ	J. JAUREGUI
QUANTITIES	J. HIGAREDA	S. MORADI

STATE OF CALIFORNIA
DEPARTMENT OF TRANSPORTATION

DIVISION OF ENGINEERING SERVICES
STRUCTURE DESIGN
DESIGN BRANCH 15

BRIDGE NO. 53-3061
POST MILE 4.91

IMPERIAL HIGHWAY UC (REPLACE)
ADDITIONAL GIRDER REINF STAGE 2

STRUCTURES DESIGN DETAIL SHEET (ENGLISH) (REV. 09-01-10)

ORIGINAL SCALE IN INCHES FOR REDUCED PLANS 0 1 2 3

UNIT: 3604
PROJECT NUMBER & PHASE: 0700001834 1
CONTRACT NO.: 07-215941

DISREGARD PRINTS BEARING EARLIER REVISION DATES

REVISION DATES 08-11-11 09-16-11 12-12-11

SHEET 37 OF 76

FILE => 53-3061-1-gr_1o2.dgn

USERNAME => s117606 DATE PLOTTED => 14-APR-2012 TIME PLOTTED => 10:30

DIST	COUNTY	ROUTE	POST MILES TOTAL PROJECT	SHEET No.	TOTAL SHEETS
07	LA	5	4.0/5.9	1042	1597

José L. Higareda 12-12-11
REGISTERED CIVIL ENGINEER DATE

4-9-12
PLANS APPROVAL DATE

REGISTERED PROFESSIONAL ENGINEER
JOSE L. HIGAREDA
No. 62338
Exp. 9-30-13
CIVIL
STATE OF CALIFORNIA

The State of California or its officers or agents shall not be responsible for the accuracy or completeness of electronic copies of this plan sheet.

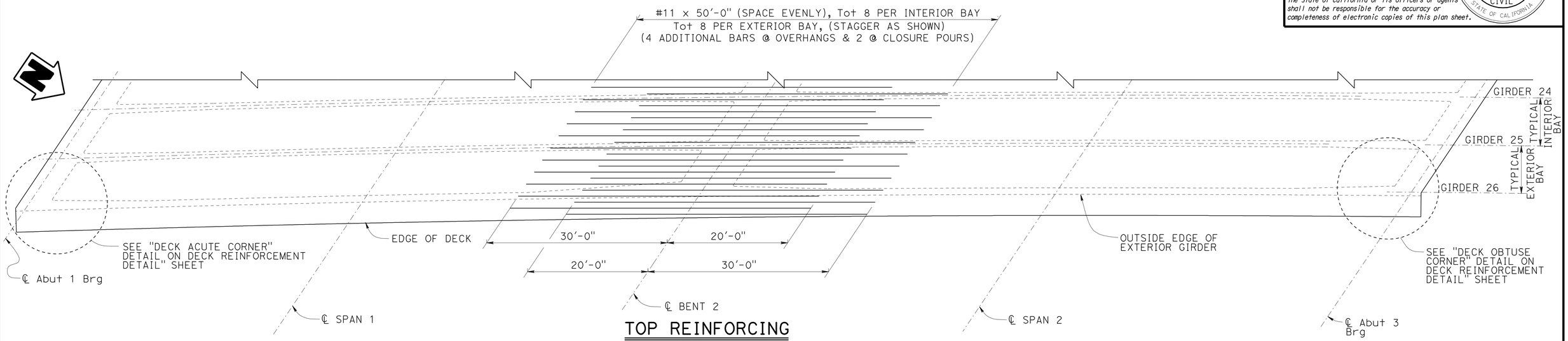

TOP REINFORCING

1/8" = 1'-0"

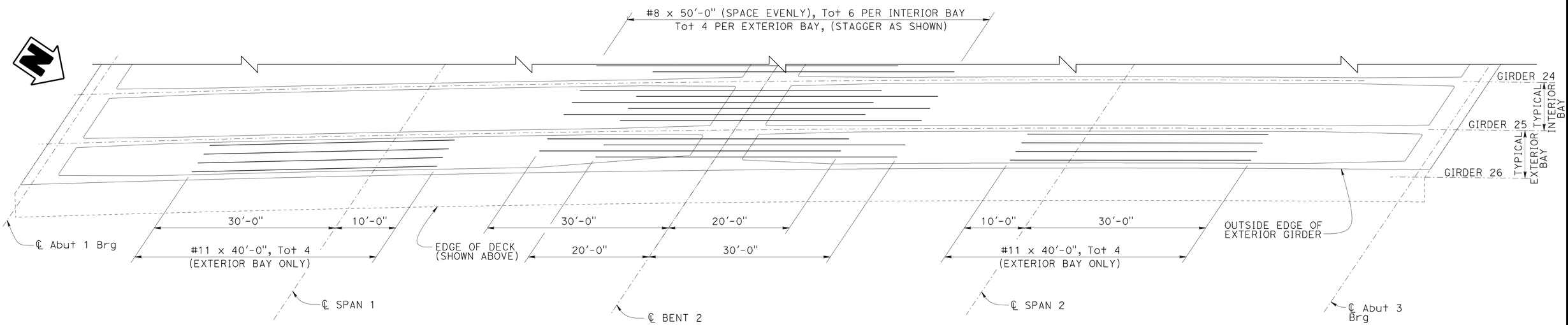

BOTTOM REINFORCING

1/8" = 1'-0"

DESIGN	BY J. HIGAREDA	CHECKED J. JAUREGUI	
DETAILS	BY T. TREFZ	CHECKED J. JAUREGUI	
QUANTITIES	BY J. HIGAREDA	CHECKED S. MORADI	

STATE OF CALIFORNIA
DEPARTMENT OF TRANSPORTATION

DIVISION OF ENGINEERING SERVICES
STRUCTURE DESIGN
DESIGN BRANCH 15

BRIDGE NO. 53-3061
POST MILE 4.91

IMPERIAL HIGHWAY UC (REPLACE)
ADDITIONAL GIRDER REINF STAGE 3

STRUCTURES DESIGN DETAIL SHEET (ENGLISH) (REV. 09-01-10)

ORIGINAL SCALE IN INCHES FOR REDUCED PLANS 0 1 2 3

UNIT: 3604
PROJECT NUMBER & PHASE: 0700001834 1
CONTRACT NO.: 07-215941

DISREGARD PRINTS BEARING EARLIER REVISION DATES

REVISION DATES 08-11-11 09-26-11 12-12-11

SHEET 38 OF 76

FILE => 53-3061-1-gr_1o3.dgn

USERNAME => s117606 DATE PLOTTED => 14-APR-2012 TIME PLOTTED => 10:30

DIST	COUNTY	ROUTE	POST MILES TOTAL PROJECT	SHEET No.	TOTAL SHEETS
07	LA	5	4.0/5.9	1043	1597

José L. Higareda 12-12-11
REGISTERED CIVIL ENGINEER DATE

4-9-12
PLANS APPROVAL DATE

REGISTERED PROFESSIONAL ENGINEER
JOSE L. HIGAREDA
No. 62338
Exp. 9-30-13
CIVIL
STATE OF CALIFORNIA

The State of California or its officers or agents shall not be responsible for the accuracy or completeness of electronic copies of this plan sheet.

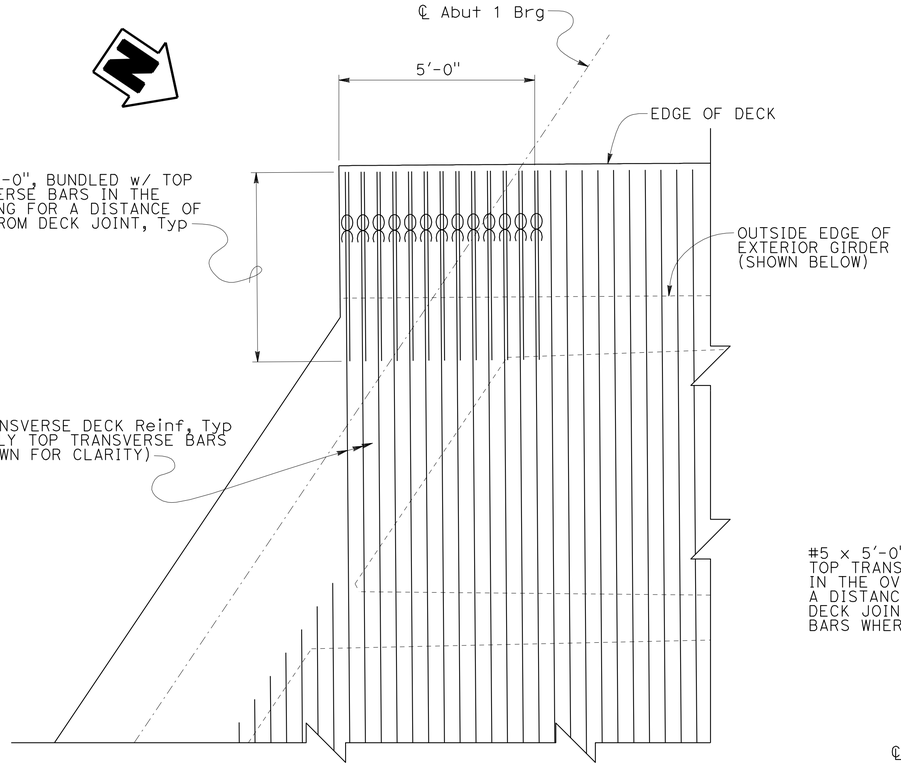

DECK OBTUSE CORNER
1/2" = 1'-0"

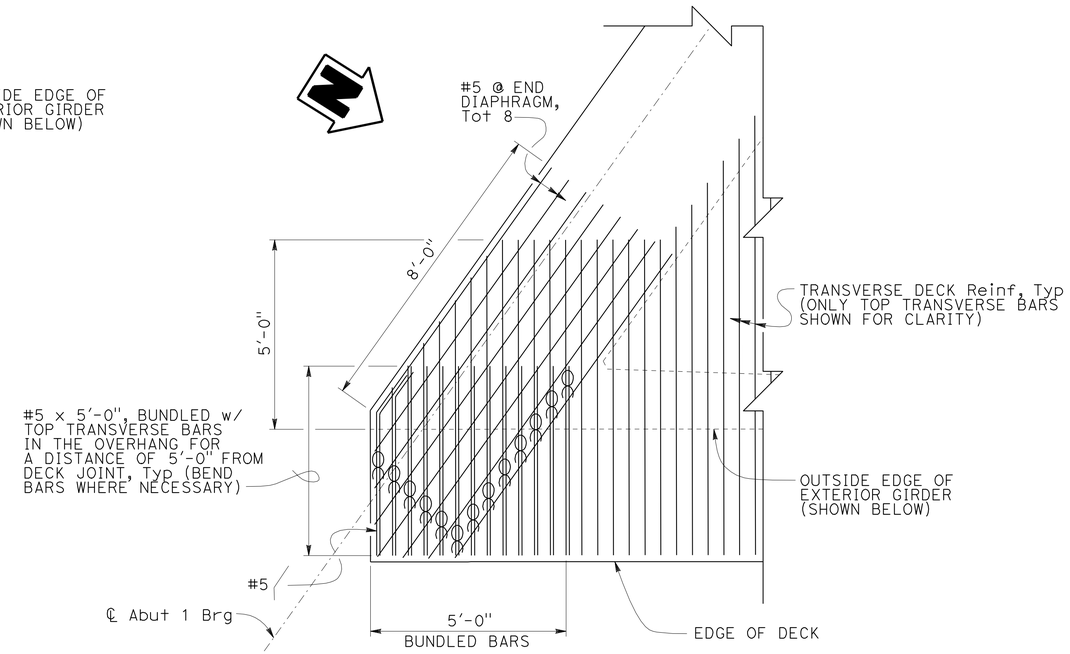

DECK ACUTE CORNER
1/2" = 1'-0"

NOTES:
1. Abutment 1 shown, (Abutment 3 similar)
2. B0-5 / 5-11 shown. B0-5 / 5-10 similar

LEGEND:
Indicates bundled bars

DESIGN	BY J. HIGAREDA	CHECKED J. JAUREGUI	
DETAILS	BY T. TREFZ	CHECKED J. JAUREGUI	
QUANTITIES	BY J. HIGAREDA	CHECKED S. MORADI	

STATE OF CALIFORNIA
DEPARTMENT OF TRANSPORTATION

DIVISION OF ENGINEERING SERVICES
STRUCTURE DESIGN
DESIGN BRANCH 15

BRIDGE NO. 53-3061
POST MILE 4.91

IMPERIAL HIGHWAY UC (REPLACE)
DECK REINFORCEMENT DETAILS

STRUCTURES DESIGN DETAIL SHEET (ENGLISH) (REV. 09-01-10)

ORIGINAL SCALE IN INCHES FOR REDUCED PLANS 0 1 2 3

UNIT: 3604
PROJECT NUMBER & PHASE: 0700001834 1
CONTRACT NO.: 07-215941

DISREGARD PRINTS BEARING EARLIER REVISION DATES

REVISION DATES: 08-16-11 12-12-11 03-15-12

SHEET 39 OF 76

FILE => 53-3061-m-ddta.dgn

USERNAME => s117606 DATE PLOTTED => 14-APR-2012 TIME PLOTTED => 10:31

DIST	COUNTY	ROUTE	POST MILES TOTAL PROJECT	SHEET No.	TOTAL SHEETS
07	LA	5	4.0/5.9	1044	1597

José L. Higareda
REGISTERED CIVIL ENGINEER 12-12-11
DATE

4-9-12
PLANS APPROVAL DATE

REGISTERED PROFESSIONAL ENGINEER
JOSE L. HIGAREDA
No. 62338
Exp. 9-30-13
CIVIL
STATE OF CALIFORNIA

The State of California or its officers or agents shall not be responsible for the accuracy or completeness of electronic copies of this plan sheet.

LEGEND:
[] Denotes TYPE C drain
▫ Denotes TYPE D-2 drain

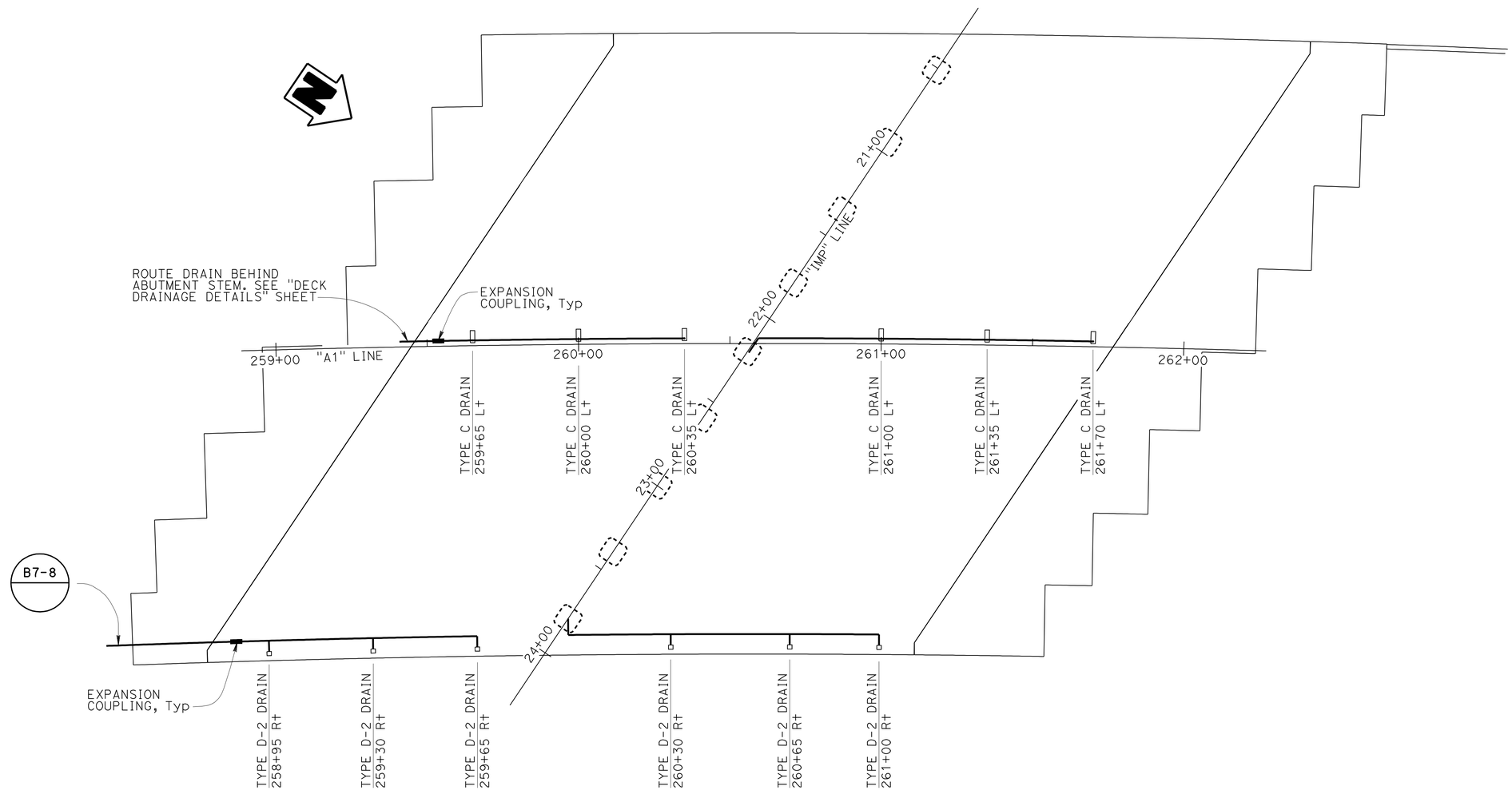

PLAN
1" = 20'
B7-6 B7-8

DESIGN	BY J. HIGAREDA	CHECKED J. JAUREGUI	
DETAILS	BY T. TREFZ	CHECKED J. JAUREGUI	
QUANTITIES	BY J. HIGAREDA	CHECKED S. MORADI	

STATE OF CALIFORNIA
DEPARTMENT OF TRANSPORTATION

DIVISION OF ENGINEERING SERVICES
STRUCTURE DESIGN
DESIGN BRANCH 15

BRIDGE NO. 53-3061
POST MILE 4.91

IMPERIAL HIGHWAY UC (REPLACE)
DECK DRAIN LAYOUT

STRUCTURES DESIGN DETAIL SHEET (ENGLISH) (REV. 09-01-10)

ORIGINAL SCALE IN INCHES FOR REDUCED PLANS 0 1 2 3

UNIT: 3604
PROJECT NUMBER & PHASE: 0700001834 1
CONTRACT NO.: 07-215941

DISREGARD PRINTS BEARING EARLIER REVISION DATES

REVISION DATES: 08-11-11 12-12-11

SHEET 40 OF 76

FILE => 53-3061-n-dd_lo.dgn

USERNAME => s117606 DATE PLOTTED => 14-APR-2012 TIME PLOTTED => 10:31

DIST	COUNTY	ROUTE	POST MILES TOTAL PROJECT	SHEET No.	TOTAL SHEETS
07	LA	5	4.0/5.9	1045	1597

José L. Higareda 12-12-11
REGISTERED CIVIL ENGINEER DATE

4-9-12
PLANS APPROVAL DATE

REGISTERED PROFESSIONAL ENGINEER
JOSE L. HIGAREDA
No. 62338
Exp. 9-30-13
CIVIL
STATE OF CALIFORNIA

The State of California or its officers or agents shall not be responsible for the accuracy or completeness of electronic copies of this plan sheet.

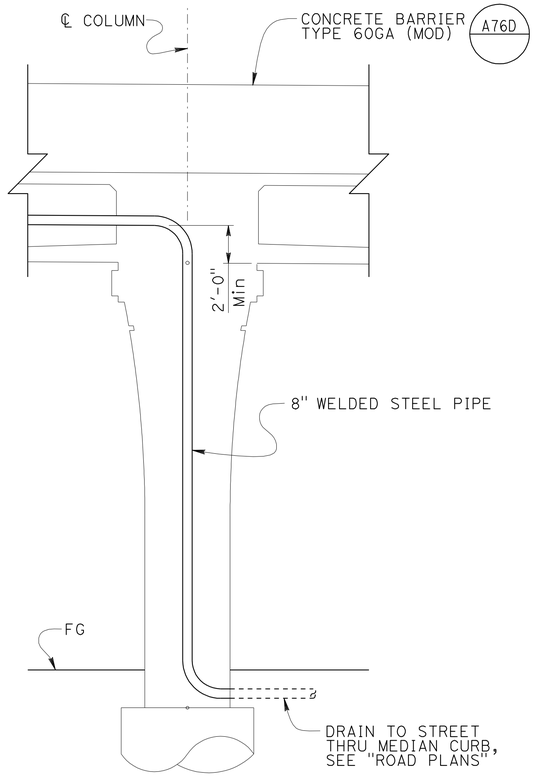

DRAINAGE THRU COLUMN FROM CENTER MEDIAN

1/4" = 1'-0"

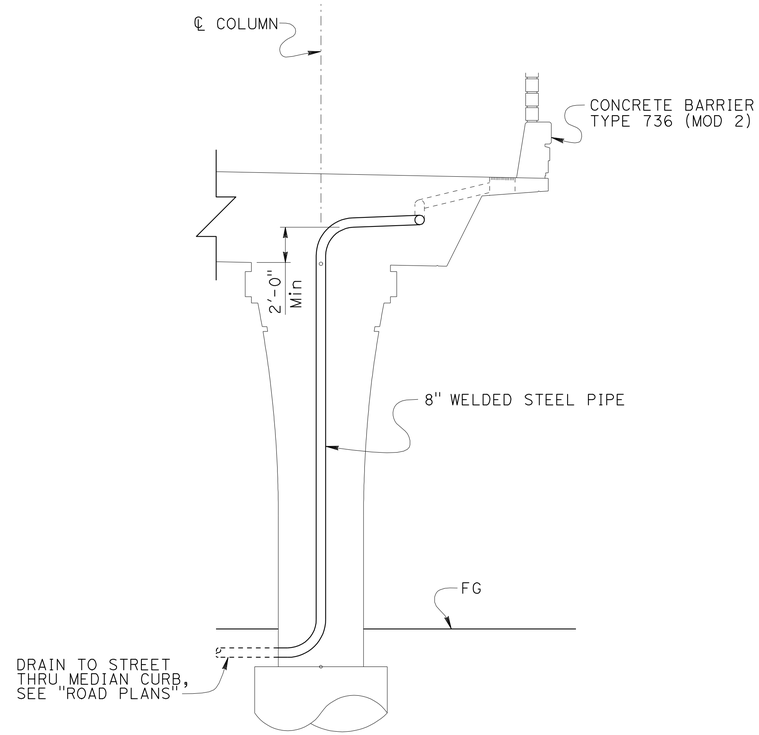

DRAINAGE THRU COLUMN FROM RIGHT EDGE OF DECK

1/4" = 1'-0"

PIPE TABLE		
PIPE SIZE	WALL THICKNESS (in)	PIPE HANGER MAXIMUM SPACING (ft)
NPS 6	.134	9.0
NPS 8	.148	9.0

NOTES:

1. All drains, pipes, connections, fittings and hangers to be galvanized. Pipes not required to be galvanized if enclosed in concrete.
2. All joints or connections to be flanged and bolted and to be smooth throughout inside of pipe unless otherwise shown.
3. Lateral bracing to deck drain pipes to be located at every other hanger or 18 ft max.
4. All drainage pipe bends shall be smooth at the following minimum radius:

   NPS 6 R = 1'-6"
   NPS 8 R = 2'-0"
5. Drain pipe shall be installed at the maximum slope conditions will allow, but not less than 2%.
6. All main pipe runs shall be NPS 8 unless otherwise noted.
7. All lateral pipe runs shall be NPS 6.

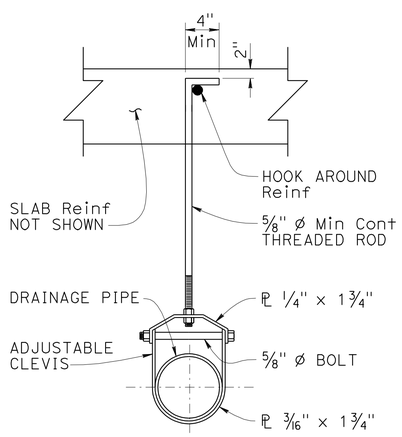

DRAIN PIPE SUPPORT

No Scale

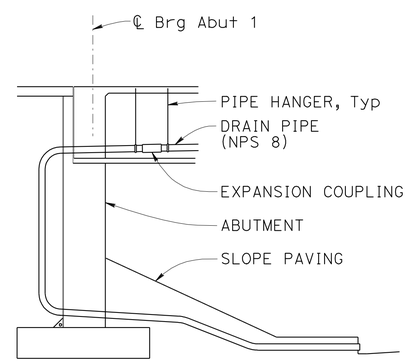

NOTE:
DISCHARGE THRU SIDEWALK CURB

DRAIN PIPE AT ABUTMENT 1

No Scale

	BY	CHECKED
DESIGN	J. HIGAREDA	J. JAUREGUI
DETAILS	T. TREFZ	J. JAUREGUI
QUANTITIES	J. HIGAREDA	S. MORADI

STATE OF CALIFORNIA
DEPARTMENT OF TRANSPORTATION

DIVISION OF ENGINEERING SERVICES
STRUCTURE DESIGN
DESIGN BRANCH 15

BRIDGE NO. 53-3061
POST MILE 4.91

IMPERIAL HIGHWAY UC (REPLACE)
DECK DRAINAGE DETAILS

STRUCTURES DESIGN DETAIL SHEET (ENGLISH) (REV. 09-01-10)

ORIGINAL SCALE IN INCHES FOR REDUCED PLANS 0 1 2 3

UNIT: 3604
PROJECT NUMBER & PHASE: 0700001834 1
CONTRACT NO.: 07-215941

DISREGARD PRINTS BEARING EARLIER REVISION DATES

REVISION DATES: 10-11-11 12-12-11

SHEET 41 OF 76

FILE => 53-3061-o-dd_dt01.dgn

USERNAME => s117606 DATE PLOTTED => 14-APR-2012 TIME PLOTTED => 10:31

DIST	COUNTY	ROUTE	POST MILES TOTAL PROJECT	SHEET No.	TOTAL SHEETS
07	LA	5	4.0/5.9	1046	1597

José L. Higareda
REGISTERED CIVIL ENGINEER — DATE 12-12-11

4-9-12
PLANS APPROVAL DATE

REGISTERED PROFESSIONAL ENGINEER — JOSE L. HIGAREDA — No. 62338 — Exp. 9-30-13 — CIVIL — STATE OF CALIFORNIA

The State of California or its officers or agents shall not be responsible for the accuracy or completeness of electronic copies of this plan sheet.

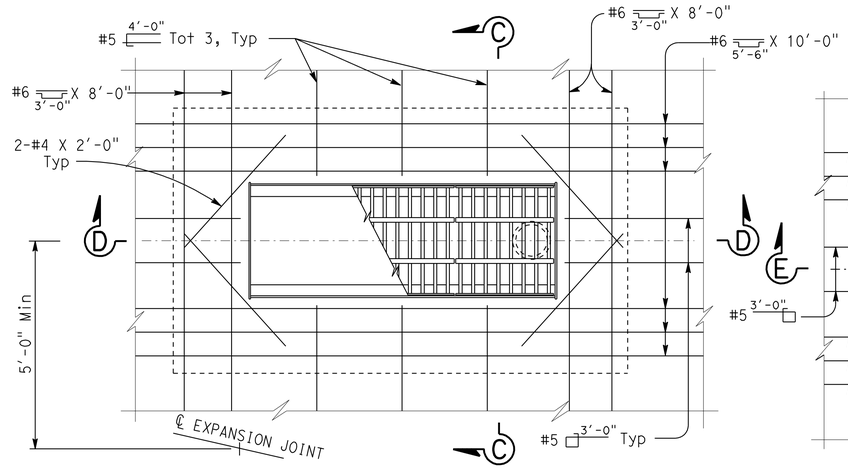

PLAN - MEDIAN INSTALLATION

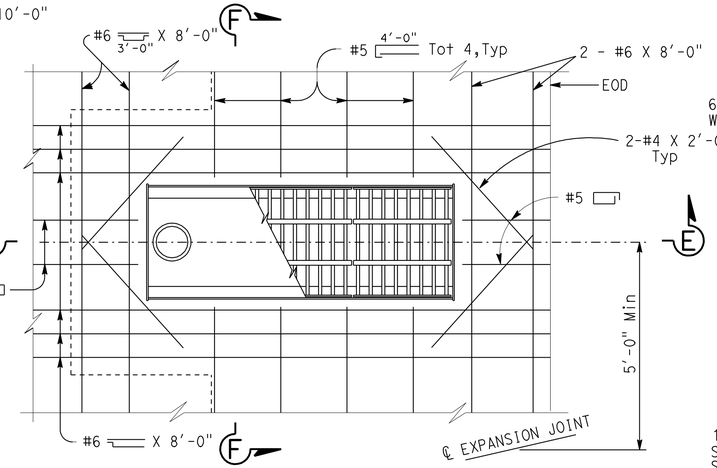

PLAN - CURB INSTALLATION

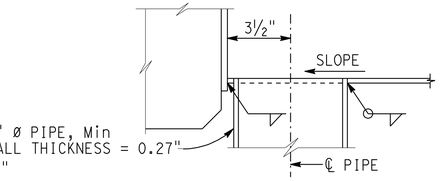

PIPE SECTION

NOTE:
Galvanize deck drain assembly after fabrication. Reinforcement shown at drains is to be placed in addition to typical slab reinforcement. Typical slab reinforcement not shown

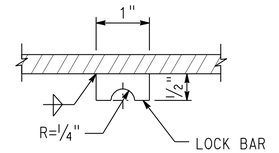

LOCK BAR

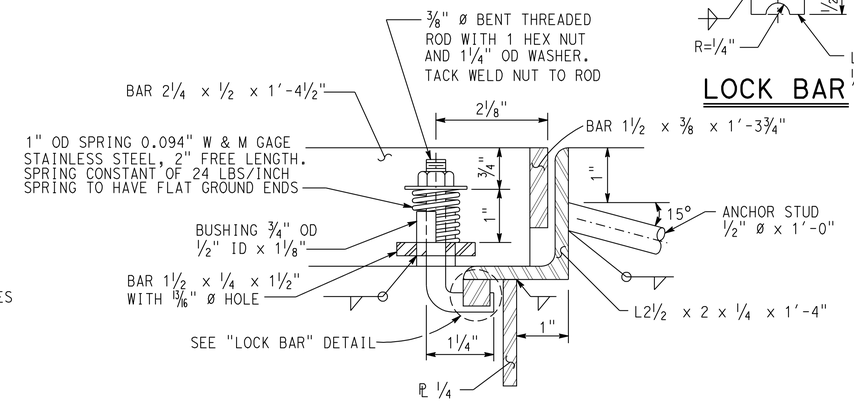

DETAIL A

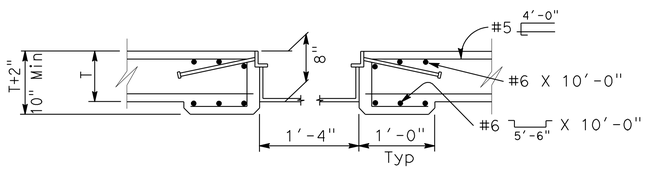

SECTION C-C

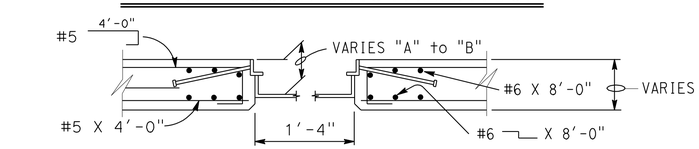

SECTION F-F

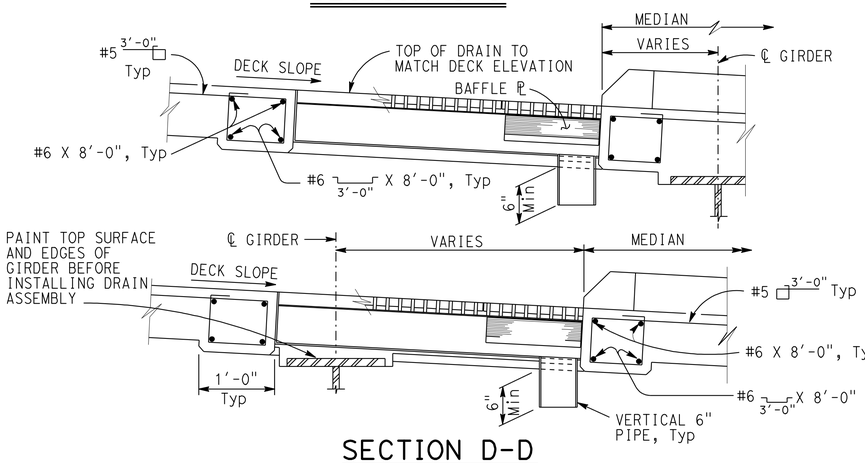

SECTION D-D

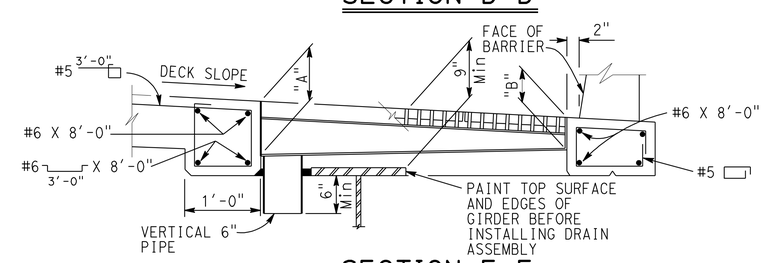

SECTION E-E

DECK DRAIN		
DECK SLOPE	"A"	"B"
0% TO 6%	9"	5"
7% TO 9%	10"	5"
10% TO 12%	10½"	4"

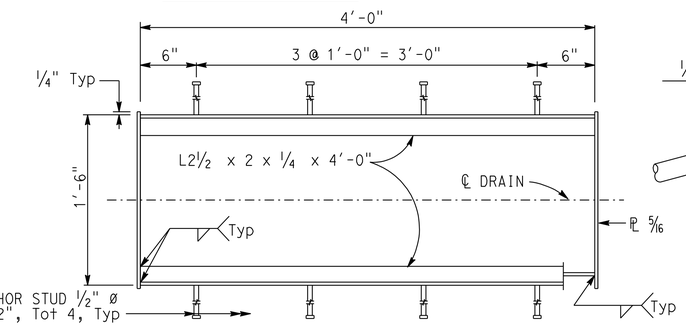

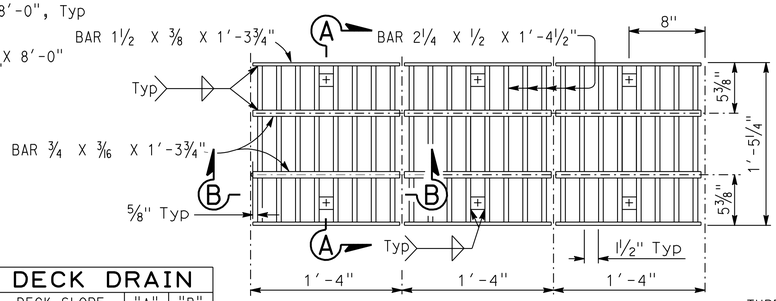

PLAN - FRAME & GRATE

NOTE:
Grating consists of 3 identical units except for baffle plate. Baffle plate is required only for the grate over the 6" ø pipe

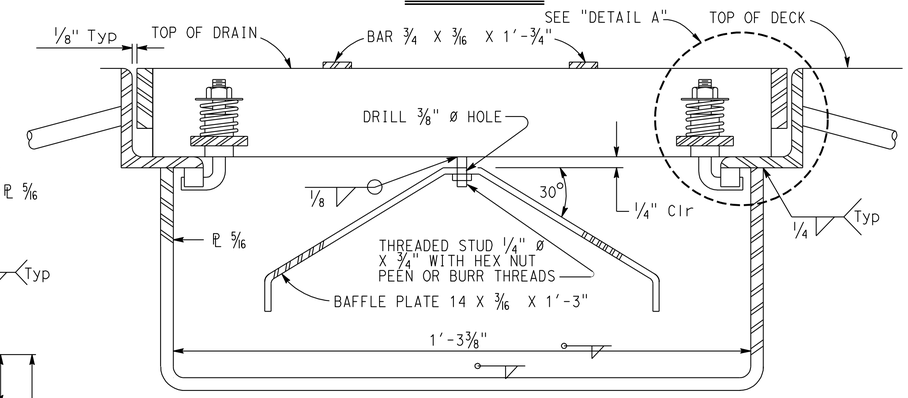

SECTION A-A (FRAME & GRATE)

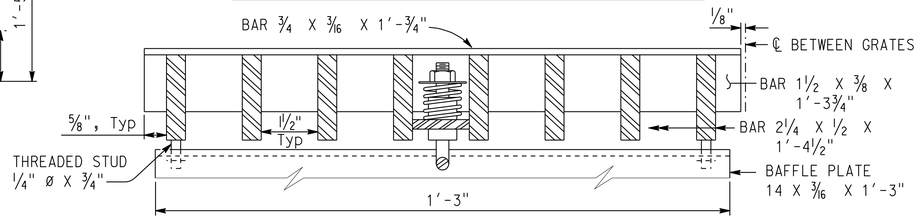

SECTION B-B

NO SCALE

STANDARD DRAWING

FILE NO. xs10-010

APPROVAL DATE July 2011

STATE OF CALIFORNIA DEPARTMENT OF TRANSPORTATION

DIVISION OF ENGINEERING SERVICES

BRIDGE NO. 53-3061

POST MILE 4.91

IMPERIAL HIGHWAY UC (REPLACE)

DECK DRAIN - TYPE C

DS OSD 2147A (ENGLISH STANDARD DRAWING "XS" BORDER REV. (02-02-11)

ORIGINAL SCALE IN INCHES FOR REDUCED PLANS 0 1 2 3

UNIT: 3604
PROJECT NUMBER & PHASE: 0700001834 1
CONTRACT NO.: 07-215941

DISREGARD PRINTS BEARING EARLIER REVISION DATES

REVISION DATES 11-28-11 12-12-11

SHEET 42 OF 76

FILE => 53-3061-o-dd_dt02.dgn

USERNAME => s119571 DATE PLOTTED => 14-APR-2012 TIME PLOTTED => 10:04

DIST	COUNTY	ROUTE	POST MILES TOTAL PROJECT	SHEET No.	TOTAL SHEETS
07	LA	5	4.0/5.9	1047	1597

José L. Higareda 12-12-11
REGISTERED CIVIL ENGINEER DATE

4-9-12
PLANS APPROVAL DATE

REGISTERED PROFESSIONAL ENGINEER JOSE L. HIGAREDA No. 62338 Exp. 9-30-13 CIVIL STATE OF CALIFORNIA

The State of California or its officers or agents shall not be responsible for the accuracy or completeness of electronic copies of this plan sheet.

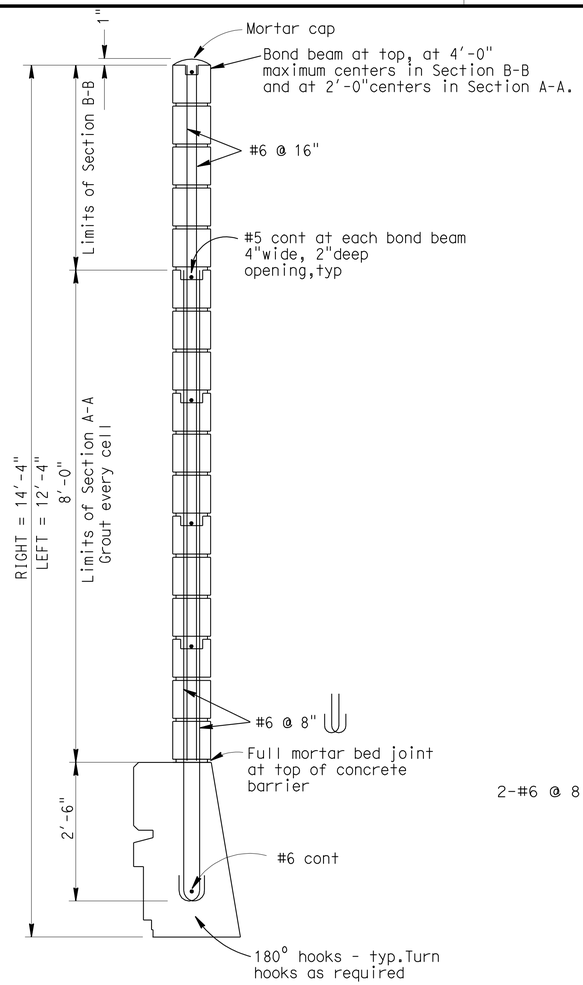

SOUND WALL SECTION
No Scale

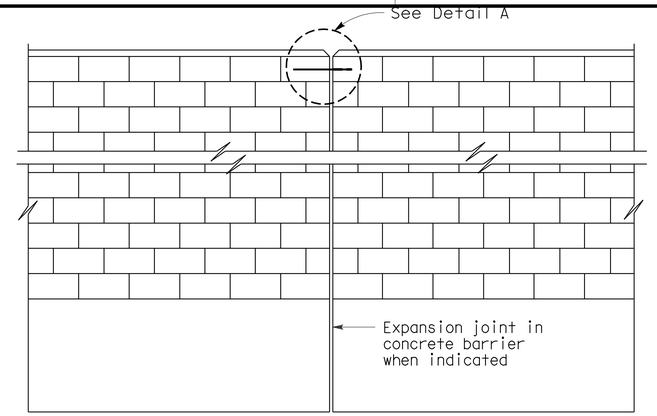

ALIGNMENT KEY DETAIL
No Scale

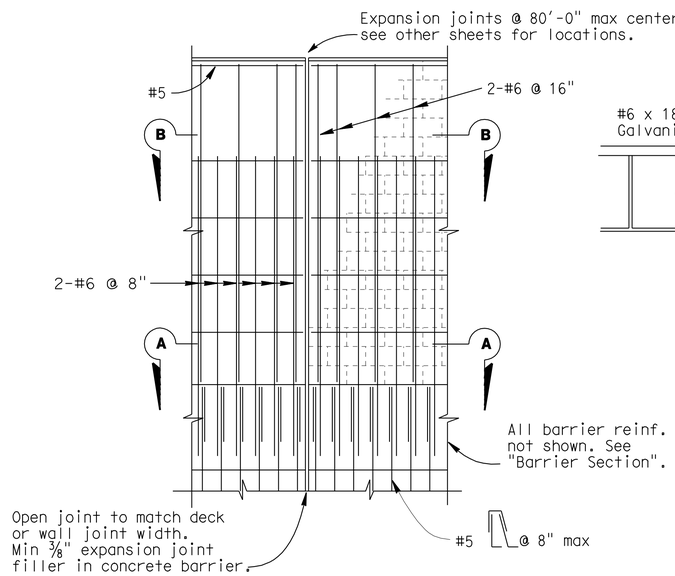

DECK AND WALL JOINT ELEVATION
No Scale

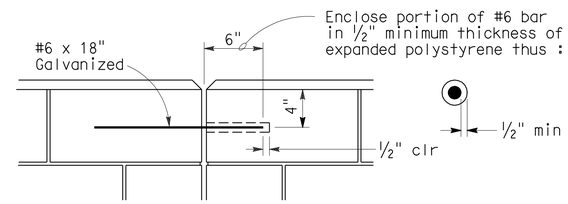

DETAIL A
No Scale

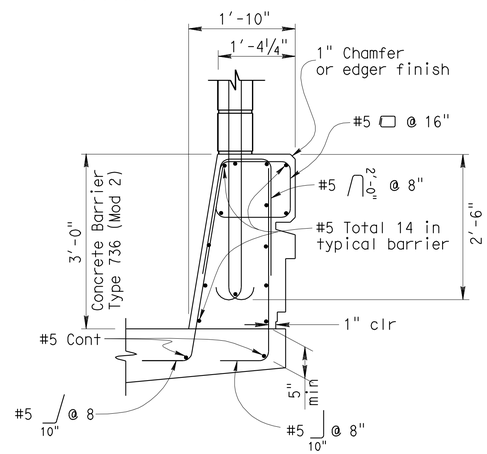

BARRIER SECTION
No Scale

NOTE:
For dimensions and reinforcement not shown, see Std. Plan B11-56 and "ARCHITECTURAL DETAILS No. 12" sheet.

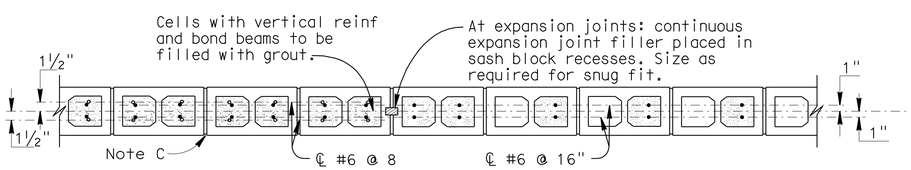

SECTION A- A
No Scale

SECTION B- B
No Scale

GENERAL NOTES

Note A: For type of block, type of block bond and joint finish, see "Road Plans".

Note B: When blocks are laid in stacked bond, ladder type, galvanized joint reinforcement shall be provided. A minimum of 2 - 12 gauge wires continuous at 4'-0" maximum to be used. Locate reinforcement in joints that are at the approximate midpoint between bond beams.

Note C: Horizontal joints shall be tooled concave or may be weathered. Vertical joints shall be tooled concave or may be raked.

Note D: All masonry to be high strength unless otherwise noted.

Note E: Concrete to be used for the barrier shall contain not less than 590 pounds of cementitious material per cubic yard.

Note F: Expansion joints in concrete barrier and masonry block to match deck joints and at ends of wing walls.

Note G: Expansion joints in Sound Wall (Masonry Block) shall be at each support, center of span, and at ends of each wingwall.

Note H: For dimensions and reinforcement not shown see "Typical Section" sheet.

DESIGN NOTES

DESIGN
Uniform Building Code,1997 Edition and the Bridge Design Specifications.

DESIGN WIND LOAD
37 psf

DESIGN SEISMIC LOAD
2.0 Dead load

REINFORCED CONCRETE
f'c = 3.6 ksi
fy = 60 ksi

CONCRETE MASONRY HIGH STRENGTH
f'm = 2500 psi
fy = 60 ksi

LOAD FACTORS AND LOAD COMBINATIONS
Load Factor Design (LFD)

Group A: βD +1.7 E + 1.7 SC
Group B: βD +1.7 E + 1.3 W
Group C: βD +1.3 E + 1.0 EQE
Group D: βD +1.3 E + 1.0 EQD
Group E: βD +1.1 E + 0.85 (EQE + EQD)

Where : β = 0.9 or 1.2, whichever controls in design
D = Dead load
E = Lateral earth pressure
SC = Live load surcharge
W = Wind load
EQD = Seismic dead load
EQE = Seismic earth load

STRENGTH REDUCTION FACTORS, Ø
Reinforced Concrete :
For flexure ..... Ø = 0.90
For shear ..... Ø = 0.85
Concrete masonry:
For flexure ..... Ø = 0.80
For shear ..... Ø = 0.60

Note 1:
Barrier, Deck and Concrete Masonry are designed by the Strength Design Method.

NO SCALE

DESIGN	BY J. HIGAREDA	CHECKED J. JAUREGUI	
DETAILS	BY T. TREFZ	CHECKED J. JAUREGUI	
QUANTITIES	BY J. HIGAREDA	CHECKED S. MORADI	

STATE OF CALIFORNIA
DEPARTMENT OF TRANSPORTATION

DIVISION OF ENGINEERING SERVICES
STRUCTURE DESIGN
DESIGN BRANCH 15

BRIDGE NO. 53-3061
POST MILE 4.91

IMPERIAL HIGHWAY UC (REPLACE)
SOUNDWALL - MASONRY BLOCK ON BRIDGE

STRUCTURES DESIGN DETAIL SHEET (ENGLISH) (REV. 09-01-10)

ORIGINAL SCALE IN INCHES FOR REDUCED PLANS 0 1 2 3

UNIT: 3604
PROJECT NUMBER & PHASE: 0700001834 1
CONTRACT NO.: 07-215941

DISREGARD PRINTS BEARING EARLIER REVISION DATES
REVISION DATES 08-22-11 12-14-11 12-15-11

SHEET 43 OF 76

FILE => 53-3061-p-sw_dt01.dgn

USERNAME => s119571 DATE PLOTTED => 14-APR-2012 TIME PLOTTED => 10:04

DIST	COUNTY	ROUTE	POST MILES TOTAL PROJECT	SHEET No.	TOTAL SHEETS
07	LA	5	4.0/5.9	1048	1597

José L. Higareda 12-12-11
REGISTERED CIVIL ENGINEER DATE

4-9-12
PLANS APPROVAL DATE

REGISTERED PROFESSIONAL ENGINEER JOSE L. HIGAREDA No. 62338 Exp. 9-30-13 CIVIL STATE OF CALIFORNIA

The State of California or its officers or agents shall not be responsible for the accuracy or completeness of electronic copies of this plan sheet.

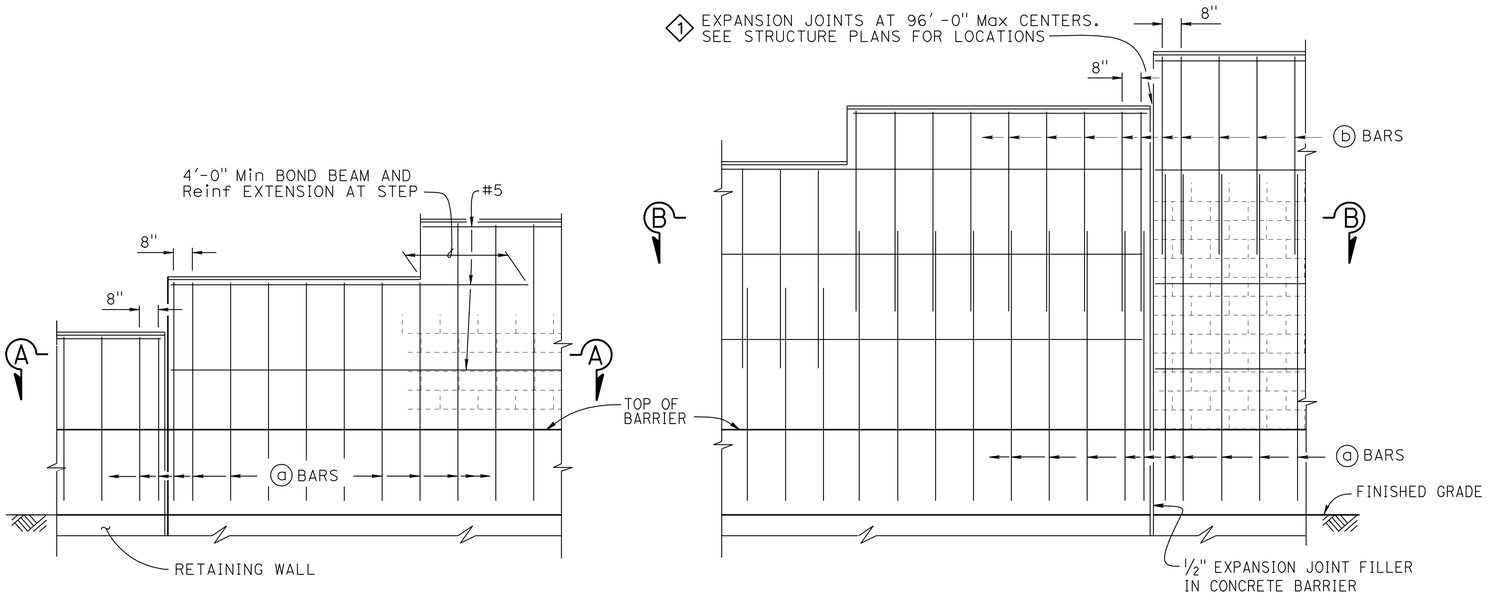

H=6'-4" THRU H=10'-4"

H=12'-4" THRU H=16'-4"

PART ELEVATION

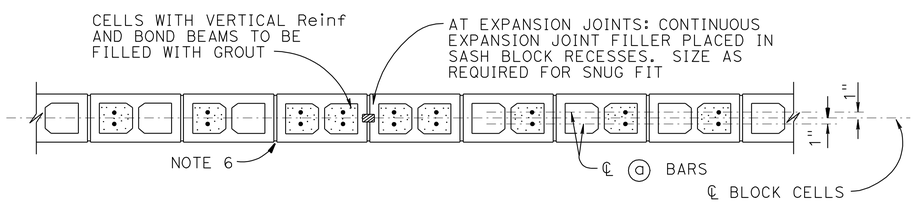

SECTION A-A

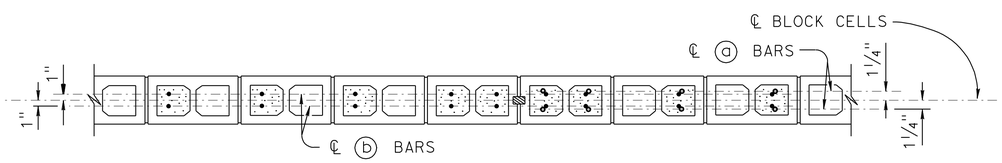

SECTION B-B

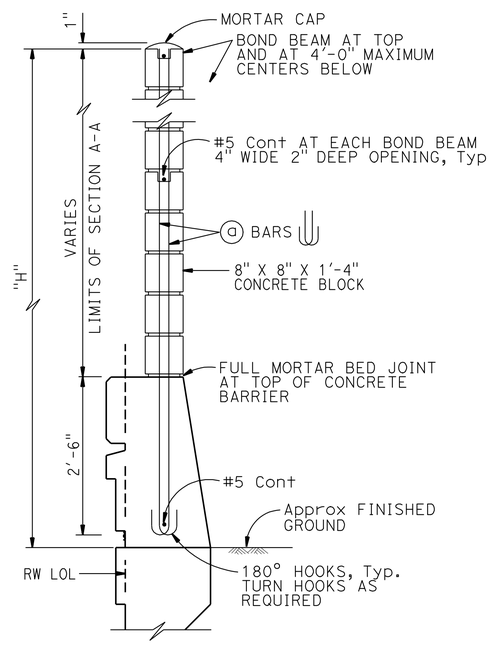

H=6'-4" THRU H=10'-4"

For details not shown, see H=12'-4" thru H=16'-4"

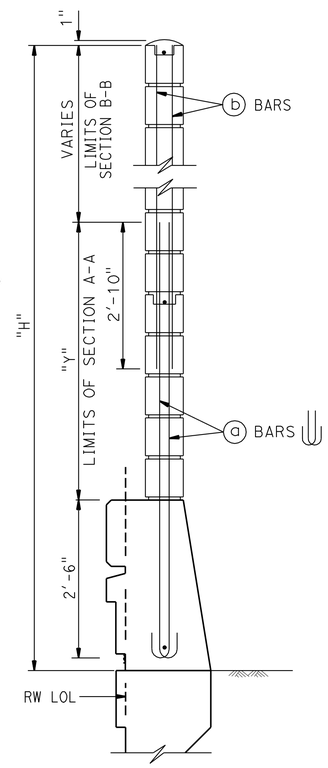

H=12'-4" THRU H=16'-4"

For details not shown, see H=6'-4" thru H=10'-4"

2 TYPICAL SECTION

SOUND WALL REINFORCEMENT TABLE

MAXIMUM "H"	ⓐ BARS @ 1'-4" Max	ⓑ BARS @ 1'-4" Max	"Y"	f'm (psi)	COMPRESSIVE STRENGTH OF CMU (psi)	MAXIMUM "H"
6'-4"	#4	———	———	1500	1900	6'-4"
8'-4"	#4	———	———	1500	1900	8'-4"
10'-4"	#4	———	———	1500	1900	10'-4"
12'-4"	#5	#4	5'-0"	1500	1900	12'-4"
14'-4"	#6	#4	7'-0"	1500	1900	14'-4"
16'-4"	#6	#4	9'-0"	2500	3700	16'-4"

NOTES:

1. For details not shown, see "SOUND WALL - MASONRY BLOCK WITH BARRIER ON RETAINING WALL - DETAILS NO. 2" sheet
2. Slope ground at traffic side of barrier to drain. Maximum slope ±10%
3. See STANDARD PLANS B15-9 for other details
4. 3 For type of block and joint finish, see "ROAD PLANS"
5. When blocks are laid in stacked bond, ladder type, galvanized joint reinforcement shall be provided. A minimum of 2-9 gauge wire continuous at 4'-0" maximum to be used. Locate reinforcement in joints that are at the approximate midpoint between bond beams
6. Horizontal joints shall be tooled concave or may be weathered. Vertical joints shall be tooled concave or may be raked
7. For intermediate wall heights that are between the "H's" given, use the tabular information for the next higher "H"
8. Masonry strengths are listed in "SOUND WALL REINFORCEMENT TABLE"
9. Concrete to be used for the barrier shall contain not less than 590 pounds of cementitious material per cubic yard

SPECIAL DETAILS

NO SCALE

REVISED STANDARD DRAWING

FILE NO. xs15-130-1e

APPROVAL DATE 10-22-09

1 Revised Call Out 3 Revised Note
2 Modified Detail

STATE OF CALIFORNIA DEPARTMENT OF TRANSPORTATION

DIVISION OF ENGINEERING SERVICES

BRIDGE NO. 53-3061
POST MILE 4.91

IMPERIAL HIGHWAY UC (REPLACE)

SOUNDWALL - MASONRY BLOCK WITH BARRIER ON RETAINING WALL DETAILS NO. 1

DS OSD 2147A (ENGLISH STANDARD DRAWING "XS" BORDER REV. (02-02-11)

ORIGINAL SCALE IN INCHES FOR REDUCED PLANS 0 1 2 3

UNIT: 3604
PROJECT NUMBER & PHASE: 0700001834 1
CONTRACT NO.: 07-215941

DISREGARD PRINTS BEARING EARLIER REVISION DATES 12-15-11

SHEET 44 OF 76

FILE => 53-3061-p-sw_dt02.dgn

USERNAME => s119571 DATE PLOTTED => 14-APR-2012 TIME PLOTTED => 10:04

DIST	COUNTY	ROUTE	POST MILES TOTAL PROJECT	SHEET No.	TOTAL SHEETS
07	LA	5	4.0/5.9	1049	1597

José L. Higareda 12-12-11
REGISTERED CIVIL ENGINEER DATE

4-9-12

REGISTERED PROFESSIONAL ENGINEER JOSE L. HIGAREDA No. 62338 Exp. 9-30-13 CIVIL STATE OF CALIFORNIA

The State of California or its officers or agents shall not be responsible for the accuracy or completeness of electronic copies of this plan sheet.

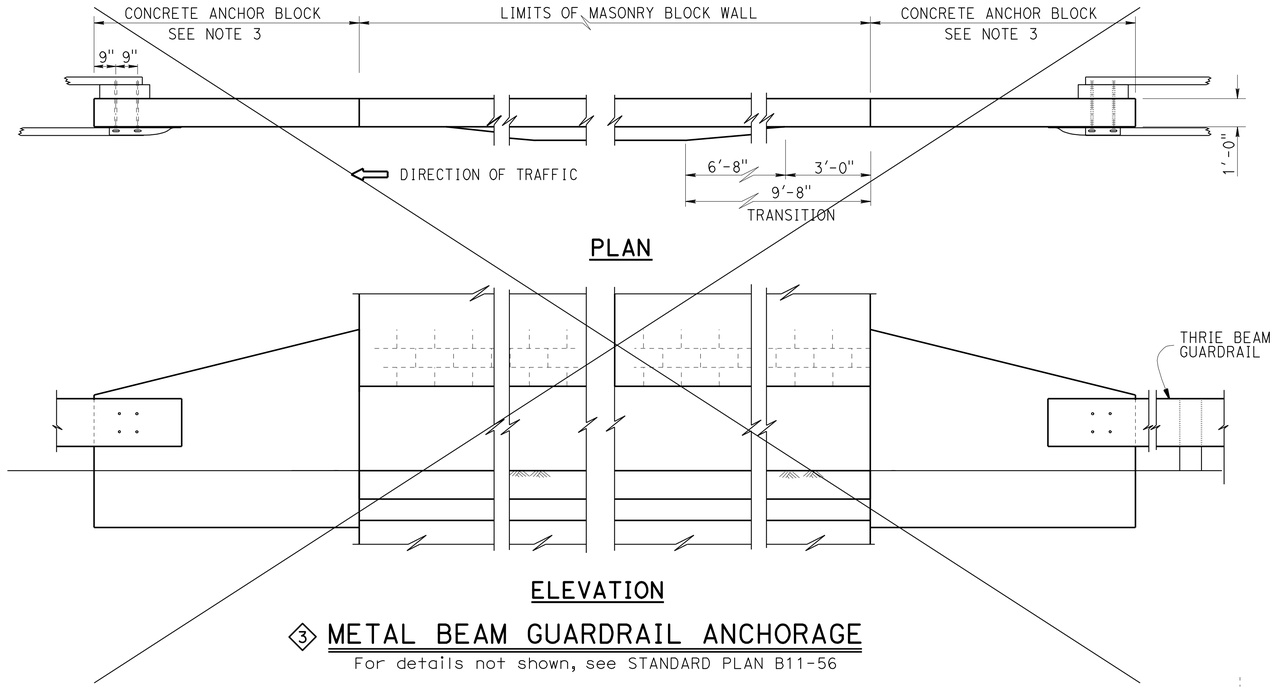

③ METAL BEAM GUARDRAIL ANCHORAGE

For details not shown, see STANDARD PLAN B11-56

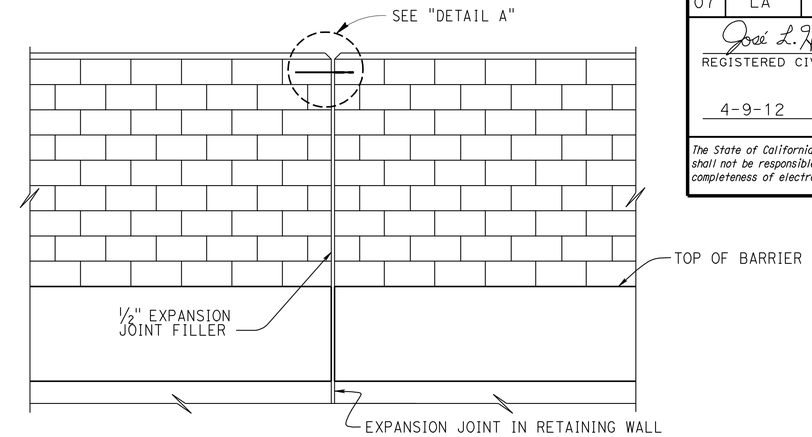

ALIGNMENT KEY DETAIL

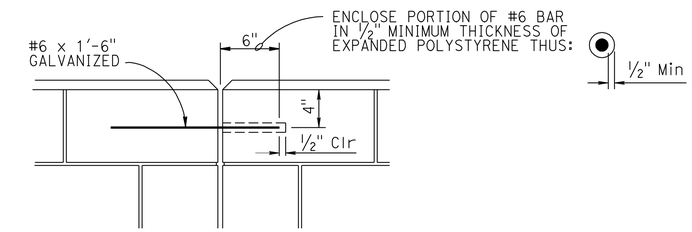

DETAIL A

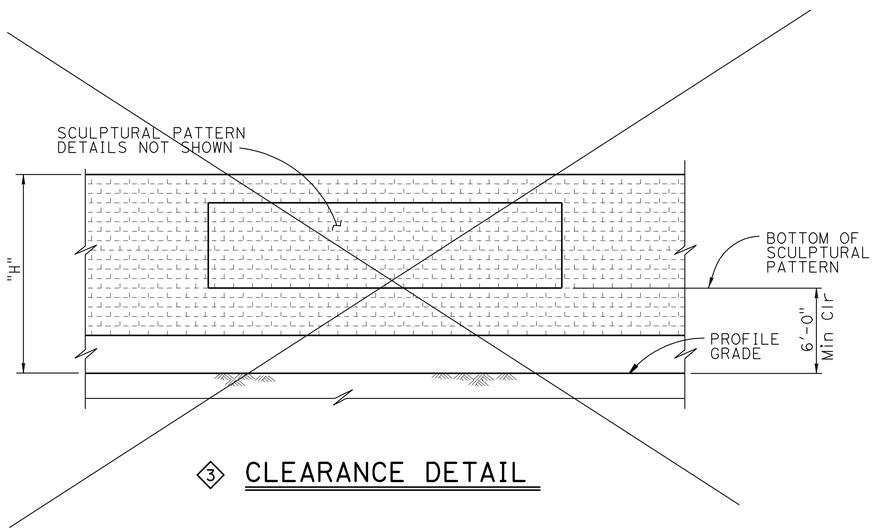

③ CLEARANCE DETAIL

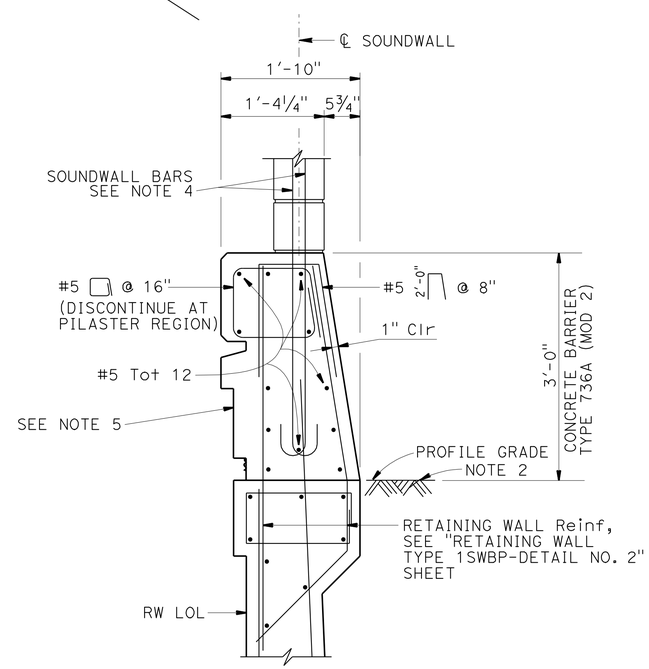

① BARRIER SECTION

DESIGN NOTES

DESIGN

Uniform Building Code, 1997 Edition and the Bridge Design Specifications

DESIGN WIND LOAD

33 psf

DESIGN SEISMIC LOAD

0.57 Dead load

CONCRETE MASONRY

REINFORCED CONCRETE

f'c = 3600 psi
fy = 60 ksi

REGULAR STRENGTH	HIGH STRENGTH	
f'm = 1500 psi	f'm = 2000 psi	f'm = 2500 psi
fb = 495 psi	fb = 660 psi	fb = 830 psi
fs = 24,000 psi	fs = 24,000 psi	fs = 24,000 psi
n = 25.8	n = 19.3	n = 15.5

② NOTES:

1. For details not shown, see STANDARD PLAN B15-9
2. Slope ground at traffic side of barrier to drain. Maximum slope ±10% See STANDARD PLAN B11-56, Note D
3. ~~For Concrete Anchor Block and connection details, see "CONNNECTION DETAIL DD" on STANDARD PLAN A77J3~~
4. See "TYPICAL SECTIONS" on "SOUNDWALL - MASONRY BLOCK WITH BARRIER ON RETAINING WALL DETAILS NO. 1" sheet
5. For barrier architectural details, see "ARCHITECTURAL DETAILS No. 13" sheet

SPECIAL DETAILS

NO SCALE

REVISED STANDARD DRAWING

FILE NO. xs15-130-2e

APPROVAL DATE 10-22-09

① Modified Detail ③ Deleted Detail
② Revised Notes

STATE OF CALIFORNIA DEPARTMENT OF TRANSPORTATION

DIVISION OF ENGINEERING SERVICES

BRIDGE NO. 53-3061
POST MILE 4.91

IMPERIAL HIGHWAY UC (REPLACE)

SOUNDWALL - MASONRY BLOCK WITH BARRIER ON RETAINING WALL DETAILS NO. 2

DS OSD 2147A (ENGLISH STANDARD DRAWING "XS" BORDER REV. (02-02-11)

ORIGINAL SCALE IN INCHES FOR REDUCED PLANS 0 1 2 3

UNIT: 3604
PROJECT NUMBER & PHASE: 0700001834 1
CONTRACT NO.: 07-215941

DISREGARD PRINTS BEARING EARLIER REVISION DATES

REVISION DATES 12-15-11

SHEET 45 OF 76

FILE => 53-3061-p-sw_dt03.dgn

USERNAME => s119571 DATE PLOTTED => 14-APR-2012 TIME PLOTTED => 10:04

DIST	COUNTY	ROUTE	POST MILES TOTAL PROJECT	SHEET No.	TOTAL SHEETS
07	LA	5	4.0/5.9	1050	1597

José L. Higareda
REGISTERED CIVIL ENGINEER 12-12-11 DATE

4-9-12
PLANS APPROVAL DATE

REGISTERED PROFESSIONAL ENGINEER JOSE L. HIGAREDA No. 62338 Exp. 9-30-13 CIVIL STATE OF CALIFORNIA

The State of California or its officers or agents shall not be responsible for the accuracy or completeness of electronic copies of this plan sheet.

Symbol:

Ø : 2 bar bundle

Note: Total ⓔ bars shown are total number of top and bottom bars combined.

TABLE 1: TABLE OF REINFORCING STEEL DIMENSIONS AND DATA ①

DESIGN H	6′	8′	10′	12′	14′	16′	18′	20′	22′	24′	26′	28′	30′	32′
W	8′- 3"	8′- 6"	9′- 0"	9′- 6"	10′- 0"	10′- 9"	11′- 3"	12′- 0"	13′- 3"	14′- 3"	15′- 9"	16′- 9"	18′- 0"	19′- 9"
C	2′- 9"	2′- 9"	3′- 0"	3′- 3"	3′- 4"	3′- 6"	3′- 9"	4′- 0"	4′- 3"	4′- 9"	5′- 3"	5′- 6"	5′- 9"	6′- 7"
B	5′- 6"	5′- 9"	6′- 0"	6′- 3"	6′- 8"	7′- 3"	7′- 6"	8′- 0"	9′- 0"	9′- 6"	10′- 6"	11′- 3"	12′- 3"	13′- 2"
F PILE FOOTING	1′- 6"	1′- 6"	1′- 6"	1′- 6"	1′- 9"	2′- 0"	2′- 0"	2′- 6"	2′- 9"	2′- 9"	3′- 0"	3′- 3"	3′- 9"	4′- 0"
M	1′- 3"	1′- 6"	1′- 6"	1′- 9"	1′- 10"	2′- 0"	2′- 3"	2′- 6"	2′- 9"	3′- 3"	3′- 9"	4′- 0"	4′- 3"	5′- 1"
N	4′- 0"	4′- 3"	4′- 6"	4′- 9"	5′- 2"	5′- 9"	6′- 0"	6′- 6"	7′- 6"	8′-0"	9′-0"	9′- 9"	10′- 9"	11′- 9"
~~ROW 1 SPACING~~	~~12′- 3"~~	~~10′- 3"~~	~~8′- 9"~~	~~7′- 6"~~	~~6′- 3"~~	~~5′- 3"~~	~~4′- 9"~~	~~4′- 0"~~	~~3′- 9"~~	~~3′- 9"~~	~~4′-0"~~	~~3′- 9"~~	~~3′- 9"~~	~~3′- 9"~~
~~ROW 2 SPACING~~	~~14′- 0"~~	~~12′- 9"~~	~~11′- 6"~~	~~10′- 3"~~	~~9′- 3"~~	~~8′- 3"~~	~~7′- 9"~~	~~6′- 6"~~	~~7′- 6"~~	~~6′- 0"~~	~~4′- 0"~~	~~4′- 0"~~	~~3′- 9"~~	~~3′-9"~~
~~ROW 3 SPACING~~									~~6′- 0"~~	~~5′- 3"~~	~~5′- 0"~~	~~4′- 0"~~	~~6′- 0"~~	~~4′- 0"~~
~~ROW 4 SPACING~~													~~3′- 9"~~	~~3′- 9"~~
STEM WITH HAUNCH, BATTER	0	½:12	½:12	½:12	½:12	½:12	½:12	½:12	½:12	⅝:12	¾:12	⅞:12	1:12	1:12
~~STEM WITHOUT HAUNCH, BATTER~~	~~0~~	~~0~~	~~0~~	~~0~~	~~0~~	~~0~~	~~0~~	~~0~~	~~¼:12~~	~~¼:12~~	~~½:12~~	~~¾:12~~	~~¾:12~~	~~¾:12~~
ⓐ BARS						#7 @ 15	#7 @ 12	#7 @ 12	#8 @ 12	#6 @ 6	#6 @ 6	#6 @ 6	#8 @ 9	#9 @ 9
ⓑ BARS	#8 @ 12	#7 @ 9	#7 @ 6	#7 @ 6	#7 @ 6	#9 @ 7.5	#9 @ 6	#10 @ 6	#10 @ 6	#8 @ 6Ø	#8 @ 6Ø	#8 @ 6Ø	#10 @ 9Ø	#11 @ 9Ø
ha			5′- 0"	6′- 0"	7′- 0"	7′ - 0"	6′- 0"	7′- 0"	7′- 0"	7′- 6"	8′- 6"	9′- 3"	15′- 0"	11′- 3"
hb						11′ - 6"	12′- 0"	13′- 3"	16′- 0"	15′- 6"	17′- 6"	18′- 9"	21′- 0"	20′- 9"
ⓒ BARS	#6 @ 12	#6 @ 9	#6 @ 6	#6 @ 6	#6 @ 6	#8 @ 7.5	#8 @ 6	#9 @ 6	#9 @ 6	#10 @ 6	#10 @ 6	#11 @ 6	#10 @ 9Ø	#10 @ 9Ø
ⓓ BARS	#5 @ 12	#5 @ 9	#5 @ 12	#5 @ 12	#5 @ 12	#6 @ 15	#5 @ 12	#5 @ 12	#6 @ 12	#6 @ 12	#6 @ 12	#7 @ 12	#6 @ 9	#9 @ 9
ⓔ BARS	10-#7 @ 6	8-#7 @ 7	10-#6 @ 6	8-#6 @ 6	6-#6 @ 12	6-#5 @ 12	6-#5 @ 12	6-#5@15	#5 @ 18	#5 @ 18	#5 @ 18	#5 @ 18	#5 @ 18	#5 @ 18
ⓕ BARS	10-#8 @ 7	10-#8 @ 6	10-#7 @ 8	12-#6 @ 7	8-#7 @ 11	7-#6 @ 13	8-#6 @ 12	8-#5@15	#5 @ 18	#5 @ 18	#5 @ 18	#5 @ 18	#5 @ 18	#5 @ 18

② Note:

1. For location of Detail A, see "RETAINING WALL TYPE 1SWBP - DETAILS NO. 2" sheet.

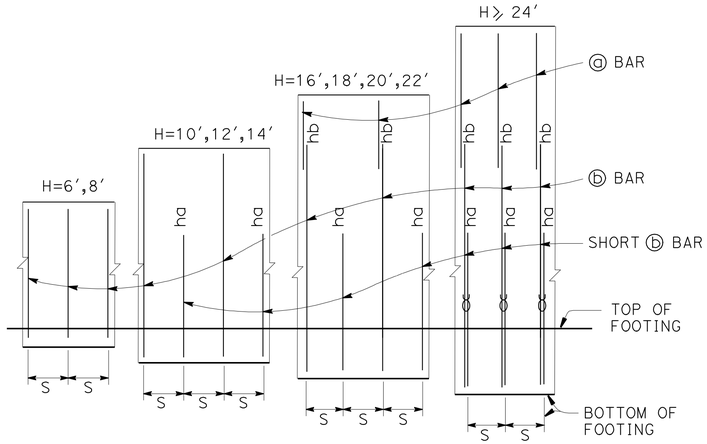

ELEVATION

Note:
"ha" and "hb" above ⓑ bars indicate distance from top of footing to upper end of ⓑ bars, see table.
"S" is ⓑ bar spacing, see table.
Ø :2 bar bundle

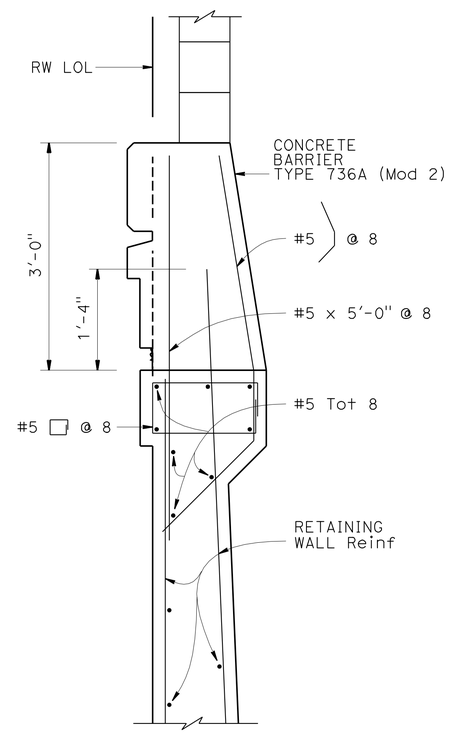

③ DETAIL A
1" = 1′-0"

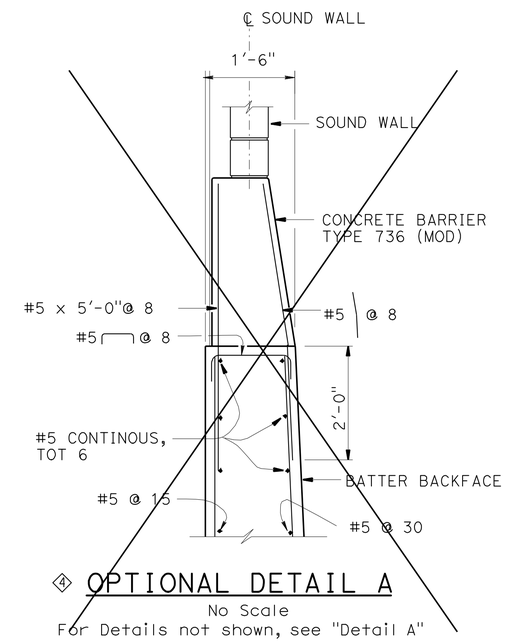

④ OPTIONAL DETAIL A
No Scale
For Details not shown, see "Detail A"

DESIGN DATA

Design: AASHTO LRFD Bridge Design Specifications 4th edition with California Amendments

WS: 33 psf on Soundwall and Barrier

LS: Varied surcharge on level ground surface

CT: 54 kip maximum traffic impact loading evenly distributed over 10 feet at top of the barrier and 1:1 distribution down and outward

EQE: Mononabe-Okabe Method
K_h = 0.3
K_v = 0.0

Soil: ϕ = 34°
γ = 120 pcf

Reinforced Concrete: f′c = 3600 psi
fy = 60,000 psi

Load Combinations and Limit States

Service I Q=1.00DC+1.00EV+1.00EH+1.00LS+0.30WS

Service II Q=1.00DC+1.00EV+1.00EH+1.00WS

Strength I Q=aDC+BEV+1.50EH+1.75LS
Q=1.25DC + 1.35EV + 0.90EH +1.75LS (for piles at heel)

Strength III Q=aDC+BEV+1.50EH+1.40WS

Strength V Q=aDC+BEV+1.50EH+1.35LS+0.40WS

Extreme I Q=1.00DC+1.00EV+1.00EH+1.00EQD+1.00EQE

Extreme II Q=1.00DC+1.00EV+1.00EH+1.00CT

Where:

Q: Force Effects
a: 1.25 or 0.90, Which ever Controls Design
B: 1.35 or 1.00, which ever Controls Design
DC: Dead Load of Structure Components
EV: Vertical Earth Fill Pressure
LS: Live Load Surcharge
EQE: Seismic Earth Pressure
EQD: Soil and Structure Components Inertia. Soil inertia ignored for stem design
WS: Wind Load on Soundwall and Barrier
CT: Vehicular Collision Force

SPECIAL DETAILS

REVISED STANDARD DRAWING
FILE NO. xs14-320-1
APPROVAL DATE July 2011

① Modified Table ③ Revised Detail
② Revised Note ④ Deleted Detail

STATE OF CALIFORNIA DEPARTMENT OF TRANSPORTATION

DIVISION OF ENGINEERING SERVICES

BRIDGE NO. 53-3061
POST MILE 4.91

IMPERIAL HIGHWAY UC (REPLACE)
RETAINING WALL TYPE 1SWBP - DETAIL NO. 1

DS OSD 2147A (ENGLISH STANDARD DRAWING "XS" BORDER REV. (02-02-11)

ORIGINAL SCALE IN INCHES FOR REDUCED PLANS 0 1 2 3

UNIT: 3604
PROJECT NUMBER & PHASE: 0700001834 1
CONTRACT NO.: 07-215941

DISREGARD PRINTS BEARING EARLIER REVISION DATES 12-15-11

REVISION DATES

SHEET 46 OF 76

FILE => 53-3061-q-rw_dt01.dgn

USERNAME => s113571 DATE PLOTTED => 14-APR-2012 TIME PLOTTED => 10:04

DIST	COUNTY	ROUTE	POST MILES TOTAL PROJECT	SHEET No.	TOTAL SHEETS
07	LA	5	4.0/5.9	1051	1597

José L. Higareda 12-12-11
REGISTERED CIVIL ENGINEER DATE

4-9-12
PLANS APPROVAL DATE

REGISTERED PROFESSIONAL ENGINEER JOSE L. HIGAREDA No. 62338 Exp. 9-30-13 CIVIL STATE OF CALIFORNIA

The State of California or its officers or agents shall not be responsible for the accuracy or completeness of electronic copies of this plan sheet.

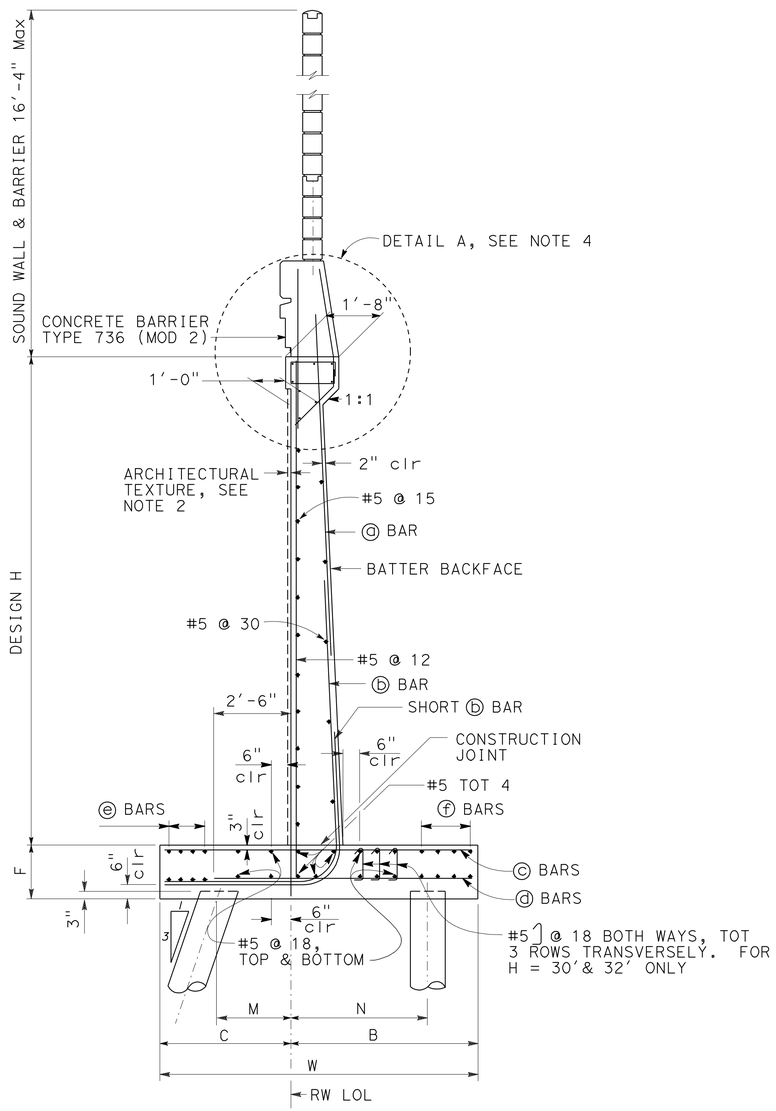

② PILE FOOTING SECTION

NO SCALE
All piles not shown

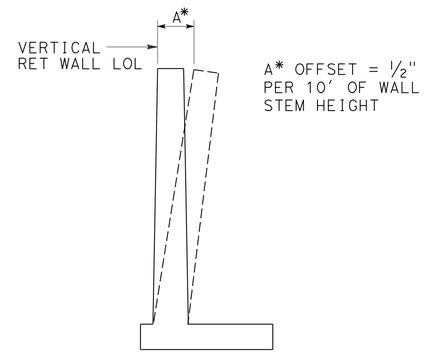

WALL OFFSET

NO SCALE
Values for offsetting forms to be determined by the engineer

① Notes:

1. For pile spacing, see "WINGWALL LAYOUT No. 1", "WINGWALL LAYOUT No. 2" and "WINGWALL LAYOUT No. 3" sheets.
2. For architectural texture, see "ARCHITECTURAL DETAILS No. 1", "ARCHITECTURAL DETAILS No. 2", "ARCHITECTURAL DETAILS No. 3" "ARCHITECTURAL DETAILS No. 4", "ARCHITECTURAL DETAILS No. 13" sheets.
3. For details not shown and drainage notes, see B3-8
4. For "Detail A", see "RETAINING WALL TYPE 1 SWBP - DETAILS NO. 1" sheet.
5. For sound wall and barrier reinforcement, see "SOUND WALL - MASONRY BLOCK WITH BARRIER ON RETAINING WALL DETAILS NO.1" and "SOUND WALL - MASONRY BLOCK WITH BARRIER ON RETAINING WALL DETAILS NO.2" sheets.
6. For H=6' through 14', extend ⓑ bars into barrier.
7. For H≥16', extend ⓐ bars into barrier.
8. For Table of Renforcing Steel Dimensions and Data, see "RETAINING WALL TYPE 1 SWBP - DETAILS NO. 1" sheet.

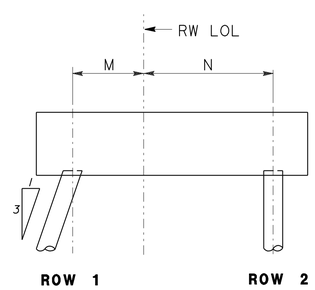

H = 6' through 20'

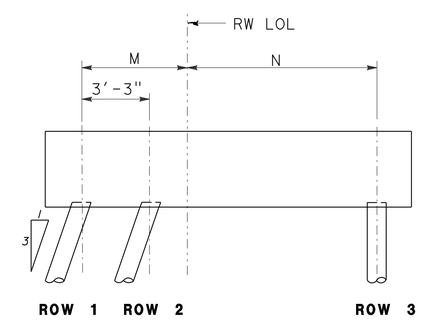

H = 22' through 28'

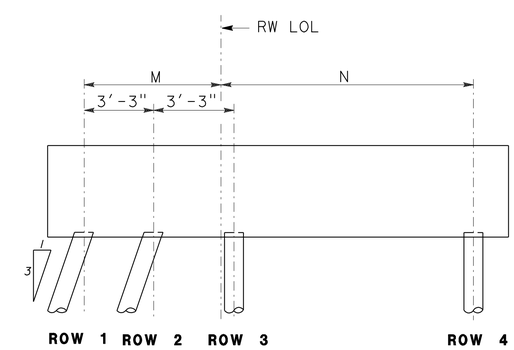

H = 30' and 32'

PILE PATTERN

NO SCALE

SPECIAL DETAILS

REVISED STANDARD DRAWING

FILE NO. xs14-320-2

APPROVAL DATE July 2011

① Added Notes
② Modified Detail

STATE OF CALIFORNIA DEPARTMENT OF TRANSPORTATION

DIVISION OF ENGINEERING SERVICES

BRIDGE NO. 53-3061
POST MILE 4.91

IMPERIAL HIGHWAY UC (REPLACE)
RETAINING WALL TYPE 1SWBP - DETAIL NO. 2

DS OSD 2147A (ENGLISH STANDARD DRAWING "XS" BORDER REV. (02-02-11)

ORIGINAL SCALE IN INCHES FOR REDUCED PLANS 0 1 2 3

UNIT: 3604
PROJECT NUMBER & PHASE: 0700001834 1
CONTRACT NO.: 07-215941

DISREGARD PRINTS BEARING EARLIER REVISION DATES

REVISION DATES 12-16-11

SHEET 47 OF 76

FILE => 53-3061-q-rw_dt02.dgn

USERNAME => s119571 DATE PLOTTED => 14-APR-2012 TIME PLOTTED => 10:05

DIST	COUNTY	ROUTE	POST MILES TOTAL PROJECT	SHEET No.	TOTAL SHEETS
07	LA	5	4.0/5.9	1052	1597

REGISTERED CIVIL ENGINEER — DATE 12-12-11

PLANS APPROVAL DATE 4-9-12

LICENSED ARCHITECT H. Javier Chavez 14073 Renewal Date 03-31-13 STATE OF CALIFORNIA

The State of California or its officers or agents shall not be responsible for the accuracy or completeness of electronic copies of this plan sheet.

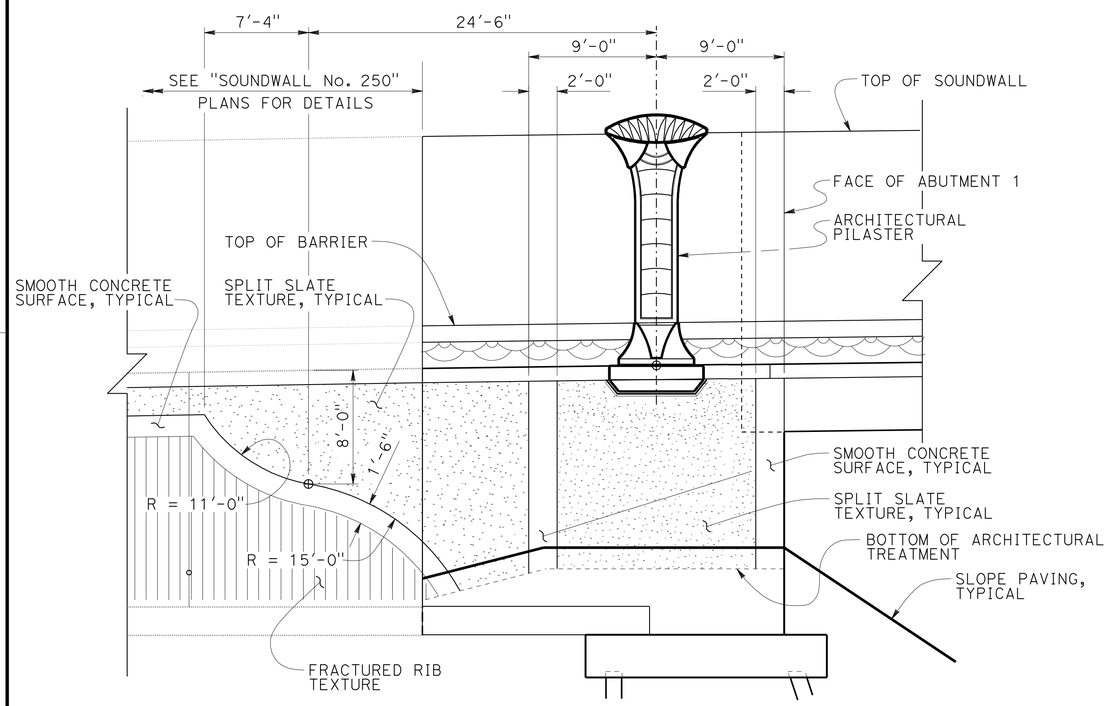

NOTE: NOT ALL PILES SHOWN

ELEVATION
ABUTMENT 1 RIGHT

3/16" = 1'-0"

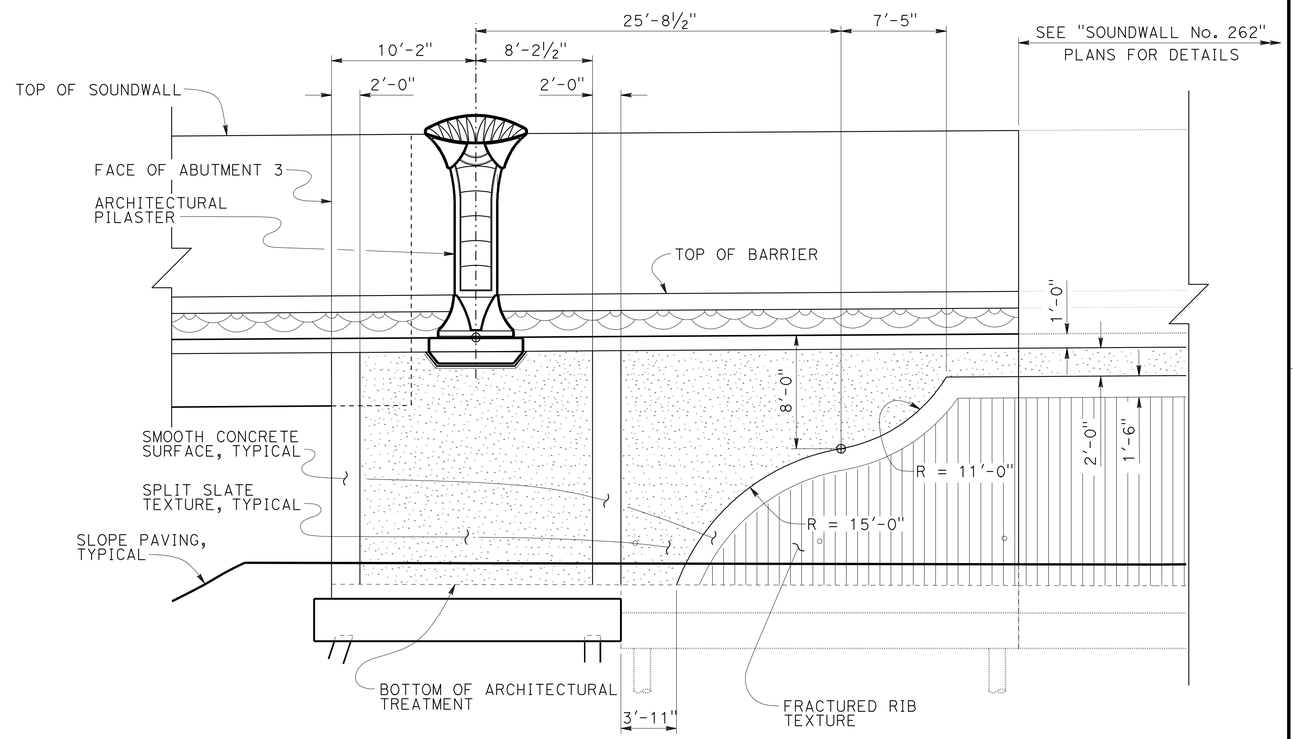

NOTE: NOT ALL PILES SHOWN

ELEVATION
ABUTMENT 3 RIGHT

3/16" = 1'-0"

DESIGN	BY H. CHAVEZ	CHECKED I. TASABIA	
DETAILS	BY K. LI	CHECKED H. CHAVEZ	
QUANTITIES	BY J. HIGAREDA	CHECKED S. MORADI	

STATE OF CALIFORNIA DEPARTMENT OF TRANSPORTATION

DIVISION OF ENGINEERING SERVICES STRUCTURE DESIGN DESIGN BRANCH 15

BRIDGE NO. 53-3061 POST MILE 4.91

IMPERIAL HIGHWAY UC (REPLACE)
ARCHITECTURAL DETAILS NO. 1

STRUCTURES DESIGN DETAIL SHEET (ENGLISH) (REV. 09-01-10)

ORIGINAL SCALE IN INCHES FOR REDUCED PLANS 0 1 2 3

UNIT: 3604
PROJECT NUMBER & PHASE: 0700001834 1 CONTRACT NO.: 07-215941

DISREGARD PRINTS BEARING EARLIER REVISION DATES 10-06-11 12-12-11

SHEET 48 OF 76

FILE => 53-3061-r-arch_dt01.dgn

USERNAME => s119571 DATE PLOTTED => 14-APR-2012 TIME PLOTTED => 10:05

DIST	COUNTY	ROUTE	POST MILES TOTAL PROJECT	SHEET No.	TOTAL SHEETS
07	LA	5	4.0/5.9	1053	1597

REGISTERED CIVIL ENGINEER 12-12-11 DATE

4-9-12
PLANS APPROVAL DATE

LICENSED ARCHITECT
H. Javier Chavez
14073
03-31-13
Renewal Date
STATE OF CALIFORNIA

The State of California or its officers or agents shall not be responsible for the accuracy or completeness of electronic copies of this plan sheet.

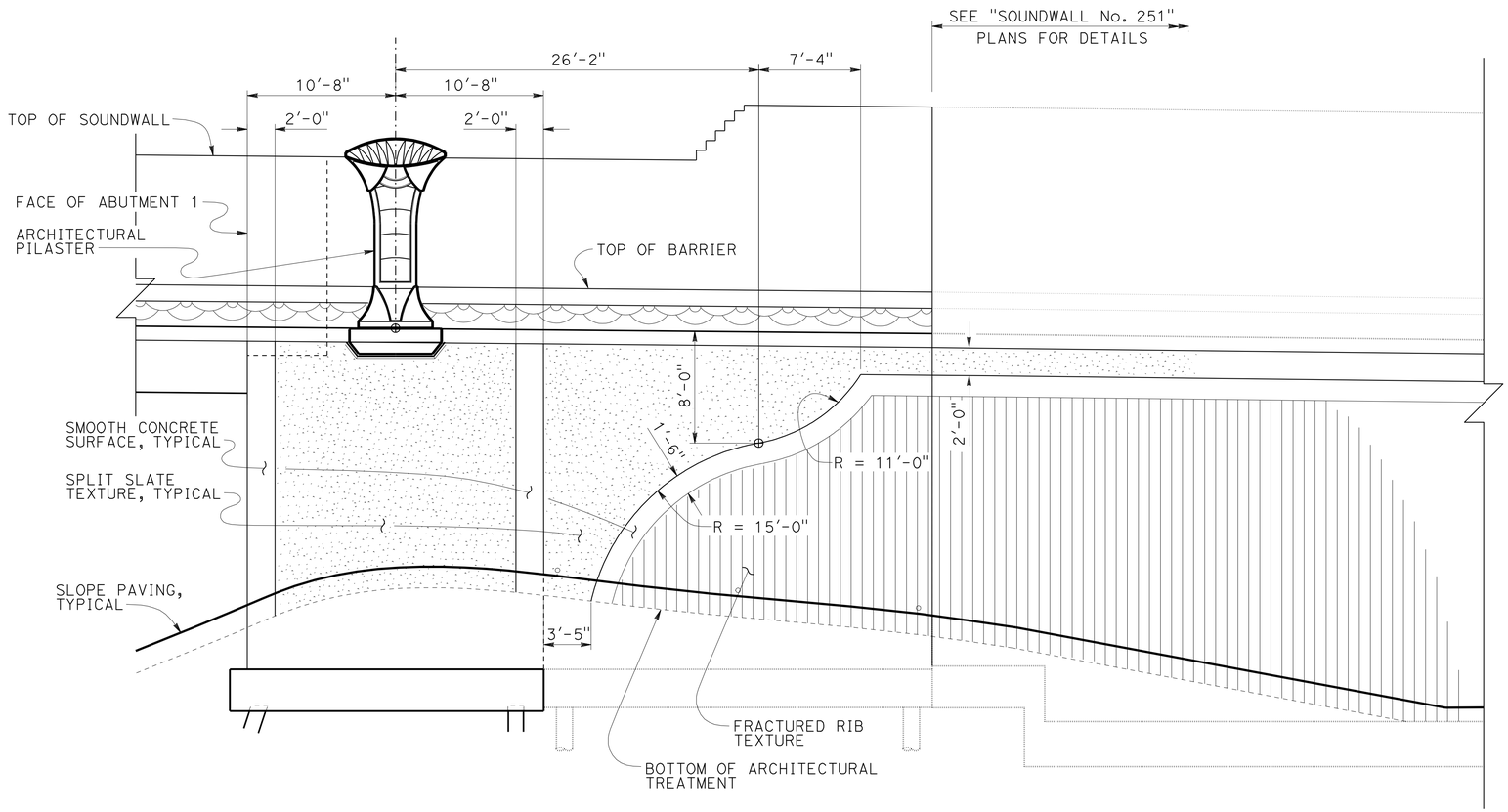

NOTE: NOT ALL PILES SHOWN

ELEVATION
ABUTMENT 1 LEFT

3/16" = 1'-0"

DESIGN	BY H. CHAVEZ	CHECKED I. TASABIA	
DETAILS	BY K. LI	CHECKED H. CHAVEZ	
QUANTITIES	BY J. HIGAREDA	CHECKED S. MORADI	

STATE OF CALIFORNIA
DEPARTMENT OF TRANSPORTATION

DIVISION OF ENGINEERING SERVICES
STRUCTURE DESIGN
DESIGN BRANCH 15

BRIDGE NO. 53-3061
POST MILE 4.91

IMPERIAL HIGHWAY UC (REPLACE)
ARCHITECTURAL DETAILS NO. 2

STRUCTURES DESIGN DETAIL SHEET (ENGLISH) (REV. 09-01-10)

ORIGINAL SCALE IN INCHES FOR REDUCED PLANS 0 1 2 3

UNIT: 3604
PROJECT NUMBER & PHASE: 0700001834 1
CONTRACT NO.: 07-215941

DISREGARD PRINTS BEARING EARLIER REVISION DATES

REVISION DATES: 10-06-11 12-12-11

SHEET 49 OF 76

FILE => 53-3061-r-arch_dt02.dgn

USERNAME => s119571 DATE PLOTTED => 14-APR-2012 TIME PLOTTED => 10:05

DIST	COUNTY	ROUTE	POST MILES TOTAL PROJECT	SHEET No.	TOTAL SHEETS
07	LA	5	4.0/5.9	1054	1597

REGISTERED CIVIL ENGINEER 12-12-11 DATE

4-9-12
PLANS APPROVAL DATE

LICENSED ARCHITECT H. Javier Chavez 14073 03-31-13 Renewal Date STATE OF CALIFORNIA

The State of California or its officers or agents shall not be responsible for the accuracy or completeness of electronic copies of this plan sheet.

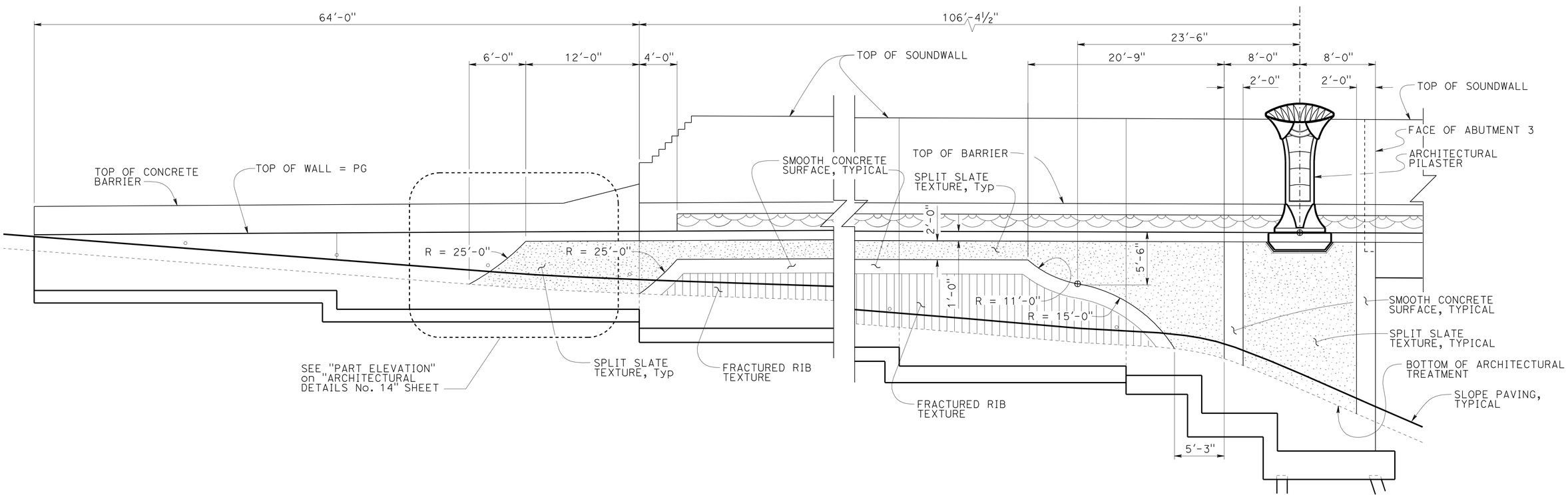

NOTE: NOT ALL PILES SHOWN

ELEVATION
ABUTMENT 3 LEFT

3/16" = 1'-0"

DESIGN	BY H. CHAVEZ	CHECKED I. TASABIA	
DETAILS	BY K. LI	CHECKED H. CHAVEZ	
QUANTITIES	BY J. HIGAREDA	CHECKED S. MORADI	

STATE OF CALIFORNIA
DEPARTMENT OF TRANSPORTATION

DIVISION OF ENGINEERING SERVICES
STRUCTURE DESIGN
DESIGN BRANCH 15

BRIDGE NO. 53-3061
POST MILE 4.91

IMPERIAL HIGHWAY UC (REPLACE)
ARCHITECTURAL DETAILS NO. 3

STRUCTURES DESIGN DETAIL SHEET (ENGLISH) (REV. 09-01-10)

ORIGINAL SCALE IN INCHES FOR REDUCED PLANS 0 1 2 3

UNIT: 3604
PROJECT NUMBER & PHASE: 0700001834 1
CONTRACT NO.: 07-215941

DISREGARD PRINTS BEARING EARLIER REVISION DATES

REVISION DATES 12-14-11

SHEET 50 OF 76

FILE => 53-3061-r-arch_dt03.dgn

USERNAME => s119571 DATE PLOTTED => 14-APR-2012 TIME PLOTTED => 10:05

DIST	COUNTY	ROUTE	POST MILES TOTAL PROJECT	SHEET No.	TOTAL SHEETS
07	LA	5	4.0/5.9	1055	1597

REGISTERED CIVIL ENGINEER 12-12-11 DATE

4-9-12
PLANS APPROVAL DATE

LICENSED ARCHITECT H. Javier Chavez 14073 03-31-13 Renewal Date STATE OF CALIFORNIA

The State of California or its officers or agents shall not be responsible for the accuracy or completeness of electronic copies of this plan sheet.

NOTE:
1. See "ARCHITECTURAL DETAILS No. 6" sheet.

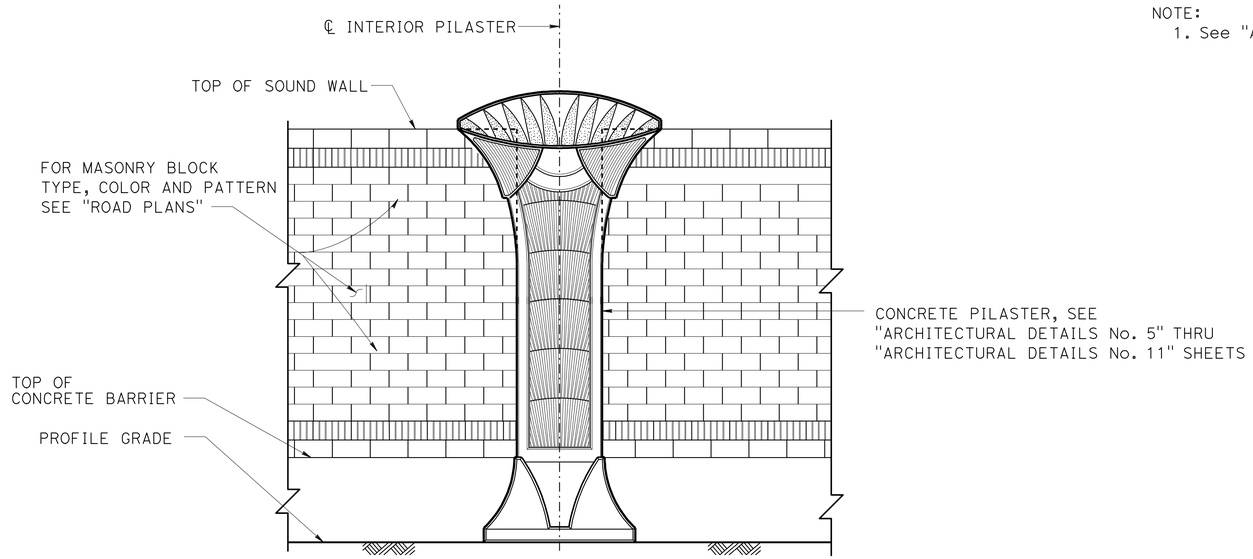

PART SOUND WALL ELEVATION - FREEWAY SIDE

NO SCALE

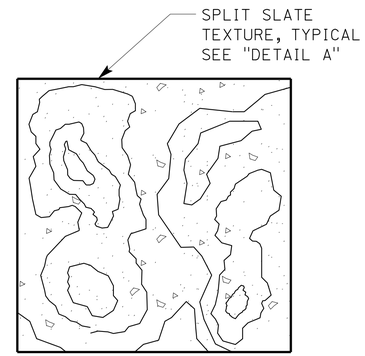

SPILT SLATE

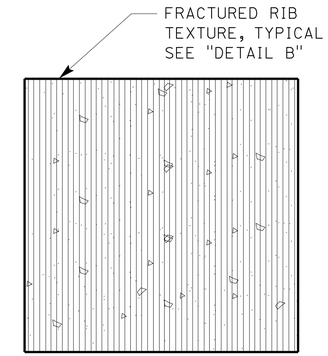

FRACTURED RIB

WINGWALL ARCHITECTURAL TEXTURES

NO SCALE

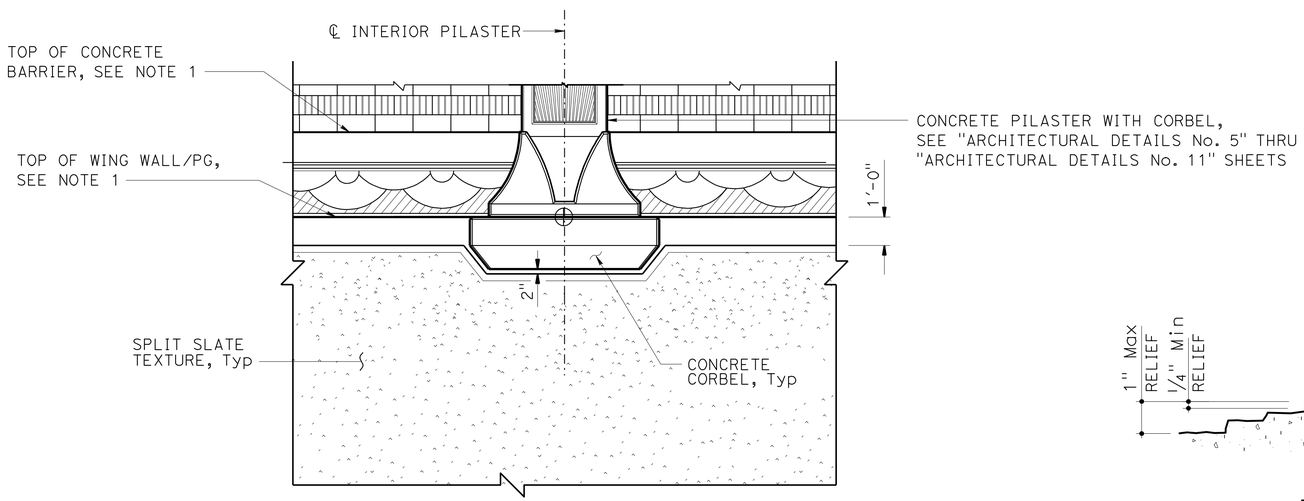

PART SOUND WALL ELEVATION - BACK SIDE

NO SCALE

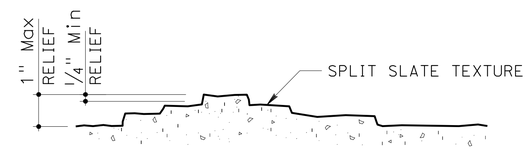

DETAIL A

NO SCALE

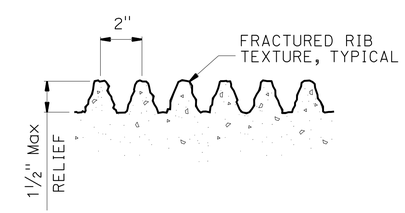

DETAIL B

NO SCALE

DESIGN	BY H. CHAVEZ	CHECKED I. TASABIA	
DETAILS	BY K. LI	CHECKED H. CHAVEZ	
QUANTITIES	BY J. HIGAREDA	CHECKED S. MORADI	

STATE OF CALIFORNIA
DEPARTMENT OF TRANSPORTATION

DIVISION OF ENGINEERING SERVICES
STRUCTURE DESIGN
DESIGN BRANCH 15

BRIDGE NO. 53-3061
POST MILE 4.91

IMPERIAL HIGHWAY UC (REPLACE)
ARCHITECTURAL DETAILS NO. 4

STRUCTURES DESIGN DETAIL SHEET (ENGLISH) (REV. 09-01-10)

ORIGINAL SCALE IN INCHES FOR REDUCED PLANS 0 1 2 3

UNIT: 3604
PROJECT NUMBER & PHASE: 0700001834 1
CONTRACT NO.: 07-215941

DISREGARD PRINTS BEARING EARLIER REVISION DATES

REVISION DATES 11-12-11 12-12-11

SHEET 51 OF 76

FILE => 53-3061-r-arch_dt04.dgn

USERNAME => s119571 DATE PLOTTED => 14-APR-2012 TIME PLOTTED => 10:05

DIST	COUNTY	ROUTE	POST MILES TOTAL PROJECT	SHEET No.	TOTAL SHEETS
07	LA	5	4.0/5.9	1056	1597

REGISTERED CIVIL ENGINEER 12-12-11 DATE

4-9-12
PLANS APPROVAL DATE

LICENSED ARCHITECT H. Javier Chavez 14073 03-31-13 Renewal Date STATE OF CALIFORNIA

The State of California or its officers or agents shall not be responsible for the accuracy or completeness of electronic copies of this plan sheet.

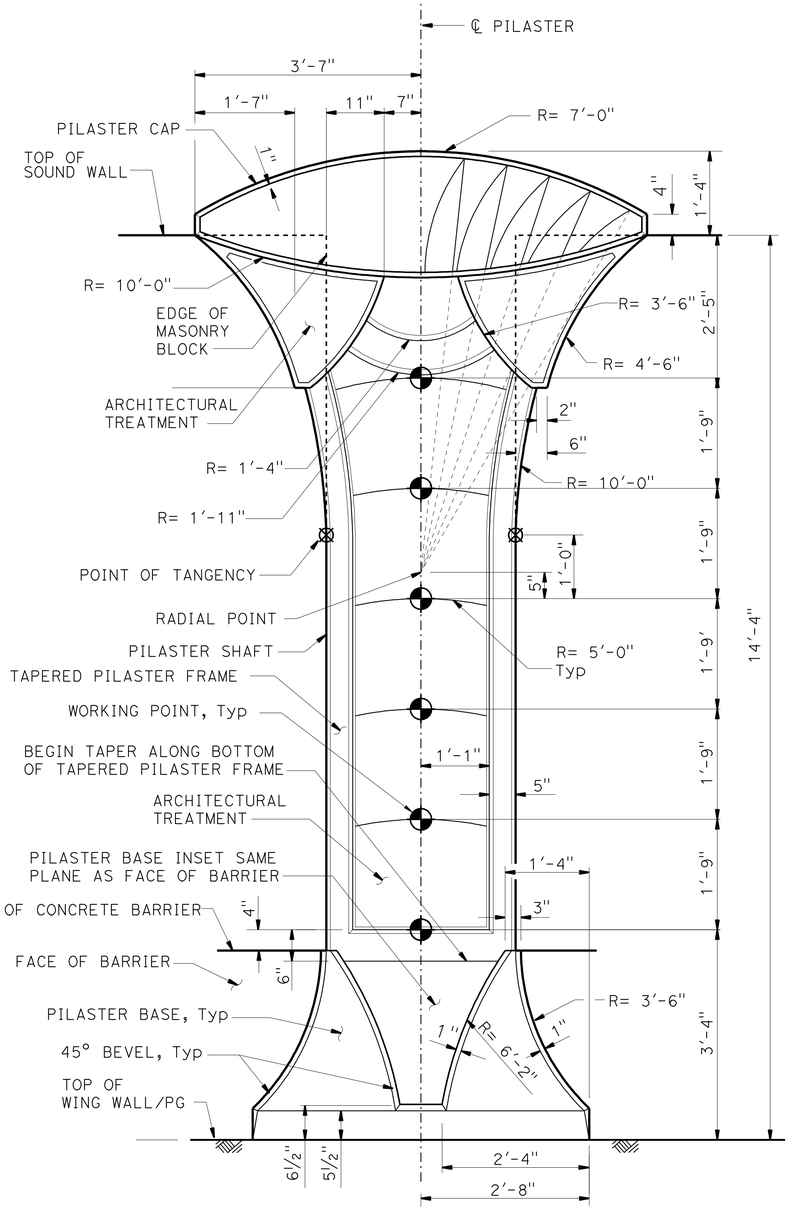

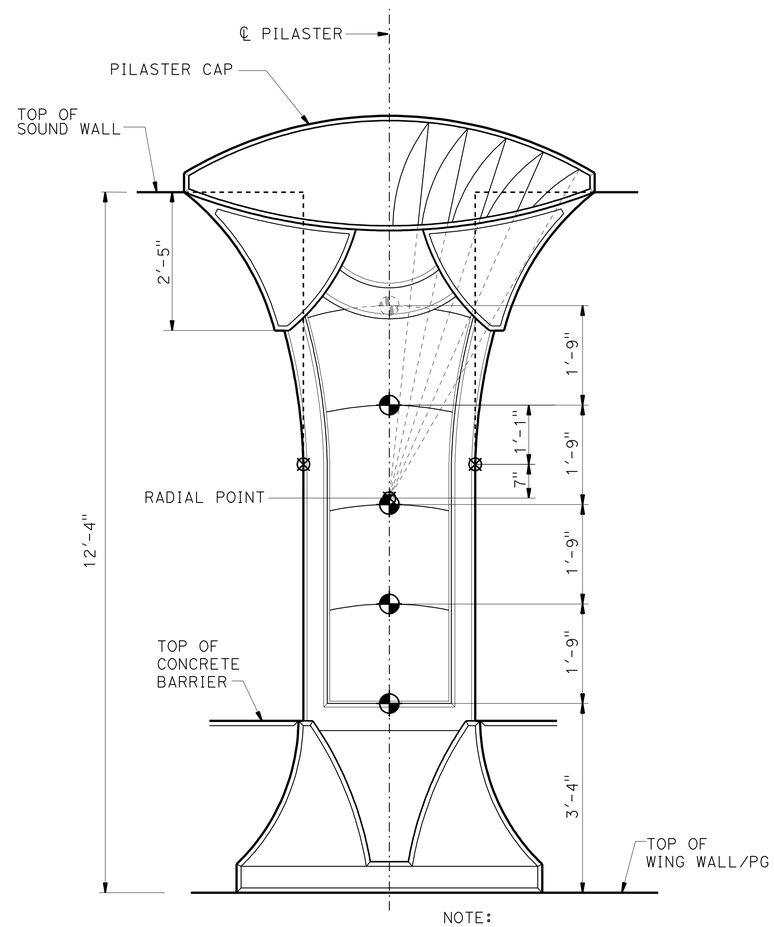

NOTE:
For dimensions and details not shown, see elevation for 14'-4" pilaster

NOTES:

1. All dimensions symmetrical about ℄ Pilaster.
2. Beveled edges are 45° unless otherwise noted
3. All vertical dimensions are measured along the ℄ Pilaster (Pilaster shall be vertical).

PILASTER ELEVATIONS - FREEWAY SIDE

NO SCALE

NOTE:
Elevation references similar for backside of pilasters.

	BY	CHECKED
DESIGN	H. CHAVEZ	I. TASABIA
DETAILS	K. LI	H. CHAVEZ
QUANTITIES	G. GALO	S. MORADI

STATE OF CALIFORNIA
DEPARTMENT OF TRANSPORTATION

DIVISION OF ENGINEERING SERVICES
STRUCTURE DESIGN
DESIGN BRANCH 15

BRIDGE NO. 53-3061
POST MILE 4.91

IMPERIAL HIGHWAY UC (REPLACE)
ARCHITECTURAL DETAILS NO. 5

STRUCTURES DESIGN DETAIL SHEET (ENGLISH) (REV. 09-01-10)

ORIGINAL SCALE IN INCHES FOR REDUCED PLANS 0 1 2 3

UNIT: 3604
PROJECT NUMBER & PHASE: 0700001834 1
CONTRACT NO.: 07-215941

DISREGARD PRINTS BEARING EARLIER REVISION DATES

REVISION DATES 11-22-11 12-12-11

SHEET 52 OF 76

FILE => 53-3061-r-arch_dt05.dgn

USERNAME => s119571 DATE PLOTTED => 14-APR-2012 TIME PLOTTED => 10:05

DIST	COUNTY	ROUTE	POST MILES TOTAL PROJECT	SHEET No.	TOTAL SHEETS
07	LA	5	4.0/5.9	1057	1597

REGISTERED CIVIL ENGINEER 12-12-11 DATE

4-9-12
PLANS APPROVAL DATE

LICENSED ARCHITECT H. Javier Chavez 14073 03-31-13 Renewal Date STATE OF CALIFORNIA

The State of California or its officers or agents shall not be responsible for the accuracy or completeness of electronic copies of this plan sheet.

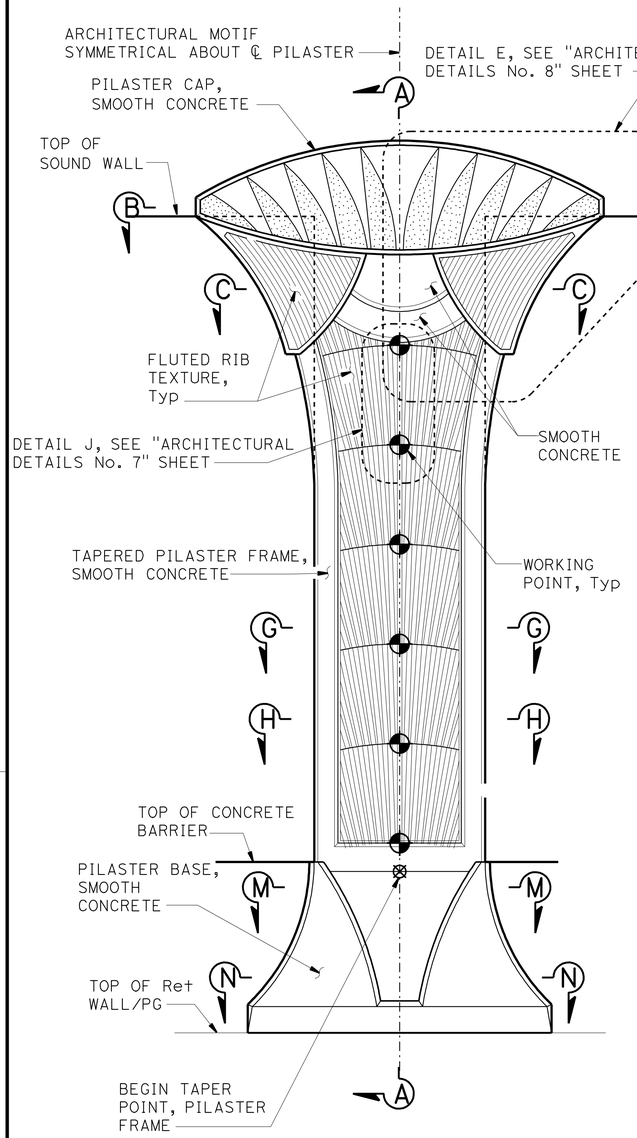

NOTE: For additional details, see "PILASTER ELEVATION - FREEWAY SIDE" on "ARCHITECTURAL DETAILS No. 5" sheet.

FREEWAY SIDE

NOTES:

1. For "SECTION B-B", "SECTION C-C", "SECTION G-G","SECTION H-H" and "SECTION L-L", see "ARCHITECTURAL DETAILS No. 7" sheet.
2. For "SECTION M-M" and "SECTION N-N"' see "ARCHITECTURAL DETAIL No. 8" sheet.
3. All dimensions symmetrical about ℄ pilaster.
4. Beveled edges are 45° unless otherwise noted
5. All vertical dimensions are measured along the ℄ Pilaster (Pilaster shall be vertical).

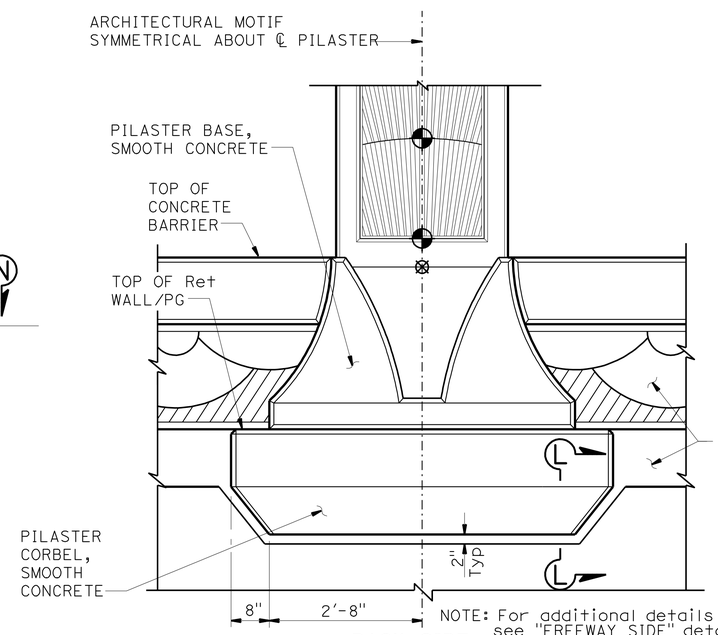

NOTE: For additional details not shown, see "FREEWAY SIDE" details.

BACK SIDE

PILASTER ARCHITECTURAL MOTIF

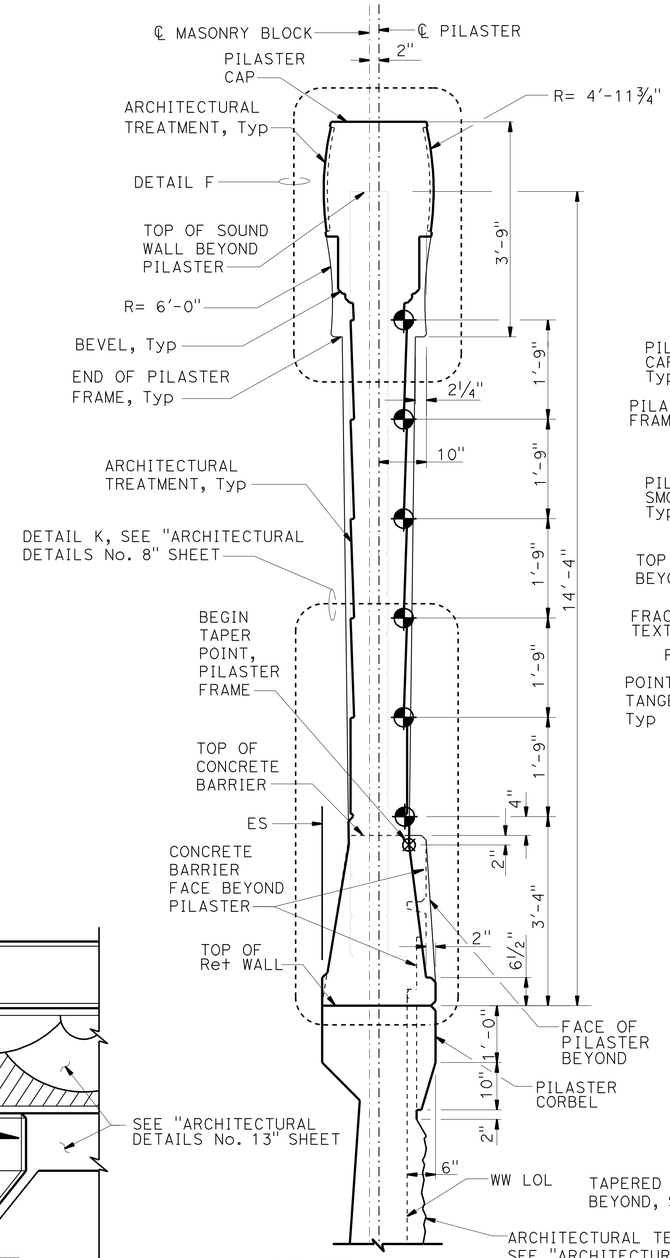

SECTION A-A
¾" = 1'-0"

NOTE:
14'-4" SOUNDWALL PILASTER DETAIL SHOWN 12'-4" PILASTER SIMILAR

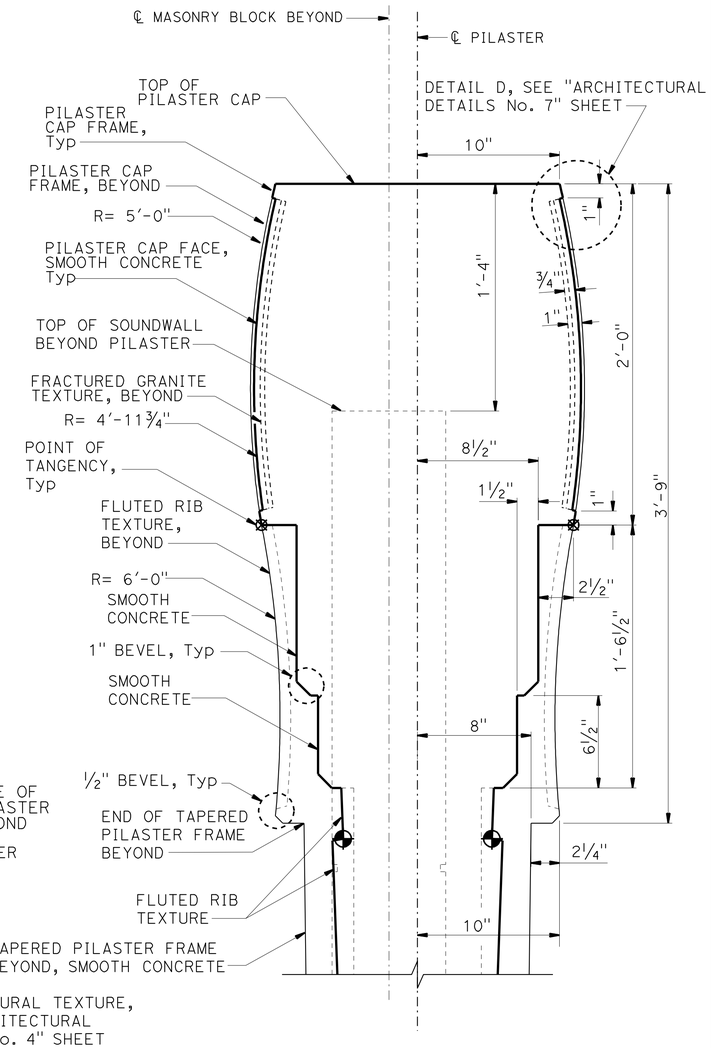

DETAIL F
NO SCALE

DESIGN	BY H. CHAVEZ	CHECKED I. TASABIA	
DETAILS	BY K. LI	CHECKED H. CHAVEZ	
QUANTITIES	BY G. GALO	CHECKED S. MORADI	

STATE OF CALIFORNIA
DEPARTMENT OF TRANSPORTATION

DIVISION OF ENGINEERING SERVICES
STRUCTURE DESIGN
DESIGN BRANCH 15

BRIDGE NO. 53-3061
POST MILE 4.91

IMPERIAL HIGHWAY UC (REPLACE)
ARCHITECTURAL DETAILS NO. 6

STRUCTURES DESIGN DETAIL SHEET (ENGLISH) (REV. 09-01-10)

ORIGINAL SCALE IN INCHES FOR REDUCED PLANS 0 1 2 3

UNIT: 3604
PROJECT NUMBER & PHASE: 0700001834 1
CONTRACT NO.: 07-215941

DISREGARD PRINTS BEARING EARLIER REVISION DATES

REVISION DATES 11-22-11 12-12-11

SHEET 53 OF 76

FILE => 53-3061-r-arch_dt06.dgn

USERNAME => s132614 DATE PLOTTED => 17-APR-2012 TIME PLOTTED => 14:09

DIST	COUNTY	ROUTE	POST MILES TOTAL PROJECT	SHEET No.	TOTAL SHEETS
07	LA	5	4.0/5.9	1058	1597

REGISTERED CIVIL ENGINEER 12-12-11 DATE

4-9-12
PLANS APPROVAL DATE

LICENSED ARCHITECT H. Javier Chavez 14073 03-31-13 Renewal Date STATE OF CALIFORNIA

The State of California or its officers or agents shall not be responsible for the accuracy or completeness of electronic copies of this plan sheet.

NOTES:

1. All notes and dimensions symmetrical about ℄ pilaster.
2. Beveled edges are 45° unless otherwise noted.
3. For location of "DETAIL J", "DETAIL D" and "SECTION B-B", "SECTION C-C", "SECTION G-G", "SECTION H-H" and "SECTION L-L", see "ARCHITECTURAL DETAILS No. 6" sheet.
4. For Retaining Wall split slate texture, see "ARCHITECTURAL DETAILS No. 4" sheet.

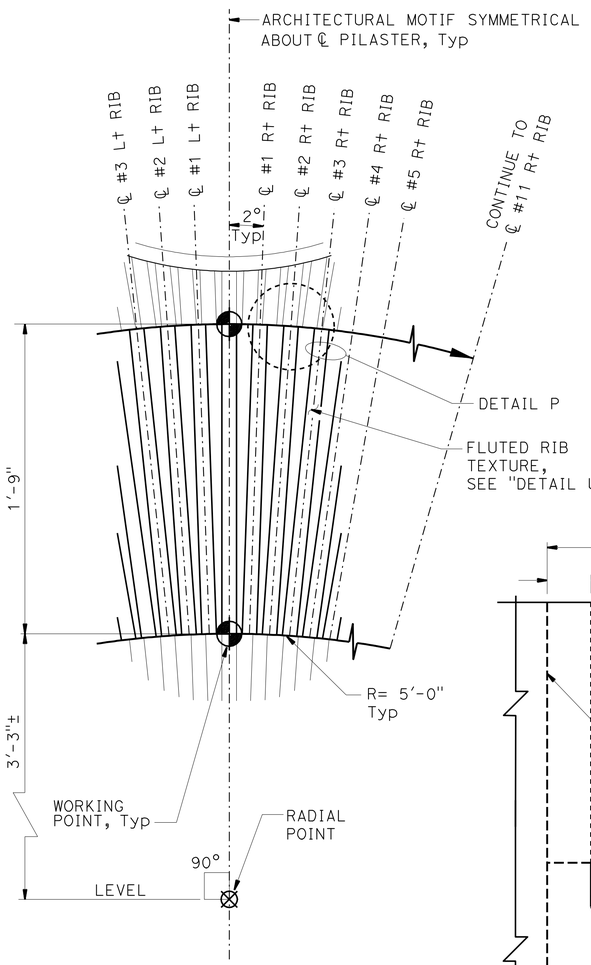

DETAIL J
NO SCALE

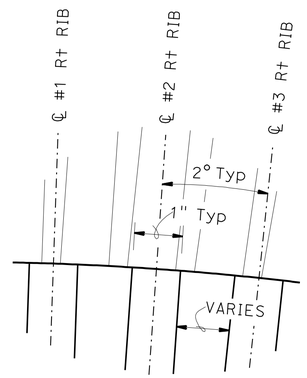

DETAIL P
NO SCALE

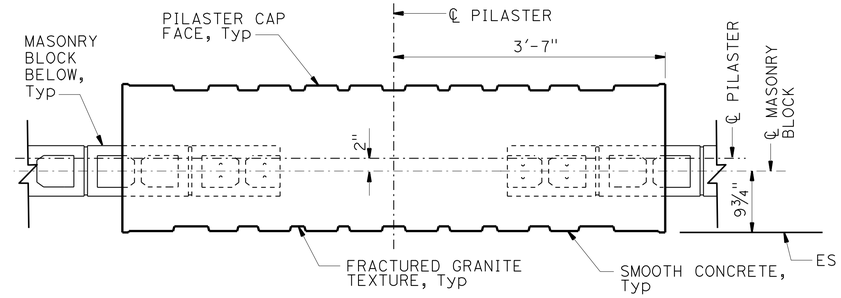

SECTION B-B
1" = 1'-0"

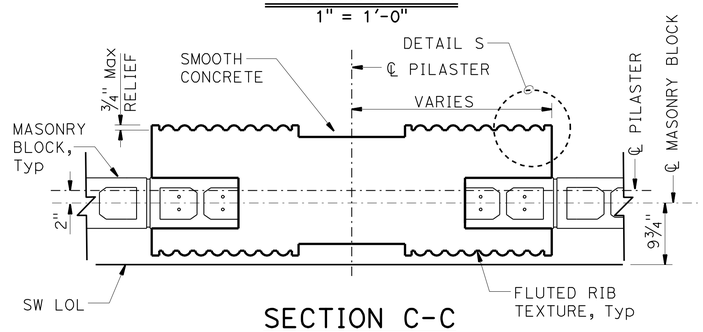

SECTION C-C
1" = 1'-0"

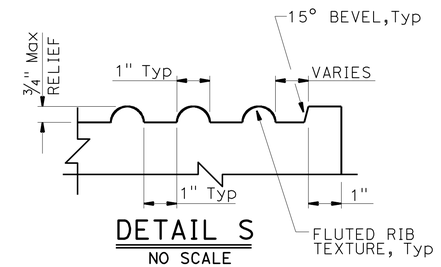

DETAIL S
NO SCALE

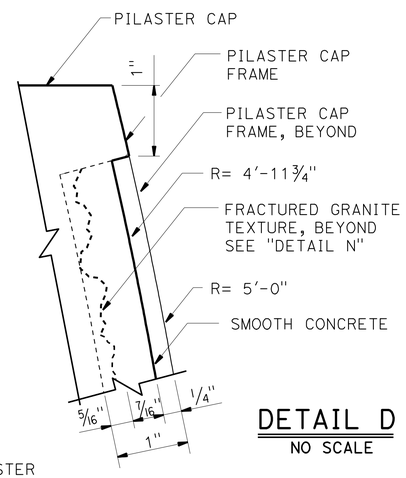

DETAIL D
NO SCALE

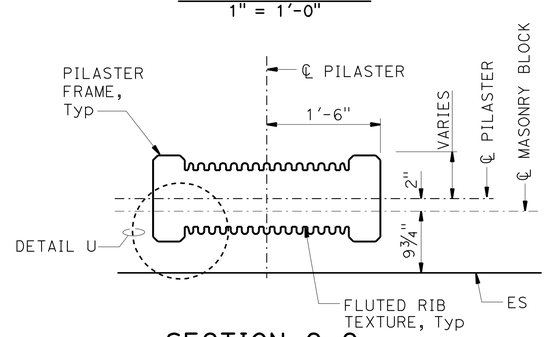

SECTION G-G
1" = 1'-0"

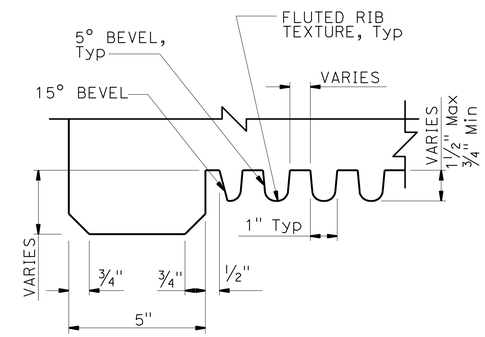

DETAIL U
NO SCALE

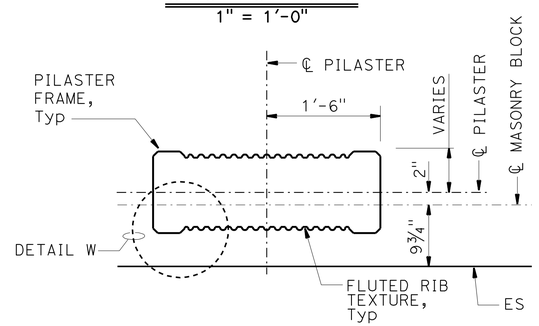

SECTION H-H
1" = 1'-0"

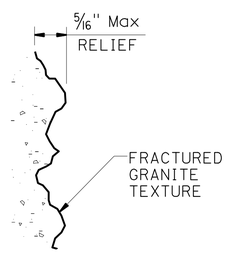

DETAIL N
NO SCALE

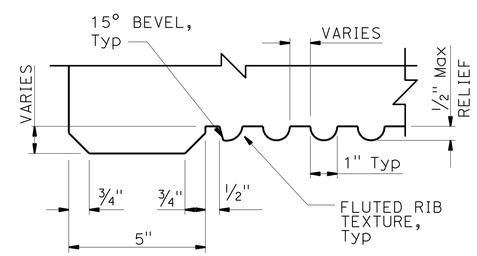

DETAIL W
NO SCALE

DESIGN	BY H. CHAVEZ	CHECKED I. TASABIA	
DETAILS	BY K. LI	CHECKED H. CHAVEZ	
QUANTITIES	BY G. GALO	CHECKED S. MORADI	

STATE OF CALIFORNIA
DEPARTMENT OF TRANSPORTATION

DIVISION OF ENGINEERING SERVICES
STRUCTURE DESIGN
DESIGN BRANCH 15

BRIDGE NO. 53-3061
POST MILE 4.91

IMPERIAL HIGHWAY UC (REPLACE)
ARCHITECTURAL DETAILS NO. 7

STRUCTURES DESIGN DETAIL SHEET (ENGLISH) (REV. 09-01-10)

ORIGINAL SCALE IN INCHES FOR REDUCED PLANS 0 1 2 3

UNIT: 3604
PROJECT NUMBER & PHASE: 0700001834 1
CONTRACT NO.: 07-215941

DISREGARD PRINTS BEARING EARLIER REVISION DATES

REVISION DATES 11-28-11 12-12-11

SHEET 54 OF 76

FILE => 53-3061-r-arch_dt07.dgn

USERNAME => s119571 DATE PLOTTED => 14-APR-2012 TIME PLOTTED => 10:06

DIST	COUNTY	ROUTE	POST MILES TOTAL PROJECT	SHEET No.	TOTAL SHEETS
07	LA	5	4.0/5.9	1059	1597

REGISTERED CIVIL ENGINEER 12-12-11 DATE

4-9-12
PLANS APPROVAL DATE

LICENSED ARCHITECT H. Javier Chavez 14073 03-31-13 Renewal Date STATE OF CALIFORNIA

The State of California or its officers or agents shall not be responsible for the accuracy or completeness of electronic copies of this plan sheet.

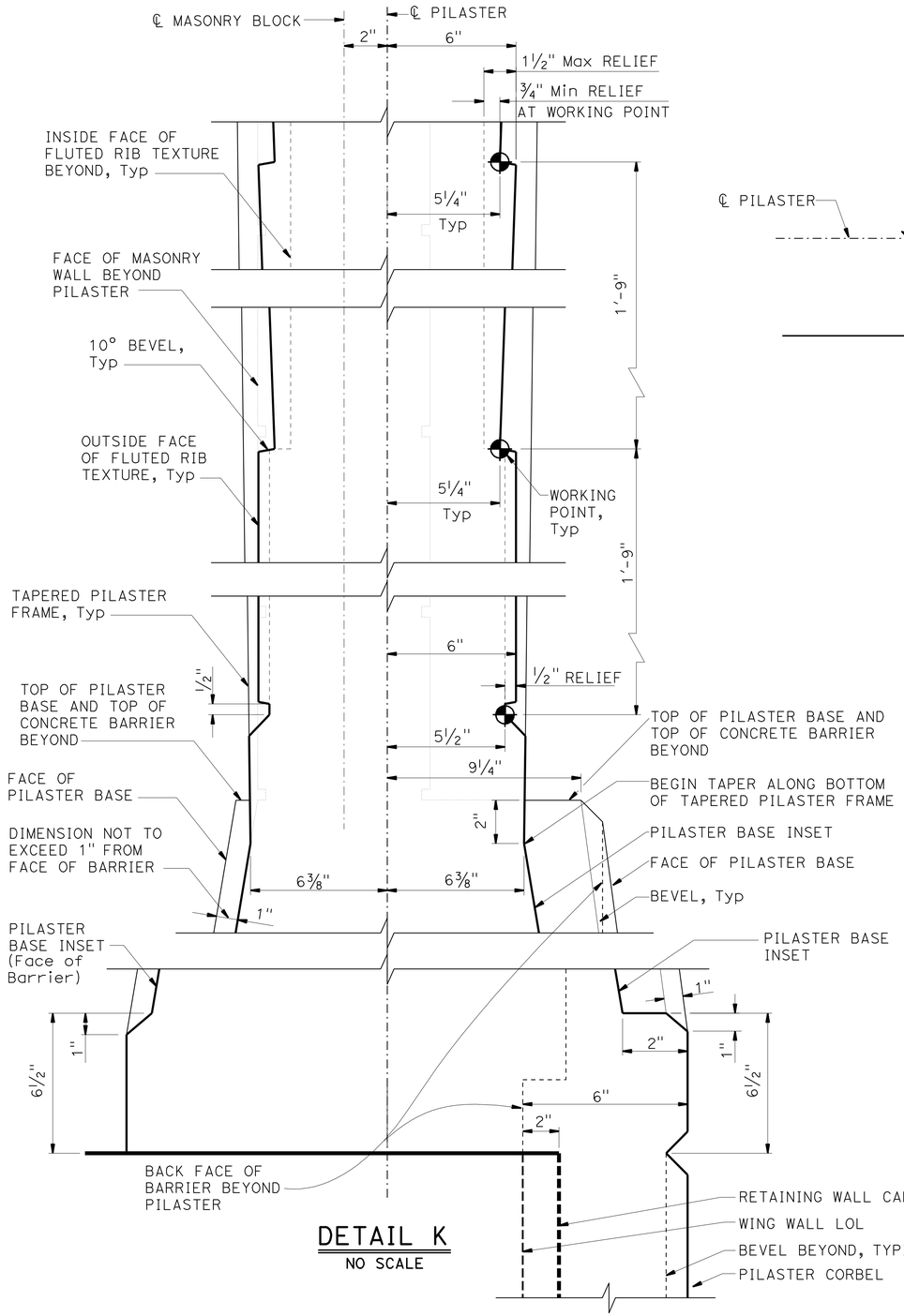

DETAIL K
NO SCALE

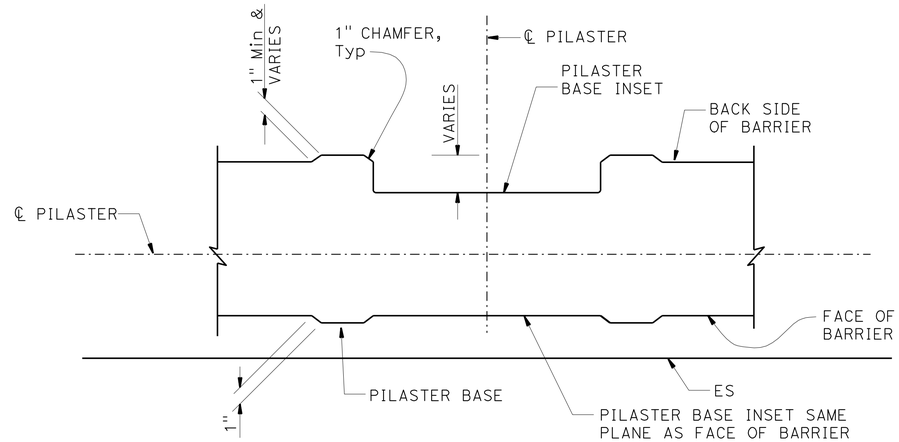

SECTION M-M
1½" = 1'-0"

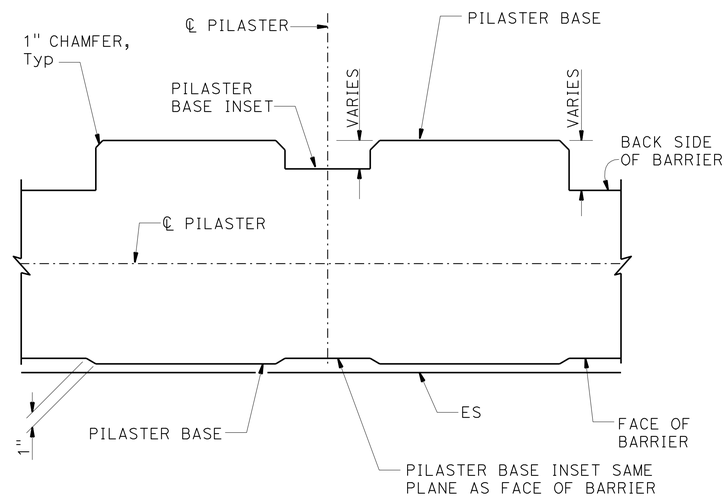

SECTION N-N
1½" = 1'-0"

NOTES:

1. For location of "SECTION M-M", "SECTION N-N" and "DETAIL K", see "ARCHITECTURAL DETAILS No. 6" sheet.
2. All dimensions symmetrical about ℄ Pilaster.
3. All vertical dimensions are measured along the ℄ Pilaster (Pilaster shall be vertical).
4. For location of Detail E, see "ARCHITECTURAL DETAILS No. 6" sheet.

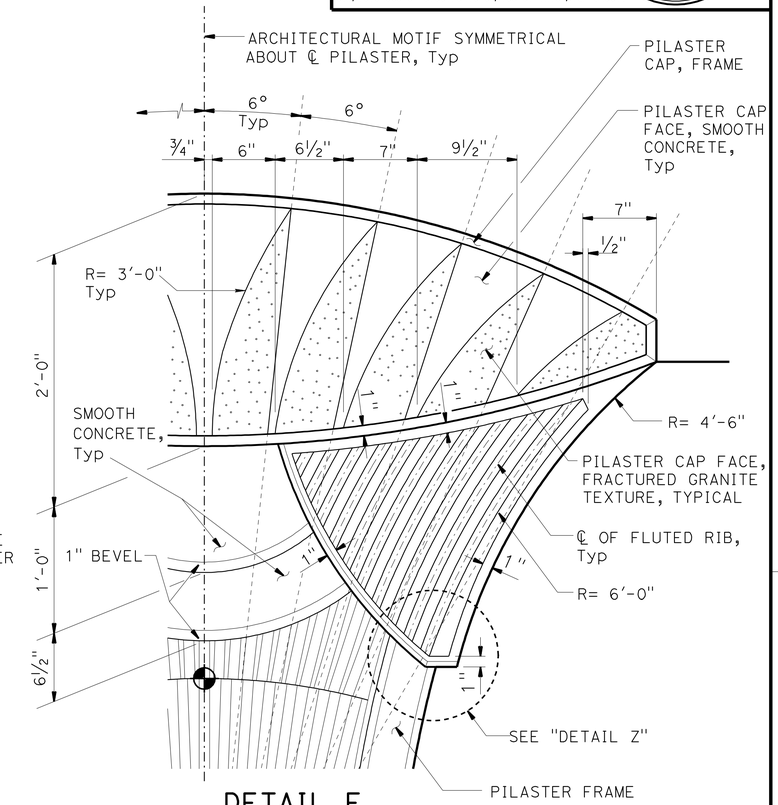

DETAIL E
NO SCALE

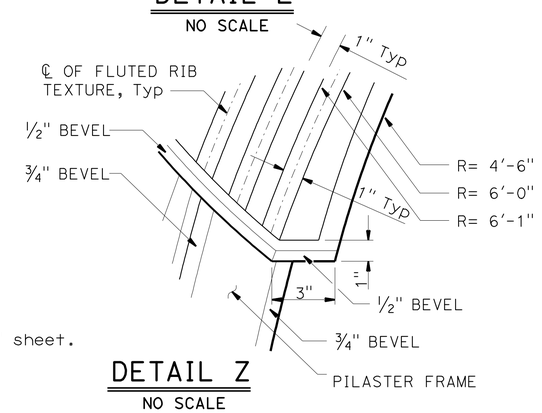

DETAIL Z
NO SCALE

DESIGN	BY H. CHAVEZ	CHECKED I. TASABIA	
DETAILS	BY K. LI	CHECKED H. CHAVEZ	
QUANTITIES	BY G. GALO	CHECKED S. MORADI	

STATE OF CALIFORNIA
DEPARTMENT OF TRANSPORTATION

DIVISION OF ENGINEERING SERVICES
STRUCTURE DESIGN
DESIGN BRANCH 15

BRIDGE NO. 53-3061
POST MILE 4.91

IMPERIAL HIGHWAY UC (REPLACE)
ARCHITECTURAL DETAILS NO. 8

STRUCTURES DESIGN DETAIL SHEET (ENGLISH) (REV. 09-01-10)

ORIGINAL SCALE IN INCHES FOR REDUCED PLANS 0 1 2 3

UNIT: 3604
PROJECT NUMBER & PHASE: 0700001834 1
CONTRACT NO.: 07-215941

DISREGARD PRINTS BEARING EARLIER REVISION DATES

REVISION DATES 11-12-11 12-12-11

SHEET 55 OF 76

FILE => 53-3061-r-arch_dt08.dgn

USERNAME => s119571 DATE PLOTTED => 14-APR-2012 TIME PLOTTED => 10:06

DIST	COUNTY	ROUTE	POST MILES TOTAL PROJECT	SHEET No.	TOTAL SHEETS
07	LA	5	4.0/5.9	1060	1597

José L. Higareda
REGISTERED CIVIL ENGINEER 12-12-11
DATE

4-9-12
PLANS APPROVAL DATE

REGISTERED PROFESSIONAL ENGINEER
JOSE L. HIGAREDA
No. 62338
Exp. 9-30-13
CIVIL
STATE OF CALIFORNIA

The State of California or its officers or agents shall not be responsible for the accuracy or completeness of electronic copies of this plan sheet.

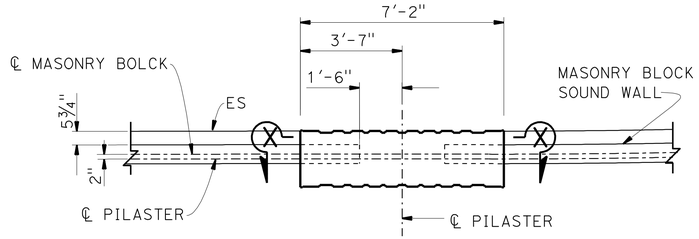

PART SOUND WALL PLAN

NO SCALE

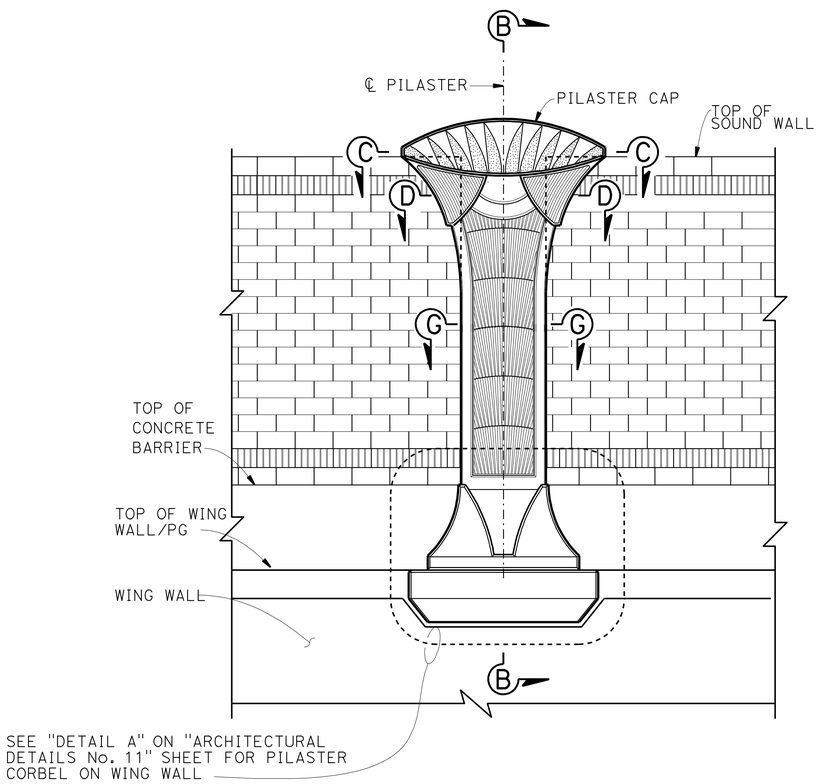

PART SOUND WALL ELEVATION

NO SCALE

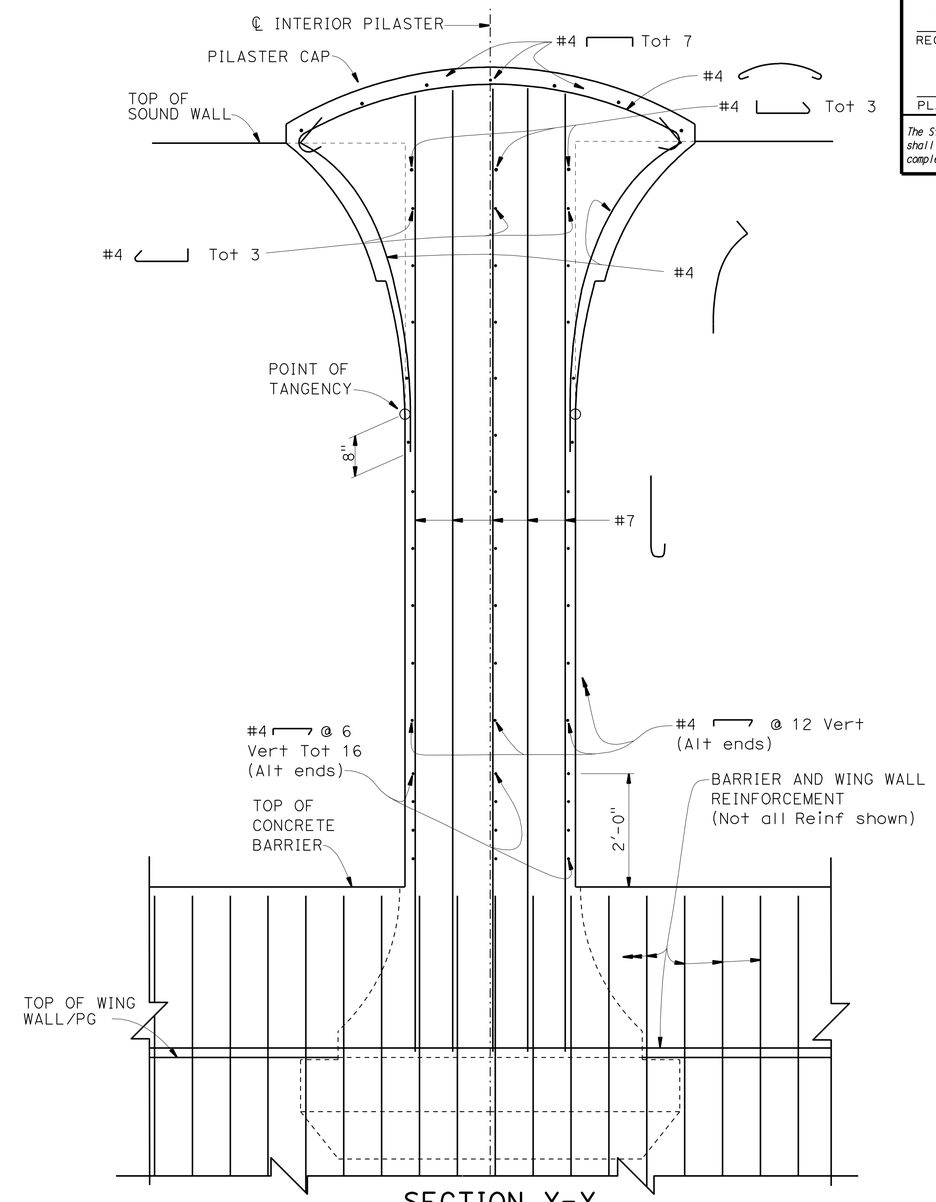

NOTE: Pilaster corbel reinf not shown.

SECTION X-X

NO SCALE

NOTE:

1. For "SECTION B-B", "SECTION C-C", "SECTION D-D" and "SECTION G-G", see "ARCHITECTURAL DETAILS No. 10" sheet.

DESIGN	BY D. TAVATLI	CHECKED J. HIGAREDA	
DETAILS	BY K. LI	CHECKED H. CHAVEZ	
QUANTITIES	BY G. GALO	CHECKED S. MORADI	

STATE OF CALIFORNIA
DEPARTMENT OF TRANSPORTATION

DIVISION OF ENGINEERING SERVICES
STRUCTURE DESIGN
DESIGN BRANCH 15

BRIDGE NO. 53-3061
POST MILE 4.91

IMPERIAL HIGHWAY UC (REPLACE)
ARCHITECTURAL DETAILS NO. 9

STRUCTURES DESIGN DETAIL SHEET (ENGLISH) (REV. 09-01-10)

ORIGINAL SCALE IN INCHES FOR REDUCED PLANS 0 1 2 3

UNIT: 3604
PROJECT NUMBER & PHASE: 0700001834 1
CONTRACT NO.: 07-215941

DISREGARD PRINTS BEARING EARLIER REVISION DATES

REVISION DATES: 11-22-11 12-12-11

SHEET 56 OF 76

FILE => 53-3061-r-arch_dt09.dgn

USERNAME => s119571 DATE PLOTTED => 14-APR-2012 TIME PLOTTED => 10:06

DIST	COUNTY	ROUTE	POST MILES TOTAL PROJECT	SHEET No.	TOTAL SHEETS
07	LA	5	4.0/5.9	1061	1597

REGISTERED CIVIL ENGINEER 12-12-11 DATE

4-9-12
PLANS APPROVAL DATE

REGISTERED PROFESSIONAL ENGINEER JOSE L. HIGAREDA No. 62338 Exp. 9-30-13 CIVIL STATE OF CALIFORNIA

The State of California or its officers or agents shall not be responsible for the accuracy or completeness of electronic copies of this plan sheet.

NOTES:

1. For location of "SECTION B-B", "SECTION C-C", "SECTION D-D" and "SECTION G-G", see "ARCHITECTURAL DETAILS No. 9" sheet.
2. For Pilaster geometry, dimensions and architectural treatments, see "ARCHITECTURAL DETAILS No. 5" thru "ARCHITECTURAL DETAILS No. 8" sheets.

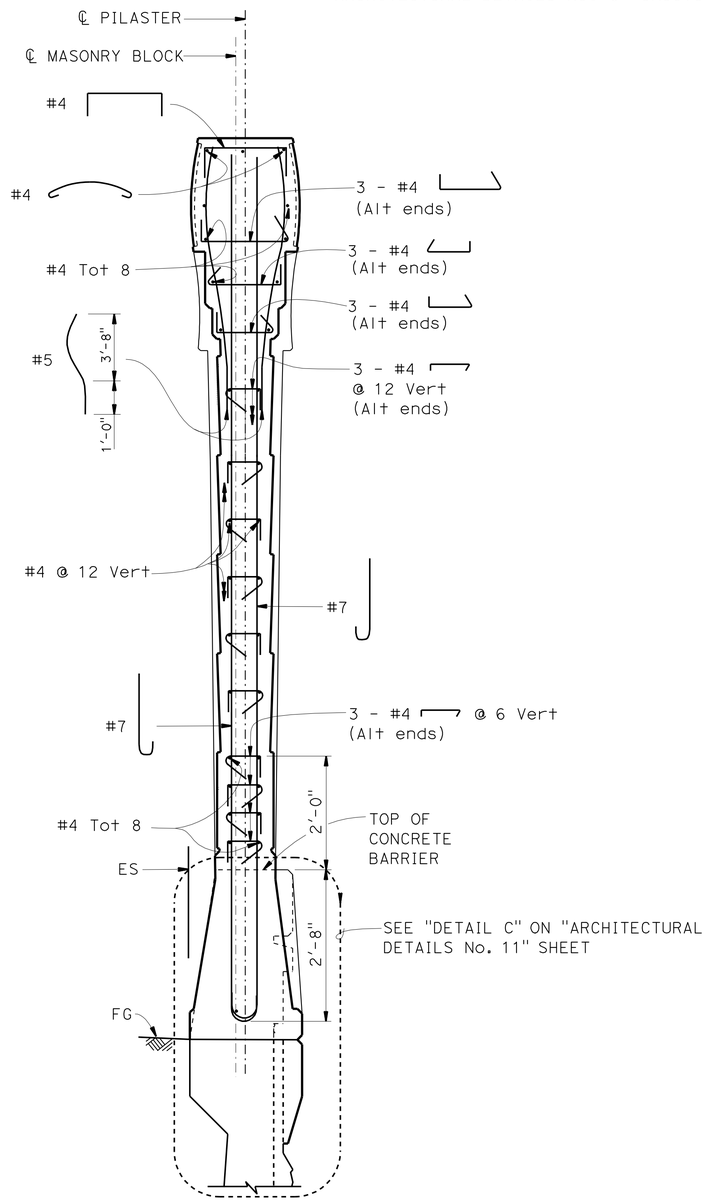

SECTION B-B

3/4" = 1'-0"

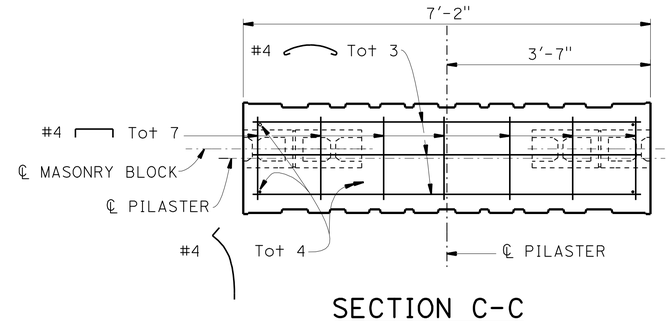

SECTION C-C

3/4" = 1'-0"

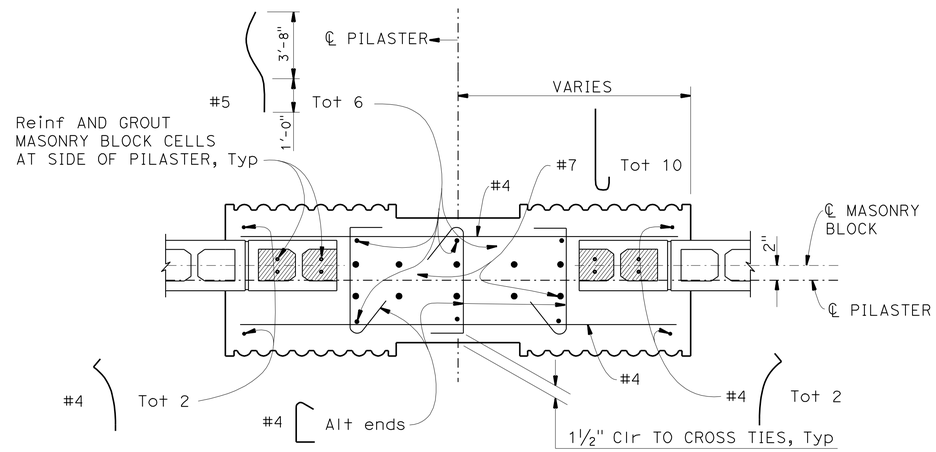

SECTION D-D

1" = 1'-0"

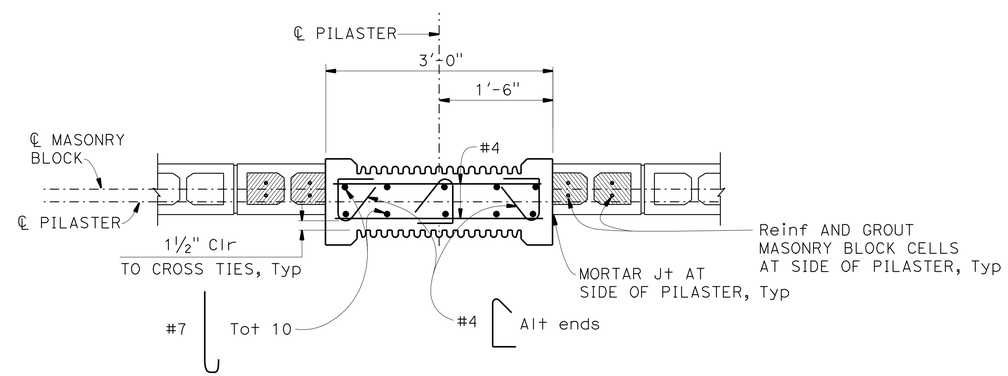

SECTION G-G

1" = 1'-0"

DESIGN	BY D. TAVATLI	CHECKED J. HIGAREDA	
DETAILS	BY K. LI	CHECKED H. CHAVEZ	
QUANTITIES	BY G. GALO	CHECKED S. MORADI	

STATE OF CALIFORNIA
DEPARTMENT OF TRANSPORTATION

DIVISION OF ENGINEERING SERVICES
STRUCTURE DESIGN
DESIGN BRANCH 15

BRIDGE NO. 53-3061
POST MILE 4.91

IMPERIAL HIGHWAY UC (REPLACE)
ARCHITECTURAL DETAILS NO. 10

STRUCTURES DESIGN DETAIL SHEET (ENGLISH) (REV. 09-01-10)

ORIGINAL SCALE IN INCHES FOR REDUCED PLANS 0 1 2 3

UNIT: 3604
PROJECT NUMBER & PHASE: 0700001834 1
CONTRACT NO.: 07-215941

DISREGARD PRINTS BEARING EARLIER REVISION DATES

REVISION DATES 11-22-11 12-12-11

SHEET 57 OF 76

FILE => 53-3061-r-arch_dt10.dgn

USERNAME => s119571 DATE PLOTTED => 14-APR-2012 TIME PLOTTED => 10:06

DIST	COUNTY	ROUTE	POST MILES TOTAL PROJECT	SHEET No.	TOTAL SHEETS
07	LA	5	4.0/5.9	1062	1597

José L. Higareda 12-12-11
REGISTERED CIVIL ENGINEER DATE

4-9-12
PLANS APPROVAL DATE

REGISTERED PROFESSIONAL ENGINEER JOSE L. HIGAREDA No. 62338 Exp. 9-30-13 CIVIL STATE OF CALIFORNIA

The State of California or its officers or agents shall not be responsible for the accuracy or completeness of electronic copies of this plan sheet.

NOTES:

1. For location of "DETAIL A", see "ARCHITECTURAL DETAILS No. 9" sheet.
2. For location of "DETAIL C", see "ARCHITECTURAL DETAILS No. 10" sheet.
3. See "ARCHITECTURAL DETAILS No. 4" sheet.

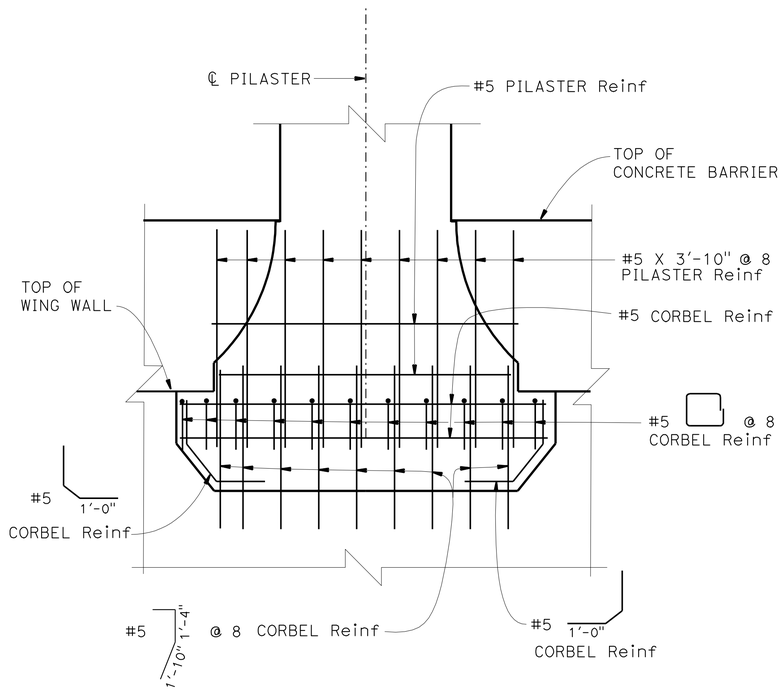

NOTE: Concrete Barrier/Wing Wall reinf not shown.

DETAIL A

¾" = 1'-0"

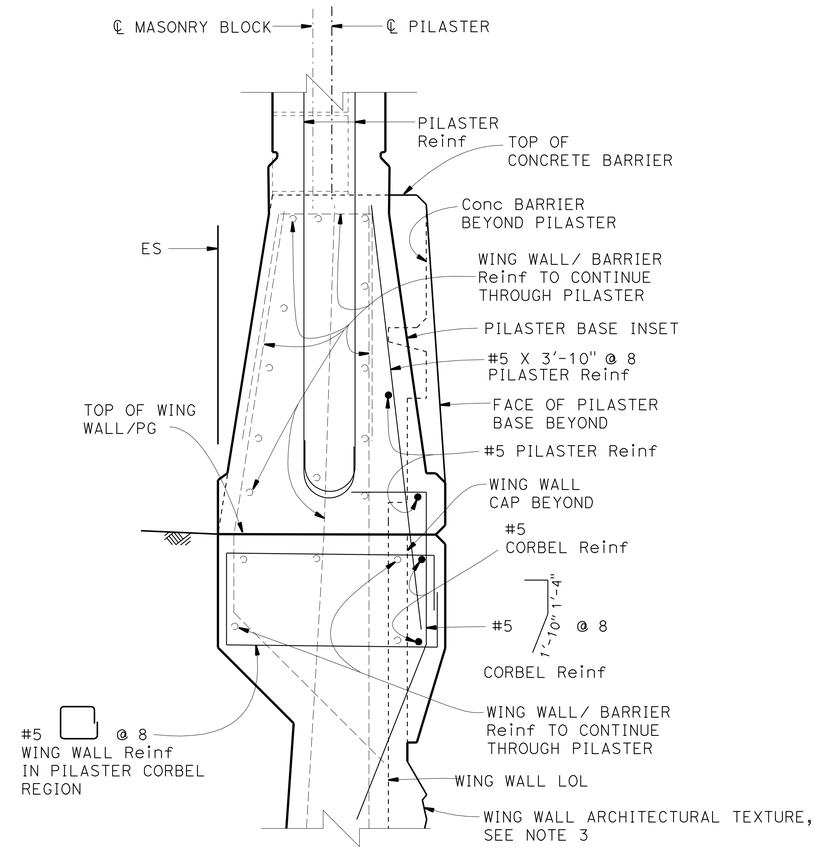

DETAIL C

1½" = 1'-0"

DESIGN	BY D. TAVATLI	CHECKED J. HIGAREDA	
DETAILS	BY T. TREFZ	CHECKED H. CHAVEZ	
QUANTITIES	BY G. GALO	CHECKED S. MORADI	

STATE OF CALIFORNIA
DEPARTMENT OF TRANSPORTATION

DIVISION OF ENGINEERING SERVICES
STRUCTURE DESIGN
DESIGN BRANCH 15

BRIDGE NO. 53-3061
POST MILE 4.91

IMPERIAL HIGHWAY UC (REPLACE)
ARCHITECTURAL DETAILS NO. 11

STRUCTURES DESIGN DETAIL SHEET (ENGLISH) (REV. 09-01-10)

ORIGINAL SCALE IN INCHES FOR REDUCED PLANS 0 1 2 3

UNIT: 3604
PROJECT NUMBER & PHASE: 0700001834 1
CONTRACT NO.: 07-215941

DISREGARD PRINTS BEARING EARLIER REVISION DATES

REVISION DATES: 11-22-11 12-12-11

SHEET 58 OF 76

FILE => 53-3061-r-arch_d+11.dgn

USERNAME => s119571 DATE PLOTTED => 14-APR-2012 TIME PLOTTED => 10:06

DIST	COUNTY	ROUTE	POST MILES TOTAL PROJECT	SHEET No.	TOTAL SHEETS
07	LA	5	4.0/5.9	1063	1597

REGISTERED CIVIL ENGINEER 12-12-11 DATE

4-9-12
PLANS APPROVAL DATE

LICENSED ARCHITECT H. Javier Chavez 14073 03-31-13 Renewal Date STATE OF CALIFORNIA

The State of California or its officers or agents shall not be responsible for the accuracy or completeness of electronic copies of this plan sheet.

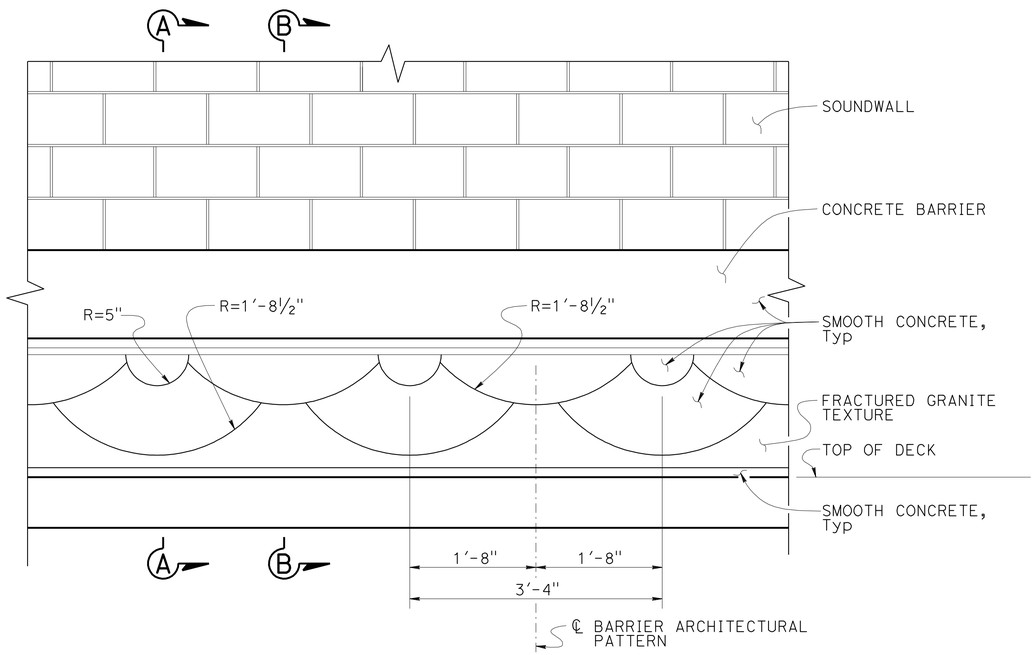

CONCRETE BARRIER TYPE 736 (MOD 2)

1" = 1'-0"

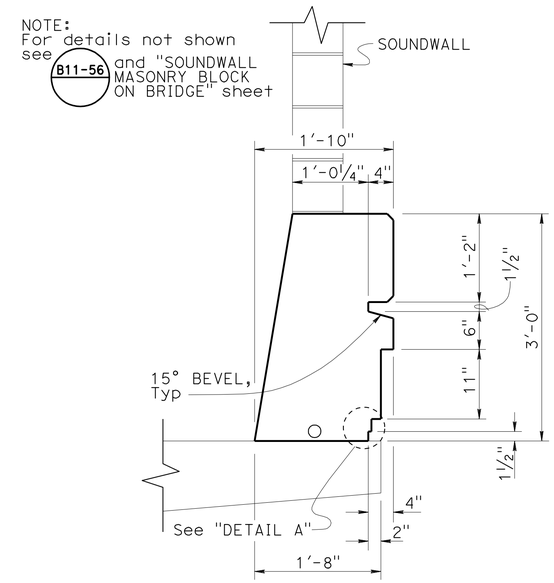

SECTION A-A

1" = 1'-0"

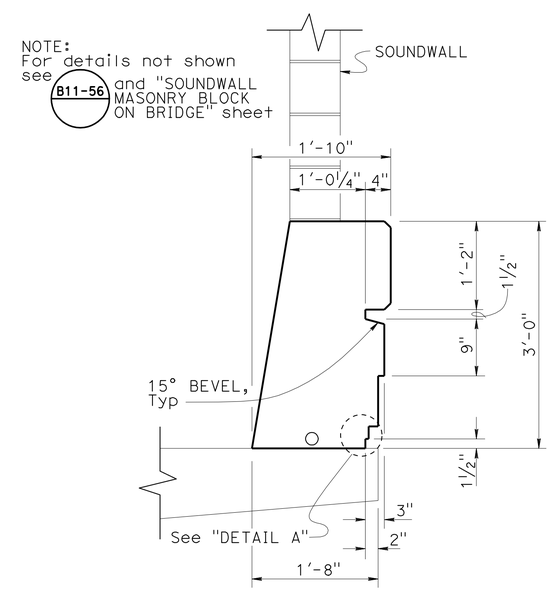

SECTION B-B

1" = 1'-0"

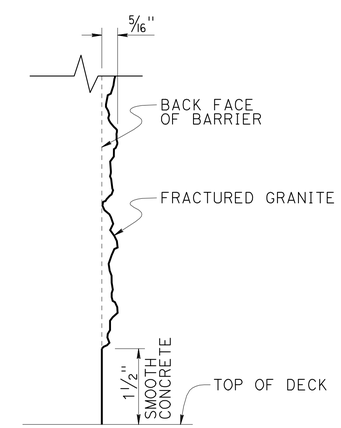

DETAIL A

NO SCALE

DESIGN	BY H. CHAVEZ	CHECKED I. TASABIA	
DETAILS	BY K. LI	CHECKED H. CHAVEZ	
QUANTITIES	BY J. HIGAREDA	CHECKED S. MORADI	

STATE OF CALIFORNIA DEPARTMENT OF TRANSPORTATION

DIVISION OF ENGINEERING SERVICES STRUCTURE DESIGN DESIGN BRANCH 15

BRIDGE NO. 53-3061
POST MILE 4.91

IMPERIAL HIGHWAY UC (REPLACE)
ARCHITECTURAL DETAILS NO. 12

STRUCTURES DESIGN DETAIL SHEET (ENGLISH) (REV. 09-01-10)

ORIGINAL SCALE IN INCHES FOR REDUCED PLANS 0 1 2 3

UNIT: 3604
PROJECT NUMBER & PHASE: 0700001834 1
CONTRACT NO.: 07-215941

DISREGARD PRINTS BEARING EARLIER REVISION DATES

REVISION DATES 08-01-11 12-12-11 12-14-11

SHEET 59 OF 76

FILE => 53-3061-r-arch_dt12.dgn

USERNAME => s119571 DATE PLOTTED => 14-APR-2012 TIME PLOTTED => 10:06

DIST	COUNTY	ROUTE	POST MILES TOTAL PROJECT	SHEET No.	TOTAL SHEETS
07	LA	5	4.0/5.9	1064	1597

REGISTERED CIVIL ENGINEER 12-12-11 DATE

4-9-12
PLANS APPROVAL DATE

LICENSED ARCHITECT H. Javier Chavez 14073 03-31-13 Renewal Date STATE OF CALIFORNIA

The State of California or its officers or agents shall not be responsible for the accuracy or completeness of electronic copies of this plan sheet.

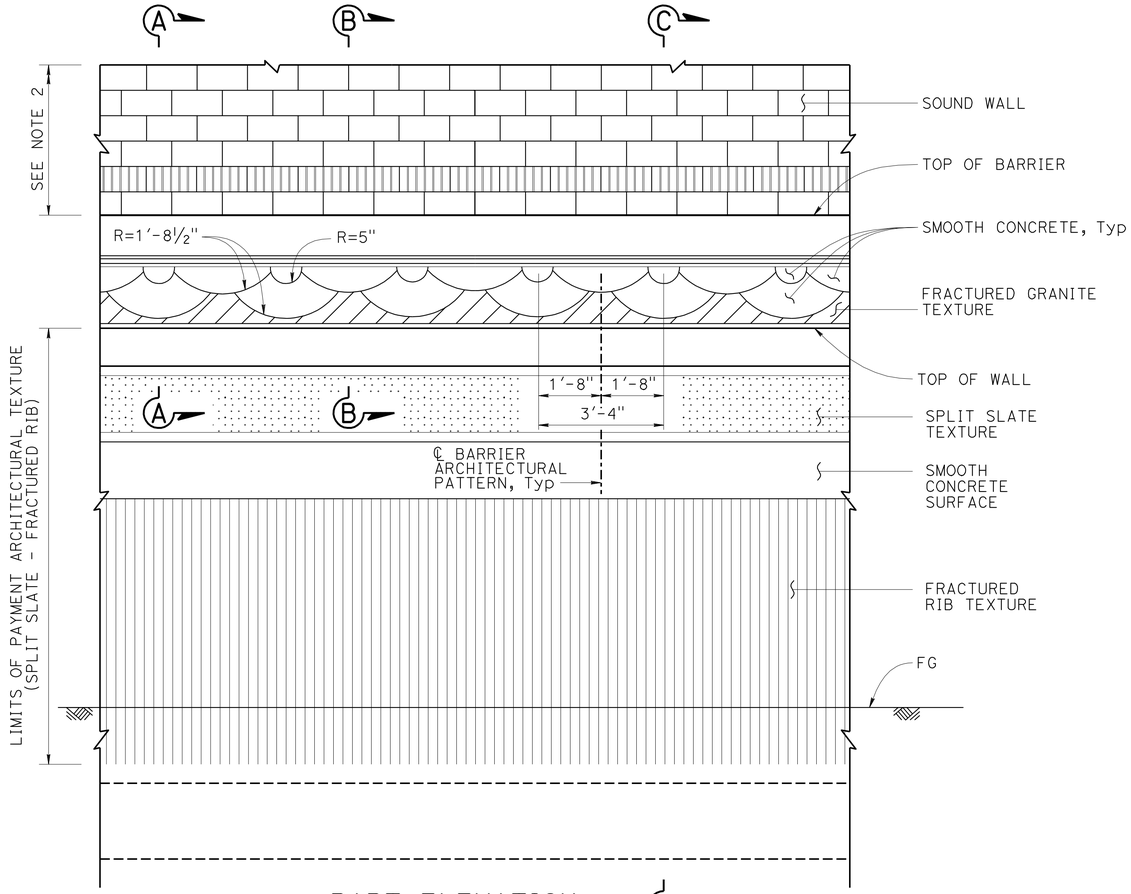

PART ELEVATION

½" = 1'-0"

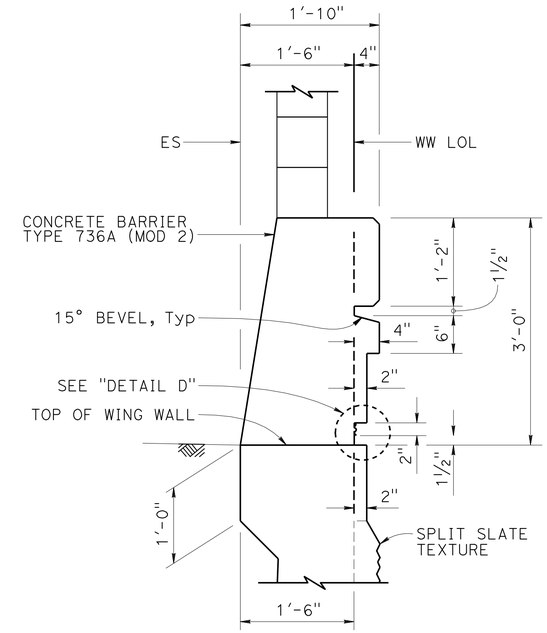

SECTION A-A

1" = 1'-0"

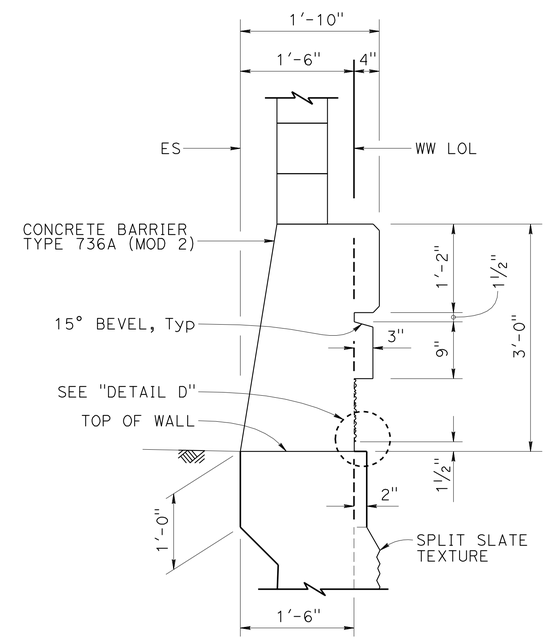

SECTION B-B

1" = 1'-0"

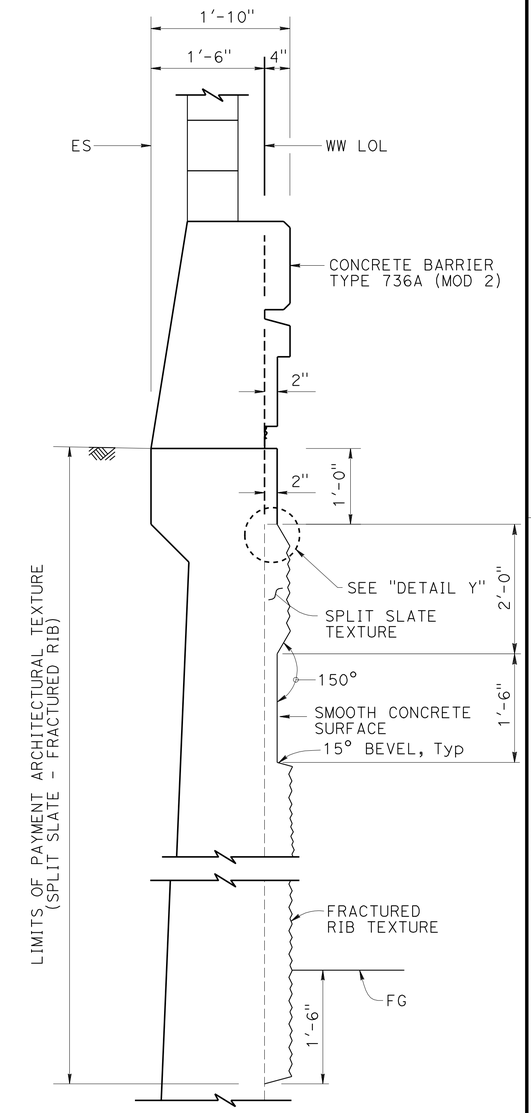

SECTION C-C

NO SCALE

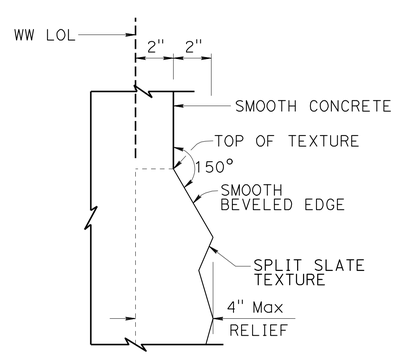

DETAIL Y

NO SCALE

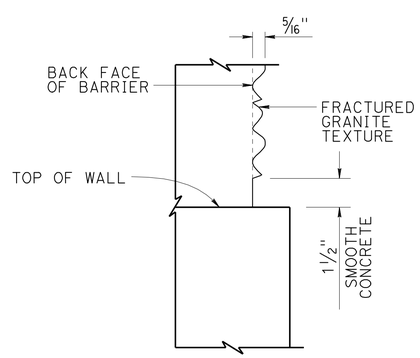

DETAIL D

NO SCALE

NOTES:

1. For Barrier Reinforcement, see "SOUND WALL - MASONRY BLOCK WITH BARRIER ON RETAINING WALL DETAILS NO. 2" sheet.
2. See "ARCHITECTURAL DETAILS No. 4" sheet.

DESIGN	BY H. CHAVEZ	CHECKED I. TASABIA	
DETAILS	BY K. LI	CHECKED H. CHAVEZ	
QUANTITIES	BY J. HIGAREDA	CHECKED S. MORADI	

STATE OF CALIFORNIA DEPARTMENT OF TRANSPORTATION

DIVISION OF ENGINEERING SERVICES STRUCTURE DESIGN DESIGN BRANCH 15

BRIDGE NO. 53-3061
POST MILE 4.91

IMPERIAL HIGHWAY UC (REPLACE)
ARCHITECTURAL DETAILS NO. 13

STRUCTURES DESIGN DETAIL SHEET (ENGLISH) (REV. 09-01-10)

ORIGINAL SCALE IN INCHES FOR REDUCED PLANS 0 1 2 3

UNIT: 3604
PROJECT NUMBER & PHASE: 0700001834 1
CONTRACT NO.: 07-215941

DISREGARD PRINTS BEARING EARLIER REVISION DATES

REVISION DATES 12-14-11

SHEET 60 OF 76

FILE => 53-3061-r-arch_d+13.dgn

USERNAME => s113571 DATE PLOTTED => 14-APR-2012 TIME PLOTTED => 10:06

DIST	COUNTY	ROUTE	POST MILES TOTAL PROJECT	SHEET No.	TOTAL SHEETS
07	LA	5	4.0/5.9	1065	1597

REGISTERED CIVIL ENGINEER 12-12-11 DATE

4-9-12
PLANS APPROVAL DATE

LICENSED ARCHITECT H. Javier Chavez 14073 03-31-13 Renewal Date STATE OF CALIFORNIA

The State of California or its officers or agents shall not be responsible for the accuracy or completeness of electronic copies of this plan sheet.

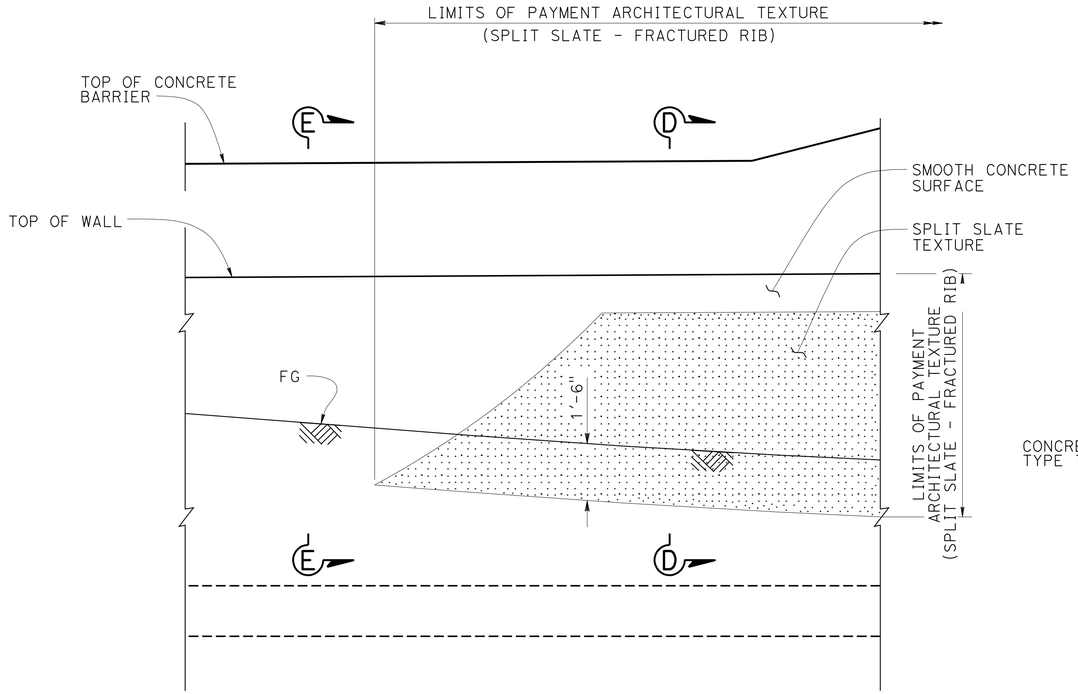

RETAINING WALL WITH NO SOUND WALL
PART ELEVATION
½" = 1'-0"

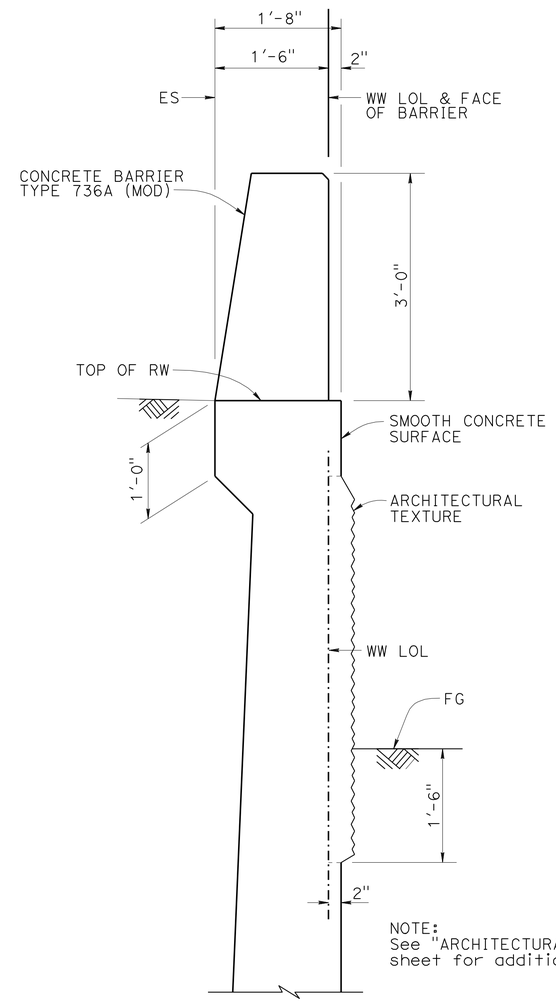

SECTION D-D
1" = 1'-0"

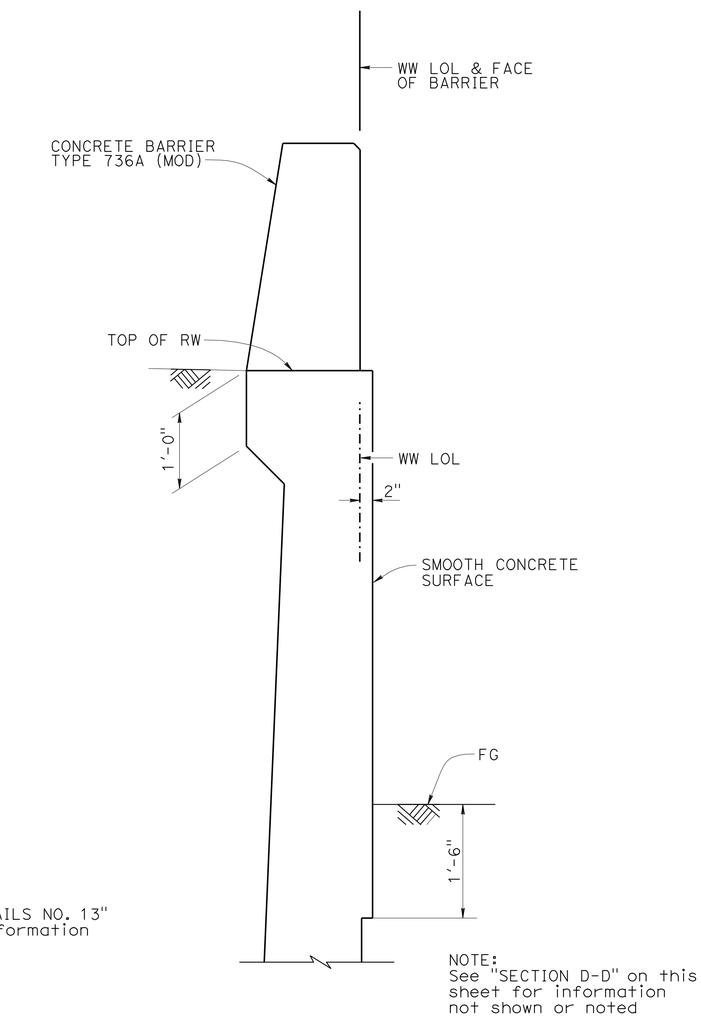

SECTION E-E
1" = 1'-0"

	BY	CHECKED
DESIGN	H. CHAVEZ	I. TASABIA
DETAILS	K. LI	H. CHAVEZ
QUANTITIES	J. HIGAREDA	S. MORADI

STATE OF CALIFORNIA
DEPARTMENT OF TRANSPORTATION

DIVISION OF ENGINEERING SERVICES
STRUCTURE DESIGN
DESIGN BRANCH 15

BRIDGE NO. 53-3061
POST MILE 4.91

IMPERIAL HIGHWAY UC (REPLACE)
ARCHITECTURAL DETAILS NO. 14

STRUCTURES DESIGN DETAIL SHEET (ENGLISH) (REV. 09-01-10)

ORIGINAL SCALE IN INCHES FOR REDUCED PLANS 0 1 2 3

UNIT: 3604
PROJECT NUMBER & PHASE: 0700001834 1
CONTRACT NO.: 07-215941

DISREGARD PRINTS BEARING EARLIER REVISION DATES

REVISION DATES 12-15-11

SHEET 61 OF 76

FILE => 53-3061-r-arch_dt14.dgn

USERNAME => s119571 DATE PLOTTED => 14-APR-2012 TIME PLOTTED => 10:06

DIST	COUNTY	ROUTE	POST MILES TOTAL PROJECT	SHEET No.	TOTAL SHEETS
07	LA	5	4.0/5.9	1066	1597

REGISTERED CIVIL ENGINEER 12-12-11 DATE

4-9-12
PLANS APPROVAL DATE

LICENSED ARCHITECT H. Javier Chavez 14073 03-31-13 Renewal Date STATE OF CALIFORNIA

The State of California or its officers or agents shall not be responsible for the accuracy or completeness of electronic copies of this plan sheet.

NOTES:
1. FOR SECTION A-A SEE "ARCHITECTURAL DETAILS No. 17" SHEET
2. FOR SLOPE PAVING STRUCTURAL DETAILS SEE "SLOPE PAVING" SHEET

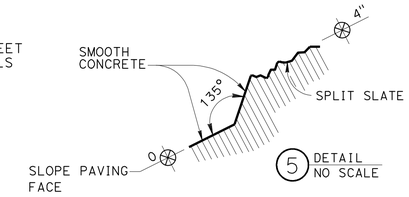

5 DETAIL NO SCALE

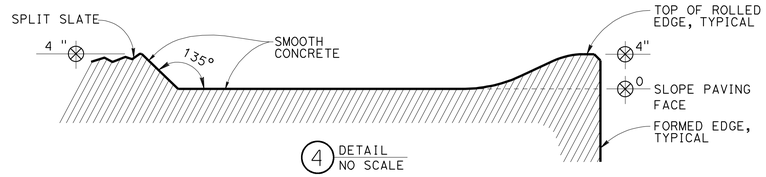

4 DETAIL NO SCALE

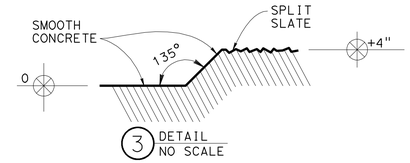

3 DETAIL NO SCALE

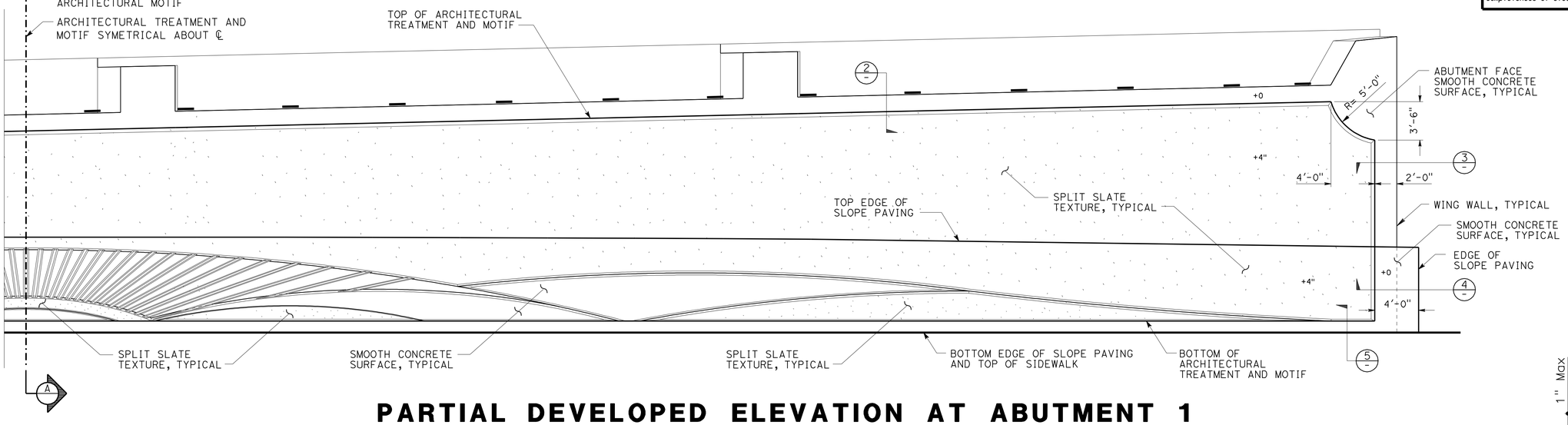

PARTIAL DEVELOPED ELEVATION AT ABUTMENT 1

NO SCALE

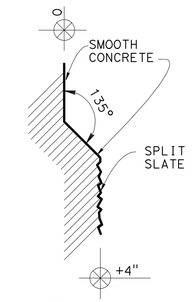

2 DETAIL NO SCALE

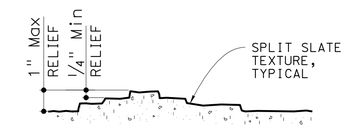

1 DETAIL NO SCALE

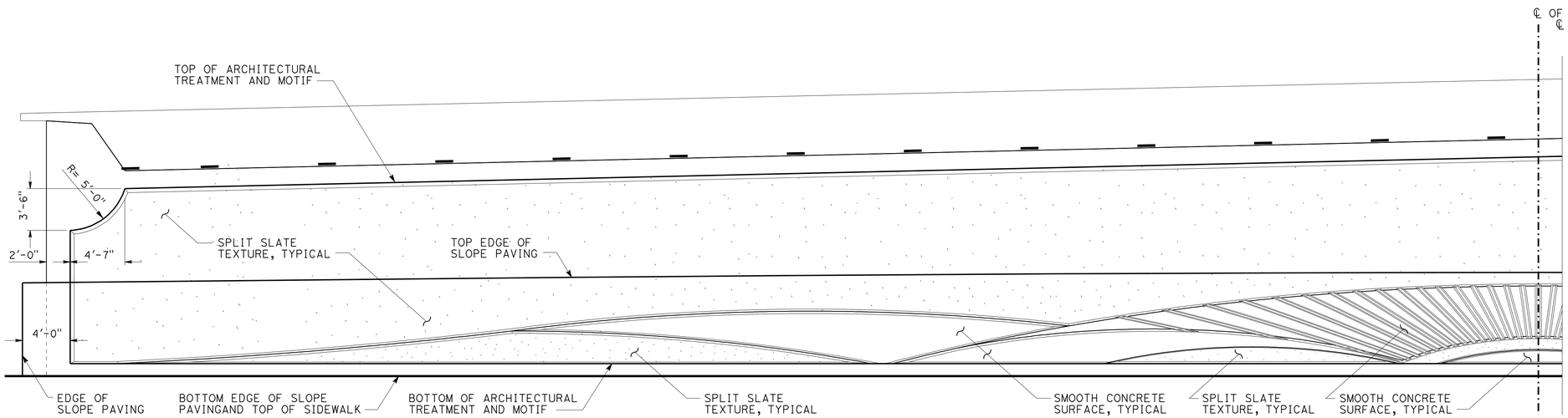

PARTIAL DEVELOPED ELEVATION AT ABUTMENT 1

NO SCALE

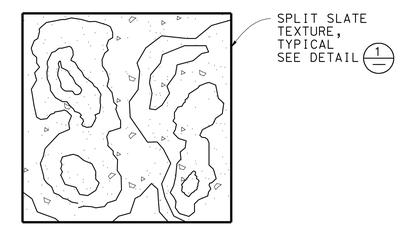

TEXTURE

NO SCALE

LEGEND:

- TEXTURED CONCRETE SURFACE = SPLIT SLATE TEXTURE
- SMOOTH CONCRETE SURFACE

NOTE: ALL REFERENCE TO SURFACE DIMENSIONS OF DETAILS ARE FROM DATUM 0 = FACE OF ABUTMENT & FACE OF SLOPE PAVING, TYPICAL

	BY	CHECKED
DESIGN	H. CHAVEZ	I. TASABIA
DETAILS	K. LI	H. CHAVEZ
QUANTITIES	J. HIGAREDA	S. MORADI

STATE OF CALIFORNIA DEPARTMENT OF TRANSPORTATION

DIVISION OF ENGINEERING SERVICES STRUCTURE DESIGN DESIGN BRANCH 15

BRIDGE NO. 53-3061
POST MILE 4.91

IMPERIAL HIGHWAY UC (REPLACE)
ARCHITECTURAL DETAILS NO. 15

STRUCTURES DESIGN DETAIL SHEET (ENGLISH) (REV. 09-01-10)

ORIGINAL SCALE IN INCHES FOR REDUCED PLANS 0 1 2 3

UNIT: 3604
PROJECT NUMBER & PHASE: 0700001834 1
CONTRACT NO.: 07-215941

DISREGARD PRINTS BEARING EARLIER REVISION DATES

REVISION DATES 12-15-11

SHEET 62 OF 76

FILE => 53-3061-r-arch_dt15.dgn

USERNAME => 8119571 DATE PLOTTED => 14-APR-2012 TIME PLOTTED => 10:06

DIST	COUNTY	ROUTE	POST MILES TOTAL PROJECT	SHEET No.	TOTAL SHEETS
07	LA	5	4.0/5.9	1067	1597

REGISTERED CIVIL ENGINEER 12-12-11 DATE

4-9-12
PLANS APPROVAL DATE

LICENSED ARCHITECT H. Javier Chavez 14073 03-31-13 Renewal Date STATE OF CALIFORNIA

The State of California or its officers or agents shall not be responsible for the accuracy or completeness of electronic copies of this plan sheet.

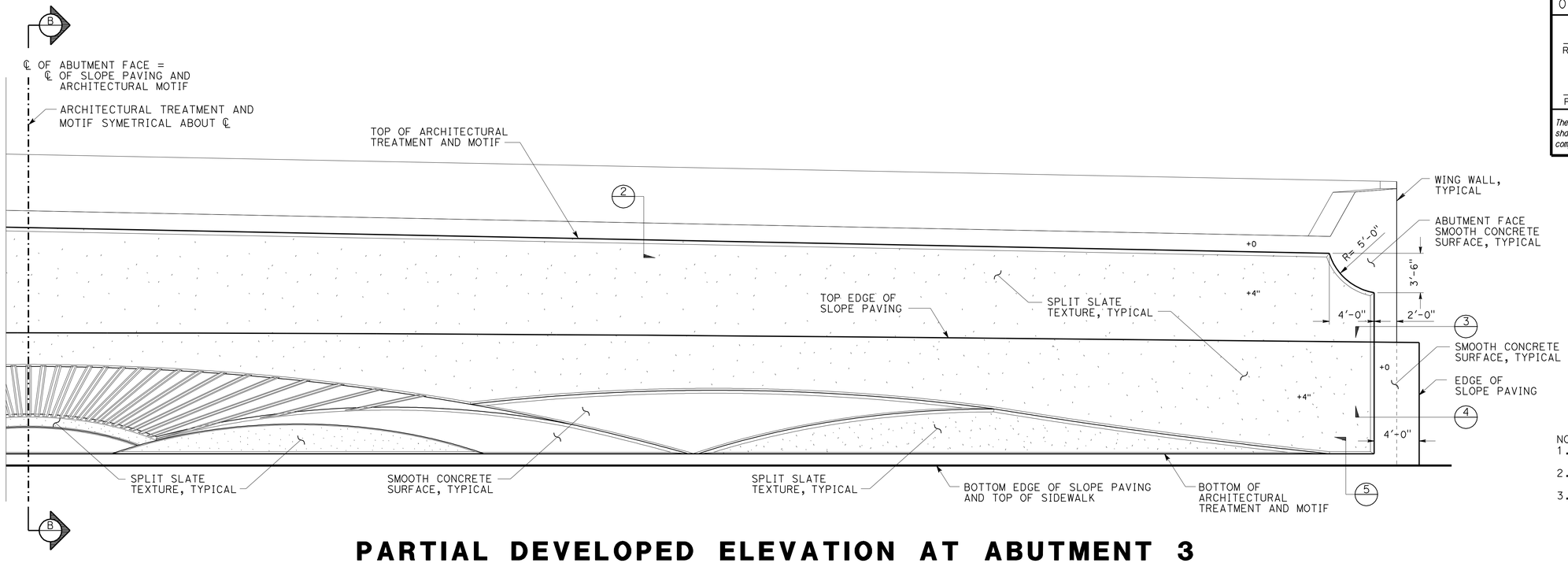

NOTES:
1. FOR SECTION B-B SEE "ARCHITECTURAL DETAILS No. 17" SHEET
2. FOR SLOPE PAVING STRUCTURAL DETAILS SEE "SLOPE PAVING" SHEET
3. FOR SECTION CUTS 2 THRU 5 AND SPLIT SLATE TEXTURE DETAIL SEE "ARCHITECTURAL DETAILS No. 15" SHEET

PARTIAL DEVELOPED ELEVATION AT ABUTMENT 3

NO SCALE

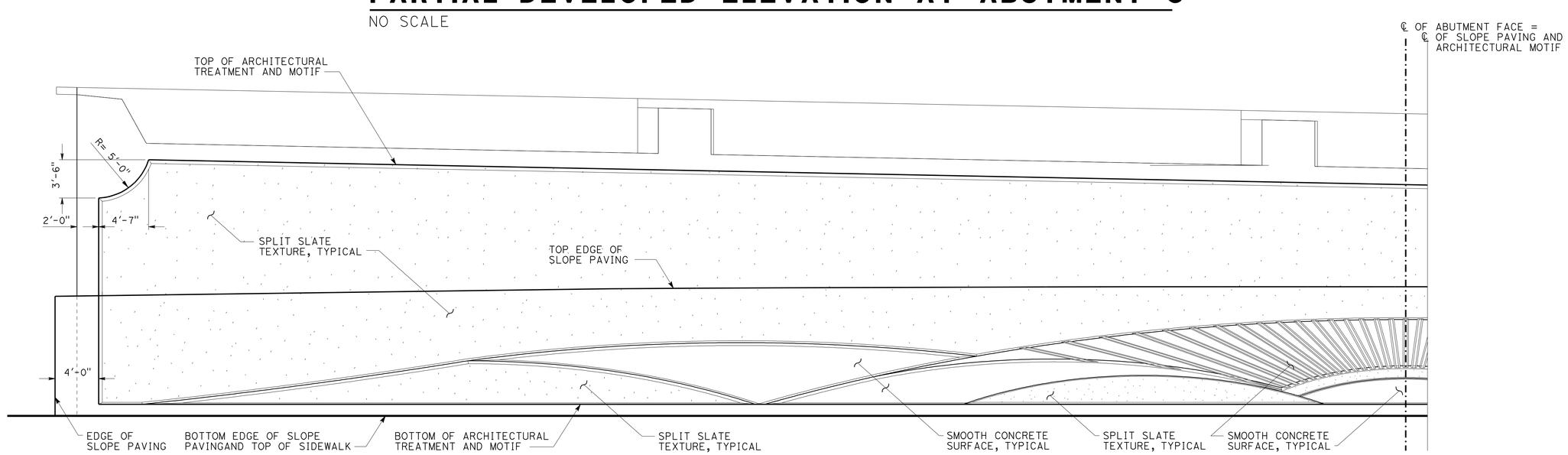

PARTIAL DEVELOPED ELEVATION AT ABUTMENT 3

NO SCALE

NOTE: ALL REFERENCE TO SURFACE DIMENSIONS OF DETAILS ARE FROM DATUM 0 = FACE OF ABUTMENT & FACE OF SLOPE PAVING, TYPICAL

DESIGN	BY H. CHAVEZ	CHECKED I. TASABIA	
DETAILS	BY K. LI	CHECKED H. CHAVEZ	
QUANTITIES	BY J. HIGAREDA	CHECKED S. MORADI	

STATE OF CALIFORNIA DEPARTMENT OF TRANSPORTATION

DIVISION OF ENGINEERING SERVICES STRUCTURE DESIGN DESIGN BRANCH 15

BRIDGE NO. 53-3061
POST MILE 4.91

IMPERIAL HIGHWAY UC (REPLACE)
ARCHITECTURAL DETAILS NO. 16

STRUCTURES DESIGN DETAIL SHEET (ENGLISH) (REV. 09-01-10)

ORIGINAL SCALE IN INCHES FOR REDUCED PLANS 0 1 2 3

UNIT: 3604
PROJECT NUMBER & PHASE: 0700001834 1
CONTRACT NO.: 07-215941

DISREGARD PRINTS BEARING EARLIER REVISION DATES

REVISION DATES 12-15-11

SHEET 63 OF 76

FILE => 53-3061-r-arch_dt16.dgn

USERNAME => s119571 DATE PLOTTED => 14-APR-2012 TIME PLOTTED => 10:07

DIST	COUNTY	ROUTE	POST MILES TOTAL PROJECT	SHEET No.	TOTAL SHEETS
07	LA	5	4.0/5.9	1068	1597

REGISTERED CIVIL ENGINEER 12-12-11 DATE

4-9-12
PLANS APPROVAL DATE

LICENSED ARCHITECT H. Javier Chavez 14073 03-31-13 Renewal Date STATE OF CALIFORNIA

The State of California or its officers or agents shall not be responsible for the accuracy or completeness of electronic copies of this plan sheet.

NOTE: ALL REFERENCE TO SURFACE DIMENSIONS OF DETAILS ARE FROM DATUM 0 = FACE OF ABUTMENT & FACE OF SLOPE PAVING, TYPICAL

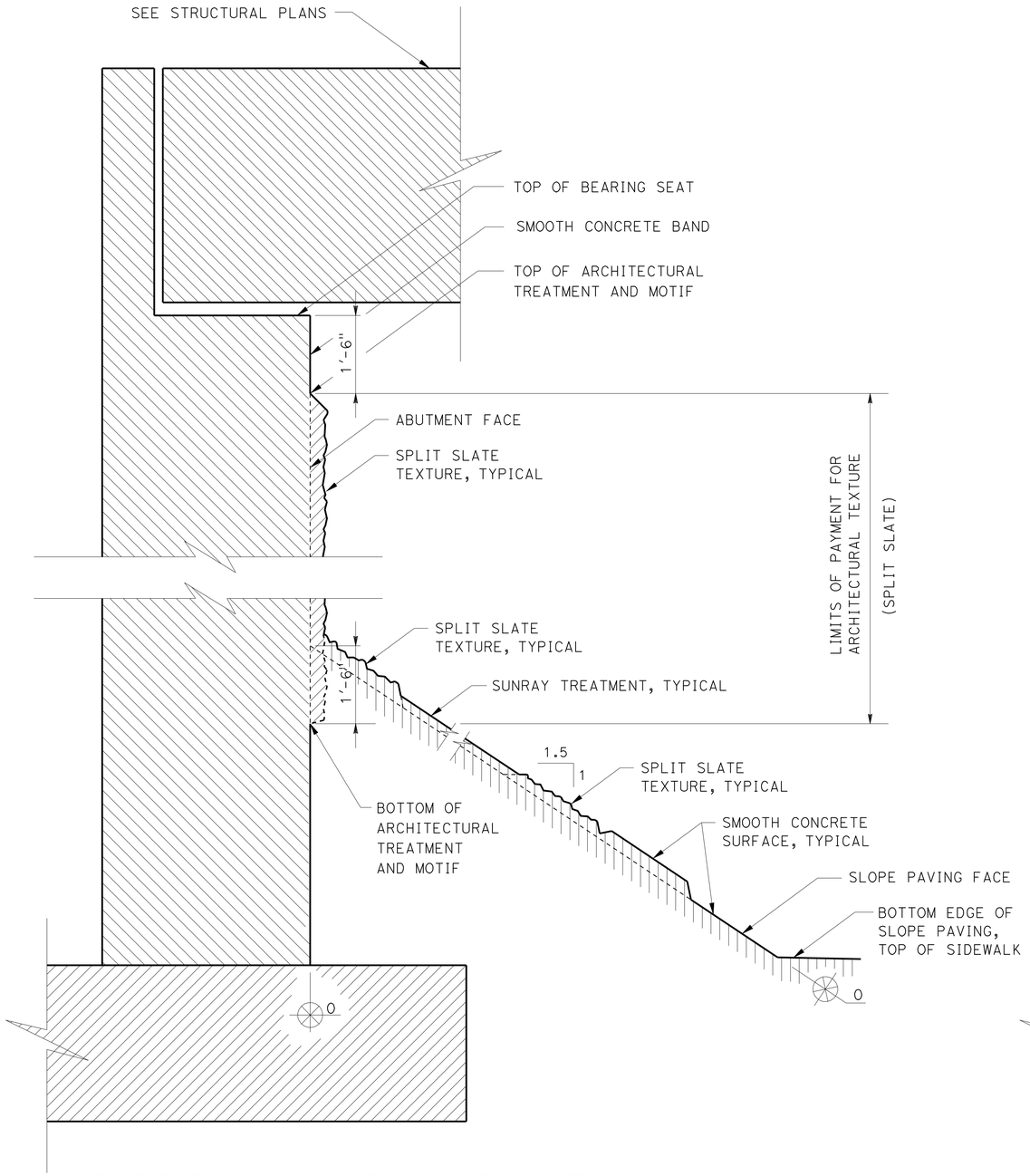

SECTION A-A AT ABUTMENT 1

NO SCALE

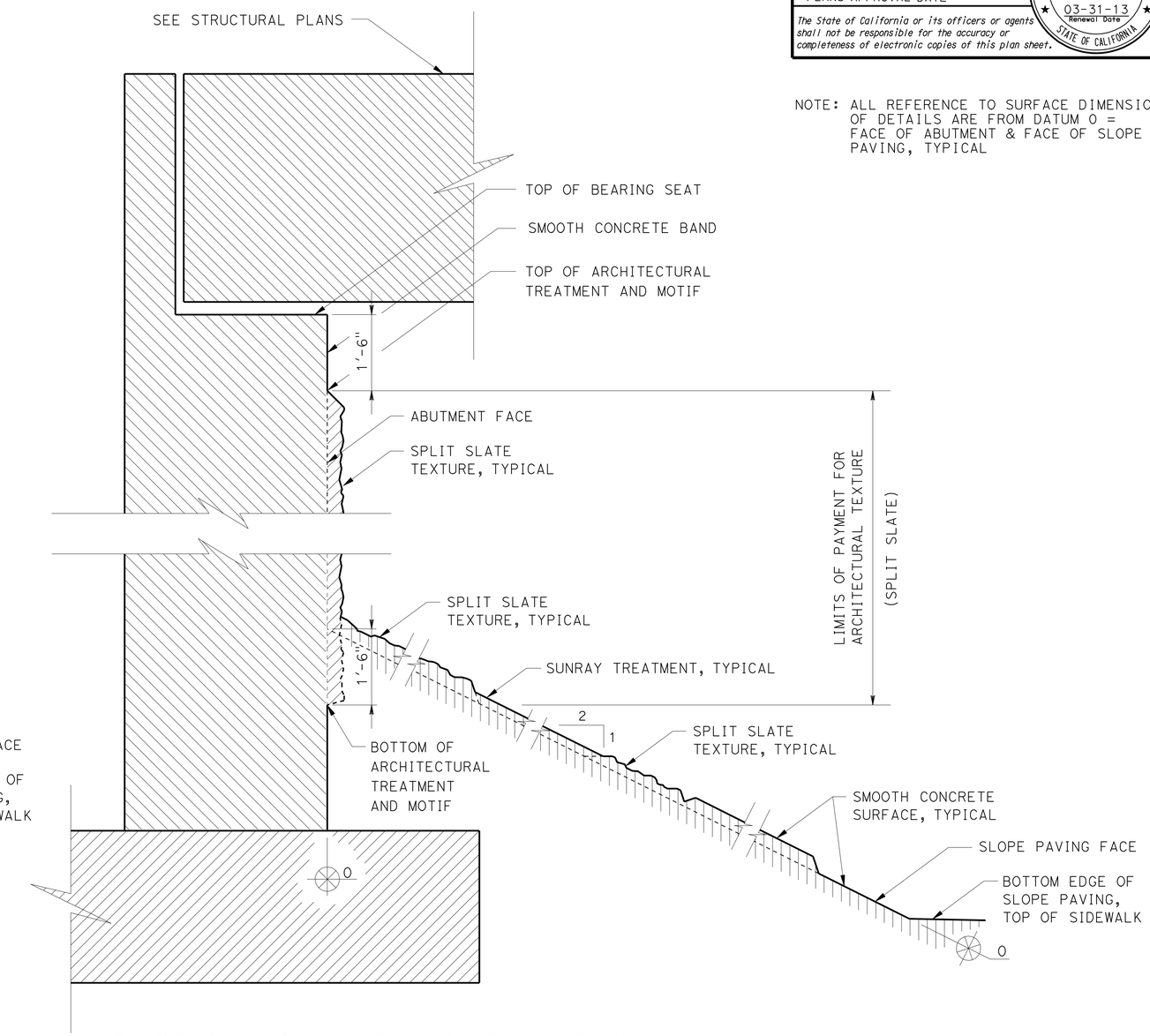

SECTION B-B AT ABUTMENT 3

NO SCALE

DESIGN	BY H. CHAVEZ	CHECKED I. TASABIA	
DETAILS	BY K. LI	CHECKED H. CHAVEZ	
QUANTITIES	BY J. HIGAREDA	CHECKED S. MORADI	

STATE OF CALIFORNIA DEPARTMENT OF TRANSPORTATION

DIVISION OF ENGINEERING SERVICES STRUCTURE DESIGN DESIGN BRANCH 15

BRIDGE NO. 53-3061
POST MILE 4.91

IMPERIAL HIGHWAY UC (REPLACE)
ARCHITECTURAL DETAILS NO. 17

STRUCTURES DESIGN DETAIL SHEET (ENGLISH) (REV. 09-01-10)

ORIGINAL SCALE IN INCHES FOR REDUCED PLANS 0 1 2 3

UNIT: 3604
PROJECT NUMBER & PHASE: 0700001834 1
CONTRACT NO.: 07-215941

DISREGARD PRINTS BEARING EARLIER REVISION DATES

REVISION DATES 12-15-11

SHEET 64 OF 76

FILE => 53-3061-r-arch_dt17.dgn

USERNAME => s119571 DATE PLOTTED => 14-APR-2012 TIME PLOTTED => 10:07

DIST	COUNTY	ROUTE	POST MILES TOTAL PROJECT	SHEET No.	TOTAL SHEETS
07	LA	5	4.0/5.9	1069	1597

REGISTERED CIVIL ENGINEER 12-12-11 DATE

4-9-12
PLANS APPROVAL DATE

LICENSED ARCHITECT H. Javier Chavez 14073 03-31-13 Renewal Date STATE OF CALIFORNIA

The State of California or its officers or agents shall not be responsible for the accuracy or completeness of electronic copies of this plan sheet.

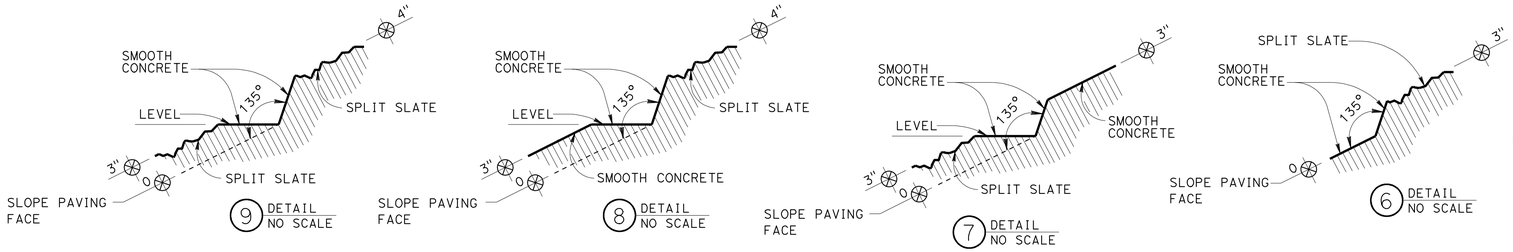

LEGEND:

- TEXTURED CONCRETE SURFACE = SPLIT SLATE TEXTURE
- SMOOTH CONCRETE SURFACE

NOTE: ALL REFERENCE TO SURFACE DIMENSIONS OF DETAILS ARE FROM DATUM 0 = FACE OF ABUTMENT AND FACE OF SLOPE PAVING, TYPICAL

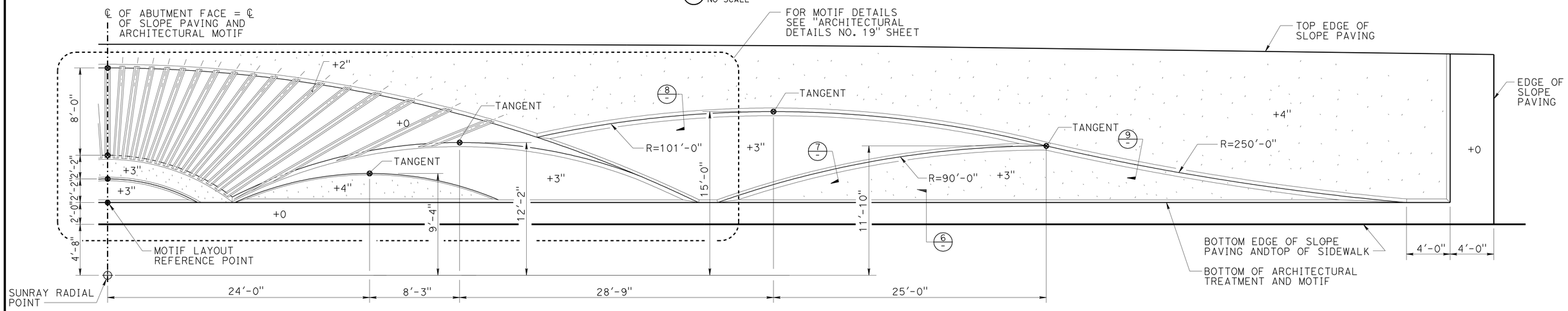

PARTIAL ARCHITECTURAL MOTIF AT SLOPE PAVING (ABUTMENT 1)

NO SCALE

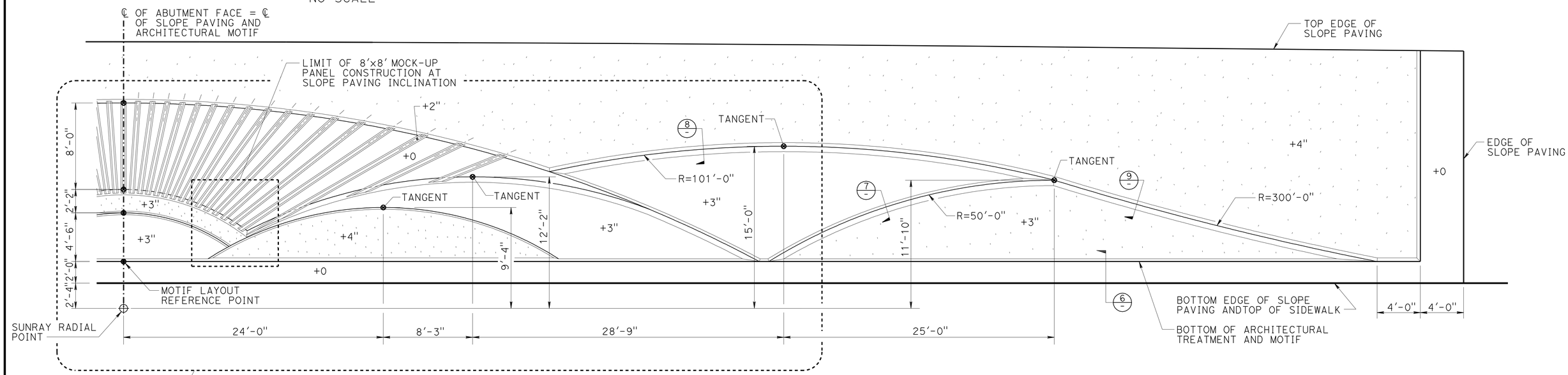

PARTIAL ARCHITECTURAL MOTIF AT SLOPE PAVING (ABUTMENT 3)

NO SCALE

DESIGN	BY H. CHAVEZ	CHECKED I. TASABIA	
DETAILS	BY K. LI	CHECKED H. CHAVEZ	
QUANTITIES	BY J. HIGAREDA	CHECKED S. MORADI	

STATE OF CALIFORNIA
DEPARTMENT OF TRANSPORTATION

DIVISION OF ENGINEERING SERVICES
STRUCTURE DESIGN
DESIGN BRANCH 15

BRIDGE NO. 53-3061
POST MILE 4.91

IMPERIAL HIGHWAY UC (REPLACE)
ARCHITECTURAL DETAILS NO. 18

STRUCTURES DESIGN DETAIL SHEET (ENGLISH) (REV. 09-01-10)

ORIGINAL SCALE IN INCHES FOR REDUCED PLANS 0 1 2 3

UNIT: 3604
PROJECT NUMBER & PHASE: 0700001834 1
CONTRACT NO.: 07-215941

DISREGARD PRINTS BEARING EARLIER REVISION DATES

REVISION DATES 12-15-11

SHEET 65 OF 76

FILE => 53-3061-r-arch_dt18.dgn

USERNAME => s119571 DATE PLOTTED => 14-APR-2012 TIME PLOTTED => 10:07

DIST	COUNTY	ROUTE	POST MILES TOTAL PROJECT	SHEET No.	TOTAL SHEETS
07	LA	5	4.0/5.9	1070	1597

REGISTERED CIVIL ENGINEER 12-12-11 DATE

4-9-12
PLANS APPROVAL DATE

LICENSED ARCHITECT H. Javier Chavez 14073 03-31-13 Renewal Date STATE OF CALIFORNIA

The State of California or its officers or agents shall not be responsible for the accuracy or completeness of electronic copies of this plan sheet.

NOTE: ALL REFERENCE TO SURFACE DIMENSIONS OF DETAILS ARE FROM DATUM 0 = FACE OF ABUTMENT & FACE OF SLOPE PAVING, TYPICAL

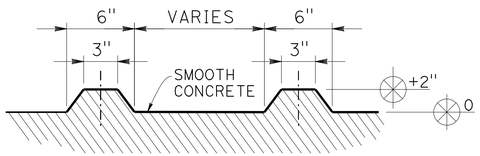

16 DETAIL NO SCALE

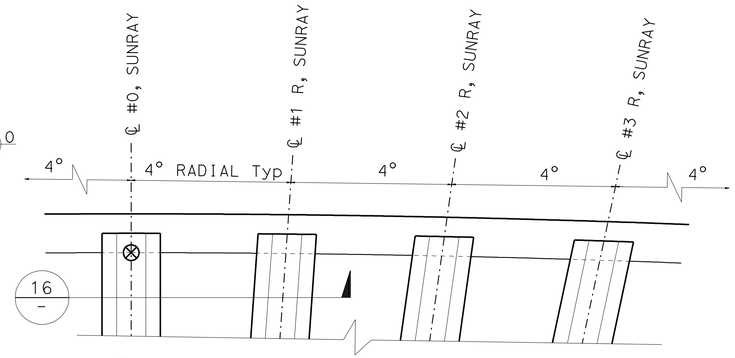

15 DETAIL AT SUNRAY TREATMENT NO SCALE

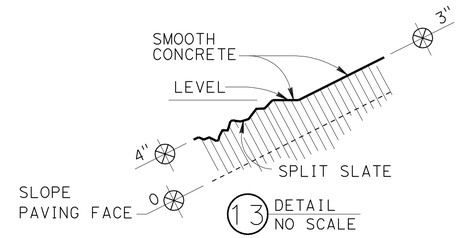

13 DETAIL NO SCALE

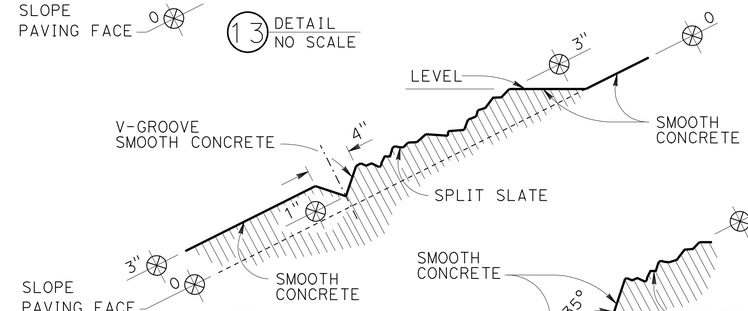

14 DETAIL NO SCALE

12 DETAIL NO SCALE

10 DETAIL NO SCALE

11 DETAIL NO SCALE

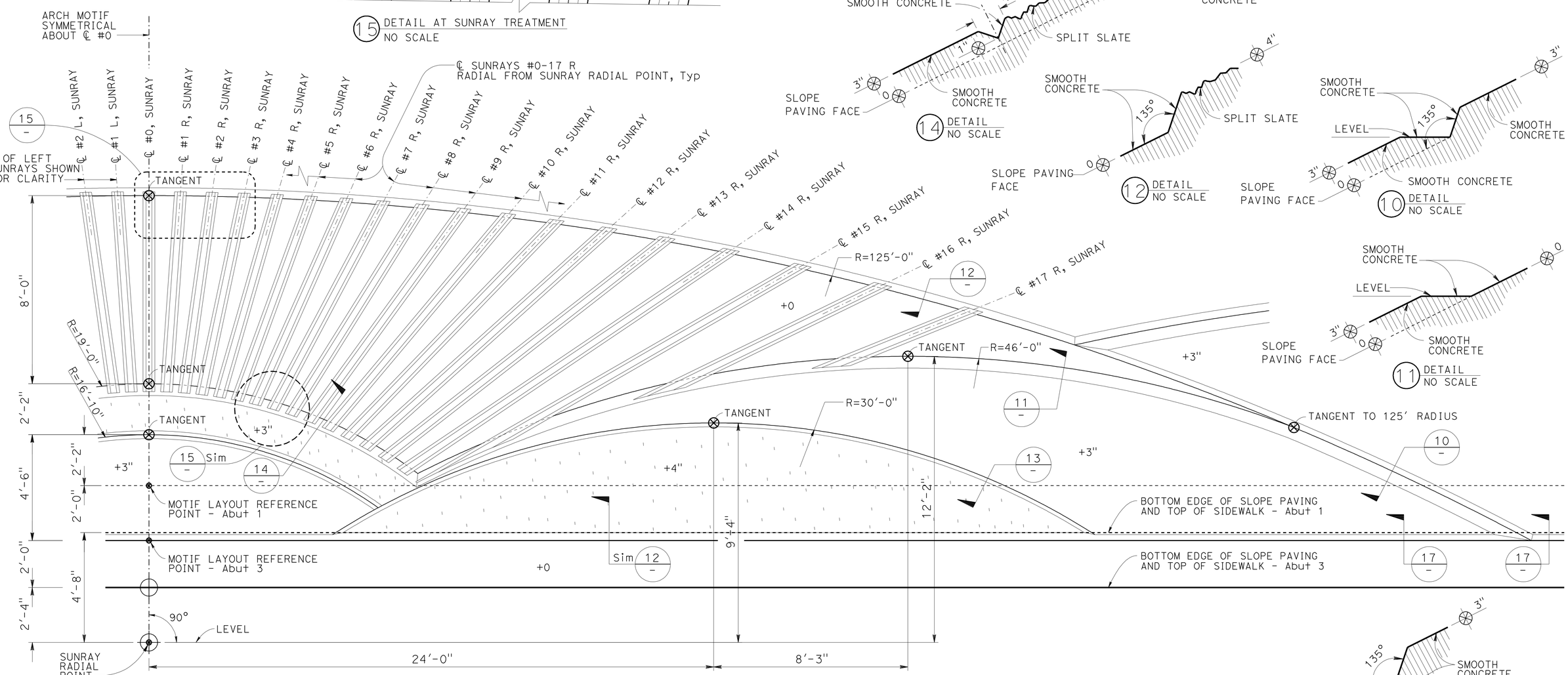

PARTIAL ARCHITECTURAL MOTIF ELEVATION AT ABUTMENT 1 & ABUTMENT 3

NO SCALE

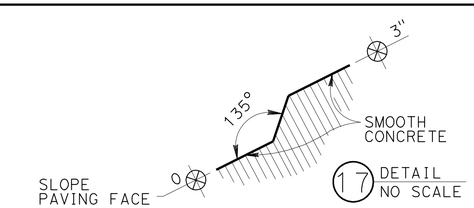

17 DETAIL NO SCALE

	BY	CHECKED
DESIGN	H. CHAVEZ	I. TASABIA
DETAILS	K. LI	H. CHAVEZ
QUANTITIES	J. HIGAREDA	S. MORADI

STATE OF CALIFORNIA DEPARTMENT OF TRANSPORTATION

DIVISION OF ENGINEERING SERVICES STRUCTURE DESIGN DESIGN BRANCH 15

BRIDGE NO. 53-3061
POST MILE 4.91

IMPERIAL HIGHWAY UC (REPLACE)
ARCHITECTURAL DETAILS NO. 19

STRUCTURES DESIGN DETAIL SHEET (ENGLISH) (REV. 09-01-10)

ORIGINAL SCALE IN INCHES FOR REDUCED PLANS 0 1 2 3

UNIT: 3604
PROJECT NUMBER & PHASE: 0700001834 1
CONTRACT NO.: 07-215941

DISREGARD PRINTS BEARING EARLIER REVISION DATES 12-15-11

REVISION DATES

SHEET 66 OF 76

FILE => 53-3061-r-arch_dt19.dgn

USERNAME => s119571 DATE PLOTTED => 14-APR-2012 TIME PLOTTED => 10:07

DIST	COUNTY	ROUTE	POST MILES TOTAL PROJECT	SHEET No.	TOTAL SHEETS
07	LA	5	4.0/5.9	1071	1597

George Olguin
LICENSED LANDSCAPE ARCHITECT DATE

4-9-12
PLANS APPROVAL DATE

LICENSED LANDSCAPE ARCHITECT GEORGE OLGUIN NO. 4533 STATE OF CALIFORNIA
George Olguin Signature
08-31-12 Renewal Date
10-10-10 Date

The State of California or its officers or agents shall not be responsible for the accuracy or completeness of electronic copies of this plan sheet.

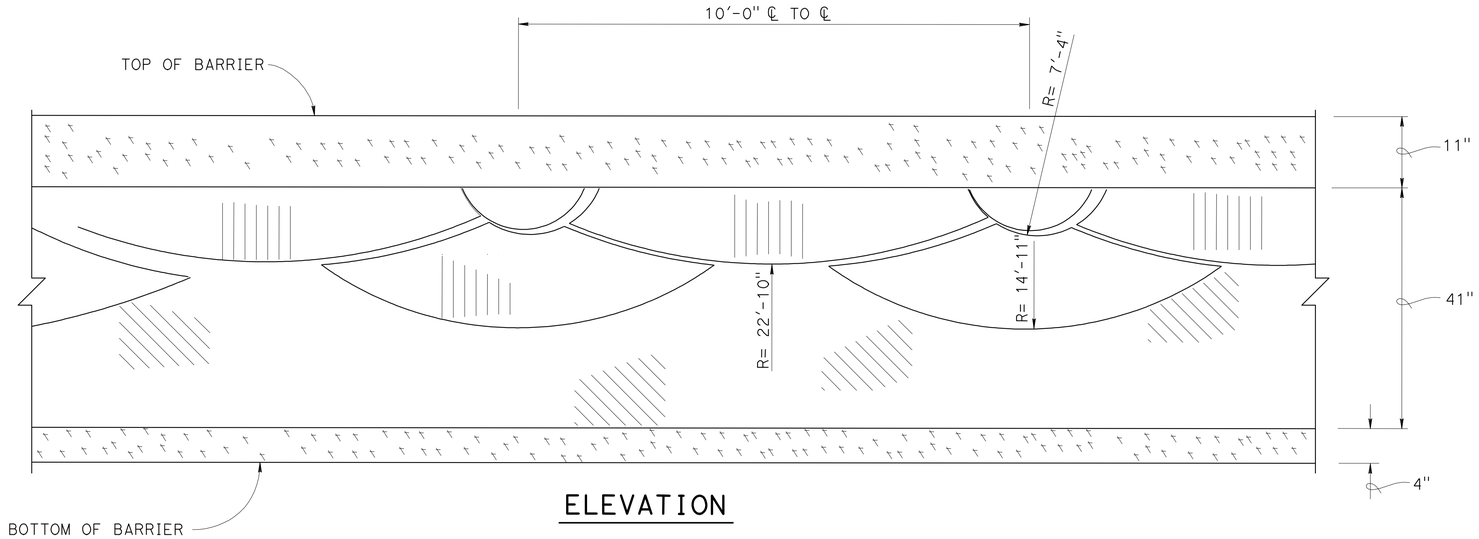

ELEVATION

CONCRETE BARRIER TYPE 60GA (MOD) ARCHITECTURAL SURFACE TREATMENT (SCALLOP WALL PATTERN)

NO SCALE

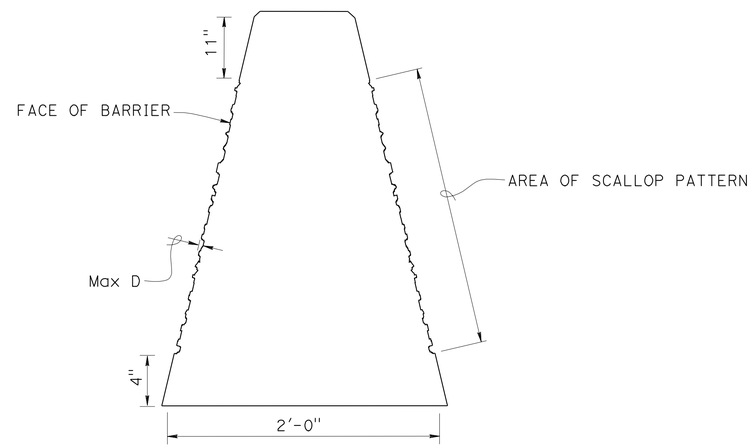

NOTE:
For details not shown see and "ROAD PLANS" A76D

LEGEND:

- SMOOTH FINISH
- LIGHT FRACTURED GRANITE FINISH MAX D 1/4"-1/2"
- HEAVY FRACTURED GRANITE FINISH MAX D 3/4"-1"

TYPICAL SECTION

CONCRETE BARRIER TYPE 60GA (MOD) (SCALLOP PATTERN DIFFERENTIAL)

NO SCALE

	BY	CHECKED
DESIGN	George Olguin	Jennifer Taira
DETAILS	George Olguin	Jennifer Taira
QUANTITIES	Suzan Moradi	Gabriel Galo

STATE OF CALIFORNIA
DEPARTMENT OF TRANSPORTATION

DIVISION OF ENGINEERING SERVICES
STRUCTURE DESIGN
DESIGN BRANCH 15

BRIDGE NO. 53-3061
POST MILE 4.91

IMPERIAL HIGHWAY UC (REPLACE)
ARCHITECTURAL DETAILS NO. 20

STRUCTURES DESIGN DETAIL SHEET (ENGLISH) (REV. 09-01-10)

ORIGINAL SCALE IN INCHES FOR REDUCED PLANS 0 1 2 3

UNIT: 3604
PROJECT NUMBER & PHASE: 0700001834 1
CONTRACT NO.: 07-215941

DISREGARD PRINTS BEARING EARLIER REVISION DATES

REVISION DATES: 03-07-12

SHEET 67 OF 76

FILE => 53-3061-r-arch_dt20.dgn

USERNAME => s119571 DATE PLOTTED => 14-APR-2012 TIME PLOTTED => 10:07

DIST	COUNTY	ROUTE	POST MILES TOTAL PROJECT	SHEET No.	TOTAL SHEETS
07	LA	5	4.0/5.9	1072	1597

José L. Higareda
REGISTERED CIVIL ENGINEER 12-12-11 DATE

4-9-12
PLANS APPROVAL DATE

REGISTERED PROFESSIONAL ENGINEER JOSE L. HIGAREDA No. 62338 Exp. 9-30-13 CIVIL STATE OF CALIFORNIA

The State of California or its officers or agents shall not be responsible for the accuracy or completeness of electronic copies of this plan sheet.

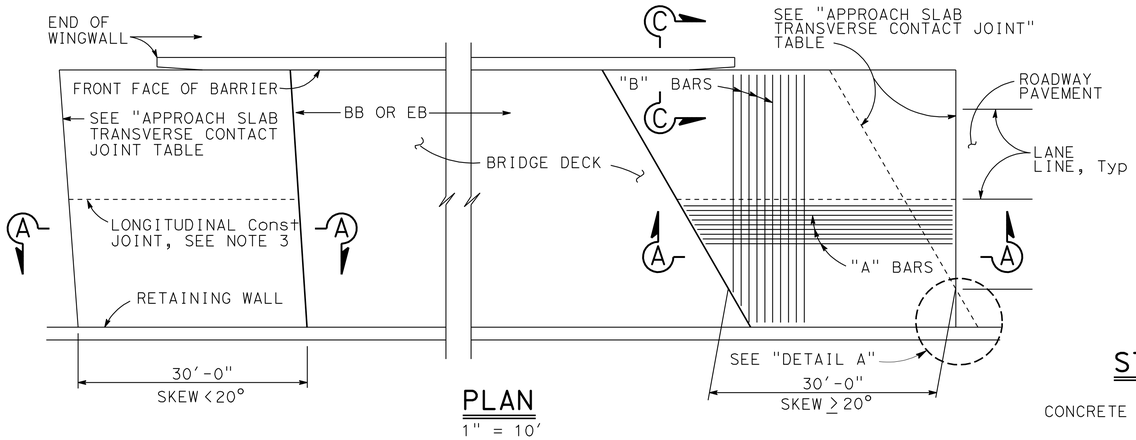

PLAN
1" = 10'

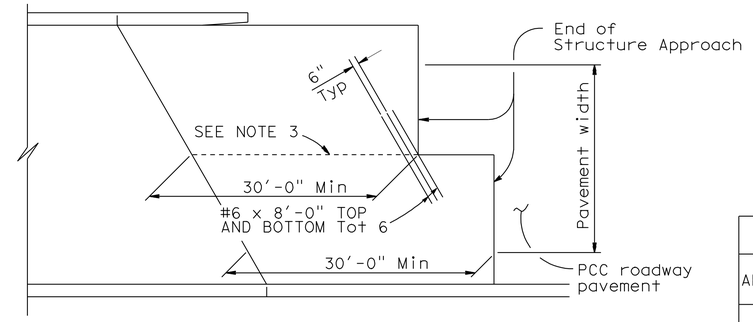

STRUCTURE APPROACH - END STAGGER DETAIL
No Scale

APPROACH SLAB TRANSVERSE CONTACT JOINT		
APPROACH SKEW	WITH AC ROADWAY PAVEMENT	WITH PCC ROADWAY PAVEMENT
< 20°	PARALLEL TO FACE OF PN	PARALLEL TO FACE OF PN
20° - 45°	PARALLEL TO FACE OF PN USE "DETAIL A"	STAGGER LINES 24' TO 36' APART
> 45°	PARALLEL TO FACE OF PN USE "DETAIL A"	STAGGER AT EACH LANE LINE

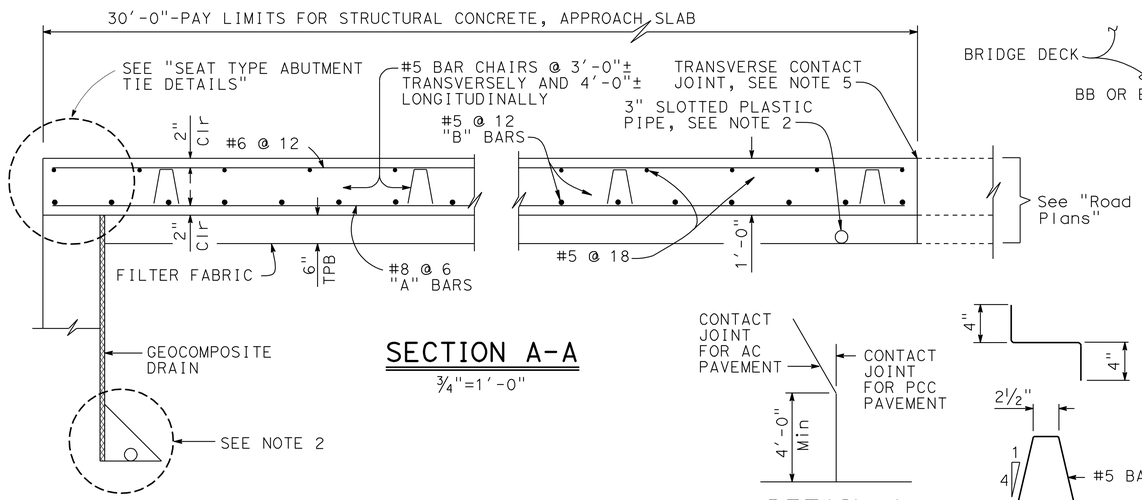

SECTION A-A
¾"=1'-0"

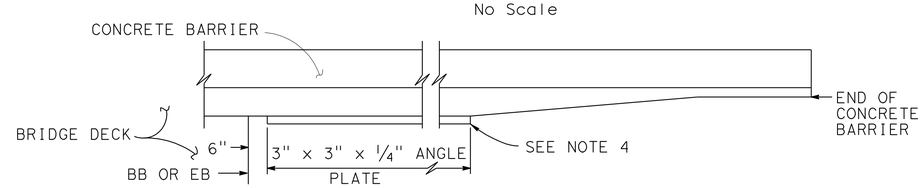

EDGE ANGLE DETAIL
½"=1'-0"

DETAIL A
No Scale

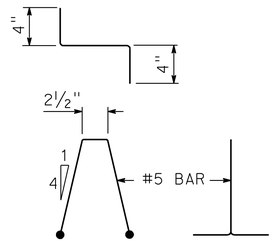

BAR CHAIR DETAIL
1½"=1'-0"

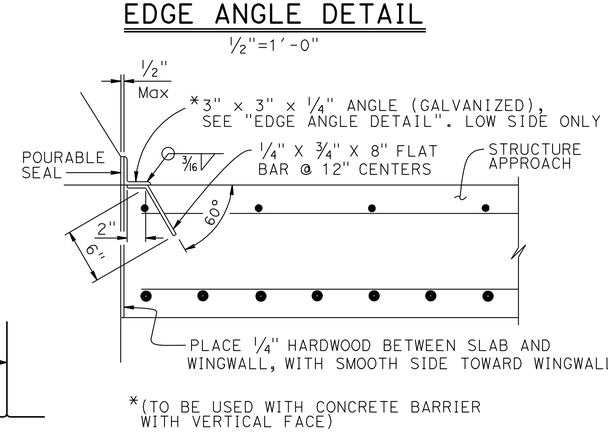

*(TO BE USED WITH CONCRETE BARRIER WITH VERTICAL FACE)

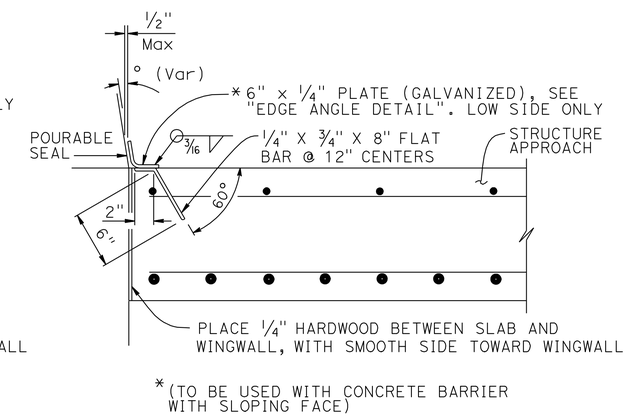

*(TO BE USED WITH CONCRETE BARRIER WITH SLOPING FACE)

DETAIL B
1½" = 1'-0"

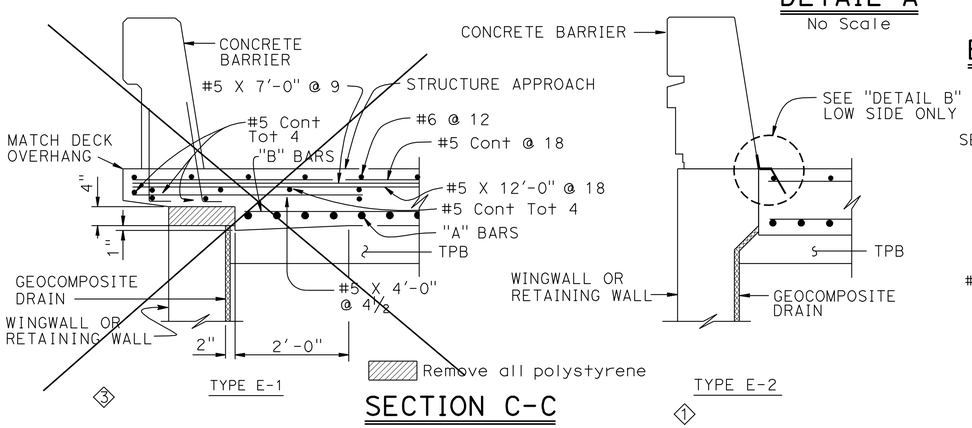

Remove all polystyrene

SECTION C-C
¾"=1'-0"

(Type E-1 to be used, unless otherwise shown on plans)

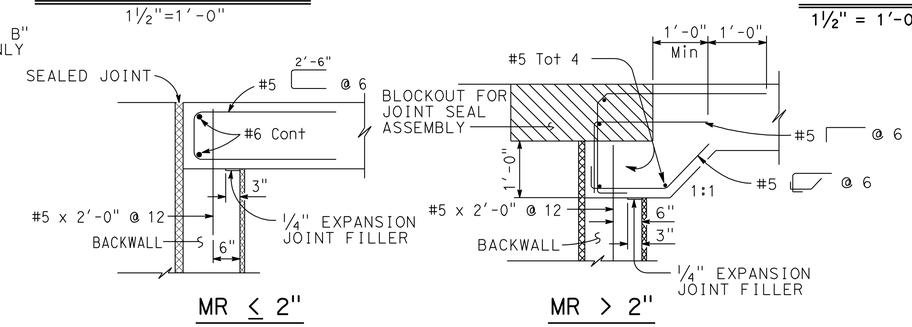

SEAT TYPE ABUTMENT TIE DETAILS (SEE NOTE 1)
¾"=1'-0"

NOTES:

1. For details not shown, see Structure Plans. For MR ≤ 2", adjust bar reinforcement to clear a sawcut for sealed joint, when required
2. For drainage details, see "STRUCTURE APPROACH DRAINAGE DETAILS" sheet
3. Longitudinal construction joints, when permitted by the Engineer, shall be located on lane lines
4. End angle or plate at beginning of barrier transition, end of wingwall or end of structure approach as applicable
5. ② For transverse contact joint with new PCC paving, refer to Standard Plan RSP P10
6. At the Contractor's option, approach slab transverse reinforcement may be placed parallel to paving notch. Spacing of transverse reinforcement is measured along ℄ roadway

REVISED STANDARD DRAWING

FILE NO. xs3-120

APPROVAL DATE July 2011

① Modified Detail ③ Deleted Detail
② Modified Note

STATE OF CALIFORNIA
DEPARTMENT OF TRANSPORTATION

DIVISION OF ENGINEERING SERVICES

BRIDGE NO. 53-3061
POST MILE 4.91

IMPERIAL HIGHWAY UC (REPLACE)
STRUCTURE APPROACH TYPE N(30S)

DS OSD 2147A (ENGLISH STANDARD DRAWING "XS" BORDER REV. (02-02-11)

ORIGINAL SCALE IN INCHES FOR REDUCED PLANS 0 1 2 3

UNIT: 3604
PROJECT NUMBER & PHASE: 0700001834 1
CONTRACT NO.: 07-215941

DISREGARD PRINTS BEARING EARLIER REVISION DATES

REVISION DATES: 08-02-11 12-12-11 03-21-12

SHEET 68 OF 76

FILE => 53-3061-s-s-sa.dgn

USERNAME => s113571 DATE PLOTTED => 14-APR-2012 TIME PLOTTED => 10:07

DIST	COUNTY	ROUTE	POST MILES TOTAL PROJECT	SHEET No.	TOTAL SHEETS
07	LA	5	4.0/5.9	1073	1597

José L. Higareda 12-12-11
REGISTERED CIVIL ENGINEER DATE

4-9-12
PLANS APPROVAL DATE

REGISTERED PROFESSIONAL ENGINEER JOSE L. HIGAREDA No. 62338 Exp. 9-30-13 CIVIL STATE OF CALIFORNIA

The State of California or its officers or agents shall not be responsible for the accuracy or completeness of electronic copies of this plan sheet.

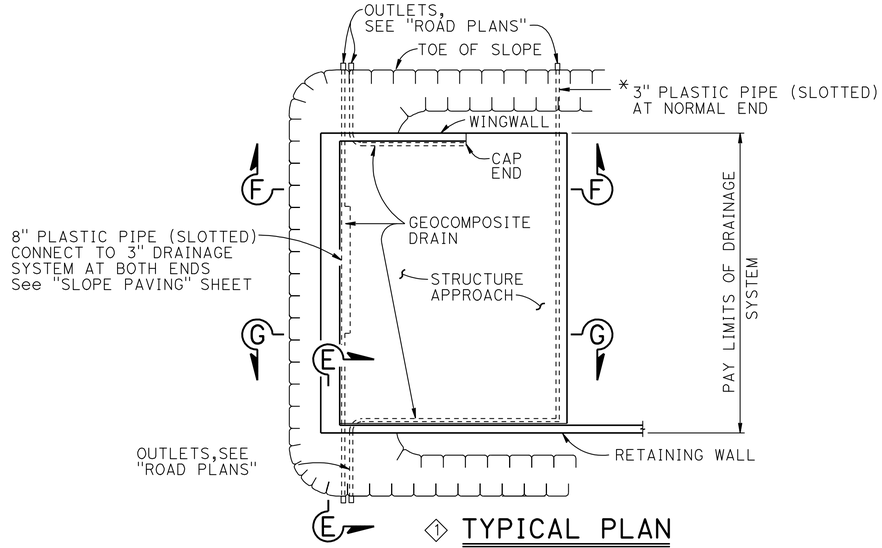

① TYPICAL PLAN

1" = 10'

* FOR PIPE LAYOUT AT STAGGERED END, SEE "DETAIL B"

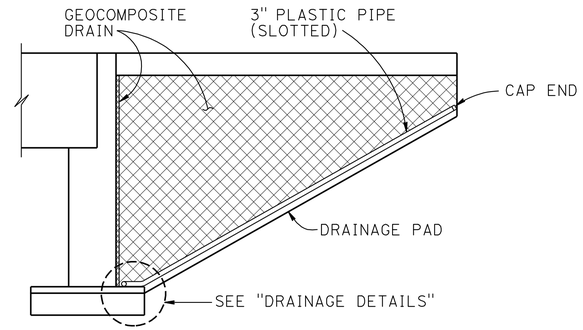

CANTILEVER WINGWALL

SECTION F-F

1/4" = 1'-0"

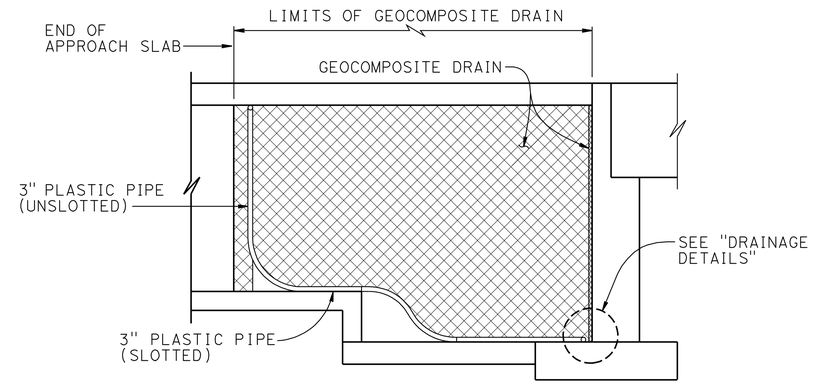

RETAINING WALL WINGWALL DRAINAGE DETAILS

SECTION G-G

1/4" = 1'-0"

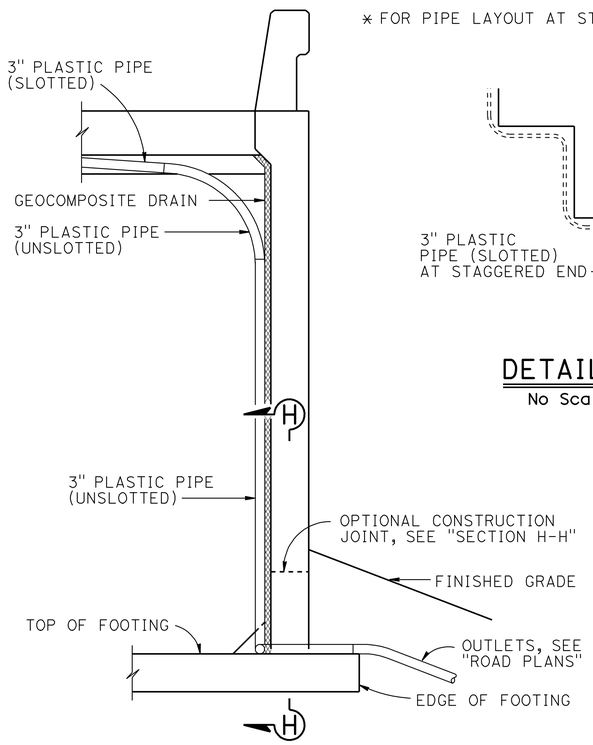

SECTION E-E

1/2" = 1'-0"

NOTE: Bends and junctions in 3" plastic pipe are 30" radius Min

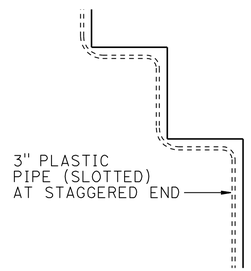

DETAIL B

No Scale

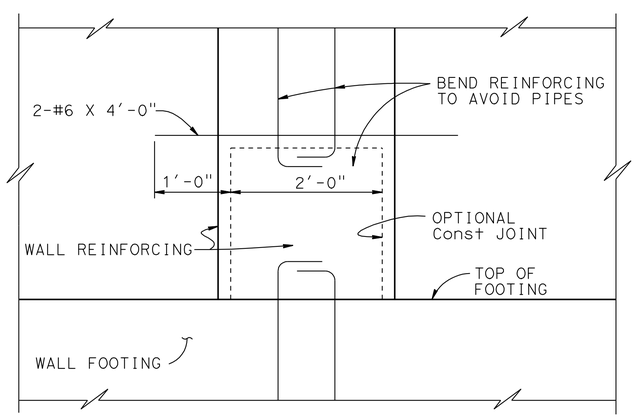

SECTION H-H

1" = 1'-0"

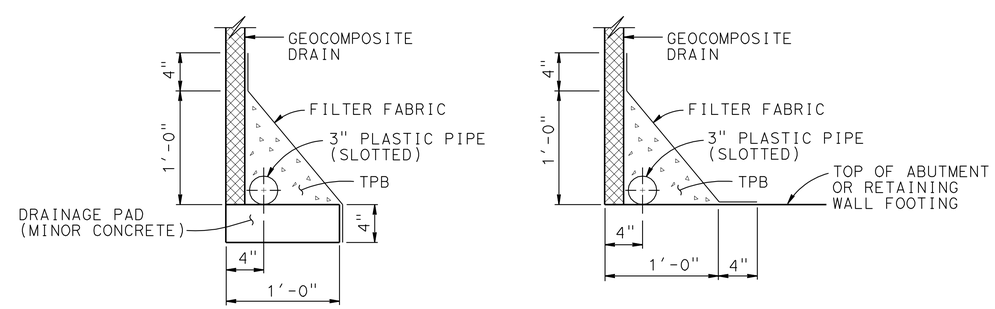

WITHOUT FOOTING

WITH FOOTING

DRAINAGE DETAILS

1 1/2" = 1'-0"

REVISED STANDARD DRAWING	① Modified Detail	STATE OF CALIFORNIA DEPARTMENT OF TRANSPORTATION	DIVISION OF ENGINEERING SERVICES	BRIDGE NO. 53-3061	IMPERIAL HIGHWAY UC (REPLACE)
FILE NO. xs3-110 APPROVAL DATE July 2011				POST MILE 4.91	STRUCTURE APPROACH DRAINAGE DETAILS

DS OSD 2147A (ENGLISH STANDARD DRAWING "XS" BORDER REV. (02-02-11)

ORIGINAL SCALE IN INCHES FOR REDUCED PLANS 0 1 2 3

UNIT: 3604
PROJECT NUMBER & PHASE: 0700001834 1 CONTRACT NO.: 07-215941

DISREGARD PRINTS BEARING EARLIER REVISION DATES → 11-1-11 12-12-11

SHEET 69 OF 76

FILE => 53-3061-t-sad.dgn

USERNAME => s119571 DATE PLOTTED => 14-APR-2012 TIME PLOTTED => 10:07

DIST	COUNTY	ROUTE	POST MILES TOTAL PROJECT	SHEET No.	TOTAL SHEETS
07	LA	5	4.0/5.9	1074	1597

José L. Higareda — REGISTERED CIVIL ENGINEER — 12-12-11 DATE

4-9-12 PLANS APPROVAL DATE

REGISTERED PROFESSIONAL ENGINEER — JOSE L. HIGAREDA — No. 62338 — Exp. 9-30-13 — CIVIL — STATE OF CALIFORNIA

The State of California or its officers or agents shall not be responsible for the accuracy or completeness of electronic copies of this plan sheet.

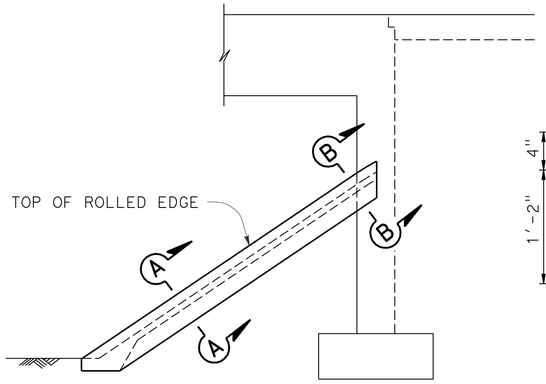

SIDE ELEVATION

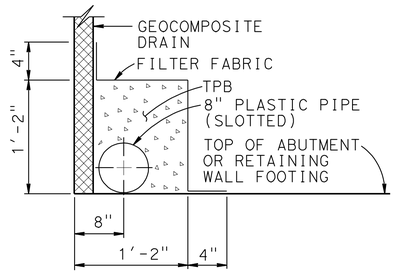

SECTION D-D

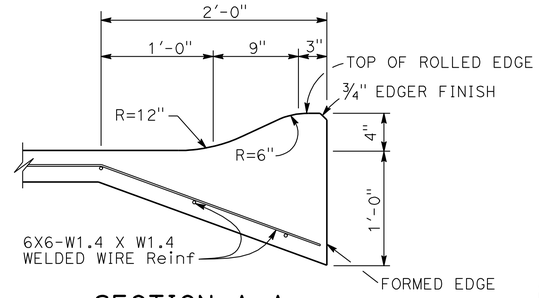

SECTION A-A

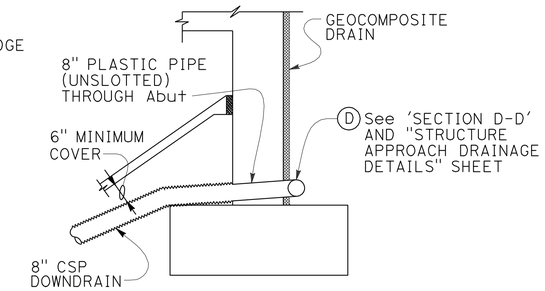

TYPICAL - DRAIN CONNECTION

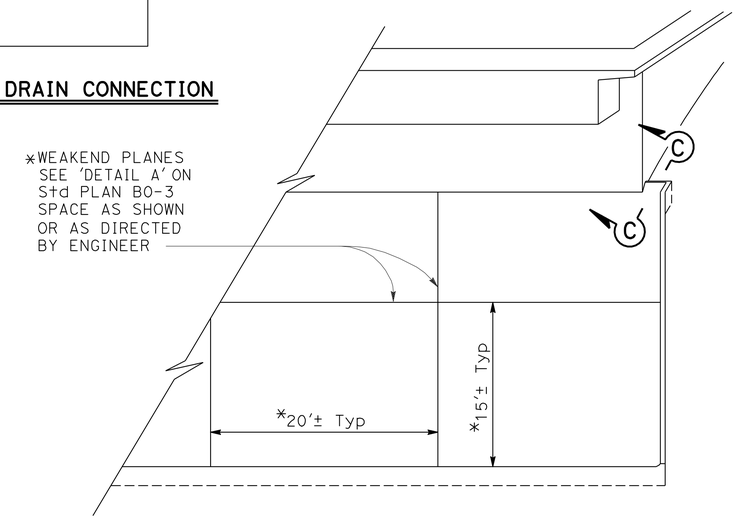

PICTORIAL VIEW OF TYPICAL INSTALLATION

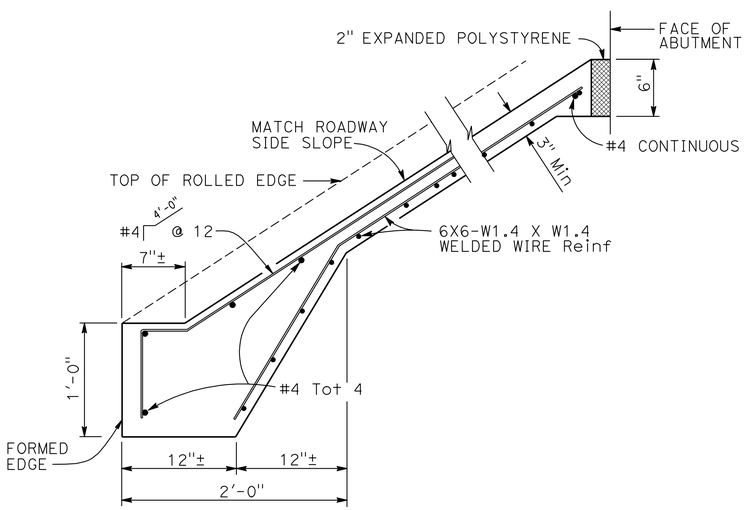

TYPICAL SECTION - CONCRETE PAVING

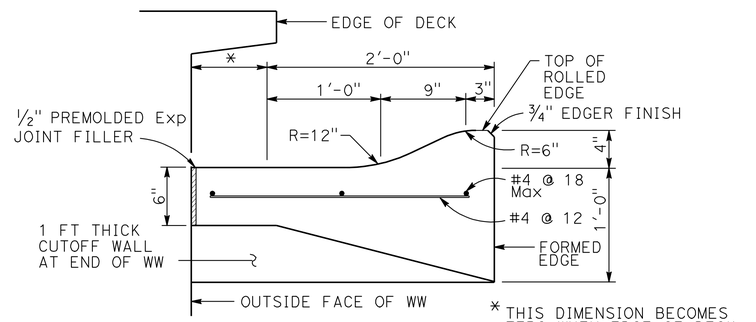

SECTION B-B

* THIS DIMENSION BECOMES ZERO WHEN EDGE OF DECK IS AT OUTSIDE FACE OF WW

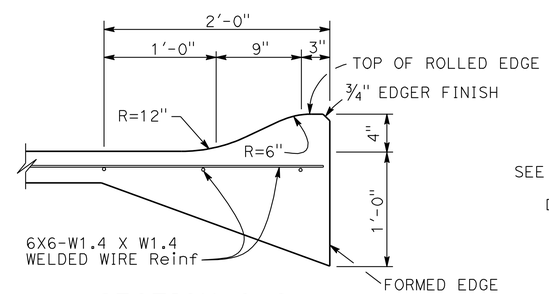

SECTION C-C

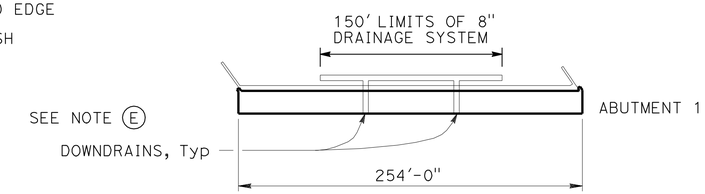

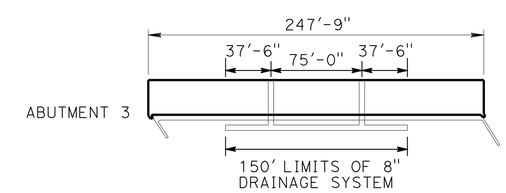

LIMITS OF SLOPE PAVING & DRAINAGE LAYOUT

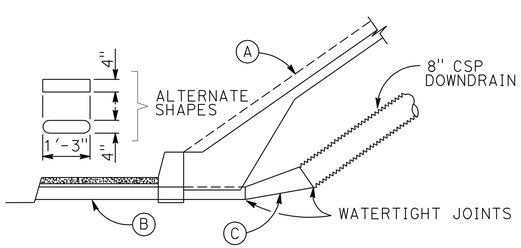

DRAINAGE DETAILS

NOTES:

(A) Top of rolled edge

(B) Conduit:
0.064" galv corrugated steel or 0.109" smooth galv steel

(C) Taper: { 0.064" galv corrugated steel or 0.109" smooth galv steel

(D) 8" PVC schedule 40 slotted pipe behind Stage 2 Abut and continued behind Stage 3 Abut. Connect to downdrains, and to 3" plastic pipe system shown on "STRUCTURE APPROACH DRAINAGE DETAILS" sheet.

(E) Total of 2 CSP downdrains per Abut.

NO SCALE

DESIGN	BY J. HIGAREDA	CHECKED J. JAUREGUI	
DETAILS	BY T. TREFZ	CHECKED J. JAUREGUI	
QUANTITIES	BY J. HIGAREDA	CHECKED G. GALO	

STATE OF CALIFORNIA — DEPARTMENT OF TRANSPORTATION

DIVISION OF ENGINEERING SERVICES — STRUCTURE DESIGN — DESIGN BRANCH 15

BRIDGE NO. 53-3061 — POST MILE 4.91

IMPERIAL HIGHWAY UC (REPLACE)

SLOPE PAVING

STRUCTURES DESIGN DETAIL SHEET (ENGLISH) (REV. 09-01-10)

ORIGINAL SCALE IN INCHES FOR REDUCED PLANS 0 1 2 3

UNIT: 3604
PROJECT NUMBER & PHASE: 0700001834 1
CONTRACT NO.: 07-215941

DISREGARD PRINTS BEARING EARLIER REVISION DATES

REVISION DATES 03-16-12 03-27-12

SHEET 70 OF 76

FILE => 53-3061-u-slope.dgn

USERNAME => s119571 DATE PLOTTED => 14-APR-2012 TIME PLOTTED => 10:08

DIST	COUNTY	ROUTE	POST MILES TOTAL PROJECT	SHEET No.	TOTAL SHEETS
07	LA	5	4.0/5.9	1075	1597

REGISTERED CIVIL ENGINEER — DATE 12-12-11

PLANS APPROVAL DATE 4-9-12

REGISTERED PROFESSIONAL ENGINEER — Amare Tsegie — No. C67529 — Exp. 6-30-13 — CIVIL — STATE OF CALIFORNIA

The State of California or its officers or agents shall not be responsible for the accuracy or completeness of electronic copies of this plan sheet.

This LOTB sheet was prepared in accordance with the Caltrans Soil & Rock Logging, Classification, & Presentation Manual (2010 Edition).

BENCH MARK

ELEVATION 105.78 FT
LA 5 PM 4.8, 1995
FOUND 2-1/2 INCH CADT DISK IN CONCRETE CURB, FLUSH, STAMPED "LA5 4.8 1995"
THE MARK IS LOCATED ON THE EASTERLY CURB OF THE OFFRAMP GORE FROM THE SOUTH BOUND 5 (SANTA ANA FWY) TO NORWALK BLVD. AND SAN ANTONIO ST.
NORTHING 1791107.943
EASTING 6538243.925
VERTICAL NAVD88, 0405-CALIFORNIA 5 US FEET.

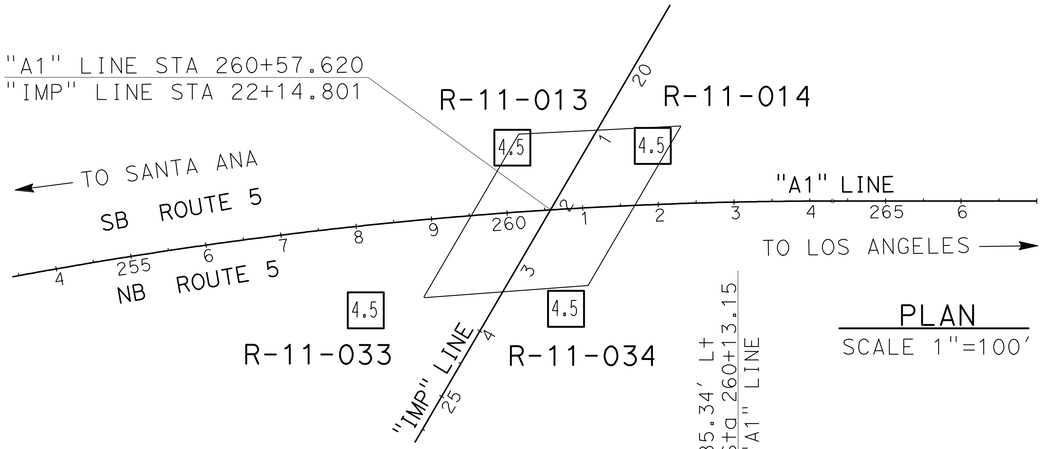

PLAN

SCALE 1"=100'

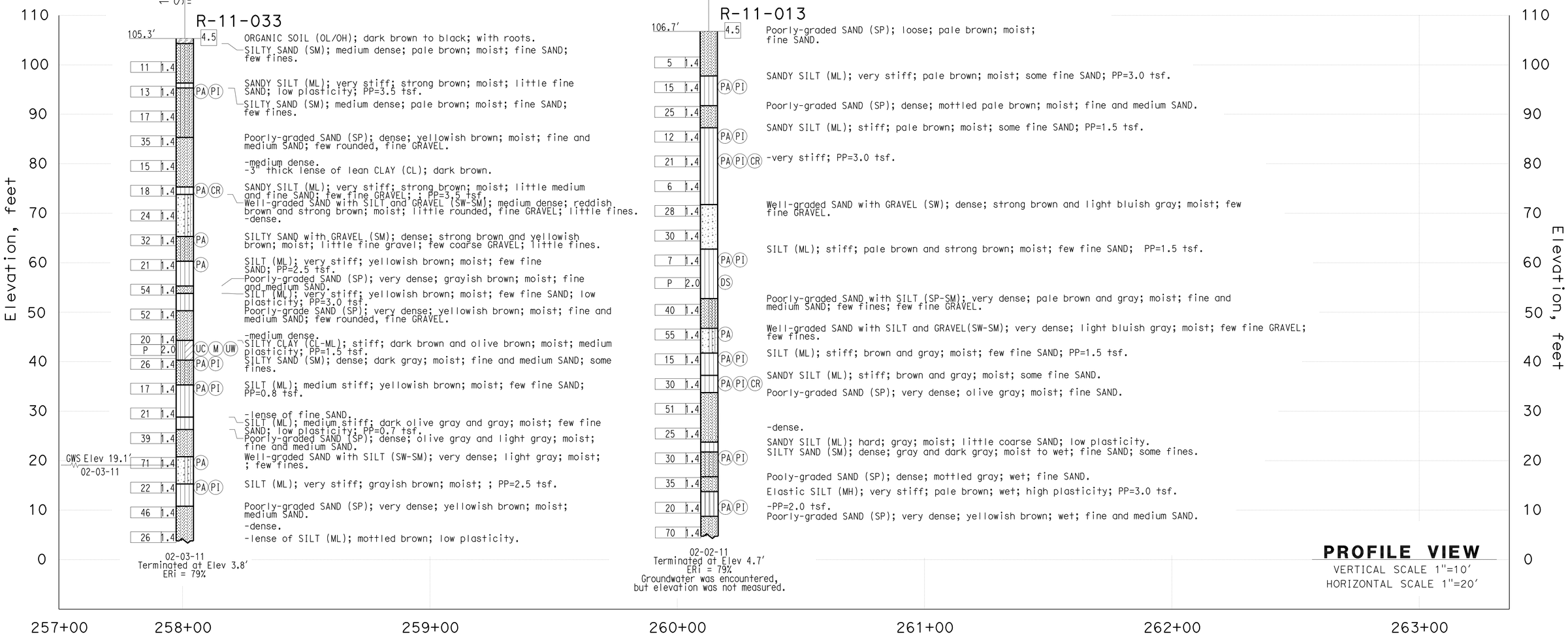

PROFILE VIEW

VERTICAL SCALE 1"=10'
HORIZONTAL SCALE 1"=20'

ENGINEERING SERVICES	MATERIALS AND GEOTECHNICAL SERVICES	STATE OF CALIFORNIA DEPARTMENT OF TRANSPORTATION	DIVISION OF ENGINEERING SERVICES STRUCTURE DESIGN DESIGN BRANCH 15	BRIDGE NO. 53-3061 POST MILE 4.91	IMPERIAL HIGHWAY UC (REPLACE)
FUNCTIONAL SUPERVISOR NAME: CHI-TSENG LIU	DRAWN BY: P.QUACH / T.Panah (URS CORP) CHECKED BY: F.GERAMI	FIELD INVESTIGATION BY: A.TSEGIE/M.ISLAM			LOG OF TEST BORINGS SHEET 1 OF 6

OGS CIVIL LOG OF TEST BORINGS SHEET

ORIGINAL SCALE IN INCHES FOR REDUCED PLANS 0 1 2 3

UNIT: 3604
PROJECT NUMBER & PHASE: 0700001834 1 CONTRACT NO.:07-215941

DISREGARD PRINTS BEARING EARLIER REVISION DATES

REVISION DATES 12-10-11 — SHEET 71 OF 76

FILE => 53-3061-z-1tb01.dgn

USERNAME => s119571 DATE PLOTTED => 14-APR-2012 TIME PLOTTED => 10:08

DIST	COUNTY	ROUTE	POST MILES TOTAL PROJECT	SHEET No.	TOTAL SHEETS
07	LA	5	4.0/5.9	1076	1597

REGISTERED CIVIL ENGINEER 12-12-11 DATE

4-9-12
PLANS APPROVAL DATE

REGISTERED PROFESSIONAL ENGINEER Amare Tsegie No. C67529 Exp. 6-30-13 CIVIL STATE OF CALIFORNIA

The State of California or its officers or agents shall not be responsible for the accuracy or completeness of electronic copies of this plan sheet.

This LOTB sheet was prepared in accordance with the Caltrans Soil & Rock Logging, Classification, & Presentation Manual (2010 Edition).

FOR PLAN VIEW, SEE
"LOG OF TEST BORINGS" 1 OF 6

ENGINEERING SERVICES	MATERIALS AND GEOTECHNICAL SERVICES	STATE OF CALIFORNIA DEPARTMENT OF TRANSPORTATION	DIVISION OF ENGINEERING SERVICES STRUCTURE DESIGN DESIGN BRANCH 15	BRIDGE NO. 53-3061 POST MILE 4.91	IMPERIAL HIGHWAY UC (REPLACE) LOG OF TEST BORINGS SHEET 2 OF 6
FUNCTIONAL SUPERVISOR NAME: CHI-TSENG LIU	DRAWN BY: P.QUACH / T.Panah (URS CORP) CHECKED BY: F.GERAMI	FIELD INVESTIGATION BY: A.TSEGIE/M.ISLAM			

OGS CIVIL LOG OF TEST BORINGS SHEET

ORIGINAL SCALE IN INCHES FOR REDUCED PLANS 0 1 2 3

UNIT: 3604
PROJECT NUMBER & PHASE: 0700001834 1 CONTRACT NO.:07-215941

DISREGARD PRINTS BEARING EARLIER REVISION DATES 12-10-11

REVISION DATES | SHEET 72 | OF 76

FILE => 53-3061-z-1tb02.dgn

USERNAME => s119571 DATE PLOTTED => 14-APR-2012 TIME PLOTTED => 10:08

REFERENCE: CALTRANS SOIL & ROCK LOGGING, CLASSIFICATION, AND PRESENTATION MANUAL (2010)

	COUNTY	ROUTE	TOTAL PROJECT	SHEET No.	TOTAL SHEETS
07	LA	5	4.0/5.9	1077	1597

Amare 12-12-11
DATE

4-9-12
PLANS APPROVAL DATE

REGISTERED PROFESSIONAL ENGINEER
Amare Tsegie
No. C67529
Exp. 6-30-13
CIVIL
STATE OF CALIFORNIA

The State of California or its officers or agents shall not be responsible for the accuracy or completeness of electronic copies of this plan sheet.

This LOTB sheet was prepared in accordance with the Caltrans Soil & Rock Logging, Classification, & Presentation Manual (2010 Edition).

CEMENTATION

Description	Criteria
Weak	Crumbles or breaks with handling or little finger pressure.
Moderate	Crumbles or breaks with considerable finger pressure.
Strong	Will not crumble or break with finger pressure.

BOREHOLE IDENTIFICATION

Symbol	Hole Type	Description
Size	A	Auger Boring (hollow or solid stem bucket)
Size	R RW RC P	Rotary drilled boring (conventional) Rotary drilled with self-casing wire-line Rotary core with continuously-sampled, self-casing wire-line Rotary percussion boring (air)
Size	R	Rotary drilled diamond core
Size	HD HA	Hand driven (1-inch soil tube) Hand Auger
●	D	Dynamic Cone Penetration Boring
▲	CPT	Cone Penetration Test (ASTM D 5778)
⬚	O	Other (note on LOTB)

Note: Size in inches.

CONSISTENCY OF COHESIVE SOILS

Description	Shear Strength (tsf)	Pocket Penetrometer Measurement, PP, (tsf)	Torvane Measurement, TV, (tsf)	Vane Shear Measurement, VS, (tsf)
Very Soft	Less than 0.12	Less than 0.25	Less than 0.12	Less than 0.12
Soft	0.12 - 0.25	0.25 - 0.5	0.12 - 0.25	0.12 - 0.25
Medium Stiff	0.25 - 0.5	0.5 - 1	0.25 - 0.5	0.25 - 0.5
Stiff	0.5 - 1	1 - 2	0.5 - 1	0.5 - 1
Very Stiff	1 - 2	2 - 4	1 - 2	1 - 2
Hard	Greater than 2	Greater than 4	Greater than 2	Greater than 2

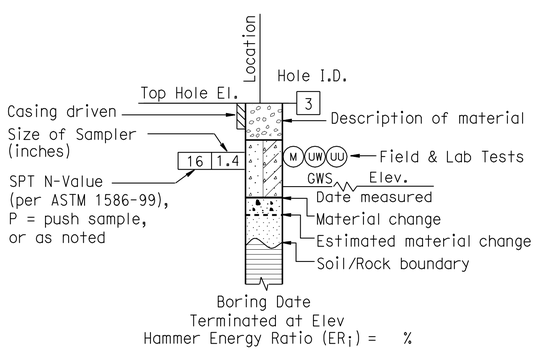

ROTARY BORING

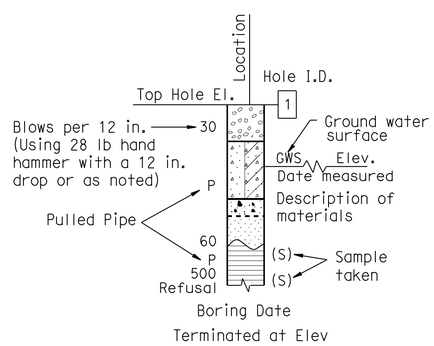

HAND BORING

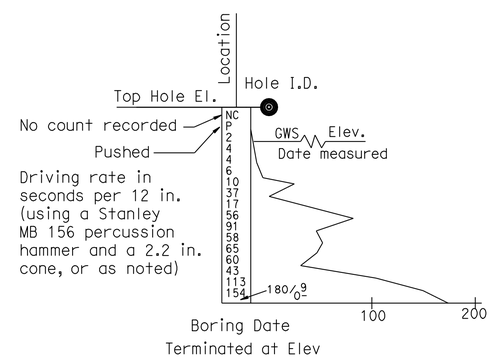

DYNAMIC CONE PENETRATION BORING

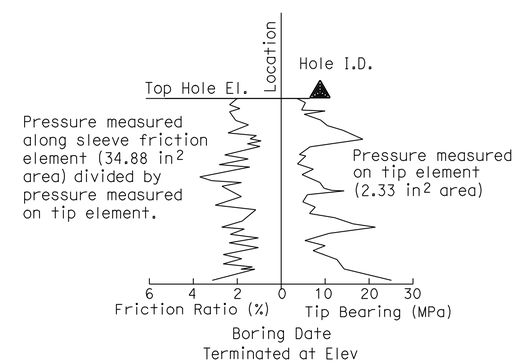

CONE PENETRATION TEST (CPT) BORING

ENGINEERING SERVICES	MATERIALS AND GEOTECHNICAL SERVICES	STATE OF CALIFORNIA DEPARTMENT OF TRANSPORTATION	DIVISION OF ENGINEERING SERVICES STRUCTURE DESIGN DESIGN BRANCH 15	IMPERIAL HIGHWAY UC (REPLACE)
FUNCTIONAL SUPERVISOR	DRAWN BY: P.QUACH / T.Panah (URS CORP)	FIELD INVESTIGATION BY:	53-3061	LOG OF TEST BORINGS SHEET 3 OF 6
NAME: CHI-TSENG LIU	CHECKED BY: F.GERAMI	A.TSEGIE/M.ISLAM	4.91	

OGS CIVIL LOG OF TEST BORINGS SHEET

ORIGINAL SCALE IN INCHES FOR REDUCED PLANS 0 1 2 3

UNIT: 3604
PROJECT NUMBER & PHASE: 0700001834 1 CONTRACT NO.:07-215941

DISREGARD PRINTS BEARING EARLIER REVISION DATES

REVISION DATES 12-10-11

73 76

FILE => 53-3061-z-ltb03.dgn

USERNAME => s114640 DATE PLOTTED => 14-APR-2012

REFERENCE: CALTRANS SOIL & ROCK LOGGING, CLASSIFICATION, AND PRESENTATION MANUAL (2010)

			TOTAL PROJECT	No.	SHEETS
07	LA	5	4.0/5.9	1078	1597

Amare 12-12-11

4-9-12
PLANS APPROVAL DATE

REGISTERED PROFESSIONAL ENGINEER
Amare Tsegie
No. C67529
Exp. 6-30-13
STATE OF CALIFORNIA

The State of California or its officers or agents shall not be responsible for the accuracy or completeness of electronic copies of this plan sheet.

This LOTB sheet was prepared in accordance with the Caltrans Soil & Rock Logging, Classification, & Presentation Manual (2010 Edition).

GROUP SYMBOLS AND NAMES

Graphic/Symbol	Group Names	Graphic/Symbol	Group Names
GW	Well-graded GRAVEL Well-graded GRAVEL with SAND	CL	Lean CLAY Lean CLAY with SAND Lean CLAY with GRAVEL SANDY lean CLAY SANDY lean CLAY with GRAVEL GRAVELLY lean CLAY GRAVELLY lean CLAY with SAND
GP	Poorly-graded GRAVEL Poorly-graded GRAVEL with SAND		
GW-GM	Well-graded GRAVEL with SILT Well-graded GRAVEL with SILT and SAND	CL-ML	SILTY CLAY SILTY CLAY with SAND SILTY CLAY with GRAVEL SANDY SILTY CLAY SANDY SILTY CLAY with GRAVEL GRAVELLY SILTY CLAY GRAVELLY SILTY CLAY with SAND
GW-GC	Well-graded GRAVEL with CLAY (or SILTY CLAY) Well-graded GRAVEL with CLAY and SAND (or SILTY CLAY and SAND)		
GP-GM	Poorly-graded GRAVEL with SILT Poorly-graded GRAVEL with SILT and SAND	ML	SILT SILT with SAND SILT with GRAVEL SANDY SILT SANDY SILT with GRAVEL GRAVELLY SILT GRAVELLY SILT with SAND
GP-GC	Poorly-graded GRAVEL with CLAY (or SILTY CLAY) Poorly-graded GRAVEL with CLAY and SAND (or SILTY CLAY and SAND)		
GM	SILTY GRAVEL SILTY GRAVEL with SAND	OL	ORGANIC lean CLAY ORGANIC lean CLAY with SAND ORGANIC lean CLAY with GRAVEL SANDY ORGANIC lean CLAY SANDY ORGANIC lean CLAY with GRAVEL GRAVELLY ORGANIC lean CLAY GRAVELLY ORGANIC lean CLAY with SAND
GC	CLAYEY GRAVEL CLAYEY GRAVEL with SAND		
GC-GM	SILTY, CLAYEY GRAVEL SILTY, CLAYEY GRAVEL with SAND	OL	ORGANIC SILT ORGANIC SILT with SAND ORGANIC SILT with GRAVEL SANDY ORGANIC SILT SANDY ORGANIC SILT with GRAVEL GRAVELLY ORGANIC SILT GRAVELLY ORGANIC SILT with SAND
SW	Well-graded SAND Well-graded SAND with GRAVEL		
SP	Poorly-graded SAND Poorly-graded SAND with GRAVEL	CH	Fat CLAY Fat CLAY with SAND Fat CLAY with GRAVEL SANDY fat CLAY SANDY fat CLAY with GRAVEL GRAVELLY fat CLAY GRAVELLY fat CLAY with SAND
SW-SM	Well-graded SAND with SILT Well-graded SAND with SILT and GRAVEL		
SW-SC	Well-graded SAND with CLAY (or SILTY CLAY) Well-graded SAND with CLAY and GRAVEL (or SILTY CLAY and GRAVEL)	MH	Elastic SILT Elastic SILT with SAND Elastic SILT with GRAVEL SANDY elastic SILT SANDY elastic SILT with GRAVEL GRAVELLY elastic SILT GRAVELLY elastic SILT with SAND
SP-SM	Poorly-graded SAND with SILT Poorly-graded SAND with SILT and GRAVEL		
SP-SC	Poorly-graded SAND with CLAY (or SILTY CLAY) Poorly-graded SAND with CLAY and GRAVEL (or SILTY CLAY and GRAVEL)	OH	ORGANIC fat CLAY ORGANIC fat CLAY with SAND ORGANIC fat CLAY with GRAVEL SANDY ORGANIC fat CLAY SANDY ORGANIC fat CLAY with GRAVEL GRAVELLY ORGANIC fat CLAY GRAVELLY ORGANIC fat CLAY with SAND
SM	SILTY SAND SILTY SAND with GRAVEL		
SC	CLAYEY SAND CLAYEY SAND with GRAVEL	OH	ORGANIC elastic SILT ORGANIC elastic SILT with SAND ORGANIC elastic SILT with GRAVEL SANDY ORGANIC elastic SILT SANDY ORGANIC elastic SILT with GRAVEL GRAVELLY ORGANIC elastic SILT GRAVELLY ORGANIC elastic SILT with SAND
SC-SM	SILTY, CLAYEY SAND SILTY, CLAYEY SAND with GRAVEL		
PT	PEAT	OL/OH	ORGANIC SOIL ORGANIC SOIL with SAND ORGANIC SOIL with GRAVEL SANDY ORGANIC SOIL SANDY ORGANIC SOIL with GRAVEL GRAVELLY ORGANIC SOIL GRAVELLY ORGANIC SOIL with SAND
	COBBLES COBBLES and BOULDERS BOULDERS		

FIELD AND LABORATORY TESTING

- (C) Consolidation (ASTM D 2435)
- (CL) Collapse Potential (ASTM D 5333)
- (CP) Compaction Curve (CTM 216)
- (CR) Corrosivity Testing (CTM 643, CTM 422, CTM 417)
- (CU) Consolidated Undrained Triaxial (ASTM D 4767)
- (DS) Direct Shear (ASTM D 3080)
- (EI) Expansion Index (ASTM D 4829)
- (M) Moisture Content (ASTM D 2216)
- (OC) Organic Content-% (ASTM D 2974)
- (P) Permeability (CTM 220)
- (PA) Particle Size Analysis (ASTM D 422)
- (PI) Plasticity Index (AASHTO T 90) Liquid Limit (AASHTO T 89)
- (PL) Point Load Index (ASTM D 5731)
- (PM) Pressure Meter
- (R) R-Value (CTM 301)
- (SE) Sand Equivalent (CTM 217)
- (SG) Specific Gravity (AASHTO T 100)
- (SL) Shrinkage Limit (ASTM D 427)
- (SW) Swell Potential (ASTM D 4546)
- (UC) Unconfined Compression-Soil (ASTM D 2166) Unconfined Compression-Rock (ASTM D 2938)
- (UU) Unconsolidated Undrained Triaxial (ASTM D 2850)
- (UW) Unit Weight (ASTM D 4767)

APPARENT DENSITY OF COHESIONLESS SOILS

Description	SPT N_{60} (Blows / 12 in.)
Very Loose	0 - 5
Loose	5 - 10
Medium Dense	10 - 30
Dense	30 - 50
Very Dense	Greater than 50

MOISTURE

Description	Criteria
Dry	No discernable moisture
Moist	Moisture present, but no free water
Wet	Visible free water

PERCENT OR PROPORTION OF SOILS

Description	Criteria
Trace	Particles are present but estimated to be less than 5%
Few	5% - 10%
Little	15% - 25%
Some	30% - 45%
Mostly	50% - 100%

PARTICLE SIZE

Description		Size (in.)
Boulder		Greater than 12
Cobble		3 - 12
Gravel	Coarse	3/4 - 3
	Fine	1/5 - 3/4
Sand	Coarse	1/16 - 1/5
	Medium	1/64 - 1/16
	Fine	1/300 - 1/64
Silt and Clay		Less than 1/300

ENGINEERING SERVICES | MATERIALS AND GEOTECHNICAL SERVICES

FUNCTIONAL SUPERVISOR
NAME: CHI-TSENG LIU

DRAWN BY: P.QUACH / T.Panah (URS CORP)
CHECKED BY: F.GERAMI

FIELD INVESTIGATION BY:
A.TSEGIE/M.ISLAM

STATE OF CALIFORNIA
DEPARTMENT OF TRANSPORTATION

DIVISION OF ENGINEERING SERVICES
STRUCTURE DESIGN
DESIGN BRANCH 15

53-3061
4.91

IMPERIAL HIGHWAY UC (REPLACE)
LOG OF TEST BORINGS SHEET 4 OF 6

OGS CIVIL LOG OF TEST BORINGS SHEET

ORIGINAL SCALE IN INCHES FOR REDUCED PLANS 0 1 2 3

UNIT: 3604
PROJECT NUMBER & PHASE: 0700001834 1
CONTRACT NO.: 07-215941

DISREGARD PRINTS BEARING EARLIER REVISION DATES

REVISION DATES 12-10-11

74 OF 76

FILE => 53-3061-z-ltb04.dgn

USERNAME => s114640 DATE PLOTTED => 14-APR-2012 TIME PLOTTED => 09:26

FED. ROAD DIST. NO.	STATE	PROJ. NO.	FISCAL YEAR	SHEET NO.	TOTAL SHEETS
7	CAL.	I-405(9)		37	43

DIST.	COUNTY	ROUTE	SECTION	SHEET NO.	TOTAL SHEETS
VII	LA	~~405~~	R		

05

BRIDGE ENGINEER — CIVIL ENGINEER — ELECTRICAL ENGINEER

DATE APPROVED MARCH 1, 1957

ORIGINAL

BRIDGE DEPARTMENT

DIVISION OF ENGINEERING SERVICES - MATERIALS AND GEOTECHNICAL SERVICES

As-Built Log of Test Borings sheet is considered an informational document only. As such, the State of California registration seal with signature, license number and registration certificate expiration date confirm that this is a true and accurate copy of the original document. It does not attest to the accuracy or validity of the information contained in the original document. This drawing is available and presented only for the convenience of any bidder, contractor or other interested party.

DIST.	COUNTY	ROUTE	POST MILE-TOTAL PROJECT	Sheet No.	Total Sheets
07	LA	5	4.0/5.9	1079	1597

Amare T — 12-12-11

REGISTERED CIVIL ENGINEER — DATE

IMPERIAL HIGHWAY UC (REPLACE)
LOG OF TEST BORINGS 5 OF 6

UNIT: ENGLISH	CONTRACT No.	BRIDGE No.
PROJECT NUMBER & PHASE: EA 215941	CU 59A0590	53-3061

NOTE: A COPY OF THIS LOG OF TEST BORINGS IS AVAILABLE AT OFFICE OF STRUCTURE MAINTENANCE AND INVESTIGATIONS, SACRAMENTO, CALIFORNIA — Sheet 75 of 76

REGISTERED PROFESSIONAL ENGINEER — Amare Tsegie — No. C67529 — Exp. 6-30-13 — CIVIL — STATE OF CALIFORNIA

To accompany plans dated 4-9-12

Notes

1. As-Built Vertical Datum = NGVD29
2. Datum Conversion
   NAVD88 = NGVD29+2.408 ft

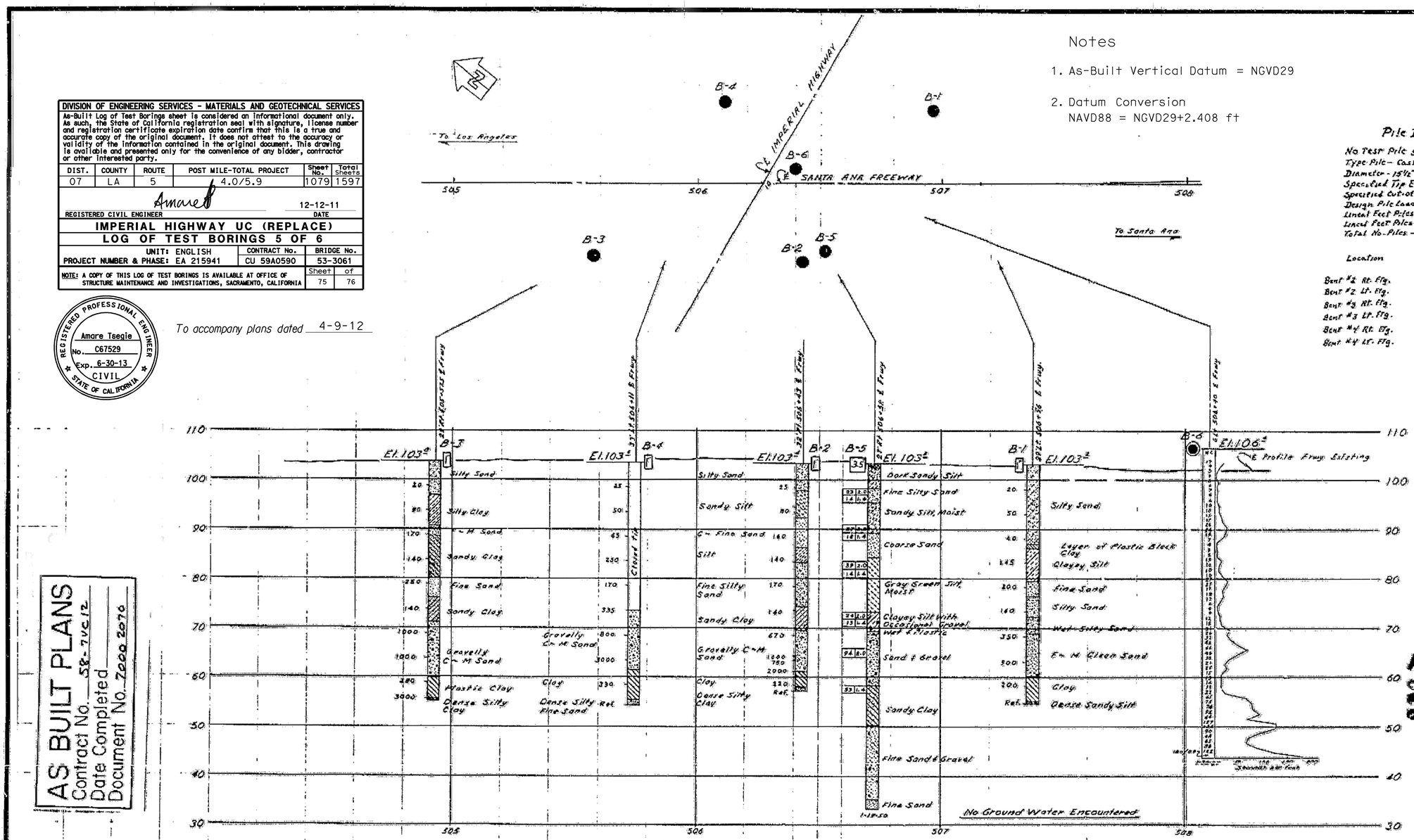

Pile Data

No Test Pile specified
Type Pile - Cast-in-drilled-hole Alternative "V"
Diameter - 15½" Min.
Specified Tip Elev. - 68.0
Specified Cut-off Elev. - 102.75
Design Pile Loading - 45 Tons
Lineal Feet Piles "As Built" - 1,050.8
Lineal Feet Piles called for on plans 1,035.0
Total No. Piles - 30

Location	Min. Tip Elev.	Max. Tip Elev.	Aver. Tip Elev.
Bent #2 Rt. Flg.	67.5	68.2	67.88
Bent #2 Lt. Flg.	66.9	68.0	67.24
Bent #3 Rt. Flg.	67.6	68.0	67.76
Bent #3 Lt. Flg.	67.3	68.1	67.72
Bent #4 Rt. Flg.	67.5	68.4	67.98
Bent #4 Lt. Flg.	67.0	68.2	67.46

AS BUILT
CONTRACT NO. 58-7VC12-FF
RESIDENT ENGR. D. H. Clark
DATE 2-7-58

B.M. #48
Brass Cap in Conc. Mon. 32' S. & Imperial Hwy. 103' Lt. Sta. 507+22 Fwy.
Elev. 103.474'

AS BUILT PLANS
Contract No. 58-7VC12
Date Completed
Document No. 7000 2070

FIELD STUDY — DRAWN — CHECKED — Approval Recommended by — Approved

CLASSIFICATION OF MATERIAL BASED ON STANDARD GRADE SIZE LIMITS

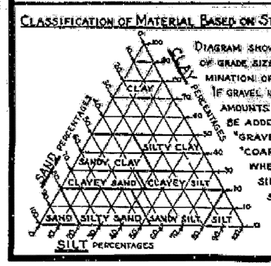

DIAGRAM SHOWING THE BASIS FOR ESTIMATES OF GRADE SIZE DISTRIBUTION USED IN DETERMINATION OF CLASS NAMES. IF GRAVEL IS PRESENT IN APPRECIABLE AMOUNTS THE TERM "GRAVELLY" MAY BE ADDED TO THE CLASS NAME, VIZ. "GRAVELLY SAND." THE TERMS "COARSE", "MEDIUM" AND "FINE" WHEN USED TO DESCRIBE SAND, SILT AND GRAVEL REFER TO STANDARD GRADE SIZE LIMITS.

LEGEND OF EARTH MATERIALS

- Gravel
- Sand
- Silt
- Clay
- Sandy Clay or Clayey Sand
- Sandy Silt or Silty Sand
- Silty Clay or Clayey Silt
- Peat and/or Organic Matter
- Fill Material
- Igneous Rock
- Sedimentary Rock
- Metamorphic Rock

LEGEND OF BORING OPERATIONS

- Plan of any boring
- Penetrometer
- 2½" Cone Penetrometer
- Sampler boring (dry)
- Rotary boring (wet)
- Auger boring (dry)
- Jet boring
- Core boring
- Test pit

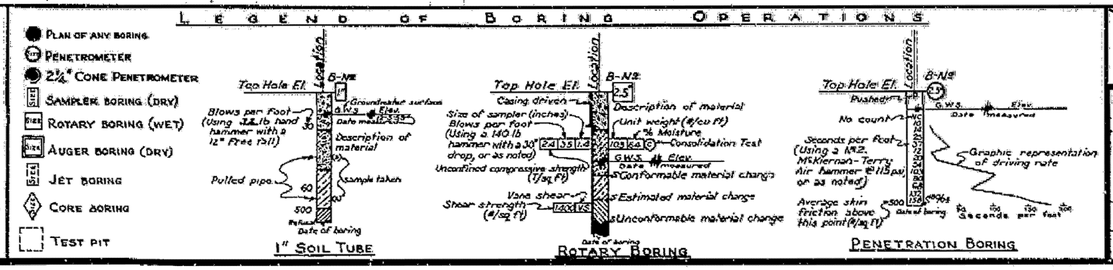

NOTES

The contractor's attention is directed to Section 2, Article (c) of the Standard Specifications and to the Special Provisions accompanying this set of plans.
Classification of earth material as shown on this sheet is based upon field inspection and is not to be construed to imply mechanical analysis.

STATE OF CALIFORNIA
DEPARTMENT OF PUBLIC WORKS
DIVISION OF HIGHWAYS

IMPERIAL HIGHWAY UNDERCROSSING
BRIDGE WIDENING

LOG OF TEST BORINGS

SCALE	BRIDGE	FILE	DRAWING
Horiz. 1"=20' Vert. 1"=10'	53-593		C-2611-27

I HEREBY CERTIFY THAT THIS IS A TRUE AND ACCURATE COPY OF THE ABOVE DOCUMENT TAKEN UNDER MY DIRECTION AND CONTROL ON THIS DATE IN SACRAMENTO, CALIFORNIA PURSUANT TO AUTHORIZATION BY THE DIRECTOR OF PUBLIC WORKS.

DATE 5/11/71 SIGNATURE W.B.K. TITLE AAC II

53-3061-z-ltb05.tif

FI-405(8)

DIST.	COUNTY	ROUTE	POST MILE
2	CAL		11.1/12.5

DIST.	COUNTY	ROUTE	SECTION	SHEET NO.	TOTAL SHEETS
VII	LA	105	A	7	9

Stuart J. Mitchell
RCE 41010
OCTOBER 27, 1950

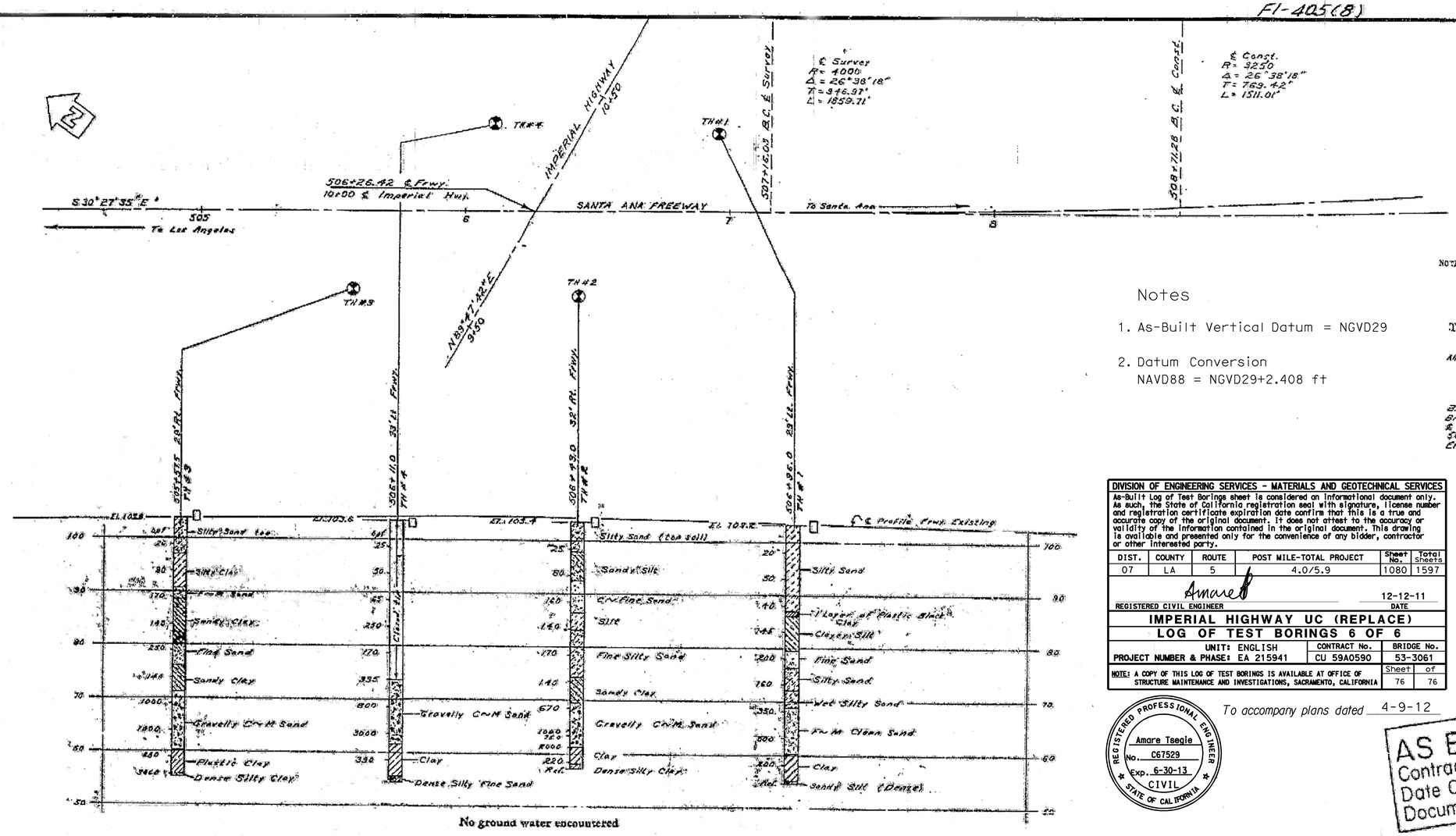

NOTE: Blows per foot are blows required to drive a one inch test pipe one foot with a 32# hand drop hammer falling free one foot.

Test Boring By Bridge Dept.
Dec. 1930
All test holes made with 1" Soil Sampler

B.M. #48
Brass Cap in Conc. Mon. 30' S. ℄ Imperial Hwy. 103' Lt Sta. 507+22 Fwy.
Elev. 102.474'

Notes

1. As-Built Vertical Datum = NGVD29
2. Datum Conversion
   NAVD88 = NGVD29+2.408 ft

DIVISION OF ENGINEERING SERVICES - MATERIALS AND GEOTECHNICAL SERVICES					
As-Built Log of Test Borings sheet is considered an informational document only. As such, the State of California registration seal with signature, license number and registration certificate expiration date confirm that this is a true and accurate copy of the original document. It does not attest to the accuracy or validity of the information contained in the original document. This drawing is available and presented only for the convenience of any bidder, contractor or other interested party.					
DIST.	COUNTY	ROUTE	POST MILE-TOTAL PROJECT	Sheet No.	Total Sheets
07	LA	5	4.0/5.9	1080	1597
REGISTERED CIVIL ENGINEER: Amare Tsegie			DATE: 12-12-11		

IMPERIAL HIGHWAY UC (REPLACE)		
LOG OF TEST BORINGS 6 OF 6		
UNIT: ENGLISH	CONTRACT No.	BRIDGE No.
PROJECT NUMBER & PHASE: EA 215941	CU 59A0590	53-3061
NOTE: A COPY OF THIS LOG OF TEST BORINGS IS AVAILABLE AT OFFICE OF STRUCTURE MAINTENANCE AND INVESTIGATIONS, SACRAMENTO, CALIFORNIA	Sheet 76	of 76

REGISTERED PROFESSIONAL ENGINEER
Amare Tsegie
No. C67529
Exp. 6-30-13
CIVIL
STATE OF CALIFORNIA

To accompany plans dated 4-9-10

AS BUILT PLANS
Contract No 53-7VC38
Date Completed
Document No 7000-2015

Classification of Material Based on Standard Grade Size Limits

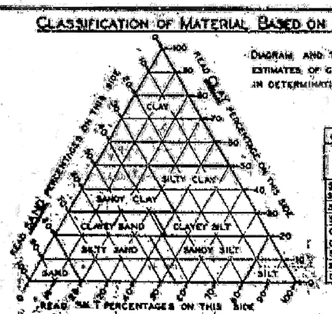

Diagram and table showing the basis for estimates of grade size distribution used in determination of class names.

Grouping Used in Triangular Classification			
Class Name	Percentage of Sizes Present		
	Sand	Silt	Clay
Sand	80-100	0-20	0-20
Silty Sand	50-80	0-50	0-20
Sandy Silt	0-50	50-80	0-20
Silt	0-20	80-100	0-20
Clayey Sand	40-80	0-40	20-30
Clayey Silt	0-38	52-80	20-30
Sandy Clay	50-70	0-40	30-50
Silty Clay	0-30	20-70	30-50
Clay	0-30	0-50	50-100

If gravel is present in appreciable amounts the term "Gravelly" may be added to the class name, viz. "Gravelly Sand". The terms "Coarse", "Medium" and "Fine" when used to describe Gravel, Sand and Silt, refer to Standard Grade Size Limits.

Legend of Boring Operations

- Plan of any boring
- 1" Sampler boring
- Rotary wash boring
- 1" Closed sampler driven
- Core boring
- 2½" Penetrometer driven
- 2" Sampler boring
- 2" to 5" Auger boring
- 8" to 20" Auger boring
- Casing driven
- Jet boring
- (S) Sample taken

The appropriate boring symbols designating the method of operation are shown, at the upper right-hand corner of the respective boring. Where tool changes were made during the boring operation symbols are shown at the point of change.

Legend of Earth Materials

- Gravel — G
- Sand — S
- Silt — Si
- Clay — C
- Silty Sand — Si S
- Clayey Sand — C S
- Sandy Silt — S Si
- Clayey Silt — C Si
- Sandy Clay — SC
- Silty Clay — Si C
- Peat and/or Organic Clay — O
- Sandstone — SS
- Shale — Sh
- Broken Rock (Fragments) — Br
- Rock — R

Abbreviations

El. 69.4	Elevation of ground at test hole
b.p.f.	Blows per foot — (see note above)
P	Pulled pipe
M	Moisture as % dry weight
El. 41.3 8-12-48	Elevation of ground water and date

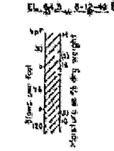

Notes

The contractor's attention is directed to Section 2, Article (c) of the Standard Specifications and to the Special Provisions accompanying this set of plans.

Classification of earth material as shown on this sheet is based upon field inspection and is not to be construed to imply mechanical analysis.

AS BUILT — The structure conforms to the data shown on this sheet
Corrections by Hill Gunell
Date

IMPERIAL HIGHWAY UNDERCROSSING	
LOG OF TEST BORINGS	
SCALE Vert. 1" = 10' Horiz. 1" = 20'	FILE NO. E-53
BRIDGE NO. 53-593	DRAWING No. 1-2011-7

I HEREBY CERTIFY THAT THIS IS A TRUE AND ACCURATE COPY OF THE ABOVE DOCUMENT TAKEN UNDER MY DIRECTION AND CONTROL ON THIS DATE IN SACRAMENTO, CALIFORNIA PURSUANT TO AUTHORIZATION BY THE DIRECTOR OF PUBLIC WORKS.

DATE _____ SIGNATURE _____ TITLE _____

53-3061-z-1tb06.tif

DIST	COUNTY	ROUTE	POST MILES TOTAL PROJECT	SHEET No.	TOTAL SHEETS
07	LA	5	4.0/5.9	1081	1597

Anthony T. Logus 12-12-11
REGISTERED CIVIL ENGINEER DATE

4-9-12
PLANS APPROVAL DATE

REGISTERED PROFESSIONAL ENGINEER Anthony T. Logus No. C68189 Exp. 09-30-13 CIVIL STATE OF CALIFORNIA

The State of California or its officers or agents shall not be responsible for the accuracy or completeness of electronic copies of this plan sheet.

NOTES:

1. PAINT "BR. No. 53-3062"
2. PAINT "PIONEER Blvd UNDERCROSSING"
3. STRUCTURE APPROACH TYPE N(30S)
4. TYPE D-2 DRAIN (Mod 1)
5. TYPE D-2 DRAIN (Mod 2)

LEGEND:

- INDICATES EXISTING STRUCTURE
- INDICATES POINT OF MINIMUM VERTICAL CLEARANCE
- * MEASURED ALONG ℄ ROUTE 5

PROFILE GRADE

NO SCALE

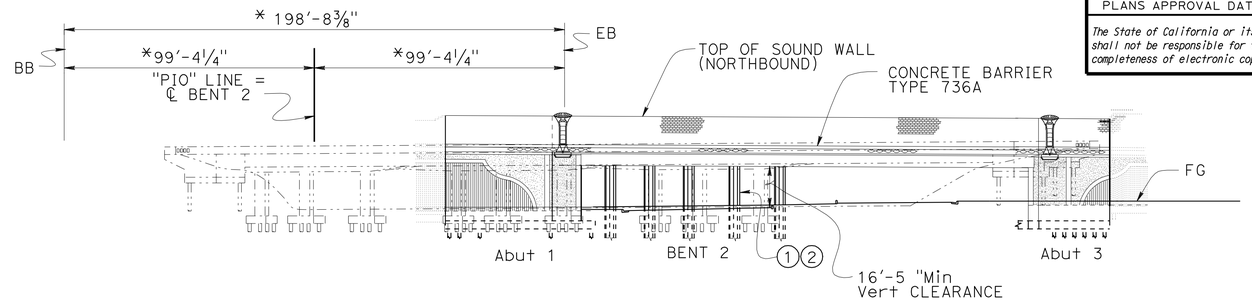

ELEVATION

1" = 30'

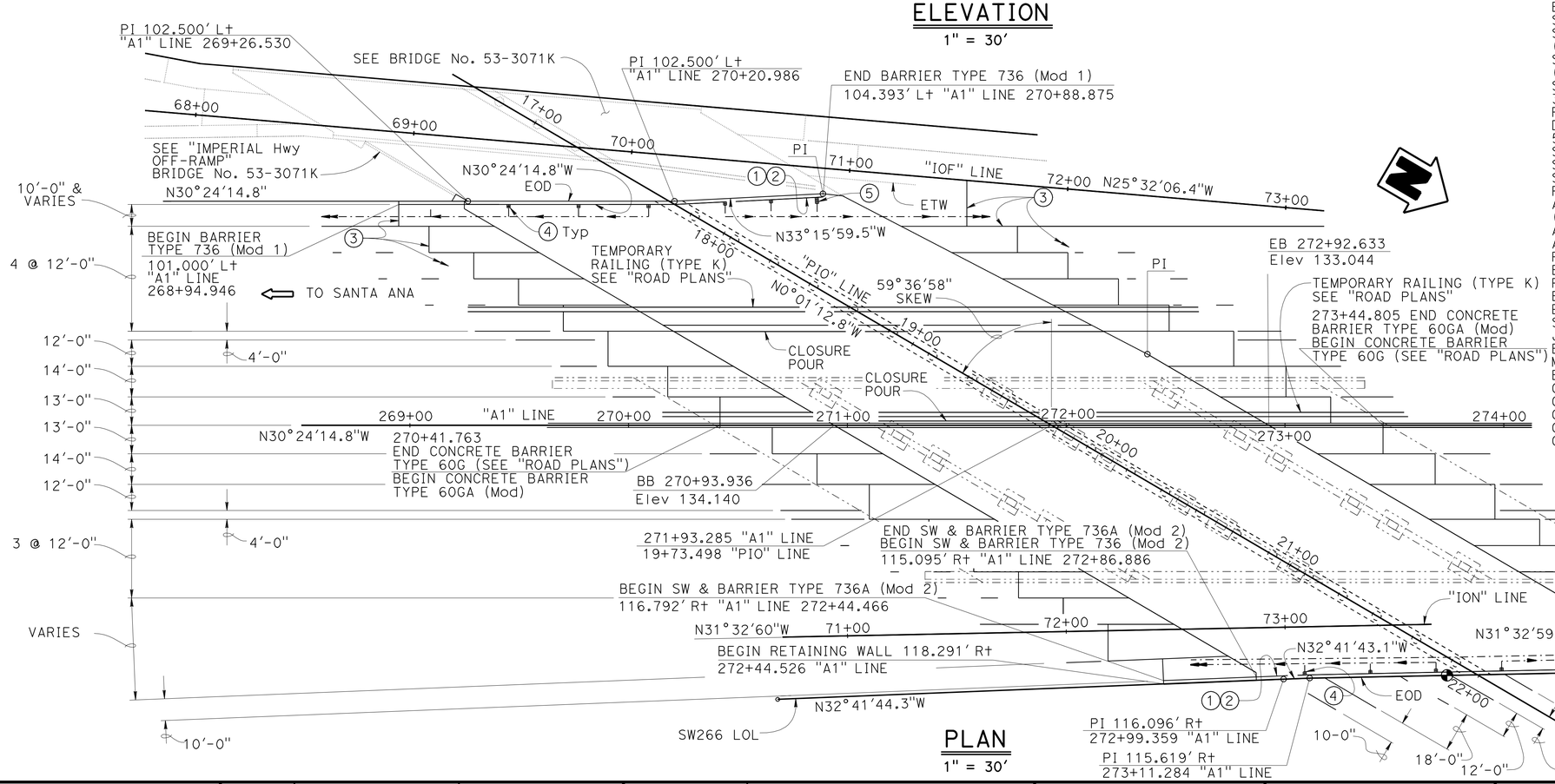

PLAN

1" = 30'

QUANTITIES

BRIDGE REMOVAL, LOCATION C	LUMP	SUM
STRUCTURE EXCAVATION (BRIDGE)	5,700	CY
STRUCTURE EXCAVATION (TYPE Y-1) (AERIALLY DEPOSITED LEAD)	1,020	CY
STRUCTURE EXCAVATION (TYPE Y-2) (AERIALLY DEPOSITED LEAD)	1,260	CY
STRUCTURE BACKFILL (BRIDGE)	12,000	CY
3" SUPPLY LINE (BRIDGE)	260	LF
FURNISH STEEL PILING (HP 14 X 89)	31,009	LF
DRIVE STEEL PILE (HP 14 X 89)	497	EA
54" CAST-IN-DRILLED-HOLE CONCRETE PILING	1,575	LF
STRUCTURAL CONCRETE, BRIDGE FOOTING	1,790	CY
STRUCTURAL CONCRETE, BRIDGE	5,900	CY
STRUCTURAL CONCRETE, APPROACH SLAB (TYPE N)	700	CY
PILASTER, SOUND WALL	5	CY
ARCHITECTURAL TEXTURE (SPLIT SLATE - FRACTURED RIB)	1,180	SQFT
ARCHITECTURAL TREATMENT (SUNRAY - SPLIT SLATE)	14,000	SQFT
ARCHITECTURAL TEXTURE (SPLIT SLATE)	2,215	SQFT
FURNISH PRECAST PRESTRESSED CONCRETE BULB-TEE GIRDER (80'-90')	6	EA
FURNISH PRECAST PRESTRESSED CONCRETE BULB-TEE GIRDER (90'-100')	54	EA
ERECT PRECAST PRESTRESSED CONCRETE GIRDER	60	EA
SOUND WALL (MASONRY BLOCK)	3,000	SQFT
JOINT SEAL (MR 1")	876	LF
BAR REINFORCING STEEL (BRIDGE)	1,819,500	LB
MISCELLANEOUS METAL (BRIDGE)	16,700	LB
BRIDGE DECK DRAINAGE SYSTEM	5,500	LB
CONCRETE BARRIER (TYPE 60GA MODIFIED)	303	LF
CONCRETE BARRIER (TYPE 736 MODIFIED 1)	204	LF
CONCRETE BARRIER (TYPE 736 MODIFIED 2)	192	LF
CONCRETE BARRIER (TYPE 736A MODIFIED 2)	72	LF
COMMUNICATION CONDUIT (BRIDGE) (LF)	540	LF

TRACI MENARD
DESIGN ENGINEER

	BY	CHECKED
DESIGN	ANTHONY LOGUS	RUSLAN NOVIK
DETAILS	HERMAN MAUROSCHADT	RUSLAN NOVIK
QUANTITIES	SARA YIP	RUSLAN NOVIK

LOAD & RESISTANCE FACTOR DESIGN — LIVE LOADING: HL93 W/"LOW-BOY"; PERMIT DESIGN VEHICLE

	BY	CHECKED
LAYOUT	ANTHONY LOGUS	RUSLAN NOVIK
SPECIFICATIONS	JOHN JIANG	PLANS AND SPECS COMPARED V. RENGANATHAN

ORIGINAL SCALE IN INCHES FOR REDUCED PLANS 0 1 2 3

STATE OF CALIFORNIA
DEPARTMENT OF TRANSPORTATION

DIVISION OF ENGINEERING SERVICES
STRUCTURE DESIGN
DESIGN BRANCH 15

BRIDGE NO. 53-3062
POST MILE 5.12

PIONEER Blvd UC (REPLACE)
GENERAL PLAN No. 1

UNIT: 3604
PROJECT NUMBER & PHASE: 0700001834 1
CONTRACT NO.: 07-215941

DISREGARD PRINTS BEARING EARLIER REVISION DATES
REVISION DATES 6-9-11 12-12-11 3-16-12 12-9-11
SHEET 1 OF 72

USERNAME => s114640 DATE PLOTTED => 14-APR-2012 TIME PLOTTED => 10:07

DIST	COUNTY	ROUTE	POST MILES TOTAL PROJECT	SHEET No.	TOTAL SHEETS
07	LA	5	4.0/5.9	1082	1597

Anthony T. Logus 12-12-11
REGISTERED CIVIL ENGINEER DATE

4-9-12
PLANS APPROVAL DATE

REGISTERED PROFESSIONAL ENGINEER
Anthony T. Logus
No. C68189
Exp. 09-30-13
CIVIL
STATE OF CALIFORNIA

The State of California or its officers or agents shall not be responsible for the accuracy or completeness of electronic copies of this plan sheet.

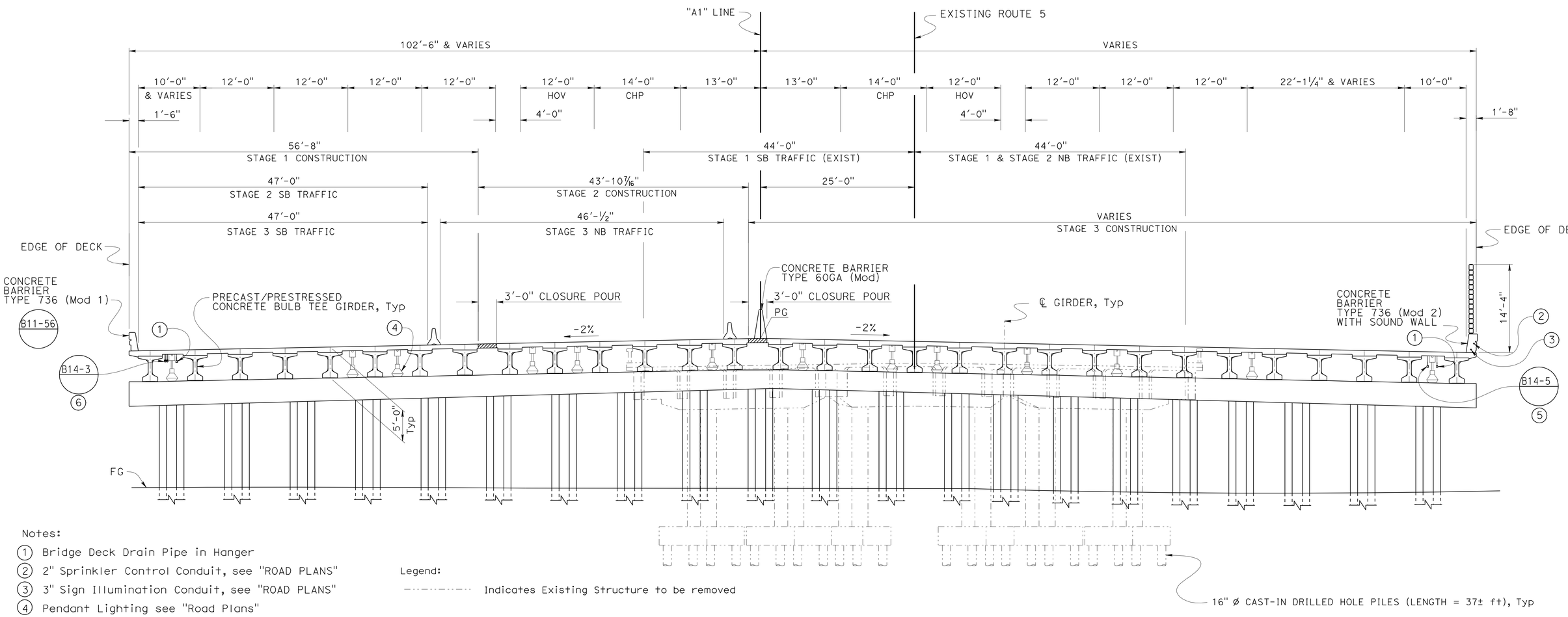

Notes:

1. Bridge Deck Drain Pipe in Hanger
2. 2" Sprinkler Control Conduit, see "ROAD PLANS"
3. 3" Sign Illumination Conduit, see "ROAD PLANS"
4. Pendant Lighting see "Road Plans"
5. 3" Supply Line
6. 2-3½" Communication Conduit

Legend:

Indicates Existing Structure to be removed

TYPICAL SECTION

⅛" = 1'-0"

TRACI MENARD DESIGN ENGINEER	DESIGN	BY ANTHONY LOGUS	CHECKED RUSLAN NOVIK	LOAD & RESISTANCE FACTOR DESIGN	LIVE LOADING: HL93 W/"LOW-BOY"; PERMIT DESIGN VEHICLE
	DETAILS	BY HERMAN MAUROSCHADT	CHECKED RUSLAN NOVIK	LAYOUT: BY ANYHONY LOGUS	CHECKED RUSLAN NOVIK
	QUANTITIES	BY SARA YIP	CHECKED RUSLAN NOVIK	SPECIFICATIONS: BY JOHN JIANG	PLANS AND SPECS COMPARED V. RENGANATHAN

STATE OF CALIFORNIA
DEPARTMENT OF TRANSPORTATION

DIVISION OF ENGINEERING SERVICES
STRUCTURE DESIGN
DESIGN BRANCH 15

BRIDGE NO. 53-3062
POST MILE 5.12

PIONEER Blvd UC (REPLACE)
GENERAL PLAN No. 2

ORIGINAL SCALE IN INCHES FOR REDUCED PLANS 0 1 2 3

UNIT: 3604
PROJECT NUMBER & PHASE: 0700001834 1
CONTRACT NO.: 07-215941

DISREGARD PRINTS BEARING EARLIER REVISION DATES

REVISION DATES: 6-21-11 12-12-11 12-15-11 3-16-12

SHEET 2 OF 72

STRUCTURES DESIGN GENERAL PLAN SHEET (ENGLISH) (REV.09-01-10)

FILE => 53-3062-b-gp02.dgn

USERNAME => s121614 DATE PLOTTED => 17-APR-2012 TIME PLOTTED => 14:06

DIST	COUNTY	ROUTE	POST MILES TOTAL PROJECT	SHEET No.	TOTAL SHEETS
07	LA	5	4.0/5.9	1083	1597

REGISTERED CIVIL ENGINEER 12-12-11 DATE

4-9-12
PLANS APPROVAL DATE

REGISTERED PROFESSIONAL ENGINEER Anthony T. Logus No. C68189 Exp. 09-30-13 CIVIL STATE OF CALIFORNIA

The State of California or its officers or agents shall not be responsible for the accuracy or completeness of electronic copies of this plan sheet.

INDEX TO PLANS

SHEET NO.	TITLE
1	GENERAL PLAN No. 1
2	GENERAL PLAN No. 2
3	INDEX TO PLANS
4	DECK CONTOURS
5	FOUNDATION PLAN
6	DEMOLITION PLAN
7	ABUTMENT LAYOUT
8	ABUTMENT DETAILS No. 1
9	ABUTMENT DETAILS No. 2
10	ABUTMENT DETAILS No. 3
11	ABUTMENT DETAILS No. 4
12	ABUTMENT DETAILS No. 5
13	ABUTMENT DETAILS No. 6
14	ABUTMENT DETAILS No. 7
15	ABUTMENT DETAILS No. 8
16	ABUTMENT DETAILS No. 9
17	BENT LAYOUT No. 1
18	BENT LAYOUT No. 2
19	BENT DETAILS No. 1
20	BENT DETAILS No. 2
21	COLUMN DETAILS No. 1
22	COLUMN DETAILS No. 2
23	TYPICAL SECTION
24	GIRDER LAYOUT No. 1
25	GIRDER LAYOUT No. 2
26	GIRDER LAYOUT No. 3
27	ADDITIONAL MILD REINFORCEMENT LAYOUT No. 1
28	ADDITIONAL MILD REINFORCEMENT LAYOUT No. 2
29	ADDITIONAL MILD REINFORCEMENT LAYOUT No. 3
30	END DIAPHRAGM DETAILS No. 1
31	END DIAPHRAGM DETAILS No. 2
32	END DIAPHRAGM DETAILS No. 3
33	BARRIER ARCHITECTURAL DETAILS No. 1
34	BARRIER ARCHITECTURAL DETAILS No. 2
35	BARRIER ARCHITECTURAL DETAILS No. 3
36	ARCHITECTURAL SHEET A0
37	ARCHITECTURAL SHEET A1
38	ARCHITECTURAL SHEET A2
39	ARCHITECTURAL SHEET A3
40	ARCHITECTURAL SHEET A4
41	ARCHITECTURAL SHEET A5
42	ARCHITECTURAL SHEET A6
43	ARCHITECTURAL SHEET A7
44	ARCHITECTURAL SHEET A8
45	ARCHITECTURAL SHEET A9
46	ARCHITECTURAL SHEET A10
47	ARCHITECTURAL SHEET A11
48	ARCHITECTURAL SHEET A12
49	ARCHITECTURAL SHEET A13
50	SOUNDWALL - MASONRY BLOCK ON BRIDGE
51	SOUNDWALL ARCHITECTURAL DETAILS No. 1
52	SOUNDWALL ARCHITECTURAL DETAILS No. 2
53	SOUNDWALL ARCHITECTURAL DETAILS No. 3
54	SOUNDWALL ARCHITECTURAL DETAILS No. 4
55	SOUNDWALL ARCHITECTURAL DETAILS No. 5
56	SOUNDWALL ARCHITECTURAL DETAILS No. 6
57	SOUNDWALL ARCHITECTURAL DETAILS No. 7
58	SOUNDWALL ARCHITECTURAL DETAILS No. 8
59	DECK DRAIN DETAILS
60	DECK DRAIN - TYPE D-2 (Mod 1)
61	DECK DRAIN - TYPE D-2 (Mod 2)
62	PC/PS BULB-TEE GIRDER (HARPED STRANDS)
63	PC/PS BULB-TEE GIRDER (MISCELLANEOUS DETAILS)
64	STRUCTURE APPROACH TYPE N(30S)
65	STRUCTURE APPROACH DRAINAGE DETAILS
66	LOG OF TEST BORINGS SHEET 1 OF 7
67	LOG OF TEST BORINGS SHEET 2 OF 7
68	LOG OF TEST BORINGS SHEET 3 OF 7
69	LOG OF TEST BORINGS SHEET 4 OF 7
70	LOG OF TEST BORINGS SHEET 5 OF 7
71	LOG OF TEST BORINGS SHEET 6 OF 7
72	LOG OF TEST BORINGS SHEET 7 OF 7

GENERAL NOTES

LOAD AND RESISTANCE FACTOR DESIGN

DESIGN:
AASHTO LRFD Bridge Design Specifications, 4th edition and the Caltrans Amendments, preface dated September 2010, except that bridge barrier and approach slabs are designed using Bridge Design Specifications ('96 AASHTO w/Revision by Caltrans).

SEISMIC DESIGN:
Caltrans Seismic Design Criteria (SDC), Version 1.5 dated September 2009

DEAD LOAD:
Includes 35 psf for future wearing surface.
Includes 10% of additional deck dead load between girders for stay-in-place deck forms.

LIVE LOADING:
HL93 and permit design load.

SEISMIC LOADING:
Soil Profile: Average Shear Wave Velocity for upper 100', $V_{s_{30}}$ = 949 ft/sec, 289 m/sec
Moment Magnitude: M =7.3
Peak Ground Acceleration: 0.7 g

CONCRETE:
fy = 60 ksi
f'c = 3.6 ksi, unless otherwise shown
n = 8

PRESTRESSED CONCRETE:
See "Prestressing Notes" on "PC/PS BULB TEE GIRDER (HARPED STRANDS)" sheet

SOUNDWALL DEAD LOAD:
The Soundwall dead load is distributed on the right side, looking up station of the bridge, with 75% of the moment and 75% of the shear forces to the exterior girder, and 25% of the moment and 25% of the shear to the first interior girder.

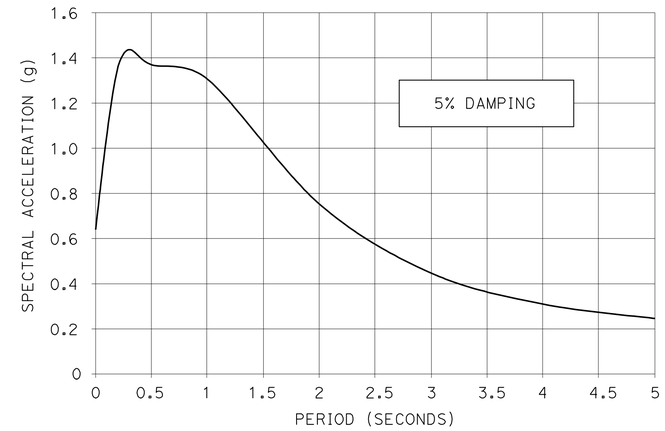

SITE SPECIFIC ACCELERATION RESPONSE SPECTRA

STANDARD PLANS DATED MAY 2006

	A10A	ACRONYMS AND ABBREVIATIONS (SHEET 1 OF 2)
	A10B	ACRONYMS AND ABBREVIATIONS (SHEET 2 OF 2)
	B0-3	BRIDGE DETAILS
	B0-5	BRIDGE DETAILS
	B0-13	BRIDGE DETAILS
	B6-1	T-BEAM DETAIL
	B6-10	UTILITY OPENINGS T-BEAM
RSP	B6-21	JOINT SEALS (MAXIMUM MOVEMENT RATING = 2")
	B7-8	DECK DRAINAGE DETAILS
	B11-56	CONCRETE BARRIER TYPE 736
	B14-3	COMMUNICATION AND SPRINKLER CONTROL CONDUITS (CONDUIT LESS THAN 4")
	B14-5	WATER SUPPLY LINE (DETAILS) (PIPE SIZES LESS THAN 4")
	B15-9	SOUND WALL MASONY BLOCK MISCELLANEOUS DETAILS
RSP	P10	CONCRETE PAVEMENT-DOWEL BAR DETAILS

STANDARD PLAN SHEET NO.
DETAIL NO.

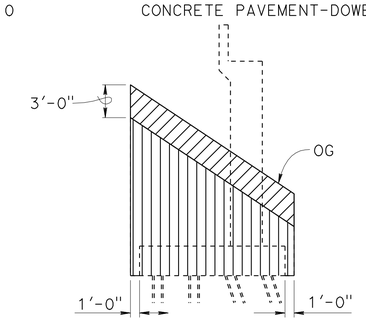

ABUTMENTS 1 AND 3 (STAGES 1 & 2)

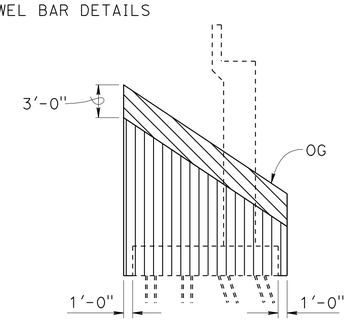

ABUTMENTS 1 AND 3 (STAGE 3)

STRUCTURE EXCAVATION (TYPE Y-1, AERIALLY DEPOSITED LEAD)
STRUCTURE EXCAVATION (TYPE Y-2, AERIALLY DEPOSITED LEAD)
STRUCTURE EXCAVATION ABUTMENT

EXCAVATION
No Scale

PILE DATA TABLE

LOCATION	PILE TYPE	CUT-OFF ELEVATION (ft)	NOMINAL RESISTANCE COMPRESSION (kip)	NOMINAL RESISTANCE TENSION (kip)	DESIGN TIP ELEVATION (ft)	SPECIFIED TIP ELEVATION (ft)	NOMINAL DRIVING RESISTANCE (ft)
ABUTMENT 1	HP 14 X 89	N/A	400	0	(a) 40 (c) 68	40	400
BENT 2	54" CIDH	102	1550	0	(a) 27 (c) 58 (d) 40	27	N/A
ABUTMENT 3	HP 14 X 89	N/A	400	0	(a) 40 (c) 62	40	400

Notes:

1. Design tip elevations for Abutments are controlled by: (a) Compression, (c) Settlement
2. Design tip elevations for Bents are controlled by: (a) Compression, (b) Tension, (c) Settlement, (d) Lateral Load, respectively.
3. The specified tip elevation shall not be raised above the design tip elevations for tension load, lateral load, and tolerable settlement

	BY	CHECKED
DESIGN	ANTHONY LOGUS	RUSLAN NOVIK
DETAILS	HERMAN MAUROSCHADT	RUSLAN NOVIK
QUANTITIES	SARA YIP	RUSLAN NOVIK

STATE OF CALIFORNIA
DEPARTMENT OF TRANSPORTATION

DIVISION OF ENGINEERING SERVICES
STRUCTURE DESIGN
DESIGN BRANCH 15

BRIDGE NO. 53-3062
POST MILE 5.12

PIONEER Blvd UC (REPLACE)
INDEX TO PLANS

STRUCTURES DESIGN DETAIL SHEET (ENGLISH) (REV. 09-01-10)

ORIGINAL SCALE IN INCHES FOR REDUCED PLANS 0 1 2 3

UNIT: 3604
PROJECT NUMBER & PHASE: 0700001834 1
CONTRACT NO.: 07-215941

DISREGARD PRINTS BEARING EARLIER REVISION DATES

REVISION DATES 2-25-11 12-12-11 3-16-12 12-6-11

SHEET 3 OF 72

FILE => 53-3062-c-itp.dgn

USERNAME => s114640 DATE PLOTTED => 14-APR-2012 TIME PLOTTED => 10:07

DIST	COUNTY	ROUTE	POST MILES TOTAL PROJECT	SHEET No.	TOTAL SHEETS
07	LA	5	4.0/5.9	1084	1597

Anthony T. Logus 12-12-11
REGISTERED CIVIL ENGINEER DATE

4-9-12
PLANS APPROVAL DATE

REGISTERED PROFESSIONAL ENGINEER
Anthony T. Logus
No. C68189
Exp. 09-30-13
CIVIL
STATE OF CALIFORNIA

The State of California or its officers or agents shall not be responsible for the accuracy or completeness of electronic copies of this plan sheet.

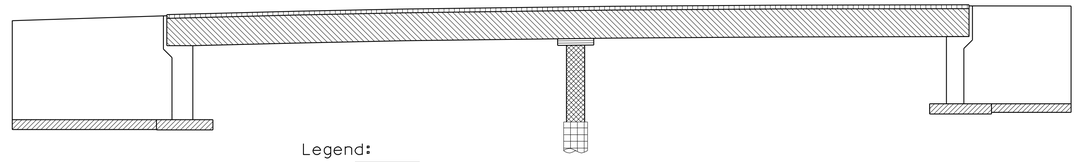

Legend:

- Structural Concrete, Bridge
- Structural Concrete, Bridge Footing
- Structural Concrete Deck (f'c 4000 psi @ 28 days)
- Precast Prestressed Wide Flange Girder see ("PC/PS BULB-TEE GIRDER (HARPED STRANDS))" sheet
- Structural Concrete CIDH Pile Shaft (f'c 4000 psi @ 28 days)
- Structural Concrete Column (f'c 4000 psi @ 28 days)
- Structural Concrete Bent Cap (f'c 4000 psi @ 28 days)

CONCRETE STRENGTH AND TYPE LIMITS

No Scale

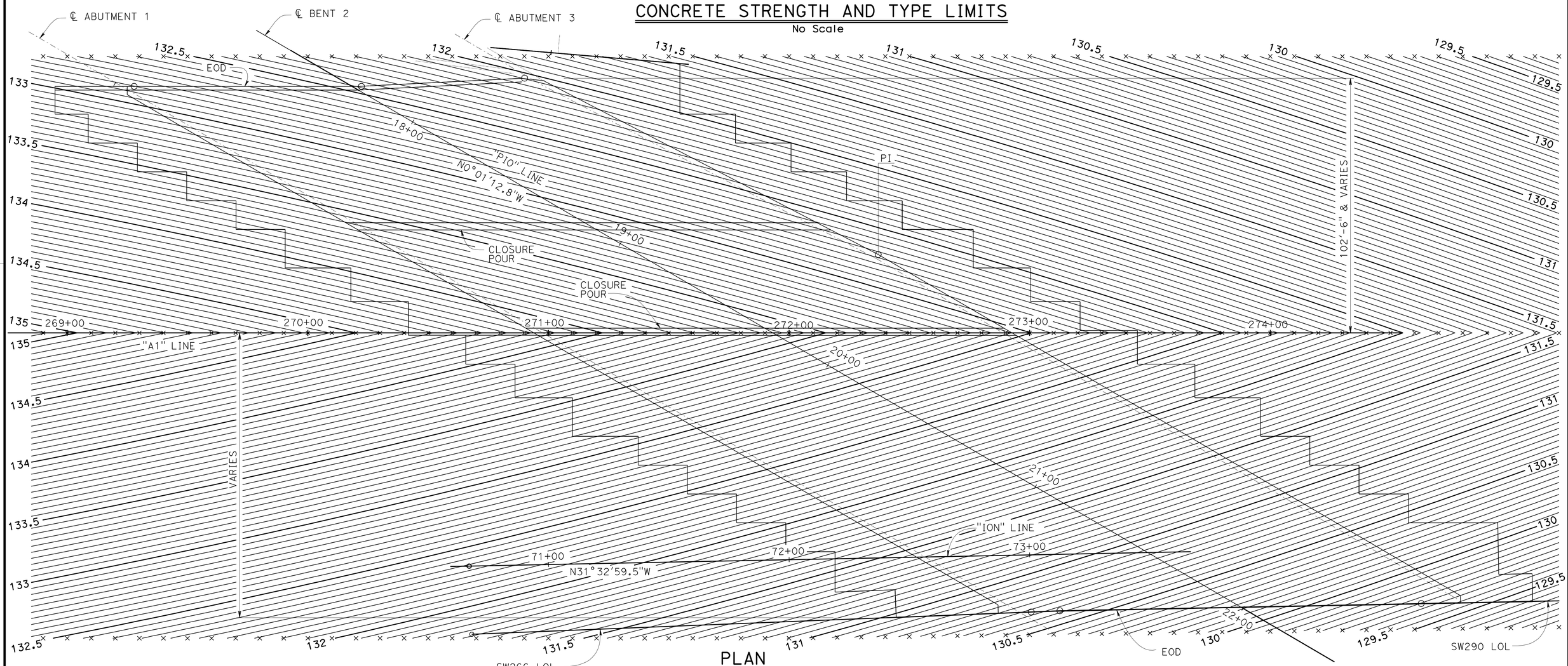

PLAN

1" = 20'

DESIGN	BY ANTHONY LOGUS	CHECKED RUSLAN NOVIK	
DETAILS	BY HERMAN MAUROSCHADT	CHECKED RUSLAN NOVIK	
QUANTITIES	BY SARA YIP	CHECKED RUSLAN NOVIK	

STATE OF CALIFORNIA
DEPARTMENT OF TRANSPORTATION

DIVISION OF ENGINEERING SERVICES
STRUCTURE DESIGN
DESIGN BRANCH 15

BRIDGE NO. 53-3062
POST MILE 5.12

PIONEER Blvd UC (REPLACE)
DECK CONTOURS

STRUCTURES DESIGN DETAIL SHEET (ENGLISH) (REV. 09-01-10)

ORIGINAL SCALE IN INCHES FOR REDUCED PLANS 0 1 2 3

UNIT: 3604
PROJECT NUMBER & PHASE: 0700001834 1
CONTRACT NO.: 07-215941

DISREGARD PRINTS BEARING EARLIER REVISION DATES

REVISION DATES: 9-14-11 12-9-11 12-12-11 3-16-12

SHEET 4 OF 72

FILE => 53-3062-d-dc.dgn

USERNAME => s114640 DATE PLOTTED => 14-APR-2012 TIME PLOTTED => 10:07

DIST	COUNTY	ROUTE	POST MILES TOTAL PROJECT	SHEET No	TOTAL SHEETS
07	LA	5	4.0/5.9	1085	1597

Anthony T. Logus 12-12-11
REGISTERED CIVIL ENGINEER DATE

4-9-12
PLANS APPROVAL DATE

The State of California or its officers or agents shall not be responsible for the accuracy or completeness of electronic copies of this plan sheet.

REGISTERED PROFESSIONAL ENGINEER Anthony T. Logus No. C68189 Exp. 09-30-13 CIVIL STATE OF CALIFORNIA

Bridge Location

Ⓐ - 18.963 Lt ℄ Sta 270+10.60 Elev=132.667 ±
Ⓑ - 16.964 Lt ℄ Sta 273+14.64 Elev=130.235 ±
Ⓒ - 68.787 Rt ℄ Sta 274+61.09 Elev=126.924 ±
Ⓓ - 68.671 Rt ℄ Sta 271+59.87 Elev=132.136 ±

(AA) Sta 17+22.05 ℄ Pioneer Blvd= Sta 69+74.83 SB Off-Ramp LOL
(BB) Sta 271+93.28 ℄ Route 5 = Sta 19+73.50 ℄ Pioneer Blvd
(CC) STA 21+54.12 ℄ Pioneer Blvd STA 73+49.10 NB On-Ramp LOL

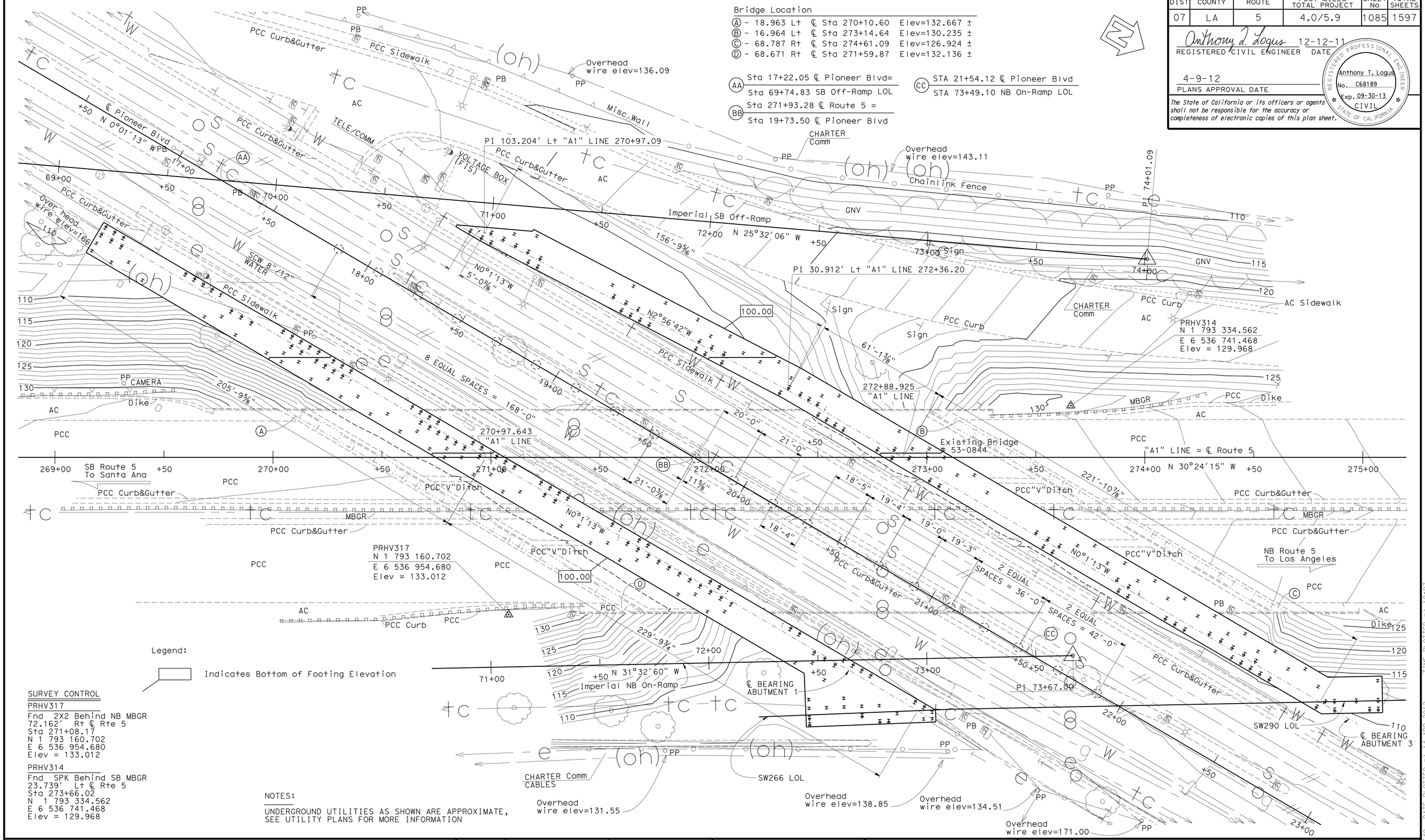

Legend:

Indicates Bottom of Footing Elevation

SURVEY CONTROL

PRHV317
Fnd 2X2 Behind NB MBGR
72.162' Rt ℄ Rte 5
Sta 271+08.17
N 1 793 160.702
E 6 536 954.680
Elev = 133.012

PRHV314
Fnd SPK Behind SB MBGR
23.739' Lt ℄ Rte 5
Sta 273+66.02
N 1 793 334.562
E 6 536 741.468
Elev = 129.968

NOTES:

UNDERGROUND UTILITIES AS SHOWN ARE APPROXIMATE, SEE UTILITY PLANS FOR MORE INFORMATION

PRELIMINARY INVESTIGATION SECTION								
SCALE 1"=20'	VERT.DATUM NAVD 88	PHOTOGRAMMETRY AS OF: X				DESIGN	BY ANTHONY LOGUS	CHECKED RUSLAN NOVIK
	HORZ.DATUM NAD 83	SURVEYED	BY T Phung 11/10	CHECKED	BY E. Viajar 11/10	DETAILS	BY HERMAN MAUROSCHADT	CHECKED RUSLAN NOVIK
	ALIGNMENT TIES Dist Trav Sheets	DRAFTED	BY M Sadaghiani 12/10	CHECKED	BY E. Viajar 12/10	QUANTITIES	BY SARA YIP	CHECKED RUSLAN NOVIK

STRUCTURES FOUNDATION PLAN SHEET (ENGLISH) (REV. 10/25/05)

ORIGINAL SCALE IN INCHES FOR REDUCED PLANS 0 1 2 3

STATE OF CALIFORNIA
DEPARTMENT OF TRANSPORTATION

DIVISION OF ENGINEERING SERVICES
STRUCTURE DESIGN
DESIGN BRANCH 15

CU 07
EA 215941

BRIDGE NO. 53-3062
POST MILE 5.12

PIONEER Blvd UC (REPLACE)
FOUNDATION PLAN

DISREGARD PRINTS BEARING EARLIER REVISION DATES

REVISION DATES: 11-15-11 8-25-11 12-5-11 12-20-11 3-16-12 4-9-12

SHEET 5 OF 72

FILE => 53-3062-e-fp1-v8.dgn

USERNAME => s114640 DATE PLOTTED => 14-APR-2012 TIME PLOTTED => 10:07

DIST	COUNTY	ROUTE	POST MILES TOTAL PROJECT	SHEET No.	TOTAL SHEETS
07	LA	5	4.0/5.9	1086	1597

Anthony T. Logus 12-12-11
REGISTERED CIVIL ENGINEER DATE

4-9-12
PLANS APPROVAL DATE

REGISTERED PROFESSIONAL ENGINEER
Anthony T. Logus
No. C68189
Exp. 09-30-13
CIVIL
STATE OF CALIFORNIA

The State of California or its officers or agents shall not be responsible for the accuracy or completeness of electronic copies of this plan sheet.

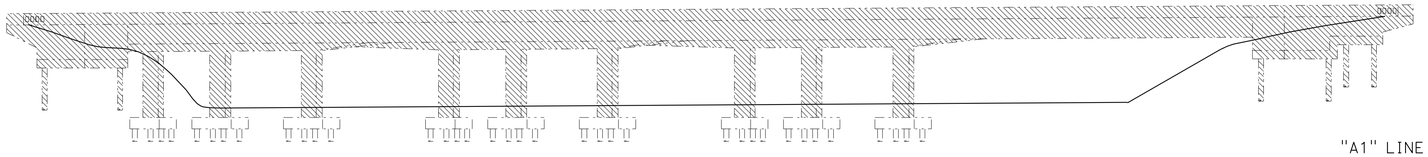

ELEVATION
1" = 20'

Legend:

- Indicates Existing Structure
- Indicates Limits of Stage 2 Existing Structure to be Removed
- Indicates Limits of Stage 3 Existing Structure to be Removed

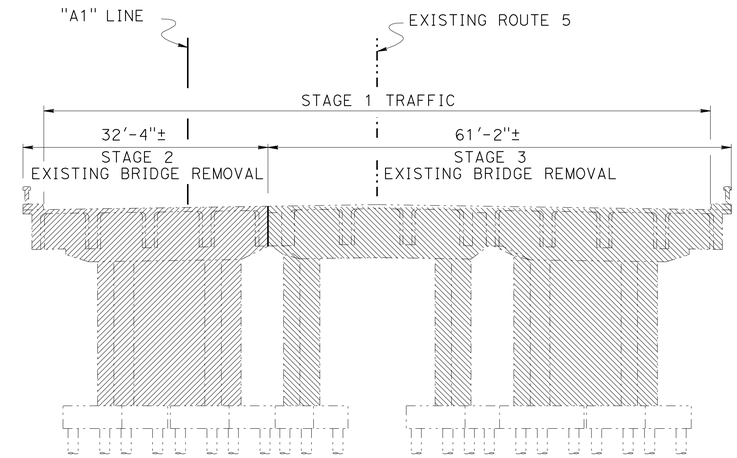

TYPICAL SECTION
1" = 10'

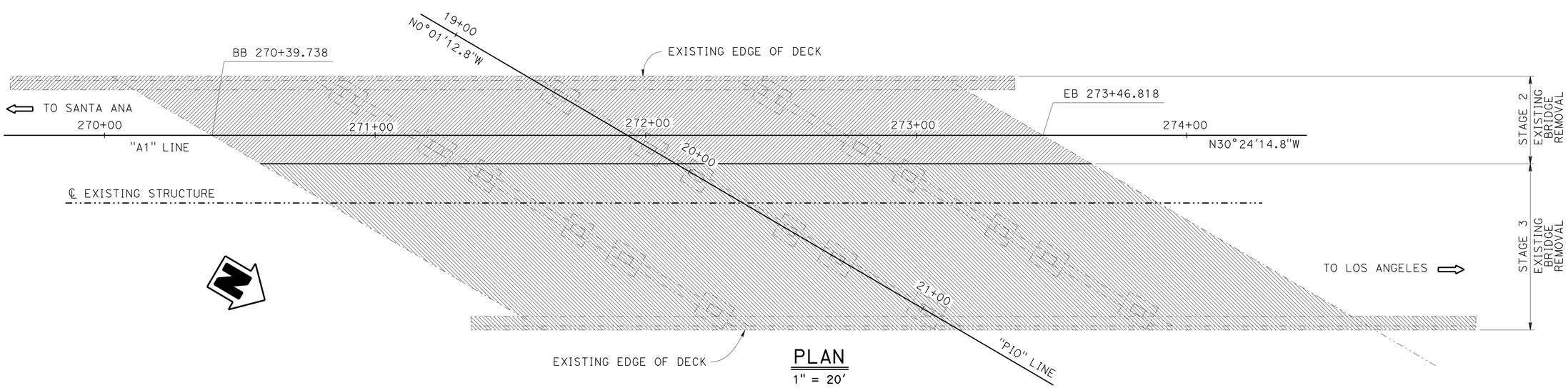

PLAN
1" = 20'

DESIGN	BY ANTHONY LOGUS	CHECKED RUSLAN NOVIK
DETAILS	BY HERMAN MAUROSCHADT	CHECKED RUSLAN NOVIK
QUANTITIES	BY SARA YIP	CHECKED RUSLAN NOVIK

STATE OF CALIFORNIA
DEPARTMENT OF TRANSPORTATION

DIVISION OF ENGINEERING SERVICES
STRUCTURE DESIGN
DESIGN BRANCH 15

BRIDGE NO. 53-3062
POST MILE 5.12

PIONEER Blvd UC (REPLACE)
DEMOLITION PLAN

STRUCTURES DESIGN DETAIL SHEET (ENGLISH) (REV. 09-01-10)

ORIGINAL SCALE IN INCHES FOR REDUCED PLANS 0 1 2 3

UNIT: 3604
PROJECT NUMBER & PHASE: 0700001834 1
CONTRACT NO.: 07-215941

DISREGARD PRINTS BEARING EARLIER REVISION DATES

REVISION DATES 11-18-11 12-6-11 12-30-11 3-16-12

SHEET 6 OF 72

FILE => 53-3062-e-g-demo.dgn

USERNAME => s114640 DATE PLOTTED => 14-APR-2012 TIME PLOTTED => 10:07

DIST	COUNTY	ROUTE	POST MILES TOTAL PROJECT	SHEET No.	TOTAL SHEETS
07	LA	5	4.0/5.9	1087	1597

Anthony T. Logus 12-12-11
REGISTERED CIVIL ENGINEER DATE

4-9-12
PLANS APPROVAL DATE

REGISTERED PROFESSIONAL ENGINEER
Anthony T. Logus
No. C68189
Exp. 09-30-13
CIVIL
STATE OF CALIFORNIA

The State of California or its officers or agents shall not be responsible for the accuracy or completeness of electronic copies of this plan sheet.

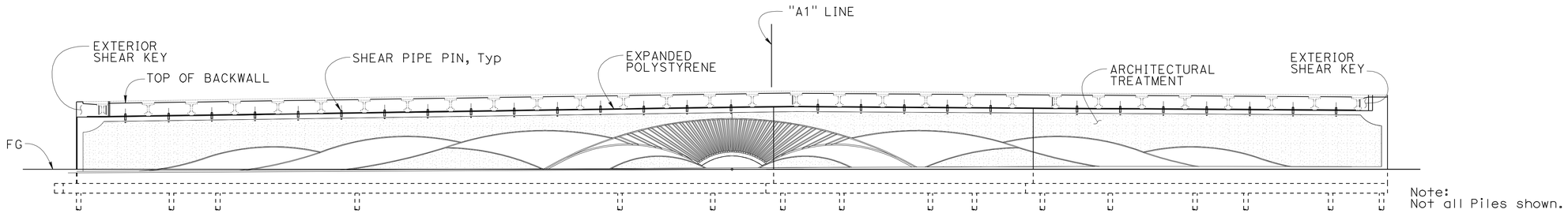

Note:
Not all Piles shown.

ELEVATION

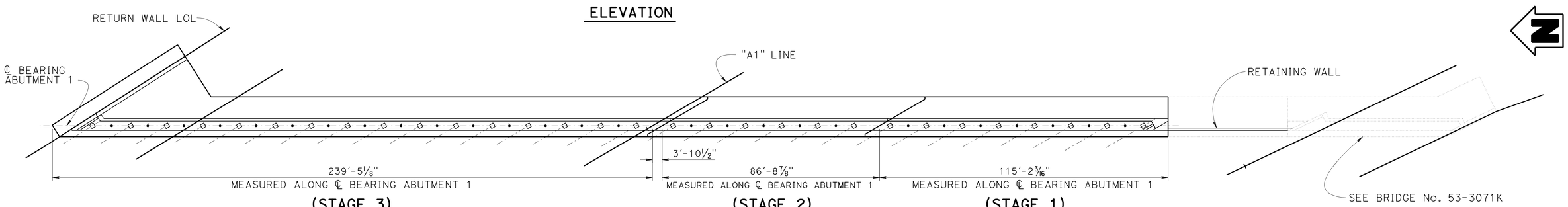

(STAGE 3) (STAGE 2) (STAGE 1)

PLAN
ABUTMENT 1
1" = 20'-0"

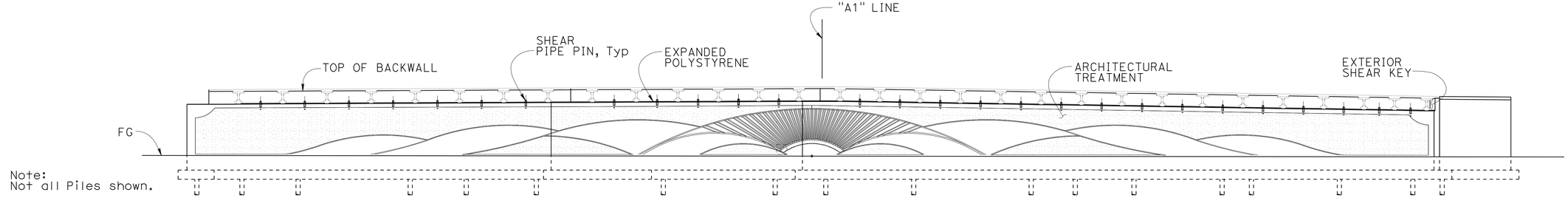

Note:
Not all Piles shown.

ELEVATION

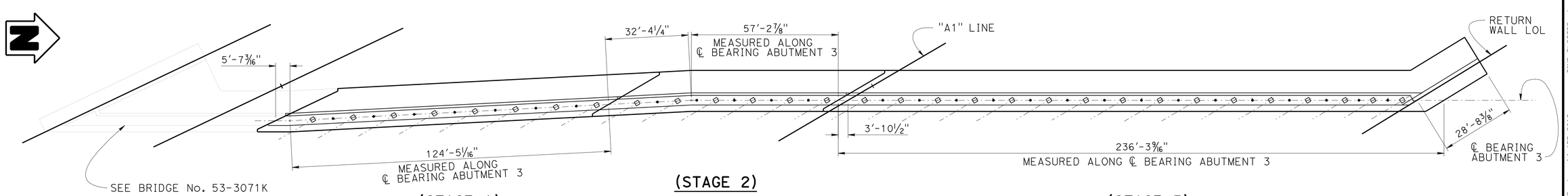

(STAGE 1) (STAGE 2) (STAGE 3)

PLAN
ABUTMENT 3
1" = 20'-0"

	BY	CHECKED
DESIGN	ANTHONY LOGUS	RUSLAN NOVIK
DETAILS	HERMAN MAUROSCHADT	RUSLAN NOVIK
QUANTITIES	SARA YIP	RUSLAN NOVIK

STATE OF CALIFORNIA
DEPARTMENT OF TRANSPORTATION

DIVISION OF ENGINEERING SERVICES
STRUCTURE DESIGN
DESIGN BRANCH 15

BRIDGE NO. 53-3062
POST MILE 5.12

PIONEER Blvd UC (REPLACE)
ABUTMENT LAYOUT

STRUCTURES DESIGN DETAIL SHEET (ENGLISH) (REV. 09-01-10)

ORIGINAL SCALE IN INCHES FOR REDUCED PLANS 0 1 2 3

UNIT: 3604
PROJECT NUMBER & PHASE: 0700001834 1
CONTRACT NO.: 07-215941

DISREGARD PRINTS BEARING EARLIER REVISION DATES

REVISION DATES: 8-8-11 11-18-11 12-9-11 3-16-12

SHEET 7 OF 72

FILE => 53-3062-f-alo.dgn

USERNAME => s114640 DATE PLOTTED => 14-APR-2012 TIME PLOTTED => 10:07

DIST	COUNTY	ROUTE	POST MILES TOTAL PROJECT	SHEET No.	TOTAL SHEETS
07	LA	5	4.0/5.9	1088	1597

Anthony T. Logus 12-12-11
REGISTERED CIVIL ENGINEER DATE

4-9-12
PLANS APPROVAL DATE

REGISTERED PROFESSIONAL ENGINEER
Anthony T. Logus
No. C68189
Exp. 09-30-13
CIVIL
STATE OF CALIFORNIA

The State of California or its officers or agents shall not be responsible for the accuracy or completeness of electronic copies of this plan sheet.

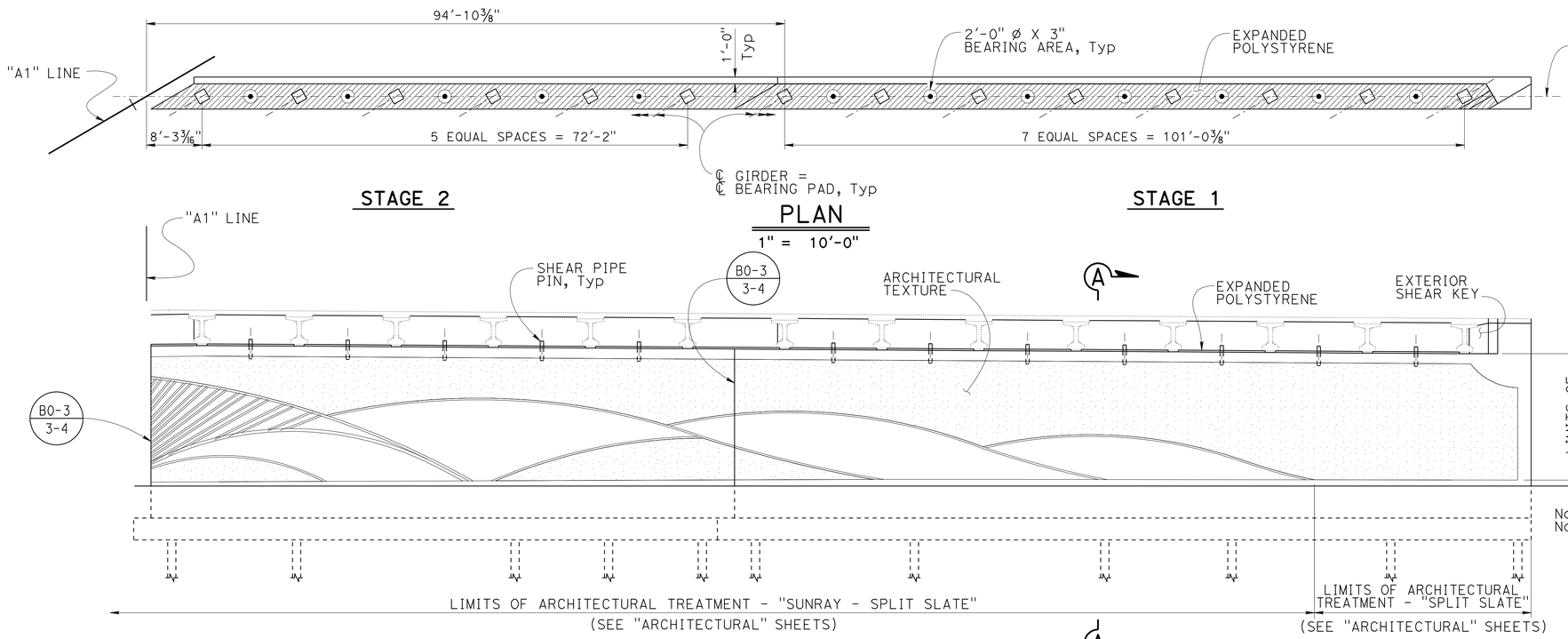

PLAN
1" = 10'-0"

ELEVATION
1" = 10'-0"

Notes:

1. For "SECTION A-A" see "ABUTMENT DETAILS No. 7" sheet.
2. For Architectural Treatment details see "ARCHITECTURAL" sheets.
3. For Shear Pipe Pin details see "SHEAR PIPE PIN DETAIL" on "END DIAPHRAGM DETAILS No. 3" sheet.
4. Omit Shear Pipe Pin in Bay with Construction Joint.

Legend:

- I — Indicates Vertical Pile
- I — Indicates 3:1 Battered Pile
- Indicates Expanded Polystyrene

Note:
Not all Piles shown.

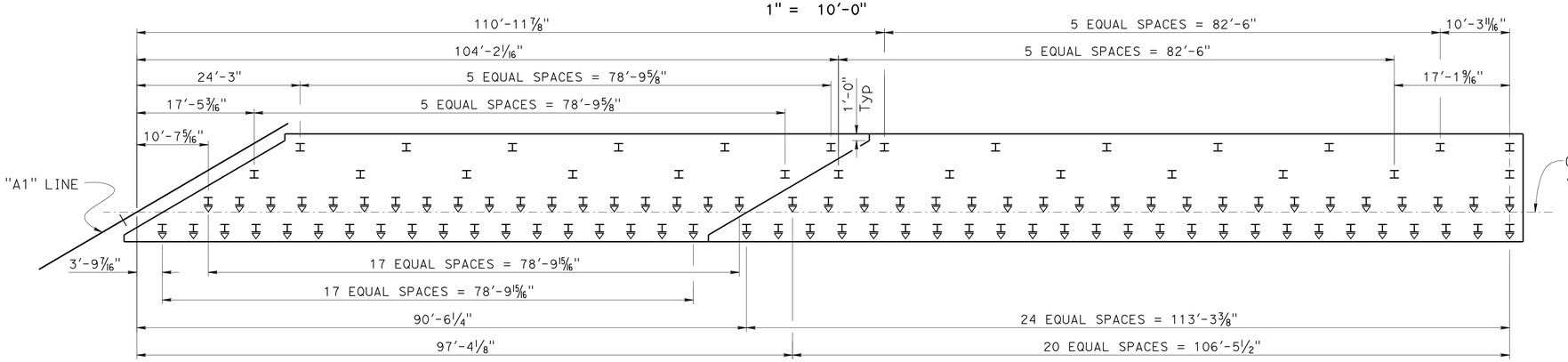

STAGE 2 STAGE 1

ABUTMENT 1 FOOTING
1" = 10'-0"

	BY	CHECKED
DESIGN	ANTHONY LOGUS	RUSLAN NOVIK
DETAILS	HERMAN MAUROSCHADT	RUSLAN NOVIK
QUANTITIES	SARA YIP	RUSLAN NOVIK

STATE OF CALIFORNIA
DEPARTMENT OF TRANSPORTATION

DIVISION OF ENGINEERING SERVICES
STRUCTURE DESIGN
DESIGN BRANCH 15

BRIDGE NO. 53-3062
POST MILE 5.12

PIONEER Blvd UC (REPLACE)
ABUTMENT DETAILS No. 1

STRUCTURES DESIGN DETAIL SHEET (ENGLISH) (REV. 09-01-10)

ORIGINAL SCALE IN INCHES FOR REDUCED PLANS 0 1 2 3

UNIT: 3604
PROJECT NUMBER & PHASE: 0700001834 1
CONTRACT NO.: 07-215941

DISREGARD PRINTS BEARING EARLIER REVISION DATES

REVISION DATES: 8-9-11 12-9-11 12-30-11 3-16-12

SHEET 8 OF 72

FILE => 53-3062-g-ad01.dgn

USERNAME => s114640 DATE PLOTTED => 14-APR-2012 TIME PLOTTED => 10:07

DIST	COUNTY	ROUTE	POST MILES TOTAL PROJECT	SHEET No.	TOTAL SHEETS
07	LA	5	4.0/5.9	1089	1597

Anthony T. Logus 12-12-11
REGISTERED CIVIL ENGINEER DATE

4-9-12
PLANS APPROVAL DATE

REGISTERED PROFESSIONAL ENGINEER
Anthony T. Logus
No. C68189
Exp. 09-30-13
CIVIL
STATE OF CALIFORNIA

The State of California or its officers or agents shall not be responsible for the accuracy or completeness of electronic copies of this plan sheet.

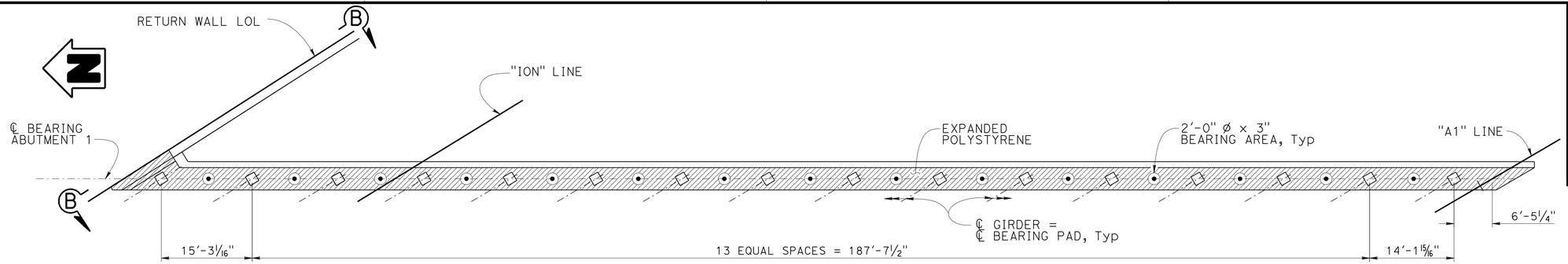

STAGE 3
PLAN
1" = 10'-0"

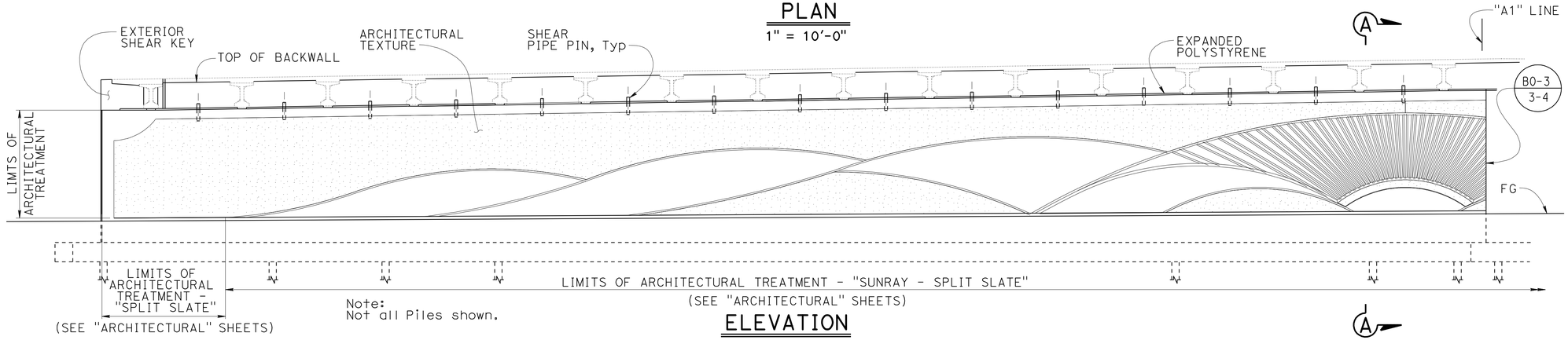

ELEVATION
1" = 10'-0"

Notes:

1. For "SECTION A-A" see "ABUTMENT DETAILS No. 7" sheet.
2. For "VIEW B-B" see "ABUTMENT DETAILS No. 8" sheet.
3. For Architectural Treatment details see "ARCHITECTURAL" sheets.
4. For Shear Pipe Pin details see "SHEAR PIPE PIN DETAIL" on "END DIAPHRAGM DETAILS No. 3" sheet.
5. Omit Shear Pipe Pin in Bay with Construction Joint.

Legend:

- I — Indicates Vertical Pile
- Ī — Indicates 3:1 Battered Pile
- Indicates Expanded Polystyrene

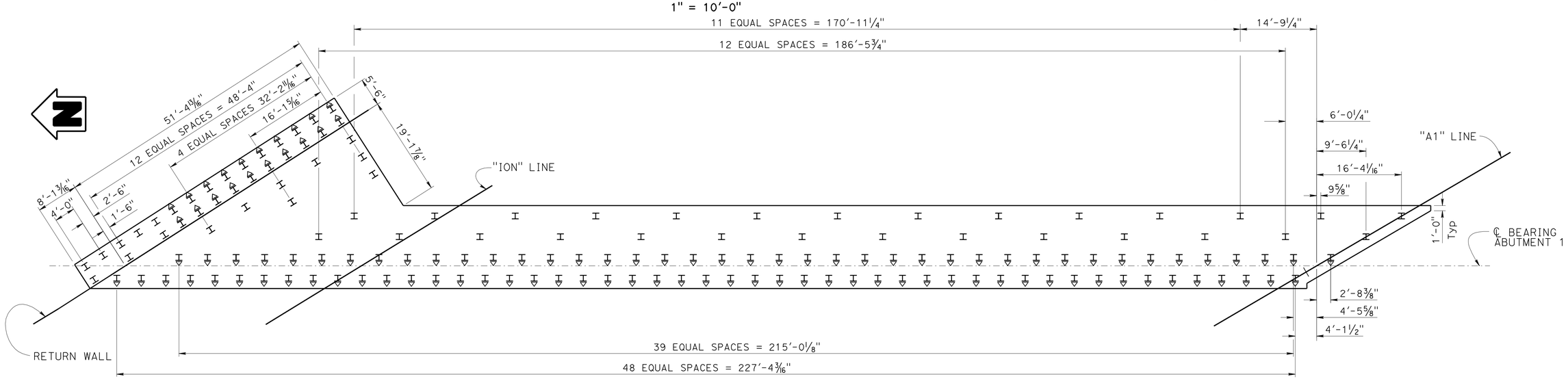

STAGE 3
ABUTMENT 1 FOOTING
1" = 10'-0"

DESIGN	BY ANTHONY LOGUS	CHECKED RUSLAN NOVIK	
DETAILS	BY HERMAN MAUROSCHADT	CHECKED RUSLAN NOVIK	
QUANTITIES	BY SARA YIP	CHECKED RUSLAN NOVIK	

STATE OF CALIFORNIA
DEPARTMENT OF TRANSPORTATION

DIVISION OF ENGINEERING SERVICES
STRUCTURE DESIGN
DESIGN BRANCH 15

BRIDGE NO. 53-3062
POST MILE 5.12

PIONEER Blvd UC (REPLACE)
ABUTMENT DETAILS No. 2

STRUCTURES DESIGN DETAIL SHEET (ENGLISH) (REV. 09-01-10)

ORIGINAL SCALE IN INCHES FOR REDUCED PLANS 0 1 2 3

UNIT: 3604
PROJECT NUMBER & PHASE: 0700001834 1
CONTRACT NO.: 07-215941

DISREGARD PRINTS BEARING EARLIER REVISION DATES

REVISION DATES: 8-18-11 11-28-11 12-8-11 3-16-12

SHEET 9 OF 72

FILE => 53-3062-g-ad02.dgn

USERNAME => s114640 DATE PLOTTED => 14-APR-2012 TIME PLOTTED => 10:07

DIST	COUNTY	ROUTE	POST MILES TOTAL PROJECT	SHEET No.	TOTAL SHEETS
07	LA	5	4.0/5.9	1090	1597

Anthony T. Logus 12-12-11
REGISTERED CIVIL ENGINEER DATE

4-9-12
PLANS APPROVAL DATE

REGISTERED PROFESSIONAL ENGINEER Anthony T. Logus No. C68189 Exp. 09-30-13 CIVIL STATE OF CALIFORNIA

The State of California or its officers or agents shall not be responsible for the accuracy or completeness of electronic copies of this plan sheet.

Notes:

1. For "SECTION A-A" see "ABUTMENT DETAILS No. 7" sheet.
2. For Architectural Treatment details see "ARCHITECTURAL" sheets.
3. For Shear Pipe Pin details see "SHEAR PIPE PIN DETAIL" on "END DIAPHRAGM DETAILS No. 3" sheet.
4. Omit Shear Pipe Pin in Bay with Construction Joint.

Legend:

- Indicates Vertical Pile
- Indicates 3:1 Battered Pile
- Indicates Expanded Polystyrene

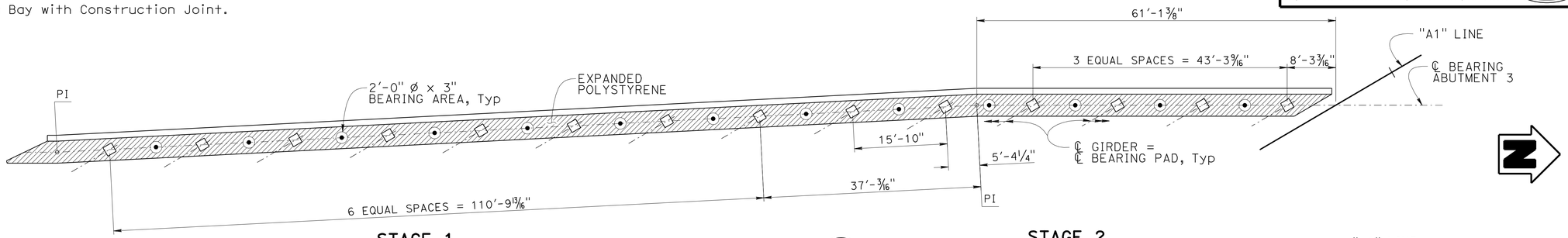

STAGE 1 STAGE 2

PLAN
1" = 10'-0"

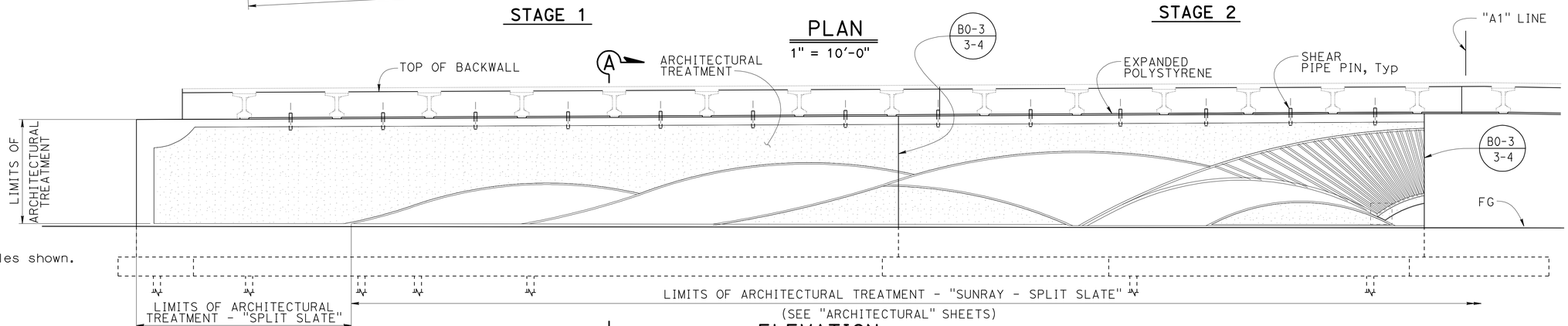

Note:
Not all Piles shown.

ELEVATION
1" = 10'-0"

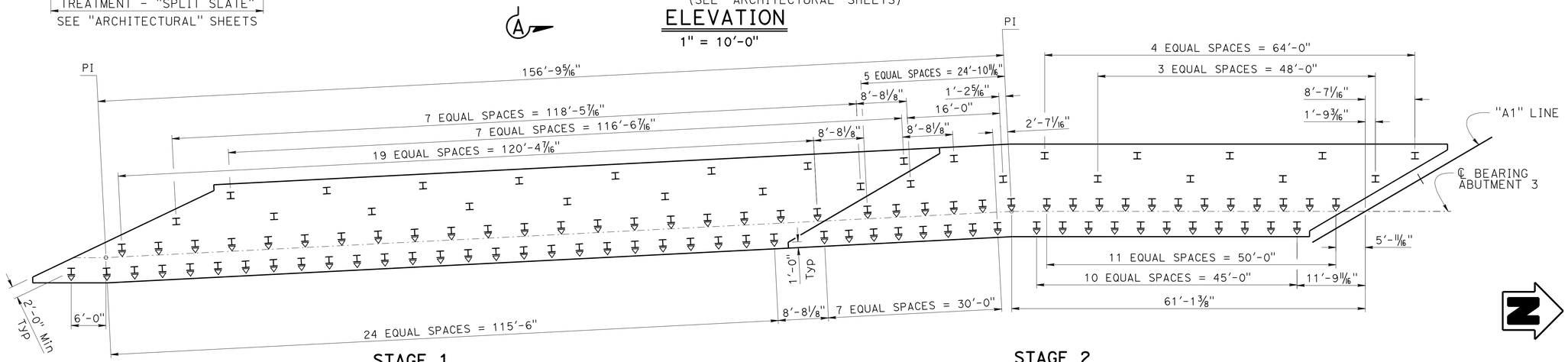

STAGE 1 STAGE 2

ABUTMENT 3 FOOTING
1" = 10'-0"

DESIGN	BY ANTHONY LOGUS	CHECKED RUSLAN NOVIK	
DETAILS	BY HERMAN MAUROSCHADT	CHECKED RUSLAN NOVIK	
QUANTITIES	BY SARA YIP	CHECKED RUSLAN NOVIK	

STATE OF CALIFORNIA
DEPARTMENT OF TRANSPORTATION

DIVISION OF ENGINEERING SERVICES
STRUCTURE DESIGN
DESIGN BRANCH 15

BRIDGE NO. 53-3062
POST MILE 5.12

PIONEER Blvd UC (REPLACE)
ABUTMENT DETAILS No. 3

STRUCTURES DESIGN DETAIL SHEET (ENGLISH) (REV. 09-01-10)

ORIGINAL SCALE IN INCHES FOR REDUCED PLANS 0 1 2 3

UNIT: 3604
PROJECT NUMBER & PHASE: 0700001834 1
CONTRACT NO.: 07-215941

DISREGARD PRINTS BEARING EARLIER REVISION DATES

REVISION DATES 8-30-11 11-29-11 12-9-11 3-16-12

SHEET 10 OF 72

FILE => 53-3062-g-ad03.dgn

USERNAME => s114640 DATE PLOTTED => 14-APR-2012 TIME PLOTTED => 10:07

DIST	COUNTY	ROUTE	POST MILES TOTAL PROJECT	SHEET No.	TOTAL SHEETS
07	LA	5	4.0/5.9	1091	1597

Anthony T. Logus 12-12-11
REGISTERED CIVIL ENGINEER DATE

4-9-12
PLANS APPROVAL DATE

REGISTERED PROFESSIONAL ENGINEER Anthony T. Logus No. C68189 Exp. 09-30-13 CIVIL STATE OF CALIFORNIA

The State of California or its officers or agents shall not be responsible for the accuracy or completeness of electronic copies of this plan sheet.

Notes:

1. For "SECTION A-A" see "ABUTMENT DETAILS No. 7" sheet.
2. For "VIEW D-D" see "ABUTMENT DETAILS No. 9" sheet.
3. For Architectural Treatment Details see "ARCHITECTURAL" sheets.
4. For Shear Pipe Pin details see "SHEAR PIPE PIN DETAIL" on "END DIAPHRAGM DETAILS No. 3" sheet.
5. Omit Shear Pipe Pin in Bay with Construction Joint.

Legend:

- Indicates Vertical Pile
- Indicates 3:1 Battered Pile
- Indicates Expanded Polystyrene

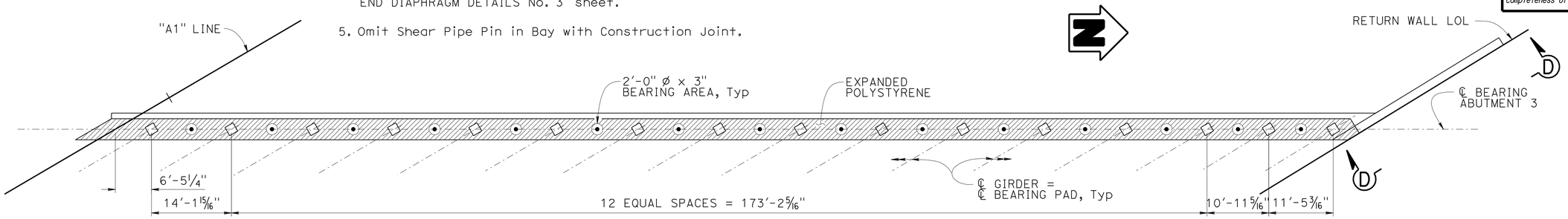

STAGE 3
PLAN
1" = 10'-0"

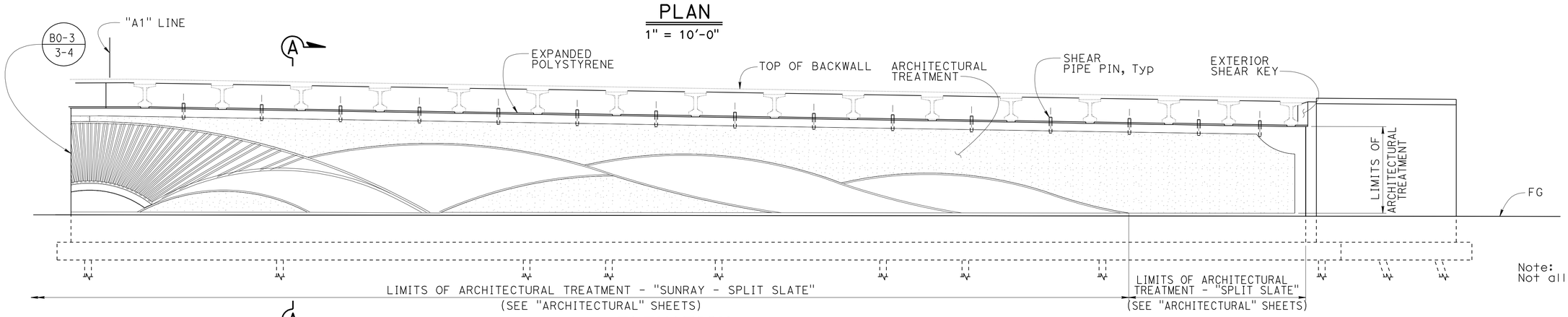

Note:
Not all Piles shown.

ELEVATION
1" = 10'-0"

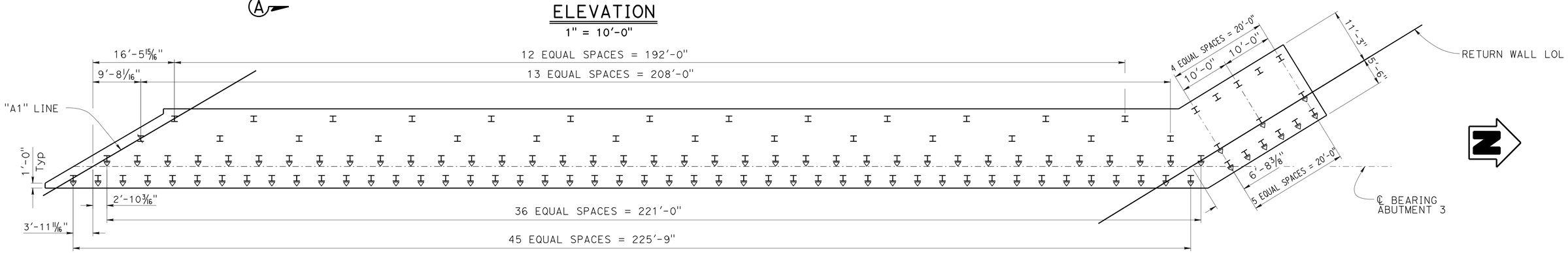

STAGE 3
ABUTMENT 3 FOOTING
1" = 10'-0"

DESIGN	BY ANTHONY LOGUS	CHECKED RUSLAN NOVIK	
DETAILS	BY HERMAN MAUROSCHADT	CHECKED RUSLAN NOVIK	
QUANTITIES	BY SARA YIP	CHECKED RUSLAN NOVIK	

STATE OF CALIFORNIA
DEPARTMENT OF TRANSPORTATION

DIVISION OF ENGINEERING SERVICES
STRUCTURE DESIGN
DESIGN BRANCH 15

BRIDGE NO. 53-3062
POST MILE 5.12

PIONEER Blvd UC (REPLACE)
ABUTMENT DETAILS No. 4

STRUCTURES DESIGN DETAIL SHEET (ENGLISH) (REV. 09-01-10)

ORIGINAL SCALE IN INCHES FOR REDUCED PLANS 0 1 2 3

UNIT: 3604
PROJECT NUMBER & PHASE: 0700001834 1
CONTRACT NO.: 07-215941

DISREGARD PRINTS BEARING EARLIER REVISION DATES

REVISION DATES: 8-16-11 11-28-11 12-9-11 3-16-12

SHEET 11 OF 72

FILE => 53-3062-g-ad04.dgn

USERNAME => s114640 DATE PLOTTED => 14-APR-2012 TIME PLOTTED => 10:08

DIST	COUNTY	ROUTE	POST MILES TOTAL PROJECT	SHEET No.	TOTAL SHEETS
07	LA	5	4.0/5.9	1092	1597

Anthony T. Logus 12-12-11
REGISTERED CIVIL ENGINEER DATE

4-9-12
PLANS APPROVAL DATE

REGISTERED PROFESSIONAL ENGINEER
Anthony T. Logus
No. C68189
Exp. 09-30-13
CIVIL
STATE OF CALIFORNIA

The State of California or its officers or agents shall not be responsible for the accuracy or completeness of electronic copies of this plan sheet.

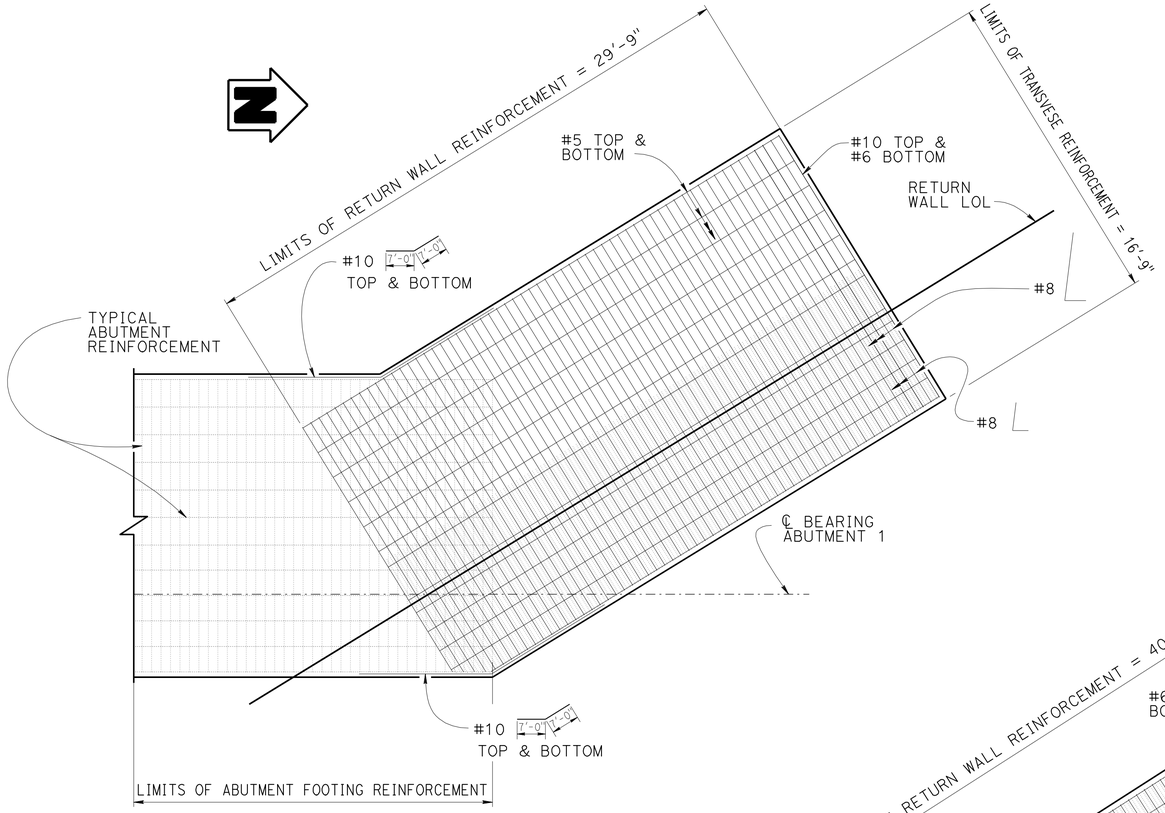

ABUTMENT 3

ADDITIONAL FOOTING REINFORCEMENT (STAGE 3)

1/4" = 1'-0"

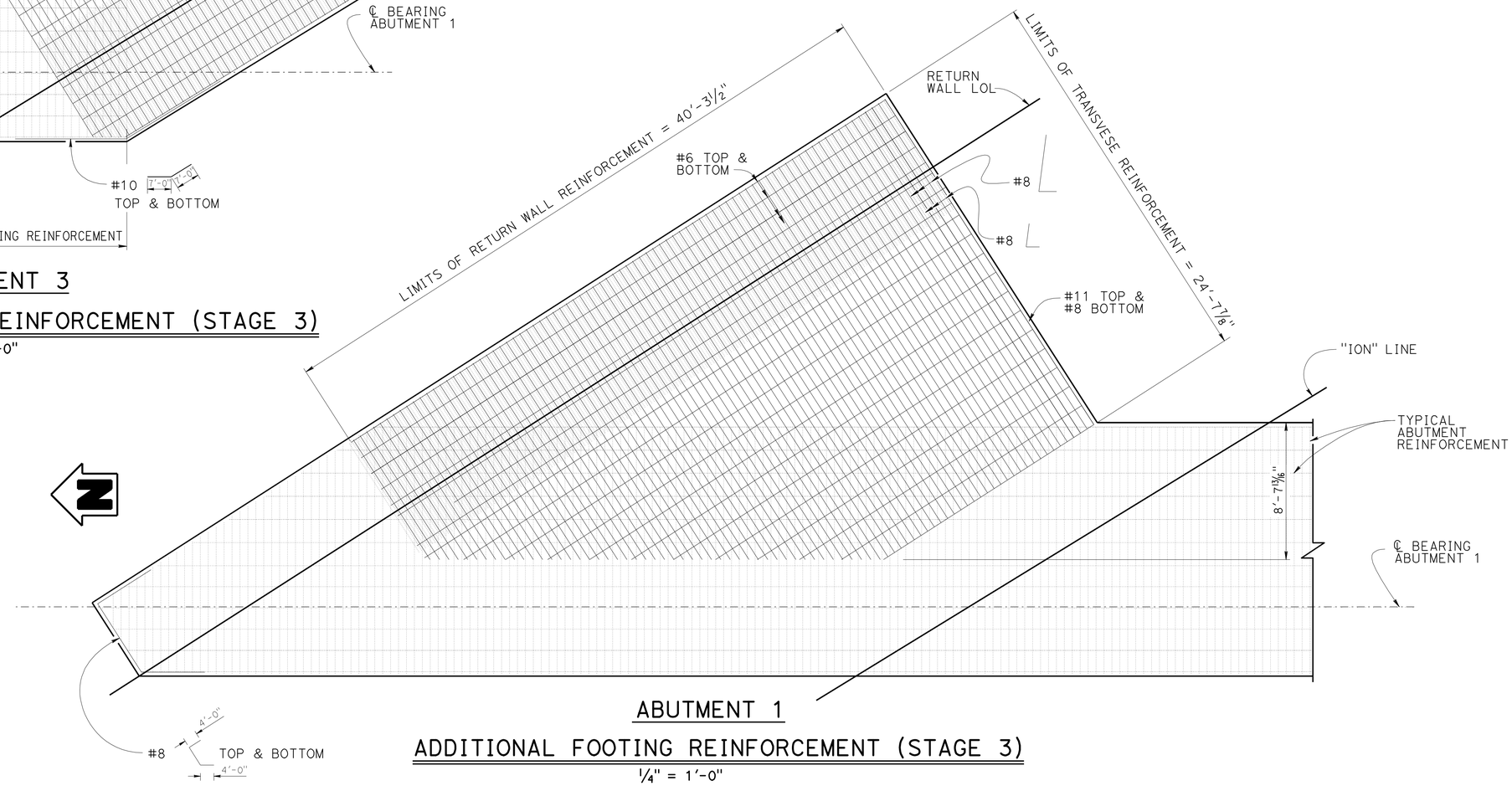

ABUTMENT 1

ADDITIONAL FOOTING REINFORCEMENT (STAGE 3)

1/4" = 1'-0"

DESIGN	BY ANTHONY LOGUS	CHECKED RUSLAN NOVIK	
DETAILS	BY HERMAN MAUROSCHADT	CHECKED RUSLAN NOVIK	
QUANTITIES	BY SARA YIP	CHECKED RUSLAN NOVIK	

STATE OF CALIFORNIA
DEPARTMENT OF TRANSPORTATION

DIVISION OF ENGINEERING SERVICES
STRUCTURE DESIGN
DESIGN BRANCH 15

BRIDGE NO. 53-3062
POST MILE 5.12

PIONEER Blvd UC (REPLACE)
ABUTMENT DETAILS No. 5

STRUCTURES DESIGN DETAIL SHEET (ENGLISH) (REV. 09-01-10)

ORIGINAL SCALE IN INCHES FOR REDUCED PLANS 0 1 2 3

UNIT: 3604
PROJECT NUMBER & PHASE: 0700001834 1
CONTRACT NO.: 07-215941

DISREGARD PRINTS BEARING EARLIER REVISION DATES

REVISION DATES: 8-2-11 12-1-11 12-12-11 3-16-12

SHEET 12 OF 72

FILE => 53-3062-g-ad05.dgn

USERNAME => s114640 DATE PLOTTED => 14-APR-2012 TIME PLOTTED => 10:08

DIST	COUNTY	ROUTE	POST MILES TOTAL PROJECT	SHEET No.	TOTAL SHEETS
07	LA	5	4.0/5.9	1093	1597

Anthony T. Logus 12-12-11
REGISTERED CIVIL ENGINEER DATE

4-9-12
PLANS APPROVAL DATE

REGISTERED PROFESSIONAL ENGINEER
Anthony T. Logus
No. C68189
Exp. 09-30-13
CIVIL
STATE OF CALIFORNIA

The State of California or its officers or agents shall not be responsible for the accuracy or completeness of electronic copies of this plan sheet.

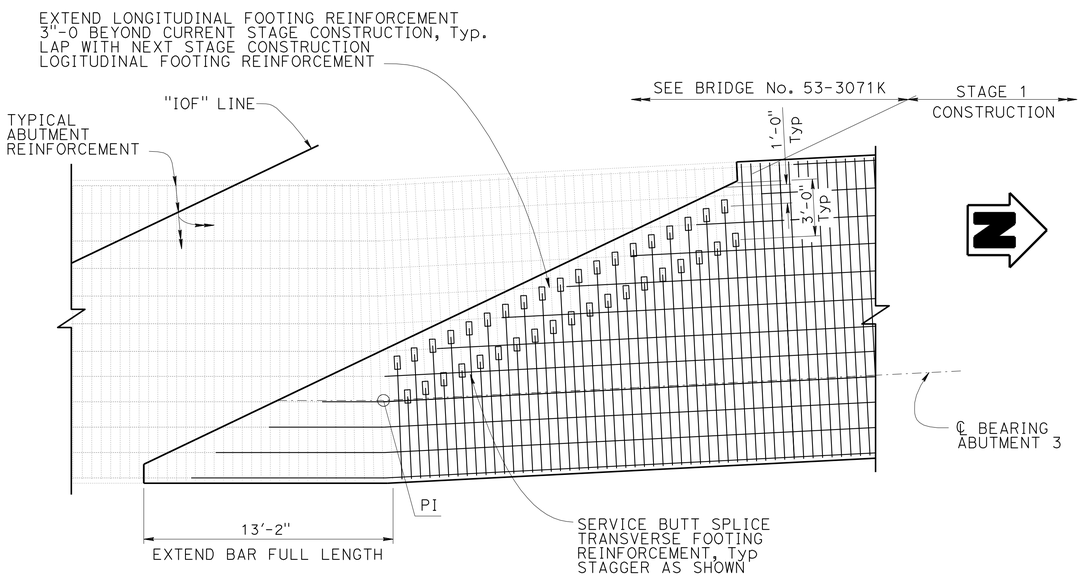

Note:
Not all reinforcement shown

PLAN

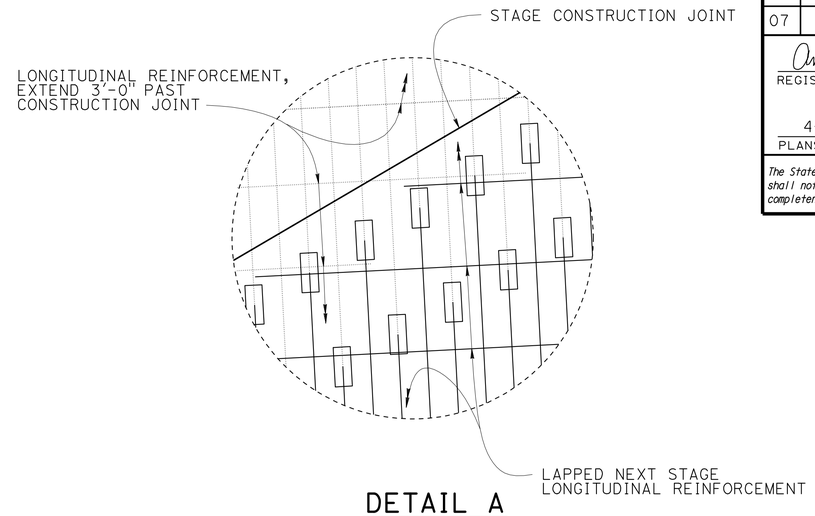

DETAIL A

3/4" = 1'-0"

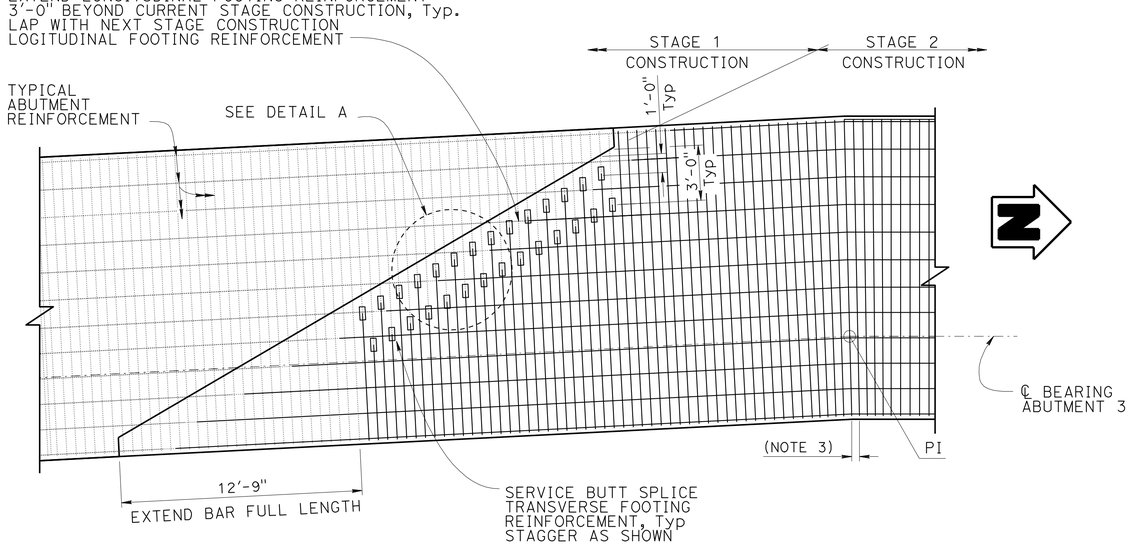

Note:
Not all reinforcement shown

PLAN

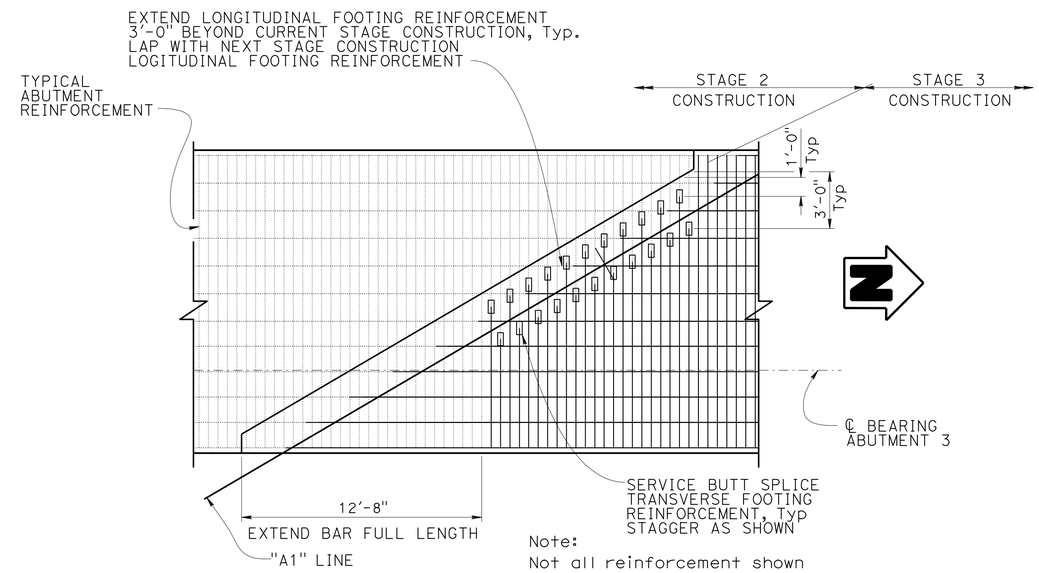

Note:
Not all reinforcement shown

PLAN

FOOTING REINFORCEMENT DETAIL

1/4" = 1'-0"

Notes:

1. Abutment 3 shown, Abutment 1 similar.
2. Not all Reinforcing shown.
3. Minimum clearance between bars shall be 5" in location where Abutment changes Bearing

	BY	CHECKED
DESIGN	ANTHONY LOGUS	RUSLAN NOVIK
DETAILS	HERMAN MAUROSCHADT	RUSLAN NOVIK
QUANTITIES	SARA YIP	RUSLAN NOVIK

STATE OF CALIFORNIA
DEPARTMENT OF TRANSPORTATION

DIVISION OF ENGINEERING SERVICES
STRUCTURE DESIGN
DESIGN BRANCH 15

BRIDGE NO. 53-3062
POST MILE 5.12

PIONEER Blvd UC (REPLACE)
ABUTMENT DETAILS No. 6

STRUCTURES DESIGN DETAIL SHEET (ENGLISH) (REV. 09-01-10)

ORIGINAL SCALE IN INCHES FOR REDUCED PLANS 0 1 2 3

UNIT: 3604
PROJECT NUMBER & PHASE: 0700001834 1
CONTRACT NO.: 07-215941

DISREGARD PRINTS BEARING EARLIER REVISION DATES

REVISION DATES: 8-8-11 12-12-11 12-23-11 3-16-12

SHEET 13 OF 72

FILE => 53-3062-g-ad06.dgn

USERNAME => s114640 DATE PLOTTED => 14-APR-2012 TIME PLOTTED => 10:08

DIST	COUNTY	ROUTE	POST MILES TOTAL PROJECT	SHEET No.	TOTAL SHEETS
07	LA	5	4.0/5.9	1094	1597

Anthony T. Logus 12-12-11
REGISTERED CIVIL ENGINEER DATE

4-9-12
PLANS APPROVAL DATE

REGISTERED PROFESSIONAL ENGINEER
Anthony T. Logus
No. C68189
Exp. 09-30-13
CIVIL
STATE OF CALIFORNIA

The State of California or its officers or agents shall not be responsible for the accuracy or completeness of electronic copies of this plan sheet.

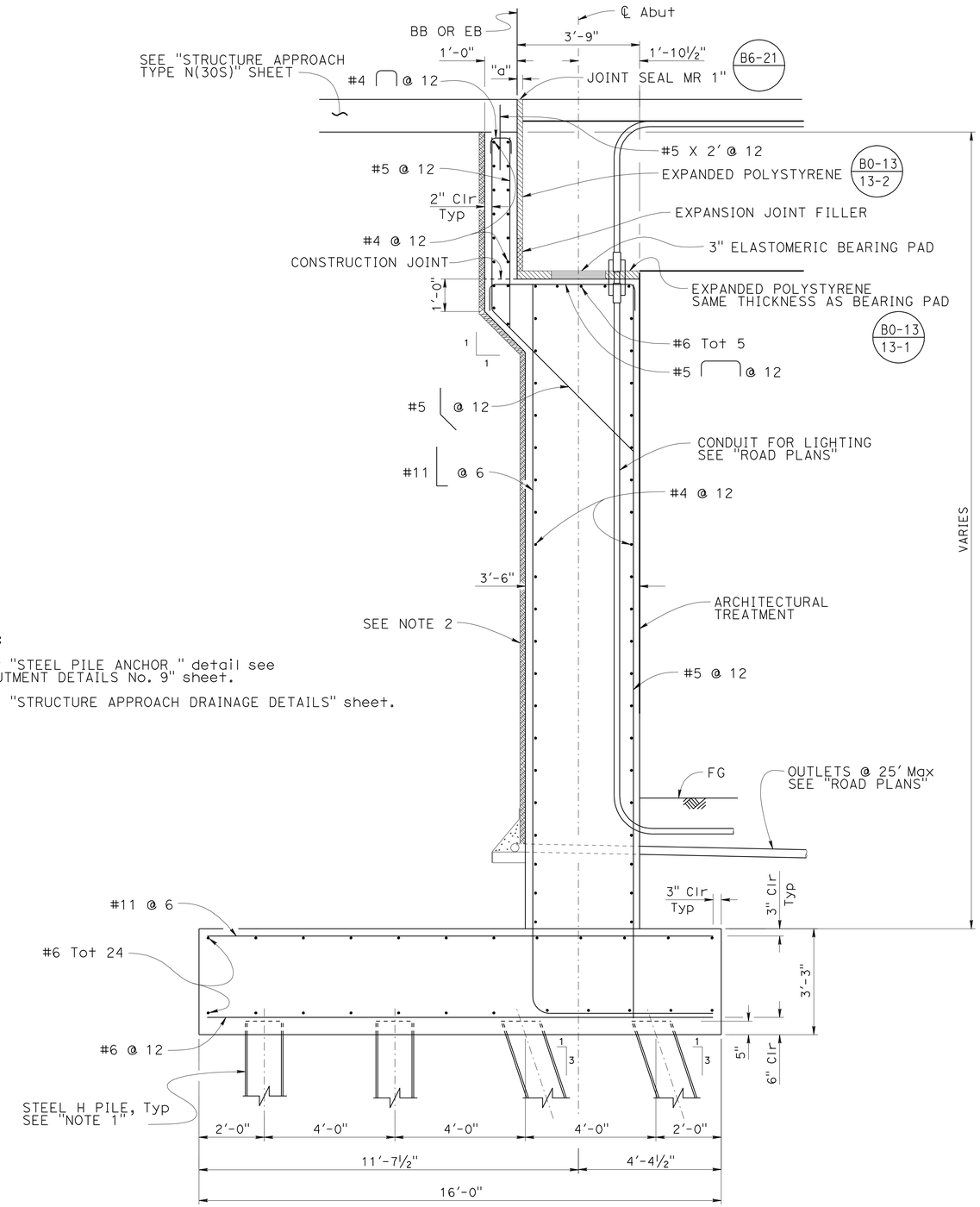

Notes:

1. For "STEEL PILE ANCHOR" detail see "ABUTMENT DETAILS No. 9" sheet.
2. See "STRUCTURE APPROACH DRAINAGE DETAILS" sheet.

SECTION A-A

½" = 1'-0"

	BY	CHECKED
DESIGN	ANTHONY LOGUS	RUSLAN NOVIK
DETAILS	HERMAN MAUROSCHADT	RUSLAN NOVIK
QUANTITIES	SARA YIP	RUSLAN NOVIK

STATE OF CALIFORNIA
DEPARTMENT OF TRANSPORTATION

DIVISION OF ENGINEERING SERVICES
STRUCTURE DESIGN
DESIGN BRANCH 15

BRIDGE NO. 53-3062
POST MILE 5.12

PIONEER Blvd UC (REPLACE)
ABUTMENT DETAILS No. 7

STRUCTURES DESIGN DETAIL SHEET (ENGLISH) (REV. 09-01-10)

ORIGINAL SCALE IN INCHES FOR REDUCED PLANS 0 1 2 3

UNIT: 3604
PROJECT NUMBER & PHASE: 0700001834 1
CONTRACT NO.: 07-215941

DISREGARD PRINTS BEARING EARLIER REVISION DATES

REVISION DATES: 3-16-12 / / / /

SHEET 14 OF 72

FILE => 53-3062-g-ad07.dgn

USERNAME => s114640 DATE PLOTTED => 14-APR-2012 TIME PLOTTED => 10:08

DIST	COUNTY	ROUTE	POST MILES TOTAL PROJECT	SHEET No.	TOTAL SHEETS
07	LA	5	4.0/5.9	1095	1597

Anthony T. Logus 12-12-11
REGISTERED CIVIL ENGINEER DATE

4-9-12
PLANS APPROVAL DATE

REGISTERED PROFESSIONAL ENGINEER
Anthony T. Logus
No. C68189
Exp. 09-30-13
CIVIL
STATE OF CALIFORNIA

The State of California or its officers or agents shall not be responsible for the accuracy or completeness of electronic copies of this plan sheet.

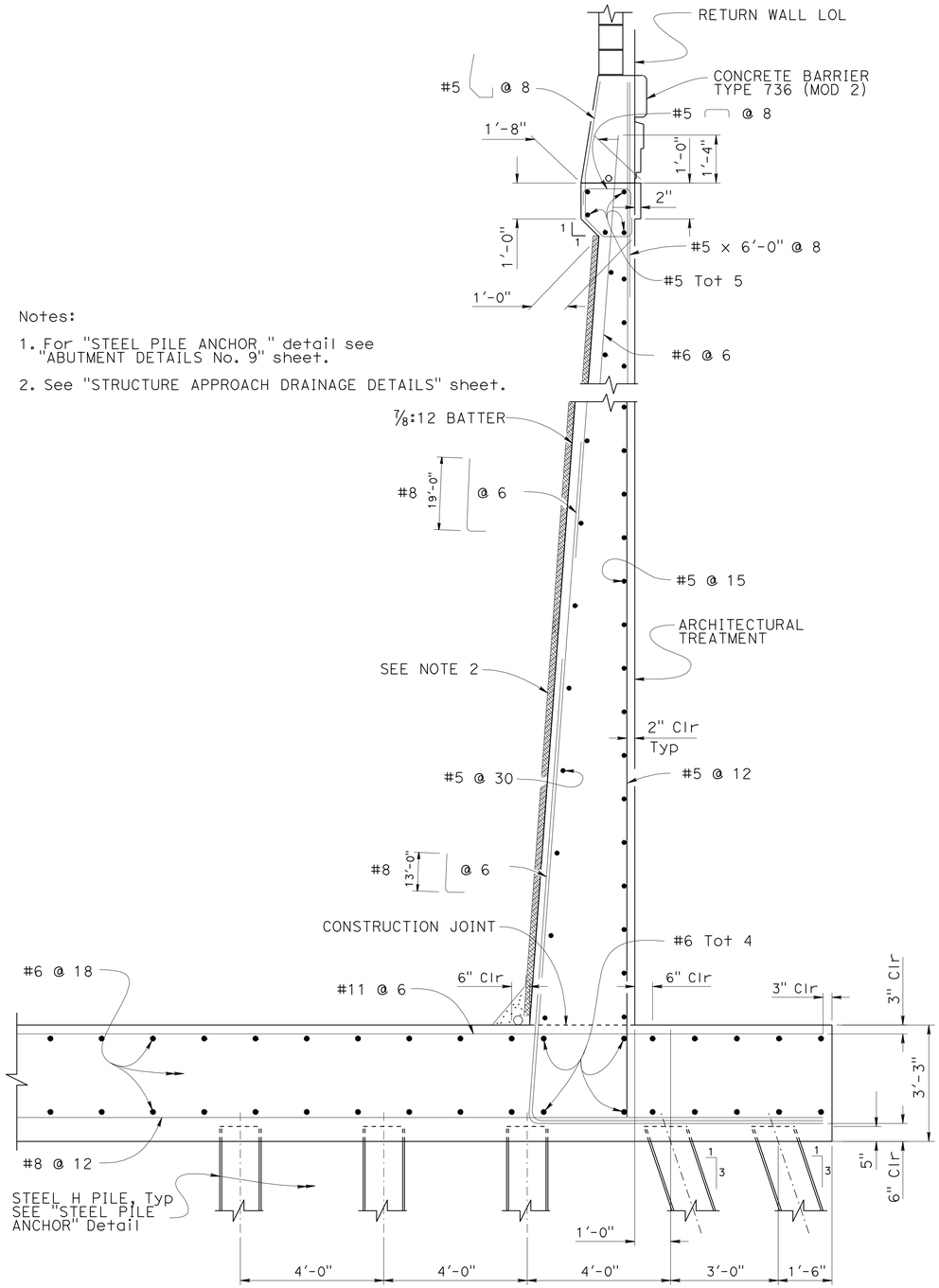

Notes:

1. For "STEEL PILE ANCHOR" detail see "ABUTMENT DETAILS No. 9" sheet.
2. See "STRUCTURE APPROACH DRAINAGE DETAILS" sheet.

SECTION C-C

1/2" = 1'-0"

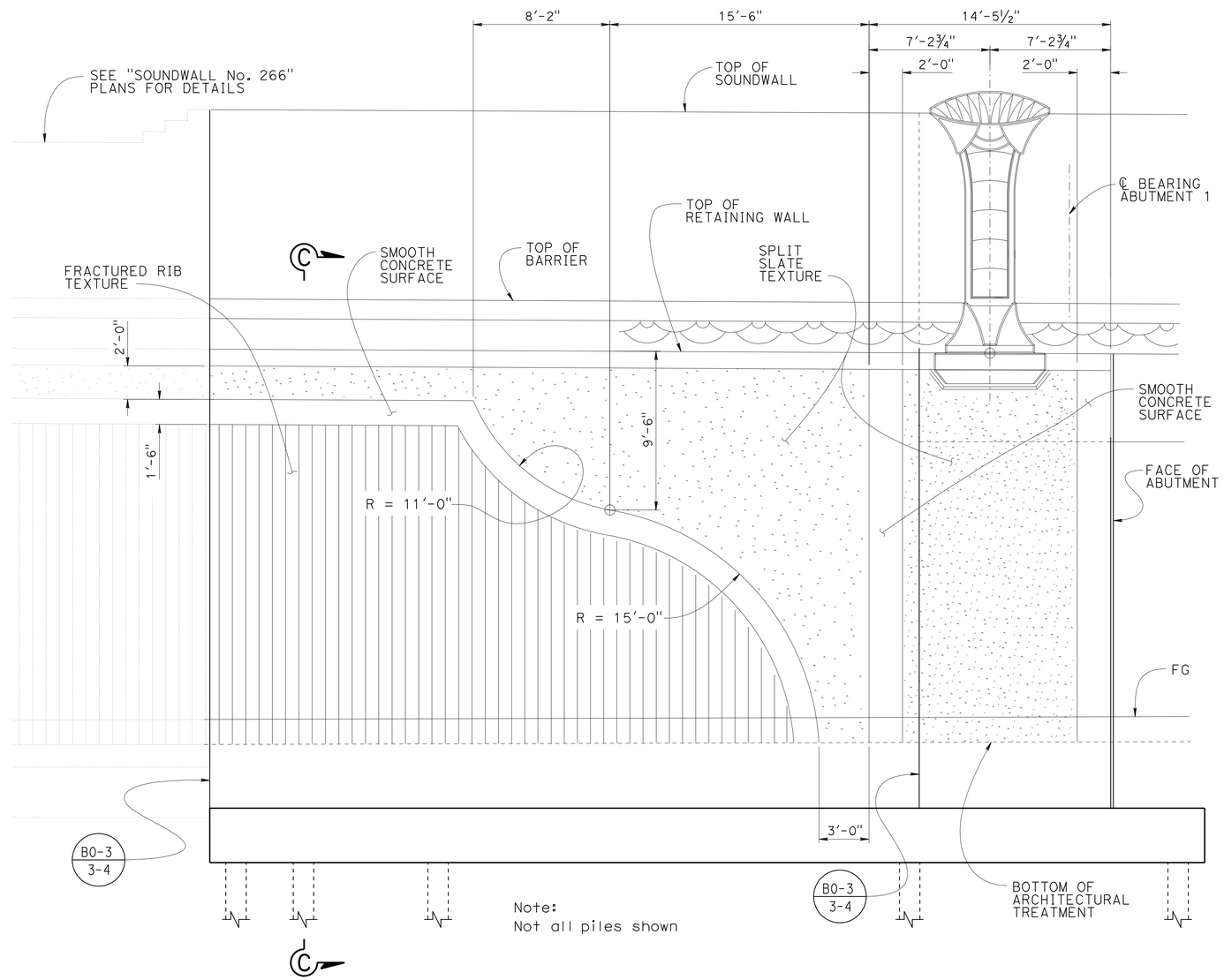

VIEW B-B

1/4" = 1'-0"

DESIGN	BY A. LOGUS / I. TASABIA	CHECKED RUSLAN NOVIK	
DETAILS	BY H. MAUROSCHADT / I. TASABIA	CHECKED RUSLAN NOVIK	
QUANTITIES	BY SARA YIP	CHECKED RUSLAN NOVIK	

STATE OF CALIFORNIA
DEPARTMENT OF TRANSPORTATION

DIVISION OF ENGINEERING SERVICES
STRUCTURE DESIGN
DESIGN BRANCH 15

BRIDGE NO. 53-3062
POST MILE 5.12

PIONEER Blvd UC (REPLACE)
ABUTMENT DETAILS No. 8

STRUCTURES DESIGN DETAIL SHEET (ENGLISH) (REV. 09-01-10)

ORIGINAL SCALE IN INCHES FOR REDUCED PLANS 0 1 2 3

UNIT: 3604
PROJECT NUMBER & PHASE: 0700001834 1
CONTRACT NO.: 07-215941

DISREGARD PRINTS BEARING EARLIER REVISION DATES

REVISION DATES: 8-15-11 10-25-11 12-12-11 3-16-12

SHEET 15 OF 72

FILE => 53-3062-g-ad08.dgn

USERNAME => s114640 DATE PLOTTED => 14-APR-2012 TIME PLOTTED => 10:08

DIST	COUNTY	ROUTE	POST MILES TOTAL PROJECT	SHEET No.	TOTAL SHEETS
07	LA	5	4.0/5.9	1096	1597

Anthony T. Logus 12-12-11
REGISTERED CIVIL ENGINEER DATE

4-9-12
PLANS APPROVAL DATE

REGISTERED PROFESSIONAL ENGINEER
Anthony T. Logus
No. C68189
Exp. 09-30-13
CIVIL
STATE OF CALIFORNIA

The State of California or its officers or agents shall not be responsible for the accuracy or completeness of electronic copies of this plan sheet.

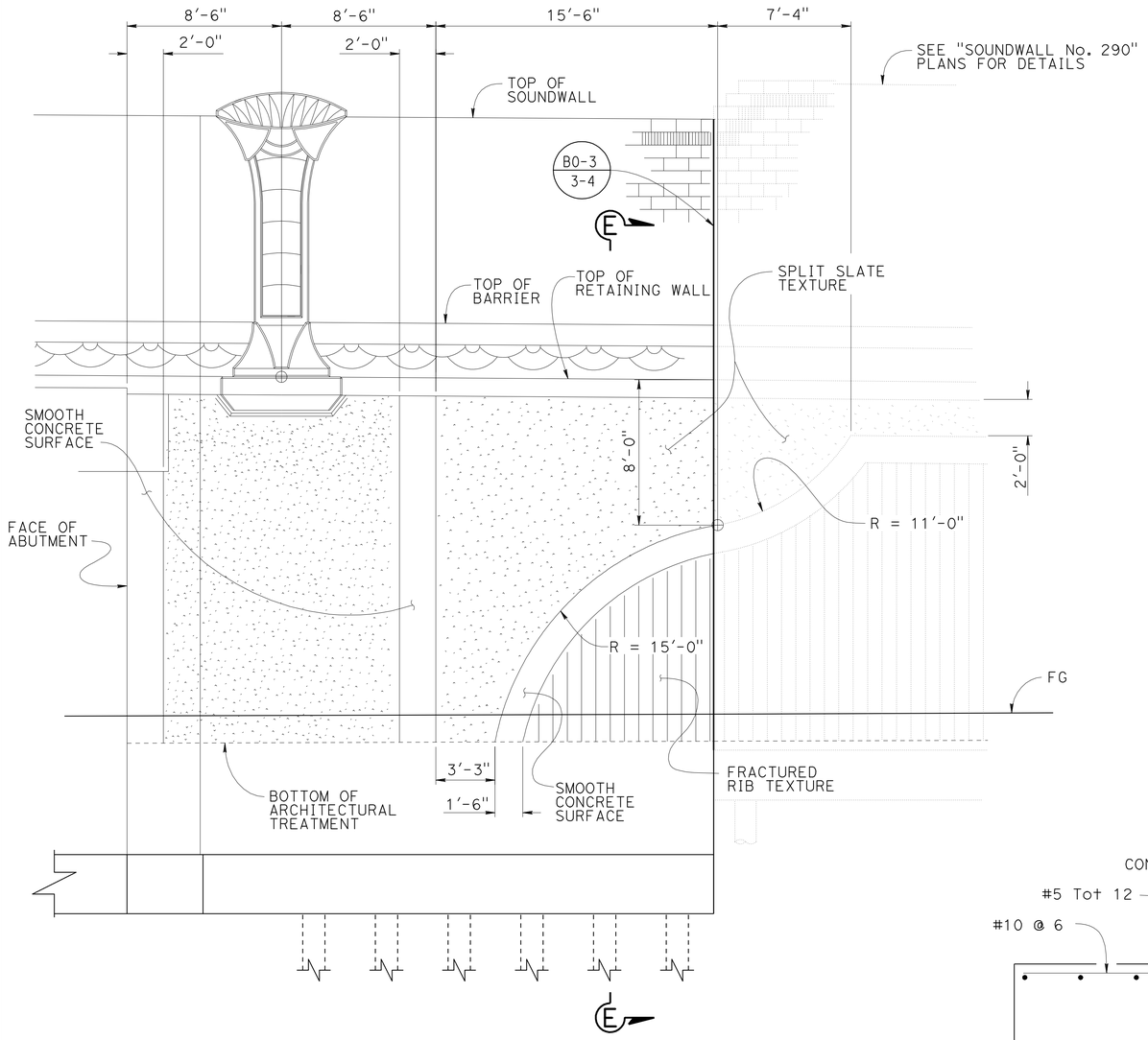

VIEW D-D
1/4" = 1'-0"

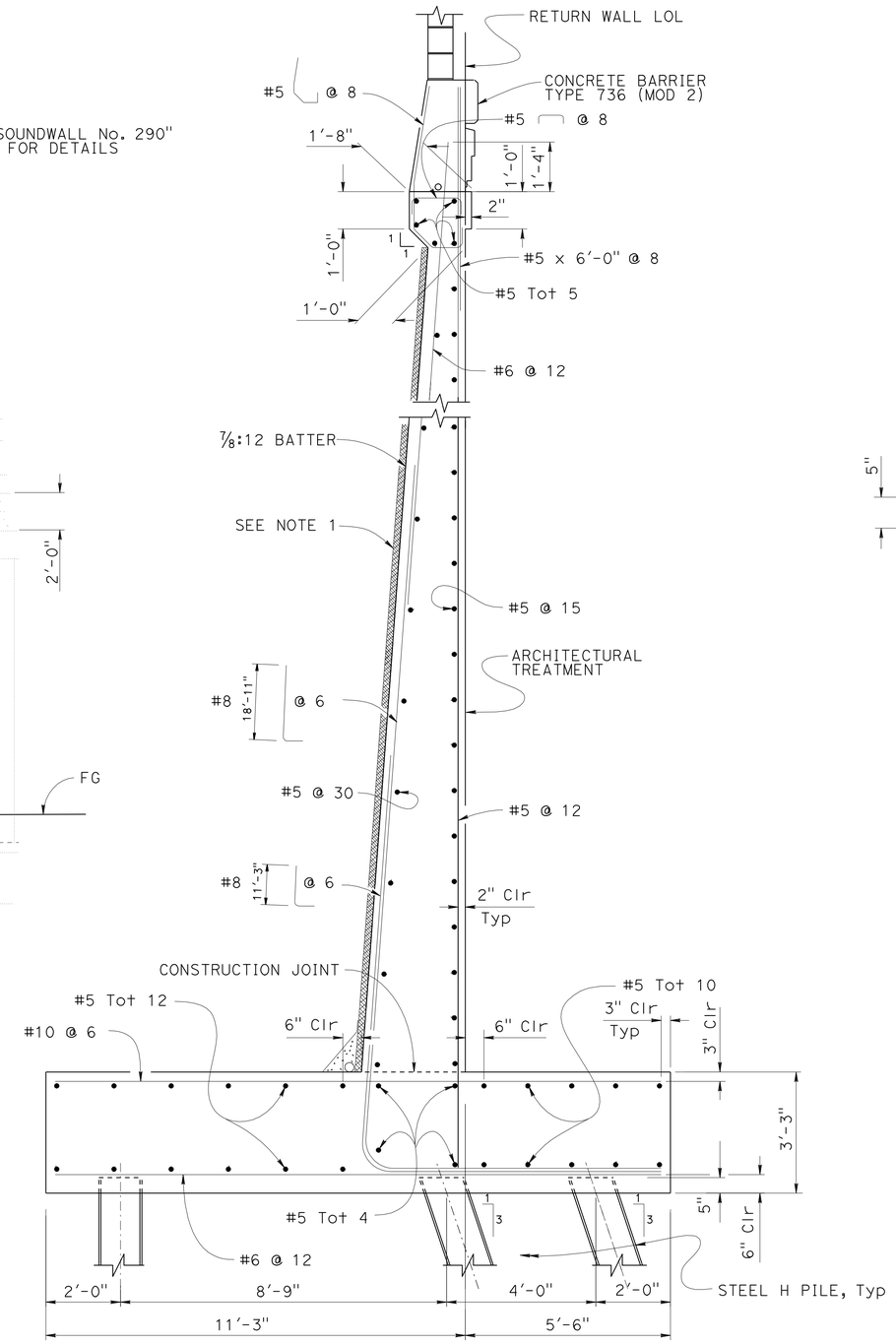

SECTION E-E
1/2" = 1'-0"

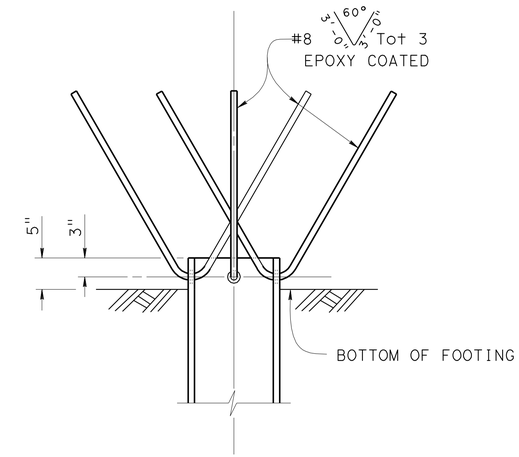

ELEVATION

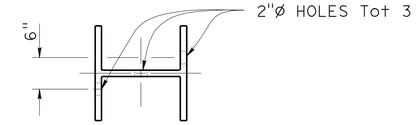

PLAN

STEEL PILE ANCHOR

Notes:
1. See "STRUCTURE APPROACH DRAINAGE DETAILS" sheet.

	BY	CHECKED
DESIGN	A. LOGUS / I. TASABIA	RUSLAN NOVIK
DETAILS	H. MAUROSCHADT / I. TASABIA	RUSLAN NOVIK
QUANTITIES	SARA YIP	RUSLAN NOVIK

STATE OF CALIFORNIA
DEPARTMENT OF TRANSPORTATION

DIVISION OF ENGINEERING SERVICES
STRUCTURE DESIGN
DESIGN BRANCH 15

BRIDGE NO. 53-3062
POST MILE 5.12

PIONEER Blvd UC (REPLACE)
ABUTMENT DETAILS No. 9

STRUCTURES DESIGN DETAIL SHEET (ENGLISH) (REV. 09-01-10)

ORIGINAL SCALE IN INCHES FOR REDUCED PLANS 0 1 2 3

UNIT: 3604
PROJECT NUMBER & PHASE: 0700001834 1
CONTRACT NO.: 07-215941

DISREGARD PRINTS BEARING EARLIER REVISION DATES

REVISION DATES 8-15-11 10-21-11 12-30-11 3-16-12

SHEET 16 OF 72

FILE => 53-3062-g-ad09.dgn

USERNAME => s114640 DATE PLOTTED => 14-APR-2012 TIME PLOTTED => 10:08

DIST	COUNTY	ROUTE	POST MILES TOTAL PROJECT	SHEET No.	TOTAL SHEETS
07	LA	5	4.0/5.9	1097	1597

Anthony T. Logus 12-12-11
REGISTERED CIVIL ENGINEER DATE

4-9-12
PLANS APPROVAL DATE

REGISTERED PROFESSIONAL ENGINEER Anthony T. Logus No. C68189 Exp. 09-30-13 CIVIL STATE OF CALIFORNIA

The State of California or its officers or agents shall not be responsible for the accuracy or completeness of electronic copies of this plan sheet.

Notes:

1. For Column details, see "COLUMN DETAILS No. 1" and "COLUMN DETAILS No. 2" sheets.
2. For Shear Pipe Pin details see "SHEAR PIPE PIN DETAIL" on "BENT DETAILS No. 2" sheet.
3. Omit Shear Pipe Pin in Bay with Construction Joint.
4. For details not shown see "BENT LAYOUT No. 2" sheet.

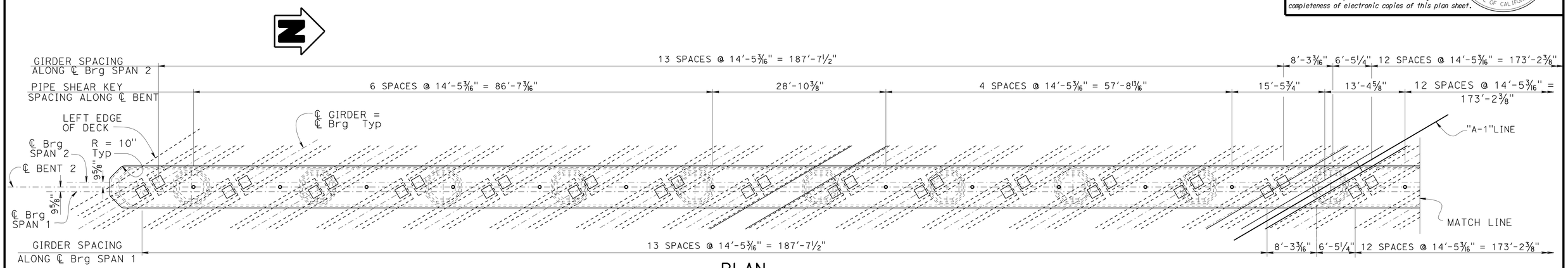

PLAN

⅛" = 1'-0"

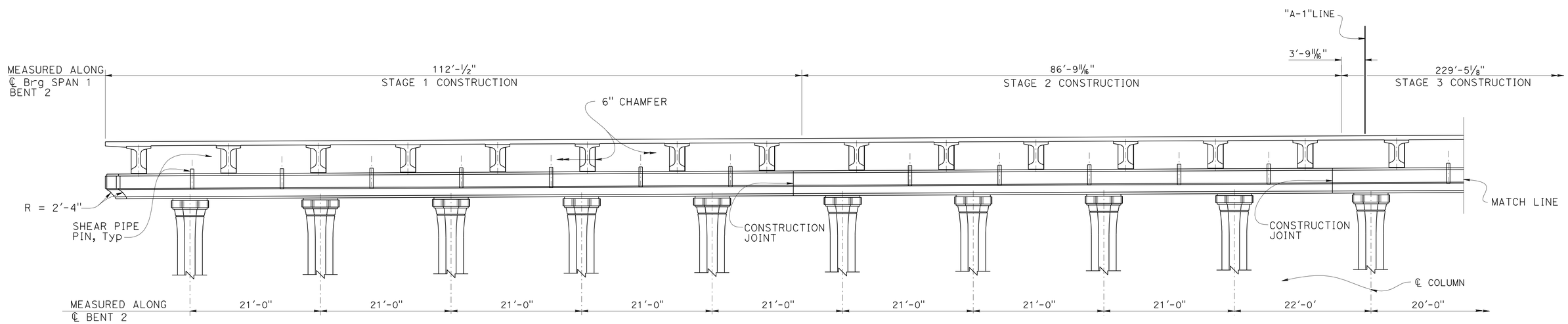

ELEVATION

⅛" = 1'-0"

NOTE:
THE CONTRACTOR SHALL VERIFY ALL CONTROLLING FIELD DIMENSIONS BEFORE ORDERING OR FABRICATING ANY MATERIAL.

	BY	CHECKED
DESIGN	ANTHONY LOGUS	RUSLAN NOVIK
DETAILS	BRUNO JENKO	RUSLAN NOVIK
QUANTITIES	SARA YIP	RUSLAN NOVIK

STATE OF CALIFORNIA
DEPARTMENT OF TRANSPORTATION

DIVISION OF ENGINEERING SERVICES
STRUCTURE DESIGN
DESIGN BRANCH 15

BRIDGE NO. 53-3062
POST MILE 5.12

PIONEER Blvd UC (REPLACE)
BENT LAYOUT No. 1

STRUCTURES DESIGN DETAIL SHEET (ENGLISH) (REV. 09-01-10)

ORIGINAL SCALE IN INCHES FOR REDUCED PLANS 0 1 2 3

UNIT: 3604
PROJECT NUMBER & PHASE: 0700001834 1
CONTRACT NO.: 07-215941

DISREGARD PRINTS BEARING EARLIER REVISION DATES

REVISION DATES 8-26-11 11-29-11 12-9-11 3-16-12

SHEET 17 OF 72

FILE => 53-3062-h-b01_1o01.dgn

USERNAME => s114640 DATE PLOTTED => 14-APR-2012 TIME PLOTTED => 10:08

DIST	COUNTY	ROUTE	POST MILES TOTAL PROJECT	SHEET No.	TOTAL SHEETS
07	LA	5	4.0/5.9	1098	1597

Anthony T. Logus 12-12-11
REGISTERED CIVIL ENGINEER DATE

4-9-12
PLANS APPROVAL DATE

REGISTERED PROFESSIONAL ENGINEER
Anthony T. Logus
No. C68189
Exp. 09-30-13
CIVIL
STATE OF CALIFORNIA

The State of California or its officers or agents shall not be responsible for the accuracy or completeness of electronic copies of this plan sheet.

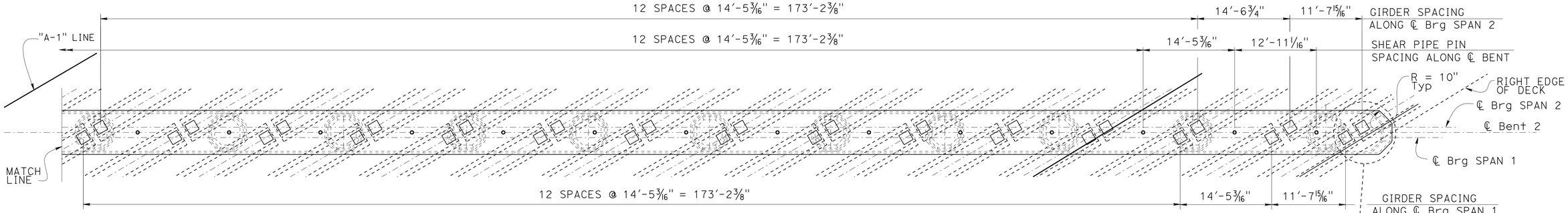

PLAN

1/8" = 1'-0"

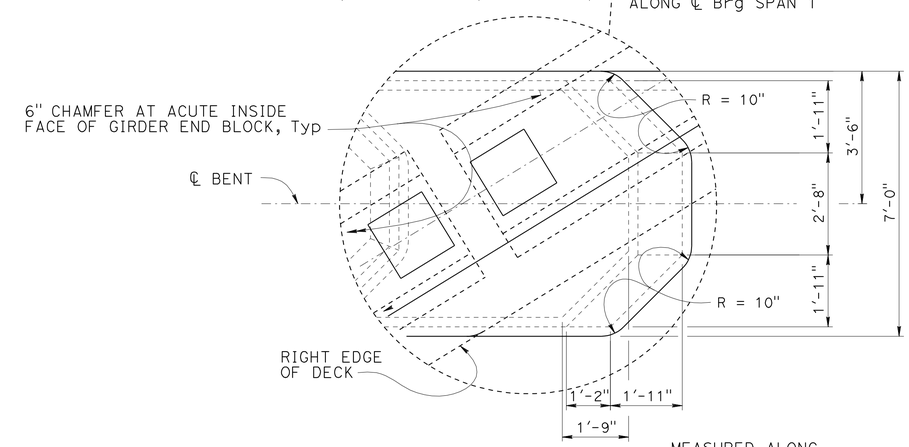

Notes:

1. For Column details, see "COLUMN DETAILS No. 1" and "COLUMN DETAILS No. 2" sheets.
2. For Shear Pipe Pin details see "SHEAR PIPE PIN DETAIL" on "BENT DETAILS No. 2" sheet.
3. Omit Shear Pipe Pin in Bay with Construction Joint.

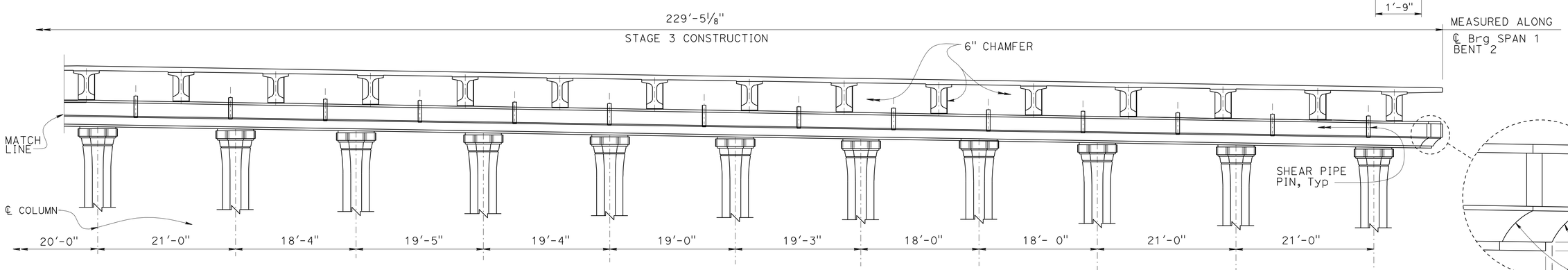

ELEVATION

1/8" = 1'-0"

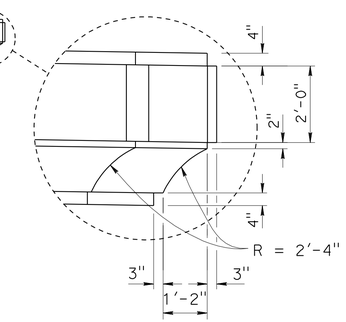

NOTE:
THE CONTRACTOR SHALL VERIFY ALL CONTROLLING FIELD DIMENSIONS BEFORE ORDERING OR FABRICATING ANY MATERIAL.

	BY	CHECKED
DESIGN	ANTHONY LOGUS	RUSLAN NOVIK
DETAILS	BRUNO JENKO	RUSLAN NOVIK
QUANTITIES	SARA YIP	RUSLAN NOVIK

STATE OF CALIFORNIA
DEPARTMENT OF TRANSPORTATION

DIVISION OF ENGINEERING SERVICES
STRUCTURE DESIGN
DESIGN BRANCH 15

BRIDGE NO. 53-3062
POST MILE 5.12

PIONEER Blvd UC (REPLACE)
BENT LAYOUT No. 2

STRUCTURES DESIGN DETAIL SHEET (ENGLISH) (REV. 09-01-10)

ORIGINAL SCALE IN INCHES FOR REDUCED PLANS 0 1 2 3

UNIT: 3604
PROJECT NUMBER & PHASE: 0700001834 1
CONTRACT NO.: 07-215941

DISREGARD PRINTS BEARING EARLIER REVISION DATES

REVISION DATES: 2-24-12 8-29-11 11-28-11 12-9-11

SHEET 18 OF 72

FILE => 53-3062-h-b01_lo02.dgn

USERNAME => s114640 DATE PLOTTED => 14-APR-2012 TIME PLOTTED => 10:08

DIST	COUNTY	ROUTE	POST MILES TOTAL PROJECT	SHEET No.	TOTAL SHEETS
07	LA	5	4.0/5.9	1099	1597

Anthony T. Logus 12-12-11
REGISTERED CIVIL ENGINEER DATE

4-9-12
PLANS APPROVAL DATE

REGISTERED PROFESSIONAL ENGINEER
Anthony T. Logus
No. C68189
Exp. 09-30-13
CIVIL
STATE OF CALIFORNIA

The State of California or its officers or agents shall not be responsible for the accuracy or completeness of electronic copies of this plan sheet.

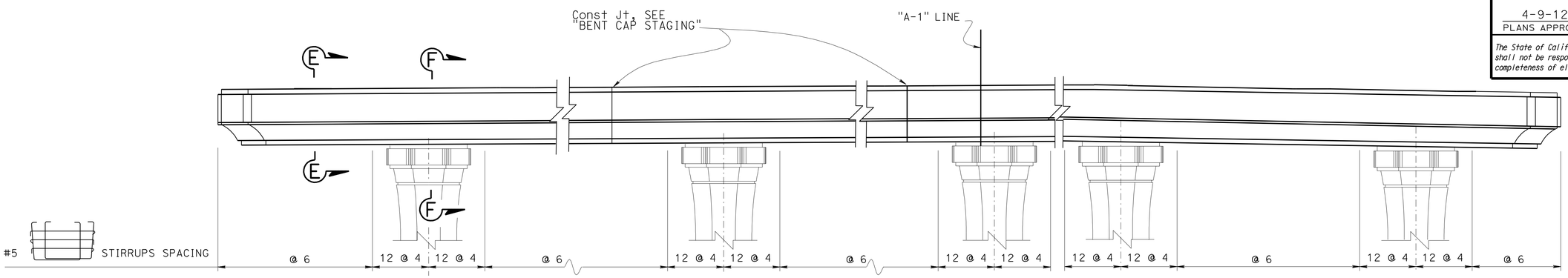

BENT CAP STIRRUP LAYOUT

NO SCALE

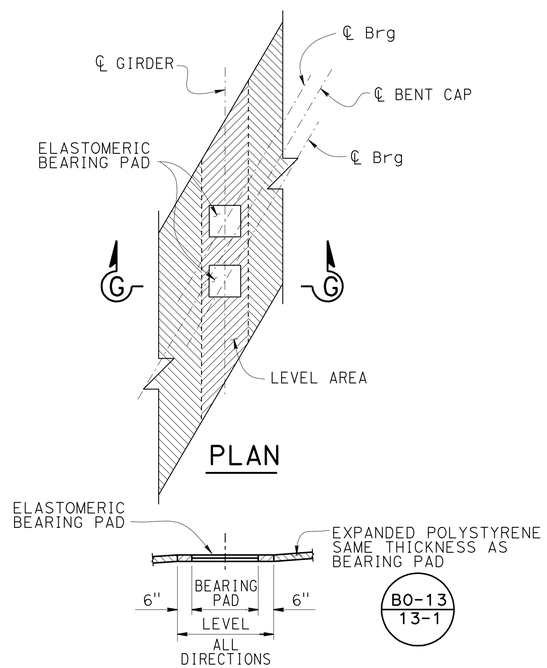

SECTION G-G
BENT CAP BEARING PAD DETAIL

NO SCALE

Note:
Details typical at all bearing pads.

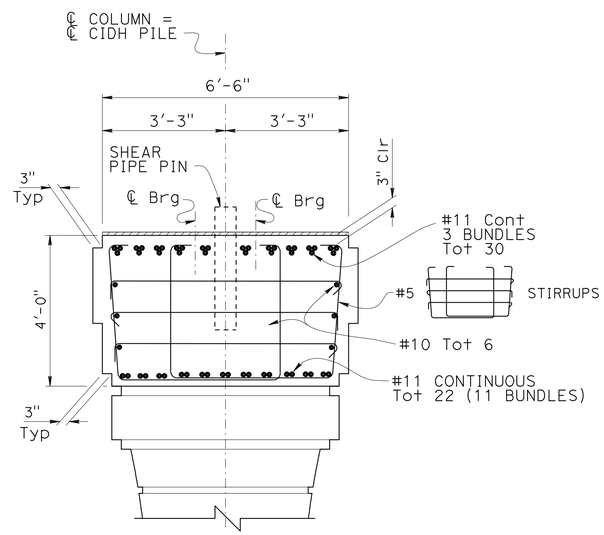

BENT CAP SECTION E-E

½" = 1'-0"

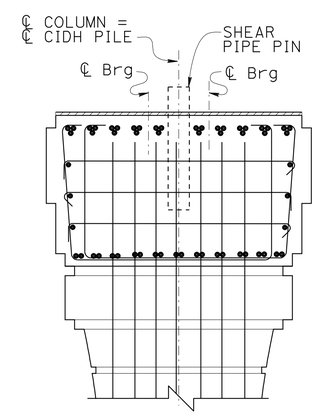

Note:
For information not shown, see "BENTCAP SECTION E-E"

BENT CAP SECTION F-F

½" = 1'-0"

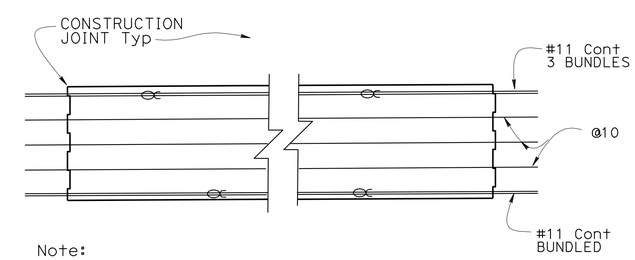

Note:

Extend longitudinal reinforcement 1'-6" beyond Stage 1 and Stage 2 cap. Mechanically splice to reinforcement in pier cap during construction of adjacent stage.

BENT CAP STAGING

⅜" = 1'-0"

Notes:
1. For Column details, see "COLUMN DETAILS No. 1" and "COLUMN DETAILS No. 2" sheets.
2. For Shear Pipe Pin details see "SHEAR PIPE PIN DETAIL" on "BENT DETAILS No. 2" sheet.
3. Omit Shear Pipe Pin in Bay with Construction Joint.

	BY	CHECKED
DESIGN	ANTHONY LOGUS	RUSLAN NOVIK
DETAILS	BRUNO JENKO	RUSLAN NOVIK
QUANTITIES	SARA YIP	RUSLAN NOVIK

STATE OF CALIFORNIA
DEPARTMENT OF TRANSPORTATION

DIVISION OF ENGINEERING SERVICES
STRUCTURE DESIGN
DESIGN BRANCH 15

BRIDGE NO. 53-3062
POST MILE 5.12

PIONEER Blvd UC (REPLACE)
BENT DETAILS No. 1

STRUCTURES DESIGN DETAIL SHEET (ENGLISH) (REV. 09-01-10)

ORIGINAL SCALE IN INCHES FOR REDUCED PLANS 0 1 2 3

UNIT: 3604
PROJECT NUMBER & PHASE: 0700001834 1
CONTRACT NO.: 07-215941

DISREGARD PRINTS BEARING EARLIER REVISION DATES

REVISION DATES: 8-24-11 11-28-11 12-9-11 3-16-12

SHEET 19 OF 72

FILE => 53-3062-h-b01dt01.dgn

USERNAME => s174640 DATE PLOTTED => 14-APR-2012 TIME PLOTTED => 10:08

DIST	COUNTY	ROUTE	POST MILES TOTAL PROJECT	SHEET No.	TOTAL SHEETS
07	LA	5	4.0/5.9	1100	1597

Anthony T. Logus 12-12-11
REGISTERED CIVIL ENGINEER DATE

4-9-12
PLANS APPROVAL DATE

REGISTERED PROFESSIONAL ENGINEER
Anthony T. Logus
No. C68189
Exp. 09-30-13
CIVIL
STATE OF CALIFORNIA

The State of California or its officers or agents shall not be responsible for the accuracy or completeness of electronic copies of this plan sheet.

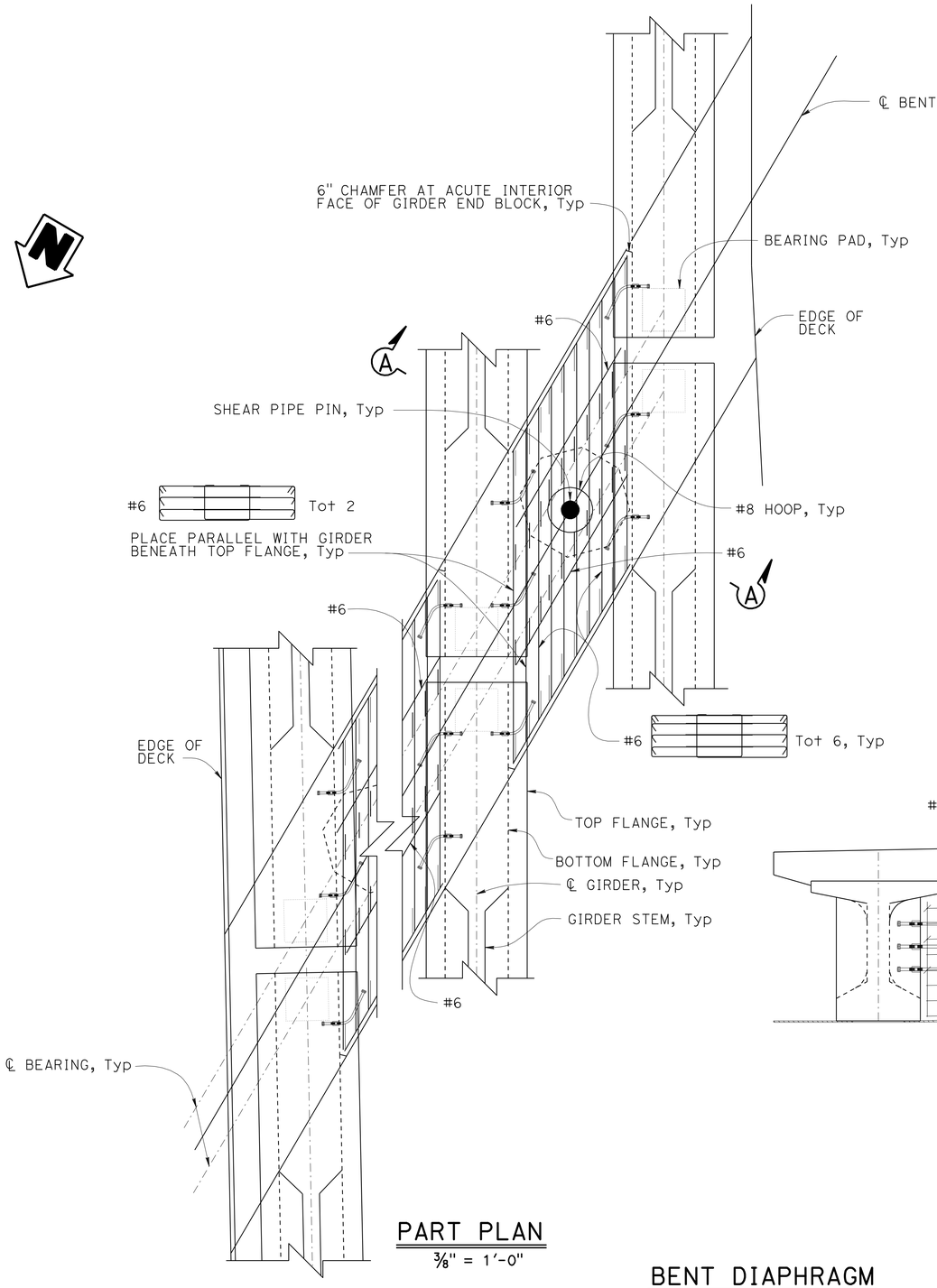

PART PLAN
3/8" = 1'-0"

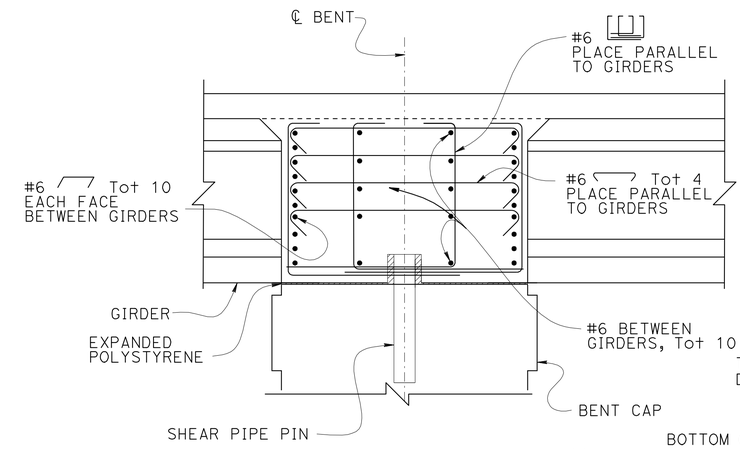

SECTION A-A
1/2" = 1'-0"

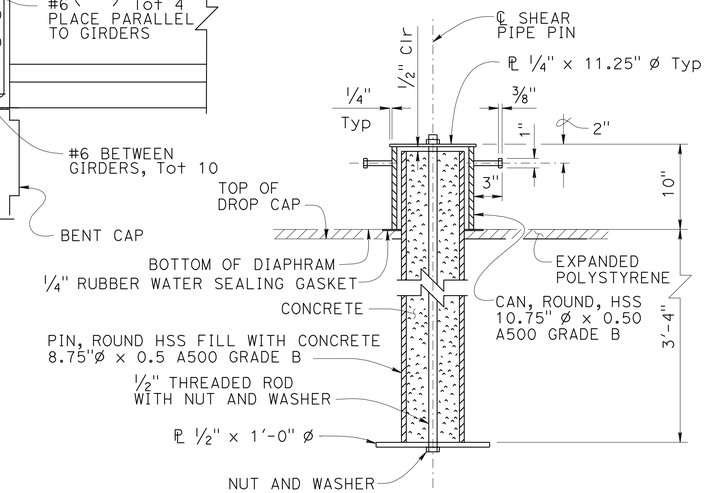

ELEVATION

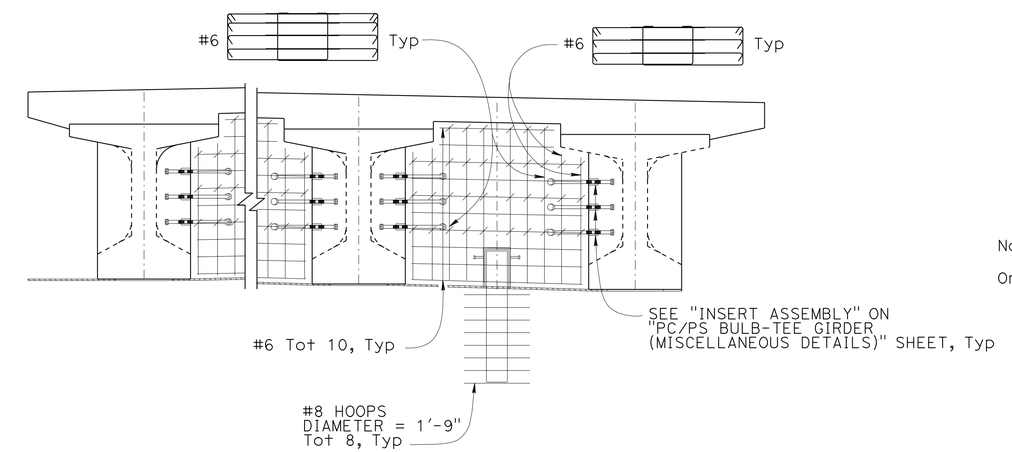

PART ELEVATION
1/2" = 1'-0"

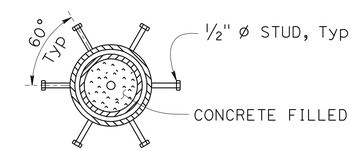

PLAN

Note:

Omit Shear Pipe Pin in Bay with joint.

SHEAR PIPE PIN DETAIL
NO SCALE

BENT DIAPHRAGM

DESIGN	BY ANTHONY LOGUS	CHECKED RUSLAN NOVIK
DETAILS	BY HERMAN MAUROSCHADT	CHECKED RUSLAN NOVIK
QUANTITIES	BY SARA YIP	CHECKED RUSLAN NOVIK

STATE OF CALIFORNIA
DEPARTMENT OF TRANSPORTATION

DIVISION OF ENGINEERING SERVICES
STRUCTURE DESIGN
DESIGN BRANCH 15

BRIDGE NO. 53-3062
POST MILE 5.12

PIONEER Blvd UC (REPLACE)
BENT DETAILS No. 2

STRUCTURES DESIGN DETAIL SHEET (ENGLISH) (REV. 09-01-10)

ORIGINAL SCALE IN INCHES FOR REDUCED PLANS 0 1 2 3

UNIT: 3604
PROJECT NUMBER & PHASE: 0700001834 1
CONTRACT NO.: 07-215941

DISREGARD PRINTS BEARING EARLIER REVISION DATES

REVISION DATES: 10-6-11 12-12-11 2-18-12 11-28-11

SHEET 20 OF 72

FILE => 53-3062-h-b01dt02.dgn

USERNAME => s119571 DATE PLOTTED => 14-APR-2012 TIME PLOTTED => 11:22