DIST	COUNTY	ROUTE	POST MILES TOTAL PROJECT	SHEET No.	TOTAL SHEETS
07	LA	5	2.4/4.0	1101	1288

REGISTERED CIVIL ENGINEER — DATE 12/7/2011

3-26-12
PLANS APPROVAL DATE

REGISTERED PROFESSIONAL ENGINEER — Kevin Harper — No. 42221 — Exp. 3-31-12 — CIVIL — STATE OF CALIFORNIA

The State of California or its officers or agents shall not be responsible for the accuracy or completeness of electronic copies of this plan sheet.

NOTES:
1. For barrier details, see "CONCRETE BARRIER TYPE 736A (Mod 1) DETAILS" sheet.
2. Retaining wall expansion joints, weakened planes and weep holes shall be placed per B0-3/3-3.
3. All longitudinal dimensions are measured along the RW LOL.
4. Not all piles are shown in "DEVELOPED MIRRORED ELEVATION".
5. For "WEEP HOLE AND GEOCOMPOSITE DRAIN" alternative, see "INDEX TO PLANS" sheet.

LEGEND:

⊙ - Indicates vertical class 90 pile

⊙ - Indicates 1:3 battered class 90 pile

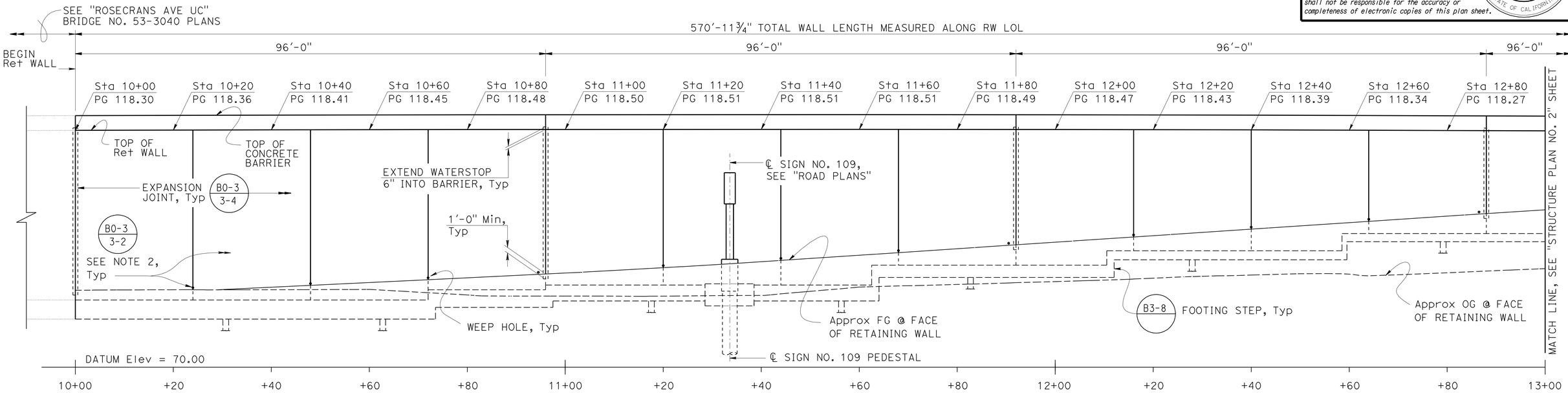

DEVELOPED MIRRORED ELEVATION (B3-1 / B3-2)

1" = 10'

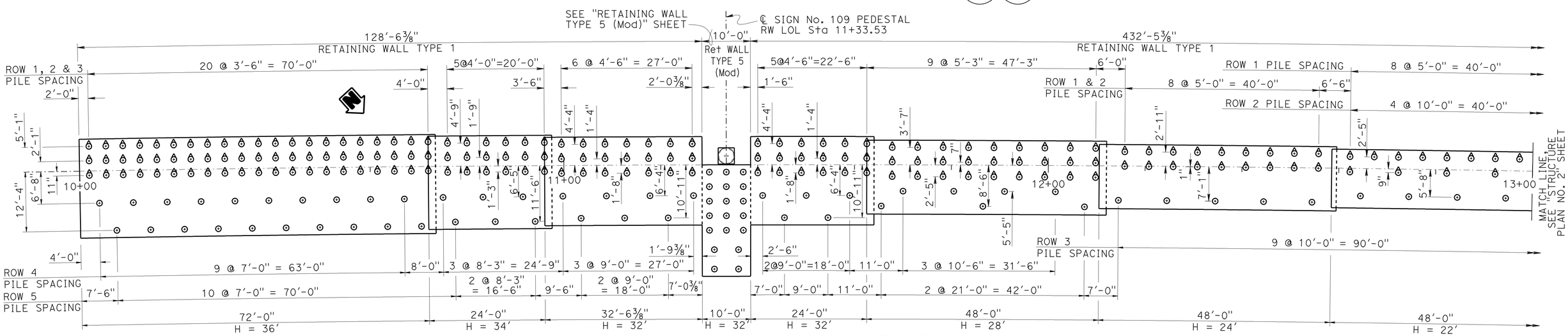

FOOTING PLAN (B3-1 / B3-2)

1" = 10'

DESIGN	BY Daniel Sessions	CHECKED Kyoung-Hyeog Lee
DETAILS	BY Y. Feng / G. Dickerson	CHECKED Kyoung-Hyeog Lee
QUANTITIES	BY April Pearson	CHECKED Greg Jones

STATE OF CALIFORNIA
DEPARTMENT OF TRANSPORTATION

DIVISION OF ENGINEERING SERVICES
STRUCTURE DESIGN
DESIGN BRANCH 1

BRIDGE NO. X
POST MILE 3.50

RETAINING WALL NO. 189
STRUCTURE PLAN NO. 1

STRUCTURES DESIGN DETAIL SHEET (ENGLISH) (REV. 09-01-10)

ORIGINAL SCALE IN INCHES FOR REDUCED PLANS 0 1 2 3

UNIT: 3576
PROJECT NUMBER & PHASE: 07000018331
CONTRACT NO.: 07-215934

DISREGARD PRINTS BEARING EARLIER REVISION DATES — REVISION DATES 10/21/11 11/8/11 11/28/11

SHEET 3 OF 14

FILE => rw 189-c-sp01.dgn

USERNAME => s174640 DATE PLOTTED => 28-MAR-2012 TIME PLOTTED => 12:44

DIST	COUNTY	ROUTE	POST MILES TOTAL PROJECT	SHEET No.	TOTAL SHEETS
07	LA	5	2.4/4.0	1102	1288

REGISTERED CIVIL ENGINEER 12/7/2011 DATE

3-26-12
PLANS APPROVAL DATE

REGISTERED PROFESSIONAL ENGINEER Kevin Harper No. 42221 Exp. 3-31-12 CIVIL STATE OF CALIFORNIA

The State of California or its officers or agents shall not be responsible for the accuracy or completeness of electronic copies of this plan sheet.

For "NOTES" and "LEGEND", see "STRUCTURE PLAN NO. 1" sheet.

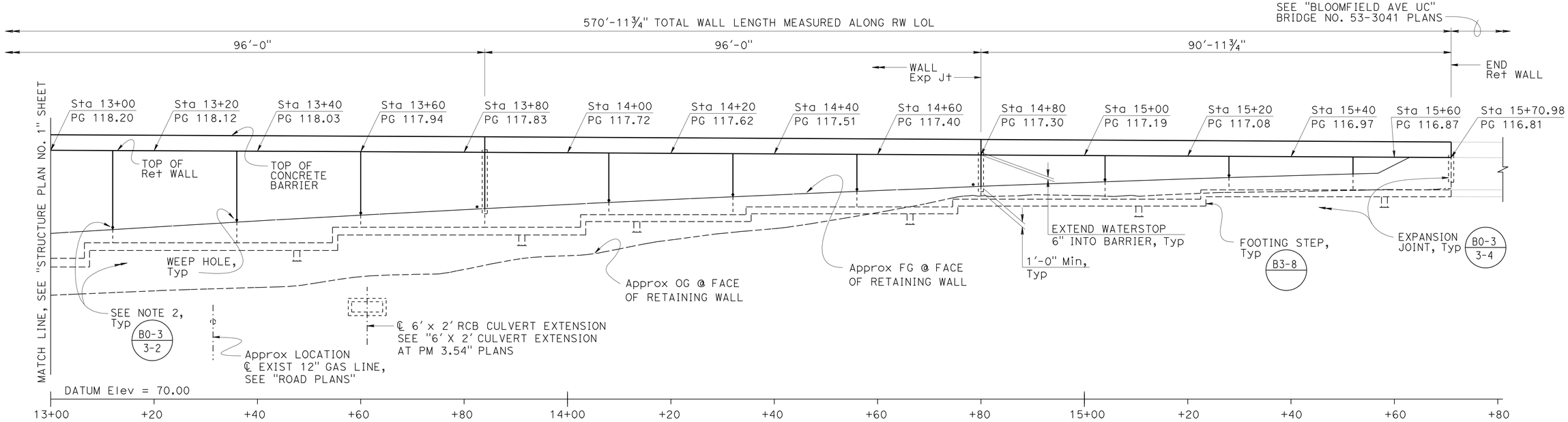

DEVELOPED MIRRORED ELEVATION (B3-1)

1" = 10'

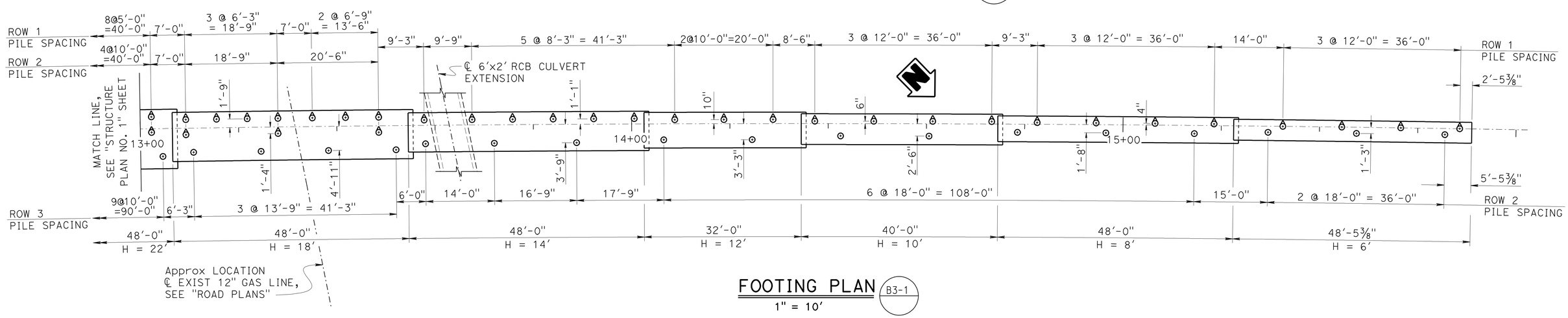

FOOTING PLAN (B3-1)

1" = 10'

DESIGN	BY Daniel Sessions	CHECKED Kyoung-Hyeog Lee	
DETAILS	BY Y. Feng / G. Dickerson	CHECKED Kyoung-Hyeog Lee	
QUANTITIES	BY April Pearson	CHECKED Greg Jones	

STATE OF CALIFORNIA
DEPARTMENT OF TRANSPORTATION

DIVISION OF ENGINEERING SERVICES
STRUCTURE DESIGN
DESIGN BRANCH 1

BRIDGE NO. X
POST MILE 3.50

RETAINING WALL NO. 189
STRUCTURE PLAN NO. 2

STRUCTURES DESIGN DETAIL SHEET (ENGLISH) (REV. 09-01-10)

ORIGINAL SCALE IN INCHES FOR REDUCED PLANS 0 1 2 3

UNIT: 3576
PROJECT NUMBER & PHASE: 07000018331
CONTRACT NO.: 07-215934

DISREGARD PRINTS BEARING EARLIER REVISION DATES

REVISION DATES: 10/26/11 11/4/11 11/29/11

SHEET 4 OF 14

FILE => rw 189-c-sp02.dgn

USERNAME => s114640 DATE PLOTTED => 28-MAR-2012 TIME PLOTTED => 12:44

DIST	COUNTY	ROUTE	POST MILES TOTAL PROJECT	SHEET No.	TOTAL SHEETS
07	LA	5	2.4/4.0	1103	1288

REGISTERED CIVIL ENGINEER 12/7/2011 DATE

3-26-12
PLANS APPROVAL DATE

REGISTERED PROFESSIONAL ENGINEER Kevin Harper No. 42221 Exp. 3-31-12 CIVIL STATE OF CALIFORNIA

The State of California or its officers or agents shall not be responsible for the accuracy or completeness of electronic copies of this plan sheet.

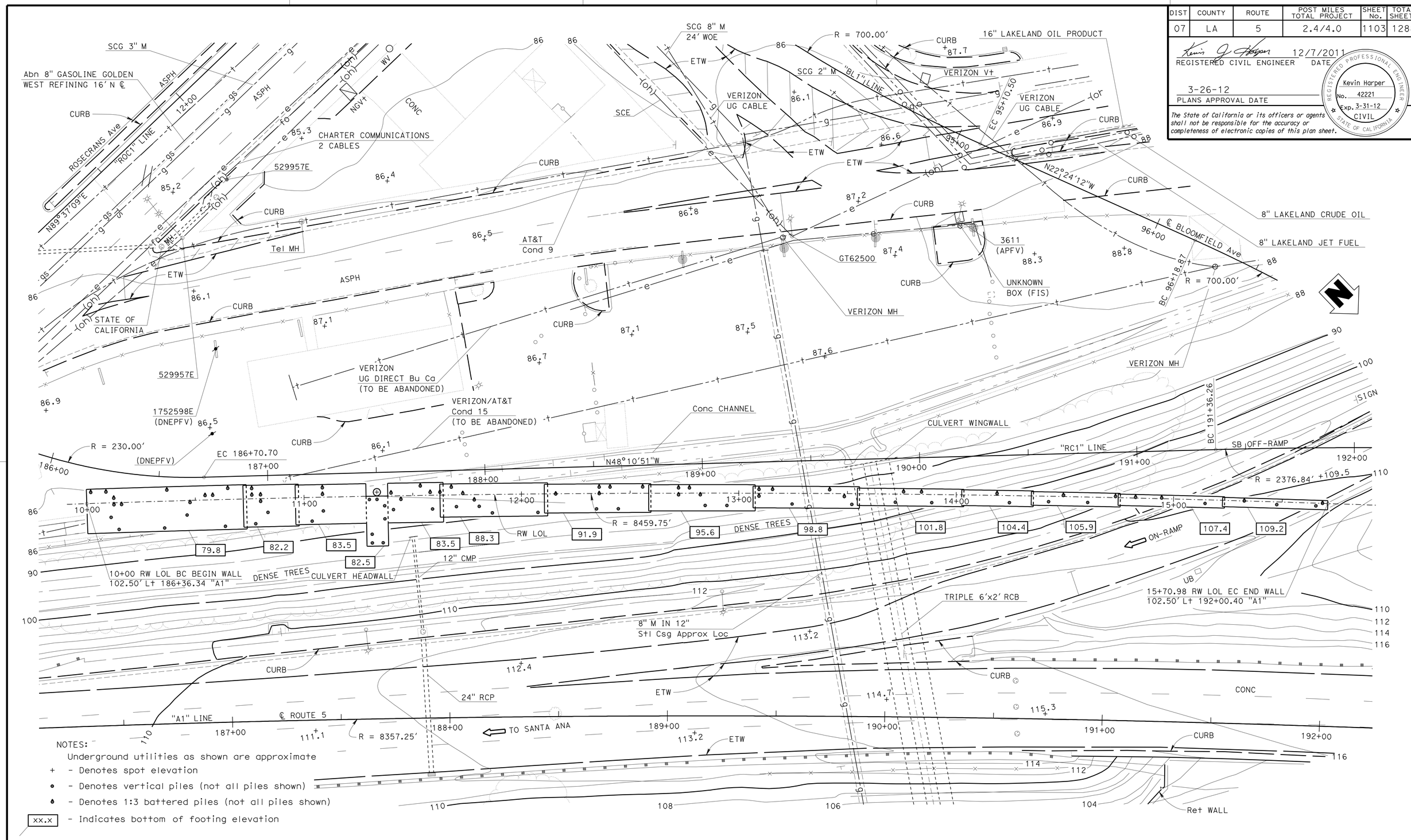

NOTES:

Underground utilities as shown are approximate

\+ - Denotes spot elevation

● - Denotes vertical piles (not all piles shown)

♦ - Denotes 1:3 battered piles (not all piles shown)

[xx.x] - Indicates bottom of footing elevation

SCALE 1" = 20'	DESIGN	BY Daniel Sessions	CHECKED Kyoung-Hyeog Lee
	DETAILS	BY Y. Feng / G. Dickerson	CHECKED Kyoung-Hyeog Lee
	QUANTITIES	BY April Pearson	CHECKED Greg Jones

STATE OF CALIFORNIA DEPARTMENT OF TRANSPORTATION

DIVISION OF ENGINEERING SERVICES STRUCTURE DESIGN DESIGN BRANCH 1

BRIDGE NO. X

POST MILE 3.50

RETAINING WALL NO. 189

FOUNDATION PLAN

STRUCTURES DESIGN DETAIL SHEET (ENGLISH) (REV. 09-01-10)

ORIGINAL SCALE IN INCHES FOR REDUCED PLANS 0 1 2 3

UNIT: 3576
PROJECT NUMBER & PHASE: 07000018331 CONTRACT NO.: 07-215934

DISREGARD PRINTS BEARING EARLIER REVISION DATES

REVISION DATES 10/28/11 11/4/11 11/30/11

SHEET 5 OF 14

FILE => rw 189-e-fdpl.dgn

USERNAME => s114640 DATE PLOTTED => 28-MAR-2012 TIME PLOTTED => 12:51

DIST	COUNTY	ROUTE	POST MILES TOTAL PROJECT	SHEET No.	TOTAL SHEETS
07	LA	5	2.4/4.0	1104	1288

REGISTERED CIVIL ENGINEER 12/7/2011 DATE

3-26-12
PLANS APPROVAL DATE

REGISTERED PROFESSIONAL ENGINEER Kevin Harper No. 42221 Exp. 3-31-12 CIVIL STATE OF CALIFORNIA

The State of California or its officers or agents shall not be responsible for the accuracy or completeness of electronic copies of this plan sheet.

NOTES:

1. Concrete Barrier not shown for clarity.
2. Weepholes not shown. For weephole locations, see "STRUCTURE PLAN NO. 1 SHEET".
3. For barrier architectural treatment details, see "CONCRETE BARRIER TYPE 736A (Mod 1) DETAILS" sheet.
4. For retaining wall architectural treatment details, see "RETAINING WALL ARCHITECTURAL TREATMENT" and "RETAINING WALL ARCHITECTURAL DETAILS" sheets.
5. Type 1 retaining wall longitudinal reinforcement to be continuous through stem and extended 1'-3" into footing.
6. Sign foundation shall be constructed prior to wall.

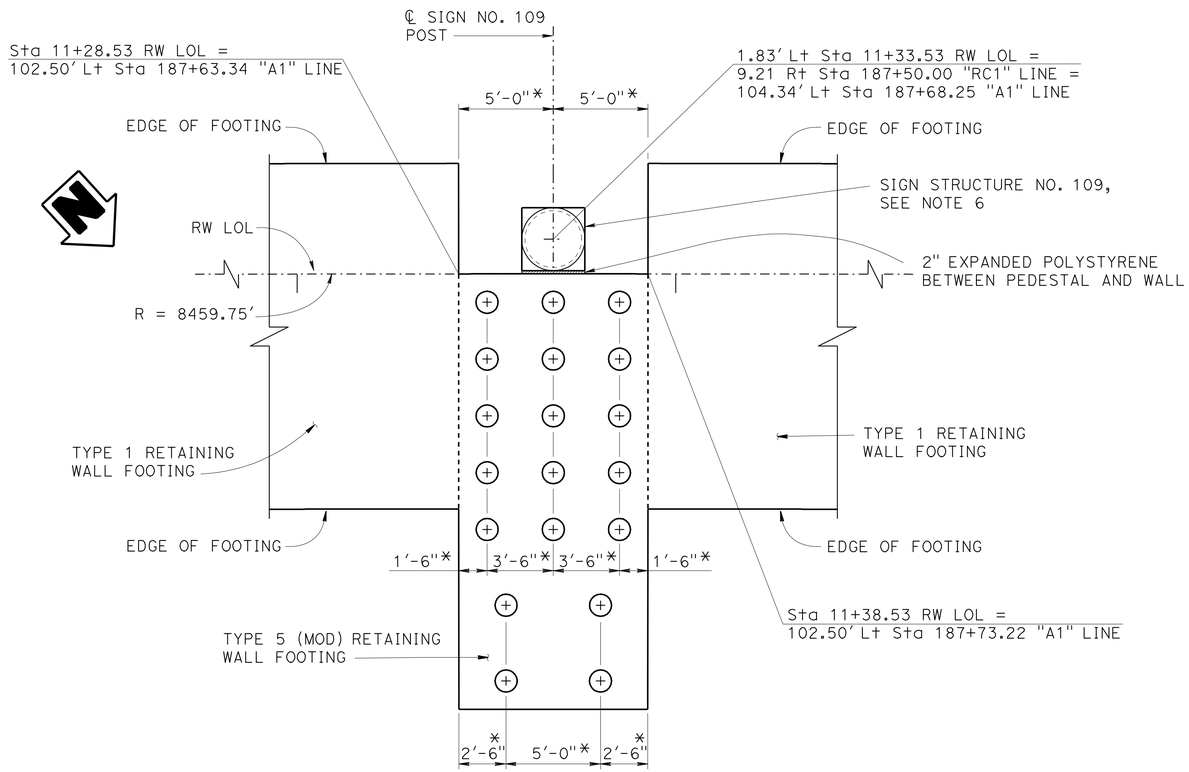

PLAN

1/4" = 1'-0"

NOTE:
* All dimensions measured along RW LOL

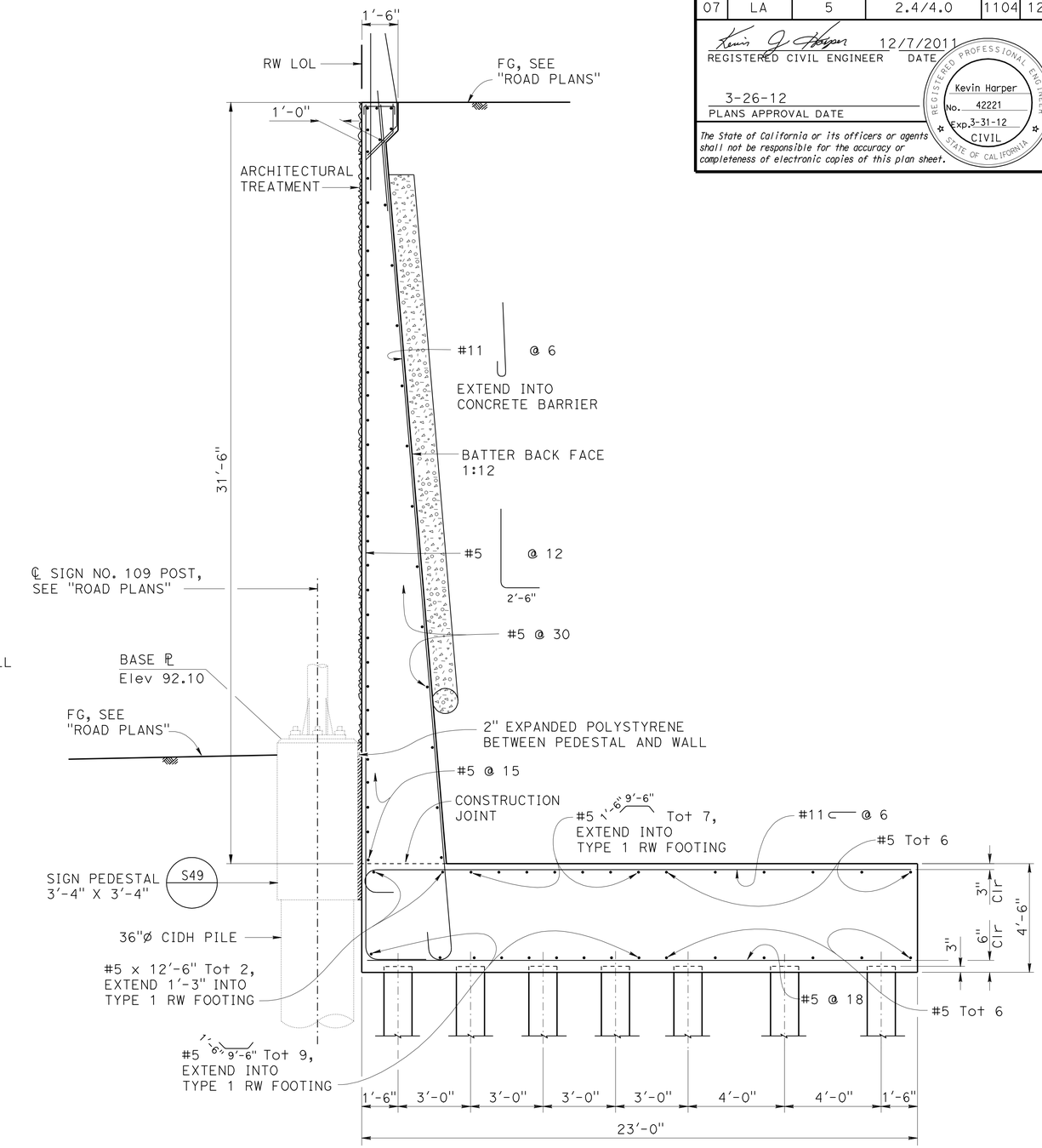

TYPICAL SECTION

3/8" = 1'-0"

DESIGN	Daniel Sessions	CHECKED	Kyoung-Hyeog Lee
DETAILS	BY Y. Feng / G. Dickerson	CHECKED	Kyoung-Hyeog Lee
QUANTITIES	BY April Pearson	CHECKED	Greg Jones

STATE OF CALIFORNIA
DEPARTMENT OF TRANSPORTATION

DIVISION OF ENGINEERING SERVICES
STRUCTURE DESIGN
DESIGN BRANCH 1

BRIDGE NO. X
POST MILE 3.50

RETAINING WALL NO. 189
RETAINING WALL TYPE 5 (MOD)

STRUCTURES DESIGN DETAIL SHEET (ENGLISH) (REV. 09-01-10)

ORIGINAL SCALE IN INCHES FOR REDUCED PLANS 0 1 2 3

UNIT: 3576
PROJECT NUMBER & PHASE: 07000018331
CONTRACT NO.: 07-215934

DISREGARD PRINTS BEARING EARLIER REVISION DATES
REVISION DATES 10/31/11 11/4/11 11/30/11

SHEET 6 OF 14

FILE => rw 189-f-rw.dgn

USERNAME => s114640 DATE PLOTTED => 28-MAR-2012 TIME PLOTTED => 12:44

DIST	COUNTY	ROUTE	POST MILES TOTAL PROJECT	SHEET No.	TOTAL SHEETS
07	LA	5	2.4/4.0	1105	1288

REGISTERED CIVIL ENGINEER 12/7/2011 DATE

3-26-12
PLANS APPROVAL DATE

REGISTERED PROFESSIONAL ENGINEER Kevin Harper No. 42221 Exp. 3-31-12 CIVIL STATE OF CALIFORNIA

The State of California or its officers or agents shall not be responsible for the accuracy or completeness of electronic copies of this plan sheet.

NOTES:

1. For "SECTION A-A", "SECTION B-B", "SECTION C-C", SECTION "D-D" and other retaining wall details, see " RETAINING WALL ARCHITECTURAL DETAILS NO. 1" and " RETAINING WALL ARCHITECTURAL DETAILS NO. 2" sheets.
2. For barrier architectural details, see "CONCRETE BARRIER TYPE 736A (Mod 1) DETAILS" sheet.
3. Retaining wall architectural pay limits shall include all split slate and fractured rib texture shown in "DEVELOPED MIRRORED ELEVATION".
4. All longitudinal dimensions are measured along Retaining Wall LOL.

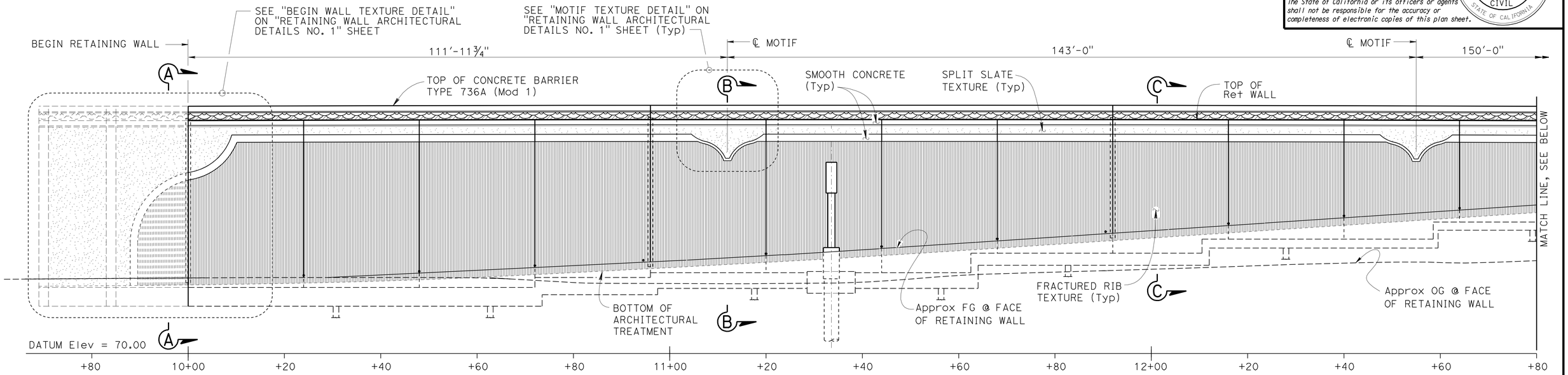

DEVELOPED MIRRORED ELEVATION

1" = 10'

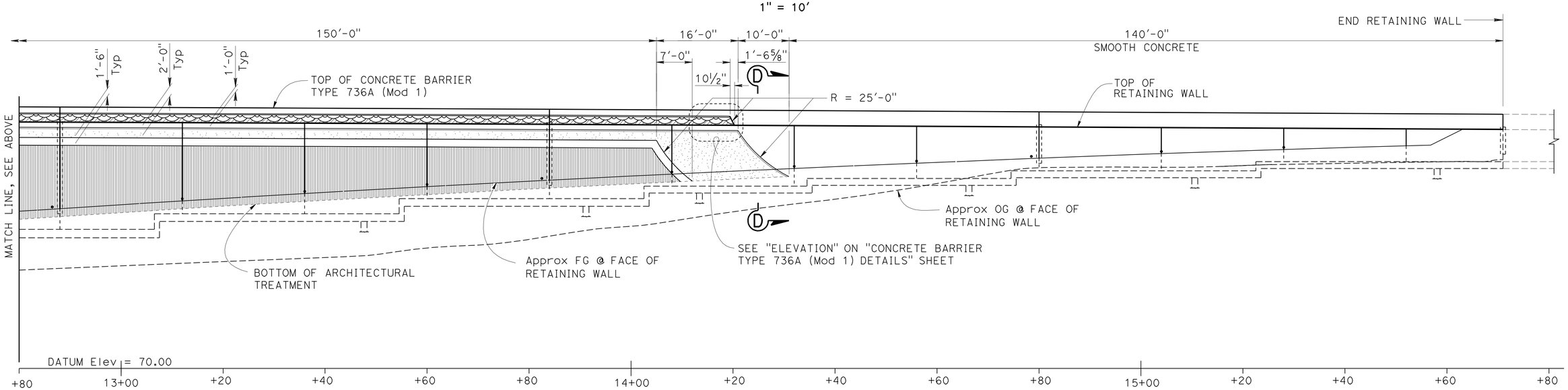

DEVELOPED MIRRORED ELEVATION

1" = 10'

DESIGN	BY Isaac Tasabia	CHECKED Javier Chavez	
DETAILS	BY Y. Feng / G. Dickerson	CHECKED D. Sessions / K. Lee	
QUANTITIES	BY April Pearson	CHECKED Greg Jones	

STATE OF CALIFORNIA
DEPARTMENT OF TRANSPORTATION

DIVISION OF ENGINEERING SERVICES
STRUCTURE DESIGN
DESIGN BRANCH 1

BRIDGE NO. X
POST MILE 3.50

RETAINING WALL NO. 189

RETAINING WALL ARCHITECTURAL TREATMENT

STRUCTURES DESIGN DETAIL SHEET (ENGLISH) (REV. 09-01-10)

ORIGINAL SCALE IN INCHES FOR REDUCED PLANS 0 1 2 3

UNIT: 3576
PROJECT NUMBER & PHASE: 07000018331
CONTRACT NO.: 07-215934

DISREGARD PRINTS BEARING EARLIER REVISION DATES

REVISION DATES: 11/17/11 11/29/11 11/30/11

SHEET 7 OF 14

FILE => rw 189-g-rwatrt1.dgn

USERNAME => s114640 DATE PLOTTED => 28-MAR-2012 TIME PLOTTED => 12:44

DIST	COUNTY	ROUTE	POST MILES TOTAL PROJECT	SHEET No.	TOTAL SHEETS
07	LA	5	2.4/4.0	1106	1288

REGISTERED CIVIL ENGINEER — DATE 12/7/2011

3-26-12
PLANS APPROVAL DATE

REGISTERED PROFESSIONAL ENGINEER — Kevin Harper — No. 42221 — Exp. 3-31-12 — CIVIL — STATE OF CALIFORNIA

The State of California or its officers or agents shall not be responsible for the accuracy or completeness of electronic copies of this plan sheet.

NOTES:

1. For location of "MOTIF TEXTURE DETAIL" and "BEGIN WALL TEXTURE DETAIL", see "RETAINING WALL ARCHITECTURAL TREATMENT" SHEET.
2. For "DETAIL A", "DETAIL B", "DETAIL C" and other retaining wall architectural details not shown, see "RETAINING WALL ARCHITECTURAL DETAILS NO. 2" sheet.
3. For barrier architectural treatment, see "CONCRETE BARRIER TYPE 736A (Mod 1)" sheet.

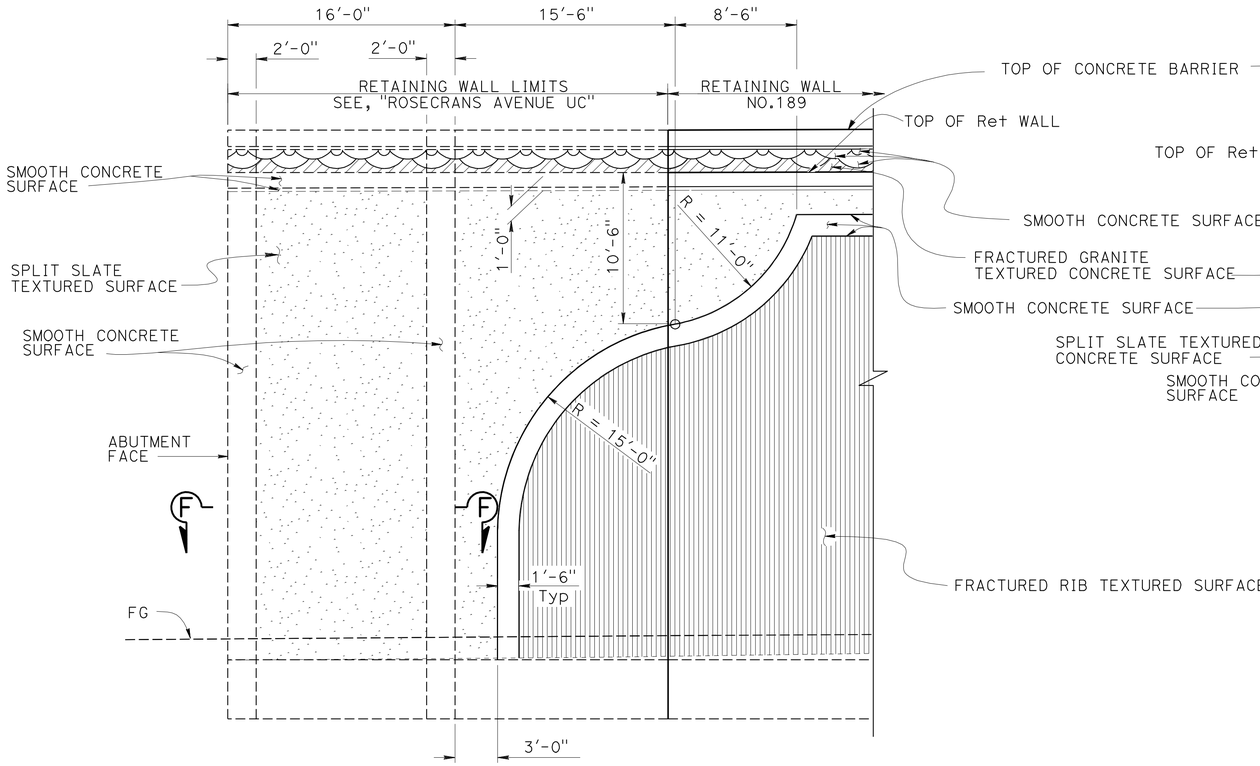

PART ELEVATION
END WALL TEXTURE DETAIL

3/16" = 1'

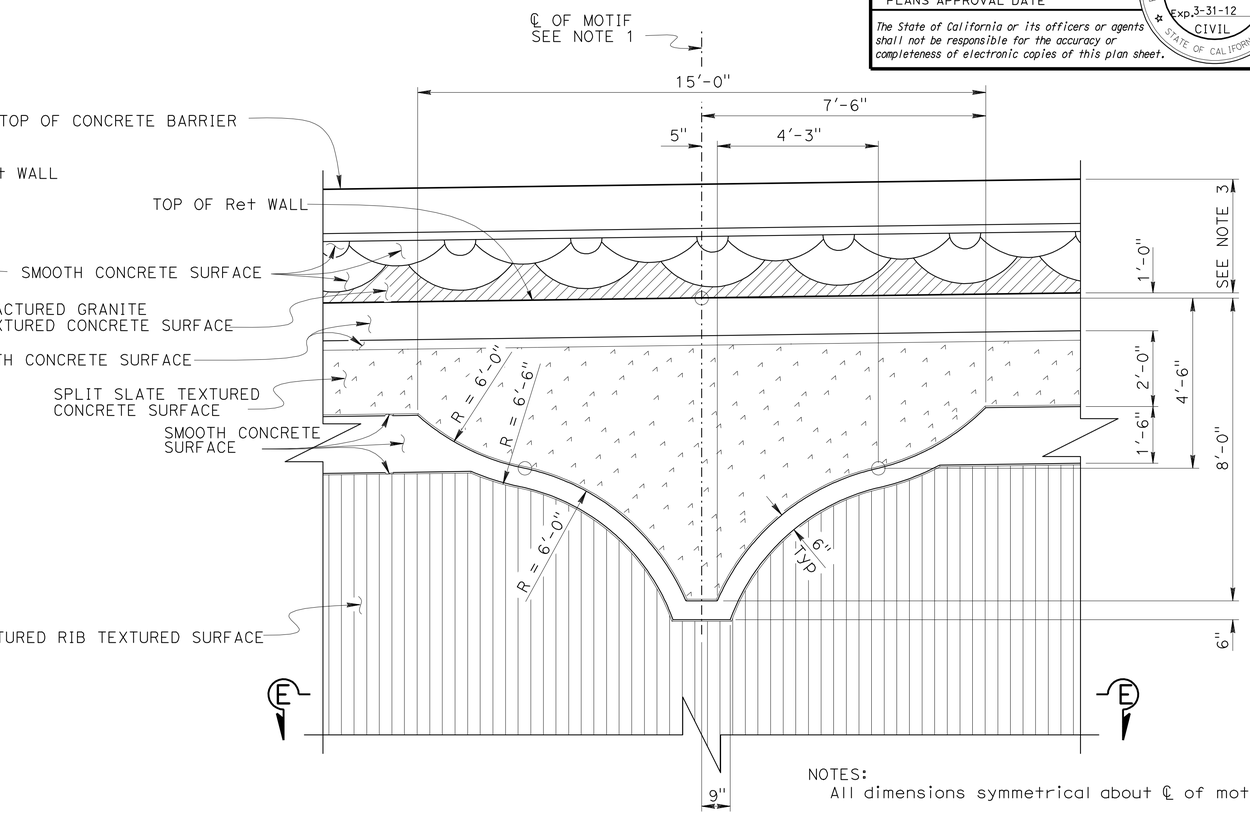

NOTES:
All dimensions symmetrical about ℄ of motif.

PART ELEVATION
MOTIF TEXTURE DETAIL

1/2" = 1'-0"

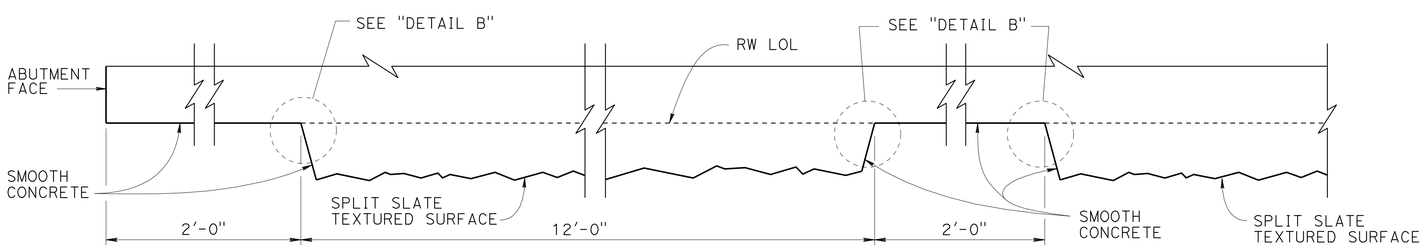

SECTION F-F

6" = 1'-0"

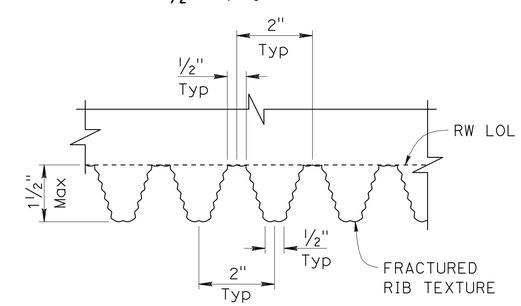

SECTION E-E

6" = 1'-0"

DESIGN	BY Isaac Tasabia	CHECKED Javier Chavez	
DETAILS	BY Y. Feng / G. Dickerson	CHECKED D. Sessions / K. Lee	
QUANTITIES	BY April Pearson	CHECKED Greg Jones	

STATE OF CALIFORNIA
DEPARTMENT OF TRANSPORTATION

DIVISION OF ENGINEERING SERVICES
STRUCTURE DESIGN
DESIGN BRANCH 1

BRIDGE NO. X
POST MILE 3.50

RETAINING WALL NO. 189
RETAINING WALL ARCHITECTURAL DETAILS NO. 1

STRUCTURES DESIGN DETAIL SHEET (ENGLISH) (REV. 09-01-10)

ORIGINAL SCALE IN INCHES FOR REDUCED PLANS 0 1 2 3

UNIT: 3576
PROJECT NUMBER & PHASE: 07000018331
CONTRACT NO.: 07-215934

DISREGARD PRINTS BEARING EARLIER REVISION DATES

REVISION DATES: 11/8/11 11/30/11 12/1/11

SHEET 8 OF 14

FILE => rw 189-h-rwatdt1.dgn

USERNAME => s114640 DATE PLOTTED => 28-MAR-2012 TIME PLOTTED => 12:44

DIST	COUNTY	ROUTE	POST MILES TOTAL PROJECT	SHEET No.	TOTAL SHEETS
07	LA	5	2.4/4.0	1107	1288

REGISTERED CIVIL ENGINEER 12/7/2011 DATE

3-26-12
PLANS APPROVAL DATE

REGISTERED PROFESSIONAL ENGINEER Kevim Harper No. 42221 Exp. 3-31-12 CIVIL STATE OF CALIFORNIA

The State of California or its officers or agents shall not be responsible for the accuracy or completeness of electronic copies of this plan sheet.

NOTES:

1. For locations of "SECTION A-A", "SECTION B-B", "SECTION C-C" AND "SECTION D-D", see "RETAINING WALL ARCHITECTURAL TREATMENT" sheet.
2. For architectural details not shown, see "RETAINING WALL ARCHITECTURAL DETAILS NO. 1" sheet.
3. For barrier architectural treatment, see "CONCRETE BARRIER TYPE 736A (Mod 1) DETAILS" sheet.

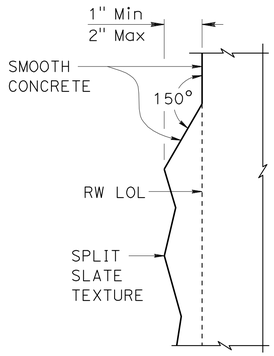

DETAIL A
3" = 1'-0"

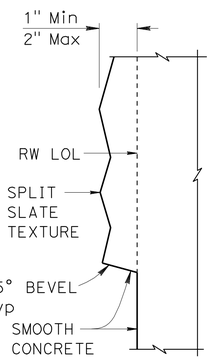

DETAIL B
3" = 1'-0"

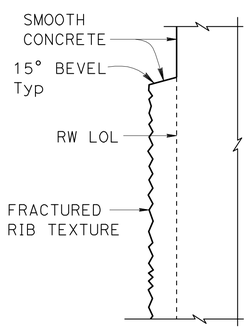

DETAIL C
3" = 1'-0"

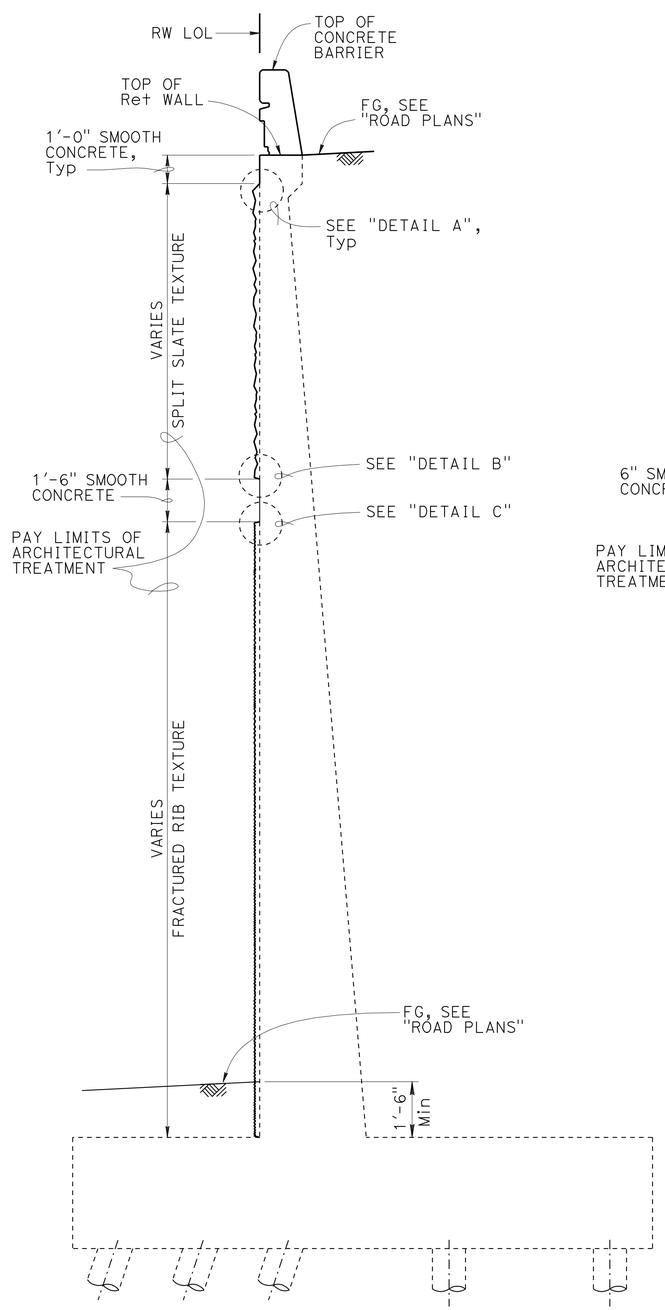

SECTION A-A
3/8" = 1'-0"

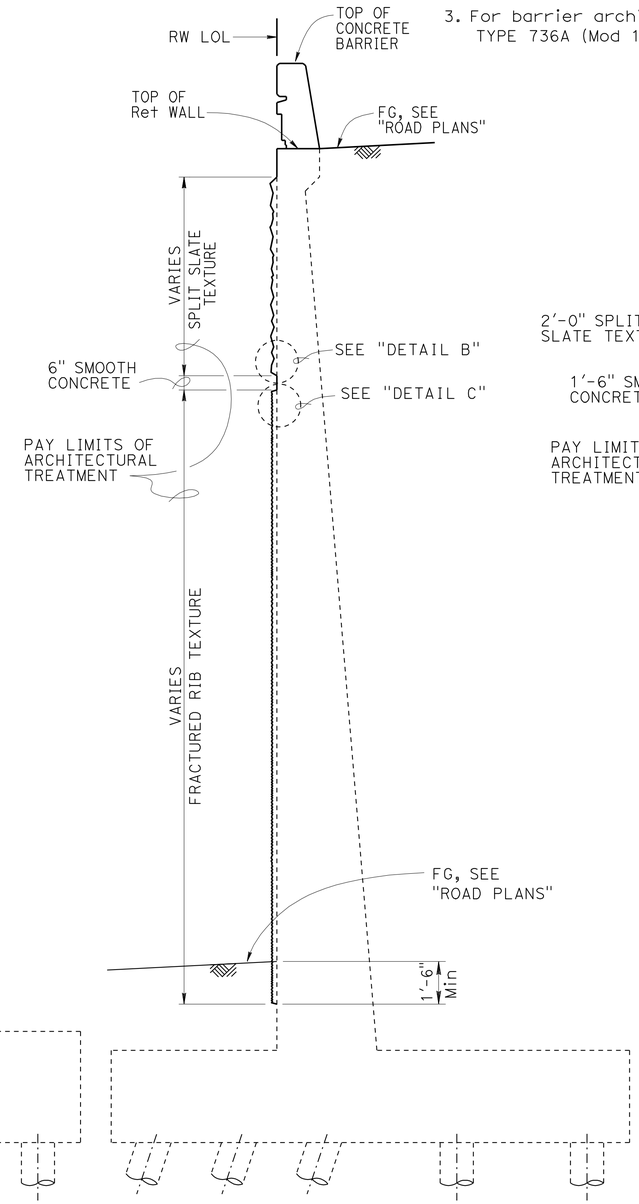

SECTION B-B
3/8" = 1'-0"

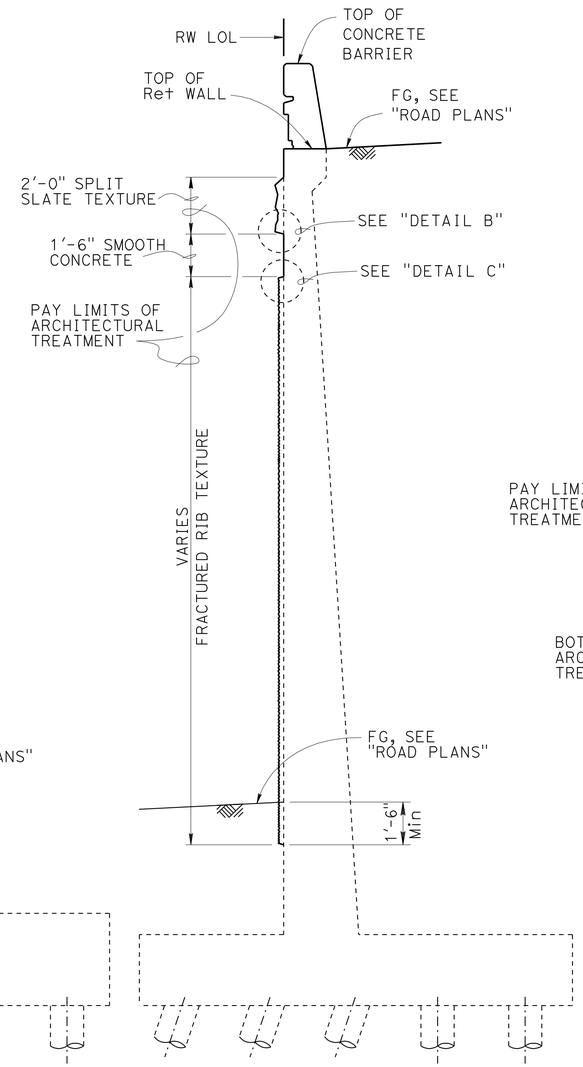

SECTION C-C
3/8 " = 1'-0"

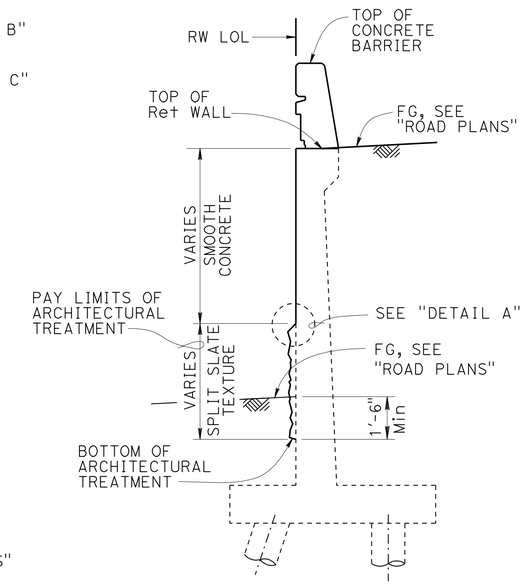

SECTION D-D
3/8" = 1'-0"

Note:
For details not shown, see "SECTION A-A".

DESIGN	BY Isaac Tasabia	CHECKED Javier Chavez	
DETAILS	BY Y. Feng / G. Dickerson	CHECKED D. Sessions / K. Lee	
QUANTITIES	BY April Pearson	CHECKED Greg Jones	

STATE OF CALIFORNIA
DEPARTMENT OF TRANSPORTATION

DIVISION OF ENGINEERING SERVICES
STRUCTURE DESIGN
DESIGN BRANCH 1

BRIDGE NO. X
POST MILE 3.50

RETAINING WALL NO. 189
RETAINING WALL ARCHITECTURAL DETAILS NO. 2

STRUCTURES DESIGN DETAIL SHEET (ENGLISH) (REV. 09-01-10)

ORIGINAL SCALE IN INCHES FOR REDUCED PLANS 0 1 2 3

UNIT: 3576
PROJECT NUMBER & PHASE: 07000018331
CONTRACT NO.: 07-215934

DISREGARD PRINTS BEARING EARLIER REVISION DATES

REVISION DATES 11/18/11 12/1/11

SHEET 9 OF 14

FILE => rw 189-h-rwatdt2.dgn

USERNAME => s114640 DATE PLOTTED => 28-MAR-2012 TIME PLOTTED => 12:44

DIST	COUNTY	ROUTE	POST MILES TOTAL PROJECT	SHEET No.	TOTAL SHEETS
07	LA	5	2.4/4.0	1108	1288

REGISTERED CIVIL ENGINEER 12/7/2011 DATE

3-26-12
PLANS APPROVAL DATE

REGISTERED PROFESSIONAL ENGINEER Kevin Harper No. 42221 Exp. 3-31-12 CIVIL STATE OF CALIFORNIA

The State of California or its officers or agents shall not be responsible for the accuracy or completeness of electronic copies of this plan sheet.

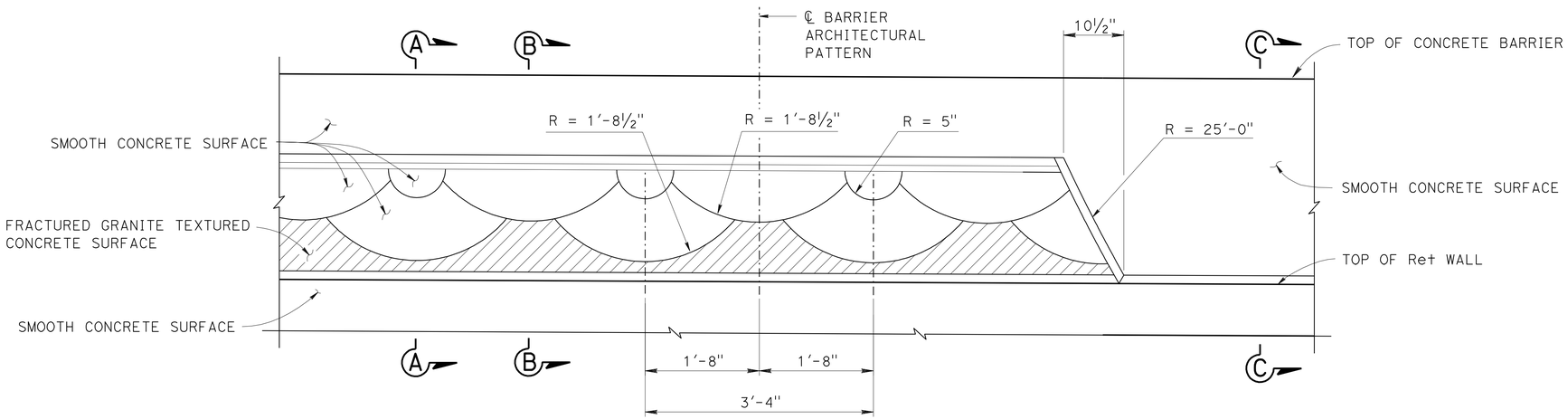

PART MIRRORED ELEVATION CONCRETE BARRIER TYPE 736A (MOD 1)

1" = 1'-0"

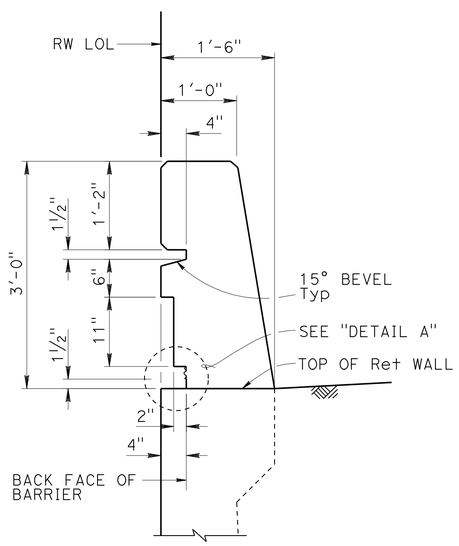

SECTION A-A

1" = 1'-0"

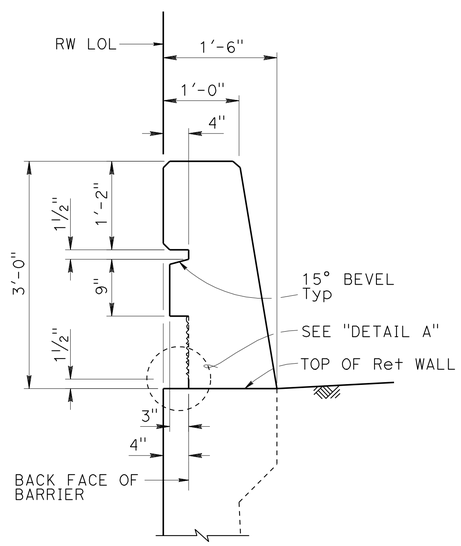

SECTION B-B

1" = 1'-0"

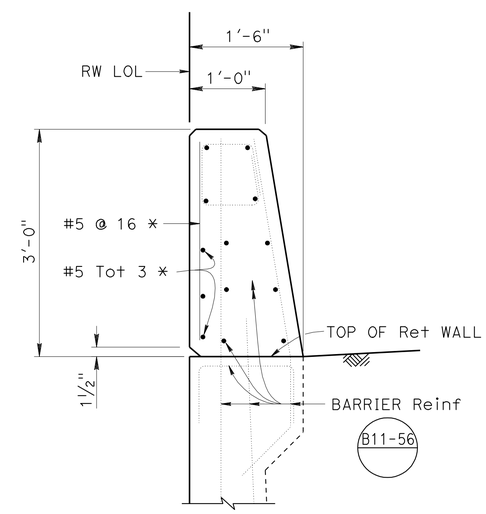

SECTION C-C

1" = 1'-0"

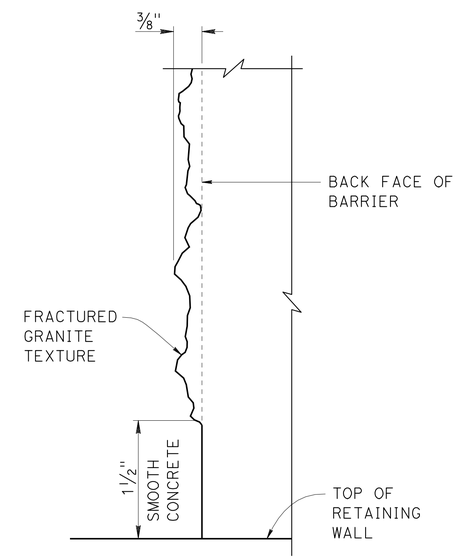

NOTE: Detail at "SECTION B-B" shown, "SECTION A-A" similar.

DETAIL A

NO SCALE

NOTES:

For barrier details not shown, see STANDARD PLAN B11-56.

* - Indicates Reinf is additional to typical barrier Reinf.

	BY	CHECKED
DESIGN	Isaac Tasabia	Javier Chavez
DETAILS	Y. Feng / G. Dickerson	D. Sessions / K. Lee
QUANTITIES	April Pearson	Greg Jones

STATE OF CALIFORNIA DEPARTMENT OF TRANSPORTATION

DIVISION OF ENGINEERING SERVICES STRUCTURE DESIGN DESIGN BRANCH 1

BRIDGE NO. X

POST MILE 3.50

RETAINING WALL NO. 189

CONCRETE BARRIER TYPE 736A (Mod 1) DETAILS

STRUCTURES DESIGN DETAIL SHEET (ENGLISH) (REV. 09-01-10)

ORIGINAL SCALE IN INCHES FOR REDUCED PLANS 0 1 2 3

UNIT: 3576
PROJECT NUMBER & PHASE: 07000018331
CONTRACT NO.: 07-215934

DISREGARD PRINTS BEARING EARLIER REVISION DATES

REVISION DATES 11/10/11 12/1/11

SHEET 10 OF 14

FILE => rw 189-1-barr01.dgn

USERNAME => s114640 DATE PLOTTED => 28-MAR-2012 TIME PLOTTED => 12:45

DIST	COUNTY	ROUTE	POST MILES TOTAL PROJECT	SHEET No.	TOTAL SHEETS
07	LA	5	2.4/4.0	1109	1288

GEOTECHNICAL PROFESSIONAL — DATE 06/2011

3-26-12
PLANS APPROVAL DATE

REGISTERED PROFESSIONAL ENGINEER — MICHAEL G. SMITH No. 2229 Exp. 3-31-2012 GEOTECHNICAL — STATE OF CALIFORNIA

The State of California or its officers or agents shall not be responsible for the accuracy or completeness of electronic copies of this plan sheet.

BENCH MARK

PRHV 102 Elev 86.67′
FOUND PK NAIL & TIN SET BY OTHERS ON ISLAND @ THE BEGINNING OF SB 1-5 ON-RAMP AND ROSECRANS AVE PER SR 09-037-000010
NAVD 88

PRHV 103 Elev 84.50′
FOUND CHISELED "X" ON BACK WALK @ INLET AT SE CORNER OF ROSECRANS AVE AND FIRESTONE BLVD PER SR 09-037-000010
NAVD 88

PRHV 104 Elev 94.31′
FOUND CHISLED "X" ON S′LY TC @+/- 250′ W/O NB 1-5 TO WB FIRESTONE BLVD OFF-RAMP TUNNEL PER SR 09-033-000011
NAVD 88

PRHV 105 Elev 96.88′
FOUND CHISLED "X" ON W′LY CURB BCR @ EB FIRESTONE BL TO SB 1-5 ON-RAMP & FIRESTONE BL INTERSECTION PER SR 09-033-000011
NAVD 88

Notes

1. This LOTB sheet was prepared in accordance with the Caltrans Soil & Rock Logging, Classification, and Presentation Manual (2010) except three digit sequence number in boring identification starting with the segment number per exception request approved on April 08, 2009.

2. For protection of underground utility lines, hand-auger was used to remove top 5 to 10 feet of subsurface material for exploratory borings and cone penetration testings.

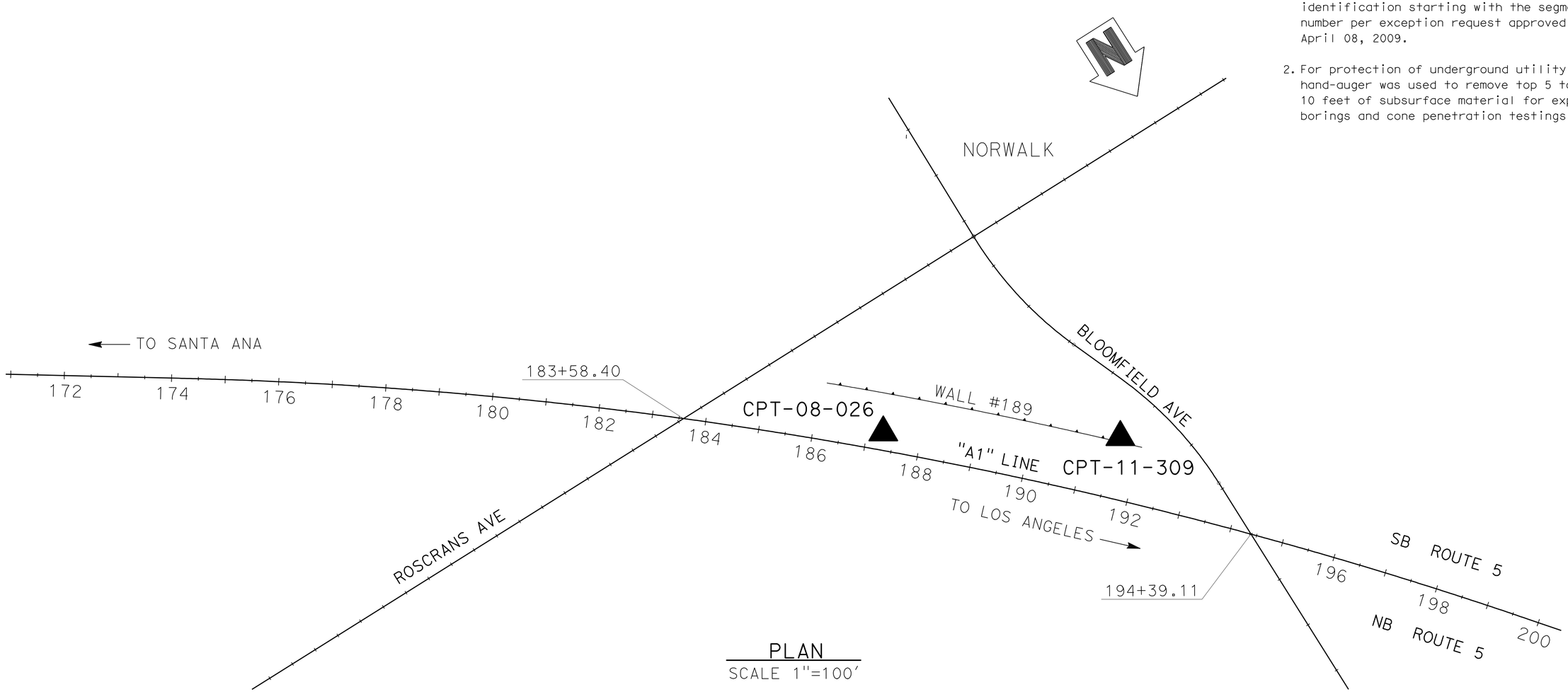

PLAN
SCALE 1"=100′

ENGINEERING SERVICES	MATERIALS AND GEOTECHNICAL SERVICES	STATE OF CALIFORNIA DEPARTMENT OF TRANSPORTATION	DIVISION OF ENGINEERING SERVICES STRUCTURE DESIGN DESIGN BRANCH 1	BRIDGE NO. X / POST MILE 3.50	RETAINING WALL NO. 189
FUNCTIONAL SUPERVISOR NAME: M. SMITH	DRAWN BY: P.QUACH / CHECKED BY: D.ORRIS	FIELD INVESTIGATION BY: P.MCDONALD/EJ.JEON/C.CARBINO/L.ROEBUCK			LOG OF TEST BORINGS SHEET 1 OF 4

OGS CIVIL LOG OF TEST BORINGS SHEET — ORIGINAL SCALE IN INCHES FOR REDUCED PLANS 0 1 2 3

UNIT: 3576
PROJECT NUMBER & PHASE: 07000018331 — CONTRACT NO.: 07-215934

DISREGARD PRINTS BEARING EARLIER REVISION DATES → REVISION DATES 06/17/11 — SHEET 11 OF 14

FILE => rw 189-z-ltb01.dgn

USERNAME => s114640 DATE PLOTTED => 28-MAR-2012 TIME PLOTTED => 12:45

DIST	COUNTY	ROUTE	POST MILES TOTAL PROJECT	SHEET No.	TOTAL SHEETS
07	LA	5	2.4/4.0	1110	1288

GEOTECHNICAL PROFESSIONAL — DATE 06/2011

3-26-12
PLANS APPROVAL DATE

REGISTERED PROFESSIONAL ENGINEER — MICHAEL G. SMITH No. 2229 Exp. 3-31-2012 GEOTECHNICAL — STATE OF CALIFORNIA

The State of California or its officers or agents shall not be responsible for the accuracy or completeness of electronic copies of this plan sheet.

FOR PLAN VIEW, SEE
"LOG OF TEST BORINGS" 1 OF 4

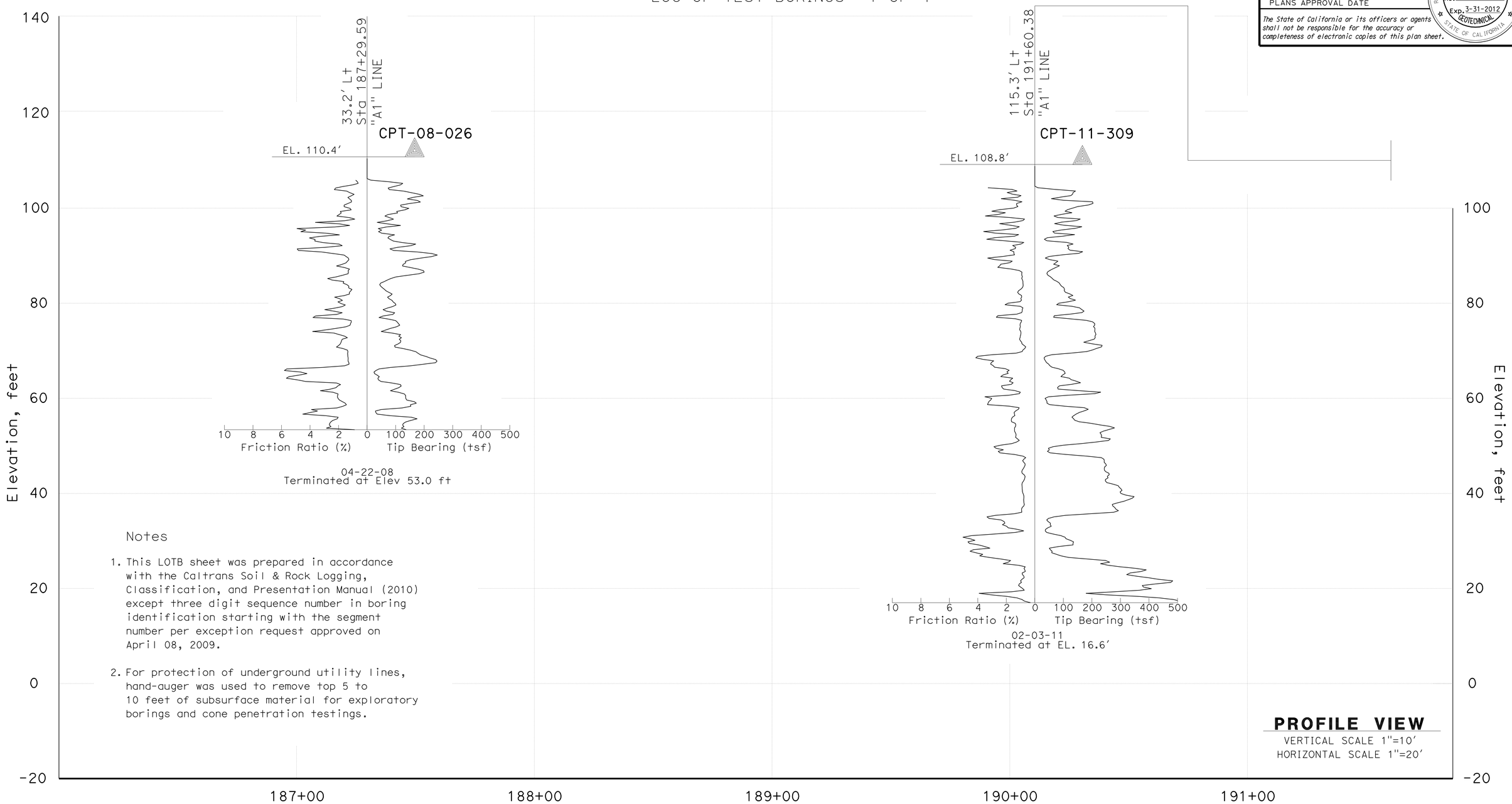

Notes

1. This LOTB sheet was prepared in accordance with the Caltrans Soil & Rock Logging, Classification, and Presentation Manual (2010) except three digit sequence number in boring identification starting with the segment number per exception request approved on April 08, 2009.

2. For protection of underground utility lines, hand-auger was used to remove top 5 to 10 feet of subsurface material for exploratory borings and cone penetration testings.

PROFILE VIEW
VERTICAL SCALE 1"=10'
HORIZONTAL SCALE 1"=20'

ENGINEERING SERVICES	MATERIALS AND GEOTECHNICAL SERVICES	STATE OF CALIFORNIA DEPARTMENT OF TRANSPORTATION	DIVISION OF ENGINEERING SERVICES STRUCTURE DESIGN DESIGN BRANCH 1	BRIDGE NO. X / POST MILE 3.50	RETAINING WALL NO. 189
FUNCTIONAL SUPERVISOR	DRAWN BY: P.QUACH	FIELD INVESTIGATION BY:			LOG OF TEST BORINGS SHEET 2 OF 4
NAME: M. SMITH	CHECKED BY: D.ORRIS	P.MCDONALD/EJ.JEON/C.CARBINO/L.ROEBUCK			

OGS CIVIL LOG OF TEST BORINGS SHEET

ORIGINAL SCALE IN INCHES FOR REDUCED PLANS 0 1 2 3

UNIT: 3576
PROJECT NUMBER & PHASE: 07000018331 CONTRACT NO.: 07-215934

DISREGARD PRINTS BEARING EARLIER REVISION DATES → 06/17/11

REVISION DATES | SHEET 12 OF 14

FILE => rw 189-z-ltb02.dgn

USERNAME => s123631 DATE PLOTTED => 28-MAR-2012 TIME PLOTTED => 12:39

DIST	COUNTY	ROUTE	POST MILES TOTAL PROJECT	SHEET No.	TOTAL SHEETS
07	LA	5	2.4/4.0	1111	1288

GEOTECHNICAL PROFESSIONAL — DATE 06/2011

3-26-12
PLANS APPROVAL DATE

REGISTERED PROFESSIONAL ENGINEER — MICHAEL G. SMITH No. 2229 Exp. 3-31-2012 GEOTECHNICAL — STATE OF CALIFORNIA

The State of California or its officers or agents shall not be responsible for the accuracy or completeness of electronic copies of this plan sheet.

REFERENCE: CALTRANS SOIL & ROCK LOGGING, CLASSIFICATION, AND PRESENTATION MANUAL (2010)

CEMENTATION

Description	Criteria
Weak	Crumbles or breaks with handling or little finger pressure.
Moderate	Crumbles or breaks with considerable finger pressure.
Strong	Will not crumble or break with finger pressure.

BOREHOLE IDENTIFICATION

Symbol	Hole Type	Description
Size	A	Auger Boring (hollow or solid stem bucket)
Size	R RW RC P	Rotary drilled boring (conventional) Rotary drilled with self-casing wire-line Rotary core with continuously-sampled, self-casing wire-line Rotary percussion boring (air)
Size	R	Rotary drilled diamond core
Size	HD HA	Hand driven (1-inch soil tube) Hand Auger
●	D	Dynamic Cone Penetration Boring
▲	CPT	Cone Penetration Test (ASTM D 5778)
⬚	O	Other (note on LOTB)

Note: Size in inches.

CONSISTENCY OF COHESIVE SOILS

Description	Shear Strength (tsf)	Pocket Penetrometer Measurement, PP, (tsf)	Torvane Measurement, TV, (tsf)	Vane Shear Measurement, VS, (tsf)
Very Soft	Less than 0.12	Less than 0.25	Less than 0.12	Less than 0.12
Soft	0.12 - 0.25	0.25 - 0.5	0.12 - 0.25	0.12 - 0.25
Medium Stiff	0.25 - 0.5	0.5 - 1	0.25 - 0.5	0.25 - 0.5
Stiff	0.5 - 1	1 - 2	0.5 - 1	0.5 - 1
Very Stiff	1 - 2	2 - 4	1 - 2	1 - 2
Hard	Greater than 2	Greater than 4	Greater than 2	Greater than 2

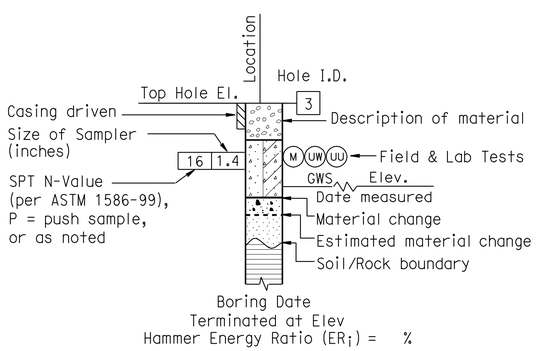

ROTARY BORING

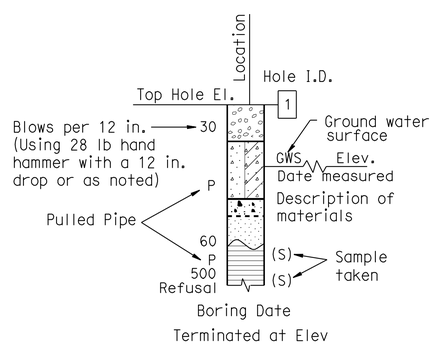

HAND BORING

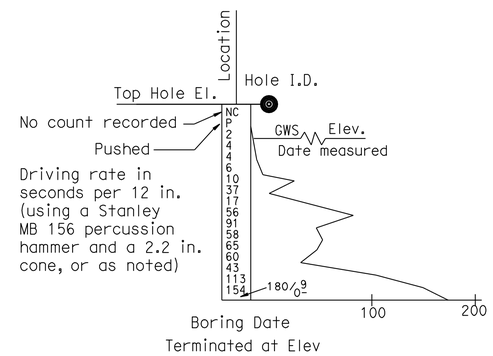

DYNAMIC CONE PENETRATION BORING

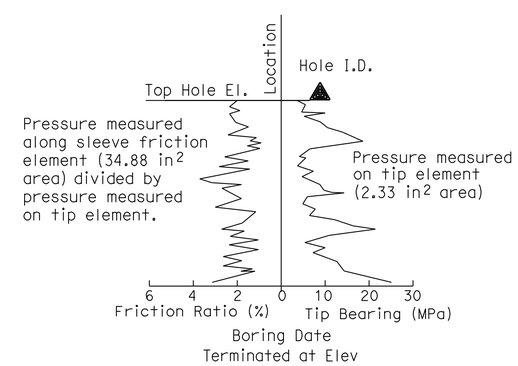

CONE PENETRATION TEST (CPT) BORING

ENGINEERING SERVICES	MATERIALS AND GEOTECHNICAL SERVICES	STATE OF CALIFORNIA DEPARTMENT OF TRANSPORTATION	DIVISION OF ENGINEERING SERVICES STRUCTURE DESIGN DESIGN BRANCH 1	BRIDGE NO. X / POST MILE 3.50	RETAINING WALL NO. 189
FUNCTIONAL SUPERVISOR NAME: M. SMITH	DRAWN BY: P.QUACH CHECKED BY: D.ORRIS	FIELD INVESTIGATION BY: P.MCDONALD/EJ.JEON/C.CARBINO/L.ROEBUCK			LOG OF TEST BORINGS SHEET 3 OF 4

OGS CIVIL LOG OF TEST BORINGS SHEET — ORIGINAL SCALE IN INCHES FOR REDUCED PLANS 0 1 2 3

UNIT: 3576
PROJECT NUMBER & PHASE: 07000018331 — CONTRACT NO.: 07-215934

DISREGARD PRINTS BEARING EARLIER REVISION DATES → REVISION DATES 06/17/11 — SHEET 13 OF 14

FILE => rw 189-z-ltb03.dgn

USERNAME => s123631 DATE PLOTTED => 28-MAR-2012 TIME PLOTTED => 12:39

REFERENCE: CALTRANS SOIL & ROCK LOGGING, CLASSIFICATION, AND PRESENTATION MANUAL (2010)

DIST	COUNTY	ROUTE	POST MILES TOTAL PROJECT	SHEET No.	TOTAL SHEETS
07	LA	5	2.4/4.0	1112	1288

GEOTECHNICAL PROFESSIONAL — 06/2011 DATE

3-26-12
PLANS APPROVAL DATE

REGISTERED PROFESSIONAL ENGINEER — MICHAEL G. SMITH No. 2229 Exp. 3-31-2012 GEOTECHNICAL — STATE OF CALIFORNIA

The State of California or its officers or agents shall not be responsible for the accuracy or completeness of electronic copies of this plan sheet.

GROUP SYMBOLS AND NAMES

Graphic/Symbol	Group Names	Graphic/Symbol	Group Names
GW	Well-graded GRAVEL Well-graded GRAVEL with SAND	CL	Lean CLAY Lean CLAY with SAND Lean CLAY with GRAVEL SANDY lean CLAY SANDY lean CLAY with GRAVEL GRAVELLY lean CLAY GRAVELLY lean CLAY with SAND
GP	Poorly-graded GRAVEL Poorly-graded GRAVEL with SAND		
GW-GM	Well-graded GRAVEL with SILT Well-graded GRAVEL with SILT and SAND	CL-ML	SILTY CLAY SILTY CLAY with SAND SILTY CLAY with GRAVEL SANDY SILTY CLAY SANDY SILTY CLAY with GRAVEL GRAVELLY SILTY CLAY GRAVELLY SILTY CLAY with SAND
GW-GC	Well-graded GRAVEL with CLAY (or SILTY CLAY) Well-graded GRAVEL with CLAY and SAND (or SILTY CLAY and SAND)		
GP-GM	Poorly-graded GRAVEL with SILT Poorly-graded GRAVEL with SILT and SAND	ML	SILT SILT with SAND SILT with GRAVEL SANDY SILT SANDY SILT with GRAVEL GRAVELLY SILT GRAVELLY SILT with SAND
GP-GC	Poorly-graded GRAVEL with CLAY (or SILTY CLAY) Poorly-graded GRAVEL with CLAY and SAND (or SILTY CLAY and SAND)		
GM	SILTY GRAVEL SILTY GRAVEL with SAND	OL	ORGANIC lean CLAY ORGANIC lean CLAY with SAND ORGANIC lean CLAY with GRAVEL SANDY ORGANIC lean CLAY SANDY ORGANIC lean CLAY with GRAVEL GRAVELLY ORGANIC lean CLAY GRAVELLY ORGANIC lean CLAY with SAND
GC	CLAYEY GRAVEL CLAYEY GRAVEL with SAND		
GC-GM	SILTY, CLAYEY GRAVEL SILTY, CLAYEY GRAVEL with SAND	OL	ORGANIC SILT ORGANIC SILT with SAND ORGANIC SILT with GRAVEL SANDY ORGANIC SILT SANDY ORGANIC SILT with GRAVEL GRAVELLY ORGANIC SILT GRAVELLY ORGANIC SILT with SAND
SW	Well-graded SAND Well-graded SAND with GRAVEL		
SP	Poorly-graded SAND Poorly-graded SAND with GRAVEL	CH	Fat CLAY Fat CLAY with SAND Fat CLAY with GRAVEL SANDY fat CLAY SANDY fat CLAY with GRAVEL GRAVELLY fat CLAY GRAVELLY fat CLAY with SAND
SW-SM	Well-graded SAND with SILT Well-graded SAND with SILT and GRAVEL		
SW-SC	Well-graded SAND with CLAY (or SILTY CLAY) Well-graded SAND with CLAY and GRAVEL (or SILTY CLAY and GRAVEL)	MH	Elastic SILT Elastic SILT with SAND Elastic SILT with GRAVEL SANDY elastic SILT SANDY elastic SILT with GRAVEL GRAVELLY elastic SILT GRAVELLY elastic SILT with SAND
SP-SM	Poorly-graded SAND with SILT Poorly-graded SAND with SILT and GRAVEL		
SP-SC	Poorly-graded SAND with CLAY (or SILTY CLAY) Poorly-graded SAND with CLAY and GRAVEL (or SILTY CLAY and GRAVEL)	OH	ORGANIC fat CLAY ORGANIC fat CLAY with SAND ORGANIC fat CLAY with GRAVEL SANDY ORGANIC fat CLAY SANDY ORGANIC fat CLAY with GRAVEL GRAVELLY ORGANIC fat CLAY GRAVELLY ORGANIC fat CLAY with SAND
SM	SILTY SAND SILTY SAND with GRAVEL		
SC	CLAYEY SAND CLAYEY SAND with GRAVEL	OH	ORGANIC elastic SILT ORGANIC elastic SILT with SAND ORGANIC elastic SILT with GRAVEL SANDY ORGANIC elastic SILT SANDY ORGANIC elastic SILT with GRAVEL GRAVELLY ORGANIC elastic SILT GRAVELLY ORGANIC elastic SILT with SAND
SC-SM	SILTY, CLAYEY SAND SILTY, CLAYEY SAND with GRAVEL		
PT	PEAT	OL/OH	ORGANIC SOIL ORGANIC SOIL with SAND ORGANIC SOIL with GRAVEL SANDY ORGANIC SOIL SANDY ORGANIC SOIL with GRAVEL GRAVELLY ORGANIC SOIL GRAVELLY ORGANIC SOIL with SAND
	COBBLES COBBLES and BOULDERS BOULDERS		

FIELD AND LABORATORY TESTING

- (C) Consolidation (ASTM D 2435)
- (CL) Collapse Potential (ASTM D 5333)
- (CP) Compaction Curve (CTM 216)
- (CR) Corrosivity Testing (CTM 643, CTM 422, CTM 417)
- (CU) Consolidated Undrained Triaxial (ASTM D 4767)
- (DS) Direct Shear (ASTM D 3080)
- (EI) Expansion Index (ASTM D 4829)
- (M) Moisture Content (ASTM D 2216)
- (OC) Organic Content-% (ASTM D 2974)
- (P) Permeability (CTM 220)
- (PA) Particle Size Analysis (ASTM D 422)
- (PI) Plasticity Index (AASHTO T 90) Liquid Limit (AASHTO T 89)
- (PL) Point Load Index (ASTM D 5731)
- (PM) Pressure Meter
- (R) R-Value (CTM 301)
- (SE) Sand Equivalent (CTM 217)
- (SG) Specific Gravity (AASHTO T 100)
- (SL) Shrinkage Limit (ASTM D 427)
- (SW) Swell Potential (ASTM D 4546)
- (UC) Unconfined Compression-Soil (ASTM D 2166) Unconfined Compression-Rock (ASTM D 2938)
- (UU) Unconsolidated Undrained Triaxial (ASTM D 2850)
- (UW) Unit Weight (ASTM D 4767)

APPARENT DENSITY OF COHESIONLESS SOILS

Description	SPT N_{60} (Blows / 12 in.)
Very Loose	0 - 5
Loose	5 - 10
Medium Dense	10 - 30
Dense	30 - 50
Very Dense	Greater than 50

MOISTURE

Description	Criteria
Dry	No discernable moisture
Moist	Moisture present, but no free water
Wet	Visible free water

PERCENT OR PROPORTION OF SOILS

Description	Criteria
Trace	Particles are present but estimated to be less than 5%
Few	5% - 10%
Little	15% - 25%
Some	30% - 45%
Mostly	50% - 100%

PARTICLE SIZE

Description		Size (in.)
Boulder		Greater than 12
Cobble		3 - 12
Gravel	Coarse	3/4 - 3
	Fine	1/5 - 3/4
Sand	Coarse	1/16 - 1/5
	Medium	1/64 - 1/16
	Fine	1/300 - 1/64
Silt and Clay		Less than 1/300

ENGINEERING SERVICES — MATERIALS AND GEOTECHNICAL SERVICES

FUNCTIONAL SUPERVISOR
NAME: M. SMITH

DRAWN BY: P.QUACH
CHECKED BY: D.ORRIS

FIELD INVESTIGATION BY:
P.MCDONALD/EJ.JEON/C.CARBINO/L.ROEBUCK

STATE OF CALIFORNIA
DEPARTMENT OF TRANSPORTATION

DIVISION OF ENGINEERING SERVICES
STRUCTURE DESIGN
DESIGN BRANCH 1

BRIDGE NO. X
POST MILE 3.50

RETAINING WALL NO. 189
LOG OF TEST BORINGS SHEET 4 OF 4

OGS CIVIL LOG OF TEST BORINGS SHEET

ORIGINAL SCALE IN INCHES FOR REDUCED PLANS 0 1 2 3

UNIT: 3576
PROJECT NUMBER & PHASE: 07000018331
CONTRACT NO.: 07-215934

DISREGARD PRINTS BEARING EARLIER REVISION DATES → 06/17/11

REVISION DATES | SHEET 14 | OF 14

FILE => rw 189-z-ltb04.dgn

USERNAME => s123631 DATE PLOTTED => 28-MAR-2012 TIME PLOTTED => 12:39

DIST	COUNTY	ROUTE	POST MILES TOTAL PROJECT	SHEET No.	TOTAL SHEETS
07	LA	5	2.4/4.0	1113	1288

REGISTERED CIVIL ENGINEER 12-7-11 DATE

3-26-12
PLANS APPROVAL DATE

REGISTERED PROFESSIONAL ENGINEER Kevin Harper No. 42221 Exp. 3-31-12 CIVIL STATE OF CALIFORNIA

The State of California or its officers or agents shall not be responsible for the accuracy or completeness of electronic copies of this plan sheet.

NOTES:

1. For Design Notes, see "RETAINING WALL TYPE 1SWBP - DETAIL NO. 1" sheet and "SOUND WALL - MASONRY BLOCK WITH BARRIER ON RETAINING WALL DETAILS NO. 2" sheet.

2. All piles are not shown in "DEVELOPED ELEVATION".

Ⓐ Angle Point @ PRC: Back Subtangent Brg = N55°52′31"W, Forward Subtangent Brg = N56°24′24"W
Ⓑ Angle Point @ PRC: Back Subtangent Brg = N45°05′24"W, Forward Subtangent Brg = N45°06′24"W
Ⓒ Angle Point @ EC: Curve Subtangent Brg = N56°43′51"W

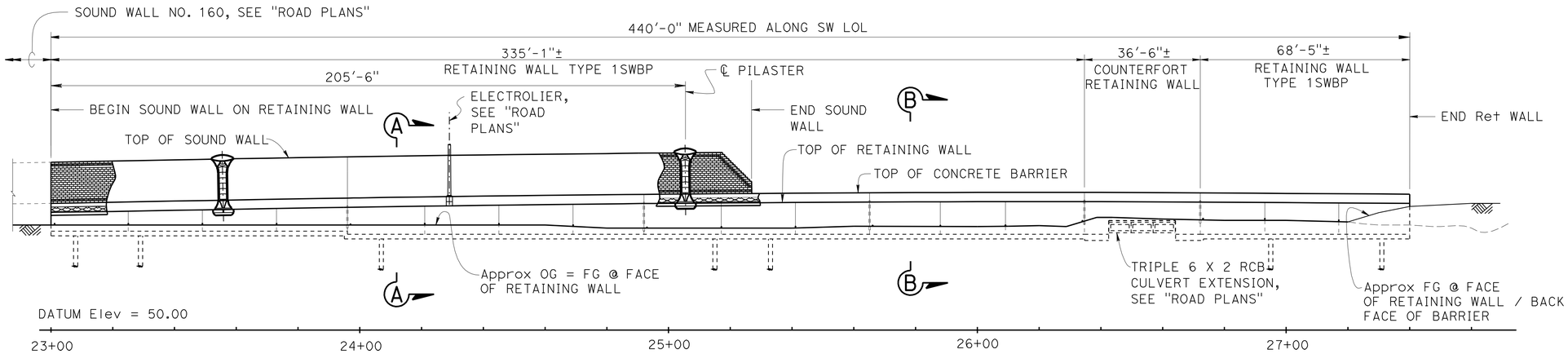

DEVELOPED ELEVATION

1" = 20′

QUANTITIES

STRUCTURE EXCAVATION (RETAINING WALL)	265	CY
STRUCTURE EXCAVATION (TYPE Y-2) (AERIALLY DEPOSITED LEAD)	450	CY
STRUCTURE BACKFILL (RETAINING WALL)	880	CY
PERVIOUS BACKFILL MATERIAL (RETAINING WALL)	47	CY
FURNISH PILING (CLASS 90)	2,367	LF
DRIVE PILE (CLASS 90)	67	EA
STRUCTURAL CONCRETE, RETAINING WALL	372	CY
PILASTER, SOUND WALL	4	CY
ARCHITECTURAL TREATMENT (SPLIT SLATE)	2,900	SQFT
SOUND WALL (MASONRY BLOCK)	2,890	SQFT
BAR REINFORCING STEEL (RETAINING WALL)	41,800	LB
CONCRETE BARRIER (TYPE 736A MODIFIED 2)	440	LF

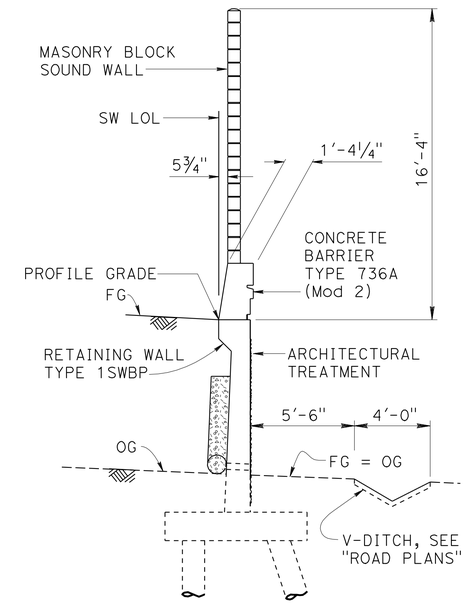

TYPICAL SECTION A-A

¼" = 1′-0"

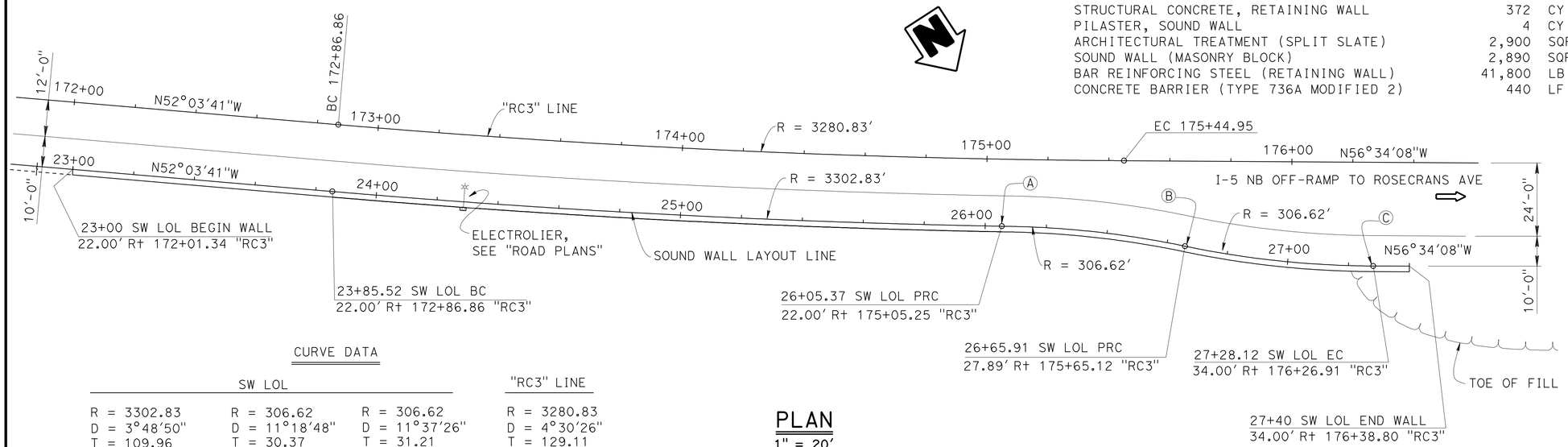

CURVE DATA

SW LOL			"RC3" LINE
R = 3302.83	R = 306.62	R = 306.62	R = 3280.83
D = 3°48′50"	D = 11°18′48"	D = 11°37′26"	D = 4°30′26"
T = 109.96	T = 30.37	T = 31.21	T = 129.11
L = 219.85	L = 60.54	L = 62.21	L = 258.09

PLAN

1" = 20′

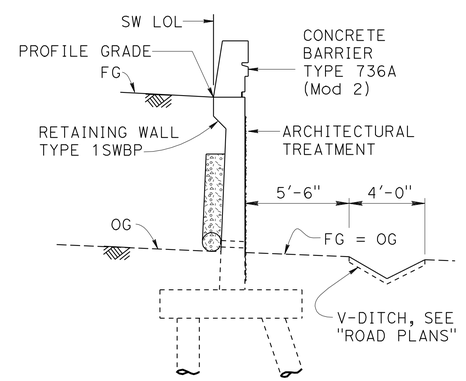

TYPICAL SECTION B-B

¼" = 1′-0"

Jeff Sims DESIGN ENGINEER	DESIGN	BY Kevin Harper	CHECKED Greg Thornton	LOAD FACTOR DESIGN	
	DETAILS	BY Jin Zhou/ Y. Feng	CHECKED Greg Thornton	LAYOUT: BY Kevin Harper	CHECKED Greg Thornton
	QUANTITIES	BY April Pearson	CHECKED Rizia Da Cruz Ferreira	SPECIFICATIONS: BY Theresa Nedwick	PLANS AND SPECS COMPARED Theresa Nedwick

ORIGINAL SCALE IN INCHES FOR REDUCED PLANS 0 1 2 3

STATE OF CALIFORNIA DEPARTMENT OF TRANSPORTATION

DIVISION OF ENGINEERING SERVICES STRUCTURE DESIGN DESIGN BRANCH 1

BRIDGE NO. 53-E0180
POST MILE 3.20

SOUND WALL NO. 166
GENERAL PLAN

UNIT: 3576
PROJECT NUMBER & PHASE: 0700001833-1 CONTRACT NO.: 07-215934

DISREGARD PRINTS BEARING EARLIER REVISION DATES → 10-26-10 8-08-11 11-10-11

SHEET 1 OF 25

FILE => sw166-a-gp.dgn

USERNAME => s123631 DATE PLOTTED => 28-MAR-2012 TIME PLOTTED => 12:39

STRUCTURES DESIGN GENERAL PLAN SHEET (ENGLISH) (REV.09-01-10)

DIST	COUNTY	ROUTE	POST MILES TOTAL PROJECT	SHEET No.	TOTAL SHEETS
07	LA	5	2.4/4.0	1114	1288

REGISTERED CIVIL ENGINEER 12-7-11 DATE

3-26-12
PLANS APPROVAL DATE

REGISTERED PROFESSIONAL ENGINEER Kevin Harper No. 42221 Exp. 3-31-12 CIVIL STATE OF CALIFORNIA

The State of California or its officers or agents shall not be responsible for the accuracy or completeness of electronic copies of this plan sheet.

INDEX TO PLANS

SHEET NO.	TITLE
1.	GENERAL PLAN
2.	INDEX TO PLANS
3.	STRUCTURE PLAN NO. 1
4.	STRUCTURE PLAN NO. 2
5.	FOUNDATION PLAN
6.	COUNTERFORT RETAINING WALL DETAILS
7.	RETAINING WALL ARCHITECTURAL DETAILS
8.	CONCRETE BARRIER TYPE 736A (MOD 2) DETAILS
9.	SOUND WALL ARCHITECTURAL DETAILS
10.	PILASTER ARCHITECTURAL DETAILS NO. 1
11.	PILASTER ARCHITECTURAL DETAILS NO. 2
12.	PILASTER ARCHITECTURAL DETAILS NO. 3
13.	PILASTER ARCHITECTURAL DETAILS NO. 4
14.	PILASTER STRUCTURAL DETAILS NO. 1
15.	PILASTER STRUCTURAL DETAILS NO. 2
16.	PILASTER STRUCTURAL DETAILS NO. 3
17.	ELECTROLIER PEDESTAL DETAILS
18.	RETAINING WALL TYPE 1SWBP - DETAIL NO. 1
19.	RETAINING WALL TYPE 1SWBP - DETAIL NO. 2
20.	SOUND WALL - MASONRY BLOCK WITH BARRIER ON RETAINING WALL DETAILS NO. 1
21.	SOUND WALL - MASONRY BLOCK WITH BARRIER ON RETAINING WALL DETAILS NO. 2
22.	LOG OF TEST BORINGS 1 OF 4
23.	LOG OF TEST BORINGS 2 OF 4
24.	LOG OF TEST BORINGS 3 OF 4
25.	LOG OF TEST BORINGS 4 OF 4

STANDARD PLANS DATED MAY 2006

A10A	ACRONYMS AND ABBREVIATIONS (SHEET 1 OF 2)
A10B	ACRONYMS AND ABBREVIATIONS (SHEET 2 OF 2)
A10C	SYMBOLS (SHEET 1 OF 2)
A10D	SYMBOLS (SHEET 2 OF 2)
A62B	LIMITS OF PAYMENT FOR EXCAVATION AND BACKFILL - BRIDGE SURCHARGE AND WALL
B0-1	BRIDGE DETAILS
B0-3	BRIDGE DETAILS
B2-5	PILE DETAILS CLASS 90 AND CLASS 140
B3-8	RETAINING WALL DETAILS No. 1
B11-56	CONCRETE BARRIER TYPE 736
B15-9	SOUND WALL MASONRY BLOCK MISCELLANEOUS DETAILS
ES-6B	ELECTRICAL SYSTEMS (LIGHTING STANDARD TYPES 15 AND 21 BARRIER RAIL MOUNTED DETAILS)

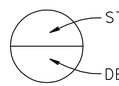

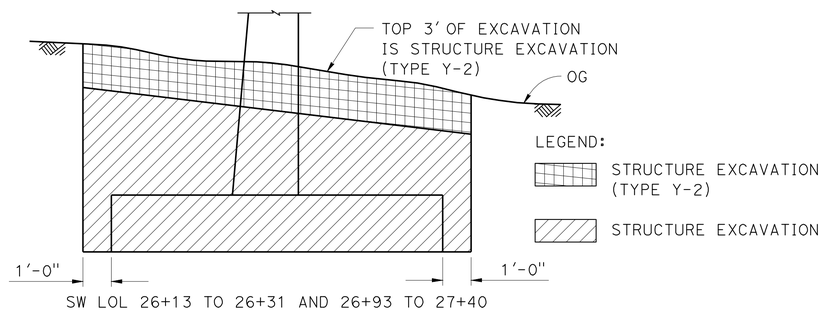

SW LOL 26+13 TO 26+31 AND 26+93 TO 27+40

LIMITS OF PAYMENT FOR STRUCTURE EXCAVATION (TYPE Y-2) (AERIALLY DEPOSITED LEAD)

NO SCALE

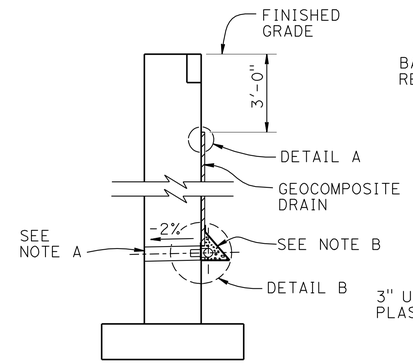

WALL SECTION

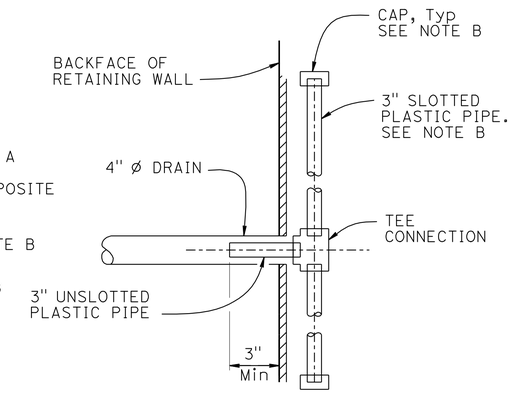

SECTION A-A

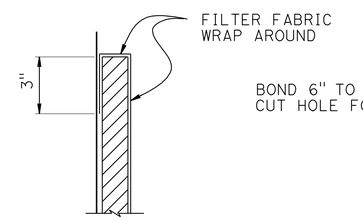

DETAIL A

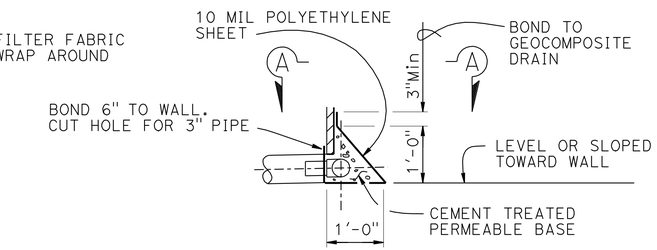

DETAIL B

WEEP HOLE AND GEOCOMPOSITE DRAIN

ALTERNATIVE TO BRIDGE DETAIL B0-3 / 3-1

NOTES:

A. 4" Ø drains at 25' max center to center. For walls adjacent to sidewalks or curbs, provide 4" cast iron or asbestos cement pipe under the sidewalk to discharge through curb face. Exposed wall drains shall be located 3"± above finished grade.

B. Geocomposite drain, cement treated permeable base, and 3"Ø slotted plastic pipe continuous behind retaining wall. Cap ends of pipe. Provide "Tee" connection at each 4" Ø drain.

PILE DATA

LOCATION	PILE TYPE	NOMINAL RESISTANCE (Kip)		SPECIFIED TIP ELEVATION	NOMINAL DRIVING RESISTANCE (Kip)
		COMPRESSION	TENSION		
Ret WALL TYPE 1SWBP SW LOL 23+00 to 23+95	CLASS 90	180	0	46.5	180
Ret WALL TYPE 1SWBP SW LOL 23+95 to 26+35.08	CLASS 90	180	0	45.5	180
Ret WALL TYPE 1SWBP SW LOL 26+70.58 to 27+40	CLASS 90	180	0	45.5	180
COUNTERFORT RETAINING WALL	CLASS 90	180	10	45.0	180

NOTES:

1. Class 90 Alternative "X" Piles shall have a dimension "T" not less than 14 inches.
2. All Design tips are controlled by compression.

	BY	CHECKED
DESIGN	Kevin Harper	Greg Thornton
DETAILS	Jin Zhou/ Y. Feng	Greg Thornton
QUANTITIES	April Pearson	Rizia Da Cruz Ferreira

STATE OF CALIFORNIA DEPARTMENT OF TRANSPORTATION

DIVISION OF ENGINEERING SERVICES STRUCTURE DESIGN DESIGN BRANCH 1

BRIDGE NO. 53-E0180
POST MILE 3.20

SOUND WALL NO. 166
INDEX TO PLANS

STRUCTURES DESIGN DETAIL SHEET (ENGLISH) (REV. 09-01-10)

ORIGINAL SCALE IN INCHES FOR REDUCED PLANS 0 1 2 3

UNIT: 3576
PROJECT NUMBER & PHASE: 0700001833-1
CONTRACT NO.: 07-215934

DISREGARD PRINTS BEARING EARLIER REVISION DATES

REVISION DATES 11/03/10 08/31/11 11/10/11

SHEET 2 OF 25

FILE => sw166-a-itp.dgn

USERNAME => s123631 DATE PLOTTED => 28-MAR-2012 TIME PLOTTED => 12:40

NOTES:

1. For barrier details, see "CONCRETE BARRIER TYPE 736A (MOD 2) DETAILS" sheet.
2. For sound wall details, see "SOUND WALL - MASONRY BLOCK WITH BARRIER ON RETAINING WALL DETAILS NO. 1" AND NO. 2 sheets.
3. For retaining wall details, see "RETAINING WALL TYPE 1SWBP - DETAIL NO. 1" and NO. 2 sheets.
4. Sound Wall No. 160, see "ROAD PLANS".
5. Retaining wall expansion joints, weakened planes, and weep holes shall be placed per B0-3/3-3
6. For Exp Jt details in the masonry block sound wall, see "SOUND WALL - MASONRY BLOCK WITH BARRIER ON RETAINING WALL DETAILS NO. 1" and NO. 2 sheets.
7. All longitudinal dimensions are measured along the SW LOL.
8. Not all piles shown in "Developed Elevation".
9. For "WEEP HOLE AND GEOCOMPOSITE DRAIN" alternative, see "INDEX TO PLANS" sheet.

LEGEND:

⊕ - Indicates Vertical Class 90 Pile

⚲ - Indicates 1:3 Battered Class 90 Pile

DIST	COUNTY	ROUTE	POST MILES TOTAL PROJECT	SHEET No.	TOTAL SHEETS
07	LA	5	2.4/4.0	1115	1288

REGISTERED CIVIL ENGINEER 12-7-11 DATE

3-26-12
PLANS APPROVAL DATE

REGISTERED PROFESSIONAL ENGINEER Kevin Harper No. 42221 Exp. 3-31-12 CIVIL STATE OF CALIFORNIA

The State of California or its officers or agents shall not be responsible for the accuracy or completeness of electronic copies of this plan sheet.

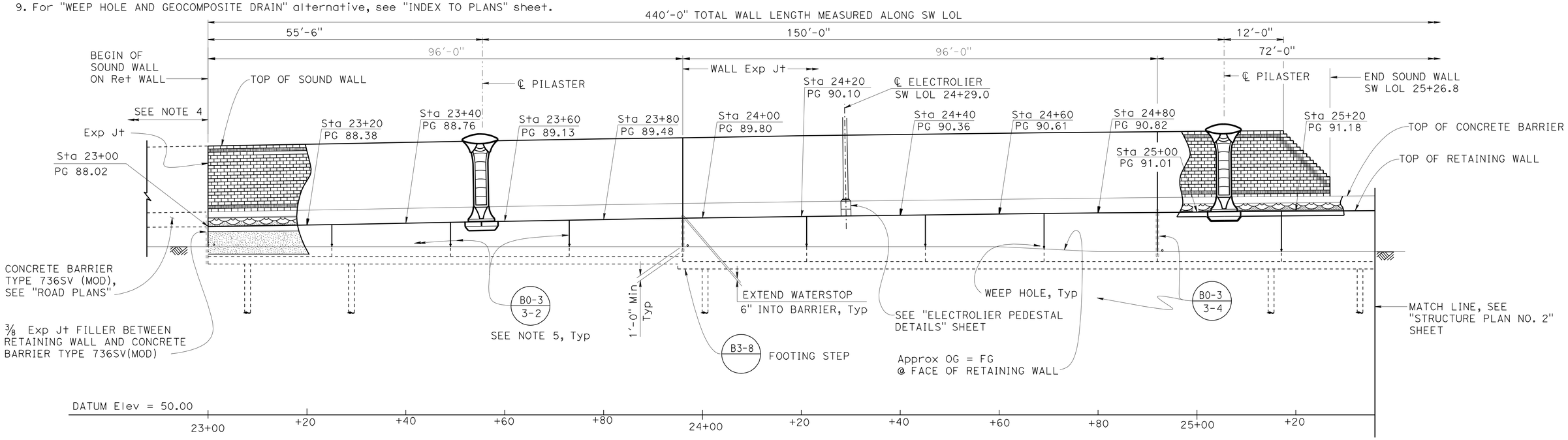

DEVELOPED ELEVATION

1" = 10'

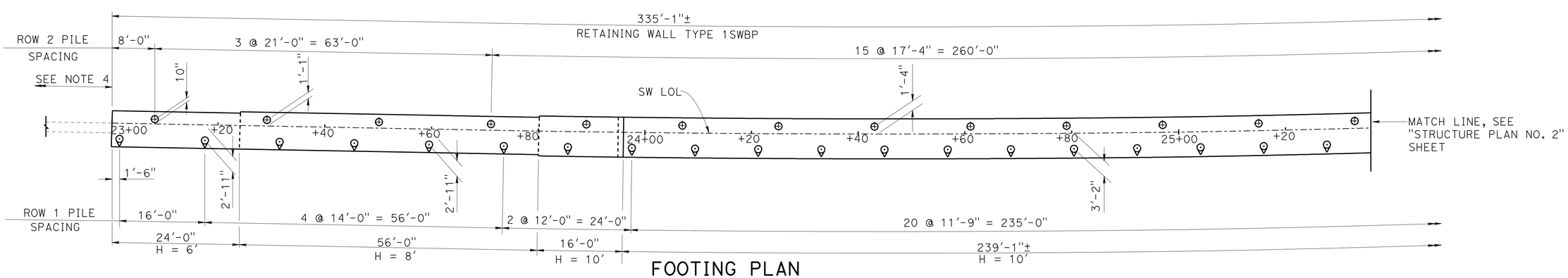

FOOTING PLAN

1" = 10'

DESIGN	BY Kevin Harper	CHECKED Greg Thornton	
DETAILS	BY Jin Zhou	CHECKED Greg Thornton	
QUANTITIES	BY April Pearson	CHECKED Rizia Da Cruz Ferreira	

STATE OF CALIFORNIA DEPARTMENT OF TRANSPORTATION

DIVISION OF ENGINEERING SERVICES STRUCTURE DESIGN DESIGN BRANCH 1

BRIDGE NO. 53-E0180

POST MILE 3.20

SOUND WALL NO. 166

STRUCTURE PLAN NO. 1

STRUCTURES DESIGN DETAIL SHEET (ENGLISH) (REV. 09-01-10)

ORIGINAL SCALE IN INCHES FOR REDUCED PLANS 0 1 2 3

UNIT: 3576
PROJECT NUMBER & PHASE: 0700001833-1
CONTRACT NO.: 07-215934

DISREGARD PRINTS BEARING EARLIER REVISION DATES

REVISION DATES 10/20/10 7-01-11 7/11/11 01/04/11

SHEET 3 OF 25

FILE => sw166-c-sp01.dgn

USERNAME => s123631 DATE PLOTTED => 28-MAR-2012 TIME PLOTTED => 12:40

DIST	COUNTY	ROUTE	POST MILES TOTAL PROJECT	SHEET No.	TOTAL SHEETS
07	LA	5	2.4/4.0	1116	1288

REGISTERED CIVIL ENGINEER 12-7-11 DATE

3-26-12
PLANS APPROVAL DATE

REGISTERED PROFESSIONAL ENGINEER Kevin Harper No. 42221 Exp. 3-31-12 CIVIL STATE OF CALIFORNIA

The State of California or its officers or agents shall not be responsible for the accuracy or completeness of electronic copies of this plan sheet.

For "NOTES", see "STRUCTURE PLAN NO. 1" sheet

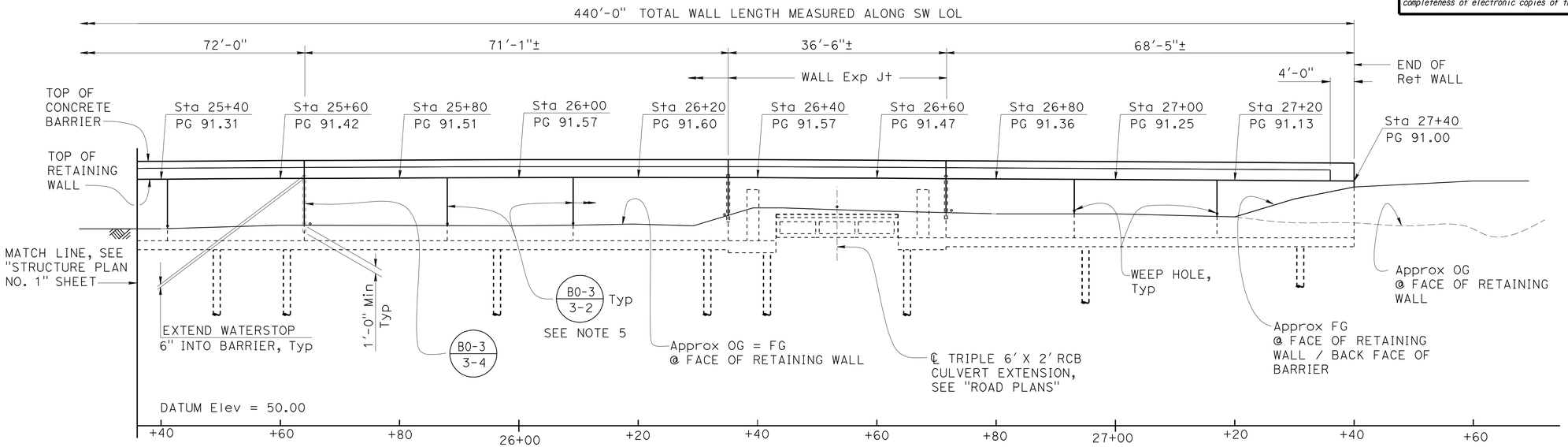

DEVELOPED ELEVATION

1" = 10'

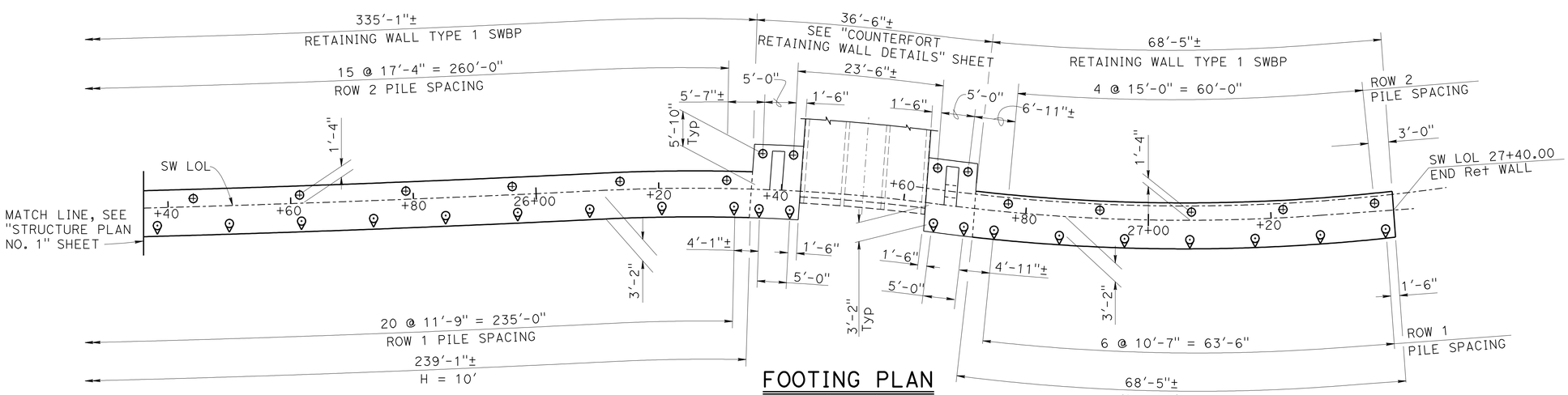

FOOTING PLAN

1" = 10'

NOTE:

THE CONTRACTOR SHALL VERIFY ALL CONTROLLING FIELD DIMENSIONS BEFORE ORDERING OR FABRICATING ANY MATERIAL.

	BY	CHECKED
DESIGN	Kevin Harper	Greg Thornton
DETAILS	Jin Zhou/ Y. Feng	Greg Thornton
QUANTITIES	April Pearson	Rizia Da Cruz Ferreira

STATE OF CALIFORNIA
DEPARTMENT OF TRANSPORTATION

DIVISION OF ENGINEERING SERVICES
STRUCTURE DESIGN
DESIGN BRANCH 1

BRIDGE NO. 53-E0180
POST MILE 3.20

SOUND WALL NO. 166
STRUCTURE PLAN NO. 2

STRUCTURES DESIGN DETAIL SHEET (ENGLISH) (REV. 09-01-10)

ORIGINAL SCALE IN INCHES FOR REDUCED PLANS 0 1 2 3

UNIT: 3576
PROJECT NUMBER & PHASE: 0700001833-1
CONTRACT NO.: 07-215934

DISREGARD PRINTS BEARING EARLIER REVISION DATES

REVISION DATES 10/30/10 3-01-11 7/15/11 08/31/11

SHEET 4 OF 25

FILE => sw166-c-sp02.dgn

USERNAME => s123651 DATE PLOTTED => 28-MAR-2012 TIME PLOTTED => 12:40

DIST	COUNTY	ROUTE	POST MILES TOTAL PROJECT	SHEET No.	TOTAL SHEETS
07	LA	5	2.4/4.0	1117	1288

REGISTERED CIVIL ENGINEER 12-7-11 DATE

3-26-12
PLANS APPROVAL DATE

REGISTERED PROFESSIONAL ENGINEER Kevin Harper No. 42221 Exp. 3-31-12 CIVIL STATE OF CALIFORNIA

The State of California or its officers or agents shall not be responsible for the accuracy or completeness of electronic copies of this plan sheet.

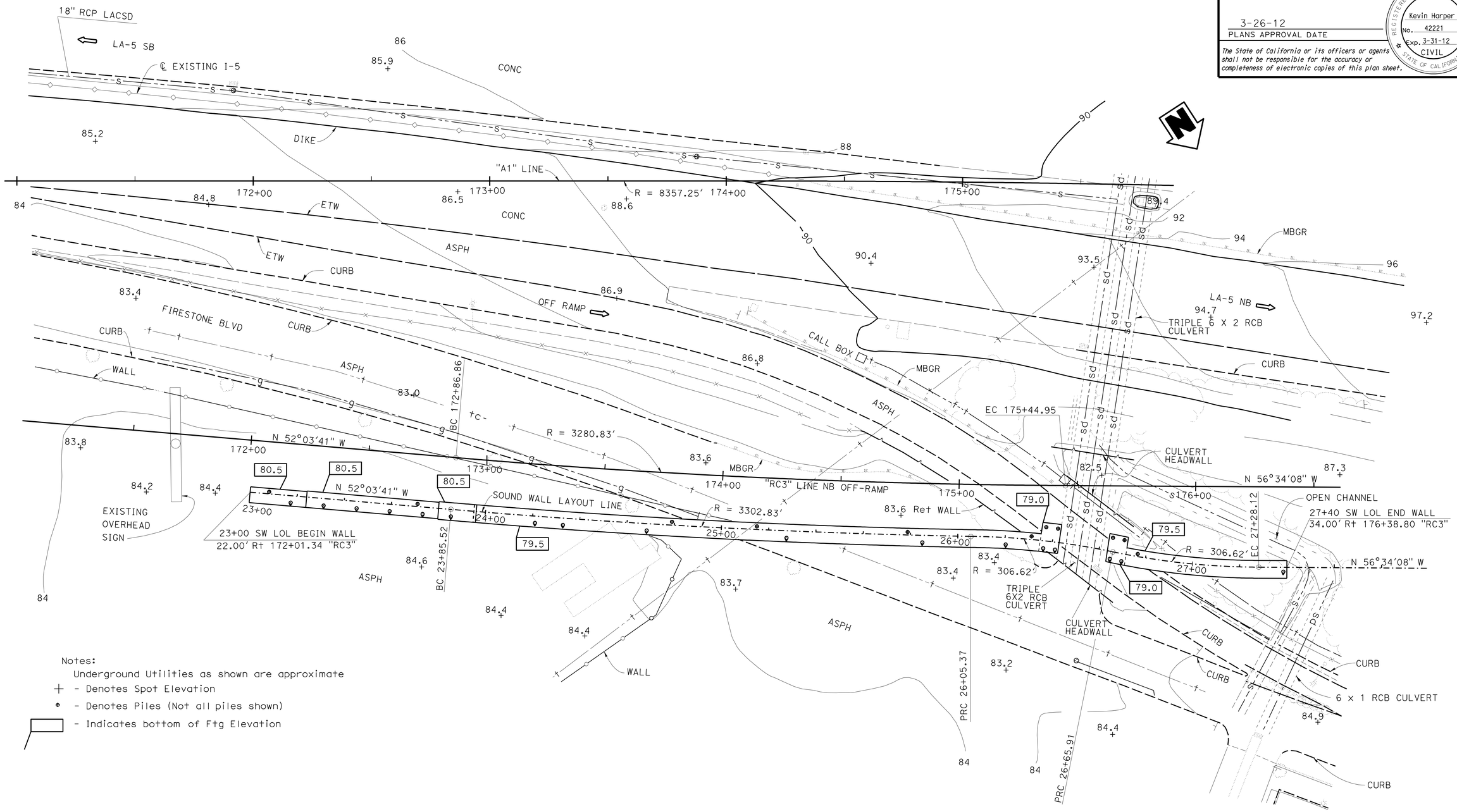

Notes:
Underground Utilities as shown are approximate
+ - Denotes Spot Elevation
• - Denotes Piles (Not all piles shown)
▭ - Indicates bottom of Ftg Elevation

SCALE 1" = 20'	DESIGN	BY Kevin Harper	CHECKED Greg Thornton	STATE OF CALIFORNIA DEPARTMENT OF TRANSPORTATION	DIVISION OF ENGINEERING SERVICES STRUCTURE DESIGN DESIGN BRANCH 1	BRIDGE NO. 53-E0180 POST MILE 3.20	SOUND WALL NO. 166 FOUNDATION PLAN
	DETAILS	BY Jin Zhou\ Y. Feng	CHECKED Greg Thornton				
	QUANTITIES	BY April Pearson	CHECKED Rizia Da Cruz Ferreira				

STRUCTURES DESIGN DETAIL SHEET (ENGLISH) (REV. 09-01-10)

ORIGINAL SCALE IN INCHES FOR REDUCED PLANS 0 1 2 3

UNIT: 3576
PROJECT NUMBER & PHASE: 07000018331 CONTRACT NO.: 07-215934

DISREGARD PRINTS BEARING EARLIER REVISION DATES → REVISION DATES 03/24/11 04/25/11 7/14/11 08/31/11

SHEET 5 OF 25

FILE => sw166-e-fp01.dgn

USERNAME => s123631 DATE PLOTTED => 28-MAR-2012 TIME PLOTTED => 12:40

DIST	COUNTY	ROUTE	POST MILES TOTAL PROJECT	SHEET No.	TOTAL SHEETS
07	LA	5	2.4/4.0	1118	1288

REGISTERED CIVIL ENGINEER 12-7-11 DATE

3-26-12
PLANS APPROVAL DATE

REGISTERED PROFESSIONAL ENGINEER Kevin Harper No. 42221 Exp. 3-31-12 CIVIL STATE OF CALIFORNIA

The State of California or its officers or agents shall not be responsible for the accuracy or completeness of electronic copies of this plan sheet.

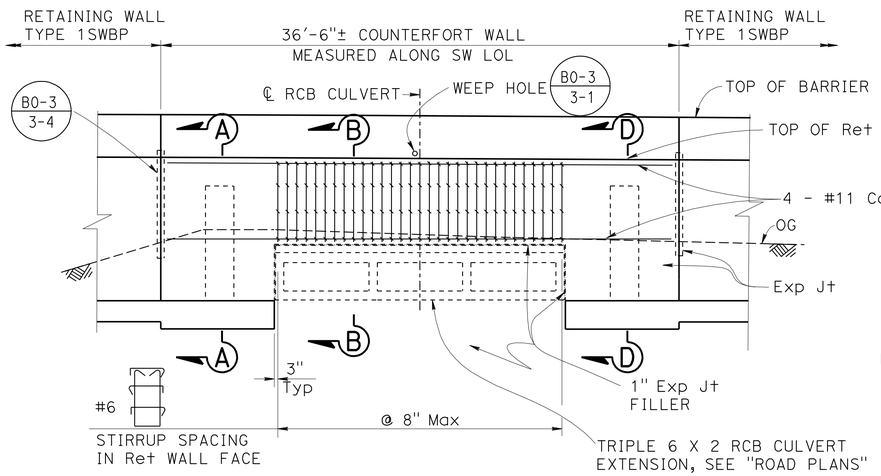

ELEVATION
3/16" = 1'-0"

LEGEND:

- Indicates Vertical Class 90 Pile
- Indicates 1:3 Battered Class 90 Pile
- Indicates bundled bars

NOTES:

1. For Barrier Details, see "CONCRETE BARRIER TYPE 736A (MOD 2) DETAILS" sheet.
2. For sound wall and barrier details, see "SOUND WALL - MASONRY BLOCK WITH BARRIER ON RETAINING WALL DETAILS NO. 1 and NO. 2" sheets.
3. For Architectural Treatment, see "RETAINING WALL ARCHITECTURAL DETAILS" sheet.

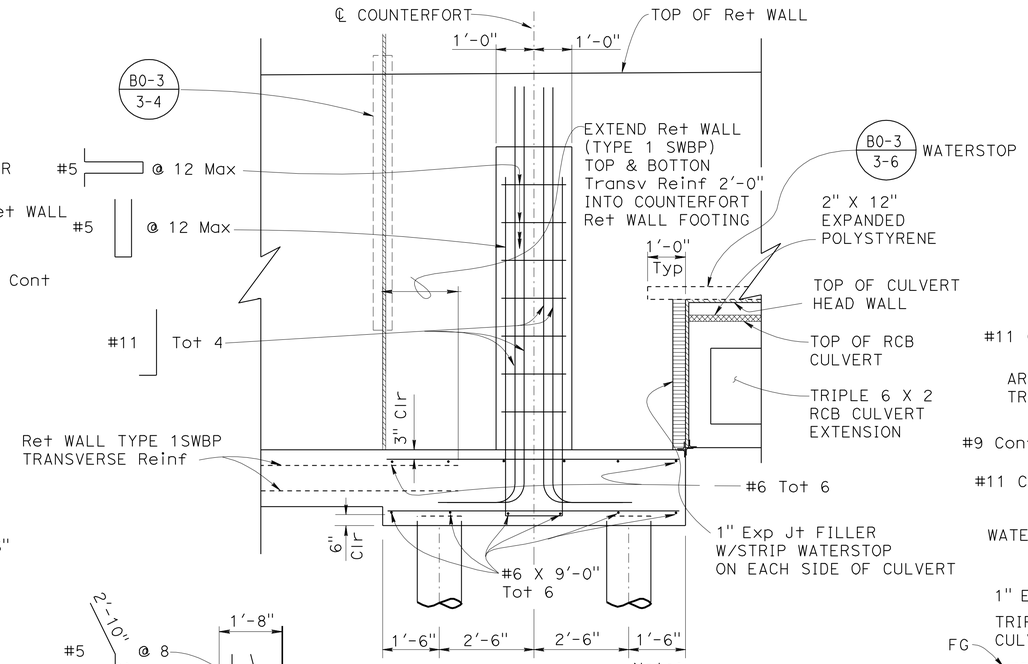

VIEW C-C
1/2" = 1'-0"

Note:
For Reinforcement and Dimensions not shown, see "SECTION A-A"

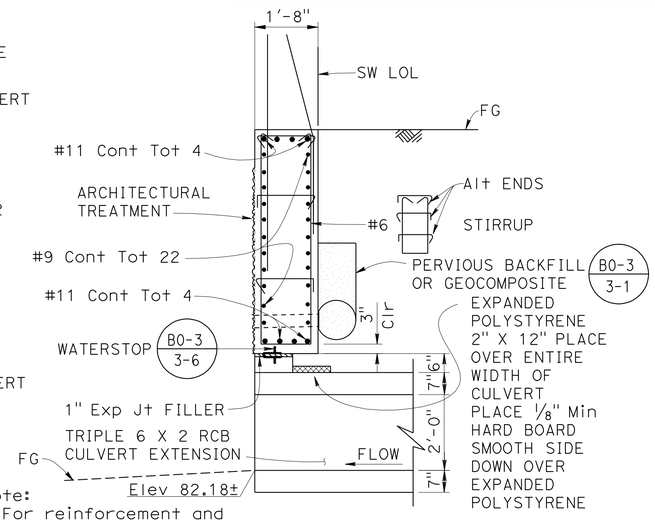

Note:
For reinforcement and dimensions not shown, see "SECTION A-A"

SECTION B-B
1/2" = 1'-0"

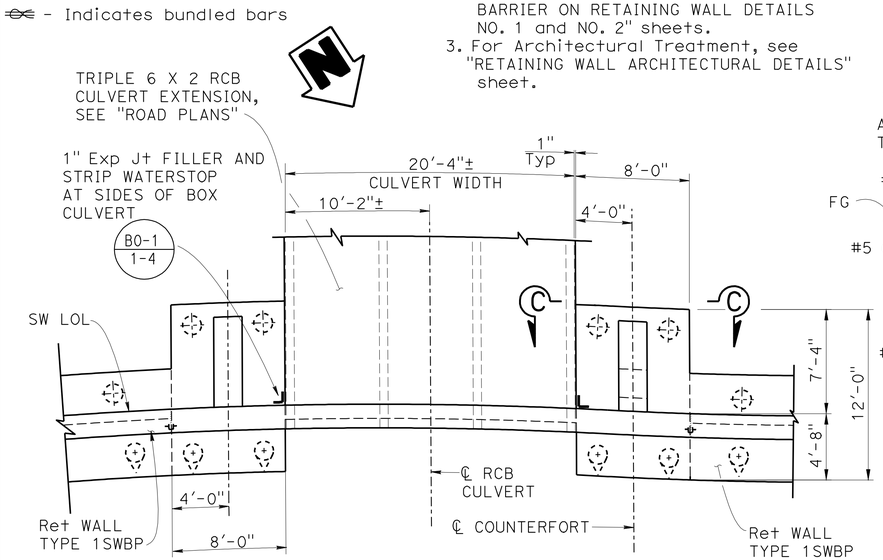

PLAN
3/16" = 1'-0"

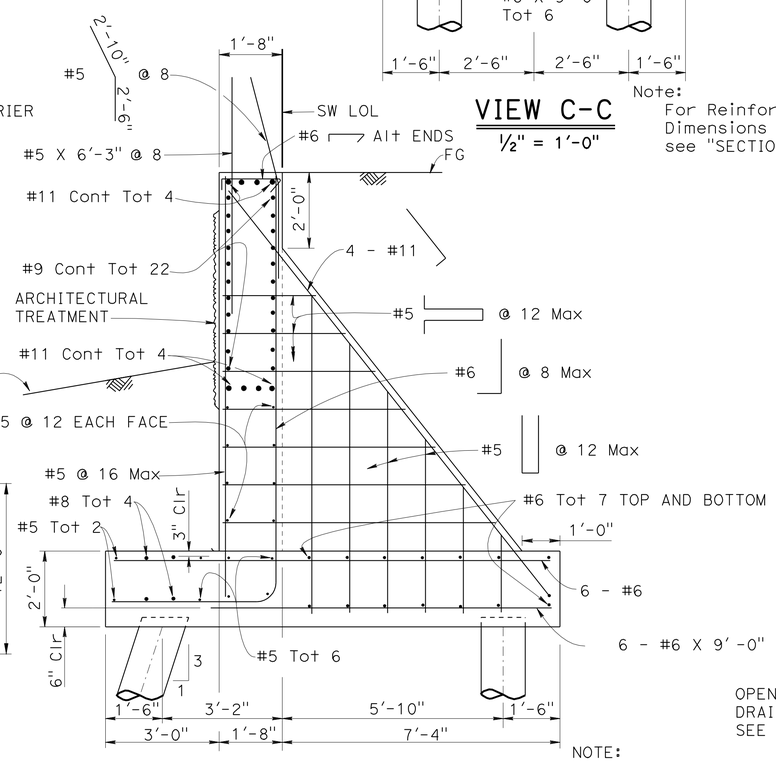

SECTION A-A
1/2" = 1'-0"

NOTE:
THE CONTRACTOR SHALL VERIFY ALL CONTROLLING FIELD DIMENSIONS BEFORE ORDERING OR FABRICATING ANY MATERIAL.

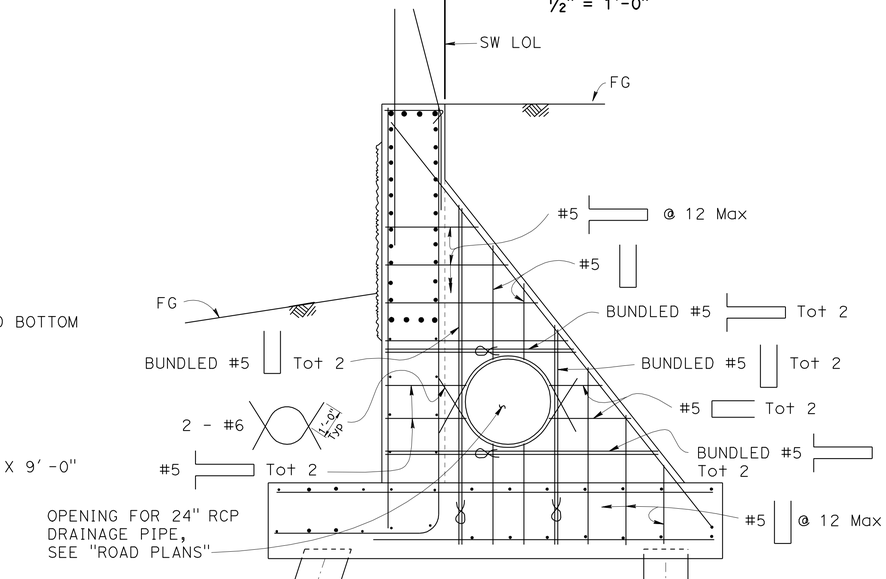

SECTION D-D
1/2" = 1'-0"

NOTE:
FOR DIMENSIONS & REINFORCEMENT NOT SHOWN, SEE "SECTION A-A"

DESIGN	BY Kevin Harper	CHECKED Greg Thornton	
DETAILS	BY Jin Zhou / Y. Feng	CHECKED Greg Thornton	
QUANTITIES	BY April Pearson	CHECKED Rizia Da Cruz Ferreira	

STATE OF CALIFORNIA
DEPARTMENT OF TRANSPORTATION

DIVISION OF ENGINEERING SERVICES
STRUCTURE DESIGN
DESIGN BRANCH 1

BRIDGE NO. 53-E0180
POST MILE 3.20

SOUND WALL NO. 166
COUNTERFORT RETAINING WALL DETAILS

STRUCTURES DESIGN DETAIL SHEET (ENGLISH) (REV. 09-01-10)

ORIGINAL SCALE IN INCHES FOR REDUCED PLANS 0 1 2 3

UNIT: 3576
PROJECT NUMBER & PHASE: 0700001833-1
CONTRACT NO.: 07-215934

DISREGARD PRINTS BEARING EARLIER REVISION DATES

REVISION DATES: 11/03/10 8-19-11 08/31/11 7-19-11

SHEET 6 OF 25

FILE => sw166-e-rcbdt01.dgn

USERNAME => s123631 DATE PLOTTED => 28-MAR-2012 TIME PLOTTED => 12:40

DIST	COUNTY	ROUTE	POST MILES TOTAL PROJECT	SHEET No.	TOTAL SHEETS
07	LA	5	2.4/4.0	1119	1288

REGISTERED CIVIL ENGINEER 12-7-11 DATE

3-26-12
PLANS APPROVAL DATE

REGISTERED PROFESSIONAL ENGINEER Kevin Harper No. 42221 Exp. 3-31-12 CIVIL STATE OF CALIFORNIA

The State of California or its officers or agents shall not be responsible for the accuracy or completeness of electronic copies of this plan sheet.

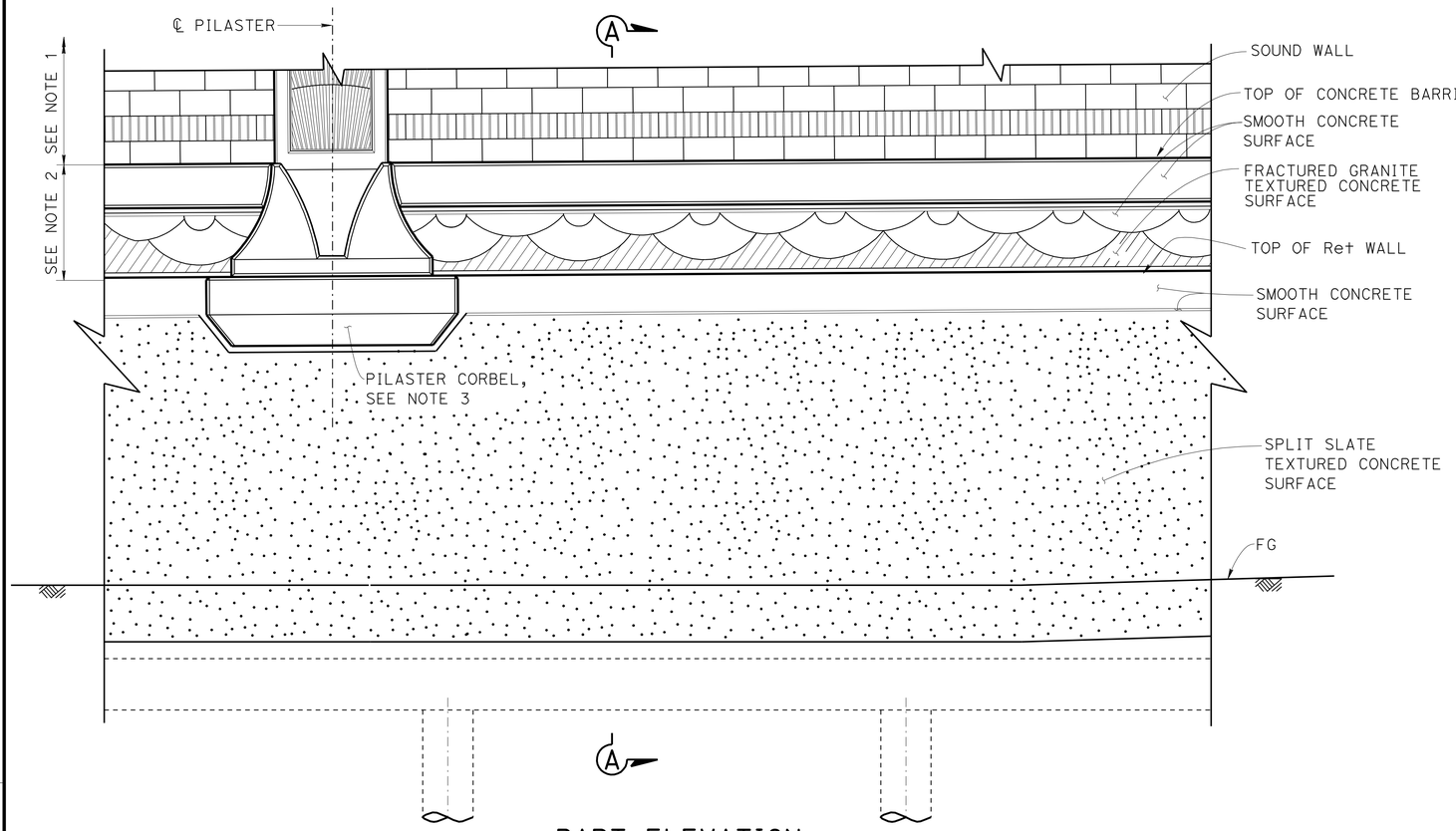

PART ELEVATION

½" = 1'-0"

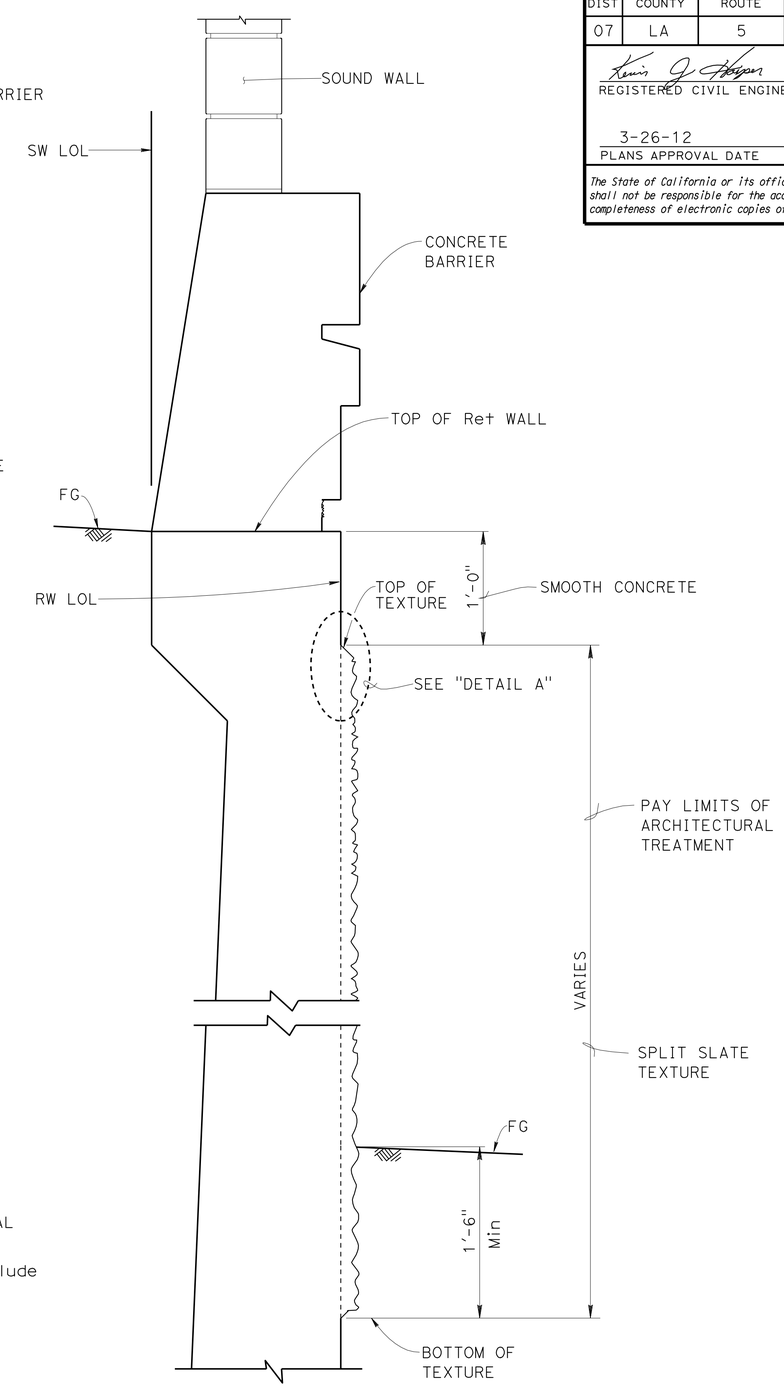

SECTION A-A

1½" = 1'-0"

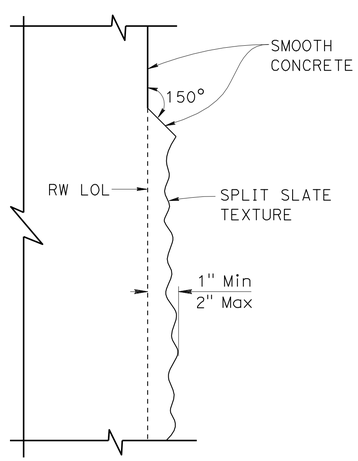

DETAIL A

NO SCALE

NOTES:

1. For sound wall architectural treatment, see "SOUND WALL ARCHITECTURAL DETAILS" sheet.
2. For barrier architectural treatment, see "CONCRETE BARRIER TYPE 736 (MOD 2) DETAILS" sheet.
3. For pilaster and corbel details, see "PILASTER ARCHITECTURAL DETAILS" and "PILASTER STRUCTURAL DETAILS" sheets.
4. Retaining wall architectural treatment pay limits shall include all split slate texture shown in "PART ELEVATION".

	BY	CHECKED
DESIGN	Isaac Tasabia	Javier Chavez
DETAILS	Jin Zhou / Y. Feng	K. Harper / G. Thornton
QUANTITIES	April Pearson	Rizia Da Cruz Ferreira

STATE OF CALIFORNIA
DEPARTMENT OF TRANSPORTATION

DIVISION OF ENGINEERING SERVICES
STRUCTURE DESIGN
DESIGN BRANCH 1

BRIDGE NO. 53-E0180
POST MILE 3.20

SOUND WALL NO. 166
RETAINING WALL ARCHITECTURAL DETAILS

STRUCTURES DESIGN DETAIL SHEET (ENGLISH) (REV. 09-01-10)

ORIGINAL SCALE IN INCHES FOR REDUCED PLANS 0 1 2 3

UNIT: 3576
PROJECT NUMBER & PHASE: 0700001833-1
CONTRACT NO.: 07-215934

DISREGARD PRINTS BEARING EARLIER REVISION DATES

REVISION DATES 12-7-10 6-27-11 7-19-11 03-26-12

SHEET 7 OF 25

FILE => sw166-e-ret01.dgn

USERNAME => s123631 DATE PLOTTED => 28-MAR-2012 TIME PLOTTED => 12:40

DIST	COUNTY	ROUTE	POST MILES TOTAL PROJECT	SHEET No.	TOTAL SHEETS
07	LA	5	2.4/4.0	1120	1288

REGISTERED CIVIL ENGINEER 12-7-11 DATE

3-26-12
PLANS APPROVAL DATE

REGISTERED PROFESSIONAL ENGINEER Kevin Harper No. 42221 Exp. 3-31-12 CIVIL STATE OF CALIFORNIA

The State of California or its officers or agents shall not be responsible for the accuracy or completeness of electronic copies of this plan sheet.

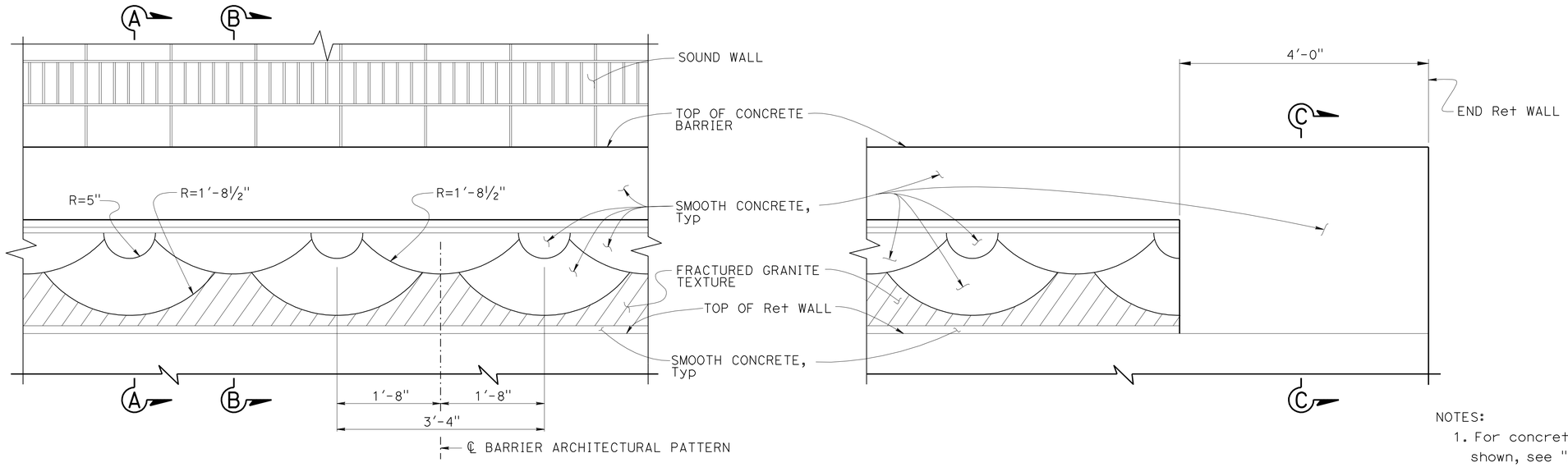

PART ELEVATION CONCRETE BARRIER TYPE 736A (MOD 2)

1" = 1'-0"

NOTES:

1. For concrete barrier type 736A (Mod 2) details not shown, see "BARRIER SECTION" on "SOUND WALL-MASONRY BLOCK WITH BARRIER ON RETAINING WALL DETAILS NO. 2" sheet.
2. For sound wall architectural details, see "SOUND WALL ARCHITECTURAL DETAILS" sheet.

* Indicates Reinf is additional to typical barrier Reinf.

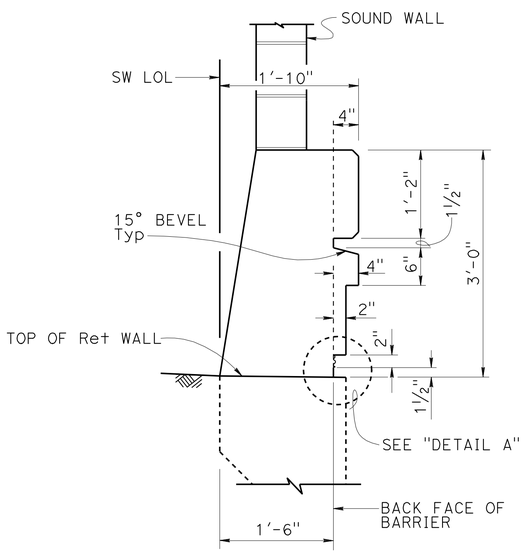

SECTION A-A

1" = 1'-0"

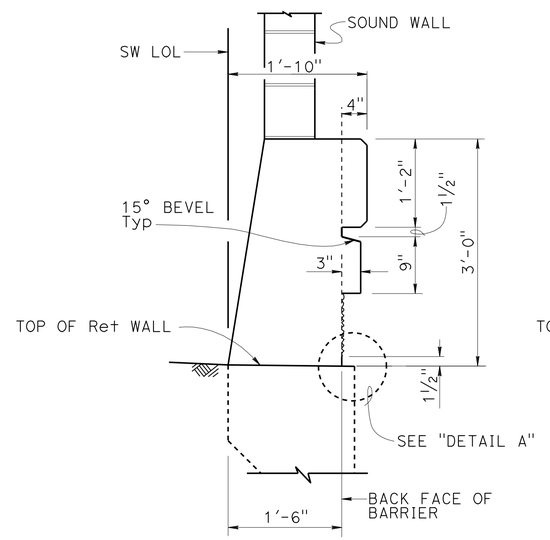

SECTION B-B

1" = 1'-0"

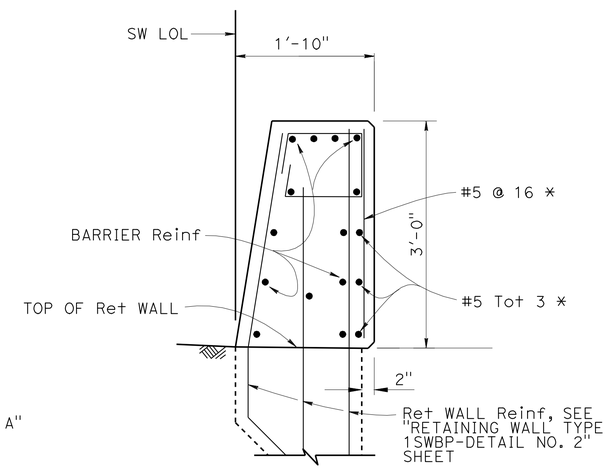

SECTION C-C

1" = 1'-0"

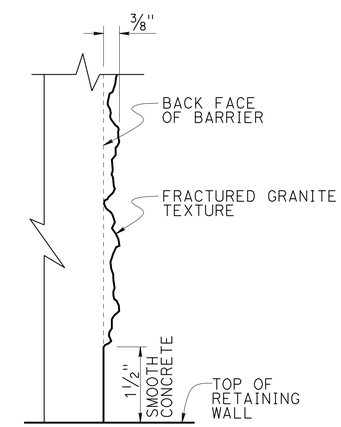

Note: Detail at "SECTION B-B" shown, "SECTION A-A" similar.

DETAIL A

NO SCALE

DESIGN	BY Kevin Harper	CHECKED Greg Thornton	
DETAILS	BY Jin Zhou/ Y. Feng	CHECKED Greg Thornton	
QUANTITIES	BY April Pearson	CHECKED Rizia Da Cruz Ferreira	

STATE OF CALIFORNIA DEPARTMENT OF TRANSPORTATION

DIVISION OF ENGINEERING SERVICES STRUCTURE DESIGN DESIGN BRANCH 1

BRIDGE NO. 53-E0180
POST MILE 3.20

SOUND WALL NO. 166
CONCRETE BARRIER TYPE 736A (MOD 2) DETAILS

STRUCTURES DESIGN DETAIL SHEET (ENGLISH) (REV. 09-01-10)

ORIGINAL SCALE IN INCHES FOR REDUCED PLANS 0 1 2 3

UNIT: 3576
PROJECT NUMBER & PHASE: 0700001833-1
CONTRACT NO.: 07-215934

DISREGARD PRINTS BEARING EARLIER REVISION DATES

REVISION DATES 11/29/10 03/29/11 7/20/11

SHEET 8 OF 25

FILE => sw166-f-barr01.dgn

USERNAME => s123631 DATE PLOTTED => 28-MAR-2012 TIME PLOTTED => 12:41

DIST	COUNTY	ROUTE	POST MILES TOTAL PROJECT	SHEET No.	TOTAL SHEETS
07	LA	5	2.4/4.0	1121	1288

REGISTERED CIVIL ENGINEER 12-7-11 DATE

3-26-12
PLANS APPROVAL DATE

REGISTERED PROFESSIONAL ENGINEER Kevin Harper No. 42221 Exp. 3-31-12 CIVIL STATE OF CALIFORNIA

The State of California or its officers or agents shall not be responsible for the accuracy or completeness of electronic copies of this plan sheet.

NOTE:
1. All Masonry Block shall be Precision units, unless otherwise noted.

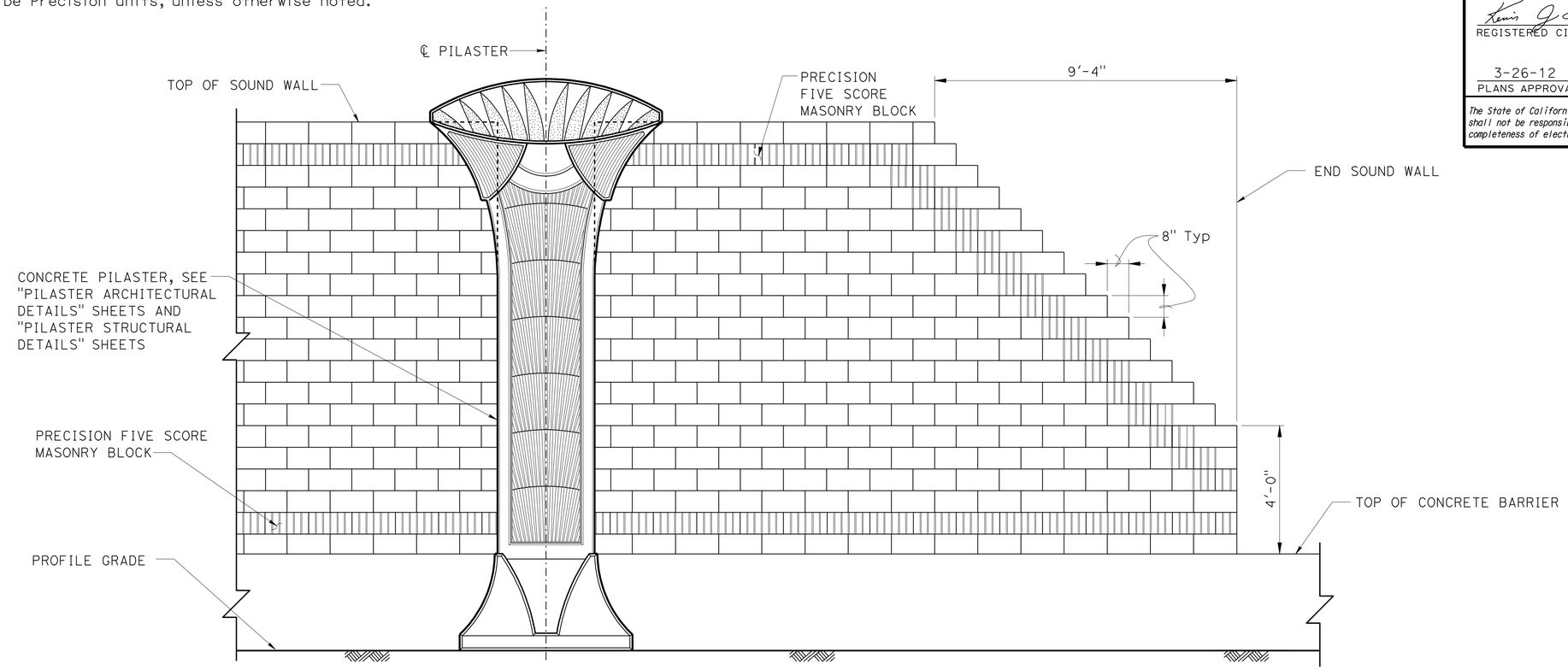

PART SOUND WALL ELEVATION - FREEWAY SIDE

½" = 1'-0"

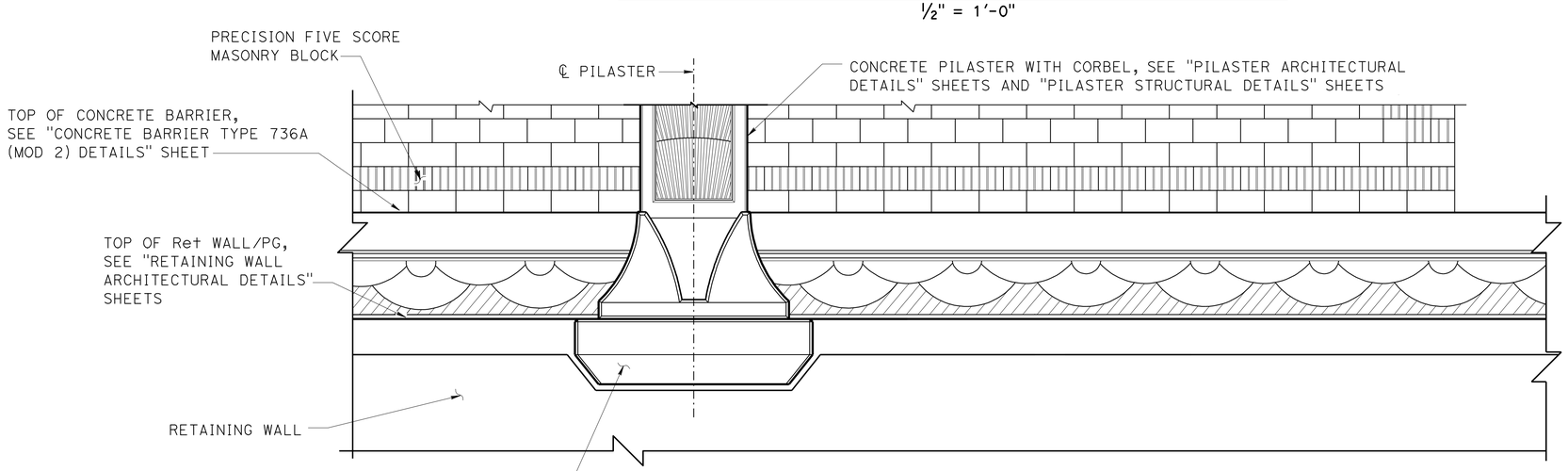

PART SOUND WALL ELEVATION - BACK SIDE

½" = 1'-0"

DESIGN	BY Isaac Tasabia	CHECKED Javier Chavez	
DETAILS	BY Jin Zhou	CHECKED K. Harper / D. Sessions	
QUANTITIES	BY April Pearson	CHECKED Kyoung Lee	

STATE OF CALIFORNIA DEPARTMENT OF TRANSPORTATION

DIVISION OF ENGINEERING SERVICES STRUCTURE DESIGN DESIGN BRANCH 1

BRIDGE NO. 53-E0180
POST MILE 3.20

SOUND WALL NO. 166
SOUND WALL ARCHITECTURAL DETAILS

STRUCTURES DESIGN DETAIL SHEET (ENGLISH) (REV. 09-01-10)

ORIGINAL SCALE IN INCHES FOR REDUCED PLANS 0 1 2 3

UNIT: 3576
PROJECT NUMBER & PHASE: 07000018331
CONTRACT NO.: 07-215934

DISREGARD PRINTS BEARING EARLIER REVISION DATES

REVISION DATES 12/10/10 04/29/11 7/20/11

SHEET 9 OF 25

FILE => sw166-f-sou01.dgn

USERNAME => s123631 DATE PLOTTED => 28-MAR-2012 TIME PLOTTED => 12:41

DIST	COUNTY	ROUTE	POST MILES TOTAL PROJECT	SHEET No.	TOTAL SHEETS
07	LA	5	2.4/4.0	1122	1288

REGISTERED CIVIL ENGINEER — DATE 12-7-11

3-26-12
PLANS APPROVAL DATE

REGISTERED PROFESSIONAL ENGINEER — Kevin Harper — No. 42221 — Exp. 3-31-12 — CIVIL — STATE OF CALIFORNIA

The State of California or its officers or agents shall not be responsible for the accuracy or completeness of electronic copies of this plan sheet.

NOTES:

1. All dimensions symmetrical about ℄ Pilaster.
2. For location of "DETAIL E", see "PILASTER ARCHITECTURAL DETAILS NO. 2" sheet.
3. Beveled edges are 45° unless otherwise noted.
4. All vertical dimensions are measured along the ℄ Pilaster (Pilaster shall be vertical).

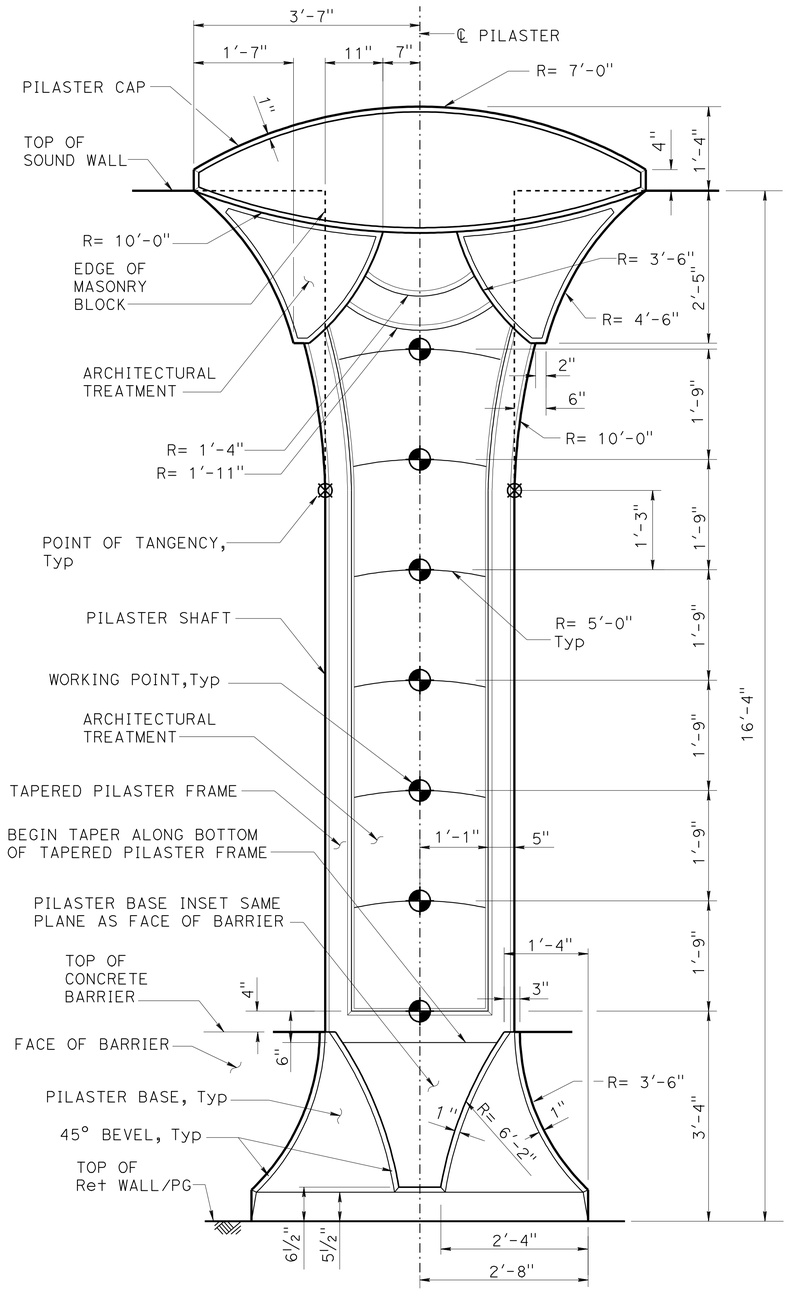

16'-4" SOUND WALL

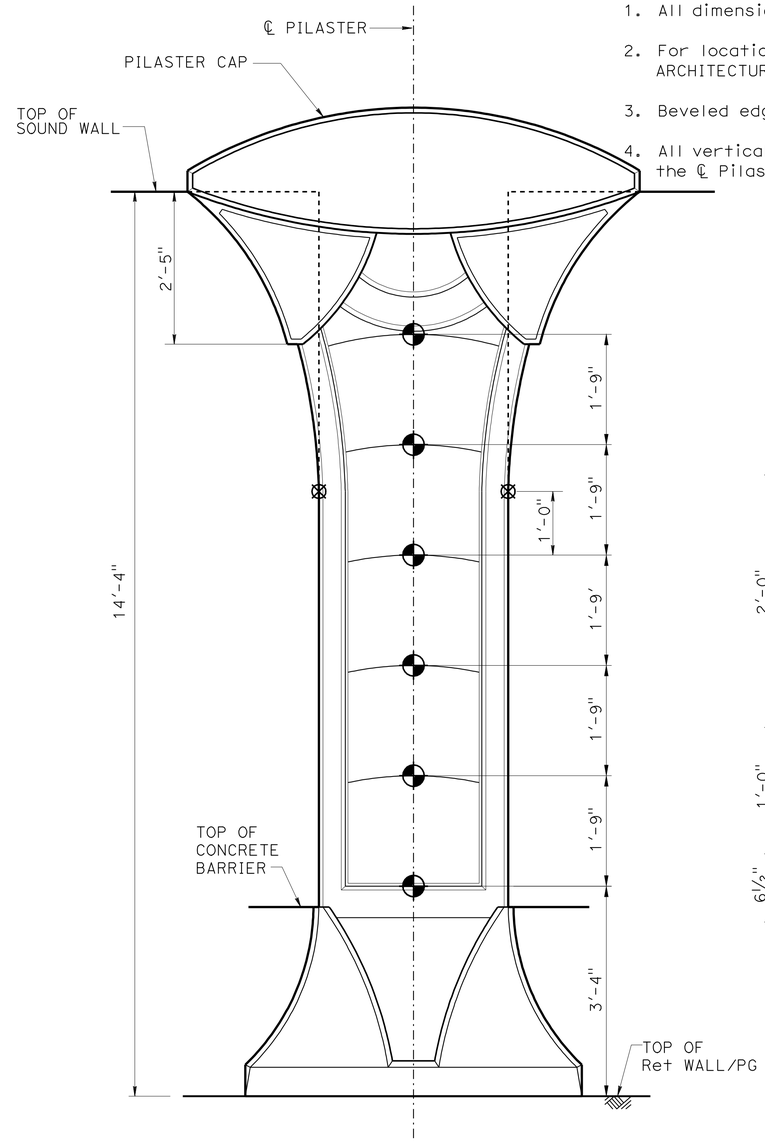

NOTE: For dimensions and details not shown, see "16'-4" SOUND WALL" details.

14'-4" SOUND WALL

PILASTER ELEVATION - FREEWAY SIDE

NO SCALE

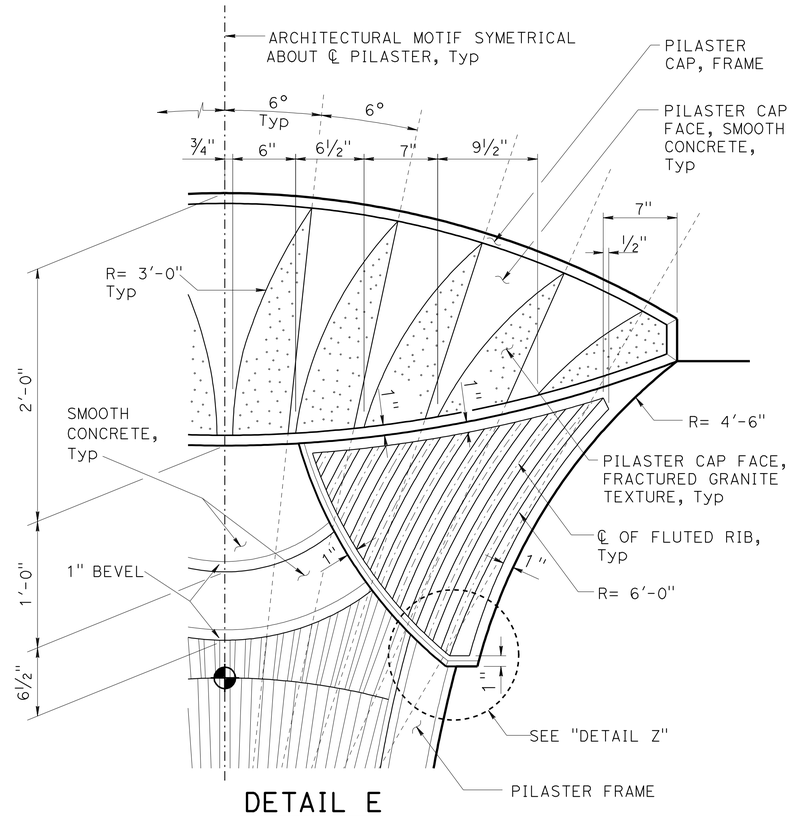

DETAIL E

NO SCALE

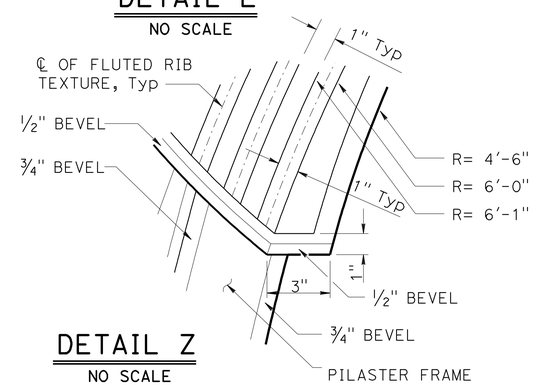

DETAIL Z

NO SCALE

DESIGN	BY Isaac Tasabia	CHECKED Javier Chavez	
DETAILS	BY Jin Zhou	CHECKED K. Harper / D. Sessions	
QUANTITIES	BY April Pearson	CHECKED Kyoung Lee	

STATE OF CALIFORNIA
DEPARTMENT OF TRANSPORTATION

DIVISION OF ENGINEERING SERVICES
STRUCTURE DESIGN
DESIGN BRANCH 1

BRIDGE NO. 53-E0180
POST MILE 3.20

SOUND WALL NO. 166
PILASTER ARCHITECTURAL DETAILS NO. 1

STRUCTURES DESIGN DETAIL SHEET (ENGLISH) (REV. 09-01-10)

ORIGINAL SCALE IN INCHES FOR REDUCED PLANS 0 1 2 3

UNIT: 3576
PROJECT NUMBER & PHASE: 07000018331
CONTRACT NO. 07-215934

DISREGARD PRINTS BEARING EARLIER REVISION DATES

REVISION DATES: 12/08/10 7/20/11 04/09/12

SHEET 10 OF 25

FILE => sw166-g-pilaster01.dgn

USERNAME => s123631 DATE PLOTTED => 28-MAR-2012 TIME PLOTTED => 12:41

DIST	COUNTY	ROUTE	POST MILES TOTAL PROJECT	SHEET No.	TOTAL SHEETS
07	LA	5	2.4/4.0	1123	1288

REGISTERED CIVIL ENGINEER 12-7-11 DATE

3-26-12
PLANS APPROVAL DATE

REGISTERED PROFESSIONAL ENGINEER Kevin Harper No. 42221 Exp. 3-31-12 CIVIL STATE OF CALIFORNIA

The State of California or its officers or agents shall not be responsible for the accuracy or completeness of electronic copies of this plan sheet.

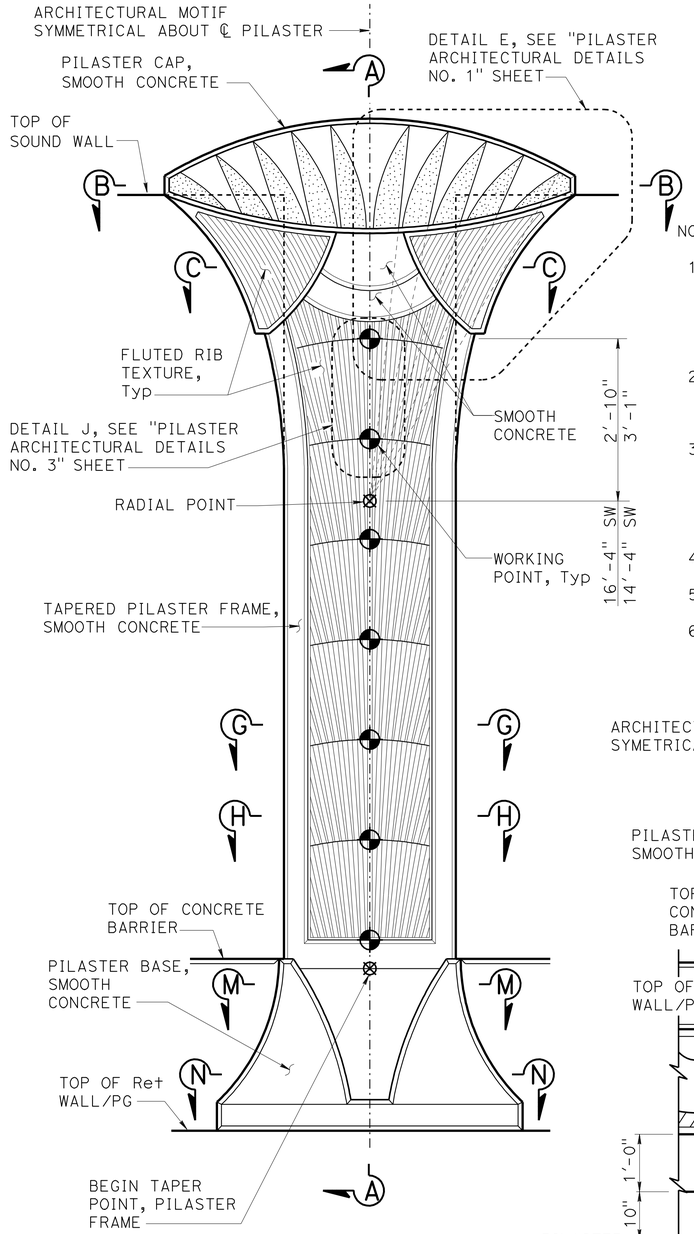

NOTES:

1. For "SECTION B-B", "SECTION C-C", "SECTION G-G","SECTION H-H" and "SECTION L-L", see "PILASTER ARCHITECTURAL DETAILS NO. 3" sheet.
2. For "SECTION M-M" and "SECTION N-N"' see "PILASTER ARCHITECTURAL DETAIL NO. 4" sheet.
3. Pilaster Sections on Retaining Wall shown, for Pilaster on Barrier Type 736SV (Mod), see "PILASTER SECTION ON TYPE 736SV (Mod) BARRIER" on "PILASTER ARCHITECTURAL DETAILS NO. 4" sheet.
4. All dimensions symmetrical about ℄ pilaster.
5. Beveled edges are 45° unless otherwise noted.
6. All vertical dimension are measured along the ℄ Pilaster (Pilaster shall be vertical).

NOTE: For additional details not shown, see "16'-4" SOUND WALL - PILASTER ELEVATION" on "PILASTER ARCHITECTURAL DETAILS NO. 1" sheet.

FREEWAY SIDE

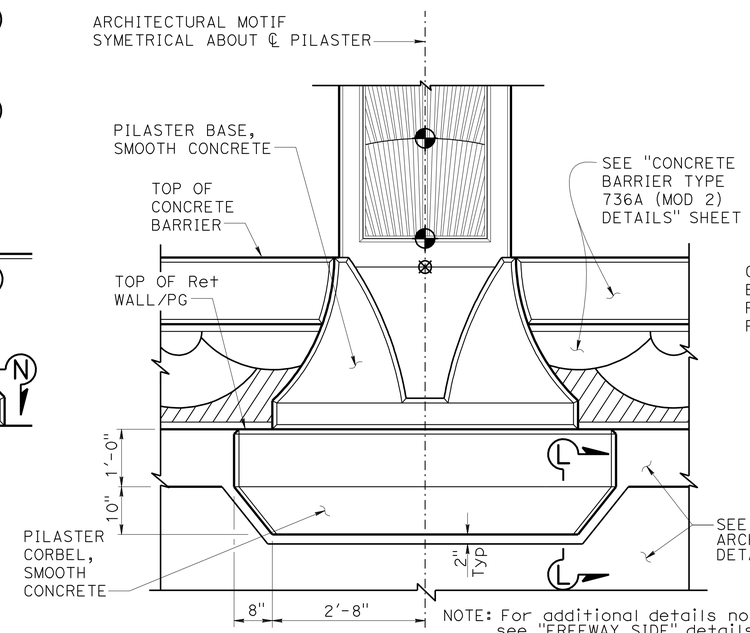

NOTE: For additional details not shown, see "FREEWAY SIDE" details.

BACK SIDE

PILASTER ARCHITECTURAL MOTIF

3/4" = 1'-0"

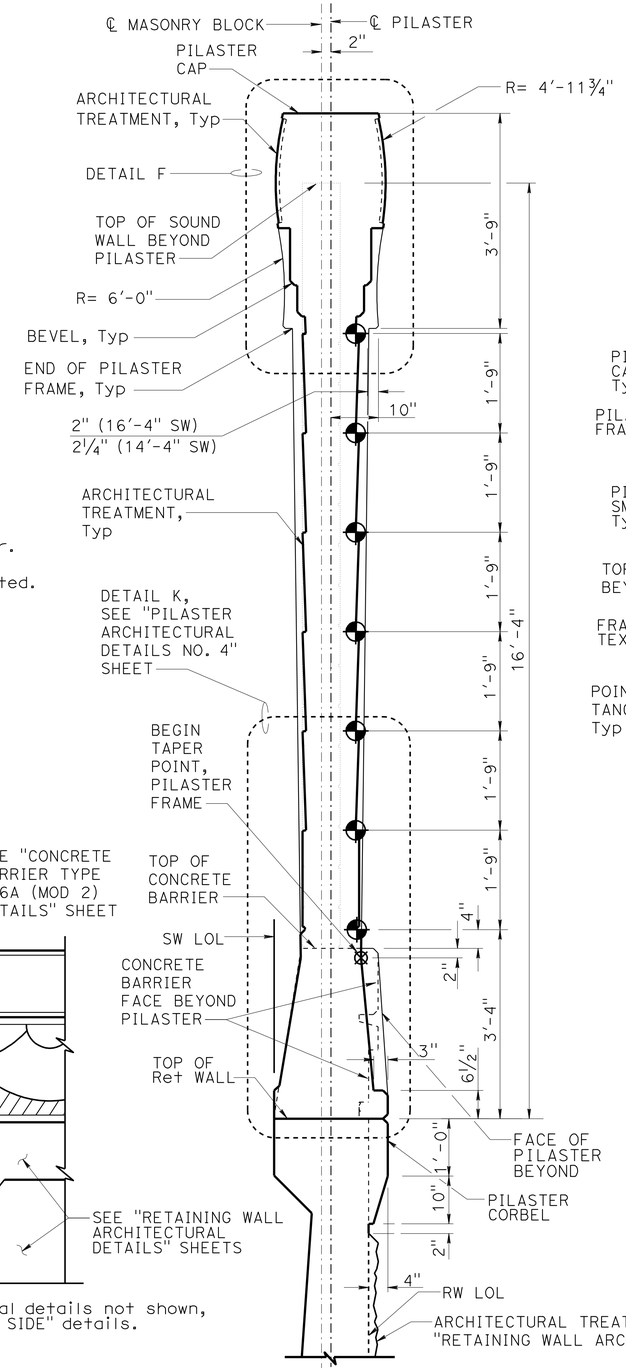

SECTION A-A

3/4" = 1'-0"

NOTE: Pilaster for 16'-4" Sound Wall shown, Pilaster at 14'-4" Sound Wall similar.

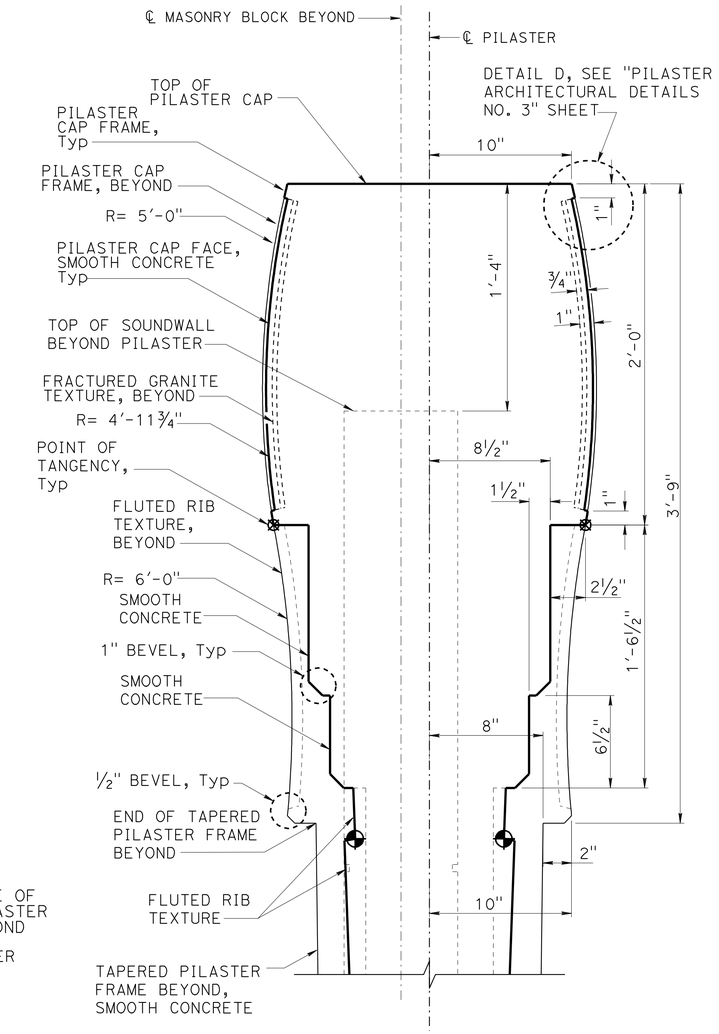

DETAIL F

NO SCALE

DESIGN	BY Isaac Tasabia	CHECKED Javier Chavez	
DETAILS	BY Jin Zhou	CHECKED K. Harper / D. Sessions	
QUANTITIES	BY April Pearson	CHECKED Kyoung Lee	

STATE OF CALIFORNIA
DEPARTMENT OF TRANSPORTATION

DIVISION OF ENGINEERING SERVICES
STRUCTURE DESIGN
DESIGN BRANCH 1

BRIDGE NO. 53-E0180
POST MILE 3.20

SOUND WALL NO. 166
PILASTER ARCHITECTURAL DETAILS NO. 2

STRUCTURES DESIGN DETAIL SHEET (ENGLISH) (REV. 09-01-10)

ORIGINAL SCALE IN INCHES FOR REDUCED PLANS 0 1 2 3

UNIT: 3576
PROJECT NUMBER & PHASE: 07000018331
CONTRACT NO.: 07-215934

DISREGARD PRINTS BEARING EARLIER REVISION DATES

REVISION DATES 12/20/10 07/20/11 7/20/11

SHEET 11 OF 25

FILE => sw166-g-pilaster02.dgn

USERNAME => s123631 DATE PLOTTED => 28-MAR-2012 TIME PLOTTED => 12:41

DIST	COUNTY	ROUTE	POST MILES TOTAL PROJECT	SHEET No.	TOTAL SHEETS
07	LA	5	2.4/4.0	1124	1288

REGISTERED CIVIL ENGINEER 12-7-11 DATE

3-26-12
PLANS APPROVAL DATE

REGISTERED PROFESSIONAL ENGINEER Kevin Harper No. 42221 Exp. 3-31-12 CIVIL STATE OF CALIFORNIA

The State of California or its officers or agents shall not be responsible for the accuracy or completeness of electronic copies of this plan sheet.

NOTES:

1. All notes and dimensions symetrical about ℄ pilaster.
2. Beveled edges are 45° unless otherwise noted.
3. For location of "DETAIL J", "DETAIL D" and "SECTION B-B", "SECTION C-C", "SECTION G-G", "SECTION H-H" and "SECTION L-L", see "PILASTER ARCHITECTURAL DETAILS NO. 2" sheet.
4. For Retaining Wall split slate texture, see "RETAINING WALL ARCHITECTURAL DETAILS" sheet.
5. For Type 736SV (Mod) Barrier fractured granite texture, see "CONCRETE BARRIER TYPE 736A (MOD 2) DETAILS" sheet if applicable.

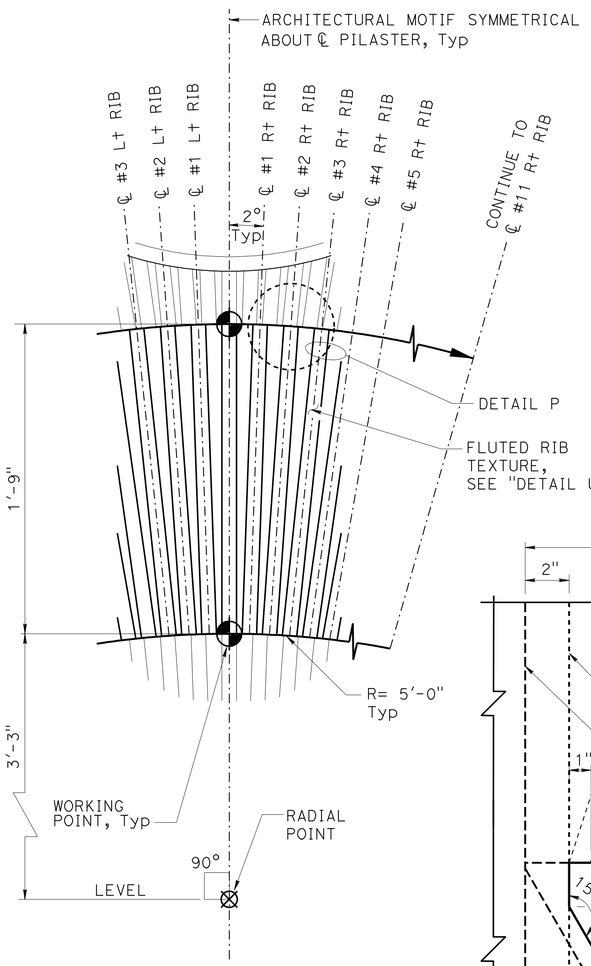

DETAIL J
NO SCALE

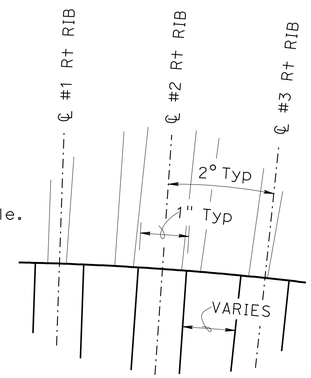

DETAIL P
NO SCALE

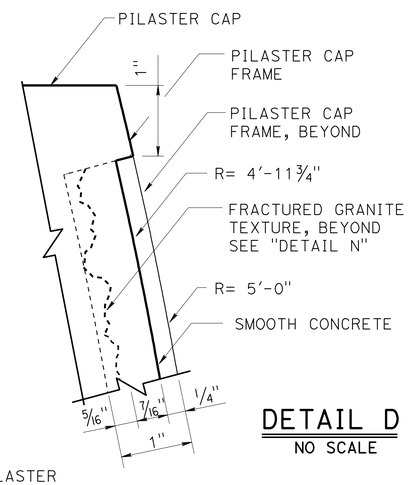

DETAIL D
NO SCALE

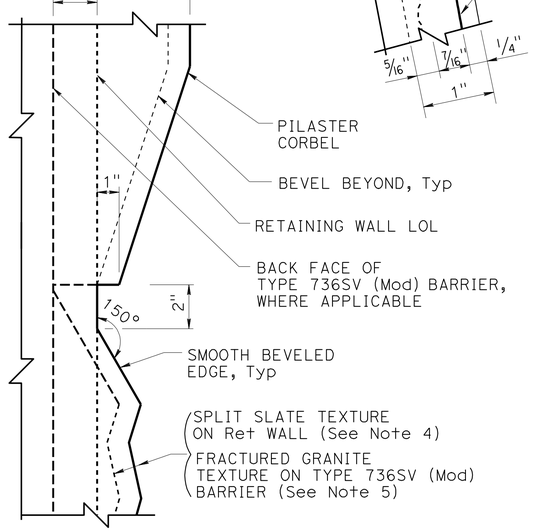

SECTION L-L
NO SCALE

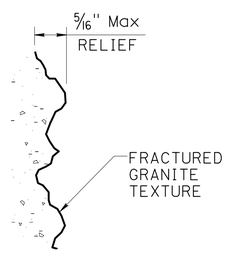

DETAIL N
NO SCALE

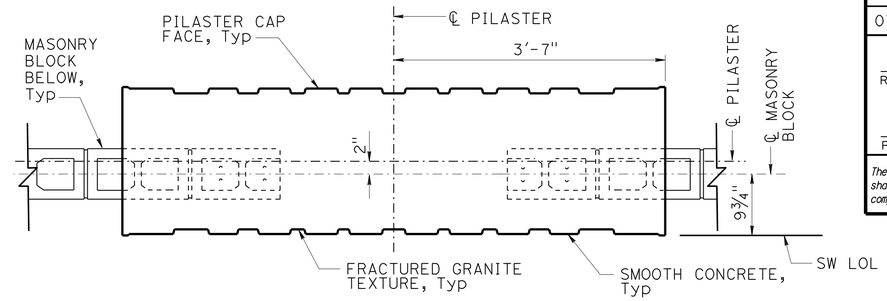

SECTION B-B
1" = 1'-0"

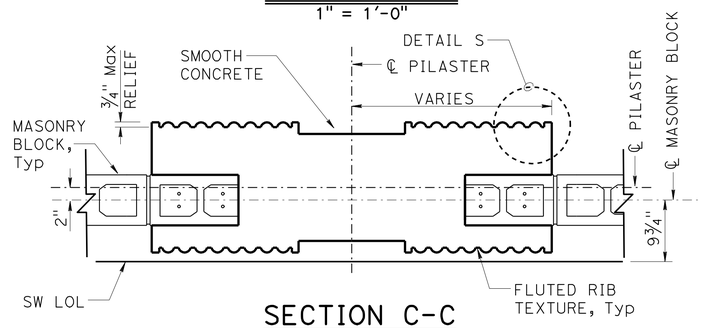

SECTION C-C
1" = 1'-0"

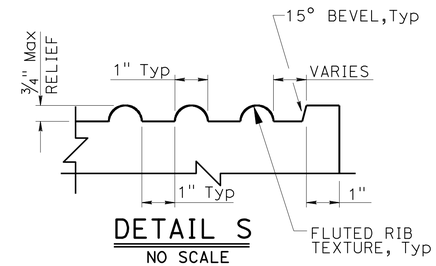

DETAIL S
NO SCALE

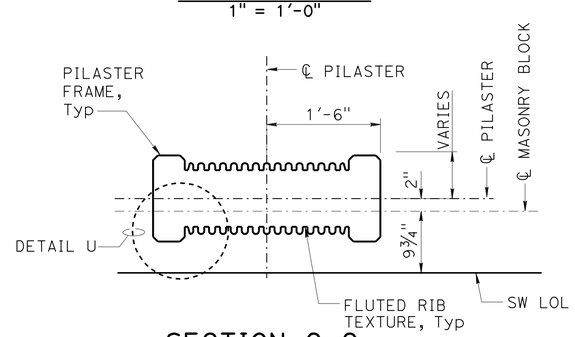

SECTION G-G
1" = 1'-0"

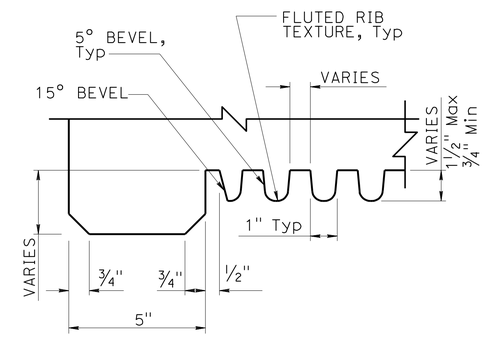

DETAIL U
NO SCALE

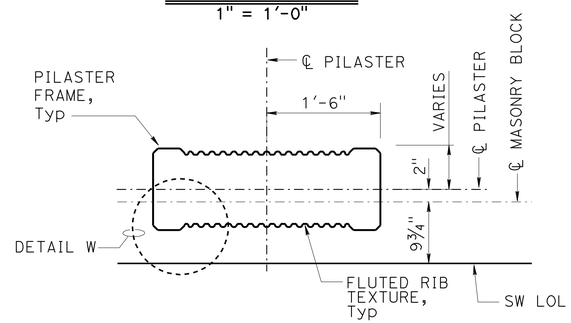

SECTION H-H
1" = 1'-0"

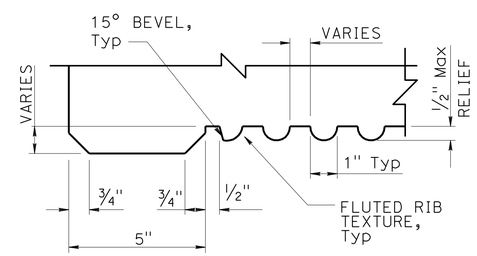

DETAIL W
NO SCALE

DESIGN	BY Isaac Tasabia	CHECKED Javier Chavez	
DETAILS	BY Jin Zhou	CHECKED K. Harper / D. Sessions	
QUANTITIES	BY April Pearson	CHECKED Kyoung Lee	

STATE OF CALIFORNIA
DEPARTMENT OF TRANSPORTATION

DIVISION OF ENGINEERING SERVICES
STRUCTURE DESIGN
DESIGN BRANCH 1

BRIDGE NO. 53-E0180
POST MILE 3.20

SOUND WALL NO. 166
PILASTER ARCHITECTURAL DETAILS NO. 3

STRUCTURES DESIGN DETAIL SHEET (ENGLISH) (REV. 09-01-10)

ORIGINAL SCALE IN INCHES FOR REDUCED PLANS 0 1 2 3

UNIT: 3576
PROJECT NUMBER & PHASE: 07000018331
CONTRACT NO.: 07-215934

DISREGARD PRINTS BEARING EARLIER REVISION DATES

REVISION DATES 12/09/10 04/28/11 04/30/11

SHEET 12 OF 25

FILE => sw166-g-pilaster03.dgn

USERNAME => s123631 DATE PLOTTED => 28-MAR-2012 TIME PLOTTED => 12:41

DIST	COUNTY	ROUTE	POST MILES TOTAL PROJECT	SHEET No.	TOTAL SHEETS
07	LA	5	2.4/4.0	1125	1288

REGISTERED CIVIL ENGINEER 12-7-11 DATE

3-26-12
PLANS APPROVAL DATE

REGISTERED PROFESSIONAL ENGINEER Kevin Harper No. 42221 Exp. 3-31-12 CIVIL STATE OF CALIFORNIA

The State of California or its officers or agents shall not be responsible for the accuracy or completeness of electronic copies of this plan sheet.

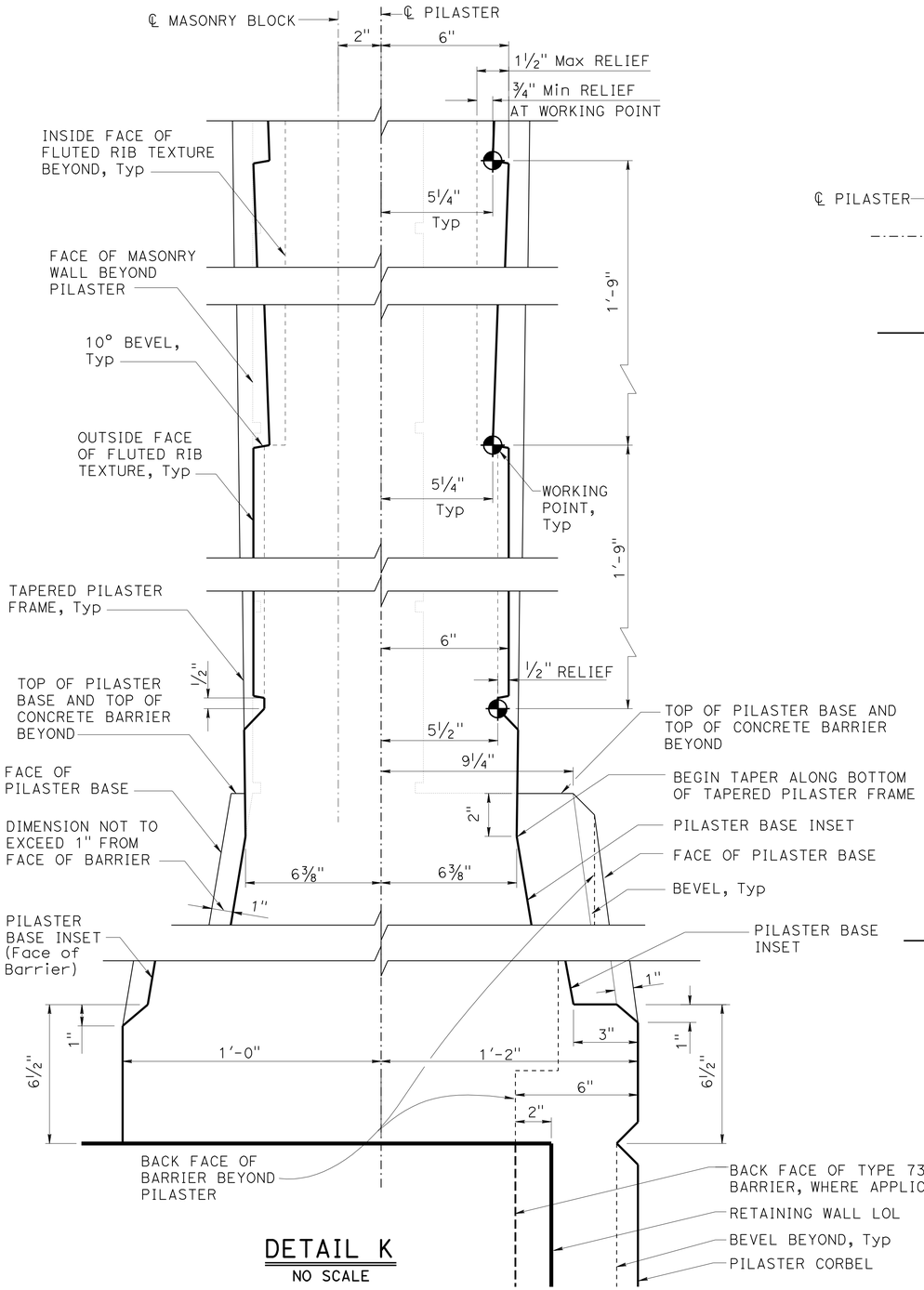

DETAIL K
NO SCALE

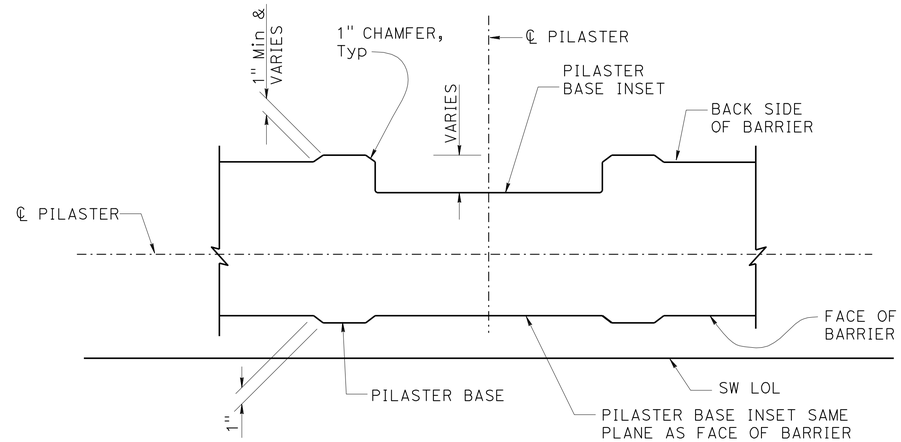

SECTION M-M
1½" = 1'-0"

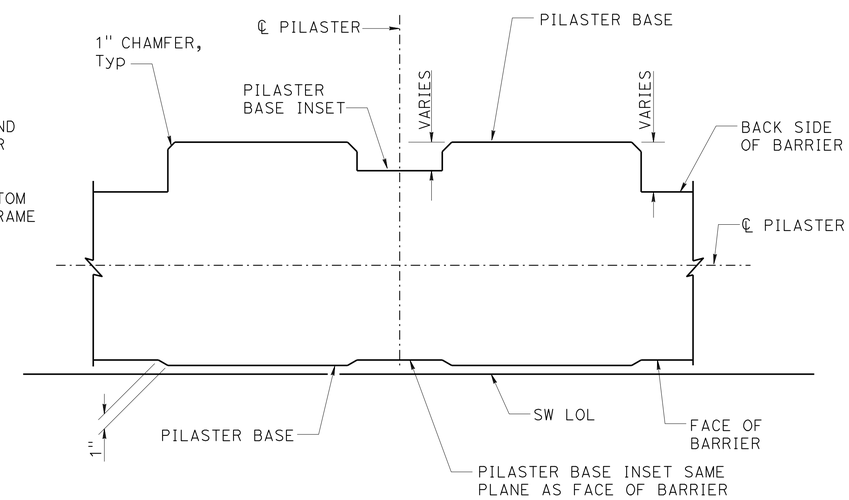

SECTION N-N
1½" = 1'-0"

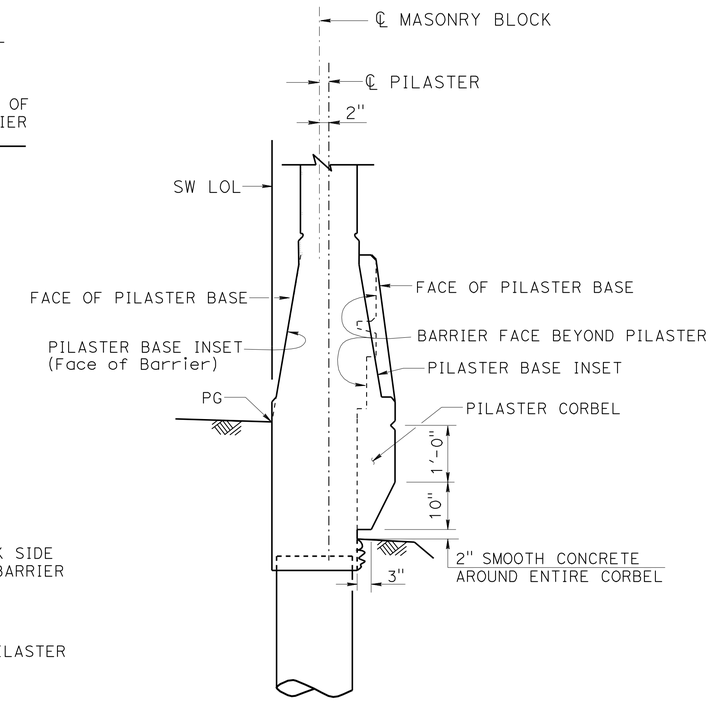

NOTE: For Pilaster details not shown, see "SECTION A-A" on "PILASTER ARCHITECTURAL DETAILS NO. 2" sheet.

PILASTER SECTION ON TYPE 736SV (MOD) BARRIER
¾" = 1'-0"

NOTES:

1. For location of "SECTION M-M", "SECTION N-N" and "DETAIL K", see "PILASTER ARCHITECTURAL DETAILS NO. 2" sheet.
2. All dimensions symmetrical about ℄ Pilaster.
3. All vertical dimension are measured along the ℄ Pilaster (Pilaster shall be vertical).

	BY	CHECKED
DESIGN	Isaac Tasabia	Javier Chavez
DETAILS	Jin Zhou	K. Harper / D. Sessions
QUANTITIES	April Pearson	Kyoung Lee

STATE OF CALIFORNIA
DEPARTMENT OF TRANSPORTATION

DIVISION OF ENGINEERING SERVICES
STRUCTURE DESIGN
DESIGN BRANCH 1

BRIDGE NO. 53-E0180
POST MILE 3.20

SOUND WALL NO. 166
PILASTER ARCHITECTURAL DETAILS NO. 4

STRUCTURES DESIGN DETAIL SHEET (ENGLISH) (REV. 09-01-10)

ORIGINAL SCALE IN INCHES FOR REDUCED PLANS 0 1 2 3

UNIT: 3576
PROJECT NUMBER & PHASE: 07000018331
CONTRACT NO.: 07-215934

DISREGARD PRINTS BEARING EARLIER REVISION DATES

REVISION DATES 12-7-10 3-26-11 7-20-11 04-23-12

SHEET 13 OF 25

FILE => sw166-g-pilaster04.dgn

USERNAME => s123631 DATE PLOTTED => 28-MAR-2012 TIME PLOTTED => 12:41

DIST	COUNTY	ROUTE	POST MILES TOTAL PROJECT	SHEET No.	TOTAL SHEETS
07	LA	5	2.4/4.0	1126	1288

REGISTERED CIVIL ENGINEER 12-7-11 DATE

3-26-12
PLANS APPROVAL DATE

REGISTERED PROFESSIONAL ENGINEER Kevin Harper No. 42221 Exp. 3-31-12 CIVIL STATE OF CALIFORNIA

The State of California or its officers or agents shall not be responsible for the accuracy or completeness of electronic copies of this plan sheet.

NOTE:
For "SECTION B-B", "SECTION C-C", "SECTION D-D" and "SECTION G-G", see "PILASTER STRUCTURAL DETAILS NO. 2" sheet.

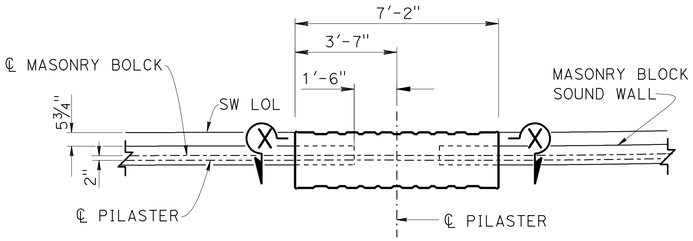

PART SOUND WALL PLAN

3/8" = 1'-0"

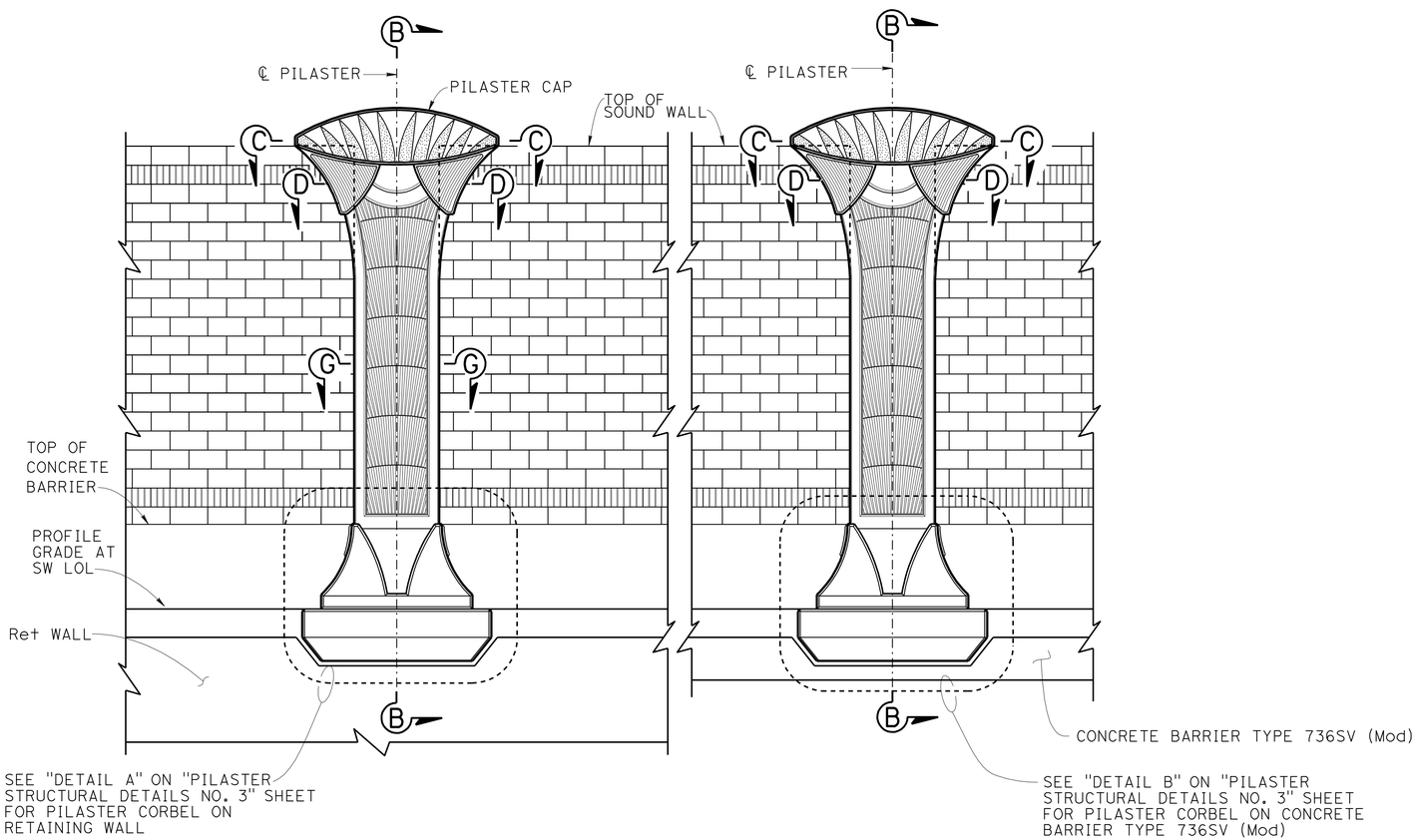

PART SOUND WALL ELEVATION

3/8" = 1'-0"

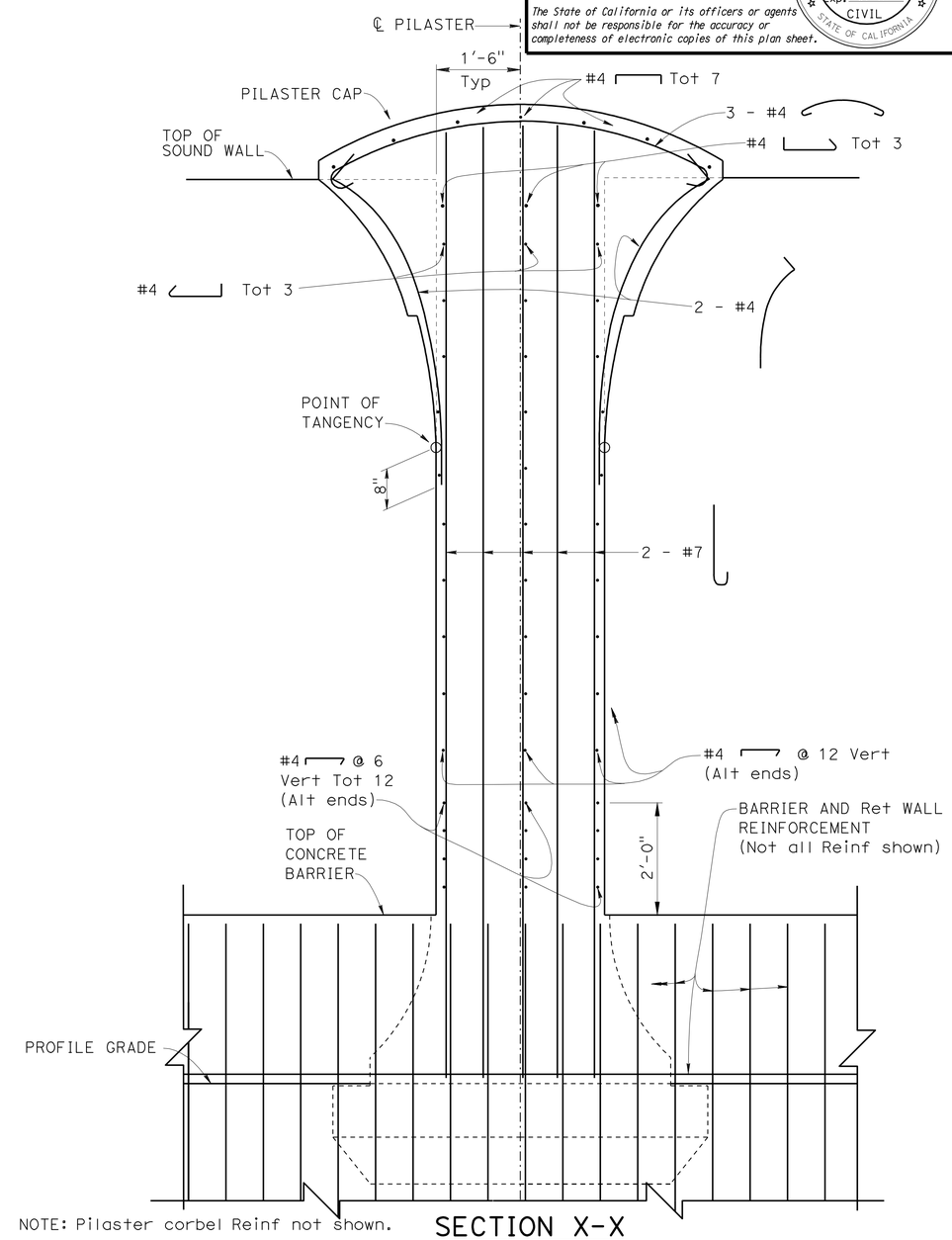

NOTE: Pilaster corbel Reinf not shown.

SECTION X-X

3/4" = 1'-0"

DESIGN	BY Kevin Harper	CHECKED Daniel Sessions	
DETAILS	BY Jin Zhou	CHECKED Daniel Sessions	
QUANTITIES	BY April Pearson	CHECKED Kyoung Lee	

STATE OF CALIFORNIA
DEPARTMENT OF TRANSPORTATION

DIVISION OF ENGINEERING SERVICES
STRUCTURE DESIGN
DESIGN BRANCH 1

BRIDGE NO. 53-E0180
POST MILE 3.20

SOUND WALL NO. 166
PILASTER STRUCTURAL DETAILS NO. 1

STRUCTURES DESIGN DETAIL SHEET (ENGLISH) (REV. 09-01-10)

ORIGINAL SCALE IN INCHES FOR REDUCED PLANS 0 1 2 3

UNIT: 3576
PROJECT NUMBER & PHASE: 07000018331
CONTRACT NO.: 07-215934

DISREGARD PRINTS BEARING EARLIER REVISION DATES

REVISION DATES 12/23/10 04/29/11 04/15/11

SHEET 14 OF 25

FILE => sw166-h-pilaster01.dgn

USERNAME => s123631 DATE PLOTTED => 28-MAR-2012 TIME PLOTTED => 12:41

DIST	COUNTY	ROUTE	POST MILES TOTAL PROJECT	SHEET No.	TOTAL SHEETS
07	LA	5	2.4/4.0	1127	1288

REGISTERED CIVIL ENGINEER 12-7-11 DATE

3-26-12
PLANS APPROVAL DATE

REGISTERED PROFESSIONAL ENGINEER Kevin Harper No. 42221 Exp. 3-31-12 CIVIL STATE OF CALIFORNIA

The State of California or its officers or agents shall not be responsible for the accuracy or completeness of electronic copies of this plan sheet.

NOTES:

1. For location of "SECTION B-B", "SECTION C-C", "SECTION D-D" and "SECTION G-G", see "PILASTER STRUCTURAL DETAILS NO. 1" sheet.
2. For Pilaster geometry, dimensions and architectural treatments, see "PILASTER ARCHITECTURAL DETAILS" sheets.

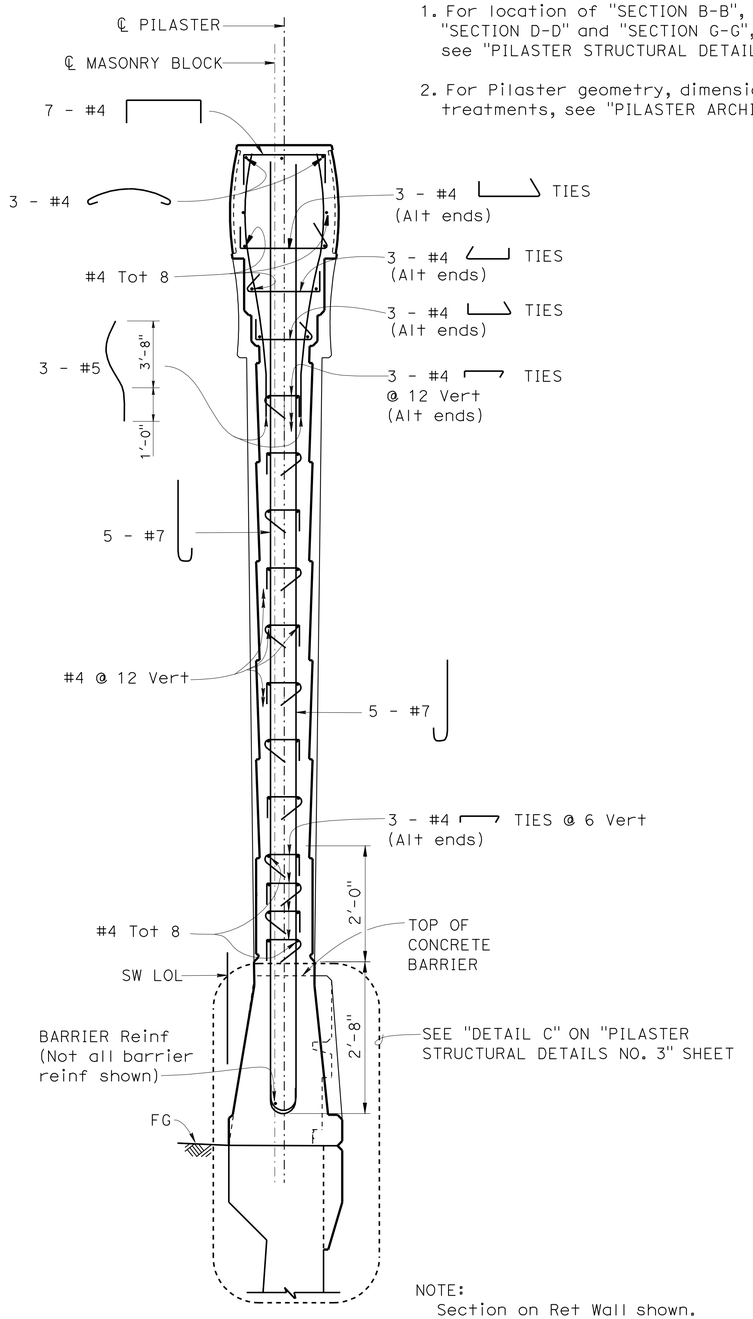

SECTION B-B

¾" = 1'-0"

NOTE:
Section on Ret Wall shown.
Pilaster on Type 736SV (Mod) Barrier similar.

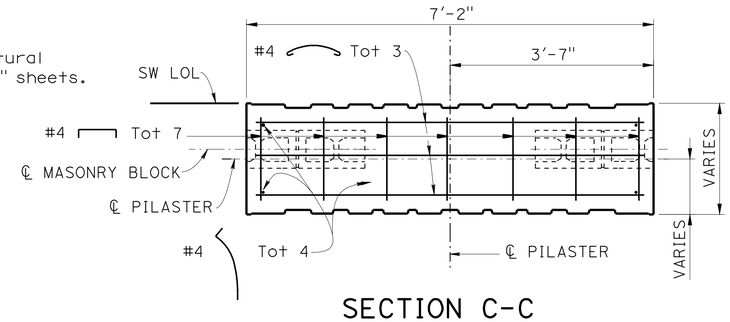

SECTION C-C

¾" = 1'-0"

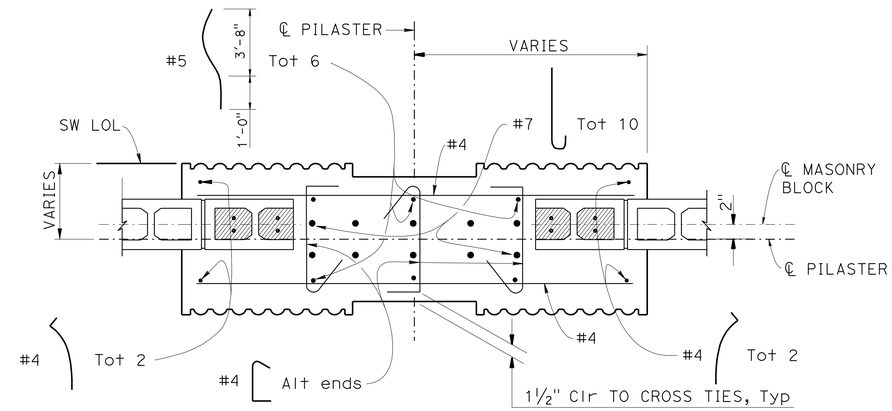

SECTION D-D

1" = 1'-0"

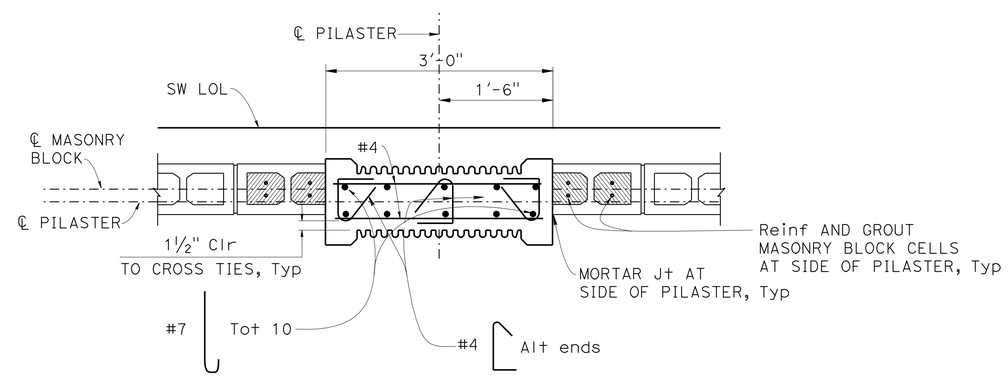

SECTION G-G

1" = 1'-0"

DESIGN	BY Kevin Harper	CHECKED Daniel Sessions	
DETAILS	BY Jin Zhou	CHECKED Daniel Sessions	
QUANTITIES	BY April Pearson	CHECKED Kyoung Lee	

STATE OF CALIFORNIA
DEPARTMENT OF TRANSPORTATION

DIVISION OF ENGINEERING SERVICES
STRUCTURE DESIGN
DESIGN BRANCH 1

BRIDGE NO. 53-E0180
POST MILE 3.20

SOUND WALL NO. 166
PILASTER STRUCTURAL DETAILS NO. 2

STRUCTURES DESIGN DETAIL SHEET (ENGLISH) (REV. 09-01-10)

ORIGINAL SCALE IN INCHES FOR REDUCED PLANS 0 1 2 3

UNIT: 3576
PROJECT NUMBER & PHASE: 07000018331
CONTRACT NO.: 07-215934

DISREGARD PRINTS BEARING EARLIER REVISION DATES

REVISION DATES 12/30/10 05/02/11 5/16/11 7/20/11

SHEET 15 OF 25

FILE => sw166-h-pilaster02.dgn

USERNAME => s123631 DATE PLOTTED => 28-MAR-2012 TIME PLOTTED => 12:42

DIST	COUNTY	ROUTE	POST MILES TOTAL PROJECT	SHEET No.	TOTAL SHEETS
07	LA	5	2.4/4.0	1128	1288

REGISTERED CIVIL ENGINEER 12-7-11 DATE

3-26-12
PLANS APPROVAL DATE

REGISTERED PROFESSIONAL ENGINEER Kevin Harper No. 42221 Exp. 3-31-12 CIVIL STATE OF CALIFORNIA

The State of California or its officers or agents shall not be responsible for the accuracy or completeness of electronic copies of this plan sheet.

NOTES:

1. For location of "DETAIL A" and "DETAIL B", see "PILASTER STRUCTURAL DETAILS NO. 1" sheet.
2. For location of "DETAIL C", see "PILASTER STRUCTURAL DETAILS NO. 2" sheet.

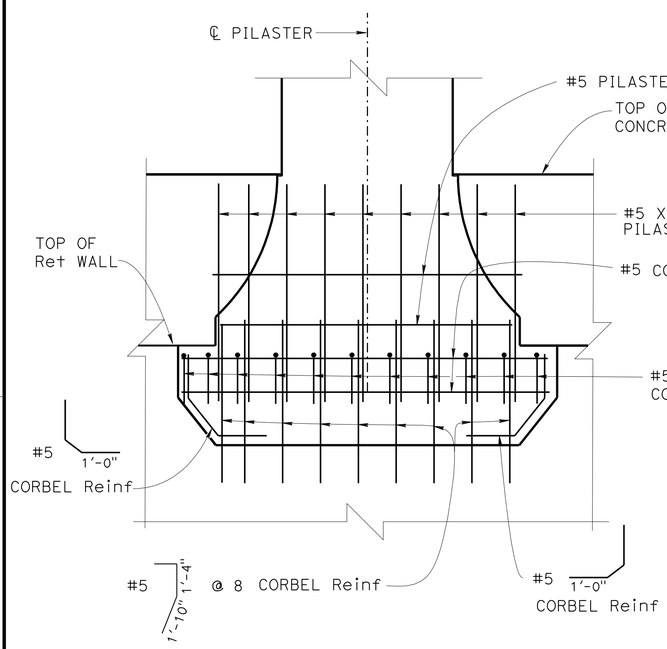

NOTE: Concrete Barrier/Ret Wall reinf not shown.

DETAIL A
¾" = 1'-0"

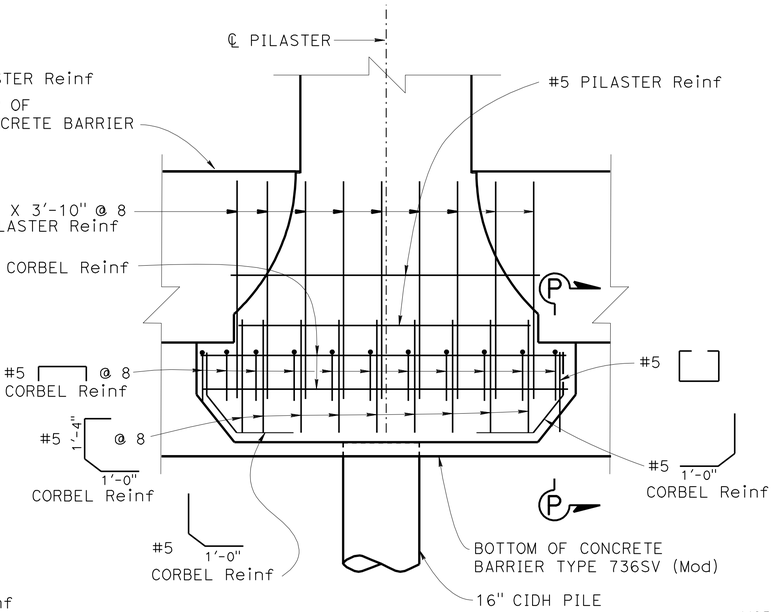

NOTE: Concrete barrier reinf not shown.

DETAIL B
¾" = 1'-0"

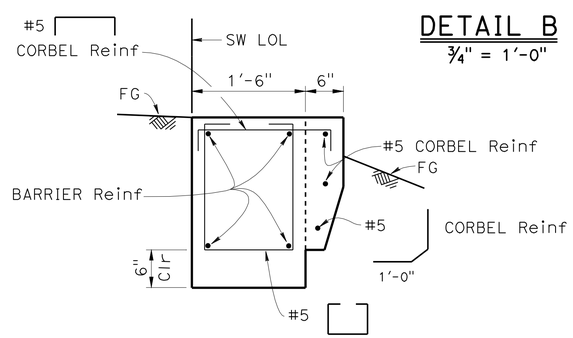

SECTION P-P
1" = 1'-0"

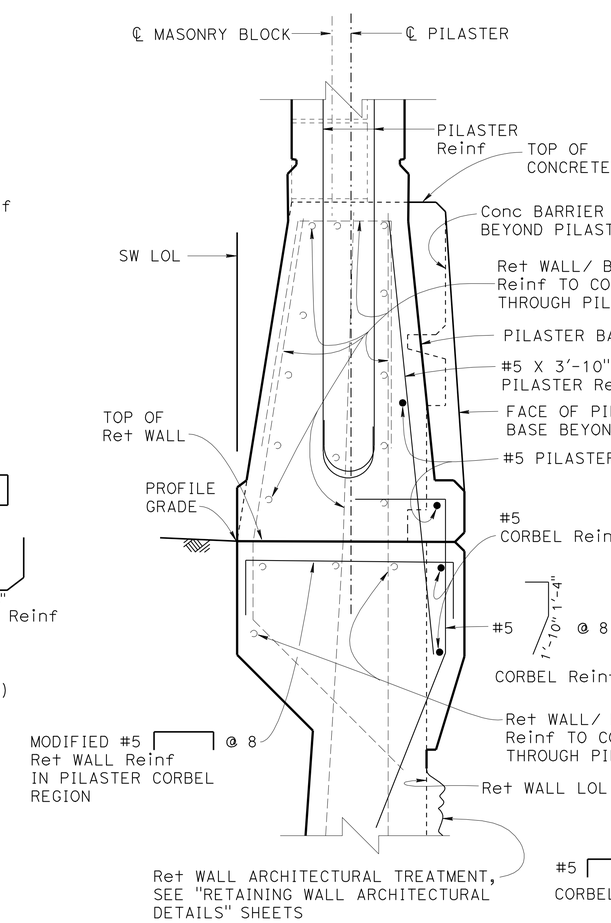

PILASTER CORBEL ON RETAINING WALL

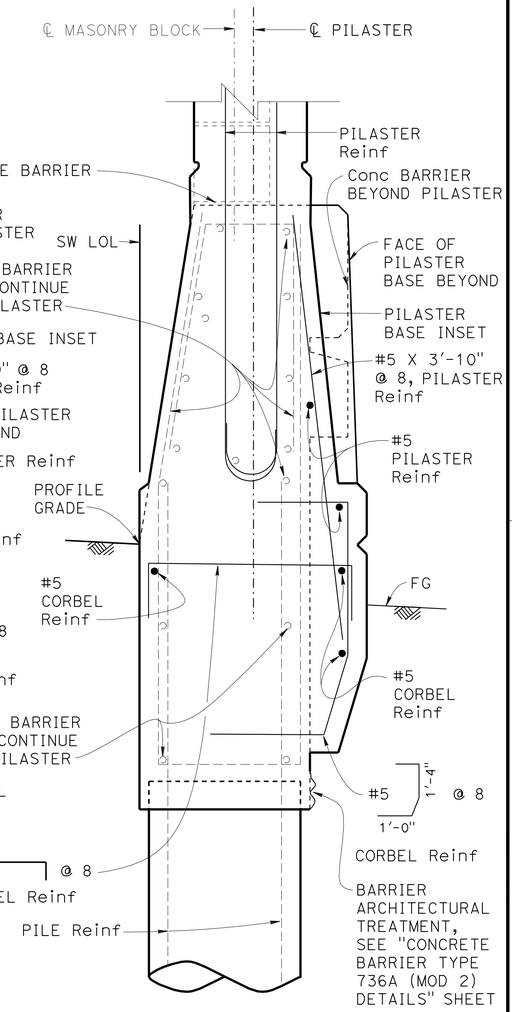

PILASTER CORBEL ON CONCRETE BARRIER TYPE 736SV (MOD)

DETAIL C
1½" = 1'-0"

DESIGN	BY Kevin Harper	CHECKED Daniel Sessions	
DETAILS	BY Jin Zhou	CHECKED Daniel Sessions	
QUANTITIES	BY April Pearson	CHECKED Kyoung Lee	

STATE OF CALIFORNIA
DEPARTMENT OF TRANSPORTATION

DIVISION OF ENGINEERING SERVICES
STRUCTURE DESIGN
DESIGN BRANCH 1

BRIDGE NO. 53-E0180
POST MILE 3.20

SOUND WALL NO. 166
PILASTER STRUCTURAL DETAILS NO. 3

STRUCTURES DESIGN DETAIL SHEET (ENGLISH) (REV. 09-01-10)

ORIGINAL SCALE IN INCHES FOR REDUCED PLANS 0 1 2 3

UNIT: 3576
PROJECT NUMBER & PHASE: 07000018331
CONTRACT NO.: 07-215934

DISREGARD PRINTS BEARING EARLIER REVISION DATES

REVISION DATES 12/30/10 05/03/11 7/21/11

SHEET 16 OF 25

FILE => sw166-h-pilaster03.dgn

USERNAME => s123631 DATE PLOTTED => 28-MAR-2012 TIME PLOTTED => 12:42

DIST	COUNTY	ROUTE	POST MILES TOTAL PROJECT	SHEET No.	TOTAL SHEETS
07	LA	5	2.4/4.0	1129	1288

REGISTERED CIVIL ENGINEER 12-7-11 DATE

3-26-12
PLANS APPROVAL DATE

REGISTERED PROFESSIONAL ENGINEER Kevin Harper No. 42221 Exp. 3-31-12 CIVIL STATE OF CALIFORNIA

The State of California or its officers or agents shall not be responsible for the accuracy or completeness of electronic copies of this plan sheet.

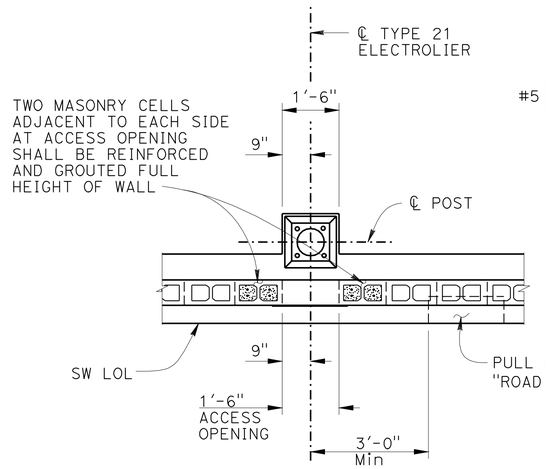

PLAN
½" = 1'-0"

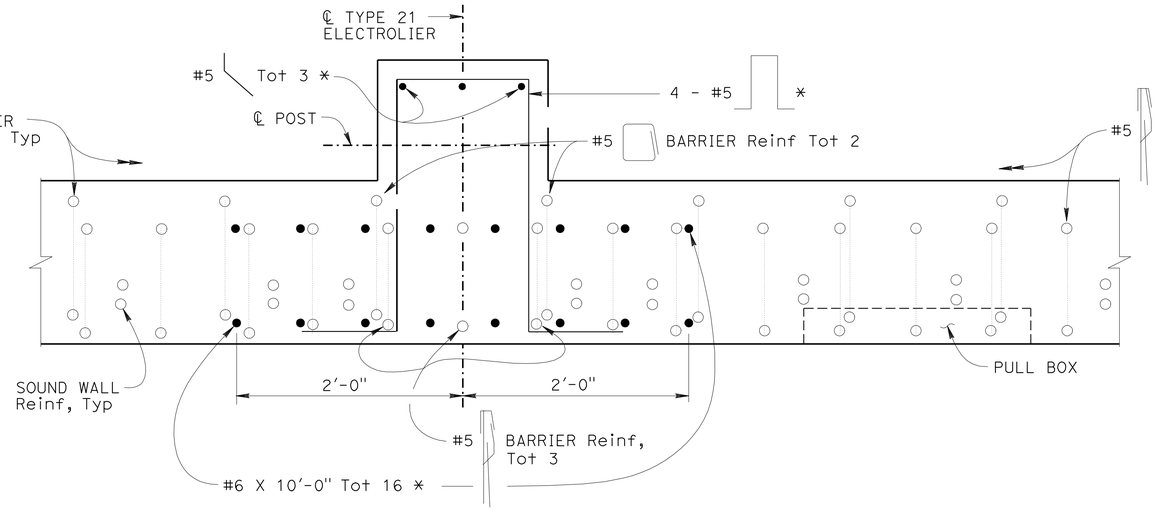

SECTION C-C
1½" = 1'-0"

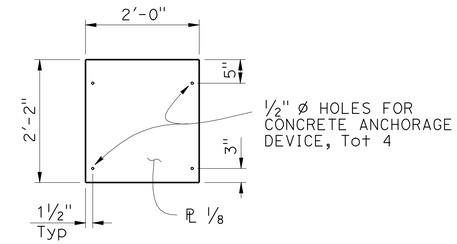

NOTE: PAINT COVER ℗ TO MATCH COLOR OF MASONRY BLOCKS

COVER PLATE
¾" = 1'-0"

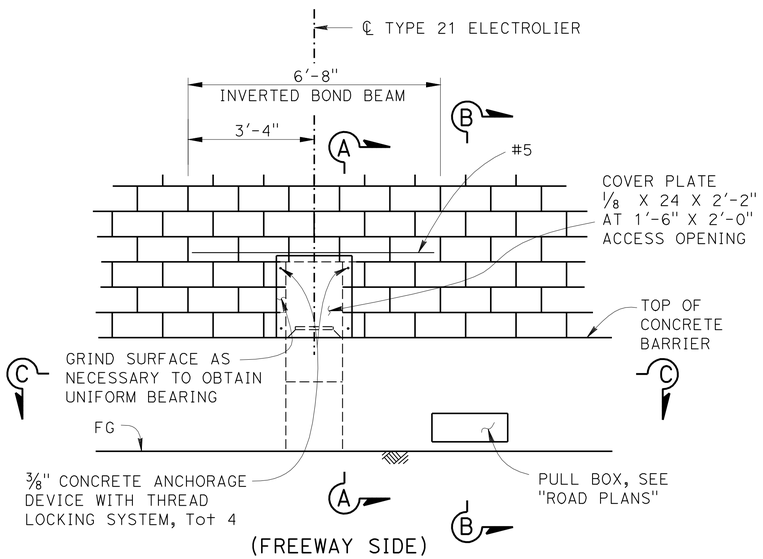

ELEVATION
½" = 1'-0"

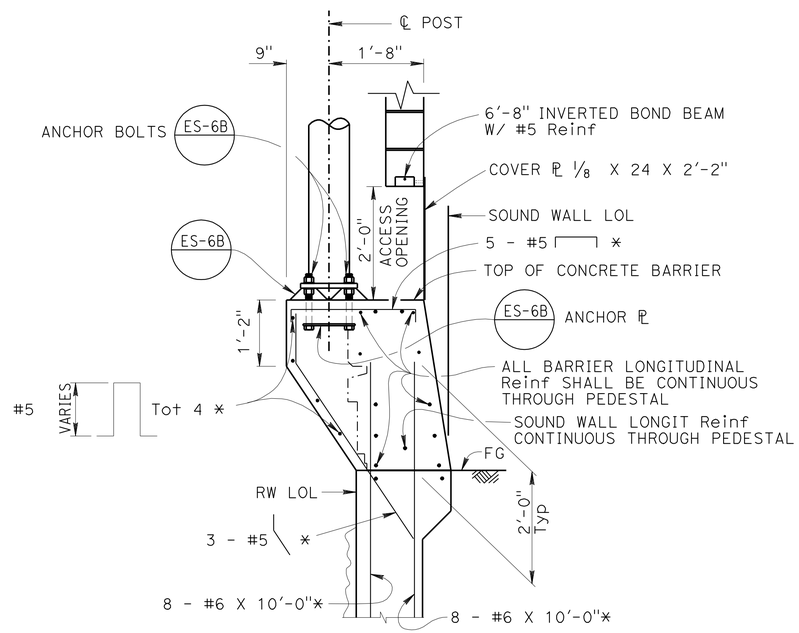

SECTION A-A
¾" = 1'-0"

NOTE: * - Indicates Reinf is additional to typical barrier and retaining wall Reinf.

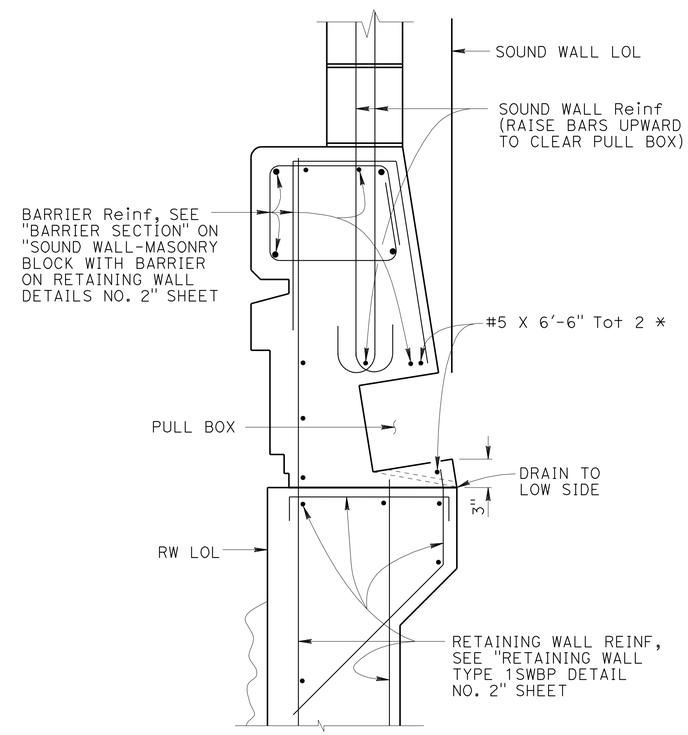

SECTION B-B
1½" = 1'-0"

NOTES:

1. For locations of electroliers, see "STRUCTURE PLAN" sheets.
2. For electrolier and electrical details, see "ROAD PLANS".
3. The maximum number of conduits in the barrier is limited to (2) 2" conduits along with (1) 3" conduit.

	BY	CHECKED
DESIGN	Kevin Harper	Daniel Sessions
DETAILS	Jin Zhou/ Y. Feng	Daniel Sessions
QUANTITIES	April Pearson	Rizia Da Cruz Ferreira

STATE OF CALIFORNIA
DEPARTMENT OF TRANSPORTATION

DIVISION OF ENGINEERING SERVICES
STRUCTURE DESIGN
DESIGN BRANCH 1

BRIDGE NO. 53-E0180
POST MILE 3.20

SOUND WALL NO. 166
ELECTROLIER PEDESTAL DETAILS

STRUCTURES DESIGN DETAIL SHEET (ENGLISH) (REV. 09-01-10)

ORIGINAL SCALE IN INCHES FOR REDUCED PLANS 0 1 2 3

UNIT: 3576
PROJECT NUMBER & PHASE: 07000018331
CONTRACT NO.: 07-215934

DISREGARD PRINTS BEARING EARLIER REVISION DATES

REVISION DATES 7/8/11 11/08/11 11/23/11 08/31/11

SHEET 17 OF 25

FILE => sw166-1-epd.dgn

USERNAME => s123631 DATE PLOTTED => 28-MAR-2012 TIME PLOTTED => 12:42

DIST.	COUNTY	ROUTE	POST MILES TOTAL PROJECT	SHEET NO.	TOTAL SHEETS
07	LA	5	2.4/4.0	1130	1288

Kevin J. Harper 12-7-11
REGISTERED ENGINEER - CIVIL

3-26-12
PLANS APPROVAL DATE

REGISTERED PROFESSIONAL ENGINEER Kevin Harper No. 42221 Exp. 3-31-12 CIVIL STATE OF CALIFORNIA

The State of California or its officers or agents shall not be responsible for the accuracy or completeness of electronic copies of this plan sheet.

TABLE OF PILE SPACING: CLASS 90 CONCRETE PILES ◇1

DESIGN H	6′	8′	10′	12′	14′	16′	18′	20′	22′	24′	26′	28′	30′	32′
W	6′-9"	7′-0"	7′-6"	8′-3"	9′-3"	10′-3"	11′-0"	12′-0"	13′-0"	14′-3"	16′-3"	16′-9"	18′-0"	20′-6"
C	2′-9"	2′-9"	3′-0"	3′-3"	3′-6"	4′-0"	4′-3"	4′-9"	5′-0"	5′-6"	6′-3"	6′-9"	7′-3"	7′-9"
B	4′-0"	4′-3"	4′-6"	5′-0"	5′-9"	6′-3"	6′-9"	7′-3"	8′-0"	8′-9"	10′-0"	10′-0"	10′-9"	12′-9"
F	1′-6"	1′-6"	1′-6"	1′-9"	1′-9"	2′-0"	2′-6"	2′-9"	3′-0"	3′-0"	3′-3"	3′-6"	3′-9"	4′-0"
M	1′-3"	1′-3"	1′-6"	1′-9"	2′-0"	2′-6"	2′-9"	3′-3"	3′-6"	4′-0"	4′-9"	5′-3"	5′-9"	6′-3"
N	2′-6"	2′-9"	3′-0"	3′-6"	4′-3"	4′-9"	5′-3"	5′-9"	6′-6"	7′-3"	8′-6"	8′-6"	9′-3"	11′-3"
ROW 1	16′-0"	14′-0"	12′-0"	10′-0"	8′-0"	6′-6"	5′-6"	4′-6"	4′-0"	4′-0"	4′-0"	4′-0"	4′-0"	4′-0"
ROW 2	24′-0"	21′-0"	18′-0"	15′-0"	14′-0"	13′-0"	11′-0"	9′-0"	8′-0"	12′-0"	10′-0"	6′-0"	4′-0"	4′-0"
ROW 3										8′-0"	5′-0"	4′-0"	4′-0"	6′-0"
ROW 4														6′-0"
CONFIGURATION	I	I	I	I	I	I	I	I	I	II	II	II	II	III

TABLE 1: TABLE OF REINFORCING STEEL DIMENSIONS AND DATA

	STEM WITH HAUNCH													
DESIGN H	6′	8′	10′	12′	14′	16′	18′	20′	22′	24′	26′	28′	30′	32′
STEM BATTER	0	1/2:12	1/2:12	1/2:12	1/2:12	1/2:12	1/2:12	1/2:12	1/2:12	5/8:12	3/4:12	7/8:12	1:12	1:12
◇2 ~~STEM THICKNESS @ TOP~~	~~1′-6"~~	~~1′-6"~~	~~1′-6"~~	~~1′-6"~~	~~1′-6"~~	~~1′-6"~~	~~1′-6"~~	~~1′-6"~~	~~1′-6"~~	~~1′-6"~~	~~1′-6"~~	~~1′-6"~~	~~1′-6"~~	~~1′-6"~~
STEM THICKNESS @ HAUNCH	1′-0"	1′-0"	1′-0"	1′-0"	1′-0"	1′-0"	1′-0"	1′-0"	1′-0"	1′-0"	1′-0"	1′-0"	1′-0"	1′-0"
ⓐ BARS				#6@18**	#7@18**	#8@18**	#9@18**	#10@18**	#8 @ 9*	#8 @ 9*	#7 @ 6*	#10@12**	#9 @ 9*	#11@12**
X				CONT	CONT	CONT	CONT	CONT	CONT	CONT	CONT	CONT	CONT	CONT
Y				8′-0"	6′-6"	7′-6"	8′-6"	9-6"	9′-6"	11′-0"	11′-6"	13′-0"	14′-0"	15′-6"
ⓑ BARS	#5 @ 12	#5 @ 12	#5 @ 9	#6@18**	#7@18**	#8@18**	#9@18**	#10@18**	#8 @ 9*	#8 @ 9*	#7 @ 6*	#10@12**	#9 @ 9*	#11@12**
X	CONT	CONT	CONT	CONT	CONT	CONT	CONT	CONT	CONT	CONT	CONT	CONT	CONT	CONT
Y	CONT	CONT	CONT	CONT	10′-6"	13′-0"	15′-0"	17′-6"	19′-6"	21′-0"	18′-6"	19′-0"	25′-6"	23′-6"
ⓒ BARS					#6 @ 18	#6 @ 18	#6 @ 18	#6 @ 18	#6 @ 18	#6 @ 18	#6 @ 12	#7 @ 12	#7 @ 18	#7 @ 12
ⓓ BARS	#5 @ 12	#5 @ 12	#5 @ 12	#5 @ 12	#5 @ 12	#5 @ 12	#5 @ 9	#5 @ 9	#6 @ 9	#5 @ 6	#7 @ 9	#7 @ 9	#6 @ 6	#7 @ 6
TOTAL ⓔ BARS	6 #5	6 #5	6 #5	6 #5	8 #5	8 #5	10 #5	10 #5	10 #5	10 #5	12 #5	12 #5	12 #5	14 #5
TOTAL ⓕ BARS	6 #5	6 #5	6 #5	6 #5	6 #5	8 #5	8 #5	8 #5	8 #5	10 #5	10 #5	10 #5	12 #5	12 #5

TABLE 2: TABLE OF REINFORCING STEEL DIMENSIONS AND DATA

	STEM WITH HAUNCH							STEM WITHOUT HAUNCH						
DESIGN H	6′	8′	10′	12′	14′	16′	18′	20′	22′	24′	26′	28′	30′	32′
BATTER	0	0	0	0	0	0	0	0	0	0	1/4:12	1/2:12	1/2:12	1/2:12
◇2 STEM THICKNESS @ TOP	~~1′-6"~~	~~1′-6"~~	~~1′-6"~~	~~1′-6"~~	~~1′-6"~~	~~1′-6"~~	~~1′-6"~~	~~1′-6"~~	2′-0"	2′-0"	2′-0"	2′-0"	2′-0"	2′-0"
STEM THICKNESS @ HAUNCH	1′-0"	1′-0"	1′-0"	1′-0"	1′-0"	1′-3"	1′-3"							
ⓐ BARS				#6@12**	#5 @ 6*	#9@18**	#9@12**	#9@12**	#9@12**	#7 @ 6*	#7 @ 6*	#7 @ 6*	#9 @ 9*	#11@12**
X				CONT	CONT	CONT	CONT	CONT	CONT	CONT	CONT	CONT	CONT	CONT
Y				5′-6"	5′-6"	8′-6"	8′-6"	8′-6"	8′-6"	9′-6"	11′-0"	12′-6"	13′-6"	14′-6"
ⓑ BARS	#5 @ 12	#5 @ 9	#6 @ 9	#6@12**	#5 @ 6*	#9@18**	#9@12**	#9@12**	#9@12**	#7 @ 6*	#7 @ 6*	#7 @ 6*	#9 @ 9*	#11@12**
X	CONT	CONT	CONT	CONT	CONT	CONT	CONT	CONT	CONT	CONT	CONT	CONT	CONT	CONT
Y	CONT	CONT	CONT	CONT	CONT	11′-6"	11′-6"	12′-0"	12′-0"	17′-6"	20′-0"	21′-6"	24′-0"	24′-0"
ⓒ BARS						#7 @ 18	#7 @ 12	#7 @ 12	#7 @ 12	#6 @ 12	#6 @ 12	#6 @ 12	#7 @ 18	#7 @ 12
ⓓ BARS	#5 @ 12	#5 @ 12	#5 @ 12	#5 @ 12	#5 @ 12	#5 @ 12	#5 @ 9	#5 @ 9	#6 @ 9	#5 @ 6	#7 @ 9	#7 @ 9	#6 @ 6	#7 @ 6
TOTAL ⓔ BARS	6 #5	6 #5	6 #5	6 #5	8 #5	8 #5	10 #5	10 #5	10 #5	10 #5	12 #5	12 #5	12 #5	14 #5
TOTAL ⓕ BARS	6 #5	6 #5	6 #5	6 #5	6 #5	8 #5	8 #5	8 #5	8 #5	10 #5	10 #5	10 #5	12 #5	12 #5

CONT = CONTINUOUS

* = ⓐ AND ⓑ BARS ARE BUNDLED TOGETHER.

** = ALTERNATE ⓐ AND ⓑ BARS AS SHOWN IN DETAIL A.

DESIGN DATA

DESIGN: LOAD FACTOR DESIGN (LFD)

CONCRETE: REINFORCED CONCRETE, f′c = 3600 psi
fy = 60000 psi

LOADING CASE:

LEVEL GROUND WITH 240 psf LIVE LOAD SURCHARGE AND 16′ SOUNDWALL.
SEISMIC LOAD = 0.3 DEAD LOAD
WIND LOAD = 30 psf
DEAD LOAD OF SOUNDWALL = 1414 lb/lf
DEAD LOAD OF BARRIER = 372 lb/lf

SEISMIC LOAD: SOIL

Kh = 0.3g
Kv = 0.0
Kae : MONONOBE-OKABE METHOD

SOIL: Ø = 34° γ = 120 pcf

EQUIVALENT FLUID PRESSURE:
= 36 pcf FOR DETERMINATION OF TOE PRESSURE
= 27 pcf FOR DETERMINATION OF HEEL PRESSURE

LOAD COMBINATIONS:

GROUP A : βD+1.7E+1.7SC
GROUP B : βD+1.7E+1.3W
GROUP C :
STEM : 1.0D+1.0E+1.0EQD+1.0EQE
FOOTING : D+PYM
WHERE : β = 1.0 OR 1.3 WHICHEVER CONTROLS DESIGN
D = DEAD LOAD
E = LATERAL EARTH PRESSURE
SC = SURCHARGE
W = WIND LOAD
EQD = SEISMIC DEAD LOAD
EQE = SEISMIC LATERAL EARTH PRESSURE
PYM = PROBABLE YIELD MOMENT (1.3* NOMINAL YIELD MOMENT OF STEM)

GENERAL NOTES

◇1
1. CLASS 90 CONCRETE PILES WERE USED FOR THE DESIGN.
2. PILE BATTER SHOWN ARE 1:3.
3. MINIMUM DISTANCE BETWEEN CENTER PILE AND EDGE OF FOOTING IS 1′-6".
4. REDUCTION FACTORS:
   GROUPS A & B : Ø = 0.75
   GROUP C : Ø = 1.0
5. LATERAL RESISTANCE OF EACH PILE:
   GROUPS A & B : = 30 kip
   GROUP C : = 40 kip
6. MAXIMUM SPACING BETWEEN PILES IS SHOWN IN THE TABLE. REDUCE TO SUIT THE LENGHTH OF FOOTING.
7. MINIMUM DISTANCE BETWEEN ANY TWO PILES IS 3′-0".
8. LIMIT OF NO SPLICING FOR REBARS = 3 TIMES THE BOTTOM THICKNESS OF STEM.

SPECIAL DETAILS

REVISED STANDARD DRAWING

FILE NO. xs14-320-1e

APPROVED BY G. WANG
RESPONSIBLE TECHNICAL SPECIALIST
APPROVAL DATE 5-29-09

RELEASED BY ROBERTO LACALLE
RESPONSIBLE OFFICE CHIEF
RELEASE DATE 5-29-09

◇1 Revise Note to indicate Class 90 piles
◇2 Stem thickness @ top shown on Detail No. 2 sheet

STATE OF CALIFORNIA
DEPARTMENT OF TRANSPORTATION

DIVISION OF ENGINEERING SERVICES
STRUCTURE DESIGN
DESIGN BRANCH 1

BRIDGE NO. 53-E0180
POST MILE 3.20

SOUND WALL NO. 166
RETAINING WALL TYPE 1SWBP - DETAIL NO. 1

DIST.	COUNTY	ROUTE	POST MILES TOTAL PROJECT	SHEET NO.	TOTAL SHEETS
07	LA	5	2.4/4.0	1131	1288

REGISTERED ENGINEER - CIVIL 12-7-11

3-26-12
PLANS APPROVAL DATE

REGISTERED PROFESSIONAL ENGINEER Kevin Harper No. 42221 Exp. 3-31-12 CIVIL STATE OF CALIFORNIA

The State of California or its officers or agents shall not be responsible for the accuracy or completeness of electronic copies of this plan sheet.

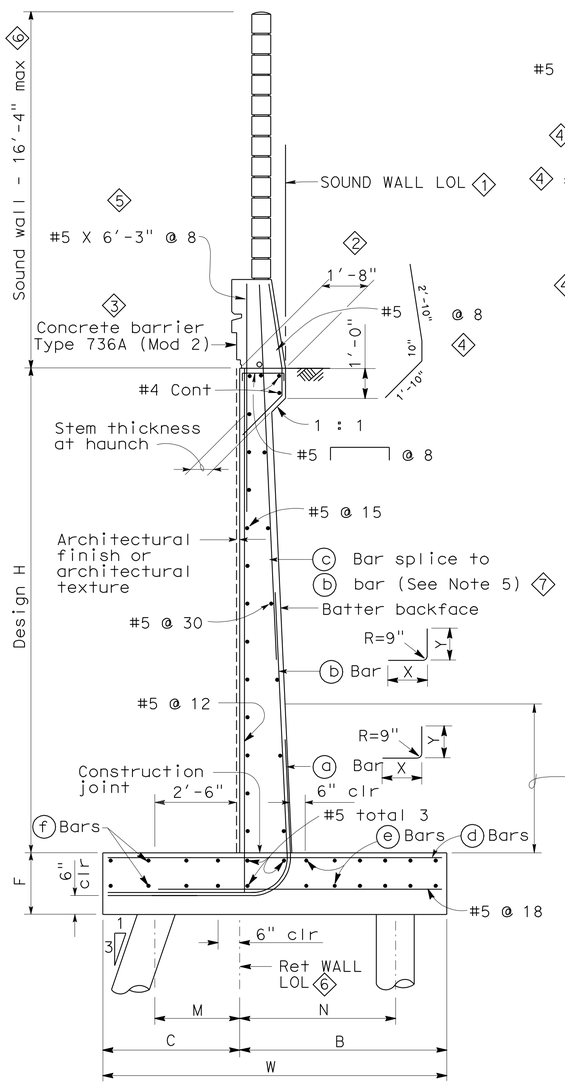

TYPICAL SECTION

NO SCALE

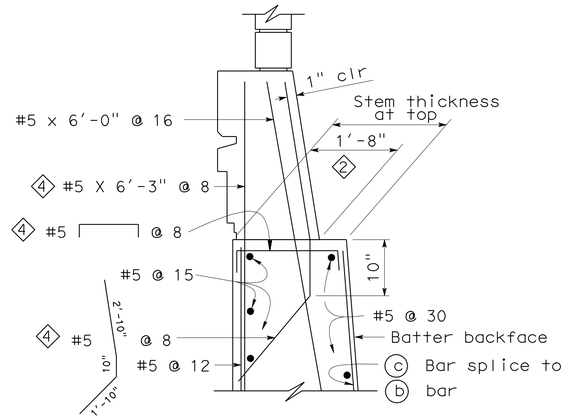

SECTION WITHOUT HAUNCH

NO SCALE

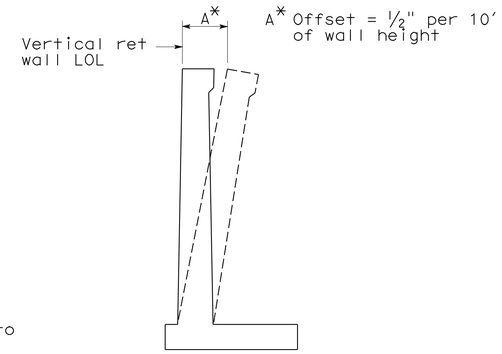

WALL OFFSET

NO SCALE

Values for offsetting forms to be determined by the engineer

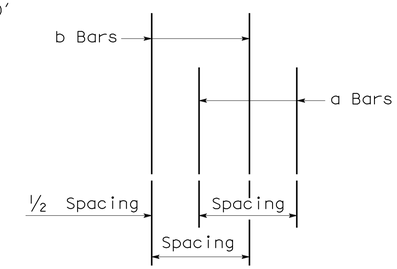

DETAIL A

NO SCALE

NOTES

1. For soundwall and retaining wall architectural finish or texture, see details elsewhere in project plans.
2. For details not shown and drainage notes, see B3-8
3. Footing cover, 1'-6" minimum.
4. For sound wall and barrier details, see "SOUND WALL - MASONARY BLOCK WITH BARRIER ON RETAINING WALL DETAILS NO. 1" and No. 2 sheets
5. Extend (b) bars into barrier for "DESIGN H" 12' or less.

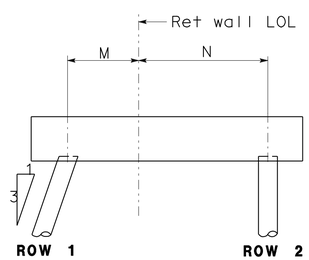

CONFIGURATION I

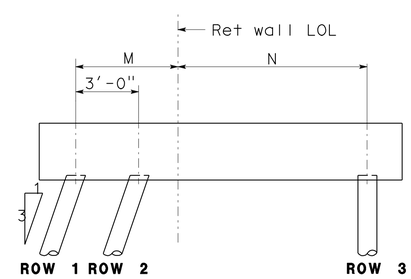

CONFIGURATION II

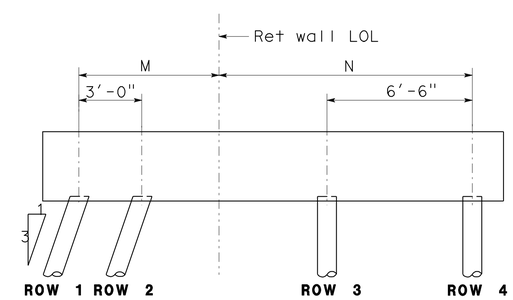

CONFIGURATION III

SPECIAL DETAILS

REVISED STANDARD DRAWING		
FILE NO. xs14-320-2e	APPROVED BY G. WANG (RESPONSIBLE TECHNICAL SPECIALIST)	RELEASED BY ROBERTO LACALLE (RESPONSIBLE OFFICE CHIEF)
	APPROVAL DATE 5-13-08	RELEASE DATE 5-13-08

1. Sound Wall LOL added
2. Stem thickness at top modified
3. Changed concrete barrier dimensions
4. Reinforcement modified
5. Added reinforcement
6. Notes Modified
7. Added note

STATE OF CALIFORNIA DEPARTMENT OF TRANSPORTATION

DIVISION OF ENGINEERING SERVICES STRUCTURE DESIGN DESIGN BRANCH 1

BRIDGE NO. 53-E0180 POST MILE 3.20

SOUND WALL NO. 166

RETAINING WALL TYPE 1SWBP - DETAIL NO. 2

DS OSD 2147A (ENGLISH STANDARD DRAWING "XS" BORDER REV. 01/11/08)

ORIGINAL SCALE IN INCHES FOR REDUCED PLANS 0 1 2 3

UNIT: 3576
PROJECT NUMBER & PHASE: 0700001833-1 CONTRACT NO.: 07-215934

DISREGARD PRINTS BEARING EARLIER REVISION DATES

REVISION DATES 10/29/10 07/21/11 03/30/12 10/01/07 11/

SHEET 19 OF 25

USERNAME => s123631

sw166-i-rwdt02.dgn

DATE PLOTTED => 28-MAR-2012 TIME PLOTTED => 12:42

DIST.	COUNTY	ROUTE	POST MILES TOTAL PROJECT	SHEET NO.	TOTAL SHEETS
07	LA	5	2.4/4.0	1132	1288

REGISTERED ENGINEER - CIVIL 12-7-11

PLANS APPROVAL DATE 3-26-12

REGISTERED PROFESSIONAL ENGINEER Kevin Harper No. 42221 Exp. 3-31-12 CIVIL STATE OF CALIFORNIA

The State of California or its officers or agents shall not be responsible for the accuracy or completeness of electronic copies of this plan sheet.

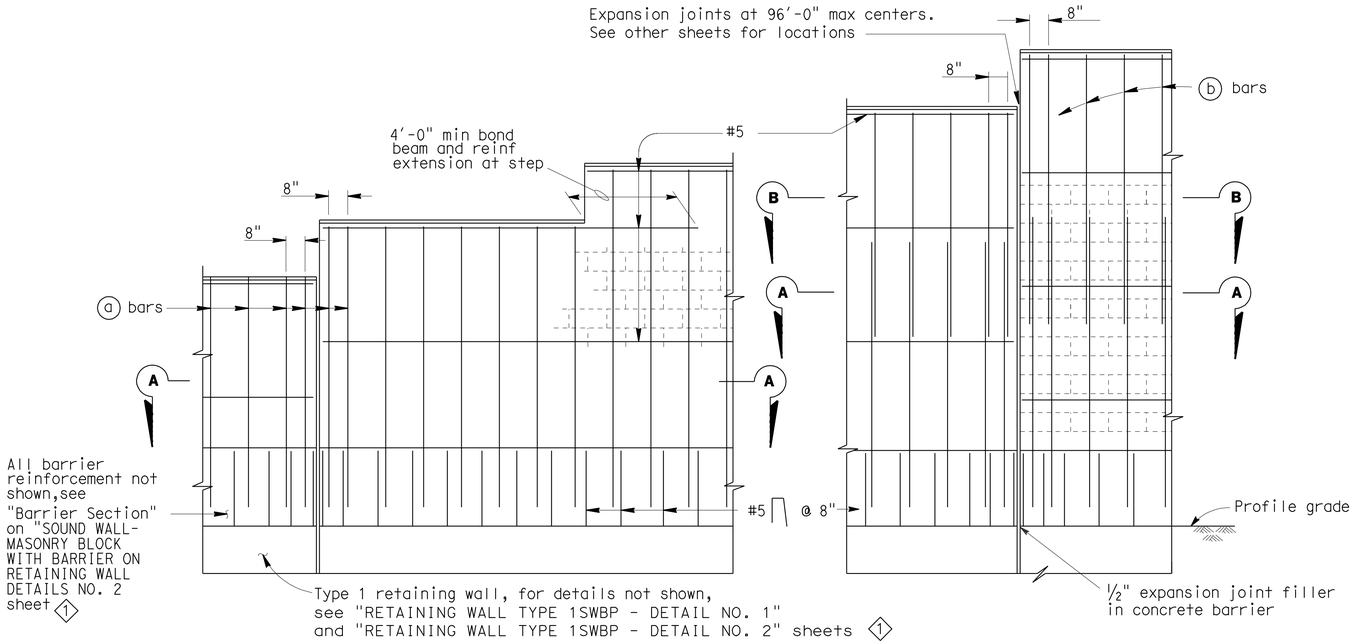

PART ELEVATIONS

SOUNDWALL REINFORCEMENT TABLE

Maximum H	(a) bars @ 1'-4" max	(b) bars @ 1'-4" max	"y"	f'm (KSI)	Compressive Strength of CMU (KSI)	Maximum H
6'-4"	# 4	———	———	1.5	1.9	6'-4"
8'-4"	# 4	———	———	1.5	1.9	8'-4"
10'-4"	# 4	———	———	1.5	1.9	10'-4"
12'-4"	# 5	# 4	5'-0"	1.5	1.9	12'-4"
14'-4"	# 6	# 4	7'-0"	1.5	1.9	14'-4"
16'-4"	# 6	# 4	9'-0"	2.5	3.7	16'-4"

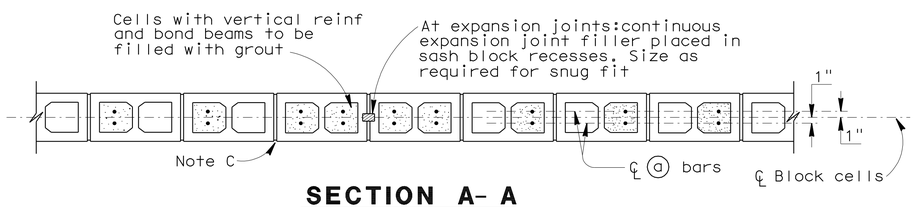

SECTION A- A

For details not shown,see other details

H=6'-4" THRU H= 10'-4"

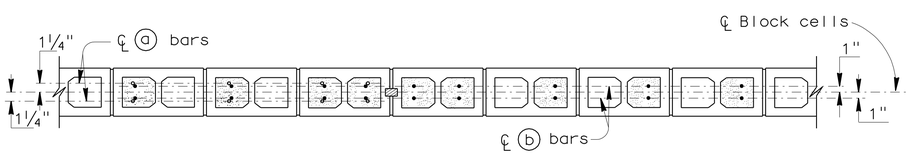

SECTION A- A

SECTION B- B

For details not shown,see other details

H=12'-4" THRU H= 16'-4"

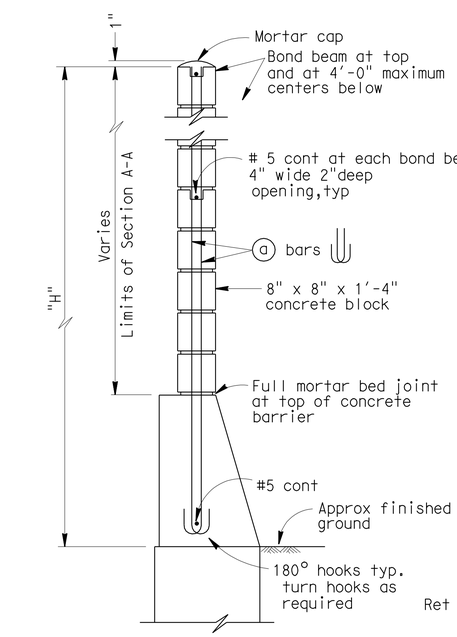

H=6'-4" THRU H=10'-4"

For details not shown,see H=12'-4" thru H=16'-4"

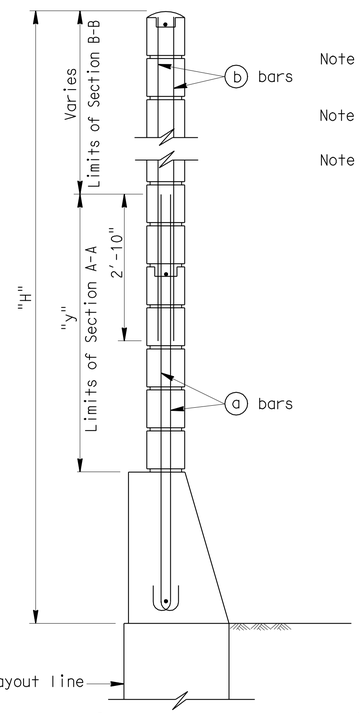

H=12'-4" THRU H=16'-4"

For details not shown,see H=6'-4" thru H=10'-4"

TYPICAL SECTIONS

Note I : For details not shown, see "SOUND WALL - MASONRY BLOCK WITH BARRIER ON RETAINING WALL DETAILS NO. 2" sheet 1

Note II : Slope ground at traffic side of barrier to drain. Maximum slope ±10%.

Note III: See Standard Plan B15-9 "SOUND WALL MASONRY BLOCK - MISCELLANEOUS DETAILS" sheet for other details. 1

GENERAL NOTES

Note A: For type of block and joint finish, see other sheets.

Note B: When blocks are laid in stacked bond, ladder type, galvanized joint reinforcement shall be provided. A minimum of 0.07"-0.14" wire continuous at 4'-0" maximum to be used. Locate reinforcement in joints that are at the approximate midpoint between bond beams.

Note C: Horizontal joints shall be tooled concave or may be weathered.
Vertical joints shall be tooled concave or may be raked.

Note D: For intermediate wall heights that are between the "H's" given. Use the tabular information for the next higher "H".

Note E: Masonry strengths are listed in "SOUNDWALL REINFORCEMENT TABLE".

Note F: Concrete to be used for the barrier shall contain not less than 590 pounds of cementitious material per cubic yard.

SPECIAL DETAILS

REVISED STANDARD DRAWING

FILE NO. xs15-130-1e

APPROVED BY T SATTER — RESPONSIBLE TECHNICAL SPECIALIST
APPROVAL DATE 10/22/09

RELEASED BY ROBERTO LACALLE — RESPONSIBLE OFFICE CHIEF
RELEASE DATE 10/22/09

1 Sheet reference notes corrected

STATE OF CALIFORNIA DEPARTMENT OF TRANSPORTATION

DIVISION OF ENGINEERING SERVICES STRUCTURE DESIGN — DESIGN BRANCH 1

BRIDGE NO. 53-E0180
POST MILE 3.20

SOUND WALL NO. 166

SOUND WALL - MASONRY BLOCK WITH BARRIER ON RETAINING WALL DETAILS NO. 1

DS OSD 2147A (ENGLISH STANDARD DRAWING "XS" BORDER REV. 10/22/09)

ORIGINAL SCALE IN INCHES FOR REDUCED PLANS 0 1 2 3

UNIT: 3576
PROJECT NUMBER & PHASE: 0700001833-1
CONTRACT NO.: 07-215934

DISREGARD PRINTS BEARING EARLIER REVISION DATES — REVISION DATES 10/28/10 7/21/11 03/23/12 03/30/12

SHEET 20 OF 25

USERNAME => s123631

sw166-k-swdt01.dgn

DATE PLOTTED => 28-MAR-2012 TIME PLOTTED => 12:42

DIST.	COUNTY	ROUTE	POST MILES TOTAL PROJECT	SHEET NO.	TOTAL SHEETS
07	LA	5	2.4/4.0	1133	1288

Kevin J. Harper 12-7-11
REGISTERED ENGINEER - CIVIL

3-26-12
PLANS APPROVAL DATE

REGISTERED PROFESSIONAL ENGINEER Kevin Harper No. 42221 Exp. 3-31-12 CIVIL STATE OF CALIFORNIA

The State of California or its officers or agents shall not be responsible for the accuracy or completeness of electronic copies of this plan sheet.

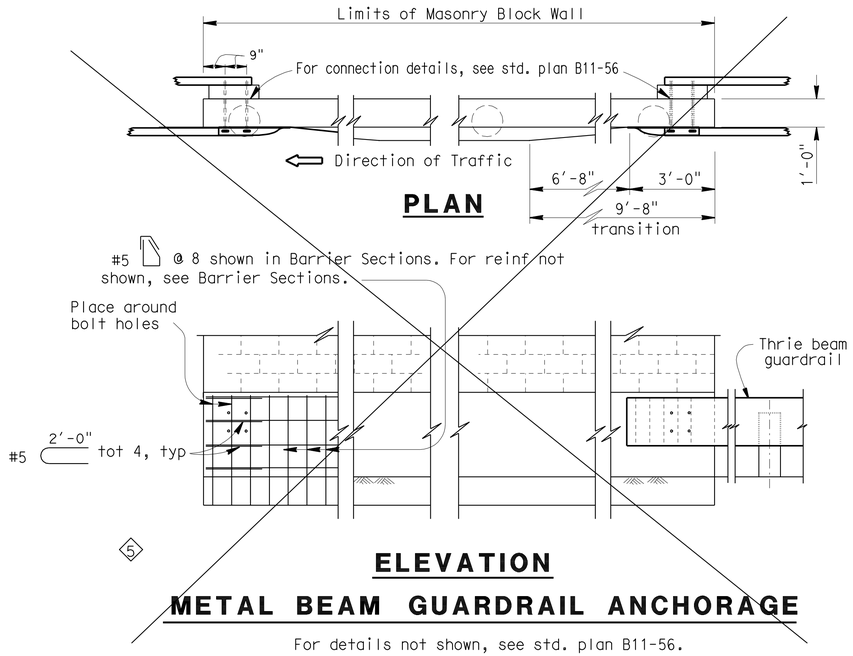

ELEVATION
METAL BEAM GUARDRAIL ANCHORAGE

For details not shown, see std. plan B11-56.

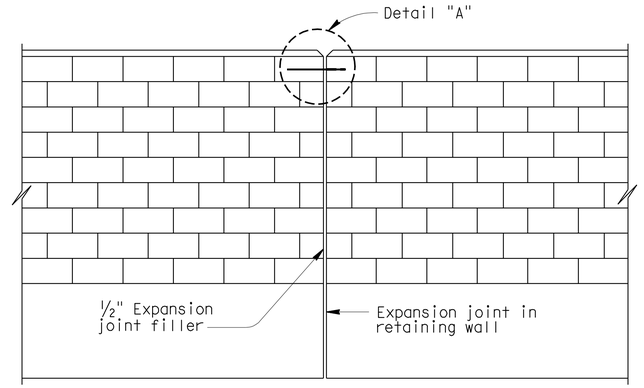

ALIGNMENT KEY DETAIL

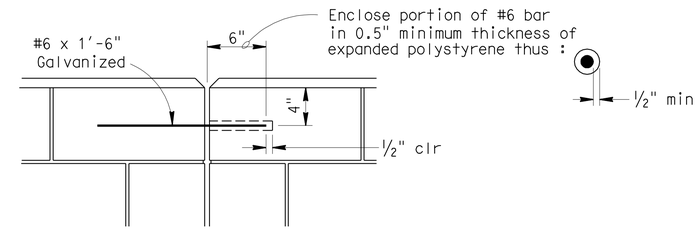

DETAIL A

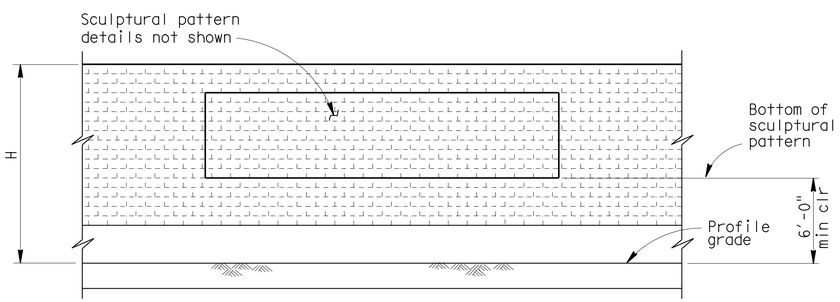

CLEARANCE DETAIL

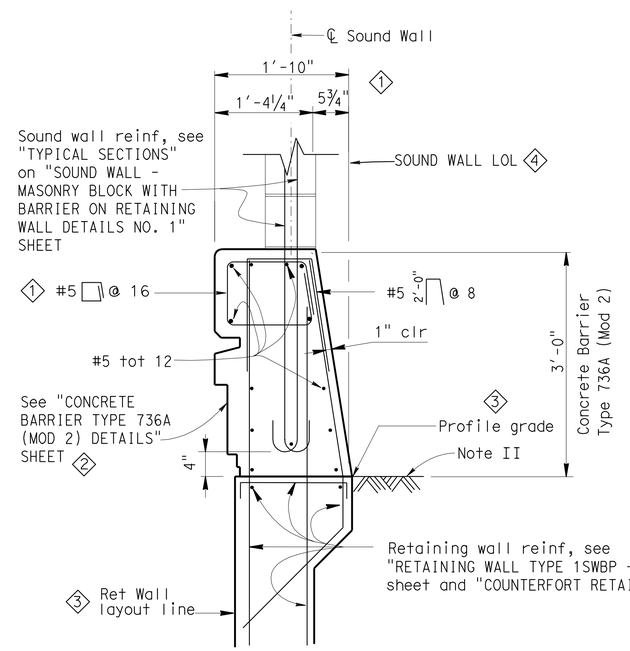

BARRIER SECTION

NOTES:

3 I : For details not shown, see "RETAINING WALL TYPE 1SWBP - DETAIL NO. 1" and No. 2 sheets.

II : Slope ground at traffic side of barrier to drain. Maximum slope ±10%. See Standard Plan B11-56, Note D.

DESIGN NOTES

DESIGN

Uniform Building Code,1997 Edition and the Bridge Design Specifications.

DESIGN WIND LOAD

33 PSF

DESIGN SEISMIC LOAD

0.57 Dead load

REINFORCED CONCRETE

f'c = 3250 PSI
fy = 60 KSI

CONCRETE MASONRY

REGULAR STRENGTH	HIGH STRENGTH	
f'm = 1500 PSI	f'm = 2000 PSI	f'm = 2500 PSI
f_b = 1500 PSI	f_b = 660 PSI	f_b = 830 PSI
fs = 24.0 KSI	fs = 24.0 KSI	fs = 24000 PSI
n = 25.8	n = 19.3	n = 15.5

LOAD FACTORS AND LOAD COMBINATIONS

Working Stress Design (WSD) Percentage of unit stress

Group 1: D + E + SC	100%
Group 2: D + W + SC + E	100%
Group 3: D + 0.71 EQD + E	100%

Where:

D = Dead load
E = Lateral earth pressure
SC = Live load surcharge
W = Wind load
EQD = Seismic dead load

Load Factor Design (LFD)

Group A: βD +1.7 E + 1.7 SC
Group B: βD +1.7 E + 1.3 W
Group C: βD +1.3 E + 1.0 EQE
Group D: βD +1.3 E + 1.0 EQD
Group E: βD +1.1 E + 0.85 (EQE + EQD)

Where : β = 0.9 or 1.2, whichever controls in design
D = Dead load
E = Lateral earth pressure
SC = Live load surcharge
W = Wind load
EQD = Seismic dead load
EQE = Seismic earth load

STRENGTH REDUCTION FACTORS, Ø

Reinforced concrete:
For flexure ---------- Ø=0.90
For shear ---------- Ø=0.85

Concrete masonry:
For flexure ---------- Ø=0.80
For shear ---------- Ø=0.60

Foundations :
See "RETAINING WALL TYPE 1SWBP - DETAIL NO. 1" sheet. 3

SPECIAL DETAILS

REVISED STANDARD DRAWING

FILE NO. xs15-130-2e

APPROVED BY T SATTER — RESPONSIBLE TECHNICAL SPECIALIST
APPROVAL DATE 10/22/09

RELEASED BY ROBERTO LACALLE — RESPONSIBLE OFFICE CHIEF
RELEASE DATE 10/22/09

1 Barrier dimensions and Reinf changed
2 Added note for barrier aesthetics
3 Sheet reference notes corrected
4 Sound Wall LOL added
5 Deleted obsolete detail

STATE OF CALIFORNIA DEPARTMENT OF TRANSPORTATION

DIVISION OF ENGINEERING SERVICES STRUCTURE DESIGN
DESIGN BRANCH 1

BRIDGE NO. 53-E0180
POST MILE 3.20

SOUND WALL NO. 166
SOUND WALL - MASONRY BLOCK WITH BARRIER ON RETAINING WALL DETAILS NO. 2

DS OSD 2147A (ENGLISH STANDARD DRAWING "XS" BORDER REV. 01/11/08)

ORIGINAL SCALE IN INCHES FOR REDUCED PLANS 0 1 2 3

UNIT: 3576
PROJECT NUMBER & PHASE: 0700001833-1 CONTRACT NO.: 07-215934

DISREGARD PRINTS BEARING EARLIER REVISION DATES → REVISION DATES 11/30/10 07/21/11 01/02/12 03/30/12

SHEET 21 OF 25

USERNAME => s123631

sw166-k-swdt02.dgn

DATE PLOTTED => 28-MAR-2012 TIME PLOTTED => 11:24:43

DIST	COUNTY	ROUTE	POST MILES TOTAL PROJECT	SHEET No.	TOTAL SHEETS
07	LA	5	2.4/4.0	1134	1288

GEOTECHNICAL PROFESSIONAL — DATE 06/2011

3-26-12
PLANS APPROVAL DATE

REGISTERED PROFESSIONAL ENGINEER — MICHAEL G. SMITH — No. 2229 — Exp. 3-31-2012 — GEOTECHNICAL — STATE OF CALIFORNIA

The State of California or its officers or agents shall not be responsible for the accuracy or completeness of electronic copies of this plan sheet.

BENCH MARK

PRHV 102 Elev 86.67′
FOUND PK NAIL & TIN SET BY OTHERS ON ISLAND @ THE BEGINNING OF SB 1-5 ON-RAMP AND ROSECRANS AVE PER SR 09-037-000010
NAVD 88

PRHV 103 Elev 84.50′
FOUND CHISELED "X" ON BACK WALK @ INLET AT SE CORNER OF ROSECRANS AVE AND FIRESTONE BLVD PER SR 09-037-000010
NAVD 88

PRHV 110 Elev 78.31′
FOUND L & "LACO DPW" TAG @ NE CORNER OF FIRESTONE BLVD AND SHOEMAKER AVE, N/O 1-5
NAVD 88

PRHV 115 Elev 79.95′
FOUND PK NAIL & TIN ON TC @ SE CORNER OF SHOEMAKER AVE AND FIRESTONE BLVD, S/O 1-5
NAVD 88

Notes

1. This LOTB sheet was prepared in accordance with the Caltrans Soil & Rock Logging, Classification, and Presentation Manual (2010) except three digit sequence number in boring identification starting with the segment number per exception request approved on April 08, 2009

2. For protection of underground utility lines, hand-auger was used to remove top 5 to 10 feet of subsurface material for exploratory borings and cone penetration testings.

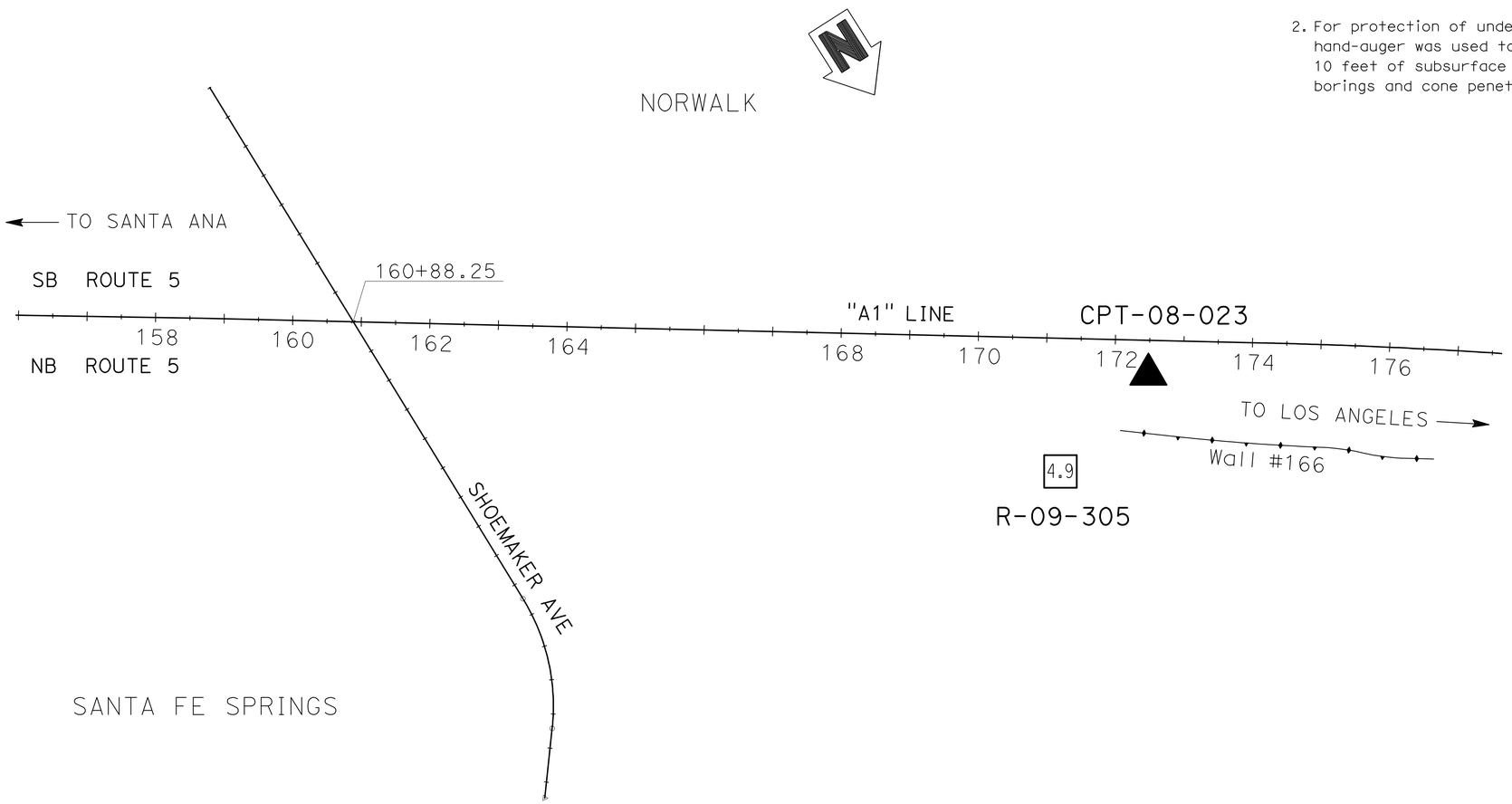

PLAN
SCALE 1"=100′

ENGINEERING SERVICES	MATERIALS AND GEOTECHNICAL SERVICES	STATE OF CALIFORNIA DEPARTMENT OF TRANSPORTATION	DIVISION OF ENGINEERING SERVICES STRUCTURE DESIGN DESIGN BRANCH 1	BRIDGE NO. 53-E0180 / POST MILE 3.20	SOUND WALL NO. 166
FUNCTIONAL SUPERVISOR NAME: M. SMITH	DRAWN BY: P.QUACH / CHECKED BY: D.ORRIS	FIELD INVESTIGATION BY: EJ.JEON/P.MCDONALD			LOG OF TEST BORINGS SHEET 1 OF 4

OGS CIVIL LOG OF TEST BORINGS SHEET — ORIGINAL SCALE IN INCHES FOR REDUCED PLANS 0 1 2 3

UNIT: 3576
PROJECT NUMBER & PHASE: 07000018331 — CONTRACT NO.: 07-215934

DISREGARD PRINTS BEARING EARLIER REVISION DATES → REVISION DATES 06/17/11 — SHEET 22 OF 25

FILE => sw166-z-1tb01.dgn

USERNAME => s123631 DATE PLOTTED => 28-MAR-2012 TIME PLOTTED => 12:43

DIST	COUNTY	ROUTE	POST MILES TOTAL PROJECT	SHEET No.	TOTAL SHEETS
07	LA	5	2.4/4.0	1135	1288

GEOTECHNICAL PROFESSIONAL — DATE 06/2011

3-26-12
PLANS APPROVAL DATE

REGISTERED PROFESSIONAL ENGINEER — MICHAEL G. SMITH No. 2229 Exp. 3-31-2012 GEOTECHNICAL — STATE OF CALIFORNIA

The State of California or its officers or agents shall not be responsible for the accuracy or completeness of electronic copies of this plan sheet.

FOR PLAN VIEW, SEE
"LOG OF TEST BORINGS" 1 OF 4

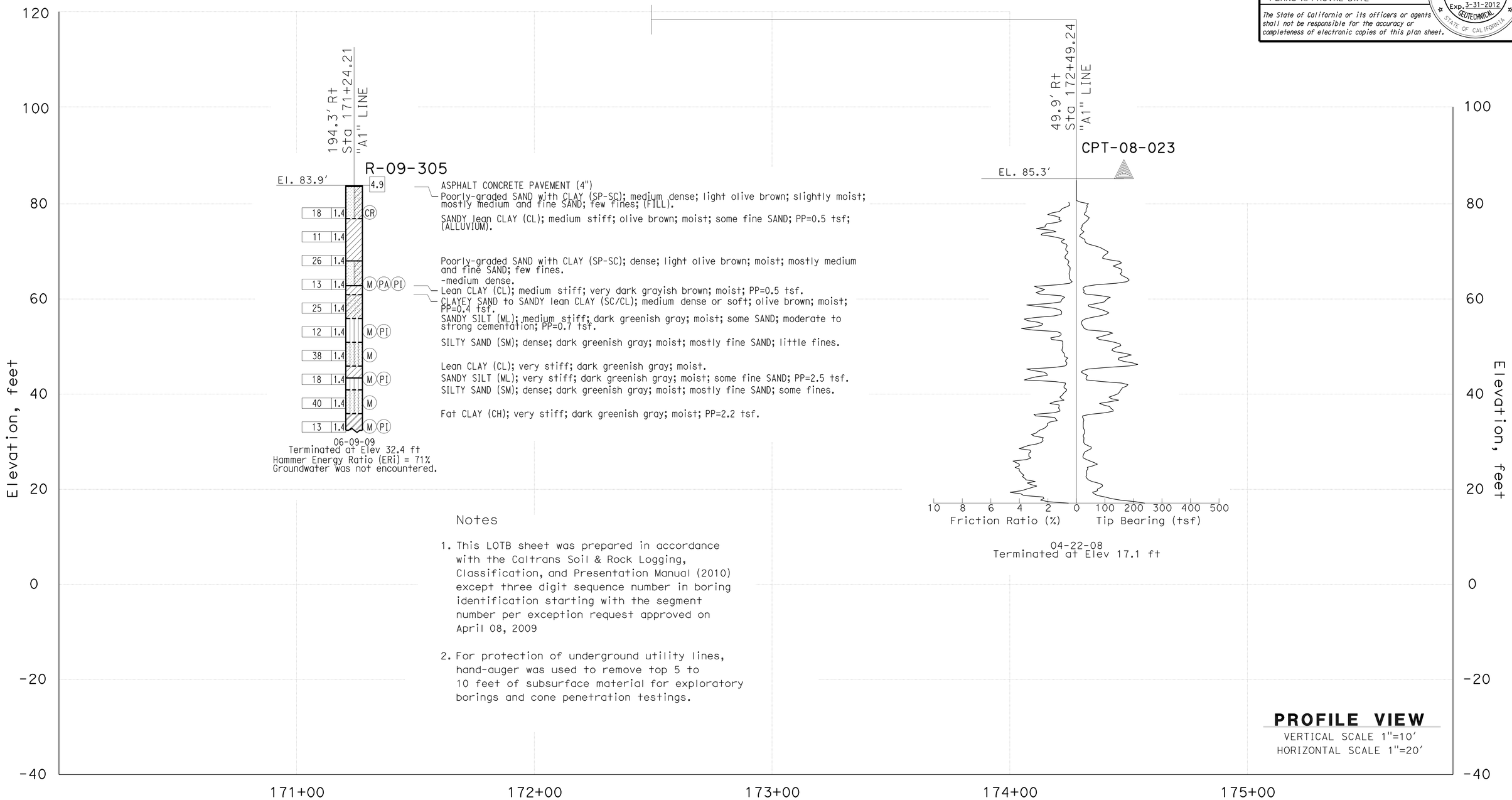

Notes

1. This LOTB sheet was prepared in accordance with the Caltrans Soil & Rock Logging, Classification, and Presentation Manual (2010) except three digit sequence number in boring identification starting with the segment number per exception request approved on April 08, 2009

2. For protection of underground utility lines, hand-auger was used to remove top 5 to 10 feet of subsurface material for exploratory borings and cone penetration testings.

ENGINEERING SERVICES	MATERIALS AND GEOTECHNICAL SERVICES	STATE OF CALIFORNIA DEPARTMENT OF TRANSPORTATION	DIVISION OF ENGINEERING SERVICES STRUCTURE DESIGN DESIGN BRANCH 1	BRIDGE NO. 53-E0180 POST MILE 3.20	SOUND WALL NO. 166
FUNCTIONAL SUPERVISOR NAME: M. SMITH	DRAWN BY: P.QUACH CHECKED BY: D.ORRIS	FIELD INVESTIGATION BY: EJ.JEON/P.MCDONALD			LOG OF TEST BORINGS SHEET 2 OF 4

OGS CIVIL LOG OF TEST BORINGS SHEET

ORIGINAL SCALE IN INCHES FOR REDUCED PLANS 0 1 2 3

UNIT: 3576
PROJECT NUMBER & PHASE: 07000018331 CONTRACT NO.: 07-215934

DISREGARD PRINTS BEARING EARLIER REVISION DATES → REVISION DATES 06/17/11 SHEET 23 OF 25

FILE => sw166-z-lltb02.dgn

USERNAME => s123631 DATE PLOTTED => 28-MAR-2012 TIME PLOTTED => 12:43

DIST	COUNTY	ROUTE	POST MILES TOTAL PROJECT	SHEET No.	TOTAL SHEETS
07	LA	5	2.4/4.0	1136	1288

GEOTECHNICAL PROFESSIONAL — DATE 06/2011

3-26-12
PLANS APPROVAL DATE

REGISTERED PROFESSIONAL ENGINEER — MICHAEL G. SMITH No. 2229 Exp. 3-31-2012 GEOTECHNICAL — STATE OF CALIFORNIA

The State of California or its officers or agents shall not be responsible for the accuracy or completeness of electronic copies of this plan sheet.

REFERENCE: CALTRANS SOIL & ROCK LOGGING, CLASSIFICATION, AND PRESENTATION MANUAL (2010)

CEMENTATION

Description	Criteria
Weak	Crumbles or breaks with handling or little finger pressure.
Moderate	Crumbles or breaks with considerable finger pressure.
Strong	Will not crumble or break with finger pressure.

BOREHOLE IDENTIFICATION

Symbol	Hole Type	Description
Size	A	Auger Boring (hollow or solid stem bucket)
Size	R RW RC P	Rotary drilled boring (conventional) Rotary drilled with self-casing wire-line Rotary core with continuously-sampled, self-casing wire-line Rotary percussion boring (air)
Size	R	Rotary drilled diamond core
Size	HD HA	Hand driven (1-inch soil tube) Hand Auger
●	D	Dynamic Cone Penetration Boring
▲	CPT	Cone Penetration Test (ASTM D 5778)
⬚	O	Other (note on LOTB)

Note: Size in inches.

CONSISTENCY OF COHESIVE SOILS

Description	Shear Strength (tsf)	Pocket Penetrometer Measurement, PP, (tsf)	Torvane Measurement, TV, (tsf)	Vane Shear Measurement, VS, (tsf)
Very Soft	Less than 0.12	Less than 0.25	Less than 0.12	Less than 0.12
Soft	0.12 - 0.25	0.25 - 0.5	0.12 - 0.25	0.12 - 0.25
Medium Stiff	0.25 - 0.5	0.5 - 1	0.25 - 0.5	0.25 - 0.5
Stiff	0.5 - 1	1 - 2	0.5 - 1	0.5 - 1
Very Stiff	1 - 2	2 - 4	1 - 2	1 - 2
Hard	Greater than 2	Greater than 4	Greater than 2	Greater than 2

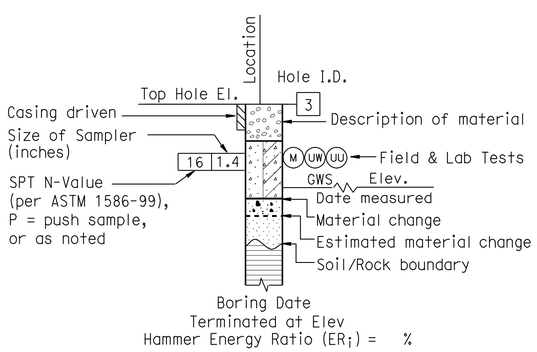

ROTARY BORING

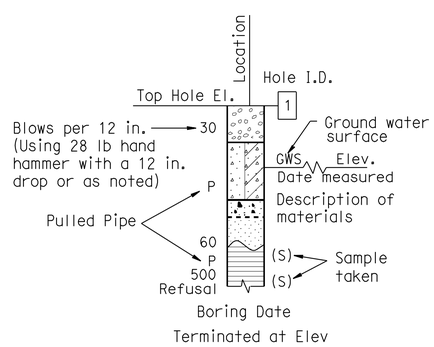

HAND BORING

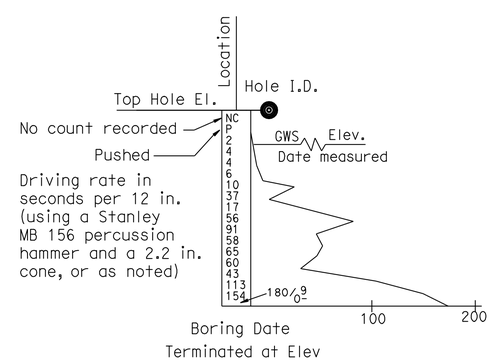

DYNAMIC CONE PENETRATION BORING

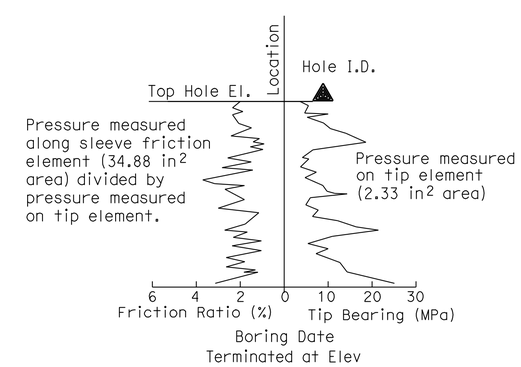

CONE PENETRATION TEST (CPT) BORING

ENGINEERING SERVICES	MATERIALS AND GEOTECHNICAL SERVICES	STATE OF CALIFORNIA DEPARTMENT OF TRANSPORTATION	DIVISION OF ENGINEERING SERVICES STRUCTURE DESIGN DESIGN BRANCH 1	BRIDGE NO. 53-E0180 POST MILE 3.20	SOUND WALL NO. 166
FUNCTIONAL SUPERVISOR NAME: M. SMITH	DRAWN BY: P.QUACH CHECKED BY: D.ORRIS	FIELD INVESTIGATION BY: EJ.JEON/P.MCDONALD			LOG OF TEST BORINGS SHEET 3 OF 4

OGS CIVIL LOG OF TEST BORINGS SHEET — ORIGINAL SCALE IN INCHES FOR REDUCED PLANS 0 1 2 3

UNIT: 3576
PROJECT NUMBER & PHASE: 07000018331 — CONTRACT NO.: 07-215934

DISREGARD PRINTS BEARING EARLIER REVISION DATES → REVISION DATES 06/17/11 — SHEET 24 OF 25

FILE => sw166-z-ltb03.dgn

USERNAME => s123631 DATE PLOTTED => 28-MAR-2012 TIME PLOTTED => 12:43

REFERENCE: CALTRANS SOIL & ROCK LOGGING, CLASSIFICATION, AND PRESENTATION MANUAL (2010)

DIST	COUNTY	ROUTE	POST MILES TOTAL PROJECT	SHEET No.	TOTAL SHEETS
07	LA	5	2.4/4.0	1137	1288

GEOTECHNICAL PROFESSIONAL — 06/2011 DATE

3-26-12
PLANS APPROVAL DATE

REGISTERED PROFESSIONAL ENGINEER — MICHAEL G. SMITH No. 2229 Exp. 3-31-2012 GEOTECHNICAL — STATE OF CALIFORNIA

The State of California or its officers or agents shall not be responsible for the accuracy or completeness of electronic copies of this plan sheet.

GROUP SYMBOLS AND NAMES

Graphic/Symbol	Group Names
GW	Well-graded GRAVEL Well-graded GRAVEL with SAND
GP	Poorly-graded GRAVEL Poorly-graded GRAVEL with SAND
GW-GM	Well-graded GRAVEL with SILT Well-graded GRAVEL with SILT and SAND
GW-GC	Well-graded GRAVEL with CLAY (or SILTY CLAY) Well-graded GRAVEL with CLAY and SAND (or SILTY CLAY and SAND)
GP-GM	Poorly-graded GRAVEL with SILT Poorly-graded GRAVEL with SILT and SAND
GP-GC	Poorly-graded GRAVEL with CLAY (or SILTY CLAY) Poorly-graded GRAVEL with CLAY and SAND (or SILTY CLAY and SAND)
GM	SILTY GRAVEL SILTY GRAVEL with SAND
GC	CLAYEY GRAVEL CLAYEY GRAVEL with SAND
GC-GM	SILTY, CLAYEY GRAVEL SILTY, CLAYEY GRAVEL with SAND
SW	Well-graded SAND Well-graded SAND with GRAVEL
SP	Poorly-graded SAND Poorly-graded SAND with GRAVEL
SW-SM	Well-graded SAND with SILT Well-graded SAND with SILT and GRAVEL
SW-SC	Well-graded SAND with CLAY (or SILTY CLAY) Well-graded SAND with CLAY and GRAVEL (or SILTY CLAY and GRAVEL)
SP-SM	Poorly-graded SAND with SILT Poorly-graded SAND with SILT and GRAVEL
SP-SC	Poorly-graded SAND with CLAY (or SILTY CLAY) Poorly-graded SAND with CLAY and GRAVEL (or SILTY CLAY and GRAVEL)
SM	SILTY SAND SILTY SAND with GRAVEL
SC	CLAYEY SAND CLAYEY SAND with GRAVEL
SC-SM	SILTY, CLAYEY SAND SILTY, CLAYEY SAND with GRAVEL
PT	PEAT
	COBBLES COBBLES and BOULDERS BOULDERS

Graphic/Symbol	Group Names
CL	Lean CLAY Lean CLAY with SAND Lean CLAY with GRAVEL SANDY lean CLAY SANDY lean CLAY with GRAVEL GRAVELLY lean CLAY GRAVELLY lean CLAY with SAND
CL-ML	SILTY CLAY SILTY CLAY with SAND SILTY CLAY with GRAVEL SANDY SILTY CLAY SANDY SILTY CLAY with GRAVEL GRAVELLY SILTY CLAY GRAVELLY SILTY CLAY with SAND
ML	SILT SILT with SAND SILT with GRAVEL SANDY SILT SANDY SILT with GRAVEL GRAVELLY SILT GRAVELLY SILT with SAND
OL	ORGANIC lean CLAY ORGANIC lean CLAY with SAND ORGANIC lean CLAY with GRAVEL SANDY ORGANIC lean CLAY SANDY ORGANIC lean CLAY with GRAVEL GRAVELLY ORGANIC lean CLAY GRAVELLY ORGANIC lean CLAY with SAND
OL	ORGANIC SILT ORGANIC SILT with SAND ORGANIC SILT with GRAVEL SANDY ORGANIC SILT SANDY ORGANIC SILT with GRAVEL GRAVELLY ORGANIC SILT GRAVELLY ORGANIC SILT with SAND
CH	Fat CLAY Fat CLAY with SAND Fat CLAY with GRAVEL SANDY fat CLAY SANDY fat CLAY with GRAVEL GRAVELLY fat CLAY GRAVELLY fat CLAY with SAND
MH	Elastic SILT Elastic SILT with SAND Elastic SILT with GRAVEL SANDY elastic SILT SANDY elastic SILT with GRAVEL GRAVELLY elastic SILT GRAVELLY elastic SILT with SAND
OH	ORGANIC fat CLAY ORGANIC fat CLAY with SAND ORGANIC fat CLAY with GRAVEL SANDY ORGANIC fat CLAY SANDY ORGANIC fat CLAY with GRAVEL GRAVELLY ORGANIC fat CLAY GRAVELLY ORGANIC fat CLAY with SAND
OH	ORGANIC elastic SILT ORGANIC elastic SILT with SAND ORGANIC elastic SILT with GRAVEL SANDY ORGANIC elastic SILT SANDY ORGANIC elastic SILT with GRAVEL GRAVELLY ORGANIC elastic SILT GRAVELLY ORGANIC elastic SILT with SAND
OL/OH	ORGANIC SOIL ORGANIC SOIL with SAND ORGANIC SOIL with GRAVEL SANDY ORGANIC SOIL SANDY ORGANIC SOIL with GRAVEL GRAVELLY ORGANIC SOIL GRAVELLY ORGANIC SOIL with SAND

FIELD AND LABORATORY TESTING

- (C) Consolidation (ASTM D 2435)
- (CL) Collapse Potential (ASTM D 5333)
- (CP) Compaction Curve (CTM 216)
- (CR) Corrosivity Testing (CTM 643, CTM 422, CTM 417)
- (CU) Consolidated Undrained Triaxial (ASTM D 4767)
- (DS) Direct Shear (ASTM D 3080)
- (EI) Expansion Index (ASTM D 4829)
- (M) Moisture Content (ASTM D 2216)
- (OC) Organic Content-% (ASTM D 2974)
- (P) Permeability (CTM 220)
- (PA) Particle Size Analysis (ASTM D 422)
- (PI) Plasticity Index (AASHTO T 90) Liquid Limit (AASHTO T 89)
- (PL) Point Load Index (ASTM D 5731)
- (PM) Pressure Meter
- (R) R-Value (CTM 301)
- (SE) Sand Equivalent (CTM 217)
- (SG) Specific Gravity (AASHTO T 100)
- (SL) Shrinkage Limit (ASTM D 427)
- (SW) Swell Potential (ASTM D 4546)
- (UC) Unconfined Compression-Soil (ASTM D 2166) Unconfined Compression-Rock (ASTM D 2938)
- (UU) Unconsolidated Undrained Triaxial (ASTM D 2850)
- (UW) Unit Weight (ASTM D 4767)

APPARENT DENSITY OF COHESIONLESS SOILS

Description	SPT N_{60} (Blows / 12 in.)
Very Loose	0 - 5
Loose	5 - 10
Medium Dense	10 - 30
Dense	30 - 50
Very Dense	Greater than 50

MOISTURE

Description	Criteria
Dry	No discernable moisture
Moist	Moisture present, but no free water
Wet	Visible free water

PERCENT OR PROPORTION OF SOILS

Description	Criteria
Trace	Particles are present but estimated to be less than 5%
Few	5% - 10%
Little	15% - 25%
Some	30% - 45%
Mostly	50% - 100%

PARTICLE SIZE

Description		Size (in.)
Boulder		Greater than 12
Cobble		3 - 12
Gravel	Coarse	3/4 - 3
	Fine	1/5 - 3/4
Sand	Coarse	1/16 - 1/5
	Medium	1/64 - 1/16
	Fine	1/300 - 1/64
Silt and Clay		Less than 1/300

ENGINEERING SERVICES	MATERIALS AND GEOTECHNICAL SERVICES	STATE OF CALIFORNIA DEPARTMENT OF TRANSPORTATION	DIVISION OF ENGINEERING SERVICES STRUCTURE DESIGN DESIGN BRANCH 1	BRIDGE NO. 53-E0180 POST MILE 3.20	SOUND WALL NO. 166
FUNCTIONAL SUPERVISOR NAME: M. SMITH	DRAWN BY: P.QUACH CHECKED BY: D.ORRIS	FIELD INVESTIGATION BY: EJ.JEON/P.MCDONALD			LOG OF TEST BORINGS SHEET 4 OF 4

OGS CIVIL LOG OF TEST BORINGS SHEET

ORIGINAL SCALE IN INCHES FOR REDUCED PLANS 0 1 2 3

UNIT: 3576
PROJECT NUMBER & PHASE: 07000018331
CONTRACT NO.: 07-215934

DISREGARD PRINTS BEARING EARLIER REVISION DATES → REVISION DATES 06/17/11

SHEET 25 OF 25

FILE => sw166-z-ltb04.dgn

USERNAME => s123631 DATE PLOTTED => 28-MAR-2012 TIME PLOTTED => 12:44

DIST	COUNTY	ROUTE	POST MILES TOTAL PROJECT	SHEET No.	TOTAL SHEETS
07	LA	5	2.4/4.0	1138	1288

REGISTERED CIVIL ENGINEER — DATE 12-08-11

3-26-12
PLANS APPROVAL DATE

REGISTERED PROFESSIONAL ENGINEER — Kevin Harper — No. 42221 — Exp. 3-31-12 — CIVIL — STATE OF CALIFORNIA

The State of California or its officers or agents shall not be responsible for the accuracy or completeness of electronic copies of this plan sheet.

NOTES:

1. For Design Notes, see Standard Plan 15-7: "SOUND WALL MASONRY BLOCK ON TYPE 736S/SV BARRIER DETAILS (2)", "RETAINING WALL TYPE 1SWBP - DETAIL NO. 1" sheet and "SOUND WALL - MASONRY BLOCK WITH BARRIER ON RETAINING WALL DETAILS NO. 2" sheet.
2. All piles are not shown in "DEVELOPED ELEVATION".

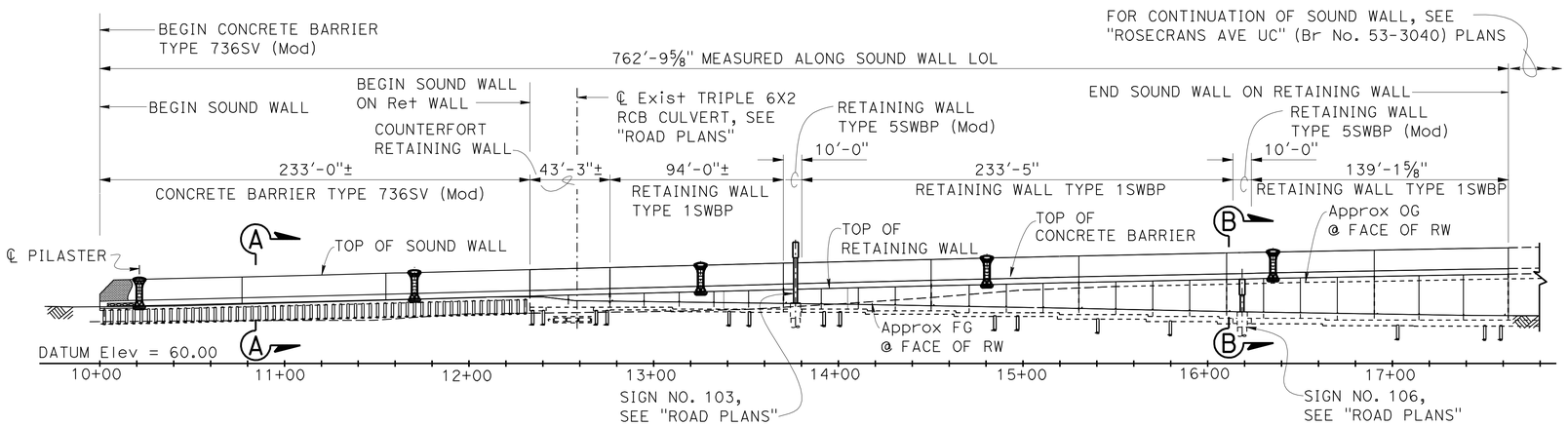

DEVELOPED ELEVATION

1" = 40'

QUANTITIES

STRUCTURE EXCAVATION (RETAINING WALL)	2,500 CY
STRUCTURE EXCAVATION (TYPE Y-2) (AERIALLY DEPOSITED LEAD)	300 CY
STRUCTURE BACKFILL (RETAINING WALL)	2,090 CY
PERVIOUS BACKFILL MATERIAL (RETAINING WALL)	203 CY
16" CAST-IN-DRILLED-HOLE CONCRETE PILING (SOUNDWALL)	927 LF
FURNISH PILING (CLASS 90)	5,411 LF
DRIVE PILE (CLASS 90)	157 EA
STRUCTURAL CONCRETE, RETAINING WALL	956 CY
PILASTER, SOUND WALL	10 CY
ARCHITECTURAL TREATMENT (SPLIT SLATE - FRACTURED RIB)	5,900 SQFT
SOUND WALL (MASONRY BLOCK)	8,450 SQFT
BAR REINFORCING STEEL (RETAINING WALL)	101,250 LB
CONCRETE BARRIER (TYPE 736A MODIFIED 2)	530 LF
CONCRETE BARRIER (TYPE 736SV MODIFIED)	233 LF

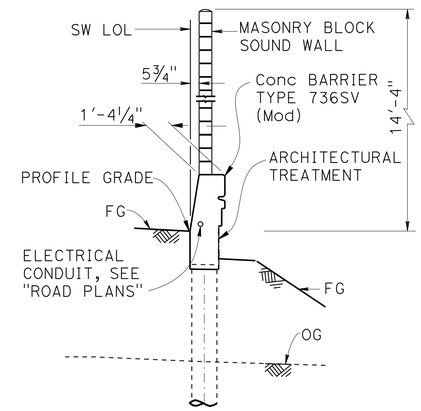

TYPICAL SECTION A-A

¼" = 1'-0"

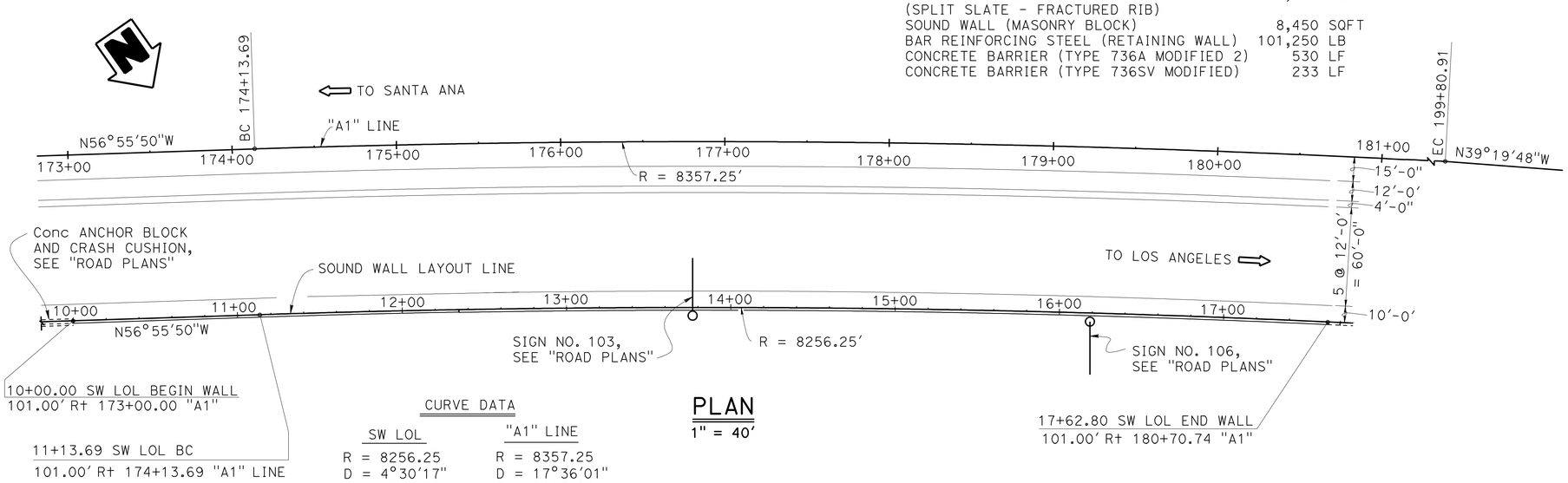

PLAN

1" = 40'

CURVE DATA

SW LOL	"A1" LINE
R = 8256.25	R = 8357.25
D = 4°30'17"	D = 17°36'01"
T = 327.72	T = 1293.80
L = 649.11	L = 2567.22

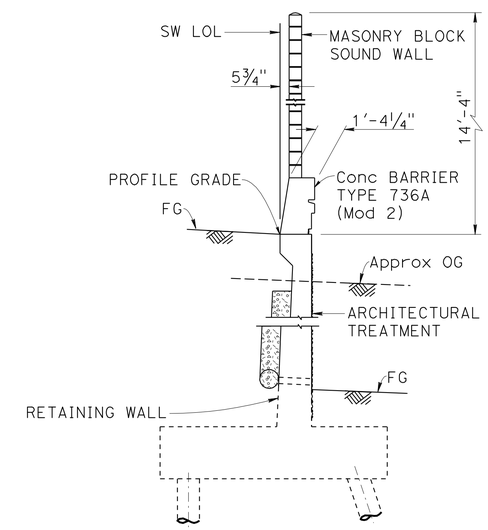

TYPICAL SECTION B-B

¼" = 1'-0"

DESIGN	BY Greg Thornton	CHECKED Daniel Sessions	LOAD FACTOR DESIGN		
DETAILS	BY J. Zhou/B. Jenko/Y. Feng	CHECKED Daniel Sessions	LAYOUT	BY Greg Thornton	CHECKED Daniel Sessions
QUANTITIES	BY A. Pearson / B. Hagy	CHECKED E. Watson / K. Harper	SPECIFICATIONS	BY Theresa Nedwick	PLANS AND SPECS COMPARED Theresa Nedwick

Jeff Sims
DESIGN ENGINEER

STATE OF CALIFORNIA
DEPARTMENT OF TRANSPORTATION

DIVISION OF ENGINEERING SERVICES
STRUCTURE DESIGN
DESIGN BRANCH 1

BRIDGE NO. 53-E0181
POST MILE 3.28

SOUND WALL NO. 176
GENERAL PLAN

ORIGINAL SCALE IN INCHES FOR REDUCED PLANS 0 1 2 3

UNIT: 3576
PROJECT NUMBER & PHASE: 07000018331
CONTRACT NO. 07-215934

DISREGARD PRINTS BEARING EARLIER REVISION DATES

REVISION DATES 12/15/10 12/01/11 11/21/11

SHEET 1 OF 31

USERNAME => s123631 DATE PLOTTED => 28-MAR-2012 TIME PLOTTED => 12:44

STRUCTURES DESIGN GENERAL PLAN SHEET (ENGLISH) (REV.09-01-10)

FILE => sw176-a-gp.dgn

DIST	COUNTY	ROUTE	POST MILES TOTAL PROJECT	SHEET No.	TOTAL SHEETS
07	LA	5	2.4/4.0	1139	1288

REGISTERED CIVIL ENGINEER 12-08-11 DATE

3-26-12
PLANS APPROVAL DATE

REGISTERED PROFESSIONAL ENGINEER Kevin Harper No. 42221 Exp. 3-31-12 CIVIL STATE OF CALIFORNIA

The State of California or its officers or agents shall not be responsible for the accuracy or completeness of electronic copies of this plan sheet.

INDEX TO PLANS

SHEET NO.	TITLE
1.	GENERAL PLAN
2.	INDEX TO PLANS
3.	STRUCTURE PLAN NO. 1
4.	STRUCTURE PLAN NO. 2
5.	STRUCTURE PLAN NO. 3
6.	FOUNDATION PLAN NO. 1
7.	FOUNDATION PLAN NO. 2
8.	COUNTERFORT RETAINING WALL DETAILS
9.	RETAINING WALL ARCHITECTURAL TREATMENT
10.	RETAINING WALL ARCHITECTURAL DETAILS NO. 1
11.	RETAINING WALL ARCHITECTURAL DETAILS NO. 2
12.	CONCRETE BARRIER TYPE 736A (Mod 2) DETAILS
13.	SOUND WALL ARCHITECTURAL DETAILS
14.	PILASTER ARCHITECTURAL DETAILS NO. 1
15.	PILASTER ARCHITECTURAL DETAILS NO. 2
16.	PILASTER ARCHITECTURAL DETAILS NO. 3
17.	PILASTER ARCHITECTURAL DETAILS NO. 4
18.	PILASTER STRUCTURAL DETAILS NO. 1
19.	PILASTER STRUCTURAL DETAILS NO. 2
20.	PILASTER STRUCTURAL DETAILS NO. 3
21.	RETAINING WALL TYPE 1SWBP DETAIL NO. 1
22.	RETAINING WALL TYPE 1SWBP DETAIL NO. 2
23.	RETAINING WALL TYPE 5SWBP DETAIL NO. 1
24.	RETAINING WALL TYPE 5SWBP DETAIL NO. 2
25.	SOUND WALL - MASONRY BLOCK WITH BARRIER ON RETAINING WALL DETAILS NO. 1
26.	SOUND WALL - MASONRY BLOCK WITH BARRIER ON RETAINING WALL DETAILS NO. 2
27.	LOG OF TEST BORINGS 1 OF 5
28.	LOG OF TEST BORINGS 2 OF 5
29.	LOG OF TEST BORINGS 3 OF 5
30.	LOG OF TEST BORINGS 4 OF 5
31.	LOG OF TEST BORINGS 5 OF 5

STANDARD PLANS DATED MAY 2006

A10A	ACRONYMS AND ABBREVIATIONS (SHEET 1 OF 2)
A10B	ACRONYMS AND ABBREVIATIONS (SHEET 2 OF 2)
A10C	SYMBOLS (SHEET 1 OF 2)
A10D	SYMBOLS (SHEET 2 OF 2)
A62B	LIMITS OF PAYMENT FOR EXCAVATION AND BACKFILL - BRIDGE SURCHARGE AND WALL
B0-1	BRIDGE DETAILS
B0-3	BRIDGE DETAILS
B2-5	PILE DETAILS CLASS 90 AND CLASS 140
B3-8	RETAINING WALL DETAILS No. 1
B11-56	CONCRETE BARRIER TYPE 736
RSP B15-6	SOUND WALL MASONRY BLOCK ON TYPE 736S/SV BARRIER DETAILS (1)
RSP B15-7	SOUND WALL MASONRY BLOCK ON TYPE 736S/SV BARRIER DETAILS (2)
RSP B15-8	SOUND WALL MASONRY BLOCK ON TYPE 736S/SV BARRIER DETAILS (3)
B15-9	SOUND WALL MASONRY BLOCK MISCELLANEOUS DETAILS

STANDARD PLAN SHEET NO.

DETAIL NO.

PILE DATA

LOCATION	PILE TYPE	NOMINAL RESISTANCE (KIP) COMPRESSION	NOMINAL RESISTANCE (KIP) TENSION	SPECIFIED TIP ELEVATION	NOMINAL DRIVING RESISTANCE (KIPS)
CONCRETE BARRIER TYPE 736SV (Mod) SW LOL 10+00.00 to 12+33.00	16" CIDH (Std PLAN B15-8)	N/A	N/A	N/A	N/A
COUNTERFORT RETAINING WALL & Ret WALL TYPE 1SWBP SW LOL 12+33.00 to 13+47.17	CLASS 90	180	0	55.0	180
Ret WALL TYPE 1SWBP & TYPE 5SWBP (Mod) SW LOL 13+47.17 to 14+13.17	CLASS 90	180	0	54.8	180
Ret WALL TYPE 1SWBP SW LOL 14+13.17 to 14+61.17	CLASS 90	180	0	53.8	180
Ret WALL TYPE 1SWBP SW LOL 14+61.17 to 15+17.17	CLASS 90	180	0	52.5	180
Ret WALL TYPE 1SWBP SW LOL 15+17.17 to 15+65.17	CLASS 90	180	0	51.0	180
Ret WALL TYPE 1SWBP SW LOL 15+65.17 to 16+05.17	CLASS 90	180	0	49.8	180
Ret WALL TYPE 1SWBP & TYPE 5SWBP (Mod) SW LOL 16+05.17 to 16+60.67	CLASS 90	180	0	48.5	180
Ret WALL TYPE 1SWBP SW LOL 16+60.67 to 17+62.80	CLASS 90	180	0	47.3	180

NOTES:
1. Class 90 Alternative "X" Piles shall have a dimension "T" not less than 14 inches.
2. All Design Tips are controlled by compression.

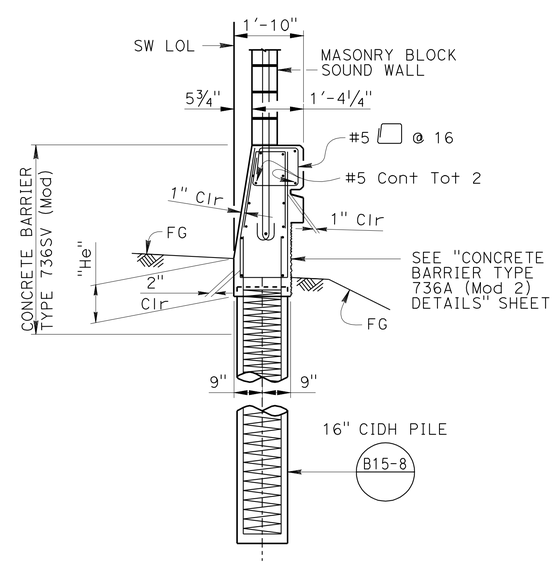

NOTE: For Barrier and Sound Wall dimensions and reinforcement not shown, see "BARRIER SECTIONS", " CASE 2" on Std Plan B15-6.

CONCRETE BARRIER TYPE 736SV (Mod)

½" = 1'-0"

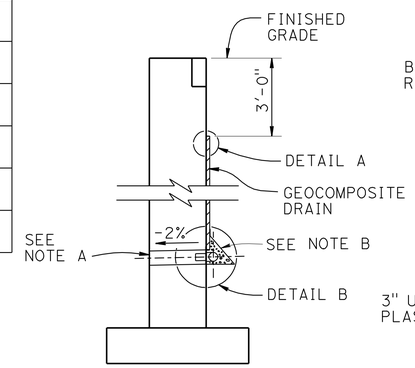

WALL SECTION

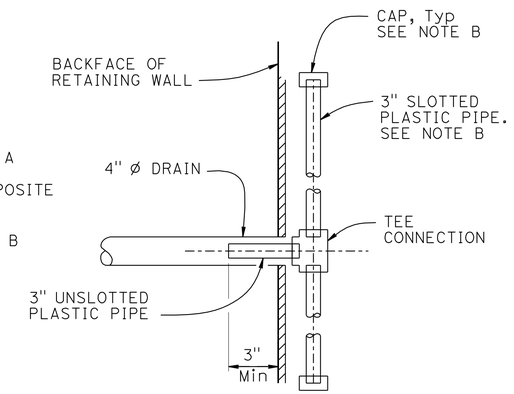

SECTION A-A

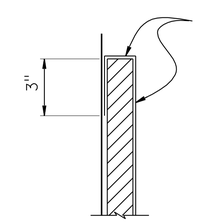

DETAIL A

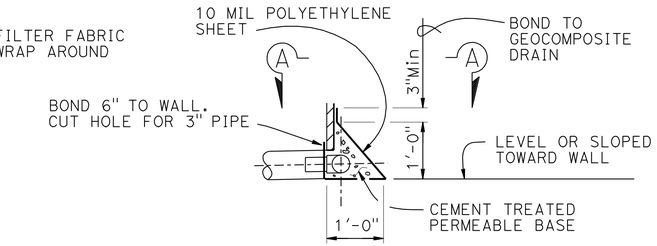

DETAIL B

WEEP HOLE AND GEOCOMPOSITE DRAIN

ALTERNATIVE TO BRIDGE DETAIL B0-3 / 3-1

NOTES:

A. 4" Ø drains at 25' max center to center. For walls adjacent to sidewalks or curbs, provide 4" cast iron or asbestos cement pipe under the sidewalk to discharge through curb face. Exposed wall drains shall be located 3"± above finished grade.

B. Geocomposite drain, cement treated permeable base, and 3"Ø slotted plastic pipe continuous behind retaining wall. Cap ends of pipe. Provide "Tee" connection at each 4" Ø drain.

	BY	CHECKED
DESIGN	Greg Thornton	Daniel Sessions
DETAILS	J. Zhou/B. Jenko/Y. Feng	Daniel Sessions
QUANTITIES	A. Pearson / B. Hagy	E. Watson / K. Harper

STATE OF CALIFORNIA DEPARTMENT OF TRANSPORTATION

DIVISION OF ENGINEERING SERVICES STRUCTURE DESIGN DESIGN BRANCH 1

BRIDGE NO. 53-E0181
POST MILE 3.28

SOUND WALL NO. 176
INDEX TO PLANS

STRUCTURES DESIGN DETAIL SHEET (ENGLISH) (REV. 09-01-10)

ORIGINAL SCALE IN INCHES FOR REDUCED PLANS 0 1 2 3

UNIT: 3576
PROJECT NUMBER & PHASE: 07000018331
CONTRACT NO. 07-215934

DISREGARD PRINTS BEARING EARLIER REVISION DATES

REVISION DATES 12-14-10 12/01/11 11-29-11

SHEET 2 OF 31

FILE => sw176-a-itp.dgn

USERNAME => s123631 DATE PLOTTED => 28-MAR-2012 TIME PLOTTED => 12:44

DIST	COUNTY	ROUTE	POST MILES TOTAL PROJECT	SHEET No.	TOTAL SHEETS
07	LA	5	2.4/4.0	1140	1288

REGISTERED CIVIL ENGINEER 12-08-11 DATE

3-26-12
PLANS APPROVAL DATE

REGISTERED PROFESSIONAL ENGINEER Kevin Harper No. 42221 Exp. 3-31-12 CIVIL STATE OF CALIFORNIA

The State of California or its officers or agents shall not be responsible for the accuracy or completeness of electronic copies of this plan sheet.

NOTES:

1. For barrier details, see "CONCRETE BARRIER TYPE 736A (Mod 2) DETAILS" sheet.
2. For sound wall details, see "SOUND WALL - MASONRY BLOCK WITH BARRIER ON RETAINING WALL DETAILS NO. 1" and NO. 2 sheets.
3. For retaining wall details, see "RETAINING WALL TYPE 1SWBP - DETAIL NO. 1" and NO. 2 sheets.
4. Retaining wall expansion joints, weakened planes, and weepholes shall be placed per B0-3/3-3
5. For Exp Jt details in the masonry block sound wall, see "SOUND WALL - MASONRY BLOCK WITH BARRIER ON RETAINING WALL DETAILS NO. 1" and NO. 2 sheets.
6. All longitudinal dimensions are measured along the SW LOL.
7. Not all piles shown in "DEVELOPED ELEVATION".
8. For "WEEPHOLE AND GEOCOMPOSITE DRAIN" alternative, see "INDEX TO PLANS" sheet.
9. Pile data for Sound Wall Masonry Block on Type 736SV (Mod) Barrier shall be from Tabular Values "Case 2" with Ø = 30" on Standard Plan B15-8.

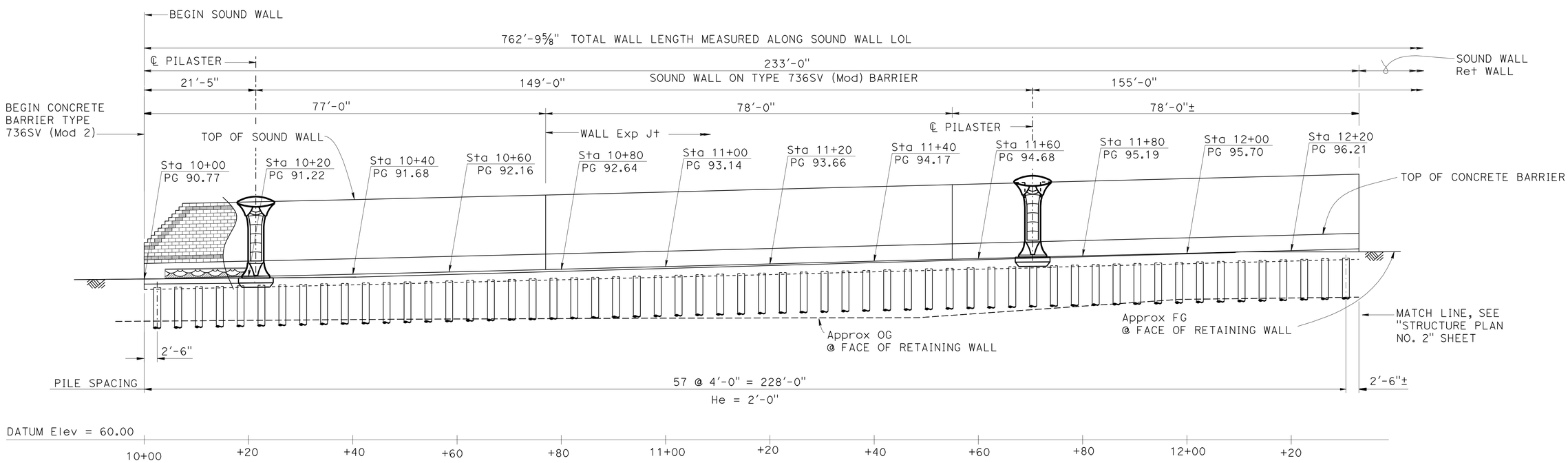

DEVELOPED ELEVATION B15-6

1" = 10'

DESIGN	BY Greg Thornton	CHECKED Daniel Sessions	
DETAILS	BY J. Zhou/B. Jenko/Y. Feng	CHECKED Daniel Sessions	
QUANTITIES	BY A. Pearson / B. Hagy	CHECKED E. Watson / K. Harper	

STATE OF CALIFORNIA DEPARTMENT OF TRANSPORTATION

DIVISION OF ENGINEERING SERVICES STRUCTURE DESIGN DESIGN BRANCH 1

BRIDGE NO. 53-E0181
POST MILE 3.28

SOUND WALL NO. 176
STRUCTURE PLAN NO. 1

STRUCTURES DESIGN DETAIL SHEET (ENGLISH) (REV. 09-01-10)

ORIGINAL SCALE IN INCHES FOR REDUCED PLANS 0 1 2 3

UNIT: 3576
PROJECT NUMBER & PHASE: 07000018331
CONTRACT NO. 07-215934

DISREGARD PRINTS BEARING EARLIER REVISION DATES

REVISION DATES 12/12/10 11/24/11 11/21/11 08/12/11

SHEET 3 OF 31

FILE => sw176-c-sp01.dgn

USERNAME => s123631 DATE PLOTTED => 28-MAR-2012 TIME PLOTTED => 12:44

DIST	COUNTY	ROUTE	POST MILES TOTAL PROJECT	SHEET No.	TOTAL SHEETS
07	LA	5	2.4/4.0	1141	1288

REGISTERED CIVIL ENGINEER 12-08-11 DATE

3-26-12
PLANS APPROVAL DATE

REGISTERED PROFESSIONAL ENGINEER Kevin Harper No. 42221 Exp. 3-31-12 CIVIL STATE OF CALIFORNIA

The State of California or its officers or agents shall not be responsible for the accuracy or completeness of electronic copies of this plan sheet.

For "NOTES", see "STRUCTURE PLAN NO. 1" sheet.

LEGEND:

- ⊕ - Indicates Vertical Class 90 Pile
- ⊕ - Indicates 1:3 Battered Class 90 Pile

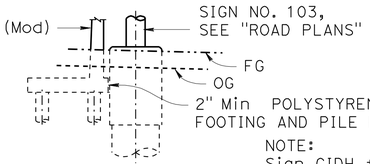

NOTE:
Sign CIDH footing shall be constructed prior to retaining wall.

SECTION A-A
1/8" = 1'-0"

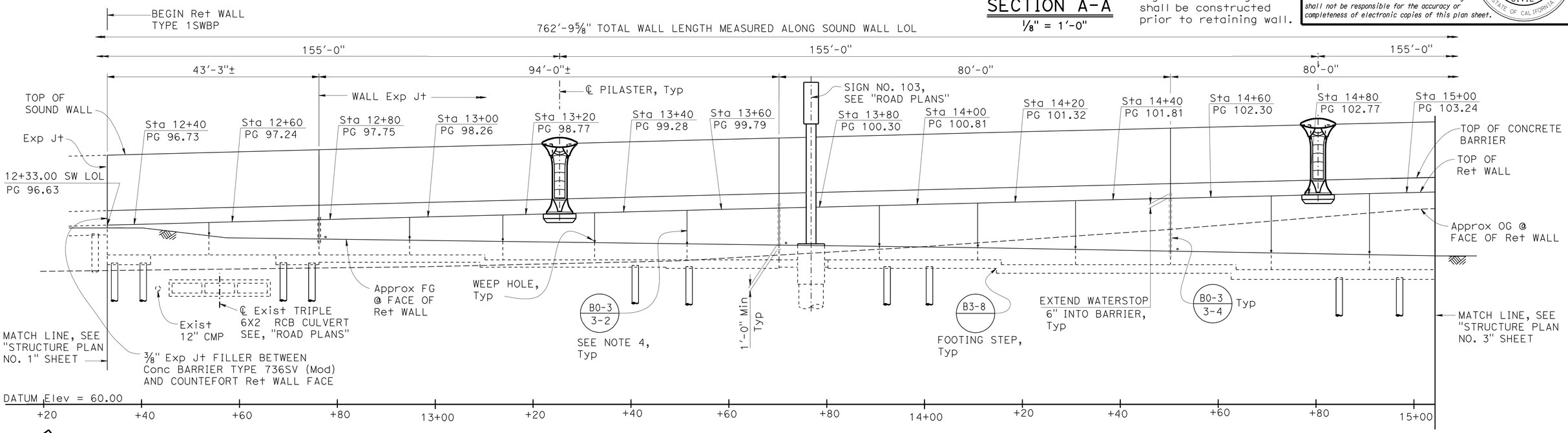

DEVELOPED ELEVATION
1" = 10'

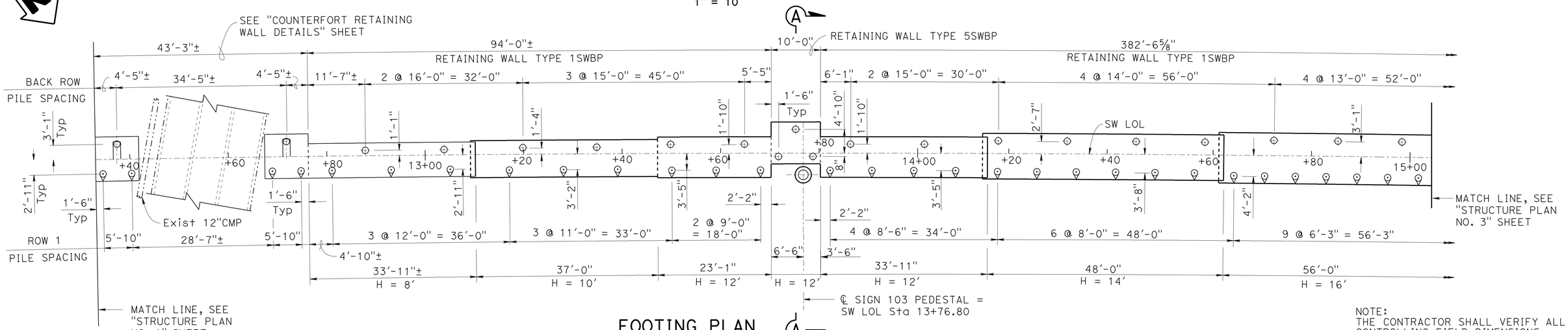

FOOTING PLAN
1" = 10'

NOTE:
THE CONTRACTOR SHALL VERIFY ALL CONTROLLING FIELD DIMENSIONS BEFORE ORDERING OR FABRICATING ANY MATERIAL.

	BY	CHECKED
DESIGN	Greg Thornton	Daniel Sessions
DETAILS	J. Zhou/B. Jenko/Y. Feng	Daniel Sessions
QUANTITIES	A. Pearson / B. Hagy	E. Watson / K. Harper

STATE OF CALIFORNIA
DEPARTMENT OF TRANSPORTATION

DIVISION OF ENGINEERING SERVICES
STRUCTURE DESIGN
DESIGN BRANCH 1

BRIDGE NO. 53-E0181
POST MILE 3.28

SOUND WALL NO. 176
STRUCTURE PLAN NO. 2

STRUCTURES DESIGN DETAIL SHEET (ENGLISH) (REV. 09-01-10)

ORIGINAL SCALE IN INCHES FOR REDUCED PLANS 0 1 2 3

UNIT: 3576
PROJECT NUMBER & PHASE: 07000018331
CONTRACT NO. 07-215934

DISREGARD PRINTS BEARING EARLIER REVISION DATES

REVISION DATES 12/14/10 11/29/11 12/01/11

SHEET 4 OF 31

USERNAME => s123631 DATE PLOTTED => 28-MAR-2012 TIME PLOTTED => 12:44

FILE => sw176-c-sp02.dgn

DIST	COUNTY	ROUTE	POST MILES TOTAL PROJECT	SHEET No.	TOTAL SHEETS
07	LA	5	2.4/4.0	1142	1288

REGISTERED CIVIL ENGINEER 12-08-11 DATE

3-26-12
PLANS APPROVAL DATE

REGISTERED PROFESSIONAL ENGINEER Kevin Harper No. 42221 Exp. 3-31-12 CIVIL STATE OF CALIFORNIA

The State of California or its officers or agents shall not be responsible for the accuracy or completeness of electronic copies of this plan sheet.

For "NOTES", see "STRUCTURE PLAN NO. 1" sheet.

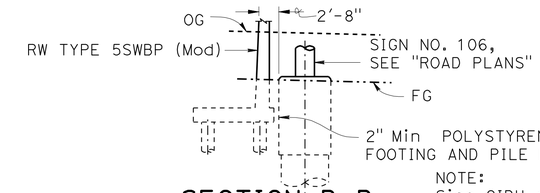

SECTION B-B

1/8" = 1'-0"

NOTE:
Sign CIDH footing shall be constructured prior to retaining wall.

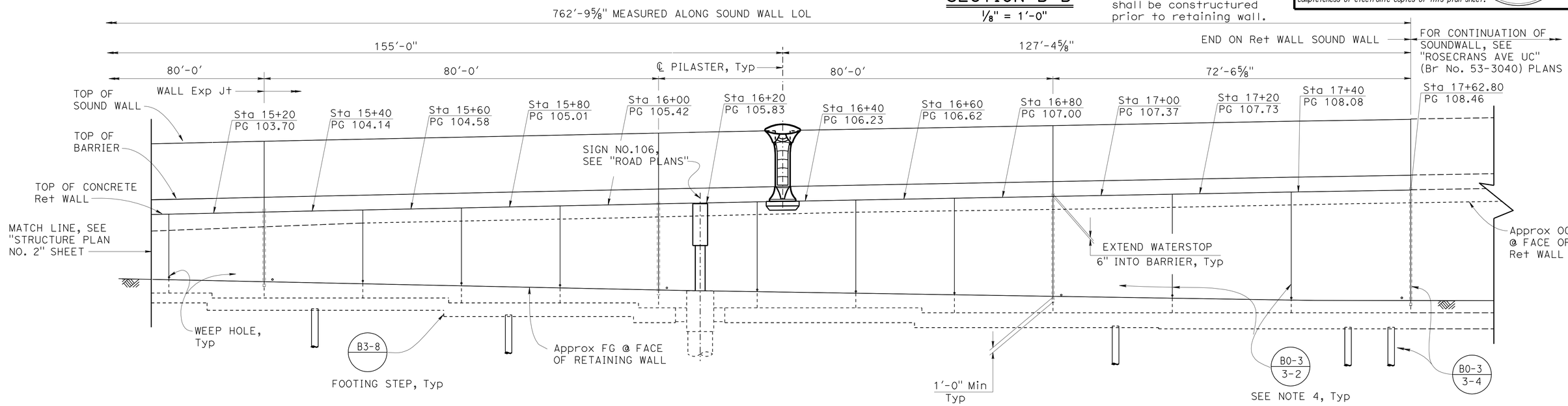

DEVELOPED ELEVATION

1" = 10'

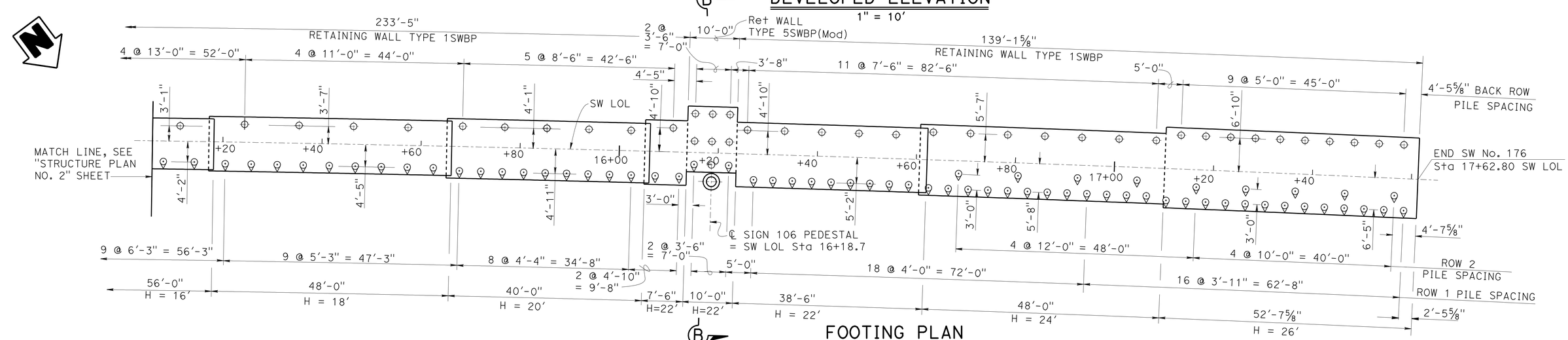

FOOTING PLAN

1" = 10'

DESIGN	BY Greg Thornton	CHECKED Daniel Sessions	
DETAILS	BY J. Zhou/B. Jenko/Y. Feng	CHECKED Daniel Sessions	
QUANTITIES	BY A. Pearson / B. Hagy	CHECKED E. Watson / K. Harper	

STATE OF CALIFORNIA
DEPARTMENT OF TRANSPORTATION

DIVISION OF ENGINEERING SERVICES
STRUCTURE DESIGN
DESIGN BRANCH 1

BRIDGE NO. 53-E0181
POST MILE 3.28

SOUND WALL NO. 176
STRUCTURE PLAN NO. 3

STRUCTURES DESIGN DETAIL SHEET (ENGLISH) (REV. 09-01-10)

ORIGINAL SCALE IN INCHES FOR REDUCED PLANS 0 1 2 3

UNIT: 3576
PROJECT NUMBER & PHASE: 07000018331
CONTRACT NO. 07-215934

DISREGARD PRINTS BEARING EARLIER REVISION DATES

REVISION DATES 3/16/11 11/16/11 12/02/11

SHEET 5 OF 31

FILE => sw176-c-sp03.dgn

USERNAME => s123631 DATE PLOTTED => 28-MAR-2012 TIME PLOTTED => 12:44

DIST	COUNTY	ROUTE	POST MILES TOTAL PROJECT	SHEET No.	TOTAL SHEETS
07	LA	5	2.4/4.0	1143	1288

REGISTERED CIVIL ENGINEER — DATE 12-08-11

3-26-12
PLANS APPROVAL DATE

REGISTERED PROFESSIONAL ENGINEER — Kevin Harper — No. 42221 — Exp. 3-31-12 — CIVIL — STATE OF CALIFORNIA

The State of California or its officers or agents shall not be responsible for the accuracy or completeness of electronic copies of this plan sheet.

NOTES:
Underground utilities as shown are approximate
+ - Denotes spot elevation
◆ or ◉ - Denotes piles (All piles are not shown)
▭ - Indicates bottom of Ftg elevation

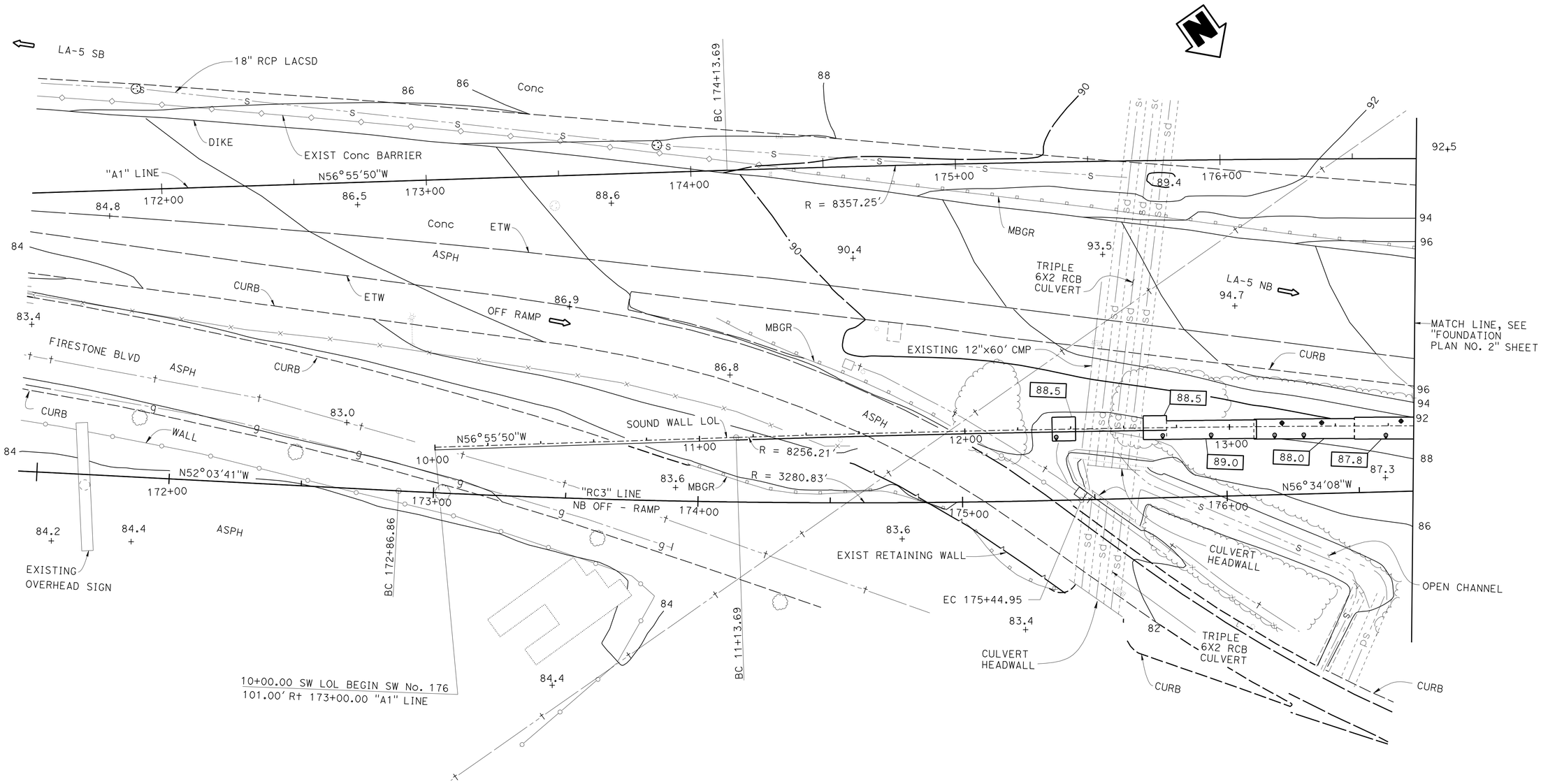

SCALE 1" = 20'					
DESIGN	BY Greg Thornton	CHECKED Daniel Sessions	STATE OF CALIFORNIA DEPARTMENT OF TRANSPORTATION	DIVISION OF ENGINEERING SERVICES STRUCTURE DESIGN DESIGN BRANCH 1	BRIDGE NO. 53-E0181
DETAILS	BY J. Zhou/B. Jenko/Y. Feng	CHECKED Daniel Sessions			POST MILE 3.28
QUANTITIES	BY Greg Jones	CHECKED Kyoung Lee			

SOUND WALL NO. 176
FOUNDATION PLAN NO. 1

STRUCTURES DESIGN DETAIL SHEET (ENGLISH) (REV. 09-01-10)

ORIGINAL SCALE IN INCHES FOR REDUCED PLANS 0 1 2 3

UNIT: 3576
PROJECT NUMBER & PHASE: 07000018331
CONTRACT NO.: 07-215934

DISREGARD PRINTS BEARING EARLIER REVISION DATES

REVISION DATES: 05/31/11 11/21/11 07/18/11 11/16/11

SHEET 6 OF 31

FILE => sw176-e-fp01.dgn

USERNAME => s123631 DATE PLOTTED => 28-MAR-2012 TIME PLOTTED => 12:45

DIST	COUNTY	ROUTE	POST MILES TOTAL PROJECT	SHEET No.	TOTAL SHEETS
07	LA	5	2.4/4.0	1144	1288

REGISTERED CIVIL ENGINEER 12-08-11 DATE

3-26-12
PLANS APPROVAL DATE

REGISTERED PROFESSIONAL ENGINEER Kevin Harper No. 42221 Exp. 3-31-12 CIVIL STATE OF CALIFORNIA

The State of California or its officers or agents shall not be responsible for the accuracy or completeness of electronic copies of this plan sheet.

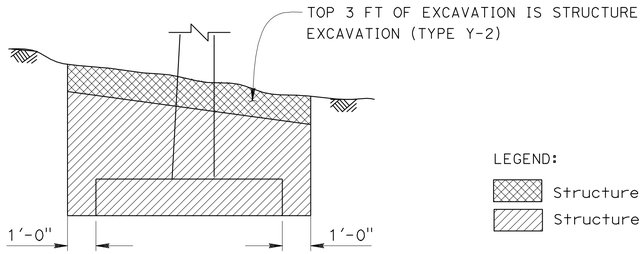

LEGEND:

Structure Exc (Type Y-2)

Structure Exc

SW LOL Sta 13+10 to 15+55

LIMITS OF PAYMENT FOR STRUCTURE EXCAVATION (TYPE Y-2) (AERIALLY DEPOSITED LEAD)

NO SCALE

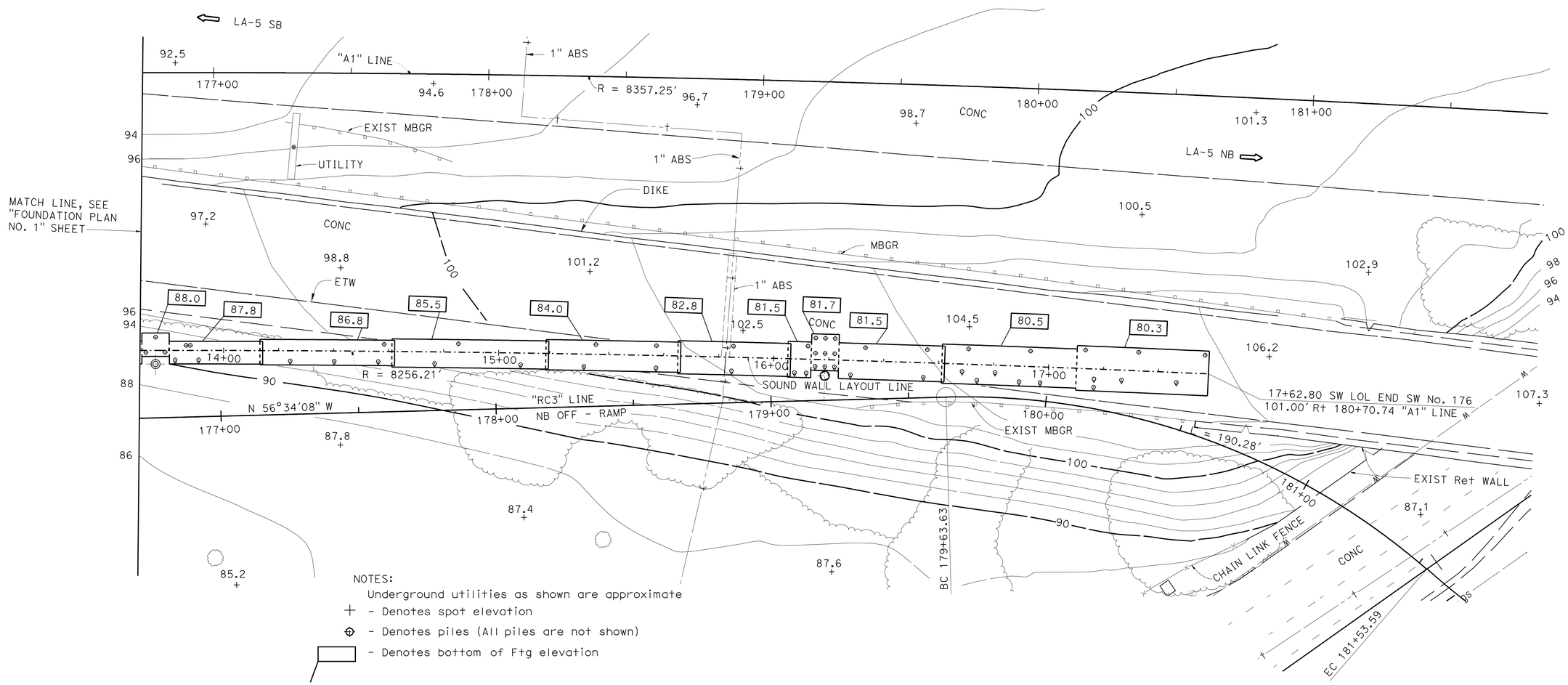

NOTES:

Underground utilities as shown are approximate

+ - Denotes spot elevation

⊕ - Denotes piles (All piles are not shown)

▭ - Denotes bottom of Ftg elevation

SCALE 1" = 20'					
	DESIGN	BY Greg Thornton	CHECKED Kevin Harper	STATE OF CALIFORNIA DEPARTMENT OF TRANSPORTATION	DIVISION OF ENGINEERING SERVICES STRUCTURE DESIGN DESIGN BRANCH 1
	DETAILS	BY J. Zhou/B. Jenko/Y. Feng	CHECKED Kevin Harper		BRIDGE NO. 53-E0181
	QUANTITIES	BY Greg Jones	CHECKED Kyoung Lee		POST MILE 3.28

SOUND WALL NO. 176

FOUNDATION PLAN NO. 2

STRUCTURES DESIGN DETAIL SHEET (ENGLISH) (REV. 09-01-10)

ORIGINAL SCALE IN INCHES FOR REDUCED PLANS 0 1 2 3

UNIT: 3576
PROJECT NUMBER & PHASE: 07000018331 CONTRACT NO.: 07-215934

DISREGARD PRINTS BEARING EARLIER REVISION DATES → REVISION DATES 03/29/11 08/19/11 11/16/11 11/21/11 SHEET 7 OF 31

FILE => sw176-e-fp02.dgn

USERNAME => s123631 DATE PLOTTED => 28-MAR-2012 TIME PLOTTED => 12:45

DIST	COUNTY	ROUTE	POST MILES TOTAL PROJECT	SHEET No.	TOTAL SHEETS
07	LA	5	2.4/4.0	1145	1288

REGISTERED CIVIL ENGINEER — DATE 12-08-11

PLANS APPROVAL DATE 3-26-12

REGISTERED PROFESSIONAL ENGINEER — Kevin Harper — No. 42221 — Exp. 3-31-12 — CIVIL — STATE OF CALIFORNIA

The State of California or its officers or agents shall not be responsible for the accuracy or completeness of electronic copies of this plan sheet.

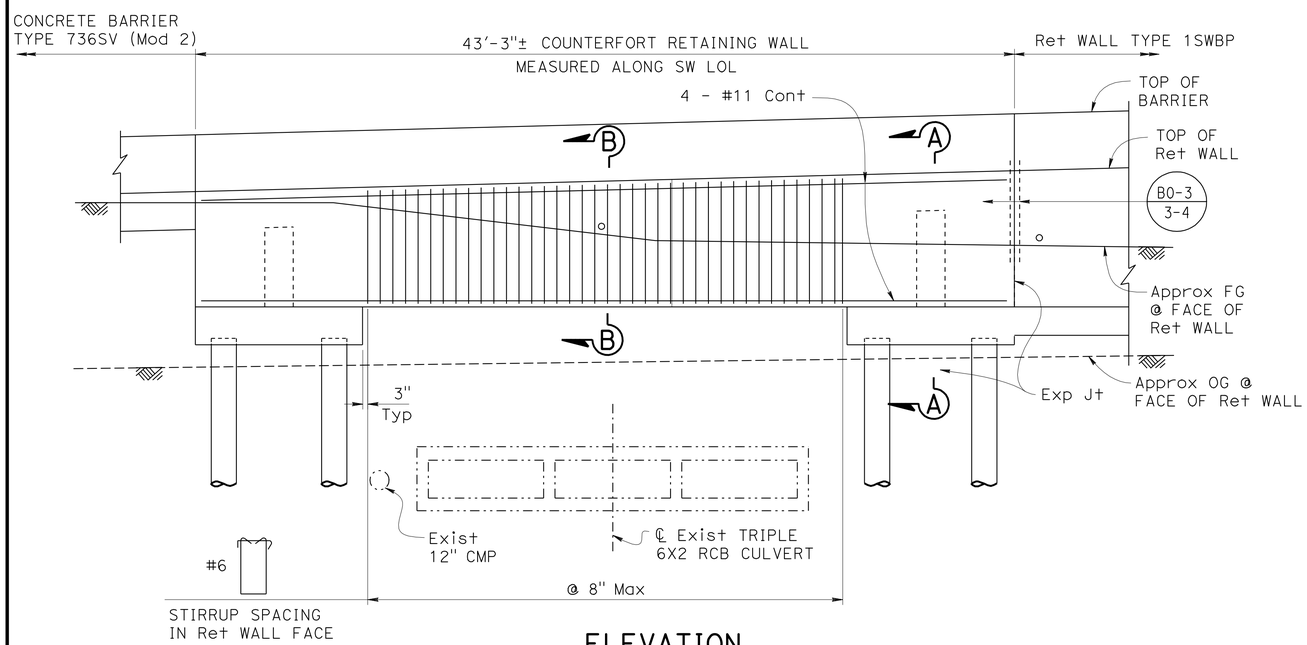

ELEVATION
1/4" = 1'-0"

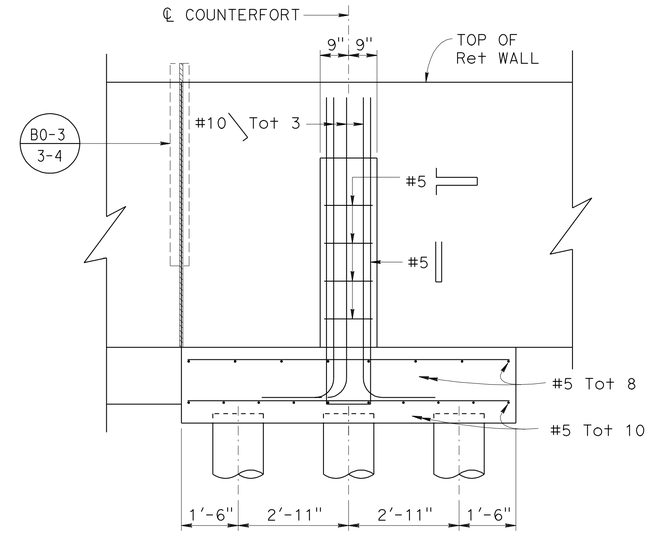

VIEW C-C
1/2" = 1'-0"

Note: For Reinforcement and Dimensions not shown, see "SECTION A-A"

NOTES:

1. For barrier details, see "CONCRETE BARRIER TYPE 736A (Mod 2) DETAILS" sheet.
2. For sound wall details, see "SOUND WALL - MASONRY BLOCK WITH BARRIER ON RETAINING WALL DETAILS NO. 1" and NO. 2 sheets.
3. For architectural treatment, see "RETAINING WALL ARCHITECTURAL TREATMENT DETAILS" sheet.
4. Sound wall not shown.

LEGEND:

- Indicates vertical class 90 pile
- Indicates 1:3 battered class 90 pile
- Indicates Exist structure

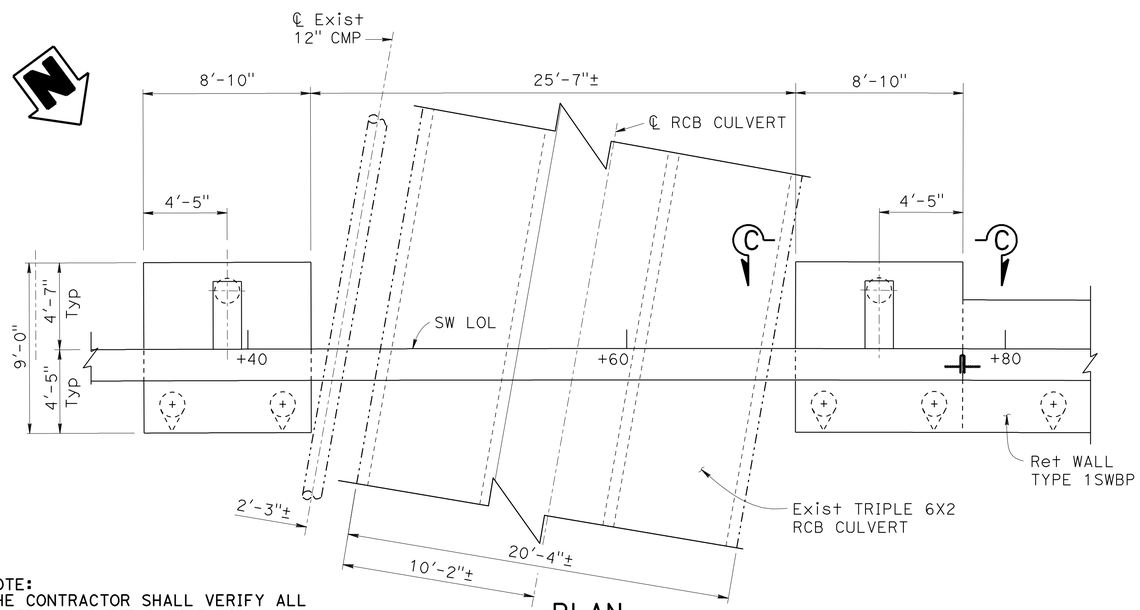

PLAN
1/4" = 1'-0"

NOTE:
THE CONTRACTOR SHALL VERIFY ALL CONTROLLING FIELD DIMENSIONS BEFORE ORDERING OR FABRICATING ANY MATERIAL.

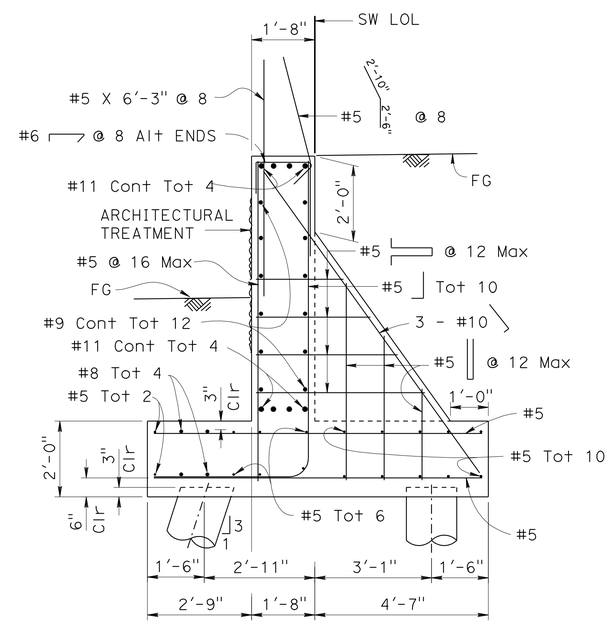

SECTION A-A
1/2" = 1'-0"

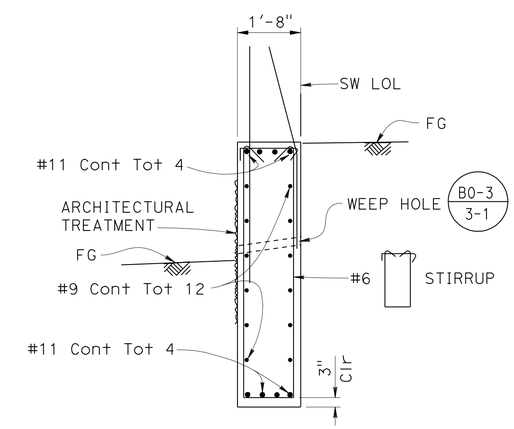

Note: For reinforcement and dimensions not shown, see "SECTION A-A"

SECTION B-B
1/2" = 1'-0"

	BY	CHECKED
DESIGN	Greg Thornton	Daniel Sessions
DETAILS	J. Tang/B. Jenko/Y. Feng	Daniel Sessions
QUANTITIES	A. Pearson / B. Hagy	E. Watson / K. Harper

STATE OF CALIFORNIA
DEPARTMENT OF TRANSPORTATION

DIVISION OF ENGINEERING SERVICES
STRUCTURE DESIGN
DESIGN BRANCH 1

BRIDGE NO. 53-E0181
POST MILE 3.28

SOUND WALL NO. 176
COUNTERFORT RETAINING WALL DETAILS

STRUCTURES DESIGN DETAIL SHEET (ENGLISH) (REV. 09-01-10)

ORIGINAL SCALE IN INCHES FOR REDUCED PLANS 0 1 2 3

UNIT: 3576
PROJECT NUMBER & PHASE: 07000018331
CONTRACT NO.: 07-215934

DISREGARD PRINTS BEARING EARLIER REVISION DATES

REVISION DATES: 05/24/11 12/02/11 11/29/11

SHEET 8 OF 31

USERNAME => s123631 DATE PLOTTED => 28-MAR-2012 TIME PLOTTED => 12:45

FILE => sw176-e-rcbd101.dgn

DIST	COUNTY	ROUTE	POST MILES TOTAL PROJECT	SHEET No.	TOTAL SHEETS
07	LA	5	2.4/4.0	1146	1288

REGISTERED CIVIL ENGINEER 12-08-11 DATE

3-26-12
PLANS APPROVAL DATE

REGISTERED PROFESSIONAL ENGINEER Kevin Harper No. 42221 Exp. 3-31-12 CIVIL STATE OF CALIFORNIA

The State of California or its officers or agents shall not be responsible for the accuracy or completeness of electronic copies of this plan sheet.

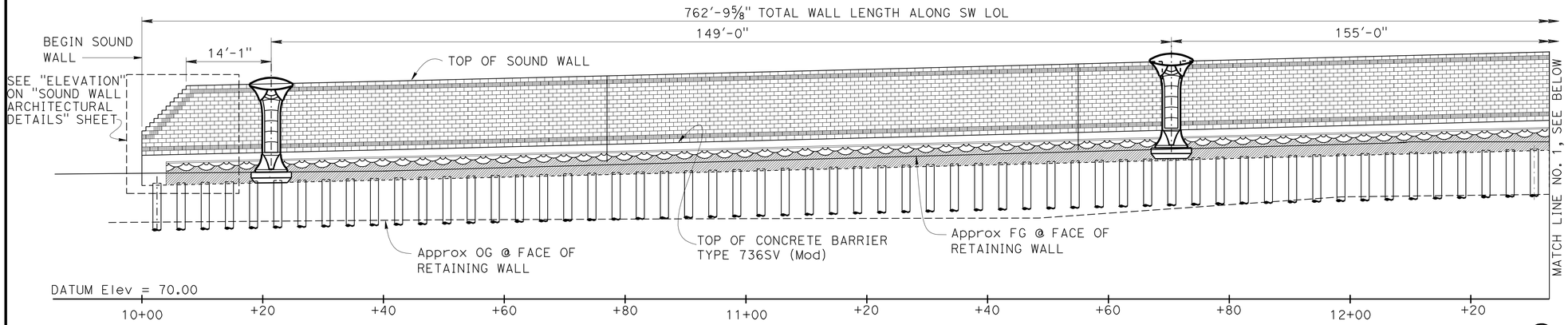

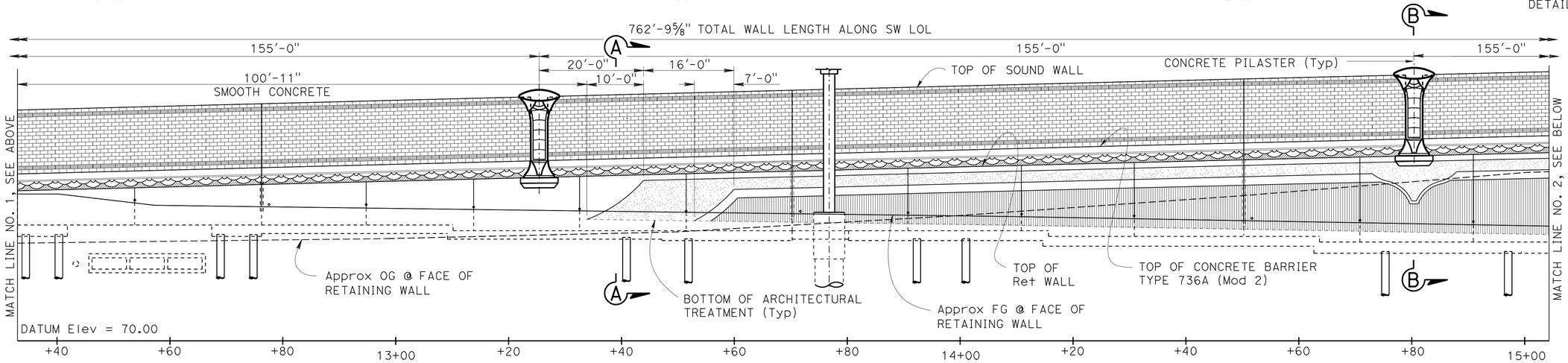

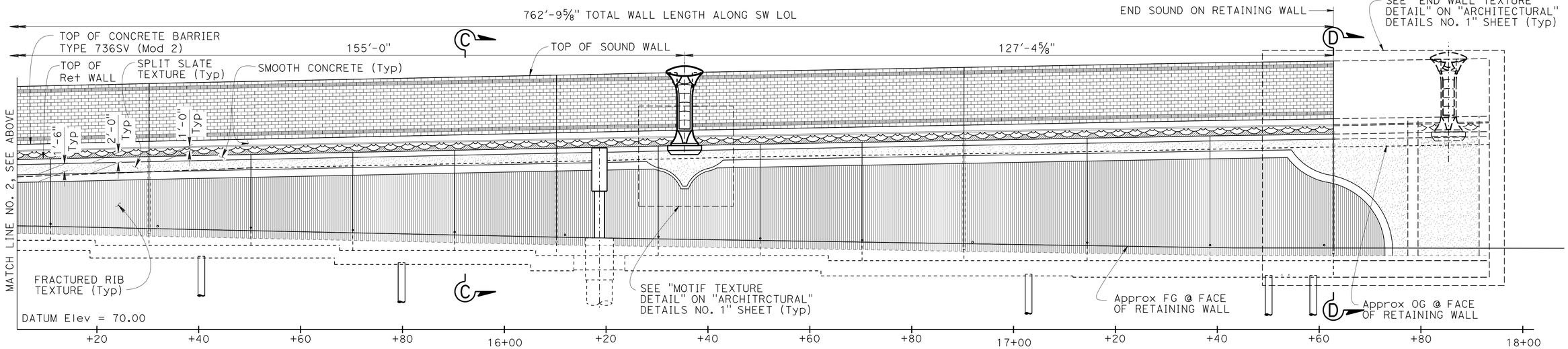

DEVELOPED ELEVATION

1" = 10'

NOTES:

1. For "SECTION A-A", "SECTION B-B", "SECTION C-C" AND "SECTION D-D", see "RETAINING WALL ARCHITECTURAL DETAILS NO. 2" sheet.
2. For barrier architectural details, see "CONCRETE BARRIER TYPE 736A (Mod 2) DETAILS" sheet.
3. For "MOTIF TEXTURE DETAIL" and "END WALL DETAIL", see "Ret WALL ARCHITECTURAL DETAILS NO. 1" sheet.
4. For sound wall architectural details, see "SOUND WALL ARCHITECTURAL DETAILS" sheet.
5. For pilaster and corbel details, see "PILASTER ARCHITECTURAL DETAILS" and "PILASTER STRUCTURAL DETAILS" sheets.
6. Retaining wall architectural treatment pay limits shall include all split slate and fractured rib texture shown in "DEVELOPED MIRRORED ELEVATION".
7. All longitudinal dimensions are measured along SW LOL.

	BY	CHECKED
DESIGN	Isaac Tasabia	Javier Chavez
DETAILS	Yingjue Feng	Daniel Sessions
QUANTITIES	A. Pearson / B. Hagy	E. Watson / K. Harper

STATE OF CALIFORNIA
DEPARTMENT OF TRANSPORTATION

DIVISION OF ENGINEERING SERVICES
STRUCTURE DESIGN
DESIGN BRANCH 1

BRIDGE NO. 53-E0181
POST MILE 3.28

SOUND WALL NO. 176
RETAINING WALL ARCHITECTURAL TREATMENT

STRUCTURES DESIGN DETAIL SHEET (ENGLISH) (REV. 09-01-10)

ORIGINAL SCALE IN INCHES FOR REDUCED PLANS 0 1 2 3

UNIT: 3576
PROJECT NUMBER & PHASE: 0700001833-1
CONTRACT NO.: 07-215934

DISREGARD PRINTS BEARING EARLIER REVISION DATES

REVISION DATES 11/22/11 11/28/11 12/02/11

SHEET 9 OF 31

FILE => sw176-e-rwatrt.dgn

USERNAME => s123631 DATE PLOTTED => 28-MAR-2012 TIME PLOTTED => 12:45

DIST	COUNTY	ROUTE	POST MILES TOTAL PROJECT	SHEET No.	TOTAL SHEETS
07	LA	5	2.4/4.0	1147	1288

REGISTERED CIVIL ENGINEER 12-08-11 DATE

3-26-12
PLANS APPROVAL DATE

REGISTERED PROFESSIONAL ENGINEER Kevin Harper No. 42221 Exp. 3-31-12 CIVIL STATE OF CALIFORNIA

The State of California or its officers or agents shall not be responsible for the accuracy or completeness of electronic copies of this plan sheet.

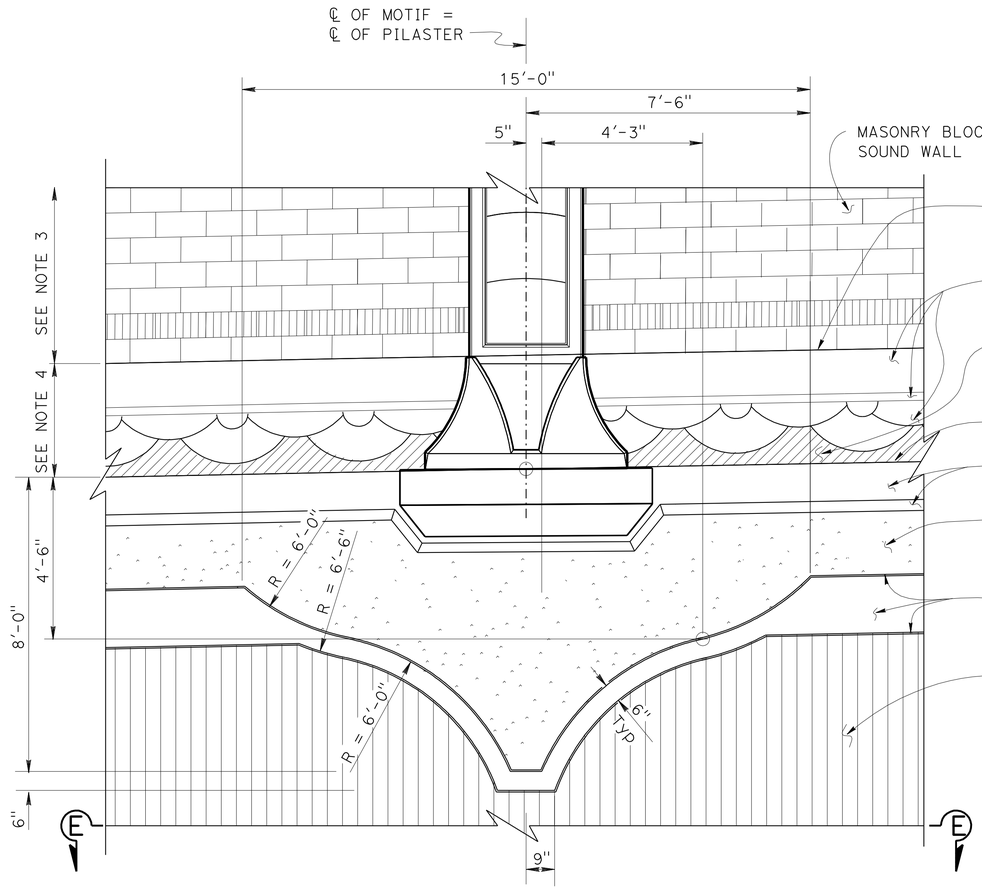

PARTIAL ELEVATION
MOTIF TEXTURE DETAIL
½" = 1'-0"

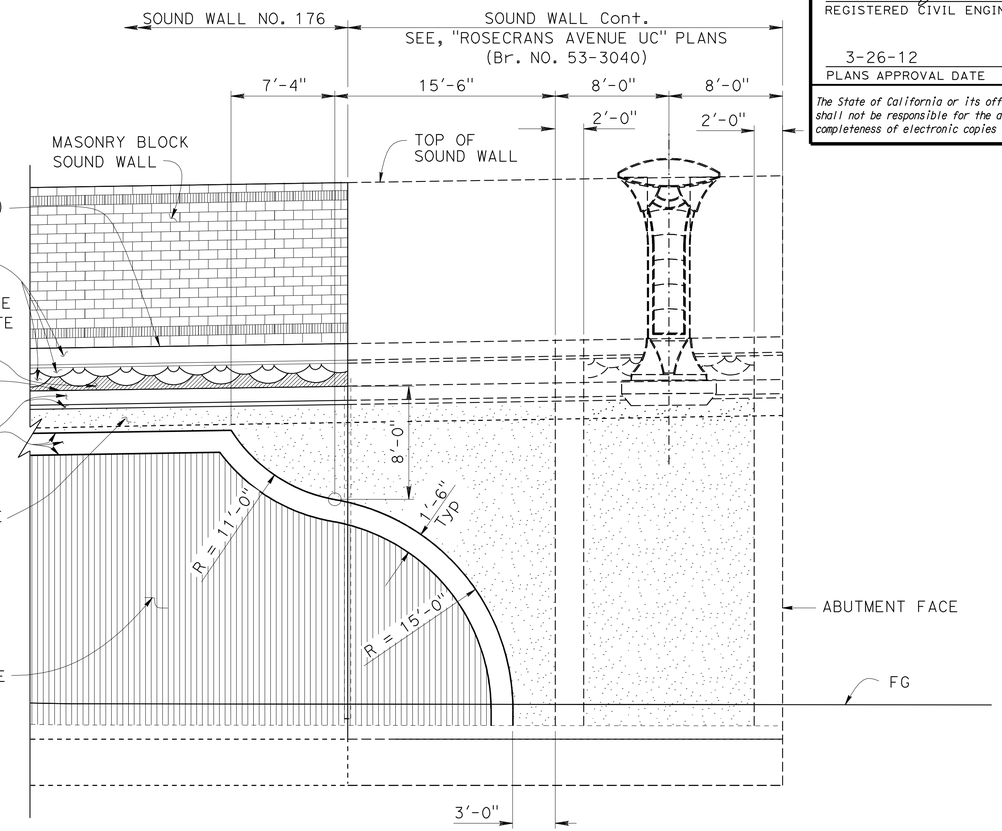

PARTIAL ELEVATION
END WALL TEXTURE DETAIL
3/16" = 1'-0"

NOTES:

1. For locations of "MOTIF TEXTURE DETAIL" and "END WALL TEXTURE DETAIL", see "RETAINING WALL ARCHITECTURAL TREATMENT" sheet.
2. For "DETAIL A", "DETAIL B", "DETAIL C" and other retaining wall architectural details not shown, see "RETAINING WALL ARCHITECTURAL DETAILS NO 2" sheet.
3. For sound wall architectural treatment, see "SOUND WALL ARCHITECTURAL DETAILS" sheet.
4. For barrier architectural details, see "CONCRETE BARRIER TYPE 736A (Mod 2) DETAILS" sheet.
5. For pilaster and corbel details, see "PILASTER ARCHITECTURAL DETAILS" and "PILASTER STRUCTURAL DETAILS" sheets.

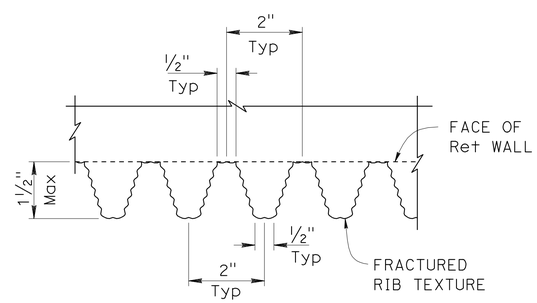

SECTION E-E
6" = 1'-0"

DESIGN	BY Isaac Tasabia	CHECKED Javier Chavez	
DETAILS	BY Yingjue Feng	CHECKED Daniel Sessions	
QUANTITIES	BY A. Pearson / B. Hagy	CHECKED E. Watson / K. harper	

STATE OF CALIFORNIA
DEPARTMENT OF TRANSPORTATION

DIVISION OF ENGINEERING SERVICES
STRUCTURE DESIGN
DESIGN BRANCH 1

BRIDGE NO. 53-E0181
POST MILE 3.28

SOUND WALL NO. 176
RETAINING WALL ARCHITECTURAL DETAILS NO. 1

STRUCTURES DESIGN DETAIL SHEET (ENGLISH) (REV. 09-01-10)

ORIGINAL SCALE IN INCHES FOR REDUCED PLANS 0 1 2 3

UNIT: 3576
PROJECT NUMBER & PHASE: 0700001833-1
CONTRACT NO.: 07-215934

DISREGARD PRINTS BEARING EARLIER REVISION DATES

REVISION DATES: 11/22/11 11/22/11

SHEET 10 OF 31

FILE => sw176-e-rwdet01.dgn

USERNAME => s123631 DATE PLOTTED => 28-MAR-2012 TIME PLOTTED => 12:45

DIST	COUNTY	ROUTE	POST MILES TOTAL PROJECT	SHEET No.	TOTAL SHEETS
07	LA	5	2.4/4.0	1148	1288

REGISTERED CIVIL ENGINEER 12-08-11 DATE

3-26-12
PLANS APPROVAL DATE

REGISTERED PROFESSIONAL ENGINEER Kevin Harper No. 42221 Exp. 3-31-12 CIVIL STATE OF CALIFORNIA

The State of California or its officers or agents shall not be responsible for the accuracy or completeness of electronic copies of this plan sheet.

NOTES:

1. For locations of "SECTION A-A", SECTION B-B", SECTION C-C" and "SECTION D-D", see "RETAINING WALL ACRCHITECTURAL TREATMENT " sheet.
2. For architectural details not shown, see "RETAINING WALL ARCHITECTURAL DETAILS NO. 1" SHEET.
3. For sound wall architectural details, see "SOUND WALL ARCHITECTURAL DETAILS" sheet.
4. For barrier architectural details, see "CONCRETE BARRIER TYPE 736A (Mod 2) DETAILS" sheet.
5. For pilaster and corbel details, see "PILASTER ARCHITECTURAL DETAILS" and "PILASTER STRUCTURAL DETAILS" sheets.

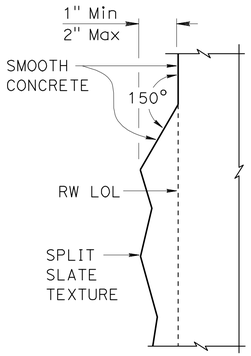

DETAIL A
3" = 1'-0"

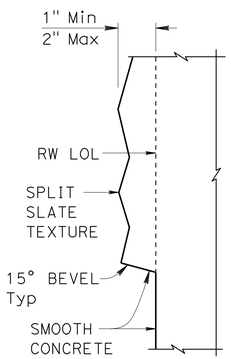

DETAIL B
3" = 1'-0"

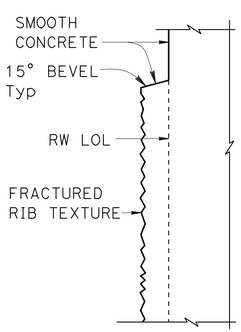

DETAIL C
3" = 1'-0"

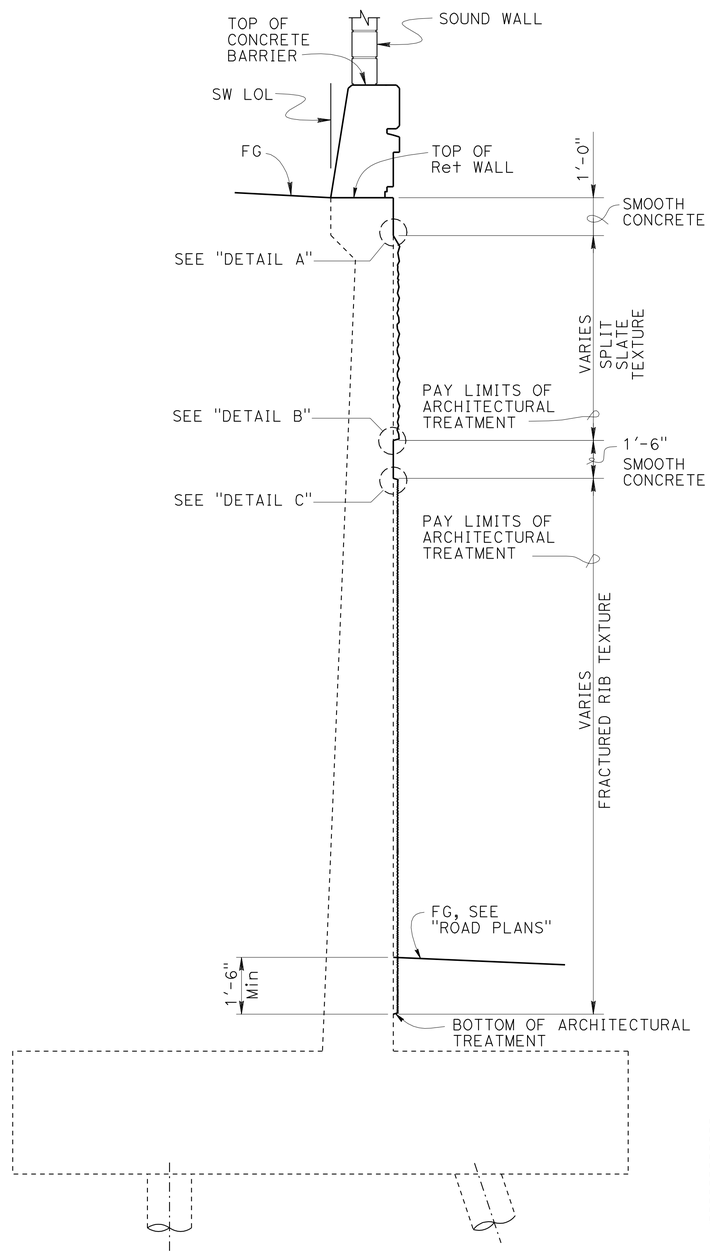

SECTION D-D
½" = 1'-0"

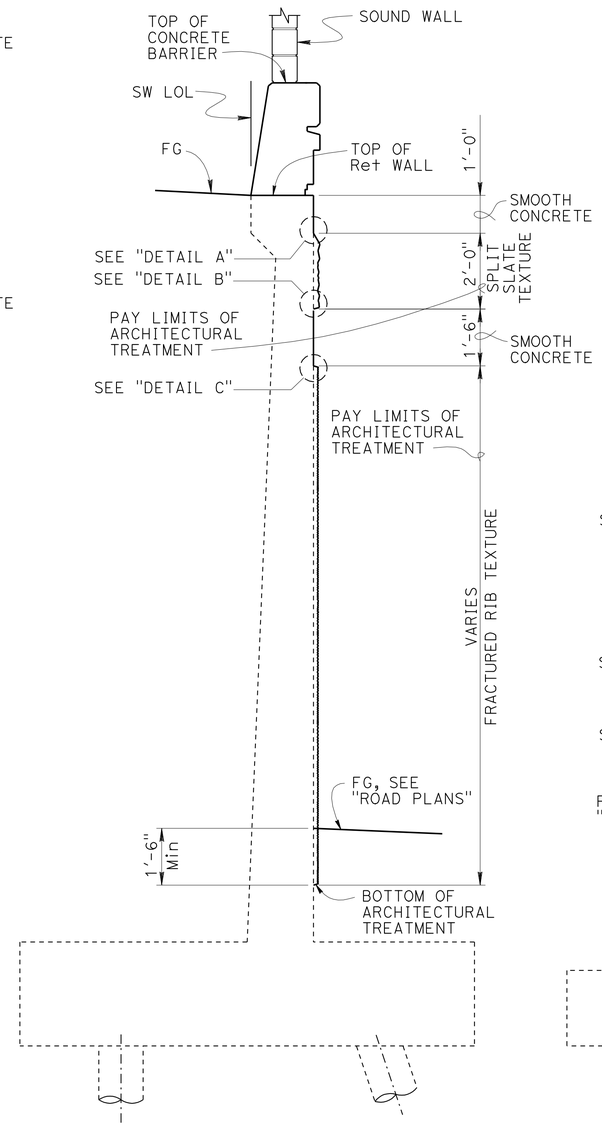

SECTION C-C
½" = 1'-0"

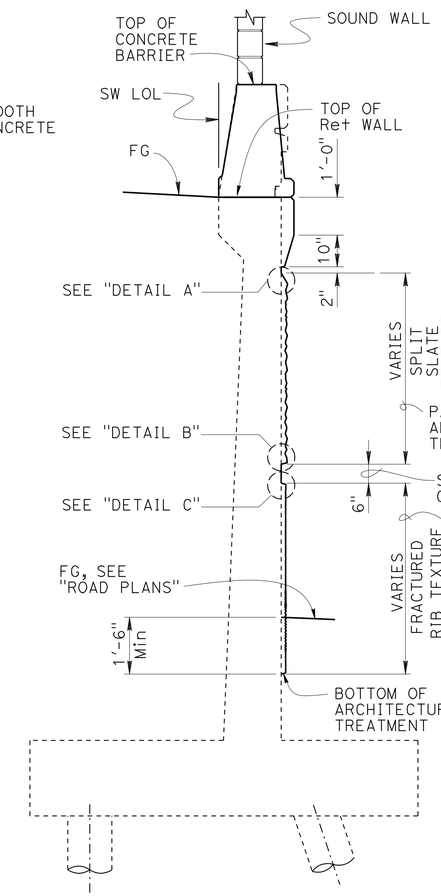

SECTION B-B
½" = 1'-0"

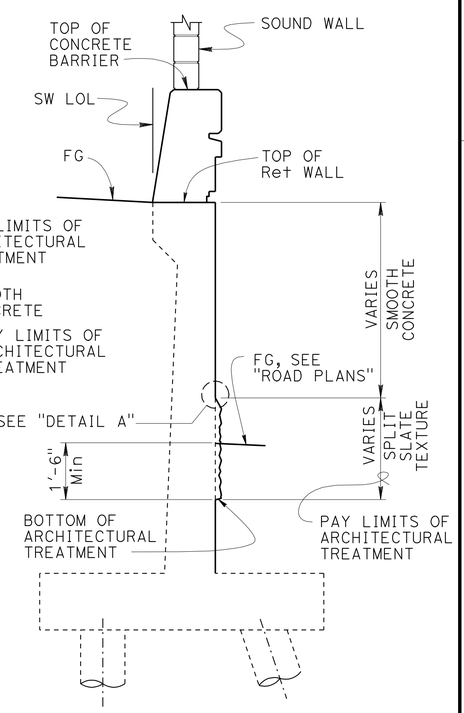

SECTION A-A
½" = 1'-0"

DESIGN	BY Isaac Tasabia	CHECKED Javier Chavez	
DETAILS	BY Yingjue Feng	CHECKED Daniel Sessions	
QUANTITIES	BY A. Pearson / B. Hagy	CHECKED E. Watson / K. Harper	

STATE OF CALIFORNIA
DEPARTMENT OF TRANSPORTATION

DIVISION OF ENGINEERING SERVICES
STRUCTURE DESIGN
DESIGN BRANCH 1

BRIDGE NO. 53-E0181
POST MILE 3.28

SOUND WALL NO. 176
RETAINING WALL ARCHITECTURAL DETAILS NO. 2

STRUCTURES DESIGN DETAIL SHEET (ENGLISH) (REV. 09-01-10)

ORIGINAL SCALE IN INCHES FOR REDUCED PLANS 0 1 2 3

UNIT: 3576
PROJECT NUMBER & PHASE: 0700001833-1
CONTRACT NO.: 07-215934

DISREGARD PRINTS BEARING EARLIER REVISION DATES 11/23/11

REVISION DATES

SHEET 11 OF 31

FILE => sw176-e-rwdet02.dgn

USERNAME => s123631 DATE PLOTTED => 28-MAR-2012 TIME PLOTTED => 12:45

DIST	COUNTY	ROUTE	POST MILES TOTAL PROJECT	SHEET No.	TOTAL SHEETS
07	LA	5	2.4/4.0	1149	1288

REGISTERED CIVIL ENGINEER 12-08-11 DATE

3-26-12
PLANS APPROVAL DATE

REGISTERED PROFESSIONAL ENGINEER Kevin Harper No. 42221 Exp. 3-31-12 CIVIL STATE OF CALIFORNIA

The State of California or its officers or agents shall not be responsible for the accuracy or completeness of electronic copies of this plan sheet.

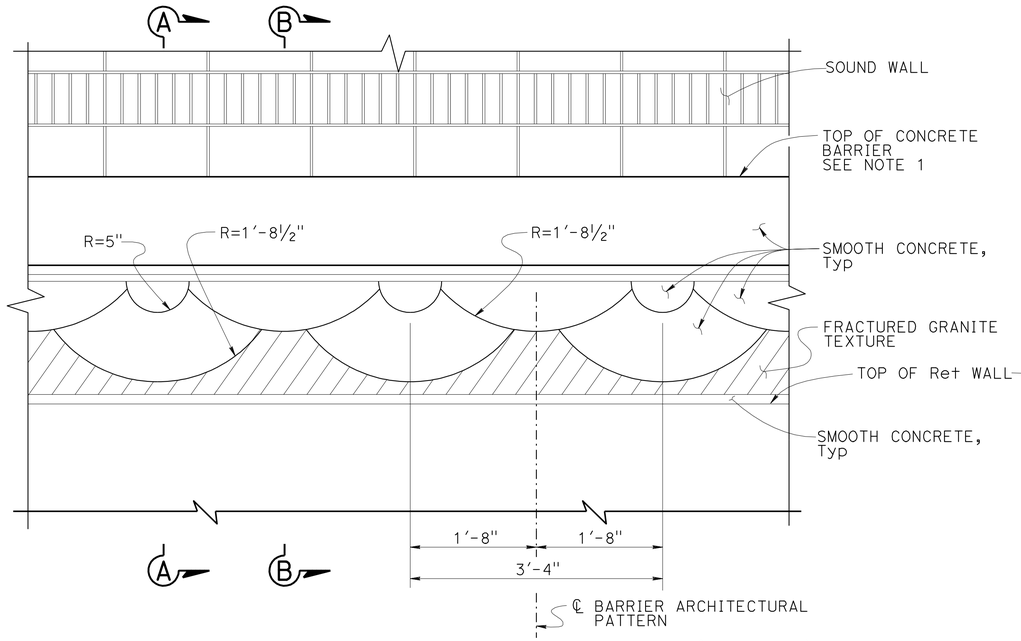

ELEVATION CONCRETE BARRIER TYPE 736A (MOD 2)

1" = 1'-0"

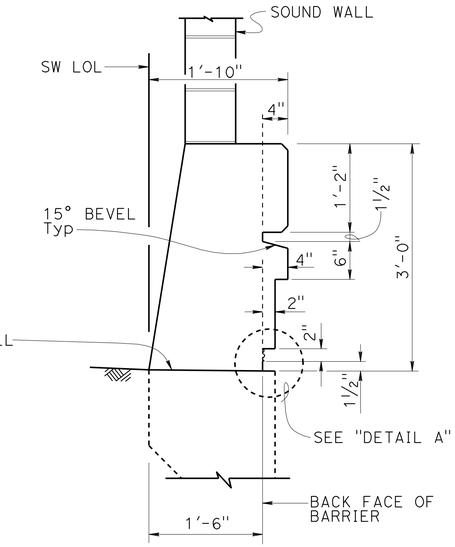

SECTION A-A

1" = 1'-0"

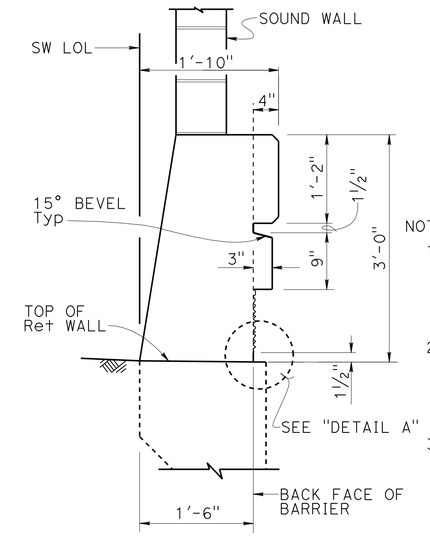

SECTION B-B

1" = 1'-0"

NOTES:

1. For concrete barrier type 736A (Mod 2) details not shown, see "BARRIER SECTION" on "SOUND WALL-MASONRY BLOCK WITH BARRIER ON RETAINING WALL DETAILS NO. 2" sheet.
2. For concrete barrier type 736SV (Mod) details not shown, see "CONCRETE BARRIER TYPE 736SV (Mod)" on "INDEX TO PLANS" sheet.
3. For sound wall architectural details, see "SOUND WALL ARCHITECTURAL DETAILS" sheet.

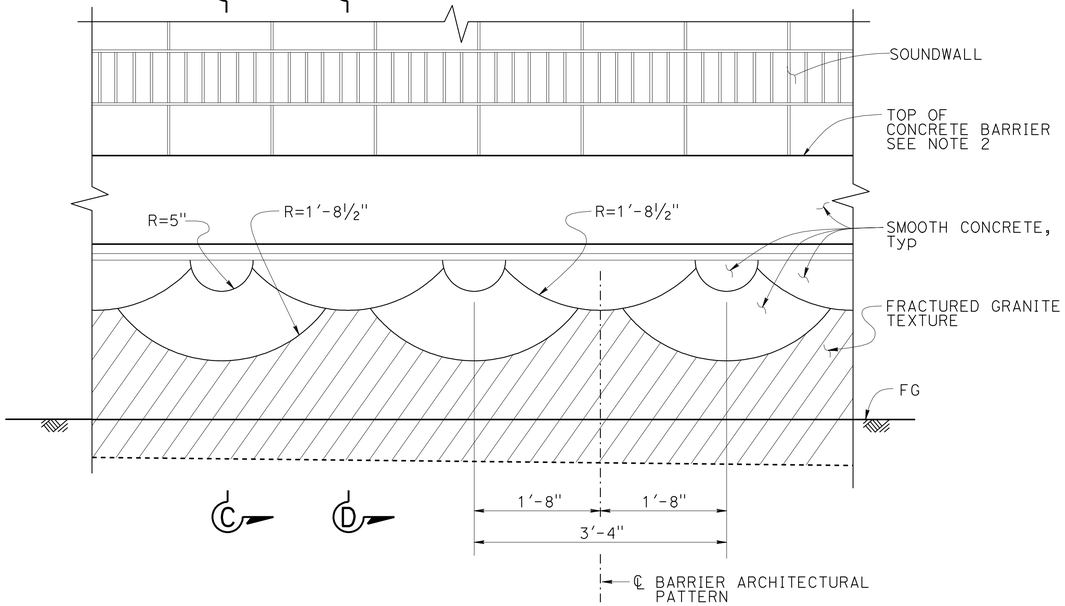

ELEVATION CONCRETE BARRIER TYPE 736SV (MOD)

1" = 1'-0"

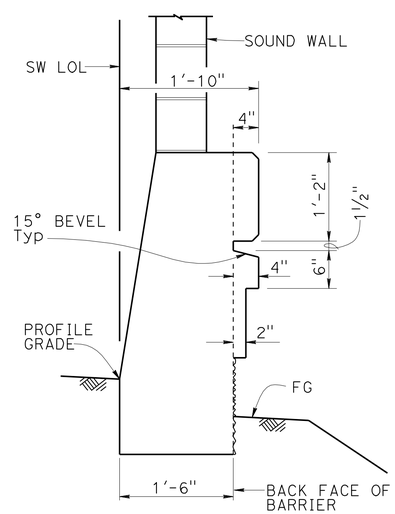

SECTION C-C

1" = 1'-0"

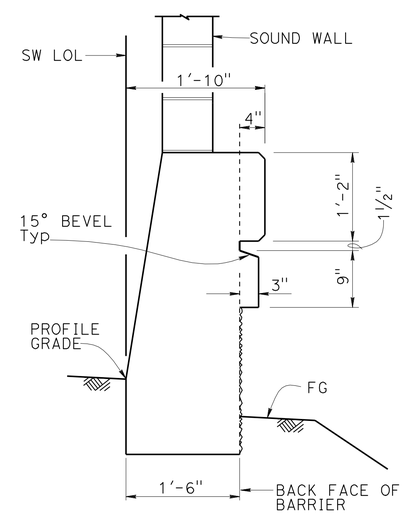

SECTION D-D

1" = 1'-0"

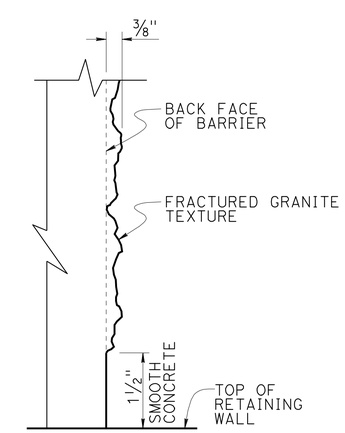

Note: Detail at "SECTION" shown, other locations similar.

DETAIL A

NO SCALE

DESIGN	BY Kevin Harper	CHECKED Daniel Sessions	
DETAILS	BY Jin Zhou	CHECKED Daniel Sessions	
QUANTITIES	BY April Pearson	CHECKED Kevin Harper	

STATE OF CALIFORNIA DEPARTMENT OF TRANSPORTATION

DIVISION OF ENGINEERING SERVICES STRUCTURE DESIGN DESIGN BRANCH 1

BRIDGE NO. 53-E0181
POST MILE 3.28

SOUND WALL NO. 176

CONCRETE BARRIER TYPE 736A (MOD 2) DETAILS

STRUCTURES DESIGN DETAIL SHEET (ENGLISH) (REV. 09-01-10)

ORIGINAL SCALE IN INCHES FOR REDUCED PLANS 0 1 2 3

UNIT: 3576
PROJECT NUMBER & PHASE: 0700001833-1
CONTRACT NO.: 07-215934

DISREGARD PRINTS BEARING EARLIER REVISION DATES

REVISION DATES 11/29/10 02/01/11 7/19/11

SHEET 12 OF 31

FILE => sw176-f-barr01.dgn

USERNAME => s123631 DATE PLOTTED => 28-MAR-2012 TIME PLOTTED => 12:46

DIST	COUNTY	ROUTE	POST MILES TOTAL PROJECT	SHEET No.	TOTAL SHEETS
07	LA	5	2.4/4.0	1150	1288

REGISTERED CIVIL ENGINEER 12-08-11 DATE

3-26-12
PLANS APPROVAL DATE

REGISTERED PROFESSIONAL ENGINEER Kevin Harper No. 42221 Exp. 3-31-12 CIVIL STATE OF CALIFORNIA

The State of California or its officers or agents shall not be responsible for the accuracy or completeness of electronic copies of this plan sheet.

NOTES:
1. All Masonry Block shall be Precision units, unless otherwise noted.
2. Sound wall Type 736SV (Mod) shown. Sound wall on retaining wall similar.

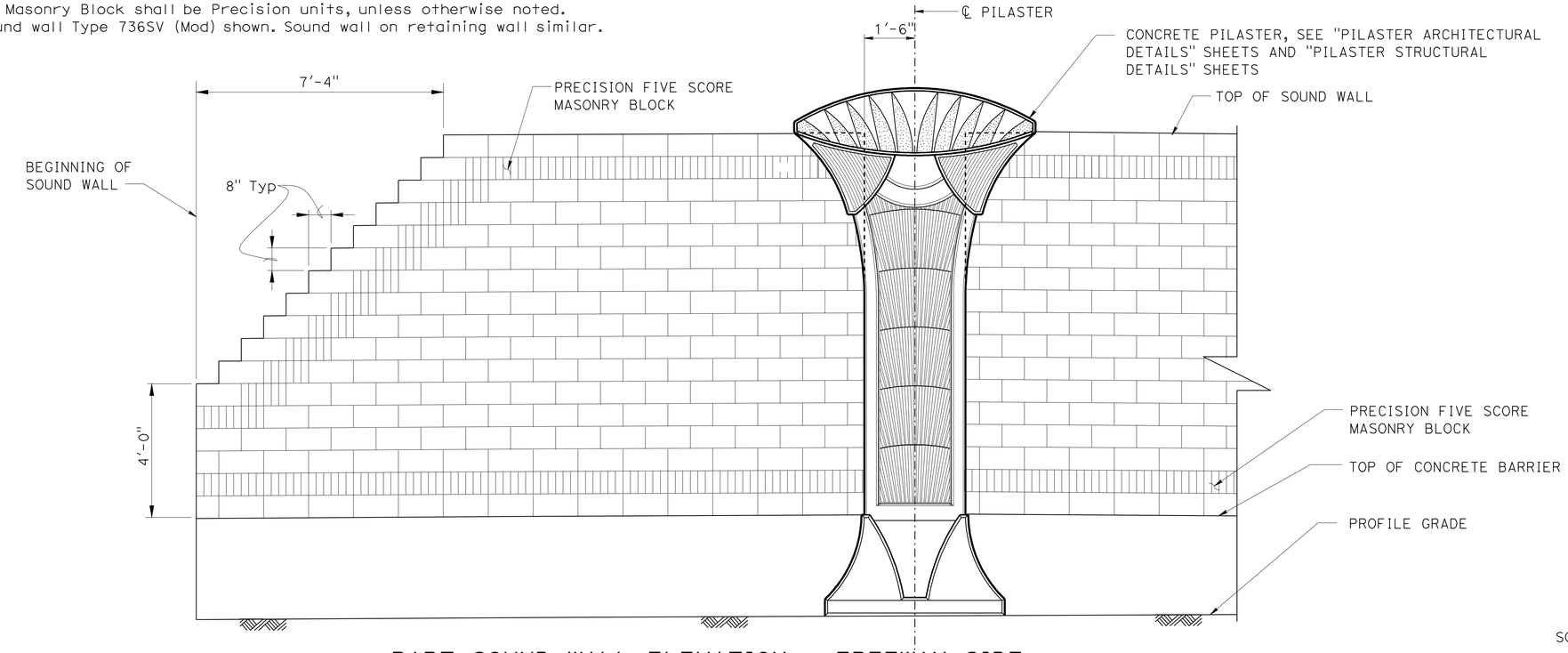

PART SOUND WALL ELEVATION - FREEWAY SIDE

½" = 1'-0"

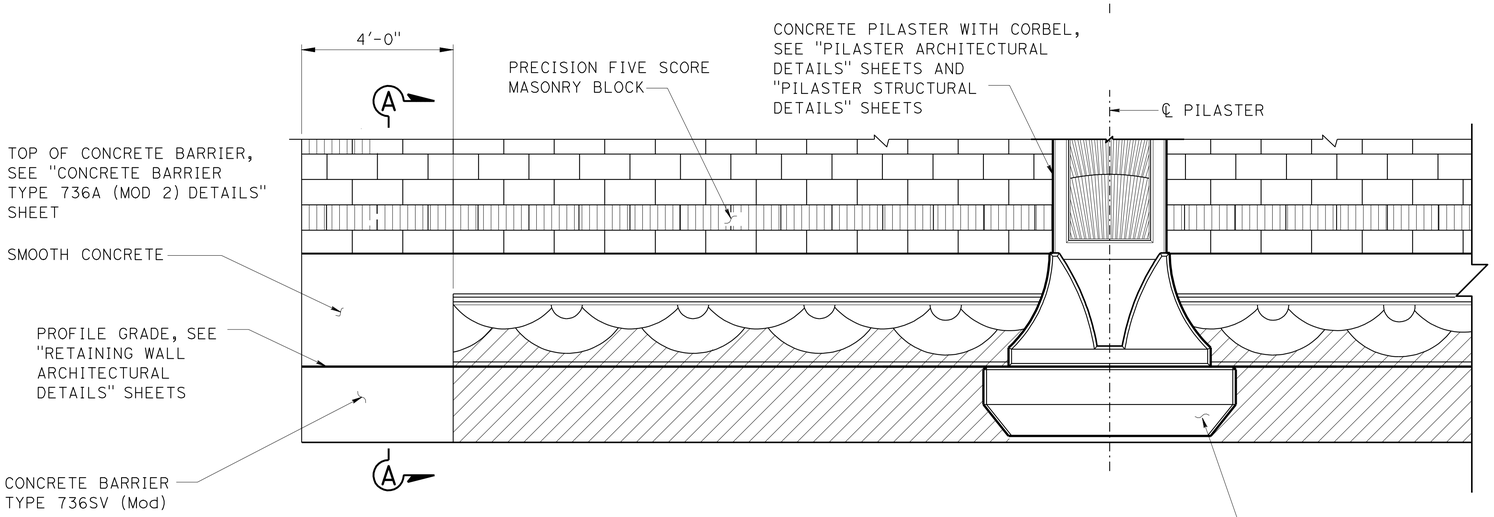

PART SOUND WALL ELEVATION - BACK SIDE

½" = 1'-0"

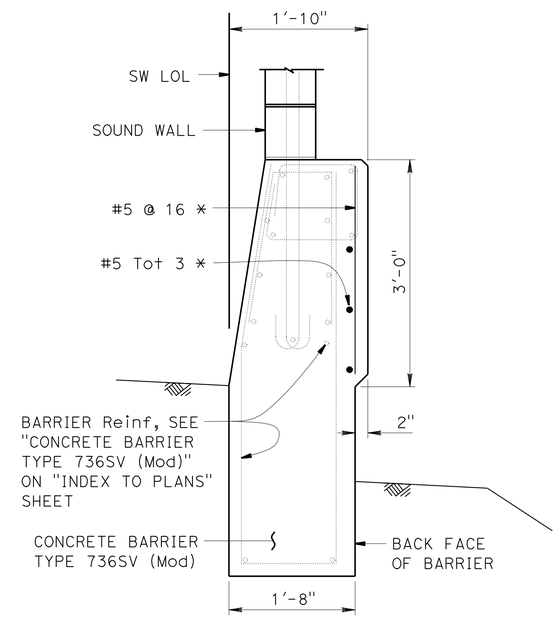

SECTION A-A

1" = 1'-0"

* - INDICATES Reinf IS ADDITIONAL TO TYPICAL BARRIER Reinf

	BY	CHECKED
DESIGN	Isaac Tasabia	Javier Chavez
DETAILS	Jin Zhou	G. Thornton/D. Sessions
QUANTITIES	April Pearson	Kyoung Lee

STATE OF CALIFORNIA
DEPARTMENT OF TRANSPORTATION

DIVISION OF ENGINEERING SERVICES
STRUCTURE DESIGN
DESIGN BRANCH 1

BRIDGE NO. 53-E0181
POST MILE 3.28

SOUND WALL NO. 176
SOUND WALL ARCHITECTURAL DETAILS

STRUCTURES DESIGN DETAIL SHEET (ENGLISH) (REV. 09-01-10)

ORIGINAL SCALE IN INCHES FOR REDUCED PLANS 0 1 2 3

UNIT: 3576
PROJECT NUMBER & PHASE: 07000018331
CONTRACT NO.: 07-215934

DISREGARD PRINTS BEARING EARLIER REVISION DATES

REVISION DATES 07/19/11 04/29/11 12/02/11

SHEET 13 OF 31

FILE => sw176-f-sou01.dgn

USERNAME => s123631 DATE PLOTTED => 28-MAR-2012 TIME PLOTTED => 12:46

DIST	COUNTY	ROUTE	POST MILES TOTAL PROJECT	SHEET No.	TOTAL SHEETS
07	LA	5	2.4/4.0	1151	1288

REGISTERED CIVIL ENGINEER 12-08-11 DATE

3-26-12
PLANS APPROVAL DATE

REGISTERED PROFESSIONAL ENGINEER Kevin Harper No. 42221 Exp. 3-31-12 CIVIL STATE OF CALIFORNIA

The State of California or its officers or agents shall not be responsible for the accuracy or completeness of electronic copies of this plan sheet.

NOTES:

1. All dimensions symetrical about ℄ Pilaster.
2. For location of "DETAIL E", see "PILASTER ARCHITECTURAL DETAILS NO. 2" sheet.
3. Beveled edges are 45° unless otherwise noted.
4. All vertical dimensions are measured along the ℄ Pilaster (Pilaster shall be vertical).

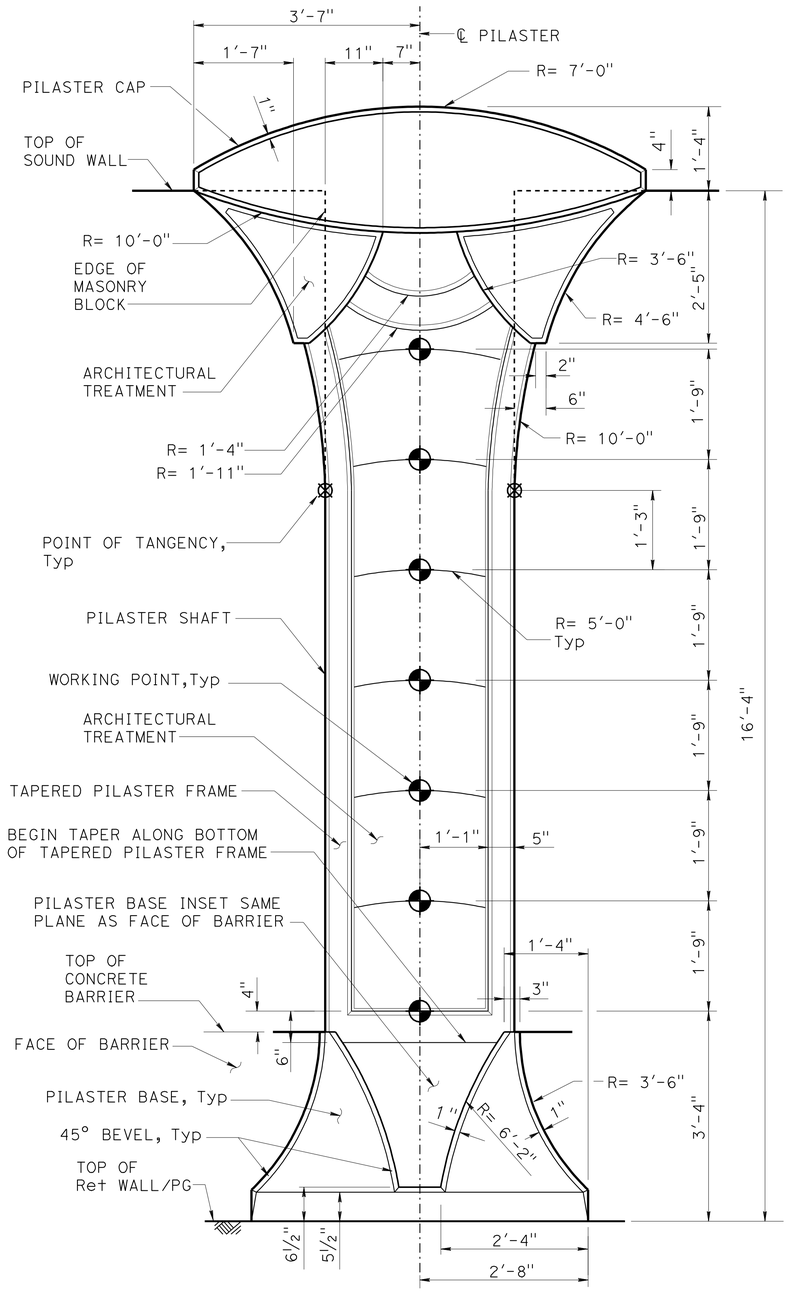

16'-4" SOUND WALL

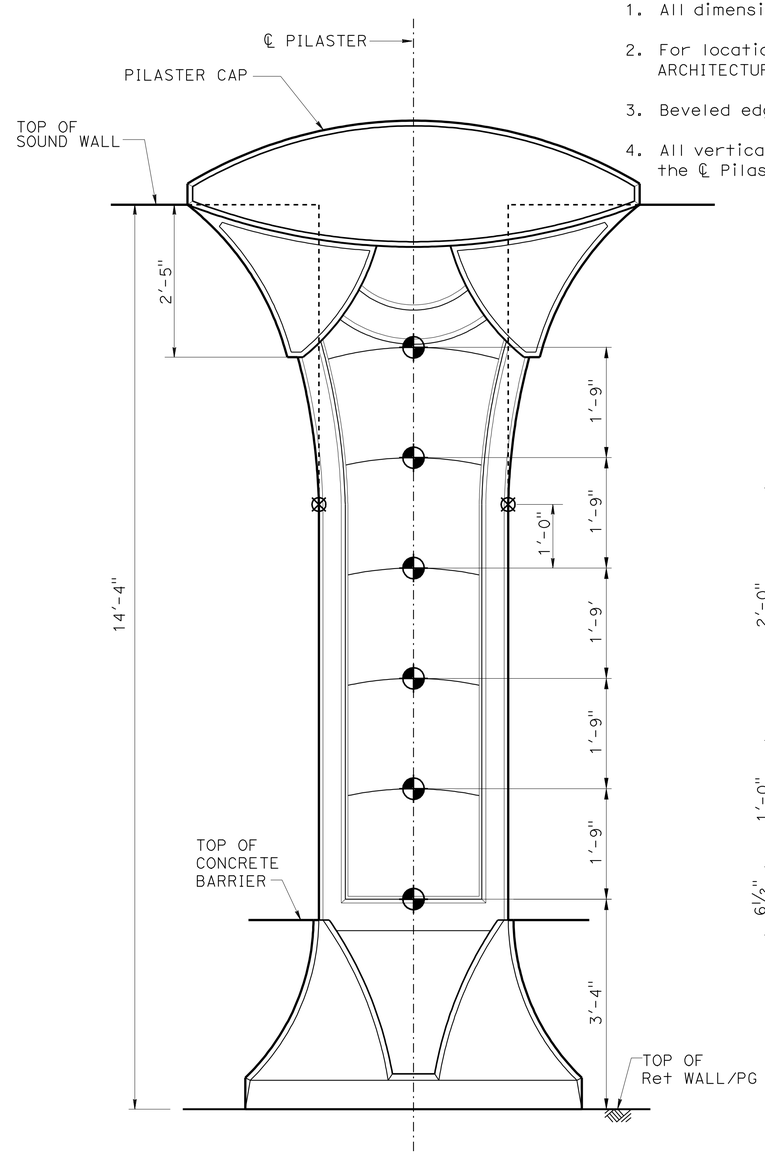

NOTE: For dimensions and details not shown, see "16'-4" SOUND WALL" details

14'-4" SOUND WALL

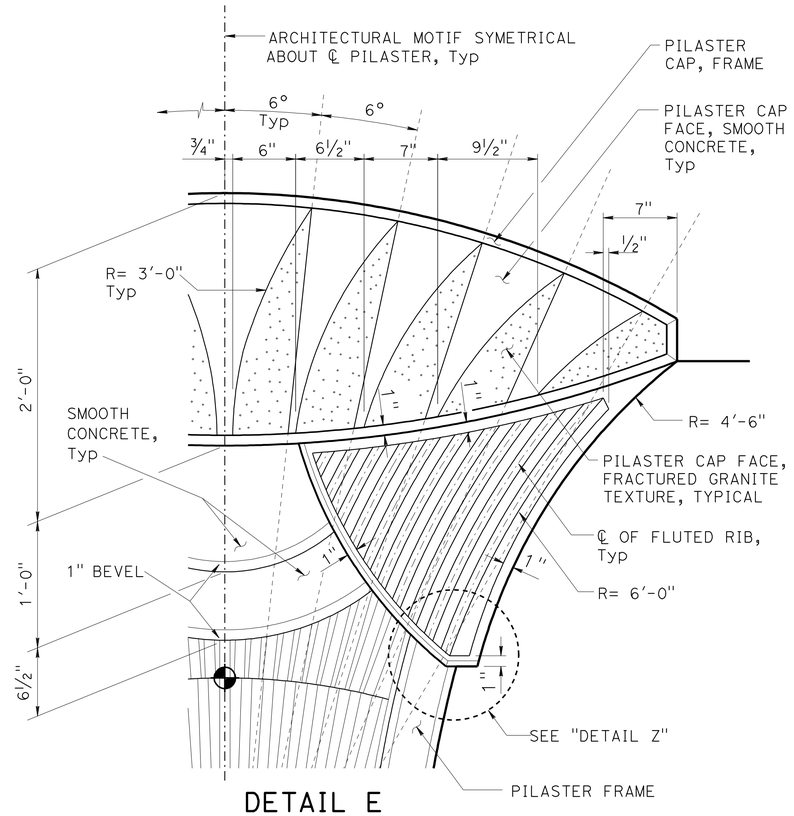

DETAIL E

NO SCALE

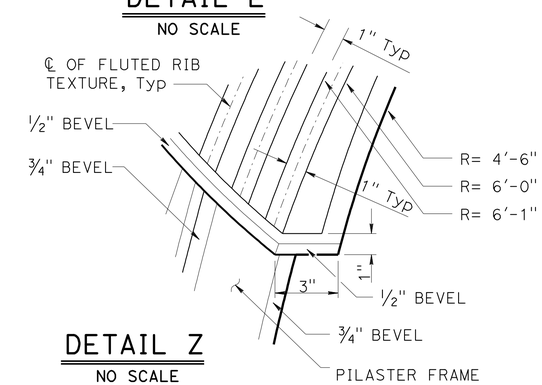

DETAIL Z

NO SCALE

PILASTER ELEVATION - FREEWAY SIDE

NO SCALE

DESIGN	BY Isaac Tasabia	CHECKED Javier Chavez	
DETAILS	BY Jin Zhou	CHECKED K. Harper / D. Sessions	
QUANTITIES	BY April Pearson	CHECKED Kyoung Lee	

STATE OF CALIFORNIA
DEPARTMENT OF TRANSPORTATION

DIVISION OF ENGINEERING SERVICES
STRUCTURE DESIGN
DESIGN BRANCH 1

BRIDGE NO. 53-E0181
POST MILE 3.28

SOUND WALL NO. 176
PILASTER ARCHITECTURAL DETAILS NO. 1

STRUCTURES DESIGN DETAIL SHEET (ENGLISH) (REV. 09-01-10)

ORIGINAL SCALE IN INCHES FOR REDUCED PLANS 0 1 2 3

UNIT: 3576
PROJECT NUMBER & PHASE: 07000018331
CONTRACT NO. 07-215934

DISREGARD PRINTS BEARING EARLIER REVISION DATES

REVISION DATES 12/08/10 07/19/11 04/29/11

SHEET 14 OF 31

FILE => sw176-g-pilaster01.dgn

USERNAME => s135518 DATE PLOTTED => 28-MAR-2012 TIME PLOTTED => 13:16

DIST	COUNTY	ROUTE	POST MILES TOTAL PROJECT	SHEET No.	TOTAL SHEETS
07	LA	5	2.4/4.0	1152	1288

REGISTERED CIVIL ENGINEER 12-08-11 DATE

3-26-12
PLANS APPROVAL DATE

REGISTERED PROFESSIONAL ENGINEER Kevin Harper No. 42221 Exp. 3-31-12 CIVIL STATE OF CALIFORNIA

The State of California or its officers or agents shall not be responsible for the accuracy or completeness of electronic copies of this plan sheet.

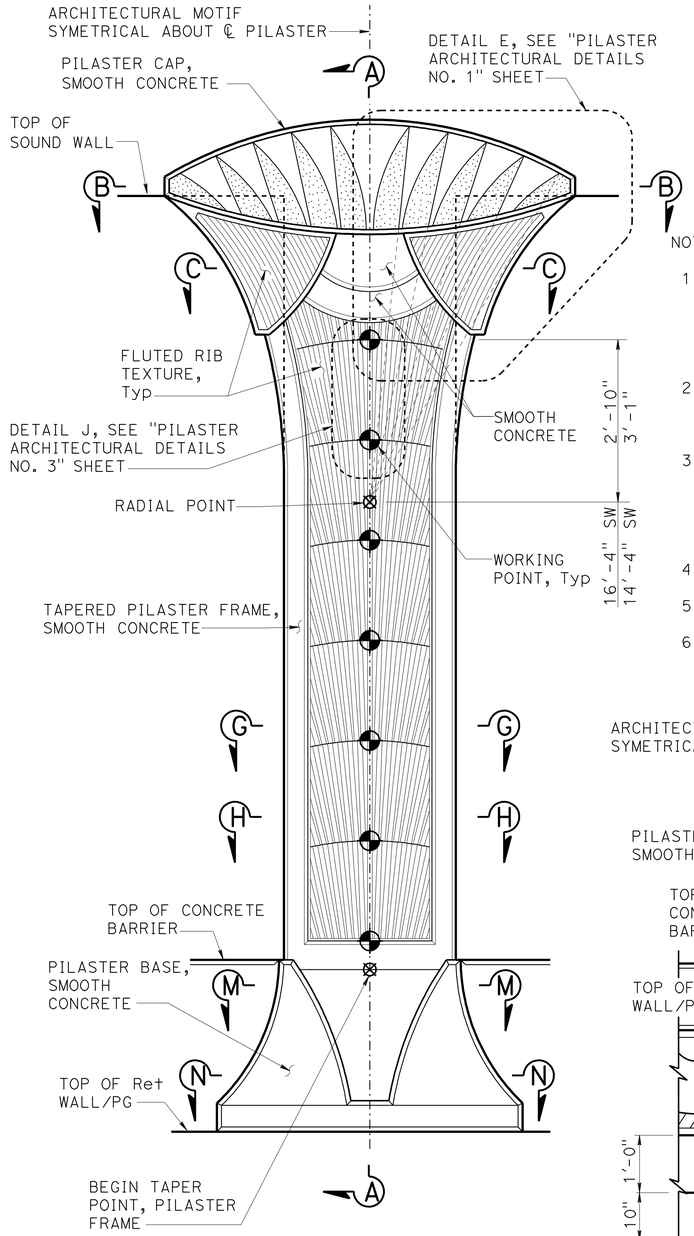

NOTES:

1. For "SECTION B-B", "SECTION C-C", "SECTION G-G","SECTION H-H" and "SECTION L-L", see "PILASTER ARCHITECTURAL DETAILS NO. 3" sheet.
2. For "SECTION M-M" and "SECTION N-N"' see "PILASTER ARCHITECTURAL DETAIL NO. 4" sheet.
3. Pilaster Sections on Retaining Wall shown, for Pilaster on Barrier Type 736SV (Mod), see "PILASTER SECTION ON TYPE 736SV (Mod) BARRIER" on "PILASTER ARCHITECTURAL DETAILS NO. 4" sheet.
4. All dimensions symetrical about ℄ pilaster.
5. Beveled edges are 45° unless otherwise noted
6. All vertical dimensions are measured along the ℄ Pilaster (Pilaster shall be vertical)

NOTE: For additional details not shown, see "16'-4" SOUND WALL - PILASTER ELEVATION" on "PILASTER ARCHITECTURAL DETAILS NO. 1" sheet.

FREEWAY SIDE

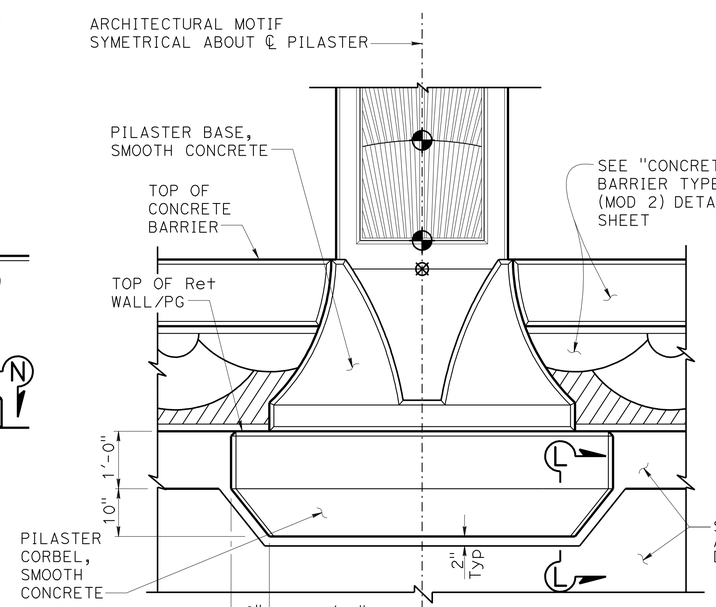

NOTE: For additional details not shown, see "FREEWAY SIDE" details.

BACK SIDE

PILASTER ARCHITECTURAL MOTIF

3/4" = 1'-0"

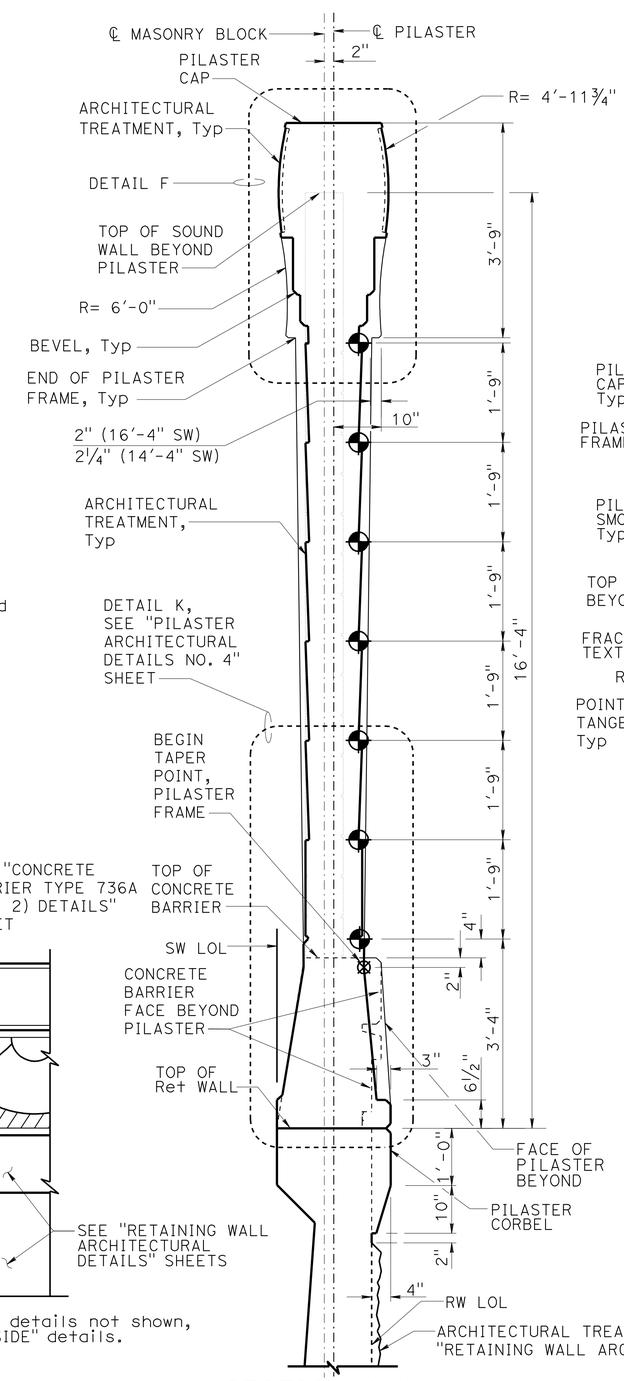

SECTION A-A

3/4" = 1'-0"

NOTE: Pilaster for 16'-4" Sound Wall shown, Pilaster at 14'-4" Sound Wall similar.

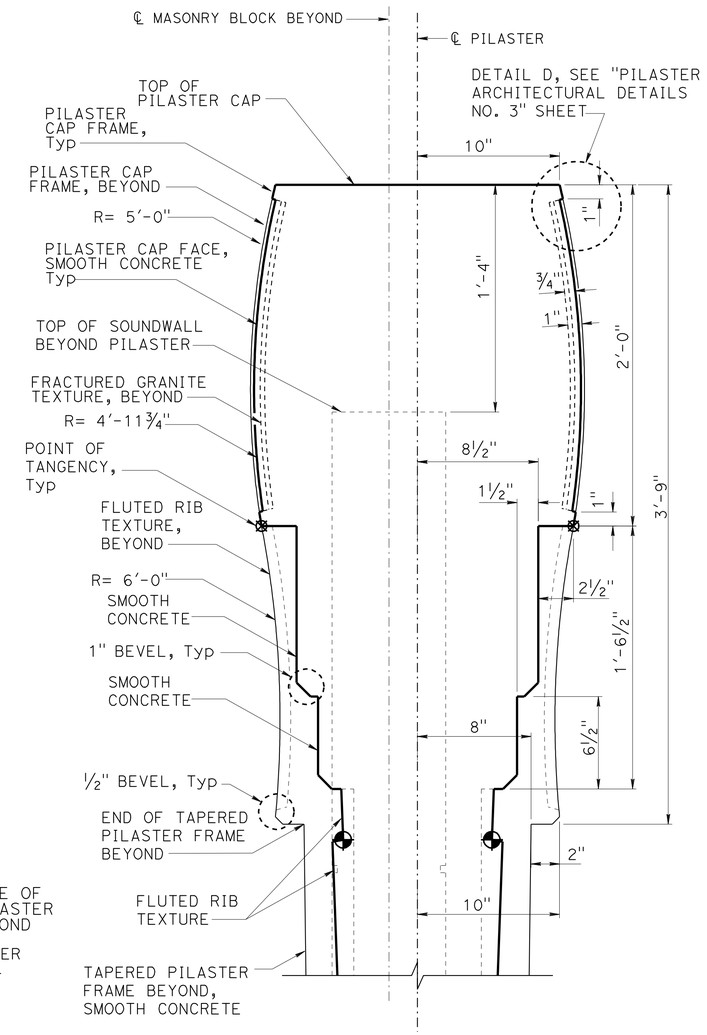

DETAIL F

NO SCALE

DESIGN	BY Isaac Tasabia	CHECKED Javier Chavez	
DETAILS	BY Jin Zhou/ Y. Feng	CHECKED K. Harper / D. Sessions	
QUANTITIES	BY April Pearson	CHECKED Kyoung Lee	

STATE OF CALIFORNIA
DEPARTMENT OF TRANSPORTATION

DIVISION OF ENGINEERING SERVICES
STRUCTURE DESIGN
DESIGN BRANCH 1

BRIDGE NO. 53-E0181
POST MILE 3.28

SOUND WALL NO. 176
PILASTER ARCHITECTURAL DETAILS NO. 2

STRUCTURES DESIGN DETAIL SHEET (ENGLISH) (REV. 09-01-10)

ORIGINAL SCALE IN INCHES FOR REDUCED PLANS 0 1 2 3

UNIT: 3576
PROJECT NUMBER & PHASE: 07000018331
CONTRACT NO.: 07-215934

DISREGARD PRINTS BEARING EARLIER REVISION DATES

REVISION DATES 12/24/10 04/27/11 7/25/11

SHEET 15 OF 31

FILE => sw176-g-pilaster02.dgn

USERNAME => s135318 DATE PLOTTED => 28-MAR-2012 TIME PLOTTED => 13:16

DIST	COUNTY	ROUTE	POST MILES TOTAL PROJECT	SHEET No.	TOTAL SHEETS
07	LA	5	2.4/4.0	1153	1288

REGISTERED CIVIL ENGINEER 12-08-11 DATE

3-26-12
PLANS APPROVAL DATE

REGISTERED PROFESSIONAL ENGINEER Kevin Harper No. 42221 Exp. 3-31-12 CIVIL STATE OF CALIFORNIA

The State of California or its officers or agents shall not be responsible for the accuracy or completeness of electronic copies of this plan sheet.

NOTES:

1. All notes and dimensions symetrical about ℄ pilaster.
2. Beveled edges are 45° unless otherwise noted.
3. For location of "DETAIL J", "DETAIL D" and "SECTION B-B", "SECTION C-C", "SECTION G-G", "SECTION H-H" and "SECTION L-L", see "PILASTER ARCHITECTURAL DETAILS NO. 2" sheet.
4. For Retaining Wall split slate texture, see "RETAINING WALL ARCHITECTURAL DETAILS" sheets.
5. For Type 736SV (Mod) Barrier fractured granite texture, see "BARRIER ARCHITECTURE DETAILS" sheet if applicable.

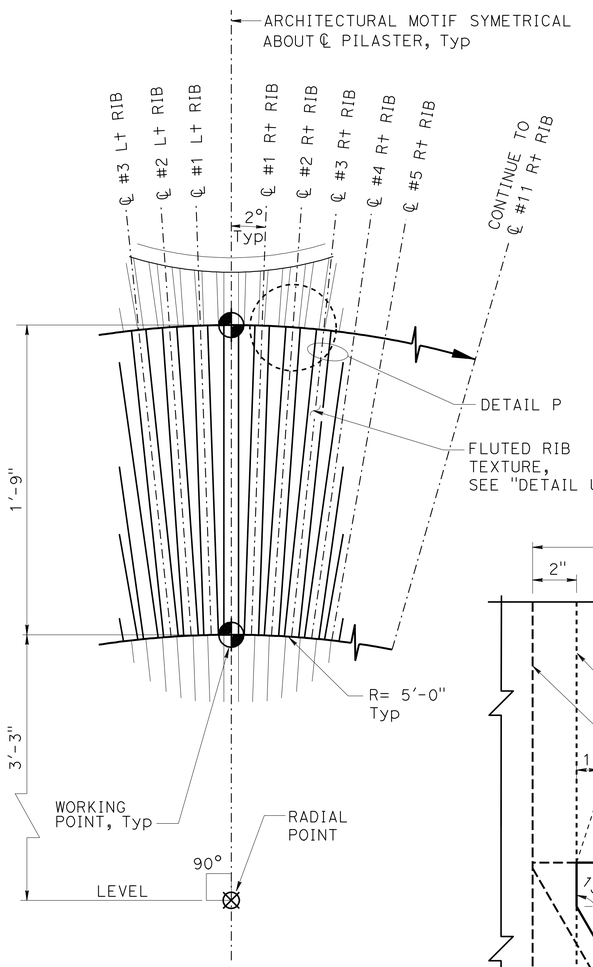

DETAIL J
NO SCALE

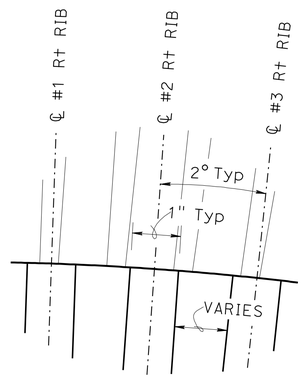

DETAIL P
NO SCALE

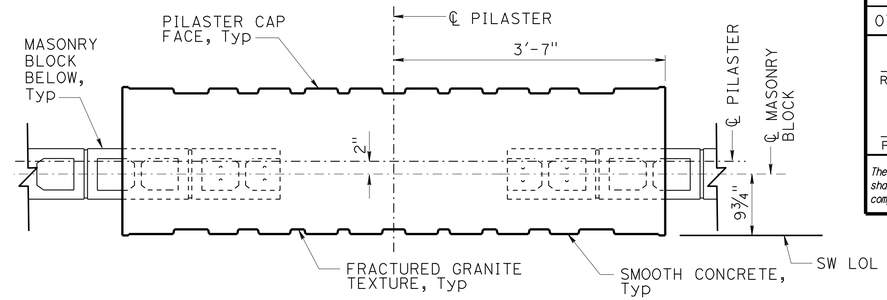

SECTION B-B
1" = 1'-0"

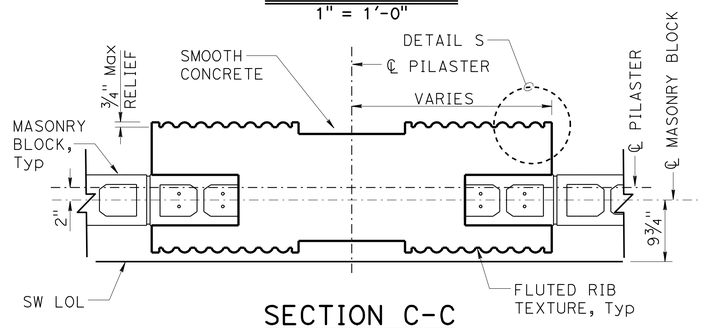

SECTION C-C
1" = 1'-0"

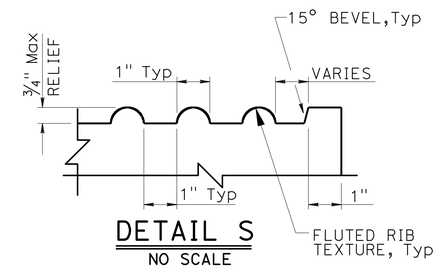

DETAIL S
NO SCALE

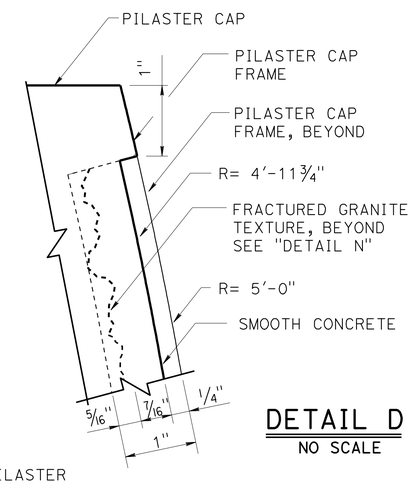

DETAIL D
NO SCALE

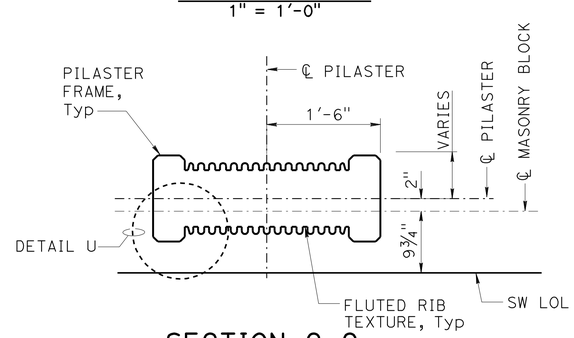

SECTION G-G
1" = 1'-0"

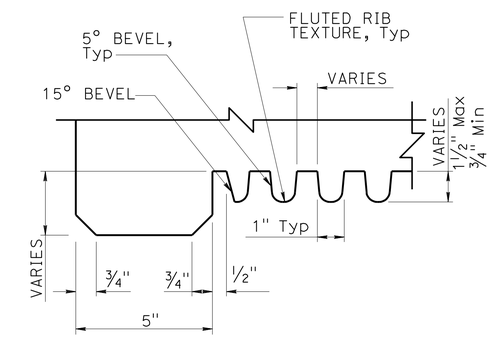

DETAIL U
NO SCALE

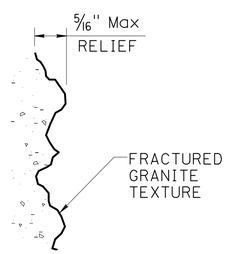

DETAIL N
NO SCALE

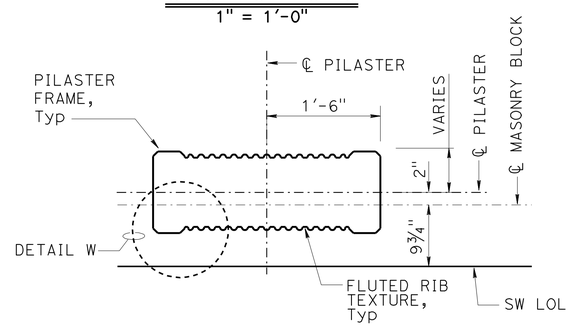

SECTION H-H
1" = 1'-0"

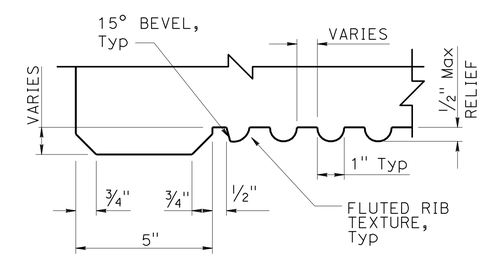

DETAIL W
NO SCALE

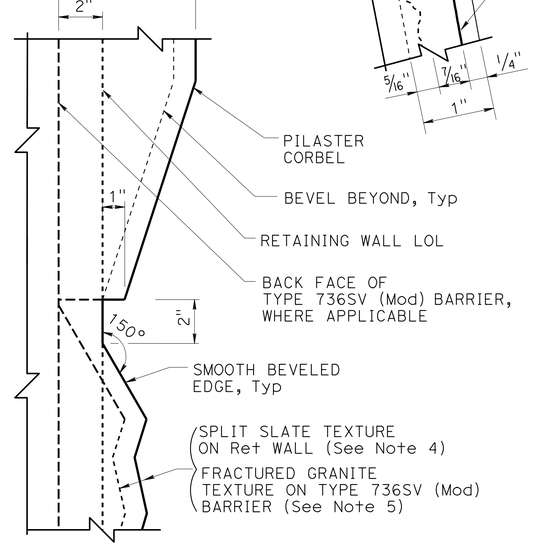

SECTION L-L

DESIGN	BY Isaac Tasabia	CHECKED Javier Chavez	
DETAILS	BY Jin Zhou/ Y. Feng	CHECKED K. Harper / D. Sessions	
QUANTITIES	BY April Pearson	CHECKED Kyoung Lee	

STATE OF CALIFORNIA
DEPARTMENT OF TRANSPORTATION

DIVISION OF ENGINEERING SERVICES
STRUCTURE DESIGN
DESIGN BRANCH 1

BRIDGE NO. 53-E0181
POST MILE 3.28

SOUND WALL NO. 176
PILASTER ARCHITECTURAL DETAILS NO. 3

STRUCTURES DESIGN DETAIL SHEET (ENGLISH) (REV. 09-01-10)

ORIGINAL SCALE IN INCHES FOR REDUCED PLANS 0 1 2 3

UNIT: 3576
PROJECT NUMBER & PHASE: 07000018331
CONTRACT NO.: 07-215934

DISREGARD PRINTS BEARING EARLIER REVISION DATES

REVISION DATES 12/09/10 04/28/11 04/20/12

SHEET 16 OF 31

FILE => sw176-g-pilaster03.dgn

USERNAME => s135318 DATE PLOTTED => 28-MAR-2012 TIME PLOTTED => 13:16

DIST	COUNTY	ROUTE	POST MILES TOTAL PROJECT	SHEET No.	TOTAL SHEETS
07	LA	5	2.4/4.0	1154	1288

REGISTERED CIVIL ENGINEER 12-08-11 DATE

3-26-12
PLANS APPROVAL DATE

REGISTERED PROFESSIONAL ENGINEER Kevin Harper No. 42221 Exp. 3-31-12 CIVIL STATE OF CALIFORNIA

The State of California or its officers or agents shall not be responsible for the accuracy or completeness of electronic copies of this plan sheet.

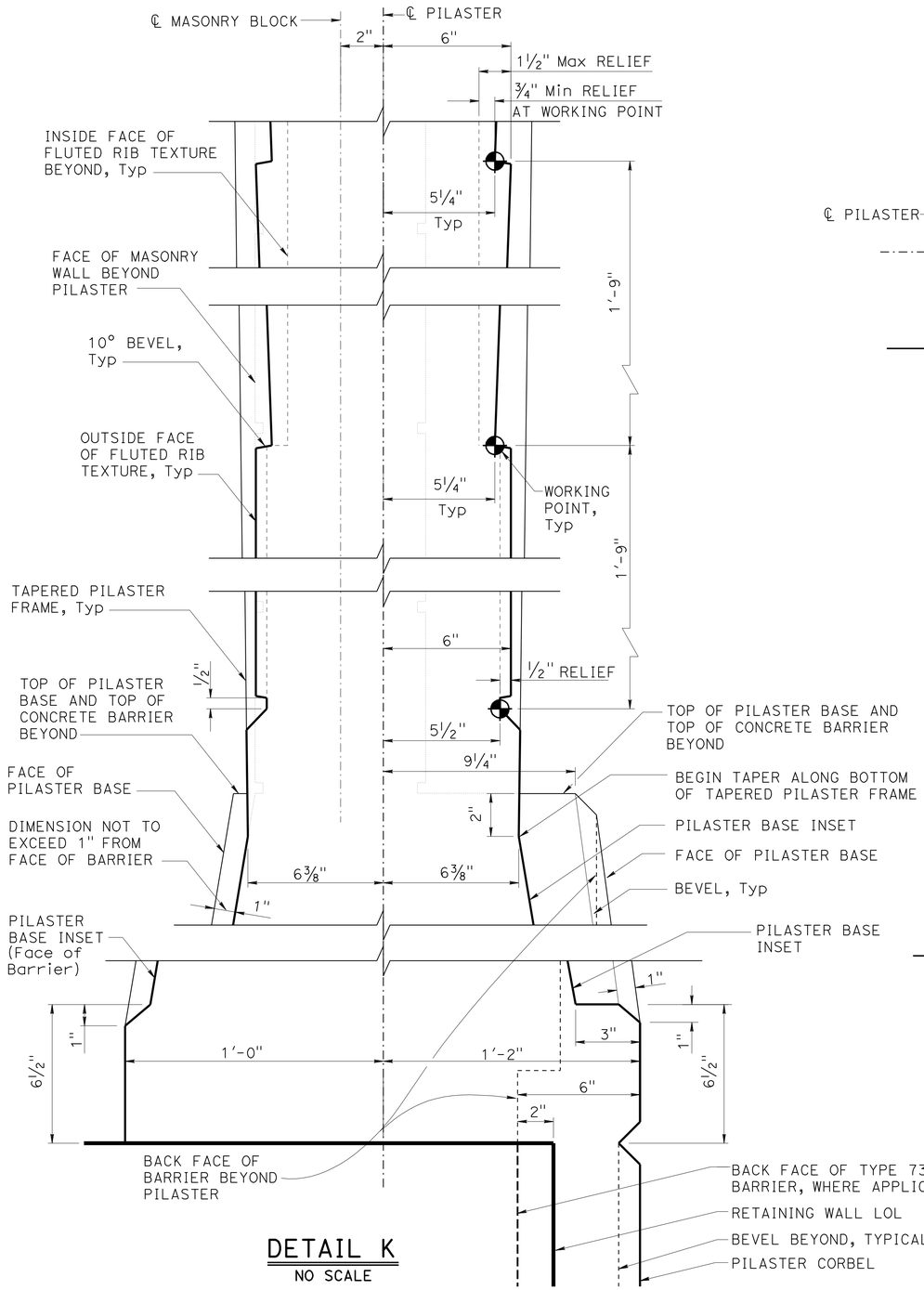

DETAIL K
NO SCALE

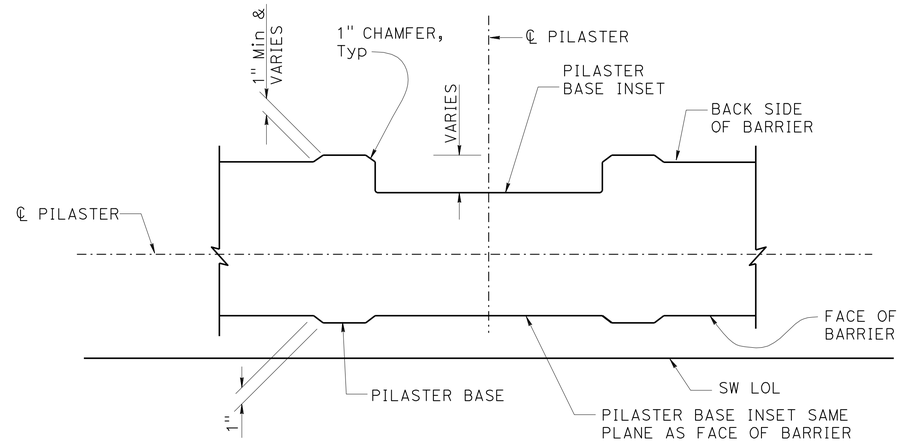

SECTION M-M
1½" = 1'-0"

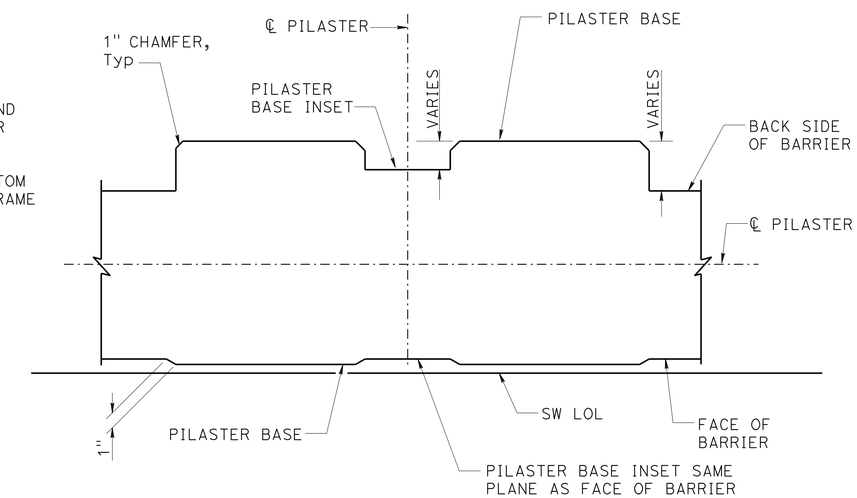

SECTION N-N
1½" = 1'-0"

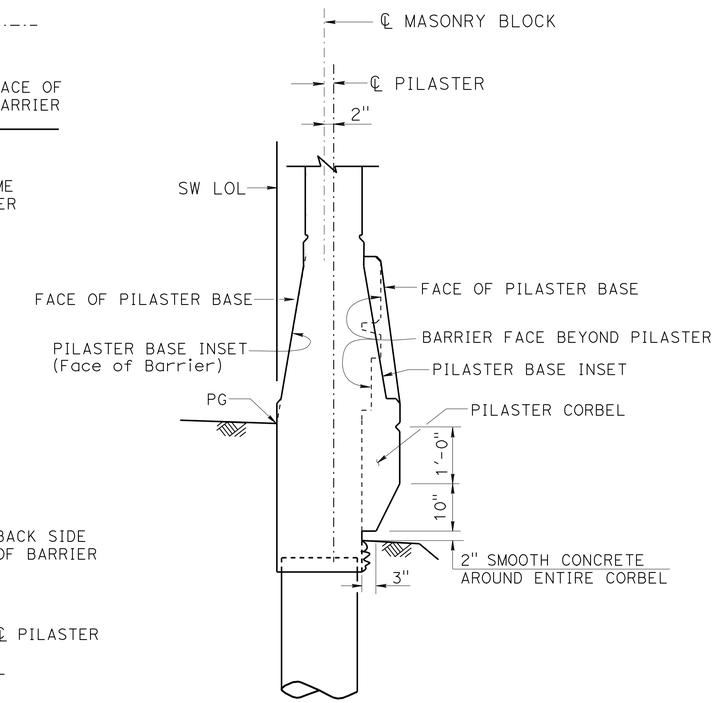

NOTE: For Pilaster details not shown, see "SECTION A-A" on "PILASTER ARCHITECTURAL DETAILS NO. 2" sheet

PILASTER SECTION ON TYPE 736SV (MOD) BARRIER
¾" = 1'-0"

NOTES:

1. For location of "SECTION M-M", "SECTION N-N" and "DETAIL K", see "PILASTER ARCHITECTURAL DETAILS NO. 2" sheet.
2. All dimensions symetrical about ℄ Pilaster.
3. All vertical dimension are measured along the ℄ Pilaster (Pilaster shall be vertical)

	BY	CHECKED
DESIGN	Isaac Tasabia	Javier Chavez
DETAILS	Jin Zhou/ Y. Feng	K. Harper / D. Sessions
QUANTITIES	April Pearson	Kyoung Lee

STATE OF CALIFORNIA
DEPARTMENT OF TRANSPORTATION

DIVISION OF ENGINEERING SERVICES
STRUCTURE DESIGN
DESIGN BRANCH 1

BRIDGE NO. 53-E0181
POST MILE 3.28

SOUND WALL NO. 176
PILASTER ARCHITECTURAL DETAILS NO. 4

STRUCTURES DESIGN DETAIL SHEET (ENGLISH) (REV. 09-01-10)

ORIGINAL SCALE IN INCHES FOR REDUCED PLANS 0 1 2 3

UNIT: 3576
PROJECT NUMBER & PHASE: 07000018331
CONTRACT NO.: 07-215934

DISREGARD PRINTS BEARING EARLIER REVISION DATES

REVISION DATES 12-2-10 5-16-11 04-25-11

SHEET 17 OF 31

FILE => sw176-g-pilaster04.dgn

USERNAME => s135318 DATE PLOTTED => 28-MAR-2012 TIME PLOTTED => 13:16

DIST	COUNTY	ROUTE	POST MILES TOTAL PROJECT	SHEET No.	TOTAL SHEETS
07	LA	5	2.4/4.0	1155	1288

REGISTERED CIVIL ENGINEER 12-08-11 DATE

3-26-12
PLANS APPROVAL DATE

REGISTERED PROFESSIONAL ENGINEER Kevin Harper No. 42221 Exp. 3-31-12 CIVIL STATE OF CALIFORNIA

The State of California or its officers or agents shall not be responsible for the accuracy or completeness of electronic copies of this plan sheet.

NPTE:
For "SECTION B-B", "SECTION C-C", "SECTION D-D" and "SECTION G-G", see "PILASTER STRUCTURAL DETAILS NO. 2" sheet.

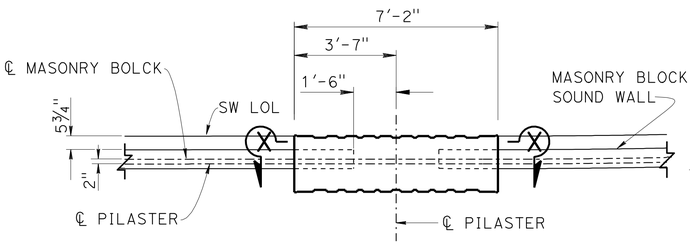

INTERIOR PILASTER

PART SOUND WALL PLAN

⅜" = 1'-0"

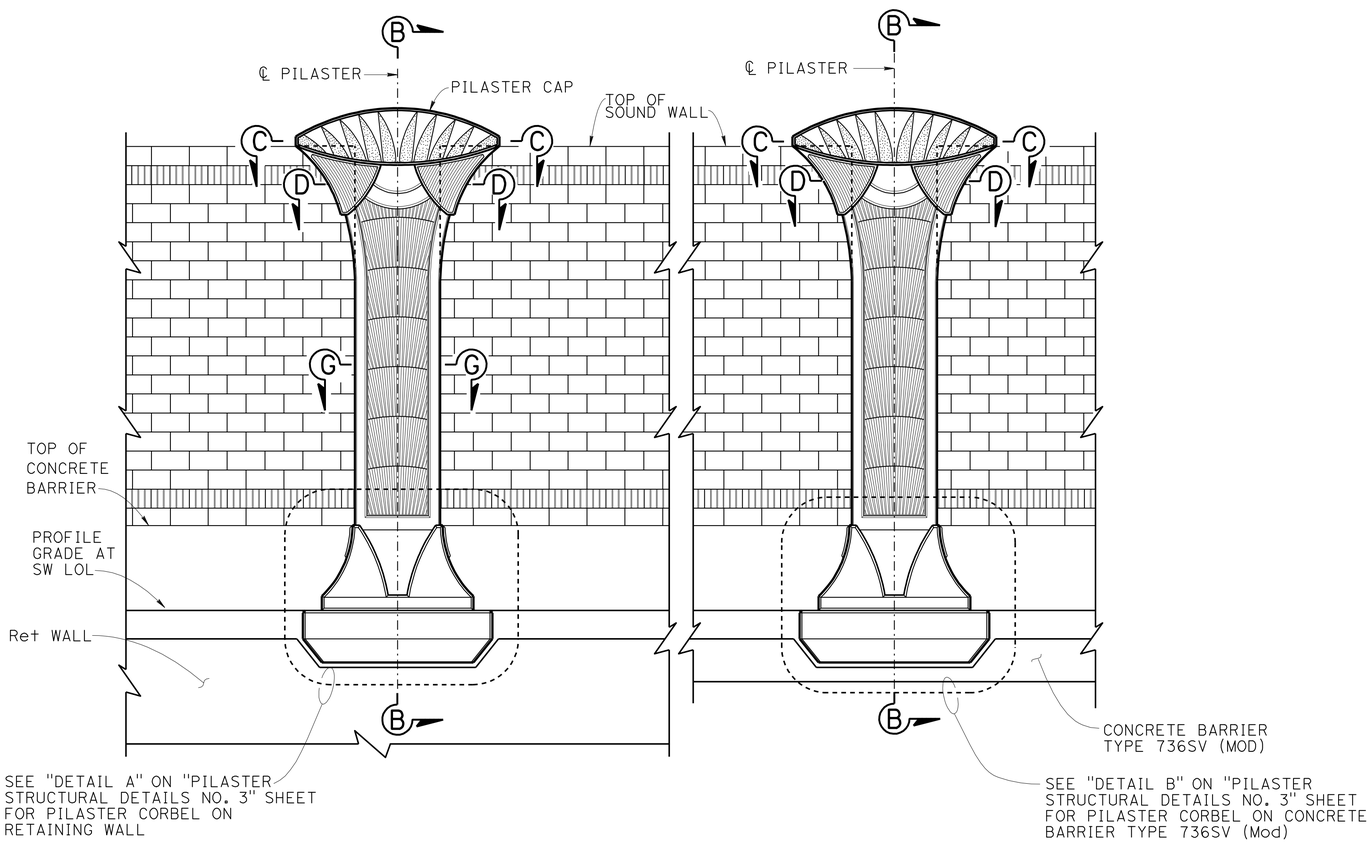

PART SOUND WALL ELEVATION

⅜" = 1'-0"

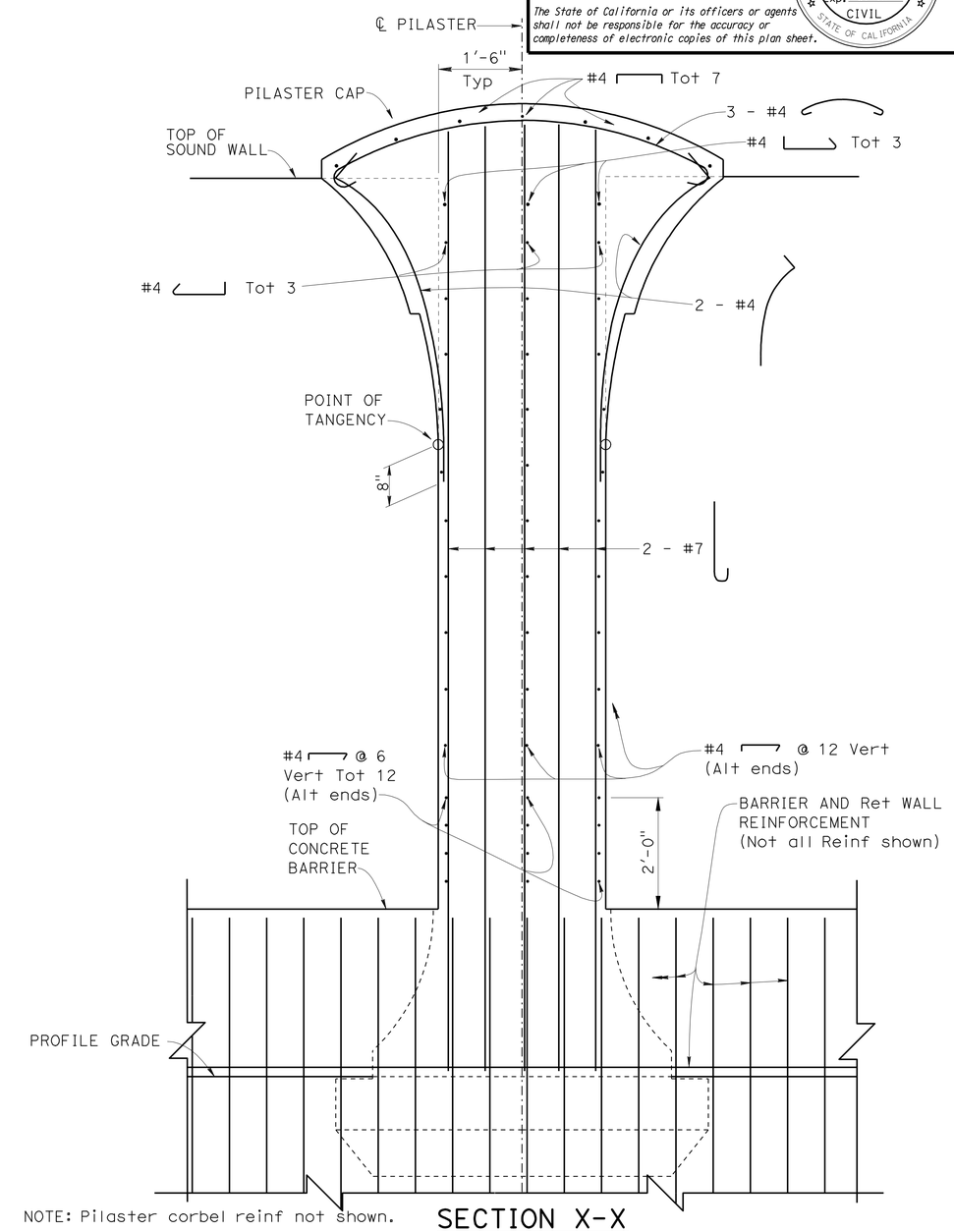

NOTE: Pilaster corbel reinf not shown.

SECTION X-X

¾" = 1'-0"

DESIGN	BY Kevin Harper	CHECKED Daniel Sessions	
DETAILS	BY Jin Zhou	CHECKED Daniel Sessions	
QUANTITIES	BY April Pearson	CHECKED Kyoung Lee	

STATE OF CALIFORNIA
DEPARTMENT OF TRANSPORTATION

DIVISION OF ENGINEERING SERVICES
STRUCTURE DESIGN
DESIGN BRANCH 1

BRIDGE NO. 53-E0181
POST MILE 3.28

SOUND WALL NO. 176
PILASTER STRUCTURAL DETAILS NO. 1

STRUCTURES DESIGN DETAIL SHEET (ENGLISH) (REV. 09-01-10)

ORIGINAL SCALE IN INCHES FOR REDUCED PLANS 0 1 2 3

UNIT: 3576
PROJECT NUMBER & PHASE: 07000018331
CONTRACT NO.: 07-215934

DISREGARD PRINTS BEARING EARLIER REVISION DATES

REVISION DATES 12/23/10 04/29/11 04/16/12

SHEET 18 OF 31

FILE => sw176-h-pilaster01.dgn

USERNAME => s135318 DATE PLOTTED => 28-MAR-2012 TIME PLOTTED => 13:16

DIST	COUNTY	ROUTE	POST MILES TOTAL PROJECT	SHEET No.	TOTAL SHEETS
07	LA	5	2.4/4.0	1156	1288

REGISTERED CIVIL ENGINEER 12-08-11 DATE

3-26-12
PLANS APPROVAL DATE

REGISTERED PROFESSIONAL ENGINEER Kevin Harper No. 42221 Exp. 3-31-12 CIVIL STATE OF CALIFORNIA

The State of California or its officers or agents shall not be responsible for the accuracy or completeness of electronic copies of this plan sheet.

NOTES:

1. For location of "SECTION B-B", "SECTION C-C", "SECTION D-D" and "SECTION G-G", see "PILASTER STRUCTURAL DETAILS NO. 1" sheet.
2. For Pilaster geometry, dimensions and architectural treatments, see "PILASTER ARCHITECTURAL DETAILS" sheets

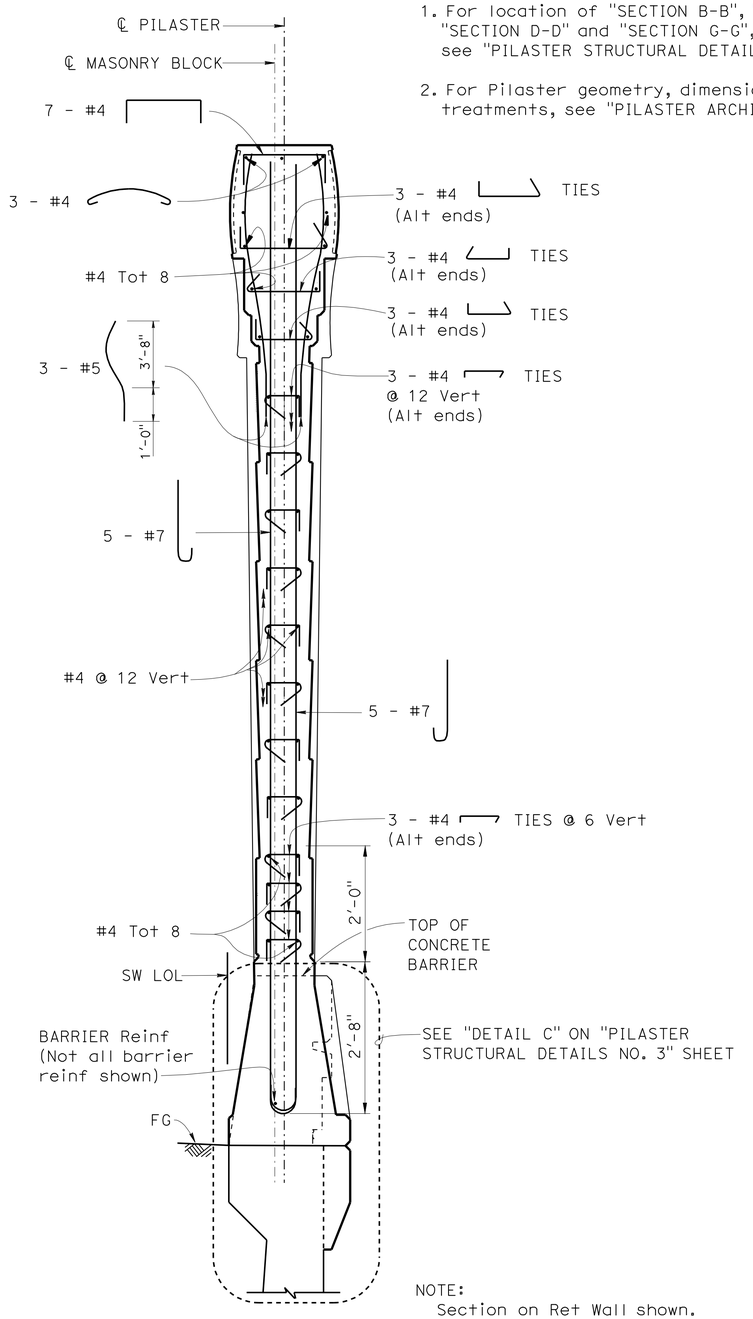

NOTE:
Section on Ret Wall shown.
Pilaster on Type 736SV (Mod) Barrier similar.

SECTION B-B
¾" = 1'-0"

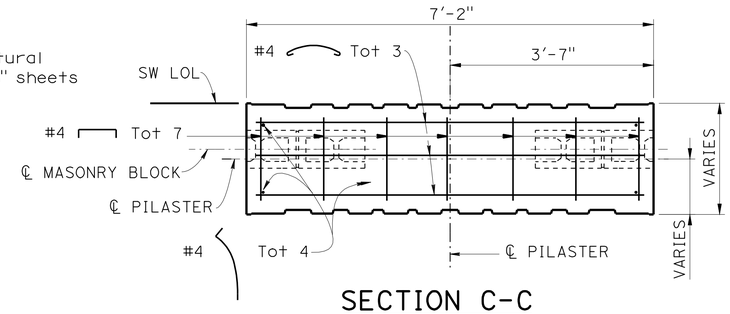

SECTION C-C
¾" = 1'-0"

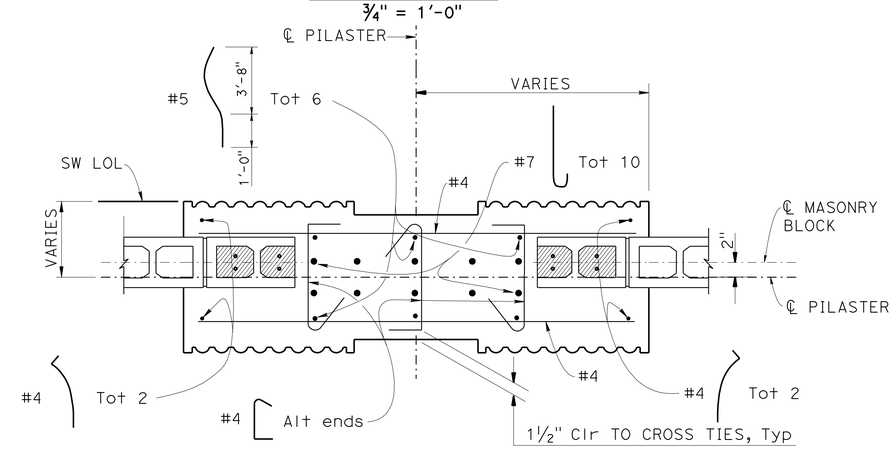

SECTION D-D
1" = 1'-0"

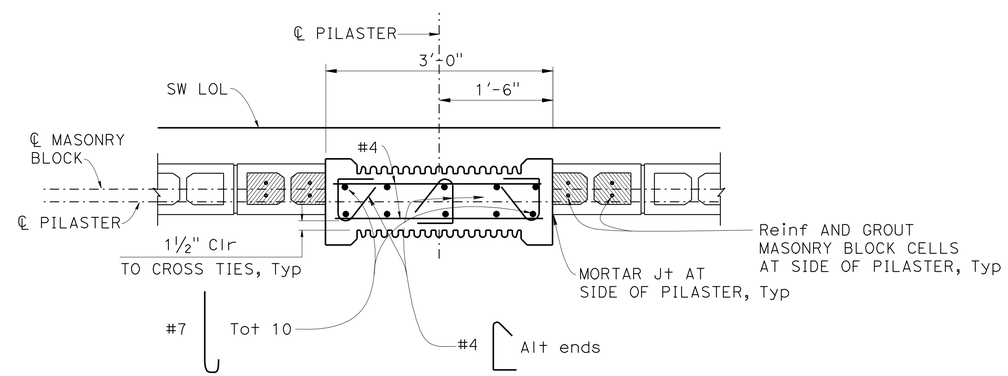

SECTION G-G
1" = 1'-0"

	BY	CHECKED
DESIGN	Kevin Harper	Daniel Sessions
DETAILS	Jin Zhou/ Y. Feng	Daniel Sessions
QUANTITIES	April Pearson	Kyoung Lee

STATE OF CALIFORNIA
DEPARTMENT OF TRANSPORTATION

DIVISION OF ENGINEERING SERVICES
STRUCTURE DESIGN
DESIGN BRANCH 1

BRIDGE NO. 53-E0181
POST MILE 3.28

SOUND WALL NO. 176
PILASTER STRUCTURAL DETAILS NO. 2

STRUCTURES DESIGN DETAIL SHEET (ENGLISH) (REV. 09-01-10)

ORIGINAL SCALE IN INCHES FOR REDUCED PLANS 0 1 2 3

UNIT: 3576
PROJECT NUMBER & PHASE: 07000018331
CONTRACT NO.: 07-215934

DISREGARD PRINTS BEARING EARLIER REVISION DATES

REVISION DATES 12/30/10 05/02/11 5/16/11 7/25/11

SHEET 19 OF 31

FILE => sw176-h-pilaster02.dgn

USERNAME => s133318 DATE PLOTTED => 28-MAR-2012 TIME PLOTTED => 13:16

DIST	COUNTY	ROUTE	POST MILES TOTAL PROJECT	SHEET No.	TOTAL SHEETS
07	LA	5	2.4/4.0	1157	1288

REGISTERED CIVIL ENGINEER 12-08-11 DATE

3-26-12
PLANS APPROVAL DATE

REGISTERED PROFESSIONAL ENGINEER Kevin Harper No. 42221 Exp. 3-31-12 CIVIL STATE OF CALIFORNIA

The State of California or its officers or agents shall not be responsible for the accuracy or completeness of electronic copies of this plan sheet.

NOTES:

1. For location of "DETAIL A" and "DETAIL B", see "PILASTER STRUCTURAL DETAILS NO. 1" sheet.
2. For location of "DETAIL C", see "PILASTER STRUCTURAL DETAILS NO. 2" sheet.

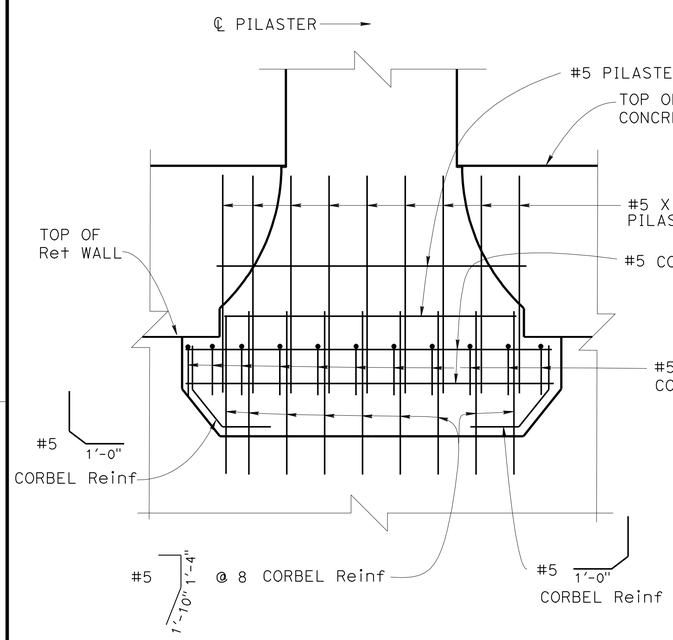

NOTE: Concrete Barrier/Ret Wall reinf not shown.

DETAIL A
¾" = 1'-0"

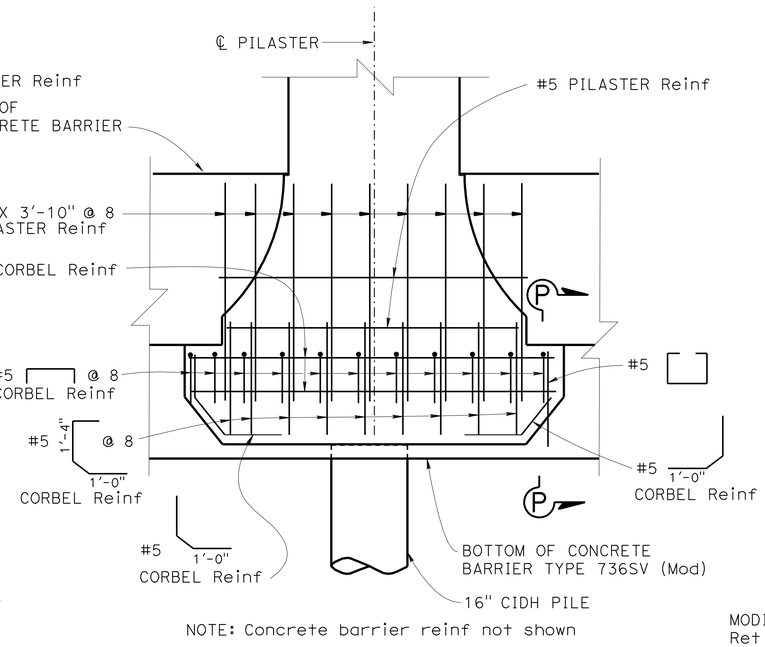

NOTE: Concrete barrier reinf not shown

DETAIL B
¾" = 1'-0"

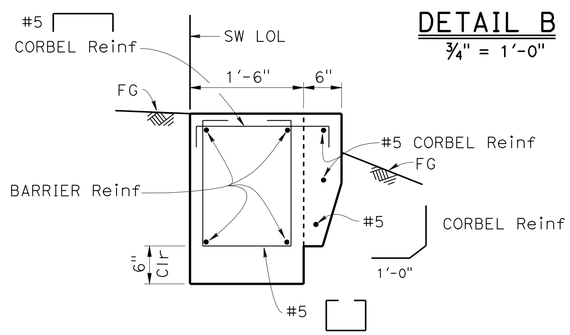

SECTION P-P
1" = 1'-0"

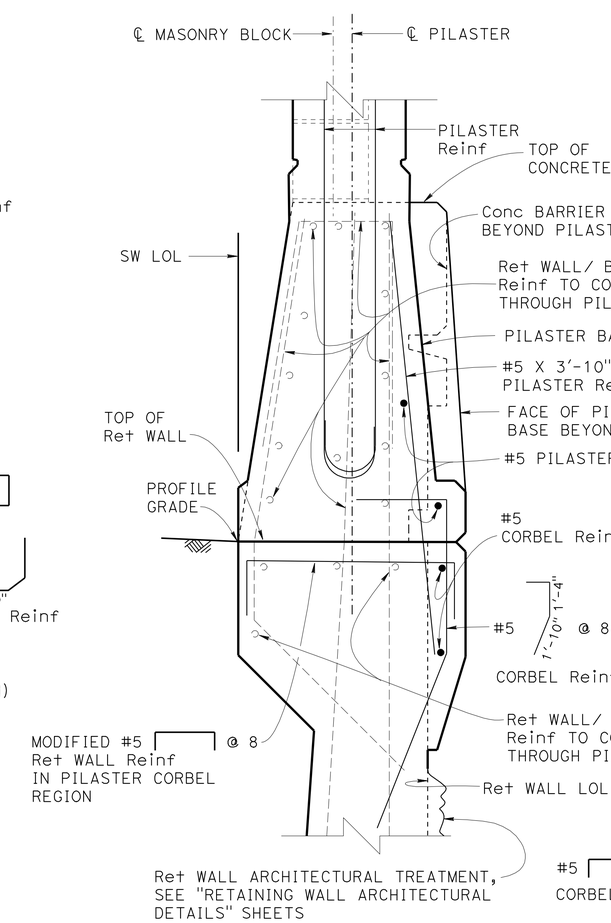

PILASTER CORBEL ON RETAINING WALL

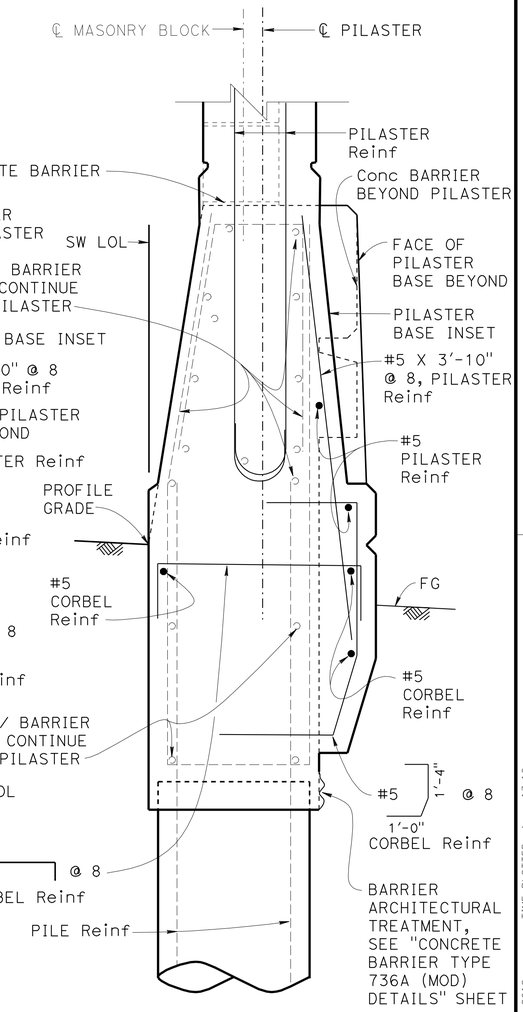

PILASTER CORBEL ON CONCRETE BARRIER TYPE 736SV (MOD)

DETAIL C
1½" = 1'-0"

DESIGN	BY Kevin Harper	CHECKED Daniel Sessions	
DETAILS	BY Jin Zhou/ Y. Feng	CHECKED Daniel Sessions	
QUANTITIES	BY April Pearson	CHECKED Kyoung Lee	

STATE OF CALIFORNIA
DEPARTMENT OF TRANSPORTATION

DIVISION OF ENGINEERING SERVICES
STRUCTURE DESIGN
DESIGN BRANCH 1

BRIDGE NO. 53-E0181
POST MILE 3.28

SOUND WALL NO. 176
PILASTER STRUCTURAL DETAILS NO. 3

STRUCTURES DESIGN DETAIL SHEET (ENGLISH) (REV. 09-01-10)

ORIGINAL SCALE IN INCHES FOR REDUCED PLANS 0 1 2 3

UNIT: 3576
PROJECT NUMBER & PHASE: 07000018331
CONTRACT NO.: 07-215934

DISREGARD PRINTS BEARING EARLIER REVISION DATES

REVISION DATES 12/30/10 05/04/11 7/25/11

SHEET 20 OF 31

FILE => sw176-h-pilaster03.dgn

USERNAME => s135318 DATE PLOTTED => 28-MAR-2012 TIME PLOTTED => 13:16

DIST.	COUNTY	ROUTE	POST MILES TOTAL PROJECT	SHEET NO.	TOTAL SHEETS
07	LA	5	2.4/4.0	1158	1288

REGISTERED ENGINEER - CIVIL 12-08-11

3-26-12
PLANS APPROVAL DATE

REGISTERED PROFESSIONAL ENGINEER Kevin Harper No. 42221 Exp. 3-31-12 CIVIL STATE OF CALIFORNIA

The State of California or its officers or agents shall not be responsible for the accuracy or completeness of electronic copies of this plan sheet.

TABLE OF PILE SPACING: CLASS 90 CONCRETE PILES ◇1

DESIGN H	6′	8′	10′	12′	14′	16′	18′	20′	22′	24′	26′	28′	30′	32′
W	6′-9"	7′-0"	7′-6"	8′-3"	9′-3"	10′-3"	11′-0"	12′-0"	13′-0"	14′-3"	16′-3"	16′-9"	18′-0"	20′-6"
C	2′-9"	2′-9"	3′-0"	3′-3"	3′-6"	4′-0"	4′-3"	4′-9"	5′-0"	5′-6"	6′-3"	6′-9"	7′-3"	7′-9"
B	4′-0"	4′-3"	4′-6"	5′-0"	5′-9"	6′-3"	6′-9"	7′-3"	8′-0"	8′-9"	10′-0"	10′-0"	10′-9"	12′-9"
F	1′-6"	1′-6"	1′-6"	1′-9"	1′-9"	2′-0"	2′-6"	2′-9"	3′-0"	3′-0"	3′-3"	3′-6"	3′-9"	4′-0"
M	1′-3"	1′-3"	1′-6"	1′-9"	2′-0"	2′-6"	2′-9"	3′-3"	3′-6"	4′-0"	4′-9"	5′-3"	5′-9"	6′-3"
N	2′-6"	2′-9"	3′-0"	3′-6"	4′-3"	4′-9"	5′-3"	5′-9"	6′-6"	7′-3"	8′-6"	8′-6"	9′-3"	11′-3"
ROW 1	16′-0"	14′-0"	12′-0"	10′-0"	8′-0"	6′-6"	5′-6"	4′-6"	4′-0"	4′-0"	4′-0"	4′-0"	4′-0"	4′-0"
ROW 2	24′-0"	21′-0"	18′-0"	15′-0"	14′-0"	13′-0"	11′-0"	9′-0"	8′-0"	12′-0"	10′-0"	6′-0"	4′-0"	4′-0"
ROW 3										8′-0"	5′-0"	4′-0"	4′-0"	6′-0"
ROW 4														6′-0"
CONFIGURATION	I	I	I	I	I	I	I	I	I	II	II	II	II	III

TABLE 1: TABLE OF REINFORCING STEEL DIMENSIONS AND DATA

	STEM WITH HAUNCH													
DESIGN H	6′	8′	10′	12′	14′	16′	18′	20′	22′	24′	26′	28′	30′	32′
STEM BATTER	0	1/2:12	1/2:12	1/2:12	1/2:12	1/2:12	1/2:12	1/2:12	1/2:12	5/8:12	3/4:12	7/8:12	1:12	1:12
◇2 ~~STEM THICKNESS @ TOP~~	~~1′ 6"~~	~~1′ 6"~~	~~1′ 6"~~	~~1′ 6"~~	~~1′ 6"~~	~~1′ 6"~~	~~1′ 6"~~	~~1′ 6"~~	~~1′ 6"~~	~~1′ 6"~~	~~1′ 6"~~	~~1′ 6"~~	~~1′ 6"~~	~~1′ 6"~~
STEM THICKNESS @ HAUNCH	1′-0"	1′-0"	1′-0"	1′-0"	1′-0"	1′-0"	1′-0"	1′-0"	1′-0"	1′-0"	1′-0"	1′-0"	1′-0"	1′-0"
ⓐ BARS				#6@18**	#7@18**	#8@18**	#9@18**	#10@18**	#8 @ 9*	#8 @ 9*	#7 @ 6*	#10@12**	#9 @ 9*	#11@12**
X				CONT	CONT	CONT	CONT	CONT	CONT	CONT	CONT	CONT	CONT	CONT
Y				8′-0"	6′-6"	7′-6"	8′-6"	9-6"	9′-6"	11′-0"	11′-6"	13′-0"	14′-0"	15′-6"
ⓑ BARS	#5 @ 12	#5 @ 12	#5 @ 9	#6@18**	#7@18**	#8@18**	#9@18**	#10@18**	#8 @ 9*	#8 @ 9*	#7 @ 6*	#10@12**	#9 @ 9*	#11@12**
X	CONT	CONT	CONT	CONT	CONT	CONT	CONT	CONT	CONT	CONT	CONT	CONT	CONT	CONT
Y	CONT	CONT	CONT	CONT	10′-6"	13′-0"	15′-0"	17′-6"	19′-6"	21′-0"	18′-6"	19′-0"	25′-6"	23′-6"
ⓒ BARS					#6 @ 18	#6 @ 18	#6 @ 18	#6 @ 18	#6 @ 18	#6 @ 18	#6 @ 12	#7 @ 12	#7 @ 18	#7 @ 12
ⓓ BARS	#5 @ 12	#5 @ 12	#5 @ 12	#5 @ 12	#5 @ 12	#5 @ 12	#5 @ 9	#5 @ 9	#6 @ 9	#5 @ 6	#7 @ 9	#7 @ 9	#6 @ 6	#7 @ 6
TOTAL ⓔ BARS	6 #5	6 #5	6 #5	6 #5	8 #5	8 #5	10 #5	10 #5	10 #5	10 #5	12 #5	12 #5	12 #5	14 #5
TOTAL ⓕ BARS	6 #5	6 #5	6 #5	6 #5	6 #5	8 #5	8 #5	8 #5	8 #5	10 #5	10 #5	10 #5	12 #5	12 #5

TABLE 2: TABLE OF REINFORCING STEEL DIMENSIONS AND DATA

	STEM WITH HAUNCH							STEM WITHOUT HAUNCH						
DESIGN H	6′	8′	10′	12′	14′	16′	18′	20′	22′	24′	26′	28′	30′	32′
BATTER	0	0	0	0	0	0	0	0	0	0	1/4:12	1/2:12	1/2:12	1/2:12
◇2 STEM THICKNESS @ TOP	~~1′ 6"~~	~~1′ 6"~~	~~1′ 6"~~	~~1′ 6"~~	~~1′ 6"~~	~~1′ 6"~~	~~1′ 6"~~	~~1′ 6"~~	2′-0"	2′-0"	2′-0"	2′-0"	2′-0"	2′-0"
STEM THICKNESS @ HAUNCH	1′-0"	1′-0"	1′-0"	1′-0"	1′-0"	1′-3"	1′-3"							
ⓐ BARS				#6@12**	#5 @ 6*	#9@18**	#9@12**	#9@12**	#9@12**	#7 @ 6*	#7 @ 6*	#7 @ 6*	#9 @ 9*	#11@12**
X				CONT	CONT	CONT	CONT	CONT	CONT	CONT	CONT	CONT	CONT	CONT
Y				5′-6"	5′-6"	8′-6"	8′-6"	8′-6"	8′-6"	9′-6"	11′-0"	12′-6"	13′-6"	14′-6"
ⓑ BARS	#5 @ 12	#5 @ 9	#6 @ 9	#6@12**	#5 @ 6*	#9@18**	#9@12**	#9@12**	#9@12**	#7 @ 6*	#7 @ 6*	#7 @ 6*	#9 @ 9*	#11@12**
X	CONT	CONT	CONT	CONT	CONT	CONT	CONT	CONT	CONT	CONT	CONT	CONT	CONT	CONT
Y	CONT	CONT	CONT	CONT	CONT	11′-6"	11′-6"	12′-0"	12′-0"	17′-6"	20′-0"	21′-6"	24′-0"	24′-0"
ⓒ BARS						#7 @ 18	#7 @ 12	#7 @ 12	#7 @ 12	#6 @ 12	#6 @ 12	#6 @ 12	#7 @ 18	#7 @ 12
ⓓ BARS	#5 @ 12	#5 @ 12	#5 @ 12	#5 @ 12	#5 @ 12	#5 @ 12	#5 @ 9	#5 @ 9	#6 @ 9	#5 @ 6	#7 @ 9	#7 @ 9	#6 @ 6	#7 @ 6
TOTAL ⓔ BARS	6 #5	6 #5	6 #5	6 #5	8 #5	8 #5	10 #5	10 #5	10 #5	10 #5	12 #5	12 #5	12 #5	14 #5
TOTAL ⓕ BARS	6 #5	6 #5	6 #5	6 #5	6 #5	8 #5	8 #5	8 #5	8 #5	10 #5	10 #5	10 #5	12 #5	12 #5

CONT = CONTINUOUS

* = ⓐ AND ⓑ BARS ARE BUNDLED TOGETHER.

** = ALTERNATE ⓐ AND ⓑ BARS AS SHOWN IN DETAIL A.

DESIGN DATA

DESIGN: LOAD FACTOR DESIGN (LFD)

CONCRETE: REINFORCED CONCRETE, f′c = 3600 psi
fy = 60000 psi

LOADING CASE:

LEVEL GROUND WITH 240 psf LIVE LOAD SURCHARGE AND 16′ SOUNDWALL.
SEISMIC LOAD = 0.3 DEAD LOAD
WIND LOAD = 30 psf
DEAD LOAD OF SOUNDWALL = 1414 lb/lf
DEAD LOAD OF BARRIER = 372 lb/lf

SEISMIC LOAD: SOIL

Kh = 0.3g
Kv = 0.0
Kae : MONONOBE-OKABE METHOD

SOIL: Ø = 34° γ = 120 pcf

EQUIVALENT FLUID PRESSURE:
= 36 pcf FOR DETERMINATION OF TOE PRESSURE
= 27 pcf FOR DETERMINATION OF HEEL PRESSURE

LOAD COMBINATIONS:

GROUP A : βD+1.7E+1.7SC
GROUP B : βD+1.7E+1.3W
GROUP C :
STEM : 1.0D+1.0E+1.0EQD+1.0EQE
FOOTING : D+PYM
WHERE : β = 1.0 OR 1.3 WHICHEVER CONTROLS DESIGN
D = DEAD LOAD
E = LATERAL EARTH PRESSURE
SC = SURCHARGE
W = WIND LOAD
EQD = SEISMIC DEAD LOAD
EQE = SEISMIC LATERAL EARTH PRESSURE
PYM = PROBABLE YIELD MOMENT (1.3* NOMINAL YIELD MOMENT OF STEM)

GENERAL NOTES

◇1
1. CLASS 90 CONCRETE PILES WERE USED FOR THE DESIGN.
2. PILE BATTER SHOWN ARE 1:3.
3. MINIMUM DISTANCE BETWEEN CENTER PILE AND EDGE OF FOOTING IS 1′-6".
4. REDUCTION FACTORS:
   GROUPS A & B : Ø = 0.75
   GROUP C : Ø = 1.0
5. LATERAL RESISTANCE OF EACH PILE:
   GROUPS A & B : = 30 kip
   GROUP C : = 40 kip
6. MAXIMUM SPACING BETWEEN PILES IS SHOWN IN THE TABLE. REDUCE TO SUIT THE LENGHTH OF FOOTING.
7. MINIMUM DISTANCE BETWEEN ANY TWO PILES IS 3′-0".
8. LIMIT OF NO SPLICING FOR REBARS = 3 TIMES THE BOTTOM THICKNESS OF STEM.

SPECIAL DETAILS

REVISED STANDARD DRAWING

FILE NO. xs14-320-1e

APPROVED BY G. WANG
RESPONSIBLE TECHNICAL SPECIALIST
APPROVAL DATE 5-29-09

RELEASED BY ROBERTO LACALLE
RESPONSIBLE OFFICE CHIEF
RELEASE DATE 5-29-09

◇1 Revise Note to indicate Class 90 piles
◇2 Stem thickness @ top shown on Detail No. 2 sheet

STATE OF CALIFORNIA
DEPARTMENT OF TRANSPORTATION

DIVISION OF ENGINEERING SERVICES
STRUCTURE DESIGN
DESIGN BRANCH 1

BRIDGE NO. 53-E0181
POST MILE 3.28

SOUND WALL NO. 176
RETAINING WALL TYPE 1SWBP - DETAIL NO. 1

DS OSD 2147A (ENGLISH STANDARD DRAWING "XS" BORDER REV. 01/11/08)

ORIGINAL SCALE IN INCHES FOR REDUCED PLANS 0 1 2 3

UNIT: 3576
PROJECT NUMBER & PHASE: 07000018331
CONTRACT NO.: 07-215934

DISREGARD PRINTS BEARING EARLIER REVISION DATES

REVISION DATES 02/28/10 04/01/11 03/30/12

SHEET 21 OF 31

TIME PLOTTED => 13:16
DATE PLOTTED => 28-MAR-2012
USERNAME => s135318

USERNAME => s135318
sw176-1-rwd+01.dgn

DIST.	COUNTY	ROUTE	POST MILES TOTAL PROJECT	SHEET NO.	TOTAL SHEETS
07	LA	5	2.4/4.0	1159	1288

REGISTERED ENGINEER - CIVIL 12-08-11

3-26-12
PLANS APPROVAL DATE

REGISTERED PROFESSIONAL ENGINEER Kevin Harper No. 42221 Exp. 3-31-12 CIVIL STATE OF CALIFORNIA

The State of California or its officers or agents shall not be responsible for the accuracy or completeness of electronic copies of this plan sheet.

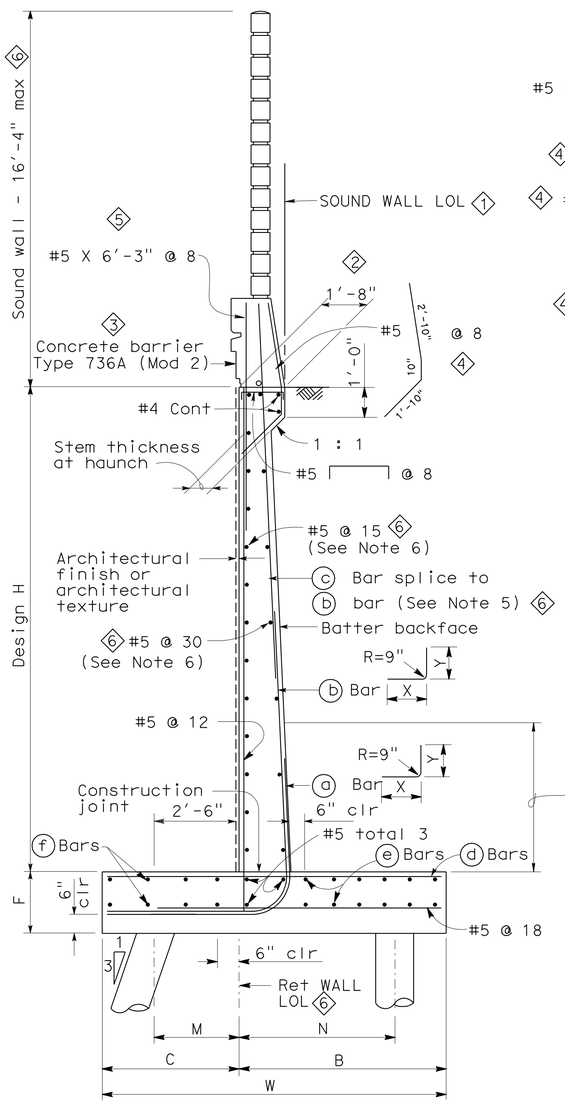

TYPICAL SECTION

NO SCALE

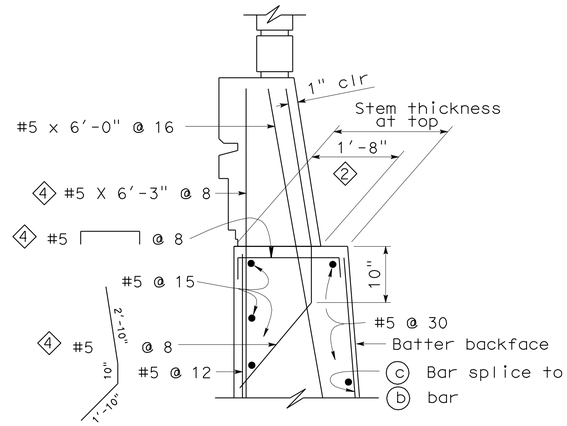

SECTION WITHOUT HAUNCH

NO SCALE

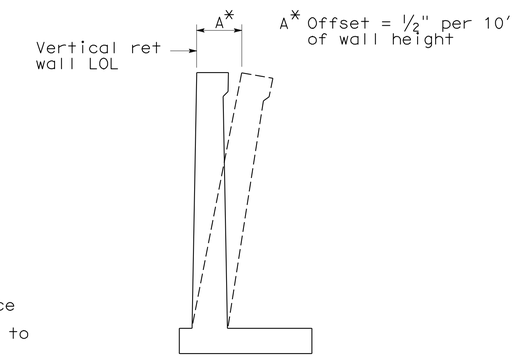

WALL OFFSET

NO SCALE

Values for offsetting forms to be determined by the engineer

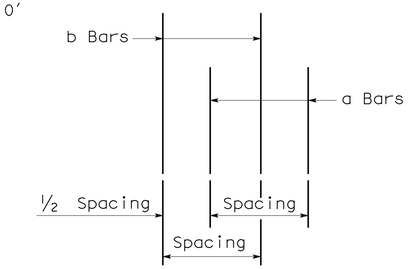

DETAIL A

NO SCALE

NOTES

1. For soundwall and retaining wall architectural finish or texture, see details elsewhere in project plans.
2. For details not shown and drainage notes, see B3-8
3. Footing cover, 1'-6" minimum.
4. For sound wall and barrier details, see "SOUND WALL - MASONARY BLOCK WITH BARRIER ON RETAINING WALL DETAILS NO. 1" and No. 2 sheets
5. (6) Extend (b) bars onto barrier for "DESIGN H" 12' or less.
6. (6) Where applicable continue reinforcement through adjacent TYPE 5SWBP RETAINING WALLS, shown on "STRUCTURE PLAN" sheets.

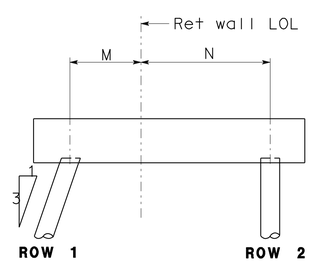

CONFIGURATION I

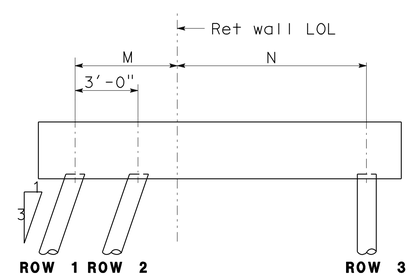

CONFIGURATION II

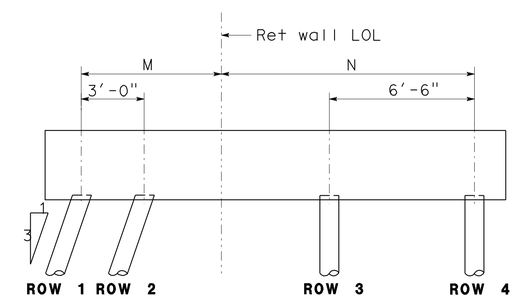

CONFIGURATION III

SPECIAL DETAILS

REVISED STANDARD DRAWING

FILE NO. xs14-320-2e

APPROVED BY G. WANG — RESPONSIBLE TECHNICAL SPECIALIST
APPROVAL DATE 5-13-08

RELEASED BY ROBERTO LACALLE — RESPONSIBLE OFFICE CHIEF
RELEASE DATE 5-13-08

1 Sound Wall LOL added
2 Stem thickness at top modified
3 Changed concrete barrier dimensions
4 Reinforcement modified
5 Added reinforcement
6 Notes Modified

STATE OF CALIFORNIA
DEPARTMENT OF TRANSPORTATION

DIVISION OF ENGINEERING SERVICES
STRUCTURE DESIGN
DESIGN BRANCH 1

BRIDGE NO. 53-E0181
POST MILE 3.28

SOUND WALL NO. 176
RETAINING WALL TYPE 1SWBP - DETAIL NO. 2

DS OSD 2147A (ENGLISH STANDARD DRAWING "XS" BORDER REV. 01/11/08)

ORIGINAL SCALE IN INCHES FOR REDUCED PLANS 0 1 2 3

UNIT: 3576
PROJECT NUMBER & PHASE: 07000018331
CONTRACT NO.: 07-215934

DISREGARD PRINTS BEARING EARLIER REVISION DATES

REVISION DATES 10/29/10 03/30/11 04/01/11

SHEET 22 OF 31

USERNAME => s135318

sw176-1-rwdt02.dgn

DATE PLOTTED => 28-MAR-2012 TIME PLOTTED => 13:16

DIST.	COUNTY	ROUTE	POST MILES TOTAL PROJECT	SHEET NO.	TOTAL SHEETS
07	LA	5	2.4/4.0	1160	1288

REGISTERED ENGINEER - CIVIL 12-08-11

3-26-12
PLANS APPROVAL DATE

REGISTERED PROFESSIONAL ENGINEER Kevin Harper No. 42221 Exp. 3-31-12 CIVIL STATE OF CALIFORNIA

The State of California or its officers or agents shall not be responsible for the accuracy or completeness of electronic copies of this plan sheet.

TABLE OF PILE SPACING: CLASS 90 CONCRETE PILES (3)

DESIGN H	6′	8′	10′	12′	14′	16′	18′	20′	22′	24′	26′	28′	30′	32′
W	7′-3"	7′-6"	8′-0"	8′-6"	9′-6"	10′-3"	11′-0"	12′-3"	14′-0"	14′-9"	17′-3"	19′-0"	21′-3"	22′-9"
F	1′-6"	1′-6"	1′-6"	1′-6"	1′-6"	1′-9"	2′-0"	2′-3"	2′-9"	3′-0"	3′-3"	3′-9"	4′-0"	4′-6"
M	1′-0"	1′-0"	1′-0"	1′-0"	1′-0"	1′-0"	1′-0"	1′-0"	1′-0"	1′-0"	1′-0"	1′-0"	1′-0"	1′-0"
N	5′-3"	5′-6"	6′-0"	6′-6"	7′-6"	8′-3"	9′-0"	10′-3"	12′-0"	12′-9"	15′-3"	17′-0"	19′-3"	20′-9"
ROW 1	8′-0"	8′-0"	8′-0"	7′-0"	6′-0"	4′-6"	4′-0"	4′-0"	4′-0"	4′-0"	4′-0"	4′-0"	4′-0"	4′-0"
ROW 2	16′-0"	16′-0"	16′-0"	14′-0"	15′-0"	11′-3"	10′-0"	12′-0"	6′-0"	4′-0"	4′-0"	4′-0"	4′-0"	4′-0"
ROW 3								8′-0"	8′-0"	6′-0"	6′-0"	4′-0"	4′-0"	4′-0"
ROW 4											6′-0"	6′-0"	4′-0"	4′-0"
ROW 5													6′-0"	6′-0"
CONFIGURATION	I	I	I	I	I	I	I	II	II	II	III	III	IIII	IIII

(1)

TABLE 1: TABLE OF REINFORCING STEEL DIMENSIONS AND DATA

	STEM WITH HAUNCH													
DESIGN H	6′	8′	10′	12′	14′	16′	18′	20′	22′	24′	26′	28′	30′	32′
STEM BATTER	0	½:12	½:12	½:12	½:12	½:12	½:12	½:12	½:12	⅝:12	¾:12	⅞:12	1:12	1:12
(2) STEM THICKNESS @ HAUNCH	1′-0"	1′-0"	1′-0"	1′-0"	1′-0"	1′-0"	1′-0"	1′-0"	1′-0"	1′-0"	1′-0"	1′-0"	1′-0"	1′-0"
a BARS				#6@18**	#7@18**	#8@18**	#9@18**	#10@18**	#8 @ 9*	#8 @ 9*	#7 @ 6*	#10@12**	#9 @ 9*	#11@12**
Y				8′-0"	6′-6"	7′-6"	8′-0"	9′-0"	9′-6"	11′-0"	11′-6"	13′-0"	14′-0"	15′-6"
b BARS	#5 @ 12	#5 @ 12	#5 @ 9	#6@18**	#7@18**	#8@18**	#9@18**	#10@18**	#8 @ 9*	#8 @ 9*	#7 @ 6*	#10@12**	#9 @ 9*	#11@12**
Y	CONT	CONT	CONT	CONT	10′-6"	13′-0"	15′-0"	17′-6"	19′-6"	21′-0"	18′-6"	19′-0"	25′-6"	23′-6"
c BARS					#6 @ 18	#6 @ 18	#6 @ 18	#6 @ 18	#6 @ 18	#6 @ 18	#6 @ 12	#7 @ 12	#7 @ 18	#7 @ 12
SHORT d BARS					#8@18**	#8@18**	#9@18**	#8@12**	#8@12**	#6 @ 6*	#8 @ 9*	#7 @ 6*	#9 @ 9*	#9 @ 9*
X					5′-6"	6′-6"	6′-6"	7′-6"	9′-6"	10′-0"	12′-0"	13′-0"	15′-0"	16′-0"
d BARS	#5 @ 12	#5 @ 9	#6 @ 9	#7 @ 9	#8@18**	#8@18**	#9@18**	#8 @ 12*	#8@12**	#6 @ 6*	#8 @ 9*	#7 @ 6*	#9 @ 9*	#9 @ 9*
X	CONT	CONT	CONT	CONT	CONT	CONT	CONT	CONT	CONT	CONT	CONT	CONT	CONT	CONT
TOTAL e BARS	12 #6	12 #6	10 #5	12 #5	12 #5	14 #5	14 #5	16 #5	18 #5	18 #5	20 #5	22 #5	26 #5	26 #5

CONT = CONTINUOUS
* = a AND b [SHORT d & d] BARS ARE BUNDLED TOGETHER.
** = ALTERNATE a AND b BARS AS SHOWN IN DETAIL A.
ALTERNATE SHORT d AND d BARS.

TABLE 2: TABLE OF REINFORCING STEEL DIMENSIONS AND DATA

	STEM WITH HAUNCH						STEM WITHOUT HAUNCH						
DESIGN H	8′	10′	12′	14′	16′	18′	20′	22′	24′	26′	28′	30′	32′
BATTER	0	0	0	0	0	0	0	0	0	¼:12	½:12	½:12	½:12
STEM THICKNESS @ HAUNCH	1′-0"	1′-0"	1′-0"	1′-0"	1′-3"	1′-3"							
STEM THICKNESS @ TOP							1′-6"	2′-0"	2′-0"	2′-0"	2′-0"	2′-0"	2′-0"
a BARS			#6@12**	#5 @ 6*	#9@18**	#9 @ 12*	#9@12**	#9@12**	#7 @ 6*	#7 @ 6*	#7 @ 6*	#9 @ 9*	#11@12**
Y			5′-6"	5′-6"	7′-0"	7′-0"	8′-0"	8′-6"	9′-6"	11′-0"	12′-6"	13′-6"	14′-6"
b BARS	#5 @ 9	#6 @ 9	#6@12**	#5 @ 6*	#9@18**	#9 @ 12*	#9@12**	#9 @ 12*	#7 @ 6*	#7 @ 6*	#7 @ 6*	#9 @ 9*	#11@12**
Y	CONT	CONT	CONT	CONT	9′-6"	9′-6"	11′-0"	11′-6"	17′-0"	19′-6"	21′-6"	24′-0"	24′-0"
c BARS					#7 @ 18	#7 @ 12	#7 @ 12	#7 @ 12	#6 @ 12	#6 @ 12	#6 @ 12	#7 @ 18	#7 @ 12
SHORT d BARS				#8@18**	#8@18**	#9@18**	#8@12**	#8@12**	#6 @ 6*	#8 @ 9*	#7 @ 6*	#9 @ 9*	#9 @ 9*
X				5′-6"	6′-6"	6′-6"	7′-6"	9′-6"	10′-0"	12′-0"	13′-0"	15′-0"	16′-0"
d BARS	#5 @ 9	#6 @ 9	#7 @ 9	#8@18**	#8@18**	#9@18**	#8@12**	#8@12**	#6 @ 6*	#8 @ 9*	#7 @ 6*	#9 @ 9*	#9 @ 9*
X	CONT	CONT	CONT	CONT	CONT	CONT	CONT	CONT	CONT	CONT	CONT	CONT	CONT
TOTAL e BARS	12 #6	10 #5	12 #5	12 #5	14 #5	14 #5	16 #5	18 #5	18 #5	20 #5	22 #5	26 #5	26 #5

DESIGN DATA

DESIGN: LOAD FACTOR DESIGN (LFD)

CONCRETE: REINFORCED CONCRETE, fc = 3600 psi
fy = 60000 psi

LOADING CASE:

LEVEL GROUND WITH 240 psf LIVE LOAD SURCHARGE AND 16′ SOUNDWALL.

SEISMIC LOAD DEAD LOAD = 0.3 DEAD LOAD
WIND LOAD = 30 psf
DEAD LOAD OF SOUNDWALL = 1414 lb/lf
DEAD LOAD OF BARRIER = 372 lb/lf

SEISMIC LOAD: SOIL

K_h = 0.3g
K_v = 0.0
K_{ae} : MONOBE-OKABE METHOD

SOIL: $\emptyset = 34°$ $\gamma = 120$ pcf

EQUIVALENT FLUID PRESSURE:
= 36 pcf MAX. FOR DETERMINATION OF TOE PRESSURE
= 27 pcf MAX. FOR DETERMINATION OF HEEL PRESSURE

LOAD COMBINATIONS:

GROUP A : βD + 1.7E + 1.7SC
GROUP B : βD + 1.7E + 1.3W
GROUP C :
STEM : 1.0D + 1.0E + 1.0EQD + 1.0EQE
FOOTING : D + PYM

WHERE : β = 1.0 OR 1.3 WHICHEVER CONTROLS DESIGN
D = DEAD LOAD
E = LATERAL EARTH PRESSURE
SC = LIVE LOAD SURCHARGE
W = WIND LOAD
EQD = SEISMIC DEAD LOAD
EQE = SEISMIC LATERAL EARTH PRESSURE

GENERAL NOTES

(3) 1. CLASS 90 CONCRETE PILES.
(4) 2. ALL PILES ARE VERTICAL
3. MINIMUM DISTANCE BETWEEN CENTER PILE AND EDGE OF FOOTING IS 1′-6".
4. REDUCTION FACTORS:
GROUPS A & B : $\emptyset$ = 0.75
GROUP C : $\emptyset$ = 1.0
5. LATERAL RESISTANCE OF EACH PILE:
GROUPS A & B : = 30 kip
GROUP C : = 40 kip
(1) 6. FOR PILE LAYOUT, SEE "FOOTING PLAN" ON "STRUCTURE PLAN NO. 2" SHEET.
7. MINIMUM DISTANCE BETWEEN ANY TWO PILES IS 3′-0".
REDUCE TO SUIT THE LENGTH OF FOOTING.

SPECIAL DETAILS

REVISED STANDARD DRAWING

FILE NO. xs14-370-1e

APPROVED BY G. WANG — RESPONSIBLE TECHNICAL SPECIALIST
APPROVAL DATE 5-13-08

RELEASED BY ROBERTO LACALLE — RESPONSIBLE OFFICE CHIEF
RELEASE DATE 5-13-08

(1) Revised pile spacing.
(2) Stem thickness at top shown on "DETAIL NO. 2" Sht
(3) Revised note to indicate Class 90 piles.
(4) Revised notes to indicate vertical piles.

STATE OF CALIFORNIA
DEPARTMENT OF TRANSPORTATION

DIVISION OF ENGINEERING SERVICES
STRUCTURE DESIGN
DESIGN BRANCH 1

BRIDGE NO. 53-E0181
POST MILE 3.28

SOUND WALL NO. 176
RETAINING WALL TYPE 5SWBP - DETAIL NO. 1

DS OSD 2147A (ENGLISH STANDARD DRAWING "XS" BORDER REV. 01/11/08)

ORIGINAL SCALE IN INCHES FOR REDUCED PLANS 0 1 2 3

UNIT: 3576
PROJECT NUMBER & PHASE: 07000018331
CONTRACT NO.: 07-215934

DISREGARD PRINTS BEARING EARLIER REVISION DATES

REVISION DATES 4-20-11 05/09/11 05/12/11 7/25/11

SHEET 23 OF 31

USERNAME => s135318
sw176-1-rwdt5-01.dgn

DATE PLOTTED => 28-MAR-2012 TIME PLOTTED => 13:17

DIST.	COUNTY	ROUTE	POST MILES TOTAL PROJECT	SHEET NO.	TOTAL SHEETS
07	LA	5	2.4/4.0	1161	1288

REGISTERED ENGINEER - CIVIL 12-08-11

3-26-12
PLANS APPROVAL DATE

REGISTERED PROFESSIONAL ENGINEER Kevin Harper No. 42221 Exp. 3-31-12 CIVIL STATE OF CALIFORNIA

The State of California or its officers or agents shall not be responsible for the accuracy or completeness of electronic copies of this plan sheet.

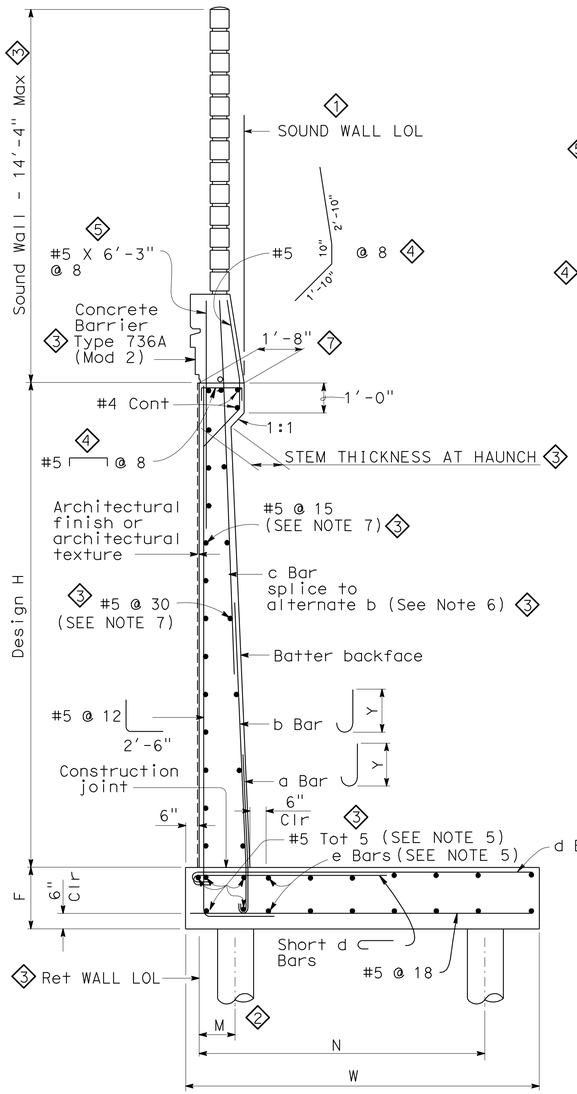

TYPICAL SECTION

NO SCALE

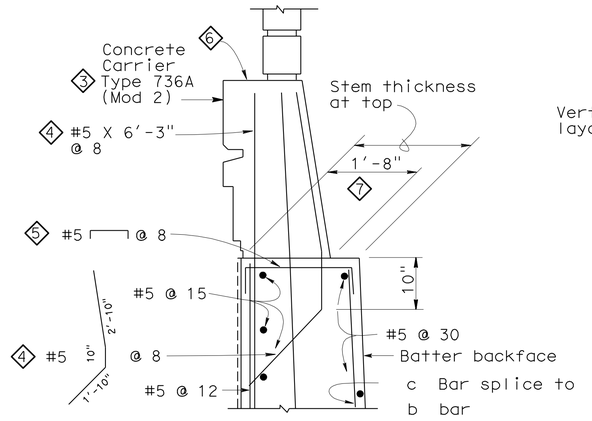

SPREAD FOOTING SECTION WITHOUT HAUNCH

NO SCALE

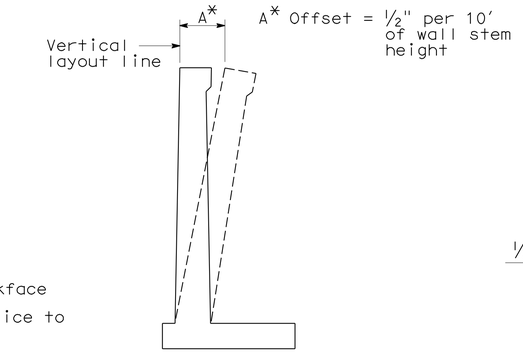

WALL OFFSET

NO SCALE

Values for offsetting forms to be determined by the engineer

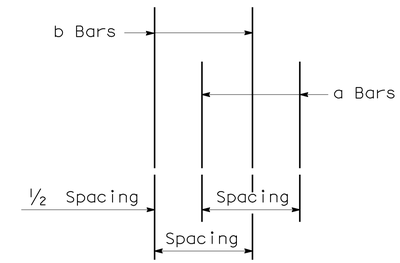

DETAIL A

NO SCALE

GENERAL NOTES

1. For soundwall and retaining wall architectural finish or texture, see details elsewhere in project plans.
2. For details not shown and drainage notes, see B3-8
3. Footing cover, 1'-6" minimum
4. For Sound Wall and Barrier Details, see "SOUND WALL - MASONRY BLOCK WITH BARRIER ON RETAINING WALL DETAILS NO. 1" and No. 2 sheets
5. Where applicable continue reinforcement 4'-0" onto adjacent Type 1SWBP Retaining Wall footings.
6. Extend "b" bars into barrier for "DESIGN H" 12' or less, see "RETAINING WALL TYPE 1 SWBP-DETAILS NO. 1 AND NO. 2" sheets for details.

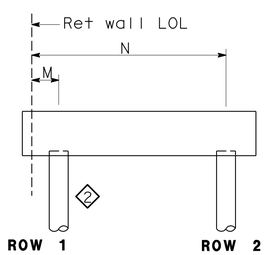

CONFIGURATION 1

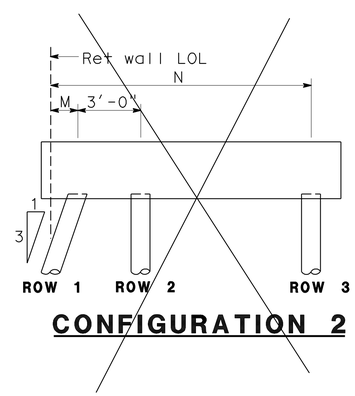

CONFIGURATION 2

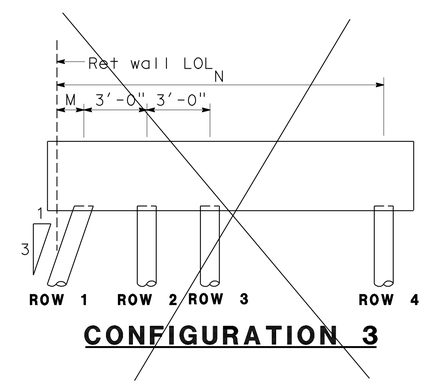

CONFIGURATION 3

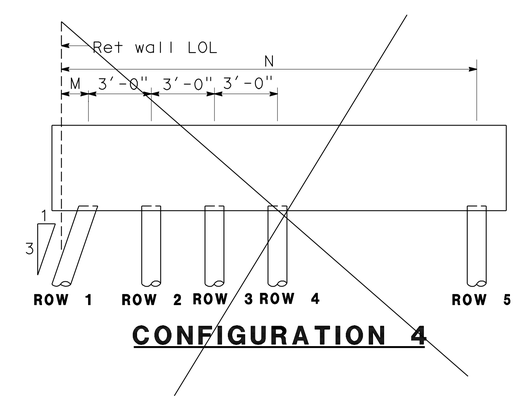

CONFIGURATION 4

SPECIAL DETAILS

REVISED STANDARD DRAWING

FILE NO. xs14-370-2e

APPROVED BY G. WANG
RESPONSIBLE TECHNICAL SPECIALIST
APPROVAL DATE 5-13-08

RELEASED BY ROBERTO LACALLE
RESPONSIBLE OFFICE CHIEF
RELEASE DATE 5-13-08

1. Sound Wall LOL added
2. Toe piles to be vertical
3. Notes modified/added
4. Reinforcement modified
5. Reinforcement added
6. Change Conc Barrier dimensions
7. Stem thickness at top modified

STATE OF CALIFORNIA
DEPARTMENT OF TRANSPORTATION

DIVISION OF ENGINEERING SERVICES
STRUCTURE DESIGN
DESIGN BRANCH 1

BRIDGE NO. 53-E0181
POST MILE 3.28

SOUND WALL NO. 176
RETAINING WALL TYPE 5SWBP - DETAIL NO. 2

DS OSD 2147A (ENGLISH STANDARD DRAWING "XS" BORDER REV. 01/11/08)

ORIGINAL SCALE IN INCHES FOR REDUCED PLANS 0 1 2 3

UNIT: 3576
PROJECT NUMBER & PHASE: 07000018331
CONTRACT NO.: 07-215934

DISREGARD PRINTS BEARING EARLIER REVISION DATES 4-21-11 05/09/11 05/12/11 7/25/11

SHEET 24 OF 31

DIST.	COUNTY	ROUTE	POST MILES TOTAL PROJECT	SHEET NO.	TOTAL SHEETS
07	LA	5	2.4/4.0	1162	1288

REGISTERED ENGINEER - CIVIL 12-08-11

3-26-12
PLANS APPROVAL DATE

REGISTERED PROFESSIONAL ENGINEER Kevin Harper No. 42221 Exp. 3-31-12 CIVIL STATE OF CALIFORNIA

The State of California or its officers or agents shall not be responsible for the accuracy or completeness of electronic copies of this plan sheet.

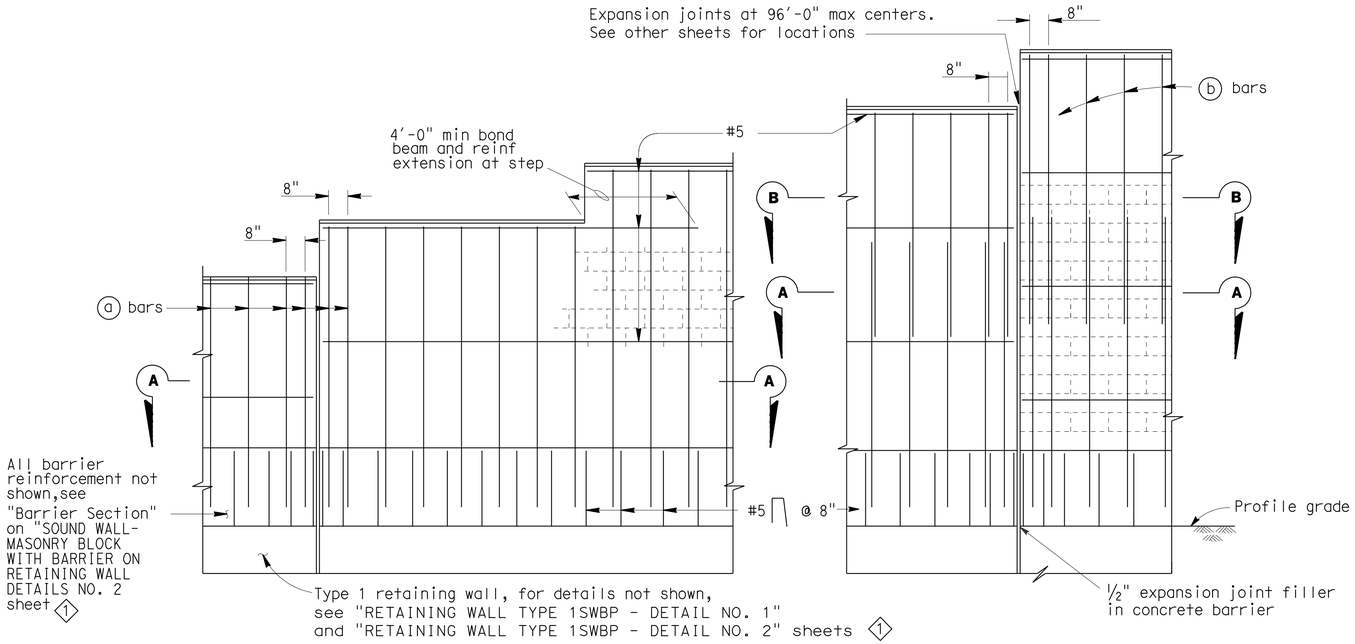

PART ELEVATIONS

SOUNDWALL REINFORCEMENT TABLE

Maximum H	ⓐ bars @ 1'-4" max	ⓑ bars @ 1'-4" max	"y"	f'm (KSI)	Compressive Strength of CMU (KSI)	Maximum H
6'-4"	# 4	———	———	1.5	1.9	6'-4"
8'-4"	# 4	———	———	1.5	1.9	8'-4"
10'-4"	# 4	———	———	1.5	1.9	10'-4"
12'-4"	# 5	# 4	5'-0"	1.5	1.9	12'-4"
14'-4"	# 6	# 4	7'-0"	1.5	1.9	14'-4"
16'-4"	# 6	# 4	9'-0"	2.5	3.7	16'-4"

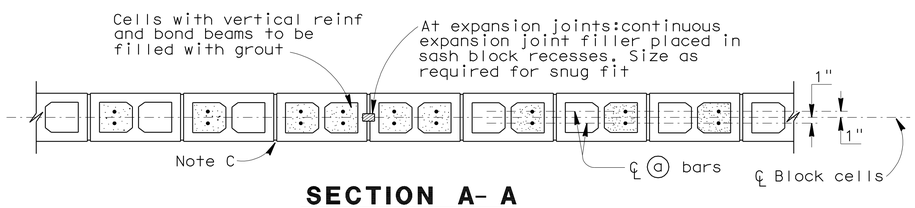

SECTION A- A

For details not shown,see other details

H=6'-4" THRU H= 10'-4"

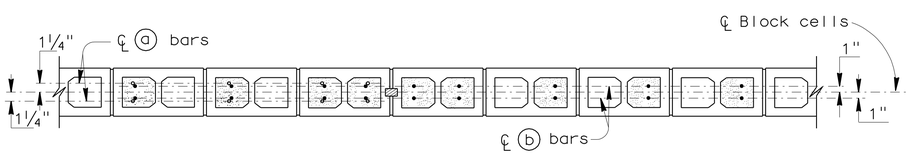

SECTION A- A

SECTION B- B

For details not shown,see other details

H=12'-4" THRU H= 16'-4"

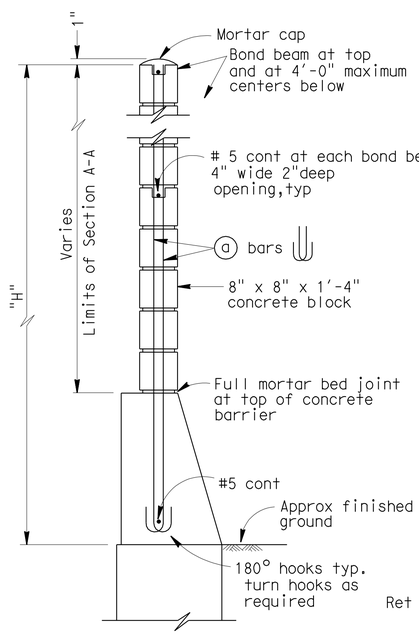

H=6'-4" THRU H=10'-4"

For details not shown,see H=12'-4" thru H=16'-4"

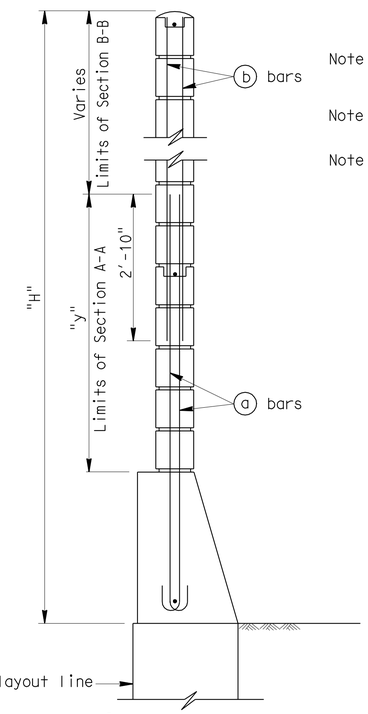

H=12'-4" THRU H=16'-4"

For details not shown,see H=6'-4" thru H=10'-4"

TYPICAL SECTIONS

Note I : For details not shown, see "SOUND WALL - MASONRY BLOCK WITH BARRIER ON RETAINING WALL DETAILS NO. 2" sheet 1

Note II : Slope ground at traffic side of barrier to drain. Maximum slope ±10%.

Note III: See Standard Plan B15-9 "SOUND WALL MASONRY BLOCK - MISCELLANEOUS DETAILS" sheet for other details. 1

GENERAL NOTES

Note A: For type of block and joint finish, see other sheets.

Note B: When blocks are laid in stacked bond, ladder type, galvanized joint reinforcement shall be provided. A minimum of 0.07"-0.14" wire continuous at 4'-0" maximum to be used. Locate reinforcement in joints that are at the approximate midpoint between bond beams.

Note C: Horizontal joints shall be tooled concave or may be weathered.
Vertical joints shall be tooled concave or may be raked.

Note D: For intermediate wall heights that are between the "H's" given. Use the tabular information for the next higher "H".

Note E: Masonry strengths are listed in "SOUNDWALL REINFORCEMENT TABLE".

Note F: Concrete to be used for the barrier shall contain not less than 590 pounds of cementitious material per cubic yard.

SPECIAL DETAILS

REVISED STANDARD DRAWING

FILE NO. xs15-130-1e

APPROVED BY T SATTER — RESPONSIBLE TECHNICAL SPECIALIST
APPROVAL DATE 10/22/09

RELEASED BY ROBERTO LACALLE — RESPONSIBLE OFFICE CHIEF
RELEASE DATE 10/22/09

1 Sheet reference notes corrected

STATE OF CALIFORNIA DEPARTMENT OF TRANSPORTATION

DIVISION OF ENGINEERING SERVICES STRUCTURE DESIGN
DESIGN BRANCH 1

BRIDGE NO. 53-E0181
POST MILE 3.28

SOUND WALL NO. 176
SOUND WALL - MASONRY BLOCK WITH BARRIER ON RETAINING WALL DETAILS NO. 1

DS OSD 2147A (ENGLISH STANDARD DRAWING "XS" BORDER REV. 10/22/09)

ORIGINAL SCALE IN INCHES FOR REDUCED PLANS 0 1 2 3

UNIT: 3576
PROJECT NUMBER & PHASE: 07000018331
CONTRACT NO.: 07-215934

DISREGARD PRINTS BEARING EARLIER REVISION DATES

REVISION DATES 10/22/10 04/01/11 03/30/12 SHEET 25 OF 31

USERNAME => s135318 sw176-k-swdt01.dgn

DATE PLOTTED => 28-MAR-2012 TIME PLOTTED => 13:17

DIST.	COUNTY	ROUTE	POST MILES TOTAL PROJECT	SHEET NO.	TOTAL SHEETS
07	LA	5	2.4/4.0	1163	1288

REGISTERED ENGINEER - CIVIL 12-08-11

3-26-12
PLANS APPROVAL DATE

REGISTERED PROFESSIONAL ENGINEER Kevin Harper No. 42221 Exp. 3-31-12 CIVIL STATE OF CALIFORNIA

The State of California or its officers or agents shall not be responsible for the accuracy or completeness of electronic copies of this plan sheet.

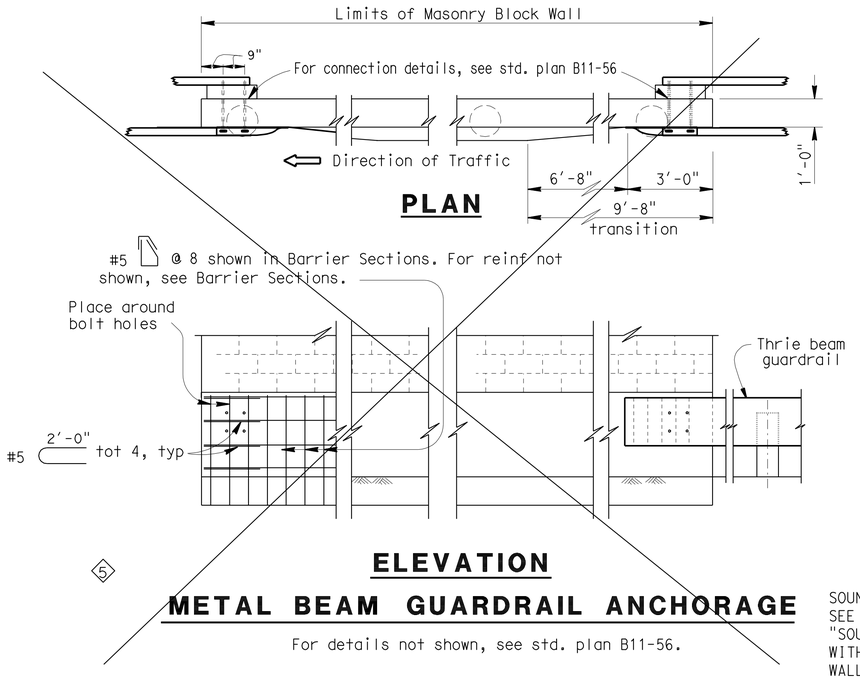

ELEVATION
METAL BEAM GUARDRAIL ANCHORAGE

For details not shown, see std. plan B11-56.

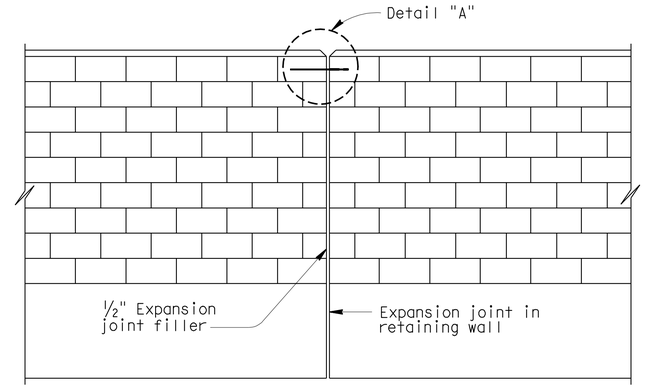

ALIGNMENT KEY DETAIL

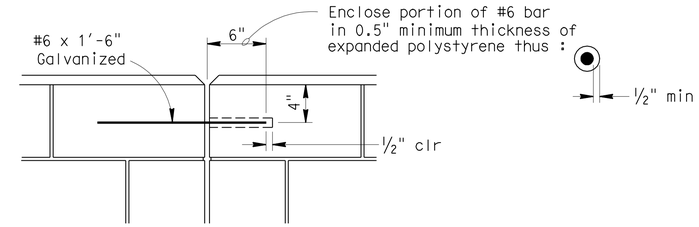

DETAIL A

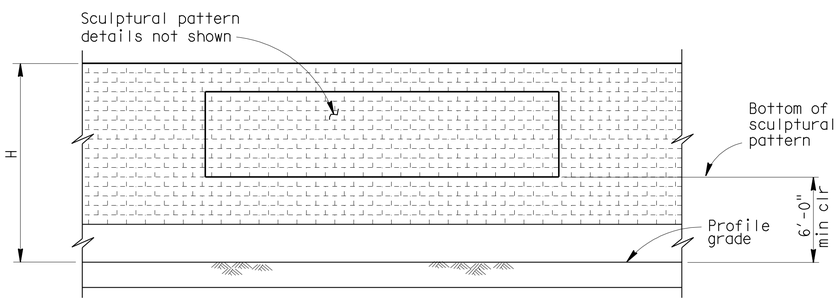

CLEARANCE DETAIL

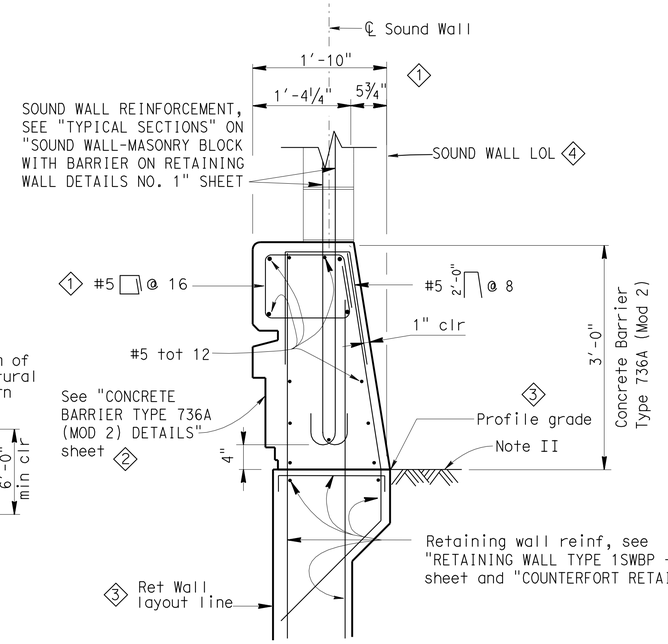

BARRIER SECTION

DESIGN NOTES

DESIGN

Uniform Building Code,1997 Edition and the Bridge Design Specifications.

DESIGN WIND LOAD

33 PSF

DESIGN SEISMIC LOAD

0.57 Dead load

CONCRETE MASONRY

REINFORCED CONCRETE

f'c = 3250 PSI
fy = 60 KSI

REGULAR STRENGTH	HIGH STRENGTH	
f'm = 1500 PSI	f'm = 2000 PSI	f'm = 2500 PSI
f_b = 1500 PSI	f_b = 660 PSI	f_b = 830 PSI
fs = 24.0 KSI	fs = 24.0 KSI	fs = 24000 PSI
n = 25.8	n = 19.3	n = 15.5

LOAD FACTORS AND LOAD COMBINATIONS

Working Stress Design (WSD) Percentage of unit stress

Group 1: D + E + SC 100%
Group 2: D + W + SC + E 100%
Group 3: D + 0.71 EQD + E 100%

Where:

D = Dead load
E = Lateral earth pressure
SC = Live load surcharge
W = Wind load
EQD = Seismic dead load

Load Factor Design (LFD)

Group A: β D +1.7 E + 1.7 SC
Group B: β D +1.7 E + 1.3 W
Group C: β D +1.3 E + 1.0 EQE
Group D: β D +1.3 E + 1.0 EQD
Group E: β D +1.1 E + 0.85 (EQE + EQD)

Where : β = 0.9 or 1.2, whichever controls in design
D = Dead load
E = Lateral earth pressure
SC = Live load surcharge
W = Wind load
EQD = Seismic dead load
EQE = Seismic earth load

STRENGTH REDUCTION FACTORS, Ø

Reinforced concrete:
For flexure _____ Ø=0.90
For shear _____ Ø=0.85

Concrete masonry:
For flexure _____ Ø=0.80
For shear _____ Ø=0.60

Foundations :

See "RETAINING WALL TYPE 1SWBP - DETAIL NO. 1" sheet. 3

NOTES:

3 I : For details not shown, see "RETAINING WALL TYPE 1SWBP - DETAIL NO. 1" and No. 2 sheets

II : Slope ground at traffic side of barrier to drain. Maximum slope ±10%. See Standard Plan B11-56, Note D.

SPECIAL DETAILS

REVISED STANDARD DRAWING

FILE NO. xs15-130-2e

APPROVED BY T SATTER — RESPONSIBLE TECHNICAL SPECIALIST
APPROVAL DATE 10/22/09

RELEASED BY ROBERTO LACALLE — RESPONSIBLE OFFICE CHIEF
RELEASE DATE 10/22/09

1 Barrier dimensions and reinf changed
2 Added note for barrier aesthetics
3 Sheet reference notes corrected
4 Sound Wall LOL added
5 Delete obsolete detail

STATE OF CALIFORNIA
DEPARTMENT OF TRANSPORTATION

DIVISION OF ENGINEERING SERVICES
STRUCTURE DESIGN
DESIGN BRANCH 1

BRIDGE NO. 53-E0181
POST MILE 3.28

SOUND WALL NO. 176
SOUND WALL - MASONRY BLOCK WITH BARRIER ON RETAINING WALL DETAILS NO. 2

DS OSD 2147A (ENGLISH STANDARD DRAWING "XS" BORDER REV. 01/11/08)

ORIGINAL SCALE IN INCHES FOR REDUCED PLANS 0 1 2 3

UNIT: 3576
PROJECT NUMBER & PHASE: 07000018331 CONTRACT NO.: 07-215934

DISREGARD PRINTS BEARING EARLIER REVISION DATES → 11/30/10 04/01/11 7/25/11

SHEET 26 OF 31

USERNAME => s135318 DATE PLOTTED => 28-MAR-2012 TIME PLOTTED => 13:17

USERNAME => s135318 sw176-k-swdt02.dgn

DIST	COUNTY	ROUTE	POST MILES TOTAL PROJECT	SHEET No.	TOTAL SHEETS
07	LA	5	2.4/4.0	1164	1288

GEOTECHNICAL PROFESSIONAL — DATE 06/2011

3-26-12
PLANS APPROVAL DATE

REGISTERED PROFESSIONAL ENGINEER — MICHAEL G. SMITH — No. 2229 — Exp. 3-31-2012 — GEOTECHNICAL — STATE OF CALIFORNIA

The State of California or its officers or agents shall not be responsible for the accuracy or completeness of electronic copies of this plan sheet.

BENCH MARK

PRHV 102 Elev 86.67′
FOUND PK NAIL & TIN SET BY OTHERS ON ISLAND @ THE BEGINNING OF SB 1-5 ON-RAMP AND ROSECRANS AVE PER SR 09-037-000010
NAVD 88

PRHV 103 Elev 84.50′
FOUND CHISELED "X" ON BACK WALK @ INLET AT SE CORNER OF ROSECRANS AVE AND FIRESTONE BLVD PER SR 09-037-000010
NAVD 88

PRHV 110 Elev 78.31′
FOUND L & "LACO DPW" TAG @ NE CORNER OF FIRESTONE BLVD AND SHOEMAKER AVE, N/O 1-5
NAVD 88

PRHV 115 Elev 79.95′
FOUND PK NAIL & TIN ON TC @ SE CORNER OF SHOEMAKER AVE AND FIRESTONE BLVD, S/O 1-5
NAVD 88

Notes

1. This LOTB sheet was prepared in accordance with the Caltrans Soil & Rock Logging, Classification, and Presentation Manual (2010) except three digit sequence number in boring identification starting with the segment number per exception request approved on April 08, 2009.

2. For protection of underground utility lines, hand-auger was used to remove top 5 to 10 feet of subsurface material for exploratory borings and cone penetration testings.

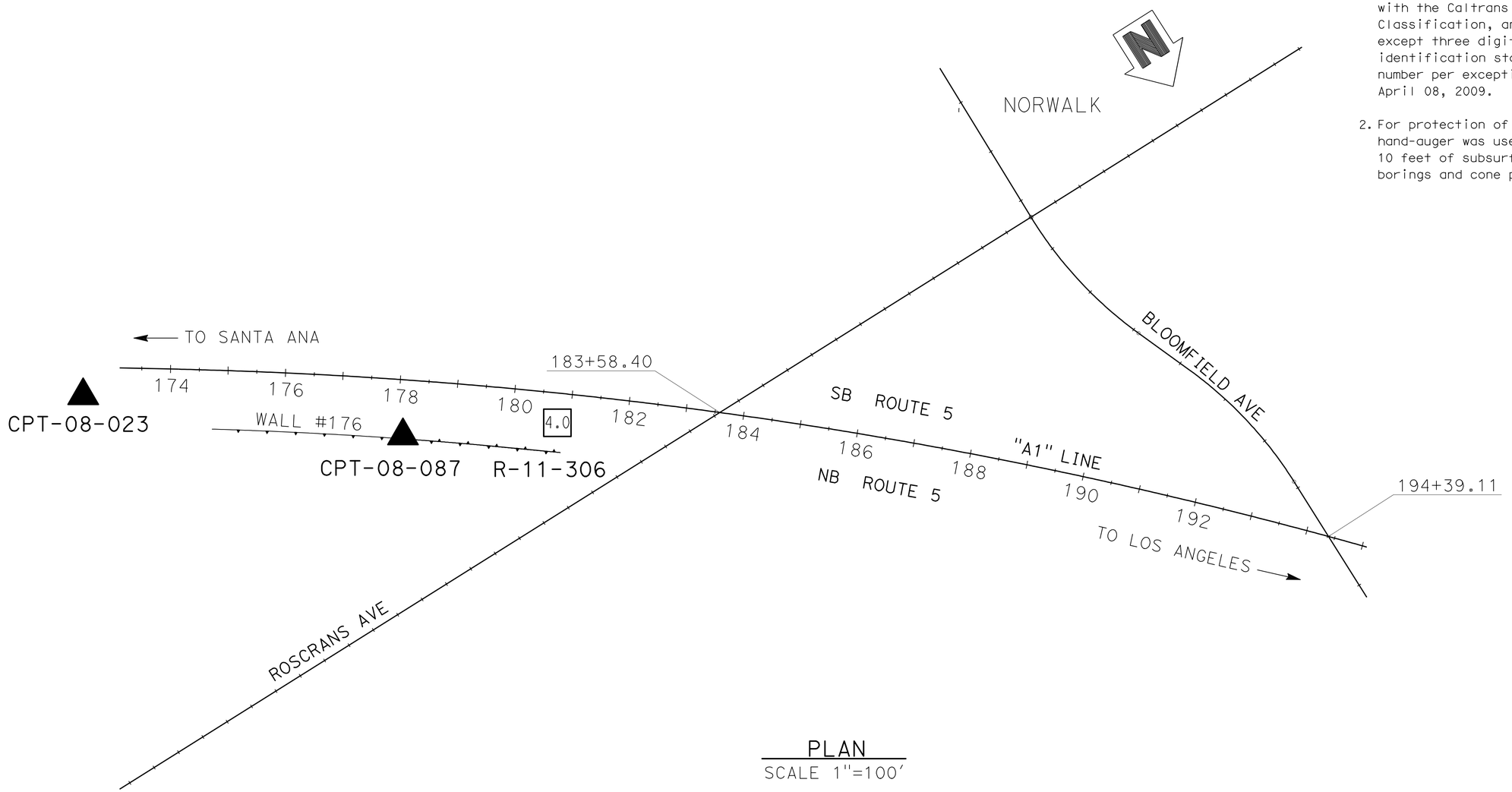

PLAN
SCALE 1"=100′

ENGINEERING SERVICES	MATERIALS AND GEOTECHNICAL SERVICES	STATE OF CALIFORNIA DEPARTMENT OF TRANSPORTATION	DIVISION OF ENGINEERING SERVICES STRUCTURE DESIGN DESIGN BRANCH 1	BRIDGE NO. 53-E0181 POST MILE 3.28	SOUND WALL NO. 176
FUNCTIONAL SUPERVISOR NAME: M. SMITH	DRAWN BY: P.QUACH CHECKED BY: D.ORRIS	FIELD INVESTIGATION BY: P.MCDONALD/L.ROEBUCK			LOG OF TEST BORINGS SHEET 1 OF 5

OGS CIVIL LOG OF TEST BORINGS SHEET

ORIGINAL SCALE IN INCHES FOR REDUCED PLANS 0 1 2 3

UNIT: 3576
PROJECT NUMBER & PHASE: 07000018331 CONTRACT NO.: 07-215934

DISREGARD PRINTS BEARING EARLIER REVISION DATES → REVISION DATES 06/17/11

SHEET 27 OF 31

FILE => sw176-z-1tb01.dgn

USERNAME => s135318 DATE PLOTTED => 28-MAR-2012 TIME PLOTTED => 13:17

DIST	COUNTY	ROUTE	POST MILES TOTAL PROJECT	SHEET No.	TOTAL SHEETS
07	LA	5	2.4/4.0	1165	1288

GEOTECHNICAL PROFESSIONAL — DATE 06/2011

3-26-12
PLANS APPROVAL DATE

REGISTERED PROFESSIONAL ENGINEER — MICHAEL G. SMITH No. 2229 Exp. 3-31-2012 GEOTECHNICAL — STATE OF CALIFORNIA

The State of California or its officers or agents shall not be responsible for the accuracy or completeness of electronic copies of this plan sheet.

FOR PLAN VIEW, SEE
"LOG OF TEST BORINGS" 1 OF 5

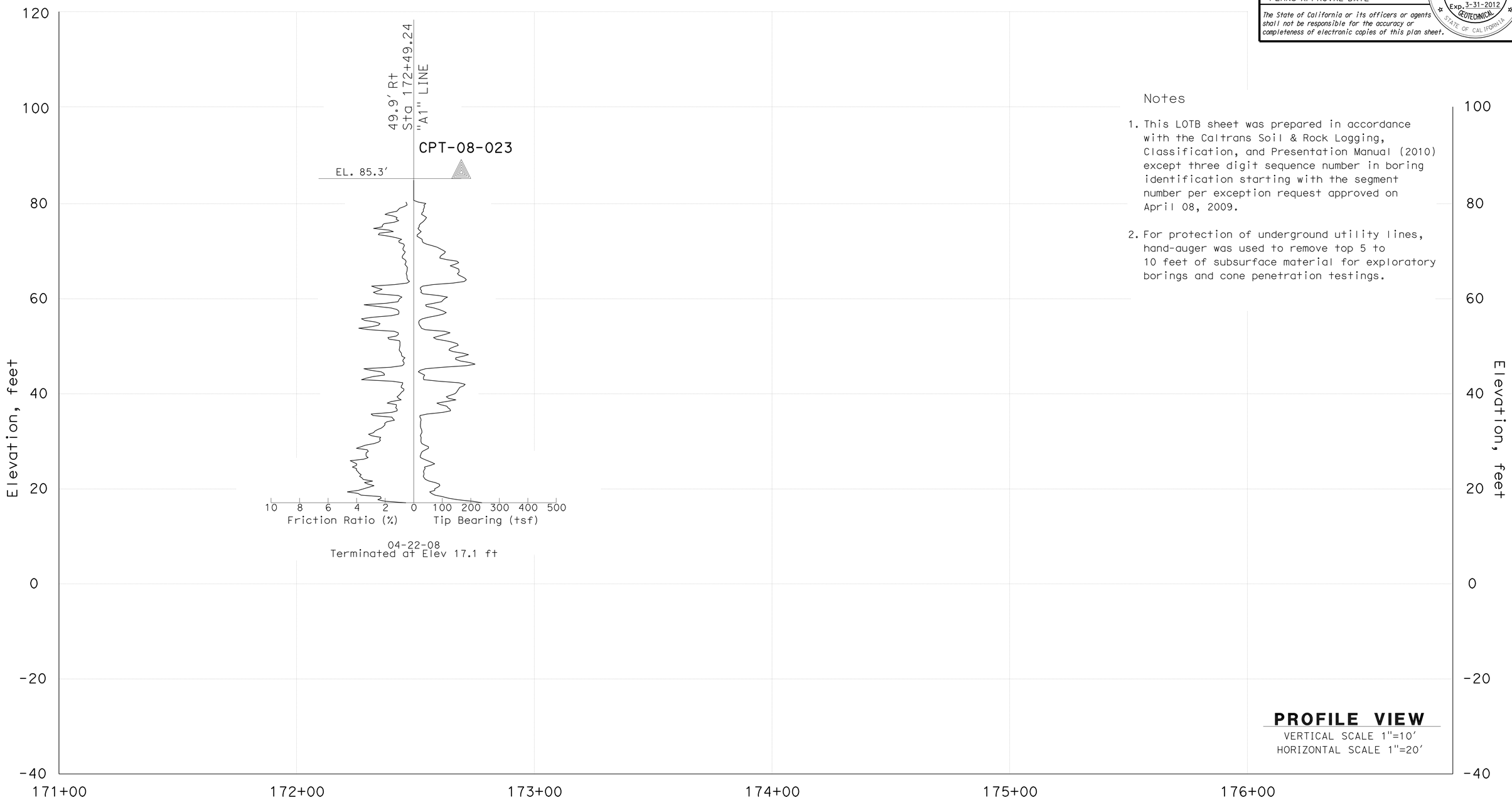

Notes

1. This LOTB sheet was prepared in accordance with the Caltrans Soil & Rock Logging, Classification, and Presentation Manual (2010) except three digit sequence number in boring identification starting with the segment number per exception request approved on April 08, 2009.

2. For protection of underground utility lines, hand-auger was used to remove top 5 to 10 feet of subsurface material for exploratory borings and cone penetration testings.

ENGINEERING SERVICES	MATERIALS AND GEOTECHNICAL SERVICES	STATE OF CALIFORNIA DEPARTMENT OF TRANSPORTATION	DIVISION OF ENGINEERING SERVICES STRUCTURE DESIGN DESIGN BRANCH 1	BRIDGE NO. 53-E0181 POST MILE 3.28	SOUND WALL NO. 176 LOG OF TEST BORINGS SHEET 2 OF 5
FUNCTIONAL SUPERVISOR NAME: M. SMITH	DRAWN BY: P.QUACH CHECKED BY: D.ORRIS	FIELD INVESTIGATION BY: P.MCDONALD/L.ROEBUCK			

OGS CIVIL LOG OF TEST BORINGS SHEET — ORIGINAL SCALE IN INCHES FOR REDUCED PLANS 0 1 2 3

UNIT: 3576
PROJECT NUMBER & PHASE: 07000018331 — CONTRACT NO.: 07-215934

DISREGARD PRINTS BEARING EARLIER REVISION DATES → 06/17/11

REVISION DATES — SHEET 28 OF 31

FILE => sw176-z-ltb02.dgn

USERNAME => s135318 DATE PLOTTED => 28-MAR-2012 TIME PLOTTED => 13:17

DIST	COUNTY	ROUTE	POST MILES TOTAL PROJECT	SHEET No.	TOTAL SHEETS
07	LA	5	2.4/4.0	1166	1288

GEOTECHNICAL PROFESSIONAL — DATE 06/2011

3-26-12
PLANS APPROVAL DATE

REGISTERED PROFESSIONAL ENGINEER — MICHAEL G. SMITH No. 2229 Exp. 3-31-2012 GEOTECHNICAL — STATE OF CALIFORNIA

The State of California or its officers or agents shall not be responsible for the accuracy or completeness of electronic copies of this plan sheet.

FOR PLAN VIEW, SEE
"LOG OF TEST BORINGS" 1 OF 5

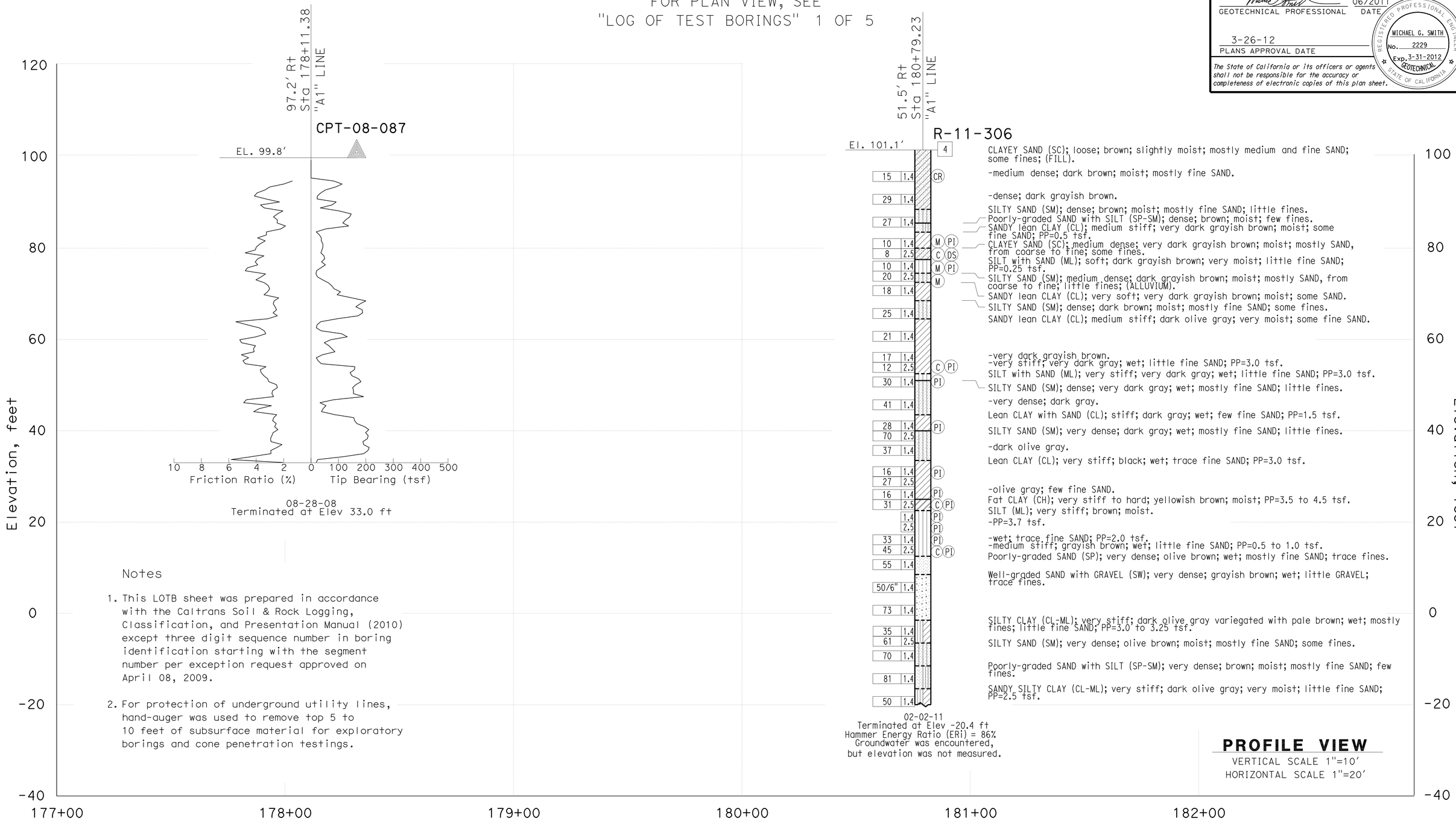

Notes

1. This LOTB sheet was prepared in accordance with the Caltrans Soil & Rock Logging, Classification, and Presentation Manual (2010) except three digit sequence number in boring identification starting with the segment number per exception request approved on April 08, 2009.

2. For protection of underground utility lines, hand-auger was used to remove top 5 to 10 feet of subsurface material for exploratory borings and cone penetration testings.

ENGINEERING SERVICES	MATERIALS AND GEOTECHNICAL SERVICES	STATE OF CALIFORNIA DEPARTMENT OF TRANSPORTATION	DIVISION OF ENGINEERING SERVICES STRUCTURE DESIGN DESIGN BRANCH 1	BRIDGE NO. 53-E0181 POST MILE 3.28	ROUND WALL NO. 176
FUNCTIONAL SUPERVISOR NAME: M. SMITH	DRAWN BY: P.QUACH CHECKED BY: D.ORRIS	FIELD INVESTIGATION BY: P.MCDONALD/L.ROEBUCK			LOG OF TEST BORINGS SHEET 3 OF 5

OGS CIVIL LOG OF TEST BORINGS SHEET — ORIGINAL SCALE IN INCHES FOR REDUCED PLANS 0 1 2 3

UNIT: 3576
PROJECT NUMBER & PHASE: 07000018331 — CONTRACT NO.: 07-215934

DISREGARD PRINTS BEARING EARLIER REVISION DATES → REVISION DATES 06/17/11 — SHEET 29 OF 31

FILE => sw176-z-ltb03.dgn

USERNAME => s135318 DATE PLOTTED => 28-MAR-2012 TIME PLOTTED => 13:17

REFERENCE: CALTRANS SOIL & ROCK LOGGING, CLASSIFICATION, AND PRESENTATION MANUAL (2010)

DIST	COUNTY	ROUTE	POST MILES TOTAL PROJECT	SHEET No.	TOTAL SHEETS
07	LA	5	2.4/4.0	1167	1288

GEOTECHNICAL PROFESSIONAL — DATE 06/2011

3-26-12
PLANS APPROVAL DATE

REGISTERED PROFESSIONAL ENGINEER — MICHAEL G. SMITH No. 2229 Exp. 3-31-2012 GEOTECHNICAL — STATE OF CALIFORNIA

The State of California or its officers or agents shall not be responsible for the accuracy or completeness of electronic copies of this plan sheet.

CEMENTATION

Description	Criteria
Weak	Crumbles or breaks with handling or little finger pressure.
Moderate	Crumbles or breaks with considerable finger pressure.
Strong	Will not crumble or break with finger pressure.

BOREHOLE IDENTIFICATION

Symbol	Hole Type	Description
Size	A	Auger Boring (hollow or solid stem bucket)
Size	R RW RC P	Rotary drilled boring (conventional) Rotary drilled with self-casing wire-line Rotary core with continuously-sampled, self-casing wire-line Rotary percussion boring (air)
Size	R	Rotary drilled diamond core
Size	HD HA	Hand driven (1-inch soil tube) Hand Auger
●	D	Dynamic Cone Penetration Boring
▲	CPT	Cone Penetration Test (ASTM D 5778)
⬚	O	Other (note on LOTB)

Note: Size in inches.

CONSISTENCY OF COHESIVE SOILS

Description	Shear Strength (tsf)	Pocket Penetrometer Measurement, PP, (tsf)	Torvane Measurement, TV, (tsf)	Vane Shear Measurement, VS, (tsf)
Very Soft	Less than 0.12	Less than 0.25	Less than 0.12	Less than 0.12
Soft	0.12 - 0.25	0.25 - 0.5	0.12 - 0.25	0.12 - 0.25
Medium Stiff	0.25 - 0.5	0.5 - 1	0.25 - 0.5	0.25 - 0.5
Stiff	0.5 - 1	1 - 2	0.5 - 1	0.5 - 1
Very Stiff	1 - 2	2 - 4	1 - 2	1 - 2
Hard	Greater than 2	Greater than 4	Greater than 2	Greater than 2

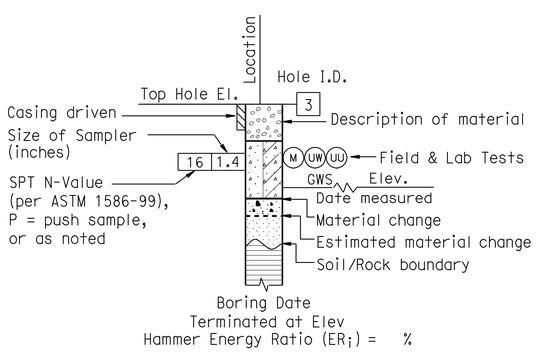

ROTARY BORING

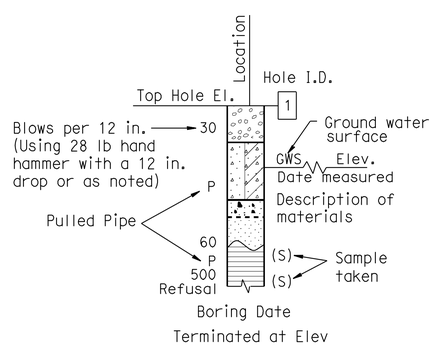

HAND BORING

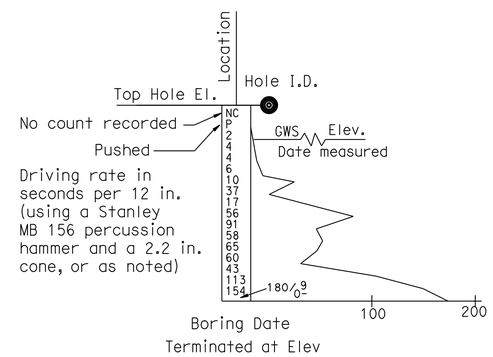

DYNAMIC CONE PENETRATION BORING

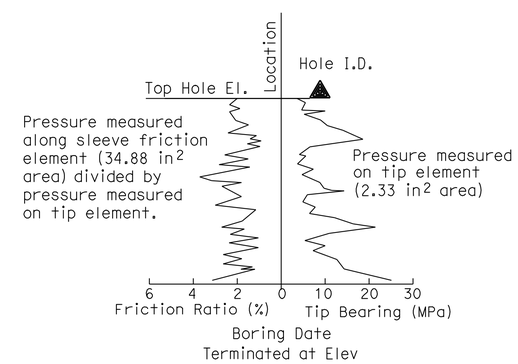

CONE PENETRATION TEST (CPT) BORING

ENGINEERING SERVICES	MATERIALS AND GEOTECHNICAL SERVICES	STATE OF CALIFORNIA DEPARTMENT OF TRANSPORTATION	DIVISION OF ENGINEERING SERVICES STRUCTURE DESIGN DESIGN BRANCH 1	BRIDGE NO. 53-E0181 POST MILE 3.28	SOUND WALL NO. 176
FUNCTIONAL SUPERVISOR NAME: M. SMITH	DRAWN BY: P.QUACH CHECKED BY: D.ORRIS	FIELD INVESTIGATION BY: P.MCDONALD/L.ROEBUCK			LOG OF TEST BORINGS SHEET 4 OF 5

OGS CIVIL LOG OF TEST BORINGS SHEET — ORIGINAL SCALE IN INCHES FOR REDUCED PLANS 0 1 2 3

UNIT: 3756
PROJECT NUMBER & PHASE: 07000018331 — CONTRACT NO.: 07-215934

DISREGARD PRINTS BEARING EARLIER REVISION DATES → 06/17/11 — REVISION DATES — SHEET 30 OF 31

FILE => sw176-z-ltb04.dgn

USERNAME => s135318 DATE PLOTTED => 28-MAR-2012 TIME PLOTTED => 13:17

REFERENCE: CALTRANS SOIL & ROCK LOGGING, CLASSIFICATION, AND PRESENTATION MANUAL (2010)

DIST	COUNTY	ROUTE	POST MILES TOTAL PROJECT	SHEET No.	TOTAL SHEETS
07	LA	5	2.4/4.0	1168	1288

GEOTECHNICAL PROFESSIONAL — 06/2011 DATE

3-26-12
PLANS APPROVAL DATE

REGISTERED PROFESSIONAL ENGINEER — MICHAEL G. SMITH No. 2229 Exp. 3-31-2012 GEOTECHNICAL — STATE OF CALIFORNIA

The State of California or its officers or agents shall not be responsible for the accuracy or completeness of electronic copies of this plan sheet.

GROUP SYMBOLS AND NAMES

Graphic/Symbol	Group Names
GW	Well-graded GRAVEL Well-graded GRAVEL with SAND
GP	Poorly-graded GRAVEL Poorly-graded GRAVEL with SAND
GW-GM	Well-graded GRAVEL with SILT Well-graded GRAVEL with SILT and SAND
GW-GC	Well-graded GRAVEL with CLAY (or SILTY CLAY) Well-graded GRAVEL with CLAY and SAND (or SILTY CLAY and SAND)
GP-GM	Poorly-graded GRAVEL with SILT Poorly-graded GRAVEL with SILT and SAND
GP-GC	Poorly-graded GRAVEL with CLAY (or SILTY CLAY) Poorly-graded GRAVEL with CLAY and SAND (or SILTY CLAY and SAND)
GM	SILTY GRAVEL SILTY GRAVEL with SAND
GC	CLAYEY GRAVEL CLAYEY GRAVEL with SAND
GC-GM	SILTY, CLAYEY GRAVEL SILTY, CLAYEY GRAVEL with SAND
SW	Well-graded SAND Well-graded SAND with GRAVEL
SP	Poorly-graded SAND Poorly-graded SAND with GRAVEL
SW-SM	Well-graded SAND with SILT Well-graded SAND with SILT and GRAVEL
SW-SC	Well-graded SAND with CLAY (or SILTY CLAY) Well-graded SAND with CLAY and GRAVEL (or SILTY CLAY and GRAVEL)
SP-SM	Poorly-graded SAND with SILT Poorly-graded SAND with SILT and GRAVEL
SP-SC	Poorly-graded SAND with CLAY (or SILTY CLAY) Poorly-graded SAND with CLAY and GRAVEL (or SILTY CLAY and GRAVEL)
SM	SILTY SAND SILTY SAND with GRAVEL
SC	CLAYEY SAND CLAYEY SAND with GRAVEL
SC-SM	SILTY, CLAYEY SAND SILTY, CLAYEY SAND with GRAVEL
PT	PEAT
	COBBLES COBBLES and BOULDERS BOULDERS

Graphic/Symbol	Group Names
CL	Lean CLAY Lean CLAY with SAND Lean CLAY with GRAVEL SANDY lean CLAY SANDY lean CLAY with GRAVEL GRAVELLY lean CLAY GRAVELLY lean CLAY with SAND
CL-ML	SILTY CLAY SILTY CLAY with SAND SILTY CLAY with GRAVEL SANDY SILTY CLAY SANDY SILTY CLAY with GRAVEL GRAVELLY SILTY CLAY GRAVELLY SILTY CLAY with SAND
ML	SILT SILT with SAND SILT with GRAVEL SANDY SILT SANDY SILT with GRAVEL GRAVELLY SILT GRAVELLY SILT with SAND
OL	ORGANIC lean CLAY ORGANIC lean CLAY with SAND ORGANIC lean CLAY with GRAVEL SANDY ORGANIC lean CLAY SANDY ORGANIC lean CLAY with GRAVEL GRAVELLY ORGANIC lean CLAY GRAVELLY ORGANIC lean CLAY with SAND
OL	ORGANIC SILT ORGANIC SILT with SAND ORGANIC SILT with GRAVEL SANDY ORGANIC SILT SANDY ORGANIC SILT with GRAVEL GRAVELLY ORGANIC SILT GRAVELLY ORGANIC SILT with SAND
CH	Fat CLAY Fat CLAY with SAND Fat CLAY with GRAVEL SANDY fat CLAY SANDY fat CLAY with GRAVEL GRAVELLY fat CLAY GRAVELLY fat CLAY with SAND
MH	Elastic SILT Elastic SILT with SAND Elastic SILT with GRAVEL SANDY elastic SILT SANDY elastic SILT with GRAVEL GRAVELLY elastic SILT GRAVELLY elastic SILT with SAND
OH	ORGANIC fat CLAY ORGANIC fat CLAY with SAND ORGANIC fat CLAY with GRAVEL SANDY ORGANIC fat CLAY SANDY ORGANIC fat CLAY with GRAVEL GRAVELLY ORGANIC fat CLAY GRAVELLY ORGANIC fat CLAY with SAND
OH	ORGANIC elastic SILT ORGANIC elastic SILT with SAND ORGANIC elastic SILT with GRAVEL SANDY ORGANIC elastic SILT SANDY ORGANIC elastic SILT with GRAVEL GRAVELLY ORGANIC elastic SILT GRAVELLY ORGANIC elastic SILT with SAND
OL/OH	ORGANIC SOIL ORGANIC SOIL with SAND ORGANIC SOIL with GRAVEL SANDY ORGANIC SOIL SANDY ORGANIC SOIL with GRAVEL GRAVELLY ORGANIC SOIL GRAVELLY ORGANIC SOIL with SAND

FIELD AND LABORATORY TESTING

- (C) Consolidation (ASTM D 2435)
- (CL) Collapse Potential (ASTM D 5333)
- (CP) Compaction Curve (CTM 216)
- (CR) Corrosivity Testing (CTM 643, CTM 422, CTM 417)
- (CU) Consolidated Undrained Triaxial (ASTM D 4767)
- (DS) Direct Shear (ASTM D 3080)
- (EI) Expansion Index (ASTM D 4829)
- (M) Moisture Content (ASTM D 2216)
- (OC) Organic Content-% (ASTM D 2974)
- (P) Permeability (CTM 220)
- (PA) Particle Size Analysis (ASTM D 422)
- (PI) Plasticity Index (AASHTO T 90) Liquid Limit (AASHTO T 89)
- (PL) Point Load Index (ASTM D 5731)
- (PM) Pressure Meter
- (R) R-Value (CTM 301)
- (SE) Sand Equivalent (CTM 217)
- (SG) Specific Gravity (AASHTO T 100)
- (SL) Shrinkage Limit (ASTM D 427)
- (SW) Swell Potential (ASTM D 4546)
- (UC) Unconfined Compression-Soil (ASTM D 2166) Unconfined Compression-Rock (ASTM D 2938)
- (UU) Unconsolidated Undrained Triaxial (ASTM D 2850)
- (UW) Unit Weight (ASTM D 4767)

APPARENT DENSITY OF COHESIONLESS SOILS

Description	SPT N_{60} (Blows / 12 in.)
Very Loose	0 - 5
Loose	5 - 10
Medium Dense	10 - 30
Dense	30 - 50
Very Dense	Greater than 50

MOISTURE

Description	Criteria
Dry	No discernable moisture
Moist	Moisture present, but no free water
Wet	Visible free water

PERCENT OR PROPORTION OF SOILS

Description	Criteria
Trace	Particles are present but estimated to be less than 5%
Few	5% - 10%
Little	15% - 25%
Some	30% - 45%
Mostly	50% - 100%

PARTICLE SIZE

Description		Size (in.)
Boulder		Greater than 12
Cobble		3 - 12
Gravel	Coarse	3/4 - 3
	Fine	1/5 - 3/4
Sand	Coarse	1/16 - 1/5
	Medium	1/64 - 1/16
	Fine	1/300 - 1/64
Silt and Clay		Less than 1/300

ENGINEERING SERVICES — MATERIALS AND GEOTECHNICAL SERVICES

FUNCTIONAL SUPERVISOR
NAME: M. SMITH
DRAWN BY: P.QUACH
CHECKED BY: D.ORRIS
FIELD INVESTIGATION BY: P.MCDONALD/L.ROEBUCK

STATE OF CALIFORNIA DEPARTMENT OF TRANSPORTATION

DIVISION OF ENGINEERING SERVICES STRUCTURE DESIGN — DESIGN BRANCH 1

BRIDGE NO. 53-E0181
POST MILE 3.28

SOUND WALL NO. 176

LOG OF TEST BORINGS SHEET 5 OF 5

OGS CIVIL LOG OF TEST BORINGS SHEET

ORIGINAL SCALE IN INCHES FOR REDUCED PLANS 0 1 2 3

UNIT: 3576
PROJECT NUMBER & PHASE: 07000018331
CONTRACT NO.: 07-215934

DISREGARD PRINTS BEARING EARLIER REVISION DATES — REVISION DATES 06/17/11

SHEET 31 OF 31

FILE => sw176-z-ltb05.dgn

USERNAME => s135318 DATE PLOTTED => 28-MAR-2012 TIME PLOTTED => 13:18

DIST	COUNTY	ROUTE	POST MILES TOTAL PROJECT	SHEET No.	TOTAL SHEETS
07	LA	5	2.4/4.0	1169	1288

REGISTERED CIVIL ENGINEER 12-8-11 DATE

3-26-12
PLANS APPROVAL DATE

REGISTERED PROFESSIONAL ENGINEER Kevin Harper No. 42221 Exp. 3-31-12 CIVIL STATE OF CALIFORNIA

The State of California or its officers or agents shall not be responsible for the accuracy or completeness of electronic copies of this plan sheet.

Notes:

1. For Design Notes, see "RETAINING WALL TYPE 1SWBP - DETAIL NO. 1" sheet, Standard Plan B15-7: "SOUND WALL MASONRY BLOCK ON TYPE 736S/SV BARRIER DETAILS (2)" and "SOUND WALL - MASONRY BLOCK WITH BARRIER ON RETAINING WALL DETAILS NO. 2" sheet.
2. All piles are not shown in "DEVELOPED ELEVATION".

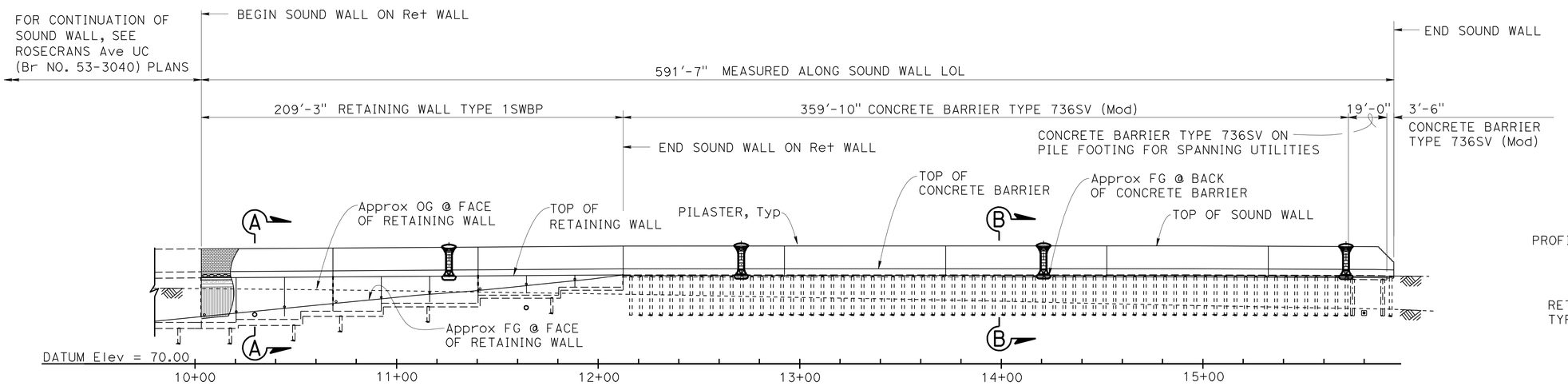

DEVELOPED ELEVATION

1" = 30'

QUANTITIES

STRUCTURE EXCAVATION (RETAINING WALL)	795	CY
STRUCTURE BACKFILL (RETAINING WALL)	720	CY
PERVIOUS BACKFILL MATERIAL (RETAINING WALL)	55	CY
16" CAST-IN-DRILLED-HOLE CONCRETE PILING	1,186	LF
24" CAST-IN-DRILLED-HOLE CONCRETE PILING (SOUND WALL)	46	LF
FURNISH PILING (CLASS 90)	2,004	LF
DRIVE PILE (CLASS 90)	52	EA
STRUCTURAL CONCRETE, RETAINING WALL	334	CY
PILASTER, SOUND WALL	8	CY
ARCHITECTURAL TREATMENT (SPLIT SLATE - FRACTURED RIB)	1,500	SQFT
SOUND WALL (MASONRY BLOCK)	6,530	SQFT
BAR REINFORCING STEEL (RETAINING WALL)	40,700	LB
CONCRETE BARRIER (TYPE 736A MODIFIED 2)	210	LF
CONCRETE BARRIER (TYPE 736SV MODIFIED)	383	LF

CURVE DATA

SW LOL	"A1" LINE
R = 8256.21	R = 8357.25
D = 4°6'20"	D = 17°36'01"
T = 295.92	T = 1293.80
L = 591.59	L = 2567.22

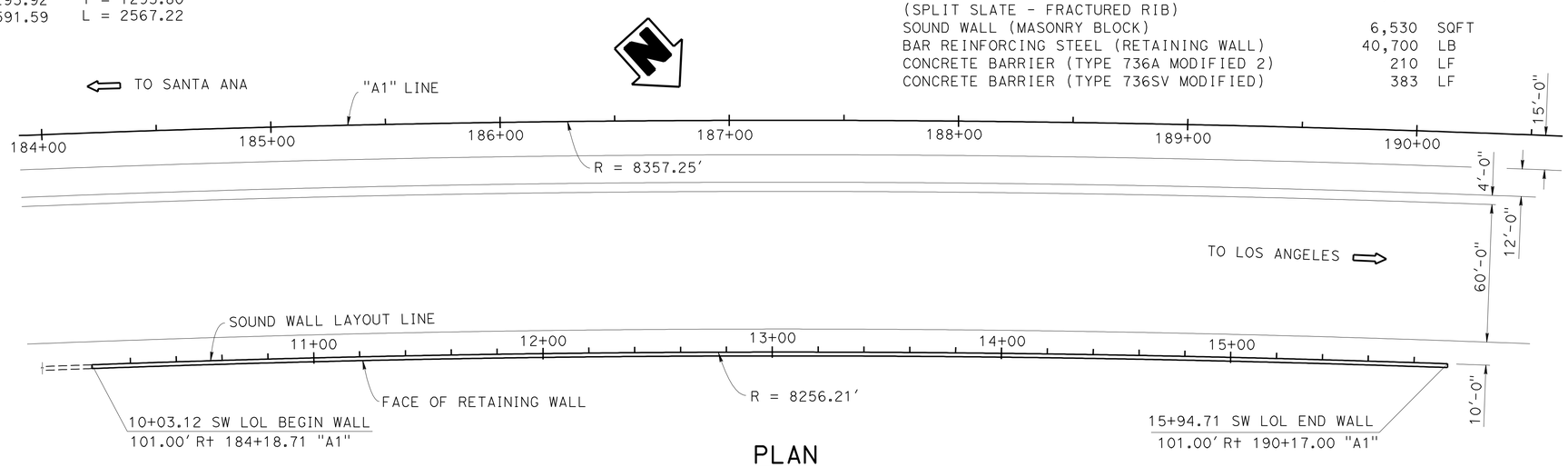

PLAN

1" = 30'

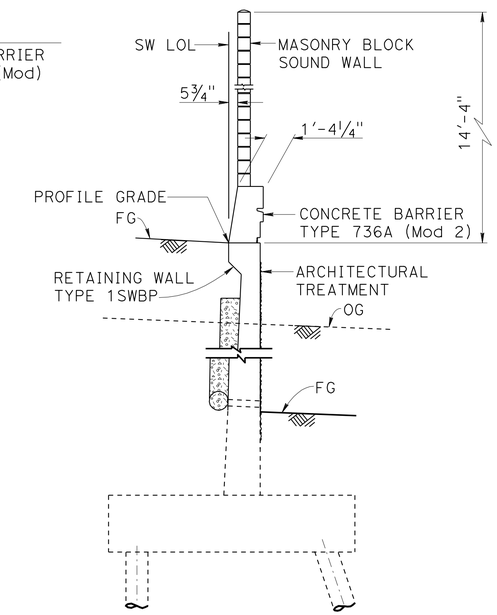

TYPICAL SECTION A-A

¼" = 1'-0"

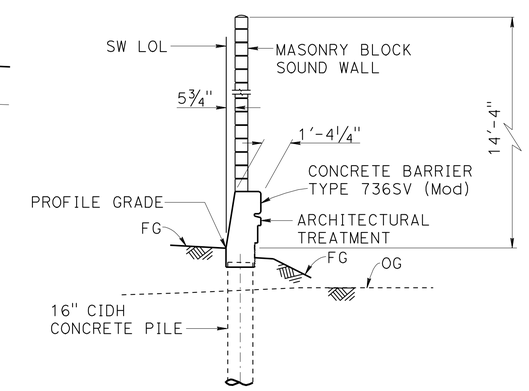

TYPICAL SECTION B-B

¼" = 1'-0"

Jeff Sims, DESIGN ENGINEER	DESIGN	BY Greg Thornton	CHECKED Vadim Shostak	LOAD FACTOR DESIGN	
	DETAILS	BY Jin Zhou	CHECKED Vadim Shostak	LAYOUT: BY Greg Thornton	CHECKED Vadim Shostak
	QUANTITIES	BY Bruce Hagy	CHECKED Eric Watson	SPECIFICATIONS: BY Theresa Nedwick	PLANS AND SPECS COMPARED Theresa Nedwick

ORIGINAL SCALE IN INCHES FOR REDUCED PLANS 0 1 2 3

STATE OF CALIFORNIA DEPARTMENT OF TRANSPORTATION

DIVISION OF ENGINEERING SERVICES STRUCTURE DESIGN DESIGN BRANCH 1

BRIDGE NO. ×
POST MILE 3.49

SOUND WALL NO. 186
GENERAL PLAN

UNIT: 3576
PROJECT NUMBER & PHASE: 07000018331
CONTRACT NO. 07-215934

DISREGARD PRINTS BEARING EARLIER REVISION DATES

REVISION DATES 12/20/10 08/12/11 11/10/11

SHEET 1 OF 25

STRUCTURES DESIGN GENERAL PLAN SHEET (ENGLISH) (REV.09-01-10)

FILE => sw186-a-gp.dgn

USERNAME => s135318 DATE PLOTTED => 28-MAR-2012 TIME PLOTTED => 13:18

DIST	COUNTY	ROUTE	POST MILES TOTAL PROJECT	SHEET No.	TOTAL SHEETS
07	LA	5	2.4/4.0	1170	1288

REGISTERED CIVIL ENGINEER 12-8-11 DATE

3-26-12
PLANS APPROVAL DATE

REGISTERED PROFESSIONAL ENGINEER Kevin Harper No. 42221 Exp. 3-31-12 CIVIL STATE OF CALIFORNIA

The State of California or its officers or agents shall not be responsible for the accuracy or completeness of electronic copies of this plan sheet.

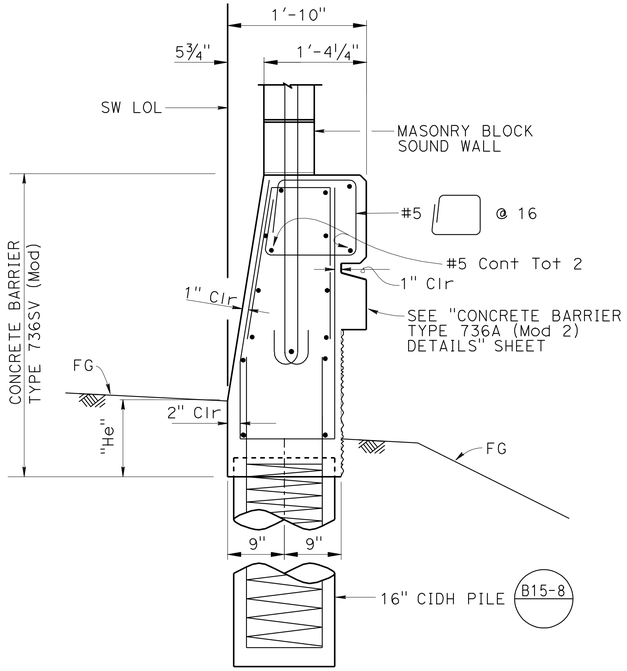

Note: For Barrier and Sound Wall dimensions and reinforcement not shown, see "BARRIER SECTIONS", " CASE 2" on B15-6

CONCRETE BARRIER TYPE 736SV (MOD)

1" = 1'-0"

INDEX TO PLANS

SHEET NO.	TITLE
1.	GENERAL PLAN
2.	INDEX TO PLANS
3.	STRUCTURE PLAN NO. 1
4.	STRUCTURE PLAN NO. 2
5.	FOUNDATION PLAN
6.	RETAINING WALL ARCHITECTURAL TREATMENT
7.	RETAINING WALL ARCHITECTURAL DETAILS
8.	CONCRETE BARRIER TYPE 736A (MOD 2) DETAILS
9.	SOUND WALL ARCHITECTURAL DETAILS
10.	PILASTER ARCHITECTURAL DETAILS NO. 1
11.	PILASTER ARCHITECTURAL DETAILS NO. 2
12.	PILASTER ARCHITECTURAL DETAILS NO. 3
13.	PILASTER ARCHITECTURAL DETAILS NO. 4
14.	PILASTER STRUCTURAL DETAILS NO. 1
15.	PILASTER STRUCTURAL DETAILS NO. 2
16.	PILASTER STRUCTURAL DETAILS NO. 3
17.	RETAINING WALL TYPE 1SWBP - DETAIL NO. 1
18.	RETAINING WALL TYPE 1SWBP - DETAIL NO. 2
19.	SOUND WALL - MASONRY BLOCK WITH BARRIER ON RETAINING WALL DETAILS NO. 1
20.	SOUND WALL - MASONRY BLOCK WITH BARRIER ON RETAINING WALL DETAILS NO. 2
21.	LOG OF TEST BORINGS 1 OF 5
22.	LOG OF TEST BORINGS 2 OF 5
23.	LOG OF TEST BORINGS 3 OF 5
24.	LOG OF TEST BORINGS 4 OF 5
25.	LOG OF TEST BORINGS 5 OF 5

STANDARD PLANS DATED MAY 2006

	A10A	ACRONYMS AND ABBREVIATIONS (SHEET 1 OF 2)
	A10B	ACRONYMS AND ABBREVIATIONS (SHEET 2 OF 2)
	A10C	SYMBOLS (SHEET 1 OF 2)
	A10D	SYMBOLS (SHEET 1 OF 2)
	A62B	LIMITS OF PAYMENT FOR EXCAVATION AND BACKFILL - BRIDGE SURCHARGE AND WALL
	B0-1	BRIDGE DETAILS
	B0-3	BRIDGE DETAILS
	B2-5	PILE DETAILS CLASS 90 AND CLASS 140
	B3-8	RETAINING WALL DETAILS No. 1
	B3-9	RETAINING WALL DETAILS No. 2
	B11-56	CONCRETE BARRIER TYPE 736
RSP	B15-6	SOUND WALL MASONRY BLOCK ON TYPE 736S/SV BARRIER DETAILS (1)
RSP	B15-7	SOUND WALL MASONRY BLOCK ON TYPE 736S/SV BARRIER DETAILS (2)
RSP	B15-8	SOUND WALL MASONRY BLOCK ON TYPE 736S/SV BARRIER DETAILS (3)
	B15-9	SOUND WALL MASONRY BLOCK MISCELLANEOUS DETAILS
RSP	B15-15	SOUND WALL MASONRY BLOCK ON TYPE 736S/SV BARRIER ON PILE FOOTING FOR SPANNING UTILITIES

STANDARD PLAN SHEET NO.

DETAIL NO.

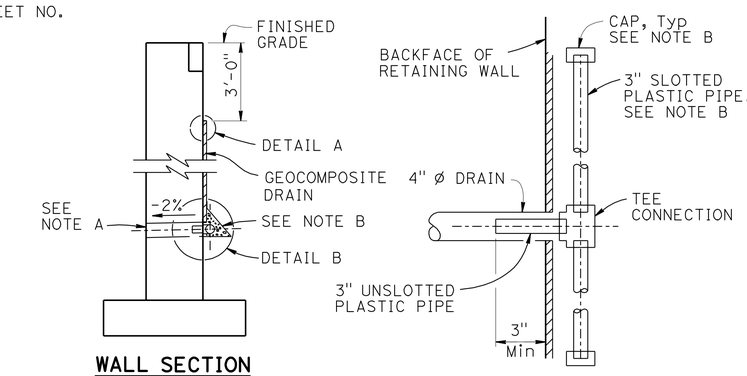

WALL SECTION

SECTION A-A

NOTES:

A. 4" Ø drains at 25' max center to center. For walls adjacent to sidewalks or curbs, provide 4" cast iron or asbestos cement pipe under the sidewalk to discharge through curb face. Exposed wall drains shall be located 3"± above finished grade.

B. Geocomposite drain, cement treated permeable base, and 3" Ø slotted plastic pipe continuous behind retaining wall Cap ends of pipe. Provide "Tee" connection at each 4" Ø drain.

C. Connect the low end of plastic pipe to the main outlet pipe as applicable.

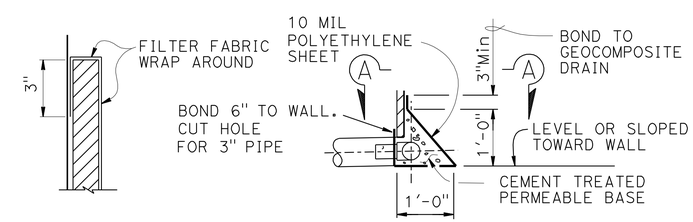

DETAIL A

DETAIL B

WEEP HOLE AND GEOCOMPOSITE DRAIN

ALTERNATIVE TO BRIDGE DETAIL BO-3 / 3-1

PILE DATA

LOCATION	PILE TYPE	NOMINAL RESISTANCE (KIPS)		SPECIFIED TIP ELEVATION	NOMINAL DRIVING RESISTANCE (KIPS)
		COMPRESSION	TENSION		
Ret WALL TYPE 1SWBP SW LOL 10+03.12 to 10+21.38	CLASS 90	180	0	50.5	180
Ret WALL TYPE 1SWBP SW LOL 10+21.38 to 10+53.38	CLASS 90	180	0	52.0	180
Ret WALL TYPE 1SWBP SW LOL10+53.38 to 10+93.38	CLASS 90	180	0	56.5	180
Ret WALL TYPE 1SWBP SW LOL 10+93.38 to 11+41.38	CLASS 90	180	0	61.3	180
Ret WALL TYPE 1SWBP SW LOL 11+41.38 to 11+81.38	CLASS 90	180	0	65.5	180
Ret WALL TYPE 1SWBP SW LOL 11+81.38 to 12+12.38	CLASS 90	180	0	69.4	180
CONCRETE BARRIER TYPE 736SV (Mod) SW LOL 12+12.38 to 15+72.21	16" CIDH (Std PLAN B15-8)	N/A	N/A	N/A	N/A
CONCRETE BARRIER TYPE 736SV (Mod) ON PILE FOOTING FOR SPANNING UTILITIES SW LOL 15+72.21 to 15+91.21	24" CIDH (Std PLAN RSP B15-15)	N/A	N/A	N/A	N/A
CONCRETE BARRIER TYPE 736SV (Mod) SW LOL 15+91.21 to 15+94.71	16" CIDH (Std PLAN RSP B15-8)	N/A	N/A	N/A	N/A

NOTES: 1. Class 90 Alternative "X" Piles shall have a dimension "T" not less than 14 inches.
2. All Design tips are controlled by compression.

	BY	CHECKED
DESIGN	Greg Thornton	Vadim Shostak
DETAILS	Jin Zhou	Vadim Shostak
QUANTITIES	Bruce Hagy	Eric Watson

STATE OF CALIFORNIA DEPARTMENT OF TRANSPORTATION

DIVISION OF ENGINEERING SERVICES STRUCTURE DESIGN DESIGN BRANCH 1

BRIDGE NO. X

POST MILE 3.49

SOUND WALL NO. 186

INDEX TO PLANS

STRUCTURES DESIGN DETAIL SHEET (ENGLISH) (REV. 09-01-10)

ORIGINAL SCALE IN INCHES FOR REDUCED PLANS 0 1 2 3

UNIT: 3576
PROJECT NUMBER & PHASE: 0700001833-1 CONTRACT NO. 07-215934

DISREGARD PRINTS BEARING EARLIER REVISION DATES

REVISION DATES 07-12-11 08-12-11 11-10-11

SHEET 2 OF 25

FILE => sw186-a-ltp.dgn

USERNAME => s124496 DATE PLOTTED => 28-MAR-2012 TIME PLOTTED => 11:42

DIST	COUNTY	ROUTE	POST MILES TOTAL PROJECT	SHEET No.	TOTAL SHEETS
07	LA	5	2.4/4.0	1171	1288

REGISTERED CIVIL ENGINEER 12-8-11 DATE

3-26-12
PLANS APPROVAL DATE

REGISTERED PROFESSIONAL ENGINEER Kevin Harper No. 42221 Exp. 3-31-12 CIVIL STATE OF CALIFORNIA

The State of California or its officers or agents shall not be responsible for the accuracy or completeness of electronic copies of this plan sheet.

NOTES:

1. For barrier details, see "CONCRETE BARRIER TYPE 736A (MOD 2) DETAILS" sheet.
2. For sound wall details, see "SOUND WALL - MASONRY BLOCK WITH BARRIER ON RETAINING WALL DETAILS NO. 1 and NO. 2" sheets.
3. For retaining wall details, see "RETAINING WALL TYPE 1SWBP - DETAIL NO. 1 and NO. 2" sheets.
4. Retaining wall expansion joints, weakened planes, and weep holes shall be placed per Std Plan (B0-3 / 3-3).
5. All longitudinal dimensions are measured along the SW LOL.
6. Not all piles shown in "DEVELOPED ELEVATION".
7. For "WEEP HOLE AND GEOCOMPOSITE DRAIN" alternative, see "INDEX TO PLANS" sheet.
8. Pile data for sound wall masonry block on Type 736SV (Mod) Barrier shall be from tabular values "CASE 2" with ø = 30° on (B15-8) and (B15-15).

LEGEND:

⊕ - Indicates Vertical Class 90 Pile
⊙ - Indicates 1:3 Battered Class 90 Pile

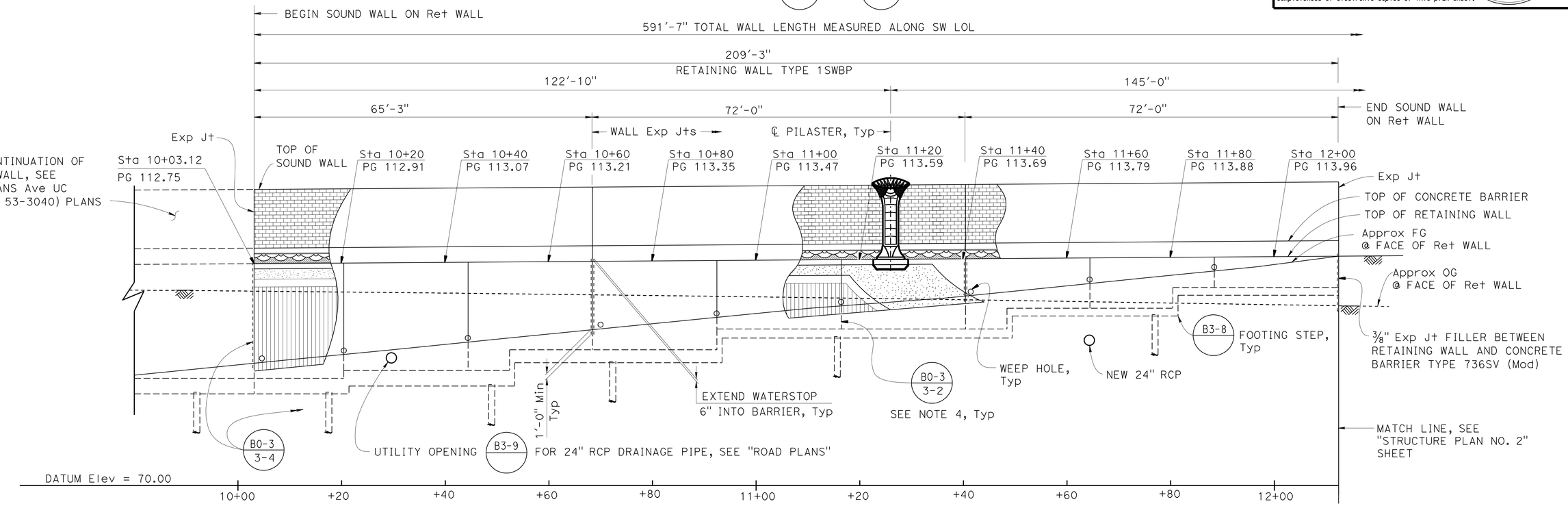

DEVELOPED ELEVATION

1" = 10'

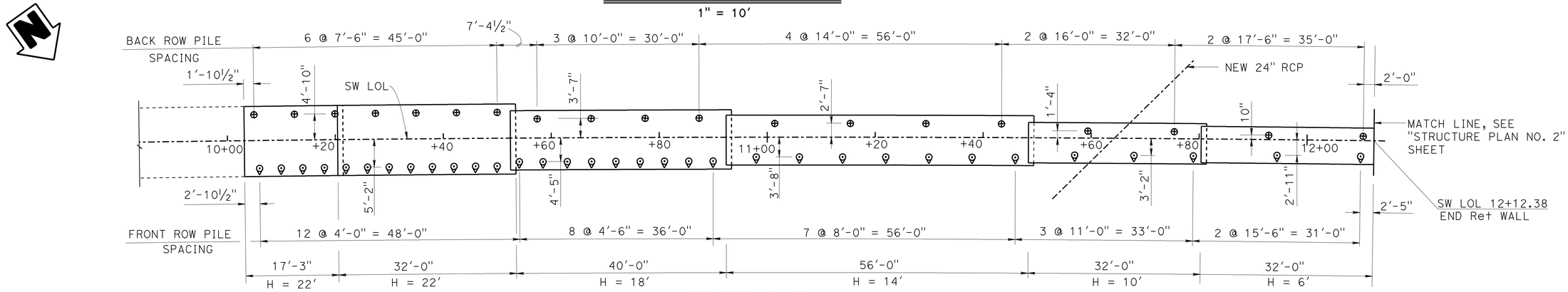

FOOTING PLAN

1" = 10'

	BY	CHECKED
DESIGN	Greg Thornton	Vadim Shostak
DETAILS	Jin Zhou	Vadim Shostak
QUANTITIES	Bruce Hagy	Eric Watson

STATE OF CALIFORNIA
DEPARTMENT OF TRANSPORTATION

DIVISION OF ENGINEERING SERVICES
STRUCTURE DESIGN
DESIGN BRANCH 1

BRIDGE NO. X
POST MILE 3.49

SOUND WALL NO. 186
STRUCTURE PLAN NO. 1

STRUCTURES DESIGN DETAIL SHEET (ENGLISH) (REV. 09-01-10)

ORIGINAL SCALE IN INCHES FOR REDUCED PLANS 0 1 2 3

UNIT: 3576
PROJECT NUMBER & PHASE: 0700001833-1
CONTRACT NO. 07-215934

DISREGARD PRINTS BEARING EARLIER REVISION DATES

REVISION DATES: 07-22-11 | 8-31-11 | 11-10-11

SHEET 3 OF 25

FILE => sw186-c-sp01.dgn

USERNAME => s124496 DATE PLOTTED => 28-MAR-2012 TIME PLOTTED => 11:42

DIST	COUNTY	ROUTE	POST MILES TOTAL PROJECT	SHEET No.	TOTAL SHEETS
07	LA	5	2.4/4.0	1172	1288

REGISTERED CIVIL ENGINEER 12-8-11 DATE

3-26-12
PLANS APPROVAL DATE

REGISTERED PROFESSIONAL ENGINEER Kevin Harper No. 42221 Exp. 3-31-12 CIVIL STATE OF CALIFORNIA

The State of California or its officers or agents shall not be responsible for the accuracy or completeness of electronic copies of this plan sheet.

For "NOTES", see "STRUCTURE PLAN NO. 1" sheet

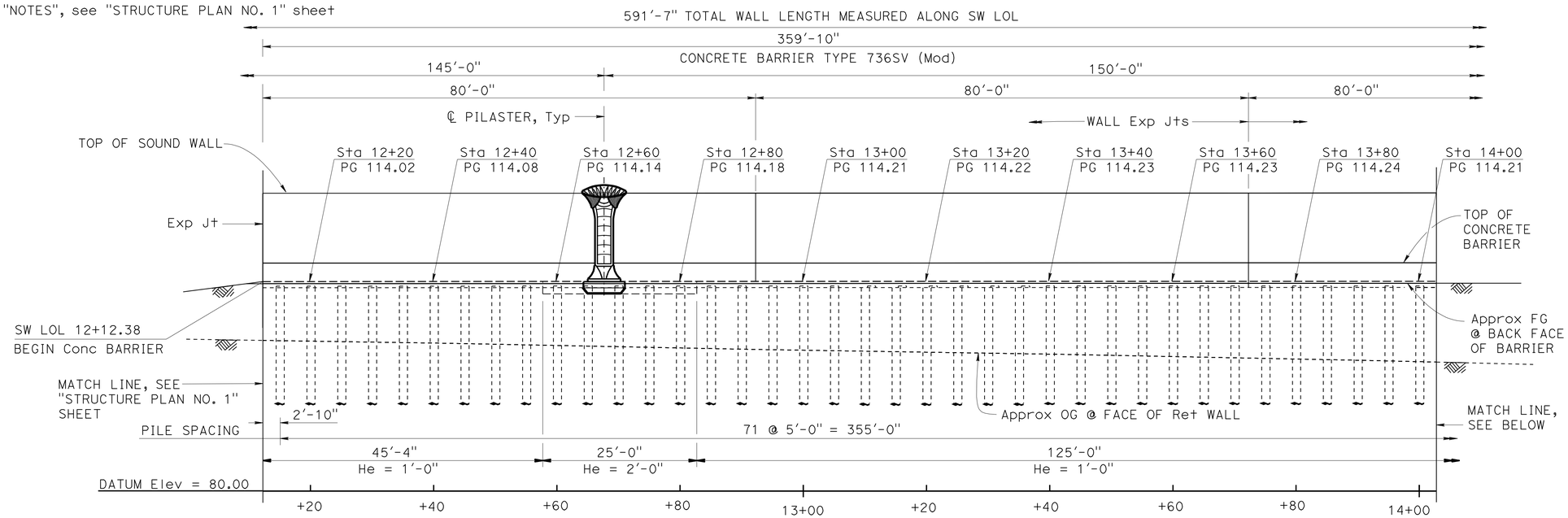

DEVELOPED ELEVATION (B15-6)

1" = 10'

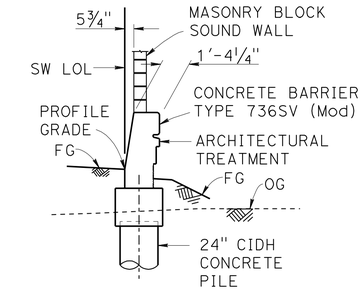

TYPICAL SECTION C-C (B15-15)

¼" = 1'-0"

NOTE:
For barrier and sound wall dimensions and reinforcement not shown, see "BARRIER SECTIONS", "CASE 2" on (B15-15).

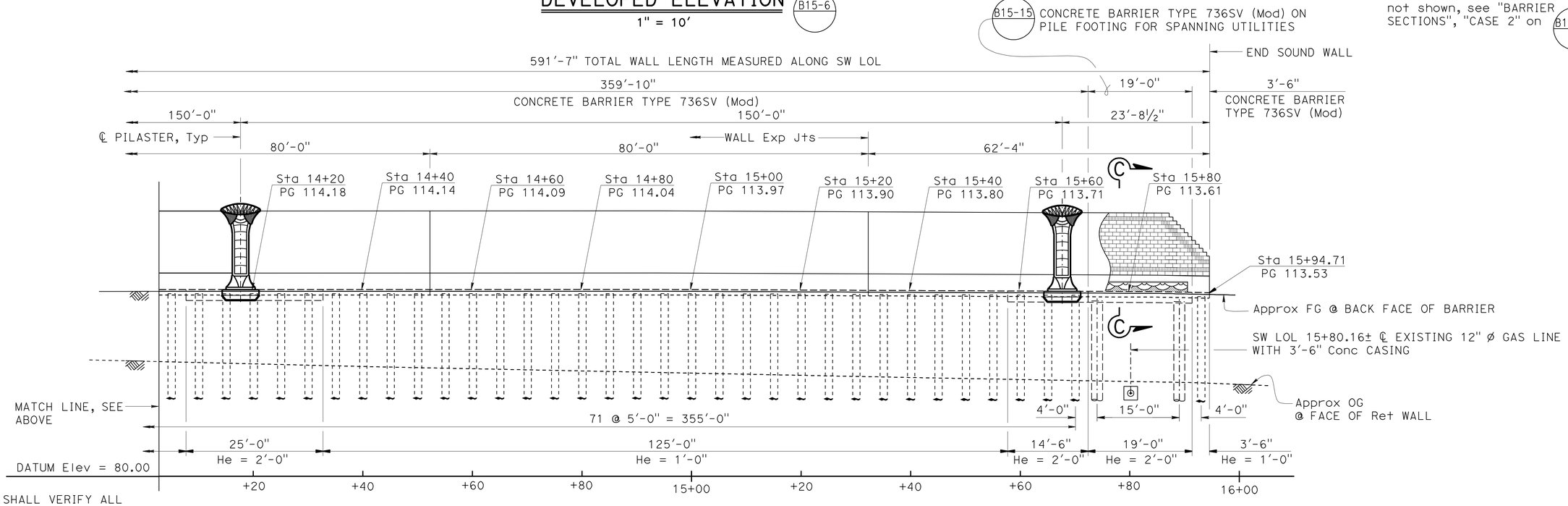

NOTE:
THE CONTRACTOR SHALL VERIFY ALL CONTROLLING FIELD DIMENSIONS BEFORE ORDERING OR FABRICATING ANY MATERIAL.

DEVELOPED ELEVATION (B15-6) (B15-15)

1" = 10'

	BY	CHECKED
DESIGN	Greg Thornton	Vadim Shostak
DETAILS	Jin Zhou	Vadim Shostak
QUANTITIES	Bruce Hagy	Eric Watson

STATE OF CALIFORNIA
DEPARTMENT OF TRANSPORTATION

DIVISION OF ENGINEERING SERVICES
STRUCTURE DESIGN
DESIGN BRANCH 1

BRIDGE NO. X
POST MILE 3.49

SOUND WALL NO. 186
STRUCTURE PLAN NO. 2

STRUCTURES DESIGN DETAIL SHEET (ENGLISH) (REV. 09-01-10)

ORIGINAL SCALE IN INCHES FOR REDUCED PLANS 0 1 2 3

UNIT: 3576
PROJECT NUMBER & PHASE: 0700001833-1
CONTRACT NO. 07-215934

DISREGARD PRINTS BEARING EARLIER REVISION DATES

REVISION DATES 01/06/11 07/19/11 11/14/11

SHEET 4 OF 25

FILE => sw186-c-sp02.dgn

USERNAME => s124496 DATE PLOTTED => 28-MAR-2012 TIME PLOTTED => 11:43

DIST	COUNTY	ROUTE	POST MILES TOTAL PROJECT	SHEET No.	TOTAL SHEETS
07	LA	5	2.4/4.0	1173	1288

REGISTERED CIVIL ENGINEER — DATE 12-8-11

3-26-12
PLANS APPROVAL DATE

REGISTERED PROFESSIONAL ENGINEER — Kevin Harper — No. 42221 — Exp. 3-31-12 — CIVIL — STATE OF CALIFORNIA

The State of California or its officers or agents shall not be responsible for the accuracy or completeness of electronic copies of this plan sheet.

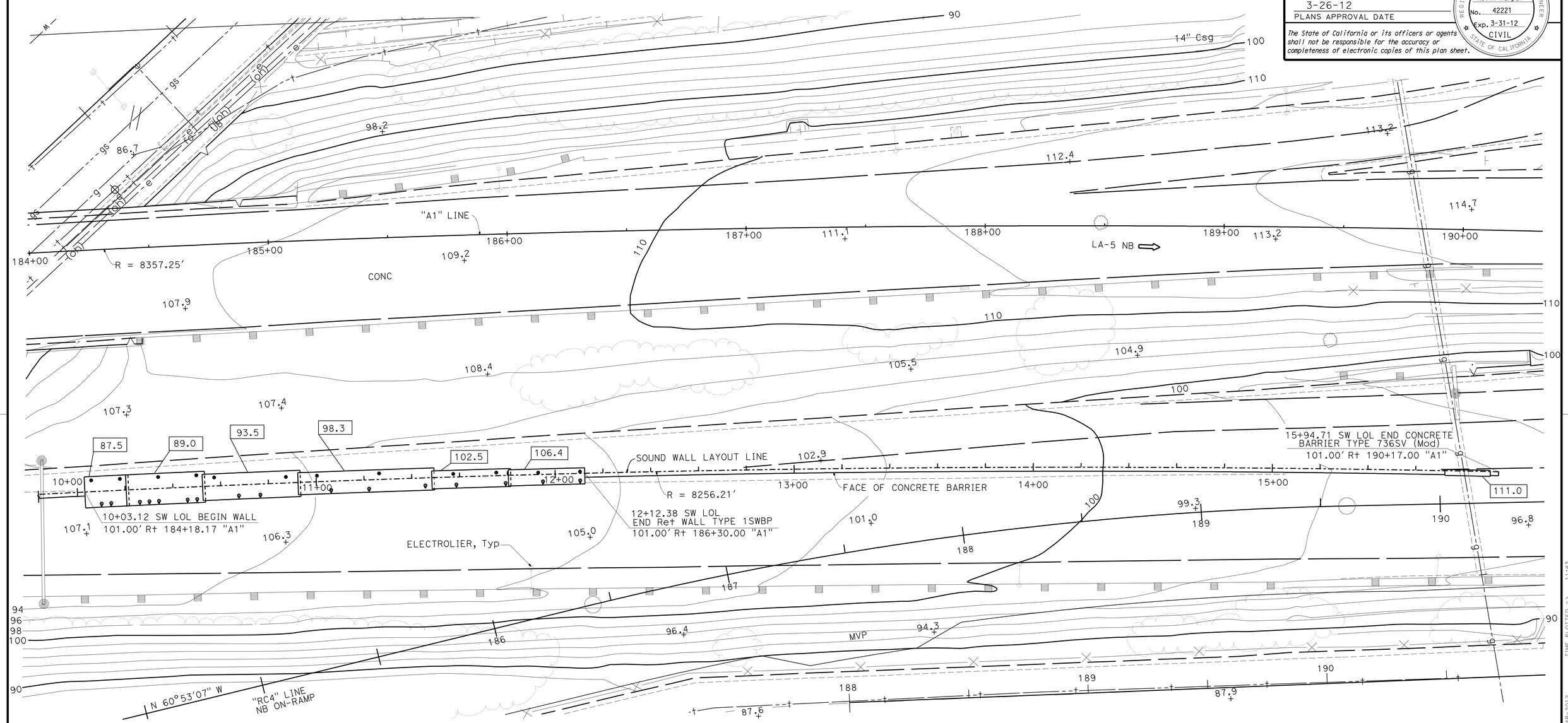

Notes:

Underground Utilities as shown are approximate

+ - Denotes Spot Elevation

⊕ - Denotes Pile (All piles are not shown)

▭ - Indicates bottom of Ftg Elevation

SCALE 1" = 20'			
DESIGN	BY Greg Thornton	CHECKED Vadim Shostak	
DETAILS	BY Jin Zhou	CHECKED Vadim Shostak	
QUANTITIES	BY Bruce Hagy	CHECKED Eric Watson	

STATE OF CALIFORNIA
DEPARTMENT OF TRANSPORTATION

DIVISION OF ENGINEERING SERVICES
STRUCTURE DESIGN
DESIGN BRANCH 1

BRIDGE NO. X
POST MILE 3.49

SOUND WALL NO. 186
FOUNDATION PLAN

STRUCTURES DESIGN DETAIL SHEET (ENGLISH) (REV. 09-01-10)

ORIGINAL SCALE IN INCHES FOR REDUCED PLANS 0 1 2 3

UNIT: 3576
PROJECT NUMBER & PHASE: 0700001833-1
CONTRACT NO.: 07-215934

DISREGARD PRINTS BEARING EARLIER REVISION DATES → REVISION DATES 03/27/11 08/26/11 11/14/11

SHEET 5 OF 25

FILE => sw186-e-fp.dgn

USERNAME => s124036 DATE PLOTTED => 28-MAR-2012 TIME PLOTTED => 11:43

DIST	COUNTY	ROUTE	POST MILES TOTAL PROJECT	SHEET No.	TOTAL SHEETS
07	LA	5	2.4/4.0	1174	1288

REGISTERED CIVIL ENGINEER 12-8-11 DATE

3-26-12
PLANS APPROVAL DATE

REGISTERED PROFESSIONAL ENGINEER Kevin Harper No. 42221 Exp. 3-31-12 CIVIL STATE OF CALIFORNIA

The State of California or its officers or agents shall not be responsible for the accuracy or completeness of electronic copies of this plan sheet.

NOTES:

1. For "SECTION A-A" and "SECTION B-B", see "RETAINING WALL ARCHITECTURAL DETAILS" sheet.
2. For barrier architectural details, see "CONCRETE BARRIER TYPE 736A (MOD 2) DETAILS" sheet.
3. For sound wall architectural details, see "SOUND WALL ARCHITECTURAL DETAILS" sheet.
4. For pilaster and corbel details, see "PILASTER ARCHITECTURAL DETAILS" and " PILASTER STRUCTURAL DETAILS" sheets.
5. Retaining wall architectural treatment pay limits shall include all split slate and fractured rib texture shown in "DEVELOPED ELEVATION".
6. All longitudinal dimensions are measured along SW LOL.

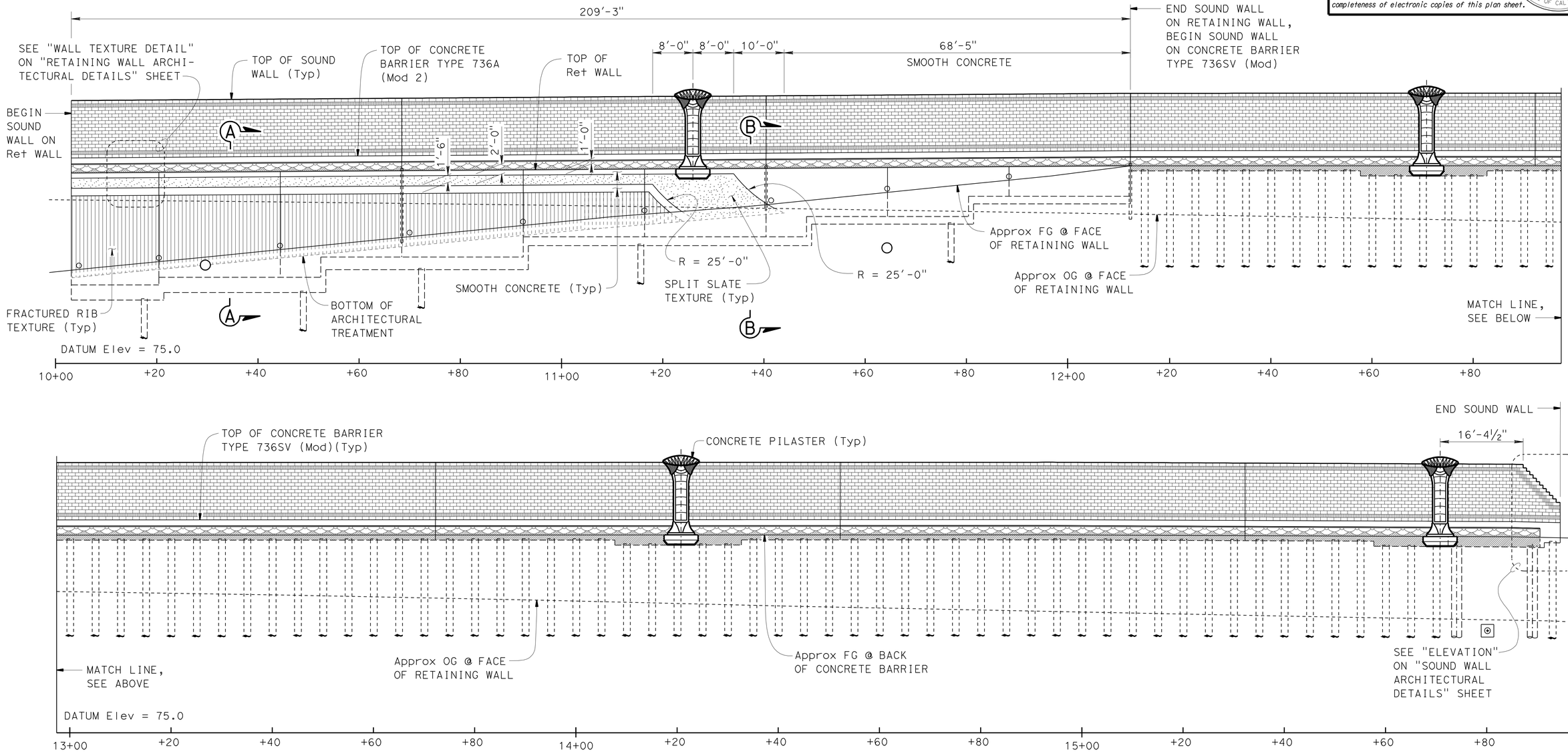

DEVELOPED ELEVATION

1" = 10'

	BY	CHECKED
DESIGN	Isaac Tasabia	Javier Chavez
DETAILS	B.Huddleston / G.Dickerson	Daniel Sessions
QUANTITIES	Bruce Hagy	Eric Watson

STATE OF CALIFORNIA
DEPARTMENT OF TRANSPORTATION

DIVISION OF ENGINEERING SERVICES
STRUCTURE DESIGN
DESIGN BRANCH 1

BRIDGE NO. X
POST MILE 3.49

SOUND WALL NO. 186
RETAINING WALL ARCHITECTURAL TREATMENT

STRUCTURES DESIGN DETAIL SHEET (ENGLISH) (REV. 09-01-10)

ORIGINAL SCALE IN INCHES FOR REDUCED PLANS 0 1 2 3

UNIT: 3576
PROJECT NUMBER & PHASE: 07000018331
CONTRACT NO.: 07-215934

DISREGARD PRINTS BEARING EARLIER REVISION DATES

REVISION DATES: 1/19/10 11/22/11 11/14/11

SHEET 6 OF 25

FILE => sw186-e-ret01.dgn

USERNAME => s124496 DATE PLOTTED => 28-MAR-2012 TIME PLOTTED => 11:43

DIST	COUNTY	ROUTE	POST MILES TOTAL PROJECT	SHEET No.	TOTAL SHEETS
07	LA	5	2.4/4.0	1175	1288

REGISTERED CIVIL ENGINEER 12-8-11 DATE

3-26-12
PLANS APPROVAL DATE

REGISTERED PROFESSIONAL ENGINEER Kevin Harper No. 42221 Exp. 3-31-12 CIVIL STATE OF CALIFORNIA

The State of California or its officers or agents shall not be responsible for the accuracy or completeness of electronic copies of this plan sheet.

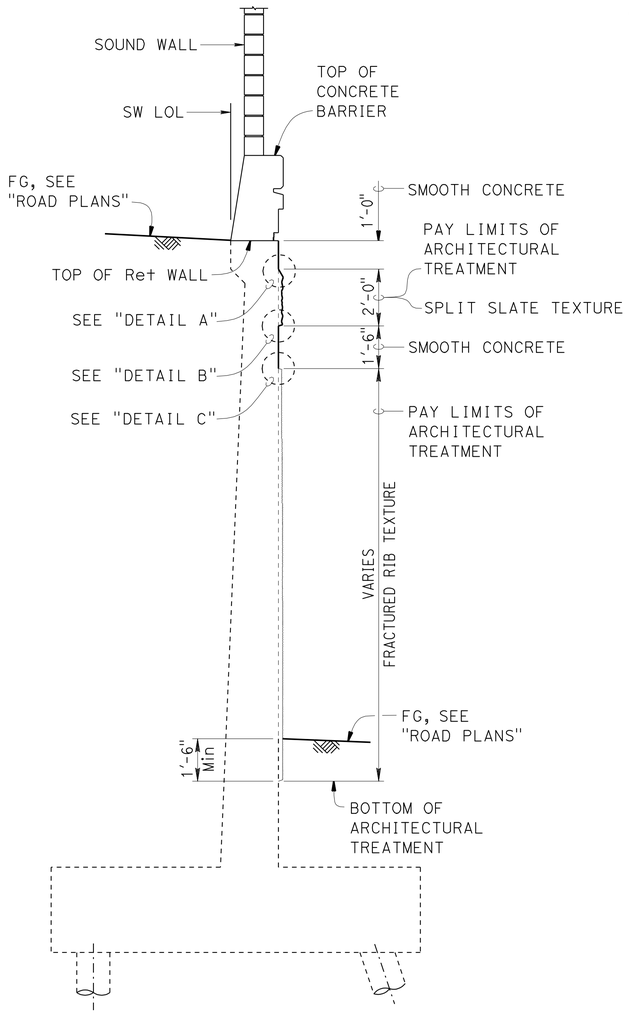

SECTION A-A

3/8" = 1'-0"

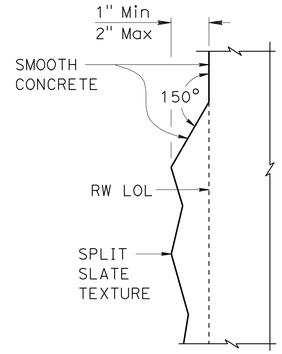

DETAIL A

3" = 1'-0"

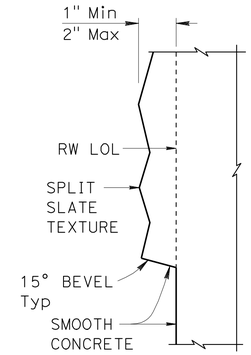

DETAIL B

3" = 1'-0"

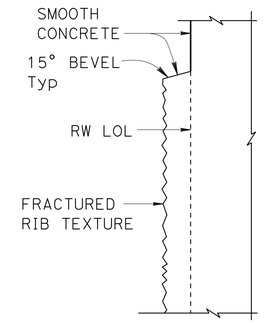

DETAIL C

3" = 1'-0"

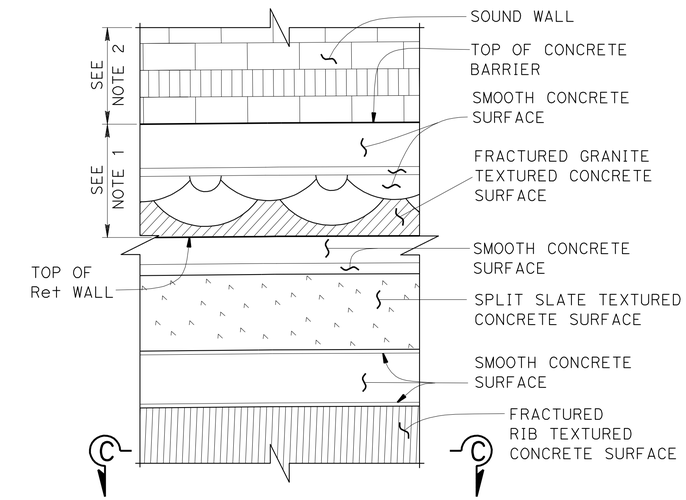

PARTIAL ELEVATION
WALL TEXTURE DETAIL

1/2" = 1'-0"

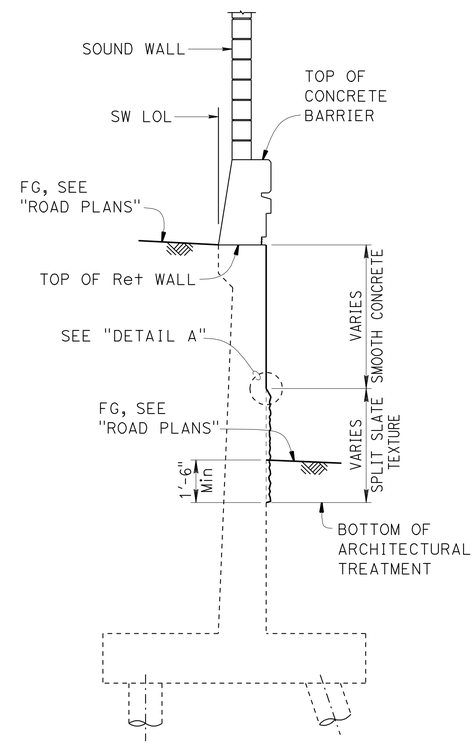

SECTION B-B

3/8" = 1'-0"

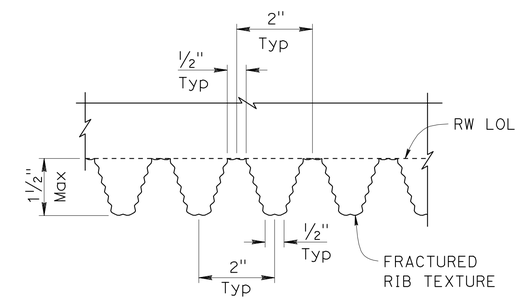

SECTION C-C

6" = 1'-0"

NOTES:

1. For barrier architectural treatment, see "CONCRETE BARRIER TYPE 736A (MOD 2) DETAILS" sheet.
2. For sound wall architectural treatment, see "SOUND WALL ARCHITECTURAL DETAILS" sheet.

	BY	CHECKED
DESIGN	Isaac Tasabia	Javier Chavez
DETAILS	Bob Huddleston	Daniel Sessions
QUANTITIES	Bruce Hagy	Eric Watson

STATE OF CALIFORNIA
DEPARTMENT OF TRANSPORTATION

DIVISION OF ENGINEERING SERVICES
STRUCTURE DESIGN
DESIGN BRANCH 1

BRIDGE NO. X
POST MILE 3.49

SOUND WALL NO. 186
RETAINING WALL ARCHITECTURAL DETAILS

STRUCTURES DESIGN DETAIL SHEET (ENGLISH) (REV. 09-01-10)

ORIGINAL SCALE IN INCHES FOR REDUCED PLANS 0 1 2 3

UNIT: 3576
PROJECT NUMBER & PHASE: 07000018331
CONTRACT NO.: 07-215934

DISREGARD PRINTS BEARING EARLIER REVISION DATES

REVISION DATES 11-16-11

SHEET 7 OF 25

FILE => sw186-e-ret02.dgn

USERNAME => s124496 DATE PLOTTED => 28-MAR-2012 TIME PLOTTED => 11:43

DIST	COUNTY	ROUTE	POST MILES TOTAL PROJECT	SHEET No.	TOTAL SHEETS
07	LA	5	2.4/4.0	1176	1288

REGISTERED CIVIL ENGINEER 12-8-11 DATE

3-26-12
PLANS APPROVAL DATE

REGISTERED PROFESSIONAL ENGINEER Kevin Harper No. 42221 Exp. 3-31-12 CIVIL STATE OF CALIFORNIA

The State of California or its officers or agents shall not be responsible for the accuracy or completeness of electronic copies of this plan sheet.

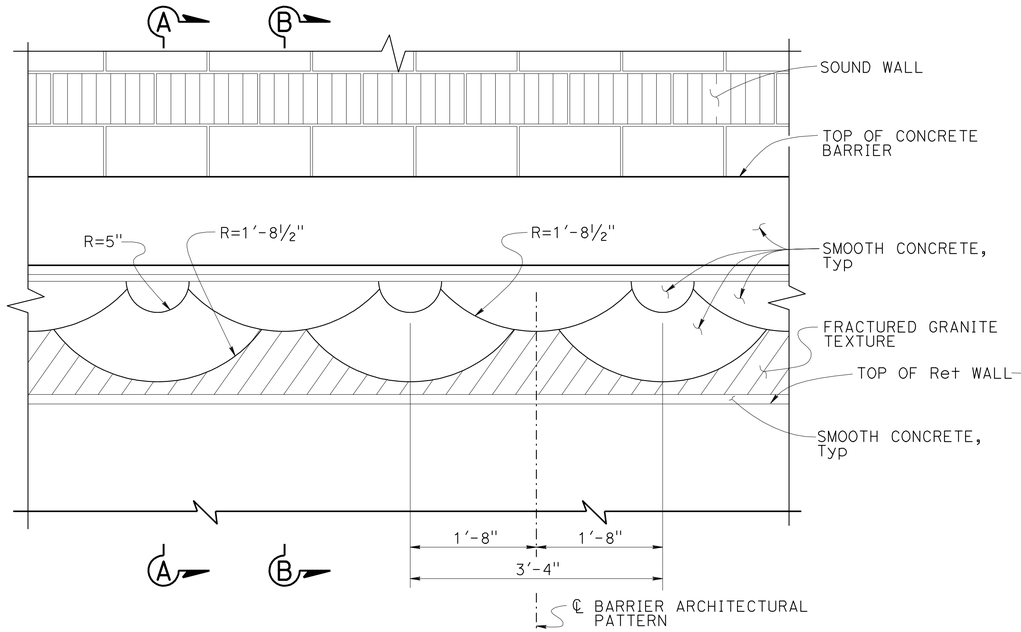

ELEVATION CONCRETE BARRIER TYPE 736A (MOD 2)

1" = 1'-0"

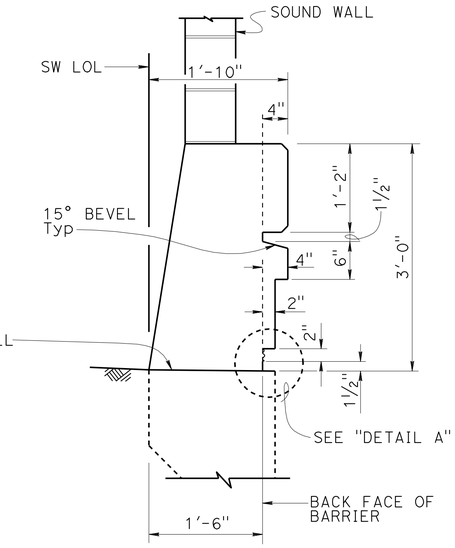

SECTION A-A

1" = 1'-0"

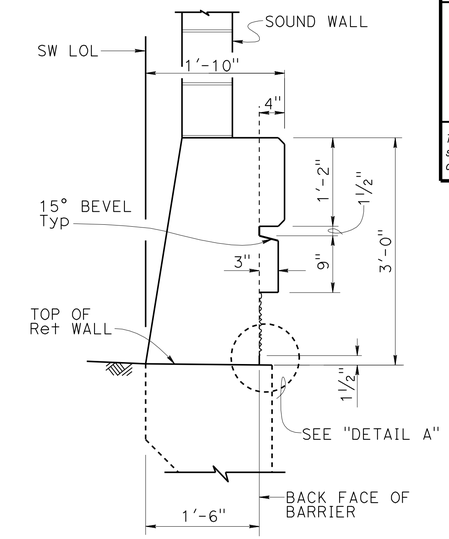

SECTION B-B

1" = 1'-0"

NOTES:

1. For Concrete Barrier Type 736A (Mod 2) details not shown, see "BARRIER SECTION" on "SOUND WALL - MASONRY BLOCK WITH BARRIER ON RETAINING WALL DETAILS NO. 2" sheet.
2. For Concrete Barrier Type 736SV (Mod) details not shown, see "CONCRETE BARRIER TYPE 736SV (MOD)" on "INDEX TO PLANS" sheet.
3. For sound wall architectural details, see "SOUND WALL ARCHITECTURAL DETAILS" sheet.

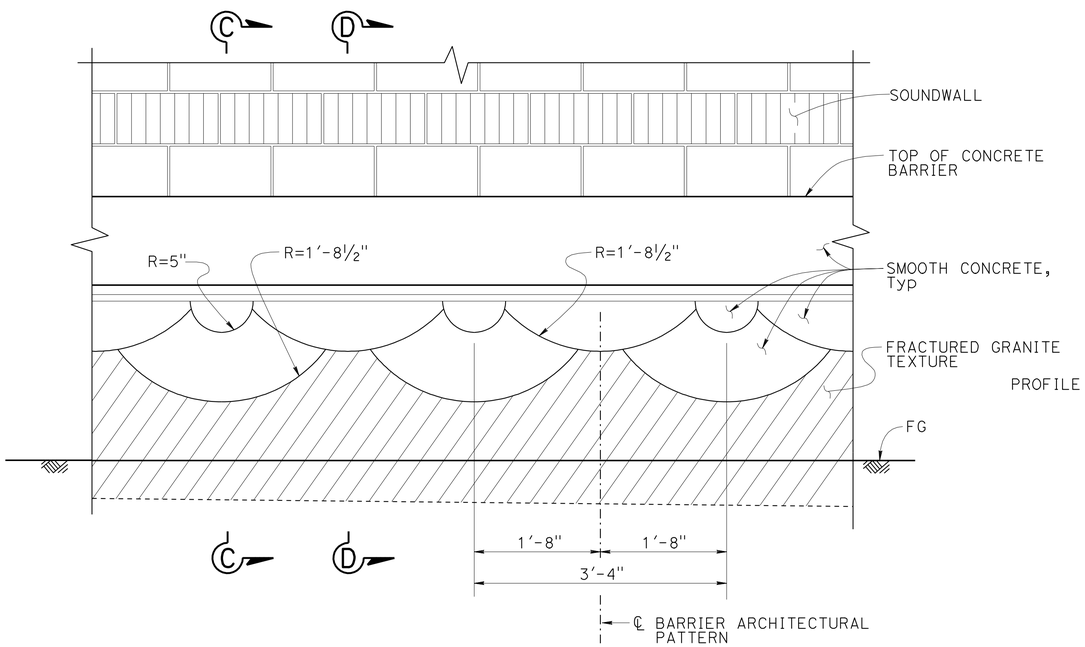

ELEVATION CONCRETE BARRIER TYPE 736SV (MOD)

1" = 1'-0"

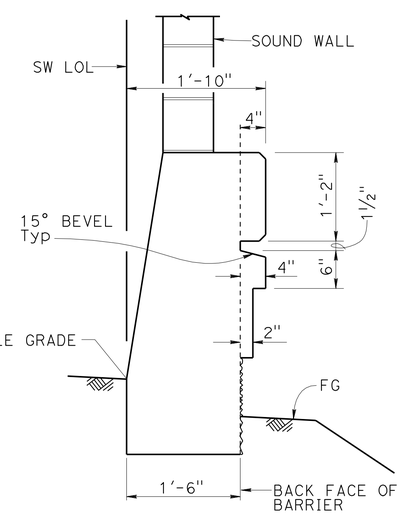

SECTION C-C

1" = 1'-0"

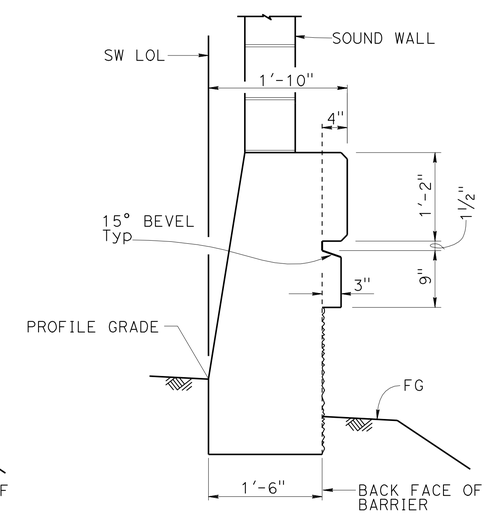

SECTION D-D

1" = 1'-0"

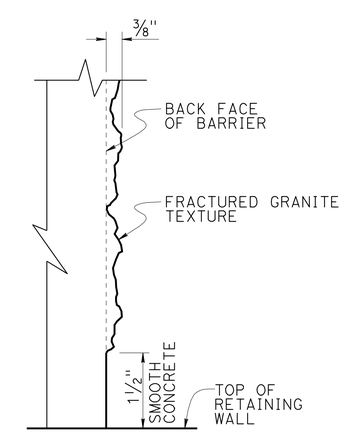

Note: Detail at "SECTION B-B" shown, other locations similar.

DETAIL A

NO SCALE

	BY	CHECKED
DESIGN	Kevin Harper	Vadim Shostak
DETAILS	Jin Zhou	Vadim Shostak
QUANTITIES	Bruce Hagy	Eric Watson

STATE OF CALIFORNIA
DEPARTMENT OF TRANSPORTATION

DIVISION OF ENGINEERING SERVICES
STRUCTURE DESIGN
DESIGN BRANCH 1

BRIDGE NO. X
POST MILE 3.49

SOUND WALL NO. 186
CONCRETE BARRIER TYPE 736A (MOD 2) DETAILS

STRUCTURES DESIGN DETAIL SHEET (ENGLISH) (REV. 09-01-10)

ORIGINAL SCALE IN INCHES FOR REDUCED PLANS 0 1 2 3

UNIT: 3576
PROJECT NUMBER & PHASE: 0700001833-1
CONTRACT NO.: 07-215934

DISREGARD PRINTS BEARING EARLIER REVISION DATES

REVISION DATES: 11-29-10 | 04-01-11 | 11-17-11

SHEET 8 OF 25

FILE => sw186-f-barr01.dgn

USERNAME => s124496 DATE PLOTTED => 28-MAR-2012 TIME PLOTTED => 11:43

DIST	COUNTY	ROUTE	POST MILES TOTAL PROJECT	SHEET No.	TOTAL SHEETS
07	LA	5	2.4/4.0	1177	1288

REGISTERED CIVIL ENGINEER 12-8-11 DATE

3-26-12
PLANS APPROVAL DATE

REGISTERED PROFESSIONAL ENGINEER Kevin Harper No. 42221 Exp. 3-31-12 CIVIL STATE OF CALIFORNIA

The State of California or its officers or agents shall not be responsible for the accuracy or completeness of electronic copies of this plan sheet.

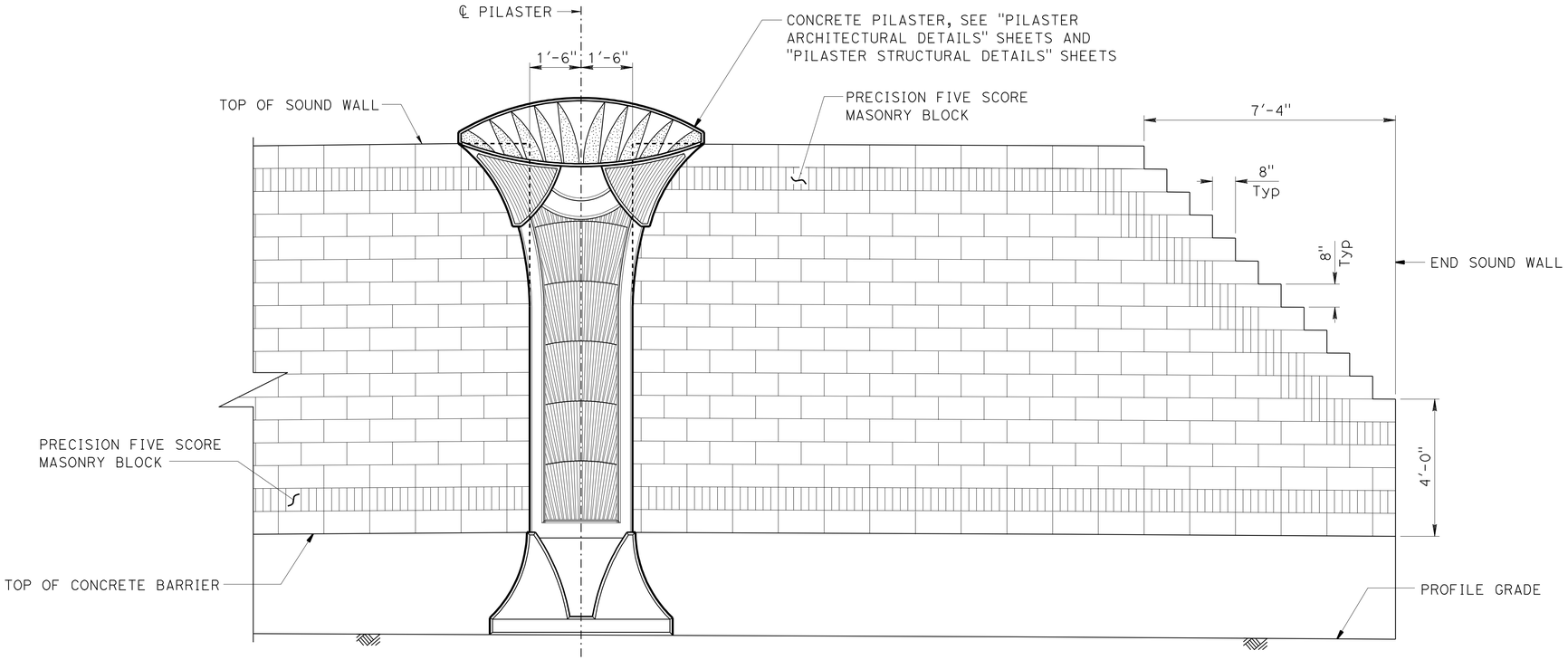

PART SOUND WALL ELEVATION - FREEWAY SIDE

½" = 1'-0"

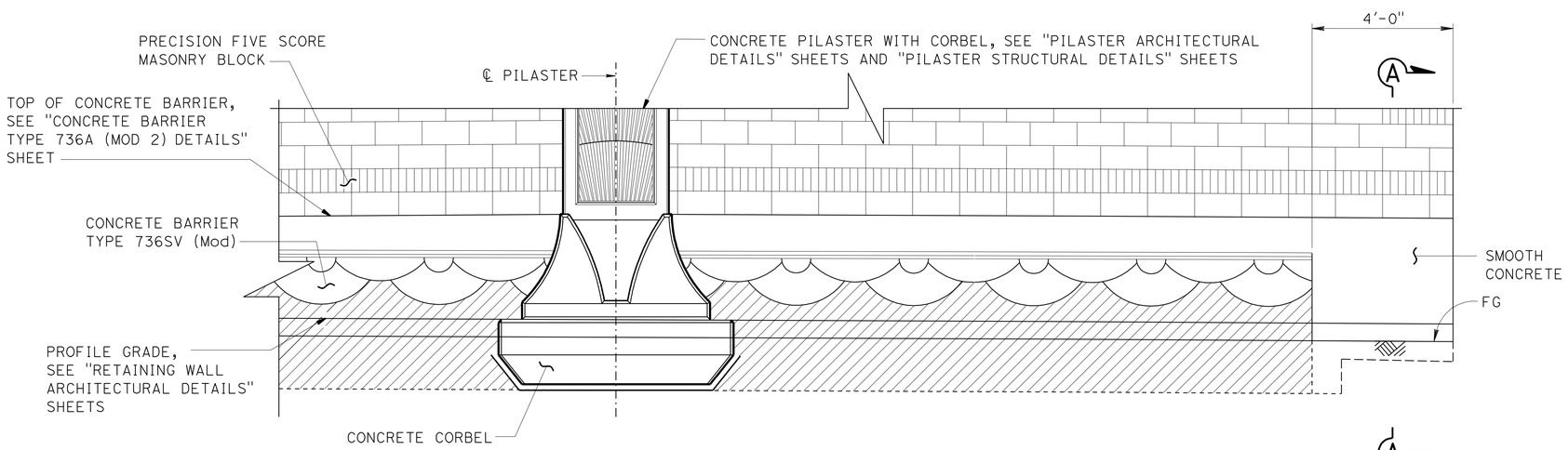

PART SOUND WALL ELEVATION - BACK SIDE

½" = 1'-0"

NOTES:

1. All masonry block shall be precision, unless otherwise noted.
2. Sound wall on Concrete Barrier Type 736SV (Mod) shown. Sound wall on retaining wall similar.

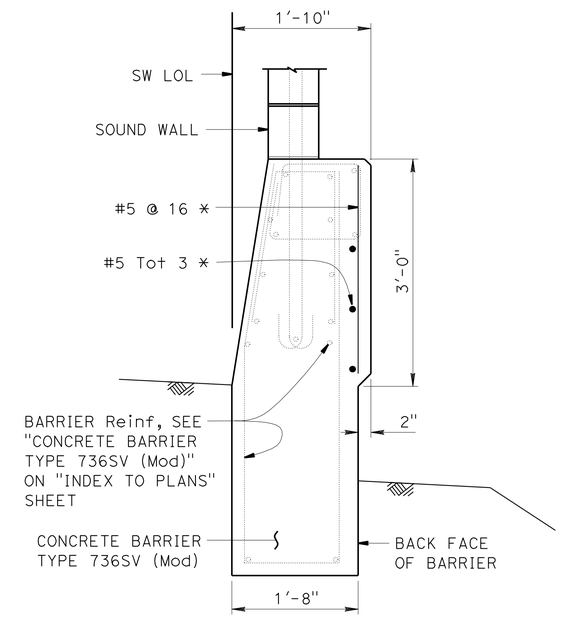

SECTION A-A

1" = 1'-0"

* - INDICATES Reinf IS ADDITIONAL TO TYPICAL BARRIER Reinf

	BY	CHECKED
DESIGN	Isaac Tasabia	Javier Chavez
DETAILS	Jin Zhou	G. Thornton / V. Shostak
QUANTITIES	April Pearson	Kyoung Lee

STATE OF CALIFORNIA DEPARTMENT OF TRANSPORTATION

DIVISION OF ENGINEERING SERVICES STRUCTURE DESIGN DESIGN BRANCH 1

BRIDGE NO. X

POST MILE 3.49

SOUND WALL NO. 186

SOUND WALL ARCHITECTURAL DETAILS

STRUCTURES DESIGN DETAIL SHEET (ENGLISH) (REV. 09-01-10)

ORIGINAL SCALE IN INCHES FOR REDUCED PLANS 0 1 2 3

UNIT: 3576
PROJECT NUMBER & PHASE: 07000018331 CONTRACT NO.: 07-215934

DISREGARD PRINTS BEARING EARLIER REVISION DATES

REVISION DATES 12/19/10 11/21/11 11/18/11

SHEET 9 OF 25

FILE => sw186-f-sou01.dgn

USERNAME => s124496 DATE PLOTTED => 28-MAR-2012 TIME PLOTTED => 11:43

DIST	COUNTY	ROUTE	POST MILES TOTAL PROJECT	SHEET No.	TOTAL SHEETS
07	LA	5	2.4/4.0	1178	1288

REGISTERED CIVIL ENGINEER 12-8-11 DATE

3-26-12
PLANS APPROVAL DATE

REGISTERED PROFESSIONAL ENGINEER Kevin Harper No. 42221 Exp. 3-31-12 CIVIL STATE OF CALIFORNIA

The State of California or its officers or agents shall not be responsible for the accuracy or completeness of electronic copies of this plan sheet.

NOTES:

1. All dimensions symmetrical about ℄ Pilaster.
2. For location of "DETAIL E", see "PILASTER ARCHITECTURAL DETAILS NO. 2" sheet.
3. Beveled edges are 45° unless otherwise noted.
4. All vertical dimensions are measured along the ℄ Pilaster (Pilaster shall be vertical).

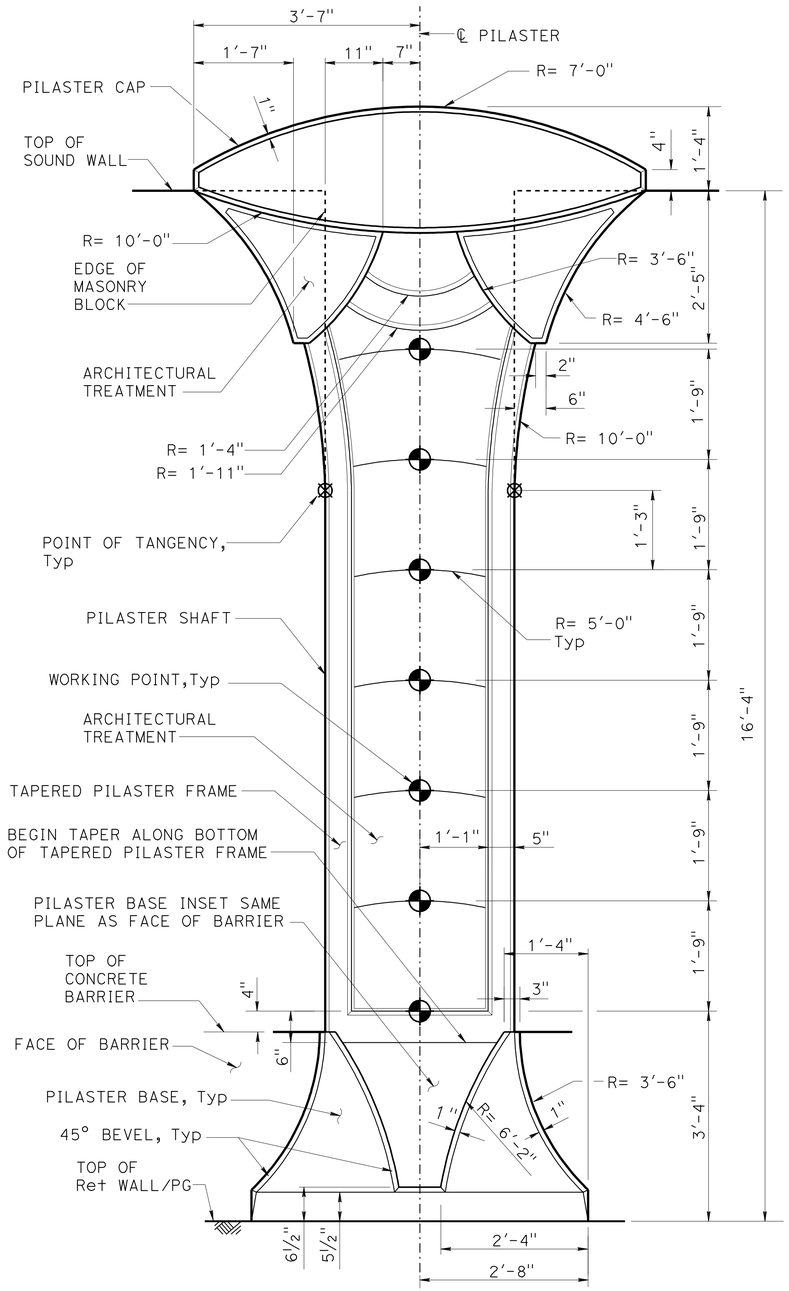

16'-4" SOUND WALL

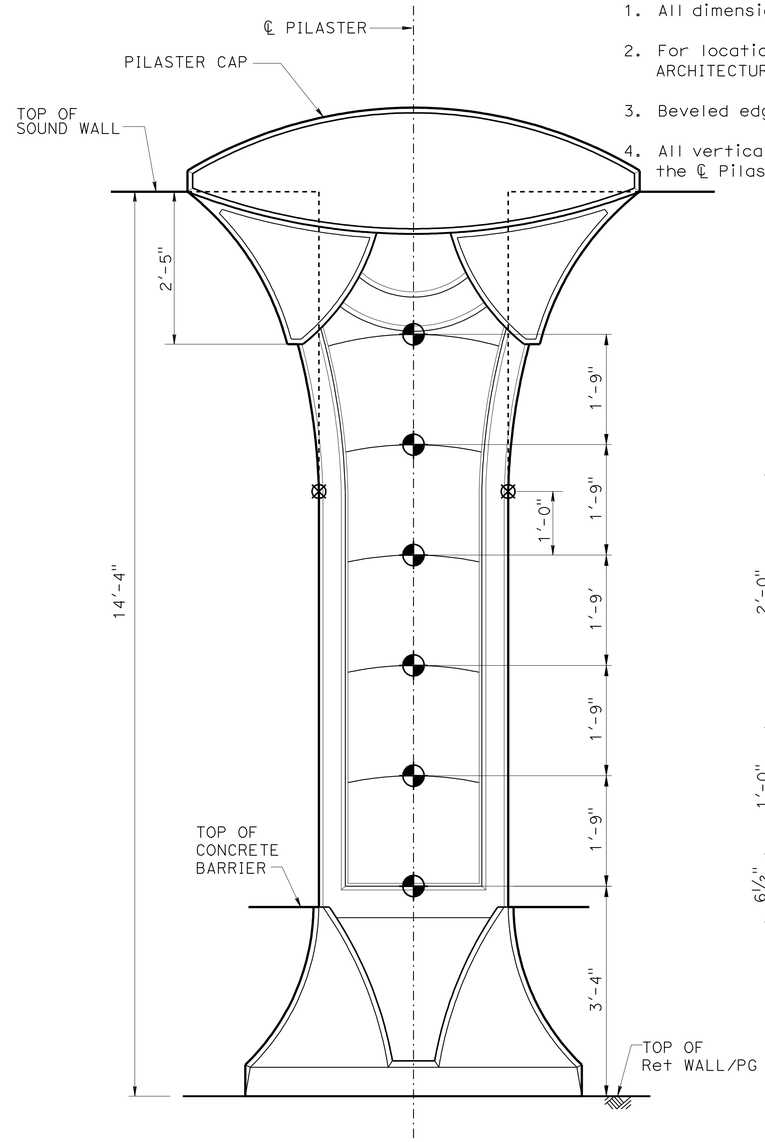

NOTE: For dimensions and details not shown, see "16'-4" SOUND WALL" details.

14'-4" SOUND WALL

PILASTER ELEVATION - FREEWAY SIDE

NO SCALE

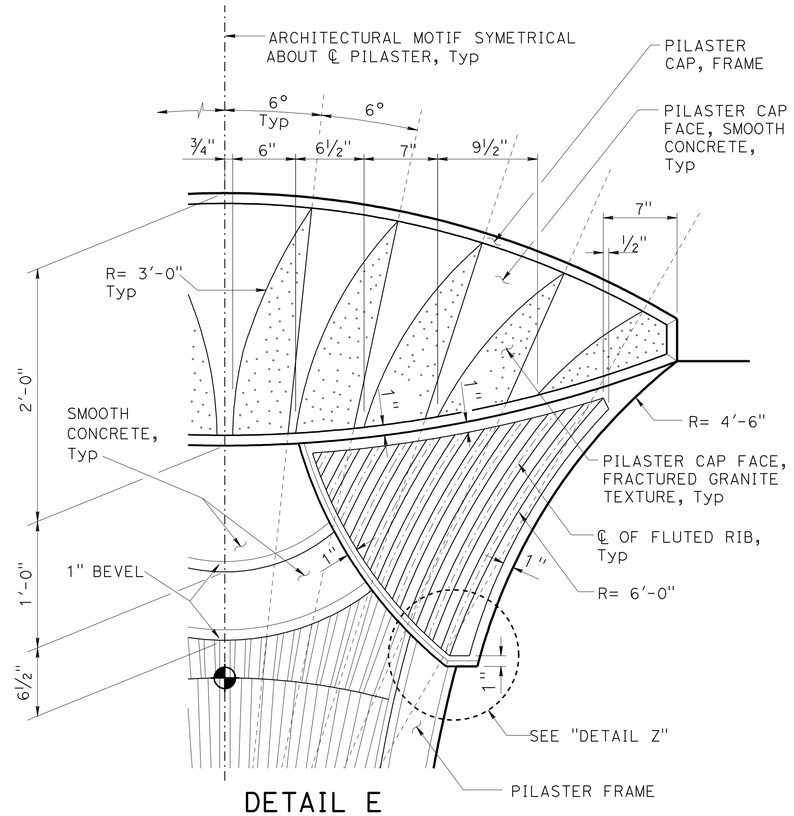

DETAIL E

NO SCALE

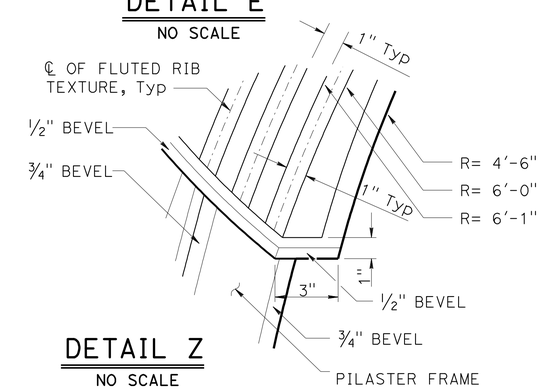

DETAIL Z

NO SCALE

DESIGN	BY Isaac Tasabia	CHECKED Javier Chavez	
DETAILS	BY Jin Zhou	CHECKED K. Harper / D. Sessions	
QUANTITIES	BY April Pearson	CHECKED Kyoung Lee	

STATE OF CALIFORNIA
DEPARTMENT OF TRANSPORTATION

DIVISION OF ENGINEERING SERVICES
STRUCTURE DESIGN
DESIGN BRANCH 1

BRIDGE NO. ×
POST MILE 3.49

SOUND WALL NO. 186

PILASTER ARCHITECTURAL DETAILS NO. 1

STRUCTURES DESIGN DETAIL SHEET (ENGLISH) (REV. 09-01-10)

ORIGINAL SCALE IN INCHES FOR REDUCED PLANS 0 1 2 3

UNIT: 3576
PROJECT NUMBER & PHASE: 07000018331
CONTRACT NO. 07-215934

DISREGARD PRINTS BEARING EARLIER REVISION DATES

REVISION DATES 12/08/10 7/20/11 04/09/12

SHEET 10 OF 25

FILE => sw186-g-pilaster01.dgn

USERNAME => s124496 DATE PLOTTED => 28-MAR-2012 TIME PLOTTED => 11:43

DIST	COUNTY	ROUTE	POST MILES TOTAL PROJECT	SHEET No.	TOTAL SHEETS
07	LA	5	2.4/4.0	1179	1288

REGISTERED CIVIL ENGINEER 12-8-11 DATE

3-26-12
PLANS APPROVAL DATE

REGISTERED PROFESSIONAL ENGINEER Kevin Harper No. 42221 Exp. 3-31-12 CIVIL STATE OF CALIFORNIA

The State of California or its officers or agents shall not be responsible for the accuracy or completeness of electronic copies of this plan sheet.

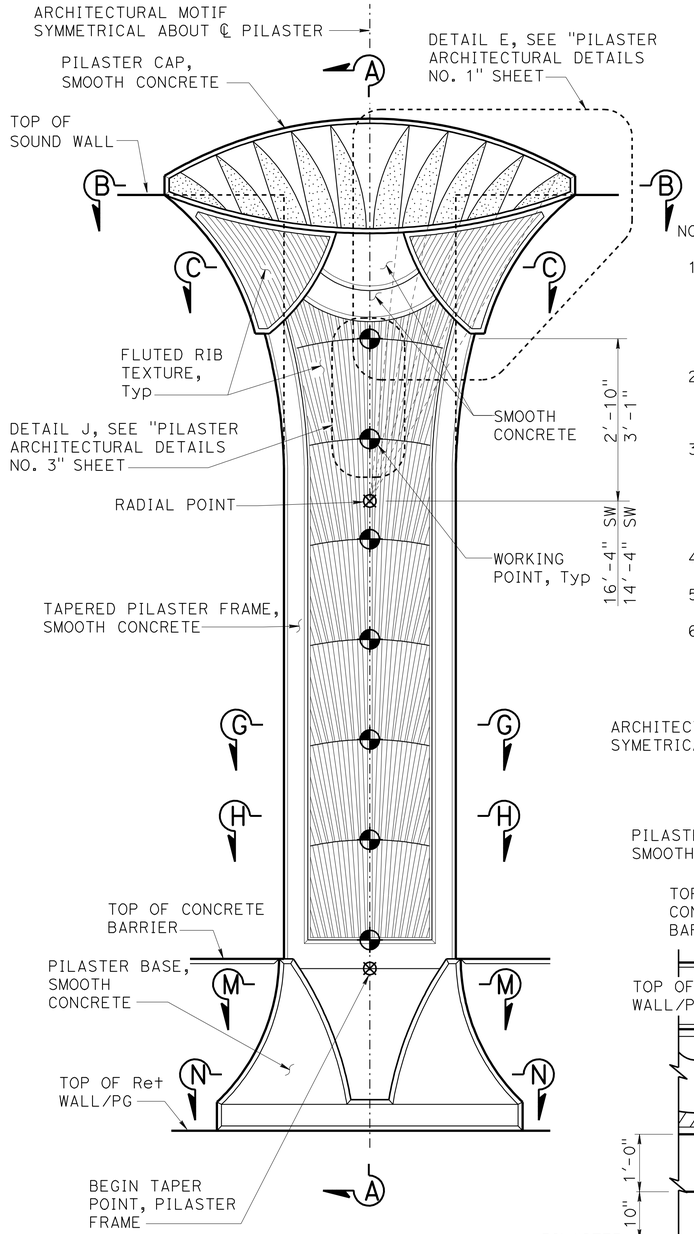

NOTE: For additional details not shown, see "16'-4" SOUND WALL - PILASTER ELEVATION" on "PILASTER ARCHITECTURAL DETAILS NO. 1" sheet.

FREEWAY SIDE

NOTES:

1. For "SECTION B-B", "SECTION C-C", "SECTION G-G","SECTION H-H" and "SECTION L-L", see "PILASTER ARCHITECTURAL DETAILS NO. 3" sheet.
2. For "SECTION M-M" and "SECTION N-N"' see "PILASTER ARCHITECTURAL DETAIL NO. 4" sheet.
3. Pilaster Sections on Retaining Wall shown, for Pilaster on Barrier Type 736SV (Mod), see "PILASTER SECTION ON TYPE 736SV (Mod) BARRIER" on "PILASTER ARCHITECTURAL DETAILS NO. 4" sheet.
4. All dimensions symmetrical about ℄ pilaster.
5. Beveled edges are 45° unless otherwise noted.
6. All vertical dimension are measured along the ℄ Pilaster (Pilaster shall be vertical).

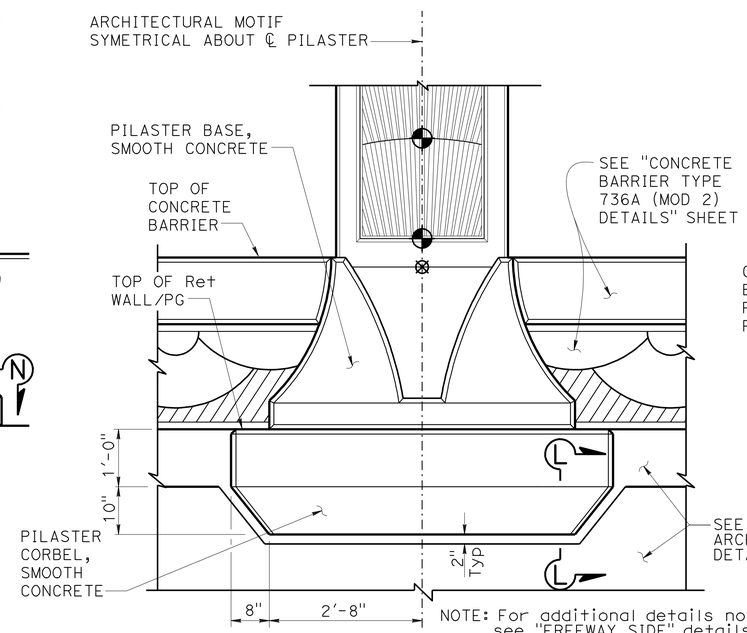

NOTE: For additional details not shown, see "FREEWAY SIDE" details.

BACK SIDE

PILASTER ARCHITECTURAL MOTIF

3/4" = 1'-0"

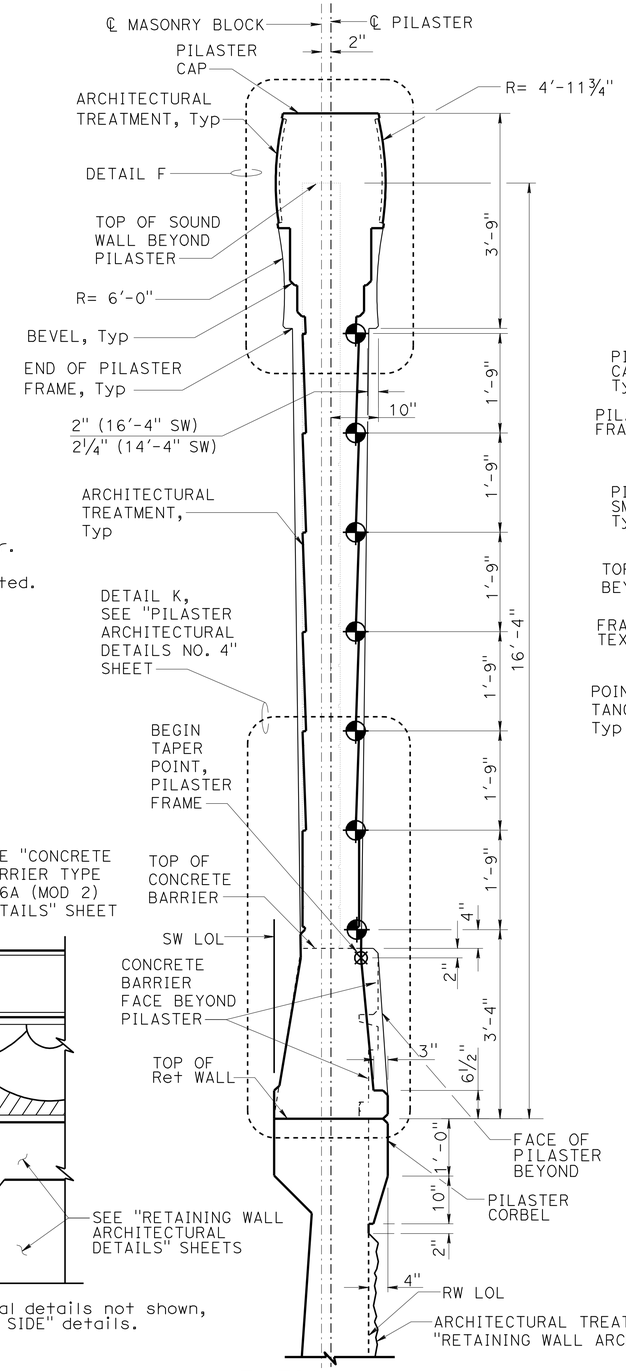

SECTION A-A

3/4" = 1'-0"

NOTE: Pilaster for 16'-4" Sound Wall shown, Pilaster at 14'-4" Sound Wall similar.

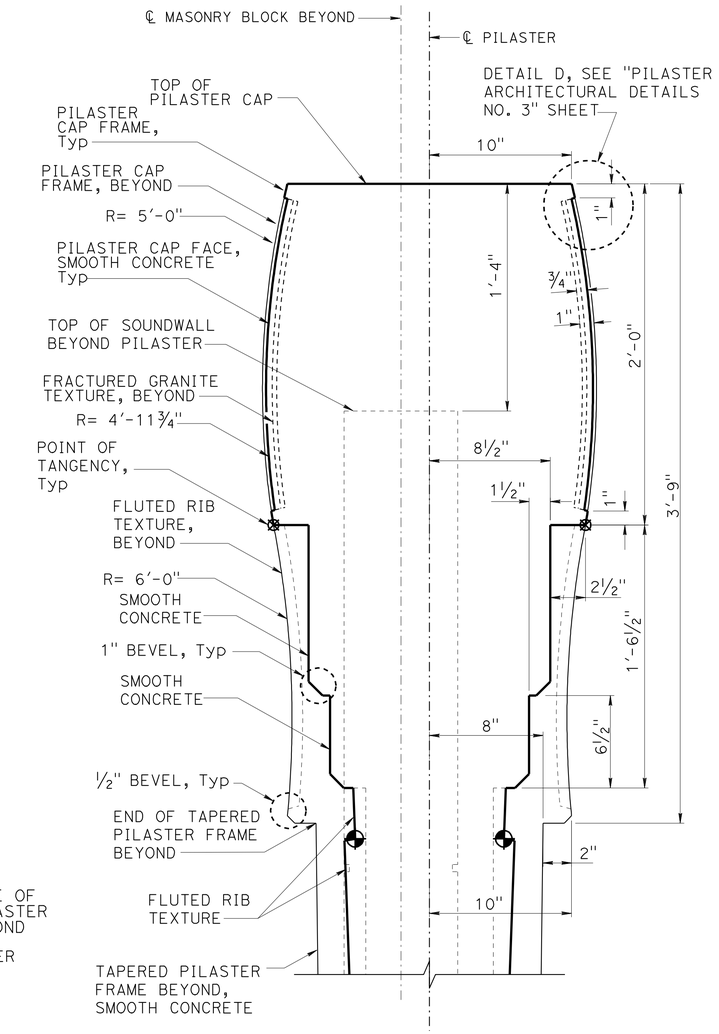

DETAIL F

NO SCALE

DESIGN	BY Isaac Tasabia	CHECKED Javier Chavez	
DETAILS	BY Jin Zhou	CHECKED K. Harper / D. Sessions	
QUANTITIES	BY April Pearson	CHECKED Kyoung Lee	

STATE OF CALIFORNIA
DEPARTMENT OF TRANSPORTATION

DIVISION OF ENGINEERING SERVICES
STRUCTURE DESIGN
DESIGN BRANCH 1

BRIDGE NO. X
POST MILE 3.49

SOUND WALL NO. 186

PILASTER ARCHITECTURAL DETAILS NO. 2

STRUCTURES DESIGN DETAIL SHEET (ENGLISH) (REV. 09-01-10)

ORIGINAL SCALE IN INCHES FOR REDUCED PLANS 0 1 2 3

UNIT: 3576
PROJECT NUMBER & PHASE: 07000018331
CONTRACT NO.: 07-215934

DISREGARD PRINTS BEARING EARLIER REVISION DATES

REVISION DATES 12/20/10 07/20/11 7/20/11

SHEET 11 OF 25

FILE => sw186-g-pilaster02.dgn

USERNAME => s124496 DATE PLOTTED => 28-MAR-2012 TIME PLOTTED => 11:43

DIST	COUNTY	ROUTE	POST MILES TOTAL PROJECT	SHEET No.	TOTAL SHEETS
07	LA	5	2.4/4.0	1180	1288

REGISTERED CIVIL ENGINEER 12-8-11 DATE

3-26-12
PLANS APPROVAL DATE

REGISTERED PROFESSIONAL ENGINEER Kevin Harper No. 42221 Exp. 3-31-12 CIVIL STATE OF CALIFORNIA

The State of California or its officers or agents shall not be responsible for the accuracy or completeness of electronic copies of this plan sheet.

NOTES:

1. All notes and dimensions symetrical about ℄ pilaster.
2. Beveled edges are 45° unless otherwise noted.
3. For location of "DETAIL J", "DETAIL D" and "SECTION B-B", "SECTION C-C", "SECTION G-G", "SECTION H-H" and "SECTION L-L", see "PILASTER ARCHITECTURAL DETAILS NO. 2" sheet.
4. For Retaining Wall split slate texture, see "RETAINING WALL ARCHITECTURAL DETAILS" sheet.
5. For Type 736SV (Mod) Barrier fractured granite texture, see "CONCRETE BARRIER TYPE 736A (MOD 2) DETAILS" sheet if applicable.

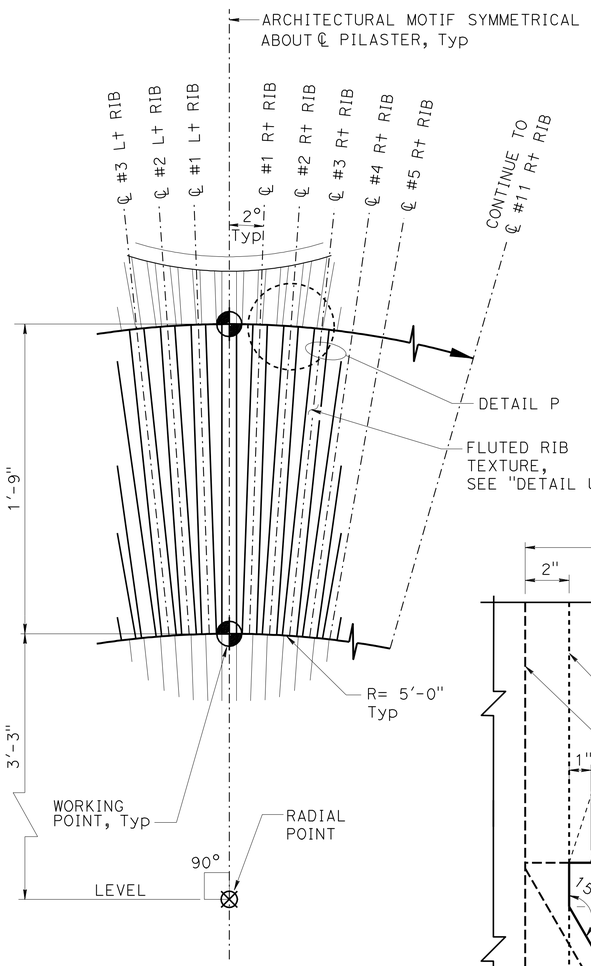

DETAIL J
NO SCALE

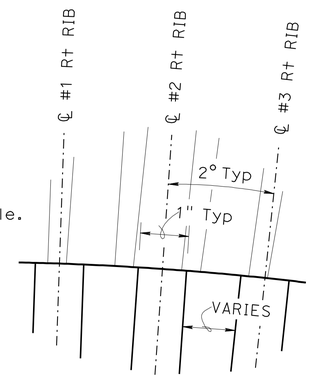

DETAIL P
NO SCALE

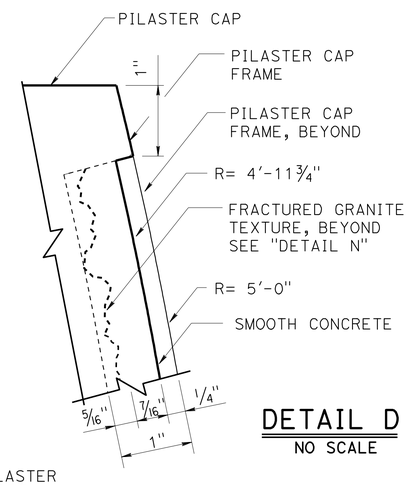

DETAIL D
NO SCALE

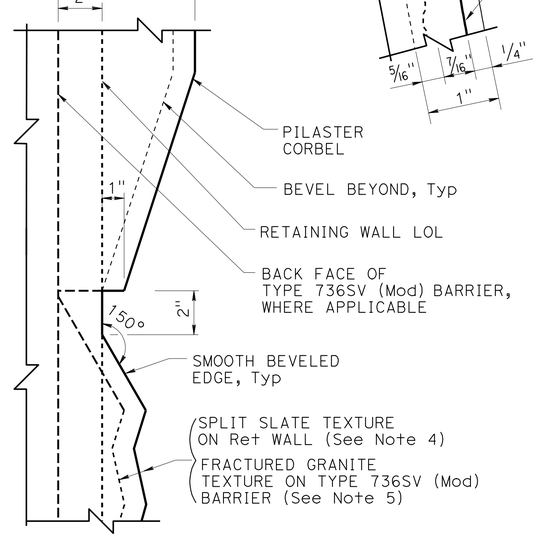

SECTION L-L
NO SCALE

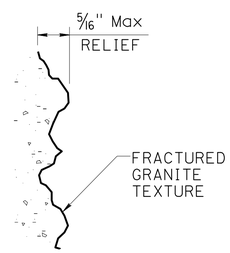

DETAIL N
NO SCALE

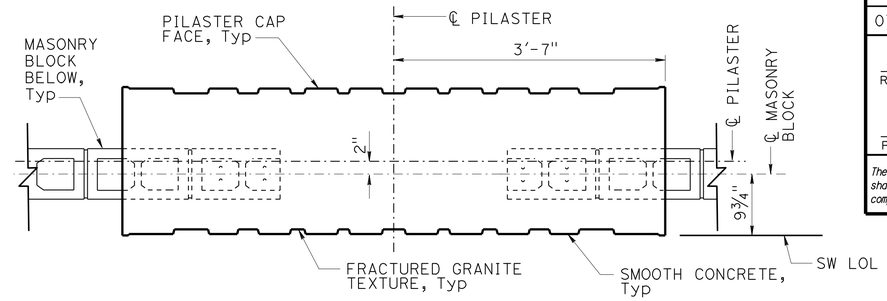

SECTION B-B
1" = 1'-0"

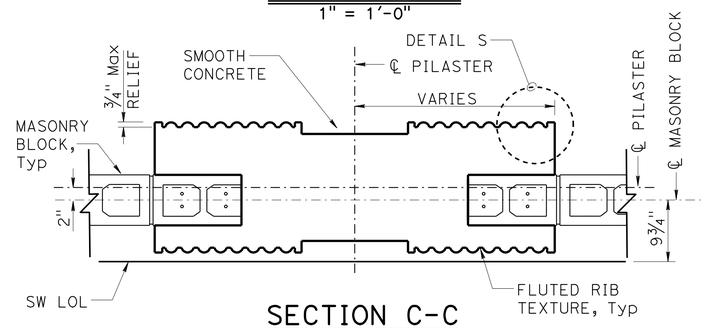

SECTION C-C
1" = 1'-0"

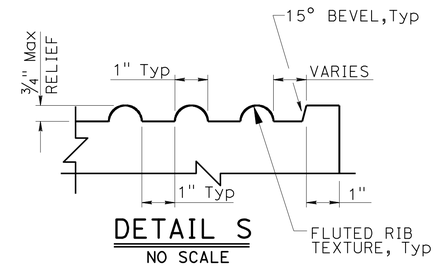

DETAIL S
NO SCALE

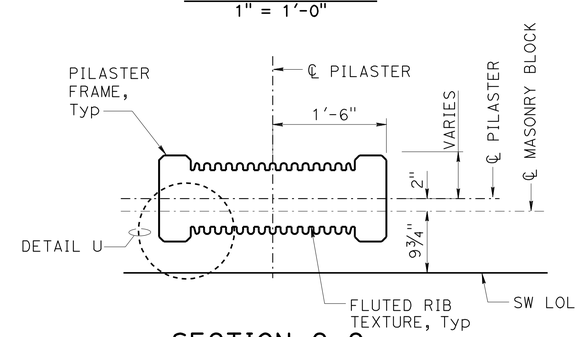

SECTION G-G
1" = 1'-0"

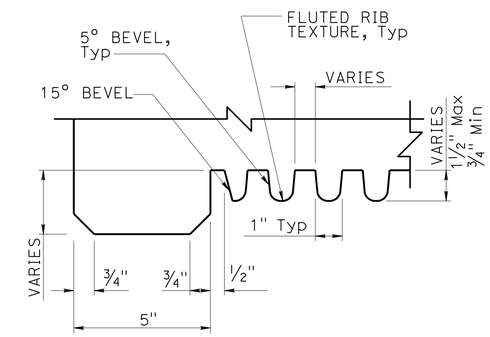

DETAIL U
NO SCALE

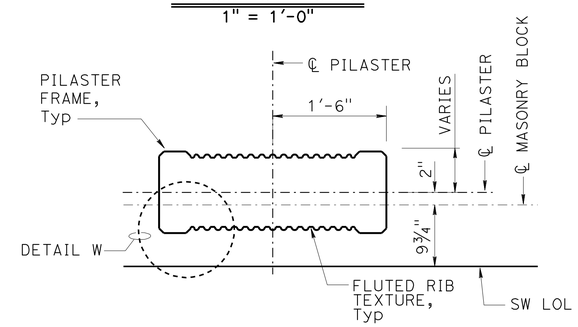

SECTION H-H
1" = 1'-0"

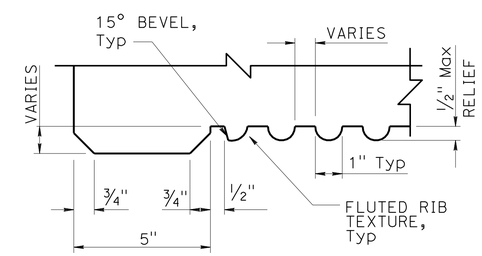

DETAIL W
NO SCALE

DESIGN	BY Isaac Tasabia	CHECKED Javier Chavez	
DETAILS	BY Jin Zhou	CHECKED K. Harper / D. Sessions	
QUANTITIES	BY April Pearson	CHECKED Kyoung Lee	

STATE OF CALIFORNIA
DEPARTMENT OF TRANSPORTATION

DIVISION OF ENGINEERING SERVICES
STRUCTURE DESIGN
DESIGN BRANCH 1

BRIDGE NO. ×
POST MILE 3.49

SOUND WALL NO. 186
PILASTER ARCHITECTURAL DETAILS NO. 3

STRUCTURES DESIGN DETAIL SHEET (ENGLISH) (REV. 09-01-10)

ORIGINAL SCALE IN INCHES FOR REDUCED PLANS 0 1 2 3

UNIT: 3576
PROJECT NUMBER & PHASE: 07000018331
CONTRACT NO.: 07-215934

DISREGARD PRINTS BEARING EARLIER REVISION DATES

REVISION DATES 12/09/10 04/28/11 04/30/11

SHEET 12 OF 25

FILE => sw186-g-pilaster03.dgn

USERNAME => s124496 DATE PLOTTED => 28-MAR-2012 TIME PLOTTED => 11:43

DIST	COUNTY	ROUTE	POST MILES TOTAL PROJECT	SHEET No.	TOTAL SHEETS
07	LA	5	2.4/4.0	1181	1288

REGISTERED CIVIL ENGINEER 12-8-11 DATE

3-26-12
PLANS APPROVAL DATE

REGISTERED PROFESSIONAL ENGINEER Kevin Harper No. 42221 Exp. 3-31-12 CIVIL STATE OF CALIFORNIA

The State of California or its officers or agents shall not be responsible for the accuracy or completeness of electronic copies of this plan sheet.

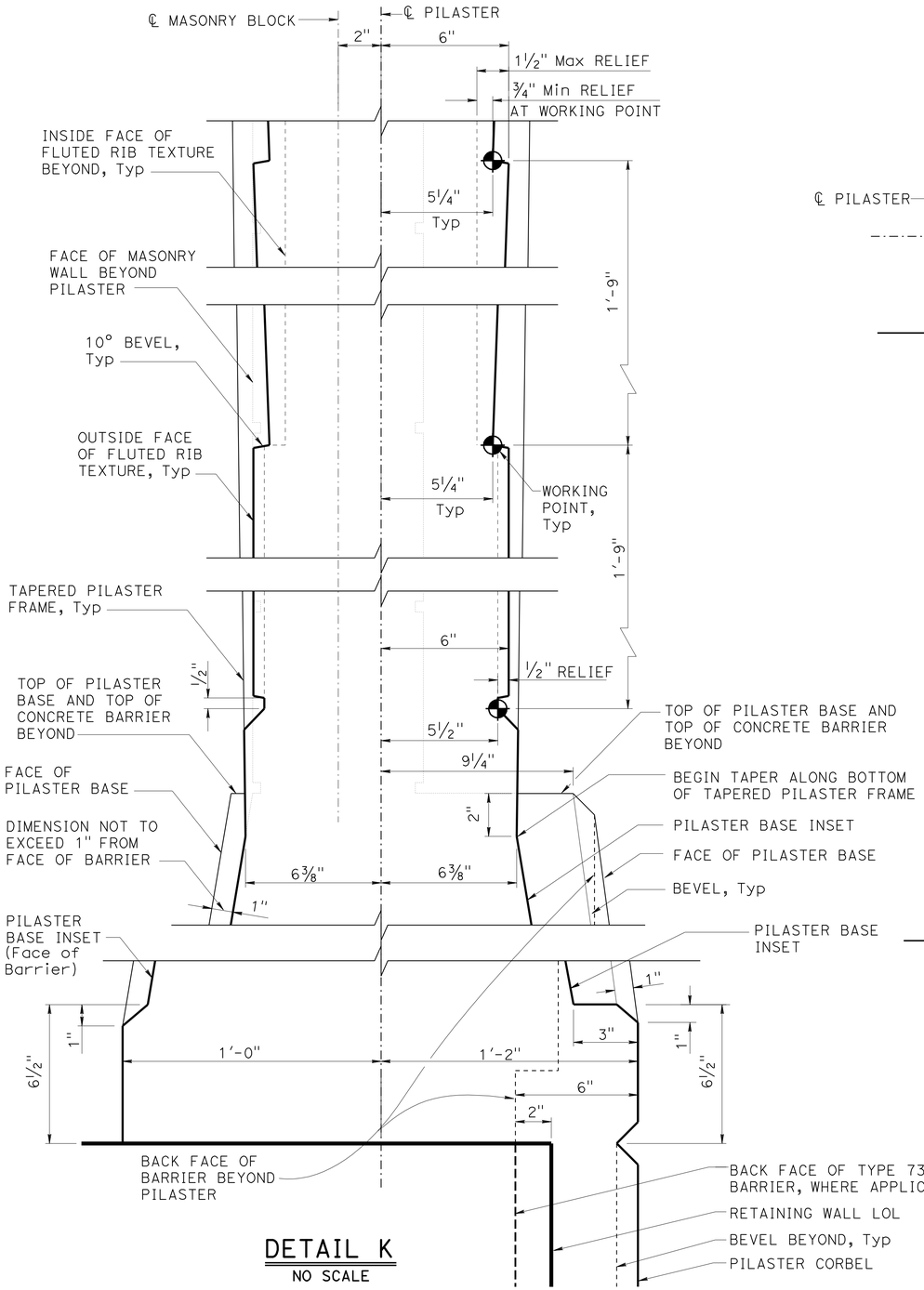

DETAIL K
NO SCALE

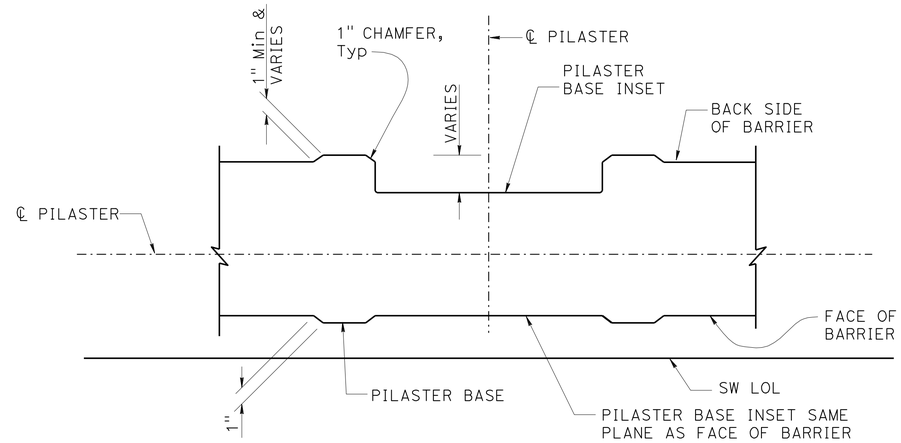

SECTION M-M
1½" = 1'-0"

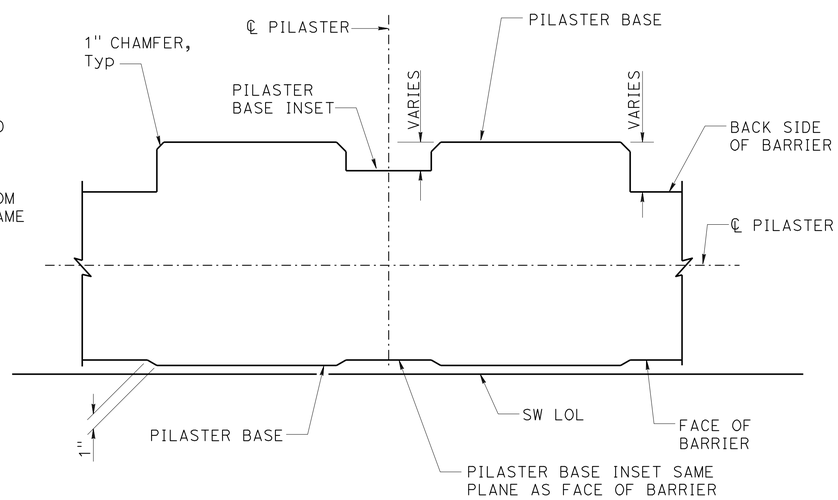

SECTION N-N
1½" = 1'-0"

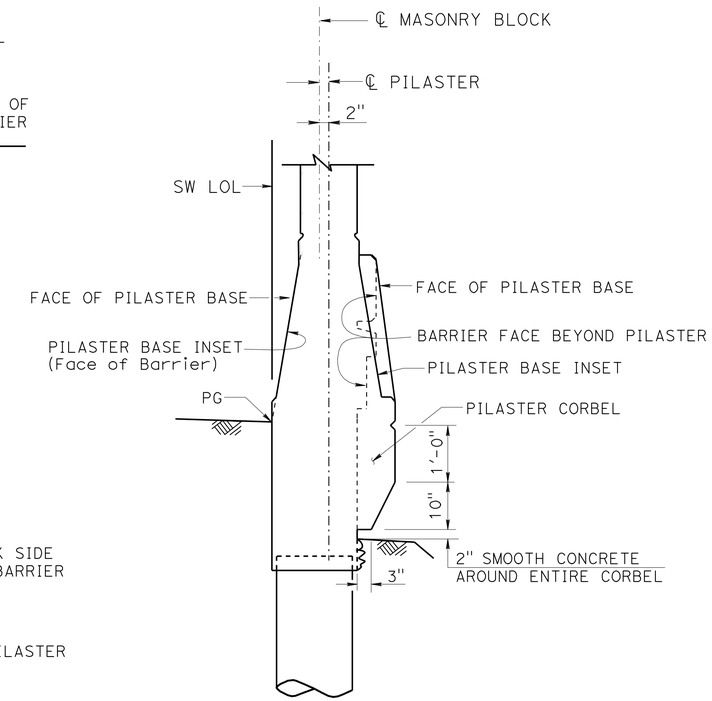

NOTE: For Pilaster details not shown, see "SECTION A-A" on "PILASTER ARCHITECTURAL DETAILS NO. 2" sheet.

PILASTER SECTION ON TYPE 736SV (MOD) BARRIER
¾" = 1'-0"

NOTES:

1. For location of "SECTION M-M", "SECTION N-N" and "DETAIL K", see "PILASTER ARCHITECTURAL DETAILS NO. 2" sheet.
2. All dimensions symmetrical about ℄ Pilaster.
3. All vertical dimension are measured along the ℄ Pilaster (Pilaster shall be vertical).

	BY	CHECKED
DESIGN	Isaac Tasabia	Javier Chavez
DETAILS	Jin Zhou	K. Harper / D. Sessions
QUANTITIES	April Pearson	Kyoung Lee

STATE OF CALIFORNIA
DEPARTMENT OF TRANSPORTATION

DIVISION OF ENGINEERING SERVICES
STRUCTURE DESIGN
DESIGN BRANCH 1

BRIDGE NO. ×
POST MILE 3.49

SOUND WALL NO. 186
PILASTER ARCHITECTURAL DETAILS NO. 4

STRUCTURES DESIGN DETAIL SHEET (ENGLISH) (REV. 09-01-10)

ORIGINAL SCALE IN INCHES FOR REDUCED PLANS 0 1 2 3

UNIT: 3576
PROJECT NUMBER & PHASE: 07000018331
CONTRACT NO.: 07-215934

DISREGARD PRINTS BEARING EARLIER REVISION DATES

REVISION DATES 12-8-10 3-26-11 7-20-11 04-23-12

SHEET 13 OF 25

FILE => sw186-g-pilaster04.dgn

USERNAME => s124496 DATE PLOTTED => 28-MAR-2012 TIME PLOTTED => 11:43

DIST	COUNTY	ROUTE	POST MILES TOTAL PROJECT	SHEET No.	TOTAL SHEETS
07	LA	5	2.4/4.0	1182	1288

REGISTERED CIVIL ENGINEER 12-8-11 DATE

3-26-12
PLANS APPROVAL DATE

REGISTERED PROFESSIONAL ENGINEER Kevin Harper No. 42221 Exp. 3-31-12 CIVIL STATE OF CALIFORNIA

The State of California or its officers or agents shall not be responsible for the accuracy or completeness of electronic copies of this plan sheet.

NOTE:
For "SECTION B-B", "SECTION C-C", "SECTION D-D" and "SECTION G-G", see "PILASTER STRUCTURAL DETAILS NO. 2" sheet.

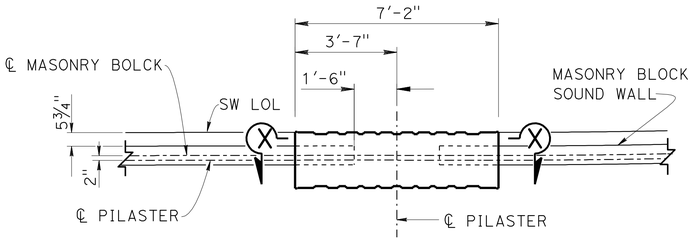

PART SOUND WALL PLAN

3/8" = 1'-0"

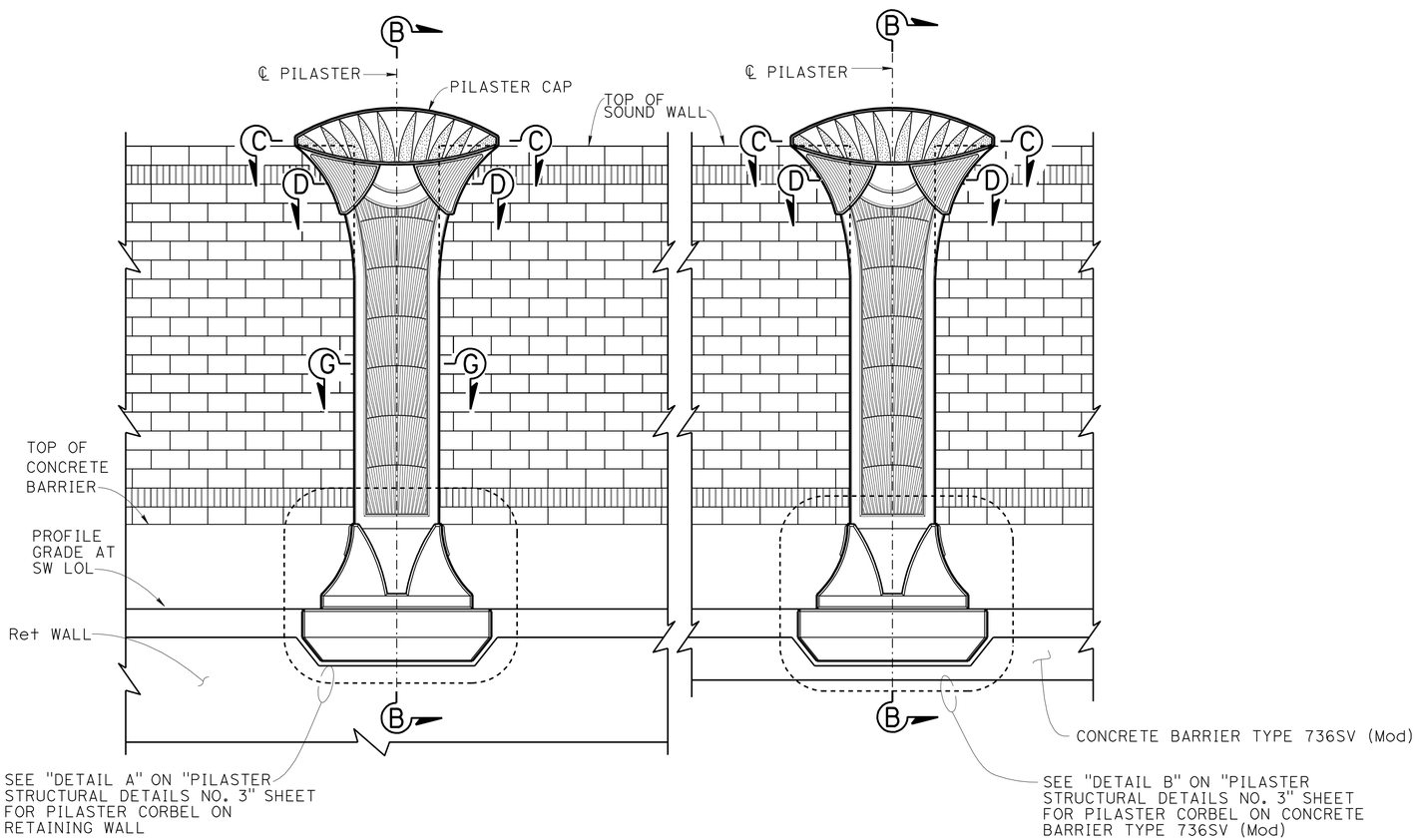

PART SOUND WALL ELEVATION

3/8" = 1'-0"

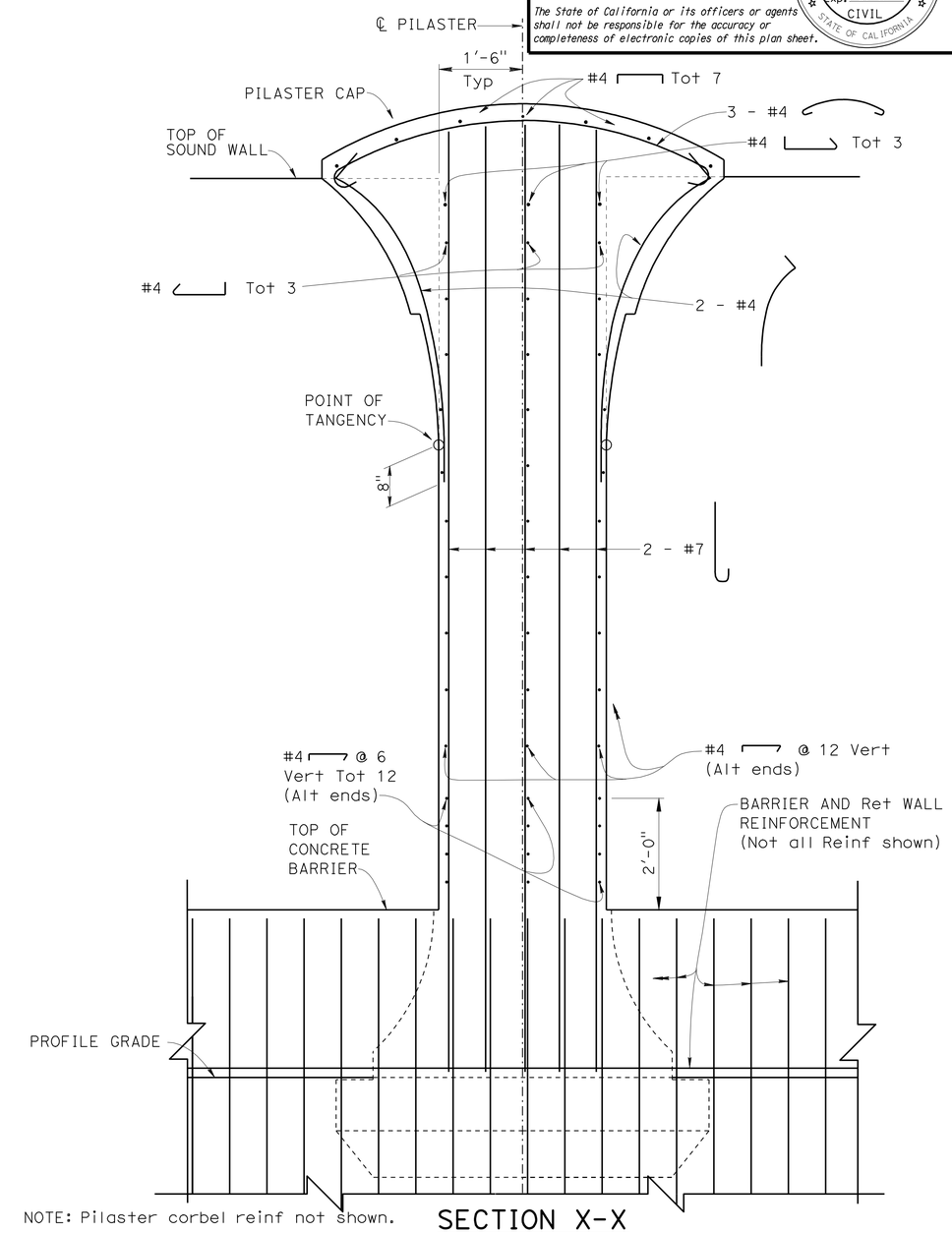

NOTE: Pilaster corbel reinf not shown.

SECTION X-X

3/4" = 1'-0"

DESIGN	BY Kevin Harper	CHECKED Daniel Sessions	
DETAILS	BY Jin Zhou	CHECKED Daniel Sessions	
QUANTITIES	BY April Pearson	CHECKED Kyoung Lee	

STATE OF CALIFORNIA
DEPARTMENT OF TRANSPORTATION

DIVISION OF ENGINEERING SERVICES
STRUCTURE DESIGN
DESIGN BRANCH 1

BRIDGE NO. X
POST MILE 3.49

SOUND WALL NO. 186
PILASTER STRUCTURAL DETAILS NO. 1

STRUCTURES DESIGN DETAIL SHEET (ENGLISH) (REV. 09-01-10)

ORIGINAL SCALE IN INCHES FOR REDUCED PLANS 0 1 2 3

UNIT: 3576
PROJECT NUMBER & PHASE: 07000018331
CONTRACT NO.: 07-215934

DISREGARD PRINTS BEARING EARLIER REVISION DATES

REVISION DATES 12/23/10 04/29/11 04/15/11

SHEET 14 OF 25

FILE => sw186-h-pilaster01.dgn

USERNAME => s124496 DATE PLOTTED => 28-MAR-2012 TIME PLOTTED => 11:43

DIST	COUNTY	ROUTE	POST MILES TOTAL PROJECT	SHEET No.	TOTAL SHEETS
07	LA	5	2.4/4.0	1183	1288

REGISTERED CIVIL ENGINEER 12-8-11 DATE

3-26-12
PLANS APPROVAL DATE

REGISTERED PROFESSIONAL ENGINEER Kevin Harper No. 42221 Exp. 3-31-12 CIVIL STATE OF CALIFORNIA

The State of California or its officers or agents shall not be responsible for the accuracy or completeness of electronic copies of this plan sheet.

NOTES:

1. For location of "SECTION B-B", "SECTION C-C", "SECTION D-D" and "SECTION G-G", see "PILASTER STRUCTURAL DETAILS NO. 1" sheet.
2. For Pilaster geometry, dimensions and architectural treatments, see "PILASTER ARCHITECTURAL DETAILS" sheets.

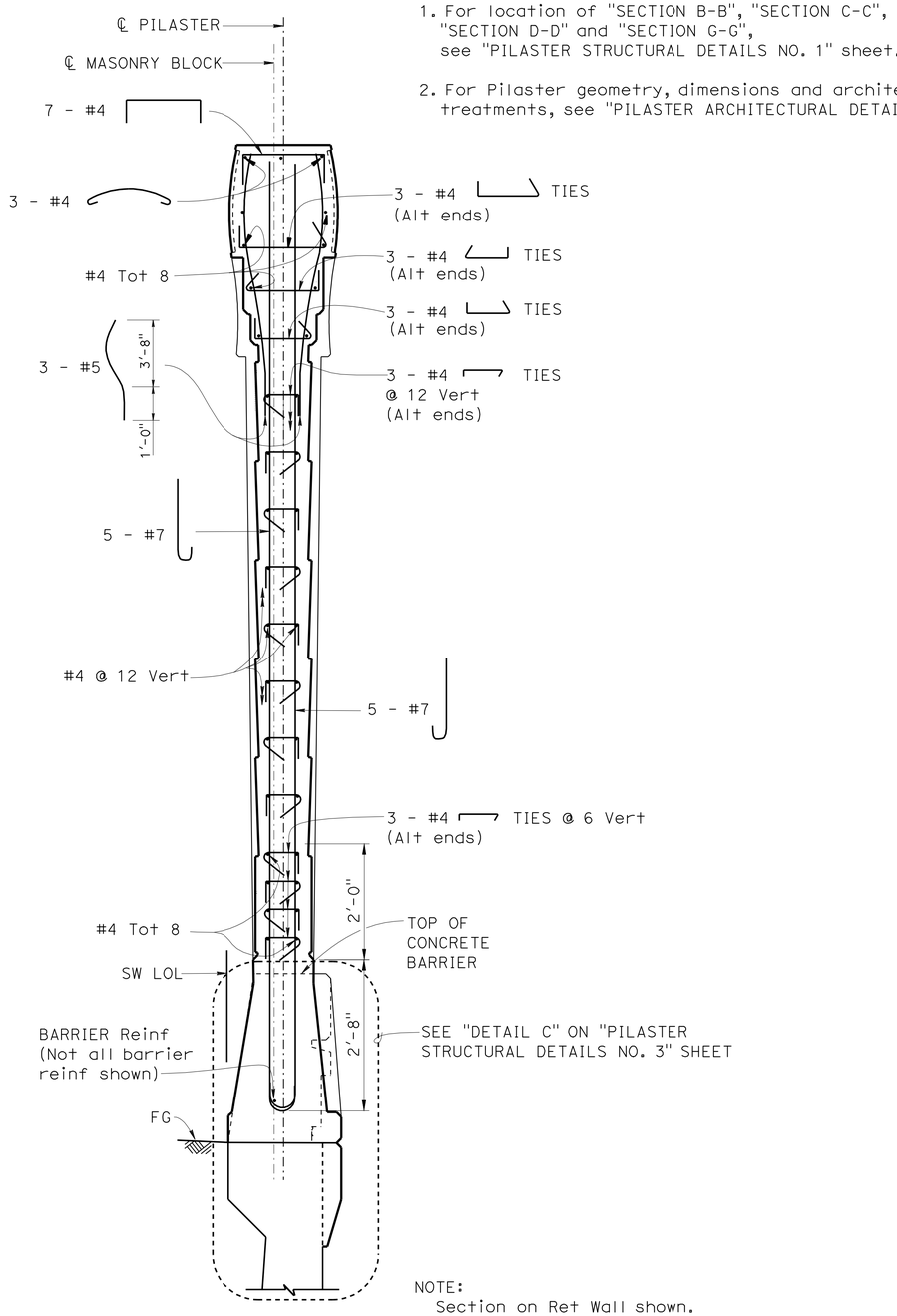

SECTION B-B

¾" = 1'-0"

NOTE:
Section on Ret Wall shown.
Pilaster on Type 736SV (Mod) Barrier similar.

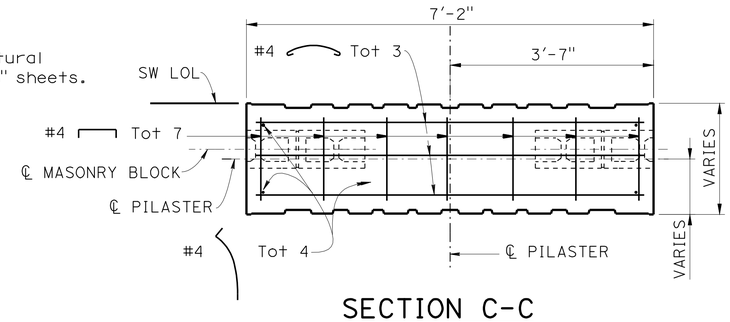

SECTION C-C

¾" = 1'-0"

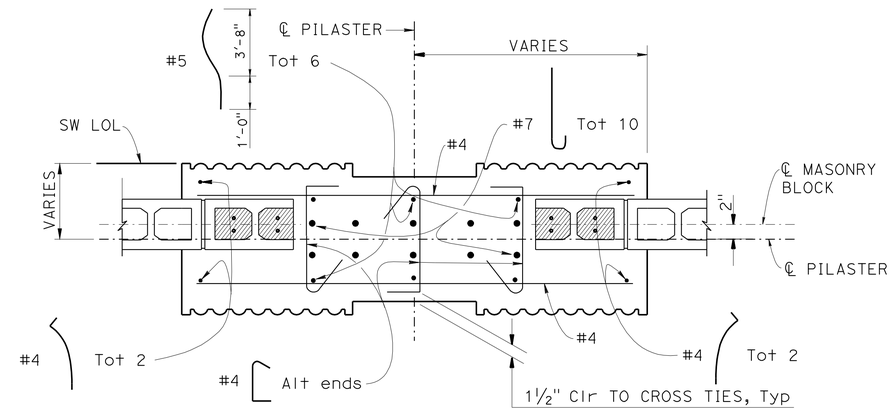

SECTION D-D

1" = 1'-0"

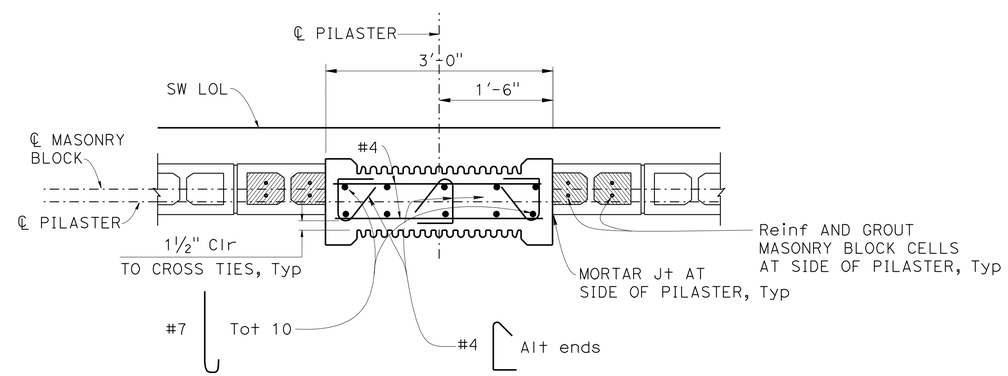

SECTION G-G

1" = 1'-0"

DESIGN	BY Kevin Harper	CHECKED Daniel Sessions	
DETAILS	BY Jin Zhou	CHECKED Daniel Sessions	
QUANTITIES	BY April Pearson	CHECKED Kyoung Lee	

STATE OF CALIFORNIA
DEPARTMENT OF TRANSPORTATION

DIVISION OF ENGINEERING SERVICES
STRUCTURE DESIGN
DESIGN BRANCH 1

BRIDGE NO. ×
POST MILE 3.49

SOUND WALL NO. 186
PILASTER STRUCTURAL DETAILS NO. 2

STRUCTURES DESIGN DETAIL SHEET (ENGLISH) (REV. 09-01-10)

ORIGINAL SCALE IN INCHES FOR REDUCED PLANS 0 1 2 3

UNIT: 3576
PROJECT NUMBER & PHASE: 07000018331
CONTRACT NO.: 07-215934

DISREGARD PRINTS BEARING EARLIER REVISION DATES

REVISION DATES 12/30/10 05/02/11 5/16/11 7/20/11

SHEET 15 OF 25

FILE => sw186-h-pilaster02.dgn

USERNAME => s124436 DATE PLOTTED => 28-MAR-2012 TIME PLOTTED => 11:44

DIST	COUNTY	ROUTE	POST MILES TOTAL PROJECT	SHEET No.	TOTAL SHEETS
07	LA	5	2.4/4.0	1184	1288

REGISTERED CIVIL ENGINEER 12-8-11 DATE

3-26-12
PLANS APPROVAL DATE

REGISTERED PROFESSIONAL ENGINEER Kevin Harper No. 42221 Exp. 3-31-12 CIVIL STATE OF CALIFORNIA

The State of California or its officers or agents shall not be responsible for the accuracy or completeness of electronic copies of this plan sheet.

NOTES:

1. For location of "DETAIL A" and "DETAIL B", see "PILASTER STRUCTURAL DETAILS NO. 1" sheet.
2. For location of "DETAIL C", see "PILASTER STRUCTURAL DETAILS NO. 2" sheet.

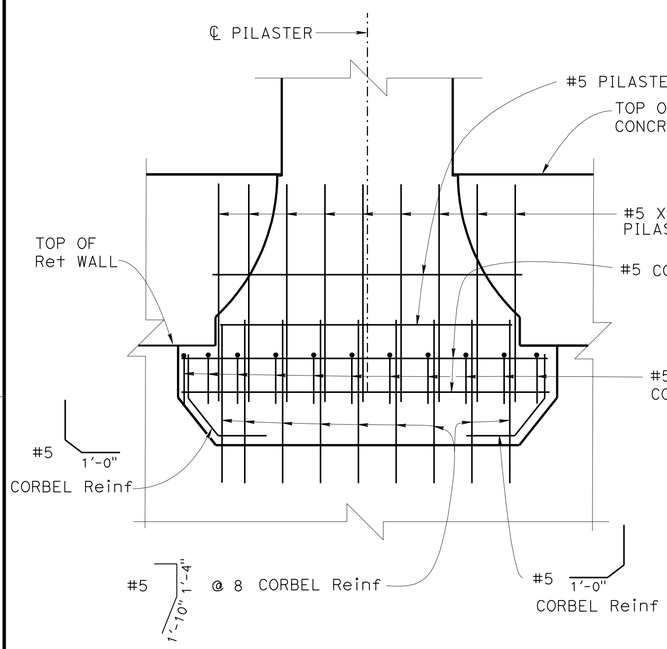

NOTE: Concrete Barrier/Ret Wall reinf not shown.

DETAIL A
¾" = 1'-0"

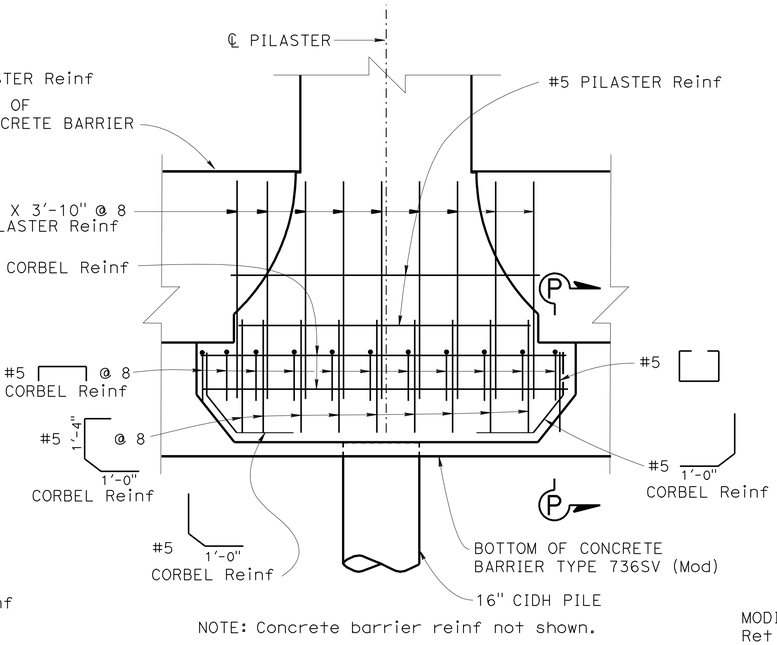

NOTE: Concrete barrier reinf not shown.

DETAIL B
¾" = 1'-0"

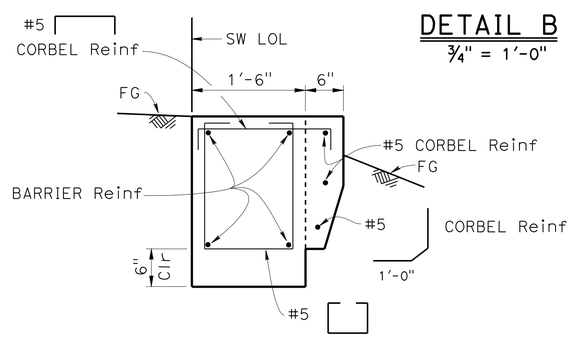

SECTION P-P
1" = 1'-0"

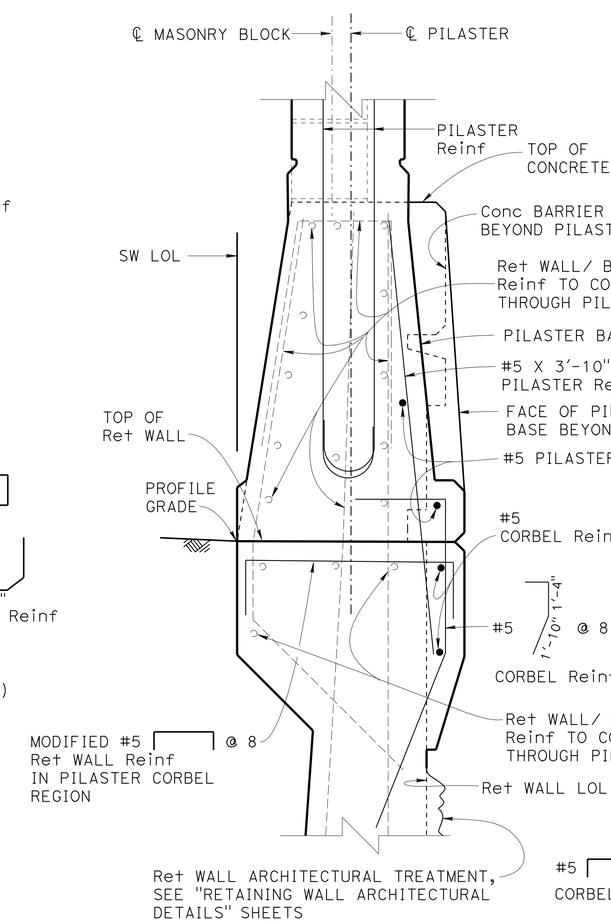

PILASTER CORBEL ON RETAINING WALL

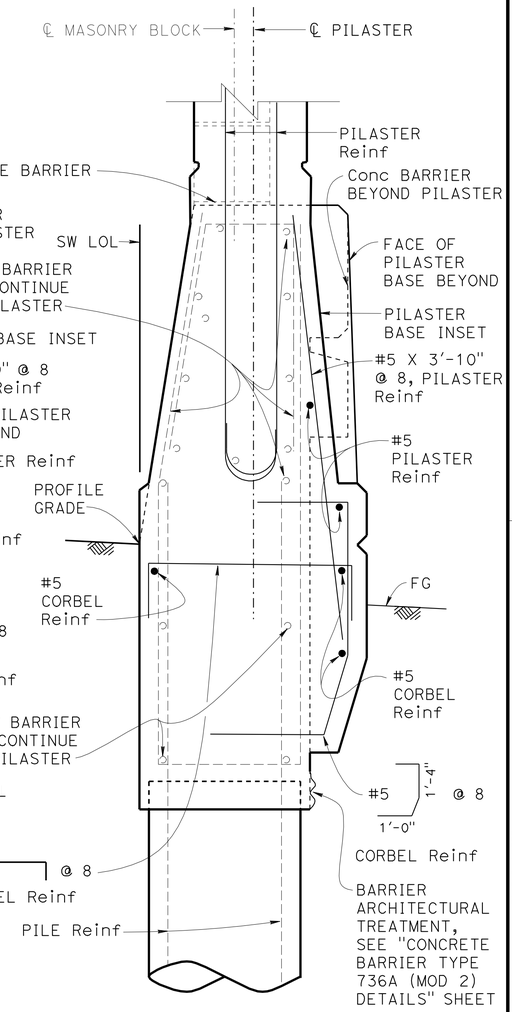

PILASTER CORBEL ON CONCRETE BARRIER TYPE 736SV (MOD)

DETAIL C
1½" = 1'-0"

DESIGN	BY Kevin Harper	CHECKED Daniel Sessions	
DETAILS	BY Jin Zhou	CHECKED Daniel Sessions	
QUANTITIES	BY April Pearson	CHECKED Kyoung Lee	

STATE OF CALIFORNIA
DEPARTMENT OF TRANSPORTATION

DIVISION OF ENGINEERING SERVICES
STRUCTURE DESIGN
DESIGN BRANCH 1

BRIDGE NO. X
POST MILE 3.49

SOUND WALL NO. 186
PILASTER STRUCTURAL DETAILS NO. 3

STRUCTURES DESIGN DETAIL SHEET (ENGLISH) (REV. 09-01-10)

ORIGINAL SCALE IN INCHES FOR REDUCED PLANS 0 1 2 3

UNIT: 3576
PROJECT NUMBER & PHASE: 07000018331
CONTRACT NO.: 07-215934

DISREGARD PRINTS BEARING EARLIER REVISION DATES

REVISION DATES 12/30/10 05/03/11 7/21/11

SHEET 16 OF 25

FILE => sw186-h-pilaster03.dgn

USERNAME => s124496 DATE PLOTTED => 28-MAR-2012 TIME PLOTTED => 11:44

DIST.	COUNTY	ROUTE	POST MILES TOTAL PROJECT	SHEET NO.	TOTAL SHEETS
07	LA	5	2.4/4.0	1185	1288

Kevin J. Harper 12-8-11
REGISTERED ENGINEER - CIVIL

3-26-12
PLANS APPROVAL DATE

REGISTERED PROFESSIONAL ENGINEER Kevin Harper No. 42221 Exp. 3-31-12 CIVIL STATE OF CALIFORNIA

The State of California or its officers or agents shall not be responsible for the accuracy or completeness of electronic copies of this plan sheet.

TABLE OF PILE SPACING: CLASS 90 CONCRETE PILES ◇1

DESIGN H	6′	8′	10′	12′	14′	16′	18′	20′	22′	24′	26′	28′	30′	32′
W	6′-9"	7′-0"	7′-6"	8′-3"	9′-3"	10′-3"	11′-0"	12′-0"	13′-0"	14′-3"	16′-3"	16′-9"	18′-0"	20′-6"
C	2′-9"	2′-9"	3′-0"	3′-3"	3′-6"	4′-0"	4′-3"	4′-9"	5′-0"	5′-6"	6′-3"	6′-9"	7′-3"	7′-9"
B	4′-0"	4′-3"	4′-6"	5′-0"	5′-9"	6′-3"	6′-9"	7′-3"	8′-0"	8′-9"	10′-0"	10′-0"	10′-9"	12′-9"
F	1′-6"	1′-6"	1′-6"	1′-9"	1′-9"	2′-0"	2′-6"	2′-9"	3′-0"	3′-0"	3′-3"	3′-6"	3′-9"	4′-0"
M	1′-3"	1′-3"	1′-6"	1′-9"	2′-0"	2′-6"	2′-9"	3′-3"	3′-6"	4′-0"	4′-9"	5′-3"	5′-9"	6′-3"
N	2′-6"	2′-9"	3′-0"	3′-6"	4′-3"	4′-9"	5′-3"	5′-9"	6′-6"	7′-3"	8′-6"	8′-6"	9′-3"	11′-3"
ROW 1	16′-0"	14′-0"	12′-0"	10′-0"	8′-0"	6′-6"	5′-6"	4′-6"	4′-0"	4′-0"	4′-0"	4′-0"	4′-0"	4′-0"
ROW 2	24′-0"	21′-0"	18′-0"	15′-0"	14′-0"	13′-0"	11′-0"	9′-0"	8′-0"	12′-0"	10′-0"	6′-0"	4′-0"	4′-0"
ROW 3										8′-0"	5′-0"	4′-0"	4′-0"	6′-0"
ROW 4														6′-0"
CONFIGURATION	I	I	I	I	I	I	I	I	I	II	II	II	II	III

TABLE 1: TABLE OF REINFORCING STEEL DIMENSIONS AND DATA

	STEM WITH HAUNCH													
DESIGN H	6′	8′	10′	12′	14′	16′	18′	20′	22′	24′	26′	28′	30′	32′
STEM BATTER	0	1/2:12	1/2:12	1/2:12	1/2:12	1/2:12	1/2:12	1/2:12	1/2:12	5/8:12	3/4:12	7/8:12	1:12	1:12
◇2 ~~STEM THICKNESS @ TOP~~	~~1′ 6"~~	~~1′ 6"~~	~~1′ 6"~~	~~1′ 6"~~	~~1′ 6"~~	~~1′ 6"~~	~~1′ 6"~~	~~1′ 6"~~	~~1′ 6"~~	~~1′ 6"~~	~~1′ 6"~~	~~1′ 6"~~	~~1′ 6"~~	~~1′ 6"~~
STEM THICKNESS @ HAUNCH	1′-0"	1′-0"	1′-0"	1′-0"	1′-0"	1′-0"	1′-0"	1′-0"	1′-0"	1′-0"	1′-0"	1′-0"	1′-0"	1′-0"
ⓐ BARS				#6@18**	#7@18**	#8@18**	#9@18**	#10@18**	#8 @ 9*	#8 @ 9*	#7 @ 6*	#10@12**	#9 @ 9*	#11@12**
X				CONT	CONT	CONT	CONT	CONT	CONT	CONT	CONT	CONT	CONT	CONT
Y				8′-0"	6′-6"	7′-6"	8′-6"	9-6"	9′-6"	11′-0"	11′-6"	13′-0"	14′-0"	15′-6"
ⓑ BARS	#5 @ 12	#5 @ 12	#5 @ 9	#6@18**	#7@18**	#8@18**	#9@18**	#10@18**	#8 @ 9*	#8 @ 9*	#7 @ 6*	#10@12**	#9 @ 9*	#11@12**
X	CONT	CONT	CONT	CONT	CONT	CONT	CONT	CONT	CONT	CONT	CONT	CONT	CONT	CONT
Y	CONT	CONT	CONT	CONT	10′-6"	13′-0"	15′-0"	17′-6"	19′-6"	21′-0"	18′-6"	19′-0"	25′-6"	23′-6"
ⓒ BARS					#6 @ 18	#6 @ 18	#6 @ 18	#6 @ 18	#6 @ 18	#6 @ 18	#6 @ 12	#7 @ 12	#7 @ 18	#7 @ 12
ⓓ BARS	#5 @ 12	#5 @ 12	#5 @ 12	#5 @ 12	#5 @ 12	#5 @ 12	#5 @ 9	#5 @ 9	#6 @ 9	#5 @ 6	#7 @ 9	#7 @ 9	#6 @ 6	#7 @ 6
TOTAL ⓔ BARS	6 #5	6 #5	6 #5	6 #5	8 #5	8 #5	10 #5	10 #5	10 #5	10 #5	12 #5	12 #5	12 #5	14 #5
TOTAL ⓕ BARS	6 #5	6 #5	6 #5	6 #5	6 #5	8 #5	8 #5	8 #5	8 #5	10 #5	10 #5	10 #5	12 #5	12 #5

TABLE 2: TABLE OF REINFORCING STEEL DIMENSIONS AND DATA

	STEM WITH HAUNCH							STEM WITHOUT HAUNCH						
DESIGN H	6′	8′	10′	12′	14′	16′	18′	20′	22′	24′	26′	28′	30′	32′
BATTER	0	0	0	0	0	0	0	0	0	0	1/4:12	1/2:12	1/2:12	1/2:12
◇2 STEM THICKNESS @ TOP	~~1′-6"~~	~~1′-6"~~	~~1′-6"~~	~~1′-6"~~	~~1′-6"~~	~~1′-6"~~	~~1′-6"~~	~~1′-6"~~	2′-0"	2′-0"	2′-0"	2′-0"	2′-0"	2′-0"
STEM THICKNESS @ HAUNCH	1′-0"	1′-0"	1′-0"	1′-0"	1′-0"	1′-3"	1′-3"							
ⓐ BARS				#6@12**	#5 @ 6*	#9@18**	#9@12**	#9@12**	#9@12**	#7 @ 6*	#7 @ 6*	#7 @ 6*	#9 @ 9*	#11@12**
X				CONT	CONT	CONT	CONT	CONT	CONT	CONT	CONT	CONT	CONT	CONT
Y				5′-6"	5′-6"	8′-6"	8′-6"	8′-6"	8′-6"	9′-6"	11′-0"	12′-6"	13′-6"	14′-6"
ⓑ BARS	#5 @ 12	#5 @ 9	#6 @ 9	#6@12**	#5 @ 6*	#9@18**	#9@12**	#9@12**	#9@12**	#7 @ 6*	#7 @ 6*	#7 @ 6*	#9 @ 9*	#11@12**
X	CONT	CONT	CONT	CONT	CONT	CONT	CONT	CONT	CONT	CONT	CONT	CONT	CONT	CONT
Y	CONT	CONT	CONT	CONT	CONT	11′-6"	11′-6"	12′-0"	12′-0"	17′-6"	20′-0"	21′-6"	24′-0"	24′-0"
ⓒ BARS						#7 @ 18	#7 @ 12	#7 @ 12	#7 @ 12	#6 @ 12	#6 @ 12	#6 @ 12	#7 @ 18	#7 @ 12
ⓓ BARS	#5 @ 12	#5 @ 12	#5 @ 12	#5 @ 12	#5 @ 12	#5 @ 12	#5 @ 9	#5 @ 9	#6 @ 9	#5 @ 6	#7 @ 9	#7 @ 9	#6 @ 6	#7 @ 6
TOTAL ⓔ BARS	6 #5	6 #5	6 #5	6 #5	8 #5	8 #5	10 #5	10 #5	10 #5	10 #5	12 #5	12 #5	12 #5	14 #5
TOTAL ⓕ BARS	6 #5	6 #5	6 #5	6 #5	6 #5	8 #5	8 #5	8 #5	8 #5	10 #5	10 #5	10 #5	12 #5	12 #5

CONT = CONTINUOUS

* = ⓐ AND ⓑ BARS ARE BUNDLED TOGETHER.

** = ALTERNATE ⓐ AND ⓑ BARS AS SHOWN IN DETAIL A.

DESIGN DATA

DESIGN: LOAD FACTOR DESIGN (LFD)

CONCRETE: REINFORCED CONCRETE, f′c = 3600 psi
fy = 60000 psi

LOADING CASE:

LEVEL GROUND WITH 240 psf LIVE LOAD SURCHARGE AND 16′ SOUNDWALL.
SEISMIC LOAD = 0.3 DEAD LOAD
WIND LOAD = 30 psf
DEAD LOAD OF SOUNDWALL = 1414 lb/lf
DEAD LOAD OF BARRIER = 372 lb/lf

SEISMIC LOAD: SOIL

Kh = 0.3g
Kv = 0.0
Kae : MONONOBE-OKABE METHOD

SOIL: Ø = 34° γ = 120 pcf

EQUIVALENT FLUID PRESSURE:
= 36 pcf FOR DETERMINATION OF TOE PRESSURE
= 27 pcf FOR DETERMINATION OF HEEL PRESSURE

LOAD COMBINATIONS:

GROUP A : βD+1.7E+1.7SC
GROUP B : βD+1.7E+1.3W
GROUP C :
STEM : 1.0D+1.0E+1.0EQD+1.0EQE
FOOTING : D+PYM
WHERE : β = 1.0 OR 1.3 WHICHEVER CONTROLS DESIGN
D = DEAD LOAD
E = LATERAL EARTH PRESSURE
SC = SURCHARGE
W = WIND LOAD
EQD = SEISMIC DEAD LOAD
EQE = SEISMIC LATERAL EARTH PRESSURE
PYM = PROBABLE YIELD MOMENT (1.3* NOMINAL YIELD MOMENT OF STEM)

GENERAL NOTES

◇1
1. CLASS 90 CONCRETE PILES WERE USED FOR THE DESIGN.
2. PILE BATTER SHOWN ARE 1:3.
3. MINIMUM DISTANCE BETWEEN CENTER PILE AND EDGE OF FOOTING IS 1′-6".
4. REDUCTION FACTORS:
   GROUPS A & B : Ø = 0.75
   GROUP C : Ø = 1.0
5. LATERAL RESISTANCE OF EACH PILE:
   GROUPS A & B : = 30 kip
   GROUP C : = 40 kip
6. MAXIMUM SPACING BETWEEN PILES IS SHOWN IN THE TABLE. REDUCE TO SUIT THE LENGHTH OF FOOTING.
7. MINIMUM DISTANCE BETWEEN ANY TWO PILES IS 3′-0".
8. LIMIT OF NO SPLICING FOR REBARS = 3 TIMES THE BOTTOM THICKNESS OF STEM.

SPECIAL DETAILS

REVISED STANDARD DRAWING

FILE NO. xs14-320-1e

APPROVED BY G. WANG
RESPONSIBLE TECHNICAL SPECIALIST
APPROVAL DATE 5-29-09

RELEASED BY ROBERTO LACALLE
RESPONSIBLE OFFICE CHIEF
RELEASE DATE 5-29-09

◇1 Revise Note to indicate Class 90 piles
◇2 Stem thickness @ top shown on Detail No. 2 sheet

STATE OF CALIFORNIA
DEPARTMENT OF TRANSPORTATION

DIVISION OF ENGINEERING SERVICES
STRUCTURE DESIGN
DESIGN BRANCH 1

BRIDGE NO. X
POST MILE 3.49

SOUND WALL NO. 186
RETAINING WALL TYPE 1SWBP - DETAIL NO. 1

DIST.	COUNTY	ROUTE	POST MILES TOTAL PROJECT	SHEET NO.	TOTAL SHEETS
07	LA	5	2.4/4.0	1186	1288

Kevin J. Harper 12-8-11
REGISTERED ENGINEER - CIVIL

3-26-12
PLANS APPROVAL DATE

REGISTERED PROFESSIONAL ENGINEER Kevin Harper No. 42221 Exp. 3-31-12 CIVIL STATE OF CALIFORNIA

The State of California or its officers or agents shall not be responsible for the accuracy or completeness of electronic copies of this plan sheet.

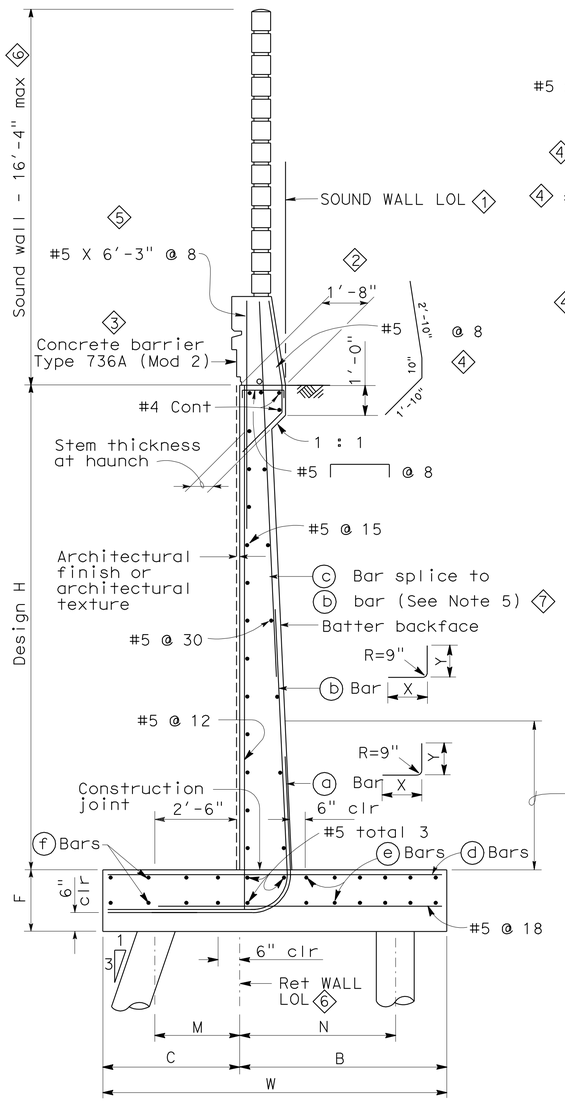

TYPICAL SECTION

NO SCALE

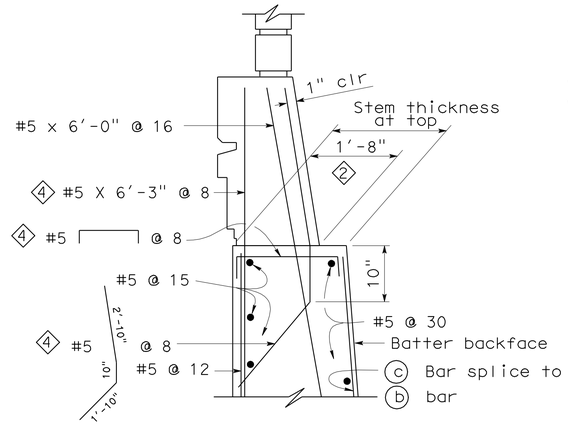

SECTION WITHOUT HAUNCH

NO SCALE

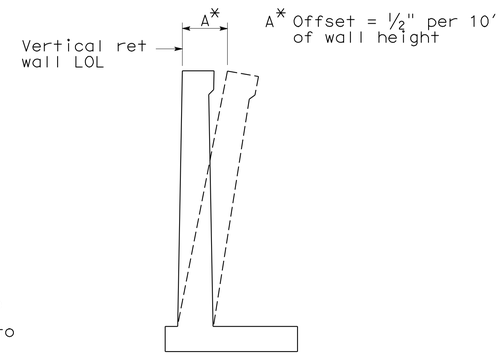

WALL OFFSET

NO SCALE

Values for offsetting forms to be determined by the engineer

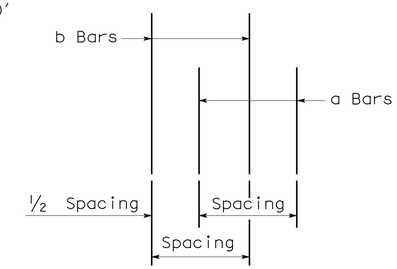

DETAIL A

NO SCALE

NOTES

1. For soundwall and retaining wall architectural finish or texture, see details elsewhere in project plans.
2. For details not shown and drainage notes, see B3-8
3. Footing cover, 1'-6" minimum.
4. For sound wall and barrier details, see "SOUND WALL - MASONARY BLOCK WITH BARRIER ON RETAINING WALL DETAILS NO. 1" and No. 2 sheets 6
5. Extend (b) bars onto barrier for "DESIGN H" 12' or less. 7

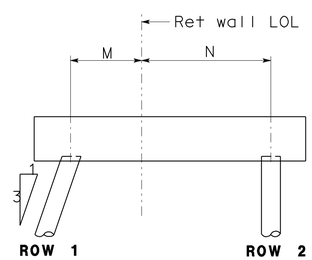

CONFIGURATION I

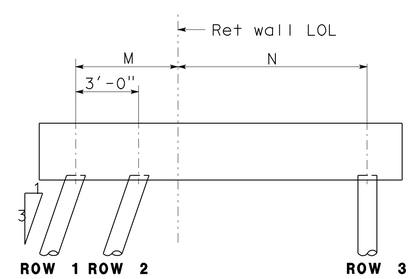

CONFIGURATION II

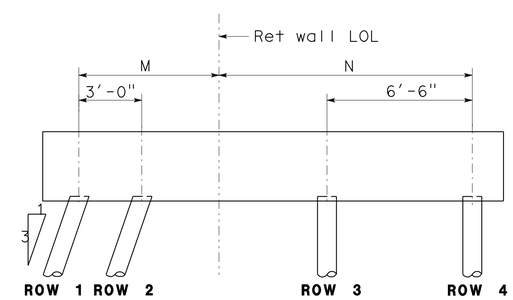

CONFIGURATION III

SPECIAL DETAILS

REVISED STANDARD DRAWING		
FILE NO. xs14-320-2e	APPROVED BY G. WANG (RESPONSIBLE TECHNICAL SPECIALIST)	RELEASED BY ROBERTO LACALLE (RESPONSIBLE OFFICE CHIEF)
	APPROVAL DATE 5-13-08	RELEASE DATE 5-13-08

1 Sound Wall LOL added
2 Stem thickness at top modified
3 Changed concrete barrier dimensions
4 Reinforcement modified
5 Added reinforcement
6 Notes Modified
7 Added note

STATE OF CALIFORNIA DEPARTMENT OF TRANSPORTATION

DIVISION OF ENGINEERING SERVICES STRUCTURE DESIGN DESIGN BRANCH 1

BRIDGE NO. X
POST MILE 3.49

SOUND WALL NO. 186
RETAINING WALL TYPE 1SWBP - DETAIL NO. 2

DS OSD 2147A (ENGLISH STANDARD DRAWING "XS" BORDER REV. 01/11/08)

ORIGINAL SCALE IN INCHES FOR REDUCED PLANS 0 1 2 3

UNIT: 3576
PROJECT NUMBER & PHASE: 0700001833-1
CONTRACT NO.: 07-215934

DISREGARD PRINTS BEARING EARLIER REVISION DATES

REVISION DATES 10/29/10 07/21/11 03/30/12 10/04/01/11 SHEET 18 OF 25

USERNAME => s124496

sw186-i-rwdt02.dgn

DATE PLOTTED => 28-MAR-2012 TIME PLOTTED => 11:44

DIST.	COUNTY	ROUTE	POST MILES TOTAL PROJECT	SHEET NO.	TOTAL SHEETS
07	LA	5	2.4/4.0	1187	1288

Kevin J. Harper 12-8-11
REGISTERED ENGINEER - CIVIL

3-26-12
PLANS APPROVAL DATE

REGISTERED PROFESSIONAL ENGINEER Kevin Harper No. 42221 Exp. 3-31-12 CIVIL STATE OF CALIFORNIA

The State of California or its officers or agents shall not be responsible for the accuracy or completeness of electronic copies of this plan sheet.

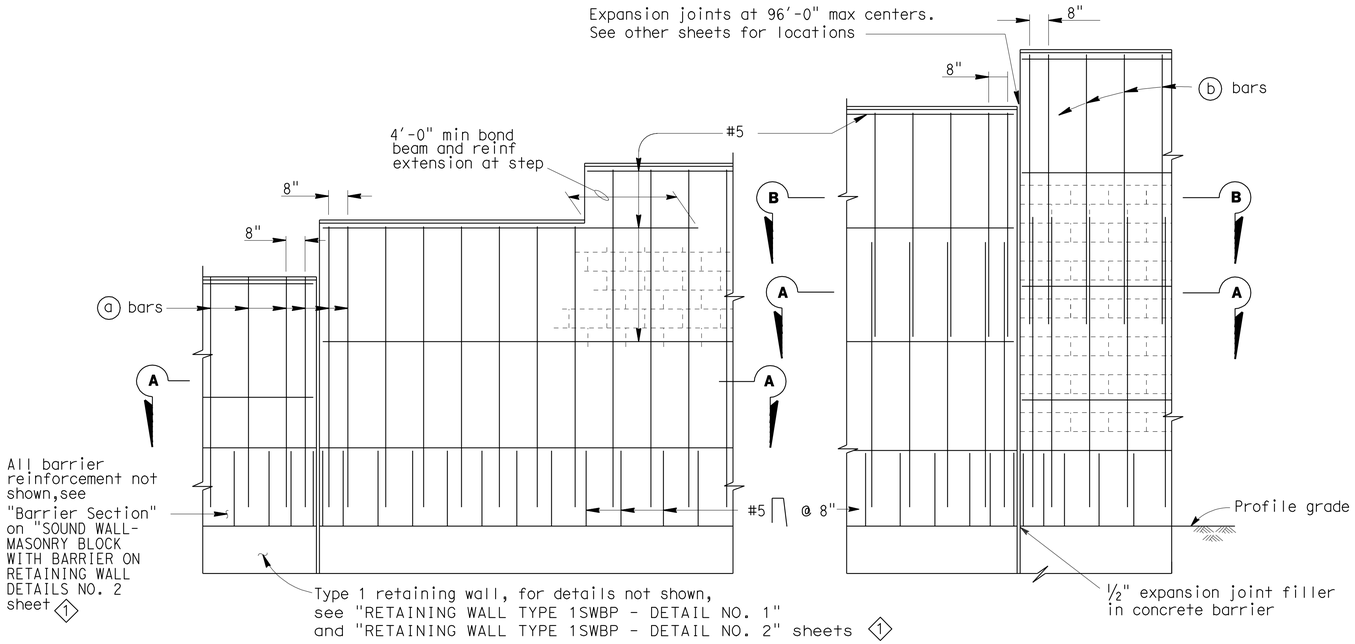

PART ELEVATIONS

SOUNDWALL REINFORCEMENT TABLE

Maximum H	ⓐ bars @ 1'-4" max	ⓑ bars @ 1'-4" max	"y"	f'm (KSI)	Compressive Strength of CMU (KSI)	Maximum H
6'-4"	# 4	———	———	1.5	1.9	6'-4"
8'-4"	# 4	———	———	1.5	1.9	8'-4"
10'-4"	# 4	———	———	1.5	1.9	10'-4"
12'-4"	# 5	# 4	5'-0"	1.5	1.9	12'-4"
14'-4"	# 6	# 4	7'-0"	1.5	1.9	14'-4"
16'-4"	# 6	# 4	9'-0"	2.5	3.7	16'-4"

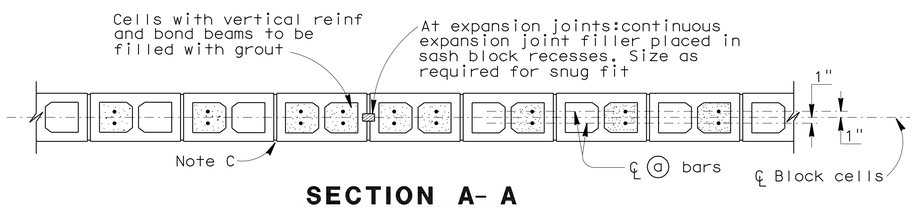

SECTION A- A

For details not shown,see other details

H=6'-4" THRU H= 10'-4"

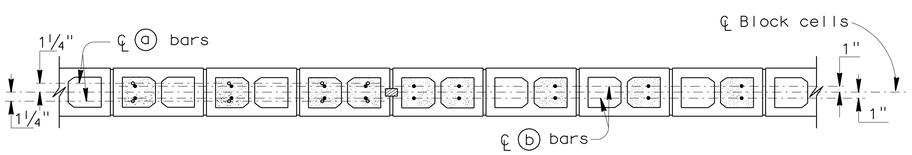

SECTION A- A

SECTION B- B

For details not shown,see other details

H=12'-4" THRU H= 16'-4"

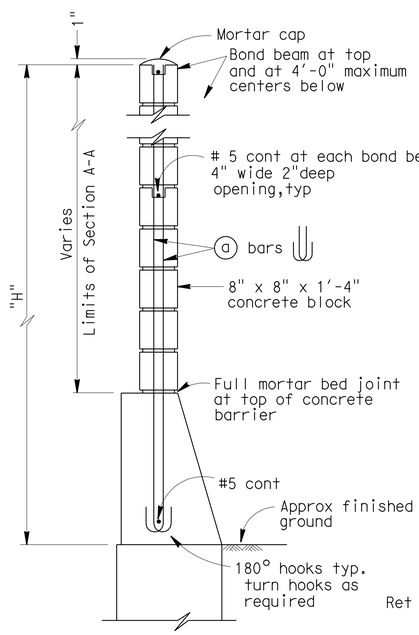

H=6'-4" THRU H=10'-4"

For details not shown,see H=12'-4" thru H=16'-4"

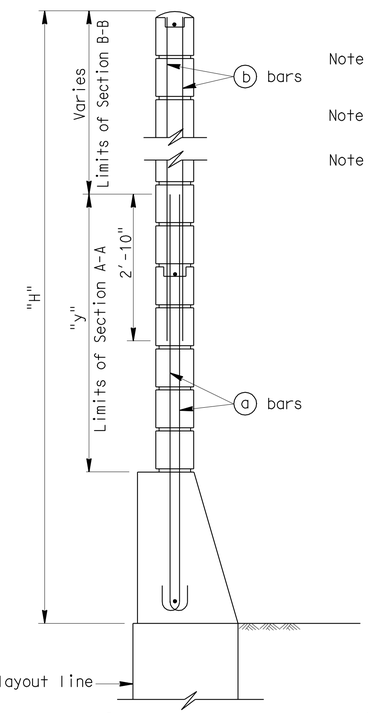

H=12'-4" THRU H=16'-4"

For details not shown,see H=6'-4" thru H=10'-4"

TYPICAL SECTIONS

Note I : For details not shown, see "SOUND WALL - MASONRY BLOCK WITH BARRIER ON RETAINING WALL DETAILS NO. 2" sheet 1

Note II : Slope ground at traffic side of barrier to drain. Maximum slope ±10%.

Note III: See Standard Plan B15-9 "SOUND WALL MASONRY BLOCK - MISCELLANEOUS DETAILS" sheet for other details. 1

GENERAL NOTES

Note A: For type of block and joint finish, see other sheets.

Note B: When blocks are laid in stacked bond, ladder type, galvanized joint reinforcement shall be provided. A minimum of 0.07"-0.14" wire continuous at 4'-0" maximum to be used. Locate reinforcement in joints that are at the approximate midpoint between bond beams.

Note C: Horizontal joints shall be tooled concave or may be weathered.
Vertical joints shall be tooled concave or may be raked.

Note D: For intermediate wall heights that are between the "H's" given. Use the tabular information for the next higher "H".

Note E: Masonry strengths are listed in "SOUNDWALL REINFORCEMENT TABLE".

Note F: Concrete to be used for the barrier shall contain not less than 590 pounds of cementitious material per cubic yard.

SPECIAL DETAILS

REVISED STANDARD DRAWING

FILE NO. xs15-130-1e

APPROVED BY T SATTER — RESPONSIBLE TECHNICAL SPECIALIST
APPROVAL DATE 10/22/09

RELEASED BY ROBERTO LACALLE — RESPONSIBLE OFFICE CHIEF
RELEASE DATE 10/22/09

1 Sheet reference notes corrected

STATE OF CALIFORNIA
DEPARTMENT OF TRANSPORTATION

DIVISION OF ENGINEERING SERVICES
STRUCTURE DESIGN
DESIGN BRANCH 1

BRIDGE NO. X
POST MILE 3.49

SOUND WALL NO. 186
SOUND WALL - MASONRY BLOCK WITH BARRIER ON RETAINING WALL DETAILS NO. 1

DS OSD 2147A (ENGLISH STANDARD DRAWING "XS" BORDER REV. 10/22/09)

ORIGINAL SCALE IN INCHES FOR REDUCED PLANS 0 1 2 3

UNIT: 3576
PROJECT NUMBER & PHASE: 0700001833-1
CONTRACT NO.: 07-215934

DISREGARD PRINTS BEARING EARLIER REVISION DATES

REVISION DATES 10/28/10 07/21/11 04/01/13 03/30/1

SHEET 19 OF 25

DATE PLOTTED => 28-MAR-2012 TIME PLOTTED => 11:44

USERNAME => s124496

sw186-k-swdt01.dgn

DIST.	COUNTY	ROUTE	POST MILES TOTAL PROJECT	SHEET NO.	TOTAL SHEETS
07	LA	5	2.4/4.0	1188	1288

Kevin J. Harper 12-8-11
REGISTERED ENGINEER - CIVIL

3-26-12
PLANS APPROVAL DATE

REGISTERED PROFESSIONAL ENGINEER Kevin Harper No. 42221 Exp. 3-31-12 CIVIL STATE OF CALIFORNIA

The State of California or its officers or agents shall not be responsible for the accuracy or completeness of electronic copies of this plan sheet.

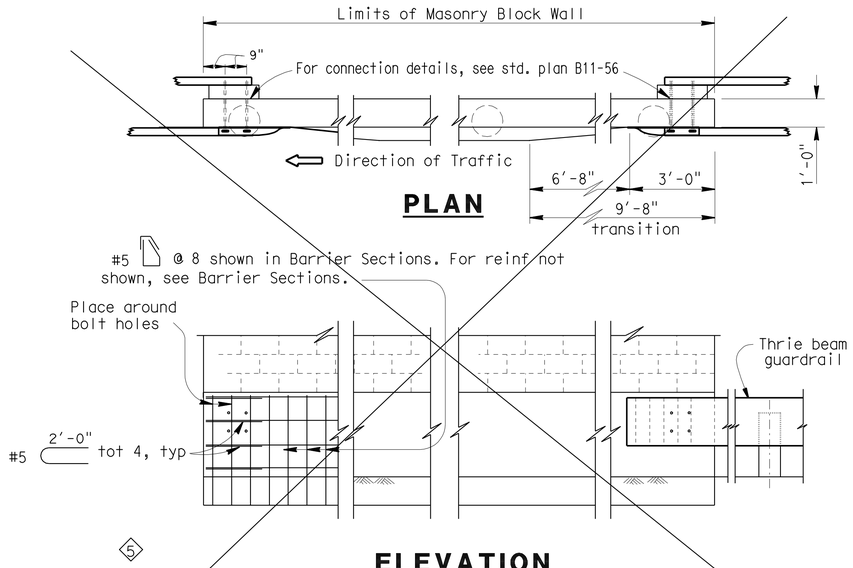

ELEVATION

METAL BEAM GUARDRAIL ANCHORAGE

For details not shown, see std. plan B11-56.

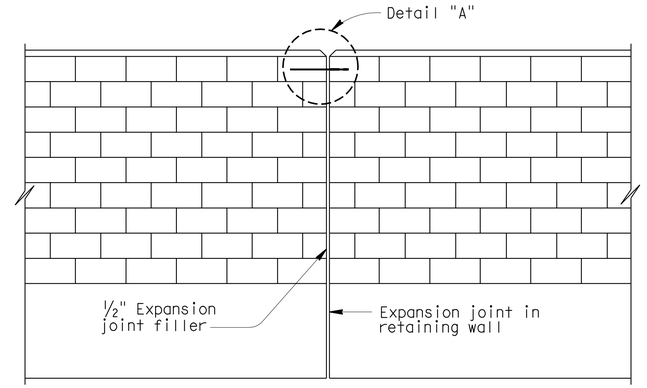

ALIGNMENT KEY DETAIL

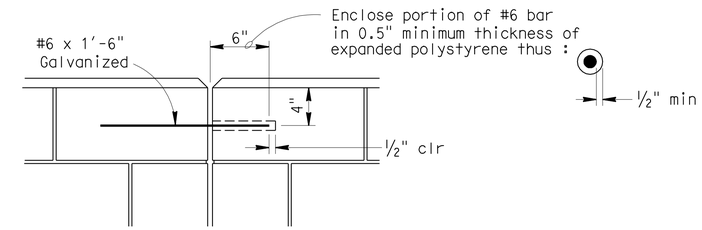

DETAIL A

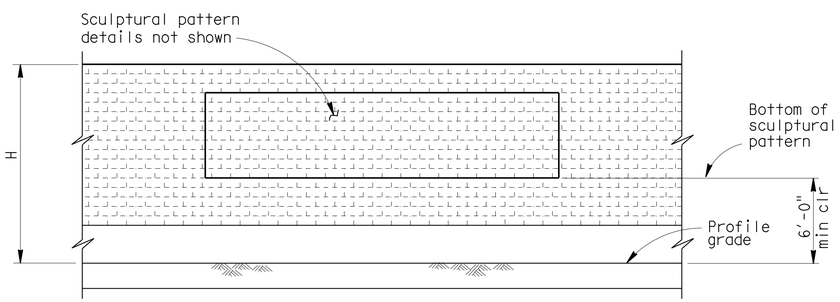

CLEARANCE DETAIL

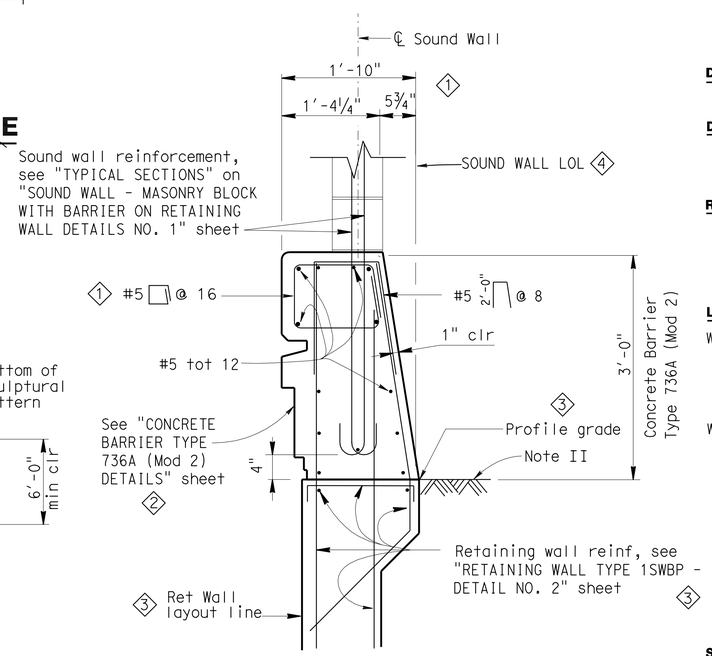

BARRIER SECTION

DESIGN NOTES

DESIGN

Uniform Building Code,1997 Edition and the Bridge Design Specifications.

DESIGN WIND LOAD

33 PSF

DESIGN SEISMIC LOAD

0.57 Dead load

REINFORCED CONCRETE

f'c = 3250 PSI
fy = 60 KSI

CONCRETE MASONRY

REGULAR STRENGTH	HIGH STRENGTH	
f'm = 1500 PSI	f'm = 2000 PSI	f'm = 2500 PSI
f_b = 1500 PSI	f_b = 660 PSI	f_b = 830 PSI
fs = 24.0 KSI	fs = 24.0 KSI	fs = 24000 PSI
n = 25.8	n = 19.3	n = 15.5

LOAD FACTORS AND LOAD COMBINATIONS

Working Stress Design (WSD) Percentage of unit stress

Group 1: D + E + SC 100%
Group 2: D + W + SC + E 100%
Group 3: D + 0.71 EQD + E 100%

Where:

D = Dead load
E = Lateral earth pressure
SC = Live load surcharge
W = Wind load
EQD = Seismic dead load

Load Factor Design (LFD)

Group A: βD +1.7 E + 1.7 SC
Group B: βD +1.7 E + 1.3 W
Group C: βD +1.3 E + 1.0 EQE
Group D: βD +1.3 E + 1.0 EQD
Group E: βD +1.1 E + 0.85 (EQE + EQD)

Where : β = 0.9 or 1.2, whichever controls in design
D = Dead load
E = Lateral earth pressure
SC = Live load surcharge
W = Wind load
EQD = Seismic dead load
EQE = Seismic earth load

STRENGTH REDUCTION FACTORS, Ø

Reinforced concrete:
For flexure ---------- Ø=0.90
For shear ---------- Ø=0.85

Concrete masonry:
For flexure ---------- Ø=0.80
For shear ---------- Ø=0.60

Foundations :

See "RETAINING WALL TYPE 1SWBP - DETAIL NO. 1" sheet. 3

NOTES:

3 I : For details not shown, see "RETAINING WALL TYPE 1SWBP - DETAIL NO. 1" and No. 2 sheets

II : Slope ground at traffic side of barrier to drain. Maximum slope ±10%. See Standard Plan B11-56, Note D.

SPECIAL DETAILS

REVISED STANDARD DRAWING

FILE NO. xs15-130-2e

APPROVED BY T SATTER — RESPONSIBLE TECHNICAL SPECIALIST
APPROVAL DATE 10/22/09

RELEASED BY ROBERTO LACALLE — RESPONSIBLE OFFICE CHIEF
RELEASE DATE 10/22/09

1 Barrier dimensions and reinf changed
2 Added note for barrier aesthetics
3 Sheet reference notes corrected
4 Sound Wall LOL added
5 Delete obsolete detail

STATE OF CALIFORNIA DEPARTMENT OF TRANSPORTATION

DIVISION OF ENGINEERING SERVICES STRUCTURE DESIGN
DESIGN BRANCH 1

BRIDGE NO. X
POST MILE 3.49

SOUND WALL NO. 186

SOUND WALL - MASONRY BLOCK WITH BARRIER ON RETAINING WALL DETAILS NO. 2

DS OSD 2147A (ENGLISH STANDARD DRAWING "XS" BORDER REV. 01/11/08)

ORIGINAL SCALE IN INCHES FOR REDUCED PLANS 0 1 2 3

UNIT: 3576
PROJECT NUMBER & PHASE: 0700001833-1 CONTRACT NO.: 07-215934

DISREGARD PRINTS BEARING EARLIER REVISION DATES → 11/30/10 07/21/11 11/22/11

SHEET 20 OF 25

USERNAME => s124496

sw186-k-swdt02.dgn

DATE PLOTTED => 28-MAR-2012 TIME PLOTTED => 11:24AM

DIST	COUNTY	ROUTE	POST MILES TOTAL PROJECT	SHEET No.	TOTAL SHEETS
07	LA	5	2.4/4.0	1189	1288

GEOTECHNICAL PROFESSIONAL — DATE 06/2011

3-26-12
PLANS APPROVAL DATE

REGISTERED PROFESSIONAL ENGINEER — MICHAEL G. SMITH — No. 2229 — Exp. 3-31-2012 — GEOTECHNICAL — STATE OF CALIFORNIA

The State of California or its officers or agents shall not be responsible for the accuracy or completeness of electronic copies of this plan sheet.

BENCH MARK

PRHV 102 Elev 86.67′
FOUND PK NAIL & TIN SET BY OTHERS ON ISLAND @ THE BEGINNING OF SB 1-5 ON-RAMP AND ROSECRANS AVE PER SR 09-037-000010
NAVD 88

PRHV 103 Elev 84.50′
FOUND CHISELED "X" ON BACK WALK @ INLET AT SE CORNER OF ROSECRANS AVE AND FIRESTONE BLVD PER SR 09-037-000010
NAVD 88

PRHV 104 Elev 94.31′
FOUND CHISLED "X" ON S′LY TC @+/- 250′ W/O NB 1-5 TO WB FIRESTONE BLVD OFF-RAMP TUNNEL PER SR 09-033-000011
NAVD 88

PRHV 105 Elev 96.88′
FOUND CHISLED "X" ON W′LY CURB BCR@ EB FIRESTONE BL TO SB 1-5 ON-RAMP & FIRESTONE BL INTERSECTION PER SR 09-033-000011
NAVD 88

Notes

1. This LOTB sheet was prepared in accordance with the Caltrans Soil & Rock Logging, Classification, and Presentation Manual (2010) except three digit sequence number in boring identification starting with the segment number per exception request approved on April 08, 2009.

2. For protection of underground utility lines, hand-auger was used to remove top 5 to 10 feet of subsurface material for exploratory borings and cone penetration testings.

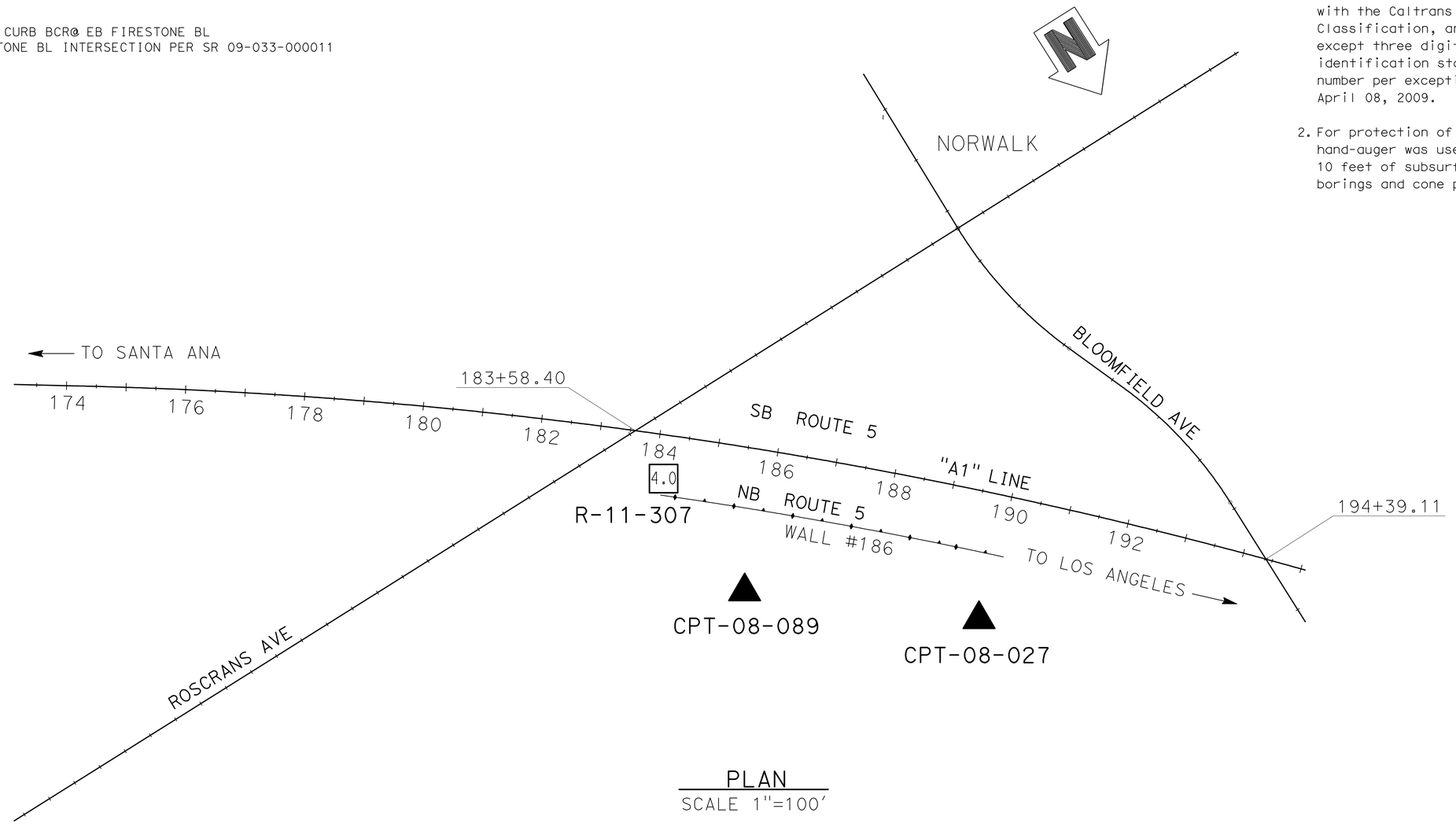

PLAN
SCALE 1"=100′

ENGINEERING SERVICES	MATERIALS AND GEOTECHNICAL SERVICES	STATE OF CALIFORNIA DEPARTMENT OF TRANSPORTATION	DIVISION OF ENGINEERING SERVICES STRUCTURE DESIGN DESIGN BRANCH 1	BRIDGE NO. X / POST MILE 3.49	SOUND WALL NO. 186
FUNCTIONAL SUPERVISOR / NAME: M. SMITH	DRAWN BY: P.QUACH / CHECKED BY: D.ORRIS	FIELD INVESTIGATION BY: P.MCDONALD/T.PANAH			LOG OF TEST BORINGS SHEET 1 OF 5

OGS CIVIL LOG OF TEST BORINGS SHEET — ORIGINAL SCALE IN INCHES FOR REDUCED PLANS 0 1 2 3 — UNIT: 3576 — PROJECT NUMBER & PHASE: 07000018331 — CONTRACT NO.: 07-215934 — DISREGARD PRINTS BEARING EARLIER REVISION DATES — REVISION DATES 06/17/11 — SHEET 21 OF 25

FILE => sw186-z-lltb01.dgn

USERNAME => s124436 DATE PLOTTED => 28-MAR-2012 TIME PLOTTED => 11:44

DIST	COUNTY	ROUTE	POST MILES TOTAL PROJECT	SHEET No.	TOTAL SHEETS
07	LA	5	2.4/4.0	1190	1288

GEOTECHNICAL PROFESSIONAL — DATE 06/2011

3-26-12
PLANS APPROVAL DATE

REGISTERED PROFESSIONAL ENGINEER — MICHAEL G. SMITH No. 2229 Exp. 3-31-2012 GEOTECHNICAL — STATE OF CALIFORNIA

The State of California or its officers or agents shall not be responsible for the accuracy or completeness of electronic copies of this plan sheet.

FOR PLAN VIEW, SEE
"LOG OF TEST BORINGS" 1 OF 5

Notes

1. This LOTB sheet was prepared in accordance with the Caltrans Soil & Rock Logging, Classification, and Presentation Manual (2010) except three digit sequence number in boring identification starting with the segment number per exception request approved on April 08, 2009.

2. For protection of underground utility lines, hand-auger was used to remove top 5 to 10 feet of subsurface material for exploratory borings and cone penetration testings.

ENGINEERING SERVICES	MATERIALS AND GEOTECHNICAL SERVICES	STATE OF CALIFORNIA DEPARTMENT OF TRANSPORTATION	DIVISION OF ENGINEERING SERVICES STRUCTURE DESIGN DESIGN BRANCH 1	BRIDGE NO. / POST MILE 3.49	SOUND WALL NO. 186
FUNCTIONAL SUPERVISOR NAME: M. SMITH	DRAWN BY: P.QUACH / CHECKED BY: D.ORRIS	FIELD INVESTIGATION BY: P.MCDONALD/T.PANAH			LOG OF TEST BORINGS SHEET 2 OF 5

OGS CIVIL LOG OF TEST BORINGS SHEET

ORIGINAL SCALE IN INCHES FOR REDUCED PLANS 0 1 2 3

UNIT: 3576
PROJECT NUMBER & PHASE: 07000018331 CONTRACT NO.: 07-215934

DISREGARD PRINTS BEARING EARLIER REVISION DATES → REVISION DATES 06/17/11 SHEET 22 OF 25

FILE => sw186-z-ltb02.dgn

USERNAME => s124496 DATE PLOTTED => 28-MAR-2012 TIME PLOTTED => 11:44

DIST	COUNTY	ROUTE	POST MILES TOTAL PROJECT	SHEET No.	TOTAL SHEETS
07	LA	5	2.4/4.0	1191	1288

GEOTECHNICAL PROFESSIONAL — DATE 06/2011

3-26-12
PLANS APPROVAL DATE

REGISTERED PROFESSIONAL ENGINEER — MICHAEL G. SMITH No. 2229 Exp. 3-31-2012 GEOTECHNICAL — STATE OF CALIFORNIA

The State of California or its officers or agents shall not be responsible for the accuracy or completeness of electronic copies of this plan sheet.

FOR PLAN VIEW, SEE
"LOG OF TEST BORINGS" 1 OF 5

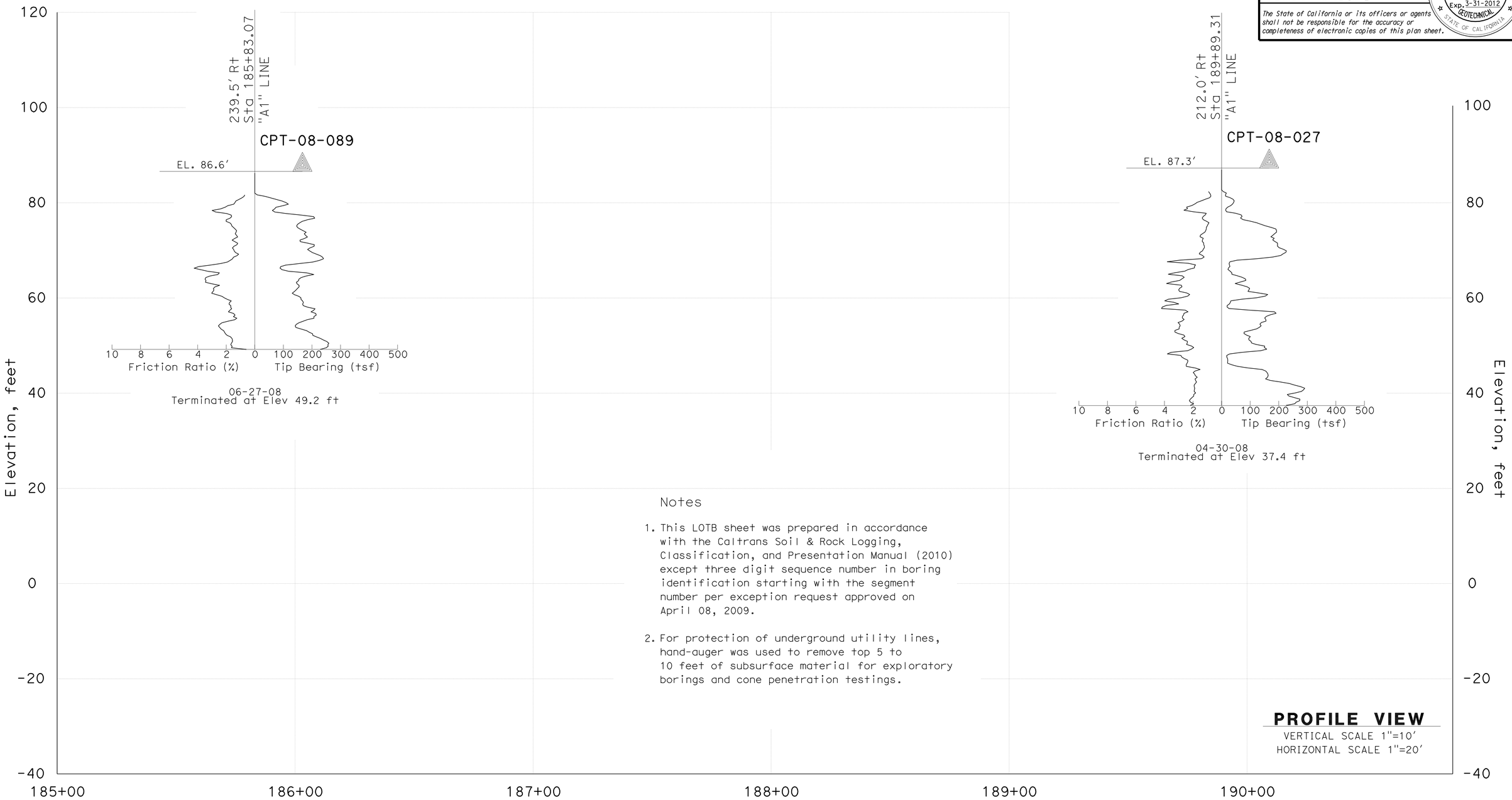

Notes

1. This LOTB sheet was prepared in accordance with the Caltrans Soil & Rock Logging, Classification, and Presentation Manual (2010) except three digit sequence number in boring identification starting with the segment number per exception request approved on April 08, 2009.

2. For protection of underground utility lines, hand-auger was used to remove top 5 to 10 feet of subsurface material for exploratory borings and cone penetration testings.

PROFILE VIEW
VERTICAL SCALE 1"=10'
HORIZONTAL SCALE 1"=20'

ENGINEERING SERVICES	MATERIALS AND GEOTECHNICAL SERVICES	STATE OF CALIFORNIA DEPARTMENT OF TRANSPORTATION	DIVISION OF ENGINEERING SERVICES STRUCTURE DESIGN DESIGN BRANCH 1	BRIDGE NO. / POST MILE 3.49	SOUND WALL NO. 186
FUNCTIONAL SUPERVISOR NAME: M. SMITH	DRAWN BY: P.QUACH CHECKED BY: D.ORRIS	FIELD INVESTIGATION BY: P.MCDONALD/T.PANAH			LOG OF TEST BORINGS SHEET 3 OF 5

OGS CIVIL LOG OF TEST BORINGS SHEET

ORIGINAL SCALE IN INCHES FOR REDUCED PLANS 0 1 2 3

UNIT: 3576
PROJECT NUMBER & PHASE: 07000018331 CONTRACT NO.: 07-215934

DISREGARD PRINTS BEARING EARLIER REVISION DATES → 06/17/11

REVISION DATES | SHEET 23 | OF 25

FILE => sw186-z-ltb03.dgn

USERNAME => s124496 DATE PLOTTED => 28-MAR-2012 TIME PLOTTED => 11:44

DIST	COUNTY	ROUTE	POST MILES TOTAL PROJECT	SHEET No.	TOTAL SHEETS
07	LA	5	2.4/4.0	1192	1288

GEOTECHNICAL PROFESSIONAL — DATE 06/2011

3-26-12
PLANS APPROVAL DATE

REGISTERED PROFESSIONAL ENGINEER — MICHAEL G. SMITH No. 2229 Exp. 3-31-2012 GEOTECHNICAL — STATE OF CALIFORNIA

The State of California or its officers or agents shall not be responsible for the accuracy or completeness of electronic copies of this plan sheet.

REFERENCE: CALTRANS SOIL & ROCK LOGGING, CLASSIFICATION, AND PRESENTATION MANUAL (2010)

CEMENTATION

Description	Criteria
Weak	Crumbles or breaks with handling or little finger pressure.
Moderate	Crumbles or breaks with considerable finger pressure.
Strong	Will not crumble or break with finger pressure.

BOREHOLE IDENTIFICATION

Symbol	Hole Type	Description
Size	A	Auger Boring (hollow or solid stem bucket)
Size	R RW RC P	Rotary drilled boring (conventional) Rotary drilled with self-casing wire-line Rotary core with continuously-sampled, self-casing wire-line Rotary percussion boring (air)
Size	R	Rotary drilled diamond core
Size	HD HA	Hand driven (1-inch soil tube) Hand Auger
●	D	Dynamic Cone Penetration Boring
▲	CPT	Cone Penetration Test (ASTM D 5778)
⬚	O	Other (note on LOTB)

Note: Size in inches.

CONSISTENCY OF COHESIVE SOILS

Description	Shear Strength (tsf)	Pocket Penetrometer Measurement, PP, (tsf)	Torvane Measurement, TV, (tsf)	Vane Shear Measurement, VS, (tsf)
Very Soft	Less than 0.12	Less than 0.25	Less than 0.12	Less than 0.12
Soft	0.12 - 0.25	0.25 - 0.5	0.12 - 0.25	0.12 - 0.25
Medium Stiff	0.25 - 0.5	0.5 - 1	0.25 - 0.5	0.25 - 0.5
Stiff	0.5 - 1	1 - 2	0.5 - 1	0.5 - 1
Very Stiff	1 - 2	2 - 4	1 - 2	1 - 2
Hard	Greater than 2	Greater than 4	Greater than 2	Greater than 2

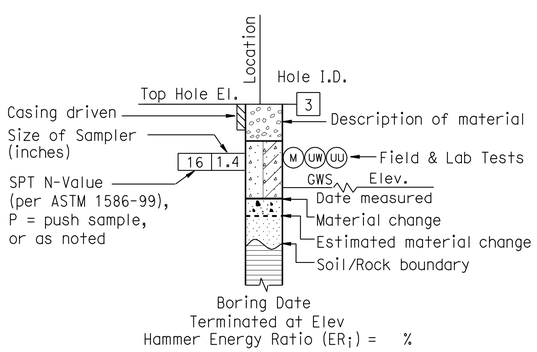

ROTARY BORING

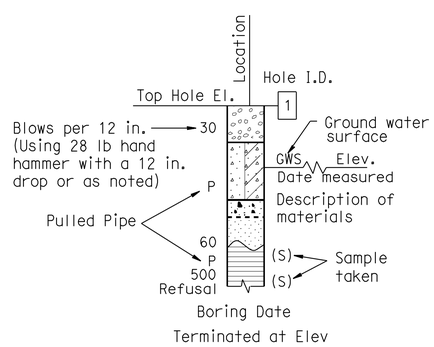

HAND BORING

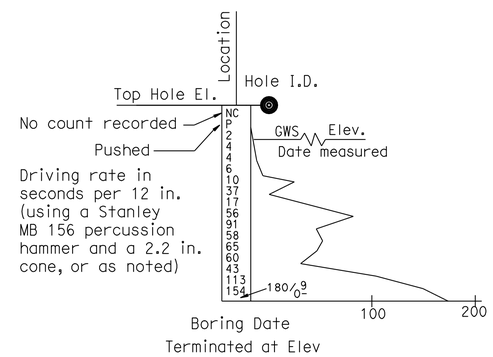

DYNAMIC CONE PENETRATION BORING

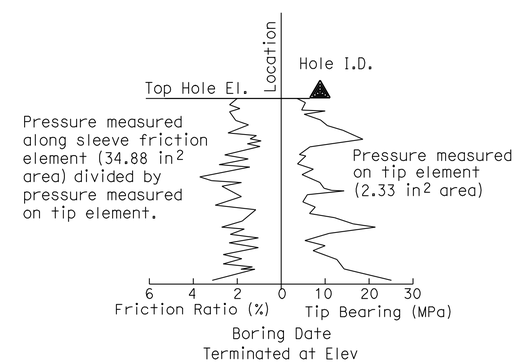

CONE PENETRATION TEST (CPT) BORING

ENGINEERING SERVICES	MATERIALS AND GEOTECHNICAL SERVICES	STATE OF CALIFORNIA DEPARTMENT OF TRANSPORTATION	DIVISION OF ENGINEERING SERVICES STRUCTURE DESIGN DESIGN BRANCH 1	BRIDGE NO. X / POST MILE 3.49	SOUND WALL NO. 186
FUNCTIONAL SUPERVISOR NAME: M. SMITH	DRAWN BY: P.QUACH CHECKED BY: D.ORRIS	FIELD INVESTIGATION BY: P.MCDONALD/T.PANAH			LOG OF TEST BORINGS SHEET 4 OF 5

OGS CIVIL LOG OF TEST BORINGS SHEET — ORIGINAL SCALE IN INCHES FOR REDUCED PLANS 0 1 2 3

UNIT: 3576
PROJECT NUMBER & PHASE: 07000018331 — CONTRACT NO.: 07-215934

DISREGARD PRINTS BEARING EARLIER REVISION DATES → 06/17/11 — REVISION DATES — SHEET 24 OF 25

FILE => sw186-z-ltb04.dgn

USERNAME => s124496 DATE PLOTTED => 28-MAR-2012 TIME PLOTTED => 11:45

REFERENCE: CALTRANS SOIL & ROCK LOGGING, CLASSIFICATION, AND PRESENTATION MANUAL (2010)

DIST	COUNTY	ROUTE	POST MILES TOTAL PROJECT	SHEET No.	TOTAL SHEETS
07	LA	5	2.4/4.0	1193	1288

GEOTECHNICAL PROFESSIONAL — DATE 06/2011

3-26-12
PLANS APPROVAL DATE

REGISTERED PROFESSIONAL ENGINEER — MICHAEL G. SMITH — No. 2229 — Exp. 3-31-2012 — GEOTECHNICAL — STATE OF CALIFORNIA

The State of California or its officers or agents shall not be responsible for the accuracy or completeness of electronic copies of this plan sheet.

GROUP SYMBOLS AND NAMES

Graphic/Symbol	Group Names
GW	Well-graded GRAVEL Well-graded GRAVEL with SAND
GP	Poorly-graded GRAVEL Poorly-graded GRAVEL with SAND
GW-GM	Well-graded GRAVEL with SILT Well-graded GRAVEL with SILT and SAND
GW-GC	Well-graded GRAVEL with CLAY (or SILTY CLAY) Well-graded GRAVEL with CLAY and SAND (or SILTY CLAY and SAND)
GP-GM	Poorly-graded GRAVEL with SILT Poorly-graded GRAVEL with SILT and SAND
GP-GC	Poorly-graded GRAVEL with CLAY (or SILTY CLAY) Poorly-graded GRAVEL with CLAY and SAND (or SILTY CLAY and SAND)
GM	SILTY GRAVEL SILTY GRAVEL with SAND
GC	CLAYEY GRAVEL CLAYEY GRAVEL with SAND
GC-GM	SILTY, CLAYEY GRAVEL SILTY, CLAYEY GRAVEL with SAND
SW	Well-graded SAND Well-graded SAND with GRAVEL
SP	Poorly-graded SAND Poorly-graded SAND with GRAVEL
SW-SM	Well-graded SAND with SILT Well-graded SAND with SILT and GRAVEL
SW-SC	Well-graded SAND with CLAY (or SILTY CLAY) Well-graded SAND with CLAY and GRAVEL (or SILTY CLAY and GRAVEL)
SP-SM	Poorly-graded SAND with SILT Poorly-graded SAND with SILT and GRAVEL
SP-SC	Poorly-graded SAND with CLAY (or SILTY CLAY) Poorly-graded SAND with CLAY and GRAVEL (or SILTY CLAY and GRAVEL)
SM	SILTY SAND SILTY SAND with GRAVEL
SC	CLAYEY SAND CLAYEY SAND with GRAVEL
SC-SM	SILTY, CLAYEY SAND SILTY, CLAYEY SAND with GRAVEL
PT	PEAT
	COBBLES COBBLES and BOULDERS BOULDERS

Graphic/Symbol	Group Names
CL	Lean CLAY Lean CLAY with SAND Lean CLAY with GRAVEL SANDY lean CLAY SANDY lean CLAY with GRAVEL GRAVELLY lean CLAY GRAVELLY lean CLAY with SAND
CL-ML	SILTY CLAY SILTY CLAY with SAND SILTY CLAY with GRAVEL SANDY SILTY CLAY SANDY SILTY CLAY with GRAVEL GRAVELLY SILTY CLAY GRAVELLY SILTY CLAY with SAND
ML	SILT SILT with SAND SILT with GRAVEL SANDY SILT SANDY SILT with GRAVEL GRAVELLY SILT GRAVELLY SILT with SAND
OL	ORGANIC lean CLAY ORGANIC lean CLAY with SAND ORGANIC lean CLAY with GRAVEL SANDY ORGANIC lean CLAY SANDY ORGANIC lean CLAY with GRAVEL GRAVELLY ORGANIC lean CLAY GRAVELLY ORGANIC lean CLAY with SAND
OL	ORGANIC SILT ORGANIC SILT with SAND ORGANIC SILT with GRAVEL SANDY ORGANIC SILT SANDY ORGANIC SILT with GRAVEL GRAVELLY ORGANIC SILT GRAVELLY ORGANIC SILT with SAND
CH	Fat CLAY Fat CLAY with SAND Fat CLAY with GRAVEL SANDY fat CLAY SANDY fat CLAY with GRAVEL GRAVELLY fat CLAY GRAVELLY fat CLAY with SAND
MH	Elastic SILT Elastic SILT with SAND Elastic SILT with GRAVEL SANDY elastic SILT SANDY elastic SILT with GRAVEL GRAVELLY elastic SILT GRAVELLY elastic SILT with SAND
OH	ORGANIC fat CLAY ORGANIC fat CLAY with SAND ORGANIC fat CLAY with GRAVEL SANDY ORGANIC fat CLAY SANDY ORGANIC fat CLAY with GRAVEL GRAVELLY ORGANIC fat CLAY GRAVELLY ORGANIC fat CLAY with SAND
OH	ORGANIC elastic SILT ORGANIC elastic SILT with SAND ORGANIC elastic SILT with GRAVEL SANDY ORGANIC elastic SILT SANDY ORGANIC elastic SILT with GRAVEL GRAVELLY ORGANIC elastic SILT GRAVELLY ORGANIC elastic SILT with SAND
OL/OH	ORGANIC SOIL ORGANIC SOIL with SAND ORGANIC SOIL with GRAVEL SANDY ORGANIC SOIL SANDY ORGANIC SOIL with GRAVEL GRAVELLY ORGANIC SOIL GRAVELLY ORGANIC SOIL with SAND

FIELD AND LABORATORY TESTING

- (C) Consolidation (ASTM D 2435)
- (CL) Collapse Potential (ASTM D 5333)
- (CP) Compaction Curve (CTM 216)
- (CR) Corrosivity Testing (CTM 643, CTM 422, CTM 417)
- (CU) Consolidated Undrained Triaxial (ASTM D 4767)
- (DS) Direct Shear (ASTM D 3080)
- (EI) Expansion Index (ASTM D 4829)
- (M) Moisture Content (ASTM D 2216)
- (OC) Organic Content-% (ASTM D 2974)
- (P) Permeability (CTM 220)
- (PA) Particle Size Analysis (ASTM D 422)
- (PI) Plasticity Index (AASHTO T 90) Liquid Limit (AASHTO T 89)
- (PL) Point Load Index (ASTM D 5731)
- (PM) Pressure Meter
- (R) R-Value (CTM 301)
- (SE) Sand Equivalent (CTM 217)
- (SG) Specific Gravity (AASHTO T 100)
- (SL) Shrinkage Limit (ASTM D 427)
- (SW) Swell Potential (ASTM D 4546)
- (UC) Unconfined Compression-Soil (ASTM D 2166) Unconfined Compression-Rock (ASTM D 2938)
- (UU) Unconsolidated Undrained Triaxial (ASTM D 2850)
- (UW) Unit Weight (ASTM D 4767)

APPARENT DENSITY OF COHESIONLESS SOILS

Description	SPT N_{60} (Blows / 12 in.)
Very Loose	0 - 5
Loose	5 - 10
Medium Dense	10 - 30
Dense	30 - 50
Very Dense	Greater than 50

MOISTURE

Description	Criteria
Dry	No discernable moisture
Moist	Moisture present, but no free water
Wet	Visible free water

PERCENT OR PROPORTION OF SOILS

Description	Criteria
Trace	Particles are present but estimated to be less than 5%
Few	5% - 10%
Little	15% - 25%
Some	30% - 45%
Mostly	50% - 100%

PARTICLE SIZE

Description		Size (in.)
Boulder		Greater than 12
Cobble		3 - 12
Gravel	Coarse	3/4 - 3
	Fine	1/5 - 3/4
Sand	Coarse	1/16 - 1/5
	Medium	1/64 - 1/16
	Fine	1/300 - 1/64
Silt and Clay		Less than 1/300

ENGINEERING SERVICES	MATERIALS AND GEOTECHNICAL SERVICES	STATE OF CALIFORNIA DEPARTMENT OF TRANSPORTATION	DIVISION OF ENGINEERING SERVICES STRUCTURE DESIGN DESIGN BRANCH 1	BRIDGE NO. X	SOUND WALL NO. 186
FUNCTIONAL SUPERVISOR	DRAWN BY: P.QUACH	FIELD INVESTIGATION BY:		POST MILE 3.49	LOG OF TEST BORINGS SHEET 5 OF 5
NAME: M. SMITH	CHECKED BY: D.ORRIS	P.MCDONALD/T.PANAH			

OGS CIVIL LOG OF TEST BORINGS SHEET

ORIGINAL SCALE IN INCHES FOR REDUCED PLANS 0 1 2 3

UNIT: 3576
PROJECT NUMBER & PHASE: 07000018331
CONTRACT NO.: 07-215934

DISREGARD PRINTS BEARING EARLIER REVISION DATES → REVISION DATES 06/17/11

SHEET 25 OF 25

FILE => sw186-z-ltb05.dgn

USERNAME => s124496 DATE PLOTTED => 28-MAR-2012 TIME PLOTTED => 11:45

DIST	COUNTY	ROUTE	POST MILES TOTAL PROJECT	SHEET No.	TOTAL SHEETS
07	LA	5	2.4/4.0	1194	1288

REGISTERED CIVIL ENGINEER 12-8-11 DATE

3-26-12
PLANS APPROVAL DATE

REGISTERED PROFESSIONAL ENGINEER Kevin Harper No. 42221 Exp. 3-31-12 CIVIL STATE OF CALIFORNIA

The State of California or its officers or agents shall not be responsible for the accuracy or completeness of electronic copies of this plan sheet.

NOTES:

1. For Design Notes, see "RETAINING WALL TYPE 1SWBP - DETAIL NO. 1" sheet and "SOUND WALL - MASONRY BLOCK WITH BARRIER ON RETAINING WALL DETAILS NO. 2" sheet.
2. All piles are not shown in "DEVELOPED ELEVATION".

(A) Angle Point @ BC: Curve Subtangent Brg = N57°32'08"W
(B) Angle Point @ EC: Curve Subtangent Brg = N55°44'06"W
(C) Angle Point @ BC: Curve Subtangent Brg = N54°56'20"W
(D) Angle Point @ EC: Curve Subtangent Brg = N47°27'07"W
(E) Angle Point @ BC: Curve Subtangent Brg = N45°33'55"W

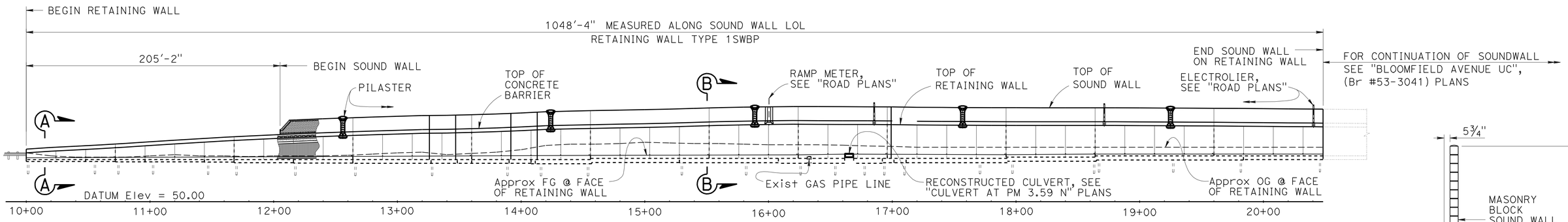

DEVELOPED ELEVATION

1" = 40'

CURVE DATA

SW LOL

R = 625.54	R = 1426.00	R = 1418.00	R = 1426.00	R = 4868.60
Δ = 2°27'08"	Δ = 2°31'18"	Δ = 1°48'01"	Δ = 7°29'12"	Δ = 0°56'05"
T = 13.39	T = 31.40	T = 22.28	T = 93.30	T = 39.71
L = 26.77	L = 62.76	L = 44.56	L = 186.33	L = 79.42

"RC4" LINE

R = 1460.00	R = 3280.00	R = 4890.00
Δ = 12°30'29"	Δ = 2°55'09"	Δ = 3°30'52"
T = 160.00	T = 83.58	T = 150.04
L = 318.73	L = 167.11	L = 299.98

QUANTITIES

STRUCTURE EXCAVATION (RETAINING WALL)	4,900	CY
STRUCTURE EXCAVATION (TYPE Y-2)	1,921	CY
(AERIALLY DEPOSITED LEAD)		
STRUCTURE BACKFILL (RETAINING WALL)	7,400	CY
PERVIOUS BACKFILL MATERIAL (RETAINING WALL)	655	CY
FURNISH PILING (CLASS 90)	20,462	LF
DRIVE PILE (CLASS 90)	512	EA
STRUCTURAL CONCRETE, RETAINING WALL	3,165	CY
PILASTER, SOUND WALL	10	CY
ARCHITECTURAL TREATMENT	19,875	SQFT
(SPLIT SLATE - FRACTURED RIB)		
SOUND WALL (MASONRY BLOCK)	9,320	SQFT
BAR REINFORCING STEEL (RETAINING WALL)	329,000	LB
CONCRETE BARRIER (TYPE 736A MODIFIED 2)	1,050	LF

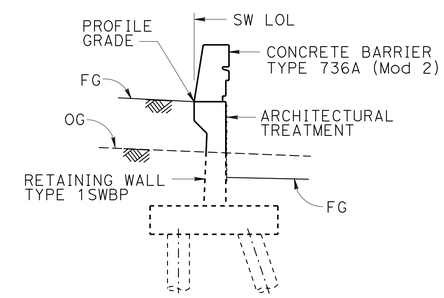

TYPICAL SECTION A-A

¼" = 1'-0"

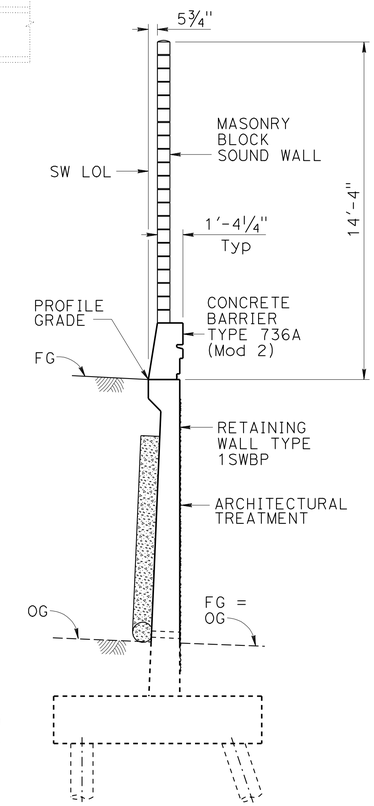

TYPICAL SECTION B-B

¼" = 1'-0"

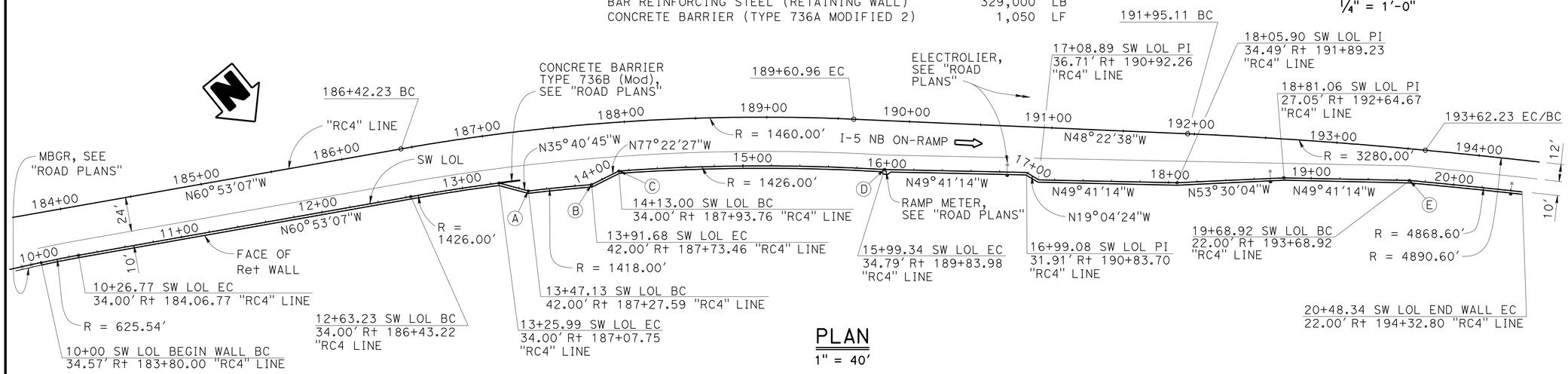

PLAN

1" = 40'

DESIGN	BY Greg Jones	CHECKED Daniel Sessions	LOAD FACTOR DESIGN		
DETAILS	BY S.Jiang / B.Huddleston	CHECKED Daniel Sessions	LAYOUT	BY Greg Jones	CHECKED Daniel Sessions
QUANTITIES	BY Vadim Shostak	CHECKED Kyoung Lee	SPECIFICATIONS	BY Theresa Nedwick	PLANS AND SPECS COMPARED Theresa Nedwick

Jeff Sims
DESIGN ENGINEER

STATE OF CALIFORNIA
DEPARTMENT OF TRANSPORTATION

DIVISION OF ENGINEERING SERVICES
STRUCTURE DESIGN
DESIGN BRANCH 1

BRIDGE NO. 53-E0182
POST MILE 3.47

SOUND WALL NO. 190
GENERAL PLAN

ORIGINAL SCALE IN INCHES FOR REDUCED PLANS 0 1 2 3

UNIT: 3576
PROJECT NUMBER & PHASE: 07000018331
CONTRACT NO.: 07-215934

DISREGARD PRINTS BEARING EARLIER REVISION DATES
REVISION DATES 12-11-10 11/23/11 11/10/11
SHEET 1 OF 35

STRUCTURES DESIGN GENERAL PLAN SHEET (ENGLISH) (REV.09-01-10)

FILE => sw190-a-gp.dgn

USERNAME => s6124196 DATE PLOTTED => 28-MAR-2012 TIME PLOTTED => 11:45

DIST	COUNTY	ROUTE	POST MILES TOTAL PROJECT	SHEET No.	TOTAL SHEETS
07	LA	5	2.4/4.0	1195	1288

REGISTERED CIVIL ENGINEER 12-8-11 DATE

3-26-12
PLANS APPROVAL DATE

REGISTERED PROFESSIONAL ENGINEER Kevin Harper No. 42221 Exp. 3-31-12 CIVIL STATE OF CALIFORNIA

The State of California or its officers or agents shall not be responsible for the accuracy or completeness of electronic copies of this plan sheet.

INDEX TO PLANS

SHEET NO. TITLE

1. GENERAL PLAN
2. INDEX TO PLANS
3. STRUCTURE PLAN NO. 1
4. STRUCTURE PLAN NO. 2
5. STRUCTURE PLAN NO. 3
6. STRUCTURE PLAN NO. 4
7. STRUCTURE PLAN NO. 5
8. FOUNDATION PLAN NO. 1
9. FOUNDATION PLAN NO. 2
10. FOOTING DETAILS
11. UTILITY OPENING DETAILS
12. RETAINING WALL ARCHITECTURAL TREATMENT NO. 1
13. RETAINING WALL ARCHITECTURAL TEEATMENT NO. 2
14. RETAINING WALL ARCHITECTURAL DETAILS NO. 1
15. RETAINING WALL ARCHITECTURAL DETAILS NO. 2
16. CONCRETE BARRIER TYPE 736A (Mod 2) DETAILS
17. SOUND WALL ARCHITECTURAL DETAILS
18. PILASTER ARCHITECTURAL DETAILS NO. 1
19. PILASTER ARCHITECTURAL DETAILS NO. 2
20. PILASTER ARCHITECTURAL DETAILS NO. 3
21. PILASTER ARCHITECTURAL DETAILS NO. 4
22. PILASTER STRUCTURAL DETAILS NO. 1
23. PILASTER STRUCTURAL DETAILS NO. 2
24. PILASTER STRUCTURAL DETAILS NO. 3
25. ELECTROLIER PEDESTAL DETAILS
26. RAMP METER PEDESTAL DETAILS
27. RETAINING WALL TYPE 1SWBP - DETAIL NO. 1
28. RETAINING WALL TYPE 1SWBP - DETAIL NO. 2
29. SOUND WALL - MASONRY BLOCK WITH BARRIER ON RETAINING WALL DETAILS NO. 1
30. SOUND WALL - MASONRY BLOCK WITH BARRIER ON RETAINING WALL DETAILS NO. 2
31. LOG OF TEST BORINGS 1 OF 5
32. LOG OF TEST BORINGS 2 OF 5
33. LOG OF TEST BORINGS 3 OF 5
34. LOG OF TEST BORINGS 4 OF 5
35. LOG OF TEST BORINGS 5 OF 5

STANDARD PLANS DATED MAY 2006

A10A	ACRONYMS AND ABBREVIATIONS (SHEET 1 OF 2)
A10B	ACRONYMS AND ABBREVIATIONS (SHEET 2 OF 2)
A10C	SYMBOLS (SHEET 1 OF 2)
A10D	SYMBOLS (SHEET 2 OF 2)
A62B	LIMITS OF PAYMENT FOR EXCAVATION AND BACKFILL BRIDGE SURCHARGE AND WALL
B0-1	BRIDGE DETAILS
B0-3	BRIDGE DETAILS
B2-5	PILE DETAILS CLASS 90 AND CLASS 140
B3-8	RETAINING WALL DETAILS No. 1
B11-56	CONCRETE BARRIER TYPE 736
B15-9	SOUND WALL MASONRY BLOCK MISCELLANEOUS DETAILS
ES-6B	ELECTRICAL SYSTEMS (LIGHTING STANDARD TYPES 15 AND 21 BARRIER RAIL MOUNTED DETAILS)
RSP ES-7B	ELECTRICAL SYSTEMS (SIGNAL AND LIGHTING STANDARD TYPE 1 STANDARD AND EQUIPMENT MUMBERING)

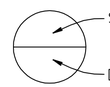

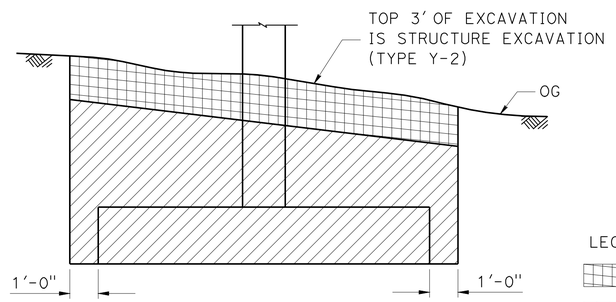

LEGEND:

STRUCTURE EXCAVATION (TYPE Y-2)
STRUCTURE EXCAVATION

LIMITS OF PAYMENT FOR STRUCTURE EXCAVATION (TYPE Y-2) (AERIALLY DEPOSITED LEAD)

NO SCALE

PILE DATA

LOCATION	PILE TYPE	NOMINAL RESISTANCE (kips)		SPECIFIED TIP ELEVATION	NOMINAL DRIVING RESISTANCE (kips)
		COMPRESSION	TENSION		
Ret WALL TYPE 1SWBP SW LOL 10+00 to 11+68	CLASS 90	180	0	44.0	180
Ret WALL TYPE 1SWBP SW LOL 11+68 to 17+92	CLASS 90	180	0	43.0	180
Ret WALL TYPE 1SWBP SW LOL 17+92 to 19+84	CLASS 90	180	0	44.8	180
Ret WALL TYPE 1SWBP SW LOL 19+84 to 20+48.34	CLASS 90	180	0	46.0	180

NOTES:

1. Class 90 Alternative "X" Piles shall have a dimension "T" not less than 14 inches.
2. All design tips are controlled by compression.

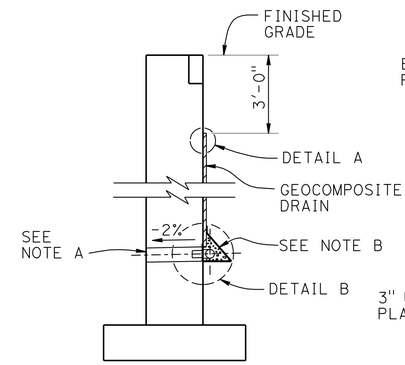

WALL SECTION

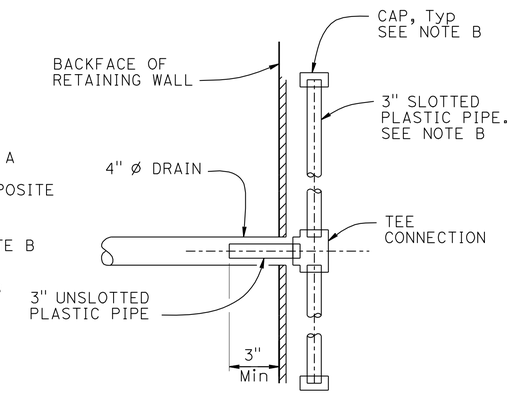

SECTION A-A

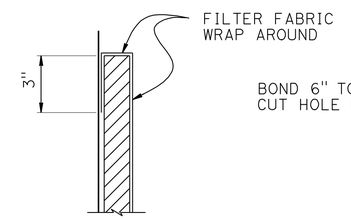

DETAIL A

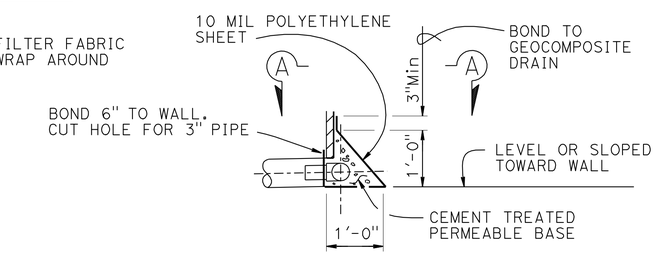

DETAIL B

WEEP HOLE AND GEOCOMPOSITE DRAIN

ALTERNATIVE TO BRIDGE DETAIL B0-3 / 3-1

NOTES:

A. 4" Ø drains at 25' max center to center. For walls adjacent to sidewalks or curbs, provide 4" cast iron or asbestos cement pipe under the sidewalk to discharge through curb face. Exposed wall drains shall be located 3"± above finished grade.

B. Geocomposite drain, cement treated permeable base, and 3"Ø slotted plastic pipe continuous behind retaining wall. Cap ends of pipe. Provide "Tee" connection at each 4" Ø drain.

	BY	CHECKED
DESIGN	Greg Jones	Daniel Sessions
DETAILS	S.Jiang / B.Huddleston	Daniel Sessions
QUANTITIES	Vadim Shostak	Kyoung Lee

STATE OF CALIFORNIA DEPARTMENT OF TRANSPORTATION

DIVISION OF ENGINEERING SERVICES STRUCTURE DESIGN DESIGN BRANCH 1

BRIDGE NO. 53-E0182
POST MILE 3.47

SOUND WALL NO. 190
INDEX TO PLANS

STRUCTURES DESIGN DETAIL SHEET (ENGLISH) (REV. 09-01-10)

ORIGINAL SCALE IN INCHES FOR REDUCED PLANS 0 1 2 3

UNIT: 3576
PROJECT NUMBER & PHASE: 07000018331
CONTRACT NO.: 07-215934

DISREGARD PRINTS BEARING EARLIER REVISION DATES

REVISION DATES 1-26-11 11-29-11 11-23-11

SHEET 2 OF 35

FILE => sw190-a-itp01.dgn

USERNAME => s124496 DATE PLOTTED => 28-MAR-2012 TIME PLOTTED => 11:45

DIST	COUNTY	ROUTE	POST MILES TOTAL PROJECT	SHEET No.	TOTAL SHEETS
07	LA	5	2.4/4.0	1196	1288

REGISTERED CIVIL ENGINEER 12-8-11 DATE

3-26-12
PLANS APPROVAL DATE

REGISTERED PROFESSIONAL ENGINEER Kevin Harper No. 42221 Exp. 3-31-12 CIVIL STATE OF CALIFORNIA

The State of California or its officers or agents shall not be responsible for the accuracy or completeness of electronic copies of this plan sheet.

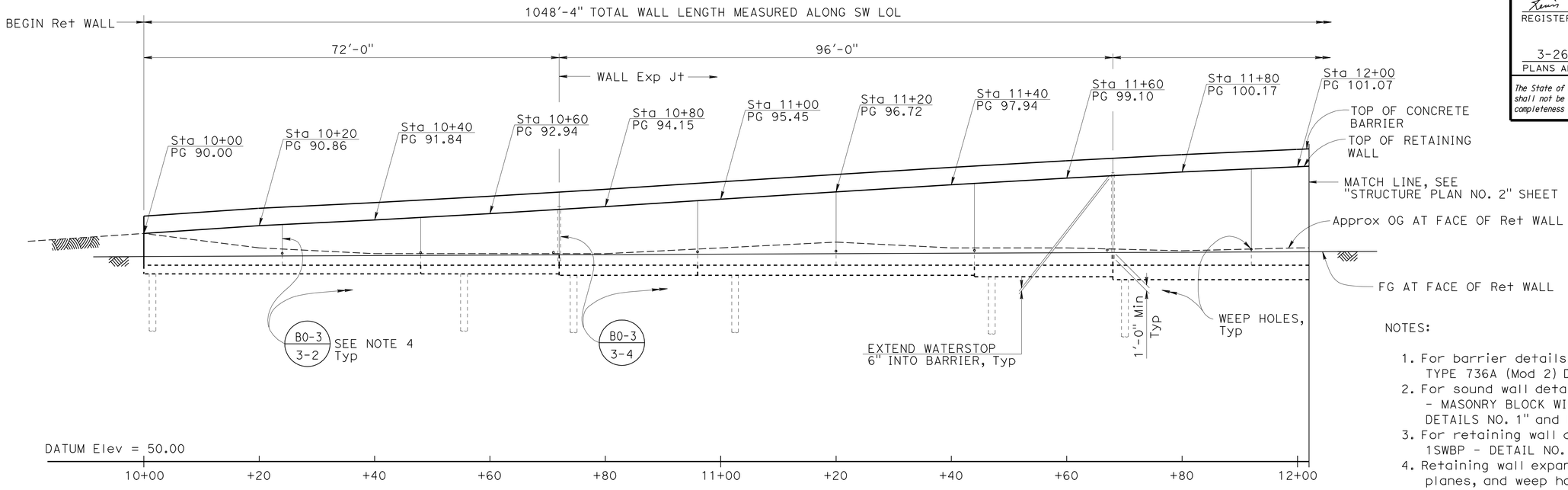

DEVELOPED ELEVATION

1" = 10'

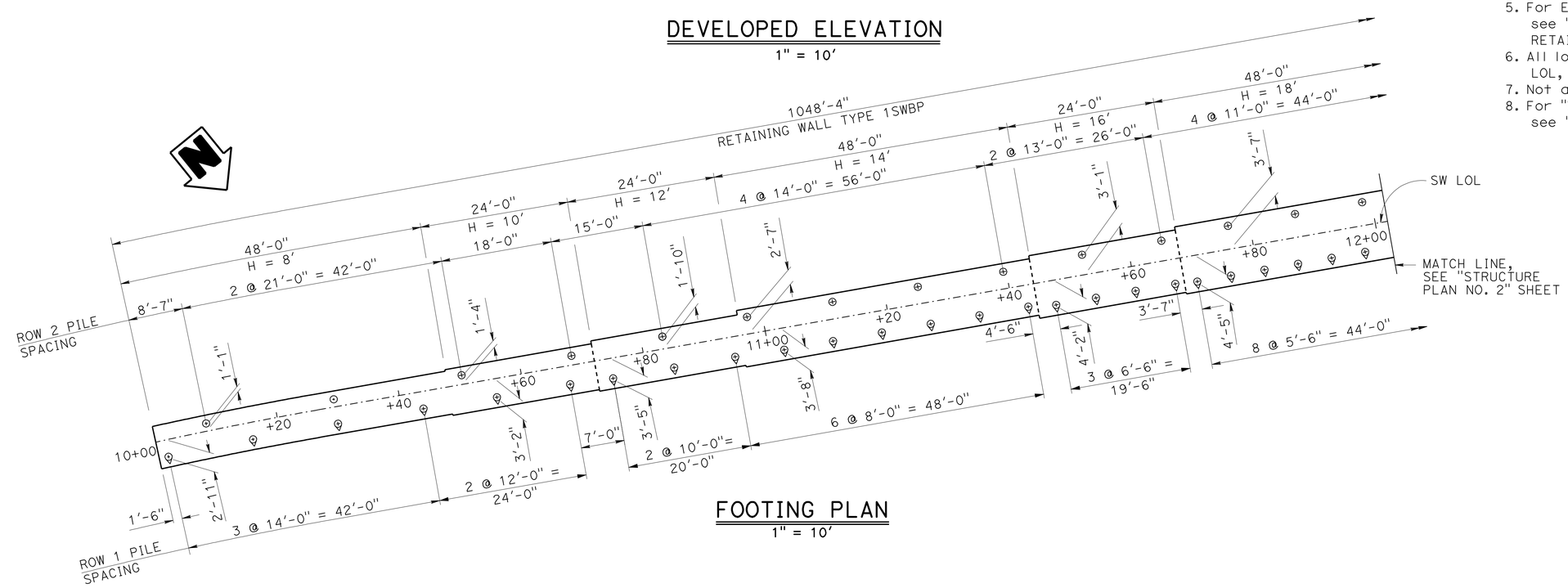

FOOTING PLAN

1" = 10'

NOTES:

1. For barrier details, see "CONCRETE BARRIER TYPE 736A (Mod 2) DETAILS" sheet.
2. For sound wall details, see "SOUND WALL - MASONRY BLOCK WITH BARRIER ON RETAINING WALL DETAILS NO. 1" and No. 2 sheets.
3. For retaining wall details, see "RETAINING WALL TYPE 1SWBP - DETAIL NO. 1" and No. 2 sheets.
4. Retaining wall expansion joints, weakened planes, and weep holes shall be placed per B0-3 / 3-3 .
5. For Exp Jt details in the masonry block sound wall, see "SOUND WALL - MASONRY BLOCK WITH BARRIER ON RETAINING WALL DETAILS NO. 1" and No. 2 sheets.
6. All longitudinal dimensions are measured along the SW LOL, except noted otherwise.
7. Not all piles shown in elevation.
8. For "WEEP HOLE AND GEOCOMPOSITE DRAIN" alternative , see "INDEX TO PLANS" sheet.

LEGEND:

⊙- Indicates Vertical Class 90 Pile
⊙- Indicates 1:3 Battered Class 90 Pile

	BY	CHECKED
DESIGN	Greg Jones	Daniel Sessions
DETAILS	S.Jiang / B.Huddleston	Daniel Sessions
QUANTITIES	Vadim Shostak	Kyoung Lee

STATE OF CALIFORNIA
DEPARTMENT OF TRANSPORTATION

DIVISION OF ENGINEERING SERVICES
STRUCTURE DESIGN
DESIGN BRANCH 1

BRIDGE NO. 53-E0182
POST MILE 3.47

SOUND WALL NO. 190
STRUCTURE PLAN NO. 1

STRUCTURES DESIGN DETAIL SHEET (ENGLISH) (REV. 09-01-10)

ORIGINAL SCALE IN INCHES FOR REDUCED PLANS 0 1 2 3

UNIT: 3576
PROJECT NUMBER & PHASE: 07000018331
CONTRACT NO.: 07-215934

DISREGARD PRINTS BEARING EARLIER REVISION DATES

REVISION DATES 12-21-10 11/10/11 11/23/11

SHEET 3 OF 35

FILE => sw190-c-sp01.dgn

USERNAME => s124436 DATE PLOTTED => 28-MAR-2012 TIME PLOTTED => 11:45

DIST	COUNTY	ROUTE	POST MILES TOTAL PROJECT	SHEET No.	TOTAL SHEETS
07	LA	5	2.4/4.0	1197	1288

REGISTERED CIVIL ENGINEER 12-8-11 DATE

3-26-12
PLANS APPROVAL DATE

REGISTERED PROFESSIONAL ENGINEER Kevin Harper No. 42221 Exp. 3-31-12 CIVIL STATE OF CALIFORNIA

The State of California or its officers or agents shall not be responsible for the accuracy or completeness of electronic copies of this plan sheet.

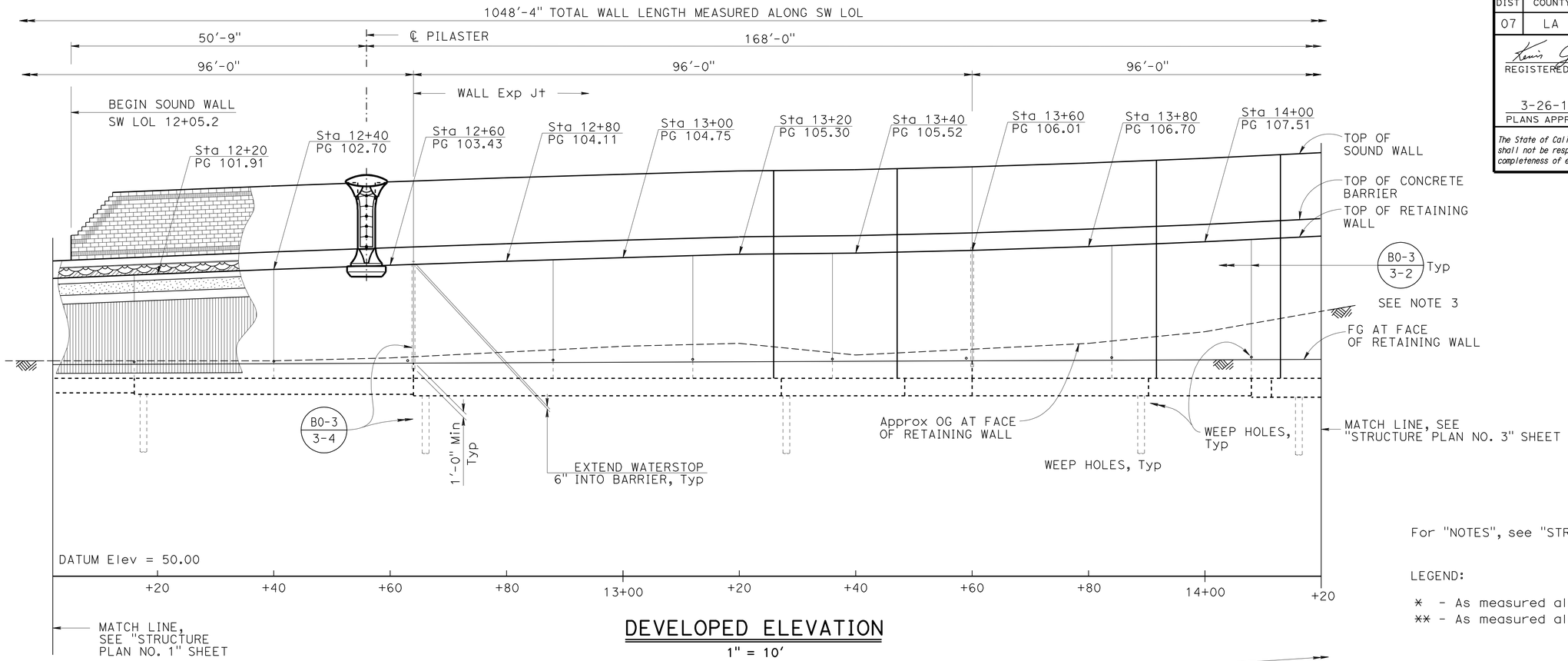

DEVELOPED ELEVATION

1" = 10'

For "NOTES", see "STRUCTURE PLAN NO. 1" sheet.

LEGEND:

* - As measured along back edge of footing
** - As measured along front edge of footing

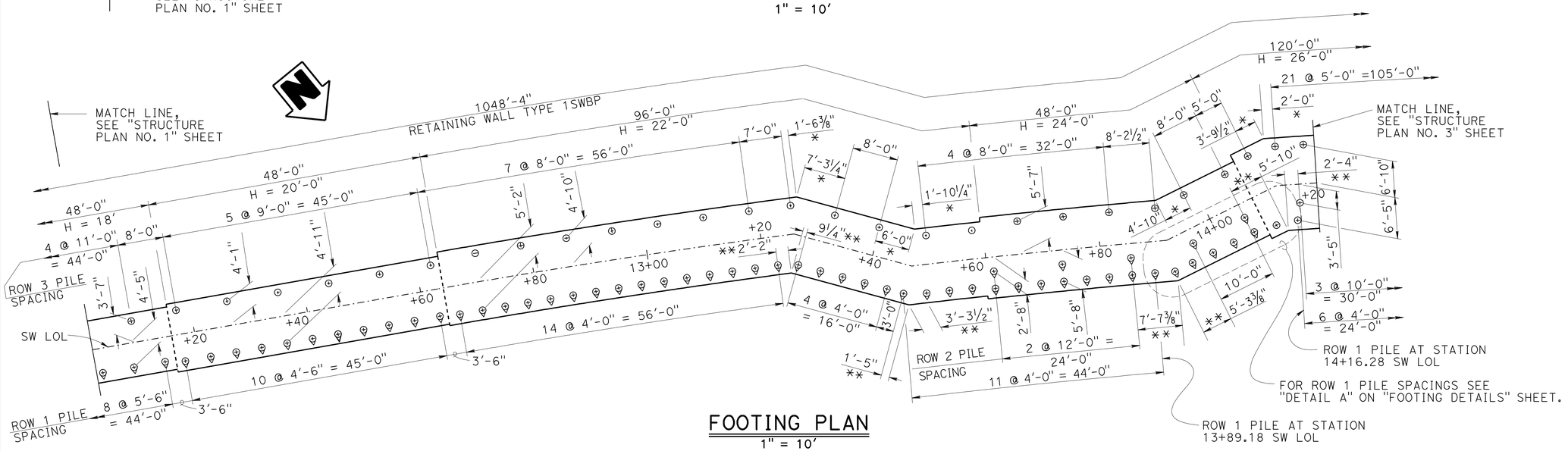

FOOTING PLAN

1" = 10'

DESIGN	BY Greg Jones	CHECKED Daniel Sessions	
DETAILS	BY S.Jiang / B.Huddleston	CHECKED Daniel Sessions	
QUANTITIES	BY Vadim Shostak	CHECKED Kyoung Lee	

STATE OF CALIFORNIA
DEPARTMENT OF TRANSPORTATION

DIVISION OF ENGINEERING SERVICES
STRUCTURE DESIGN
DESIGN BRANCH 1

BRIDGE NO. 53-E0182
POST MILE 3.47

SOUND WALL NO. 190
STRUCTURE PLAN NO. 2

STRUCTURES DESIGN DETAIL SHEET (ENGLISH) (REV. 09-01-10)

ORIGINAL SCALE IN INCHES FOR REDUCED PLANS 0 1 2 3

UNIT: 3576
PROJECT NUMBER & PHASE: 07000018331
CONTRACT NO.: 07-215934

DISREGARD PRINTS BEARING EARLIER REVISION DATES

REVISION DATES 12-21-10 11/19/11 11/23/11

SHEET 4 OF 35

FILE => sw190-c-sp02.dgn

USERNAME => s124496 DATE PLOTTED => 28-MAR-2012 TIME PLOTTED => 11:45

DIST	COUNTY	ROUTE	POST MILES TOTAL PROJECT	SHEET No.	TOTAL SHEETS
07	LA	5	2.4/4.0	1198	1288

REGISTERED CIVIL ENGINEER 12-8-11 DATE

3-26-12
PLANS APPROVAL DATE

REGISTERED PROFESSIONAL ENGINEER Kevin Harper No. 42221 Exp. 3-31-12 CIVIL STATE OF CALIFORNIA

The State of California or its officers or agents shall not be responsible for the accuracy or completeness of electronic copies of this plan sheet.

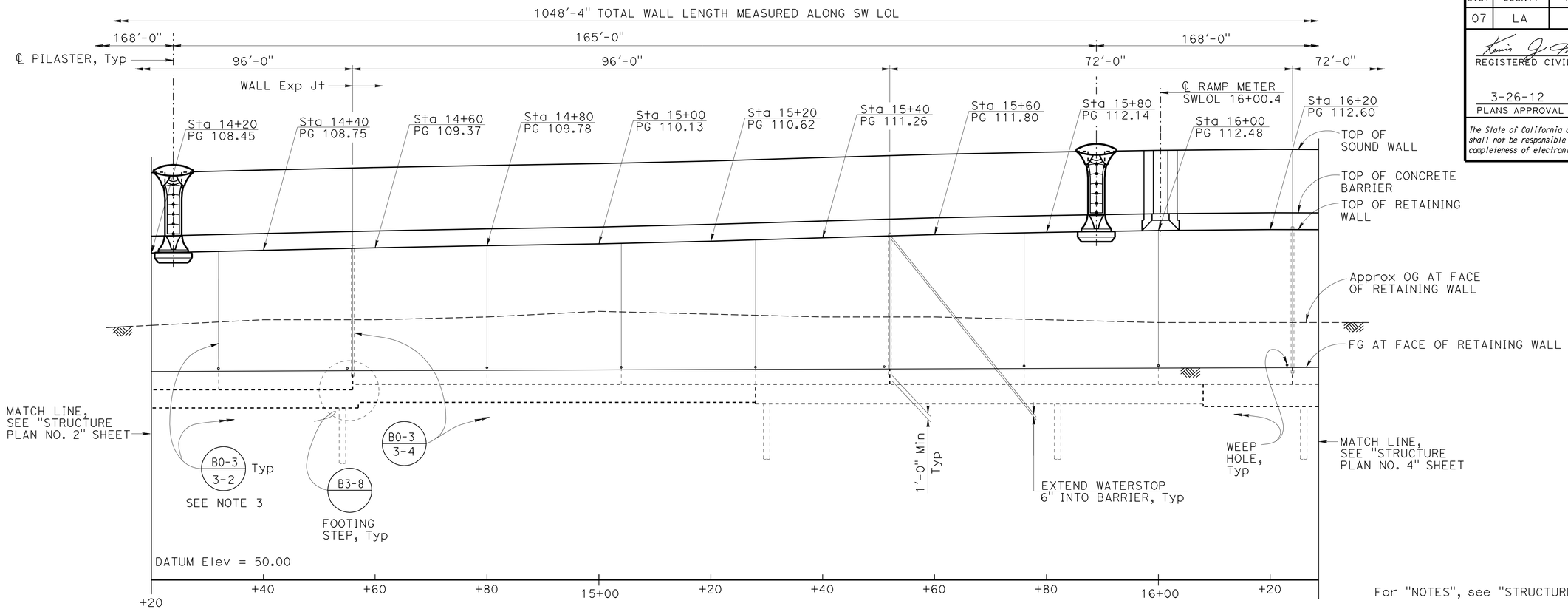

For "NOTES", see "STRUCTURE PLAN NO. 1" sheet.

DEVELOPED ELEVATION

1" = 10'

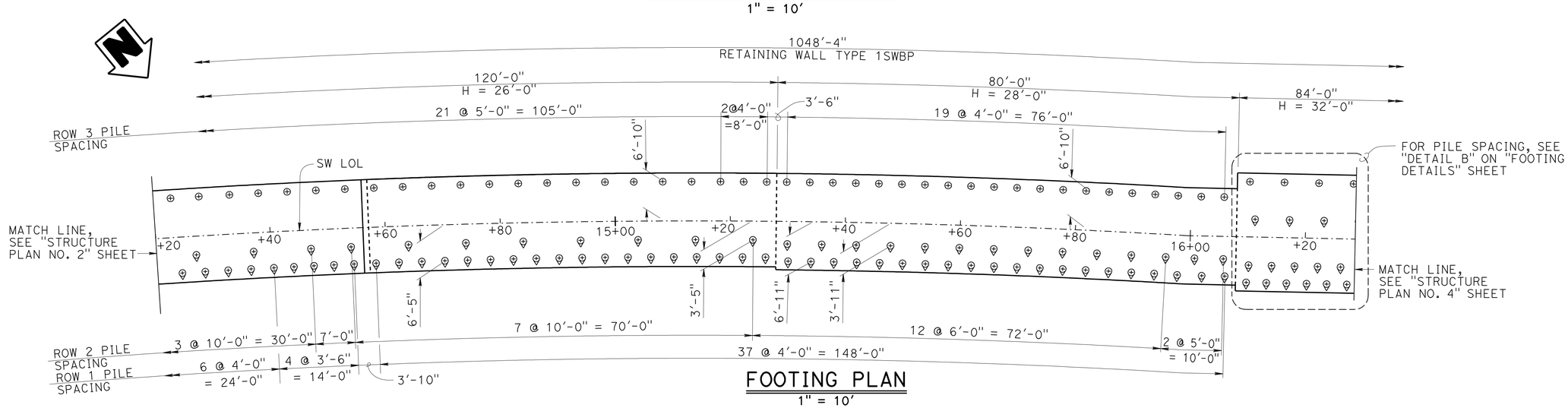

FOOTING PLAN

1" = 10'

DESIGN	BY Greg Jones	CHECKED Daniel Sessions	
DETAILS	BY S.Jiang / B.Huddleston	CHECKED Daniel Sessions	
QUANTITIES	BY Vadim Shostak	CHECKED Kyoung Lee	

STATE OF CALIFORNIA
DEPARTMENT OF TRANSPORTATION

DIVISION OF ENGINEERING SERVICES
STRUCTURE DESIGN
DESIGN BRANCH 1

BRIDGE NO. 53-E0182
POST MILE 3.47

SOUND WALL NO. 190
STRUCTURE PLAN NO. 3

STRUCTURES DESIGN DETAIL SHEET (ENGLISH) (REV. 09-01-10)

ORIGINAL SCALE IN INCHES FOR REDUCED PLANS 0 1 2 3

UNIT: 3576
PROJECT NUMBER & PHASE: 07000018331
CONTRACT NO.: 07-215934

DISREGARD PRINTS BEARING EARLIER REVISION DATES

REVISION DATES 12-21-10 11/23/11 11/10/11

SHEET 5 OF 35

FILE => sw190-c-sp03.dgn

USERNAME => s124496 DATE PLOTTED => 28-MAR-2012 TIME PLOTTED => 11:45

DIST	COUNTY	ROUTE	POST MILES TOTAL PROJECT	SHEET No.	TOTAL SHEETS
07	LA	5	2.4/4.0	1199	1288

REGISTERED CIVIL ENGINEER 12-8-11 DATE

3-26-12
PLANS APPROVAL DATE

REGISTERED PROFESSIONAL ENGINEER Kevin Harper No. 42221 Exp. 3-31-12 CIVIL STATE OF CALIFORNIA

The State of California or its officers or agents shall not be responsible for the accuracy or completeness of electronic copies of this plan sheet.

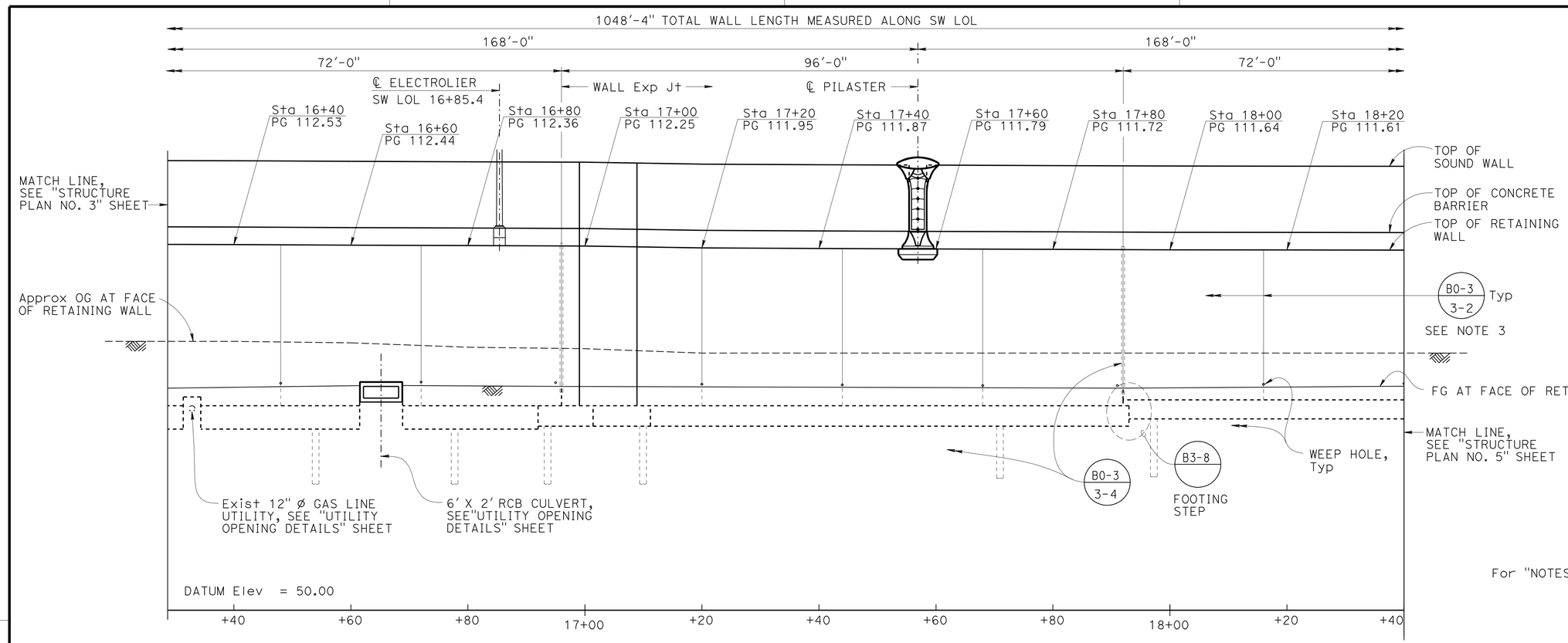

For "NOTES", see "STRUCTURE PLAN NO. 1" sheet.

DEVELOPED ELEVATION

1" = 10'

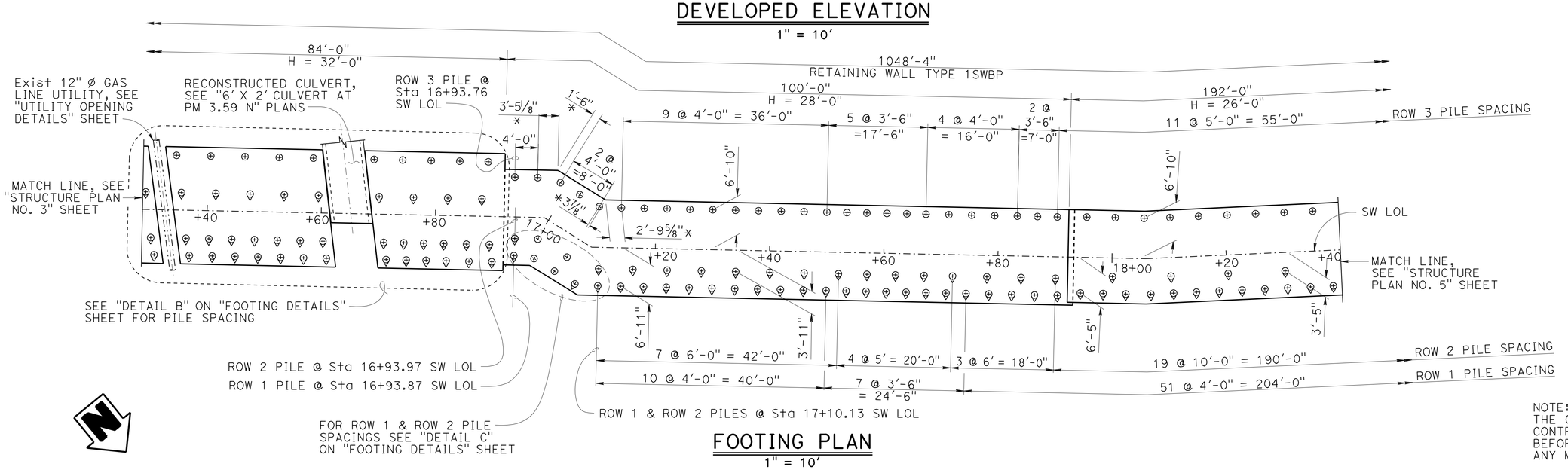

FOOTING PLAN

1" = 10'

NOTE:
THE CONTRACTOR SHALL VERIFY ALL CONTROLLING FIELD DIMENSIONS BEFORE ORDERING OR FABRICATING ANY MATERIAL.

	BY	CHECKED
DESIGN	Greg Jones	Daniel Sessions
DETAILS	S.Jiang / B.Huddleston	Daniel Sessions
QUANTITIES	Vadim Shostak	Kyoung Lee

STATE OF CALIFORNIA
DEPARTMENT OF TRANSPORTATION

DIVISION OF ENGINEERING SERVICES
STRUCTURE DESIGN
DESIGN BRANCH 1

BRIDGE NO. 53-E0182
POST MILE 3.47

SOUND WALL NO. 190
STRUCTURE PLAN NO. 4

STRUCTURES DESIGN DETAIL SHEET (ENGLISH) (REV. 09-01-10)

ORIGINAL SCALE IN INCHES FOR REDUCED PLANS 0 1 2 3

UNIT: 3576
PROJECT NUMBER & PHASE: 07000018331
CONTRACT NO.: 07-215934

DISREGARD PRINTS BEARING EARLIER REVISION DATES

REVISION DATES 12-21-10 11/16/11 11/23/11

SHEET 6 OF 35

FILE => sw190-c-sp04.dgn

USERNAME => s124496 DATE PLOTTED => 28-MAR-2012 TIME PLOTTED => 11:45

DIST	COUNTY	ROUTE	POST MILES TOTAL PROJECT	SHEET No.	TOTAL SHEETS
07	LA	5	2.4/4.0	1200	1288

REGISTERED CIVIL ENGINEER 12-8-11 DATE

3-26-12
PLANS APPROVAL DATE

The State of California or its officers or agents shall not be responsible for the accuracy or completeness of electronic copies of this plan sheet.

REGISTERED PROFESSIONAL ENGINEER Kevin Harper No. 42221 Exp. 3-31-12 CIVIL STATE OF CALIFORNIA

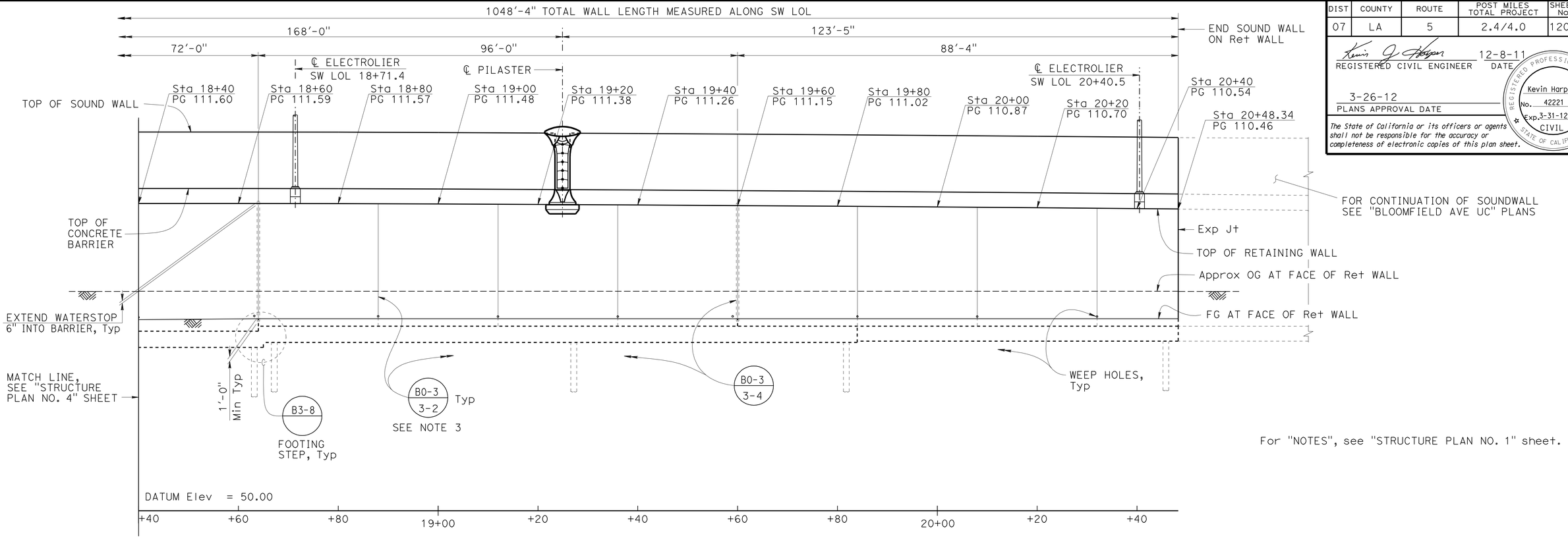

For "NOTES", see "STRUCTURE PLAN NO. 1" sheet.

DEVELOPED ELEVATION

1" = 10'

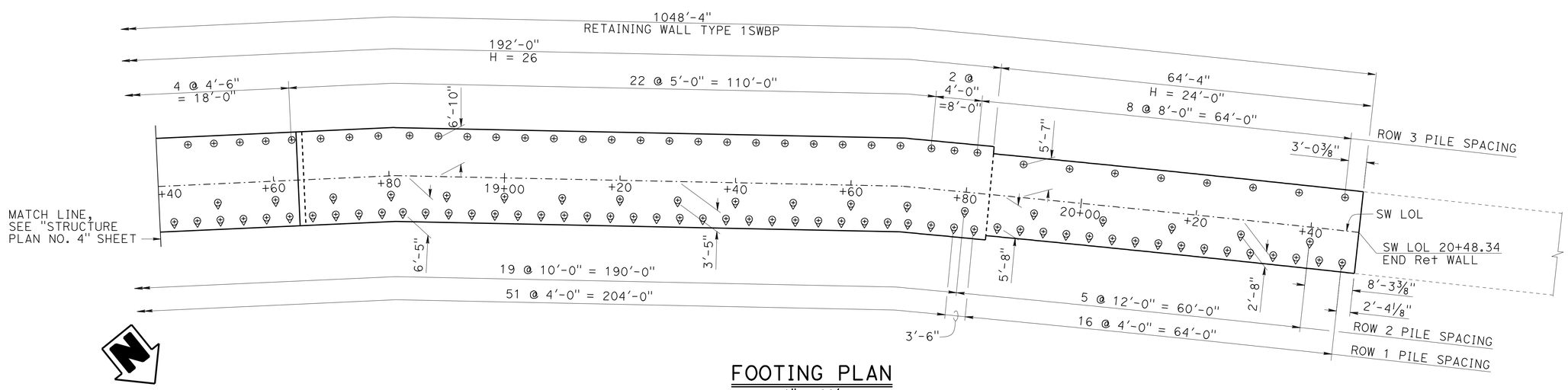

FOOTING PLAN

1" = 10'

	BY	CHECKED
DESIGN	Greg Jones	Daniel Sessions
DETAILS	S.Jiang / B.Huddleston	Daniel Sessions
QUANTITIES	Vadim Shostak	Kyoung Lee

STATE OF CALIFORNIA
DEPARTMENT OF TRANSPORTATION

DIVISION OF ENGINEERING SERVICES
STRUCTURE DESIGN
DESIGN BRANCH 1

BRIDGE NO. 53-E0182
POST MILE 3.47

SOUND WALL NO. 190
STRUCTURE PLAN NO. 5

STRUCTURES DESIGN DETAIL SHEET (ENGLISH) (REV. 09-01-10)

ORIGINAL SCALE IN INCHES FOR REDUCED PLANS 0 1 2 3

UNIT: 3576
PROJECT NUMBER & PHASE: 07000018331
CONTRACT NO.: 07-215934

DISREGARD PRINTS BEARING EARLIER REVISION DATES

REVISION DATES: 12-28-10 11/16/11 11/23/11

SHEET 7 OF 35

FILE => sw190-c-sp05.dgn

USERNAME => s124436 DATE PLOTTED => 28-MAR-2012 TIME PLOTTED => 11:45