Dist	COUNTY	ROUTE	POST MILES TOTAL PROJECT	SHEET No.	TOTAL SHEETS
07	LA	710	17.2/26.4	901	1507

REGISTERED CIVIL ENGINEER — DATE 4/4/11

6-27-11
PLANS APPROVAL DATE

REGISTERED PROFESSIONAL ENGINEER — VINCENT NGUYEN — No. 57797 — Exp. 3/31/12 — CIVIL — STATE OF CALIFORNIA

THE STATE OF CALIFORNIA OR ITS OFFICERS OR AGENTS SHALL NOT BE RESPONSIBLE FOR THE ACCURACY OR COMPLETENESS OF SCANNED COPIES OF THIS PLAN SHEET.

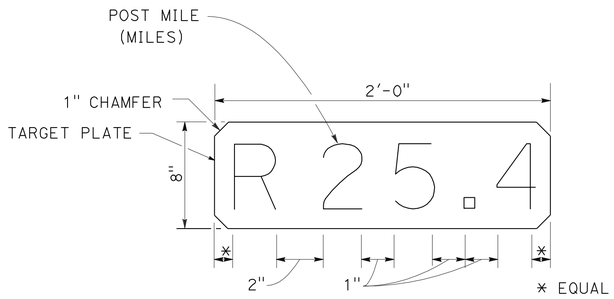

TYPICAL MEDIAN MILEAGE PANEL
WHITE BACKGROUND WITH BLACK LETTERS

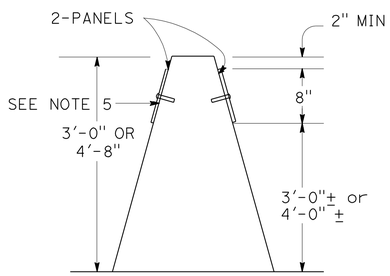

CONCRETE BARRIER

QUANTITIES

MEDIAN MILEAGE PANEL		
ROUTE	POST MILE	INSTALL (EA)
710	20.3 - 21.9 23.4 - 25.2	34
	TOTALS	34

MEDIAN MILEAGE PANEL AND INSTALLATION DETAILS

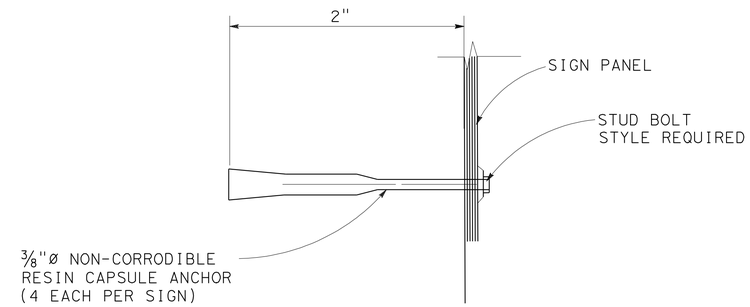

DETAIL

SIGN PANEL ON SOUNDWALL (BOLTED)

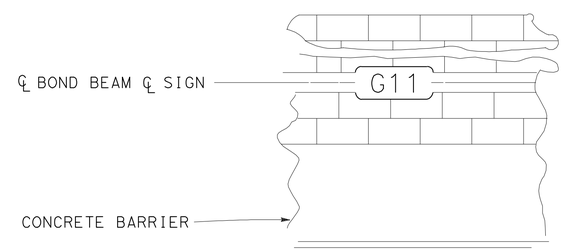

BOLT ON SOUNDWALL
TYPICAL FOR G11

ROADSIDE SIGNS G11(CA) ON CONCRETE BARRIER/SOUNDWALL MOUNTING DETAILS

NOTES:

1. INSTALL HORIZONTAL FACING EP ON BOTH SIDES OF BARRIER AT 0.2 MILE INTERVALS AS LOCATED BY THE ENGINEER.
2. LETTERS AND NUMERALS SHALL BE 6" SERIES D DIE CUT NON-REFLECTIVE PRESSURE SENSITIVE BLACK VINYL FROM AN APPROVED MANUFACTURER.
3. NUTS, BOLTS, WASHERS, ETC. ON PANEL FACE SHALL BE NEATLY PAINTED IN APPROPRIATE COLOR.
4. 2¼" EXPANSION ANCHORAGE DEVICES, ONE @ EACH END. HOLE DEPTH AND DIAMETER TO BE DETERMINED BY MANUFACTURER'S SPECIFICATIONS.
5. TARGET PLATE LEGEND SHALL BE IN POST MILES AS DIRECTED BY THE ENGINEER.

SIGN DETAILS
NO SCALE

SD-21

STATE OF CALIFORNIA - DEPARTMENT OF TRANSPORTATION
Caltrans® **TRAFFIC DESIGN**

FUNCTIONAL SUPERVISOR: CRICORIS BIGLARIAN
CALCULATED-DESIGNED BY: EUGENE BRAVO
CHECKED BY: VINCENT NGUYEN
REVISED BY / DATE REVISED

LAST REVISION 00-00-00 | DATE PLOTTED => 29-JUN-2011 | TIME PLOTTED => 11:38

Dist	COUNTY	ROUTE	POST MILES TOTAL PROJECT	SHEET No.	TOTAL SHEETS
07	LA	710	17.2/26.4	902	1507

REGISTERED CIVIL ENGINEER 4/4/11 DATE

6-27-11
PLANS APPROVAL DATE

REGISTERED PROFESSIONAL ENGINEER VINCENT NGUYEN No. 57797 Exp. 3/31/12 CIVIL STATE OF CALIFORNIA

THE STATE OF CALIFORNIA OR ITS OFFICERS OR AGENTS SHALL NOT BE RESPONSIBLE FOR THE ACCURACY OR COMPLETENESS OF SCANNED COPIES OF THIS PLAN SHEET.

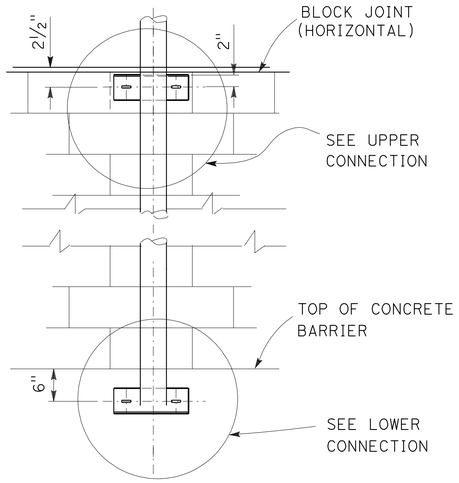

PART SIDE ELEVATION

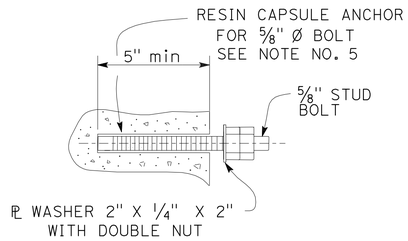

RESIN CAPSULE TYPE BOLT ANCHORAGE

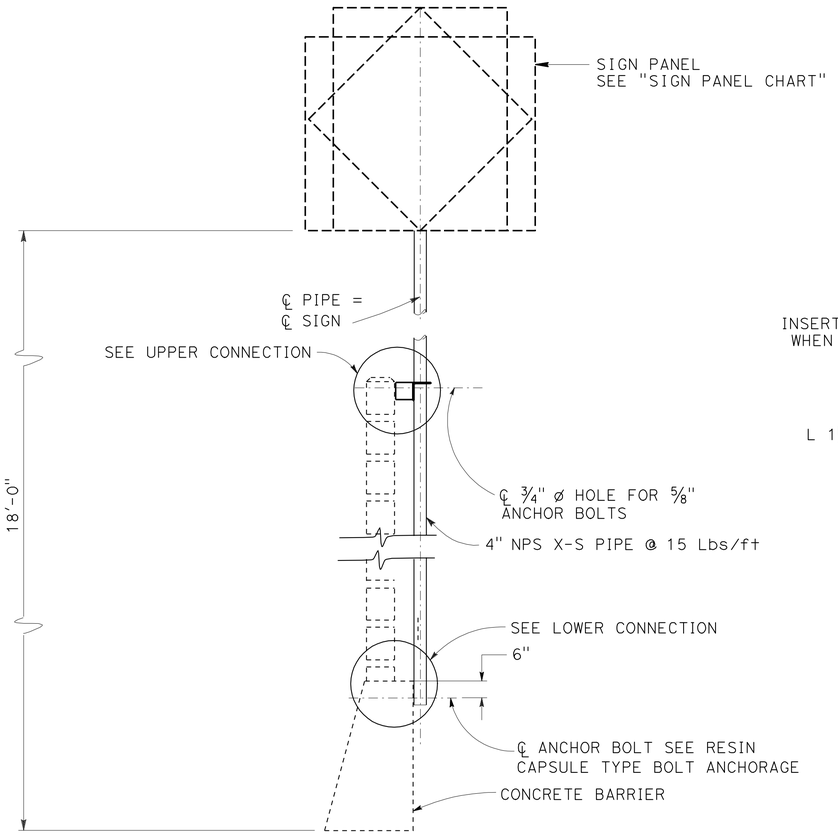

ELEVATION

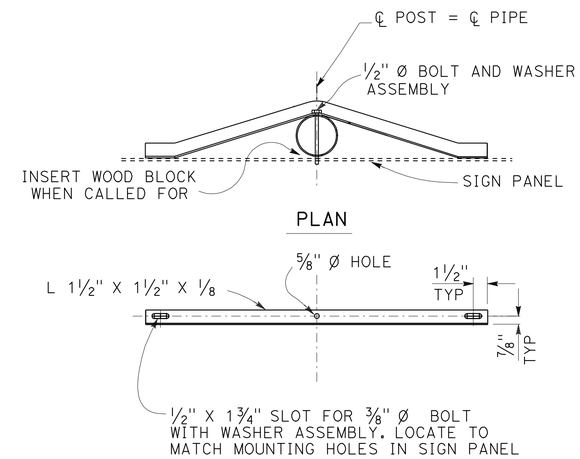

BACK BRACE DETAILS

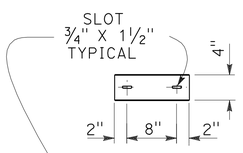

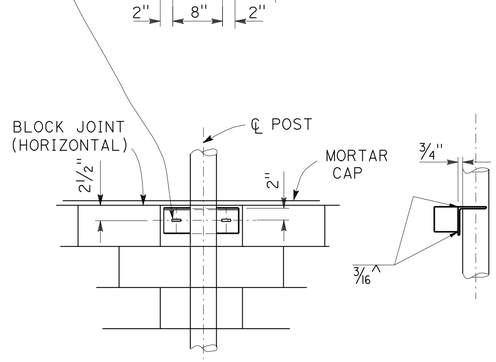

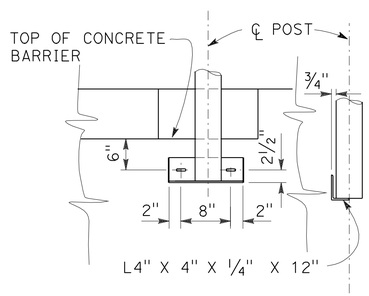

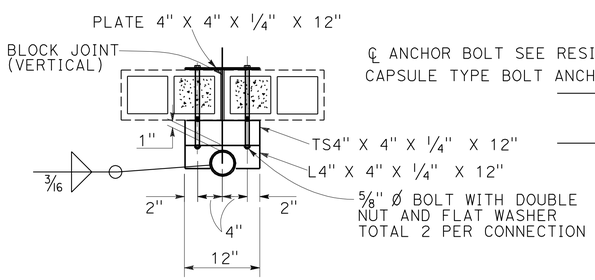

UPPER CONNECTION

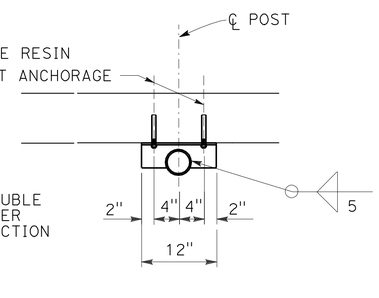

LOWER CONNECTION

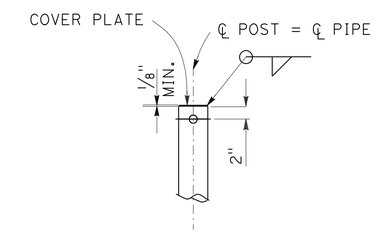

TOP OF POST DETAIL

SIGN PANEL CHART

SIGN No.	SIGN CODE	PANEL SIZE (in X in)
902	W4-7	48" X 48"
1001	W4-2R	48" X 48"

NOTES:

1. THE CONTRACTOR SHALL VERIFY CONTROLLING FIELD DIMENSIONS BEFORE ORDERING OR FABRICATING MATERIAL.
2. FOR DETAILS NOT SHOWN, SEE STANDARD PLANS.
3. DAMAGED SOUNDWALL BLOCKS SHALL BE REPLACED IN KIND.
4. STEEL SHALL TO BE GALVANIZED AFTER FABRICATION.
5. RESIN CAPSULE ANCHORAGE IS SUBJECT TO APPROVAL OF THE ENGINEER. INSTALLATION PROCEDURES SHALL COMPLY WITH MANUFACTURER'S INSTRUCTIONS.
6. WASHER ASSEMBLY CONSISTS OF TWO OVERSIZED WASHERS, NUT AND JAM NUT.
7. SEE SIGN PLANS FOR SIGN LOCATIONS.

ROADSIDE METAL SIGN ON CONCRETE BARRIER/SOUNDWALL MOUNTING DETAILS

NO SCALE

SD-22

STATE OF CALIFORNIA - DEPARTMENT OF TRANSPORTATION
Caltrans® TRAFFIC DESIGN

FUNCTIONAL SUPERVISOR: CRICORIS BIGLARIAN
CALCULATED-DESIGNED BY: EUGENE BRAVO
CHECKED BY: VINCENT NGUYEN
REVISED BY
DATE REVISED

LAST REVISION 00-00-00 | DATE PLOTTED => 29-JUN-2011 | TIME PLOTTED => 11:38

Dist	COUNTY	ROUTE	POST MILES TOTAL PROJECT	SHEET No.	TOTAL SHEETS
07	LA	710	17.2/26.4	903	1507

REGISTERED CIVIL ENGINEER 4/4/11 DATE

6-27-11
PLANS APPROVAL DATE

REGISTERED PROFESSIONAL ENGINEER VINCENT NGUYEN No. 57797 Exp. 3/31/12 CIVIL STATE OF CALIFORNIA

THE STATE OF CALIFORNIA OR ITS OFFICERS OR AGENTS SHALL NOT BE RESPONSIBLE FOR THE ACCURACY OR COMPLETENESS OF SCANNED COPIES OF THIS PLAN SHEET.

NOTES:

1. For sign locations, see "SIGN PLANS".
2. All bolts shall have a washer under the nut. Bolts through post shall be ½" diameter Bolts through sign panel and back brace shall be ½" diameter. Ream holes in sign as required.
3. All steel shall be galvanized after fabrication.
4. Washer assembly consists of two oversize washers, two fiber washers, nut and jam nut.
5. For pipe size, see "SIGN ANCHORAGE CHART"

SIGN ANCHORAGE CHART

Sign No.	Sign Code	A (in)	C (in)	R (in)	D (in)	Pipe Size
1501	W4-2R	30	84	20	12	4 NPS

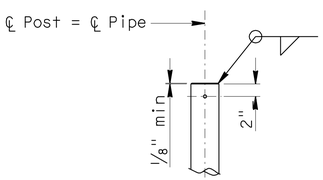

TOP OF POST DETAIL

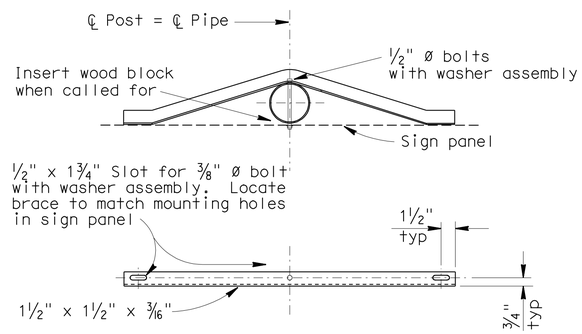

BACK BRACE DETAILS

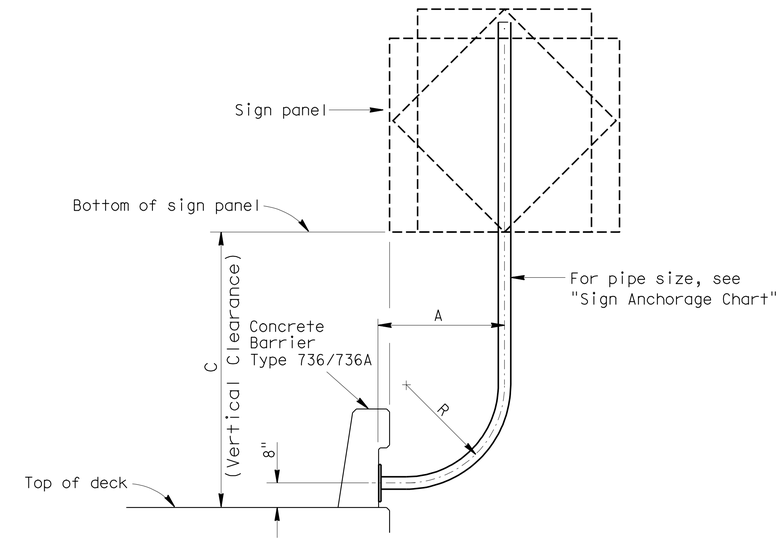

TYPE 736/736A

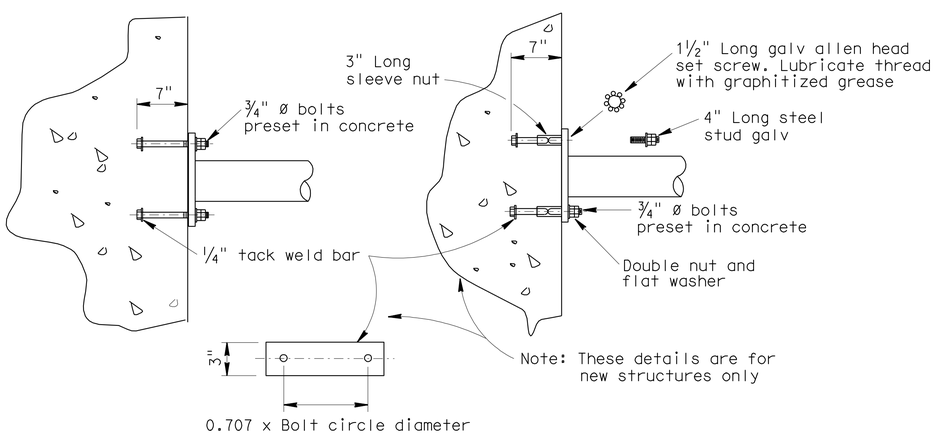

ALTERNATIVE CIP BOLT ANCHORAGE

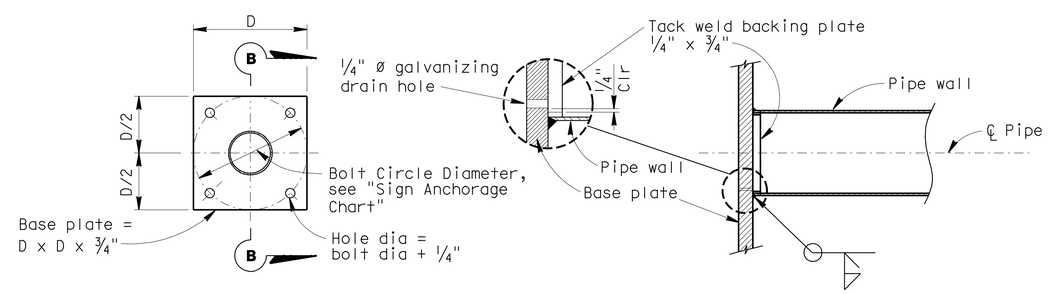

VIEW A-A

SECTION B-B

BASE PLATE DETAILS

BARRIER MOUNTED METAL SIGNS SIGN CONNECTION DETAILS

NO SCALE

SD-23

STATE OF CALIFORNIA - DEPARTMENT OF TRANSPORTATION
Caltrans® TRAFFIC DESIGN

FUNCTIONAL SUPERVISOR: CRICORIS BIGLARIAN
CALCULATED-DESIGNED BY: EUGENE BRAVO
CHECKED BY: VINCENT NGUYEN
REVISED BY
DATE REVISED

LAST REVISION 00-00-00
DATE PLOTTED => 29-JUN-2011
TIME PLOTTED => 11:38

Dist	COUNTY	ROUTE	POST MILES TOTAL PROJECT	SHEET No.	TOTAL SHEETS
07	LA	710	17.2/26.4	904	1507

REGISTERED CIVIL ENGINEER 4/4/11 DATE

6-27-11
PLANS APPROVAL DATE

REGISTERED PROFESSIONAL ENGINEER VINCENT NGUYEN No. 57797 Exp. 3/31/12 CIVIL STATE OF CALIFORNIA

THE STATE OF CALIFORNIA OR ITS OFFICERS OR AGENTS SHALL NOT BE RESPONSIBLE FOR THE ACCURACY OR COMPLETENESS OF SCANNED COPIES OF THIS PLAN SHEET.

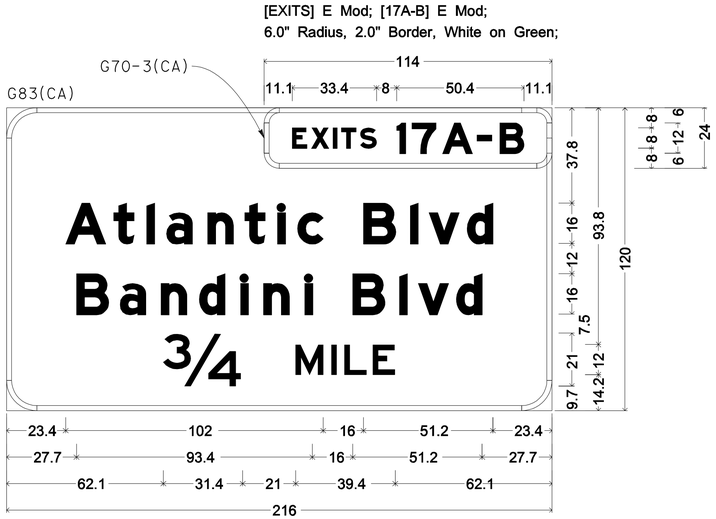

12.0" Radius, 2.0" Border, White on Green;
[Atlantic Blvd] E Mod; [Bandini Blvd] E Mod; [3/4] E; [MILE] E;

SIGN 2B

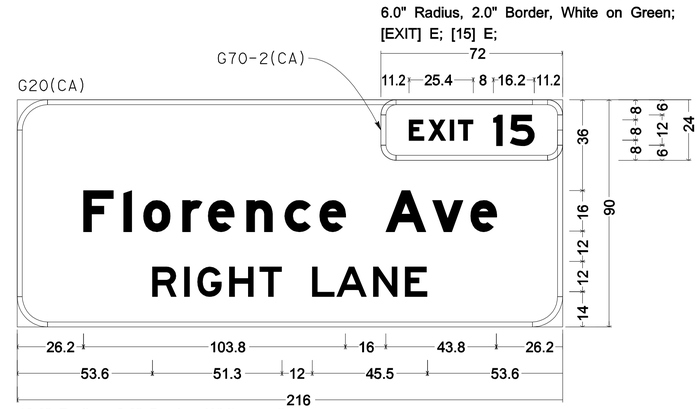

12.0" Radius, 2.0" Border, White on Green;
[Florence Ave] E Mod; [RIGHT LANE] E;

SIGN 2C

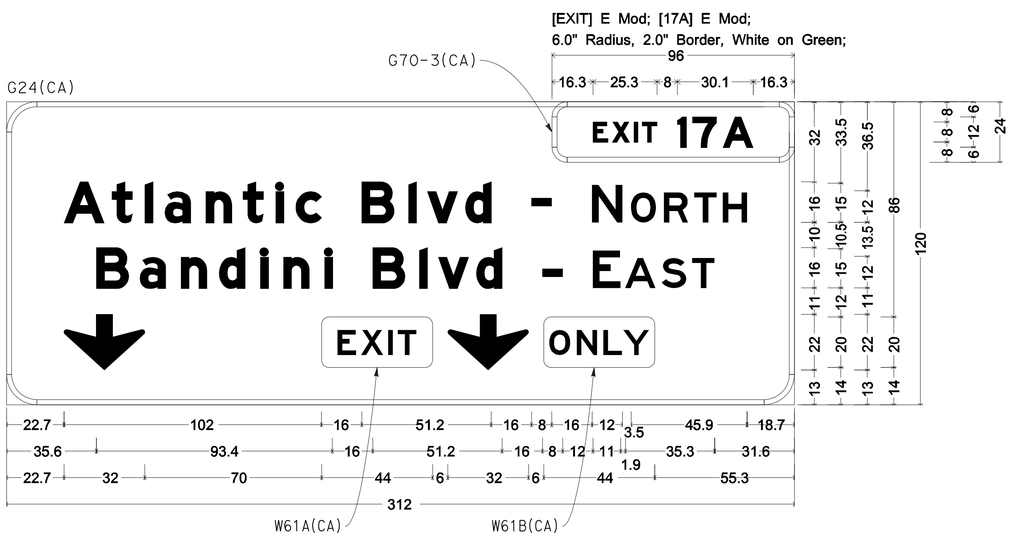

12.0" Radius, 2.0" Border, White on Green;
[Atlantic Blvd -] E Mod; [NORTH] E; [Bandini Blvd -] E Mod; [EAST] E; Down Arrow 22.0" 270°; Rounded Rectangle 3.0" Radius Yellow;
Down Arrow 22.0" 270°; Rounded Rectangle 3.0" Radius Yellow;

SIGN 3A

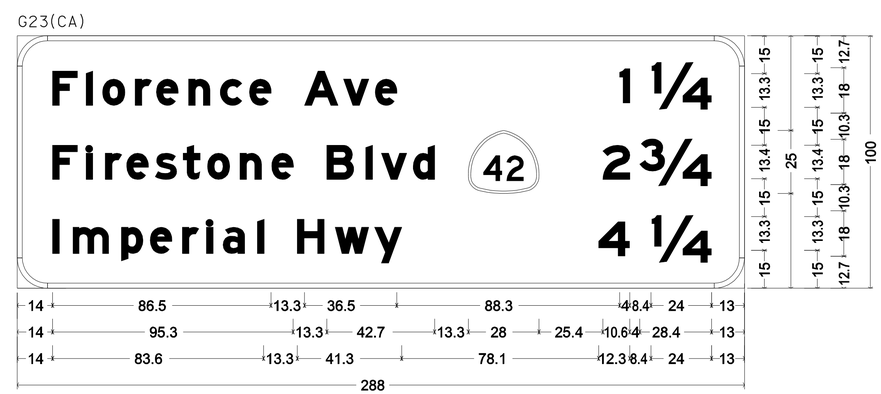

12.0" Radius, 2.0" Border, White on Green; [Florence Ave] E Mod; [Firestone Blvd] E Mod;
[Imperial Hwy] E Mod; [1] E Mod; [1/4] E Mod; [2] E Mod; [3/4] E Mod; [4] E Mod; [1/4] E Mod;

SIGN 3D

SIGN DETAILS

NO SCALE

SD-24

STATE OF CALIFORNIA - DEPARTMENT OF TRANSPORTATION
Caltrans® TRAFFIC DESIGN

FUNCTIONAL SUPERVISOR: CRICORIS BIGLARIAN
CALCULATED-DESIGNED BY: EUGENE BRAVO
CHECKED BY: VINCENT NGUYEN
REVISED BY
DATE REVISED

LAST REVISION 00-00-00
DATE PLOTTED => 29-JUN-2011
TIME PLOTTED => 11:38

Dist	COUNTY	ROUTE	POST MILES TOTAL PROJECT	SHEET No.	TOTAL SHEETS
07	LA	710	17.2/26.4	905	1507

REGISTERED CIVIL ENGINEER 4/4/11 DATE

6-27-11
PLANS APPROVAL DATE

REGISTERED PROFESSIONAL ENGINEER VINCENT NGUYEN No. 57797 Exp. 3/31/12 CIVIL STATE OF CALIFORNIA

THE STATE OF CALIFORNIA OR ITS OFFICERS OR AGENTS SHALL NOT BE RESPONSIBLE FOR THE ACCURACY OR COMPLETENESS OF SCANNED COPIES OF THIS PLAN SHEET.

6.0" Radius, 2.0" Border, White on Green;
[EXIT] E; [17C] E;

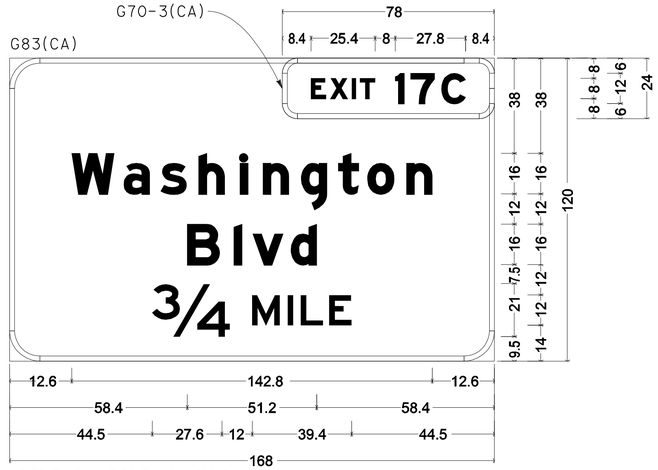

12.0" Radius, 2.0" Border, White on Green;
[Washington] E Mod; [Blvd] E Mod; [1/2] E; [MILE] E;

SIGN 4A

6.0" Radius, 2.0" Border, White on Green;
[EXIT] E; [17A] E;

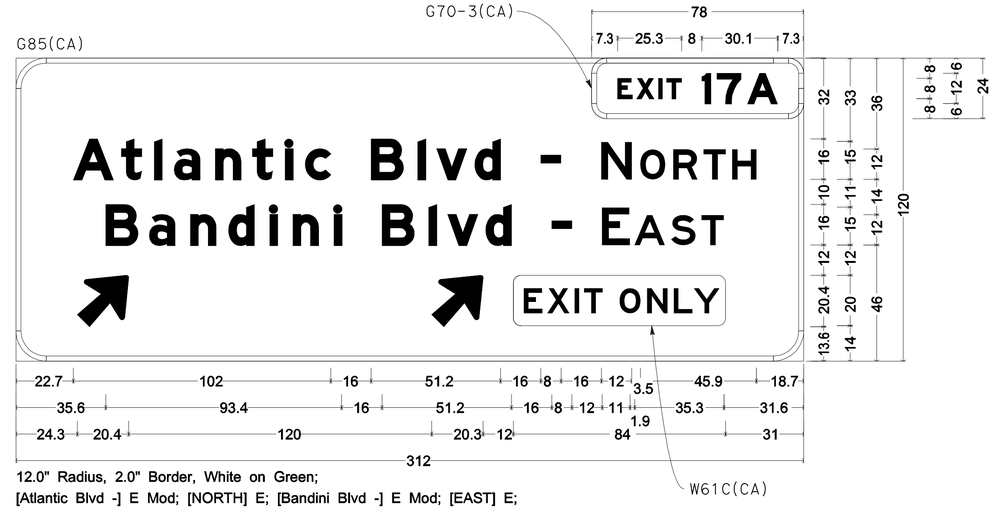

12.0" Radius, 2.0" Border, White on Green;
[Atlantic Blvd -] E Mod; [NORTH] E; [Bandini Blvd -] E Mod; [EAST] E;
Arrow 16CAP-1L - 25.0" 45°; Arrow 16CAP-1L - 25.0" 45°; Rounded Rectangle 3.0" Radius Yellow;

SIGN 4A

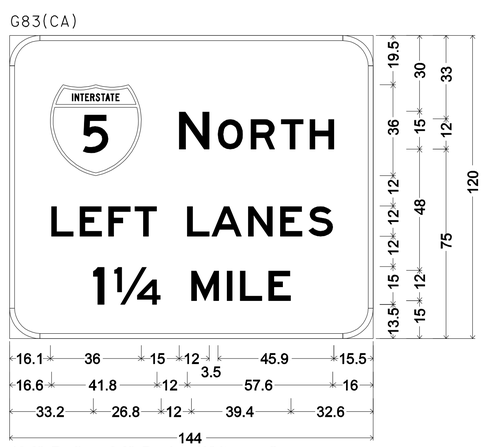

12.0" Radius, 2.0" Border, White on Green;
[NORTH] E; [LEFT LANES] E; [1 1/4] E; [MILE] E;

SIGN 5A

6.0" Radius, 2.0" Border, White on Green;
[EXIT] E; [17B] E;

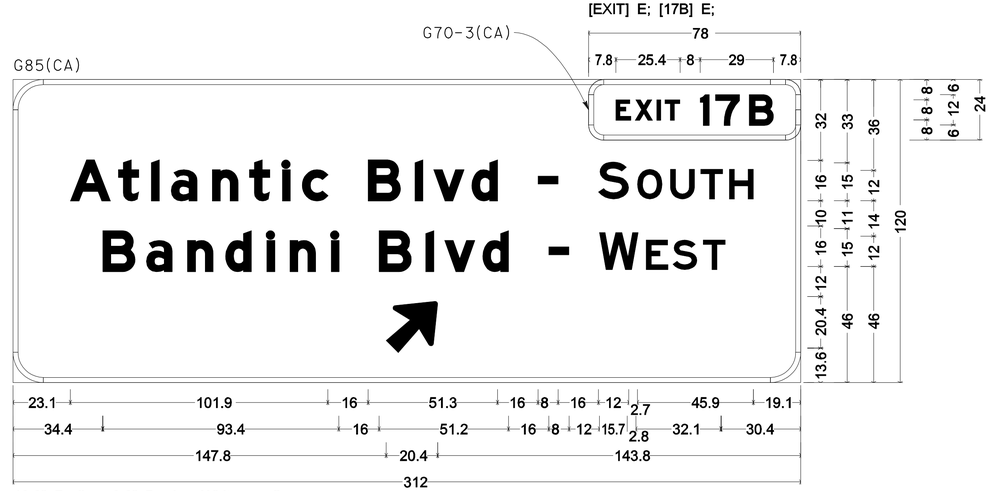

12.0" Radius, 2.0" Border, White on Green;
[Atlantic Blvd -] E Mod; [NORTH] E; [Bandini Blvd -] E Mod; [EAST] E; Arrow 16CAP-1L - 25.0" 45°;

SIGN 5A

SIGN DETAILS

NO SCALE

SD-25

STATE OF CALIFORNIA - DEPARTMENT OF TRANSPORTATION
Caltrans® TRAFFIC DESIGN

FUNCTIONAL SUPERVISOR: CRICORIS BIGLARIAN
CALCULATED-DESIGNED BY: EUGENE BRAVO
CHECKED BY: VINCENT NGUYEN
REVISED BY
DATE REVISED

LAST REVISION 00-00-00
DATE PLOTTED => 29-JUN-2011
TIME PLOTTED => 11:38

Dist	COUNTY	ROUTE	POST MILES TOTAL PROJECT	SHEET No.	TOTAL SHEETS
07	LA	710	17.2/26.4	906	1507

REGISTERED CIVIL ENGINEER 4/4/11 DATE

6-27-11
PLANS APPROVAL DATE

REGISTERED PROFESSIONAL ENGINEER VINCENT NGUYEN No. 57797 Exp. 3/31/12 CIVIL STATE OF CALIFORNIA

THE STATE OF CALIFORNIA OR ITS OFFICERS OR AGENTS SHALL NOT BE RESPONSIBLE FOR THE ACCURACY OR COMPLETENESS OF SCANNED COPIES OF THIS PLAN SHEET.

G23(CA)

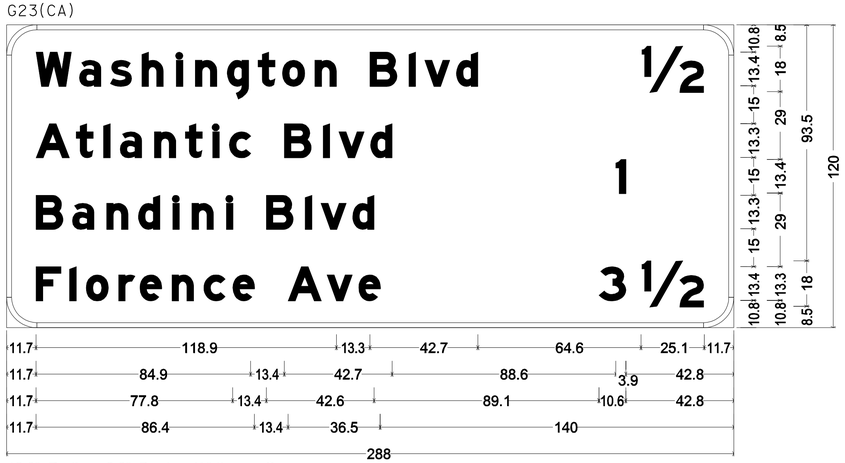

12.0" Radius, 2.0" Border, White on Green;
[Washington Blvd] E Mod; [Atlantic Blvd] E Mod; [Bandini Blvd] E Mod; [Florence Ave] E Mod; [½] E Mod; [1] E Mod; [3] E Mod; [½] E Mod;

SIGN 7B

G83(CA)

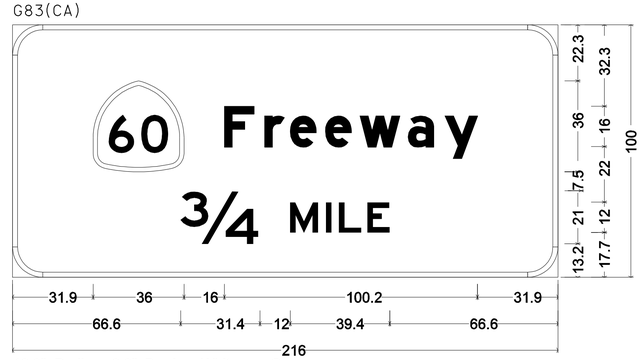

12.0" Radius, 2.0" Border, White on Green;
[Freeway] E Mod; [¾] E; [MILE] E;

SIGN 7A

G85(CA)

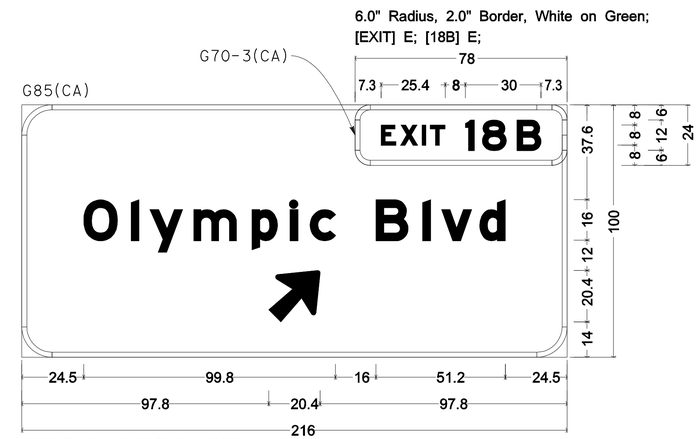

12.0" Radius, 2.0" Border, White on Green;
[Olympic Blvd] E Mod; Arrow 16CAP-1L - 25.0" 45°;

SIGN 7A

G85(CA)

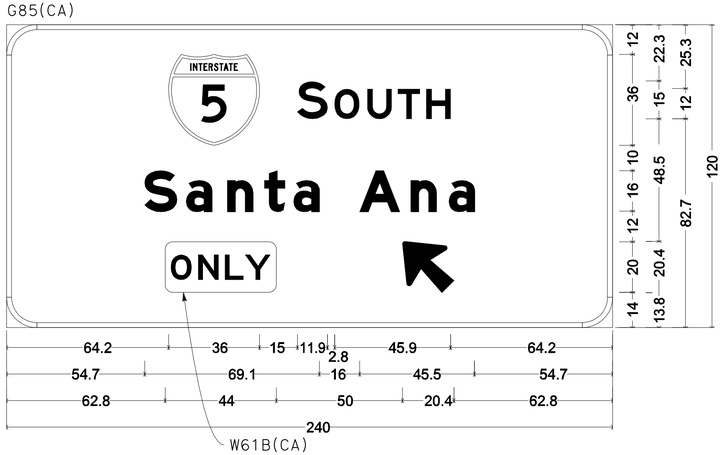

12.0" Radius, 2.0" Border, White on Green;
[SOUTH] E; [Santa Ana] E Mod; Rounded Rectangle 3.0" Radius Yellow;
Arrow 16CAP-1L - 25.0" 135°;

SIGN 8A

G24(CA)

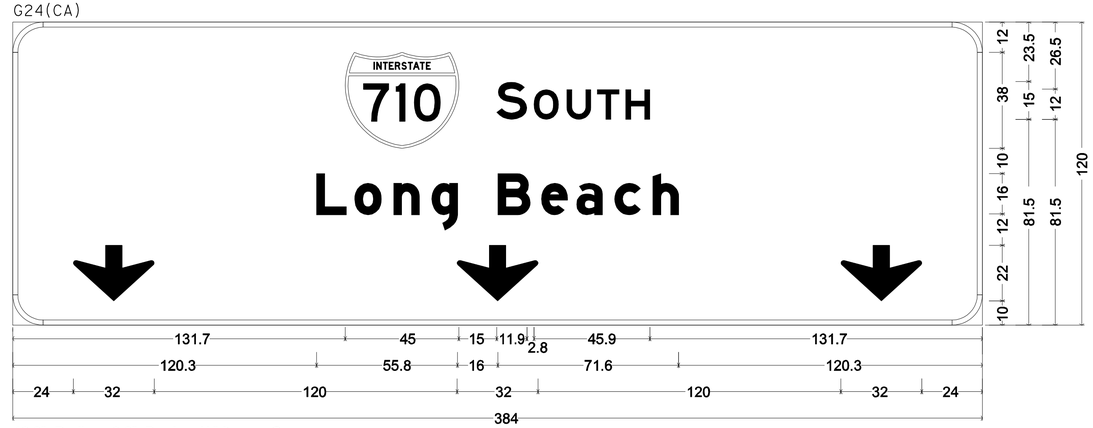

12.0" Radius, 2.0" Border, White on Green;
[SOUTH] E; [Long Beach] E Mod; Down Arrow 22.0" 270°; Down Arrow 22.0" 270°; Down Arrow 22.0" 270°;

SIGN 8A

SIGN DETAILS
NO SCALE

SD-26

STATE OF CALIFORNIA - DEPARTMENT OF TRANSPORTATION
Caltrans® TRAFFIC DESIGN

FUNCTIONAL SUPERVISOR: CRICORIS BIGLARIAN
CALCULATED-DESIGNED BY: EUGENE BRAVO
CHECKED BY: VINCENT NGUYEN
REVISED BY
DATE REVISED

LAST REVISION 00-00-00
DATE PLOTTED => 29-JUN-2011
TIME PLOTTED => 11:38

Dist	COUNTY	ROUTE	POST MILES TOTAL PROJECT	SHEET No.	TOTAL SHEETS
07	LA	710	17.2/26.4	907	1507

REGISTERED CIVIL ENGINEER 4/4/11 DATE

6-27-11
PLANS APPROVAL DATE

REGISTERED PROFESSIONAL ENGINEER VINCENT NGUYEN No. 57797 Exp. 3/31/12 CIVIL STATE OF CALIFORNIA

THE STATE OF CALIFORNIA OR ITS OFFICERS OR AGENTS SHALL NOT BE RESPONSIBLE FOR THE ACCURACY OR COMPLETENESS OF SCANNED COPIES OF THIS PLAN SHEET.

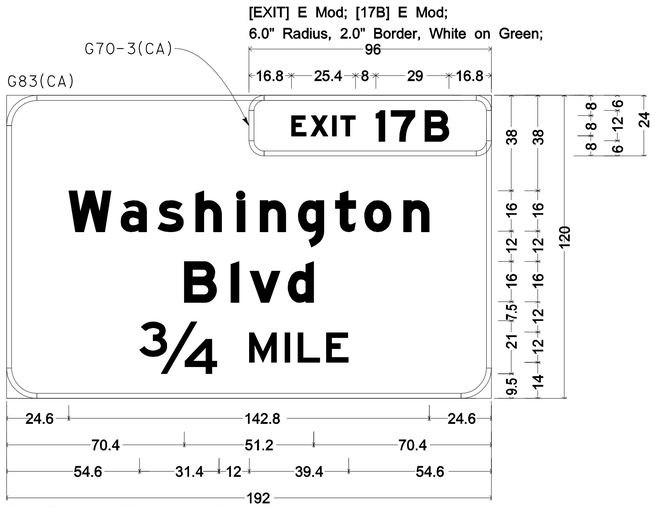

SIGN 8A

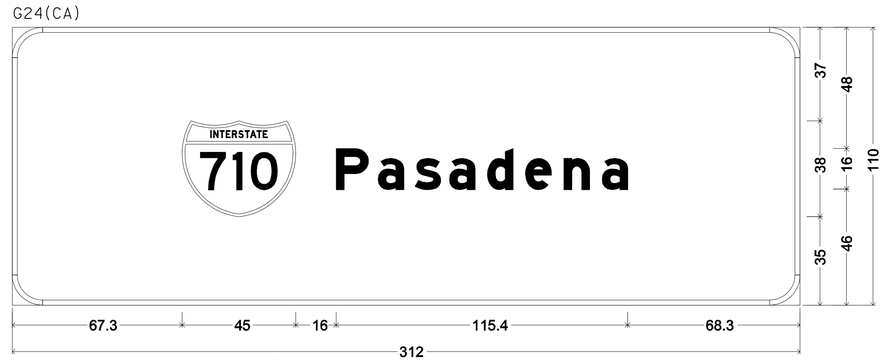

SIGN 8C

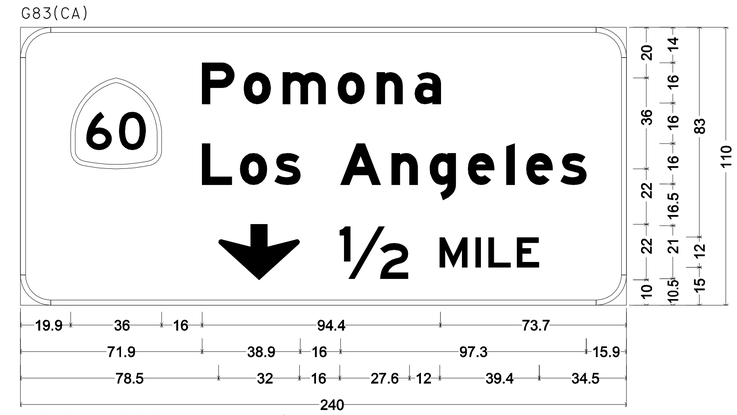

SIGN 8C

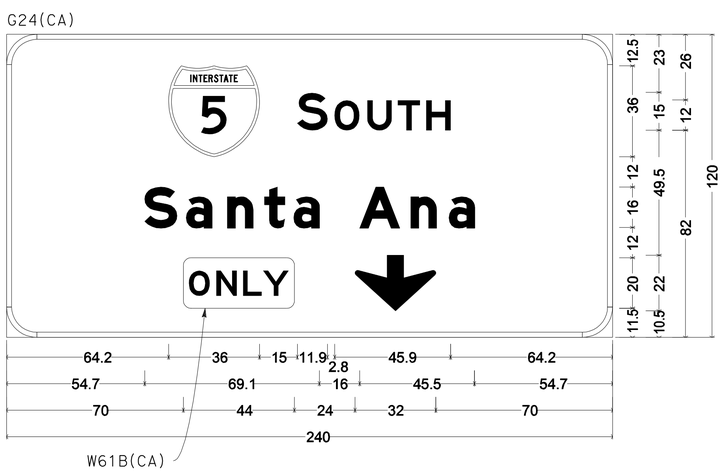

SIGN 9A

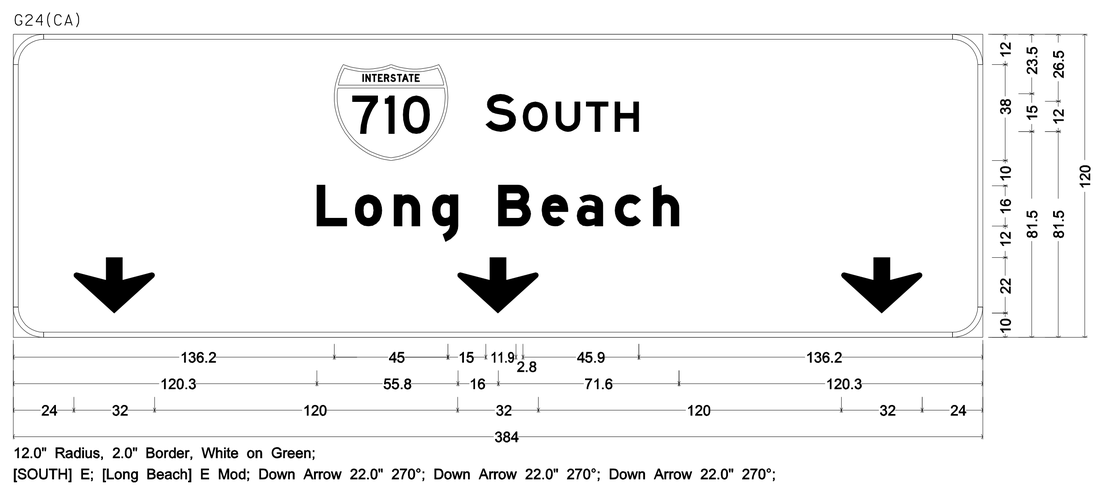

SIGN 9A

SIGN DETAILS
NO SCALE

SD-27

STATE OF CALIFORNIA - DEPARTMENT OF TRANSPORTATION
Caltrans® TRAFFIC DESIGN

FUNCTIONAL SUPERVISOR: CRICORIS BIGLARIAN
CALCULATED-DESIGNED BY: EUGENE BRAVO
CHECKED BY: VINCENT NGUYEN
REVISED BY / DATE REVISED

LAST REVISION 00-00-00 | DATE PLOTTED => 29-JUN-2011 | TIME PLOTTED => 11:39

Dist	COUNTY	ROUTE	POST MILES TOTAL PROJECT	SHEET No.	TOTAL SHEETS
07	LA	710	17.2/26.4	908	1507

REGISTERED CIVIL ENGINEER 4/4/11 DATE

6-27-11
PLANS APPROVAL DATE

REGISTERED PROFESSIONAL ENGINEER VINCENT NGUYEN No. 57797 Exp. 3/31/12 CIVIL STATE OF CALIFORNIA

THE STATE OF CALIFORNIA OR ITS OFFICERS OR AGENTS SHALL NOT BE RESPONSIBLE FOR THE ACCURACY OR COMPLETENESS OF SCANNED COPIES OF THIS PLAN SHEET.

6.0" Radius, 2.0" Border, White on Green;
[EXIT] E; [19] E;

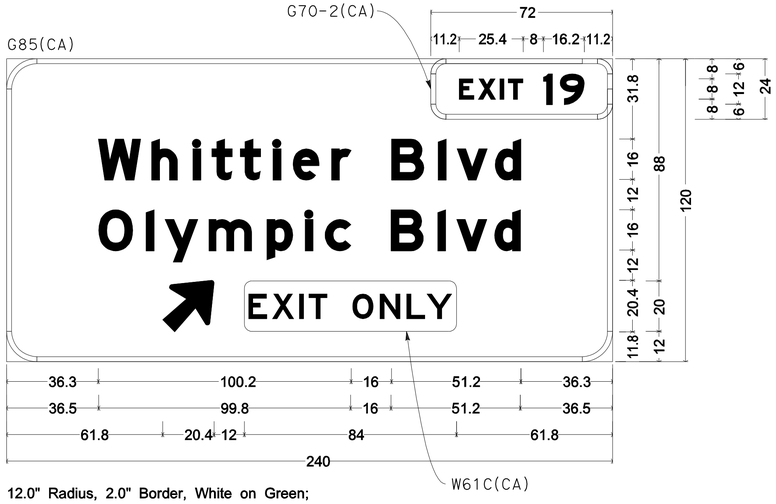

12.0" Radius, 2.0" Border, White on Green;
[Whittier Blvd] E Mod; [Olympic Blvd] E Mod; Arrow 16CAP-1L - 25.0" 45°; Rounded Rectangle 3.0" Radius Yellow;

SIGN 9A

6.0" Radius, 2.0" Border, White on Green;
[EXIT] E; [20B] E;

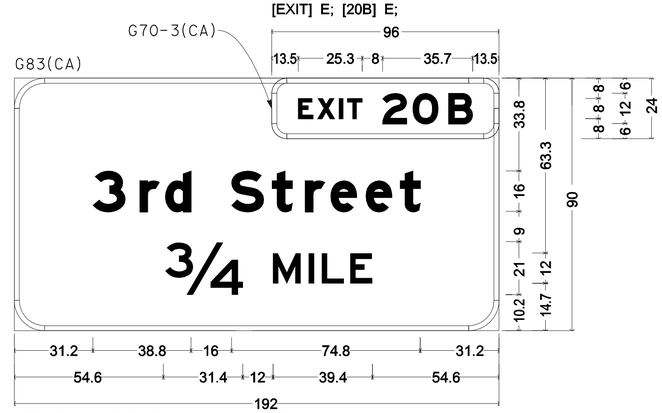

12.0" Radius, 2.0" Border, White on Green;
[3rd Street] E Mod; [3/4] E; [MILE] E;

SIGN 9D

6.0" Radius, 2.0" Border, White on Green;
[EXIT] E; [19] E;

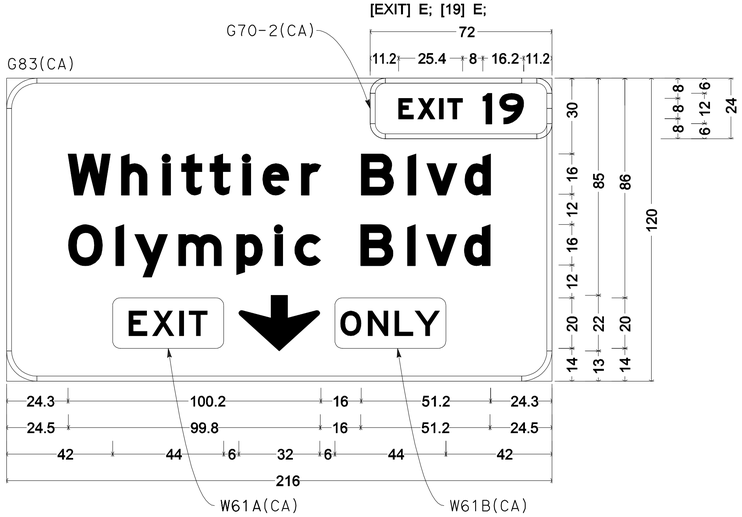

12.0" Radius, 2.0" Border, White on Green;
[Whittier Blvd] E Mod; [Olympic Blvd] E Mod; Rounded Rectangle 3.0" Radius Yellow;
Down Arrow 22.0" 270°; Rounded Rectangle 3.0" Radius Yellow;

SIGN 10A

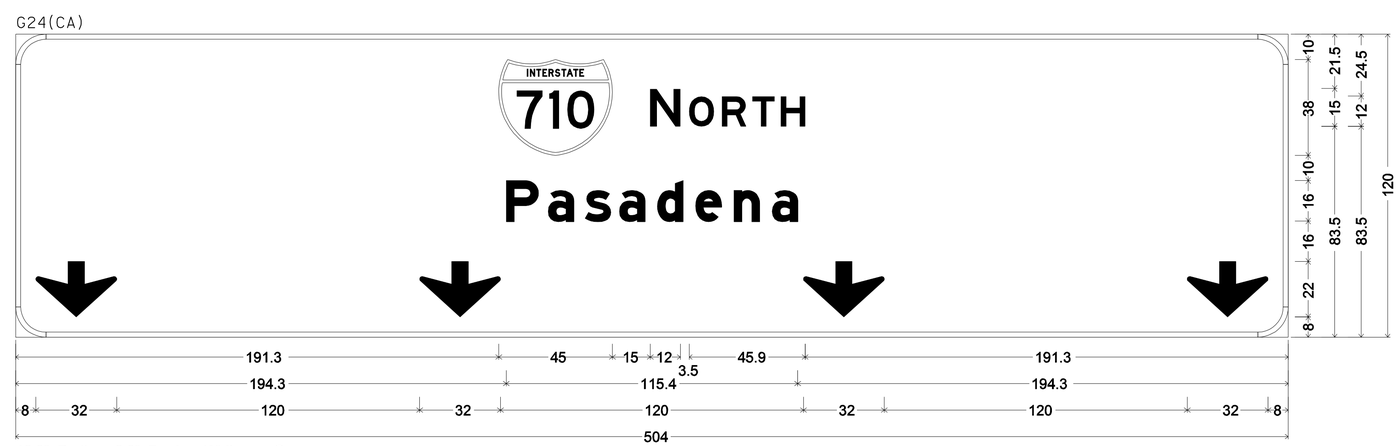

12.0" Radius, 2.0" Border, White on Green;
[NORTH] E; [Pasadena] E Mod; Down Arrow 22.0" 270°; Down Arrow 22.0" 270°; Down Arrow 22.0" 270°; Down Arrow 22.0" 270°;

SIGN 10B

SIGN DETAILS
NO SCALE

SD-28

STATE OF CALIFORNIA - DEPARTMENT OF TRANSPORTATION
Caltrans® TRAFFIC DESIGN

FUNCTIONAL SUPERVISOR: CRICORIS BIGLARIAN
CALCULATED-DESIGNED BY: EUGENE BRAVO
CHECKED BY: VINCENT NGUYEN
REVISED BY
DATE REVISED

LAST REVISION 00-00-00
DATE PLOTTED => 29-JUN-2011
TIME PLOTTED => 11:39

Dist	COUNTY	ROUTE	POST MILES TOTAL PROJECT	SHEET No.	TOTAL SHEETS
07	LA	710	17.2/26.4	909	1507

REGISTERED CIVIL ENGINEER 4/4/11 DATE

6-27-11
PLANS APPROVAL DATE

REGISTERED PROFESSIONAL ENGINEER VINCENT NGUYEN No. 57797 Exp. 3/31/12 CIVIL STATE OF CALIFORNIA

THE STATE OF CALIFORNIA OR ITS OFFICERS OR AGENTS SHALL NOT BE RESPONSIBLE FOR THE ACCURACY OR COMPLETENESS OF SCANNED COPIES OF THIS PLAN SHEET.

G85(CA)

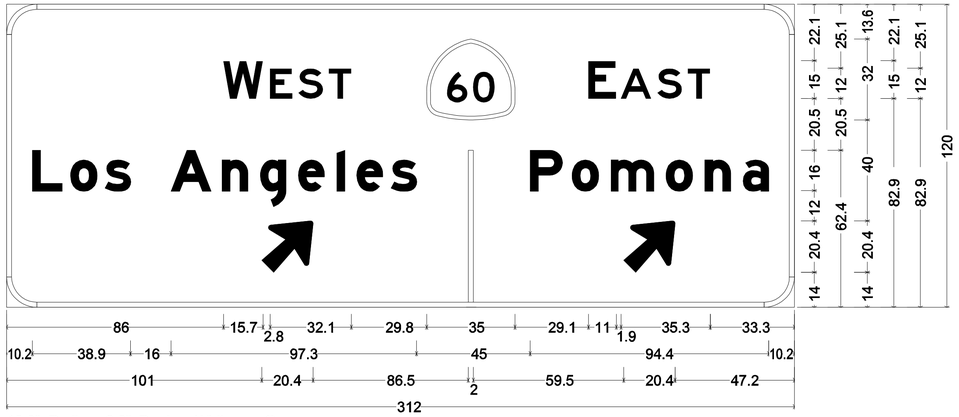

12.0" Radius, 2.0" Border, White on Green;
[WEST] E; [EAST] E; [Los Angeles] E Mod; [Pomona] E Mod; Arrow 16CAP-1L - 25.0" 45°; Arrow 16CAP-1L - 25.0" 45°;

SIGN 10B

G83(CA)

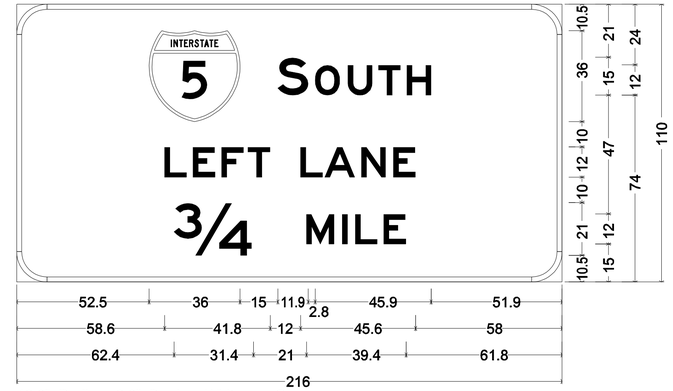

12.0" Radius, 2.0" Border, White on Green;
[SOUTH] E; [LEFT LANE] E; [3/4] E; [MILE] E;

SIGN 11D

G70-3(CA)

6.0" Radius, 2.0" Border, White on Green;
[EXIT] E; [20C] E;

G83(CA)

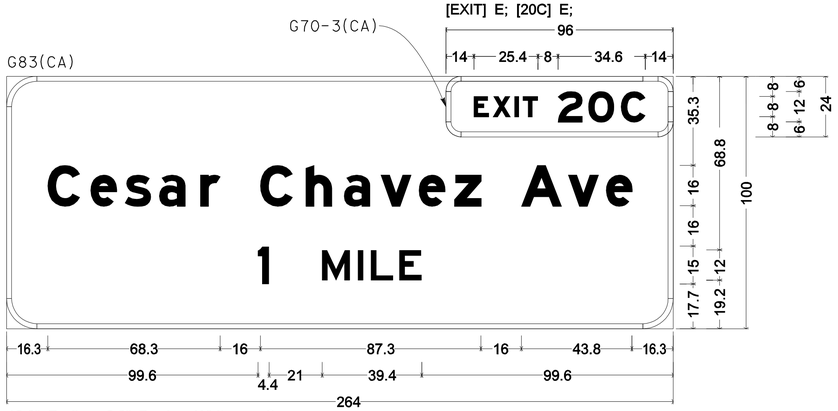

12.0" Radius, 2.0" Border, White on Green;
[Cesar Chavez Ave] E Mod; [1] E; [MILE] E;

SIGN 11A

G70-3(CA)

6.0" Radius, 2.0" Border, White on Green;
[EXIT] E; [20B] E;

G85(CA)

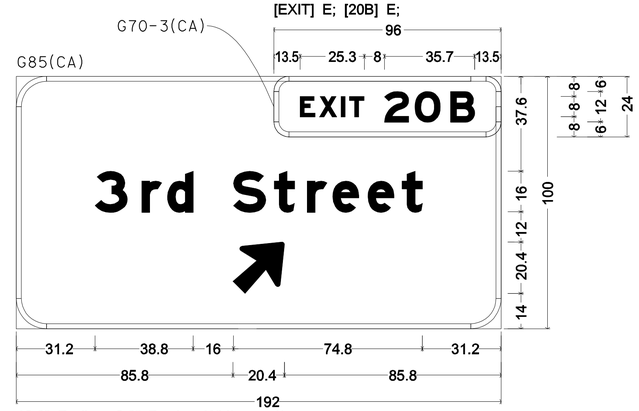

12.0" Radius, 2.0" Border, White on Green;
[3rd Street] E Mod; Arrow 16CAP-1L - 25.0" 45°;

SIGN 11A

SIGN DETAILS

NO SCALE

SD-29

STATE OF CALIFORNIA - DEPARTMENT OF TRANSPORTATION
Caltrans TRAFFIC DESIGN

FUNCTIONAL SUPERVISOR: CRICORIS BIGLARIAN
CALCULATED-DESIGNED BY: EUGENE BRAVO
CHECKED BY: VINCENT NGUYEN
REVISED BY
DATE REVISED

LAST REVISION 00-00-00
DATE PLOTTED => 29-JUN-2011
TIME PLOTTED => 11:39

Dist	COUNTY	ROUTE	POST MILES TOTAL PROJECT	SHEET No.	TOTAL SHEETS
07	LA	710	17.2/26.4	910	1507

REGISTERED CIVIL ENGINEER 4/4/11 DATE

6-27-11
PLANS APPROVAL DATE

REGISTERED PROFESSIONAL ENGINEER VINCENT NGUYEN No. 57797 Exp. 3/31/12 CIVIL STATE OF CALIFORNIA

THE STATE OF CALIFORNIA OR ITS OFFICERS OR AGENTS SHALL NOT BE RESPONSIBLE FOR THE ACCURACY OR COMPLETENESS OF SCANNED COPIES OF THIS PLAN SHEET.

6.0" Radius, 2.0" Border, White on Green;
[EXIT] E ; [19] E;

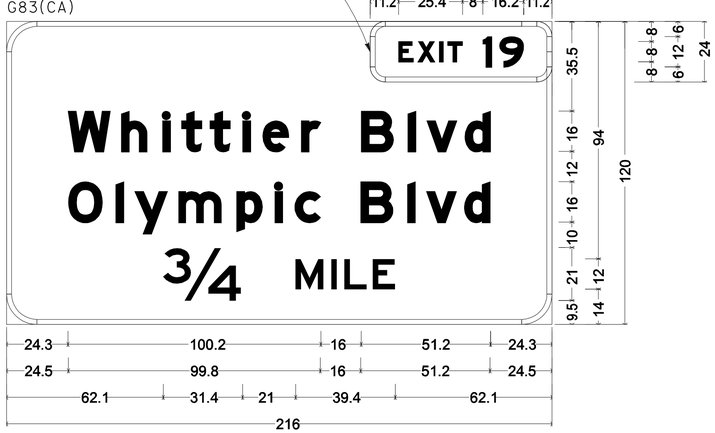

12.0" Radius, 2.0" Border, White on Green;
[Whittier Blvd] E Mod; [Olympic Blvd] E Mod; [3/4] E; [MILE] E;

SIGN 12A

[EXIT] E Mod; [20A] E Mod;
6.0" Radius, 2.0" Border, White on Green;

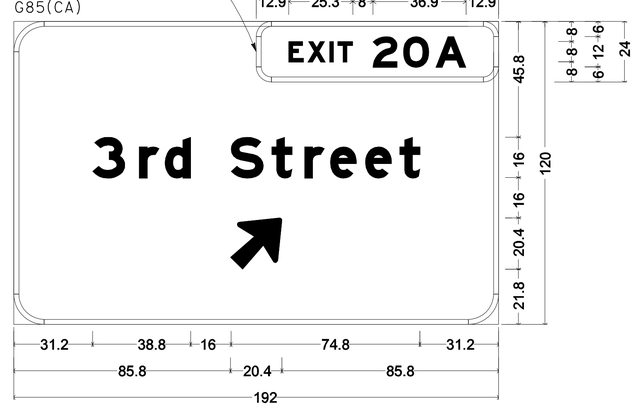

12.0" Radius, 2.0" Border, White on Green;
[3rd Street] E Mod; Arrow 16CAP-1L - 25.0" 45°;

SIGN 12A

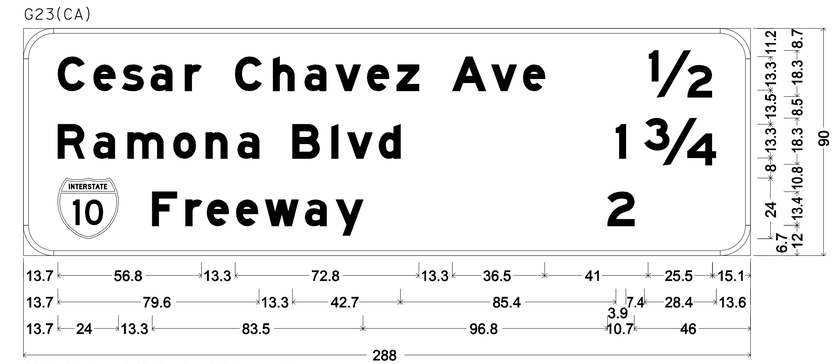

12.0" Radius, 2.0" Border, White on Green;
[Cesar Chavez Ave] E Mod; [1/2] E Mod; [Ramona Blvd] E Mod; [1] E Mod; [3/4] E Mod; [Freeway] E Mod; [2] E Mod;

SIGN 12C

6.0" Radius, 2.0" Border, White on Green;
[EXIT] E; [21] E

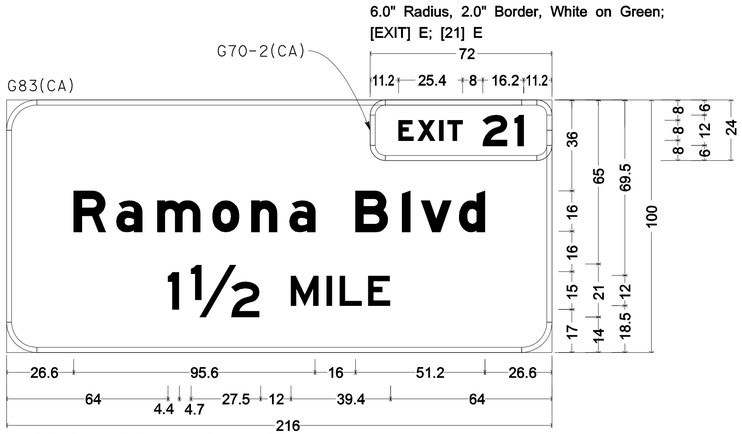

12.0" Radius, 2.0" Border, White on Green;
[Ramona Blvd] E Mod; [1 1/2] E; [MILE] E;

SIGN 13A

6.0" Radius, 2.0" Border, White on Green;
[EXIT] E; [20C] E;

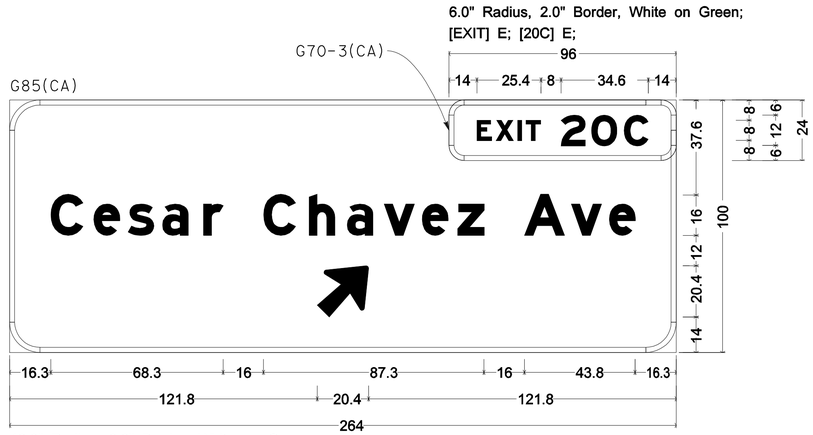

12.0" Radius, 2.0" Border, White on Green;
[Cesar Chavez Ave] E Mod; Arrow 16CAP-1L - 25.0" 45°;

SIGN 13A

SIGN DETAILS
NO SCALE

SD-30

STATE OF CALIFORNIA - DEPARTMENT OF TRANSPORTATION
Caltrans® TRAFFIC DESIGN
FUNCTIONAL SUPERVISOR: CRICORIS BIGLARIAN
CALCULATED-DESIGNED BY: EUGENE BRAVO
CHECKED BY: VINCENT NGUYEN
REVISED BY / DATE REVISED

LAST REVISION 00-00-00 | DATE PLOTTED => 29-JUN-2011 | TIME PLOTTED => 11:39

Dist	COUNTY	ROUTE	POST MILES TOTAL PROJECT	SHEET No.	TOTAL SHEETS
07	LA	710	17.2/26.4	911	1507

REGISTERED CIVIL ENGINEER 4/4/11 DATE

6-27-11
PLANS APPROVAL DATE

REGISTERED PROFESSIONAL ENGINEER VINCENT NGUYEN No. 57797 Exp. 3/31/12 CIVIL STATE OF CALIFORNIA

THE STATE OF CALIFORNIA OR ITS OFFICERS OR AGENTS SHALL NOT BE RESPONSIBLE FOR THE ACCURACY OR COMPLETENESS OF SCANNED COPIES OF THIS PLAN SHEET.

G20(CA)

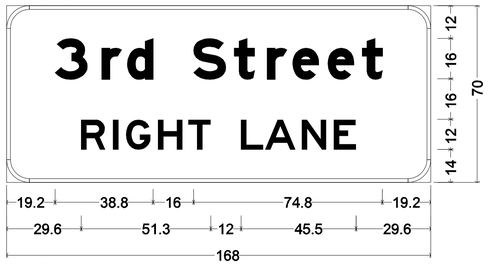

9.0" Radius, 1.5" Border, White on Green;
[3rd Street] E Mod; [RIGHT LANE] E;

SIGN 13C

G23(CA)

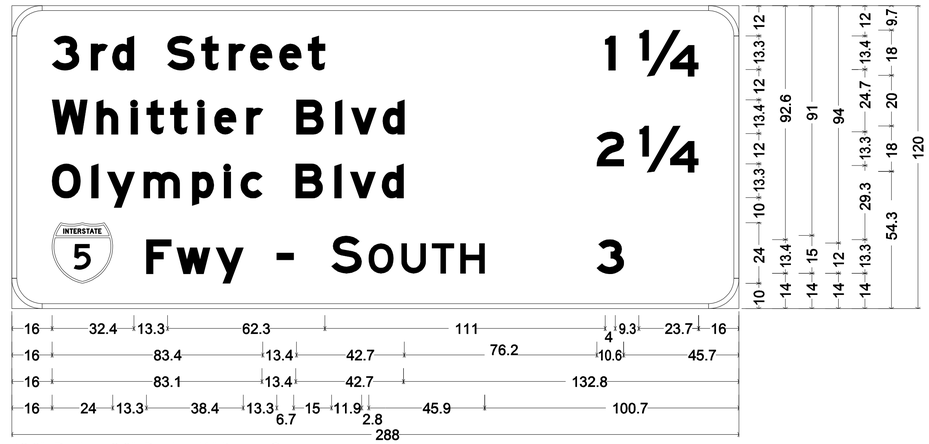

12.0" Radius, 2.0" Border, White on Green;
[3rd Street] E Mod; [Whittier Blvd] E Mod; [Olympic Blvd] E Mod; [Fwy -] E Mod; [SOUTH] E; [1] E Mod; [1/4] E Mod; [2] E Mod; [1/4] E Mod; [3] E Mod;

SIGN 14A

G83(CA)

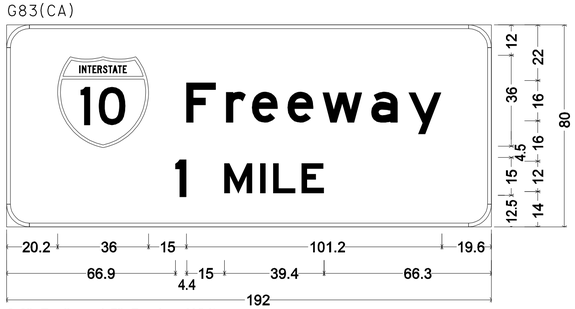

9.0" Radius, 1.5" Border, White on Green;
[Freeway] E; [1] E; [MILE] E;

SIGN 15C

6.0" Radius, 2.0" Border, White on Green;
[EXIT] E Mod; [20A] E Mod;

G70-3(CA)

G83(CA)

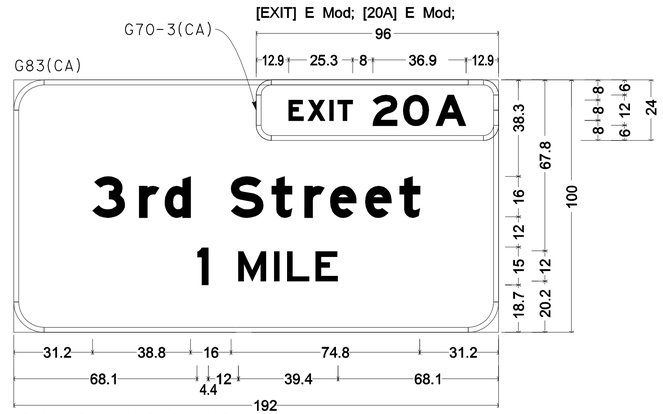

12.0" Radius, 2.0" Border, White on Green;
[3rd Street] E Mod; [1] E; [MILE] E;

SIGN 16A

6.0" Radius, 2.0" Border, White on Green;
[EXIT] E Mod; [20C] E Mod;

G70-3(CA)

G85(CA)

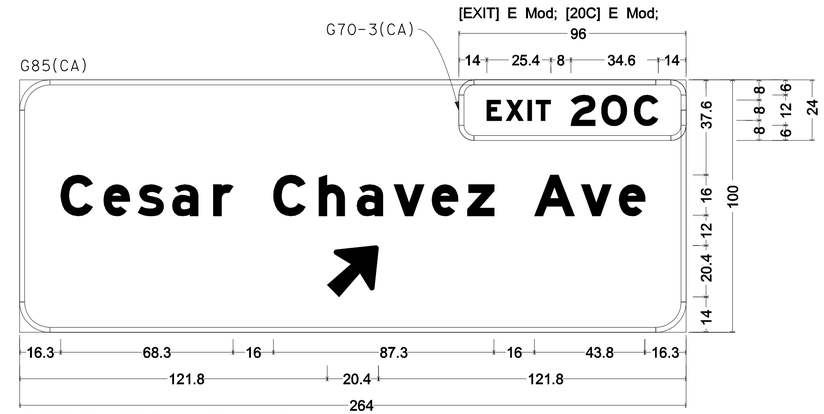

12.0" Radius, 2.0" Border, White on Green;
[Cesar Chavez Ave] E Mod; Arrow 16CAP-1L - 25.0" 45°;

SIGN 16A

SIGN DETAILS
NO SCALE

SD-31

REVISED BY | DATE REVISED
EUGENE BRAVO | VINCENT NGUYEN
CALCULATED-DESIGNED BY | CHECKED BY
FUNCTIONAL SUPERVISOR
CRICORIS BIGLARIAN

STATE OF CALIFORNIA - DEPARTMENT OF TRANSPORTATION
Caltrans® TRAFFIC DESIGN

LAST REVISION 00-00-00 | DATE PLOTTED => 29-JUN-2011 | TIME PLOTTED => 11:39

Dist	COUNTY	ROUTE	POST MILES TOTAL PROJECT	SHEET No.	TOTAL SHEETS
07	LA	710	17.2/26.4	912	1507

REGISTERED CIVIL ENGINEER 4/4/11 DATE

6-27-11
PLANS APPROVAL DATE

REGISTERED PROFESSIONAL ENGINEER
VINCENT NGUYEN
No. 57797
Exp. 3/31/12
CIVIL
STATE OF CALIFORNIA

THE STATE OF CALIFORNIA OR ITS OFFICERS OR AGENTS SHALL NOT BE RESPONSIBLE FOR THE ACCURACY OR COMPLETENESS OF SCANNED COPIES OF THIS PLAN SHEET.

G23(CA)

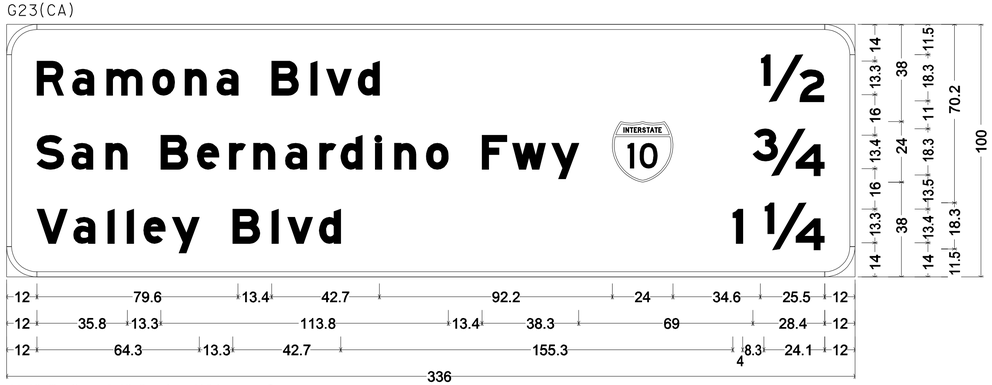

12.0" Radius, 2.0" Border, White on Green;
[Ramona Blvd] E Mod; [San Bernardino Fwy] E Mod; [Valley Blvd] E Mod; [1/2] E Mod; [3/4] E Mod; [1] E Mod; [1/4] E Mod;

SIGN 16B

G23(CA)

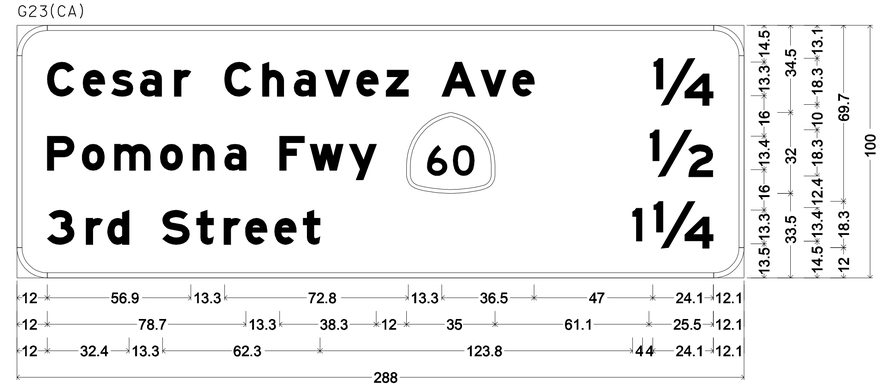

12.0" Radius, 2.0" Border, White on Green;
[Cesar Chavez Ave] E Mod; [Pomona Fwy] E Mod; [3rd Street] E Mod; [1/4] E Mod; [1/2] E Mod; [1] E [1/4] E Mod;

SIGN 17A

G24(CA)

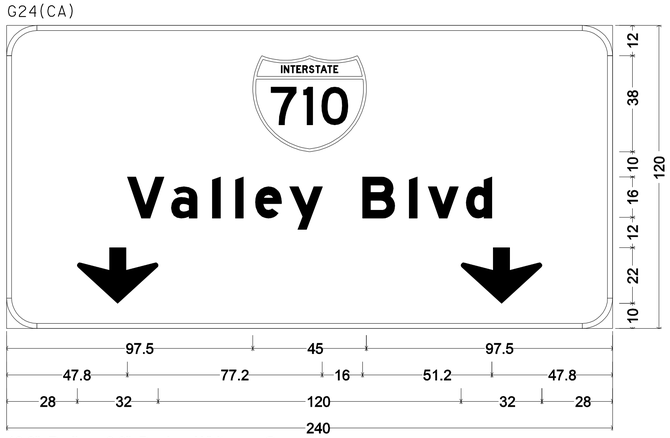

12.0" Radius, 2.0" Border, White on Green;
[Valley Blvd] E Mod; Down Arrow 22.0" 270°; Down Arrow 22.0" 270°;

SIGN 17C

G24(CA)

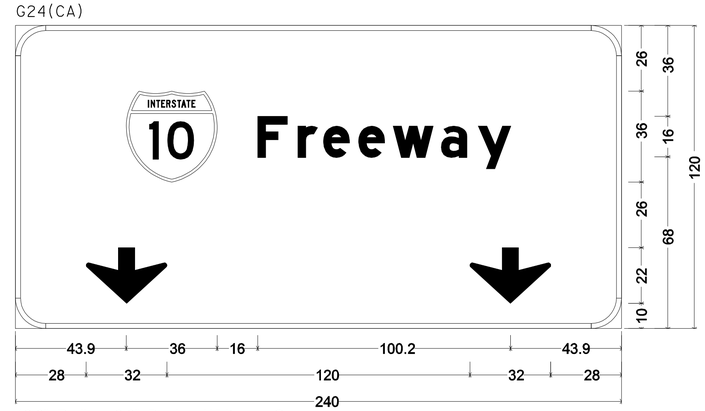

12.0" Radius, 2.0" Border, White on Green;
[Freeway] E Mod; Down Arrow 22.0" 270°; Down Arrow 22.0" 270°;

SIGN 17C

6.0" Radius, 2.0" Border, White on Green;
[EXIT] E Mod; [21] E Mod;

G70-2(CA)

G85(CA)

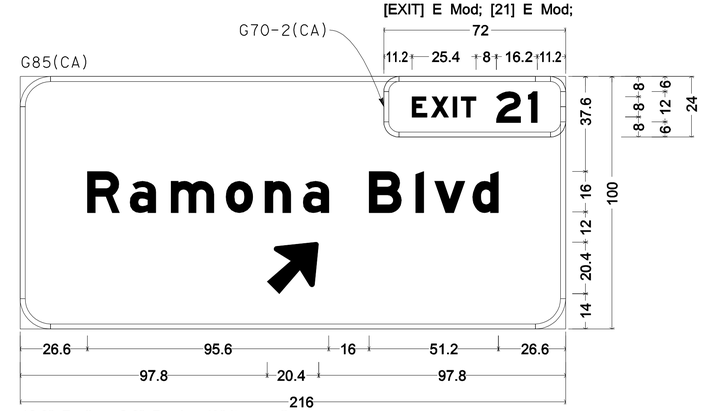

12.0" Radius, 2.0" Border, White on Green;
[Ramona Blvd] E Mod; Arrow 16CAP-1L - 25.0" 45°;

SIGN 18A

SIGN DETAILS
NO SCALE

SD-32

REVISED BY | DATE REVISED
EUGENE BRAVO | VINCENT NGUYEN
CALCULATED-DESIGNED BY | CHECKED BY
FUNCTIONAL SUPERVISOR
CRICORIS BIGLARIAN
STATE OF CALIFORNIA - DEPARTMENT OF TRANSPORTATION
Caltrans® TRAFFIC DESIGN

LAST REVISION 00-00-00 | DATE PLOTTED => 29-JUN-2011 | TIME PLOTTED => 11:39

Dist	COUNTY	ROUTE	POST MILES TOTAL PROJECT	SHEET No.	TOTAL SHEETS
07	LA	710	17.2/26.4	913	1507

REGISTERED CIVIL ENGINEER 4/4/11 DATE

6-27-11
PLANS APPROVAL DATE

REGISTERED PROFESSIONAL ENGINEER VINCENT NGUYEN No. 57797 Exp. 3/31/12 CIVIL STATE OF CALIFORNIA

THE STATE OF CALIFORNIA OR ITS OFFICERS OR AGENTS SHALL NOT BE RESPONSIBLE FOR THE ACCURACY OR COMPLETENESS OF SCANNED COPIES OF THIS PLAN SHEET.

G83(CA)

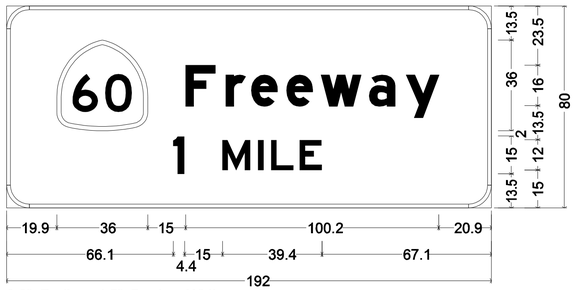

9.0" Radius, 1.5" Border, White on Green;
[Freeway] E Mod; [1] E; [MILE] E;

SIGN 18D

G83(CA)

6.0" Radius, 2.0" Border, White on Green;
[EXIT] E Mod; [20C] E Mod;

G70-3(CA)

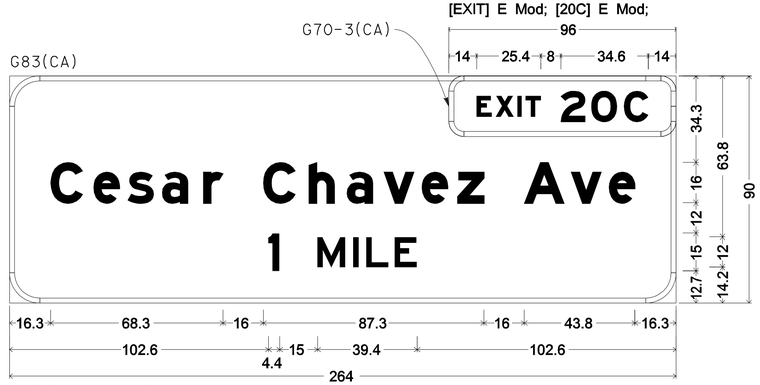

12.0" Radius, 2.0" Border, White on Green;
[Cesar Chavez Ave] E Mod; [1] E; [MILE] E;

SIGN 19A

G24(CA)

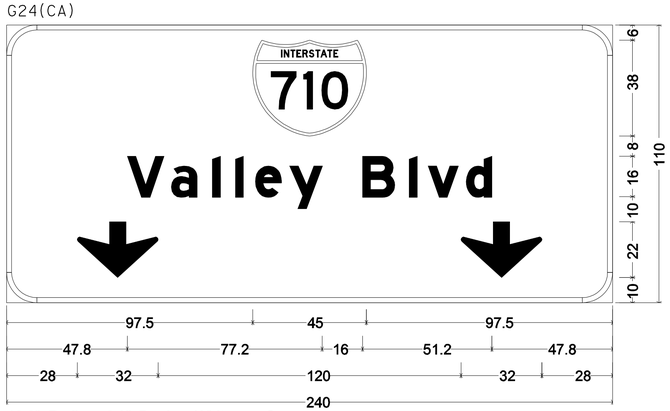

12.0" Radius, 2.0" Border, White on Green;
[Valley Blvd] E Mod; Down Arrow 22.0" 270°; Down Arrow 22.0" 270°;

SIGN 19B

G85(CA)

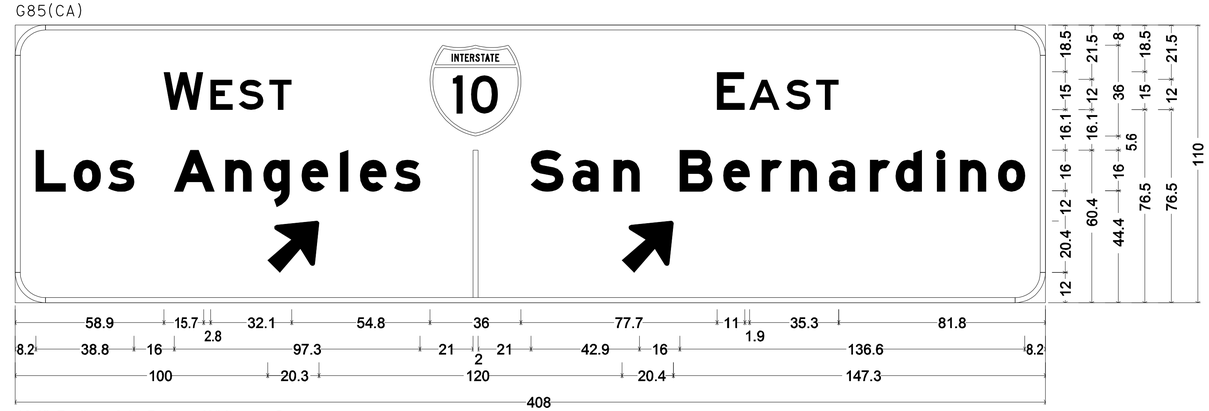

12.0" Radius, 2.0" Border, White on Green;
[WEST] E; [EAST] E; [Los Angeles] E Mod; [San Bernardino] E Mod; Arrow 16CAP-1L - 25.0" 45°; Arrow 16CAP-1L - 25.0" 45°;

SIGN 19B

SIGN DETAILS
NO SCALE

SD-33

STATE OF CALIFORNIA - DEPARTMENT OF TRANSPORTATION
Caltrans® TRAFFIC DESIGN

FUNCTIONAL SUPERVISOR: CRICORIS BIGLARIAN
CALCULATED-DESIGNED BY: EUGENE BRAVO
CHECKED BY: VINCENT NGUYEN
REVISED BY
DATE REVISED

LAST REVISION 00-00-00
DATE PLOTTED => 29-JUN-2011
TIME PLOTTED => 11:39

Dist	COUNTY	ROUTE	POST MILES TOTAL PROJECT	SHEET No.	TOTAL SHEETS
07	LA	710	17.2/26.4	914	1507

REGISTERED CIVIL ENGINEER 4/4/11 DATE

6-27-11
PLANS APPROVAL DATE

REGISTERED PROFESSIONAL ENGINEER VINCENT NGUYEN No. 57797 Exp. 3/31/12 CIVIL STATE OF CALIFORNIA

THE STATE OF CALIFORNIA OR ITS OFFICERS OR AGENTS SHALL NOT BE RESPONSIBLE FOR THE ACCURACY OR COMPLETENESS OF SCANNED COPIES OF THIS PLAN SHEET.

G86(CA)

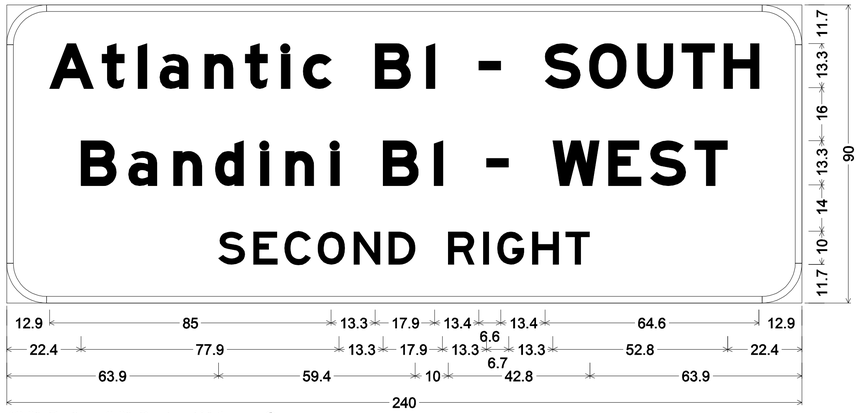

12.0" Radius, 2.0" Border, White on Green;
[Atlantic Bl - SOUTH] E Mod; [Bandini Bl - WEST] E Mod; [SECOND RIGHT] E;

SIGN 209

G86-3(CA)

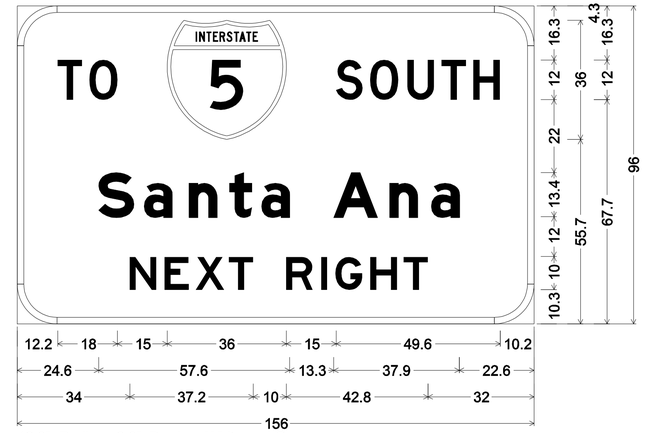

12.0" Radius, 2.0" Border, White on Green;
[TO] D; [SOUTH] D; [Santa Ana] E Mod; [NEXT RIGHT] E;

SIGN 212

G83-2(CA)

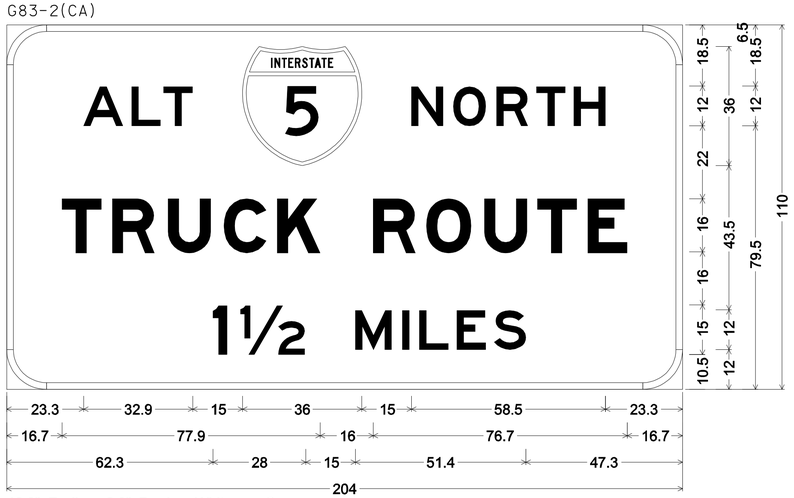

12.0" Radius, 2.0" Border, White on Green;
[ALT] E; [NORTH] E; [TRUCK ROUTE] E Mod; [1½] E; [MILES] E;

SIGN 406

G85-3(CA)

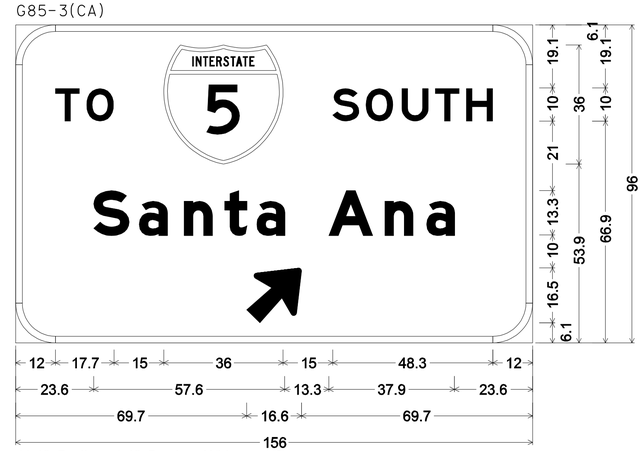

12.0" Radius, 2.0" Border, White on Green;
[TO] E; [SOUTH] E; [Santa Ana] E Mod;
Arrow 13.33UC-1L - 20.3" 45°;

SIGN 413

G9-5(CA)

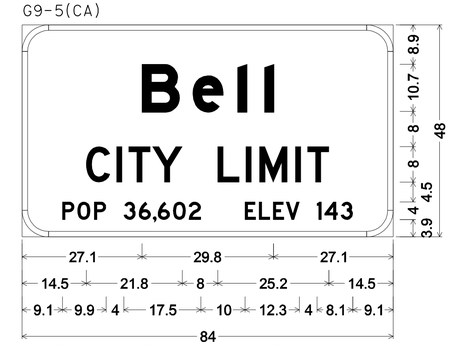

6.0" Radius, 1.3" Border, White on Green;
[Bell] E Mod; [CITY LIMIT] D; [POP 36,602] D;
[ELEV 143] D;

SIGN 511

SIGN DETAILS

NO SCALE

SD-34

STATE OF CALIFORNIA - DEPARTMENT OF TRANSPORTATION
Caltrans® TRAFFIC DESIGN

FUNCTIONAL SUPERVISOR: CRICORIS BIGLARIAN
CALCULATED-DESIGNED BY: EUGENE BRAVO
CHECKED BY: VINCENT NGUYEN
REVISED BY
DATE REVISED

LAST REVISION 00-00-00
DATE PLOTTED => 29-JUN-2011
TIME PLOTTED => 11:39

Dist	COUNTY	ROUTE	POST MILES TOTAL PROJECT	SHEET No.	TOTAL SHEETS
07	LA	710	17.2/26.4	915	1507

REGISTERED CIVIL ENGINEER 4/4/11 DATE

6-27-11
PLANS APPROVAL DATE

REGISTERED PROFESSIONAL ENGINEER VINCENT NGUYEN No. 57797 Exp. 3/31/12 CIVIL STATE OF CALIFORNIA

THE STATE OF CALIFORNIA OR ITS OFFICERS OR AGENTS SHALL NOT BE RESPONSIBLE FOR THE ACCURACY OR COMPLETENESS OF SCANNED COPIES OF THIS PLAN SHEET.

G87(CA)

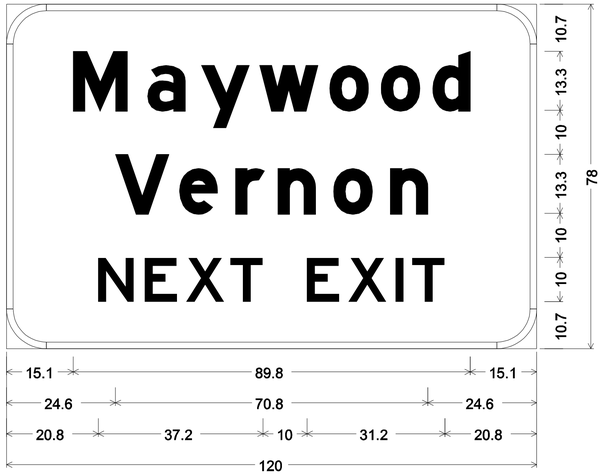

9.0" Radius, 1.5" Border, White on Green;
[Maywood] E Mod; [Vernon] E Mod; [NEXT EXIT] E;

SIGN 524

G85-1(CA)

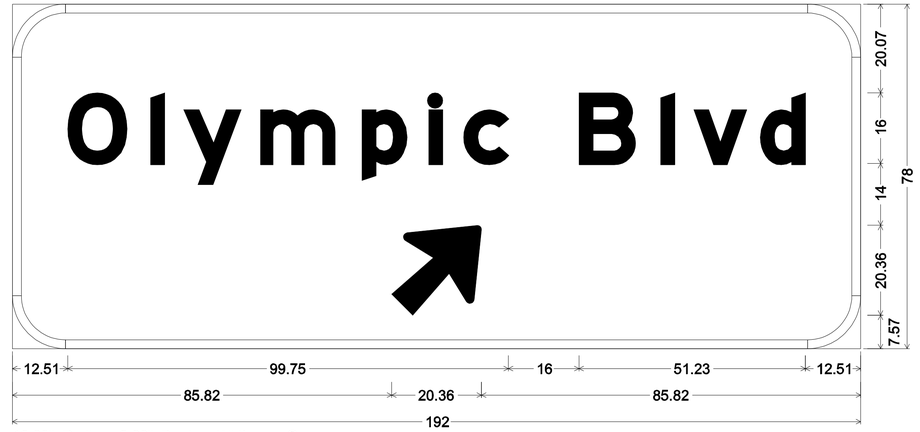

12.00" Radius, 2.00" Border, White on Green;
[Olympic Blvd] E Mod; Arrow 16CAP-1L - 25.00" 45°;

SIGN 713

G87(CA)

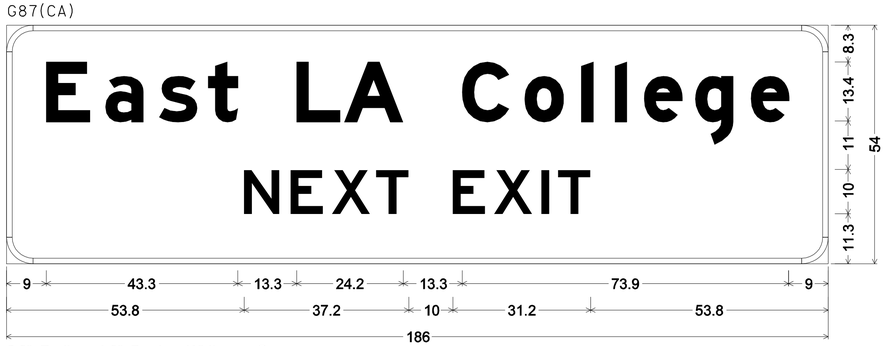

6.0" Radius, 1.3" Border, White on Green;
[East LA College] E Mod; [NEXT EXIT] E;

SIGN 1701

STATE OF CALIFORNIA - DEPARTMENT OF TRANSPORTATION
Caltrans® TRAFFIC DESIGN

FUNCTIONAL SUPERVISOR: CRICORIS BIGLARIAN
CALCULATED-DESIGNED BY: EUGENE BRAVO
CHECKED BY: VINCENT NGUYEN
REVISED BY
DATE REVISED

SIGN DETAILS
NO SCALE

SD-35

LAST REVISION 00-00-00
DATE PLOTTED => 29-JUN-2011
TIME PLOTTED => 11:40

Dist	COUNTY	ROUTE	POST MILES TOTAL PROJECT	SHEET No.	TOTAL SHEETS
07	LA	710	17.2/26.4	916	1507

REGISTERED CIVIL ENGINEER 4/4/11 DATE

6-27-11
PLANS APPROVAL DATE

REGISTERED PROFESSIONAL ENGINEER VINCENT NGUYEN No. 57797 Exp. 3/31/12 CIVIL STATE OF CALIFORNIA

THE STATE OF CALIFORNIA OR ITS OFFICERS OR AGENTS SHALL NOT BE RESPONSIBLE FOR THE ACCURACY OR COMPLETENESS OF SCANNED COPIES OF THIS PLAN SHEET.

LEGEND

L = LENGTH OF SIGN
D = DEPTH OF SIGN
B = BLACK ; Y = YELLOW ; R = RED ; W = WHITE ; G = GREEN ; BLU = BLUE ; BRW=BROWN

OVERHEAD SIGN QUANTITIES

SHEET No.	SIGN No.	LOCATION	SIGN CODE	SIGN SIZE L X D (in x in)	CIDH CONCRETE PILE (SIGN FOUNDATION) 60" L†	CIDH CONCRETE PILE (SIGN FOUNDATION) 60" R†	SIGN STRUCTURE (TRUSS) FURNISH	SIGN STRUCTURE (TRUSS) INSTALL	INSTALL SIGN PANEL ON EXISTING FRAME	REMOVE SIGN PANEL (N)	REMOVE SIGN STRUCTURE	REMOVE BRIDGE MOUNTED SIGN	MATERIAL SUMMARY SINGLE FACED	BACKGROUND SHEETING COLOR	BACKGROUND RETROREFLECTIVE ASTM TYPE	LEGEND SHEETING COLOR	LEGEND RETROREFLECTIVE ASTM TYPE	GRAFFITI FILM STANDARD	GRAFFITI FILM PREMIUM	FURNISH FORMED PANEL SIGN (OVERHEAD)	REMARKS
					LF	LF	LB	LB	SQFT	SQFT	EA	EA								SQFT	
S-2	2A	FNBT	G83(CA)									1									
	2B	FNBT Sta 1109+00	G83(CA)	216 X 120		25	19,621	19,621					X	GREEN	IV	WHITE	IV		X	180	
	2C	FSBT	G20(CA)	216 X 90					135	135			X	GREEN	IV	WHITE	IV		X	135	
S-3	3A	FNBT Sta 1128+00	G83(CA)	312 X 120		25	20,192	20,192					X	GREEN	IV	WHITE	IV		X	260	
	3B	FNBT	G83(CA)								1										
	3C	FNBT & FSBT	G83(CA) & G23(CA)								1										
	3D	FSBT Sta 1133+00	G23(CA)	288 X 100		25	18,167	18,167					X	GREEN	IV	WHITE	IV		X	200	
S-4	4A	FNBT Sta 1148+50	G83(CA)	168 X 120		25	23,348	23,348					X	GREEN	IV	WHITE	IV		X	140	
			G85(CA)	312 X 120									X	GREEN	IV	WHITE	IV		X	260	
	4B	FNBT	G85(CA)								1										
S-5	5A	FNBT Sta 1160+50	G83(CA)	144 X 120		25	23,539	23,539					X	GREEN	IV	WHITE	IV		X	120	
			G85(CA)	312 X 120									X	GREEN	IV	WHITE	IV		X	260	
	5B	FNBT	G85(CA)								1										
S-7	7A	FNBT Sta 1224+00	G83(CA)	216 X 100		23	20,915	20,915					X	GREEN	IV	WHITE	IV		X	150	
			G85(CA)	216 X 100									X	GREEN	IV	WHITE	IV		X	150	
	7B	FSBT Sta 1225+30	G23(CA)	288 X 120		23	19,274	19,274					X	GREEN	IV	WHITE	IV		X	240	
	7C	FNBT	G85(CA)								1										
S-8	8A	FSBT Sta 1239+40	G85(CA)	240 X 120	26.25	26.25	45,585	45,585					X	GREEN	IV	WHITE	IV		X	200	
			G24(CA)	384 X 120									X	GREEN	IV	WHITE	IV		X	320	
			G83(CA)	192 X 120									X	GREEN	IV	WHITE	IV		X	160	
	8B	FSBT	G85(CA) & G24(CA)								1										
	8C	FNBT	G24(CA)	312 X 110					238.3	238.3			X	GREEN	IV	WHITE	IV		X	238.3	
			G83(CA)	240 X 110					183.3	183.3			X	GREEN	IV	WHITE	IV		X	183.3	
SUB-TOTAL SHEET SQ-1					26.25	197.25	190,641	190,641	556.6	556.6	6	1								3196.6	

(N) - NOT A SEPARATE PAY ITEM, FOR INFORMATION ONLY.

SIGN QUANTITIES

SQ-1

STATE OF CALIFORNIA - DEPARTMENT OF TRANSPORTATION
Caltrans TRAFFIC DESIGN

FUNCTIONAL SUPERVISOR: CRICORIS BIGLARIAN
CALCULATED-DESIGNED BY: EUGENE BRAVO
CHECKED BY: VINCENT NGUYEN
REVISED BY
DATE REVISED

LAST REVISION 00-00-00
DATE PLOTTED => 29-JUN-2011
TIME PLOTTED => 09:29

Dist	COUNTY	ROUTE	POST MILES TOTAL PROJECT	SHEET No.	TOTAL SHEETS
07	LA	710	17.2/26.4	917	1507

REGISTERED CIVIL ENGINEER 4/4/11 DATE

6-27-11
PLANS APPROVAL DATE

REGISTERED PROFESSIONAL ENGINEER VINCENT NGUYEN No. 57797 Exp 3/31/12 CIVIL STATE OF CALIFORNIA

THE STATE OF CALIFORNIA OR ITS OFFICERS OR AGENTS SHALL NOT BE RESPONSIBLE FOR THE ACCURACY OR COMPLETENESS OF SCANNED COPIES OF THIS PLAN SHEET.

OVERHEAD SIGN QUANTITIES

SHEET No.	SIGN No.	LOCATION	SIGN CODE	SIGN SIZE L X D (in x in)	CIDH CONCRETE PILE (SIGN FOUNDATION) 60" Lt LF	CIDH CONCRETE PILE (SIGN FOUNDATION) 60" Rt LF	SIGN STRUCTURE (TRUSS) FURNISH LB	SIGN STRUCTURE (TRUSS) INSTALL LB	INSTALL SIGN PANEL ON EXISTING FRAME SQFT	REMOVE SIGN PANEL (N) SQFT	REMOVE SIGN STRUCTURE EA	REMOVE BRIDGE MOUNTED SIGN EA	MATERIAL SUMMARY: SINGLE FACED	BACKGROUND: SHEETING COLOR	BACKGROUND: RETROREFLECTIVE ASTM TYPE	LEGEND: SHEETING COLOR	LEGEND: RETROREFLECTIVE ASTM TYPE	GRAFFITI FILM: STANDARD	GRAFFITI FILM: PREMIUM	FURNISH FORMED PANEL SIGN (OVERHEAD) SQFT	REMARKS
S-9	9A	FSBT Sta 1254+60	G24(CA)	240 X 120	26.25	26.25	36,899	36,899					X	GREEN	IV	WHITE	IV		X	200	
			G24(CA)	384 X 120									X	GREEN	IV	WHITE	IV		X	320	
			G85(CA)	240 X 120									X	GREEN	IV	WHITE	IV		X	200	
	9B	FSBT	G23(CA), G24(CA, G24(CA & G85(CA)								1										
	9C	FSBT	G20(CA)								1										
	9D	FNBT Sta 1251+00	G83(CA)	192 X 90		23	18,042	18,042					X	GREEN	IV	WHITE	IV		X	120	
S-10	10A	FSBT Sta 1267+50	G83(CA)	216 X 120		25	20,268	20,268					X	GREEN	IV	WHITE	IV		X	180	
	10B	FSBT Sta 1267+00	G24(CA)	504 X 120	26.25	26.25	42,801	42,801					X	GREEN	IV	WHITE	IV		X	420	
			G85(CA)	312 X 120									X	GREEN	IV	WHITE	IV		X	260	
	10C	FNBT	G24(CA) & G24(CA)								1										
S-11	11A	FNBT Sta 1277+50	G83(CA)	264 X 100		25	22,511	22,511					X	GREEN	IV	WHITE	IV		X	183.3	
			G85(CA)	192 X 100									X	GREEN	IV	WHITE	IV		X	133.3	
	11B	FNBT	G20(CA)								1										
S-11	11C	FNBT	G85(CA)								1										
	11D	FSBT Sta 1280+50	G83(CA)	216 X 110		25	20,644	20,644					X	GREEN	IV	WHITE	IV		X	165	
	11E	FSBT	G23(CA)								1										
S-12	12A	FSBT Sta 1292+50	G83(CA)	216 X 120		25	21,932	21,932					X	GREEN	IV	WHITE	IV		X	180	
			G85(CA)	192 X 120									X	GREEN	IV	WHITE	IV		X	160	
	12B	FSBT	G83(CA) & G85(CA)									1									
	12C	FNBT	G23(CA)	288 X 90					180	180			X	GREEN	IV	WHITE	IV		X	180	
	12D	FNBT	G20(CA)								1										
S-13	13A	FNBT Sta 1304+70	G83(CA)	216 X 100		25	21,392	21,392					X	GREEN	IV	WHITE	IV		X	150	
			G85(CA)	264 X 100									X	GREEN	IV	WHITE	IV		X	183.3	
	13B	FNBT	G85(CA)								1										
	13C	FSBT	G20(CA)	168 X 70					81.7	81.7			X	GREEN	IV	WHITE	IV		X	81.7	
	13D	FSBT	G23(CA)								1										
SUB-TOTAL SHEET SQ-2					52.50	200.50	204,489	204,489	261.7	261.7	9	1								3116.6	

(N) - NOT A SEPARATE PAY ITEM, FOR INFORMATION ONLY.

SIGN QUANTITIES

SQ-2

STATE OF CALIFORNIA - DEPARTMENT OF TRANSPORTATION
Caltrans® TRAFFIC DESIGN

FUNCTIONAL SUPERVISOR: CRICORIS BIGLARIAN
CALCULATED-DESIGNED BY: EUGENE BRAVO
CHECKED BY: VINCENT NGUYEN
REVISED BY
DATE REVISED

LAST REVISION 00-00-00
DATE PLOTTED => 29-JUN-2011
TIME PLOTTED => 09:29

Dist	COUNTY	ROUTE	POST MILES TOTAL PROJECT	SHEET No.	TOTAL SHEETS
07	LA	710	17.2/26.4	918	1507

REGISTERED CIVIL ENGINEER 4/4/11 DATE

6-27-11
PLANS APPROVAL DATE

REGISTERED PROFESSIONAL ENGINEER VINCENT NGUYEN No. 57797 Exp 3/31/12 CIVIL STATE OF CALIFORNIA

THE STATE OF CALIFORNIA OR ITS OFFICERS OR AGENTS SHALL NOT BE RESPONSIBLE FOR THE ACCURACY OR COMPLETENESS OF SCANNED COPIES OF THIS PLAN SHEET.

OVERHEAD SIGN QUANTITIES

SHEET No.	SIGN No.	LOCATION	SIGN CODE	SIGN SIZE L X D (in x in)	* CIDH CONCRETE PILE (SIGN FOUNDATION) 60" Lt	60" Rt	SIGN STRUCTURE (TRUSS) FURNISH	SIGN STRUCTURE (TRUSS) INSTALL	INSTALL SIGN PANEL ON EXISTING FRAME	(N) REMOVE SIGN PANEL	REMOVE SIGN STRUCTURE	REMOVE BRIDGE MOUNTED SIGN	MATERIAL SUMMARY SINGLE FACED	BACKGROUND SHEETING COLOR	BACKGROUND RETROREFLECTIVE ASTM TYPE	LEGEND SHEETING COLOR	LEGEND RETROREFLECTIVE ASTM TYPE	GRAFFITI FILM STANDARD	GRAFFITI FILM PREMIUM	FURNISH FORMED PANEL SIGN (OVERHEAD)	REMARKS
					LF	LF	LB	LB	SQFT	SQFT	EA	EA								SQFT	
S-14	14A	FSBT Sta 1319+10	G23(CA)	288 X 120		23	19,449	19,449					X	GREEN	IV	WHITE	IV		X	240	
	14B	FSBT	G83(CA)									1									
	14C	FNBT	G83(CA)									1									
S-15	15A	FNBT Sta 1336+00	G83(CA)	192 X 80		22	16,301	16,301					X	GREEN	IV	WHITE	IV		X	106.7	
	15B	FSBT	G24(CA) & G85(CA)								1										
S-16	16A	FSBT Sta 1345+00	G83(CA)	192 X 100		25	22,457	22,457					X	GREEN	IV	WHITE	IV		X	133.3	
			G85(CA)	264 X 100									X	GREEN	IV	WHITE	IV		X	183.3	
	16B	FNBT	G23(CA)	336 X 100					233.3	233.3			X	GREEN	IV	WHITE	IV		X	233.3	
S-17	17A	FSBT Sta 1360+00	G23(CA)	288 X 100		23	18,789	18,789					X	GREEN	IV	WHITE	IV		X	200	
	17B	FSBT	G87(CA)								1										
	17C	FNBT Sta 1359+00	G24(CA)	240 X 120	26.25	26.25	34,543	34,543					X	GREEN	IV	WHITE	IV		X	200	
			G24(CA)	240 X 120									X	GREEN	IV	WHITE	IV		X	200	
	17D	FNBT	G20(CA) & G20(CA)								1										
S-18	18A	FNBT Sta 1378+00	G85(CA)	216 X 100		23	18,172	18,172					X	GREEN	IV	WHITE	IV		X	150	
	18B	FNBT	G85(CA)								1										
	18C	FNBT & FSBT	G23(CA) & G23(CA)								1										
	18D	FSBT Sta 1379+00	G83(CA)	192 X 90		22	14,131	14,131					X	GREEN	IV	WHITE	IV		X	120	
S-19	19A	FSBT Sta 1397+15	G83(CA)	264 X 90		22	14,884	14,884					X	GREEN	IV	WHITE	IV		X	165	
	19B	FNBT	G24(CA)	240 X 120					200	200			X	GREEN	IV	WHITE	IV		X	200	
			G24(CA)	408 X 120					340	340			X	GREEN	IV	WHITE	IV		X	340	
SUB-TOTAL SHEET SQ-3					26.25	186.25	158,726	158,726	773.3	773.3	5	2								2,471.6	
SUB-TOTAL SHEET SQ-2					52.50	200.50	204,489	204,489	261.7	261.7	9	1								3,116.6	
SUB-TOTAL SHEET SQ-1					26.25	197.25	190,641	190,641	556.6	556.6	6	1								3,196.6	
SUB-TOTAL SHEET SQ-7						52	33,733	33,733													
GRAND TOTAL					741.00		587,589	587,589	1,591.6	1,591.6	20	4								8,784.8	

(N) - NOT A SEPARATE PAY ITEM, FOR INFORMATION ONLY.

* FOR ADDITIONAL QUANTITIES SEE SHEET SQ-7

SIGN QUANTITIES

SQ-3

REVISED BY | DATE REVISED
EUGENE BRAVO | VINCENT NGUYEN
CALCULATED-DESIGNED BY | CHECKED BY
FUNCTIONAL SUPERVISOR
CRICORIS BIGLARIAN

STATE OF CALIFORNIA - DEPARTMENT OF TRANSPORTATION
Caltrans® TRAFFIC DESIGN

LAST REVISION 00-00-00 | DATE PLOTTED => 29-JUN-2011 | TIME PLOTTED => 09:29

Dist	COUNTY	ROUTE	POST MILES TOTAL PROJECT	SHEET No.	TOTAL SHEETS
07	LA	710	17.2/26.4	919	1507

REGISTERED CIVIL ENGINEER 4/4/11 DATE

6-27-11
PLANS APPROVAL DATE

REGISTERED PROFESSIONAL ENGINEER VINCENT NGUYEN No. 57797 Exp. 3/31/12 CIVIL STATE OF CALIFORNIA

THE STATE OF CALIFORNIA OR ITS OFFICERS OR AGENTS SHALL NOT BE RESPONSIBLE FOR THE ACCURACY OR COMPLETENESS OF SCANNED COPIES OF THIS PLAN SHEET.

NOTES:

1. EXACT LOCATION AND POSITION OF ROADSIDE SIGNS WILL BE DETERMINED BY THE ENGINEER.
2. SIGNS ARE MUTCD (MANUAL ON UNIFORM TRAFFIC CONTROL DEVICES, JAN 2010 EDITION) CODED EXCEPT AS NOTED.
3. (CA) DENOTES CALIFORNIA CODED SIGNS.
4. FOR SIGN SPECIFICATIONS SEE CALTRANS WEBSITE: http://www.dot.ca.gov/hq/traffops/signtech/signdel/specs.htm

LEGEND

L = LENGTH OF SIGN
D = DEPTH OF SIGN
B = BLACK ; Y = YELLOW ; R = RED ; W = WHITE ; G = GREEN ; BLU = BLUE ; BRW=BROWN

ROADSIDE SIGN QUANTITIES

SHEET No.	SIGN No.	SIGN CODE	PANEL SIZE	PANEL SIZE	POST TYPE	SIGN FACING MATERIAL: SINGLE FACED	BACKGROUND: SHEETING COLOR	BACKGROUND: RETRO-REFLECTIVE ASTM TYPE	LEGEND: SHEETING COLOR	LEGEND: RETRO-REFLECTIVE ASTM TYPE	NON-REFLECTIVE	GRAFFITI FILM PREMIUM	FURNISH SIGNLE SHEET ALUMINUM SIGN: UNFRAMED ALUMINUM 0.063"	UNFRAMED ALUMINUM 0.080"	FRAMED ALUMINUM 0.063"	FRAMED ALUMINUM 0.080"	FURNISH LAMINATED SIGN: TYPE B (1" THICK)	TYPE B (2.5" THICK)	ROADSIDE SIGN (WOOD): ONE POST	TWO POST	REMOVE ROADSIDE SIGN	RELOCATE ROADSIDE SIGN	REPLACE SIGN PANEL	METAL (BARRIER MOUNTED SIGN)	INSTALL SIGN PANEL ON BARRIER / SOUNDWALL	INSTALL SIGN (STRAP & SADDLE BRACKET METHOD	REMARKS
			(in X in)	SQFT									SQFT	SQFT	SQFT	SQFT	SQFT	SQFT	EA	EA	EA	EA	EA	LBS	EA	EA	
S-1	101	G11-5(CA)	44 X 24	7.3	4" X 6"	X	WHITE	III	BLACK		X	X	7.3						1								LOS ANGELES RIVER
	102	G11-5(CA)																			1						LOS ANGELES RIVER
	103	G11-5(CA)																			1						LOS ANGELES RIVER
	104	G11-5(CA)	44 X 24	7.3	4" X 6"	X	WHITE	III	BLACK		X	X	7.3						1								LOS ANGELES RIVER
S-2	201	G11-4.1(CA)	44 X 18	5.5	4" X 4"	X	WHITE	III	BLACK		X	X	5.5						1								SLAUSON AVE
	202	G11-4.1(CA)																			1						SLAUSON AVE
	203	SR15(CA)	18 X 24	3	4" X 4"	X	WHITE	III	BLACK		X	X	3						1								SEAT BELT
		SR15A(CA)	18 X 18	2.25		X	WHITE	III	BLACK		X	X	2.25														SAFETY BELT LAW ENFORCED
	204	SR15(CA)																			1						SEAT BELT
		SR15A(CA)																									SAFETY BELT LAW ENFORCED
	205	G11-4.1(CA)	44 X 18	5.5	4" X 4"	X	WHITE	III	BLACK		X	X	5.5						1								SLAUSON UP
	206	G11-4.1(CA)																			1						SLAUSON UP
	207	G11-4.1(CA)	44 X 18	5.5	4" X 4"	X	WHITE	III	BLACK		X	X	5.5						1								SLAUSON AVE
	208	G86(CA)																			1						Atlantic BI-SOUTH/Bandini BI
	209	G86(CA)	240 X 90	150	TYPE L	X	GREEN	IV	WHITE	IV		X						150		1							Atlantic BI-SOUTH/Bandini BI
	210	SR15(CA)																			1						SEAT BELT
		SR15A(CA)																									SAFETY BELT LAW ENFORCED
	211	SR15(CA)	18 X 24	3	4" X 4"	X	WHITE	III	BLACK		X	X	3						1								SEAT BELT
		SR15A(CA)	18 X 18	2.25		X	WHITE	III	BLACK		X	X	2.25														SAFETY BELT LAW ENFORCED
	212	G86-3(CA)	156 X 96	104	TYPE M	X	GREEN	IV	WHITE	IV		X					104			1							SANTA ANA FWY NEXT RIGHT
	213	G86-3(CA)																			1						SANTA ANA NEXT RIGHT
S-3	301	G11-4.1(CA)	44 X 18	5.5	4" X 4"	X	WHITE	III	BLACK		X	X	5.5						1								SLAUSON UP
	302	G11-4.1(CA)																			1						SLAUSON UP
	303	R47(CA)	52 X 36	13	4" X 6"	X	WHITE	III	BLACK		X	X		13					1								$1000 FINE FOR LITTERING
	304	R47(CA)																			1						$1000 FINE FOR LITTERING
S-4	401	W4-1R																			1						MERGE
	402	W4-1R	48 X 48	16	4" X 6"	X	YELLOW	III	BLACK		X	X		16					1								MERGE
	403	W4-7	48 X 48	16	4" X 6"	X	YELLOW	III	BLACK		X	X		16					1								THRU TRAFFIC MERGE LEFT
	404	W4-7																			1						THRU TRAFFIC MERGE LEFT
	405	G83-2(CA)(Mod)																			1						ALT 5 NORTH TRUCK ROUTE
	406	G83-2(CA)(Mod)	204 X108	153	TYPE L	X	GREEN	IV	WHITE	IV		X						153		1							ALT 5 NORTH TRUCK ROUTE
	407	R18A(CA)	66 X 48	22	4" X 6"	X	WHITE	III	BLACK		X	X			22					1							RIGHT LANE MUST EXIT
	408	R18A(CA)																			1						RIGHT LANE MUST EXIT
	409	W13-2 (35)																			1						EXIT 35 MPH (ADVISORY SPEED)
	410	W13-2 (35)	48 X 60	20		X	YELLOW	III	BLACK		X	X		20												1	EXIT 35 MPH (ADVISORY SPEED)
	411	W4-2R	48 X 48	16		X	YELLOW	III	BLACK		X	X											1				LANE ENDS
	412	G11-5(CA)	44 X 24	7.3	4" X 4"	X	WHITE	III	BLACK		X	X	7.3						1								CHELI DEPOT OVERHEAD
	413	G85-3(Mod)(CA)	156 X 96	104	TYPE M	X	GREEN	IV	WHITE	IV		X					104			1							TO 5 SOUTH SANTA ANA
SUB-TOTAL SHEET SQ-4													54.4	65	22	0	208	303	12	5	15	0	1	0	0	1	

SIGN QUANTITIES

SQ-4

REVISED BY | DATE REVISED
EUGENE BRAVO | VINCENT NGUYEN
CALCULATED-DESIGNED BY | CHECKED BY
FUNCTIONAL SUPERVISOR: CRICORIS BIGLARIAN

STATE OF CALIFORNIA - DEPARTMENT OF TRANSPORTATION
Caltrans® TRAFFIC DESIGN

LAST REVISION 00-00-00 | DATE PLOTTED => 29-JUN-2011 | TIME PLOTTED => 09:30

Dist	COUNTY	ROUTE	POST MILES TOTAL PROJECT	SHEET No.	TOTAL SHEETS
07	LA	710	17.2/26.4	920	1507

REGISTERED CIVIL ENGINEER 4/4/11 DATE

6-27-11
PLANS APPROVAL DATE

REGISTERED PROFESSIONAL ENGINEER VINCENT NGUYEN No. 57797 Exp. 3/31/12 CIVIL STATE OF CALIFORNIA

THE STATE OF CALIFORNIA OR ITS OFFICERS OR AGENTS SHALL NOT BE RESPONSIBLE FOR THE ACCURACY OR COMPLETENESS OF SCANNED COPIES OF THIS PLAN SHEET.

ROADSIDE SIGN QUANTITIES

SHEET No.	SIGN No.	SIGN CODE	PANEL SIZE	PANEL SIZE	POST TYPE	SIGN FACING MATERIAL: SINGLE FACED	BACKGROUND: SHEETING COLOR	BACKGROUND: RETRO-REFLECTIVE ASTM TYPE	LEGEND: SHEETING COLOR	LEGEND: RETRO-REFLECTIVE ASTM TYPE	NON-REFLECTIVE	GRAFFITI FILM PREMIUM	FURNISH SIGNLE SHEET ALUMINUM SIGN: UNFRAMED ALUMINUM 0.063"	UNFRAMED ALUMINUM 0.080"	FRAMED ALUMINUM 0.063"	FRAMED ALUMINUM 0.080"	FURNISH LAMINATED SIGN: TYPE B (1" THICK)	TYPE B (2.5" THICK)	ROADSIDE SIGN (WOOD): ONE POST	TWO POST	REMOVE ROADSIDE SIGN	RELOCATE ROADSIDE SIGN	REPLACE SIGN PANEL	METAL (BARRIER MOUNTED SIGN)	INSTALL SIGN PANEL ON BARRIER / SOUNDWALL	INSTALL SIGN (STRAP & SADDLE BRACKET METHOD	REMARKS
			(in X in)	SQFT									SQFT	SQFT	SQFT	SQFT	SQFT	SQFT	EA	EA	EA	EA	EA	LBS	EA	EA	
S-5	501	G11-5(CA)	44 X 24	7.3	4" X 4"	X	WHITE	III	BLACK		X	X	7.3						1								CHELI DEPOT OVERHEAD
	502	W4-1R	48 X 48	16	4" X 6"	X	YELLOW	III	BLACK		X	X		16					1								MERGE
	503	W4-1R																			1						MERGE
	504	G11-4.1(CA)																			1						ATLANTIC BL
	505	G11-5(CA)																			1						ATLANTIC BL S/B ON-RAMP
	506	G11-5(CA)	44 X 24	7.3	4" X 4"	X	WHITE	III	BLACK		X	X	7.3						1								ATLANTIC BL S/B ON-RAMP
	507	G11-4.1(CA)	44 X 18	5.5	4" X 4"	X	WHITE	III	BLACK		X	X	5.5						1								ATLANTIC BL
	508	S32(CA)																			1						ADOPT-A-HIGHWAY
	509	S32(CA)	54 X 42	15.75	6" X 6"	X	TEALG	II	WHITE	II		X		15.75					1								ADOPT-A-HIGHWAY
		S32A(CA)	15 X 18	1.875		X	O/ TEALG	II	WHITE	II		X	1.875														ADOPT-A-HIGHWAY SYMBOL
	510	G9-5(CA)																			1						BELL CITY LIMIT
	511	G9-5(CA)	84 X 48	28	6" X 6"	X	GREEN	IV	WHITE	IV		X				28				1							BELL CITY LIMIT
	520	G84-3(CA)																			1						EXIT 17A
	521	G84-3(CA)	48 X 60	20	6" X 6"	X	GREEN	III	WHITE	III		X		20					1								EXIT 17A
	522	W3-1																			1						STOP AHEAD
	523	W3-1	48 X 48	16	4" X 6"	X	RED / Y	VII	BLACK		X	X		16					1								STOP AHEAD
	524	G87(CA)	120 X 78	65	TYPE M	X	GREEN	IV	WHITE	IV		X				65				1							BELL CITY LIMIT
	525	G87(CA)																			1						BELL CITY LIMIT
	526	G11-4.1(CA)																			1						ATLANTIC BL
	527	G11-4.1(CA)	44 X 18	5.5		X	WHITE	III	BLACK		X	X	5.5												1		ATLANTIC BL
S-7	701	W4-3R	48 X 48	16	4" X 6"	X	YELLOW	III	BLACK		X	X		16					1								ADDED LANE
	702	W4-3R																			1						ADDED LANE
	703	G11-5(CA)																			1						RTE 710/ 5 SEPARATION
	704	W4-2R	48 X 48	16	4" X 6"	X	YELLOW	III	BLACK		X	X		16					1								LANE ENDS
	705	G11-5(CA)	44 X 24	7.3		X	WHITE	III	BLACK		X	X	7.3													1	RTE 710/ 5 SEPARATION
	706	SW60(CA)	48 X 48	16	4" X 6"	X	YELLOW	III	BLACK		X	X		16					1								TURN ARROW 30
	707	W13-2 (35)	48 X 60	20		X	YELLOW	III	BLACK		X	X		20												1	EXIT 35 MPH (ADVISORY SPEED)
	708	G84-3(CA)	48 X 60	20	6" X 6"	X	GREEN	III	WHITE	III		X		20					1								EXIT 18B
	709	W3-3	48 X 48	16		X	R/ Y/ G	VII	BLACK		X	X		16												1	STOP AHEAD
	710	W13-2 (35)																			1						EXIT 35 MPH (ADVISORY SPEED)
	711	G84-3(CA)																			1						EXIT 18B
	712	W3-3																			1						STOP AHEAD
	713	G85-1(CA)	192 X 78	104	TYPE M	X	GREEN	IV	WHITE	IV		X						104		1							OLYMPIC BLVD
S-8	801	W4-1R																			1						MERGE
	802	W4-1R	48 X 48	16	4" X 6"	X	YELLOW	III	BLACK		X	X		16					1								MERGE
	803	R61-32(CA)																				1					INTERSECTION LANE CONTROL
	804	G11-4.1(CA)																			1						OLYMPIC BL
	805	G11-4.1(CA)	44 X 18	5.5	4" X 4"	X	WHITE	III	BLACK		X	X	5.5						1								OLYMPIC BL
SUB-TOTAL SHEET SQ-5													40.275	187.75	0	93	0	104	13	3	16	1	0	0	1	3	

SIGN QUANTITIES

SQ-5

STATE OF CALIFORNIA - DEPARTMENT OF TRANSPORTATION
Caltrans® TRAFFIC DESIGN

FUNCTIONAL SUPERVISOR: CRICORIS BIGLARIAN
CALCULATED-DESIGNED BY: EUGENE BRAVO
CHECKED BY: VINCENT NGUYEN
REVISED BY
DATE REVISED

LAST REVISION 00-00-00
DATE PLOTTED => 29-JUN-2011
TIME PLOTTED => 09:30

Dist	COUNTY	ROUTE	POST MILES TOTAL PROJECT	SHEET No.	TOTAL SHEETS
07	LA	710	17.2/26.4	921	1507

REGISTERED CIVIL ENGINEER 4/4/11 DATE

6-27-11
PLANS APPROVAL DATE

REGISTERED PROFESSIONAL ENGINEER VINCENT NGUYEN No. 57797 Exp. 3/31/12 CIVIL STATE OF CALIFORNIA

THE STATE OF CALIFORNIA OR ITS OFFICERS OR AGENTS SHALL NOT BE RESPONSIBLE FOR THE ACCURACY OR COMPLETENESS OF SCANNED COPIES OF THIS PLAN SHEET.

ROADSIDE SIGN QUANTITIES

SHEET No.	SIGN No.	SIGN CODE	PANEL SIZE	PANEL SIZE	POST TYPE	SIGN FACING MATERIAL: SINGLE FACED	BACKGROUND: SHEETING COLOR	BACKGROUND: RETRO-REFLECTIVE ASTM TYPE	LEGEND: SHEETING COLOR	LEGEND: RETRO-REFLECTIVE ASTM TYPE	NON-REFLECTIVE	GRAFFITI FILM PREMIUM	FURNISH SIGNLE SHEET ALUMINUM SIGN: UNFRAMED ALUMINUM 0.063"	UNFRAMED ALUMINUM 0.080"	FRAMED ALUMINUM 0.063"	FRAMED ALUMINUM 0.080"	FURNISH LAMINATED SIGN PANEL: TYPE B (1" THICK)	TYPE B (2.5" THICK)	ROADSIDE SIGN (WOOD): ONE POST	TWO POST	REMOVE ROADSIDE SIGN	RELOCATE ROADSIDE SIGN	REPLACE SIGN PANEL	METAL (BARRIER MOUNTED SIGN)	INSTALL SIGN PANEL ON BARRIER / SOUNDWALL	INSTALL SIGN (STRAP & SADDLE BRACKET METHOD	REMARKS
			(in X in)	SQFT									SQFT	SQFT	SQFT	SQFT	SQFT	SQFT	EA	EA	EA	EA	EA	LBS	EA	EA	
S-9	901	R18A(CA)	66 X 48	22	4" X 6"	X	WHITE	III	BLACK		X	X			22									322			RIGHT LANE MUST EXIT
	902	G84-2(CA)	48 X 54	18	6" X 6"	X	GREEN	III	WHITE	III		X		18					1								EXIT 19
S-10	1001	W4-7	48 X 48	16	4" X 6"	X	YELLOW	III	BLACK		X	X		16										322			THRU TRAFFIC MERGE LEFT
S-11	1101	W3-3	48 X 48	16		X	R/ Y/ G	VII	BLACK		X	X		16					1								STOP AHEAD
	1102	W9-2L	48 X 48	16	4" X 6"	X	YELLOW	III	BLACK		X	X		16					1								LANE ENDS MERGE LEFT
	1103	W9-2L																			1						LANE ENDS MERGE LEFT
	1104	W4-2	48 X 48	16	4" X 6"	X	YELLOW	III	BLACK		X	X		16					1								LANE ENDS
	1105	W4-2	48 X 48	16	4" X 6"	X	YELLOW	III	BLACK		X	X		16					1								LANE ENDS
S-12	1201	G11-4.1(CA)	44 X 18	5.5	4" X 4"	X	WHITE	III	BLACK		X	X	5.5						1								3RD STREET
	1202	G11-4.1(CA)																			1						3RD STREET
S-13	1301	M3-3	30 X 15	3.125		X	BLU	III	WHITE	III		X	3.125										1				SOUTH
	1302	W13-2 (35)	48 X 60	20		X	YELLOW	III	BLACK		X	X		20									1				EXIT 35 MPH (ADVISORY SPEED)
	1303	G84-3(CA)	48 X 60	20	6" X 6"	X	GREEN	III	WHITE	III		X		20					1								EXIT 20C
S-14	1401	R47(CA)	52 X 36	13	4" X 6"	X	WHITE	III	BLACK		X	X		13					1								$1000 FINE FOR LITTERING
	1402	R47(CA)																			1						$1000 FINE FOR LITTERING
S-15	1501	W4-2R	36 X 36	9		X	YELLOW	III	BLACK		X	X	9											186			LANE ENDS
	1502	G11-4.1(CA)																			1						FLORAL DR
	1503	G11-4.1(CA)	44 X 18	5.5	4" X 4"	X	WHITE	III	BLACK		X	X	5.5						1								FLORAL DR
	1504	W4-2R	48 X 48	16		X	YELLOW	III	BLACK		X	X														1	LANE ENDS
		W9-2L																			1						LANE ENDS MERGE LEFT
S-16	1601	W4-2R																			1						LANE ENDS
	1602	W9-2L	48 X 48	16		X	YELLOW	III	BLACK		X	X		16					1								LANE ENDS MERGE LEFT
	1603	W4-2R	48 X 48	16		X	YELLOW	III	BLACK		X	X		16					1								LANE ENDS
S-17	1701	G87(CA)	186 X 54	69.75	TYPE M	X	GREEN	IV	WHITE	IV		X						69.75		1							EAST LA COLLEGE NEXT EXIT
	1702	G12(CA)																			1						EAST LA COLLEGE NEXT EXIT
	1703	R6-3(CA)	48 X 60	20		X	WHITE	III	BLACK		X	X		20												1	TRUCKS, 3 ALXELS OR MORE 55
		R48-1(CA)	48 X 24	8		X	WHITE	III	BLACK		X	X		8												1	RADAR ENFORCED
	1704	W4-2R	48 X 48	16		X	YELLOW	III	BLACK		X	X		16												1	LANE ENDS
S-18	1801	W9-2L	48 X 48	16		X	YELLOW	III	BLACK		X	X		16												1	LANE ENDS MERGE LEFT
	1802	R6-3(CA)																			1						TRUCKS, 3 ALXELS OR MORE 55
		R48-1(CA)																			1						RADAR ENFORCED
	1803	R6-3(CA)	48 X 60	20		X	WHITE	III	BLACK		X			20												1	TRUCKS, 3 ALXELS OR MORE 55
		R48-1(CA)	48 X 24	8		X	WHITE	III	BLACK		X			8												1	RADAR ENFORCED
	1804	W9-2L																			1						LANE ENDS MERGE LEFT
S-19	1901	R47(CA)	52 X 36	13		X	WHITE	III	BLACK		X			13									1				$1000 FINE FOR LITTERING
SUB-TOTAL SHEET SQ-6													23.125	284.0	22	0	0	69.75	11	1	10	0	3	830	0	7	
SUB-TOTAL SHEET SQ-5													40.275	187.75	0	93	0	104	13	3	16	1	0	0	1	3	
SUB-TOTAL SHEET SQ-4													54.4	65	22	0	208	303	12	5	15	0	1	0	0	1	
GRAND-TOTAL													117.8	536.75	44	93	208	476.75	36	9	41	1	4	830	1	11	

SIGN QUANTITIES

SQ-6

STATE OF CALIFORNIA - DEPARTMENT OF TRANSPORTATION
Caltrans® TRAFFIC DESIGN

FUNCTIONAL SUPERVISOR: CRICORIS BIGLARIAN
CALCULATED-DESIGNED BY: EUGENE BRAVO
CHECKED BY: VINCENT NGUYEN
REVISED BY / DATE REVISED

LAST REVISION 00-00-00 | DATE PLOTTED => 29-JUN-2011 | TIME PLOTTED => 09:30

Dist	COUNTY	ROUTE	POST MILES TOTAL PROJECT	SHEET No.	TOTAL SHEETS
07	LA	710	17.2/26.4	922	1507

REGISTERED CIVIL ENGINEER 4/4/11 DATE

6-27-11
PLANS APPROVAL DATE

REGISTERED PROFESSIONAL ENGINEER HEATHER LIANG No. C69374 Exp. 6/30/13 CIVIL STATE OF CALIFORNIA

THE STATE OF CALIFORNIA OR ITS OFFICERS OR AGENTS SHALL NOT BE RESPONSIBLE FOR THE ACCURACY OR COMPLETENESS OF SCANNED COPIES OF THIS PLAN SHEET.

CHANGEABLE MESSAGE SIGN QUANTITIES

SHEET No.	SIGN No.	LOCATION	SIGN CODE	X	h	ELEVATION		* CIDH CONCRETE PILE (SIGN FOUNDATION)	SIGN STRUCTURE (TRUSS) (TWO SIDES WALKWAY)	
						Elev. A	Elev. B	60" Dia	FURNISH	INSTALL
				LF	LF	ft	ft	LF	LBS	LBS
S-16	LB25	FSBT, STA 1352+00	BALANCED BUTTERFLY	20	20	100	99.8	30	16,780	16,780
S-16	LB26	FNBT, STA. 1353+50	UNBALANCED BUTTERFLY	16	21	100	99.0	22	16,953	16,953
						SUBTOTAL		52	33,733	33,733

* FOR ADDITIONAL QUANTITIES SEE SHEET SQ-3

SIGN QUANTITIES

NO SCALE

SQ-7

STATE OF CALIFORNIA - DEPARTMENT OF TRANSPORTATION
Caltrans® OFFICE OF ITS

FUNCTIONAL SUPERVISOR: PETER LIN
CALCULATED-DESIGNED BY: HEATHER LIANG
CHECKED BY: PETER LIN
REVISED BY
DATE REVISED

LAST REVISION 00-00-00
DATE PLOTTED => 29-JUN-2011
TIME PLOTTED => 09:30

Dist	COUNTY	ROUTE	POST MILES TOTAL PROJECT	SHEET No.	TOTAL SHEETS
07	LA	710	17.2/26.4	923	1507

REGISTERED CIVIL ENGINEER 2-3-11 DATE

6-27-11
PLANS APPROVAL DATE

REGISTERED PROFESSIONAL ENGINEER RENE YIN No. C49915 Exp. 9/30/12 CIVIL STATE OF CALIFORNIA

THE STATE OF CALIFORNIA OR ITS OFFICERS OR AGENTS SHALL NOT BE RESPONSIBLE FOR THE ACCURACY OR COMPLETENESS OF SCANNED COPIES OF THIS PLAN SHEET.

ROADWAY ITEMS

LOCATION	SHEET No.	ROADWAY EXCAVATION (TYPE Y-1) AERIALLY DEPOSITED LEAD	ROADWAY EXCAVATION (TYPE Z-2) AERIALLY DEPOSITED LEAD	ROADWAY EXCAVATION	EMBANKMENT (N)	PRECAST PRESTRESSED CONCRETE PAVEMENT	JOINTED PLAIN CONCRETE PAVEMENT	JOINTED PLAIN CONCRETE PAVEMENT (RAPID STRENGTH CONCRETE 550 PSI)	JOINTED PLAIN CONCRETE PAVEMENT (RAPID STRENGTH CONCRETE 400 PSI)	DOWEL BAR RETROFIT	DOWEL BAR (DRILL & BOND)	HOT MIXED ASPHALT (TYPE B)	GEOSYNTHETIC PAVEMENT INTERLAYER	PAVING ASPHALT (BINDER, GEOSYNTHETIC PAVEMENT INTERLAYER)	LEAN CONCRETE BASE (RAPID SETTING)	LEAN CONCRETE BASE	CLASS 3 AGGREGATE BASE	TIE BAR (DRILL & BOND)	SEAL PAVEMENT JOINT	SEAL LONGITUDINAL ISOLATION JOINT	GRIND CONCRETE PAVEMENT	PLACE HMA DIKE (TYPE A)	PLACE HMA DIKE (TYPE C)	PLACE HMA DIKE (TYPE E)	PLACE HMA DIKE (TYPE F)	BAR REINFORCING STEEL	REPAIR SPALLED JOINT (POLYESTER GROUT)
		CY	CY	CY	CY	CY	CY	CY	CY	EA	EA	TON	SQYD	TON	CY	CY	CY	EA	LF	LF	SQYD	LF	LF	LF	LF	LB	SQYD
Sta 947+47 TO Sta 951+48 (NB)	C-268											6											68		333		
Sta 914+32.07 TO Sta 922+90.05 (SB)	L-1		25	366								186				92	184										
Sta 913+35.76 TO Sta 922+24.41 (NB)	L-1			182								131				46	91										
Sta 1086+50 TO Sta 1094+50 (C/L)	L-2																			54							
Sta 1101+60 TO Sta 1103+65 (NB)	L-3											4										102	107				
Sta 1101+60 TO Sta 1103+50 (NB)	L-3					170			70	52	8				140		45		130	430	1410					90	
Sta 1103+50 TO Sta 1108+50 (NB)	L-3								1415		32				615		865		4310		3695						
Sta 1103+75 TO Sta 1108+50 (NB)	L-3																										
Sta 1105+74.85 TO Sta 1108+50 (NB)	L-3											95			47		89										
Sta 1094+50 TO Sta 1108+50	L-3		455	5625																252						340	
Sta 1101+60 TO Sta 1108+50 (SB)	L-3					607	233			26	8	19			385	102	142		458	1402	5000	683				50	50
Sta 1101+60 TO Sta 1101+82.93 (SB)	L-3								5		12				3			20	12								
Sta 1108+50 TO Sta 1122+50 (NB)	L-4							3310	720						1775		2480		12020	90	10280					191	
Sta 1108+50 TO Sta 1109+36.38 (NB)	L-4											2			1		2										
Sta 1109+31 TO Sta 1110+38 (NB)	L-4								29																	2075	
Sta 1110+33.7 TO Sta 1121+94.74 (NB)	L-4											32										1107			76		
Sta 1122+00 TO Sta 1122+50 (NB)	L-4							16																		1225	
Sta 1108+50 TO Sta 1122+50	L-4		3670	15640	1															320						1375	
Sta 1108+50 TO Sta 1122+50 (SB)	L-4					1235	460								781	200	280		940	2942	10100					210	
Sta 1108+50 TO Sta 1110+11.99 (SB)	L-4											5										162					
Sta 1111+15.88 TO Sta 1122+50 (SB)	L-4											29										1025	79		25		
SHEET TOTAL			4150	21813	1	2012	693	3326	2239	78	60	509			3747	440	4178	20	17870	5490	30485	3079	254		434	5556	50

(N) - NOT A SEPARATE PAY ITEM, FOR INFORMATION ONLY

SUMMARY OF QUANTITIES

Q-1

STATE OF CALIFORNIA - DEPARTMENT OF TRANSPORTATION
Caltrans DESIGN

MONA GIRGUIS — REVISED BY
I. L. REYNON JR. — DATE REVISED
CALCULATED-DESIGNED BY
CHECKED BY
FUNCTIONAL SUPERVISOR
ALINE ANTARAMIAN

LAST REVISION 00-00-00
DATE PLOTTED => 29-JUN-2011
TIME PLOTTED => 09:30

Dist	COUNTY	ROUTE	POST MILES TOTAL PROJECT	SHEET No.	TOTAL SHEETS
07	LA	710	17.2/26.4	924	1507

Rene Yin 2-3-11
REGISTERED CIVIL ENGINEER DATE

6-27-11
PLANS APPROVAL DATE

REGISTERED PROFESSIONAL ENGINEER
RENE YIN
No. C49915
Exp. 9/30/12
CIVIL
STATE OF CALIFORNIA

THE STATE OF CALIFORNIA OR ITS OFFICERS OR AGENTS SHALL NOT BE RESPONSIBLE FOR THE ACCURACY OR COMPLETENESS OF SCANNED COPIES OF THIS PLAN SHEET.

ROADWAY ITEMS

LOCATION	SHEET No.	ROADWAY EXCAVATION (TYPE Y-1) AERIALLY DEPOSITED LEAD	ROADWAY EXCAVATION (TYPE Z-2) AERIALLY DEPOSITED LEAD	ROADWAY EXCAVATION	EMBANKMENT (N)	PRECAST PRESTRESSED CONCRETE PAVEMENT	JOINTED PLAIN CONCRETE PAVEMENT	JOINTED PLAIN CONCRETE PAVEMENT (RAPID STRENGTH CONCRETE 550 PSI)	JOINTED PLAIN CONCRETE PAVEMENT (RAPID STRENGTH CONCRETE 400 PSI)	DOWEL BAR RETROFIT	DOWEL BAR (DRILL & BOND)	HOT MIXED ASPHALT (TYPE B)	GEOSYNTHETIC PAVEMENT INTERLAYER	ASPHALT PAVING (BINDER, GEOSYNTHETIC PAVEMENT INTERLAYER)	LEAN CONCRETE BASE (RAPID SETTING)	LEAN CONCRETE BASE	CLASS 3 AGGREGATE BASE	TIE BAR (DRILL & BOND)	SEAL PAVEMENT JOINT	SEAL LONGITUDINAL ISOLATION JOINT	GRIND CONCRETE PAVEMENT	PLACE HMA DIKE (TYPE A)	PLACE HMA DIKE (TYPE C)	PLACE HMA DIKE (TYPE E)	PLACE HMA DIKE (TYPE F)	BAR REINFORCING STEEL	REPAIR SPALLED JOINT (POLYESTER GROUT)
		CY	CY	CY	CY	CY	CY	CY	CY	EA	EA	TON	SQYD	TON	CY	CY	CY	EA	LF	LF	SQYD	LF	LF	LF	LF	LB	SQYD
Sta 1122+50 TO Sta 1123+10 (NB)	L-5							19																		1350	
Sta 1122+50 TO Sta 1130+00 (NB)	L-5							2321			35				1016		1425		6945	92	6095					181	
Sta 1130+00 TO Sta 1136+50 (NB)	L-5					845	222		135	38	14				610	97	135	266	770	1302	5845						
Sta 1122+50 TO Sta 1136+50	L-5	300	610	10900	155															286						1128	
Sta 1122+50 TO Sta 1136+50 (SB)	L-5					1240	455								785	200	280		940	2853	10490					98	
Sta 1122+50 TO Sta 1123+97.89 (SB)	L-5											4										148					
Sta 1125+20.96 TO Sta 1136+50 (SB)	L-5								235		6				130			460	564								
Sta 1132+85 TO Sta 1136+50 (SB)	L-5											5													370		
Sta 1136+50 TO Sta 1150+50 (NB)	L-6					1790	440		285	26					1290	192	268	554	1630	2880	12375					152	
Sta 1137+25 TO Sta 1150+50 (NB)	L-6											19													1345		
Sta 1136+50 TO Sta 1150+50	L-6	540		6400	5845																						150
Sta 1148+29.4 TO Sta 1150+50 (C/L)	L-6						128				16					56	78	188	292								
Sta 1136+50 TO Sta 1150+50 (SB)	L-6					1470			295	14					1090			570	714	2840	11275						
Sta 1136+50 TO Sta 1141+56.72 (SB)	L-6						136									59	83		350								
Sta 1136+50 TO Sta 1149+04.84 (SB)	L-6											18													1321		
Sta 1146+67.13 TO Sta 1150+50 (SB)	L-6						102					7				45	62		270			80			313		
Sta 46+84.23 TO Sta 49+26.27 (AT1)	L-6											4.5										79			165		
Sta 41+56.72 TO Sta 49+20 (AT1)	L-6	485		1950	2810															33						70	
Sta 41+56.72 TO Sta 46+84.23 (AT1)	L-6								637						277		388		1050		1275						
Sta 46+84.23 TO Sta 49+20 (AT1)	L-6											414	878	1	205		409										
Sta 50+30.52 TO Sta 50+49.48 (AT2)	L-6								26						12		18		60		65						
SHEET TOTAL		1325	610	19250	8810	5345	1483	2340	1613	78	71	471.5	878	1	5415	649	3146	2038	13585	10286	47420	307			3514	2979	150

(N) - NOT A SEPARATE PAY ITEM, FOR INFORMATION ONLY

SUMMARY OF QUANTITIES
Q-2

STATE OF CALIFORNIA - DEPARTMENT OF TRANSPORTATION
Caltrans® DESIGN

FUNCTIONAL SUPERVISOR: ALINE ANTARAMIAN
CALCULATED-DESIGNED BY: MONA GIRGUIS
CHECKED BY: I. L. REYNON JR.
REVISED BY
DATE REVISED

LAST REVISION 00-00-00
DATE PLOTTED => 29-JUN-2011
TIME PLOTTED => 09:30

Dist	COUNTY	ROUTE	POST MILES TOTAL PROJECT	SHEET No.	TOTAL SHEETS
07	LA	710	17.2/26.4	925	1507

REGISTERED CIVIL ENGINEER 2-3-11 DATE

6-27-11
PLANS APPROVAL DATE

REGISTERED PROFESSIONAL ENGINEER RENE YIN No. C49915 Exp. 9/30/12 CIVIL STATE OF CALIFORNIA

THE STATE OF CALIFORNIA OR ITS OFFICERS OR AGENTS SHALL NOT BE RESPONSIBLE FOR THE ACCURACY OR COMPLETENESS OF SCANNED COPIES OF THIS PLAN SHEET.

ROADWAY ITEMS

LOCATION	SHEET No.	ROADWAY EXCAVATION (TYPE Y-1) AERIALLY DEPOSITED LEAD	ROADWAY EXCAVATION (TYPE Z-2) AERIALLY DEPOSITED LEAD	ROADWAY EXCAVATION	EMBANKMENT (N)	PRECAST PRESTRESSED CONCRETE PAVEMENT	JOINTED PLAIN CONCRETE PAVEMENT	JOINTED PLAIN CONCRETE PAVEMENT (RAPID STRENGTH CONCRETE 550 PSI)	JOINTED PLAIN CONCRETE PAVEMENT (RAPID STRENGTH CONCRETE 400 PSI)	DOWEL BAR RETROFIT	DOWEL BAR (DRILL & BOND)	HOT MIXED ASPHALT (TYPE B)	GEOSYNTHETIC PAVEMENT INTERLAYER	PAVING ASPHALT (BINDER, SYNTHETIC PAVEMENT INTERLAYER)	LEAN CONCRETE BASE (RAPID SETTING)	LEAN CONCRETE BASE	CLASS 3 AGGREGATE BASE	TIE BAR (DRILL & BOND)	SEAL PAVEMENT JOINT	SEAL LONGITUDINAL ISOLATION JOINT	GRIND CONCRETE PAVEMENT	PLACE HMA DIKE (TYPE A)	PLACE HMA DIKE (TYPE C)	PLACE HMA DIKE (TYPE E)	PLACE HMA DIKE (TYPE F)	BAR REINFORCING STEEL	REPAIR SPALLED JOINT (POLYESTER GROUT)
		CY	CY	CY	CY	CY	CY	CY	CY	EA	EA	TON	SQYD	TON	CY	CY	CY	EA	LF	LF	SQYD	LF	LF	LF	LF	LB	SQYD
Sta 1150+50 TO Sta 1157+27.53 (NB)	L-7					575	160		265	38					500	70	200	294	1100	1310	5430					57	
Sta 1150+50 TO Sta 1156+66.12 (NB)	L-7											8													585		
Sta 1153+08.73 TO Sta 1155+00 (NB)	L-7											4										86	78		25		
Sta 1159+43.30 TO Sta 1160+73.76 (NB)	L-7								115			63			65			148	341		1200						
Sta 1150+50 TO Sta 1160+75.00	L-7		350	3600	1260																						
Sta 1150+50 TO Sta 1156+76.69 (C/L)	L-7						297									130	181	510	795								
Sta 1159+11.57 TO Sta 1160+72.20 (C/L)	L-7						54									24	33	148	210								
Sta 1150+50 TO Sta 1151+00 (SB)	L-7						14									6	9		40								
Sta 1150+50 TO Sta 1156+76.69 (SB)	L-7					500			150	38					400			288	312	1230	4405						
Sta 1158+42.11 TO Sta 1160+68.93 (SB)	L-7					160	75		70	52		90			140	131	131	117	300	190	1800						
Sta 1151+64 TO Sta 1155+58.48 (SB)	L-7											5.5													415		
Sta 50+50 TO Sta 56+00 (AT2)	L-7		365	1645	80				700			490			545		910		626		265						75
Sta 52+99.57 TO Sta 56+00 (AT2)	L-7											9										301					
Sta 51+00 TO Sta 56+36.76 (AT3)	L-7	220		640	7875				672						293		409		1560		1960						
Sta 57+84.70 TO Sta 61+50 (AT3)	L-7	260		620	1145							510	290	0.40	252		504			38						68	
Sta 58+38.61 TO Sta 61+50 (AT3)	L-7											4.5													339		
Sta 58+87.64 TO Sta 61+50 (AT3)	L-7											4.5											76	115	50		
SHEET TOTAL		480	715	6505	10360	1235	600		1972	128		1188.5	290	0.40	2195	361	2377	1505	5284	2768	15060	387	154	115	1414	125	75

(N) - NOT A SEPARATE PAY ITEM, FOR INFORMATION ONLY

SUMMARY OF QUANTITIES

Q-3

STATE OF CALIFORNIA - DEPARTMENT OF TRANSPORTATION
DESIGN
Caltrans

FUNCTIONAL SUPERVISOR: ALINE ANTARAMIAN
CALCULATED-DESIGNED BY: MONA GIRGUIS
CHECKED BY: I. L. REYNON JR.
REVISED BY
DATE REVISED

LAST REVISION 00-00-00
DATE PLOTTED => 29-JUN-2011
TIME PLOTTED => 09:30

Dist	COUNTY	ROUTE	POST MILES TOTAL PROJECT	SHEET No.	TOTAL SHEETS
07	LA	710	17.2/26.4	926	1507

Rene Yin 2-3-11
REGISTERED CIVIL ENGINEER DATE

6-27-11
PLANS APPROVAL DATE

REGISTERED PROFESSIONAL ENGINEER
RENE YIN
No. C49915
Exp. 9/30/12
CIVIL
STATE OF CALIFORNIA

THE STATE OF CALIFORNIA OR ITS OFFICERS OR AGENTS SHALL NOT BE RESPONSIBLE FOR THE ACCURACY OR COMPLETENESS OF SCANNED COPIES OF THIS PLAN SHEET.

ROADWAY ITEMS

LOCATION	SHEET No.	ROADWAY EXCAVATION (TYPE Y-1) AERIALLY DEPOSITED LEAD	ROADWAY EXCAVATION (TYPE Z-2) AERIALLY DEPOSITED LEAD	ROADWAY EXCAVATION	EMBANKMENT (N)	PRECAST PRESTRESSED CONCRETE PAVEMENT	JOINTED PLAIN CONCRETE PAVEMENT	JOINTED PLAIN CONCRETE PAVEMENT (RAPID STRENGTH CONCRETE 550 PSI)	JOINTED PLAIN CONCRETE PAVEMENT (RAPID STRENGTH CONCRETE 400 PSI)	DOWEL BAR RETROFIT	DOWEL BAR (DRILL & BOND)	HOT MIXED ASPHALT (TYPE B)	GEOSYNTHETIC PAVEMENT INTERLAYER	ASPHALT PAVING (BINDER, GEOSYNTHETIC PAVEMENT INTERLAYER)	LEAN CONCRETE BASE (RAPID SETTING)	LEAN CONCRETE BASE	CLASS 3 AGGREGATE BASE	TIE BAR (DRILL & BOND)	SEAL PAVEMENT JOINT	SEAL LONGITUDINAL ISOLATION JOINT	GRIND CONCRETE PAVEMENT	PLACE HMA DIKE (TYPE A)	PLACE HMA DIKE (TYPE C)	PLACE HMA DIKE (TYPE E)	PLACE HMA DIKE (TYPE F)	BAR REINFORCING STEEL	REPAIR SPALLED JOINT (POLYESTER GROUT)
		CY	CY	CY	CY	CY	CY	CY	CY	EA	EA	TON	SQYD	TON	CY	CY	CY	EA	LF	LF	SQYD	LF	LF	LF	LF	LB	SQYD
Sta 1221+89.62 TO Sta 1225+91.37 (CONN1)	L-8		140	320	460		227									99	138	156	605		2240						
Sta 1233+00 TO Sta 1234+50 (CONN1)	L-8			180		50			7	14					35					242	795					46	
Sta 1231+76.13 TO Sta 1234+50 (CONN2)	L-8		200	480	50	115	92		10	14		4			80	40	56		180	514	1685				269		
Sta 1222+21.82 TO Sta 1229+75 (CONN3)	L-8						520				14					228	317	284	2562		1670						
Sta 1222+42.38 TO Sta 1228+51 (CONN3)	L-8								525		70				290						1686						
Sta 1222+42.38 TO Sta 1229+75+00 (CONN3)	L-8		100	1030	140															60						140	
Sta 1228+51 TO Sta 1229+75 (CONN3)	L-8											1.5											31		51		
Sta 13+30 TO Sta 16+70 (OL2)	L-8		310	450	660							537			265		530										
Sta 14+30 TO Sta 16+70 (OL2)	L-8											7												240			
Sta 16+25 TO Sta 16+70 (OL2)	L-8											1.5												55			
Sta 1233+11.31 TO Sta 1234+62 (OL3)	L-8			200	285																						
Sta 1233+32.53 TO Sta 1234+62 (OL3)	L-8								121						53		74		250		430						100
Sta 1234+50 TO Sta 1237+44.91 (CONN1)	L-9			460		125				14					78					540	1435					80	
Sta 1235+43.66 TO Sta 1237+44.91 (CONN1)	L-9								60						33			110	102								
Sta 1234+50 TO Sta 1237+36.82 (CONN2)	L-9		125	410	1240	120	86			14					75	37	52		200	580	1600					114	
Sta 1234+50 TO Sta 1237+18.58 (CONN2)	L-9											2													265		
Sta 1234+56.38 TO Sta 1237+36.82 (CONN2)	L-9								72						40			144	204								
Sta 1235+83.66 TO Sta 1237+46.51 (CONN2)	L-9		720	750																							
Sta 16+70 TO Sta 18+56.80 (OL2)	L-9		160	650	10							346			160		320							364			
Sta 1234+62 TO Sta 1237+56.82 (OL3)	L-9			660	85				377						164		229		860		985						
SHEET TOTAL			1755	5590	2930	410	925		1172	56	84	899			1273	404	1716	694	4963	1936	12526		31	659	585	380	100

(N) - NOT A SEPARATE PAY ITEM, FOR INFORMATION ONLY

SUMMARY OF QUANTITIES

Q-4

STATE OF CALIFORNIA - DEPARTMENT OF TRANSPORTATION
Caltrans
DESIGN

FUNCTIONAL SUPERVISOR: ALINE ANTARAMIAN
CALCULATED-DESIGNED BY: MONA GIRGUIS
CHECKED BY: I. L. REYNON JR.
REVISED BY
DATE REVISED

LAST REVISION 00-00-00
DATE PLOTTED => 29-JUN-2011
TIME PLOTTED => 09:30

Dist	COUNTY	ROUTE	POST MILES TOTAL PROJECT	SHEET No.	TOTAL SHEETS
07	LA	710	17.2/26.4	927	1507

REGISTERED CIVIL ENGINEER 2-3-11 DATE

6-27-11
PLANS APPROVAL DATE

REGISTERED PROFESSIONAL ENGINEER LE NGUYEN No. 65414 Exp. 9-30-11 CIVIL STATE OF CALIFORNIA

THE STATE OF CALIFORNIA OR ITS OFFICERS OR AGENTS SHALL NOT BE RESPONSIBLE FOR THE ACCURACY OR COMPLETENESS OF SCANNED COPIES OF THIS PLAN SHEET.

ROADWAY ITEMS

LOCATION	SHEET No.	ROADWAY EXCAVATION (TYPE Y-1) AERIALLY DEPOSITED LEAD	ROADWAY EXCAVATION (TYPE Z-2) AERIALLY DEPOSITED LEAD	ROADWAY EXCAVATION	EMBANKMENT (N)	PRECAST PRESTRESSED CONCRETE PAVEMENT	JOINTED PLAIN CONCRETE PAVEMENT	JOINTED PLAIN CONCRETE PAVEMENT (RAPID STRENGTH CONCRETE 550 PSI)	JOINTED PLAIN CONCRETE PAVEMENT (RAPID STRENGTH CONCRETE 400 PSI)	DOWEL BAR RETROFIT	DOWEL BAR (DRILL & BOND)	HOT MIXED ASPHALT (TYPE B)	GEOSYNTHETIC PAVEMENT INTERLAYER	PAVING ASPHALT (BINDER, GEOSYNTHETIC PAVEMENT INTERLAYER)	LEAN CONCRETE BASE (RAPID SETTING)	LEAN CONCRETE BASE	CLASS 3 AGGREGATE BASE	TIE BAR (DRILL & BOND)	SEAL PAVEMENT JOINT	SEAL LONGITUDINAL ISOLATION JOINT	GRIND CONCRETE PAVEMENT	PLACE HMA DIKE (TYPE A)	PLACE HMA DIKE (TYPE C)	PLACE HMA DIKE (TYPE E)	PLACE HMA DIKE (TYPE F)	BAR REINFORCING STEEL	REPAIR SPALLED JOINTS (POLYESTER GROUT)
		CY	CY	CY	CY	CY	CY	CY	CY	EA	EA	TON	SQYD	TON	CY	CY	CY	EA	LF	LF	SQYD	LF	LF	LF	LF	LB	SQYD
Sta 1239+33.34 TO Sta 1247+50.00	L-9		285	4078	15																						
Sta 1239+32.64 TO Sta 1247+50.00 (SB)	L-9					717	283		165		14				491	123	173	340	555	1686	6320					40	
Sta 1239+32.64 TO Sta 1247+50.00 (NB)	L-9					682	168.5		391		16				549	74	341		1045	1651	6675					70	
Sta 1247+44.28 TO Sta 1247+50.00 (C/L)	L-9						6				22					3	4			16						35	
Sta 1247+50.00 TO Sta 1261+50.00	L-10		500	6614	100																						
Sta 1247+50.00 TO Sta 1261+50.00 (SB)	L-10					1231	321		451	76	8				875	140	463	31	1478	2465	10946					45	
Sta 1251+50.37 TO Sta 1254+90.54 (SB)	L-10											5													341		115
Sta 1247+50.00 TO Sta 1261+50.00 (NB)	L-10					1406	317		497.5	76	8				952	138	432.5	218	1338	2469	11408						
Sta 47+35.00 TO Sta 50+69.67 (OLY4)	L-10											393			194		387										
Sta 1247+50.00 TO Sta 1261+50.00 (C/L)	L-10						1165								507		709		2274	142.5						282	
Sta 1261+50.00 TO Sta 1275+50.00	L-11		1640	15735	71																						
Sta 1261+50.00 TO Sta 1275+50.00 (SB)	L-11					1819	501		224	50	8				1108	218	441.5		1318	2850	13385					35	
Sta 1264+46.49 TO Sta 1275+50.00 (SB)	L-11											26										564	125	302	113		
Sta 1261+50.00 TO Sta 1275+50.00 (C/L)	L-11						1373									597	836		2692	104						226.5	
SHEET TOTAL			2425	26427	186	5855	4134.5		1728.5	202	76	424			4676	1293	3787	589	10700	11383.5	48734	564	125	302	454	733.5	115

(N) - NOT A SEPARATE PAY ITEM, FOR INFORMATION ONLY

SUMMARY OF QUANTITIES
Q-5

STATE OF CALIFORNIA - DEPARTMENT OF TRANSPORTATION
Caltrans
DESIGN
FUNCTIONAL SUPERVISOR: ALINE ANTARAMIAN
CALCULATED-DESIGNED BY: MONA GIRGUIS
CHECKED BY: I. L. REYNON JR.
REVISED BY
DATE REVISED

LAST REVISION 00-00-00
DATE PLOTTED => 29-JUN-2011
TIME PLOTTED => 09:30

Dist	COUNTY	ROUTE	POST MILES TOTAL PROJECT	SHEET No.	TOTAL SHEETS
07	LA	710	17.2/26.4	928	1507

REGISTERED CIVIL ENGINEER 2-3-11 DATE

6-27-11
PLANS APPROVAL DATE

REGISTERED PROFESSIONAL ENGINEER LE NGUYEN No. 65414 Exp. 9-30-11 CIVIL STATE OF CALIFORNIA

THE STATE OF CALIFORNIA OR ITS OFFICERS OR AGENTS SHALL NOT BE RESPONSIBLE FOR THE ACCURACY OR COMPLETENESS OF SCANNED COPIES OF THIS PLAN SHEET.

ROADWAY ITEMS

LOCATION	SHEET No.	ROADWAY EXCAVATION (TYPE Y-1) AERIALLY DEPOSITED LEAD	ROADWAY EXCAVATION (TYPE Z-2) AERIALLY DEPOSITED LEAD	ROADWAY EXCAVATION	EMBANKMENT (N)	PRECAST PRESTRESSED CONCRETE PAVEMENT	JOINTED PLAIN CONCRETE PAVEMENT	JOINTED PLAIN CONCRETE PAVEMENT (RAPID STRENGTH CONCRETE 550 PSI)	JOINTED PLAIN CONCRETE PAVEMENT (RAPID STRENGTH CONCRETE 400 PSI)	DOWEL BAR RETROFIT	DOWEL BAR (DRILL & BOND)	HOT MIXED ASPHALT (TYPE B)	GEOSYNTHETIC PAVEMENT INTERLAYER	PAVING ASPHALT (BINDER, GEOSYNTHETIC PAVEMENT INTERLAYER)	LEAN CONCRETE BASE (RAPID SETTING)	LEAN CONCRETE BASE	CLASS 3 AGGREGATE BASE	TIE BAR (DRILL & BOND)	SEAL PAVEMENT JOINT	SEAL LONGITUDINAL ISOLATION JOINT	GRIND CONCRETE PAVEMENT	PLACE HMA DIKE (TYPE A)	PLACE HMA DIKE (TYPE C)	PLACE HMA DIKE (TYPE E)	PLACE HMA DIKE (TYPE F)	BAR REINFORCING STEEL	REPAIR SPALLED JOINTS (POLYESTER GROUT)
		CY	CY	CY	CY	CY	CY	CY	CY	EA	EA		SQYD	TON	CY	CY	CY	EA	LF	LF	SQYD	LF	LF	LF	LF	LB	SQYD
Sta 1261+50.00 TO Sta 1275+50.00 (NB)	L-11					1541	376		1227	26	26				1330	164	892	284	2748	2832.5	14366					107	
Sta 69+47.11-74+90.00 (Conn A)	L-11								919						400		560										
Sta 74+63.97-74+73.97.00 (Conn A)	L-11											1										10					
Sta 73+45.29-74+90.00 (Conn A)	L-11											4										145					
Sta 1273+59.00 TO Sta 1275+50 (NB)	L-11											5												191			
Sta 1275+50.00 TO Sta 1289+50.00	L-12		1745	5358	189																						
Sta 75+53.00 TO Sta 77+16.62 (Conn B)	L-12											4.3												161.5			
Sta 76+06.34 TO Sta 77+16.62 (Conn B)	L-12																										175
Sta 1275+50.00 TO Sta 1289+50.00 (SB)	L-12					630	362		889	17	22				669	158	668	318	1683	3286	11969					91	
Sta 1277+02.60 TO Sta 1289+50.00 (SB)	L-12											13.5										15	135	406.5	100		
Sta 86+51.56 TO Sta 89+34.17 (H)	L-12											8.7										283					
Sta 1275+50.00 TO Sta 1289+50.00 (C/L)	L-12						1777									773	1082		3462	63						128	
Sta 1275+50.00 TO Sta 1289+50.00 (NB)	L-12					1143	384		270	14	28	41			752	184	431		1270	2866	11253					101	
Sta 1275+50.00 TO Sta 1289+50.00 (NB)	L-12											27.5												1044			
Sta 82+44.45 TO Sta 84+62.30 (F)	L-12											240.5			116		232							218			
SHEET TOTAL			1745	5358	189	3314	2899		3305	57	76	345.5			3267	1279	3865	602	9163	9047.5	37588	453	135	2021	100	427	175

(N) - NOT A SEPARATE PAY ITEM, FOR INFORMATION ONLY

SUMMARY OF QUANTITIES

Q-6

STATE OF CALIFORNIA - DEPARTMENT OF TRANSPORTATION
Caltrans
DESIGN

FUNCTIONAL SUPERVISOR: ALINE ANTARAMIAN
CALCULATED-DESIGNED BY: MONA GIRGUIS
CHECKED BY: I. L. REYNON JR.
REVISED BY
DATE REVISED

LAST REVISION 00-00-00 | DATE PLOTTED => 29-JUN-2011 | TIME PLOTTED => 09:30

Dist	COUNTY	ROUTE	POST MILES TOTAL PROJECT	SHEET No.	TOTAL SHEETS
07	LA	710	17.2/26.4	929	1507

REGISTERED CIVIL ENGINEER 2-3-11 DATE

6-27-11
PLANS APPROVAL DATE

REGISTERED PROFESSIONAL ENGINEER LE NGUYEN No. 65414 Exp. 9-30-11 CIVIL STATE OF CALIFORNIA

THE STATE OF CALIFORNIA OR ITS OFFICERS OR AGENTS SHALL NOT BE RESPONSIBLE FOR THE ACCURACY OR COMPLETENESS OF SCANNED COPIES OF THIS PLAN SHEET.

ROADWAY ITEMS

LOCATION	SHEET No.	ROADWAY EXCAVATION (TYPE Y-1) AERIALLY DEPOSITED LEAD	ROADWAY EXCAVATION (TYPE Z-2) AERIALLY DEPOSITED LEAD	ROADWAY EXCAVATION	EMBANKMENT (N)	PRECAST PRESTRESSED CONCRETE PAVEMENT	JOINTED PLAIN CONCRETE PAVEMENT	JOINTED PLAIN CONCRETE PAVEMENT (RAPID STRENGTH CONCRETE 550 PSI)	JOINTED PLAIN CONCRETE PAVEMENT (RAPID STRENGTH CONCRETE 400 PSI)	DOWEL BAR RETROFIT	DOWEL BAR (DRILL & BOND)	HOT MIXED ASPHALT (TYPE B)	GEOSYNTHETIC PAVEMENT INTERLAYER	PAVING ASPHALT (BINDER, GEOSYNTHETIC PAVEMENT INTERLAYER)	LEAN CONCRETE BASE (RAPID SETTING)	LEAN CONCRETE BASE	CLASS 3 AGGREGATE BASE	TIE BAR (DRILL & BOND)	SEAL PAVEMENT JOINT	SEAL LONGITUDINAL ISOLATION JOINT	GRIND CONCRETE PAVEMENT	PLACE HMA DIKE (TYPE A)	PLACE HMA DIKE (TYPE C)	PLACE HMA DIKE (TYPE E)	PLACE HMA DIKE (TYPE F)	BAR REINFORCING STEEL	REPAIR SPALLED JOINTS (POLYESTER GROUT)
		CY	CY	CY	CY	CY	CY	CY	CY	EA	EA	TON	SQYD	TON	CY	CY	CY	EA	LF	LF	SQYD	LF	LF	LF	LF	LB	SQYD
Sta 1289+50.00 TO Sta 1303+50.00	L-13	3562		13785	203																						
Sta 1289+50.00 TO Sta 1296+75.00 (SB)	L-13					489	122		469	29	8				476	53	360		1139	1455	6524					70	
Sta 1289+50.00 TO Sta 1296+75.00 (SB)	L-13											5										141	63		50		
Sta 1296+40.39 TO Sta 1303+75.00 (SB)	L-13											9.5											58	121	432		
Sta 93+21.77 TO Sta 97+00.00 (T2)	L-13											10										353					
Sta 1289+50.00 TO Sta 1296+75.00 (C/L)	L-13						883				27					384	538	664	1698	101						178	
Sta 1289+50.00 TO Sta 1296+75.00 (NB)	L-13					375	69		537	30	23	65			474	30	432		1255	1602	6588					209.5	
Sta 1289+50.00 TO Sta 1296+75.00 (NB)	L-13											5										148		22			
Sta 88+69.77 TO Sta 90+00.00 (T1)	L-13											145	394	0.4	71.5		143										
Sta 88+69.77 TO Sta 95+35.05 (T1)	L-13											15.5										261	208	205	102		
Sta 1296+75.00 TO Sta 1303+50.00	L-13						3852				144					1693	2371				10134						50
Sta 1296+75.00 TO Sta 1303+50.00 (NB)	L-13											11.5										73	63	115	425		
Sta 1300+34.83 TO Sta 1300+73.76 (NB)	L-13						18																			995	
Sta 1300+11.00 TO Sta 1300+49.74 (SB)	L-13						24																			1304	
Sta 1303+50.00 TO Sta 1317+50.00	L-14	2451		24707	143															76						140.5	
Sta 1303+50.00 TO Sta 1317+50.00	L-14						7920									3444	5383	1182	1817		23126						
Sta 1303+50.00 TO Sta 1317+50.00 (SB)	L-14											14								90		107	34	411		158.5	
Sta 306+95.06 TO Sta 316+32.50 (C)	L-14											243	419	0.5	120		240										
Sta 313+22.26 TO Sta 316+32.50 (C)	L-14											1											98		25		
Sta 1303+50.00 TO Sta 1317+50.00 (NB)	L-14											12.5								59			125	416	50	101	
SHEET TOTAL		6013		38492	346	864	12888		1006	59	202	537	813	0.9	1141.5	5604	9467	1846	5909	3383	46372	1083	649	1290	1084	3156.5	50

(N) - NOT A SEPARATE PAY ITEM, FOR INFORMATION ONLY

SUMMARY OF QUANTITIES

Q-7

DARRYL MAYS — REVISED BY
LE NGUYEN — DATE REVISED
CALCULATED-DESIGNED BY
CHECKED BY
FUNCTIONAL SUPERVISOR
RENE YIN

STATE OF CALIFORNIA - DEPARTMENT OF TRANSPORTATION
Caltrans
DESIGN

LAST REVISION 00-00-00 DATE PLOTTED => 29-JUN-2011 TIME PLOTTED => 09:30

Dist	COUNTY	ROUTE	POST MILES TOTAL PROJECT	SHEET No.	TOTAL SHEETS
07	LA	710	17.2/26.4	930	1507

REGISTERED CIVIL ENGINEER 2-3-11 DATE

6-27-11
PLANS APPROVAL DATE

REGISTERED PROFESSIONAL ENGINEER LE NGUYEN No. 65414 Exp. 9-30-11 CIVIL STATE OF CALIFORNIA

THE STATE OF CALIFORNIA OR ITS OFFICERS OR AGENTS SHALL NOT BE RESPONSIBLE FOR THE ACCURACY OR COMPLETENESS OF SCANNED COPIES OF THIS PLAN SHEET.

ROADWAY ITEMS

LOCATION	SHEET No.	ROADWAY EXCAVATION (TYPE Y-1) AERIALLY DEPOSITED LEAD	ROADWAY EXCAVATION (TYPE Z-2) AERIALLY DEPOSITED LEAD	ROADWAY EXCAVATION	EMBANKMENT (N)	PRECAST PRESTRESSED CONCRETE PAVEMENT	JOINTED PLAIN CONCRETE PAVEMENT	JOINTED PLAIN CONCRETE PAVEMENT (RAPID STRENGTH CONCRETE 550 PSI)	JOINTED PLAIN CONCRETE PAVEMENT (RAPID STRENGTH CONCRETE 400 PSI)	DOWEL BAR RETROFIT	DOWEL BAR (DRILL & BOND)	HOT MIXED ASPHALT (TYPE B)	GEOSYNTHETIC PAVEMENT INTERLAYER	PAVING ASPHALT (BINDER, GEOSYNTHETIC PAVEMENT INTERLAYER)	LEAN CONCRETE BASE (RAPID SETTING)	LEAN CONCRETE BASE	CLASS 3 AGGREGATE BASE	TIE BAR (DRILL & BOND)	SEAL PAVEMENT JOINT	SEAL LONGITUDINAL ISOLATION JOINT	GRIND CONCRETE PAVEMENT	PLACE HMA DIKE (TYPE A)	PLACE HMA DIKE (TYPE C)	PLACE HMA DIKE (TYPE E)	PLACE HMA DIKE (TYPE F)	BAR REINFORCING STEEL	REPAIR SPALLED JOINTS (POLYESTER GROUT)
		CY	CY	CY	CY	CY	CY	CY	CY	EA	EA	TON	SQYD	TON	CY	CY	CY	EA	LF	LF	SQYD	LF	LF	LF	LF	LB	SQYD
Sta 307+00.63 TO Sta 311+00.00 (F1)	L-14											416			205		410										
Sta 307+00.63 TO Sta 311+04.75 (F1)	L-14											10.5												400			
Sta 1317+50.00 TO Sta 1330+50.00	L-15	1000	1627	14698	319															141						237	
Sta 1317+50.00 TO Sta 1328+07.11 (SB)	L-15						4055				136					1763	2468		1557		8061						
Sta 1328+07.11 TO Sta 1330+50.00 (SB)	L-15					278	225		57	14	16				179	98	172		484	1213	2922						
Sta 1317+50.00 TO Sta 1329+98.26 (SB)	L-15											26.6										383	63	566	50		
Sta 143+89.00 TO Sta 146+39.55 (Conn D)	L-15								369						160		224		708								
Sta 143+89.00 TO Sta 146+39.55 (Conn D)	L-15											7												251			
Sta 1317+50.00 TO Sta 1324+50.00	L-15						794									345	483										
Sta 1324+50.00 TO Sta 1330+50.00 (NB)	L-15					240			283.5	14					256.5		172.5		547	1190	11429						
Sta 200+39.28 TO Sta 204+83.00 (Conn C)	L-15								637.5						277		388		1255								
Sta 203+01.67 TO Sta 203+51.67 (Conn C)	L-15											6.5											63	200	50		
Sta 1330+50.00 TO Sta 1344+50.00	L-16		1125	9749	234																						
Sta 141+38.14 TO Sta 142+47.81 (Conn D)	L-16								228						99		139			567							
Sta 143+13.24 TO Sta 143+43.71 (Conn D)	L-16								64			0.2			28		39			153				9			
Sta 1330+50.00 TO Sta 1330+95.00 (SB)	L-16					18			20	12					22		13			89	544						
Sta 1332+35.00 TO Sta 1344+47.50 (SB)	L-16											16											63	327	513		
SHEET TOTAL		1000	2752	24447	553	536	5074		1659	40	152	482.8			1226.5	2206	4508.5		4551	3353	22956	383	189	1753	613	237	

(N) - NOT A SEPERATEPAY ITEM, FOR INFORMATION ONLY

SUMMARY OF QUANTITIES
Q-8

REVISED BY | DATE REVISED

DARRYL MAYS | LE NGUYEN

CALCULATED-DESIGNED BY | CHECKED BY

FUNCTIONAL SUPERVISOR: RENE YIN

STATE OF CALIFORNIA - DEPARTMENT OF TRANSPORTATION

Caltrans

DESIGN

LAST REVISION 00-00-00 | DATE PLOTTED => 29-JUN-2011 | TIME PLOTTED => 10:53

Dist	COUNTY	ROUTE	POST MILES TOTAL PROJECT	SHEET No.	TOTAL SHEETS
07	LA	710	17.2/26.4	931	1507

REGISTERED CIVIL ENGINEER 2-3-11 DATE

6-27-11
PLANS APPROVAL DATE

REGISTERED PROFESSIONAL ENGINEER LE NGUYEN No. 65414 Exp. 9-30-11 CIVIL STATE OF CALIFORNIA

THE STATE OF CALIFORNIA OR ITS OFFICERS OR AGENTS SHALL NOT BE RESPONSIBLE FOR THE ACCURACY OR COMPLETENESS OF SCANNED COPIES OF THIS PLAN SHEET.

ROADWAY ITEMS

LOCATION	SHEET No.	ROADWAY EXCAVATION (TYPE Y-1) AERIALLY DEPOSITED LEAD	ROADWAY EXCAVATION (TYPE Z-2) AERIALLY DEPOSITED LEAD	ROADWAY EXCAVATION	EMBANKMENT (N)	PRECAST PRESTRESSED CONCRETE PAVEMENT	JOINTED PLAIN CONCRETE PAVEMENT	JOINTED PLAIN CONCRETE PAVEMENT (RAPID STRENGTH CONCRETE 550 PSI)	JOINTED PLAIN CONCRETE PAVEMENT (RAPID STRENGTH CONCRETE 400 PSI)	DOWEL BAR RETROFIT	DOWEL BAR (DRILL & BOND)	HOT MIXED ASPHALT (TYPE B)	GEOSYNTHETIC PAVEMENT INTERLAYER	PAVING ASPHALT (BINDER, GEOSYNTHETIC INTERLAYER	LEAN CONCRETE BASE (RAPID SETTING)	LEAN CONCRETE BASE	CLASS 3 AGGREGATE BASE	TIE BAR (DRILL & BOND)	SEAL PAVEMENT JOINT	SEAL LONGITUDINAL ISOLATION JOINT	GRIND CONCRETE PAVEMENT	PLACE HMA DIKE (TYPE A)	PLACE HMA DIKE (TYPE C)	PLACE HMA DIKE (TYPE E)	PLACE HMA DIKE (TYPE F)	BAR REINFORCING STEEL	REPAIR SPALLED JOINTS (POLYESTER GROUT)
		CY	CY	CY	CY	CY	CY	CY	CY	EA	EA	TON	SQYD	TON	CY	CY	CY	EA	LF	LF	SQYD	LF	LF	LF	LF	LB	SQYD
Sta 1332+38.87 TO Sta 1344+50.00 (SB)	L-16					843	832		433	40	22				656.5	361.5	770		1395	2512	9952					73.5	
Sta 41+59.00 TO Sta 44+89.56 (F3)	L-16											9												331			
Sta 1330+50.00 TO Sta 1331+04.44 (C/L)	L-16						69									30	42		1134								
Sta 1330+50.00 TO Sta 1331+40.18 (NB)	L-16					17			30	12					22		18			84	632						
Sta 204+83.00 TO Sta 205+71.48 (Conn C)	L-16								90						39		55		332								
Sta 206+37.00 TO Sta 209+10.70 (Conn C)	L-16								342						148.5		208		806								
Sta 206+98.18 TO Sta 209+10.70 (Conn C)	L-16											3													220		
Sta 1332+06.29 TO Sta 1344+50.00 (NB)	L-16					975	86		758	26	16				871	37.5	514		1729	2410	9778					56.5	
Sta 1334+98.77 TO Sta 1344+50.00 (NB)	L-16											3.5												72	113		
Sta 35+96.50 TO Sta 37+29.46 (F2)	L-16											175			82		163						134		681		
																											90
Sta 1344+50.00 TO Sta 1358+50.00	L-17		2109	4573	1164																						
Sta 1344+50.00 TO Sta 1358+50.00 (SB)	L-17					655	1040.5					35.5			364	470	666.5		2040	2850	8499					85	
Sta 1345+91.00 TO Sta 1358+50.00 (SB)	L-17											25.5											63	539	799		
Sta 44+11.00 TO Sta 44+60.05 (F2)	L-17											1													49		
Sta 1344+50.00 TO Sta 1358+50.00 (NB)	L-17					1328	1120.5			14	15	85			755.5	529	787.50		1436	2802	9402						
Sta 1344+98.78 TO Sta 1358+50.00 (NB)	L-17											24											40	447	865		
Sta 1358+50.00 TO Sta 1372+50.00	L-18		1284	7450	529																						
SHEET TOTAL			3393	12023	1693	3818	3148		1653	92	53	361.5			2938.5	1428	3224		8872	10658	38263		237	1389	2727	215	90

(N) - NOT A SEPARATE PAY ITEM, FOR INFORMATION ONLY

SUMMARY OF QUANTITIES
Q - 9

STATE OF CALIFORNIA - DEPARTMENT OF TRANSPORTATION
DESIGN

FUNCTIONAL SUPERVISOR: RENE YIN
CALCULATED-DESIGNED BY: LE NGUYEN
CHECKED BY: DARRYL MAYS
REVISED BY
DATE REVISED

LAST REVISION 00-00-00
DATE PLOTTED => 29-JUN-2011
TIME PLOTTED => 10:53

Dist	COUNTY	ROUTE	POST MILES TOTAL PROJECT	SHEET No.	TOTAL SHEETS
07	LA	710	17.2/26.4	932	1507

REGISTERED CIVIL ENGINEER 2-3-11 DATE

6-27-11
PLANS APPROVAL DATE

REGISTERED PROFESSIONAL ENGINEER LE NGUYEN No. 65414 Exp. 9-30-11 CIVIL STATE OF CALIFORNIA

THE STATE OF CALIFORNIA OR ITS OFFICERS OR AGENTS SHALL NOT BE RESPONSIBLE FOR THE ACCURACY OR COMPLETENESS OF SCANNED COPIES OF THIS PLAN SHEET.

ROADWAY ITEMS

LOCATION	SHEET No.	ROADWAY EXCAVATION (TYPE Y-1) AERIALLY DEPOSITED LEAD	ROADWAY EXCAVATION (TYPE Z-2) AERIALLY DEPOSITED LEAD	ROADWAY EXCAVATION	EMBANKMENT (N)	PRECAST PRESTRESSED CONCRETE PAVEMENT	JOINTED PLAIN CONCRETE PAVEMENT	JOINTED PLAIN CONCRETE PAVEMENT (RAPID STRENGTH CONCRETE 550 PSI)	JOINTED PLAIN CONCRETE PAVEMENT (RAPID STRENGTH CONCRETE 400 PSI)	DOWEL BAR RETROFIT	DOWEL BAR (DRILL & BOND)	HOT MIXED ASPHALT (TYPE B)	GEOSYNTHETIC PAVEMENT INTERLAYER	PAVING ASPHALT (BINDER, GEOSYNTHETIC PAVEMENT INTERLAYER)	LEAN CONCRETE BASE (RAPID SETTING)	LEAN CONCRETE BASE	CLASS 3 AGGREGATE BASE	TIE BAR (DRILL & BOND)	SEAL PAVEMENT JOINT	SEAL LONGITUDINAL ISOLATION JOINT	GRIND CONCRETE PAVEMENT	PLACE HMA DIKE (TYPE A)	PLACE HMA DIKE (TYPE C)	PLACE HMA DIKE (TYPE E)	PLACE HMA DIKE (TYPE F)	BAR REINFORCING STEEL	REPAIR SPALLED JOINTS (POLYESTER GROUT)
		CY	CY	CY	CY	CY	CY	CY	CY	EA	EA	TON	SQYD	TON	CY	CY	CY	EA	LF	LF	SQYD	LF	LF	LF	LF	LB	SQYD
Sta 1358+00.00 TO Sta 1372+50.00 (SB)	L-18					931	769.5								517.5	334.5	468.5		1505	2727	7981						
Sta 1358+00.00 TO Sta 1372+50.00 (SB)	L-18											14													987		
Sta 1358+00.00 TO Sta 1372+50.00 (NB)	L-18					924	812.5		246		14	618			650	657.5	1078	434	1375	2876	8208						
Sta 1358+00.00 TO Sta 1372+50.00 (NB)	L-18											44.5										836	94	90	1368		
Sta 1372+50.00 TO Sta 1386+50.00	L-19		958	6898	293																						
Sta 1372+50.00 TO Sta 1386+50.00 (SB)	L-19					1320.5	510.5			26	9	281			747	360.5	595		1047	2809	9513					18	
Sta 1372+50.00 TO Sta 1386+50.00 (SB)	L-19											14											140	409.5	150		
Sta 86+30.15 TO Sta 86+51.00 (R)	L-19											38			19		37.5										
Sta 1372+50.00 TO Sta 1386+50.00 (NB)	L-19					691.5	378.5		402	14	28	337			551	331	782	47	1549	2852	8049					57	
Sta 1372+50.00 TO Sta 1386+50.00 (NB)	L-19											18.5											10	339	694		
Sta 79+31.37 TO Sta 82+04.21 (C1)	L-19											7.5												259			90
Sta 1386+50.00 TO Sta 1392+88.78	L-20		742	5159	24																						
Sta 86+51.00 TO Sta 93+02.14 (R)	L-20											899.5			443		886										
Sta 1386+50.00 TO Sta 1392+88.78 (SB)	L-20					357			761	24		269.5			528.5	133	717		1432	1266	4737						
Sta 1386+50.00 TO Sta 1390+39.35 (NB)	L-20					56	17		524	32	6				258.5	7.5	329		1976	133	2614						
Sta 1386+50.00 TO Sta 1390+39.35 (NB)	L-20											1.5											55		50		
Sta 87+18.17 TO Sta 90+31.39 (Conn E)	L-20											7.3												277			
SHEET TOTAL			1700	12057	317	4280	2488		1933	96	57	2550.3			3714.5	1824	4893	481	8884	12663	41102	836	299	1374.5	3249	75	90
TOTAL FROM SCQ-30							147.9					2445.2				1274.1	2405.8										
TOTAL ALL SHEETS		8818	19245	171962	25385	27669	34480.4	5666	18281	886	831	10214.3	1981	2.3	29594	16762.1	43567.3	7775	89781	70968	340506	7092	2073	8904	14174	13884	895

SUMMARY OF QUANTITIES
Q-10

STATE OF CALIFORNIA - DEPARTMENT OF TRANSPORTATION
DESIGN

FUNCTIONAL SUPERVISOR: RENE YIN
CALCULATED-DESIGNED BY: DARRYL MAYS
CHECKED BY: LE NGUYEN
REVISED BY
DATE REVISED

LAST REVISION 00-00-00
DATE PLOTTED => 29-JUN-2011
TIME PLOTTED => 10:53

Dist	COUNTY	ROUTE	POST MILES TOTAL PROJECT	SHEET No.	TOTAL SHEETS
07	LA	710	17.2/26.4	933	1507

Rene Yin 2-3-11
REGISTERED CIVIL ENGINEER DATE

6-27-11
PLANS APPROVAL DATE

REGISTERED PROFESSIONAL ENGINEER RENE YIN No. C49915 Exp. 9/30/12 CIVIL STATE OF CALIFORNIA

THE STATE OF CALIFORNIA OR ITS OFFICERS OR AGENTS SHALL NOT BE RESPONSIBLE FOR THE ACCURACY OR COMPLETENESS OF SCANNED COPIES OF THIS PLAN SHEET.

MINOR CONCRETE

LOCATION	SHEET No.	MINOR CONCRETE (STAMPED CONCRETE)	MINOR CONCRETE (GUTTER)	MINOR CONCRETE (MINOR STRUCTURE) ANCHOR BLOCK	MINOR CONCRETE				
					CONCRETE CURB (TYPE B4)	CONCRETE CURB (TYPE B4 Mod)	CONCRETE CURB (TYPE B2)	CONCRETE CURB (TYPE B2 Mod)	SIDEWALK & DRIVEWAY
		SQFT	CY	CY	CY	CY	CY	CY	CY
Sta 66+26.75 TO Sta 66+61.25 (OL1)	C-269								5
Sta 1103+75 TO Sta 1108+50 (NB)	L-3		20						
Sta 1108+50 TO Sta 1109+35.31 (NB)	L-4		4						
Sta 1121+94.74 TO 1122+05 (NB)	L-4			2.5					
Sta 1111+05.60 TO Sta 1111+15.88 (SB)	L-4			2.5					
Sta 1122+90.56 TO Sta 1129+25 (NB)	L-5		45						
Sta 1127+34 TO Sta 1131+00 (NB)	L-5	2873							
Sta 1125+03.25 TO Sta 1132+75 (SB)	L-5		30						
Sta 1146+67.13 TO Sta 1157+67 (SB)	L-6	1641							
Sta 53+00 TO Sta 58+00 (AT2)	L-7	9541							
Sta 55+79.64 TO Sta 56+16.92 (AT3)	L-7					4			
Sta 417+19 TO Sta 418+19 (AT7)	L-7	1551							
Sta 420+07.25 TO Sta 420+83 (AT7)	L-7	2352							
Sta 1222+49 TO Sta 1224+00 (CONN1)	L-8				9				
Sta 1222+42.38 TO Sta 1228+51 (CONN3)	L-8				37				
Sta 1226+75 TO Sta 1228+95.10 (CONN3)	L-8		11						
Sta 1248+41 TO Sta 1248+70 (SB)	L-12	701							
Sta 76+06.34 TO Sta 77+16.62 (Conn B)	L-12	403				6.3			
Sta 1276+03.34 TO Sta 1277+02.60 (SB)	L-12				5.7				
Sta 1285+15.28 TO Sta 1285+25.00 (SB)	L-12			2.5					
Sta 1292+26.00 TO Sta 1292+35.50 (SB)	L-13			2.5					
Sta 1296+40.39 TO Sta 1298+61.00 (SB)	L-13					5.7			
SUBTOTAL		19062	110	10	51.7	16			5
TOTAL THIS TABLE		19062	110	10	72.7				

MINOR CONCRETE

LOCATION	SHEET No.	MINOR CONCRETE (STAMPED CONCRETE)	MINOR CONCRETE (GUTTER)	MINOR CONCRETE (MINOR STRUCTURE) ANCHOR BLOCK	MINOR CONCRETE				
					CONCRETE CURB (TYPE B4)	CONCRETE CURB (TYPE B4 Mod)	CONCRETE CURB (TYPE B2)	CONCRETE CURB (TYPE B2 Mod)	SIDEWALK & DRIVEWAY
		SQFT	CY	CY	CY	CY	CY	CY	CY
Sta 96+34.46 TO Sta 97+00.00 (T2)	L-13	712				2.5		1.3	
Sta 87+31 TO Sta 88+30 (T1)	L-13	1800							
Sta 91+46.00 TO Sta 91+55.68 (T1)	L-13			2.5					
Sta 1289+71.81 TO Sta 1290+67.82 (NB)	L-13					5.5			
Sta 87+88.02 TO Sta 90+60.86 (T1)	L-13	219				4		0.6	
Sta 1312+43.24 TO Sta 1313+39.82 (SB)	L-14				5.5				
Sta 306+95.06 TO Sta 316+32.50 (C)	L-14	404	30			4		8.6	
Sta 1314+21.41 TO Sta 1317+50.00 (NB)	L-14		12.3						
Sta 311+00.63 TO Sta 311+04.75 (F1)	L-14							0.3	
Sta 144+42.82 TO Sta 146+39.55 (Conn D)	L-15	1108				11.2			
Sta 1329+01.46 TO Sta 1329+98.26 (NB)	L-15					5.3			
Sta 1317+50.00 TO Sta 1319+82.70 (NB)	L-15		5.7						
Sta 1321+63.00 TO Sta 1323+93.00 (NB)	L-15	3218							
Sta 1336+82.84 TO Sta 1337+87.11 (NB)	L-16					6			
Sta 35+96.50 TO Sta 37+59.51 (F2)	L-16	729				6		3.2	
Sta 1331+34.00 TO Sta 1332+47 (NB)	L-16	1421							
Sta 1383+27.50 TO Sta 1386+50.00 (SB)	L-19						17.8		
Sta 86+51.00 TO Sta 93+02.14 (R)	L-20	2337					36		
SUBTOTAL		11948	48	2.5	5.5	44.5	53.8	14	
FROM PREVIOUS TABLE		19062	110	10	72.7				
GRAND TOTAL		31010	158	12.5	190.5				

(N) - NOT A separate PAY ITEM, FOR INFORMATION ONLY

SUMMARY OF QUANTITIES
Q-11

STATE OF CALIFORNIA - DEPARTMENT OF TRANSPORTATION
Caltrans® DESIGN

FUNCTIONAL SUPERVISOR: ALINE ANTARAMIAN
CALCULATED-DESIGNED BY: DARRYL MAYS
CHECKED BY: LE NGUYEN
REVISED BY
DATE REVISED

LAST REVISION 00-00-00
DATE PLOTTED => 29-JUN-2011
TIME PLOTTED => 10:53

Dist	COUNTY	ROUTE	POST MILES TOTAL PROJECT	SHEET No.	TOTAL SHEETS
07	LA	710	17.2/26.4	934	1507

REGISTERED CIVIL ENGINEER 2-3-11 DATE

6-27-11
PLANS APPROVAL DATE

REGISTERED PROFESSIONAL ENGINEER RENE YIN No. C49915 Exp. 9/30/12 CIVIL STATE OF CALIFORNIA

THE STATE OF CALIFORNIA OR ITS OFFICERS OR AGENTS SHALL NOT BE RESPONSIBLE FOR THE ACCURACY OR COMPLETENESS OF SCANNED COPIES OF THIS PLAN SHEET.

CONCRETE BARRIER

LOCATION	SHEET No.	CONCRETE BARRIER (TYPE 736B)	CONCRETE BARRIER (TYPE 736B Mod)	CONCRETE BARRIER (TYPE 732B)	CONCRETE BARRIER (TYPE 60)	CONCRETE BARRIER (TYPE 60D)	CONCRETE BARRIER (TYPE 60G)	CONCRETE BARRIER (TYPE 60GC)	CONCRETE BARRIER (TYPE 60GE MOD)	CONCRETE BARRIER (TYPE 60GCR)	CONCRETE BARRIER (TYPE 60R)	CONCRETE BARRIER (TYPE 60S)	CONCRETE BARRIER (TYPE 60SE)	CONCRETE BARRIER (TYPE 60SC)	CONCRETE BARRIER (TYPE 60SW Mod)	CONCRETE BARRIER (TYPE 60W Mod)	CONCRETE BARRIER (TYPE 60E Mod)
		LF	LF	LF	LF	LF	LF	LF	LF	LF	LF	LF	LF	LF	LF	LF	LF
Sta 921+75 TO Sta 922+90.05 (SB)	L-1			68													
Sta 1086+00 TO Sta 1094+50 (C/L)	L-2															850	
Sta 1094+50 TO Sta 1108+50 (C/L)	L-3															1400	
Sta 1103+65 TO Sta 1106+15 (NB)	L-3		10		41	203											
Sta 1106+00 TO Sta 1108+50 (NB)	L-3					254											
Sta 1108+50 TO Sta 1109+35.31 (NB)	L-4					87											
Sta 1108+50 TO Sta 1122+50 (C/L)	L-4									219						1181	
Sta 1122+50.9059 TO Sta 1133+75 (NB)	L-5					1098											
Sta 1122+50 TO Sta 1136+50 (C/L)	L-5									207					97	1097	
Sta 1125+03.25 TO Sta 1132+85 (SB)	L-5		10			763											
Sta 1136+50 TO Sta 1150+50 (C/L)	L-6														1400		
Sta 1150+50 TO Sta 1160+72.20 (C/L)	L-7														788		
Sta 1159+96.26 TO Sta 1160+60.82 (NB)	L-7				64												
Sta 1224+00 TO Sta 1225+35.35 (CONN1)	L-8	133															
Sta 1226+75 TO Sta 1229+05.10 (CONN3)	L-8		10			212											
Sta 1229+75.82 TO Sta 1230+15.98 (CONN5)	L-8	40															
Sta 13+68.07 TO Sta 14+30 (OL2)	L-8			63													
Sta 1235+82.34 TO Sta 1237+56.82 (OL3)	L-9													175			
SHEET TOTAL		173	30	131	105	2617				426				175	2285	4528	

SUMMARY OF QUANTITIES

Q-12

STATE OF CALIFORNIA - DEPARTMENT OF TRANSPORTATION
Caltrans
DESIGN

FUNCTIONAL SUPERVISOR: ALINE ANTARAMIAN
CALCULATED-DESIGNED BY: MONA GIRGUIS
CHECKED BY: I. L. REYNON JR.
REVISED BY
DATE REVISED

LAST REVISION 00-00-00
DATE PLOTTED => 29-JUN-2011
TIME PLOTTED => 10:53

Dist	COUNTY	ROUTE	POST MILES TOTAL PROJECT	SHEET No.	TOTAL SHEETS
07	LA	710	17.2/26.4	935	1507

REGISTERED CIVIL ENGINEER 2-3-11 DATE

6-27-11
PLANS APPROVAL DATE

REGISTERED PROFESSIONAL ENGINEER LE NGUYEN No. 65414 Exp. 9-30-11 CIVIL STATE OF CALIFORNIA

THE STATE OF CALIFORNIA OR ITS OFFICERS OR AGENTS SHALL NOT BE RESPONSIBLE FOR THE ACCURACY OR COMPLETENESS OF SCANNED COPIES OF THIS PLAN SHEET.

CONCRETE BARRIER

LOCATION	SHEET NO.	CONCRETE BARRIER (TYPE 736B)	CONCRETE BARRIER (TYPE 736B Mod)	CONCRETE BARRIER (TYPE 732B)	CONCRETE BARRIER (TYPE 60)	CONCRETE BARRIER (TYPE 60D)	CONCRETE BARRIER (TYPE 60G)	CONCRETE BARRIER (TYPE 60GC)	CONCRETE BARRIER (TYPE 60GE MOD)	CONCRETE BARRIER (TYPE 60GCR)	CONCRETE BARRIER (TYPE 60R)	CONCRETE BARRIER (TYPE 60S)	CONCRETE BARRIER (TYPE 60SE)	CONCRETE BARRIER (TYPE 60SC)	CONCRETE BARRIER (TYPE 60SW Mod)	CONCRETE BARRIER (TYPE 60W Mod)	CONCRETE BARRIER (TYPE 60E Mod)
		LF	LF	LF	LF	LF	LF	LF	LF	LF	LF	LF	LF	LF	LF	LF	LF
Sta1238+72.05 TO Sta 1240+09.22 (C/L)	L-9									137.5							
Sta1239+33.34 TO Sta 1247+50.00 (SB)	L-9											817					
Sta 1247+44.28 TO Sta 1247+50.00 (C/L)	L-9															6	
Sta 1247+50.00 TO Sta 1254+90.16 (C/L)	L-10				297.5								91			352	
Sta 1247+50.00 TO Sta 1251+44.80 (SB)	L-10											395			387.50		
Sta 1256+37.67 TO Sta 1261+50.00 (C/L)	L-10										64	171			278		
Sta 1261+50.00 TO Sta 1275+50.00 (C/L)	L-11												96				
Sta 1266+66.52 TO Sta 1274+81.29 (NB)	L-11					815											
Sta 1275+50.00 TO Sta 1289+50.00 (NB)	L-12						583	400		173					244	73	
STA 1276+93.59 TO STA 1278+32.28 (NB)	L-12																139
Sta 1279+28.89 TO Sta 1279+93.46 (SB)	L-12					65											
Sta 1279+93.46 TO Sta 1280+03.46 (SB)	L-12		10														
Sta 1289+50.00 TO Sta 1303+50.00 (C/L)	L-13							533	172	363						226	126
SHEET TOTAL			10		297.5	880	583	933	172	673.5	64	1383	187		909.5	657	265

SUMMARY OF QUANTITIES
Q-13

STATE OF CALIFORNIA - DEPARTMENT OF TRANSPORTATION
Caltrans
DESIGN

FUNCTIONAL SUPERVISOR: RENE YIN
CALCULATED-DESIGNED BY: LE NGUYEN
CHECKED BY: DARRYL MAYS
REVISED BY
DATE REVISED

LAST REVISION 00-00-00
DATE PLOTTED => 29-JUN-2011
TIME PLOTTED => 10:53

Dist	COUNTY	ROUTE	POST MILES TOTAL PROJECT	SHEET No.	TOTAL SHEETS
07	LA	710	17.2/26.4	936	1507

REGISTERED CIVIL ENGINEER 2-3-11 DATE

6-27-11
PLANS APPROVAL DATE

REGISTERED PROFESSIONAL ENGINEER LE NGUYEN No. 65414 Exp. 9-30-11 CIVIL STATE OF CALIFORNIA

THE STATE OF CALIFORNIA OR ITS OFFICERS OR AGENTS SHALL NOT BE RESPONSIBLE FOR THE ACCURACY OR COMPLETENESS OF SCANNED COPIES OF THIS PLAN SHEET.

CONCRETE BARRIER

LOCATION	SHEET NO.	CONCRETE BARRIER (TYPE 736B)	CONCRETE BARRIER (TYPE 736B Mod)	CONCRETE BARRIER (TYPE 732B)	CONCRETE BARRIER (TYPE 60)	CONCRETE BARRIER (TYPE 60D)	CONCRETE BARRIER (TYPE 60G)	CONCRETE BARRIER (TYPE 60GC)	CONCRETE BARRIER (TYPE 60GE MOD)	CONCRETE BARRIER (TYPE 60GCR)	CONCRETE BARRIER (TYPE 60R)	CONCRETE BARRIER (TYPE 60S)	CONCRETE BARRIER (TYPE 60SE)	CONCRETE BARRIER (TYPE 60SC)	CONCRETE BARRIER (TYPE 60SW Mod)	CONCRETE BARRIER (TYPE 60W Mod)	CONCRETE BARRIER (TYPE 60E Mod)
		LF	LF	LF	LF	LF	LF	LF	LF	LF	LF	LF	LF	LF	LF	LF	LF
Sta 1303+50.00 TO Sta 1317+50.00 (C/L)	L-14							586.5								551.5	97
Sta 1305+68.42 TO Sta 1306+94.62 (SB)	L-14		126.5														
Sta 306+95.06 "C" TO Sta 315+00.00 "C" (SB)	L-14					805											
Sta 315+00.00 "C" TO Sta 315+10.00 "C" (SB)	L-14		10														
Sta 1317+50.00 TO Sta 1330+50.00 (C/L)	L-15						1063	59.5	163.5							15	
Sta 1317+50.00 TO Sta 1319+82.70 (NB)	L-15					233											
Sta 1318+05.70 TO Sta 1318+87.00 (SB)	L-15					18.5											
Sta 1330+50.00 TO Sta 1331+33.31 (C/L)	L-16						83.5										
Sta 1341+57.00 TO Sta 1344+50.00 (NB)	L-16				293												
Sta 1344+50.00 TO Sta 1348+77.77 (NB)	L-17				428												
SHEET TOTAL			136.5		721	1056.5	1146.5	646	163.5	165.5						566.5	97
TOTAL ALL SHEETS		173	177	131	1124	4554	1730	1579	336	1100	64	1383	187	175	3195	5752	362

SUMMARY OF QUANTITIES
Q-14

STATE OF CALIFORNIA - DEPARTMENT OF TRANSPORTATION
Caltrans
DESIGN

FUNCTIONAL SUPERVISOR: RENE YIN
CALCULATED-DESIGNED BY: DARRYL MAYS
CHECKED BY: LE NGUYEN
REVISED BY
DATE REVISED

LAST REVISION 00-00-00
DATE PLOTTED => 29-JUN-2011
TIME PLOTTED => 10:53

Dist	COUNTY	ROUTE	POST MILES TOTAL PROJECT	SHEET No.	TOTAL SHEETS
07	LA	710	17.2/26.4	937	1507

Rene Yin 2-3-11
REGISTERED CIVIL ENGINEER DATE

6-27-11
PLANS APPROVAL DATE

REGISTERED PROFESSIONAL ENGINEER RENE YIN No. C49915 Exp. 9/30/12 CIVIL STATE OF CALIFORNIA

THE STATE OF CALIFORNIA OR ITS OFFICERS OR AGENTS SHALL NOT BE RESPONSIBLE FOR THE ACCURACY OR COMPLETENESS OF SCANNED COPIES OF THIS PLAN SHEET.

MISCELLANEOUS ITEMS

LOCATION	SHEET No.	CRASH CUSHION (SAND FILLED)	CRASH CUSHION (REACT 9CBS)	BURIED POST END ANCHOR	MBGR (WOOD POST)	END ANCHOR ASSEMBLY (TYPE SFT)	ALTERNATIVE IN-LINE TERMINAL SYSTEM	ALTERNATIVE FLARED TERMINAL SYSTEM	TRANSITION RAILING (TYPE WB)	ROCK BLANKET	CHAIN LINK FENCE (TYPE CL-6)	8' CHAIN LINK GATE (TYPE CL-6)	3' CHAIN LINK GATE (TYPE CL-6)	3' CHAIN LINK GATE (TYPE CL-5)	SINGLE THRIE BEAM BARRIER (BRIDGE)	SINGLE THRIE BEAM BARRIER (WOOD POST)
		EA	EA	EA	LF	EA	EA	EA	EA	SQYD	LF	EA	EA	EA	LF	LF
Sta 948+15 TO Sta 951+38 (NB)	C-265				323	1		1								
Sta 950+32 TO Sta 950+38 (NB)	C-265													2		
Sta 951+53 TO Sta 951+59 (SB)	C-265													2		
Sta 66+26 TO Sta 66+62 (OL1)	C-266										20	2				
Sta 913+74.86 TO Sta 914+745.32 (NB)	L-1										75					
Sta 921+16.98 TO Sta 922+36.66 (NB)	L-1										140					
Sta 915+95.13 TO Sta 916+00.38 (SB)	L-1										55					
Sta 1102+60.21 TO Sta 1103+65 (NB)	L-3						1		1							
Sta 1121+20.30 TO Sta 1121+94.74 (NB)	L-4						1		1							
Sta 1111+05.60 TO Sta 1112+00 (SB)	L-4						1		1							
Sta 1129+25 TO Sta 1136+50 (NB)	L-5										725					
Sta 1132+85 TO Sta 1136+50 (SB)	L-5				354				1							
Sta 1137+25 TO Sta 1150+50 (NB)	L-6				1250				1							
Sta 1136+50 TO Sta 1137+00 (NB)	L-6										48					
Sta 1136+50 TO Sta 1149+04.84 (SB)	L-6				1321											
Sta 1147+44.19 TO Sta 1150+45 (SB)	L-6				288	1			1							
Sta 47+62.19 TO Sta 49+26.27 (AT1)	L-6				156	1										
SHEET TOTAL					3692	3	3	1	6		1063	2		4		

SUMMARY OF QUANTITIES
Q-15

STATE OF CALIFORNIA - DEPARTMENT OF TRANSPORTATION
Caltrans® DESIGN

FUNCTIONAL SUPERVISOR: ALINE ANTARAMIAN
CALCULATED-DESIGNED BY: I. L. REYNON JR.
CHECKED BY: MONA GIRGUIS
REVISED BY
DATE REVISED

LAST REVISION 00-00-00
DATE PLOTTED => 29-JUN-2011
TIME PLOTTED => 10:53

Dist	COUNTY	ROUTE	POST MILES TOTAL PROJECT	SHEET No.	TOTAL SHEETS
07	LA	710	17.2/26.4	938	1507

REGISTERED CIVIL ENGINEER 2-3-11 DATE

6-27-11
PLANS APPROVAL DATE

REGISTERED PROFESSIONAL ENGINEER RENE YIN No. C49915 Exp. 9/30/12 CIVIL STATE OF CALIFORNIA

THE STATE OF CALIFORNIA OR ITS OFFICERS OR AGENTS SHALL NOT BE RESPONSIBLE FOR THE ACCURACY OR COMPLETENESS OF SCANNED COPIES OF THIS PLAN SHEET.

MISCELLANEOUS ITEMS

LOCATION	SHEET No.	CRASH CUSHION (SAND FILLED)	CRASH CUSHION (REACT 9CBS)	BURIED POST END ANCHOR	MBGR (WOOD POST)	END ANCHOR ASSEMBLY (TYPE SFT)	ALTERNATIVE IN-LINE TERMINAL SYSTEM	ALTERNATIVE FLARED TERMINAL SYSTEM	TRANSITION RAILING (TYPE WB)	ROCK BLANKET	CHAIN LINK FENCE (TYPE CL-6)	8' CHAIN LINK GATE (TYPE CL-6)	3' CHAIN LINK GATE (TYPE CL-6)	3' CHAIN LINK GATE (TYPE CL-5)	SINGLE THRIE BEAM BARRIER (BRIDGE)	SINGLE THRIE BEAM BARRIER (WOOD POST)
		EA	EA	EA	LF	EA	EA	EA	EA	SQYD	LF	EA	EA	EA	LF	LF
Sta 1150+50 TO Sta 1156+66.12 (NB)	L-7				585	1										
Sta 1154+21 TO Sta 1155+00 (NB)	L-7						1		1							
Sta 1159+96.26 (NB)	L-7	21														
Sta 1151+64 TO Sta 1155+58.48 (SB)	L-7				363				2							
Sta 1158+62.51 TO Sta 1160+73.03 (SB)	L-7				220				2							
Sta 58+62.53 TO Sta 61+50 (AT3)	L-7				314				1							
Sta 58+71.22 TO Sta 59+03.79 (AT3)	L-7				25		1		1							
Sta 420+72.24 TO Sta 420+92.24 (AT7)	L-7										20					
Sta 1225+11.23 TO Sta 1225+38.68 (CONN1)	L-8								1							
Sta 1230+06.23 TO Sta 1230+29.92 (CONN1)	L-8								1							
Sta 1222+91.68 TO Sta 1224+91.27 (CONN2)	L-8				103	1										
Sta 1230+49.25 TO Sta 1234+50 (CONN2)	L-8	21			244				1							
Sta 1221+94.81 TO Sta 1224+19.76 (CONN3)	L-8						1								62	157
Sta 1222+42.38 TO Sta 1226+00 (CONN3)	L-8									530						
Sta 1228+95.10 TO Sta 1229+80.06 (CONN3)	L-8			1	53				1							
Sta 1234+50 TO Sta 1237+18.58 (CONN2)	L-9				240				1							
SHEET TOTAL		42		1	2147	2	3		12	530	20				62	157

SUMMARY OF QUANTITIES
Q-16

STATE OF CALIFORNIA - DEPARTMENT OF TRANSPORTATION
Caltrans
DESIGN

FUNCTIONAL SUPERVISOR: ALINE ANTARAMIAN
CALCULATED-DESIGNED BY: MONA GIRGUIS
CHECKED BY: I. L. REYNON JR.
REVISED BY
DATE REVISED

LAST REVISION 00-00-00
DATE PLOTTED => 29-JUN-2011
TIME PLOTTED => 10:53

Dist	COUNTY	ROUTE	POST MILES TOTAL PROJECT	SHEET No.	TOTAL SHEETS
07	LA	710	17.2/26.4	939	1507

REGISTERED CIVIL ENGINEER 2-3-11 DATE

6-27-11
PLANS APPROVAL DATE

REGISTERED PROFESSIONAL ENGINEER LE NGUYEN No. 65414 Exp. 9-30-11 CIVIL STATE OF CALIFORNIA

THE STATE OF CALIFORNIA OR ITS OFFICERS OR AGENTS SHALL NOT BE RESPONSIBLE FOR THE ACCURACY OR COMPLETENESS OF SCANNED COPIES OF THIS PLAN SHEET.

MISCELLANEOUS ITEMS

LOCATION	SHEET NO.	CRASH CUSHION (SAND FILLED)	CRASH CUSHION (REACT 9CBS)	BURIED POST END ANCHOR	MBGR (WOOD POST)	END ANCHOR ASSEMBLY (TYPE SFT)	ALTERNATIVE IN-LINE TERMINAL SYSTEM	ALTERNATIVE FLARED TERMINAL SYSTEM	TRANSITION RAILING (TYPE WB)	ROCK BLANKET	CHAIN LINK FENCE (TYPE CL-6)	8' CHAIN LINK GATE (TYPE CL-6)	3' CHAIN LINK GATE (TYPE CL-6)	3' CHAIN LINK GATE (TYPE CL-5)	SINGLE THRIE BEAM BARRIER (BRIDGE)	SINGLE THRIE BEAM BARRIER (WOOD POST)
		EA	EA	EA	LF	EA	EA	EA	EA	SQYD	LF	EA	EA	EA	LF	LF
Sta 65+22.51 TO Sta 65+42.51 (OL1)	L-9										20					
Sta 1251+84.36 TO Sta 1254+65.54 (SB)	L-10				281.18				1							
Sta 12+17.40 TO Sta 12+37.40 (W)	L-10										20					
Sta 12+16.23 TO Sta 12+36.37 (W)	L-10										20					
Sta 1264+46.49 TO Sta 1265+21.55 (SB)	L-11				50.06		1		1							
Sta 1267+41.00 TO Sta 1267+79.00 (SB)	L-11				38	1		1								
Sta 1276+47.86 TO Sta 1276+93.59 (NB)	L-12		1													
Sta 1280+28.46 TO Sta 1280+78.55 (SB)	L-12				50.09			1	1							
Sta1285+21.00 (SB)	L-12					1		1	1							
Sta 89+23.04 "T1" TO Sta 90+17.48 "T1" (NB)	L-13				94.44		1	1								
Sta 91+21.38 "T1" TO Sta 91+46.37 "T1" (NB)	L-13				25	1			1							
Sta 1292+60.95 TO Sta 1292+85.95 (SB)	L-13				25			1	1							
Sta 1298+10.00 TO Sta 1302+35.00 (NB)	L-13				425	1		1								
Sta 1298+61.00 (SB)	L-13					1										
Sta 1298+61.00 TO Sta 1303+49.00 (SB)	L-13			1	488	1										
SHEET TOTAL			1	1	1476.77	6	2	6	6		60					

SUMMARY OF QUANTITIES

Q - 17

STATE OF CALIFORNIA - DEPARTMENT OF TRANSPORTATION
Caltrans DESIGN

FUNCTIONAL SUPERVISOR: RENE YIN
CALCULATED-DESIGNED BY: DARRYL MAYS
CHECKED BY: LE NGUYEN
REVISED BY
DATE REVISED

LAST REVISION 00-00-00 | DATE PLOTTED => 29-JUN-2011 | TIME PLOTTED => 10:53

Dist	COUNTY	ROUTE	POST MILES TOTAL PROJECT	SHEET No.	TOTAL SHEETS
07	LA	710	17.2/26.4	940	1507

REGISTERED CIVIL ENGINEER 2-3-11 DATE

6-27-11
PLANS APPROVAL DATE

REGISTERED PROFESSIONAL ENGINEER LE NGUYEN No. 65414 Exp. 9-30-11 CIVIL STATE OF CALIFORNIA

THE STATE OF CALIFORNIA OR ITS OFFICERS OR AGENTS SHALL NOT BE RESPONSIBLE FOR THE ACCURACY OR COMPLETENESS OF SCANNED COPIES OF THIS PLAN SHEET.

MISCELLANEOUS ITEMS

LOCATION	SHEET NO.	CRASH CUSHION (SAND FILLED)	CRASH CUSHION (REACT 9CBB)	BURIED POST END ANCHOR	MBGR (WOOD POST)	END ANCHOR ASSEMBLY (TYPE SFT)	ALTERNATIVE IN-LINE TERMINAL SYSTEM	ALTERNATIVE FLARED TERMINAL SYSTEM	TRANSITION RAILING (TYPE WB)	ROCK BLANKET	CHAIN LINK FENCE (TYPE CL-6)	8' CHAIN LINK GATE (TYPE CL-6)	3' CHAIN LINK GATE (TYPE CL-6)	3' CHAIN LINK GATE (TYPE CL-5)	SINGLE THRIE BEAM BARRIER (BRIDGE)	SINGLE THRIE BEAM BARRIER (WOOD POST)
		EA	EA	EA	LF	EA	EA	EA	EA	SQYD	LF	EA	EA	EA	LF	LF
Sta 1304+55.79 TO Sta 1304+80.79 (NB)	L-14							1	1							
Sta 315+10.00 TO Sta 315+35.00 "C" (NB)	L-14							1	1							
Sta 1313+96.41 TO Sta 1314+21.41 (NB)	L-14							1	1							
Sta 1319+22.00 TO Sta 1319+47.00 (SB)	L-15				25			1	1							
Sta 203+01.67 TO Sta 203+26.67 " C" (NB)	L-15				25			1	1							
Sta 1332+60.00 TO Sta 1337+47.50 (SB)	L-16				487.5			1	1							
Sta 1332+73.56 TO Sta 1336+11.06 (NB)	L-16				337.5	1			1							
Sta 1337+61.21 TO Sta 1344+50.00 (NB)	L-16				688.79			1								
Sta 11+38.59 TO Sta 11+58.59 (FL)	L-16										20					
Sta 11+48.42 TO Sta 11+83.42 (FL)	L-16										32		1			
Sta 1344+50.00 TO Sta 1353+61.21 (NB)	L-17				911.21	1										
Sta 1344+91.00 TO Sta 1345+28.50 (SB)	L-17				37.50	1		1								
Sta 1350+89.00 TO Sta 1358+50.00 (SB)	L-17				761	1										
Sta 1358+50.00 TO Sta 1368+12.00 (SB)	L-18				962			1								
Sta 1358+71.19 TO Sta 1359+09.00 (NB)	L-18				37.5	1		1								
Sta 1369+06.50 TO Sta 1372+50.00 (NB)	L-18				343.5			1								
Sta 1372+50.00 TO Sta 1379+44.00 (NB)	L-19				694	1										
Sta 1376+26.00 TO Sta 1376+38.50 (SB)	L-19				12.5			1	1							
Sta 1378+19.00 (SB)	L-19					1										
Sta 1378+16.50 TO Sta 1379+29.00 (SB)	L-19				112.5			1								
Sta 1387+05.00 TO Sta 1387+55.00 (NB)	L-20				50	1		1								
SHEET TOTAL					5485.5	8		14	8		52		1			
TOTAL ALL SHEETS		42	1	2	12802	19	8	21	32	530	1195	2	1	4	62	157

SUMMARY OF QUANTITIES

Q - 18

STATE OF CALIFORNIA - DEPARTMENT OF TRANSPORTATION
Caltrans DESIGN

FUNCTIONAL SUPERVISOR: RENE YIN
CALCULATED-DESIGNED BY: DARRYL MAYS
CHECKED BY: LE NGUYEN
REVISED BY
DATE REVISED

LAST REVISION 00-00-00
DATE PLOTTED => 29-JUN-2011
TIME PLOTTED => 10:53

Dist	COUNTY	ROUTE	POST MILES TOTAL PROJECT	SHEET No.	TOTAL SHEETS
07	LA	710	17.2/26.4	941	1507

Rene Yin 2-3-11
REGISTERED CIVIL ENGINEER DATE

6-27-11
PLANS APPROVAL DATE

REGISTERED PROFESSIONAL ENGINEER
RENE YIN
No. C49915
Exp. 9/30/12
CIVIL
STATE OF CALIFORNIA

THE STATE OF CALIFORNIA OR ITS OFFICERS OR AGENTS SHALL NOT BE RESPONSIBLE FOR THE ACCURACY OR COMPLETENESS OF SCANNED COPIES OF THIS PLAN SHEET.

ROADWAY QUANTITIES (REMOVAL)

LOCATION	SHEET No.	SALVAGE PORTABLE Conc BARRIER (TYPE 60K)	REMOVE CONCRETE BARRIER TYPE 60W Mod	TYPE 60	TYPE 60D	TYPE 50	TYPE 27SV	TYPE 27R Mod	REMOVE MBGR	REMOVE SINGLE THRIE BEAM BARRIER (STEEL POST)	REMOVE CHANNELIZERS	SALVAGE CONCRETE BARRIER (TYPE K)	REMOVE RETAINING WALL	REMOVE SOUND WALL	REMOVE CRASH CUSHION (SAND FILLED)	REMOVE Conc CURB	REMOVE CONCRETE PAVEMENT	OBLITERATE SURFACING	REMOVE CHAIN LINK FENCE	REMOVE ASPHALT Conc. DIKE	REMOVE CONCRETE (SIDEWALK)	REMOVE CONCRETE (GUTTER)	REMOVE CABLE RAILING
		LF	LF	LF	LF	LF	LF	LF	LF	LF	EA	LF	LF	LF	EA	CY	CY	SQYD	LF	LF	CY	LF	LF
Sta 947+47 TO Sta 951+48 (NB)	C-268																		6	401			
Sta 951+53 TO Sta 951+59 (SB)	C-268																		6				
Sta 66+26 TO Sta 66+61.25 (OL1)	C-269															3			36		5		
Sta 912+57.06 TO Sta 914+67.01 (NB)	L-1								188										105				
Sta 921+15.08 TO Sta 923+01.51 (NB)	L-1								177										155				
Sta 914+11.84 TO Sta 915+98.89 (SB)	L-1								163										65				
Sta 921+89.12 TO Sta 924+80.65 (SB)	L-1								250														
Sta 1086+00 TO Sta 1094+50 (C/L)	L-2	850																					
Sta 1101+60 TO Sta 1108+50 (NB)	L-3															47	815						
Sta 1094+50 TO Sta 1108+50 (C/L)	L-3	710	690																				
Sta 1101+60 TO Sta 1108+50 (SB)	L-3															46	471						
Sta 1108+50 TO Sta 1122+50 (NB)	L-4															95	2075						
Sta 1108+86.06 TO Sta 1110+33.70 (NB)	L-4				100				52														
Sta 1121+32.75 TO Sta 1122+20.68 (NB)	L-4								90														
Sta 1108+50 TO Sta 1122+50 (C/L)	L-4		1400																				
Sta 1108+50 TO Sta 1122+50 (SB)	L-4															93	944						
Sta 1110+11.99 TO Sta 1111+66.52 (SB)	L-4				100				63														
SUBTOTAL		1560	2090		200				983							284	4305		373	401	5		
SHEET TOTAL		1560	2290						983							284	4305		373	401	5		

SUMMARY OF QUANTITIES

STATE OF CALIFORNIA - DEPARTMENT OF TRANSPORTATION
Caltrans®
DESIGN

FUNCTIONAL SUPERVISOR: ALINE ANTARAMIAN
CALCULATED-DESIGNED BY: MONA GIRGUIS
CHECKED BY: I. L. REYNON JR.
REVISED BY
DATE REVISED

LAST REVISION DATE PLOTTED => 29-JUN-2011
00-00-00 TIME PLOTTED => 10:53

Dist	COUNTY	ROUTE	POST MILES TOTAL PROJECT	SHEET No.	TOTAL SHEETS
07	LA	710	17.2/26.4	942	1507

REGISTERED CIVIL ENGINEER 2-3-11 DATE

6-27-11
PLANS APPROVAL DATE

REGISTERED PROFESSIONAL ENGINEER RENE YIN No. C49915 Exp. 9/30/12 CIVIL STATE OF CALIFORNIA

THE STATE OF CALIFORNIA OR ITS OFFICERS OR AGENTS SHALL NOT BE RESPONSIBLE FOR THE ACCURACY OR COMPLETENESS OF SCANNED COPIES OF THIS PLAN SHEET.

ROADWAY QUANTITIES (REMOVAL)

LOCATION	SHEET No.	SALVAGE PORTABLE Conc BARRIER (TYPE 60K)	REMOVE CONCRETE BARRIER TYPE 60W Mod	TYPE 60	TYPE 60D	TYPE 50	TYPE 27SV	TYPE 27R Mod	REMOVE MBGR	REMOVE SINGLE THRIE BEAM BARRIER (STEEL POST)	REMOVE CHANNELIZERS	SALVAGE CONCRETE BARRIER (TYPE K)	REMOVE RETAINING WALL	REMOVE SOUND WALL	REMOVE CRASH CUSHION (SAND FILLED)	REMOVE Conc CURB	REMOVE CONCRETE PAVEMENT	OBLITERATE SURFACING	REMOVE CHAIN LINK FENCE	REMOVE ASPHALT Conc. DIKE	REMOVE CONCRETE (SIDEWALK)	REMOVE CONCRETE (GUTTER)	REMOVE CABLE RAILING
		LF	LF	LF	LF	LF	LF	LF	LF	LF	EA	LF	LF	LF	EA	CY	CY	SQYD	LF	LF	CY	LF	LF
Sta 1122+50 TO Sta 1136+50 (NB)	L-5																1835						
Sta 1122+50 TO Sta 1125+59.84 (NB)	L-5															21							
Sta 1126+83.71 TO Sta 1127+49.44 (NB)	L-5								67														
Sta 1129+25 TO Sta 1136+50 (NB)	L-5																		725				
Sta 1135+33.61 TO Sta 1136+50 (NB)	L-5										12												
Sta 1122+50 TO Sta 1136+50 (C/L)	L-5		1400																				
Sta 1122+50 TO Sta 1136+50 (SB)	L-5																1028						
Sta 1122+50 TO Sta 1133+86.61 (SB)	L-5															76							
Sta 1124+97.90 TO Sta 1125+69.31 (SB)	L-5								71														
Sta 1136+05.91 TO Sta 1136+50 (SB)	L-5								45														
Sta 1136+50 TO Sta 1150+50 (NB)	L-6																1300						
Sta 1136+50 TO Sta 1137+00 (NB)	L-6																		48				
Sta 1136+50 TO Sta 1137+50 (NB)	L-6										6												
Sta 1137+83.35 TO Sta 1150+50 (NB)	L-6								1225														
Sta 1136+50 TO Sta 1150+50 (C/L)	L-6		1180			221																	
Sta 1136+50 TO Sta 1150+50 (SB)	L-6																1073						
Sta 1136+50 TO Sta 1149+04.84 (SB)	L-6								1320														
Sta 1138+94.10 TO Sta 1149+04.84 (SB)	L-6															69							
SUBTOTAL			2580			221			2728		18					166	5236		773				
SHEET TOTAL			2801						2728		18					166	5236		773				

SUMMARY OF QUANTITIES

Q-20

STATE OF CALIFORNIA - DEPARTMENT OF TRANSPORTATION
Caltrans
DESIGN

FUNCTIONAL SUPERVISOR: ALINE ANTARAMIAN
CALCULATED-DESIGNED BY: MONA GIRGUIS
CHECKED BY: I. L. REYNON JR.
REVISED BY
DATE REVISED

LAST REVISION 00-00-00
DATE PLOTTED => 29-JUN-2011
TIME PLOTTED => 10:54

Dist	COUNTY	ROUTE	POST MILES TOTAL PROJECT	SHEET No.	TOTAL SHEETS
07	LA	710	17.2/26.4	943	1507

Rene Yin 2-3-11
REGISTERED CIVIL ENGINEER DATE

6-27-11
PLANS APPROVAL DATE

REGISTERED PROFESSIONAL ENGINEER RENE YIN No. C49915 Exp. 9/30/12 CIVIL STATE OF CALIFORNIA

THE STATE OF CALIFORNIA OR ITS OFFICERS OR AGENTS SHALL NOT BE RESPONSIBLE FOR THE ACCURACY OR COMPLETENESS OF SCANNED COPIES OF THIS PLAN SHEET.

ROADWAY QUANTITIES (REMOVAL)

LOCATION	SHEET No.	SALVAGE PORTABLE Conc BARRIER (TYPE 60K)	REMOVE CONCRETE BARRIER TYPE 60W Mod	TYPE 60	TYPE 60D	TYPE 50	TYPE 27SV	TYPE 27R Mod	REMOVE MBGR	REMOVE SINGLE THRIE BEAM BARRIER (STEEL POST)	REMOVE CHANNELIZERS	SALVAGE CONCRETE BARRIER (TYPE K)	REMOVE RETAINING WALL	REMOVE SOUND WALL	REMOVE CRASH CUSHION (SAND FILLED)	REMOVE Conc CURB	REMOVE CONCRETE PAVEMENT	OBLITERATE SURFACING	REMOVE CHAIN LINK FENCE	REMOVE ASPHALT Conc. DIKE	REMOVE CONCRETE (SIDEWALK)	REMOVE CONCRETE (GUTTER)	REMOVE CABLE RAILING
		LF	LF	LF	LF	LF	LF	LF	LF	LF	EA	LF	LF	LF	EA	CY	CY	SQYD	LF	LF	CY	LF	LF
Sta 1145+04.45 TO Sta 1164+42.36 (SB)	L-6															10							
Sta 1147+90.34 TO Sta 1150+50 (SB)	L-6								268														
Sta 45+15.88 TO Sta 49+26.27 (AT1)	L-6															28							
Sta 47+77.75 TO Sta 49+26.27 (AT1)	L-6								149														
Sta 1150+50 TO Sta 1157+27.53 (NB)	L-7																487						
Sta 1150+50 TO Sta 1156+66.12 (NB)	L-7								584														
Sta 1154+30.35 TO Sta 1157+05.63 (NB)	L-7								267														
Sta 1159+11.57 TO Sta 1160+71.86 (NB)	L-7																83						
Sta 1150+50 TO Sta 1156+76.69 (C/L)	L-7					627																	
Sta 1159+11.57 TO Sta 1160+72.20 (C/L)	L-7					161																	
Sta 1150+50 TO Sta 1155+57.94 (SB)	L-7								528														
Sta 1150+50 TO Sta 1156+55 (SB)	L-7																410						
Sta 1155+45.05 TO Sta 1156+69.03 (SB)	L-7															17							
Sta 1158+15.90 TO Sta 1160+97.21 (SB)	L-7								292														
Sta 1158+51.27 TO Sta 1160+68.93 (SB)	L-7																185						
Sta 58+07.76 TO Sta 61+50 (AT3)	L-7								365														
Sta 58+41.87 TO Sta 59+68.68 (AT3)	L-7								109														
Sta 420+72.24 TO Sta 421+10.43 (AT7)	L-7																		40				
SUBTOTAL						788			2562							55	1165		40				
SHEET TOTAL			788						2562							55	1165		40				

SUMMARY OF QUANTITIES

Q-21

STATE OF CALIFORNIA - DEPARTMENT OF TRANSPORTATION
Caltrans DESIGN

MONA GIRGUIS — REVISED BY
I. L. REYNON JR. — DATE REVISED
CALCULATED-DESIGNED BY
CHECKED BY
FUNCTIONAL SUPERVISOR
ALINE ANTARAMIAN

LAST REVISION 00-00-00 | DATE PLOTTED => 29-JUN-2011 | TIME PLOTTED => 10:54

Dist	COUNTY	ROUTE	POST MILES TOTAL PROJECT	SHEET No.	TOTAL SHEETS
07	LA	710	17.2/26.4	944	1507

Rene Yin 2-3-11
REGISTERED CIVIL ENGINEER DATE

6-27-11
PLANS APPROVAL DATE

REGISTERED PROFESSIONAL ENGINEER RENE YIN No. C49915 Exp. 9/30/12 CIVIL STATE OF CALIFORNIA

THE STATE OF CALIFORNIA OR ITS OFFICERS OR AGENTS SHALL NOT BE RESPONSIBLE FOR THE ACCURACY OR COMPLETENESS OF SCANNED COPIES OF THIS PLAN SHEET.

ROADWAY QUANTITIES (REMOVAL)

LOCATION	SHEET No.	SALVAGE PORTABLE Conc BARRIER (TYPE 60K)	REMOVE CONCRETE BARRIER						REMOVE MBGR	REMOVE SINGLE THRIE BEAM BARRIER (STEEL POST)	REMOVE CHANNELIZERS	SALVAGE CONCRETE BARRIER (TYPE K)	REMOVE RETAINING WALL	REMOVE SOUND WALL	REMOVE CRASH CUSHION (SAND FILLED)	REMOVE Conc CURB	REMOVE CONCRETE PAVEMENT	OBLITERATE SURFACING	REMOVE CHAIN LINK FENCE	REMOVE ASPHALT Conc. DIKE	REMOVE CONCRETE (SIDEWALK)	REMOVE CONCRETE (GUTTER)	REMOVE CABLE RAILING
			TYPE 60W Mod	TYPE 60	TYPE 60D	TYPE 50	TYPE 27SV	TYPE 27R Mod															
		LF	LF	LF	LF	LF	LF	LF	LF	LF	EA	LF	LF	LF	EA	CY	CY	SQYD	LF	LF	CY	LF	LF
Sta 1222+47.50 TO Sta 1233+37.16 (CONN1)	L-8															19							
Sta 1225+11.23 TO Sta 1233+31.23 (CONN1)	L-8								50														
Sta 1233+40.92 TO Sta 1234+50 (CONN1)	L-8																41						
Sta 1234+04.05 TO Sta 1234+50 (CONN1)	L-8															4							
Sta 1223+00 TO Sta 1224+32 (CONN2)	L-8								141														
Sta 1232+57.35 TO Sta 1234+50 (CONN2)	L-8								191														
Sta 1231+91.91 TO Sta 1234+50 (CONN2)	L-8																95						
Sta 1221+53.52 TO Sta 1225+26 (CONN3)	L-8								226			140											
Sta 1222+42.38 TO Sta 1228+51 (CONN3)	L-8															41		553					
Sta 1222+49 TO Sta 1228+51 (CONN3)	L-8																485						
Sta 13+62.59 TO Sta 16+70 (OL2)	L-8								228							21							
Sta 13+47.29 TO Sta 16+98 (OL2)	L-8																	592					
Sta 14+69 TO Sta 16+70 (OL2)	L-8															15							
Sta 1233+32.53 TO Sta 1234+62 (OL3)	L-8							130					130										
Sta 1234+15.66 TO Sta 1234+62 (OL3)	L-8															4							
Sta 1234+50 TO Sta 1237+44.91 (CONN1)	L-9															20	151						
Sta 1234+50 TO Sta 1237+36.82 (CONN2)	L-9								265								162						
Sta 16+70 TO Sta 18+56.80 (OL2)	L-9															25							
Sta 1234+62 TO Sta 1237+30 (OL3)	L-9							268					268										
Sta 1234+62 TO Sta 1237+56.82 (OL3)	L-9															20							
Sta 65+18.90 TO Sta 65+38.90 (OL1)	L-9																		20				
SUBTOTAL								398	1101			140	398			169	934	1145	20				
SHEET TOTAL			398						1101			140	398			169	934	1145	20				

SUMMARY OF QUANTITIES

Q-22

STATE OF CALIFORNIA - DEPARTMENT OF TRANSPORTATION
Caltrans® DESIGN

FUNCTIONAL SUPERVISOR: ALINE ANTARAMIAN
CALCULATED-DESIGNED BY: MONA GIRGUIS
CHECKED BY: I. L. REYNON JR.
REVISED BY
DATE REVISED

LAST REVISION 00-00-00
DATE PLOTTED => 29-JUN-2011
TIME PLOTTED => 10:54

Dist	COUNTY	ROUTE	POST MILES TOTAL PROJECT	SHEET No.	TOTAL SHEETS
07	LA	710	17.2/26.4	945	1507

REGISTERED CIVIL ENGINEER 2-3-11 DATE

6-27-11
PLANS APPROVAL DATE

REGISTERED PROFESSIONAL ENGINEER LE NGUYEN No. 65414 Exp. 9-30-11 CIVIL STATE OF CALIFORNIA

THE STATE OF CALIFORNIA OR ITS OFFICERS OR AGENTS SHALL NOT BE RESPONSIBLE FOR THE ACCURACY OR COMPLETENESS OF SCANNED COPIES OF THIS PLAN SHEET.

ROADWAY QUANTITIES (REMOVAL)

LOCATION	SHEET NO.	SALVAGE PORTABLE Conc BARRIER (TYPE 60K)	REMOVE CONCRETE BARRIER TYPE 60W Mod	TYPE 60	TYPE 60D	TYPE 50	TYPE 27SV	TYPE 27R Mod	REMOVE MBGR	REMOVE SINGLE THRIE BEAM BARRIER (STEEL POST)	REMOVE CHANNELIZERS	SALVAGE CONCRETE BARRIER (TYPE K)	REMOVE RETAINING WALL	REMOVE SOUND WALL	REMOVE CRASH CUSHION (SAND FILLED)	REMOVE Conc CURB	REMOVE CONCRETE PAVEMENT	OBLITERATE SURFACING	REMOVE CHAIN LINK FENCE	REMOVE ASPHALT Conc. DIKE	REMOVE CONCRETE (SIDEWALK)	REMOVE CONCRETE (GUTTER)	REMOVE CABLE RAILING
		LF	LF	LF	LF	LF	LF	LF	LF	LF	EA	LF	LF	LF	EA	CY	CY	SQYD	LF	LF	CY	LF	LF
Sta 1238+63.63 TO 1247+50.00 (SB)	L-9															59							
Sta 1238+68.82 TO 1243+84.24 (SB)	L-9															35							
Sta 1238+72.05 TO 1240+09.22 (C/L)	L-9		137.2																				
Sta 65+18.00 TO 65+42.51 (OL1)	L-9																		24.5				
Sta 1239+32.63 TO 1247+50.00 (SB)	L-9																445						
Sta 1239+32.63 TO 1247+50.00 (NB)	L-9																478						
Sta 1239+11.41 TO 1239+54.85 (NB)	L-9						43.4							43.4									
Sta 1247+44.28 TO Sta 1247+50.00 (C/L)	L-9					5.7																	
Sta 1247+50.00 TO Sta 1251+50.64 (SB)	L-10															27							
Sta 1247+50.00 TO Sta 1254+90.16 (C/L)	L-10					740.2																	
Sta 1251+50.37 TO 1254+83.56 (SB)	L-10															23							
Sta 1251+84.36 TO Sta 1254+83.56 (SB)	L-10								299.2														
Sta 1256+37.67 TO Sta 1261+50.00 (C/L)	L-10					512.3																	
Sta 1256+41.00 TO Sta 1257+16.61 (SB)	L-10						75.6							75.6									
Sta 12+17.40 TO Sta 12+41.00 (W)	L-10																		23.5				
Sta 12+16.23 TO Sta 12+39.23 (W)	L-10																		23				
Sta 1247+50.00 TO Sta 1254+90.18 (SB)	L-10																685						
SUBTOTAL			137.2			1258.2	119		299.2					119		144	1608		71				
SHEET TOTAL			1514.4						299.2					119		144	1608		71				

SUMMARY OF QUANTITIES

Q-23

STATE OF CALIFORNIA - DEPARTMENT OF TRANSPORTATION
Caltrans DESIGN

FUNCTIONAL SUPERVISOR: RENE YIN
CALCULATED-DESIGNED BY: DARRYL MAYS
CHECKED BY: LE NGUYEN
REVISED BY
DATE REVISED

LAST REVISION 00-00-00 | DATE PLOTTED => 29-JUN-2011 | TIME PLOTTED => 10:54

Dist	COUNTY	ROUTE	POST MILES TOTAL PROJECT	SHEET No.	TOTAL SHEETS
07	LA	710	17.2/26.4	946	1507

REGISTERED CIVIL ENGINEER 2-3-11 DATE

6-27-11
PLANS APPROVAL DATE

REGISTERED PROFESSIONAL ENGINEER LE NGUYEN No. 65414 Exp. 9-30-11 CIVIL STATE OF CALIFORNIA

THE STATE OF CALIFORNIA OR ITS OFFICERS OR AGENTS SHALL NOT BE RESPONSIBLE FOR THE ACCURACY OR COMPLETENESS OF SCANNED COPIES OF THIS PLAN SHEET.

ROADWAY QUANTITIES (REMOVAL)

LOCATION	SHEET NO.	SALVAGE PORTABLE Conc BARRIER (TYPE 60K)	REMOVE CONCRETE BARRIER TYPE 60W Mod	TYPE 60	TYPE 60D	TYPE 50	TYPE 27SV	TYPE 27R Mod	REMOVE MBGR	REMOVE SINGLE THRIE BEAM BARRIER (STEEL POST)	REMOVE CHANNELIZERS	SALVAGE CONCRETE BARRIER (TYPE K)	REMOVE RETAINING WALL	REMOVE SOUND WALL	REMOVE CRASH CUSHION (SAND FILLED)	REMOVE Conc CURB	REMOVE CONCRETE PAVEMENT	OBLITERATE SURFACING	REMOVE CHAIN LINK FENCE	REMOVE ASPHALT Conc. DIKE	REMOVE CONCRETE (SIDEWALK)	REMOVE CONCRETE (GUTTER)	REMOVE CONCRETE (GUTTER)
		LF	LF	LF	LF	LF	LF	LF	LF	LF	EA	LF	LF	LF	EA	CY	CY	SQYD	LF	LF	CY	LF	LF
Sta 1247+50.00 TO Sta 1254+90.18 (NB)	L-10																567						
Sta 1256+37.58 TO Sta 1261+50.00 (SB)	L-10																458						
Sta 1256+37.58 TO Sta 1261+50.00 (NB)	L-10																471						
Sta 1261+50.00 TO Sta 1275+50.00 (C/L)	L-11					1400																	
Sta 1266+66.52 TO Sta 1269+09.57 (NB)	L-11						243.1							243.1									
Sta 74+10.00 TO 74+90.00 (Conn A)	L-11															6							
Sta 1264+46.49 TO Sta 1265+21.55 (SB)	L-11								75.1														
Sta 1261+50.00 TO Sta 1275+50.00 (SB)	L-11																1387						
Sta 1261+50.00 TO Sta 1275+50.00 (NB)	L-11																1416						
Sta 1275+50.00 TO Sta 1277+65.00 (C/L)	L-12					215																	
Sta 1275+50.00 TO Sta 1289+50.00 (SB)	L-12																609						
Sta 1275+50.00 TO Sta 1289+50.00 (NB)	L-12																790						
Sta 1275+85.74 TO 1277+02.60 (SB)	L-12															8							
Sta 75+89.00 TO 77+16.62 (Conn B)	L-12															9							
Sta 1277+24.00 TO Sta 1277+73.47 (NB)	L-12								49.5						11								
Sta 1277+24.00 TO Sta 1277+74.69 (NB)	L-12								50.7														
Sta 1277+65.00 TO Sta 1279+50.00 (C/L)	L-12									185													
SUBTOTAL						1615	243.1		175.3	185				243.1	11	23	5698						
SHEET TOTAL			1858.1						175.3	185				243.1	11	23	5698						

SUMMARY OF QUANTITIES
Q-24

STATE OF CALIFORNIA - DEPARTMENT OF TRANSPORTATION
Caltrans
DESIGN

FUNCTIONAL SUPERVISOR: RENE YIN
CALCULATED-DESIGNED BY: DARRYL MAYS
CHECKED BY: LE NGUYEN
REVISED BY
DATE REVISED

LAST REVISION 00-00-00 | DATE PLOTTED => 20-JUL-2011 | TIME PLOTTED => 09:47

Dist	COUNTY	ROUTE	POST MILES TOTAL PROJECT	SHEET No.	TOTAL SHEETS
07	LA	710	17.2/26.4	947	1507

REGISTERED CIVIL ENGINEER 2-3-11 DATE

6-27-11
PLANS APPROVAL DATE

REGISTERED PROFESSIONAL ENGINEER LE NGUYEN No. 65414 Exp. 9-30-11 CIVIL STATE OF CALIFORNIA

THE STATE OF CALIFORNIA OR ITS OFFICERS OR AGENTS SHALL NOT BE RESPONSIBLE FOR THE ACCURACY OR COMPLETENESS OF SCANNED COPIES OF THIS PLAN SHEET.

ROADWAY QUANTITIES (REMOVAL)

LOCATION	SHEET NO.	SALVAGE PORTABLE Conc BARRIER (TYPE 60K)	REMOVE CONCRETE BARRIER TYPE 60W Mod	TYPE 60	TYPE 60D	TYPE 50	TYPE 27SV	TYPE 27R Mod	REMOVE MBGR	REMOVE SINGLE THRIE BEAM BARRIER (STEEL POST)	REMOVE CHANNELIZERS	SALVAGE CONCRETE BARRIER (TYPE K)	REMOVE RETAINING WALL	REMOVE SOUND WALL	REMOVE CRASH CUSHION (SAND FILLED)	REMOVE Conc CURB	REMOVE CONCRETE PAVEMENT	OBLITERATE SURFACING	REMOVE CHAIN LINK FENCE	REMOVE ASPHALT Conc. DIKE	REMOVE CONCRETE (SIDEWALK)	REMOVE CONCRETE (GUTTER)	REMOVE CABLE RAILING
		LF	LF	LF	LF	LF	LF	LF	LF	LF	EA	LF	LF	LF	EA	CY	CY	SQYD	LF	LF	CY	LF	LF
Sta 1277+65.00 TO Sta 1284+89.44 (C/L)	L-12									724.4													
Sta 1279+50.00 TO Sta 1285+42.00 (C/L)	L-12			592																			
Sta 1279+81.00 TO 1284+60.00 (NB)	L-12															32							
Sta 1279+97.59 TO Sta 1280+54.83 (SB)	L-12								57.2														
Sta 1284+79.00 TO Sta 1289+50.00 (C/L)	L-12			441																			
Sta 1285+15.28 TO Sta 1285+77.10 (SB)	L-12								62														
Sta 1285+59.00 TO Sta 1289+50.00 (CL)	L-12									391													
Sta 1289+50.00 TO Sta 1296+58.00 (C/L)	L-13			708																			
Sta 1289+50.00 TO Sta 1295+92.00 (C/L)	L-13									642													
Sta 1295+92.00 TO Sta 1303+50.00 (C/L)	L-13			758																			
Sta 87+88.02 TO 90+60.86 (T1)	L-13															18.5							
Sta 1290+15.20 TO 1290+67.82 (NB)	L-13															3.5							
Sta 1296+40.39 TO 1296+86.39 (SB)	L-13															3							
Sta 96+34.46 TO 97+00.00 (T2)	L-13															4.5							
Sta 88+69.77 (T1) TO 1297+26.00 (NB)	L-13															58							
Sta 88+23.04 (T1) TO 90+17.48 (T1)	L-13								194.4														
Sta 90+83.98 TO 91+55.68 (NB)	L-13								71.6														
Sta 1297+72.49 TO 1302+26.00 (NB)	L-13								453.5														
Sta 1298+61.00 TO 1303+49.00 (SB)	L-13								488														
Sta 1289+50.00 TO 1303+50.00 (SB)	L-13																974.5						
SUBTOTAL				2499					1326.7	1757.4						119.5	974.5						
SHEET TOTAL				2499					1326.7	1757.4						119.5	974.5						

SUMMARY OF QUANTITIES

Q-25

STATE OF CALIFORNIA - DEPARTMENT OF TRANSPORTATION
Caltrans
DESIGN

FUNCTIONAL SUPERVISOR: RENE YIN
CALCULATED-DESIGNED BY: DARRYL MAYS
CHECKED BY: LE NGUYEN
REVISED BY
DATE REVISED

LAST REVISION 00-00-00
DATE PLOTTED => 29-JUN-2011
TIME PLOTTED => 10:54

Dist	COUNTY	ROUTE	POST MILES TOTAL PROJECT	SHEET No.	TOTAL SHEETS
07	LA	710	17.2/26.4	948	1507

REGISTERED CIVIL ENGINEER 2-3-11 DATE

6-27-11
PLANS APPROVAL DATE

REGISTERED PROFESSIONAL ENGINEER LE NGUYEN No. 65414 Exp. 9-30-11 CIVIL STATE OF CALIFORNIA

THE STATE OF CALIFORNIA OR ITS OFFICERS OR AGENTS SHALL NOT BE RESPONSIBLE FOR THE ACCURACY OR COMPLETENESS OF SCANNED COPIES OF THIS PLAN SHEET.

ROADWAY QUANTITIES (REMOVAL)

LOCATION	SHEET NO.	SALVAGE PORTABLE Conc BARRIER (TYPE 60K)	REMOVE CONCRETE BARRIER						REMOVE MBGR	REMOVE SINGLE THRIE BEAM BARRIER (STEEL POST)	REMOVE CHANNELIZERS	SALVAGE CONCRETE BARRIER (TYPE K)	REMOVE RETAINING WALL	REMOVE SOUND WALL	REMOVE CRASH CUSHION (SAND FILLED)	REMOVE Conc CURB	REMOVE CONCRETE PAVEMENT	OBLITERATE SURFACING	REMOVE CHAIN LINK FENCE	REMOVE ASPHALT Conc. DIKE	REMOVE CONCRETE (SIDEWALK)	REMOVE CONCRETE (GUTTER)	REMOVE CABLE RAILING
			TYPE 60W Mod	TYPE 60	TYPE 60D	TYPE 50	TYPE 27SV	TYPE 27R Mod															
		LF	LF	LF	LF	LF	LF	LF	LF	LF	EA	LF	LF	LF	EA	CY	CY	SQYD	LF	LF	CY	LF	LF
Sta 1289+50.00 TO 1303+50.00 (NB)	L-13																1142.5						
Sta 1292+26.00 TO 1293+06.00 (SB)	L-13								80														
Sta 1296+58.00 TO 1303+50.00 (SB)	L-13									692													
Sta 1303+50.00 TO Sta 1310+37.00 (C/L)	L-14									687													
Sta 1303+50.00 TO Sta 1317+50.00 (C/L)	L-14			1400																			
Sta 1303+50.00 TO Sta 1317+50.00 (SB)	L-14																1385						
Sta 1303+50.00 TO Sta 1317+50.00 (NB)	L-14																1780.5						
Sta 1304+06.00 TO Sta 1316+28.2 (SB)	L-14															81.5							
Sta 1304+40.00 TO Sta 1304+90.79 (NB)	L-14								51														
Sta 1304+58.00 TO Sta 1310+98.13 (NB)	L-14															43							
Sta 1305+68.42 TO Sta 1306+42.43 (SB)	L-14								74														
Sta 310+85.00 TO Sta 311+04.75 (F1)	L-14															1.5							
Sta 311+21.61 TO Sta 315+00.00 (C)	L-14												378.5									378.5	378.5
Sta 312+73.70 TO Sta 315+00.00 (C)	L-14															15							
Sta 1312+74.00 TO Sta 1313+26.16 (SB)	L-14															3.5							
Sta 314+77.00 TO Sta 314+92.00 (C)	L-14								15														
Sta 1315+77.00 TO Sta 1317+50.00 (C/L)	L-14									173													
SUBTOTAL				1400					220	1552			378.5			144.5	4308					378.5	378.5
SHEET TOTAL			1400						220	1552			378.5			144.5	4308					378.5	378.5

SUMMARY OF QUANTITIES

Q-26

STATE OF CALIFORNIA - DEPARTMENT OF TRANSPORTATION
Caltrans
DESIGN

FUNCTIONAL SUPERVISOR: RENE YIN
CALCULATED-DESIGNED BY: LE NGUYEN
CHECKED BY: DARRYL MAYS
REVISED BY
DATE REVISED

LAST REVISION 00-00-00
DATE PLOTTED => 29-JUN-2011
TIME PLOTTED => 10:54

Dist	COUNTY	ROUTE	POST MILES TOTAL PROJECT	SHEET No.	TOTAL SHEETS
07	LA	710	17.2/26.4	949	1507

REGISTERED CIVIL ENGINEER 2-3-11 DATE

6-27-11
PLANS APPROVAL DATE

REGISTERED PROFESSIONAL ENGINEER LE NGUYEN No. 65414 Exp. 9-30-11 CIVIL STATE OF CALIFORNIA

THE STATE OF CALIFORNIA OR ITS OFFICERS OR AGENTS SHALL NOT BE RESPONSIBLE FOR THE ACCURACY OR COMPLETENESS OF SCANNED COPIES OF THIS PLAN SHEET.

ROADWAY QUANTITIES (REMOVAL)

LOCATION	SHEET NO.	SALVAGE PORTABLE Conc BARRIER (TYPE 60K)	REMOVE CONCRETE BARRIER						REMOVE MBGR	REMOVE SINGLE THRIE BEAM BARRIER (STEEL POST)	REMOVE CHANNELIZERS	SALVAGE CONCRETE BARRIER (TYPE K)	REMOVE RETAINING WALL	REMOVE SOUND WALL	REMOVE CRASH CUSHION (SAND FILLED)	REMOVE Conc CURB	REMOVE CONCRETE PAVEMENT	OBLITERATE SURFACING	REMOVE CHAIN LINK FENCE	REMOVE ASPHALT Conc. DIKE	REMOVE CONCRETE (SIDEWALK)	REMOVE CONCRETE (GUTTER)	REMOVE CABLE RAILING
			TYPE 60W Mod	TYPE 60	TYPE 60D	TYPE 50	TYPE 27SV	TYPE 27R Mod															
		LF	LF	LF	LF	LF	LF	LF	LF	LF	EA	LF	LF	LF	EA	CY	CY	SQYD	LF	LF	LF	LF	LF
Sta 1317+50.00 TO Sta 1321+10.00 (C/L)	L-15									360													
Sta 1317+50.00 TO Sta 1330+50.00 (C/L)	L-15			1300																			
Sta 1317+50.00 TO Sta 1330+50.00 (SB)	L-15																972						
Sta 1317+50.00 TO Sta 1330+50.00 (NB)	L-15																1516						
Sta 1317+53.55 TO Sta 1318+05.00 (NB)	L-15								52														
Sta 204+51.45 TO Sta 1330+50.00 (ConnC)	L-15								31														
Sta 1330+50.00 TO Sta 1331+02.79 (NB)	L-16																59						
Sta 1330+50.00 TO Sta 1331+02.79 (SB)	L-16																40.5						
Sta 11+32.00 TO Sta 11+58.59 (FL)	L-16																		26.5				
Sta 11+42.41 TO Sta 11+83.42 (FL)	L-16																		41				
Sta 204+83.00 TO Sta 205+44.44 (Conn C)	L-16								65														
Sta 1330+50.00 TO Sta 1330+98.00 (C/L)	L-16			48.3																			
Sta 1332+28.65 TO Sta 1334+50.00 (SB)	L-16																754						
Sta 1332+28.65 TO Sta 1334+50.00 (NB)	L-16																1023						
Sta 1332+35.00 TO Sta 1337+83.70 (SB)	L-16								548.7														
Sta 1337+26 TO Sta 1344+50.00 (NB)	L-16								724														
Sta 1341+57.00 TO Sta 1344+50.00 (C/L)	L-16			293																			
Sta 1344+18.21 TO Sta 1344+50.00 (SB)	L-16								31.8														
Sta 35+96.50 TO Sta 38+00.00 (F2)	L-16															14							
SUBTOTAL				1641.3					1452.5	360						14	4364.5		67.5				
SHEET TOTAL			1641.3						1452.5	360						14	4364.5		67.5				

SUMMARY OF QUANTITIES

Q-27

STATE OF CALIFORNIA - DEPARTMENT OF TRANSPORTATION
Caltrans DESIGN

FUNCTIONAL SUPERVISOR: RENE YIN
CALCULATED-DESIGNED BY: DARRYL MAYS
CHECKED BY: LE NGUYEN
REVISED BY
DATE REVISED

LAST REVISION 00-00-00
DATE PLOTTED => 29-JUN-2011
TIME PLOTTED => 10:54

Dist	COUNTY	ROUTE	POST MILES TOTAL PROJECT	SHEET No.	TOTAL SHEETS
07	LA	710	17.2/26.4	950	1507

REGISTERED CIVIL ENGINEER 2-3-11 DATE

6-27-11
PLANS APPROVAL DATE

REGISTERED PROFESSIONAL ENGINEER LE NGUYEN No. 65414 Exp. 9-30-11 CIVIL STATE OF CALIFORNIA

THE STATE OF CALIFORNIA OR ITS OFFICERS OR AGENTS SHALL NOT BE RESPONSIBLE FOR THE ACCURACY OR COMPLETENESS OF SCANNED COPIES OF THIS PLAN SHEET.

ROADWAY QUANTITIES (REMOVAL)

LOCATION	SHEET NO.	SALVAGE PORTABLE Conc BARRIER (TYPE 60K)	REMOVE CONCRETE BARRIER TYPE 60W Mod	REMOVE CONCRETE BARRIER TYPE 60	REMOVE CONCRETE BARRIER TYPE 60D	REMOVE CONCRETE BARRIER TYPE 50	REMOVE CONCRETE BARRIER TYPE 27SV	REMOVE CONCRETE BARRIER TYPE 27R Mod	REMOVE MBGR	REMOVE SINGLE THRIE BEAM BARRIER (STEEL POST)	REMOVE CHANNELIZERS	SALVAGE CONCRETE BARRIER (TYPE K)	REMOVE RETAINING WALL	REMOVE SOUND WALL	REMOVE CRASH CUSHION (SAND FILLED)	REMOVE Conc CURB	REMOVE CONCRETE PAVEMENT	OBLITERATE SURFACING	REMOVE CHAIN LINK FENCE	REMOVE ASPHALT Conc. DIKE	REMOVE CONCRETE (SIDEWALK)	REMOVE CONCRETE (GUTTER)	REMOVE CABLE RAILING
		LF	LF	LF	LF	LF	LF	LF	LF	LF	EA	LF	LF	LF	EA	CY	CY	SQYD	LF	LF	LF	LF	LF
Sta 35+96.50 TO Sta 38+00.00 (F2)	L-16															14							
Sta 37+50.96 TO Sta 38+00.00 (F2)	L-16															3.5							
Sta 1339+61.00 TO Sta 1344+50.00 (SB)	L-16															33							
Sta 1344+50.00 TO Sta 1350+92.00 (NB)	L-17								642														
Sta 1344+50.00 TO Sta 1344+96.64 (SB)	L-17								46.6														
Sta 1344+50.00 TO Sta 1345+64.00 (SB)	L-17															8							
Sta 1351+82.00 TO Sta 1358+50.00 (SB)	L-17								668														
Sta 1345+30.00 TO Sta 1358+50.00 (SB)	L-17																453.5						
Sta 1345+30.00 TO Sta 1358+50.00 (NB)	L-17																797.5						
Sta 1358+50.00 TO Sta 1358+68.00 (NB)	L-18																390.5						
Sta 1358+50.00 TO Sta 1358+68.00 (SB)	L-18																718.5						
Sta 1358+50.00 TO Sta 1368+37.00 (SB)	L-18								987														
Sta 1359+02.00 TO Sta 1359+37.00 (NB)	L-18								35														
Sta 1368+69.28 TO Sta 1375+50.00 (NB)	L-18								681														
SUBTOTAL									3059.6							58.5	2360						
SHEET TOTAL									3059.6							58.5	2360						

SUMMARY OF QUANTITIES
Q-28

STATE OF CALIFORNIA - DEPARTMENT OF TRANSPORTATION
Caltrans
DESIGN

FUNCTIONAL SUPERVISOR: RENE YIN
CALCULATED-DESIGNED BY: DARRYL MAYS
CHECKED BY: LE NGUYEN
REVISED BY
DATE REVISED

LAST REVISION 00-00-00 | DATE PLOTTED => 29-JUN-2011 | TIME PLOTTED => 10:54

Dist	COUNTY	ROUTE	POST MILES TOTAL PROJECT	SHEET No.	TOTAL SHEETS
07	LA	710	17.2/26.4	951	1507

REGISTERED CIVIL ENGINEER 2-3-11 DATE

6-27-11
PLANS APPROVAL DATE

REGISTERED PROFESSIONAL ENGINEER LE NGUYEN No. 65414 Exp. 9-30-11 CIVIL STATE OF CALIFORNIA

THE STATE OF CALIFORNIA OR ITS OFFICERS OR AGENTS SHALL NOT BE RESPONSIBLE FOR THE ACCURACY OR COMPLETENESS OF SCANNED COPIES OF THIS PLAN SHEET.

ROADWAY QUANTITIES (REMOVAL)

LOCATION	SHEET NO.	SALVAGE PORTABLE Conc BARRIER (TYPE 60K)	REMOVE CONCRETE BARRIER						REMOVE MBGR	REMOVE SINGLE THRIE BEAM BARRIER (STEEL POST)	REMOVE CHANNELIZERS	SALVAGE CONCRETE BARRIER (TYPE K)	REMOVE RETAINING WALL	REMOVE SOUND WALL	REMOVE CRASH CUSHION (SAND FILLED)	REMOVE Conc CURB	REMOVE CONCRETE PAVEMENT	OBLITERATE SURFACING	REMOVE CHAIN LINK FENCE	REMOVEASPHALT Conc DIKE	REMOVE CONCRETE SIDEWALK	REMOVE CONCRETE (GUTTER)	REMOVE CABLE RAILING
			TYPE 60W Mod	TYPE 60	TYPE 60D	TYPE 50	TYPE 27SV	TYPE 27R Mod															
		LF	LF	LF	LF	LF	LF	LF	LF	LF	EA	LF	LF	LF	EA	CY	CY	SQYD	LF	LF	LF	LF	LF
Sta 1372+50.00 TO Sta 1386+50.00 (NB)	L-19																502						
Sta 1372+50.00 TO Sta 1386+50.00 (SB)	L-19																971						
Sta 1372+50.00 TO Sta 1379+48.00 (NB)	L-19								698														
Sta 1376+01.00 TO Sta 1376+67.00 (SB)	L-19								66														
Sta 1384+21.00 TO Sta 1386+50.00 (NB)	L-19															15.5							
Sta 1386+50.00 TO Sta 1387+20.61 (NB)	L-20																38						
Sta 1386+50.00 TO Sta 1390+39.35 (NB)	L-20															26							
Sta 1386+50.00 TO Sta 1392+68.01 (SB)	L-20																257						
Sta 1386+63.31 TO Sta 1387+46.00 (NB)	L-20								83														
SUBTOTAL									847							41.5	1768						
SHEET TOTAL									847							41.5	1768						
TOTAL FROM SCQ-30																	212.4						
TOTAL FROM SCQ-50												494											
GRAND TOTAL		1560	15189.8						14754.3	3854.4	18	634	777	362.1	11	1219	32933.4	1145	1344.5	401	5	378.5	378.5

SUMMARY OF QUANTITIES
Q-29

STATE OF CALIFORNIA - DEPARTMENT OF TRANSPORTATION
Caltrans® DESIGN

FUNCTIONAL SUPERVISOR: RENE YIN
CALCULATED-DESIGNED BY: DARRYL MAYS
CHECKED BY: LE NGUYEN
REVISED BY
DATE REVISED

LAST REVISION 00-00-00 | DATE PLOTTED => 29-JUN-2011 | TIME PLOTTED => 10:25

Dist	COUNTY	ROUTE	POST MILES TOTAL PROJECT	SHEET No.	TOTAL SHEETS
07	LA	710	17.2/26.4	952	1507

Rene Yin 2-3-11
REGISTERED CIVIL ENGINEER DATE

6-27-11
PLANS APPROVAL DATE

REGISTERED PROFESSIONAL ENGINEER
RENE YIN
No. C49915
Exp. 9/30/12
CIVIL
STATE OF CALIFORNIA

THE STATE OF CALIFORNIA OR ITS OFFICERS OR AGENTS SHALL NOT BE RESPONSIBLE FOR THE ACCURACY OR COMPLETENESS OF ELECTRONIC COPIES OF THIS PLAN SHEET.

RETAINING WALL SUMMARY OF QUANTITIES

RETAINING WALL No.	SHEET No.	STRUCTURE EXCAVATION (TYPE Y-1) (AERIALLY DEPOSITED LEAD)	STRUCTURE EXCAVATION (TYPE Z-2) (AERIALLY DEPOSITED LEAD)	STRUCTURE EXCAVATION (RETAINING WALL)		STRUCTURE BACKFILL (RETAINING WALL)		STRUCTURAL CONCRETE, RETAINING WALL	BAR REINFORCING STEEL (RETAINING WALL)	CONCRETE BARRIER (TYPE 736 Mod)	PERVIOUS BACKFILL MATERIAL (RETAINING WALL)	CONCRETE BARRIER (TYPE 736A)	CONCRETE BARRIER (TYPE 732A)	CABLE RAILING
				RETAINING WALL	AT OVEREXCAVATED AREA	RETAINING WALL	AT OVEREXCAVATED AREA							
		CY	CY	CY	CY	CY	CY	CY	LB	LF	CY	LF	LF	LF
RW-913	R-1		64	98	62	81	62	64	15540	149	29			
RW-914	R-5		48	99	50	110	50	64	13560	84	28			
RW-922	R-5		59	116	65	120	65	70	14520	110	33			
RW-1105	R-14,15		346	1000	500	740	500	440	92460		120			572
RW-1126	R-20,21		500	1390	225	1125	225	595	118560		173			763
RW-1127	R-26,27,28		630	1235	845	1020	845	735	144650		175			1098
RW-1135	R-34		185	200	165	185	165	190	40290		44	343		
RW-1155	R-38		145	345	195	410	195	195	45520	220	52			
RW-1228	R-42		555	15		320		165	32860		36			212
RW-1233	R-47		225	385	305	615	305	330	83600		107		287	
RW-1234	R-51		455	835	240	1010	240	415	92580		123	387		
RW-1308	R-57,58	455		1273		1480		650	139000		290			745
RW-1315	R-63	217		450		495		267	57740		125			384
RW-1319	R-64		48	89		85		54	11970		25			96
RW-1331	R-65		137	208		345		177	38350		68	192		
SUBTOTAL		672	3399	7738	2652	8141	2652	4411	941200	563	1428	922	287	3870
TOTAL		672	3399	10390		10793		4411	941200	563	1428	922	287	3870
FSPS			2108	265		360		565	70200	56	7	234	27	646
GRAND TOTAL		672	5507	10655		11153		4976	1011400	619	1435	1154	314	4516

FSPS - FROM STRUCTURE PLAN SHEETS

SOUND WALL

SOUND WALL No.	SHEET No.	SOUND WALL (MASONRY BLOCK) ON Conc BARRIER (TYPE 732SV)					REMOVE CONCRETE
		CONCRETE BARRIER (TYPE 732SV)	SOUND WALL (MASONRY BLOCK)	MINOR CONCRETE (SOUND WALL)	16" CAST-IN-DRILLED-HOLE CONCRETE PILING	24" CAST-IN-DRILLED-HOLE CONCRETE PILING	
		LF	SQFT	CY	LF	LF	CY
SW-1239	SW-1	46	340	7		108	1.6
SW-1256	SW-4	74	780		370		2.3
SUB-TOTAL		120	1120	7		108	1.6
FSPS			2030		2994	230	7
GRAND TOTAL		120	3150	7	3364	338	10.9

FSPS - FROM STRUCTURE PLAN SHEETS

SUMMARY OF QUANTITIES
Q-30

STATE OF CALIFORNIA - DEPARTMENT OF TRANSPORTATION
Caltrans®
DESIGN

FUNCTIONAL SUPERVISOR: ALINE ANTARAMIAN
CALCULATED-DESIGNED BY: MONA GIRGUIS \ DAN TRAN
CHECKED BY: I. L. REYNON JR.
REVISED BY
DATE REVISED

LAST REVISION 00-00-00
DATE PLOTTED => 06-JUL-2011
TIME PLOTTED => 12:58

Dist	COUNTY	ROUTE	POST MILES TOTAL PROJECT	SHEET No.	TOTAL SHEETS
07	LA	710	17.2/26.4	953	1507

Rene Yin 2-3-11
REGISTERED CIVIL ENGINEER DATE

6-27-11
PLANS APPROVAL DATE

REGISTERED PROFESSIONAL ENGINEER RENE YIN No. C49915 Exp. 9/30/12 CIVIL STATE OF CALIFORNIA

THE STATE OF CALIFORNIA OR ITS OFFICERS OR AGENTS SHALL NOT BE RESPONSIBLE FOR THE ACCURACY OR COMPLETENESS OF SCANNED COPIES OF THIS PLAN SHEET.

NOTES:

1. FOR ACCURATE RIGHT OF WAY AND ACCESS DATA, CONTACT RIGHT OF WAY ENGINEERING AT THE DISTRICT OFFICE.
2. WATERSTOP IN THE EXPANSION JOINT SHALL BE EXTENDED 6" INTO CONCRETE BARRIER.

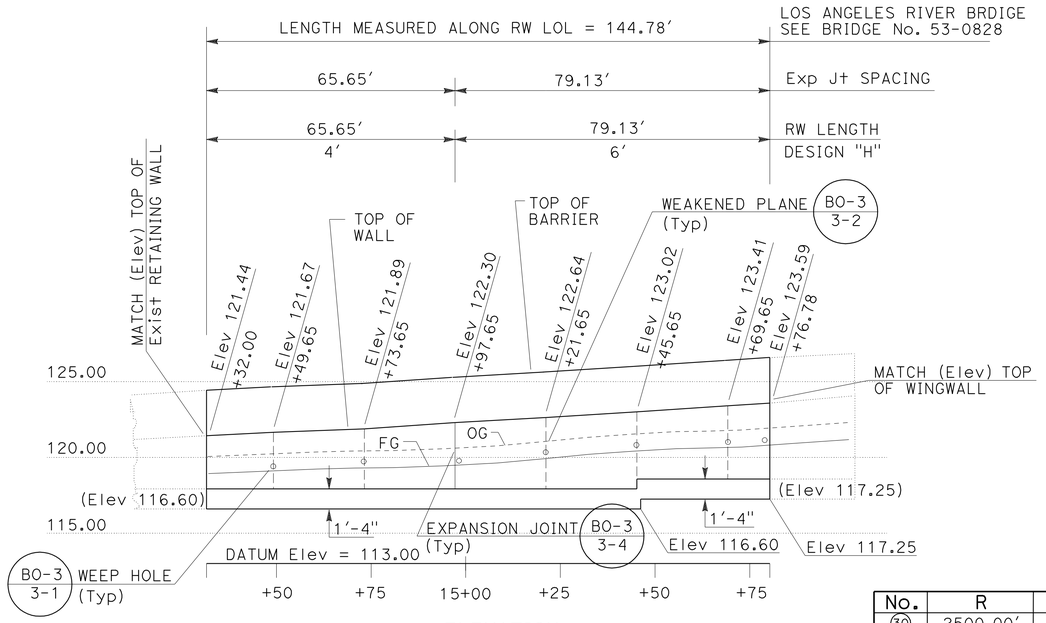

ELEVATION
SCALE Horiz: 1" = 20'
Vert: 1" = 5'

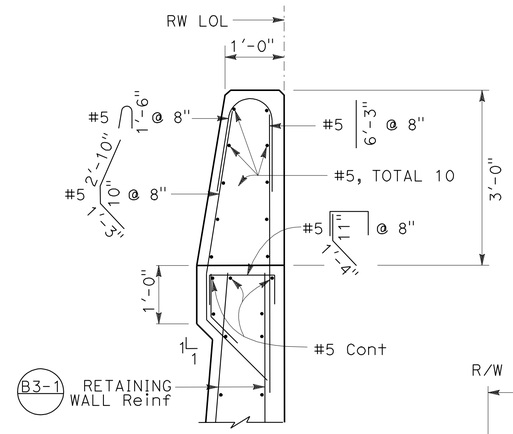

Conc BARRIER (TYPE 736 Mod)
NO SCALE

CURVE DATA

No.	R	Δ	T	L
30	2500.00'	66°55'54"	1562.57'	2920.44'
32	2571.19'	3°13'35"	72.41'	144.78'

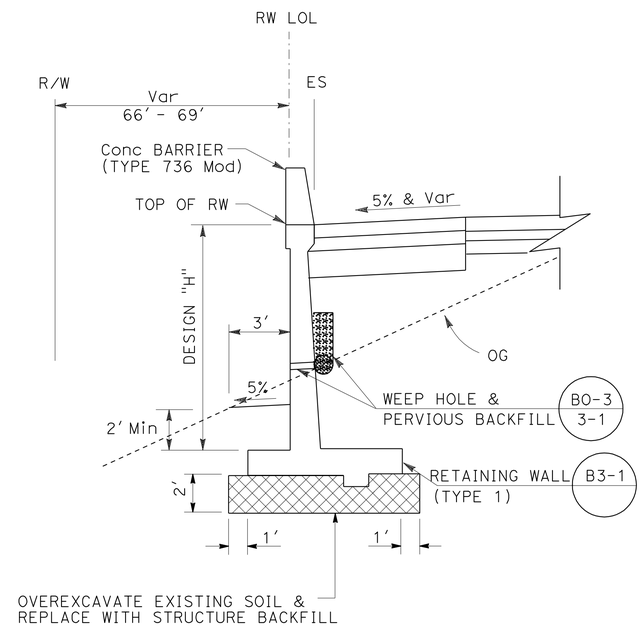

Sta 14+32.00 TO 15+76.78
TYPICAL SECTION
NO SCALE

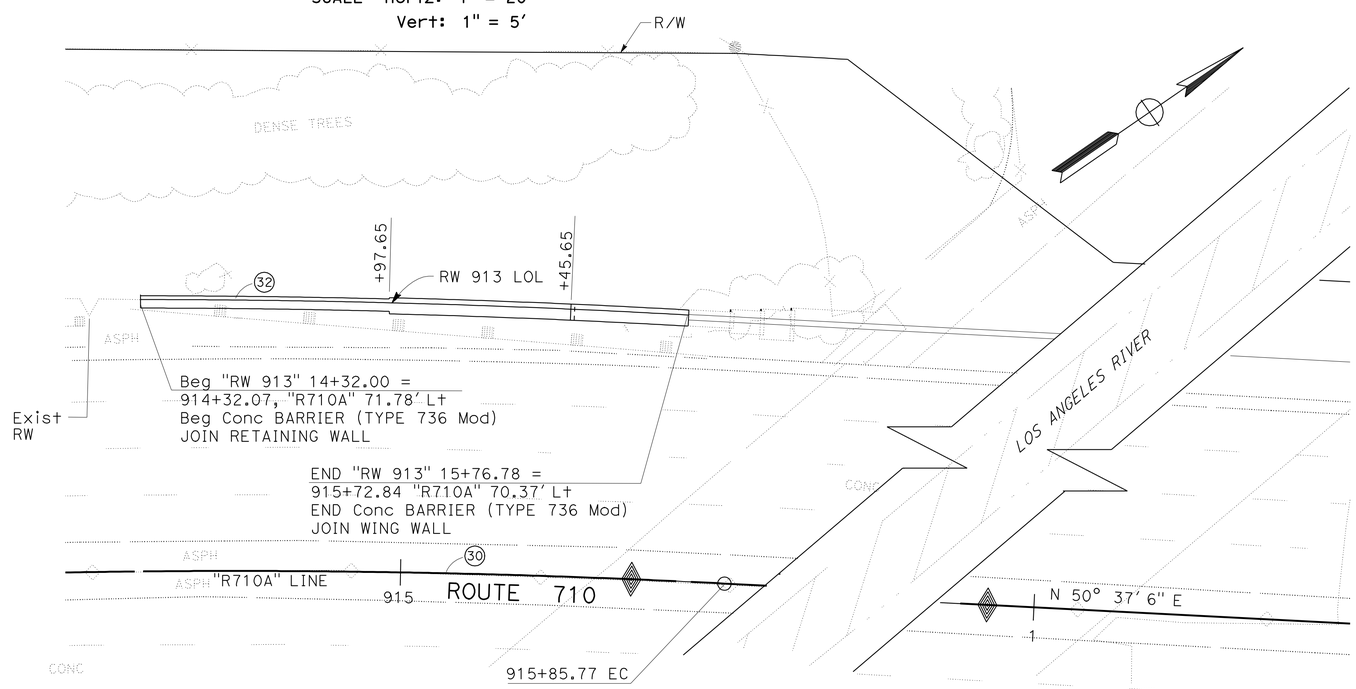

RETAINING WALL PLAN
SCALE 1" = 20'

THIS PLAN ACCURATE FOR RETAINING WALL WORK ONLY.

RETAINING WALL PLAN

RETAINING WALL No. 913

SCALE AS SHOWN

R-1

STATE OF CALIFORNIA - DEPARTMENT OF TRANSPORTATION
Caltrans® DESIGN

FUNCTIONAL SUPERVISOR: ALINE ANTARAMIAN
CALCULATED-DESIGNED BY: DAN TRAN
CHECKED BY: RENE YIN
REVISED BY
DATE REVISED

LAST REVISION 00-00-00
DATE PLOTTED => 29-JUN-2011
TIME PLOTTED => 10:25

DIST	COUNTY	ROUTE	POST MILES TOTAL PROJECT	SHEET No	TOTAL SHEETS
07	LA	710	17.2/26.4	954	1507

Tatjana Halda 1-18-11
REGISTERED CIVIL ENGINEER

6-27-11
PLANS APPROVAL DATE

The State of California or its officers or agents shall not be responsible for the accuracy or completeness of electronic copies of this plan sheet.

REGISTERED PROFESSIONAL ENGINEER Tatjana L. Halda No. C68293 Exp. 9-30-11 CIVIL STATE OF CALIFORNIA

This LOTB sheet was prepared in accordance with the Caltrans Soil & Rock Logging, Classification, & Presentation Manual (2010 Edition).

BENCH MARK

PRHV 109
PK Nail SB710 Shldr,
84' S'ly/Br Rail
63.346' Lt ℄ Rte 710
Sta 914+96.91
N 1 798 877.209
E 6 508 210.228
Elev = 122.185

PRHV 22
2x2 behind MBGR NB710,
19.5' S/Br Rail
64.596' Rt ℄ Rte 710
Sta.914+34.26
N 1 798 740.3198
E 6 508 249.6114
Elev = 118.891'

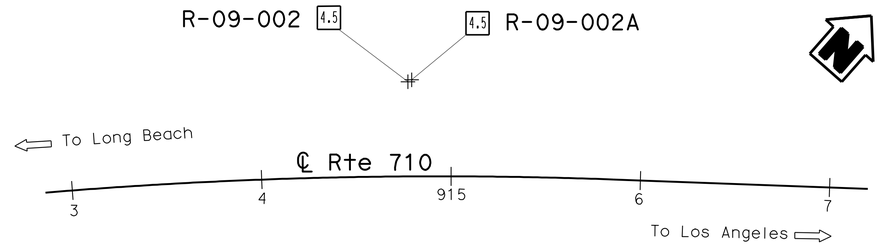

PLAN
1" = 40'

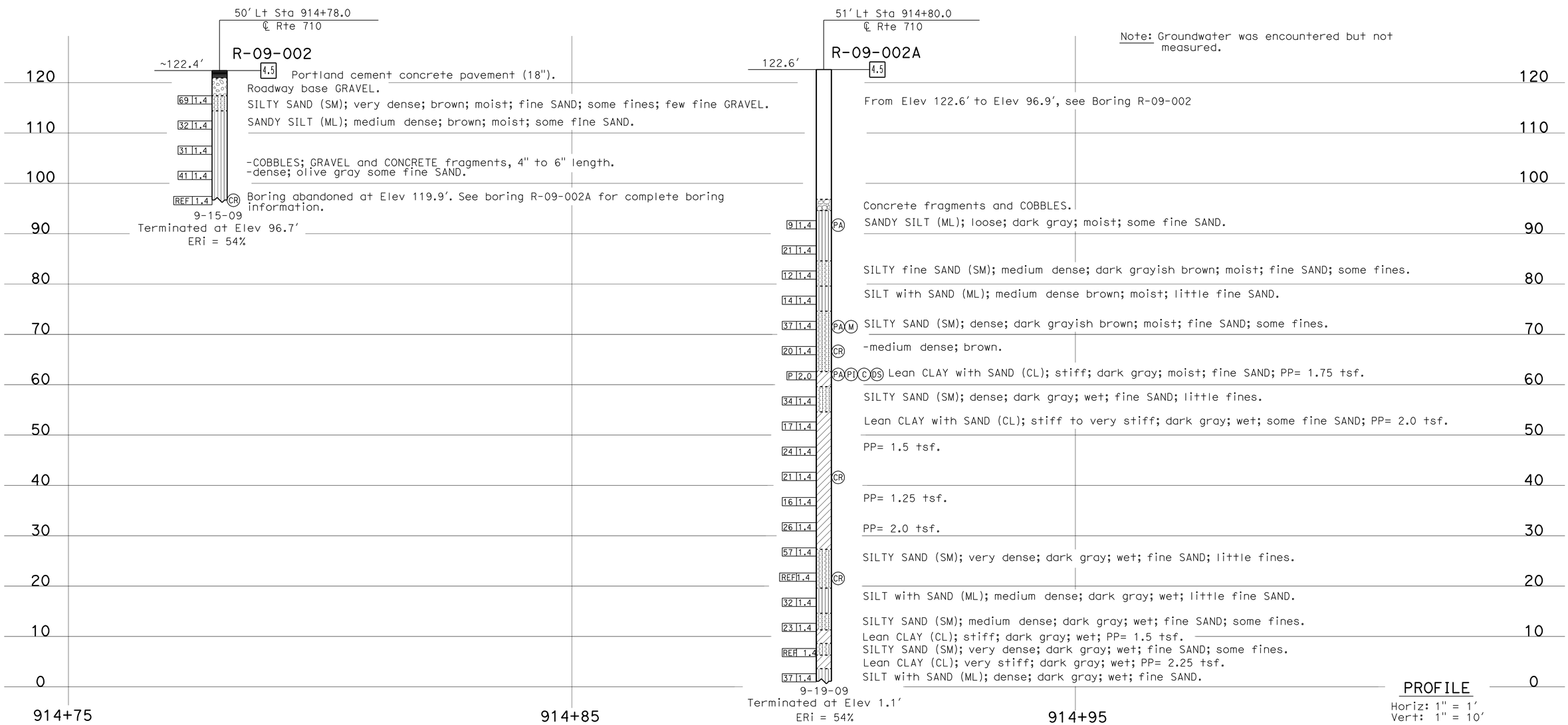

PROFILE
Horiz: 1" = 1'
Vert: 1" = 10'

ENGINEERING SERVICES	GEOTECHNICAL SERVICES	STATE OF CALIFORNIA DEPARTMENT OF TRANSPORTATION	DIVISION OF ENGINEERING SERVICES STRUCTURE DESIGN DESIGN BRANCH X	BRIDGE NO. / POST MILE 17.30/17.33	RETAINING WALL 913 R-2
FUNCTIONAL SUPERVISOR NAME: S. Karimi	DRAWN BY: I.G-Remmen 1/11 CHECKED BY: K. Lai	FIELD INVESTIGATION BY: T. Halda, J Pratt			LOG OF TEST BORINGS 1 OF 3

OGS CIVIL LOG OF TEST BORINGS SHEET

ORIGINAL SCALE IN INCHES FOR REDUCED PLANS 0 1 2 3

UNIT: 3643
PROJECT NUMBER & PHASE: 07000208691 CONTRACT NO.: 07-202111

DISREGARD PRINTS BEARING EARLIER REVISION DATES → 01-18-11

REVISION DATES | SHEET X | OF X

FILE => 720211qa002.dgn

USERNAME => trrrcmt DATE PLOTTED => 29-JUN-2011 TIME PLOTTED => 10:25

DIST	COUNTY	ROUTE	POST MILES TOTAL PROJECT	SHEET No	TOTAL SHEETS
07	LA	710	17.2/26.4	955	1507

Tatjana Halda 1-18-11
REGISTERED CIVIL ENGINEER

6-27-11
PLANS APPROVAL DATE

REGISTERED PROFESSIONAL ENGINEER
Tatjana L. Halda
No. C68293
Exp. 9-30-11
CIVIL
STATE OF CALIFORNIA

The State of California or its officers or agents shall not be responsible for the accuracy or completeness of electronic copies of this plan sheet.

REFERENCE: CALTRANS SOIL & ROCK LOGGING, CLASSIFICATION, AND PRESENTATION MANUAL (2010)

CEMENTATION

Description	Criteria
Weak	Crumbles or breaks with handling or little finger pressure.
Moderate	Crumbles or breaks with considerable finger pressure.
Strong	Will not crumble or break with finger pressure.

BOREHOLE IDENTIFICATION

Symbol	Hole Type	Description
Size	A	Auger Boring (hollow or solid stem bucket)
Size	R RW RC P	Rotary drilled boring (conventional) Rotary drilled with self-casing wire-line Rotary core with continuously-sampled, self-casing wire-line Rotary percussion boring (air)
Size	R	Rotary drilled diamond core
Size	HD HA	Hand driven (1-inch soil tube) Hand Auger
●	D	Dynamic Cone Penetration Boring
▲	CPT	Cone Penetration Test (ASTM D 5778)
⬚	O	Other (note on LOTB)

Note: Size in inches.

CONSISTENCY OF COHESIVE SOILS

Description	Shear Strength (tsf)	Pocket Penetrometer Measurement, PP, (tsf)	Torvane Measurement, TV, (tsf)	Vane Shear Measurement, VS, (tsf)
Very Soft	Less than 0.12	Less than 0.25	Less than 0.12	Less than 0.12
Soft	0.12 - 0.25	0.25 - 0.5	0.12 - 0.25	0.12 - 0.25
Medium Stiff	0.25 - 0.5	0.5 - 1	0.25 - 0.5	0.25 - 0.5
Stiff	0.5 - 1	1 - 2	0.5 - 1	0.5 - 1
Very Stiff	1 - 2	2 - 4	1 - 2	1 - 2
Hard	Greater than 2	Greater than 4	Greater than 2	Greater than 2

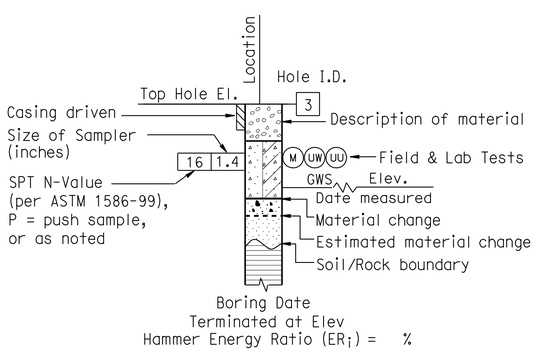

ROTARY BORING

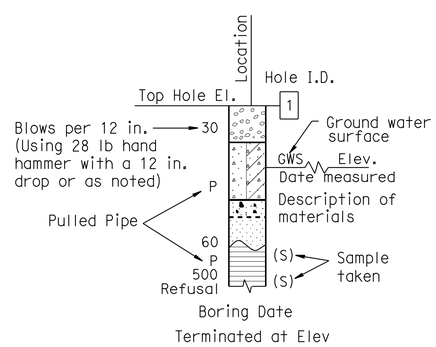

HAND BORING

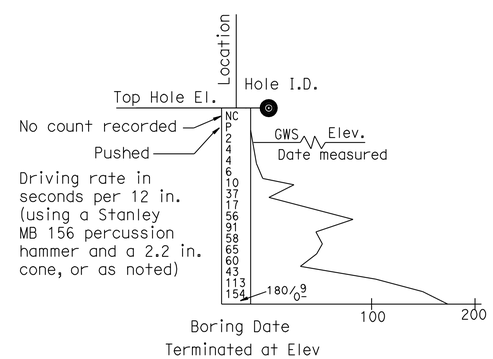

DYNAMIC CONE PENETRATION BORING

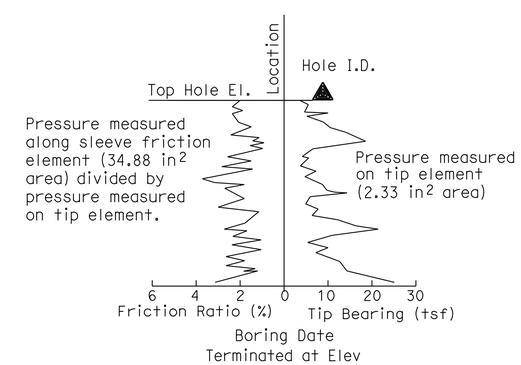

CONE PENETRATION TEST (CPT) BORING

ENGINEERING SERVICES	GEOTECHNICAL SERVICES	STATE OF CALIFORNIA DEPARTMENT OF TRANSPORTATION	DIVISION OF ENGINEERING SERVICES STRUCTURE DESIGN DESIGN BRANCH X	BRIDGE NO. / POST MILE 17.30/17.33	RETAINING WALL 913 R-3 LOG OF TEST BORINGS 2 OF 3
	PREPARED BY: I.G-Remmen 1/11				

GS LOTB SOIL LEGEND

ORIGINAL SCALE IN INCHES FOR REDUCED PLANS 0 1 2 3

UNIT: 3643
PROJECT NUMBER & PHASE: 07000208691 CONTRACT NO.: 07-202111

DISREGARD PRINTS BEARING EARLIER REVISION DATES

REVISION DATES				SHEET	OF
01-18-11				X	X

FILE => 720211qa003.dgn

USERNAME => trrichf DATE PLOTTED => 29-JUN-2011 TIME PLOTTED => 10:26

REFERENCE: CALTRANS SOIL & ROCK LOGGING, CLASSIFICATION, AND PRESENTATION MANUAL (2010)

DIST	COUNTY	ROUTE	POST MILES TOTAL PROJECT	SHEET No	TOTAL SHEETS
07	LA	710	17.2/26.4	956	1507

Tatjana Halda 1-18-11
REGISTERED CIVIL ENGINEER

6-27-11
PLANS APPROVAL DATE

REGISTERED PROFESSIONAL ENGINEER Tatjana L. Halda No. C68293 Exp. 9-30-11 CIVIL STATE OF CALIFORNIA

The State of California or its officers or agents shall not be responsible for the accuracy or completeness of electronic copies of this plan sheet.

GROUP SYMBOLS AND NAMES

Graphic/Symbol	Group Names	Graphic/Symbol	Group Names
GW	Well-graded GRAVEL Well-graded GRAVEL with SAND	CL	Lean CLAY Lean CLAY with SAND Lean CLAY with GRAVEL SANDY lean CLAY SANDY lean CLAY with GRAVEL GRAVELLY lean CLAY GRAVELLY lean CLAY with SAND
GP	Poorly-graded GRAVEL Poorly-graded GRAVEL with SAND		
GW-GM	Well-graded GRAVEL with SILT Well-graded GRAVEL with SILT and SAND	CL-ML	SILTY CLAY SILTY CLAY with SAND SILTY CLAY with GRAVEL SANDY SILTY CLAY SANDY SILTY CLAY with GRAVEL GRAVELLY SILTY CLAY GRAVELLY SILTY CLAY with SAND
GW-GC	Well-graded GRAVEL with CLAY (or SILTY CLAY) Well-graded GRAVEL with CLAY and SAND (or SILTY CLAY and SAND)		
GP-GM	Poorly-graded GRAVEL with SILT Poorly-graded GRAVEL with SILT and SAND	ML	SILT SILT with SAND SILT with GRAVEL SANDY SILT SANDY SILT with GRAVEL GRAVELLY SILT GRAVELLY SILT with SAND
GP-GC	Poorly-graded GRAVEL with CLAY (or SILTY CLAY) Poorly-graded GRAVEL with CLAY and SAND (or SILTY CLAY and SAND)		
GM	SILTY GRAVEL SILTY GRAVEL with SAND	OL	ORGANIC lean CLAY ORGANIC lean CLAY with SAND ORGANIC lean CLAY with GRAVEL SANDY ORGANIC lean CLAY SANDY ORGANIC lean CLAY with GRAVEL GRAVELLY ORGANIC lean CLAY GRAVELLY ORGANIC lean CLAY with SAND
GC	CLAYEY GRAVEL CLAYEY GRAVEL with SAND		
GC-GM	SILTY, CLAYEY GRAVEL SILTY, CLAYEY GRAVEL with SAND	OL	ORGANIC SILT ORGANIC SILT with SAND ORGANIC SILT with GRAVEL SANDY ORGANIC SILT SANDY ORGANIC SILT with GRAVEL GRAVELLY ORGANIC SILT GRAVELLY ORGANIC SILT with SAND
SW	Well-graded SAND Well-graded SAND with GRAVEL		
SP	Poorly-graded SAND Poorly-graded SAND with GRAVEL	CH	Fat CLAY Fat CLAY with SAND Fat CLAY with GRAVEL SANDY fat CLAY SANDY fat CLAY with GRAVEL GRAVELLY fat CLAY GRAVELLY fat CLAY with SAND
SW-SM	Well-graded SAND with SILT Well-graded SAND with SILT and GRAVEL		
SW-SC	Well-graded SAND with CLAY (or SILTY CLAY) Well-graded SAND with CLAY and GRAVEL (or SILTY CLAY and GRAVEL)	MH	Elastic SILT Elastic SILT with SAND Elastic SILT with GRAVEL SANDY elastic SILT SANDY elastic SILT with GRAVEL GRAVELLY elastic SILT GRAVELLY elastic SILT with SAND
SP-SM	Poorly-graded SAND with SILT Poorly-graded SAND with SILT and GRAVEL		
SP-SC	Poorly-graded SAND with CLAY (or SILTY CLAY) Poorly-graded SAND with CLAY and GRAVEL (or SILTY CLAY and GRAVEL)	OH	ORGANIC fat CLAY ORGANIC fat CLAY with SAND ORGANIC fat CLAY with GRAVEL SANDY ORGANIC fat CLAY SANDY ORGANIC fat CLAY with GRAVEL GRAVELLY ORGANIC fat CLAY GRAVELLY ORGANIC fat CLAY with SAND
SM	SILTY SAND SILTY SAND with GRAVEL		
SC	CLAYEY SAND CLAYEY SAND with GRAVEL	OH	ORGANIC elastic SILT ORGANIC elastic SILT with SAND ORGANIC elastic SILT with GRAVEL SANDY ORGANIC elastic SILT SANDY ORGANIC elastic SILT with GRAVEL GRAVELLY ORGANIC elastic SILT GRAVELLY ORGANIC elastic SILT with SAND
SC-SM	SILTY, CLAYEY SAND SILTY, CLAYEY SAND with GRAVEL		
PT	PEAT	OL/OH	ORGANIC SOIL ORGANIC SOIL with SAND ORGANIC SOIL with GRAVEL SANDY ORGANIC SOIL SANDY ORGANIC SOIL with GRAVEL GRAVELLY ORGANIC SOIL GRAVELLY ORGANIC SOIL with SAND
	COBBLES COBBLES and BOULDERS BOULDERS		

FIELD AND LABORATORY TESTING

- (C) Consolidation (ASTM D 2435)
- (CL) Collapse Potential (ASTM D 5333)
- (CP) Compaction Curve (CTM 216)
- (CR) Corrosivity Testing (CTM 643, CTM 422, CTM 417)
- (CU) Consolidated Undrained Triaxial (ASTM D 4767)
- (DS) Direct Shear (ASTM D 3080)
- (EI) Expansion Index (ASTM D 4829)
- (M) Moisture Content (ASTM D 2216)
- (OC) Organic Content-% (ASTM D 2974)
- (P) Permeability (CTM 220)
- (PA) Particle Size Analysis (ASTM D 422)
- (PI) Plasticity Index (AASHTO T 90) Liquid Limit (AASHTO T 89)
- (PL) Point Load Index (ASTM D 5731)
- (PM) Pressure Meter
- (R) R-Value (CTM 301)
- (SE) Sand Equivalent (CTM 217)
- (SG) Specific Gravity (AASHTO T 100)
- (SL) Shrinkage Limit (ASTM D 427)
- (SW) Swell Potential (ASTM D 4546)
- (UC) Unconfined Compression-Soil (ASTM D 2166) Unconfined Compression-Rock (ASTM D 2938)
- (UU) Unconsolidated Undrained Triaxial (ASTM D 2850)
- (UW) Unit Weight (ASTM D 4767)

APPARENT DENSITY OF COHESIONLESS SOILS

Description	SPT N_{60} (Blows / 12 in.)
Very Loose	0 - 5
Loose	5 - 10
Medium Dense	10 - 30
Dense	30 - 50
Very Dense	Greater than 50

MOISTURE

Description	Criteria
Dry	No discernable moisture
Moist	Moisture present, but no free water
Wet	Visible free water

PERCENT OR PROPORTION OF SOILS

Description	Criteria
Trace	Particles are present but estimated to be less than 5%
Few	5% - 10%
Little	15% - 25%
Some	30% - 45%
Mostly	50% - 100%

PARTICLE SIZE

Description		Size (in.)
Boulder		Greater than 12
Cobble		3 - 12
Gravel	Coarse	3/4 - 3
	Fine	1/5 - 3/4
Sand	Coarse	1/16 - 1/5
	Medium	1/64 - 1/16
	Fine	1/300 - 1/64
Silt and Clay		Less than 1/300

ENGINEERING SERVICES

GEOTECHNICAL SERVICES
PREPARED BY: I.G-Remmen 1/11

STATE OF CALIFORNIA
DEPARTMENT OF TRANSPORTATION

DIVISION OF ENGINEERING SERVICES
STRUCTURE DESIGN
DESIGN BRANCH X

BRIDGE NO.
POST MILE 17.30/17.33

RETAINING WALL 913 R-4
LOG OF TEST BORINGS 3 OF 3

GS LOTB SOIL LEGEND

ORIGINAL SCALE IN INCHES FOR REDUCED PLANS 0 1 2 3

UNIT: 3643
PROJECT NUMBER & PHASE: 07000208691
CONTRACT NO.: 07-202111

DISREGARD PRINTS BEARING EARLIER REVISION DATES

REVISION DATES 01-18-11 | SHEET X | OF X

FILE => 720211qa004.dgn

USERNAME => trrright DATE PLOTTED => 29-JUN-2011 TIME PLOTTED => 10:26

Dist	COUNTY	ROUTE	POST MILES TOTAL PROJECT	SHEET No.	TOTAL SHEETS
07	LA	710	17.2/26.4	957	1507

Rene Yin 2-3-11
REGISTERED CIVIL ENGINEER DATE

6-27-11
PLANS APPROVAL DATE

REGISTERED PROFESSIONAL ENGINEER RENE YIN No. C49915 Exp. 9/30/12 CIVIL STATE OF CALIFORNIA

THE STATE OF CALIFORNIA OR ITS OFFICERS OR AGENTS SHALL NOT BE RESPONSIBLE FOR THE ACCURACY OR COMPLETENESS OF SCANNED COPIES OF THIS PLAN SHEET.

NOTES:

1. FOR ACCURATE RIGHT OF WAY AND ACCESS DATA, CONTACT RIGHT OF WAY ENGINEERING AT THE DISTRICT OFFICE.
2. WATERSTOP IN THE EXPANSION JOINT SHALL BE EXTENDED 6" INTO CONCRETE BARRIER.

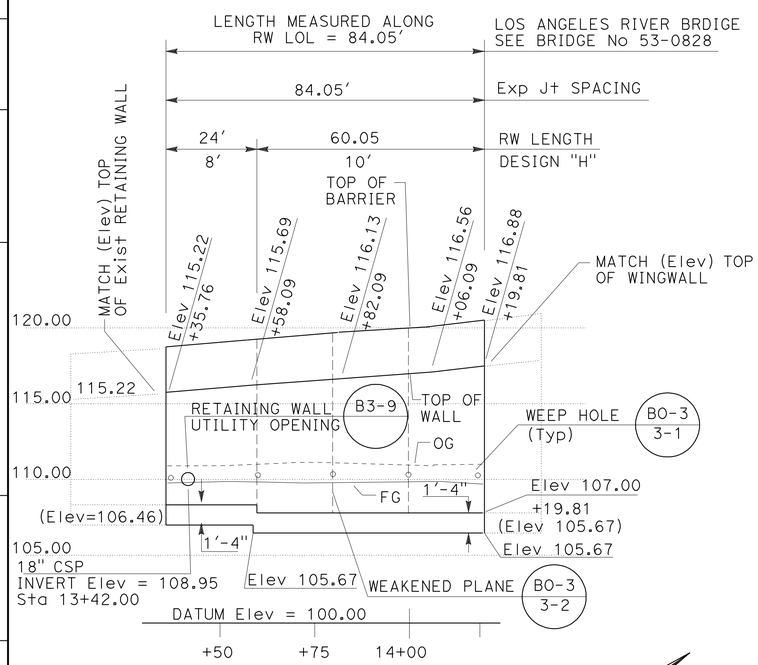

ELEVATION
SCALE Horiz: 1" = 20'
Vert: 1" = 5'

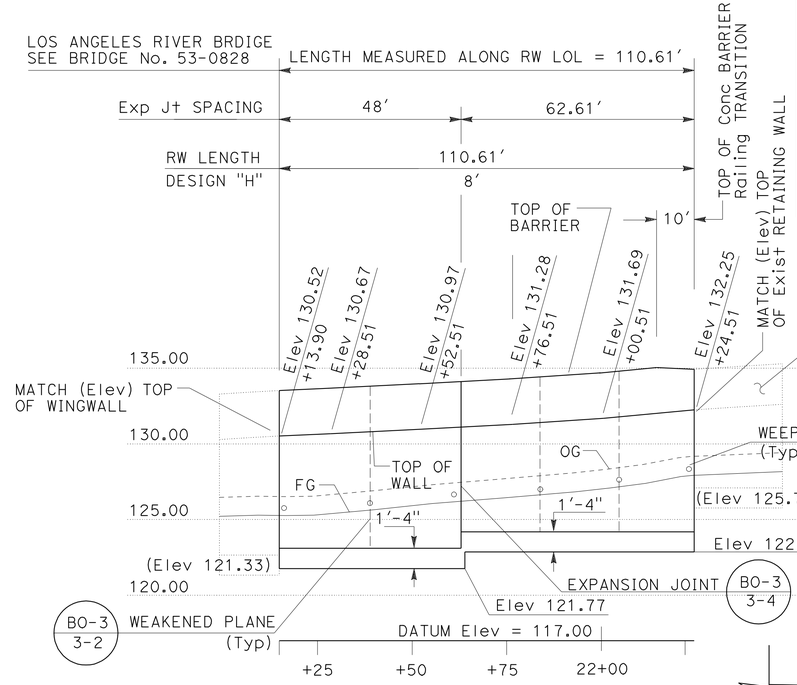

ELEVATION
SCALE Horiz: 1" = 20'
Vert: 1" = 5'

CURVE DATA

No.	R	Δ	T	L
30	2500.00'	66°55'54"	1562.57'	2920.44'
31	2420.89'	01°59'21"	42.03'	84.05'

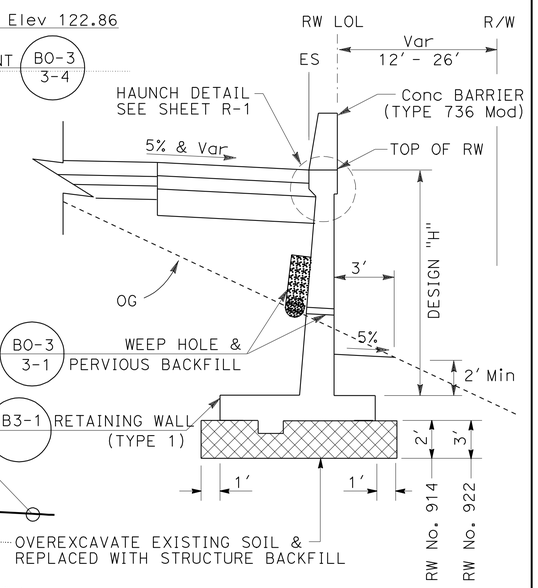

TYPICAL SECTION
NO SCALE

RETAINING WALL No. 914 & 922
Sta 13+35.76 TO 14+19.81
Sta 21+13.90 TO 22+24.51

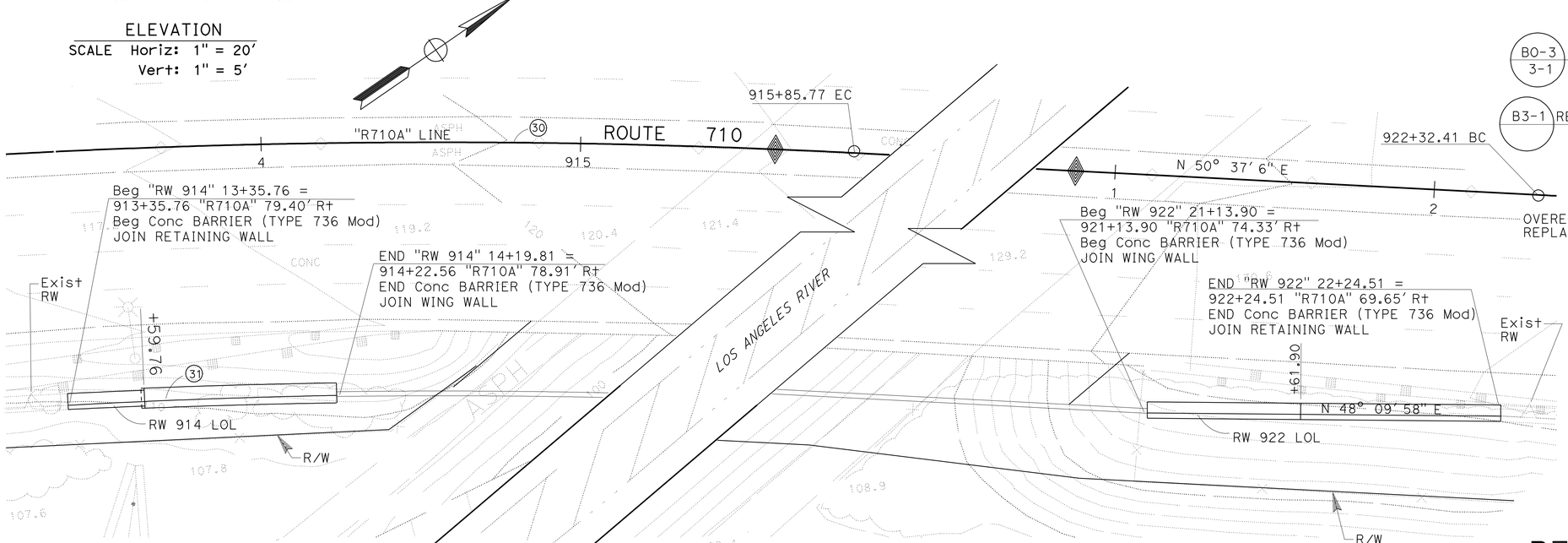

RETAINING WALL PLAN
SCALE 1" = 20'

THIS PLAN ACCURATE FOR RETAINING WALL WORK ONLY.

RETAINING WALL PLAN

RETAINING WALL No. 914 & 922

SCALE AS SHOWN **R-5**

STATE OF CALIFORNIA - DEPARTMENT OF TRANSPORTATION
Caltrans® DESIGN
FUNCTIONAL SUPERVISOR: ALINE ANTARAMIAN
CALCULATED-DESIGNED BY: DAN TRAN
CHECKED BY: RENE YIN
REVISED BY / DATE REVISED

LAST REVISION 00-00-00 | DATE PLOTTED => 29-JUN-2011 | TIME PLOTTED => 10:26

DIST	COUNTY	ROUTE	POST MILES TOTAL PROJECT	SHEET No	TOTAL SHEETS
07	LA	710	17.2/26.4	958	1507

Tatjana Halda 1-18-11
REGISTERED CIVIL ENGINEER

6-27-11
PLANS APPROVAL DATE

REGISTERED PROFESSIONAL ENGINEER
Tatjana L. Halda
No. C68293
Exp. 9-30-11
CIVIL
STATE OF CALIFORNIA

The State of California or its officers or agents shall not be responsible for the accuracy or completeness of electronic copies of this plan sheet.

This LOTB sheet was prepared in accordance with the Caltrans Soil & Rock Logging, Classification, & Presentation Manual (2010 Edition).

BENCH MARK

PRHV 109

PK Nail SB710 Shldr,
84' S'ly/Br Rail
63.346' Lt ℄ Rte 710
Sta 914+96.91
N 1 798 877.209
E 6 508 210.228
Elev = 122.185

PRHV 108

PK Nail SB710 on dike
behind MBGR, 22' N'LY/Br Rail
61.830'Lt ℄ Rte 710
Sta.922+63.41
N 1 799 364.692
E 6 508 803.633
Elev = 130.541'

PRHV 22

2x2 behind MBGR NB710,
19.5' S/Br Rail
64.596' Rt ℄ Rte 710
Sta.914+34.26
N 1 798 740.3198
E 6 508 249.6114
Elev = 118.891'

PRHV 23

PK in NB710 Shldr,
134.5' N'ly/Br
63.604' Rt ℄ Rte 710
Sta 9922+46.33
N 1 799 527.5000
E 6 508 870.9780
Elev = 132.493

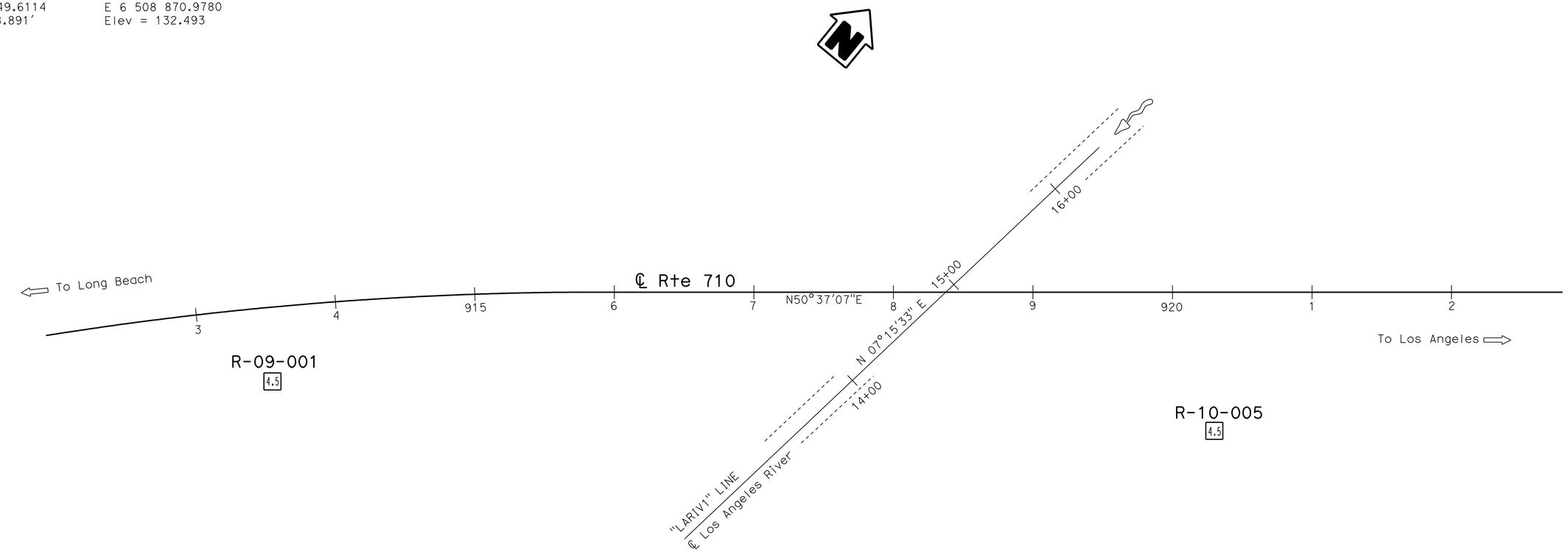

PLAN
1" = 40'

ENGINEERING SERVICES	GEOTECHNICAL SERVICES	STATE OF CALIFORNIA DEPARTMENT OF TRANSPORTATION	DIVISION OF ENGINEERING SERVICES STRUCTURE DESIGN DESIGN BRANCH X	BRIDGE NO. / POST MILE 17.31/17.33	RETAINING WALL 914 R-6
FUNCTIONAL SUPERVISOR NAME: S. Karimi	DRAWN BY: I.G-Remmen 1/11 / CHECKED BY: K. Lai	FIELD INVESTIGATION BY: T. Halda, J Pratt			LOG OF TEST BORINGS 1 OF 4

OGS CIVIL LOG OF TEST BORINGS SHEET

ORIGINAL SCALE IN INCHES FOR REDUCED PLANS 0 1 2 3

UNIT: 3643
PROJECT NUMBER & PHASE: 07000208691 CONTRACT NO.: 07-202111

DISREGARD PRINTS BEARING EARLIER REVISION DATES

REVISION DATES				SHEET	OF
01-18-11				X	X

FILE => 720211qb002.dgn

USERNAME => trrichf DATE PLOTTED => 29-JUN-2011 TIME PLOTTED => 10:26

DIST	COUNTY	ROUTE	POST MILES TOTAL PROJECT	SHEET No	TOTAL SHEETS
07	LA	710	17.2/26.4	959	1507

Tatjana Halda 1-18-11
REGISTERED CIVIL ENGINEER

6-27-11
PLANS APPROVAL DATE

The State of California or its officers or agents shall not be responsible for the accuracy or completeness of electronic copies of this plan sheet.

REGISTERED PROFESSIONAL ENGINEER Tatjana L. Halda No. C68293 Exp. 9-30-11 CIVIL STATE OF CALIFORNIA

This LOTB sheet was prepared in accordance with the Caltrans Soil & Rock Logging, Classification, & Presentation Manual (2010 Edition).

FOR PLAN VIEW, SEE
"LOG OF TEST BORINGS" 1 OF 4

Note: Groundwater was encountered but not measured.

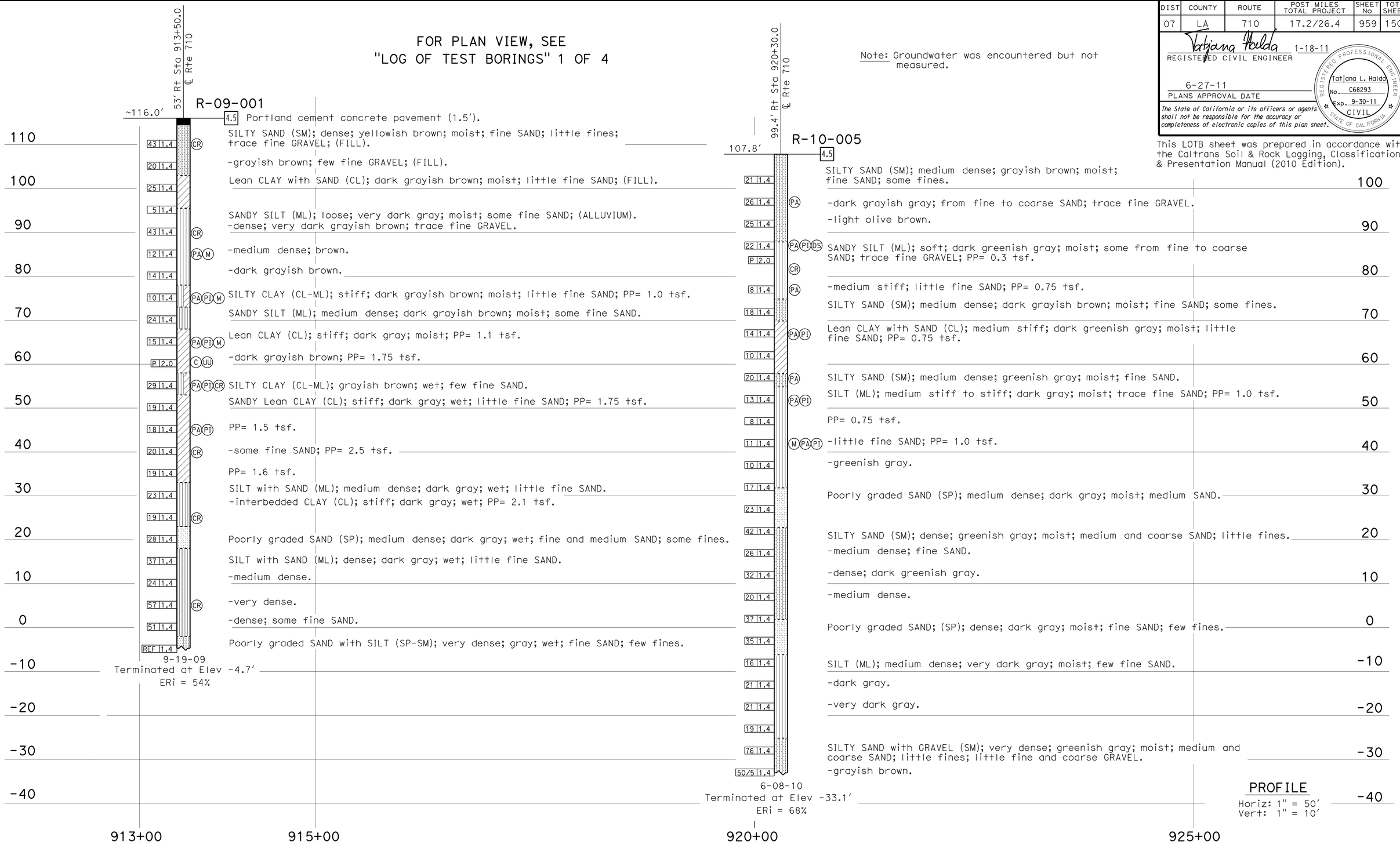

ENGINEERING SERVICES	GEOTECHNICAL SERVICES	STATE OF CALIFORNIA DEPARTMENT OF TRANSPORTATION	DIVISION OF ENGINEERING SERVICES STRUCTURE DESIGN DESIGN BRANCH X	BRIDGE NO. / POST MILE 17.31/17.33	RETAINING WALL 914 R-7
FUNCTIONAL SUPERVISOR NAME: S. Karimi	DRAWN BY: I.G-Remmen 1/11 / CHECKED BY: K. Lai	FIELD INVESTIGATION BY: T. Halda, J Pratt			LOG OF TEST BORINGS 2 OF 4

OGS CIVIL LOG OF TEST BORINGS SHEET

ORIGINAL SCALE IN INCHES FOR REDUCED PLANS 0 1 2 3

UNIT: 3643
PROJECT NUMBER & PHASE: 07000208691 CONTRACT NO.: 07-202111

DISREGARD PRINTS BEARING EARLIER REVISION DATES → 01-18-11

REVISION DATES | SHEET X | OF X

FILE => 720211qb003.dgn

USERNAME => trrlcnf DATE PLOTTED => 29-JUN-2011 TIME PLOTTED => 10:26

DIST	COUNTY	ROUTE	POST MILES TOTAL PROJECT	SHEET No	TOTAL SHEETS
07	LA	710	17.2/26.4	960	1507

Tatjana Halda 1-18-11
REGISTERED CIVIL ENGINEER

6-27-11
PLANS APPROVAL DATE

REGISTERED PROFESSIONAL ENGINEER
Tatjana L. Halda
No. C68293
Exp. 9-30-11
CIVIL
STATE OF CALIFORNIA

The State of California or its officers or agents shall not be responsible for the accuracy or completeness of electronic copies of this plan sheet.

REFERENCE: CALTRANS SOIL & ROCK LOGGING, CLASSIFICATION, AND PRESENTATION MANUAL (2010)

CEMENTATION

Description	Criteria
Weak	Crumbles or breaks with handling or little finger pressure.
Moderate	Crumbles or breaks with considerable finger pressure.
Strong	Will not crumble or break with finger pressure.

BOREHOLE IDENTIFICATION

Symbol	Hole Type	Description
Size	A	Auger Boring (hollow or solid stem bucket)
Size	R RW RC P	Rotary drilled boring (conventional) Rotary drilled with self-casing wire-line Rotary core with continuously-sampled, self-casing wire-line Rotary percussion boring (air)
Size	R	Rotary drilled diamond core
Size	HD HA	Hand driven (1-inch soil tube) Hand Auger
●	D	Dynamic Cone Penetration Boring
▲	CPT	Cone Penetration Test (ASTM D 5778)
⬚	O	Other (note on LOTB)

Note: Size in inches.

CONSISTENCY OF COHESIVE SOILS

Description	Shear Strength (tsf)	Pocket Penetrometer Measurement, PP, (tsf)	Torvane Measurement, TV, (tsf)	Vane Shear Measurement, VS, (tsf)
Very Soft	Less than 0.12	Less than 0.25	Less than 0.12	Less than 0.12
Soft	0.12 - 0.25	0.25 - 0.5	0.12 - 0.25	0.12 - 0.25
Medium Stiff	0.25 - 0.5	0.5 - 1	0.25 - 0.5	0.25 - 0.5
Stiff	0.5 - 1	1 - 2	0.5 - 1	0.5 - 1
Very Stiff	1 - 2	2 - 4	1 - 2	1 - 2
Hard	Greater than 2	Greater than 4	Greater than 2	Greater than 2

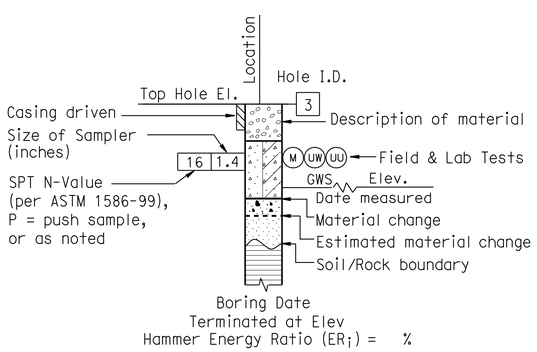

ROTARY BORING

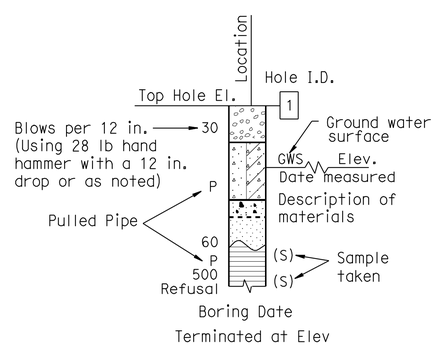

HAND BORING

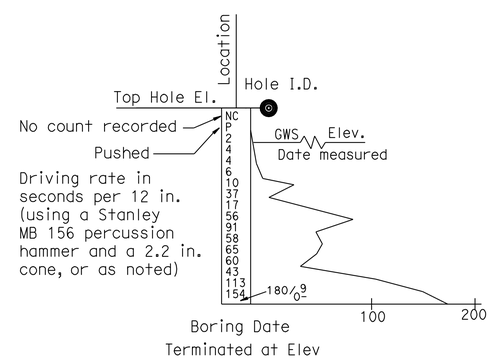

DYNAMIC CONE PENETRATION BORING

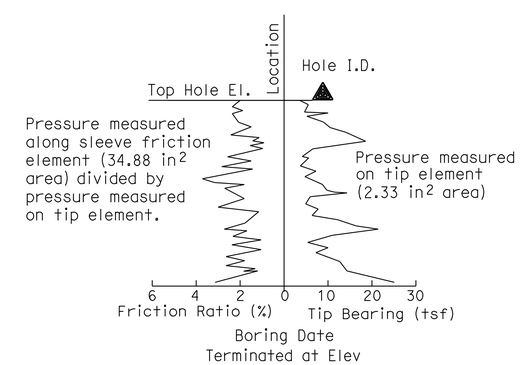

CONE PENETRATION TEST (CPT) BORING

ENGINEERING SERVICES	GEOTECHNICAL SERVICES	STATE OF CALIFORNIA DEPARTMENT OF TRANSPORTATION	DIVISION OF ENGINEERING SERVICES STRUCTURE DESIGN DESIGN BRANCH X	BRIDGE NO. / POST MILE 17.31/17.33	RETAINING WALL 914 R-8 LOG OF TEST BORINGS 3 OF 4
	PREPARED BY: I.G-Remmen 1/11				

GS LOTB SOIL LEGEND

ORIGINAL SCALE IN INCHES FOR REDUCED PLANS 0 1 2 3

UNIT: 3643
PROJECT NUMBER & PHASE: 07000208691 CONTRACT NO.: 07-202111

DISREGARD PRINTS BEARING EARLIER REVISION DATES

REVISION DATES | SHEET X | OF X

FILE => 720211qb004.dgn

USERNAME => trrichf DATE PLOTTED => 29-JUN-2011 TIME PLOTTED => 10:26

REFERENCE: CALTRANS SOIL & ROCK LOGGING, CLASSIFICATION, AND PRESENTATION MANUAL (2010)

DIST	COUNTY	ROUTE	POST MILES TOTAL PROJECT	SHEET No	TOTAL SHEETS
07	LA	710	17.2/26.4	961	1507

Tatjana Halda 1-18-11
REGISTERED CIVIL ENGINEER

6-27-11
PLANS APPROVAL DATE

REGISTERED PROFESSIONAL ENGINEER Tatjana L. Halda No. C68293 Exp. 9-30-11 CIVIL STATE OF CALIFORNIA

The State of California or its officers or agents shall not be responsible for the accuracy or completeness of electronic copies of this plan sheet.

GROUP SYMBOLS AND NAMES

Graphic/Symbol	Group Names	Graphic/Symbol	Group Names
GW	Well-graded GRAVEL Well-graded GRAVEL with SAND	CL	Lean CLAY Lean CLAY with SAND Lean CLAY with GRAVEL SANDY lean CLAY SANDY lean CLAY with GRAVEL GRAVELLY lean CLAY GRAVELLY lean CLAY with SAND
GP	Poorly-graded GRAVEL Poorly-graded GRAVEL with SAND		
GW-GM	Well-graded GRAVEL with SILT Well-graded GRAVEL with SILT and SAND	CL-ML	SILTY CLAY SILTY CLAY with SAND SILTY CLAY with GRAVEL SANDY SILTY CLAY SANDY SILTY CLAY with GRAVEL GRAVELLY SILTY CLAY GRAVELLY SILTY CLAY with SAND
GW-GC	Well-graded GRAVEL with CLAY (or SILTY CLAY) Well-graded GRAVEL with CLAY and SAND (or SILTY CLAY and SAND)		
GP-GM	Poorly-graded GRAVEL with SILT Poorly-graded GRAVEL with SILT and SAND	ML	SILT SILT with SAND SILT with GRAVEL SANDY SILT SANDY SILT with GRAVEL GRAVELLY SILT GRAVELLY SILT with SAND
GP-GC	Poorly-graded GRAVEL with CLAY (or SILTY CLAY) Poorly-graded GRAVEL with CLAY and SAND (or SILTY CLAY and SAND)		
GM	SILTY GRAVEL SILTY GRAVEL with SAND	OL	ORGANIC lean CLAY ORGANIC lean CLAY with SAND ORGANIC lean CLAY with GRAVEL SANDY ORGANIC lean CLAY SANDY ORGANIC lean CLAY with GRAVEL GRAVELLY ORGANIC lean CLAY GRAVELLY ORGANIC lean CLAY with SAND
GC	CLAYEY GRAVEL CLAYEY GRAVEL with SAND		
GC-GM	SILTY, CLAYEY GRAVEL SILTY, CLAYEY GRAVEL with SAND	OL	ORGANIC SILT ORGANIC SILT with SAND ORGANIC SILT with GRAVEL SANDY ORGANIC SILT SANDY ORGANIC SILT with GRAVEL GRAVELLY ORGANIC SILT GRAVELLY ORGANIC SILT with SAND
SW	Well-graded SAND Well-graded SAND with GRAVEL		
SP	Poorly-graded SAND Poorly-graded SAND with GRAVEL	CH	Fat CLAY Fat CLAY with SAND Fat CLAY with GRAVEL SANDY fat CLAY SANDY fat CLAY with GRAVEL GRAVELLY fat CLAY GRAVELLY fat CLAY with SAND
SW-SM	Well-graded SAND with SILT Well-graded SAND with SILT and GRAVEL		
SW-SC	Well-graded SAND with CLAY (or SILTY CLAY) Well-graded SAND with CLAY and GRAVEL (or SILTY CLAY and GRAVEL)	MH	Elastic SILT Elastic SILT with SAND Elastic SILT with GRAVEL SANDY elastic SILT SANDY elastic SILT with GRAVEL GRAVELLY elastic SILT GRAVELLY elastic SILT with SAND
SP-SM	Poorly-graded SAND with SILT Poorly-graded SAND with SILT and GRAVEL		
SP-SC	Poorly-graded SAND with CLAY (or SILTY CLAY) Poorly-graded SAND with CLAY and GRAVEL (or SILTY CLAY and GRAVEL)	OH	ORGANIC fat CLAY ORGANIC fat CLAY with SAND ORGANIC fat CLAY with GRAVEL SANDY ORGANIC fat CLAY SANDY ORGANIC fat CLAY with GRAVEL GRAVELLY ORGANIC fat CLAY GRAVELLY ORGANIC fat CLAY with SAND
SM	SILTY SAND SILTY SAND with GRAVEL		
SC	CLAYEY SAND CLAYEY SAND with GRAVEL	OH	ORGANIC elastic SILT ORGANIC elastic SILT with SAND ORGANIC elastic SILT with GRAVEL SANDY ORGANIC elastic SILT SANDY ORGANIC elastic SILT with GRAVEL GRAVELLY ORGANIC elastic SILT GRAVELLY ORGANIC elastic SILT with SAND
SC-SM	SILTY, CLAYEY SAND SILTY, CLAYEY SAND with GRAVEL		
PT	PEAT	OL/OH	ORGANIC SOIL ORGANIC SOIL with SAND ORGANIC SOIL with GRAVEL SANDY ORGANIC SOIL SANDY ORGANIC SOIL with GRAVEL GRAVELLY ORGANIC SOIL GRAVELLY ORGANIC SOIL with SAND
	COBBLES COBBLES and BOULDERS BOULDERS		

FIELD AND LABORATORY TESTING

- (C) Consolidation (ASTM D 2435)
- (CL) Collapse Potential (ASTM D 5333)
- (CP) Compaction Curve (CTM 216)
- (CR) Corrosivity Testing (CTM 643, CTM 422, CTM 417)
- (CU) Consolidated Undrained Triaxial (ASTM D 4767)
- (DS) Direct Shear (ASTM D 3080)
- (EI) Expansion Index (ASTM D 4829)
- (M) Moisture Content (ASTM D 2216)
- (OC) Organic Content-% (ASTM D 2974)
- (P) Permeability (CTM 220)
- (PA) Particle Size Analysis (ASTM D 422)
- (PI) Plasticity Index (AASHTO T 90) Liquid Limit (AASHTO T 89)
- (PL) Point Load Index (ASTM D 5731)
- (PM) Pressure Meter
- (R) R-Value (CTM 301)
- (SE) Sand Equivalent (CTM 217)
- (SG) Specific Gravity (AASHTO T 100)
- (SL) Shrinkage Limit (ASTM D 427)
- (SW) Swell Potential (ASTM D 4546)
- (UC) Unconfined Compression-Soil (ASTM D 2166) Unconfined Compression-Rock (ASTM D 2938)
- (UU) Unconsolidated Undrained Triaxial (ASTM D 2850)
- (UW) Unit Weight (ASTM D 4767)

APPARENT DENSITY OF COHESIONLESS SOILS

Description	SPT N_{60} (Blows / 12 in.)
Very Loose	0 - 5
Loose	5 - 10
Medium Dense	10 - 30
Dense	30 - 50
Very Dense	Greater than 50

MOISTURE

Description	Criteria
Dry	No discernable moisture
Moist	Moisture present, but no free water
Wet	Visible free water

PERCENT OR PROPORTION OF SOILS

Description	Criteria
Trace	Particles are present but estimated to be less than 5%
Few	5% - 10%
Little	15% - 25%
Some	30% - 45%
Mostly	50% - 100%

PARTICLE SIZE

Description		Size (in.)
Boulder		Greater than 12
Cobble		3 - 12
Gravel	Coarse	3/4 - 3
	Fine	1/5 - 3/4
Sand	Coarse	1/16 - 1/5
	Medium	1/64 - 1/16
	Fine	1/300 - 1/64
Silt and Clay		Less than 1/300

ENGINEERING SERVICES

GEOTECHNICAL SERVICES
PREPARED BY: I.G-Remmen 1/11

STATE OF CALIFORNIA
DEPARTMENT OF TRANSPORTATION

DIVISION OF ENGINEERING SERVICES
STRUCTURE DESIGN
DESIGN BRANCH X

BRIDGE NO.
POST MILE 17.31/17.33

RETAINING WALL 914 R-9
LOG OF TEST BORINGS 4 OF 4

GS LOTB SOIL LEGEND

ORIGINAL SCALE IN INCHES FOR REDUCED PLANS 0 1 2 3

UNIT: 3643
PROJECT NUMBER & PHASE: 07000208691
CONTRACT NO.: 07-202111

DISREGARD PRINTS BEARING EARLIER REVISION DATES

REVISION DATES | SHEET X | OF X

FILE => 720211qb005.dgn

USERNAME => trrlcht DATE PLOTTED => 29-JUN-2011 TIME PLOTTED => 10:27

DIST	COUNTY	ROUTE	POST MILES TOTAL PROJECT	SHEET No	TOTAL SHEETS
07	LA	710	17.2/26.4	962	1507

Tatjana Halda 1-18-11
REGISTERED CIVIL ENGINEER

6-27-11
PLANS APPROVAL DATE

REGISTERED PROFESSIONAL ENGINEER
Tatjana L. Halda
No. C68293
Exp. 9-30-11
CIVIL
STATE OF CALIFORNIA

The State of California or its officers or agents shall not be responsible for the accuracy or completeness of electronic copies of this plan sheet.

This LOTB sheet was prepared in accordance with the Caltrans Soil & Rock Logging, Classification, & Presentation Manual (2010 Edition).

BENCH MARK

PRHV 109

PK Nail SB710 Shldr,
84' S'ly/Br Rail
63.346' Lt ℄ Rte 710
Sta 914+96.91
N 1 798 877.209
E 6 508 210.228
Elev = 122.185

PRHV 108

PK Nail SB710 on dike
behind MBGR, 22' N'LY/Br Rail
61.830'Lt ℄ Rte 710
Sta.922+63.41
N 1 799 364.692
E 6 508 803.633
Elev = 130.541'

PRHV 22

2x2 behind MBGR NB710,
19.5' S/Br Rail
64.596' Rt ℄ Rte 710
Sta.914+34.26
N 1 798 740.3198
E 6 508 249.6114
Elev = 118.891'

PRHV 23

PK in NB710 Shldr,
134.5' N'ly/Br
63.604' Rt ℄ Rte 710
Sta 9922+46.33
N 1 799 527.5000
E 6 508 870.9780
Elev = 132.493

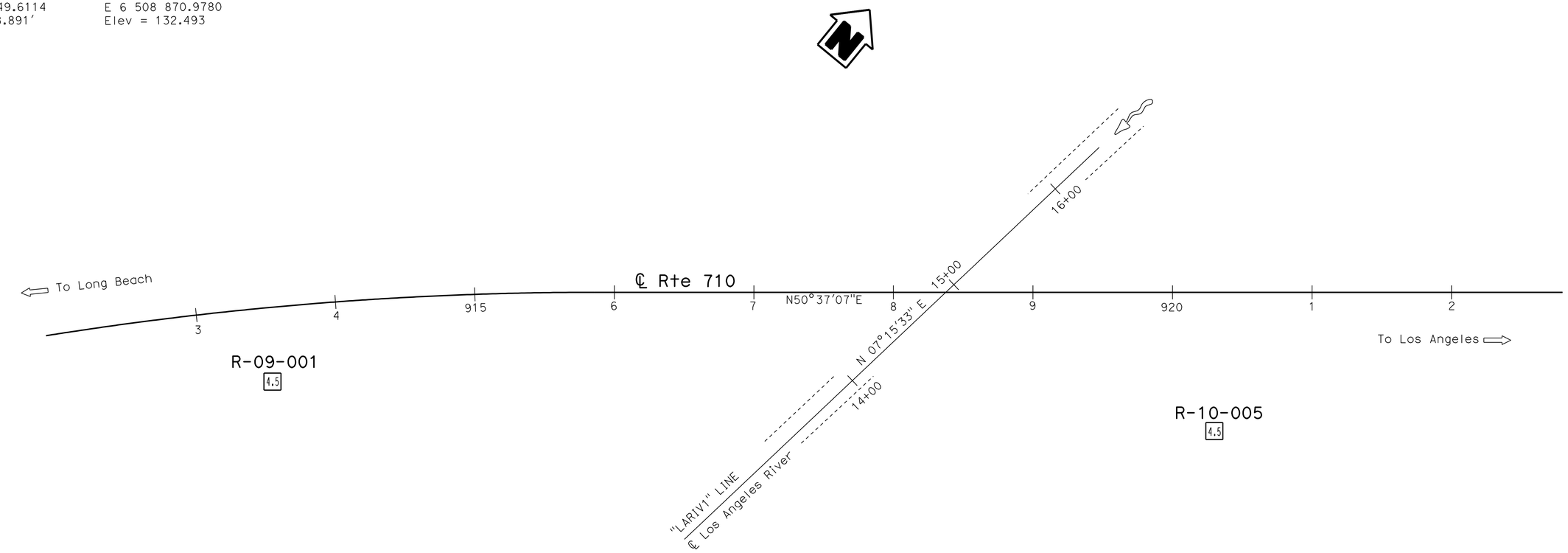

PLAN
1" = 40'

ENGINEERING SERVICES	GEOTECHNICAL SERVICES	STATE OF CALIFORNIA DEPARTMENT OF TRANSPORTATION	DIVISION OF ENGINEERING SERVICES STRUCTURE DESIGN DESIGN BRANCH X	BRIDGE NO. / POST MILE 17.45/17.47	RETAINING WALL 922 R-10 LOG OF TEST BORINGS 1 OF 4
FUNCTIONAL SUPERVISOR NAME: S. Karimi	DRAWN BY: I.G-Remmen 1/11 CHECKED BY: K. Lai	FIELD INVESTIGATION BY: T. Halda, J Pratt			

OGS CIVIL LOG OF TEST BORINGS SHEET

ORIGINAL SCALE IN INCHES FOR REDUCED PLANS 0 1 2 3

UNIT: 3643
PROJECT NUMBER & PHASE: 07000208691 CONTRACT NO.: 07-202111

DISREGARD PRINTS BEARING EARLIER REVISION DATES

REVISION DATES				SHEET	OF
01-18-11				X	X

FILE => 720211qb006.dgn

USERNAME => trrichf DATE PLOTTED => 29-JUN-2011 TIME PLOTTED => 10:27

DIST	COUNTY	ROUTE	POST MILES TOTAL PROJECT	SHEET No	TOTAL SHEETS
07	LA	710	17.2/26.4	963	1507

Tatjana Halda 1-18-11
REGISTERED CIVIL ENGINEER

6-27-11
PLANS APPROVAL DATE

The State of California or its officers or agents shall not be responsible for the accuracy or completeness of electronic copies of this plan sheet.

REGISTERED PROFESSIONAL ENGINEER Tatjana L. Halda No. C68293 Exp. 9-30-11 CIVIL STATE OF CALIFORNIA

This LOTB sheet was prepared in accordance with the Caltrans Soil & Rock Logging, Classification, & Presentation Manual (2010 Edition).

FOR PLAN VIEW, SEE
"LOG OF TEST BORINGS" 1 OF 4

Note: Groundwater was encountered but not measured.

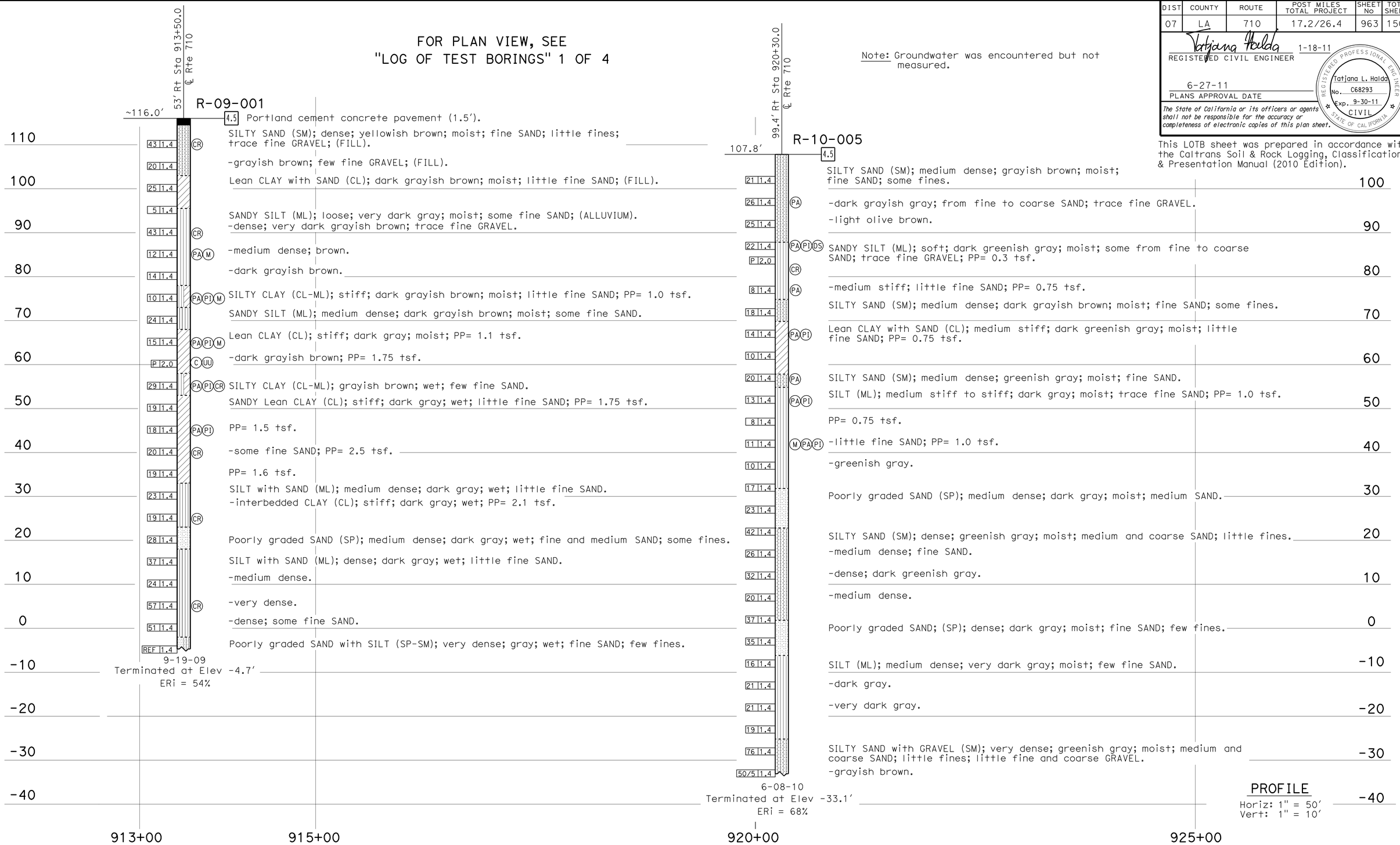

ENGINEERING SERVICES	GEOTECHNICAL SERVICES	STATE OF CALIFORNIA DEPARTMENT OF TRANSPORTATION	DIVISION OF ENGINEERING SERVICES STRUCTURE DESIGN DESIGN BRANCH X	BRIDGE NO. / POST MILE 17.45/17.47	RETAINING WALL 922 R-11 LOG OF TEST BORINGS 2 OF 4
FUNCTIONAL SUPERVISOR NAME: S. Karimi	DRAWN BY: I.G-Remmen 1/11 CHECKED BY: K. Lai	FIELD INVESTIGATION BY: T. Halda, J Pratt			

OGS CIVIL LOG OF TEST BORINGS SHEET

ORIGINAL SCALE IN INCHES FOR REDUCED PLANS 0 1 2 3

UNIT: 3643
PROJECT NUMBER & PHASE: 07000208691 CONTRACT NO.: 07-202111

DISREGARD PRINTS BEARING EARLIER REVISION DATES

REVISION DATES				SHEET	OF
01-18-11				X	X

FILE => 720211qb007.dgn

USERNAME => trrlcnf DATE PLOTTED => 29-JUN-2011 TIME PLOTTED => 10:27

DIST	COUNTY	ROUTE	POST MILES TOTAL PROJECT	SHEET No	TOTAL SHEETS
07	LA	710	17.2/26.4	964	1507

Tatjana Halda 1-18-11
REGISTERED CIVIL ENGINEER

6-27-11
PLANS APPROVAL DATE

REGISTERED PROFESSIONAL ENGINEER Tatjana L. Halda No. C68293 Exp. 9-30-11 CIVIL STATE OF CALIFORNIA

The State of California or its officers or agents shall not be responsible for the accuracy or completeness of electronic copies of this plan sheet.

REFERENCE: CALTRANS SOIL & ROCK LOGGING, CLASSIFICATION, AND PRESENTATION MANUAL (2010)

CEMENTATION

Description	Criteria
Weak	Crumbles or breaks with handling or little finger pressure.
Moderate	Crumbles or breaks with considerable finger pressure.
Strong	Will not crumble or break with finger pressure.

BOREHOLE IDENTIFICATION

Symbol	Hole Type	Description
Size	A	Auger Boring (hollow or solid stem bucket)
Size	R RW RC P	Rotary drilled boring (conventional) Rotary drilled with self-casing wire-line Rotary core with continuously-sampled, self-casing wire-line Rotary percussion boring (air)
Size	R	Rotary drilled diamond core
Size	HD HA	Hand driven (1-inch soil tube) Hand Auger
●	D	Dynamic Cone Penetration Boring
▲	CPT	Cone Penetration Test (ASTM D 5778)
⬚	O	Other (note on LOTB)

Note: Size in inches.

CONSISTENCY OF COHESIVE SOILS

Description	Shear Strength (tsf)	Pocket Penetrometer Measurement, PP, (tsf)	Torvane Measurement, TV, (tsf)	Vane Shear Measurement, VS, (tsf)
Very Soft	Less than 0.12	Less than 0.25	Less than 0.12	Less than 0.12
Soft	0.12 - 0.25	0.25 - 0.5	0.12 - 0.25	0.12 - 0.25
Medium Stiff	0.25 - 0.5	0.5 - 1	0.25 - 0.5	0.25 - 0.5
Stiff	0.5 - 1	1 - 2	0.5 - 1	0.5 - 1
Very Stiff	1 - 2	2 - 4	1 - 2	1 - 2
Hard	Greater than 2	Greater than 4	Greater than 2	Greater than 2

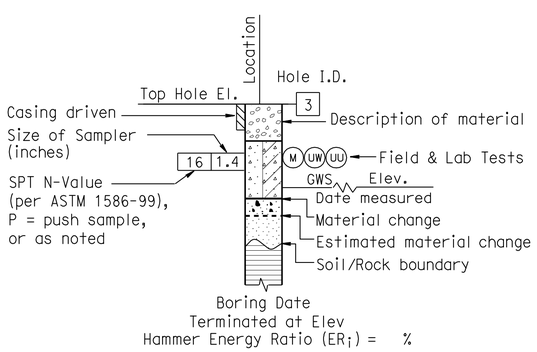

ROTARY BORING

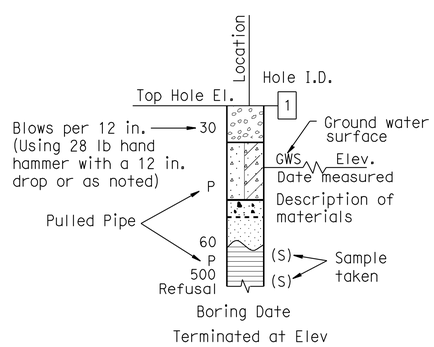

HAND BORING

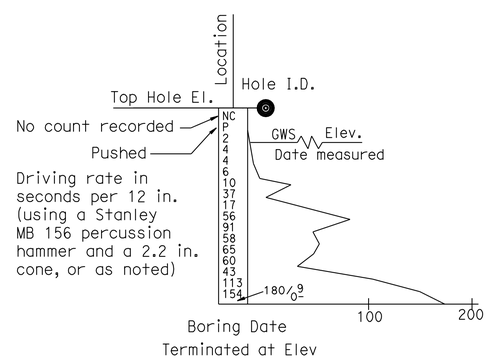

DYNAMIC CONE PENETRATION BORING

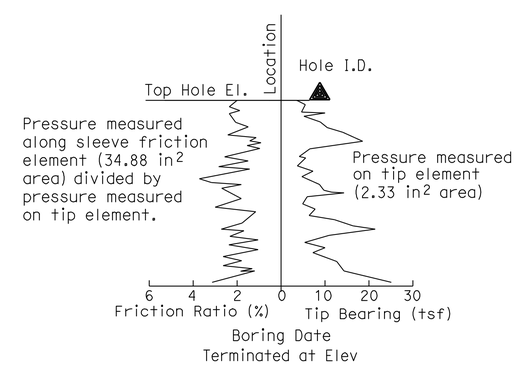

CONE PENETRATION TEST (CPT) BORING

ENGINEERING SERVICES	GEOTECHNICAL SERVICES	STATE OF CALIFORNIA DEPARTMENT OF TRANSPORTATION	DIVISION OF ENGINEERING SERVICES STRUCTURE DESIGN DESIGN BRANCH X	BRIDGE NO. / POST MILE 17.45/17.47	RETAINING WALL 922 R-12 LOG OF TEST BORINGS 3 OF 4
	PREPARED BY: I.G-Remmen 1/11				

GS LOTB SOIL LEGEND

ORIGINAL SCALE IN INCHES FOR REDUCED PLANS 0 1 2 3

UNIT: 3643
PROJECT NUMBER & PHASE: 07000208691 CONTRACT NO.: 07-202111

DISREGARD PRINTS BEARING EARLIER REVISION DATES

REVISION DATES | SHEET X | OF X

FILE => 720211qb008.dgn

USERNAME => trrichf DATE PLOTTED => 29-JUN-2011 TIME PLOTTED => 10:27

REFERENCE: CALTRANS SOIL & ROCK LOGGING, CLASSIFICATION, AND PRESENTATION MANUAL (2010)

DIST	COUNTY	ROUTE	POST MILES TOTAL PROJECT	SHEET No	TOTAL SHEETS
07	LA	710	17.2/26.4	965	1507

Tatjana Halda 1-18-11
REGISTERED CIVIL ENGINEER

6-27-11
PLANS APPROVAL DATE

REGISTERED PROFESSIONAL ENGINEER Tatjana L. Halda No. C68293 Exp. 9-30-11 CIVIL STATE OF CALIFORNIA

The State of California or its officers or agents shall not be responsible for the accuracy or completeness of electronic copies of this plan sheet.

GROUP SYMBOLS AND NAMES

Graphic/Symbol	Group Names
GW	Well-graded GRAVEL Well-graded GRAVEL with SAND
GP	Poorly-graded GRAVEL Poorly-graded GRAVEL with SAND
GW-GM	Well-graded GRAVEL with SILT Well-graded GRAVEL with SILT and SAND
GW-GC	Well-graded GRAVEL with CLAY (or SILTY CLAY) Well-graded GRAVEL with CLAY and SAND (or SILTY CLAY and SAND)
GP-GM	Poorly-graded GRAVEL with SILT Poorly-graded GRAVEL with SILT and SAND
GP-GC	Poorly-graded GRAVEL with CLAY (or SILTY CLAY) Poorly-graded GRAVEL with CLAY and SAND (or SILTY CLAY and SAND)
GM	SILTY GRAVEL SILTY GRAVEL with SAND
GC	CLAYEY GRAVEL CLAYEY GRAVEL with SAND
GC-GM	SILTY, CLAYEY GRAVEL SILTY, CLAYEY GRAVEL with SAND
SW	Well-graded SAND Well-graded SAND with GRAVEL
SP	Poorly-graded SAND Poorly-graded SAND with GRAVEL
SW-SM	Well-graded SAND with SILT Well-graded SAND with SILT and GRAVEL
SW-SC	Well-graded SAND with CLAY (or SILTY CLAY) Well-graded SAND with CLAY and GRAVEL (or SILTY CLAY and GRAVEL)
SP-SM	Poorly-graded SAND with SILT Poorly-graded SAND with SILT and GRAVEL
SP-SC	Poorly-graded SAND with CLAY (or SILTY CLAY) Poorly-graded SAND with CLAY and GRAVEL (or SILTY CLAY and GRAVEL)
SM	SILTY SAND SILTY SAND with GRAVEL
SC	CLAYEY SAND CLAYEY SAND with GRAVEL
SC-SM	SILTY, CLAYEY SAND SILTY, CLAYEY SAND with GRAVEL
PT	PEAT
	COBBLES COBBLES and BOULDERS BOULDERS

Graphic/Symbol	Group Names
CL	Lean CLAY Lean CLAY with SAND Lean CLAY with GRAVEL SANDY lean CLAY SANDY lean CLAY with GRAVEL GRAVELLY lean CLAY GRAVELLY lean CLAY with SAND
CL-ML	SILTY CLAY SILTY CLAY with SAND SILTY CLAY with GRAVEL SANDY SILTY CLAY SANDY SILTY CLAY with GRAVEL GRAVELLY SILTY CLAY GRAVELLY SILTY CLAY with SAND
ML	SILT SILT with SAND SILT with GRAVEL SANDY SILT SANDY SILT with GRAVEL GRAVELLY SILT GRAVELLY SILT with SAND
OL	ORGANIC lean CLAY ORGANIC lean CLAY with SAND ORGANIC lean CLAY with GRAVEL SANDY ORGANIC lean CLAY SANDY ORGANIC lean CLAY with GRAVEL GRAVELLY ORGANIC lean CLAY GRAVELLY ORGANIC lean CLAY with SAND
OL	ORGANIC SILT ORGANIC SILT with SAND ORGANIC SILT with GRAVEL SANDY ORGANIC SILT SANDY ORGANIC SILT with GRAVEL GRAVELLY ORGANIC SILT GRAVELLY ORGANIC SILT with SAND
CH	Fat CLAY Fat CLAY with SAND Fat CLAY with GRAVEL SANDY fat CLAY SANDY fat CLAY with GRAVEL GRAVELLY fat CLAY GRAVELLY fat CLAY with SAND
MH	Elastic SILT Elastic SILT with SAND Elastic SILT with GRAVEL SANDY elastic SILT SANDY elastic SILT with GRAVEL GRAVELLY elastic SILT GRAVELLY elastic SILT with SAND
OH	ORGANIC fat CLAY ORGANIC fat CLAY with SAND ORGANIC fat CLAY with GRAVEL SANDY ORGANIC fat CLAY SANDY ORGANIC fat CLAY with GRAVEL GRAVELLY ORGANIC fat CLAY GRAVELLY ORGANIC fat CLAY with SAND
OH	ORGANIC elastic SILT ORGANIC elastic SILT with SAND ORGANIC elastic SILT with GRAVEL SANDY ORGANIC elastic SILT SANDY ORGANIC elastic SILT with GRAVEL GRAVELLY ORGANIC elastic SILT GRAVELLY ORGANIC elastic SILT with SAND
OL/OH	ORGANIC SOIL ORGANIC SOIL with SAND ORGANIC SOIL with GRAVEL SANDY ORGANIC SOIL SANDY ORGANIC SOIL with GRAVEL GRAVELLY ORGANIC SOIL GRAVELLY ORGANIC SOIL with SAND

FIELD AND LABORATORY TESTING

- (C) Consolidation (ASTM D 2435)
- (CL) Collapse Potential (ASTM D 5333)
- (CP) Compaction Curve (CTM 216)
- (CR) Corrosivity Testing (CTM 643, CTM 422, CTM 417)
- (CU) Consolidated Undrained Triaxial (ASTM D 4767)
- (DS) Direct Shear (ASTM D 3080)
- (EI) Expansion Index (ASTM D 4829)
- (M) Moisture Content (ASTM D 2216)
- (OC) Organic Content-% (ASTM D 2974)
- (P) Permeability (CTM 220)
- (PA) Particle Size Analysis (ASTM D 422)
- (PI) Plasticity Index (AASHTO T 90) Liquid Limit (AASHTO T 89)
- (PL) Point Load Index (ASTM D 5731)
- (PM) Pressure Meter
- (R) R-Value (CTM 301)
- (SE) Sand Equivalent (CTM 217)
- (SG) Specific Gravity (AASHTO T 100)
- (SL) Shrinkage Limit (ASTM D 427)
- (SW) Swell Potential (ASTM D 4546)
- (UC) Unconfined Compression-Soil (ASTM D 2166) Unconfined Compression-Rock (ASTM D 2938)
- (UU) Unconsolidated Undrained Triaxial (ASTM D 2850)
- (UW) Unit Weight (ASTM D 4767)

APPARENT DENSITY OF COHESIONLESS SOILS

Description	SPT N_{60} (Blows / 12 in.)
Very Loose	0 - 5
Loose	5 - 10
Medium Dense	10 - 30
Dense	30 - 50
Very Dense	Greater than 50

MOISTURE

Description	Criteria
Dry	No discernable moisture
Moist	Moisture present, but no free water
Wet	Visible free water

PERCENT OR PROPORTION OF SOILS

Description	Criteria
Trace	Particles are present but estimated to be less than 5%
Few	5% - 10%
Little	15% - 25%
Some	30% - 45%
Mostly	50% - 100%

PARTICLE SIZE

Description		Size (in.)
Boulder		Greater than 12
Cobble		3 - 12
Gravel	Coarse	3/4 - 3
	Fine	1/5 - 3/4
Sand	Coarse	1/16 - 1/5
	Medium	1/64 - 1/16
	Fine	1/300 - 1/64
Silt and Clay		Less than 1/300

ENGINEERING SERVICES

GEOTECHNICAL SERVICES
PREPARED BY: I.G-Remmen 1/11

STATE OF CALIFORNIA
DEPARTMENT OF TRANSPORTATION

DIVISION OF ENGINEERING SERVICES
STRUCTURE DESIGN
DESIGN BRANCH X

BRIDGE NO.
POST MILE 17.45/17.47

RETAINING WALL 922 R-13
LOG OF TEST BORINGS 4 OF 4

GS LOTB SOIL LEGEND

ORIGINAL SCALE IN INCHES FOR REDUCED PLANS 0 1 2 3

UNIT: 3643
PROJECT NUMBER & PHASE: 07000208691
CONTRACT NO.: 07-202111

DISREGARD PRINTS BEARING EARLIER REVISION DATES

REVISION DATES | SHEET X | OF X

FILE => 720211qb009.dgn

USERNAME => trrichf DATE PLOTTED => 29-JUN-2011 TIME PLOTTED => 10:27

Dist	COUNTY	ROUTE	POST MILES TOTAL PROJECT	SHEET No.	TOTAL SHEETS
07	LA	710	17.2/26.4	966	1507

REGISTERED CIVIL ENGINEER 2-3-11 DATE

6-27-11
PLANS APPROVAL DATE

REGISTERED PROFESSIONAL ENGINEER RENE YIN No. C49915 Exp. 9/30/12 CIVIL STATE OF CALIFORNIA

THE STATE OF CALIFORNIA OR ITS OFFICERS OR AGENTS SHALL NOT BE RESPONSIBLE FOR THE ACCURACY OR COMPLETENESS OF SCANNED COPIES OF THIS PLAN SHEET.

NOTE:

1. FOR ACCURATE RIGHT OF WAY AND ACCESS DATA, CONTACT RIGHT OF WAY ENGINEERING AT THE DISTRICT OFFICE.

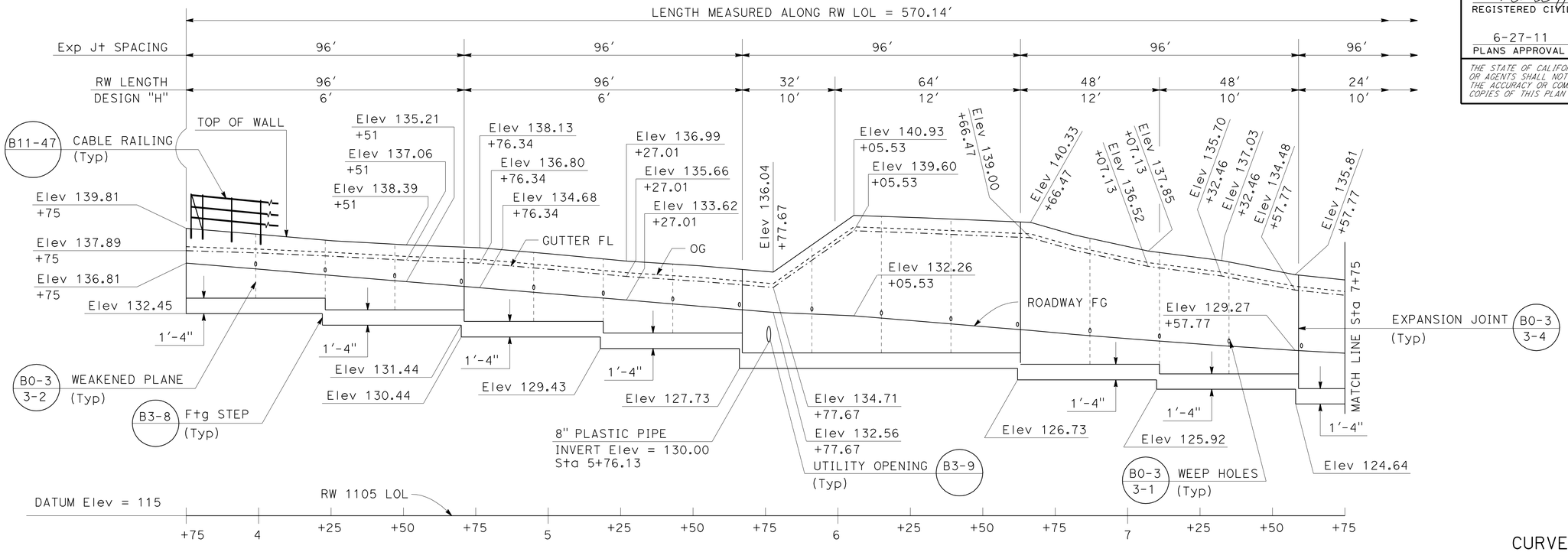

ELEVATION
SCALE Horiz: 1" = 20'
Vert: 1" = 5'

CURVE DATA

No.	R	Δ	T	L
5	5000.00'	8°09'30"	356.57'	711.94'
6	6679.55'	15°18'53"	898.05'	1785.40'
29	5066.80'	2°17'31"	101.35'	202.67'

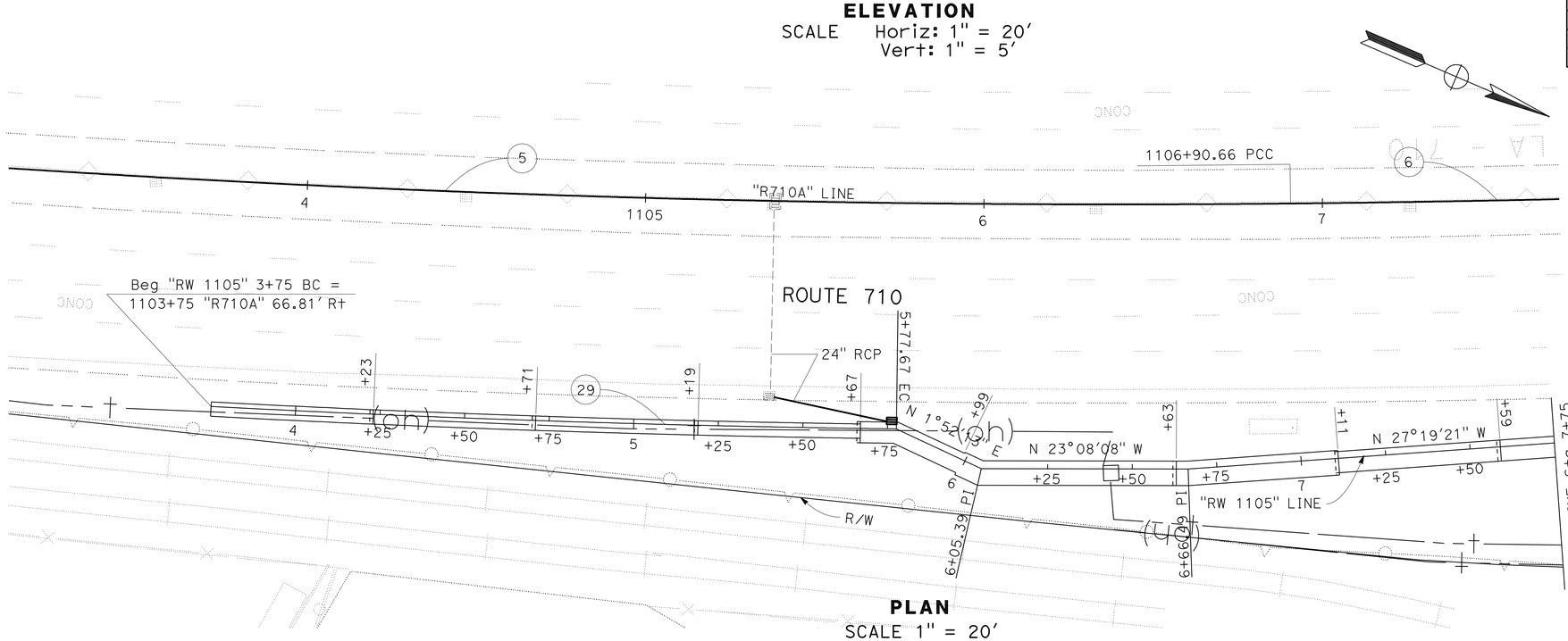

PLAN
SCALE 1" = 20'

THIS PLAN ACCURATE FOR RETAINING WALL WORK ONLY.

RETAINING WALL

RETAINING WALL No. 1105
SCALE AS SHOWN

R-14

STATE OF CALIFORNIA - DEPARTMENT OF TRANSPORTATION
Caltrans® DESIGN

FUNCTIONAL SUPERVISOR: ALINE ANTARAMIAN
CALCULATED-DESIGNED BY: I. L. REYNON JR.
CHECKED BY: RENE YIN
REVISED BY / DATE REVISED

LAST REVISION 00-00-00
DATE PLOTTED => 29-JUN-2011
TIME PLOTTED => 10:28

Dist	COUNTY	ROUTE	POST MILES TOTAL PROJECT	SHEET No.	TOTAL SHEETS
07	LA	710	17.2/26.4	967	1507

REGISTERED CIVIL ENGINEER 2-3-11 DATE

6-27-11
PLANS APPROVAL DATE

REGISTERED PROFESSIONAL ENGINEER RENE YIN No. C49915 Exp. 9/30/12 CIVIL STATE OF CALIFORNIA

THE STATE OF CALIFORNIA OR ITS OFFICERS OR AGENTS SHALL NOT BE RESPONSIBLE FOR THE ACCURACY OR COMPLETENESS OF SCANNED COPIES OF THIS PLAN SHEET.

NOTES:

1. FOR ACCURATE RIGHT OF WAY AND ACCESS DATA, CONTACT RIGHT OF WAY ENGINEERING AT THE DISTRICT OFFICE.

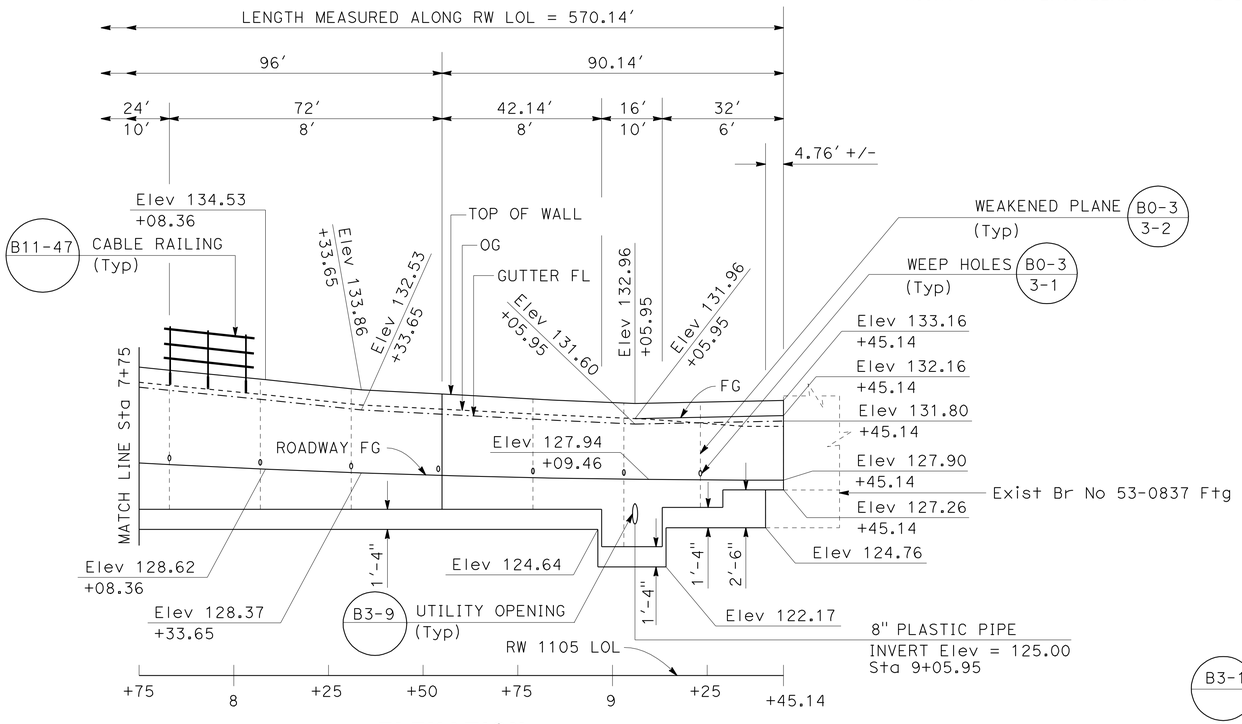

ELEVATION
SCALE Horiz: 1" = 20'
Vert: 1" = 5'

CURVE DATA

No.	R	Δ	T	L
6	6679.55'	15°18'53"	898.05	1785.40'

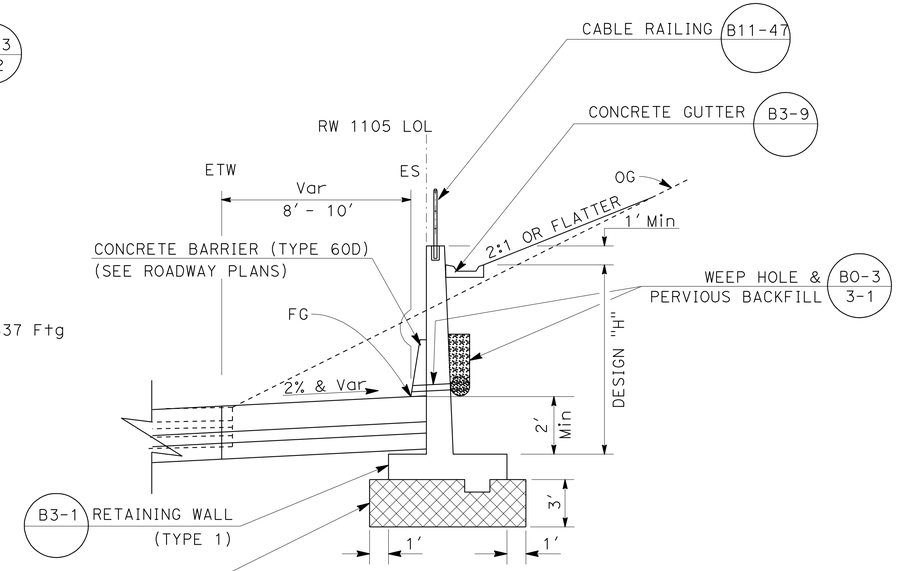

Sta 9+05.85 TO Sta 9+29.95
TYPICAL SECTION
NO SCALE

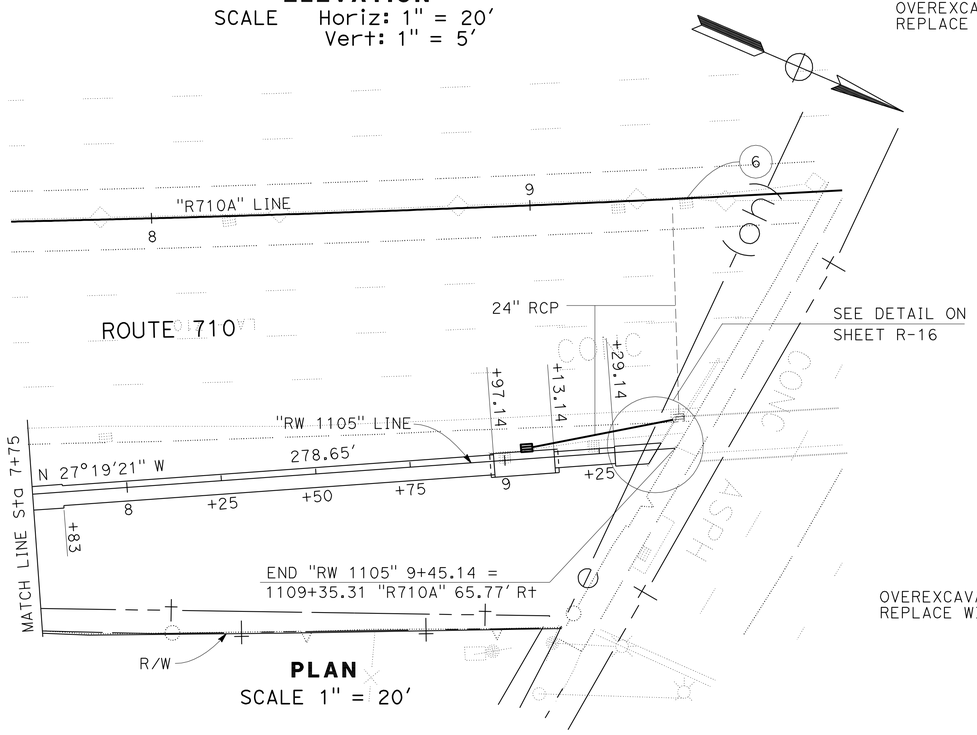

PLAN
SCALE 1" = 20'

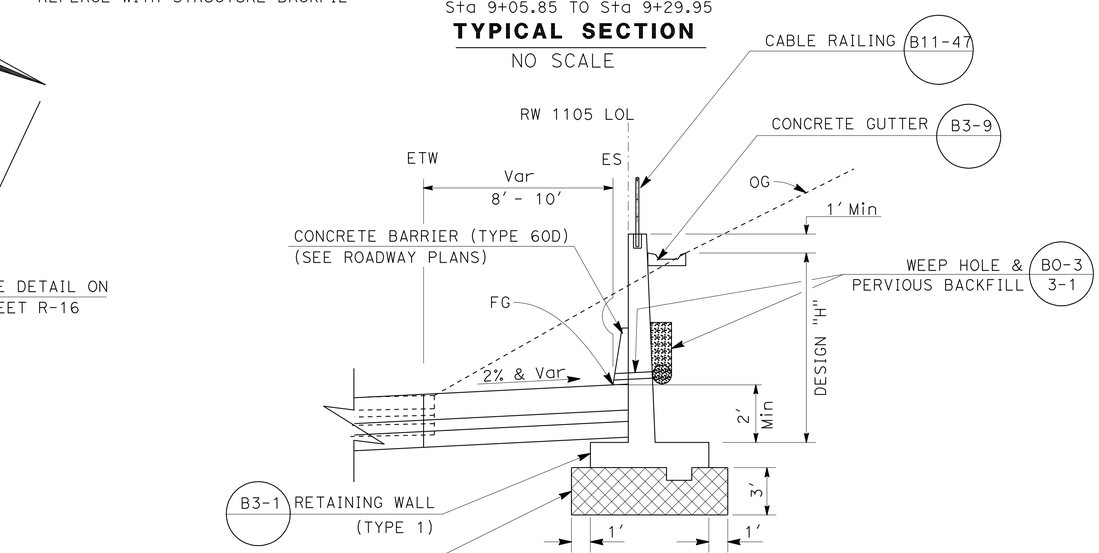

Sta 3+75 TO Sta 9+05.85
TYPICAL SECTION
NO SCALE

RETAINING WALL

RETAINING WALL No. 1105
SCALE AS SHOWN

THIS PLAN ACCURATE FOR RETAINING WALL WORK ONLY.

R-15

STATE OF CALIFORNIA - DEPARTMENT OF TRANSPORTATION
Caltrans
DESIGN
FUNCTIONAL SUPERVISOR: ALINE ANTARAMIAN
CALCULATED-DESIGNED BY: I. L. REYNON JR.
CHECKED BY: RENE YIN
REVISED BY
DATE REVISED

LAST REVISION 00-00-00
DATE PLOTTED => 29-JUN-2011
TIME PLOTTED => 10:28

Dist	COUNTY	ROUTE	POST MILES TOTAL PROJECT	SHEET No.	TOTAL SHEETS
07	LA	710	17.2/26.4	968	1507

Rene Yin 2-3-11
REGISTERED CIVIL ENGINEER DATE

6-27-11
PLANS APPROVAL DATE

REGISTERED PROFESSIONAL ENGINEER
RENE YIN
No. C49915
Exp. 9/30/12
CIVIL
STATE OF CALIFORNIA

THE STATE OF CALIFORNIA OR ITS OFFICERS OR AGENTS SHALL NOT BE RESPONSIBLE FOR THE ACCURACY OR COMPLETENESS OF SCANNED COPIES OF THIS PLAN SHEET.

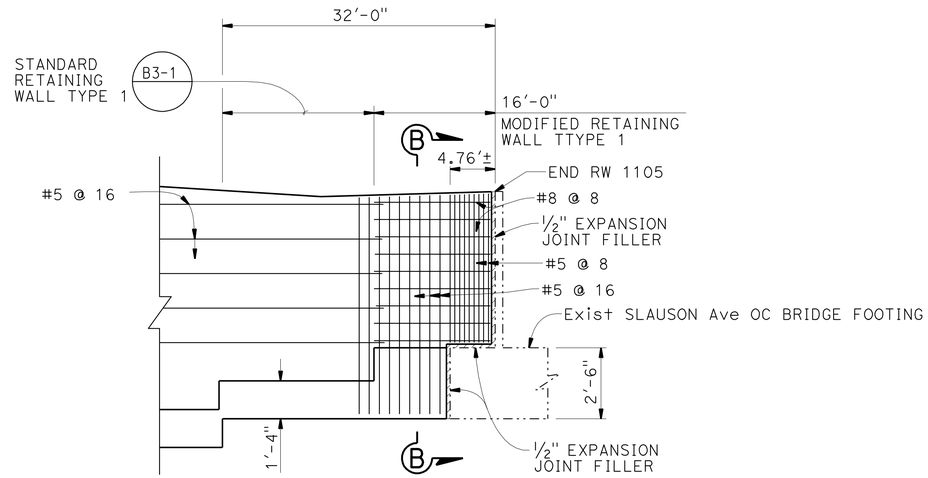

ELEVATION

HORIZ SCALE: 1" = 10'
VERT SCALE: 3/8" = 1'-0"

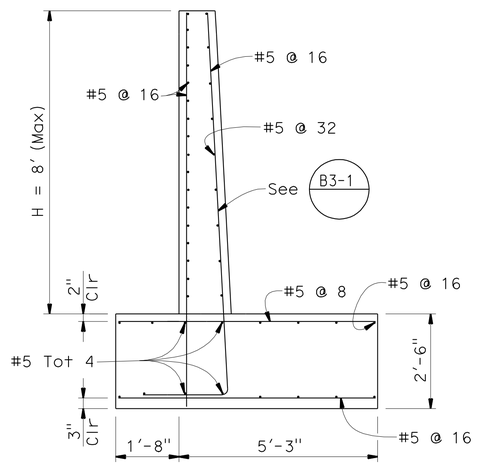

SECTION B-B

NO SCALE

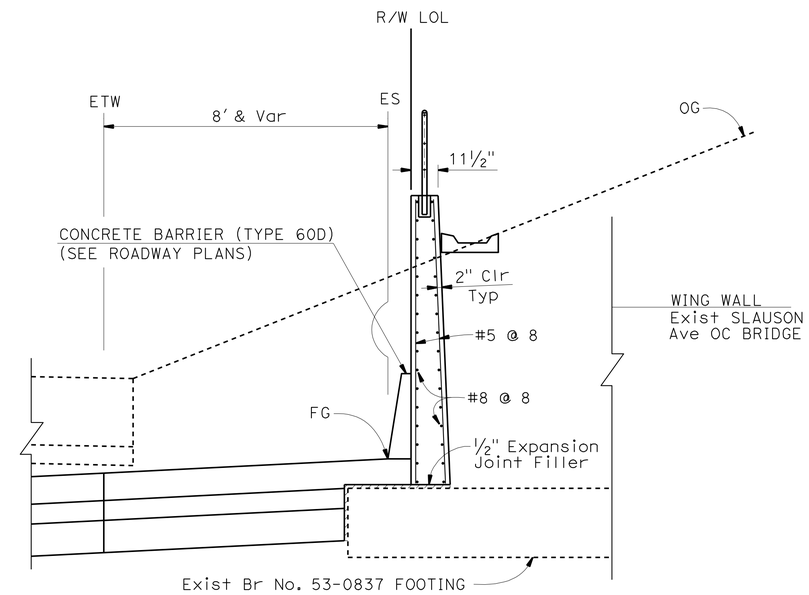

TYPICAL SECTION

NO SCALE

RETAINING WALL

RETAINING WALL No. 1105
SCALE AS SHOWN

R-16

THIS PLAN ACCURATE FOR RETAINING WALL WORK ONLY

STATE OF CALIFORNIA - DEPARTMENT OF TRANSPORTATION
Caltrans®
DESIGN

FUNCTIONAL SUPERVISOR: ALINE ANTARAMIAN
CALCULATED-DESIGNED BY: I. L. REYNON JR.
CHECKED BY: RENE YIN
REVISED BY
DATE REVISED

LAST REVISION 00-00-00
DATE PLOTTED => 29-JUN-2011
TIME PLOTTED => 10:28

DIST	COUNTY	ROUTE	POST MILES TOTAL PROJECT	SHEET No	TOTAL SHEETS
07	LA	710	17.2/26.4	969	1507

Tatjana Halda 11-19-10
REGISTERED CIVIL ENGINEER DATE

6-27-11
PLANS APPROVAL DATE

REGISTERED PROFESSIONAL ENGINEER Tatjana Halda No. C68293 Exp. 9-30-11 CIVIL STATE OF CALIFORNIA

The State of California or its officers or agents shall not be responsible for the accuracy or completeness of electronic copies of this plan sheet.

This LOTB sheet was prepared in accordance with the Caltrans Soil & Rock Logging, Classification, & Presentation Manual (June 2007).

BENCH MARK

RTK714
FD AERIAL TARGET, HV90, PER SR 07-258,
PK NAIL/TIN AT NB710 FWY SHOULDER,
+/- 80′ S/O SLAUSON AVE BRIDGE O.C.
ELEV 129.17′
N 1817440.280
E 6510329.137

PRHV19350
FD PK NAIL AT SB 710 FWY SHOULDER
+/- 26′ S/O SLAUSON AVE BRIDGE O.C.,
+/- 2.5′ W/O TOP OF CURB.
ELEV 127.25
N 1817500.235
E 6510163.330

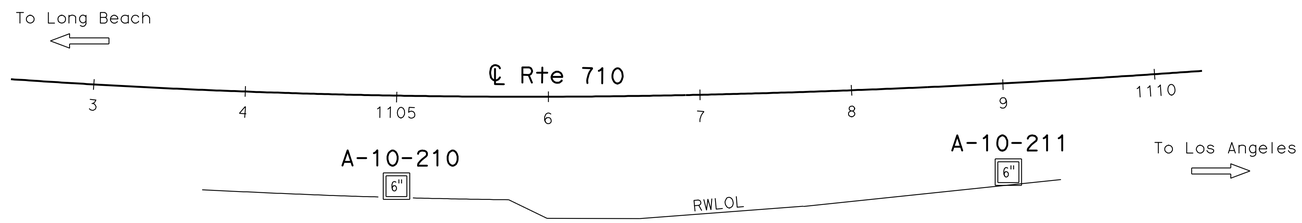

PLAN
1" = 50′

Note: No ground water encountered during field investigation.

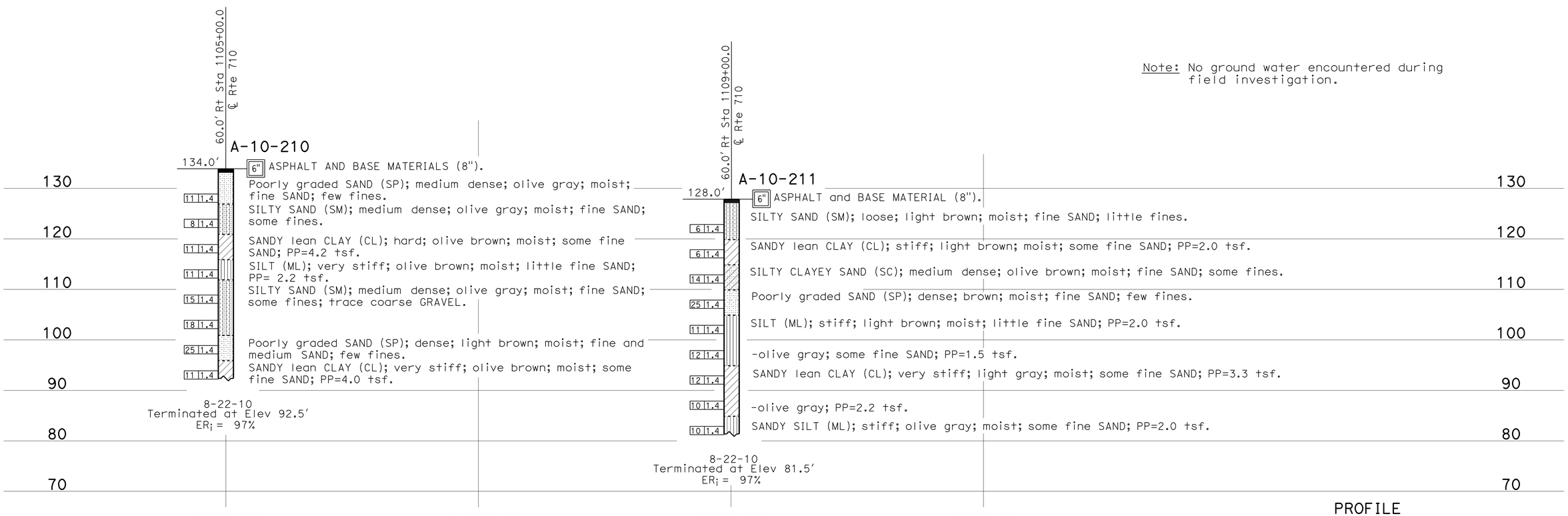

PROFILE
Horiz: 1" = 40′
Vert: 1" = 10′

ENGINEERING SERVICES	GEOTECHNICAL SERVICES	STATE OF CALIFORNIA DEPARTMENT OF TRANSPORTATION	DIVISION OF ENGINEERING SERVICES STRUCTURE DESIGN	BRIDGE NO.	RETAINING WALL 1105 R-17
FUNCTIONAL SUPERVISOR	DRAWN BY: C. Christian, W. Tang 10/10	FIELD INVESTIGATION BY:	DESIGN BRANCH	POST MILES 17.2/26.4	LOG OF TEST BORINGS 1 OF 3
NAME: S. Karimi	CHECKED BY: K. Lai	A. Mehrazar			

OGS CIVIL LOG OF TEST BORINGS SHEET

ORIGINAL SCALE IN INCHES FOR REDUCED PLANS 0 1 2 3

CU 07
EA 202111

DISREGARD PRINTS BEARING EARLIER REVISION DATES

REVISION DATES: 11-17-10 11-19-10

SHEET OF

FILE => 720211qc004.dgn

USERNAME => trrichf DATE PLOTTED => 29-JUN-2011 TIME PLOTTED => 10:28

DIST	COUNTY	ROUTE	POST MILES TOTAL PROJECT	SHEET No	TOTAL SHEETS
07	LA	710	17.2/26.4	970	1507

Tatjana Halda 11-19-10
REGISTERED CIVIL ENGINEER DATE

6-27-11
PLANS APPROVAL DATE

REGISTERED PROFESSIONAL ENGINEER Tatjana Halda No. C68293 Exp. 9-30-11 CIVIL STATE OF CALIFORNIA

The State of California or its officers or agents shall not be responsible for the accuracy or completeness of electronic copies of this plan sheet.

REFERENCE: CALTRANS SOIL & ROCK LOGGING, CLASSIFICATION, AND PRESENTATION MANUAL (2010)

CEMENTATION

Description	Criteria
Weak	Crumbles or breaks with handling or little finger pressure.
Moderate	Crumbles or breaks with considerable finger pressure.
Strong	Will not crumble or break with finger pressure.

BOREHOLE IDENTIFICATION

Symbol	Hole Type	Description
Size	A	Auger Boring (hollow or solid stem bucket)
Size	R RW RC P	Rotary drilled boring (conventional) Rotary drilled with self-casing wire-line Rotary core with continuously-sampled, self-casing wire-line Rotary percussion boring (air)
Size	R	Rotary drilled diamond core
Size	HD HA	Hand driven (1-inch soil tube) Hand Auger
●	D	Dynamic Cone Penetration Boring
▲	CPT	Cone Penetration Test (ASTM D 5778)
⬚	O	Other (note on LOTB)

Note: Size in inches.

CONSISTENCY OF COHESIVE SOILS

Description	Shear Strength (tsf)	Pocket Penetrometer Measurement, PP, (tsf)	Torvane Measurement, TV, (tsf)	Vane Shear Measurement, VS, (tsf)
Very Soft	Less than 0.12	Less than 0.25	Less than 0.12	Less than 0.12
Soft	0.12 - 0.25	0.25 - 0.5	0.12 - 0.25	0.12 - 0.25
Medium Stiff	0.25 - 0.5	0.5 - 1	0.25 - 0.5	0.25 - 0.5
Stiff	0.5 - 1	1 - 2	0.5 - 1	0.5 - 1
Very Stiff	1 - 2	2 - 4	1 - 2	1 - 2
Hard	Greater than 2	Greater than 4	Greater than 2	Greater than 2

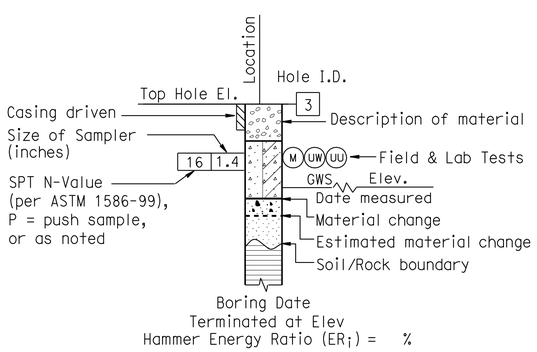

ROTARY BORING

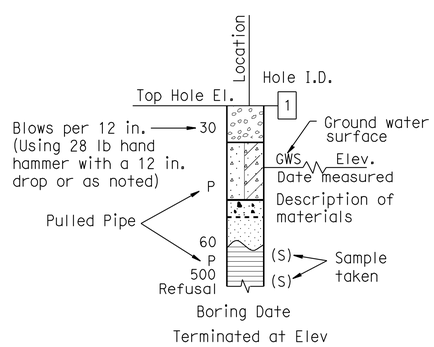

HAND BORING

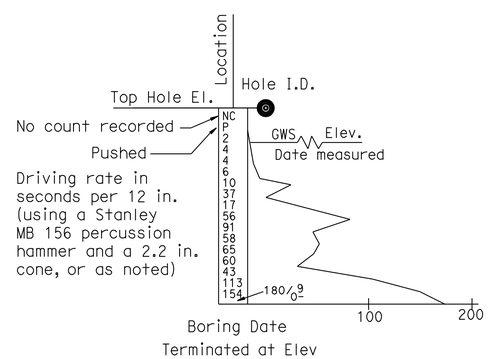

DYNAMIC CONE PENETRATION BORING

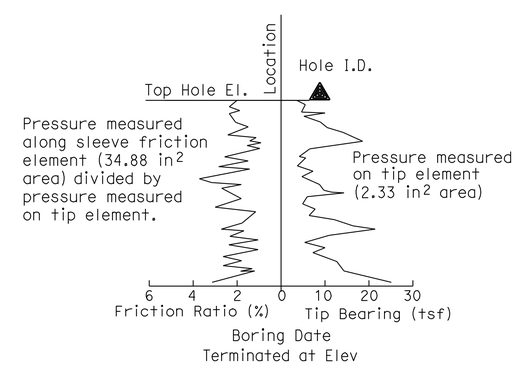

CONE PENETRATION TEST (CPT) BORING

ENGINEERING SERVICES	GEOTECHNICAL SERVICES	STATE OF CALIFORNIA DEPARTMENT OF TRANSPORTATION	DIVISION OF ENGINEERING SERVICES STRUCTURE DESIGN DESIGN BRANCH	BRIDGE NO. / POST MILE 17.2/26.4	RETAINING WALL 1105 R-18 LOG OF TEST BORINGS 2 OF 3
	PREPARED BY: I. G-Remmen, 10/10		CU 07 EA 202111	DISREGARD PRINTS BEARING EARLIER REVISION DATES	REVISION DATES / SHEET / OF

GS LOTB SOIL LEGEND

ORIGINAL SCALE IN INCHES FOR REDUCED PLANS 0 1 2 3

FILE => 720211qc005.dgn

USERNAME => trrichf DATE PLOTTED => 29-JUN-2011 TIME PLOTTED => 10:28

REFERENCE: CALTRANS SOIL & ROCK LOGGING, CLASSIFICATION, AND PRESENTATION MANUAL (2010)

DIST	COUNTY	ROUTE	POST MILES TOTAL PROJECT	SHEET No	TOTAL SHEETS
07	LA	710	17.2/26.4	971	1507

Tatjana Halda 11-19-10
REGISTERED CIVIL ENGINEER DATE

6-27-11
PLANS APPROVAL DATE

REGISTERED PROFESSIONAL ENGINEER Tatjana Halda No. C68293 Exp. 9-30-11 CIVIL STATE OF CALIFORNIA

The State of California or its officers or agents shall not be responsible for the accuracy or completeness of electronic copies of this plan sheet.

GROUP SYMBOLS AND NAMES

Graphic/Symbol	Group Names	Graphic/Symbol	Group Names
GW	Well-graded GRAVEL Well-graded GRAVEL with SAND	CL	Lean CLAY Lean CLAY with SAND Lean CLAY with GRAVEL SANDY lean CLAY SANDY lean CLAY with GRAVEL GRAVELLY lean CLAY GRAVELLY lean CLAY with SAND
GP	Poorly-graded GRAVEL Poorly-graded GRAVEL with SAND		
GW-GM	Well-graded GRAVEL with SILT Well-graded GRAVEL with SILT and SAND	CL-ML	SILTY CLAY SILTY CLAY with SAND SILTY CLAY with GRAVEL SANDY SILTY CLAY SANDY SILTY CLAY with GRAVEL GRAVELLY SILTY CLAY GRAVELLY SILTY CLAY with SAND
GW-GC	Well-graded GRAVEL with CLAY (or SILTY CLAY) Well-graded GRAVEL with CLAY and SAND (or SILTY CLAY and SAND)		
GP-GM	Poorly-graded GRAVEL with SILT Poorly-graded GRAVEL with SILT and SAND	ML	SILT SILT with SAND SILT with GRAVEL SANDY SILT SANDY SILT with GRAVEL GRAVELLY SILT GRAVELLY SILT with SAND
GP-GC	Poorly-graded GRAVEL with CLAY (or SILTY CLAY) Poorly-graded GRAVEL with CLAY and SAND (or SILTY CLAY and SAND)		
GM	SILTY GRAVEL SILTY GRAVEL with SAND	OL	ORGANIC lean CLAY ORGANIC lean CLAY with SAND ORGANIC lean CLAY with GRAVEL SANDY ORGANIC lean CLAY SANDY ORGANIC lean CLAY with GRAVEL GRAVELLY ORGANIC lean CLAY GRAVELLY ORGANIC lean CLAY with SAND
GC	CLAYEY GRAVEL CLAYEY GRAVEL with SAND		
GC-GM	SILTY, CLAYEY GRAVEL SILTY, CLAYEY GRAVEL with SAND	OL	ORGANIC SILT ORGANIC SILT with SAND ORGANIC SILT with GRAVEL SANDY ORGANIC SILT SANDY ORGANIC SILT with GRAVEL GRAVELLY ORGANIC SILT GRAVELLY ORGANIC SILT with SAND
SW	Well-graded SAND Well-graded SAND with GRAVEL		
SP	Poorly-graded SAND Poorly-graded SAND with GRAVEL	CH	Fat CLAY Fat CLAY with SAND Fat CLAY with GRAVEL SANDY fat CLAY SANDY fat CLAY with GRAVEL GRAVELLY fat CLAY GRAVELLY fat CLAY with SAND
SW-SM	Well-graded SAND with SILT Well-graded SAND with SILT and GRAVEL		
SW-SC	Well-graded SAND with CLAY (or SILTY CLAY) Well-graded SAND with CLAY and GRAVEL (or SILTY CLAY and GRAVEL)	MH	Elastic SILT Elastic SILT with SAND Elastic SILT with GRAVEL SANDY elastic SILT SANDY elastic SILT with GRAVEL GRAVELLY elastic SILT GRAVELLY elastic SILT with SAND
SP-SM	Poorly-graded SAND with SILT Poorly-graded SAND with SILT and GRAVEL		
SP-SC	Poorly-graded SAND with CLAY (or SILTY CLAY) Poorly-graded SAND with CLAY and GRAVEL (or SILTY CLAY and GRAVEL)	OH	ORGANIC fat CLAY ORGANIC fat CLAY with SAND ORGANIC fat CLAY with GRAVEL SANDY ORGANIC fat CLAY SANDY ORGANIC fat CLAY with GRAVEL GRAVELLY ORGANIC fat CLAY GRAVELLY ORGANIC fat CLAY with SAND
SM	SILTY SAND SILTY SAND with GRAVEL		
SC	CLAYEY SAND CLAYEY SAND with GRAVEL	OH	ORGANIC elastic SILT ORGANIC elastic SILT with SAND ORGANIC elastic SILT with GRAVEL SANDY ORGANIC elastic SILT SANDY ORGANIC elastic SILT with GRAVEL GRAVELLY ORGANIC elastic SILT GRAVELLY ORGANIC elastic SILT with SAND
SC-SM	SILTY, CLAYEY SAND SILTY, CLAYEY SAND with GRAVEL		
PT	PEAT	OL/OH	ORGANIC SOIL ORGANIC SOIL with SAND ORGANIC SOIL with GRAVEL SANDY ORGANIC SOIL SANDY ORGANIC SOIL with GRAVEL GRAVELLY ORGANIC SOIL GRAVELLY ORGANIC SOIL with SAND
	COBBLES COBBLES and BOULDERS BOULDERS		

FIELD AND LABORATORY TESTING

- (C) Consolidation (ASTM D 2435)
- (CL) Collapse Potential (ASTM D 5333)
- (CP) Compaction Curve (CTM 216)
- (CR) Corrosivity Testing (CTM 643, CTM 422, CTM 417)
- (CU) Consolidated Undrained Triaxial (ASTM D 4767)
- (DS) Direct Shear (ASTM D 3080)
- (EI) Expansion Index (ASTM D 4829)
- (M) Moisture Content (ASTM D 2216)
- (OC) Organic Content-% (ASTM D 2974)
- (P) Permeability (CTM 220)
- (PA) Particle Size Analysis (ASTM D 422)
- (PI) Plasticity Index (AASHTO T 90) Liquid Limit (AASHTO T 89)
- (PL) Point Load Index (ASTM D 5731)
- (PM) Pressure Meter
- (R) R-Value (CTM 301)
- (SE) Sand Equivalent (CTM 217)
- (SG) Specific Gravity (AASHTO T 100)
- (SL) Shrinkage Limit (ASTM D 427)
- (SW) Swell Potential (ASTM D 4546)
- (UC) Unconfined Compression-Soil (ASTM D 2166) Unconfined Compression-Rock (ASTM D 2938)
- (UU) Unconsolidated Undrained Triaxial (ASTM D 2850)
- (UW) Unit Weight (ASTM D 4767)

APPARENT DENSITY OF COHESIONLESS SOILS

Description	SPT N_{60} (Blows / 12 in.)
Very Loose	0 - 5
Loose	5 - 10
Medium Dense	10 - 30
Dense	30 - 50
Very Dense	Greater than 50

MOISTURE

Description	Criteria
Dry	No discernable moisture
Moist	Moisture present, but no free water
Wet	Visible free water

PERCENT OR PROPORTION OF SOILS

Description	Criteria
Trace	Particles are present but estimated to be less than 5%
Few	5% - 10%
Little	15% - 25%
Some	30% - 45%
Mostly	50% - 100%

PARTICLE SIZE

Description		Size (in.)
Boulder		Greater than 12
Cobble		3 - 12
Gravel	Coarse	3/4 - 3
	Fine	1/5 - 3/4
Sand	Coarse	1/16 - 1/5
	Medium	1/64 - 1/16
	Fine	1/300 - 1/64
Silt and Clay		Less than 1/300

ENGINEERING SERVICES	GEOTECHNICAL SERVICES	STATE OF CALIFORNIA DEPARTMENT OF TRANSPORTATION	DIVISION OF ENGINEERING SERVICES STRUCTURE DESIGN DESIGN BRANCH	BRIDGE NO. / POST MILE 17.2/26.4	RETAINING WALL 1105 R-19 LOG OF TEST BORINGS 3 OF 3
	PREPARED BY: I. G-Remmen, 10/10		CU 07 EA 202111		

GS LOTB SOIL LEGEND

ORIGINAL SCALE IN INCHES FOR REDUCED PLANS 0 1 2 3

DISREGARD PRINTS BEARING EARLIER REVISION DATES

REVISION DATES SHEET OF

FILE => 720211qc006.dgn

USERNAME => trrright DATE PLOTTED => 29-JUN-2011 TIME PLOTTED => 10:28

Dist	COUNTY	ROUTE	POST MILES TOTAL PROJECT	SHEET No.	TOTAL SHEETS
07	LA	710	17.2/26.4	972	1507

REGISTERED CIVIL ENGINEER 2-3-11 DATE

6-27-11
PLANS APPROVAL DATE

REGISTERED PROFESSIONAL ENGINEER RENE YIN No. C49915 Exp. 9/30/12 CIVIL STATE OF CALIFORNIA

THE STATE OF CALIFORNIA OR ITS OFFICERS OR AGENTS SHALL NOT BE RESPONSIBLE FOR THE ACCURACY OR COMPLETENESS OF SCANNED COPIES OF THIS PLAN SHEET.

NOTE:

1. FOR ACCURATE RIGHT OF WAY AND ACCESS DATA, CONTACT RIGHT OF WAY ENGINEERING AT THE DISTRICT OFFICE.

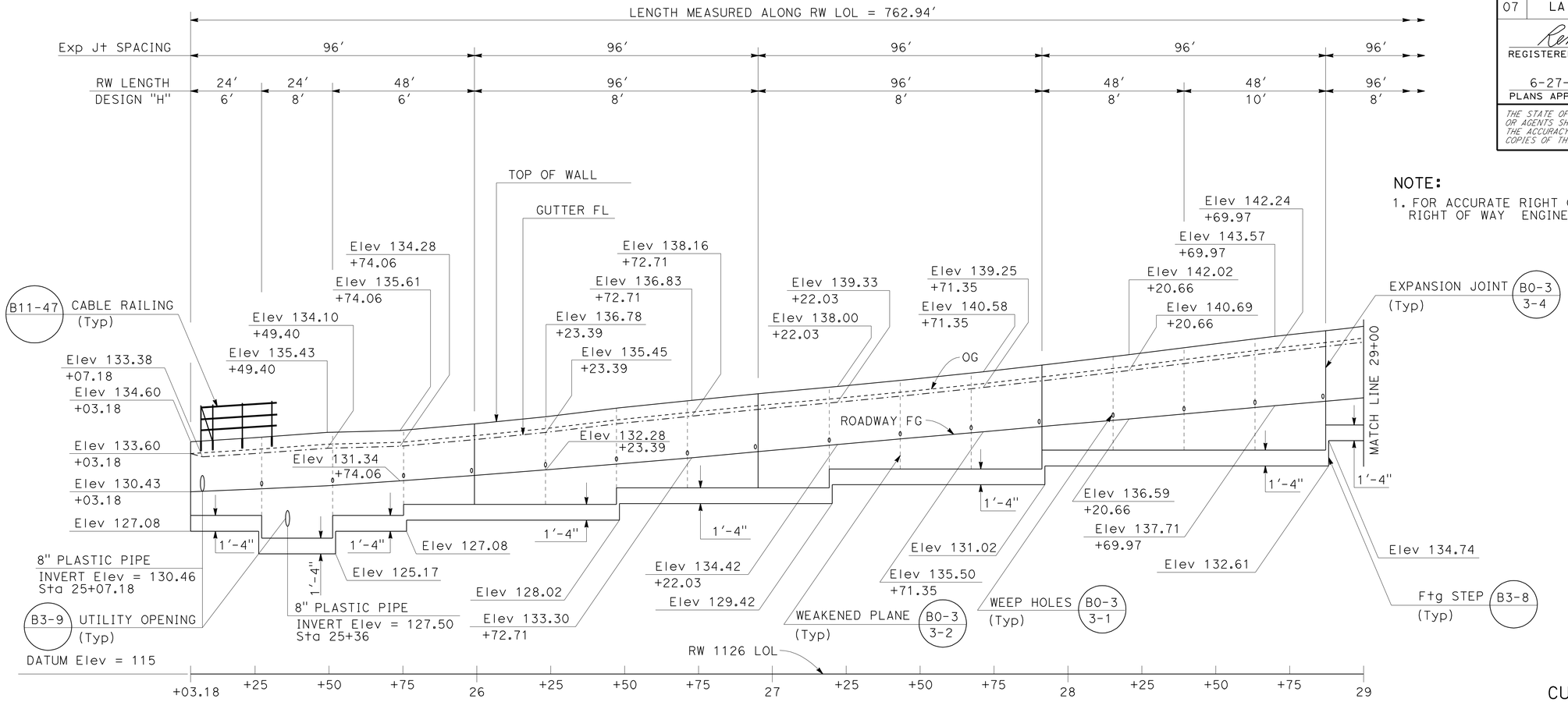

ELEVATION
SCALE Horiz: 1" = 20'
Vert: 1" = 5'

CURVE DATA

No.	R	Δ	T	L
7	4998.23'	7°43'57"	337.79'	674.56'
32	4931.19'	3°58'51"	171.37'	342.61'

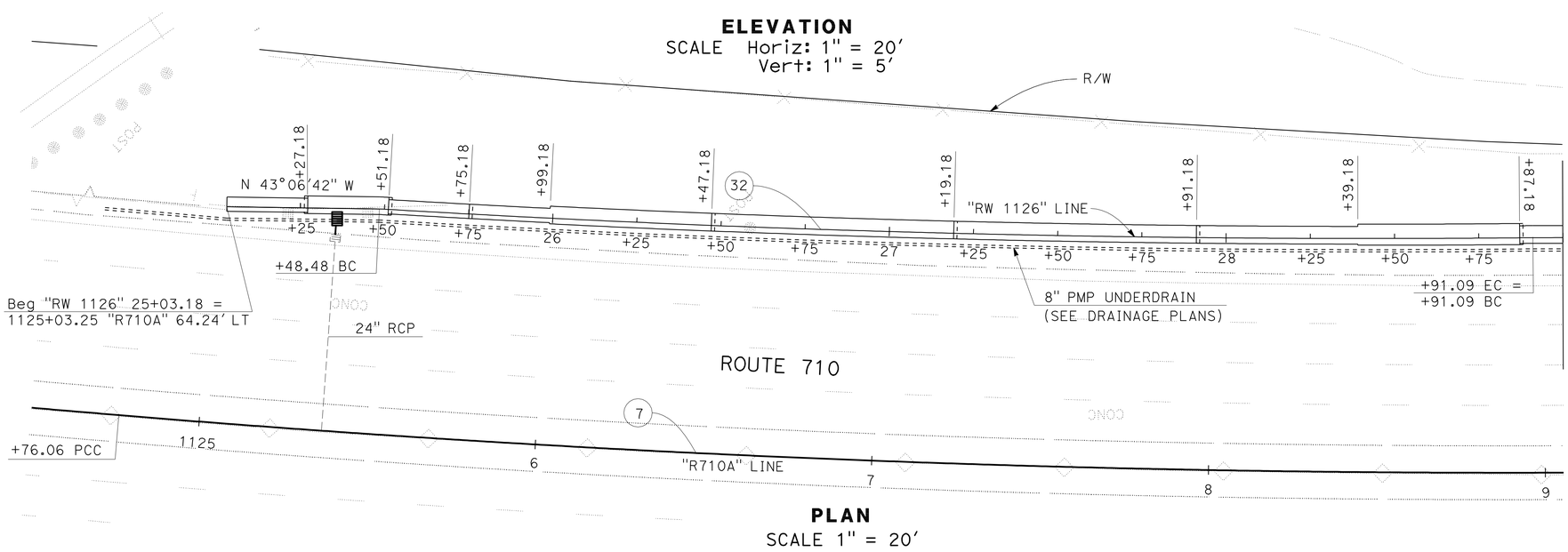

PLAN
SCALE 1" = 20'

THIS PLAN ACCURATE FOR RETAINING WALL WORK ONLY.

RETAINING WALL

RETAINING WALL No. 1126
SCALE AS SHOWN

R-20

REVISED BY | DATE REVISED
I. L. REYNON JR. | RENE YIN
CALCULATED-DESIGNED BY | CHECKED BY
FUNCTIONAL SUPERVISOR
ALINE ANTARAMIAN

STATE OF CALIFORNIA - DEPARTMENT OF TRANSPORTATION
Caltrans
DESIGN

LAST REVISION 00-00-00 | DATE PLOTTED => 29-JUN-2011 | TIME PLOTTED => 10:29

Dist	COUNTY	ROUTE	POST MILES TOTAL PROJECT	SHEET No.	TOTAL SHEETS
07	LA	710	17.2/26.4	973	1507

REGISTERED CIVIL ENGINEER 2-3-11 DATE

6-27-11
PLANS APPROVAL DATE

REGISTERED PROFESSIONAL ENGINEER RENE YIN No. C49915 Exp. 9/30/12 CIVIL STATE OF CALIFORNIA

THE STATE OF CALIFORNIA OR ITS OFFICERS OR AGENTS SHALL NOT BE RESPONSIBLE FOR THE ACCURACY OR COMPLETENESS OF SCANNED COPIES OF THIS PLAN SHEET.

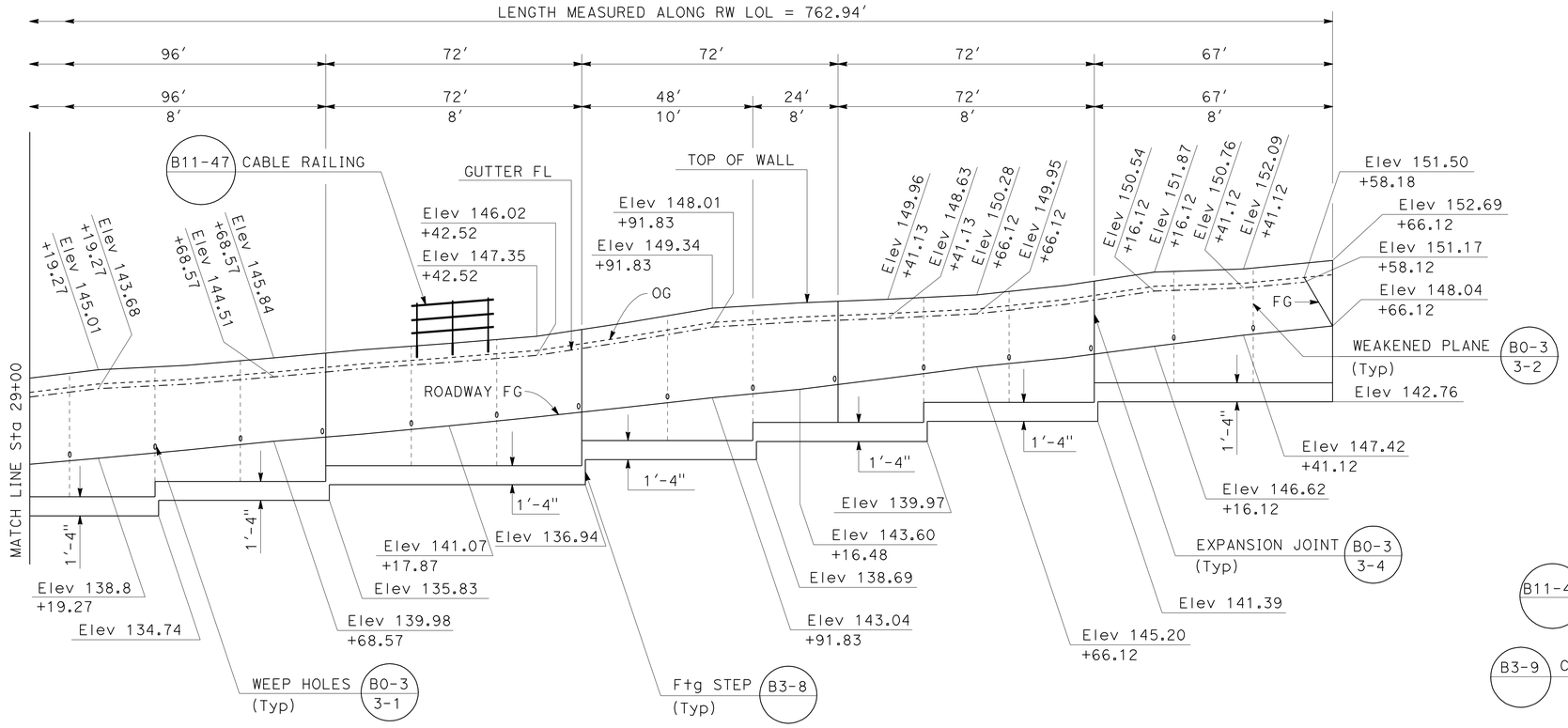

ELEVATION
SCALE Horiz: 1" = 20'
Vert: 1" = 5'

NOTE:
FOR ACCURATE RIGHT OF WAY AND ACCESS DATA, CONTACT RIGHT OF WAY ENGINEERING AT THE DISTRICT OFFICE.

CURVE DATA

No.	R	Δ	T	L
7	4998.23'	7°43'57"	337.79'	674.56'
33	4928.58'	2°54'50"	125.35'	250.65'

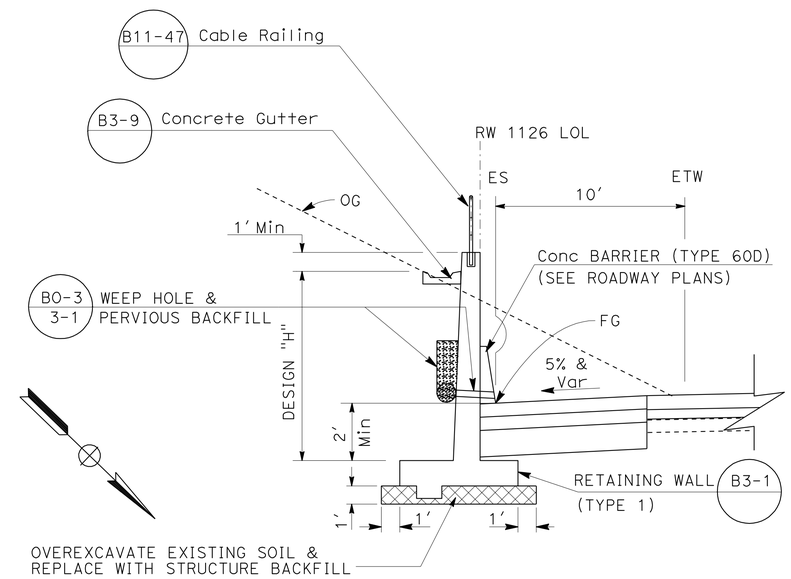

Sta 25+03.18 TO Sta 32+66.12
TYPICAL SECTION
NO SCALE

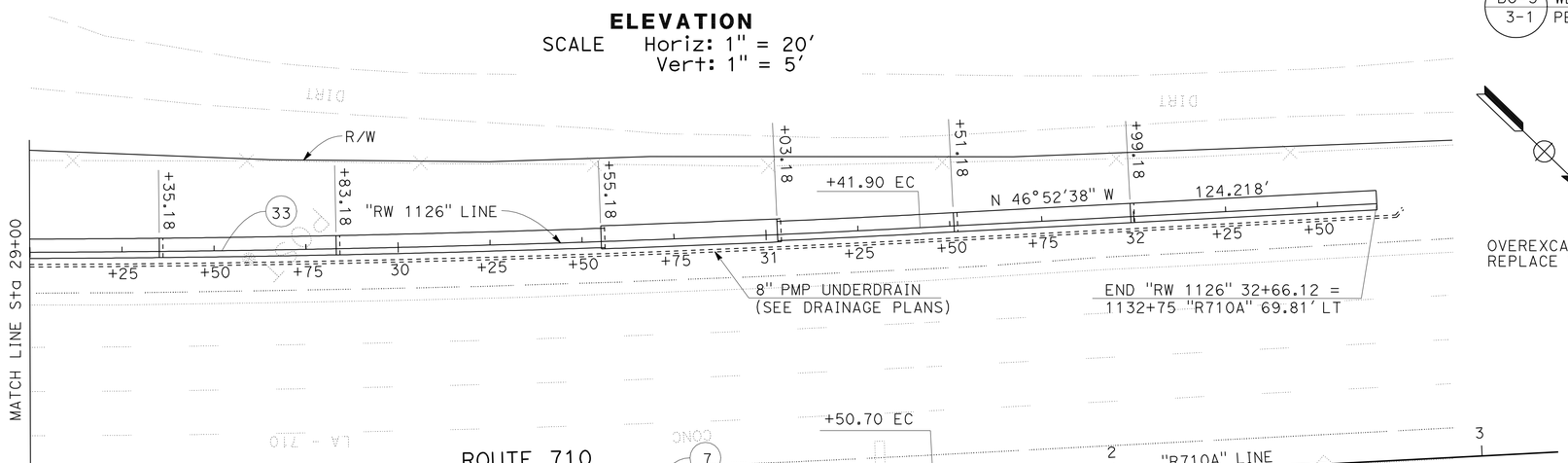

PLAN
SCALE: 1" = 20'

THIS PLAN ACCURATE FOR RETAINING WALL WORK ONLY.

RETAINING WALL
RETAINING WALL No. 1126
SCALE AS SHOWN

R-21

STATE OF CALIFORNIA - DEPARTMENT OF TRANSPORTATION
Caltrans® DESIGN
FUNCTIONAL SUPERVISOR: ALINE ANTARAMIAN
CALCULATED-DESIGNED BY: I. L. REYNON JR.
CHECKED BY: RENE YIN
REVISED BY
DATE REVISED

LAST REVISION 00-00-00
DATE PLOTTED => 29-JUN-2011
TIME PLOTTED => 11:05

DIST	COUNTY	ROUTE	POST MILES TOTAL PROJECT	SHEET No	TOTAL SHEETS
07	LA	710	17.2/26.4	974	1507

CERTIFIED GEOTECHNICAL ENGINEER 12-6-10

6-27-11
PLANS APPROVAL DATE

REGISTERED PROFESSIONAL ENGINEER Paramananthan Piratheepan No. 2826 Exp. 9-30-12 GEOTECHNICAL STATE OF CALIFORNIA

The State of California or its officers or agents shall not be responsible for the accuracy or completeness of electronic copies of this plan sheet.

This LOTB sheet was prepared in accordance with the Caltrans Soil & Rock Logging, Classification, & Presentation Manual (2010 Edition).

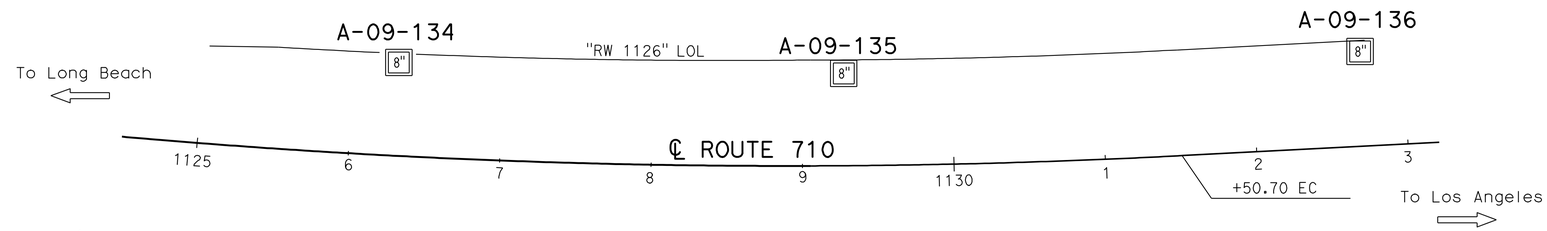

PLAN

1" = 50'

BENCH MARK

PRHV401 Elev 133.09'
SET PK NAIL AT SB 710 FWY SHOULDER, ±195' N/O SLAUSON AVE (BNSF) RR OH BRIDGE, ±4' W/O TOP OF CURB
N 1818858.742 E 6509264.003

PRHV402 Elev 130.40'
SET PK NAIL AT SB 710 FWY SHOULDER, ±45' S/O SLAUSON AVE (BNSF) RR OH BRIDGE, ±4' W/O TOP OF CURB
N 1818641.107 E 6509442.592

VERTICAL DATUM NAVD 1988

Note: Groundwater was not encountered in borings A-09-134 and A-09-136.

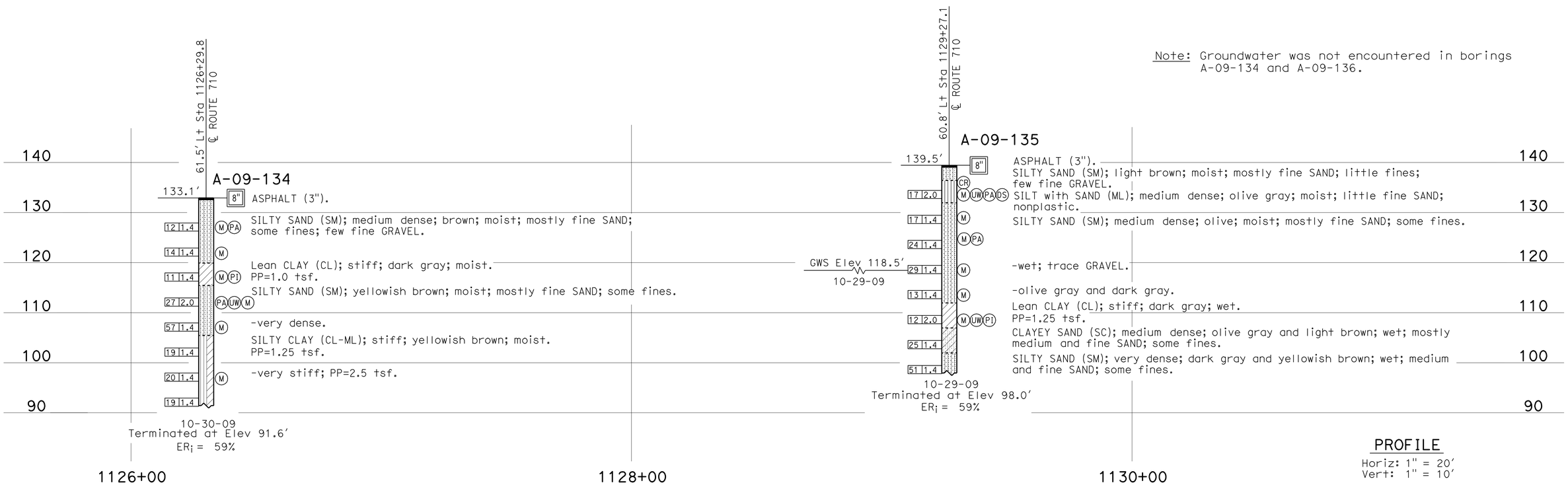

PROFILE

Horiz: 1" = 20'
Vert: 1" = 10'

ENGINEERING SERVICES	GEOTECHNICAL SERVICES	STATE OF CALIFORNIA DEPARTMENT OF TRANSPORTATION	DIVISION OF ENGINEERING SERVICES STRUCTURE DESIGN DESIGN BRANCH	BRIDGE NO. / POST MILES 21.31/21.45	RETAINING WALL 1126 R-22
FUNCTIONAL SUPERVISOR NAME: S. Karimi	DRAWN BY: W. Tang, I.G-Remmen 11/10 CHECKED BY: T. Halda	FIELD INVESTIGATION BY: K. Lai	CU 07 EA 202111		LOG OF TEST BORINGS 1 OF 4

OGS CIVIL LOG OF TEST BORINGS SHEET

ORIGINAL SCALE IN INCHES FOR REDUCED PLANS 0 1 2 3

DISREGARD PRINTS BEARING EARLIER REVISION DATES 11-16-10 11-17-10 12-06-10 REVISION DATES SHEET OF

FILE => 720211qd003.dgn

USERNAME => ttrmartin DATE PLOTTED => 29-JUN-2011 TIME PLOTTED => 11:05

DIST	COUNTY	ROUTE	POST MILES TOTAL PROJECT	SHEET No	TOTAL SHEETS
07	LA	710	17.2/26.4	975	1507

CERTIFIED GEOTECHNICAL ENGINEER 12-6-10

6-27-11
PLANS APPROVAL DATE

REGISTERED PROFESSIONAL ENGINEER
Paramananthan Piratheepan
No. 2826
Exp. 9-30-12
GEOTECHNICAL
STATE OF CALIFORNIA

The State of California or its officers or agents shall not be responsible for the accuracy or completeness of electronic copies of this plan sheet.

This LOTB sheet was prepared in accordance with the Caltrans Soil & Rock Logging, Classification, & Presentation Manual (2010 Edition).

FOR PLAN VIEW, SEE
"LOG OF TEST BORINGS" 1 OF 4

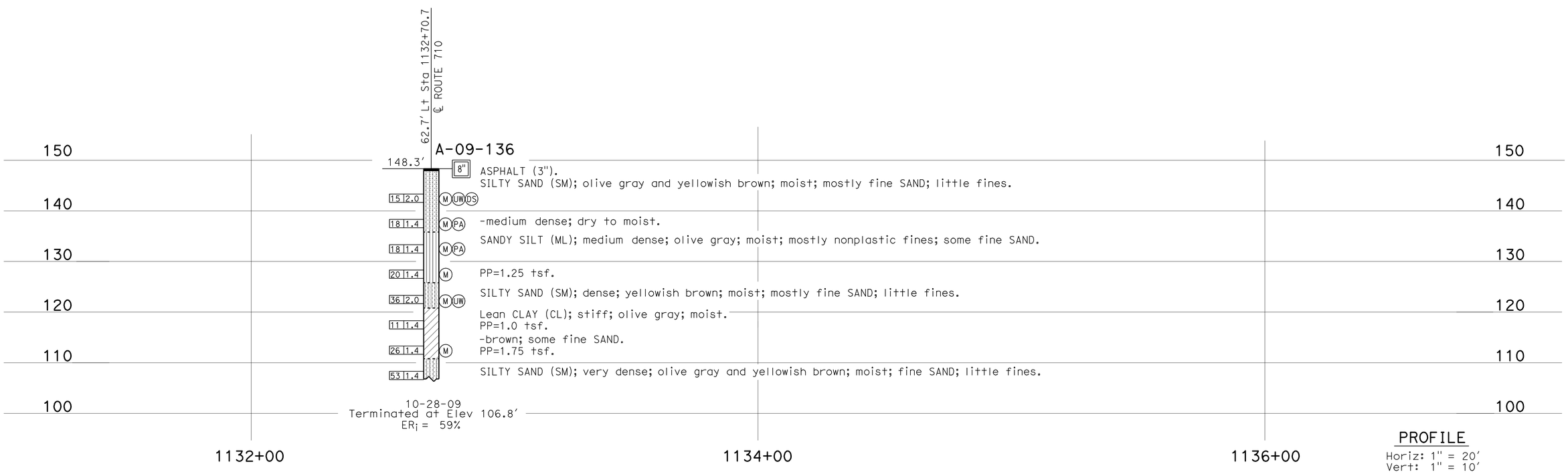

PROFILE
Horiz: 1" = 20'
Vert: 1" = 10'

ENGINEERING SERVICES		GEOTECHNICAL SERVICES	STATE OF CALIFORNIA DEPARTMENT OF TRANSPORTATION	DIVISION OF ENGINEERING SERVICES STRUCTURE DESIGN DESIGN BRANCH	BRIDGE NO. / POST MILES 21.31/21.45	RETAINING WALL 1126 R-23 LOG OF TEST BORINGS 2 OF 4
FUNCTIONAL SUPERVISOR	DRAWN BY: W. Tang 11/10	FIELD INVESTIGATION BY:				
NAME: S. Karimi	CHECKED BY: T. Halda	P. Piratheepan				
OGS CIVIL LOG OF TEST BORINGS SHEET	ORIGINAL SCALE IN INCHES FOR REDUCED PLANS 0 1 2 3			CU 07 EA 202111	DISREGARD PRINTS BEARING EARLIER REVISION DATES	REVISION DATES 11-16-10 11-17-10 12-06-10 SHEET OF

FILE => 720211qd004.dgn

USERNAME => trmartin DATE PLOTTED => 29-JUN-2011 TIME PLOTTED => 11:05

REFERENCE: CALTRANS SOIL & ROCK LOGGING, CLASSIFICATION, AND PRESENTATION MANUAL (2010)

DIST	COUNTY	ROUTE	POST MILES TOTAL PROJECT	SHEET No	TOTAL SHEETS
07	LA	710	17.2/26.4	976	1507

CERTIFIED GEOTECHNICAL ENGINEER 12-6-10

6-27-11
PLANS APPROVAL DATE

REGISTERED PROFESSIONAL ENGINEER
Paramananthan Piratheepan
No. 2826
Exp. 9-30-12
GEOTECHNICAL
STATE OF CALIFORNIA

The State of California or its officers or agents shall not be responsible for the accuracy or completeness of electronic copies of this plan sheet.

CEMENTATION

Description	Criteria
Weak	Crumbles or breaks with handling or little finger pressure.
Moderate	Crumbles or breaks with considerable finger pressure.
Strong	Will not crumble or break with finger pressure.

BOREHOLE IDENTIFICATION

Symbol	Hole Type	Description
Size	A	Auger Boring (hollow or solid stem bucket)
Size	R RW RC P	Rotary drilled boring (conventional) Rotary drilled with self-casing wire-line Rotary core with continuously-sampled, self-casing wire-line Rotary percussion boring (air)
Size	R	Rotary drilled diamond core
Size	HD HA	Hand driven (1-inch soil tube) Hand Auger
●	D	Dynamic Cone Penetration Boring
▲	CPT	Cone Penetration Test (ASTM D 5778)
⬚	O	Other (note on LOTB)

Note: Size in inches.

CONSISTENCY OF COHESIVE SOILS

Description	Shear Strength (tsf)	Pocket Penetrometer Measurement, PP, (tsf)	Torvane Measurement, TV, (tsf)	Vane Shear Measurement, VS, (tsf)
Very Soft	Less than 0.12	Less than 0.25	Less than 0.12	Less than 0.12
Soft	0.12 - 0.25	0.25 - 0.5	0.12 - 0.25	0.12 - 0.25
Medium Stiff	0.25 - 0.5	0.5 - 1	0.25 - 0.5	0.25 - 0.5
Stiff	0.5 - 1	1 - 2	0.5 - 1	0.5 - 1
Very Stiff	1 - 2	2 - 4	1 - 2	1 - 2
Hard	Greater than 2	Greater than 4	Greater than 2	Greater than 2

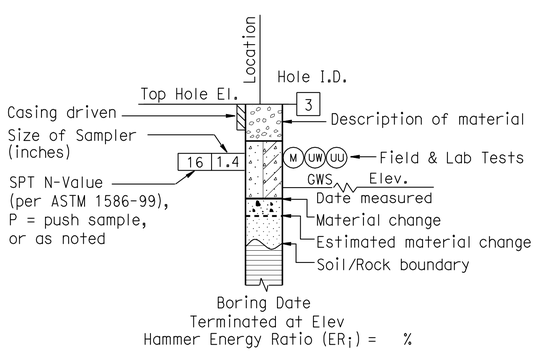

ROTARY BORING

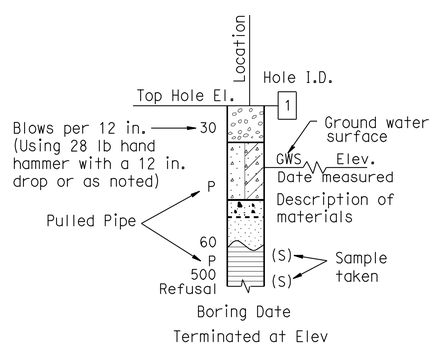

HAND BORING

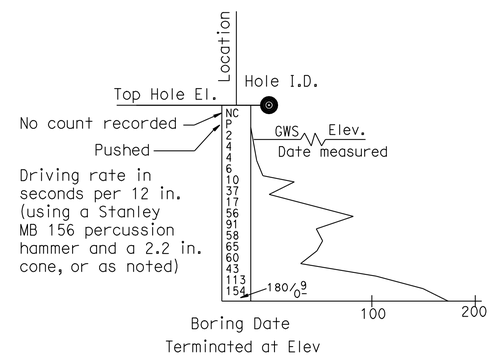

DYNAMIC CONE PENETRATION BORING

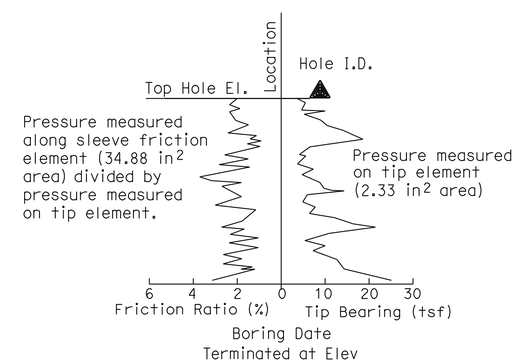

CONE PENETRATION TEST (CPT) BORING

ENGINEERING SERVICES	GEOTECHNICAL SERVICES	STATE OF CALIFORNIA DEPARTMENT OF TRANSPORTATION	DIVISION OF ENGINEERING SERVICES STRUCTURE DESIGN DESIGN BRANCH	BRIDGE NO. / POST MILE 21.31/21.45	RETAINING WALL 1126 R-24 LOG OF TEST BORINGS 3 OF 4
	PREPARED BY: I. G-Remmen, 11/10				

GS LOTB SOIL LEGEND

ORIGINAL SCALE IN INCHES FOR REDUCED PLANS 0 1 2 3

CU 07
EA 202111

DISREGARD PRINTS BEARING EARLIER REVISION DATES

REVISION DATES | SHEET | OF

FILE => 720211qd005.dgn

USERNAME => trmartin DATE PLOTTED => 23-JUN-2011 TIME PLOTTED => 11:05

REFERENCE: CALTRANS SOIL & ROCK LOGGING, CLASSIFICATION, AND PRESENTATION MANUAL (2010)

DIST	COUNTY	ROUTE	POST MILES TOTAL PROJECT	SHEET No	TOTAL SHEETS
07	LA	710	17.2/26.4	977	1507

CERTIFIED GEOTECHNICAL ENGINEER 12-6-10

6-27-11
PLANS APPROVAL DATE

REGISTERED PROFESSIONAL ENGINEER
Paramananthan Piratheepan
No. 2826
Exp. 9-30-12
GEOTECHNICAL
STATE OF CALIFORNIA

The State of California or its officers or agents shall not be responsible for the accuracy or completeness of electronic copies of this plan sheet.

GROUP SYMBOLS AND NAMES

Graphic/Symbol	Group Names	Graphic/Symbol	Group Names
GW	Well-graded GRAVEL Well-graded GRAVEL with SAND	CL	Lean CLAY Lean CLAY with SAND Lean CLAY with GRAVEL SANDY lean CLAY SANDY lean CLAY with GRAVEL GRAVELLY lean CLAY GRAVELLY lean CLAY with SAND
GP	Poorly-graded GRAVEL Poorly-graded GRAVEL with SAND		
GW-GM	Well-graded GRAVEL with SILT Well-graded GRAVEL with SILT and SAND	CL-ML	SILTY CLAY SILTY CLAY with SAND SILTY CLAY with GRAVEL SANDY SILTY CLAY SANDY SILTY CLAY with GRAVEL GRAVELLY SILTY CLAY GRAVELLY SILTY CLAY with SAND
GW-GC	Well-graded GRAVEL with CLAY (or SILTY CLAY) Well-graded GRAVEL with CLAY and SAND (or SILTY CLAY and SAND)		
GP-GM	Poorly-graded GRAVEL with SILT Poorly-graded GRAVEL with SILT and SAND	ML	SILT SILT with SAND SILT with GRAVEL SANDY SILT SANDY SILT with GRAVEL GRAVELLY SILT GRAVELLY SILT with SAND
GP-GC	Poorly-graded GRAVEL with CLAY (or SILTY CLAY) Poorly-graded GRAVEL with CLAY and SAND (or SILTY CLAY and SAND)		
GM	SILTY GRAVEL SILTY GRAVEL with SAND	OL	ORGANIC lean CLAY ORGANIC lean CLAY with SAND ORGANIC lean CLAY with GRAVEL SANDY ORGANIC lean CLAY SANDY ORGANIC lean CLAY with GRAVEL GRAVELLY ORGANIC lean CLAY GRAVELLY ORGANIC lean CLAY with SAND
GC	CLAYEY GRAVEL CLAYEY GRAVEL with SAND		
GC-GM	SILTY, CLAYEY GRAVEL SILTY, CLAYEY GRAVEL with SAND	OL	ORGANIC SILT ORGANIC SILT with SAND ORGANIC SILT with GRAVEL SANDY ORGANIC SILT SANDY ORGANIC SILT with GRAVEL GRAVELLY ORGANIC SILT GRAVELLY ORGANIC SILT with SAND
SW	Well-graded SAND Well-graded SAND with GRAVEL		
SP	Poorly-graded SAND Poorly-graded SAND with GRAVEL	CH	Fat CLAY Fat CLAY with SAND Fat CLAY with GRAVEL SANDY fat CLAY SANDY fat CLAY with GRAVEL GRAVELLY fat CLAY GRAVELLY fat CLAY with SAND
SW-SM	Well-graded SAND with SILT Well-graded SAND with SILT and GRAVEL		
SW-SC	Well-graded SAND with CLAY (or SILTY CLAY) Well-graded SAND with CLAY and GRAVEL (or SILTY CLAY and GRAVEL)	MH	Elastic SILT Elastic SILT with SAND Elastic SILT with GRAVEL SANDY elastic SILT SANDY elastic SILT with GRAVEL GRAVELLY elastic SILT GRAVELLY elastic SILT with SAND
SP-SM	Poorly-graded SAND with SILT Poorly-graded SAND with SILT and GRAVEL		
SP-SC	Poorly-graded SAND with CLAY (or SILTY CLAY) Poorly-graded SAND with CLAY and GRAVEL (or SILTY CLAY and GRAVEL)	OH	ORGANIC fat CLAY ORGANIC fat CLAY with SAND ORGANIC fat CLAY with GRAVEL SANDY ORGANIC fat CLAY SANDY ORGANIC fat CLAY with GRAVEL GRAVELLY ORGANIC fat CLAY GRAVELLY ORGANIC fat CLAY with SAND
SM	SILTY SAND SILTY SAND with GRAVEL		
SC	CLAYEY SAND CLAYEY SAND with GRAVEL	OH	ORGANIC elastic SILT ORGANIC elastic SILT with SAND ORGANIC elastic SILT with GRAVEL SANDY ORGANIC elastic SILT SANDY ORGANIC elastic SILT with GRAVEL GRAVELLY ORGANIC elastic SILT GRAVELLY ORGANIC elastic SILT with SAND
SC-SM	SILTY, CLAYEY SAND SILTY, CLAYEY SAND with GRAVEL		
PT	PEAT	OL/OH	ORGANIC SOIL ORGANIC SOIL with SAND ORGANIC SOIL with GRAVEL SANDY ORGANIC SOIL SANDY ORGANIC SOIL with GRAVEL GRAVELLY ORGANIC SOIL GRAVELLY ORGANIC SOIL with SAND
	COBBLES COBBLES and BOULDERS BOULDERS		

FIELD AND LABORATORY TESTING

- (C) Consolidation (ASTM D 2435)
- (CL) Collapse Potential (ASTM D 5333)
- (CP) Compaction Curve (CTM 216)
- (CR) Corrosivity Testing (CTM 643, CTM 422, CTM 417)
- (CU) Consolidated Undrained Triaxial (ASTM D 4767)
- (DS) Direct Shear (ASTM D 3080)
- (EI) Expansion Index (ASTM D 4829)
- (M) Moisture Content (ASTM D 2216)
- (OC) Organic Content-% (ASTM D 2974)
- (P) Permeability (CTM 220)
- (PA) Particle Size Analysis (ASTM D 422)
- (PI) Plasticity Index (AASHTO T 90) Liquid Limit (AASHTO T 89)
- (PL) Point Load Index (ASTM D 5731)
- (PM) Pressure Meter
- (R) R-Value (CTM 301)
- (SE) Sand Equivalent (CTM 217)
- (SG) Specific Gravity (AASHTO T 100)
- (SL) Shrinkage Limit (ASTM D 427)
- (SW) Swell Potential (ASTM D 4546)
- (UC) Unconfined Compression-Soil (ASTM D 2166) Unconfined Compression-Rock (ASTM D 2938)
- (UU) Unconsolidated Undrained Triaxial (ASTM D 2850)
- (UW) Unit Weight (ASTM D 4767)

APPARENT DENSITY OF COHESIONLESS SOILS

Description	SPT N_{60} (Blows / 12 in.)
Very Loose	0 - 5
Loose	5 - 10
Medium Dense	10 - 30
Dense	30 - 50
Very Dense	Greater than 50

MOISTURE

Description	Criteria
Dry	No discernable moisture
Moist	Moisture present, but no free water
Wet	Visible free water

PERCENT OR PROPORTION OF SOILS

Description	Criteria
Trace	Particles are present but estimated to be less than 5%
Few	5% - 10%
Little	15% - 25%
Some	30% - 45%
Mostly	50% - 100%

PARTICLE SIZE

Description		Size (in.)
Boulder		Greater than 12
Cobble		3 - 12
Gravel	Coarse	3/4 - 3
	Fine	1/5 - 3/4
Sand	Coarse	1/16 - 1/5
	Medium	1/64 - 1/16
	Fine	1/300 - 1/64
Silt and Clay		Less than 1/300

ENGINEERING SERVICES	GEOTECHNICAL SERVICES	STATE OF CALIFORNIA DEPARTMENT OF TRANSPORTATION	DIVISION OF ENGINEERING SERVICES STRUCTURE DESIGN DESIGN BRANCH	BRIDGE NO. / POST MILE 21.31/21.45	RETAINING WALL 1126 R-25
	PREPARED BY: I. G-Remmen, 11/10				LOG OF TEST BORINGS 4 OF 4

GS LOTB SOIL LEGEND

ORIGINAL SCALE IN INCHES FOR REDUCED PLANS 0 1 2 3

CU 07
EA 202111

DISREGARD PRINTS BEARING EARLIER REVISION DATES

REVISION DATES | SHEET | OF

FILE => 720211qd006.dgn

USERNAME => trmartin DATE PLOTTED => 29-JUN-2011 TIME PLOTTED => 11:05

Dist	COUNTY	ROUTE	POST MILES TOTAL PROJECT	SHEET No.	TOTAL SHEETS
07	LA	710	17.2/26.4	978	1507

REGISTERED CIVIL ENGINEER 2-3-11 DATE

6-27-11
PLANS APPROVAL DATE

REGISTERED PROFESSIONAL ENGINEER RENE YIN No. C49915 Exp. 9/30/12 CIVIL STATE OF CALIFORNIA

THE STATE OF CALIFORNIA OR ITS OFFICERS OR AGENTS SHALL NOT BE RESPONSIBLE FOR THE ACCURACY OR COMPLETENESS OF SCANNED COPIES OF THIS PLAN SHEET.

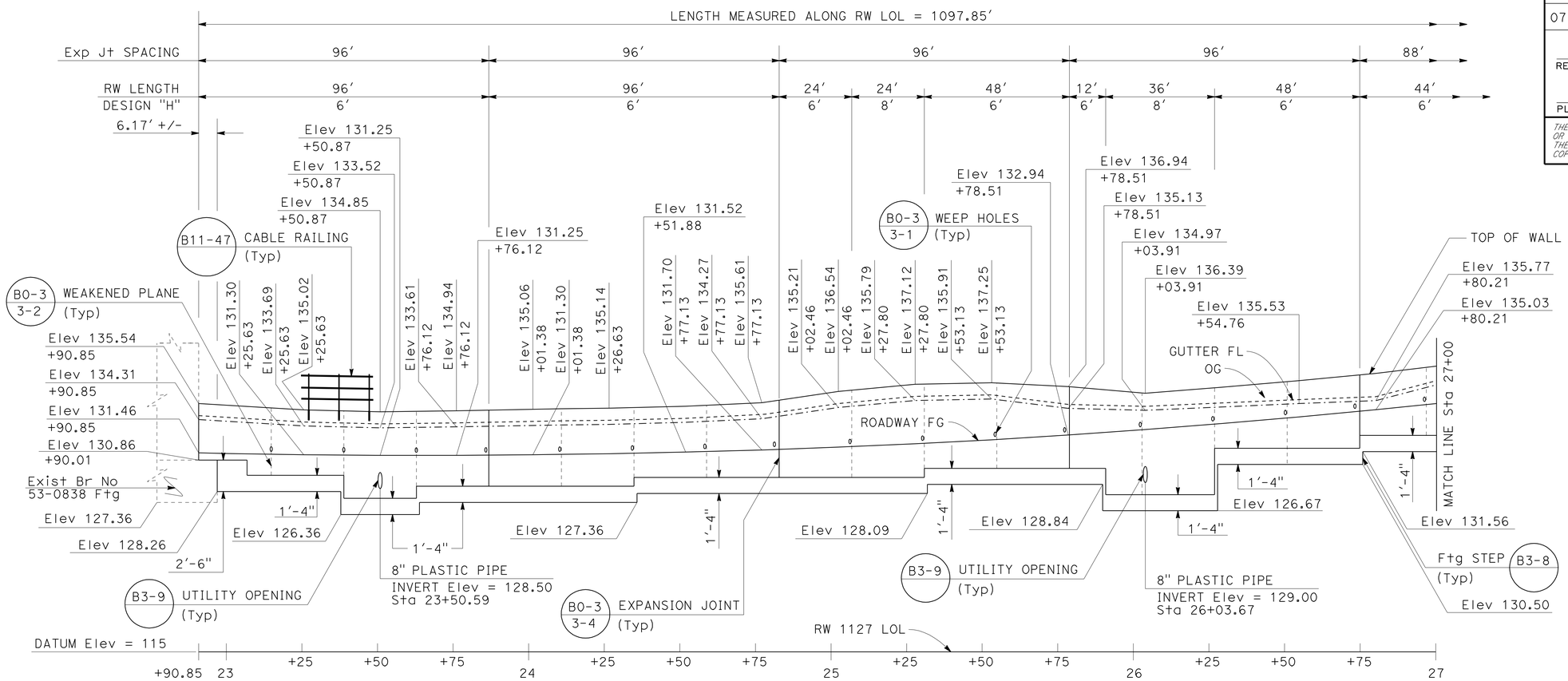

ELEVATION
SCALE: Horiz: 1" = 20'
Vert: 1" = 5'

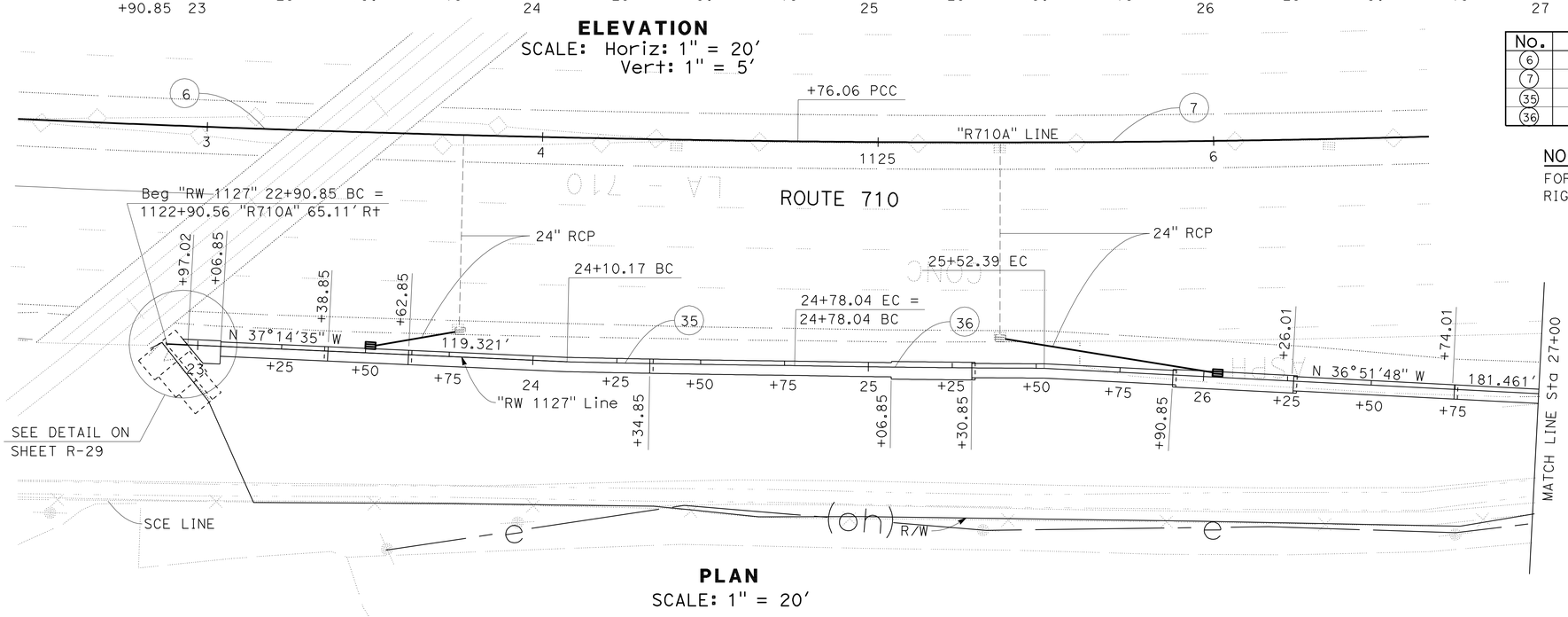

PLAN
SCALE: 1" = 20'

THIS PLAN ACCURATE FOR RETAINING WALL WORK ONLY.

CURVE DATA

No.	R	Δ	T	L
6	6679.55'	15°18'53"	898.05'	1785.40'
7	4998.23'	7°43'57"	337.79'	674.56'
35	6746.67'	0°34'35"	33.94'	67.87'
36	5125.65'	0°49'52"	37.17'	74.34'

NOTE:
FOR ACCURATE RIGHT OF WAY AND ACCESS DATA, CONTACT RIGHT OF WAY ENGINEERING AT THE DISTRICT OFFICE.

RETAINING WALL
RETAINING WALL No. 1127
SCALE AS SHOWN

R-26

STATE OF CALIFORNIA - DEPARTMENT OF TRANSPORTATION
Caltrans DESIGN
FUNCTIONAL SUPERVISOR: ALINE ANTARAMIAN
CALCULATED-DESIGNED BY: I. L. REYNON JR.
CHECKED BY: RENE YIN
REVISED BY
DATE REVISED

LAST REVISION 00-00-00
DATE PLOTTED => 29-JUN-2011
TIME PLOTTED => 11:06

Dist	COUNTY	ROUTE	POST MILES TOTAL PROJECT	SHEET No.	TOTAL SHEETS
07	LA	710	17.2/26.4	979	1507

Rene Yin 2-3-11
REGISTERED CIVIL ENGINEER DATE

6-27-11
PLANS APPROVAL DATE

REGISTERED PROFESSIONAL ENGINEER RENE YIN No. C49915 Exp. 9/30/12 CIVIL STATE OF CALIFORNIA

THE STATE OF CALIFORNIA OR ITS OFFICERS OR AGENTS SHALL NOT BE RESPONSIBLE FOR THE ACCURACY OR COMPLETENESS OF SCANNED COPIES OF THIS PLAN SHEET.

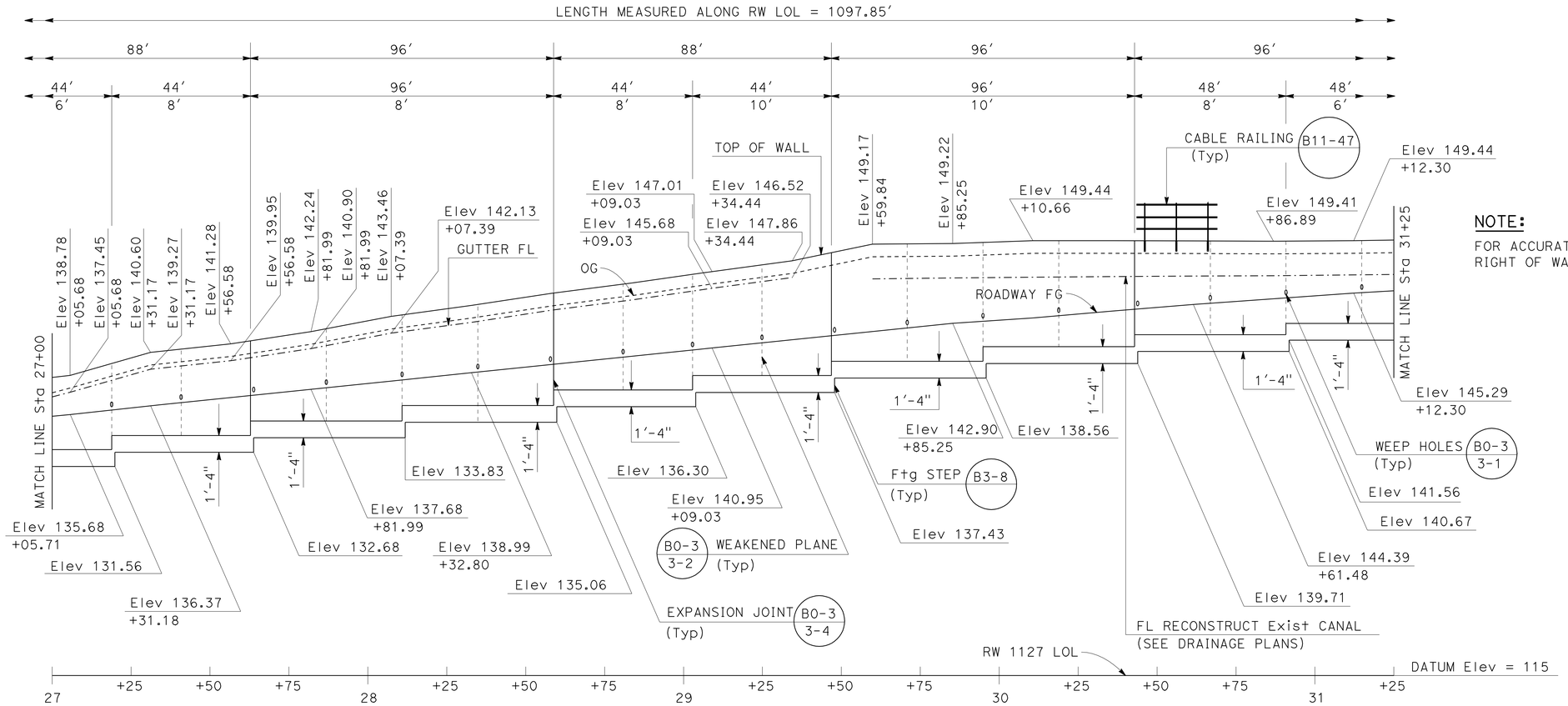

ELEVATION
SCALE: Horiz: 1" = 20'
Vert: 1" = 5'

NOTE:
FOR ACCURATE RIGHT OF WAY AND ACCESS DATA, CONTACT RIGHT OF WAY ENGINEERING AT THE DISTRICT OFFICE.

CURVE DATA

No.	R	Δ	T	L
7	4998.23'	7°43'57"	337.79'	674.56'
37	5075.90'	1°56'08"	85.74'	171.46'
38	5080.01'	2°54'57"	129.29'	258.52'

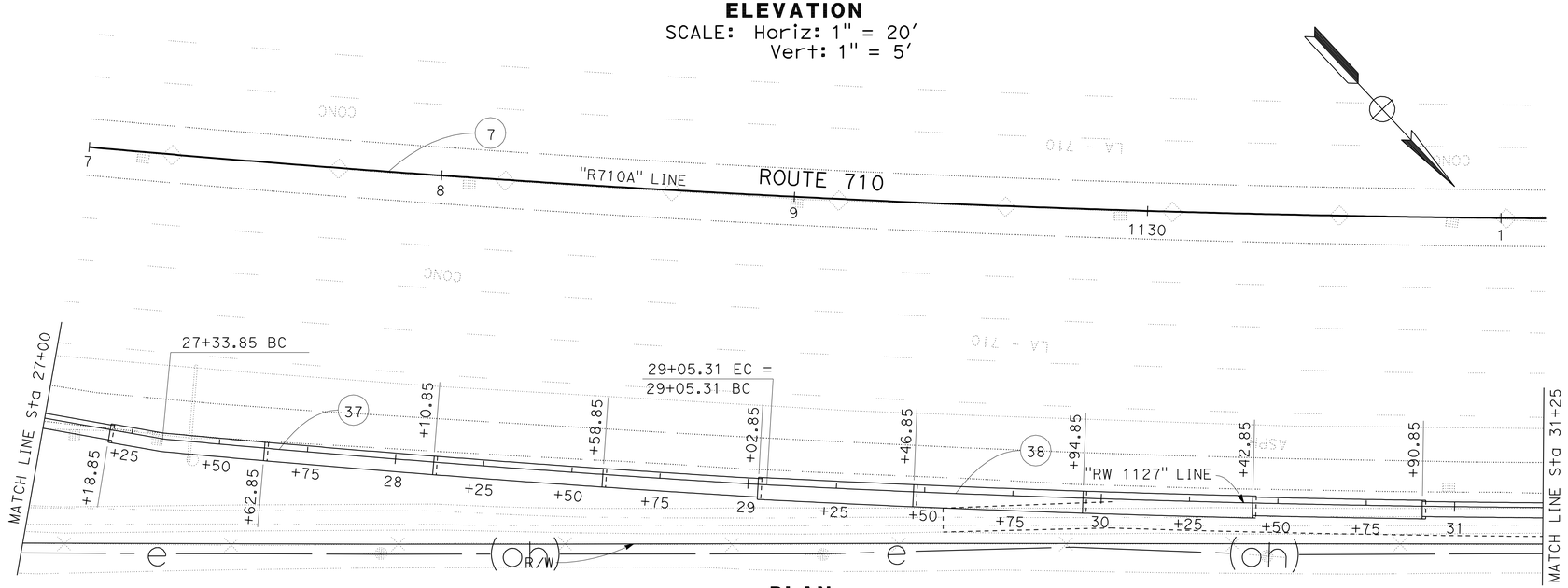

PLAN
SCALE: 1" = 20'

THIS PLAN ACCURATE FOR RETAINING WALL WORK ONLY.

RETAINING WALL
RETAINING WALL No. 1127
SCALE AS SHOWN

R-27

STATE OF CALIFORNIA - DEPARTMENT OF TRANSPORTATION
DESIGN
FUNCTIONAL SUPERVISOR: ALINE ANTARAMIAN
CALCULATED-DESIGNED BY: I. L. REYNON JR.
CHECKED BY: RENE YIN
REVISED BY / DATE REVISED

LAST REVISION 00-00-00
DATE PLOTTED => 29-JUN-2011
TIME PLOTTED => 11:06

Dist	COUNTY	ROUTE	POST MILES TOTAL PROJECT	SHEET No.	TOTAL SHEETS
07	LA	710	17.2/26.4	980	1507

REGISTERED CIVIL ENGINEER 2-3-11 DATE

6-27-11
PLANS APPROVAL DATE

REGISTERED PROFESSIONAL ENGINEER RENE YIN No. C49915 Exp. 9/30/12 CIVIL STATE OF CALIFORNIA

THE STATE OF CALIFORNIA OR ITS OFFICERS OR AGENTS SHALL NOT BE RESPONSIBLE FOR THE ACCURACY OR COMPLETENESS OF SCANNED COPIES OF THIS PLAN SHEET.

NOTE:

FOR ACCURATE RIGHT OF WAY AND ACCESS DATA, CONTACT RIGHT OF WAY ENGINEERING AT THE DISTRICT OFFICE.

CURVE DATA

No.	R	Δ	T	L
7	4998.23′	7°43′57″	337.79′	674.56′
38	5080.01′	2°54′57″	129.29′	258.52′

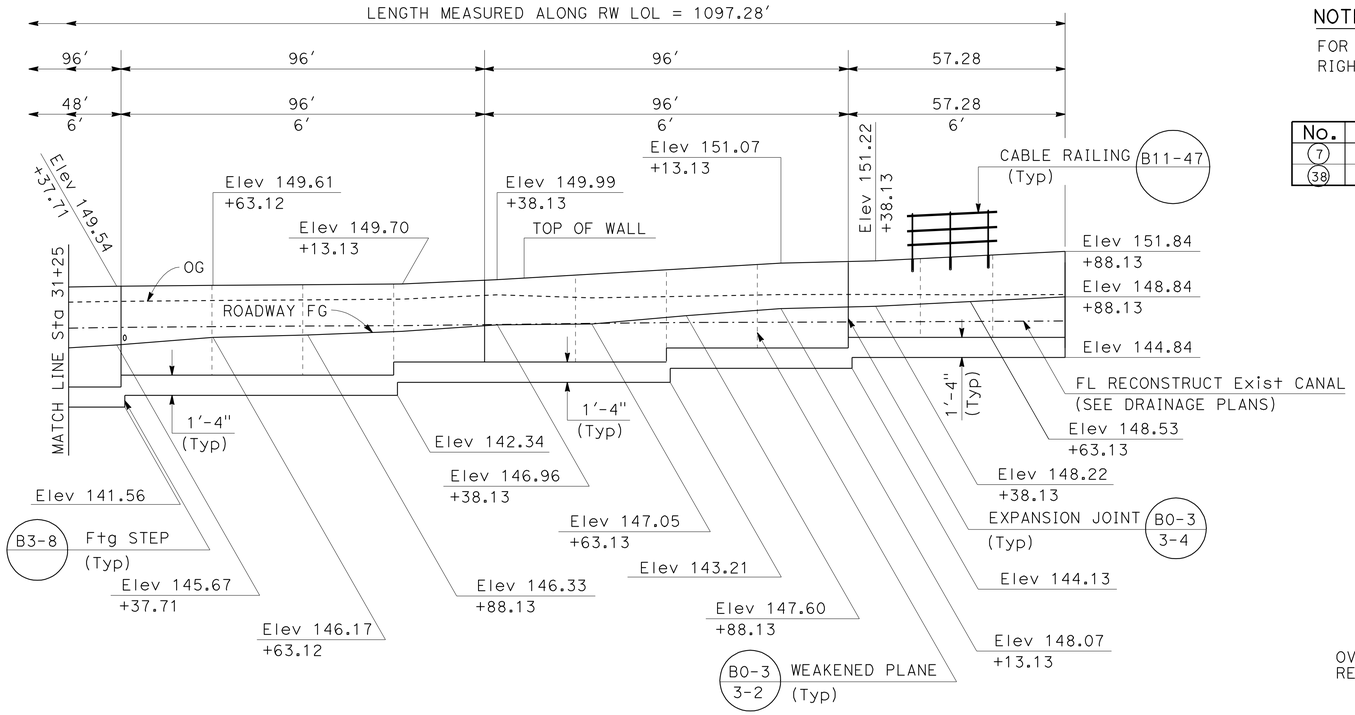

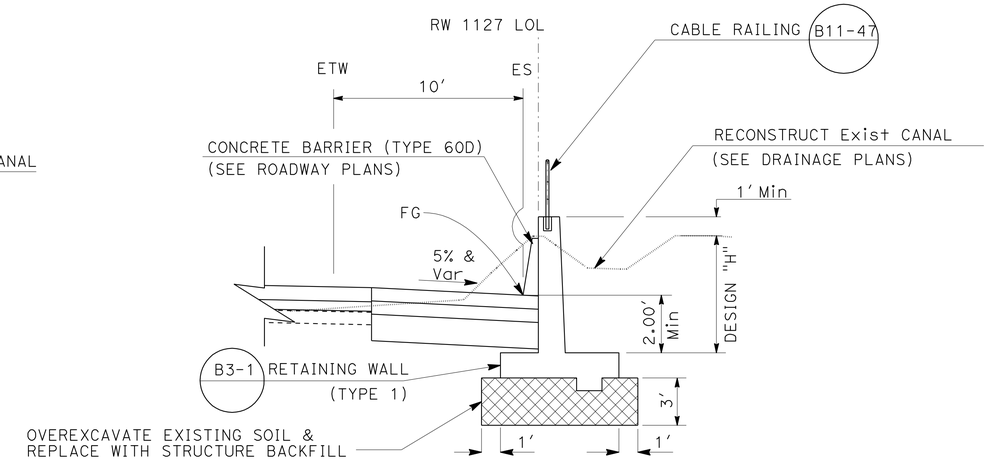

Sta 29+59.58 TO Sta 33+88.13

TYPICAL SECTION

NO SCALE

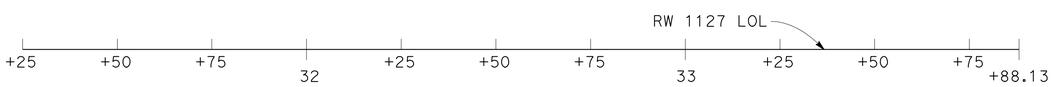

ELEVATION

SCALE: Horiz: 1″ = 20′
Vert: 1″ = 5′

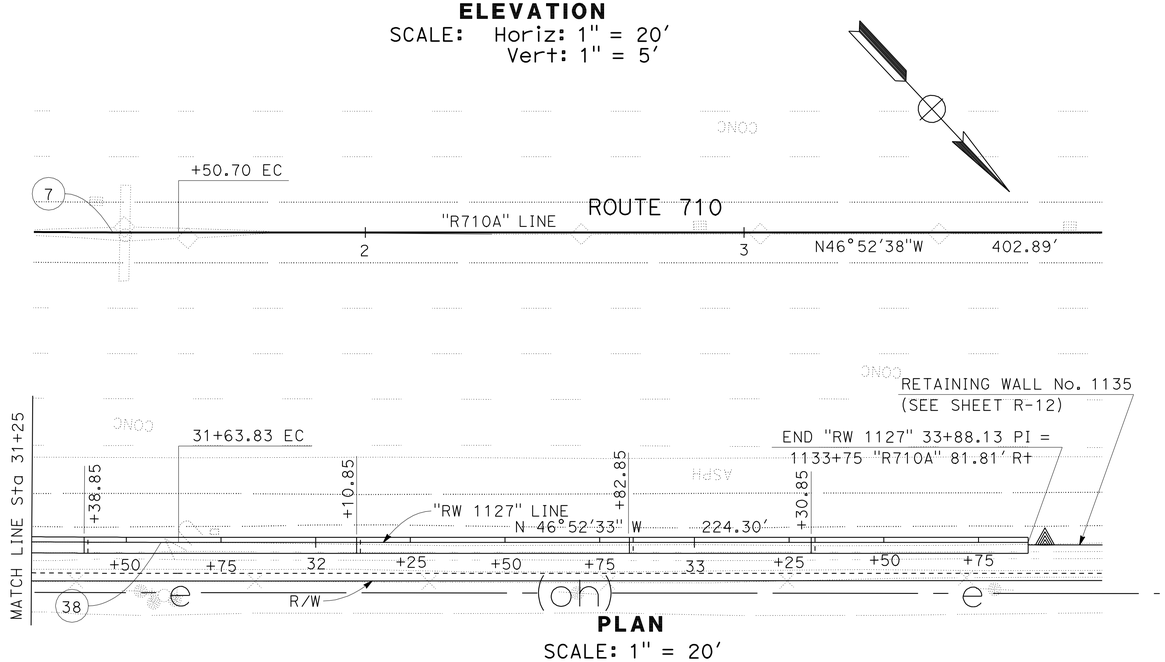

PLAN

SCALE: 1″ = 20′

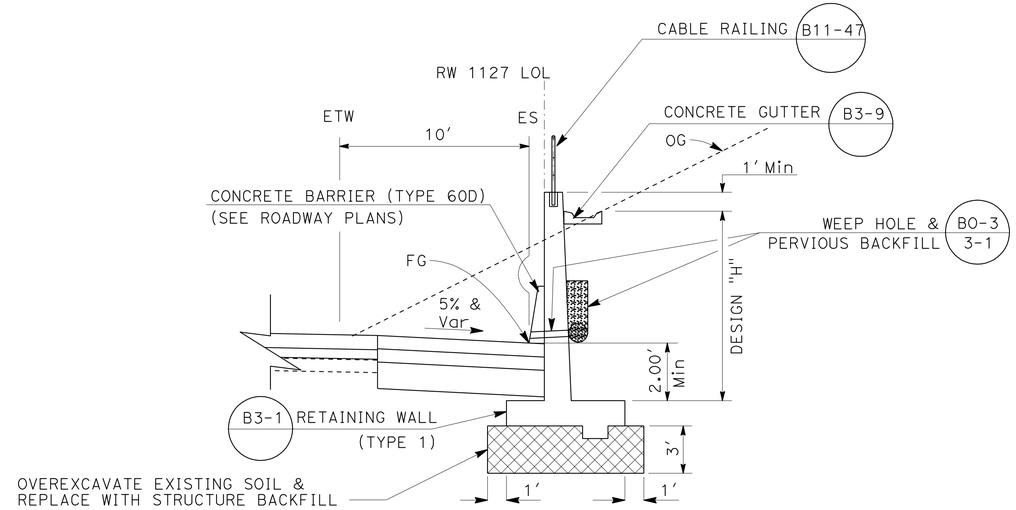

Sta 23+06.85 TO Sta 29+59.58

TYPICAL SECTION

NO SCALE

RETAINING WALL

RETAINING WALL No. 1127
SCALE AS SHOWN

THIS PLAN ACCURATE FOR RETAINING WALL WORK ONLY.

R-28

STATE OF CALIFORNIA - DEPARTMENT OF TRANSPORTATION
Caltrans® DESIGN
FUNCTIONAL SUPERVISOR: ALINE ANTARAMIAN
CALCULATED-DESIGNED BY: I. L. REYNON JR.
CHECKED BY: RENE YIN
REVISED BY / DATE REVISED

LAST REVISION 00-00-00
DATE PLOTTED => 29-JUN-2011
TIME PLOTTED => 11:06

Dist	COUNTY	ROUTE	POST MILES TOTAL PROJECT	SHEET No.	TOTAL SHEETS
07	LA	710	17.2/26.4	981	1507

Rene Yin 2-3-11
REGISTERED CIVIL ENGINEER DATE

6-27-11
PLANS APPROVAL DATE

REGISTERED PROFESSIONAL ENGINEER
RENE YIN
No. C49915
Exp. 9/30/12
CIVIL
STATE OF CALIFORNIA

THE STATE OF CALIFORNIA OR ITS OFFICERS OR AGENTS SHALL NOT BE RESPONSIBLE FOR THE ACCURACY OR COMPLETENESS OF SCANNED COPIES OF THIS PLAN SHEET.

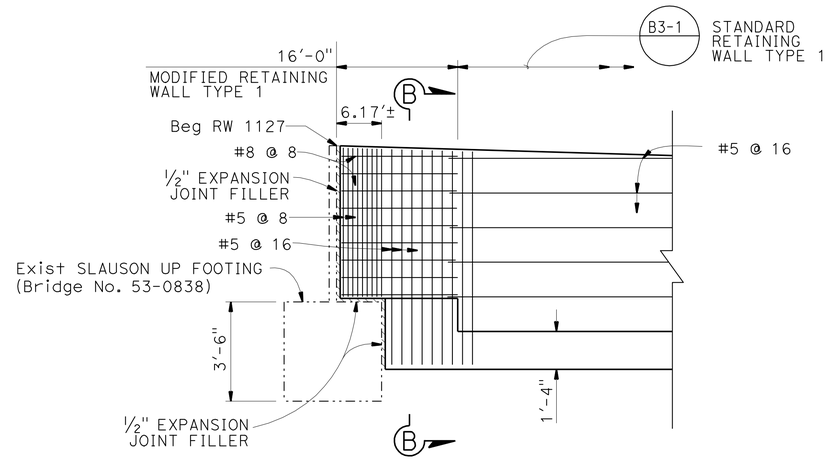

ELEVATION

HORIZ SCALE: 1" = 10'
VERT SCALE: 3/8" = 1'-0"

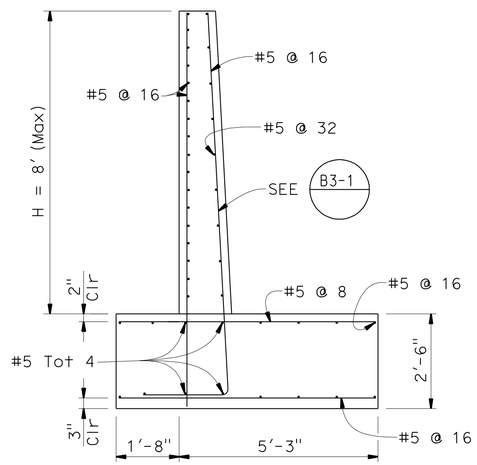

SECTION B-B

NO SCALE

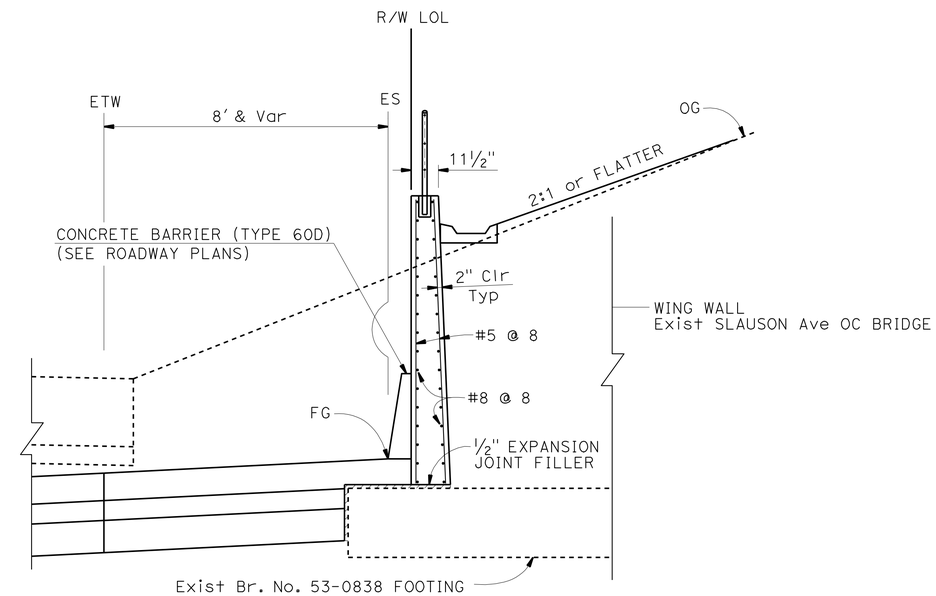

TYPICAL SECTION

NO SCALE

RETAINING WALL

RETAINING WALL No. 1127
SCALE AS SHOWN

R-29

THIS PLAN ACCURATE FOR RETAINING WALL WORK ONLY

STATE OF CALIFORNIA - DEPARTMENT OF TRANSPORTATION
Caltrans®
DESIGN
FUNCTIONAL SUPERVISOR: ALINE ANTARAMIAN
CALCULATED-DESIGNED BY: I. L. REYNON JR.
CHECKED BY: RENE YIN
REVISED BY
DATE REVISED

LAST REVISION 00-00-00
DATE PLOTTED => 29-JUN-2011
TIME PLOTTED => 11:06

DIST	COUNTY	ROUTE	POST MILES TOTAL PROJECT	SHEET No	TOTAL SHEETS
07	LA	710	17.2/26.4	982	1507

CERTIFIED GEOTECHNICAL ENGINEER 11-18-10

6-27-11
PLANS APPROVAL DATE

REGISTERED PROFESSIONAL ENGINEER Paramananthan Piratheepan No. 2826 Exp. 9-30-12 GEOTECHNICAL STATE OF CALIFORNIA

The State of California or its officers or agents shall not be responsible for the accuracy or completeness of electronic copies of this plan sheet.

This LOTB sheet was prepared in accordance with the Caltrans Soil & Rock Logging, Classification, & Presentation Manual (2010 Edition).

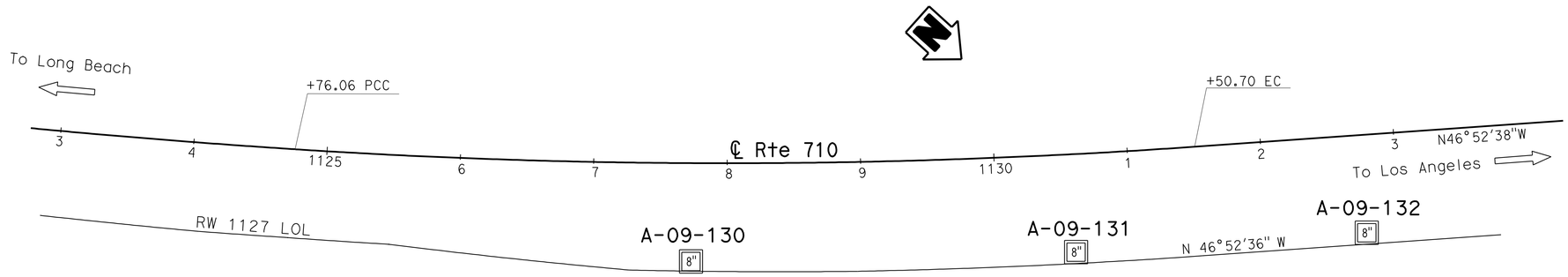

BENCH MARK

RTK717 Elev 133.62′
FD AERIAL TARGET, HV93, PER SR 07-258, PK NAIL & TIN
AT NB 710 FWY SHOULDER, ±279′ N/O SLAUSON AVE (BNSF)
RR OH BRIDGE
N 1818890.427 E 6509404.847

PRHV200 Elev 132.25′
SET PK NAIL AT NB 710 FWY SHOULDER, ±108′ N/O SLAUSON
AVE (BNSF) RR OH BRIDGE, ±4.5′ E/O TOP OF CURB
N 1818756.554 E 6509513.419

VERTICAL DATUM NAVD 1988.

PLAN

1" = 50′

Note: Groundwater was not encountered in borings A-09-130 and A-09-132.

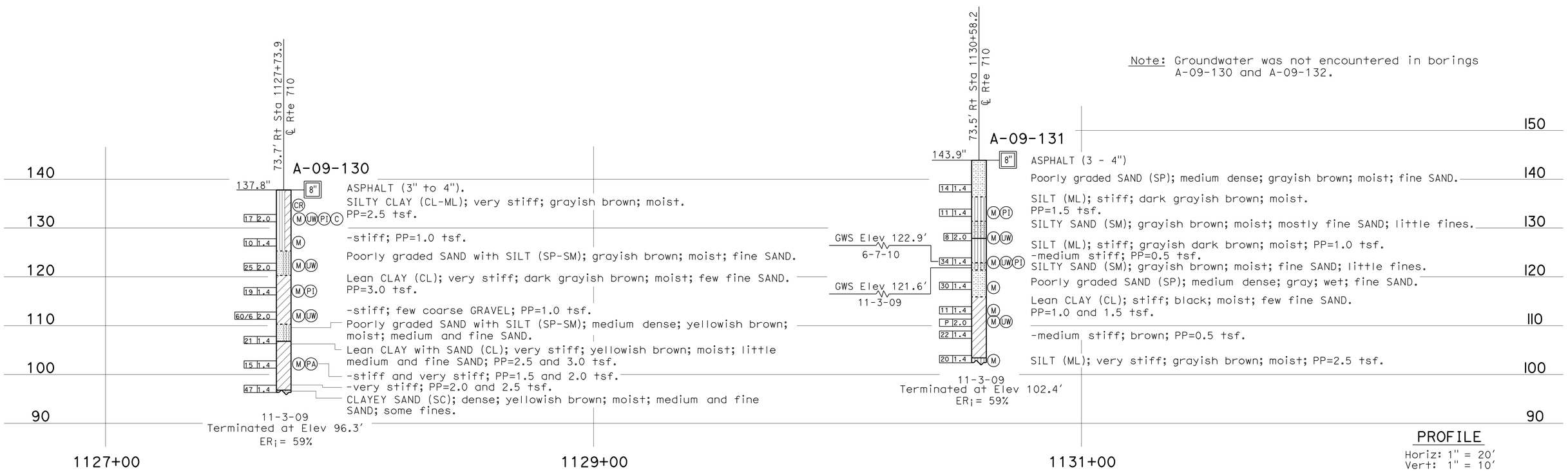

PROFILE

Horiz: 1" = 20′
Vert: 1" = 10′

ENGINEERING SERVICES	GEOTECHNICAL SERVICES	STATE OF CALIFORNIA DEPARTMENT OF TRANSPORTATION	DIVISION OF ENGINEERING SERVICES STRUCTURE DESIGN DESIGN BRANCH	BRIDGE NO. / POST MILES 21.29/21.50	RETAINING WALL 1127 R-30 LOG OF TEST BORINGS 1 OF 4
FUNCTIONAL SUPERVISOR NAME: S. Karimi	DRAWN BY: W. Tang, I.G-Remmen 11/10 CHECKED BY: K. Lai	FIELD INVESTIGATION BY: P. Piratheepan	CU 07 EA 202111	DISREGARD PRINTS BEARING EARLIER REVISION DATES 11-17-10	REVISION DATES / SHEET OF

OGS CIVIL LOG OF TEST BORINGS SHEET

ORIGINAL SCALE IN INCHES FOR REDUCED PLANS 0 1 2 3

FILE => 720211qe005.dgn

USERNAME => frmartin DATE PLOTTED => 29-JUN-2011 TIME PLOTTED => 11:06

DIST	COUNTY	ROUTE	POST MILES TOTAL PROJECT	SHEET No	TOTAL SHEETS
07	LA	710	17.2/26.4	983	1507

CERTIFIED GEOTECHNICAL ENGINEER 11-18-10

6-27-11
PLANS APPROVAL DATE

REGISTERED PROFESSIONAL ENGINEER
Paramananthan Piratheepan
No. 2826
Exp. 9-30-12
GEOTECHNICAL
STATE OF CALIFORNIA

The State of California or its officers or agents shall not be responsible for the accuracy or completeness of electronic copies of this plan sheet.

This LOTB sheet was prepared in accordance with the Caltrans Soil & Rock Logging, Classification, & Presentation Manual (2010 Edition).

FOR PLAN VIEW, SEE
"LOG OF TEST BORINGS 1 OF 4"

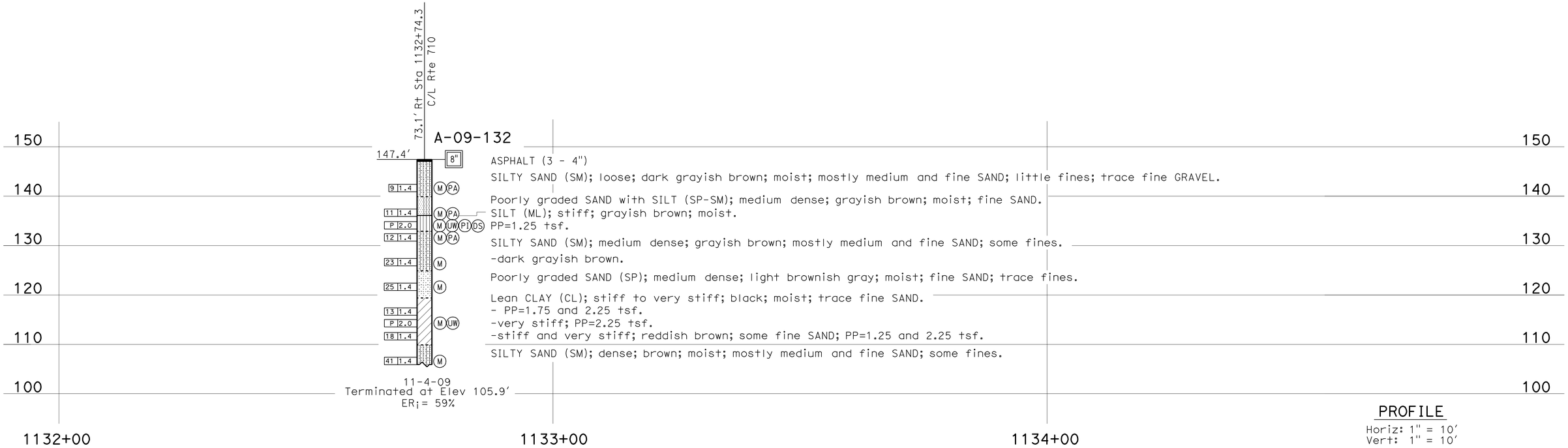

PROFILE
Horiz: 1" = 10'
Vert: 1" = 10'

ENGINEERING SERVICES		GEOTECHNICAL SERVICES	STATE OF CALIFORNIA DEPARTMENT OF TRANSPORTATION	DIVISION OF ENGINEERING SERVICES STRUCTURE DESIGN DESIGN BRANCH	BRIDGE NO. / POST MILES 21.29/21.50	RETAINING WALL 1127 R-31
FUNCTIONAL SUPERVISOR	DRAWN BY: W. Tang 11/10	FIELD INVESTIGATION BY:				LOG OF TEST BORINGS 2 OF 4
NAME: S. Karimi	CHECKED BY: K. Lai	P. Piratheepan				
OGS CIVIL LOG OF TEST BORINGS SHEET	ORIGINAL SCALE IN INCHES FOR REDUCED PLANS 0 1 2 3		CU 07 EA 202111		DISREGARD PRINTS BEARING EARLIER REVISION DATES 11-17-10	REVISION DATES / SHEET / OF

FILE => 720211qe006.dgn

USERNAME => tracarol DATE PLOTTED => 29-JUN-2011 TIME PLOTTED => 13:06

DIST	COUNTY	ROUTE	POST MILES TOTAL PROJECT	SHEET No	TOTAL SHEETS
07	LA	710	17.2/26.4	984	1507

CERTIFIED GEOTECHNICAL ENGINEER 11-18-10

6-27-11
PLANS APPROVAL DATE

REGISTERED PROFESSIONAL ENGINEER
Paramananthan Piratheepan
No. 2826
Exp. 9-30-12
GEOTECHNICAL
STATE OF CALIFORNIA

The State of California or its officers or agents shall not be responsible for the accuracy or completeness of electronic copies of this plan sheet.

REFERENCE: CALTRANS SOIL & ROCK LOGGING, CLASSIFICATION, AND PRESENTATION MANUAL (2010)

CEMENTATION

Description	Criteria
Weak	Crumbles or breaks with handling or little finger pressure.
Moderate	Crumbles or breaks with considerable finger pressure.
Strong	Will not crumble or break with finger pressure.

BOREHOLE IDENTIFICATION

Symbol	Hole Type	Description
Size	A	Auger Boring (hollow or solid stem bucket)
Size	R RW RC P	Rotary drilled boring (conventional) Rotary drilled with self-casing wire-line Rotary core with continuously-sampled, self-casing wire-line Rotary percussion boring (air)
Size	R	Rotary drilled diamond core
Size	HD HA	Hand driven (1-inch soil tube) Hand Auger
●	D	Dynamic Cone Penetration Boring
▲	CPT	Cone Penetration Test (ASTM D 5778)
⬚	O	Other (note on LOTB)

Note: Size in inches.

CONSISTENCY OF COHESIVE SOILS

Description	Shear Strength (tsf)	Pocket Penetrometer Measurement, PP, (tsf)	Torvane Measurement, TV, (tsf)	Vane Shear Measurement, VS, (tsf)
Very Soft	Less than 0.12	Less than 0.25	Less than 0.12	Less than 0.12
Soft	0.12 - 0.25	0.25 - 0.5	0.12 - 0.25	0.12 - 0.25
Medium Stiff	0.25 - 0.5	0.5 - 1	0.25 - 0.5	0.25 - 0.5
Stiff	0.5 - 1	1 - 2	0.5 - 1	0.5 - 1
Very Stiff	1 - 2	2 - 4	1 - 2	1 - 2
Hard	Greater than 2	Greater than 4	Greater than 2	Greater than 2

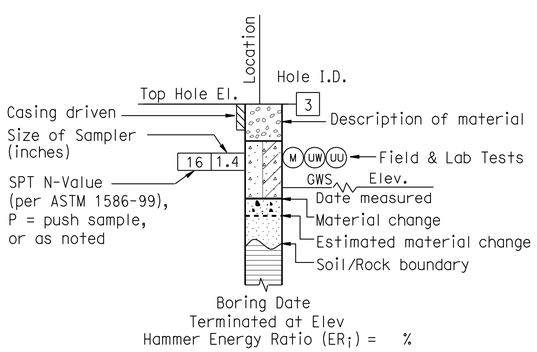

ROTARY BORING

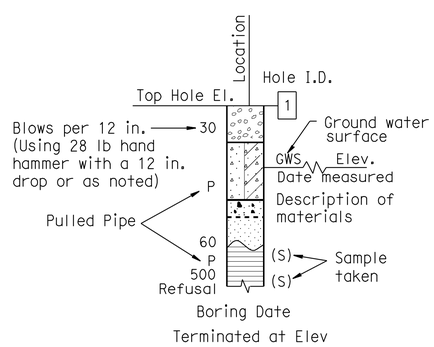

HAND BORING

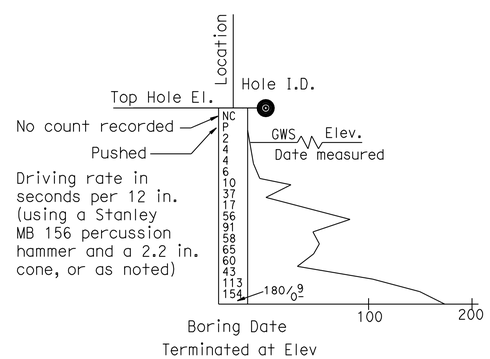

DYNAMIC CONE PENETRATION BORING

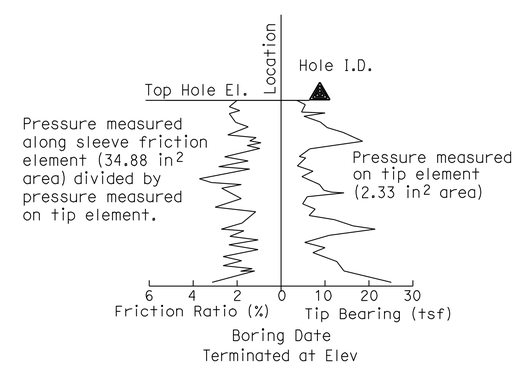

CONE PENETRATION TEST (CPT) BORING

ENGINEERING SERVICES	GEOTECHNICAL SERVICES	STATE OF CALIFORNIA DEPARTMENT OF TRANSPORTATION	DIVISION OF ENGINEERING SERVICES STRUCTURE DESIGN DESIGN BRANCH	BRIDGE NO. / POST MILE 21.29/21.50	RETAINING WALL 1127 R-32 LOG OF TEST BORINGS 3 OF 4
	PREPARED BY: I. G-Remmen, 11/10		CU 07 EA 202111	DISREGARD PRINTS BEARING EARLIER REVISION DATES	REVISION DATES / SHEET / OF

GS LOTB SOIL LEGEND

ORIGINAL SCALE IN INCHES FOR REDUCED PLANS 0 1 2 3

FILE => 720211qe007.dgn

USERNAME => trcarol DATE PLOTTED => 29-JUN-2011 TIME PLOTTED => 13:06

REFERENCE: CALTRANS SOIL & ROCK LOGGING, CLASSIFICATION, AND PRESENTATION MANUAL (2010)

DIST	COUNTY	ROUTE	POST MILES TOTAL PROJECT	SHEET No	TOTAL SHEETS
07	LA	710	17.2/26.4	985	1507

CERTIFIED GEOTECHNICAL ENGINEER 11-18-10

6-27-11
PLANS APPROVAL DATE

REGISTERED PROFESSIONAL ENGINEER Paramananthan Piratheepan No. 2826 Exp. 9-30-12 GEOTECHNICAL STATE OF CALIFORNIA

The State of California or its officers or agents shall not be responsible for the accuracy or completeness of electronic copies of this plan sheet.

GROUP SYMBOLS AND NAMES

Graphic/Symbol	Group Names
GW	Well-graded GRAVEL Well-graded GRAVEL with SAND
GP	Poorly-graded GRAVEL Poorly-graded GRAVEL with SAND
GW-GM	Well-graded GRAVEL with SILT Well-graded GRAVEL with SILT and SAND
GW-GC	Well-graded GRAVEL with CLAY (or SILTY CLAY) Well-graded GRAVEL with CLAY and SAND (or SILTY CLAY and SAND)
GP-GM	Poorly-graded GRAVEL with SILT Poorly-graded GRAVEL with SILT and SAND
GP-GC	Poorly-graded GRAVEL with CLAY (or SILTY CLAY) Poorly-graded GRAVEL with CLAY and SAND (or SILTY CLAY and SAND)
GM	SILTY GRAVEL SILTY GRAVEL with SAND
GC	CLAYEY GRAVEL CLAYEY GRAVEL with SAND
GC-GM	SILTY, CLAYEY GRAVEL SILTY, CLAYEY GRAVEL with SAND
SW	Well-graded SAND Well-graded SAND with GRAVEL
SP	Poorly-graded SAND Poorly-graded SAND with GRAVEL
SW-SM	Well-graded SAND with SILT Well-graded SAND with SILT and GRAVEL
SW-SC	Well-graded SAND with CLAY (or SILTY CLAY) Well-graded SAND with CLAY and GRAVEL (or SILTY CLAY and GRAVEL)
SP-SM	Poorly-graded SAND with SILT Poorly-graded SAND with SILT and GRAVEL
SP-SC	Poorly-graded SAND with CLAY (or SILTY CLAY) Poorly-graded SAND with CLAY and GRAVEL (or SILTY CLAY and GRAVEL)
SM	SILTY SAND SILTY SAND with GRAVEL
SC	CLAYEY SAND CLAYEY SAND with GRAVEL
SC-SM	SILTY, CLAYEY SAND SILTY, CLAYEY SAND with GRAVEL
PT	PEAT
	COBBLES COBBLES and BOULDERS BOULDERS

Graphic/Symbol	Group Names
CL	Lean CLAY Lean CLAY with SAND Lean CLAY with GRAVEL SANDY lean CLAY SANDY lean CLAY with GRAVEL GRAVELLY lean CLAY GRAVELLY lean CLAY with SAND
CL-ML	SILTY CLAY SILTY CLAY with SAND SILTY CLAY with GRAVEL SANDY SILTY CLAY SANDY SILTY CLAY with GRAVEL GRAVELLY SILTY CLAY GRAVELLY SILTY CLAY with SAND
ML	SILT SILT with SAND SILT with GRAVEL SANDY SILT SANDY SILT with GRAVEL GRAVELLY SILT GRAVELLY SILT with SAND
OL	ORGANIC lean CLAY ORGANIC lean CLAY with SAND ORGANIC lean CLAY with GRAVEL SANDY ORGANIC lean CLAY SANDY ORGANIC lean CLAY with GRAVEL GRAVELLY ORGANIC lean CLAY GRAVELLY ORGANIC lean CLAY with SAND
OL	ORGANIC SILT ORGANIC SILT with SAND ORGANIC SILT with GRAVEL SANDY ORGANIC SILT SANDY ORGANIC SILT with GRAVEL GRAVELLY ORGANIC SILT GRAVELLY ORGANIC SILT with SAND
CH	Fat CLAY Fat CLAY with SAND Fat CLAY with GRAVEL SANDY fat CLAY SANDY fat CLAY with GRAVEL GRAVELLY fat CLAY GRAVELLY fat CLAY with SAND
MH	Elastic SILT Elastic SILT with SAND Elastic SILT with GRAVEL SANDY elastic SILT SANDY elastic SILT with GRAVEL GRAVELLY elastic SILT GRAVELLY elastic SILT with SAND
OH	ORGANIC fat CLAY ORGANIC fat CLAY with SAND ORGANIC fat CLAY with GRAVEL SANDY ORGANIC fat CLAY SANDY ORGANIC fat CLAY with GRAVEL GRAVELLY ORGANIC fat CLAY GRAVELLY ORGANIC fat CLAY with SAND
OH	ORGANIC elastic SILT ORGANIC elastic SILT with SAND ORGANIC elastic SILT with GRAVEL SANDY ORGANIC elastic SILT SANDY ORGANIC elastic SILT with GRAVEL GRAVELLY ORGANIC elastic SILT GRAVELLY ORGANIC elastic SILT with SAND
OL/OH	ORGANIC SOIL ORGANIC SOIL with SAND ORGANIC SOIL with GRAVEL SANDY ORGANIC SOIL SANDY ORGANIC SOIL with GRAVEL GRAVELLY ORGANIC SOIL GRAVELLY ORGANIC SOIL with SAND

FIELD AND LABORATORY TESTING

- (C) Consolidation (ASTM D 2435)
- (CL) Collapse Potential (ASTM D 5333)
- (CP) Compaction Curve (CTM 216)
- (CR) Corrosivity Testing (CTM 643, CTM 422, CTM 417)
- (CU) Consolidated Undrained Triaxial (ASTM D 4767)
- (DS) Direct Shear (ASTM D 3080)
- (EI) Expansion Index (ASTM D 4829)
- (M) Moisture Content (ASTM D 2216)
- (OC) Organic Content-% (ASTM D 2974)
- (P) Permeability (CTM 220)
- (PA) Particle Size Analysis (ASTM D 422)
- (PI) Plasticity Index (AASHTO T 90) Liquid Limit (AASHTO T 89)
- (PL) Point Load Index (ASTM D 5731)
- (PM) Pressure Meter
- (R) R-Value (CTM 301)
- (SE) Sand Equivalent (CTM 217)
- (SG) Specific Gravity (AASHTO T 100)
- (SL) Shrinkage Limit (ASTM D 427)
- (SW) Swell Potential (ASTM D 4546)
- (UC) Unconfined Compression-Soil (ASTM D 2166) Unconfined Compression-Rock (ASTM D 2938)
- (UU) Unconsolidated Undrained Triaxial (ASTM D 2850)
- (UW) Unit Weight (ASTM D 4767)

APPARENT DENSITY OF COHESIONLESS SOILS

Description	SPT N_{60} (Blows / 12 in.)
Very Loose	0 - 5
Loose	5 - 10
Medium Dense	10 - 30
Dense	30 - 50
Very Dense	Greater than 50

MOISTURE

Description	Criteria
Dry	No discernable moisture
Moist	Moisture present, but no free water
Wet	Visible free water

PERCENT OR PROPORTION OF SOILS

Description	Criteria
Trace	Particles are present but estimated to be less than 5%
Few	5% - 10%
Little	15% - 25%
Some	30% - 45%
Mostly	50% - 100%

PARTICLE SIZE

Description		Size (in.)
Boulder		Greater than 12
Cobble		3 - 12
Gravel	Coarse	3/4 - 3
	Fine	1/5 - 3/4
Sand	Coarse	1/16 - 1/5
	Medium	1/64 - 1/16
	Fine	1/300 - 1/64
Silt and Clay		Less than 1/300

ENGINEERING SERVICES

GEOTECHNICAL SERVICES
PREPARED BY: I. G-Remmen, 11/10

STATE OF CALIFORNIA DEPARTMENT OF TRANSPORTATION

DIVISION OF ENGINEERING SERVICES STRUCTURE DESIGN
DESIGN BRANCH

BRIDGE NO.
POST MILE 21.29/21.50

RETAINING WALL 1127 R-33
LOG OF TEST BORINGS 4 OF 4

GS LOTB SOIL LEGEND

ORIGINAL SCALE IN INCHES FOR REDUCED PLANS 0 1 2 3

CU 07
EA 202111

DISREGARD PRINTS BEARING EARLIER REVISION DATES

REVISION DATES SHEET OF

FILE => 720211qe008.dgn

USERNAME => rtcarol DATE PLOTTED => 29-JUN-2011 TIME PLOTTED => 13:06

Dist	COUNTY	ROUTE	POST MILES TOTAL PROJECT	SHEET No.	TOTAL SHEETS
07	LA	710	17.2/26.4	986	1507

Rene Yin 2-3-11
REGISTERED CIVIL ENGINEER DATE

6-27-11
PLANS APPROVAL DATE

REGISTERED PROFESSIONAL ENGINEER
RENE YIN
No. C49915
Exp. 9/30/12
CIVIL
STATE OF CALIFORNIA

THE STATE OF CALIFORNIA OR ITS OFFICERS OR AGENTS SHALL NOT BE RESPONSIBLE FOR THE ACCURACY OR COMPLETENESS OF SCANNED COPIES OF THIS PLAN SHEET.

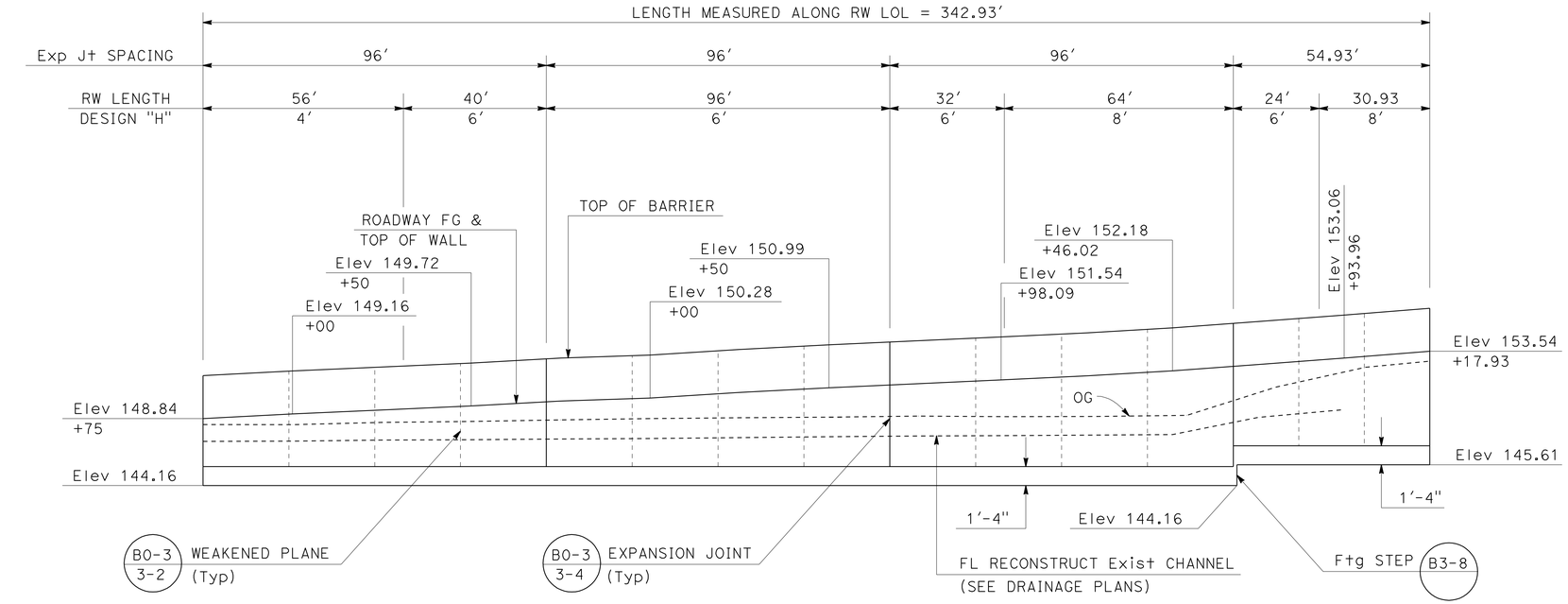

NOTES:

1. FOR ACCURATE RIGHT OF WAY AND ACCESS DATA, CONTACT RIGHT OF WAY ENGINEERING AT THE DISTRICT OFFICE.
2. WATERSTOP IN THE EXPANSION JOINT SHALL BE EXTENDED 6" INTO CONCRETE BARRIER.

CURVE DATA

No. O	R	Δ	T	L
8	2000.00'	76°26'21"	1574.95'	2668.23'
39	1917.50'	4°54'38"	82.22'	164.34'

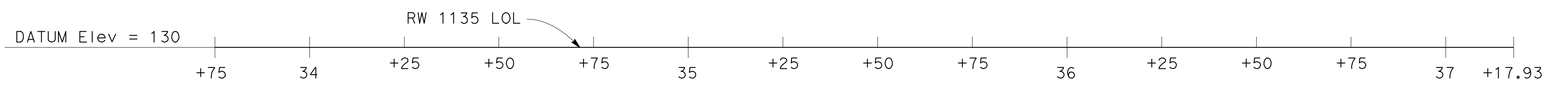

ELEVATION
SCALE Horiz: 1" = 20'
Vert: 1" = 5'

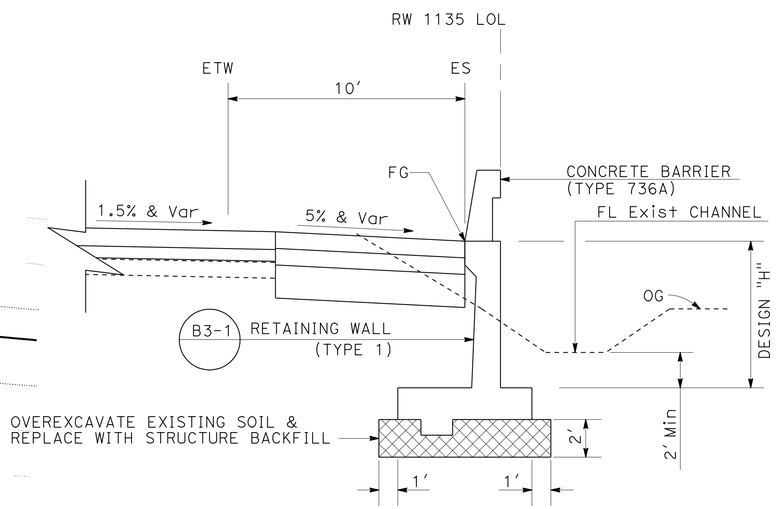

Sta 33+75 TO Sta 37+17.93
TYPICAL SECTION
AS SHOWN

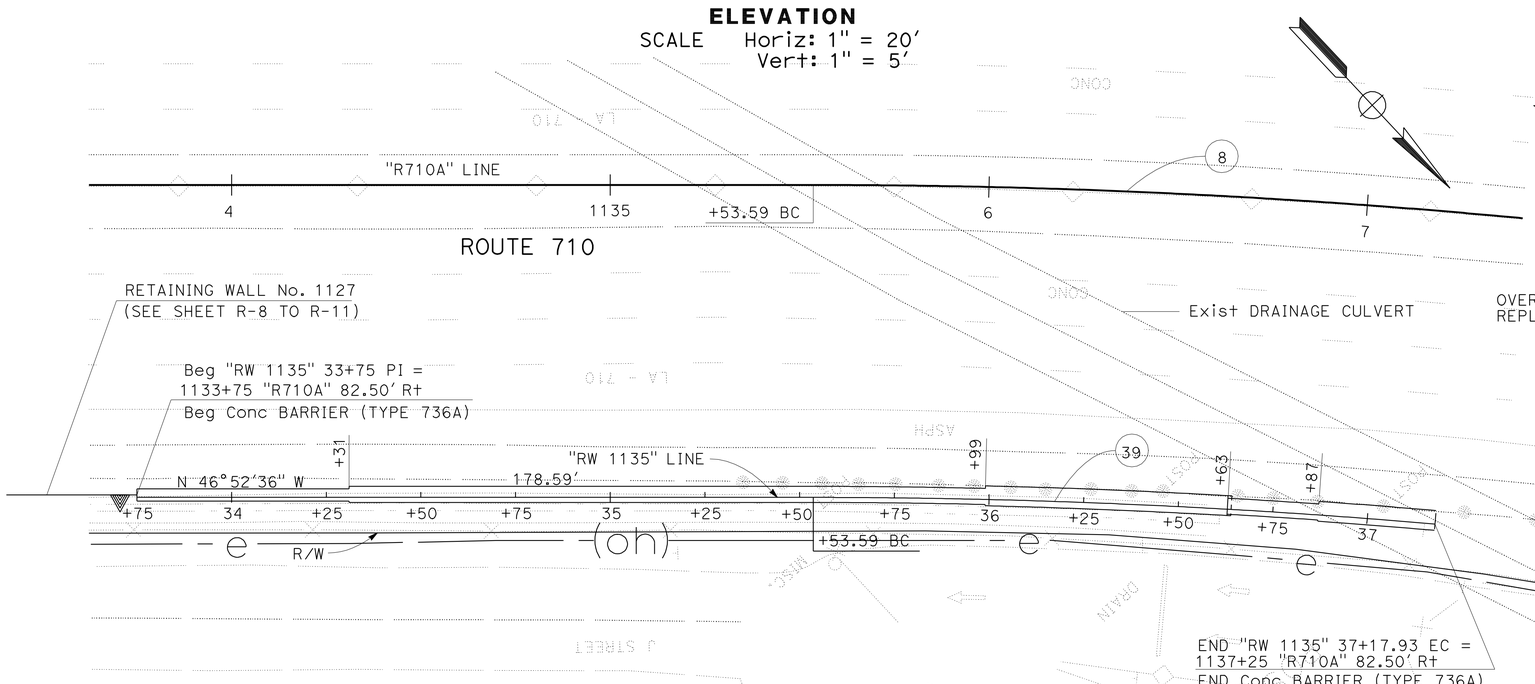

PLAN
SCALE 1" = 20'

THIS PLAN ACCURATE FOR RETAINING WALL WORK ONLY.

RETAINING WALL

RETAINING WALL No. 1135
SCALE AS SHOWN

R-34

STATE OF CALIFORNIA - DEPARTMENT OF TRANSPORTATION
Caltrans
DESIGN
FUNCTIONAL SUPERVISOR: ALINE ANTARAMIAN
CALCULATED-DESIGNED BY: I. L. REYNON JR.
CHECKED BY: RENE YIN
REVISED BY
DATE REVISED

LAST REVISION 00-00-00
DATE PLOTTED => 29-JUN-2011
TIME PLOTTED => 13:06

DIST	COUNTY	ROUTE	POST MILES TOTAL PROJECT	SHEET No	TOTAL SHEETS
07	LA	710	17.2/26.4	987	1507

CERTIFIED GEOTECHNICAL ENGINNER 11-18-10

6-27-11
PLANS APPROVAL DATE

REGISTERED PROFESSIONAL ENGINEER Paramananthan Piratheepan No. 2826 Exp. 9-30-12 GEOTECHNICAL STATE OF CALIFORNIA

The State of California or its officers or agents shall not be responsible for the accuracy or completeness of electronic copies of this plan sheet.

This LOTB sheet was prepared in accordance with the Caltrans Soil & Rock Logging, Classification, & Presentation Manual (2010 Edition).

BENCH MARK

RTK717 Elev 133.62′
FD AERIAL TARGET, HV93, PER SR 07-258, PK NAIL & TIN AT NB 710 FWY SHOULDER, ±279′ N/O SLAUSON AVE (BNSF) RR OH BRIDGE
N 1818890.427 E 6509404.847

PRHV200 Elev 132.25′
SET PK NAIL AT NB 710 FWY SHOULDER, ±108′ N/O SLAUSON AVE (BNSF) RR OH BRIDGE, ±4.5′ E/O TOP OF CURB
N 1818756.554 E 6509513.419
VERTICAL DATUM NAVD 1988

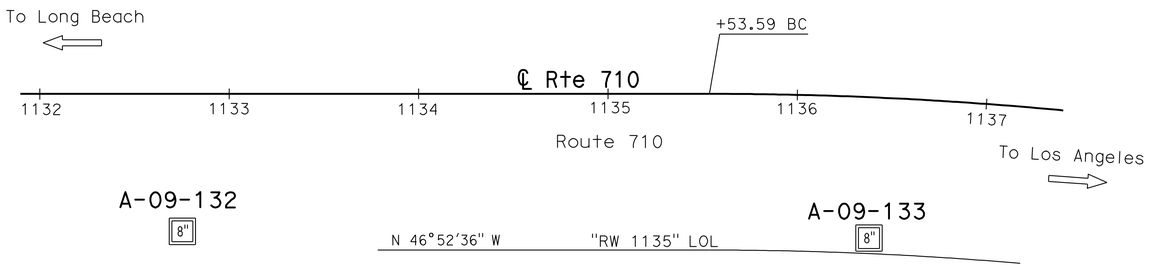

PLAN

1" = 40′

Note: Groundwater was not encountered in boring A-09-132.

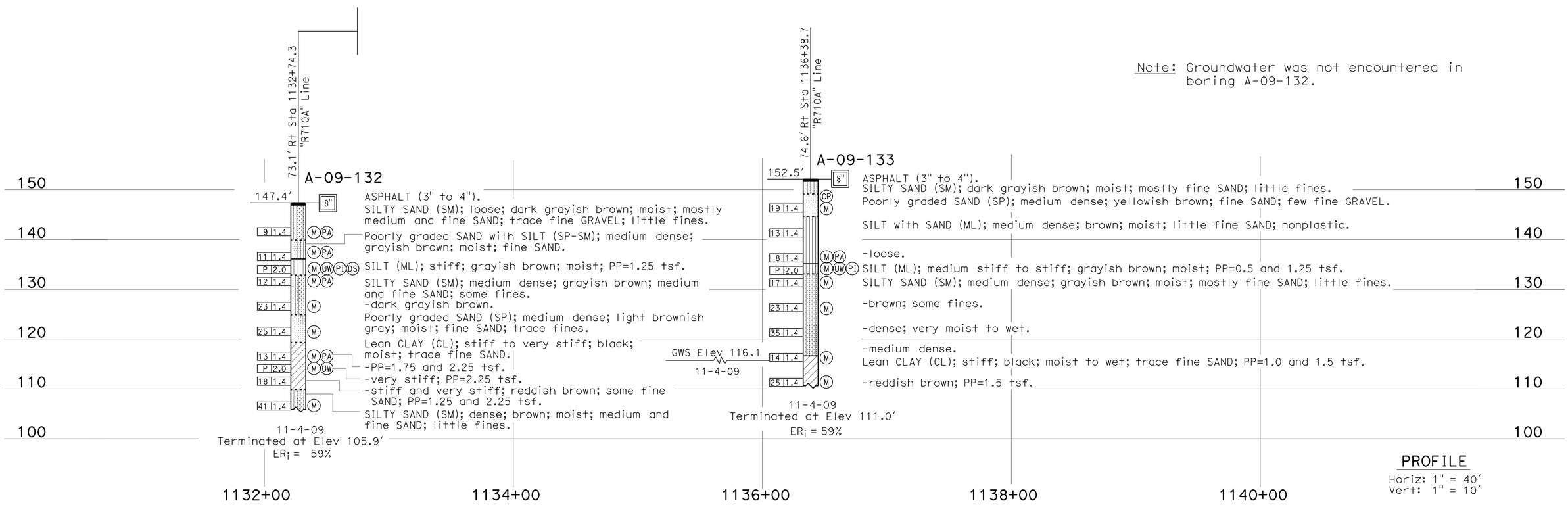

PROFILE

Horiz: 1" = 40′
Vert: 1" = 10′

ENGINEERING SERVICES	GEOTECHNICAL SERVICES	STATE OF CALIFORNIA DEPARTMENT OF TRANSPORTATION	DIVISION OF ENGINEERING SERVICES STRUCTURE DESIGN	BRIDGE NO.	RETAINING WALL 1135 R-35
FUNCTIONAL SUPERVISOR	DRAWN BY: C. Christian, W. Tang, I.G-Remmen 11/10	FIELD INVESTIGATION BY:	DESIGN BRANCH	POST MILES 21.50/21.56	LOG OF TEST BORINGS 1 OF 3
NAME: S. Karimi	CHECKED BY: K. Lai	P. Piratheepan	CU 07 EA 202111		

OGS CIVIL LOG OF TEST BORINGS SHEET

ORIGINAL SCALE IN INCHES FOR REDUCED PLANS 0 1 2 3

DISREGARD PRINTS BEARING EARLIER REVISION DATES 11-18-10 11-17-10 REVISION DATES SHEET OF

FILE => 720211qf002.dgn

USERNAME => trcarrol DATE PLOTTED => 29-JUN-2011 TIME PLOTTED => 13:07

DIST	COUNTY	ROUTE	POST MILES TOTAL PROJECT	SHEET No	TOTAL SHEETS
07	LA	710	17.2/26.4	988	1507

CERTIFIED GEOTECHNICAL ENGINNER 11-18-10

6-27-11
PLANS APPROVAL DATE

REGISTERED PROFESSIONAL ENGINEER
Paramananthan Piratheepan
No. 2826
Exp. 9-30-12
GEOTECHNICAL
STATE OF CALIFORNIA

The State of California or its officers or agents shall not be responsible for the accuracy or completeness of electronic copies of this plan sheet.

REFERENCE: CALTRANS SOIL & ROCK LOGGING, CLASSIFICATION, AND PRESENTATION MANUAL (2010)

CEMENTATION

Description	Criteria
Weak	Crumbles or breaks with handling or little finger pressure.
Moderate	Crumbles or breaks with considerable finger pressure.
Strong	Will not crumble or break with finger pressure.

BOREHOLE IDENTIFICATION

Symbol	Hole Type	Description
Size	A	Auger Boring (hollow or solid stem bucket)
Size	R RW RC P	Rotary drilled boring (conventional) Rotary drilled with self-casing wire-line Rotary core with continuously-sampled, self-casing wire-line Rotary percussion boring (air)
Size	R	Rotary drilled diamond core
Size	HD HA	Hand driven (1-inch soil tube) Hand Auger
●	D	Dynamic Cone Penetration Boring
▲	CPT	Cone Penetration Test (ASTM D 5778)
⬚	O	Other (note on LOTB)

Note: Size in inches.

CONSISTENCY OF COHESIVE SOILS

Description	Shear Strength (tsf)	Pocket Penetrometer Measurement, PP, (tsf)	Torvane Measurement, TV, (tsf)	Vane Shear Measurement, VS, (tsf)
Very Soft	Less than 0.12	Less than 0.25	Less than 0.12	Less than 0.12
Soft	0.12 - 0.25	0.25 - 0.5	0.12 - 0.25	0.12 - 0.25
Medium Stiff	0.25 - 0.5	0.5 - 1	0.25 - 0.5	0.25 - 0.5
Stiff	0.5 - 1	1 - 2	0.5 - 1	0.5 - 1
Very Stiff	1 - 2	2 - 4	1 - 2	1 - 2
Hard	Greater than 2	Greater than 4	Greater than 2	Greater than 2

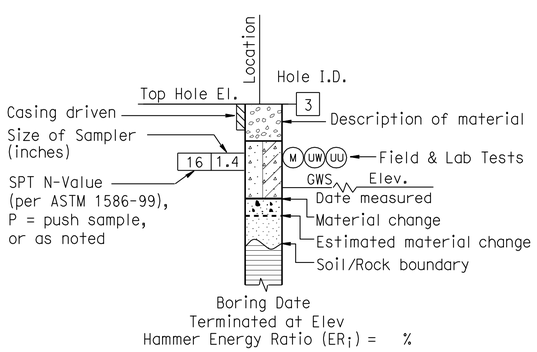

ROTARY BORING

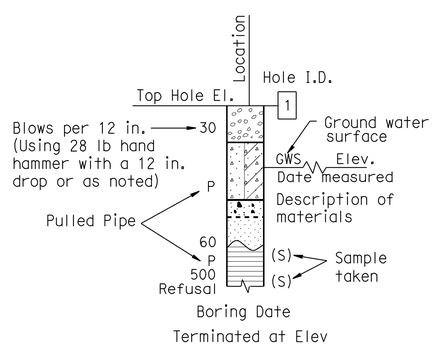

HAND BORING

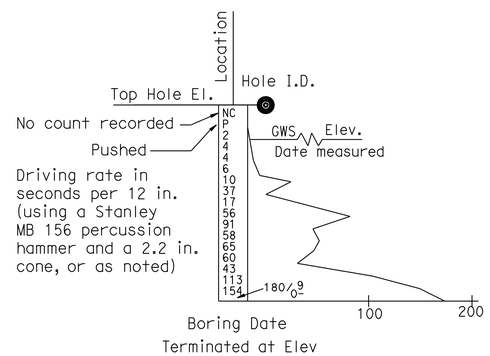

DYNAMIC CONE PENETRATION BORING

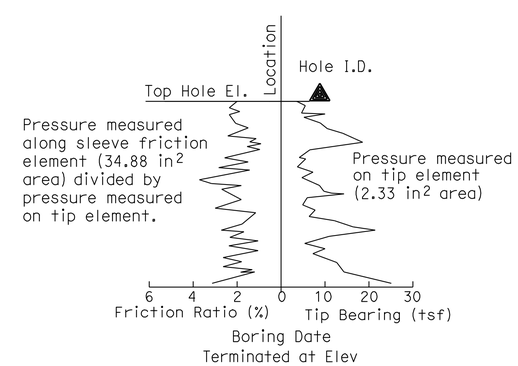

CONE PENETRATION TEST (CPT) BORING

ENGINEERING SERVICES	GEOTECHNICAL SERVICES	STATE OF CALIFORNIA DEPARTMENT OF TRANSPORTATION	DIVISION OF ENGINEERING SERVICES STRUCTURE DESIGN DESIGN BRANCH	BRIDGE NO. / POST MILE 21.50/21.56	RETAINING WALL 1135 R-36 LOG OF TEST BORINGS 2 OF 3
	PREPARED BY: I. G-Remmen, 10/10				

GS LOTB SOIL LEGEND

ORIGINAL SCALE IN INCHES FOR REDUCED PLANS 0 1 2 3

CU 07
EA 202111

DISREGARD PRINTS BEARING EARLIER REVISION DATES

REVISION DATES | SHEET | OF

FILE => 720211qf003.dgn

USERNAME => trcarol DATE PLOTTED => 29-JUN-2011 TIME PLOTTED => 13:07

REFERENCE: CALTRANS SOIL & ROCK LOGGING, CLASSIFICATION, AND PRESENTATION MANUAL (2010)

DIST	COUNTY	ROUTE	POST MILES TOTAL PROJECT	SHEET No	TOTAL SHEETS
07	LA	710	17.2/26.4	989	1507

CERTIFIED GEOTECHNICAL ENGINEER 11-18-10

6-27-11
PLANS APPROVAL DATE

REGISTERED PROFESSIONAL ENGINEER Paramananthan Piratheepan No. 2826 Exp. 9-30-12 GEOTECHNICAL STATE OF CALIFORNIA

The State of California or its officers or agents shall not be responsible for the accuracy or completeness of electronic copies of this plan sheet.

GROUP SYMBOLS AND NAMES

Graphic/Symbol	Group Names	Graphic/Symbol	Group Names
GW	Well-graded GRAVEL Well-graded GRAVEL with SAND	CL	Lean CLAY Lean CLAY with SAND Lean CLAY with GRAVEL SANDY lean CLAY SANDY lean CLAY with GRAVEL GRAVELLY lean CLAY GRAVELLY lean CLAY with SAND
GP	Poorly-graded GRAVEL Poorly-graded GRAVEL with SAND		
GW-GM	Well-graded GRAVEL with SILT Well-graded GRAVEL with SILT and SAND	CL-ML	SILTY CLAY SILTY CLAY with SAND SILTY CLAY with GRAVEL SANDY SILTY CLAY SANDY SILTY CLAY with GRAVEL GRAVELLY SILTY CLAY GRAVELLY SILTY CLAY with SAND
GW-GC	Well-graded GRAVEL with CLAY (or SILTY CLAY) Well-graded GRAVEL with CLAY and SAND (or SILTY CLAY and SAND)		
GP-GM	Poorly-graded GRAVEL with SILT Poorly-graded GRAVEL with SILT and SAND	ML	SILT SILT with SAND SILT with GRAVEL SANDY SILT SANDY SILT with GRAVEL GRAVELLY SILT GRAVELLY SILT with SAND
GP-GC	Poorly-graded GRAVEL with CLAY (or SILTY CLAY) Poorly-graded GRAVEL with CLAY and SAND (or SILTY CLAY and SAND)		
GM	SILTY GRAVEL SILTY GRAVEL with SAND	OL	ORGANIC lean CLAY ORGANIC lean CLAY with SAND ORGANIC lean CLAY with GRAVEL SANDY ORGANIC lean CLAY SANDY ORGANIC lean CLAY with GRAVEL GRAVELLY ORGANIC lean CLAY GRAVELLY ORGANIC lean CLAY with SAND
GC	CLAYEY GRAVEL CLAYEY GRAVEL with SAND		
GC-GM	SILTY, CLAYEY GRAVEL SILTY, CLAYEY GRAVEL with SAND	OL	ORGANIC SILT ORGANIC SILT with SAND ORGANIC SILT with GRAVEL SANDY ORGANIC SILT SANDY ORGANIC SILT with GRAVEL GRAVELLY ORGANIC SILT GRAVELLY ORGANIC SILT with SAND
SW	Well-graded SAND Well-graded SAND with GRAVEL		
SP	Poorly-graded SAND Poorly-graded SAND with GRAVEL	CH	Fat CLAY Fat CLAY with SAND Fat CLAY with GRAVEL SANDY fat CLAY SANDY fat CLAY with GRAVEL GRAVELLY fat CLAY GRAVELLY fat CLAY with SAND
SW-SM	Well-graded SAND with SILT Well-graded SAND with SILT and GRAVEL		
SW-SC	Well-graded SAND with CLAY (or SILTY CLAY) Well-graded SAND with CLAY and GRAVEL (or SILTY CLAY and GRAVEL)	MH	Elastic SILT Elastic SILT with SAND Elastic SILT with GRAVEL SANDY elastic SILT SANDY elastic SILT with GRAVEL GRAVELLY elastic SILT GRAVELLY elastic SILT with SAND
SP-SM	Poorly-graded SAND with SILT Poorly-graded SAND with SILT and GRAVEL		
SP-SC	Poorly-graded SAND with CLAY (or SILTY CLAY) Poorly-graded SAND with CLAY and GRAVEL (or SILTY CLAY and GRAVEL)	OH	ORGANIC fat CLAY ORGANIC fat CLAY with SAND ORGANIC fat CLAY with GRAVEL SANDY ORGANIC fat CLAY SANDY ORGANIC fat CLAY with GRAVEL GRAVELLY ORGANIC fat CLAY GRAVELLY ORGANIC fat CLAY with SAND
SM	SILTY SAND SILTY SAND with GRAVEL		
SC	CLAYEY SAND CLAYEY SAND with GRAVEL	OH	ORGANIC elastic SILT ORGANIC elastic SILT with SAND ORGANIC elastic SILT with GRAVEL SANDY ORGANIC elastic SILT SANDY ORGANIC elastic SILT with GRAVEL GRAVELLY ORGANIC elastic SILT GRAVELLY ORGANIC elastic SILT with SAND
SC-SM	SILTY, CLAYEY SAND SILTY, CLAYEY SAND with GRAVEL		
PT	PEAT	OL/OH	ORGANIC SOIL ORGANIC SOIL with SAND ORGANIC SOIL with GRAVEL SANDY ORGANIC SOIL SANDY ORGANIC SOIL with GRAVEL GRAVELLY ORGANIC SOIL GRAVELLY ORGANIC SOIL with SAND
	COBBLES COBBLES and BOULDERS BOULDERS		

FIELD AND LABORATORY TESTING

- (C) Consolidation (ASTM D 2435)
- (CL) Collapse Potential (ASTM D 5333)
- (CP) Compaction Curve (CTM 216)
- (CR) Corrosivity Testing (CTM 643, CTM 422, CTM 417)
- (CU) Consolidated Undrained Triaxial (ASTM D 4767)
- (DS) Direct Shear (ASTM D 3080)
- (EI) Expansion Index (ASTM D 4829)
- (M) Moisture Content (ASTM D 2216)
- (OC) Organic Content-% (ASTM D 2974)
- (P) Permeability (CTM 220)
- (PA) Particle Size Analysis (ASTM D 422)
- (PI) Plasticity Index (AASHTO T 90) Liquid Limit (AASHTO T 89)
- (PL) Point Load Index (ASTM D 5731)
- (PM) Pressure Meter
- (R) R-Value (CTM 301)
- (SE) Sand Equivalent (CTM 217)
- (SG) Specific Gravity (AASHTO T 100)
- (SL) Shrinkage Limit (ASTM D 427)
- (SW) Swell Potential (ASTM D 4546)
- (UC) Unconfined Compression-Soil (ASTM D 2166) Unconfined Compression-Rock (ASTM D 2938)
- (UU) Unconsolidated Undrained Triaxial (ASTM D 2850)
- (UW) Unit Weight (ASTM D 4767)

APPARENT DENSITY OF COHESIONLESS SOILS

Description	SPT N_{60} (Blows / 12 in.)
Very Loose	0 - 5
Loose	5 - 10
Medium Dense	10 - 30
Dense	30 - 50
Very Dense	Greater than 50

MOISTURE

Description	Criteria
Dry	No discernable moisture
Moist	Moisture present, but no free water
Wet	Visible free water

PERCENT OR PROPORTION OF SOILS

Description	Criteria
Trace	Particles are present but estimated to be less than 5%
Few	5% - 10%
Little	15% - 25%
Some	30% - 45%
Mostly	50% - 100%

PARTICLE SIZE

Description		Size (in.)
Boulder		Greater than 12
Cobble		3 - 12
Gravel	Coarse	3/4 - 3
	Fine	1/5 - 3/4
Sand	Coarse	1/16 - 1/5
	Medium	1/64 - 1/16
	Fine	1/300 - 1/64
Silt and Clay		Less than 1/300

ENGINEERING SERVICES	GEOTECHNICAL SERVICES	STATE OF CALIFORNIA DEPARTMENT OF TRANSPORTATION	DIVISION OF ENGINEERING SERVICES STRUCTURE DESIGN DESIGN BRANCH	BRIDGE NO. / POST MILE 21.50/21.56	RETAINING WALL 1135 R-37
	PREPARED BY: I. G-Remmen, 10/10				LOG OF TEST BORINGS 3 OF 3

GS LOTB SOIL LEGEND

ORIGINAL SCALE IN INCHES FOR REDUCED PLANS 0 1 2 3

CU 07
EA 202111

DISREGARD PRINTS BEARING EARLIER REVISION DATES

REVISION DATES | SHEET | OF

FILE => 720211qf004.dgn

USERNAME => rrcarol DATE PLOTTED => 29-JUN-2011 TIME PLOTTED => 13:07

Dist	COUNTY	ROUTE	POST MILES TOTAL PROJECT	SHEET No.	TOTAL SHEETS
07	LA	710	17.2/26.4	990	1507

REGISTERED CIVIL ENGINEER 2-3-11 DATE

6-27-11
PLANS APPROVAL DATE

REGISTERED PROFESSIONAL ENGINEER RENE YIN No. C49915 Exp. 9/30/12 CIVIL STATE OF CALIFORNIA

THE STATE OF CALIFORNIA OR ITS OFFICERS OR AGENTS SHALL NOT BE RESPONSIBLE FOR THE ACCURACY OR COMPLETENESS OF SCANNED COPIES OF THIS PLAN SHEET.

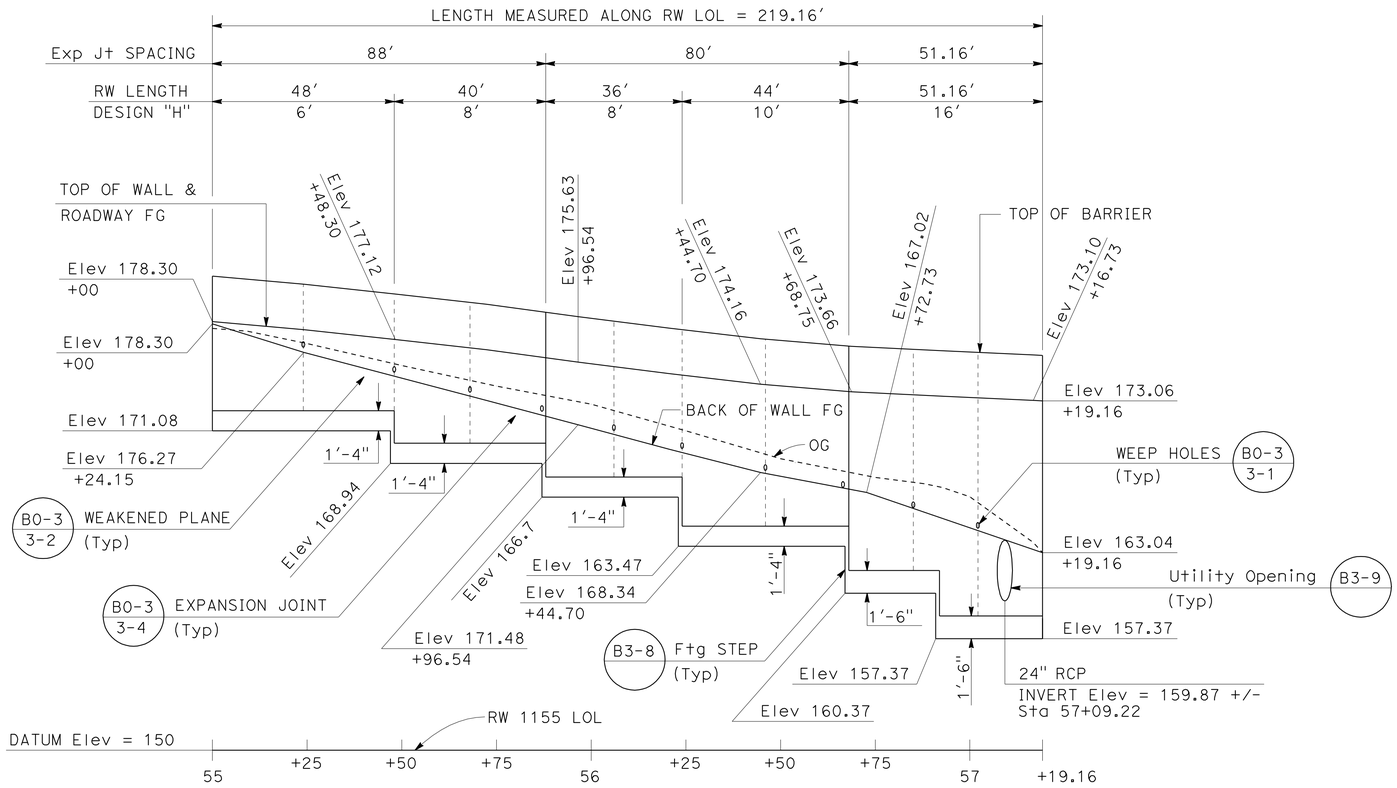

ELEVATION
SCALE Horiz: 1" = 20'
Vert: 1" = 5'

NOTES:

1. FOR ACCURATE RIGHT OF WAY AND ACCESS DATA, CONTACT RIGHT OF WAY ENGINEERING AT THE DISTRICT OFFICE.
2. WATERSTOP IN THE EXPANSION JOINT SHALL BE EXTENDED 6" INTO CONCRETE BARRIER.

CURVE DATA

No.	R	Δ	T	L
8	2000.00'	76°26'21"	1574.95'	2668.23'
11	1990.00'	17°02'24"	298.12'	591.84'
12	412.000'	29°00'58"	106.61'	208.65'
40	1944.92'	0°16'14"	4.59'	9.18'
41	1929.50'	5°18'31"	89.45'	178.78'
42	1915.84'	0°55'59"	15.60'	31.20'

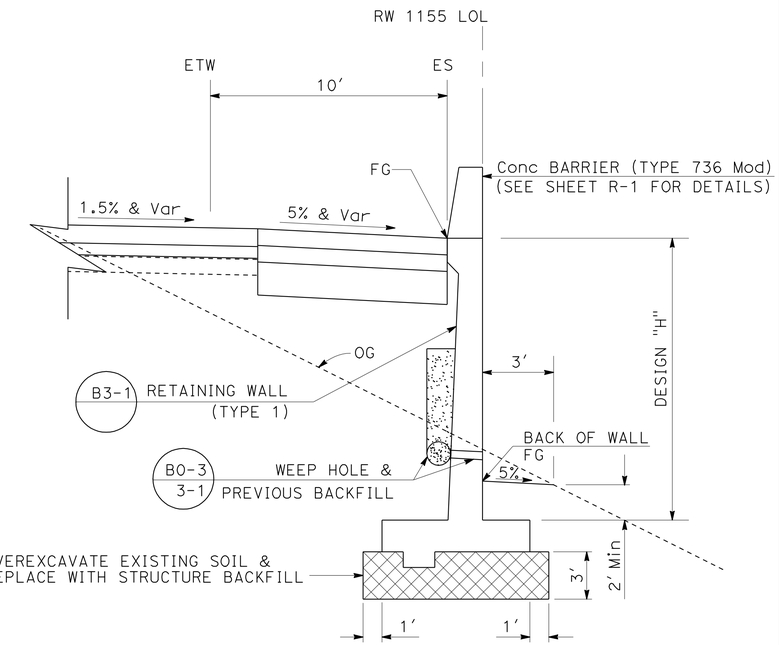

Sta 55+00 TO Sta 57+19.16
TYPICAL SECTION
NO SCALE

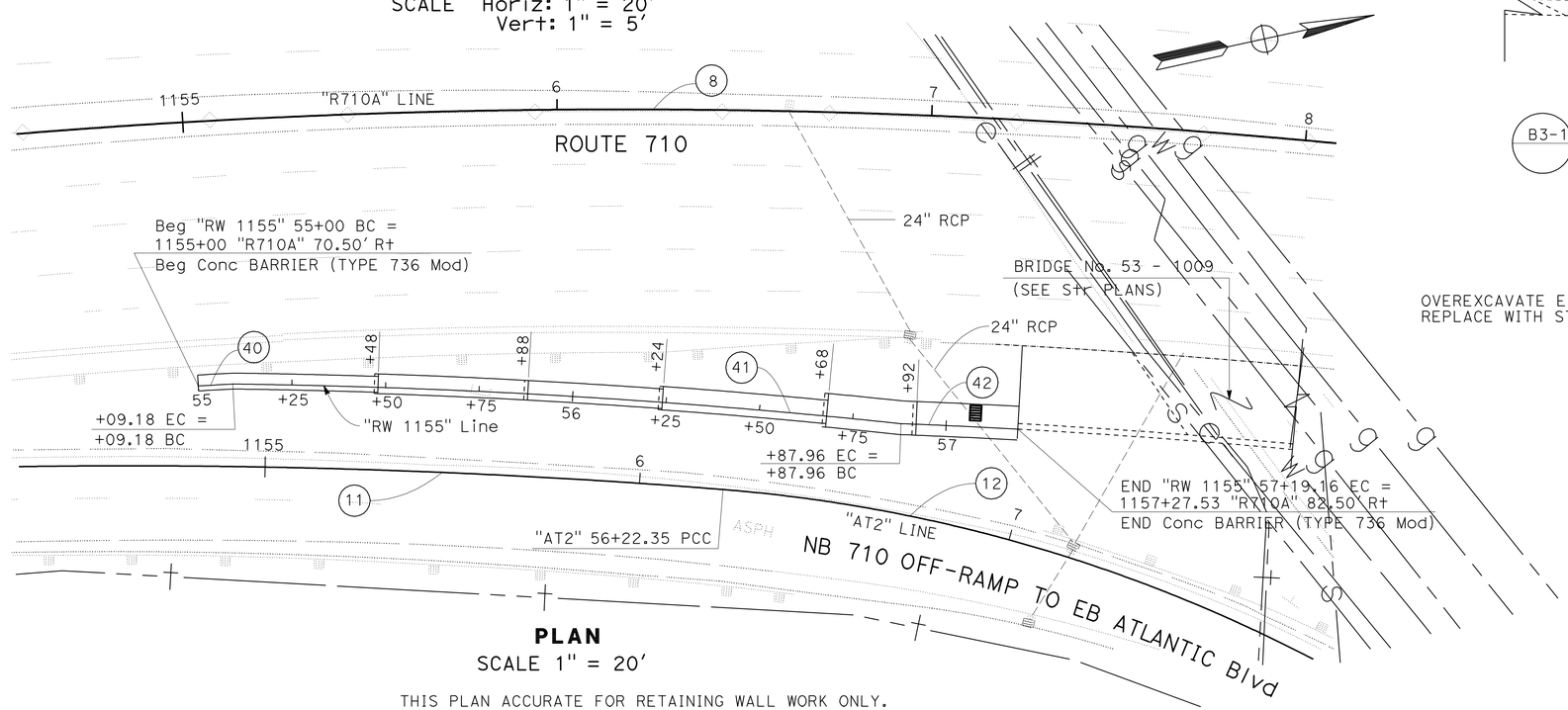

PLAN
SCALE 1" = 20'

THIS PLAN ACCURATE FOR RETAINING WALL WORK ONLY.

RETAINING WALL

RETAINING WALL No. 1155
SCALE AS SHOWN

R-38

STATE OF CALIFORNIA - DEPARTMENT OF TRANSPORTATION
Caltrans®
DESIGN
FUNCTIONAL SUPERVISOR: ALINE ANTARAMIAN
CALCULATED-DESIGNED BY: I. L. REYNON JR.
CHECKED BY: RENE YIN
REVISED BY
DATE REVISED

LAST REVISION 00-00-00
DATE PLOTTED => 29-JUN-2011
TIME PLOTTED => 13:07

DIST	COUNTY	ROUTE	POST MILES TOTAL PROJECT	SHEET No	TOTAL SHEETS
07	LA	710	17.2/26.4	991	1507

Tatjana Halda 11-19-10
REGISTERED CIVIL ENGINEER DATE

6-27-11
PLANS APPROVAL DATE

REGISTERED PROFESSIONAL ENGINEER Tatjana Halda No. C68293 Exp. 9-30-11 CIVIL STATE OF CALIFORNIA

The State of California or its officers or agents shall not be responsible for the accuracy or completeness of electronic copies of this plan sheet.

This LOTB sheet was prepared in accordance with the Caltrans Soil & Rock Logging, Classification, & Presentation Manual (June 2007).

BENCH MARK

RTK 722
PD: FD PK/TIN NB 710 SHLDR, 16.5′
S/ ATLANTIC BL BRDG RAIL
62.918′ RT ℄ RTE 710
STA 1156+88.43
N 1821485.5130
E 6508148.8370
ELEV = 174.490′

PRHV 7613
PD: FD PK SB 710 SHLDR, 55′
S/ ATLANTIC BL BRDG RAIL
-55.215 LT ℄ RTE 710
STA 1156+13.36
N 1821439.5580
E 6508016.7320
ELEV = 182.303′

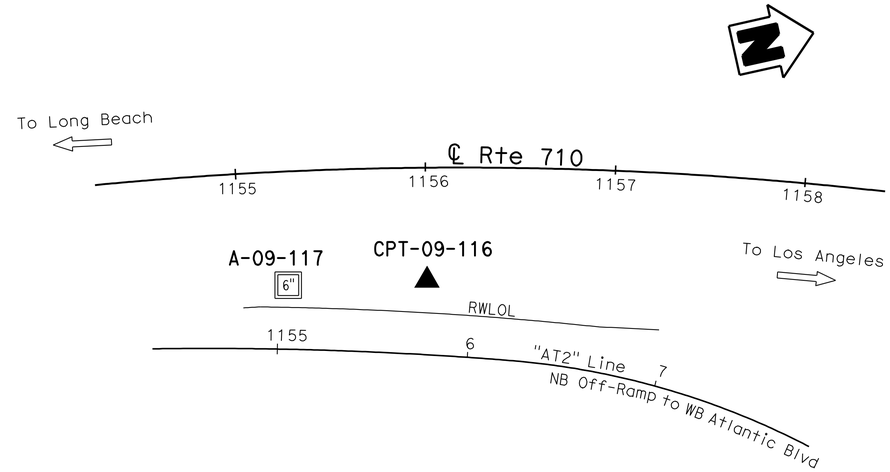

PLAN

1" = 40′

Note: No ground water encountered during field investigation.

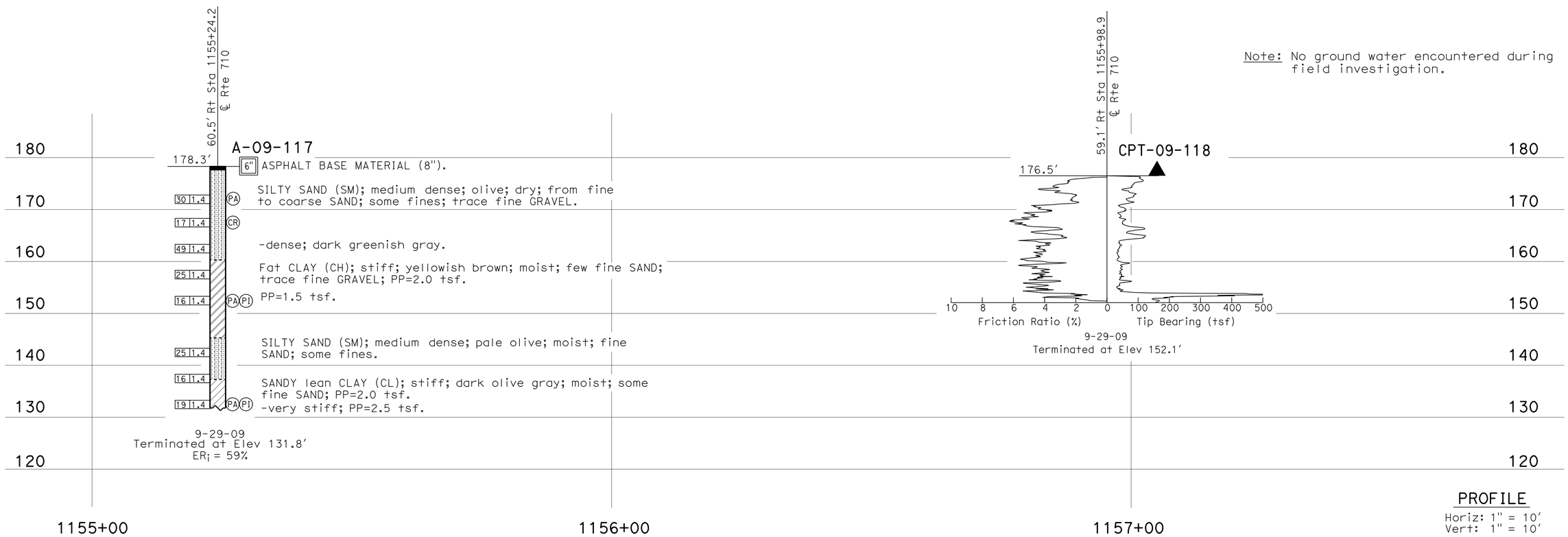

PROFILE

Horiz: 1" = 10′
Vert: 1" = 10′

ENGINEERING SERVICES	GEOTECHNICAL SERVICES	STATE OF CALIFORNIA DEPARTMENT OF TRANSPORTATION	DIVISION OF ENGINEERING SERVICES STRUCTURE DESIGN DESIGN BRANCH	BRIDGE NO. / POST MILES 17.2/26.4	RETAINING WALL 1155 R-39 LOG OF TEST BORINGS 1 OF 3
FUNCTIONAL SUPERVISOR NAME: S. Karimi	DRAWN BY: C. Christian/W. Tang 10/10 CHECKED BY: K. Lai	FIELD INVESTIGATION BY: T. Halda			

OGS CIVIL LOG OF TEST BORINGS SHEET

ORIGINAL SCALE IN INCHES FOR REDUCED PLANS 0 1 2 3

CU 07
EA 202111

DISREGARD PRINTS BEARING EARLIER REVISION DATES 11-17-10 11-19-10

REVISION DATES | SHEET | OF

FILE => 720211qg002.dgn

USERNAME => trcarol DATE PLOTTED => 29-JUN-2011 TIME PLOTTED => 13:07

REFERENCE: CALTRANS SOIL & ROCK LOGGING, CLASSIFICATION, AND PRESENTATION MANUAL (2010)

DIST	COUNTY	ROUTE	POST MILES TOTAL PROJECT	SHEET No	TOTAL SHEETS
07	LA	710	17.2/26.4	992	1507

Tatjana Halda 11-19-10
REGISTERED CIVIL ENGINEER DATE

6-27-11
PLANS APPROVAL DATE

REGISTERED PROFESSIONAL ENGINEER Tatjana Halda No. C68293 Exp. 9-30-11 CIVIL STATE OF CALIFORNIA

The State of California or its officers or agents shall not be responsible for the accuracy or completeness of electronic copies of this plan sheet.

CEMENTATION

Description	Criteria
Weak	Crumbles or breaks with handling or little finger pressure.
Moderate	Crumbles or breaks with considerable finger pressure.
Strong	Will not crumble or break with finger pressure.

BOREHOLE IDENTIFICATION

Symbol	Hole Type	Description
Size	A	Auger Boring (hollow or solid stem bucket)
Size	R RW RC P	Rotary drilled boring (conventional) Rotary drilled with self-casing wire-line Rotary core with continuously-sampled, self-casing wire-line Rotary percussion boring (air)
Size	R	Rotary drilled diamond core
Size	HD HA	Hand driven (1-inch soil tube) Hand Auger
●	D	Dynamic Cone Penetration Boring
▲	CPT	Cone Penetration Test (ASTM D 5778)
⬚	O	Other (note on LOTB)

Note: Size in inches.

CONSISTENCY OF COHESIVE SOILS

Description	Shear Strength (tsf)	Pocket Penetrometer Measurement, PP, (tsf)	Torvane Measurement, TV, (tsf)	Vane Shear Measurement, VS, (tsf)
Very Soft	Less than 0.12	Less than 0.25	Less than 0.12	Less than 0.12
Soft	0.12 - 0.25	0.25 - 0.5	0.12 - 0.25	0.12 - 0.25
Medium Stiff	0.25 - 0.5	0.5 - 1	0.25 - 0.5	0.25 - 0.5
Stiff	0.5 - 1	1 - 2	0.5 - 1	0.5 - 1
Very Stiff	1 - 2	2 - 4	1 - 2	1 - 2
Hard	Greater than 2	Greater than 4	Greater than 2	Greater than 2

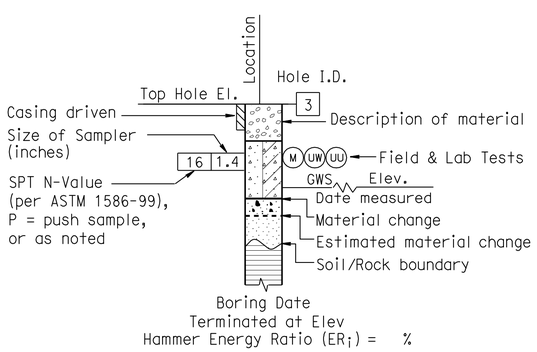

ROTARY BORING

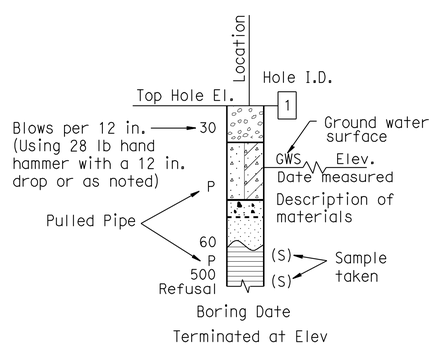

HAND BORING

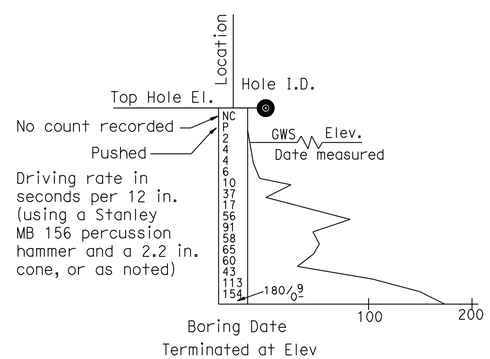

DYNAMIC CONE PENETRATION BORING

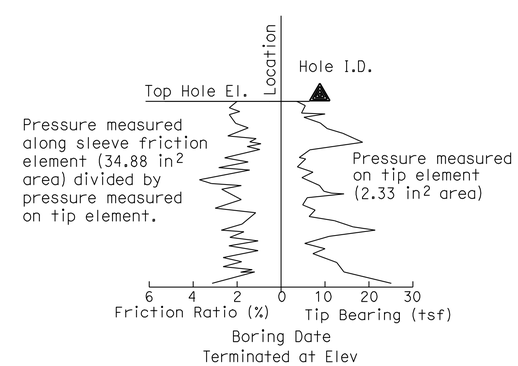

CONE PENETRATION TEST (CPT) BORING

ENGINEERING SERVICES	GEOTECHNICAL SERVICES	STATE OF CALIFORNIA DEPARTMENT OF TRANSPORTATION	DIVISION OF ENGINEERING SERVICES STRUCTURE DESIGN DESIGN BRANCH	BRIDGE NO. / POST MILE 17.2/26.4	RETAINING WALL 1155 R-40 LOG OF TEST BORINGS 2 OF 3
	PREPARED BY: I. G-Remmen, 10/10		CU 07 EA 202111	DISREGARD PRINTS BEARING EARLIER REVISION DATES	REVISION DATES / SHEET / OF

GS LOTB SOIL LEGEND

ORIGINAL SCALE IN INCHES FOR REDUCED PLANS 0 1 2 3

FILE => 720211qg003.dgn

USERNAME => trcarol DATE PLOTTED => 29-JUN-2011 TIME PLOTTED => 13:07

REFERENCE: CALTRANS SOIL & ROCK LOGGING, CLASSIFICATION, AND PRESENTATION MANUAL (2010)

DIST	COUNTY	ROUTE	POST MILES TOTAL PROJECT	SHEET No	TOTAL SHEETS
07	LA	710	17.2/26.4	993	1507

Tatjana Halda 11-19-10
REGISTERED CIVIL ENGINEER DATE

6-27-11
PLANS APPROVAL DATE

REGISTERED PROFESSIONAL ENGINEER Tatjana Halda No. C68293 Exp. 9-30-11 CIVIL STATE OF CALIFORNIA

The State of California or its officers or agents shall not be responsible for the accuracy or completeness of electronic copies of this plan sheet.

GROUP SYMBOLS AND NAMES

Graphic/Symbol	Group Names	Graphic/Symbol	Group Names
GW	Well-graded GRAVEL Well-graded GRAVEL with SAND	CL	Lean CLAY Lean CLAY with SAND Lean CLAY with GRAVEL SANDY lean CLAY SANDY lean CLAY with GRAVEL GRAVELLY lean CLAY GRAVELLY lean CLAY with SAND
GP	Poorly-graded GRAVEL Poorly-graded GRAVEL with SAND		
GW-GM	Well-graded GRAVEL with SILT Well-graded GRAVEL with SILT and SAND	CL-ML	SILTY CLAY SILTY CLAY with SAND SILTY CLAY with GRAVEL SANDY SILTY CLAY SANDY SILTY CLAY with GRAVEL GRAVELLY SILTY CLAY GRAVELLY SILTY CLAY with SAND
GW-GC	Well-graded GRAVEL with CLAY (or SILTY CLAY) Well-graded GRAVEL with CLAY and SAND (or SILTY CLAY and SAND)		
GP-GM	Poorly-graded GRAVEL with SILT Poorly-graded GRAVEL with SILT and SAND	ML	SILT SILT with SAND SILT with GRAVEL SANDY SILT SANDY SILT with GRAVEL GRAVELLY SILT GRAVELLY SILT with SAND
GP-GC	Poorly-graded GRAVEL with CLAY (or SILTY CLAY) Poorly-graded GRAVEL with CLAY and SAND (or SILTY CLAY and SAND)		
GM	SILTY GRAVEL SILTY GRAVEL with SAND	OL	ORGANIC lean CLAY ORGANIC lean CLAY with SAND ORGANIC lean CLAY with GRAVEL SANDY ORGANIC lean CLAY SANDY ORGANIC lean CLAY with GRAVEL GRAVELLY ORGANIC lean CLAY GRAVELLY ORGANIC lean CLAY with SAND
GC	CLAYEY GRAVEL CLAYEY GRAVEL with SAND		
GC-GM	SILTY, CLAYEY GRAVEL SILTY, CLAYEY GRAVEL with SAND	OL	ORGANIC SILT ORGANIC SILT with SAND ORGANIC SILT with GRAVEL SANDY ORGANIC SILT SANDY ORGANIC SILT with GRAVEL GRAVELLY ORGANIC SILT GRAVELLY ORGANIC SILT with SAND
SW	Well-graded SAND Well-graded SAND with GRAVEL		
SP	Poorly-graded SAND Poorly-graded SAND with GRAVEL	CH	Fat CLAY Fat CLAY with SAND Fat CLAY with GRAVEL SANDY fat CLAY SANDY fat CLAY with GRAVEL GRAVELLY fat CLAY GRAVELLY fat CLAY with SAND
SW-SM	Well-graded SAND with SILT Well-graded SAND with SILT and GRAVEL		
SW-SC	Well-graded SAND with CLAY (or SILTY CLAY) Well-graded SAND with CLAY and GRAVEL (or SILTY CLAY and GRAVEL)	MH	Elastic SILT Elastic SILT with SAND Elastic SILT with GRAVEL SANDY elastic SILT SANDY elastic SILT with GRAVEL GRAVELLY elastic SILT GRAVELLY elastic SILT with SAND
SP-SM	Poorly-graded SAND with SILT Poorly-graded SAND with SILT and GRAVEL		
SP-SC	Poorly-graded SAND with CLAY (or SILTY CLAY) Poorly-graded SAND with CLAY and GRAVEL (or SILTY CLAY and GRAVEL)	OH	ORGANIC fat CLAY ORGANIC fat CLAY with SAND ORGANIC fat CLAY with GRAVEL SANDY ORGANIC fat CLAY SANDY ORGANIC fat CLAY with GRAVEL GRAVELLY ORGANIC fat CLAY GRAVELLY ORGANIC fat CLAY with SAND
SM	SILTY SAND SILTY SAND with GRAVEL		
SC	CLAYEY SAND CLAYEY SAND with GRAVEL	OH	ORGANIC elastic SILT ORGANIC elastic SILT with SAND ORGANIC elastic SILT with GRAVEL SANDY ORGANIC elastic SILT SANDY ORGANIC elastic SILT with GRAVEL GRAVELLY ORGANIC elastic SILT GRAVELLY ORGANIC elastic SILT with SAND
SC-SM	SILTY, CLAYEY SAND SILTY, CLAYEY SAND with GRAVEL		
PT	PEAT	OL/OH	ORGANIC SOIL ORGANIC SOIL with SAND ORGANIC SOIL with GRAVEL SANDY ORGANIC SOIL SANDY ORGANIC SOIL with GRAVEL GRAVELLY ORGANIC SOIL GRAVELLY ORGANIC SOIL with SAND
	COBBLES COBBLES and BOULDERS BOULDERS		

FIELD AND LABORATORY TESTING

- (C) Consolidation (ASTM D 2435)
- (CL) Collapse Potential (ASTM D 5333)
- (CP) Compaction Curve (CTM 216)
- (CR) Corrosivity Testing (CTM 643, CTM 422, CTM 417)
- (CU) Consolidated Undrained Triaxial (ASTM D 4767)
- (DS) Direct Shear (ASTM D 3080)
- (EI) Expansion Index (ASTM D 4829)
- (M) Moisture Content (ASTM D 2216)
- (OC) Organic Content-% (ASTM D 2974)
- (P) Permeability (CTM 220)
- (PA) Particle Size Analysis (ASTM D 422)
- (PI) Plasticity Index (AASHTO T 90) Liquid Limit (AASHTO T 89)
- (PL) Point Load Index (ASTM D 5731)
- (PM) Pressure Meter
- (R) R-Value (CTM 301)
- (SE) Sand Equivalent (CTM 217)
- (SG) Specific Gravity (AASHTO T 100)
- (SL) Shrinkage Limit (ASTM D 427)
- (SW) Swell Potential (ASTM D 4546)
- (UC) Unconfined Compression-Soil (ASTM D 2166) Unconfined Compression-Rock (ASTM D 2938)
- (UU) Unconsolidated Undrained Triaxial (ASTM D 2850)
- (UW) Unit Weight (ASTM D 4767)

APPARENT DENSITY OF COHESIONLESS SOILS

Description	SPT N_{60} (Blows / 12 in.)
Very Loose	0 - 5
Loose	5 - 10
Medium Dense	10 - 30
Dense	30 - 50
Very Dense	Greater than 50

MOISTURE

Description	Criteria
Dry	No discernable moisture
Moist	Moisture present, but no free water
Wet	Visible free water

PERCENT OR PROPORTION OF SOILS

Description	Criteria
Trace	Particles are present but estimated to be less than 5%
Few	5% - 10%
Little	15% - 25%
Some	30% - 45%
Mostly	50% - 100%

PARTICLE SIZE

Description		Size (in.)
Boulder		Greater than 12
Cobble		3 - 12
Gravel	Coarse	3/4 - 3
	Fine	1/5 - 3/4
Sand	Coarse	1/16 - 1/5
	Medium	1/64 - 1/16
	Fine	1/300 - 1/64
Silt and Clay		Less than 1/300

ENGINEERING SERVICES	GEOTECHNICAL SERVICES	STATE OF CALIFORNIA DEPARTMENT OF TRANSPORTATION	DIVISION OF ENGINEERING SERVICES STRUCTURE DESIGN DESIGN BRANCH	BRIDGE NO. / POST MILE 17.2/26.4	RETAINING WALL 1155 R-41 LOG OF TEST BORINGS 3 OF 3
	PREPARED BY: I. G-Remmen, 10/10				

GS LOTB SOIL LEGEND

ORIGINAL SCALE IN INCHES FOR REDUCED PLANS 0 1 2 3

CU 07
EA 202111

DISREGARD PRINTS BEARING EARLIER REVISION DATES

REVISION DATES | SHEET | OF

FILE => 720211qg004.dgn

USERNAME => rrcarol DATE PLOTTED => 29-JUN-2011 TIME PLOTTED => 13:08

Dist	COUNTY	ROUTE	POST MILES TOTAL PROJECT	SHEET No.	TOTAL SHEETS
07	LA	710	17.2/26.4	994	1507

Rene Yin 2-3-11
REGISTERED CIVIL ENGINEER DATE

6-27-11
PLANS APPROVAL DATE

REGISTERED PROFESSIONAL ENGINEER RENE YIN No. C49915 Exp. 9/30/12 CIVIL STATE OF CALIFORNIA

THE STATE OF CALIFORNIA OR ITS OFFICERS OR AGENTS SHALL NOT BE RESPONSIBLE FOR THE ACCURACY OR COMPLETENESS OF ELECTRONIC COPIES OF THIS PLAN SHEET.

NOTE:

1. FOR ACCURATE RIGHT OF WAY AND ACCESS DATA, CONTACT RIGHT OF WAY ENGINEERING AT THE DISTRICT OFFICE.

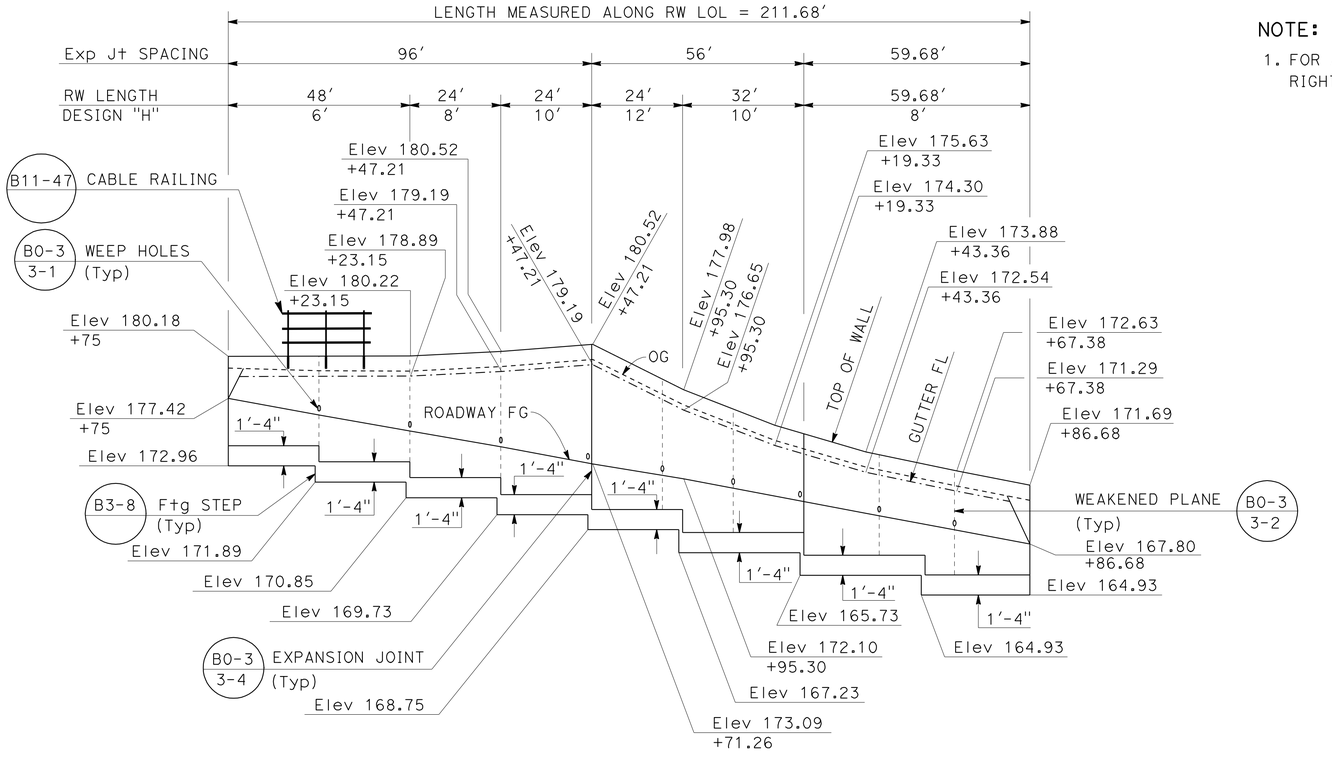

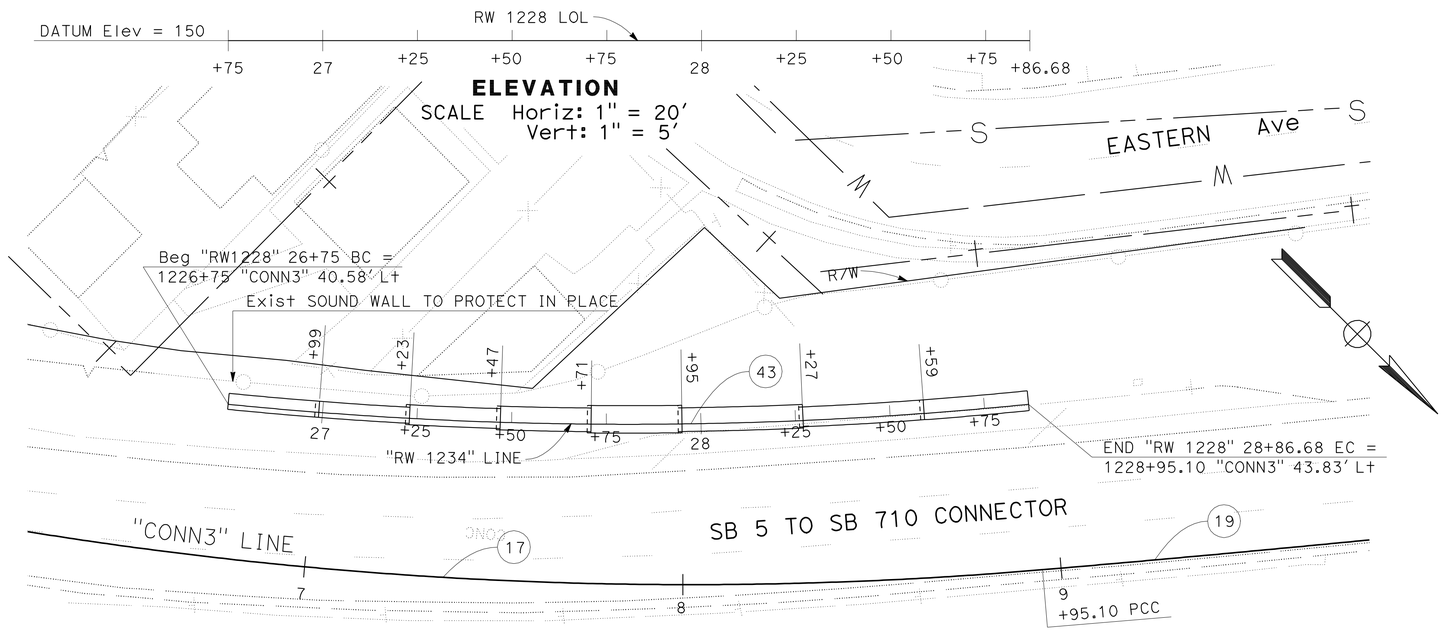

ELEVATION
SCALE Horiz: 1" = 20′
Vert: 1" = 5′

PLAN
SCALE 1" = 20′

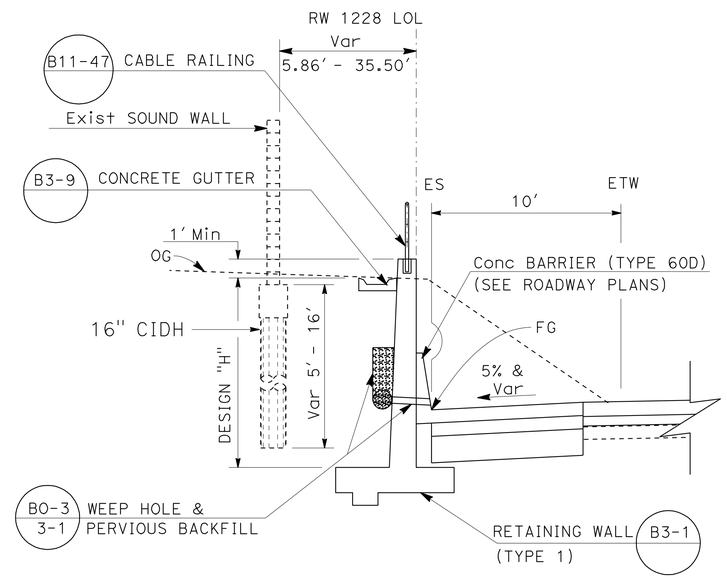

Sta 26+75 TO Sta 28+86.68
TYPICAL SECTION
NO SCALE

CURVE DATA

No.	R	Δ	T	L
17	1100.00′	47°11′12"	480.43′	905.92′
19	7030.09′	1°48′20"	110.78′	221.54′
43	1060.69′	11°26′04"	106.19′	211.68′

THIS PLAN ACCURATE FOR RETAINING WALL WORK ONLY.

RETAINING WALL

RETAINING WALL No. 1228
SCALE AS SHOWN

R-42

STATE OF CALIFORNIA - DEPARTMENT OF TRANSPORTATION
DESIGN
FUNCTIONAL SUPERVISOR: ALINE ANTARAMIAN
CALCULATED-DESIGNED BY: I. L. REYNON JR.
CHECKED BY: RENE YIN
REVISED BY
DATE REVISED

LAST REVISION 00-00-00
DATE PLOTTED => 29-JUN-2011
TIME PLOTTED => 13:08

DIST	COUNTY	ROUTE	POST MILES TOTAL PROJECT	SHEET No	TOTAL SHEETS
07	LA	710	17.2/26.4	995	1507

Joseph S. Pratt 1-21-11
CERTIFIED ENGINEERING GEOLOGIST

6-27-11
PLANS APPROVAL DATE

PROFESSIONAL GEOLOGIST Joseph S. Pratt No. 2141 Exp. 5-3-11 CERTIFIED ENGINEERING GEOLOGIST STATE OF CALIFORNIA

The State of California or its officers or agents shall not be responsible for the accuracy or completeness of electronic copies of this plan sheet.

This LOTB sheet was prepared in accordance with the Caltrans Soil & Rock Logging, Classification, & Presentation Manual (2010 Edition).

BENCH MARK

PRHV7907 Elev 180.946′
Fd PK Nail W'ly shldr SB5/SB710 Conctr, 346′ north of Triggs St Brdg, 131.150′ Lt Sta1226+23.03 "Conn 1" Line.
N 1828092.1720
E 6509157.6170
NAVD88

PRHV7842 Elev 172.155′
Fd Spk in median btwn SB5 and Conctr from at Top Slope under SB710 Brdg, 35.339′ Lt Sta 1228+86.37 "Conn 1" Line.
N 1828373.7950
E 6509147.0320
NAVD88

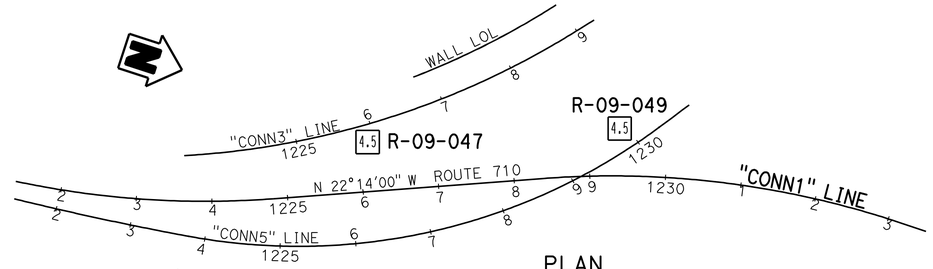

PLAN
1" = 100′

66.5′ Lt Sta 1226+11.9 "Conn 1" Line

R-09-047

186.1′ 4.5

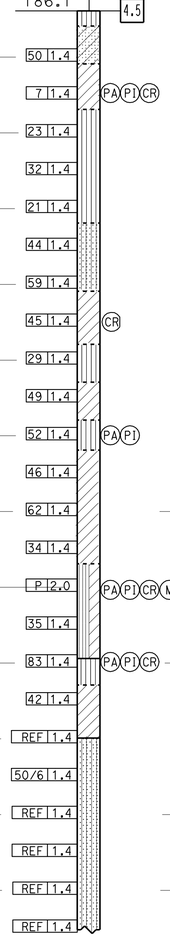

Elev	Description
	SILT (ML); olive gray; dry; (FILL).
180	CLAYEY SAND (SC); dense; light brown; moist; fine SAND; little CLAY; trace fine GRAVEL.
	SANDY lean CLAY (CL); very stiff; light brown; moist; little fine SAND; PP=2.0 tsf; (ALLUVIUM).
170	SANDY SILT (ML); medium dense; light brown; moist; nonplastic.
	-dense; yellowish red.
160	-medium dense; olive brown.
	SILTY SAND (SM); dense; yellowish red; moist; fine SAND; little fines; trace fine GRAVEL.
150	-very dense; from fine to coarse SAND; little fine GRAVEL.
	SANDY lean CLAY (CL); very stiff; olive brown; moist; PP=2.9 tsf.
140	SANDY SILT (ML) medium dense; yellowish red; moist; nonplastic.
	Lean CLAY with SAND (CL); very stiff; brown; moist; PP=3.1 tsf.
130	SANDY SILT (ML); very dense; olive brown; moist; some fine SAND; nonplastic.
	SANDY lean CLAY (CL); very stiff; olive brown and yellowish red; moist; PP=2.0 tsf.
120	
	-stiff; PP=1.8 tsf.
110	
	SANDY SILTY CLAY (CL-ML); very stiff; brown; moist; some medium and fine SAND; PP=2.5 tsf.
100	
	SILT (ML); very dense; yellowish red; moist; few fine SAND.
	Lean CLAY (CL); very stiff; yellowish red; moist; PP=2.4 tsf.
90	-few coarse GRAVEL; PP=2.75 tsf.
	SILTY SAND with GRAVEL (SM); very dense; yellowish red; moist; from fine to coarse SAND; little fines; little fine and coarse GRAVEL.
80	
70	
60	
50	
40	

10-20-09
Terminated at Elev 65.8′
ER_i = 59%

61.1′ Lt Sta 1229+40.0 "Conn 1" Line

NOTE: Ground water was not encountered in Boring R-09-047.

R-09-049

169.1′ 4.5

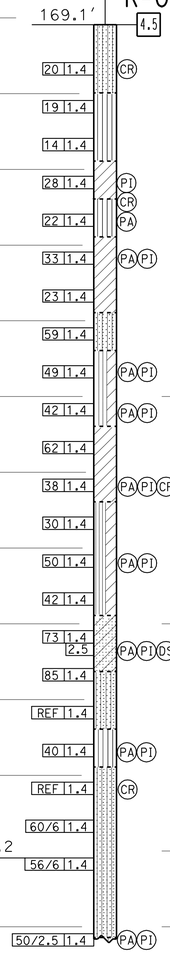

Elev	Description
170	SANDY SILT (ML) moderately interlayered with moderate layers of SILTY SAND (SM). SANDY SILT (ML); medium dense; reddish brown; moist; fine SAND; nonplastic. SILTY SAND (SM); medium dense; reddish brown; moist; fine SAND; little asphalt and concrete fragments (6"); few fine GRAVEL; (FILL).
160	SANDY SILT (ML); medium dense; yellowish brown; moist; some fine SAND; trace fine GRAVEL; nonplastic; trace calcite filaments; (ALLUVIUM).
150	SANDY Lean CLAY (CL); very stiff; reddish brown; moist; from fine to coarse SAND; PP=2.5 tsf.
	SILT with SAND (ML); medium dense yellowish brown; moist; fine SAND; nonplastic.
140	Lean CLAY (CL); hard; brown; moist; few fine SAND; PP>4.5 tsf.
	-stiff; PP=1.75 tsf.
130	SILTY SAND (SM); very dense; yellowish brown and reddish brown stained; moist; little SILT.
120	SILTY CLAY with SAND (CL-ML); very stiff; brown; moist; fine SAND; PP=2.7 tsf.
	Lean CLAY with SAND (CL); very stiff; strong brown; moist; little fine SAND; PP=3.0 tsf.
110	-PP=2.5 tsf.
100	SILTY CLAY with SAND (CL-ML); very stiff; yellowish brown and strong brown; moist; fine and medium SAND; PP=3.0 tsf.
	-few fine and coarse GRAVEL; PP=2.7 tsf.
90	
	CLAYEY SAND (SC); very dense; reddish brown; moist; from coarse to fine SAND; some fines;low plasticity; intensely weathered.
80	SILTY SAND with GRAVEL (SM); very dense; variegated yellowish red and olive gray; moist; fine SAND; little fine GRAVEL.
70	SANDY SILT (ML); dense; yellowish red and olive gray; moist; some fine and medium SAND. SILTY SAND (SM); very dense; yellowish red; moist; fine SAND; little SILT.
60	
	-olive brown; wet.
50	
	SILT with SAND (ML); very dense; olive brown; wet; fine SAND few GRAVEL.
40	

GWS Elev +59.2
2-25-10

8-19-09
Terminated at Elev 48.4′
ER_i = 59%

PROFILE
Horiz: 1" = 20′
Vert: 1" = 10′

1226+00 1228+00 1230+00

ENGINEERING SERVICES	GEOTECHNICAL SERVICES	STATE OF CALIFORNIA DEPARTMENT OF TRANSPORTATION	DIVISION OF ENGINEERING SERVICES STRUCTURE DESIGN DESIGN BRANCH	BRIDGE NO. / POST MILES 23.23/23.27	RETAINING WALL NO. 1228 R-43 LOG OF TEST BORINGS 1 OF 4
FUNCTIONAL SUPERVISOR NAME: S. Karimi	DRAWN BY: I.G-Remmen 12/10 CHECKED BY: Mushtaq Ahmed	FIELD INVESTIGATION BY: K. Lai, J. Pratt, T. Halda	CU 07 EA 202111	DISREGARD PRINTS BEARING EARLIER REVISION DATES	REVISION DATES 01-21-11 SHEET OF

OGS GEOLOGIST LOG OF TEST BORINGS SHEET

ORIGINAL SCALE IN INCHES FOR REDUCED PLANS 0 1 2 3

FILE => 720211qh002.dgn

USERNAME => rrcarol DATE PLOTTED => 29-JUN-2011 TIME PLOTTED => 13:08

REFERENCE: CALTRANS SOIL & ROCK LOGGING, CLASSIFICATION, AND PRESENTATION MANUAL (2010)

DIST	COUNTY	ROUTE	POST MILES TOTAL PROJECT	SHEET No	TOTAL SHEETS
07	LA	710	17.2/26.4	996	1507

Joseph S. Pratt 1-21-11
CERTIFIED ENGINEERING GEOLOGIST DATE

REGISTERED GEOLOGIST
Joseph S. Pratt
No. 2141
Exp. 5-31-11
CERTIFIED ENGINEERING GEOLOGIST
STATE OF CALIFORNIA

6-27-11
PLANS APPROVAL DATE

The State of California or its officers or agents shall not be responsible for the accuracy or completeness of electronic copies of this plan sheet.

CEMENTATION

Description	Criteria
Weak	Crumbles or breaks with handling or little finger pressure.
Moderate	Crumbles or breaks with considerable finger pressure.
Strong	Will not crumble or break with finger pressure.

BOREHOLE IDENTIFICATION

Symbol	Hole Type	Description
Size	A	Auger Boring (hollow or solid stem bucket)
Size	R RW RC P	Rotary drilled boring (conventional) Rotary drilled with self-casing wire-line Rotary core with continuously-sampled, self-casing wire-line Rotary percussion boring (air)
Size	R	Rotary drilled diamond core
Size	HD HA	Hand driven (1-inch soil tube) Hand Auger
●	D	Dynamic Cone Penetration Boring
▲	CPT	Cone Penetration Test (ASTM D 5778)
⬚	O	Other (note on LOTB)

Note: Size in inches.

CONSISTENCY OF COHESIVE SOILS

Description	Shear Strength (tsf)	Pocket Penetrometer Measurement, PP, (tsf)	Torvane Measurement, TV, (tsf)	Vane Shear Measurement, VS, (tsf)
Very Soft	Less than 0.12	Less than 0.25	Less than 0.12	Less than 0.12
Soft	0.12 - 0.25	0.25 - 0.5	0.12 - 0.25	0.12 - 0.25
Medium Stiff	0.25 - 0.5	0.5 - 1	0.25 - 0.5	0.25 - 0.5
Stiff	0.5 - 1	1 - 2	0.5 - 1	0.5 - 1
Very Stiff	1 - 2	2 - 4	1 - 2	1 - 2
Hard	Greater than 2	Greater than 4	Greater than 2	Greater than 2

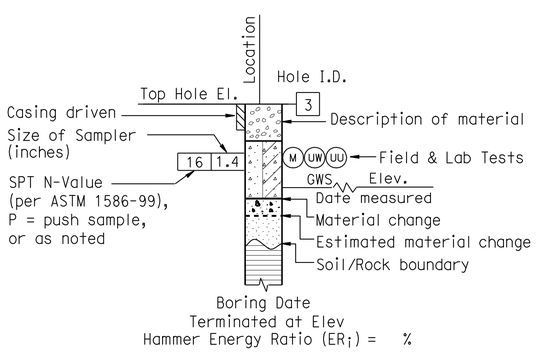

ROTARY BORING

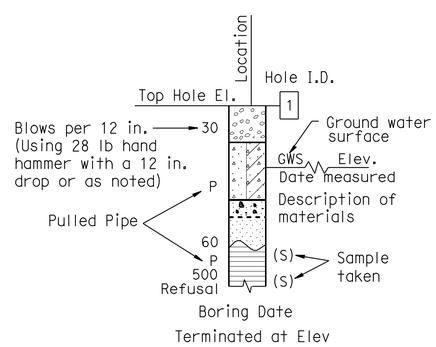

HAND BORING

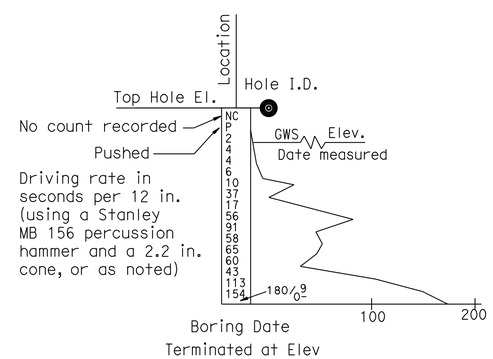

DYNAMIC CONE PENETRATION BORING

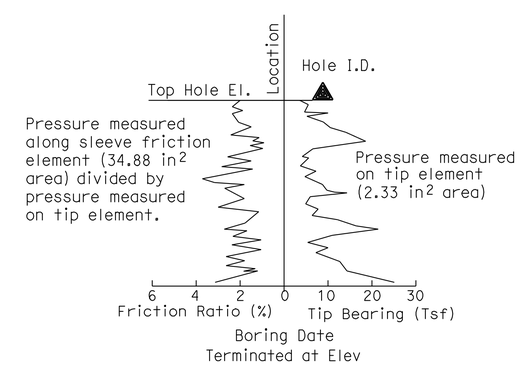

CONE PENETRATION TEST (CPT) BORING

ENGINEERING SERVICES	GEOTECHNICAL SERVICES	STATE OF CALIFORNIA DEPARTMENT OF TRANSPORTATION	DIVISION OF ENGINEERING SERVICES STRUCTURE DESIGN DESIGN BRANCH	BRIDGE NO. / POST MILE 23.23/23.27	RETAINING WALL NO. 1228 R-44 LOG OF TEST BORINGS 2 OF 4
	PREPARED BY: I.G-Remmen 1/11				

GS LOTB SOIL LEGEND

ORIGINAL SCALE IN INCHES FOR REDUCED PLANS 0 1 2 3

CU 07
EA 202111

DISREGARD PRINTS BEARING EARLIER REVISION DATES

REVISION DATES | SHEET | OF

FILE => 720211qh003.dgn

USERNAME => trcarol DATE PLOTTED => 29-JUN-2011 TIME PLOTTED => 13:08

REFERENCE: CALTRANS SOIL & ROCK LOGGING, CLASSIFICATION, AND PRESENTATION MANUAL (2010)

DIST	COUNTY	ROUTE	POST MILES TOTAL PROJECT	SHEET No	TOTAL SHEETS
07	LA	710	17.2/26.4	997	1507

Joseph S. Pratt — CERTIFIED ENGINEERING GEOLOGIST — 1-21-11 DATE

6-27-11
PLANS APPROVAL DATE

REGISTERED GEOLOGIST — Joseph S. Pratt — No. 2141 — Exp. 5-31-11 — CERTIFIED ENGINEERING GEOLOGIST — STATE OF CALIFORNIA

The State of California or its officers or agents shall not be responsible for the accuracy or completeness of electronic copies of this plan sheet.

GROUP SYMBOLS AND NAMES

Graphic/Symbol	Group Names	Graphic/Symbol	Group Names
GW	Well-graded GRAVEL Well-graded GRAVEL with SAND	CL	Lean CLAY Lean CLAY with SAND Lean CLAY with GRAVEL SANDY lean CLAY SANDY lean CLAY with GRAVEL GRAVELLY lean CLAY GRAVELLY lean CLAY with SAND
GP	Poorly-graded GRAVEL Poorly-graded GRAVEL with SAND		
GW-GM	Well-graded GRAVEL with SILT Well-graded GRAVEL with SILT and SAND	CL-ML	SILTY CLAY SILTY CLAY with SAND SILTY CLAY with GRAVEL SANDY SILTY CLAY SANDY SILTY CLAY with GRAVEL GRAVELLY SILTY CLAY GRAVELLY SILTY CLAY with SAND
GW-GC	Well-graded GRAVEL with CLAY (or SILTY CLAY) Well-graded GRAVEL with CLAY and SAND (or SILTY CLAY and SAND)		
GP-GM	Poorly-graded GRAVEL with SILT Poorly-graded GRAVEL with SILT and SAND	ML	SILT SILT with SAND SILT with GRAVEL SANDY SILT SANDY SILT with GRAVEL GRAVELLY SILT GRAVELLY SILT with SAND
GP-GC	Poorly-graded GRAVEL with CLAY (or SILTY CLAY) Poorly-graded GRAVEL with CLAY and SAND (or SILTY CLAY and SAND)		
GM	SILTY GRAVEL SILTY GRAVEL with SAND	OL	ORGANIC lean CLAY ORGANIC lean CLAY with SAND ORGANIC lean CLAY with GRAVEL SANDY ORGANIC lean CLAY SANDY ORGANIC lean CLAY with GRAVEL GRAVELLY ORGANIC lean CLAY GRAVELLY ORGANIC lean CLAY with SAND
GC	CLAYEY GRAVEL CLAYEY GRAVEL with SAND		
GC-GM	SILTY, CLAYEY GRAVEL SILTY, CLAYEY GRAVEL with SAND	OL	ORGANIC SILT ORGANIC SILT with SAND ORGANIC SILT with GRAVEL SANDY ORGANIC SILT SANDY ORGANIC SILT with GRAVEL GRAVELLY ORGANIC SILT GRAVELLY ORGANIC SILT with SAND
SW	Well-graded SAND Well-graded SAND with GRAVEL		
SP	Poorly-graded SAND Poorly-graded SAND with GRAVEL	CH	Fat CLAY Fat CLAY with SAND Fat CLAY with GRAVEL SANDY fat CLAY SANDY fat CLAY with GRAVEL GRAVELLY fat CLAY GRAVELLY fat CLAY with SAND
SW-SM	Well-graded SAND with SILT Well-graded SAND with SILT and GRAVEL		
SW-SC	Well-graded SAND with CLAY (or SILTY CLAY) Well-graded SAND with CLAY and GRAVEL (or SILTY CLAY and GRAVEL)	MH	Elastic SILT Elastic SILT with SAND Elastic SILT with GRAVEL SANDY elastic SILT SANDY elastic SILT with GRAVEL GRAVELLY elastic SILT GRAVELLY elastic SILT with SAND
SP-SM	Poorly-graded SAND with SILT Poorly-graded SAND with SILT and GRAVEL		
SP-SC	Poorly-graded SAND with CLAY (or SILTY CLAY) Poorly-graded SAND with CLAY and GRAVEL (or SILTY CLAY and GRAVEL)	OH	ORGANIC fat CLAY ORGANIC fat CLAY with SAND ORGANIC fat CLAY with GRAVEL SANDY ORGANIC fat CLAY SANDY ORGANIC fat CLAY with GRAVEL GRAVELLY ORGANIC fat CLAY GRAVELLY ORGANIC fat CLAY with SAND
SM	SILTY SAND SILTY SAND with GRAVEL		
SC	CLAYEY SAND CLAYEY SAND with GRAVEL	OH	ORGANIC elastic SILT ORGANIC elastic SILT with SAND ORGANIC elastic SILT with GRAVEL SANDY ORGANIC elastic SILT SANDY ORGANIC elastic SILT with GRAVEL GRAVELLY ORGANIC elastic SILT GRAVELLY ORGANIC elastic SILT with SAND
SC-SM	SILTY, CLAYEY SAND SILTY, CLAYEY SAND with GRAVEL		
PT	PEAT	OL/OH	ORGANIC SOIL ORGANIC SOIL with SAND ORGANIC SOIL with GRAVEL SANDY ORGANIC SOIL SANDY ORGANIC SOIL with GRAVEL GRAVELLY ORGANIC SOIL GRAVELLY ORGANIC SOIL with SAND
	COBBLES COBBLES and BOULDERS BOULDERS		

FIELD AND LABORATORY TESTING

- (C) Consolidation (ASTM D 2435)
- (CL) Collapse Potential (ASTM D 5333)
- (CP) Compaction Curve (CTM 216)
- (CR) Corrosivity Testing (CTM 643, CTM 422, CTM 417)
- (CU) Consolidated Undrained Triaxial (ASTM D 4767)
- (DS) Direct Shear (ASTM D 3080)
- (EI) Expansion Index (ASTM D 4829)
- (M) Moisture Content (ASTM D 2216)
- (OC) Organic Content-% (ASTM D 2974)
- (P) Permeability (CTM 220)
- (PA) Particle Size Analysis (ASTM D 422)
- (PI) Plasticity Index (AASHTO T 90) Liquid Limit (AASHTO T 89)
- (PL) Point Load Index (ASTM D 5731)
- (PM) Pressure Meter
- (R) R-Value (CTM 301)
- (SE) Sand Equivalent (CTM 217)
- (SG) Specific Gravity (AASHTO T 100)
- (SL) Shrinkage Limit (ASTM D 427)
- (SW) Swell Potential (ASTM D 4546)
- (UC) Unconfined Compression-Soil (ASTM D 2166) Unconfined Compression-Rock (ASTM D 2938)
- (UU) Unconsolidated Undrained Triaxial (ASTM D 2850)
- (UW) Unit Weight (ASTM D 4767)

APPARENT DENSITY OF COHESIONLESS SOILS

Description	SPT N_{60} (Blows / 12 in.)
Very Loose	0 - 5
Loose	5 - 10
Medium Dense	10 - 30
Dense	30 - 50
Very Dense	Greater than 50

MOISTURE

Description	Criteria
Dry	No discernable moisture
Moist	Moisture present, but no free water
Wet	Visible free water

PERCENT OR PROPORTION OF SOILS

Description	Criteria
Trace	Particles are present but estimated to be less than 5%
Few	5% - 10%
Little	15% - 25%
Some	30% - 45%
Mostly	50% - 100%

PARTICLE SIZE

Description		Size (in.)
Boulder		Greater than 12
Cobble		3 - 12
Gravel	Coarse	3/4 - 3
	Fine	1/5 - 3/4
Sand	Coarse	1/16 - 1/5
	Medium	1/64 - 1/16
	Fine	1/300 - 1/64
Silt and Clay		Less than 1/300

ENGINEERING SERVICES

GEOTECHNICAL SERVICES
PREPARED BY: I. G-Remmen 1/11

STATE OF CALIFORNIA DEPARTMENT OF TRANSPORTATION

DIVISION OF ENGINEERING SERVICES STRUCTURE DESIGN
DESIGN BRANCH

BRIDGE NO.
POST MILE 23.23/23.27

RETAINING WALL NO. 1228 R-45
LOG OF TEST BORINGS 3 OF 4

GS LOTB SOIL LEGEND

ORIGINAL SCALE IN INCHES FOR REDUCED PLANS 0 1 2 3

CU 07
EA 202111

DISREGARD PRINTS BEARING EARLIER REVISION DATES

REVISION DATES — SHEET — OF

FILE => 720211gh004.dgn

USERNAME => rrcarol DATE PLOTTED => 29-JUN-2011 TIME PLOTTED => 13:08

Old-VII-LA-167-Conc.
U-026011

FED. ROAD DIST. NO.	STATE	PROJ. NO.	FISCAL YEAR	SHEET NO.	TOTAL SHEETS
2	CAL.				

To accompany plans dated September 27, 1965

DIST.	COUNTY	ROUTE	POSTMILE	SHEET NO.	TOTAL SHEETS
07	LA	7	26.4/27.6	153	161

APRIL 26 1954

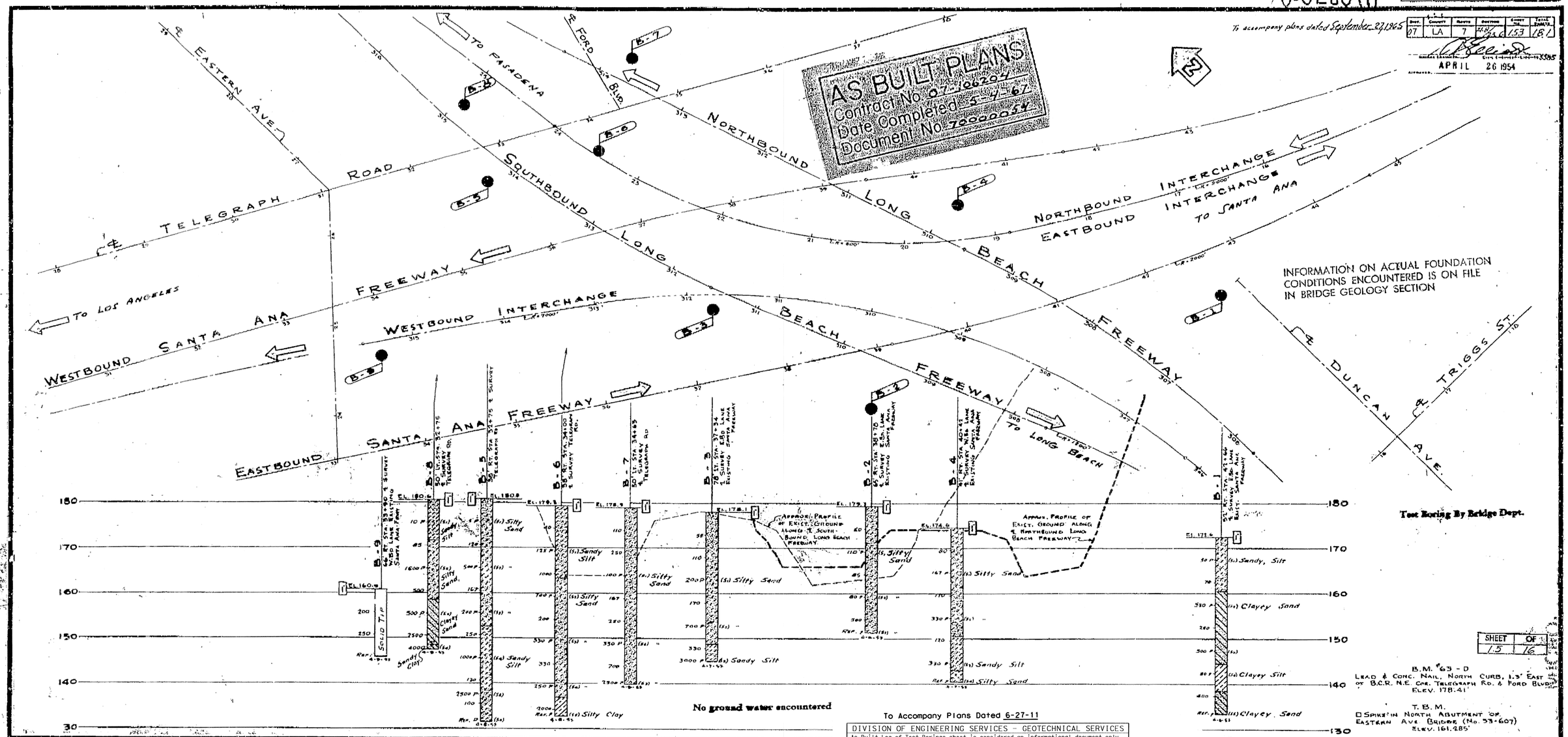

SHEET	OF
15	16

To Accompany Plans Dated 6-27-11

DIVISION OF ENGINEERING SERVICES - GEOTECHNICAL SERVICES

As-Built Log of Test Borings sheet is considered an informational document only. As such, the State of California registration seal with signature, license number and registration certificate expiration date confirm that this is a true and accurate copy of the original document. It does not attest to the accuracy or validity of the information contained in the original document. This drawing is available and presented only for the convenience of any bidder, contractor or other interested party.

DIST.	COUNTY	ROUTE	POST MILE-TOTAL PROJECT	Sheet No.	Total Sheets
04	Ala	84	17.2/26.4	998	1507

Joseph S. Pratt — 1/21/10
CERTIFIED ENGINEERING GEOLOGIST — DATE

PROFESSIONAL GEOLOGIST — Joseph S. Pratt — No. 2141 — Exp. 5-31-11 — CERTIFIED ENGINEERING GEOLOGIST — STATE OF CALIFORNIA

RETAINING WALL NO. 1228

LOG OF TEST BORINGS 4 OF 4

NOTE: A COPY OF THIS LOG OF TEST BORINGS IS AVAILABLE AT OFFICE OF STRUCTURE MAINTENANCE AND INVESTIGATIONS, SACRAMENTO, CALIFORNIA

CU: 07
EA: 202111

BRIDGE No.
Sheet of

Note:

As-Built Vertical Datum:
Local Datum Conversion: NAVD88 = Local Datum +1.31 ft.
(elevation shift applies to Soil Tubes B-2, B-3, B-5, B-8, and B-9).

Classification of Material Based on Standard Grade Size Limits

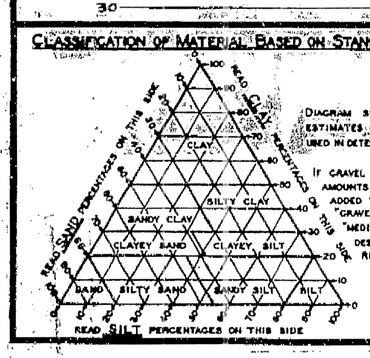

Diagram showing the basis for estimates of grade size distribution used in determination of class names

If gravel is present in appreciable amounts the term "gravelly" may be added to the class name, viz. "gravelly sand". The terms "coarse", "medium" and "fine" when used to describe gravel, sand and silt refer to standard grade size limits.

Legend of Earth Materials

- Gravel
- Sand
- Silt
- Clay
- Sandy Clay or Clayey Sand
- Sandy Silt or Silty Sand
- Silty Clay or Clayey Silt
- Peat and/or Organic Clay
- Filled Material
- Igneous Rock
- Sedimentary Rock
- Metamorphic Rock

- Plan of any boring
- Penetrometer
- 2½" Cone penetrometer
- Sampler boring (dry)
- Rotary boring (wet)
- Auger boring (dry)
- Jet boring
- Core boring
- Test pit

Notes

The contractor's attention is directed to Section 2, Article (c) of the Standard Specifications and to the special provisions accompanying this set of plans. Classification of earth material as shown on this sheet is based upon field inspection and is not to be construed to imply mechanical analysis. Penetrometer borings having a rate of penetration measured in seconds per foot are driven with a #2 McKiernan-Terry air hammer at 115 psi.

07-106204

State of California
Department of Public Works
Division of Highways

R-46

ROUTE 7 NORTHBOUND/ 5 SEPARATION WIDENING

LOG OF TEST BORINGS SHT. 1

Scale: Horiz. 1" = 50' Vert. 1" = 10' | Bridge 53-783 (Route 7) | File | Drawing 53788-14

Rel. Drawing No. P-2944

BRIDGE DEPARTMENT

720211qh005.tif

Dist	COUNTY	ROUTE	POST MILES TOTAL PROJECT	SHEET No.	TOTAL SHEETS
07	LA	710	17.2/26.4	999	1507

REGISTERED CIVIL ENGINEER 2-3-11 DATE

6-27-11
PLANS APPROVAL DATE

REGISTERED PROFESSIONAL ENGINEER RENE YIN No. C49915 Exp. 9/30/12 CIVIL STATE OF CALIFORNIA

THE STATE OF CALIFORNIA OR ITS OFFICERS OR AGENTS SHALL NOT BE RESPONSIBLE FOR THE ACCURACY OR COMPLETENESS OF SCANNED COPIES OF THIS PLAN SHEET.

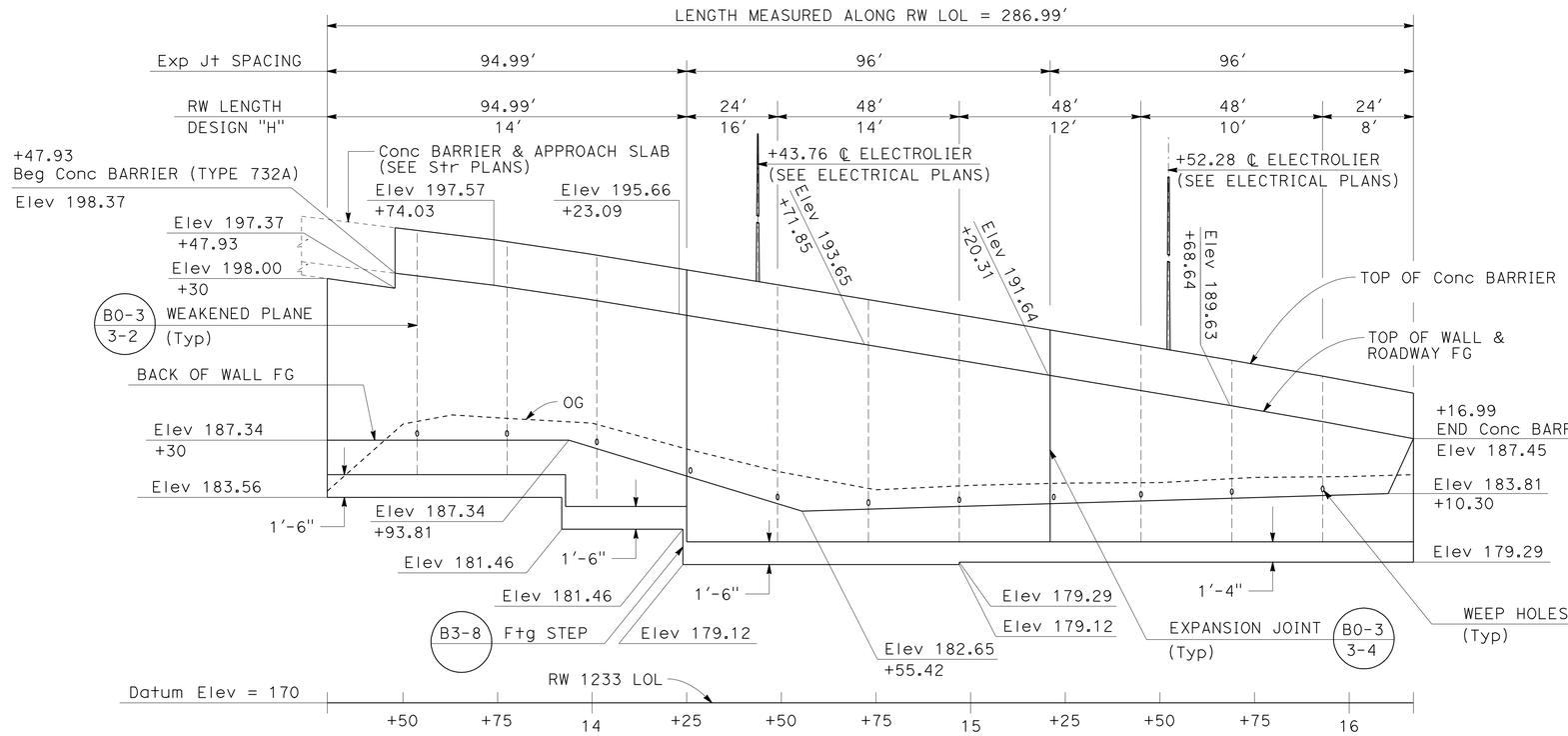

ELEVATION
SCALE Horiz: 1" = 20'
Vert: 1" = 5'

NOTES:

1. FOR ACCURATE RIGHT OF WAY AND ACCESS DATA, CONTACT RIGHT OF WAY ENGINEERING AT THE DISTRICT OFFICE.
2. WATERSTOP IN THE EXPANSION JOINT SHALL BE EXTENDED 6" INTO CONCRETE BARRIER.

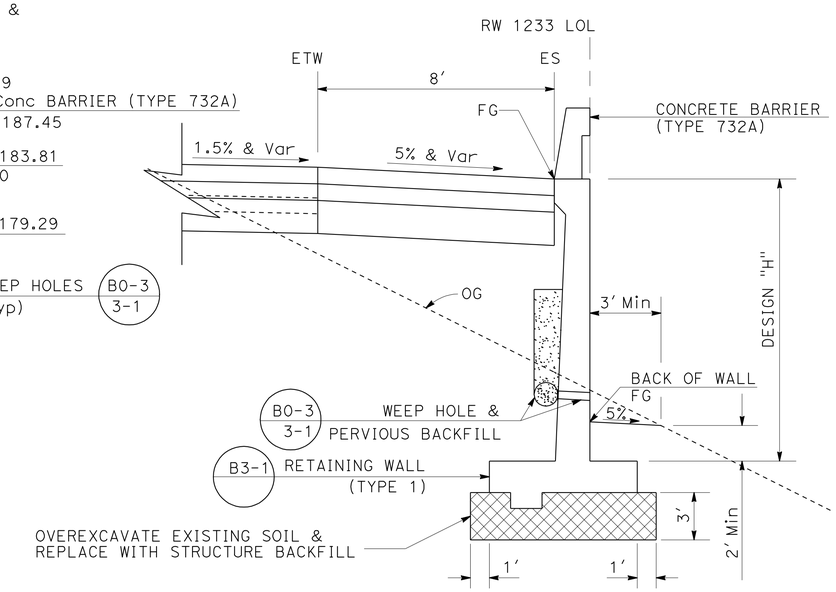

Sta 13+30 TO Sta 16+16.99
TYPICAL SECTION
NO SCALE

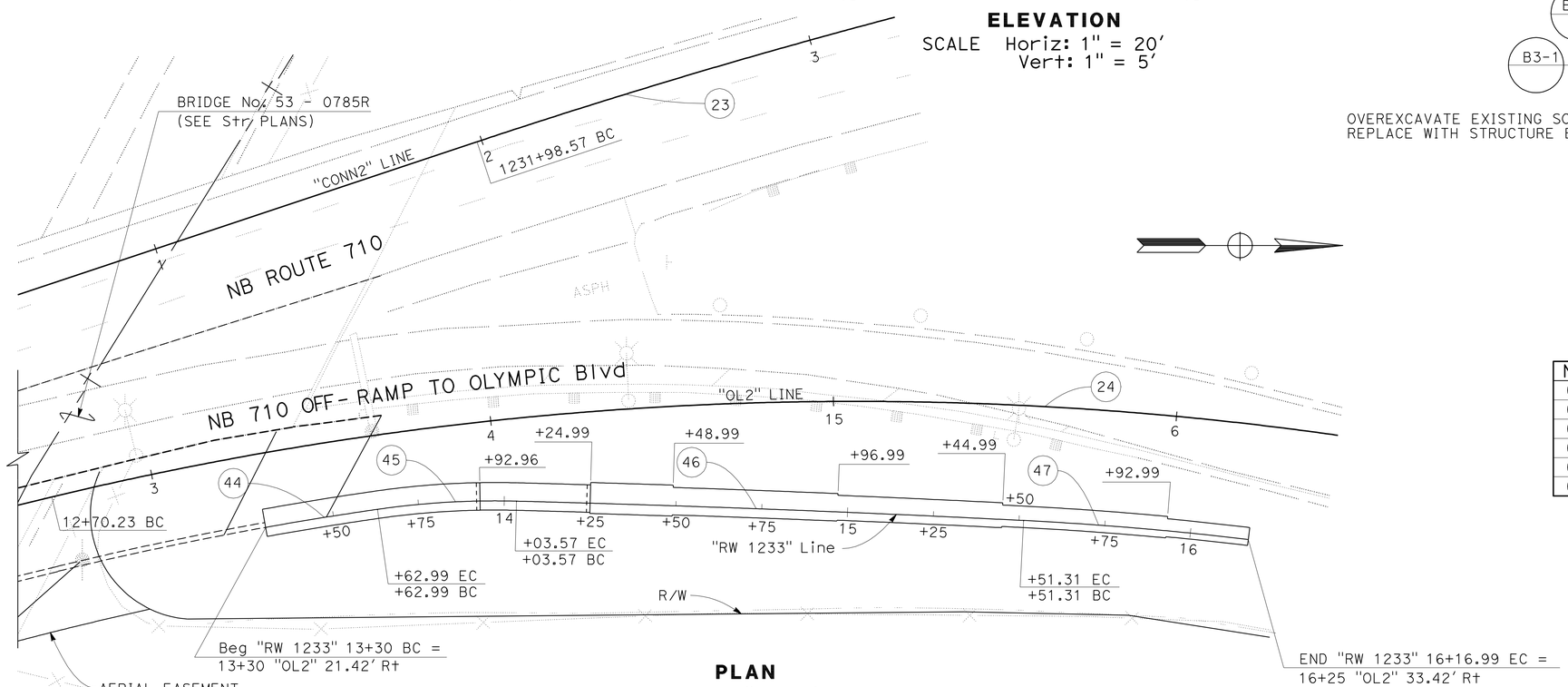

PLAN
SCALE 1" = 20'

CURVE DATA

No.	R	Δ	T	L
23	2000.00'	17°56'41"	315.78'	626.39'
24	1000.00'	27°47'42"	247.43'	485.12'
44	978.50'	1°55'53"	16.49'	32.99'
45	240.50'	9°39'49"	20.33'	40.56'
46	5990.49'	1°24'47"	73.87'	147.73'
47	966.50'	3°53'37"	32.85'	65.68'

RETAINING WALL

RETAINING WALL No. 1233
SCALE AS SHOWN

THIS PLAN ACCURATE FOR RETAINING WALL WORK ONLY.

R-47

STATE OF CALIFORNIA - DEPARTMENT OF TRANSPORTATION
Caltrans
DESIGN
FUNCTIONAL SUPERVISOR: ALINE ANTARAMIAN
CALCULATED-DESIGNED BY: I. L. REYNON JR.
CHECKED BY: RENE YIN
REVISED BY
DATE REVISED

LAST REVISION 00-00-00
DATE PLOTTED => 29-JUN-2011
TIME PLOTTED => 13:09

DIST	COUNTY	ROUTE	POST MILES TOTAL PROJECT	SHEET No	TOTAL SHEETS
07	LA	710	17.2/26.4	1000	1507

Joseph S. Pratt 1-20-11
CERTIFIED ENGINEERING GEOLOGIST DATE

REGISTERED GEOLOGIST
Joseph S. Pratt
No. 2141
Exp. 5-31-11
CERTIFIED ENGINEERING GEOLOGIST
STATE OF CALIFORNIA

6-27-11
PLANS APPROVAL DATE

The State of California or its officers or agents shall not be responsible for the accuracy or completeness of electronic copies of this plan sheet.

This LOTB sheet was prepared in accordance with the Caltrans Soil & Rock Logging, Classification, & Presentation Manual (June 2010).

BENCH MARK

RTK732 Elev 202.657′
Fd PK Nail and Tin 11′ NB710 shldr at gore Olympic off-rmp, 44.038′ Rt Sta 1232+24.43 "Conn 2" Line.
N 1828744.1920
E 6509278.3030

VERT DATUM NAVD88

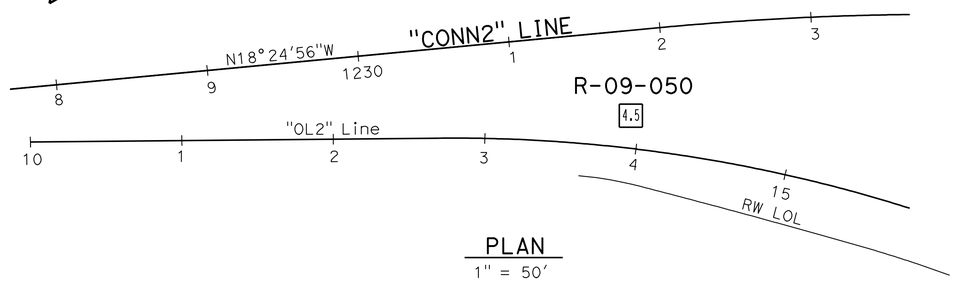

PLAN
1" = 50′

NOTE: Ground water was not encountered in Boring R-09-050.

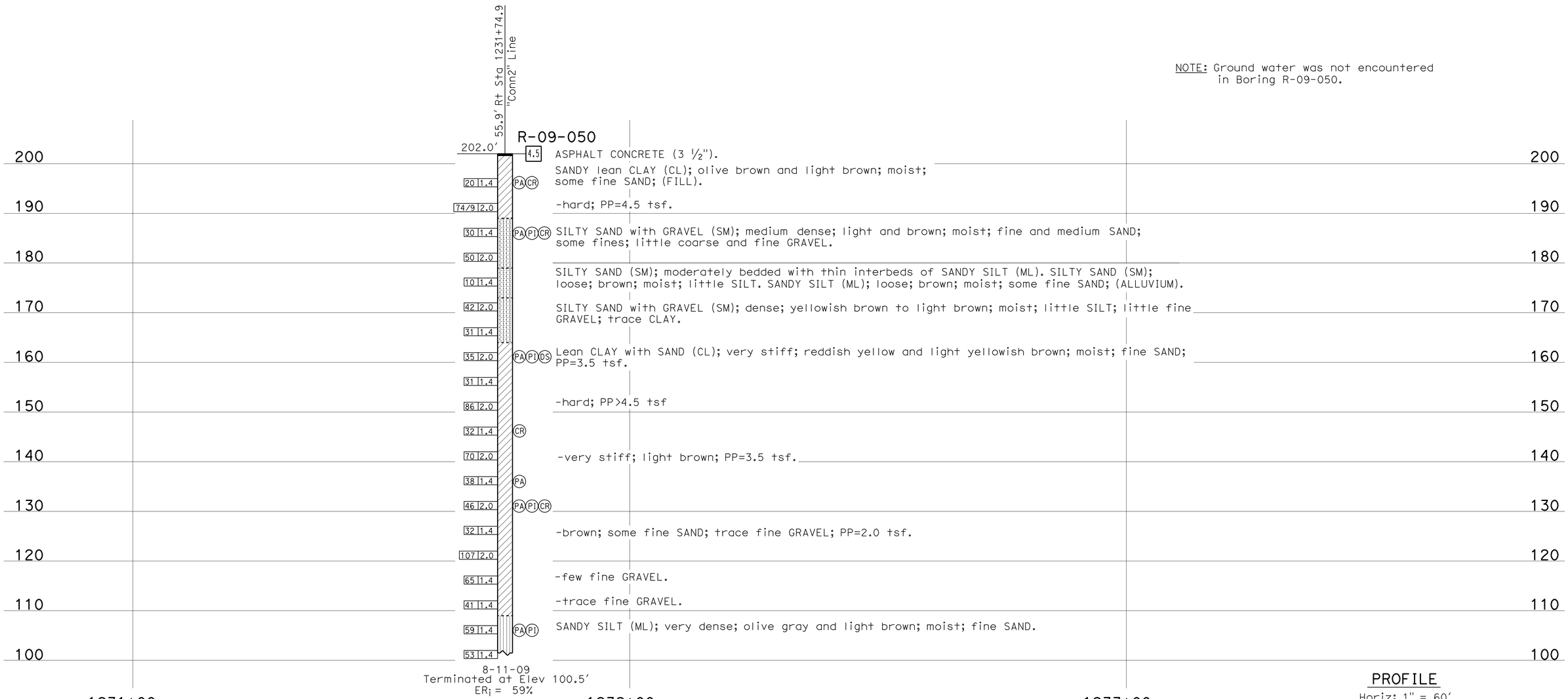

8-11-09
Terminated at Elev 100.5′
ER_i = 59%

PROFILE
Horiz: 1" = 60′
Vert: 1" = 10′

ENGINEERING SERVICES		GEOTECHNICAL SERVICES	STATE OF CALIFORNIA DEPARTMENT OF TRANSPORTATION	DIVISION OF ENGINEERING SERVICES STRUCTURE DESIGN	BRIDGE NO.	RETAINING WALL NO. 1233 R-48
FUNCTIONAL SUPERVISOR	DRAWN BY: I.G-Remmen, 1/11	FIELD INVESTIGATION BY:		DESIGN BRANCH	POST MILES 23.31/23.36	LOG OF TEST BORINGS 1 OF 3
NAME: S. Karimi	CHECKED BY: M. Mushtaq Ahmed	T. Halda				

OGS CIVIL LOG OF TEST BORINGS SHEET

ORIGINAL SCALE IN INCHES FOR REDUCED PLANS 0 1 2 3

CU 07
EA 202111

DISREGARD PRINTS BEARING EARLIER REVISION DATES → 01-20-11

REVISION DATES | SHEET | OF

FILE => 720211gi002.dgn

USERNAME => trcarol DATE PLOTTED => 29-JUN-2011 TIME PLOTTED => 13:03