PAVEMENT DELINEATION QUANTITIES
(MAINLINE)

SHEET No.	STATION LIMITS	THERMOPLASTIC TRAFFIC STRIPE: DETAIL 9 4" WHITE (BROKEN 17-7)	DETAIL 13 Mod 4" WHITE (BROKEN 36-12)	DETAIL 14 Mod 4" WHITE (BROKEN 36-12)	DETAIL 25 4" SOLID YELLOW	DETAIL 25A 4" SOLID WHITE	DETAIL 27B 4" SOLID WHITE	DETAIL 36, 36A, 36B 8" SOLID WHITE	DETAIL 38 8" SOLID WHITE	DETAIL 38B 8" SOLID WHITE	DETAIL 37 8" WHITE (BROKEN 12-3)	PAVEMENT MARKER: NON-REFLECTIVE TYPE A	RETRO-REFLECTIVE TYPE C	RETRO-REFLECTIVE TYPE G	RETRO-REFLECTIVE TYPE H	THERMOPLASTIC PAVEMENT MARKINGS (ARROWS & 12" SOLID WHITE)	DELINEATOR (CLASS 1) TYPE F	TYPE G	REMOVE: YELLOW THERMOPLASTIC TRAFFIC STRIPE (HAZARDOUS WASTE)	THERMOPLASTIC TRAFFIC STRIPE (WHITE)	THERMOPLASTIC PAVEMENT MARKING	PAVEMENT MARKER
		LF	LF	LF	LF	LF	LF	LF	LF	LF	LF	EA	EA	EA	EA	SQFT	EA	EA	LF	LF	SQFT	EA
PD-1	"A" LINDERO CYN RD TO "A" 26+96.00		3,263									116	126	156						722		399
PD-1	"A" 13+15.00 TO "A" 26+96.00		1,381									116		30						345		146
PD-1	"A" 13+15.00 TO "A" 26+96.00		1,381									116		30						345		146
PD-1	"A" 13+15.00 TO "A" 26+96.00		1,381									116		30						345		146
PD-1	"A" 22+07.00 TO "A" 29+50.00						743													743		
PD-1	"A" 26+96.00 TO "A" 28+40.00			144								12	4							36		16
PD-1	"A" 26+96.00 TO "A" 28+40.00			144								12	4							36		16
PD-1	"A" 26+96.00 TO "A" 28+40.00			144								12	4							36		16
PD-1	"A" 26+96.00 TO "A" 28+40.00			144								12	4							36		16
PD-1	"A" 27+99.00 TO "A" 29+50.00							151						7						151		7
PD-1	"A" 28+40.00 TO "A" 29+50.00		110									10		3						28		13
PD-1	"A" 28+40.00 TO "A" 29+50.00		110									10		3						28		13
PD-1	"A" 28+40.00 TO "A" 29+50.00		110									10		3						28		13
PD-1	"A" 28+40.00 TO "A" 29+50.00		110									10		3						28		13
PD-1	"A" 13+15.00 TO "A" 29+50.00				1635														1,635			
PD-1	"A" 13+15.00 TO "A" 29+50.00		1595									134		34						399		168
PD-1	"A" 13+15.00 TO "A" 29+50.00		1595									134		34						399		168
PD-1	"A" 13+15.00 TO "A" 29+50.00		1595									134		34						399		168
PD-1	"A" 13+15.00 TO "A" 29+50.00		1595		1595							134		34					1,595	399		168
PD-1	"A" 19+95.00 TO "A" 29+50.00						955													955		
PD-2	"A" 29+50.00 TO "A" 30+88.00							138						7						138		7
PD-2	"A" 29+50.00 TO "A" 42+50.00		1300									109		28						325		137
PD-2	"A" 29+50.00 TO "A" 42+50.00		1300									109		28						325		137
PD-2	"A" 29+50.00 TO "A" 42+50.00		1300									109		28						325		137
PD-2	"A" 29+50.00 TO "A" 42+50.00		1300		1300							109		28					1,300	325		137
PD-2	"A" 29+50.00 TO "A" 42+50.00		1300		1300							109		28					1,300	325		137
PD-2	"A" 29+50.00 TO "A" 42+50.00		1300									109		28						325		137
PD-2	"A" 29+50.00 TO "A" 42+50.00		1300									109		28						325		137
PD-2	"A" 29+50.00 TO "A" 42+50.00		1300									109		28						325		137
PD-2	"A" 29+50.00 TO "WL-2" 37+80.00						1260													1,260		
PD-2	"A" 30+88.00 TO "A" 42+50.00						1162									12				1,162	12	
PD-2	"WL-3" 30+88.00 TO "WL-3" 42+10.00					1122									48				1,122			48
PD-2	"A" 32+81.00 TO "A" 36+80.00							399						18						399		18
PD-2	"WL-2" 32+81.00 TO "WL-2" 36+83.00							402						18		63				402	63	18
PD-2	"A" 36+80.00 TO "A" 42+50.00						570													570		
PD-2	"WL-2" 36+83.00 TO "WL-2" 37+80.00					97									5	99	16	8	97		99	5
PD-2	"WL-6" 37+90.00 TO "WL-6" 40+86.00							296						13						296		13
PD-2	"WL-6" 40+86.00 TO "WL-6" 42+50.00					164									8				164			8
PD-2	"A" 40+87.00 TO "A" 42+50.00						163													163		
PD-3	"WL-6" 42+50.00 TO "WL-6" 45+53.00							303						14						303		14
PD-3	"WL-6" 42+50.00 TO "WL-6" 54+70.00					1220									52	24			1,220		24	52
PD-3	"WL-6" 42+50.00 TO "WL-6" 54+70.00						1220													1,220		
PD-3	"A" 42+50.00 TO "A" 45+54.00							304						14						304		14
PD-3	"A" 45+54.00 TO "A" 51+50.00						596									66				596	66	
PD-3	"A" 42+50.00 TO "A" 51+50.00		900									76		20						225		96
PD-3	"A" 42+50.00 TO "A" 51+50.00		900									76		20						225		96
PD-3	"A" 42+50.00 TO "A" 51+50.00		900									76		20						225		96
PD-3	"A" 42+50.00 TO "A" 51+50.00		900		900							76		20					900	225		96
	SHEET SUBTOTAL		28,802		16,002			1,993				2,267		1,044		264	16	8	9,333	15,769	264	3,312

Dist	COUNTY	ROUTE	POST MILES TOTAL PROJECT	SHEET No.	TOTAL SHEETS
07	Ven	23,101	3.3/3.8, R0.1/R4.5	301	652

REGISTERED CIVIL ENGINEER 3/25/13 DATE

6-3-13
PLANS APPROVAL DATE

REGISTERED PROFESSIONAL ENGINEER CESAR TISCARENO No. C79951 Exp. 9/30/14 CIVIL STATE OF CALIFORNIA

THE STATE OF CALIFORNIA OR ITS OFFICERS OR AGENTS SHALL NOT BE RESPONSIBLE FOR THE ACCURACY OR COMPLETENESS OF SCANNED COPIES OF THIS PLAN SHEET.

CH2M HILL
1000 WILSHIRE Blvd
LOS ANGELES, CA 90017

CITY OF THOUSAND OAKS
2100 THOUSAND OAKS BLVD
THOUSAND OAKS. CA 91362

REVISED BY | DATE REVISED
CESAR TISCARENO | TED MEKURIA
CALCULATED-DESIGNED BY | CHECKED BY
CONSULTANT FUNCTIONAL SUPERVISOR: CHRIS BRETALL
STATE OF CALIFORNIA - DEPARTMENT OF TRANSPORTATION
Caltrans

PAVEMENT DELINEATION QUANTITIES

PDQ-1

LAST REVISION 00-00-00 | DATE PLOTTED => 08-JUN-2013 | TIME PLOTTED => 13:22

PAVEMENT DELINEATION QUANTITIES
(MAINLINE)

SHEET No.	STATION LIMITS	THERMOPLASTIC TRAFFIC STRIPE: DETAIL 9 4" WHITE (BROKEN 17-7)	DETAIL 13 Mod 4" WHITE (BROKEN 36-12)	DETAIL 14 Mod 4" WHITE (BROKEN 36-12)	DETAIL 25 4" SOLID YELLOW	DETAIL 25A 4" SOLID WHITE	DETAIL 27B 4" SOLID WHITE	DETAIL 36, 36A, 36B 8" SOLID WHITE	DETAIL 38 8" SOLID WHITE	DETAIL 38B 8" SOLID WHITE	DETAIL 37 8" WHITE (BROKEN 12-3)	PAVEMENT MARKER: NON-REFLECTIVE TYPE A	RETRO-REFLECTIVE TYPE C	RETRO-REFLECTIVE TYPE G	RETRO-REFLECTIVE TYPE H	THERMOPLASTIC PAVEMENT MARKINGS (ARROWS & 12" SOLID WHITE)	DELINEATOR (CLASS 1) TYPE F	TYPE G	REMOVE: YELLOW THERMOPLASTIC TRAFFIC STRIPE (HAZARDOUS WASTE)	THERMOPLASTIC TRAFFIC STRIPE (WHITE)	THERMOPLASTIC PAVEMENT MARKING	PAVEMENT MARKER
		LF	LF	LF	LF	LF	LF	LF	LF	LF	LF	EA	EA	EA	EA	SQFT	EA	EA	LF	LF	SQFT	EA
PD-3	"A" 42+50.00 TO "A" 51+50.00		900		900							76		20					900	225		96
PD-3	"A" 42+50.00 TO "A" 51+50.00		900									76		20						225		96
PD-3	"A" 42+50.00 TO "A" 51+50.00		900									76		20						225		96
PD-3	"A" 42+50.00 TO "A" 51+50.00		900				900					76		20				1		1,125		96
PD-3	"WL-6" 44+50.00 TO "WL-6" 54+70.00	1,020												22								22
PD-3	"WL-6" 54+82.00 TO "WL-6" 121+47.00								145					7								7
PD-3	"WL-6" 120+92.00 TO "WL-124+11.00															225					225	
PD-4	"A" 51+50.00 TO "A" 58+69.00						719										18	10		719		
PD-4	"A" 58+69.00 TO "A" 63+87.00							518						23						518		23
PD-4	"A" 63+87.00 TO "A" 65+50.00									163				16						163		16
PD-4	"A" 51+50.00 TO "A" 65+50.00		1,400									118		30						350		148
PD-4	"A" 51+50.00 TO "A" 65+50.00		1,400									118		30						350		148
PD-4	"A" 51+50.00 TO "A" 65+50.00		1,400									118		30						350		148
PD-4	"A" 51+50.00 TO "A" 65+50.00		1,400		1,400							118		30					1,400	350		148
PD-4	"A" 51+50.00 TO "A" 65+50.00				1,400														1,400			
PD-4	"A" 51+50.00 TO "A" 54+52.00		302									26		7						76		33
PD-4	"A" 51+50.00 TO "A" 54+52.00		302									26		7						76		33
PD-4	"A" 51+50.00 TO "A" 54+52.00		302									26		7						76		33
PD-4	"A" 51+50.00 TO "A" 54+52.00		302									26		7						76		33
PD-4	"A" 54+52.00 TO "A" 55+96.00			144								12	4							36		16
PD-4	"A" 54+52.00 TO "A" 55+96.00			144								12	4							36		16
PD-4	"A" 54+52.00 TO "A" 55+96.00			144								12	4							36		16
PD-4	"A" 54+52.00 TO "A" 55+96.00			144								12	4							36		16
PD-4	"A" 55+96.00 TO "A" 65+50.00		954									81		21						239		101
PD-4	"A" 55+96.00 TO "A" 65+50.00		954									81		21						239		101
PD-4	"A" 55+96.00 TO "A" 65+50.00		954									81		21						239		101
PD-4	"A" 55+96.00 TO "A" 65+50.00		954									81		21						239		101
PD-4	"A" 51+50.00 TO "A" 52+96.00						146													146		
PD-4	"A" 52+96.00 TO "A" 55+68.00							272						12						272		12
PD-4	"WL-5" 52+96.00 TO "WL-5" 55+68.00							272						12						272		12
PD-4	"A" 56+62.00 TO "A" 58+57.00						195													195		
PD-4	"A" 58+57.00 TO "A" 65+50.00							693						30						693		30
PD-4	"WL-1" 59+88.00 TO "WL-1 65+50.00						562	562						24						1,124		24
PD-5	"A" 65+50.00 TO "A" 66+87.00									137				13						137		13
PD-5	"A" 65+50.00 TO "A" 66+87.00		137									12		4						34		16
PD-5	"A" 65+50.00 TO "A" 66+87.00		137									12		4						34		16
PD-5	"A" 65+50.00 TO "A" 66+87.00		137									12		4						34		16
PD-5	"A" 65+50.00 TO "A" 66+87.00		137									12		4						34		16
PD-5	"A" 66+87.00 TO "A" 79+50.00										1,263		85	85						253		170
PD-5	"A" 66+87.00 TO "A" 68+31.00			144								12	4							36		16
PD-5	"A" 66+87.00 TO "A" 68+31.00			144								12	4							36		16
PD-5	"A" 66+87.00 TO "A" 68+31.00			144								12	4							36		16
PD-5	"A" 66+87.00 TO "A" 68+31.00			144								12	4							36		16
PD-5	"A" 68+31.00 TO "A" 79+50.00		1,119									94		24						280		119
PD-5	"A" 68+31.00 TO "A" 79+50.00		1,119									94		24						280		119
PD-5	"A" 68+31.00 TO "A" 79+50.00		1,119									94		24						280		119
PD-5	"A" 68+31.00 TO "A" 79+50.00		1,119									94		24						280		119
PD-5	"A" 65+50.00 TO "A" 79+50.00				1,400														1,400			
	SHEET SUBTOTAL	1,020	20,400		7,622			2,762			1,263	1,724		787		225	18	11	5,100	10,492	255	2,511

Dist	COUNTY	ROUTE	POST MILES TOTAL PROJECT	SHEET No.	TOTAL SHEETS
07	Ven	23,101	3.3/3.8, R0.1/R4.5	302	652

REGISTERED CIVIL ENGINEER 3/25/13 DATE

6-3-13
PLANS APPROVAL DATE

REGISTERED PROFESSIONAL ENGINEER CESAR TISCARENO No. C79951 Exp. 9/30/14 CIVIL STATE OF CALIFORNIA

THE STATE OF CALIFORNIA OR ITS OFFICERS OR AGENTS SHALL NOT BE RESPONSIBLE FOR THE ACCURACY OR COMPLETENESS OF SCANNED COPIES OF THIS PLAN SHEET.

CH2M HILL
1000 WILSHIRE Blvd
LOS ANGELES, CA 90017

CITY OF THOUSAND OAKS
2100 THOUSAND OAKS BLVD
THOUSAND OAKS. CA 91362

REVISED BY | DATE REVISED

CESAR TISCARENO | TED MEKURIA

CALCULATED-DESIGNED BY | CHECKED BY

CONSULTANT FUNCTIONAL SUPERVISOR: CHRIS BRETALL

STATE OF CALIFORNIA - DEPARTMENT OF TRANSPORTATION

Caltrans

PAVEMENT DELINEATION QUANTITIES

PDQ-2

LAST REVISION 00-00-00 | DATE PLOTTED => 08-JUN-2013 | TIME PLOTTED => 13:22

PAVEMENT DELINEATION QUANTITIES
(MAINLINE)

SHEET No.	STATION LIMITS	THERMOPLASTIC TRAFFIC STRIPE: DETAIL 9 4" WHITE (BROKEN 17-7)	DETAIL 13 Mod 4" WHITE (BROKEN 36-12)	DETAIL 14 Mod 4" WHITE (BROKEN 36-12)	DETAIL 25 4" SOLID YELLOW	DETAIL 25A 4" SOLID WHITE	DETAIL 27B 4" SOLID WHITE	DETAIL 36, 36A, 36B 8" SOLID WHITE	DETAIL 38 8" SOLID WHITE	DETAIL 38B 8" SOLID WHITE	DETAIL 37 8" WHITE (BROKEN 12-3)	PAVEMENT MARKER: NON-REFLECTIVE TYPE A	RETRO-REFLECTIVE TYPE C	RETRO-REFLECTIVE TYPE G	RETRO-REFLECTIVE TYPE H	THERMOPLASTIC PAVEMENT MARKINGS (ARROWS & 12" SOLID WHITE)	DELINEATOR (CLASS 1) TYPE F	TYPE G	REMOVE: YELLOW THERMOPLASTIC TRAFFIC STRIPE (HAZARDOUS WASTE)	THERMOPLASTIC TRAFFIC STRIPE (WHITE)	THERMOPLASTIC PAVEMENT MARKING	PAVEMENT MARKER
		LF	LF	LF	LF	LF	LF	LF	LF	LF	LF	EA	EA	EA	EA	SQFT	EA	EA	LF	LF	SQFT	EA
PD-5	"A" 65+50.00 TO "A" 79+50.00		1,400		1,400							118		30					1,400	350		148
PD-5	"A" 65+50.00 TO "A" 79+50.00		1,400									118		30						350		148
PD-5	"A" 65+50.00 TO "A" 79+50.00		1,400									118		30						350		148
PD-5	"A" 65+50.00 TO "A" 79+50.00		1,400									118		30						350		148
PD-5	"A" 65+50.00 TO "A" 65+68.00							18						2						18		2
PD-5	"A" 65+50.00 TO "A" 65+68.00							18						2						18		2
PD-5	"A" 65+50.00 TO "A" 71+68.00						618													618		
PD-6	"A" 79+50.00 TO "A" 84+33.00										483		33	33						97		66
PD-6	"A" 84+33.00 TO "A" 93+50.00						617													917		
PD-6	"A" 79+50.00 TO "A" 93+50.00		1,400									118		30						350		148
PD-6	"A" 79+50.00 TO "A" 93+50.00		1,400									118		30						350		148
PD-6	"A" 79+50.00 TO "A" 93+50.00		1,400									118		30						350		148
PD-6	"A" 79+50.00 TO "A" 93+50.00		1,400		1,400							118		30					1,400	350		148
PD-6	"A" 79+50.00 TO "A" 93+50.00				1,400														1,400			
PD-6	"A" 79+50.00 TO "A" 82+36.00		286									25		7						72		32
PD-6	"A" 79+50.00 TO "A" 82+36.00		286									25		7						72		32
PD-6	"A" 79+50.00 TO "A" 82+36.00		286									25		7						72		32
PD-6	"A" 79+50.00 TO "A" 82+36.00		286									25		7						72		32
PD-6	"A" 82+36.00 TO "A" 83+80.00			144								12	4							36		16
PD-6	"A" 82+36.00 TO "A" 83+80.00			144								12	4							36		16
PD-6	"A" 82+36.00 TO "A" 83+80.00			144								12	4							36		16
PD-6	"A" 82+36.00 TO "A" 83+80.00			144								12	4							36		16
PD-6	"A" 83+80.00 TO "A" 93+50.00		970									82		21						243		103
PD-6	"A" 83+80.00 TO "A" 93+50.00		970									82		21						243		103
PD-6	"A" 83+80.00 TO "A" 93+50.00		970									82		21						243		103
PD-6	"A" 83+80.00 TO "A" 93+50.00		970									82		21						243		103
PD-6	"A" 83+80.00 TO "A" 93+50.00						1,050													1,050		
PD-6	"HM-2" 88+22.00 TO "HM-2" 91+09.00							287						13						287		13
PD-6	"A" 88+22.00 TO "A" 91+08.00							286						13						286		13
PD-6	"A" 91+08.00 TO "A" 93+50.00						242													242		
PD-6	"HM-2" 91+09.00 TO "HM-2" 93+50.00					241									11				241			11
PD-6	"HM-2" 93+39.00 TO "HM-2" 93+50.00	11												1								1
PD-7	"A" 93+50.00 TO "A" 102+66.00						916													916		
PD-7	"A" 102+66.00 TO "A" 105+73.00							307						14						307		14
PD-7	"A" 105+73.00 TO "A" 107+50.00									177				17						177		17
PD-7	"A" 93+50.00 TO "A" 94+71.00		121									11		4						30		15
PD-7	"A" 93+50.00 TO "A" 94+71.00		121									11		4						30		15
PD-7	"A" 93+50.00 TO "A" 94+71.00		121									11		4						30		15
PD-7	"A" 93+50.00 TO "A" 94+71.00		121									11		4						30		15
PD-7	"A" 94+71.00 TO "A" 96+15.00			144								12	4							36		16
PD-7	"A" 94+71.00 TO "A" 96+15.00			144								12	4							36		16
PD-7	"A" 94+71.00 TO "A" 96+15.00			144								12	4							36		16
PD-7	"A" 94+71.00 TO "A" 96+15.00			144								12	4							36		16
PD-7	"A" 96+15.00 TO "A" 107+50.00		1,135									96		25						284		120
PD-7	"A" 96+15.00 TO "A" 107+50.00		1,135									96		25						284		120
PD-7	"A" 96+15.00 TO "A" 107+50.00		1,135									96		25						284		120
PD-7	"A" 96+15.00 TO "A" 107+50.00		1,135									96		25						284		120
PD-7	"A" 93+50.00 TO "A" 107+50.00				1,400														1,400			
	SHEET SUBTOTAL	11	22,400		9,584			1,093			483	1,891		637					5,841	10,533		2,528

Dist	COUNTY	ROUTE	POST MILES TOTAL PROJECT	SHEET No.	TOTAL SHEETS
07	Ven	23,101	3.3/3.8, R0.1/R4.5	303	652

REGISTERED CIVIL ENGINEER 3/25/13 DATE

6-3-13
PLANS APPROVAL DATE

REGISTERED PROFESSIONAL ENGINEER CESAR TISCARENO No. C79951 Exp. 9/30/14 CIVIL STATE OF CALIFORNIA

THE STATE OF CALIFORNIA OR ITS OFFICERS OR AGENTS SHALL NOT BE RESPONSIBLE FOR THE ACCURACY OR COMPLETENESS OF SCANNED COPIES OF THIS PLAN SHEET.

CH2M HILL
1000 WILSHIRE Blvd
LOS ANGELES, CA 90017

CITY OF THOUSAND OAKS
2100 THOUSAND OAKS BLVD
THOUSAND OAKS. CA 91362

REVISED BY | DATE REVISED

CESAR TISCARENO | TED MEKURIA

CALCULATED-DESIGNED BY | CHECKED BY

CONSULTANT FUNCTIONAL SUPERVISOR: CHRIS BRETALL

STATE OF CALIFORNIA - DEPARTMENT OF TRANSPORTATION

Caltrans

PAVEMENT DELINEATION QUANTITIES

PDQ-3

LAST REVISION 00-00-00 | DATE PLOTTED => 08-JUN-2013 | TIME PLOTTED => 13:22

PAVEMENT DELINEATION QUANTITIES
(MAINLINE)

SHEET No.	STATION LIMITS	THERMOPLASTIC TRAFFIC STRIPE: DETAIL 9 4" WHITE (BROKEN 17-7)	DETAIL 13 Mod 4" WHITE (BROKEN 36-12)	DETAIL 14 Mod 4" WHITE (BROKEN 36-12)	DETAIL 25 4" SOLID YELLOW	DETAIL 25A 4" SOLID WHITE	DETAIL 27B 4" SOLID WHITE	DETAIL 36, 36A, 36B 8" SOLID WHITE	DETAIL 38 8" SOLID WHITE	DETAIL 38B 8" SOLID WHITE	DETAIL 37 8" WHITE (BROKEN 12-3)	PAVEMENT MARKER: NON-REFLECTIVE TYPE A	RETRO-REFLECTIVE TYPE C	RETRO-REFLECTIVE TYPE G	RETRO-REFLECTIVE TYPE H	THERMOPLASTIC PAVEMENT MARKINGS (ARROWS & 12" SOLID WHITE)	DELINEATOR (CLASS 1) TYPE F	TYPE G	REMOVE: YELLOW THERMOPLASTIC TRAFFIC STRIPE (HAZARDOUS WASTE)	THERMOPLASTIC TRAFFIC STRIPE (WHITE)	THERMOPLASTIC PAVEMENT MARKING	PAVEMENT MARKER
		LF	LF	LF	LF	LF	LF	LF	LF	LF	LF	EA	EA	EA	EA	SQFT	EA	EA	LF	LF	SQFT	EA
PD-7	"A" 93+50.00 TO "A" 107+50.00		1,400		1,400							118		30					1,400	350		148
PD-7	"A" 93+50.00 TO "A" 107+50.00		1,400									118		30						350		148
PD-7	"A" 93+50.00 TO "A" 107+50.00		1,400									118		30						350		148
PD-7	"A" 93+50.00 TO "A" 107+50.00		1,400									118		30						350		148
PD-7	"A" 93+50.00 TO "A" 103+59.00						1,009													1,009		
PD-7	"A" 103+59.00 TO "A" 107+50.00							391						17						391		17
PD-7	"HM-2" 93+50.00 TO "HM-2" 94+96.00	146				146	146							4	7				146	146		11
PD-7	"HM-1" 97+70.00 TO "HM-1" 103+56.00					586									25				586			25
PD-7	"HM-1" 97+70.00 TO "HM-1" 101+47.00	377												9								9
PD-7	"HM-1" 97+70.00 TO "HM-1" 107+50.00						980													980		
PD-7	"HM-1" 103+56.00 TO "HM-1" 107+50.00							394						17						394		17
PD-7	"HM-4" 101+11.00 TO "HM-4" 105+73.00							462						20						462		20
PD-9	"A" 107+50.00 TO "A" 108+73.00		123							123		11		16						154		27
PD-9	"A" 107+50.00 TO "A" 108+73.00		123									11		4						31		15
PD-9	"A" 107+50.00 TO "A" 108+73.00		123									11		4						31		15
PD-9	"A" 107+50.00 TO "A" 108+73.00		123									11		4						31		15
PD-9	"A" 108+73.00 TO "A" 120+50.00										1,177		79	79						235		159
PD-9	"A" 108+73.00 TO "A" 110+17.00			144								12	4							36		16
PD-9	"A" 108+73.00 TO "A" 110+17.00			144								12	4							36		16
PD-9	"A" 108+73.00 TO "A" 110+17.00			144								12	4							36		16
PD-9	"A" 108+73.00 TO "A" 110+17.00			144								12	4							36		16
PD-9	"A" 110+17.00 TO "A" 120+50.00		1,033									87		23						258		110
PD-9	"A" 110+17.00 TO "A" 120+50.00		1,033									87		23						258		110
PD-9	"A" 110+17.00 TO "A" 120+50.00		1,033									87		23						258		110
PD-9	"A" 110+17.00 TO "A" 120+50.00		1,033									87		23						258		110
PD-9	"A" 107+50.00 TO "A" 120+50.00				1,300														1,300			
PD-9	"A" 107+50.00 TO "A" 120+50.00				1,300		1,300												1,300	1,300		
PD-9	"A" 107+50.00 TO "A" 111+92.00		442									38		10						111		48
PD-9	"A" 107+50.00 TO "A" 111+92.00		442									38		10						111		48
PD-9	"A" 107+50.00 TO "A" 111+92.00		442									38		10						111		48
PD-9	"A" 107+50.00 TO "A" 111+92.00		442									38		10						111		48
PD-9	"A" 108+07.00 TO "A" 111+92.00		385									33		9						96		42
PD-9	"A" 111+92.00 TO "A" 113+36.00			144								12	4							36		16
PD-9	"A" 111+92.00 TO "A" 113+36.00			144								12	4							36		16
PD-9	"A" 111+92.00 TO "A" 113+36.00			144								12	4							36		16
PD-9	"A" 111+92.00 TO "A" 113+36.00			144								12	4							36		16
PD-9	"A" 111+92.00 TO "A" 113+36.00			144								12	4							36		16
PD-9	"A" 113+36.00 TO "A" 120+50.00		714									61		16						179		76
PD-9	"A" 113+36.00 TO "A" 120+50.00		714									61		16						179		76
PD-9	"A" 113+36.00 TO "A" 120+50.00		714									61		16						179		76
PD-9	"A" 113+36.00 TO "A" 120+50.00		714									61		16						179		76
PD-9	"A" 113+36.00 TO "A" 114+80.00		144									13		4						36		17
PD-9	"A" 114+80.00 TO "A" 120+50.00										570		39	39						114		78
PD-9	"A" 107+50.00 TO "A" 108+07.00							57						3						57		3
PD-9	"A" 107+50.00 TO "A" 108+07.00							57						3						57		3
PD-10	"A" 120+50.00 TO "A" 133+50.00		1,300		1,300		1,300				1,300	109	88	116					1,300	1,885		313
PD-10	"A" 120+50.00 TO "A" 133+50.00		1,300		1,300						1,300	109	88	116					1,300	585		313
PD-10	"A" 120+50.00 TO "A" 133+50.00		1,300									109		28						325		137
	SHEET SUBTOTAL	523	20,573		12,067				1,484		4,347	1,739		1,170					7,332	12,232		2,909

Dist	COUNTY	ROUTE	POST MILES TOTAL PROJECT	SHEET No.	TOTAL SHEETS
07	Ven	23,101	3.3/3.8, R0.1/R4.5	304	652

REGISTERED CIVIL ENGINEER 3/25/13 DATE

6-3-13
PLANS APPROVAL DATE

REGISTERED PROFESSIONAL ENGINEER CESAR TISCARENO No. C79951 Exp. 9/30/14 CIVIL STATE OF CALIFORNIA

THE STATE OF CALIFORNIA OR ITS OFFICERS OR AGENTS SHALL NOT BE RESPONSIBLE FOR THE ACCURACY OR COMPLETENESS OF SCANNED COPIES OF THIS PLAN SHEET.

CH2M HILL
1000 WILSHIRE Blvd
LOS ANGELES, CA 90017

CITY OF THOUSAND OAKS
2100 THOUSAND OAKS BLVD
THOUSAND OAKS. CA 91362

REVISED BY | DATE REVISED
CESAR TISCARENO | TED MEKURIA
CALCULATED-DESIGNED BY | CHECKED BY
CONSULTANT FUNCTIONAL SUPERVISOR: CHRIS BRETALL
STATE OF CALIFORNIA - DEPARTMENT OF TRANSPORTATION
Caltrans

PAVEMENT DELINEATION QUANTITIES

PDQ-4

LAST REVISION 00-00-00 | DATE PLOTTED => 08-JUN-2013 | TIME PLOTTED => 13:22

PAVEMENT DELINEATION QUANTITIES
(MAINLINE)

SHEET No.	STATION LIMITS	THERMOPLASTIC TRAFFIC STRIPE: DETAIL 9 4" WHITE (BROKEN 17-7)	DETAIL 13 Mod 4" WHITE (BROKEN 36-12)	DETAIL 14 Mod 4" WHITE (BROKEN 36-12)	DETAIL 25 4" SOLID YELLOW	DETAIL 25A 4" SOLID WHITE	DETAIL 27B 4" SOLID WHITE	DETAIL 36, 36A, 36B 8" SOLID WHITE	DETAIL 38 8" SOLID WHITE	DETAIL 38B 8" SOLID WHITE	DETAIL 37 8" WHITE (BROKEN 12-3)	PAVEMENT MARKER: NON-REFLECTIVE TYPE A	RETRO-REFLECTIVE TYPE C	RETRO-REFLECTIVE TYPE G	RETRO-REFLECTIVE TYPE H	THERMOPLASTIC PAVEMENT MARKINGS (ARROWS & 12" SOLID WHITE)	DELINEATOR (CLASS 1) TYPE F	DELINEATOR (CLASS 1) TYPE G	REMOVE: YELLOW THERMOPLASTIC TRAFFIC STRIPE (HAZARDOUS WASTE)	THERMOPLASTIC TRAFFIC STRIPE (WHITE)	THERMOPLASTIC PAVEMENT MARKING	PAVEMENT MARKER
		LF	LF	LF	LF	LF	LF	LF	LF	LF	LF	EA	EA	EA	EA	SQFT	EA	EA	LF	LF	SQFT	EA
PD-10	"A" 120+50.00 TO "A" 133+50.00		1,300									109		28						325		137
PD-10	"A" 120+50.00 TO "A" 133+50.00		1,300									109		28						325		137
PD-10	"A" 120+50.00 TO "A" 133+50.00		1,300									109		28						325		137
PD-10	"A" 120+50.00 TO "A" 133+50.00		1,300									109		28						325		137
PD-10	"A" 120+50.00 TO "A" 133+50.00		1,300									109		28						325		137
PD-12	"A" 133+50.00 TO "A" 135+13.00										163		12	12						33		24
PD-12	"A" 135+13.00 TO "A" 136+57.00		144									13		4						36		17
PD-12	"A" 140+20.00 TO "A" 146+50.00						630													630		
PD-12	"A" 133+50.00 TO "A" 136+57.00		307									27		7						77		34
PD-12	"A" 133+50.00 TO "A" 136+57.00		307									27		7						77		34
PD-12	"A" 133+50.00 TO "A" 136+57.00		307									27		7						77		34
PD-12	"A" 133+50.00 TO "A" 136+57.00		307									27		7						77		34
PD-12	"A" 136+57.00 TO "A" 138+01.00			144								12	4							36		16
PD-12	"A" 136+57.00 TO "A" 138+01.00			144								12	4							36		16
PD-12	"A" 136+57.00 TO "A" 138+01.00			144								12	4							36		16
PD-12	"A" 136+57.00 TO "A" 138+01.00			144								12	4							36		16
PD-12	"A" 136+57.00 TO "A" 138+01.00			144								12	4							36		16
PD-12	"A" 138+01.00 TO "A" 146+50.00		849									72		19						212		90
PD-12	"A" 138+01.00 TO "A" 146+50.00		849									72		19						212		90
PD-12	"A" 138+01.00 TO "A" 146+50.00		849									72		19						212		90
PD-12	"A" 138+01.00 TO "A" 146+50.00		849									72		19						212		90
PD-12	"A" 138+01.00 TO "A" 146+50.00		849									72		19						212		90
PD-12	"A" 133+50.00 TO "A" 146+50.00				1,300														1,300			
PD-12	"A" 133+50.00 TO "A" 146+50.00				1,300														1,300			
PD-12	"A" 133+50.00 TO "A" 139+60.00		610									52		14						153		66
PD-12	"A" 133+50.00 TO "A" 139+60.00		610									52		14						153		66
PD-12	"A" 133+50.00 TO "A" 139+60.00		610									52		14						153		66
PD-12	"A" 133+50.00 TO "A" 139+60.00		610									52		14						153		66
PD-12	"A" 139+60.00 TO "A" 141+04.00			144								12	4							36		16
PD-12	"A" 139+60.00 TO "A" 141+04.00			144								12	4							36		16
PD-12	"A" 139+60.00 TO "A" 141+04.00			144								12	4							36		16
PD-12	"A" 139+60.00 TO "A" 141+04.00			144								12	4							36		16
PD-12	"A" 141+04.00 TO "A" 146+50.00		546									47		12						137		59
PD-12	"A" 141+04.00 TO "A" 146+50.00		546									47		12						137		59
PD-12	"A" 141+04.00 TO "A" 146+50.00		546									47		12						137		59
PD-12	"A" 141+04.00 TO "A" 144+68.00		364									31		9						91		40
PD-12	"A" 133+50.00 TO "A" 141+04.00										754		51	51						151		103
PD-12	"A" 141+20.00 TO "A" 144+20.00									300				27						300		27
PD-12	"A" 144+04.00 TO "A" 146+50.00							246						11						246		11
PD-12	"A" 133+50.00 TO "A" 144+68.00						1,118													1,118		
PD-12	"A" 146+45.00 TO "A" 146+50.00							5						1						5		1
PD-12	"A" 146+45.00 TO "A" 146+50.00							5						1						5		1
PD-13	"A" 146+50.00 TO "A" 159+50.00		1,300									109		28						325		137
PD-13	"A" 146+50.00 TO "A" 159+50.00		1,300									109		28						325		137
PD-13	"A" 146+50.00 TO "A" 159+50.00		1,300		1,300							109		28					1,300	325		137
PD-13	"A" 146+50.00 TO "A" 159+50.00				1,300														1,300			
PD-13	"A" 146+50.00 TO "A" 153+80.00		730									62		16						183		78
PD-13	"A" 146+50.00 TO "A" 153+80.00		730									62		16						183		78
	SHEET SUBTOTAL		23,215		6,948			556			917	1,963		688					5,200	8,291		2,650

Dist	COUNTY	ROUTE	POST MILES TOTAL PROJECT	SHEET No.	TOTAL SHEETS
07	Ven	23,101	3.3/3.8, R0.1/R4.5	305	652

REGISTERED CIVIL ENGINEER 3/25/13 DATE

6-3-13
PLANS APPROVAL DATE

REGISTERED PROFESSIONAL ENGINEER CESAR TISCARENO No. C79951 Exp. 9/30/14 CIVIL STATE OF CALIFORNIA

THE STATE OF CALIFORNIA OR ITS OFFICERS OR AGENTS SHALL NOT BE RESPONSIBLE FOR THE ACCURACY OR COMPLETENESS OF SCANNED COPIES OF THIS PLAN SHEET.

CH2M HILL
1000 WILSHIRE Blvd
LOS ANGELES, CA 90017

CITY OF THOUSAND OAKS
2100 THOUSAND OAKS BLVD
THOUSAND OAKS. CA 91362

REVISED BY | DATE REVISED
CESAR TISCARENO | TED MEKURIA
CALCULATED-DESIGNED BY | CHECKED BY
CONSULTANT FUNCTIONAL SUPERVISOR: CHRIS BRETALL

STATE OF CALIFORNIA - DEPARTMENT OF TRANSPORTATION
Caltrans

PAVEMENT DELINEATION QUANTITIES

PDQ-5

LAST REVISION 00-00-00 | DATE PLOTTED => 08-JUN-2013 | TIME PLOTTED => 13:22

PAVEMENT DELINEATION QUANTITIES
(MAINLINE)

SHEET No.	STATION LIMITS	THERMOPLASTIC TRAFFIC STRIPE: DETAIL 9 4" WHITE (BROKEN 17-7)	DETAIL 13 Mod 4" WHITE (BROKEN 36-12)	DETAIL 14 Mod 4" WHITE (BROKEN 36-12)	DETAIL 25 4" SOLID YELLOW	DETAIL 25A 4" SOLID WHITE	DETAIL 27B 4" SOLID WHITE	DETAIL 36, 36A, 36B 8" SOLID WHITE	DETAIL 38 8" SOLID WHITE	DETAIL 38B 8" SOLID WHITE	DETAIL 37 8" WHITE (BROKEN 12-3)	PAVEMENT MARKER: NON-REFLECTIVE TYPE A	RETRO-REFLECTIVE TYPE C	RETRO-REFLECTIVE TYPE G	RETRO-REFLECTIVE TYPE H	THERMOPLASTIC PAVEMENT MARKINGS (ARROWS & 12" SOLID WHITE)	DELINEATOR (CLASS 1) TYPE F	TYPE G	REMOVE: YELLOW THERMOPLASTIC TRAFFIC STRIPE (HAZARDOUS WASTE)	THERMOPLASTIC TRAFFIC STRIPE (WHITE)	THERMOPLASTIC PAVEMENT MARKING	PAVEMENT MARKER
		LF	LF	LF	LF	LF	LF	LF	LF	LF	LF	EA	EA	EA	EA	SQFT	EA	EA	LF	LF	SQFT	EA
PD-13	"A" 146+50.00 TO "A" 153+80.00		730									62		16						183		78
PD-13	"A" 153+80.00 TO "A" 155+24.00			144								12	4							36		16
PD-13	"A" 153+80.00 TO "A" 155+24.00			144								12	4							36		16
PD-13	"A" 153+80.00 TO "A" 155+24.00			144								12	4							36		16
PD-13	"A" 155+24.00 TO "A" 159+50.00		426									37		10						107		46
PD-13	"A" 155+24.00 TO "A" 159+50.00		426									37		10						107		46
PD-13	"A" 155+24.00 TO "A" 159+50.00		426									37		10						107		46
PD-13	"S-3" 870+23.00 TO "S-3" 882+90.00		1,267				1,267					107		27						1,584		134
PD-13	"S-3" 870+23.00 TO "S-3" 877+28.00							705						30						705		30
PD-13	"S-3" 877+28.00 TO "S-3" 882+90.00					562									24				562			24
PD-13	"A" 146+50.00 TO "A" 153+75.00							725						31						725		31
PD-13	"A" 153+75.00 TO "A" 159+50.00						575													575		
PD-13	"A" 146+50.00 TO "A" 147+40.00							90						5						90		5
PD-13	"A" 147+40.00 TO "A" 153+80.00						640													640		
PD-13	"A" 158+24.00 TO "A" 159+50.00							126						6						126		6
PD-14	"S-3" 882+90.00 TO "S-3" 895+00.00		1,210			1,210	1,210					102		26	51				1,210	1,513		179
PD-14	"A" 159+50.00 TO "A" 161+44.00						194													194		
PD-14	"A" 159+50.00 TO "A" 164+41.00		491									42		11						123		53
PD-14	"A" 159+50.00 TO "A" 164+41.00		491									42		11						123		53
PD-14	"A" 159+50.00 TO "A" 164+41.00		491									42		11						123		53
PD-14	"A" 164+41.00 TO "A" 165+85.00			144								12	4							36		16
PD-14	"A" 164+41.00 TO "A" 165+85.00			144								12	4							36		16
PD-14	"A" 165+85.00 TO "A" 169+65.00			144								12	4							36		16
PD-14	"A" 165+85.00 TO "A" 169+65.00		380									33		9						95		42
PD-14	"A" 165+85.00 TO "A" 169+65.00		380									33		9						95		42
PD-14	"A" 159+50.00 TO "A" 169+65.00		380									33		9						95		42
PD-14	"A" 159+50.00 TO "A" 171+50.00				1,015														1,015			
PD-14	"A" 159+50.00 TO "A" 171+50.00		1,200		1,200							101		26					1,200	300		127
PD-14	"A" 159+50.00 TO "A" 171+50.00		1,200									101		26						300		127
PD-14	"A" 159+50.00 TO "A" 160+91.00		1,200									101		26						300		127
PD-14	"A" 159+50.00 TO "A" 160+61.00							141						7						141		7
PD-14	"A" 160+91.00 TO "A" 169+15.00						824													824		
PD-15	"A" 171+50.00 TO "A" 183+50.00				1,200														1,200			
PD-15	"A" 171+50.00 TO "A" 179+91.00		841									71		19						210		90
PD-15	"A" 171+50.00 TO "A" 179+91.00		841									71		19						210		90
PD-15	"A" 171+50.00 TO "A" 179+91.00		841									71		19						210		90
PD-15	"A" 179+91.00 TO "A" 181+35.00			144								12	4							36		16
PD-15	"A" 179+91.00 TO "A" 181+35.00			144								12	4							36		16
PD-15	"A" 179+91.00 TO "A" 181+35.00			144								12	4							36		16
PD-15	"A" 181+35.00 TO "A" 183+50.00		215									19		5						54		24
PD-15	"A" 181+35.00 TO "A" 183+50.00		215									19		5						54		24
PD-15	"A" 181+35.00 TO "A" 183+50.00		215									19		5						54		24
PD-15	"S-1" 399+50.00 TO "S-1" 408+50.00		900		900		900					76		20					900	1,125		96
PD-15	"S-3" 895+00.00 TO "S-3" 900+16.00		516			516	516					44		12	23				516	645		78
PD-16	"S-1" 408+50.00 TO "S-1" 419+77.00		1,127		1,127		1,127					95		24					1,127	1,409		119
PD-17	"A" 183+50.00 TO "A" 197+50.00		1,400		1,400							118		30					1,400	350		148
PD-17	"A" 183+50.00 TO "A" 197+50.00		1,400									118		30						350		148
PD-17	"A" 183+50.00 TO "A" 197+50.00		1,400									118		30						350		148
	SHEET SUBTOTAL		21,905		16,383			1,787				1,852		670					9,130	14,516		2,523

Dist	COUNTY	ROUTE	POST MILES TOTAL PROJECT	SHEET No.	TOTAL SHEETS
07	Ven	23,101	3.3/3.8, R0.1/R4.5	306	652

REGISTERED CIVIL ENGINEER 3/25/13 DATE

6-3-13
PLANS APPROVAL DATE

REGISTERED PROFESSIONAL ENGINEER CESAR TISCARENO No. C79951 Exp. 9/30/14 CIVIL STATE OF CALIFORNIA

THE STATE OF CALIFORNIA OR ITS OFFICERS OR AGENTS SHALL NOT BE RESPONSIBLE FOR THE ACCURACY OR COMPLETENESS OF SCANNED COPIES OF THIS PLAN SHEET.

CH2M HILL
1000 WILSHIRE Blvd
LOS ANGELES, CA 90017

CITY OF THOUSAND OAKS
2100 THOUSAND OAKS BLVD
THOUSAND OAKS. CA 91362

REVISED BY | DATE REVISED
CESAR TISCARENO | TED MEKURIA
CALCULATED-DESIGNED BY | CHECKED BY
CONSULTANT FUNCTIONAL SUPERVISOR: CHRIS BRETALL
STATE OF CALIFORNIA - DEPARTMENT OF TRANSPORTATION
Caltrans

PAVEMENT DELINEATION QUANTITIES
PDQ-6

LAST REVISION 00-00-00 | DATE PLOTTED => 08-JUN-2013 | TIME PLOTTED => 13:22

PAVEMENT DELINEATION QUANTITIES
(MAINLINE)

SHEET No.	STATION LIMITS	THERMOPLASTIC TRAFFIC STRIPE: DETAIL 9 4" WHITE (BROKEN 17-7)	DETAIL 13 Mod 4" WHITE (BROKEN 36-12)	DETAIL 14 Mod 4" WHITE (BROKEN 36-12)	DETAIL 25 4" SOLID YELLOW	DETAIL 25A 4" SOLID WHITE	DETAIL 27B 4" SOLID WHITE	DETAIL 36, 36A, 36B 8" SOLID WHITE	DETAIL 38 8" SOLID WHITE	DETAIL 38B 8" SOLID WHITE	DETAIL 37 8" WHITE (BROKEN 12-3)	PAVEMENT MARKER: NON-REFLECTIVE TYPE A	RETRO-REFLECTIVE TYPE C	RETRO-REFLECTIVE TYPE G	RETRO-REFLECTIVE TYPE H	THERMOPLASTIC PAVEMENT MARKINGS (ARROWS & 12" SOLID WHITE)	DELINEATOR (CLASS 1) TYPE F	TYPE G	REMOVE: YELLOW THERMOPLASTIC TRAFFIC STRIPE (HAZARDOUS WASTE)	THERMOPLASTIC TRAFFIC STRIPE (WHITE)	THERMOPLASTIC PAVEMENT MARKING	PAVEMENT MARKER
		LF	LF	LF	LF	LF	LF	LF	LF	LF	LF	EA	EA	EA	EA	SQFT	EA	EA	LF	LF	SQFT	EA
PD-17	"A" 188+07.00 TO "A" 193+51.00							544						24						544		24
PD-17	"S-1" 390+00.00 TO "S-1" 399+50.00						950													950		
PD-17	"S-1" 395+59.00 TO "S-1" 399+50.00				391											126			391		126	
PD-17	"S-1" 390+00.00 TO "S-1" 395+59.00						559	559						24						1,118		24
PD-17	"S-1" 396+38.00 TO "S-1" 399+50.00		312									27		8		24				78	24	35
PD-17	"A" 193+51.00 TO "A" 197+50.00						399				399		28	28						479		55
PD-18	"A" 197+50.00 TO "A" 210+50.00				1,300		1,300												1,300	1,300		
PD-18	"A" 197+50.00 TO "A" 207+75.00		1,025									86		22						256		109
PD-18	"A" 197+50.00 TO "A" 207+75.00		1,025									86		22						256		109
PD-18	"A" 197+50.00 TO "A" 207+75.00		1,025									86		22						256		109
PD-18	"A" 207+75.00 TO "A" 209+19.00			144								12	4							36		16
PD-18	"A" 207+75.00 TO "A" 209+19.00			144								12	4							36		16
PD-18	"A" 207+75.00 TO "A" 209+19.00			144								12	4							36		16
PD-18	"A" 209+19.00 TO "A" 210+50.00		131									12		4						33		16
PD-18	"A" 209+19.00 TO "A" 210+50.00		131									12		4						33		16
PD-18	"A" 209+19.00 TO "A" 210+50.00		131									12		4						33		16
PD-18	"A" 197+50.00 TO "A" 209+19.00										1,169		79	79						234		158
PD-18	"A" 209+19.00 TO "A" 210+50.00									131				13						131		13
PD-19	"A" 210+50.00 TO "A" 223+50.00		1,300		1,300							109		28					1,300	325		137
PD-19	"A" 210+50.00 TO "A" 223+50.00		1,300									109		28						325		137
PD-19	"A" 210+50.00 TO "A" 223+50.00		1,300									109		28						325		137
PD-19	"A" 210+50.00 TO "A" 213+99.00						349			349				31						698		31
PD-19	"MR-2" 13+99.00 TO "MR-2" 23+00.00	901					901							20		258				901	258	20
PD-19	"A" 213+99.00 TO "A" 217+74.00							375						17						375		17
PD-19	"MR-2" 13+99.00 TO "MR-2" 17+75.00							376						17						376		17
PD-19	"A" 217+74.00 TO "A" 223+50.00						576													576		
PD-19	"MR-2" 17+75.00 TO "MR-2" 23+00.00					525									23				525			23
PD-20	"A" 223+50.00 TO "A" 236+50.00		1,300		1,300							109		28					1,300	325		137
PD-20	"A" 223+50.00 TO "A" 236+50.00		1,300									109		28						325		137
PD-20	"A" 223+50.00 TO "A" 236+50.00		1,300									109		28						325		137
PD-20	"A" 223+50.00 TO "A" 233+32.00						982													982		
PD-20	"A" 233+32.00 TO "A" 236+50.00							318						14						318		14
PD-20	"MR-1" 33+43.00 TO "MR-1" 36+50.00							307						14						307		14
PD-20	"MR-1" 27+75.00 TO "MR-1" 29+45.00	170												5		27					27	5
PD-20	"MR-1" 27+75.00 TO "MR-1" 33+43.00					568									25				568			25
PD-20	"MR-1" 27+75.00 TO "MR-1" 36+50.00						875													875		
PD-22	"A" 236+50.00 TO "A" 246+36.00		986		986							83		22					986	247		105
PD-22	"A" 236+50.00 TO "A" 246+36.00		986									83		22						247		105
PD-22	"A" 236+50.00 TO "A" 246+36.00		986									83		22						247		105
PD-22	"A" 236+50.00 TO "A" 239+01.00							251						11						251		11
PD-22	"MR-1" 36+50.00 TO "MR-1" 39+01.00							251						11						251		11
PD-22	"A" 236+50.00 TO "A" 245+00.00						850													850		
	SHEET SUBTOTAL	1,071	14,970		14,111			3,461			1,568	1,264		792		435			6,370	15,258	435	2,056

Dist	COUNTY	ROUTE	POST MILES TOTAL PROJECT	SHEET No.	TOTAL SHEETS
07	Ven	23,101	3.3/3.8, R0.1/R4.5	307	652

REGISTERED CIVIL ENGINEER 3/25/13 DATE

6-3-13
PLANS APPROVAL DATE

REGISTERED PROFESSIONAL ENGINEER CESAR TISCARENO No. C79951 Exp. 9/30/14 CIVIL STATE OF CALIFORNIA

THE STATE OF CALIFORNIA OR ITS OFFICERS OR AGENTS SHALL NOT BE RESPONSIBLE FOR THE ACCURACY OR COMPLETENESS OF SCANNED COPIES OF THIS PLAN SHEET.

CH2M HILL
1000 WILSHIRE Blvd
LOS ANGELES, CA 90017

CITY OF THOUSAND OAKS
2100 THOUSAND OAKS BLVD
THOUSAND OAKS. CA 91362

REVISED BY | DATE REVISED
CESAR TISCARENO | TED MEKURIA
CALCULATED-DESIGNED BY | CHECKED BY
CONSULTANT FUNCTIONAL SUPERVISOR | CHRIS BRETALL

STATE OF CALIFORNIA - DEPARTMENT OF TRANSPORTATION
Caltrans

PAVEMENT DELINEATION QUANTITIES
PDQ-7

LAST REVISION 00-00-00 | DATE PLOTTED => 08-JUN-2013 | TIME PLOTTED => 13:22

Dist	COUNTY	ROUTE	POST MILES TOTAL PROJECT	SHEET No.	TOTAL SHEETS
07	Ven	23,101	3.3/3.8, R0.1/R4.5	308	652

REGISTERED CIVIL ENGINEER 03-25-13 DATE

6-3-13
PLANS APPROVAL DATE

REGISTERED PROFESSIONAL ENGINEER SRIKANTH CHAKRAVARTHY No. C73629 Exp. 12/31/14 CIVIL STATE OF CALIFORNIA

THE STATE OF CALIFORNIA OR ITS OFFICERS OR AGENTS SHALL NOT BE RESPONSIBLE FOR THE ACCURACY OR COMPLETENESS OF SCANNED COPIES OF THIS PLAN SHEET.

KIMLEY-HORN AND ASSOCIATES, INC.
6800 Owensmouth Ave, Ste 410
Canoga Park, CA 91303

CITY OF THOUSAND OAKS
2100 THOUSAND OAKS BLVD
THOUSAND OAKS. CA 91362

PAVEMENT DELINEATION QUANTITIES (LOCAL STREETS)

SHEET No.	STATION LIMITS	THERMOPLASTIC TRAFFIC STRIPE														PAVEMENT MARKER				REMOVE PAINTED TRAFFIC STRIPE	REMOVE PAINTED PAVEMENT MARKING
																RETRO-REFLECTIVE					
		DETAIL 9 4" WHITE (BROKEN 17-7)	"DETAIL 13 MOD 4"" WHITE (BROKEN 36-12)"	"DETAIL 22 DOUBLE 4"" SOLID YELLOW"	"DETAIL 24 4"" SOLID YELLOW"	"DETAIL 25A 4"" SOLID YELLOW"	"DETAIL 27B 4"" SOLID WHITE"	"DETAIL 28 4-4"" SOLID YELLOW"	"DETAIL 29 4-4"" SOLID YELLOW"	"DETAIL 37B 8"" WHITE (BROKEN 12-3)"	"DETAIL 38 8"" SOLID WHITE"	"DETAIL 39 6"" SOLID WHITE"	"DETAIL 39A 6"" WHITE BROKEN (8'-4')"	"12"" WHITE LIMIT LINE"	"PAVEMENT MARKING (ARROWS AND WORDS)	TYPE C	TYPE D	TYPE G	TYPE H		
		LF	LF	LF	LF	LF	LF	LF	LF	LF	LF	LF	LF	SQFT	SQFT	EA	EA	EA	EA	LF	SQFT
PD-8	HAMPSHIRE RD: 75+00 TO 81+50	541				590		90		740	502	307	100	48	717	26		35	26		
PD-8	HAMPSHIRE RD: 81+50 TO 85+50										1149			60	90			49		856	165
PD-8	HAMPSHIRE RD: 85+50 TO 89+30									477	276			50	68	17		13			
PD-8	HAMPSHIRE RD-101 SB OFF-RAMP		614	285		550	550				286			106	353		13	27	20		
PD-11	WILLOW LN: 126+00 TO 133+00			300					660			1270					40			730	
PD-21	MOORPARK RD: 15+24 TO 18+50	260			632		50				400	70	200		58			25			
PD-21	MOORPARK RD: 18+50 TO 21+50	224				314	200				700			90	135			36	14	658	140
PD-21	MOORPARK RD: 21+50 TO 25+00	157				334					800			45	168			38	15		
	SUBTOTAL	1,182	614	585	632	1,788	800	90	660	1,217	4,113	1,647	300	399	1,589	43	53	223	75	2,244	305
	SHEET TOTAL	1,796		4,555						1,217	4,113	1,947		1,988		394				2,244	305

(N) NOT A SEPARATE ITEM, FOR INFORMATION ONLY.

REVISED BY | DATE REVISED

ANGELA PINLEY
ROSSINA CHICHIRI
MICHAEL WASHKOWIAK

CALCULATED-DESIGNED BY | CHECKED BY

CONSULTANT FUNCTIONAL SUPERVISOR
SRIKANTH CHAKRAVARTHY

STATE OF CALIFORNIA - DEPARTMENT OF TRANSPORTATION
Caltrans

PAVEMENT DELINEATION QUANTITIES

PDQ-8

LAST REVISION 03-25-13 | DATE PLOTTED => 08-JUN-2013 TIME PLOTTED => 13:22

Dist	COUNTY	ROUTE	POST MILES TOTAL PROJECT	SHEET No.	TOTAL SHEETS
07	Ven	23,101	3.3/3.8, R0.1/R4.5	309	652

REGISTERED CIVIL ENGINEER 3/25/13 DATE

6-3-13
PLANS APPROVAL DATE

REGISTERED PROFESSIONAL ENGINEER CESAR TISCARENO No. C79951 Exp. 9/30/14 CIVIL STATE OF CALIFORNIA

THE STATE OF CALIFORNIA OR ITS OFFICERS OR AGENTS SHALL NOT BE RESPONSIBLE FOR THE ACCURACY OR COMPLETENESS OF SCANNED COPIES OF THIS PLAN SHEET.

CH2M HILL
1000 WILSHIRE Blvd
LOS ANGELES, CA 90017

CITY OF THOUSAND OAKS
2100 THOUSAND OAKS BLVD
THOUSAND OAKS. CA 91362

PAVEMENT DELINEATION QUANTITIES

SHEET No.	STATION LIMITS	THERMOPLASTIC TRAFFIC STRIPE																	PAVEMENT MARKER					THERMOPLASTIC PAVEMENT MARKING		DELINEATOR (CLASS 1)		REMOVE					
		DETAIL 9 4" WHITE (BROKEN 17-7)	DETAIL 13 Mod 4" WHITE (BROKEN 36-12)	DETAIL 14 Mod 4" WHITE (BROKEN 36-12)	DETAIL 22 DOUBLE 4" SOLID YELLOW	DETAIL 24 4" SOLID YELLOW	DETAIL 25 4" SOLID YELLOW	DETAIL 25A 4" SOLID YELLOW	DETAIL 27B 4" SOLID WHITE	DETAIL 28 4-4" SOLID YELLOW	DETAIL 29 4-4" SOLID WHITE	DETAIL 39 6" SOLID WHITE	DETAIL 39A 6" WHITE (BROKEN 8-4)	DETAIL 36, 36A, 36B 8" SOLID WHITE	DETAIL 38 8" SOLID WHITE	DETAIL 38B 8" SOLID WHITE	DETAIL 37 8" WHITE (BROKEN 12-3)	DETAIL 37B 8" WHITE (BROKEN 12-3)	NON-REFLECTIVE TYPE A	RETRO-REFLECTIVE TYPE C	RETRO-REFLECTIVE TYPE D	RETRO-REFLECTIVE TYPE G	RETRO-REFLECTIVE TYPE H	MARKINGS-ARROWS	12" WHITE LIMIT LINE	TYPE F	TYPE G	YELLOW THERMOPLASTIC TRAFFIC STRIPE (HAZARDOUS WASTE)	THERMOPLASTIC TRAFFIC STRIPE (WHITE)	THERMOPLASTIC PAVEMENT MARKING	PAVEMENT MARKER	PAINTED PAVEMENT MARKING	PAINTED TRAFFIC STRIPE
		LF	LF	LF	LF	LF	LF	LF	LF	LF	LF	LF	LF	LF	LF	LF	LF	LF	EA	EA	EA	EA	EA	SQFT	SQFT	EA	EA	LF	LF	SQFT	EA	LF	SQFT
	TOTAL SHEET PDQ-1		28,802				16,002							1,993					2,267	1,044				264		16	8	9,333	15,769	264	3,312		
	TOTAL SHEET PDQ-2	1,020	20,400				7,622							2,762			1,263		1,724	787				225		18	11	5,100	10,492	225	2,511		
	TOTAL SHEET PDQ-3	11	22,400				9,584							1,093			483		1,891	637								5,841	10,533		2,528		
	TOTAL SHEET PDQ-4	523	20,573				12,067							1,484			4,347		1,739	1,170								7,332	12,232		2,909		
	TOTAL SHEET PDQ-5		23,215				6,948							556			917		1,963	688								5,200	8,291		2,650		
	TOTAL SHEET PDQ-6		21,905				16,383							1,787					1,852	670								9,130	14,516		2,523		
	TOTAL SHEET PDQ-7	1,071	14,970				14,111							3,461			1,568		1,264	792				435				6,370	15,258	435	2,056		
	TOTAL SHEET PDQ-8	1,182	614				4,555					1,947		4,113			1,217			394				1,988								305	2,244
	TOTAL	3,807	152,879				87,272					1,947		17,249			9,795		12,700*	6,181*				2,912		53		48,306	87,090	924	18,488*	305*	2,244*

NOTE:

* SEE SCQ-16 FOR GRAND TOTAL QUANTITIES OF PAINT TRAFFIC STRIPE (2-COAT), PAVEMENT MARKER (NON-REFLECTIVE), PAVEMENT MARKER (RETROREFLECTIVE), AND REMOVE PAVEMENT MARKER.

STATE OF CALIFORNIA - DEPARTMENT OF TRANSPORTATION
Caltrans

CONSULTANT FUNCTIONAL SUPERVISOR: CHRIS BRETALL
CALCULATED-DESIGNED BY: CESAR TISCARENO
CHECKED BY: TED MEKURIA
REVISED BY
DATE REVISED

PAVEMENT DELINEATION QUANTITIES

PDQ-9

LAST REVISION 00-00-00
DATE PLOTTED => 08-JUN-2013
TIME PLOTTED => 13:22

Dist	COUNTY	ROUTE	POST MILES TOTAL PROJECT	SHEET No.	TOTAL SHEETS
07	Ven	23,101	3.3/3.8, R0.1/R4.5	310	652

REGISTERED CIVIL ENGINEER 3-25-13 DATE

6-3-13
PLANS APPROVAL DATE

REGISTERED PROFESSIONAL ENGINEER CESAR TISCARENO No. C79951 Exp. 9/30/14 CIVIL STATE OF CALIFORNIA

THE STATE OF CALIFORNIA OR ITS OFFICERS OR AGENTS SHALL NOT BE RESPONSIBLE FOR THE ACCURACY OR COMPLETENESS OF SCANNED COPIES OF THIS PLAN SHEET.

CH2M HILL
1000 WILSHIRE Blvd
LOS ANGELES, CA 90017

CITY OF THOUSAND OAKS
2100 THOUSAND OAKS BLVD
THOUSAND OAKS. CA 91362

LEGEND

- (X-X) ROADSIDE SIGN (IDENTIFIED BY NUMBER)
- (A) OVERHEAD SIGN (IDENTIFIED BY LETTER)
- MW METAL (WALL MOUNTED SIGN)
- MB METAL (BRIDGE MOUNTED SIGN)
- RL RELOCATE ROADSIDE SIGN
- R REMOVE ROADSIDE SIGN / SIGN STRUCTURE
- RB REMOVE BRIDGE MOUNTED SIGN PANEL
- RS REMOVE ROADSIDE SIGN (STRAP & SADDLE BRACKET METHOD)
- E EXISTING SIGN TO REMAIN
- SR SAVE AND REUSE EXISTING SIGN PANEL(S) AT NEW LOCATION

NOTE:

1. FOR ACCURATE RIGHT OF WAY DATA, CONTACT RIGHT OF WAY ENGINEERING AT THE DISTRICT OFFICE.
2. EXACT LOCATION AND POSITION OF ROADSIDE SIGN TO BE DETERMINED BY THE ENGINEER.
3. SEE SIGNAL AND LIGHTING PLANS FOR ADDITIONAL SIGNS.

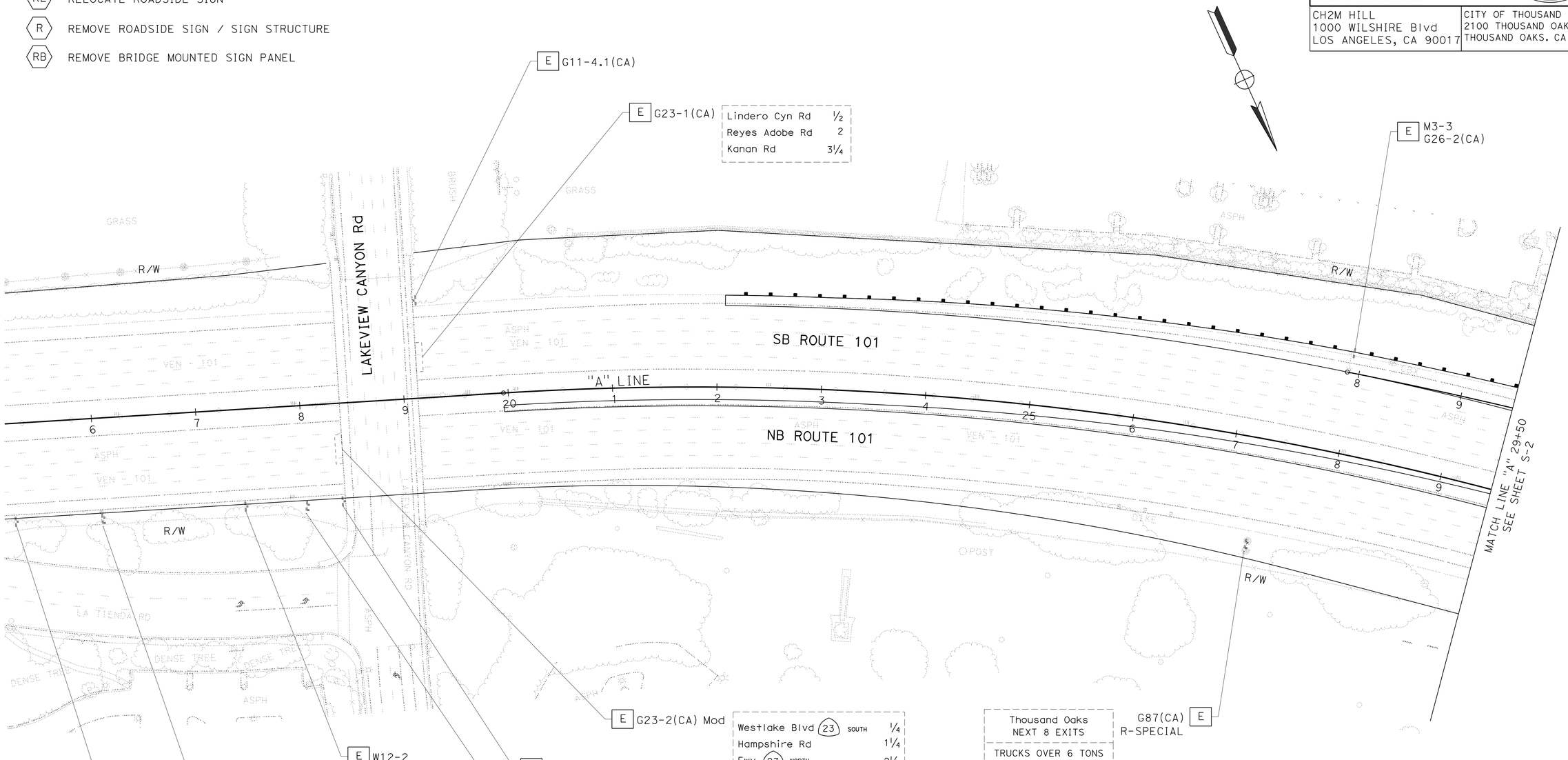

SIGN PLAN

SCALE: 1" = 50'

APPROVED FOR SIGN WORK ONLY

S-1

STATE OF CALIFORNIA - DEPARTMENT OF TRANSPORTATION
Caltrans

CONSULTANT FUNCTIONAL SUPERVISOR: CHRIS BRETALL
CALCULATED-DESIGNED BY: TED MEKURIA
CHECKED BY: CESAR TISCARENO
REVISED BY
DATE REVISED

LAST REVISION 00-00-00
DATE PLOTTED => 08-JUN-2013
TIME PLOTTED => 13:22

Dist	COUNTY	ROUTE	POST MILES TOTAL PROJECT	SHEET No.	TOTAL SHEETS
07	Ven	23,101	3.3/3.8, R0.1/R4.5	311	652

REGISTERED CIVIL ENGINEER 3-25-13 DATE

6-3-13
PLANS APPROVAL DATE

REGISTERED PROFESSIONAL ENGINEER CESAR TISCARENO No. C79951 Exp. 9/30/14 CIVIL STATE OF CALIFORNIA

THE STATE OF CALIFORNIA OR ITS OFFICERS OR AGENTS SHALL NOT BE RESPONSIBLE FOR THE ACCURACY OR COMPLETENESS OF SCANNED COPIES OF THIS PLAN SHEET.

CH2M HILL
1000 WILSHIRE Blvd
LOS ANGELES, CA 90017

CITY OF THOUSAND OAKS
2100 THOUSAND OAKS BLVD
THOUSAND OAKS. CA 91362

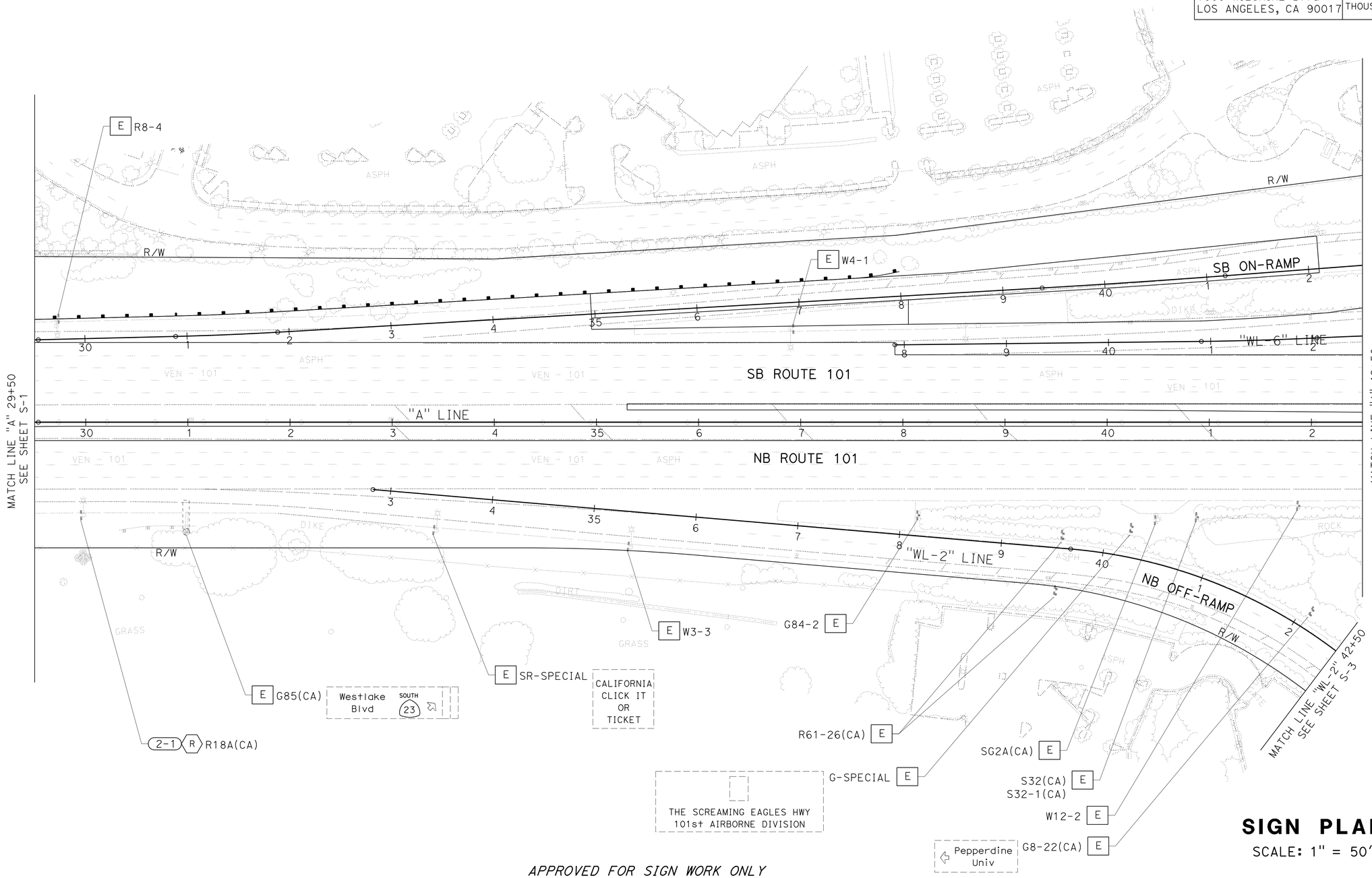

SIGN PLAN

SCALE: 1" = 50'

APPROVED FOR SIGN WORK ONLY

S-2

STATE OF CALIFORNIA - DEPARTMENT OF TRANSPORTATION
Caltrans

CONSULTANT FUNCTIONAL SUPERVISOR: CHRIS BRETALL
CALCULATED-DESIGNED BY: CESAR TISCARENO
CHECKED BY: TED MEKURIA
REVISED BY
DATE REVISED

LAST REVISION 00-00-00
DATE PLOTTED => 08-JUN-2013
TIME PLOTTED => 13:22

Dist	COUNTY	ROUTE	POST MILES TOTAL PROJECT	SHEET No.	TOTAL SHEETS
07	Ven	23,101	3.3/3.8, R0.1/R4.5	312	652

REGISTERED CIVIL ENGINEER 3-25-13 DATE

6-3-13
PLANS APPROVAL DATE

REGISTERED PROFESSIONAL ENGINEER CESAR TISCARENO No. C79951 Exp. 9/30/14 CIVIL STATE OF CALIFORNIA

THE STATE OF CALIFORNIA OR ITS OFFICERS OR AGENTS SHALL NOT BE RESPONSIBLE FOR THE ACCURACY OR COMPLETENESS OF SCANNED COPIES OF THIS PLAN SHEET.

CH2M HILL
1000 WILSHIRE Blvd
LOS ANGELES, CA 90017

CITY OF THOUSAND OAKS
2100 THOUSAND OAKS BLVD
THOUSAND OAKS. CA 91362

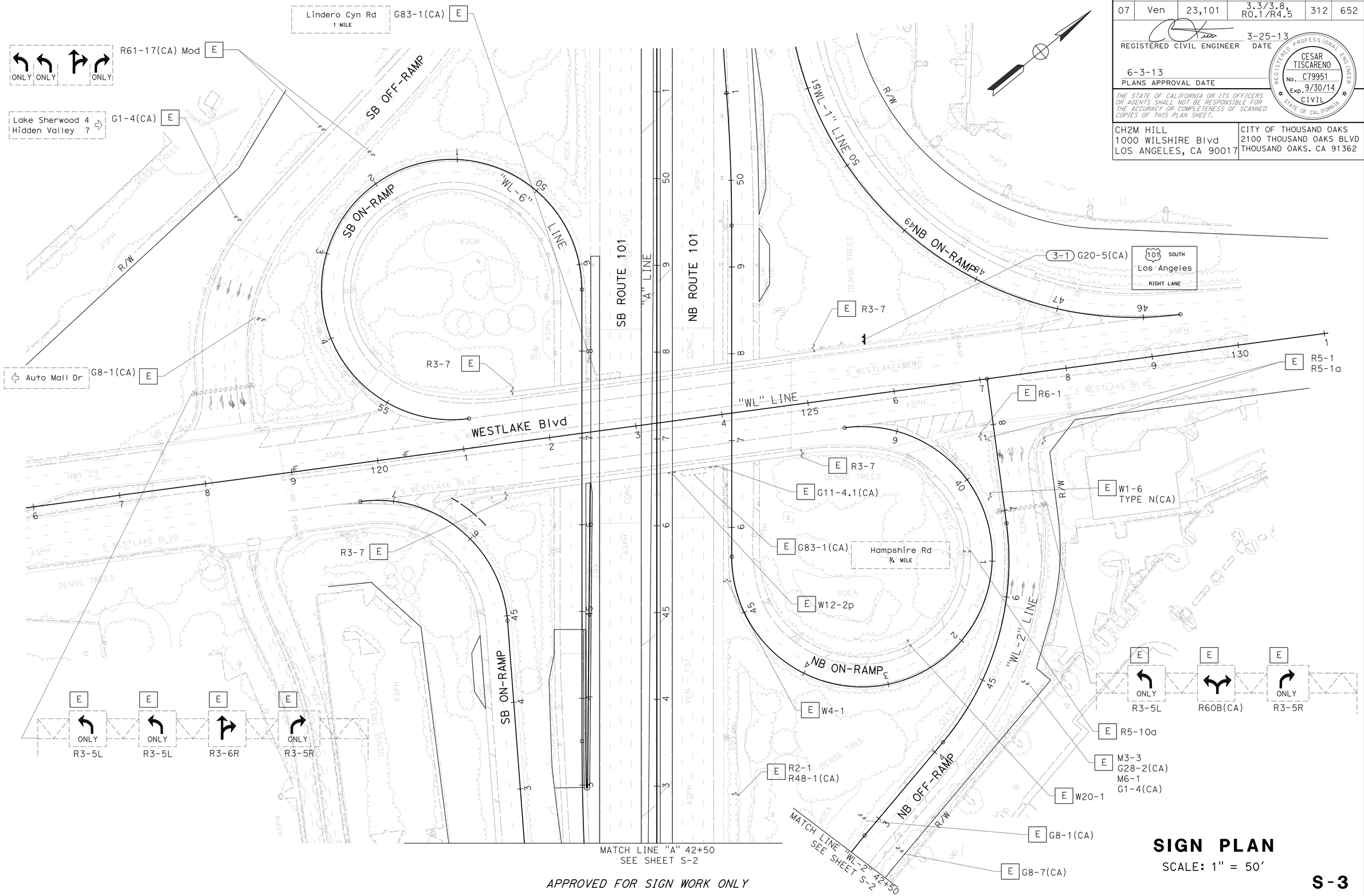

APPROVED FOR SIGN WORK ONLY

SIGN PLAN

SCALE: 1" = 50'

S-3

STATE OF CALIFORNIA - DEPARTMENT OF TRANSPORTATION

Caltrans

CONSULTANT FUNCTIONAL SUPERVISOR: CHRIS BRETALL

CESAR TISCARENO | TED MEKURIA

CALCULATED-DESIGNED BY | CHECKED BY

REVISED BY | DATE REVISED

LAST REVISION 00-00-00 | DATE PLOTTED => 08-JUN-2013 | TIME PLOTTED => 13:22

Dist	COUNTY	ROUTE	POST MILES TOTAL PROJECT	SHEET No.	TOTAL SHEETS
07	Ven	23,101	3.3/3.8, R0.1/R4.5	313	652

REGISTERED CIVIL ENGINEER 3-25-13 DATE

6-3-13
PLANS APPROVAL DATE

REGISTERED PROFESSIONAL ENGINEER CESAR TISCARENO No. C79951 Exp. 9/30/14 CIVIL STATE OF CALIFORNIA

THE STATE OF CALIFORNIA OR ITS OFFICERS OR AGENTS SHALL NOT BE RESPONSIBLE FOR THE ACCURACY OR COMPLETENESS OF SCANNED COPIES OF THIS PLAN SHEET.

CH2M HILL
1000 WILSHIRE Blvd
LOS ANGELES, CA 90017

CITY OF THOUSAND OAKS
2100 THOUSAND OAKS BLVD
THOUSAND OAKS. CA 91362

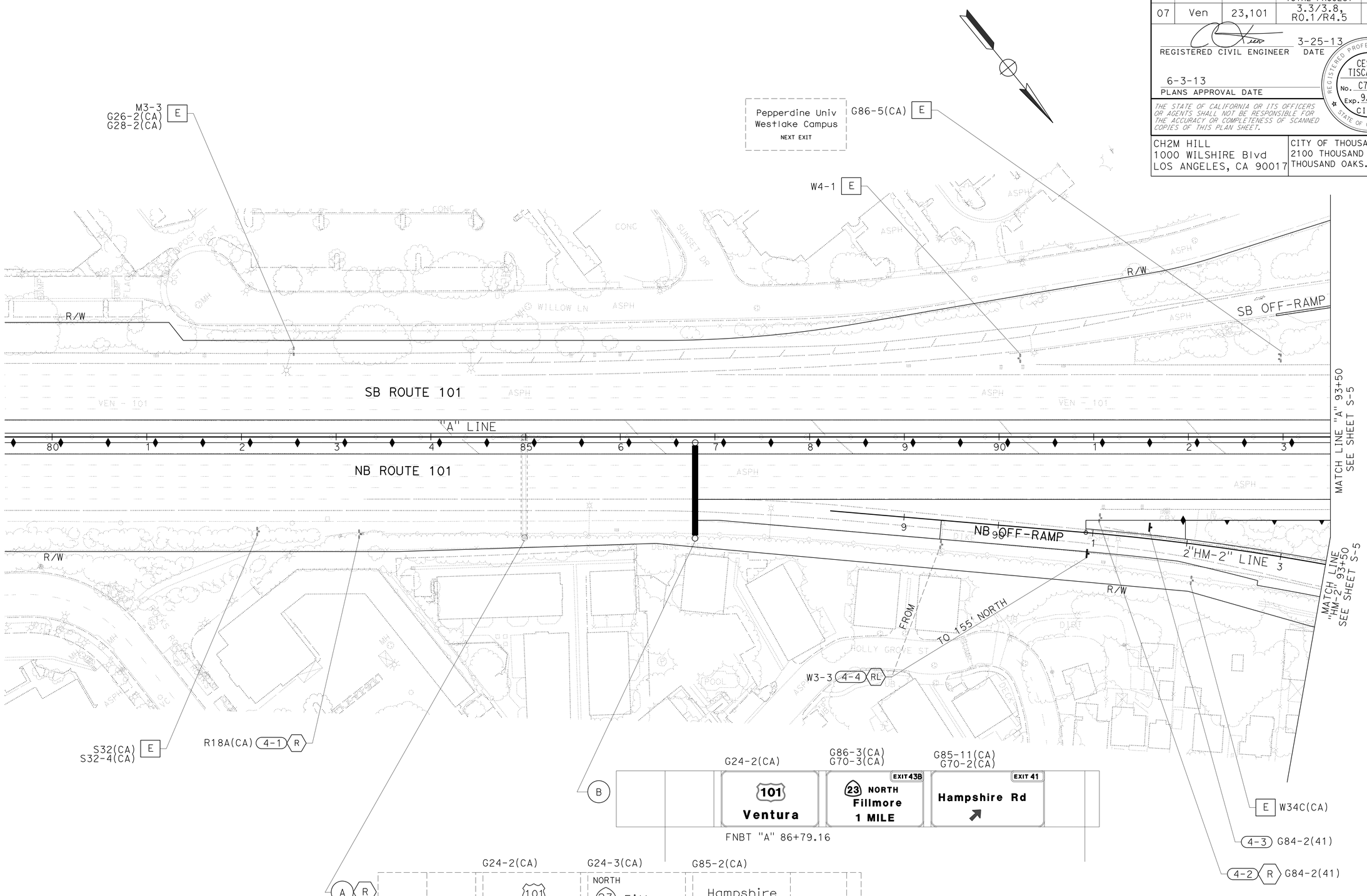

APPROVED FOR SIGN WORK ONLY

SIGN PLAN

SCALE: 1" = 50'

S-4

STATE OF CALIFORNIA - DEPARTMENT OF TRANSPORTATION

Caltrans

CONSULTANT FUNCTIONAL SUPERVISOR: CHRIS BRETALL

CALCULATED-DESIGNED BY: CESAR TISCARENO

CHECKED BY: TED MEKURIA

REVISED BY

DATE REVISED

LAST REVISION 00-00-00

DATE PLOTTED => 08-JUN-2013
TIME PLOTTED => 13:22

Dist	COUNTY	ROUTE	POST MILES TOTAL PROJECT	SHEET No.	TOTAL SHEETS
07	Ven	23,101	3.3/3.8, R0.1/R4.5	314	652

REGISTERED CIVIL ENGINEER 3-25-13 DATE

6-3-13
PLANS APPROVAL DATE

REGISTERED PROFESSIONAL ENGINEER CESAR TISCARENO No. C79951 Exp. 9/30/14 CIVIL STATE OF CALIFORNIA

THE STATE OF CALIFORNIA OR ITS OFFICERS OR AGENTS SHALL NOT BE RESPONSIBLE FOR THE ACCURACY OR COMPLETENESS OF SCANNED COPIES OF THIS PLAN SHEET.

CH2M HILL
1000 WILSHIRE Blvd
LOS ANGELES, CA 90017

CITY OF THOUSAND OAKS
2100 THOUSAND OAKS BLVD
THOUSAND OAKS. CA 91362

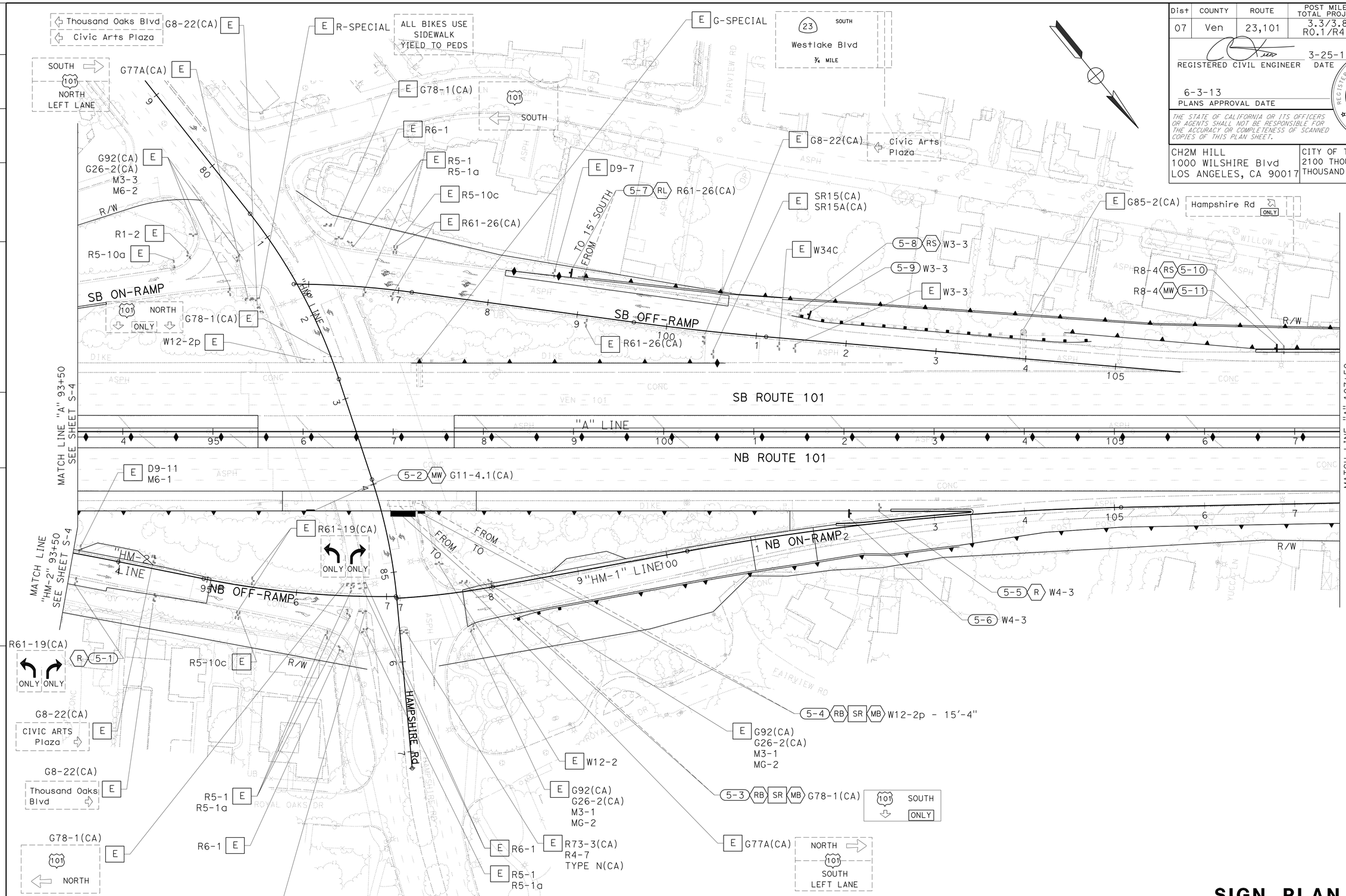

SIGN PLAN

SCALE: 1" = 50'

S-5

APPROVED FOR SIGN WORK ONLY

STATE OF CALIFORNIA - DEPARTMENT OF TRANSPORTATION

CONSULTANT FUNCTIONAL SUPERVISOR: CHRIS BRETALL

CALCULATED-DESIGNED BY: TED MEKURIA

CHECKED BY: CESAR TISCARENO

REVISED BY / DATE REVISED

LAST REVISION 00-00-00

DATE PLOTTED => 08-JUN-2013
TIME PLOTTED => 13:22

Dist	COUNTY	ROUTE	POST MILES TOTAL PROJECT	SHEET No.	TOTAL SHEETS
07	Ven	23,101	3.3/3.8, R0.1/R4.5	315	652

REGISTERED CIVIL ENGINEER 3-25-13 DATE

6-3-13
PLANS APPROVAL DATE

REGISTERED PROFESSIONAL ENGINEER
CESAR TISCARENO
No. C79951
Exp. 9/30/14
CIVIL
STATE OF CALIFORNIA

THE STATE OF CALIFORNIA OR ITS OFFICERS OR AGENTS SHALL NOT BE RESPONSIBLE FOR THE ACCURACY OR COMPLETENESS OF SCANNED COPIES OF THIS PLAN SHEET.

CH2M HILL
1000 WILSHIRE Blvd
LOS ANGELES, CA 90017

CITY OF THOUSAND OAKS
2100 THOUSAND OAKS BLVD
THOUSAND OAKS. CA 91362

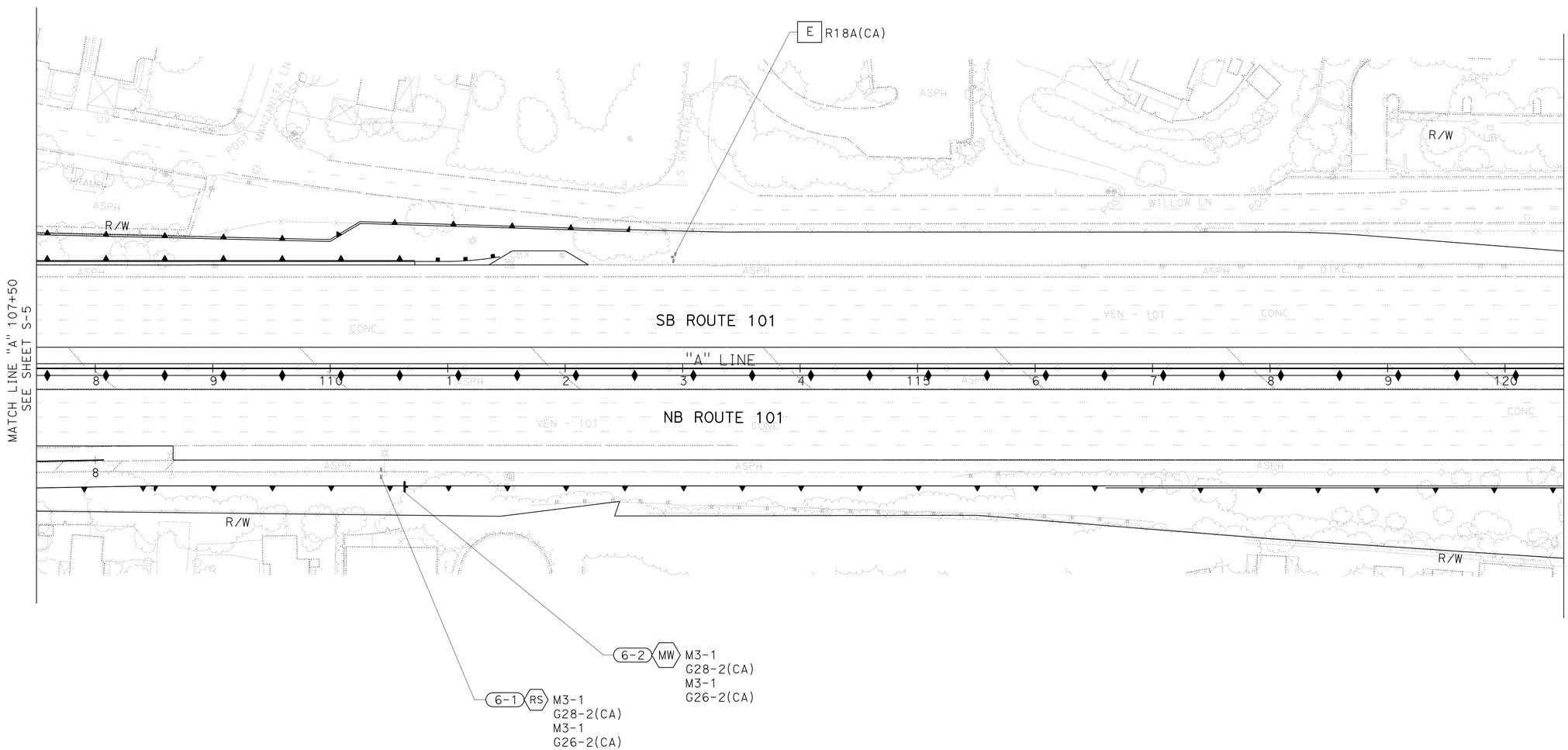

SIGN PLAN

SCALE: 1" = 50'

APPROVED FOR SIGN WORK ONLY

S-6

STATE OF CALIFORNIA - DEPARTMENT OF TRANSPORTATION

Caltrans

CONSULTANT FUNCTIONAL SUPERVISOR: CHRIS BRETALL

CALCULATED-DESIGNED BY: CESAR TISCARENO

CHECKED BY: TED MEKURIA

REVISED BY

DATE REVISED

LAST REVISION 00-00-00

DATE PLOTTED => 08-JUN-2013

TIME PLOTTED => 13:22

Dist	COUNTY	ROUTE	POST MILES TOTAL PROJECT	SHEET No.	TOTAL SHEETS
07	Ven	23,101	3.3/3.8, R0.1/R4.5	316	652

REGISTERED CIVIL ENGINEER 3-25-13 DATE

6-3-13
PLANS APPROVAL DATE

REGISTERED PROFESSIONAL ENGINEER CESAR TISCARENO No. C79951 Exp. 9/30/14 CIVIL STATE OF CALIFORNIA

THE STATE OF CALIFORNIA OR ITS OFFICERS OR AGENTS SHALL NOT BE RESPONSIBLE FOR THE ACCURACY OR COMPLETENESS OF SCANNED COPIES OF THIS PLAN SHEET.

CH2M HILL
1000 WILSHIRE Blvd
LOS ANGELES, CA 90017

CITY OF THOUSAND OAKS
2100 THOUSAND OAKS BLVD
THOUSAND OAKS. CA 91362

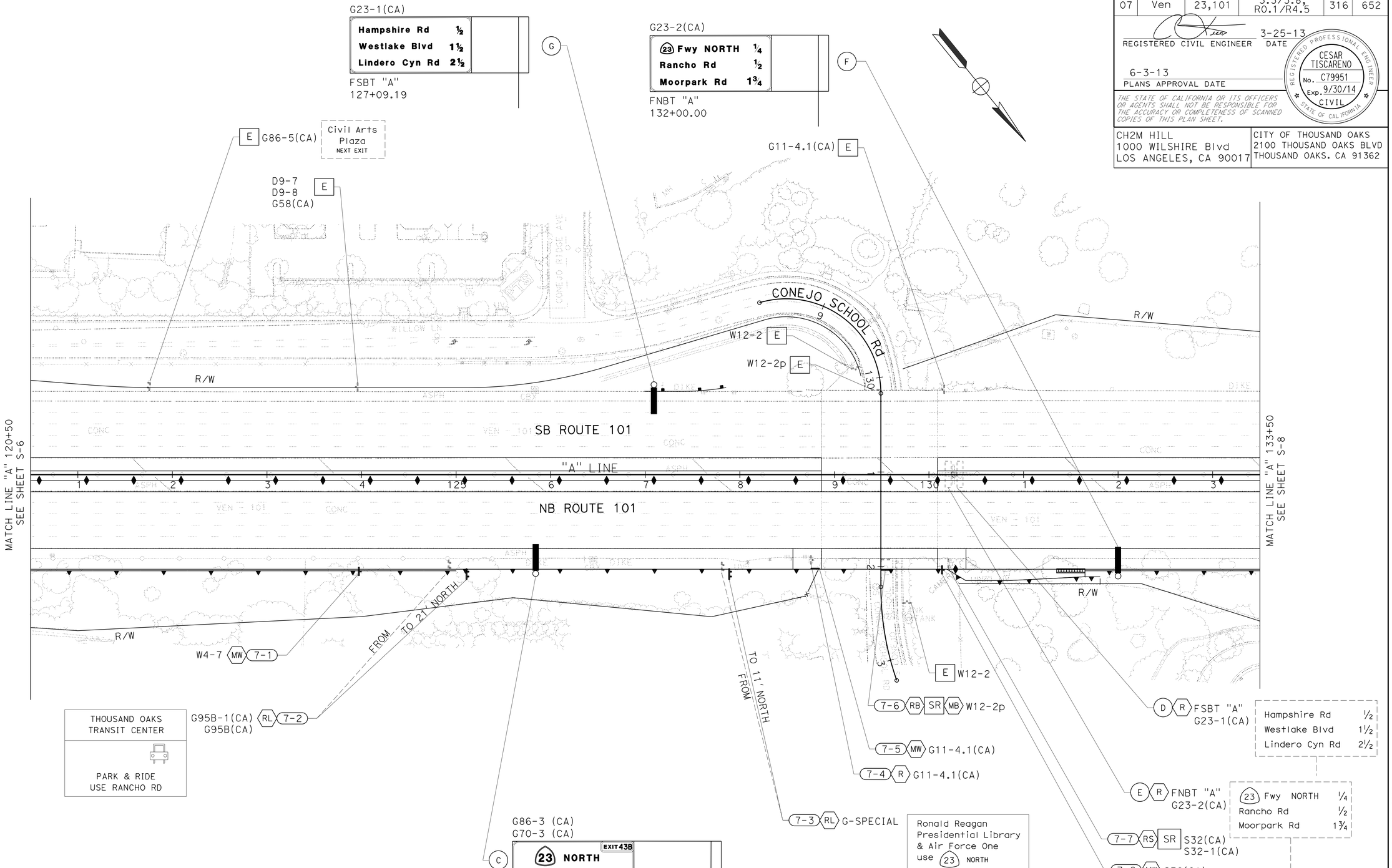

SIGN PLAN

SCALE: 1" = 50'

APPROVED FOR SIGN WORK ONLY

S-7

STATE OF CALIFORNIA - DEPARTMENT OF TRANSPORTATION
Caltrans

CONSULTANT FUNCTIONAL SUPERVISOR: CHRIS BRETALL
CALCULATED-DESIGNED BY: TED MEKURIA
CHECKED BY: CESAR TISCARENO
REVISED BY
DATE REVISED

LAST REVISION 00-00-00
DATE PLOTTED => 08-JUN-2013
TIME PLOTTED => 13:22

Dist	COUNTY	ROUTE	POST MILES TOTAL PROJECT	SHEET No.	TOTAL SHEETS
07	Ven	23,101	3.3/3.8, R0.1/R4.5	317	652

REGISTERED CIVIL ENGINEER 3-25-13 DATE

6-3-13
PLANS APPROVAL DATE

REGISTERED PROFESSIONAL ENGINEER CESAR TISCARENO No. C79951 Exp. 9/30/14 CIVIL STATE OF CALIFORNIA

THE STATE OF CALIFORNIA OR ITS OFFICERS OR AGENTS SHALL NOT BE RESPONSIBLE FOR THE ACCURACY OR COMPLETENESS OF SCANNED COPIES OF THIS PLAN SHEET.

CH2M HILL
1000 WILSHIRE Blvd
LOS ANGELES, CA 90017

CITY OF THOUSAND OAKS
2100 THOUSAND OAKS BLVD
THOUSAND OAKS. CA 91362

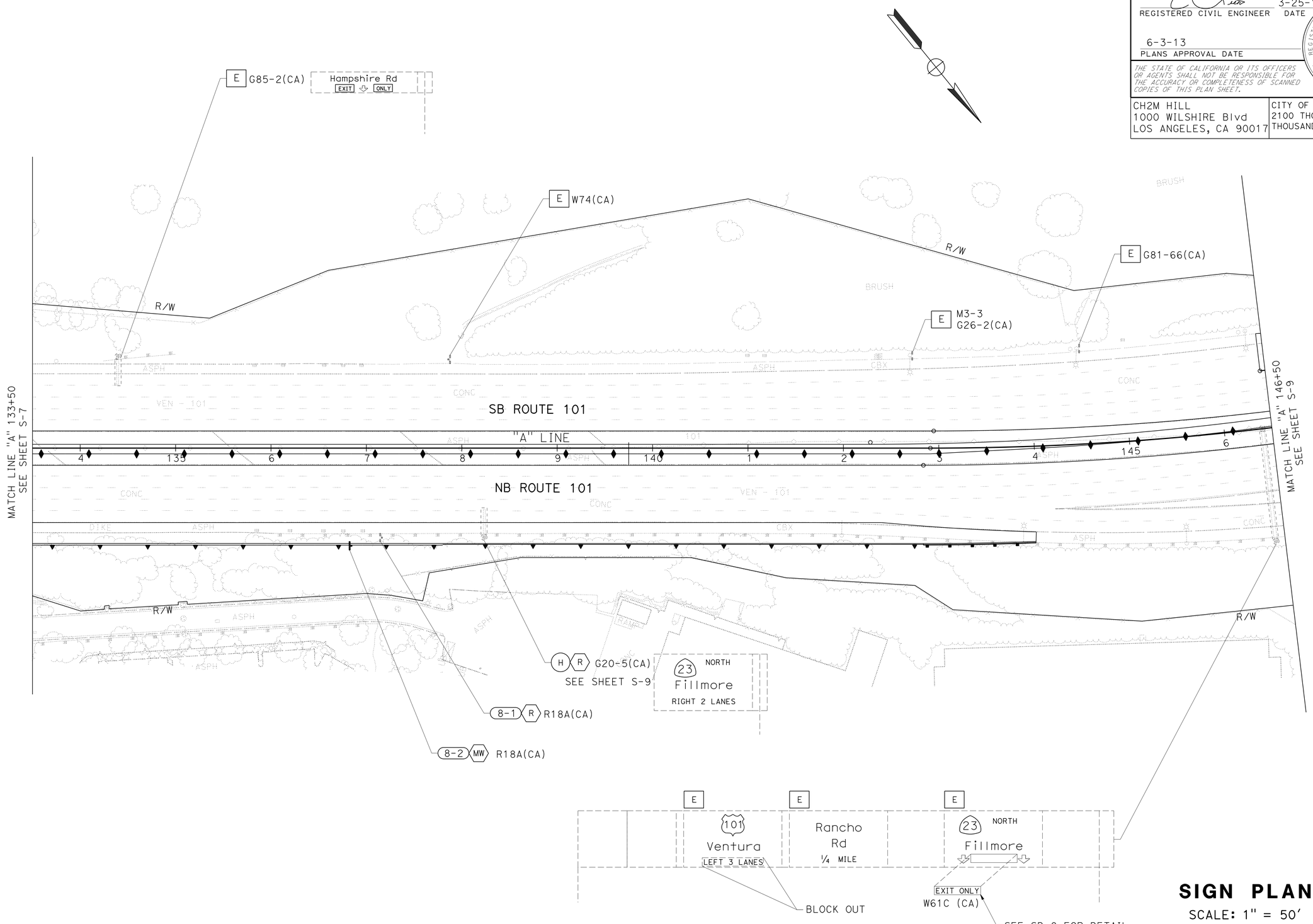

APPROVED FOR SIGN WORK ONLY

SIGN PLAN

SCALE: 1" = 50'

S-8

STATE OF CALIFORNIA - DEPARTMENT OF TRANSPORTATION
Caltrans

CONSULTANT FUNCTIONAL SUPERVISOR: CHRIS BRETALL
CALCULATED-DESIGNED BY: CESAR TISCARENO
CHECKED BY: TED MEKURIA
REVISED BY
DATE REVISED

LAST REVISION 00-00-00
DATE PLOTTED => 08-JUN-2013
TIME PLOTTED => 13:22

Dist	COUNTY	ROUTE	POST MILES TOTAL PROJECT	SHEET No.	TOTAL SHEETS
07	Ven	23,101	3.3/3.8, R0.1/R4.5	318	652

REGISTERED CIVIL ENGINEER 3-25-13 DATE

6-3-13
PLANS APPROVAL DATE

REGISTERED PROFESSIONAL ENGINEER
CESAR TISCARENO
No. C79951
Exp. 9/30/14
CIVIL
STATE OF CALIFORNIA

THE STATE OF CALIFORNIA OR ITS OFFICERS OR AGENTS SHALL NOT BE RESPONSIBLE FOR THE ACCURACY OR COMPLETENESS OF SCANNED COPIES OF THIS PLAN SHEET.

CH2M HILL
1000 WILSHIRE Blvd
LOS ANGELES, CA 90017

CITY OF THOUSAND OAKS
2100 THOUSAND OAKS BLVD
THOUSAND OAKS. CA 91362

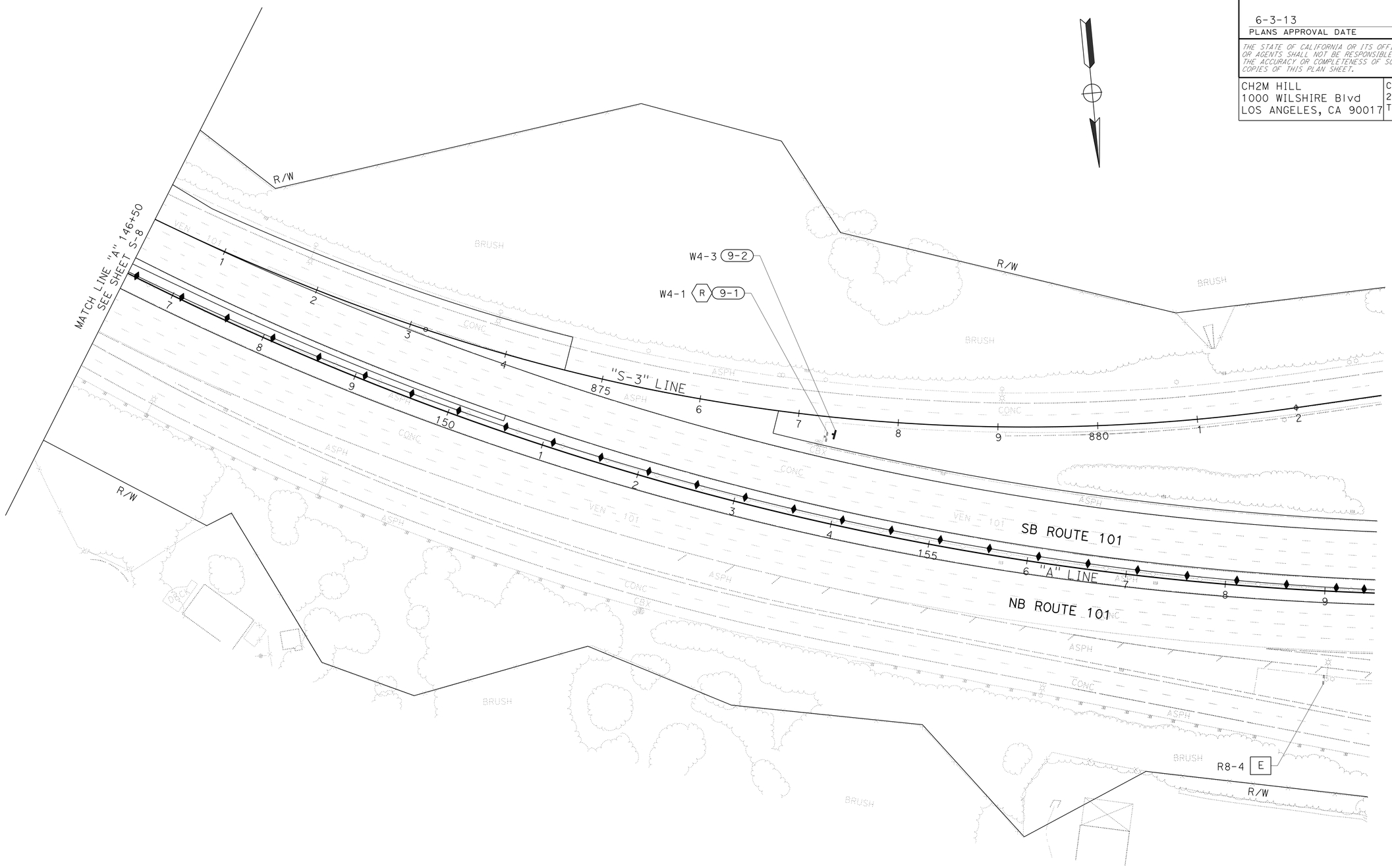

SIGN PLAN

SCALE: 1" = 50'

APPROVED FOR SIGN WORK ONLY

S-9

STATE OF CALIFORNIA - DEPARTMENT OF TRANSPORTATION
Caltrans

CONSULTANT FUNCTIONAL SUPERVISOR: CHRIS BRETALL
CALCULATED-DESIGNED BY: CESAR TISCARENO
CHECKED BY: TED MEKURIA
REVISED BY
DATE REVISED

LAST REVISION 00-00-00
DATE PLOTTED => 08-JUN-2013
TIME PLOTTED => 13:22

Dist	COUNTY	ROUTE	POST MILES TOTAL PROJECT	SHEET No.	TOTAL SHEETS
07	Ven	23,101	3.3/3.8, R0.1/R4.5	319	652

REGISTERED CIVIL ENGINEER 3-25-13 DATE

6-3-13
PLANS APPROVAL DATE

REGISTERED PROFESSIONAL ENGINEER
CESAR TISCARENO
No. C79951
Exp. 9/30/14
CIVIL
STATE OF CALIFORNIA

THE STATE OF CALIFORNIA OR ITS OFFICERS OR AGENTS SHALL NOT BE RESPONSIBLE FOR THE ACCURACY OR COMPLETENESS OF SCANNED COPIES OF THIS PLAN SHEET.

CH2M HILL
1000 WILSHIRE Blvd
LOS ANGELES, CA 90017

CITY OF THOUSAND OAKS
2100 THOUSAND OAKS BLVD
THOUSAND OAKS. CA 91362

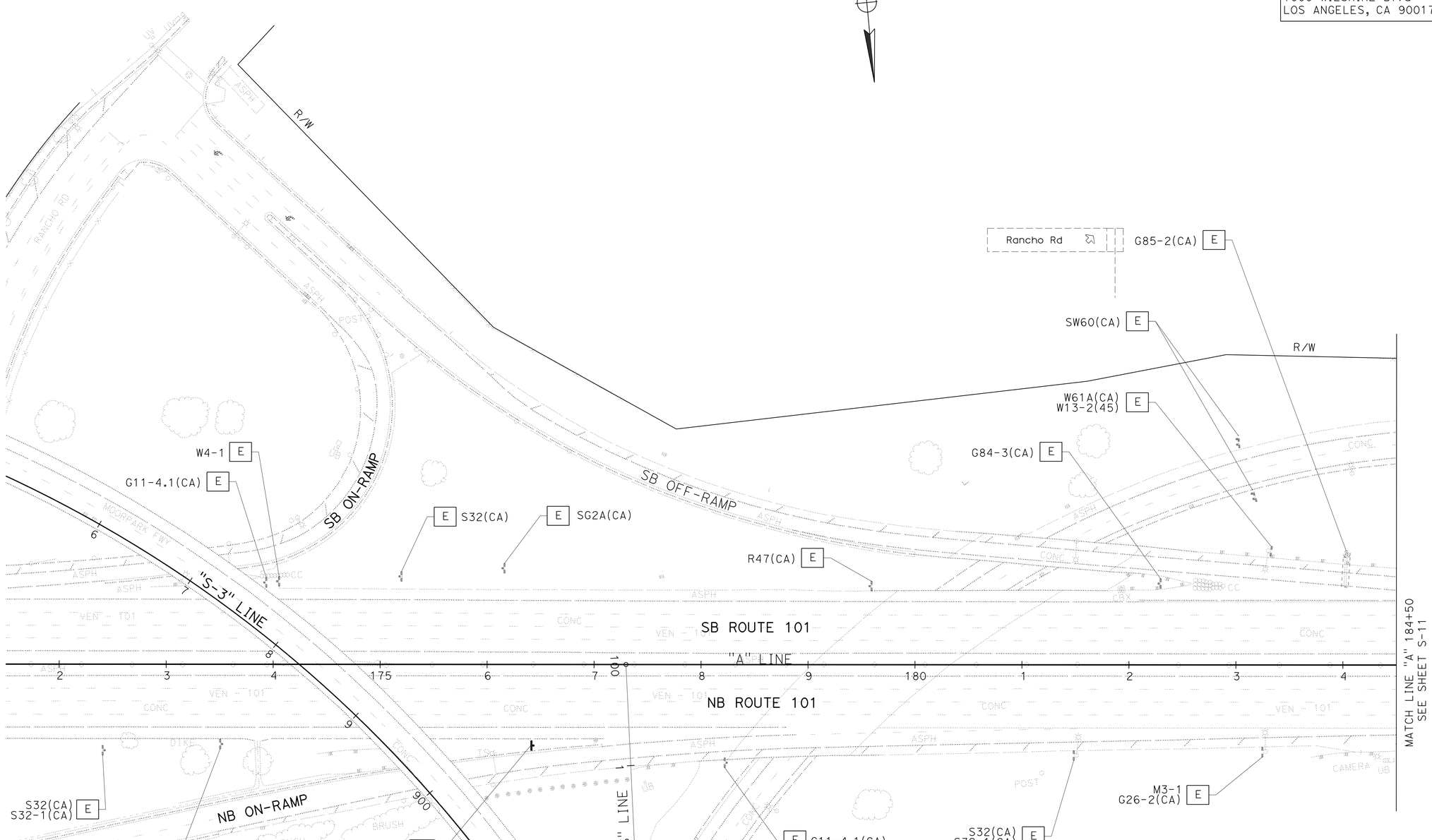

SIGN PLAN

SCALE: 1" = 50'

APPROVED FOR SIGN WORK ONLY

S-10

STATE OF CALIFORNIA - DEPARTMENT OF TRANSPORTATION

Caltrans

CONSULTANT FUNCTIONAL SUPERVISOR: CHRIS BRETALL

CALCULATED-DESIGNED BY: CESAR TISCARENO

CHECKED BY: TED MEKURIA

REVISED BY

DATE REVISED

LAST REVISION 00-00-00

DATE PLOTTED => 06-JUN-2013
TIME PLOTTED => 13:22

Dist	COUNTY	ROUTE	POST MILES TOTAL PROJECT	SHEET No.	TOTAL SHEETS
07	Ven	23,101	3.3/3.8, R0.1/R4.5	320	652

REGISTERED CIVIL ENGINEER 3-25-13 DATE

6-3-13
PLANS APPROVAL DATE

REGISTERED PROFESSIONAL ENGINEER CESAR TISCARENO No. C79951 Exp. 9/30/14 CIVIL STATE OF CALIFORNIA

THE STATE OF CALIFORNIA OR ITS OFFICERS OR AGENTS SHALL NOT BE RESPONSIBLE FOR THE ACCURACY OR COMPLETENESS OF SCANNED COPIES OF THIS PLAN SHEET.

CH2M HILL
1000 WILSHIRE Blvd
LOS ANGELES, CA 90017

CITY OF THOUSAND OAKS
2100 THOUSAND OAKS BLVD
THOUSAND OAKS. CA 91362

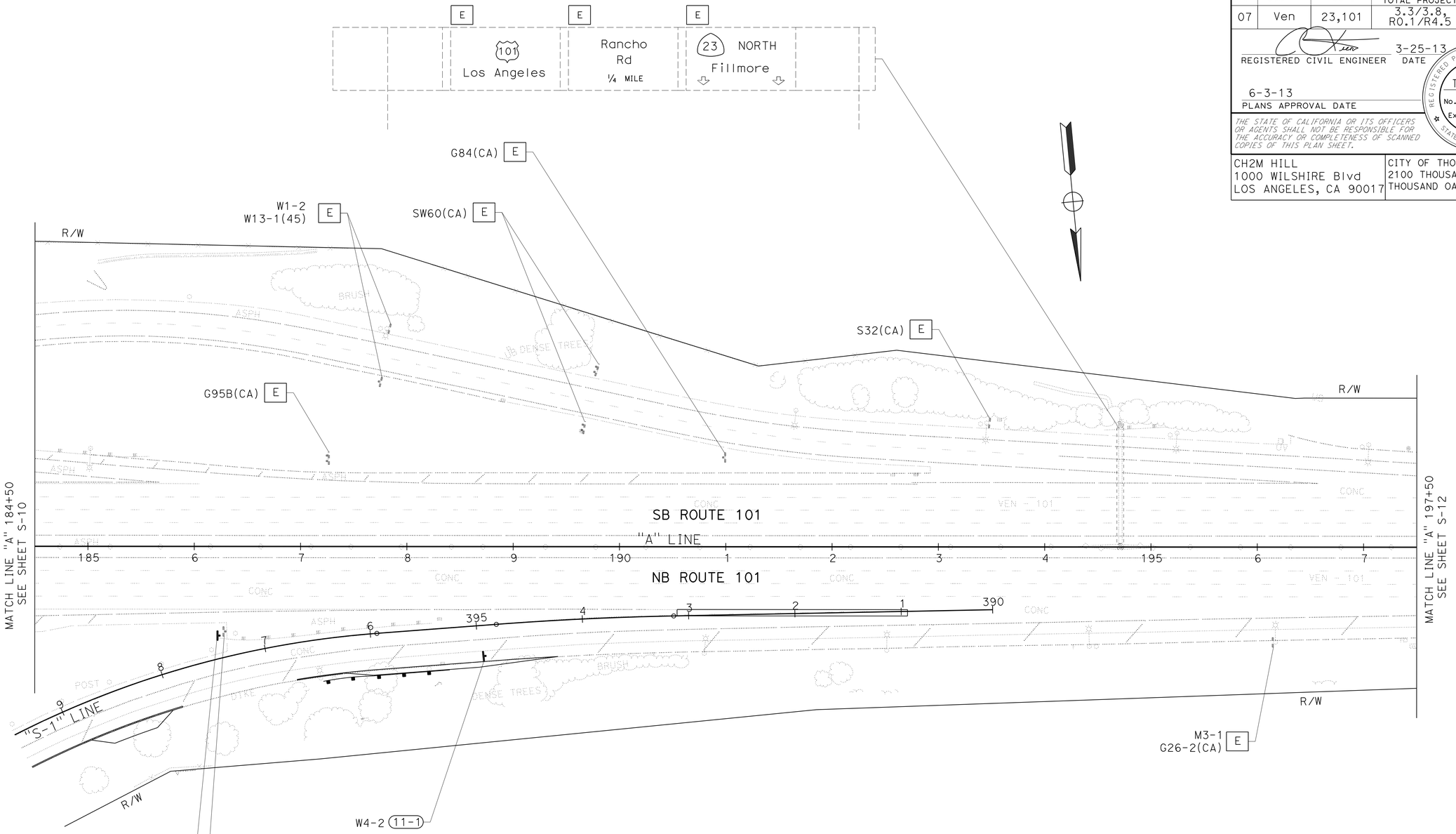

SIGN PLAN

SCALE: 1" = 50'

APPROVED FOR SIGN WORK ONLY

S-11

STATE OF CALIFORNIA - DEPARTMENT OF TRANSPORTATION
Caltrans

CONSULTANT FUNCTIONAL SUPERVISOR: CHRIS BRETALL
CALCULATED-DESIGNED BY: CESAR TISCARENO
CHECKED BY: TED MEKURIA
REVISED BY
DATE REVISED

LAST REVISION 00-00-00 | DATE PLOTTED => 08-JUN-2013 | TIME PLOTTED => 13:22

Dist	COUNTY	ROUTE	POST MILES TOTAL PROJECT	SHEET No.	TOTAL SHEETS
07	Ven	23,101	3.3/3.8, R0.1/R4.5	321	652

REGISTERED CIVIL ENGINEER 3-25-13 DATE

6-3-13
PLANS APPROVAL DATE

REGISTERED PROFESSIONAL ENGINEER CESAR TISCARENO No. C79951 Exp. 9/30/14 CIVIL STATE OF CALIFORNIA

THE STATE OF CALIFORNIA OR ITS OFFICERS OR AGENTS SHALL NOT BE RESPONSIBLE FOR THE ACCURACY OR COMPLETENESS OF SCANNED COPIES OF THIS PLAN SHEET.

CH2M HILL
1000 WILSHIRE Blvd
LOS ANGELES, CA 90017

CITY OF THOUSAND OAKS
2100 THOUSAND OAKS BLVD
THOUSAND OAKS. CA 91362

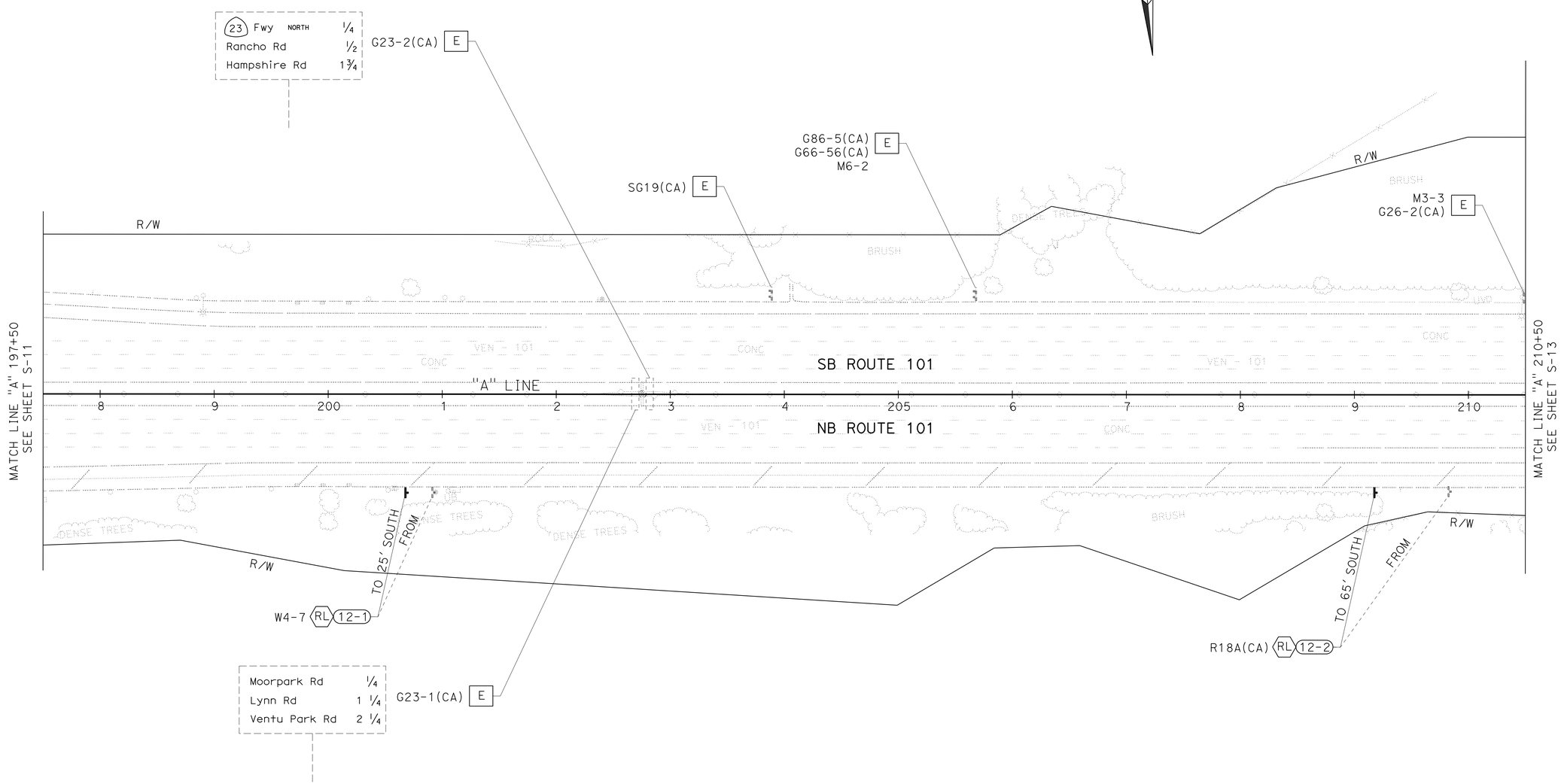

SIGN PLAN

SCALE: 1" = 50'

APPROVED FOR SIGN WORK ONLY

S-12

STATE OF CALIFORNIA - DEPARTMENT OF TRANSPORTATION
Caltrans

CONSULTANT FUNCTIONAL SUPERVISOR: CHRIS BRETALL
CALCULATED-DESIGNED BY: CESAR TISCARENO
CHECKED BY: TED MEKURIA
REVISED BY
DATE REVISED

LAST REVISION 00-00-00
DATE PLOTTED => 08-JUN-2013
TIME PLOTTED => 13:22

Dist	COUNTY	ROUTE	POST MILES TOTAL PROJECT	SHEET No.	TOTAL SHEETS
07	Ven	23,101	3.3/3.8, R0.1/R4.5	322	652

REGISTERED CIVIL ENGINEER 3-25-13 DATE

6-3-13
PLANS APPROVAL DATE

REGISTERED PROFESSIONAL ENGINEER CESAR TISCARENO No. C79951 Exp. 9/30/14 CIVIL STATE OF CALIFORNIA

THE STATE OF CALIFORNIA OR ITS OFFICERS OR AGENTS SHALL NOT BE RESPONSIBLE FOR THE ACCURACY OR COMPLETENESS OF SCANNED COPIES OF THIS PLAN SHEET.

CH2M HILL
1000 WILSHIRE Blvd
LOS ANGELES, CA 90017

CITY OF THOUSAND OAKS
2100 THOUSAND OAKS BLVD
THOUSAND OAKS. CA 91362

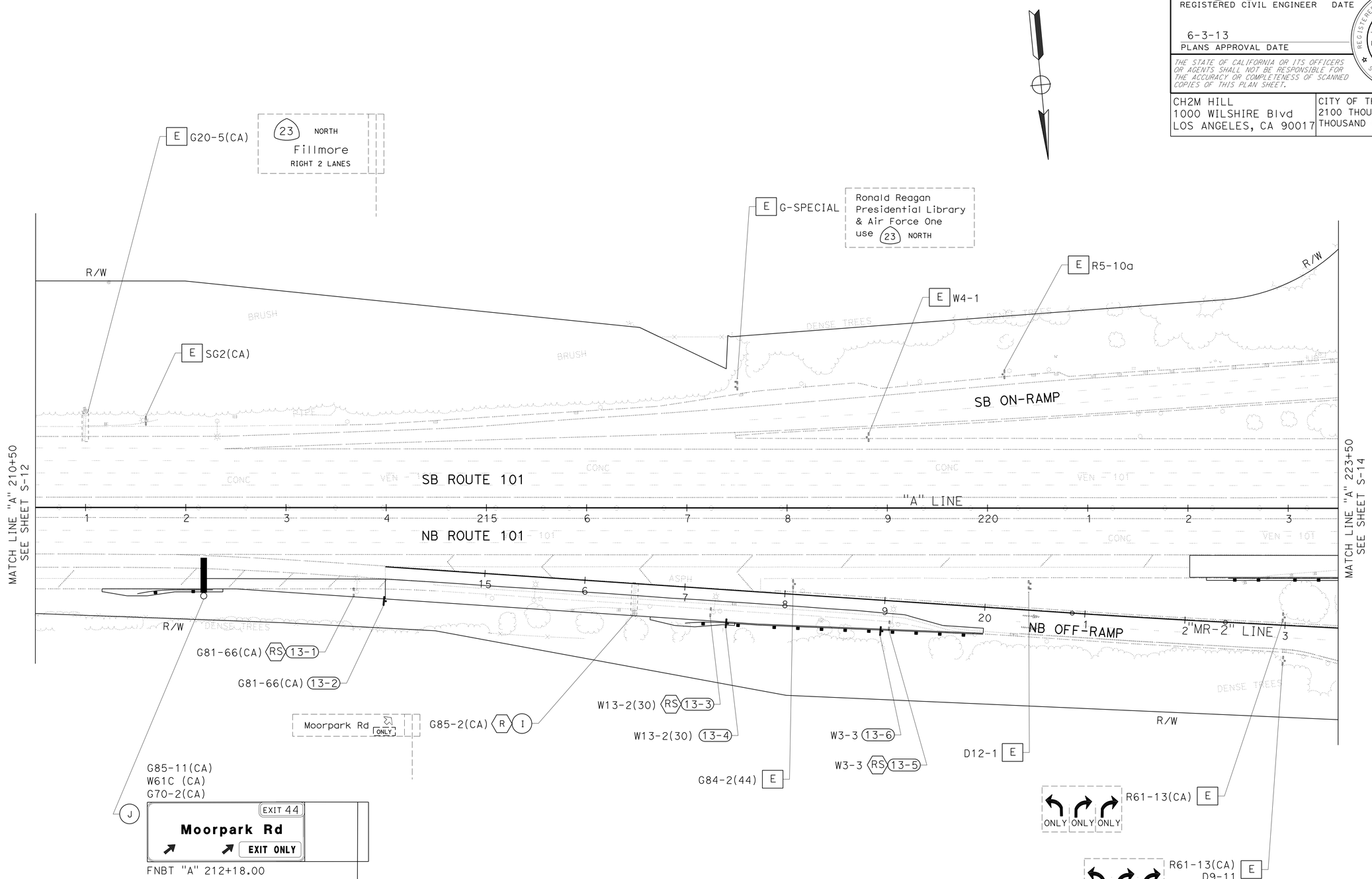

SIGN PLAN

SCALE: 1" = 50'

APPROVED FOR SIGN WORK ONLY

S-13

REVISED BY	DATE REVISED

CESAR TISCARENO — CALCULATED-DESIGNED BY
TED MEKURIA — CHECKED BY
CHRIS BRETALL — CONSULTANT FUNCTIONAL SUPERVISOR

STATE OF CALIFORNIA - DEPARTMENT OF TRANSPORTATION
Caltrans

LAST REVISION 00-00-00 | DATE PLOTTED => 08-JUN-2013 | TIME PLOTTED => 13:22

Dist	COUNTY	ROUTE	POST MILES TOTAL PROJECT	SHEET No.	TOTAL SHEETS
07	Ven	23,101	3.3/3.8, R0.1/R4.5	323	652

REGISTERED CIVIL ENGINEER 3-25-13 DATE

6-3-13
PLANS APPROVAL DATE

REGISTERED PROFESSIONAL ENGINEER CESAR TISCARENO No. C79951 Exp. 9/30/14 CIVIL STATE OF CALIFORNIA

THE STATE OF CALIFORNIA OR ITS OFFICERS OR AGENTS SHALL NOT BE RESPONSIBLE FOR THE ACCURACY OR COMPLETENESS OF SCANNED COPIES OF THIS PLAN SHEET.

CH2M HILL
1000 WILSHIRE Blvd
LOS ANGELES, CA 90017

CITY OF THOUSAND OAKS
2100 THOUSAND OAKS BLVD
THOUSAND OAKS. CA 91362

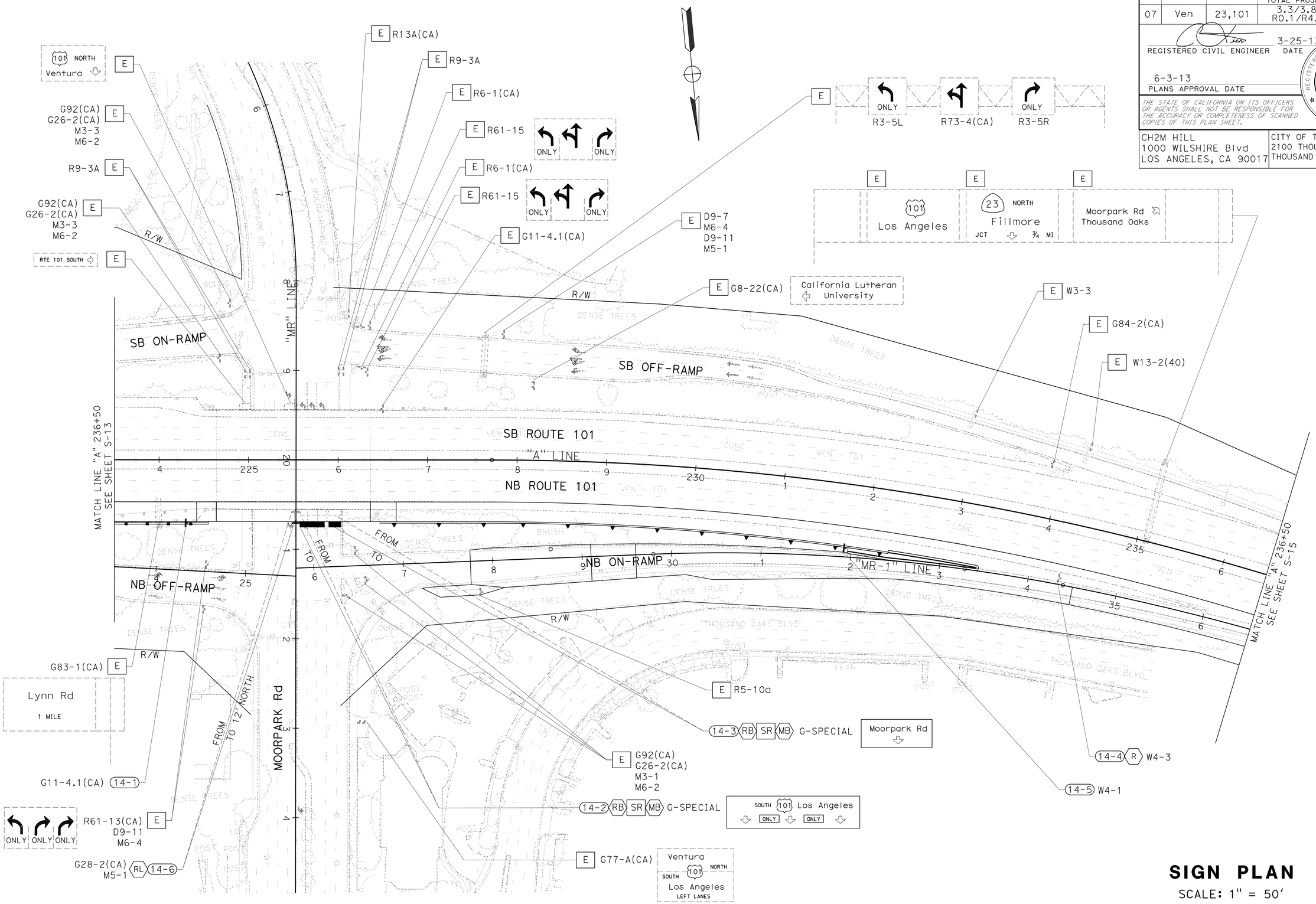

SIGN PLAN

SCALE: 1" = 50'

S-14

APPROVED FOR SIGN WORK ONLY

STATE OF CALIFORNIA - DEPARTMENT OF TRANSPORTATION
Caltrans

CONSULTANT FUNCTIONAL SUPERVISOR: CHRIS BRETALL
CALCULATED-DESIGNED BY: CESAR TISCARENO
CHECKED BY: TED MEKURIA
REVISED BY
DATE REVISED

LAST REVISION 00-00-00
DATE PLOTTED => 08-JUN-2013
TIME PLOTTED => 13:22

Dist	COUNTY	ROUTE	POST MILES TOTAL PROJECT	SHEET No.	TOTAL SHEETS
07	Ven	23,101	3.3/3.8, R0.1/R4.5	324	652

REGISTERED CIVIL ENGINEER 3-25-13 DATE

6-3-13
PLANS APPROVAL DATE

REGISTERED PROFESSIONAL ENGINEER
CESAR TISCARENO
No. C79951
Exp. 9/30/14
CIVIL
STATE OF CALIFORNIA

THE STATE OF CALIFORNIA OR ITS OFFICERS OR AGENTS SHALL NOT BE RESPONSIBLE FOR THE ACCURACY OR COMPLETENESS OF SCANNED COPIES OF THIS PLAN SHEET.

CH2M HILL
1000 WILSHIRE Blvd
LOS ANGELES, CA 90017

CITY OF THOUSAND OAKS
2100 THOUSAND OAKS BLVD
THOUSAND OAKS. CA 91362

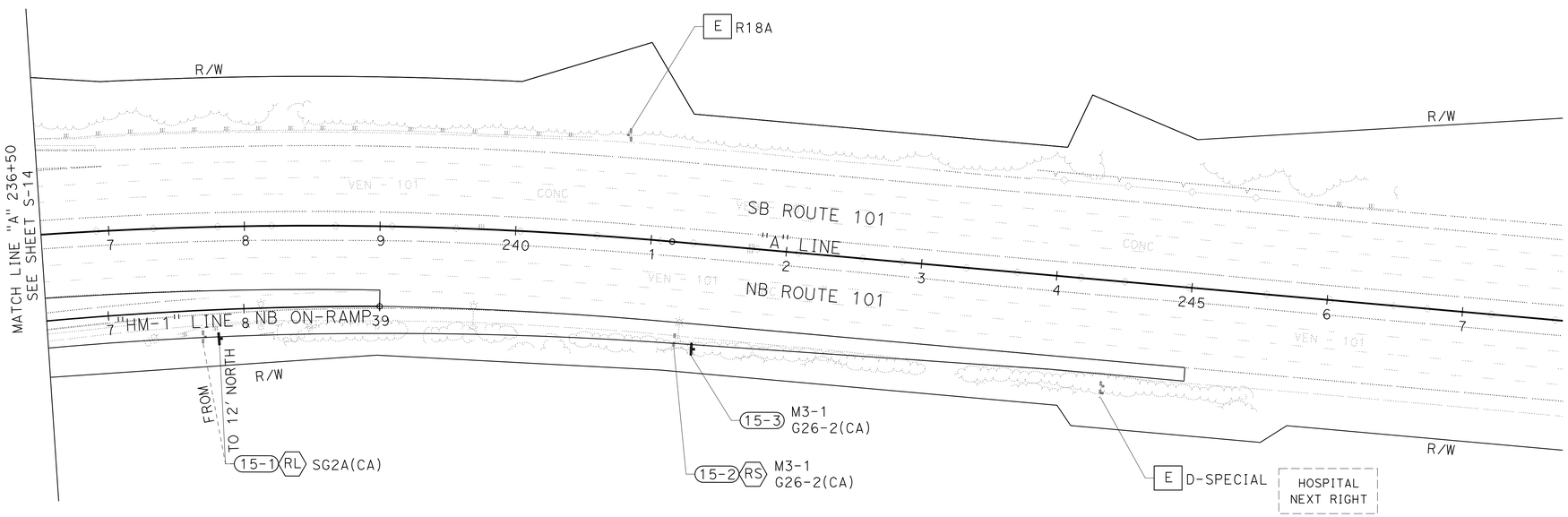

SIGN PLAN

SCALE: 1" = 50'

S-15

APPROVED FOR SIGN WORK ONLY

STATE OF CALIFORNIA - DEPARTMENT OF TRANSPORTATION
Caltrans

CONSULTANT FUNCTIONAL SUPERVISOR: CHRIS BRETALL
CALCULATED-DESIGNED BY: CESAR TISCARENO
CHECKED BY: TED MEKURIA
REVISED BY
DATE REVISED

LAST REVISION 00-00-00
DATE PLOTTED => 08-JUN-2013
TIME PLOTTED => 13:22

Dist	COUNTY	ROUTE	POST MILES TOTAL PROJECT	SHEET No.	TOTAL SHEETS
07	Ven	23,101	3.3/3.8, R0.1/R4.5	325	652

REGISTERED CIVIL ENGINEER 3-25-13 DATE

6-3-13
PLANS APPROVAL DATE

REGISTERED PROFESSIONAL ENGINEER CESAR TISCARENO No. C79951 Exp. 9/30/14 CIVIL STATE OF CALIFORNIA

THE STATE OF CALIFORNIA OR ITS OFFICERS OR AGENTS SHALL NOT BE RESPONSIBLE FOR THE ACCURACY OR COMPLETENESS OF SCANNED COPIES OF THIS PLAN SHEET.

CH2M HILL
1000 WILSHIRE Blvd
LOS ANGELES, CA 90017

CITY OF THOUSAND OAKS
2100 THOUSAND OAKS BLVD
THOUSAND OAKS. CA 91362

NOTES:

1. USE TYPE IV (HIGH INTENSITY) RETROREFLECTIVE SHEETING FOR BACKGROUND, BORDERS AND LEGENDS FOR ALL SIGNS.

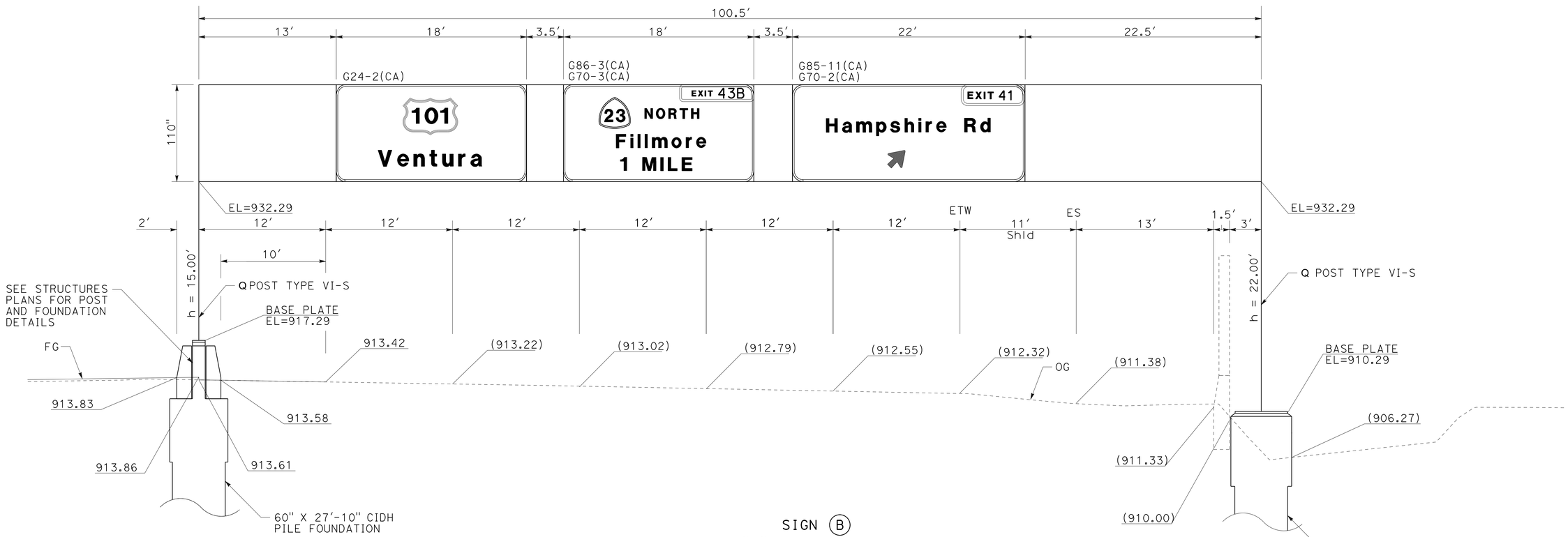

SIGN (B)

FNBT "A" LINE STA 86+79.16

1. INSTALL SIGN STRUCTURE (TRUSS)
2. INSTALL TYPE A LAMINATED PANELS & MOUNTING BEAMS
3. ILLUMINATED

SIGN DETAILS

NO SCALE

SD-1

STATE OF CALIFORNIA - DEPARTMENT OF TRANSPORTATION
Caltrans

CONSULTANT FUNCTIONAL SUPERVISOR: CHRIS BRETALL

CALCULATED-DESIGNED BY: CESAR TISCARENO
CHECKED BY: TED MEKURIA

REVISED BY
DATE REVISED

LAST REVISION 00-00-00
DATE PLOTTED => 08-JUN-2013
TIME PLOTTED => 13:22

Dist	COUNTY	ROUTE	POST MILES TOTAL PROJECT	SHEET No.	TOTAL SHEETS
07	Ven	23,101	3.3/3.8, R0.1/R4.5	326	652

REGISTERED CIVIL ENGINEER 3-25-13 DATE

6-3-13
PLANS APPROVAL DATE

REGISTERED PROFESSIONAL ENGINEER
CESAR TISCARENO
No. C79951
Exp. 9/30/14
CIVIL
STATE OF CALIFORNIA

THE STATE OF CALIFORNIA OR ITS OFFICERS OR AGENTS SHALL NOT BE RESPONSIBLE FOR THE ACCURACY OR COMPLETENESS OF SCANNED COPIES OF THIS PLAN SHEET.

CH2M HILL
1000 WILSHIRE Blvd
LOS ANGELES, CA 90017

CITY OF THOUSAND OAKS
2100 THOUSAND OAKS BLVD
THOUSAND OAKS. CA 91362

NOTES:

1. USE TYPE IV (HIGH INTENSITY) RETROREFLECTIVE SHEETING FOR BACKGROUND, BORDERS AND LEGENDS FOR ALL SIGNS.

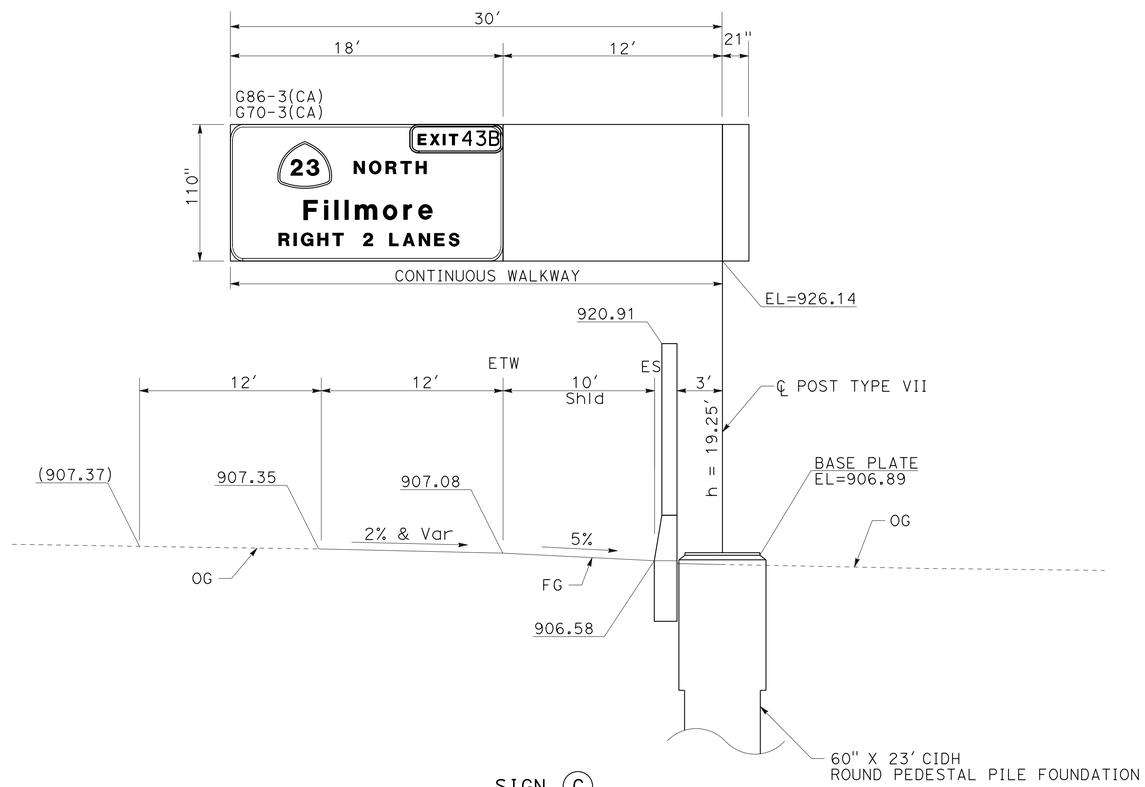

SIGN (C)

FNBT "A" LINE STA 125+84.10

1. INSTALL SIGN STRUCTURE (TRUSS)
2. INSTALL TYPE A LAMINATED PANEL & MOUNTING BEAMS
3. ILLUMINATED

SIGN DETAILS

NO SCALE

SD-2

STATE OF CALIFORNIA - DEPARTMENT OF TRANSPORTATION
Caltrans

CONSULTANT FUNCTIONAL SUPERVISOR: CHRIS BRETALL
CALCULATED-DESIGNED BY: CESAR TISCARENO
CHECKED BY: TED MEKURIA
REVISED BY
DATE REVISED

LAST REVISION 00-00-00
DATE PLOTTED => 08-JUN-2013
TIME PLOTTED => 13:22

Dist	COUNTY	ROUTE	POST MILES TOTAL PROJECT	SHEET No.	TOTAL SHEETS
07	Ven	23,101	3.3/3.8, R0.1/R4.5	327	652

REGISTERED CIVIL ENGINEER 3-25-13 DATE

6-3-13
PLANS APPROVAL DATE

REGISTERED PROFESSIONAL ENGINEER CESAR TISCARENO No. C79951 Exp. 9/30/14 CIVIL STATE OF CALIFORNIA

THE STATE OF CALIFORNIA OR ITS OFFICERS OR AGENTS SHALL NOT BE RESPONSIBLE FOR THE ACCURACY OR COMPLETENESS OF SCANNED COPIES OF THIS PLAN SHEET.

CH2M HILL
1000 WILSHIRE Blvd
LOS ANGELES, CA 90017

CITY OF THOUSAND OAKS
2100 THOUSAND OAKS BLVD
THOUSAND OAKS. CA 91362

NOTES:

1. USE TYPE IV (HIGH INTENSITY) RETROREFLECTIVE SHEETING FOR BACKGROUND, BORDERS AND LEGENDS FOR ALL SIGNS.

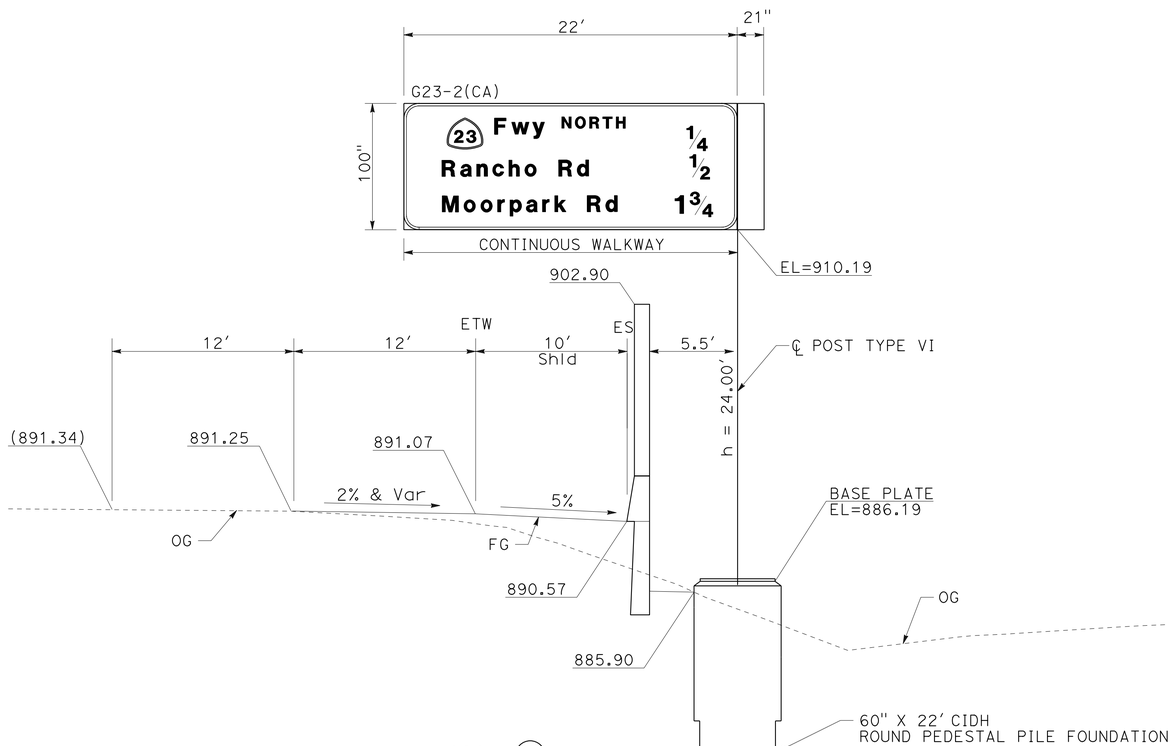

SIGN (F)
FNBT "A" LINE STA 132+00.00

1. INSTALL SIGN STRUCTURE (TRUSS)
2. INSTALL TYPE A LAMINATED PANEL & MOUNTING BEAMS
3. ILLUMINATED

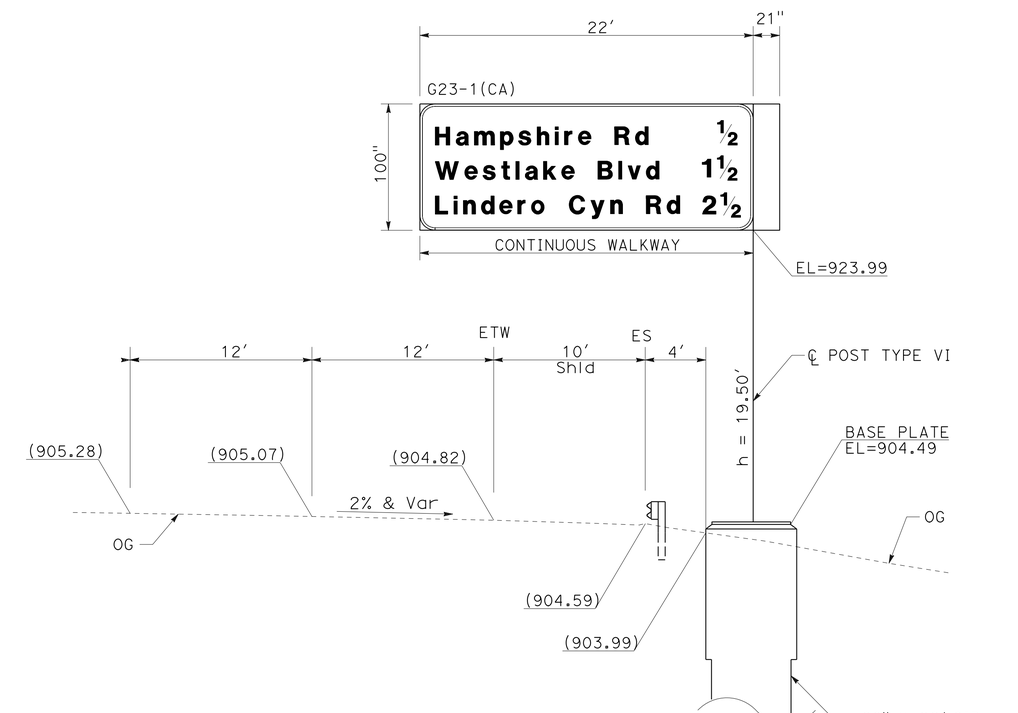

SIGN (G)
FSBT "A" LINE STA 127+09.19

1. INSTALL SIGN STRUCTURE (TRUSS)
2. INSTALL TYPE A LAMINATED PANEL & MOUNTING BEAMS
3. ILLUMINATED

SIGN DETAILS

NO SCALE

SD-3

STATE OF CALIFORNIA - DEPARTMENT OF TRANSPORTATION
Caltrans

CONSULTANT FUNCTIONAL SUPERVISOR: CHRIS BRETALL
CALCULATED-DESIGNED BY: CESAR TISCARENO
CHECKED BY: TED MEKURIA
REVISED BY
DATE REVISED

LAST REVISION 00-00-00
DATE PLOTTED => 08-JUN-2013
TIME PLOTTED => 13:22

Dist	COUNTY	ROUTE	POST MILES TOTAL PROJECT	SHEET No.	TOTAL SHEETS
07	Ven	23,101	3.3/3.8, R0.1/R4.5	328	652

REGISTERED CIVIL ENGINEER 3-25-13 DATE

6-3-13
PLANS APPROVAL DATE

REGISTERED PROFESSIONAL ENGINEER CESAR TISCARENO No. C79951 Exp. 9/30/14 CIVIL STATE OF CALIFORNIA

THE STATE OF CALIFORNIA OR ITS OFFICERS OR AGENTS SHALL NOT BE RESPONSIBLE FOR THE ACCURACY OR COMPLETENESS OF SCANNED COPIES OF THIS PLAN SHEET.

CH2M HILL
1000 WILSHIRE Blvd
LOS ANGELES, CA 90017

CITY OF THOUSAND OAKS
2100 THOUSAND OAKS BLVD
THOUSAND OAKS. CA 91362

NOTES:

1. USE TYPE IV (HIGH INTENSITY) RETROREFLECTIVE SHEETING FOR BACKGROUND, BORDERS AND LEGENDS FOR ALL SIGNS.

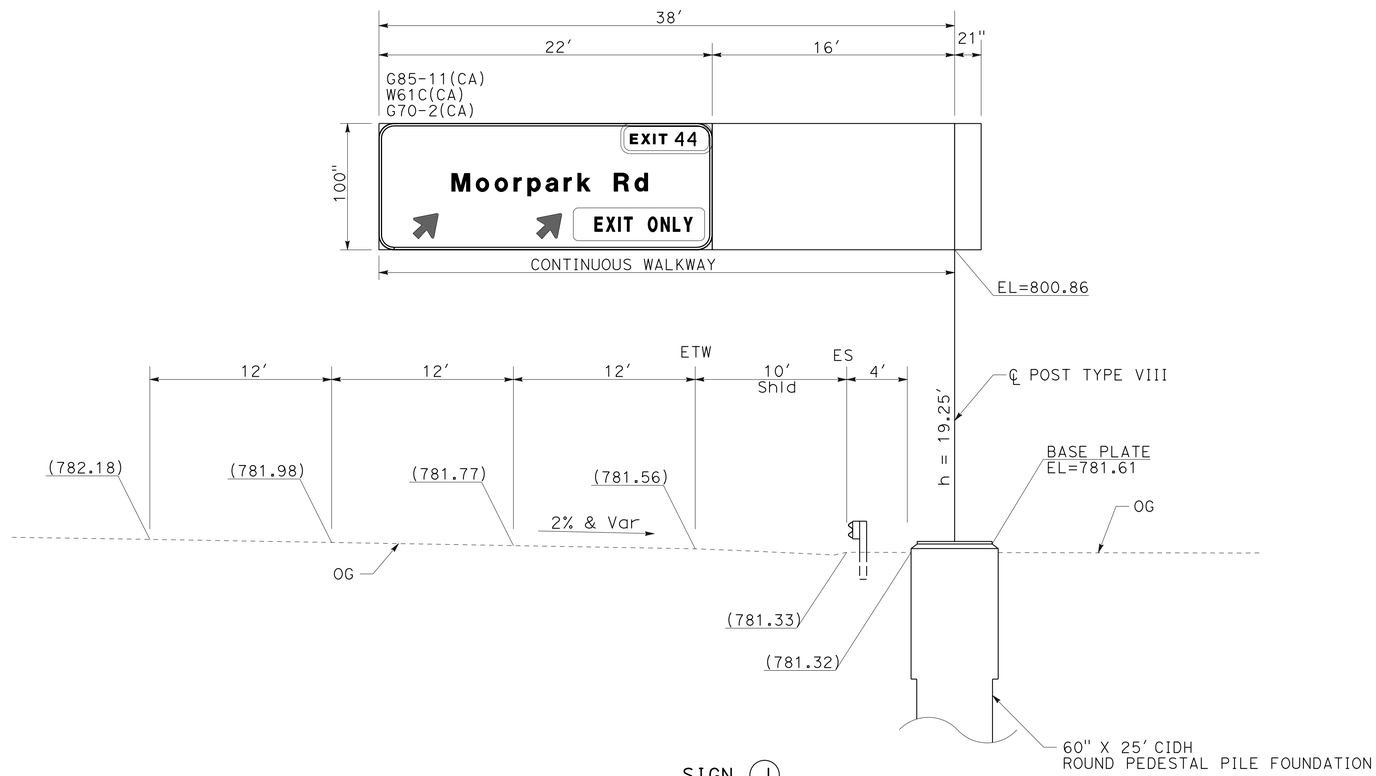

SIGN (J)

FNBT "A" LINE STA 212+18.00

1. INSTALL SIGN STRUCTURE (TRUSS)
2. INSTALL TYPE A LAMINATED PANEL & MOUNTING BEAMS
3. ILLUMINATED

SIGN DETAILS

NO SCALE

SD-4

STATE OF CALIFORNIA - DEPARTMENT OF TRANSPORTATION
Caltrans

CONSULTANT FUNCTIONAL SUPERVISOR: CHRIS BRETALL
CALCULATED-DESIGNED BY: CESAR TISCARENO
CHECKED BY: TED MEKURIA
REVISED BY
DATE REVISED

LAST REVISION 00-00-00
DATE PLOTTED => 08-JUN-2013
TIME PLOTTED => 13:22

Dist	COUNTY	ROUTE	POST MILES TOTAL PROJECT	SHEET No.	TOTAL SHEETS
07	Ven	23,101	3.3/3.8, R0.1/R4.5	329	652

REGISTERED CIVIL ENGINEER 3-25-13 DATE

6-3-13
PLANS APPROVAL DATE

REGISTERED PROFESSIONAL ENGINEER CESAR TISCARENO No. C79951 Exp. 9/30/14 CIVIL STATE OF CALIFORNIA

THE STATE OF CALIFORNIA OR ITS OFFICERS OR AGENTS SHALL NOT BE RESPONSIBLE FOR THE ACCURACY OR COMPLETENESS OF SCANNED COPIES OF THIS PLAN SHEET.

CH2M HILL
1000 WILSHIRE Blvd
LOS ANGELES, CA 90017

CITY OF THOUSAND OAKS
2100 THOUSAND OAKS BLVD
THOUSAND OAKS. CA 91362

NOTES:

1. USE TYPE IV (HIGH INTENSITY) RETROREFLECTIVE SHEETING FOR BACKGROUND, BORDERS AND LEGENDS FOR ALL SIGNS.

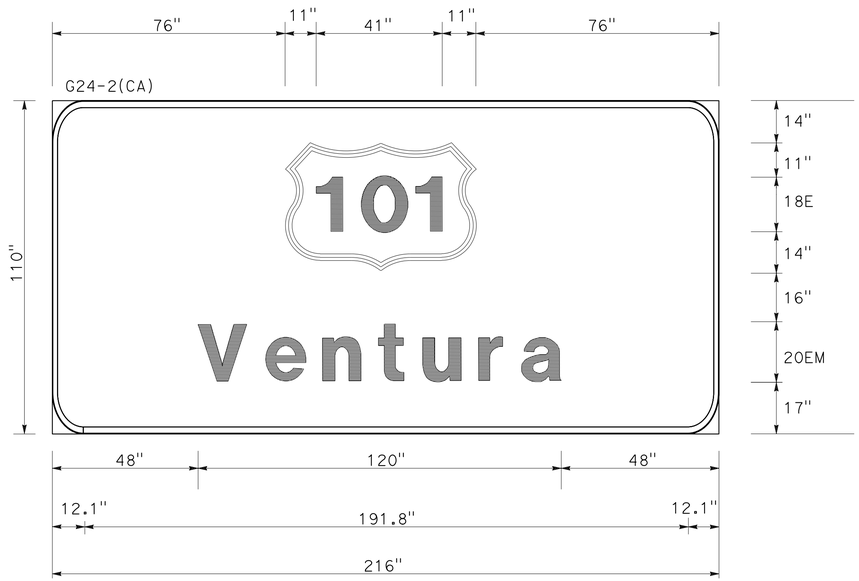

12" Radius, 2" Border, White on Green;
[Ventura] 20" U.C., 15" L.C.;
US Route Shield Size 63" X 42"

SIGN (B)
FSBT "A" LINE STA 86+79.16

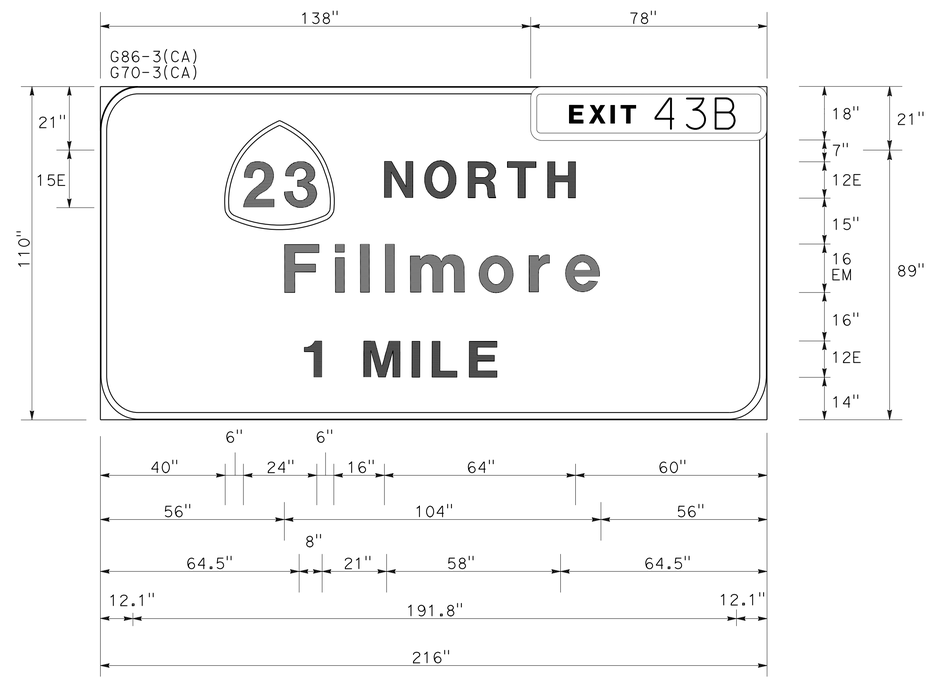

12" Radius, 2" Border, White on Green;
[NORTH] 12" U.C.
[Fillmore] 16" U.C., 12" L.C.;
[1 MILE] 12" U.C.
Route Shield Size 36" x 36"

SIGN (B)
FNBT "A" LINE STA 86+79.16

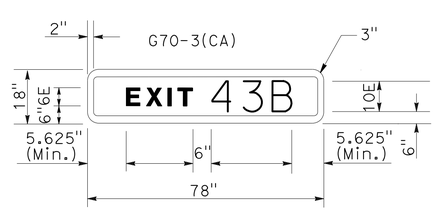

SIGN DETAILS

NO SCALE

SD-5

STATE OF CALIFORNIA - DEPARTMENT OF TRANSPORTATION
Caltrans

CONSULTANT FUNCTIONAL SUPERVISOR: CHRIS BRETALL
CALCULATED-DESIGNED BY: CESAR TISCARENO
CHECKED BY: TED MEKURIA
REVISED BY
DATE REVISED

LAST REVISION 00-00-00
DATE PLOTTED => 08-JUN-2013
TIME PLOTTED => 13:22

Dist	COUNTY	ROUTE	POST MILES TOTAL PROJECT	SHEET No.	TOTAL SHEETS
07	Ven	23,101	3.3/3.8, R0.1/R4.5	330	652

REGISTERED CIVIL ENGINEER 3-25-13 DATE

6-3-13
PLANS APPROVAL DATE

REGISTERED PROFESSIONAL ENGINEER CESAR TISCARENO No. C79951 Exp. 9/30/14 CIVIL STATE OF CALIFORNIA

THE STATE OF CALIFORNIA OR ITS OFFICERS OR AGENTS SHALL NOT BE RESPONSIBLE FOR THE ACCURACY OR COMPLETENESS OF SCANNED COPIES OF THIS PLAN SHEET.

CH2M HILL
1000 WILSHIRE Blvd
LOS ANGELES, CA 90017

CITY OF THOUSAND OAKS
2100 THOUSAND OAKS BLVD
THOUSAND OAKS. CA 91362

NOTES:

1. USE TYPE IV (HIGH INTENSITY) RETROREFLECTIVE SHEETING FOR BACKGROUND, BORDERS AND LEGENDS FOR ALL SIGNS.

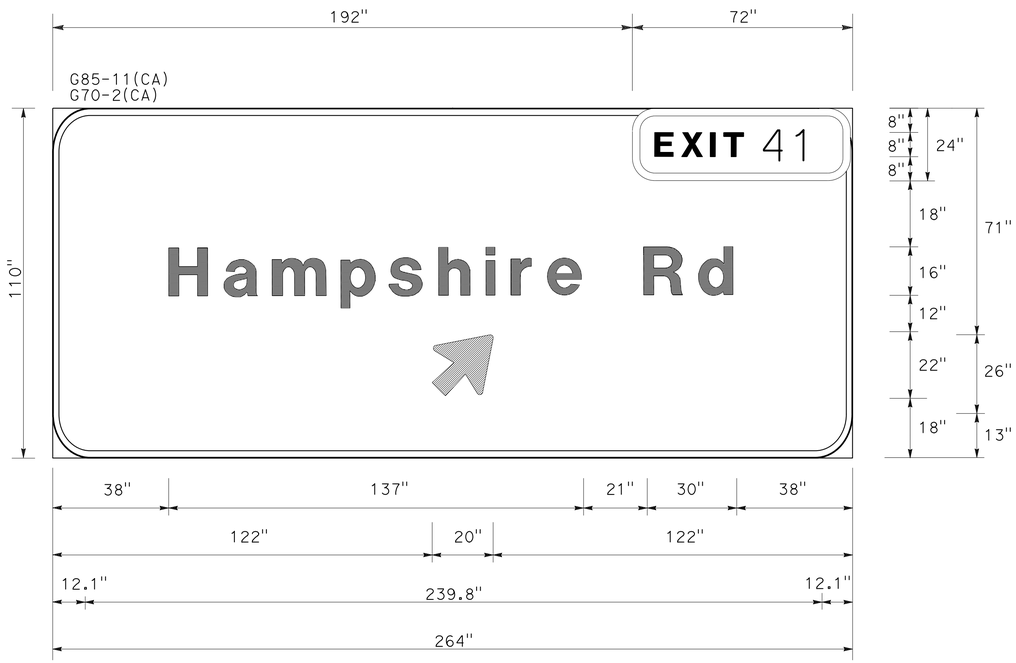

12" Radius, 2" Border, White on Green;
[Hampshire Rd] 16" U.C., 12" L.C.;
Standard Arrow Custom 22.25" x 25" 45°

SIGN (B)
FSBT "A" LINE STA 86+79.16

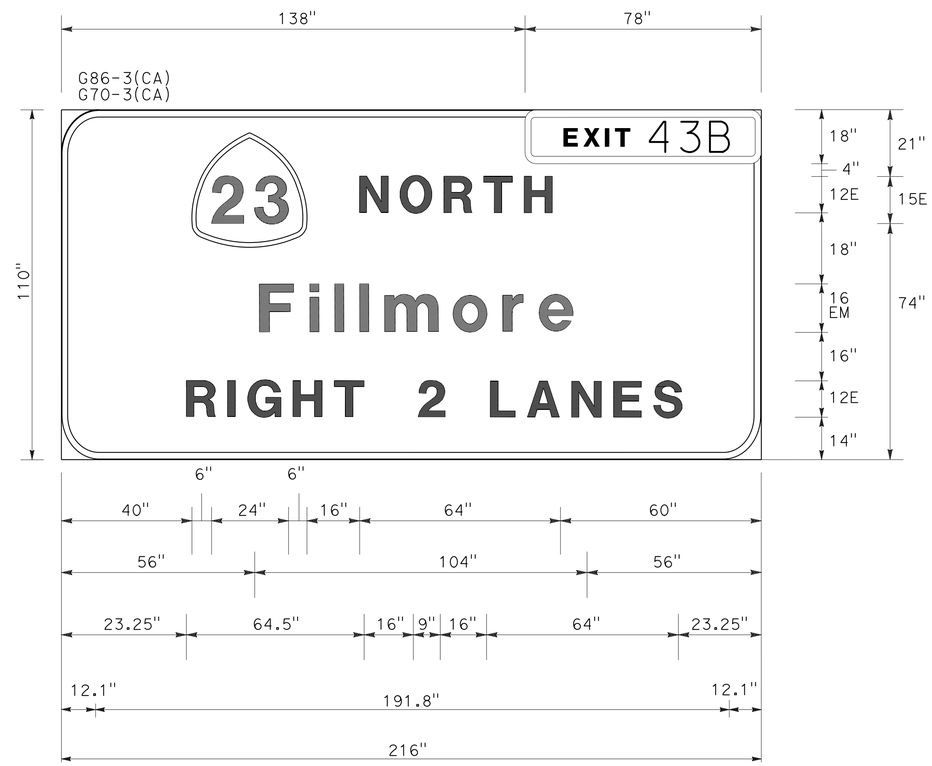

12" Radius, 2" Border, White on Green;
[NORTH] 12" U.C.
[Fillmore] 16" U.C., 12" L.C.;
[RIGHT 2 LANES] 12" CAPS
Route Shield Size 36" x 36"

SIGN (C)
FNBT "A" LINE STA 125+84.10

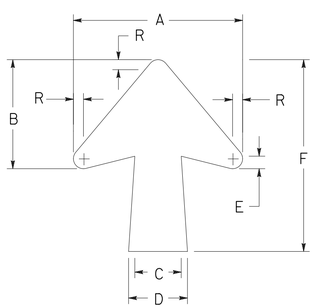

DIAGONAL ARROW DETAIL
DIMENSION (INCHES)

A	B	C	D	E	F	R
22-1/4	17	5-3/8	6-3/16	1-3/4	25	1

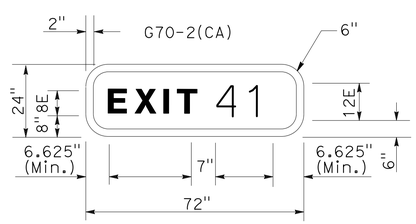

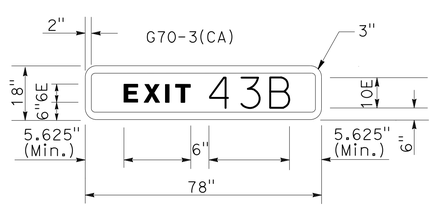

SIGN DETAILS

NO SCALE

SD-6

STATE OF CALIFORNIA - DEPARTMENT OF TRANSPORTATION
Caltrans

CONSULTANT FUNCTIONAL SUPERVISOR: CHRIS BRETALL
CALCULATED-DESIGNED BY: TED MEKURIA
CHECKED BY: CESAR TISCARENO
REVISED BY
DATE REVISED

LAST REVISION 00-00-00
DATE PLOTTED => 08-JUN-2013
TIME PLOTTED => 13:22

Dist	COUNTY	ROUTE	POST MILES TOTAL PROJECT	SHEET No.	TOTAL SHEETS
07	Ven	23,101	3.3/3.8, R0.1/R4.5	331	652

REGISTERED CIVIL ENGINEER 3-25-13 DATE

6-3-13
PLANS APPROVAL DATE

REGISTERED PROFESSIONAL ENGINEER CESAR TISCARENO No. C79951 Exp. 9/30/14 CIVIL STATE OF CALIFORNIA

THE STATE OF CALIFORNIA OR ITS OFFICERS OR AGENTS SHALL NOT BE RESPONSIBLE FOR THE ACCURACY OR COMPLETENESS OF SCANNED COPIES OF THIS PLAN SHEET.

CH2M HILL
1000 WILSHIRE Blvd
LOS ANGELES, CA 90017

CITY OF THOUSAND OAKS
2100 THOUSAND OAKS BLVD
THOUSAND OAKS. CA 91362

NOTES:

1. USE TYPE IV (HIGH INTENSITY) RETROREFLECTIVE SHEETING FOR BACKGROUND, BORDERS AND LEGENDS FOR ALL SIGNS.

G23-2(CA)

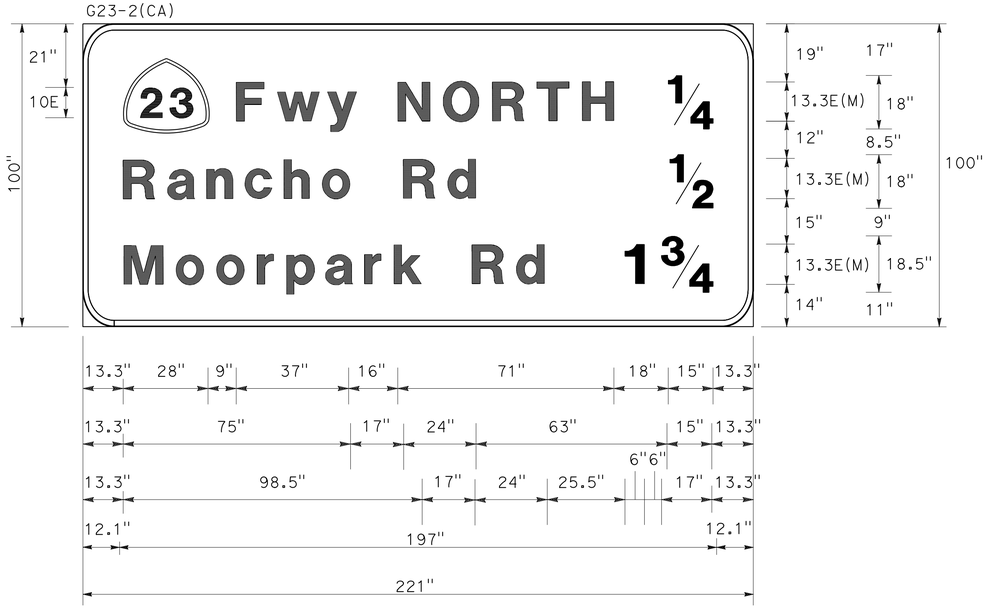

12" Radius, 2" Border, White on Green;
[NORTH] 13.3" CAPS;
[Fwy 1/4] 13.3' U.C. , 10" L.C.;
[Rancho Rd 1/2] 13.3" U.C., 10" L.C.;
[Moorpark Rd 1 3/4] 13.3" U.C., 10" L.C.
Route Shield Size 25" x 28"

SIGN (F)

FNBT "A" LINE STA 132+00.00

G23-1(CA)

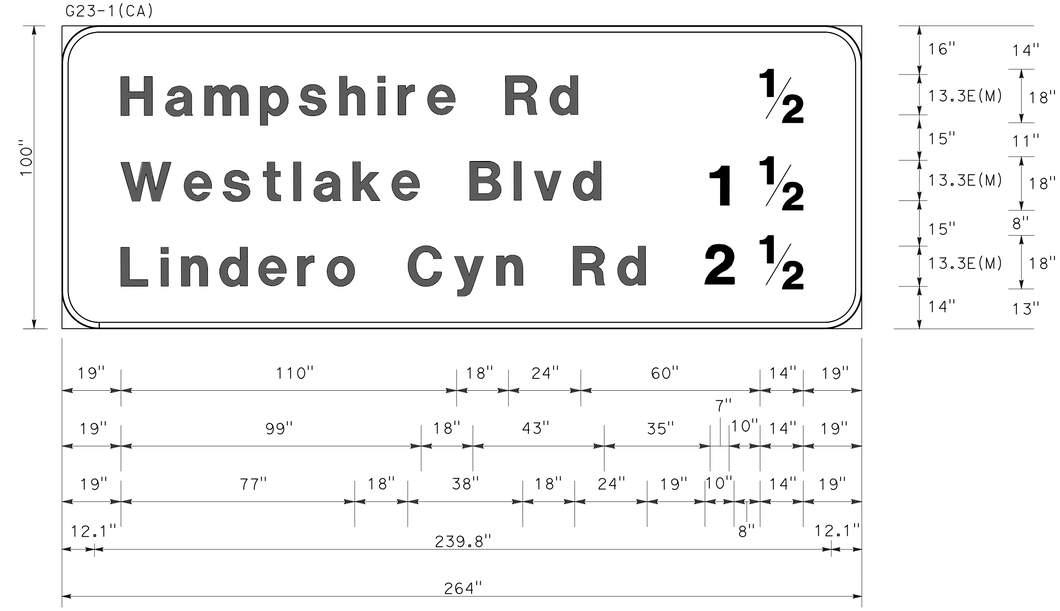

12" Radius, 2" Border, White on Green;
[Hampshire Rd 1/2] 13.3" U.C., 10" L.C.;
[Westlake Blvd 1 1/2] 13.3" U.C., 10" L.C.;
[Lindero Cyn Rd 2 1/2] 13.3" U.C., 10" L.C.

SIGN (G)

FSBT "A" LINE STA 127+09.19

SIGN DETAILS

NO SCALE

SD-7

STATE OF CALIFORNIA - DEPARTMENT OF TRANSPORTATION
Caltrans

CONSULTANT FUNCTIONAL SUPERVISOR: CHRIS BRETALL
CALCULATED-DESIGNED BY: TED MEKURIA
CHECKED BY: CESAR TISCARENO
REVISED BY
DATE REVISED

LAST REVISION 00-00-00
DATE PLOTTED => 08-JUN-2013
TIME PLOTTED => 13:22

Dist	COUNTY	ROUTE	POST MILES TOTAL PROJECT	SHEET No.	TOTAL SHEETS
07	Ven	23,101	3.3/3.8, R0.1/R4.5	332	652

REGISTERED CIVIL ENGINEER 3-25-13 DATE

6-3-13
PLANS APPROVAL DATE

REGISTERED PROFESSIONAL ENGINEER CESAR TISCARENO No. C79951 Exp. 9/30/14 CIVIL STATE OF CALIFORNIA

THE STATE OF CALIFORNIA OR ITS OFFICERS OR AGENTS SHALL NOT BE RESPONSIBLE FOR THE ACCURACY OR COMPLETENESS OF SCANNED COPIES OF THIS PLAN SHEET.

CH2M HILL
1000 WILSHIRE Blvd
LOS ANGELES, CA 90017

CITY OF THOUSAND OAKS
2100 THOUSAND OAKS BLVD
THOUSAND OAKS. CA 91362

NOTES:

1. USE TYPE IV (HIGH INTENSITY) RETROREFLECTIVE SHEETING FOR BACKGROUND, BORDERS AND LEGENDS FOR ALL SIGNS.

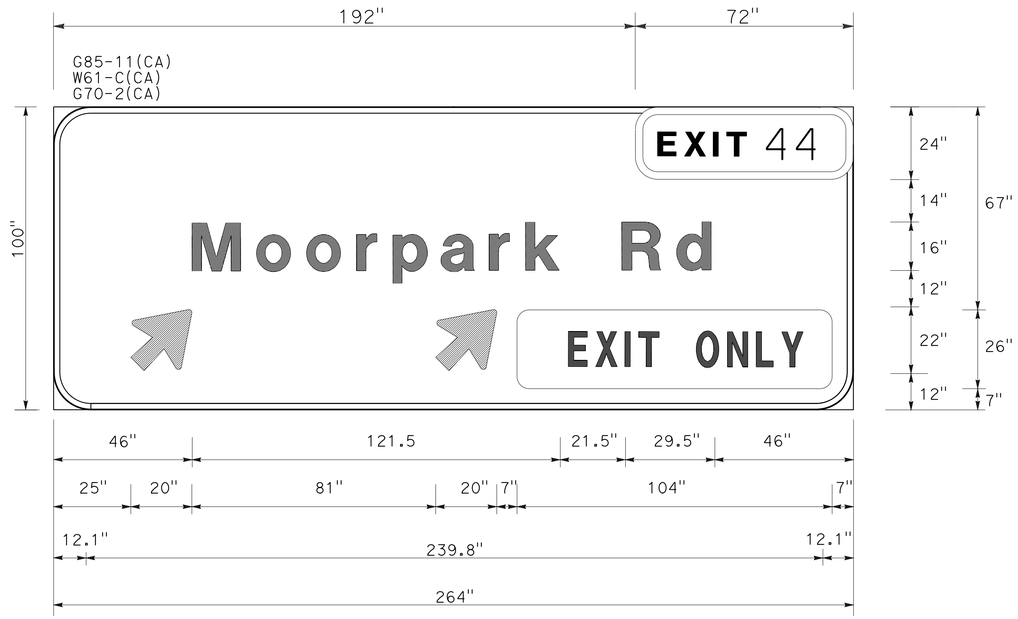

12" Radius, 2" Border, White on Green;
[Moorpark Rd] 16" U.C., 12" L.C.;
Standard Arrows Custom 22.25" x 25" 45°

SIGN (J)
FSBT "A" LINE STA 212+18.00

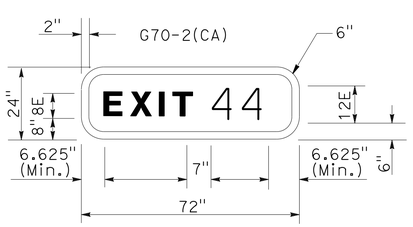

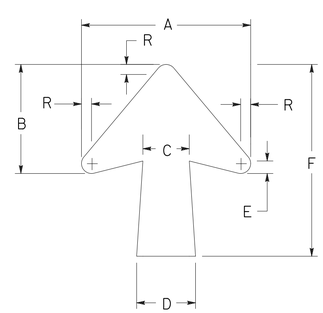

DIAGONAL ARROW DETAIL
DIMENSION (INCHES)

A	B	C	D	E	F	R
22-1/4	17	5-3/8	6-3/16	1-3/4	25	1

SIGN DETAILS

NO SCALE

SD-8

STATE OF CALIFORNIA - DEPARTMENT OF TRANSPORTATION
Caltrans

CONSULTANT FUNCTIONAL SUPERVISOR: CHRIS BRETALL
CALCULATED-DESIGNED BY: CESAR TISCARENO
CHECKED BY: TED MEKURIA
REVISED BY
DATE REVISED

LAST REVISION 00-00-00
DATE PLOTTED => 08-JUN-2013
TIME PLOTTED => 13:22

Dist	COUNTY	ROUTE	POST MILES TOTAL PROJECT	SHEET No.	TOTAL SHEETS
07	Ven	23,101	3.3/3.8, R0.1/R4.5	333	652

REGISTERED CIVIL ENGINEER 3-25-13 DATE

6-3-13
PLANS APPROVAL DATE

REGISTERED PROFESSIONAL ENGINEER CESAR TISCARENO No. C79951 Exp. 9/30/14 CIVIL STATE OF CALIFORNIA

THE STATE OF CALIFORNIA OR ITS OFFICERS OR AGENTS SHALL NOT BE RESPONSIBLE FOR THE ACCURACY OR COMPLETENESS OF SCANNED COPIES OF THIS PLAN SHEET.

CH2M HILL
1000 WILSHIRE Blvd
LOS ANGELES, CA 90017

CITY OF THOUSAND OAKS
2100 THOUSAND OAKS BLVD
THOUSAND OAKS. CA 91362

NOTES:

1. USE TYPE IV (HIGH INTENSITY) RETROREFLECTIVE SHEETING FOR BACKGROUND, BORDERS AND LEGENDS FOR ALL SIGNS.

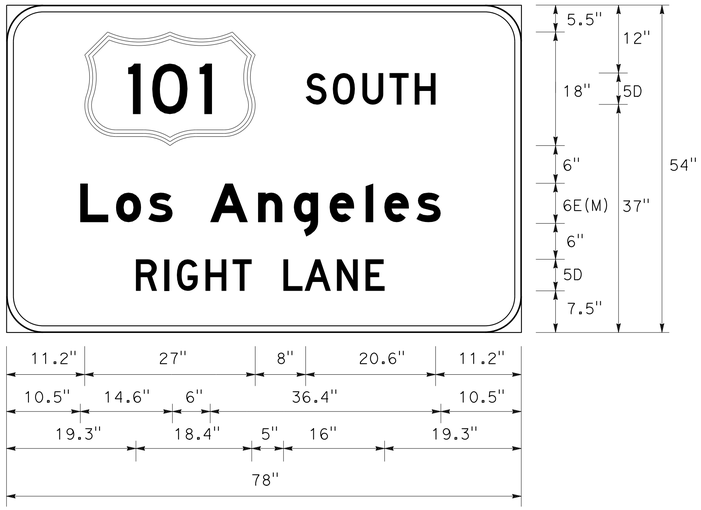

6" Radius, 2" Border, White on Green;
[SOUTH] 5" U.C.;
[Los Angeles] 6" U.C., 4.5" L.C.;
[RIGHT LANE] 5" U.C., 4.5" L.C.;
US Route Shield Size 27" X 18"

(3-1) G20-5(CA)

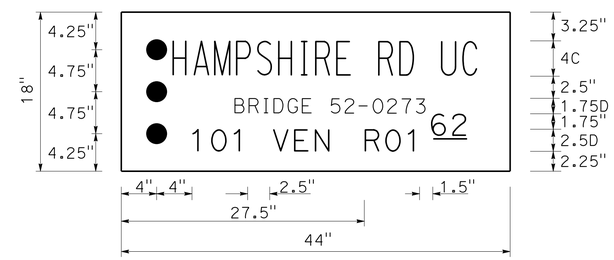

(5-2) G11-4.1(CA)

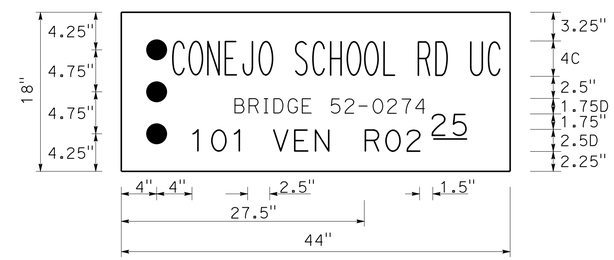

(7-5) G11-4.1(CA)

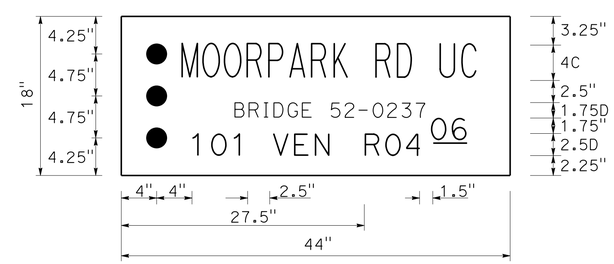

(14-1) G11-4.1(CA)

SIGN DETAILS

NO SCALE

SD-9

STATE OF CALIFORNIA - DEPARTMENT OF TRANSPORTATION
Caltrans

CONSULTANT FUNCTIONAL SUPERVISOR: CHRIS BRETALL
CALCULATED-DESIGNED BY: CESAR TISCARENO
CHECKED BY: TED MEKURIA
REVISED BY
DATE REVISED

LAST REVISION 00-00-00
DATE PLOTTED => 08-JUN-2013
TIME PLOTTED => 13:22

Dist	COUNTY	ROUTE	POST MILES TOTAL PROJECT	SHEET No.	TOTAL SHEETS
07	Ven	23,101	3.3/3.8, R0.1/R4.5	334	652

REGISTERED CIVIL ENGINEER 3-25-13 DATE

6-3-13
PLANS APPROVAL DATE

REGISTERED PROFESSIONAL ENGINEER CESAR TISCARENO No. C79951 Exp. 9/30/14 CIVIL STATE OF CALIFORNIA

THE STATE OF CALIFORNIA OR ITS OFFICERS OR AGENTS SHALL NOT BE RESPONSIBLE FOR THE ACCURACY OR COMPLETENESS OF SCANNED COPIES OF THIS PLAN SHEET.

CH2M HILL
1000 WILSHIRE Blvd
LOS ANGELES, CA 90017

CITY OF THOUSAND OAKS
2100 THOUSAND OAKS BLVD
THOUSAND OAKS. CA 91362

NOTES:

1. USE TYPE IV (HIGH INTENSITY) RETROREFLECTIVE SHEETING FOR BACKGROUND, BORDERS AND LEGENDS FOR ALL SIGNS.
2. SEE STRUCTURES SHEETS FOR BRIDGE MOUNTED SIGN DETAILS.

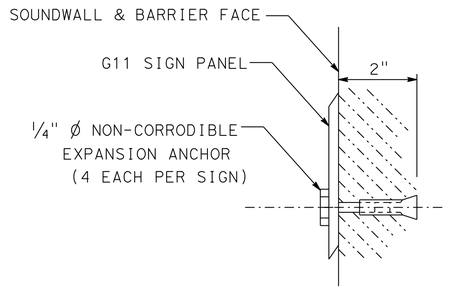

EXPANSION ANCHOR DETAIL

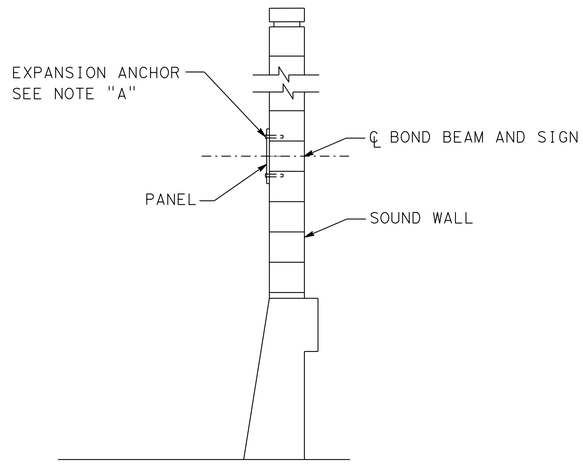

SOUNDWALL MOUNTED SIGN (FLUSH SIGN)

SIGN (5-2) (7-5)

NOTE "A":

1/4" X 2" EXPANSION ANCHORAGE DEVICES, TWO AT EACH END. MINIMUM DEPTH OF HOLE TO BE 1 1/8". MINUMUM DIAMETER OF HOLE TO BE 1/4". HOLE DEPTH AND DIAMETER INFORMATION PROVIDED IN CALTRANS STANDARD SPECIFICATIONS.

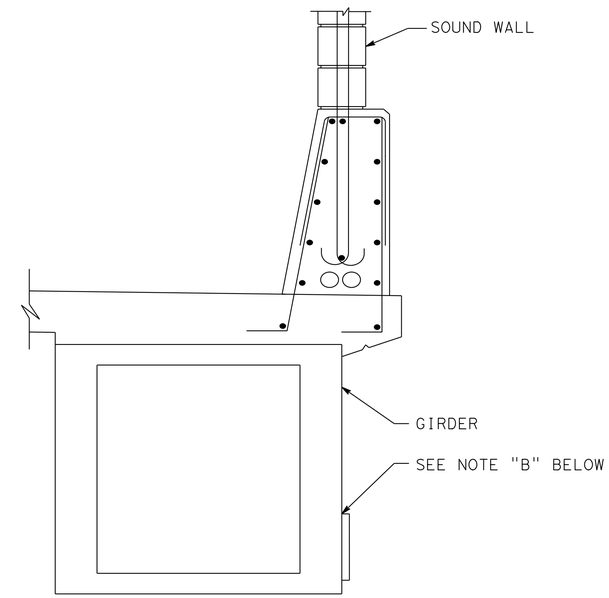

BRIDGE MOUNTED SIGN (FLUSH SIGN)

SIGN (5-4) (7-6)

NOTE "B":

WHEN INSTALLING ON GIRDERS, SIGN PANELS SHALL BE MOUNTED WITH 1 INCH WIDE AND 62 MILS THICK ACRYLIC FOAM TAPE COMPRISED OF A MODIFIED ACRYLIC ADHESIVE ON BOTH SIDES OF A CONFORMABLE ACRYLIC FOAM WITH DENSITY OF 38-42 POUNDS PER CUBIC FOOT, AND THE 90-DEGREE PEEL ADHESION MUST BE GREATER THAN 20 POUNDS PER INCH WIDTH PER ASTM D3330.

SIGN DETAILS

NO SCALE

SD-10

STATE OF CALIFORNIA - DEPARTMENT OF TRANSPORTATION
Caltrans

CONSULTANT FUNCTIONAL SUPERVISOR: CHRIS BRETALL
CALCULATED-DESIGNED BY: CESAR TISCARENO
CHECKED BY: TED MEKURIA
REVISED BY
DATE REVISED

LAST REVISION 00-00-00
DATE PLOTTED => 08-JUN-2013
TIME PLOTTED => 13:22

Dist	COUNTY	ROUTE	POST MILES TOTAL PROJECT	SHEET No.	TOTAL SHEETS
07	Ven	23,101	3.3/3.8, R0.1/R4.5	335	652

REGISTERED CIVIL ENGINEER 3-25-13 DATE

6-3-13
PLANS APPROVAL DATE

REGISTERED PROFESSIONAL ENGINEER CESAR TISCARENO No. C79951 Exp. 9/30/14 CIVIL STATE OF CALIFORNIA

THE STATE OF CALIFORNIA OR ITS OFFICERS OR AGENTS SHALL NOT BE RESPONSIBLE FOR THE ACCURACY OR COMPLETENESS OF SCANNED COPIES OF THIS PLAN SHEET.

CH2M HILL
1000 WILSHIRE Blvd
LOS ANGELES, CA 90017

CITY OF THOUSAND OAKS
2100 THOUSAND OAKS BLVD
THOUSAND OAKS. CA 91362

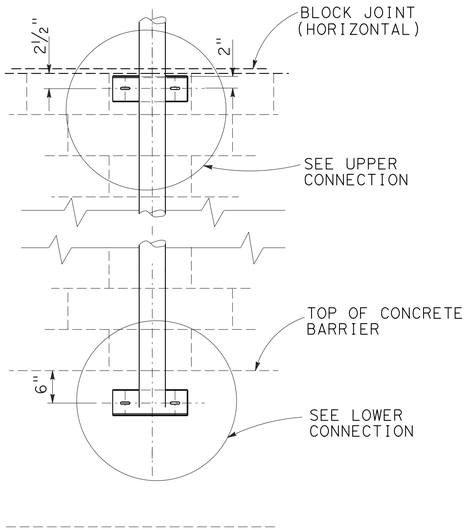

PART SIDE ELEVATION

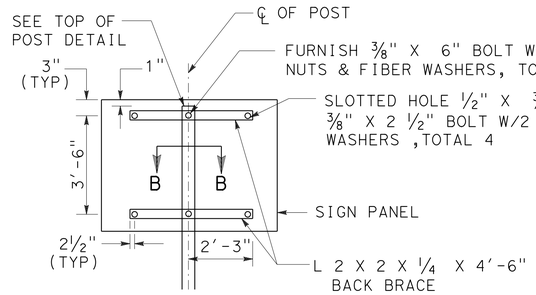

RECTANGULAR SHAPED SIGN PANEL MOUNTING DETAIL

SIGNS 6-2, 7-8, 8-2

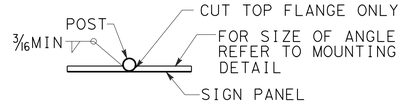

SECTION B-B

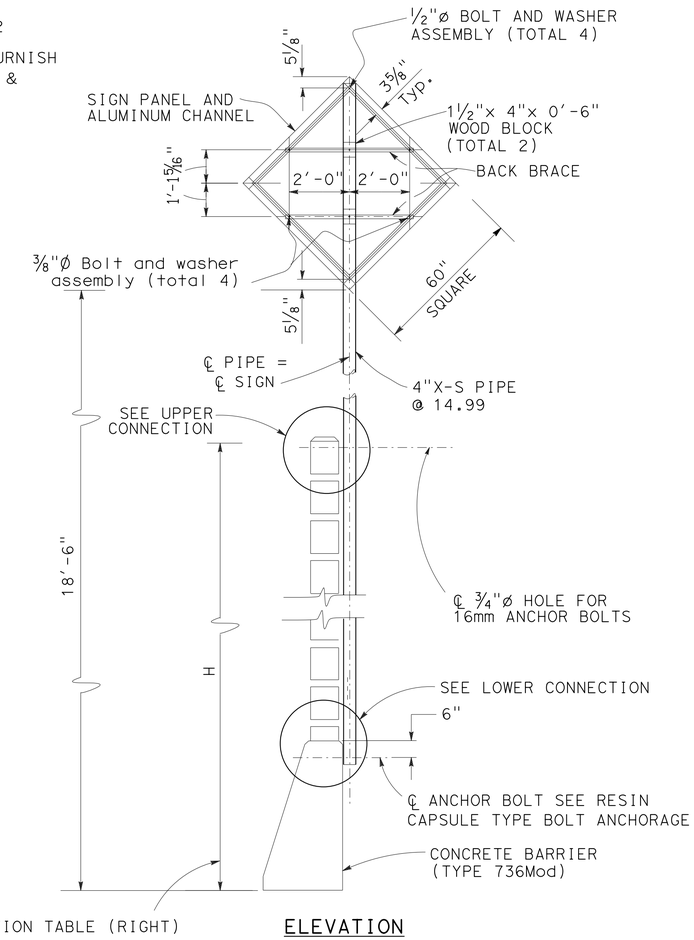

ELEVATION

DIAMOND SHAPED SIGN PANEL MOUNTING DETAIL

SIGN 7-1

WALL MOUNTED SIGN

SIGNS 5-11, 6-2, 7-1, 7-8, 8-2, 14-5

SIGN No.	H
5-11	10'-0"
6-2	14'-4"
7-1	10'-0"
7-8	12'-4"
8-2	12'-0"
14-5	6'-0"

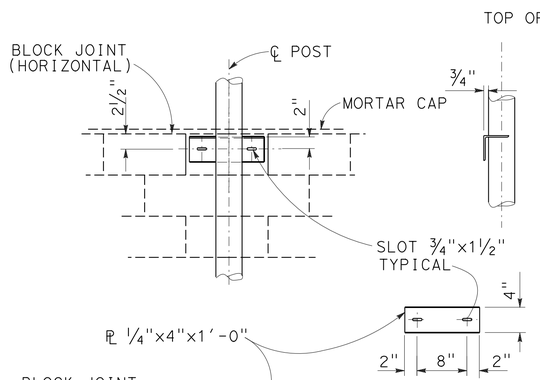

UPPER CONNECTION

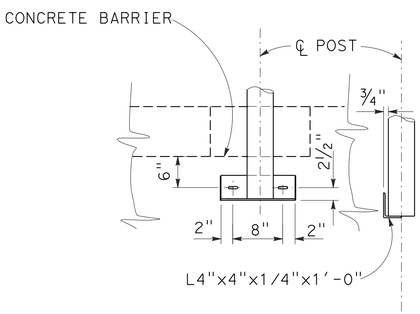

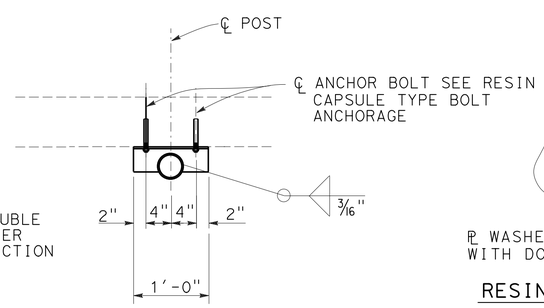

LOWER CONNECTION

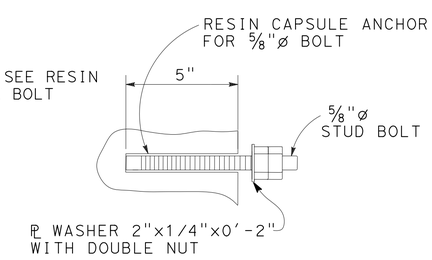

RESIN CAPSULE TYPE BOLT ANCHORAGE

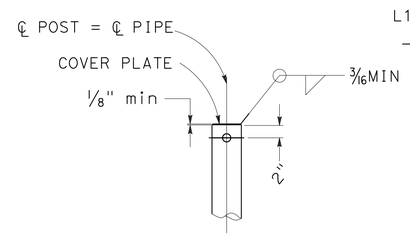

TOP OF POST DETAIL

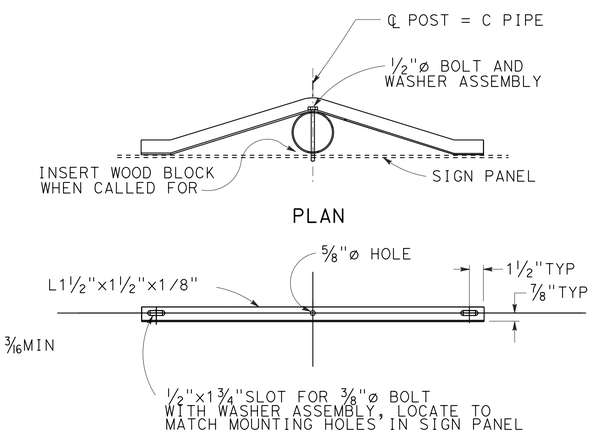

ELEVATION

BACK BRACE DETAILS

STANDARD PLAN No.

DETAIL No.

NOTE:

THE CONTRACTOR SHALL VERIFY ALL CONTROLLING FIELD DIMENSIONS BEFORE ORDERING OR FABRICATING ANY MATERIAL.

NOTES:

1. RESIN CAPSULE ANCHORAGE IS SUBJECT TO APPROVAL OF ENGINEER. INSTALLATION PROCEDURES SHALL COMPLY WITH MANUFACTURER'S INSTRUCTIONS.

SIGN DETAILS

NO SCALE

SD-11

STATE OF CALIFORNIA - DEPARTMENT OF TRANSPORTATION

Caltrans

CONSULTANT FUNCTIONAL SUPERVISOR: CHRIS BRETALL

CALCULATED-DESIGNED BY: CESAR TISCARENO

CHECKED BY: TED MEKURIA

REVISED BY

DATE REVISED

LAST REVISION 00-00-00

DATE PLOTTED => 08-JUN-2013

TIME PLOTTED => 13:22

DIST	COUNTY	ROUTE	POST MILES TOTAL PROJECT	SHEET No	TOTAL SHEETS
07	Ven	23,101	3.3/3.8, R0.1/R4.5	336	652

REGISTERED CIVIL ENGINEER 11/21/12 DATE

6-3-13
PLANS APPROVAL DATE

REGISTERED PROFESSIONAL ENGINEER DOUGLAS M. FREDERICKS No. C050863 Exp. 09/30/13 CIVIL STATE OF CALIFORNIA

The State of California or its officers or agents shall not be responsible for the accuracy or completeness of electronic copies of this plan sheet.

CITY OF THOUSAND OAKS
2100 THOUSAND OAKS BLVD
THOUSAND OAKS, CA 91362

CH2M HILL
1000 WILSHIRE BLVD, 21ST FLOOR
LOS ANGELES, CA 90017

NOTES:

1. For "General Notes" see Standard Plan S1.
2. Longer side of post and footing (longitudinal) shall be normal to axis of sign.
3. Backfill shall be in place prior to erection of post.
4. Thread upper 10" of anchor bolts and galvanize upper 1'-0".
5. Anchor plates may be retained with Hex nut or formed head as an alternative to details shown.
6. Excavate to neat lines and place concrete against undisturbed material.
7. Frame widths shown are nominal. These widths may be varied by ¼" to standardize fabrication methods.
8. Weld coupling or drill and tap for 1½"C chase nipple, perpendicular to sign panel axis away from approaching traffic. Plug with recessed pipe plug. See Standard Plan ES-15C.
9. For location and elevation of Sign structure, see "Road Plans".
10. Use Standard Plans for Type VI-S post, except top connection, plate is 3" thick.
11. HSS = Hollow Structural Section

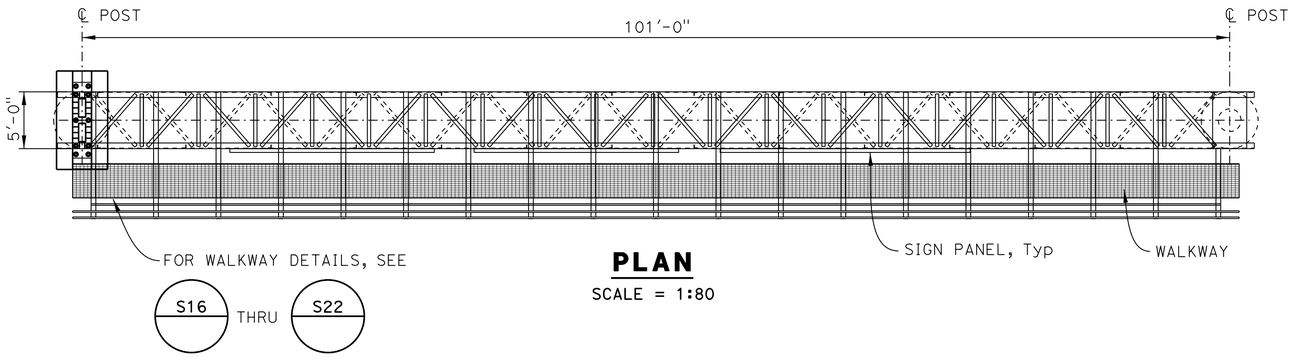

PLAN
SCALE = 1:80

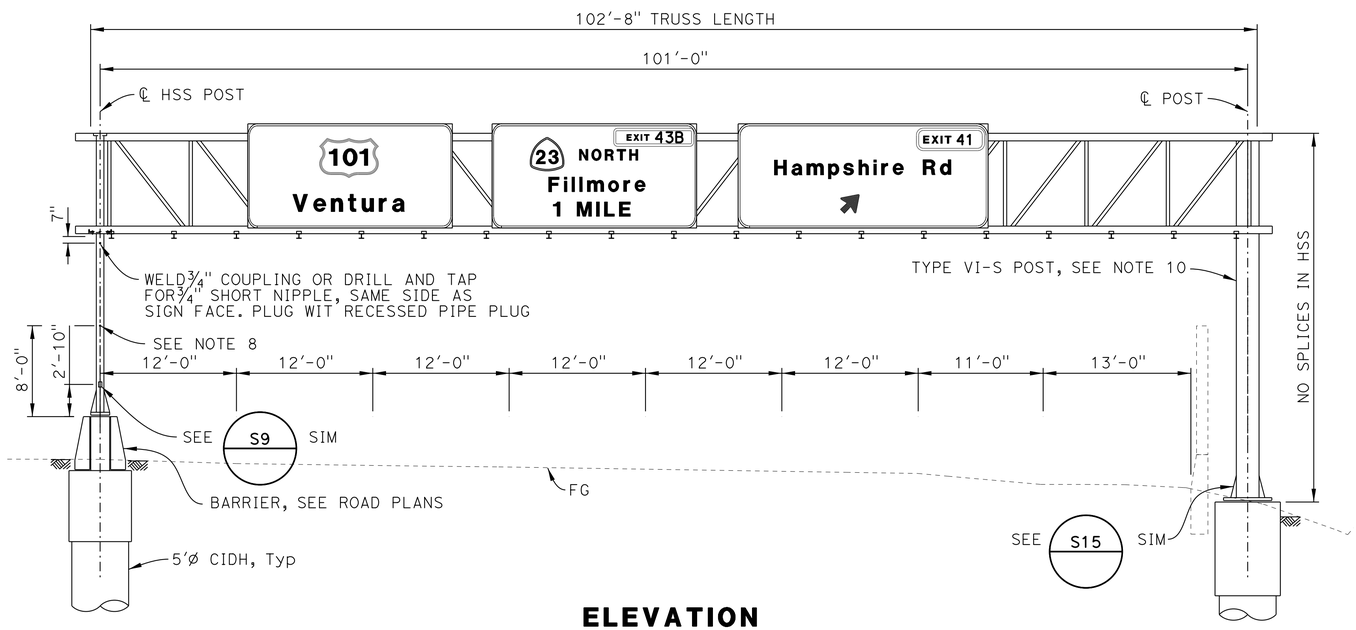

ELEVATION
SCALE = 1:80

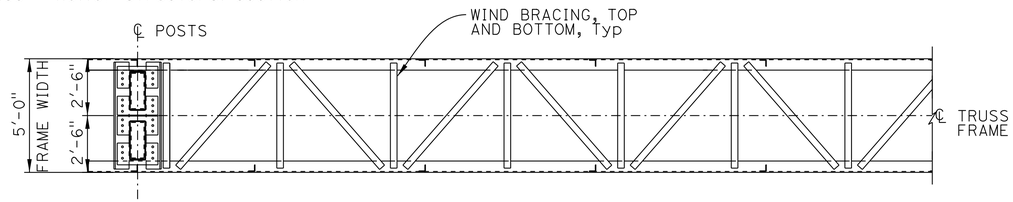

SECTION A-A
SCALE = 1:40

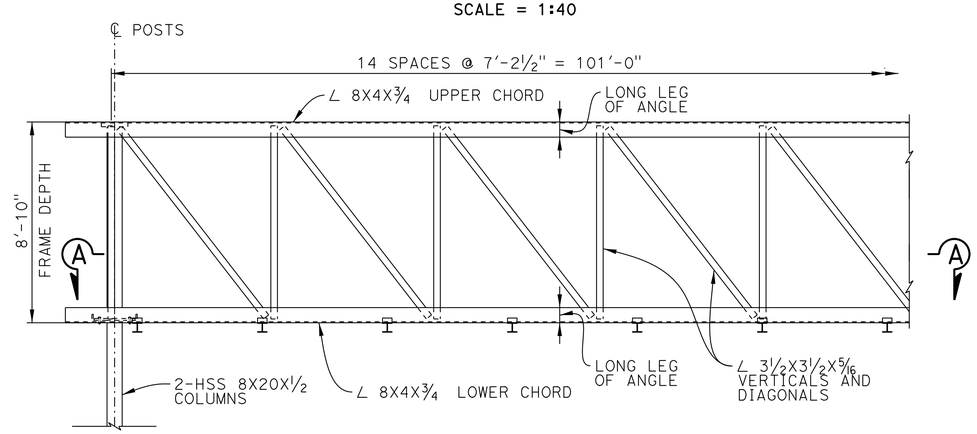

FRAME ELEVATION
SCALE = 1:40

NOTE:

THE CONTRACTOR SHALL VERIFY ALL CONTROLLING FIELD DIMENSIONS BEFORE ORDERING OR FABRICATING ANY MATERIALS.

SD-12

DESIGN OVERSIGHT Richard C. Hartzell	DESIGN	BY D. Fredericks	CHECKED A. Harrison	PREPARED FOR THE STATE OF CALIFORNIA DEPARTMENT OF TRANSPORTATION
12-17-12 SIGN OFF DATE	DETAILS	BY P. Walker	CHECKED A. Harrison	
	QUANTITIES	BY D. Fredericks	CHECKED A. Harrison	

Milind Desai
PROJECT ENGINEER

BRIDGE NO.
POST MILES

OVERHEAD SIGN
TRUSS STRUCTURAL FRAME DETAILS NO. 1

DESIGN DETAIL SHEET (ENGLISH) (REV.7/16/10)

ORIGINAL SCALE IN INCHES FOR REDUCED PLANS 0 1 2 3

CONTRACT NO.: 07-1952U1

DISREGARD PRINTS BEARING EARLIER REVISION DATES → 10/24/12

REVISION DATES | SHEET 1 | OF 3

USERNAME => s109858 DATE PLOTTED => 08-JUN-2013 TIME PLOTTED => 13:37

DIST	COUNTY	ROUTE	POST MILES TOTAL PROJECT	SHEET No	TOTAL SHEETS
07	Ven	23,101	3.3/3.8, R0.1/R4.5	337	652

REGISTERED CIVIL ENGINEER 11/21/12 DATE

6-3-13
PLANS APPROVAL DATE

REGISTERED PROFESSIONAL ENGINEER DOUGLAS M. FREDERICKS No. C050863 Exp. 09/30/13 CIVIL STATE OF CALIFORNIA

The State of California or its officers or agents shall not be responsible for the accuracy or completeness of electronic copies of this plan sheet.

CITY OF THOUSAND OAKS
2100 THOUSAND OAKS BLVD
THOUSAND OAKS, CA 91362

CH2M HILL
1000 WILSHIRE BLVD, 21ST FLOOR
LOS ANGELES, CA 90017

NOTES:

1. For Post to Baseplate connection, Anchorage Detail, and Anchor Bolt Template Assembly, see S10
2. Locate first interior walkway bracket 2'-8"max from ℄ of Post
3. For details not shown see S12 and S13

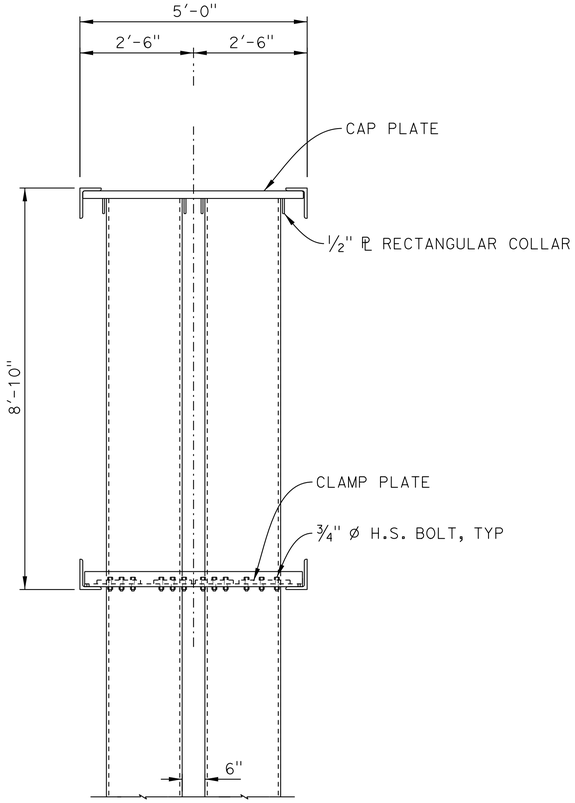

SECTION B-B
NO SCALE

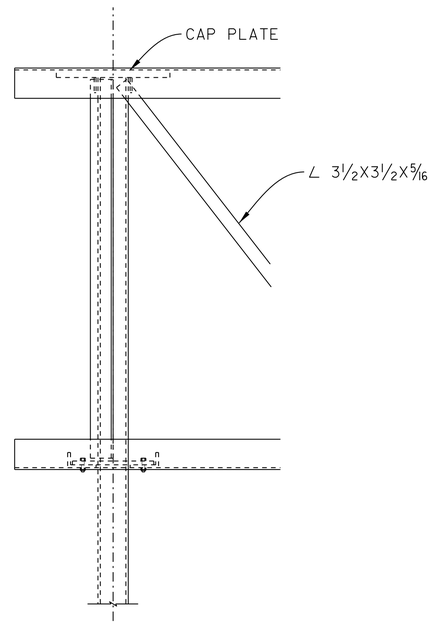

DETAIL E
NO SCALE

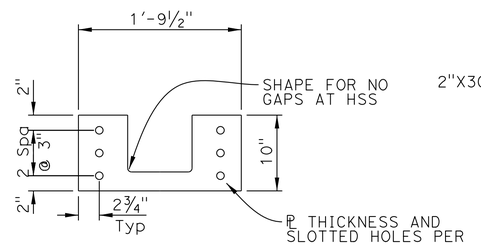

CLAMP PLATE A
NO SCALE

S13

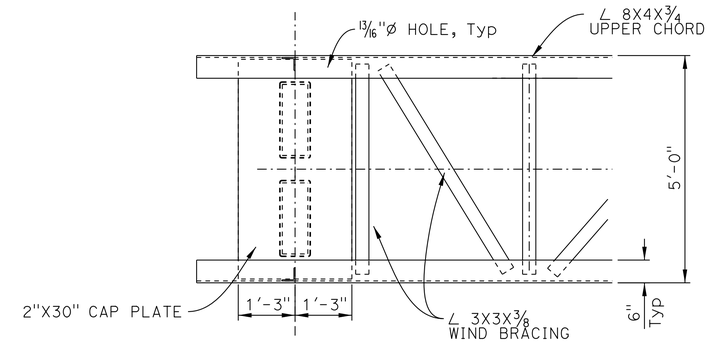

CAP PLATE DETAIL
NO SCALE

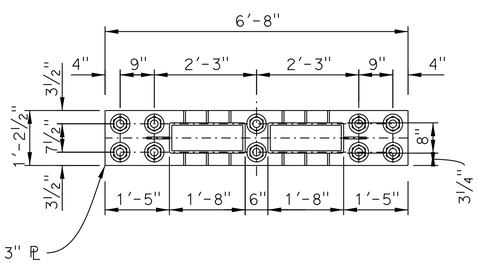

BASE PLATE DETAIL
NO SCALE

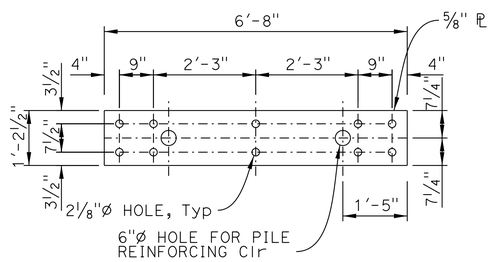

TEMPLATE DETAIL
NO SCALE

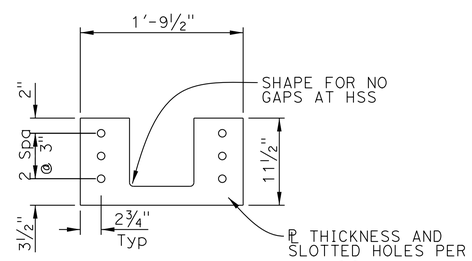

CLAMP PLATE B
NO SCALE

S13

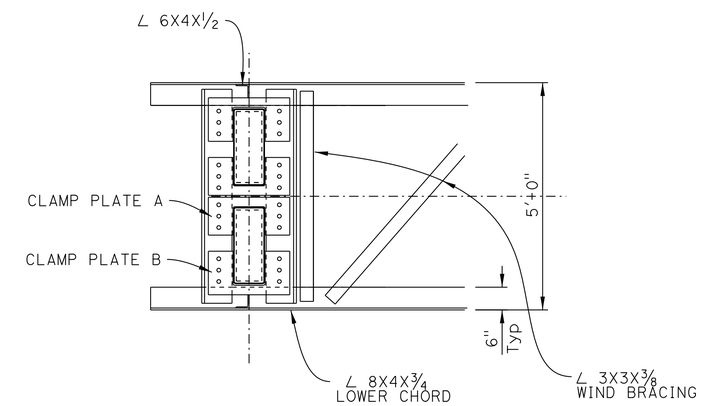

CLAMP PLATE
NO SCALE

NOTE:

THE CONTRACTOR SHALL VERIFY ALL CONTROLLING FIELD DIMENSIONS BEFORE ORDERING OR FABRICATING ANY MATERIALS.

SD-13

DESIGN	BY D. Fredericks	CHECKED A. Harrison	
DETAILS	BY P. Walker	CHECKED A. Harrison	
QUANTITIES	BY D. Fredericks	CHECKED A. Harrison	

DESIGN OVERSIGHT Richard C. Hartzell
12-17-12
SIGN OFF DATE

PREPARED FOR THE STATE OF CALIFORNIA DEPARTMENT OF TRANSPORTATION

Milind Desai
PROJECT ENGINEER

BRIDGE NO.
POST MILES

OVERHEAD SIGN
TRUSS STRUCTURAL FRAME DETAILS NO. 2

DESIGN DETAIL SHEET (ENGLISH) (REV.7/16/10)

ORIGINAL SCALE IN INCHES FOR REDUCED PLANS 0 1 2 3

UNIT: 3573
PROJECT NUMBER & PHASE: 0700000201 CONTRACT NO.: 07-1952U1

DISREGARD PRINTS BEARING EARLIER REVISION DATES

REVISION DATES

SHEET 2 OF 3

FILE => 101-23-Sign-02.dgn

USERNAME => s109858 DATE PLOTTED => 08-JUN-2013 TIME PLOTTED => 13:38

DIST	COUNTY	ROUTE	POST MILES TOTAL PROJECT	SHEET No	TOTAL SHEETS
07	Ven	23,101	3.3/3.8, R0.1/R4.5	338	652

REGISTERED CIVIL ENGINEER 11/21/12 DATE

6-3-13
PLANS APPROVAL DATE

REGISTERED PROFESSIONAL ENGINEER DOUGLAS M. FREDERICKS No. C050863 Exp. 09/30/13 CIVIL STATE OF CALIFORNIA

The State of California or its officers or agents shall not be responsible for the accuracy or completeness of electronic copies of this plan sheet.

CITY OF THOUSAND OAKS
2100 THOUSAND OAKS BLVD
THOUSAND OAKS, CA 91362

CH2M HILL
1000 WILSHIRE BLVD, 21ST FLOOR
LOS ANGELES, CA 90017

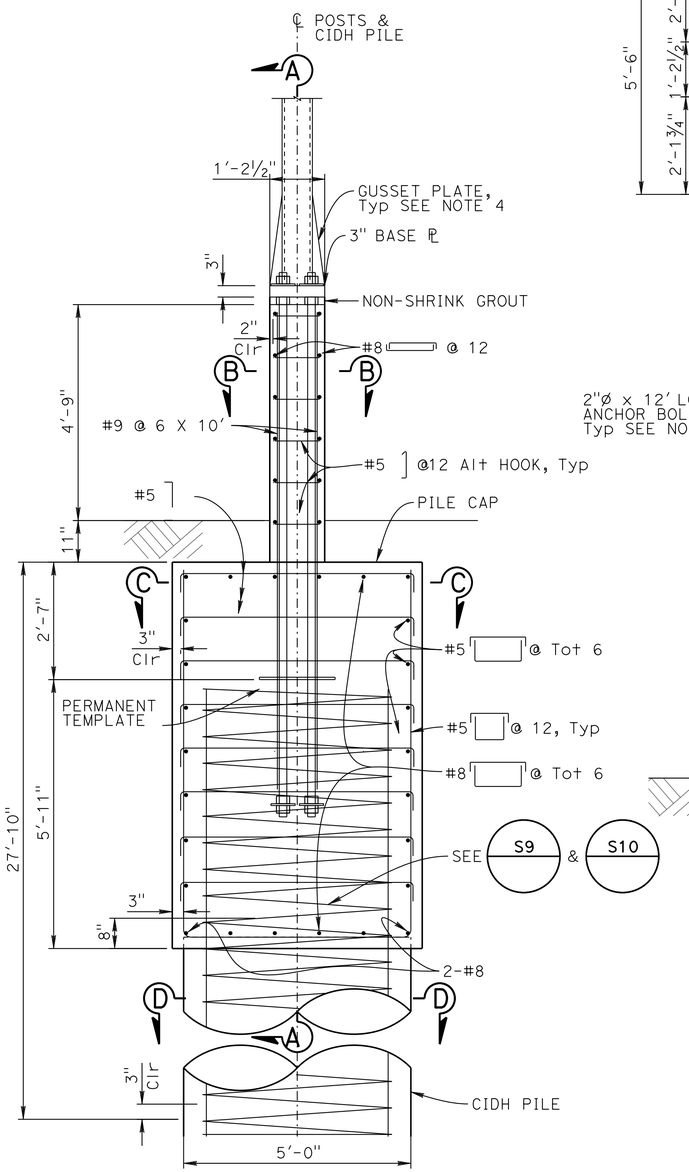

ELEVATION

SCALE = 1:20

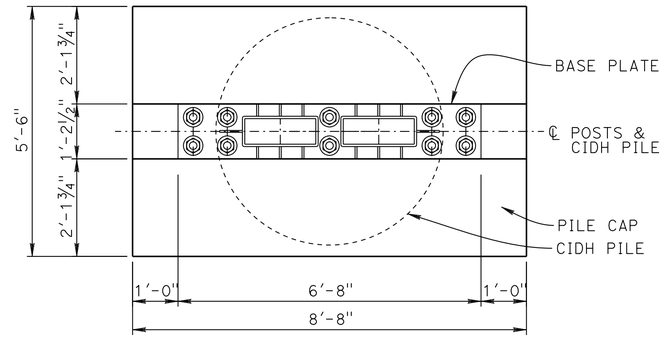

PLAN

SCALE = 1:20

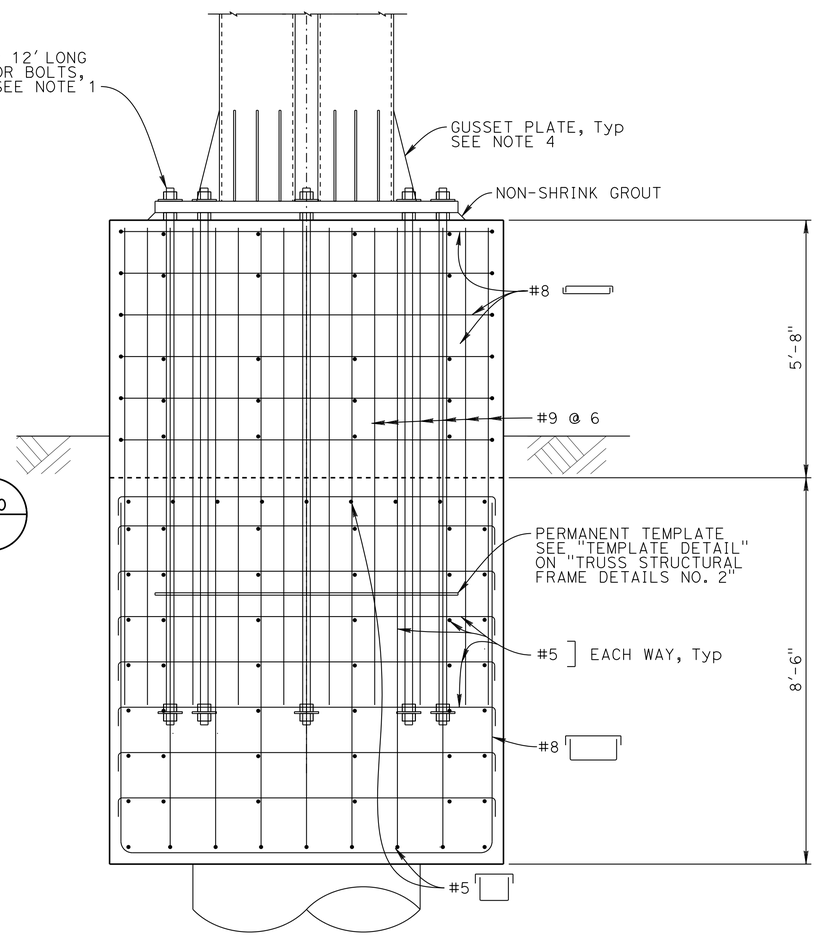

SECTION A-A

SCALE = 1:20

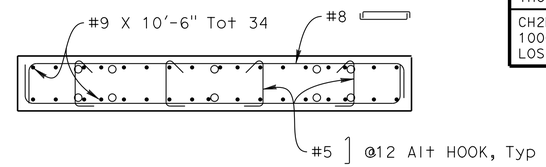

SECTION B-B

SCALE = 1:20

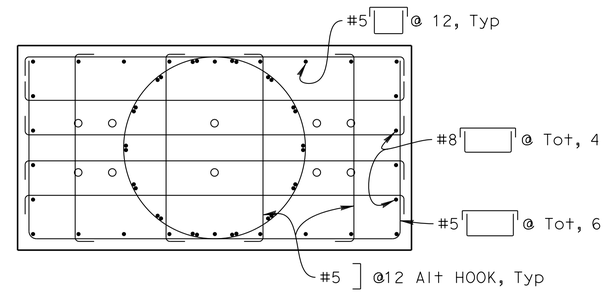

SECTION C-C

SCALE = 1:20

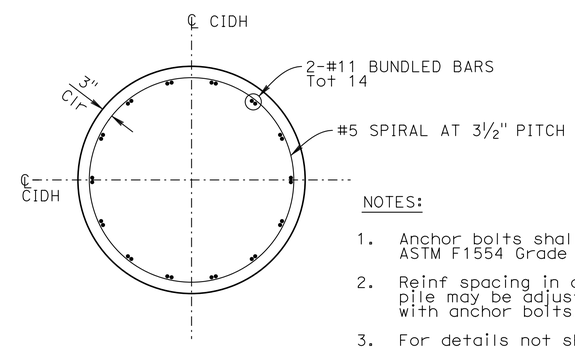

SECTION D-D

SCALE = 1:20

NOTES:

1. Anchor bolts shall conform to ASTM F1554 Grade 55.
2. Reinf spacing in concrete wall and pile may be adjusted to avoid conflict with anchor bolts.
3. For details not shown see S9 S10 S14
4. For weld details, thickness and height of gusset and instalation procedures, see S10

NOTE:

THE CONTRACTOR SHALL VERIFY ALL CONTROLLING FIELD DIMENSIONS BEFORE ORDERING OR FABRICATING ANY MATERIALS.

SD-14

DESIGN OVERSIGHT Richard C. Hartzell
12-17-12
SIGN OFF DATE

	BY	CHECKED
DESIGN	D. Fredericks	A. Harrison
DETAILS	P. Walker	A. Harrison
QUANTITIES	D. Fredericks	A. Harrison

PREPARED FOR THE STATE OF CALIFORNIA DEPARTMENT OF TRANSPORTATION

Milind Desai
PROJECT ENGINEER

BRIDGE NO.
POST MILES

OVERHEAD SIGN
TRUSS STRUCTURAL FRAME DETAILS NO. 3

DESIGN DETAIL SHEET (ENGLISH) (REV.7/16/10)

ORIGINAL SCALE IN INCHES FOR REDUCED PLANS 0 1 2 3

UNIT: 3573
PROJECT NUMBER & PHASE: 0700000201 CONTRACT NO.: 07-1952U1

DISREGARD PRINTS BEARING EARLIER REVISION DATES

REVISION DATES 10/24/12

SHEET 3 OF 3

USERNAME => s109358 DATE PLOTTED => 08-JUN-2013 TIME PLOTTED => 13:38

Dist	COUNTY	ROUTE	POST MILES TOTAL PROJECT	SHEET No.	TOTAL SHEETS
07	Ven	23,101	3.3/3.8, R0.1/R4.5	339	652

REGISTERED CIVIL ENGINEER 3-25-13 DATE

6-3-13
PLANS APPROVAL DATE

REGISTERED PROFESSIONAL ENGINEER CESAR TISCARENO No. C79951 Exp. 9/30/14 CIVIL STATE OF CALIFORNIA

THE STATE OF CALIFORNIA OR ITS OFFICERS OR AGENTS SHALL NOT BE RESPONSIBLE FOR THE ACCURACY OR COMPLETENESS OF SCANNED COPIES OF THIS PLAN SHEET.

CH2M HILL
1000 WILSHIRE Blvd
LOS ANGELES, CA 90017

CITY OF THOUSAND OAKS
2100 THOUSAND OAKS BLVD
THOUSAND OAKS. CA 91362

ROADSIDE SIGNS

SHEET No.	SIGN No.	SIGN CODE	PANEL SIZE Horiz in	PANEL SIZE Vert in	POST LENGTH Lt LF	POST LENGTH Rt LF	POST SIZE 4" x 4"	POST SIZE 4" x 6"	ROADSIDE SIGN ONE POST EA	ROADSIDE SIGN TWO POST EA	RELOCATE EA	REMOVE EA	REMOVE ROADSIDE SIGN (STRAP & SADDLE BRACKET METHOD) EA	REMOVE BRIDGE MOUNTED SIGN PANEL EA	INSTALL SIGN (ACRYLIC ADHESIVE MOUNT FLUSH SIGN, BRIDGE) EA	INSTALL SIGN (EXPANSION ANCHOR MOUNTING METHOD,BRIDGE BARRIER) EA	INSTALL SIGN (EXPANSION ANCHOR MOUNTING METHOD,SOUND WALL MOUNTED) EA	METAL (BARRIER MOUNTED SIGN) LB	REMARKS
S-1	1-1	W73(CA)	Exist								1								
S-2	2-1	R18A(CA)	Exist								1								
S-3	3-1	G20-5(CA)	72x54		16	16		1		1									
S-4	4-1	R18A(CA)	Exist								1								
	4-2	G84-2(41)	Exist								1								
	4-3	G84-2(41)	54x48		15.5			1	1										
	4-4	W3-3	Exist								1								
S-5	5-1	R61-19(CA)	Exist								1								
	5-2	G11-4,4(CA)	44x18														1		
	5-3	G78-1(CA)	Exist											1		1			SAVE AND REUSE SIGN PANEL FOR SMEL LOCATION
	5-4	W12-2P	Exist											1	1				SAVE AND REUSE SIGN PANEL FOR SMEL LOCATION
	5-5	W4-3	Exist								1								
	5-6	W4-3	48x48		16			1	1										
	5-7	R61-26(CA)	Exist								1								
	5-8	W3-3	Exist										1						
	5-9	W3-3	48x48		16			1	1										
	5-10	R8-4-4	Exist										1						
	5-11	R8-4-4	48x30															296	
S-6	6-1	W3-1	Exist										1						
		G28-2(CA)	Exist										1						
		W3-1	Exist										1						
		G26-2(CA)	Exist										1						
	6-2	W3-1	24x18															296	
		G28-2(CA)	24x18																
		W3-1	24x18																
		G26-2(CA)	24x18																
S-7	7-1	W4-7	48x48															203	
	7-2	G95B-1(CA)	Exist								1								
		G95B(CA)	Exist																
	7-3	G-SPECIAL	Exist								1								
	7-4	G-11-4,1(CA)	Exist									1							
	7-5	G-11-4,1(CA)	44x18														1		
	7-6	W12-2p	Exist											1	1				
	7-7	S32(CA)	Exist										1						SAVE AND REUSE SIGN PANEL FOR SMEL LOCATION
		S32-1(CA)	Exist										1						SAVE AND REUSE SIGN PANEL FOR SMEL LOCATION
	7-8	S32(CA)	52x42															214	
		S32-1(CA)	15x18																
S-8	8-1	R18A(CA)	Exist									1							
	8-2	R18A(CA)	66x48															203	
S-9	9-1	W4-1	Exist									1							
	9-2	W4-3	48x48		16			1	1										
S-10	10-1	W4-7	Exist									1							
	10-2	W4-1	48x48		16			1	1										
S-11	11-1	W4-2	48x48		16			1	1										
	11-2	W4-1	Exist									1							
	11-3	W4-3	48x48		16			1	1										
S-12	12-1	W4-7	Exist								1								
	12-2	R18A(CA)	Exist								1								
TOTAL									7	1	6	11	8	3	2	1	2	1,212	

NOTES:

1. EXACT LOCATION AND POSITION OF ROADSIDE SIGNS TO BE DETERMINED BY THE ENGINEER.
2. POST LENGTHS GIVEN ARE APPROXIMATE. EXACT LENGTH TO BE DETERMINED BY THE ENGINEER.
3. POST DATA (SIZE & LENGTH) ARE (N) - NOT A SEPARATE PAY ITEM, FOR INFORMATION ONLY.

SIGN QUANTITIES

SQ-1

REVISED BY | DATE REVISED
CESAR TISCARENO | TED MEKURIA
CALCULATED-DESIGNED BY | CHECKED BY
CONSULTANT FUNCTIONAL SUPERVISOR: CHRIS BRETALL
STATE OF CALIFORNIA - DEPARTMENT OF TRANSPORTATION
Caltrans

LAST REVISION 00-00-00 | DATE PLOTTED => 08-JUN-2013 | TIME PLOTTED => 13:22

Dist	COUNTY	ROUTE	POST MILES TOTAL PROJECT	SHEET No.	TOTAL SHEETS
07	Ven	23,101	3.3/3.8, R0.1/R4.5	340	652

REGISTERED CIVIL ENGINEER 3-25-13 DATE

6-3-13
PLANS APPROVAL DATE

REGISTERED PROFESSIONAL ENGINEER CESAR TISCARENO No. C79951 Exp. 9/30/14 CIVIL STATE OF CALIFORNIA

THE STATE OF CALIFORNIA OR ITS OFFICERS OR AGENTS SHALL NOT BE RESPONSIBLE FOR THE ACCURACY OR COMPLETENESS OF SCANNED COPIES OF THIS PLAN SHEET.

CH2M HILL
1000 WILSHIRE Blvd
LOS ANGELES, CA 90017

CITY OF THOUSAND OAKS
2100 THOUSAND OAKS BLVD
THOUSAND OAKS. CA 91362

NOTES:

1. EXACT LOCATION AND POSITION OF ROADSIDE SIGNS TO BE DETERMINED BY THE ENGINEER.
2. POST LENGTHS GIVEN ARE APPROXIMATE. EXACT LENGTH TO BE DETERMINED BY THE ENGINEER.
3. POST DATA (SIZE & LENGTH) ARE (N) - NOT A SEPARATE PAY ITEM, FOR INFORMATION ONLY.

ROADSIDE SIGNS

SHEET No.	SIGN No.	SIGN CODE	PANEL SIZE Horiz in	PANEL SIZE Vert in	POST LENGTH Lt LF	POST LENGTH Rt LF	POST SIZE 4" x 4"	POST SIZE 4" x 6"	ROADSIDE SIGN ONE POST EA	ROADSIDE SIGN TWO POST EA	RELOCATE EA	REMOVE EA	REMOVE ROADSIDE SIGN (STRAP & SADDLE BRACKET METHOD) EA	REMOVE BRIDGE MOUNTED SIGN PANEL EA	INSTALL SIGN (ACRYLIC ADHESIVE MOUNT FLUSH SIGN, BRIDGE) EA	INSTALL SIGN (EXPANSION ANCHOR MOUNTING METHOD,BRIDGE BARRIER) EA	INSTALL SIGN (EXPANSION ANCHOR MOUNTING METHOD,SOUND WALL MOUNTED) EA	METAL (BARRIER MOUNTED SIGN) LB	REMARKS
S-13	13-1	G81-66(CA)	Exist										1						
	13-2	G81-66(CA)	48x48		16			1	1										
	13-3	W13-2(30)	Exist										1						
	13-4	W13-2(30)	48x60		17			1	1										
	13-5	W3-3	Exist										1						
	13-6	W3-3	48x48		16			1	1										
S-14	14-1	G11-4,1(CA)	48x18		12	1			1										
	14-2	G-SPECIAL	Exist											1		1			
	14-3	G-SPECIAL	Exist											1		1			
	14-4	W4-3	Exist									1							
	14-5	W4-1	48x48		16			1	1										
	14-6	G28-2(CA)	Exist								1								
		W5-1	Exist																
S-15	15-1	SG2A(CA)	Exist								1								
	15-2	W3-3	Exist										1						
		G26-2(CA)	Exist										1						
	15-3	M3-1	24x18		16			1	1										
		G26-2(CA)	24x18																
TOTAL									6		2	1	5	2		2			
SHEET TOTAL FROM SQ-1									7	1	6	11	8	3		1			
SHEET TOTAL FROM SQ-2									6		2	1	5	2		2			SAVE AND REUSE SIGN PANEL FOR SMEL LOCATION
GRAND TOTAL									13	1	8	12	13	5		3			SAVE AND REUSE SIGN PANEL FOR SMEL LOCATION

SIGN QUANTITIES

SQ-2

STATE OF CALIFORNIA - DEPARTMENT OF TRANSPORTATION
Caltrans

CONSULTANT FUNCTIONAL SUPERVISOR: CHRIS BRETALL
CALCULATED-DESIGNED BY: CESAR TISCARENO
CHECKED BY: TED MEKURIA
REVISED BY
DATE REVISED

LAST REVISION 00-00-00 | DATE PLOTTED => 08-JUN-2013 | TIME PLOTTED => 13:22

Dist	COUNTY	ROUTE	POST MILES TOTAL PROJECT	SHEET No.	TOTAL SHEETS
07	Ven	23,101	3.3/3.8, R0.1/R4.5	341	652

REGISTERED CIVIL ENGINEER 3-25-13 DATE

6-3-13
PLANS APPROVAL DATE

REGISTERED PROFESSIONAL ENGINEER CESAR TISCARENO No. C79951 Exp. 9/30/14 CIVIL STATE OF CALIFORNIA

THE STATE OF CALIFORNIA OR ITS OFFICERS OR AGENTS SHALL NOT BE RESPONSIBLE FOR THE ACCURACY OR COMPLETENESS OF SCANNED COPIES OF THIS PLAN SHEET.

CH2M HILL
1000 WILSHIRE Blvd
LOS ANGELES, CA 90017

CITY OF THOUSAND OAKS
2100 THOUSAND OAKS BLVD
THOUSAND OAKS. CA 91362

OVERHEAD SIGNS

SHEET No.	LOCATION	SIGN No.	FURNISH SIGN STRUCTURE (TRUSS)	INSTALL SIGN STRUCTURE (TRUSS)	60" CIDH CONCRETE PILE (SIGN FOUNDATION)	REMOVE SIGN STRUCTURE	SIGN STRUCTURE FOUNDATION		POST TYPE (STD PLAN)	REMARKS
							BAR REINFORCING STEEL	STRUCTURAL CONCRETE		
			LB	LB	LF	EA	LB	CY		
S-3		A				1				
S-3	FNBT "A" 86+79.16	B	51,010	51,010	56		410	2.7	VI-S	
S-7	FNBT "A" 125+84.10	C	18,400	18,400	23				VII	
S-7		D				1				
S-7		E				1				
S-7	FNBT "A" 132+00.00	F	15,030	15,030	22				VI	
S-7	FSBT "A" 127+09.19	G	14,440	14,440	22				VI	
S-8		H				1				
S-13		I				1				
S-13	FNBT "A" 212+18.00	J	22,240	22,240	25				VIII	
TOTAL			121,120	121,120	148	5	410	2.7		

SIGN QUANTITIES

SQ-3

STATE OF CALIFORNIA - DEPARTMENT OF TRANSPORTATION
Caltrans

CONSULTANT FUNCTIONAL SUPERVISOR: CHRIS BRETALL
CALCULATED-DESIGNED BY: CESAR TISCARENO
CHECKED BY: TED MEKURIA
REVISED BY
DATE REVISED

LAST REVISION 00-00-00
DATE PLOTTED => 08-JUN-2013
TIME PLOTTED => 13:22

Dist	COUNTY	ROUTE	POST MILES TOTAL PROJECT	SHEET No.	TOTAL SHEETS
07	Ven	23,101	3.3/3.8, R0.1/R4.5	342	652

REGISTERED CIVIL ENGINEER 3-25-13 DATE

6-3-13
PLANS APPROVAL DATE

REGISTERED PROFESSIONAL ENGINEER CESAR TISCARENO No. C79951 Exp. 9/30/14 CIVIL STATE OF CALIFORNIA

THE STATE OF CALIFORNIA OR ITS OFFICERS OR AGENTS SHALL NOT BE RESPONSIBLE FOR THE ACCURACY OR COMPLETENESS OF SCANNED COPIES OF THIS PLAN SHEET.

CH2M HILL
1000 WILSHIRE Blvd
LOS ANGELES, CA 90017

CITY OF THOUSAND OAKS
2100 THOUSAND OAKS BLVD
THOUSAND OAKS. CA 91362

NOTES:

1. SIGNS ARE CALIFORNIA MUTCD (MANUAL ON UNIFORM TRAFFIC CONTROL DEVICES) CODED EXCEPT AS NOTED.
2. (CA) DENOTES CALIFORNIA CODED SIGNS.
3. FOR SIGN SPECIFICATIONS, SEE CALTRANS WEBSITE: http://www.dot.ca.gov/hq/traffops/signtech/signdel/specs.htm

ABBREVIATIONS:
NON NON-REFLECTIVE

MATERIAL SUMMARY (CONTRACTOR FURNISHED SIGNS)

SIGN No.	SIGN CODE	SIGN PANEL DIMENSION (L X H)	SINGLE FACED	SIGN FACING MATERIAL				OVERHEAD	ROADSIDE				PREMIUM GRAFFITI FILM	REMARKS
				BACKGROUND		LEGEND		FURNISH LAMINATED PANEL SIGN	FURNISH SINGLE SHEET ALUMINUM SIGN					
									0.063"		0.080"			
				SHEETING COLOR	RETROREFLECTIVE ASTM TYPE	SHEETING COLOR	RETROREFLECTIVE ASTM TYPE	1" TYPE A	UNFRAMED	FRAMED	UNFRAMED	FRAMED		
								SQFT	SQFT	SQFT	SQFT	SQFT		
3-1	G20-5(CA)	72x54	X	GREEN	IV	WHITE	IV			27			X	
4-3	G84-2(41)	54x48	X	GREEN	IV	WHITE	IV				18		X	
5-2	G11-4.1(CA)	44x18	X	WHITE	II	BLACK	NON		6				X	
5-6	W4-3	48x48	X	YELLOW	III	BLACK	NON				16		X	
5-9	W3-3	48x48	X	YELLOW	III	BLACK	NON				16		X	
6-2	M3-1	24x18	X	WHITE	III	BLACK	NON		3				X	
	G28-2(CA)	24x28	X	GREEN	IV	WHITE	IV		5				X	
	G26-2 (CA)	24x28	X	WHITE	IV	BLACK	NON		5				X	
	M3-1	24x18	X	WHITE	III	BLACK	NON		3				X	
7-1	W4-7	48x48	X	YELLOW	III	BLACK	NON				16		X	
7-5	G11-4.1(CA)	44x18	X	WHITE	II	BLACK	NON		6				X	
7-8	S32(CA)	54x42	X	PANTONE327C	II	WHITE	II		16				X	
	S32-1(CA)	15x18	X	PANTONE327C	II	WHITE	II		2				X	
8-2	R18A(CA)	66x48	X	WHITE	III	BLACK	NON			22			X	
9-2	W4-3	48x48	X	YELLOW	III	BLACK	NON				16		X	
10-2	W4-1	48x48	X	YELLOW	III	BLACK	NON				16		X	
11-1	W4-2	48x48	X	YELLOW	III	BLACK	NON				16		X	
11-3	W4-3	48x48	X	YELLOW	III	BLACK	NON				16		X	
13-2	G81-66(CA)	48x48	X	BLUE	IV	WHITE	IV				16		X	
13-4	W13-2(30)	48x60	X	YELLOW	III	BLACK	NON				20		X	
13-6	W3-3	48x48	X	YELLOW	III	BLACK	NON				16		X	
14-1	G11-4.1(CA)	44x18	X	WHITE	II	BLACK	NON		6				X	
14-5	W4-1	48x48	X	YELLOW	III	BLACK	NON				16		X	
15-3	M3-1	24x18	X	WHITE	III	BLACK	NON		3				X	
							SUBTOTAL		55	49	198			

SIGN QUANTITIES

SQ- 4

STATE OF CALIFORNIA - DEPARTMENT OF TRANSPORTATION
Caltrans

CONSULTANT FUNCTIONAL SUPERVISOR: CHRIS BRETALL
CALCULATED-DESIGNED BY: CESAR TISCARENO
CHECKED BY: TED MEKURIA
REVISED BY / DATE REVISED

LAST REVISION 00-00-00
DATE PLOTTED => 08-JUN-2013
TIME PLOTTED => 13:22

Dist	COUNTY	ROUTE	POST MILES TOTAL PROJECT	SHEET No.	TOTAL SHEETS
07	Ven	23,101	3.3/3.8, R0.1/R4.5	343	652

REGISTERED CIVIL ENGINEER 3-25-13 DATE

6-3-13
PLANS APPROVAL DATE

REGISTERED PROFESSIONAL ENGINEER CESAR TISCARENO No. C79951 Exp. 9/30/14 CIVIL STATE OF CALIFORNIA

THE STATE OF CALIFORNIA OR ITS OFFICERS OR AGENTS SHALL NOT BE RESPONSIBLE FOR THE ACCURACY OR COMPLETENESS OF SCANNED COPIES OF THIS PLAN SHEET.

CH2M HILL
1000 WILSHIRE Blvd
LOS ANGELES, CA 90017

CITY OF THOUSAND OAKS
2100 THOUSAND OAKS BLVD
THOUSAND OAKS. CA 91362

MATERIAL SUMMARY (CONTRACTOR FURNISHED SIGNS)

SIGN No.	SIGN CODE	SIGN PANEL DIMENSION (L X H)	SINGLE FACED	SIGN FACING MATERIAL				OVERHEAD	ROADSIDE				PREMIUM GRAFFITI FILM	REMARKS
				BACKGROUND		LEGEND		FURNISH LAMINATED PANEL SIGN	FURNISH SINGLE SHEET ALUMINUM SIGN					
									0.063"		0.080"			
				SHEETING COLOR	RETROREFLECTIVE ASTM TYPE	SHEETING COLOR	RETROREFLECTIVE ASTM TYPE	1" TYPE A	UNFRAMED	FRAMED	UNFRAMED	FRAMED		
								SQFT	SQFT	SQFT	SQFT	SQFT		
15-3	G26-2(CA)	24x28	X	WHITE	IV	BLACK	NON		5				X	
B	G24-2(CA)	216 X 110	X	GREEN	IV	WHITE	IV	165					X	
	G86-3 (CA)	216 X 110	X	GREEN	IV	WHITE	IV	165					X	
	G85-11 (CA)	264 X 110	X	GREEN	IV	WHITE	IV	202					X	
C	G86-3 (CA)	216 X 110	X	GREEN	IV	WHITE	IV	165					X	
F	G23-2 (CA)	264 X 100	X	GREEN	IV	WHITE	IV	184					X	
G	G23-1 (CA)	264 X 100	X	GREEN	IV	WHITE	IV	184					X	
J	G85-11 (CA)	264 X 100	X	GREEN	IV	WHITE	IV	184					X	
SUBTOTAL								1,249	5					
TOTAL FROM SHEET SQ-4									55	49	198			
TOTAL FROM SHEET SQ-5								1,249	5					
GRAND TOTAL								1,249	60	49	198			

* SEE THQ-1 FOR CONSTRUCTION AREA SIGNS.

** SEE CS-1 FOR STATIONARY MOUNTED CONSTRUCTION AREA SIGNS.

SIGN QUANTITIES

SQ-5

REVISED BY | DATE REVISED
CESAR TISCARENO | TED MEKURIA
CALCULATED-DESIGNED BY | CHECKED BY
CONSULTANT FUNCTIONAL SUPERVISOR | CHRIS BRETALL
STATE OF CALIFORNIA - DEPARTMENT OF TRANSPORTATION
Caltrans

LAST REVISION 00-00-00 | DATE PLOTTED => 12-JUN-2013 | TIME PLOTTED => 09:45

ROADWAY QUANTITIES

SHEET No.	LOCATION	STATION LIMITS	PAVEMENT Str SECTION TYPE	HOT MIX ASPHALT (TYPE A-WMA) TON	LEAN CONCRETE BASE CY	CLASS 3 AGGREGATE BASE CY	CLASS 2 AGGREGATE BASE CY	JOINTED PLAIN CONCRETE PAVEMENT CY	COLD PLANE RHMA Pvmt SQYD	MINOR Conc (TEXTURED PAVING) CY	GEOSYNTHETIC PAVEMENT INTERLAYER (PAVING FABRIC) SQYD	RUBBERIZED HOT MIX ASPHALT (GAP GRADED-WMA) TON
L-1	NB ROUTE 101	"A" 19+95.41 TO "A" 29+50.00	1		147.98	207.17		295.96				
L-1	SB ROUTE 101	"A" 22+07.44 TO "A" 29+50.00	1		107.06	149.88		214.11				
L-2	NB ROUTE 101	"A" 29+50.00 TO "A" 42+50.00	1		337.04	471.85		674.07				
L-2	SB ROUTE 101	"A" 29+50.00 TO "A" 42+50.00	1		706.01	988.42		1,412.03				
L-2	SB ROUTE 101 MEDIAN	"A" 35+30.00 TO "A" 42+50.00	1		29.35	41.09		58.70				
L-2	SB ON-RAMP AT WESTLAKE Blvd	"WL-3" 34+96.48 TO "WL-3" 42+10.34	2	893.17	434.55	832.90						
L-2	SB ROUTE 101	"A" 34+95.28 TO "A" 38+05.43	7		100.23	140.32				200.45		
L-3	NB ROUTE 101 MEDIAN	"A" 42+50.00 TO "A" 51+50.00	1		233.33	326.67		466.67				
L-3	SB ROUTE 101 MEDIAN	"A" 42+50.00 TO "A" 51+50.00	1		198.26	277.56		396.52				
L-3	SB ROUTE 101	"A" 42+50.00 TO "A" 49+10.52	1		167.96	235.15		335.93				
L-3	SB ON-RAMP AT WESTLAKE Blvd	"WL-6" 42+97.23 TO "WL-6" 44+79.25	2	308.76	150.22	287.93						
L-3	SB ROUTE 101	"A" 42+97.23 TO "A" 46+49.45	4				19.34			12.76		
L-3	SB ON-RAMP AT WESTLAKE Blvd MVP	"WL-3" 43+95.00 TO "WL-3" 44+80.00	2	26.95	13.11	25.13						
L-3	NB ON-RAMP AT WESTLAKE Blvd MVP	"WL-5" 48+60.00 TO "WL-5" 49+45.00	2	26.95	13.11	25.13						
L-3	NB ON-RAMP AT WESTLAKE Blvd	"WL-5" 49+60.00 TO "WL-5" 51+50.00	2	49.56	24.11	46.21						
L-4	NB ROUTE 101 MEDIAN	"A" 51+50.00 TO "A" 65+50.00	1		298.46	417.85		596.93				
L-4	SB ROUTE 101 MEDIAN	"A" 51+50.00 TO "A" 65+50.00	1		362.96	508.15		725.93				
L-4	NB ON-RAMP AT WESTLAKE Blvd	"WL-5" 51+50.00 TO "WL-5" 51+95.00	2	2.83	1.38	2.64						
L-4	NB ON-RAMP AT WESTLAKE Blvd MVP	"WL-1" 53+40.00 TO "WL-1" 54+25.00	2	35.67	17.36	33.26						
L-4	NB AND SB ROUTE 101 MEDIAN	"A" 65+25.00 TO "A" 65+50.00	3						9.15			5.97
L-5	NB ROUTE 101 MEDIAN	"A" 65+50.00 TO "A" 70+35.00	1		53.94	75.52		107.89				
L-5	SB ROUTE 101 MEDIAN	"A" 65+50.00 TO "A" 79+50.00	1		362.96	508.15		725.93				
L-5	NB AND SB ROUTE 101 MEDIAN	"A" 65+50.00 TO "A" 79+50.00	3						650.70			424.58
L-5	NB ROUTE 101	"A" 66+53.60 TO "A" 71+67.62	1		94.98	132.97		189.96				
L-6	NB AND SB ROUTE 101 MEDIAN	"A" 79+50.00 TO "A" 93+50.00	3						718.67			468.93
L-6	SB ROUTE 101	"A" 79+50.00 TO "A" 93+50.00	1		362.96	508.15		725.93				
L-6	NB ROUTE 101	"A" 86+80.33 TO "A" 93+50.00	1		334.69	468.56		669.37				
L-6	NB OFF-RAMP AT HAMPSHIRE Blvd	"HM-2" 89+39.53 TO "HM-2" 93+50.00	2	432.91	210.62	403.69						
L-6	NB ROUTE 101 (HM-2 GORE AREA)	"A" 90+91.72 TO "A" 91+96.84	7		27.54	38.55				55.07		
L-7	SB OFF-RAMP AT HAMPSHIRE Blvd	"HM-4" 98+15.00 TO "HM-4" 100+65.60	2	105.14	51.16	98.05						
L-7	NB AND SB ROUTE 101 MEDIAN	"A" 93+50.00 TO "A" 95+50.03	3						102.68			67.00
L-7	NB AND SB ROUTE 101 MEDIAN	"A" 97+67.61 TO "A" 107+50.00	3						504.29			329.05
L-7	SB ROUTE 101 MEDIAN	"A" 93+50.00 TO "A" 95+50.03	1		51.86	72.60		103.72				
L-7	SB ROUTE 101 MEDIAN	"A" 97+67.61 TO "A" 107+50.00	1		254.69	356.57		509.39				
L-7	NB ROUTE 101	"A" 93+50.00 TO "A" 95+77.17	1		92.55	129.57		185.10				
L-7	NB OFF-RAMP AT HAMPSHIRE Blvd MVP	"HM-2" 93+53.00 TO "HM-2" 94+38.00	2	35.67	17.36	33.26						
L-7	NB OFF-RAMP AT HAMPSHIRE Blvd	"HM-2" 93+50.00 TO "HM-2" 95+04.00	2	239.98	116.76	223.78						
L-7	NB ON-RAMP AT HAMPSHIRE Blvd	"HM-1" 97+70.00 TO "HM-1" 100+95.00	2	566.14	275.44	527.94						
SHEET Q-1 TOTAL				2,723.73	5,650.00	8,594.68	19.34	8,394.12	1,985.49	268.29		1,295.53

Dist	COUNTY	ROUTE	POST MILES TOTAL PROJECT	SHEET No.	TOTAL SHEETS
07	Ven	23,101	3.3/3.8, R0.1/R4.5	344	652

REGISTERED CIVIL ENGINEER 3-25-13 DATE

6-3-13
PLANS APPROVAL DATE

REGISTERED PROFESSIONAL ENGINEER SUSAN CHAU No. C74420 Exp. 9/30/13 CIVIL STATE OF CALIFORNIA

THE STATE OF CALIFORNIA OR ITS OFFICERS OR AGENTS SHALL NOT BE RESPONSIBLE FOR THE ACCURACY OR COMPLETENESS OF SCANNED COPIES OF THIS PLAN SHEET.

CH2M HILL
1000 WILSHIRE Blvd
LOS ANGELES, CA 90017

CITY OF THOUSAND OAKS
2100 THOUSAND OAKS BLVD
THOUSAND OAKS. CA 91362

REVISED BY | DATE REVISED
SUSAN CHAU | MIKE ROBINSON
CALCULATED-DESIGNED BY | CHECKED BY
CONSULTANT FUNCTIONAL SUPERVISOR | CHRIS BRETALL
STATE OF CALIFORNIA - DEPARTMENT OF TRANSPORTATION
Caltrans

SUMMARY OF QUANTITIES

Q-1

LAST REVISION 00-00-00 | DATE PLOTTED => 12-JUN-2013 | TIME PLOTTED => 09:45

ROADWAY QUANTITIES

SHEET No.	LOCATION	STATION LIMITS	PAVEMENT Str SECTION TYPE	HOT MIX ASPHALT (TYPE A-WMA) TON	LEAN CONCRETE BASE CY	CLASS 3 AGGREGATE BASE CY	CLASS 2 AGGREGATE BASE CY	JOINTED PLAIN CONCRETE PAVEMENT CY	COLD PLANE RHMA Pvmt SQYD	MINOR Conc (TEXTURED PAVING) CY	GEOSYNTHETIC PAVEMENT INTERLAYER (PAVING FABRIC) SQYD	RUBBERIZED HOT MIX ASPHALT (GAP GRADED-WMA) TON
L-7	NB ON-RAMP AT HAMPSHIRE Blvd MVP	"HM-1" 98+70.00 TO "HM-1" 99+55.00	2	35.63	17.33	33.22						
L-7	NB ON-RAMP AT HAMPSHIRE Blvd	"HM-1" 100+95.00 TO "HM-1" 101+65.00	6	120.67	58.71	112.53					293.56	
L-7	NB ON-RAMP AT HAMPSHIRE Blvd	"HM-1" 100+65.00 TO "HM-1" 103+40.30	2	273.82	133.22	255.34						
L-7	NB ROUTE 101	"A" 97+92.16 TO "A" 107+50.00	1		534.91	748.87		1,069.81				
L-7	NB ROUTE 101 (HM-1 GORE AREA)	"A" 101+40.05 TO "A" 103+40.34	7		38.06	53.28				76.11		
L-7	SB ROUTE 101	"A" 106+56.68 TO "A" 107+50.00	5	7.46	5.18							
L-8	SB ROUTE 101	"A" 107+50.00 TO "A" 110+72.00	5	25.74	17.89							
L-8	SB ROUTE 101 MVP	"A" 111+35.00 TO "A" 112+20.00	2	35.63	17.33	33.22						
L-8	NB AND SB ROUTE 101 MEDIAN	"A" 107+50.00 TO "A" 120+50.00	3						667.33			435.44
L-8	SB ROUTE 101	"A" 107+50.00 TO "A" 120+50.00	1		337.04	471.85		674.07				
L-8	NB ROUTE 101	"A" 107+50.00 TO "A" 120+50.00	1		557.15	780.01		1,114.30				
L-9	NB AND SB ROUTE 101 MEDIAN	"A" 120+50.00 TO "A" 128+86.16	3						429.23			280.07
L-9	SB ROUTE 101 MEDIAN	"A" 120+50.00 TO "A" 128+86.16	1		216.78	303.50		433.56				
L-9	NB ROUTE 101	"A" 120+50.00 TO "A" 128+56.16	1		328.44	459.81		656.87				
L-9	NB AND SB ROUTE 101 MEDIAN	"A" 130+09.16 TO "A" 133+50.00	3						174.96			114.16
L-9	SB ROUTE 101 MEDIAN	"A" 130+09.16 TO "A" 133+50.00	1		88.37	123.71		176.73				
L-9	NB ROUTE 101	"A" 130+19.02 TO "A" 133+50.00	1		153.83	215.37		307.67				
L-10	NB AND SB ROUTE 101 MEDIAN	"A" 133+50.00 TO "A" 146+50.00	3						320.84			209.34
L-10	SB ROUTE 101 MEDIAN	"A" 133+50.00 TO "A" 146+50.00	1		309.57	433.40		619.15				
L-10	NB ROUTE 101	"A" 133+50.00 TO "A" 143+99.02	1		409.70	573.59		819.41				
L-10	NB AND SB ROUTE 101 MEDIAN	"A" 139+75.00 TO "A" 146+50.00	2	733.90	357.06	684.37						
L-10	SB ON-RAMP AT ROUTE 23	"S-3" 870+17.78 TO "S-3" 870+23.10	1		3.83	5.37		7.67				
L-11	SB ROUTE 101 MEDIAN	"A" 146+50.00 TO "A" 150+55.52	1		45.30	63.41		90.59				
L-11	NB AND SB ROUTE 101 MEDIAN	"A" 146+50.00 TO "A" 159+50.00	2	1,679.31	817.03	1,565.98						
L-11	SB ROUTE 101 & ON-RAMP @ ROUTE 23	"A" 146+50.00 TO "A" 159+50.00	1		543.20	760.49		1,086.41				
L-12	NB AND SB ROUTE 101 MEDIAN	"A" 159+50.00 TO "A" 163+15.00	2	402.26	195.71	375.11						
L-12	SB ROUTE 101	"A" 159+50.00 TO "A" 160+90.88	1		28.15	39.41		56.30				
L-15	NB ROUTE 101 (S-1 GORE AREA)	"A" 190+54.24 TO "A" 192+71.03	1		24.09	33.72		48.18				
L-15	NB ROUTE 101 @ ROUTE 23	"S-1" 397+90.00 TO "S-1" 398+85.00	2	38.37	18.67	35.78						
L-15	NB ROUTE 101 @ ROUTE 23 MVP	"S-1" 394+25.00 TO "S-1" 396+30.00	2	35.40	17.22	33.01						
L-17	NB 101 AT MOORPARK OFF-RAMP	"A" 212+16.00 TO "A" 213+99.18	1		47.89	67.04		95.78				
L-17	NB OFF-RAMP AT MOORPARK Rd	"MR-2" 14+01.20 TO "MR-2" 20+00.00	2	492.60	239.67	459.36						
L-17	NB ROUTE 101	"A" 222+01.82 TO "A" 223+50.00	1		60.37	84.52		120.74				
L-18	NB ROUTE 101	"A" 223+50.00 TO "A" 224+42.00	1		37.48	52.47		74.96				
L-18	NB ROUTE 101	"A" 226+65.01 TO "A" 236+50.00	1		470.78	659.09		941.56				
L-18	NB ROUTE 101 (MR-1 GORE AREA)	"A" 231+80.81 TO "A" 233+31.92	4				19.81			13.08		
L-18	NB ON-RAMP AT MOORPARK Rd MVP	"MR-1" 27+20.12 TO "MR-1" 28+12.53	2	36.77	17.89	34.29						
L-18	NB ON-RAMP AT MOORPARK Rd	"MR-1" 27+75.00 TO "MR-1" 29+10.00	2	263.77	128.33	245.97						
SHEET Q-2 TOTAL				4,181.32	6,276.19	9,797.09	19.81	8,393.75	1,592.36	89.19	293.56	1,039.01

Dist	COUNTY	ROUTE	POST MILES TOTAL PROJECT	SHEET No.	TOTAL SHEETS
07	Ven	23,101	3.3/3.8, R0.1/R4.5	345	652

REGISTERED CIVIL ENGINEER 3-25-13 DATE

6-3-13
PLANS APPROVAL DATE

REGISTERED PROFESSIONAL ENGINEER SUSAN CHAU No. C74420 Exp. 9/30/13 CIVIL STATE OF CALIFORNIA

THE STATE OF CALIFORNIA OR ITS OFFICERS OR AGENTS SHALL NOT BE RESPONSIBLE FOR THE ACCURACY OR COMPLETENESS OF SCANNED COPIES OF THIS PLAN SHEET.

CH2M HILL
1000 WILSHIRE Blvd
LOS ANGELES, CA 90017

CITY OF THOUSAND OAKS
2100 THOUSAND OAKS BLVD
THOUSAND OAKS. CA 91362

REVISED BY | DATE REVISED
SUSAN CHAU | MIKE ROBINSON
CALCULATED-DESIGNED BY | CHECKED BY
CONSULTANT FUNCTIONAL SUPERVISOR: CHRIS BRETALL

STATE OF CALIFORNIA - DEPARTMENT OF TRANSPORTATION
Caltrans

SUMMARY OF QUANTITIES
Q-2

LAST REVISION 00-00-00 | DATE PLOTTED => 12-JUN-2013 | TIME PLOTTED => 09:45

Dist	COUNTY	ROUTE	POST MILES TOTAL PROJECT	SHEET No.	TOTAL SHEETS
07	Ven	23,101	3.3/3.8, R0.1/R4.5	346	652

REGISTERED CIVIL ENGINEER 3-25-13 DATE

6-3-13
PLANS APPROVAL DATE

REGISTERED PROFESSIONAL ENGINEER SUSAN CHAU No. C74420 Exp. 9/30/13 CIVIL STATE OF CALIFORNIA

THE STATE OF CALIFORNIA OR ITS OFFICERS OR AGENTS SHALL NOT BE RESPONSIBLE FOR THE ACCURACY OR COMPLETENESS OF SCANNED COPIES OF THIS PLAN SHEET.

CH2M HILL
1000 WILSHIRE Blvd
LOS ANGELES, CA 90017

CITY OF THOUSAND OAKS
2100 THOUSAND OAKS BLVD
THOUSAND OAKS. CA 91362

ROADWAY QUANTITIES

SHEET No.	LOCATION	STATION LIMITS	PAVEMENT Str SECTION TYPE	HOT MIX ASPHALT (TYPE A-WMA) TON	LEAN CONCRETE BASE CY	CLASS 3 AGGREGATE BASE CY	CLASS 2 AGGREGATE BASE CY	JOINTED PLAIN CONCRETE PAVEMENT CY	COLD PLANE RHMA Pvmt SQYD	MINOR Conc (TEXTURE PAVING) CY	GEOSYNTHETIC PAVEMENT INTERLAYER (PAVING FABRIC) SQYD	RUBBERIZED HOT MIX ASPHALT (GAP GRADED-WMA) TON
L-18	NB ON-RAMP AT MOORPARK Rd	"MR-1" 29+10.00 TO "MR-1" 29+60.00	6	90.76	44.16	84.63					220.78	
L-18	NB ON-RAMP AT MOORPARK Rd	"MR-1" 29+60.00 TO "MR-1" 34+50.88	2	619.03	301.18	577.26						
L-19	NB ROUTE 101	"A" 236+50.00 TO "A" 245+00.00	1		311.11	435.56		622.22				
C-11	NB HAMPSHIRE Rd	"HM" 81+68.54 TO "HM" 84+27.94	2	76.73	37.33	71.56						
C-11	SB HAMPSHIRE Rd	"HM" 82+63.76 TO "HM" 84+84.23	2	71.57	34.82	66.74						
C-12	NB CONEJO SCHOOL Rd	"CO" 130+00.00 TO "CO" 132+55.00	2	34.94	17.00	32.58						
C-12	SB CONEJO SCHOOL Rd	"CO" 129+64.14 TO "CO" 132+15.00	2	35.31	17.18	32.92						
C-13	NB MOORPARK Rd	"MR" 18+77.99 TO "MR" 21+01.01	2	69.65	33.89	64.95						
C-13	SB MOORPARK Rd	"MR" 19+02.66 TO "MR" 21+11.65	2	64.40	31.33	60.06						
C-13	NB AND SB MOORPARK Rd MEDIAN	"MR" 19+30.00 TO "MR" 20+85.00	2	136.57	66.44	127.35						
SHEET TOTAL				1,198.97	894.44	1,553.61		622.22			220.78	
SHEET Q-1 TOTAL				2,723.73	5,650.00	8,594.68	19.34	8,394.12	1,985.49	268.29		1,295.53
SHEET Q-2 TOTAL				4,181.32	6,276.19	9,797.09	19.81	8,393.75	1,592.36	89.19	293.56	1,039.01
AGGREGATE BASE FOR SIDEWALK (SHEET Q-5 TOTAL)						91.20						
HOT MIX ASPHALT DIKE (SHEET Q-7 TOTAL)				249.10								
PLACE HMA (Misc AREA) (SHEET DQ-9 TOTAL)				0.49								
HOT MIX ASPHALT (TYPE A) (SHEET SCQ-16 TOTAL)				160.91								
CLASS 2 AGGREGATE BASE (SHEET SCQ-16 TOTAL)							270.43					
GRAND TOTAL				8,514.53	12,820.63	20,036.58	309.58	17,410.10	3,577.85	357.48	514.33	2,334.54

REMOVE CRASH CUSHION

SHEET No.	LOCATION	REMOVE CRASH CUSHION EA
C-13	NB MOORPARK Rd	2
C-13	SB MOORPARK Rd	2
	TOTAL	4

RESET MISSION BELL MARKER

SHEET No.	LOCATION	RESET MISSION BELL MARKER EA
L-8	"A" 111+21	1
	TOTAL	1

REMOVE ASPHALT CONCRETE DIKE

SHEET No.	LOCATION	STATION LIMITS	REMOVE AC DIKE LF
L-4	NB WESTLAKE Blvd ON-RAMP	"WL-1" 53+40.00 TO "WL-1" 54+25.00	85.00
L-7	SB ROUTE 101	"A" 97+20.00 TO "A" 100+99.00	379.00
L-7	SB HAMPSHIRE Rd OFF-RAMP	"HM-4" 103+98.50 TO "HM-4" 104+96.00	97.50
L-9	SB ROUTE 101	"A" 127+38.00 TO "A" 128+10.50	72.50
L-13	SB 23 TO NB 101 CONNECTOR	"S-1" 400+50.00 TO "S-1" 400+80.00	30.00
L-14	SB 23 TO NB 101 CONNECTOR	"S-1" 408+96.00 TO "S-1" 409+64.75	68.75
L-15	SB 23 TO NB 101 CONNECTOR	"S-1" 394+25.00 TO "S-1" 396+75.00	250.00
L-15	SB 23 TO NB 101 CONNECTOR	"S-1" 397+90.00 TO "S-1" 400+50.00	260.00
L-17	NB ROUTE 101	"A" 211+16.50 TO "A" 212+16.00	99.50
C-12	NB CONEJO SCHOOL Rd	"CO" 129+90.00 TO "CO" 130+00.00	10.00
C-12	NB CONEJO SCHOOL Rd	"CO" 132+55.00 TO "CO" 132+65.00	10.00
		TOTAL	1,362.25
		DRAINAGE TOTAL (SEE SHEET DQ-9)	340.50
		GRAND TOTAL	1,702.75

REMOVE CONCRETE CURB

SHEET No.	LOCATION	STATION LIMITS	REMOVE CONCRETE CURB LF
L-6	NB HAMPSHIRE OFF-RAMP	"HM-2" 91+12.00 TO "HM-2" 93+50.00	238.00
L-6	SB HAMPSHIRE ON-RAMP	"A" 92+93.00 TO "A" 93+50.00	57.63
L-7	SB HAMPSHIRE ON-RAMP	"A" 93+50.00 TO "A" 93+82.03	32.37
L-7	NB HAMPSHIRE OFF-RAMP	"HM-2" 93+50.00 TO "HM-2" 95+04.00	154.00
L-7	NB HAMPSHIRE ON-RAMP	"HM-1" 97+70.00 TO "HM-1" 103+54.00	584.00
C-11	NB HAMPSHIRE Rd	"HM" 81+67.18 TO "HM" 81+87.22	20.04
C-11	SB HAMPSHIRE Rd	"HM" 84+72.02 TO "HM" 84+84.23	12.21
C-13	SB MOORPARK Rd	"MR" 19+02.66 TO "MR" 19+43.70	41.88
C-13	SB MOORPARK Rd	"MR" 20+55.50 TO "MR" 21+06.02	50.35
C-13	NB MOORPARK Rd	"MR" 18+84.66 TO "MR" 19+43.85	63.23
C-13	NB MOORPARK Rd	"MR" 20+55.70 TO "MR" 21+01.01	45.31
		TOTAL	1,299.02

SUMMARY OF QUANTITIES
Q-3

REVISED BY | DATE REVISED
SUSAN CHAU | MIKE ROBINSON
CALCULATED-DESIGNED BY | CHECKED BY
CONSULTANT FUNCTIONAL SUPERVISOR | CHRIS BRETALL
STATE OF CALIFORNIA - DEPARTMENT OF TRANSPORTATION
Caltrans

LAST REVISION 00-00-00
DATE PLOTTED => 12-JUN-2013
TIME PLOTTED => 09:47

JOINTED PLAIN CONCRETE PAVEMENT
(SEAL PAVEMENT JOINT)

SHEET No.	LOCATION	STATION LIMITS	SEAL LONGITUDINAL JOINT (LF)	SEAL ISOLATION JOINT (LF)	SEAL PAVEMENT JOINTS (LF)
L-1	NB ROUTE 101	"A" 19+95.41 TO "A" 23+46.21		350.80	259.85
L-1	SB ROUTE 101	"A" 22+07.44 TO "A" 29+50.00		742.56	770.06
L-1	NB ROUTE 101	"A" 23+46.21 TO "A" 29+50.00		603.79	447.25
L-2	NB ROUTE 101	"A" 29+50.00 TO "A" 42+50.00		1,300.00	1,348.15
L-2	SB ROUTE 101	"A" 35+30.00 TO "A" 42+50.00	720.00	720.00	381.33
L-2	SB ROUTE 101	"A" 29+50.00 TO "A" 34+95.28	545.28	545.28	1,373.30
L-2	SB ROUTE 101	"A" 34+95.28 TO "A" 37+92.23	296.95	296.95	439.93
L-2	SB ROUTE 101	"A" 37+92.23 TO "A" 42+50.00	457.77	457.77	1,152.90
L-3	SB ROUTE 101	"A" 42+50.00 TO "A" 42+97.23	47.23	47.23	171.43
L-3	SB ROUTE 101	"A" 42+97.23 TO "A" 49+10.52	613.29	613.29	454.29
L-3	NB ROUTE 101	"A" 42+50.00 TO "A" 51+50.00		900.00	933.33
L-3	SB ROUTE 101	"A" 42+50.00 TO "A" 51+50.00	900.00	900.00	635.13
L-4	NB ROUTE 101	"A" 51+50.00 TO "A" 65+50.00		1,400.00	1,037.04
L-4	SB ROUTE 101	"A" 51+50.00 TO "A" 65+50.00		1,400.00	1,451.85
L-5	NB ROUTE 101	"A" 65+50.00 TO "A" 70+35.00		485.00	215.56
L-5	SB ROUTE 101	"A" 65+50.00 TO "A" 79+50.00		1,400.00	1,451.85
L-5	NB ROUTE 101	"A" 66+53.60 TO "A" 71+67.62		514.02	369.33
L-6	SB ROUTE 101	"A" 79+50.00 TO "A" 93+50.00		1,400.00	1,451.85
L-6	NB ROUTE 101	"A" 86+80.33 TO "A" 93+50.00	410.47	669.67	1,282.62
L-7	NB ROUTE 101	"A" 93+50.00 TO "A" 95+77.17	227.17	227.17	370.20
L-7	SB ROUTE 101	"A" 93+50.00 TO "A" 95+50.03		200.03	207.44
L-7	SB ROUTE 101	"A" 97+67.61 TO "A" 107+50.00		982.39	1,018.77
L-7	NB ROUTE 101	"A" 97+92.16 TO "A" 107+50.00	957.84	957.84	2,071.36
L-8	NB ROUTE 101	"A" 107+50.00 TO "A" 120+50.00	1,300.00	1,300.00	2,221.85
L-8	SB ROUTE 101	"A" 107+50.00 TO "A" 120+50.00		1,300.00	1,348.15
L-9	NB ROUTE 101	"A" 120+50.00 TO "A" 128+56.16	806.16	806.16	1,313.74
L-9	SB ROUTE 101	"A" 120+50.00 TO "A" 128+86.16		836.16	867.13
L-9	SB ROUTE 101	"A" 130+09.16 TO "A" 133+50.00		340.84	353.46
L-9	NB ROUTE 101	"A" 130+19.02 TO "A" 131+65.00	145.98	145.98	346.03
L-9	NB ROUTE 101	"A" 131+65.00 TO "A" 133+50.00	185.00	185.00	301.48
L-10	NB ROUTE 101	"A" 133+50.00 TO "A" 143+99.02	1,049.02	1,049.02	1,520.74
L-10	SB ROUTE 101	"A" 133+50.00 TO "A" 146+50.00		1,300.00	1,223.19
L-10	SB ROUTE 101	"A" 145+44.57 TO "A" 145+50.00	5.43	5.43	15.69
L-11	SB ROUTE 101	"A" 146+50.00 TO "A" 195+50.00	445.18	4,900.00	2,314.55
L-11	SB ROUTE 101	"A" 146+50.00 TO "A" 150+55.52		405.52	180.23
L-12	SB ROUTE 101	"A" 159+50.00 TO "A" 160+90.88		140.88	104.36
L-15	NB ROUTE 101	"A" 190+54.24 TO "A" 192+71.03		433.58	96.35
L-17	NB ROUTE 101	"A" 212+16.00 TO "A" 213+99.18	183.18	183.18	203.53
L-17	NB ROUTE 101	"A" 221+15.00 TO "A" 223+50.00	235.00	235.00	382.96
L-18	NB ROUTE 101	"A" 223+50.00 TO "A" 224+35.01	85.01	85.01	138.53
L-18	NB ROUTE 101	"A" 226+65.01 TO "A" 236+50.00	984.99	984.99	1,863.29
L-19	NB ROUTE 101	"A" 236+50.00 TO "A" 245+00.00	850.00	850.00	1,260.12
		TOTAL	11,450.95	32,600.54	35,350.22

Dist	COUNTY	ROUTE	POST MILES TOTAL PROJECT	SHEET No.	TOTAL SHEETS
07	Ven	23,101	3.3/3.8, R0.1/R4.5	347	652

REGISTERED CIVIL ENGINEER 3-25-13 DATE

6-3-13
PLANS APPROVAL DATE

REGISTERED PROFESSIONAL ENGINEER SUSAN CHAU No. C74420 Exp. 9/30/13 CIVIL STATE OF CALIFORNIA

THE STATE OF CALIFORNIA OR ITS OFFICERS OR AGENTS SHALL NOT BE RESPONSIBLE FOR THE ACCURACY OR COMPLETENESS OF SCANNED COPIES OF THIS PLAN SHEET.

CH2M HILL
1000 WILSHIRE Blvd
LOS ANGELES, CA 90017

CITY OF THOUSAND OAKS
2100 THOUSAND OAKS BLVD
THOUSAND OAKS. CA 91362

REVISED BY | DATE REVISED
SUSAN CHAU | MIKE ROBINSON
CALCULATED-DESIGNED BY | CHECKED BY
CONSULTANT FUNCTIONAL SUPERVISOR
CHRIS BRETALL

STATE OF CALIFORNIA - DEPARTMENT OF TRANSPORTATION
Caltrans

SUMMARY OF QUANTITIES

Q-4

LAST REVISION 00-00-00 | DATE PLOTTED => 08-JUN-2013 | TIME PLOTTED => 13:22

Dist	COUNTY	ROUTE	POST MILES TOTAL PROJECT	SHEET No.	TOTAL SHEETS
07	Ven	23,101	3.3/3.8, R0.1/R4.5	348	652

REGISTERED CIVIL ENGINEER 3-25-13 DATE

6-3-13
PLANS APPROVAL DATE

REGISTERED PROFESSIONAL ENGINEER SUSAN CHAU No. C74420 Exp. 9/30/13 CIVIL STATE OF CALIFORNIA

THE STATE OF CALIFORNIA OR ITS OFFICERS OR AGENTS SHALL NOT BE RESPONSIBLE FOR THE ACCURACY OR COMPLETENESS OF SCANNED COPIES OF THIS PLAN SHEET.

CH2M HILL
1000 WILSHIRE Blvd
LOS ANGELES, CA 90017

CITY OF THOUSAND OAKS
2100 THOUSAND OAKS BLVD
THOUSAND OAKS. CA 91362

MINOR CONCRETE (Misc Const)

SHEET No.	LOCATION	STATION LIMITS	Conc CURB (TYPE A1 Mod)	Conc CURB (TYPE A2-6)	Conc CURB (TYPE B1-6)	Conc CURB (TYPE B2-6)	Conc CURB (TYPE B4)	Conc CURB (TYPE B4 Mod)	Conc CURB & GUTTER	MONOLITHIC CURB & GUTTER	GUTTER	CURB RAMP
			CY	CY	CY	CY	CY	CY	CY	CY	CY	CY
L-3	SB ON-RAMP AT WESTLAKE Blvd	"WL-6" 42+97.23 TO "WL-6" 44+79.25					10.4					
L-3	SB ROUTE 101	"A" 42+98.59 TO "A" 46+49.45					20.2					
L-6	SB ROUTE 101 AT SB ON-RAMP	"A" 92+93.00 TO "A" 93+50.00					3.3					
L-7	SB ROUTE 101 AT SB ON-RAMP	"A" 93+50.00 TO "A" 93+82.03					1.9					
L-7	NB ROUTE 101	"A" 102+52.00 TO "A" 103+40.34					5.1					
L-7	NB ON-RAMP AT HAMPSHIRE Rd	"HM-1" 101+90.76 TO "HM-1" 103+40.30					8.6					
L-18	NB ON-RAMP AT MOORPARK Rd	"MR-1" 31+96.24 TO "MR-1" 33+43.51						8.5				
L-18	NB ROUTE 101	"A" 232+26.84 TO "A" 233+31.92					6.0					
C-11	NB HAMPSHIRE Rd	"HM" 81+68.54 TO "HM" 84+27.94							12.1			
C-11	SB HAMPSHIRE Rd	"HM" 82+63.76 TO "HM" 84+84.23							10.3			
C-11	NB HAMPSHIRE Rd	"HM" 81+67.18 TO "HM" 81+87.22			0.6							
C-11	SB HAMPSHIRE Rd	"HM" 84+72.02 TO "HM" 84+84.23			0.4							
C-12	SB CONEJO SCHOOL Rd	"CO" 129+64.14 TO "CO" 132+15.00							11.7			
C-12	NB CONEJO SCHOOL Rd	"CO" 130+00.00 TO "CO" 132+55.00							4.1			
C-13	NB MOORPARK Rd	"MR" 18+83.90 TO "MR" 18+84.66				0.5						
C-13	NB MOORPARK Rd	"MR" 19+33.64 TO "MR" 20+66.31									6.6	
C-13	SB MOORPARK Rd	"MR" 19+48.83 TO "MR" 20+81.50									6.6	
C-13	NB MOORPARK Rd	"MR" 19+19.23 TO "MR" 19+33.64								1.5		
C-13	SB MOORPARK Rd	"MR" 19+18.83 TO "MR" 19+48.83								3.0		
C-13	NB MOORPARK Rd	"MR" 20+66.31 TO "MR" 20+81.23								1.5		
C-13	SB MOORPARK Rd	"MR" 20+81.50 TO "MR" 20+91.50								1.0		
C-13	NB MOORPARK Rd	"MR" 19+33.64 TO "MR" 19+48.90	0.7									
C-13	SB MOORPARK Rd	"MR" 20+55.50 TO "MR" 20+81.50	1.1									
C-13	SB MOORPARK Rd	"MR" 19+02.66 TO "MR" 19+18.83		1.0								
C-13	SB MOORPARK Rd	"MR" 20+91.50 TO "MR" 20+99.52		0.5								
C-13	NB MOORPARK Rd	"MR" 18+95.82 TO "MR" 19+19.23		1.4				3.0				
C-13	NB MOORPARK Rd	"MR" 20+81.23 TO "MR" 21+01.01		1.2								
C-13	NB MOORPARK Rd	"MR" 18+84.66 TO "MR" 19+43.85			1.9							
C-13	NB MOORPARK Rd	"MR" 20+69.07 TO "MR" 21+01.01			1.0							
C-13	SB MOORPARK Rd	"MR" 19+02.66 TO "MR" 19+43.70			1.3							
C-13	SB MOORPARK Rd	"MR" 20+69.00 TO "MR" 21+06.02			1.1							
C-13	NB MOORPARK Rd	"MR" 18+84.66 TO "MR" 18+95.82										0.8
C-13	SB MOORPARK Rd	"MR" 20+91.50 TO "MR" 21+06.02										1.6
		SUBTOTAL	1.8	4.1	6.3	0.5	55.5	11.5	38.2	7.0	13.2	2.4
		TOTAL	140.5									
		SIDEWALK TOTAL (THIS SHEET)	91.2									
		RETAINING WALL TOTAL (SEE SHEET R-11)	22.0									
		GRAND TOTAL	253.7									

SIDEWALK

SHEET No.	LOCATION	STATION LIMITS	SIDEWALK Minor Conc (Misc Const)	SIDEWALK AGGREGATE BASE (CLASS 3)
			CY	CY
C-11	SB HAMPSHIRE Rd	"HM" 82+63.76 TO "HM" 84+84.23	12.9	12.9
C-11	NB HAMPSHIRE Rd	"HM" 81+68.54 TO "HM" 84+27.94	15.1	15.1
C-12	SB CONEJO SCHOOL Rd	"CO" 129+64.14 TO "CO" 132+15.00	14.6	14.6
C-12	NB CONEJO SCHOOL Rd	"CO" 130+15.84 TO "CO" 132+02.86	10.9	10.9
C-13	NB MOORPARK Rd	"MR" 18+84.66 TO "MR" 21+01.01	26.6	26.6
C-13	SB MOORPARK Rd	"MR" 19+02.66 TO "MR" 21+06.02	26.4	26.4
		TOTAL	** 106.5	* 106.5

* SEE SHEET Q-3 FOR GRAND TOTAL
** SEE MINOR CONCRETE (Misc Const) TABLE (THIS SHEET) FOR GRAND TOTAL

CRASH CUSHION

SHEET No.	LOCATION	CRASH CUSHION ALTERNATIVE	CRASH CUSHION TYPE (4SCBS)	CONCRETE BARRIER (TYPE 736SV)
		EA	EA	LF
L-6	NB ROUTE 101 LOCATION 1	1		15
L-7	SB ROUTE 101 LOCATION 2	1		15
L-9	NB ROUTE 101 LOCATION 3	1		
C-11	HAMPSHIRE Rd		2	
C-13	MOORPARK Rd		4	
	TOTAL	3	6	* 30

* SEE SHEET SW-15 FOR GRAND TOTAL

SUMMARY OF QUANTITIES

Q-5

REVISED BY | DATE REVISED
SUSAN CHAU | MIKE ROBINSON
CALCULATED-DESIGNED BY | CHECKED BY
CONSULTANT FUNCTIONAL SUPERVISOR: CHRIS BRETALL
STATE OF CALIFORNIA - DEPARTMENT OF TRANSPORTATION
Caltrans

LAST REVISION 00-00-00 | DATE PLOTTED => 08-JUN-2013 | TIME PLOTTED => 13:22

Dist	COUNTY	ROUTE	POST MILES TOTAL PROJECT	SHEET No.	TOTAL SHEETS
07	Ven	23,101	3.3/3.8, R0.1/R4.5	349	652

REGISTERED CIVIL ENGINEER 3-25-13 DATE

6-3-13
PLANS APPROVAL DATE

REGISTERED PROFESSIONAL ENGINEER SUSAN CHAU No. C74420 Exp. 9/30/13 CIVIL STATE OF CALIFORNIA

THE STATE OF CALIFORNIA OR ITS OFFICERS OR AGENTS SHALL NOT BE RESPONSIBLE FOR THE ACCURACY OR COMPLETENESS OF SCANNED COPIES OF THIS PLAN SHEET.

CH2M HILL
1000 WILSHIRE Blvd
LOS ANGELES, CA 90017

CITY OF THOUSAND OAKS
2100 THOUSAND OAKS BLVD
THOUSAND OAKS. CA 91362

CONCRETE BARRIER

SHEET No.	LOCATION	STATION LIMITS	CONCRETE BARRIER (TYPE 60)	CONCRETE BARRIER (TYPE 60C)	CONCRETE BARRIER (TYPE 60D)	CONCRETE BARRIER (TYPE 60F Mod)	CONCRETE BARRIER (TYPE 60GE)	CONCRETE BARRIER (TYPE 60W)	CONCRETE BARRIER (TYPE 60CW)	CONCRETE BARRIER (TYPE 736B)
			LF	LF	LF	LF	LF	LF	LF	LF
L-4	ROUTE 101	"A" 65+25.00 TO "A" 65+50.00		25.00						
L-5	ROUTE 101	"A" 65+50.00 TO "A" 79+50.00		1,400.00						
L-6	ROUTE 101	"A" 79+50.00 TO "A" 86+54.00		704.00						
L-6	ROUTE 101	"A" 86+54.00 TO "A" 87+04.00					50.00			
L-6	ROUTE 101	"A" 87+04.00 TO "A" 93+50.00		646.00						
L-7	ROUTE 101	"A" 93+50.00 TO "A" 95+50.03		200.03						
L-7	ROUTE 101	"A" 97+67.61 TO "A" 105+20.00		752.39						
L-7	SB HAMPSHIRE OFF-RAMP	"HM-4" 98+15.00 TO "HM-4" 98+95.00								80.00
L-7	ROUTE 101	"A" 105+20.00 TO "A" 107+50.00	230.00							
L-8	ROUTE 101	"A" 107+50.00 TO "A" 108+50.00	100.00							
L-8	ROUTE 101	"A" 108+50.00 TO "A" 112+00.00		350.00						
L-8	ROUTE 101	"A" 112+00.00 TO "A" 120+50.00	850.00							
L-9	ROUTE 101	"A" 120+50.00 TO "A" 128+86.16	836.16							
L-9	ROUTE 101	"A" 130+09.16 TO "A" 133+50.00	340.84							
L-9	NB ROUTE 101	"A" 130+19.02 TO "A" 130+50.02	31.00							
L-10	ROUTE 101	"A" 133+50.00 TO "A" 140+00.00	650.00							
L-10	ROUTE 101	"A" 140+00.00 TO "A" 141+00.00						100.00		
L-10	ROUTE 101	"A" 141+00.00 TO "A" 142+00.00							100.00	
L-10	ROUTE 101	"A" 142+00.00 TO "A" 145+60.00		360.00						
L-10	ROUTE 101	"A" 145+60.00 TO "A" 146+50.00				90.00				
L-11	ROUTE 101	"A" 146+50.00 TO "A" 147+20.00				70.00				
L-11	ROUTE 101	"A" 147+20.00 TO "A" 159+50.00		1,230.00						
L-12	ROUTE 101	"A" 159+50.00 TO "A" 160+25.00		75.00						
L-12	ROUTE 101	"A" 160+25.00 TO "A" 161+80.00							155.00	
L-12	ROUTE 101	"A" 161+80.00 TO "A" 165+65.00						385.00		
C-13	NB MOORPARK Rd	"MR" 19+48.44 TO "MR" 20+66.70			118.26					
C-13	SB MOORPARK Rd	"MR" 19+48.44 TO "MR" 20+66.70			118.26					
C-13	SB MOORPARK Rd	"MR" 19+48.83 TO "MR" 20+66.25			117.42					
C-13	NB MOORPARK Rd	"MR" 19+48.90 TO "MR" 20+66.31			117.41					
SUBTOTAL			3,038.00	5,742.42	471.35	160.00	50.00	485.00	255.00	80.00
RETAINING WALL TOTAL (SEE SHEET R-11)					629.00					
GRAND TOTAL			3,038.00	5,742.42	1,100.35	160.00	50.00	485.00	255.00	80.00

SUMMARY OF QUANTITIES

Q-6

REVISED BY | DATE REVISED
SUSAN CHAU | MIKE ROBINSON
CALCULATED-DESIGNED BY | CHECKED BY
CONSULTANT FUNCTIONAL SUPERVISOR | CHRIS BRETALL
STATE OF CALIFORNIA - DEPARTMENT OF TRANSPORTATION
Caltrans

LAST REVISION 00-00-00 | DATE PLOTTED => 08-JUN-2013 | TIME PLOTTED => 13:22

Dist	COUNTY	ROUTE	POST MILES TOTAL PROJECT	SHEET No.	TOTAL SHEETS
07	Ven	23,101	3.3/3.8, R0.1/R4.5	350	652

REGISTERED CIVIL ENGINEER 3-25-13 DATE

6-3-13
PLANS APPROVAL DATE

REGISTERED PROFESSIONAL ENGINEER SUSAN CHAU No. C74420 Exp. 9/30/13 CIVIL STATE OF CALIFORNIA

THE STATE OF CALIFORNIA OR ITS OFFICERS OR AGENTS SHALL NOT BE RESPONSIBLE FOR THE ACCURACY OR COMPLETENESS OF SCANNED COPIES OF THIS PLAN SHEET.

CH2M HILL
1000 WILSHIRE Blvd
LOS ANGELES, CA 90017

CITY OF THOUSAND OAKS
2100 THOUSAND OAKS BLVD
THOUSAND OAKS. CA 91362

CURB RAMP DETECTABLE WARNING SURFACE

SHEET No.	LOCATION	CURB RAMP DETECTABLE WARNING SURFACE	
		CASE A	CASE F (Mod)
		SQFT	SQFT
C-13	NB MOORPARK Rd	12	
C-13	SB MOORPARK Rd		28.55
	TOTAL	40.55	

CHAIN LINK FENCE (TYPE CL-6)

SHEET No.	LOCATION	STATION LIMITS	CL FENCE (TYPE CL-6)
			LF
L-9	CONEJO SCHOOL Rd	"CO" 132+02.86 TO "CO" 132+29.40	32.00
L-9	NB ROUTE 101	"A" 131+81.00	6.28
		TOTAL	38.28

HOT MIX ASPHALT DIKE

SHEET No.	STATION LIMITS		PLACE HMA DIKE				HOT MIX ASPHALT
			(TYPE A)	(TYPE E)	(TYPE F)	(TYPE C)	
		SIDE	LF	LF	LF	LF	TON
L-2	"WL-3" 30+50.00 TO "WL-3" 37+52.50	L+			702.50		18.6
L-2	"WL-3" 37+52.50 TO "WL-3" 38+25.00	L+				72.50	2.0
L-2	"WL-3" 38+25.00 TO "WL-3" 42+10.34	L+		384.87			9.8
L-2	"WL-3" 34+96.48 TO "WL-3" 42+10.34	R+		713.86			18.2
L-2	"A" 34+95.28 TO "A" 37+92.23	L+		296.95			7.6
L-2	"WL-6" 37+90.85 TO "WL-6" 42+50.00	L+		458.57			11.7
L-3	"WL-6" 42+50.00 TO "WL-6" 44+79.25	L+		231.72			5.9
L-3	"WL-5" 48+60.00 TO "WL-5" 49+45.00	R+		85.00			2.2
L-4	"WL-1" 53+40.00 TO "WL-1" 54+25.00	R+		85.00			2.2
L-6	"A" 86+80.33 TO "A" 92+80.26	R+	597.31				15.8
L-6	"HM-2" 90+92.35 TO "HM-2" 93+50.00	L+		257.65			6.6
L-7	"HM-2" 93+50.00 TO "HM-2" 95+04.00	L+		162.76			4.2
L-7	"HM-2" 93+92.34 TO "HM-2" 95+04.00	R+	111.88				3.0
L-7	"HM-1" 97+70.00 TO "HM-1" 101+90.76	L+		427.60			10.9
L-7	"HM-1" 97+70.00 TO "HM-1" 97+94.50	R+	26.41				0.7
L-7	"HM-1" 97+94.50 TO "HM-1" 98+67.00	R+				72.50	2.0
L-7	"HM-1" 98+67.00 TO "HM-1" 98+92.00	R+			25.00		0.7
L-7	"HM-4" 103+98.50 TO "HM-4" 104+96.00	L+				97.50	2.6
L-7	"A" 101+10.00 TO "A" 102+52.00	R+	142.00				3.8
L-7	"A" 106+56.68 TO "A" 107+50.00	L+				93.32	2.5
L-8	"A" 107+50.00 TO "A" 112+20.00	L+				470.00	12.5
L-10	"A" 143+08.85 TO "A" 143+98.41	R+			89.56		2.4
L-11	"A" 153+21.67 TO "A" 155+25.00	L+	203.33				5.4
L-13	"S-1" 400+50.00 TO "S-1" 400+80.00	L+	30.00				0.8
L-14	"S-1" 408+96.00 TO "S-1" 409+64.75	L+				68.75	1.9
L-15	"S-1" 394+25.00 TO "S-1" 395+28.00	L+	102.50				2.8
L-15	"S-1" 395+28.00 TO "S-1" 396+00.00	L+			174.23		4.7

HOT MIX ASPHALT DIKE

SHEET No.	STATION LIMITS		PLACE HMA DIKE				HOT MIX ASPHALT
			(TYPE A)	(TYPE E)	(TYPE F)	(TYPE C)	
		SIDE	LF	LF	LF	LF	TON
L-15	"S-1" 396+00.00 TO "S-1" 396+75.00	L+				72.51	2.0
L-15	"S-1" 398+85.00 TO "S-1" 400+50.00	L+	165.00				4.4
L-15	"S-1" 397+90.00 TO "S-1" 398+85.00	L+		95.00			2.5
L-17	"A" 211+16.50 TO "A" 211+26.50	R+	10.00				0.3
L-17	"A" 211+16.50 TO "A" 211+99.00	R+				81.91	2.2
L-17	"A" 211+89.00 TO "A" 212+27.08	R+			38.08		1.1
L-17	"A" 211+26.50 TO "A" 211+89.00	R+				62.50	1.7
L-17	"A" 212+27.08 TO "A" 214+50.00	R+	223.36				6.0
L-17	"MR-2" 14+50.00 TO "MR-2" 16+77.50	R+			227.50		6.1
L-17	"MR-2" 16+77.50 TO "MR-2" 17+40.00	R+				62.50	1.7
L-17	"MR-2" 17+40.00 TO "MR-2" 20+00.00	R+			260.00		6.9
L-17	"A" 222+01.82 TO "A" 222+15.00	R+			13.18		0.4
L-17	"A" 222+15.00 TO "A" 222+90.00	R+				75.00	2.0
L-17	"A" 222+90.00 TO "A" 223+55.00	R+			65.00		1.8
L-18	"A" 223+50.00 TO "A" 224+55.00	R+			105.00		2.8
L-18	"MR-1" 27+75.00 TO "MR-1" 36+50.00	R+		869.68			22.2
L-18	"MR-1" 27+75.00 TO "MR-1" 31+96.24	L+		421.24			10.8
L-19	"MR-1" 36+50.00 TO "MR-1" 38+23.52	R+		173.52			4.6
C-27	"MR-2" 16+67.50 TO "MR-2" 17+52.00	R+				84.12	2.3
C-27	"A" 222+18.49 TO "A" 223+90.00	R+				171.51	4.6
C-28	"WL-3" 44+15.30 TO "WL-3" 44+60.00	R+		44.70			1.2
	TOTAL		1,611.79	4,708.12	1,700.05	1,484.62	* 249.1

* SEE SHEET Q-3 FOR GRAND TOTAL

SUMMARY OF QUANTITIES

Q-7

STATE OF CALIFORNIA - DEPARTMENT OF TRANSPORTATION
Caltrans
CONSULTANT FUNCTIONAL SUPERVISOR: CHRIS BRETALL
CALCULATED-DESIGNED BY: SUSAN CHAU
CHECKED BY: MIKE ROBINSON
REVISED BY
DATE REVISED

LAST REVISION 00-00-00
DATE PLOTTED => 08-JUN-2013
TIME PLOTTED => 13:22

Dist	COUNTY	ROUTE	POST MILES TOTAL PROJECT	SHEET No.	TOTAL SHEETS
07	Ven	23,101	3.3/3.8, R0.1/R4.5	351	652

REGISTERED CIVIL ENGINEER 3-25-13 DATE

6-3-13
PLANS APPROVAL DATE

REGISTERED PROFESSIONAL ENGINEER SUSAN CHAU No. C74420 Exp. 9/30/13 CIVIL STATE OF CALIFORNIA

THE STATE OF CALIFORNIA OR ITS OFFICERS OR AGENTS SHALL NOT BE RESPONSIBLE FOR THE ACCURACY OR COMPLETENESS OF SCANNED COPIES OF THIS PLAN SHEET.

CH2M HILL
1000 WILSHIRE Blvd
LOS ANGELES, CA 90017

CITY OF THOUSAND OAKS
2100 THOUSAND OAKS BLVD
THOUSAND OAKS. CA 91362

METAL BEAM GUARD RAILING (WOOD POST)

SHEET No.	LOCATION	SIDE	STATION LIMITS	MBGR (WOOD POST)	ALTERNATIVE FLARED TERMINAL SYSTEM	ALTERNATIVE IN-LINE TERMINAL SYSTEM	END ANCHOR ASSEMBLY (TYPE SFT)	Trans RAILING (TYPE WB)	VEGETATION CONTROL (MINOR Conc)
				LF	EA	EA	EA	EA	SQYD
L-1	SB ROUTE 101	L+	"A" 22+07.44 TO "A" 27+92.23	602.70			1		200.90
L-1	SB ON-RAMP AT WESTLAKE Blvd	L+	"WL-3" 27+88.74 TO "WL-3" 29+50.00	161.89					54.00
L-2	SB ON-RAMP AT WESTLAKE Blvd	L+	"WL-3" 29+50.00 TO "WL-3" 38+16.00	802.50	1				316.89
L-5	NB ROUTE 101	R+	"A" 67+69.86 TO "A" 68+60.49	37.41	1		1		53.86
L-7	NB ON-RAMP AT HAMPSHIRE Rd	R+	"HM-1" 98+03.50 TO "HM-1" 98+92.00		1			1	29.00
L-7	SB OFF-RAMP AT HAMPSHIRE Rd	L+	"HM-4" 101+36.99 TO "HM-4" 104+87.00	261.51	1		1		156.00
L-8	SB ROUTE 101	L+	"A" 110+72.00 TO "A" 111+60.50		1			1	30.00
L-9	SB ROUTE 101	L+	"A" 126+99.00 TO "A" 128+01.50	39.00	1		1		35.00
L-10	NB 101 BRANCH CONNECTION TO NB 23	R+	"A" 143+08.85 TO "A" 143+98.41	89.56				1	57.73
L-14	SB 23 TO NB 101 CONNECTOR	L+	"S-1" 408+60.00 TO "S-1" 408+96.00	36.00		1	1		62.39
L-15	SB 23 TO NB 101 CONNECTOR	L+	"S-1" 395+28.00 TO "S-1" 396+66.00	71.73	1		1		46.00
L-17	NB 101 AT MOORPARK Rd	R+	"A" 211+16.50 TO "A" 212+37.08	38.08	1		1		60.52
L-17	NB OFF-RAMP AT MOORPARK Rd	R+	"MR-2" 16+67.50 TO "MR-2" 20+00.00	225.09	1		1		131.17
L-17	NB ROUTE 101	R+	"A" 222+18.49 TO "A" 223+50.00	60.00		1			43.84
L-18	NB ROUTE 101	R+	"A" 223+50.00 TO "A" 224+55.00	80.00				1	35.00
			TOTAL	2,505.47	9	2	8	4	1,312.29

REMOVE CONCRETE BARRIER

SHEET No.	LOCATION	STATION LIMITS	REMOVE CONCRETE BARRIER
			LF
L-4	ROUTE 101	"A" 65+25.00 TO "A" 65+50.00	25.00
L-5	ROUTE 101	"A" 65+50.00 TO "A" 79+50.00	1,400.00
L-6	ROUTE 101	"A" 79+50.00 TO "A" 93+50.00	1,400.00
L-7	ROUTE 101	"A" 93+50.00 TO "A" 95+50.03	200.03
L-7	ROUTE 101	"A" 97+67.61 TO "A" 107+50.00	982.39
L-8	ROUTE 101	"A" 107+50.00 TO "A" 120+50.00	1,300.00
L-8	NB ROUTE 101	"A" 115+91.87 TO "A" 120+50.00	458.13
L-9	NB ROUTE 101	"A" 120+50.00 TO "A" 125+40.00	490.00
L-9	ROUTE 101	"A" 120+50.00 TO "A" 128+86.16	836.16
L-9	ROUTE 101	"A" 130+09.16 TO "A" 133+50.00	340.84
L-10	ROUTE 101	"A" 133+50.00 TO "A" 146+50.00	1,300.00
L-11	ROUTE 101	"A" 146+50.00 TO "A" 159+50.00	1,300.00
L-12	ROUTE 101	"A" 159+50.00 TO "A" 165+65.00	615.00
C-11	NB HAMPSHIRE ROAD	"HM" 82+44.00 TO "HM" 84+08.47	164.47
C-11	SB HAMPSHIRE ROAD	"HM" 82+69.32 TO "HM" 84+31.17	161.85
C-13	MOORPARK ROAD	"MR" 19+52.36 TO "MR" 20+47.70	95.34
		TOTAL	11,069.21

REMOVE RETAINING WALL

SHEET No.	LOCATION	STATION LIMITS	REMOVE RETAINING WALL
			LF
L-7	SB HAMPSHIRE OFF-RAMP	"HM-4" 99+63.38 TO "HM-4" 102+22.12	307.43
L-7	NB HAMPSHIRE ON-RAMP	"HM-1" 100+62.00 TO "HM-1" 101+28.00	92.95
C-13	SB MOORPARK Rd	"MR" 19+02.66 TO "MR" 20+48.00	145.34
C-13	NB MOORPARK Rd	"MR" 19+52.00 TO "MR" 21+01.01	149.01
		TOTAL	694.73

CONSTRUCTION SITE BMP QUANTITIES

TEMPORARY FIBER ROLL	TEMPORARY CONSTRUCTION ENTRANCE	TEMPORARY CHECK DAM	TEMPORARY DRAINAGE INLET PROTECTION	TEMPORARY HYDRAULIC MULCH (BONDED FIBER MATRIX)	MOVE-IN/MOVE OUT (TEMPORARY EROSION CONTROL)
LF	EA	LF	EA	SQYD	EA
21,900	3	1,120	110	22,700	3

SUMMARY OF QUANTITIES

Q-8

STATE OF CALIFORNIA - DEPARTMENT OF TRANSPORTATION
Caltrans

CONSULTANT FUNCTIONAL SUPERVISOR: CHRIS BRETALL
CALCULATED-DESIGNED BY: SUSAN CHAU
CHECKED BY: MIKE ROBINSON
REVISED BY
DATE REVISED

LAST REVISION 00-00-00
DATE PLOTTED => 11-JUN-2013
TIME PLOTTED => 14:22

Dist	COUNTY	ROUTE	POST MILES TOTAL PROJECT	SHEET No.	TOTAL SHEETS
07	Ven	23,101	3.3/3.8, R0.1/R4.5	352	652

REGISTERED CIVIL ENGINEER 3-25-13 DATE

6-3-13
PLANS APPROVAL DATE

REGISTERED PROFESSIONAL ENGINEER SUSAN CHAU No. C74420 Exp. 9/30/13 CIVIL STATE OF CALIFORNIA

THE STATE OF CALIFORNIA OR ITS OFFICERS OR AGENTS SHALL NOT BE RESPONSIBLE FOR THE ACCURACY OR COMPLETENESS OF SCANNED COPIES OF THIS PLAN SHEET.

CH2M HILL
1000 WILSHIRE Blvd
LOS ANGELES, CA 90017

CITY OF THOUSAND OAKS
2100 THOUSAND OAKS BLVD
THOUSAND OAKS. CA 91362

GRIND Exist Conc PAVEMENT

SHEET No.	LOCATION	STATION LIMITS	GRIND Exist Conc PAVEMENT
			SQYD
L-7	NB ROUTE 101	"A" 97+67.61 TO "A" 107+50.00	1,310
L-7	SB MEDIAN ROUTE 101	"A" 97+67.61 TO "A" 107+50.00	1,310
L-8	NB ROUTE 101	"A" 107+50.00 TO "A" 120+50.00	1,733
L-8	SB MEDIAN ROUTE 101	"A" 107+50.00 TO "A" 120+50.00	1,733
L-9	NB ROUTE 101	"A" 120+50.00 TO "A" 128+56.16	1,075
L-9	SB MEDIAN ROUTE 101	"A" 120+50.00 TO "A" 128+86.16	1,115
L-9	NB ROUTE 101	"A" 130+39.16 TO "A" 133+50.00	414
L-9	SB MEDIAN ROUTE 101	"A" 130+09.16 TO "A" 133+50.00	454
L-10	NB ROUTE 101	"A" 133+50.00 TO "A" 143+99.02	1,399
L-10	SB MEDIAN ROUTE 101	"A" 133+50.00 TO "A" 146+50.00	1,733
L-10	SB ROUTE 101	"A" 146+44.57 TO "A" 146+50.00	7
L-11	SB MEDIAN ROUTE 101	"A" 146+50.00 TO "A" 150+55.52	541
L-11	SB ROUTE 101	"A" 146+50.00 TO "A" 159+50.00	1,733
L-12	SB ROUTE 101	"A" 159+50.00 TO "A" 160+90.88	188
L-15	NB ROUTE 101	"A" 190+54.24 TO "A" 192+71.03	289
L-17	NB ROUTE 101	"A" 212+16.00 TO "A" 213+99.18	244
L-17	NB ROUTE 101	"A" 222+01.82 TO "A" 223+50.00	198
L-18	NB ROUTE 101	"A" 223+50.00 TO "A" 224+35.01	113
L-18	NB ROUTE 101	"A" 226+65.01 TO "A" 236+50.00	1,313
L-19	NB ROUTE 101	"A"236+50.00 TO "A" 245+00.00	1,133
		TOTAL	18,037

REMOVE CONCRETE CURB AND GUTTER

SHEET No.	LOCATION	STATION LIMITS	TYPE B2	TYPE A2
			LF	LF
L-7	NB HAMPSHIRE OFF-RAMP	"HM-2" 94+03.00 TO "HM-2" 95+04.00	101.00	
L-7	SB HAMPSHIRE OFF-RAMP	"HM-4" 98+15.00 TO "HM-4" 98+95.00	80.00	
L-7	NB HAMPSHIRE ON-RAMP	"HM-1" 97+70.00 TO "HM-1" 100+35.00	265.00	
L-17	NB MOORPARK OFF-RAMP	"MR-2" 14+49.67 TO "MR-2" 20+00.00	550.33	
L-18	NB ROUTE 101	"A" 235+51.00 TO "A" 235+99.00	48.00	
L-18	NB MOORPARK ON-RAMP	"MR-1" 27+75.00 TO "MR-1" 36+05.00	830.00	
L-18	NB MOORPARK ON-RAMP	"MR-1" 27+75.00 TO "MR-1" 36+50.00	875.00	
L-19	NB MOORPARK ON-RAMP	"MR-1" 36+50.00 TO "MR-1" 37+20.00	70.00	
C-11	SB HAMPSHIRE Rd	"HM" 82+63.76 TO "HM" 84+84.23		220.47
C-11	NB HAMPSHIRE Rd	"HM" 81+68.54 TO "HM" 84+27.94		259.40
C-12	SB CONEJO SCHOOL Rd	"CO" 129+64.14 TO "CO" 132+15.00		250.86
		SUBTOTAL	2819.33	730.73
		TOTAL	3550.06	

PIPE HANDRAILING

SHEET No.	LOCATION	STATION LIMITS	PIPE HANDRAILING
			LF
C-13	SB MOORPARK Rd	"MR" 19+18.83 TO "MR" 20+81.16	128.77
C-13	NB MOORPARK Rd	"MR" 19+19.23 TO "MR" 20+81.23	128.26
		TOTAL	257.03

REMOVE CONCRETE (Misc)

SHEET No.	LOCATION	STATION LIMITS	GUTTER (Mod)
			CY
C-13	SB MOORPARK Rd	"MR" 19+02.66 TO "MR" 21+06.02	10.10
C-13	NB MOORPARK Rd	"MR" 18+83.90 TO "MR" 21+01.01	14.10
		TOTAL	24.20

REMOVE METAL BEAM GUARD RAILING

SHEET No.	LOCATION	STATION LIMITS	REMOVE METAL BEAM GUARD RAILING
			LF
L-5	NB ROUTE 101	"A" 67+77.40 TO "A" 68+02.39	24.99
L-7	NB ROUTE 101	"A" 95+37.00 TO "A" 95+99.00	62.00
L-7	SB ROUTE 101	"A" 97+20.00 TO "A" 97+81.00	61.00
L-7	SB HAMPSHIRE OFF-RAMP	"HM-4" 100+63.67 TO "HM-4" 104+63.20	400.22
L-8	NB ROUTE 101	"A" 111+70.00 TO "A" 117+02.00	533.37
L-8	NB ROUTE 101	"A" 115+30.00 TO "A" 115+91.87	62.32
L-9	NB ROUTE 101	"A" 128+03.00 TO "A" 128+78.00	75.00
L-10	NB ROUTE 101	"A" 136+02.00 TO "A" 143+98.41	796.41
L-17	NB OFF-RAMP AT MOORPARK Rd	"MR-2" 15+83.00 TO "MR-2" 16+59.00	76.00
L-17	NB ROUTE 101	"A" 222+53.00 TO "A" 223+50.00	97.00
L-18	NB ROUTE 101	"A" 223+50.00 TO "A" 224+53.00	103.00
L-18	NB ON-RAMP AT MOORPARK Rd	"MR-1" 28+65.09 TO "MR-1" 29+52.03	86.94
L-19	NB ON-RAMP AT MOORPARK Rd	"MR-1" 37+50.00 TO "MR-1" 38+25.00	75.00
C-11	NB HAMPSHIRE Rd	"HM" 81+87.00 TO "HM" 82+44.00	57.00
C-11	SB HAMPSHIRE Rd	"HM" 84+31.17 TO "HM" 84+82.00	50.83
		TOTAL	2,561.08

SUMMARY OF QUANTITIES

Q-9

REVISED BY | DATE REVISED
SUSAN CHAU | MIKE ROBINSON
CALCULATED-DESIGNED BY | CHECKED BY
CONSULTANT FUNCTIONAL SUPERVISOR: CHRIS BRETALL
STATE OF CALIFORNIA - DEPARTMENT OF TRANSPORTATION
Caltrans

LAST REVISION 00-00-00 | DATE PLOTTED => 08-JUN-2013 | TIME PLOTTED => 13:22

Dist	COUNTY	ROUTE	POST MILES TOTAL PROJECT	SHEET No.	TOTAL SHEETS
07	Ven	23,101	3.3/3.8, R0.1/R4.5	353	652

REGISTERED CIVIL ENGINEER 3-25-13 DATE

6-3-13
PLANS APPROVAL DATE

REGISTERED PROFESSIONAL ENGINEER SUSAN CHAU No. C74420 Exp. 9/30/13 CIVIL STATE OF CALIFORNIA

THE STATE OF CALIFORNIA OR ITS OFFICERS OR AGENTS SHALL NOT BE RESPONSIBLE FOR THE ACCURACY OR COMPLETENESS OF SCANNED COPIES OF THIS PLAN SHEET.

CH2M HILL
1000 WILSHIRE Blvd
LOS ANGELES, CA 90017

CITY OF THOUSAND OAKS
2100 THOUSAND OAKS BLVD
THOUSAND OAKS. CA 91362

EARTHWORK

SHEET No.	LOCATION	STATION LIMITS	ROADWAY Exc (CY)	ROADWAY EXCAVATION (AERIALLY DEPOSITED LEAD) (TYPE Y-1) (CY)	(TYPE Z-2) (CY)	IMPORTED BORROW (CY)	EMBANKMENT (N) (CY)
L-1	ROUTE 101	"A" 19+95.41 TO "A" 29+50.00	565.5				
L-1	ROUTE 101 & WESTLAKE SB ON-RAMP	"A" 22+07.44 TO "A" 29+50.00	898.0				1,111.5
L-2	ROUTE 101	"A" 29+50.00 TO "A" 42+50.00	1,587.9				0.4
L-2	SB ON-RAMP AT WESTLAKE Blvd	"A" 29+50.00 TO "A" 42+50.00	3,387.4				1,762.4
L-2	SB ON-RAMP AT WESTLAKE Blvd	"WL-3" 34+96.48 TO "WL-3" 42+10.34	1,013.9				144.1
L-3	ROUTE 101	"A" 42+50.00 TO "A" 51.50.00	1,545.2				0.2
L-3	SB ROUTE 101 & WESTLAKE Blvd ON-RAMP	"A" 42+50.00 TO "A" 49+10.52	1,469.6				
L-3	SB ON-RAMP AT WESTLAKE Blvd	"WL-3" 43+95.00 TO "WL-3" 44+80.00	67.9				612.1
L-3	NB ON-RAMP AT WESTLAKE Blvd	"WL-5" 48+60.00 TO "WL-5" 51+50.00	161.0				44.0
L-4	ROUTE 101	"A" 51+50.00 TO "A" 65+50.00	2,481.5				14.2
L-4	NB ON-RAMP WESTLAKE Blvd MVP	"WL-1" 53+40.00 TO "WL-1" 54+25.00	36.0				69.0
L-4	NB ON-RAMP WESTLAKE Blvd	"WL-5" 51+50.00 TO "WL-5" 51+95.00	7.0				1.0
L-5	ROUTE 101	"A" 65+50.00 TO "A" 79+50.00	2,410.9				14.6
L-6	ROUTE 101	"A" 79+50.00 TO "A" 93+50.00	2,574.8				316.9
L-6	NB OFF-RAMP HAMPSHIRE Rd	"HM-2" 88+21.71 TO "HM-2" 93+50.00	507.0				63.1
L-7	ROUTE 101	"A" 93+50.00 TO "A" 95+77.00	523.3				63.8
L-7	ROUTE 101	"A" 97+67.17 TO "A" 107+50.00	3,992.2			705.2	50.9
L-7	NB OFF-RAMP HAMPSHIRE Rd	"HM-2" 93+50.00 TO "HM-2" 95+25.00	268.1				11.0
L-7	HAMPSHIRE Rd	"HM" 83+94.25 TO "HM" 85+31.17	77.5				302.8
L-7	NB ON-RAMP HAMPSHIRE Rd	"HM-1" 98+76.56 TO "HM-1" 104+50.00	1,920.2	127.3			141.2
L-7	SB OFF-RAMP HAMPSHIRE Rd	"HM-4" 98+00.00 TO "HM-4" 105+72.19	240.9				489.8
L-8	ROUTE 101	"A" 107+50.00 TO "A" 120+50.00	4,378.9	323.4	14.0	352.6	912.0
L-9	ROUTE 101	"A" 120+50.00 TO "A" 128+86.16	1,721.7	193.3			89.4
L-9	ROUTE 101	"A" 130+09.16 TO "A" 133+50.00	927.3				40.9
L-9	CONEJO SCHOOL Rd	"CO" 132+00.00 TO "CO" 132+50.00	64.4				30.8
L-10	ROUTE 101	"A" 133+50.00 TO "A" 146+50.00	2,551.4	205.3			667.5
L-11	ROUTE 101	"A" 146+50.00 TO "A" 159+50.00	3,157.5	2.2			47.7
L-12	ROUTE 101	"A" 159+50.00 TO "A" 163+15.00	277.1	0.9			2.2
L-13	ROUTE 101 NB ON-RAMP SR-23	"S-1" 400+50.00 TO "S-1" 400+95.00	4.0				1.0
L-15	ROUTE 101	"A" 190+25.00 TO "A" 193+00.00	62.3				
L-15	ROUTE 101 NB ON-RAMP SR-23	"S-1" 397+90.00 TO "S-1" 400+50.00	320.0				5.0
L-15	ROUTE 101 NB ON-RAMP SR-23	"S-1" 394+25.00 TO "S-1" 396+75.00	144.0				408.0
L-17	ROUTE 101	"A" 212+16.00 TO "A" 213+99.18	259.2				1.2
		SHEET TOTAL	39,344.4	852.4	14.0	1,057.8	7,417.5

REMOVE CONCRETE PAVEMENT

SHEET No.	LOCATION	STATION LIMITS	REMOVE CONCRETE PAVEMENT CY
L-2	SB ROUTE 101	"A" 40+87.09 TO "A" 42+50.00	9.05
L-3	SB ROUTE 101	"A" 42+50.00 TO "A" 49+10.52	36.70
L-7	NB MEDIAN ROUTE 101	"A" 97+67.61 TO "A" 107+50.00	109.15
L-7	SB MEDIAN ROUTE 101	"A" 97+67.61 TO "A" 107+50.00	236.50
L-8	NB MEDIAN ROUTE 101	"A" 107+50.00 TO "A" 120+50.00	144.44
L-8	SB MEDIAN ROUTE 101	"A" 107+50.00 TO "A" 120+50.00	312.96
L-9	NB MEDIAN ROUTE 101	"A" 120+50.00 TO "A" 128+86.16	92.91
L-9	SB MEDIAN ROUTE 101	"A" 120+50.00 TO "A" 128+86.16	201.30
L-9	NB MEDIAN ROUTE 101	"A" 130+09.16 TO "A" 133+50.00	37.87
L-9	SB MEDIAN ROUTE 101	"A" 130+09.16 TO "A" 133+50.00	82.05
L-10	NB MEDIAN ROUTE 101	"A" 133+50.00 TO "A" 139+75.00	69.44
L-10	NB MEDIAN ROUTE 101	"A" 139+75.00 TO "A" 146+50.00	92.50
L-10	SB MEDIAN ROUTE 101	"A" 133+50.00 TO "A" 146+50.00	312.96
L-10	SB ON-RAMP @ ROUTE 23	"S-3" 870+17.78 TO "S-3" 870+23.10	4.98
L-11	NB MEDIAN ROUTE 101	"A" 146+50.00 TO "A" 159+50.00	178.15
L-11	SB MEDIAN ROUTE 101	"A" 146+50.00 TO "A" 150+55.52	97.63
L-11	SB MEDIAN ROUTE 101	"A" 150+55.52 TO "A" 159+50.00	145.77
L-11	SB ON-RAMP @ ROUTE 23	"A" 146+44.57 TO "A" 146+50.00	267.37
L-12	NB MEDIAN ROUTE 101	"A" 159+50.00 TO "A" 163+15.00	50.02
L-12	SB MEDIAN ROUTE 101	"A" 159+50.00 TO "A" 163+15.00	59.48
L-19	NB ROUTE 101	"A"236+50.00 TO "A" 245+00.00	23.61
		TOTAL	2,564.84

SUMMARY OF QUANTITIES

Q-10

REVISED BY | DATE REVISED
SUSAN CHAU | MIKE ROBINSON
CALCULATED-DESIGNED BY | CHECKED BY
CONSULTANT FUNCTIONAL SUPERVISOR: CHRIS BRETALL
STATE OF CALIFORNIA - DEPARTMENT OF TRANSPORTATION
Caltrans

LAST REVISION 00-00-00 | DATE PLOTTED => 08-JUN-2013 | TIME PLOTTED => 13:22

Dist	COUNTY	ROUTE	POST MILES TOTAL PROJECT	SHEET No.	TOTAL SHEETS
07	Ven	23,101	3.3/3.8, R0.1/R4.5	354	652

REGISTERED CIVIL ENGINEER 3-25-13 DATE

6-3-13
PLANS APPROVAL DATE

REGISTERED PROFESSIONAL ENGINEER SUSAN CHAU No. C74420 Exp. 9/30/13 CIVIL STATE OF CALIFORNIA

THE STATE OF CALIFORNIA OR ITS OFFICERS OR AGENTS SHALL NOT BE RESPONSIBLE FOR THE ACCURACY OR COMPLETENESS OF SCANNED COPIES OF THIS PLAN SHEET.

CH2M HILL
1000 WILSHIRE Blvd
LOS ANGELES, CA 90017

CITY OF THOUSAND OAKS
2100 THOUSAND OAKS BLVD
THOUSAND OAKS. CA 91362

EARTHWORK

SHEET No.	LOCATION	STATION LIMITS	ROADWAY Exc (CY)	ROADWAY EXCAVATION (AERIALLY DEPOSITED LEAD) (TYPE Y-1) (CY)	(TYPE Z-2) (CY)	IMPORTED BORROW (CY)	EMBANKMENT (N) (CY)
L-17	NB OFF-RAMP MOORPARK Rd.	"MR-2" 14+00.38 TO "MR-2" 20+87.30	643.8				294.8
L-17	NB OFF-RAMP MOORPARK Rd.	"MR-2" 23+00.00 TO "MR-2" 23+50.00		6.9			
L-18	ROUTE 101	"A" 223+50.00 TO "A" 224+64.04	361.0				29.8
L-18	ROUTE 101	"A" 226+36.04 TO "A" 236+50.00	1,787.0	156.0			131.6
L-18	NB OFF-RAMP MOORPARK Rd.	"MR-2" 23+50.00 TO "MR-2" 24+00.00		3.5			
L-18	NB ON-RAMP MOORPARK Rd	"MR-1" 27+00.00 TO "MR-1" 39+00.00	1,833.9	190.8			156.0
L-18	MOORPARK Rd	"MR" 20+50.00 TO "MR" 21+21.03	37.6	18.2			150.9
L-19	ROUTE 101	"A" 236+50.00 TO "A" 245+00.00	2,673.6	192.3			243.5
		SHEET TOTAL	7,873.7	567.7			1,007.9
		SHEET Q-10 TOTALS	39,344.4	852.4	14.0	1,057.8	7,417.5
		GRAND TOTAL	47,218.1	1,420.1	14.0	1,057.8	8,425.4

REMOVE CHAINLINK FENCE AND WOOD STEPS

SHEET No.	LOCATION	STATION LIMITS	REMOVE CL FENCE (LF)	REMOVE WOOD STEPS (LF)	TREATED WOOD WASTE (LB)
L-7	SB ROUTE 101	''HM-4'' 100+73.72 TO "A" 107+50.00	670.34		
L-8	SB ROUTE 101	"A" 107+50.00 TO "A" 112+55.16	506.70		
L-9	CONEJO SCHOOL Rd	"CO" 131+91.64 TO "CO" 132+29.40	37.76		
L-9	NB 101	"A" 130+03.00 TO "A" 131+81.00	188.35		
L-18	MOORPARK Rd	"MR" 20+63.00 TO "MR" 21+02.00		39.00	1,374
		TOTAL	1,403.15	39.00	1,374

REMOVE CONCRETE SIDEWALK

SHEET No.	LOCATION	STATION LIMITS	REMOVE SIDEWALK (SQYD)
C-11	SB HAMPSHIRE Rd	"HM" 82+63.76 TO "HM" 84+84.23	2,094.46
C-11	NB HAMPSHIRE Rd	"HM" 81+68.54 TO "HM" 84+27.94	2,464.30
C-12	SB CONEJO SCHOOL Rd	"CO" 129+64.14 TO "CO" 132+15	1,254.30
C-13	SB MOORPARK Rd	"MR" 19+02.66 TO "MR" 21+06.02	1,801.77
C-13	NB MOORPARK Rd	"MR" 18+84.66 TO "MR" 21+01.01	1,916.86
		TOTAL	9,531.70

RECONSTRUCT FENCE

SHEET No.	LOCATION	STATION LIMITS	RECONSTRUCT FENCE (LF)
C-12	CONEJO SCHOOL Rd	''CO'' 129+65.06 TO "CO" 130+14.18	60.88
		TOTAL	60.88

SUMMARY OF QUANTITIES

Q-11

STATE OF CALIFORNIA - DEPARTMENT OF TRANSPORTATION
Caltrans

CONSULTANT FUNCTIONAL SUPERVISOR: CHRIS BRETALL
CALCULATED-DESIGNED BY: SUSAN CHAU
CHECKED BY: MIKE ROBINSON
REVISED BY
DATE REVISED

LAST REVISION 00-00-00
DATE PLOTTED => 08-JUN-2013
TIME PLOTTED => 13:23

Dist	COUNTY	ROUTE	POST MILES TOTAL PROJECT	SHEET No.	TOTAL SHEETS
07	Ven	23,101	3.3/3.8, R0.1/R4.5	355	652

REGISTERED CIVIL ENGINEER 3-25-13 DATE

6-3-13
PLANS APPROVAL DATE

REGISTERED PROFESSIONAL ENGINEER JOHN W. POWELL No. C71463 Exp.12/31/13 CIVIL STATE OF CALIFORNIA

THE STATE OF CALIFORNIA OR ITS OFFICERS OR AGENTS SHALL NOT BE RESPONSIBLE FOR THE ACCURACY OR COMPLETENESS OF SCANNED COPIES OF THIS PLAN SHEET.

CH2M HILL
1000 WILSHIRE Blvd
LOS ANGELES, CA 90017

CITY OF THOUSAND OAKS
2100 THOUSAND OAKS BLVD
THOUSAND OAKS. CA 91362

NOTES:

1. FOR ACCURATE RIGHT OF WAY DATA, CONTACT RIGHT OF WAY ENGINEERING AT THE DISTRICT OFFICE.
2. CONTRACTOR TO FIELD VERIFY ALL UTILITY LOCATIONS PRIOR TO RETAINING WALL CONSTRUCTION.
3. SEE TOP OF RETAINING WALL ELEVATIONS ON SHEET R-2.

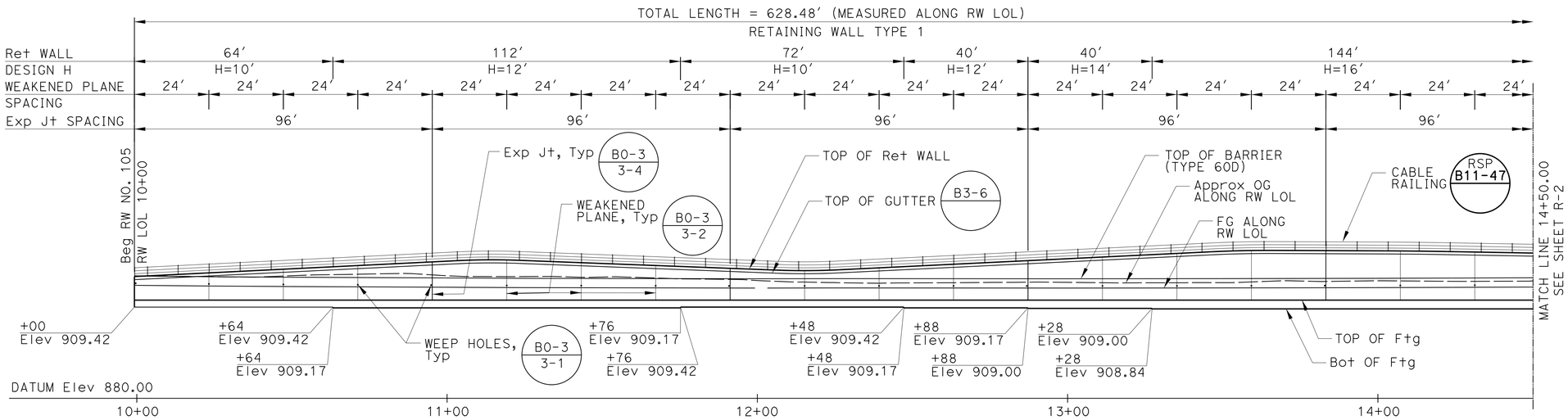

ELEVATION

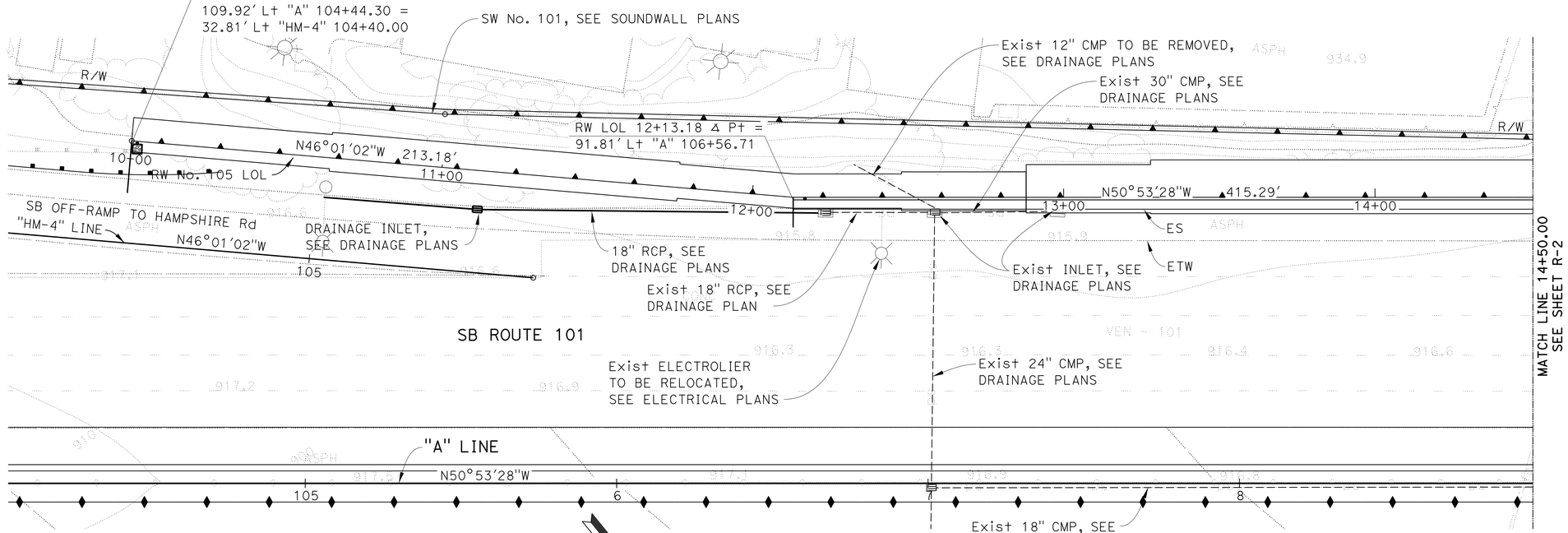

PLAN

APPROVED FOR RETAINING WALL WORK ONLY

RETAINING WALL PLAN
RW No. 105

SCALE: 1" = 20′

R-1

STATE OF CALIFORNIA - DEPARTMENT OF TRANSPORTATION
Caltrans

CONSULTANT FUNCTIONAL SUPERVISOR: CHRIS BRETALL
CALCULATED-DESIGNED BY: JOHN POWELL
CHECKED BY: MIKE ROBINSON
REVISED BY
DATE REVISED

LAST REVISION 00-00-00
DATE PLOTTED => 08-JUN-2013
TIME PLOTTED => 13:23

Dist	COUNTY	ROUTE	POST MILES TOTAL PROJECT	SHEET No.	TOTAL SHEETS
07	Ven	23,101	3.3/3.8, R0.1/R4.5	356	652

REGISTERED CIVIL ENGINEER 3-25-13 DATE

6-3-13
PLANS APPROVAL DATE

REGISTERED PROFESSIONAL ENGINEER JOHN W. POWELL No. C71463 Exp. 12/31/13 CIVIL STATE OF CALIFORNIA

THE STATE OF CALIFORNIA OR ITS OFFICERS OR AGENTS SHALL NOT BE RESPONSIBLE FOR THE ACCURACY OR COMPLETENESS OF SCANNED COPIES OF THIS PLAN SHEET.

CH2M HILL
1000 WILSHIRE Blvd
LOS ANGELES, CA 90017

CITY OF THOUSAND OAKS
2100 THOUSAND OAKS BLVD
THOUSAND OAKS. CA 91362

NOTES:

1. FOR ACCURATE RIGHT OF WAY DATA, CONTACT RIGHT OF WAY ENGINEERING AT THE DISTRICT OFFICE.
2. CONTRACTOR TO FIELD VERIFY ALL UTILITY LOCATIONS PRIOR TO RETAINING WALL CONSTRUCTIONS.

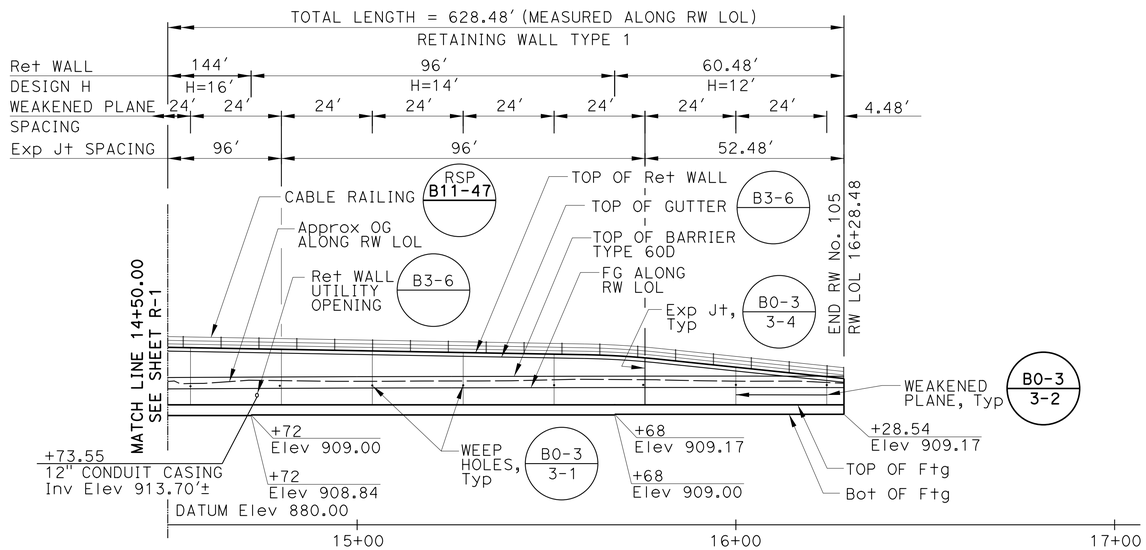

ELEVATION

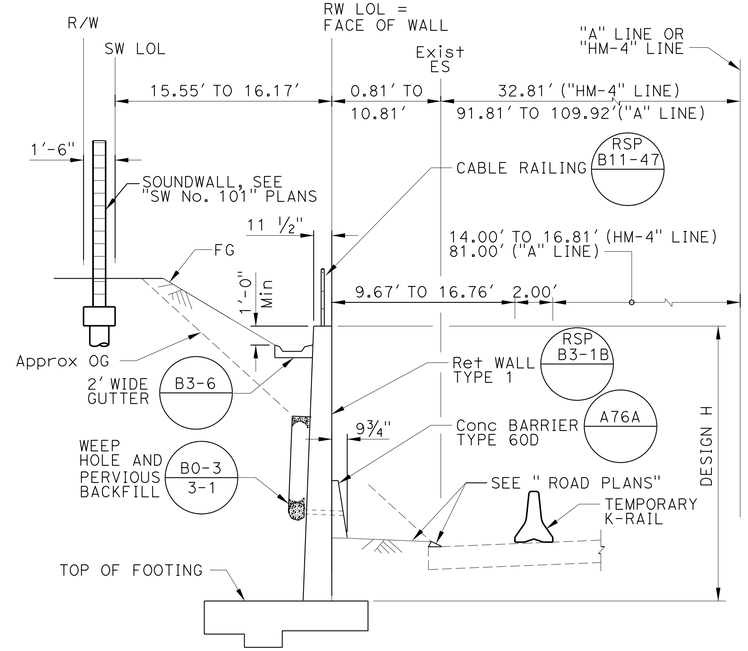

RW No. 105 - TYPICAL SECTION

RW LOL Sta 10+00 TO 12+13.18
NO SCALE

RETAINING WALL ELEVATIONS

RW LOL STA	TOP OF WALL
10+00	918.77
10+25	920.00
10+50	921.23
10+75	922.46
11+00	923.69
11+25	923.96
11+50	923.01
11+75	922.06
12+00	921.11
12+25	920.86
12+50	922.06
12+75	923.27
13+00	924.48
13+25	925.69
13+50	926.89
13+75	927.17
14+00	927.06
14+25	926.80
14+50	926.35
14+75	925.91
15+00	925.47
15+25	925.02
15+50	924.58
15+75	923.65
16+00	921.10
16+25	918.49
16+28.48	918.12

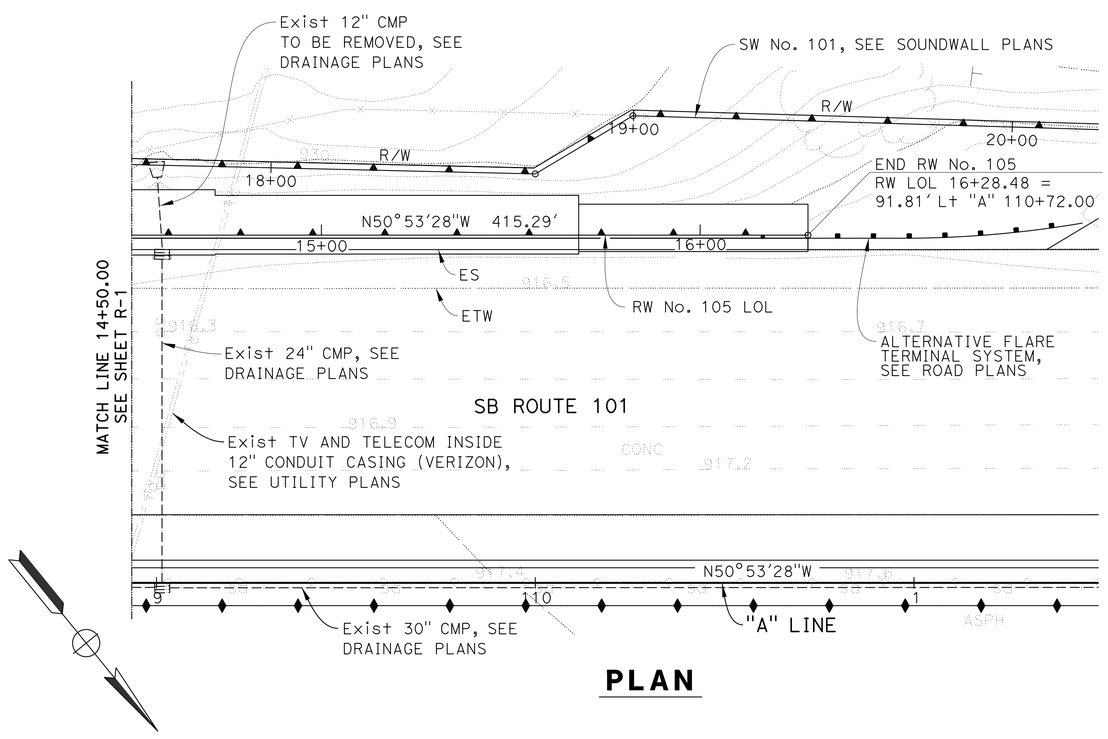

PLAN

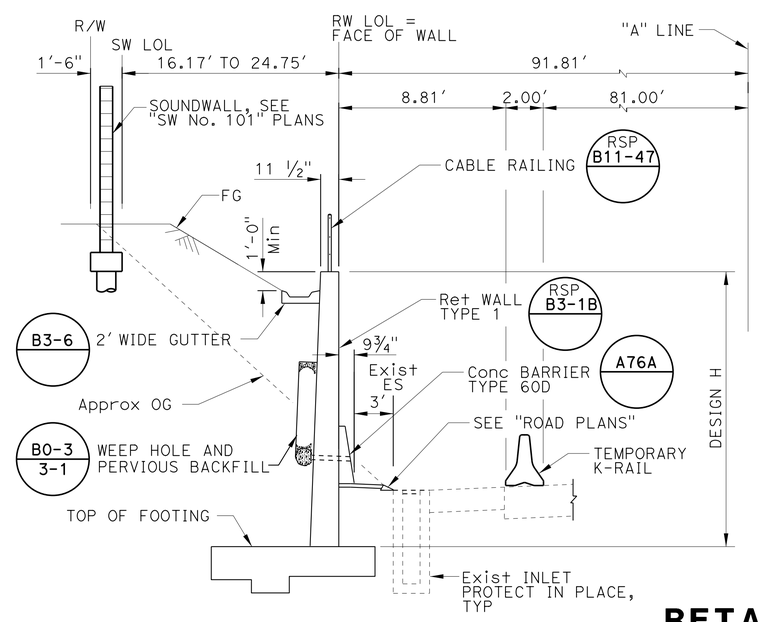

RW No. 105 - TYPICAL SECTION

RW LOL Sta 12+13.18 TO 16+28.48
NO SCALE

RETAINING WALL PLAN
RW No. 105

SCALE: 1" = 20'

R-2

APPROVED FOR RETAINING WALL WORK ONLY

STATE OF CALIFORNIA - DEPARTMENT OF TRANSPORTATION

CONSULTANT FUNCTIONAL SUPERVISOR: CHRIS BRETALL

CALCULATED-DESIGNED BY: JOHN POWELL

CHECKED BY: MIKE ROBINSON

REVISED BY / DATE REVISED

LAST REVISION 00-00-00 DATE PLOTTED => 08-JUN-2013 TIME PLOTTED => 13:23

DIST	COUNTY	ROUTE	POST MILES TOTAL PROJECT	SHEET No	TOTAL SHEETS
07	Ven	23,101	3.3/3.8, R0.1/R4.5	357	652

GEOTECHNICAL PROFESSIONAL — DATE 12-06-12

6-3-13
PLANS APPROVAL DATE

REGISTERED PROFESSIONAL ENGINEER — PING TIAN — No. GE2660 — Exp. 12/31/13 — GEOTECHNICAL — STATE OF CALIFORNIA

The State of California or its officers or agents shall not be responsible for the accuracy or completeness of electronic copies of this plan sheet.

CITY OF THOUSAND OAKS
2100 THOUSAND OAKS BLVD
THOUSAND OAKS, CA 91362

CH2M HILL
1000 WILSHIRE BLVD, 21ST FLOOR
LOS ANGELES, CA 90017

BENCHMARKS AND DATUM

The horizontal coordinates are based on the North American Datum of 1983 (NAD83) California Coordinate System Zone 5 epoch 1991.35, locally determined by points 5434,5433,5435, and 5441 from Caltrans Survey Request 94-156.

Vertical control is based on the North American Vertical Datum of 1988 (NAVD88) locally determined by the following benchmarks published by the National Geodetic Survey.

AA3344	Elev	830.93	(Adj 1995)
AA3348	Elev	953.66	(Adj 1995)
AA3205	Elev	747.56	(Adj 1995)
AA3346	Elev	922.40	(Adj 1995)

Survey Disk at the intersection of Freeway 101 and Hampshire Rd on top of and 2 ft northeast of the southwest end of the bridge deck.

NOTE:

1. This LOTB sheet was prepared in accordance with the Caltrans Soil and Rock Logging, Classification, and Presentation Manual (June 2010).

CORRECTION FACTOR:

A multiplication factor 0.65 was used to convert from California Modified Ring Sampler blow count to equivalent Standard Penetration Test Sampler blow count.

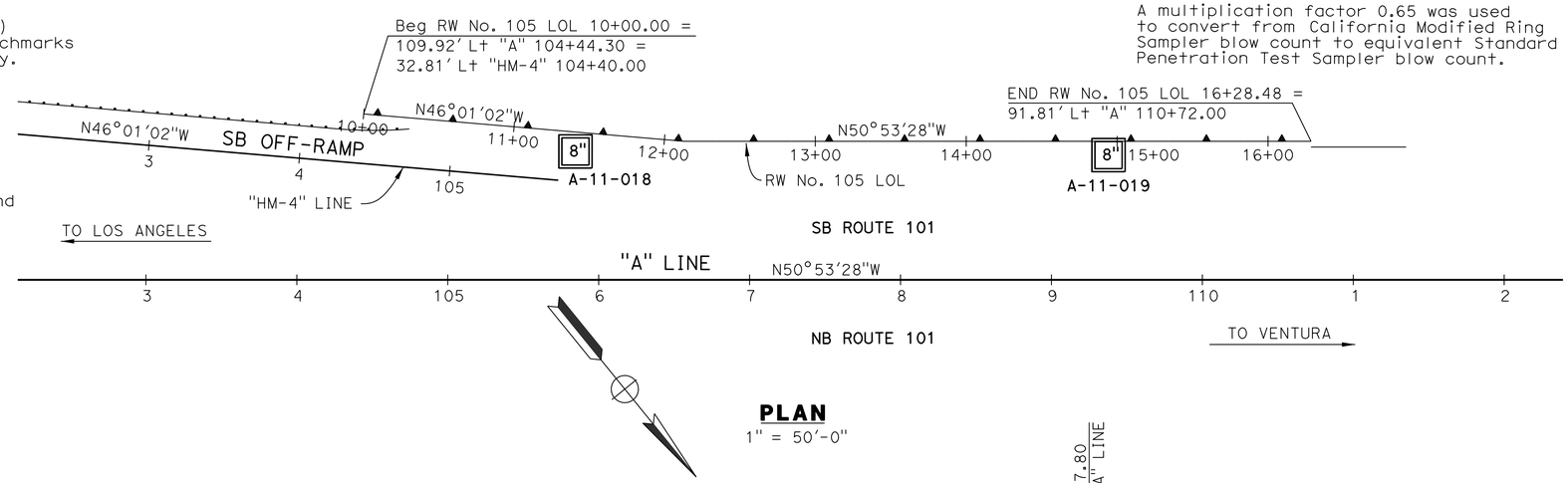

PLAN
1" = 50'-0"

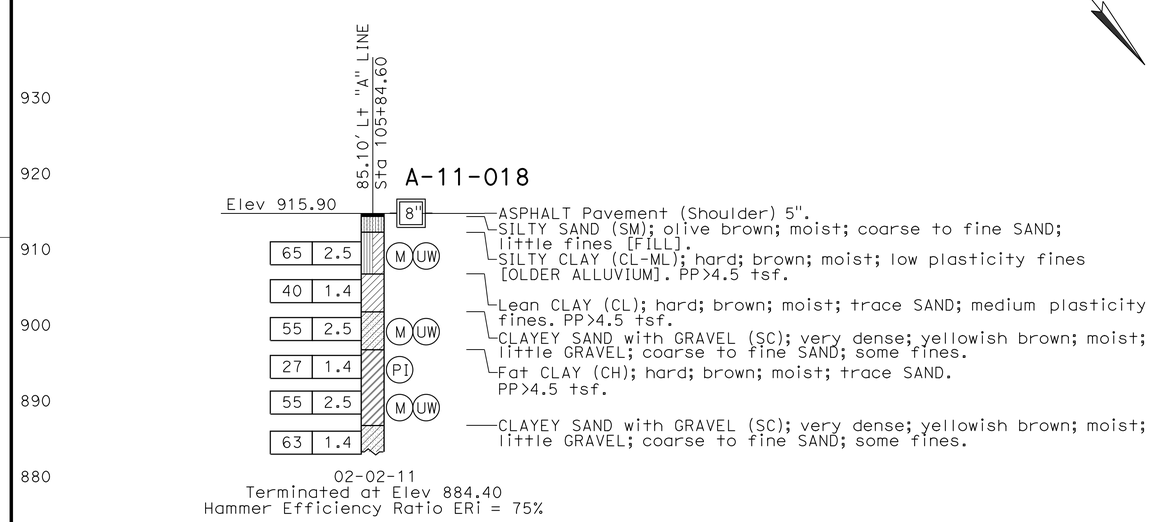

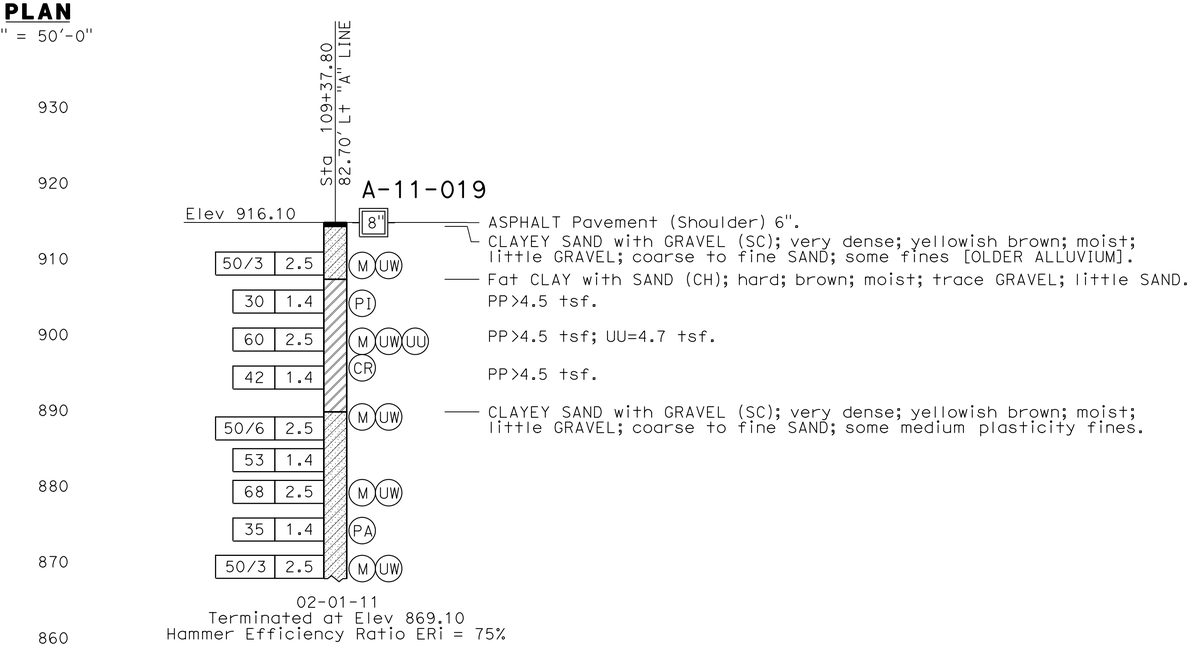

PROFILE
Horz: 1" = 50'
Vert: 1" = 10'

STATIONING "A" Line

Richard Hartzell	DRAWN BY	N. MORALES	K. RADHAKRISHNAN & J. LEE	PREPARED FOR THE STATE OF CALIFORNIA DEPARTMENT OF TRANSPORTATION	Milind Desai	BRIDGE NO.	RETAINING WALL NO. 105	
DESIGN OVERSIGHT	CHECKED BY	J. LEE	FIELD INVESTIGATION BY: DATE: 02/01/11 & 02/02/11		PROJECT ENGINEER	POST MILES	LOG OF TEST BORINGS 1 OF 3	R-3
SIGN OFF DATE								

GS GEOTECHNICAL LOG OF TEST BORINGS SHEET (ENGLISH) (REV. 7/16/10)

ORIGINAL SCALE IN INCHES FOR REDUCED PLANS 0 1 2 3

UNIT: 3573
PROJECT NUMBER & PHASE: 0700000201 CONTRACT NO.: 07-1952U1

DISREGARD PRINTS BEARING EARLIER REVISION DATES → REVISION DATES 10/12/11 05/11/12

SHEET 3 OF 5

FILE => 0700000201qa003.dgn

USERNAME => s1224496 DATE PLOTTED => 10-JUN-2013 TIME PLOTTED => 12:17

REFERENCE: CALTRANS SOIL & ROCK LOGGING, CLASSIFICATION, AND PRESENTATION MANUAL (2010)

DIST	COUNTY	ROUTE	POST MILES TOTAL PROJECT	SHEET No	TOTAL SHEETS
07	Ven	23,101	3.3/3.8, R0.1/R4.5	358	652

GEOTECHNICAL PROFESSIONAL — DATE 12-06-12

6-3-13
PLANS APPROVAL DATE

REGISTERED PROFESSIONAL ENGINEER — PING TIAN — No. GE2660 — Exp. 12/31/13 — GEOTECHNICAL — STATE OF CALIFORNIA

The State of California or its officers or agents shall not be responsible for the accuracy or completeness of electronic copies of this plan sheet.

CITY OF THOUSAND OAKS
2100 THOUSAND OAKS BLVD
THOUSAND OAKS, CA 91362

CH2M HILL
1000 WILSHIRE BLVD, 21ST FLOOR
LOS ANGELES, CA 90017

CEMENTATION

Description	Criteria
Weak	Crumbles or breaks with handling or little finger pressure.
Moderate	Crumbles or breaks with considerable finger pressure.
Strong	Will not crumble or break with finger pressure.

BOREHOLE IDENTIFICATION

Symbol	Hole Type	Description
Size	A	Auger Boring (hollow or solid stem bucket)
Size	R RW RC P	Rotary drilled boring (conventional) Rotary drilled with self-casing wire-line Rotary core with continuously-sampled, self-casing wire-line Rotary percussion boring (air)
Size	R	Rotary drilled diamond core
Size	HD HA	Hand driven (1-inch soil tube) Hand Auger
●	D	Dynamic Cone Penetration Boring
▲	CPT	Cone Penetration Test (ASTM D 5778)
⬚	O	Other (note on LOTB)

Note: Size in inches.

CONSISTENCY OF COHESIVE SOILS

Description	Shear Strength (tsf)	Pocket Penetrometer Measurement, PP, (tsf)	Torvane Measurement, TV, (tsf)	Vane Shear Measurement, VS, (tsf)
Very Soft	Less than 0.12	Less than 0.25	Less than 0.12	Less than 0.12
Soft	0.12 - 0.25	0.25 - 0.5	0.12 - 0.25	0.12 - 0.25
Medium Stiff	0.25 - 0.5	0.5 - 1	0.25 - 0.5	0.25 - 0.5
Stiff	0.5 - 1	1 - 2	0.5 - 1	0.5 - 1
Very Stiff	1 - 2	2 - 4	1 - 2	1 - 2
Hard	Greater than 2	Greater than 4	Greater than 2	Greater than 2

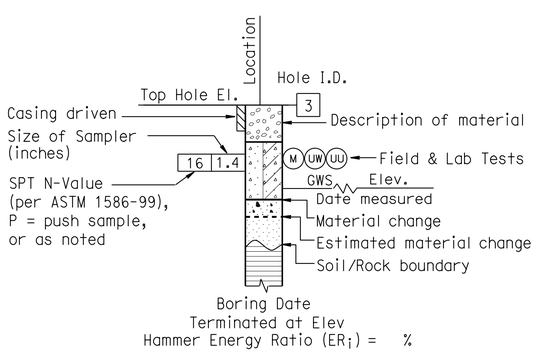

ROTARY BORING

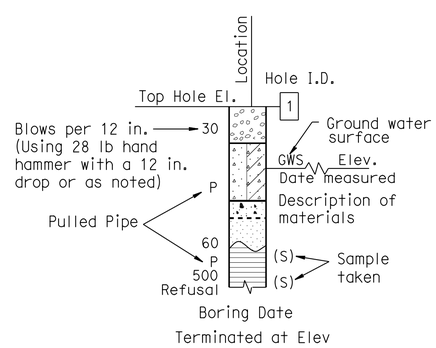

HAND BORING

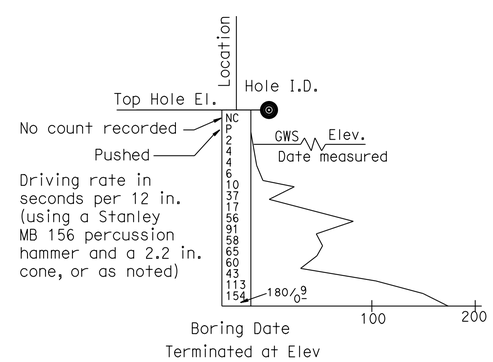

DYNAMIC CONE PENETRATION BORING

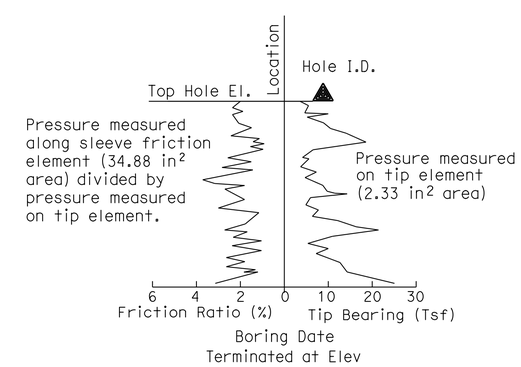

CONE PENETRATION TEST (CPT) BORING

Richard Hartzell DESIGN OVERSIGHT SIGN OFF DATE	DRAWN BY N. MORALES CHECKED BY J. LEE	K. RADHAKRISHNAN & J. LEE FIELD INVESTIGATION BY: DATE: 02/01/11 & 02/02/11	PREPARED FOR THE STATE OF CALIFORNIA DEPARTMENT OF TRANSPORTATION

Milind Desai
PROJECT ENGINEER

BRIDGE NO.
POST MILES

RETAINING WALL NO. 105

LOG OF TEST BORINGS 2 OF 3

R-4

GS GEOTECHNICAL LOG OF TEST BORINGS SHEET (ENGLISH) (REV. 7/16/10)

ORIGINAL SCALE IN INCHES FOR REDUCED PLANS 0 1 2 3

UNIT: 3573
PROJECT NUMBER & PHASE: 0700000201
CONTRACT NO.: 07-1952U1

DISREGARD PRINTS BEARING EARLIER REVISION DATES

REVISION DATES: ~~10/12/11~~ 05/11/12

SHEET 4 OF 5

FILE => 0700000201qa004.dgn

USERNAME => s109858 DATE PLOTTED => 08-JUN-2013 TIME PLOTTED => 13:23

REFERENCE: CALTRANS SOIL & ROCK LOGGING, CLASSIFICATION, AND PRESENTATION MANUAL (2010)

DIST	COUNTY	ROUTE	POST MILES TOTAL PROJECT	SHEET No	TOTAL SHEETS
07	Ven	23,101	3.3/3.8, R0.1/R4.5	359	652

GEOTECHNICAL PROFESSIONAL — DATE 12-06-12

6-3-13
PLANS APPROVAL DATE

REGISTERED PROFESSIONAL ENGINEER — PING TIAN — No. GE2660 — Exp. 12/31/13 — GEOTECHNICAL — STATE OF CALIFORNIA

The State of California or its officers or agents shall not be responsible for the accuracy or completeness of electronic copies of this plan sheet.

CITY OF THOUSAND OAKS
2100 THOUSAND OAKS BLVD
THOUSAND OAKS, CA 91362

CH2M HILL
1000 WILSHIRE BLVD, 21ST FLOOR
LOS ANGELES, CA 90017

GROUP SYMBOLS AND NAMES

Graphic/Symbol	Group Names
GW	Well-graded GRAVEL Well-graded GRAVEL with SAND
GP	Poorly-graded GRAVEL Poorly-graded GRAVEL with SAND
GW-GM	Well-graded GRAVEL with SILT Well-graded GRAVEL with SILT and SAND
GW-GC	Well-graded GRAVEL with CLAY (or SILTY CLAY) Well-graded GRAVEL with CLAY and SAND (or SILTY CLAY and SAND)
GP-GM	Poorly-graded GRAVEL with SILT Poorly-graded GRAVEL with SILT and SAND
GP-GC	Poorly-graded GRAVEL with CLAY (or SILTY CLAY) Poorly-graded GRAVEL with CLAY and SAND (or SILTY CLAY and SAND)
GM	SILTY GRAVEL SILTY GRAVEL with SAND
GC	CLAYEY GRAVEL CLAYEY GRAVEL with SAND
GC-GM	SILTY, CLAYEY GRAVEL SILTY, CLAYEY GRAVEL with SAND
SW	Well-graded SAND Well-graded SAND with GRAVEL
SP	Poorly-graded SAND Poorly-graded SAND with GRAVEL
SW-SM	Well-graded SAND with SILT Well-graded SAND with SILT and GRAVEL
SW-SC	Well-graded SAND with CLAY (or SILTY CLAY) Well-graded SAND with CLAY and GRAVEL (or SILTY CLAY and GRAVEL)
SP-SM	Poorly-graded SAND with SILT Poorly-graded SAND with SILT and GRAVEL
SP-SC	Poorly-graded SAND with CLAY (or SILTY CLAY) Poorly-graded SAND with CLAY and GRAVEL (or SILTY CLAY and GRAVEL)
SM	SILTY SAND SILTY SAND with GRAVEL
SC	CLAYEY SAND CLAYEY SAND with GRAVEL
SC-SM	SILTY, CLAYEY SAND SILTY, CLAYEY SAND with GRAVEL
PT	PEAT
	COBBLES COBBLES and BOULDERS BOULDERS

Graphic/Symbol	Group Names
CL	Lean CLAY Lean CLAY with SAND Lean CLAY with GRAVEL SANDY lean CLAY SANDY lean CLAY with GRAVEL GRAVELLY lean CLAY GRAVELLY lean CLAY with SAND
CL-ML	SILTY CLAY SILTY CLAY with SAND SILTY CLAY with GRAVEL SANDY SILTY CLAY SANDY SILTY CLAY with GRAVEL GRAVELLY SILTY CLAY GRAVELLY SILTY CLAY with SAND
ML	SILT SILT with SAND SILT with GRAVEL SANDY SILT SANDY SILT with GRAVEL GRAVELLY SILT GRAVELLY SILT with SAND
OL	ORGANIC lean CLAY ORGANIC lean CLAY with SAND ORGANIC lean CLAY with GRAVEL SANDY ORGANIC lean CLAY SANDY ORGANIC lean CLAY with GRAVEL GRAVELLY ORGANIC lean CLAY GRAVELLY ORGANIC lean CLAY with SAND
OL	ORGANIC SILT ORGANIC SILT with SAND ORGANIC SILT with GRAVEL SANDY ORGANIC SILT SANDY ORGANIC SILT with GRAVEL GRAVELLY ORGANIC SILT GRAVELLY ORGANIC SILT with SAND
CH	Fat CLAY Fat CLAY with SAND Fat CLAY with GRAVEL SANDY fat CLAY SANDY fat CLAY with GRAVEL GRAVELLY fat CLAY GRAVELLY fat CLAY with SAND
MH	Elastic SILT Elastic SILT with SAND Elastic SILT with GRAVEL SANDY elastic SILT SANDY elastic SILT with GRAVEL GRAVELLY elastic SILT GRAVELLY elastic SILT with SAND
OH	ORGANIC fat CLAY ORGANIC fat CLAY with SAND ORGANIC fat CLAY with GRAVEL SANDY ORGANIC fat CLAY SANDY ORGANIC fat CLAY with GRAVEL GRAVELLY ORGANIC fat CLAY GRAVELLY ORGANIC fat CLAY with SAND
OH	ORGANIC elastic SILT ORGANIC elastic SILT with SAND ORGANIC elastic SILT with GRAVEL SANDY ORGANIC elastic SILT SANDY ORGANIC elastic SILT with GRAVEL GRAVELLY ORGANIC elastic SILT GRAVELLY ORGANIC elastic SILT with SAND
OL/OH	ORGANIC SOIL ORGANIC SOIL with SAND ORGANIC SOIL with GRAVEL SANDY ORGANIC SOIL SANDY ORGANIC SOIL with GRAVEL GRAVELLY ORGANIC SOIL GRAVELLY ORGANIC SOIL with SAND

FIELD AND LABORATORY TESTING

- (C) Consolidation (ASTM D 2435)
- (CL) Collapse Potential (ASTM D 5333)
- (CP) Compaction Curve (CTM 216)
- (CR) Corrosivity Testing (CTM 643, CTM 422, CTM 417)
- (CU) Consolidated Undrained Triaxial (ASTM D 4767)
- (DS) Direct Shear (ASTM D 3080)
- (EI) Expansion Index (ASTM D 4829)
- (M) Moisture Content (ASTM D 2216)
- (OC) Organic Content-% (ASTM D 2974)
- (P) Permeability (CTM 220)
- (PA) Particle Size Analysis (ASTM D 422)
- (PI) Plasticity Index (AASHTO T 90) Liquid Limit (AASHTO T 89)
- (PL) Point Load Index (ASTM D 5731)
- (PM) Pressure Meter
- (R) R-Value (CTM 301)
- (SE) Sand Equivalent (CTM 217)
- (SG) Specific Gravity (AASHTO T 100)
- (SL) Shrinkage Limit (ASTM D 427)
- (SW) Swell Potential (ASTM D 4546)
- (UC) Unconfined Compression-Soil (ASTM D 2166) Unconfined Compression-Rock (ASTM D 2938)
- (UU) Unconsolidated Undrained Triaxial (ASTM D 2850)
- (UW) Unit Weight (ASTM D 4767)

APPARENT DENSITY OF COHESIONLESS SOILS

Description	SPT N_{60} (Blows / 12 in.)
Very Loose	0 - 5
Loose	5 - 10
Medium Dense	10 - 30
Dense	30 - 50
Very Dense	Greater than 50

MOISTURE

Description	Criteria
Dry	No discernable moisture
Moist	Moisture present, but no free water
Wet	Visible free water

PERCENT OR PROPORTION OF SOILS

Description	Criteria
Trace	Particles are present but estimated to be less than 5%
Few	5% - 10%
Little	15% - 25%
Some	30% - 45%
Mostly	50% - 100%

PARTICLE SIZE

Description		Size (in.)
Boulder		Greater than 12
Cobble		3 - 12
Gravel	Coarse	3/4 - 3
	Fine	1/5 - 3/4
Sand	Coarse	1/16 - 1/5
	Medium	1/64 - 1/16
	Fine	1/300 - 1/64
Silt and Clay		Less than 1/300

Richard Hartzell
DESIGN OVERSIGHT
SIGN OFF DATE

DRAWN BY N. MORALES
CHECKED BY J. LEE

K. RADHAKRISHNAN & J. LEE
FIELD INVESTIGATION BY:
DATE: 02/01/11 & 02/02/11

PREPARED FOR THE STATE OF CALIFORNIA DEPARTMENT OF TRANSPORTATION

Milind Desai
PROJECT ENGINEER

BRIDGE NO.
POST MILES

RETAINING WALL NO. 105

LOG OF TEST BORINGS 3 OF 3

R-5

GS GEOTECHNICAL LOG OF TEST BORINGS SHEET (ENGLISH) (REV. 7/16/10)

ORIGINAL SCALE IN INCHES FOR REDUCED PLANS 0 1 2 3

UNIT: 3573
PROJECT NUMBER & PHASE: 0700000201
CONTRACT NO.: 07-1952U1

DISREGARD PRINTS BEARING EARLIER REVISION DATES
REVISION DATES 10/12/11 05/11/12

SHEET 5 OF 5

FILE => 0700000201qa005.dgn

USERNAME => s109858 DATE PLOTTED => 08-JUN-2013 TIME PLOTTED => 13:23

Dist	COUNTY	ROUTE	POST MILES TOTAL PROJECT	SHEET No.	TOTAL SHEETS
07	Ven	23,101	3.3/3.8, R0.1/R4.5	360	652

REGISTERED CIVIL ENGINEER 3-25-13 DATE

6-3-13
PLANS APPROVAL DATE

REGISTERED PROFESSIONAL ENGINEER JOHN W. POWELL No. C71463 Exp. 12/31/13 CIVIL STATE OF CALIFORNIA

THE STATE OF CALIFORNIA OR ITS OFFICERS OR AGENTS SHALL NOT BE RESPONSIBLE FOR THE ACCURACY OR COMPLETENESS OF SCANNED COPIES OF THIS PLAN SHEET.

CH2M HILL
1000 WILSHIRE Blvd
LOS ANGELES, CA 90017

CITY OF THOUSAND OAKS
2100 THOUSAND OAKS BLVD
THOUSAND OAKS. CA 91362

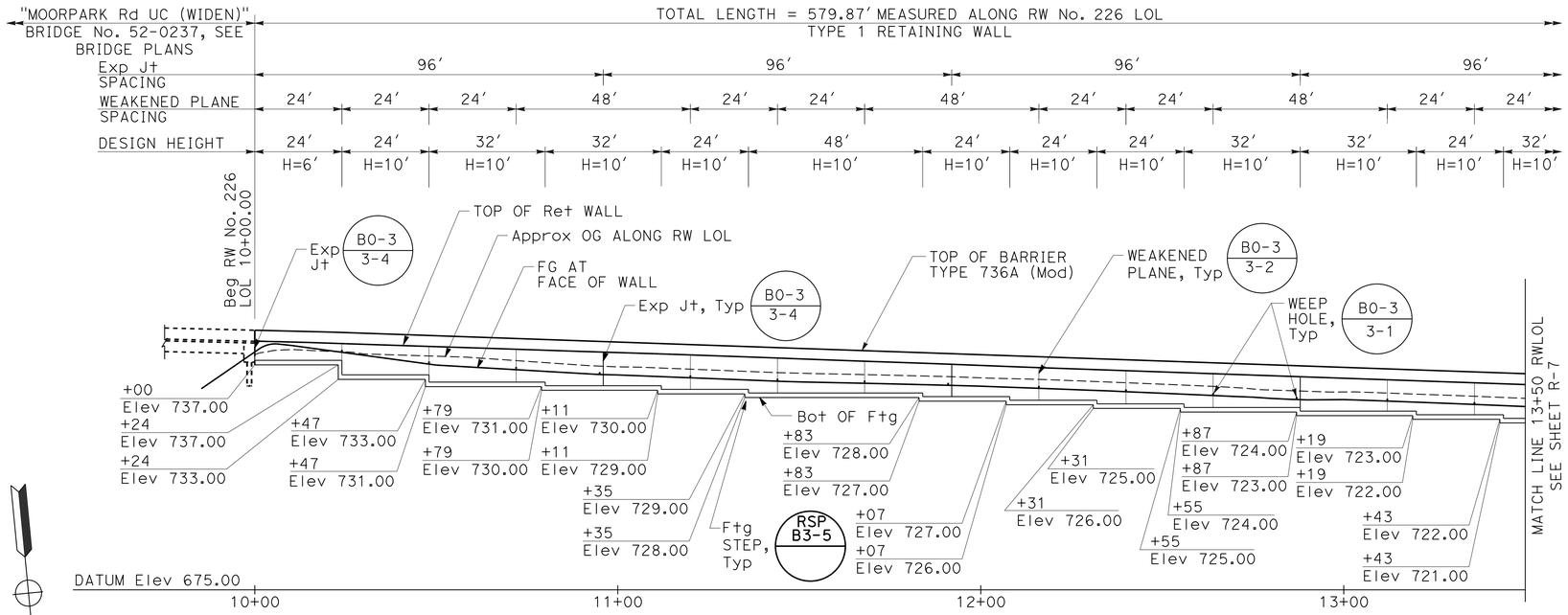

DEVELOPED ELEVATION

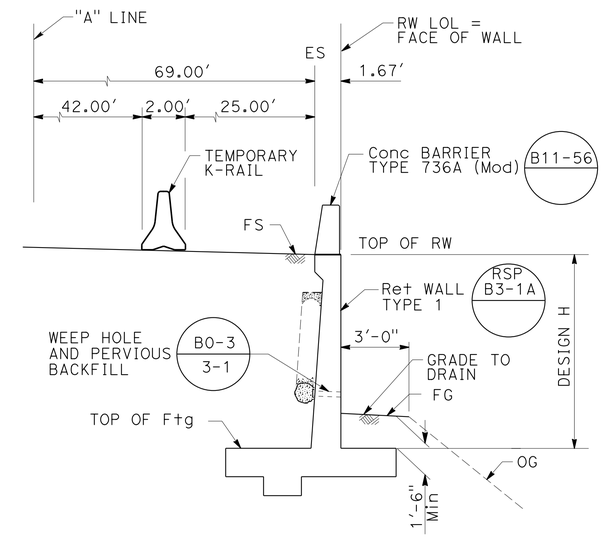

TYPICAL SECTION

NO SCALE

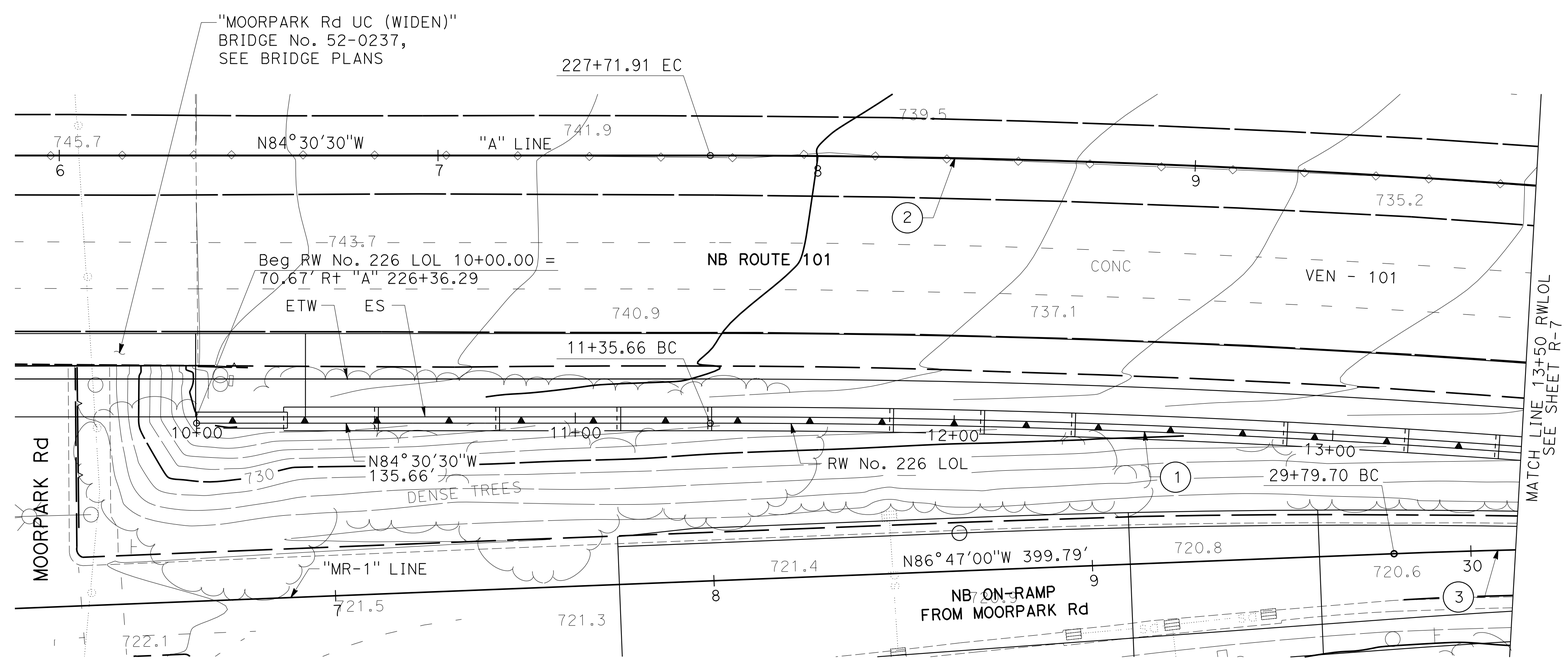

PLAN

CURVE DATA

No.	R	Δ	T	L
1	2929.33'	08°41'19"	222.53'	444.21'
2	3000.00'	25°39'42"	683.28'	1343.64'
3	2000.00'	13°10'30"	230.96'	459.89'

NOTES:

1. CONTRACTOR TO FIELD VERIFY ALL UTILITY LOCATIONS PRIOR TO RETAINING WALL CONSTRUCTION.
2. SEE TOP OF RETAINING WALL ELEVATIONS ON SHEET R-7.
3. SEE LIMITS OF PAYMENT FOR STRUCTURE EXCAVATION (TYPE Y-1) (AERIALLY DEPOSITED LEAD) ON SHEET R-7.
4. FOR ACCURATE RIGHT OF WAY DATA, CONTACT RIGHT OF WAY ENGINEERING AT THE DISTRICT OFFICE.

RETAINING WALL PLAN
RW No.226

SCALE: 1" = 20'

R-6

APPROVED FOR RETAINING WALL WORK ONLY

STATE OF CALIFORNIA - DEPARTMENT OF TRANSPORTATION
Caltrans

CONSULTANT FUNCTIONAL SUPERVISOR: CHRIS BRETALL
CALCULATED-DESIGNED BY: JOHN POWELL
CHECKED BY: MIKE ROBINSON
REVISED BY
DATE REVISED

LAST REVISION 00-00-00
DATE PLOTTED => 08-JUN-2013
TIME PLOTTED => 13:23

Dist	COUNTY	ROUTE	POST MILES TOTAL PROJECT	SHEET No.	TOTAL SHEETS
07	Ven	23,101	3.3/3.8, R0.1/R4.5	361	652

REGISTERED CIVIL ENGINEER 3-25-13 DATE

6-3-13
PLANS APPROVAL DATE

REGISTERED PROFESSIONAL ENGINEER JOHN W. POWELL No. C71463 Exp. 12/31/13 CIVIL STATE OF CALIFORNIA

THE STATE OF CALIFORNIA OR ITS OFFICERS OR AGENTS SHALL NOT BE RESPONSIBLE FOR THE ACCURACY OR COMPLETENESS OF SCANNED COPIES OF THIS PLAN SHEET.

CH2M HILL
1000 WILSHIRE Blvd
LOS ANGELES, CA 90017

CITY OF THOUSAND OAKS
2100 THOUSAND OAKS BLVD
THOUSAND OAKS. CA 91362

RETAINING WALL ELEVATIONS

RW LOL STA	TOP OF WALL
10+00.00	743.55
10+25.00	742.84
10+50.00	742.02
10+75.00	741.20
11+00.00	740.39
11+25.00	739.57
11+50.00	738.66
11+75.00	737.76
12+00.00	736.85
12+25.00	735.93
12+50.00	735.05
12+75.00	734.18
13+00.00	733.31
13+25.00	732.44
13+50.00	731.57
13+75.00	730.69
14+00.00	729.82
14+25.00	728.95
14+50.00	728.08
14+75.00	727.21
15+00.00	726.33
15+25.00	725.46
15+50.00	724.59
15+79.87	723.55

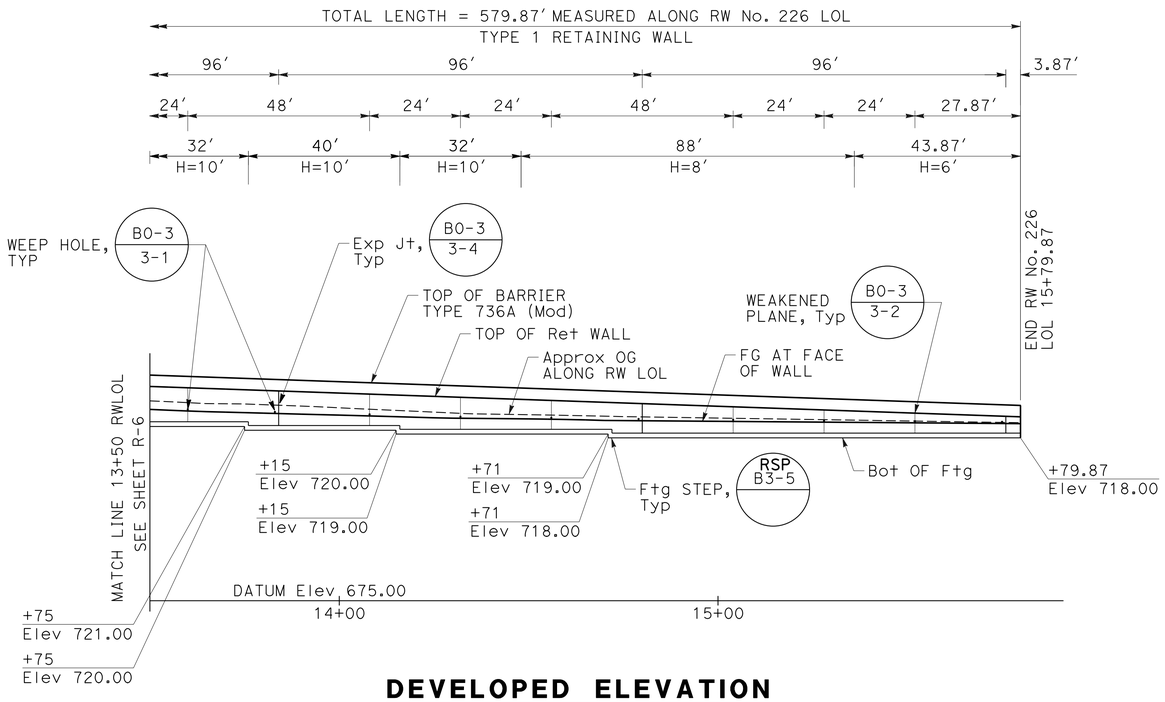

DEVELOPED ELEVATION

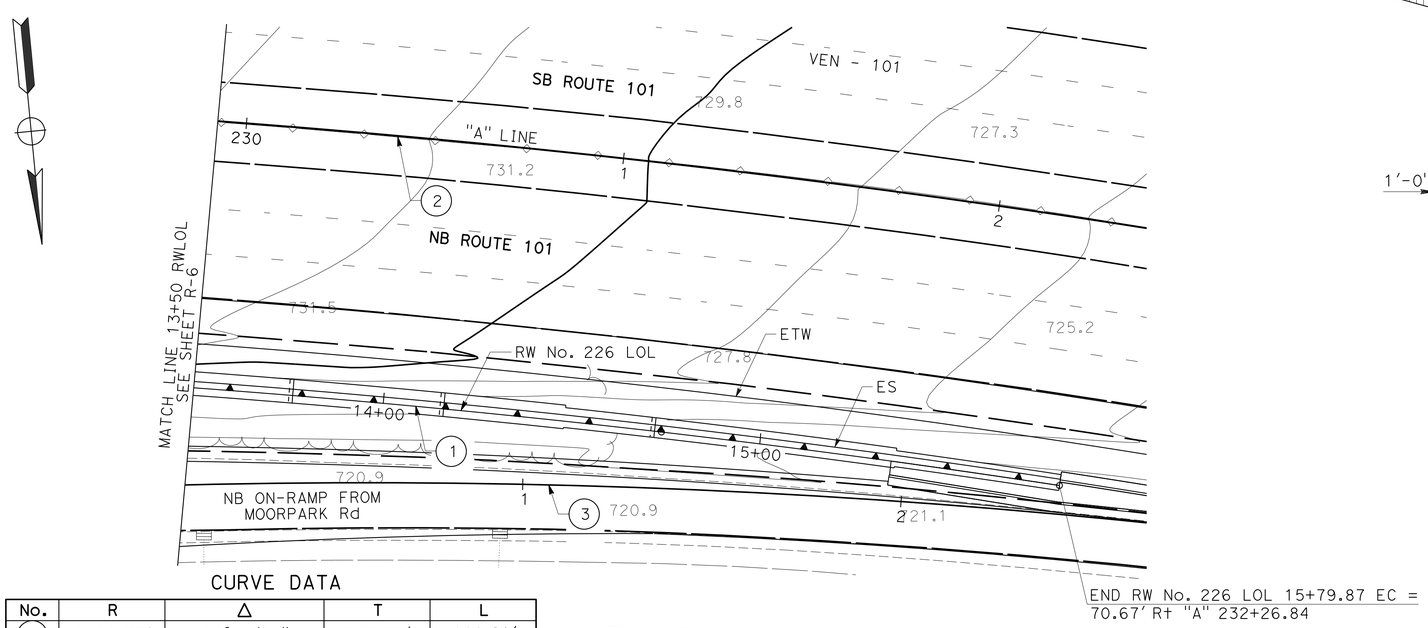

CURVE DATA

No.	R	Δ	T	L
1	2929.33'	08°41'19"	222.53'	444.21'
2	3000.00'	25°39'42"	683.28'	1343.64'
3	2000.00'	13°10'30"	230.96'	459.89'

PLAN

LEGEND:

- Structure Excavation (Ret Wall)
- Structure Backfill (Ret Wall)
- Indicates Structure Excavation (Type Y-1) (Aerially Deposited Lead)

NOTE: For limits and depth of Structure Excavation (Type Y-1) (Aerially Deposited Lead), see road plans.

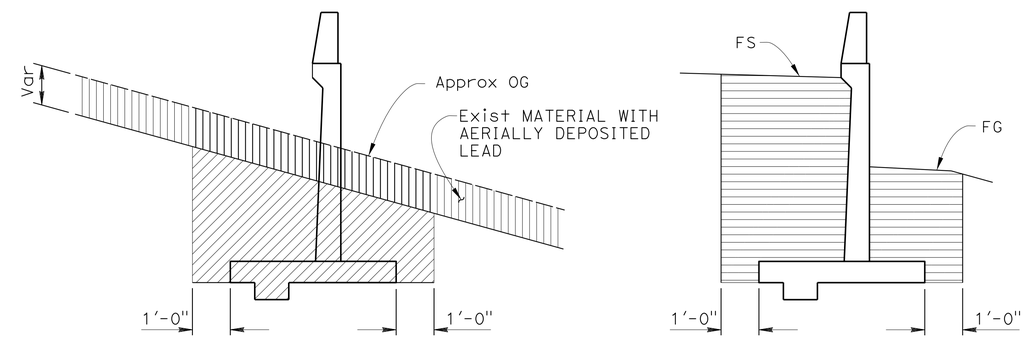

LIMITS OF PAYMENT FOR EXCAVATION AND BACKFILL

NO SCALE

For details not shown, see A62B

NOTES:

1. CONTRACTOR TO FIELD VERIFY ALL UTILITY LOCATIONS PRIOR TO RETAINING WALL CONSTRUCTION.
2. SEE TYPICAL SECTION ON SHEET R-6.
3. FOR ACCURATE RIGHT OF WAY DATA, CONTACT RIGHT OF WAY ENGINEERING AT THE DISTRICT OFFICE.

RETAINING WALL PLAN
RW No.226

SCALE: 1" = 20'

R-7

APPROVED FOR RETAINING WALL WORK ONLY

STATE OF CALIFORNIA - DEPARTMENT OF TRANSPORTATION
Caltrans

CONSULTANT FUNCTIONAL SUPERVISOR: CHRIS BRETALL
CALCULATED-DESIGNED BY: JOHN POWELL
CHECKED BY: MIKE ROBINSON
REVISED BY / DATE REVISED

LAST REVISION 00-00-00
DATE PLOTTED => 08-JUN-2013
TIME PLOTTED => 13:23

DIST	COUNTY	ROUTE	POST MILES TOTAL PROJECT	SHEET No	TOTAL SHEETS
07	Ven	23,101	3.3/3.8, R0.1/R4.5	362	652

GEOTECHNICAL PROFESSIONAL — DATE 12-06-12

6-3-13
PLANS APPROVAL DATE

REGISTERED PROFESSIONAL ENGINEER — PING TIAN — No. GE2660 — Exp. 12/31/13 — GEOTECHNICAL — STATE OF CALIFORNIA

The State of California or its officers or agents shall not be responsible for the accuracy or completeness of electronic copies of this plan sheet.

CITY OF THOUSAND OAKS
2100 THOUSAND OAKS BLVD
THOUSAND OAKS, CA 91362

CH2M HILL
1000 WILSHIRE BLVD, 21ST FLOOR
LOS ANGELES, CA 90017

BENCHMARKS AND DATUM

The horizontal coordinates are based on the North American Datum of 1983 (NAD83) California Coordinate System Zone 5 epoch 1991.35, locally determined by points 5434,5433,5435, and 5441 from Caltrans Survey Request 94-156.

Vertical control is based on the North American Vertical Datum of 1988 (NAVD88) locally determined by the following benchmarks published by the National Geodetic Survey.

AA3344	Elev	830.93	(Adj 1995)
AA3348	Elev	953.66	(Adj 1995)
AA3205	Elev	747.56	(Adj 1995)
AA3346	Elev	922.40	(Adj 1995)

Survey Disk at the intersection of Freeway 101 and Hampshire Rd on top of and 2 ft northeast of the southwest end of the bridge deck.

NOTES:

1. This LOTB sheet was prepared in accordance with the Caltrans Soil and Rock Logging, Classification, and Presentation Manual (June 2010).
2. Groundwater was encountered in boring R-11-010, but elevation was not measured.

CORRECTION FACTOR:

A multiplication factor 0.65 was used to convert from California Modified Ring Sampler blow count to equivalent Standard Penetration Test Sampler blow count.

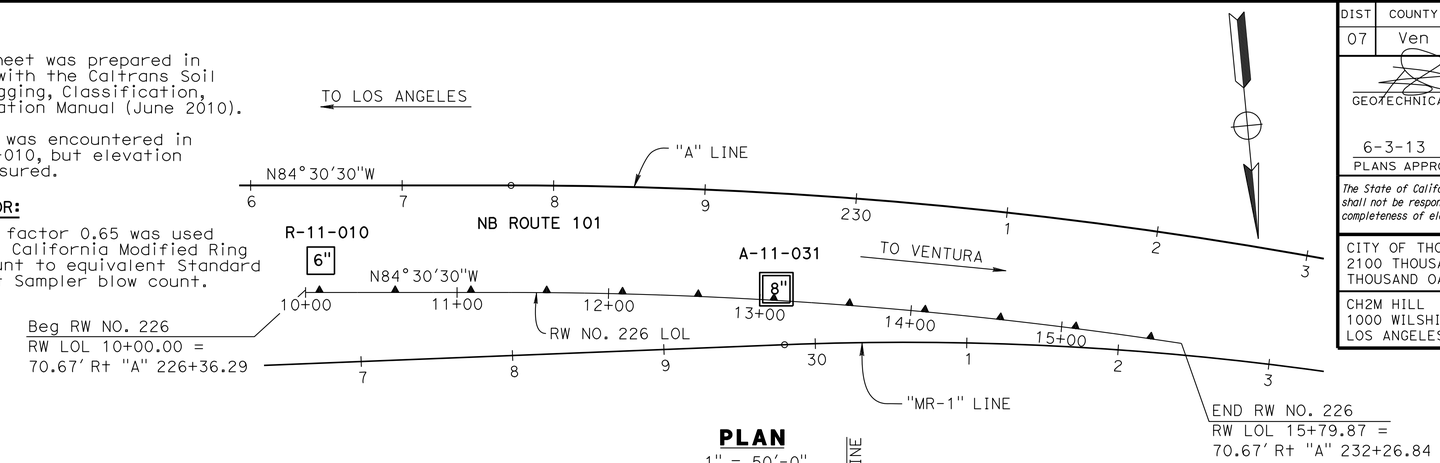

PLAN

1" = 50'-0"

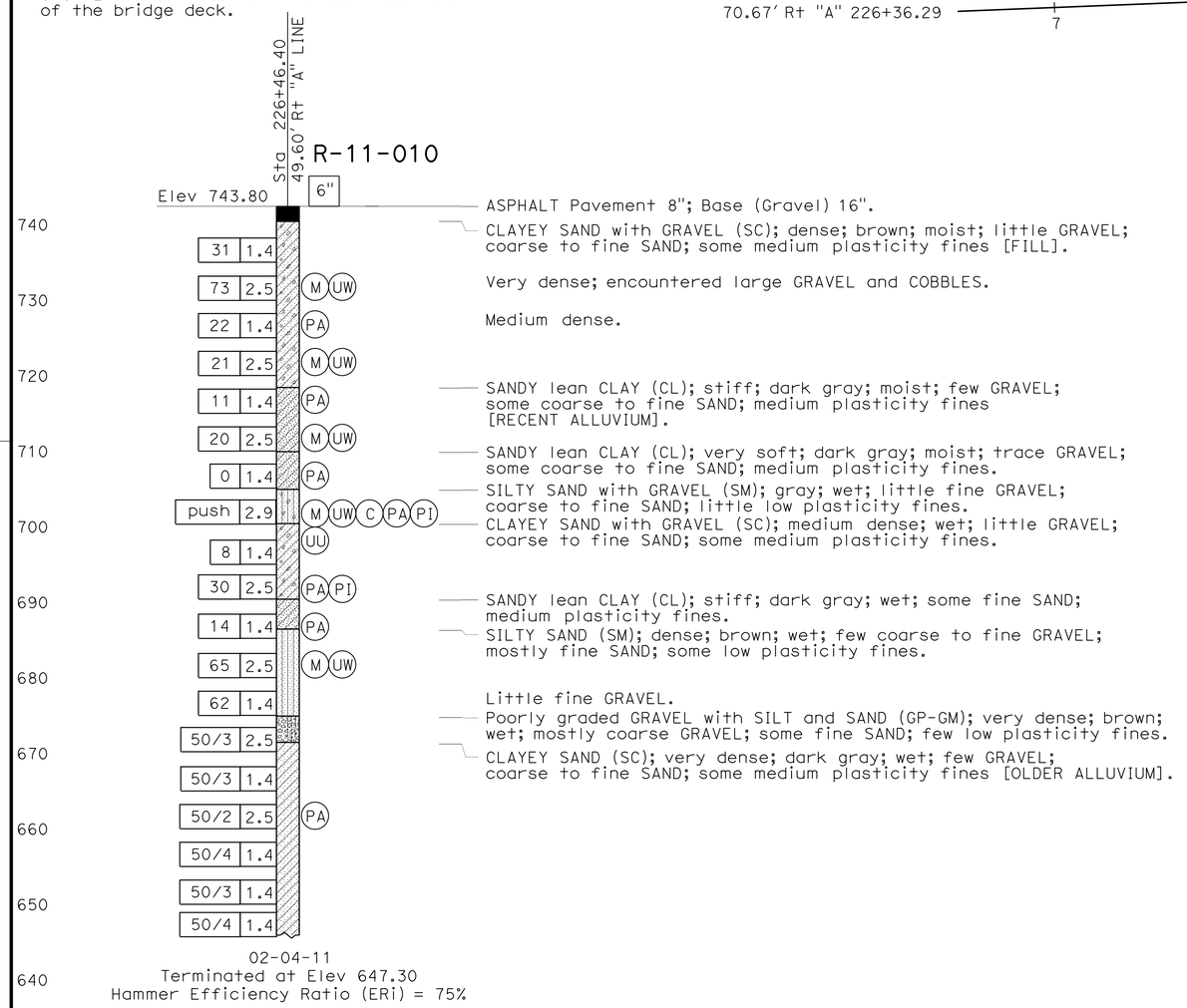

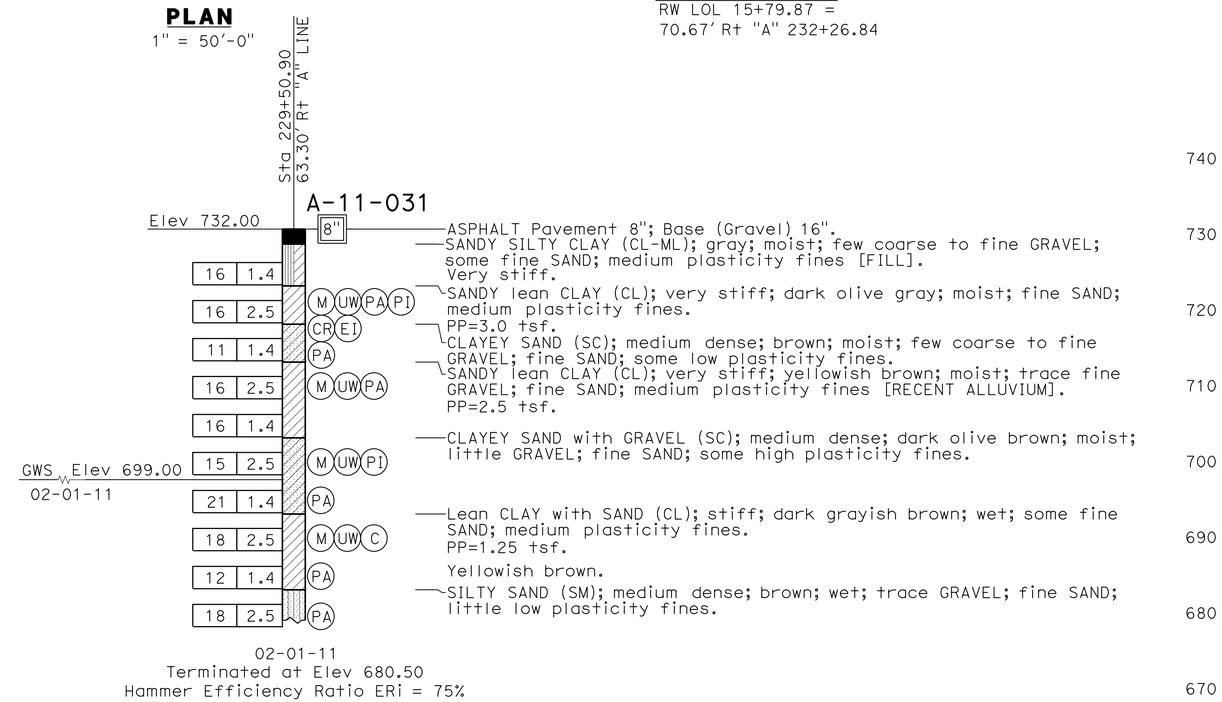

PROFILE

Horz: 1" = 50'
Vert: 1" = 10'

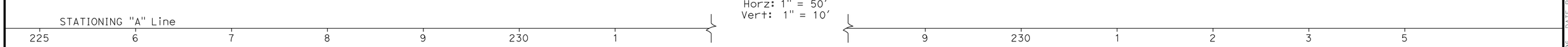

Richard Hartzell — DESIGN OVERSIGHT	DRAWN BY	N. MORALES	K. RADHAKRISHNAN & J. LEE — FIELD INVESTIGATION BY:
SIGN OFF DATE	CHECKED BY	J. LEE	DATE: 02/01/11 & 02/04/11

PREPARED FOR THE STATE OF CALIFORNIA DEPARTMENT OF TRANSPORTATION

Milind Desai — PROJECT ENGINEER

BRIDGE NO. / POST MILES

RETAINING WALL NO. 226

LOG OF TEST BORINGS 1 OF 3

R-8

GS GEOTECHNICAL LOG OF TEST BORINGS SHEET (ENGLISH) (REV. 7/16/10)

ORIGINAL SCALE IN INCHES FOR REDUCED PLANS 0 1 2 3

UNIT: 3573
PROJECT NUMBER & PHASE: 0700000201 CONTRACT NO.: 07-1952U1

DISREGARD PRINTS BEARING EARLIER REVISION DATES — REVISION DATES 10/12/11 05/11/12

SHEET 3 OF 5

FILE => 0700000201qb003.dgn

USERNAME => s124496 DATE PLOTTED => 10-JUN-2013 TIME PLOTTED => 12:17

REFERENCE: CALTRANS SOIL & ROCK LOGGING, CLASSIFICATION, AND PRESENTATION MANUAL (2010)

DIST	COUNTY	ROUTE	POST MILES TOTAL PROJECT	SHEET No	TOTAL SHEETS
07	Ven	23,101	3.3/3.8, R0.1/R4.5	363	652

GEOTECHNICAL PROFESSIONAL — DATE 12-06-12

6-3-13
PLANS APPROVAL DATE

REGISTERED PROFESSIONAL ENGINEER — PING TIAN — No. GE2660 — Exp. 12/31/13 — GEOTECHNICAL — STATE OF CALIFORNIA

The State of California or its officers or agents shall not be responsible for the accuracy or completeness of electronic copies of this plan sheet.

CITY OF THOUSAND OAKS
2100 THOUSAND OAKS BLVD
THOUSAND OAKS, CA 91362

CH2M HILL
1000 WILSHIRE BLVD, 21ST FLOOR
LOS ANGELES, CA 90017

CEMENTATION

Description	Criteria
Weak	Crumbles or breaks with handling or little finger pressure.
Moderate	Crumbles or breaks with considerable finger pressure.
Strong	Will not crumble or break with finger pressure.

BOREHOLE IDENTIFICATION

Symbol	Hole Type	Description
Size	A	Auger Boring (hollow or solid stem bucket)
Size	R RW RC P	Rotary drilled boring (conventional) Rotary drilled with self-casing wire-line Rotary core with continuously-sampled, self-casing wire-line Rotary percussion boring (air)
Size	R	Rotary drilled diamond core
Size	HD HA	Hand driven (1-inch soil tube) Hand Auger
●	D	Dynamic Cone Penetration Boring
▲	CPT	Cone Penetration Test (ASTM D 5778)
⬚	O	Other (note on LOTB)

Note: Size in inches.

CONSISTENCY OF COHESIVE SOILS

Description	Shear Strength (tsf)	Pocket Penetrometer Measurement, PP, (tsf)	Torvane Measurement, TV, (tsf)	Vane Shear Measurement, VS, (tsf)
Very Soft	Less than 0.12	Less than 0.25	Less than 0.12	Less than 0.12
Soft	0.12 - 0.25	0.25 - 0.5	0.12 - 0.25	0.12 - 0.25
Medium Stiff	0.25 - 0.5	0.5 - 1	0.25 - 0.5	0.25 - 0.5
Stiff	0.5 - 1	1 - 2	0.5 - 1	0.5 - 1
Very Stiff	1 - 2	2 - 4	1 - 2	1 - 2
Hard	Greater than 2	Greater than 4	Greater than 2	Greater than 2

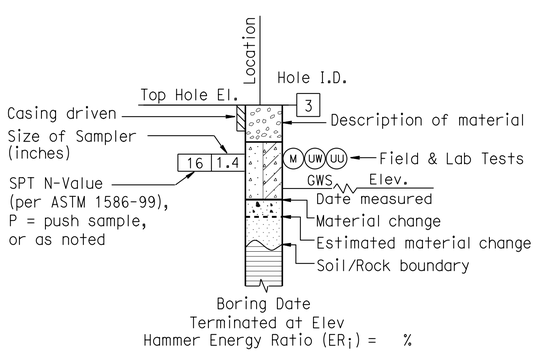

ROTARY BORING

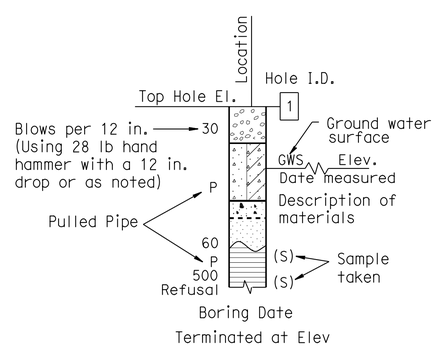

HAND BORING

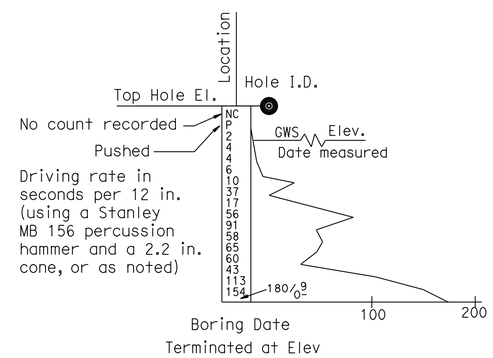

DYNAMIC CONE PENETRATION BORING

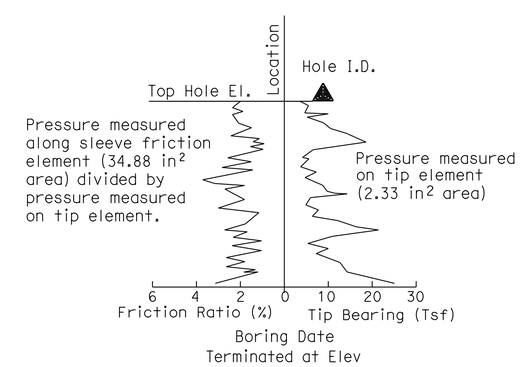

CONE PENETRATION TEST (CPT) BORING

Richard Hartzell DESIGN OVERSIGHT	DRAWN BY	N. MORALES	K. RADHAKRISHNAN & J. LEE FIELD INVESTIGATION BY:
SIGN OFF DATE	CHECKED BY	J. LEE	DATE: 02/01/11 & 02/04/11

PREPARED FOR THE STATE OF CALIFORNIA DEPARTMENT OF TRANSPORTATION

Milind Desai
PROJECT ENGINEER

BRIDGE NO.
POST MILES

RETAINING WALL NO. 226

LOG OF TEST BORINGS 2 OF 3

R-9

GS GEOTECHNICAL LOG OF TEST BORINGS SHEET (ENGLISH) (REV. 7/16/10)

ORIGINAL SCALE IN INCHES FOR REDUCED PLANS 0 1 2 3

UNIT: 3573
PROJECT NUMBER & PHASE: 0700000201
CONTRACT NO.: 07-1952U1

DISREGARD PRINTS BEARING EARLIER REVISION DATES
REVISION DATES: ~~10/12/11~~ 05/11/12
SHEET 4 OF 5

FILE => 0700000201qb004.dgn

USERNAME => s109858 DATE PLOTTED => 08-JUN-2013 TIME PLOTTED => 13:23

REFERENCE: CALTRANS SOIL & ROCK LOGGING, CLASSIFICATION, AND PRESENTATION MANUAL (2010)

DIST	COUNTY	ROUTE	POST MILES TOTAL PROJECT	SHEET No	TOTAL SHEETS
07	Ven	23,101	3.3/3.8, R0.1/R4.5	364	652

GEOTECHNICAL PROFESSIONAL 12-06-12 DATE

6-3-13
PLANS APPROVAL DATE

REGISTERED PROFESSIONAL ENGINEER PING TIAN No. GE2660 Exp. 12/31/13 GEOTECHNICAL STATE OF CALIFORNIA

The State of California or its officers or agents shall not be responsible for the accuracy or completeness of electronic copies of this plan sheet.

CITY OF THOUSAND OAKS
2100 THOUSAND OAKS BLVD
THOUSAND OAKS, CA 91362

CH2M HILL
1000 WILSHIRE BLVD, 21ST FLOOR
LOS ANGELES, CA 90017

GROUP SYMBOLS AND NAMES

Graphic/Symbol	Group Names	Graphic/Symbol	Group Names
GW	Well-graded GRAVEL Well-graded GRAVEL with SAND	CL	Lean CLAY Lean CLAY with SAND Lean CLAY with GRAVEL SANDY lean CLAY SANDY lean CLAY with GRAVEL GRAVELLY lean CLAY GRAVELLY lean CLAY with SAND
GP	Poorly-graded GRAVEL Poorly-graded GRAVEL with SAND		
GW-GM	Well-graded GRAVEL with SILT Well-graded GRAVEL with SILT and SAND	CL-ML	SILTY CLAY SILTY CLAY with SAND SILTY CLAY with GRAVEL SANDY SILTY CLAY SANDY SILTY CLAY with GRAVEL GRAVELLY SILTY CLAY GRAVELLY SILTY CLAY with SAND
GW-GC	Well-graded GRAVEL with CLAY (or SILTY CLAY) Well-graded GRAVEL with CLAY and SAND (or SILTY CLAY and SAND)		
GP-GM	Poorly-graded GRAVEL with SILT Poorly-graded GRAVEL with SILT and SAND	ML	SILT SILT with SAND SILT with GRAVEL SANDY SILT SANDY SILT with GRAVEL GRAVELLY SILT GRAVELLY SILT with SAND
GP-GC	Poorly-graded GRAVEL with CLAY (or SILTY CLAY) Poorly-graded GRAVEL with CLAY and SAND (or SILTY CLAY and SAND)		
GM	SILTY GRAVEL SILTY GRAVEL with SAND	OL	ORGANIC lean CLAY ORGANIC lean CLAY with SAND ORGANIC lean CLAY with GRAVEL SANDY ORGANIC lean CLAY SANDY ORGANIC lean CLAY with GRAVEL GRAVELLY ORGANIC lean CLAY GRAVELLY ORGANIC lean CLAY with SAND
GC	CLAYEY GRAVEL CLAYEY GRAVEL with SAND		
GC-GM	SILTY, CLAYEY GRAVEL SILTY, CLAYEY GRAVEL with SAND	OL	ORGANIC SILT ORGANIC SILT with SAND ORGANIC SILT with GRAVEL SANDY ORGANIC SILT SANDY ORGANIC SILT with GRAVEL GRAVELLY ORGANIC SILT GRAVELLY ORGANIC SILT with SAND
SW	Well-graded SAND Well-graded SAND with GRAVEL		
SP	Poorly-graded SAND Poorly-graded SAND with GRAVEL	CH	Fat CLAY Fat CLAY with SAND Fat CLAY with GRAVEL SANDY fat CLAY SANDY fat CLAY with GRAVEL GRAVELLY fat CLAY GRAVELLY fat CLAY with SAND
SW-SM	Well-graded SAND with SILT Well-graded SAND with SILT and GRAVEL		
SW-SC	Well-graded SAND with CLAY (or SILTY CLAY) Well-graded SAND with CLAY and GRAVEL (or SILTY CLAY and GRAVEL)	MH	Elastic SILT Elastic SILT with SAND Elastic SILT with GRAVEL SANDY elastic SILT SANDY elastic SILT with GRAVEL GRAVELLY elastic SILT GRAVELLY elastic SILT with SAND
SP-SM	Poorly-graded SAND with SILT Poorly-graded SAND with SILT and GRAVEL		
SP-SC	Poorly-graded SAND with CLAY (or SILTY CLAY) Poorly-graded SAND with CLAY and GRAVEL (or SILTY CLAY and GRAVEL)	OH	ORGANIC fat CLAY ORGANIC fat CLAY with SAND ORGANIC fat CLAY with GRAVEL SANDY ORGANIC fat CLAY SANDY ORGANIC fat CLAY with GRAVEL GRAVELLY ORGANIC fat CLAY GRAVELLY ORGANIC fat CLAY with SAND
SM	SILTY SAND SILTY SAND with GRAVEL		
SC	CLAYEY SAND CLAYEY SAND with GRAVEL	OH	ORGANIC elastic SILT ORGANIC elastic SILT with SAND ORGANIC elastic SILT with GRAVEL SANDY ORGANIC elastic SILT SANDY ORGANIC elastic SILT with GRAVEL GRAVELLY ORGANIC elastic SILT GRAVELLY ORGANIC elastic SILT with SAND
SC-SM	SILTY, CLAYEY SAND SILTY, CLAYEY SAND with GRAVEL		
PT	PEAT	OL/OH	ORGANIC SOIL ORGANIC SOIL with SAND ORGANIC SOIL with GRAVEL SANDY ORGANIC SOIL SANDY ORGANIC SOIL with GRAVEL GRAVELLY ORGANIC SOIL GRAVELLY ORGANIC SOIL with SAND
	COBBLES COBBLES and BOULDERS BOULDERS		

FIELD AND LABORATORY TESTING

- (C) Consolidation (ASTM D 2435)
- (CL) Collapse Potential (ASTM D 5333)
- (CP) Compaction Curve (CTM 216)
- (CR) Corrosivity Testing (CTM 643, CTM 422, CTM 417)
- (CU) Consolidated Undrained Triaxial (ASTM D 4767)
- (DS) Direct Shear (ASTM D 3080)
- (EI) Expansion Index (ASTM D 4829)
- (M) Moisture Content (ASTM D 2216)
- (OC) Organic Content-% (ASTM D 2974)
- (P) Permeability (CTM 220)
- (PA) Particle Size Analysis (ASTM D 422)
- (PI) Plasticity Index (AASHTO T 90) Liquid Limit (AASHTO T 89)
- (PL) Point Load Index (ASTM D 5731)
- (PM) Pressure Meter
- (R) R-Value (CTM 301)
- (SE) Sand Equivalent (CTM 217)
- (SG) Specific Gravity (AASHTO T 100)
- (SL) Shrinkage Limit (ASTM D 427)
- (SW) Swell Potential (ASTM D 4546)
- (UC) Unconfined Compression-Soil (ASTM D 2166) Unconfined Compression-Rock (ASTM D 2938)
- (UU) Unconsolidated Undrained Triaxial (ASTM D 2850)
- (UW) Unit Weight (ASTM D 4767)

APPARENT DENSITY OF COHESIONLESS SOILS

Description	SPT N_{60} (Blows / 12 in.)
Very Loose	0 - 5
Loose	5 - 10
Medium Dense	10 - 30
Dense	30 - 50
Very Dense	Greater than 50

MOISTURE

Description	Criteria
Dry	No discernable moisture
Moist	Moisture present, but no free water
Wet	Visible free water

PERCENT OR PROPORTION OF SOILS

Description	Criteria
Trace	Particles are present but estimated to be less than 5%
Few	5% - 10%
Little	15% - 25%
Some	30% - 45%
Mostly	50% - 100%

PARTICLE SIZE

Description		Size (in.)
Boulder		Greater than 12
Cobble		3 - 12
Gravel	Coarse	3/4 - 3
	Fine	1/5 - 3/4
Sand	Coarse	1/16 - 1/5
	Medium	1/64 - 1/16
	Fine	1/300 - 1/64
Silt and Clay		Less than 1/300

Richard Hartzell
DESIGN OVERSIGHT

SIGN OFF DATE

DRAWN BY N. MORALES
CHECKED BY J. LEE

K. RADHAKRISHNAN & J. LEE
FIELD INVESTIGATION BY:
DATE: 02/01/11 & 02/04/11

PREPARED FOR THE STATE OF CALIFORNIA DEPARTMENT OF TRANSPORTATION

Milind Desai
PROJECT ENGINEER

BRIDGE NO.
POST MILES

RETAINING WALL NO. 226

LOG OF TEST BORINGS 3 OF 3

R-10

GS GEOTECHNICAL LOG OF TEST BORINGS SHEET (ENGLISH) (REV. 7/16/10)

ORIGINAL SCALE IN INCHES FOR REDUCED PLANS 0 1 2 3

UNIT: 3573
PROJECT NUMBER & PHASE: 0700000201
CONTRACT NO.: 07-1952U1

DISREGARD PRINTS BEARING EARLIER REVISION DATES

REVISION DATES 10/12/11 05/11/12

SHEET 5 OF 5

FILE => 0700000201qb005.dgn

USERNAME => s109858 DATE PLOTTED => 08-JUN-2013 TIME PLOTTED => 13:23

Dist	COUNTY	ROUTE	POST MILES TOTAL PROJECT	SHEET No.	TOTAL SHEETS
07	Ven	23,101	3.3/3.8, R0.1/R4.5	365	652

REGISTERED CIVIL ENGINEER 3-25-13 DATE

6-3-13
PLANS APPROVAL DATE

REGISTERED PROFESSIONAL ENGINEER SUSAN CHAU No. C74420 Exp. 9/30/13 CIVIL STATE OF CALIFORNIA

THE STATE OF CALIFORNIA OR ITS OFFICERS OR AGENTS SHALL NOT BE RESPONSIBLE FOR THE ACCURACY OR COMPLETENESS OF SCANNED COPIES OF THIS PLAN SHEET.

CH2M HILL
1000 WILSHIRE Blvd
LOS ANGELES, CA 90017

CITY OF THOUSAND OAKS
2100 THOUSAND OAKS BLVD
THOUSAND OAKS. CA 91362

NOTE:
SEE STRUCTURE PLANS FOR ADDITIONAL QUANTITIES

RETAINING WALL QUANTITIES

SHEET No.	RW No.	STATION LIMITS	STRUCTURE EXCAVATION (Ret WALL)	STRUCTURE BACKFILL (Ret WALL)	STRUCTURE CONCRETE, Ret WALL	BAR REINFORCING STEEL (RETAINING WALL)	CABLE RAILING	MINOR Conc (Misc Const)	CONCRETE BARRIER (TYPE 60D)	CONCRETE BARRIER (TYPE 736A Mod)	PERVIOUS BACKFILL MATERIAL (RETAINING WALL)
			CY	CY	CY	LB	LF	CY	LF	LF	CY
R-1 TO R-2	105	"A" 104+44.30 TO "A" 110+72.00	3,058.16	3,213.98	1,268.01	91,143	628.48	22.37	628.48	0.00	237.68
R-6 TO R-7	226	"A" 226+36.25 TO "A" 232+26.84	1,366.21	1,188.41	499.21	60,176	0.00	0.00	0.00	579.87	134.11
TOTAL			4,424.37	4,402.39	1,767.22	151,319	628.48	* 22.37	**628.48	579.87	371.79

* SEE SHEET Q-5 FOR GRAND TOTAL
** SEE SHEET Q-6 FOR GRAND TOTAL

REVISED BY | DATE REVISED
HEATHER ANDERSON | MIKE ROBINSON
CALCULATED-DESIGNED BY | CHECKED BY
CONSULTANT FUNCTIONAL SUPERVISOR | CHRIS BRETALL
STATE OF CALIFORNIA - DEPARTMENT OF TRANSPORTATION
Caltrans

RETAINING WALL QUANTITIES

R-11

LAST REVISION 00-00-00 | DATE PLOTTED => 08-JUN-2013 | TIME PLOTTED => 13:23

Dist	COUNTY	ROUTE	POST MILES TOTAL PROJECT	SHEET No.	TOTAL SHEETS
07	Ven	23,101	3.3/3.8, R0.1/R4.5	366	652

REGISTERED CIVIL ENGINEER 3-25-13 DATE

6-3-13
PLANS APPROVAL DATE

REGISTERED PROFESSIONAL ENGINEER MICHAEL ROBINSON No. C70317 Exp. 9/30/14 CIVIL STATE OF CALIFORNIA

THE STATE OF CALIFORNIA OR ITS OFFICERS OR AGENTS SHALL NOT BE RESPONSIBLE FOR THE ACCURACY OR COMPLETENESS OF SCANNED COPIES OF THIS PLAN SHEET.

CH2M HILL
1000 WILSHIRE Blvd
LOS ANGELES, CA 90017

CITY OF THOUSAND OAKS
2100 THOUSAND OAKS BLVD
THOUSAND OAKS. CA 91362

NOTES:

1. FOR ACCURATE RIGHT OF WAY DATA, CONTACT RIGHT OF WAY ENIGNEERING AT THE DISTRICT OFFICE.
2. PG AND OG LINES SHOWN IN PROFILES ARE TAKEN ALONG THE WALL LOL. THE FG SHOWN IN THE PROFILE REPRESENTS FG ELEVATION BEHIND THE SW.

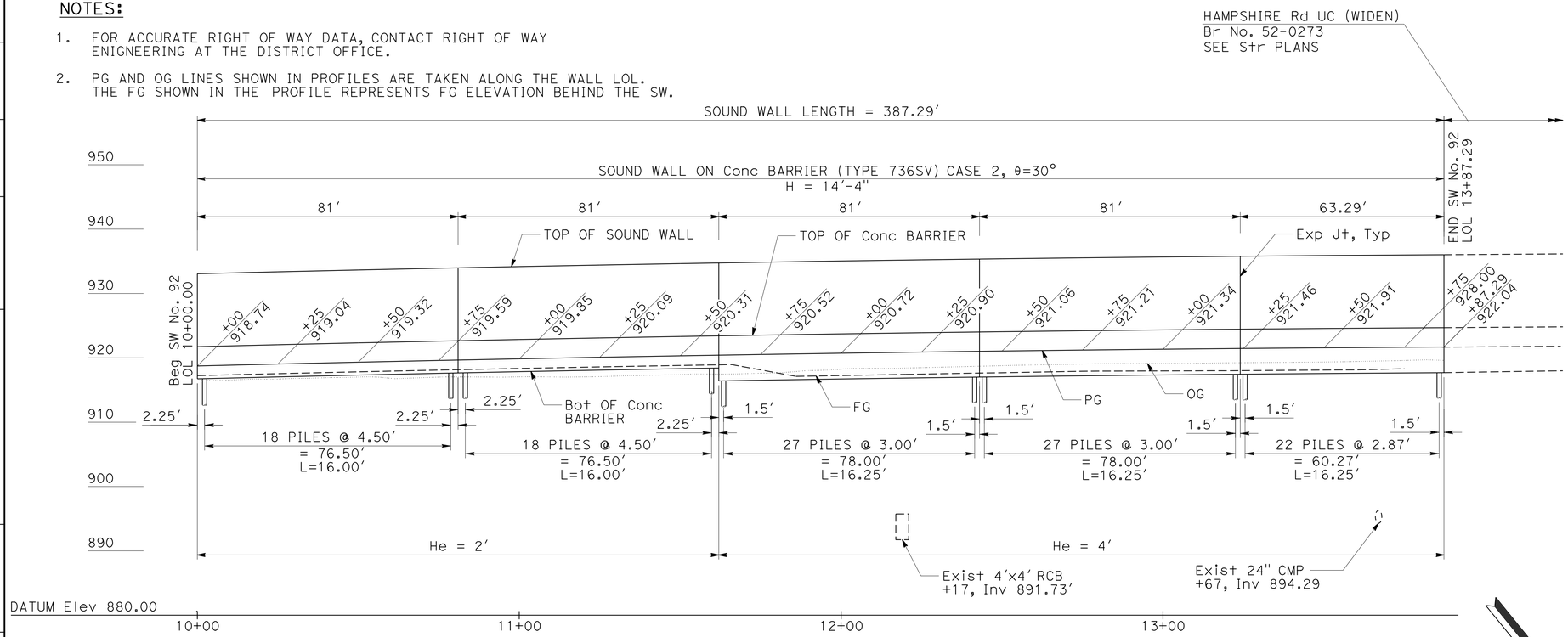

ELEVATION

Horiz 1" = 20'
Vert 1" = 10'

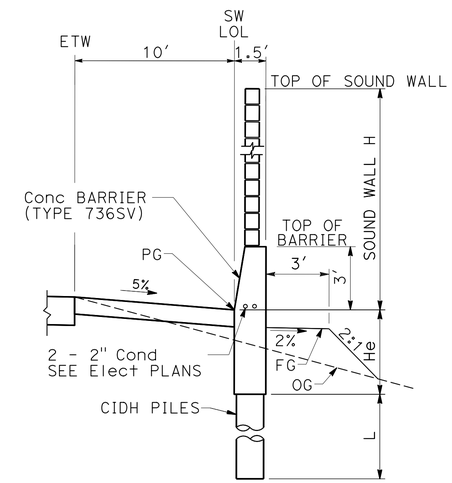

TYPICAL SECTION

NO SCALE
SW LOL Sta 10+00 TO Sta 12+20

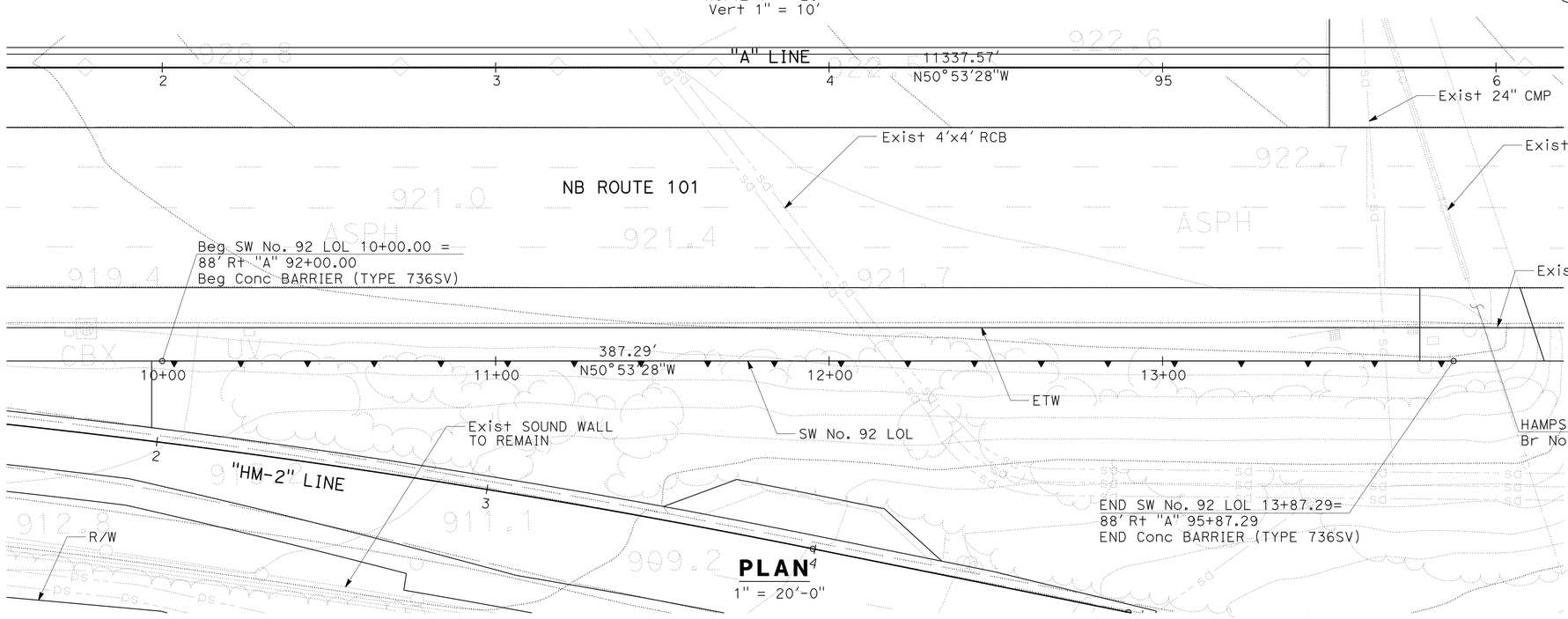

PLAN

1" = 20'-0"

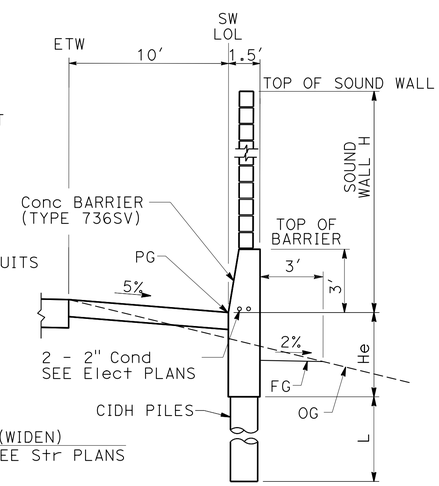

TYPICAL SECTION

NO SCALE
SW LOL Sta 12+20 TO Sta 13+87.29

SOUND WALL PLAN
SW No. 92

SCALE AS SHOWN

SW-1

APPROVED FOR SOUND WALL WORK ONLY

REVISED BY	DATE REVISED
HEATHER ANDERSON	MIKE ROBINSON

CALCULATED-DESIGNED BY | CHECKED BY

CONSULTANT FUNCTIONAL SUPERVISOR: CHRIS BRETALL

STATE OF CALIFORNIA - DEPARTMENT OF TRANSPORTATION

Caltrans

LAST REVISION 00-00-00 | DATE PLOTTED => 10-JUN-2013 | TIME PLOTTED => 12:18

Dist	COUNTY	ROUTE	POST MILES TOTAL PROJECT	SHEET No.	TOTAL SHEETS
07	Ven	23,101	3.3/3.8, R0.1/R4.5	367	652

REGISTERED CIVIL ENGINEER 3-25-13 DATE

6-3-13
PLANS APPROVAL DATE

REGISTERED PROFESSIONAL ENGINEER MICHAEL ROBINSON No. C70317 Exp. 9/30/14 CIVIL STATE OF CALIFORNIA

THE STATE OF CALIFORNIA OR ITS OFFICERS OR AGENTS SHALL NOT BE RESPONSIBLE FOR THE ACCURACY OR COMPLETENESS OF SCANNED COPIES OF THIS PLAN SHEET.

CH2M HILL
1000 WILSHIRE Blvd
LOS ANGELES, CA 90017

CITY OF THOUSAND OAKS
2100 THOUSAND OAKS BLVD
THOUSAND OAKS. CA 91362

NOTE:
FOR ACCURATE RIGHT OF WAY DATA, CONTACT RIGHT OF WAY ENGINEERING AT THE DISTRICT OFFICE.

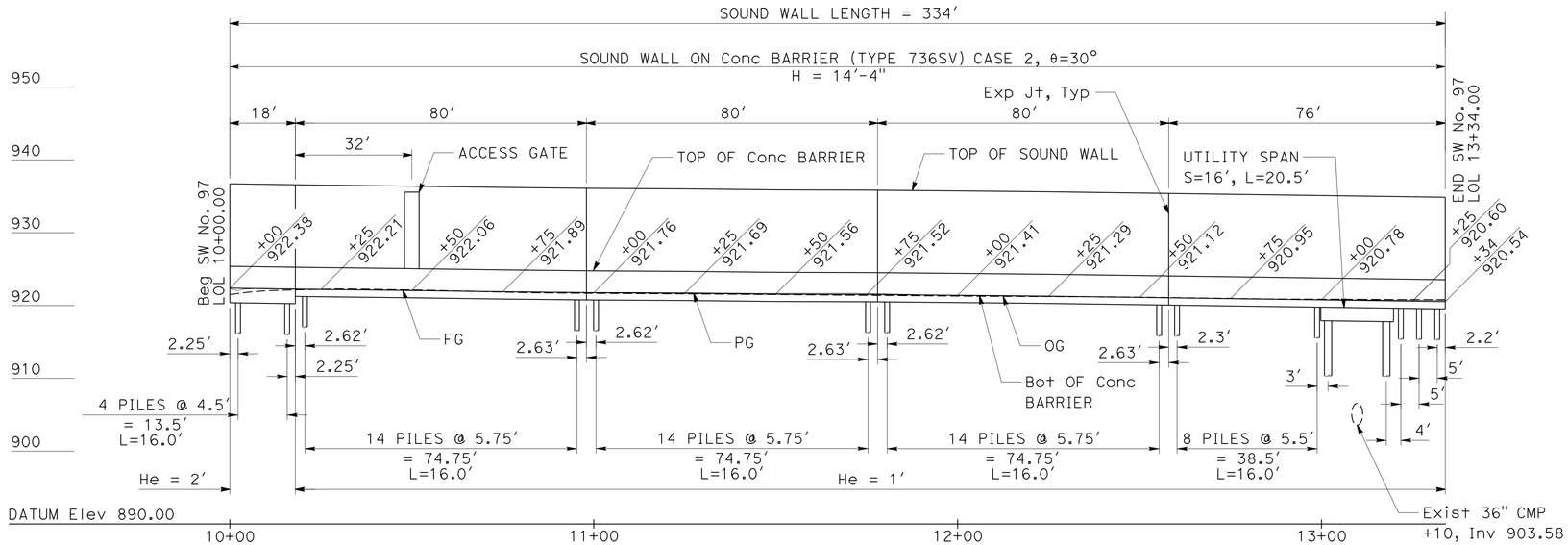

ELEVATION

Horiz 1" = 20'
Vert 1" = 10'

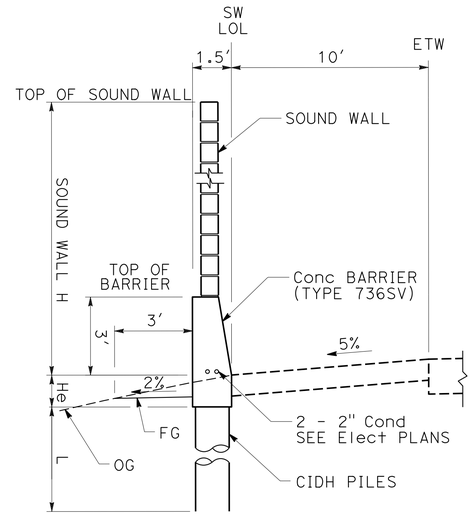

TYPICAL SECTION

NO SCALE
SW LOL Sta 10+00 TO Sta 13+34

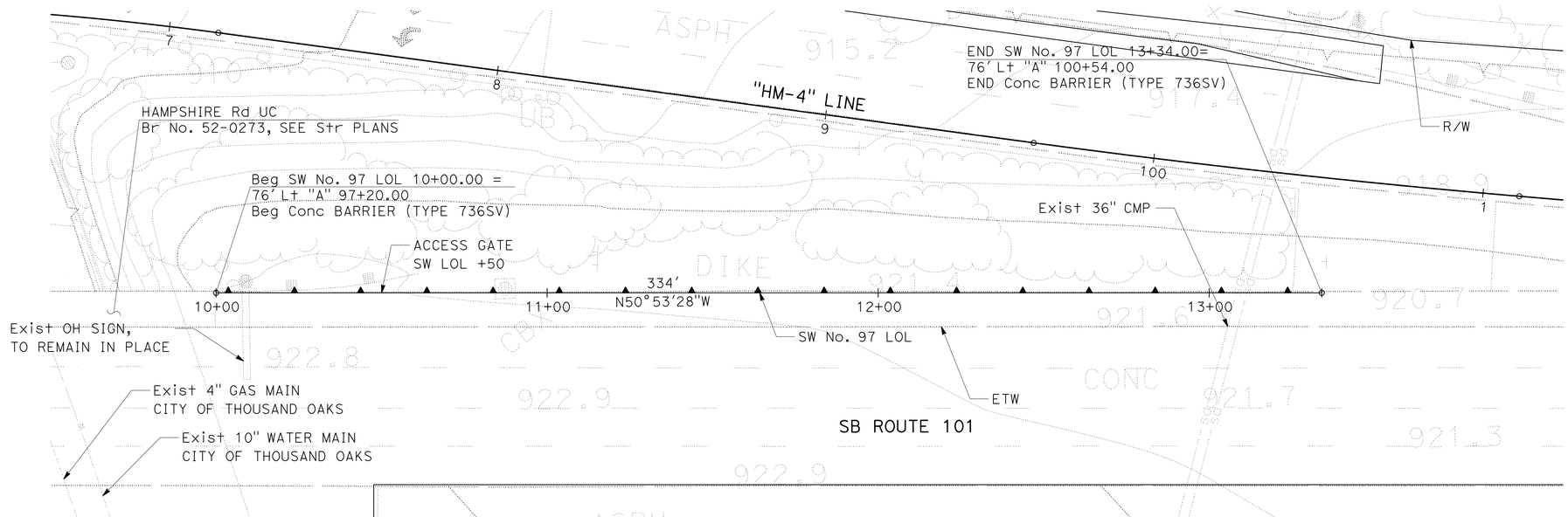

PLAN

1" = 20'-0"

SOUND WALL PLAN
SW No. 97

SCALE AS SHOWN

SW-2

APPROVED FOR SOUND WALL WORK ONLY

STATE OF CALIFORNIA - DEPARTMENT OF TRANSPORTATION
Caltrans
CONSULTANT FUNCTIONAL SUPERVISOR: CHRIS BRETALL
CALCULATED-DESIGNED BY: HEATHER ANDERSON
CHECKED BY: MIKE ROBINSON
REVISED BY
DATE REVISED

LAST REVISION 00-00-00
DATE PLOTTED => 10-JUN-2013
TIME PLOTTED => 11:42

Dist	COUNTY	ROUTE	POST MILES TOTAL PROJECT	SHEET No.	TOTAL SHEETS
07	Ven	23,101	3.3/3.8, R0.1/R4.5	368	652

REGISTERED CIVIL ENGINEER 3-25-13 DATE

6-3-13
PLANS APPROVAL DATE

REGISTERED PROFESSIONAL ENGINEER MICHAEL ROBINSON No. C70317 Exp. 9/30/14 CIVIL STATE OF CALIFORNIA

THE STATE OF CALIFORNIA OR ITS OFFICERS OR AGENTS SHALL NOT BE RESPONSIBLE FOR THE ACCURACY OR COMPLETENESS OF SCANNED COPIES OF THIS PLAN SHEET.

CH2M HILL
1000 WILSHIRE Blvd
LOS ANGELES, CA 90017

CITY OF THOUSAND OAKS
2100 THOUSAND OAKS BLVD
THOUSAND OAKS. CA 91362

NOTE:
FOR ACCURATE RIGHT OF WAY DATA, CONTACT RIGHT OF WAY ENGINEERING AT THE DISTRICT OFFICE.

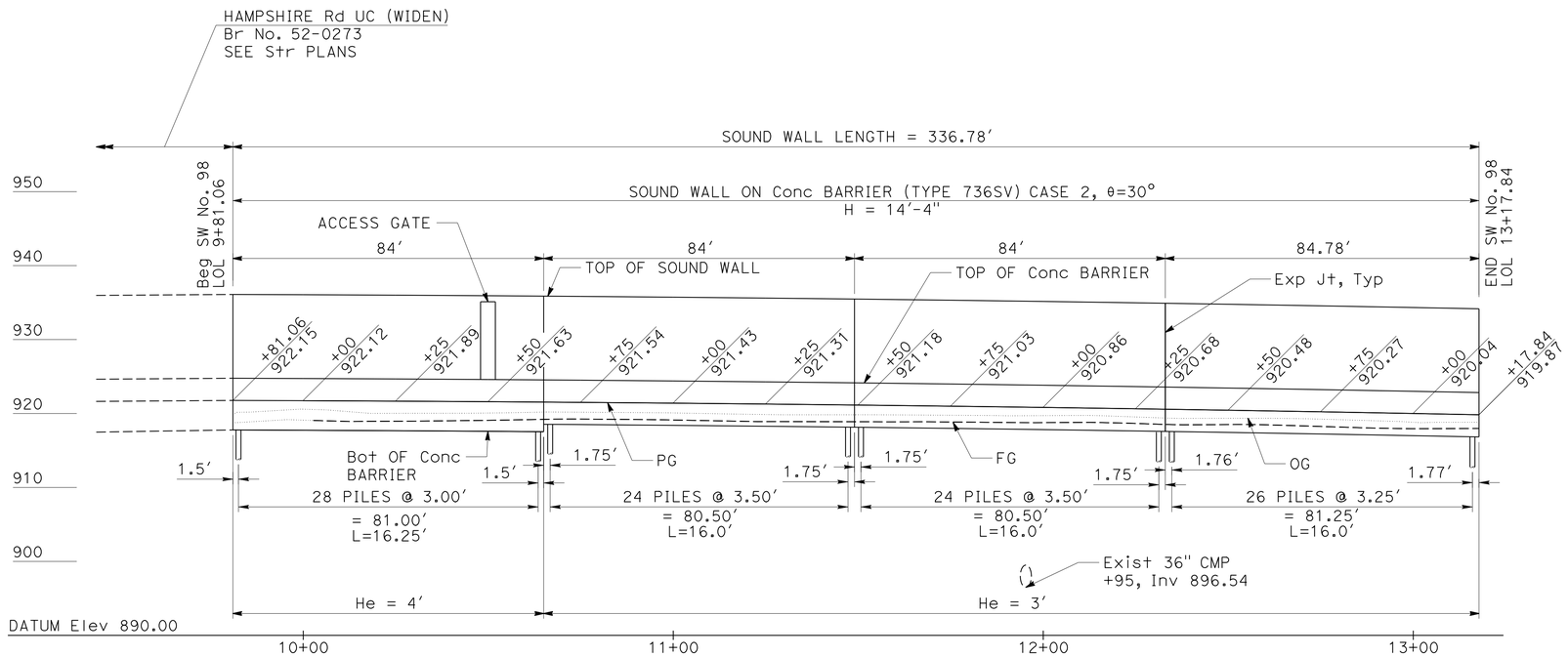

ELEVATION

Horiz 1" = 20'
Vert 1" = 10'

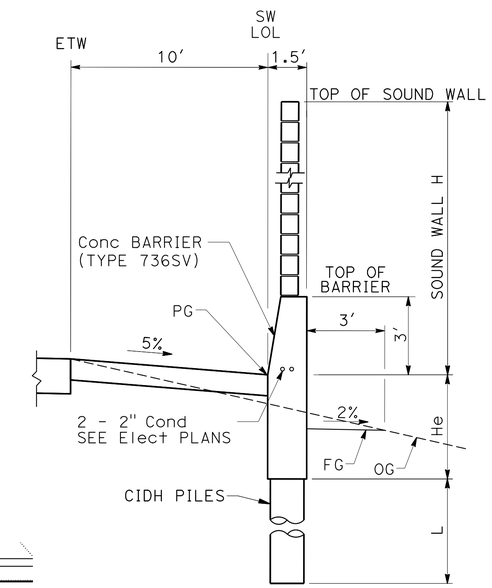

TYPICAL SECTION

NO SCALE
SW LOL Sta 9+81.06 TO Sta 13+17.84

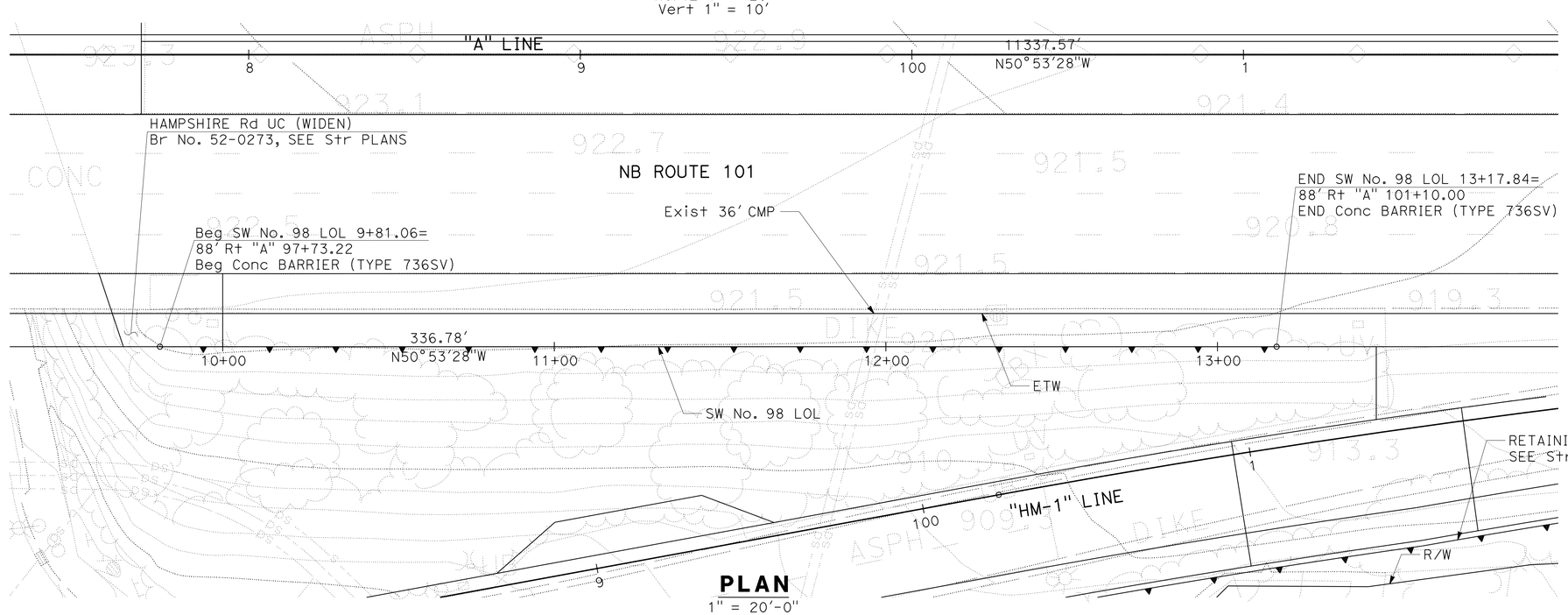

PLAN

1" = 20'-0"

APPROVED FOR SOUND WALL WORK ONLY

SOUND WALL PLAN
SW No. 98

SCALE AS SHOWN

SW-3

STATE OF CALIFORNIA - DEPARTMENT OF TRANSPORTATION
Caltrans

CONSULTANT FUNCTIONAL SUPERVISOR: CHRIS BRETALL
CALCULATED-DESIGNED BY: HEATHER ANDERSON
CHECKED BY: MIKE ROBINSON
REVISED BY
DATE REVISED

LAST REVISION 00-00-00
DATE PLOTTED => 10-JUN-2013
TIME PLOTTED => 11:42

Dist	COUNTY	ROUTE	POST MILES TOTAL PROJECT	SHEET No.	TOTAL SHEETS
07	Ven	23,101	3.3/3.8, R0.1/R4.5	369	652

REGISTERED CIVIL ENGINEER 3-25-13 DATE

6-3-13
PLANS APPROVAL DATE

REGISTERED PROFESSIONAL ENGINEER MICHAEL ROBINSON No. C70317 Exp. 9/30/14 CIVIL STATE OF CALIFORNIA

THE STATE OF CALIFORNIA OR ITS OFFICERS OR AGENTS SHALL NOT BE RESPONSIBLE FOR THE ACCURACY OR COMPLETENESS OF SCANNED COPIES OF THIS PLAN SHEET.

CH2M HILL
1000 WILSHIRE Blvd
LOS ANGELES, CA 90017

CITY OF THOUSAND OAKS
2100 THOUSAND OAKS BLVD
THOUSAND OAKS. CA 91362

NOTES:

1. FOR ACCURATE RIGHT OF WAY DATA, CONTACT RIGHT OF WAY ENGINEERING AT THE DISTRICT OFFICE.
2. PLACE HIGH STRENGTH CONCRETE MASONRY BLOCKS (H=4' Min) BETWEEN TOP OF PILE CAP AND BOTTOM OF TRANSPARENT SOUND WALL PANEL.

HIGH STRENGTH MASONRY BLOCK

f'm = 2500 psi
fb = 830 psi
fs = 24,000 psi
n = 15.5

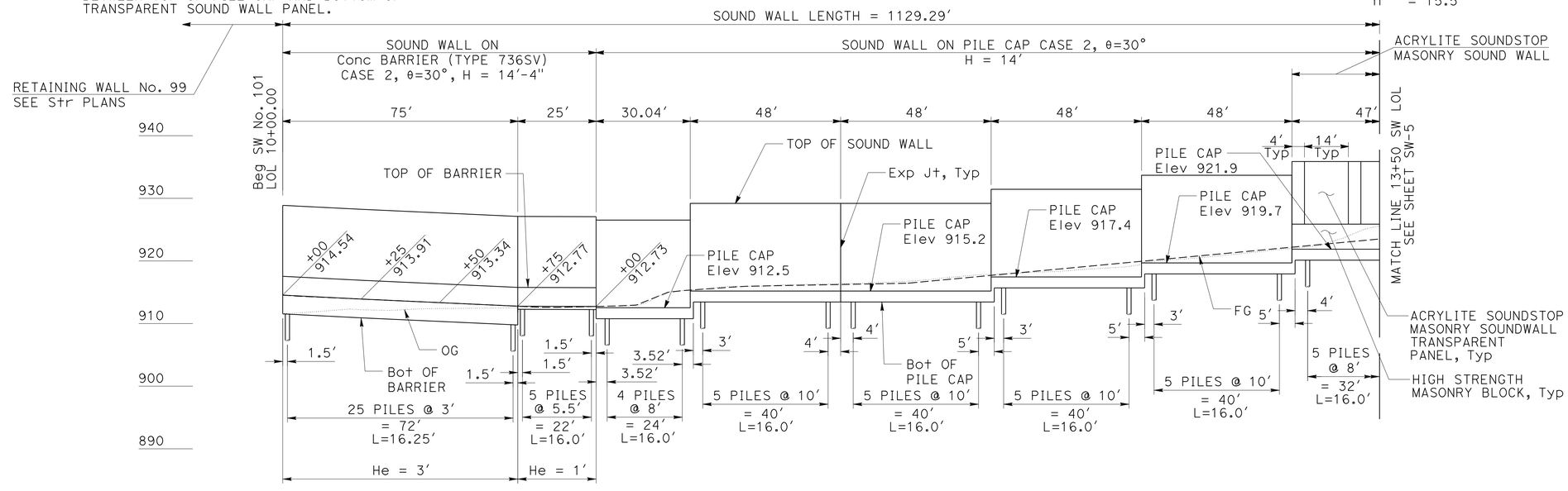

ELEVATION

Horiz 1" = 20'
Vert 1" = 10'

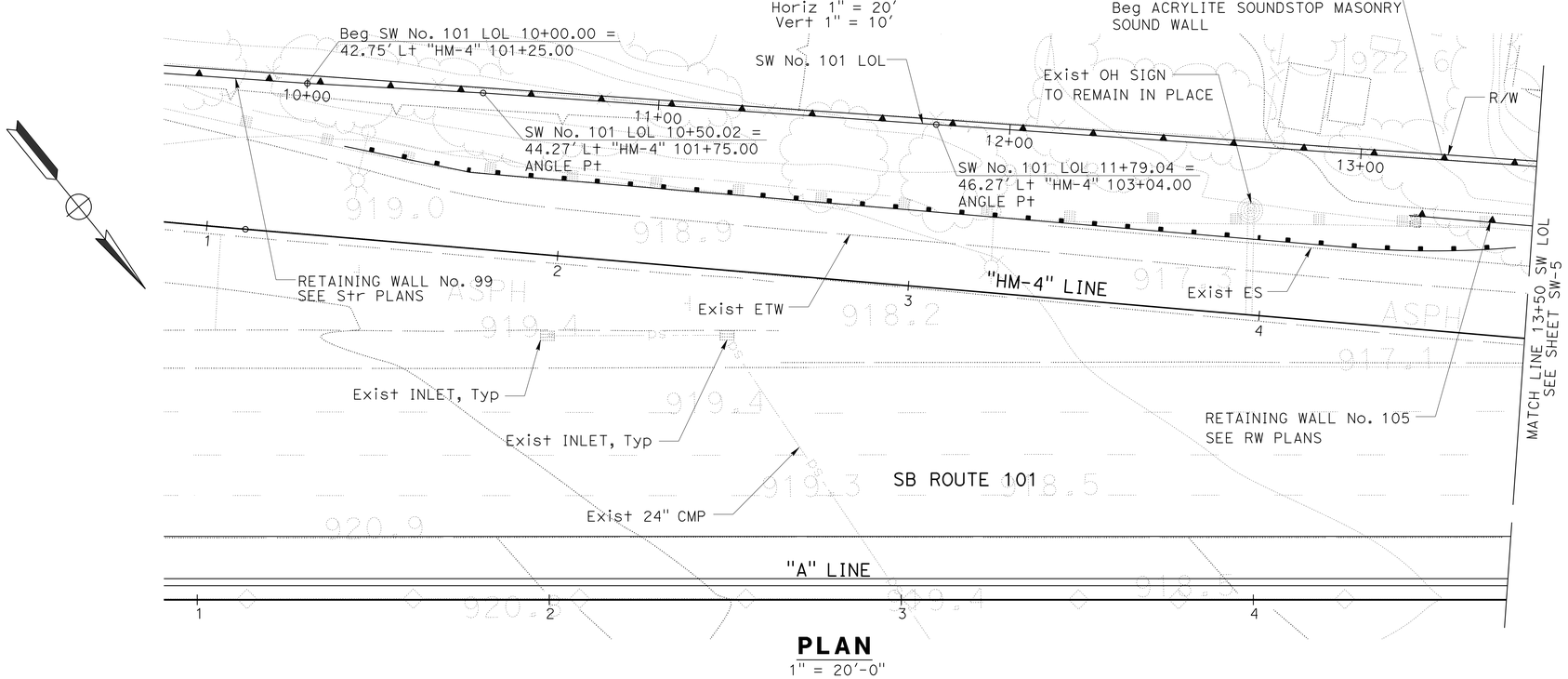

PLAN

1" = 20'-0"

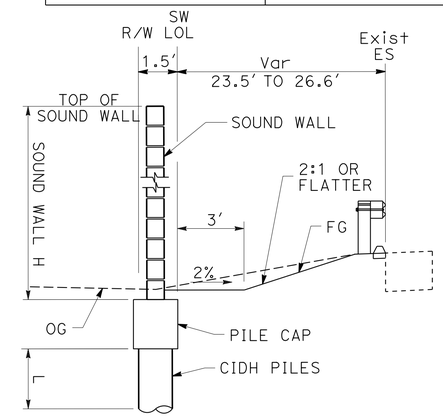

TYPICAL SECTION

NO SCALE
SW LOL Sta 11+00 TO Sta 13+22.04

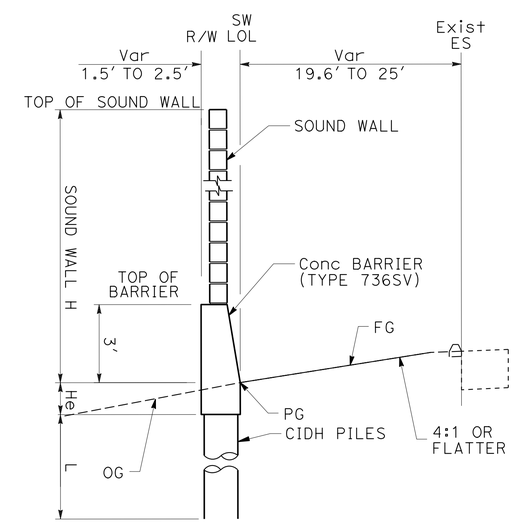

TYPICAL SECTION

NO SCALE
SW LOL Sta 10+00 TO Sta 11+00

SOUND WALL PLAN
SW No. 101

SCALE AS SHOWN

SW-4

APPROVED FOR SOUND WALL WORK ONLY

STATE OF CALIFORNIA - DEPARTMENT OF TRANSPORTATION
Caltrans

CONSULTANT FUNCTIONAL SUPERVISOR: CHRIS BRETALL
CALCULATED-DESIGNED BY: HEATHER ANDERSON
CHECKED BY: MIKE ROBINSON
REVISED BY
DATE REVISED

LAST REVISION 00-00-00
DATE PLOTTED => 10-JUN-2013
TIME PLOTTED => 11:42

Dist	COUNTY	ROUTE	POST MILES TOTAL PROJECT	SHEET No.	TOTAL SHEETS
07	Ven	23,101	3.3/3.8, R0.1/R4.5	370	652

REGISTERED CIVIL ENGINEER 3-25-13 DATE

6-3-13
PLANS APPROVAL DATE

REGISTERED PROFESSIONAL ENGINEER MICHAEL ROBINSON No. C70317 Exp. 9/30/14 CIVIL STATE OF CALIFORNIA

THE STATE OF CALIFORNIA OR ITS OFFICERS OR AGENTS SHALL NOT BE RESPONSIBLE FOR THE ACCURACY OR COMPLETENESS OF SCANNED COPIES OF THIS PLAN SHEET.

CH2M HILL
1000 WILSHIRE Blvd
LOS ANGELES, CA 90017

CITY OF THOUSAND OAKS
2100 THOUSAND OAKS BLVD
THOUSAND OAKS. CA 91362

NOTES:

1. FOR ACCURATE RIGHT OF WAY DATA, CONTACT RIGHT OF WAY ENGINEERING AT THE DISTRICT OFFICE.
2. PLACE HIGH STRENGTH CONCRETE MASONRY BLOCKS (H=4' Min) BETWEEN TOP OF PILE CAP AND BOTTOM OF TRANSPARENT SOUND WALL PANEL.

HIGH STRENGTH MASONRY BLOCK

f'm = 2500 psi
fb = 830 psi
fs = 24,000 psi
n = 15.5

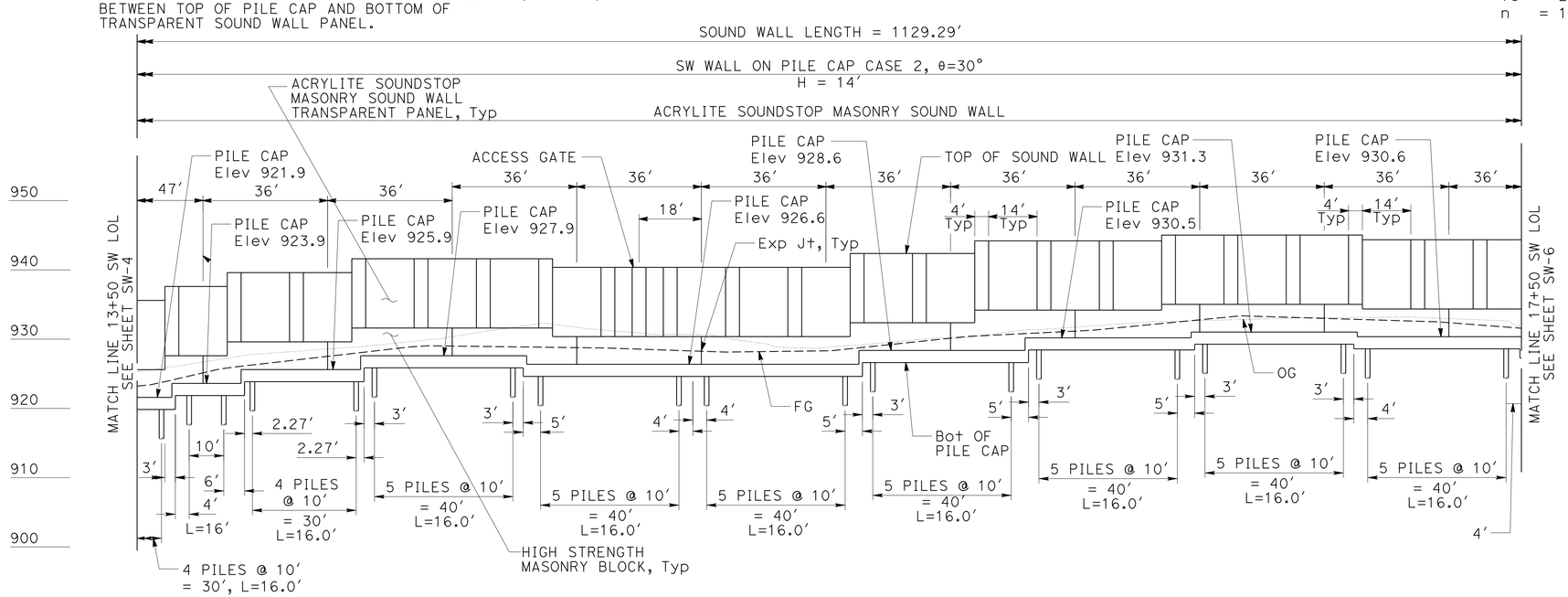

ELEVATION

Horiz 1" = 20'
Vert 1" = 10'

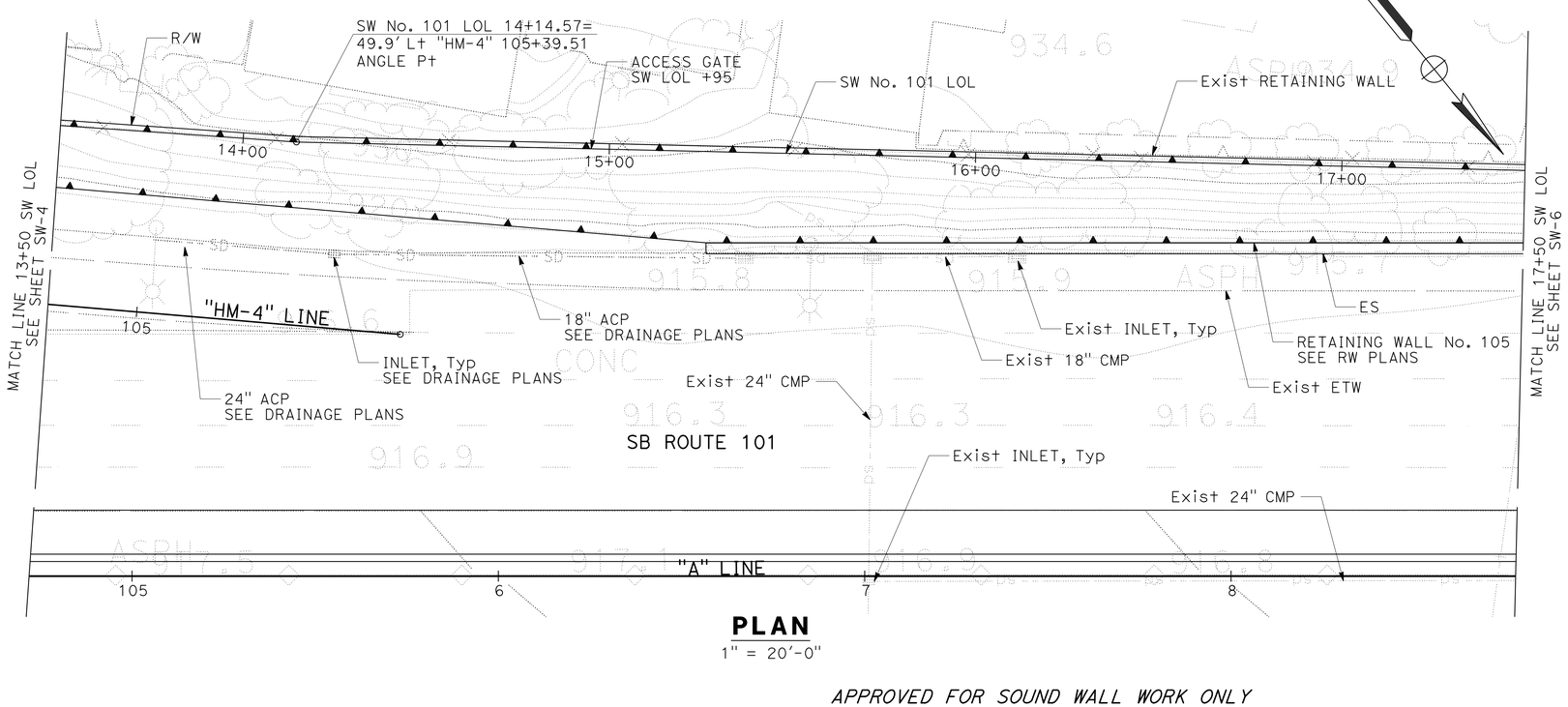

PLAN

1" = 20'-0"

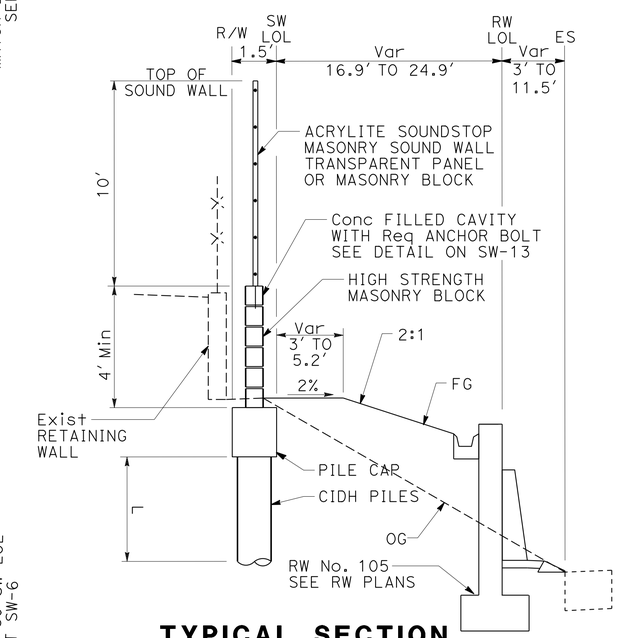

TYPICAL SECTION

NO SCALE
SW LOL Sta 13+22.04 TO Sta 17+50

APPROVED FOR SOUND WALL WORK ONLY

SOUND WALL PLAN
SW No. 101

SCALE AS SHOWN

SW-5

STATE OF CALIFORNIA - DEPARTMENT OF TRANSPORTATION
Caltrans

CONSULTANT FUNCTIONAL SUPERVISOR: CHRIS BRETALL
CALCULATED-DESIGNED BY: HEATHER ANDERSON
CHECKED BY: MIKE ROBINSON
REVISED BY / DATE REVISED

LAST REVISION 00-00-00 | DATE PLOTTED => 10-JUN-2013 | TIME PLOTTED => 11:42

Dist	COUNTY	ROUTE	POST MILES TOTAL PROJECT	SHEET No.	TOTAL SHEETS
07	Ven	23,101	3.3/3.8, R0.1/R4.5	371	652

REGISTERED CIVIL ENGINEER 3-25-13 DATE

6-3-13
PLANS APPROVAL DATE

REGISTERED PROFESSIONAL ENGINEER MICHAEL ROBINSON No. C70317 Exp. 9/30/14 CIVIL STATE OF CALIFORNIA

THE STATE OF CALIFORNIA OR ITS OFFICERS OR AGENTS SHALL NOT BE RESPONSIBLE FOR THE ACCURACY OR COMPLETENESS OF SCANNED COPIES OF THIS PLAN SHEET.

CH2M HILL
1000 WILSHIRE Blvd
LOS ANGELES, CA 90017

CITY OF THOUSAND OAKS
2100 THOUSAND OAKS BLVD
THOUSAND OAKS. CA 91362

NOTES:

1. FOR ACCURATE RIGHT OF WAY DATA, CONTACT RIGHT OF WAY ENGINEERING AT THE DISTRICT OFFICE.
2. PLACE HIGH STRENGTH CONCRETE MASONRY BLOCKS (H=4' Min) BETWEEN TOP OF PILE CAP AND BOTTOM OF TRANSPARENT SOUND WALL PANEL.

HIGH STRENGTH MASONRY BLOCK

f'm = 2500 psi
fb = 830 psi
fs = 24,000 psi
n = 15.5

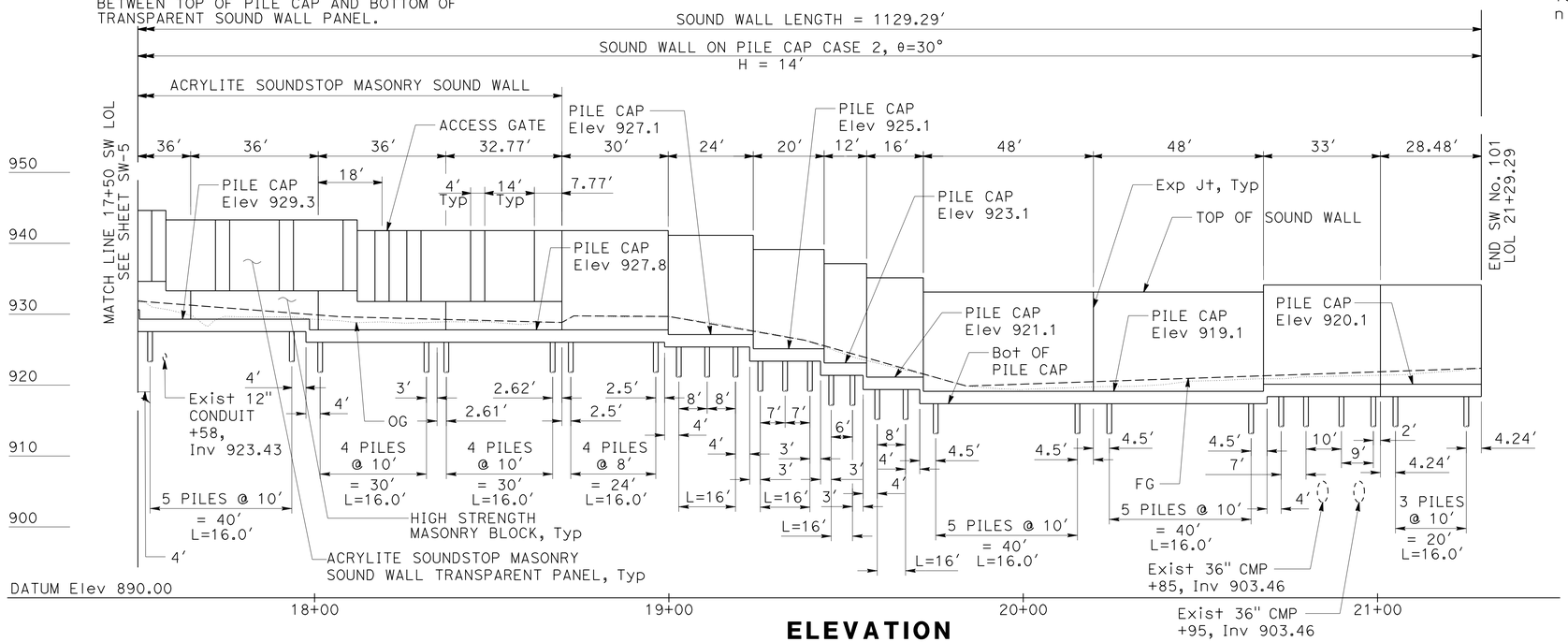

ELEVATION

Horiz 1" = 20'
Vert 1" = 10'

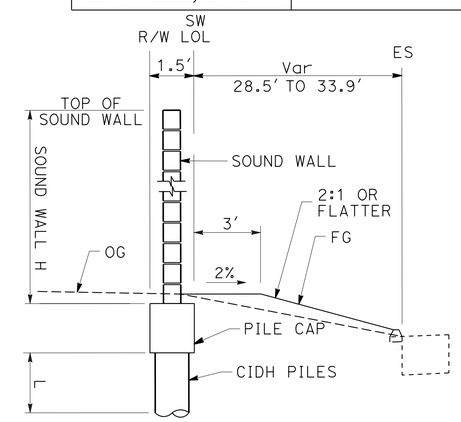

TYPICAL SECTION

NO SCALE
SW LOL Sta 18+69.80 TO Sta 21+29.29

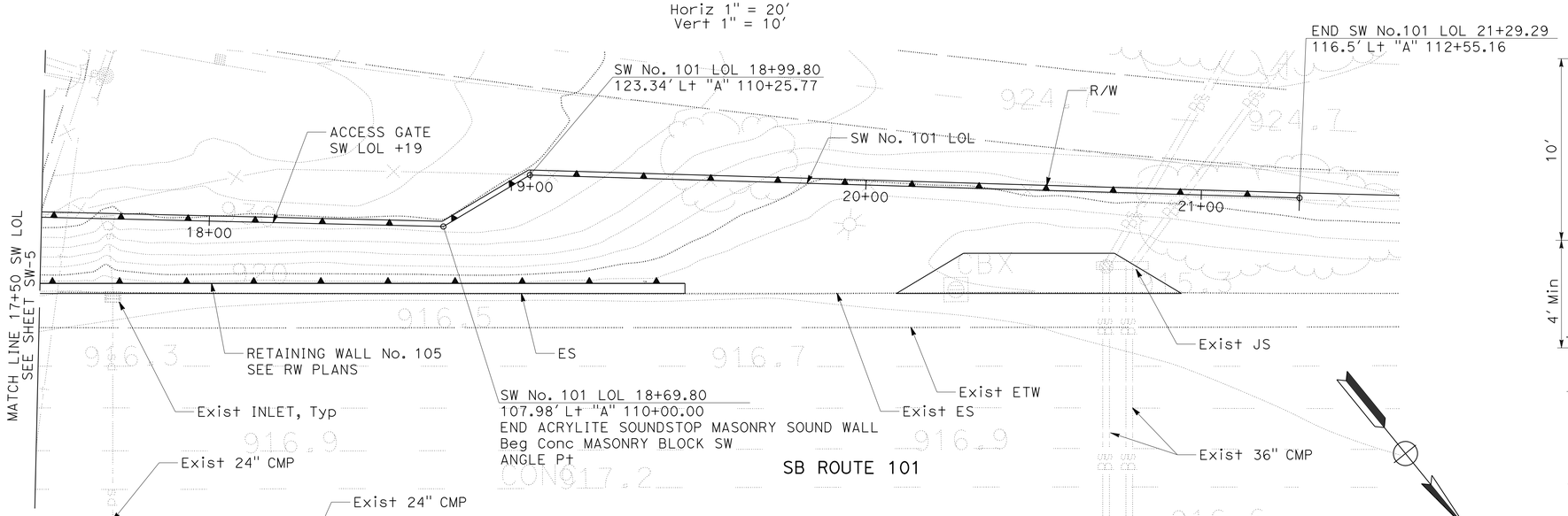

PLAN

1" = 20'-0"

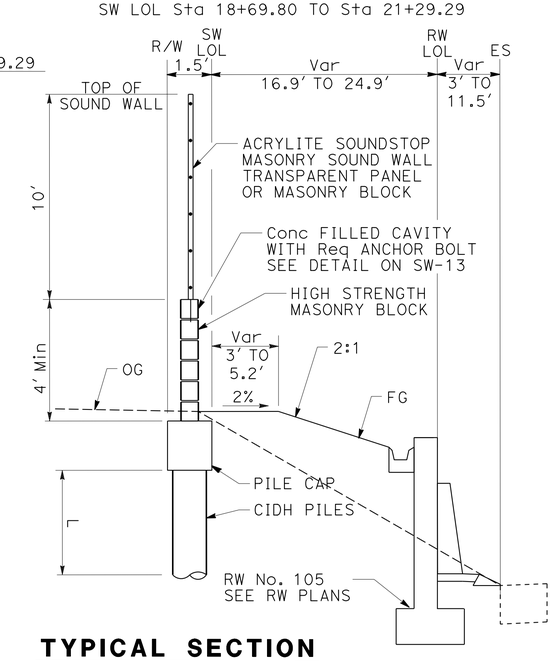

TYPICAL SECTION

NO SCALE
SW LOL Sta 17+50 TO Sta 18+69.80

APPROVED FOR SOUND WALL WORK ONLY

SOUND WALL PLAN
SW No. 101

SCALE AS SHOWN

SW-6

STATE OF CALIFORNIA - DEPARTMENT OF TRANSPORTATION
Caltrans

CONSULTANT FUNCTIONAL SUPERVISOR: CHRIS BRETALL
CALCULATED-DESIGNED BY: HEATHER ANDERSON
CHECKED BY: MIKE ROBINSON
REVISED BY / DATE REVISED

LAST REVISION 00-00-00
DATE PLOTTED => 10-JUN-2013
TIME PLOTTED => 11:42

Dist	COUNTY	ROUTE	POST MILES TOTAL PROJECT	SHEET No.	TOTAL SHEETS
07	Ven	23,101	3.3/3.8, R0.1/R4.5	372	652

REGISTERED CIVIL ENGINEER 3-25-13 DATE

6-3-13
PLANS APPROVAL DATE

REGISTERED PROFESSIONAL ENGINEER MICHAEL ROBINSON No. C70317 Exp. 9/30/14 CIVIL STATE OF CALIFORNIA

THE STATE OF CALIFORNIA OR ITS OFFICERS OR AGENTS SHALL NOT BE RESPONSIBLE FOR THE ACCURACY OR COMPLETENESS OF SCANNED COPIES OF THIS PLAN SHEET.

CH2M HILL
1000 WILSHIRE Blvd
LOS ANGELES, CA 90017

CITY OF THOUSAND OAKS
2100 THOUSAND OAKS BLVD
THOUSAND OAKS. CA 91362

NOTE:
FOR ACCURATE RIGHT OF WAY DATA, CONTACT RIGHT OF WAY ENGINEERING AT THE DISTRICT OFFICE.

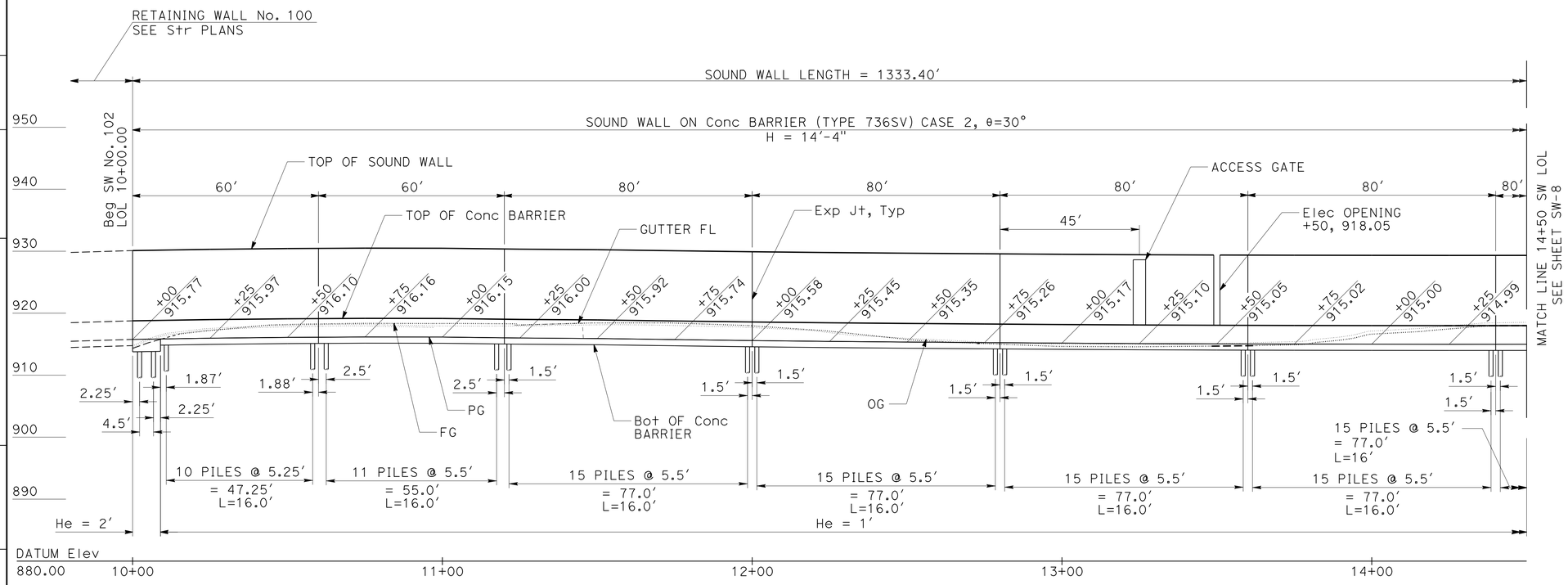

ELEVATION

Horiz 1" = 20'
Vert 1" = 10'

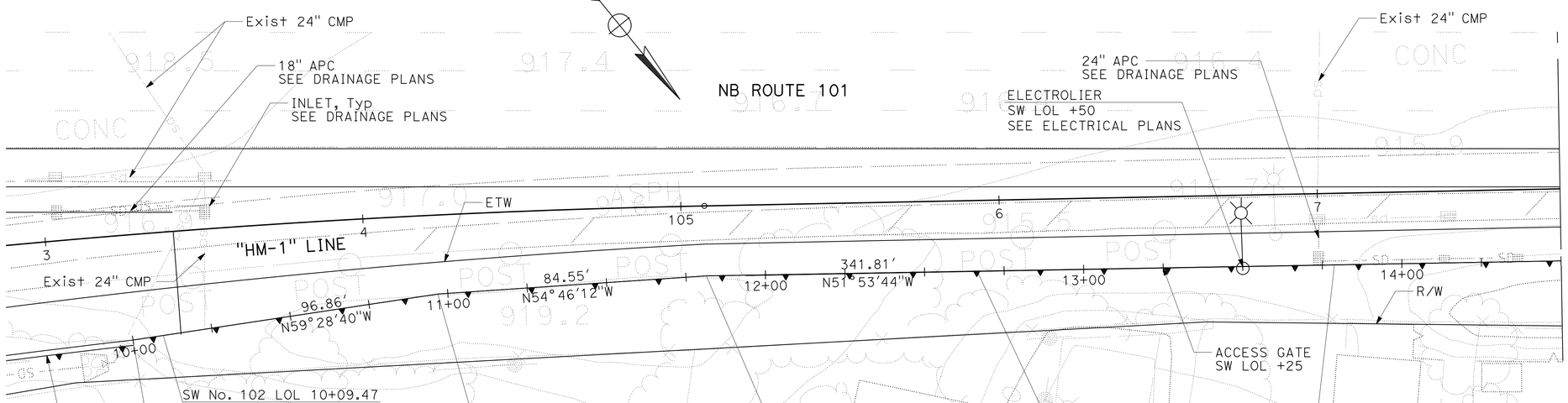

PLAN

1" = 20'-0"

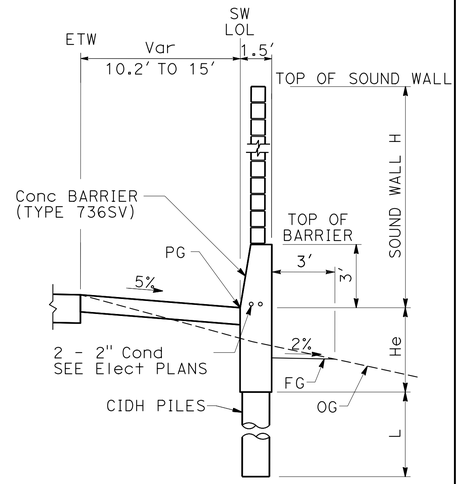

TYPICAL SECTION

NO SCALE
SW LOL Sta 10+00.00 TO Sta 10+09.47
SW LOL Sta 12+66.53 TO Sta 13+78.82

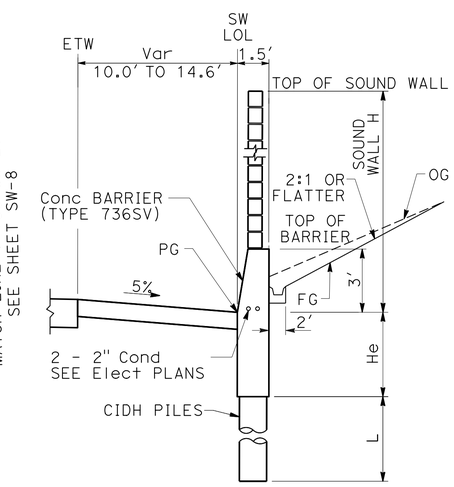

TYPICAL SECTION

NO SCALE
SW LOL Sta 10+09.47 TO Sta 12+66.53
SW LOL Sta 13+78.82 TO Sta 14+50.00

SOUND WALL PLAN
SW No. 102

SCALE AS SHOWN

SW-7

APPROVED FOR SOUND WALL WORK ONLY

REVISED BY | DATE REVISED
HEATHER ANDERSON | MIKE ROBINSON
CALCULATED-DESIGNED BY | CHECKED BY
CONSULTANT FUNCTIONAL SUPERVISOR
CHRIS BRETALL

STATE OF CALIFORNIA - DEPARTMENT OF TRANSPORTATION
Caltrans

LAST REVISION 00-00-00 | DATE PLOTTED => 10-JUN-2013 | TIME PLOTTED => 11:42

Dist	COUNTY	ROUTE	POST MILES TOTAL PROJECT	SHEET No.	TOTAL SHEETS
07	Ven	23,101	3.3/3.8, R0.1/R4.5	373	652

REGISTERED CIVIL ENGINEER 3-25-13 DATE

6-3-13
PLANS APPROVAL DATE

REGISTERED PROFESSIONAL ENGINEER MICHAEL ROBINSON No. C70317 Exp. 9/30/14 CIVIL STATE OF CALIFORNIA

THE STATE OF CALIFORNIA OR ITS OFFICERS OR AGENTS SHALL NOT BE RESPONSIBLE FOR THE ACCURACY OR COMPLETENESS OF SCANNED COPIES OF THIS PLAN SHEET.

CH2M HILL
1000 WILSHIRE Blvd
LOS ANGELES, CA 90017

CITY OF THOUSAND OAKS
2100 THOUSAND OAKS BLVD
THOUSAND OAKS. CA 91362

NOTE:
FOR ACCURATE RIGHT OF WAY DATA, CONTACT RIGHT OF WAY ENGINEERING AT THE DISTRICT OFFICE.

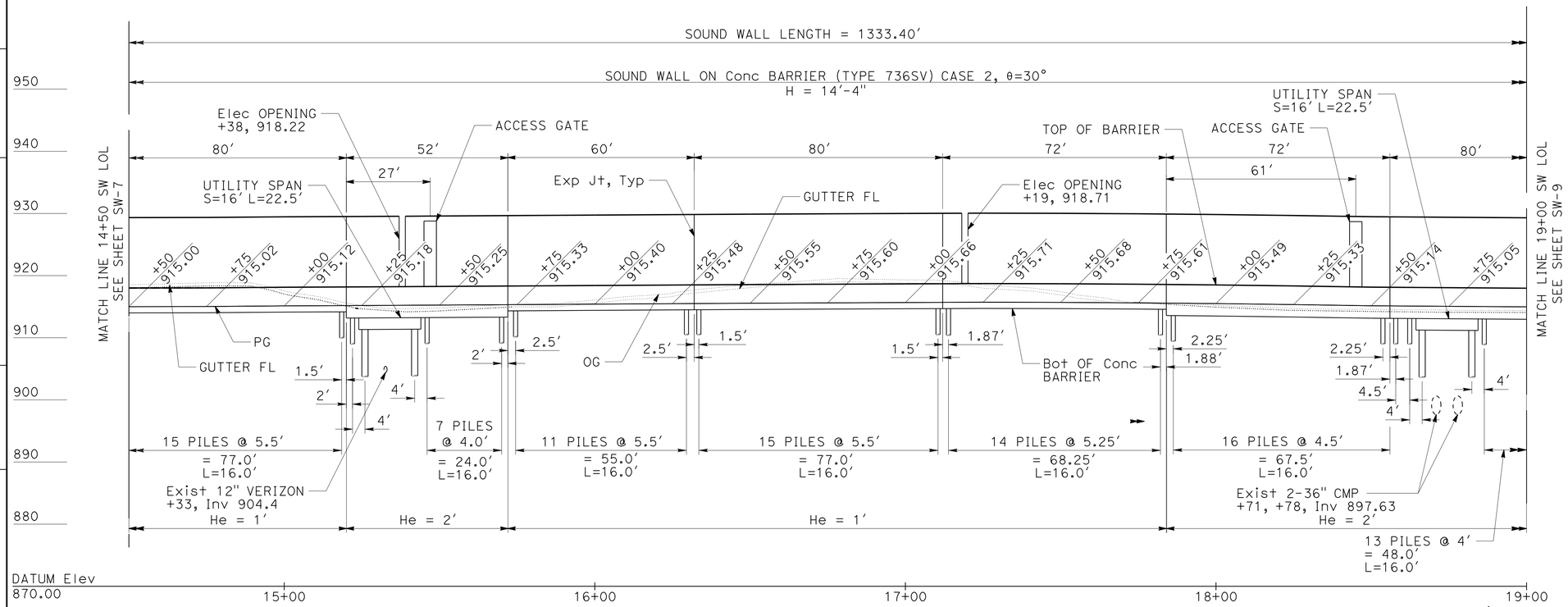

ELEVATION

Horiz 1″ = 20′
Vert 1″ = 10′

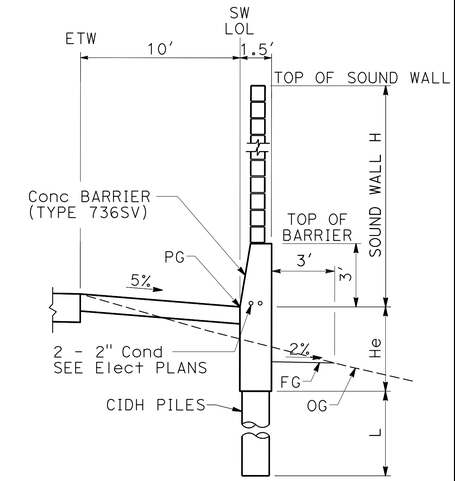

TYPICAL SECTION

NO SCALE
SW LOL Sta 15+19.28 TO Sta 15+96.50
SW LOL Sta 17+66.67 TO Sta 19+00.00

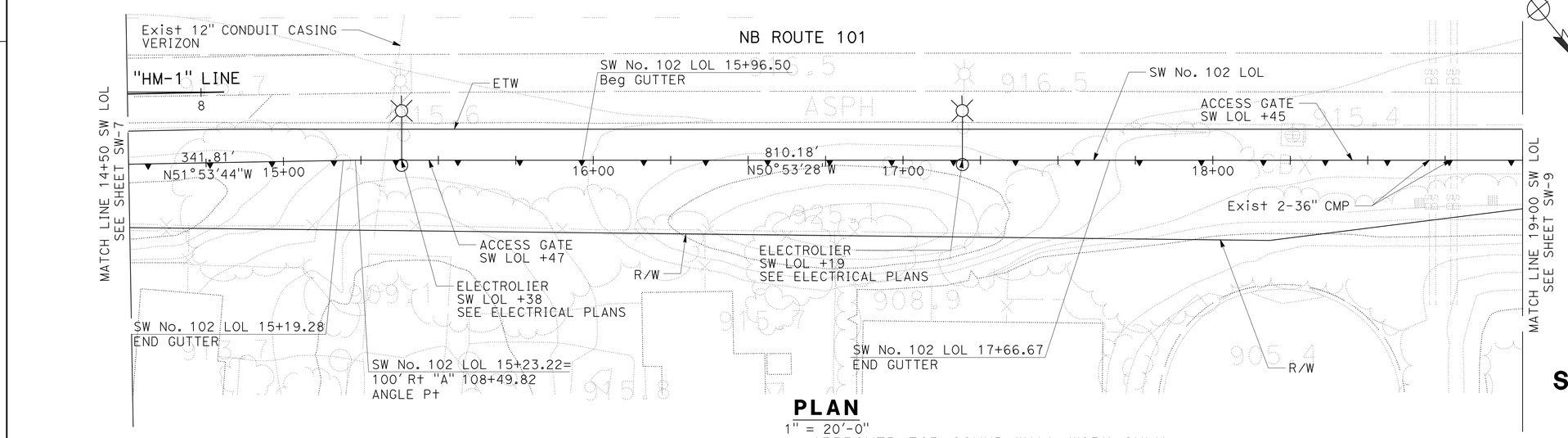

PLAN

1″ = 20′-0″
APPROVED FOR SOUND WALL WORK ONLY

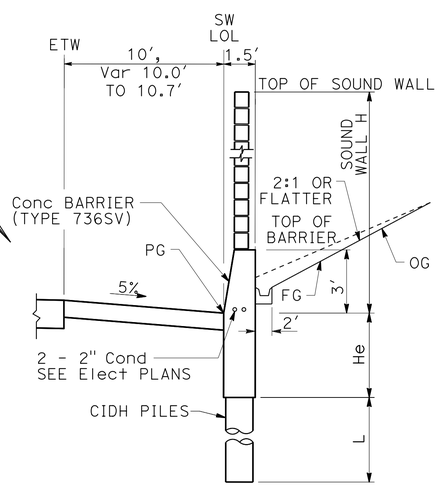

TYPICAL SECTION

NO SCALE
SW LOL Sta 14+50.00 TO Sta 15+19.28
SW LOL Sta 15+96.50 TO Sta 17+66.67

SOUND WALL PLAN
SW No. 102

SCALE AS SHOWN

SW-8

REVISED BY	DATE REVISED
HEATHER ANDERSON	MIKE ROBINSON

CALCULATED-DESIGNED BY | CHECKED BY

CONSULTANT FUNCTIONAL SUPERVISOR: CHRIS BRETALL

STATE OF CALIFORNIA - DEPARTMENT OF TRANSPORTATION

Caltrans

LAST REVISION 00-00-00 | DATE PLOTTED => 10-JUN-2013 | TIME PLOTTED => 11:43

Dist	COUNTY	ROUTE	POST MILES TOTAL PROJECT	SHEET No.	TOTAL SHEETS
07	Ven	23,101	3.3/3.8, R0.1/R4.5	374	652

REGISTERED CIVIL ENGINEER 3-25-13 DATE

6-3-13
PLANS APPROVAL DATE

REGISTERED PROFESSIONAL ENGINEER MICHAEL ROBINSON No. C70317 Exp. 9/30/14 CIVIL STATE OF CALIFORNIA

THE STATE OF CALIFORNIA OR ITS OFFICERS OR AGENTS SHALL NOT BE RESPONSIBLE FOR THE ACCURACY OR COMPLETENESS OF SCANNED COPIES OF THIS PLAN SHEET.

CH2M HILL
1000 WILSHIRE Blvd
LOS ANGELES, CA 90017

CITY OF THOUSAND OAKS
2100 THOUSAND OAKS BLVD
THOUSAND OAKS. CA 91362

NOTE:
FOR ACCURATE RIGHT OF WAY DATA, CONTACT RIGHT OF WAY ENGINEERING AT THE DISTRICT OFFICE.

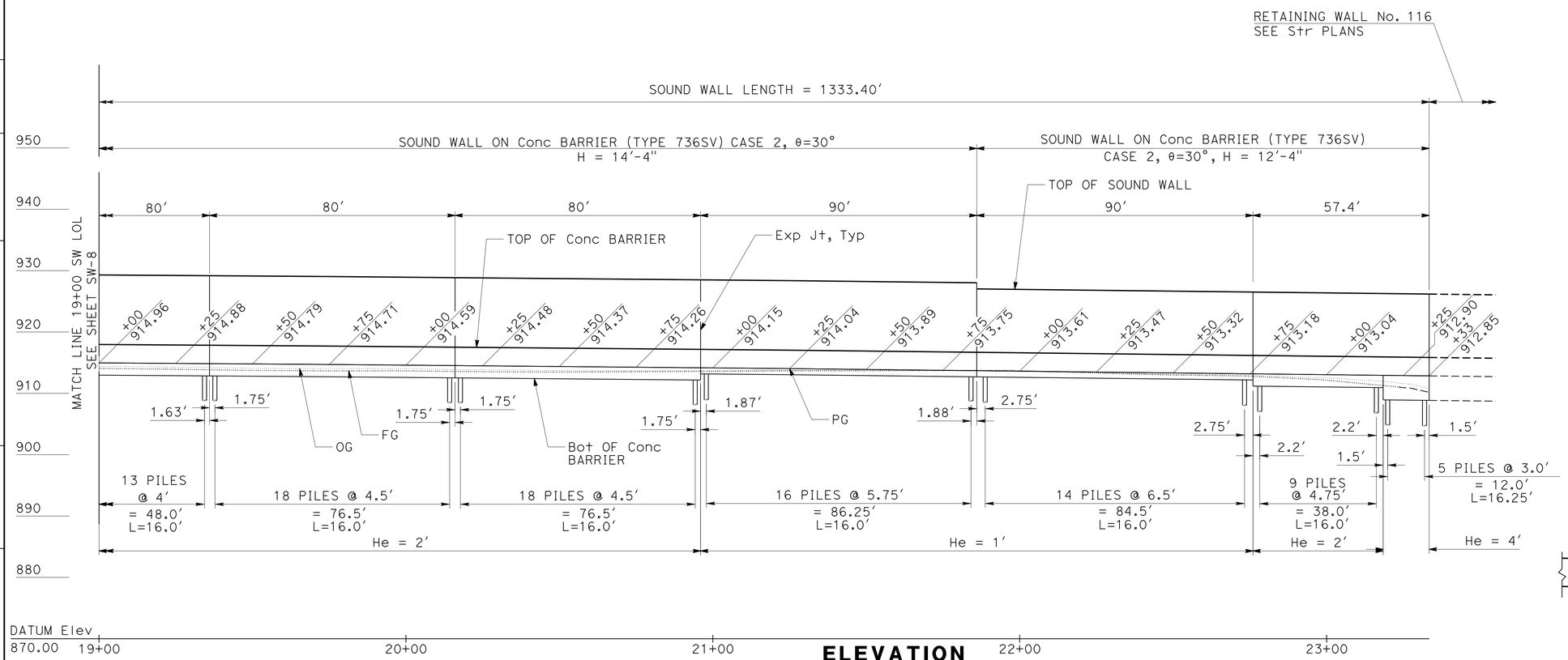

ELEVATION

Horiz 1" = 20'
Vert 1" = 10'

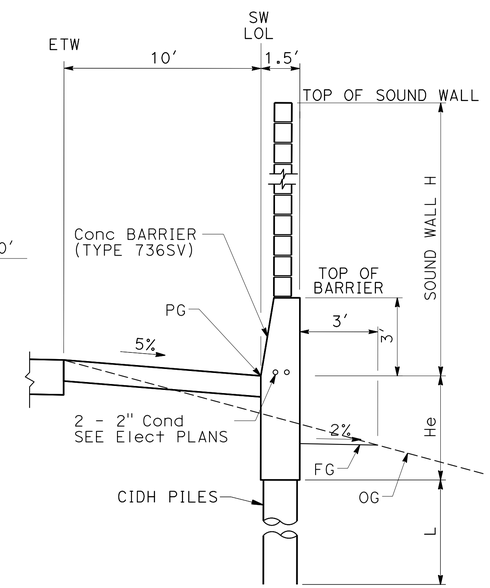

TYPICAL SECTION

NO SCALE
SW LOL Sta 19+00 TO Sta 23+33.40

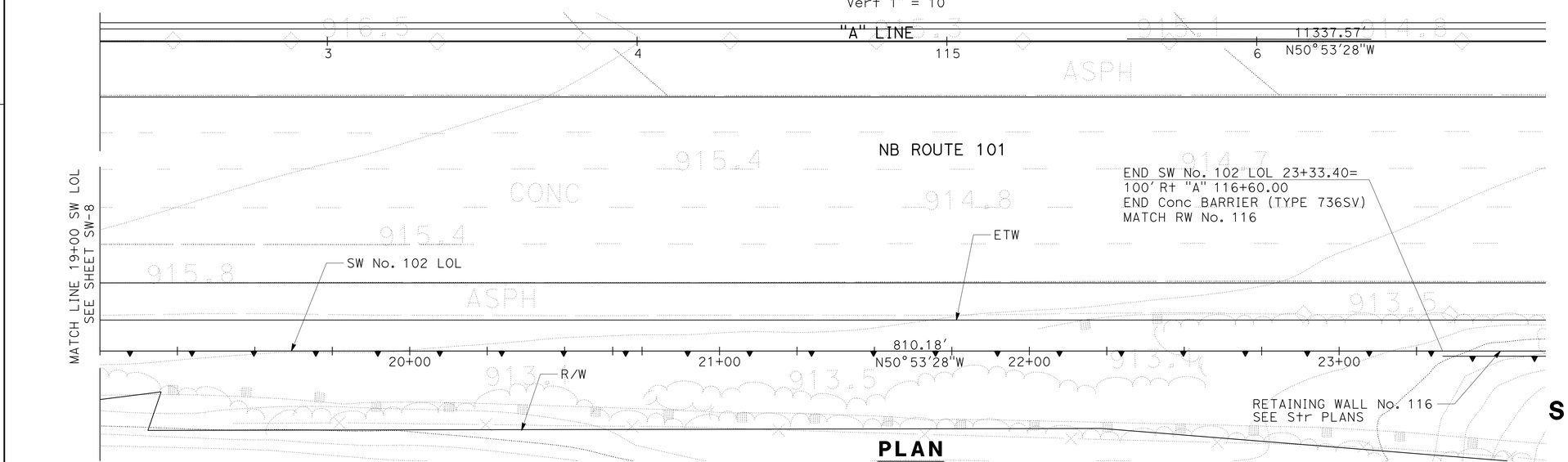

PLAN

1" = 20'-0"

SOUND WALL PLAN
SW No. 102

SCALE AS SHOWN

SW-9

APPROVED FOR SOUND WALL WORK ONLY

STATE OF CALIFORNIA - DEPARTMENT OF TRANSPORTATION
Caltrans

CONSULTANT FUNCTIONAL SUPERVISOR: CHRIS BRETALL
CALCULATED-DESIGNED BY: HEATHER ANDERSON
CHECKED BY: MIKE ROBINSON
REVISED BY
DATE REVISED

LAST REVISION 00-00-00
DATE PLOTTED => 10-JUN-2013
TIME PLOTTED => 11:43

Dist	COUNTY	ROUTE	POST MILES TOTAL PROJECT	SHEET No.	TOTAL SHEETS
07	Ven	23,101	3.3/3.8, R0.1/R4.5	375	652

REGISTERED CIVIL ENGINEER 3-25-13 DATE

6-3-13
PLANS APPROVAL DATE

REGISTERED PROFESSIONAL ENGINEER MICHAEL ROBINSON No. C70317 Exp. 9/30/14 CIVIL STATE OF CALIFORNIA

THE STATE OF CALIFORNIA OR ITS OFFICERS OR AGENTS SHALL NOT BE RESPONSIBLE FOR THE ACCURACY OR COMPLETENESS OF SCANNED COPIES OF THIS PLAN SHEET.

CH2M HILL
1000 WILSHIRE Blvd
LOS ANGELES, CA 90017

CITY OF THOUSAND OAKS
2100 THOUSAND OAKS BLVD
THOUSAND OAKS. CA 91362

NOTE:
FOR ACCURATE RIGHT OF WAY DATA, CONTACT RIGHT OF WAY ENGINEERING AT THE DISTRICT OFFICE.

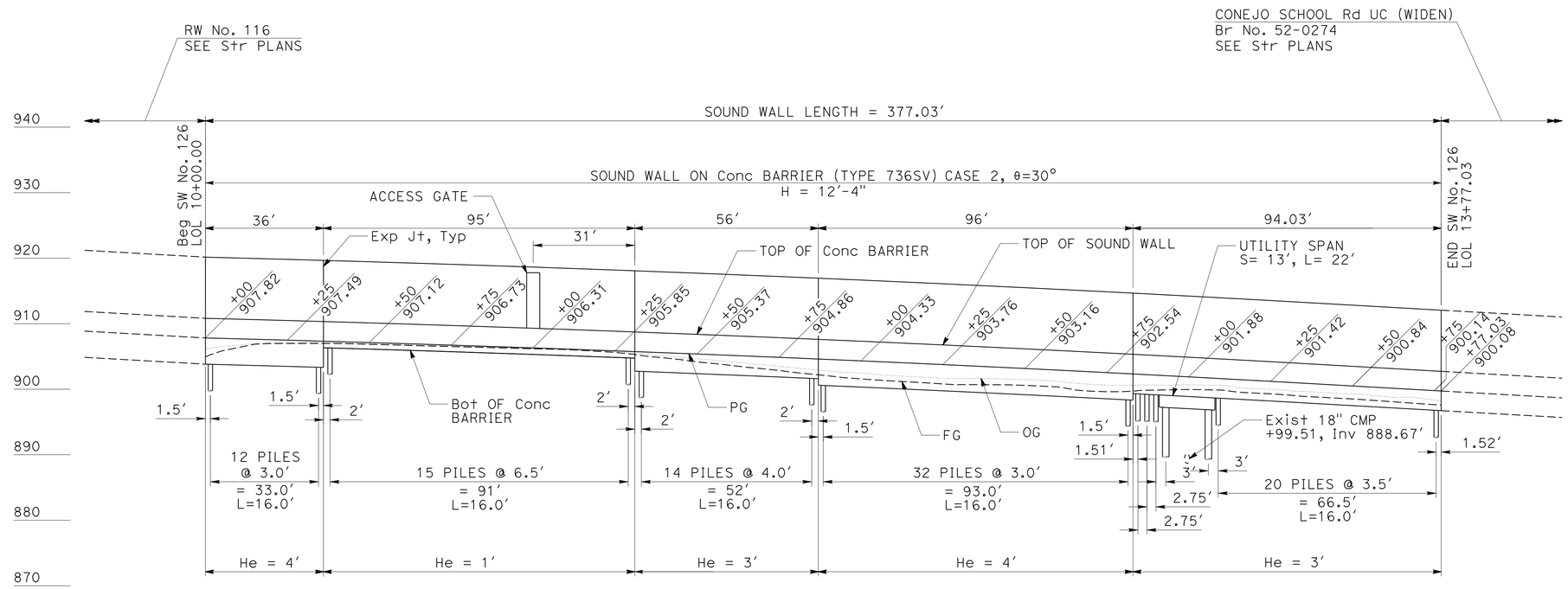

ELEVATION

Horiz 1" = 20'
Vert 1" = 10'

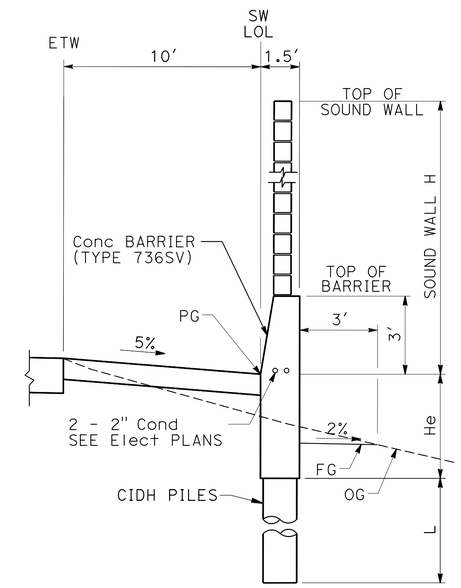

TYPICAL SECTION

NO SCALE
SW LOL Sta 10+00 TO Sta 13+77.03

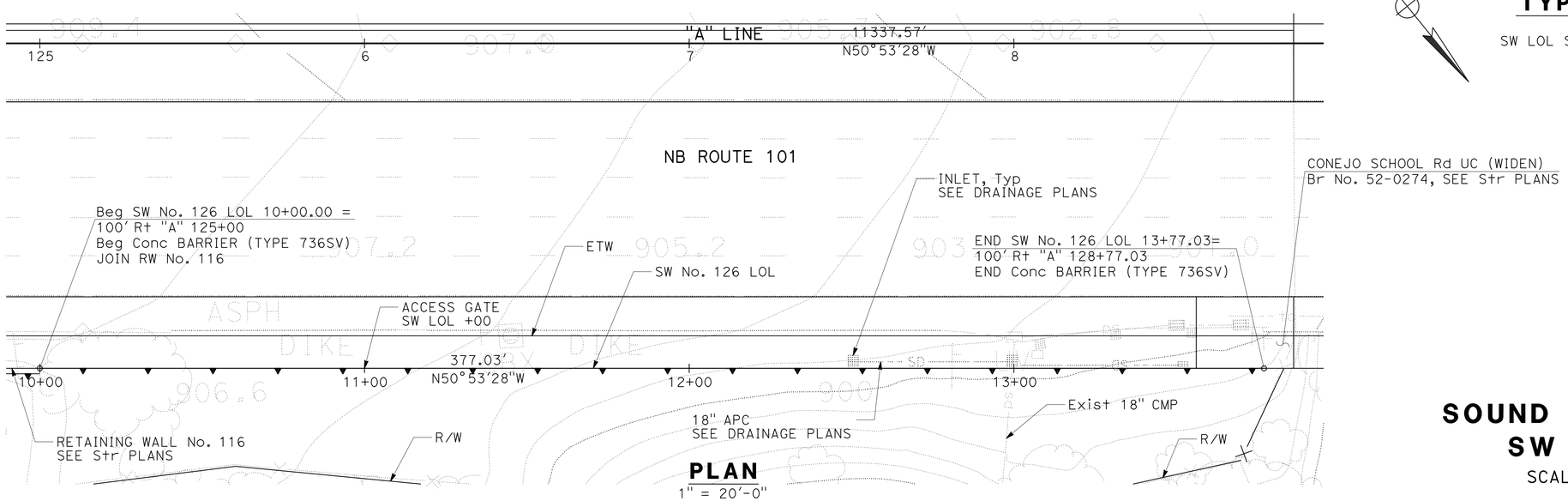

PLAN

1" = 20'-0"

APPROVED FOR SOUND WALL WORK ONLY

SOUND WALL PLAN
SW No. 126

SCALE AS SHOWN

SW-10

STATE OF CALIFORNIA - DEPARTMENT OF TRANSPORTATION
Caltrans

CONSULTANT FUNCTIONAL SUPERVISOR: CHRIS BRETALL
CALCULATED-DESIGNED BY: HEATHER ANDERSON
CHECKED BY: MIKE ROBINSON
REVISED BY / DATE REVISED

LAST REVISION 00-00-00
DATE PLOTTED => 10-JUN-2013
TIME PLOTTED => 11:43

Dist	COUNTY	ROUTE	POST MILES TOTAL PROJECT	SHEET No.	TOTAL SHEETS
07	Ven	23,101	3.3/3.8, R0.1/R4.5	376	652

REGISTERED CIVIL ENGINEER 3-25-13 DATE

6-3-13
PLANS APPROVAL DATE

REGISTERED PROFESSIONAL ENGINEER MICHAEL ROBINSON No. C70317 Exp. 9/30/14 CIVIL STATE OF CALIFORNIA

THE STATE OF CALIFORNIA OR ITS OFFICERS OR AGENTS SHALL NOT BE RESPONSIBLE FOR THE ACCURACY OR COMPLETENESS OF SCANNED COPIES OF THIS PLAN SHEET.

CH2M HILL
1000 WILSHIRE Blvd
LOS ANGELES, CA 90017

CITY OF THOUSAND OAKS
2100 THOUSAND OAKS BLVD
THOUSAND OAKS. CA 91362

NOTES:

1. FOR ACCURATE RIGHT OF WAY DATA, CONTACT RIGHT OF WAY ENGINEERING AT THE DISTRICT OFFICE.
2. CONSTRUCT CONCRETE BARRIER CONNECTION AS PART OF THE TYPE 736SV CONCRETE BARRIER. SEE SHEET C-34 FOR CONCRETE BARRIER CONNECTION DETAILS.

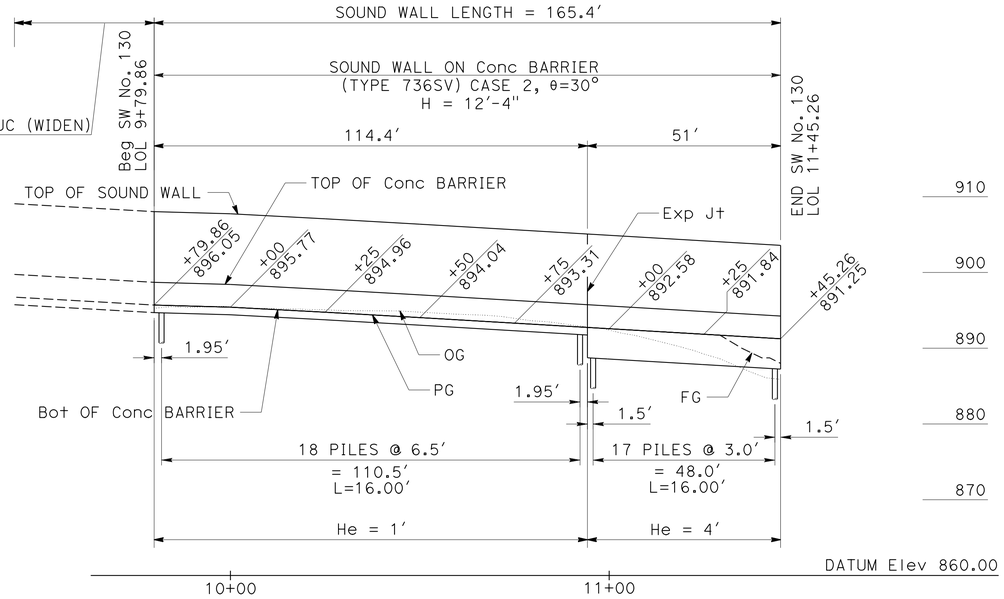

ELEVATION

Horiz 1" = 20'
Vert 1" = 10'

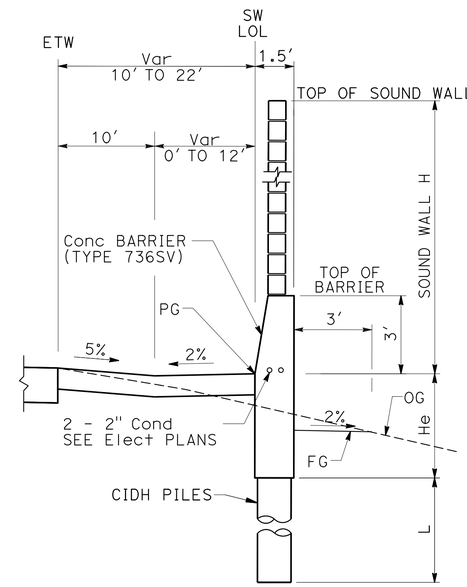

TYPICAL SECTION

NO SCALE
SW LOL Sta 9+79.86 TO Sta 11+45.26

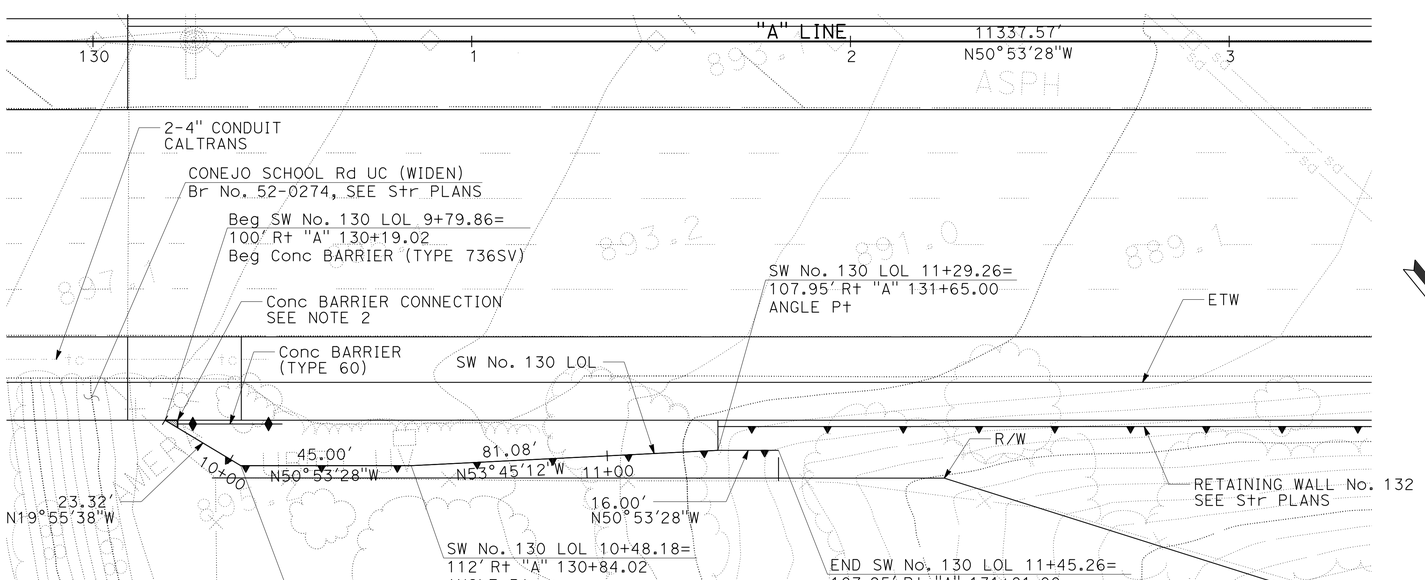

PLAN

1" = 20'-0"

SOUND WALL PLAN
SW No. 130

SCALE AS SHOWN

SW-11

APPROVED FOR SOUND WALL WORK ONLY

STATE OF CALIFORNIA - DEPARTMENT OF TRANSPORTATION
Caltrans

CONSULTANT FUNCTIONAL SUPERVISOR: CHRIS BRETALL
CALCULATED-DESIGNED BY: HEATHER ANDERSON
CHECKED BY: MIKE ROBINSON
REVISED BY / DATE REVISED

LAST REVISION 00-00-00 | DATE PLOTTED => 10-JUN-2013 | TIME PLOTTED => 11:43

Dist	COUNTY	ROUTE	POST MILES TOTAL PROJECT	SHEET No.	TOTAL SHEETS
07	Ven	23,101	3.3/3.8, R0.1/R4.5	377	652

REGISTERED CIVIL ENGINEER 3-25-13 DATE

6-3-13
PLANS APPROVAL DATE

REGISTERED PROFESSIONAL ENGINEER MICHAEL ROBINSON No. C70317 Exp. 9/30/14 CIVIL STATE OF CALIFORNIA

THE STATE OF CALIFORNIA OR ITS OFFICERS OR AGENTS SHALL NOT BE RESPONSIBLE FOR THE ACCURACY OR COMPLETENESS OF SCANNED COPIES OF THIS PLAN SHEET.

CH2M HILL
1000 WILSHIRE Blvd
LOS ANGELES, CA 90017

CITY OF THOUSAND OAKS
2100 THOUSAND OAKS BLVD
THOUSAND OAKS. CA 91362

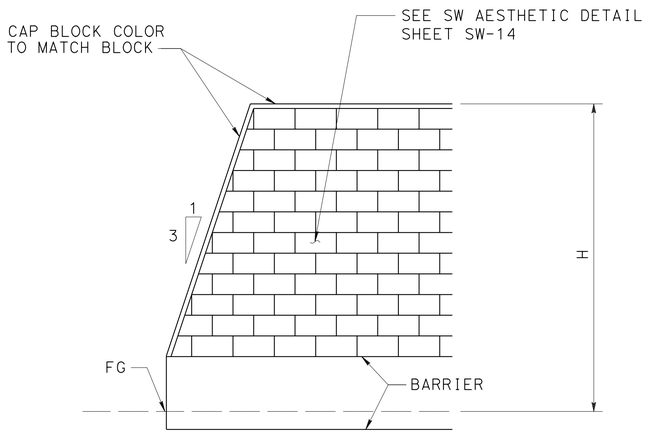

END WALL ELEVATION
NO SCALE

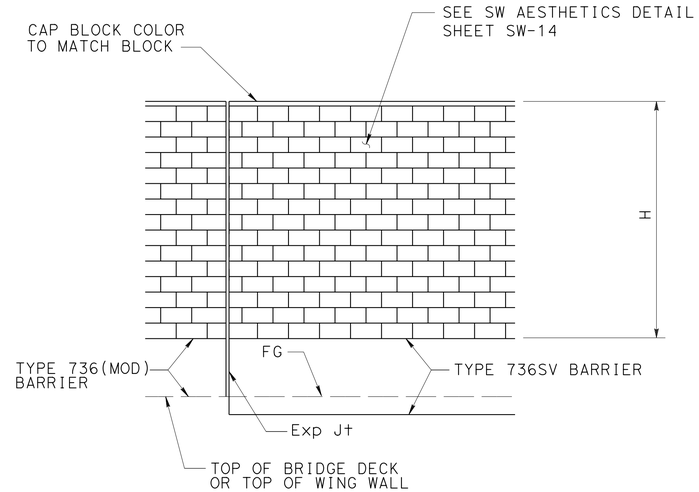

END WALL ELEVATION
NO SCALE

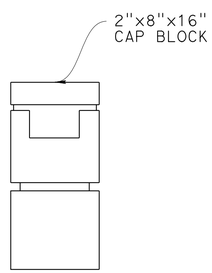

CAP BLOCK DETAIL
NO SCALE

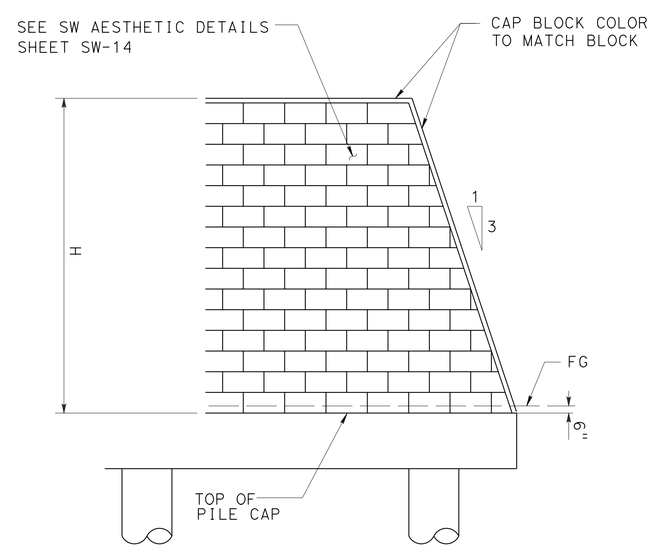

END WALL ELEVATION
NO SCALE

SOUND WALL DETAILS

SCALE AS SHOWN

SW-12

STATE OF CALIFORNIA - DEPARTMENT OF TRANSPORTATION
Caltrans

CONSULTANT FUNCTIONAL SUPERVISOR: CHRIS BRETALL
CALCULATED-DESIGNED BY: HEATHER ANDERSON
CHECKED BY: MIKE ROBINSON
REVISED BY
DATE REVISED

LAST REVISION 00-00-00
DATE PLOTTED => 08-JUN-2013
TIME PLOTTED => 11:33

Dist	COUNTY	ROUTE	POST MILES TOTAL PROJECT	SHEET No.	TOTAL SHEETS
07	Ven	23,101	3.3/3.8, R0.1/R4.5	378	652

REGISTERED CIVIL ENGINEER 3-25-13 DATE

6-3-13
PLANS APPROVAL DATE

REGISTERED PROFESSIONAL ENGINEER MICHAEL ROBINSON No. C70317 Exp. 9/30/14 CIVIL STATE OF CALIFORNIA

THE STATE OF CALIFORNIA OR ITS OFFICERS OR AGENTS SHALL NOT BE RESPONSIBLE FOR THE ACCURACY OR COMPLETENESS OF SCANNED COPIES OF THIS PLAN SHEET.

CH2M HILL
1000 WILSHIRE Blvd
LOS ANGELES, CA 90017

CITY OF THOUSAND OAKS
2100 THOUSAND OAKS BLVD
THOUSAND OAKS. CA 91362

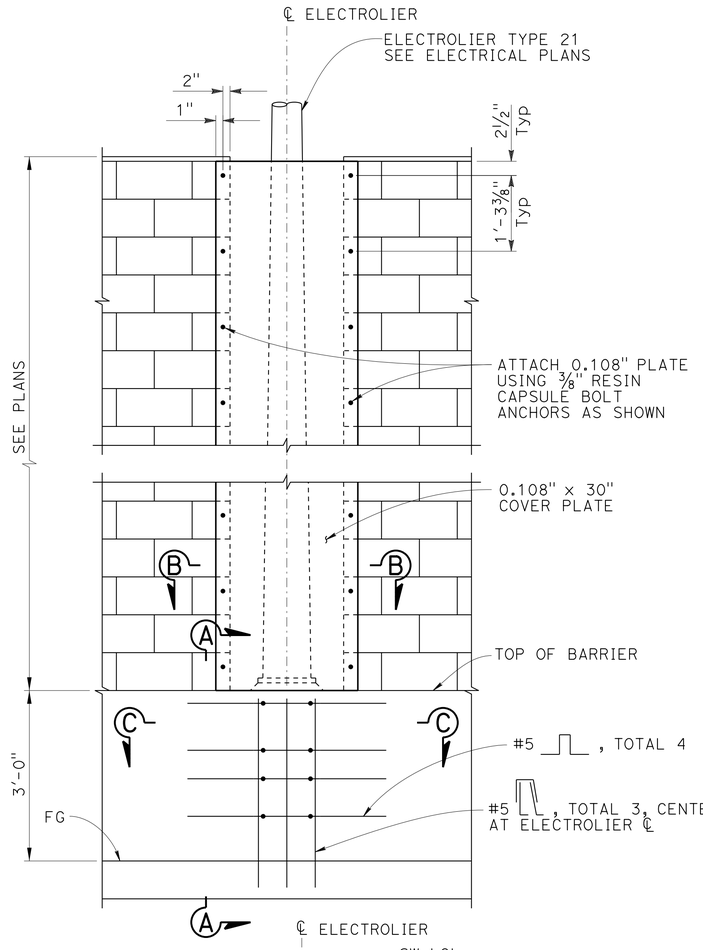

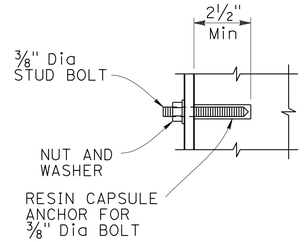

RESIN CAPSULE BOLT ANCHORAGE

NO SCALE

NOTE:

RESIN CAPSULE ANCHORAGE IS SUBJECT TO APPROVAL OF ENGINEER. INSTALLATION PROCEDURES SHALL COMPLY WITH MANUFACTURER'S INSTRUCTIONS.

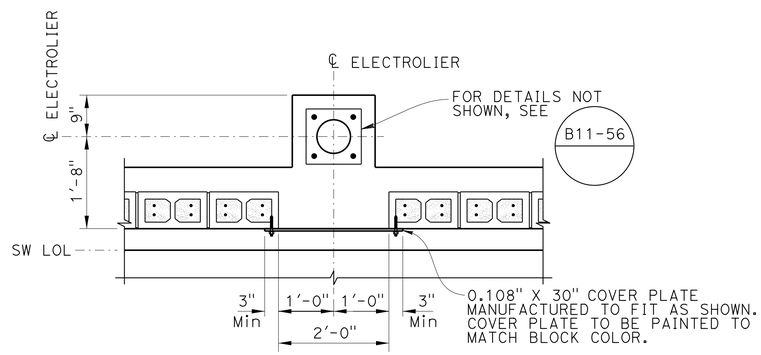

SECTION B-B

NO SCALE

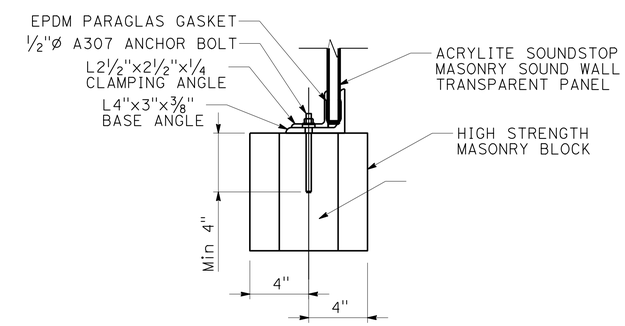

Conc FILLED CAVITY WITH Req ANCHOR BOLT DETAIL

NO SCALE

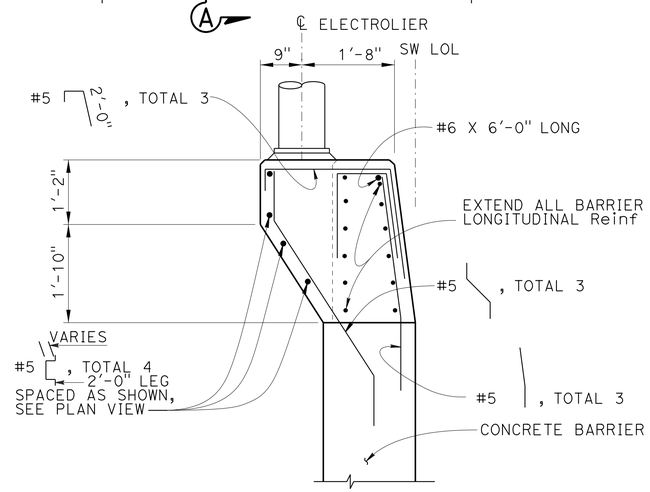

SECTION A-A

NO SCALE

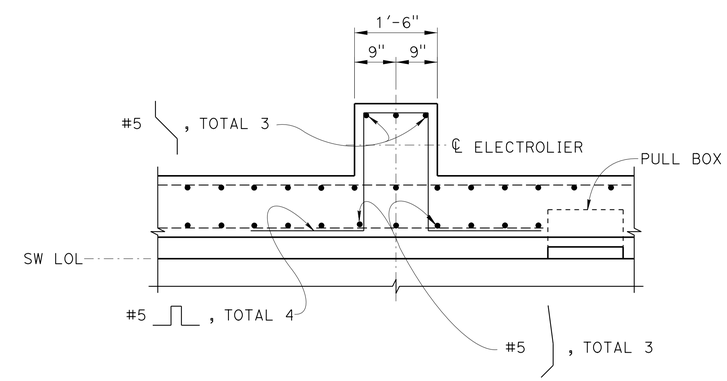

SECTION C-C

NO SCALE

SOUND WALL DETAILS

SCALE AS SHOWN

SW-13

STATE OF CALIFORNIA - DEPARTMENT OF TRANSPORTATION

Caltrans

CONSULTANT FUNCTIONAL SUPERVISOR: CHRIS BRETALL

CALCULATED-DESIGNED BY: HEATHER ANDERSON

CHECKED BY: MIKE ROBINSON

REVISED BY

DATE REVISED

LAST REVISION 00-00-00

DATE PLOTTED => 08-JUN-2013

TIME PLOTTED => 11:33

Dist	COUNTY	ROUTE	POST MILES TOTAL PROJECT	SHEET No.	TOTAL SHEETS
07	Ven	23,101	3.3/3.8, R0.1/R4.5	379	652

REGISTERED CIVIL ENGINEER 3-25-13 DATE

6-3-13
PLANS APPROVAL DATE

REGISTERED PROFESSIONAL ENGINEER MICHAEL ROBINSON No. C70317 Exp. 9/30/14 CIVIL STATE OF CALIFORNIA

THE STATE OF CALIFORNIA OR ITS OFFICERS OR AGENTS SHALL NOT BE RESPONSIBLE FOR THE ACCURACY OR COMPLETENESS OF SCANNED COPIES OF THIS PLAN SHEET.

CH2M HILL
1000 WILSHIRE Blvd
LOS ANGELES, CA 90017

CITY OF THOUSAND OAKS
2100 THOUSAND OAKS BLVD
THOUSAND OAKS. CA 91362

LEGEND:

SYMBOL	NOMINAL SIZE	TEXTURE	COLOR
	8 INCH x 8 INCH x 16 INCH	SLUMPSTONE	MISSION (70%) & FAWN (30%) RANDOM MIX *

NOTES:

1. BOND (TYPE 2) COMMON BOND
2. MORTAR COLOR TO MATCH BLOCK
3. TOOLED JOINTS.

* TO MATCH ANGELUS BLOCK COMPANY COLOR FAWN AND MISSION OR EQUAL.

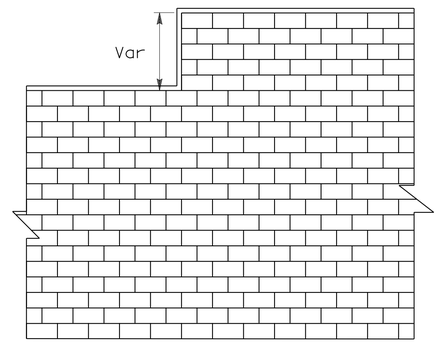

SECTION

STEP DETAIL

NO SCALE

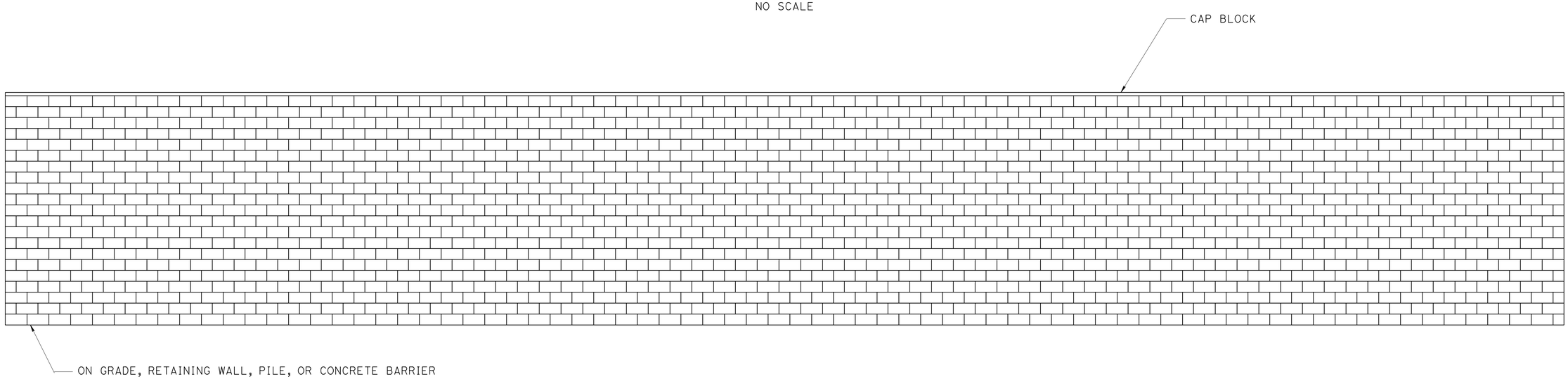

SOUND WALL Nos. 92-130

SOUND WALL AESTHETIC DETAILS

SCALE AS SHOWN

SW-14

STATE OF CALIFORNIA - DEPARTMENT OF TRANSPORTATION
Caltrans

CONSULTANT FUNCTIONAL SUPERVISOR: CHRIS BRETALL
CALCULATED-DESIGNED BY: HEATHER ANDERSON
CHECKED BY: MIKE ROBINSON
REVISED BY
DATE REVISED

LAST REVISION 00-00-00
DATE PLOTTED => 08-JUN-2013
TIME PLOTTED => 11:33

Dist	COUNTY	ROUTE	POST MILES TOTAL PROJECT	SHEET No.	TOTAL SHEETS
07	Ven	23,101	3.3/3.8, R0.1/R4.5	380	652

REGISTERED CIVIL ENGINEER 3-25-13 DATE

6-3-13
PLANS APPROVAL DATE

REGISTERED PROFESSIONAL ENGINEER MICHAEL ROBINSON No. C70317 Exp. 9/30/14 CIVIL STATE OF CALIFORNIA

THE STATE OF CALIFORNIA OR ITS OFFICERS OR AGENTS SHALL NOT BE RESPONSIBLE FOR THE ACCURACY OR COMPLETENESS OF SCANNED COPIES OF THIS PLAN SHEET.

CH2M HILL
1000 WILSHIRE Blvd
LOS ANGELES, CA 90017

CITY OF THOUSAND OAKS
2100 THOUSAND OAKS BLVD
THOUSAND OAKS. CA 91362

SOUND WALL QUANTITIES

SHEET No.	SW No.	STATION LIMITS	16" CIDH Conc PILE (SOUND WALL)	24" CIDH Conc PILE (SOUND WALL)	SOUND WALL (MASONRY BLOCK)	SOUND WALL (HIGH STRENGTH MASONRY BLOCK)	STRUCTURAL CONCRETE (SOUND WALL)	CONCRETE BARRIER (TYPE 736SV)	ACRYLITE SOUNDSTOP MASONRY SOUND WALL TRANSPARENT PANEL
			LF	LF	SQFT	SQFT	CY	LF	SQFT
SW-1	92	"A" 92+00.00 TO "A" 95+87.29	1,839.00		4,388			387	
SW-2	97	"A" 97+20.00 TO "A" 100+54.00	975.00	41.50	3,784		4	334	
SW-3	98	"A" 97+73.22 TO "A" 101+10.00	1,202.50		3,816			337	
SW-4 TO SW-6	101	"HM-4" 101+25.00 TO "A" 112+55.16	2,340.00		9,153	2,192	100	100	4,200
SW-7 TO SW-9	102	"HM-1" 103+25.00 TO "A" 116+60.00	4,257.50	91.00	14,813		8	1,333	
SW-10	126	"A"125+00.00 TO "A" 128+77.03	1,560.00	45.50	3,518		4	377	
SW-11	130	"A" 130+19.02 TO "A" 131+81.00	568.75		1,544			165	
SHEET TOTAL			12,742.75	178.00	41,016	2,192	116	3,034	4,200
TOTALS FROM SHEET Q-3								30	
GRAND TOTAL			12,742.75	178.00	41,016	2,192	116	3,064	4,200

REVISED BY | DATE REVISED
HEATHER ANDERSON | MIKE ROBINSON
CALCULATED-DESIGNED BY | CHECKED BY
CONSULTANT FUNCTIONAL SUPERVISOR
CHRIS BRETALL

STATE OF CALIFORNIA - DEPARTMENT OF TRANSPORTATION
Caltrans

SOUND WALL QUANTITIES

SW-15

LAST REVISION 00-00-00 | DATE PLOTTED => 08-JUN-2013 | TIME PLOTTED => 11:33

DIST	COUNTY	ROUTE	POST MILES TOTAL PROJECT	SHEET No	TOTAL SHEETS
07	Ven	23,101	3.3/3.8, R0.1/R4.5	381	652

GEOTECHNICAL PROFESSIONAL — DATE 12-06-12

PLANS APPROVAL DATE 6-3-13

REGISTERED PROFESSIONAL ENGINEER — PING TIAN — No. GE2660 — Exp. 12/31/13 — GEOTECHNICAL — STATE OF CALIFORNIA

The State of California or its officers or agents shall not be responsible for the accuracy or completeness of electronic copies of this plan sheet.

CITY OF THOUSAND OAKS
2100 THOUSAND OAKS BLVD
THOUSAND OAKS, CA 91362

CH2M HILL
1000 WILSHIRE BLVD, 21ST FLOOR
LOS ANGELES, CA 90017

BENCHMARKS AND DATUM

The horizontal coordinates are based on the North American Datum of 1983 (NAD83) California Coordinate System Zone 5 epoch 1991.35, locally determined by points 5434,5433,5435, and 5441 from Caltrans Survey Request 94-156.

Vertical control is based on the North American Vertical Datum of 1988 (NAVD88) locally determined by the following benchmarks published by the National Geodetic Survey.

AA3344	Elev	830.93	(Adj 1995)
AA3348	Elev	953.66	(Adj 1995)
AA3205	Elev	747.56	(Adj 1995)
AA3346	Elev	922.40	(Adj 1995)

Survey Disk at the intersection of Freeway 101 and Hampshire Rd on top of and 2 ft northeast of the southwest end of the bridge deck.

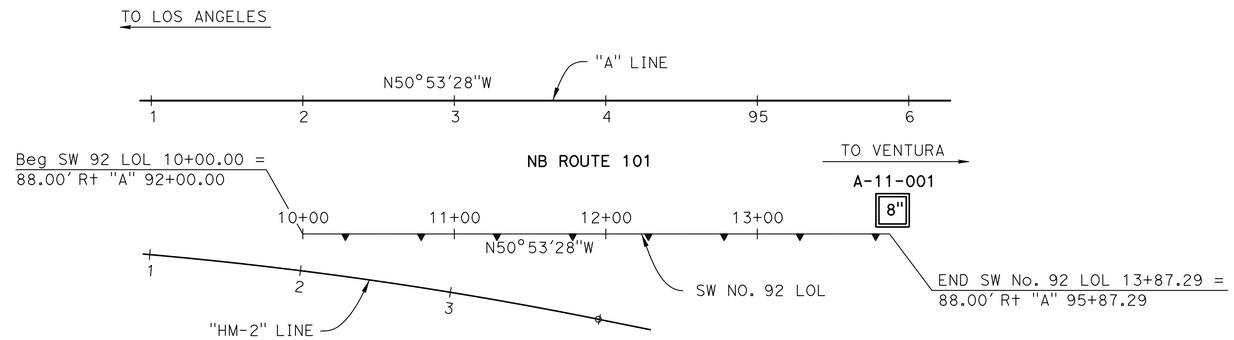

PLAN
1" = 50'

NOTE:

1. This LOTB sheet was prepared in accordance with the Caltrans Soil and Rock Logging, Classification, and Presentation Manual (June 2010).

CORRECTION FACTOR:

A multiplication factor 0.65 was used to convert from California Modified Ring Sampler blow count to equivalent Standard Penetration Test Sampler blow count.

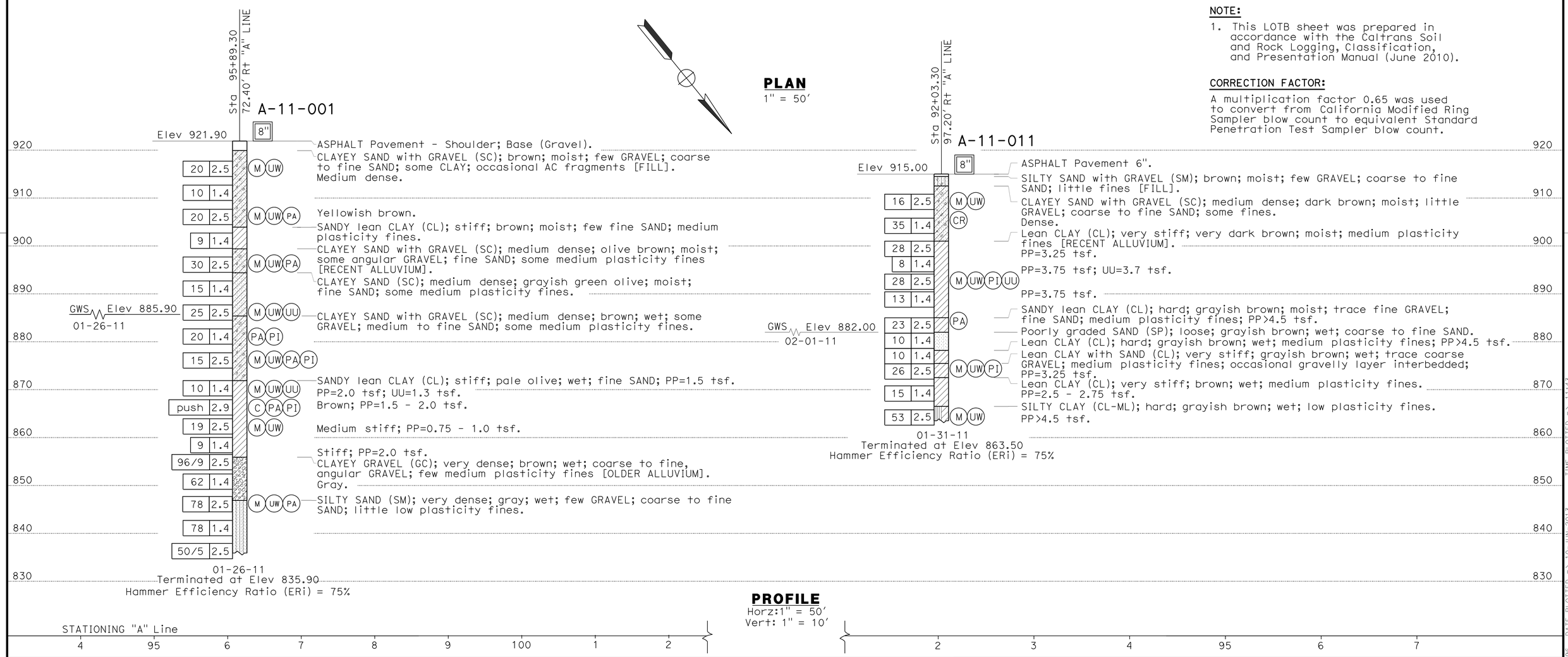

PROFILE
Horz:1" = 50'
Vert: 1" = 10'

Richard Hartzell — DESIGN OVERSIGHT	DRAWN BY	N. MORALES	K. RADHAKRISHNAN & J. LEE — FIELD INVESTIGATION BY:	PREPARED FOR THE STATE OF CALIFORNIA DEPARTMENT OF TRANSPORTATION	Milind Desai — PROJECT ENGINEER
SIGN OFF DATE	CHECKED BY	J. LEE	DATE: 01/26/11 & 01/31/11		

BRIDGE NO. / POST MILES

SOUNDWALL NO. 92

LOG OF TEST BORINGS 1 of 3

SW-16

GS GEOTECHNICAL LOG OF TEST BORINGS SHEET (ENGLISH) (REV. 7/16/10)

ORIGINAL SCALE IN INCHES FOR REDUCED PLANS 0 1 2 3

UNIT: 3573
PROJECT NUMBER & PHASE: 0700000201 CONTRACT NO.: 07-1952U1

DISREGARD PRINTS BEARING EARLIER REVISION DATES — REVISION DATES 10/12/11 05/11/12 — SHEET OF

FILE => 0700000201rz001.dgn

USERNAME => s124496 DATE PLOTTED => 10-JUN-2013 TIME PLOTTED => 11:43

REFERENCE: CALTRANS SOIL & ROCK LOGGING, CLASSIFICATION, AND PRESENTATION MANUAL (2010)

DIST	COUNTY	ROUTE	POST MILES TOTAL PROJECT	SHEET No	TOTAL SHEETS
07	Ven	23,101	3.3/3.8, R0.1/R4.5	382	652

GEOTECHNICAL PROFESSIONAL — DATE 12-06-12

PLANS APPROVAL DATE 6-3-13

REGISTERED PROFESSIONAL ENGINEER — PING TIAN — No. GE2660 — Exp. 12/31/13 — GEOTECHNICAL — STATE OF CALIFORNIA

The State of California or its officers or agents shall not be responsible for the accuracy or completeness of electronic copies of this plan sheet.

CITY OF THOUSAND OAKS
2100 THOUSAND OAKS BLVD
THOUSAND OAKS, CA 91362

CH2M HILL
1000 WILSHIRE BLVD, 21ST FLOOR
LOS ANGELES, CA 90017

CEMENTATION

Description	Criteria
Weak	Crumbles or breaks with handling or little finger pressure.
Moderate	Crumbles or breaks with considerable finger pressure.
Strong	Will not crumble or break with finger pressure.

BOREHOLE IDENTIFICATION

Symbol	Hole Type	Description
Size	A	Auger Boring (hollow or solid stem bucket)
Size	R RW RC P	Rotary drilled boring (conventional) Rotary drilled with self-casing wire-line Rotary core with continuously-sampled, self-casing wire-line Rotary percussion boring (air)
Size	R	Rotary drilled diamond core
Size	HD HA	Hand driven (1-inch soil tube) Hand Auger
●	D	Dynamic Cone Penetration Boring
▲	CPT	Cone Penetration Test (ASTM D 5778)
⬚	O	Other (note on LOTB)

Note: Size in inches.

CONSISTENCY OF COHESIVE SOILS

Description	Shear Strength (tsf)	Pocket Penetrometer Measurement, PP, (tsf)	Torvane Measurement, TV, (tsf)	Vane Shear Measurement, VS, (tsf)
Very Soft	Less than 0.12	Less than 0.25	Less than 0.12	Less than 0.12
Soft	0.12 - 0.25	0.25 - 0.5	0.12 - 0.25	0.12 - 0.25
Medium Stiff	0.25 - 0.5	0.5 - 1	0.25 - 0.5	0.25 - 0.5
Stiff	0.5 - 1	1 - 2	0.5 - 1	0.5 - 1
Very Stiff	1 - 2	2 - 4	1 - 2	1 - 2
Hard	Greater than 2	Greater than 4	Greater than 2	Greater than 2

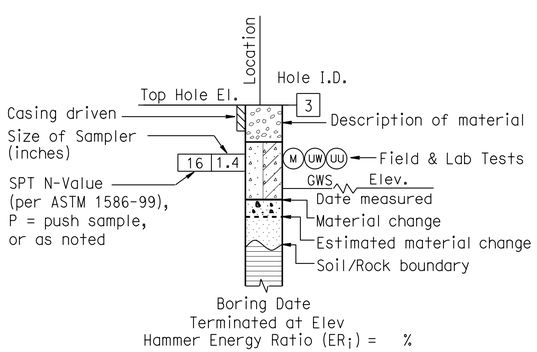

ROTARY BORING

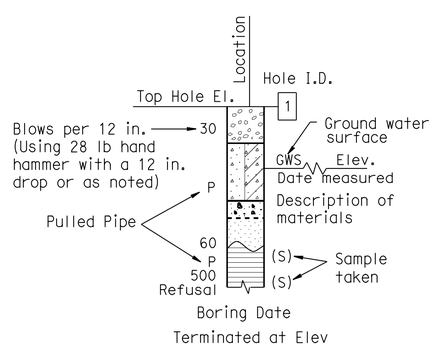

HAND BORING

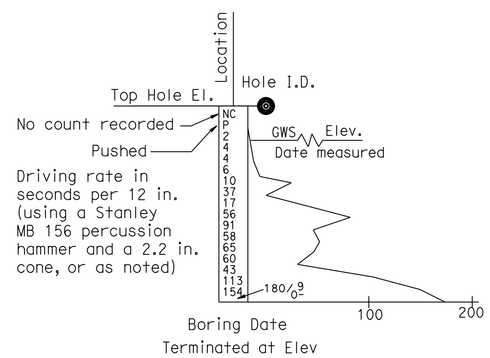

DYNAMIC CONE PENETRATION BORING

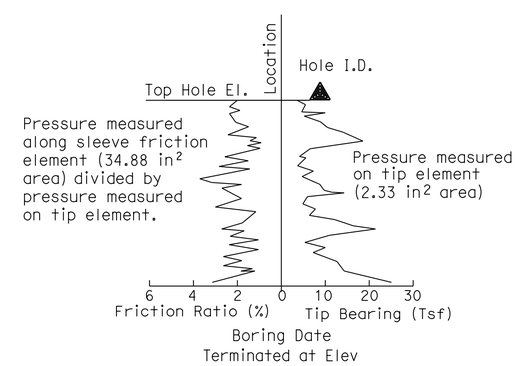

CONE PENETRATION TEST (CPT) BORING

Richard Hartzell — DESIGN OVERSIGHT	DRAWN BY	N. MORALES	K. RADHAKRISHNAN & J. LEE — FIELD INVESTIGATION BY: 01/26/11, 01/27/11, 01/28/11, 01/29/11, 01/31/11 & 02/02/11 — DATE:
SIGN OFF DATE	CHECKED BY	J. LEE	

PREPARED FOR THE STATE OF CALIFORNIA DEPARTMENT OF TRANSPORTATION

Milind Desai — PROJECT ENGINEER

BRIDGE NO. / POST MILES

SOUNDWALL NO. 92

LOG OF TEST BORINGS 2 OF 3 — SW-17

GS GEOTECHNICAL LOG OF TEST BORINGS SHEET (ENGLISH) (REV. 7/16/10)

ORIGINAL SCALE IN INCHES FOR REDUCED PLANS 0 1 2 3

UNIT: 3573
PROJECT NUMBER & PHASE: 0700000201 CONTRACT NO.: 07-1952U1

DISREGARD PRINTS BEARING EARLIER REVISION DATES — REVISION DATES 10/12/11 05/11/12 — SHEET — OF

FILE => 0700000201rz002.dgn

USERNAME => s113946 DATE PLOTTED => 08-JUN-2013 TIME PLOTTED => 15:45

REFERENCE: CALTRANS SOIL & ROCK LOGGING, CLASSIFICATION, AND PRESENTATION MANUAL (2010)

DIST	COUNTY	ROUTE	POST MILES TOTAL PROJECT	SHEET No	TOTAL SHEETS
07	Ven	23,101	3.3/3.8, R0.1/R4.5	383	652

GEOTECHNICAL PROFESSIONAL — DATE 12-06-12

6-3-13
PLANS APPROVAL DATE

REGISTERED PROFESSIONAL ENGINEER — PING TIAN — No. GE2660 — Exp. 12/31/13 — GEOTECHNICAL — STATE OF CALIFORNIA

The State of California or its officers or agents shall not be responsible for the accuracy or completeness of electronic copies of this plan sheet.

CITY OF THOUSAND OAKS
2100 THOUSAND OAKS BLVD
THOUSAND OAKS, CA 91362

CH2M HILL
1000 WILSHIRE BLVD, 21ST FLOOR
LOS ANGELES, CA 90017

GROUP SYMBOLS AND NAMES

Graphic/Symbol	Group Names	Graphic/Symbol	Group Names
GW	Well-graded GRAVEL Well-graded GRAVEL with SAND	CL	Lean CLAY Lean CLAY with SAND Lean CLAY with GRAVEL SANDY lean CLAY SANDY lean CLAY with GRAVEL GRAVELLY lean CLAY GRAVELLY lean CLAY with SAND
GP	Poorly-graded GRAVEL Poorly-graded GRAVEL with SAND		
GW-GM	Well-graded GRAVEL with SILT Well-graded GRAVEL with SILT and SAND	CL-ML	SILTY CLAY SILTY CLAY with SAND SILTY CLAY with GRAVEL SANDY SILTY CLAY SANDY SILTY CLAY with GRAVEL GRAVELLY SILTY CLAY GRAVELLY SILTY CLAY with SAND
GW-GC	Well-graded GRAVEL with CLAY (or SILTY CLAY) Well-graded GRAVEL with CLAY and SAND (or SILTY CLAY and SAND)		
GP-GM	Poorly-graded GRAVEL with SILT Poorly-graded GRAVEL with SILT and SAND	ML	SILT SILT with SAND SILT with GRAVEL SANDY SILT SANDY SILT with GRAVEL GRAVELLY SILT GRAVELLY SILT with SAND
GP-GC	Poorly-graded GRAVEL with CLAY (or SILTY CLAY) Poorly-graded GRAVEL with CLAY and SAND (or SILTY CLAY and SAND)		
GM	SILTY GRAVEL SILTY GRAVEL with SAND	OL	ORGANIC lean CLAY ORGANIC lean CLAY with SAND ORGANIC lean CLAY with GRAVEL SANDY ORGANIC lean CLAY SANDY ORGANIC lean CLAY with GRAVEL GRAVELLY ORGANIC lean CLAY GRAVELLY ORGANIC lean CLAY with SAND
GC	CLAYEY GRAVEL CLAYEY GRAVEL with SAND		
GC-GM	SILTY, CLAYEY GRAVEL SILTY, CLAYEY GRAVEL with SAND	OL	ORGANIC SILT ORGANIC SILT with SAND ORGANIC SILT with GRAVEL SANDY ORGANIC SILT SANDY ORGANIC SILT with GRAVEL GRAVELLY ORGANIC SILT GRAVELLY ORGANIC SILT with SAND
SW	Well-graded SAND Well-graded SAND with GRAVEL		
SP	Poorly-graded SAND Poorly-graded SAND with GRAVEL	CH	Fat CLAY Fat CLAY with SAND Fat CLAY with GRAVEL SANDY fat CLAY SANDY fat CLAY with GRAVEL GRAVELLY fat CLAY GRAVELLY fat CLAY with SAND
SW-SM	Well-graded SAND with SILT Well-graded SAND with SILT and GRAVEL		
SW-SC	Well-graded SAND with CLAY (or SILTY CLAY) Well-graded SAND with CLAY and GRAVEL (or SILTY CLAY and GRAVEL)	MH	Elastic SILT Elastic SILT with SAND Elastic SILT with GRAVEL SANDY elastic SILT SANDY elastic SILT with GRAVEL GRAVELLY elastic SILT GRAVELLY elastic SILT with SAND
SP-SM	Poorly-graded SAND with SILT Poorly-graded SAND with SILT and GRAVEL		
SP-SC	Poorly-graded SAND with CLAY (or SILTY CLAY) Poorly-graded SAND with CLAY and GRAVEL (or SILTY CLAY and GRAVEL)	OH	ORGANIC fat CLAY ORGANIC fat CLAY with SAND ORGANIC fat CLAY with GRAVEL SANDY ORGANIC fat CLAY SANDY ORGANIC fat CLAY with GRAVEL GRAVELLY ORGANIC fat CLAY GRAVELLY ORGANIC fat CLAY with SAND
SM	SILTY SAND SILTY SAND with GRAVEL		
SC	CLAYEY SAND CLAYEY SAND with GRAVEL	OH	ORGANIC elastic SILT ORGANIC elastic SILT with SAND ORGANIC elastic SILT with GRAVEL SANDY ORGANIC elastic SILT SANDY ORGANIC elastic SILT with GRAVEL GRAVELLY ORGANIC elastic SILT GRAVELLY ORGANIC elastic SILT with SAND
SC-SM	SILTY, CLAYEY SAND SILTY, CLAYEY SAND with GRAVEL		
PT	PEAT	OL/OH	ORGANIC SOIL ORGANIC SOIL with SAND ORGANIC SOIL with GRAVEL SANDY ORGANIC SOIL SANDY ORGANIC SOIL with GRAVEL GRAVELLY ORGANIC SOIL GRAVELLY ORGANIC SOIL with SAND
	COBBLES COBBLES and BOULDERS BOULDERS		

FIELD AND LABORATORY TESTING

- (C) Consolidation (ASTM D 2435)
- (CL) Collapse Potential (ASTM D 5333)
- (CP) Compaction Curve (CTM 216)
- (CR) Corrosivity Testing (CTM 643, CTM 422, CTM 417)
- (CU) Consolidated Undrained Triaxial (ASTM D 4767)
- (DS) Direct Shear (ASTM D 3080)
- (EI) Expansion Index (ASTM D 4829)
- (M) Moisture Content (ASTM D 2216)
- (OC) Organic Content-% (ASTM D 2974)
- (P) Permeability (CTM 220)
- (PA) Particle Size Analysis (ASTM D 422)
- (PI) Plasticity Index (AASHTO T 90) Liquid Limit (AASHTO T 89)
- (PL) Point Load Index (ASTM D 5731)
- (PM) Pressure Meter
- (R) R-Value (CTM 301)
- (SE) Sand Equivalent (CTM 217)
- (SG) Specific Gravity (AASHTO T 100)
- (SL) Shrinkage Limit (ASTM D 427)
- (SW) Swell Potential (ASTM D 4546)
- (UC) Unconfined Compression-Soil (ASTM D 2166) Unconfined Compression-Rock (ASTM D 2938)
- (UU) Unconsolidated Undrained Triaxial (ASTM D 2850)
- (UW) Unit Weight (ASTM D 4767)

APPARENT DENSITY OF COHESIONLESS SOILS

Description	SPT N_{60} (Blows / 12 in.)
Very Loose	0 - 5
Loose	5 - 10
Medium Dense	10 - 30
Dense	30 - 50
Very Dense	Greater than 50

MOISTURE

Description	Criteria
Dry	No discernable moisture
Moist	Moisture present, but no free water
Wet	Visible free water

PERCENT OR PROPORTION OF SOILS

Description	Criteria
Trace	Particles are present but estimated to be less than 5%
Few	5% - 10%
Little	15% - 25%
Some	30% - 45%
Mostly	50% - 100%

PARTICLE SIZE

Description		Size (in.)
Boulder		Greater than 12
Cobble		3 - 12
Gravel	Coarse	3/4 - 3
	Fine	1/5 - 3/4
Sand	Coarse	1/16 - 1/5
	Medium	1/64 - 1/16
	Fine	1/300 - 1/64
Silt and Clay		Less than 1/300

Richard Hartzell
DESIGN OVERSIGHT

SIGN OFF DATE

DRAWN BY N. MORALES
CHECKED BY J. LEE

K. RADHAKRISHNAN & J. LEE
FIELD INVESTIGATION BY:
DATE: 01/26/11, 01/27/11, 01/28/11, 01/29/11, 01/31/11 & 02/02/11

PREPARED FOR THE STATE OF CALIFORNIA DEPARTMENT OF TRANSPORTATION

Milind Desai
PROJECT ENGINEER

BRIDGE NO.
POST MILES

SOUNDWALL NO. 92

LOG OF TEST BORINGS 3 OF 3

SW-18

GS GEOTECHNICAL LOG OF TEST BORINGS SHEET (ENGLISH) (REV. 7/16/10)

ORIGINAL SCALE IN INCHES FOR REDUCED PLANS 0 1 2 3

UNIT: 3573
PROJECT NUMBER & PHASE: 0700000201
CONTRACT NO.: 07-1952U1

DISREGARD PRINTS BEARING EARLIER REVISION DATES

REVISION DATES 10/12/11 05/11/12 SHEET OF

FILE => 0700000201rz003.dgn

USERNAME => s113946 DATE PLOTTED => 08-JUN-2013 TIME PLOTTED => 15:45

DIST	COUNTY	ROUTE	POST MILES TOTAL PROJECT	SHEET No	TOTAL SHEETS
07	Ven	23,101	3.3/3.8, R0.1/R4.5	384	652

GEOTECHNICAL PROFESSIONAL 12-06-12 DATE

6-3-13
PLANS APPROVAL DATE

REGISTERED PROFESSIONAL ENGINEER
PING TIAN
No. GE2660
Exp. 12/31/13
GEOTECHNICAL
STATE OF CALIFORNIA

The State of California or its officers or agents shall not be responsible for the accuracy or completeness of electronic copies of this plan sheet.

CITY OF THOUSAND OAKS
2100 THOUSAND OAKS BLVD
THOUSAND OAKS, CA 91362

CH2M HILL
1000 WILSHIRE BLVD, 21ST FLOOR
LOS ANGELES, CA 90017

BENCHMARKS AND DATUM

The horizontal coordinates are based on the North American Datum of 1983 (NAD83) California Coordinate System Zone 5 epoch 1991.35, locally determined by points 5434,5433,5435, and 5441 from Caltrans Survey Request 94-156.

Vertical control is based on the North American Vertical Datum of 1988 (NAVD88) locally determined by the following benchmarks published by the National Geodetic Survey.

AA3344	Elev	830.93	(Adj 1995)
AA3348	Elev	953.66	(Adj 1995)
AA3205	Elev	747.56	(Adj 1995)
AA3346	Elev	922.40	(Adj 1995)

Survey Disk at the intersection of Freeway 101 and Hampshire Rd on top of and 2 ft northeast of the southwest end of the bridge deck.

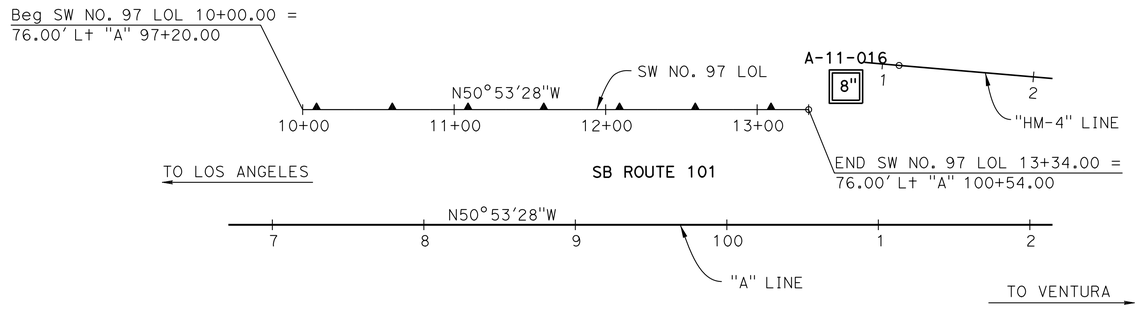

NOTES:

1. This LOTB sheet was prepared in accordance with the Caltrans Soil and Rock Logging, Classification, and Presentation Manual (June 2010).
2. Groundwater was not encountered in boring A-11-016.

CORRECTION FACTOR:

A multiplication factor 0.65 was used to convert from California Modified Ring Sampler blow count to equivalent Standard Penetration Test Sampler blow count.

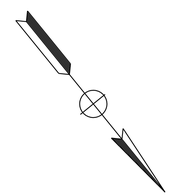

PLAN
1" = 50'

PROFILE
Horz:1" = 50'
Vert: 1" = 10'

STATIONING "A" Line
100 1 2 3 4 105

Richard Hartzell, DESIGN OVERSIGHT	DRAWN BY	N. MORALES	K. RADHAKRISHNAN & J. LEE, FIELD INVESTIGATION BY:
SIGN OFF DATE	CHECKED BY	J. LEE	DATE: 02/02/11

PREPARED FOR THE STATE OF CALIFORNIA DEPARTMENT OF TRANSPORTATION

Milind Desai, PROJECT ENGINEER

BRIDGE NO.
POST MILES

SOUNDWALL NO. 97
LOG OF TEST BORINGS 1 of 3
SW-19

GS GEOTECHNICAL LOG OF TEST BORINGS SHEET (ENGLISH) (REV. 7/16/10)

ORIGINAL SCALE IN INCHES FOR REDUCED PLANS 0 1 2 3

UNIT: 3573
PROJECT NUMBER & PHASE: 0700000201
CONTRACT NO.: 07-1952U1

DISREGARD PRINTS BEARING EARLIER REVISION DATES
REVISION DATES 10/12/11 05/11/12
SHEET OF

FILE => 0700000201rz004.dgn

USERNAME => s124496 DATE PLOTTED => 10-JUN-2013 TIME PLOTTED => 11:43

REFERENCE: CALTRANS SOIL & ROCK LOGGING, CLASSIFICATION, AND PRESENTATION MANUAL (2010)

DIST	COUNTY	ROUTE	POST MILES TOTAL PROJECT	SHEET No	TOTAL SHEETS
07	Ven	23,101	3.3/3.8, R0.1/R4.5	385	652

GEOTECHNICAL PROFESSIONAL — DATE 12-06-12

6-3-13
PLANS APPROVAL DATE

REGISTERED PROFESSIONAL ENGINEER — PING TIAN — No. GE2660 — Exp. 12/31/13 — GEOTECHNICAL — STATE OF CALIFORNIA

The State of California or its officers or agents shall not be responsible for the accuracy or completeness of electronic copies of this plan sheet.

CITY OF THOUSAND OAKS
2100 THOUSAND OAKS BLVD
THOUSAND OAKS, CA 91362

CH2M HILL
1000 WILSHIRE BLVD, 21ST FLOOR
LOS ANGELES, CA 90017

CEMENTATION

Description	Criteria
Weak	Crumbles or breaks with handling or little finger pressure.
Moderate	Crumbles or breaks with considerable finger pressure.
Strong	Will not crumble or break with finger pressure.

BOREHOLE IDENTIFICATION

Symbol	Hole Type	Description
Size	A	Auger Boring (hollow or solid stem bucket)
Size	R RW RC P	Rotary drilled boring (conventional) Rotary drilled with self-casing wire-line Rotary core with continuously-sampled, self-casing wire-line Rotary percussion boring (air)
Size	R	Rotary drilled diamond core
Size	HD HA	Hand driven (1-inch soil tube) Hand Auger
●	D	Dynamic Cone Penetration Boring
▲	CPT	Cone Penetration Test (ASTM D 5778)
⬚	O	Other (note on LOTB)

Note: Size in inches.

CONSISTENCY OF COHESIVE SOILS

Description	Shear Strength (tsf)	Pocket Penetrometer Measurement, PP, (tsf)	Torvane Measurement, TV, (tsf)	Vane Shear Measurement, VS, (tsf)
Very Soft	Less than 0.12	Less than 0.25	Less than 0.12	Less than 0.12
Soft	0.12 - 0.25	0.25 - 0.5	0.12 - 0.25	0.12 - 0.25
Medium Stiff	0.25 - 0.5	0.5 - 1	0.25 - 0.5	0.25 - 0.5
Stiff	0.5 - 1	1 - 2	0.5 - 1	0.5 - 1
Very Stiff	1 - 2	2 - 4	1 - 2	1 - 2
Hard	Greater than 2	Greater than 4	Greater than 2	Greater than 2

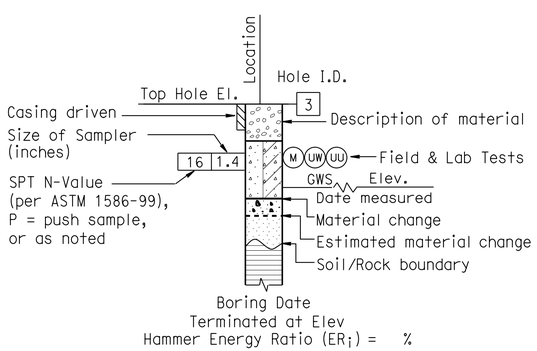

ROTARY BORING

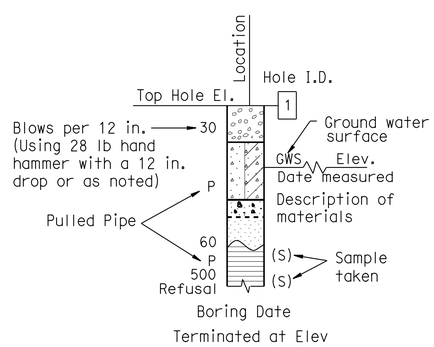

HAND BORING

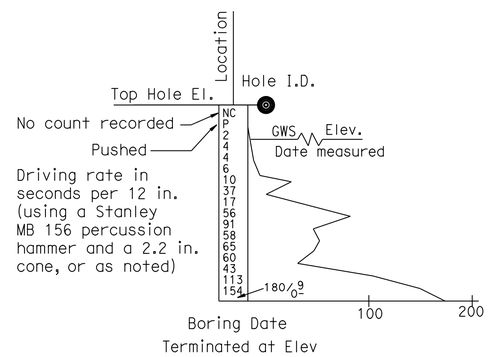

DYNAMIC CONE PENETRATION BORING

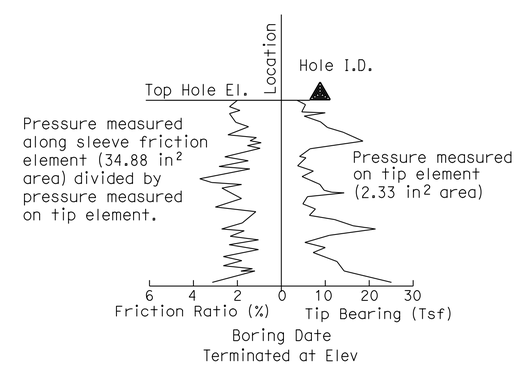

CONE PENETRATION TEST (CPT) BORING

Richard Hartzell DESIGN OVERSIGHT	DRAWN BY	N. MORALES	K. RADHAKRISHNAN & J. LEE FIELD INVESTIGATION BY: DATE: 01/26/11, 01/27/11, 01/28/11, 01/29/11, 01/31/11 & 02/02/11
SIGN OFF DATE	CHECKED BY	J. LEE	

PREPARED FOR THE STATE OF CALIFORNIA DEPARTMENT OF TRANSPORTATION

Milind Desai
PROJECT ENGINEER

BRIDGE NO.
POST MILES

SOUNDWALL NO. 97

LOG OF TEST BORINGS 2 OF 3 — SW-20

GS GEOTECHNICAL LOG OF TEST BORINGS SHEET (ENGLISH) (REV. 7/16/10)

ORIGINAL SCALE IN INCHES FOR REDUCED PLANS 0 1 2 3

UNIT: 3573
PROJECT NUMBER & PHASE: 0700000201
CONTRACT NO.: 07-1952U1

DISREGARD PRINTS BEARING EARLIER REVISION DATES
REVISION DATES: 10/12/11 05/11/12
SHEET OF

FILE => 0700000201rz005.dgn

USERNAME => s113946 DATE PLOTTED => 08-JUN-2013 TIME PLOTTED => 15:45

REFERENCE: CALTRANS SOIL & ROCK LOGGING, CLASSIFICATION, AND PRESENTATION MANUAL (2010)

DIST	COUNTY	ROUTE	POST MILES TOTAL PROJECT	SHEET No	TOTAL SHEETS
07	Ven	23,101	3.3/3.8, R0.1/R4.5	386	652

GEOTECHNICAL PROFESSIONAL — DATE 12-06-12

6-3-13
PLANS APPROVAL DATE

REGISTERED PROFESSIONAL ENGINEER — PING TIAN — No. GE2660 — Exp. 12/31/13 — GEOTECHNICAL — STATE OF CALIFORNIA

The State of California or its officers or agents shall not be responsible for the accuracy or completeness of electronic copies of this plan sheet.

CITY OF THOUSAND OAKS
2100 THOUSAND OAKS BLVD
THOUSAND OAKS, CA 91362

CH2M HILL
1000 WILSHIRE BLVD, 21ST FLOOR
LOS ANGELES, CA 90017

GROUP SYMBOLS AND NAMES

Graphic/Symbol	Group Names	Graphic/Symbol	Group Names
GW	Well-graded GRAVEL Well-graded GRAVEL with SAND	CL	Lean CLAY Lean CLAY with SAND Lean CLAY with GRAVEL SANDY lean CLAY SANDY lean CLAY with GRAVEL GRAVELLY lean CLAY GRAVELLY lean CLAY with SAND
GP	Poorly-graded GRAVEL Poorly-graded GRAVEL with SAND		
GW-GM	Well-graded GRAVEL with SILT Well-graded GRAVEL with SILT and SAND	CL-ML	SILTY CLAY SILTY CLAY with SAND SILTY CLAY with GRAVEL SANDY SILTY CLAY SANDY SILTY CLAY with GRAVEL GRAVELLY SILTY CLAY GRAVELLY SILTY CLAY with SAND
GW-GC	Well-graded GRAVEL with CLAY (or SILTY CLAY) Well-graded GRAVEL with CLAY and SAND (or SILTY CLAY and SAND)		
GP-GM	Poorly-graded GRAVEL with SILT Poorly-graded GRAVEL with SILT and SAND	ML	SILT SILT with SAND SILT with GRAVEL SANDY SILT SANDY SILT with GRAVEL GRAVELLY SILT GRAVELLY SILT with SAND
GP-GC	Poorly-graded GRAVEL with CLAY (or SILTY CLAY) Poorly-graded GRAVEL with CLAY and SAND (or SILTY CLAY and SAND)		
GM	SILTY GRAVEL SILTY GRAVEL with SAND	OL	ORGANIC lean CLAY ORGANIC lean CLAY with SAND ORGANIC lean CLAY with GRAVEL SANDY ORGANIC lean CLAY SANDY ORGANIC lean CLAY with GRAVEL GRAVELLY ORGANIC lean CLAY GRAVELLY ORGANIC lean CLAY with SAND
GC	CLAYEY GRAVEL CLAYEY GRAVEL with SAND		
GC-GM	SILTY, CLAYEY GRAVEL SILTY, CLAYEY GRAVEL with SAND	OL	ORGANIC SILT ORGANIC SILT with SAND ORGANIC SILT with GRAVEL SANDY ORGANIC SILT SANDY ORGANIC SILT with GRAVEL GRAVELLY ORGANIC SILT GRAVELLY ORGANIC SILT with SAND
SW	Well-graded SAND Well-graded SAND with GRAVEL		
SP	Poorly-graded SAND Poorly-graded SAND with GRAVEL	CH	Fat CLAY Fat CLAY with SAND Fat CLAY with GRAVEL SANDY fat CLAY SANDY fat CLAY with GRAVEL GRAVELLY fat CLAY GRAVELLY fat CLAY with SAND
SW-SM	Well-graded SAND with SILT Well-graded SAND with SILT and GRAVEL		
SW-SC	Well-graded SAND with CLAY (or SILTY CLAY) Well-graded SAND with CLAY and GRAVEL (or SILTY CLAY and GRAVEL)	MH	Elastic SILT Elastic SILT with SAND Elastic SILT with GRAVEL SANDY elastic SILT SANDY elastic SILT with GRAVEL GRAVELLY elastic SILT GRAVELLY elastic SILT with SAND
SP-SM	Poorly-graded SAND with SILT Poorly-graded SAND with SILT and GRAVEL		
SP-SC	Poorly-graded SAND with CLAY (or SILTY CLAY) Poorly-graded SAND with CLAY and GRAVEL (or SILTY CLAY and GRAVEL)	OH	ORGANIC fat CLAY ORGANIC fat CLAY with SAND ORGANIC fat CLAY with GRAVEL SANDY ORGANIC fat CLAY SANDY ORGANIC fat CLAY with GRAVEL GRAVELLY ORGANIC fat CLAY GRAVELLY ORGANIC fat CLAY with SAND
SM	SILTY SAND SILTY SAND with GRAVEL		
SC	CLAYEY SAND CLAYEY SAND with GRAVEL	OH	ORGANIC elastic SILT ORGANIC elastic SILT with SAND ORGANIC elastic SILT with GRAVEL SANDY ORGANIC elastic SILT SANDY ORGANIC elastic SILT with GRAVEL GRAVELLY ORGANIC elastic SILT GRAVELLY ORGANIC elastic SILT with SAND
SC-SM	SILTY, CLAYEY SAND SILTY, CLAYEY SAND with GRAVEL		
PT	PEAT	OL/OH	ORGANIC SOIL ORGANIC SOIL with SAND ORGANIC SOIL with GRAVEL SANDY ORGANIC SOIL SANDY ORGANIC SOIL with GRAVEL GRAVELLY ORGANIC SOIL GRAVELLY ORGANIC SOIL with SAND
	COBBLES COBBLES and BOULDERS BOULDERS		

FIELD AND LABORATORY TESTING

- (C) Consolidation (ASTM D 2435)
- (CL) Collapse Potential (ASTM D 5333)
- (CP) Compaction Curve (CTM 216)
- (CR) Corrosivity Testing (CTM 643, CTM 422, CTM 417)
- (CU) Consolidated Undrained Triaxial (ASTM D 4767)
- (DS) Direct Shear (ASTM D 3080)
- (EI) Expansion Index (ASTM D 4829)
- (M) Moisture Content (ASTM D 2216)
- (OC) Organic Content-% (ASTM D 2974)
- (P) Permeability (CTM 220)
- (PA) Particle Size Analysis (ASTM D 422)
- (PI) Plasticity Index (AASHTO T 90) Liquid Limit (AASHTO T 89)
- (PL) Point Load Index (ASTM D 5731)
- (PM) Pressure Meter
- (R) R-Value (CTM 301)
- (SE) Sand Equivalent (CTM 217)
- (SG) Specific Gravity (AASHTO T 100)
- (SL) Shrinkage Limit (ASTM D 427)
- (SW) Swell Potential (ASTM D 4546)
- (UC) Unconfined Compression-Soil (ASTM D 2166) Unconfined Compression-Rock (ASTM D 2938)
- (UU) Unconsolidated Undrained Triaxial (ASTM D 2850)
- (UW) Unit Weight (ASTM D 4767)

APPARENT DENSITY OF COHESIONLESS SOILS

Description	SPT N_{60} (Blows / 12 in.)
Very Loose	0 - 5
Loose	5 - 10
Medium Dense	10 - 30
Dense	30 - 50
Very Dense	Greater than 50

MOISTURE

Description	Criteria
Dry	No discernable moisture
Moist	Moisture present, but no free water
Wet	Visible free water

PERCENT OR PROPORTION OF SOILS

Description	Criteria
Trace	Particles are present but estimated to be less than 5%
Few	5% - 10%
Little	15% - 25%
Some	30% - 45%
Mostly	50% - 100%

PARTICLE SIZE

Description		Size (in.)
Boulder		Greater than 12
Cobble		3 - 12
Gravel	Coarse	3/4 - 3
	Fine	1/5 - 3/4
Sand	Coarse	1/16 - 1/5
	Medium	1/64 - 1/16
	Fine	1/300 - 1/64
Silt and Clay		Less than 1/300

Richard Hartzell
DESIGN OVERSIGHT

SIGN OFF DATE

DRAWN BY N. MORALES
CHECKED BY J. LEE

K. RADHAKRISHNAN & J. LEE
FIELD INVESTIGATION BY:
DATE: 01/26/11, 01/27/11, 01/28/11, 01/29/11, 01/31/11 & 02/02/11

PREPARED FOR THE STATE OF CALIFORNIA DEPARTMENT OF TRANSPORTATION

Milind Desai
PROJECT ENGINEER

BRIDGE NO.
POST MILES

SOUNDWALL NO. 97

LOG OF TEST BORINGS 3 OF 3 — SW-21

GS GEOTECHNICAL LOG OF TEST BORINGS SHEET (ENGLISH) (REV. 7/16/10)

ORIGINAL SCALE IN INCHES FOR REDUCED PLANS 0 1 2 3

UNIT: 3573
PROJECT NUMBER & PHASE: 0700000201
CONTRACT NO.: 07-1952U1

DISREGARD PRINTS BEARING EARLIER REVISION DATES
REVISION DATES 10/12/11 05/11/12 SHEET OF

FILE => 0700000201rz006.dgn

USERNAME => s113946 DATE PLOTTED => 08-JUN-2013 TIME PLOTTED => 15:45

DIST	COUNTY	ROUTE	POST MILES TOTAL PROJECT	SHEET No	TOTAL SHEETS
07	Ven	23,101	3.3/3.8, R0.1/R4.5	387	652

GEOTECHNICAL PROFESSIONAL — DATE 12-06-12

PLANS APPROVAL DATE 6-3-13

REGISTERED PROFESSIONAL ENGINEER — PING TIAN — No. GE2660 — Exp. 12/31/13 — GEOTECHNICAL — STATE OF CALIFORNIA

The State of California or its officers or agents shall not be responsible for the accuracy or completeness of electronic copies of this plan sheet.

CITY OF THOUSAND OAKS
2100 THOUSAND OAKS BLVD
THOUSAND OAKS, CA 91362

CH2M HILL
1000 WILSHIRE BLVD, 21ST FLOOR
LOS ANGELES, CA 90017

BENCHMARKS AND DATUM

The horizontal coordinates are based on the North American Datum of 1983 (NAD83) California Coordinate System Zone 5 epoch 1991.35, locally determined by points 5434,5433,5435, and 5441 from Caltrans Survey Request 94-156.

Vertical control is based on the North American Vertical Datum of 1988 (NAVD88) locally determined by the following benchmarks published by the National Geodetic Survey.

AA3344	Elev	830.93	(Adj 1995)
AA3348	Elev	953.66	(Adj 1995)
AA3205	Elev	747.56	(Adj 1995)
AA3346	Elev	922.40	(Adj 1995)

Survey Disk at the intersection of Freeway 101 and Hampshire Rd on top of and 2 ft northeast of the southwest end of the bridge deck.

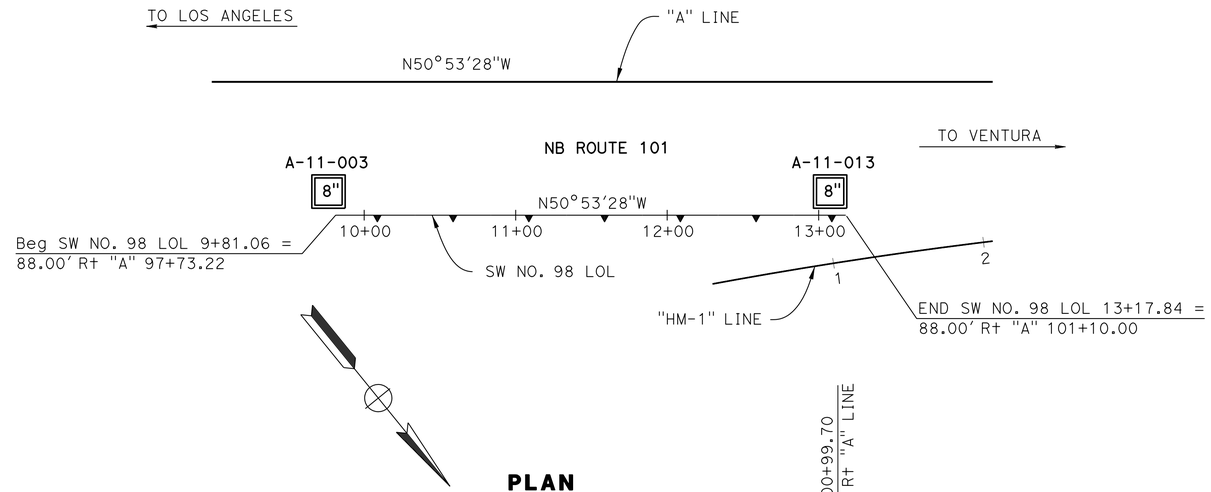

PLAN
1" = 50'

NOTE:

1. This LOTB sheet was prepared in accordance with the Caltrans Soil and Rock Logging, Classification, and Presentation Manual (June 2010).

CORRECTION FACTOR:

A multiplication factor 0.65 was used to convert from California Modified Ring Sampler blow count to equivalent Standard Penetration Test Sampler blow count.

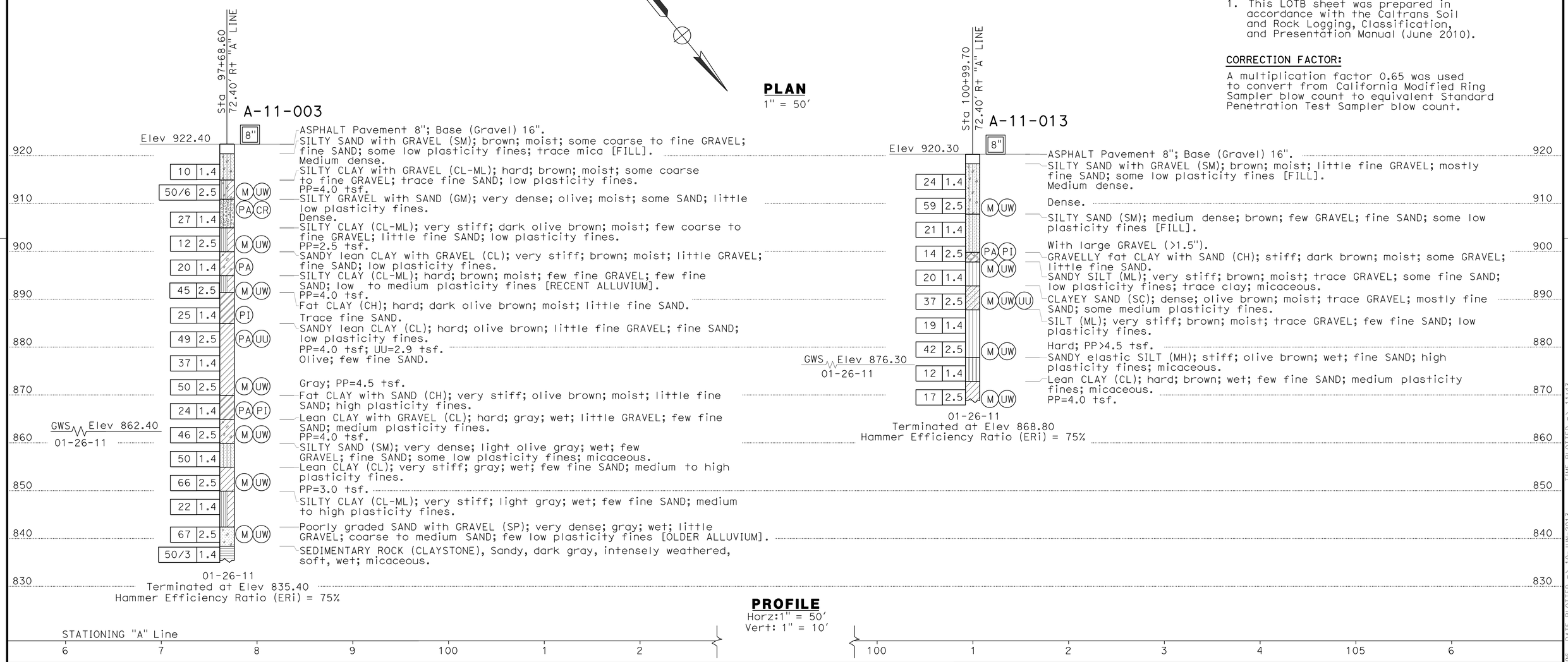

PROFILE
Horz:1" = 50'
Vert: 1" = 10'

Richard Hartzell — DESIGN OVERSIGHT	DRAWN BY	N. MORALES	K. RADHAKRISHNAN & J. LEE — FIELD INVESTIGATION BY:	PREPARED FOR THE STATE OF CALIFORNIA DEPARTMENT OF TRANSPORTATION	Milind Desai — PROJECT ENGINEER
SIGN OFF DATE	CHECKED BY	J. LEE	DATE: 01/26/11		

BRIDGE NO. / POST MILES

SOUNDWALL NO. 98

LOG OF TEST BORINGS 1 of 3 — SW-22

GS GEOTECHNICAL LOG OF TEST BORINGS SHEET (ENGLISH) (REV. 7/16/10)

ORIGINAL SCALE IN INCHES FOR REDUCED PLANS 0 1 2 3

UNIT: 3573
PROJECT NUMBER & PHASE: 0700000201 CONTRACT NO.: 07-1952U1

DISREGARD PRINTS BEARING EARLIER REVISION DATES — REVISION DATES 10/12/11 05/11/12 — SHEET OF

FILE => 0700000201rz007.dgn

USERNAME => s124496 DATE PLOTTED => 10-JUN-2013 TIME PLOTTED => 11:43

REFERENCE: CALTRANS SOIL & ROCK LOGGING, CLASSIFICATION, AND PRESENTATION MANUAL (2010)

DIST	COUNTY	ROUTE	POST MILES TOTAL PROJECT	SHEET No	TOTAL SHEETS
07	Ven	23,101	3.3/3.8, R0.1/R4.5	388	652

GEOTECHNICAL PROFESSIONAL — DATE 12-06-12

PLANS APPROVAL DATE 6-3-13

REGISTERED PROFESSIONAL ENGINEER — PING TIAN — No. GE2660 — Exp. 12/31/13 — GEOTECHNICAL — STATE OF CALIFORNIA

The State of California or its officers or agents shall not be responsible for the accuracy or completeness of electronic copies of this plan sheet.

CITY OF THOUSAND OAKS
2100 THOUSAND OAKS BLVD
THOUSAND OAKS, CA 91362

CH2M HILL
1000 WILSHIRE BLVD, 21ST FLOOR
LOS ANGELES, CA 90017

CEMENTATION

Description	Criteria
Weak	Crumbles or breaks with handling or little finger pressure.
Moderate	Crumbles or breaks with considerable finger pressure.
Strong	Will not crumble or break with finger pressure.

BOREHOLE IDENTIFICATION

Symbol	Hole Type	Description
Size	A	Auger Boring (hollow or solid stem bucket)
Size	R RW RC P	Rotary drilled boring (conventional) Rotary drilled with self-casing wire-line Rotary core with continuously-sampled, self-casing wire-line Rotary percussion boring (air)
Size	R	Rotary drilled diamond core
Size	HD HA	Hand driven (1-inch soil tube) Hand Auger
●	D	Dynamic Cone Penetration Boring
▲	CPT	Cone Penetration Test (ASTM D 5778)
⬚	O	Other (note on LOTB)

Note: Size in inches.

CONSISTENCY OF COHESIVE SOILS

Description	Shear Strength (tsf)	Pocket Penetrometer Measurement, PP, (tsf)	Torvane Measurement, TV, (tsf)	Vane Shear Measurement, VS, (tsf)
Very Soft	Less than 0.12	Less than 0.25	Less than 0.12	Less than 0.12
Soft	0.12 - 0.25	0.25 - 0.5	0.12 - 0.25	0.12 - 0.25
Medium Stiff	0.25 - 0.5	0.5 - 1	0.25 - 0.5	0.25 - 0.5
Stiff	0.5 - 1	1 - 2	0.5 - 1	0.5 - 1
Very Stiff	1 - 2	2 - 4	1 - 2	1 - 2
Hard	Greater than 2	Greater than 4	Greater than 2	Greater than 2

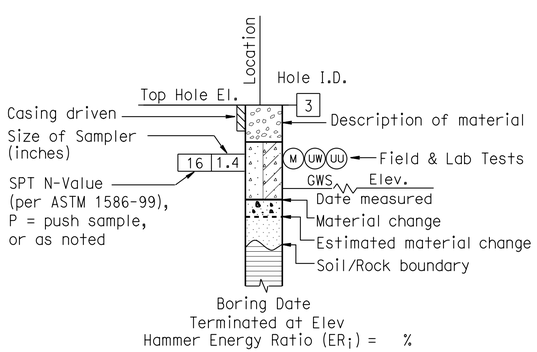

ROTARY BORING

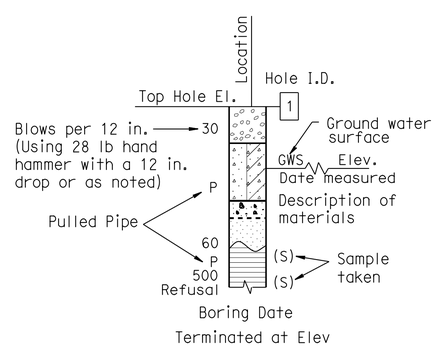

HAND BORING

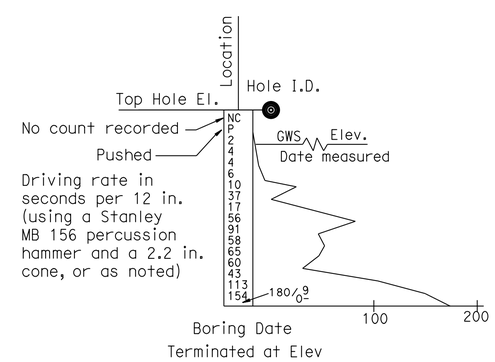

DYNAMIC CONE PENETRATION BORING

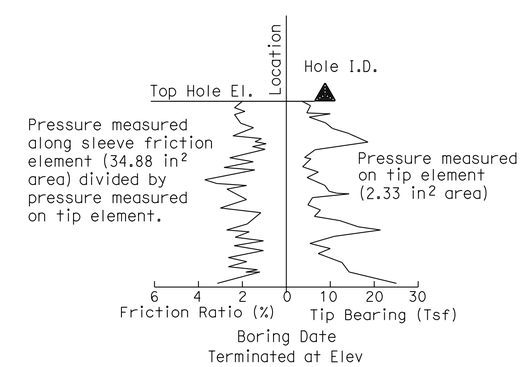

CONE PENETRATION TEST (CPT) BORING

Richard Hartzell — DESIGN OVERSIGHT	DRAWN BY	N. MORALES	K. RADHAKRISHNAN & J. LEE — FIELD INVESTIGATION BY: 01/26/11, 01/27/11, 01/28/11, 01/29/11, 01/31/11 & 02/02/11 — DATE:
SIGN OFF DATE	CHECKED BY	J. LEE	

PREPARED FOR THE STATE OF CALIFORNIA DEPARTMENT OF TRANSPORTATION

Milind Desai — PROJECT ENGINEER

BRIDGE NO.

POST MILES

SOUNDWALL NO. 98

LOG OF TEST BORINGS 2 OF 3 — SW-23

GS GEOTECHNICAL LOG OF TEST BORINGS SHEET (ENGLISH) (REV. 7/16/10)

ORIGINAL SCALE IN INCHES FOR REDUCED PLANS 0 1 2 3

UNIT: 3573
PROJECT NUMBER & PHASE: 0700000201
CONTRACT NO.: 07-1952U1

DISREGARD PRINTS BEARING EARLIER REVISION DATES

REVISION DATES: 10/12/11 05/11/12 — SHEET — OF

FILE => 0700000201rz008.dgn

USERNAME => s113946 DATE PLOTTED => 08-JUN-2013 TIME PLOTTED => 15:45

REFERENCE: CALTRANS SOIL & ROCK LOGGING, CLASSIFICATION, AND PRESENTATION MANUAL (2010)

DIST	COUNTY	ROUTE	POST MILES TOTAL PROJECT	SHEET No	TOTAL SHEETS
07	Ven	23,101	3.3/3.8, R0.1/R4.5	389	652

GEOTECHNICAL PROFESSIONAL — DATE 12-06-12

6-3-13
PLANS APPROVAL DATE

REGISTERED PROFESSIONAL ENGINEER — PING TIAN — No. GE2660 — Exp. 12/31/13 — GEOTECHNICAL — STATE OF CALIFORNIA

The State of California or its officers or agents shall not be responsible for the accuracy or completeness of electronic copies of this plan sheet.

CITY OF THOUSAND OAKS
2100 THOUSAND OAKS BLVD
THOUSAND OAKS, CA 91362

CH2M HILL
1000 WILSHIRE BLVD, 21ST FLOOR
LOS ANGELES, CA 90017

GROUP SYMBOLS AND NAMES

Graphic/Symbol	Group Names
GW	Well-graded GRAVEL Well-graded GRAVEL with SAND
GP	Poorly-graded GRAVEL Poorly-graded GRAVEL with SAND
GW-GM	Well-graded GRAVEL with SILT Well-graded GRAVEL with SILT and SAND
GW-GC	Well-graded GRAVEL with CLAY (or SILTY CLAY) Well-graded GRAVEL with CLAY and SAND (or SILTY CLAY and SAND)
GP-GM	Poorly-graded GRAVEL with SILT Poorly-graded GRAVEL with SILT and SAND
GP-GC	Poorly-graded GRAVEL with CLAY (or SILTY CLAY) Poorly-graded GRAVEL with CLAY and SAND (or SILTY CLAY and SAND)
GM	SILTY GRAVEL SILTY GRAVEL with SAND
GC	CLAYEY GRAVEL CLAYEY GRAVEL with SAND
GC-GM	SILTY, CLAYEY GRAVEL SILTY, CLAYEY GRAVEL with SAND
SW	Well-graded SAND Well-graded SAND with GRAVEL
SP	Poorly-graded SAND Poorly-graded SAND with GRAVEL
SW-SM	Well-graded SAND with SILT Well-graded SAND with SILT and GRAVEL
SW-SC	Well-graded SAND with CLAY (or SILTY CLAY) Well-graded SAND with CLAY and GRAVEL (or SILTY CLAY and GRAVEL)
SP-SM	Poorly-graded SAND with SILT Poorly-graded SAND with SILT and GRAVEL
SP-SC	Poorly-graded SAND with CLAY (or SILTY CLAY) Poorly-graded SAND with CLAY and GRAVEL (or SILTY CLAY and GRAVEL)
SM	SILTY SAND SILTY SAND with GRAVEL
SC	CLAYEY SAND CLAYEY SAND with GRAVEL
SC-SM	SILTY, CLAYEY SAND SILTY, CLAYEY SAND with GRAVEL
PT	PEAT
	COBBLES COBBLES and BOULDERS BOULDERS

Graphic/Symbol	Group Names
CL	Lean CLAY Lean CLAY with SAND Lean CLAY with GRAVEL SANDY lean CLAY SANDY lean CLAY with GRAVEL GRAVELLY lean CLAY GRAVELLY lean CLAY with SAND
CL-ML	SILTY CLAY SILTY CLAY with SAND SILTY CLAY with GRAVEL SANDY SILTY CLAY SANDY SILTY CLAY with GRAVEL GRAVELLY SILTY CLAY GRAVELLY SILTY CLAY with SAND
ML	SILT SILT with SAND SILT with GRAVEL SANDY SILT SANDY SILT with GRAVEL GRAVELLY SILT GRAVELLY SILT with SAND
OL	ORGANIC lean CLAY ORGANIC lean CLAY with SAND ORGANIC lean CLAY with GRAVEL SANDY ORGANIC lean CLAY SANDY ORGANIC lean CLAY with GRAVEL GRAVELLY ORGANIC lean CLAY GRAVELLY ORGANIC lean CLAY with SAND
OL	ORGANIC SILT ORGANIC SILT with SAND ORGANIC SILT with GRAVEL SANDY ORGANIC SILT SANDY ORGANIC SILT with GRAVEL GRAVELLY ORGANIC SILT GRAVELLY ORGANIC SILT with SAND
CH	Fat CLAY Fat CLAY with SAND Fat CLAY with GRAVEL SANDY fat CLAY SANDY fat CLAY with GRAVEL GRAVELLY fat CLAY GRAVELLY fat CLAY with SAND
MH	Elastic SILT Elastic SILT with SAND Elastic SILT with GRAVEL SANDY elastic SILT SANDY elastic SILT with GRAVEL GRAVELLY elastic SILT GRAVELLY elastic SILT with SAND
OH	ORGANIC fat CLAY ORGANIC fat CLAY with SAND ORGANIC fat CLAY with GRAVEL SANDY ORGANIC fat CLAY SANDY ORGANIC fat CLAY with GRAVEL GRAVELLY ORGANIC fat CLAY GRAVELLY ORGANIC fat CLAY with SAND
OH	ORGANIC elastic SILT ORGANIC elastic SILT with SAND ORGANIC elastic SILT with GRAVEL SANDY ORGANIC elastic SILT SANDY ORGANIC elastic SILT with GRAVEL GRAVELLY ORGANIC elastic SILT GRAVELLY ORGANIC elastic SILT with SAND
OL/OH	ORGANIC SOIL ORGANIC SOIL with SAND ORGANIC SOIL with GRAVEL SANDY ORGANIC SOIL SANDY ORGANIC SOIL with GRAVEL GRAVELLY ORGANIC SOIL GRAVELLY ORGANIC SOIL with SAND

FIELD AND LABORATORY TESTING

- (C) Consolidation (ASTM D 2435)
- (CL) Collapse Potential (ASTM D 5333)
- (CP) Compaction Curve (CTM 216)
- (CR) Corrosivity Testing (CTM 643, CTM 422, CTM 417)
- (CU) Consolidated Undrained Triaxial (ASTM D 4767)
- (DS) Direct Shear (ASTM D 3080)
- (EI) Expansion Index (ASTM D 4829)
- (M) Moisture Content (ASTM D 2216)
- (OC) Organic Content-% (ASTM D 2974)
- (P) Permeability (CTM 220)
- (PA) Particle Size Analysis (ASTM D 422)
- (PI) Plasticity Index (AASHTO T 90) Liquid Limit (AASHTO T 89)
- (PL) Point Load Index (ASTM D 5731)
- (PM) Pressure Meter
- (R) R-Value (CTM 301)
- (SE) Sand Equivalent (CTM 217)
- (SG) Specific Gravity (AASHTO T 100)
- (SL) Shrinkage Limit (ASTM D 427)
- (SW) Swell Potential (ASTM D 4546)
- (UC) Unconfined Compression-Soil (ASTM D 2166) Unconfined Compression-Rock (ASTM D 2938)
- (UU) Unconsolidated Undrained Triaxial (ASTM D 2850)
- (UW) Unit Weight (ASTM D 4767)

APPARENT DENSITY OF COHESIONLESS SOILS

Description	SPT N_{60} (Blows / 12 in.)
Very Loose	0 - 5
Loose	5 - 10
Medium Dense	10 - 30
Dense	30 - 50
Very Dense	Greater than 50

MOISTURE

Description	Criteria
Dry	No discernable moisture
Moist	Moisture present, but no free water
Wet	Visible free water

PERCENT OR PROPORTION OF SOILS

Description	Criteria
Trace	Particles are present but estimated to be less than 5%
Few	5% - 10%
Little	15% - 25%
Some	30% - 45%
Mostly	50% - 100%

PARTICLE SIZE

Description		Size (in.)
Boulder		Greater than 12
Cobble		3 - 12
Gravel	Coarse	3/4 - 3
	Fine	1/5 - 3/4
Sand	Coarse	1/16 - 1/5
	Medium	1/64 - 1/16
	Fine	1/300 - 1/64
Silt and Clay		Less than 1/300

Richard Hartzell
DESIGN OVERSIGHT

SIGN OFF DATE

DRAWN BY N. MORALES
CHECKED BY J. LEE

K. RADHAKRISHNAN & J. LEE
FIELD INVESTIGATION BY:
DATE: 01/26/11, 01/27/11, 01/28/11, 01/29/11, 01/31/11 & 02/02/11

PREPARED FOR THE STATE OF CALIFORNIA DEPARTMENT OF TRANSPORTATION

Milind Desai
PROJECT ENGINEER

BRIDGE NO.
POST MILES

SOUNDWALL NO. 98

LOG OF TEST BORINGS 3 OF 3

SW-24

GS GEOTECHNICAL LOG OF TEST BORINGS SHEET (ENGLISH) (REV. 7/16/10)

ORIGINAL SCALE IN INCHES FOR REDUCED PLANS 0 1 2 3

UNIT: 3573
PROJECT NUMBER & PHASE: 0700000201
CONTRACT NO.: 07-1952U1

DISREGARD PRINTS BEARING EARLIER REVISION DATES

REVISION DATES 10/12/11 05/11/12 — SHEET — OF

FILE => 0700000201rz009.dgn

USERNAME => s113946 DATE PLOTTED => 08-JUN-2013 TIME PLOTTED => 15:45

DIST	COUNTY	ROUTE	POST MILES TOTAL PROJECT	SHEET No	TOTAL SHEETS
07	Ven	23,101	3.3/3.8, R0.1/R4.5	390	652

GEOTECHNICAL PROFESSIONAL — DATE 12-06-12

6-3-13
PLANS APPROVAL DATE

REGISTERED PROFESSIONAL ENGINEER — PING TIAN — No. GE2660 — Exp. 12/31/13 — GEOTECHNICAL — STATE OF CALIFORNIA

The State of California or its officers or agents shall not be responsible for the accuracy or completeness of electronic copies of this plan sheet.

CITY OF THOUSAND OAKS
2100 THOUSAND OAKS BLVD
THOUSAND OAKS, CA 91362

CH2M HILL
1000 WILSHIRE BLVD, 21ST FLOOR
LOS ANGELES, CA 90017

BENCHMARKS AND DATUM

The horizontal coordinates are based on the North American Datum of 1983 (NAD83) California Coordinate System Zone 5 epoch 1991.35, locally determined by points 5434,5433,5435, and 5441 from Caltrans Survey Request 94-156.

Vertical control is based on the North American Vertical Datum of 1988 (NAVD88) locally determined by the following benchmarks published by the National Geodetic Survey.

AA3344	Elev	830.93	(Adj 1995)
AA3348	Elev	953.66	(Adj 1995)
AA3205	Elev	747.56	(Adj 1995)
AA3346	Elev	922.40	(Adj 1995)

Survey Disk at the intersection of Freeway 101 and Hampshire Rd on top of and 2 ft northeast of the southwest end of the bridge deck.

NOTE:

1. This LOTB sheet was prepared in accordance with the Caltrans Soil and Rock Logging, Classification, and Presentation Manual (June 2010).

CORRECTION FACTOR:

A multiplication factor 0.65 was used to convert from California Modified Ring Sampler blow count to equivalent Standard Penetration Test Sampler blow count.

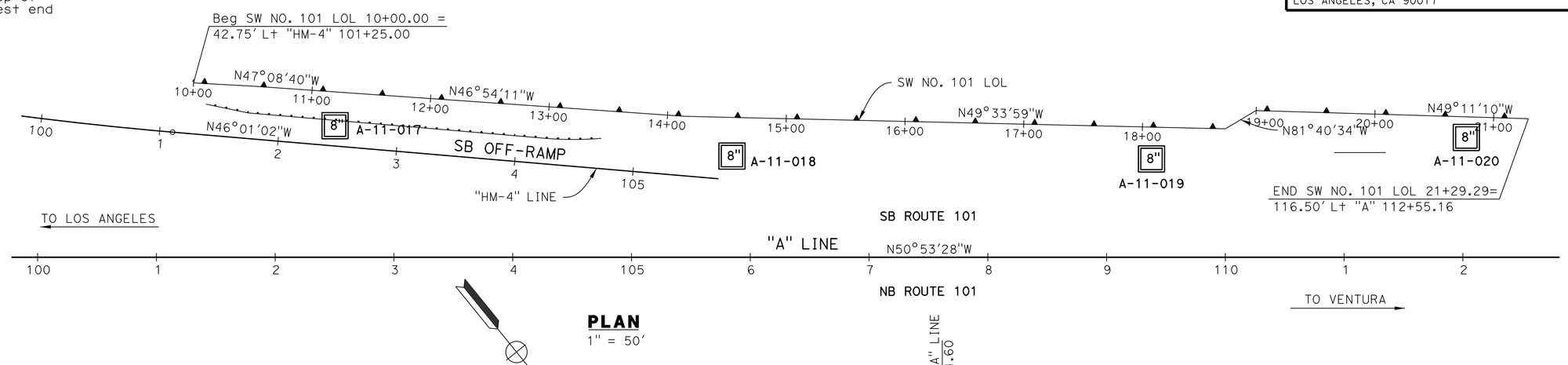

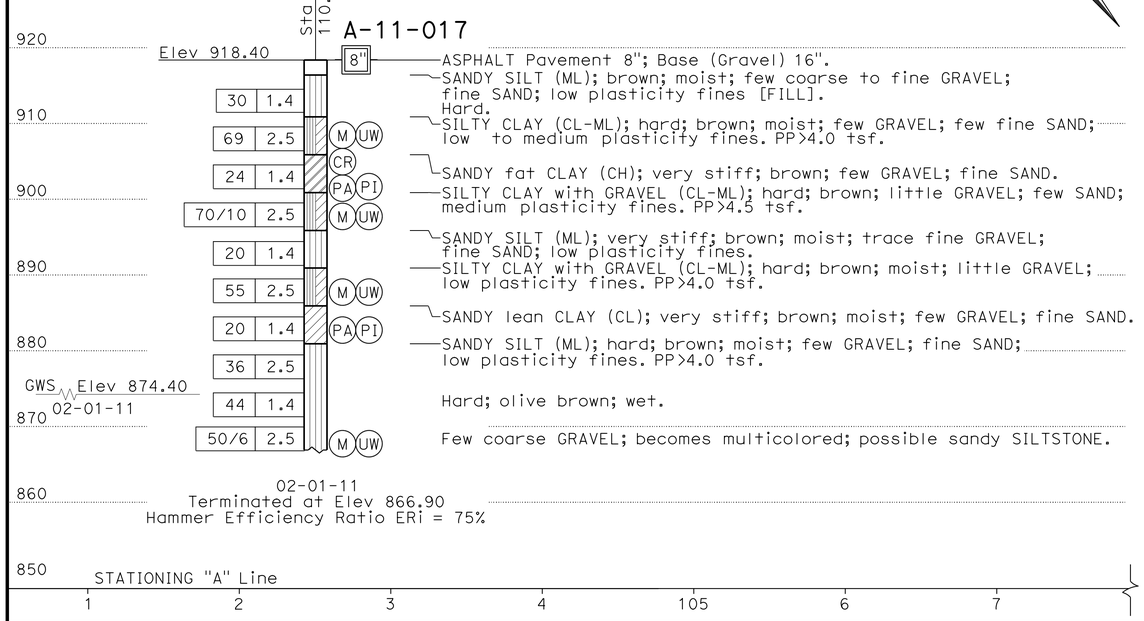

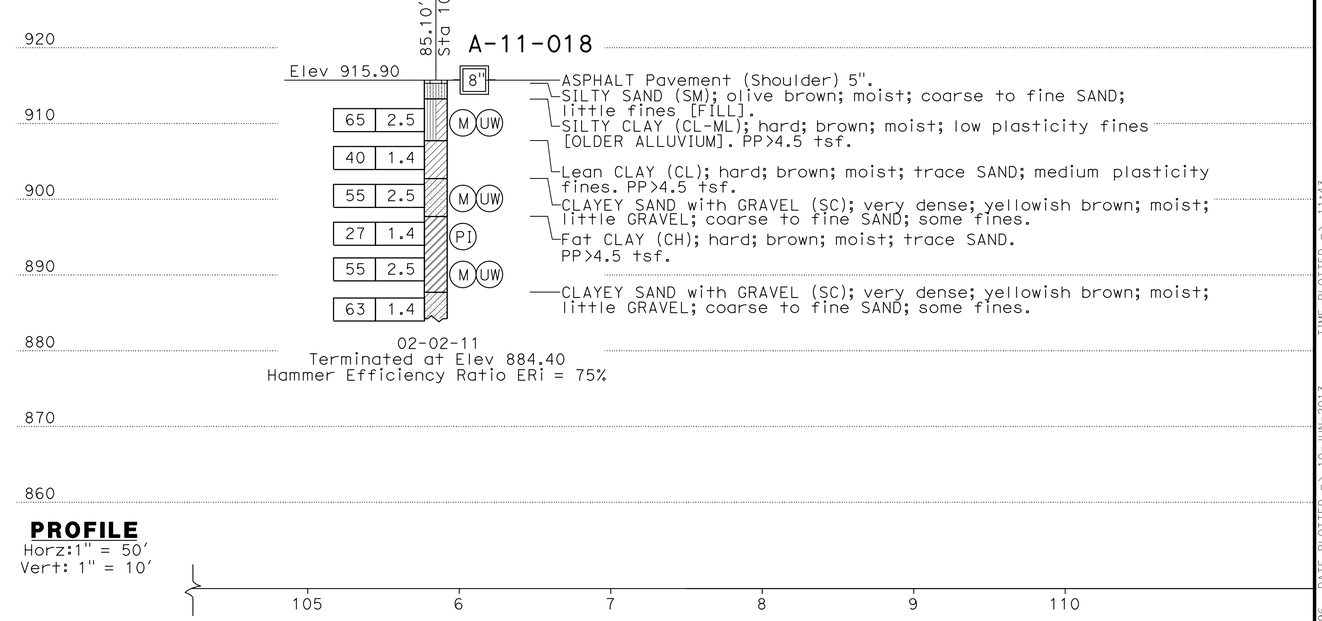

PROFILE
Horz:1" = 50'
Vert: 1" = 10'

Richard Hartzell — DESIGN OVERSIGHT	DRAWN BY	N. MORALES	K. RADHAKRISHNAN & J. LEE — FIELD INVESTIGATION BY:
SIGN OFF DATE	CHECKED BY	J. LEE	DATE: 02/01/11 & 02/02/11

PREPARED FOR THE STATE OF CALIFORNIA DEPARTMENT OF TRANSPORTATION

Milind Desai — PROJECT ENGINEER

BRIDGE NO. / POST MILES

RETAINING WALL NO. 105
LOG OF TEST BORINGS 1 OF 4

SW-25

GS GEOTECHNICAL LOG OF TEST BORINGS SHEET (ENGLISH) (REV. 7/16/10)

ORIGINAL SCALE IN INCHES FOR REDUCED PLANS 0 1 2 3

UNIT: 3573
PROJECT NUMBER & PHASE: 0700000201 CONTRACT NO.: 07-1952U1

DISREGARD PRINTS BEARING EARLIER REVISION DATES — REVISION DATES 10/17/11 05/11/12 — SHEET OF

FILE => 0700000201rz010.dgn

USERNAME => s124496 DATE PLOTTED => 10-JUN-2013 TIME PLOTTED => 11:43

DIST	COUNTY	ROUTE	POST MILES TOTAL PROJECT	SHEET No	TOTAL SHEETS
07	Ven	23,101	3.3/3.8, R0.1/R4.5	391	652

GEOTECHNICAL PROFESSIONAL — DATE 12-06-12

6-3-13
PLANS APPROVAL DATE

REGISTERED PROFESSIONAL ENGINEER — PING TIAN — No. GE2660 — Exp. 12/31/13 — GEOTECHNICAL — STATE OF CALIFORNIA

The State of California or its officers or agents shall not be responsible for the accuracy or completeness of electronic copies of this plan sheet.

CITY OF THOUSAND OAKS
2100 THOUSAND OAKS BLVD
THOUSAND OAKS, CA 91362

CH2M HILL
1000 WILSHIRE BLVD, 21ST FLOOR
LOS ANGELES, CA 90017

BENCHMARKS AND DATUM

The horizontal coordinates are based on the North American Datum of 1983 (NAD83) California Coordinate System Zone 5 epoch 1991.35, locally determined by points 5434,5433,5435, and 5441 from Caltrans Survey Request 94-156.

Vertical control is based on the North American Vertical Datum of 1988 (NAVD88) locally determined by the following benchmarks published by the National Geodetic Survey.

AA3344	Elev	830.93	(Adj 1995)
AA3348	Elev	953.66	(Adj 1995)
AA3205	Elev	747.56	(Adj 1995)
AA3346	Elev	922.40	(Adj 1995)

Survey Disk at the intersection of Freeway 101 and Hampshire Rd on top of and 2 ft northeast of the southwest end of the bridge deck.

NOTE:

1. This LOTB sheet was prepared in accordance with the Caltrans Soil and Rock Logging, Classification, and Presentation Manual (June 2010).

CORRECTION FACTOR:

A multiplication factor 0.65 was used to convert from California Modified Ring Sampler blow count to equivalent Standard Penetration Test Sampler blow count.

FOR PLAN VIEW, SEE "LOG OF TEST BORINGS 1 OF 4" SHEET.

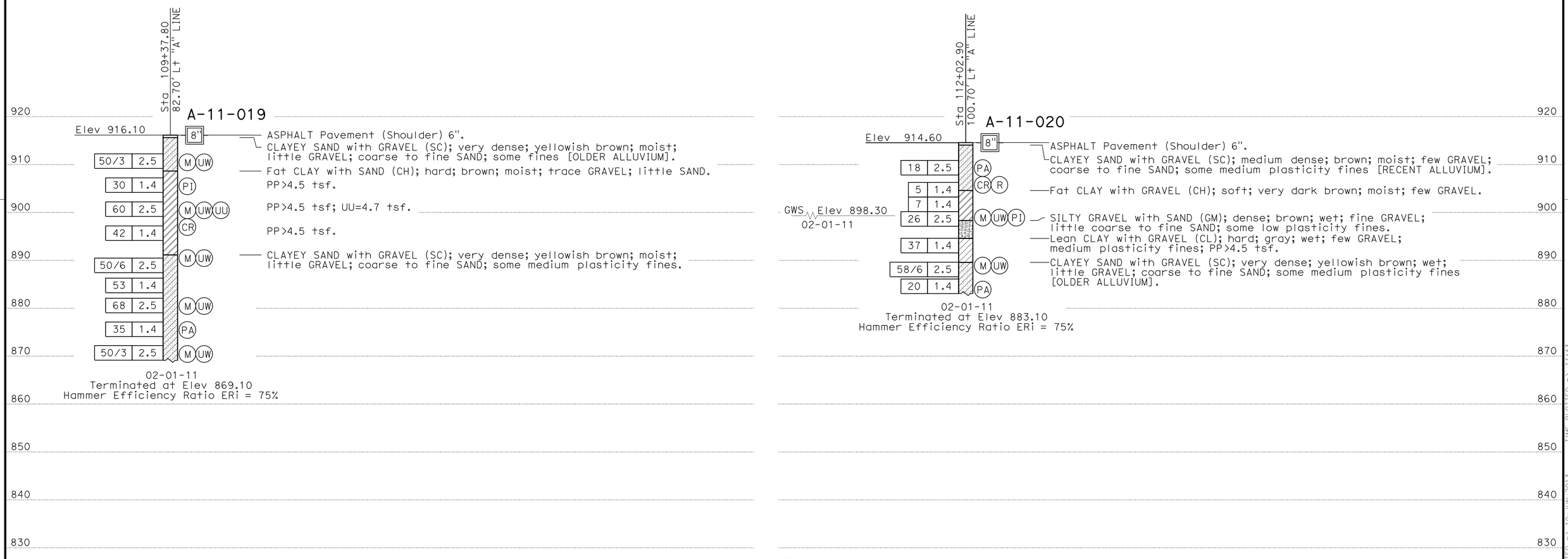

PROFILE

Horz:1" = 50'
Vert: 1" = 10'

Richard Hartzell — DESIGN OVERSIGHT	DRAWN BY	N. MORALES	K. RADHAKRISHNAN & J. LEE — FIELD INVESTIGATION BY:	PREPARED FOR THE STATE OF CALIFORNIA DEPARTMENT OF TRANSPORTATION	Milind Desai — PROJECT ENGINEER
SIGN OFF DATE	CHECKED BY	J. LEE	DATE: 02/01/11		

BRIDGE NO.
POST MILES

RETAINING WALL NO. 105

LOG OF TEST BORINGS 2 OF 4

SW-26

GS GEOTECHNICAL LOG OF TEST BORINGS SHEET (ENGLISH) (REV. 7/16/10)

ORIGINAL SCALE IN INCHES FOR REDUCED PLANS 0 1 2 3

UNIT: 3573
PROJECT NUMBER & PHASE: 0700000201
CONTRACT NO.: 07-1952U1

DISREGARD PRINTS BEARING EARLIER REVISION DATES → REVISION DATES 10/12/11 05/11/12 — SHEET — OF

FILE => 0700000201rz011.dgn

USERNAME => s1244996 DATE PLOTTED => 10-JUN-2013 TIME PLOTTED => 11:43

REFERENCE: CALTRANS SOIL & ROCK LOGGING, CLASSIFICATION, AND PRESENTATION MANUAL (2010)

DIST	COUNTY	ROUTE	POST MILES TOTAL PROJECT	SHEET No	TOTAL SHEETS
07	Ven	23,101	3.3/3.8, R0.1/R4.5	392	652

GEOTECHNICAL PROFESSIONAL — DATE 12-06-12

PLANS APPROVAL DATE 6-3-13

REGISTERED PROFESSIONAL ENGINEER — PING TIAN — No. GE2660 — Exp. 12/31/13 — GEOTECHNICAL — STATE OF CALIFORNIA

The State of California or its officers or agents shall not be responsible for the accuracy or completeness of electronic copies of this plan sheet.

CITY OF THOUSAND OAKS
2100 THOUSAND OAKS BLVD
THOUSAND OAKS, CA 91362

CH2M HILL
1000 WILSHIRE BLVD, 21ST FLOOR
LOS ANGELES, CA 90017

CEMENTATION

Description	Criteria
Weak	Crumbles or breaks with handling or little finger pressure.
Moderate	Crumbles or breaks with considerable finger pressure.
Strong	Will not crumble or break with finger pressure.

BOREHOLE IDENTIFICATION

Symbol	Hole Type	Description
Size	A	Auger Boring (hollow or solid stem bucket)
Size	R RW RC P	Rotary drilled boring (conventional) Rotary drilled with self-casing wire-line Rotary core with continuously-sampled, self-casing wire-line Rotary percussion boring (air)
Size	R	Rotary drilled diamond core
Size	HD HA	Hand driven (1-inch soil tube) Hand Auger
●	D	Dynamic Cone Penetration Boring
▲	CPT	Cone Penetration Test (ASTM D 5778)
⬚	O	Other (note on LOTB)

Note: Size in inches.

CONSISTENCY OF COHESIVE SOILS

Description	Shear Strength (tsf)	Pocket Penetrometer Measurement, PP, (tsf)	Torvane Measurement, TV, (tsf)	Vane Shear Measurement, VS, (tsf)
Very Soft	Less than 0.12	Less than 0.25	Less than 0.12	Less than 0.12
Soft	0.12 - 0.25	0.25 - 0.5	0.12 - 0.25	0.12 - 0.25
Medium Stiff	0.25 - 0.5	0.5 - 1	0.25 - 0.5	0.25 - 0.5
Stiff	0.5 - 1	1 - 2	0.5 - 1	0.5 - 1
Very Stiff	1 - 2	2 - 4	1 - 2	1 - 2
Hard	Greater than 2	Greater than 4	Greater than 2	Greater than 2

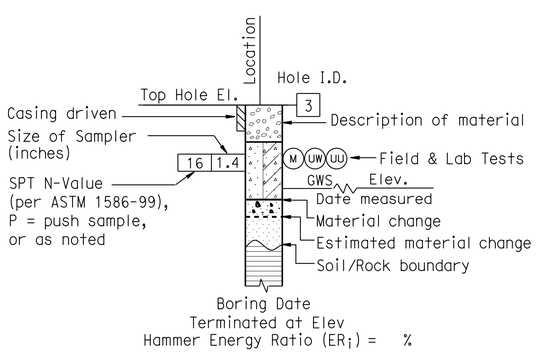

ROTARY BORING

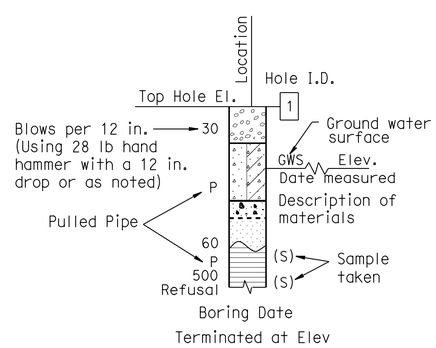

HAND BORING

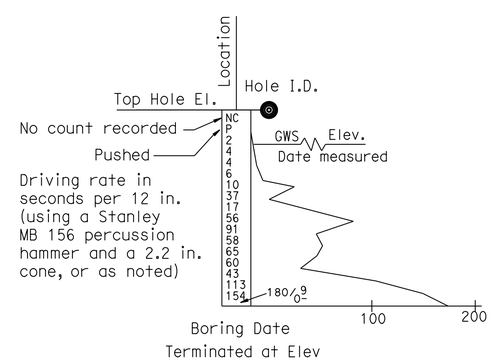

DYNAMIC CONE PENETRATION BORING

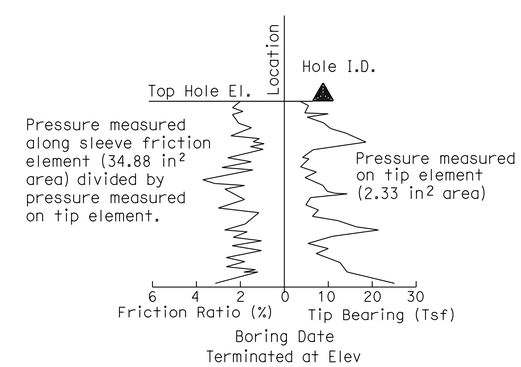

CONE PENETRATION TEST (CPT) BORING

Richard Hartzell — DESIGN OVERSIGHT	DRAWN BY	N. MORALES	K. RADHAKRISHNAN & J. LEE — FIELD INVESTIGATION BY:
SIGN OFF DATE	CHECKED BY	J. LEE	DATE: 02/01/11 & 02/02/11

PREPARED FOR THE STATE OF CALIFORNIA DEPARTMENT OF TRANSPORTATION

Milind Desai — PROJECT ENGINEER

BRIDGE NO.

POST MILES

RETAINING WALL NO. 105

LOG OF TEST BORINGS 3 OF 4

SW-27

GS GEOTECHNICAL LOG OF TEST BORINGS SHEET (ENGLISH) (REV. 7/16/10)

ORIGINAL SCALE IN INCHES FOR REDUCED PLANS 0 1 2 3

UNIT: 3573
PROJECT NUMBER & PHASE: 0700000201
CONTRACT NO.: 07-1952U1

DISREGARD PRINTS BEARING EARLIER REVISION DATES

REVISION DATES: 10/12/11 05/11/12 — SHEET — OF

FILE => 0700000201rz012.dgn

USERNAME => s113946 DATE PLOTTED => 08-JUN-2013 TIME PLOTTED => 15:45

REFERENCE: CALTRANS SOIL & ROCK LOGGING, CLASSIFICATION, AND PRESENTATION MANUAL (2010)

DIST	COUNTY	ROUTE	POST MILES TOTAL PROJECT	SHEET No	TOTAL SHEETS
07	Ven	23,101	3.3/3.8, R0.1/R4.5	393	652

GEOTECHNICAL PROFESSIONAL — DATE 12-06-12

6-3-13
PLANS APPROVAL DATE

REGISTERED PROFESSIONAL ENGINEER — PING TIAN — No. GE2660 — Exp. 12/31/13 — GEOTECHNICAL — STATE OF CALIFORNIA

The State of California or its officers or agents shall not be responsible for the accuracy or completeness of electronic copies of this plan sheet.

CITY OF THOUSAND OAKS
2100 THOUSAND OAKS BLVD
THOUSAND OAKS, CA 91362

CH2M HILL
1000 WILSHIRE BLVD, 21ST FLOOR
LOS ANGELES, CA 90017

GROUP SYMBOLS AND NAMES

Graphic/Symbol	Group Names	Graphic/Symbol	Group Names
GW	Well-graded GRAVEL Well-graded GRAVEL with SAND	CL	Lean CLAY Lean CLAY with SAND Lean CLAY with GRAVEL SANDY lean CLAY SANDY lean CLAY with GRAVEL GRAVELLY lean CLAY GRAVELLY lean CLAY with SAND
GP	Poorly-graded GRAVEL Poorly-graded GRAVEL with SAND		
GW-GM	Well-graded GRAVEL with SILT Well-graded GRAVEL with SILT and SAND	CL-ML	SILTY CLAY SILTY CLAY with SAND SILTY CLAY with GRAVEL SANDY SILTY CLAY SANDY SILTY CLAY with GRAVEL GRAVELLY SILTY CLAY GRAVELLY SILTY CLAY with SAND
GW-GC	Well-graded GRAVEL with CLAY (or SILTY CLAY) Well-graded GRAVEL with CLAY and SAND (or SILTY CLAY and SAND)		
GP-GM	Poorly-graded GRAVEL with SILT Poorly-graded GRAVEL with SILT and SAND	ML	SILT SILT with SAND SILT with GRAVEL SANDY SILT SANDY SILT with GRAVEL GRAVELLY SILT GRAVELLY SILT with SAND
GP-GC	Poorly-graded GRAVEL with CLAY (or SILTY CLAY) Poorly-graded GRAVEL with CLAY and SAND (or SILTY CLAY and SAND)		
GM	SILTY GRAVEL SILTY GRAVEL with SAND	OL	ORGANIC lean CLAY ORGANIC lean CLAY with SAND ORGANIC lean CLAY with GRAVEL SANDY ORGANIC lean CLAY SANDY ORGANIC lean CLAY with GRAVEL GRAVELLY ORGANIC lean CLAY GRAVELLY ORGANIC lean CLAY with SAND
GC	CLAYEY GRAVEL CLAYEY GRAVEL with SAND		
GC-GM	SILTY, CLAYEY GRAVEL SILTY, CLAYEY GRAVEL with SAND	OL	ORGANIC SILT ORGANIC SILT with SAND ORGANIC SILT with GRAVEL SANDY ORGANIC SILT SANDY ORGANIC SILT with GRAVEL GRAVELLY ORGANIC SILT GRAVELLY ORGANIC SILT with SAND
SW	Well-graded SAND Well-graded SAND with GRAVEL		
SP	Poorly-graded SAND Poorly-graded SAND with GRAVEL	CH	Fat CLAY Fat CLAY with SAND Fat CLAY with GRAVEL SANDY fat CLAY SANDY fat CLAY with GRAVEL GRAVELLY fat CLAY GRAVELLY fat CLAY with SAND
SW-SM	Well-graded SAND with SILT Well-graded SAND with SILT and GRAVEL		
SW-SC	Well-graded SAND with CLAY (or SILTY CLAY) Well-graded SAND with CLAY and GRAVEL (or SILTY CLAY and GRAVEL)	MH	Elastic SILT Elastic SILT with SAND Elastic SILT with GRAVEL SANDY elastic SILT SANDY elastic SILT with GRAVEL GRAVELLY elastic SILT GRAVELLY elastic SILT with SAND
SP-SM	Poorly-graded SAND with SILT Poorly-graded SAND with SILT and GRAVEL		
SP-SC	Poorly-graded SAND with CLAY (or SILTY CLAY) Poorly-graded SAND with CLAY and GRAVEL (or SILTY CLAY and GRAVEL)	OH	ORGANIC fat CLAY ORGANIC fat CLAY with SAND ORGANIC fat CLAY with GRAVEL SANDY ORGANIC fat CLAY SANDY ORGANIC fat CLAY with GRAVEL GRAVELLY ORGANIC fat CLAY GRAVELLY ORGANIC fat CLAY with SAND
SM	SILTY SAND SILTY SAND with GRAVEL		
SC	CLAYEY SAND CLAYEY SAND with GRAVEL	OH	ORGANIC elastic SILT ORGANIC elastic SILT with SAND ORGANIC elastic SILT with GRAVEL SANDY ORGANIC elastic SILT SANDY ORGANIC elastic SILT with GRAVEL GRAVELLY ORGANIC elastic SILT GRAVELLY ORGANIC elastic SILT with SAND
SC-SM	SILTY, CLAYEY SAND SILTY, CLAYEY SAND with GRAVEL		
PT	PEAT	OL/OH	ORGANIC SOIL ORGANIC SOIL with SAND ORGANIC SOIL with GRAVEL SANDY ORGANIC SOIL SANDY ORGANIC SOIL with GRAVEL GRAVELLY ORGANIC SOIL GRAVELLY ORGANIC SOIL with SAND
	COBBLES COBBLES and BOULDERS BOULDERS		

FIELD AND LABORATORY TESTING

- (C) Consolidation (ASTM D 2435)
- (CL) Collapse Potential (ASTM D 5333)
- (CP) Compaction Curve (CTM 216)
- (CR) Corrosivity Testing (CTM 643, CTM 422, CTM 417)
- (CU) Consolidated Undrained Triaxial (ASTM D 4767)
- (DS) Direct Shear (ASTM D 3080)
- (EI) Expansion Index (ASTM D 4829)
- (M) Moisture Content (ASTM D 2216)
- (OC) Organic Content-% (ASTM D 2974)
- (P) Permeability (CTM 220)
- (PA) Particle Size Analysis (ASTM D 422)
- (PI) Plasticity Index (AASHTO T 90) Liquid Limit (AASHTO T 89)
- (PL) Point Load Index (ASTM D 5731)
- (PM) Pressure Meter
- (R) R-Value (CTM 301)
- (SE) Sand Equivalent (CTM 217)
- (SG) Specific Gravity (AASHTO T 100)
- (SL) Shrinkage Limit (ASTM D 427)
- (SW) Swell Potential (ASTM D 4546)
- (UC) Unconfined Compression-Soil (ASTM D 2166) Unconfined Compression-Rock (ASTM D 2938)
- (UU) Unconsolidated Undrained Triaxial (ASTM D 2850)
- (UW) Unit Weight (ASTM D 4767)

APPARENT DENSITY OF COHESIONLESS SOILS

Description	SPT N_{60} (Blows / 12 in.)
Very Loose	0 - 5
Loose	5 - 10
Medium Dense	10 - 30
Dense	30 - 50
Very Dense	Greater than 50

MOISTURE

Description	Criteria
Dry	No discernable moisture
Moist	Moisture present, but no free water
Wet	Visible free water

PERCENT OR PROPORTION OF SOILS

Description	Criteria
Trace	Particles are present but estimated to be less than 5%
Few	5% - 10%
Little	15% - 25%
Some	30% - 45%
Mostly	50% - 100%

PARTICLE SIZE

Description		Size (in.)
Boulder		Greater than 12
Cobble		3 - 12
Gravel	Coarse	3/4 - 3
	Fine	1/5 - 3/4
Sand	Coarse	1/16 - 1/5
	Medium	1/64 - 1/16
	Fine	1/300 - 1/64
Silt and Clay		Less than 1/300

Richard Hartzell
DESIGN OVERSIGHT

SIGN OFF DATE

DRAWN BY N. MORALES
CHECKED BY J. LEE

K. RADHAKRISHNAN & J. LEE
FIELD INVESTIGATION BY:
DATE: 02/01/11 & 02/02/11

PREPARED FOR THE STATE OF CALIFORNIA DEPARTMENT OF TRANSPORTATION

Milind Desai
PROJECT ENGINEER

BRIDGE NO.
POST MILES

RETAINING WALL NO. 105

LOG OF TEST BORINGS 4 OF 4

SW-28

GS GEOTECHNICAL LOG OF TEST BORINGS SHEET (ENGLISH) (REV. 7/16/10)

ORIGINAL SCALE IN INCHES FOR REDUCED PLANS 0 1 2 3

UNIT: 3573
PROJECT NUMBER & PHASE: 0700000201
CONTRACT NO.: 07-1952U1

DISREGARD PRINTS BEARING EARLIER REVISION DATES

REVISION DATES 10/12/11 05/11/12 — SHEET — OF

FILE => 0700000201rz013.dgn

USERNAME => s113946 DATE PLOTTED => 08-JUN-2013 TIME PLOTTED => 15:45

DIST	COUNTY	ROUTE	POST MILES TOTAL PROJECT	SHEET No	TOTAL SHEETS
07	Ven	23,101	3.3/3.8, R0.1/R4.5	394	652

GEOTECHNICAL PROFESSIONAL — DATE 12-06-12

PLANS APPROVAL DATE 6-3-13

REGISTERED PROFESSIONAL ENGINEER — PING TIAN — No. GE2660 — Exp. 12/31/13 — GEOTECHNICAL — STATE OF CALIFORNIA

The State of California or its officers or agents shall not be responsible for the accuracy or completeness of electronic copies of this plan sheet.

CITY OF THOUSAND OAKS
2100 THOUSAND OAKS BLVD
THOUSAND OAKS, CA 91362

CH2M HILL
1000 WILSHIRE BLVD, 21ST FLOOR
LOS ANGELES, CA 90017

BENCHMARKS AND DATUM

The horizontal coordinates are based on the North American Datum of 1983 (NAD83) California Coordinate System Zone 5 epoch 1991.35, locally determined by points 5434,5433,5435, and 5441 from Caltrans Survey Request 94-156.

Vertical control is based on the North American Vertical Datum of 1988 (NAVD88) locally determined by the following benchmarks published by the National Geodetic Survey.

AA3344	Elev	830.93	(Adj 1995)
AA3348	Elev	953.66	(Adj 1995)
AA3205	Elev	747.56	(Adj 1995)
AA3346	Elev	922.40	(Adj 1995)

Survey Disk at the intersection of Freeway 101 and Hampshire Rd on top of and 2 ft northeast of the southwest end of the bridge deck.

NOTES:

1. This LOTB sheet was prepared in accordance with the Caltrans Soil and Rock Logging, Classification, and Presentation Manual (June 2010).
2. Groundwater was not encountered in borings A-11-014 and A-11-015.

CORRECTION FACTOR:

A multiplication factor 0.65 was used to convert from California Modified Ring Sampler blow count to equivalent Standard Penetration Test Sampler blow count.

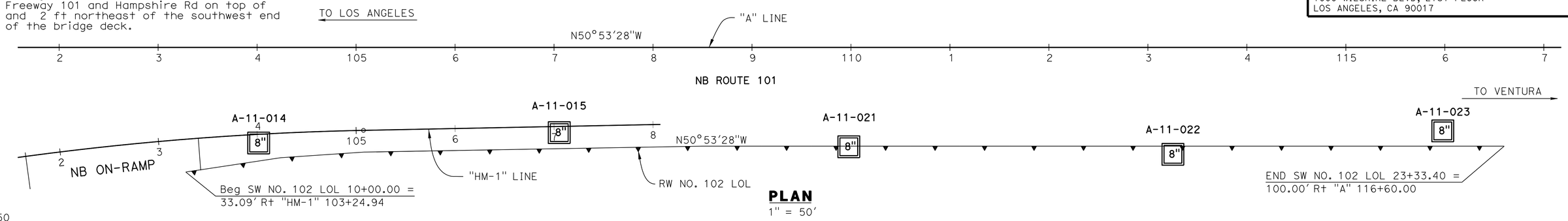

PLAN
1" = 50'

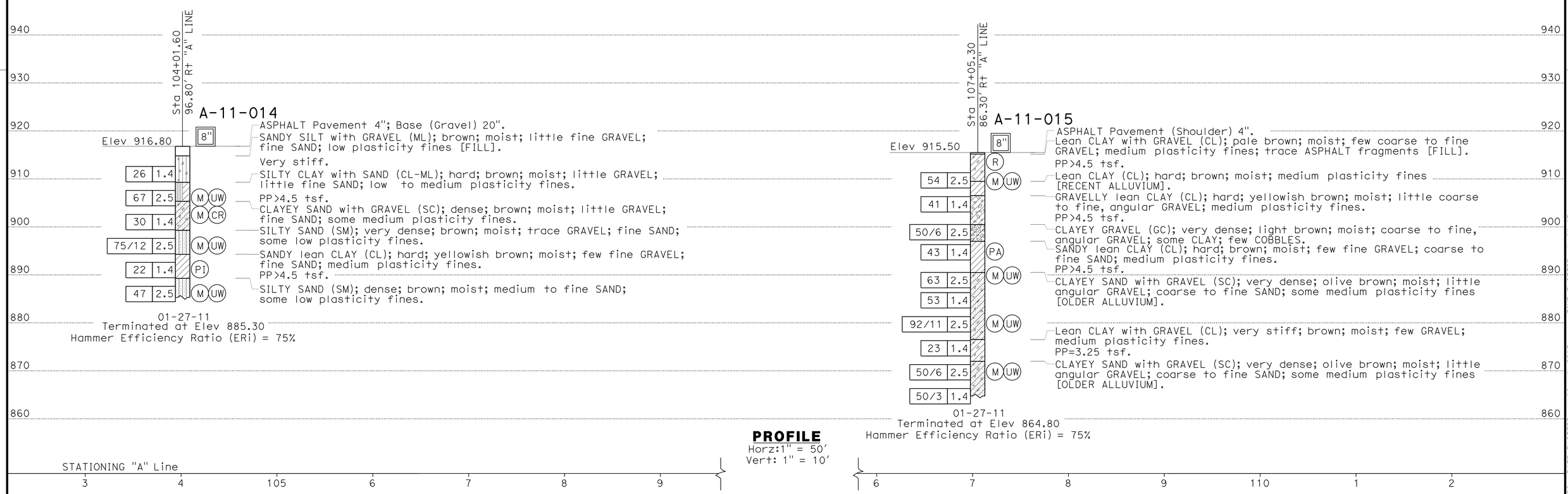

PROFILE
Horz:1" = 50'
Vert: 1" = 10'

Richard Hartzell — DESIGN OVERSIGHT — SIGN OFF DATE	DRAWN BY N. MORALES	K. RADHAKRISHNAN & J. LEE — FIELD INVESTIGATION BY:	PREPARED FOR THE STATE OF CALIFORNIA DEPARTMENT OF TRANSPORTATION	Milind Desai — PROJECT ENGINEER	BRIDGE NO. / POST MILES
	CHECKED BY J. LEE	DATE: 01/27/11			

SOUNDWALL NO. 102

LOG OF TEST BORINGS 1 OF 5 — SW-29

GS GEOTECHNICAL LOG OF TEST BORINGS SHEET (ENGLISH) (REV. 7/16/10)

ORIGINAL SCALE IN INCHES FOR REDUCED PLANS 0 1 2 3

UNIT: 3573
PROJECT NUMBER & PHASE: 0700000201 CONTRACT NO.: 07-1952U1

DISREGARD PRINTS BEARING EARLIER REVISION DATES — REVISION DATES 10/12/11 05/11/12 — SHEET OF

FILE => 0700000201rz014.dgn

USERNAME => S124496 DATE PLOTTED => 10-JUN-2013 TIME PLOTTED => 11:43

DIST	COUNTY	ROUTE	POST MILES TOTAL PROJECT	SHEET No	TOTAL SHEETS
07	Ven	23,101	3.3/3.8, R0.1/R4.5	395	652

GEOTECHNICAL PROFESSIONAL — DATE 12-06-12

6-3-13
PLANS APPROVAL DATE

REGISTERED PROFESSIONAL ENGINEER — PING TIAN — No. GE2660 — Exp. 12/31/13 — GEOTECHNICAL — STATE OF CALIFORNIA

The State of California or its officers or agents shall not be responsible for the accuracy or completeness of electronic copies of this plan sheet.

CITY OF THOUSAND OAKS
2100 THOUSAND OAKS BLVD
THOUSAND OAKS, CA 91362

CH2M HILL
1000 WILSHIRE BLVD, 21ST FLOOR
LOS ANGELES, CA 90017

BENCHMARKS AND DATUM

The horizontal coordinates are based on the North American Datum of 1983 (NAD83) California Coordinate System Zone 5 epoch 1991.35, locally determined by points 5434,5433,5435, and 5441 from Caltrans Survey Request 94-156.

Vertical control is based on the North American Vertical Datum of 1988 (NAVD88) locally determined by the following benchmarks published by the National Geodetic Survey.

AA3344	Elev	830.93	(Adj 1995)
AA3348	Elev	953.66	(Adj 1995)
AA3205	Elev	747.56	(Adj 1995)
AA3346	Elev	922.40	(Adj 1995)

Survey Disk at the intersection of Freeway 101 and Hampshire Rd on top of and 2 ft northeast of the southwest end of the bridge deck.

NOTES:

1. This LOTB sheet was prepared in accordance with the "Caltrans Soil and Rock Logging, Classification, and Presentation Manual" (June 2010).

2. Groundwater was not encountered in borings A-11-021 and A-11-022.

CORRECTION FACTOR:

A multiplication factor 0.65 was used to convert from California Modified Ring Sampler blow count to equivalent Standard Penetration Test Sampler blow count.

FOR PLAN VIEW, SEE "LOG OF TEST BORINGS 1 OF 5" SHEET.

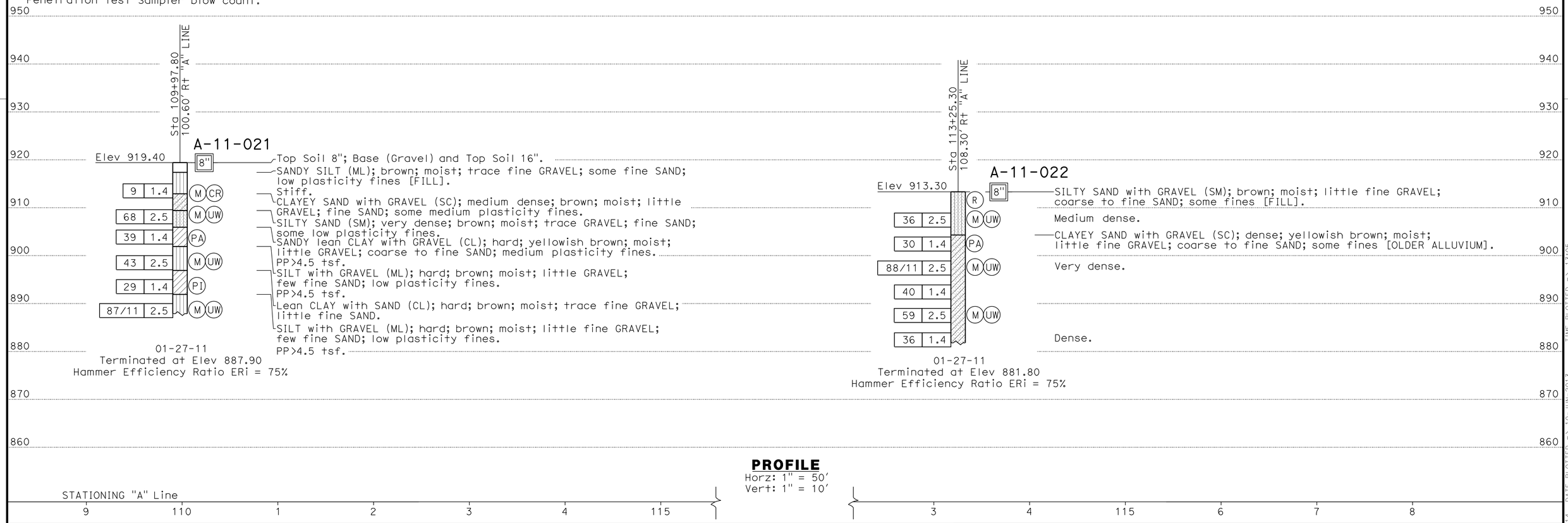

Richard Hartzell — DESIGN OVERSIGHT	DRAWN BY	N. MORALES	K. RADHAKRISHNAN & J. LEE — FIELD INVESTIGATION BY:	PREPARED FOR THE STATE OF CALIFORNIA DEPARTMENT OF TRANSPORTATION	Milind Desai — PROJECT ENGINEER
SIGN OFF DATE	CHECKED BY	J. LEE	DATE: 01/27/11		

BRIDGE NO.
POST MILES

SOUNDWALL NO. 102

LOG OF TEST BORINGS 2 OF 5 — SW-30

GS GEOTECHNICAL LOG OF TEST BORINGS SHEET (ENGLISH) (REV. 7/16/10)

ORIGINAL SCALE IN INCHES FOR REDUCED PLANS 0 1 2 3

UNIT: 3573
PROJECT NUMBER & PHASE: 0700000201 CONTRACT NO.: 07-1952U1

DISREGARD PRINTS BEARING EARLIER REVISION DATES → 10/12/11 05/11/12

SHEET OF

FILE => 0700000201rz015.dgn

USERNAME => s121614 DATE PLOTTED => 10-JUN-2013 TIME PLOTTED => 13:05

DIST	COUNTY	ROUTE	POST MILES TOTAL PROJECT	SHEET No	TOTAL SHEETS
07	Ven	23,101	3.3/3.8, R0.1/R4.5	396	652

GEOTECHNICAL PROFESSIONAL — DATE 12-06-12

6-3-13
PLANS APPROVAL DATE

REGISTERED PROFESSIONAL ENGINEER — PING TIAN — No. GE2660 — Exp. 12/31/13 — GEOTECHNICAL — STATE OF CALIFORNIA

The State of California or its officers or agents shall not be responsible for the accuracy or completeness of electronic copies of this plan sheet.

CITY OF THOUSAND OAKS
2100 THOUSAND OAKS BLVD
THOUSAND OAKS, CA 91362

CH2M HILL
1000 WILSHIRE BLVD, 21ST FLOOR
LOS ANGELES, CA 90017

BENCHMARKS AND DATUM

The horizontal coordinates are based on the North American Datum of 1983 (NAD83) California Coordinate System Zone 5 epoch 1991.35, locally determined by points 5434,5433,5435, and 5441 from Caltrans Survey Request 94-156.

Vertical control is based on the North American Vertical Datum of 1988 (NAVD88) locally determined by the following benchmarks published by the National Geodetic Survey.

AA3344	Elev	830.93	(Adj 1995)
AA3348	Elev	953.66	(Adj 1995)
AA3205	Elev	747.56	(Adj 1995)
AA3346	Elev	922.40	(Adj 1995)

Survey Disk at the intersection of Freeway 101 and Hampshire Rd on top of and 2 ft northeast of the southwest end of the bridge deck.

NOTES:

1. This LOTB sheet was prepared in accordance with the "Caltrans Soil and Rock Logging, Classification, and Presentation Manual" (June 2010).

2. Groundwater was not encountered in boring A-11-023.

CORRECTION FACTOR:

A multiplication factor 0.65 was used to convert from California Modified Ring Sampler blow count to equivalent Standard Penetration Test Sampler blow count.

FOR PLAN VIEW, SEE "LOG OF TEST BORINGS 1 OF 5" SHEET.

PROFILE
Horz: 1" = 50'
Vert: 1" = 10'

STATIONING "A" Line
115 6 7 8 9 120 1

Richard Hartzell — DESIGN OVERSIGHT	DRAWN BY	N. MORALES	K. RADHAKRISHNAN & J. LEE — FIELD INVESTIGATION BY:
SIGN OFF DATE	CHECKED BY	J. LEE	DATE: 01/27/11

PREPARED FOR THE STATE OF CALIFORNIA DEPARTMENT OF TRANSPORTATION

Milind Desai — PROJECT ENGINEER

BRIDGE NO.
POST MILES

SOUNDWALL NO. 102
LOG OF TEST BORINGS 3 OF 5 — SW-31

GS GEOTECHNICAL LOG OF TEST BORINGS SHEET (ENGLISH) (REV. 7/16/10)

ORIGINAL SCALE IN INCHES FOR REDUCED PLANS 0 1 2 3

UNIT: 3573
PROJECT NUMBER & PHASE: 0700000201 CONTRACT NO.: 07-1952U1

DISREGARD PRINTS BEARING EARLIER REVISION DATES → REVISION DATES 10/12/11 05/11/12 — SHEET — OF

FILE => 0700000201rz016.dgn

USERNAME => s121614 DATE PLOTTED => 10-JUN-2013 TIME PLOTTED => 13:05

REFERENCE: CALTRANS SOIL & ROCK LOGGING, CLASSIFICATION, AND PRESENTATION MANUAL (2010)

DIST	COUNTY	ROUTE	POST MILES TOTAL PROJECT	SHEET No	TOTAL SHEETS
07	Ven	23,101	3.3/3.8, R0.1/R4.5	397	652

GEOTECHNICAL PROFESSIONAL — DATE 12-06-12

PLANS APPROVAL DATE 6-3-13

REGISTERED PROFESSIONAL ENGINEER — PING TIAN — No. GE2660 — Exp. 12/31/13 — GEOTECHNICAL — STATE OF CALIFORNIA

The State of California or its officers or agents shall not be responsible for the accuracy or completeness of electronic copies of this plan sheet.

CITY OF THOUSAND OAKS
2100 THOUSAND OAKS BLVD
THOUSAND OAKS, CA 91362

CH2M HILL
1000 WILSHIRE BLVD, 21ST FLOOR
LOS ANGELES, CA 90017

CEMENTATION

Description	Criteria
Weak	Crumbles or breaks with handling or little finger pressure.
Moderate	Crumbles or breaks with considerable finger pressure.
Strong	Will not crumble or break with finger pressure.

BOREHOLE IDENTIFICATION

Symbol	Hole Type	Description
Size	A	Auger Boring (hollow or solid stem bucket)
Size	R RW RC P	Rotary drilled boring (conventional) Rotary drilled with self-casing wire-line Rotary core with continuously-sampled, self-casing wire-line Rotary percussion boring (air)
Size	R	Rotary drilled diamond core
Size	HD HA	Hand driven (1-inch soil tube) Hand Auger
●	D	Dynamic Cone Penetration Boring
▲	CPT	Cone Penetration Test (ASTM D 5778)
⬚	O	Other (note on LOTB)

Note: Size in inches.

CONSISTENCY OF COHESIVE SOILS

Description	Shear Strength (tsf)	Pocket Penetrometer Measurement, PP, (tsf)	Torvane Measurement, TV, (tsf)	Vane Shear Measurement, VS, (tsf)
Very Soft	Less than 0.12	Less than 0.25	Less than 0.12	Less than 0.12
Soft	0.12 - 0.25	0.25 - 0.5	0.12 - 0.25	0.12 - 0.25
Medium Stiff	0.25 - 0.5	0.5 - 1	0.25 - 0.5	0.25 - 0.5
Stiff	0.5 - 1	1 - 2	0.5 - 1	0.5 - 1
Very Stiff	1 - 2	2 - 4	1 - 2	1 - 2
Hard	Greater than 2	Greater than 4	Greater than 2	Greater than 2

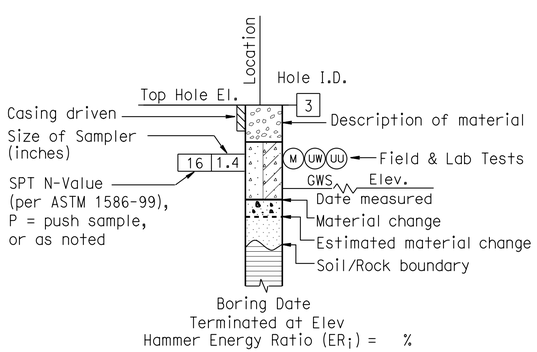

ROTARY BORING

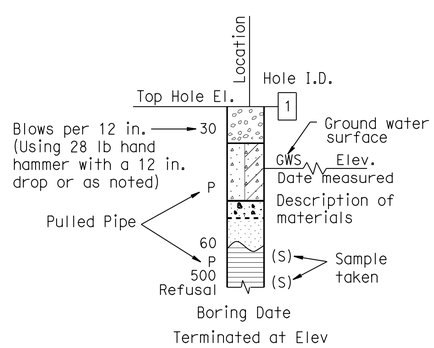

HAND BORING

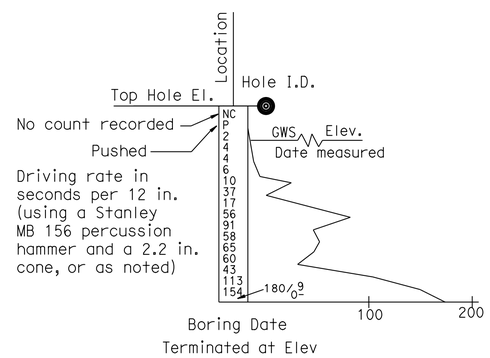

DYNAMIC CONE PENETRATION BORING

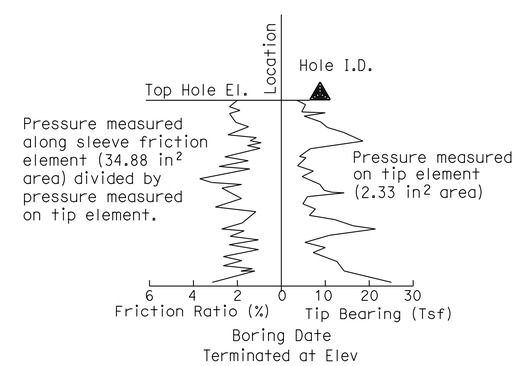

CONE PENETRATION TEST (CPT) BORING

Richard Hartzell — DESIGN OVERSIGHT	DRAWN BY	N. MORALES	K. RADHAKRISHNAN & J. LEE — FIELD INVESTIGATION BY: 01/26/11, 01/27/11, 01/28/11, 01/29/11, 01/31/11 & 02/02/11 — DATE:
SIGN OFF DATE	CHECKED BY	J. LEE	

PREPARED FOR THE STATE OF CALIFORNIA DEPARTMENT OF TRANSPORTATION

Milind Desai — PROJECT ENGINEER

BRIDGE NO. / POST MILES

SOUNDWALL NO. 102

LOG OF TEST BORINGS 4 OF 5 — SW-32

GS GEOTECHNICAL LOG OF TEST BORINGS SHEET (ENGLISH) (REV. 7/16/10)

ORIGINAL SCALE IN INCHES FOR REDUCED PLANS 0 1 2 3

UNIT: 3573
PROJECT NUMBER & PHASE: 0700000201 CONTRACT NO.: 07-1952U1

DISREGARD PRINTS BEARING EARLIER REVISION DATES — REVISION DATES ~~10/12/11~~ 05/11/12 — SHEET — OF

FILE => 0700000201rz017.dgn

USERNAME => s113946 DATE PLOTTED => 08-JUN-2013 TIME PLOTTED => 15:45

REFERENCE: CALTRANS SOIL & ROCK LOGGING, CLASSIFICATION, AND PRESENTATION MANUAL (2010)

DIST	COUNTY	ROUTE	POST MILES TOTAL PROJECT	SHEET No	TOTAL SHEETS
07	Ven	23,101	3.3/3.8, R0.1/R4.5	398	652

GEOTECHNICAL PROFESSIONAL — DATE 12-06-12

6-3-13
PLANS APPROVAL DATE

REGISTERED PROFESSIONAL ENGINEER — PING TIAN — No. GE2660 — Exp. 12/31/13 — GEOTECHNICAL — STATE OF CALIFORNIA

The State of California or its officers or agents shall not be responsible for the accuracy or completeness of electronic copies of this plan sheet.

CITY OF THOUSAND OAKS
2100 THOUSAND OAKS BLVD
THOUSAND OAKS, CA 91362

CH2M HILL
1000 WILSHIRE BLVD, 21ST FLOOR
LOS ANGELES, CA 90017

GROUP SYMBOLS AND NAMES

Graphic/Symbol	Group Names
GW	Well-graded GRAVEL Well-graded GRAVEL with SAND
GP	Poorly-graded GRAVEL Poorly-graded GRAVEL with SAND
GW-GM	Well-graded GRAVEL with SILT Well-graded GRAVEL with SILT and SAND
GW-GC	Well-graded GRAVEL with CLAY (or SILTY CLAY) Well-graded GRAVEL with CLAY and SAND (or SILTY CLAY and SAND)
GP-GM	Poorly-graded GRAVEL with SILT Poorly-graded GRAVEL with SILT and SAND
GP-GC	Poorly-graded GRAVEL with CLAY (or SILTY CLAY) Poorly-graded GRAVEL with CLAY and SAND (or SILTY CLAY and SAND)
GM	SILTY GRAVEL SILTY GRAVEL with SAND
GC	CLAYEY GRAVEL CLAYEY GRAVEL with SAND
GC-GM	SILTY, CLAYEY GRAVEL SILTY, CLAYEY GRAVEL with SAND
SW	Well-graded SAND Well-graded SAND with GRAVEL
SP	Poorly-graded SAND Poorly-graded SAND with GRAVEL
SW-SM	Well-graded SAND with SILT Well-graded SAND with SILT and GRAVEL
SW-SC	Well-graded SAND with CLAY (or SILTY CLAY) Well-graded SAND with CLAY and GRAVEL (or SILTY CLAY and GRAVEL)
SP-SM	Poorly-graded SAND with SILT Poorly-graded SAND with SILT and GRAVEL
SP-SC	Poorly-graded SAND with CLAY (or SILTY CLAY) Poorly-graded SAND with CLAY and GRAVEL (or SILTY CLAY and GRAVEL)
SM	SILTY SAND SILTY SAND with GRAVEL
SC	CLAYEY SAND CLAYEY SAND with GRAVEL
SC-SM	SILTY, CLAYEY SAND SILTY, CLAYEY SAND with GRAVEL
PT	PEAT
	COBBLES COBBLES and BOULDERS BOULDERS

Graphic/Symbol	Group Names
CL	Lean CLAY Lean CLAY with SAND Lean CLAY with GRAVEL SANDY lean CLAY SANDY lean CLAY with GRAVEL GRAVELLY lean CLAY GRAVELLY lean CLAY with SAND
CL-ML	SILTY CLAY SILTY CLAY with SAND SILTY CLAY with GRAVEL SANDY SILTY CLAY SANDY SILTY CLAY with GRAVEL GRAVELLY SILTY CLAY GRAVELLY SILTY CLAY with SAND
ML	SILT SILT with SAND SILT with GRAVEL SANDY SILT SANDY SILT with GRAVEL GRAVELLY SILT GRAVELLY SILT with SAND
OL	ORGANIC lean CLAY ORGANIC lean CLAY with SAND ORGANIC lean CLAY with GRAVEL SANDY ORGANIC lean CLAY SANDY ORGANIC lean CLAY with GRAVEL GRAVELLY ORGANIC lean CLAY GRAVELLY ORGANIC lean CLAY with SAND
OL	ORGANIC SILT ORGANIC SILT with SAND ORGANIC SILT with GRAVEL SANDY ORGANIC SILT SANDY ORGANIC SILT with GRAVEL GRAVELLY ORGANIC SILT GRAVELLY ORGANIC SILT with SAND
CH	Fat CLAY Fat CLAY with SAND Fat CLAY with GRAVEL SANDY fat CLAY SANDY fat CLAY with GRAVEL GRAVELLY fat CLAY GRAVELLY fat CLAY with SAND
MH	Elastic SILT Elastic SILT with SAND Elastic SILT with GRAVEL SANDY elastic SILT SANDY elastic SILT with GRAVEL GRAVELLY elastic SILT GRAVELLY elastic SILT with SAND
OH	ORGANIC fat CLAY ORGANIC fat CLAY with SAND ORGANIC fat CLAY with GRAVEL SANDY ORGANIC fat CLAY SANDY ORGANIC fat CLAY with GRAVEL GRAVELLY ORGANIC fat CLAY GRAVELLY ORGANIC fat CLAY with SAND
OH	ORGANIC elastic SILT ORGANIC elastic SILT with SAND ORGANIC elastic SILT with GRAVEL SANDY ORGANIC elastic SILT SANDY ORGANIC elastic SILT with GRAVEL GRAVELLY ORGANIC elastic SILT GRAVELLY ORGANIC elastic SILT with SAND
OL/OH	ORGANIC SOIL ORGANIC SOIL with SAND ORGANIC SOIL with GRAVEL SANDY ORGANIC SOIL SANDY ORGANIC SOIL with GRAVEL GRAVELLY ORGANIC SOIL GRAVELLY ORGANIC SOIL with SAND

FIELD AND LABORATORY TESTING

- (C) Consolidation (ASTM D 2435)
- (CL) Collapse Potential (ASTM D 5333)
- (CP) Compaction Curve (CTM 216)
- (CR) Corrosivity Testing (CTM 643, CTM 422, CTM 417)
- (CU) Consolidated Undrained Triaxial (ASTM D 4767)
- (DS) Direct Shear (ASTM D 3080)
- (EI) Expansion Index (ASTM D 4829)
- (M) Moisture Content (ASTM D 2216)
- (OC) Organic Content-% (ASTM D 2974)
- (P) Permeability (CTM 220)
- (PA) Particle Size Analysis (ASTM D 422)
- (PI) Plasticity Index (AASHTO T 90) Liquid Limit (AASHTO T 89)
- (PL) Point Load Index (ASTM D 5731)
- (PM) Pressure Meter
- (R) R-Value (CTM 301)
- (SE) Sand Equivalent (CTM 217)
- (SG) Specific Gravity (AASHTO T 100)
- (SL) Shrinkage Limit (ASTM D 427)
- (SW) Swell Potential (ASTM D 4546)
- (UC) Unconfined Compression-Soil (ASTM D 2166) Unconfined Compression-Rock (ASTM D 2938)
- (UU) Unconsolidated Undrained Triaxial (ASTM D 2850)
- (UW) Unit Weight (ASTM D 4767)

APPARENT DENSITY OF COHESIONLESS SOILS

Description	SPT N_{60} (Blows / 12 in.)
Very Loose	0 - 5
Loose	5 - 10
Medium Dense	10 - 30
Dense	30 - 50
Very Dense	Greater than 50

MOISTURE

Description	Criteria
Dry	No discernable moisture
Moist	Moisture present, but no free water
Wet	Visible free water

PERCENT OR PROPORTION OF SOILS

Description	Criteria
Trace	Particles are present but estimated to be less than 5%
Few	5% - 10%
Little	15% - 25%
Some	30% - 45%
Mostly	50% - 100%

PARTICLE SIZE

Description		Size (in.)
Boulder		Greater than 12
Cobble		3 - 12
Gravel	Coarse	3/4 - 3
	Fine	1/5 - 3/4
Sand	Coarse	1/16 - 1/5
	Medium	1/64 - 1/16
	Fine	1/300 - 1/64
Silt and Clay		Less than 1/300

Richard Hartzell
DESIGN OVERSIGHT

SIGN OFF DATE

DRAWN BY N. MORALES
CHECKED BY J. LEE

K. RADHAKRISHNAN & J. LEE
FIELD INVESTIGATION BY:
DATE: 01/26/11, 01/27/11, 01/28/11, 01/29/11, 01/31/11 & 02/02/11

PREPARED FOR THE STATE OF CALIFORNIA DEPARTMENT OF TRANSPORTATION

Milind Desai
PROJECT ENGINEER

BRIDGE NO.
POST MILES

SOUNDWALL NO. 102

LOG OF TEST BORINGS 5 OF 5

SW-33

GS GEOTECHNICAL LOG OF TEST BORINGS SHEET (ENGLISH) (REV. 7/16/10)

ORIGINAL SCALE IN INCHES FOR REDUCED PLANS 0 1 2 3

UNIT: 3573
PROJECT NUMBER & PHASE: 0700000201
CONTRACT NO.: 07-1952U1

DISREGARD PRINTS BEARING EARLIER REVISION DATES

REVISION DATES 10/12/11 05/11/12 SHEET OF

FILE => 0700000201rz018.dgn

USERNAME => s113946 DATE PLOTTED => 08-JUN-2013 TIME PLOTTED => 15:45

DIST	COUNTY	ROUTE	POST MILES TOTAL PROJECT	SHEET No	TOTAL SHEETS
07	Ven	23,101	3.3/3.8, R0.1/R4.5	399	652

GEOTECHNICAL PROFESSIONAL — DATE 12-06-12

6-3-13
PLANS APPROVAL DATE

REGISTERED PROFESSIONAL ENGINEER — PING TIAN — No. GE2660 — Exp. 12/31/13 — GEOTECHNICAL — STATE OF CALIFORNIA

The State of California or its officers or agents shall not be responsible for the accuracy or completeness of electronic copies of this plan sheet.

CITY OF THOUSAND OAKS
2100 THOUSAND OAKS BLVD
THOUSAND OAKS, CA 91362

CH2M HILL
1000 WILSHIRE BLVD, 21ST FLOOR
LOS ANGELES, CA 90017

BENCHMARKS AND DATUM

The horizontal coordinates are based on the North American Datum of 1983 (NAD83) California Coordinate System Zone 5 epoch 1991.35, locally determined by points 5434,5433,5435, and 5441 from Caltrans Survey Request 94-156.

Vertical control is based on the North American Vertical Datum of 1988 (NAVD88) locally determined by the following benchmarks published by the National Geodetic Survey.

AA3344	Elev	830.93	(Adj 1995)
AA3348	Elev	953.66	(Adj 1995)
AA3205	Elev	747.56	(Adj 1995)
AA3346	Elev	922.40	(Adj 1995)

Survey Disk at the intersection of Freeway 101 and Hampshire Rd on top of and 2 ft northeast of the southwest end of the bridge deck.

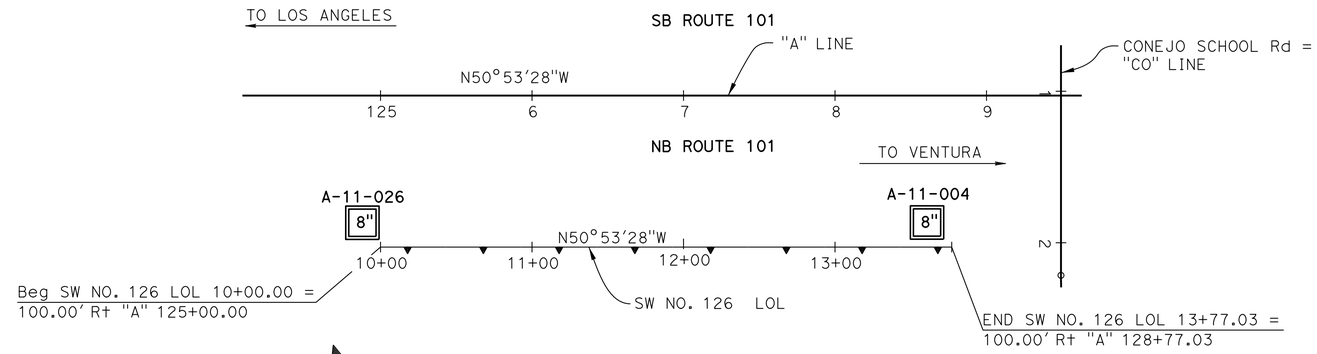

PLAN
1" = 50'

NOTES:

1. This LOTB sheet was prepared in accordance with the Caltrans Soil and Rock Logging, Classification, and Presentation Manual (June 2010).
2. Groundwater was not encountered in boring A-11-026.

CORRECTION FACTOR:

A multiplication factor 0.65 was used to convert from California Modified Ring Sampler blow count to equivalent Standard Penetration Test Sampler blow count.

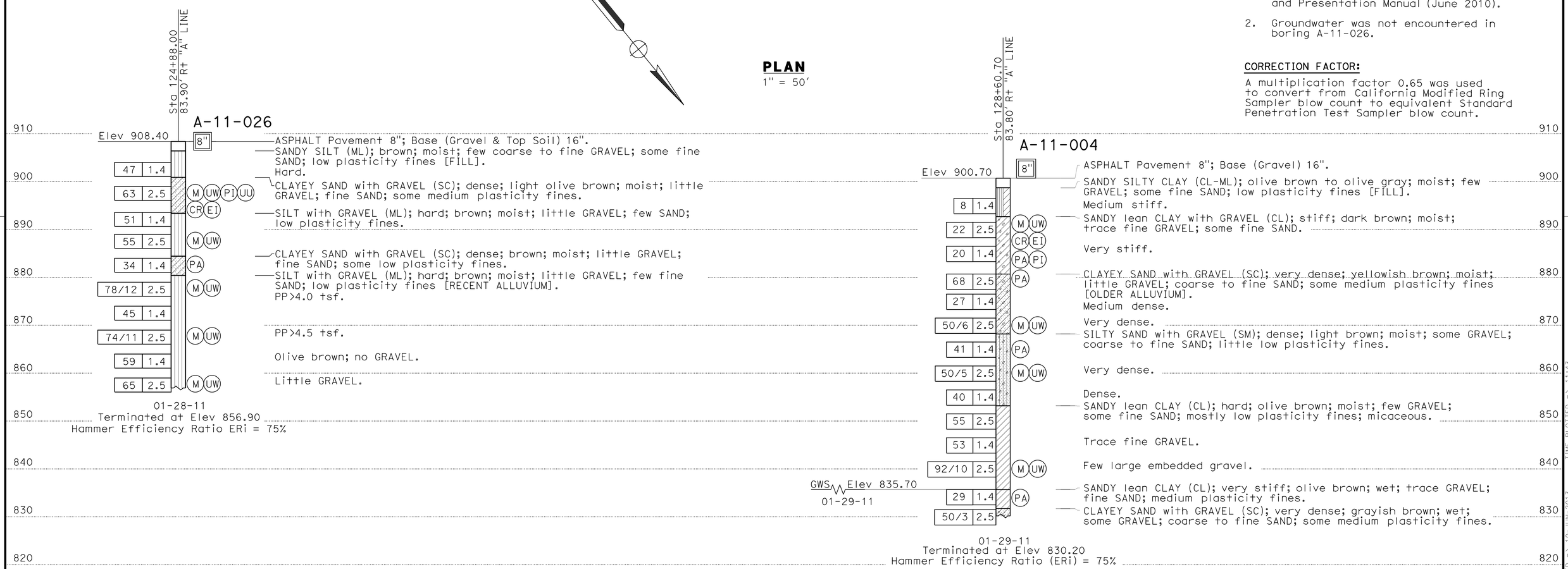

PROFILE
Horz:1" = 50'
Vert: 1" = 10'

STATIONING "A" Line
4 125 6 7 8 9 7 8 9 130 1 2 3

Richard Hartzell — DESIGN OVERSIGHT	DRAWN BY	N. MORALES	K. RADHAKRISHNAN & J. LEE — FIELD INVESTIGATION BY:
SIGN OFF DATE	CHECKED BY	J. LEE	DATE: 01/28/11 & 01/29/11

PREPARED FOR THE STATE OF CALIFORNIA DEPARTMENT OF TRANSPORTATION

Milind Desai — PROJECT ENGINEER

BRIDGE NO.
POST MILES

SOUNDWALL NO. 126
LOG OF TEST BORINGS 1 of 3
SW-34

GS GEOTECHNICAL LOG OF TEST BORINGS SHEET (ENGLISH) (REV. 7/16/10)

ORIGINAL SCALE IN INCHES FOR REDUCED PLANS 0 1 2 3

UNIT: 3573
PROJECT NUMBER & PHASE: 0700000201 CONTRACT NO.: 07-1952U1

DISREGARD PRINTS BEARING EARLIER REVISION DATES — REVISION DATES 10/12/11 05/11/12 — SHEET X OF X

FILE => 0700000201rz019.dgn

USERNAME => s124496 DATE PLOTTED => 10-JUN-2013 TIME PLOTTED => 11:43

REFERENCE: CALTRANS SOIL & ROCK LOGGING, CLASSIFICATION, AND PRESENTATION MANUAL (2010)

DIST	COUNTY	ROUTE	POST MILES TOTAL PROJECT	SHEET No	TOTAL SHEETS
07	Ven	23,101	3.3/3.8, R0.1/R4.5	400	652

GEOTECHNICAL PROFESSIONAL — DATE 12-06-12

PLANS APPROVAL DATE 6-3-13

REGISTERED PROFESSIONAL ENGINEER — PING TIAN — No. GE2660 — Exp. 12/31/13 — GEOTECHNICAL — STATE OF CALIFORNIA

The State of California or its officers or agents shall not be responsible for the accuracy or completeness of electronic copies of this plan sheet.

CITY OF THOUSAND OAKS
2100 THOUSAND OAKS BLVD
THOUSAND OAKS, CA 91362

CH2M HILL
1000 WILSHIRE BLVD, 21ST FLOOR
LOS ANGELES, CA 90017

CEMENTATION

Description	Criteria
Weak	Crumbles or breaks with handling or little finger pressure.
Moderate	Crumbles or breaks with considerable finger pressure.
Strong	Will not crumble or break with finger pressure.

BOREHOLE IDENTIFICATION

Symbol	Hole Type	Description
Size	A	Auger Boring (hollow or solid stem bucket)
Size	R RW RC P	Rotary drilled boring (conventional) Rotary drilled with self-casing wire-line Rotary core with continuously-sampled, self-casing wire-line Rotary percussion boring (air)
Size	R	Rotary drilled diamond core
Size	HD HA	Hand driven (1-inch soil tube) Hand Auger
●	D	Dynamic Cone Penetration Boring
▲	CPT	Cone Penetration Test (ASTM D 5778)
⬚	O	Other (note on LOTB)

Note: Size in inches.

CONSISTENCY OF COHESIVE SOILS

Description	Shear Strength (tsf)	Pocket Penetrometer Measurement, PP, (tsf)	Torvane Measurement, TV, (tsf)	Vane Shear Measurement, VS, (tsf)
Very Soft	Less than 0.12	Less than 0.25	Less than 0.12	Less than 0.12
Soft	0.12 - 0.25	0.25 - 0.5	0.12 - 0.25	0.12 - 0.25
Medium Stiff	0.25 - 0.5	0.5 - 1	0.25 - 0.5	0.25 - 0.5
Stiff	0.5 - 1	1 - 2	0.5 - 1	0.5 - 1
Very Stiff	1 - 2	2 - 4	1 - 2	1 - 2
Hard	Greater than 2	Greater than 4	Greater than 2	Greater than 2

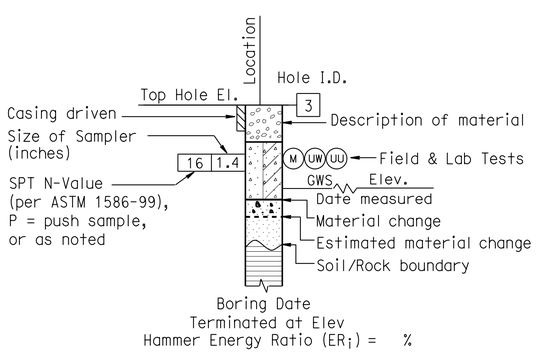

ROTARY BORING

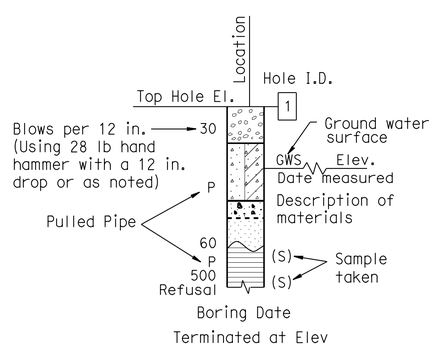

HAND BORING

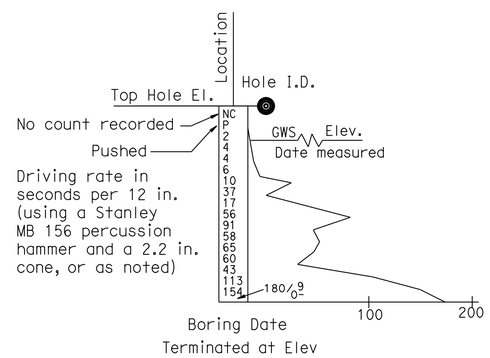

DYNAMIC CONE PENETRATION BORING

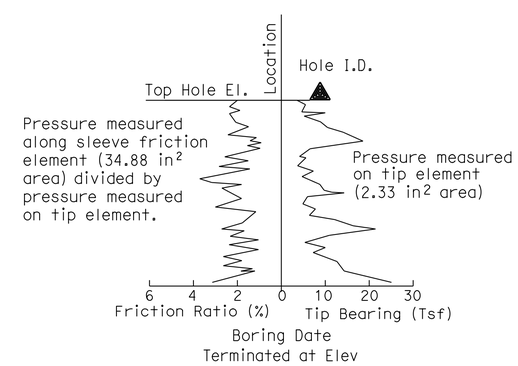

CONE PENETRATION TEST (CPT) BORING

Richard Hartzell — DESIGN OVERSIGHT	DRAWN BY	N. MORALES	K. RADHAKRISHNAN & J. LEE — FIELD INVESTIGATION BY: 01/26/11, 01/27/11, 01/28/11, 01/29/11, 01/31/11 & 02/02/11 — DATE:
SIGN OFF DATE	CHECKED BY	J. LEE	

PREPARED FOR THE STATE OF CALIFORNIA DEPARTMENT OF TRANSPORTATION

Milind Desai — PROJECT ENGINEER

BRIDGE NO.

POST MILES

SOUNDWALL NO. 126

LOG OF TEST BORINGS 2 OF 3

SW-35

GS GEOTECHNICAL LOG OF TEST BORINGS SHEET (ENGLISH) (REV. 7/16/10)

ORIGINAL SCALE IN INCHES FOR REDUCED PLANS 0 1 2 3

UNIT: 3573
PROJECT NUMBER & PHASE: 0700000201
CONTRACT NO.: 07-1952U1

DISREGARD PRINTS BEARING EARLIER REVISION DATES

REVISION DATES: 10/12/11 05/11/12 — SHEET X OF X

FILE => 0700000201rz020.dgn

USERNAME => s113946 DATE PLOTTED => 08-JUN-2013 TIME PLOTTED => 15:45