Dist	COUNTY	ROUTE	POST MILES TOTAL PROJECT	SHEET No.	TOTAL SHEETS
07	LA	47,103	3.5/4.6, 0.0/1.1	57	1003

REGISTERED CIVIL ENGINEER 01/31/11 DATE

10-11-10
PLANS APPROVAL DATE

REGISTERED PROFESSIONAL ENGINEER RICHARD F. NORTON No. C41646 Exp. 12/31/11 CIVIL STATE OF CALIFORNIA

THE STATE OF CALIFORNIA OR ITS OFFICERS OR AGENTS SHALL NOT BE RESPONSIBLE FOR THE ACCURACY OR COMPLETENESS OF SCANNED COPIES OF THIS PLAN SHEET.

URS CORPORATION
915 WILSHIRE BOULEVARD
SUITE 700
LOS ANGELES, CA 90017

ALAMEDA CORRIDOR TRANSPORTATION AUTHORITY
ONE CIVIC PLAZA, SUITE 350
CARSON, CA 90745

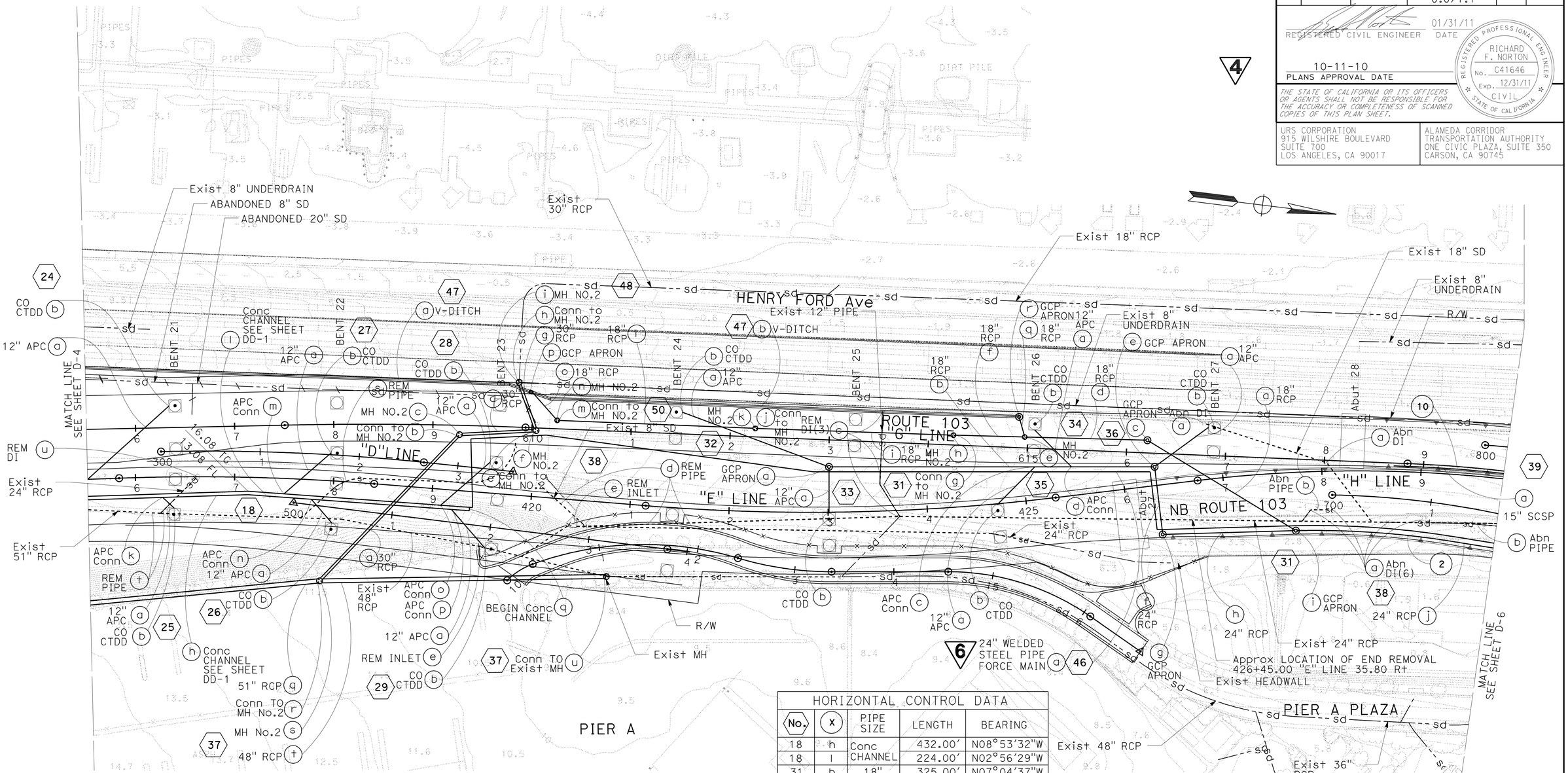

CURVE DATA						
(X)	R	D	L	T	BC*	EC*
2	864.02′	11°07′52″	157.48′	84.19′	16+89.26	18+46.74
10	1352.50′	09°39′53″	228.14′	114.34	10+00.00	12+28.14

*STORM DRAIN STATIONS ALSO SEE PROFILE DP-4

HORIZONTAL CONTROL DATA									
(No.)	(X)	PIPE SIZE	LENGTH	BEARING					
18	h	Conc CHANNEL	432.00′	N08°53′32″W					
18	l		224.00′	N02°56′29″W					
31	b	18″	325.00′	N07°04′37″W					
31	f	24″	65.92′	N76°03′22″E					
31	h	24″	131.35′	N08°41′18″W					
31	j	24″	45.00′	N02°03′22″E					
37	q	51″	289.31′	S12°34′43″E					
37	t	48″	284.84′	N07°56′19″W					
47	a	V-DITCH	428.91′	N04°48′59″W					
47	a		23.00′	N12°26′03″E					
47	b		19.37′	N12°26′03″E					
47	b		471.50′	N04°52′38″W					
48	a	30″	198.30′	S53°19′13″E					
48	d	30″	71.42′	S10°04′42″E					
48	f	30″	45.70′	N63°33′24″E	50	i	18″	195.32′	N05°07′41″W
50	a	18″	171.46′	S24°16′49″W	50	l	18″	195.32′	N04°44′04″W
50	d	18″	120.02′	S05°34′51″E	50	o	18″	35.02′	S41°23′09″W
50	f	18″	68.02′	S05°34′51″E	50	q	18″	17.00′	N67°36′29″E

6 REVISED PER ADDENDUM No. 6 DATED MAY 5, 2011

4 REVISED PER ADDENDUM No. 4 DATED APRIL 8, 2011

THIS PLAN ACCURATE FOR DRAINAGE WORK ONLY.

DRAINAGE PLAN

SCALE: 1″ = 50′

D-5

STATE OF CALIFORNIA - DEPARTMENT OF TRANSPORTATION
CONSULTANT FUNCTIONAL SUPERVISOR: SHAHRAM VAHDAT
CALCULATED-DESIGNED BY: JERRY GANTNY
CHECKED BY: YOUNG YOON
REVISED BY / DATE REVISED

LAST REVISION 00-00-00
DATE PLOTTED => 04-MAY-2011
TIME PLOTTED => 13:55

Dist	COUNTY	ROUTE	POST MILES TOTAL PROJECT	SHEET No.	TOTAL SHEETS
07	LA	47,103	3.5/4.6, 0.0/1.1	58	1003

REGISTERED CIVIL ENGINEER 01/31/11 DATE

10-11-10
PLANS APPROVAL DATE

REGISTERED PROFESSIONAL ENGINEER RICHARD F. NORTON No. C41646 Exp. 12/31/11 CIVIL STATE OF CALIFORNIA

THE STATE OF CALIFORNIA OR ITS OFFICERS OR AGENTS SHALL NOT BE RESPONSIBLE FOR THE ACCURACY OR COMPLETENESS OF SCANNED COPIES OF THIS PLAN SHEET.

URS CORPORATION
915 WILSHIRE BOULEVARD
SUITE 700
LOS ANGELES, CA 90017

ALAMEDA CORRIDOR
TRANSPORTATION AUTHORITY
ONE CIVIC PLAZA, SUITE 350
CARSON, CA 90745

CURVE DATA						
X	R	D	L	T	BC	EC
3	865.00′	04°14′02"	63.92′	31.97′	18+91.71	19+55.63
4	405.00′	05°56′29"	42.00′	21.02′	19+55.63	19+97.62
10	1352.50′	08°23′38"	198.14′	99.25′	10+00.00	11+96.64
13	1358.77′	15°51′25"	376.05′	189.23′	12+35.47	15+74.20

HORIZONTAL CONTROL DATA				
No.	X	PIPE SIZE	LENGTH	BEARING
31	l	24"	43.82	N49°08′17"W
31	n	24"	86.35′	N16°07′09"E
31	p	24"	17.10′	S24°53′13"W
31	r	24"	198.50′	S24°53′13"W
40	b	18"	16.00′	N10°05′47"E
40	d	18"	16.00′	N10°50′48"E
40	i	18"	7.86′	S86°43′60"E
40	l	18"	43.21′	S48°02′49"E
40	m	18"	23.80′	S48°02′49"E
40	n	18"	34.38′	S84°02′51"E
40	p	24"	5.00′	S25°42′22"E
41	b	15"	85.00′	S25°46′39"W
41	c	18"	11.53′	S59°10′37"E
43	d	18"	15.00′	S50°16′12"W
49	a	18"	53.06′	N29°51′10"W

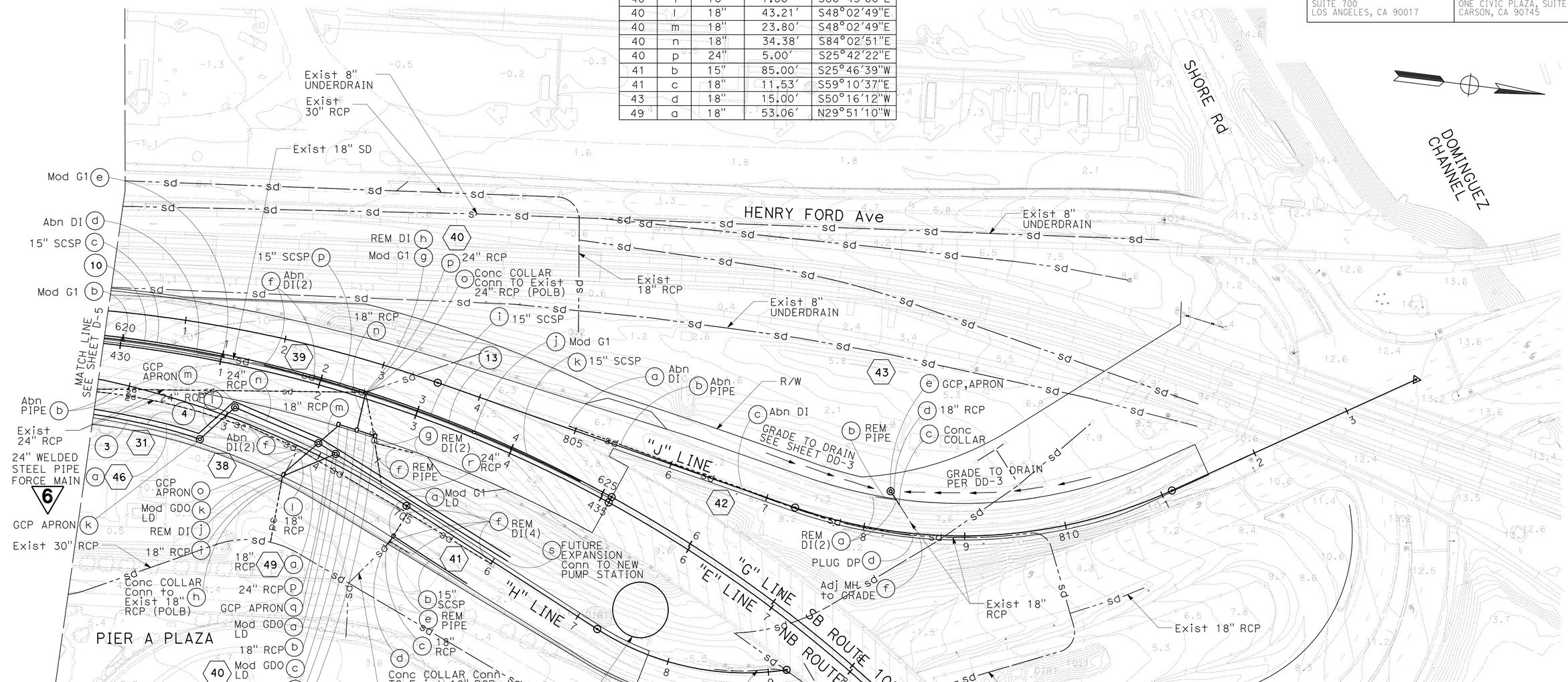

6 REVISED PER ADDENDUM No. 6 DATED MAY 5, 2011

4 REVISED PER ADDENDUM No. 4 DATED APRIL 8, 2011

THIS PLAN ACCURATE FOR DRAINAGE WORK ONLY.

DRAINAGE PLAN

SCALE: 1" = 50′

D-6

STATE OF CALIFORNIA - DEPARTMENT OF TRANSPORTATION

CONSULTANT FUNCTIONAL SUPERVISOR: SHAHRAM VAHDAT

CALCULATED-DESIGNED BY: YOUNG YOON

CHECKED BY: JERRY GANTNY

REVISED BY / DATE REVISED

LAST REVISION 00-00-00

DATE PLOTTED => 04-MAY-2011
TIME PLOTTED => 13:55

Dist	COUNTY	ROUTE	POST MILES TOTAL PROJECT	SHEET No.	TOTAL SHEETS
07	LA	47,103	3.5/4.6, 0.0/1.1	64A	1003

REGISTERED CIVIL ENGINEER 01/31/11 DATE

10-11-10
PLANS APPROVAL DATE

REGISTERED PROFESSIONAL ENGINEER RICHARD F. NORTON No. C41646 Exp. 12/31/11 CIVIL STATE OF CALIFORNIA

THE STATE OF CALIFORNIA OR ITS OFFICERS OR AGENTS SHALL NOT BE RESPONSIBLE FOR THE ACCURACY OR COMPLETENESS OF SCANNED COPIES OF THIS PLAN SHEET.

URS CORPORATION
915 WILSHIRE BOULEVARD
SUITE 700
LOS ANGELES, CA 90017

ALAMEDA CORRIDOR
TRANSPORTATION AUTHORITY
ONE CIVIC PLAZA, SUITE 350
CARSON, CA 90745

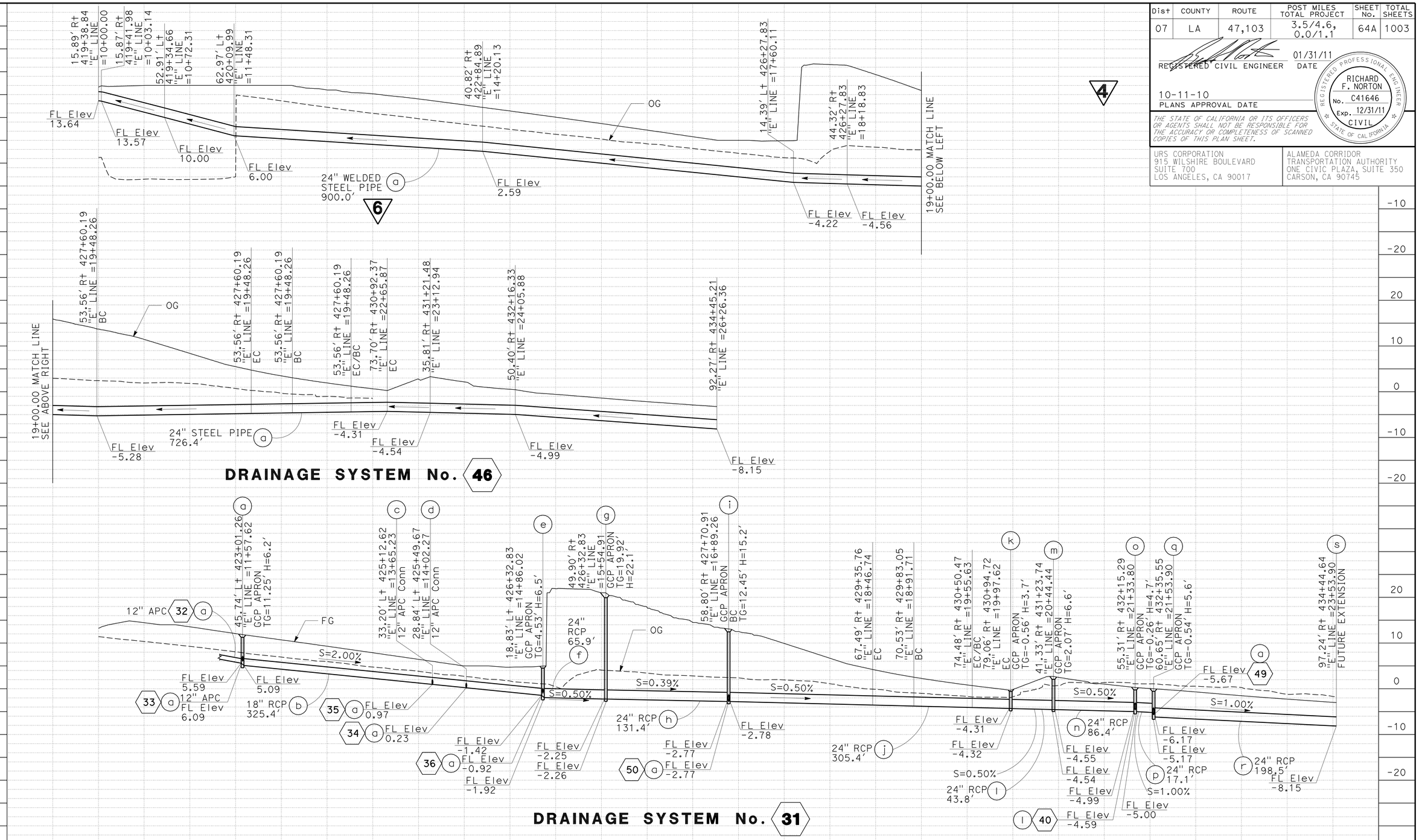

6 REVISED PER ADDENDUM No. 6 DATED MAY 5, 2011

4 ADDED PER ADDENDUM No. 4 DATED APRIL 8, 2011

DRAINAGE PROFILE

SCALE: Horiz 1" = 50'
Vert 1" = 10'

DP-7

STATION		TOTAL
CY	Exc	
	Emb	

STATE OF CALIFORNIA - DEPARTMENT OF TRANSPORTATION

CONSULTANT FUNCTIONAL SUPERVISOR: SHAHRAM VAHDAT

CALCULATED-DESIGNED BY: YOUNG YOON

CHECKED BY: JERRY GANTNY

REVISED BY / DATE REVISED

LAST REVISION 00-00-00 | DATE PLOTTED => 04-MAY-2011 | TIME PLOTTED => 13:55

Dist	COUNTY	ROUTE	POST MILES TOTAL PROJECT	SHEET No.	TOTAL SHEETS
07	LA	47,103	3.5/4.6, 0.0/1.1	76	1003

REGISTERED CIVIL ENGINEER 07/19/10 DATE

10-11-10
PLANS APPROVAL DATE

REGISTERED PROFESSIONAL ENGINEER HUA LIN McCAFFREY No. C49405 Exp. 9/30/10 CIVIL STATE OF CALIFORNIA

THE STATE OF CALIFORNIA OR ITS OFFICERS OR AGENTS SHALL NOT BE RESPONSIBLE FOR THE ACCURACY OR COMPLETENESS OF SCANNED COPIES OF THIS PLAN SHEET.

URS CORPORATION
915 WILSHIRE BOULEVARD
SUITE 700
LOS ANGELES, CA 90017

ALAMEDA CORRIDOR TRANSPORTATION AUTHORITY
ONE CIVIC PLAZA, SUITE 350
CARSON, CA 90745

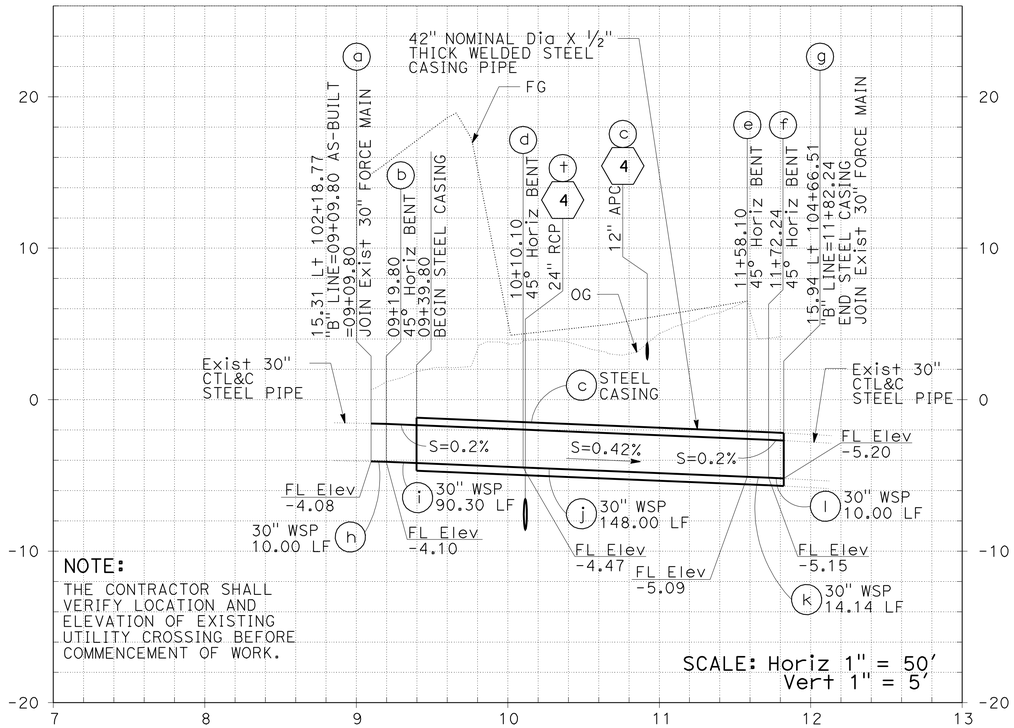

HORIZONTAL CONTROL DATA				
No.	X	PIPE SIZE	LENGTH	BEARING
5	h	30"	10.00′	N04°45′32"W
5	i	30"	90.30′	N41°14′56"E
5	j	30"	148.00′	N03°45′14"W
5	k	30"	14.14′	N48°45′04"W
5	l	30"	10.00′	N03°45′04"W

6

NOTES:
30" WSP - ASPHALT COATED AND WRAPPED WELDED STEEL PIPE (.375" THICK)
CTL&C - COAL TAR ENAMEL LINED AND COATED

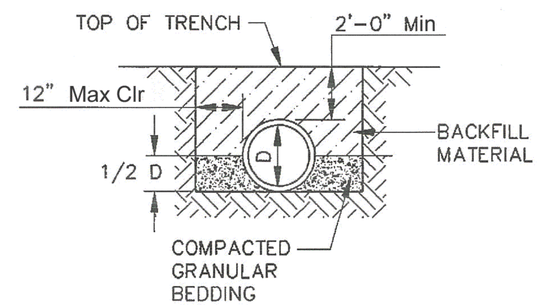

PIPE BACKFILL DETAIL
NTS

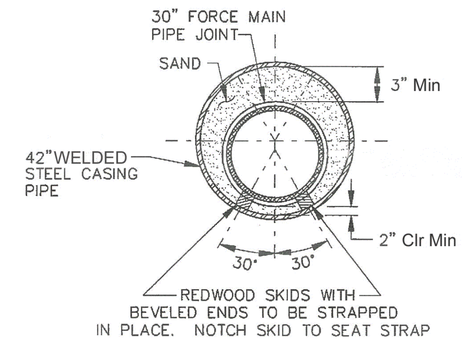

c WELDED STEEL CASING DETAIL
NTS

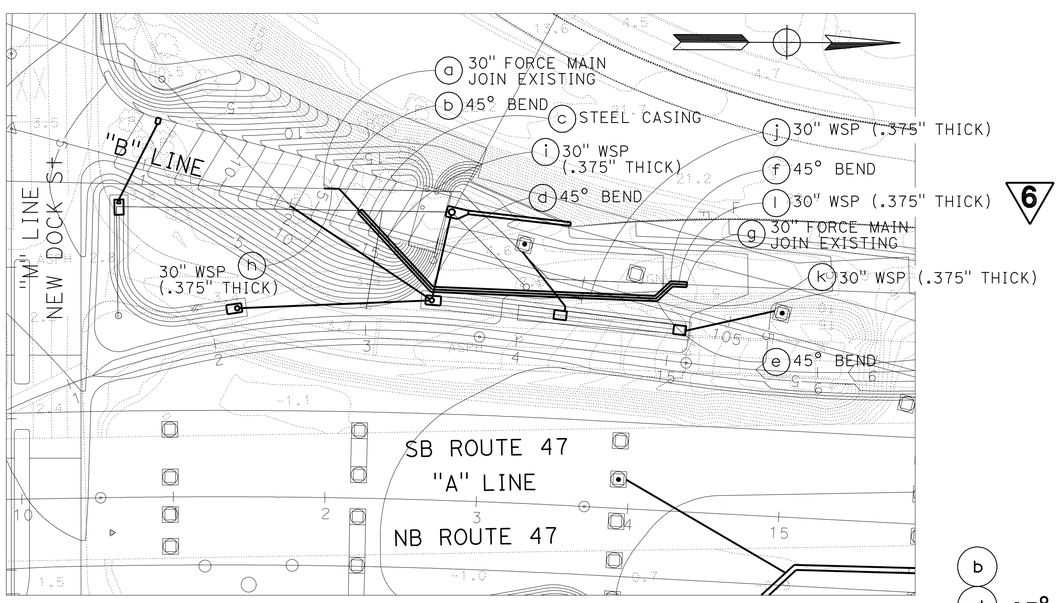

6

5 RELOCATION OF 30" STORM DRAIN FORCE MAIN
SCALE: 1" = 50′

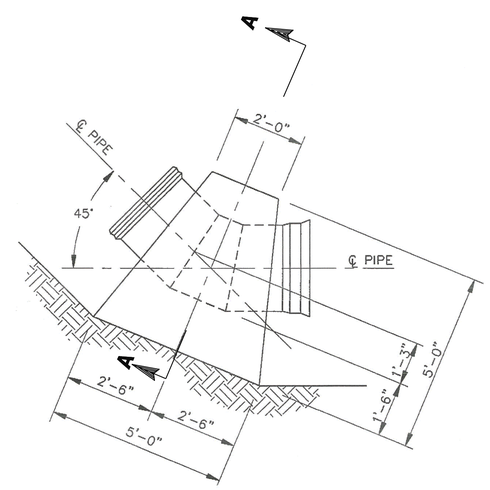

b d e f 45° BEND WITH THRUST BLOCK DETAIL
NTS

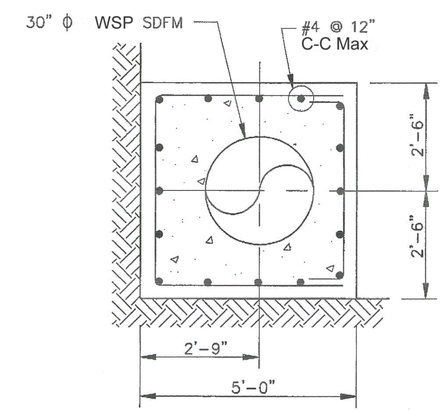

SECTION A-A
NTS

6 REVISED PER ADDENDUM No. 6 DATED MAY 5, 2011

THIS PLAN ACCURATE FOR DRAINAGE WORK ONLY.

DRAINAGE DETAILS

SCALE AS SHOWN

DD-12

REVISED BY	DATE REVISED

CALCULATED-DESIGNED BY: YOUNG YOON
CHECKED BY: JERRY GANTNY
CONSULTANT FUNCTIONAL SUPERVISOR: SHAHRAM VAHDAT

STATE OF CALIFORNIA - DEPARTMENT OF TRANSPORTATION
Caltrans

LAST REVISION 00-00-00 | DATE PLOTTED => 04-MAY-2011 | TIME PLOTTED => 13:53

Dist	COUNTY	ROUTE	POST MILES TOTAL PROJECT	SHEET No.	TOTAL SHEETS
07	LA	47,103	3.5/4.6, 0.0/1.1	89	1003

REGISTERED CIVIL ENGINEER 01/31/11 DATE

10-11-10
PLANS APPROVAL DATE

REGISTERED PROFESSIONAL ENGINEER RICHARD F. NORTON No. C41646 Exp. 12/31/11 CIVIL STATE OF CALIFORNIA

THE STATE OF CALIFORNIA OR ITS OFFICERS OR AGENTS SHALL NOT BE RESPONSIBLE FOR THE ACCURACY OR COMPLETENESS OF SCANNED COPIES OF THIS PLAN SHEET.

URS CORPORATION
915 WILSHIRE BOULEVARD
SUITE 700
LOS ANGELES, CA 90017

ALAMEDA CORRIDOR
TRANSPORTATION AUTHORITY
ONE CIVIC PLAZA, SUITE 350
CARSON, CA 90745

4

DRAINAGE SHEET No.	DRAINAGE SYSTEM No.	DRAINAGE UNIT	REMOVE PIPE	REMOVE MANHOLE	REMOVE INLET	ABANDON PIPELINE	ABANDON INLET	APC 12"	Conc FLARED END SECTION 18"	RCP 18"	RCP 24"	RCP 30"	RCP 36"	RCP 48"	RCP 51"	WSP 30"	WSP 42"	STEEL 24"	DRAINAGE MANHOLE	DRAINAGE INLET MARKER	ADJUST INLET	ADJUST MANHOLE TO GRADE	CLEANOUT	PLUG PIPE	Misc IRON AND STEEL	MINOR Conc (MINOR STRUCTURE)	ROCK SLOPE PROTECTION (GRANULAR MATERIAL)	ROCK SLOPE PROTECTION FABRIC	15" SLOTTED CORRUGATED STEEL PIPE	HOT MIX ASPHALT (TYPE A)	PLACE HOT MIX ASPHALT (Misc AREA)	(N) DRAINAGE INLET	(N) Conc COLLAR	(N) HEIGHT OF INLET	(N) HEIGHT OF COVER	DESCRIPTION	STATION	DRAINAGE SHEET No.	DRAINAGE SYSTEM No.	DRAINAGE UNIT
			LF	EA	EA	LF	EA	LF	EA	LF						LF		LF	EA	EA	EA	EA	EA	EA	LB	CY	CY	SQYD	LF	TON	SQYD	EA	EA	LF	LF					
D5/D6	46	a																1626.4																		FORCE MAIN 24" WSP (0.250" THICK)	6	D5/D6	46	a
D4/D5	47	a																								28.8										CONCRETE V-DITCH		D4/D5	47	a
		b																								16.1										CONCRETE V-DITCH				b
D-5	48	a										199.5																								30" RCP		D-5	48	a
		b																																		Conn TO MH No. 2				b
		c																	1																	MANHOLE No. 2	419+22.85 "E" LINE			c
		d										72.6																								30" RCP				d
		e																																		Conn TO MH No. 2				e
		f																	1																	MANHOLE No. 2	419+99.49 "E" LINE			f
		g										46.9																								30" RCP				g
		h																																		Conn TO MH No. 2				h
		i																	1																	MANHOLE No. 2	419+78.33 "E" LINE			i
D-6	49	a								53.1																										18" RCP		D-6	49	a
D-5	50	a								171.5																										18" RCP		D-5	50	a
		b																																		NOT USED				b
		c											6.2												236	6.2					1.0		6.2		GCP APRON	426+28.90 "E" LINE			c
		d								120.0																										18" RCP				d
		e																	1																	MANHOLE No. 2	425+05.60 "E" LINE			e
		f								68.0																										18" RCP				f
		g																																		Conn TO MH No. 2				g
		h																	1																	MANHOLE No. 2	424+31.78 "E" LINE			h
		i								195.3																										18" RCP				i
		j																																		Conn TO MH No. 2				j
		k																	1																	MANHOLE No. 2	422+24.17 "E" LINE			k
		l								195.3																										18" RCP				l
		m																																		Conn TO MH No. 2				m
		n																	1																	MANHOLE No. 2	420+19.89 "E" LINE			n
		o								35.0																										18" RCP				o
		p								2.0										1					236	0.6					1.0		2.0		GCP APRON	419+91.35 "E" LINE			p
		q								17.0																										18" RCP				q
		r								2.5										1					236	0.6					1.0		2.5		GCP APRON	425+02.11 "E" LINE			r
SUBTOTAL										859.7		319.0	6.2					1626.4	7	2					708.0	46.7					3.0									

6 **REVISED PER ADDENDUM No. 6 DATED MAY 5, 2011**

4 **REVISED PER ADDENDUM No. 4 DATED APRIL 8, 2011**

DRAINAGE QUANTITIES

DQ-9

STATE OF CALIFORNIA - DEPARTMENT OF TRANSPORTATION
Caltrans

CONSULTANT FUNCTIONAL SUPERVISOR: SHAHRAM VAHDAT
CALCULATED-DESIGNED BY: YOUNG YOON
CHECKED BY: JERRY GANTNY
REVISED BY
DATE REVISED

LAST REVISION 00-00-00
DATE PLOTTED => 04-MAY-2011
TIME PLOTTED => 14:08

Dist	COUNTY	ROUTE	POST MILES TOTAL PROJECT	SHEET No.	TOTAL SHEETS
07	LA	47,103	3.5/4.6, 0.0/1.1	90	1003

REGISTERED CIVIL ENGINEER 01/31/11 DATE

10-11-10
PLANS APPROVAL DATE

REGISTERED PROFESSIONAL ENGINEER SULIEMAN T. KASSISIEH No. C58043 Exp. 6/30/12 CIVIL STATE OF CALIFORNIA

THE STATE OF CALIFORNIA OR ITS OFFICERS OR AGENTS SHALL NOT BE RESPONSIBLE FOR THE ACCURACY OR COMPLETENESS OF SCANNED COPIES OF THIS PLAN SHEET.

URS CORPORATION
915 WILSHIRE BOULEVARD
SUITE 700
LOS ANGELES, CA 90017

ALAMEDA CORRIDOR
TRANSPORTATION AUTHORITY
ONE CIVIC PLAZA, SUITE 350
CARSON, CA 90745

LADPW ENGINEERING PLANNING FOR PRESENT + ANTICIPATE FUTURE

B - PERMITS
BR600453

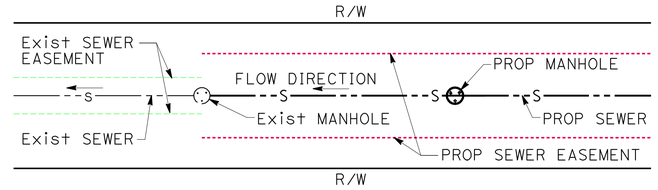

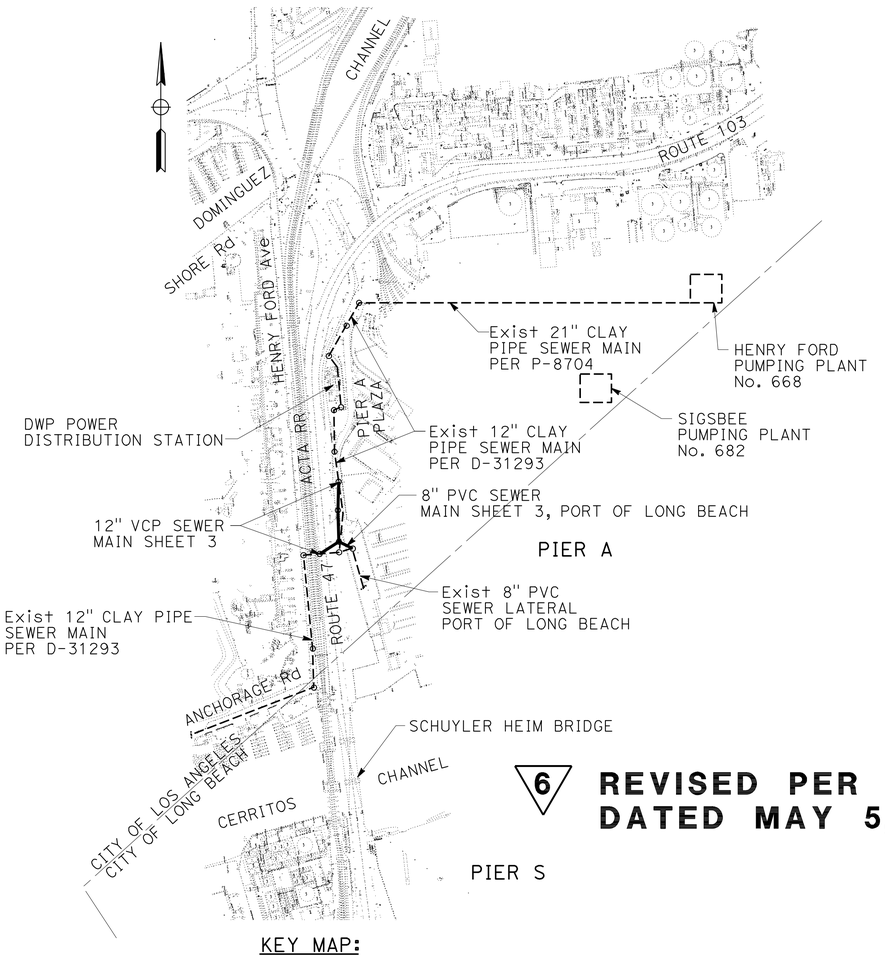

KEY MAP:
NO SCALE

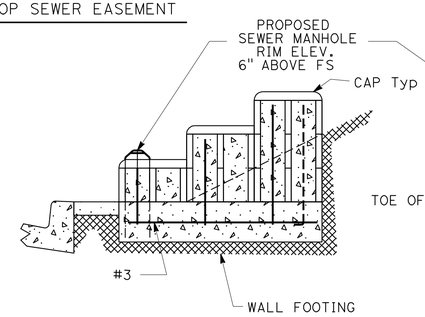

SIDE SECTION
N.T.S.

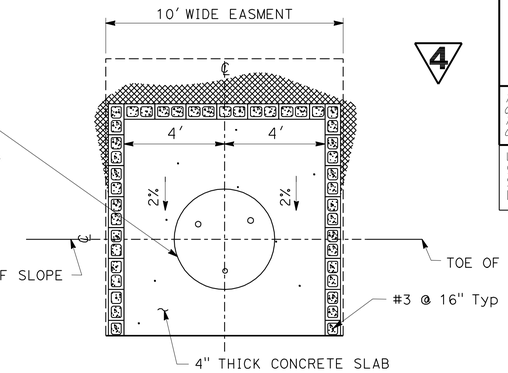

HORIZONTAL SECTION
N.T.S.

WALL SIDE AND HORIZONTAL SECTION
DETAIL 1
N.T.S.

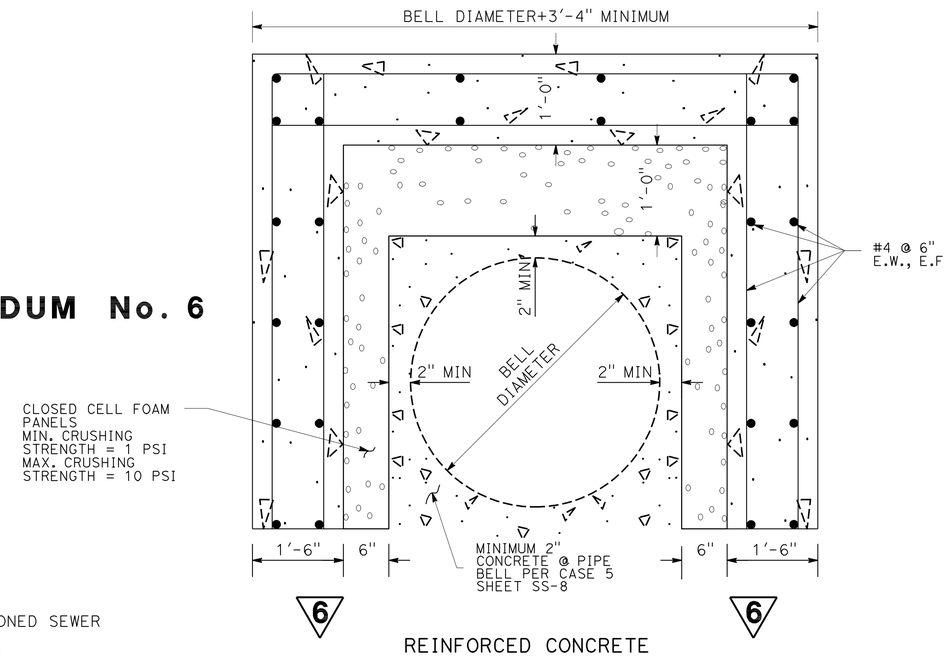

REINFORCED CONCRETE INVERTED U-CHANNEL
DETAIL 2
N.T.S.

6 REVISED PER ADDENDUM No. 6 DATED MAY 5, 2011

INDEX TO SHEETS

SHEET No.	DRAWING No.	PLANS OF	FROM	TO
R-1	SS-1	TITLE SHEET	1100' N/O CERRITOS CHANNEL	1550' N/O CERRITOS CHANNEL
R-2	SS-2	N/A		
C-1	SS-3	PLAN/PROFILE		
C-2	SS-4	DETAILS		
C-3	SS-5	DETAILS		
C-4	SS-6	DETAILS		
C-5	SS-7	DETAILS		
C-6	SS-8	DETAILS		
C-7	SS-9	DETAILS		
C-8	SS-10	DETAILS		
C-9	SS-11	DETAILS		
C-10	SS-12	DETAILS		
C-11	SS-13	DETAILS		
C-12	SS-14	QUANTITIES		

LEGEND:

- EXISTING SEWER
- EXISTING ABANDONED SEWER
- PROPOSED SEWER
- SEWER TO BE ABANDONED
- EXISTING STRUCTURE FOOTING
- PROPOSED STRUCTURE FOOTING AND BUFFER
- PROPOSED STRUCTURE TEST PILES AND BUFFER

THIS PLAN ACCURATE FOR SANITARY SEWER WORK ONLY

4 REVISED PER ADDENDUM No. 4 DATED APRIL 8, 2011

SANITARY SEWER PLAN
RELOCATION - LABOE

SS-1

PLANS PREPARED BY: URS 915 WILSHIRE BOULEVARD SUITE 700 LOS ANGELES, CA 90017-3437 TEL: 213.996.2200 FAX: 213.996.2374

ENGINEER/ARCHITECT SIGNATURE DATE

CITY OF LOS ANGELES DEPARTMENT OF PUBLIC WORKS BUREAU OF ENGINEERING

VERTICAL CONTROL: NAVD88
HORIZONTAL CONTROL: NAD83, CALIFORNIA STATE PLANES, ZONE V

SHEET TITLE: GENERAL SEWER IMPROVEMENTS

PROJECT: SIGSBEE SEWER LINE REPLACEMENT STATE ROUTE 47 SCHUYLER HEIM BRIDGE

ADDRESS: SR-47 AT PIER A PLAZA PORTS OF LONG BEACH & LOS ANGELES, CA

PROJECT NO.

DRAWING NO. R-1

SHEET 1 OF 14 SHEETS

REFERENCES: DISTRICT MAP BASIS; DRAINAGE MAP DR-613 BASIS; SUPERSEDES PLAN; RW NO.; SEWER MAP S-613

BENCH MARKS: DESCRIPTION; Tidal 8; NGS STATION "TIDAL 8" IN LOS ANGELES HARBOR N 1720537.51, E 6478693.88 ELEV. 13.55

APPROVALS: DATE: BY:
ST. TREES DIV.
ST. LIGHTING
D.O.T.

GARY LEE MOORE, P.E. CITY ENGINEER
ACCEPTED BY:
PLAN CHECKER DATE
DIVISION / DISTRICT ENGINEER DATE

LAST REVISION 00-00-00 DATE PLOTTED => 04-MAY-2011 TIME PLOTTED => 14:18

STATE OF CALIFORNIA - DEPARTMENT OF TRANSPORTATION
Caltrans
CONSULTANT FUNCTIONAL SUPERVISOR: SHAHRAM VAHDAT
CALCULATED-DESIGNED BY: CHRIS PAPPAS
CHECKED BY: MARK MARQUEZ
REVISED BY
DATE REVISED

BORDER LAST REVISED 4/11/2008
RELATIVE BORDER SCALE IS IN INCHES 0 1 2 3
USERNAME => trlim
DGN FILE => 713820ja001.add
CU 07271
EA 138201

DIST	COUNTY	ROUTE	POST MILES TOTAL PROJECT	SHEET No	TOTAL SHEETS
07	LA	47,103	3.5/4.6, 0.0/1.1	460	1003

REGISTERED CIVIL ENGINEER — DATE 05-24-10

10-11-10
PLANS APPROVAL DATE

REGISTERED PROFESSIONAL ENGINEER — FOUED ZAYATI — No. C57046 — Exp. 06-30-11 — CIVIL — STATE OF CALIFORNIA

The State of California or its officers or agents shall not be responsible for the accuracy or completeness of electronic copies of this plan sheet.

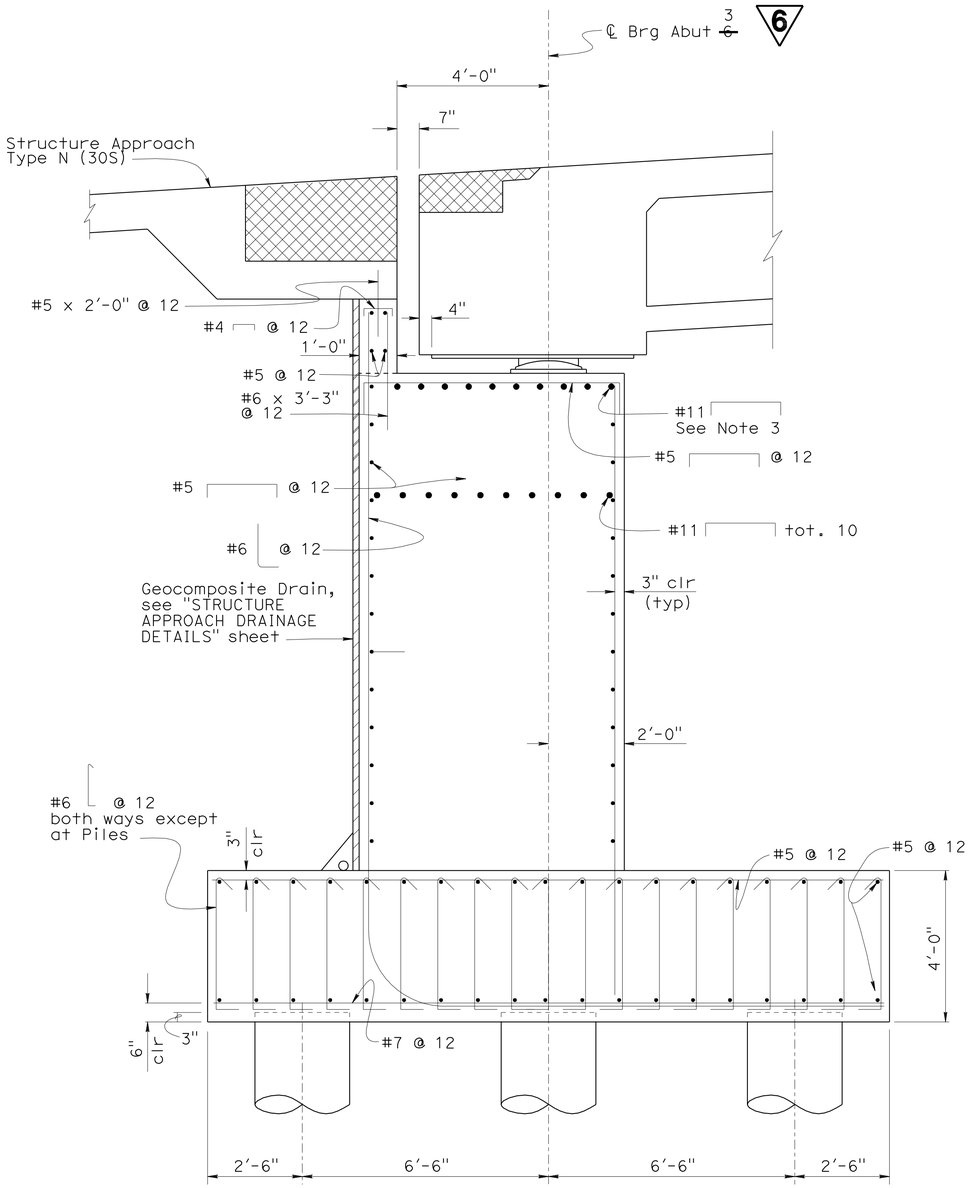

ABUTMENT SECTION AT BEARING PADS

½" = 1'-0"

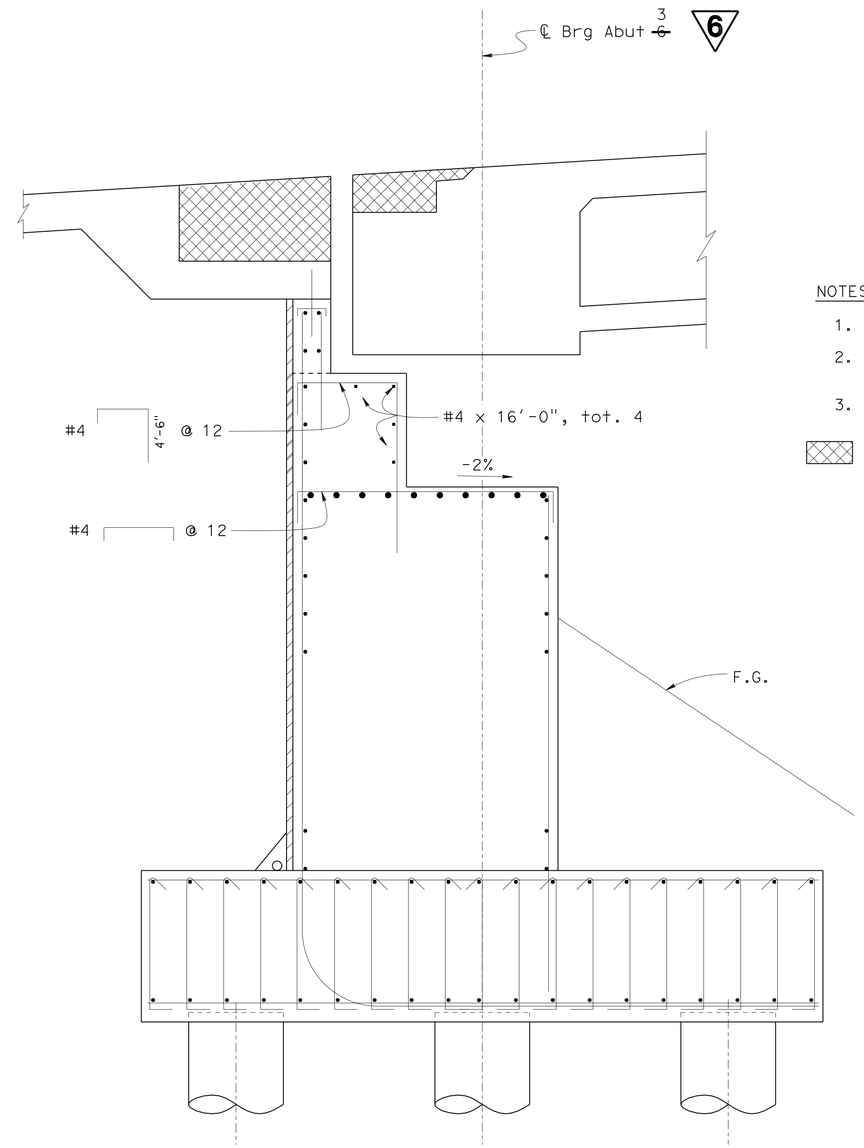

ABUTMENT SECTION AT ACCESS BLOCKOUT

½" = 1'-0"

NOTES:

1. Not all steel shown.
2. For Joint Seal Assembly Blockout dimensions, see "JOINT SEAL ASSEMBLY DETAILS NO. 1" sheet.
3. See 'Part Elevation' view on "ABUTMENT DETAILS No. 2" sheet

Indicates Limits of Joint Seal Blockout

6 **REVISED PER ADDENDUM No. 6 DATED MAY 5, 2011**

	BY	CHECKED
DESIGN	S. Galgiani	J. Lane
DETAILS	K. Kubo	F. Zayati
QUANTITIES	J. Lane	V. Ramakrishnan

STATE OF CALIFORNIA
DEPARTMENT OF TRANSPORTATION

DIVISION OF ENGINEERING SERVICES
STRUCTURE DESIGN
DESIGN BRANCH 14

BRIDGE NO. 53-3031
POST MILE 3.74

NEW DOCK STREET OFF-RAMP
ABUTMENT 3 DETAILS NO. 1

STRUCTURES DESIGN DETAIL SHEET (ENGLISH) (REV. 10/25/05)

ORIGINAL SCALE IN INCHES FOR REDUCED PLANS 0 1 2 3

CU 07-271
EA 138201

DISREGARD PRINTS BEARING EARLIER REVISION DATES

REVISION DATES: 05-18-10 | ~~06-11-08~~ | ~~06-26-08~~ | ~~09-17-09~~ | ~~11-18-09~~ | ~~02-15-10~~ | ~~04-05-10~~ | ~~04-22-10~~ | ~~05-18-10~~

SHEET 7 OF 49

FILE => 53-3031-f-a03dt01.add

USERNAME => trstrk DATE PLOTTED => 03-MAY-2011 TIME PLOTTED => 17:24

DIST	COUNTY	ROUTE	POST MILES TOTAL PROJECT	SHEET No	TOTAL SHEETS
07	LA	47,103	3.5/4.6, 0.0/1.1	466	1003

REGISTERED CIVIL ENGINEER 05-24-10 DATE

10-11-10
PLANS APPROVAL DATE

REGISTERED PROFESSIONAL ENGINEER FOUED ZAYATI No. C57046 Exp. 06-30-11 CIVIL STATE OF CALIFORNIA

The State of California or its officers or agents shall not be responsible for the accuracy or completeness of electronic copies of this plan sheet.

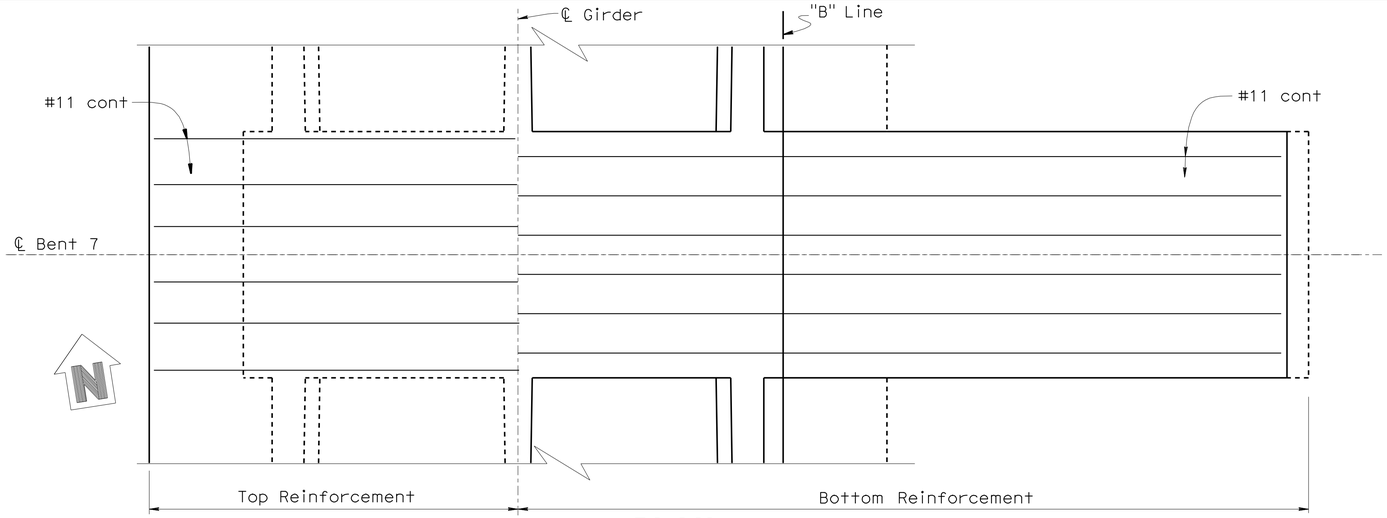

PLAN

1/4"=1'-0"

PRESTRESSING NOTES

270 KSI Low Relaxation Strand:

P_{jack} =4400 kips

Anchor Set = 3/8 in

Concrete: f'_c = 5.0 psi @ 28 days

f'_{ci} = 3.5 psi @ time of stressing

Contractor shall submit elongation calculations based on initial stress at

⊠ = 0.855 times jacking stress.

One end stressing shall be performed from Left End.

6

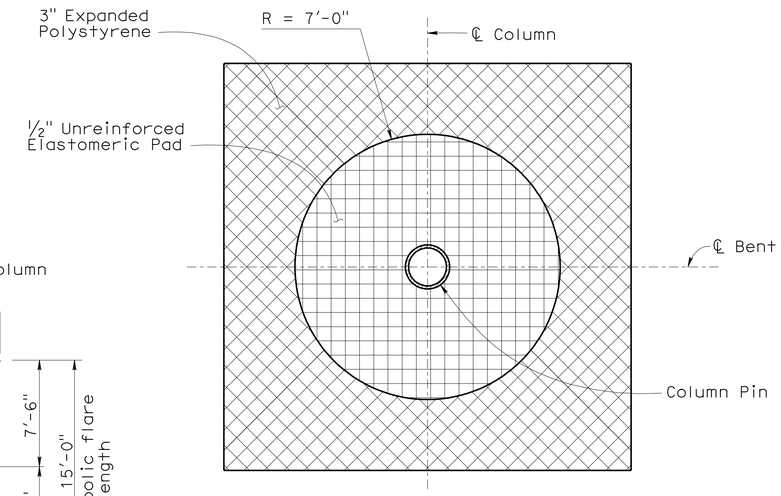

SECTION A-A

1/2"=1'-0"

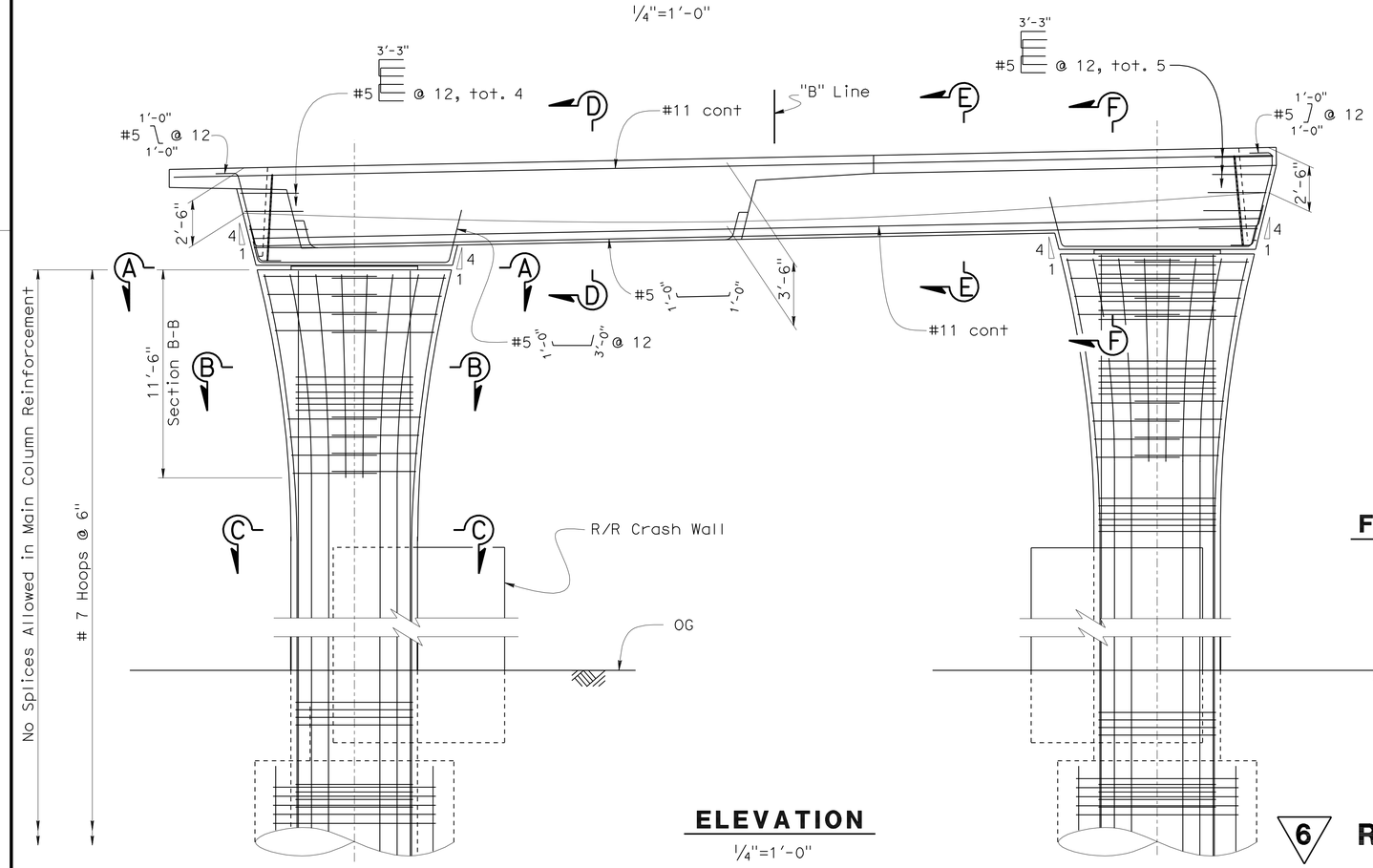

ELEVATION

1/4"=1'-0"

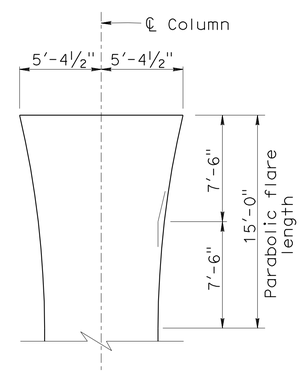

FLARE DETAIL

No Scale

NOTE:

For 'Section B-B', Section C-C', 'Section D-D', 'Section E-E' and 'Section F-F', see "BENT 7 DETAILS No. 1" sheet.

6 **REVISED PER ADDENDUM No. 6 DATED MAY 5, 2011**

DESIGN	BY J. Lane	CHECKED V. Ramakrishnan	
DETAILS	BY T. Nguyen	CHECKED F. Zayati	
QUANTITIES	BY J. Lane	CHECKED V. Ramakrishnan	

STATE OF CALIFORNIA
DEPARTMENT OF TRANSPORTATION

DIVISION OF ENGINEERING SERVICES
STRUCTURE DESIGN
DESIGN BRANCH 14

BRIDGE NO. 53-3031
POST MILE 3.74

NEW DOCK STREET OFF-RAMP
BENT 7 LAYOUT

STRUCTURES DESIGN DETAIL SHEET (ENGLISH) (REV. 10/25/05)

ORIGINAL SCALE IN INCHES FOR REDUCED PLANS 0 1 2 3

CU 07-271
EA 138201

DISREGARD PRINTS BEARING EARLIER REVISION DATES

REVISION DATES: 5-19-10 01-05-11 04-19-11 11-12-08 07-15-09 04-22-10 05-10-10

SHEET 13 OF 49

FILE => 53-3031-h-b7_1o.add

USERNAME => trmikes1 DATE PLOTTED => 04-MAY-2011 TIME PLOTTED => 06:39

DIST	COUNTY	ROUTE	POST MILES TOTAL PROJECT	SHEET No	TOTAL SHEETS
07	LA	47,103	3.5/4.6, 0.0/1.1	469	1003

REGISTERED CIVIL ENGINEER — DATE 05-24-10

10-11-10
PLANS APPROVAL DATE

The State of California or its officers or agents shall not be responsible for the accuracy or completeness of electronic copies of this plan sheet.

REGISTERED PROFESSIONAL ENGINEER — FOUED ZAYATI No. C57046 Exp. 06-30-11 CIVIL — STATE OF CALIFORNIA

6

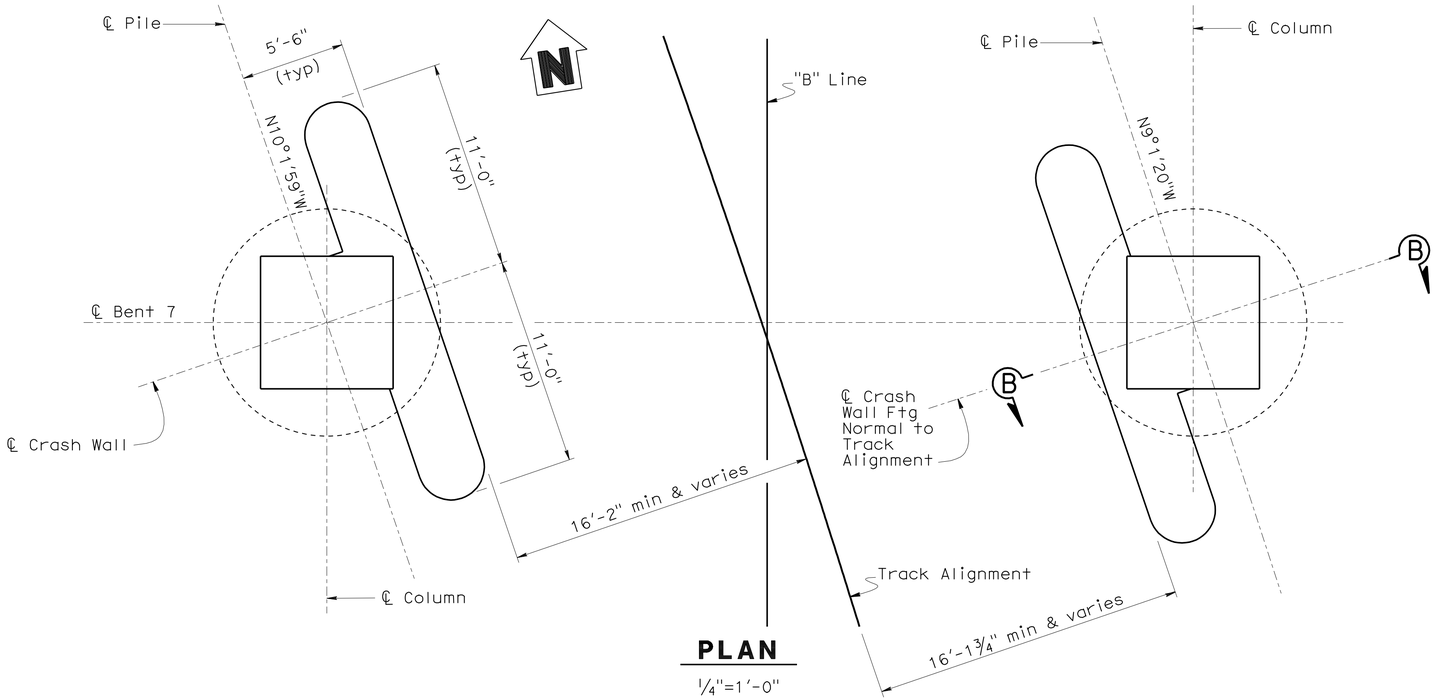

PLAN
¼"=1'-0"

NOTES:

1. For Column Reinforcement, see "BENT 7 DETAILS NO. 1" sheet.
2. For Pile Reinforcement, see "10 FT CIDH PILE DETAILS No. 1" sheet.
3. for the purpose of measurement and payment, Crashwalls shall be designated as "Structural Concrete, Bridge."

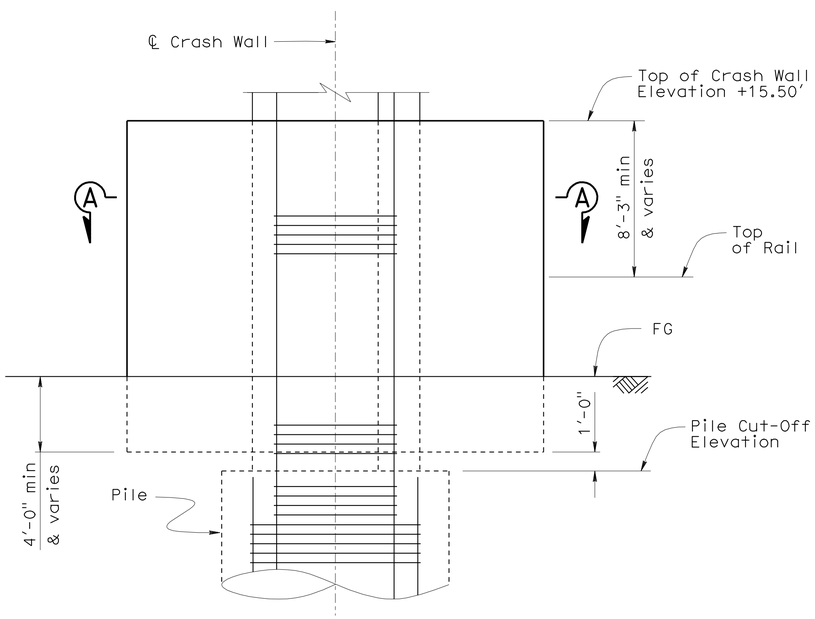

ELEVATION
¼"=1'-0"

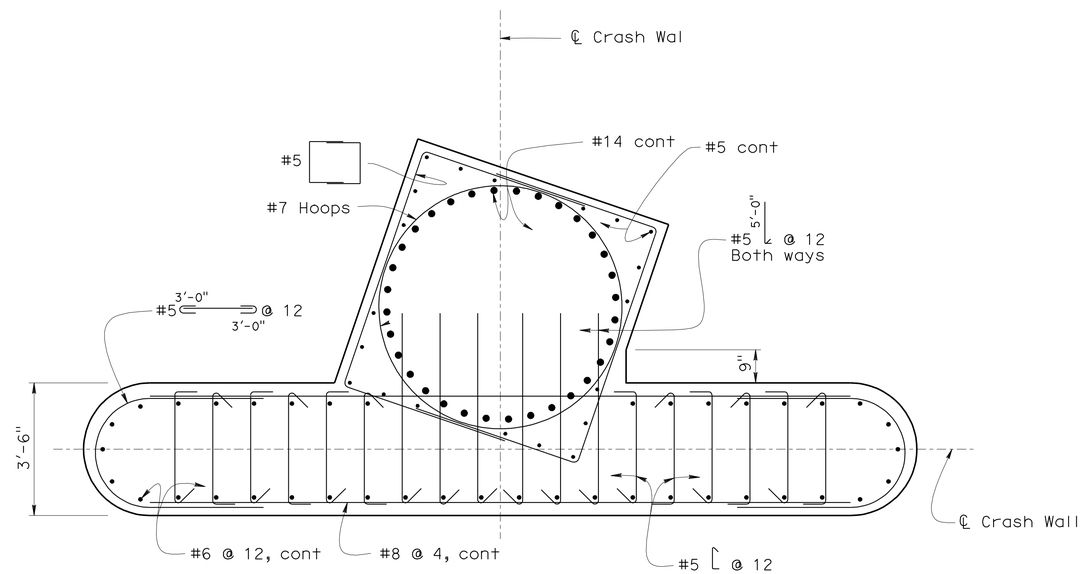

SECTION A-A
SCALE: ½" = 1'-0"

6 **REVISED PER ADDENDUM No. 6 DATED MAY 5, 2011**

DESIGN	BY J. Lane	CHECKED V. Ramakrishnan	
DETAILS	BY T. Nguyen	CHECKED F. Zayati	
QUANTITIES	BY J. Lane	CHECKED V. Ramakrishnan	

STATE OF CALIFORNIA
DEPARTMENT OF TRANSPORTATION

DIVISION OF ENGINEERING SERVICES
STRUCTURE DESIGN
DESIGN BRANCH 14

BRIDGE NO. 53-3031
POST MILE 3.74

NEW DOCK STREET OFF-RAMP
BENT 7 DETAILS NO. 3

STRUCTURES DESIGN DETAIL SHEET (ENGLISH) (REV. 10/25/05)

ORIGINAL SCALE IN INCHES FOR REDUCED PLANS 0 1 2 3

CU 07-271
EA 138201

DISREGARD PRINTS BEARING EARLIER REVISION DATES

REVISION DATES: 05-26-10 06-30-10 07-06-10 01-06-11 04-19-11 07-15-09 04-22-10 05-10-10

SHEET 16 OF 47

FILE => 53-3031-h-b7dt03.add

USERNAME => tr5ttk DATE PLOTTED => 03-MAY-2011 TIME PLOTTED => 17:24

DIST	COUNTY	ROUTE	POST MILES TOTAL PROJECT	SHEET No	TOTAL SHEETS
07	LA	47,103	3.5/4.6, 0.0/1.1	470	1003

REGISTERED CIVIL ENGINEER — DATE 05-24-10

10-11-10
PLANS APPROVAL DATE

The State of California or its officers or agents shall not be responsible for the accuracy or completeness of electronic copies of this plan sheet.

REGISTERED PROFESSIONAL ENGINEER — FOUED ZAYATI — No. C57046 — Exp. 06-30-11 — CIVIL — STATE OF CALIFORNIA

6

NOTES:

1. For Column Reinforcement, see "BENTS 4, 5, 6 & 8 LAYOUT" sheet.
2. For Pile Reinforcement, see "10 FT CIDH PILE DETAILS No. 1" sheet.

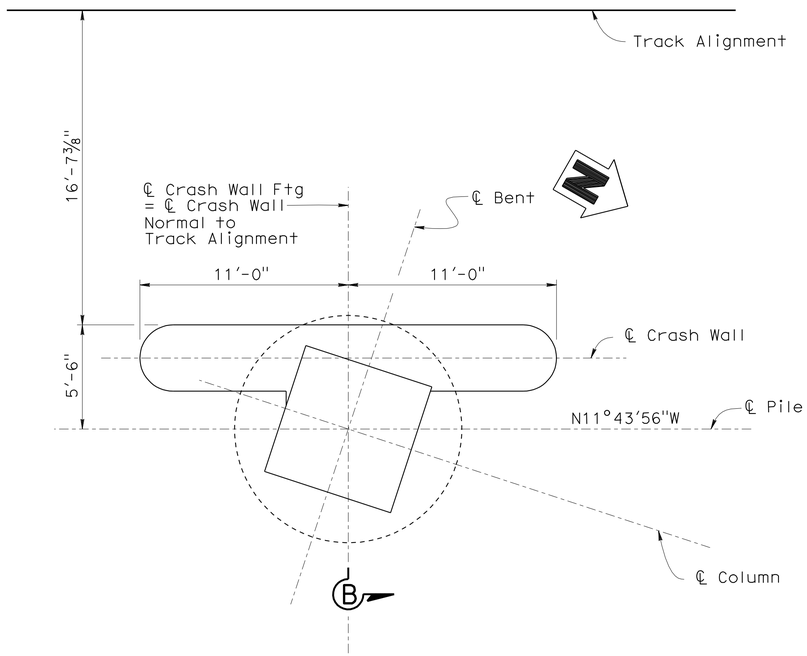

PLAN

1/4"=1'-0"

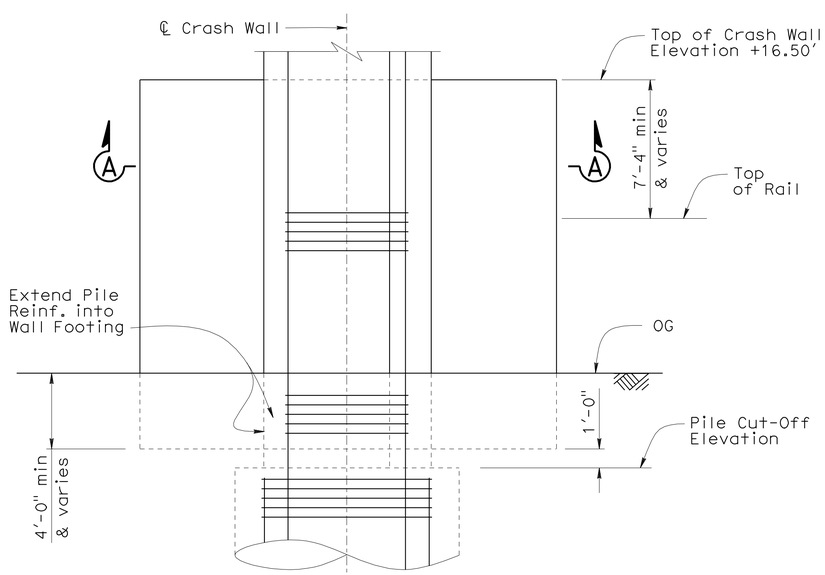

ELEVATION

1/4"=1'-0"

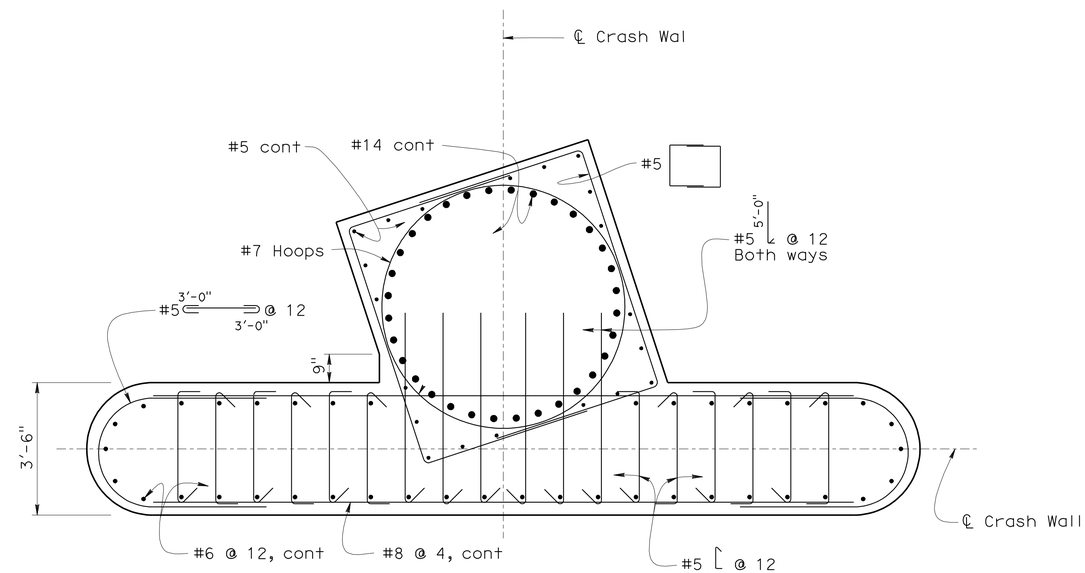

SECTION A-A

SCALE: 1/2" = 1'-0"

6 **REVISED PER ADDENDUM No. 6 DATED MAY 5, 2011**

	BY	CHECKED
DESIGN	J. Lane	V. Ramakrishnan
DETAILS	T. Nguyen	F. Zayati
QUANTITIES	J. Lane	V. Ramakrishnan

STATE OF CALIFORNIA
DEPARTMENT OF TRANSPORTATION

DIVISION OF ENGINEERING SERVICES
STRUCTURE DESIGN
DESIGN BRANCH 14

BRIDGE NO. 53-3031
POST MILE 3.74

NEW DOCK STREET OFF-RAMP
BENT 8 CRASHWALL DETAILS

STRUCTURES DESIGN DETAIL SHEET (ENGLISH) (REV. 10/25/05)

ORIGINAL SCALE IN INCHES FOR REDUCED PLANS 0 1 2 3

CU 07-271
EA 138201

DISREGARD PRINTS BEARING EARLIER REVISION DATES

REVISION DATES: 04-28-10 05-18-10 01-06-11 04-19-11

SHEET 17 OF 49

FILE => 53-3031-h-b8dt.add

USERNAME => frstrk DATE PLOTTED => 03-MAY-2011 TIME PLOTTED => 17:24

DIST	COUNTY	ROUTE	POST MILES TOTAL PROJECT	SHEET No	TOTAL SHEETS
07	LA	47,103	3.5/4.6, 0.0/1.1	479	1003

REGISTERED CIVIL ENGINEER — DATE 05-24-10

10-11-10
PLANS APPROVAL DATE

REGISTERED PROFESSIONAL ENGINEER — FOUED ZAYATI — No. C57046 — Exp. 06-30-11 — CIVIL — STATE OF CALIFORNIA

The State of California or its officers or agents shall not be responsible for the accuracy or completeness of electronic copies of this plan sheet.

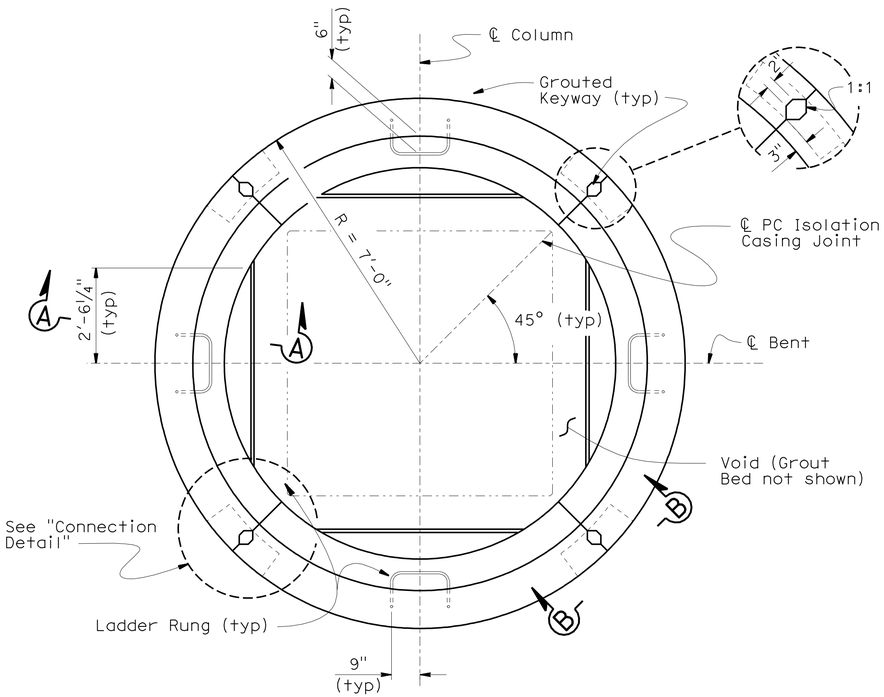

PLAN

½"=1'-0"

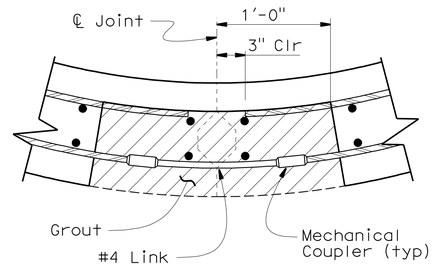

CONNECTION DETAIL

1½"=1'-0"

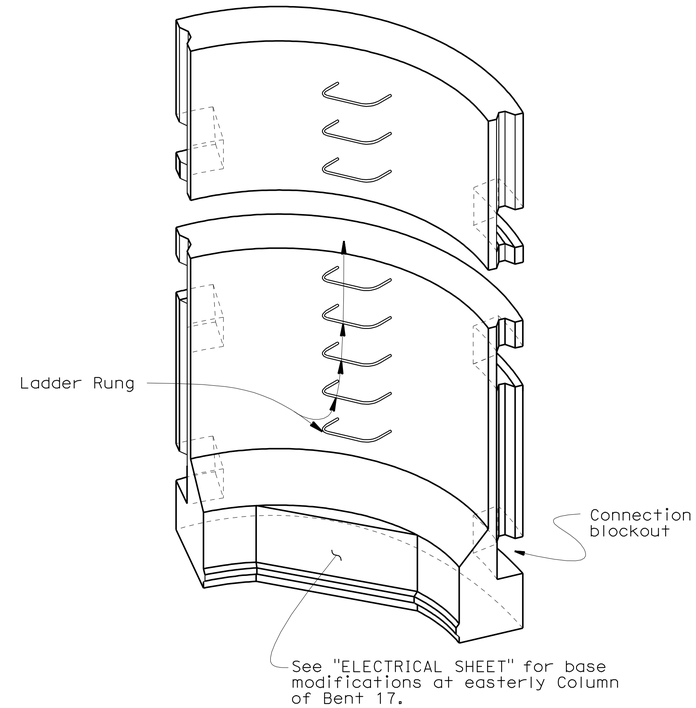

ISOMETRIC VIEW PRECAST ISOLATION CASING

NO SCALE

NOTES:

1. All hardware to be galvanized before casting.
2. Place connections 3 feet from top, 2 feet from bottom and at mid - height of casing.
3. Align shells prior to grouting Keyway and Connection Blockouts.
4. Casing to be set on grout pad to level.
5. Minimum concrete strength shall be 5000 psi
6. Casing to be plumb and centered about column.

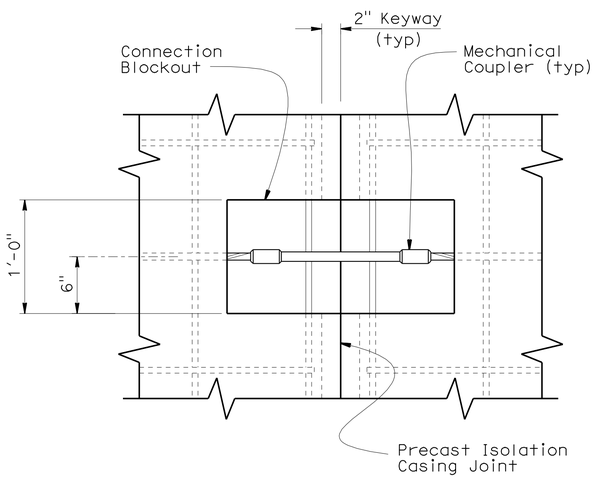

VIEW B-B

1½"=1'-0"

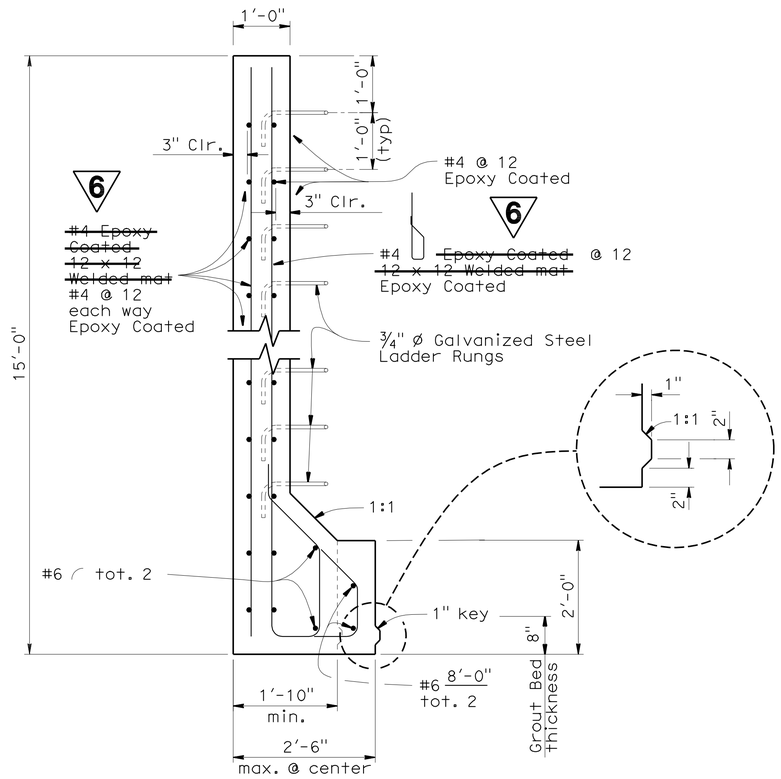

SECTION A-A

¾"=1'-0"

6 REVISED PER ADDENDUM No. 6 DATED MAY 5, 2011

3 REVISED PER ADDENDUM No. 3 DATED MARCH 28, 2011

	BY	CHECKED
DESIGN	R. Bromenschenkel	F. Zayati
DETAILS	Jeff Thorne	F. Zayati
QUANTITIES	J. Lane	V. Ramakrishnan

STATE OF CALIFORNIA
DEPARTMENT OF TRANSPORTATION

DIVISION OF ENGINEERING SERVICES
STRUCTURE DESIGN
DESIGN BRANCH 14

BRIDGE NO. 53-3031
POST MILE 3.74

NEW DOCK STREET OFF-RAMP
PRECAST ISOLATION CASING DETAILS

STRUCTURES DESIGN DETAIL SHEET (ENGLISH) (REV. 10/25/05)

ORIGINAL SCALE IN INCHES FOR REDUCED PLANS 0 1 2 3

CU 07-271
EA 138201

DISREGARD PRINTS BEARING EARLIER REVISION DATES

REVISION DATES: 03-18-10 | 03-26-10 | 03-22-10 | 04-22-10 | 07-08-10 | 08-26-10 | 01-06-11

SHEET 26 OF 49

FILE => 53-3031-p-1isolation-precast.add

USERNAME => trstrk DATE PLOTTED => 03-MAY-2011 TIME PLOTTED => 17:24

DIST	COUNTY	ROUTE	POST MILES TOTAL PROJECT	SHEET No	TOTAL SHEETS
07	LA	47,103	3.5/4.6, 0.0/1.1	488	1003

REGISTERED CIVIL ENGINEER 05-24-10 DATE

10-11-10
PLANS APPROVAL DATE

REGISTERED PROFESSIONAL ENGINEER FOUED ZAYATI No. C57046 Exp. 06-30-11 CIVIL STATE OF CALIFORNIA

The State of California or its officers or agents shall not be responsible for the accuracy or completeness of electronic copies of this plan sheet.

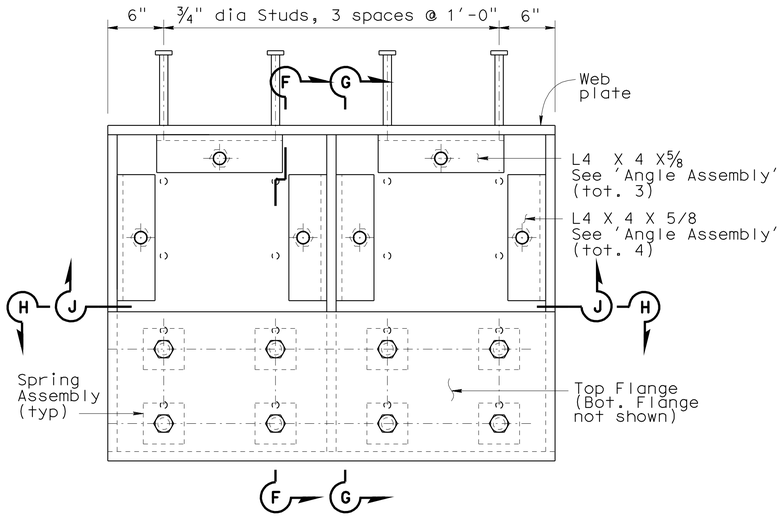

PLAN - CHANNEL ASSEMBLY "C"

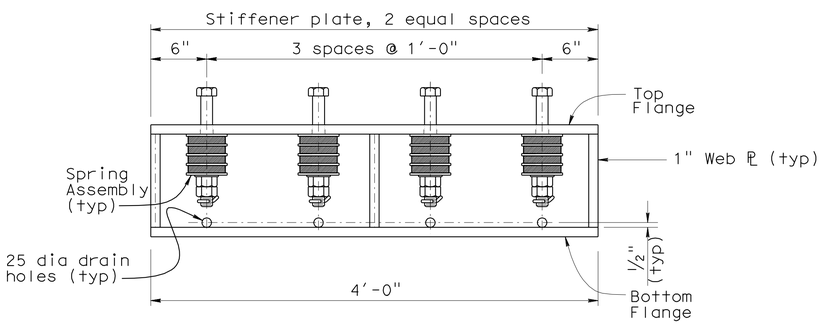

SECTION H-H - CHANNEL ASSEMBLY "C"

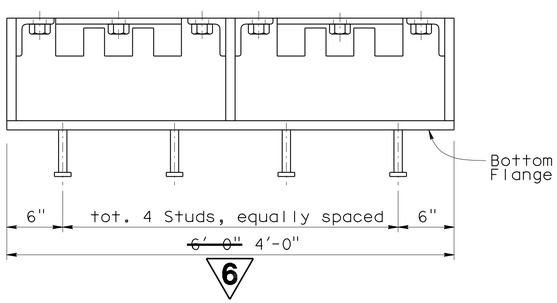

SECTION J-J - CHANNEL ASSEMBLY "C"

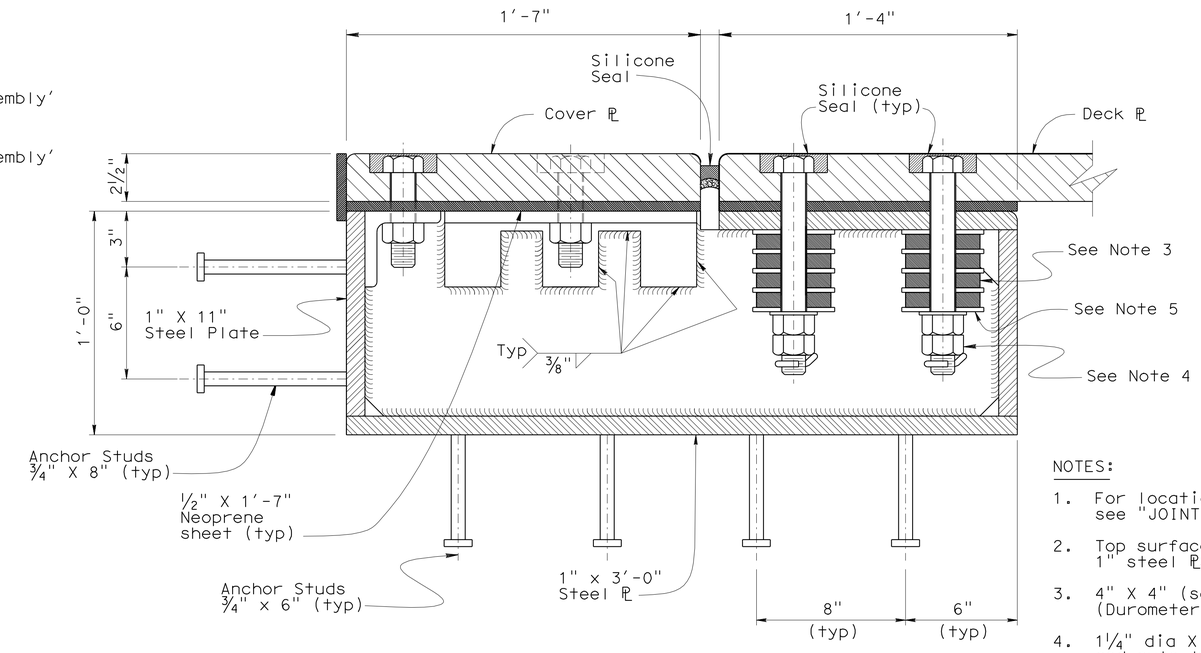

SECTION F-F

NOTES:

1. For location of 'Section F-F' and 'Section G-G', see "JOINT SEAL ASSEMBLY DETAILS No. 4" sheet.
2. Top surfaces of L 4 x 4 x⅝" angles and 1" steel ℙs shall be on same level.
3. 4" X 4" (sq) x¾" Long elastomeric washers (Durometer 60) with 1⅜" dia hole (tot. 4 per bolt).
4. 1¼" dia X 10½" HS bolts (with cotter pins) and nuts thru holes and counterbores or equal. Tighten nuts to remove slack within the system, then turn each nut an additional half turn. (Half turn corresponds to 1/16")
5. Plate Washer galvanized ¼" X 5½" X 5½" with 1⅜" dia hole (tot. 5 per bolt)

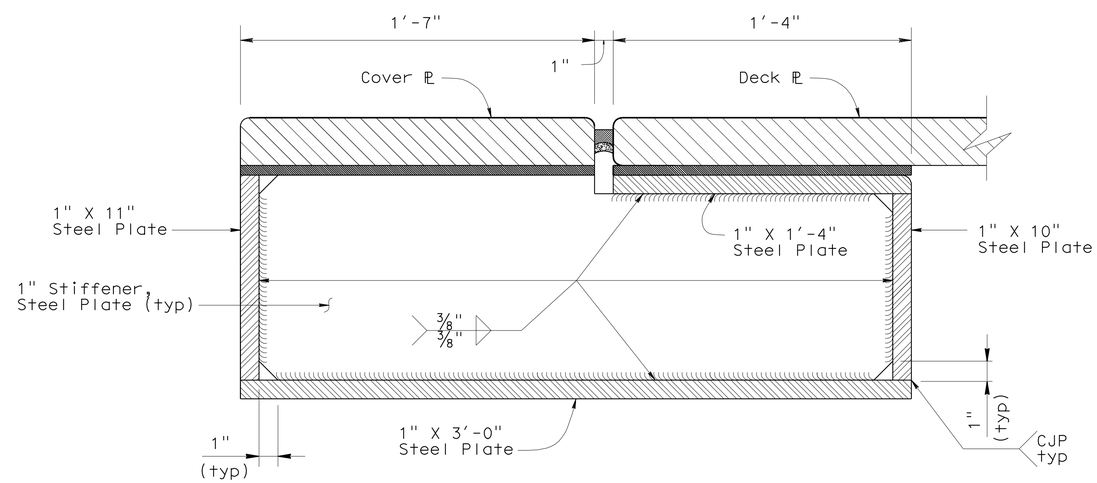

SECTION G-G

THE CONTRACTOR SHALL VERIFY ALL CONTROLLING FIELD DIMENSIONS BEFORE ORDERING OR FABRICATING ANY MATERIAL.

6 **REVISED PER ADDENDUM No. 6 DATED MAY 5, 2011**

NO SCALE

	BY	CHECKED
DESIGN	F. Zayati	R. Bromenschenkel
DETAILS	K. Kubo	F. Zayati
QUANTITIES	J. Lane	V. Ramakrishnan

STATE OF CALIFORNIA
DEPARTMENT OF TRANSPORTATION

DIVISION OF ENGINEERING SERVICES
STRUCTURE DESIGN
DESIGN BRANCH 14

BRIDGE NO. 53-3031
POST MILE 3.74

NEW DOCK STREET OFF-RAMP
JOINT SEAL ASSEMBLY DETAILS NO. 5

STRUCTURES DESIGN DETAIL SHEET (ENGLISH) (REV. 10/25/05)

ORIGINAL SCALE IN INCHES FOR REDUCED PLANS 0 1 2 3

CU 07-271
EA 138201

DISREGARD PRINTS BEARING EARLIER REVISION DATES

REVISION DATES: 12-22-09 04-20-10 05-19-10

SHEET 35 OF 49

FILE => 53-3031-q-jntsealdet05.add

USERNAME => trstrk DATE PLOTTED => 03-MAY-2011 TIME PLOTTED => 17:25

DIST	COUNTY	ROUTE	POST MILES TOTAL PROJECT	SHEET No	TOTAL SHEETS
07	LA	47,103	3.5/4.6, 0.0/1.1	504	1003

REGISTERED CIVIL ENGINEER — DATE 05-24-10

10-11-10
PLANS APPROVAL DATE

REGISTERED PROFESSIONAL ENGINEER — FOUED ZAYATI — No. C57046 — Exp. 06-30-11 — CIVIL — STATE OF CALIFORNIA

The State of California or its officers or agents shall not be responsible for the accuracy or completeness of electronic copies of this plan sheet.

3

INDEX TO PLANS

SHEET No.	TITLE
1	GENERAL PLAN
2	INDEX TO PLANS
3	GENERAL NOTES NO. 1
4	GENERAL NOTES NO. 2
5	STRUCTURE PLAN NO. 1
6	STRUCTURE PLAN NO. 2
7	STRUCTURE PLAN NO. 3
8	STRUCTURE PLAN NO. 4
9	STRUCTURE PLAN NO. 5
10	STRUCTURE PLAN NO. 6
11	STRUCTURE PLAN NO. 7
12	STRUCTURE PLAN NO. 8
13	STRUCTURE PLAN NO. 9
14	DECK CONTOURS NO. 1
15	DECK CONTOURS NO. 2
16	DECK CONTOURS NO. 3
17	DECK CONTOURS NO. 4
18	DECK CONTOURS NO. 5
19	DECK CONTOURS NO. 6
20	DECK CONTOURS NO. 7
21	DECK CONTOURS NO. 8
22	DECK CONTOURS NO. 9
23	FOUNDATION PLAN NO. 1
24	FOUNDATION PLAN NO. 2
25	FOUNDATION PLAN NO. 3
26	FOUNDATION PLAN NO. 4
27	FOUNDATION PLAN NO. 5
28	FOUNDATION PLAN NO. 6
29	FOUNDATION PLAN NO. 7
30	FOUNDATION PLAN NO. 8
31	ABUTMENT 1 LAYOUT
32	ABUTMENT 1 DETAILS NO. 1
33	ABUTMENT 1 DETAILS NO. 2
34	ABUTMENT 1 DETAILS NO. 3
35	ABUTMENT 1 DETAILS NO. 4
36	ABUTMENT 1 DETAILS NO. 5
37	BENTS 2 & 3 LAYOUT
38	BENT 4 LAYOUT
39	BENT 5 LAYOUT
40	BENT 6 LAYOUT
41	BENT 6 DETAILS NO. 1
42	BENT 6 DETAILS NO. 2
43	BENT 6 DETAILS NO. 3
44	BENT 7 LAYOUT
45	BENT 8 LAYOUT
46	BENT 9 LAYOUT
47	BENT 10 LAYOUT
48	BENT 11 LAYOUT NO. 1
49	BENT 11 LAYOUT NO. 2
50	BENT 12 LAYOUT
51	PIERS 13 THRU 16 LAYOUT
52	PIERS 13 THRU 16 DETAILS NO. 1
53	PIERS 13 THRU 16 DETAILS NO. 2
54	PIERS 13 THRU 16 DETAILS NO. 3
55	BENTS 17 THRU 19 LAYOUT (STAGE 1)
56	BENTS 17 THRU 19 LAYOUT (STAGE 2)
57	BENTS 20 THRU 22 LAYOUT (STAGE 1)
58	BENTS 20 THRU 22 LAYOUT (STAGE 2)
59	BENT 23 LAYOUT (STAGE 1)
60	BENT 23 LAYOUT (STAGE 2)
61	BENT 24 LAYOUT (STAGE 1)
62	BENT DETAILS NO. 1
63	BENT DETAILS NO. 2
64	BENT DETAILS NO. 3
65	BENT DETAILS NO. 4
66	BENT DETAILS NO. 5
67	BENT DETAILS NO. 6
68	BENT DETAILS NO. 7
69	BENT DETAILS NO. 8
70	TYPICAL SECTION NO. 1
71	TYPICAL SECTION NO. 2
72	TYPICAL SECTION NO. 3
73	TYPICAL SECTION NO. 4
74	GIRDER LAYOUT NO. 1
75	GIRDER LAYOUT NO. 2
76	GIRDER LAYOUT NO. 3
77	GIRDER LAYOUT NO. 4
78	GIRDER LAYOUT NO. 5
79	GIRDER LAYOUT NO. 6
80	GIRDER LAYOUT NO. 7
81	GIRDER LAYOUT NO. 8
82	GIRDER LAYOUT NO. 9
83	GIRDER LAYOUT NO. 10
84	GIRDER LAYOUT NO. 11
85	GIRDER DETAILS NO. 1
86	GIRDER DETAILS NO. 2
87	GIRDER DETAILS NO. 3
88	GIRDER DETAILS NO. 4
89	GIRDER DETAILS NO. 5
90	GIRDER DETAILS NO. 6
91	HINGE 2 (STAGE 1) LAYOUT
92	HINGE 2 DETAILS NO. 1
93	HINGE 2 (STAGE 1) DETAILS NO. 2
94	HINGE 2 DETAILS NO. 3
95	HINGE 2 (STAGE 1) DETAILS NO. 4
96	HINGE 2 (STAGE 1) DETAILS NO. 5
97	HINGE 2 (NEW DOCK ON RAMP) DETAILS NO. 6
98	HINGE 2 (NEW DOCK ON RAMP) DETAILS NO. 7
99	HINGE 2 (STAGE 2) LAYOUT
100	HINGE 2 (STAGE 2) DETAILS NO. 1
101	HINGE 2 (STAGE 2) DETAILS NO. 2
102	HINGE 2 (STAGE 2) DETAILS NO. 3
103	HINGE 2 (NEW DOCK OFF RAMP) DETAILS NO. 4
104	HINGE 2 (NEW DOCK OFF RAMP) DETAILS NO. 5
105	HINGE 3 LAYOUT
106	HINGE 3 DETAILS NO. 1
107	HINGE 3 DETAILS NO. 2
108	HINGE 3 DETAILS NO. 3
109	HINGE 3 DETAILS NO. 4
110	HINGE 3 (STAGE 1) DETAILS NO. 5
111	HINGE 3 (STAGE 1) DETAILS NO. 6
112	HINGE 3 (STAGE 2) DETAILS NO. 7
113	HINGE 3 (STAGE 2) DETAILS NO. 8
114	HINGE 4 LAYOUT
115	HINGE 4 DETAILS NO. 1
116	HINGE 4 DETAILS NO. 2
117	HINGE 4 DETAILS NO. 3
118	HINGE 4 DETAILS NO. 4
119	HINGE 4 DETAILS NO. 5
120	HINGE 5 LAYOUT
121	HINGE 5 DETAILS NO. 1
122	HINGE 5 DETAILS NO. 2
123	HINGE 5 DETAILS NO. 3
124	HINGE 5 (STAGE 1) DETAILS NO. 4
125	HINGE 5 (STAGE 2) DETAILS NO. 5
126	HINGE 6 LAYOUT
127	HINGE 6 DETAILS NO. 1
128	HINGE 6 DETAILS NO. 2
129	HINGE 6 DETAILS NO. 3
130	HINGE 6 (STAGE 1) DETAILS NO. 4
131	HINGE 6 (STAGE 2) DETAILS NO. 5
132	HINGE 7 (STAGE 1) LAYOUT
133	HINGE 7 (STAGE 2) LAYOUT
134	HINGE 7 DETAILS NO. 1
135	HINGE 7 DETAILS NO. 2
136	HINGE 7 DETAILS NO. 3
137	HINGE 7 (STAGE 1) DETAILS NO. 4
138	HINGE 7 (STAGE 2) DETAILS NO. 5
139	HINGE 7 DETAILS NO. 6
140	MISCELLANEOUS DETAILS
141	2.5 ft CIDH PILE DETAILS
142	10 ft CIDH PILE DETAILS NO. 1
143	10 ft CIDH PILE DETAILS NO. 2
144	10 ft CIDH PILE DETAILS NO. 3
145	10 ft CIDH PILE DETAILS NO. 4
146	12 ft CIDH PILE DETAILS NO. 1
147	12 ft CIDH PILE DETAILS NO. 2
148	12 ft CIDH PILE DETAILS NO. 3
149	PILE LOAD TEST DATA
150	PRECAST ISOLATION CASING DETAILS
151	ISOLATION CASING COVER DETAILS
152	PTFE BEARING DETAILS NO. 1
153	PTFE BEARING DETAILS NO. 2
154	FENDER LAYOUT
155	FENDER DETAILS NO. 1
156	FENDER DETAILS NO. 2
157	FENDER DETAILS NO. 3
158	FENDER DETAILS NO. 4
159	FENDER DETAILS NO. 5
160	FENDER DETAILS NO. 6
161	GUIDEWAY DETAILS NO. 1
162	GUIDEWAY DETAILS NO. 2
163	GUIDEWAY DETAILS NO. 3
164	JOINT SEAL ASSEMBLY LAYOUT NO. 1
165	JOINT SEAL ASSEMBLY LAYOUT NO. 2
166	ABUTMENT JOINT SEAL ASSEMBLY DETAILS NO. 1
167	ABUTMENT JOINT SEAL ASSEMBLY DETAILS NO. 2
168	ABUTMENT JOINT SEAL ASSEMBLY DETAILS NO. 3
169	ABUTMENT JOINT SEAL ASSEMBLY DETAILS NO. 4
170	ABUTMENT JOINT SEAL ASSEMBLY DETAILS NO. 5
171	ABUTMENT JOINT SEAL ASSEMBLY DETAILS NO. 6
172	ABUTMENT JOINT SEAL ASSEMBLY DETAILS NO. 7
173	HINGE JOINT SEAL ASSEMBLY DETAILS NO. 1
174	HINGE JOINT SEAL ASSEMBLY DETAILS NO. 2
175	HINGE JOINT SEAL ASSEMBLY DETAILS NO. 3
176	HINGE JOINT SEAL ASSEMBLY DETAILS NO. 4
177	HINGE JOINT SEAL ASSEMBLY DETAILS NO. 5
178	HINGE JOINT SEAL ASSEMBLY DETAILS NO. 6
179	HINGE JOINT SEAL ASSEMBLY DETAILS NO. 7
180	HINGE JOINT SEAL ASSEMBLY DETAILS NO. 8
181	HINGE JOINT SEAL ASSEMBLY DETAILS NO. 9
182	HINGE JOINT SEAL ASSEMBLY DETAILS NO. 10
183	HINGE JOINT SEAL ASSEMBLY DETAILS NO. 11
184	HINGE JOINT SEAL ASSEMBLY DETAILS NO. 12
185	HINGE JOINT SEAL ASSEMBLY DETAILS NO. 13
186	HINGE JOINT SEAL ASSEMBLY DETAILS NO. 14
187	HINGE JOINT SEAL ASSEMBLY DETAILS NO. 15
188	HINGE JOINT SEAL ASSEMBLY DETAILS NO. 16
189	HINGE JOINT SEAL ASSEMBLY DETAILS NO. 17
190	DECK DRAIN DETAILS NO. 1
191	DECK DRAIN DETAILS NO. 2
192	STRUCTURE APPROACH TYPE N(30S)
193	STRUCTURE APPROACH DRAINAGE DETAILS
194	CONCRETE BARRIER DETAILS NO. 1
195	CONCRETE BARRIER DETAILS NO. 2
196	CONCRETE BARRIER DETAILS NO. 3
197	CONCRETE BARRIER DETAILS NO. 4
198	CONCRETE BARRIER DETAILS NO. 5
199	CONCRETE BARRIER DETAILS NO. 6
200	CONCRETE BARRIER DETAILS NO. 7
201	RAILING DETAILS NO. 1
202	RAILING DETAILS NO. 2
203	RAILING DETAILS NO. 3
204	RAILING DETAILS NO. 4
205	LEGEND AND ABBREVIATIONS
206	SEISMIC SITE PLAN
207	ENLARGED LAYOUT NO. 1, BENT 8 TO BENT 10
208	ENLARGED LAYOUT NO. 2, BENT 11 TO PIER 13
209	ENLARGED LAYOUT NO. 3, PIER 14 TO PIER 16
210	ENLARGED LAYOUT NO. 4, BENT 17 TO BENT 20
211	SEISMIC SENSOR ENCLOSURE DETAILS
212	RECORDER DETAILS
213	SEISMIC SENSOR ENCLOSURE LOCATION TABLE
214	LOG OF TEST BORINGS NO. 1 OF 34
215	LOG OF TEST BORINGS NO. 2 OF 34
216	LOG OF TEST BORINGS NO. 3 OF 34
217	LOG OF TEST BORINGS NO. 4 OF 34
218	LOG OF TEST BORINGS NO. 5 OF 34
219	LOG OF TEST BORINGS NO. 6 OF 34
220	LOG OF TEST BORINGS NO. 7 OF 34
221	LOG OF TEST BORINGS NO. 8 OF 34
222	LOG OF TEST BORINGS NO. 9 OF 34
223	LOG OF TEST BORINGS NO. 10 OF 34
224	LOG OF TEST BORINGS NO. 11 OF 34
225	LOG OF TEST BORINGS NO. 12 OF 34
226	LOG OF TEST BORINGS NO. 13 OF 34
227	LOG OF TEST BORINGS NO. 14 OF 34
228	LOG OF TEST BORINGS NO. 15 OF 34
229	LOG OF TEST BORINGS NO. 16 OF 34
230	LOG OF TEST BORINGS NO. 17 OF 34
231	LOG OF TEST BORINGS NO. 18 OF 34
232	LOG OF TEST BORINGS NO. 19 OF 34
233	LOG OF TEST BORINGS NO. 20 OF 34
234	LOG OF TEST BORINGS NO. 21 OF 34
235	LOG OF TEST BORINGS NO. 22 OF 34
236	LOG OF TEST BORINGS NO. 23 OF 34
237	LOG OF TEST BORINGS NO. 24 OF 34
238	LOG OF TEST BORINGS NO. 25 OF 34
239	LOG OF TEST BORINGS NO. 26 OF 34
240	LOG OF TEST BORINGS NO. 27 OF 34
241	LOG OF TEST BORINGS NO. 28 OF 34
242	LOG OF TEST BORINGS NO. 29 OF 34
243	LOG OF TEST BORINGS NO. 30 OF 34
244	LOG OF TEST BORINGS NO. 31 OF 34
245	LOG OF TEST BORINGS NO. 32 OF 34
246	LOG OF TEST BORINGS NO. 33 OF 34
247	LOG OF TEST BORINGS NO. 34 OF 34

QUANTITIES

BRIDGE REMOVAL (PORTION), LOCATION E	LUMP	SUM
STRUCTURE EXCAVATION (TYPE A)	1,900	CY
STRUCTURE EXCAVATION (TYPE SC)	670	CY
STRUCTURE EXCAVATION (TYPE DC)	794	CY
STRUCTURE EXCAVATION (TYPE GC)	2,043,000	GAL
STRUCTURE EXCAVATION (TYPE Z-2) (AERIALLY DEPOSITED LEAD)	504	CY
STRUCTURE BACKFILL (BRIDGE)	1,635	CY
FURNISH 18" STEEL PIPE PILING	9,625	LF
DRIVE 18" STEEL PIPE PILE	77	EA
30" CAST-IN-DRILLED-HOLE CONCRETE PILING	2,937	LF
96" CAST-IN-DRILLED-HOLE CONCRETE PILING	504	LF
120" CAST-IN-DRILLED-HOLE CONCRETE PILING	5,680	LF
156" CAST-IN-DRILLED-HOLE CONCRETE PILING	772	LF
132" CAST-IN-DRILLED-HOLE CONCRETE PILING	2,952	LF
144" CAST-IN-DRILLED-HOLE CONCRETE PILING	4,723	LF
132" PERMANENT STEEL CASING	1,257	LF
144" PERMANENT STEEL CASING	1,505	LF
156" PERMANENT STEEL CASING	765	LF
PRESTRESSING CAST-IN-PLACE CONCRETE	LUMP	SUM
PRESTRESSING CAST-IN-PLACE CONCRETE (TRANSVERSE)	LUMP	SUM
PRESTRESSING CAST-IN-PLACE CONCRETE (HIGH-STRENGTH BARS)	LUMP	SUM
TEMPORARY HINGE TIEDOWN ANCHOR	8	EA
SEAL COURSE CONCRETE	2,436	CY
STRUCTURAL CONCRETE, BRIDGE FOOTING	432	CY
STRUCTURAL CONCRETE, BRIDGE	57,925	CY
STRUCTURAL CONCRETE, APPROACH SLAB (TYPE N)	155	CY
FRACTURED RIB TEXTURE WITH WAVE PATTERN	3,724	SQFT
PRECAST CONCRETE ISOLATION CASING	1028	CY
FURNISH PRECAST CONCRETE FENDER MODULE	48	EA
ERECT PRECAST CONCRETE FENDER MODULE	48	EA
PTFE SPHERICAL BEARING	63	EA
JOINT SEAL ASSEMBLY (MR = 42")	110	LF
JOINT SEAL ASSEMBLY (MR = 54")	377 ~~515~~	LF
JOINT SEAL ASSEMBLY (MR = 60")	507 ~~440~~	LF
BAR REINFORCING STEEL (BRIDGE)	22,166,000	LB
BAR REINFORCING STEEL (EPOXY COATED) (BRIDGE)	690,000	LB
HEADED BAR REINFORCEMENT	14,600	EA
TREATED LUMBER AND TIMBER	11	MFBM
PLASTIC LUMBER	127	CY
UHMW SHEATHING	12,300	SQFT
MISCELLANEOUS METAL (BRIDGE)	421,000	LB
BRIDGE DECK DRAINAGE SYSTEM	253,000	LB
BIRD RAILING	1,320	LF
BICYCLE RAILING	4,027	LF
CONCRETE BARRIER (TYPE 60A)	2,754	LF
CONCRETE BARRIER (TYPE 736 MODIFIED)	11,350	LF
SEISMIC MONITORING SYSTEM	LUMP	SUM
FURNISH STEEL PILING (W14x120)	240	LF
DRIVE STEEL PILE (W14x120)	4	EA

4

6

6 REVISED PER ADDENDUM No. 6 DATED MAY 5, 2011

4 REVISED PER ADDENDUM No. 4 DATED APRIL 8, 2011

3 REVISED PER ADDENDUM No. 3 DATED MARCH 28, 2011

	BY	CHECKED
DESIGN	F. Zayati	T. Skreslet
DETAILS	T. Nguyen	T. Skreslet
QUANTITIES	J/P Peterson	J/P Peterson

STATE OF CALIFORNIA
DEPARTMENT OF TRANSPORTATION

DIVISION OF ENGINEERING SERVICES
STRUCTURE DESIGN
DESIGN BRANCH 14

BRIDGE NO. 53-3032
POST MILE 3.58

SCHUYLER HEIM BRIDGE (REPLACE)

INDEX TO PLANS

STRUCTURES DESIGN DETAIL SHEET (ENGLISH) (REV. 10/25/05)

ORIGINAL SCALE IN INCHES FOR REDUCED PLANS 0 1 2 3

CU 07-271
EA 138201

DISREGARD PRINTS BEARING EARLIER REVISION DATES

REVISION DATES: 01-07-11 01-12-11 04-28-10 04-30-10 05-05-10 05-06-10 05-18-10 05-19-10 05-25-10

SHEET 2 OF 247

FILE => 53-3032-a-itp.add

USERNAME => trstrk DATE PLOTTED => 03-MAY-2011 TIME PLOTTED => 17:25

DIST	COUNTY	ROUTE	POST MILES TOTAL PROJECT	SHEET No	TOTAL SHEETS
07	LA	47,103	3.5/4.6, 0.0/1.1	540	1003

REGISTERED CIVIL ENGINEER — DATE 05-24-10

10-11-10
PLANS APPROVAL DATE

REGISTERED PROFESSIONAL ENGINEER — FOUED ZAYATI — No. C57046 — Exp. 06-30-11 — CIVIL — STATE OF CALIFORNIA

The State of California or its officers or agents shall not be responsible for the accuracy or completeness of electronic copies of this plan sheet.

6

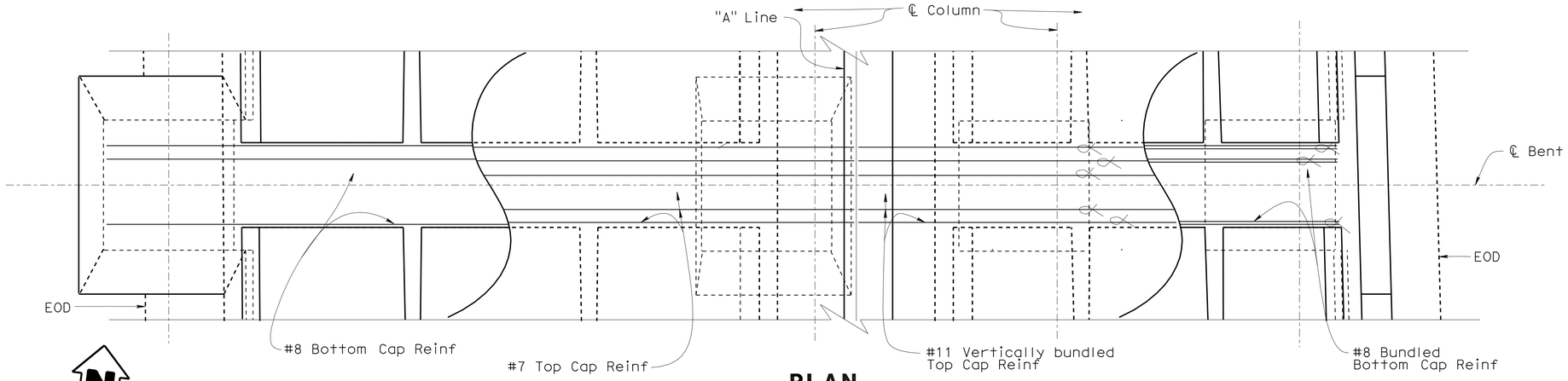

NOTE: Not all top and bottom bars shown.
Top Cap Reinf extends to 2" from EOD.

PLAN
3/16"=1'-0"

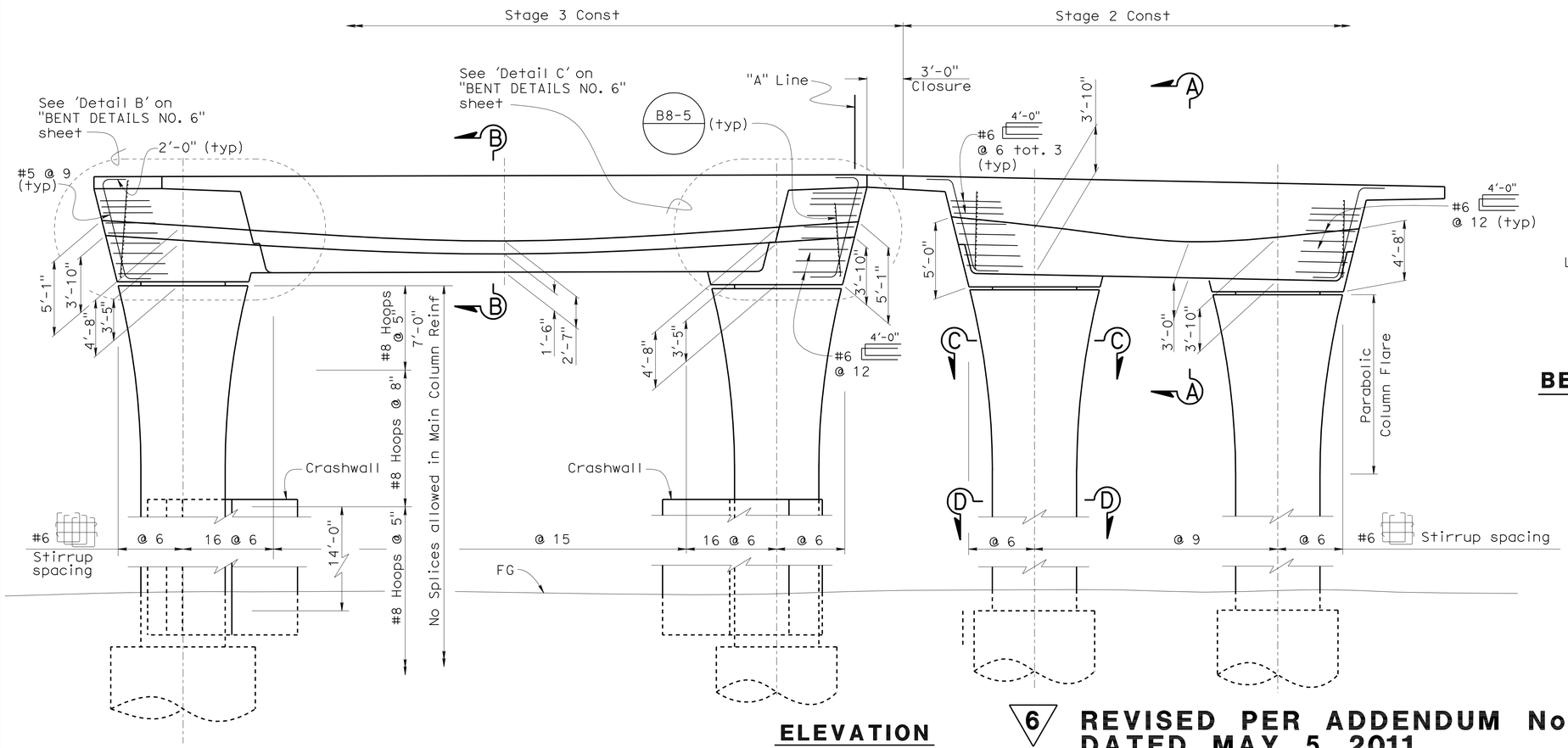

ELEVATION
3/16"=1'-0"

6 **REVISED PER ADDENDUM No. 6 DATED MAY 5, 2011**

PRESTRESSING NOTES

270 KSI Low Relaxation Strand:

P_{jack} (Upper Cable) Stage 2 = 5120 kips

Anchor Set = 3/8 in

P_{jack} (Lower Cable) Stage 2 = 4500 kips

P_{jack} Stage 1 = 2540 kips

Anchor Set = 3/8 in

Concrete: f'_c = 5.0 ksi @ 28 days

f'_{ci} = 3.5 ksi @ time of stressing

Contractor shall submit elongation calculations based on initial stress at

☒ Stage 1 = 0.878 times jacking stress for both Cables.

☒ Stage 2 = 0.923 times jacking stress for both Cables.

One end stressing shall be performed.

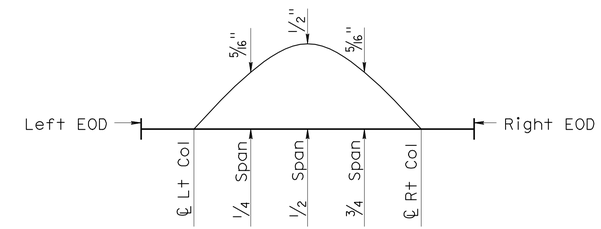

BENT 4, STAGE 3 CAMBER DIAGRAM

NOTES:

1. For 'Section A-A', see "BENT DETAILS NO. 4" sheet. For 'Section B-B', see "BENT DETAILS NO. 5" sheet.
2. For 'Section C-C' and 'Section D-D', see "BENT DETAILS NO. 2" sheet.
3. For P/S Anchorage Zone detail, see "TYPICAL SECTION NO. 1" sheet
4. For Parabolic Column flare, see "BENT DETAILs NO. 1" sheet
5. Cable Paths are parabolic between centerline of Columns and straight all other locations.
6. Barrier Rails not shown.
7. Stirrups not shown.

	BY	CHECKED
DESIGN	J. Massoomi	T. Skreslet
DETAILS	T. Nguyen	T. Skreslet
QUANTITIES	J. Massoomi	L. Han

STATE OF CALIFORNIA
DEPARTMENT OF TRANSPORTATION

DIVISION OF ENGINEERING SERVICES
STRUCTURE DESIGN
DESIGN BRANCH 14

BRIDGE NO. 53-3032
POST MILE 3.58

SCHUYLER HEIM BRIDGE (REPLACE)
BENT 4 LAYOUT

STRUCTURES DESIGN DETAIL SHEET (ENGLISH) (REV. 10/25/05)

ORIGINAL SCALE IN INCHES FOR REDUCED PLANS 0 1 2 3

CU 07-271
EA 138201

DISREGARD PRINTS BEARING EARLIER REVISION DATES

REVISION DATES: 04-18-11 | 4-29-10 | 05-04-10 | 5-17-10 | 5-28-10 | 06-08-10 | 12-23-10

SHEET 38 OF 247

FILE => 53-3032-h-b04_lo.add

USERNAME => trstrk DATE PLOTTED => 03-MAY-2011 TIME PLOTTED => 17:50

DIST	COUNTY	ROUTE	POST MILES TOTAL PROJECT	SHEET No	TOTAL SHEETS
07	LA	47,103	3.5/4.6, 0.0/1.1	566	1003

REGISTERED CIVIL ENGINEER 05-24-10 DATE

10-11-10
PLANS APPROVAL DATE

The State of California or its officers or agents shall not be responsible for the accuracy or completeness of electronic copies of this plan sheet.

REGISTERED PROFESSIONAL ENGINEER FOUED ZAYATI No. C57046 Exp. 06-30-11 CIVIL STATE OF CALIFORNIA

NOTES:

1. For Column Reinforcement, see "BENT DETAILS No. 2" sheet.
2. For Pile Reinforcement, see "10 FT CIDH PILE DETAILS No. 1" sheet.
3. For the purpose of measurement and payment, crashwalls shall be designated as "Structural Concrete, Bridge." 6

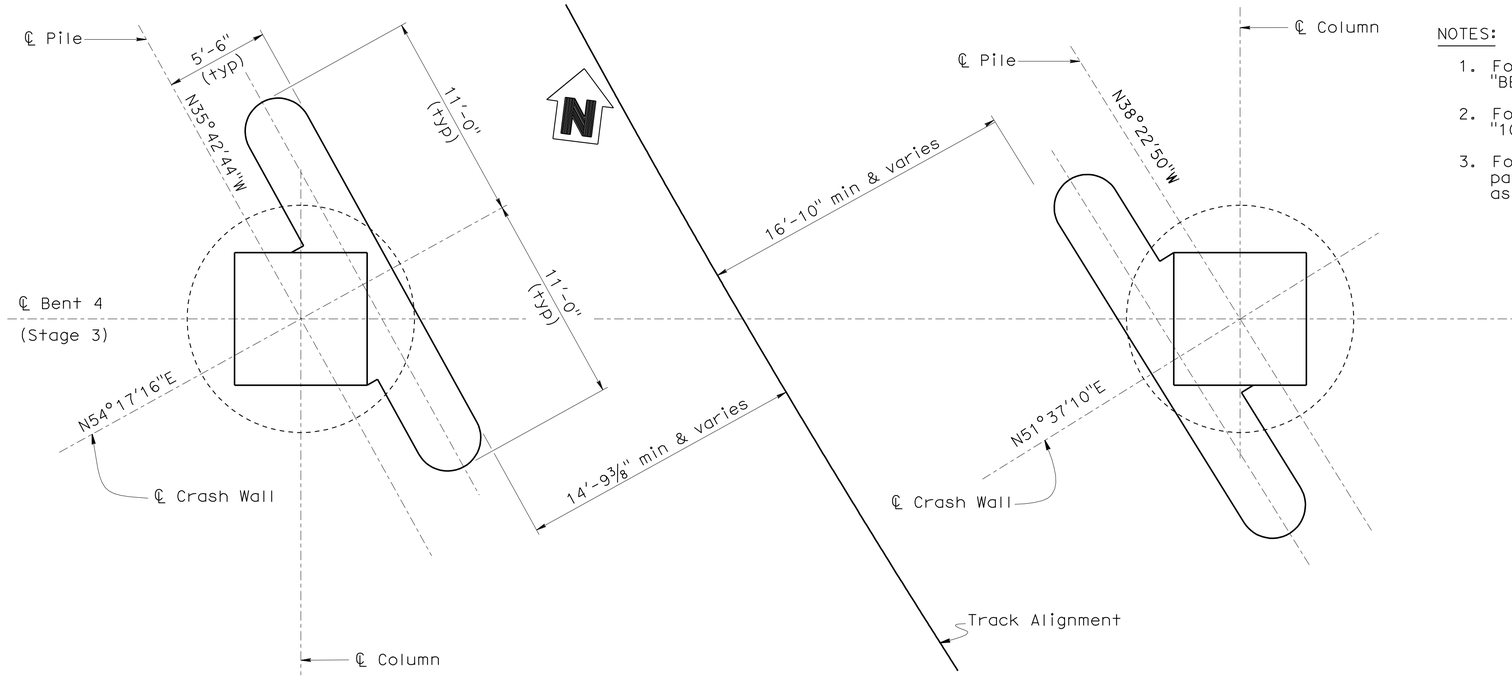

PLAN

SCALE: ¼" = 1'-0"

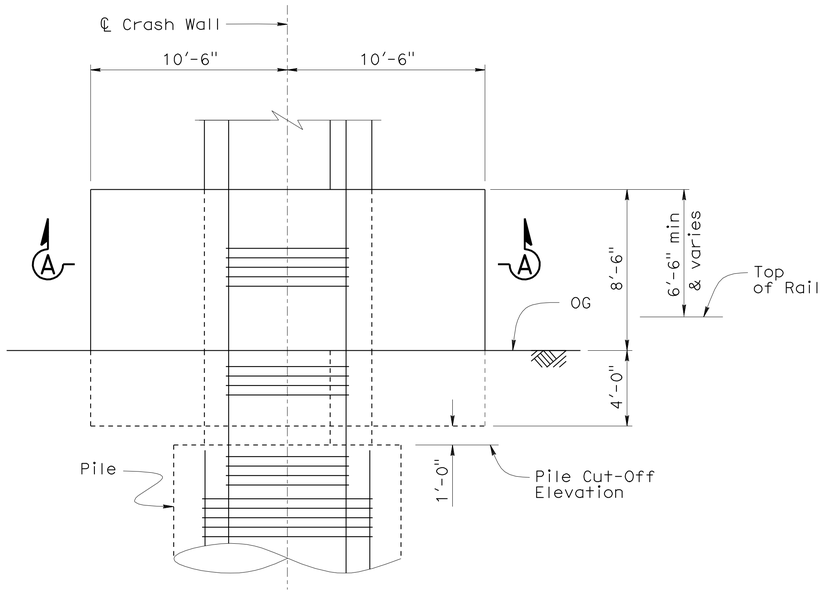

ELEVATION

SCALE: ¼" = 1'-0"

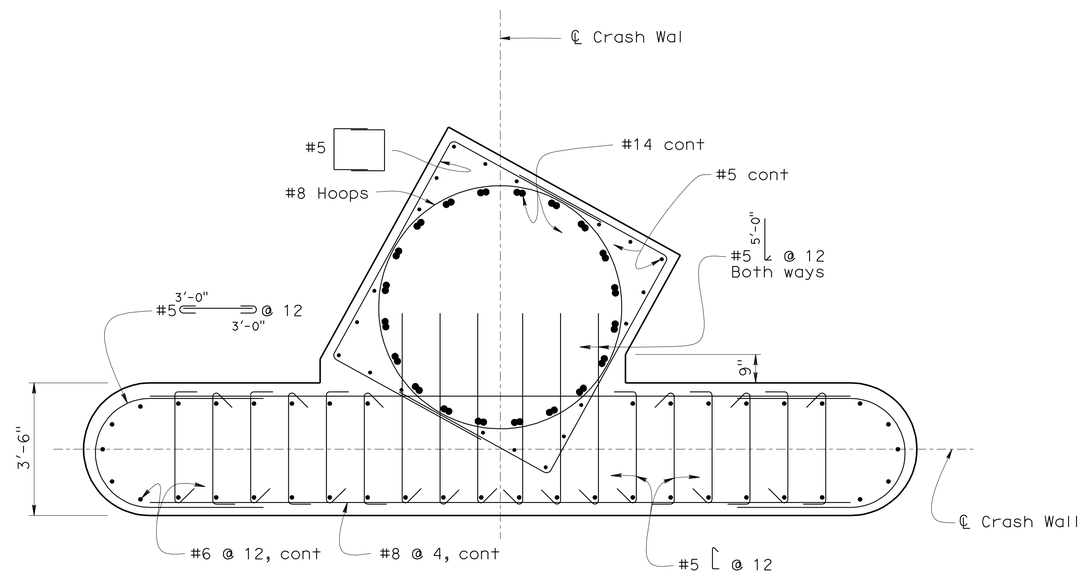

SECTION A-A

SCALE: ½" = 1'-0"

6 **REVISED PER ADDENDUM No. 6 DATED MAY 5, 2011**

	BY	CHECKED
DESIGN	F. Zayati	R. Bromenschenkel
DETAILS	K. Kubo	F. Zayati
QUANTITIES	J. Massoomi	L. Han

STATE OF CALIFORNIA DEPARTMENT OF TRANSPORTATION

DIVISION OF ENGINEERING SERVICES STRUCTURE DESIGN DESIGN BRANCH 14

BRIDGE NO. 53-3032
POST MILE 3.58

SCHUYLER HEIM BRIDGE (REPLACE)

BENT DETAILS NO. 3

STRUCTURES DESIGN DETAIL SHEET (ENGLISH) (REV. 10/25/05)

ORIGINAL SCALE IN INCHES FOR REDUCED PLANS 0 1 2 3

CU 07-271
EA 138201

DISREGARD PRINTS BEARING EARLIER REVISION DATES

REVISION DATES: 01-03-10 02-04-10 02-26-10 03-05-10 04-29-10 06-29-10 07-06-10 04-18-11

SHEET 64 OF 247

FILE => 53-3032-h-bdt03.add

USERNAME => trostrk DATE PLOTTED => 03-MAY-2011 TIME PLOTTED => 17:25

DIST	COUNTY	ROUTE	POST MILES TOTAL PROJECT	SHEET No	TOTAL SHEETS
07	LA	47,103	3.5/4.6, 0.0/1.1	644	1003

REGISTERED CIVIL ENGINEER — DATE 05-24-10

10-11-10
PLANS APPROVAL DATE

FOUED ZAYATI No. C57046 Exp. 06-30-11 CIVIL — REGISTERED PROFESSIONAL ENGINEER — STATE OF CALIFORNIA

The State of California or its officers or agents shall not be responsible for the accuracy or completeness of electronic copies of this plan sheet.

6

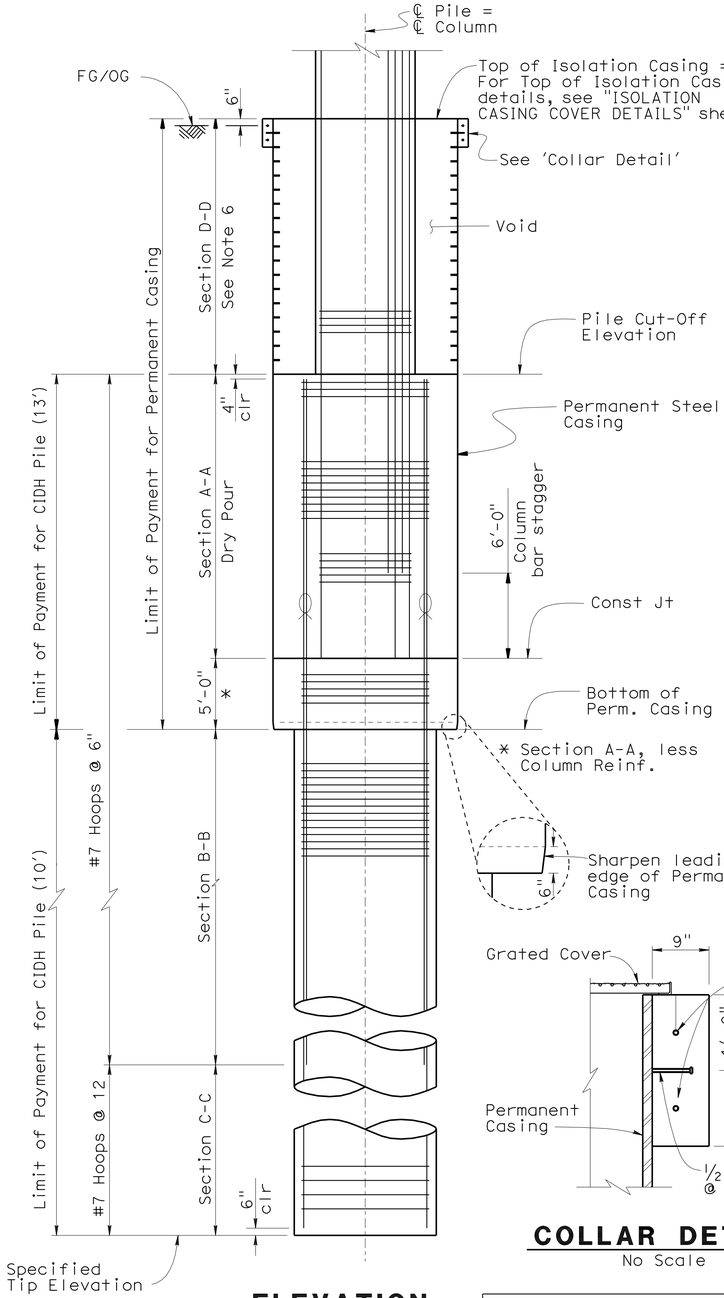

ELEVATION

3/16"=1'-0"

Note: ⌒ Denotes bundled bars

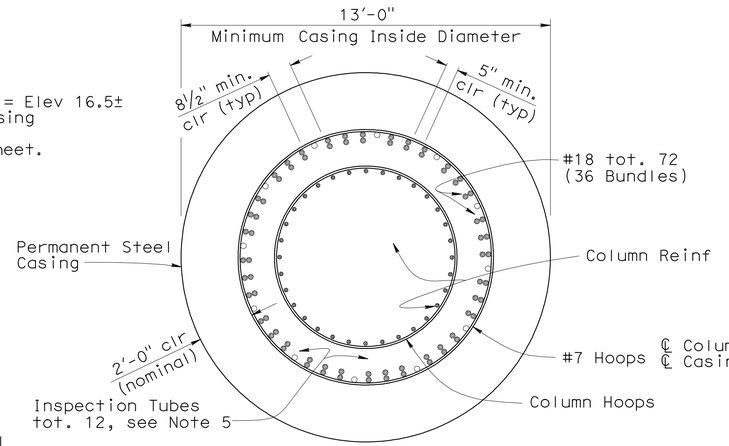

SECTION A-A

3/8"=1'-0"

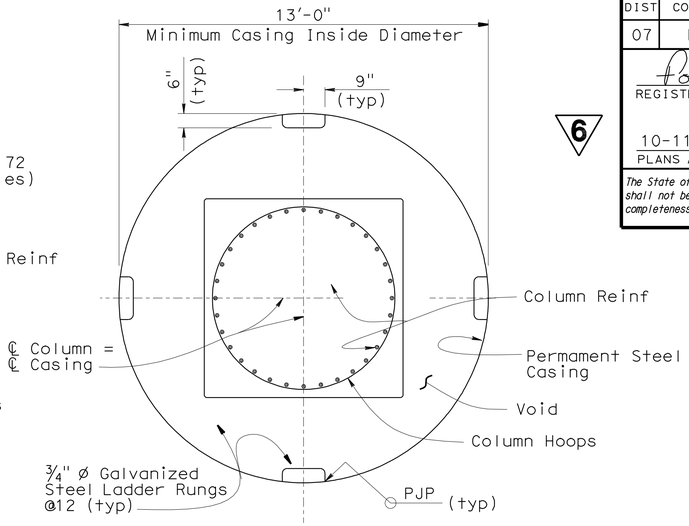

SECTION D-D

3/8"=1'-0"

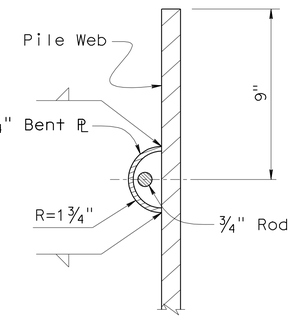

SECTION E-E

1½"=1'-0"

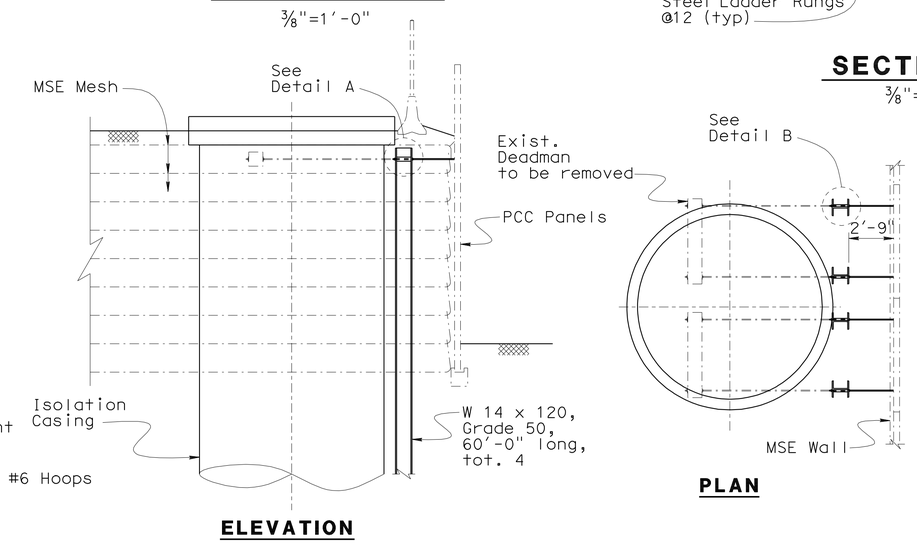

ELEVATION

PLAN

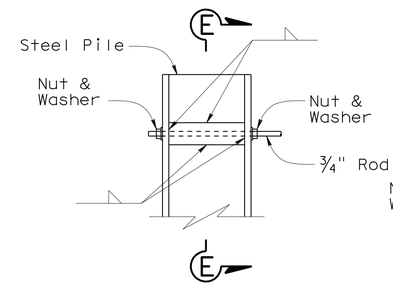

DETAIL A

1"=1'-0"

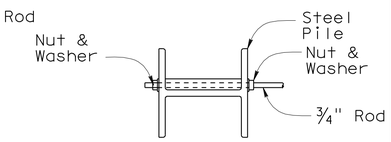

DETAIL B

1"=1'-0"

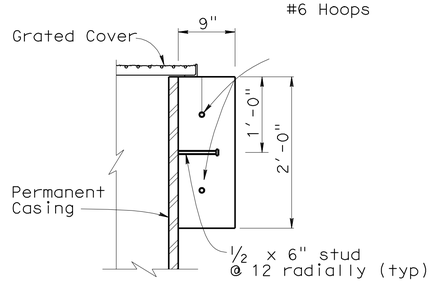

COLLAR DETAIL

No Scale

Location	Section B-B Length
Bent 11 Easterly Pile	50'-0"

STEEL PILE INSTALLATION DETAIL

3/16"=1'-0"

Steel Pile Installation Sequence:

1. Remove existing K Rail and Fence within excavation area.
2. Brace PCC Panels before any soil is excavated.
3. Excavate soil to expose PCC panel anchor rods and deadmen. Cut MSE mesh as needed to access anchor rods and deadmen.
4. Remove PCC panel anchors and deadmen.
5. Cut and rethread anchor rods to fit new setup.
6. Drive steel piles into position as shown.
7. Attach PCC panel anchor rods to panels and steel piles.
8. Reinstall existing K rail and Fence.

NOTES:

1. Steel Piles must be installed before Column Isolation Casing.
2. For sections 'B-B' and 'C-C', see "10 FT CIDH PILE DETAILS NO. 1" sheet.
3. For Column Reinf details, see "TYPICAL BENT LAYOUT" sheet.
4. For Pile Cut-Off data, see "INDEX TO PLANS" sheet.
5. All hoops are "Ultimate" butt splice continuous.
6. Only staggered "Ultimate" butt splices are allowed in Pile longitudinal reinforcement.
7. Inspection tubes may be removed above construction joint after testing and acceptance of pile.
8. Sever MSE wall straps as required.

6 **REVISED PER ADDENDUM No. 6 DATED MAY 5, 2011**

	BY	CHECKED
DESIGN	R. Bromenschenkel	F. Zayati
DETAILS	J. Thorne	F. Zayati
QUANTITIES	J. Massoomi	L. Han

STATE OF CALIFORNIA DEPARTMENT OF TRANSPORTATION

DIVISION OF ENGINEERING SERVICES STRUCTURE DESIGN — DESIGN BRANCH 14

BRIDGE NO. 53-3032 — POST MILE 3.58

SCHUYLER HEIM BRIDGE (REPLACE)

10 FT CIDH PILE DETAILS NO. 4

STRUCTURES DESIGN DETAIL SHEET (ENGLISH) (REV. 10/25/05)

ORIGINAL SCALE IN INCHES FOR REDUCED PLANS 0 1 2 3

CU 07-271
EA 138201

DISREGARD PRINTS BEARING EARLIER REVISION DATES → 04-06-10 04-08-10 04-09-10 04-13-10 07-12-10 07-13-10 04-25-11

REVISION DATES

SHEET 145 OF 247

FILE => 53-3032-1-p-kcpt10fdet4.add

USERNAME => trstrk DATE PLOTTED => 03-MAY-2011 TIME PLOTTED => 17:54

DIST	COUNTY	ROUTE	POST MILES TOTAL PROJECT	SHEET No	TOTAL SHEETS
07	LA	47,103	3.5/4.6, 0.0/1.1	652	1003

REGISTERED CIVIL ENGINEER — DATE 05-24-10

10-11-10
PLANS APPROVAL DATE

REGISTERED PROFESSIONAL ENGINEER — FOUED ZAYATI — No. C57046 — Exp. 06-30-11 — CIVIL — STATE OF CALIFORNIA

The State of California or its officers or agents shall not be responsible for the accuracy or completeness of electronic copies of this plan sheet.

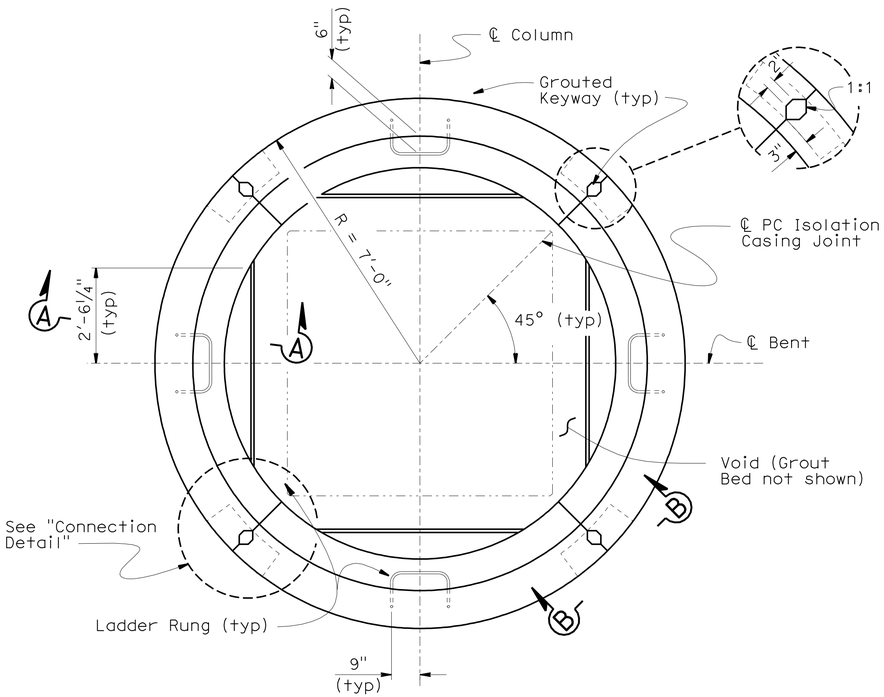

PLAN

½"=1'-0"

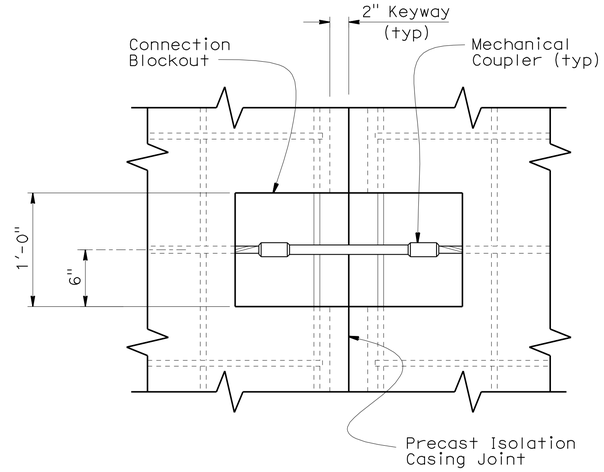

VIEW B-B

1½"=1'-0"

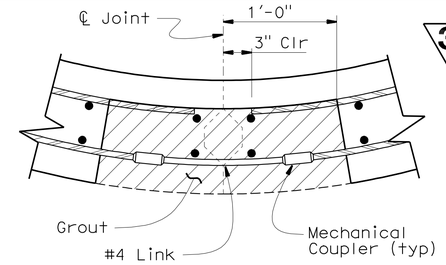

CONNECTION DETAIL

1½"=1'-0"

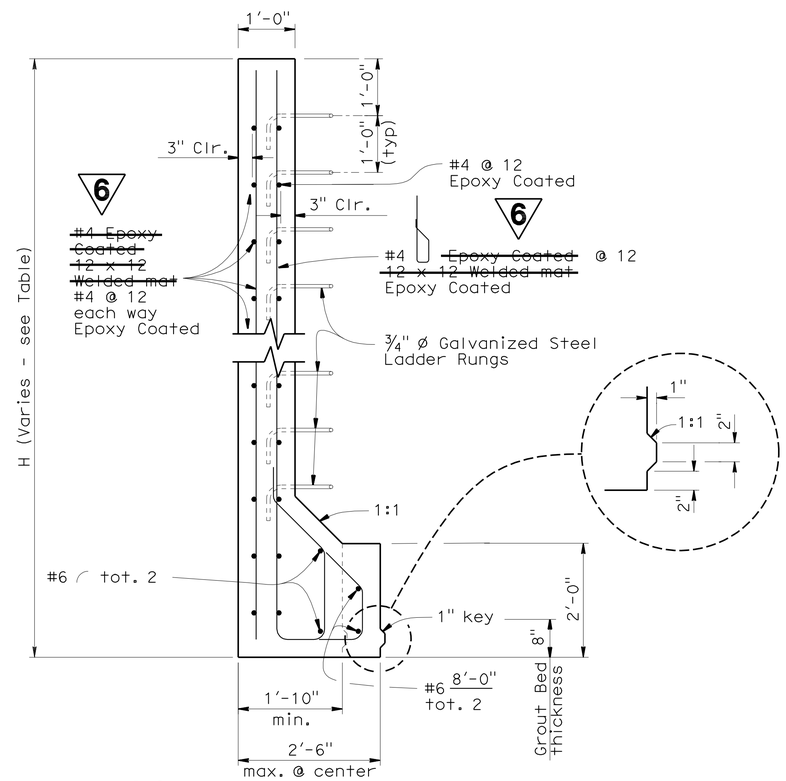

SECTION A-A

¾"=1'-0"

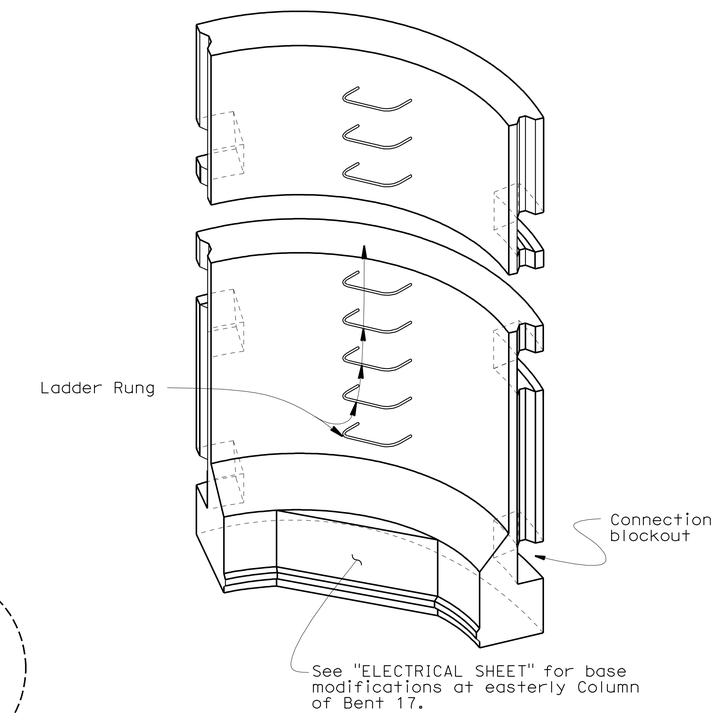

ISOMETRIC VIEW PRECAST ISOLATION CASING

No Scale

NOTES:

1. All hardware to be galvanized before casting.
2. Place connections 3 feet from top, 2 feet from bottom and at mid - height of casing.
3. Align shells prior to grouting Keyway and Connection Blockouts.
4. Casing to be set on grout pad to level.
5. Minimum concrete strength shall be 5000 psi
6. Casing to be plumb and centered about column.

Location	Column*	H (ft)
Bent 2	All	15
Bent 17	1, 2	13
Bent 17	3	17
Bent 17	4	21
Bents 18 - 20	All	21
Bents 21 - 22	All	23
Bent 23	1, 2, 3	23
Bent 23	4	17
Bent 24	All	15

* Column 1 is the left most column. Column 2 is the the next column.

6 REVISED PER ADDENDUM No. 6 DATED MAY 5, 2011

3 REVISED PER ADDENDUM No. 3 DATED MARCH 28, 2011

	BY	CHECKED
DESIGN	R. Bromenschenkel	F. Zayati
DETAILS	Jeff Thorne	F. Zayati
QUANTITIES	R. Bromenschenkel	F. Zayati

STATE OF CALIFORNIA DEPARTMENT OF TRANSPORTATION

DIVISION OF ENGINEERING SERVICES STRUCTURE DESIGN DESIGN BRANCH 14

BRIDGE NO. 53-3032 POST MILE 3.58

SCHUYLER HEIM BRIDGE (REPLACE)

PRECAST ISOLATION CASING DETAILS

STRUCTURES DESIGN DETAIL SHEET (ENGLISH) (REV. 10/25/05)

ORIGINAL SCALE IN INCHES FOR REDUCED PLANS 0 1 2 3

CU 07-271
EA 138201

DISREGARD PRINTS BEARING EARLIER REVISION DATES

REVISION DATES: 03-18-10 03-26-10 03-22-10 03-30-10 04-06-10 04-02-10 04-30-10 07-06-10 08-26-10 01-04-11

SHEET 150 OF 247

FILE => 53-3032-1-p-kisolation-precast.add

USERNAME => trstrk DATE PLOTTED => 03-MAY-2011 TIME PLOTTED => 17:26

DIST	COUNTY	ROUTE	POST MILES TOTAL PROJECT	SHEET No	TOTAL SHEETS
07	LA	47,103	3.5/4.6, 0.0/1.1	672	1003

Foued Zayati 05-24-10
REGISTERED CIVIL ENGINEER DATE

10-11-10
PLANS APPROVAL DATE

REGISTERED PROFESSIONAL ENGINEER FOUED ZAYATI No. C57046 Exp. 06-30-11 CIVIL STATE OF CALIFORNIA

The State of California or its officers or agents shall not be responsible for the accuracy or completeness of electronic copies of this plan sheet.

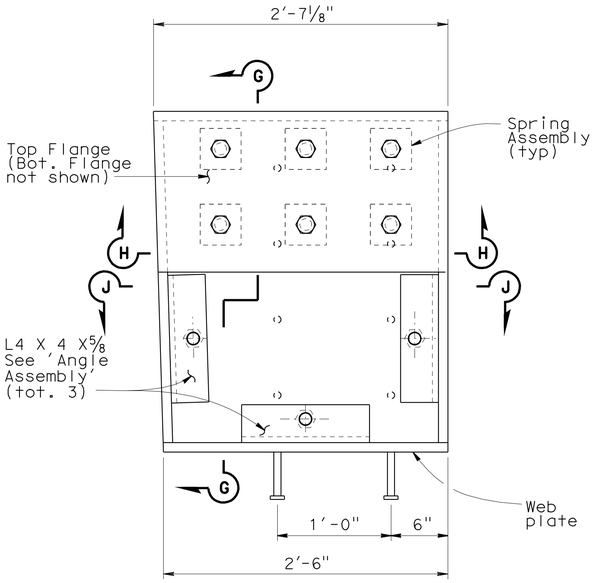

PLAN
CHANNEL ASSEMBLY "A" - STAGE 1

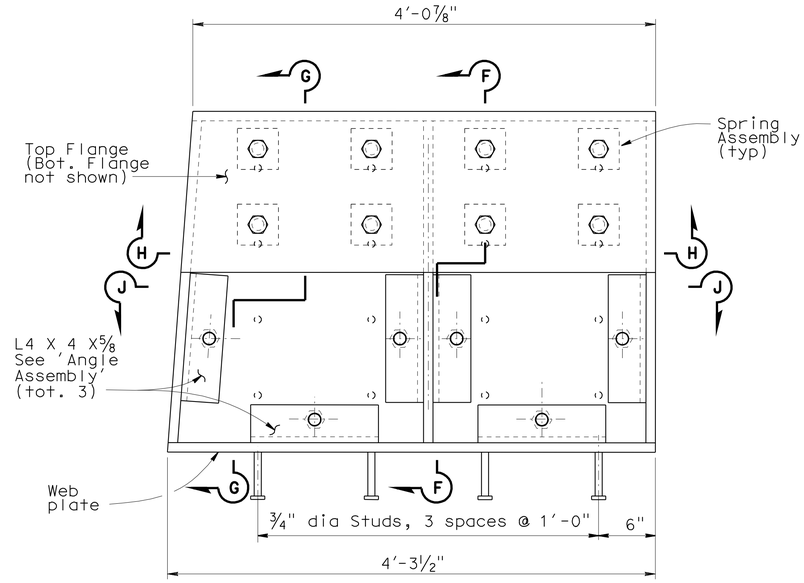

PLAN
CHANNEL ASSEMBLY "A" - STAGE 2

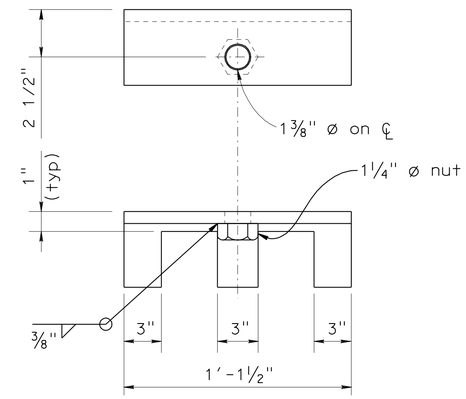

ANGLE ASSEMBLY

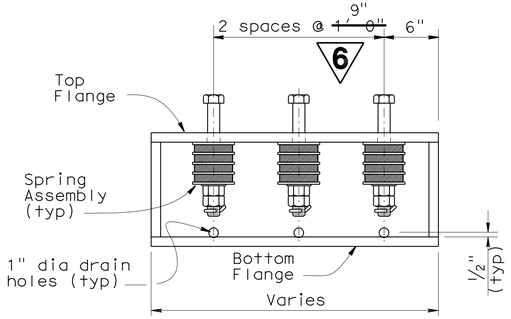

SECTION H-H
CHANNEL ASSEMBLY "A" - STAGE 1

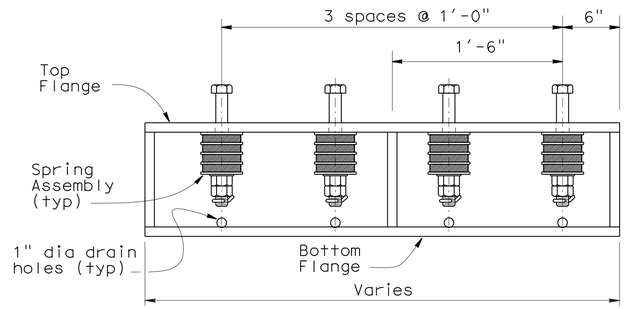

SECTION H-H
CHANNEL ASSEMBLY "A" - STAGE 2

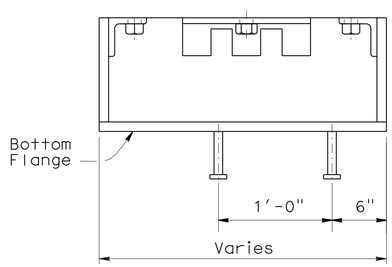

SECTION J-J
CHANNEL ASSEMBLY "A" - STAGE 1

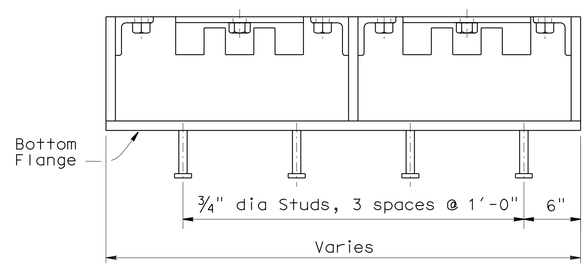

SECTION J-J
CHANNEL ASSEMBLY "A" - STAGE 2

NOTES:

1. For 'Section F-F' and 'Section G-G', see "ABUTMENT JOINT SEAL ASSEMBLY DETAILS NO. 7" sheet for TYPE A Joint.
2. Top surfaces of L 4 x 4 x ⅝" angles and 1" steel ℙs shall be on same level.

THE CONTRACTOR SHALL VERIFY ALL CONTROLLING FIELD DIMENSIONS BEFORE ORDERING OR FABRICATING ANY MATERIAL.

6 **REVISED PER ADDENDUM No. 6 DATED MAY 5, 2011**

NO SCALE

	BY	CHECKED
DESIGN	F. Zayati	R. Bromenschenkel
DETAILS	K. Kubo/M. Lane	F. Zayati
QUANTITIES	V. Ramakrishnan	J. Lane

STATE OF CALIFORNIA
DEPARTMENT OF TRANSPORTATION

DIVISION OF ENGINEERING SERVICES
STRUCTURE DESIGN
DESIGN BRANCH 14

BRIDGE NO. 53-3032
POST MILE 3.58

SCHUYLER HEIM BRIDGE (REPLACE)
ABUTMENT JOINT SEAL ASSEMBLY DETAILS NO. 5

STRUCTURES DESIGN DETAIL SHEET (ENGLISH) (REV. 10/25/05)

ORIGINAL SCALE IN INCHES FOR REDUCED PLANS 0 1 2 3

CU 07-271
EA 138201

DISREGARD PRINTS BEARING EARLIER REVISION DATES

REVISION DATES: 05-16-10 05-17-10 05-23-10 05-25-10 6-22-10 6-29-10

SHEET 170 OF 247

FILE => 53-3032-l-q-jtsealdet07.add

USERNAME => trstrk DATE PLOTTED => 03-MAY-2011 TIME PLOTTED => 17:26

DIST	COUNTY	ROUTE	POST MILES TOTAL PROJECT	SHEET No	TOTAL SHEETS
07	LA	47,103	3.5/4.6, 0.0/1.1	767	1003

REGISTERED CIVIL ENGINEER — 05-24-10 DATE

10-11-10
PLANS APPROVAL DATE

The State of California or its officers or agents shall not be responsible for the accuracy or completeness of electronic copies of this plan sheet.

REGISTERED PROFESSIONAL ENGINEER — FOUED ZAYATI — No. C57046 — Exp. 06-30-11 — CIVIL — STATE OF CALIFORNIA

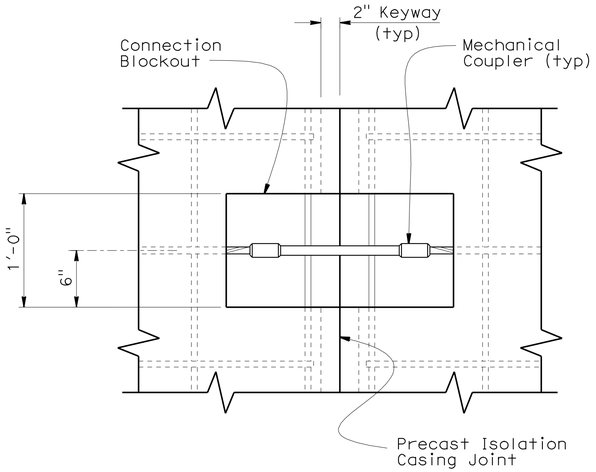

VIEW B-B

1½"=1'-0"

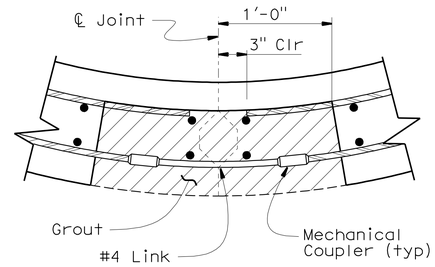

CONNECTION DETAIL

1½"=1'-0"

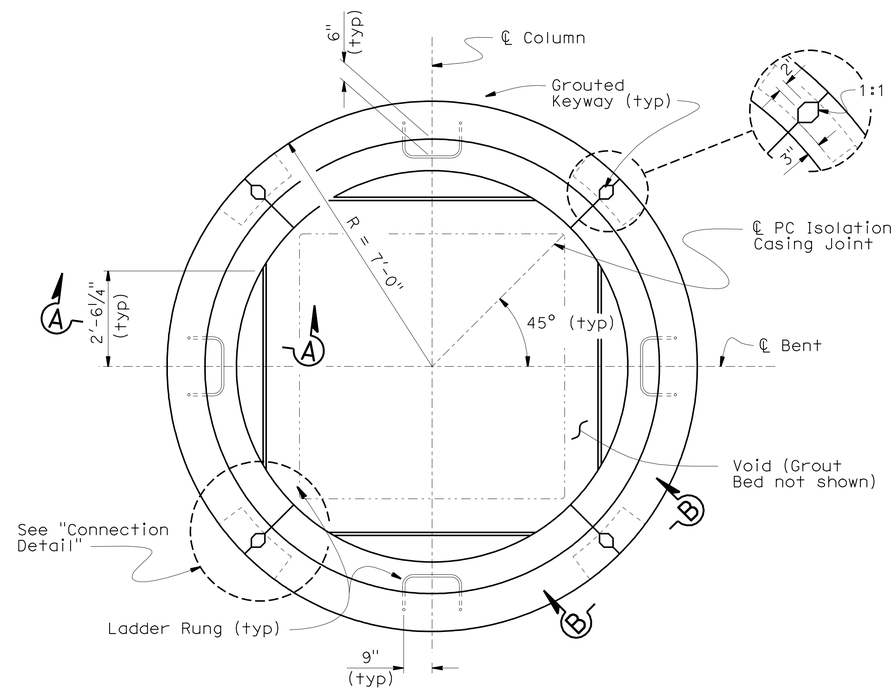

PLAN

½"=1'-0"

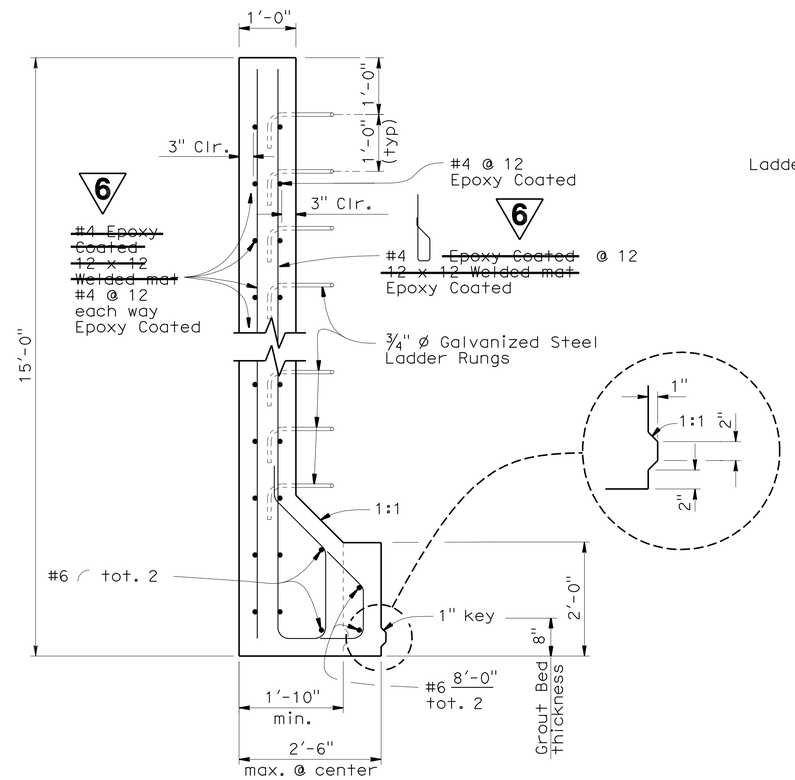

SECTION A-A

¾"=1'-0"

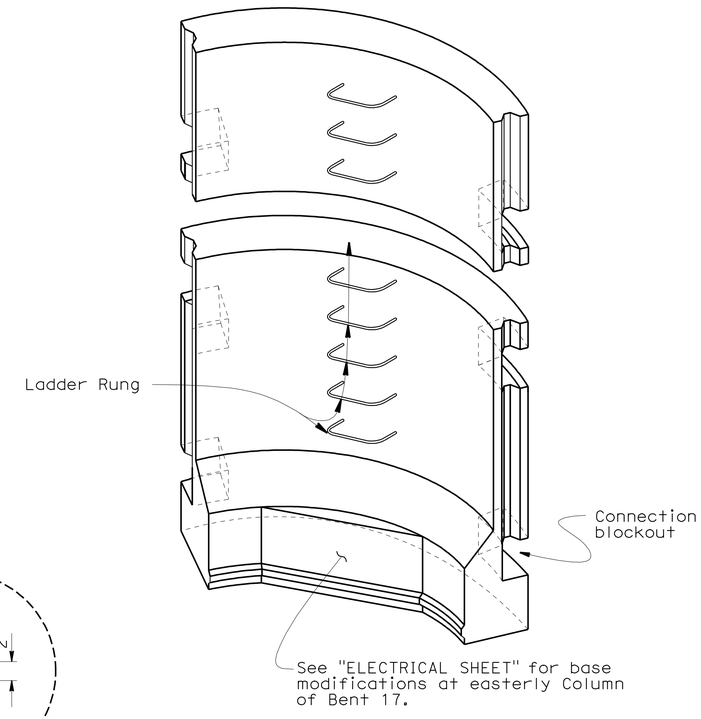

ISOMETRIC VIEW PRECAST ISOLATION CASING

No Scale

NOTES:

1. All hardware to be galvanized before casting.
2. Place connections 3 feet from top, 2 feet from bottom and at mid - height of casing.
3. Align shells prior to grouting Keyway and Connection Blockouts.
4. Casing to be set on grout pad to level.
5. Minimum concrete strength shall be 5000 psi
6. Casing to be plumb and centered about column.

6 REVISED PER ADDENDUM No. 6 DATED MAY 5, 2011

3 REVISED PER ADDENDUM No. 3 DATED MARCH 28, 2011

	BY	CHECKED
DESIGN	R. Bromenschenkel	F. Zayati
DETAILS	Jeff Thorne	F. Zayati
QUANTITIES	J. Lane	V. Ramakrishnan

STATE OF CALIFORNIA DEPARTMENT OF TRANSPORTATION

DIVISION OF ENGINEERING SERVICES STRUCTURE DESIGN DESIGN BRANCH 14

BRIDGE NO. 53-3033
POST MILE 0.01

NEW DOCK STREET ON-RAMP
PRECAST ISOLATION CASING DETAILS

STRUCTURES DESIGN DETAIL SHEET (ENGLISH) (REV. 10/25/05)

ORIGINAL SCALE IN INCHES FOR REDUCED PLANS 0 1 2 3

CU 07-271
EA 138201

DISREGARD PRINTS BEARING EARLIER REVISION DATES

REVISION DATES: 03-18-10 03-28-10 03-22-10 07-08-10 08-26-10 12-14-10 01-07-11

SHEET 18 OF 40

FILE => 53-3033-p-1isolation-precast.add

USERNAME => trsitrk DATE PLOTTED => 03-MAY-2011 TIME PLOTTED => 17:26

DIST	COUNTY	ROUTE	POST MILES TOTAL PROJECT	SHEET No	TOTAL SHEETS
07	LA	47,103	3.5/4.6, 0.0/1.1	815	1003

REGISTERED CIVIL ENGINEER — DATE 05-24-10

10-11-10
PLANS APPROVAL DATE

REGISTERED PROFESSIONAL ENGINEER — FOUED ZAYATI No. C57046 Exp. 06-30-11 CIVIL — STATE OF CALIFORNIA

The State of California or its officers or agents shall not be responsible for the accuracy or completeness of electronic copies of this plan sheet.

3

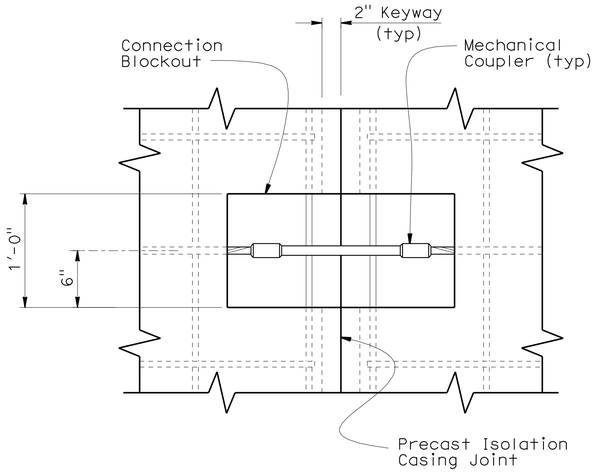

VIEW B-B

1½"=1'-0"

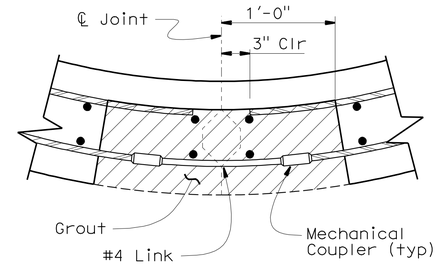

CONNECTION DETAIL

1½"=1'-0"

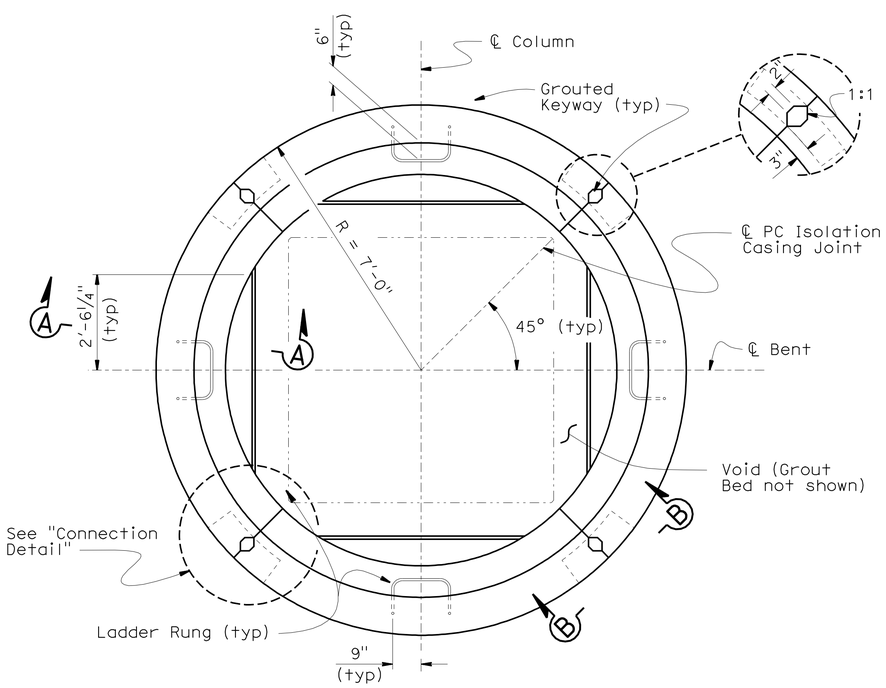

PLAN

½"=1'-0"

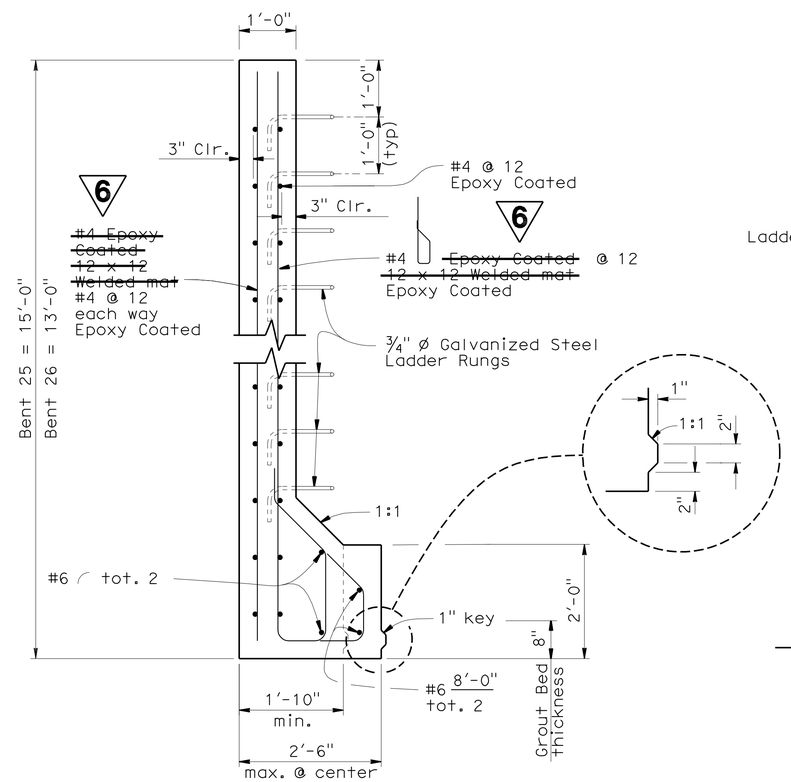

SECTION A-A

¾"=1'-0"

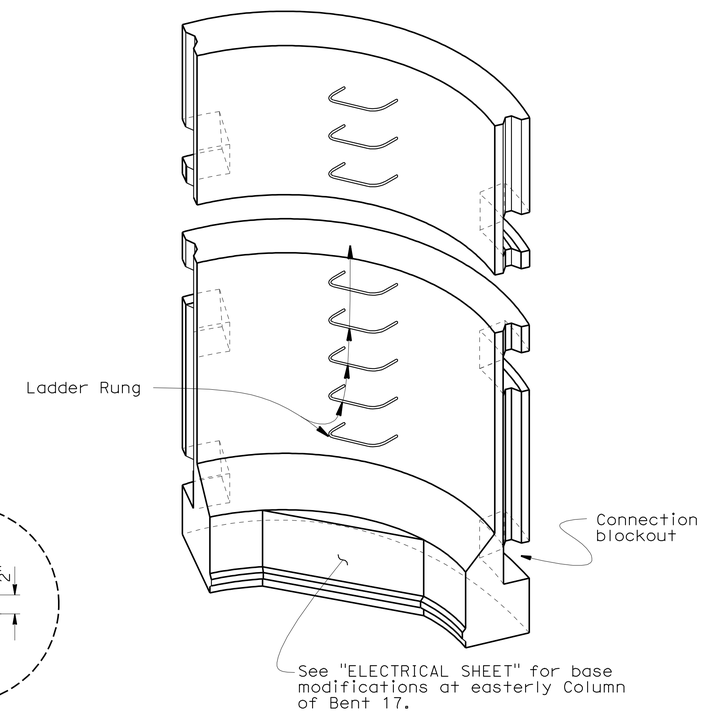

ISOMETRIC VIEW PRECAST ISOLATION CASING

No Scale

NOTES:

1. All hardware to be galvanized before casting.
2. Place connections 3 feet from top, 2 feet from bottom and at mid - height of casing.
3. Align shells prior to grouting Keyway and Connection Blockouts.
4. Casing to be set on grout pad to level.
5. Minimum concrete strength shall be 5000 psi
6. Casing to be plumb and centered about column.

6 REVISED PER ADDENDUM No. 6 DATED MAY 5, 2011

3 REVISED PER ADDENDUM No. 3 DATED MARCH 28, 2011

	BY	CHECKED
DESIGN	R. Bromenschenkel	F. Zayati
DETAILS	Jeff Thorne	F. Zayati
QUANTITIES	J. Lane	V. Ramakrishnan

STATE OF CALIFORNIA
DEPARTMENT OF TRANSPORTATION

DIVISION OF ENGINEERING SERVICES
STRUCTURE DESIGN
DESIGN BRANCH 14

BRIDGE NO. 53-3034K
POST MILE 0.01

NB SR-103 OFF-RAMP
PRECAST ISOLATION CASING DETAILS

STRUCTURES DESIGN DETAIL SHEET (ENGLISH) (REV. 10/25/05)

ORIGINAL SCALE IN INCHES FOR REDUCED PLANS 0 1 2 3

CU 07-271
EA 138201

DISREGARD PRINTS BEARING EARLIER REVISION DATES

REVISION DATES: 03-18-10 03-20-10 03-22-10 03-26-10 07-08-10 08-26-10 12-14-10 01-06-10

SHEET 26 OF 47

FILE => 53-3034k-p-1isolation-precast.dgn

USERNAME => trostrk DATE PLOTTED => 03-MAY-2011 TIME PLOTTED => 17:26

DIST	COUNTY	ROUTE	POST MILES TOTAL PROJECT	SHEET No	TOTAL SHEETS
07	LA	47,103	3.5/4.6, 0.0/1.1	862	1003

REGISTERED CIVIL ENGINEER — DATE 05-24-10

10-11-10
PLANS APPROVAL DATE

FOUED ZAYATI No. C57046 Exp. 06-30-11 CIVIL — REGISTERED PROFESSIONAL ENGINEER — STATE OF CALIFORNIA

The State of California or its officers or agents shall not be responsible for the accuracy or completeness of electronic copies of this plan sheet.

3

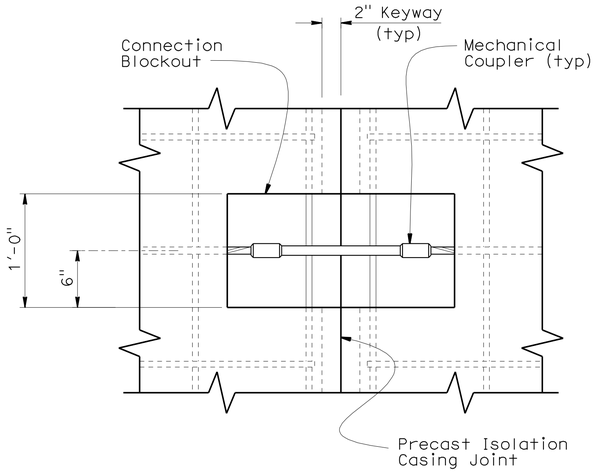

VIEW B-B

1½"=1'-0"

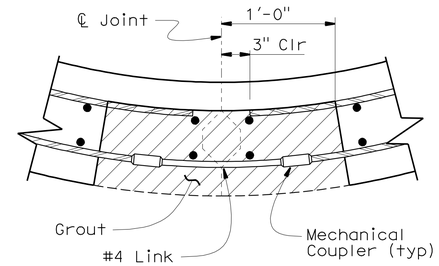

CONNECTION DETAIL

1½"=1'-0"

3 **REVISED PER ADDENDUM No. 3 DATED MARCH 28, 2011**

Location	H (ft)
Bents 24 & 25	21
Bent 26	23
Bent 27	25

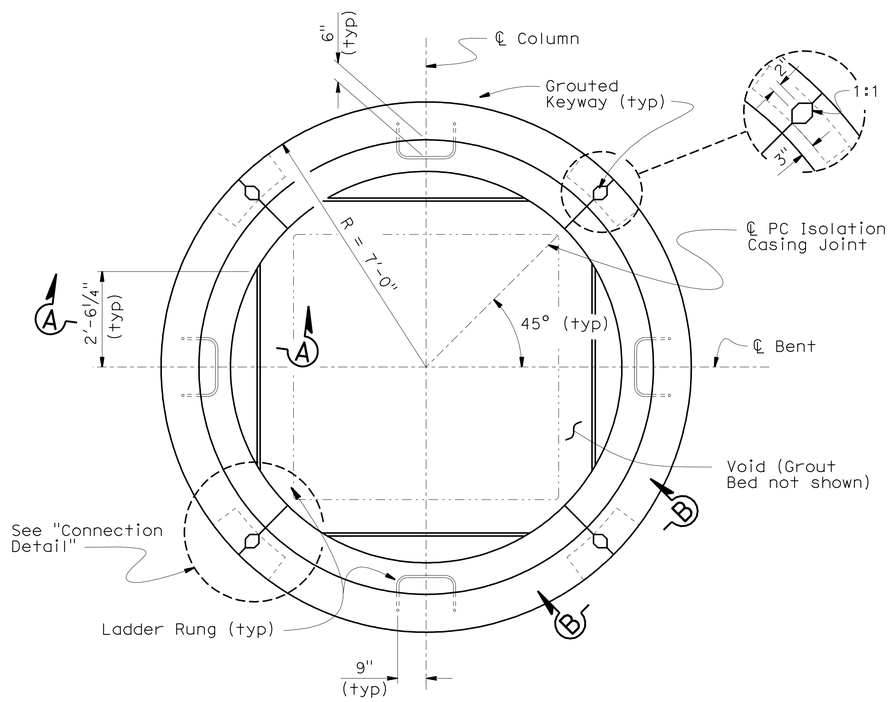

PLAN

½"=1'-0"

6 **REVISED PER ADDENDUM No. 6 DATED MAY 5, 2011**

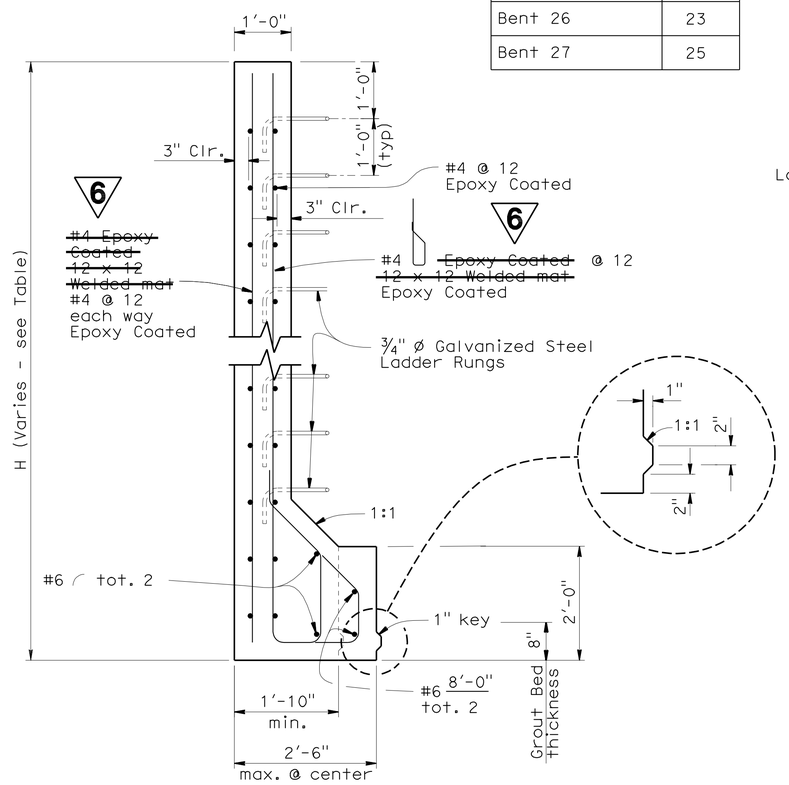

SECTION A-A

¾"=1'-0"

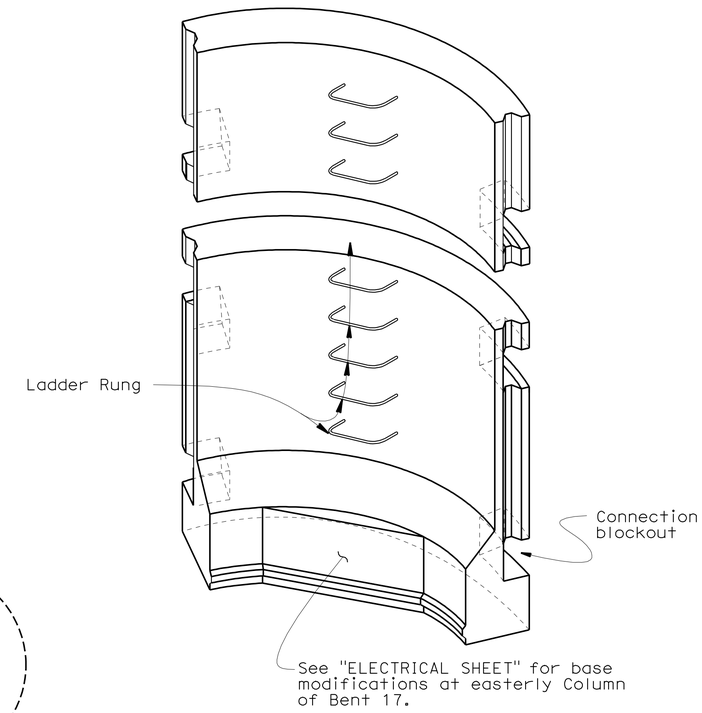

ISOMETRIC VIEW PRECAST ISOLATION CASING

No Scale

NOTES:

1. All hardware to be galvanized before casting.
2. Place connections 3 feet from top, 2 feet from bottom and at mid - height of casing.
3. Align shells prior to grouting Keyway and Connection Blockouts.
4. Casing to be set on grout pad to level.
5. Minimum concrete strength shall be 5000 psi
6. Casing to be plumb and centered about column.

	BY	CHECKED
DESIGN	R. Bromenschenkel	F. Zayati
DETAILS	Jeff Thorne	F. Zayati
QUANTITIES	V. Ramakrishnan	J. Lane

STATE OF CALIFORNIA DEPARTMENT OF TRANSPORTATION

DIVISION OF ENGINEERING SERVICES STRUCTURE DESIGN DESIGN BRANCH 14

BRIDGE NO. 53-3035S POST MILE 0.01

SB SR-103 ON-RAMP
PRECAST ISOLATION CASING DETAILS

STRUCTURES DESIGN DETAIL SHEET (ENGLISH) (REV. 10/25/05)

ORIGINAL SCALE IN INCHES FOR REDUCED PLANS 0 1 2 3

CU 07-271
EA 138201

DISREGARD PRINTS BEARING EARLIER REVISION DATES

REVISION DATES: 03-18-10 03-20-10 03-22-10 03-26-10 05-18-10 07-08-10 08-26-10 01-07-11

SHEET 26 OF 50

FILE => 53-3035s-p-1isolation-precast.dgn

USERNAME => trostrk DATE PLOTTED => 03-MAY-2011 TIME PLOTTED => 17:26