DIST	COUNTY	ROUTE	POST MILES TOTAL PROJECT	SHEET No	TOTAL SHEETS
07	LA	5	29.4/31.6	1301	1931

Joseph S. Pratt 1-13-12
CERTIFIED ENGINEERING GEOLOGIST

5-21-12
PLANS APPROVAL DATE

PROFESSIONAL GEOLOGIST Joseph S. Pratt No. 2141 Exp. 5-31-13 CERTIFIED ENGINEERING GEOLOGIST STATE OF CALIFORNIA

The State of California or its officers or agents shall not be responsible for the accuracy or completeness of electronic copies of this plan sheet.

LEGEND:

- (M) Moisture Content
- (PA) Particle Size Analysis
- (PI) Plasticity, Index, Liquid Limit
- (CR) Corrosivity Testing
- (CP) Compaction

FOR PLAN VIEW, SEE
"LOG OF TEST BORINGS 1 OF 2"

Note: No ground water encountered during field investigation.

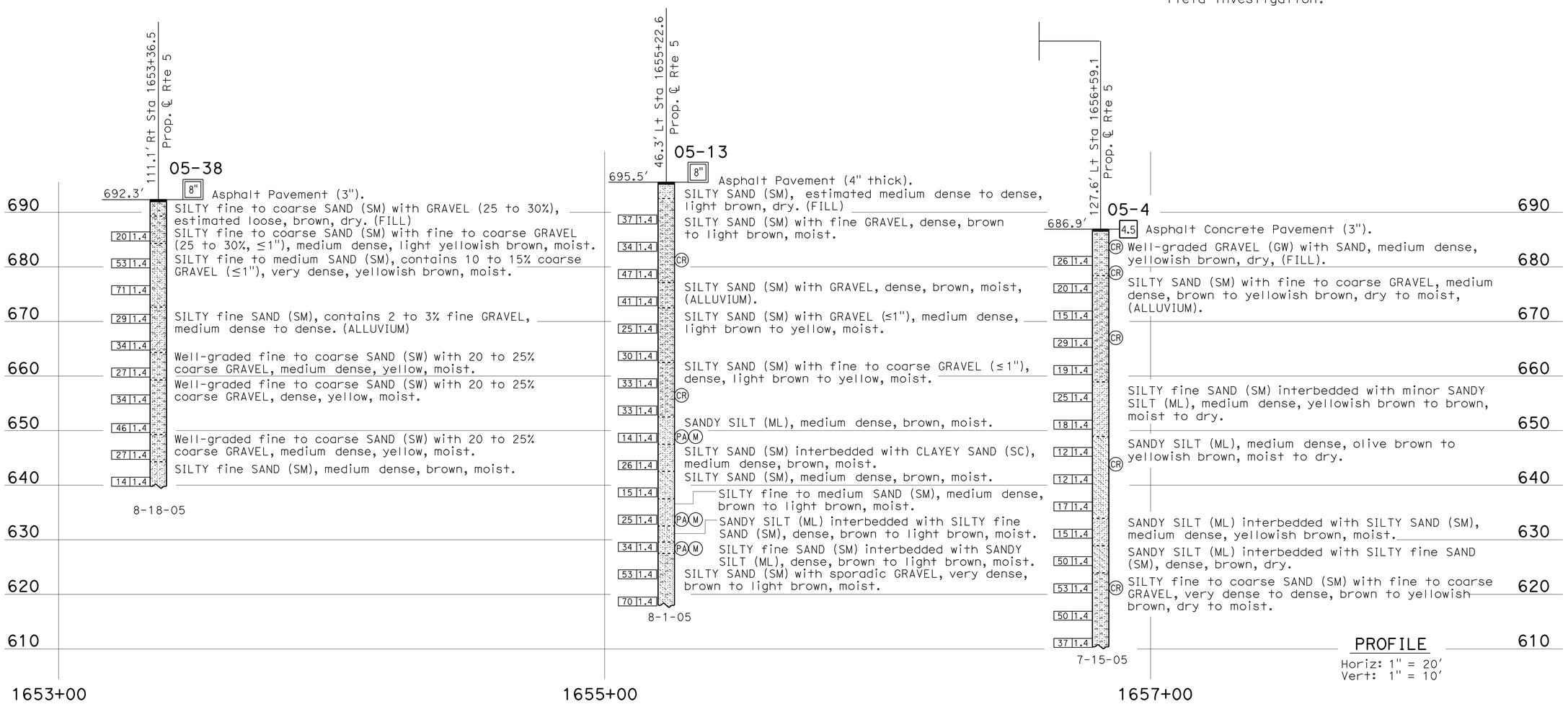

PROFILE
Horiz: 1" = 20'
Vert: 1" = 10'

LEGEND OF BORING OPERATIONS

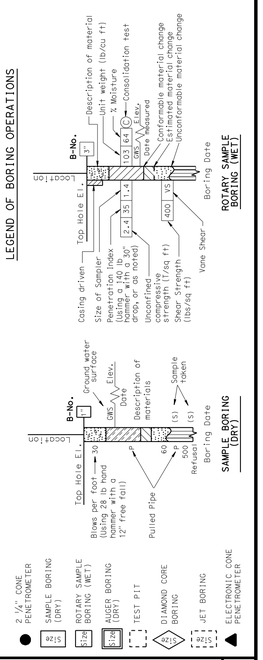

LEGEND OF EARTH MATERIALS

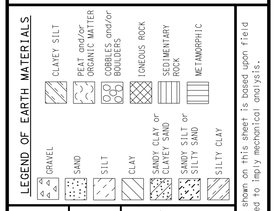

CONSISTENCY CLASSIFICATION FOR SOILS
According to the Standard Penetration Test

SPT N-Value (Blows/ Foot)	Granular	SPT N-Value (Blows/ Foot)	Cohesive
0-4	Very Loose	<2	Very Soft
5-10	Loose	2-4	Soft
11-30	Medium Dense	5-8	Medium stiff
31-50	Dense	9-15	Stiff
>50	Very Dense	16-30	Very Stiff
		31-60	Hard
		>60	Very Hard

NOTE: Classification of earth material as shown on this sheet is based upon field inspection and is not to be construed to imply mechanical analysis.

ENGINEERING SERVICES	GEOTECHNICAL SERVICES
DRAWN BY	I.G-Remmen
CHECKED BY	J. Pratt

FIELD INVESTIGATION BY:
J. Pratt,
M Abouzaian, K. Lai

STATE OF CALIFORNIA
DEPARTMENT OF TRANSPORTATION

DIVISION OF ENGINEERING SERVICES
STRUCTURE DESIGN
DESIGN BRANCH 18

BRIDGE NO. RW 1655
POST MILE 31.35

RETAINING WALL NO. 1655
LOG OF TEST BORINGS 2 OF 2

OGS LOG OF TEST BORINGS SHEET (ENGLISH) (REV. 5/25/07)

ORIGINAL SCALE IN INCHES FOR REDUCED PLANS 0 1 2 3

UNIT: 3603
PROJECT NUMBER & PHASE: 07000211191
CONTRACT NO.: 07-1218W1

DISREGARD PRINTS BEARING EARLIER REVISION DATES

REVISION DATES				SHEET	OF
01-13-12				7	7

FILE => 53-rw1655rl-z-ltb02.dgn

USERNAME => s124496 DATE PLOTTED => 21-MAY-2012 TIME PLOTTED => 14:43

DIST	COUNTY	ROUTE	POST MILES TOTAL PROJECT	SHEET No.	TOTAL SHEETS
07	LA	5	29.4/31.6	1302	1931

JEstrada. 01/31/12
REGISTERED CIVIL ENGINEER DATE

5-21-12
PLANS APPROVAL DATE

REGISTERED PROFESSIONAL ENGINEER JORGE I. ESTRADA No. C51473 Exp. 06/30/12 CIVIL STATE OF CALIFORNIA

The State of California or its officers or agents shall not be responsible for the accuracy or completeness of electronic copies of this plan sheet.

INDEX TO PLANS

SHEET NO.	TITLE
1.	GENERAL PLAN
2.	FOUNDATION PLAN NO. 1
3.	FOUNDATION PLAN NO. 2
4.	STRUCTURE PLAN NO. 1
5.	STRUCTURE PLAN NO. 2
6.	STRUCTURE PLAN NO. 3
7.	STRUCTURE PLAN NO. 4
8.	STRUCTURE PLAN NO. 5
9.	STRUCTURE PLAN NO. 6
10.	MISCELLANEOUS DETAILS
11.	RETAINING WALL TYPE 1SWB
12.	MASONRY BLOCK SOUNDWALL WITH BARRIER ON RETAINING WALL - DETAILS NO.1
13.	MASONRY BLOCK SOUNDWALL WITH BARRIER ON RETAINING WALL - DETAILS NO.2
14.	ARCHITECTURAL TREATMENT
15.	AESTHETIC SOUNDWALL DETAILS
16.	LOG TEST BORINGS
17.	LOG TEST BORINGS

QUANTITIES

STRUCTURE EXCAVATION (RETAINING WALL)	1,480	CY
STRUCTURE EXCAVATION (TYPE Z-3) (AERIALLY DEPOSITED LEAD)	79	CY
STRUCTURE EXCAVATION (TYPE Y-1) (AERIALLY DEPOSITED LEAD)	645	CY
STRUCTURE EXCAVATION (TYPE Y-2) (AERIALLY DEPOSITED LEAD)	83	CY
STRUCTURE BACKFILL (RETAINING WALL)	1,555	CY
PERVIOUS BACKFILL MATERIAL	62	CY
16" CAST-IN-DRILLED-HOLE CONCRETE PILING	1,089	LF
STRUCTURAL CONCRETE, RETAINING WALL	708	CY
ARCHITECTURAL TREATMENT	3,641	SQFT
SOUND WALL (MASONRY BLOCK)	9,807	SQFT
BAR REINFORCING STEEL (RETAINING WALL)	56,152	LB
CONCRETE BARRIER (TYPE 736A MODIFIED)	674	LF
CONCRETE BARRIER (TYPE 736SV)	218	LF

STANDARD PLANS DATED MAY 2006

SHEET NO.	TITLE
A10A, A10B	ACRONYMS AND ABBREVIATIONS
A10C, A10D	SYMBOLS
A62B	LIMITS OF PAYMENT FOR EXCAVATION AND BACKFILL BRIDGE SURCHARGE AND WALL
A77J3	METAL BEAM GUARD RAILING CONNECTIONS TO ABUTMENTS AND WALLS
BO-3	BRIDGE DETAILS
B3-8	RETAINING WALL DETAILS NO. 1
B3-9	RETAINING WALL DETAILS NO. 2
B11-56	CONCRETE BARRIER TYPE 736 (MOD)
RSP B15-6	SOUNDWALL Masonry Block on Type 736 S/SV BARRIER- Details (1)
RSP B15-7	SOUNDWALL Masonry Block on Type 736 S/SV BARRIER- Details (2)
RSP B15-8	SOUNDWALL Masonry Block on Type 736 S/SV BARRIER- Details (3)
B15-12, B15-13	SOUNDWALL MASONRY BLOCK ON BARRIER 5'-0" ACCESS GATE DETAILS (1 AND 2)
B15-14	SOUNDWALL MASONRY BLOCK ACCESS GATE LOCKING DETAILS
RSP ES-6A	ELECTRICAL SYSTEMS (Lighting Standard Types 15 and 21)

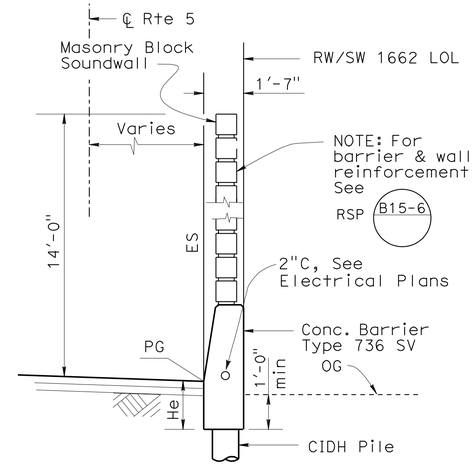

SECTION A-A
SOUNDWALL ON TYPE 736 SV BARRIER
STA 659+25.00 TO STA 661+42.08

NO SCALE

LEGEND

STANDARD PLAN SHEET NO.
DETAIL NO.

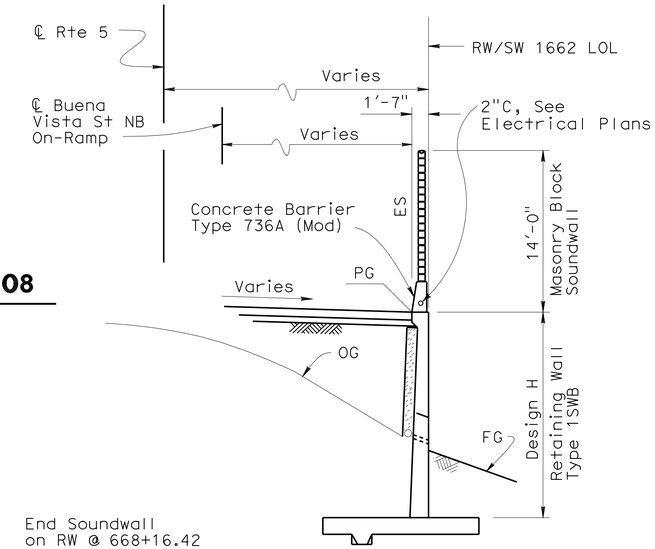

SECTION B-B (TYPE 1SWB)
STA 661+42.08 TO 668+16.42

NO SCALE

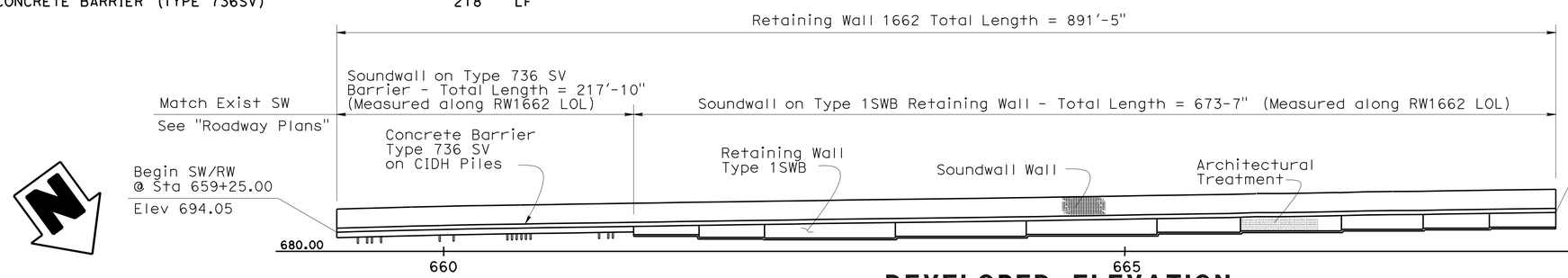

DEVELOPED ELEVATION

1" = 50'-0"

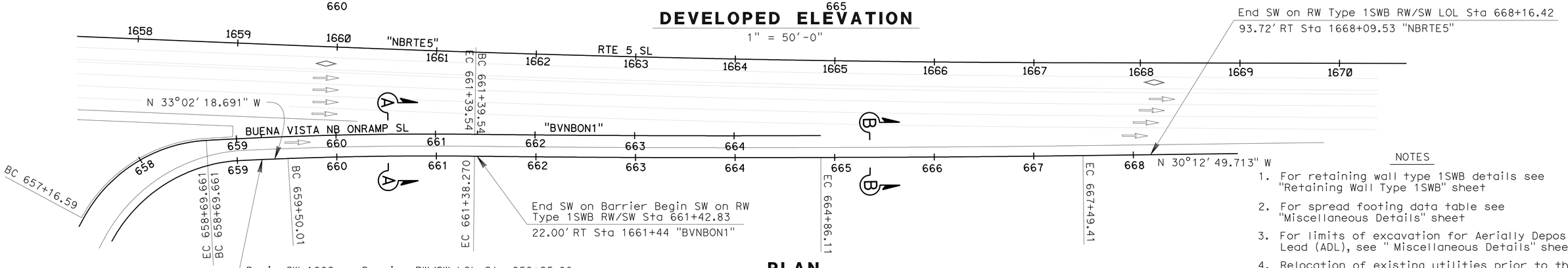

PLAN

1" = 50'-0"

NOTES

1. For retaining wall type 1SWB details see "Retaining Wall Type 1SWB" sheet
2. For spread footing data table see "Miscellaneous Details" sheet
3. For limits of excavation for Aerially Deposited Lead (ADL), see " Miscellaneous Details" sheet.
4. Relocation of existing utilities prior to this Contract by Others.
5. For electroilier and pedestal details, see "Miscellaneous Details" sheet

MIKE POPE
DESIGN ENGINEER

	BY	CHECKED
DESIGN	RUPERD WILSON	JEFF DUFFIN
DETAILS	SURAJ DUTTA	RUPERD WILSON
QUANTITIES	RUPERD WILSON	JEFF DUFFIN

LOAD FACTOR DESIGN | LIVE LOADING: HS20-44 AND ALTERNATIVE AND PERMIT DESIGN LOAD
LAYOUT: BY SURAJ DUTTA | CHECKED J. ESTRADA
SPECIFICATIONS: BY JAMES CHOI | PLANS AND SPECS COMPARED X

STATE OF CALIFORNIA
DEPARTMENT OF TRANSPORTATION

DIVISION OF ENGINEERING SERVICES
STRUCTURE DESIGN
DESIGN BRANCH 18

BRIDGE NO. RW1662
POST MILE 31.46

RETAINING WALL 1662
GENERAL PLAN

ORIGINAL SCALE IN INCHES FOR REDUCED PLANS 0 1 2 3

UNIT: 3603
PROJECT NUMBER & PHASE: 0700021119-1
CONTRACT NO.: 07-1218w1

DISREGARD PRINTS BEARING EARLIER REVISION DATES

REVISION DATES: 07/01/09 04/30/12 04/30/12 07/01/09 | SHEET 1 OF 17

STRUCTURES DESIGN GENERAL PLAN SHEET (ENGLISH) (REV.09-01-10)

FILE => rw1662-a-gp.dgn

USERNAME => s114337 DATE PLOTTED => 11-JUL-2012 TIME PLOTTED => 10:55

DIST	COUNTY	ROUTE	POST MILES TOTAL PROJECT	SHEET No.	TOTAL SHEETS
07	LA	5	29.4/31.6	1303	1931

JEstrada. 01/31/12
REGISTERED CIVIL ENGINEER DATE

5-21-12
PLANS APPROVAL DATE

REGISTERED PROFESSIONAL ENGINEER JORGE I. ESTRADA No. C51473 Exp. 06/30/12 CIVIL STATE OF CALIFORNIA

The State of California or its officers or agents shall not be responsible for the accuracy or completeness of electronic copies of this plan sheet.

CURVE DATA

No.	R	Δ	T	L
Ⓜ	19689.83	02°15'15"	387.34	774.58
Ⓝ	3914.00	02°45'21"	94.14	188.25
Ⓞ	21423.67	00°55'49"	173.92	347.84

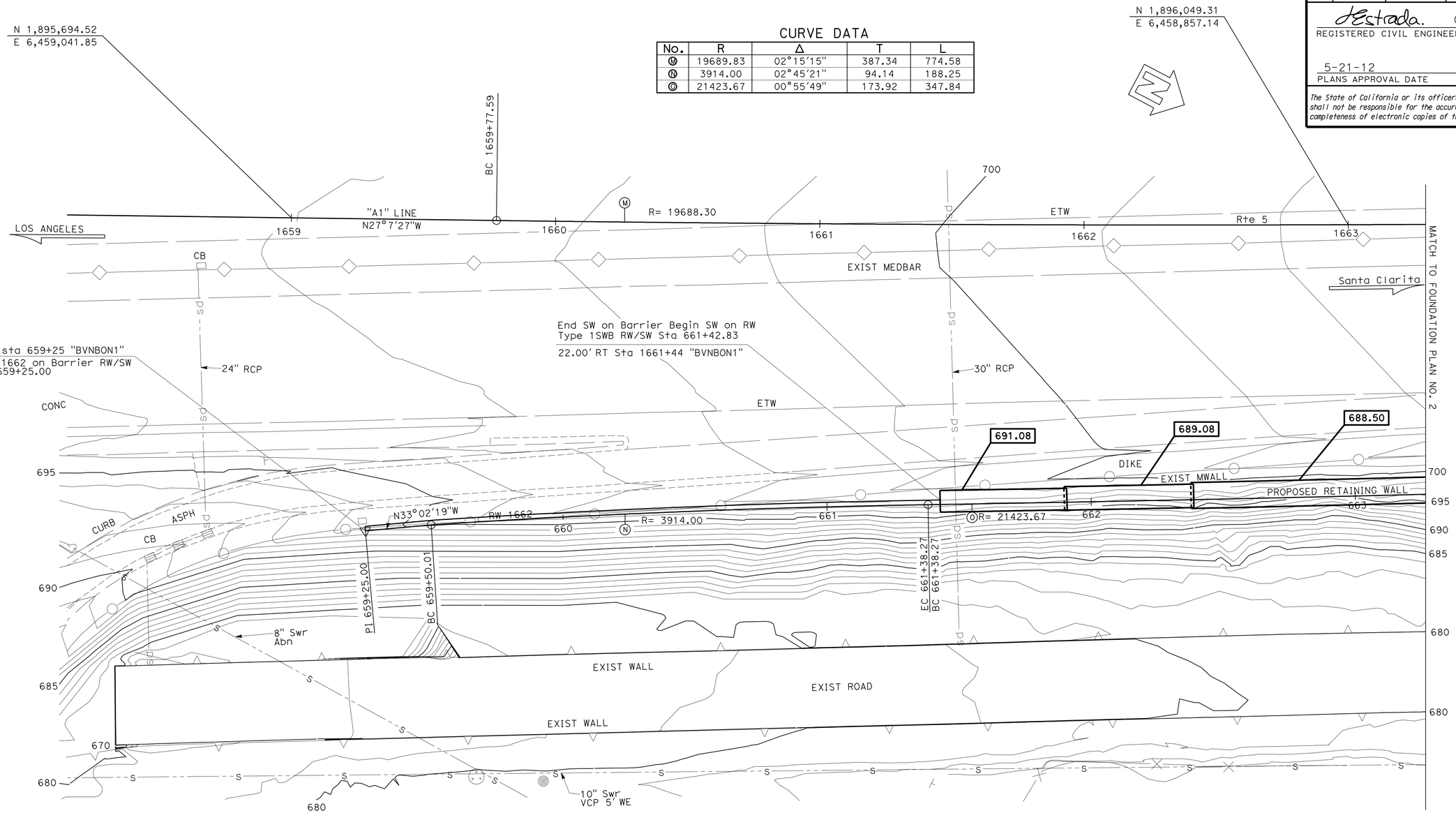

SURVEY CONTROL

PRHV123 (NOT SHOWN ON THE PLAN)

Fnd PK NAIL WITH WASHER STAMPED CALTRANS 123
88.00 Lt "A1" LINE. Rte 5
Sta. 1581+75.69
N 1,890,470.97
E 6,464,594.96
EL.=598.93

PRHV127 (NOT SHOWN ON THE PLAN)

Fnd PK NAIL WIJTH WASHER STAMPED CALTRANS 127
67.36 Lt "A1" LINE. Rte 5
Sta. 1585+96.99
N 1,890,753.54
E 6,464,269.04
EL.=604.23

PRELIMINARY INVESTIGATION SECTION

SCALE	VERT.DATUM NAVD88	PHOTOGRAMMETRY AS OF: X			
1"=20'	HORZ.DATUM NAD83(1991.35)	SURVEYED	BY District	CHECKED	BY Don Ivy 10/24/11
ALIGNMENT TIES Dist. Traverse Sheet		DRAFTED	BY J. Zhou 10/24/11	CHECKED	BY L. LEW 10/24/11

	BY	CHECKED
DESIGN	RUPERD WILSON	JEFF DUFFIN
DETAILS	SURAJ DUTTA	RUPERD WILSON
QUANTITIES	RUPERD WILSON	JEFF DUFFIN

STATE OF CALIFORNIA
DEPARTMENT OF TRANSPORTATION

DIVISION OF ENGINEERING SERVICES
STRUCTURE DESIGN
DESIGN BRANCH 18

BRIDGE NO. RW1662
POST MILE 31.23

RETAINING WALL NO. 1662
FOUNDATION PLAN NO. 1

STRUCTURES FOUNDATION PLAN SHEET (ENGLISH) (REV. 09-01-10)

ORIGINAL SCALE IN INCHES FOR REDUCED PLANS 0 1 2 3

UNIT: 3646
PROJECT NUMBER & PHASE: 07000000021119 CONTRACT NO.: 07-1218w1

DISREGARD PRINTS BEARING EARLIER REVISION DATES

REVISION DATES 01/26/09 10/06/11 03/11/01 SHEET 2 OF 17

FILE => rw1662-b-fp01.dgn

DIST	COUNTY	ROUTE	POST MILES TOTAL PROJECT	SHEET No.	TOTAL SHEETS
07	LA	5	29.4/31.6	1304	1931

dEstrada. 01/31/12
REGISTERED CIVIL ENGINEER DATE

5-21-12
PLANS APPROVAL DATE

REGISTERED PROFESSIONAL ENGINEER
JORGE I. ESTRADA
No. C51473
Exp. 06/30/12
CIVIL
STATE OF CALIFORNIA

The State of California or its officers or agents shall not be responsible for the accuracy or completeness of electronic copies of this plan sheet.

CURVE DATA

No.	R	Δ	T	L
Ⓜ	19689.82	2°15'14"	387.34	774.58
Ⓞ	21423.67	0°55'49"	173.92	347.84
Ⓟ	21876.29	0°41'23"	131.65	263.30

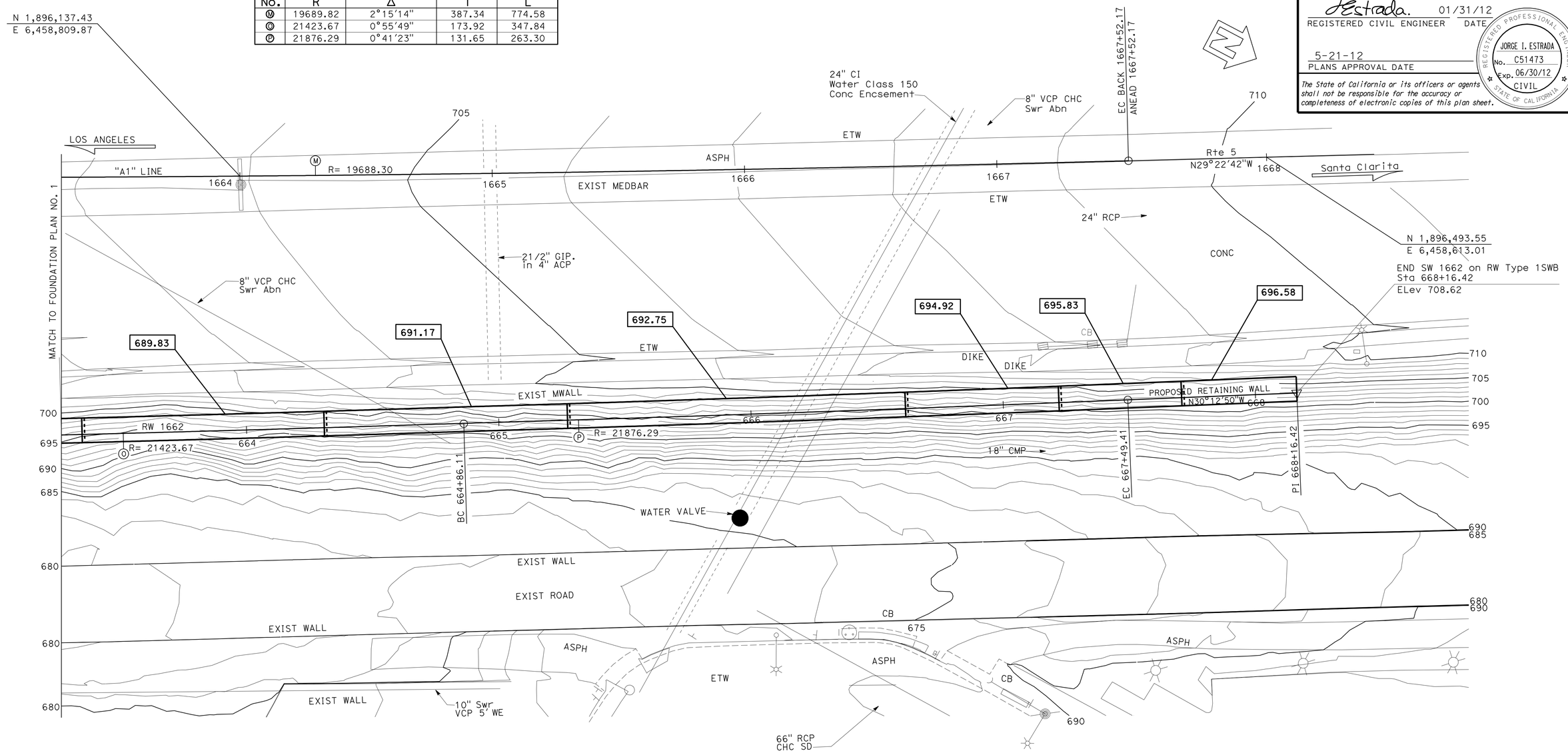

XXX.XX Indicates Bottom of Footing Elevation

PRELIMINARY INVESTIGATION SECTION							
SCALE 1"=20'	VERT.DATUM NAVD88	PHOTOGRAMMETRY AS OF: X					
	HORZ.DATUM NAD83(1991.35)	SURVEYED	BY District	CHECKED	BY Don Ivy 10/24/11		
ALIGNMENT TIES Dist. Traverse Sheet		DRAFTED	BY J. Zhou 10/24/11	CHECKED	BY L. LEW 10/24/11		

DESIGN	BY RUPERD WILSON	CHECKED JEFF DUFFIN
DETAILS	BY SURAJ DUTTA	CHECKED RUPERD WILSON
QUANTITIES	BY RUPERD WILSON	CHECKED JEFF DUFFIN

STATE OF CALIFORNIA
DEPARTMENT OF TRANSPORTATION

DIVISION OF ENGINEERING SERVICES
STRUCTURE DESIGN
DESIGN BRANCH 18

BRIDGE NO. RW1662
POST MILE 31.23

RETAINING WALL NO. 1662
FOUNDATION PLAN NO. 2

STRUCTURES FOUNDATION PLAN SHEET (ENGLISH) (REV. 09-01-10)

ORIGINAL SCALE IN INCHES FOR REDUCED PLANS 0 1 2 3

UNIT: 3646
PROJECT NUMBER & PHASE: 0700021119-1
CONTRACT NO.: 07-1218w1

DISREGARD PRINTS BEARING EARLIER REVISION DATES

REVISION DATES 01/26/09 10/06/11 03/11/07 SHEET 3 OF 17

FILE => rw1662-b-fp02.dgn

DIST	COUNTY	ROUTE	POST MILES TOTAL PROJECT	SHEET No.	TOTAL SHEETS
07	LA	5	29.4/31.6	1305	1931

REGISTERED CIVIL ENGINEER 01/31/12 DATE

5-21-12
PLANS APPROVAL DATE

REGISTERED PROFESSIONAL ENGINEER JORGE I. ESTRADA No. C51473 Exp. 06/30/12 CIVIL STATE OF CALIFORNIA

The State of California or its officers or agents shall not be responsible for the accuracy or completeness of electronic copies of this plan sheet.

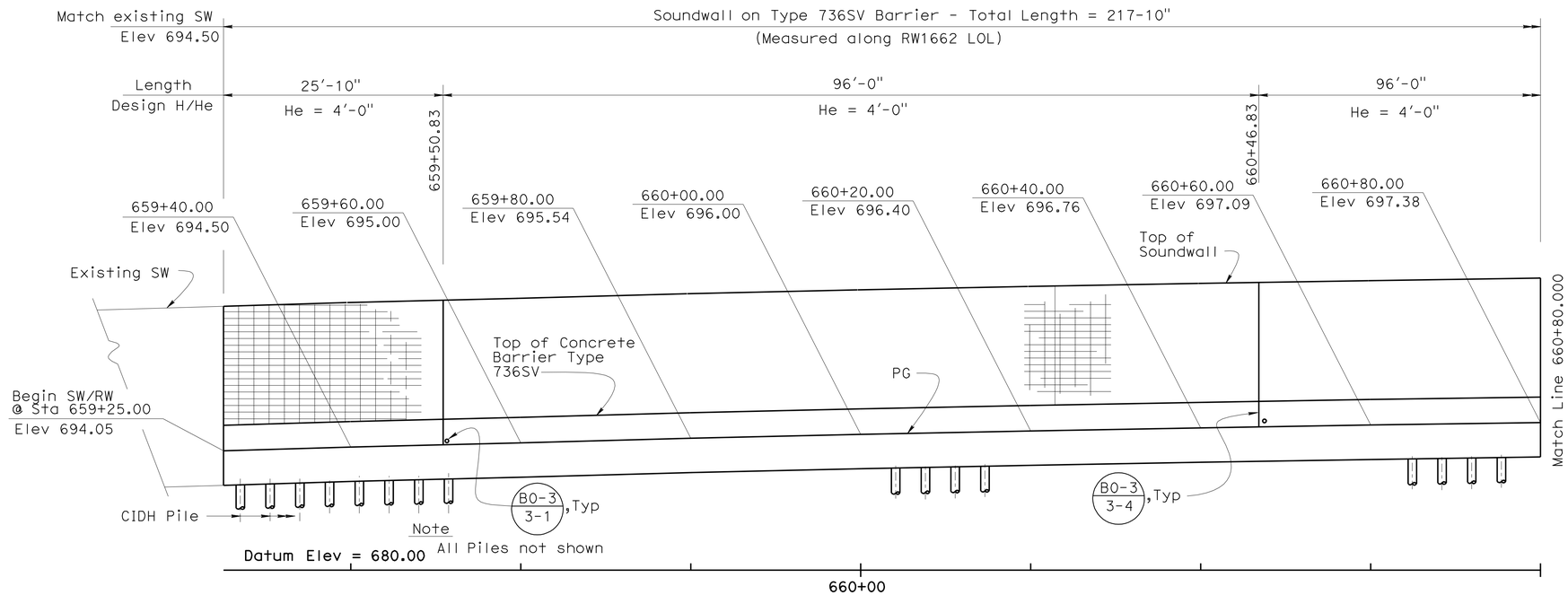

DEVELOPED MIRROR ELEVATION

1/8" = 1'-0"

NOTE:
FOR PILE DETAILS, SEE RSP B15-8 Ø SOIL = 30°

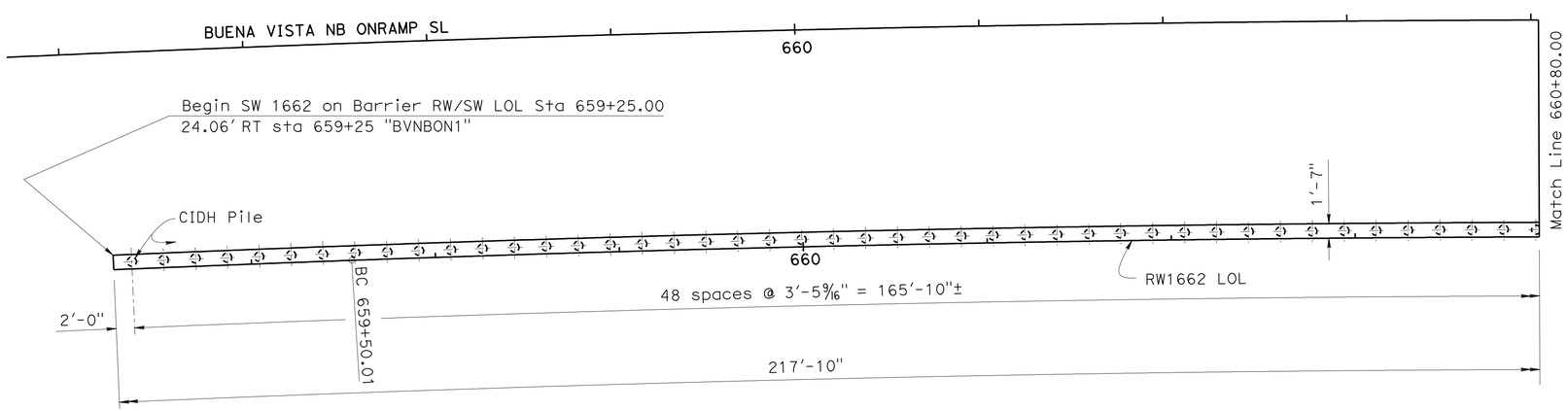

PLAN

1/8" = 1'-0"

DESIGN	BY RUPERD WILSON	CHECKED JEFF DUFFIN	
DETAILS	BY SURAJ DUTTA	CHECKED RUPERD WILSON	
QUANTITIES	BY RUPERD WILSON	CHECKED JEFF DUFFIN	

STATE OF CALIFORNIA
DEPARTMENT OF TRANSPORTATION

DIVISION OF ENGINEERING SERVICES
STRUCTURE DESIGN
DESIGN BRANCH 18

BRIDGE NO. RW1662
POST MILE 31.46

RETAINING WALL 1662
STRUCTURE PLAN NO. 1

STRUCTURES DESIGN DETAIL SHEET (ENGLISH) (REV. 09-01-10)

ORIGINAL SCALE IN INCHES FOR REDUCED PLANS 0 1 2 3

UNIT: 3603
PROJECT NUMBER & PHASE: 0700021119-1 CONTRACT NO.: 07-1218W1

DISREGARD PRINTS BEARING EARLIER REVISION DATES

REVISION DATES 01/26/09 10/06/2011 03/17/07

SHEET 4 OF 17

FILE => rw1662-c-sp1.dgn

USERNAME => s123631 DATE PLOTTED => 19-JUN-2012 TIME PLOTTED => 10:03

DIST	COUNTY	ROUTE	POST MILES TOTAL PROJECT	SHEET No.	TOTAL SHEETS
07	LA	5	29.4/31.6	1306	1931

REGISTERED CIVIL ENGINEER — DATE 01/31/12

5-21-12
PLANS APPROVAL DATE

REGISTERED PROFESSIONAL ENGINEER — JORGE I. ESTRADA — No. C51473 — Exp. 06/30/12 — CIVIL — STATE OF CALIFORNIA

The State of California or its officers or agents shall not be responsible for the accuracy or completeness of electronic copies of this plan sheet.

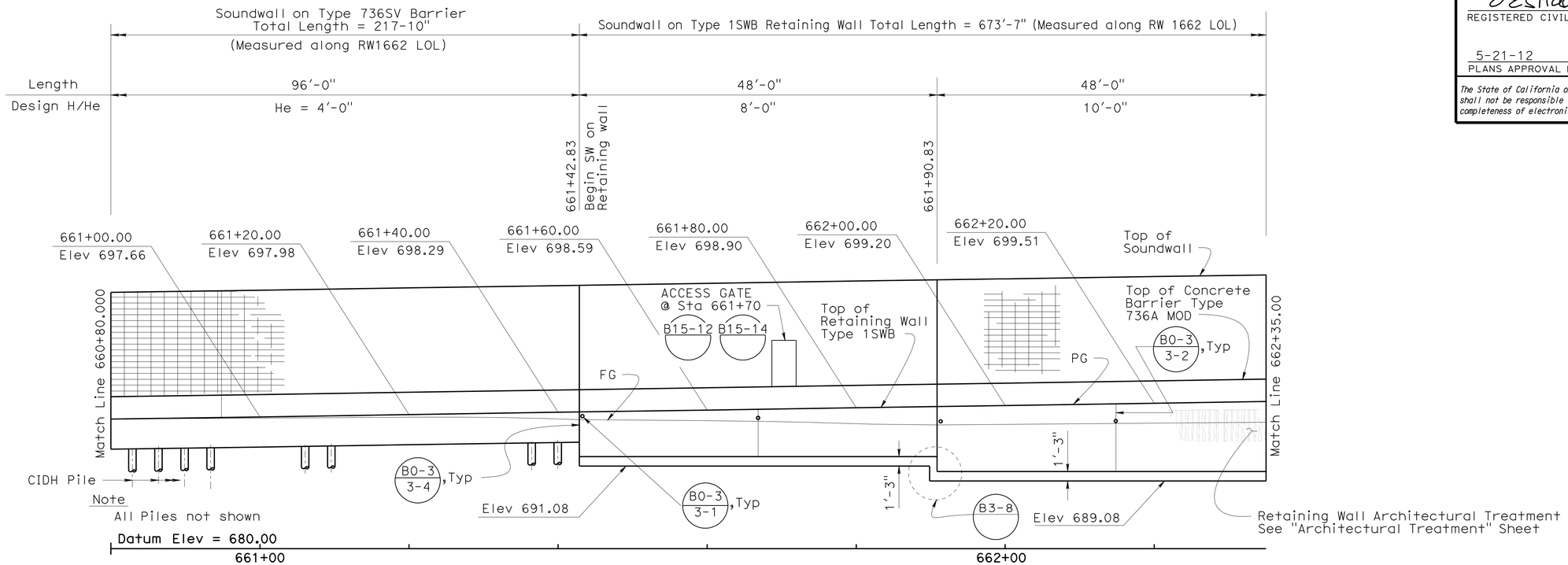

DEVELOPED MIRROR ELEVATION

1/8" = 1'-0"

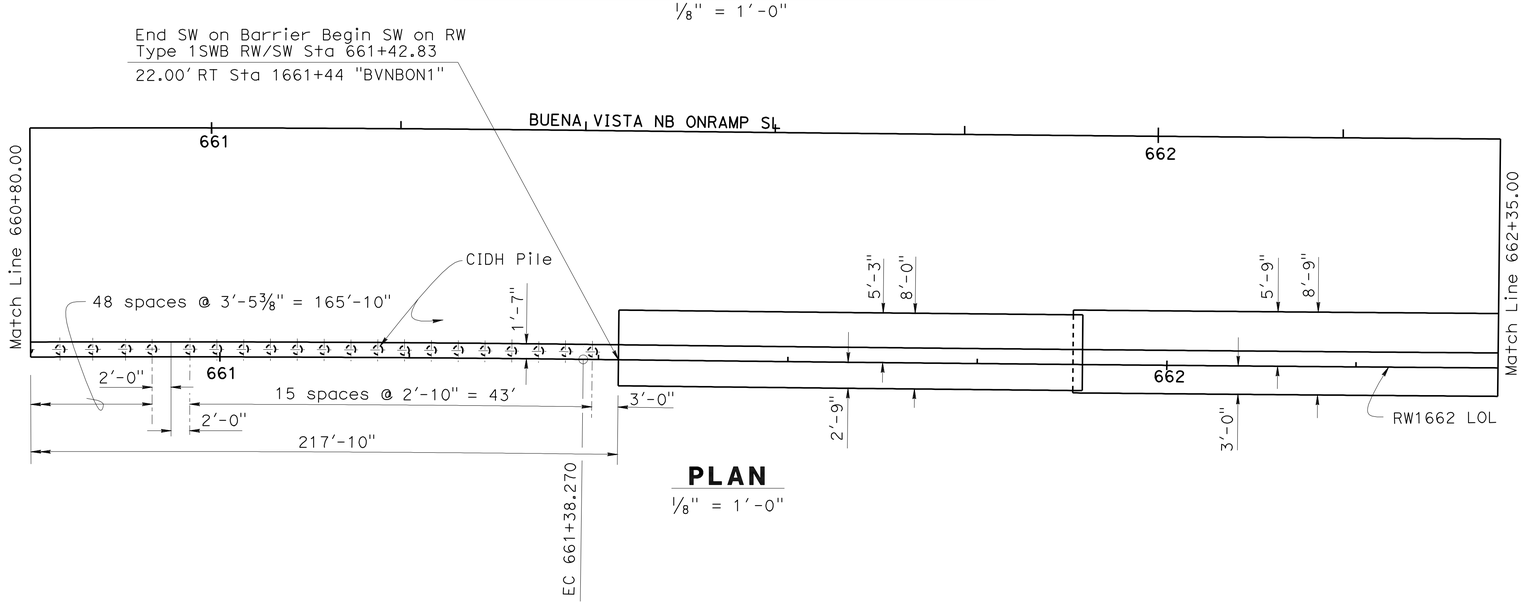

PLAN

1/8" = 1'-0"

DESIGN	BY RUPERD WILSON	CHECKED JEFF DUFFIN	
DETAILS	BY SURAJ DUTTA	CHECKED RUPERD WILSON	
QUANTITIES	BY RUPERD WILSON	CHECKED JEFF DUFFIN	

STATE OF CALIFORNIA
DEPARTMENT OF TRANSPORTATION

DIVISION OF ENGINEERING SERVICES
STRUCTURE DESIGN
DESIGN BRANCH 18

BRIDGE NO. RW1662
POST MILE 31.46

RETAINING WALL 1662
STRUCTURE PLAN NO. 2

STRUCTURES DESIGN DETAIL SHEET (ENGLISH) (REV. 09-01-10)

ORIGINAL SCALE IN INCHES FOR REDUCED PLANS 0 1 2 3

UNIT: 3603
PROJECT NUMBER & PHASE: 0700021119-1
CONTRACT NO.: 07-1218w1

DISREGARD PRINTS BEARING EARLIER REVISION DATES

REVISION DATES: 01/26/09 10/06/201 03/17/07

SHEET 5 OF 17

FILE => rw1662-c-sp2.dgn

USERNAME => s123631 DATE PLOTTED => 19-JUN-2012 TIME PLOTTED => 10:03

DIST	COUNTY	ROUTE	POST MILES TOTAL PROJECT	SHEET No.	TOTAL SHEETS
07	LA	5	29.4/31.6	1307	1931

REGISTERED CIVIL ENGINEER — DATE 01/31/12

5-21-12
PLANS APPROVAL DATE

REGISTERED PROFESSIONAL ENGINEER — JORGE I. ESTRADA — No. C51473 — Exp. 06/30/12 — CIVIL — STATE OF CALIFORNIA

The State of California or its officers or agents shall not be responsible for the accuracy or completeness of electronic copies of this plan sheet.

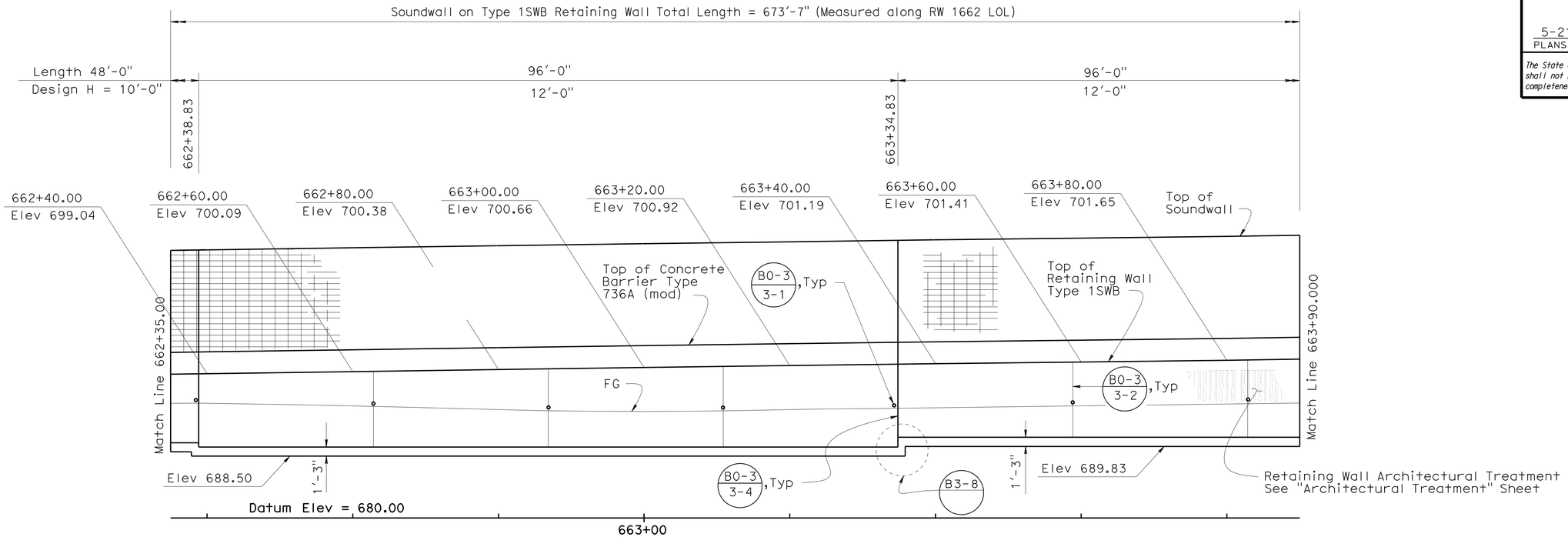

DEVELOPED MIRROR ELEVATION

1/8" = 1'-0"

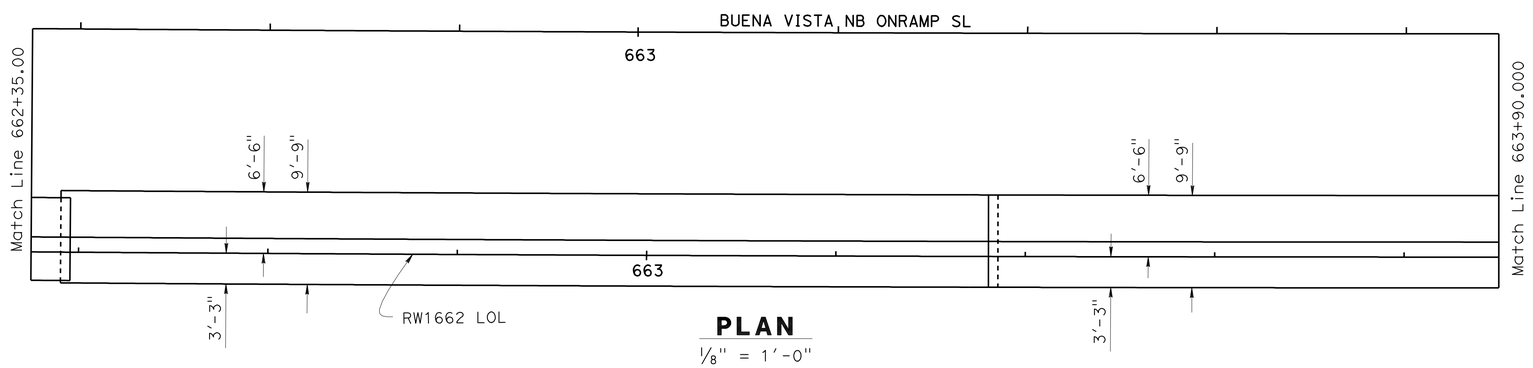

PLAN

1/8" = 1'-0"

DESIGN	BY RUPERD WILSON	CHECKED JEFF DUFFIN	
DETAILS	BY SURAJ DUTTA	CHECKED RUPERD WILSON	
QUANTITIES	BY RUPERD WILSON	CHECKED JEFF DUFFIN	

STATE OF CALIFORNIA
DEPARTMENT OF TRANSPORTATION

DIVISION OF ENGINEERING SERVICES
STRUCTURE DESIGN
DESIGN BRANCH 18

BRIDGE NO. RW1662
POST MILE 31.46

RETAINING WALL 1662
STRUCTURE PLAN NO. 3

STRUCTURES DESIGN DETAIL SHEET (ENGLISH) (REV. 09-01-10)

ORIGINAL SCALE IN INCHES FOR REDUCED PLANS 0 1 2 3

UNIT: 3603
PROJECT NUMBER & PHASE: 0700021119-1
CONTRACT NO.: 07-1218w1

DISREGARD PRINTS BEARING EARLIER REVISION DATES

REVISION DATES: 01/26/09 10/06/201 03/17/01

SHEET 6 OF 17

FILE => rw1662-c-sp3.dgn

USERNAME => s124496 DATE PLOTTED => 21-MAY-2012 TIME PLOTTED => 14:44

DIST	COUNTY	ROUTE	POST MILES TOTAL PROJECT	SHEET No.	TOTAL SHEETS
07	LA	5	29.4/31.6	1308	1931

REGISTERED CIVIL ENGINEER — DATE 01/31/12

5-21-12
PLANS APPROVAL DATE

REGISTERED PROFESSIONAL ENGINEER — JORGE I. ESTRADA — No. C51473 — Exp. 06/30/12 — CIVIL — STATE OF CALIFORNIA

The State of California or its officers or agents shall not be responsible for the accuracy or completeness of electronic copies of this plan sheet.

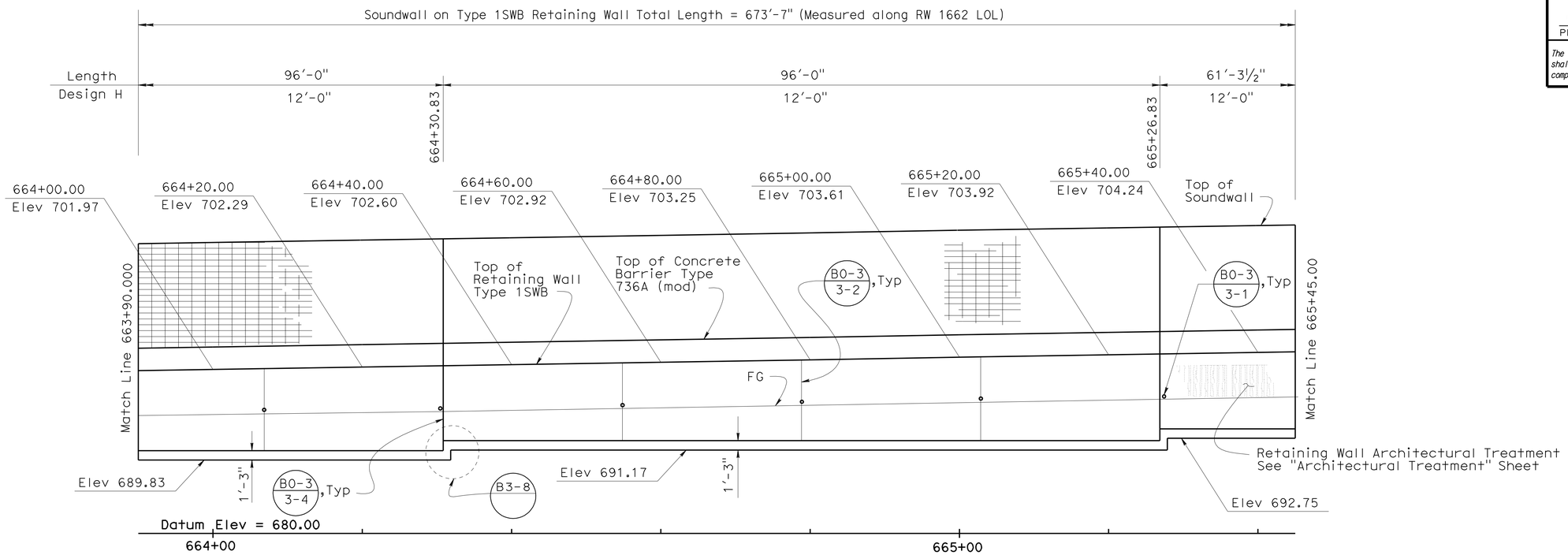

DEVELOPED MIRROR ELEVATION

1/8" = 1'-0"

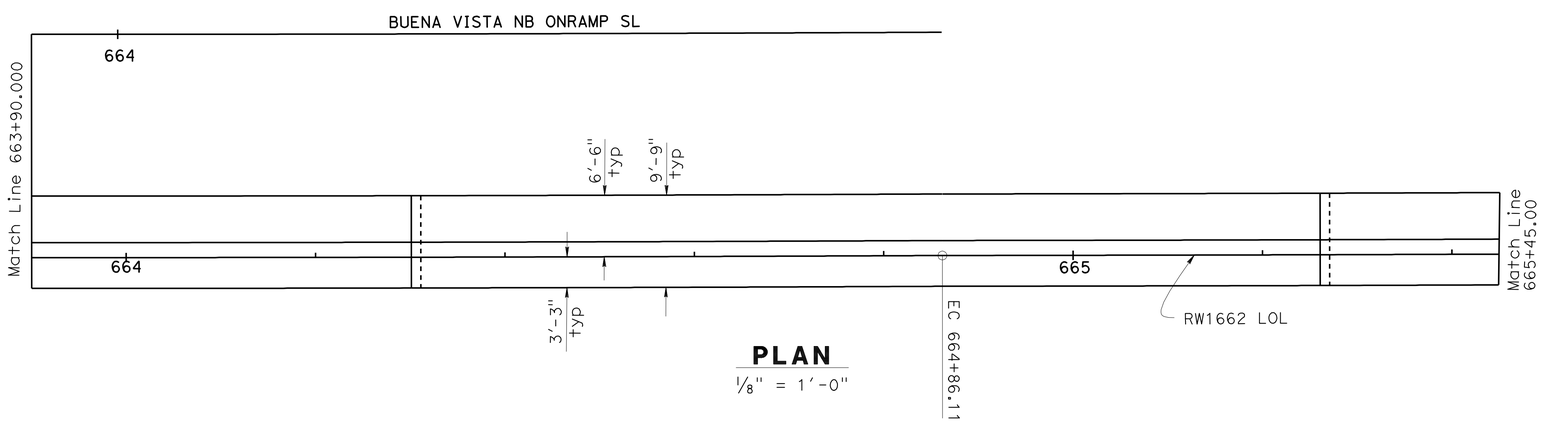

PLAN

1/8" = 1'-0"

	BY	CHECKED
DESIGN	RUPERD WILSON	JEFF DUFFIN
DETAILS	SURAJ DUTTA	RUPERD WILSON
QUANTITIES	RUPERD WILSON	JEFF DUFFIN

STATE OF CALIFORNIA
DEPARTMENT OF TRANSPORTATION

DIVISION OF ENGINEERING SERVICES
STRUCTURE DESIGN
DESIGN BRANCH 18

BRIDGE NO. RW1662
POST MILE 31.46

RETAINING WALL 1662
STRUCTURE PLAN NO. 4

STRUCTURES DESIGN DETAIL SHEET (ENGLISH) (REV. 09-01-10)

ORIGINAL SCALE IN INCHES FOR REDUCED PLANS 0 1 2 3

UNIT: 3603
PROJECT NUMBER & PHASE: 0700021119-1
CONTRACT NO.: 07-1218w1

DISREGARD PRINTS BEARING EARLIER REVISION DATES

REVISION DATES: 01/26/09 10/06/201 03/17/07

SHEET 7 OF 17

FILE => rw1662-c-sp4.dgn

USERNAME => s124496 DATE PLOTTED => 21-MAY-2012 TIME PLOTTED => 14:44

DIST	COUNTY	ROUTE	POST MILES TOTAL PROJECT	SHEET No.	TOTAL SHEETS
07	LA	5	29.4/31.6	1309	1931

REGISTERED CIVIL ENGINEER 01/31/12 DATE

5-21-12
PLANS APPROVAL DATE

REGISTERED PROFESSIONAL ENGINEER JORGE I. ESTRADA No. C51473 Exp. 06/30/12 CIVIL STATE OF CALIFORNIA

The State of California or its officers or agents shall not be responsible for the accuracy or completeness of electronic copies of this plan sheet.

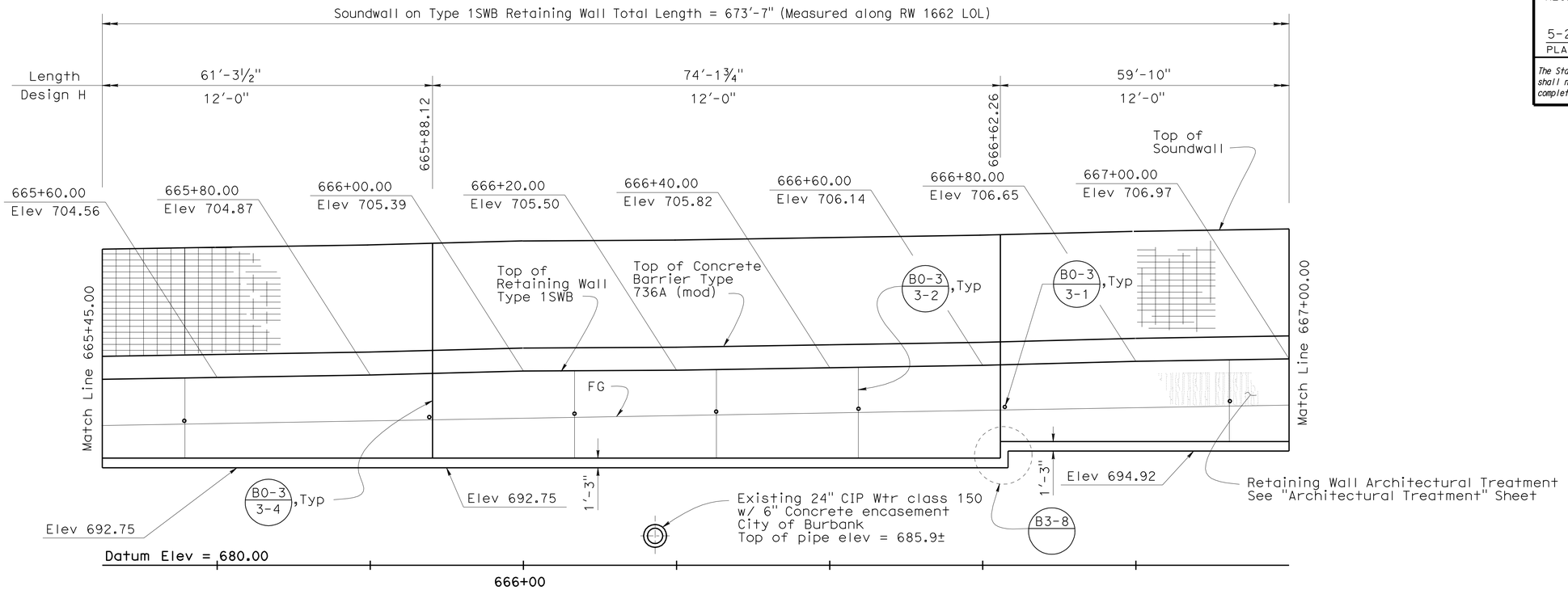

DEVELOPED MIRROR ELEVATION

⅛" = 1'-0"

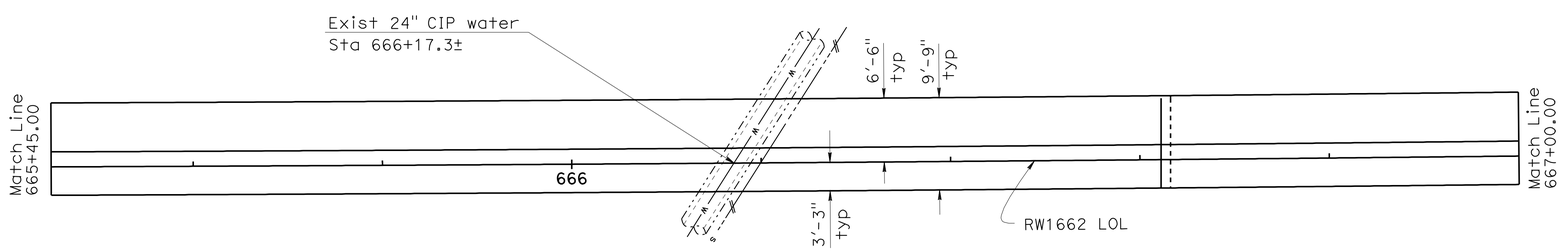

PLAN

⅛" = 1'-0"

DESIGN	BY RUPERD WILSON	CHECKED JEFF DUFFIN	
DETAILS	BY SURAJ DUTTA	CHECKED RUPERD WILSON	
QUANTITIES	BY RUPERD WILSON	CHECKED JEFF DUFFIN	

STATE OF CALIFORNIA
DEPARTMENT OF TRANSPORTATION

DIVISION OF ENGINEERING SERVICES
STRUCTURE DESIGN
DESIGN BRANCH 18

BRIDGE NO. RW1662
POST MILE 31.46

RETAINING WALL 1662
STRUCTURE PLAN NO. 5

STRUCTURES DESIGN DETAIL SHEET (ENGLISH) (REV. 09-01-10)

ORIGINAL SCALE IN INCHES FOR REDUCED PLANS 0 1 2 3

UNIT: 3603
PROJECT NUMBER & PHASE: 0700021119-1
CONTRACT NO.: 07-1218W1

DISREGARD PRINTS BEARING EARLIER REVISION DATES

REVISION DATES 01/26/09 12/08/11 07/10/12 03/17/07

SHEET 8 OF 17

FILE => rw1662-c-sp5.dgn

USERNAME => s124496 DATE PLOTTED => 11-JUL-2012 TIME PLOTTED => 08:14

DIST	COUNTY	ROUTE	POST MILES TOTAL PROJECT	SHEET No.	TOTAL SHEETS
07	LA	5	29.4/31.6	1310	1931

REGISTERED CIVIL ENGINEER 01/31/12 DATE

5-21-12
PLANS APPROVAL DATE

REGISTERED PROFESSIONAL ENGINEER JORGE I. ESTRADA No. C51473 Exp. 06/30/12 CIVIL STATE OF CALIFORNIA

The State of California or its officers or agents shall not be responsible for the accuracy or completeness of electronic copies of this plan sheet.

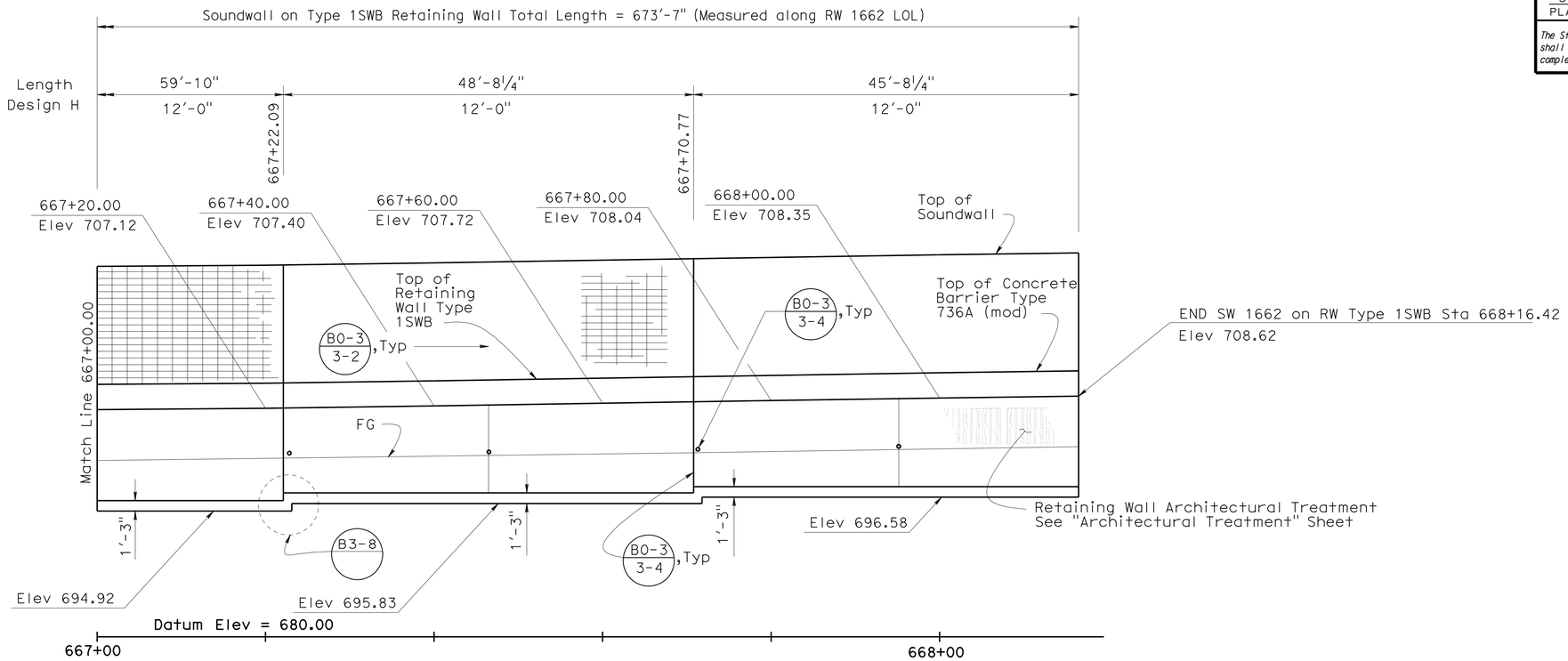

DEVELOPED MIRROR ELEVATION

⅛" = 1'-0"

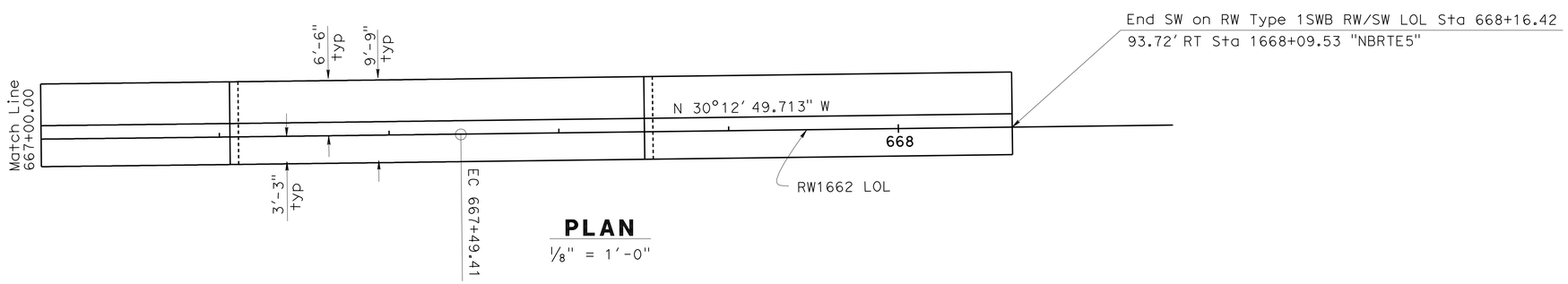

PLAN

⅛" = 1'-0"

DESIGN	BY RUPERD WILSON	CHECKED JEFF DUFFIN	
DETAILS	BY SURAJ DUTTA	CHECKED RUPERD WILSON	
QUANTITIES	BY RUPERD WILSON	CHECKED JEFF DUFFIN	

STATE OF CALIFORNIA
DEPARTMENT OF TRANSPORTATION

DIVISION OF ENGINEERING SERVICES
STRUCTURE DESIGN
DESIGN BRANCH 18

BRIDGE NO. RW1662
POST MILE 31.46

RETAINING WALL 1662
STRUCTURE PLAN NO. 6

STRUCTURES DESIGN DETAIL SHEET (ENGLISH) (REV. 09-01-10)

ORIGINAL SCALE IN INCHES FOR REDUCED PLANS 0 1 2 3

UNIT: 3603
PROJECT NUMBER & PHASE: 0700021119-1 CONTRACT NO.: 07-1218w1

DISREGARD PRINTS BEARING EARLIER REVISION DATES

REVISION DATES 01/26/09 03/06/2011 03/17/01

SHEET 9 OF 17

FILE => rw1662-c-sp6.dgn

USERNAME => s124936 DATE PLOTTED => 21-MAY-2012 TIME PLOTTED => 14:44

DIST	COUNTY	ROUTE	POST MILES TOTAL PROJECT	SHEET No.	TOTAL SHEETS
07	LA	5	29.4/31.6	1311	1931

JEstrada. 01/31/12
REGISTERED CIVIL ENGINEER DATE

5-21-12
PLANS APPROVAL DATE

REGISTERED PROFESSIONAL ENGINEER
JORGE I. ESTRADA
No. C51473
Exp. 06/30/12
CIVIL
STATE OF CALIFORNIA

The State of California or its officers or agents shall not be responsible for the accuracy or completeness of electronic copies of this plan sheet.

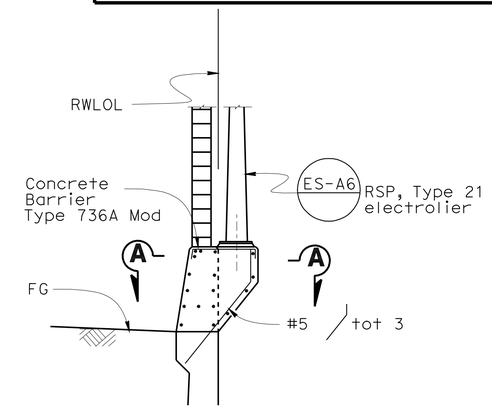

PEDESTAL ELEVATION

3/8" = 1'-0"

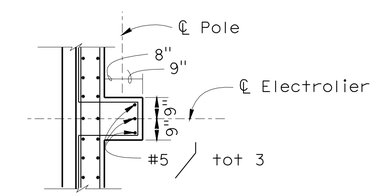

SECTION A-A

3/8" = 1'-0"

NOTES:

1. For pedestal details not shown, see B11-56
2. Electrolier locations (stations along ℄ Rte): 1664+60, 1666+40

RW-1662 SPREAD FOOTING DATA TABLE

LOL STATIONS	WALL DESIGN H, ft	Ret wall Ultimate bearing capacity, Kips
661+42.83-661+90.83	8'	5.5
661+90.83 - 662+38.83	10'	6.1
662+38.83 - 663+34.83	12'	6.6
663+34.83 - 664+30.83	12'	6.6
664+30.83 - 665+26.83	12'	6.6
665+26.83 - 665+88.12	12'	6.6
665+88.12 - 666+62.26	12'	6.6
666+62.26 - 667+22.09	12'	6.6
667+22.09 - 667+70.77	12'	6.6
667+70.77 - 668+16.42	12'	6.6

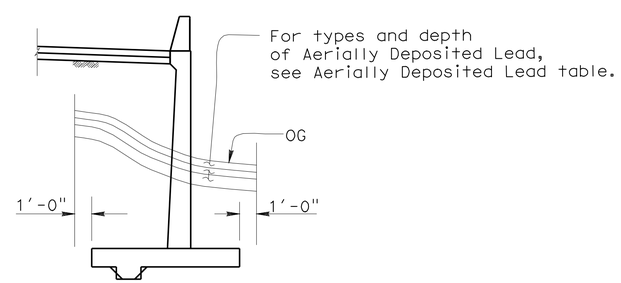

LIMITS OF STRUCTURE EXCAVATION, AERIALLY DEPOSITED LEAD(ADL)

No Scale

AERIALLY DEPOSITED LEAD			
ADL TYPE	DEPTH H, FT	STATION LIMIT	
		FROM	TO
Y-1	2.0	1659+30	1668+16.42
Y-2	0.50	1659+30	1664+70.00
Z-3	0.50	1659+30	1668+16.42

Note: Stations are centerline of Rte 5

	BY	CHECKED
DESIGN	RUPERD WILSON	JEFF DUFFIN
DETAILS	SURAJ DUTTA	RUPERD WILSON
QUANTITIES	RUPERD WILSON	JEFF DUFFIN

STATE OF CALIFORNIA
DEPARTMENT OF TRANSPORTATION

DIVISION OF ENGINEERING SERVICES
STRUCTURE DESIGN
DESIGN BRANCH 18

BRIDGE NO. RW1662
POST MILE 31.46

RETAINING WALL 1662
MISCELLANEOUS DETAILS

STRUCTURES DESIGN DETAIL SHEET (ENGLISH) (REV. 09-01-10)

ORIGINAL SCALE IN INCHES FOR REDUCED PLANS 0 1 2 3

UNIT: 3603
PROJECT NUMBER & PHASE: 0700021119-1
CONTRACT NO.: 07-1218w1

DISREGARD PRINTS BEARING EARLIER REVISION DATES

REVISION DATES: 01/26/09 04/19/12 5-14-12

SHEET 10 OF 17

FILE => rw1662-u-mis.dgn

USERNAME => s128843 DATE PLOTTED => 11-JUL-2012 TIME PLOTTED => 10:55

DIST	COUNTY	ROUTE	POST MILES TOTAL PROJECT	SHEET No.	TOTAL SHEETS
07	LA	5	29.4/31.6	1312	1931

REGISTERED CIVIL ENGINEER — DATE 01/31/12

5-21-12
PLANS APPROVAL DATE

The State of California or its officers or agents shall not be responsible for the accuracy or completeness of electronic copies of this plan sheet.

REGISTERED PROFESSIONAL ENGINEER — JORGE I. ESTRADA No. C51473 Exp. 06/30/12 CIVIL — STATE OF CALIFORNIA

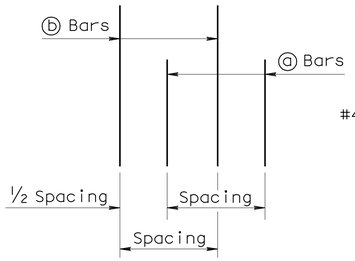

DETAIL B

No Scale

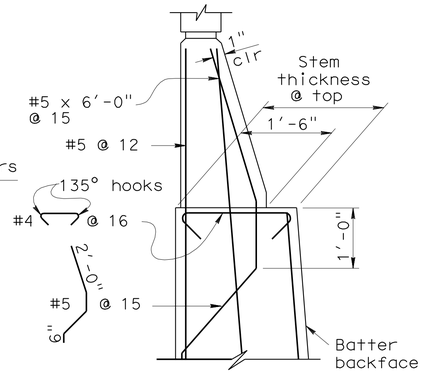

DETAIL A WITHOUT HAUNCH

No Scale

GENERAL NOTES

1. For soundwall and retaining wall architectural finish or texture, see details elsewhere in project plans.
2. For details not shown and drainage notes, see (B3-8)
3. Footing cover, 1'-6" minimum.
4. Limit of no splicing rebars = 3 times the bottom thickness of the stem.
5. Placement of reinforcements :
   - ⓑ & ⓒ bars are spliced together.
   - * ⓐ & ⓑ bars are bundled together.
   - ** Alternate ⓐ & ⓑ bars are shown in "Detail B".
   - Cont = Continuous.
6. For Soundwall & Barrier reinforcement, see "Soundwall Masonry Block on Barriers" sheets in Standard Plans.

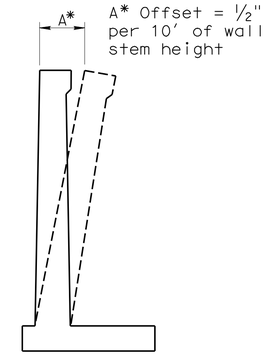

A* Offset = ½" per 10' of wall stem height

WALL OFFSET

No Scale

Values for offsetting forms to be determined by the Engineer.

TABLE 1: TABLE OF REINFORCING STEEL DIMENSIONS AND DATA

	Stem With Haunch													
Design H	6'	8'	10'	12'	14'	16'	18'	20'	22'	24'	26'	28'	30'	32'
W	7'-9"	8'-0"	8'-9"	9'-9"	10'-9"	12'-0"	13'-0"	14'-3"	15'-3"	16'-6"	18'-6"	19'-9"	21'-3"	22'-6"
C	2'-9"	2'-9"	3'-0"	3'-3"	3'-6"	4'-0"	4'-3"	4'-9"	5'-0"	5'-6"	6'-3"	6'-9"	7'-3"	7'-9"
B	5'-0"	5'-3"	5'-9"	6'-6"	7'-3"	8'-0"	8'-9"	9'-6"	10'-3"	11'-0"	12'-3"	13'-0"	14'-0"	14'-9"
F Spread footing	1'-3"	1'-3"	1'-3"	1'-3"	1'-3"	1'-6"	1'-6"	1'-9"	2'-0"	2'-3"	2'-9"	3'-0"	3'-3"	3'-9"
Batter	0	½:12	½:12	½:12	½:12	½:12	½:12	½:12	½:12	⅝:12	¾:12	⅞:12	1:12	1:12
Stem thickn. @ Haunch	1'-0"	1'-0"	1'-0"	1'-0"	1'-0"	1'-0"	1'-0"	1'-0"	1'-0"	1'-0"	1'-0"	1'-0"	1'-0"	1'-0"
ⓐ Bars				#6 @18**	#7 @18**	#8 @18**	#9 @18**	#10 @18**	#8 @ 9*	#8 @ 9*	#7 @ 6*	#10 @12**	#9 @ 9*	#11@12**
X				Cont	Cont	Cont	Cont	Cont	Cont	Cont	Cont	Cont	Cont	Cont
Y				8'-0"	6'-6"	7'-6"	8'-6"	9'-6"	9'-6"	11'-0"	11'-6"	13'-0"	14'-0"	15'-6"
ⓑ Bars	#5 @12	#5 @12	#5 @ 9	#6 @18**	#7 @18**	#8 @18**	#9 @18**	#10 @18**	#8 @ 9*	#8 @ 9*	#7 @ 6*	#10 @12**	#9 @ 9*	#11@12**
X	Cont	Cont	Cont	Cont	Cont	Cont	Cont	Cont	Cont	5'-6"	6'-6"	7'-0"	8'-0"	8'-6"
Y	Cont	Cont	Cont	Cont	10'-6"	13'-0"	15'-0"	17'-6"	19'-6"	21'-0"	18'-6"	19'-0"	25'-6"	23'-6"
ⓒ Bars					#6 @18	#6 @18	#6 @18	#6 @18	#6 @18	#6 @18	#6 @12	#7 @12	#7 @18	#7 @12
ⓓ Bars	#5 @12	#5 @12	#5 @12	#5 @ 9	#6 @ 9	#6 @ 9	#6 @ 6	#8 @ 9	#8 @ 9	#8 @ 9	#7 @ 6	#7 @ 6	#9 @ 9	#9 @ 9
Ultimate Bearing Capacity Req'd k/sf	4.6	5.5	6.1	6.6	7.3	8.1	9.0	9.9	11.3	12.2	12.5	13.4	14.1	15.4

TABLE 2: TABLE OF REINFORCING STEEL DIMENSIONS AND DATA

	Stem With Haunch						Stem Without Haunch						
Design H	8'	10'	12'	14'	16'	18'	20'	22'	24'	26'	28'	30'	32'
W	8'-0"	8'-6"	9'-3"	10'-3"	11'-3"	13'-0"	13'-9"	16'-0"	16'-6"	18'-6"	20'-0"	20'-6"	21'-9"
C	2'-9"	2'-9"	3'-0"	3'-6"	3'-9"	4'-3"	4'-6"	5'-3"	5'-6"	6'-3"	6'-9"	6'-9"	7'-6"
B	5'-3"	5'-9"	6'-3"	6'-9"	7'-6"	8'-9"	9'-3"	10'-9"	11'-0"	12'-3"	13'-3"	13'-9"	14'-3"
F Spread footing	1'-3"	1'-3"	1'-3"	1'-3"	1'-6"	1'-6"	1'-9"	2'-0"	2'-3"	2'-9"	3'-0"	3'-3"	3'-6"
Batter	0	0	0	0	0	0	0	0	0	¼:12	½:12	½:12	½:12
Stem thickn. @ Haunch	1'-0"	1'-0"	1'-0"	1'-0"	1'-3"	1'-3"							
Stem thickn. @ top							1'-6"	2'-0"	2'-0"	2'-0"	2'-0"	2'-0"	2'-0"
ⓐ Bars			#6 @12**	#5 @ 6*	#9 @18**	#9 @12**	#9 @12**	#9 @12**	#7 @ 6*	#7 @ 6*	#7 @ 6*	#9 @ 9*	#11@12**
X			Cont	Cont	Cont	Cont	Cont	Cont	Cont	Cont	Cont	Cont	Cont
Y			5'-6"	5'-6"	8'-6"	8'-6"	8'-6"	8'-6"	9'-6"	11'-0"	12'-6"	13'-6"	14'-6"
ⓑ Bars	#5 @ 9	#6 @ 9	#6 @12**	#5 @ 6*	#9 @18**	#9 @12**	#9 @12**	#9 @12**	#7 @ 6*	#7 @ 6*	#7 @ 6*	#9 @ 9*	#11@12**
X	Cont	Cont	Cont	Cont	Cont	Cont	Cont	Cont	5'-6"	6'-0"	7'-6"	7'-6"	8'-0"
Y	Cont	Cont	Cont	Cont	11'-6"	11'-6"	12'-0"	12'-0"	17'-6"	20'-0"	21'-6"	24'-0"	24'-0"
ⓒ Bars					#7 @18	#7 @12	#7 @12	#7 @12	#6 @ 12	#6 @ 12	#6 @12	#7 @18	#7 @12
ⓓ Bars	#5 @12	#5 @ 9	#5 @9	#6 @9	#6 @ 9	#9 @12	#9 @12	#7 @#7	6 @ 6	#7 @ 6	#7 @ 6	#9 @ 9	#9 @ 9
Ultimate Bearing Capacity Req'd k/sf	5.5	6.5	7.3	7.6	9.0	9.0	10.6	10.5	12.2	12.6	13.3	15.4	16.0

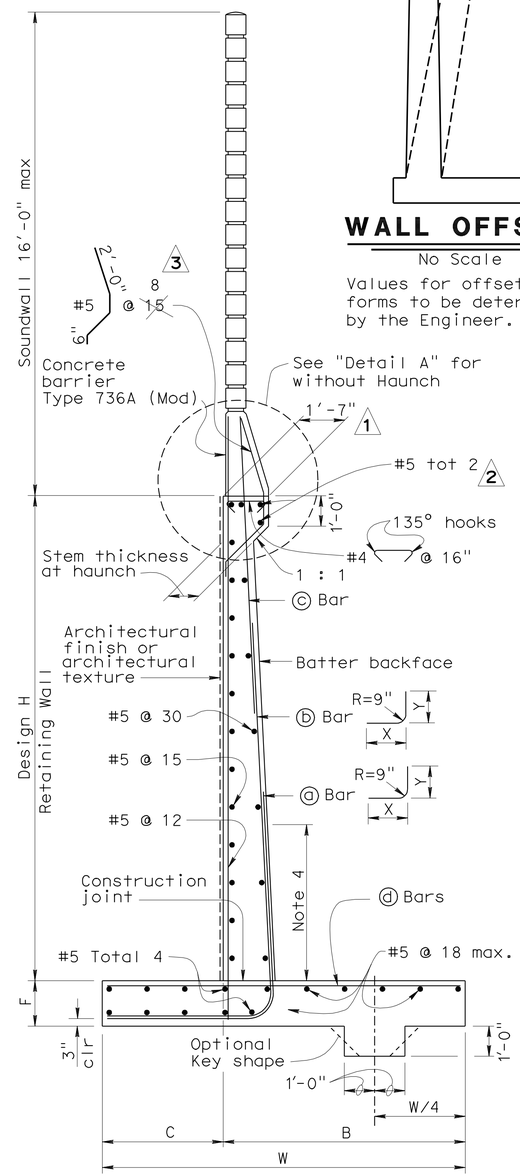

SPREAD FOOTING SECTION

No Scale

DESIGN DATA

DESIGN: Load Factor Design (LFD)

CONCRETE: Reinforced Concrete, f'c = 3600 psi
fy = 60,000 psi

LOADING CASE:
Level ground with 240 psf surcharge and 16' Soundwall

Seismic Load = 0.3 Dead Load
Wind Load = 30 psf
Dead Load of Soundwall = 1414 lb/ft
Dead Load of Barrier = 372 lb/ft

SEISMIC LOAD: SOIL
Kh = 0.3g
Kv = 0.0
Kae : Mononobe-Okabe Method

SOIL: $\emptyset$ = 34° γ = 120 pcf
Equivalent fluid pressure:
= 36 pcf for determination of toe pressure
= 27 pcf for determination of heel pressure

EXTERNAL STABILITY:
Group 1 : D + E + SC
Group 2 : D + E + SC + W
Group 3 : D + PYM

INTERNAL STABILITY (LFD):
Group A : βD + 1.7E + 1.7SC
Group B : βD + 1.7E + 1.3W
Group C (stem) : 1.0D + 1.0E + 1.0EQD + 1.0EQE
Group C (footing) : D + PYM

Where : β = 1.0 or 1.3 whichever controls design
D = Dead Load
E = Lateral Earth Pressure
SC = Surcharge
W = Wind load
EQD = Seismic Dead Load
EQE = Seismic Lateral Earth Pressure
PYM = Probable Yield Moment (1.3 x Nominal Yield Moment of Stem)

REVISED STANDARD DRAWING

FILE NO. xs14-220x

APPROVAL DATE July 2011

1 Revised dimension
2 Added rebar information
3 Revised rebar spacing

STATE OF CALIFORNIA
DEPARTMENT OF TRANSPORTATION

DIVISION OF ENGINEERING SERVICES

BRIDGE NO. RW1662
POST MILE 31.46

RETAINING WALL 1662
RETAINING WALL TYPE 1SWB

DS OSD 2147A (ENGLISH STANDARD DRAWING "XS" BORDER REV. (02-02-11)

ORIGINAL SCALE IN INCHES FOR REDUCED PLANS 0 1 2 3

UNIT: 3603
PROJECT NUMBER & PHASE: 0700021119-1
CONTRACT NO.: 07-1218W1

DISREGARD PRINTS BEARING EARLIER REVISION DATES

REVISION DATES

SHEET 11 OF 17

FILE => rw1662-v-rwtyp1swb.dgn

USERNAME => s124896 DATE PLOTTED => 21-MAY-2012 TIME PLOTTED => 14:44

DIST	COUNTY	ROUTE	POST MILES TOTAL PROJECT	SHEET No.	TOTAL SHEETS
07	LA	5	29.4/31.6	1313	1931

REGISTERED CIVIL ENGINEER — DATE 01/31/12

5-21-12
PLANS APPROVAL DATE

REGISTERED PROFESSIONAL ENGINEER — JORGE I. ESTRADA — No. C51473 — Exp. 06/30/12 — CIVIL — STATE OF CALIFORNIA

The State of California or its officers or agents shall not be responsible for the accuracy or completeness of electronic copies of this plan sheet.

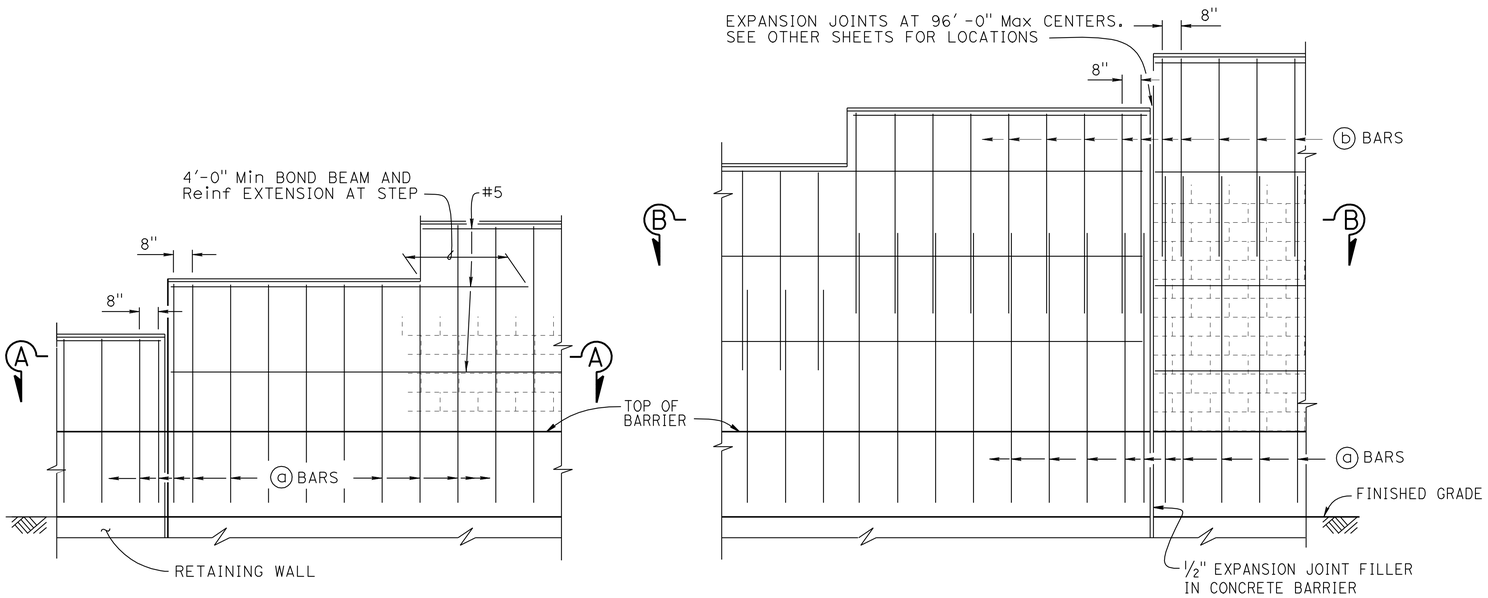

H=6'-4" THRU H=10'-4"

H=12'-4" THRU H=16'-4"

PART ELEVATION

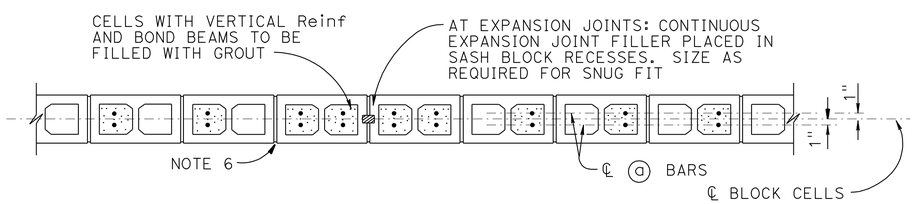

SECTION A-A

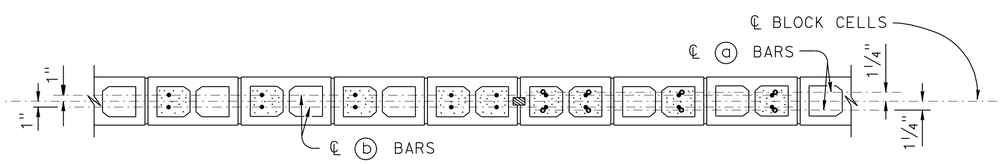

SECTION B-B

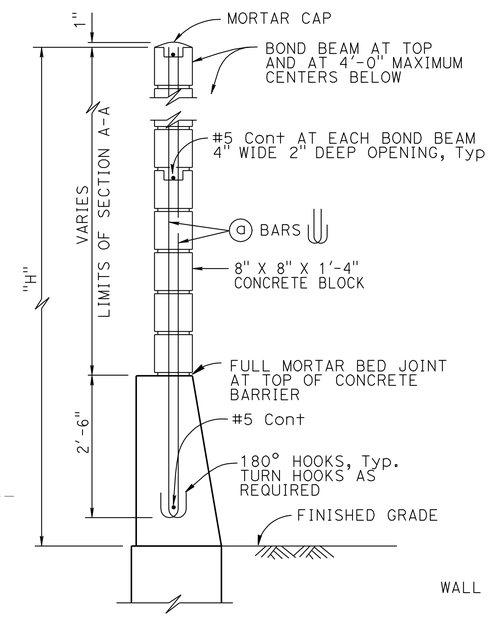

H=6'-4" THRU H=10'-4"

For details not shown, see H=12'-4" thru H=16'-4"

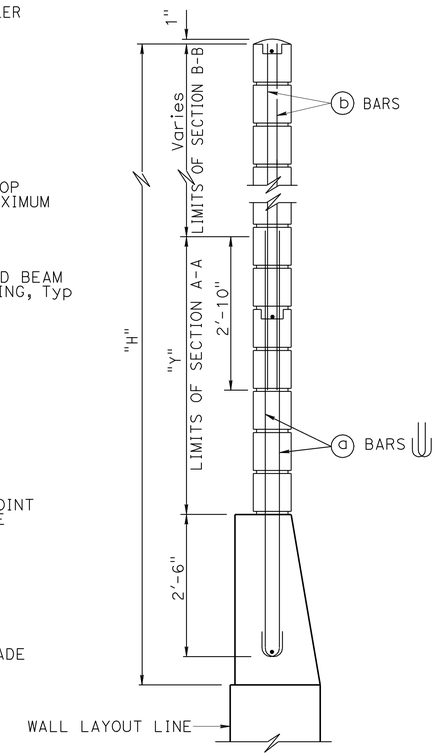

H=12'-4" THRU H=16'-4"

For details not shown, see H=6'-4" thru H=10'-4"

TYPICAL SECTION

SOUND WALL REINFORCEMENT TABLE

MAXIMUM "H"	ⓐ BARS @ 1'-4" Max	ⓑ BARS @ 1'-4" Max	"Y"	f'm (psi)	COMPRESSIVE STRENGTH OF CMU (psi)	MAXIMUM "H"
6'-4"	#4	———	———	1500	1900	6'-4"
8'-4"	#4	———	———	1500	1900	8'-4"
10'-4"	#4	———	———	1500	1900	10'-4"
12'-4"	#5	#4	5'-0"	1500	1900	12'-4"
14'-4"	#6	#4	7'-0"	1500	1900	14'-4"
16'-4"	#6	#4	9'-0"	2500	3700	16'-4"

NOTES:

1. For details not shown, see "SOUND WALL - MASONRY BLOCK WITH BARRIER ON RETAINING WALL - DETAILS NO. 2" sheet
2. Slope ground at traffic side of barrier to drain. Maximum slope ±10%
3. See STANDARD PLANS B15-9 for other details
4. For type of block and joint finish, see other sheets
5. When blocks are laid in stacked bond, ladder type, galvanized joint reinforcement shall be provided. A minimum of 2-9 gauge wire continuous at 4'-0" maximum to be used. Locate reinforcement in joints that are at the approximate midpoint between bond beams
6. Horizontal joints shall be tooled concave or may be weathered. Vertical joints shall be tooled concave or may be raked
7. For intermediate wall heights that are between the "H's" given, use the tabular information for the next higher "H"
8. Masonry strengths are listed in "SOUND WALL REINFORCEMENT TABLE"
9. Concrete to be used for the barrier shall contain not less than 590 pounds of cementitious material per cubic yard

NO SCALE

RETAINING WALL 1662

MASONRY BLOCK SOUND WALL WITH BARRIER ON RETAINING WALL

DETAILS NO. 1

STANDARD DRAWING

FILE NO. xs15-130-1

APPROVAL DATE July 2011

STATE OF CALIFORNIA DEPARTMENT OF TRANSPORTATION

DIVISION OF ENGINEERING SERVICES

BRIDGE NO. RW1662

POST MILE 31.46

DS OSD 2147A (ENGLISH STANDARD DRAWING "XS" BORDER REV. (02-02-11)

ORIGINAL SCALE IN INCHES FOR REDUCED PLANS 0 1 2 3

UNIT: 3603
PROJECT NUMBER & PHASE: 0700021119-1
CONTRACT NO.: 07-1218w1

DISREGARD PRINTS BEARING EARLIER REVISION DATES

REVISION DATES

SHEET 12 OF 17

FILE => rw1662-w-masonrydet1.dgn

USERNAME => s124496 DATE PLOTTED => 21-MAY-2012 TIME PLOTTED => 14:44

DIST	COUNTY	ROUTE	POST MILES TOTAL PROJECT	SHEET No.	TOTAL SHEETS
07	LA	5	29.4/31.6	1314	1931

JEstrada. 01/31/12
REGISTERED CIVIL ENGINEER DATE

5-21-12
PLANS APPROVAL DATE

REGISTERED PROFESSIONAL ENGINEER JORGE I. ESTRADA No. C51473 Exp. 06/30/12 CIVIL STATE OF CALIFORNIA

The State of California or its officers or agents shall not be responsible for the accuracy or completeness of electronic copies of this plan sheet.

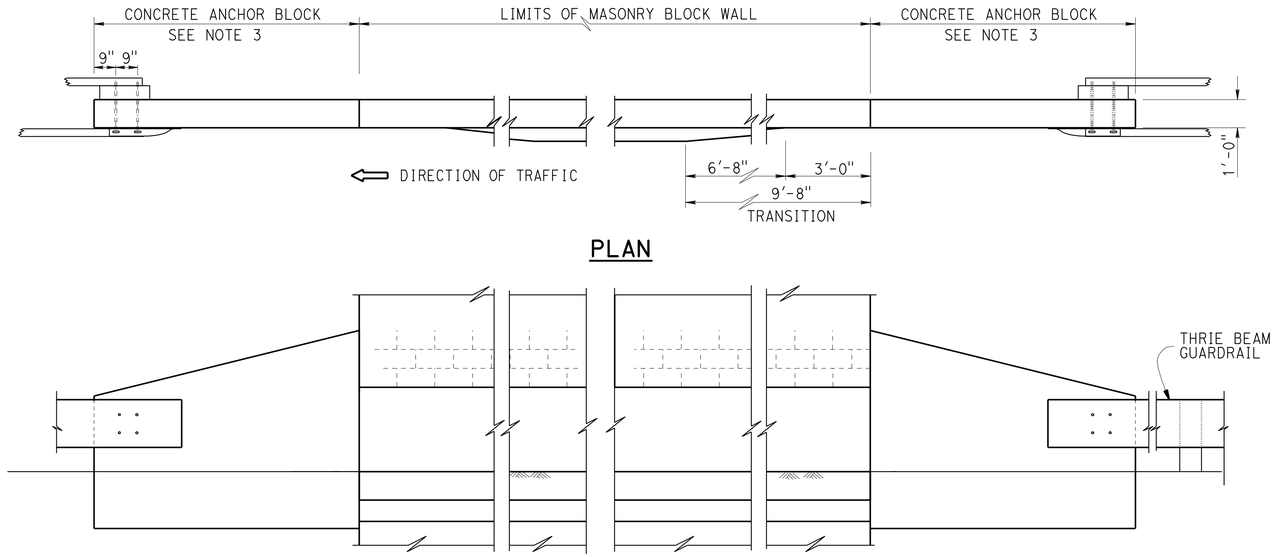

PLAN

ELEVATION

METAL BEAM GUARDRAIL ANCHORAGE

For details not shown, see STANDARD PLAN B11-56

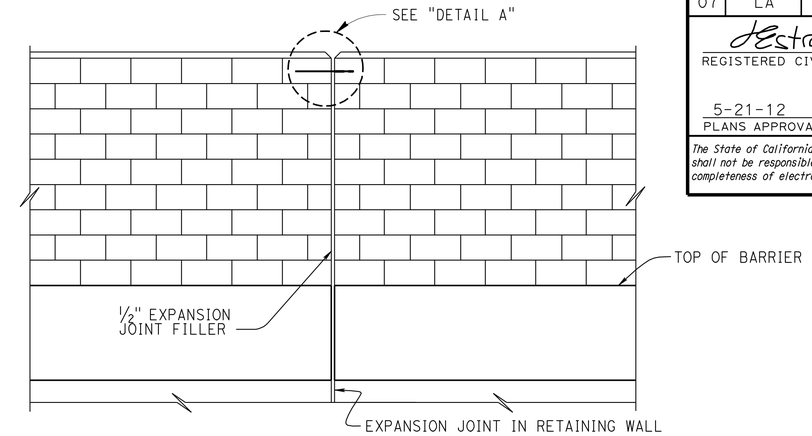

ALIGNMENT KEY DETAIL

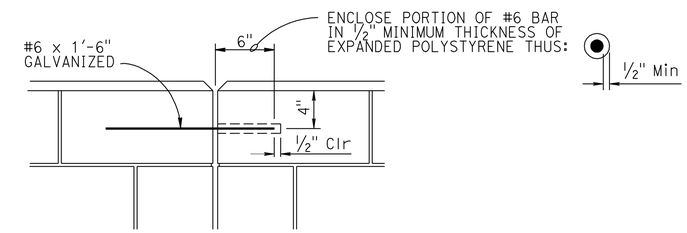

DETAIL A

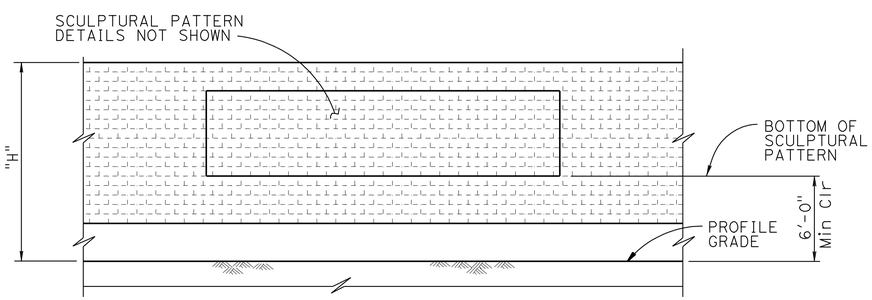

CLEARANCE DETAIL

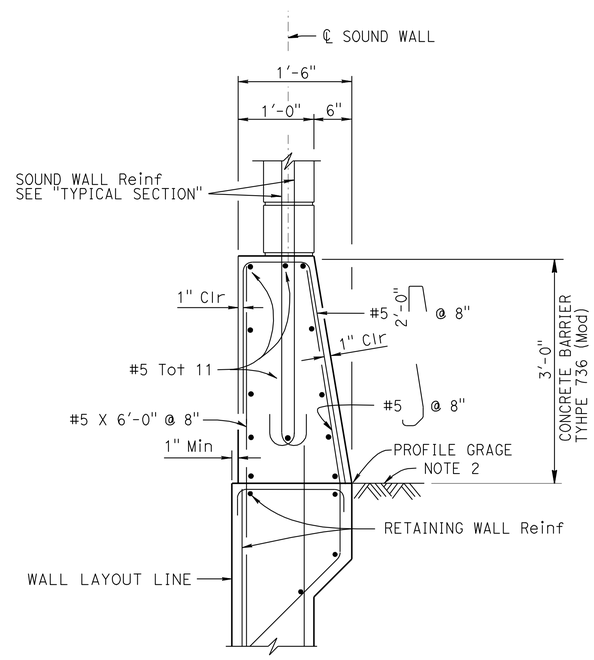

BARRIER SECTION

DESIGN NOTES

DESIGN
Uniform Building Code, 1997 Edition and the Bridge Design Specifications

DESIGN WIND LOAD
33 psf

DESIGN SEISMIC LOAD
0.57 Dead load

REINFORCED CONCRETE
f'c = 3600 psi
fy = 60 ksi

CONCRETE MASONRY

REGULAR STRENGTH	HIGH STRENGTH	
f'm = 1500 psi	f'm = 2000 psi	f'm = 2500 psi
fb = 495 psi	fb = 660 psi	fb = 830 psi
fs = 24,000 psi	fs = 24,000 psi	fs = 24,000 psi
n = 25.8	n = 19.3	n = 15.5

NOTES:

1. For details not shown, see RSP B15-6
2. Slope ground at traffic side of barrier to drain. Maximum slope ±10% See STANDARD PLAN B11-56, Note D
3. For Concrete Anchor Block and connection details, see "CONNNECTION DETAIL DD" on RSP A77J3

NO SCALE

RETAINING WALL 1662

MASONRY BLOCK SOUND WALL W/BARRIER ON RETAINING WALL

DETAILS NO. 2

STANDARD DRAWING
FILE NO. xs15-130-2
APPROVAL DATE July 2011

STATE OF CALIFORNIA
DEPARTMENT OF TRANSPORTATION

DIVISION OF ENGINEERING SERVICES

BRIDGE NO. RW1662
POST MILE 31.46

DS OSD 2147A (ENGLISH STANDARD DRAWING "XS" BORDER REV. (02-02-11)

ORIGINAL SCALE IN INCHES FOR REDUCED PLANS 0 1 2 3

UNIT: 3603
PROJECT NUMBER & PHASE: 0700021119-1
CONTRACT NO.: 07-1218w1

DISREGARD PRINTS BEARING EARLIER REVISION DATES

REVISION DATES

SHEET 13 OF 17

FILE => rw1662-w-masonrydet2.dgn

USERNAME => s124496 DATE PLOTTED => 21-MAY-2012 TIME PLOTTED => 14:45

DIST	COUNTY	ROUTE	POST MILES TOTAL PROJECT	SHEET No.	TOTAL SHEETS
07	LA	5	29.4/31.6	1315	1931

REGISTERED CIVIL ENGINEER 01/31/12 DATE

5-21-12
PLANS APPROVAL DATE

REGISTERED PROFESSIONAL ENGINEER JORGE I. ESTRADA No. C51473 Exp. 06/30/12 CIVIL STATE OF CALIFORNIA

The State of California or its officers or agents shall not be responsible for the accuracy or completeness of electronic copies of this plan sheet.

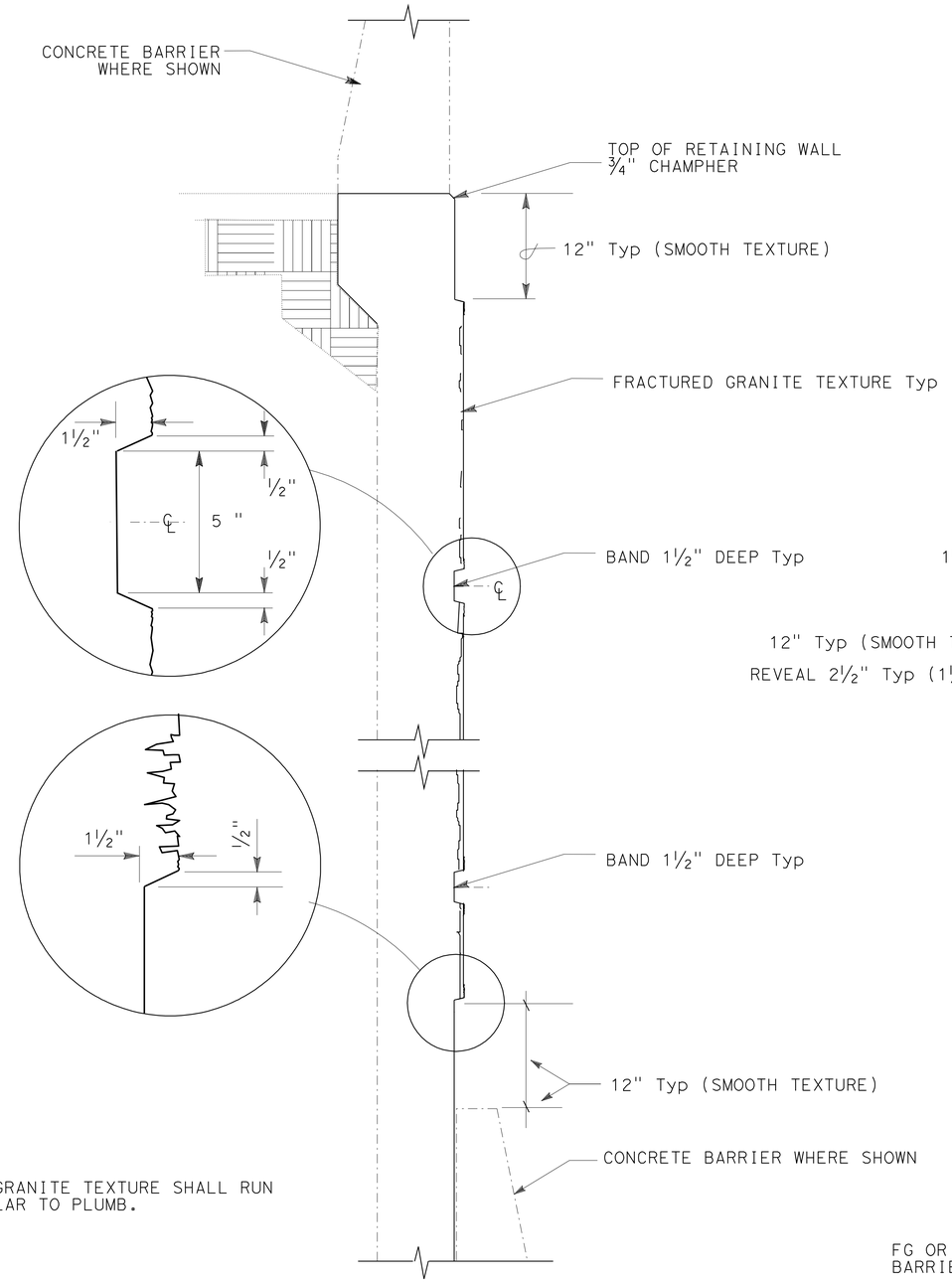

NOTE:

FRACTURED GRANITE TEXTURE SHALL RUN PERPENDICULAR TO PLUMB.

RETAINING WALL
TYPICAL SECTION

ARCHITECTURAL TREATMENT SECTION FOR RETAINING WALL

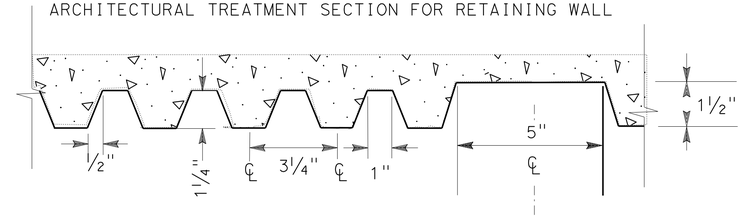

FRACTURED GRANITE TEXTURE & BAND

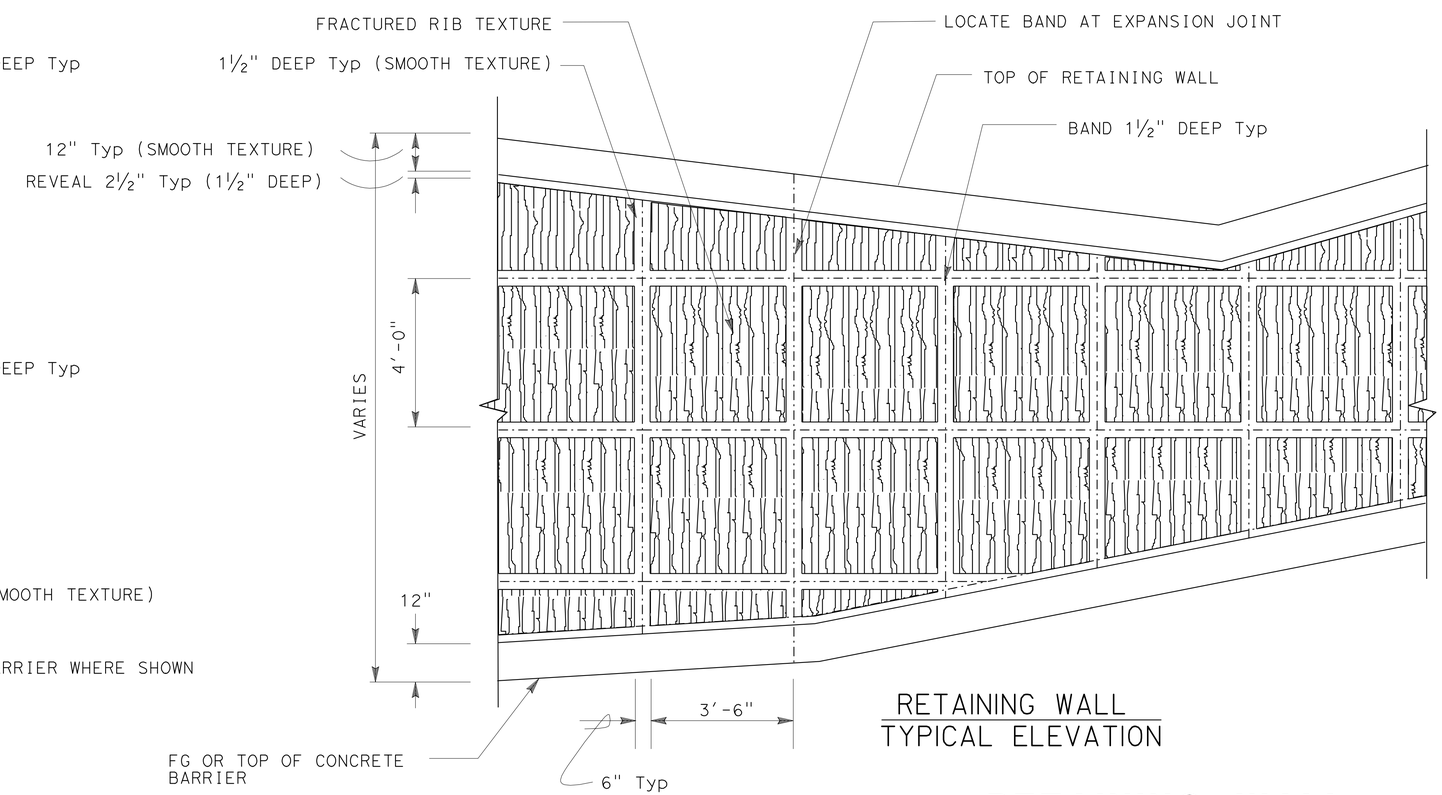

RETAINING WALL
TYPICAL ELEVATION

APPROVED FOR SOUNDWALL AESTHETIC FEATURES ONLY

RETAINING WALL ARCHITECTURAL TREATMENT

NO SCALE

DESIGN	BY RUPERD WILSON	CHECKED JEFF DUFFIN	
DETAILS	BY SURAJ DUTTA	CHECKED RUPERD WILSON	
QUANTITIES	BY RUPERD WILSON	CHECKED JEFF DUFFIN	

STATE OF CALIFORNIA
DEPARTMENT OF TRANSPORTATION

DIVISION OF ENGINEERING SERVICES
STRUCTURE DESIGN
DESIGN BRANCH 18

BRIDGE NO. RW1662
POST MILE 31.46

RETAINING WALL 1662
ARCHITECTURAL TREATMENT

STRUCTURES DESIGN DETAIL SHEET (ENGLISH) (REV. 09-01-10)

ORIGINAL SCALE IN INCHES FOR REDUCED PLANS 0 1 2 3

UNIT: 3603
PROJECT NUMBER & PHASE: 0700021119-1
CONTRACT NO.: 07-1218w1

DISREGARD PRINTS BEARING EARLIER REVISION DATES

REVISION DATES 10/26/11 11/15/12 08/15/08

SHEET 14 OF 17

FILE => rw1662-x-aarchtreatment.dgn

USERNAME => s124496 DATE PLOTTED => 21-MAY-2012 TIME PLOTTED => 14:45

DIST	COUNTY	ROUTE	POST MILES TOTAL PROJECT	SHEET No.	TOTAL SHEETS
07	LA	5	29.4/31.6	1316	1931

JEstrada. 01/31/12
REGISTERED CIVIL ENGINEER DATE

5-21-12
PLANS APPROVAL DATE

REGISTERED PROFESSIONAL ENGINEER
JORGE I. ESTRADA
No. C51473
Exp. 06/30/12
CIVIL
STATE OF CALIFORNIA

The State of California or its officers or agents shall not be responsible for the accuracy or completeness of electronic copies of this plan sheet.

LEGEND

	SYMBOL	NOMINAL SIZE	TEXTURE
(A)		8" × 8" × 16"	4-SCORE SPLIT FACE REVERSE SIDE PRECISION BLOCK
(B)		8" × 8" × 16"	PRECISION FACE REVERSE SIDE 4-SCORE SPLIT FACE

NOTES:
1. BOND (TYPE 1) STAKED BOND.
2. MORTAR COLOR TO MATCH BLOCK.
3. TOOLED JOINTS.
4. BLOCKS ON BRIDGE SHALL BE PRECISION BLOCK BOTH SIDES (MEDIUM WEIGHT).
5. PILASTER EFFECT (PRECISION SIDE TO FREEWAY) IS NOT TO BE USED ON END ADJACENT TO BRIDGE.
6. PLACE ELEVATION CHANGE AT EXPANSION JOINTS WHERE POSSIBLE

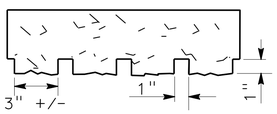

4 SCORE SPLIT FACE

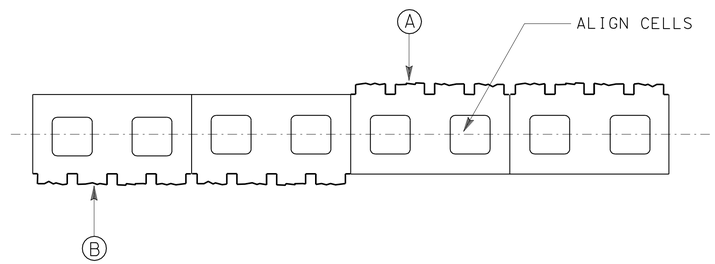

BLOCK ALIGNMENT

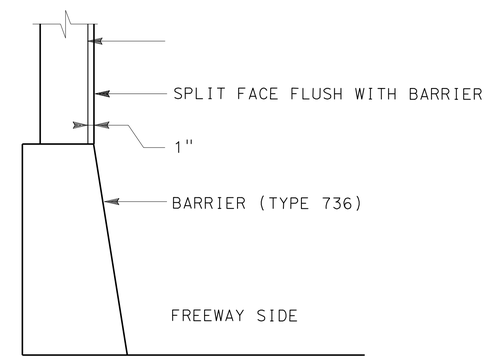

BARRIER SECTION

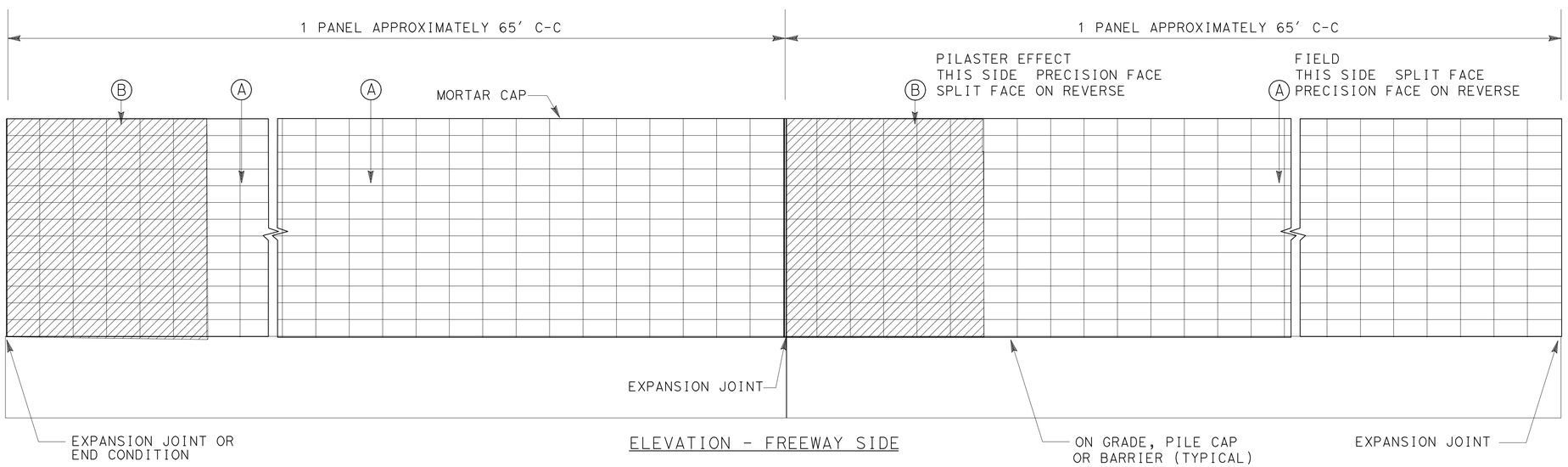

ELEVATION - FREEWAY SIDE

WALL PATTERN

DESIGN	BY RUPERD WILSON	CHECKED JEFF DUFFIN	
DETAILS	BY SURAJ DUTTA	CHECKED RUPERD WILSON	
QUANTITIES	BY RUPERD WILSON	CHECKED JEFF DUFFIN	

STATE OF CALIFORNIA
DEPARTMENT OF TRANSPORTATION

DIVISION OF ENGINEERING SERVICES
STRUCTURE DESIGN
DESIGN BRANCH 18

BRIDGE NO. RW1662
POST MILE 31.46

RETAINING WALL 1662
AESTHETIC SOUNDWALL DETAILS

STRUCTURES DESIGN DETAIL SHEET (ENGLISH) (REV. 09-01-10)

ORIGINAL SCALE IN INCHES FOR REDUCED PLANS 0 1 2 3

UNIT: 3603
PROJECT NUMBER & PHASE: 0700021119-1
CONTRACT NO.: 07-1218w1

DISREGARD PRINTS BEARING EARLIER REVISION DATES
REVISION DATES 01/26/09 10/06/201 03/17/07
SHEET 15 OF 17

FILE => rw1662-x-aesthetic.dgn

USERNAME => s124496 DATE PLOTTED => 25-MAY-2012 TIME PLOTTED => 11:20

DIST	COUNTY	ROUTE	POST MILE TOTAL PROJECT	SHEET No	TOTAL SHEETS
07	LA	5	29.4/31.6	1317	1931

R Shiva Karimi 2-6-12
REGISTERED GEOTECHNICAL ENGINEER

5-21-12
PLANS APPROVAL DATE

REGISTERED PROFESSIONAL ENGINEER Shiva Karimi No. GE2651 Exp. 6-30-12 GEOTECHNICAL STATE OF CALIFORNIA

The State of California or its officers or agents shall not be responsible for the accuracy or completeness of electronic copies of this plan sheet.

BENCH MARK

BM PRHV611 Elev 694.251 ft
Fd Geodetic Control Mark ±8.9 ft east of the east curb of NBND LA-5; ±68.9 ft south of Call Box #5-314; between NBND Buena Vista St. Off-ramp and On-ramp; 102.567 ft Rt Sta 1657+19.04 C/L Rte 5 (Prop).
N 1895580.234
E 6459215.635

NAD83, NAVD88

LEGEND:

- (M) Moisture Content
- (PA) Particle Size Analysis
- (PI) Plasticity, Index, Liquid Limit
- (CR) Corrosivity Testing
- (CP) Compaction

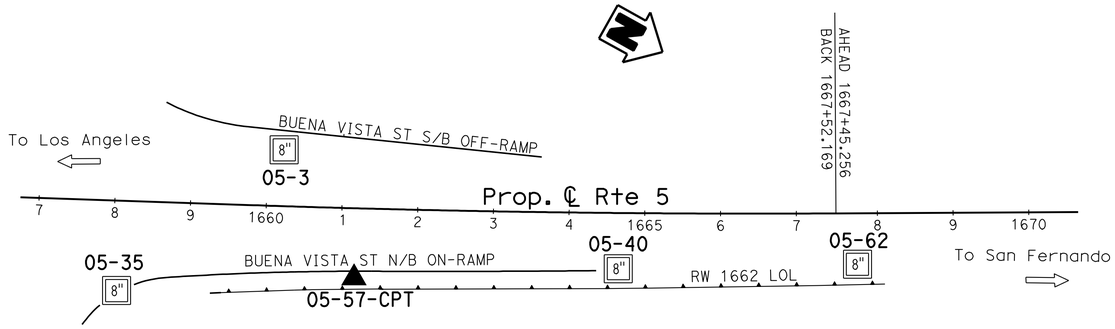

PLAN

1" = 100'

Note: No ground water encountered during field investigation.

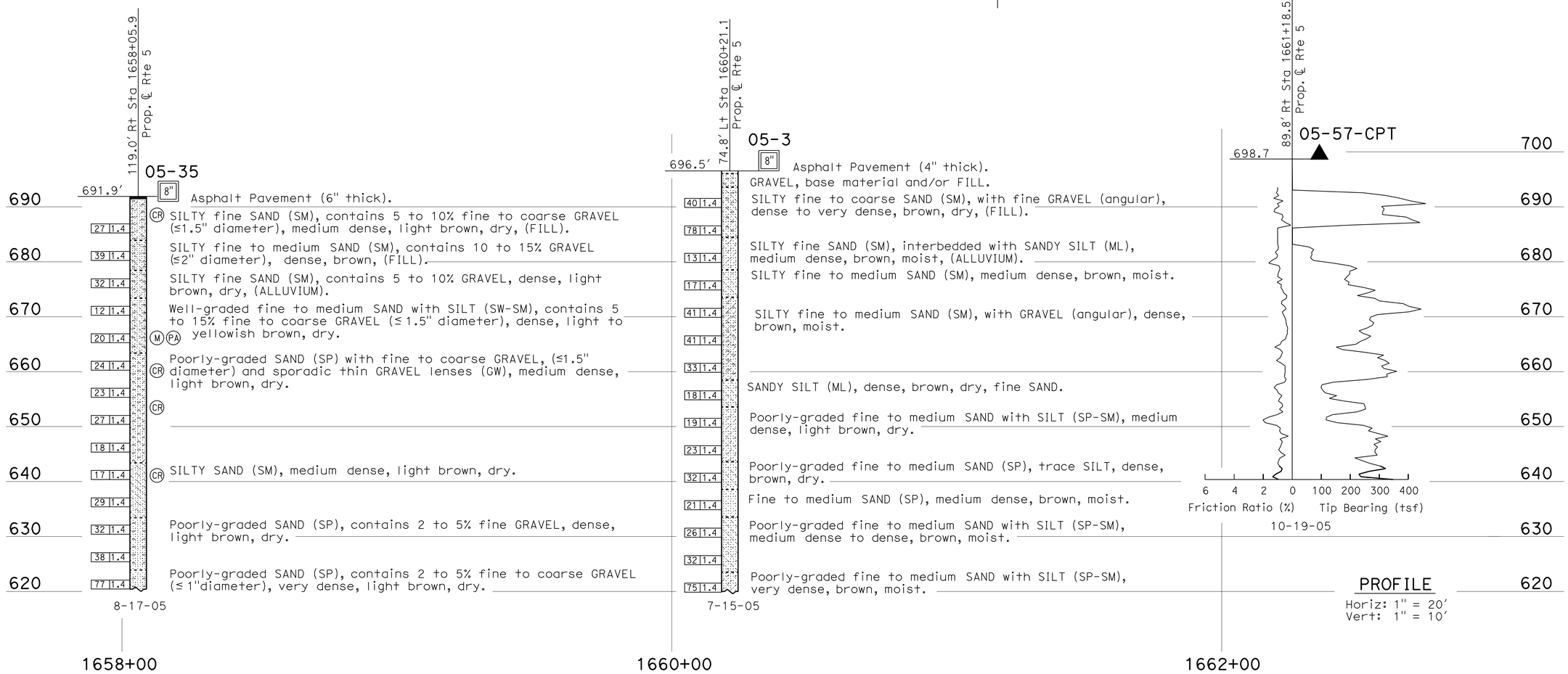

PROFILE

Horiz: 1" = 20'
Vert: 1" = 10'

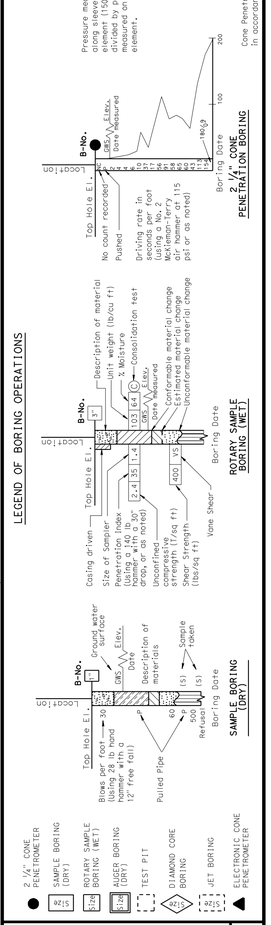

CONSISTENCY CLASSIFICATION FOR SOILS
According to the Standard Penetration Test

SPT N-Value (Blows/ foot)	Granular	SPT N-Value (Blows/ foot)	Cohesive
0-4	Very Loose	<2	Very Soft
5-10	Loose	2-4	Soft
11-30	Medium Dense	5-8	Medium stiff
31-50	Dense	9-15	Stiff
>50	Very Dense	16-30	Very Stiff
		31-60	Hard
		>60	Very Hard

NOTE: Classification of earth material as shown on this sheet is based upon field inspection and is not to be construed to imply mechanical analysis.

ENGINEERING SERVICES	GEOTECHNICAL SERVICES
DRAWN BY	I.G-Remmen
CHECKED BY	A. Mehrazar

FIELD INVESTIGATION BY:
E. Schramm, P. McDonald, J. Pyska

STATE OF CALIFORNIA
DEPARTMENT OF TRANSPORTATION

DIVISION OF ENGINEERING SERVICES
STRUCTURE DESIGN
DESIGN BRANCH 18

BRIDGE NO.
POST MILE 31.43/31.60

RETAINING WALL NO. 1662
LOG OF TEST BORINGS 1 OF 2

OGS LOG OF TEST BORINGS SHEET (ENGLISH) (REV. 5/25/07)

ORIGINAL SCALE IN INCHES FOR REDUCED PLANS 0 1 2 3

UNIT: 3643
PROJECT NUMBER & PHASE: 07000211191
CONTRACT NO.: 07-1218W1

DISREGARD PRINTS BEARING EARLIER REVISION DATES
REVISION DATES 01-25-12

SHEET 16 OF 17

FILE => rw-1662-z-log1of2.dgn

USERNAME => s1244396 DATE PLOTTED => 21-MAY-2012 TIME PLOTTED => 14:45

DIST	COUNTY	ROUTE	POST MILE TOTAL PROJECT	SHEET No	TOTAL SHEETS
07	LA	5	29.4/31.6	1318	1931

REGISTERED GEOTECHNICAL ENGINEER Shiva Karimi 2-6-12

5-21-12
PLANS APPROVAL DATE

REGISTERED PROFESSIONAL ENGINEER Shiva Karimi No. GE2651 Exp. 6-30-12 GEOTECHNICAL STATE OF CALIFORNIA

The State of California or its officers or agents shall not be responsible for the accuracy or completeness of electronic copies of this plan sheet.

LEGEND:

- (M) Moisture Content
- (PA) Particle Size Analysis
- (PI) Plasticity, Index, Liquid Limit
- (CR) Corrosivity Testing
- (CP) Compaction

FOR PLAN VIEW, SEE
"LOG OF TEST BORINGS" 1 OF 2

Note: No ground water encountered during field investigation.

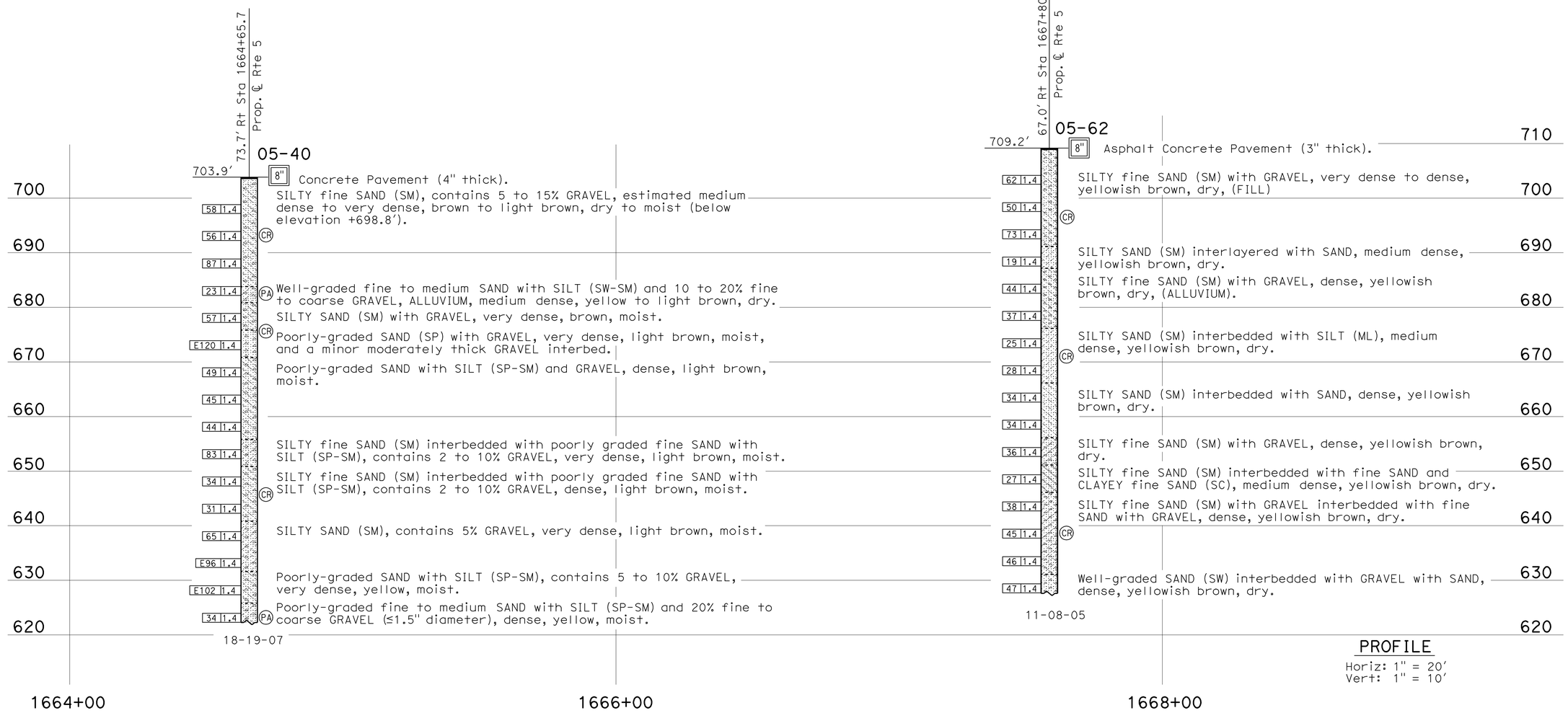

PROFILE
Horiz: 1" = 20'
Vert: 1" = 10'

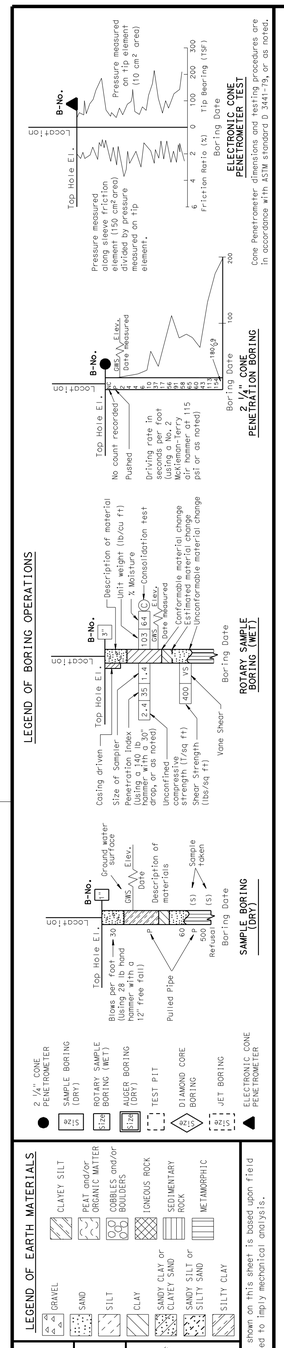

CONSISTENCY CLASSIFICATION FOR SOILS
According to the Standard Penetration Test

SPT N-Value (Blows/ Foot)	Granular	SPT N-Value (Blows/ Foot)	Cohesive
0-4	Very Loose	<2	Very Soft
5-10	Loose	2-4	Soft
11-30	Medium Dense	5-8	Medium stiff
31-50	Dense	9-15	Stiff
>50	Very Dense	16-30	Very Stiff
		31-60	Hard
		>60	Very Hard

NOTE: Classification of earth material as shown on this sheet is based upon field inspection and is not to be construed to imply mechanical analysis.

ENGINEERING SERVICES	GEOTECHNICAL SERVICES
DRAWN BY	I.G-Remmen
CHECKED BY	A. Mehrazar

FIELD INVESTIGATION BY: M. Abouzalan, K. Lai

STATE OF CALIFORNIA DEPARTMENT OF TRANSPORTATION

DIVISION OF ENGINEERING SERVICES STRUCTURE DESIGN DESIGN BRANCH 18

BRIDGE NO.
POST MILE 31.43/31.60

RETAINING WALL NO. 1662
LOG OF TEST BORINGS 2 OF 2

OGS LOG OF TEST BORINGS SHEET (ENGLISH) (REV. 5/25/07)

ORIGINAL SCALE IN INCHES FOR REDUCED PLANS 0 1 2 3

UNIT: 3643
PROJECT NUMBER & PHASE: 07000211191
CONTRACT NO.: 07-1218W1

DISREGARD PRINTS BEARING EARLIER REVISION DATES

REVISION DATES 01-25-12

SHEET 17 OF 17

FILE => rw-1662-z-log2of2.dgn

USERNAME => s124196 DATE PLOTTED => 21-MAY-2012 TIME PLOTTED => 14:45

DIST	COUNTY	ROUTE	POST MILES TOTAL PROJECT	SHEET No.	TOTAL SHEETS
07	LA	5	29.4/31.6	1319	1931

J.Estrada. 1/31/12
REGISTERED CIVIL ENGINEER DATE

5-21-12
PLANS APPROVAL DATE

REGISTERED PROFESSIONAL ENGINEER
JORGE I. ESTRADA
No. C51473
Exp. 06-30-12
CIVIL
STATE OF CALIFORNIA

The State of California or its officers or agents shall not be responsible for the accuracy or completeness of electronic copies of this plan sheet.

INDEX TO PLANS

1 GENERAL PLAN
2 FOUNDATION PLAN NO. 1
3 FOUNDATION PLAN NO. 2
4 FOUNDATION PLAN NO. 3
5 STRUCTURE PLAN NO. 1
6 STRUCTURE PLAN NO. 2
7 STRUCTURE PLAN NO. 3
8 STRUCTURE PLAN NO. 4
9 STRUCTURE PLAN NO. 5
10 ARCHITECTURAL TREATMENT
11 SIGN DETAILS
12 LOG OF TEST BORINGS 1 OF 3
13 LOG OF TEST BORINGS 2 OF 3
14 LOG OF TEST BORINGS 3 OF 3

STANDARD PLANS DATED MAY 2006

SHEET NO.	TITLE
A10A- A10B	ACRONYNMS AND ABBREVIATIONS
A10C -A10D	SYMBOLS
A62B	LIMITS OF PAYMENT FOR EXCAVATION AND BACKFILL - BRIDGE SURCHARGE AND WALL
B0-3	BRIDGE DETAILS
B3-1	RETAINING WALL TYPE 1 H=4′ THROUGH 30′
B3-8	RETAINING WALL DETAILS NO. 1
B3-9	RETAINING WALL DETAILS NO. 2
B11-56	CONCRETE BARRIER TYPE 736
RSP ES-6A	ELECTRICAL SYSTEM (Lighting Satndard Types 15 and 21)

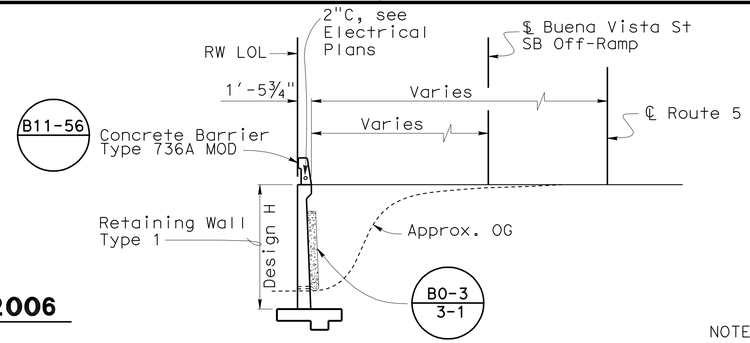

TYPICAL SECTION

B3-1

⅛" = 1′

QUANTITIES

STRUCTURE EXCAVATION (RETAINING WALL)	2,103 CY
STRUCTURE EXCAVATION (TYPE Y-1) (AERIALLY DEPOSITED LEAD)	673 CY
STRUCTURE EXCAVATION (TYPE Y-2) (AERIALLY DEPOSITED LEAD)	168 CY
STRUCTURE BACKFILL (RETAINING WALL)	3,057 CY
PERVIOUS BACKFILL MATERIAL	401 CY
STRUCTURAL CONCRETE, RETAINING WALL	1,480 CY
ARCHITECTURAL TREATMENT	13,240 SQFT
BAR REINFORCING STEEL (RETAINING WALL)	165,286 LB
CONCRETE BARRIER (TYPE 736A MODIFIED)	1,206 LF

NOTES:

1. For spread footing data table, see "STRUCTURE PLAN NO. 5" sheet.
2. For Curve Data, see "STRUCTURE PLAN" sheets.
3. For limits of excavation for Aerially Deposited Lead (ADL), see "STRUCTURE PLAN NO. 5" sheet.
4. Relocation of existing utilities prior to this Contract by Others.
5. For electroilier locations and pedestal details, see "Structure Plan No. 5" sheet

STANDARD PLAN SHEET NO.

DETAIL NO.

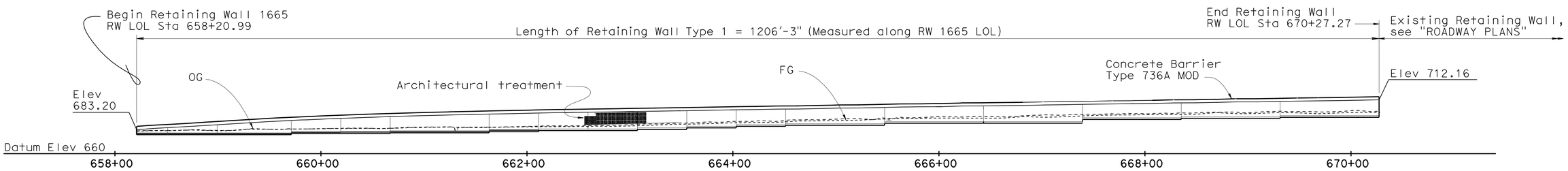

DEVELOPED MIRROR ELEVATION

1" = 50′

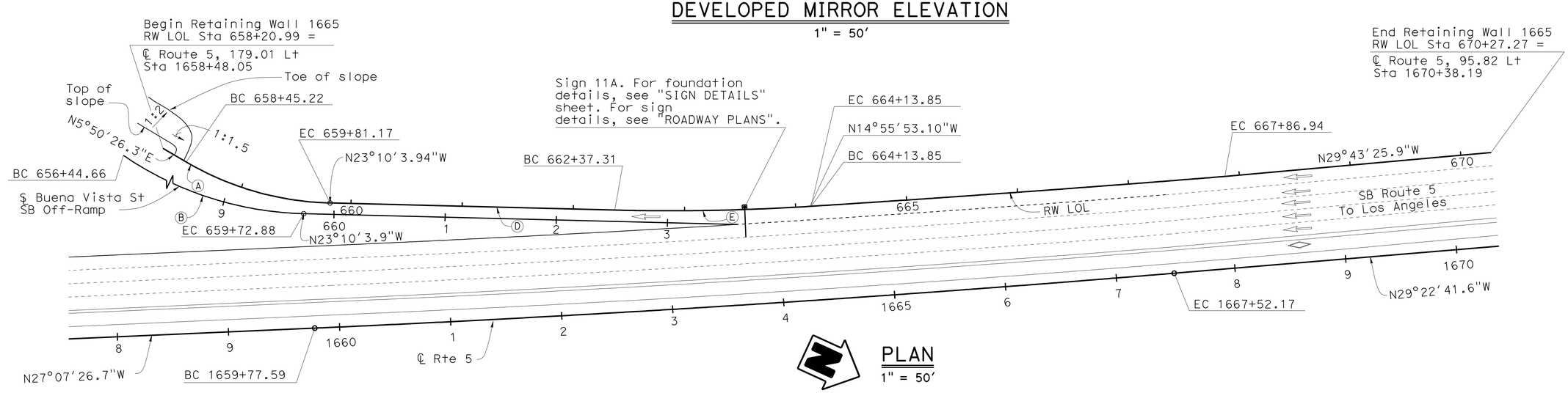

PLAN

1" = 50′

MICHAEL POPE DESIGN ENGINEER	DESIGN	BY David P. Murray	CHECKED JD/ Jorge Estrada	LOAD FACTOR DESIGN	LIVE LOADING: HL93 W/"LOW-BOY"; PERMIT DESIGN VEHICLE		
	DETAILS	BY DE/ Minh Tran	CHECKED David P. Murray	LAYOUT	BY Minh Tran	CHECKED Jorge Estrada	
	QUANTITIES	BY David P. Murray	CHECKED JD/ Sannow Mam	SPECIFICATIONS	BY James Choi	PLANS AND SPECS COMPARED James Choi	

STATE OF CALIFORNIA
DEPARTMENT OF TRANSPORTATION

DIVISION OF ENGINEERING SERVICES
STRUCTURE DESIGN
DESIGN BRANCH 18

BRIDGE NO. RW1665
POST MILE 31.44

RETAINING WALL 1665
GENERAL PLAN

ALL DIMENSIONS ARE IN FEET UNLESS OTHERWISE SHOWN

ORIGINAL SCALE IN INCHES FOR REDUCED PLANS 0 1 2 3

UNIT: 3603
PROJECT NUMBER & PHASE: 0700021119-1 CONTRACT NO.: 07-1218w1

DISREGARD PRINTS BEARING EARLIER REVISION DATES

REVISION DATES 11/10/11 02/09/12 04/30/12

SHEET 1 OF 14

USERNAME => s124496 DATE PLOTTED => 21-MAY-2012 TIME PLOTTED => 14:45

STRUCTURES DESIGN GENERAL PLAN SHEET (ENGLISH) (REV.09-01-10)

FILE => e-rw1665-a-gp.dgn

DIST	COUNTY	ROUTE	POST MILES TOTAL PROJECT	SHEET No.	TOTAL SHEETS
07	LA	5	29.4/31.6	1320	1931

REGISTERED CIVIL ENGINEER — DATE 1/31/12

5-21-12
PLANS APPROVAL DATE

REGISTERED PROFESSIONAL ENGINEER — JORGE I. ESTRADA — No. C51473 — Exp. 06-30-12 — CIVIL — STATE OF CALIFORNIA

The State of California or its officers or agents shall not be responsible for the accuracy or completeness of electronic copies of this plan sheet.

CURVE DATA

No.	R	Δ	T	L
Ⓐ	268.51	29°00′31"	69.46	135.94
Ⓑ	300.00	62°41′04"	182.71	328.22
Ⓒ	19688.30	2°15′15"	387.34	774.58

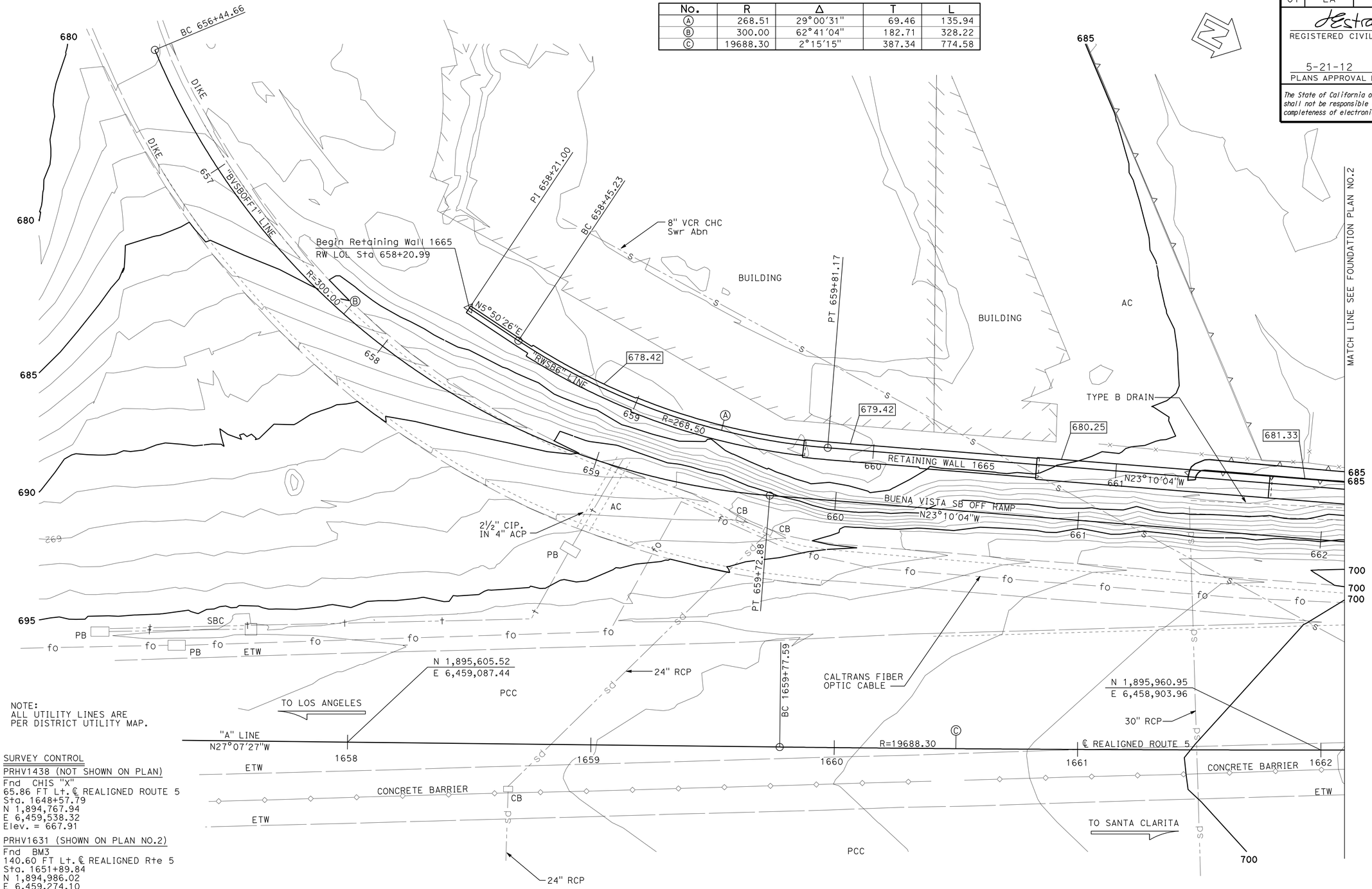

LEGEND

xxx.xx — Indicates Bottom of Footing elevation

NOTE:
ALL UTILITY LINES ARE
PER DISTRICT UTILITY MAP.

SURVEY CONTROL

PRHV1438 (NOT SHOWN ON PLAN)
Fnd CHIS "X"
65.86 FT Lt. ℄ REALIGNED ROUTE 5
Sta. 1648+57.79
N 1,894,767.94
E 6,459,538.32
Elev. = 667.91

PRHV1631 (SHOWN ON PLAN NO.2)
Fnd BM3
140.60 FT Lt. ℄ REALIGNED Rte 5
Sta. 1651+89.84
N 1,894,986.02
E 6,459,274.10
Elev. = 672.30

PRELIMINARY INVESTIGATION SECTION

SCALE	VERT.DATUM NAVD88	PHOTOGRAMMETRY AS OF: X			
1"=20′	HORZ.DATUM NAD83	SURVEYED	BY DISTRICT	CHECKED	BY J.PALLARES 10/2011
ALIGNMENT TIES Dist. Traverse Sheet		DRAFTED	BY T.ZOLNIKOV 10/2011	CHECKED	BY J.PALLARES 10/2011

DESIGN	BY David P. Murray	CHECKED JD/ Jorge Estrada
DETAILS	BY DE/ Minh Tran	CHECKED David P. Murray
QUANTITIES	BY David P. Murray	CHECKED JD/ Sannow Mam

STATE OF CALIFORNIA
DEPARTMENT OF TRANSPORTATION

DIVISION OF ENGINEERING SERVICES
STRUCTURE DESIGN
DESIGN BRANCH 18

BRIDGE NO. RW1665
POST MILE 31.44

RETAINING WALL 1665
FOUNDATION PLAN NO.1

STRUCTURES FOUNDATION PLAN SHEET (ENGLISH) (REV. 09-01-10)

ORIGINAL SCALE IN INCHES FOR REDUCED PLANS 0 1 2 3

UNIT: 3603
PROJECT NUMBER & PHASE: 0700021119-1
CONTRACT NO.: 07-1218w1

DISREGARD PRINTS BEARING EARLIER REVISION DATES

REVISION DATES: 11/15/11 1/30/12

SHEET 2 OF 14

FILE => e-rw1665-b-fp101.dgn

DIST	COUNTY	ROUTE	POST MILES TOTAL PROJECT	SHEET No.	TOTAL SHEETS
07	LA	5	29.4/31.6	1321	1931

JEstrada. 1/31/12
REGISTERED CIVIL ENGINEER DATE

5-21-12
PLANS APPROVAL DATE

REGISTERED PROFESSIONAL ENGINEER
JORGE I. ESTRADA
No. C51473
Exp. 06-30-12
CIVIL
STATE OF CALIFORNIA

The State of California or its officers or agents shall not be responsible for the accuracy or completeness of electronic copies of this plan sheet.

CURVE DATA

No.	R	Δ	T	L
D	1998.50	5°03'42"	88.33	176.55
E	21507.61	0°59'38"	186.55	373.08

NOTE:
ALL UTILITY LINES ARE
PER DISTRICT UTILITY MAP.

LEGEND

xxx.xx Indicates Bottom of Footing elevation

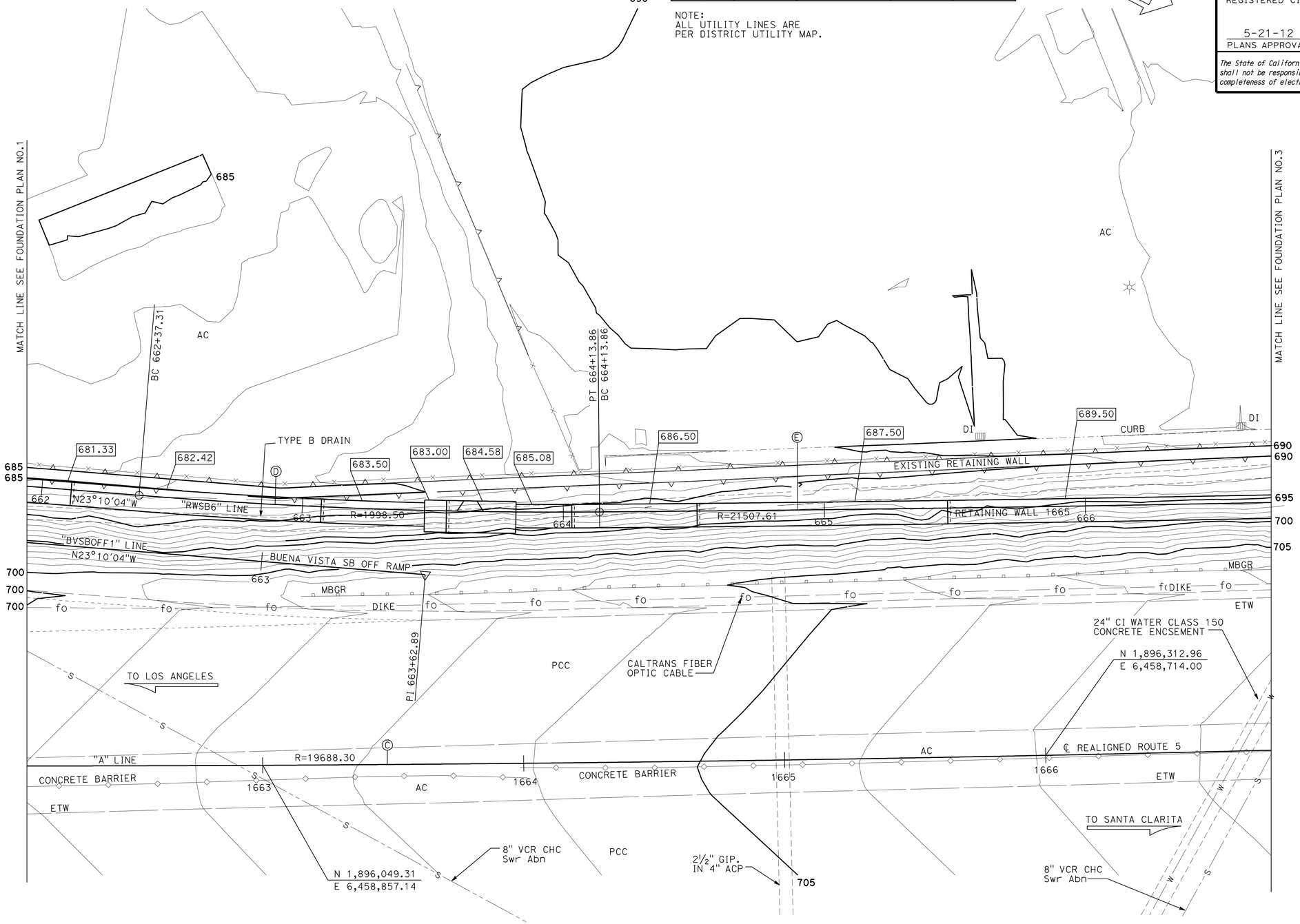

PRELIMINARY INVESTIGATION SECTION							
SCALE 1"=20'	VERT.DATUM NAVD88	PHOTOGRAMMETRY AS OF: X					
	HORZ.DATUM NAD83	SURVEYED	BY DISTRICT	CHECKED	BY J.PALLARES 10/2011		
ALIGNMENT TIES Dist. Traverse Sheet		DRAFTED	BY T.ZOLNIKOV 10/2011	CHECKED	BY J.PALLARES 10/2011		

	BY	CHECKED
DESIGN	David P. Murray	JD/ Jorge Estrada
DETAILS	DE/ Minh Tran	David P. Murray
QUANTITIES	David P. Murray	JD/ Sannow Mam

STATE OF CALIFORNIA
DEPARTMENT OF TRANSPORTATION

DIVISION OF ENGINEERING SERVICES
STRUCTURE DESIGN
DESIGN BRANCH 18

BRIDGE NO. RW1665
POST MILE 31.44

RETAINING WALL 1665
FOUNDATION PLAN NO.2

STRUCTURES FOUNDATION PLAN SHEET (ENGLISH) (REV. 09-01-10)

ORIGINAL SCALE IN INCHES FOR REDUCED PLANS 0 1 2 3

UNIT: 3603
PROJECT NUMBER & PHASE: 0700021119-1
CONTRACT NO.: 07-1218w1

DISREGARD PRINTS BEARING EARLIER REVISION DATES

REVISION DATES 11/15/11 01/30/12 04/24/12

SHEET 3 OF 14

FILE => e-rw1665-b-fp102.dgn

DIST	COUNTY	ROUTE	POST MILES TOTAL PROJECT	SHEET No.	TOTAL SHEETS
07	LA	5	29.4/31.6	1322	1931

JEstrada. 1/31/12
REGISTERED CIVIL ENGINEER DATE

5-21-12
PLANS APPROVAL DATE

REGISTERED PROFESSIONAL ENGINEER
JORGE I. ESTRADA
No. C51473
Exp. 06-30-12
CIVIL
STATE OF CALIFORNIA

The State of California or its officers or agents shall not be responsible for the accuracy or completeness of electronic copies of this plan sheet.

LEGEND

xxx.xx Indicates Bottom of Footing elevation

NOTE:
ALL UTILITY LINES ARE
PER DISTRICT UTILITY MAP.

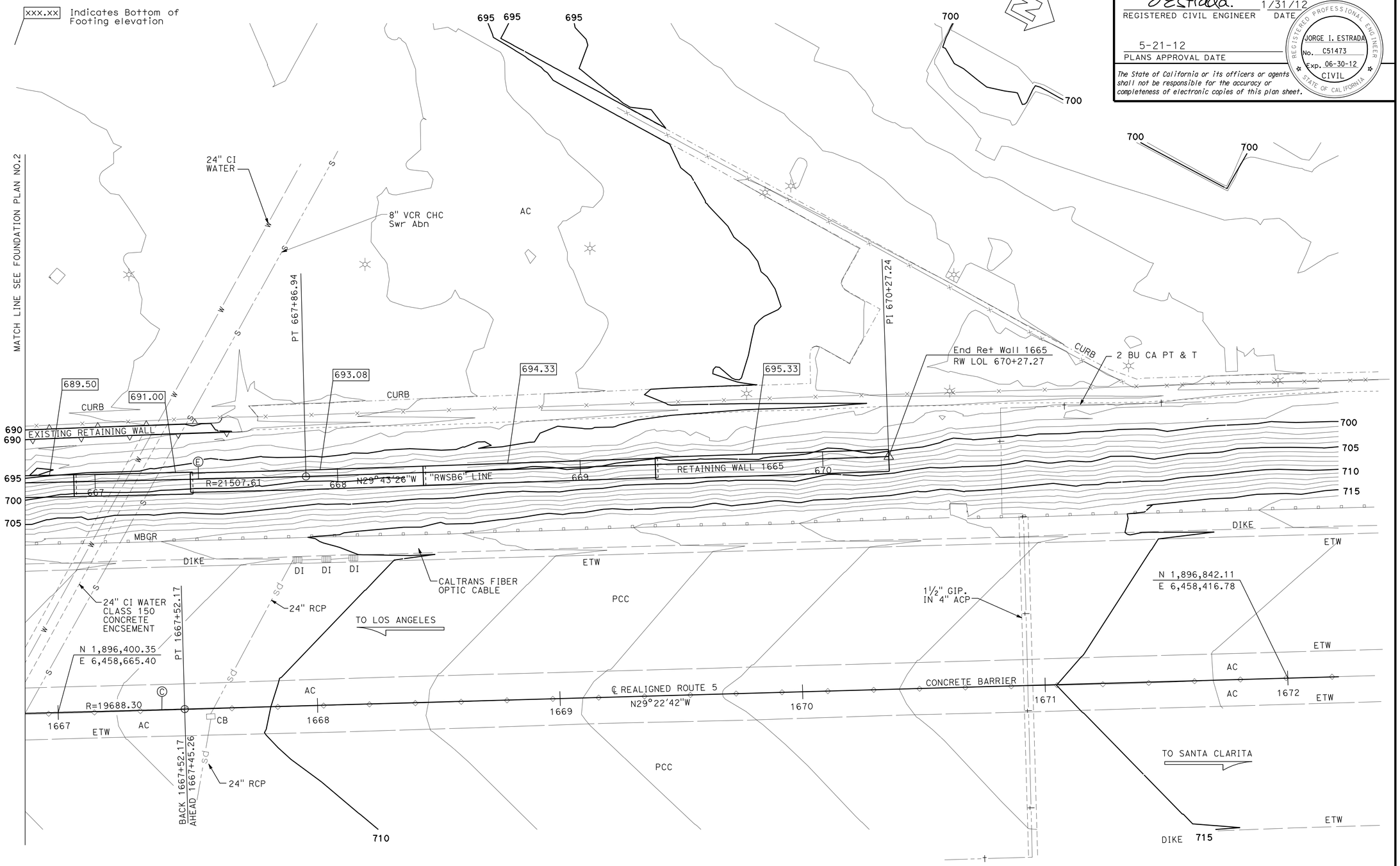

PRELIMINARY INVESTIGATION SECTION								
SCALE 1"=20'	VERT.DATUM NAVD88	PHOTOGRAMMETRY AS OF: X						
	HORZ.DATUM NAD83	SURVEYED	BY DISTRICT	CHECKED	BY J.PALLARES 10/2011			
	ALIGNMENT TIES Dist. Traverse Sheet	DRAFTED	BY T.ZOLNIKOV 10/2011	CHECKED	BY J.PALLARES 10/2011			

DESIGN	BY David P. Murray	CHECKED JD/ Jorge Estrada
DETAILS	BY DE/ Minh Tran	CHECKED David P. Murray
QUANTITIES	BY David P. Murray	CHECKED JD/ Sannow Mam

STATE OF CALIFORNIA
DEPARTMENT OF TRANSPORTATION

DIVISION OF ENGINEERING SERVICES
STRUCTURE DESIGN
DESIGN BRANCH 18

BRIDGE NO. RW1665
POST MILE 31.44

RETAINING WALL 1665
FOUNDATION PLAN NO.3

STRUCTURES FOUNDATION PLAN SHEET (ENGLISH) (REV. 09-01-10)

ORIGINAL SCALE IN INCHES FOR REDUCED PLANS 0 1 2 3

UNIT: 3603
PROJECT NUMBER & PHASE: 0700021119-1 CONTRACT NO.: 07-1218w1

DISREGARD PRINTS BEARING EARLIER REVISION DATES

REVISION DATES 11/15/11 1/30/12

SHEET 4 OF 14

FILE => e-rw1665-b-fpl03.dgn

DIST	COUNTY	ROUTE	POST MILES TOTAL PROJECT	SHEET No.	TOTAL SHEETS
07	LA	5	29.4/31.6	1323	1931

JEstrada. 1/31/12
REGISTERED CIVIL ENGINEER DATE

5-21-12
PLANS APPROVAL DATE

REGISTERED PROFESSIONAL ENGINEER
JORGE I. ESTRADA
No. C51473
Exp. 06-30-12
CIVIL
STATE OF CALIFORNIA

The State of California or its officers or agents shall not be responsible for the accuracy or completeness of electronic copies of this plan sheet.

CURVE DATA

No.	R	Δ	T	L
Ⓐ	268.51	29°00′31"	69.46	135.94
Ⓑ	300.00	62°41′04"	182.71	328.22

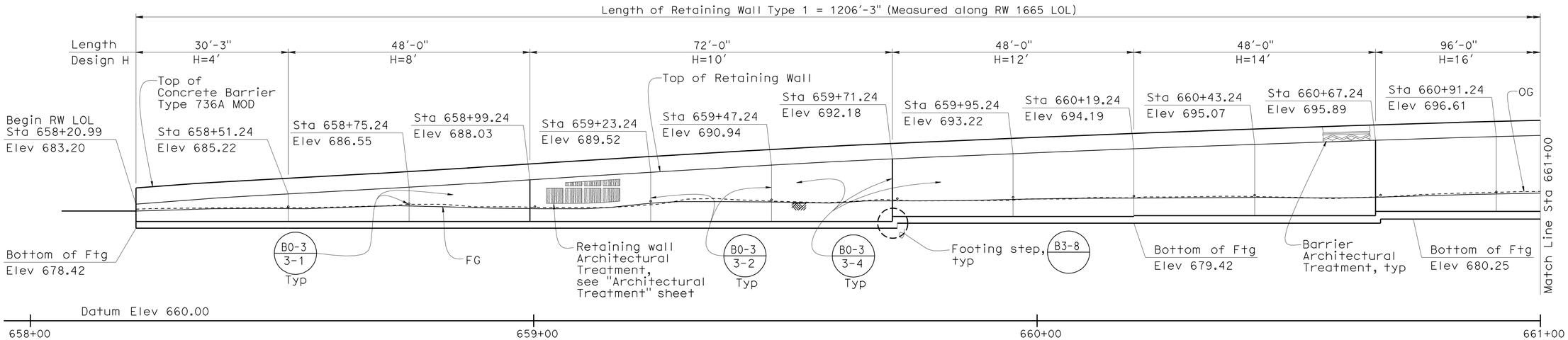

DEVELOPED MIRROR ELEVATION

B3-1 / B0-3 3-3

3/32" = 1′

Note:
Weakened planes to be spaced equally between expansion joints

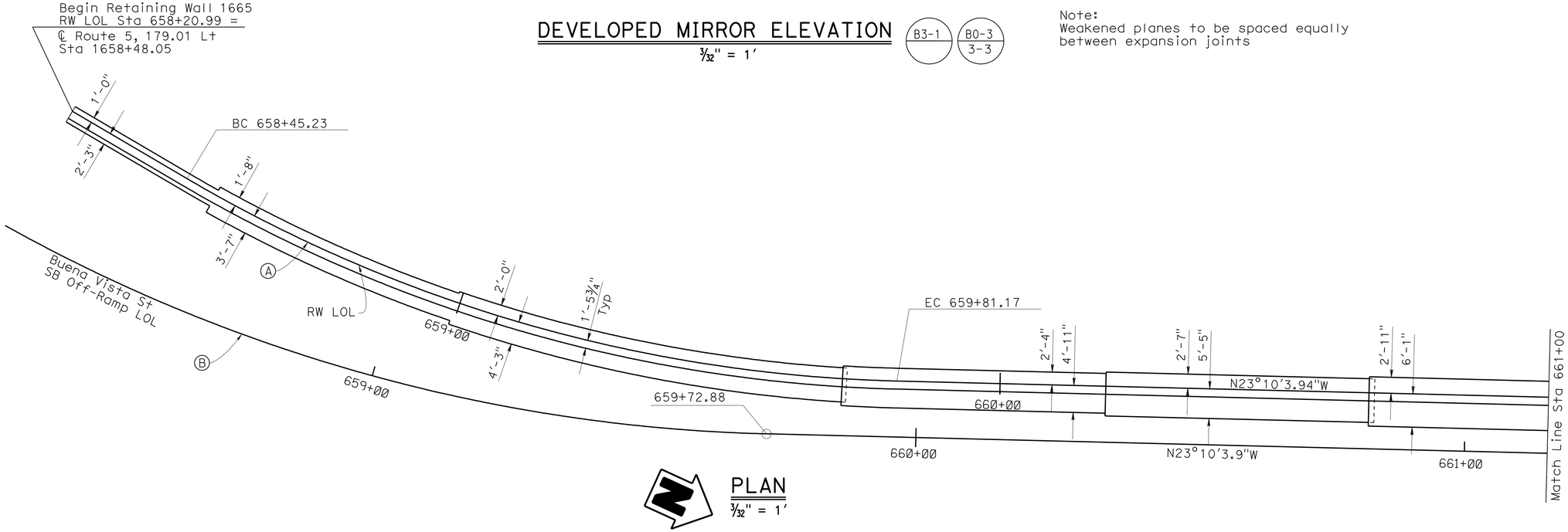

PLAN

3/32" = 1′

DESIGN	BY David P. Murray	CHECKED JD/ Jorge Estrada	
DETAILS	BY DE/ Minh Tran	CHECKED David P. Murray	
QUANTITIES	BY David P. Murray	CHECKED JD/ Sannow Mam	

STATE OF CALIFORNIA
DEPARTMENT OF TRANSPORTATION

DIVISION OF ENGINEERING SERVICES
STRUCTURE DESIGN
DESIGN BRANCH 18

BRIDGE NO. RW1665
POST MILE 31.44

RETAINING WALL 1665
STRUCTURE PLAN NO. 1

STRUCTURES DESIGN DETAIL SHEET (ENGLISH) (REV. 09-01-10)

ORIGINAL SCALE IN INCHES FOR REDUCED PLANS 0 1 2 3

UNIT: 3603
PROJECT NUMBER & PHASE: 0700021119-1
CONTRACT NO.: 07-1218w1

DISREGARD PRINTS BEARING EARLIER REVISION DATES

REVISION DATES 11/15/11 1/30/12

SHEET 5 OF 14

FILE => e-rw1665-c-sp01.dgn

USERNAME => s124496 DATE PLOTTED => 21-MAY-2012 TIME PLOTTED => 14:45

DIST	COUNTY	ROUTE	POST MILES TOTAL PROJECT	SHEET No.	TOTAL SHEETS
07	LA	5	29.4/31.6	1324	1931

REGISTERED CIVIL ENGINEER — DATE 1/31/12

5-21-12
PLANS APPROVAL DATE

REGISTERED PROFESSIONAL ENGINEER — JORGE I. ESTRADA — No. C51473 — Exp. 06-30-12 — CIVIL — STATE OF CALIFORNIA

The State of California or its officers or agents shall not be responsible for the accuracy or completeness of electronic copies of this plan sheet.

CURVE DATA

No.	R	Δ	T	L
D	1998.50	5°03′42″	88.33	176.55

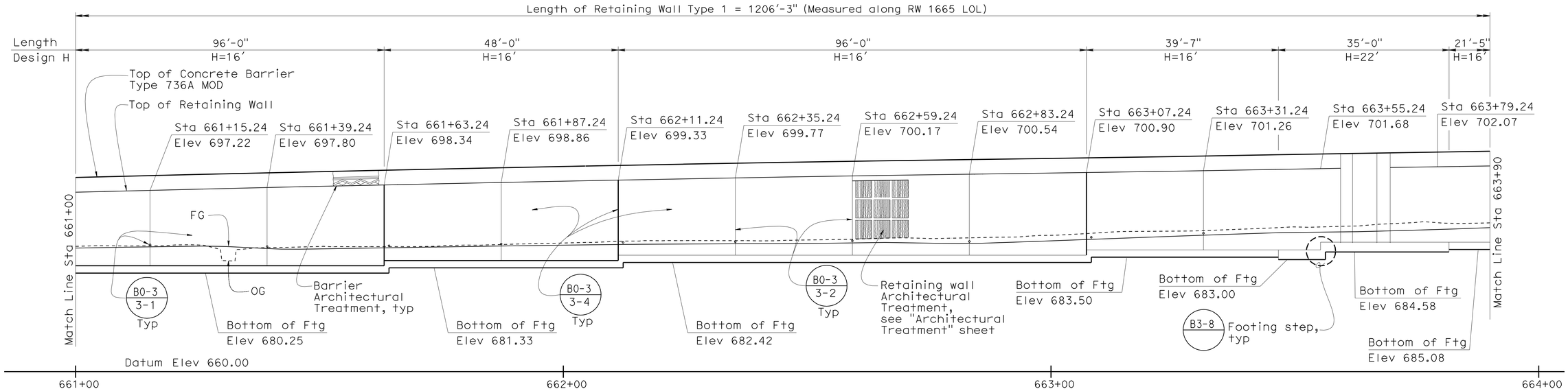

DEVELOPED MIRROR ELEVATION

B3-1 B0-3 3-3

3/32″ = 1′

Note:
Weakened planes to be spaced equally between expansion joints

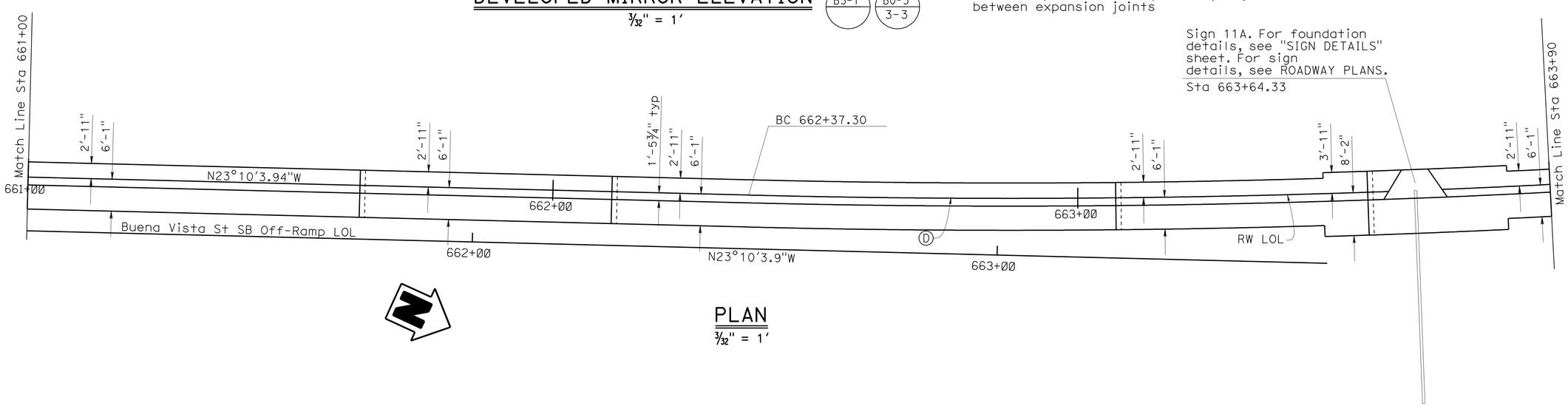

PLAN

3/32″ = 1′

DESIGN	BY David P. Murray	CHECKED JD/ Jorge Estrada	
DETAILS	BY DE/ Minh Tran	CHECKED David P. Murray	
QUANTITIES	BY David P. Murray	CHECKED JD/ Sannow Mam	

STATE OF CALIFORNIA
DEPARTMENT OF TRANSPORTATION

DIVISION OF ENGINEERING SERVICES
STRUCTURE DESIGN
DESIGN BRANCH 18

BRIDGE NO. RW1665
POST MILE 31.44

RETAINING WALL 1665
STRUCTURE PLAN NO. 2

STRUCTURES DESIGN DETAIL SHEET (ENGLISH) (REV. 09-01-10)

ORIGINAL SCALE IN INCHES FOR REDUCED PLANS 0 1 2 3

UNIT: 3603
PROJECT NUMBER & PHASE: 0700021119-1
CONTRACT NO.: 07-1218w1

DISREGARD PRINTS BEARING EARLIER REVISION DATES

REVISION DATES 11/15/11 01/30/12 04/24/12

SHEET 6 OF 14

FILE => e-rw1665-c-sp02.dgn

USERNAME => s124496 DATE PLOTTED => 21-MAY-2012 TIME PLOTTED => 14:46

DIST	COUNTY	ROUTE	POST MILES TOTAL PROJECT	SHEET No.	TOTAL SHEETS
07	LA	5	29.4/31.6	1325	1931

REGISTERED CIVIL ENGINEER — DATE 1/31/12

5-21-12
PLANS APPROVAL DATE

REGISTERED PROFESSIONAL ENGINEER — JORGE I. ESTRADA — No. C51473 — Exp. 06-30-12 — CIVIL — STATE OF CALIFORNIA

The State of California or its officers or agents shall not be responsible for the accuracy or completeness of electronic copies of this plan sheet.

CURVE DATA

No.	R	Δ	T	L
D	1998.50	5°03′42″	88.33	176.55
E	21507.61	0°59′38″	186.55	373.08

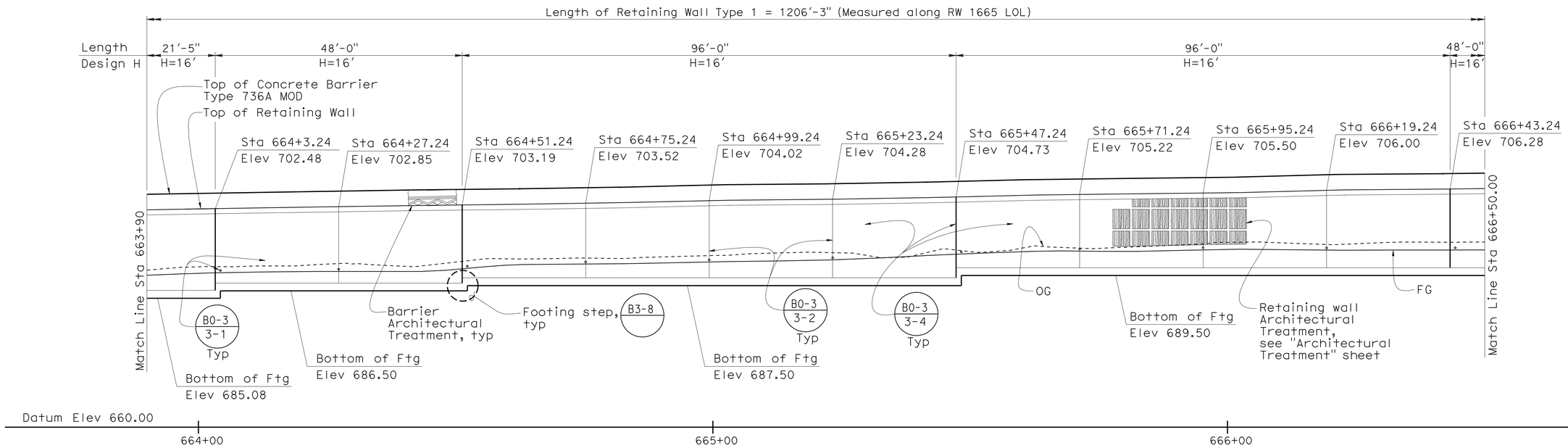

DEVELOPED MIRROR ELEVATION

3/32″ = 1′

B3-1 B0-3 3-3

Note:
Weakened planes to be spaced equally between expansion joints

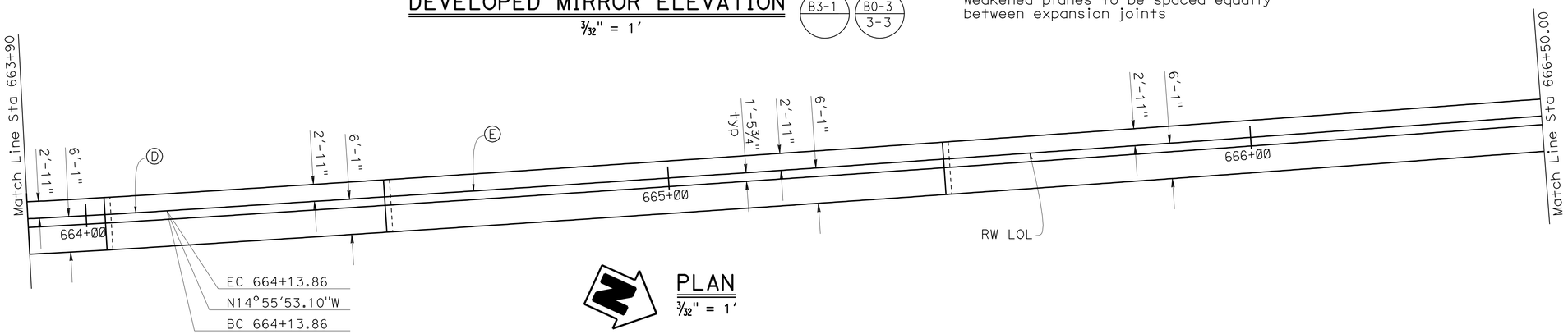

PLAN

3/32″ = 1′

DESIGN	BY David P. Murray	CHECKED JD/ Jorge Estrada	
DETAILS	BY DE/ Minh Tran	CHECKED David P. Murray	
QUANTITIES	BY David P. Murray	CHECKED JD/ Sannow Mam	

STATE OF CALIFORNIA
DEPARTMENT OF TRANSPORTATION

DIVISION OF ENGINEERING SERVICES
STRUCTURE DESIGN
DESIGN BRANCH 18

BRIDGE NO. RW1665
POST MILE 31.44

RETAINING WALL 1665
STRUCTURE PLAN NO. 3

STRUCTURES DESIGN DETAIL SHEET (ENGLISH) (REV. 09-01-10)

ORIGINAL SCALE IN INCHES FOR REDUCED PLANS 0 1 2 3

UNIT: 3603
PROJECT NUMBER & PHASE: 0700021119-1
CONTRACT NO.: 07-1218w1

DISREGARD PRINTS BEARING EARLIER REVISION DATES

REVISION DATES 11/15/11 01/30/12 04/18/12

SHEET 7 OF 14

FILE => e-rw1665-c-sp03.dgn

USERNAME => s128843 DATE PLOTTED => 11-JUL-2012 TIME PLOTTED => 10:55

DIST	COUNTY	ROUTE	POST MILES TOTAL PROJECT	SHEET No.	TOTAL SHEETS
07	LA	5	29.4/31.6	1326	1931

REGISTERED CIVIL ENGINEER — DATE 1/31/12

5-21-12
PLANS APPROVAL DATE

REGISTERED PROFESSIONAL ENGINEER — JORGE I. ESTRADA — No. C51473 — Exp. 06-30-12 — CIVIL — STATE OF CALIFORNIA

The State of California or its officers or agents shall not be responsible for the accuracy or completeness of electronic copies of this plan sheet.

CURVE DATA

No.	R	Δ	T	L
(E)	21507.61	0°59′38"	186.55	373.08

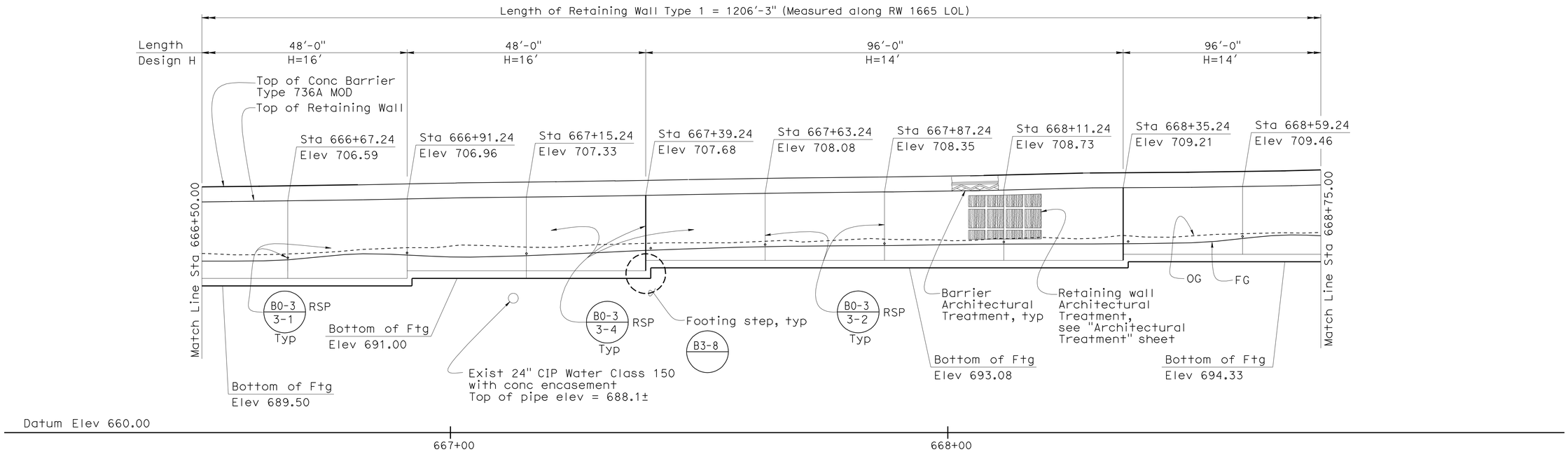

DEVELOPED MIRROR ELEVATION

B3-1 B0-3 3-3

3/32" = 1′

Note:
Weakened planes to be spaced equally between expansion joints

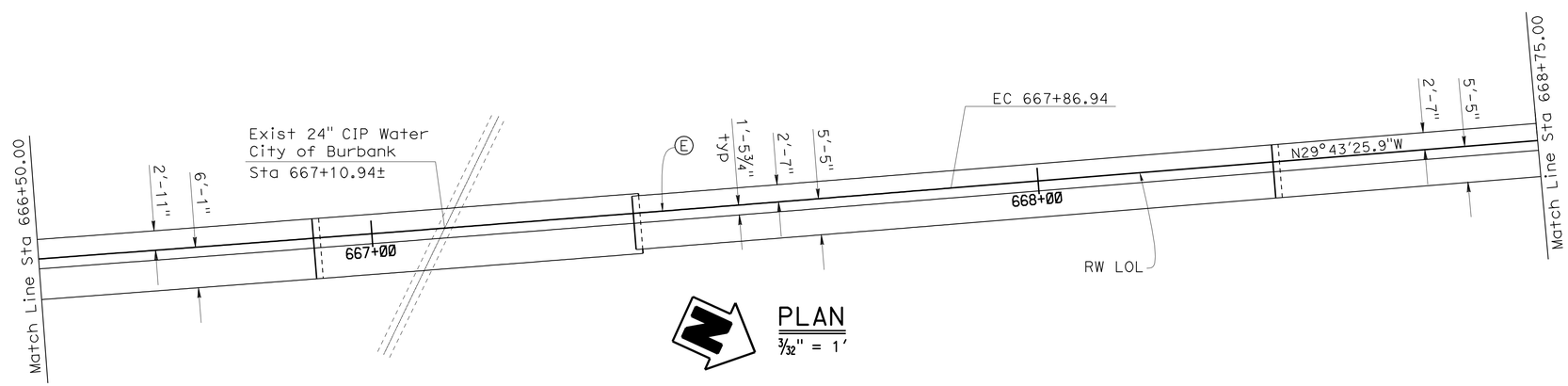

PLAN

3/32" = 1′

DESIGN	BY David P. Murray	CHECKED JD/ Jorge Estrada	
DETAILS	BY DE/ Minh Tran	CHECKED David P. Murray	
QUANTITIES	BY David P. Murray	CHECKED JD/ Sannow Mam	

STATE OF CALIFORNIA
DEPARTMENT OF TRANSPORTATION

DIVISION OF ENGINEERING SERVICES
STRUCTURE DESIGN
DESIGN BRANCH 18

BRIDGE NO. RW1665
POST MILE 31.44

RETAINING WALL 1665
STRUCTURE PLAN NO. 4

STRUCTURES DESIGN DETAIL SHEET (ENGLISH) (REV. 09-01-10)

ORIGINAL SCALE IN INCHES FOR REDUCED PLANS 0 1 2 3

UNIT: 3603
PROJECT NUMBER & PHASE: 0700021119-1
CONTRACT NO.: 07-1218w1

DISREGARD PRINTS BEARING EARLIER REVISION DATES

REVISION DATES 11/25/11 1/20/12 7/9/12

SHEET 8 OF 14

FILE => e-rw1665-c-sp04.dgn

USERNAME => s124496 DATE PLOTTED => 11-JUL-2012 TIME PLOTTED => 08:14

DIST	COUNTY	ROUTE	POST MILES TOTAL PROJECT	SHEET No.	TOTAL SHEETS
07	LA	5	29.4/31.6	1327	1931

JEstrada. 1/31/12
REGISTERED CIVIL ENGINEER DATE

5-21-12
PLANS APPROVAL DATE

REGISTERED PROFESSIONAL ENGINEER
JORGE I. ESTRADA
No. C51473
Exp. 06-30-12
CIVIL
STATE OF CALIFORNIA

The State of California or its officers or agents shall not be responsible for the accuracy or completeness of electronic copies of this plan sheet.

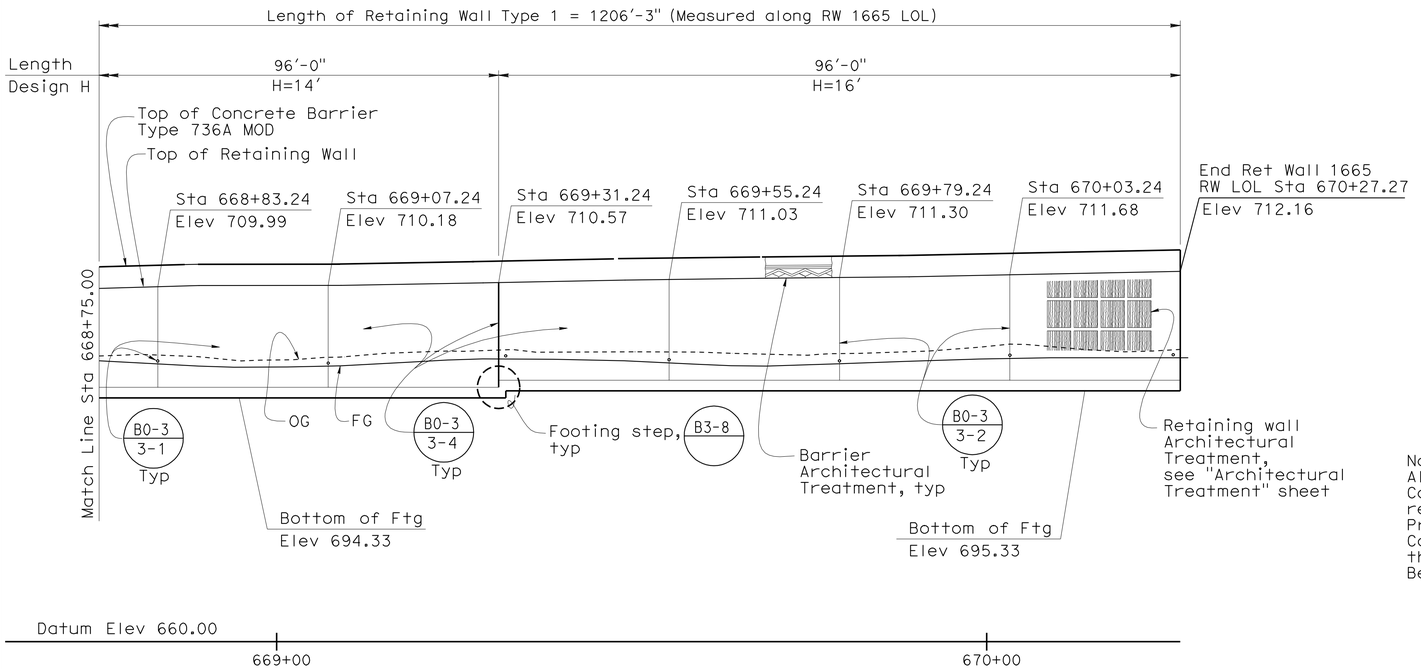

DEVELOPED MIRROR ELEVATION

3/32" = 1'

B3-1 B0-3 3-3

Note:
Weakened planes to be spaced equally between expansion joints

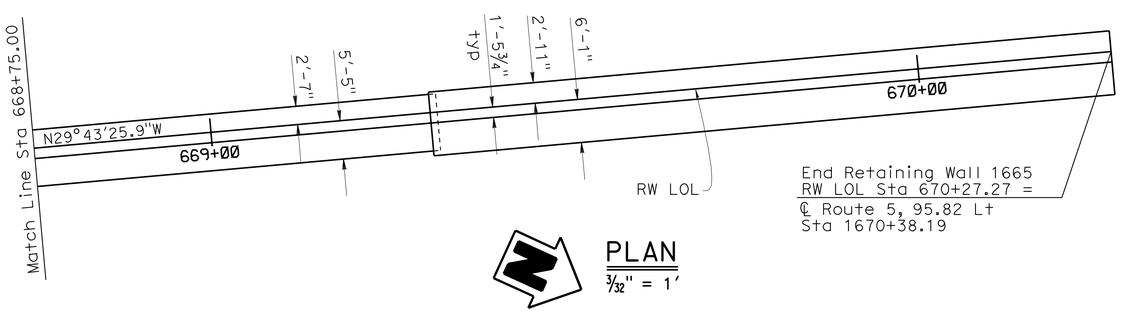

PLAN

3/32" = 1'

SPREAD FOOTING DATA TABLE

RW LOL Station (ft) From	RW LOL Station (ft) To	Gross Allowable Soil Bearing Pressure ASD (q all) (ksF)
658+20.99	658+51.24	1.7
658+51.24	658+99.24	2.2
658+99.24	659+71.24	2.5
659+71.24	660+19.24	2.8
660+19.24	660+67.24	3.3
660+67.24	661+63.24	3.5
661+63.24	662+11.24	3.5
662+11.24	663+07.24	3.5
663+07.24	663+55.24	3.5
663+55.24	664+03.24	3.5
664+03.24	664+51.24	3.5
664+51.24	665+47.24	3.5
665+47.24	666+43.24	3.5
666+43.24	666+91.24	3.5
666+91.24	667+39.24	3.5
667+39.24	668+35.24	3.3
668+35.24	669+31.24	3.3
669+31.24	670+27.27	3.5

Notes:
Allowable Stress Design, (ASD). The Maximum Contact Pressure, (q max), is not to exceed the recommended Gross Allowable Soil Bearing Pressure, (q all). The Ultimate Soil Bearing Capacity, (q ult), will equal or exceed 3 times the recommended Gross Allowable Soil Bearing Pressure, (q all).

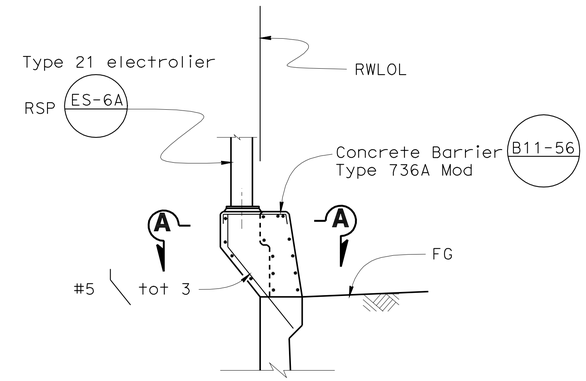

PEDESTAL ELEVATION

3/8" = 1'-0"

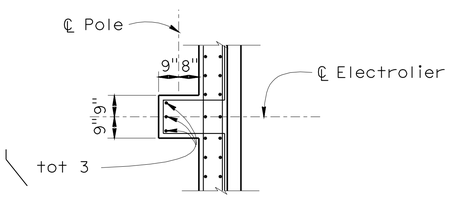

SECTION A-A

3/8" = 1'-0"

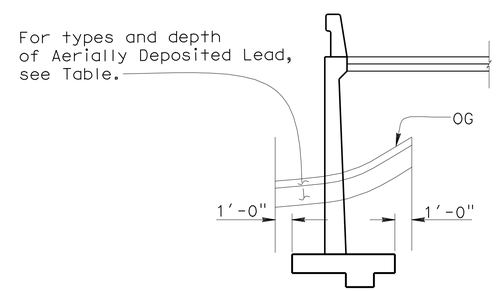

LIMITS OF STRUCTURE EXCAVATION, AERIALLY DEPOSITED LEAD (ADL)

No Scale

ADL TYPE	DEPTH FT	STATION LIMIT ALONG ℄ I-5 FROM	STATION LIMIT ALONG ℄ I-5 TO
Y-1	2.00	1662+00.00	1670+38.00
Y-2	0.50	1662+00.00	1670+38.00

NOTES:

1. For pedestal details not shown, see B11-56
2. Electrolier locations (Stations along ℄ Rte 5): 1659+50
   1661+30
   1663+10
   1664+90
   1666+70
   1668+50
   1670+30

	BY	CHECKED
DESIGN	David P. Murray	JD/ Jorge Estrada
DETAILS	DE/ Minh Tran	David P. Murray
QUANTITIES	David P. Murray	JD/ Sannow Mam

STATE OF CALIFORNIA
DEPARTMENT OF TRANSPORTATION

DIVISION OF ENGINEERING SERVICES
STRUCTURE DESIGN
DESIGN BRANCH 18

BRIDGE NO. RW1665
POST MILE 31.44

RETAINING WALL 1665
STRUCTURE PLAN NO. 5

STRUCTURES DESIGN DETAIL SHEET (ENGLISH) (REV. 09-01-10)

ORIGINAL SCALE IN INCHES FOR REDUCED PLANS 0 1 2 3

UNIT: 3603
PROJECT NUMBER & PHASE: 0700021119-1
CONTRACT NO.: 07-1218w1

DISREGARD PRINTS BEARING EARLIER REVISION DATES

REVISION DATES 11/15/11 01/30/12 04/23/12 05/14/12

SHEET 9 OF 14

FILE => e-rw1665-c-sp05.dgn

USERNAME => s128843 DATE PLOTTED => 11-JUL-2012 TIME PLOTTED => 10:55

DIST	COUNTY	ROUTE	POST MILES TOTAL PROJECT	SHEET No.	TOTAL SHEETS
07	LA	5	29.4/31.6	1328	1931

JEstrada. 1/31/12
REGISTERED CIVIL ENGINEER DATE

5-21-12
PLANS APPROVAL DATE

REGISTERED PROFESSIONAL ENGINEER
JORGE I. ESTRADA
No. C51473
Exp. 06-30-12
CIVIL
STATE OF CALIFORNIA

The State of California or its officers or agents shall not be responsible for the accuracy or completeness of electronic copies of this plan sheet.

NOTE:
FRACTURED GRANITE TEXTURE SHALL RUN PERPENDICULAR TO PLUMB.

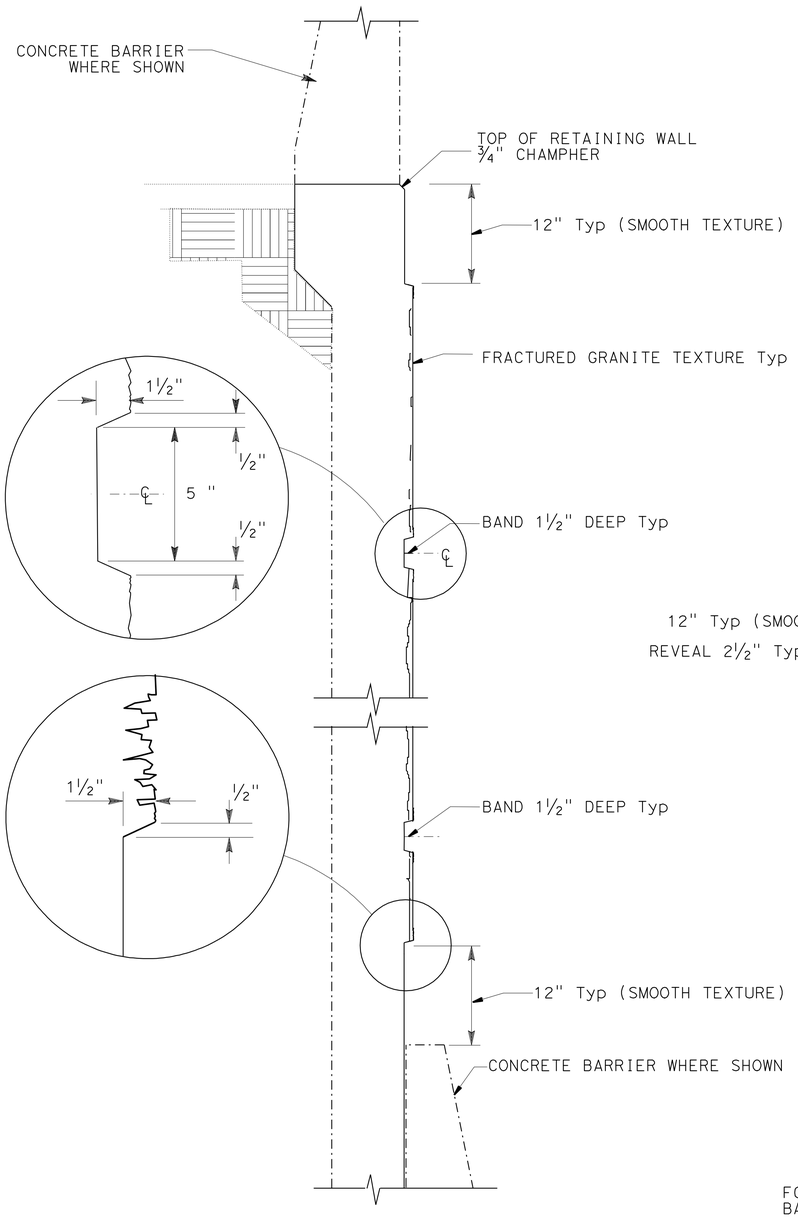

TYPICAL SECTION

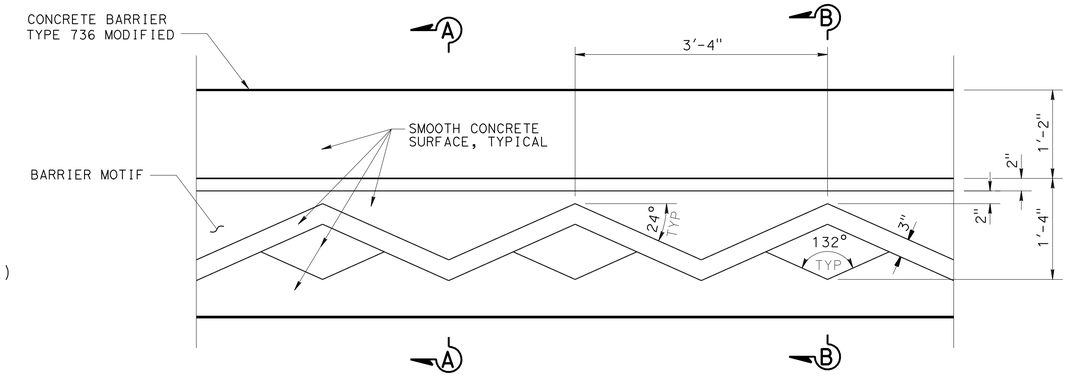

TYPICAL ELEVATION

BARRIER AESTHETIC TREATMENT

NO SCALE

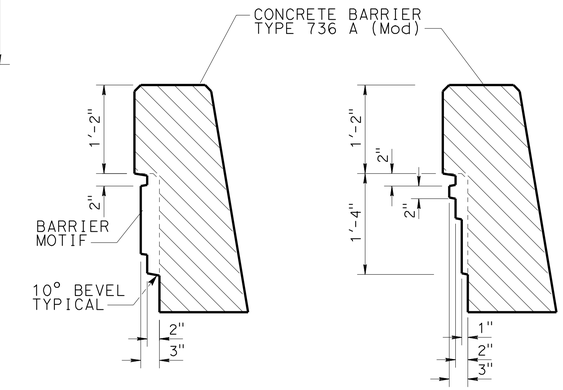

SECTION A-A

SECTION B-B

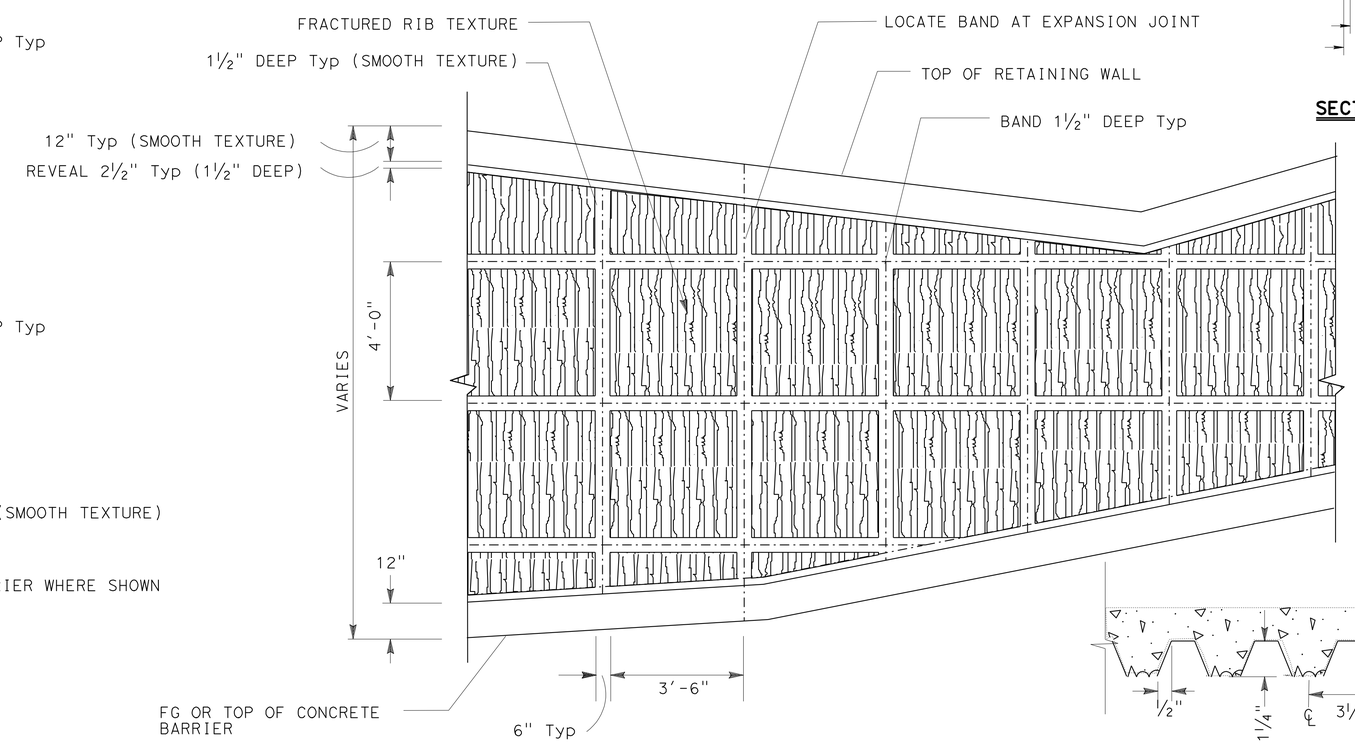

TYPICAL ELEVATION

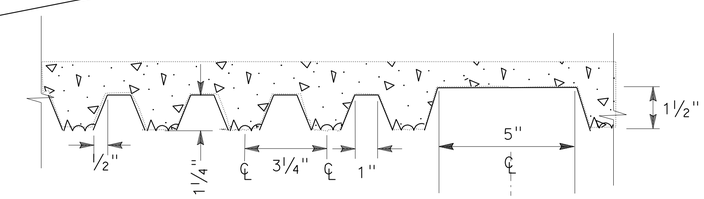

FRACTURED GRANITE TEXTURE & BAND

RETAINING WALL ARCHITECTURAL TREATMENT

NO SCALE

DESIGN	BY David P. Murray	CHECKED JD/ Jorge Estrada
DETAILS	BY Minh Tran	CHECKED David P. Murray
QUANTITIES	BY David P. Murray	CHECKED JD/ Sannow Mam

STATE OF CALIFORNIA
DEPARTMENT OF TRANSPORTATION

DIVISION OF ENGINEERING SERVICES
STRUCTURE DESIGN
DESIGN BRANCH 18

BRIDGE NO. RW1665
POST MILE 31.44

RETAINING WALL 1665
ARCHITECTURAL TREATMENT

STRUCTURES DESIGN DETAIL SHEET (ENGLISH) (REV. 09-01-10)

ORIGINAL SCALE IN INCHES FOR REDUCED PLANS 0 1 2 3

UNIT: 3603
PROJECT NUMBER & PHASE: 0700021119-1
CONTRACT NO.: 07-1218w1

DISREGARD PRINTS BEARING EARLIER REVISION DATES

REVISION DATES 11/30/11 1/30/12

SHEET 10 OF 14

FILE => e-rw1665-r-arch.dgn

USERNAME => s124496 DATE PLOTTED => 21-MAY-2012 TIME PLOTTED => 14:46

DIST	COUNTY	ROUTE	POST MILES TOTAL PROJECT	SHEET No.	TOTAL SHEETS
07	LA	5	29.4/31.6	1329	1931

JEstrada. 1/31/12
REGISTERED CIVIL ENGINEER DATE

5-21-12
PLANS APPROVAL DATE

REGISTERED PROFESSIONAL ENGINEER
JORGE I. ESTRADA
No. C51473
Exp. 06-30-12
CIVIL
STATE OF CALIFORNIA

The State of California or its officers or agents shall not be responsible for the accuracy or completeness of electronic copies of this plan sheet.

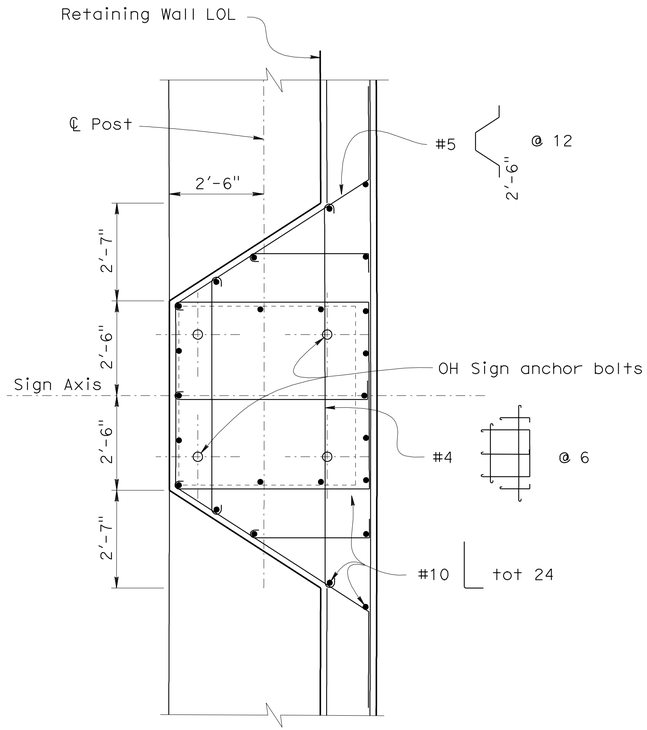

SECTION B-B

½" = 1'

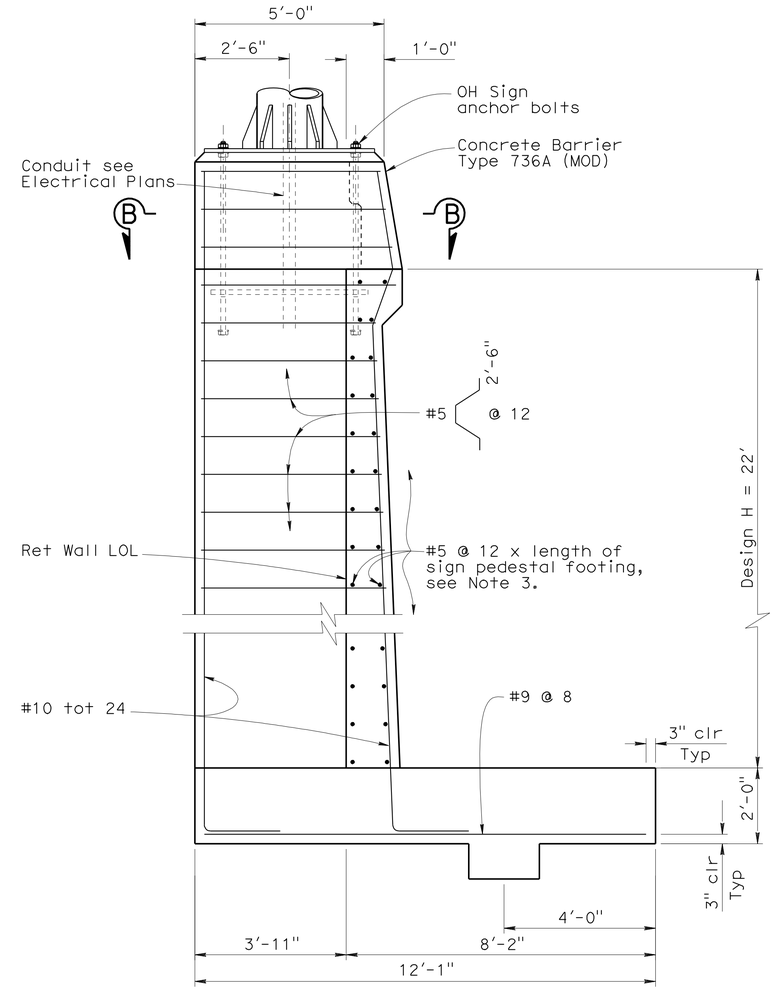

SECTION A-A

½" = 1'

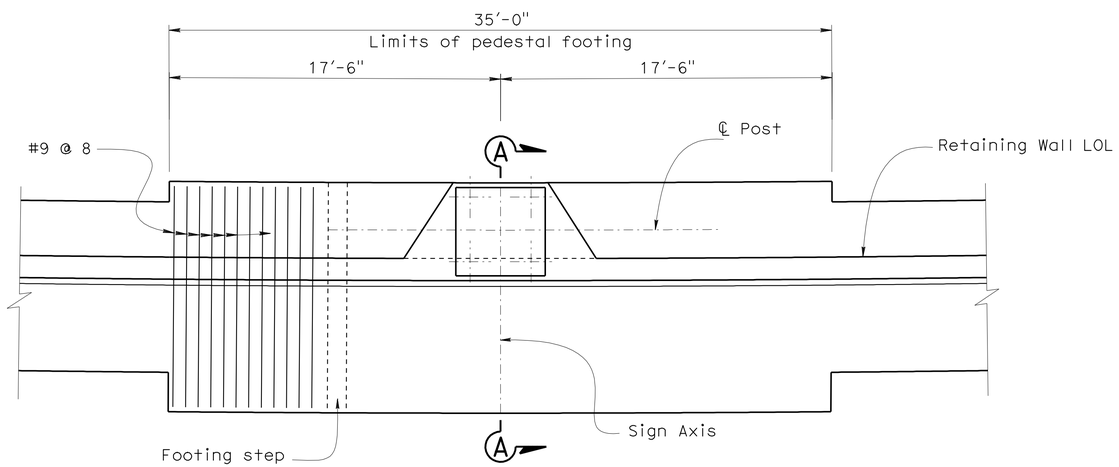

FOOTING PLAN VIEW

¼" = 1'

Notes:

1. For details not shown, see B3-1 and B11-56
2. Reinforcing shown is in addition to retaining wall and concrete barrier reinforcing.
3. Reinforcing shall be centered from sign axis.

DESIGN	BY David P. Murray	CHECKED Jorge Estrada	
DETAILS	BY Minh Tran	CHECKED David P. Murray	
QUANTITIES	BY David P. Murray	CHECKED Jorge Estrada	

STATE OF CALIFORNIA
DEPARTMENT OF TRANSPORTATION

DIVISION OF ENGINEERING SERVICES
STRUCTURE DESIGN
DESIGN BRANCH 18

BRIDGE NO. RW1665
POST MILE 31.44

RETAINING WALL 1665
SIGN DETAILS

STRUCTURES DESIGN DETAIL SHEET (ENGLISH) (REV. 09-01-10)

ORIGINAL SCALE IN INCHES FOR REDUCED PLANS 0 1 2 3

UNIT: 3603
PROJECT NUMBER & PHASE: 0700021119-1
CONTRACT NO.: 07-1218W1

DISREGARD PRINTS BEARING EARLIER REVISION DATES

REVISION DATES: 01/30/12 04/4/12

SHEET 11 OF 14

FILE => e-rw1665-s-sign.dgn

USERNAME => s124496 DATE PLOTTED => 21-MAY-2012 TIME PLOTTED => 14:46

DIST	COUNTY	ROUTE	POST MILES TOTAL PROJECT	SHEET No	TOTAL SHEETS
07	LA	5	29.4/31.6	1330	1931

Kristopher Barker 1-23-12
CERTIFIED ENGINEERING GEOLOGIST

5-21-12
PLANS APPROVAL DATE

PROFESSIONAL GEOLOGIST Kristopher Barker No. 2383 Exp. 8-31-13 CERTIFIED ENGINEERING GEOLOGIST STATE OF CALIFORNIA

The State of California or its officers or agents shall not be responsible for the accuracy or completeness of electronic copies of this plan sheet.

BENCH MARKS

BM PRHV909 Elev 696.094 ft
Fd PK Nail in SBND LA-5 AC shoulder between Buena Vista St Off-ramp and On-ramp; 43.894 ft Lt Sta 1657+24.72 C/L Rte 5 (Prop).
N 1895518.509
E 6459082.695

BM PRHV908 Elev 702.715 ft
Fd Spike behind guardrail at SBND LA-5 Buena Vista St Off-ramp; 67.976 ft Lt Sta 1663+43.59 C/L Rte 5 (Prop).
N 1896055.647
E 6458776.676

NAD83, NAVD88

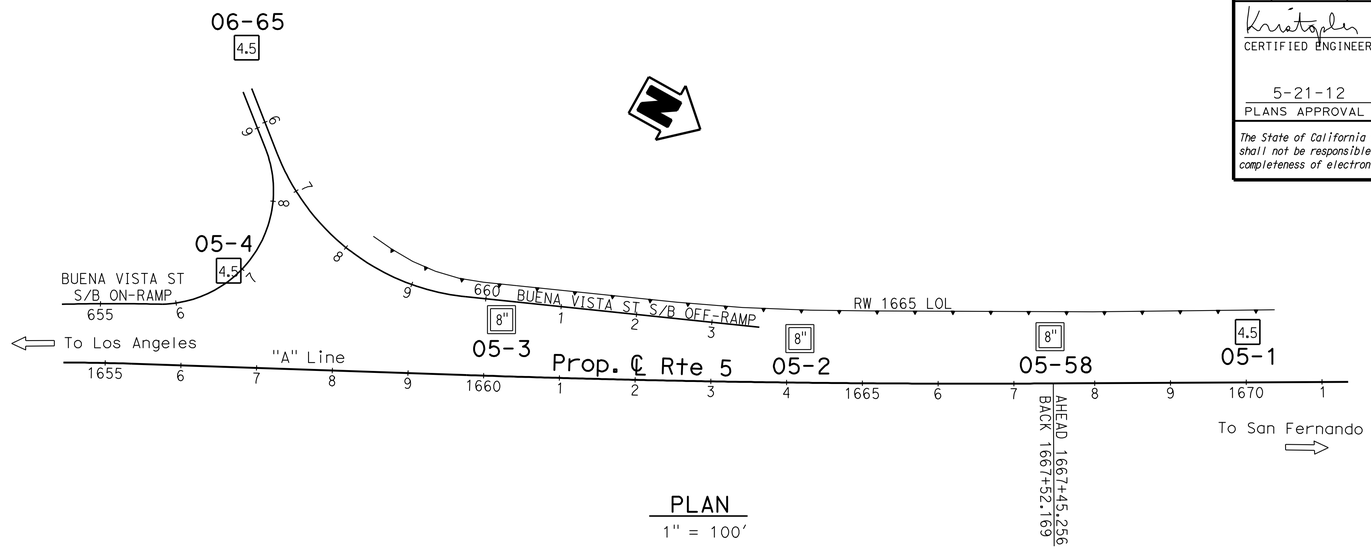

PLAN
1" = 100'

Note: No ground water encountered during field investigation.

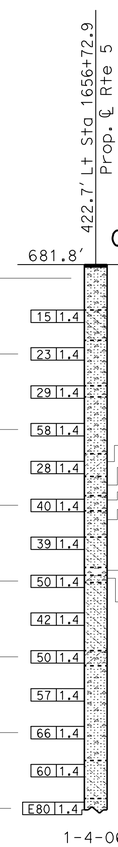

4.5 Asphaltic Concrete Pavement.

SILTY fine SAND (SM) with coarse GRAVEL (10 to 15%), estimated loose, brown, moist, nonplastic.(Undifferentiated FILL/ALLUVIUM,)

Poorly-graded fine SAND with SILT (SP-SM) and scattered fine GRAVEL (15 to 20%,≤1" diameter), medium dense, yellowish brown, moist, nonplastic. (ALLUVIUM)

Well-graded fine to coarse SAND (SW) with intermittent scattered fine GRAVEL (5 to 20%) and a minor thick lense (23.5" thick) of poorly-graded fine GRAVEL (GP) below elevation +669', medium dense, yellowish brown, moist, nonplastic.

SILTY fine SAND (SM) with fine to coarse GRAVEL (15%), medium dense, brown, moist, nonplastic.

Well-graded fine to coarse SAND (SW) interbedded with well graded fine to coarse GRAVEL (GW) lenses with SAND matrix (30%) and SILTY fine SAND (SM), very dense, light gray to yellowish brown, moist, nonplastic.

Poorly-graded fine SAND with SILT (SP-SM), medium dense, yellowish brown, moist, nonplastic.

SAND and GRAVEL interbeds, medium dense to dense.

SILTY fine SAND (SM), contains intermittent fine GRAVEL (0 to 5%), interbedded with poorly graded fine SAND (SP), dense, yellowish brown, moist, nonplastic, clean.

Poorly-graded coarse GRAVEL (GP) lense (12 to 23.5" thick) with SAND matrix interbedded with well graded fine to coarse SAND (SW) with coarse to fine GRAVEL (15 to 25%), dense, varicolored to yellowish brown, moist, nonplastic.

Poorly-graded fine SAND with SILT (SP-SM), dense, yellowish brown, moist, nonplastic.

Well-graded coarse to fine GRAVEL (GW) with COBBLES (≤6" diameter), estimated very dense, varicolored, contains rounded equant hard (slightly weathered) GRANITOID and SCHIST ROCK fragments, variable hard rock drilling.

Poorly-graded fine to medium SAND with SILT (SP-SM) with scattered fine to coarse GRAVEL (10 to 20%), dense, yellowish brown, moist, nonplastic.

SILTY fine SAND (SM) moderately interbedded (≤12" thick) with minor SANDY SILT (ML) and well graded fine to medium SAND (SW), dense, yellowish brown, moist, nonplastic

Poorly-graded fine SAND with SILT (SP-SM) interbedded with SILTY fine SAND (SM), contains fine GRAVEL (10%), dense, yellowish brown, moist, nonplastic.

Well-graded fine to medium SAND (SW) with intermittent scattered GRAVEL (0 to 25%), very dense, yellowish brown, moist, nonplastic.

SILTY fine SAND (SM), very dense, yellowish brown, moist, nonplastic.

Well-graded fine to medium SAND (SW), contains intermittent GRAVEL (0 to 5%), very dense, yellowish brown, moist, nonplastic.

1656+50 1657+00 1658+00

PROFILE
Horiz: 1" = 10'
Vert: 1" = 10'

LEGEND OF BORING OPERATIONS

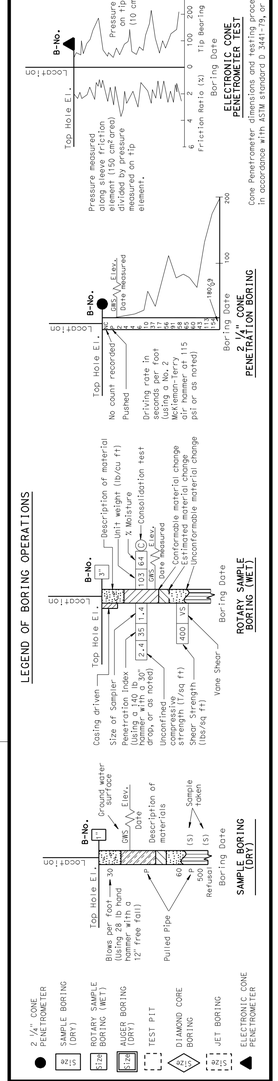

LEGEND OF EARTH MATERIALS

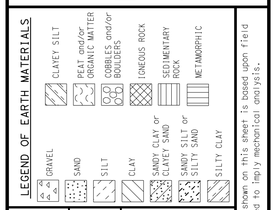

CONSISTENCY CLASSIFICATION FOR SOILS
According to the Standard Penetration Test

SPT N-Value (Blows/ Foot)	Granular	SPT N-Value (Blows/ Foot)	Cohesive
0-4	Very Loose	<2	Very Soft
5-10	Loose	2-4	Soft
11-30	Medium Dense	5-8	Medium stiff
31-50	Dense	9-15	Stiff
>50	Very Dense	16-30	Very Stiff
		31-60	Hard
		>60	Very Hard

NOTE: Classification of earth material as shown on this sheet is based upon field inspection and is not to be construed to imply mechanical analysis.

ENGINEERING SERVICES	GEOTECHNICAL SERVICES
DRAWN BY	I.G-Remmen
CHECKED BY	K. Barker

FIELD INVESTIGATION BY: J. Pratt

STATE OF CALIFORNIA DEPARTMENT OF TRANSPORTATION

DIVISION OF ENGINEERING SERVICES STRUCTURE DESIGN
DESIGN BRANCH 18

BRIDGE NO. RW1665
POST MILE 31.44

RETAINING WALL NO. 1665
LOG OF TEST BORINGS 1 OF 3

UNIT: 3603
PROJECT NUMBER & PHASE: 0700021119-1 CONTRACT NO.: 07-1218W1

DISREGARD PRINTS BEARING EARLIER REVISION DATES 01-20-12

SHEET 12 OF 14

ORIGINAL SCALE IN INCHES FOR REDUCED PLANS 0 1 2 3

OGS LOG OF TEST BORINGS SHEET (ENGLISH) (REV. 5/25/07)

FILE => e-rw1665-z-ltb01.dgn

USERNAME => s124496 DATE PLOTTED => 21-MAY-2012 TIME PLOTTED => 14:46

DIST	COUNTY	ROUTE	POST MILES TOTAL PROJECT	SHEET No	TOTAL SHEETS
07	LA	5	29.4/31.6	1331	1931

Kristopher Barker 1-23-12
CERTIFIED ENGINEERING GEOLOGIST

5-21-12
PLANS APPROVAL DATE

PROFESSIONAL GEOLOGIST Kristopher Barker No. 2383 Exp. 8-31-13 CERTIFIED ENGINEERING GEOLOGIST STATE OF CALIFORNIA

The State of California or its officers or agents shall not be responsible for the accuracy or completeness of electronic copies of this plan sheet.

LEGEND:

- (M) Moisture Content
- (PA) Particle Size Analysis
- (PI) Plasticity, Index, Liquid Limit
- (CR) Corrosivity Testing
- (CP) Compaction

FOR PLAN VIEW, SEE
"LOG OF TEST BORINGS 1 OF 3"

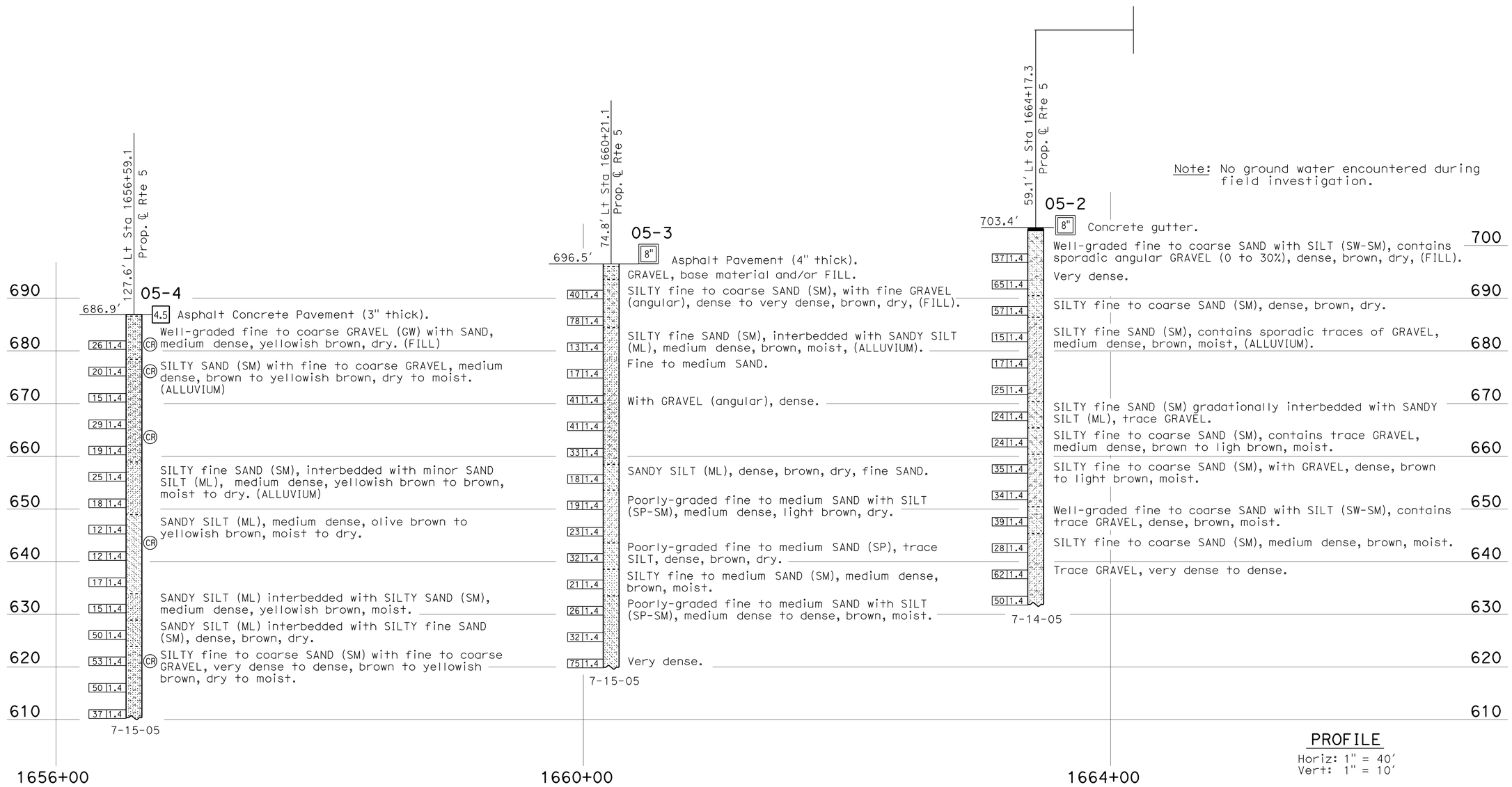

Note: No ground water encountered during field investigation.

PROFILE
Horiz: 1" = 40'
Vert: 1" = 10'

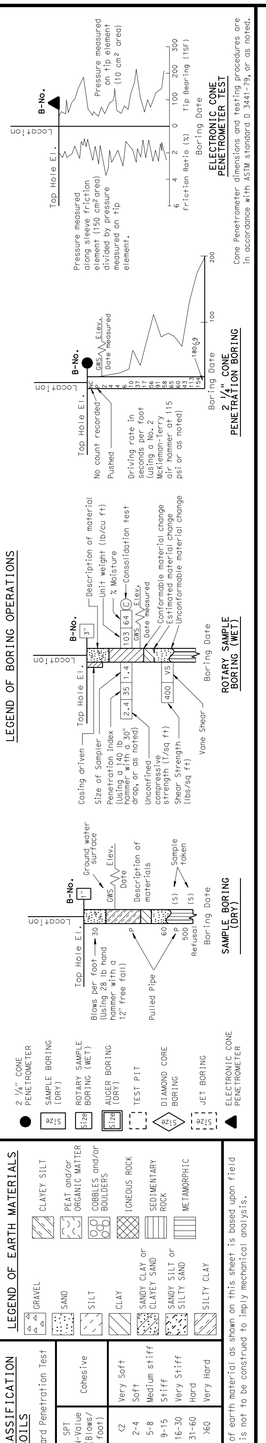

ENGINEERING SERVICES	GEOTECHNICAL SERVICES
DRAWN BY	I.G-Remmen
CHECKED BY	K. Barker

FIELD INVESTIGATION BY: K. Lai, P. McDonald (URS)

STATE OF CALIFORNIA DEPARTMENT OF TRANSPORTATION

DIVISION OF ENGINEERING SERVICES STRUCTURE DESIGN DESIGN BRANCH 18

BRIDGE NO. RW1665
POST MILE 31.44

RETAINING WALL NO. 1665
LOG OF TEST BORINGS 2 OF 3

OGS LOG OF TEST BORINGS SHEET (ENGLISH) (REV. 5/25/07)

ORIGINAL SCALE IN INCHES FOR REDUCED PLANS 0 1 2 3

UNIT: 3603
PROJECT NUMBER & PHASE: 0700021119-1 CONTRACT NO.: 07-1218W1

DISREGARD PRINTS BEARING EARLIER REVISION DATES

REVISION DATES 01-20-12

SHEET 13 OF 14

FILE => e-rw1665-z-ltb02.dgn

USERNAME => s124496 DATE PLOTTED => 21-MAY-2012 TIME PLOTTED => 14:46

DIST	COUNTY	ROUTE	POST MILES TOTAL PROJECT	SHEET No	TOTAL SHEETS
07	LA	5	29.4/31.6	1332	1931

Kristopher Barker 1-23-12
CERTIFIED ENGINEERING GEOLOGIST

5-21-12
PLANS APPROVAL DATE

PROFESSIONAL GEOLOGIST Kristopher Barker No. 2383 Exp. 8-31-13 CERTIFIED ENGINEERING GEOLOGIST STATE OF CALIFORNIA

The State of California or its officers or agents shall not be responsible for the accuracy or completeness of electronic copies of this plan sheet.

LEGEND:

- (M) Moisture Content
- (PA) Particle Size Analysis
- (PI) Plasticity, Index, Liquid Limit
- (CR) Corrosivity Testing
- (CP) Compaction

FOR PLAN VIEW, SEE
"LOG OF TEST BORINGS 1 OF 3"

Note: No ground water encountered during field investigation.

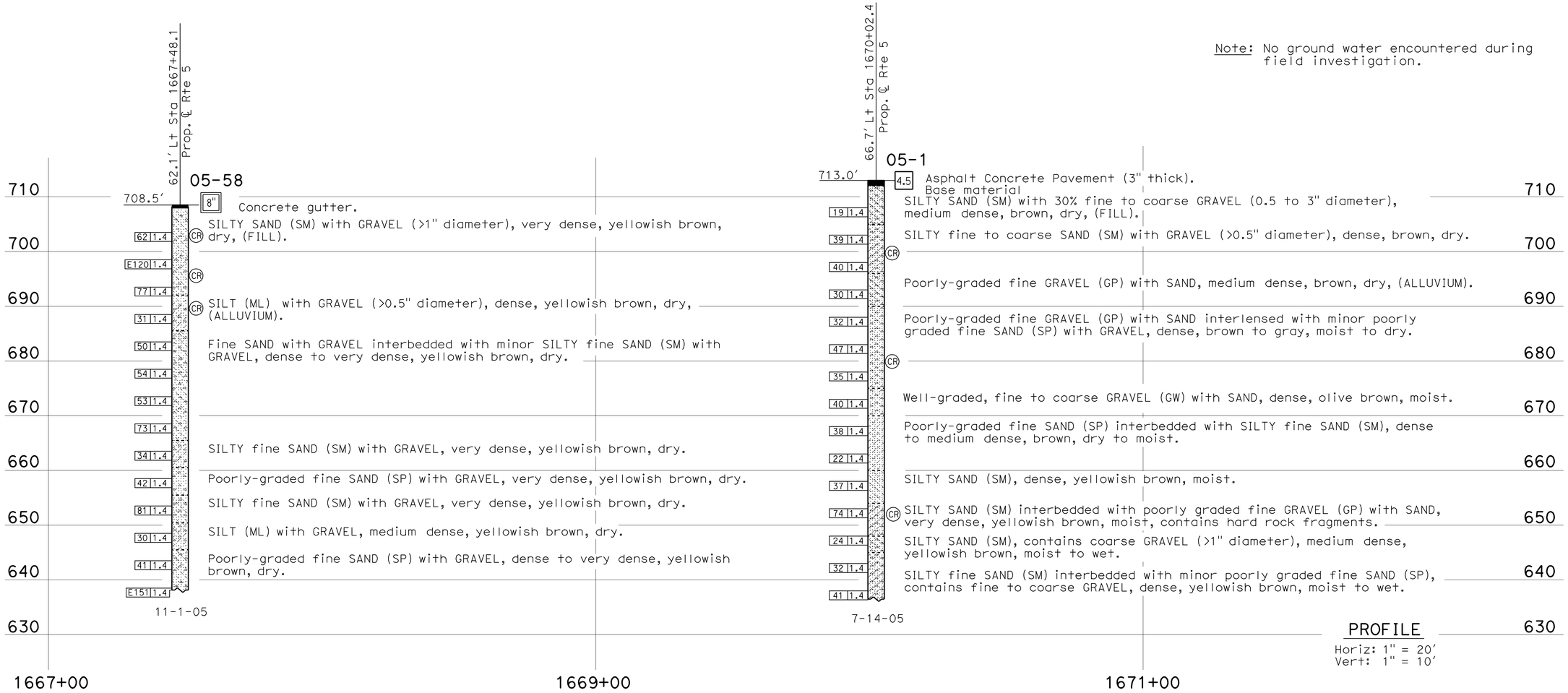

PROFILE
Horiz: 1" = 20'
Vert: 1" = 10'

LEGEND OF BORING OPERATIONS

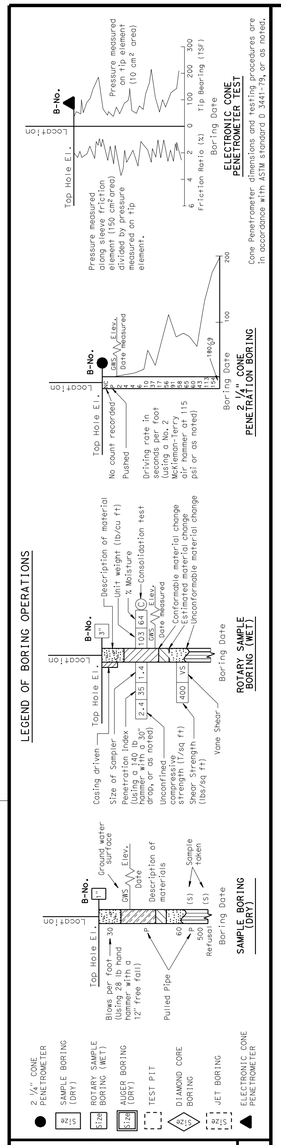

LEGEND OF EARTH MATERIALS

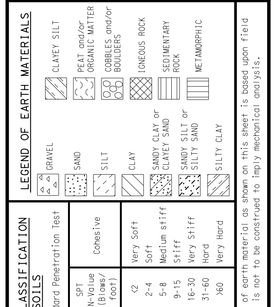

CONSISTENCY CLASSIFICATION FOR SOILS

According to the Standard Penetration Test

SPT N-Value (Blows/foot)	Granular	SPT N-Value (Blows/foot)	Cohesive
0-4	Very Loose	<2	Very Soft
5-10	Loose	2-4	Soft
11-30	Medium Dense	5-8	Medium stiff
31-50	Dense	9-15	Stiff
>50	Very Dense	16-30	Very Stiff
		31-60	Hard
		>60	Very Hard

NOTE: Classification of earth material as shown on this sheet is based upon field inspection and is not to be construed to imply mechanical analysis.

ENGINEERING SERVICES	GEOTECHNICAL SERVICES
DRAWN BY	I.G-Remmen
CHECKED BY	K. Barker

FIELD INVESTIGATION BY: K. Lai

STATE OF CALIFORNIA DEPARTMENT OF TRANSPORTATION

DIVISION OF ENGINEERING SERVICES STRUCTURE DESIGN
DESIGN BRANCH 18

BRIDGE NO. RW1665
POST MILE 31.44

RETAINING WALL NO. 1665
LOG OF TEST BORINGS 3 OF 3

OGS LOG OF TEST BORINGS SHEET (ENGLISH) (REV. 5/25/07)

ORIGINAL SCALE IN INCHES FOR REDUCED PLANS 0 1 2 3

UNIT: 3603
PROJECT NUMBER & PHASE: 0700021119-1 CONTRACT NO.: 07-1218W1

DISREGARD PRINTS BEARING EARLIER REVISION DATES 01-20-12

REVISION DATES				SHEET	OF
01-20-12				14	14

FILE => e-rw1665-z-ltb3.dgn

USERNAME => s124496 DATE PLOTTED => 21-MAY-2012 TIME PLOTTED => 14:46

DIST	COUNTY	ROUTE	POST MILES TOTAL PROJECT	SHEET No.	TOTAL SHEETS
07	LA	5	29.4/31.6	1333	1931

REGISTERED CIVIL ENGINEER — DATE 1/31/12

5-21-12
PLANS APPROVAL DATE

REGISTERED PROFESSIONAL ENGINEER — JORGE I. ESTRADA — No. C51473 — Exp. 06-30-12 — CIVIL — STATE OF CALIFORNIA

The State of California or its officers or agents shall not be responsible for the accuracy or completeness of electronic copies of this plan sheet.

INDEX TO PLANS

SHEET NO.	TITLE
1.	GENERAL PLAN
2	FOUNDATION PLAN
3.	STRUCTURE PLAN NO. 1
4.	STRUCTURE PLAN NO. 2
5.	ARCHITECTURAL TREATMENT
6.	LOG TEST BORINGS

STANDARD PLANS DATED MAY 2006

SHEET NO.	TITLE
A10A-A10B	ACRONYMS AND ABBREVIATIONS
A10C-A10D	SYMBOLS
A62B	LIMITS OF PAYMENT FOR EXCAVATION AND BACKFILL
	- BRIDGE SURCHARGE AND WALL
BO-3	BRIDGE DETAILS
B3-1	RETAINING WALL TYPE 1 H=4′ THROUGH H=30′
B3-8	RETAINING WALL DETAILS NO. 1
B3-9	RETAINING WALL DETAILS NO. 2
B11-52	CHAIN LINK RAILING TYPE 7

LEGEND

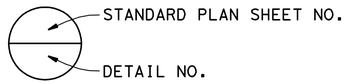

NOTES:
1. For Limits of Aerially Deposited Lead, see "STRUCTURE PLAN NO. 2" sheet.
2. Relocation of existing utilities prior to this Contract by Others.

SPREAD FOOTING DATA TABLE

RW 1670 LOL Station Location	Design H (Ft)	Allowable Bearing Capacity q_{all} (KsF)
STA 667+73.76 to STA 667+91.84	12	2.8
STA 667+91.846 to STA 668+09.93	20	4.3
STA 668+09.93 to STA 668+57.93	22	4.6
STA 668+57.93 to STA 669+05.93	22	4.6
STA 669+05.93 to STA 669+53.93	20	4.3
STA 669+53.93 to STA 670+01.93	20	4.3
STA 670+01.93 to STA 670+38.26	20	4.3
STA 670+38.26 to STA 670+55.01	20	4.3
STA 670+55.01 to STA 670+71.76	12	2.8

Notes:
Allowable Stress Design, (ASD). The Maximum Contact Pressure, (q max), is not to exceed the recommended Gross Allowable Soil Bearing Pressure, (q all). The Ultimate Soil Bearing Capacity, (q ult), will equal or exceed 3 times the recommended Gross Allowable Soil Bearing Pressure, (q all).

QUANTITIES

STRUCTURE EXCAVATION (RETAINING WALL)	376 CY
STRUCTURE EXCAVATION (TYPE Y-1) (AERIALLY DEPOSITED LEAD)	71 CY
STRUCTURE EXCAVATION (TYPE Y-2) (AERIALLY DEPOSITED LEAD)	285 CY
STRUCTURE BACKFILL (RETAINING WALL)	1,241 CY
PERVIOUS BACKFILL MATERIAL	135 CY
STRUCTURAL CONCRETE, RETAINING WALL	483 CY
ARCHITECTURAL TREATMENT	4,804 SQFT
BAR REINFORCING STEEL (RETAINING WALL)	73,217 LB
CHAIN LINK RAILING (TYPE 7)	306 LF

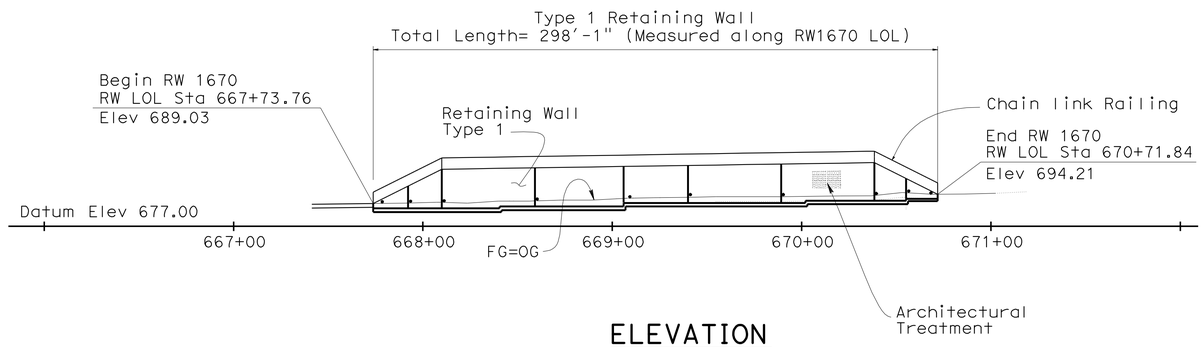

ELEVATION
1" = 40′

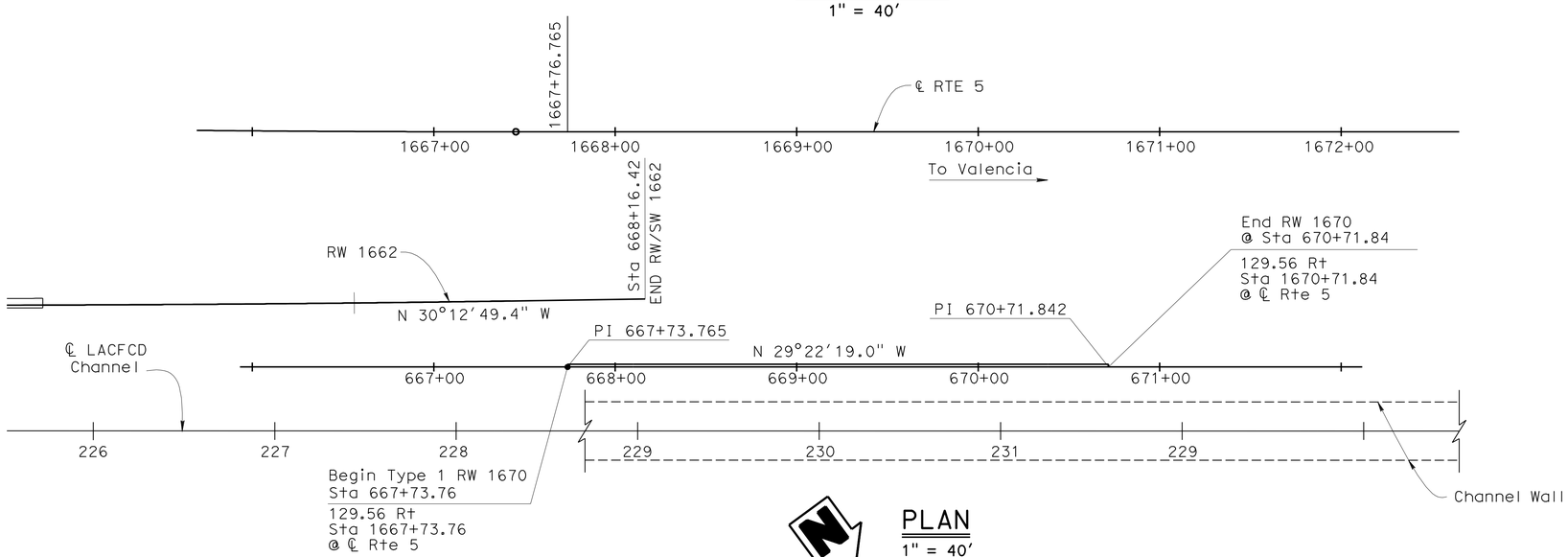

PLAN
1" = 40′

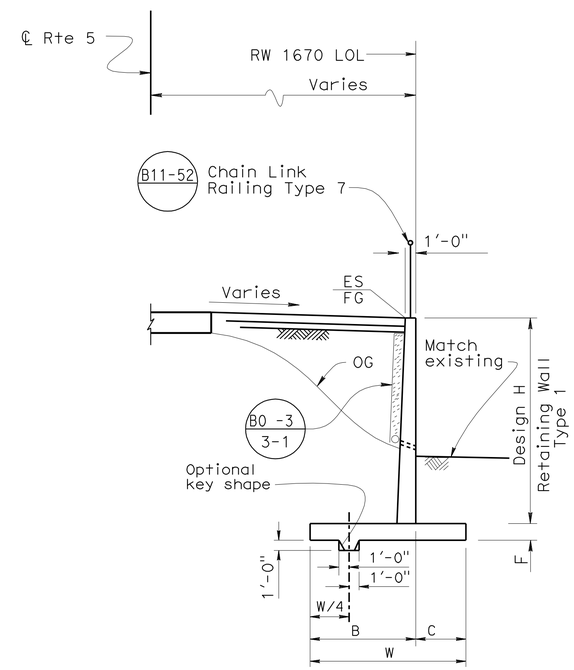

TYPICAL SECTION
No Scale
B3 -1

MICHAEL POPE — DESIGN ENGINEER	DESIGN	BY Ruperd Wilson	CHECKED Jeff Duffin	LOAD FACTOR DESIGN	LIVE LOADING: HS20-44 AND ALTERNATIVE AND PERMIT DESIGN LOAD
	DETAILS	BY R. Wilson/ M. Tran	CHECKED Ruperd Wilson	LAYOUT: BY Minh Tran	CHECKED Jorge Estrada
	QUANTITIES	BY Cory Cowden	CHECKED Matt Schott	SPECIFICATIONS: BY James Choi	PLANS AND SPECS COMPARED James Choi

ORIGINAL SCALE IN INCHES FOR REDUCED PLANS 0 1 2 3

STATE OF CALIFORNIA
DEPARTMENT OF TRANSPORTATION

DIVISION OF ENGINEERING SERVICES
STRUCTURE DESIGN
DESIGN BRANCH 18

BRIDGE NO. RW 1670
POST MILE 31.60

RETAINING WALL 1670
GENERAL PLAN

UNIT: 3603
PROJECT NUMBER & PHASE: 0700021119-1
CONTRACT NO.: 071218W1

DISREGARD PRINTS BEARING EARLIER REVISION DATES
REVISION DATES: 9/28/11 02/24/12 04/30/12
SHEET 1 OF 6

USERNAME => s124496 DATE PLOTTED => 21-MAY-2012 TIME PLOTTED => 14:47

STRUCTURES DESIGN GENERAL PLAN SHEET (ENGLISH) (REV.09-01-10)

FILE => e-rw1670-a-gp.dgn

DIST	COUNTY	ROUTE	POST MILES TOTAL PROJECT	SHEET No.	TOTAL SHEETS
07	LA	5	29.4/31.6	1334	1931

REGISTERED CIVIL ENGINEER — DATE 1/31/12

5-21-12
PLANS APPROVAL DATE

REGISTERED PROFESSIONAL ENGINEER — JORGE I. ESTRADA — No. C51473 — Exp. 06-30-12 — CIVIL — STATE OF CALIFORNIA

The State of California or its officers or agents shall not be responsible for the accuracy or completeness of electronic copies of this plan sheet.

CURVE DATA

No.	R	Δ	T	L
A	19688.30	02°15'15"	387.34	774.58
B	21876.29	00°41'23"	131.65	263.30
C	21423.67	00°55'49"	173.92	347.84

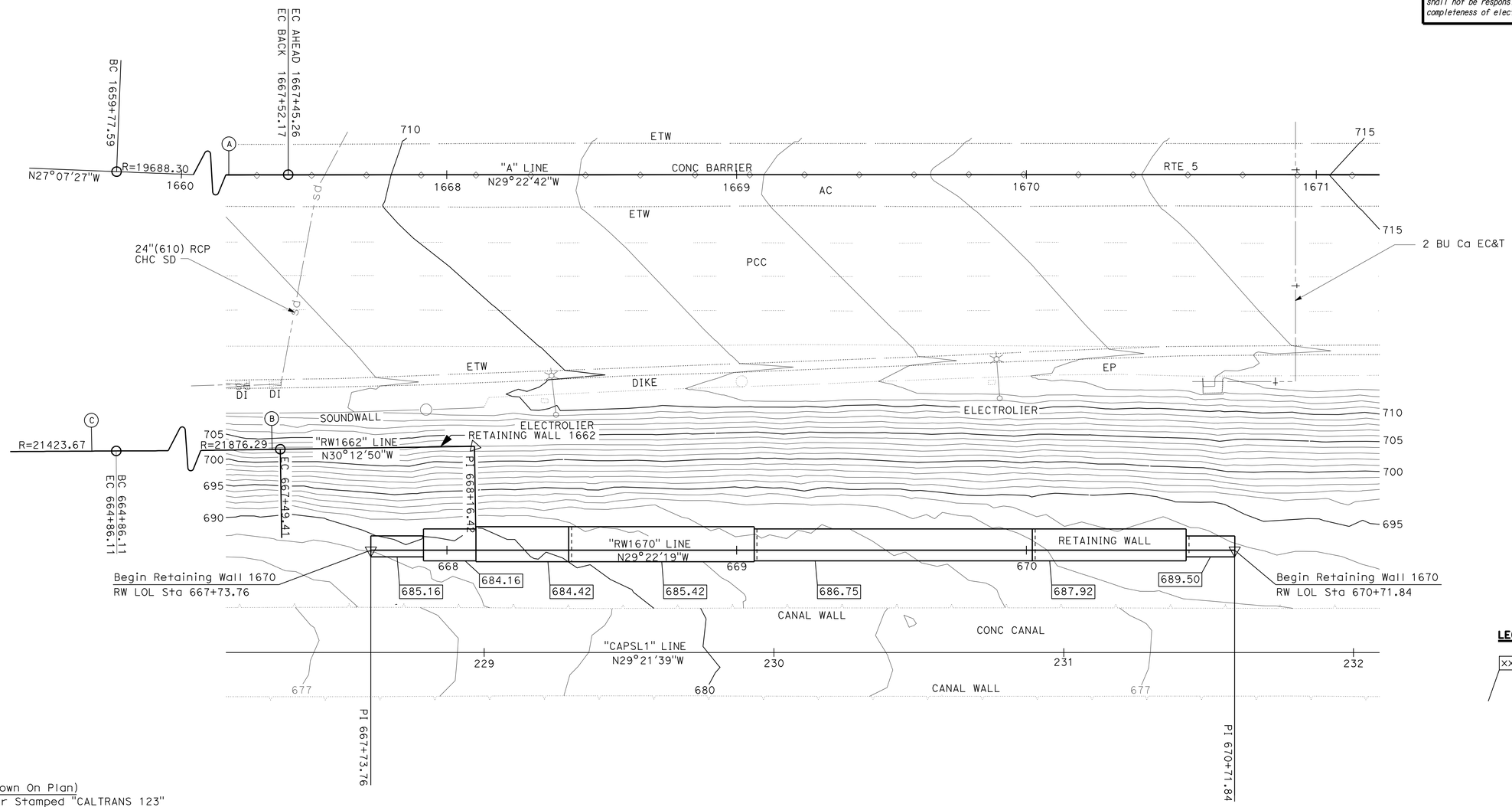

LEGEND

xxx.xx — Indicates Bottom of Footing elevation

SURVEY CONTROL

SUHV123 (Not Shown On Plan)
Fnd PK w/ Washer Stamped "CALTRANS 123"
88.00 Ft Rt "A" Line, Rte 5
Sta 1581+75.69
N 1,890,470.97
E 6,464,594.96
Elev= 598.93

SUHV127 (Not Shown On Plan)
Fnd PK w/ Washer Stamped "CALTRANS 127"
67.36 Ft Rt "A" Line, Rte 5
Sta 1585+96.99
N 1,890,753.54
E 6,464,269.04
Elev= 604.23

PRELIMINARY INVESTIGATION SECTION

SCALE	VERT.DATUM NAVD88	PHOTOGRAMMETRY AS OF: X			
1"=20'	HORZ.DATUM NAD83	SURVEYED	BY District	CHECKED	BY J. Pallares 10/2011
ALIGNMENT TIES Dist. Traverse Sheet		DRAFTED	BY C. Fassett 10/2011	CHECKED	BY J. Pallares 10/2011

DESIGN	BY Ruperd Wilson	CHECKED Jeff Duffin
DETAILS	BY Minh Tran	CHECKED Ruperd Wilson
QUANTITIES	BY Cory Cowden	CHECKED Matt Schott

STATE OF CALIFORNIA
DEPARTMENT OF TRANSPORTATION

DIVISION OF ENGINEERING SERVICES
STRUCTURE DESIGN
DESIGN BRANCH 18

BRIDGE NO. RW 1670
POST MILE 31.60

RETAINING WALL 1670
FOUNDATION PLAN

STRUCTURES FOUNDATION PLAN SHEET (ENGLISH) (REV. 09-01-10)

ORIGINAL SCALE IN INCHES FOR REDUCED PLANS 0 1 2 3

UNIT: 3603
PROJECT NUMBER & PHASE: 0700021119-1
CONTRACT NO.: 071218w1

DISREGARD PRINTS BEARING EARLIER REVISION DATES

REVISION DATES: 10/31/11 12/1/11

SHEET 2 OF 6

FILE => e-rw1670-b-fp101.dgn

DIST	COUNTY	ROUTE	POST MILES TOTAL PROJECT	SHEET No.	TOTAL SHEETS
07	LA	5	29.4/31.6	1335	1931

JEstrada. 1/31/12
REGISTERED CIVIL ENGINEER DATE

5-21-12
PLANS APPROVAL DATE

REGISTERED PROFESSIONAL ENGINEER
JORGE I. ESTRADA
No. C51473
Exp. 06-30-12
CIVIL
STATE OF CALIFORNIA

The State of California or its officers or agents shall not be responsible for the accuracy or completeness of electronic copies of this plan sheet.

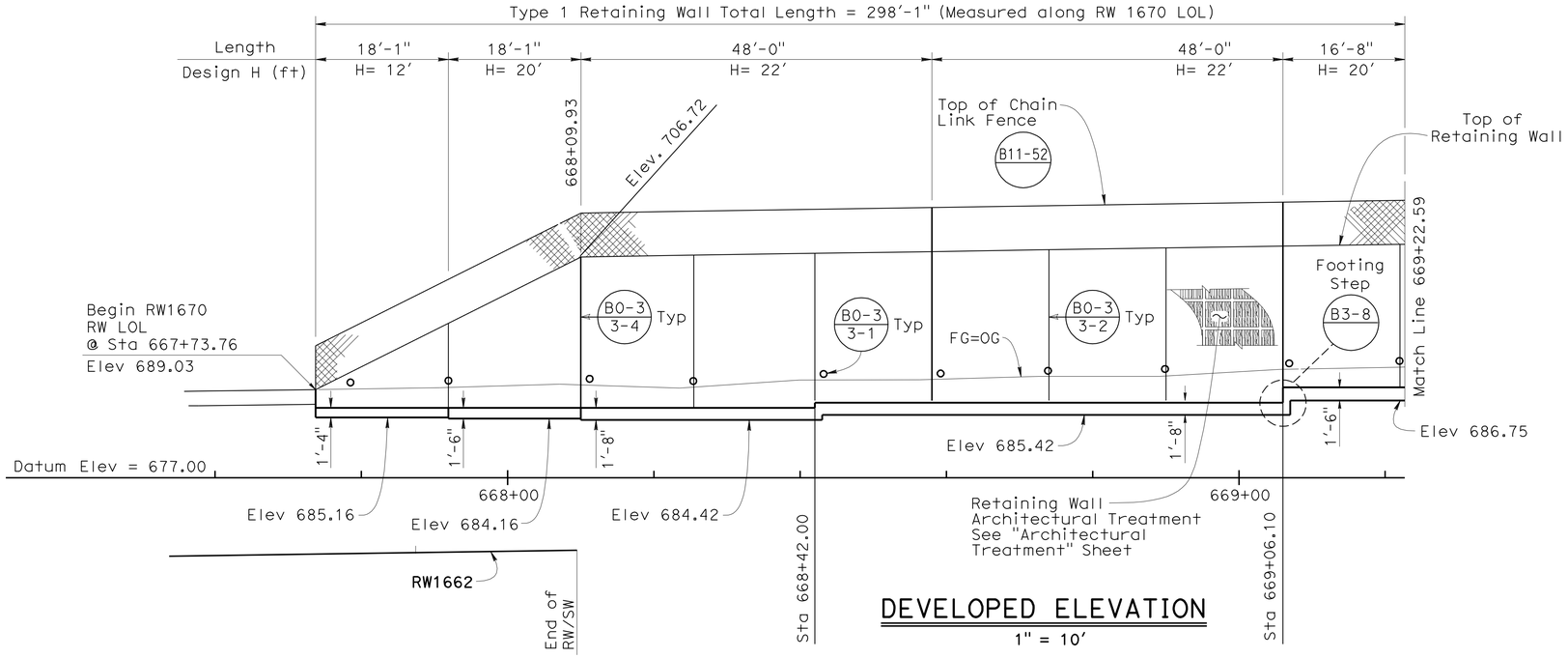

DEVELOPED ELEVATION
1" = 10'

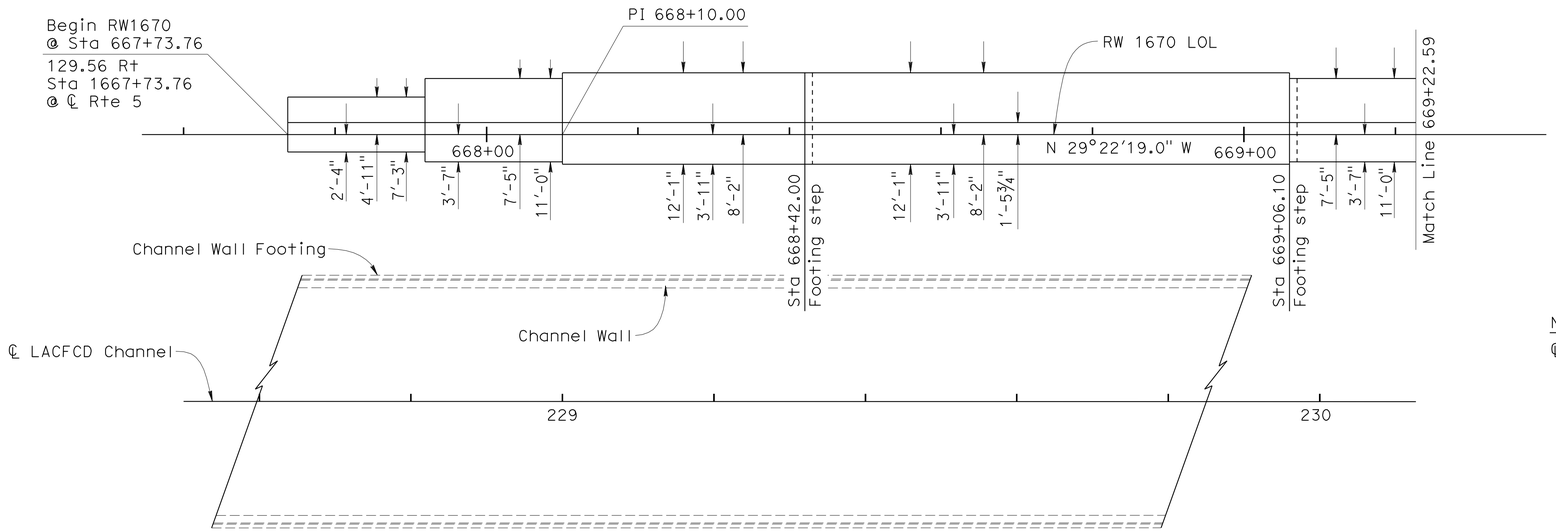

NOTE

℄ Rte 5 not shown on Plans.

PLAN
1" = 10'

DESIGN	BY Ruperd Wilson	CHECKED Jeff Duffin	
DETAILS	BY R. Wilson/ Minh Tran	CHECKED Ruperd Wilson	
QUANTITIES	BY Cory Cowden	CHECKED Matt Schott	

STATE OF CALIFORNIA
DEPARTMENT OF TRANSPORTATION

DIVISION OF ENGINEERING SERVICES
STRUCTURE DESIGN
DESIGN BRANCH 18

BRIDGE NO. RW 1670
POST MILE 31.60

RETAINING WALL 1670
STRUCTURE PLAN NO. 1

STRUCTURES DESIGN DETAIL SHEET (ENGLISH) (REV. 09-01-10)

ORIGINAL SCALE IN INCHES FOR REDUCED PLANS 0 1 2 3

UNIT: 3603
PROJECT NUMBER & PHASE: 0700021119-1
CONTRACT NO.: 071218W1

DISREGARD PRINTS BEARING EARLIER REVISION DATES

REVISION DATES: ~~09-26-11~~ 1/31/12 4/19/12

SHEET 3 OF 6

FILE => e-rw1670-c-sp01.dgn

USERNAME => s124496 DATE PLOTTED => 21-MAY-2012 TIME PLOTTED => 14:47

DIST	COUNTY	ROUTE	POST MILES TOTAL PROJECT	SHEET No.	TOTAL SHEETS
07	LA	5	29.4/31.6	1336	1931

REGISTERED CIVIL ENGINEER 1/31/12 DATE

5-21-12
PLANS APPROVAL DATE

REGISTERED PROFESSIONAL ENGINEER JORGE I. ESTRADA No. C51473 Exp. 06-30-12 CIVIL STATE OF CALIFORNIA

The State of California or its officers or agents shall not be responsible for the accuracy or completeness of electronic copies of this plan sheet.

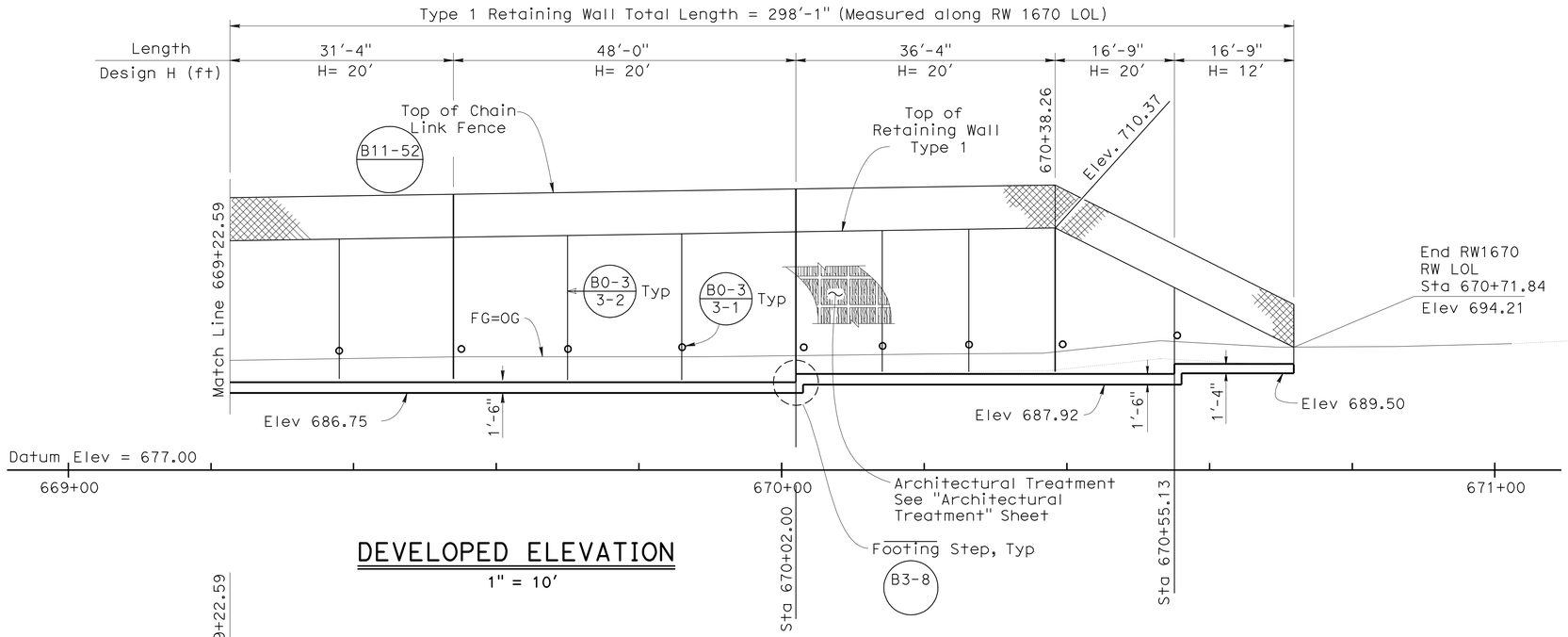

DEVELOPED ELEVATION

1" = 10'

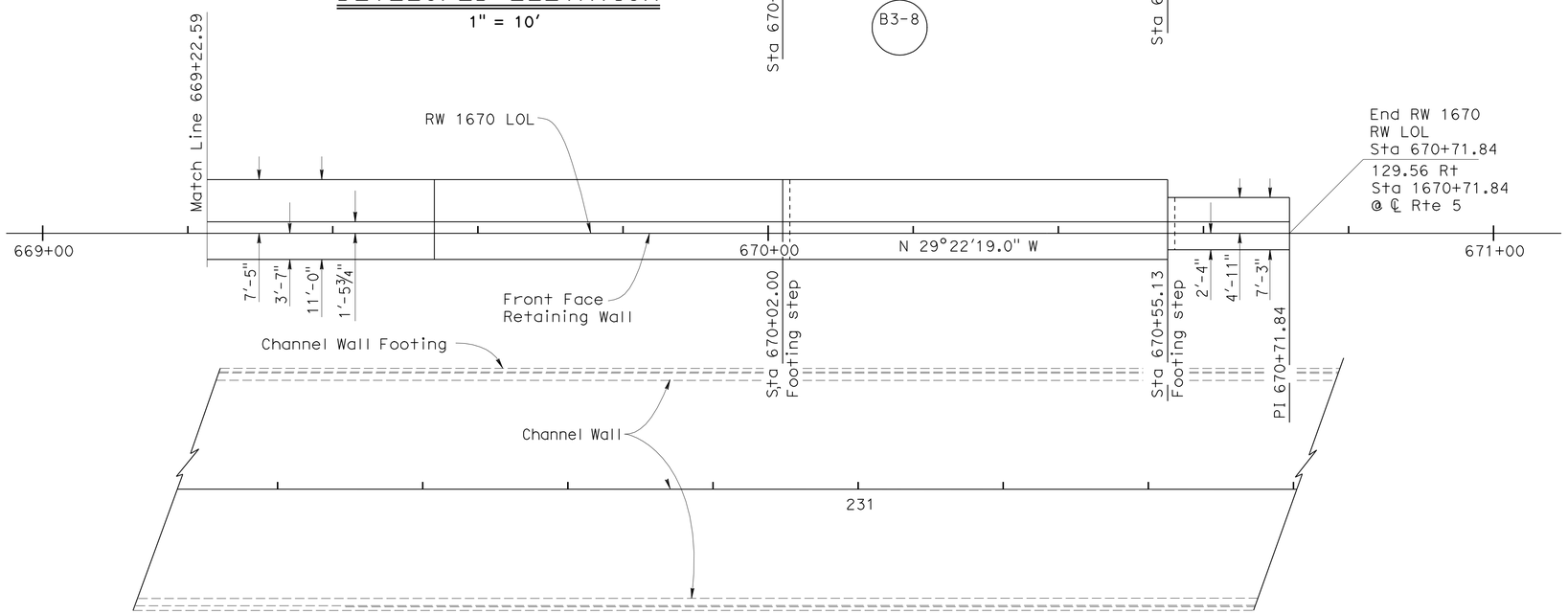

PLAN

1" = 10'

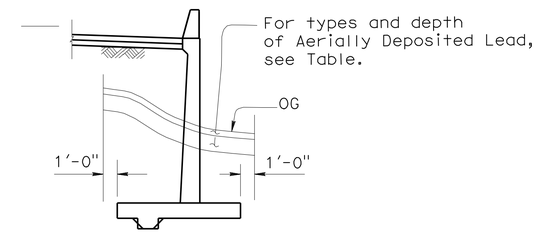

AERIALLY DEPOSITED LEAD

ADL TYPE	DEPTH H, FT	STATION LIMIT	
		FROM	TO
Y-1	2.0	1667+73.76	1670+71.84
Y-2	0.50	1667+73.76	1670+71.84

stations are centerline of Route 5

LIMITS OF STRUCTURE EXCAVATION, AERIALLY DEPOSITED LEAD(ADL)

No Scale

NOTE:

℄ Rte 5 not shown on Plans.

DESIGN	BY Ruperd Wilson	CHECKED Jeff Duffin	
DETAILS	BY R. Wilson/ Minh Tran	CHECKED Ruperd Wilson	
QUANTITIES	BY Cory Cowden	CHECKED Matt Schott	

STATE OF CALIFORNIA
DEPARTMENT OF TRANSPORTATION

DIVISION OF ENGINEERING SERVICES
STRUCTURE DESIGN
DESIGN BRANCH 18

BRIDGE NO. RW 1670
POST MILE 31.60

RETAINING WALL 1670
STRUCTURE PLAN NO. 2

STRUCTURES DESIGN DETAIL SHEET (ENGLISH) (REV. 09-01-10)

ORIGINAL SCALE IN INCHES FOR REDUCED PLANS 0 1 2 3

UNIT: 3603
PROJECT NUMBER & PHASE: 0700021119-1 CONTRACT NO.: 071218W1

DISREGARD PRINTS BEARING EARLIER REVISION DATES

REVISION DATES: 08-26-11 1-31-12 4-19-12

SHEET 4 OF 6

FILE => e-rw1670-c-sp02.dgn

USERNAME => s124496 DATE PLOTTED => 21-MAY-2012 TIME PLOTTED => 14:47

NOTE: FRACTURED GRANITE TEXTURE SHALL RUN PERPENDICULAR TO PLUMB.

DIST	COUNTY	ROUTE	POST MILES TOTAL PROJECT	SHEET No.	TOTAL SHEETS
07	LA	5	29.4/31.6	1337	1931

dEstrada. 1/31/12
REGISTERED CIVIL ENGINEER DATE

5-21-12
PLANS APPROVAL DATE

REGISTERED PROFESSIONAL ENGINEER
JORGE I. ESTRADA
No. C51473
Exp. 06-30-12
CIVIL
STATE OF CALIFORNIA

The State of California or its officers or agents shall not be responsible for the accuracy or completeness of electronic copies of this plan sheet.

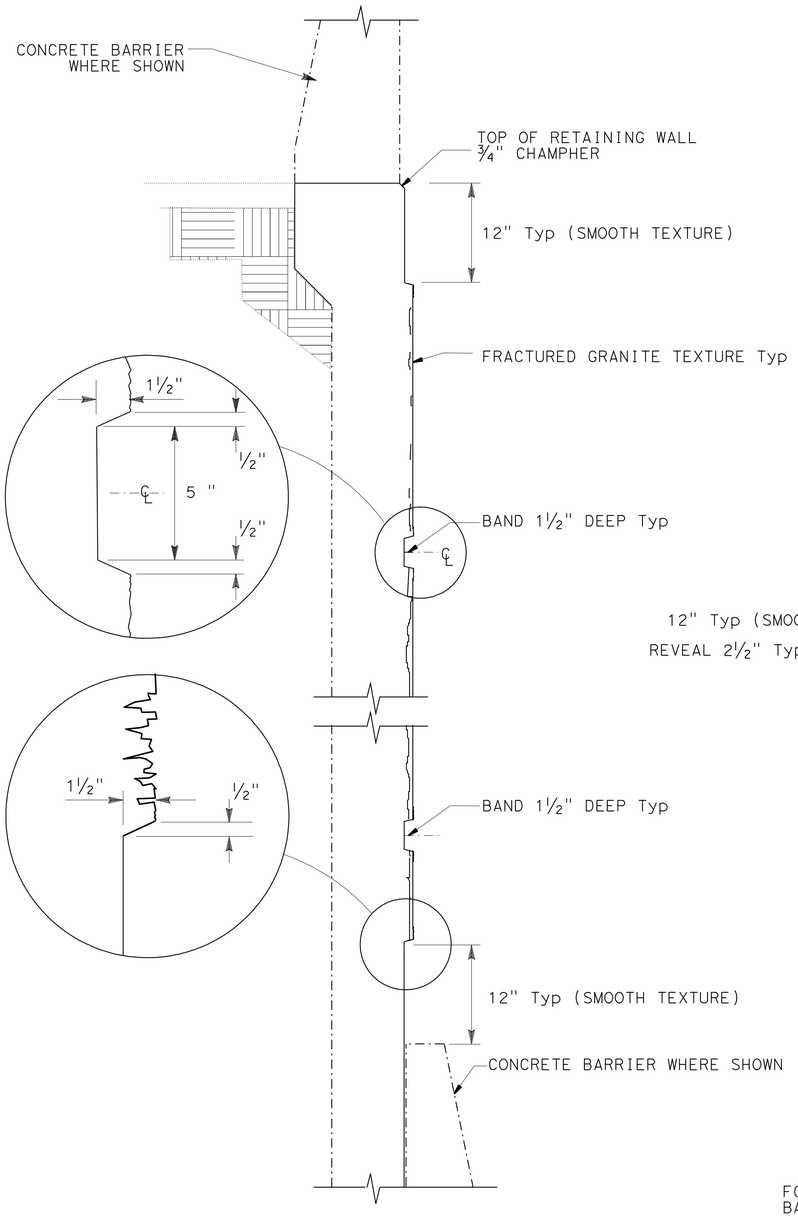

TYPICAL SECTION

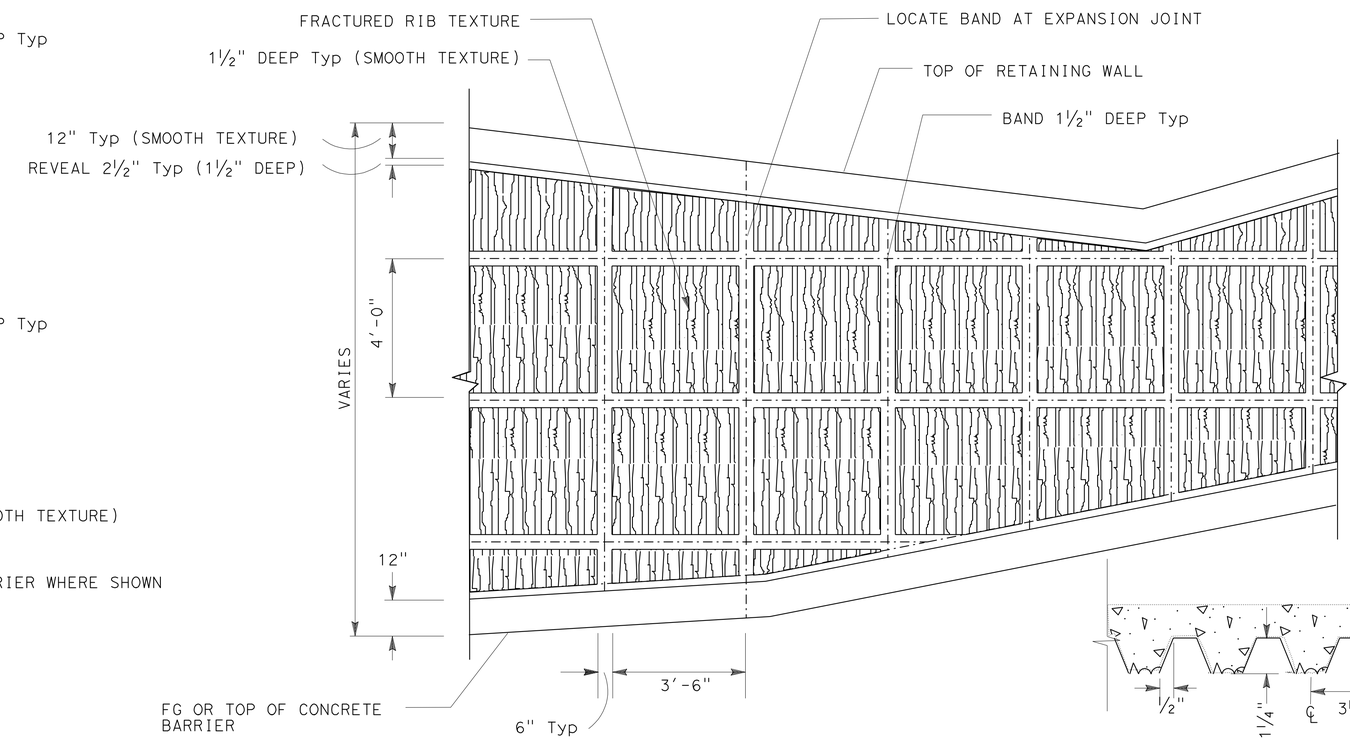

TYPICAL ELEVATION

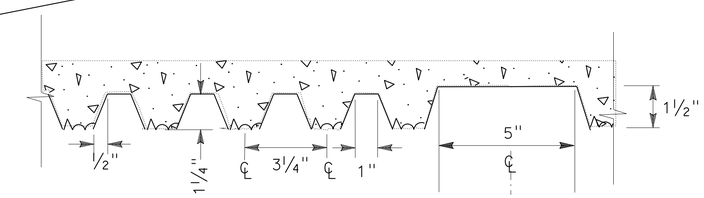

FRACTURED GRANITE TEXTURE & BAND

RETAINING WALL ARCHITECTURAL TREATMENT

NO SCALE

	BY	CHECKED
DESIGN	Ruperd Wilson	JD/ Jorge Estrada
DETAILS	Minh Tran	Ruperd Wilson
QUANTITIES	Cory Cowden	Matt Schott

STATE OF CALIFORNIA
DEPARTMENT OF TRANSPORTATION

DIVISION OF ENGINEERING SERVICES
STRUCTURE DESIGN
DESIGN BRANCH 18

BRIDGE NO. RW 1670
POST MILE 30.36

RETAINING WALL 1670
ARCHITECTURAL TREATMENT

STRUCTURES DESIGN DETAIL SHEET (ENGLISH) (REV. 09-01-10)

ORIGINAL SCALE IN INCHES FOR REDUCED PLANS 0 1 2 3

UNIT: 3603
PROJECT NUMBER & PHASE: 0700021119-1 CONTRACT NO.: 071218w1

DISREGARD PRINTS BEARING EARLIER REVISION DATES

REVISION DATES: 8-18-07 1/30/12 4/19/12

SHEET 5 OF 6

FILE => e-rw1670-r-arch_treat.dgn

USERNAME => s124496 DATE PLOTTED => 21-MAY-2012 TIME PLOTTED => 14:47

DIST	COUNTY	ROUTE	KILOMETER POST TOTAL PROJECT	SHEET No	TOTAL SHEETS
07	LA	5	29.4/31.6	1338	1931

Joseph S. Pratt 1-11-12
CERTIFIED ENGINEERING GEOLOGIST

5-21-12
PLANS APPROVAL DATE

PROFESSIONAL GEOLOGIST Joseph S. Pratt No. 2141 Exp. 5-31-13 CERTIFIED ENGINEERING GEOLOGIST STATE OF CALIFORNIA

The State of California or its officers or agents shall not be responsible for the accuracy or completeness of electronic copies of this plan sheet.

BENCH MARK

BM PRHV611 Elev 694.251 ft
Fd Geodetic Control Mark ±8.9 ft
east of the east curb of NBND LA-5;
±68.9 ft south of Call Box #5-314;
between NBND Buena Vista St Off-ramp
and On-ramp; 102.567 ft Rt Sta 1657+19.04
C/L Rte 5 (Prop).
N 1895580.234
E 6459215.635

NAD83, NAVD88

LEGEND:

- (M) Moisture Content
- (PA) Particle Size Analysis
- (PI) Plasticity, Index, Liquid Limit
- (CR) Corrosivity Testing
- (CP) Compaction

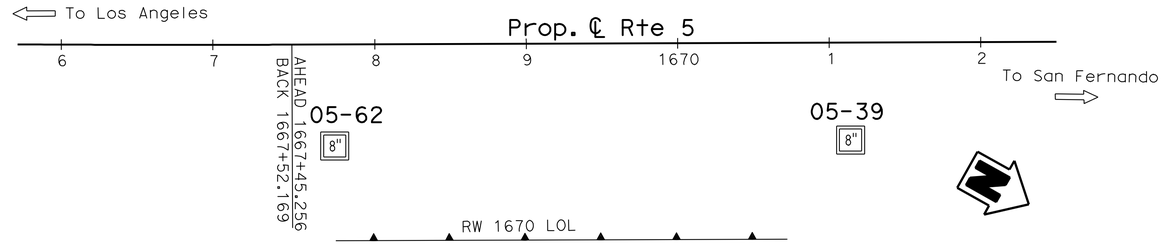

PLAN

1" = 50'

Note: No ground water encountered during field investigation.

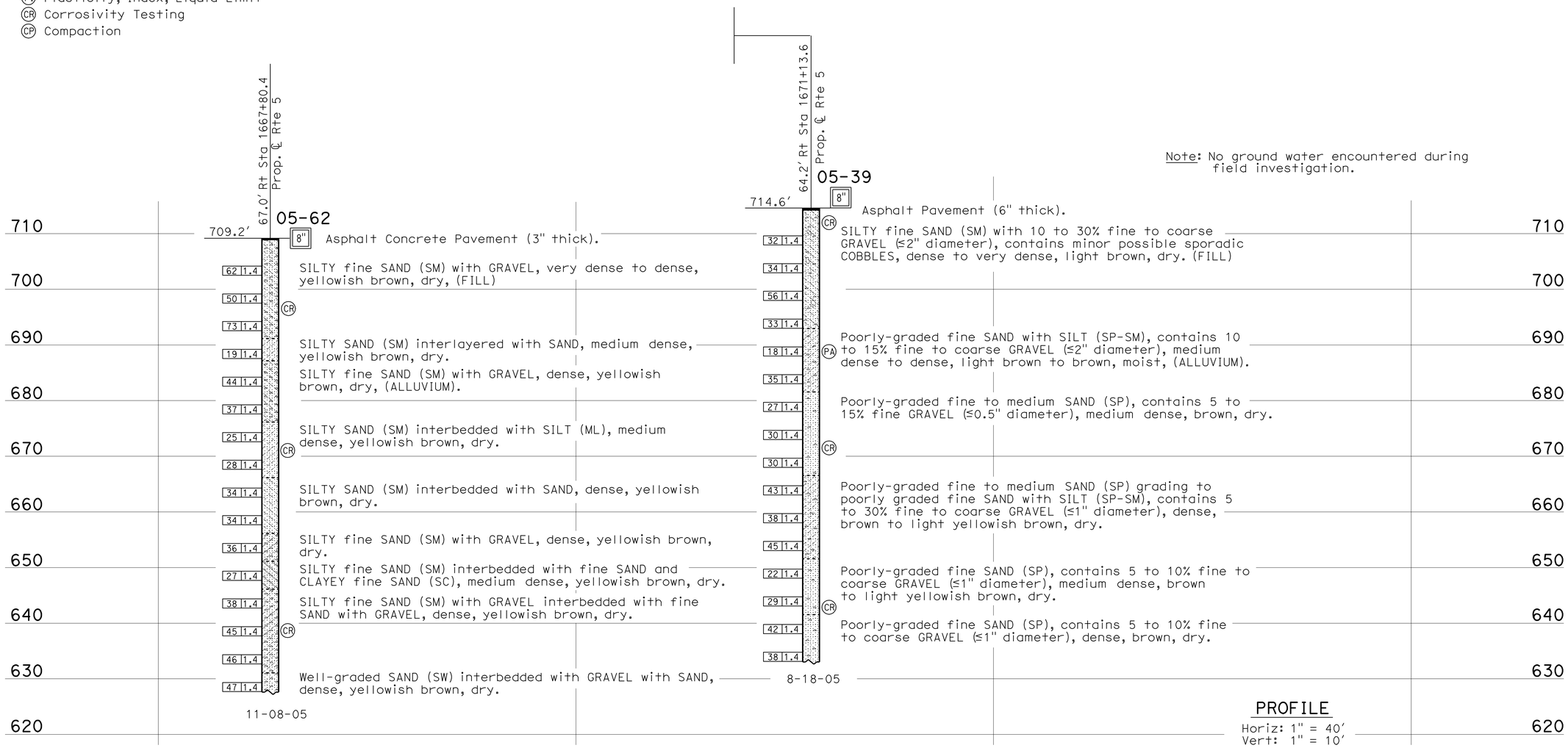

PROFILE

Horiz: 1" = 40'
Vert: 1" = 10'

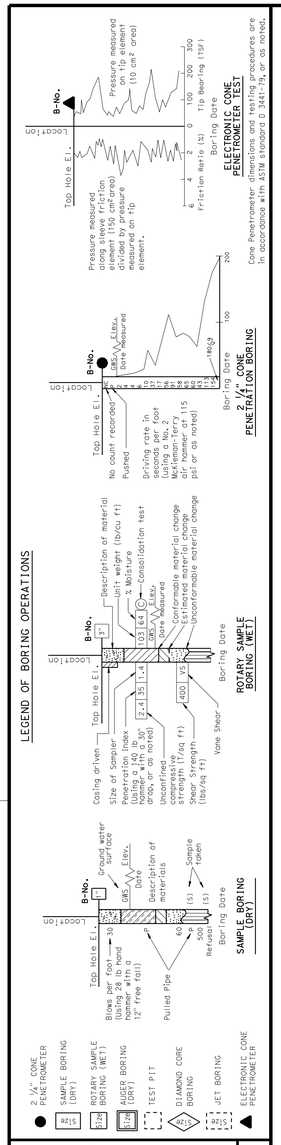

ENGINEERING SERVICES	GEOTECHNICAL SERVICES
DRAWN BY	I.G-Remmen
CHECKED BY	J. Pratt

FIELD INVESTIGATION BY: K. Lai, E. Schramm

STATE OF CALIFORNIA DEPARTMENT OF TRANSPORTATION

DIVISION OF ENGINEERING SERVICES STRUCTURE DESIGN DESIGN BRANCH 18

BRIDGE NO. RW1670
POST MILE 31.59/31.65

RETAINING WALL NO. 1670
LOG OF TEST BORINGS

OGS LOG OF TEST BORINGS SHEET (ENGLISH) (REV. 5/25/07)

ORIGINAL SCALE IN INCHES FOR REDUCED PLANS 0 1 2 3

UNIT: 3603
PROJECT NUMBER & PHASE: 0700021119-1 CONTRACT NO.: 07-1218W1

DISREGARD PRINTS BEARING EARLIER REVISION DATES

REVISION DATES				SHEET	OF
01-11-12				6	6

FILE => e-rw1670-u-ltb.dgn

USERNAME => s124196 DATE PLOTTED => 21-MAY-2012 TIME PLOTTED => 14:47

DIST	COUNTY	ROUTE	POST MILES TOTAL PROJECT	SHEET No	TOTAL SHEETS
07	LA	5	29.4/31.6	1339	1931

REGISTERED CIVIL ENGINEER — DATE 5/11/12

5-21-12
PLANS APPROVAL DATE

REGISTERED PROFESSIONAL ENGINEER — RICHARD STEVEN AGOR — No. 57082 — Exp. 12/31/13 — CIVIL — STATE OF CALIFORNIA

The State of California or its officers or agents shall not be responsible for the accuracy or completeness of electronic copies of this plan sheet.

TETRA TECH
17885 VON KARMAN AVE
IRVINE, CA 92614

CITY OF BURBANK
150 N 3RD ST
BURBANK, CA 91510

INDEX TO PLANS

SHEET	TITLE
GP	GENERAL PLAN

STRUCTURAL:

SHEET	TITLE
ST-1	GENERAL STRUCTURAL NOTES
ST-2	FOUNDATION PLAN
ST-3	PLAN VIEW - Elev 610.00
ST-4	PLAN VIEW - Elev 613.00
ST-5	PLAN VIEW - Elev 619.00
ST-6	ROOF SLAB PLAN
ST-7	SECTION A
ST-8	SECTIONS B & C
ST-9	TYPICAL DETAILS 1
ST-10	TYPICAL DETAILS 2
ST-11	STRUCTURAL DETAILS 1
ST-12	STRUCTURAL DETAILS 2
ST-13	STRUCTURAL DETAILS 3
ST-14	STRUCTURAL DETAILS 4

MECHANICAL:

SHEET	TITLE
M-1	PUMP STATION MECHANICAL PLAN
M-2	PUMP STATION MECHANICAL SECTION
M-3	PUMP STATION DETAILS 1
M-4	PUMP STATION DETAILS 2

ELECTRICAL:

SHEET	TITLE
EE-1	SYMBOLS AND ABBREVIATIONS 1
EE-2	SYMBOLS AND ABBREVIATIONS 2
EE-3	ELECTRICAL SITE PLAN
EE-4	POWER PLAN
EE-5	LIGHTING PLAN
EE-6	ELECTRICAL CONTROL PLAN
EE-7	SINGLE LINE DIAGRAM
EE-8	ELECTRICAL CONDUIT SCHEDULE
EE-9	ELECTRICAL SCHEMATIC
EE-10	ELECTRICAL DETAILS 1
EE-11	ELECTRICAL DETAILS 2
EE-12	P&ID SYMBOLS - I1
EE-13	P&ID - I2

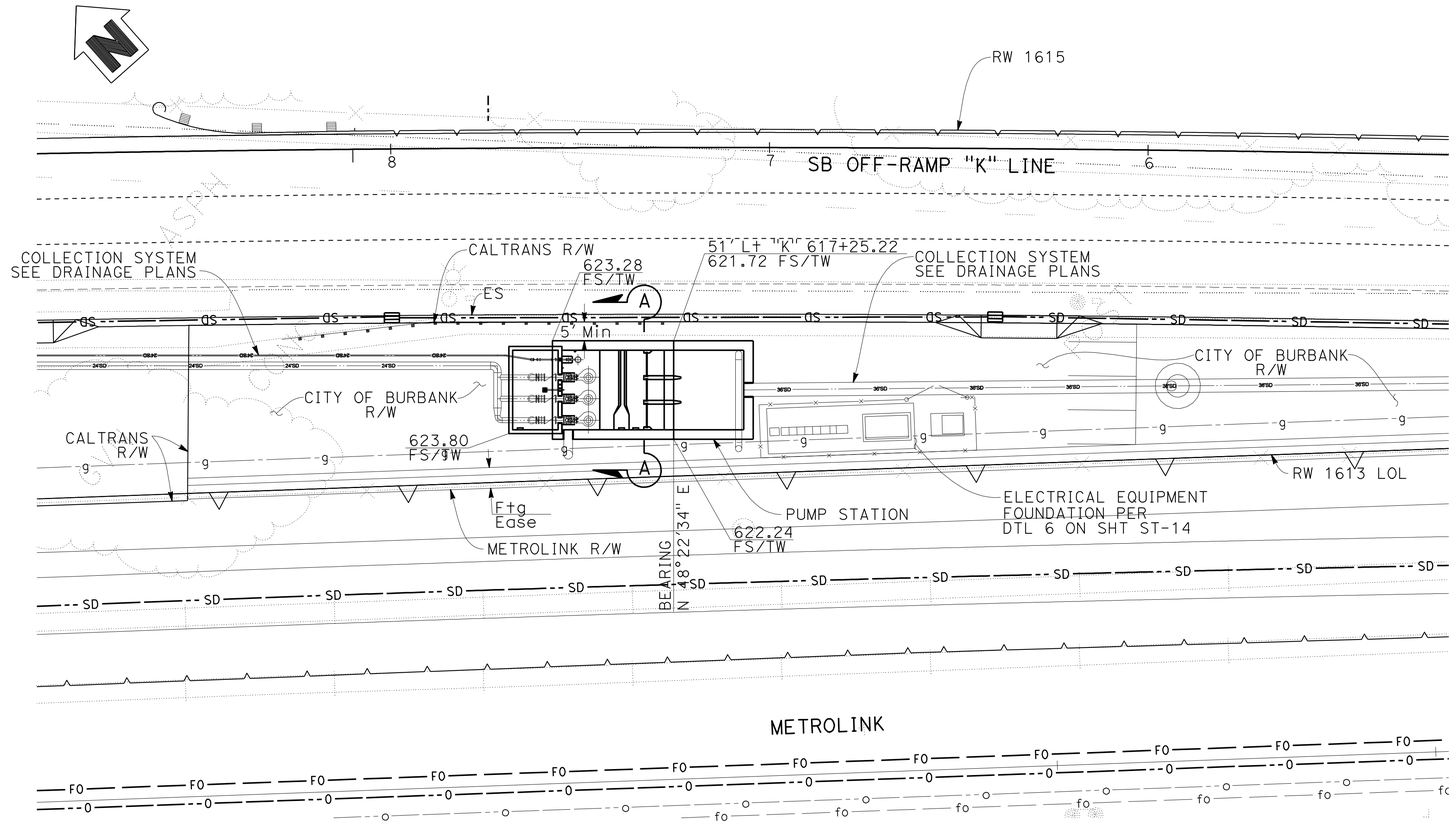

SITE PLAN

1"=20'

ABBREVIATIONS:

ACI	AMERICAN CONCRETE INSTITUTE
AISC	AMERICAN INSTITUTE OF STEEL CONSTRUCTION
AISI	AMERICAN IRON AND STEEL INSTITUTE
ASTM	AMERICAN SOCIETY FOR TESTING AND MATERIALS
ANSI	AMERICAN NATIONAL STANDARDS INSTITUTE
AWS	AMERICAN WELDING SOCIETY
BTW	BETWEEN
BWP	BURBANK POWER AND WATER
DIP	DUCTILE IRON PIPE
DTL	DETAIL
EFP	EQUIVALENT FLUID PRESSURE
ETC	ETCETERA
FLG	FLANGE
FRP	FIBERGLASS REINFORCED PIPE
GPM	GALLONS PER MINUTE
HSS	HALLOW STEEL SECTIONS
ICC	INTERNATIONAL CODE COUNCIL
IE	THAT IS
INC	INCORPORATED
MC	MACHINE CUT
MJ	MECHANICAL JOINT
PCI	POUNDS CUBIC INCH
PCT	PERCENT
P&ID	PIPING AND INSTRUMENTATION DIAGRAM
RCSC	RESEARCH COUNCIL ON STRUCTURAL CONNECTIONS OF THE ENGINEERING FOUNDATION
RPM	REVOLUTIONS PER MINUTE
SCH	SCHEDULE
SHT	SHEET
STL	STEEL
SQ	SQUARE
TO	TOP OF
TOF	TOP OF FOOTING
TOG	TOP OF GRATING
TOS	TOP OF SLAB
UNO	UNLESS NOTED OTHERWISE
w/	WITH

NOTE:
REFER TO CONSTRUCTION DETAIL C-55 FOR SITE LAYOUT.

RAINFALL DATA

Storm Time (Min)	R50 (INCH)
5	0.470
10	0.673
15	0.814
30	1.120
60	1.590

Storage: 20,000 cubic feet
Drainage Area: 14.1 acres

QUANTITIES

PUMPING PLANT	LUMP SUM

EQUIPMENT SCHEDULE

QUANTITY	EQUIPMENT	PUMP PERFORMANCE		ELECTRICAL CHARACTERISTICS			
		PUMPING RATE (Gallons per Minute)	TOTAL DYNAMIC HEAD (feet)	HP	RPM	VOLTS	PHASE
(3)	Submersible Pump	4000	47	75 (MAX)	1200	460	3
(1)	Submersible Pump	196	63	5	3600	460	3

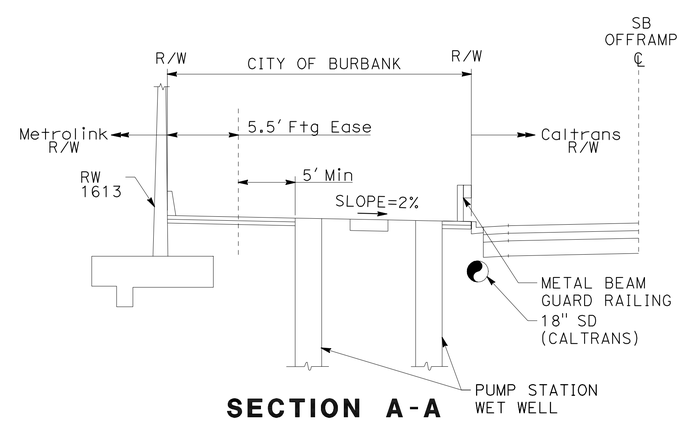

SECTION A-A

NO SCALE

GP

EMPIRE AVENUE UC
PUMPING PLANT
GENERAL PLAN

STEVEN AGOR
DESIGN OVERSIGHT
5/11/12
SIGN OFF DATE

	BY	CHECKED
DESIGN	CRISNA ESTRADA	STEVEN AGOR
DETAILS	CRISNA ESTRADA	STEVEN AGOR
QUANTITIES	CRISNA ESTRADA	STEVEN AGOR

PREPARED FOR THE STATE OF CALIFORNIA DEPARTMENT OF TRANSPORTATION

PROJECT ENGINEER

BRIDGE NO. 53-2920W
POST MILES 30.63

DESIGN DETAIL SHEET (ENGLISH) (REV.7/16/10)

ORIGINAL SCALE IN INCHES FOR REDUCED PLANS 0 1 2 3

UNIT: 1812
PROJECT NUMBER & PHASE: 07000211191 CONTRACT NO.: X

DISREGARD PRINTS BEARING EARLIER REVISION DATES

REVISION DATES X

SHEET 1 OF 32

FILE => wc000.dgn

USERNAME => s124496 DATE PLOTTED => 21-MAY-2012 TIME PLOTTED => 15:52

DIST	COUNTY	ROUTE	POST MILES TOTAL PROJECT	SHEET No	TOTAL SHEETS
07	LA	5	29.4/31.6	1340	1931

REGISTERED CIVIL ENGINEER 5/11/12 DATE

5-21-12
PLANS APPROVAL DATE

REGISTERED PROFESSIONAL ENGINEER
DALE E. WAH
No. 2582
Exp. 3/31/14
STRUCTURAL
STATE OF CALIFORNIA

The State of California or its officers or agents shall not be responsible for the accuracy or completeness of electronic copies of this plan sheet.

TETRA TECH
17885 VON KARMAN AVE
IRVINE, CA 92614

CITY OF BURBANK
150 N 3RD ST
BURBANK, CA 91510

DESIGN CRITERIA

DESIGN:
AASHTO STANDARD SPECIFICATIONS FOR HIGHWAY BRIDGES (17TH EDITION)
WITH CALTRANS AMENDMENTS

MATERIAL PROPERTIES:
REINFORCED CONCRETE, f'c = 4,500 psi
REINFORCING STEEL, fy = 60 ksi
STRUCTURAL STEEL, Fy = 50 ksi (UNLESS NOTED OTHERWISE)
MISCELLANEOUS STEEL, Fy = 36 ksi (UNLESS NOTED OTHERWISE)

LOADING:
PUMP STATION ROOF SLAB LIVE LOAD = H20-44 TRUCK LOAD (8KIP FRONT AXLE, 32KIP REAR AXLE, IMPACT FACTOR OF 1.3)
CATWALK LIVE LOAD = 100 psf (Max ALLOWABLE DEFLECTION FOR GRATING IS L/240)

SOIL DESIGN PARAMETERS:
SOILS REPORT BY LEIGHTON CONSULTING, INC. (REPORT No. 603239-001) DATED NOVEMBER 9, 2011
ALLOWABLE SOIL BEARING (DEEP FOUNDATION) = 6000 psf
ALLOWABLE SOIL BEARING (SHALLOW FOUNDATION) = 2000 psf (NET VALUE)
FOR DEAD LOAD & LIVE LOAD. MAY BE INCREASED BY 1/3 FOR SHORT TERM LOAD DUE TO WIND OR SEISMIC FORCES

ACTIVE SOIL PRESSURE (E.F.P.)
AT-REST WALL = 58 lb/ft^3 AT LEVEL BACKFILL
CANTILELVERED WALL = 38 lb/ft^3 AT LEVEL BACKFILL
GROUNDWATER DEPTH = 40 Ft BELOW EXISTING GRADE
PASSIVE SOIL PRESSURE = 380 lb/ft^3 AT LEVEL BACKFILL
NEGLECT UPPER 1 FOOT OF SOIL UNLESS WALL IS NOT DISTURBED BY EXCAVATION
FRICTION COEFFICIENT = 0.35 BETWEEN WALL FOOTING AND UNDERLYING SOIL, REDUCED BY 50% WHEN COMBINED WITH PASSIVE RESISTANCE

TOE PRESSURE FROM ADJACENT RETAINING WALL = 5.87 ksf (DESIGN H=26Ft)
= 6.84 ksf (DESIGN H=24Ft)
DESIGN SOIL DRAG-DOWN LOAD = 240 psf
DESIGN SOIL DENSITY = 120 lb/ft^3
SUBGRADE MODULUS = 150 PCI

SEISMIC DESIGN PARAMETERS:
ACI 350.3-06 SEISMIC DESIGN OF LIQUID-CONTAINING CONCRETE STRUCTURES
LOCATION: 34.1924, -118.3288
SITE CLASS: D
Ss = 2.237 S1 = 0.758 Fa = 1.0 Fv = 1.5
Sds = 1.489 Sd1 = 0.758

ST-1

EMPIRE AVENUE UC
PUMPING PLANT
GENERAL STRUCTURAL NOTES

DALE WAH
DESIGN OVERSIGHT
5/11/12
SIGN OFF DATE

	BY	CHECKED
DESIGN	WYATT DRESSLER	DAVID KUANG
DETAILS	ERIC HUTCHINS	DAVID KUANG
QUANTITIES	WYATT DRESSLER	MIKE OLSEN

PREPARED FOR THE STATE OF CALIFORNIA DEPARTMENT OF TRANSPORTATION

WYATT DRESSLER
PROJECT ENGINEER

BRIDGE NO. 53-2920W
POST MILES 30.63

DESIGN DETAIL SHEET (ENGLISH) (REV.7/16/10)

ORIGINAL SCALE IN INCHES FOR REDUCED PLANS 0 1 2 3

UNIT: 1812
PROJECT NUMBER & PHASE: 07000211191 CONTRACT NO.: X

DISREGARD PRINTS BEARING EARLIER REVISION DATES

REVISION DATES X

SHEET 2 OF 32

FILE => wc001.dgn

USERNAME => s124436 DATE PLOTTED => 21-MAY-2012 TIME PLOTTED => 15:52

DIST	COUNTY	ROUTE	POST MILES TOTAL PROJECT	SHEET No	TOTAL SHEETS
07	LA	5	29.4/31.6	1341	1931

REGISTERED CIVIL ENGINEER — DATE 5/11/12

5-21-12
PLANS APPROVAL DATE

REGISTERED PROFESSIONAL ENGINEER — DALE E. WAH — No. 2582 — Exp. 3/31/14 — STRUCTURAL — STATE OF CALIFORNIA

The State of California or its officers or agents shall not be responsible for the accuracy or completeness of electronic copies of this plan sheet.

TETRA TECH
17885 VON KARMAN AVE
IRVINE, CA 92614

CITY OF BURBANK
150 N 3RD ST
BURBANK, CA 91510

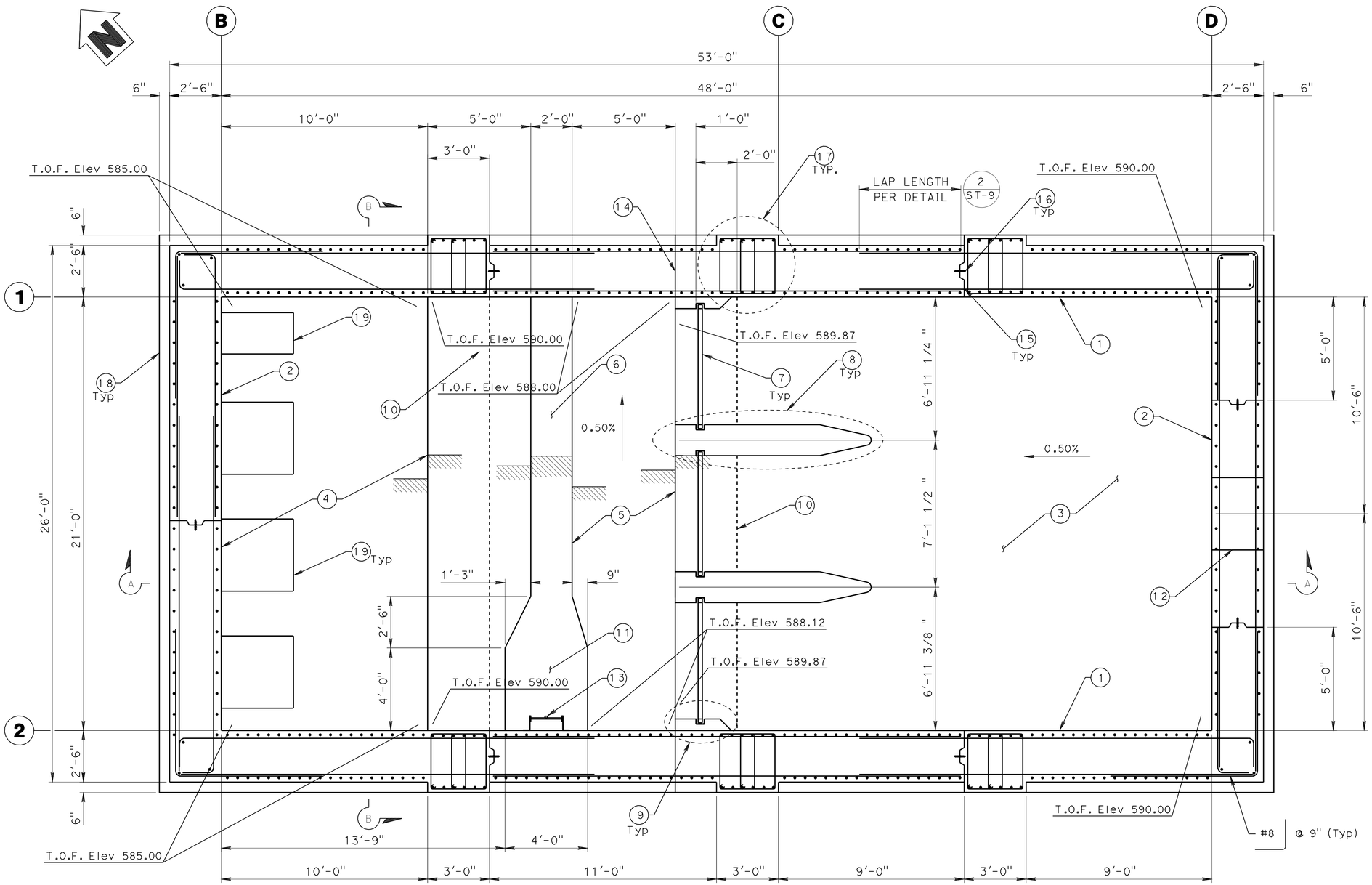

FOUNDATION PLAN

SCALE 3/8"=1'-0"

CONSTRUCTION NOTES:

1. PUMP STATION WET WELL CONCRETE WALL. REINFORCE w/ # 8 @ 6" VERT. EACH FACE, AND #8 @ 9" HORIZ. EACH FACE.
2. PUMP STATION WET WELL CONCRETE WALL. REINFORCE w/ #8 @ 12" VERT. EACH FACE, AND #8 @ 9" HORIZ. EACH FACE.
3. 36" THICK C.I.P. CONCRETE FOUNDATION SLAB. Reinf w/ #8 @ 6" EACH WAY, TOP AND BOTTOM.
4. 36" THICK SUMP FOUNDATION SLAB. Reinf w/ #8 @ 6" EACH WAY, TOP AND BOTTOM.
5. 36" THICK DEBRIS SUMP FOUNDATION SLAB. REINF. w/ #8 @ 6" EACH WAY, TOP AND BOTTOM
6. 8" DEBRIS SUMP CONCRETE CURB WITH 1" CHAMFERED EDGES
7. REMOVABLE DEBRIS SCREEN PER 1/ST-14
8. 12" THICK C.I.P. CONCRETE PIER WALL PER 6/ST-13
9. CONCRETE DEBRIS SCREEN SLOT DETAIL PER 4/ST-13
10. EDGE OF FOUNDATION STEP BELOW
11. CONCRETE LANDING FOR ACCESS LADDER AT Elev 590.67
12. WALL PENETRATION FOR 42" RCP INLET PIPE PER DETAIL 5/ST-9
13. WALL MOUNTED Galv STEEL LADDER WITH SAFETY POST EXTENTION; I.E. "LADDER-UP" - PER 5/ST-10
14. CONTINUOUS FLOOR SLAB CONSTRUCTION JOINT PER DETAIL 2/ST-10
15. VERTICAL WALL CONSTRUCTION JOINT PER DETAIL 3/ST-9
16. PVC WATERSTOP PER 6/ST-9, TERMINATE WATERSTOP AT Elev = 610.00
17. VERTICAL CONCRETE WALL BEAM PER STRUCTURAL DETAIL 3/ST-13
18. EDGE OF FOUNDATION SLAB BELOW
19. RAISED PUMP PAD, DIMENSIONS PER PUMP MANUFACTURER, SEE 6/ST-10

ST-2

EMPIRE AVENUE UC
PUMPING PLANT
FOUNDATION PLAN

DALE WAH
DESIGN OVERSIGHT
5/11/12
SIGN OFF DATE

	BY	CHECKED
DESIGN	WYATT DRESSLER	DAVID KUANG
DETAILS	ERIC HUTCHINS	DAVID KUANG
QUANTITIES	WYATT DRESSLER	MIKE OLSEN

PREPARED FOR THE STATE OF CALIFORNIA DEPARTMENT OF TRANSPORTATION

WYATT DRESSLER
PROJECT ENGINEER

BRIDGE NO. 53-2920W
POST MILES 30.63

DESIGN DETAIL SHEET (ENGLISH) (REV.7/16/10)

ORIGINAL SCALE IN INCHES FOR REDUCED PLANS 0 1 2 3

UNIT: 1812
PROJECT NUMBER & PHASE: 07000211191 CONTRACT NO.: X

DISREGARD PRINTS BEARING EARLIER REVISION DATES

REVISION DATES X

SHEET 3 OF 32

FILE => wc002.dgn

USERNAME => s121614 DATE PLOTTED => 07-JUN-2012 TIME PLOTTED => 05:47

DIST	COUNTY	ROUTE	POST MILES TOTAL PROJECT	SHEET No	TOTAL SHEETS
07	LA	5	29.4/31.6	1342	1931

REGISTERED CIVIL ENGINEER 5/11/12 DATE

5-21-12
PLANS APPROVAL DATE

REGISTERED PROFESSIONAL ENGINEER
DALE E. WAH
No. 2582
Exp. 3/31/14
STRUCTURAL
STATE OF CALIFORNIA

The State of California or its officers or agents shall not be responsible for the accuracy or completeness of electronic copies of this plan sheet.

TETRA TECH
17885 VON KARMAN AVE
IRVINE, CA 92614

CITY OF BURBANK
150 N 3RD ST
BURBANK, CA 91510

CONSTRUCTION NOTES

1. PUMP STATION WET WELL CONCRETE WALL ABOVE - SEE STRUCTURAL Sht ST-4 FOR REINFORCING
2. CONCRETE WALL OF INLET CHAMBER BELOW. REINFORCE w/ #8 @ 12" VERT. EACH FACE, AND #8 @ 9" HORIZ. EACH FACE.
3. CONCRETE WALL OF INLET CHAMBER BELOW, REINFORCE w/ #8 @ 6" VERT. EACH FACE, AND #8 @ 9" HORIZ. EACH FACE.
4. 24" THICK LOWER ROOF SLAB OVER INLET CHAMBER, Reinf w/ #8 @ 9" EACH WAY, TOP AND BOTTOM
5. 20" Dia PENETRATION THROUGH INLET CHAMBER ROOF SLAB FOR FRP FAN DUCT PER DETAIL 5/ST-9
6. HORIZONTAL CONCRETE WALL BEAM BELOW - SEE SECTION 'A' ON STRUCTURAL Sht ST-7
7. VERTICAL CONCRETE WALL BEAM PER STRUCTURAL DETAIL 3/ST-13

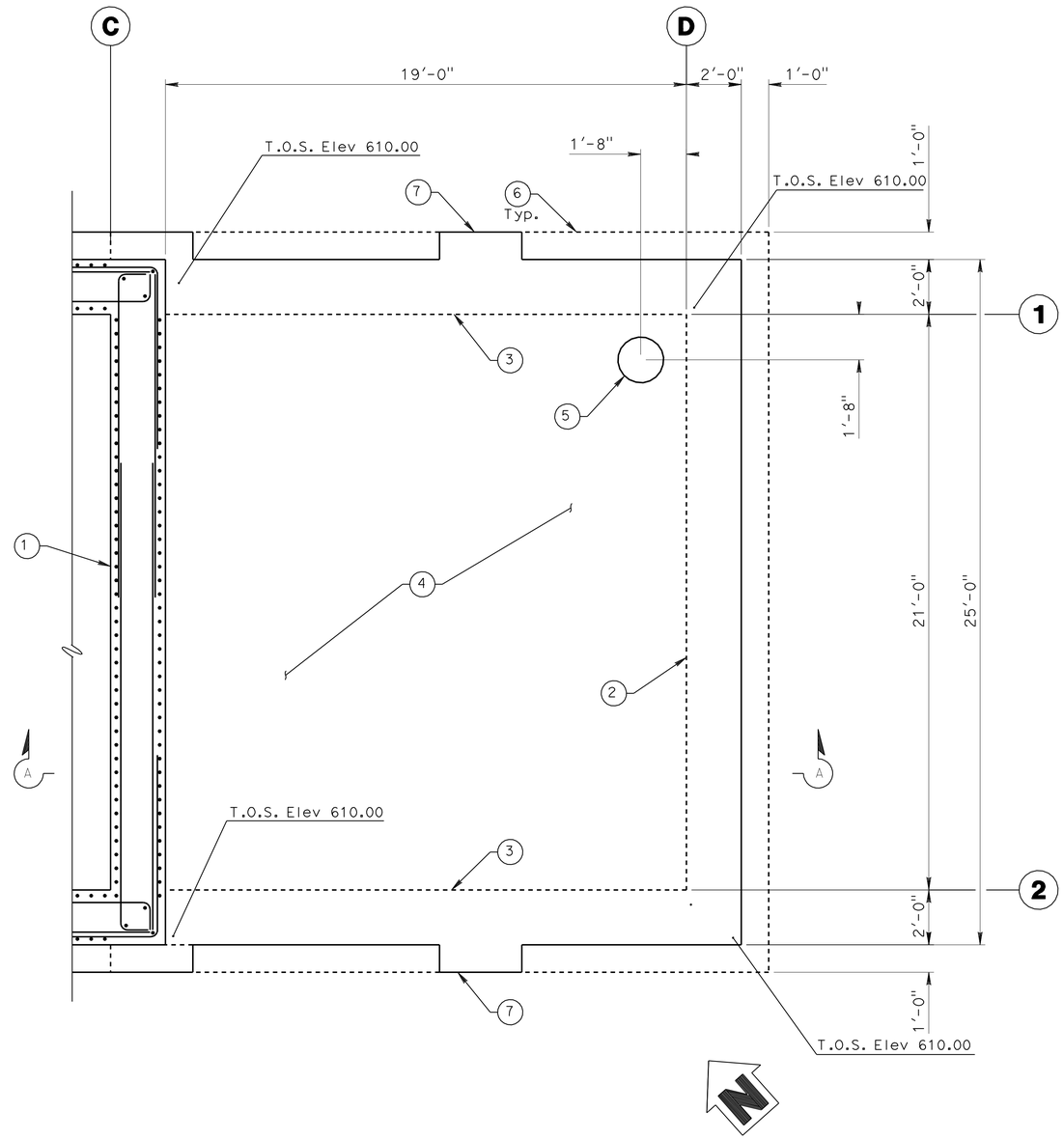

PLAN VIEW - Elev 610.00

SCALE 3/8"=1'-0"

ST-3

EMPIRE AVENUE UC
PUMPING PLANT
PLAN VIEW - Elev 610.00

DALE WAH
DESIGN OVERSIGHT
5/11/12
SIGN OFF DATE

	BY	CHECKED
DESIGN	WYATT DRESSLER	DAVID KUANG
DETAILS	ERIC HUTCHINS	DAVID KUANG
QUANTITIES	WYATT DRESSLER	MIKE OLSEN

PREPARED FOR THE STATE OF CALIFORNIA DEPARTMENT OF TRANSPORTATION

WYATT DRESSLER
PROJECT ENGINEER

BRIDGE NO. 53-2920W
POST MILES 30.63

DESIGN DETAIL SHEET (ENGLISH) (REV.7/16/10)

ORIGINAL SCALE IN INCHES FOR REDUCED PLANS 0 1 2 3

UNIT: 1812
PROJECT NUMBER & PHASE: 07000211191 CONTRACT NO.: X

DISREGARD PRINTS BEARING EARLIER REVISION DATES

REVISION DATES X

SHEET 4 OF 32

FILE => wc003.dgn

USERNAME => s124496 DATE PLOTTED => 21-MAY-2012 TIME PLOTTED => 15:52

DIST	COUNTY	ROUTE	POST MILES TOTAL PROJECT	SHEET No	TOTAL SHEETS
07	LA	5	29.4/31.6	1343	1931

REGISTERED CIVIL ENGINEER 5/11/12 DATE

5-21-12
PLANS APPROVAL DATE

REGISTERED PROFESSIONAL ENGINEER
DALE E. WAH
No. 2582
Exp. 3/31/14
STRUCTURAL
STATE OF CALIFORNIA

The State of California or its officers or agents shall not be responsible for the accuracy or completeness of electronic copies of this plan sheet.

TETRA TECH
17885 VON KARMAN AVE
IRVINE, CA 92614

CITY OF BURBANK
150 N 3RD ST
BURBANK, CA 91510

CONSTRUCTION NOTES

1. PUMP STATION WET WELL CONCRETE WALL. REINFORCE w/ #8 @ 6" VERT. EACH FACE, AND #8 @ 9" HORIZ. EACH FACE.
2. ROOF SLAB OVER INLET CHAMBER BELOW - SEE STRUCTURAL Sht ST-3
3. WALL DOWELS TO MATCH SIZE AND SPACING OF Typ. WALL Reinf - SEE Dtl 2, Sht ST-9 FOR LAP LENGTH
4. MC8x18.7 Galv STEEL CATWALK STRINGER
5. L3x3x1/4 Galv STEEL HORIZONTAL BRACE
6. Galv STEEL GUARDRAIL PER DETAIL 3/ST-12
7. 1 1/4" x 1/8" MIN STEEL BAR GRATING. T.O.G. Elev = 612.00. FOR BAR SPACING SEE SPECIAL PROVISIONS
8. CATWALK STRINGER TO WALL CONNECTION - SEE STRUCTURAL DETAIL 3/ST-11
9. CHANNEL TO CHANNEL/BRACE CONNECTION - SEE STRUCTURAL DETAIL 5/ST-11
10. ANGLE BRACE TO CHANNEL CONNECTION - SEE STRUCTURAL DETAIL 7/ST-11
11. WALL MOUNTED Galv STEEL LADDER - SEE DETAIL 5/ST-10
12. NOT USED
13. 18" THICK C.I.P. CONCRETE VALVE VAULT FLOOR SLAB. REINFORCE w/ #6 @ 12" EACH WAY TOP AND BOTTOM.
14. CONCRETE WALL OF VALVE VAULT - REINFORCE w/ #6 @ 12" EACH WAY, EACH FACE.
15. EDGE OF FOUNDATION BELOW
16. 4" Dia OPENING IN FLOOR SLAB FOR PVC DRAIN REFER TO MECHANICAL SECTION M-2 FOR DRAIN OUTLET INTO WET WELL.
17. 16" Dia PIPE PENETRATION THROUGH FLOOR SLAB PER DETAIL 5/ST-9
18. 4" Dia PIPE PENETRATION THROUGH FLOOR SLAB FOR D.I.P.
19. VERTICAL WALL JOINT PER DETAIL 3/ST-9
20. CONCRETE DIVIDER WALL BETWEEN WET WELL AND DRY WELL. REINFORCE w/ #7 @ 12" EACH WAY, EACH FACE.
21. 2'-0" LONG x 1'-0" WIDE x 8" DEEP THICKENED SLAB BELOW TO ENCASE FLOOR DRAIN TRAP
22. WALL BEAM BELOW
23. 3'-0" OPENING IN GUARDRAIL TO ACCESS LADDER. PROVIDE SAFETY CHAIN

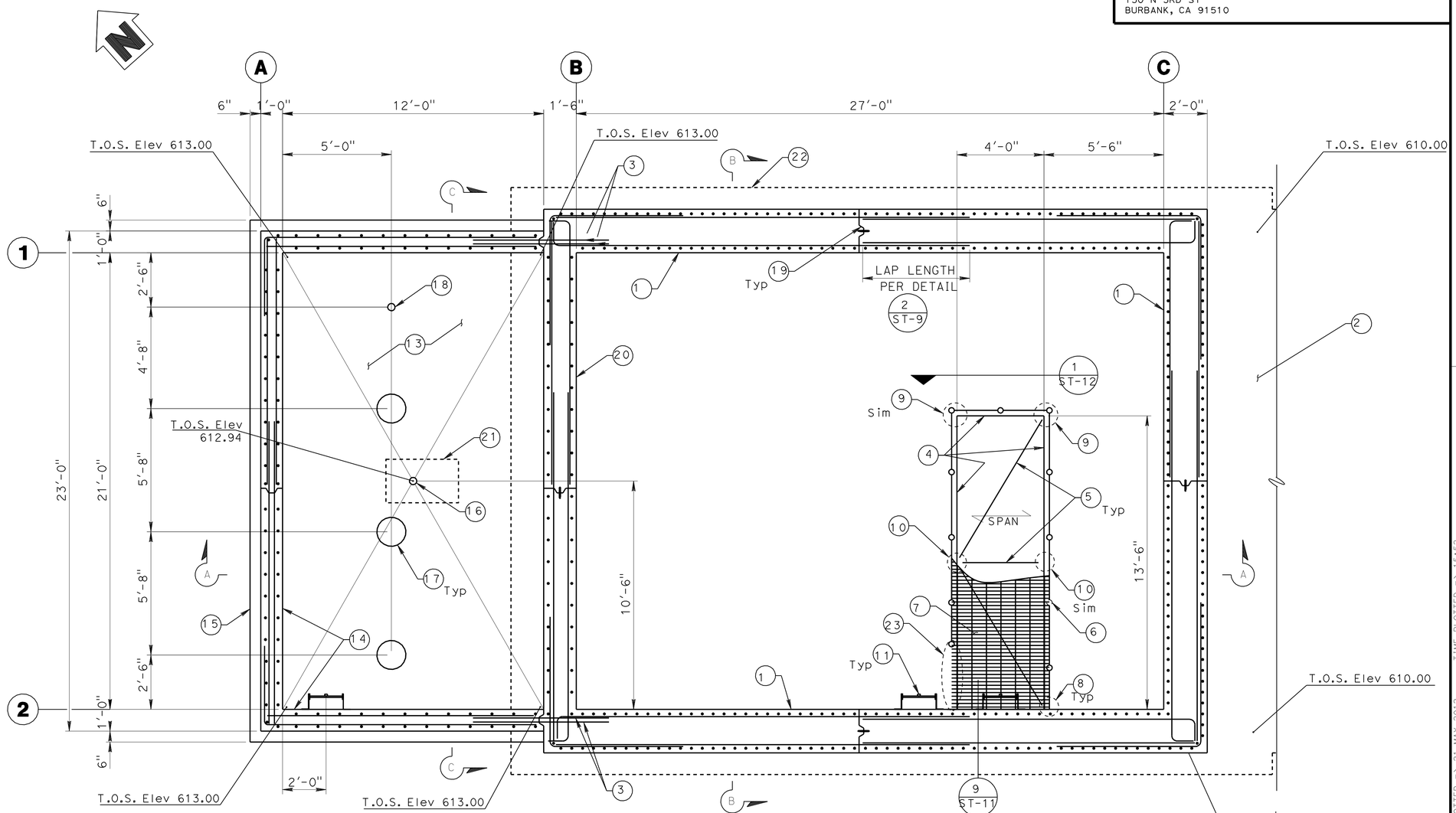

PLAN VIEW - Elev 613.00

SCALE 3/8"=1'-0"

ST-4

DALE WAH DESIGN OVERSIGHT 5/11/12 SIGN OFF DATE	DESIGN	BY WYATT DRESSLER	CHECKED DAVID KUANG	PREPARED FOR THE STATE OF CALIFORNIA DEPARTMENT OF TRANSPORTATION	WYATT DRESSLER PROJECT ENGINEER
	DETAILS	BY ERIC HUTCHINS	CHECKED DAVID KUANG		BRIDGE NO. 53-2920W POST MILES 30.63
	QUANTITIES	BY WYATT DRESSLER	CHECKED MIKE OLSEN		

EMPIRE AVENUE UC
PUMPING PLANT
PLAN VIEW - Elev 613.00

DESIGN DETAIL SHEET (ENGLISH) (REV.7/16/10)

ORIGINAL SCALE IN INCHES FOR REDUCED PLANS 0 1 2 3

UNIT: 1812
PROJECT NUMBER & PHASE: 07000211191 CONTRACT NO.: X

DISREGARD PRINTS BEARING EARLIER REVISION DATES

REVISION DATES X

SHEET 5 OF 32

FILE => wc004.dgn

USERNAME => s124496 DATE PLOTTED => 21-MAY-2012 TIME PLOTTED => 15:52

DIST	COUNTY	ROUTE	POST MILES TOTAL PROJECT	SHEET No	TOTAL SHEETS
07	LA	5	29.4/31.6	1344	1931

REGISTERED CIVIL ENGINEER 5/11/12 DATE

5-21-12
PLANS APPROVAL DATE

REGISTERED PROFESSIONAL ENGINEER
DALE E. WAH
No. 2582
Exp. 3/31/14
STRUCTURAL
STATE OF CALIFORNIA

The State of California or its officers or agents shall not be responsible for the accuracy or completeness of electronic copies of this plan sheet.

TETRA TECH
17885 VON KARMAN AVE
IRVINE, CA 92614

CITY OF BURBANK
150 N 3RD ST
BURBANK, CA 91510

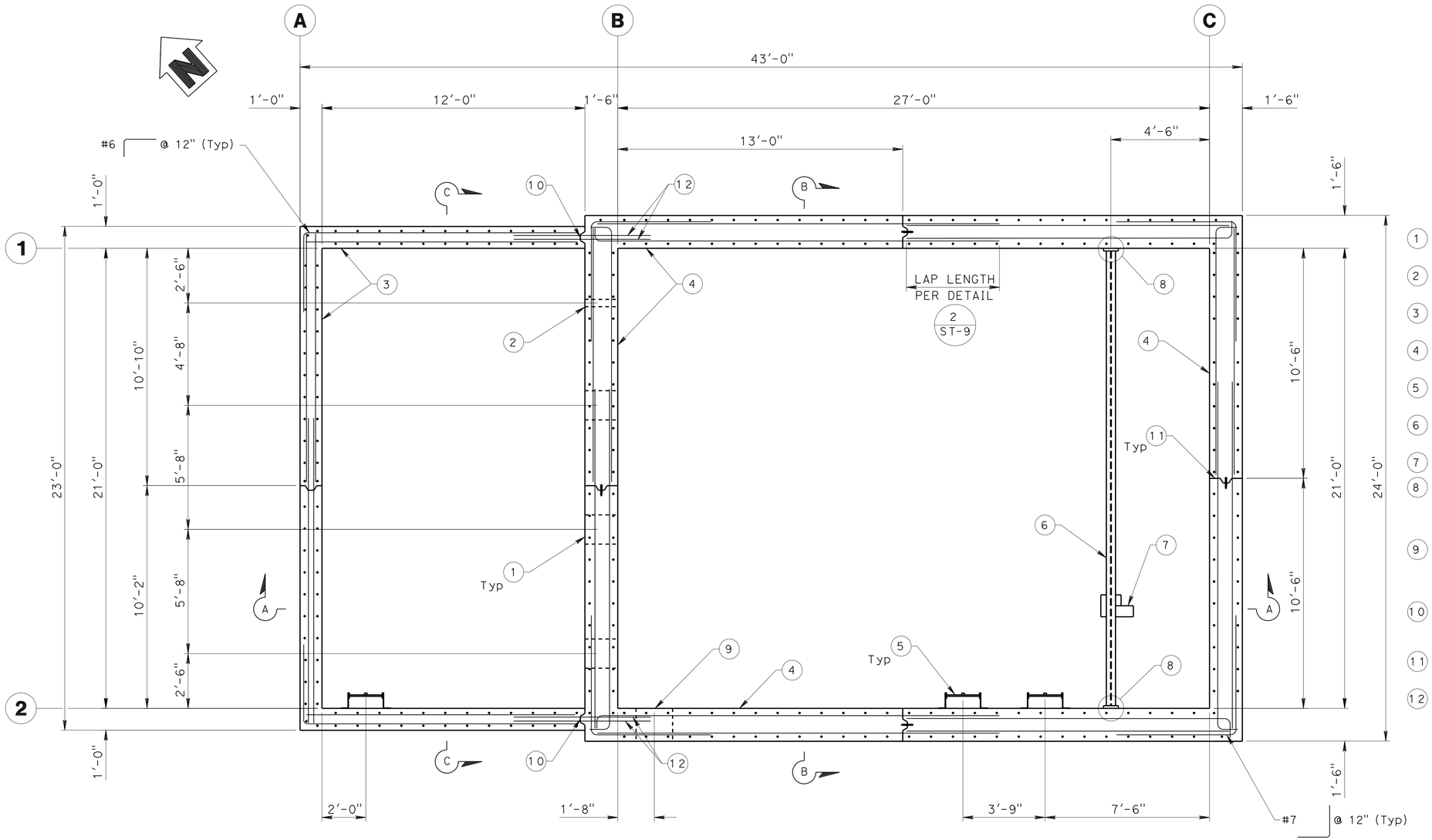

PLAN VIEW - Elev 619.00

SCALE 3/8"=1'-0"

CONSTRUCTION NOTES

1. 16" Dia WALL PENETRATION FOR D.I.P. PER DETAIL SEE MECHANICAL SECTION M-1 FOR PIPE ELEVATIONS (5 / ST-9)
2. 4" Dia WALL PENETRATION FOR D.I.P. SEE MECHANICAL SECTION M-1.
3. CONCRETE WALL OF VALVE VAULT. REINFORCE w/ #6 @ 12" EACH WAY, EACH FACE.
4. CONCRETE WALL OF PUMP STATION WET WELL SHAFT. REINFORCE w/ #7 @ 12" EACH WAY, EACH FACE.
5. WALL MOUNTED Galv STEEL LADDER - SEE TYPICAL DETAIL (5 / ST-10)
6. S12x35 Galv STEEL MONORAIL BEAM. SET TOP OF STEEL Elev = 619.00
7. 1-TON CAPACITY CHAIN HOIST
8. MONORAIL BEAM TO WALL CONNECTION - SEE STRUCTURAL DETAIL (1 / ST-11)
9. 20" Dia WALL PENETRATION FOR VENT PIPE PER DETAIL (5 / ST-9), SEE MECHANICAL SHEETS FOR ELEVATION OF WALL PENETRATION
10. VERTICAL WALL CONSTRUCTION JOINT PER DETAIL (1 / ST-10)
11. VERTICAL WALL CONSTRUCTION JOINT PER DETAIL (3 / ST-9)
12. WALL DOWELS TO MATCH SIZE AND SPACING OF Typ. WALL Reinf - SEE Dtl 2, Sht ST-9 FOR LAP LENGTH.

ST-5

EMPIRE AVENUE UC
PUMPING PLANT
PLAN VIEW - Elev 619.00

DALE WAH
DESIGN OVERSIGHT
5/11/12
SIGN OFF DATE

	BY	CHECKED
DESIGN	WYATT DRESSLER	DAVID KUANG
DETAILS	ERIC HUTCHINS	DAVID KUANG
QUANTITIES	WYATT DRESSLER	MIKE OLSEN

PREPARED FOR THE STATE OF CALIFORNIA DEPARTMENT OF TRANSPORTATION

WYATT DRESSLER
PROJECT ENGINEER

BRIDGE NO. 53-2920W
POST MILES 30.63

DESIGN DETAIL SHEET (ENGLISH) (REV.7/16/10)

ORIGINAL SCALE IN INCHES FOR REDUCED PLANS 0 1 2 3

UNIT: 1812
PROJECT NUMBER & PHASE: 07000211191 CONTRACT NO.: X

DISREGARD PRINTS BEARING EARLIER REVISION DATES

REVISION DATES X

SHEET 6 OF 32

FILE => wc005.dgn

USERNAME => s124436 DATE PLOTTED => 21-MAY-2012 TIME PLOTTED => 15:52

DIST	COUNTY	ROUTE	POST MILES TOTAL PROJECT	SHEET No	TOTAL SHEETS
07	LA	5	29.4/31.6	1345	1931

REGISTERED CIVIL ENGINEER 5/11/12 DATE

5-21-12
PLANS APPROVAL DATE

REGISTERED PROFESSIONAL ENGINEER
DALE E. WAH
No. 2582
Exp. 3/31/14
STRUCTURAL
STATE OF CALIFORNIA

The State of California or its officers or agents shall not be responsible for the accuracy or completeness of electronic copies of this plan sheet.

TETRA TECH
17885 VON KARMAN AVE
IRVINE, CA 92614

CITY OF BURBANK
150 N 3RD ST
BURBANK, CA 91510

CONSTRUCTION NOTES

1. 1'-8" WIDE x 1'-8" DEEP CONCRETE ROOF BEAM 'B1' - SEE DETAIL 4/ST-12 FOR REINFORCEMENT
2. 1'-4" WIDE x 1'-8" DEEP CONCRETE ROOF BEAM 'B2' - SEE DETAIL 4/ST-12 FOR REINFORCEMENT
3. 1'-6" WIDE x 1'-6" DEEP CONCRETE ROOF BEAM 'B3' - SEE DETAIL 4/ST-12 FOR REINFORCEMENT
4. 2'-0" WIDE x 2'-0" DEEP CONCRETE ROOF BEAM 'B4' - SEE DETAIL 5/ST-12 FOR REINFORCEMENT
5. NOT USED
6. 2'-6" WIDE x 2'-6" DEEP CONCRETE ROOF BEAM 'B6' - SEE DETAIL 5/ST-12 FOR REINFORCEMENT
7. 2'-2" WIDE x 2'-0" DEEP CONCRETE ROOF BEAM 'B7' - SEE DETAIL 4/ST-12 5/ST-12 FOR REINFORCEMENT
8. 1'-8" WIDE x 2'-0" DEEP CONCRETE ROOF BEAM 'B8' - SEE DETAIL 4/ST-12 FOR REINFORCMENT
9. 12" THICK TYPICAL ROOF SLAB BETWEEN ROOF BEAMS AND ACCESS HATCHES. REINF. w/ #6 @ 12" EACH WAY, TOP AND BOTTOM
10. PUMP STATION CONCRETE WALL BELOW
11. OPENING FOR 4'-0" x 4'-0" H-20 RATED HATCH TO ACCESS VALVE (3 TOTAL). SEE 4/ST-10 7/ST-10
12. OPENING FOR 4'-0" x 2'-6" H-20 RATED HATCH TO ACCESS VALVE. SEE 4/ST-10 7/ST-10
13. OPENING FOR 6'-0" x 4'-0" H-20 RATED HATCH FOR PUMP ACCESS (3 TOTAL). SEE 4/ST-10 7/ST-10
14. OPENING FOR 3'-6" x 3'-6" H-20 RATED HATCH FOR SUMP PUMP ACCESS. SEE 4/ST-10 7/ST-10
15. OPENING FOR 4'-0" x 4'-0" H-20 RATED HATCH FOR TRASH RACK OPERATIONAL ACCESS (2 TOTAL). SEE 4/ST-10 7/ST-10
16. OPENING FOR 6'-6" x 4'-0" H-20 RATED VACTOR PUMP ACCESS HATCH. SEE 4/ST-10 7/ST-10
17. OPENING FOR 4'-0" x 4'-0" H-20 RATED VALVE VAULT ACCESS HATCH. SEE 4/ST-10 7/ST-10
18. CONSTRUCTION JOINT IN ROOF SLAB

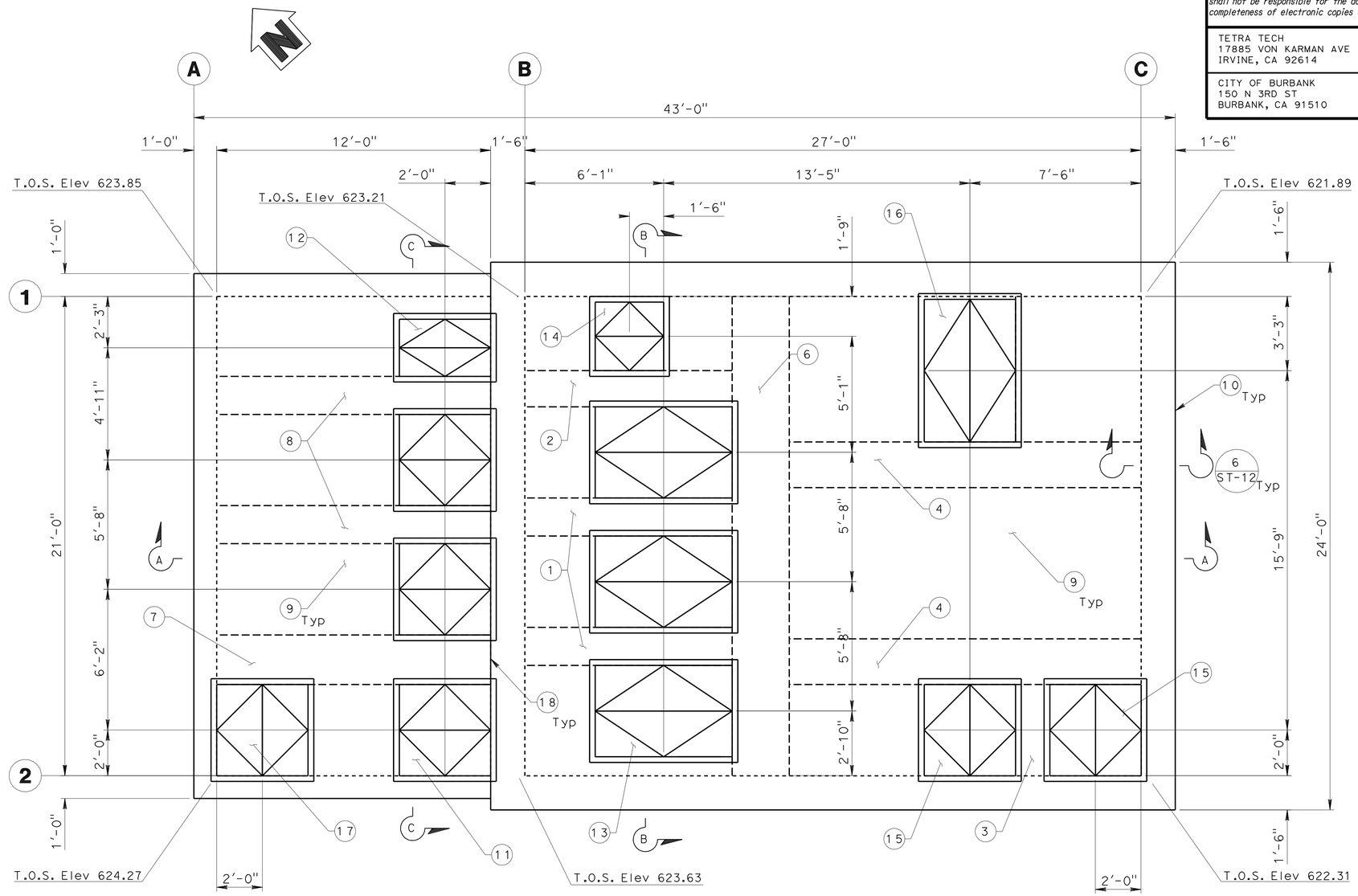

ROOF SLAB PLAN

SCALE 3/8"=1'-0"

ST-6

DALE WAH DESIGN OVERSIGHT 5/11/12 SIGN OFF DATE	DESIGN	BY WYATT DRESSLER	CHECKED DAVID KUANG	PREPARED FOR THE STATE OF CALIFORNIA DEPARTMENT OF TRANSPORTATION	WYATT DRESSLER PROJECT ENGINEER
	DETAILS	BY ERIC HUTCHINS	CHECKED DAVID KUANG		BRIDGE NO. 53-2920W POST MILES 30.63
	QUANTITIES	BY WYATT DRESSLER	CHECKED MIKE OLSEN		

EMPIRE AVENUE UC
PUMPING PLANT
ROOF SLAB PLAN

DESIGN DETAIL SHEET (ENGLISH) (REV.7/16/10)

ORIGINAL SCALE IN INCHES FOR REDUCED PLANS 0 1 2 3

UNIT: 1812
PROJECT NUMBER & PHASE: 07000211191 CONTRACT NO.: X

DISREGARD PRINTS BEARING EARLIER REVISION DATES

REVISION DATES X

SHEET 7 OF 32

FILE => wc006.dgn

USERNAME => s124496 DATE PLOTTED => 21-MAY-2012 TIME PLOTTED => 15:52

DIST	COUNTY	ROUTE	POST MILES TOTAL PROJECT	SHEET No	TOTAL SHEETS
07	LA	5	29.4/31.6	1346	1931

REGISTERED CIVIL ENGINEER 5/11/12 DATE

5-21-12
PLANS APPROVAL DATE

REGISTERED PROFESSIONAL ENGINEER DALE E. WAH No. 2582 Exp. 3/31/14 STRUCTURAL STATE OF CALIFORNIA

The State of California or its officers or agents shall not be responsible for the accuracy or completeness of electronic copies of this plan sheet.

TETRA TECH
17885 VON KARMAN AVE
IRVINE, CA 92614

CITY OF BURBANK
150 N 3RD ST
BURBANK, CA 91510

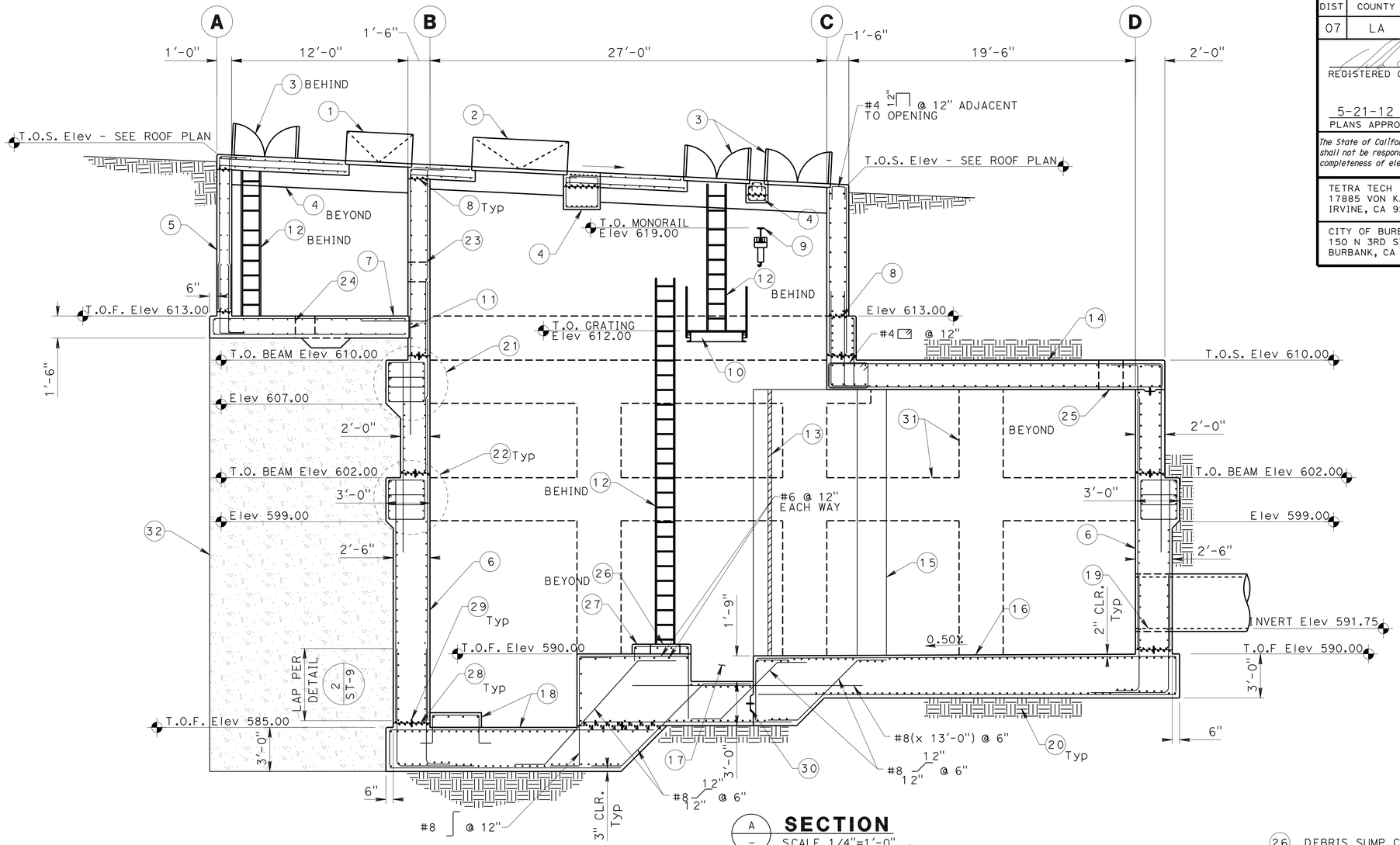

A – **SECTION**
SCALE 1/4"=1'-0"

CONSTRUCTION NOTES

1. H-20 RATED VALVE VAULT ACCESS HATCH - SEE ROOF SLAB PLAN AND 4/ST-10
2. H-20 RATED PUMP ACCESS HATCH - SEE ROOF SLAB PLAN AND 4/ST-10
3. H-20 RATED TRASH RACK ACCESS HATCH - SEE ROOF SLAB PLAN AND 4/ST-10
4. C.I.P CONCRETE ROOF BEAM - SEE ROOF SLAB PLAN
5. C.I.P. CONCRETE VALVE VAULT WALL - SEE Sht ST-4 FOR Reinf
6. C.I.P. CONCRETE PUMP STATION WET WELL WALL - THICKNESS VARIES - SEE ST-2 TO ST-5 FOR Reinf
7. C.I.P. CONCRETE VALVE VAULT FLOOR SLAB - SEE STRUCTURAL Sht ST-4 FOR REINFORCING
8. ROUGHENED CONSTRUCTION JOINT
9. MONORAIL WITH 1-TON CAPACITY HOIST - SEE STRUCTURAL Sht ST-5 FOR FRAMING
10. CATWALK FRAMING - SEE STRUCTURAL Sht ST-4
11. VERTICAL CONSTRUCTION JOINT w/ 1" DEEP KEY
12. Galv STEEL LADDER ALONG GRIDLINE 2 - SEE TYPICAL DETAIL 5/ST-10
13. REMOVABLE DEBRIS SCREEN
14. C.I.P. CONCRETE ROOF SLAB - SEE STRUCTURAL Sht ST-3 FOR REINFORCING.
15. 12" C.I.P. CONCRETE PIER WALL - SEE STRUCTURAL DETAIL 6/ST-13
16. C.I.P. CONCRETE WET WELL FLOOR SLAB - SEE STRUCTURAL Sht ST-2 FOR TYPICAL REINFORCING
17. DEBRIS SUMP
18. SUMP FOUNDATION WITH RAISED PUMP PAD, DIMENSIONS PER PUMP MANUFACTURER SEE DETAIL 6/ST-10
19. WALL PENETRATION FOR 42" RCP INLET PIPE - SEE STRUCTURAL Sht ST-2 FOR Reinf
20. UNDISTURBED OR RECOMPACTED NATIVE SOIL
21. UPPER HORIZONTAL CONCRETE WALL BEAM PER STRUCTURAL DETAIL 1/ST-13
22. LOWER HORIZONTAL CONCRETE WALL BEAM PER STRUCTURAL DETAIL 2/ST-13
23. WALL PENETRATION FOR 16" Dia D.I.P. - SEE STRUCTURAL Sht ST-5 FOR LOCATION AND REINFORCING
24. FLOOR SLAB PENETRATION FOR 16" Dia D.I.P. - SEE STRUCTURAL Sht ST-4 FOR LOCATION AND REINFORCING
25. 20" Dia PIPE PENETRATION THROUGH ROOF SLAB FOR FAN DUCT - SEE STRUCTURAL Sht ST-3 FOR Reinf
26. DEBRIS SUMP CURB w/ #5 @ 12" EACH WAY
27. CONCRETE LANDING FOR ACCESS LADDER w/ #5 @ 12" EACH WAY
28. STARTER WALL PER DETAIL 7/ST-9
29. PVC WATERSTOP PER DETAIL 6/ST-9
30. HORIZONTAL CONSTRUCTION JOINT THROUGH FOUNDATION SLAB PER DETAIL 2/ST-10
31. CONCRETE WALL BEAM AT EXTERIOR FACE OF WALL
32. SLURRY BACKFILL - SEE SPECIAL PROVISIONS SECTION 12-3.01

ST-7

EMPIRE AVENUE UC
PUMPING PLANT
SECTION A

DALE WAH
DESIGN OVERSIGHT
5/11/12
SIGN OFF DATE

	BY	CHECKED
DESIGN	WYATT DRESSLER	DAVID KUANG
DETAILS	ERIC HUTCHINS	DAVID KUANG
QUANTITIES	WYATT DRESSLER	MIKE OLSEN

PREPARED FOR THE STATE OF CALIFORNIA DEPARTMENT OF TRANSPORTATION

WYATT DRESSLER
PROJECT ENGINEER

BRIDGE NO. 53-2920W
POST MILES 30.63

DESIGN DETAIL SHEET (ENGLISH) (REV.7/16/10)

ORIGINAL SCALE IN INCHES FOR REDUCED PLANS 0 1 2 3

UNIT: 1812
PROJECT NUMBER & PHASE: 07000211191 CONTRACT NO.: X

DISREGARD PRINTS BEARING EARLIER REVISION DATES

REVISION DATES X

SHEET 8 OF 32

FILE => wc007.dgn

USERNAME => s124496 DATE PLOTTED => 21-MAY-2012 TIME PLOTTED => 15:52

DIST	COUNTY	ROUTE	POST MILES TOTAL PROJECT	SHEET No	TOTAL SHEETS
07	LA	5	29.4/31.6	1347	1931

REGISTERED CIVIL ENGINEER 5/11/12 DATE

5-21-12
PLANS APPROVAL DATE

REGISTERED PROFESSIONAL ENGINEER
DALE E. WAH
No. 2582
Exp. 3/31/14
STRUCTURAL
STATE OF CALIFORNIA

The State of California or its officers or agents shall not be responsible for the accuracy or completeness of electronic copies of this plan sheet.

TETRA TECH
17885 VON KARMAN AVE
IRVINE, CA 92614

CITY OF BURBANK
150 N 3RD ST
BURBANK, CA 91510

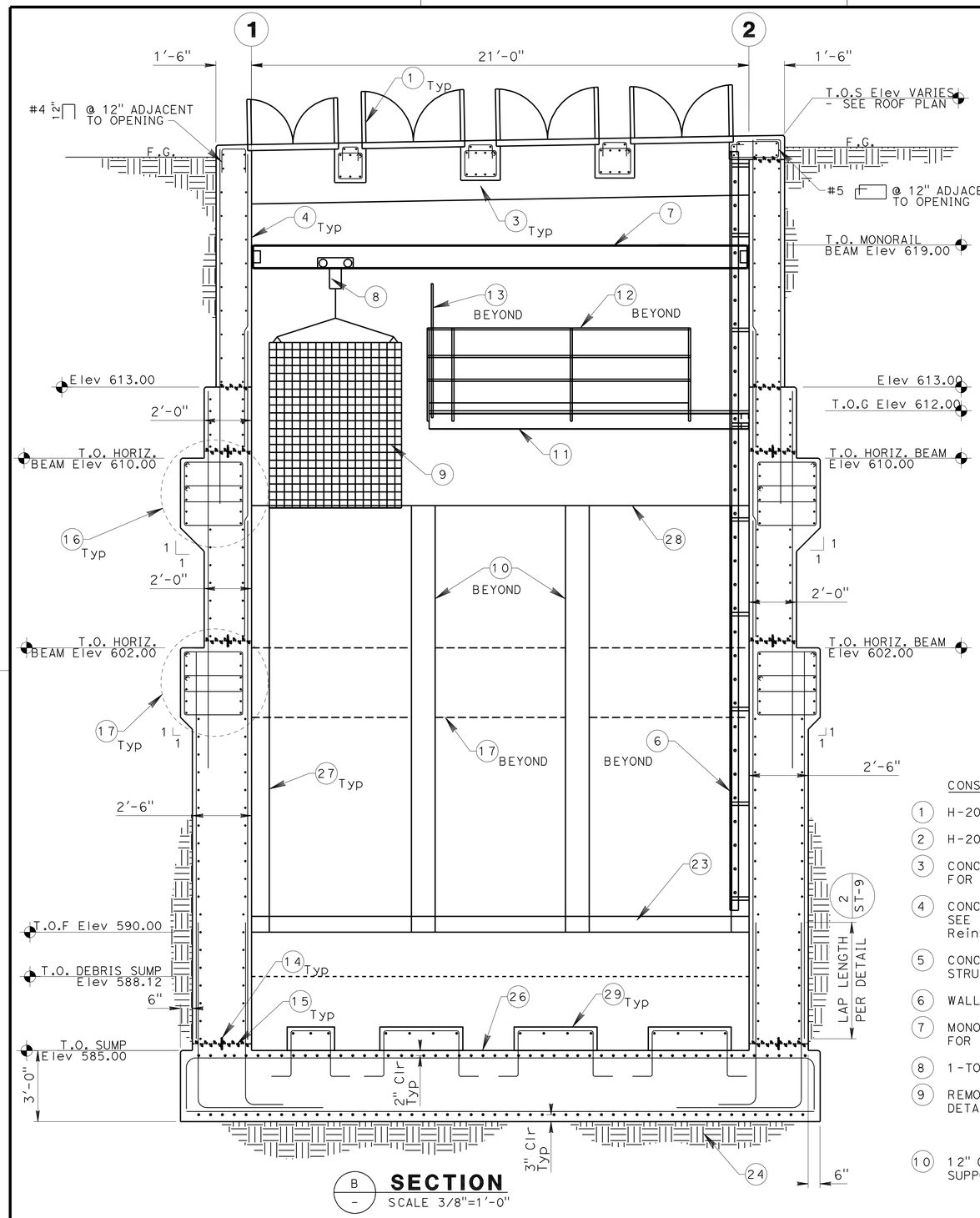

B – SECTION
SCALE 3/8"=1'-0"

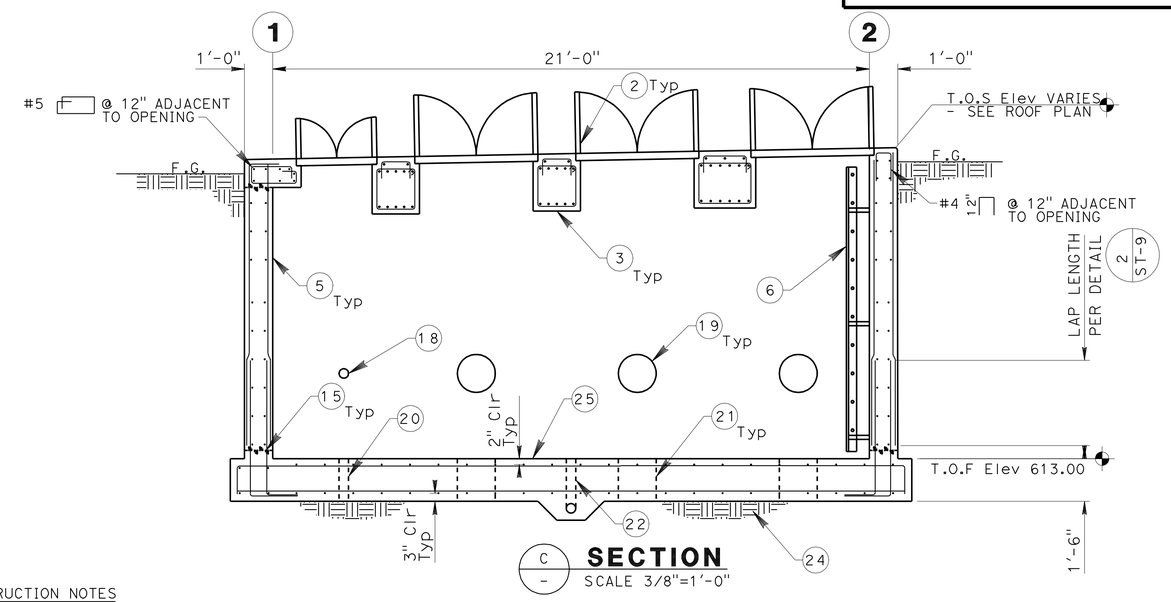

C – SECTION
SCALE 3/8"=1'-0"

CONSTRUCTION NOTES

1. H-20 RATED PUMP ACCESS HATCH
2. H-20 RATED VALVE ACCESS HATCH
3. CONCRETE ROOF BEAM - SEE ROOF PLAN ST-6 FOR LAYOUT.
4. CONCRETE WALL OF PUMP STATION WET WELL - SEE STRUCTURAL Sht ST-2 TO ST-5 FOR Reinf
5. CONCRETE WALL OF VALVE VAULT - SEE STRUCTURAL Sht ST-4 FOR Reinf
6. WALL MOUNTED Galv STEEL LADDER
7. MONORAIL BEAM - SEE STRUCTURAL Sht ST-5 FOR FRAMING
8. 1-TON CAPACITY CHAIN OPERATED HOIST
9. REMOVABLE DEBRIS SCREEN - SEE STRUCTURAL DETAIL 1/ST-14
10. 12" CONCRETE PIER WALL/DEBRIS SCREEN SUPPORT - SEE STRUCTURAL DETAIL 6/ST-13
11. CATWALK FRAMING - SEE STRUCTURAL Sht ST-4
12. CATWALK GUARDRAIL - SEE STRUCTURAL Sht ST-4
13. CATWALK ROD HANGER - SEE DETAIL 1 ON SHEET ST-12
14. PVC WATERSTOP PER DETAIL 6/ST-9
15. STARTER WALL PER DETAIL 7/ST-9
16. UPPER HORIZ. CONCRETE WALL BEAM PER STRUCTURAL DETAIL 1/ST-13
17. LOWER HORIZ. CONCRETE WALL BEAM PER STRUCTURAL DETAIL 2/ST-13
18. WALL PENETRATION FOR 4" Dia D.I.P.
19. WALL PENETRATION FOR 16" Dia D.I.P.
20. FLOOR SLAB PENETRATION FOR 4" Dia D.I.P.
21. FLOOR SLAB PENETRATION FOR 16" Dia D.I.P.
22. 4" Dia PVC FLOOR DRAIN
23. 8" CONCRETE DEBRIS CURB
24. UNDISTURBED OR RECOMPACTED NATIVE SOIL
25. VALVE VAULT FOUNDATION SLAB - SEE STRUCTURAL Sht ST-4 FOR Reinf
26. WET WELL FOUNDATION SLAB - SEE STRUCTURAL Sht ST-2 FOR Reinf
27. DEBRIS SCREEN SLOT PER STRUCTURAL DETAIL 4/ST-13
28. SOFFIT OF INLET CHAMBER ROOF SLAB
29. RAISED PUMP PAD DIMENSIONS PER PUMP MANUFACTRER - SEE DETAIL 6/ST-10

ST-8

EMPIRE AVENUE UC
PUMPING PLANT
SECTIONS B AND C

DALE WAH
DESIGN OVERSIGHT
5/11/12
SIGN OFF DATE

	BY	CHECKED
DESIGN	WYATT DRESSLER	DAVID KUANG
DETAILS	ERIC HUTCHINS	DAVID KUANG
QUANTITIES	WYATT DRESSLER	MIKE OLSEN

PREPARED FOR THE STATE OF CALIFORNIA DEPARTMENT OF TRANSPORTATION

WYATT DRESSLER
PROJECT ENGINEER

BRIDGE NO. 53-2920W
POST MILES 30.63

DESIGN DETAIL SHEET (ENGLISH) (REV.7/16/10)

ORIGINAL SCALE IN INCHES FOR REDUCED PLANS 0 1 2 3

UNIT: 1812
PROJECT NUMBER & PHASE: 07000211191 CONTRACT NO.: X

DISREGARD PRINTS BEARING EARLIER REVISION DATES

REVISION DATES X

SHEET 9 OF 32

FILE => wc008.dgn

USERNAME => s124496 DATE PLOTTED => 21-MAY-2012 TIME PLOTTED => 15:53

DIST	COUNTY	ROUTE	POST MILES TOTAL PROJECT	SHEET No	TOTAL SHEETS
07	LA	5	29.4/31.6	1348	1931

REGISTERED CIVIL ENGINEER 5/11/12 DATE

5-21-12
PLANS APPROVAL DATE

REGISTERED PROFESSIONAL ENGINEER
DALE E. WAH
No. 2582
Exp. 3/31/14
STRUCTURAL
STATE OF CALIFORNIA

The State of California or its officers or agents shall not be responsible for the accuracy or completeness of electronic copies of this plan sheet.

TETRA TECH
17885 VON KARMAN AVE
IRVINE, CA 92614

CITY OF BURBANK
150 N 3RD ST
BURBANK, CA 91510

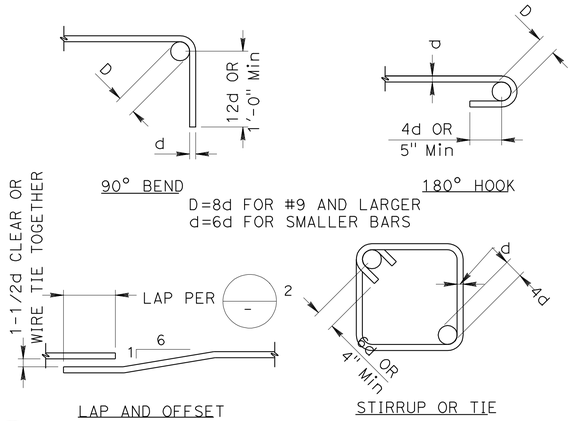

1 Typ BAR BENDS
SCALE 1"=1'-0"

Reinf LAP SPLICE SCHEDULE				
BAR	f'c=2500 L (inches)	f'c=3000 L (inches)	f'c=4000 L (inches)	f'c=4500 L (inches)
3	24	22	19	18
4	32	29	25	24
5	39	36	31	30
6	47	43	37	35
7	69	63	54	51
8	78	72	62	59

NOTES:
1. LAPS SHOWN IN THIS TABLE ARE CLASS B, CATEGORY 3 TYPE SPLICES. LAP LENGTH IS BASED UPON SMALLER OF TWO BARS BEING SPLICED WHEN NOT THE SAME SIZE.
2. INCREASE LAP LENGTHS BY A FACTOR OF 1.3 FOR Horiz Reinf SO PLACED THAT MORE THAN 12 INCHES OF Conc IS CAST IN THE MEMBER BELOW THIS Reinf.

2 REINFORCING LAP SPLICE SCHEDULE
SCALE 1"=1'-0"

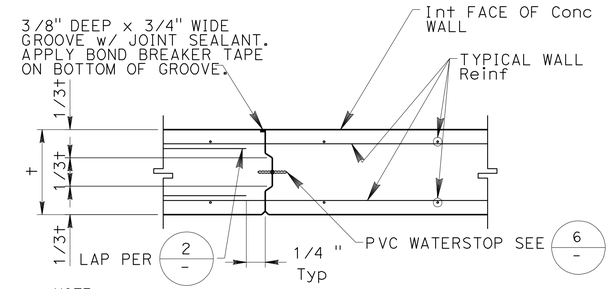

NOTE:
THIS Const JOINT SHALL ONLY BE USED WHERE SHOWN ON THE DRAWINGS AND WHERE APPROVED BY THE ENGINEER.

FOR Const JOINT AT WALL CORNERS AND INTERSECTIONS SEE 1 ST-10

3 Typ Vert Conc WALL JOINT
SCALE 3/4"=1'-0"

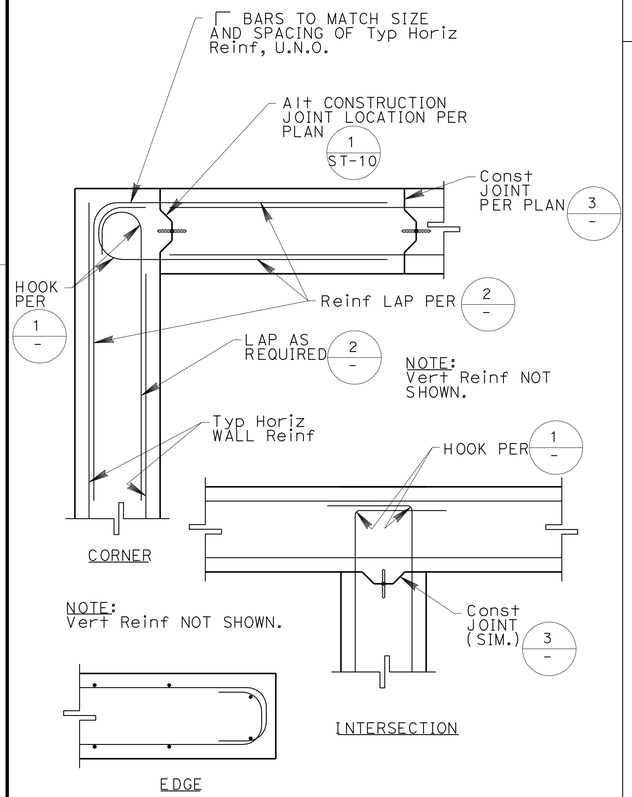

4 Conc WALL Reinf AT CORNERS, INTERSECTIONS & EDGES OF OPENINGS
SCALE 3/4"=1'-0"

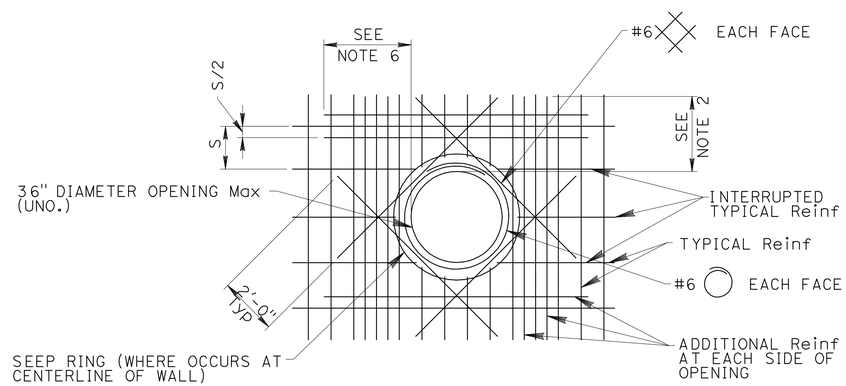

NOTES:
1. NUMBER OF ADDITIONAL Reinf BARS ON EACH SIDE OF OPENING SHALL BE EQUAL TO HALF OF THE NUMBER OF INTERRUPTED BARS IN EACH LAYER OF Reinf.
2. SIZE OF ADDITIONAL BARS SHALL MATCH THE SIZE OF INTERRUPTED Reinf BARS.
3. PROVIDE Std HOOKS ON BARS IF LAP LENGTH EXTENSION CANNOT BE OBTAINED.
4. PLACE ADDITIONAL BARS IN SAME PLANE AS INTERRUPTED REinf. PLACE #6 ⊗ & ○ INSIDE OF PLANE OF INTERRUPTED AND ADDITIONAL Reinf.
5. ALL Reinf SHALL CLEAR EDGE OF OPENING, PIPE OR FLANGE COLLARS BY 2"
6. EXTEND ADDED BARS PAST EDGE OF OPENING A Dist EQUAL TO THE OPENING Dia OR 48 BAR Dia, WHICHEVER IS GREATER.
7. WHERE SPECIFIED LENGTHS CANNOT BE ACHIEVED, BEND Reinf AND PROVIDE A Std 90° BEND OR 180° HOOK.

5 ADDITIONAL Reinf AT PENETRATIONS
SCALE 3/8"=1'-0"

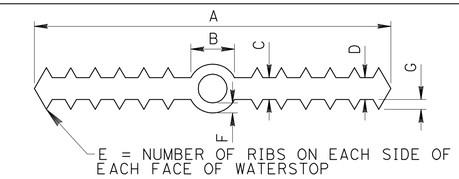

A	B	C	D	E	F	G	GREENSTREAK
6"	-	3/8"	1/4"	7	-	1/8"	783

* SEE NOTE 1 BELOW

NOTES:
1. NO CENTERBULB ALLOWED IN WATERSTOP FOR VERTICAL JOINTS.
2. ALL SPLICES SHALL BE MADE IN ACCORDANCE WITH MANUFACTURER'S RECOMMENDATIONS. SUBMIT SHOP DRAWINGS PRIOR TO INSTALLATION OR SPLICING WATERSTOPS.

6 WATERSTOP
SCALE 1"=1'-0"

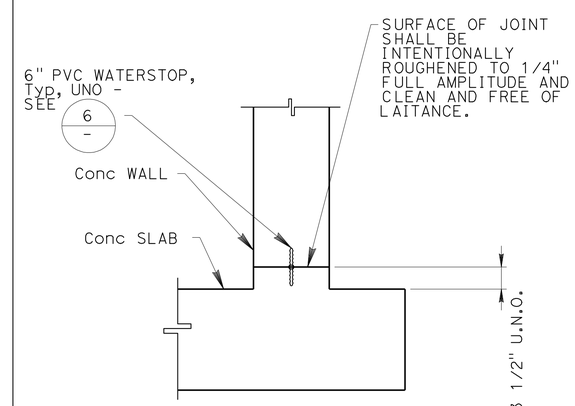

7 Typ STARTER WALL
SCALE 1"=1'-0"

ST-9

DESIGN	BY WYATT DRESSLER	CHECKED DAVID KUANG	PREPARED FOR THE STATE OF CALIFORNIA DEPARTMENT OF TRANSPORTATION	WYATT DRESSLER PROJECT ENGINEER
DETAILS	BY ERIC HUTCHINS	CHECKED DAVID KUANG		
QUANTITIES	BY WYATT DRESSLER	CHECKED MIKE OLSEN		

DALE WAH
DESIGN OVERSIGHT
5/11/12
SIGN OFF DATE

BRIDGE NO. 53-2920W
POST MILES 30.63

EMPIRE AVENUE UC
PUMPING PLANT
TYPICAL DETAILS 1

DESIGN DETAIL SHEET (ENGLISH) (REV.7/16/10)

ORIGINAL SCALE IN INCHES FOR REDUCED PLANS 0 1 2 3

UNIT: 1812
PROJECT NUMBER & PHASE: 07000211191 CONTRACT NO.: X

DISREGARD PRINTS BEARING EARLIER REVISION DATES

REVISION DATES X

SHEET 10 OF 32

FILE => wc009.dgn

USERNAME => s124496 DATE PLOTTED => 21-MAY-2012 TIME PLOTTED => 15:53

DIST	COUNTY	ROUTE	POST MILES TOTAL PROJECT	SHEET No	TOTAL SHEETS
07	LA	5	29.4/31.6	1349	1931

REGISTERED CIVIL ENGINEER 5/11/12 DATE

5-21-12
PLANS APPROVAL DATE

REGISTERED PROFESSIONAL ENGINEER
DALE E. WAH
No. 2582
Exp. 3/31/14
STRUCTURAL
STATE OF CALIFORNIA

The State of California or its officers or agents shall not be responsible for the accuracy or completeness of electronic copies of this plan sheet.

TETRA TECH
17885 VON KARMAN AVE
IRVINE, CA 92614

CITY OF BURBANK
150 N 3RD ST
BURBANK, CA 91510

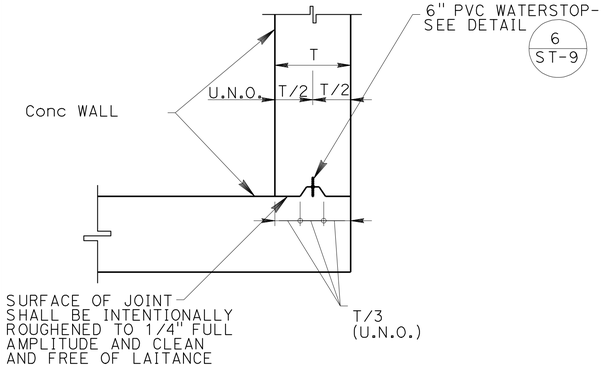

1 Const JOINT AT WALL CORNERS AND INTERSECTIONS

SCALE 1"=1'-0"

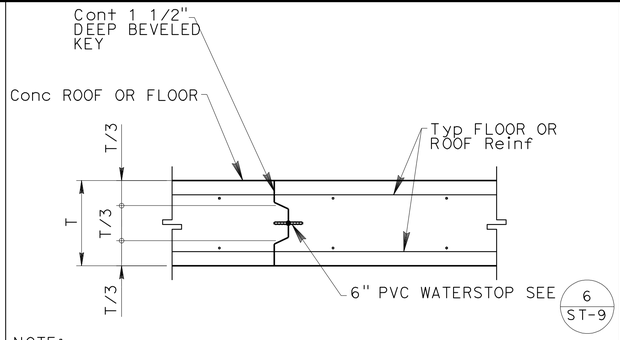

NOTE:
THIS Const JOINT SHALL ONLY BE USED WHERE APPROVED BY THE ENGINEER.

2 SLAB Const JOINT

SCALE 3/4"=1'-0"

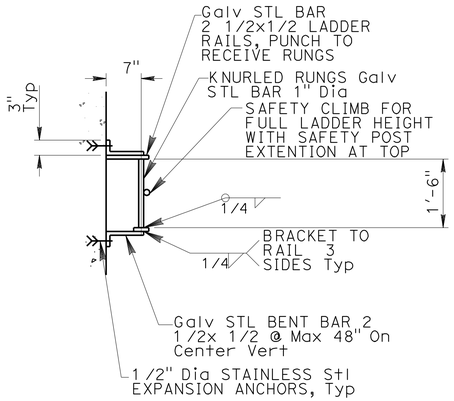

3 LADDER PLAN

SCALE 1"=1'-0"

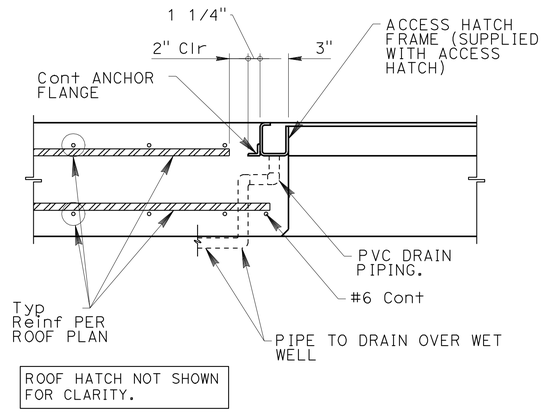

ROOF HATCH NOT SHOWN FOR CLARITY.

4 FLUSH MOUNTED ROOF HATCH

SCALE 1"=1'-0"

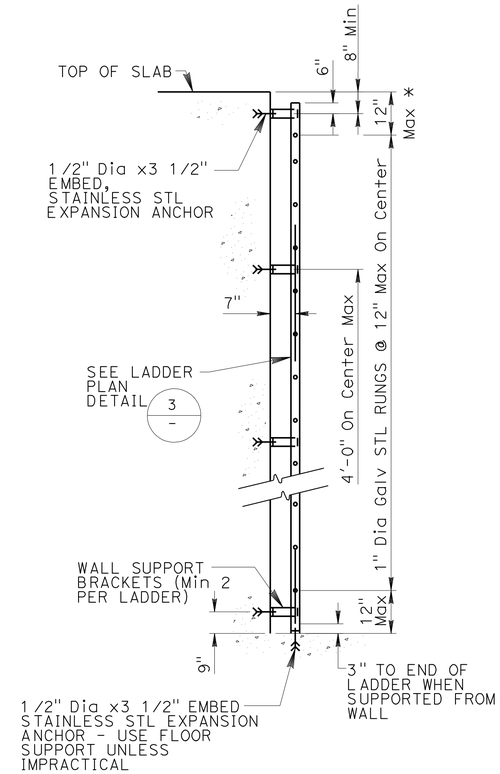

* PLACE TOP RUNG OF LADDER AS CLOSE TO TOP OF SLAB AS PRACTICABLE, WITH ADEQUATE CLEARANCE BELOW HATCH STIFFENERS.

5 Galv STL LADDER

SCALE 1"=1'-0"

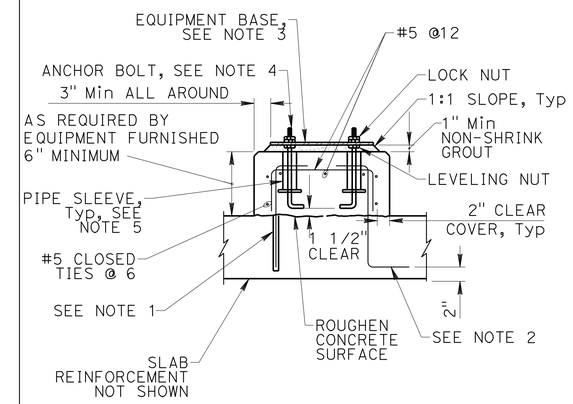

NOTES:

1. FOR NEW EQUIPMENT BASES ON EXISTING SLABS, DRILL INTO EXISTING SLAB TO DEVELOPMENT DEPTH AT 12" CENTERS AROUND PERIMETER OF EQUIPMENT BASE AND SET #5 HOOKED DOWELS IN EPOXY GROUT.
2. FOR EQUIPMENT BASES ON NEW SLABS, PROVIDE #5 DOWELS HAVING TWO HOOKED ENDS AT 12" CENTERS AROUND PERIMETER OF EQUIPMENT BASE.
3. EQUIPMENT BASE DIMENSIONS SHALL BE AS REQUIRED BY THE APPROVED SHOP DRAWINGS.
4. ANCHOR BOLTS AS RECOMMENDED BY THE EQUIPMENT MANUFACTURER. BOLTS SHALL BE HELD IN POSITION WITH A TEMPLATE WHILE EQUIPMENT BASE IS BEING CAST.
5. PIPE SLEEVES SHALL BE USED TO PROVIDE THE ANCHOR BOLT A Min MOVEMENT OF 1/2" IN ALL DIRECTIONS. Min SLEEVE LENGTH SHALL BE 8 TIMES THE BOLT Dia. SLEEVES SHALL BE FILLED WITH NON-SHRINK GROUT. PIPE SLEEVES SHALL HAVE A Min INTERNAL Dia 1" GREATER THAN BOLT Dia AND A Max INTERNAL Dia OF 3" GREATER THAN BOLT Dia.
6. EQUIPMENT BASES SHALL BE INSTALLED LEVEL. TOLERANCE IS 1/16"

6 RAISED PUMP PAD DETAIL

NO SCALE

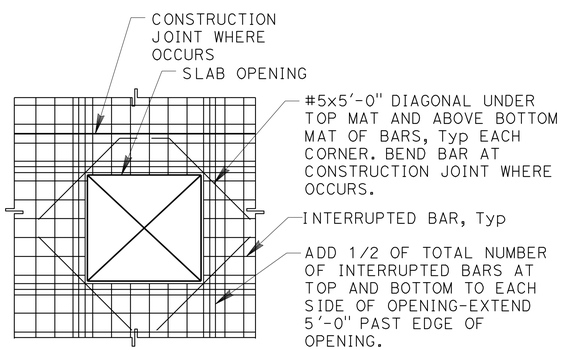

7 ADDITIOINAL REINF. AT SLAB OPENING

SCALE 1"=1'-0"

8 NOT USED

NO SCALE

9 NOT USED

NO SCALE

ST-10

EMPIRE AVENUE UC
PUMPING PLANT
TYPICAL DETAILS 2

DALE WAH
DESIGN OVERSIGHT
5/11/12
SIGN OFF DATE

	BY	CHECKED
DESIGN	WYATT DRESSLER	DAVID KUANG
DETAILS	ERIC HUTCHINS	DAVID KUANG
QUANTITIES	WYATT DRESSLER	MIKE OLSEN

PREPARED FOR THE STATE OF CALIFORNIA DEPARTMENT OF TRANSPORTATION

WYATT DRESSLER
PROJECT ENGINEER

BRIDGE NO. 53-2920W
POST MILES 30.63

DESIGN DETAIL SHEET (ENGLISH) (REV.7/16/10)

ORIGINAL SCALE IN INCHES FOR REDUCED PLANS 0 1 2 3

UNIT: 1812
PROJECT NUMBER & PHASE: 07000211191
CONTRACT NO.: X

DISREGARD PRINTS BEARING EARLIER REVISION DATES

REVISION DATES X

SHEET 11 OF 32

FILE => wc010.dgn

USERNAME => s124496 DATE PLOTTED => 21-MAY-2012 TIME PLOTTED => 15:53

DIST	COUNTY	ROUTE	POST MILES TOTAL PROJECT	SHEET No	TOTAL SHEETS
07	LA	5	29.4/31.6	1350	1931

REGISTERED CIVIL ENGINEER 5/11/12 DATE

5-21-12
PLANS APPROVAL DATE

REGISTERED PROFESSIONAL ENGINEER DALE E. WAH No. 2582 Exp. 3/31/14 STRUCTURAL STATE OF CALIFORNIA

The State of California or its officers or agents shall not be responsible for the accuracy or completeness of electronic copies of this plan sheet.

TETRA TECH
17885 VON KARMAN AVE
IRVINE, CA 92614

CITY OF BURBANK
150 N 3RD ST
BURBANK, CA 91510

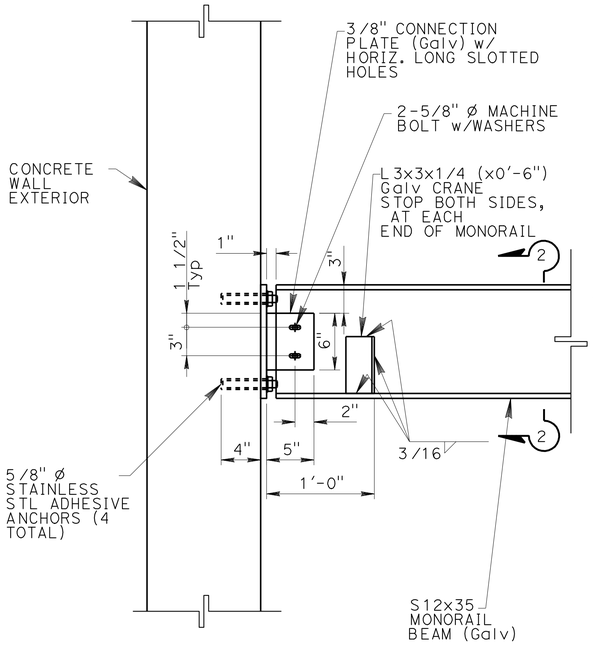

MONORAIL BEAM TO WALL CONNECTION

1 SCALE 1 1/2"=1'-0"

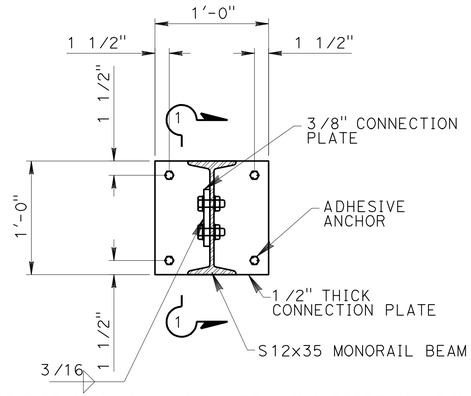

MONORAIL BEAM CONNECTION PLATE

2 SCALE 1 1/2"=1'-0"

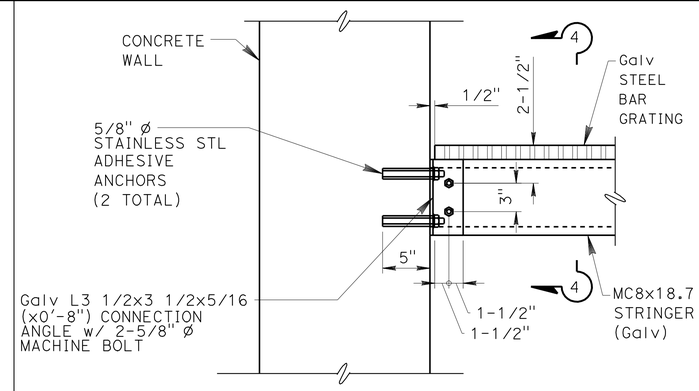

CATWALK STRINGER TO WALL CONNECTION

3 SCALE 1"=1'-0"

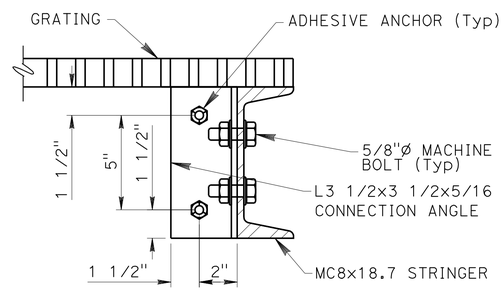

NOTE:
DIAGONAL BRACE AT WALL CONNECTION PLATE NOT SHOWN FOR CLARITY SEE DETAIL 5 FOR SIMILAR CONNECTION

CATWALK STRINGER TO WALL Conn

4 SCALE 3"=1'-0"

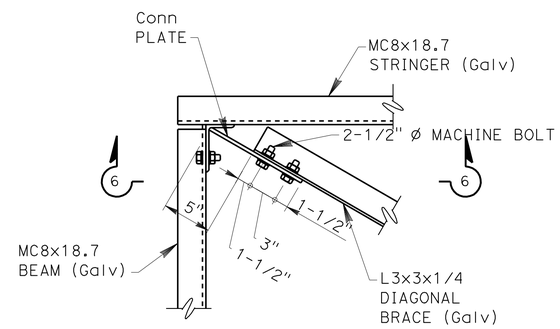

Chnl TO Chnl / DIAGONAL BRACE Conn

5 SCALE 1 1/2"=1'-0"

NOTE:
BAR GRATING AND GUARDRAILING NOT SHOWN FOR CLARITY

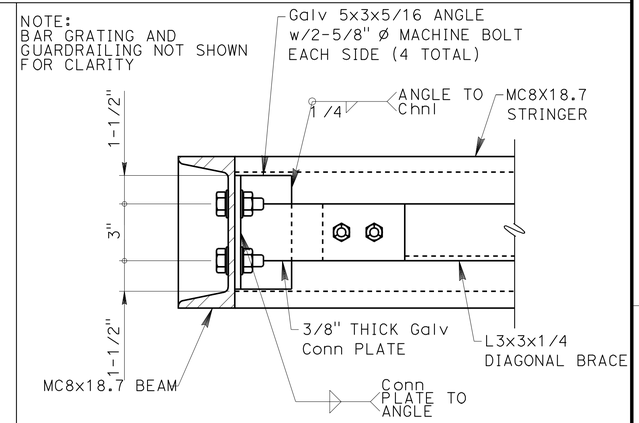

Chnl TO Chnl Sec

6 SCALE 3"=1'-0"

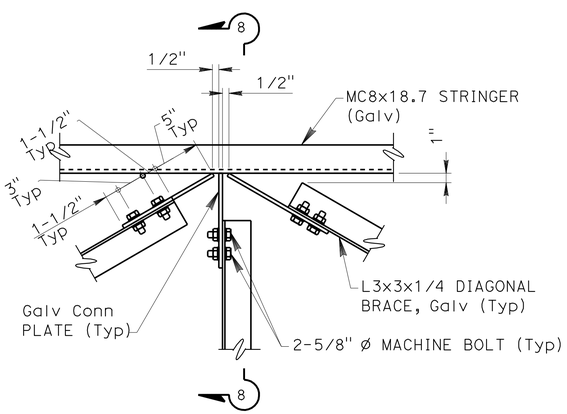

BRACE TO Chnl Conn

7 SCALE 1 1/2"=1'-0"

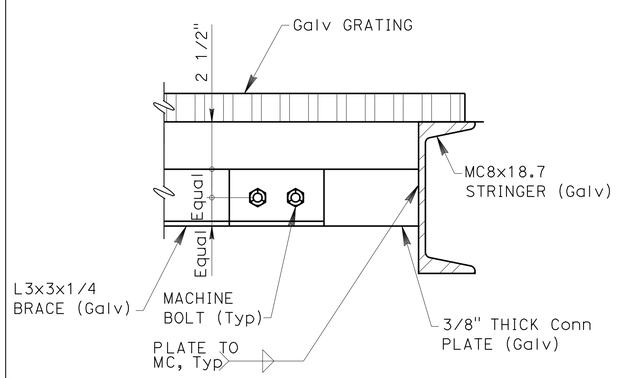

BRACE TO Chnl Sec

8 SCALE 3"=1'-0"

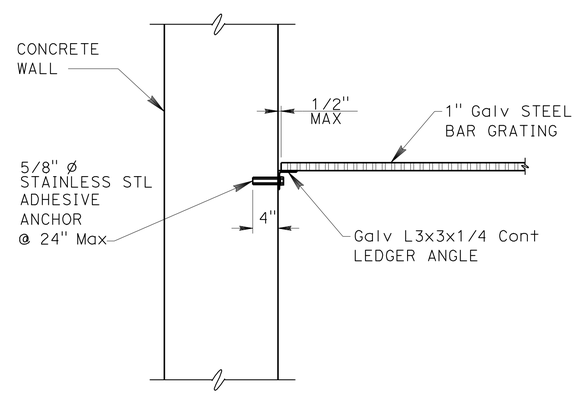

GRATING AT LEDGER ANGLE

9 SCALE 1"=1'-0"

NOT USED

10 NO SCALE

ST-11

DESIGN	BY WYATT DRESSLER	CHECKED DAVID KUANG	
DETAILS	BY ERIC HUTCHINS	CHECKED DAVID KUANG	
QUANTITIES	BY WYATT DRESSLER	CHECKED MIKE OLSEN	

DALE WAH
DESIGN OVERSIGHT
5/11/12
SIGN OFF DATE

PREPARED FOR THE STATE OF CALIFORNIA DEPARTMENT OF TRANSPORTATION

WYATT DRESSLER
PROJECT ENGINEER

BRIDGE NO. 53-2920W
POST MILES 30.63

EMPIRE AVENUE UC
PUMPING PLANT
STRUCTURAL DETAILS 1

DESIGN DETAIL SHEET (ENGLISH) (REV.7/16/10)

ORIGINAL SCALE IN INCHES FOR REDUCED PLANS 0 1 2 3

UNIT: 1812
PROJECT NUMBER & PHASE: 07000211191 CONTRACT NO.: X

DISREGARD PRINTS BEARING EARLIER REVISION DATES

REVISION DATES X

SHEET 12 OF 34

FILE => wc011.dgn

USERNAME => s124896 DATE PLOTTED => 21-MAY-2012 TIME PLOTTED => 15:53

DIST	COUNTY	ROUTE	POST MILES TOTAL PROJECT	SHEET No	TOTAL SHEETS
07	LA	5	29.4/31.6	1351	1931

REGISTERED CIVIL ENGINEER 5/11/12 DATE

5-21-12
PLANS APPROVAL DATE

REGISTERED PROFESSIONAL ENGINEER DALE E. WAH No. 2582 Exp. 3/31/14 STRUCTURAL STATE OF CALIFORNIA

The State of California or its officers or agents shall not be responsible for the accuracy or completeness of electronic copies of this plan sheet.

TETRA TECH
17885 VON KARMAN AVE
IRVINE, CA 92614

CITY OF BURBANK
150 N 3RD ST
BURBANK, CA 91510

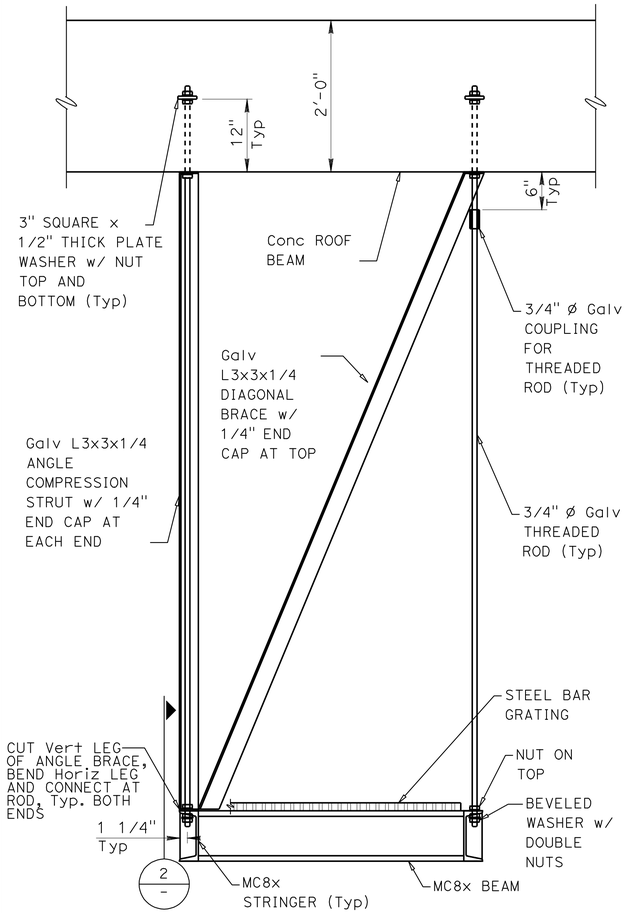

1 - **CATWALK ROD HANGER/BRACING**
SCALE 1"=1'-0"

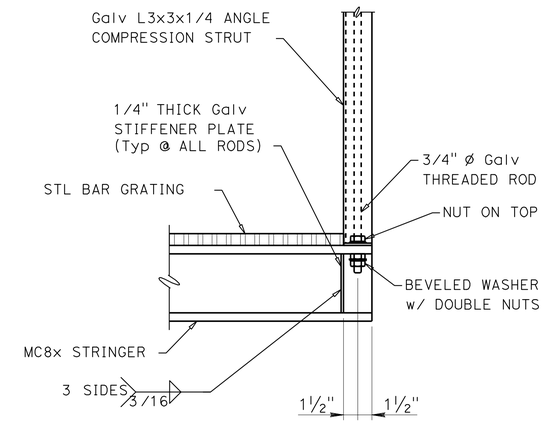

2 - **CATWALK HANGER SECTION**
SCALE 1 1/2"=1'-0"

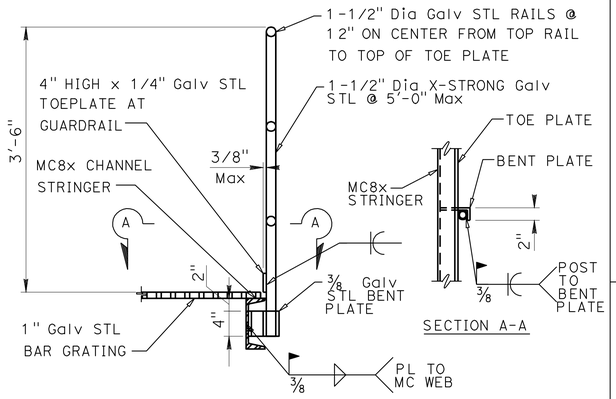

3 - **GUARDRAIL AT STL FRAMING**
SCALE 1"=1'-0"

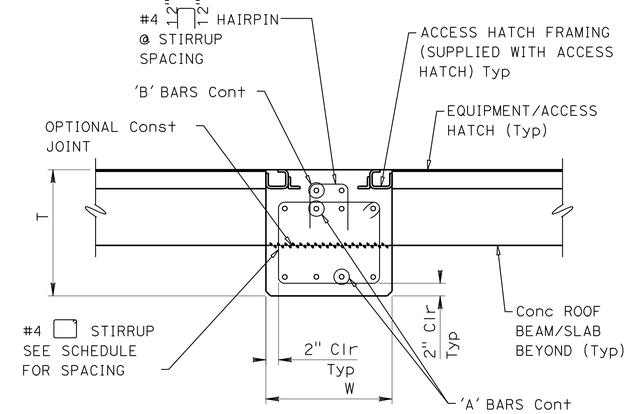

BEAM No.	THICKNESS, T	WIDTH, W	'A' BARS TOP & BOTTOM	'B' BARS	STIRRUP SPACING AT ENDS	STIRRUP SPACING BTW ENDS
B1	1'-8"	1'-8"	4 - #7	2 - #5	6" ON CENTER WITHIN 4'-0"	12" ON CENTER
B2	1'-8"	1'-4"	3 - #7	2 - #5	6" ON CENTER WITHIN 4'-0"	12" ON CENTER
B3	1'-6"	1'-6"	3 - #6	2 - #5	6" ON CENTER Cont	6" ON CENTER Cont
B7	2'-0"	2'-2"	5 - #7	3 - #5	9" ON CENTER Cont	9" ON CENTER Cont
B8	2'-0"	1'-8"	5 - #7	2 - #5	9" ON CENTER Cont	9" ON CENTER Cont

NOTE: BEAM FALSEWORK REQUIRED UNTIL ROOF SLAB Conc REACHES 28-DAY COMPRESSIVE STRENGTH

4 - **ROOF BETWEEN OPENINGS**
SCALE 1 1/2"=1'-0"

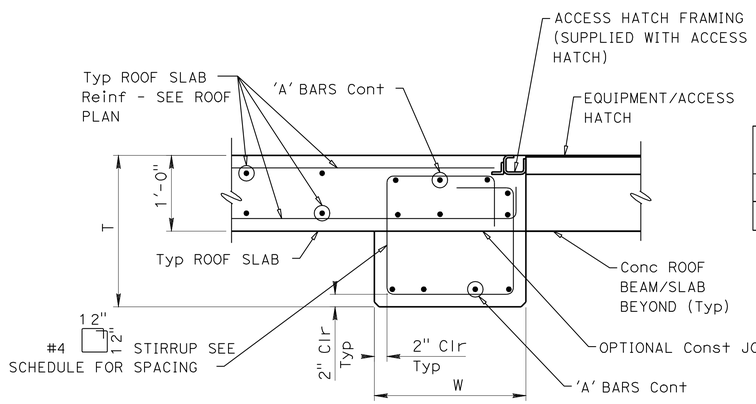

BEAM No.	THICKNESS, T	WIDTH, W	'A' BARS TOP & BOTTOM	STIRRUP SPACING AT ENDS	STIRRUP SPACING BTW. ENDS
B4	2'-0"	2'-0"	5 - #7	10" ON CENTER WITHIN 6'-6"	12" ON CENTER
B6	2'-6"	2'-6"	8 - #8	10" ON CENTER WITHIN 9'-0"	15" ON CENTER

NOTE: BEAM FALSEWORK REQUIRED UNTIL ROOF SLAB Conc REACHES 28-DAY COMPRESSIVE STRENGTH

5 - **ROOF BEAM ADJACENT TO OPENING**
SCALE 1"=1'0"

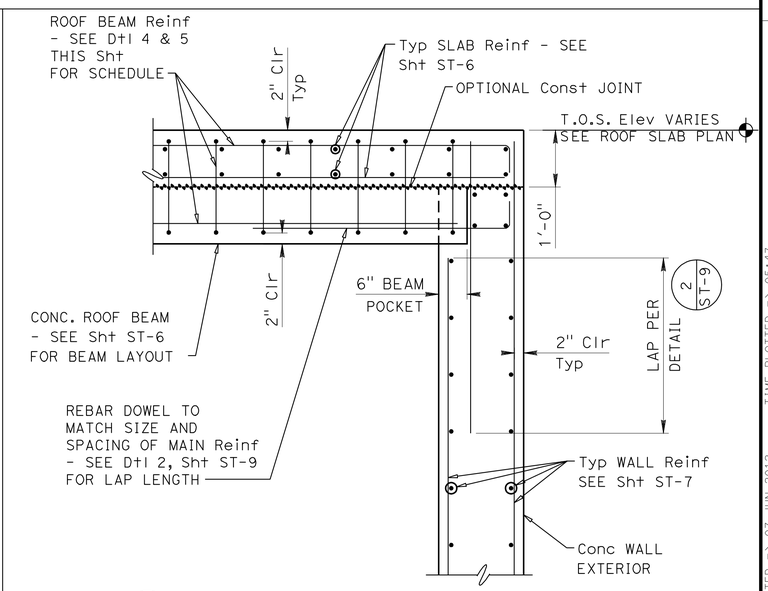

6 - **CONCRETE BEAM POCKET**
3/4" = 1'-0"

ST-12

EMPIRE AVENUE UC
PUMPING PLANT
STRUCTURAL DETAILS 2

DALE WAH
DESIGN OVERSIGHT
5/11/12
SIGN OFF DATE

	BY	CHECKED
DESIGN	WYATT DRESSLER	DAVID KUANG
DETAILS	ERIC HUTCHINS	DAVID KUANG
QUANTITIES	WYATT DRESSLER	MIKE OLSEN

PREPARED FOR THE STATE OF CALIFORNIA DEPARTMENT OF TRANSPORTATION

WYATT DRESSLER
PROJECT ENGINEER

BRIDGE NO. 53-2920W
POST MILES 30.63

DESIGN DETAIL SHEET (ENGLISH) (REV.7/16/10)

ORIGINAL SCALE IN INCHES FOR REDUCED PLANS 0 1 2 3

UNIT: 1812
PROJECT NUMBER & PHASE: 07000211191 CONTRACT NO.: X

DISREGARD PRINTS BEARING EARLIER REVISION DATES

REVISION DATES X

SHEET 13 OF 32

FILE => wc012.dgn

USERNAME => s121614 DATE PLOTTED => 07-JUN-2012 TIME PLOTTED => 05:47

DIST	COUNTY	ROUTE	POST MILES TOTAL PROJECT	SHEET No	TOTAL SHEETS
07	LA	5	29.4/31.6	1352	1931

REGISTERED CIVIL ENGINEER 5/11/12 DATE

5-21-12
PLANS APPROVAL DATE

REGISTERED PROFESSIONAL ENGINEER
DALE E. WAH
No. 2582
Exp. 3/31/14
STRUCTURAL
STATE OF CALIFORNIA

The State of California or its officers or agents shall not be responsible for the accuracy or completeness of electronic copies of this plan sheet.

TETRA TECH
17885 VON KARMAN AVE
IRVINE, CA 92614

CITY OF BURBANK
150 N 3RD ST
BURBANK, CA 91510

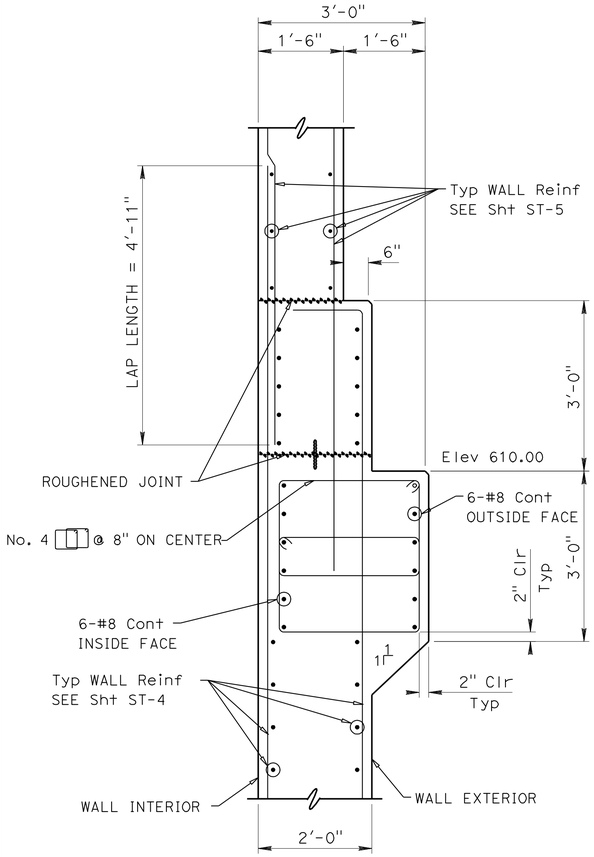

1 - **UPPER Horiz WALL BEAM**
SCALE 3/4"=1'-0"

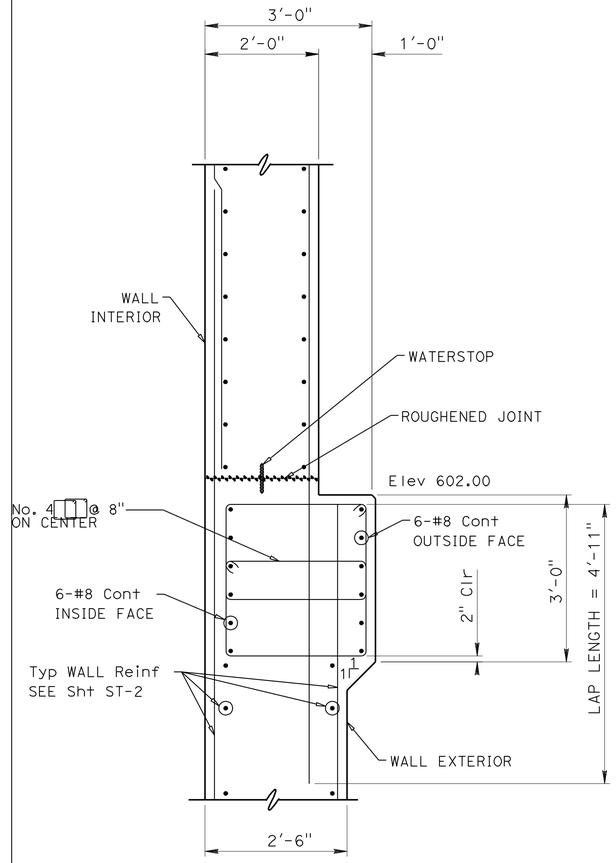

2 - **LOWER Horiz WALL BEAM**
SCALE 3/4"=1'-0"

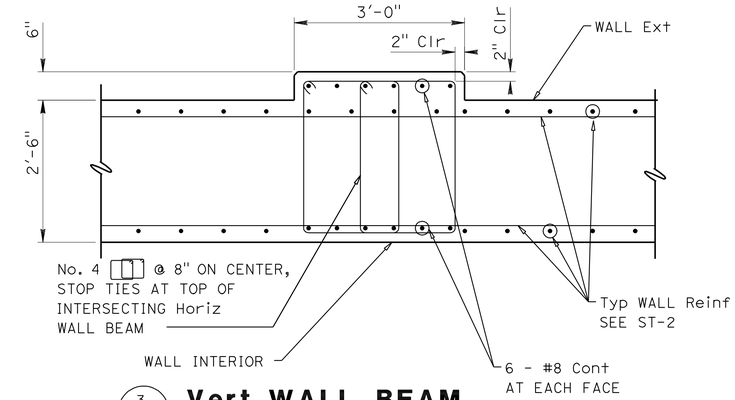

3 - **Vert WALL BEAM**
SCALE 3/4"= 1'-0"

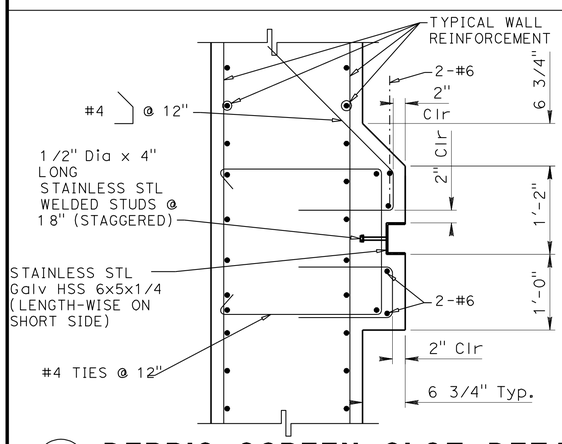

4 - **DEBRIS SCREEN SLOT DETAIL**
SCALE 1"=1'-0"

5 - **NOT USED**
NO SCALE

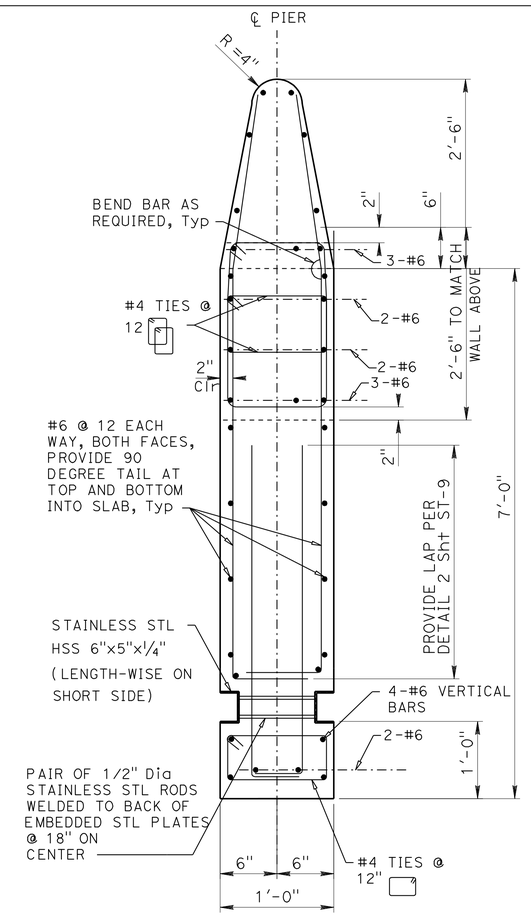

6 - **PIER DETAIL**
SCALE 1"= 1'-0"

7 - **NOT USED**
NO SCALE

ST-13

EMPIRE AVENUE UC
PUMPING PLANT
STRUCTURAL DETAILS 3

DALE WAH
DESIGN OVERSIGHT
5/11/12
SIGN OFF DATE

	BY	CHECKED
DESIGN	WYATT DRESSLER	DAVID KUANG
DETAILS	ERIC HUTCHINS	DAVID KUANG
QUANTITIES	WYATT DRESSLER	MIKE OLSEN

PREPARED FOR THE STATE OF CALIFORNIA DEPARTMENT OF TRANSPORTATION

WYATT DRESSLER
PROJECT ENGINEER

BRIDGE NO. 53-2920W
POST MILES 30.63

DESIGN DETAIL SHEET (ENGLISH) (REV.7/16/10)

ORIGINAL SCALE IN INCHES FOR REDUCED PLANS 0 1 2 3

UNIT: 1812
PROJECT NUMBER & PHASE: 07000211191 CONTRACT NO.: X

DISREGARD PRINTS BEARING EARLIER REVISION DATES

REVISION DATES X

SHEET 14 OF 32

FILE => wc013.dgn

USERNAME => s124436 DATE PLOTTED => 21-MAY-2012 TIME PLOTTED => 15:53

DIST	COUNTY	ROUTE	POST MILES TOTAL PROJECT	SHEET No	TOTAL SHEETS
07	LA	5	29.4/31.6	1353	1931

REGISTERED CIVIL ENGINEER 5/11/12 DATE

5-21-12
PLANS APPROVAL DATE

REGISTERED PROFESSIONAL ENGINEER
DALE E. WAH
No. 2582
Exp. 3/31/14
STRUCTURAL
STATE OF CALIFORNIA

The State of California or its officers or agents shall not be responsible for the accuracy or completeness of electronic copies of this plan sheet.

TETRA TECH
17885 VON KARMAN AVE
IRVINE, CA 92614

CITY OF BURBANK
150 N 3RD ST
BURBANK, CA 91510

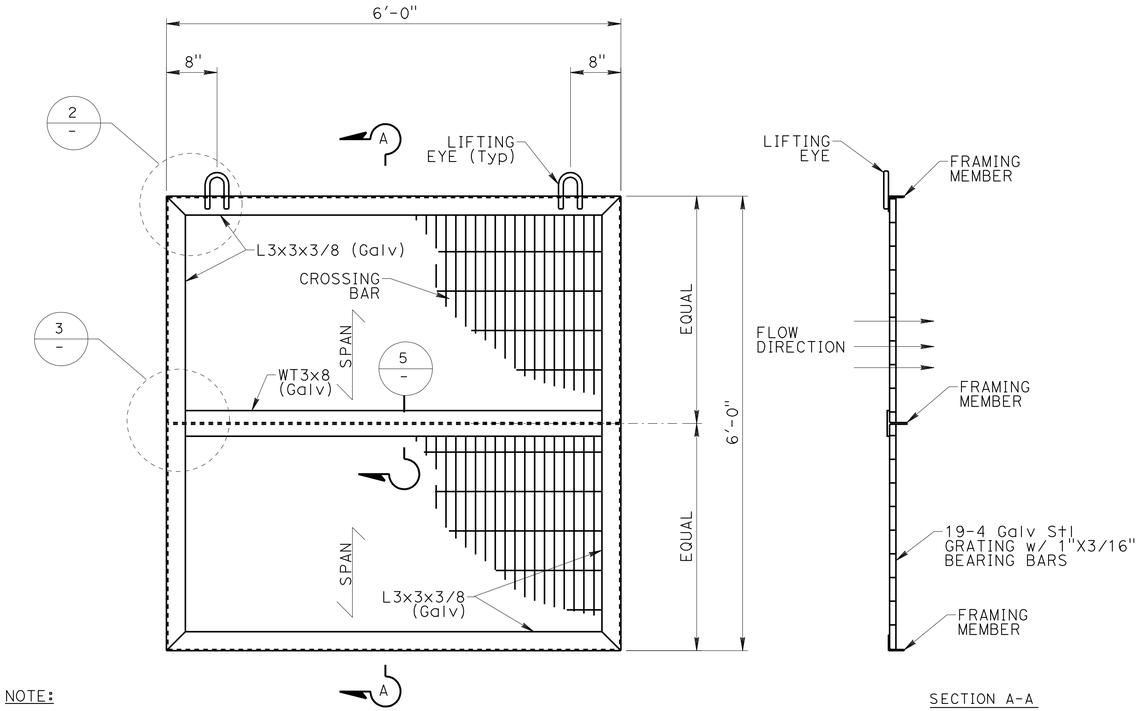

NOTE:
SINGLE DEBRIS SCREEN UNIT SHOWN MEASURING 6'-0" x 6'-0". EACH BAY BETWEEN CONCRETE PIER WALLS CONTAINS THREE DEBRIS SCREEN UNITS STACKED VERTICALLY ON ONE ANOTHER FOR A TOTAL HEIGHT OF 18'-0". REFER TO SHEET ST-7 AND ST-8 FOR OVERALL VIEW.

SECTION A-A

1 / - DEBRIS SCREEN ELEVATION
SCALE 1"=1'-0"

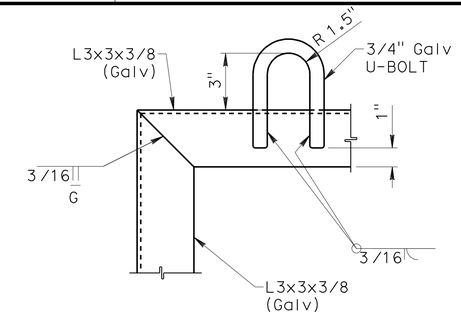

2 / - CORNER DETAIL
SCALE 3"=1'-0"

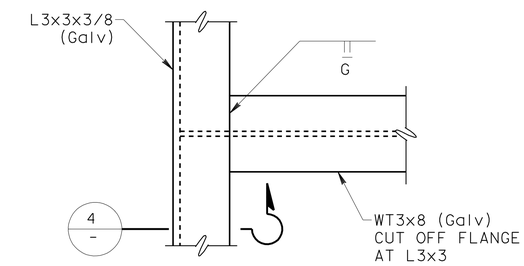

3 / - FRAMING CONNECTION
SCALE 3"=1'-0"

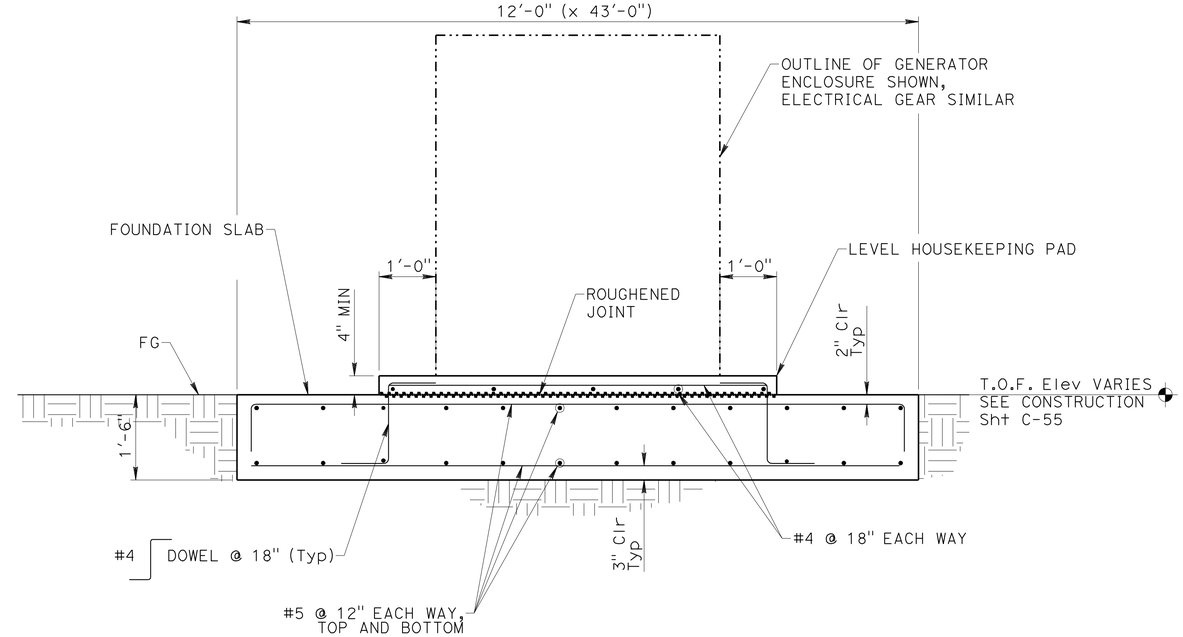

6 / - ELECTRICAL EQUIPMENT FOUNDATION
SCALE 3/4"=1'-0"

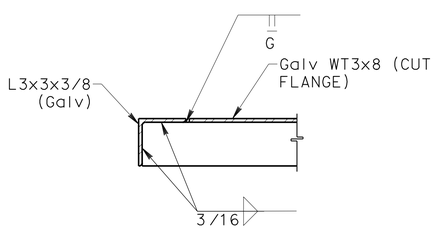

4 / - FRAMING SECTION
SCALE 3"=1'-0"

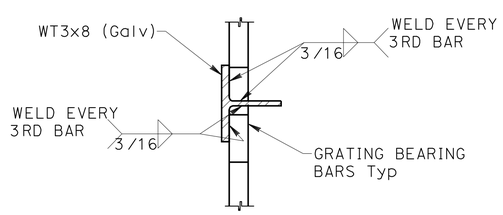

5 / - GRATING TO FRAMING CONNECTION
SCALE 3"=1'-0"

ST-14

EMPIRE AVENUE UC
PUMPING PLANT
STRUCTURAL DETAILS 4

DALE WAH
DESIGN OVERSIGHT
5/11/12
SIGN OFF DATE

	BY	CHECKED
DESIGN	WYATT DRESSLER	DAVID KUANG
DETAILS	ERIC HUTCHINS	DAVID KUANG
QUANTITIES	WYATT DRESSLER	MIKE OLSEN

PREPARED FOR THE STATE OF CALIFORNIA DEPARTMENT OF TRANSPORTATION

WYATT DRESSLER
PROJECT ENGINEER

BRIDGE NO. 53-2920W
POST MILES 30.63

DESIGN DETAIL SHEET (ENGLISH) (REV.7/16/10)

ORIGINAL SCALE IN INCHES FOR REDUCED PLANS 0 1 2 3

UNIT: 1812
PROJECT NUMBER & PHASE: 07000211191 CONTRACT NO.: X

DISREGARD PRINTS BEARING EARLIER REVISION DATES

REVISION DATES X

SHEET 15 OF 32

FILE => wc014.dgn

USERNAME => s124496 DATE PLOTTED => 21-MAY-2012 TIME PLOTTED => 15:53

DIST	COUNTY	ROUTE	POST MILES TOTAL PROJECT	SHEET No	TOTAL SHEETS
07	LA	5	29.4/31.6	1354	1931

REGISTERED CIVIL ENGINEER 5/11/12 DATE

5-21-12
PLANS APPROVAL DATE

REGISTERED PROFESSIONAL ENGINEER RICHARD STEVEN AGOR No. 57082 Exp. 12/31/13 CIVIL STATE OF CALIFORNIA

The State of California or its officers or agents shall not be responsible for the accuracy or completeness of electronic copies of this plan sheet.

TETRA TECH
17885 VON KARMAN AVE
IRVINE, CA 92614

CITY OF BURBANK
150 N 3RD ST
BURBANK, CA 91510

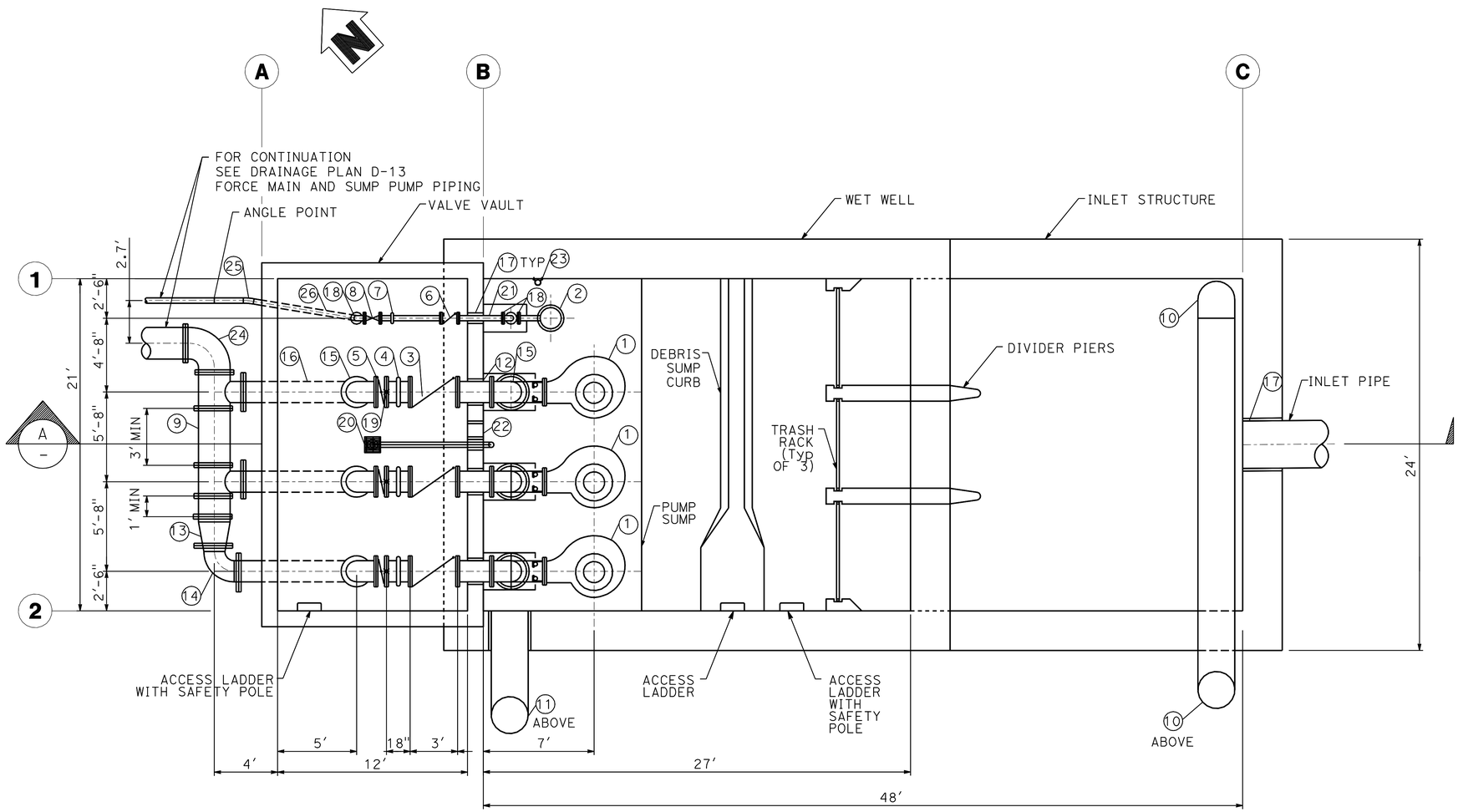

PLAN

1"= 8'-0"

CONSTRUCTION NOTES

1. 75 HP SUBMERSIBLE PUMP, 4000 GPM WITH BASE ELBOW AND GUIDE BARS.
2. 5 HP SUBMERSIBLE PUMP, 196 GPM WITH BASE ELBOW AND GUIDE BARS.
3. 16" SWING CHECK VALVE, LEVER AND SPRING, FLG.
4. 16" VICTUALIC COUPLING.
5. 16" BUTTERFLY VALVE, FLG.
6. 4" SWING CHECK VALVE, LEVEL AND SPRING, FLG.
7. 4" VICTUALIC COUPLING.
8. 4" GATE VALVE, FLG.
9. 24" DUCTILE IRON HEADER, CI 250 WITH 2-16" OUTLETS, MJ.
10. FAN WITH 20" FRP DUCT PER DETAIL 2/M-3
11. 20" STAINLESS STL VENT PIPE PER DETAIL 4/M-3
12. 16" DIP, CI 250, FLG.
13. 24" X 16" DUCTILE IRON CONCETRIC REDUCER, FLG.
14. 16" DUCTILE IRON 90° ELBOW, FLG.
15. 16" DUCTILE IRON 90° ELBOW, FLG.
16. 16" DIP, CI 250.
17. WALL PENETRATION PER DETAIL 3/M-4
18. 4" DUCTILE IRON 90° LONG RADIUS ELBOW, FLG.
19. PIPE SUPPORT PER DETAIL 3/M-3
20. 4" PVC PIPE TRAP DRAIN TO WET WELL WITH HEAVY DUTY STAINLESS STEEL GRATE.
21. 4" DUCTILE IRON CI 350, MJ, FLG.
22. 12" DIAMETER VENT HOLE.
23. LEVEL TRANSDUCER IN 25' LONG, 4" Dia, PERFORATED, SCH. 40, PVC PIPE MOUNTED ON WETWELL WALL. POSITION LEVEL TRANSDUCER AT ELEVATION 585.0.
24. 24" DUCTILE IRON 90° ELBOW, FLG.
25. 4" DUCTILE IRON 11.25° ELBOW, FLG.
26. 4" DUCTILE IRON CI 350, FLG.

NOTES

1. ACTUAL DIMENSIONS SHALL BE PER PUMP MANUFACTURER'S RECOMENDATIONS.
2. SLOPE FLOOR TO DRAIN GRATE/ SUMP PUMP.
3. DUCTILE IRON PIPE IN THE WET WELL AND VAULT SHALL BE CEMENT MORTAR LINED AND PAINTED. BURIED DUCTILE IRON PIPE SHALL BE CEMENT LINED AND COATED PER PROJECT SPECIFICATIONS.

M-1

EMPIRE AVENUE UC
PUMPING PLANT
PUMP STATION MECHANICAL PLAN

STEVEN AGOR
DESIGN OVERSIGHT
5/11/12
SIGN OFF DATE

	BY	CHECKED
DESIGN	CRISNA ESTRADA	STEVEN AGOR
DETAILS	CRISNA ESTRADA	STEVEN AGOR
QUANTITIES	CRISNA ESTRADA	STEVEN AGOR

PREPARED FOR THE STATE OF CALIFORNIA DEPARTMENT OF TRANSPORTATION

CRISNA ESTRADA
PROJECT ENGINEER

BRIDGE NO. 53-2920W
POST MILES 30.63

DESIGN DETAIL SHEET (ENGLISH) (REV.7/16/10)

ORIGINAL SCALE IN INCHES FOR REDUCED PLANS 0 1 2 3

UNIT: 1812
PROJECT NUMBER & PHASE: 07000211191 CONTRACT NO.: X

DISREGARD PRINTS BEARING EARLIER REVISION DATES

REVISION DATES X

SHEET 16 OF 32

FILE => wd001.dgn

USERNAME => s124496 DATE PLOTTED => 21-MAY-2012 TIME PLOTTED => 15:53

DIST	COUNTY	ROUTE	POST MILES TOTAL PROJECT	SHEET No	TOTAL SHEETS
07	LA	5	29.4/31.6	1355	1931

REGISTERED CIVIL ENGINEER 5/11/12 DATE

5-21-12
PLANS APPROVAL DATE

REGISTERED PROFESSIONAL ENGINEER RICHARD STEVEN AGOR No. 57082 Exp. 12/31/13 CIVIL STATE OF CALIFORNIA

The State of California or its officers or agents shall not be responsible for the accuracy or completeness of electronic copies of this plan sheet.

TETRA TECH
17885 VON KARMAN AVE
IRVINE, CA 92614

CITY OF BURBANK
150 N 3RD ST
BURBANK, CA 91510

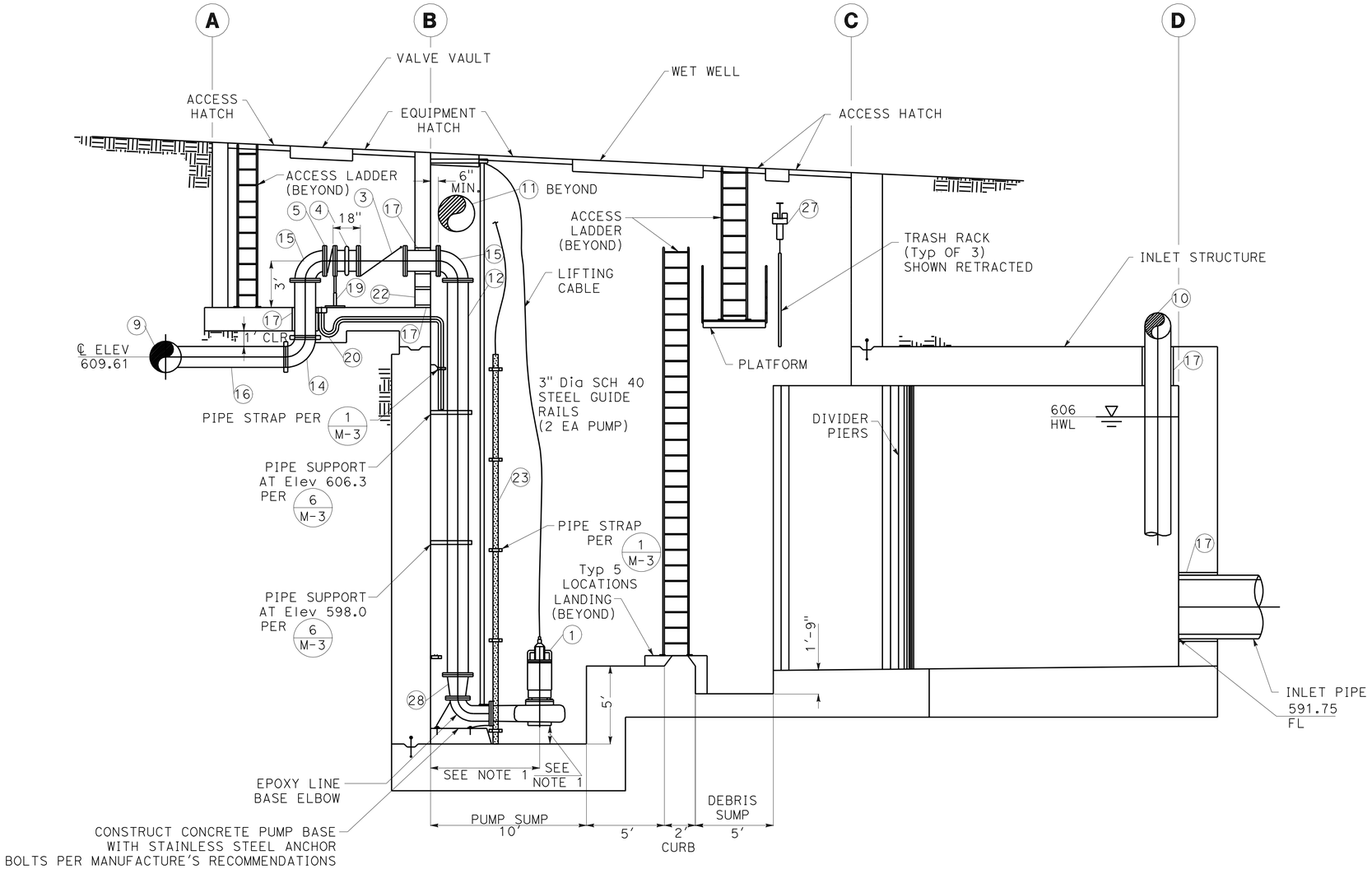

A — **SECTION**
1"= 8'-0"

CONSTRUCTION NOTES

1. 75 HP SUBMERSIBLE PUMP, 4000 GPM WITH BASE ELBOW AND GUIDE BARS.
3. 16" SWING CHECK VALVE, LEVER AND SPRING, FLG.
4. 16" VICTUALIC COUPLING.
5. 16" BUTTERFLY VALVE, FLG.
9. 24" DIP HEADER, CI 250 WITH 2-16" OUTLETS, FLG.
10. FAN WITH 20" FRP DUCT PER DETAIL 2/M-3
11. 20" STAINLESS STL VENT PIPE PER DETAIL 4/M-3
12. 16" DIP, CI 250, FLG.
14. 16" DUCTILE IRON 90° ELBOW, FLG.
15. 16" DUCTILE IRON 90° ELBOW, FLG.
16. 16" DIP, CI 250, FLG.
17. WALL PENETRATION PER DETAIL 3/M-4
19. PIPE SUPPORT PER DETAIL 3/M-3
20. 4" PVC PIPE TRAP DRAIN TO WET WELL WITH HEAVY DUTY STAINLESS STL GRATE.
22. 12" DIAMETER VENT HOLE.
23. LEVEL TRANSDUCER IN 25' LONG, 4" Dia, PERFORATED, SCH. 40, PVC PIPE MOUNTED ON WETWELL WALL. POSITION LEVEL TRANSDUCER AT ELEVATION 585.0.
27. MECHANICAL HAND HOST WITH GEARED TROLLEY, ONE-PIECE SUSPENSION FRAME WITH CHAIN LENGTH TO SUIT.
28. 16" x 12" DUCTILE IRON CONCENTRIC REDUCER, FLG.

PUMP CONTROL SCHEDULE

TRANSDUCER CONTROLLED

Conditions	Control	Pump	Action
Rising Levels	595.0	Lead Pump	On
	605.0	Lag Pump	On
Falling Levels	595.0	Lag Pump	Off
	590.0	Lead Pump	Off
	590.0	Sump Pump	On
	585.0	Sump Pump	Off

NOTES

1. ACTUAL DIMENSIONS SHALL BE PER PUMP MANUFACTURER'S RECOMENDATIONS.
2. SLOPE FLOOR TO DRAIN GRATE/ SUMP PUMP.
3. DUCTILE IRON PIPE IN THE WET WELL AND VAULT SHALL BE CEMENT MORTAR LINED AND PAINTED. BURIED DUCTILE IRON PIPE SHALL BE CEMENT LINED AND COATED PER PROJECT SPECIFICATIONS.

REDUNDANT CONTROL SCHEDULE

LEVEL SWITCH CONTROLLED

Control Elevation	Action
590.0	Off-Restore
606.0	High Wetwell Alarm
606.5	High- High Wetwell Alarm Activation of Pump Start Sequence

STORM WATER PUMPS OPERATE IN A FIRST ON/ FIRST OFF BASIS

M-2

EMPIRE AVENUE UC
PUMPING PLANT
PUMP STATION MECHANICAL SECTION

STEVEN AGOR
DESIGN OVERSIGHT
5/11/12
SIGN OFF DATE

	BY	CHECKED
DESIGN	CRISNA ESTRADA	STEVEN AGOR
DETAILS	CRISNA ESTRADA	STEVEN AGOR
QUANTITIES	CRISNA ESTRADA	STEVEN AGOR

PREPARED FOR THE STATE OF CALIFORNIA DEPARTMENT OF TRANSPORTATION

CRISNA ESTRADA
PROJECT ENGINEER

BRIDGE NO. 53-2920W
POST MILES 30.63

DESIGN DETAIL SHEET (ENGLISH) (REV.7/16/10)

ORIGINAL SCALE IN INCHES FOR REDUCED PLANS 0 1 2 3

UNIT: 1812
PROJECT NUMBER & PHASE: 07000211191 CONTRACT NO.: X

DISREGARD PRINTS BEARING EARLIER REVISION DATES

REVISION DATES X

SHEET 17 OF 32

FILE => wd002.dgn

USERNAME => s124496 DATE PLOTTED => 21-MAY-2012 TIME PLOTTED => 15:54

DIST	COUNTY	ROUTE	POST MILES TOTAL PROJECT	SHEET No	TOTAL SHEETS
07	LA	5	29.4/31.6	1356	1931

REGISTERED CIVIL ENGINEER 5/11/12 DATE

5-21-12
PLANS APPROVAL DATE

REGISTERED PROFESSIONAL ENGINEER RICHARD STEVEN AGOR No. 57082 Exp. 12/31/13 CIVIL STATE OF CALIFORNIA

The State of California or its officers or agents shall not be responsible for the accuracy or completeness of electronic copies of this plan sheet.

TETRA TECH
17885 VON KARMAN AVE
IRVINE, CA 92614

CITY OF BURBANK
150 N 3RD ST
BURBANK, CA 91510

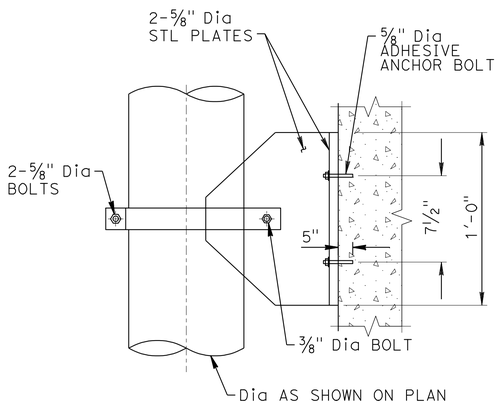

DETAIL

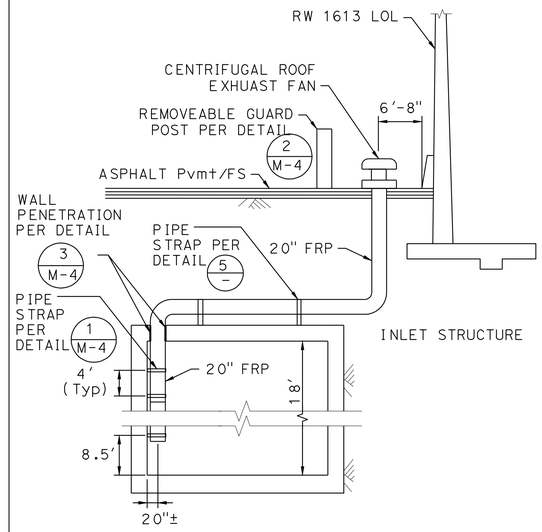

2 FAN DETAIL
NO SCALE

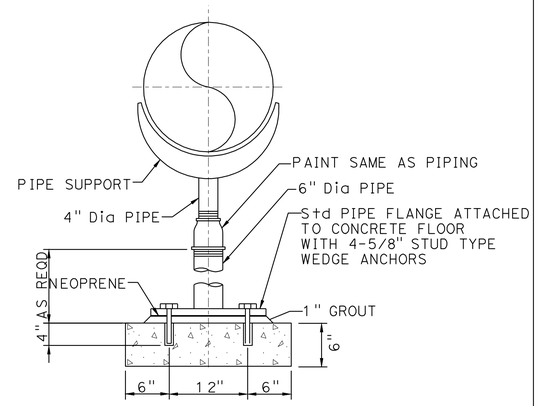

3 PIPE SUPPORT
NO SCALE

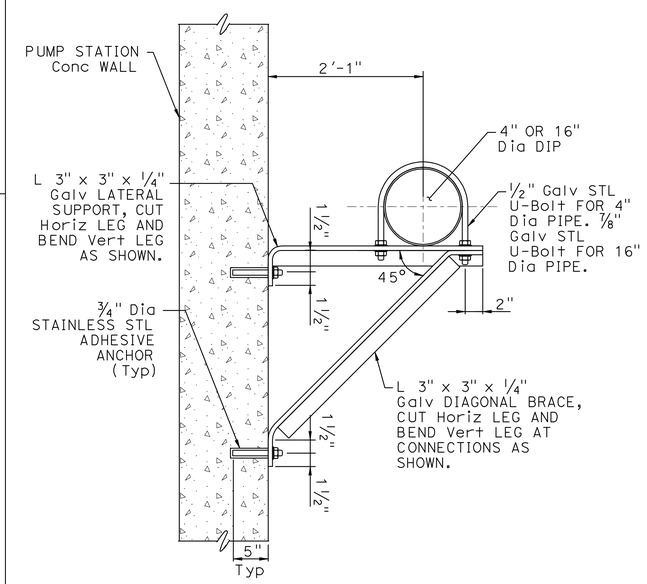

PLAN VIEW

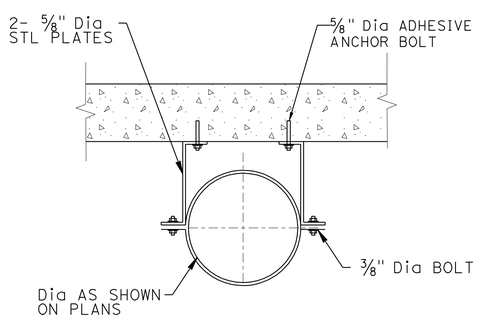

PLAN VIEW

1 PIPE STRAP PLAN
NO SCALE

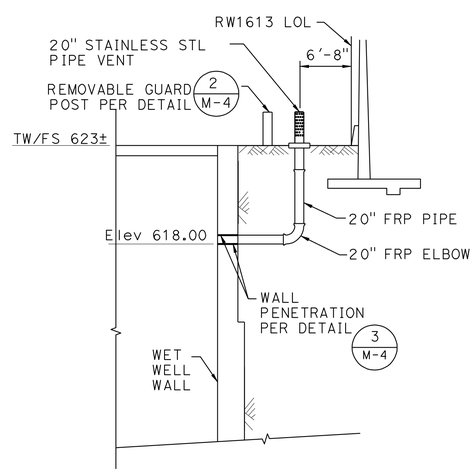

4 PIPE VENT DETAIL
NO SCALE

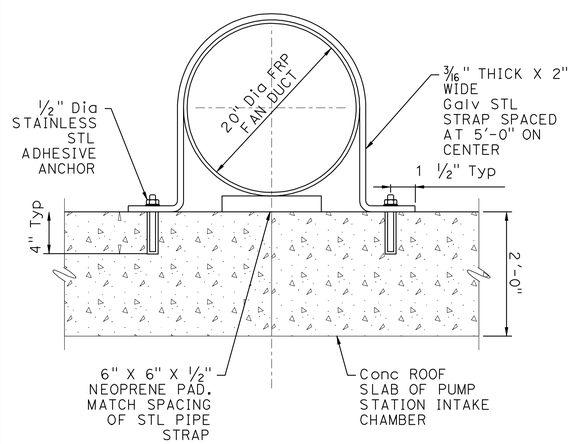

FAN DUCT PIPE STRAP TO Conc ROOF
NO SCALE

6 DISCHARGE PIPE SUPPORT
NO SCALE

M-3

EMPIRE AVENUE UC
PUMPING PLANT
PUMP STATION DETAILS 1

STEVEN AGOR
DESIGN OVERSIGHT
5/11/12
SIGN OFF DATE

	BY	CHECKED
DESIGN	CRISNA ESTRADA	STEVEN AGOR
DETAILS	CRISNA ESTRADA	STEVEN AGOR
QUANTITIES	CRISNA ESTRADA	STEVEN AGOR

PREPARED FOR THE STATE OF CALIFORNIA DEPARTMENT OF TRANSPORTATION

CRISNA ESTRADA
PROJECT ENGINEER

BRIDGE NO. 53-2920W
POST MILES 30.63

DESIGN DETAIL SHEET (ENGLISH) (REV.7/16/10)

ORIGINAL SCALE IN INCHES FOR REDUCED PLANS 0 1 2 3

UNIT: 1812
PROJECT NUMBER & PHASE: 07000211191 CONTRACT NO.: X

DISREGARD PRINTS BEARING EARLIER REVISION DATES

REVISION DATES X

SHEET 18 OF 32

FILE => wd003.dgn

USERNAME => s124496 DATE PLOTTED => 21-MAY-2012 TIME PLOTTED => 15:54

DIST	COUNTY	ROUTE	POST MILES TOTAL PROJECT	SHEET No	TOTAL SHEETS
07	LA	5	29.4/31.6	1357	1931

REGISTERED CIVIL ENGINEER 5/11/12 DATE

5-21-12
PLANS APPROVAL DATE

REGISTERED PROFESSIONAL ENGINEER RICHARD STEVEN AGOR No. 57082 Exp. 12/31/13 CIVIL STATE OF CALIFORNIA

The State of California or its officers or agents shall not be responsible for the accuracy or completeness of electronic copies of this plan sheet.

TETRA TECH
17885 VON KARMAN AVE
IRVINE, CA 92614

CITY OF BURBANK
150 N 3RD ST
BURBANK, CA 91510

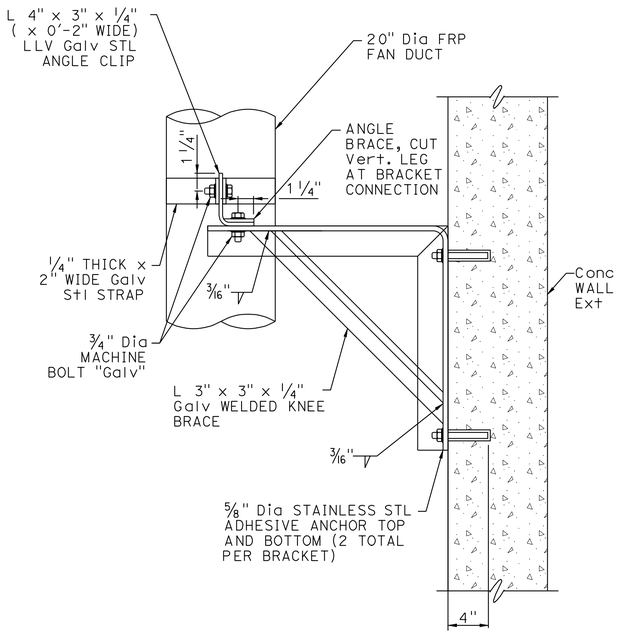

SECTION

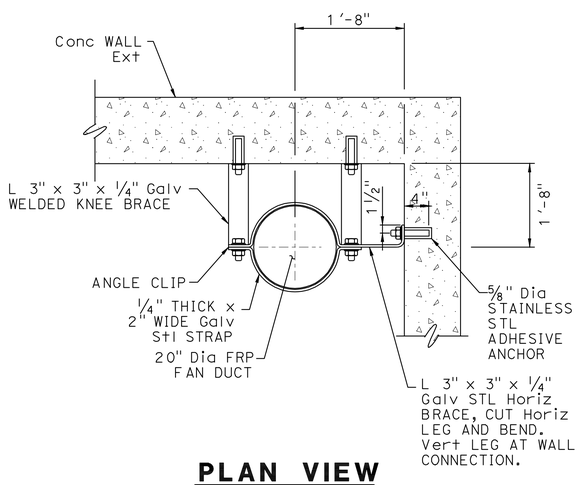

PLAN VIEW

1 PIPE STRAP
NO SCALE

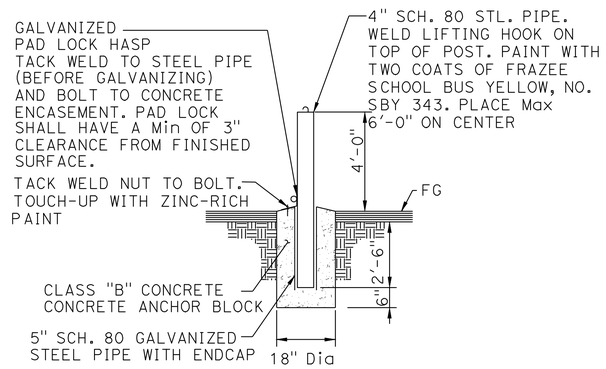

2 REMOVABLE GUARD POST
NO SCALE

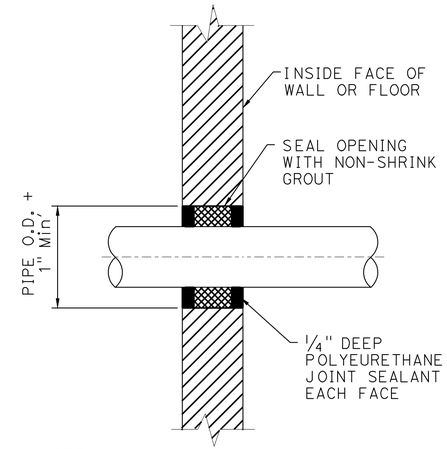

NOTE:

1. A CEMENT MORTAR PATCH COATING SHALL EXTEND APPROXIMATELY 3" AROUND OPENING.

3 PIPE PENETRATION WALL AND FLOOR
NO SCALE

4 NOT USED
NO SCALE

5 NOT USED
NO SCALE

6 NOT USED
NO SCALE

7 NOT USED
NO SCALE

M-4

EMPIRE AVENUE UC
PUMPING PLANT
PUMP STATION DETAILS 2

STEVEN AGOR
DESIGN OVERSIGHT
5/11/12
SIGN OFF DATE

	BY	CHECKED
DESIGN	CRISNA ESTRADA	STEVEN AGOR
DETAILS	CRISNA ESTRADA	STEVEN AGOR
QUANTITIES	CRISNA ESTRADA	STEVEN AGOR

PREPARED FOR THE STATE OF CALIFORNIA DEPARTMENT OF TRANSPORTATION

CRISNA ESTRADA
PROJECT ENGINEER

BRIDGE NO. 53-2920W
POST MILES 30.63

DESIGN DETAIL SHEET (ENGLISH) (REV.7/16/10)

ORIGINAL SCALE IN INCHES FOR REDUCED PLANS 0 1 2 3

UNIT: 1812
PROJECT NUMBER & PHASE: 07000211191 CONTRACT NO.: X

DISREGARD PRINTS BEARING EARLIER REVISION DATES

REVISION DATES X

SHEET 19 OF 32

FILE => wd004.dgn

USERNAME => s124496 DATE PLOTTED => 21-MAY-2012 TIME PLOTTED => 15:54

DIST	COUNTY	ROUTE	POST MILES TOTAL PROJECT	SHEET No	TOTAL SHEETS
07	LA	5	29.4/31.6	1358	1931

REGISTERED CIVIL ENGINEER 5/11/12 DATE

5-21-12
PLANS APPROVAL DATE

REGISTERED PROFESSIONAL ENGINEER AMIR HAGHPANAH No. E18480 Exp. 06/30/12 STATE OF CALIFORNIA

The State of California or its officers or agents shall not be responsible for the accuracy or completeness of electronic copies of this plan sheet.

TETRA TECH
17885 VON KARMAN AVE
IRVINE, CA 92614

CITY OF BURBANK
150 N 3RD ST
BURBANK, CA 91510

ELECTRICAL SYMBOLS - PLANS

SYMBOL	DESCRIPTION
	SINGLE RECEPTACLE
	DUPLEX RECEPTACLE
J	JUNCTION BOX
$	LIGHTING SWITCH
$3	3-WAY SWITCH
$M	MANUAL MOTOR STARTER
	WALL FIXTURE
	LIGHT POLE
P0000	Cond REFERENCE P=POWER C=DISCRETE A=ANALOG T=COMMUNICATION SP=SPARE
	Cond OR DUCTBANK IN SLAB, CONCEALED OR UNDERGROUND
	CONDUIT EXPOSED. SEE GENERAL NOTE 2.
G	GROUNDING CONDUCTOR 30" BELOW GRADE
	COMMUNICATION
3	HOMERUN TO PANEL, CIRCUIT 3
P0000	HOMERUN PER CONDUIT SCHEDULE
	Cond BENDS TOWARD OBSERVER
	Cond BENDS AWAY FROM OBSERVER
J	FLEXIBLE Cond CONNECTION
	PANELBOARD
	DISCONNECT SWITCH
HH	HANDHOLE
PB	PULLBOX
	Cond SEAL
	GROUND WELL

ELECTRICAL SYMBOLS - SCHEMATIC DIAGRAMS

NORMALLY OPEN	NORMALLY CLOSED	SYMBOL DESCRIPTION
		CONTACT
1 TR	1 TR	TIMED CONTACT, CONTACT ACTION RETARDED ON ENERGIZATION
1 TR		TIMED CONTACT, CONTACT ACTION RETARDED ON DE-ENERGIZATION
		LEVEL SWITCH
		PUSH BUTTON SINGLE CIRCUIT MOMENTARY CONTACT
		TEMPERATURE SWITCH
		LIMIT SWITCH
OFF HAND AUTO XOO OXO OOX		SELECTOR SWITCH HOA : HAND - OFF - AUTO HO : HAND - OFF HOR : HAND - OFF - REMOTE R-O : REMOTE - OFF
O/L'S		MOTOR OVERLOAD HEATER CONTACTS
		MOTOR OVERLOAD HEATER
R		PILOT LIGHT R= RED, W= WHITE, G= GREEN, A= AMBER
CR		RELAY, 120VAC
TD		TIME DELAY RELAY
M		STARTER COIL
		SOLENOID OPERATED VALVE
ETM		ELAPSED TIME METER
		FUSE
		CONTROL POWER TRANSFORMER
		GROUND
		MOTOR SPACE HEATER
		WIRING WITHIN MCC, FURNISHED BY MCC MANUFACTURER, UON
		FIELD WIRING
		WIRE TERMINAL IN MOTOR STARTER

ELECTRICAL SYMBOLS - SINGLE LINE DIAGRAM

DEVICE	SYMBOL DESCRIPTION
	DRY-TYPE TRANSFORMER
	POTENTIAL TRANSFORMER
	CURRENT TRANSFORMER
	FUSE
100 A 3P	CIRCUIT BREAKER, 3P - 3 POLE, MCP - MOTOR CIRCUIT PROTECTOR
75	MOTOR, 75 HORSEPOWER
	GROUND
	FUSED DISCONNECT SWITCH WITH CURRENT LIMITING FUSES
TVSS	TRANSIENT VOLTAGE SURGE SUPRESSOR
	DISCONNECT SWITCH, 30A/3P UON
	VALVE MOTOR AND ACTUATOR
PQM	POWER QUALITY MONITOR
SSS	SOLID STATE STARTER
SST	SOLID STATE TRIP
1	MAGNETIC MOTOR STARTER, NEMA SIZE INDICATED FULL-VOLTAGE NON-REVERSING UNLESS NOTED RV=REDUCED VOLTAGE STARTING 2S, 2W = 2SPEED, 2 WINDING

NOTES:

1. THIS DRAWING CONTAINS STANDARD SYMBOLS. NOT ALL SYMBOLS SHOWN ARE USED ON THIS PROJECT.
2. THE CONTRACTOR SHALL PROVIDE ALL NEEDED CHANNELS, ANGLES ETC. TO SUPPORT THE LIGHTING FIXTURES IN THE LOCATIONS SHOWN ON THE DRAWINGS.
3. THE CONTRACTOR SHALL NOT CUT ANY STRUCTURAL MEMBER(S) OR USE ANY ATTACHMENTS THAT WOULD IMPAIR THEIR STRENGTH.
4. THE CONTRACTOR SHALL DESIGN THE SUPPORTS IN BETWEEN THE STRUCTURAL SUPPORT MEMBER(S) AND SUBMIT THE DESIGN AS A SHOP DRAWING SUBMITTAL.
5. MINIMUM CONDUCTOR SIZE SHALL BE #12 WITH #12 GROUND UNLESS LARGER SIZES ARE NOTED.
6. INSTRUMENTATION ARE SHOWN IN GENERAL VICINITY AND MAY NOT NECESSARILY MATCH LOCATIONS ON THE MECHANICAL SHEET. VERIFY ACTUAL LOCATIONS OF INSTRUMENTS AND RUN ASSOCIATED CONDUITS ACCORDINGLY.

EE-1

EMPIRE AVE UC
PUMPING PLANT
SYMBOLS AND ABBREVIATIONS 1

SHANNON ENGLISH
DESIGN OVERSIGHT
5/11/12
SIGN OFF DATE

	BY	CHECKED
DESIGN	AMIR HAGHPANAH	SHANNON ENGLISH
DETAILS	AMIR HAGHPANAH	SHANNON ENGLISH
QUANTITIES	AMIR HAGHPANAH	SHANNON ENGLISH

PREPARED FOR THE STATE OF CALIFORNIA DEPARTMENT OF TRANSPORTATION

AMIR HAGHPANAH
PROJECT ENGINEER

BRIDGE NO. 53-2920W
POST MILES 30.63

DESIGN DETAIL SHEET (ENGLISH) (REV.7/16/10)

ORIGINAL SCALE IN INCHES FOR REDUCED PLANS 0 1 2 3

UNIT: 1812
PROJECT NUMBER & PHASE: 07000211191 CONTRACT NO.: 07-1218W4

DISREGARD PRINTS BEARING EARLIER REVISION DATES

REVISION DATES X

SHEET 20 OF 32

FILE => we001.dgn

USERNAME => s124496 DATE PLOTTED => 21-MAY-2012 TIME PLOTTED => 15:54

DIST	COUNTY	ROUTE	POST MILES TOTAL PROJECT	SHEET No	TOTAL SHEETS
07	LA	5	29.4/31.6	1359	1931

REGISTERED CIVIL ENGINEER 5/11/12 DATE

5-21-12
PLANS APPROVAL DATE

REGISTERED PROFESSIONAL ENGINEER
AMIR HAGHPANAH
No. E18480
Exp. 06/30/12
STATE OF CALIFORNIA

The State of California or its officers or agents shall not be responsible for the accuracy or completeness of electronic copies of this plan sheet.

TETRA TECH
17885 VON KARMAN AVE
IRVINE, CA 92614

CITY OF BURBANK
150 N 3RD ST
BURBANK, CA 91510

ELECTRICAL NOTES

1. REFER TO ELECTRICAL SPECIFICATIONS FOR FURTHER DETAIL AS TO SCOPE, MATERIALS, AND EXECUTION OF ELECTRICAL WORK.
2. ALL WIRING DESIGN IS BASED ON 75 DEGREE C CONDITIONS FOR COPPER CONDUCTORS OF TYPE THWN UNLESS OTHERWISE STATED.
3. ALL CONDUCTORS SHALL BE COPPER (MINIMUM SIZE #12 AWG UNLESS SPECIFICALLY NOTED OTHERWISE).
4. ALL INDICATIONS OF NUMBER OF CONDUCTORS EXCLUDE GREEN WIRE GROUND CONDUCTOR WHICH MUST BE PROVIDED.
5. THE ELECTRICAL CONTRACTOR SHALL BE RESPONSIBLE TO CONFORM TO ALL LOCAL CODES AND ORDINANCES, THE STATE OF CALIFORNIA ELECTRICAL SAFETY ORDERS, THE NATIONAL ELECTRICAL CODE AND ANY ADDITIONAL JURISDICTION RELATING TO THE WORK.
6. THE ELECTRICAL CONTRACTOR SHALL PROVIDE SEISMIC ANCHORAGE FOR ALL ELECTRICAL EQUIPMENT IN ACCORDANCE WITH THE CALIFORNIA BUILDING CODE.
7. THE ELECTRICAL CONTRACTOR SHALL INSTALL ALL CONDUIT, WIRE, TRANSFER SWITCHES, RECEPTACLES, SERVICES, SWITCHBOARDS, MCC, AND PANELBOARDS REQUIRED FOR A COMPLETE AND OPERATIONAL ELECTRICAL SYSTEM.
8. THE ELECTRICAL CONTRACTOR SHALL BE RESPONSIBLE TO CONFIRM THAT PROPOSED NEW EQUIPMENT ON THE CONTRACT WILL FIT DIMENSIONALLY WITH EXISTING EQUIPMENT IN LOCATION SHOWN ON DRAWINGS.
9. IN THE EVENT OF A CONFLICT OR INCONSISTENCY BETWEEN ITEMS INDICATED ON THE PLANS SPECIFICATIONS, OR WITH CODE REQUIREMENTS, THE NOTE, SPECIFICATION OR CODE WHICH PRESCRIBES AND ESTABLISHES THE MORE COMPLETE JOB OR HIGHER STANDARD SHALL PREVAIL.
10. ALL ELECTRICAL EQUIPMENT EXPOSED TO THE CLIMATE SHALL BE WEATHERPROOF.
11. ALL ELECTRICAL EQUIPMENT IN THIS PROJECT SHALL BE U.L. LISTED.
12. ALL UNDERGROUND CONDUIT SHALL BE INSTALLED AT 30" BELOW FINSHED GRADE MINIMUM.
13. THE ELECTRICAL CONTRACTOR SHALL BE RESPONSIBLE FOR LOCATING EXISTING UNDERGROUND FACILITIES AND PROTECTING THESE FACILITIES FROM DAMAGE.
14. THE ELECTRICAL CONTRACTOR SHALL ROUTE CONDUITS AS REQUIRED PER FIELD CONDITIONS AND N.E.C.
15. THE ELECTRICAL CONTRACTOR SHALL BE RESPONSIBLE FOR REPAIRING ANY DAMAGE TO EXISTING UNDERGROUND FACILITIES.

ELECTRICAL ABBREVIATIONS

A	AMPERES, ANALOG
AC	ALTERNATING CURRENT
AICS	AMPERES INTERRUPTING CAPACITY, SYMMETRICAL
AWG	AMERICAN WIRE GAUGE
BC	BARE COPPER
BTCW	BARE TINNED COPPER WIRE
BWP	BURBANK WATER & POWER.
C	CONDUIT
CB	CIRCUIT BREAKER
CO	CONDUIT ONLY
CP	CONTROL PANEL
CPT	CONTROL POWER TRANSFORMER
DC	DIRECT CURRENT
ELEV	ELEVATION
ETM	ELAPSED TIME METER
EXIST	EXISTING
F	FLUORESCENT
FIT	FLOW TRANSMITTER
FLEX	FLEXIBLE
G, GND	GROUND
GFI	GROUND FAULT INTERRUPTER
HOA	HAND OFF AUTOMATIC
HP	HORSEPOWER
HPS	HIGH PRESSURE SODIUM
HS	HAND SWITCH
ICP	INSTRUMENTATION CONTROL PANEL
KVA	KILOVOLT-AMPERE
KW	KILOWATT
LCP	LOCAL CONTROL PANEL
LIT	LEVEL INDICATOR TRANSMITTER
LOS	LOCKOUT STOP PUSHBUTTON
LS-H,HH	LEVEL SWITCH HIGH, HIGH-HIGH
LS-L,LL	LEVEL SWITCH LOW, LOW-LOW

ELECTRICAL ABBREVIATIONS

MCC	MOTOR CONTROL CENTER
MIN	MINIMUM
N	NEUTRAL
NC	NORMALLY CLOSED
NIC	NOT IN CONTRACT
NL	NIGHT LIGHT
NO	NORMALLY OPEN
NO.	NUMBER
NTS	NOT TO SCALE
OL'S	MOTOR OVERLOAD CONTACTS
P	POLE
PB	PUSHBUTTON, PULLBOX
PE	PHOTOELECTRIC
PFM	PHASE FAILURE MONITOR
PH	PHASE
PIT	PRESSURE INDICATOR TRANSMITTER
PSHL	PRESSURE SWITCH HIGH/LOW
REC	RECEPTACLE
RPM	REVERSE POWER MONITOR
RTD	RESISTANT TEMPERATURE DETECTOR
SCAQMD	SOUTH COAST AIR QUALITY MANAGEMENT DISTRICT
SSS	SOLID STATE STARTER
SWBD	SWITCHBOARD
T	TELEPHONE
TEMP	TEMPERATURE
TSP	TWISTED SHIELDED PAIR
TST	TWISTED SHIELDED TRIPLEX
TTB	TERMINAL TELEPHONE BACKBOARD
TYP	TYPICAL
UGPS	UNDERGROUND PULL SECTION
UON	UNLESS OTHERWISE NOTED
V	VOLT
W	WATT, WIRE
WP	WEATHERPROOF
XFMR	TRANSFORMER
ZS	LIMIT SWITCH

EE-2

SHANNON ENGLISH
DESIGN OVERSIGHT
5/11/12
SIGN OFF DATE

	BY	CHECKED
DESIGN	AMIR HAGHPANAH	SHANNON ENGLISH
DETAILS	AMIR HAGHPANAH	SHANNON ENGLISH
QUANTITIES	AMIR HAGHPANAH	SHANNON ENGLISH

PREPARED FOR THE STATE OF CALIFORNIA DEPARTMENT OF TRANSPORTATION

AMIR HAGHPANAH
PROJECT ENGINEER

BRIDGE NO. 53-2920W
POST MILES 30.63

EMPIRE AVENUE UC
PUMPING PLANT
SYMBOLS AND ABBREVIATIONS 2

DESIGN DETAIL SHEET (ENGLISH) (REV.7/16/10)

ORIGINAL SCALE IN INCHES FOR REDUCED PLANS 0 1 2 3

UNIT: 1812
PROJECT NUMBER & PHASE: 07000211191 CONTRACT NO.: 07-1218W4

DISREGARD PRINTS BEARING EARLIER REVISION DATES

REVISION DATES X

SHEET 21 OF 32

FILE => we002.dgn

USERNAME => s124496 DATE PLOTTED => 21-MAY-2012 TIME PLOTTED => 15:54

DIST	COUNTY	ROUTE	POST MILES TOTAL PROJECT	SHEET No	TOTAL SHEETS
07	LA	5	29.4/31.6	1360	1931

REGISTERED CIVIL ENGINEER — DATE 5/11/12

REGISTERED PROFESSIONAL ENGINEER — AMIR HAGHPANAH — No. E18480 — Exp. 06/30/12 — STATE OF CALIFORNIA

5-21-12
PLANS APPROVAL DATE

The State of California or its officers or agents shall not be responsible for the accuracy or completeness of electronic copies of this plan sheet.

TETRA TECH
17885 VON KARMAN AVE
IRVINE, CA 92614

CITY OF BURBANK
150 N 3RD ST
BURBANK, CA 91510

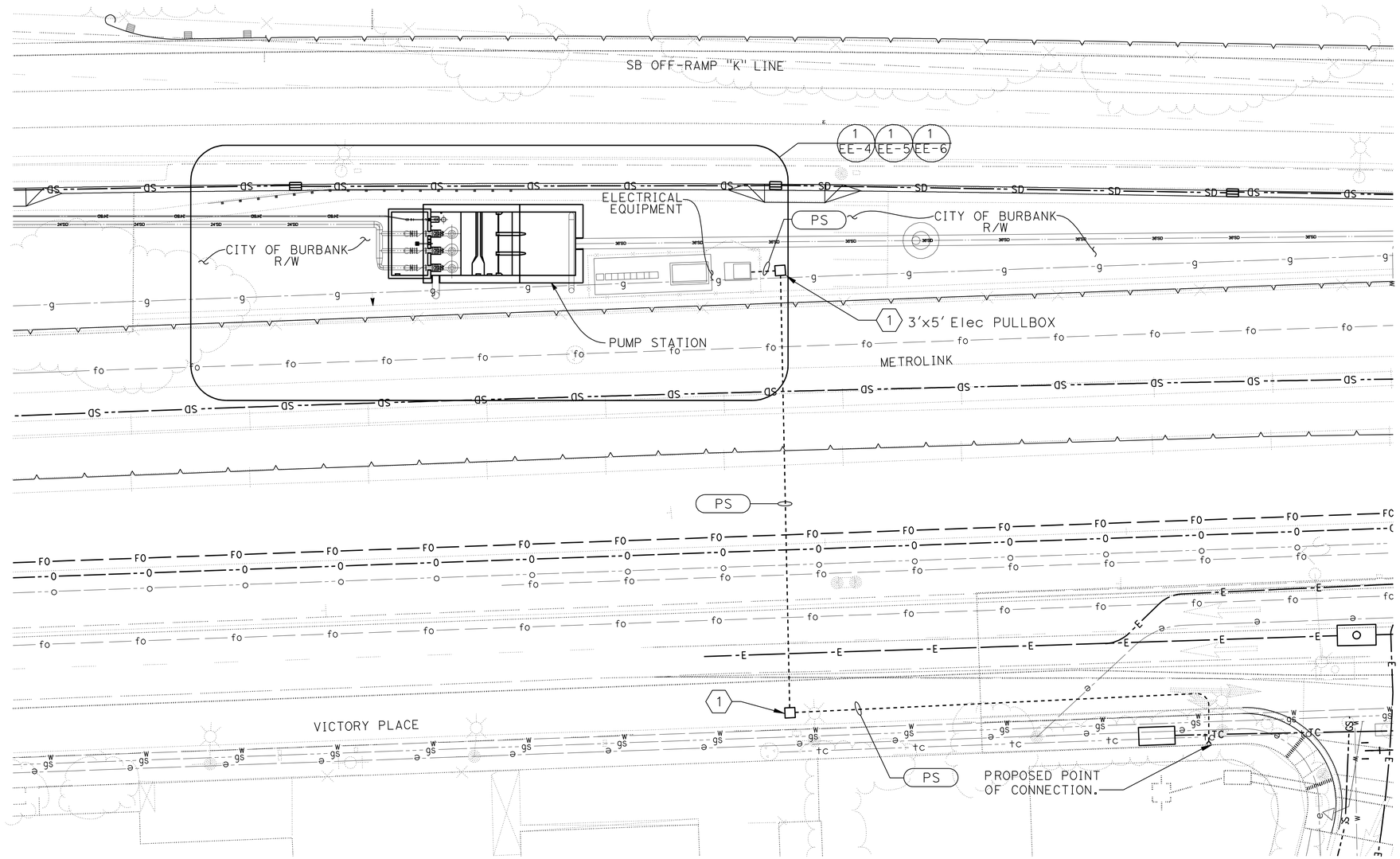

ELECTRICAL SITE PLAN

1"=20'

NOTE:

1 PROVIDE PULL BOX PER BWP REQUIREMENTS

EE-3

EMPIRE AVENUE UC
PUMPING PLANT
ELECTRICAL SITE PLAN

SHANNON ENGLISH
DESIGN OVERSIGHT
5/11/12
SIGN OFF DATE

	BY	CHECKED
DESIGN	AMIR HAGHPANAH	SHANNON ENGLISH
DETAILS	AMIR HAGHPANAH	SHANNON ENGLISH
QUANTITIES	AMIR HAGHPANAH	SHANNON ENGLISH

PREPARED FOR THE STATE OF CALIFORNIA DEPARTMENT OF TRANSPORTATION

AMIR HAGHPANAH
PROJECT ENGINEER

BRIDGE NO. 53-2920W
POST MILES 30.63

DESIGN DETAIL SHEET (ENGLISH) (REV.7/16/10)

ORIGINAL SCALE IN INCHES FOR REDUCED PLANS 0 1 2 3

UNIT: 1812
PROJECT NUMBER & PHASE: 07000211191 CONTRACT NO.: 07-1218W4

DISREGARD PRINTS BEARING EARLIER REVISION DATES

REVISION DATES X

SHEET 22 OF 32

FILE => we003.dgn

USERNAME => s121614 DATE PLOTTED => 06-JUN-2012 TIME PLOTTED => 09:31

DIST	COUNTY	ROUTE	POST MILES TOTAL PROJECT	SHEET No	TOTAL SHEETS
07	LA	5	29.4/31.6	1361	1931

REGISTERED CIVIL ENGINEER 5/11/12 DATE

5-21-12
PLANS APPROVAL DATE

REGISTERED PROFESSIONAL ENGINEER
AMIR HAGHPANAH
No. E18480
Exp. 06/30/12
STATE OF CALIFORNIA

The State of California or its officers or agents shall not be responsible for the accuracy or completeness of electronic copies of this plan sheet.

TETRA TECH
17885 VON KARMAN AVE
IRVINE, CA 92614

CITY OF BURBANK
150 N 3RD ST
BURBANK, CA 91510

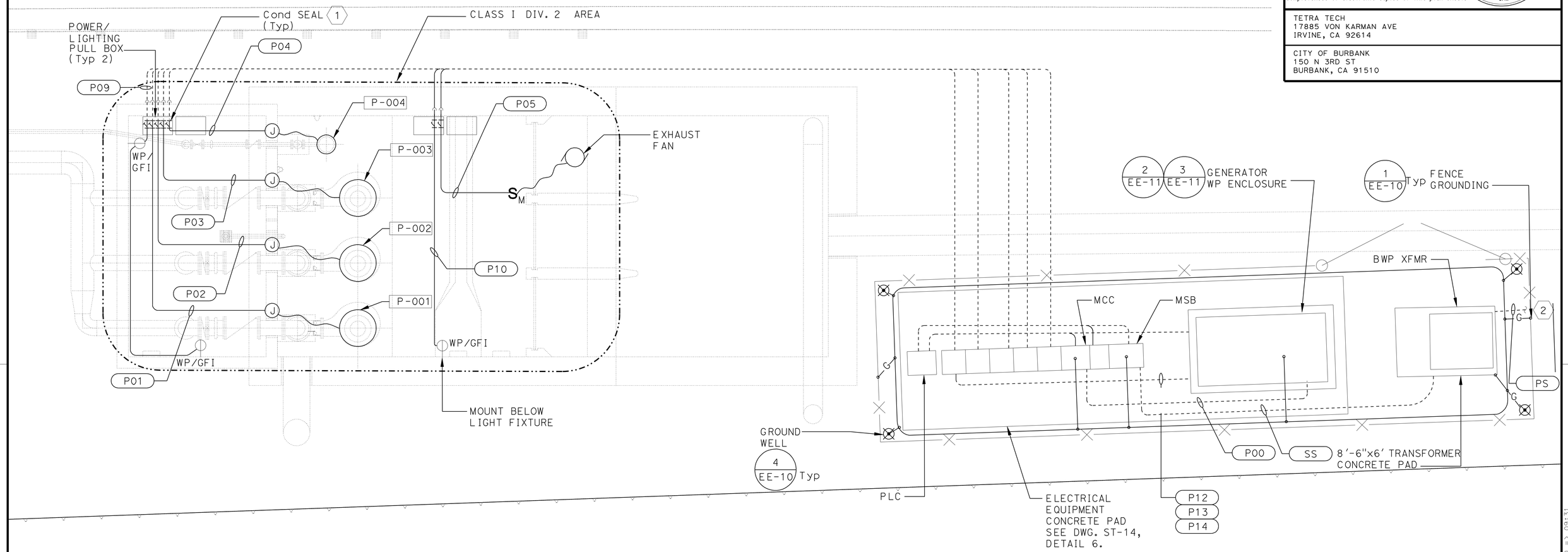

1 - **ELECTRICAL POWER PLAN** 1 3

SCALE: 1' = 20'

NOTES

1. Cond SEALS SHALL BE INSTALLED ON ALL Cond ENTERING/LEAVING PUMPING AREA.
2. TO BWP POINT OF CONNECTION AT EMPIRE AVENUE AND VICTORY PLACE INTER-CONNECTION. SEE DWG. EE-3 FOR CONTINUATION.
3. LOCATE ALL ELECTRICAL EQUIPMENT AT LEAST 10 FEET AWAY HORIZONTALLY AND 18" AWAY VERTICALLY FROM CLASSIFIED AREA. USE CONDUITS, FITTINGS, ETC. SUITABLE FOR CLASS I DIV.2 AREA.

EE-4

EMPIRE AVENUE UC
PUMPING PLANT
POWER PLAN

SHANNON ENGLISH
DESIGN OVERSIGHT
5/11/12
SIGN OFF DATE

	BY	CHECKED
DESIGN	AMIR HAGHPANAH	SHANNON ENGLISH
DETAILS	AMIR HAGHPANAH	SHANNON ENGLISH
QUANTITIES	AMIR HAGHPANAH	SHANNON ENGLISH

PREPARED FOR THE STATE OF CALIFORNIA DEPARTMENT OF TRANSPORTATION

AMIR HAGHPANAH
PROJECT ENGINEER

BRIDGE NO. 53-2920W
POST MILES 30.63

DESIGN DETAIL SHEET (ENGLISH) (REV.7/16/10)

ORIGINAL SCALE IN INCHES FOR REDUCED PLANS 0 1 2 3

UNIT: 1812
PROJECT NUMBER & PHASE: 07000211191 CONTRACT NO.: 07-1218W4

DISREGARD PRINTS BEARING EARLIER REVISION DATES

REVISION DATES X

SHEET 23 OF 32

FILE => we004.dgn

USERNAME => s121614 DATE PLOTTED => 06-JUN-2012 TIME PLOTTED => 09:31

DIST	COUNTY	ROUTE	POST MILES TOTAL PROJECT	SHEET No	TOTAL SHEETS
07	LA	5	29.4/31.6	1362	1931

REGISTERED CIVIL ENGINEER 5/11/12 DATE

5-21-12
PLANS APPROVAL DATE

REGISTERED PROFESSIONAL ENGINEER
AMIR HAGHPANAH
No. E18480
Exp. 06/30/12
STATE OF CALIFORNIA

The State of California or its officers or agents shall not be responsible for the accuracy or completeness of electronic copies of this plan sheet.

TETRA TECH
17885 VON KARMAN AVE
IRVINE, CA 92614

CITY OF BURBANK
150 N 3RD ST
BURBANK, CA 91510

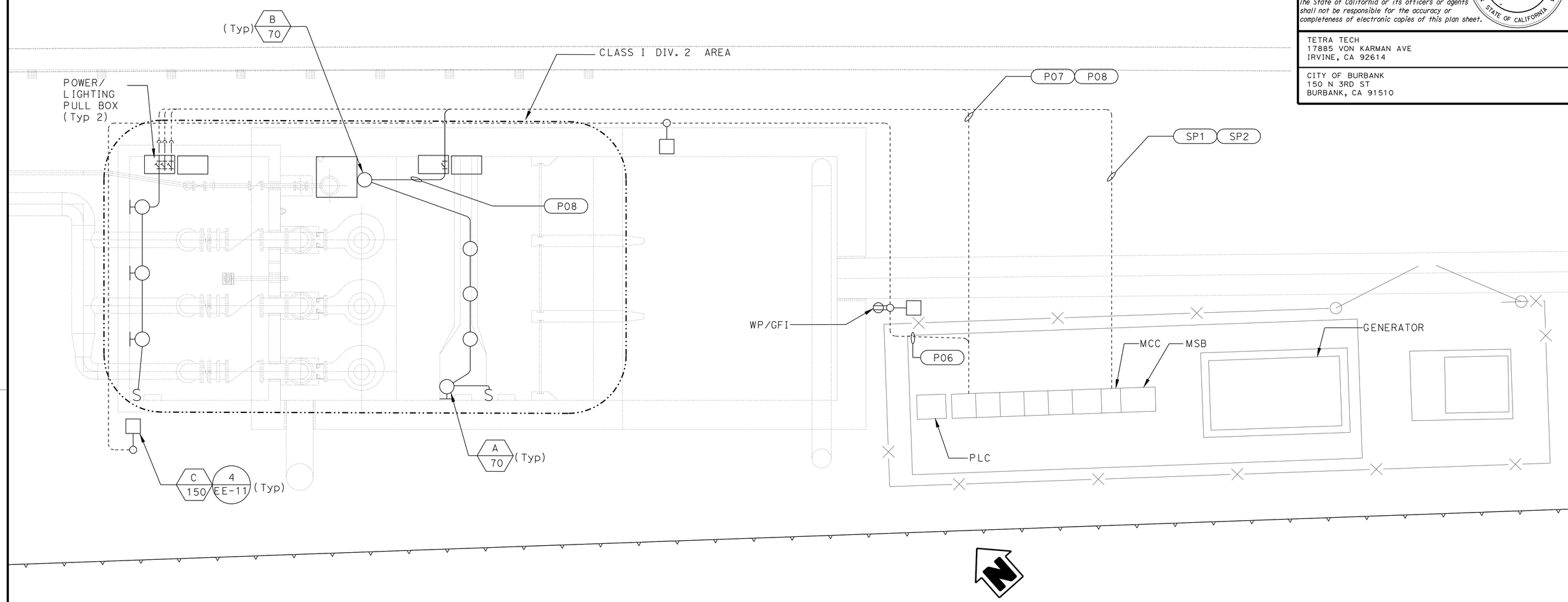

1 ELECTRICAL LIGHTING PLAN (1)(2)

SCALE: 1" = 20'

NOTES

(1) Cond SEALS SHALL BE INSTALLED ON ALL Cond ENTERING/LEAVING PUMPING AREA.

(2) LOCATE ALL Elect EQUIPMENT AT LEAST 10 FEET AWAY HORIZONTALLY AND 18" AWAY VERTICALLY FROM CLASSIFIED AREA. USE CONDUITS, FITTINGS, ETC. SUITABLE FOR CLASS I DIV.2 AREA.

EE-5

EMPIRE AVENUE UC
PUMPING PLANT
LIGHTING PLAN

SHANNON ENGLISH
DESIGN OVERSIGHT
5/11/12
SIGN OFF DATE

	BY	CHECKED
DESIGN	AMIR HAGHPANAH	SHANNON ENGLISH
DETAILS	AMIR HAGHPANAH	SHANNON ENGLISH
QUANTITIES	AMIR HAGHPANAH	SHANNON ENGLISH

PREPARED FOR THE STATE OF CALIFORNIA DEPARTMENT OF TRANSPORTATION

AMIR HAGHPANAH
PROJECT ENGINEER

BRIDGE NO. 53-2920W
POST MILES 30.63

DESIGN DETAIL SHEET (ENGLISH) (REV.7/16/10)

ORIGINAL SCALE IN INCHES FOR REDUCED PLANS 0 1 2 3

UNIT: 1812
PROJECT NUMBER & PHASE: 07000211191 CONTRACT NO.: 07-1218W4

DISREGARD PRINTS BEARING EARLIER REVISION DATES

REVISION DATES X

SHEET 24 OF 32

FILE => we005.dgn

USERNAME => s121614 DATE PLOTTED => 06-JUN-2012 TIME PLOTTED => 09:31

DIST	COUNTY	ROUTE	POST MILES TOTAL PROJECT	SHEET No	TOTAL SHEETS
07	LA	5	29.4/31.6	1363	1931

REGISTERED CIVIL ENGINEER 5/11/12 DATE

5-21-12
PLANS APPROVAL DATE

REGISTERED PROFESSIONAL ENGINEER
AMIR HAGHPANAH
No. E18480
Exp. 06/30/12
STATE OF CALIFORNIA

The State of California or its officers or agents shall not be responsible for the accuracy or completeness of electronic copies of this plan sheet.

TETRA TECH
17885 VON KARMAN AVE
IRVINE, CA 92614

CITY OF BURBANK
150 N 3RD ST
BURBANK, CA 91510

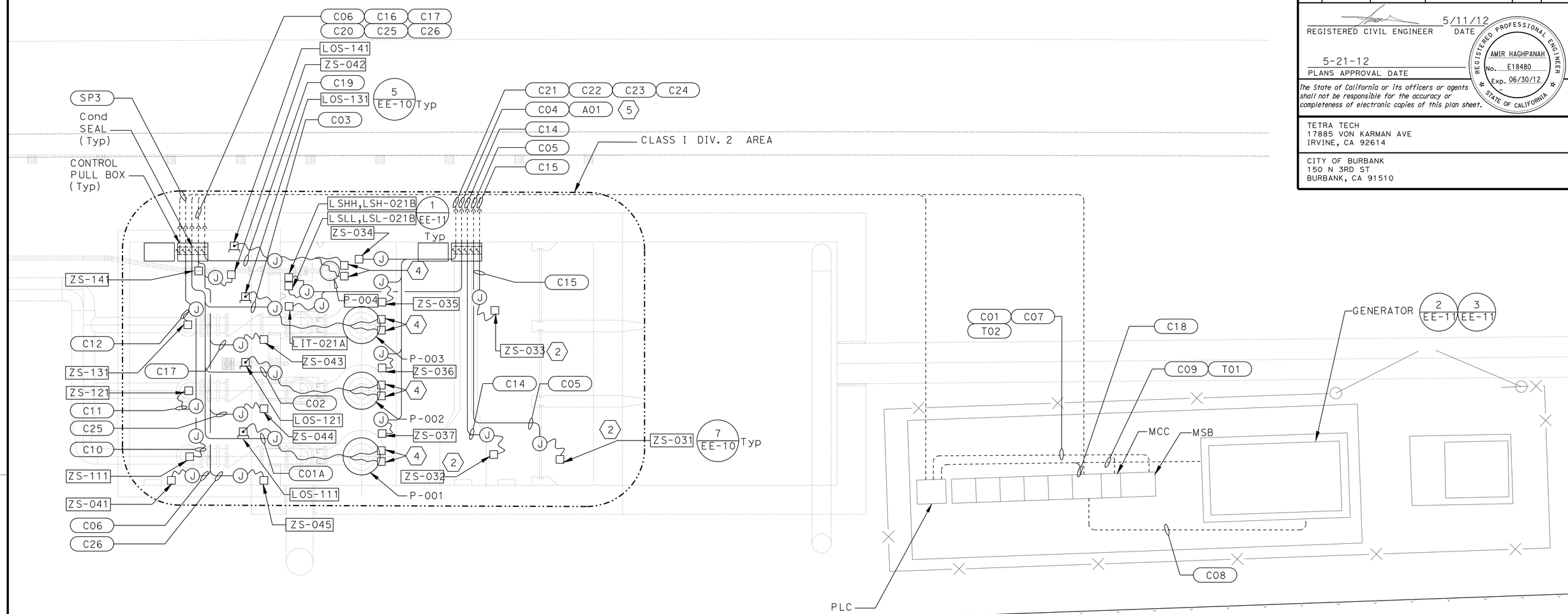

1 **ELECTRICAL CONTROL PLAN** 1 3 6
1'=20'

NOTES

1. CONDUIT SEALS SHALL BE INSTALLED ON ALL CONDUIT ENTERING/LEAVING PUMPING AREA.
2. SEE DWG. EE-11, DETAIL 5 FOR EXHAUST FAN INTERLOCK CONNECTION.
3. LOCATE ALL ELECTRICAL EQUIPMENT AT LEAST 10 FEET AWAY HORIZONTALLY AND 18" AWAY VERTICALLY FROM CLASSIFIED AREA. USE CONDUITS, FITTINGS, ETC. SUITABLE FOR CLASS 1 DIV.2 AREA.
4. LEAK SENSOR AND THERMOSTAT PROVIDED BY MOTOR MANUFACTURER.
5. PROVIDE BARRIER BETWEEN DIGITAL AND ANALOG SIGNALS.
6. ALL MAKE AND BREAK CONTACTS FOR SWITCHES, MOTOR CONTROLLERS, AND PILOT DEVICES SHALL BE IDENTIFIED FOR USE IN CLASS I DIVISION I AREA.

EE-6

EMPIRE AVENUE UC
PUMPING PLANT
ELECTRICAL CONTROL PLAN

SHANNON ENGLISH
DESIGN OVERSIGHT
5/11/12
SIGN OFF DATE

	BY	CHECKED
DESIGN	AMIR HAGHPANAH	SHANNON ENGLISH
DETAILS	AMIR HAGHPANAH	SHANNON ENGLISH
QUANTITIES	AMIR HAGHPANAH	SHANNON ENGLISH

PREPARED FOR THE STATE OF CALIFORNIA DEPARTMENT OF TRANSPORTATION

AMIR HAGHPANAH
PROJECT ENGINEER

BRIDGE NO. 53-2920W
POST MILES 30.63

DESIGN DETAIL SHEET (ENGLISH) (REV.7/16/10)

ORIGINAL SCALE IN INCHES FOR REDUCED PLANS 0 1 2 3

UNIT: 1812
PROJECT NUMBER & PHASE: 07000211191 CONTRACT NO.: 07-1218W4

DISREGARD PRINTS BEARING EARLIER REVISION DATES

REVISION DATES X

SHEET 25 OF 32

FILE => we006.dgn

USERNAME => s121614 DATE PLOTTED => 06-JUN-2012 TIME PLOTTED => 09:31

DIST	COUNTY	ROUTE	POST MILES TOTAL PROJECT	SHEET No	TOTAL SHEETS
07	LA	5	29.4/31.6	1364	1931

REGISTERED CIVIL ENGINEER 5/11/12 DATE

5-21-12
PLANS APPROVAL DATE

REGISTERED PROFESSIONAL ENGINEER AMIR HAGHPANAH No. E18480 Exp. 06/30/12 STATE OF CALIFORNIA

The State of California or its officers or agents shall not be responsible for the accuracy or completeness of electronic copies of this plan sheet.

TETRA TECH
17885 VON KARMAN AVE
IRVINE, CA 92614

CITY OF BURBANK
150 N 3RD ST
BURBANK, CA 91510

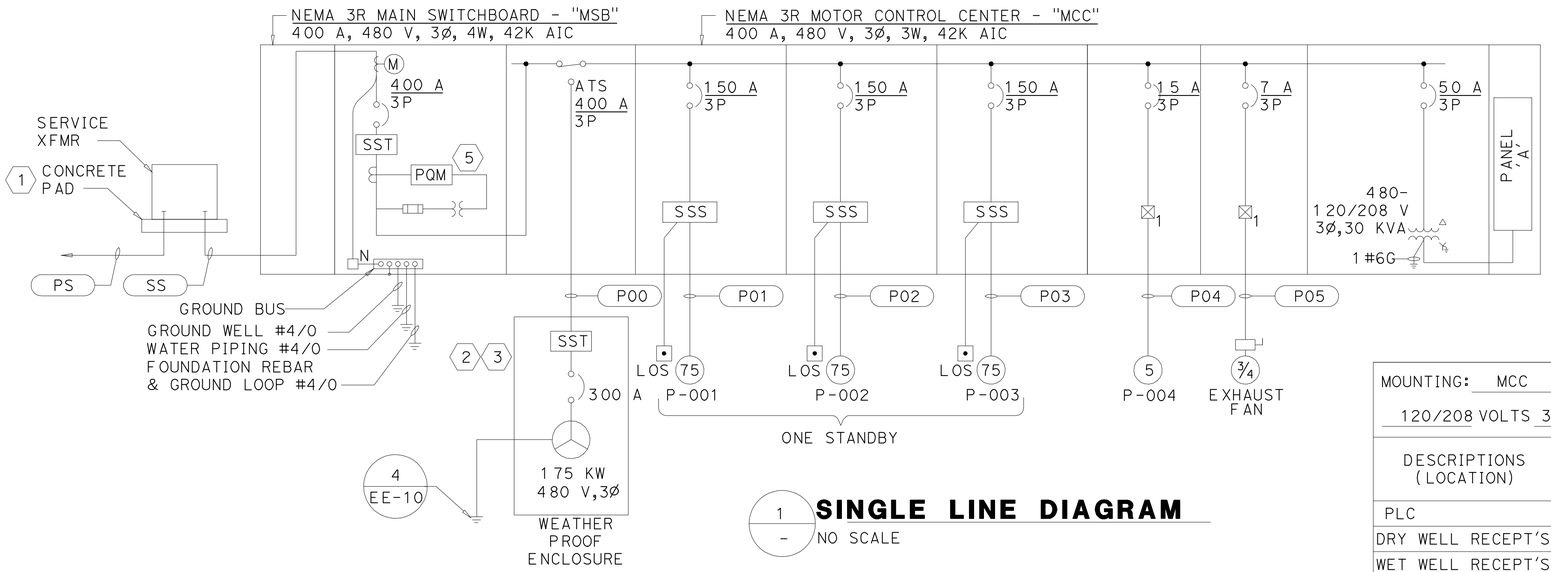

1 / - **SINGLE LINE DIAGRAM**
NO SCALE

LOAD SCHEDULE @ 480 V		
DESCRIPTION	HP/kVA	AMPS
P-001	75	96
P-002	75	96
P-003 (STANDBY)	75	-
P-004	5	7.6
EXHAUST FAN	.75	1.6
PANEL "A"	30	36
TOTAL	260.75	237.2

MOUNTING: MCC PANEL: 'A' MAIN 80 A
120/208 VOLTS 3 ø 4 WIRE BUS 100 A

DESCRIPTIONS (LOCATION)	VOLT-AMPS ø A	ø B	ø C	LTG	REC	MISC	BKR AMP	CIR	A B C	CIR	BKR AMP	LTG	REC	MISC	VOLT-AMPS ø A	ø B	øC	DESCRIPTIONS (LOCATION)
PLC	600					1	20/1	1		2	20/1	3	1		744			EXT. LIGHTING, REC.
DRY WELL RECEPT'S		360			2		20/1	3		4	20/1	3				273		INTERIOR LIGHTING
WET WELL RECEPT'S			360		2		20/1	5		6	20/1	4					364	INTERIOR LIGHTING
JACKET HEATER	1000					1	20/2P	7		8	20/1							SPARE
		1000						9		10	20/1			1		1000		UPS
BATTERY CHARGER			300			1	20/1	11		12	20/1		1	1			280	REC. & LIGHT (GEN.)
SPARE							20/1	13		14	20/1							SPARE
SPARE							20/1	15		16	20/1							SPACE
SPARE							20/1	17		18	20/1							SPACE
VOLT-AMPS:	ø A = 2344						ø B = 2633								ø C = 1304			
TOTAL VOLT-AMPS: 6281							AMPS = 17.44										LCL = -	

3 / - **PANEL SCHEDULE**
NO SCALE

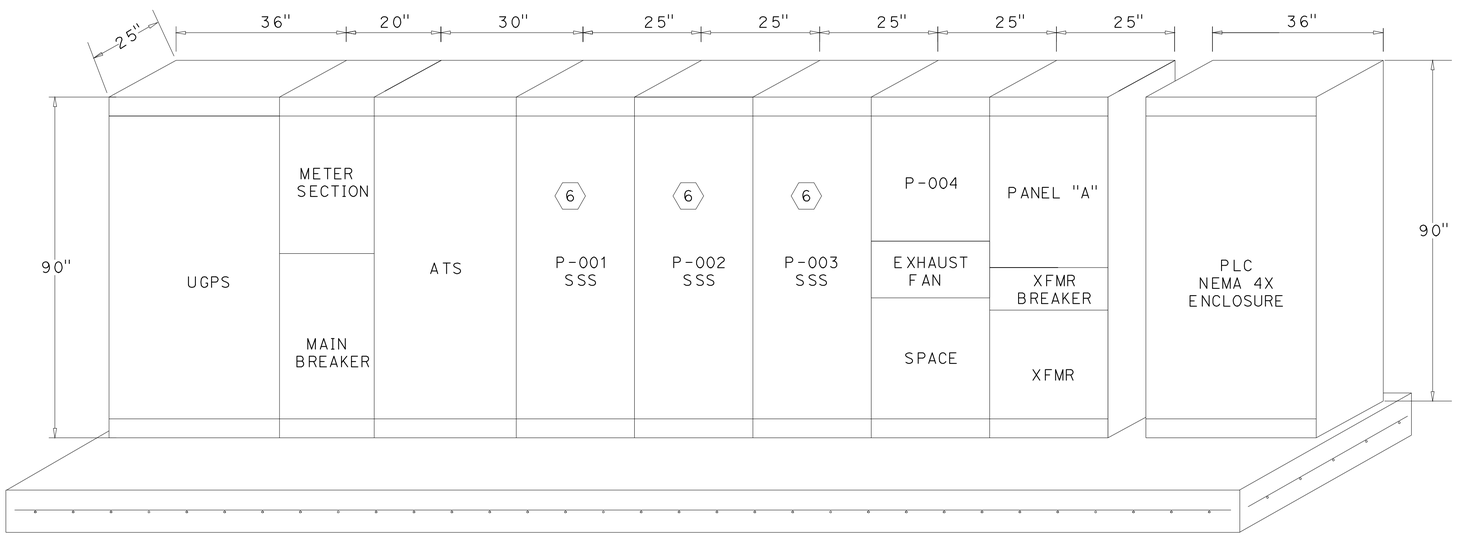

2 / - **MSB,MCC & PLC ELEVATION**
NO SCALE

NOTES

1. PRECAST Conc PAD FOR UTILITY TRANSFORMER WITH GROUNDING SYSTEM AND PROTECTIVE BARRIERS PER BURBANK WATER & POWER (BWP) REQUIREMENTS.
2. THE CONTRACTOR SHALL PROVIDE PARTICULATE MATTER FILTER REQUIRED BY SCAQMD.
3. PROVIDE LOAD BANK IF PARTICULATE MATTER FILTER IS REQUIRED.
4. NOT USED
5. ELECTRONIC POWER METER EATON IQ250 OR ALLEN-BRADLEY 1404 POWER MONITOR 3000, OR GE EPM 2000.
6. STARTERS SHALL BE LABELED, ONE PUMP MUST REMAIN OFF AT ALL TIME.

EE-7

EMPIRE AVENUE UC
PUMPING PLANT
SINGLE LINE DIAGRAM

SHANNON ENGLISH
DESIGN OVERSIGHT
5/11/12
SIGN OFF DATE

	BY	CHECKED
DESIGN	AMIR HAGHPANAH	SHANNON ENGLISH
DETAILS	AMIR HAGHPANAH	SHANNON ENGLISH
QUANTITIES	AMIR HAGHPANAH	SHANNON ENGLISH

PREPARED FOR THE STATE OF CALIFORNIA DEPARTMENT OF TRANSPORTATION

AMIR HAGHPANAH
PROJECT ENGINEER

BRIDGE NO. 53-2920W
POST MILES 30.63

DESIGN DETAIL SHEET (ENGLISH) (REV.7/16/10)

ORIGINAL SCALE IN INCHES FOR REDUCED PLANS 0 1 2 3

UNIT: 1812
PROJECT NUMBER & PHASE: 07000211191 CONTRACT NO.: 07-1218W4

DISREGARD PRINTS BEARING EARLIER REVISION DATES

REVISION DATES X

SHEET 26 OF 32

FILE => we007.dgn

USERNAME => s121614 DATE PLOTTED => 06-JUN-2012 TIME PLOTTED => 09:31

DIST	COUNTY	ROUTE	POST MILES TOTAL PROJECT	SHEET No	TOTAL SHEETS
07	LA	5	29.4/31.6	1365	1931

REGISTERED CIVIL ENGINEER 5/11/12 DATE

5-21-12
PLANS APPROVAL DATE

REGISTERED PROFESSIONAL ENGINEER AMIR HAGHPANAH No. E18480 Exp. 06/30/12 STATE OF CALIFORNIA

The State of California or its officers or agents shall not be responsible for the accuracy or completeness of electronic copies of this plan sheet.

TETRA TECH
17885 VON KARMAN AVE
IRVINE, CA 92614

CITY OF BURBANK
150 N 3RD ST
BURBANK, CA 91510

LIGHTING FIXTURE SCHEDULE

FIXTURE I.D.	FIXTURE INCAND.	FIXTURE FLUOR.	FIXTURE H.P.S.	FIXTURE MET HAL	FIXTURE L.P.S	VOLTS	LAMPS NO.	LAMPS WATTS AND TYPE	FIXTURE RECESS	FIXTURE CEILING	FIXTURE PEND.	FIXTURE WALL	FIXTURE POLE	DESCRIPTION AND VARIATIONS	MANUFACTURER AND CATALOG NO.	LOCATIONS USED
A / 70				●		120	1	70 MH				●		COMPACT METAL HALIDE, WALL MOUNTED, ENCLOSED AND GASKETED FIXTURES, DIE-CAST ALUMINUM HOUSING, WEATHER RESISTANT, UL LISTED FOR CLASS I, DIVISION 2 LOCATIONS.	RIG-A-LITE# SAF 07-H-12-GG-W1, APPLETON # MLWH702J5N, CROUSE-HINDS # DMVS2TW070GR305	HAZARDOUS
B / 70				●		120	1	70 MH		●				SAME AS TYPE 'A' EXCEPT CEILING MOUNTED	RIG-A-LITE# SAF 07-H-12-GG-C1, APPLETON # MLCH702T5N, CROUSE-HINDS # DMVS2C070GR305	HAZARDOUS
C / 150			●			120	1	150 HPS					●	HPS, RUGGED ALUMINUM RECTILINEAR HOUSING, WEATHERPROOF SEAL BETWEEN HOUSING AND DOOR FRAME EQUIPPED WITH SHIELD, PHOTOCELL, UL LISTED FOR WET LOCATIONS	LITHONIA KSFHS 150S, RUDD # MAC SERIES 615M, GE # DSMT-15-S-1-H-1-G	OUTDOOR, SITE LIGHTING

ID	FROM	TO	WIRE NO	WIRE SIZE	GND	COND SIZE	NOTES
PS	SOURCE	XFMR				(2)4" (1)3"	PER BWP REQUIREMENTS
SS	XFMR	MSB				(2)5"	PER BWP REQUIREMENTS
P00	GENERATOR	MCC (ATS)	(2) 4	#2/0	#4	(2)3"	
P01	MCC	P-001	-	-	-	2"C.O.	SUBMERSIBLE CABLE, SEE NOTE 1.
P02	MCC	P-002	-	-	-	2"C.O.	SUBMERSIBLE CABLE, SEE NOTE 1.
P03	MCC	P-003	-	-	-	2"C.O.	SUBMERSIBLE CABLE, SEE NOTE 1.
P04	MCC	P-004	-	-	-	1"C.O.	SUBMERSIBLE CABLE, SEE NOTE 1.
P05	MCC	EXHAUST FAN	3	#10	#10	1"	
P06	PANEL "A"	EXTERIOR LIGHTING	2	#12	#12	1"	CKT#A-2
P07	PANEL "A"	DRY WELL LIGHTING	2	#12	#12	1"	CKT#A-4
P08	PANEL "A"	WET WELL LIGHTING	2	#12	#12	1"	CKT#A-6
P09	PANEL "A"	DRY WELL RECEPT'S	2	#12	#12	1"	CKT#A-3
P10	PANEL "A"	WET WELL RECEPT'S	2	#12	#12	1"	CKT#A-5
P11	-	-	-	-	-	-	NOT USED
P12	PANEL "A"	GEN. JACKET HEATER	2	#12	#12	1"	CKT#A-7,9
P13	PANEL "A"	BATTERY CHARGER	2	#12	#12	1"	CKT#A-11
P14	PANEL "A"	REC. & LIGHT(@ GEN.)	2	#12	#12	1"	CKT#A-12
A01	PLC	LIT-021A	1		#18 TSP	1"	
C01	PLC	MCC	60	#14	#14	2"	12#14 ARE SPARE.
C01A	MCC	P-001	6	#14	#14	3/4"	LOS, SEE NOTE 1.
C02	MCC	P-002	6	#14	#14	3/4"	LOS, SEE NOTE 1.
C03	MCC	P-003	6	#14	#14	3/4"	LOS, SEE NOTE 1.
C04	PLC	LSHH,LSH,LSL,LSLL-021B	8	#14	#14	1"	
C05	PLC	ZS-031	2	#14	#14	3/4"	ACCESS HATCH, SEE NOTE 2.
C06	PLC	ZS-041	2	#14	#14	3/4"	
C07	PLC	MSB	2	#14	#14	3/4"	
C08	MCC (ATS)	GENERATOR	2	#14	#14	3/4"	
C09	PLC	GENERATOR	20	#14	#14	1"	6#14 ARE SPARE.
C10	PLC	ZS-111	2	#14	#14	3/4"	
C11	PLC	ZS-121	2	#14	#14	3/4"	
C12	PLC	ZS-131	2	#14	#14	3/4"	
C13	-	-	-	-	-	-	NOT USED
C14	PLC	ZS-032	2	#14	#14	3/4"	ACCESS HATCH, SEE NOTE 2.
C15	PLC	ZS-033	2	#14	#14	3/4"	ACCESS HATCH, SEE NOTE 2.
C16	PLC	ZS-042	2	#14	#14	3/4"	PUMP ACCESS HATCH
C17	PLC	ZS-043	2	#14	#14	3/4"	PUMP ACCESS HATCH

ID	FROM	TO	WIRE NO	WIRE SIZE	GND	COND SIZE	NOTES
C18	PLC	MCC (ATS)	4	#14	#14	3/4"	
C19	PLC	P-004	6	#14	#14	3/4"	LOS, SEE NOTE 1.
C20	PLC	ZS-141	2	#14	#14	3/4"	
C21	PLC	ZS-034	2	#14	#14	3/4"	
C22	PLC	ZS-035	2	#14	#14	3/4"	
C23	PLC	ZS-036	2	#14	#14	3/4"	
C24	PLC	ZS-037	2	#14	#14	3/4"	
C25	PLC	ZS-044	2	#14	#14	3/4"	
C26	PLC	ZS-045	2	#14	#14	3/4"	
C27	-	-	-	-	-	-	
T01	PLC	GENERATOR		CAT 6		1 1/2"	
T02	PLC	MSB		CAT 6		1 1/2"	PQM
SP1	MCC	PUMP STATION				2"CO	
SP2	MCC	PUMP STATION				1"CO	
SP3	PLC	PUMP STATION				2"CO	

NOTES:

1. CABLES SHALL BE PROVIDED BY MANUFACTURER AND INCLUDE POWER AND CONTROL WIRES.
2. PROVIDE CONDUIT AND WIRES BETWEEN INTRUSION SWITCH AND EXHAUST FAN (P-005) CONTROL LOCATED IN MCC AS SHOWN ON DRAWING EE-11 DETAIL 5.

EE-8

EMPIRE AVENUE UC
PUMPING PLANT
ELECTRICAL CONDUIT SCHEDULE

SHANNON ENGLISH
DESIGN OVERSIGHT
5/11/12
SIGN OFF DATE

	BY	CHECKED
DESIGN	AMIR HAGHPANAH	SHANNON ENGLISH
DETAILS	AMIR HAGHPANAH	SHANNON ENGLISH
QUANTITIES	AMIR HAGHPANAH	SHANNON ENGLISH

PREPARED FOR THE STATE OF CALIFORNIA DEPARTMENT OF TRANSPORTATION

AMIR HAGHPANAH
PROJECT ENGINEER

BRIDGE NO. 53-2920W
POST MILES 30.63

DESIGN DETAIL SHEET (ENGLISH) (REV.7/16/10)

ORIGINAL SCALE IN INCHES FOR REDUCED PLANS 0 1 2 3

UNIT: 1812
PROJECT NUMBER & PHASE: 07000211191 CONTRACT NO.: 07-1218W4

DISREGARD PRINTS BEARING EARLIER REVISION DATES

REVISION DATES X

SHEET 27 OF 32

FILE => we008.dgn

USERNAME => s12614 DATE PLOTTED => 06-JUN-2012 TIME PLOTTED => 09:31

DIST	COUNTY	ROUTE	POST MILES TOTAL PROJECT	SHEET No	TOTAL SHEETS
07	LA	5	29.4/31.6	1366	1931

REGISTERED CIVIL ENGINEER 5/11/12 DATE

5-21-12
PLANS APPROVAL DATE

REGISTERED PROFESSIONAL ENGINEER AMIR HAGHPANAH No. E18480 Exp. 06/30/12 STATE OF CALIFORNIA

The State of California or its officers or agents shall not be responsible for the accuracy or completeness of electronic copies of this plan sheet.

TETRA TECH
17885 VON KARMAN AVE
IRVINE, CA 92614

CITY OF BURBANK
150 N 3RD ST
BURBANK, CA 91510

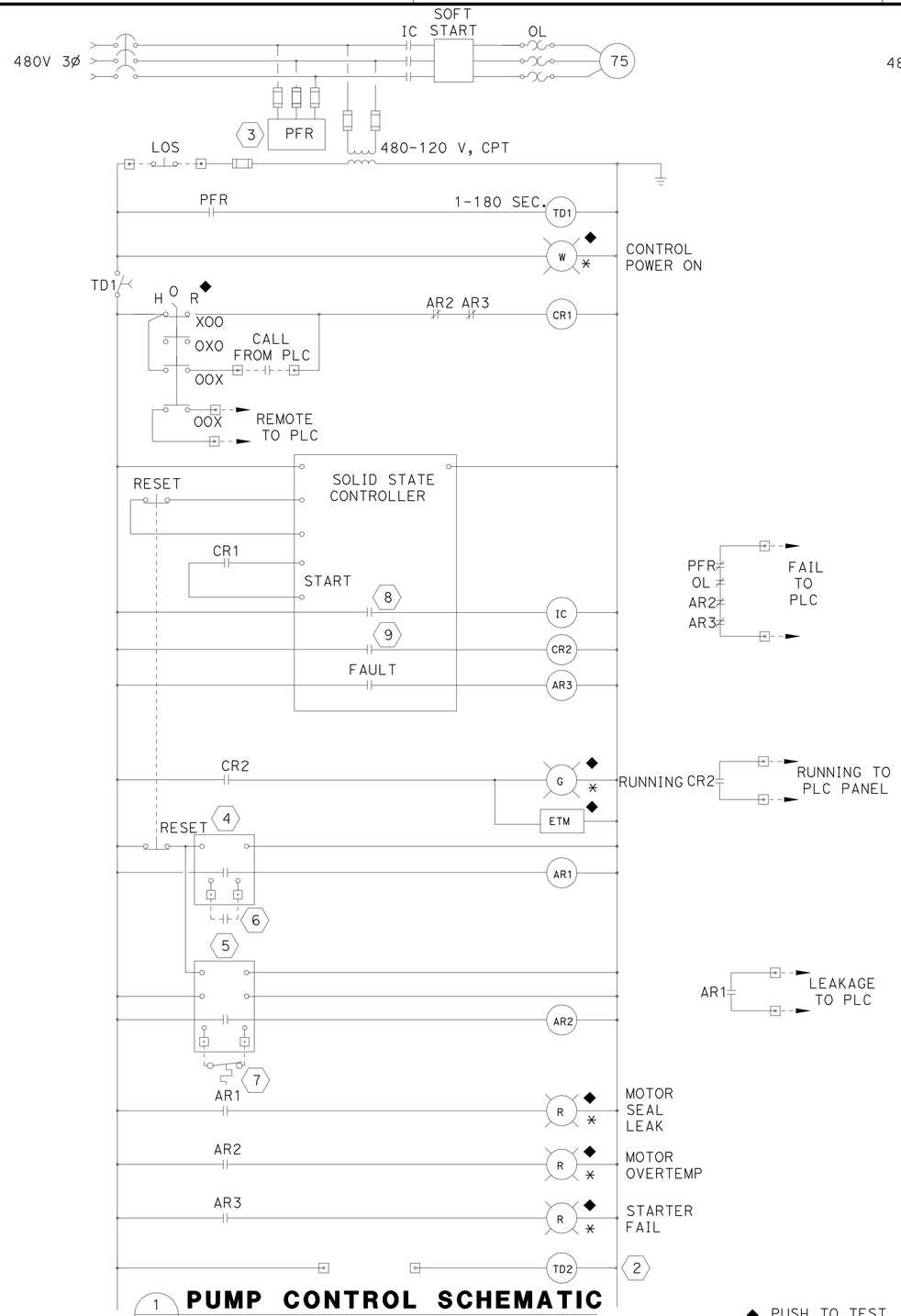

1 **PUMP CONTROL SCHEMATIC**
FOR P-001, P-002, P-003 (10)
NO SCALE

◆ PUSH TO TEST
✳ DOOR MOUNTED

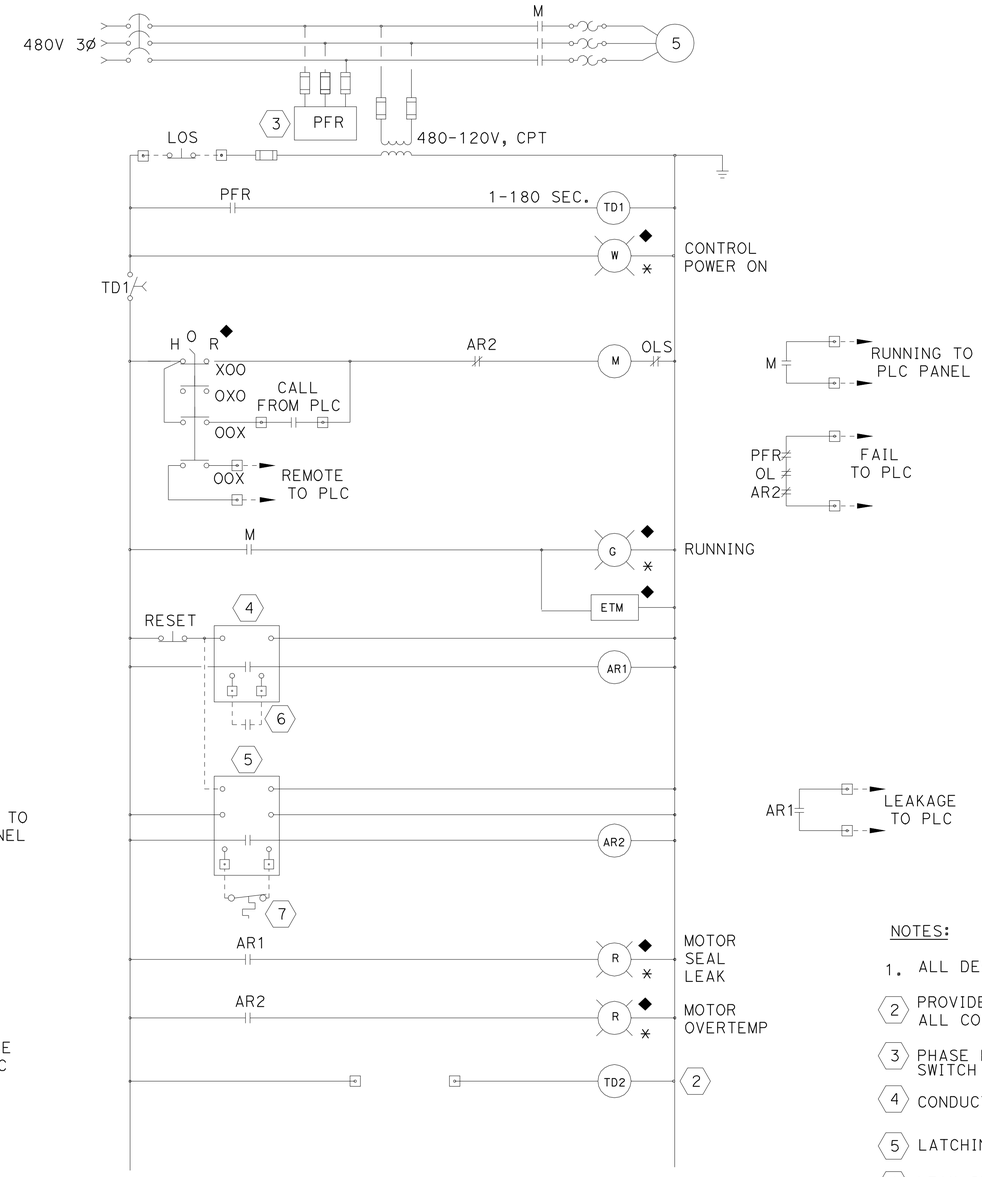

2 **PUMP CONTROL SCHEMATIC**
FOR P-004
NO SCALE (10)

NOTES:

1. ALL DEVICES LOCATED IN LOCAL MCC, UON.
2. PROVIDE A SPARE RELAY TO HAVE 2 NC AND 2 NO CONTACTS. ALL CONTACTS SHALL BE WIRED TO TERMINALS.
3. PHASE FAILURE RELAY. PROVIDE A SEPARATE RESET SWITCH IF REQUIRED.
4. CONDUCTIVITY INTRINSICALLY SAFE.
5. LATCHING TEMPERATURE SWITCH RELAY.
6. LEAK SENSOR PROBE LOCATE IN MOTOR CHAMBER.
7. THREE NC TEMPERATURE SWITCHES LOCATED IN MOTOR HOUSING.
8. AUXILIARY CONTACT FOR UP TO SPEED CONTACT, OR NC FAULT CONTACT WHICH OPENS ON FAULT CONDITION.
9. AUXILIARY CONTACT TO BE SET FOR NORMAL OPERATION.
10. PROVIDE ADDITIONAL CONTROL FEATURE REQUIRED BY THE MANUFACTURER.

EE-9

EMPIRE AVENUE UC
PUMPING PLANT
ELECTRICAL SCHEMATIC

SHANNON ENGLISH
DESIGN OVERSIGHT
5/11/12
SIGN OFF DATE

	BY	CHECKED
DESIGN	AMIR HAGHPANAH	SHANNON ENGLISH
DETAILS	AMIR HAGHPANAH	SHANNON ENGLISH
QUANTITIES	AMIR HAGHPANAH	SHANNON ENGLISH

PREPARED FOR THE STATE OF CALIFORNIA DEPARTMENT OF TRANSPORTATION

AMIR HAGHPANAH
PROJECT ENGINEER

BRIDGE NO. 53-2920W
POST MILES 30.63

DESIGN DETAIL SHEET (ENGLISH) (REV.7/16/10)

ORIGINAL SCALE IN INCHES FOR REDUCED PLANS 0 1 2 3

UNIT: 1812
PROJECT NUMBER & PHASE: 07000211191 CONTRACT NO.: 07-1218W4

DISREGARD PRINTS BEARING EARLIER REVISION DATES

REVISION DATES X

SHEET 28 OF 32

FILE => we009.dgn

USERNAME => s121614 DATE PLOTTED => 08-JUN-2012 TIME PLOTTED => 06:52

DIST	COUNTY	ROUTE	POST MILES TOTAL PROJECT	SHEET No	TOTAL SHEETS
07	LA	5	29.4/31.6	1367	1931

REGISTERED CIVIL ENGINEER 5/11/12 DATE

5-21-12
PLANS APPROVAL DATE

REGISTERED PROFESSIONAL ENGINEER AMIR HAGHPANAH No. E18480 Exp. 06/30/12 STATE OF CALIFORNIA

The State of California or its officers or agents shall not be responsible for the accuracy or completeness of electronic copies of this plan sheet.

TETRA TECH
17885 VON KARMAN AVE
IRVINE, CA 92614

CITY OF BURBANK
150 N 3RD ST
BURBANK, CA 91510

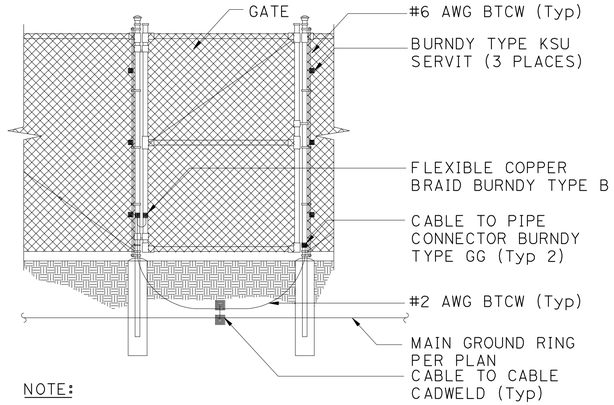

NOTE:

1. FLEXIBLE BRAID JUMPER SHALL BE MOUNTED SO THAT IT WILL NOT BE SUBJECTED TO DAMAGING STRAIN WHEN GATE IS FULLY OPEN IN EITHER DIRECTION.
2. #2 AWG BTCW AND ONE END OF THE FLEXIBLE BRAID JUMPER (BURNDY TYPE B) IS JOINED TO THE FENCE POST WITH A (BURNDY TYPE GD) GROUND CONNECTION. THE OTHER END OF THE JUMPER IS TO THE GATE WITH A (BURNDY TYPE GG) CONNECTOR Typ 2 PLACES.

1 FENCE GROUND DETAIL
NO SCALE

1. PRECAST Conc PULL BOX WITH Conc COVER. COVER TO HAVE CAST "GROUND WELL" MARKING.
2. GROUND CONNECTOR BURNDY TYPE GAR. GD THOMAS AND BETTS TYPE BLACKBURN, ERITECH EK.
3. BARE COPPER GROUNDING CONDUCTOR #4/0.
4. 3/4" x 10' LONG COPPER CLAD STEEL GROUND ROD.
5. PEA GRAVEL SHALL BE INSTALLED AS SHOWN.

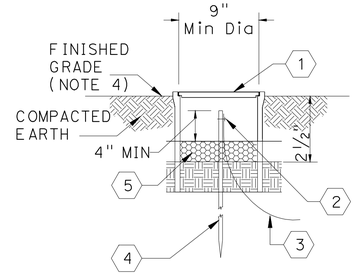

NOTES

1. CORROSION/OXIDATION INHIBITING COMPOUND SHALL BE USED THROUGHOUT ON JOINTS AND TERMINATIONS. THOMAS AND BETTS COPPER SHIELD.
2. TEST WELL SHALL BE ARRANGED AND CONSTRUCTED TO FREELY DRAIN RAINWATER.
3. ENGINEER (AUTHORITY) TO TEST PRIOR TO WELD.
4. SET PULL BOX HEIGHT AT 1" ABOVE FINISHED FLOOR.

4 GROUND WELL DETAIL
NO SCALE

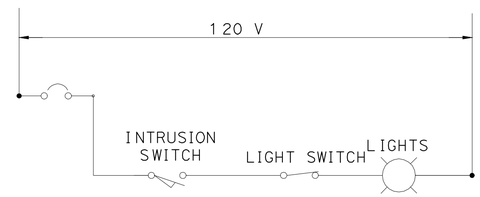

6 LIGHTING CONTROL
NO SCALE

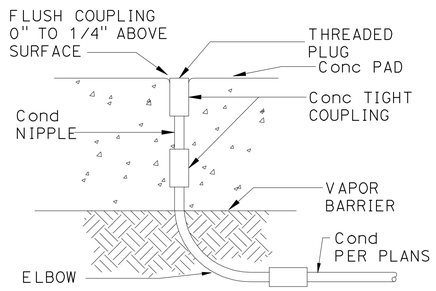

2 ELECTRICAL STUB-UP
NO SCALE

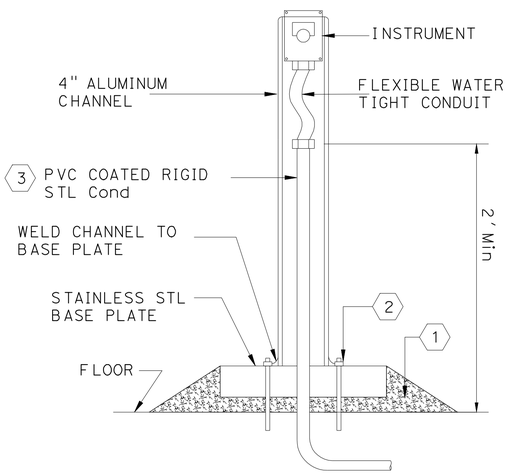

NOTES:

1. 1" Min NON SHRINK GROUT. SLOPE AWAY FROM STANCHION BASE PLATE AND CONDUIT.
2. 1/2" Dia STAINLESS STL ANCHOR BOLT AND WASHERS (4 REQUIRED). 4" Min EMBEDMENT.
3. SEE PROJECT DRAWINGS FOR SIZE OF CONDUIT AND QUANTITY OF CONDUCTORS.
4. FOR EXTERNAL USE ALL UNISTRUT AND FITTINGS TO BE STAINLESS STL. FOR INTERNAL USE ALL UNISTRUT AND FITTINGS TO BE Galv.

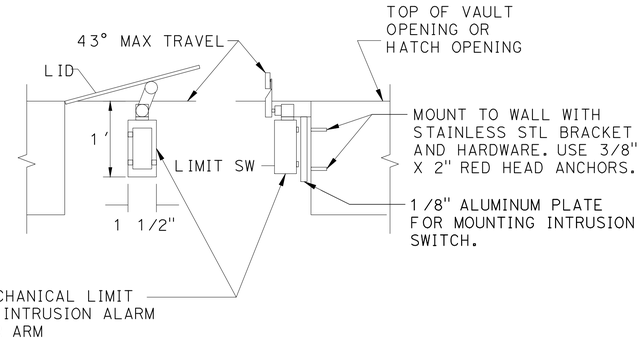

FRONT VIEW SIDE VIEW

7 HATCH INTRUSION SWITCH
NO SCALE

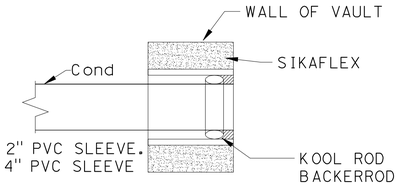

NOTES:

1. FOR 1" Cond USE 2" PVC SLEEVE.
   FOR 2" Cond USE 4" PVC SLEEVE
2. INTERIOR SIDE OF VAULT.

3 CONDUIT WALL PENETRATION AT VAULT DETAIL
NO SCALE

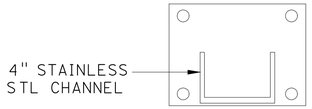

5 LOCAL LOCK-OUT SWITCH 4
NO SCALE

EE-10

EMPIRE AVENUE UC
PUMPING PLANT
ELECTRICAL DETAILS 1

SHANNON ENGLISH
DESIGN OVERSIGHT
5/11/12
SIGN OFF DATE

	BY	CHECKED
DESIGN	AMIR HAGHPANAH	SHANNON ENGLISH
DETAILS	AMIR HAGHPANAH	SHANNON ENGLISH
QUANTITIES	AMIR HAGHPANAH	SHANNON ENGLISH

PREPARED FOR THE STATE OF CALIFORNIA DEPARTMENT OF TRANSPORTATION

AMIR HAGHPANAH
PROJECT ENGINEER

BRIDGE NO. 53-2920W
POST MILES 30.63

DESIGN DETAIL SHEET (ENGLISH) (REV.7/16/10)

ORIGINAL SCALE IN INCHES FOR REDUCED PLANS 0 1 2 3

UNIT: 1812
PROJECT NUMBER & PHASE: 07000211191 CONTRACT NO.: 07-1218W4

DISREGARD PRINTS BEARING EARLIER REVISION DATES

REVISION DATES X

SHEET 29 OF 32

FILE => we010.dgn

USERNAME => s12161d DATE PLOTTED => 06-JUN-2012 TIME PLOTTED => 12:22

DIST	COUNTY	ROUTE	POST MILES TOTAL PROJECT	SHEET No	TOTAL SHEETS
07	LA	5	29.4/31.6	1368	1931

REGISTERED CIVIL ENGINEER — DATE 5/11/12

PLANS APPROVAL DATE 5-21-12

REGISTERED PROFESSIONAL ENGINEER — AMIR HAGHPANAH — No. E18480 — Exp. 06/30/12 — STATE OF CALIFORNIA

The State of California or its officers or agents shall not be responsible for the accuracy or completeness of electronic copies of this plan sheet.

TETRA TECH
17885 VON KARMAN AVE
IRVINE, CA 92614

CITY OF BURBANK
150 N 3RD ST
BURBANK, CA 91510

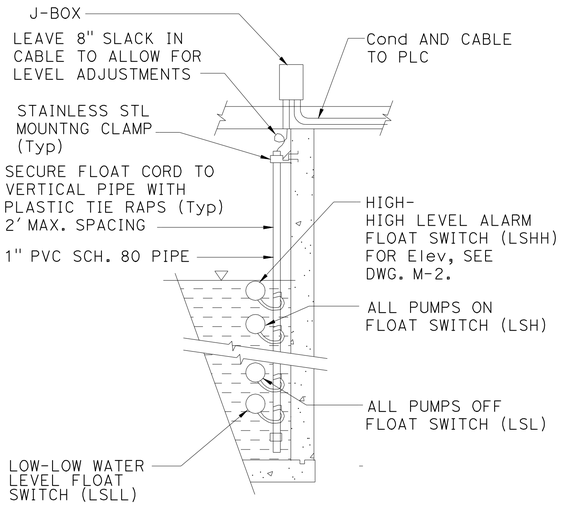

1 **FLOAT SWITCH DETAIL**
NO SCALE

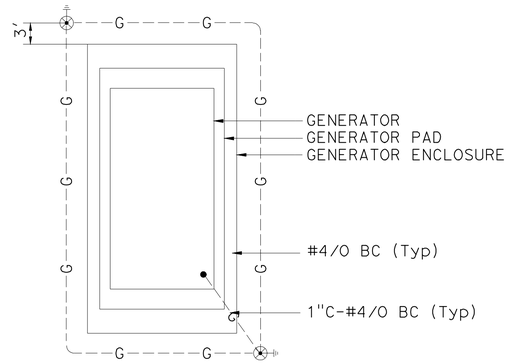

2 **GENERATOR GROUNDING DETAIL**
NO SCALE

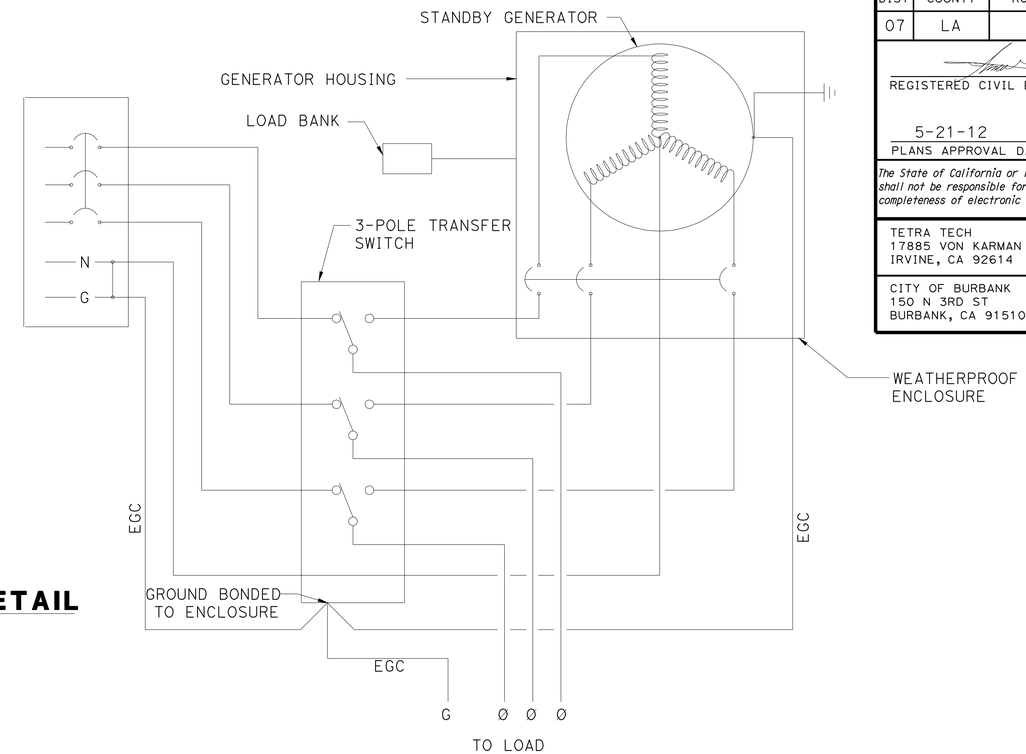

3 **GENERATOR WIRING DETAIL**
NO SCALE

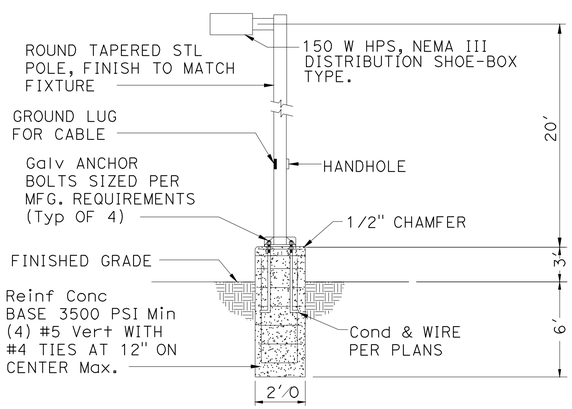

4 **POLE LIGHT DETAIL**
NO SCALE

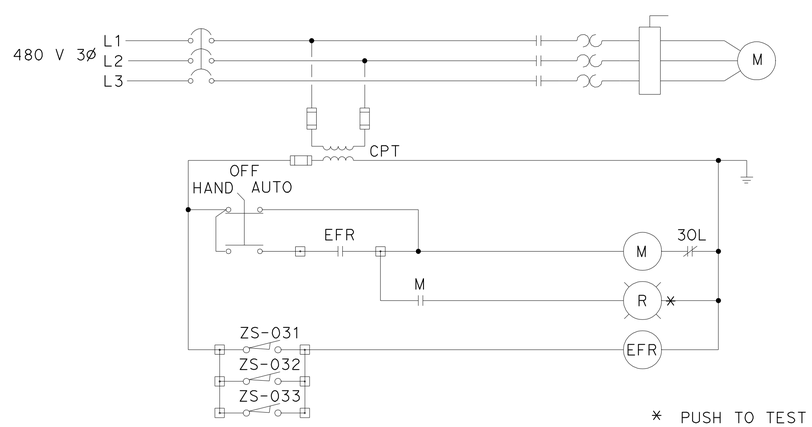

5 **EXHAUST FAN CONTROL**
NO SCALE

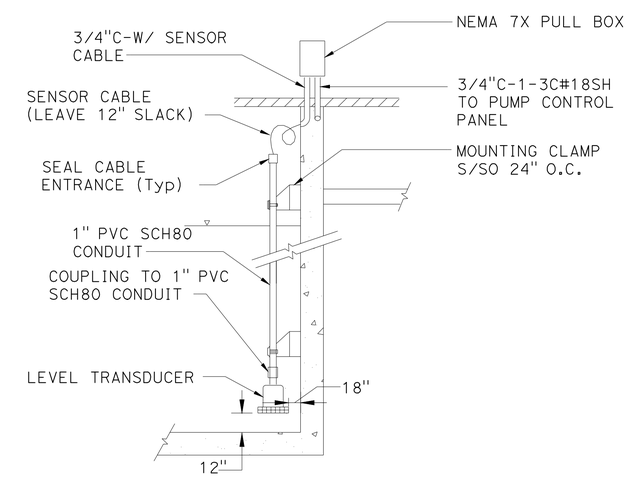

6 **SUBMERSIBLE LEVEL TRANSDUCER**
NO SCALE

EE-11

EMPIRE AVENUE UC
PUMPING PLANT
ELECTRICAL DETAILS 2

SHANNON ENGLISH
DESIGN OVERSIGHT
5/11/12
SIGN OFF DATE

	BY	CHECKED
DESIGN	AMIR HAGHPANAH	SHANNON ENGLISH
DETAILS	AMIR HAGHPANAH	SHANNON ENGLISH
QUANTITIES	AMIR HAGHPANAH	SHANNON ENGLISH

PREPARED FOR THE STATE OF CALIFORNIA DEPARTMENT OF TRANSPORTATION

AMIR HAGHPANAH
PROJECT ENGINEER

BRIDGE NO. 53-2920W
POST MILES 30.63

DESIGN DETAIL SHEET (ENGLISH) (REV.7/16/10)

ORIGINAL SCALE IN INCHES FOR REDUCED PLANS 0 1 2 3

UNIT: 1812
PROJECT NUMBER & PHASE: 07000211191
CONTRACT NO.: 07-1218W4

DISREGARD PRINTS BEARING EARLIER REVISION DATES

REVISION DATES X

SHEET 30 OF 32

FILE => we011.dgn

USERNAME => s124496 DATE PLOTTED => 21-MAY-2012 TIME PLOTTED => 15:55

DIST	COUNTY	ROUTE	POST MILES TOTAL PROJECT	SHEET No	TOTAL SHEETS
07	LA	5	29.4/31.6	1369	1931

REGISTERED CIVIL ENGINEER — DATE 5/11/12

PLANS APPROVAL DATE 5-21-12

REGISTERED PROFESSIONAL ENGINEER — AMIR HAGHPANAH — No. E18480 — Exp. 06/30/12 — STATE OF CALIFORNIA

The State of California or its officers or agents shall not be responsible for the accuracy or completeness of electronic copies of this plan sheet.

TETRA TECH
17885 VON KARMAN AVE
IRVINE, CA 92614

CITY OF BURBANK
150 N 3RD ST
BURBANK, CA 91510

INSTRUMENT SOCIETY OF AMERICA TABLE
IDENTIFICATION LETTERS

	FIRST-LETTER		SUCCEEDING-LETTERS		
	MEASURED OR INITIATING VARIABLE	MODIFIER	READOUT OR PASSIVE FUNCTION	OUTPUT FUNCTION	MODIFIER
A	ANALYSIS		ALARM		
B	BURNER, COMBUSTION		USER'S CHOICE	USER'S CHOICE	USER'S CHOICE
C	CONDUCTIVITY			CONTROL	
D	USER'S CHOICE	DIFFERENTIAL			
E	VOLTAGE		SENSOR (PRIMARY ELEMENT)		
F	FLOW RATE	RATIO (FRACTION)			
G	USER'S CHOICE		GLASS, VIEWING DEVICE		
H	HAND				HIGH
I	CURRENT (ELECTRICAL)		INDICATE		
J	POWER	SCAN			
K	TIME, TIME SCHEDULE	TIME RATE OF CHANGE		CONTROL STATION	
L	LEVEL		LIGHT		LOW
M	MOISTURE	MOMENTARY			MIDDLE, INTERMEDIATE
N	USER'S CHOICE		USER'S CHOICE	USER'S CHOICE	USER'S CHOICE
O	USER'S CHOICE		ORIFICE, RESTRICTION		
P	PRESSURE, VACUUM		POINT (TEST) CONNECTION		
Q	QUANTITY	INTEGRATE,TOTALIZE			
R	RADIATION		RECORD		
S	SPEED, FREQUENCY	SAFETY		SWITCH	
T	TEMPERATURE			TRANSMIT	
U	MULTIVARIABLE		MULTIFUNCTION	MULTIFUNCTION	MULTIFUNCTION
V	VIBRATION, MECHANICAL ANALYSIS			VALVE,DAMPER LOUVER	
W	WEIGHT, FORCE		WELL		
X	UNCLASSIFIED	X AXIS	UNCLASSIFIED(*)	UNCLASSIFIED(*)	UNCLASSIFIED(*)
Y	EVENT, STATE OR PRESENCE	Y AXIS		RELAY, COMPUTE CONVERT	
Z	POSITION, DIMENSION	Z AXIS		DRIVER, ACTUATOR, UNCLASSIFIED FINAL CONTROL ELEMENT	

INSTRUMENT LINE SYMBOLS

CONTROL SIGNAL

DATA SIGNAL

MECHANICAL EQUIPMENT

FLOAT SWITCH

VALVES & GATES

BUTTERFLY VALVE (BFV)

GATE VALVE (GV)

SWING CHECK VALVE (CV)

M — MOTOR OPERATED VALVE (MOV)

PUMPS & COMPRESSORS

M — SUBMERSIBLE PUMP

INSTRUMENT ABBREVIATIONS

AC	ALTERNATING CURRENT
AI	ANALOG INPUT
AM	AUTO-MANUAL
AMR	AUTO-MANUAL-REMOTE
AO	ANALOG OUTPUT
C	CLOSE
CP	CONTROL PANEL
CSP	CONSTANT SPEED PUMP
DC	DIRECT CURRENT
DI	DISCRETE INPUT
DO	DISCRETE OUTPUT
ETM	ELAPSED TIME METER
HA	HAND-AUTO
HL	HIGH-LOW
HOA	HAND-OFF-AUTO
HSC	HAND SWITCH COMPUTER
I/O	INPUT/OUTPUT
LOR	LOCAL-OFF-REMOTE
LOS	LOCK-OUT STOP
LR	LOCAL-REMOTE
MCC	MOTOR CONTROL CENTER
MCP	MASTER CONTROL PANEL
PID	PROPORTIONAL-INTEGRAL-DERIVATIVE
P&ID	PROCESS & INSTRUMENTATION DIAGRAM
SSS	SOLID STATE STARTER
UPS	UNINTERRUPTED POWER SUPPLY

INSTRUMENT IDENTIFICATION

	PRIMARY LOCATION *** NORMALLY ACCESSIBLE TO OPERATOR	FIELD MOUNTED
DISCRETE INSTRUMENTS	1 * IP1** XXX XXX	2 XXX XXX
SHARED DISPLAY, SHARED CONTROL	3 XXX XXX	4 XXX XXX
PROGRAMMABLE LOGIC CONTROL	5	6

* SYMBOL SIZE MAY VARY ACCORDING TO THE USER'S NEEDS AND THE TYPE OF DOCUMENT. A SUGGESTED SQUARE AND CIRCLE SIZE FOR LARGE DIAGRAMS IS SHOWN ABOVE. CONSISTENCY IS RECOMMENDED.

** ABBREVIATIONS OF THE USER'S CHOICE SUCH AS IP1 (INSTRUMENT PANEL #1), IC2 (INSTRUMENT CONSOLE #2), CC3 (COMPUTER CONSOLE #3), ETC., MAY BE USED WHEN IT IS NECESSARY TO SPECIFY INSTRUMENT OR FUNCTION LOCATION.

*** NORMALLY INACCESSIBLE OR BEHIND-THE-PANEL DEVICES OR FUNCTIONS MAY BE DEPICTED BY USING THE SAME SYMBOL BUT WITH DASHED Horiz BARS, IE.

XXX XXX — XXX XXX — XXX XXX

EE-12

EMPIRE AVENUE UC
PUMPING PLANT
P&ID SYMBOLS - I1

SHANNON ENGLISH
DESIGN OVERSIGHT
5/11/12
SIGN OFF DATE

	BY	CHECKED
DESIGN	AMIR HAGHPANAH	SHANNON ENGLISH
DETAILS	AMIR HAGHPANAH	SHANNON ENGLISH
QUANTITIES	AMIR HAGHPANAH	SHANNON ENGLISH

PREPARED FOR THE STATE OF CALIFORNIA DEPARTMENT OF TRANSPORTATION

AMIR HAGHPANAH
PROJECT ENGINEER

BRIDGE NO. 53-2920W
POST MILES 30.63

DESIGN DETAIL SHEET (ENGLISH) (REV.7/16/10)

ORIGINAL SCALE IN INCHES FOR REDUCED PLANS 0 1 2 3

UNIT: 1812
PROJECT NUMBER & PHASE: 07000211191 CONTRACT NO.: 07-1218W4

DISREGARD PRINTS BEARING EARLIER REVISION DATES

REVISION DATES X

SHEET 31 OF 32

FILE => we012.dgn

USERNAME => s124496 DATE PLOTTED => 21-MAY-2012 TIME PLOTTED => 15:55

DIST	COUNTY	ROUTE	POST MILES TOTAL PROJECT	SHEET No	TOTAL SHEETS
07	LA	5	29.4/31.6	1370	1931

REGISTERED CIVIL ENGINEER — DATE 5/11/12

5-21-12
PLANS APPROVAL DATE

REGISTERED PROFESSIONAL ENGINEER — AMIR HAGHPANAH — No. E18480 — Exp. 06/30/12 — STATE OF CALIFORNIA

The State of California or its officers or agents shall not be responsible for the accuracy or completeness of electronic copies of this plan sheet.

TETRA TECH
17885 VON KARMAN AVE
IRVINE, CA 92614

CITY OF BURBANK
150 N 3RD ST
BURBANK, CA 91510

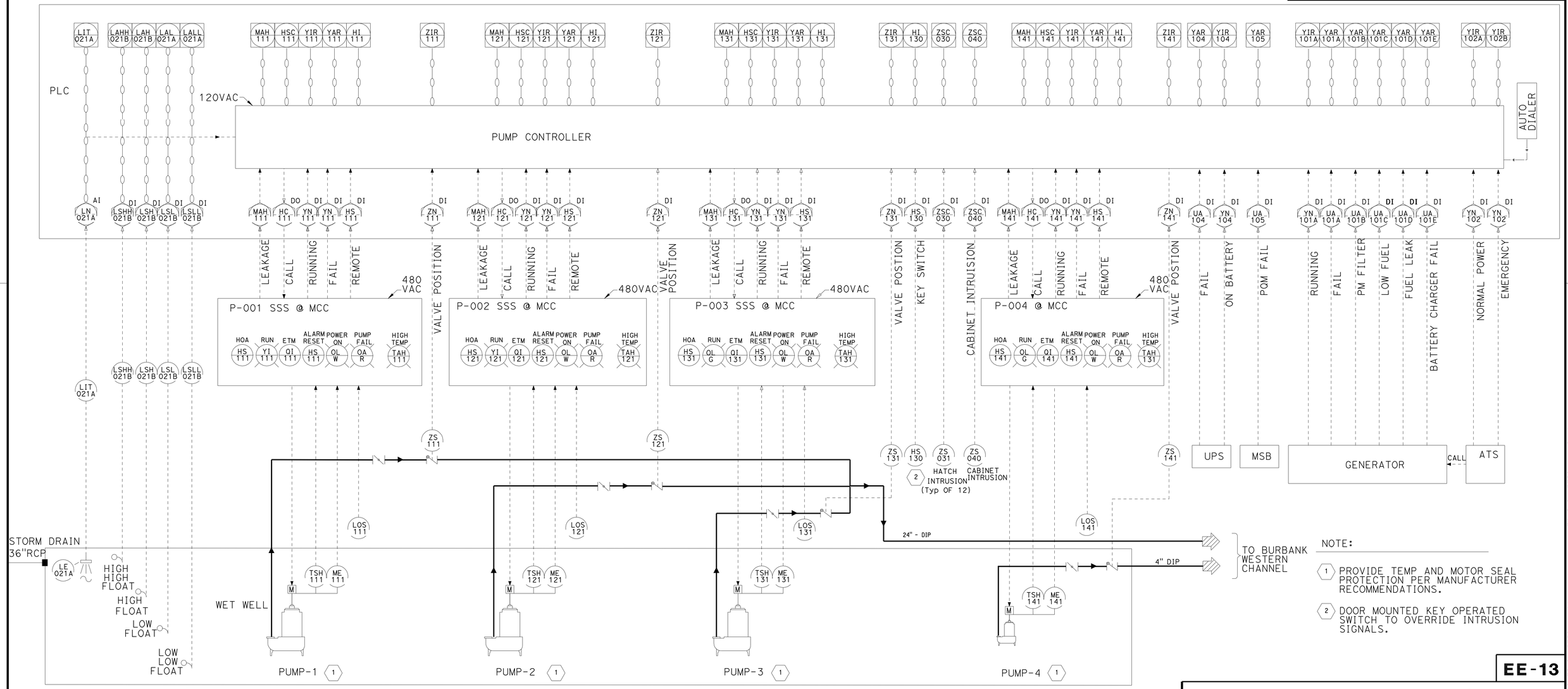

NOTE:

1. PROVIDE TEMP AND MOTOR SEAL PROTECTION PER MANUFACTURER RECOMMENDATIONS.
2. DOOR MOUNTED KEY OPERATED SWITCH TO OVERRIDE INTRUSION SIGNALS.

EE-13

EMPIRE AVENUE UC

PUMPING PLANT

P&ID - I2

SHANNON ENGLISH
DESIGN OVERSIGHT
5/11/12
SIGN OFF DATE

	BY	CHECKED
DESIGN	AMIR HAGHPANAH	SHANNON ENGLISH
DETAILS	AMIR HAGHPANAH	SHANNON ENGLISH
QUANTITIES	AMIR HAGHPANAH	SHANNON ENGLISH

PREPARED FOR THE STATE OF CALIFORNIA DEPARTMENT OF TRANSPORTATION

AMIR HAGHPANAH
PROJECT ENGINEER

BRIDGE NO. 53-2920W
POST MILES 30.63

DESIGN DETAIL SHEET (ENGLISH) (REV.7/16/10)

ORIGINAL SCALE IN INCHES FOR REDUCED PLANS 0 1 2 3

UNIT: 1812
PROJECT NUMBER & PHASE: 07000211191
CONTRACT NO.: 07-1218W4

DISREGARD PRINTS BEARING EARLIER REVISION DATES

REVISION DATES X

SHEET 32 OF 32

FILE => we013.dgn

USERNAME => s121614 DATE PLOTTED => 22-MAY-2012 TIME PLOTTED => 05:42