Dist	COUNTY	ROUTE	KILOMETER POST TOTAL PROJECT	SHEET No.	TOTAL SHEETS
07	LA	5	50.8/58.0	101	869

REGISTERED CIVIL ENGINEER 10/21/08 DATE

5-3-10
PLANS APPROVAL DATE

REGISTERED PROFESSIONAL ENGINEER KYLE M KUNITAKE No. 63726 Exp. 9/30/10 CIVIL STATE OF CALIFORNIA

THE STATE OF CALIFORNIA OR ITS OFFICERS OR AGENTS SHALL NOT BE RESPONSIBLE FOR THE ACCURACY OR COMPLETENESS OF ELECTRONIC COPIES OF THIS PLAN SHEET.

Caltrans Metric

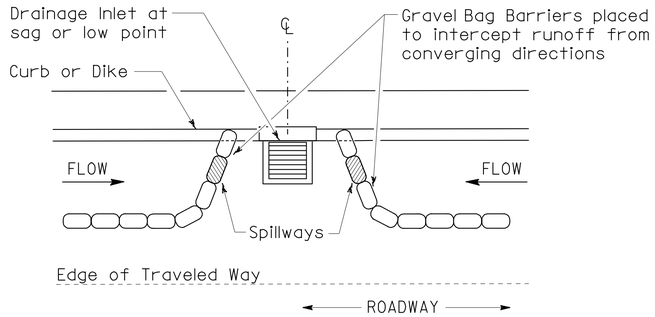

PLAN

CONFIGURATION FOR SAG POINT INLET (GRAVEL BAG BARRIER)

GRAVEL BAG BARRIER (TYPE 3A) SPACING TABLE

SLOPE OF ROADWAY (PERCENT)	1 to 3.9	4 to 5.9	6 to 7.9	8 to 10	10 +
INTERVAL BETWEEN BARRIERS (m)	30.0	22.5	15.0	7.5	4.0

For slope of less than 1%, install barriers only if erosion/sediment is prevalent

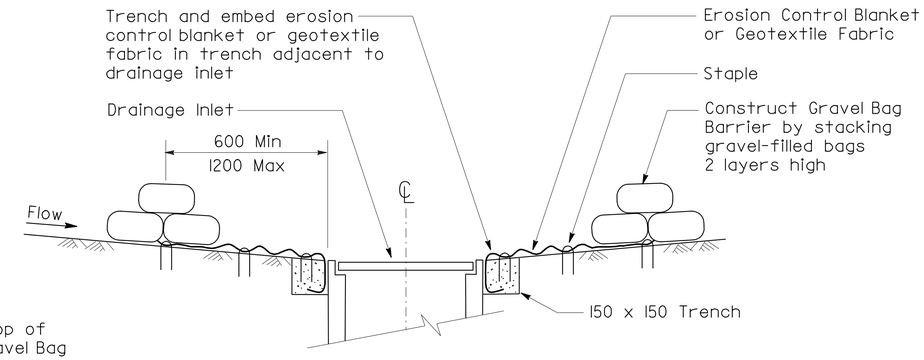

SECTION A-A

NOTES

1. Place safety cones adjacent to drainage inlet protection.
2. Dimensions may vary to fit field conditions.
3. Install a minimum of 3 gravel bag barriers upstream of each drainage inlet to be protected.
4. Position erosion control blanket or geotextile fabric at edge of concrete apron and secure in trench.
5. Erosion control blanket/geotextile fabric is not required if the area adjacent to the drainage inlet is vegetated or paved.

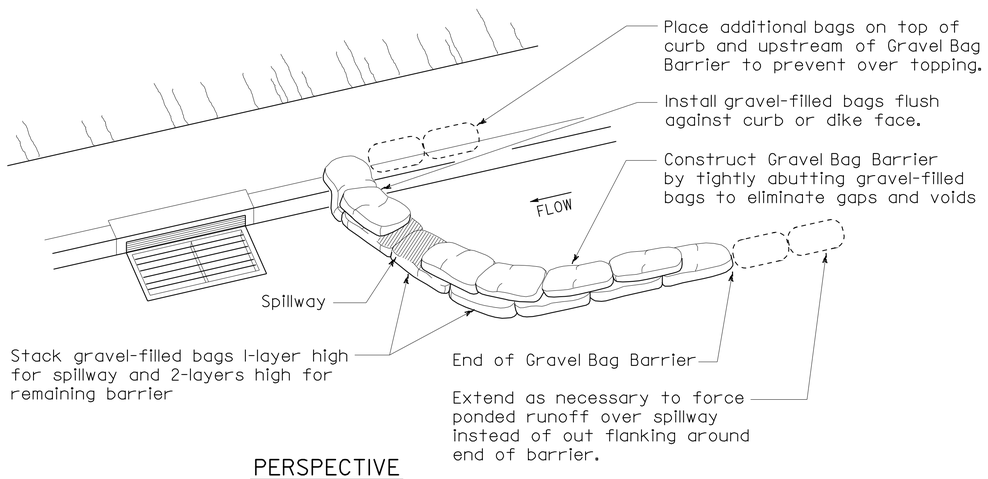

PERSPECTIVE

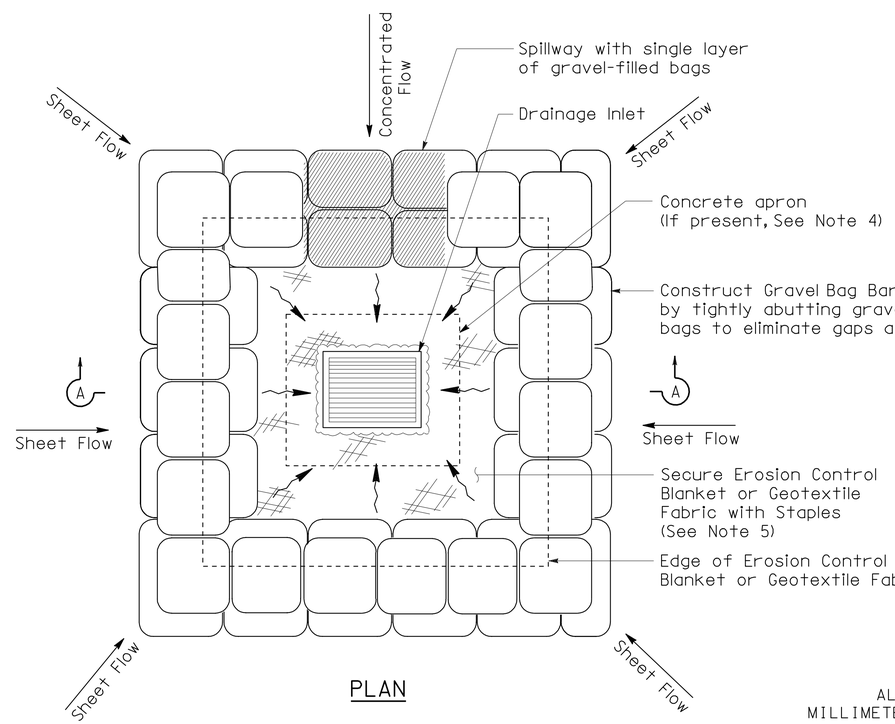

PLAN

TEMPORARY DRAINAGE INLET PROTECTION (TYPE 3B) (GRAVEL BAG BARRIER)

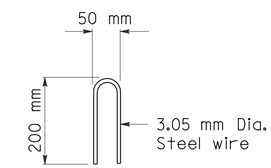

STAPLE DETAIL

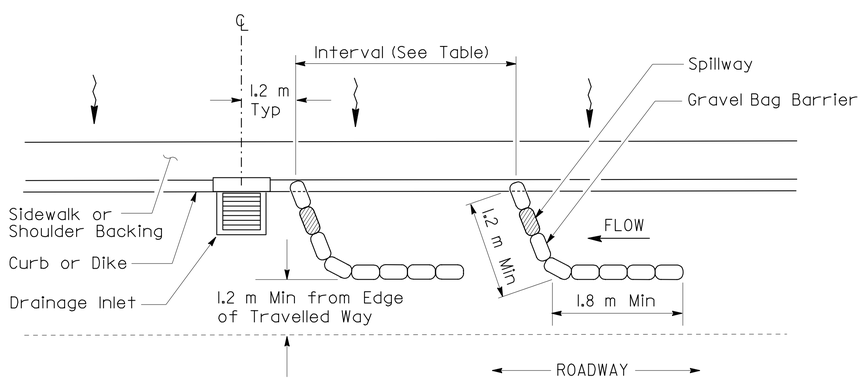

PLAN

TEMPORARY DRAINAGE INLET PROTECTION (TYPE 3A) (GRAVEL BAG BARRIER)

ALL DIMENSIONS ARE IN MILLIMETERS UNLESS OTHERWISE SHOWN

TEMPORARY WATER POLLUTION CONTROL DETAILS (TEMPORARY DRAINAGE INLET PROTECTION)

NO SCALE

WPCD-2

STATE OF CALIFORNIA - DEPARTMENT OF TRANSPORTATION
Caltrans
DESIGN

PROJECT ENGINEER CELINA AVILES

CALCULATED/DESIGNED BY | CHECKED BY | DATE REVISED BY | DATE REVISED

LAST REVISION 00-00-00 | DATE PLOTTED => 03-MAY-2010 | TIME PLOTTED => 12:54

Dist	COUNTY	ROUTE	KILOMETER POST TOTAL PROJECT	SHEET No.	TOTAL SHEETS
07	LA	5	50.8/58.0	102	869

REGISTERED CIVIL ENGINEER 10/21/08 DATE

5-3-10
PLANS APPROVAL DATE

REGISTERED PROFESSIONAL ENGINEER KYLE M KUNITAKE No. 63726 Exp. 9/30/10 CIVIL STATE OF CALIFORNIA

THE STATE OF CALIFORNIA OR ITS OFFICERS OR AGENTS SHALL NOT BE RESPONSIBLE FOR THE ACCURACY OR COMPLETENESS OF ELECTRONIC COPIES OF THIS PLAN SHEET.

Caltrans Metric

FOAM BARRIER SPACING TABLE

SLOPE OF ROADWAY (PERCENT)	0 to 0.9	1 to 1.9	2 to 2.9	3 to 4	5 +
INTERVAL BETWEEN BARRIERS (m)	15.24	10.67	9.14	7.62	6.10
ANGLE FROM FACE OF CURB (DEGREES)	70	70	70	45	45
SUGGESTED BARRIER LENGTH (m)	1.82	1.82	1.82	1.82	1.82

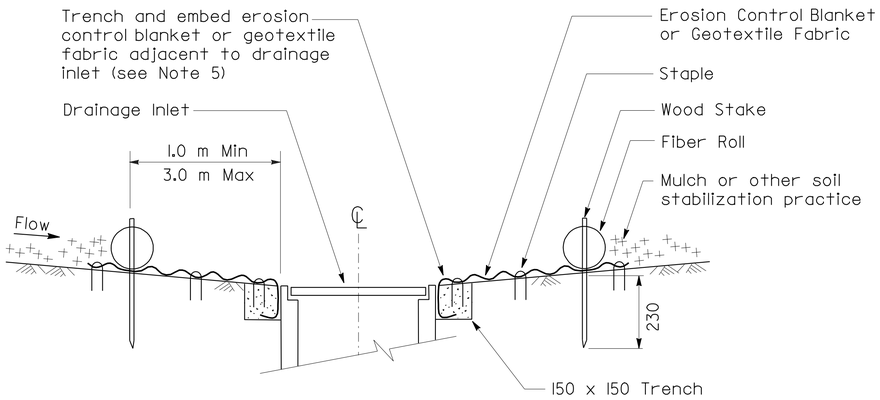

SECTION A-A

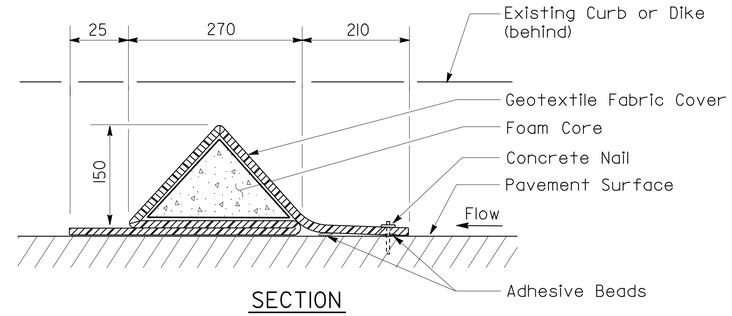

SECTION

FOAM BARRIER DETAIL

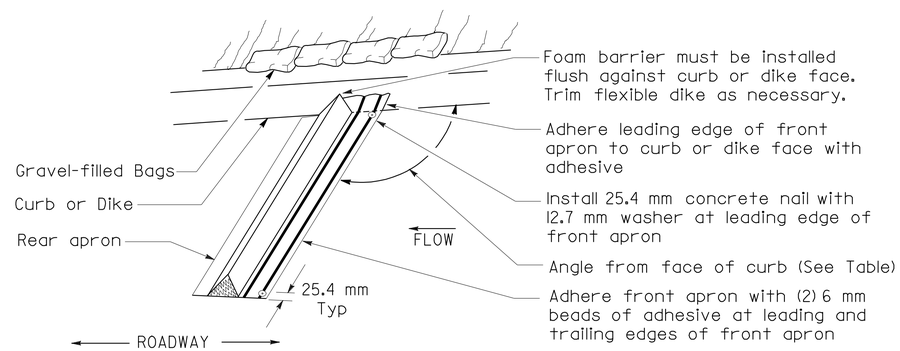

PERSPECTIVE

NOTES

1. Temporary linear sediment barrier shall be silt fence, fiber roll, gravel bag barrier, or other.
2. Dimensions may vary to fit field conditions.
3. Install a minimum of 3 foam barriers upstream of each drainage inlet to be protected.
4. Position erosion control blanket or geotextile fabric at edge of concrete apron and secure in trench.
5. Erosion control blanket/geotextile fabric is not required if the area adjacent to the drainage inlet is vegetated.

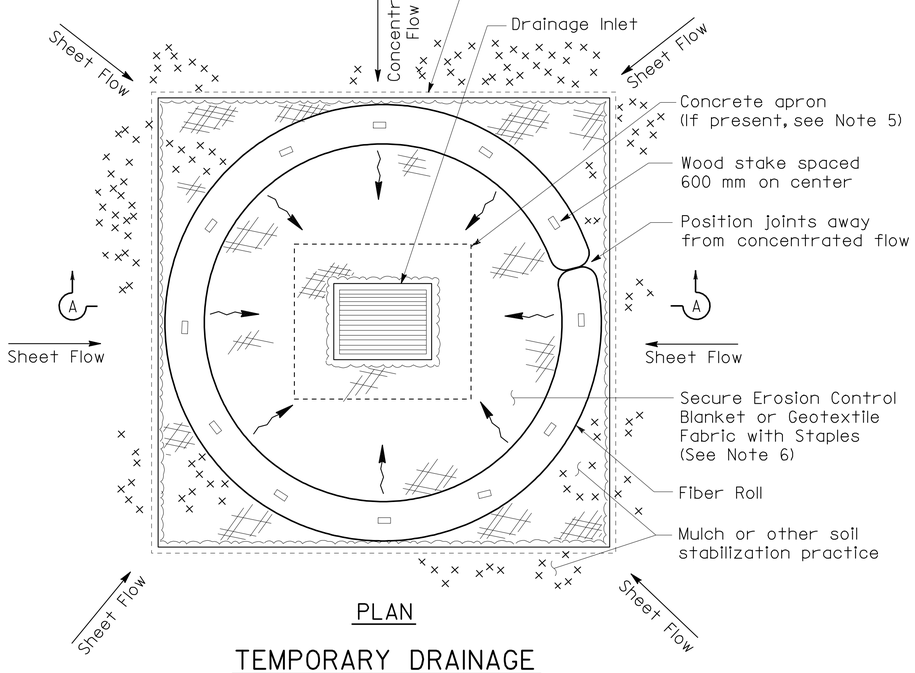

PLAN

TEMPORARY DRAINAGE INLET PROTECTION (TYPE 4A) (FIBER ROLLS)

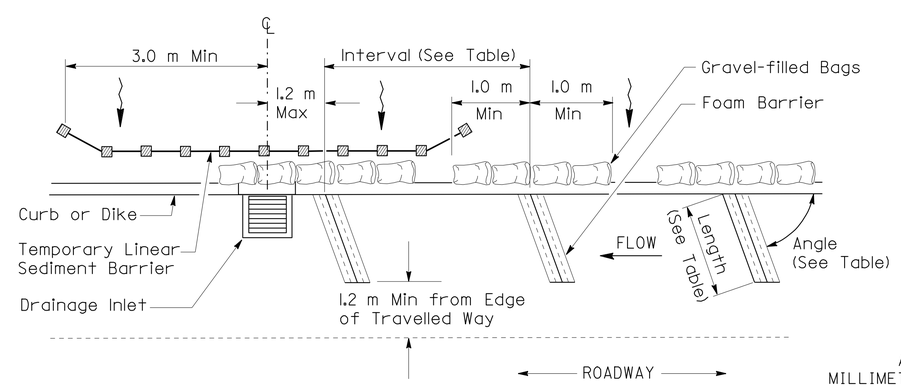

PLAN

TEMPORARY DRAINAGE INLET PROTECTION (TYPE 4B) (FOAM BARRIER)

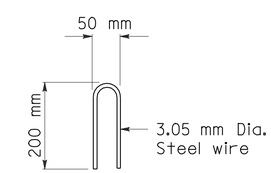

STAPLE DETAIL

ALL DIMENSIONS ARE IN MILLIMETERS UNLESS OTHERWISE SHOWN

TEMPORARY WATER POLLUTION CONTROL DETAILS (TEMPORARY DRAINAGE INLET PROTECTION)

NO SCALE

WPCD-3

STATE OF CALIFORNIA - DEPARTMENT OF TRANSPORTATION
Caltrans DESIGN
PROJECT ENGINEER CELINA AVILES
CALCULATED/DESIGNED BY | CHECKED BY
DATE | REVISED BY | DATE REVISED

LAST REVISION 00-00-00 | DATE PLOTTED => 03-MAY-2010 | TIME PLOTTED => 12:54

Dist	COUNTY	ROUTE	KILOMETER POST TOTAL PROJECT	SHEET No.	TOTAL SHEETS
07	LA	5	50.8/58.0	103	869

REGISTERED CIVIL ENGINEER 10/21/08 DATE

5-3-10
PLANS APPROVAL DATE

REGISTERED PROFESSIONAL ENGINEER KYLE M KUNITAKE No. 63726 Exp. 9/30/10 CIVIL STATE OF CALIFORNIA

THE STATE OF CALIFORNIA OR ITS OFFICERS OR AGENTS SHALL NOT BE RESPONSIBLE FOR THE ACCURACY OR COMPLETENESS OF ELECTRONIC COPIES OF THIS PLAN SHEET.

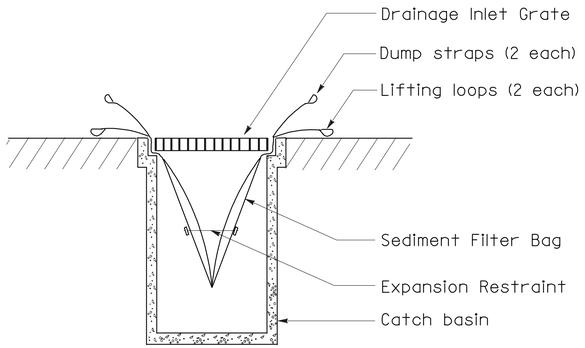

SECTION B-B

SEDIMENT FILTER BAG DETAIL

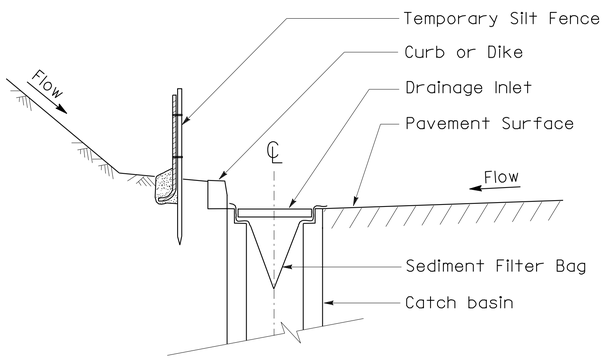

SECTION A-A

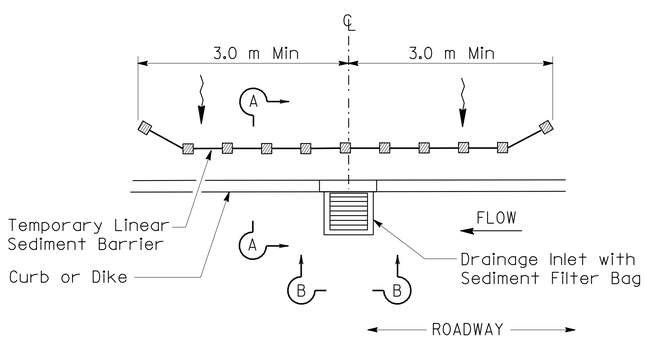

PLAN

TEMPORARY DRAINAGE INLET PROTECTION (TYPE 5) (SEDIMENT FILTER BAG)

NOTES

1. Temporary Linear Sediment Barrier shall be silt fence, fiber roll, gravel bag barrier, or other.
2. See Std Plan T51 for Temporary Silt Fence.
3. Dimensions may vary to fit field conditions.

ALL DIMENSIONS ARE IN MILLIMETERS UNLESS OTHERWISE SHOWN

TEMPORARY WATER POLLUTION CONTROL DETAILS (TEMPORARY DRAINAGE INLET PROTECTION)

NO SCALE

WPCD-4

DATE	REVISED BY	DATE REVISED

CALCULATED/DESIGNED BY
CHECKED BY
PROJECT ENGINEER

STATE OF CALIFORNIA - DEPARTMENT OF TRANSPORTATION
Caltrans

LAST REVISION 00-00-00 DATE PLOTTED => 03-MAY-2010 TIME PLOTTED => 12:54

Dist	COUNTY	ROUTE	KILOMETER POST TOTAL PROJECT	SHEET No.	TOTAL SHEETS
07	LA	5	50.8/58.0	104	869

REGISTERED CIVIL ENGINEER 7/02/08 DATE

5-3-10
PLANS APPROVAL DATE

REGISTERED PROFESSIONAL ENGINEER KYLE M KUNITAKE No. 63726 Exp. 9/30/10 CIVIL STATE OF CALIFORNIA

THE STATE OF CALIFORNIA OR ITS OFFICERS OR AGENTS SHALL NOT BE RESPONSIBLE FOR THE ACCURACY OR COMPLETENESS OF ELECTRONIC COPIES OF THIS PLAN SHEET.

Caltrans Metric

NOTES:

1. FOR COMPLETE RIGHT OF WAY AND ACCURATE ACCESS DATA, SEE RIGHT OF WAY RECORD MAPS AT DISTRICT OFFICE.
2. CONTOUR LINES ARE AT 0.5 INTERVAL

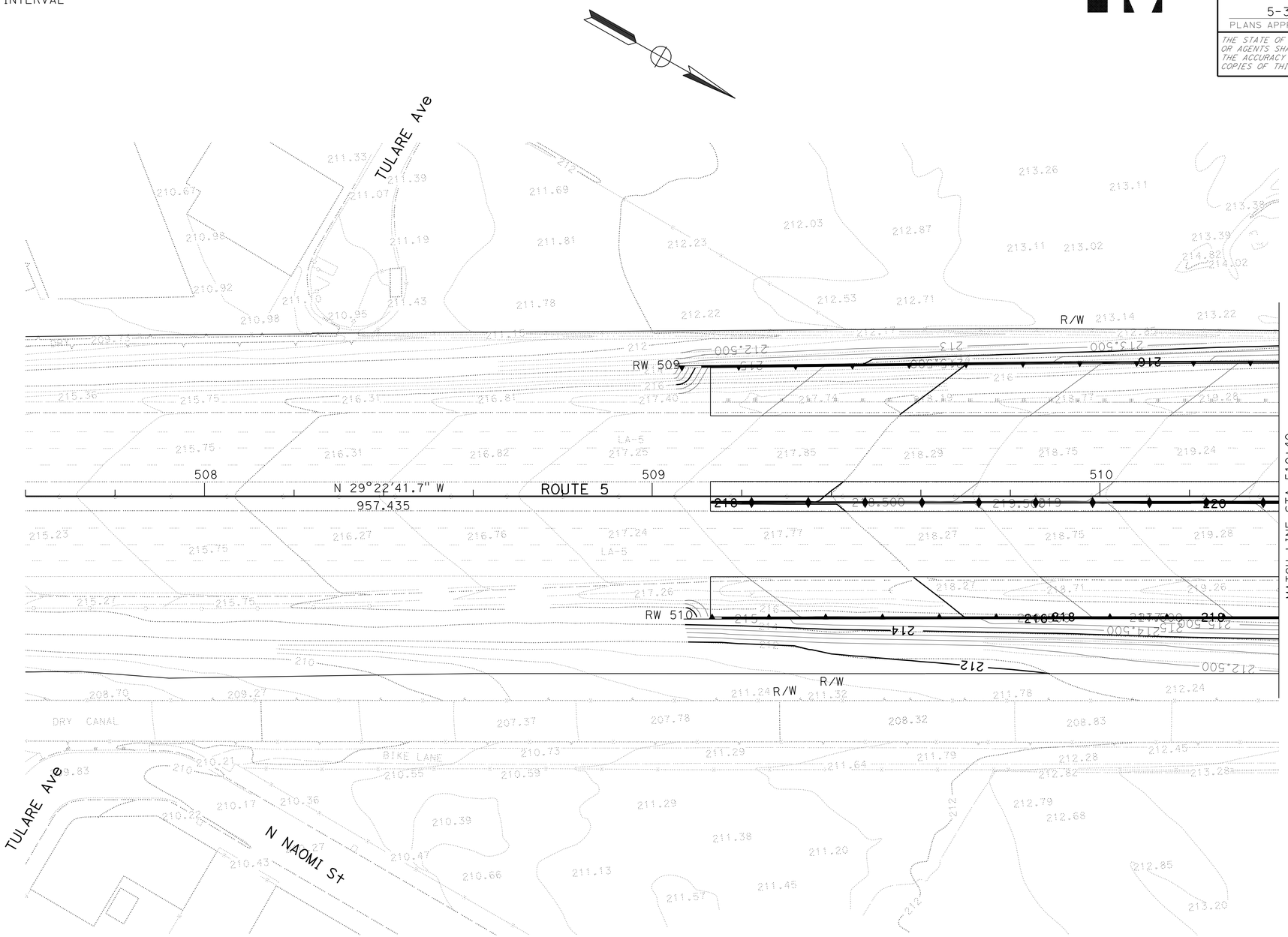

ALL DIMENSIONS ARE IN METERS
UNLESS OTHERWISE SHOWN

THIS PLAN ACCURATE FOR CONTOUR GRADING ONLY

CONTOUR GRADING

SCALE 1:500

G-1

STATE OF CALIFORNIA - DEPARTMENT OF TRANSPORTATION
Caltrans
DESIGN

FUNCTIONAL SUPERVISOR: CELINA AVILES
CALCULATED-DESIGNED BY: DAWIT WORKU
CHECKED BY: JOSEPH KIBE
REVISED BY: AE
DATE REVISED: 04-08

LAST REVISION 02-22-08
DATE PLOTTED => 03-MAY-2010
TIME PLOTTED => 1254

Dist	COUNTY	ROUTE	KILOMETER POST TOTAL PROJECT	SHEET No.	TOTAL SHEETS
07	LA	5	50.8/58.0	105	869

REGISTERED CIVIL ENGINEER 7/02/08 DATE

5-3-10
PLANS APPROVAL DATE

REGISTERED PROFESSIONAL ENGINEER KYLE M KUNITAKE No. 63726 Exp. 9/30/10 CIVIL STATE OF CALIFORNIA

THE STATE OF CALIFORNIA OR ITS OFFICERS OR AGENTS SHALL NOT BE RESPONSIBLE FOR THE ACCURACY OR COMPLETENESS OF ELECTRONIC COPIES OF THIS PLAN SHEET.

Caltrans Metric

NOTES:

1. FOR COMPLETE RIGHT OF WAY AND ACCURATE ACCESS DATA, SEE RIGHT OF WAY RECORD MAPS AT DISTRICT OFFICE.
2. CONTOUR LINES ARE AT 0.5 INTERVAL

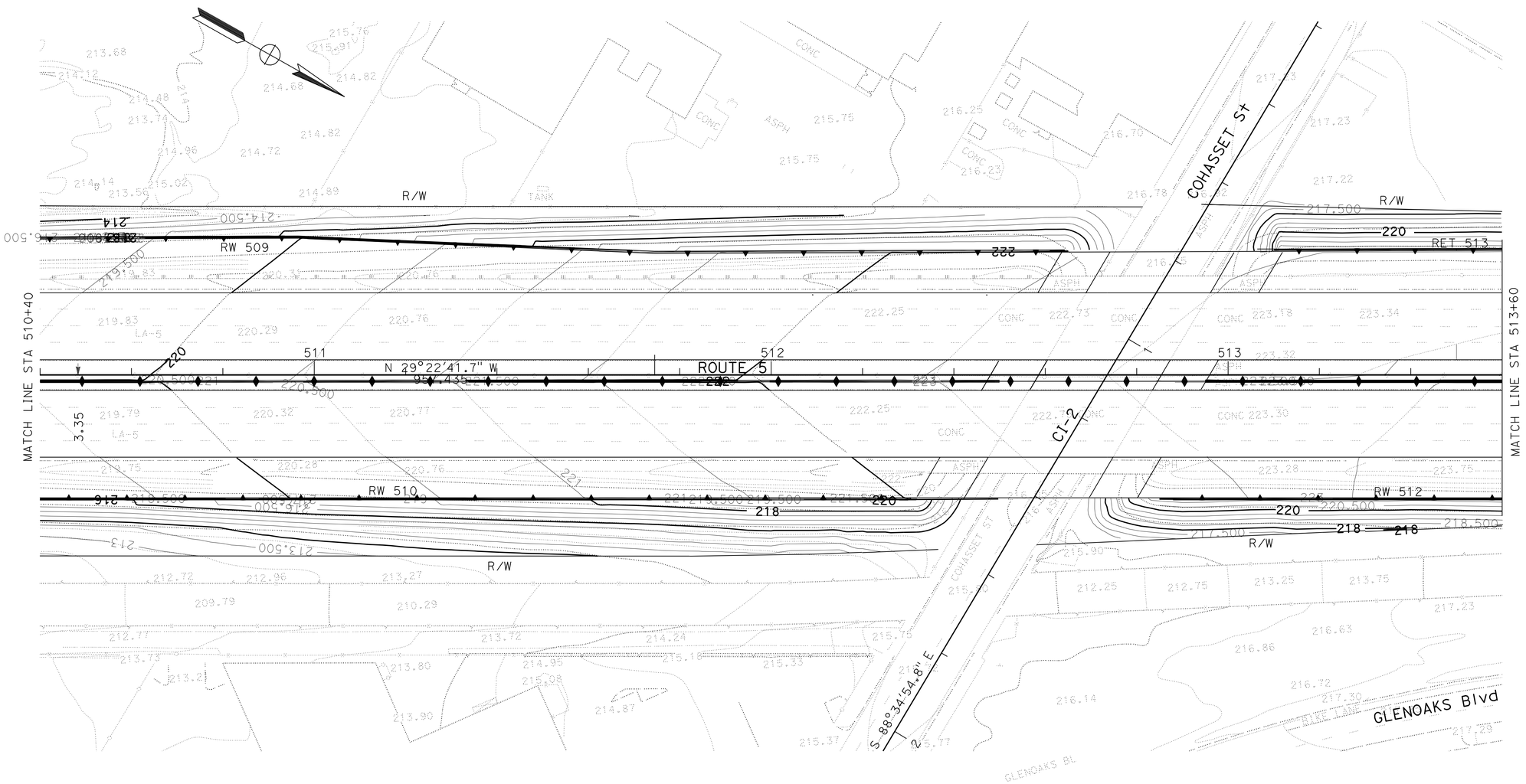

ALL DIMENSIONS ARE IN METERS
UNLESS OTHERWISE SHOWN

CONTOUR GRADING

SCALE 1:500

G-2

THIS PLAN ACCURATE FOR CONTOUR GRADING ONLY

STATE OF CALIFORNIA - DEPARTMENT OF TRANSPORTATION
Caltrans DESIGN

FUNCTIONAL SUPERVISOR: CELINA AVILES
CALCULATED-DESIGNED BY: DAWIT WORKU
CHECKED BY: JOSEPH KIBE
REVISED BY: AE
DATE REVISED: 05-08

LAST REVISION 02-22-08
DATE PLOTTED => 03-MAY-2010
TIME PLOTTED => 12:54

Dist	COUNTY	ROUTE	KILOMETER POST TOTAL PROJECT	SHEET No.	TOTAL SHEETS
07	LA	5	50.8/58.0	106	869

REGISTERED CIVIL ENGINEER 7/02/08 DATE

5-3-10
PLANS APPROVAL DATE

REGISTERED PROFESSIONAL ENGINEER KYLE M KUNITAKE No. 63726 Exp. 9/30/10 CIVIL STATE OF CALIFORNIA

THE STATE OF CALIFORNIA OR ITS OFFICERS OR AGENTS SHALL NOT BE RESPONSIBLE FOR THE ACCURACY OR COMPLETENESS OF ELECTRONIC COPIES OF THIS PLAN SHEET.

Caltrans Metric

NOTES:

1. FOR COMPLETE RIGHT OF WAY AND ACCURATE ACCESS DATA, SEE RIGHT OF WAY RECORD MAPS AT DISTRICT OFFICE.
2. CONTOUR LINES ARE AT 0.5 INTERVAL

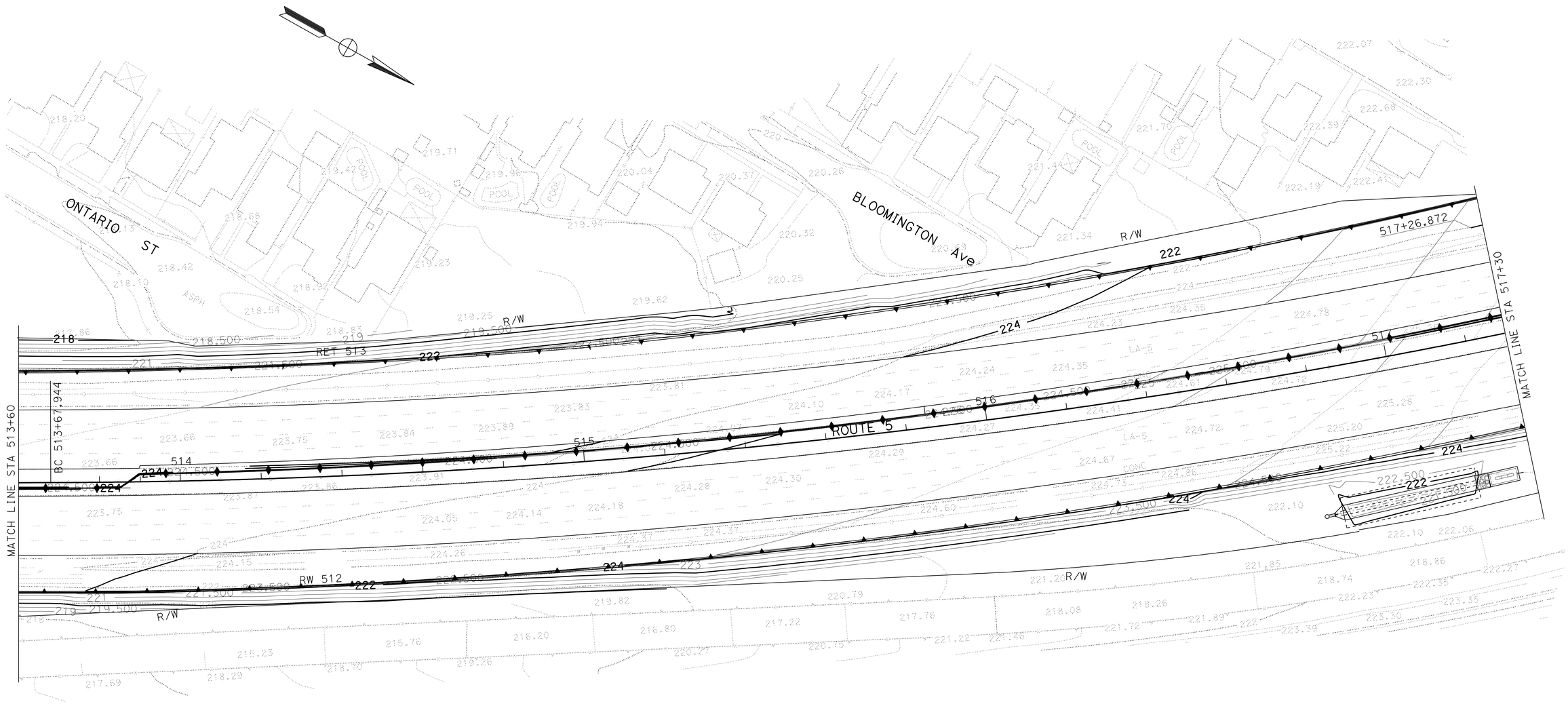

ALL DIMENSIONS ARE IN METERS
UNLESS OTHERWISE SHOWN

CONTOUR GRADING

SCALE 1:500

G-3

THIS PLAN ACCURATE FOR CONTOUR GRADING ONLY

STATE OF CALIFORNIA - DEPARTMENT OF TRANSPORTATION
Caltrans
DESIGN

FUNCTIONAL SUPERVISOR: CELINA AVILES
CALCULATED-DESIGNED BY: DAWIT WORKU
CHECKED BY: JOSEPH KIBE
REVISED BY: AE
DATE REVISED: 05-08

LAST REVISION 02-22-08
DATE PLOTTED => 03-MAY-2010
TIME PLOTTED => 12:55

Dist	COUNTY	ROUTE	KILOMETER POST TOTAL PROJECT	SHEET No.	TOTAL SHEETS
07	LA	5	50.8/58.0	107	869

REGISTERED CIVIL ENGINEER 7/02/08 DATE

5-3-10
PLANS APPROVAL DATE

REGISTERED PROFESSIONAL ENGINEER KYLE M KUNITAKE No. 63726 Exp. 9/30/10 CIVIL STATE OF CALIFORNIA

THE STATE OF CALIFORNIA OR ITS OFFICERS OR AGENTS SHALL NOT BE RESPONSIBLE FOR THE ACCURACY OR COMPLETENESS OF ELECTRONIC COPIES OF THIS PLAN SHEET.

Caltrans Metric

NOTES:

1. FOR COMPLETE RIGHT OF WAY AND ACCURATE ACCESS DATA, SEE RIGHT OF WAY RECORD MAPS AT DISTRICT OFFICE.
2. CONTOUR LINES ARE AT 0.5 INTERVAL

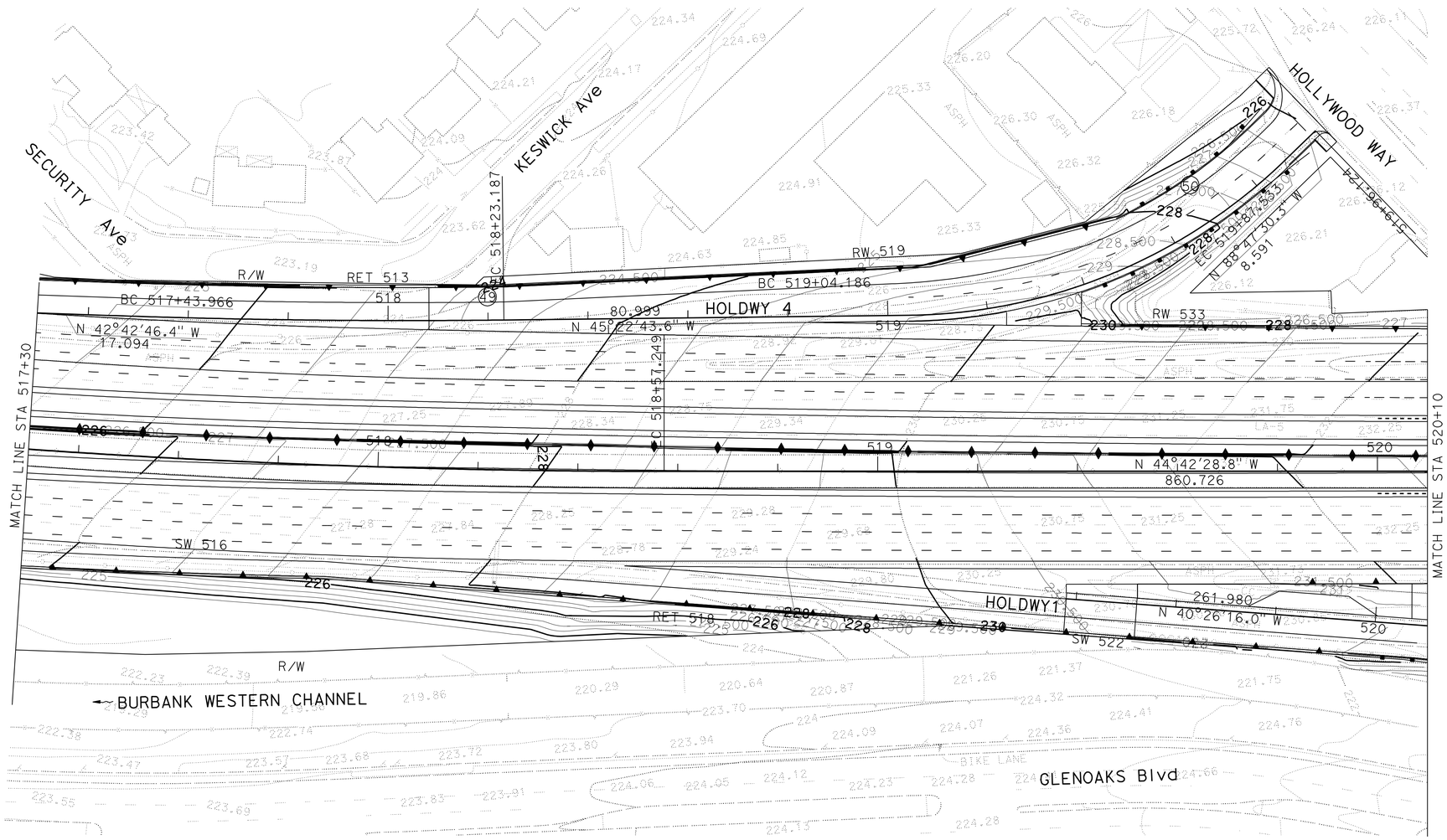

ALL DIMENSIONS ARE IN METERS
UNLESS OTHERWISE SHOWN

CONTOUR GRADING

SCALE 1:500

G-4

THIS PLAN ACCURATE FOR CONTOUR GRADING ONLY

CALCULATED-DESIGNED BY	DAWIT WORKU	REVISED BY	AE
CHECKED BY	JOSEPH KIBE	DATE REVISED	05-08
FUNCTIONAL SUPERVISOR	CELINA AVILES		

STATE OF CALIFORNIA - DEPARTMENT OF TRANSPORTATION
Caltrans DESIGN

LAST REVISION 02-22-08 DATE PLOTTED => 03-MAY-2010 TIME PLOTTED => 12:55

Dist	COUNTY	ROUTE	KILOMETER POST TOTAL PROJECT	SHEET No.	TOTAL SHEETS
07	LA	5	50.8/58.0	108	869

REGISTERED CIVIL ENGINEER 7/02/08 DATE

5-3-10
PLANS APPROVAL DATE

REGISTERED PROFESSIONAL ENGINEER KYLE M KUNITAKE No. 63726 Exp. 9/30/10 CIVIL STATE OF CALIFORNIA

THE STATE OF CALIFORNIA OR ITS OFFICERS OR AGENTS SHALL NOT BE RESPONSIBLE FOR THE ACCURACY OR COMPLETENESS OF ELECTRONIC COPIES OF THIS PLAN SHEET.

Caltrans Metric

NOTES:

1. FOR COMPLETE RIGHT OF WAY AND ACCURATE ACCESS DATA, SEE RIGHT OF WAY RECORD MAPS AT DISTRICT OFFICE.
2. CONTOUR LINES ARE AT 0.5 INTERVAL

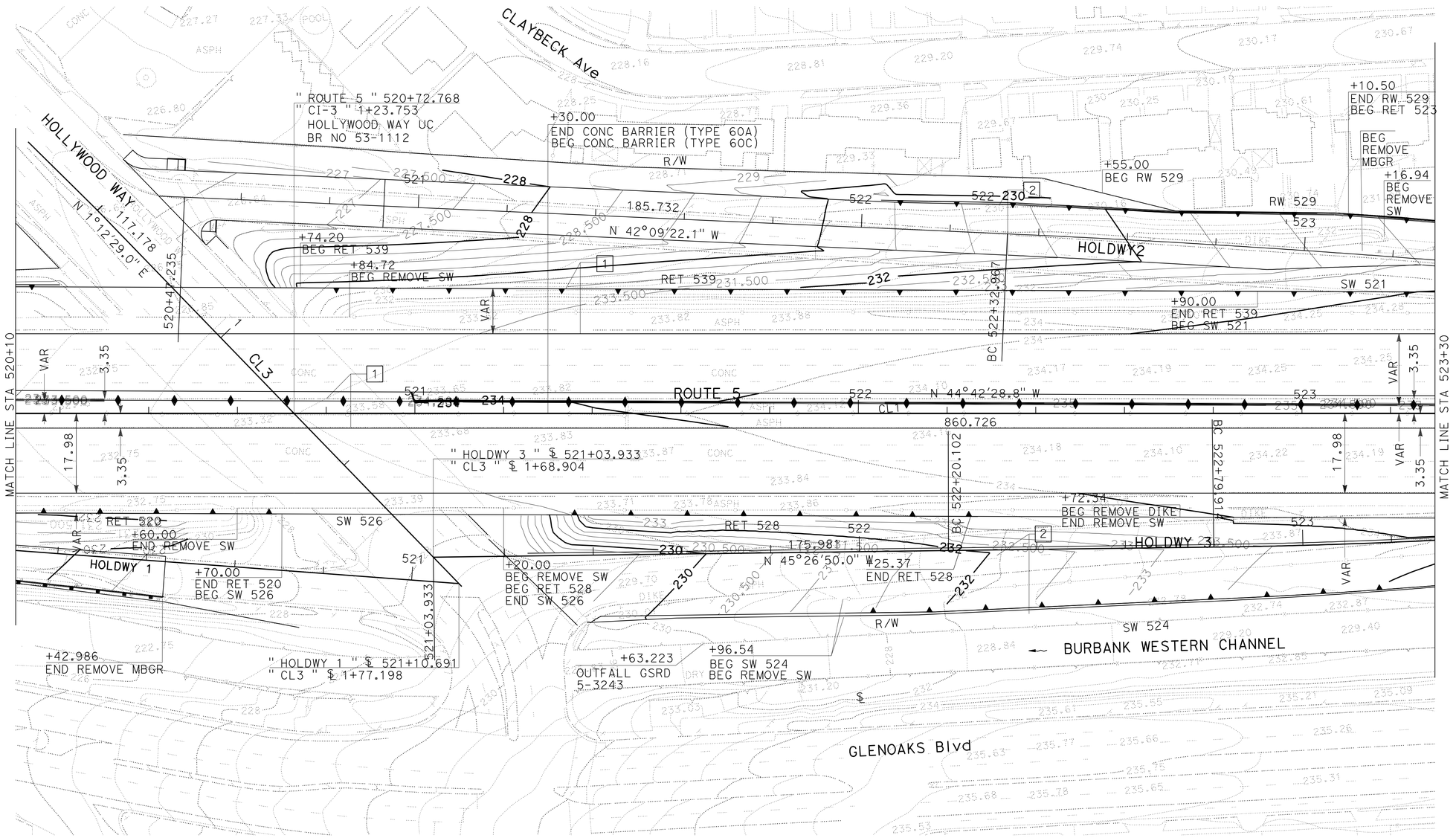

ALL DIMENSIONS ARE IN METERS
UNLESS OTHERWISE SHOWN

CONTOUR GRADING

SCALE 1:500

G-5

THIS PLAN ACCURATE FOR CONTOUR GRADING ONLY

REVISED BY	DATE REVISED
AE	05-08

CALCULATED-DESIGNED BY: DAWIT WORKU
CHECKED BY: JOSEPH KIBE
FUNCTIONAL SUPERVISOR: CELINA AVILES

STATE OF CALIFORNIA - DEPARTMENT OF TRANSPORTATION
Caltrans
DESIGN

LAST REVISION 02-22-08 | DATE PLOTTED => 03-MAY-2010 | TIME PLOTTED => 12:55

Dist	COUNTY	ROUTE	KILOMETER POST TOTAL PROJECT	SHEET No.	TOTAL SHEETS
07	LA	5	50.8/58.0	109	869

REGISTERED CIVIL ENGINEER 7/02/08 DATE

5-3-10
PLANS APPROVAL DATE

REGISTERED PROFESSIONAL ENGINEER KYLE M KUNITAKE No. 63726 Exp. 9/30/10 CIVIL STATE OF CALIFORNIA

THE STATE OF CALIFORNIA OR ITS OFFICERS OR AGENTS SHALL NOT BE RESPONSIBLE FOR THE ACCURACY OR COMPLETENESS OF ELECTRONIC COPIES OF THIS PLAN SHEET.

Caltrans Metric

NOTES:

1. FOR COMPLETE RIGHT OF WAY AND ACCURATE ACCESS DATA, SEE RIGHT OF WAY RECORD MAPS AT DISTRICT OFFICE.
2. CONTOUR LINES ARE AT 0.5 INTERVAL

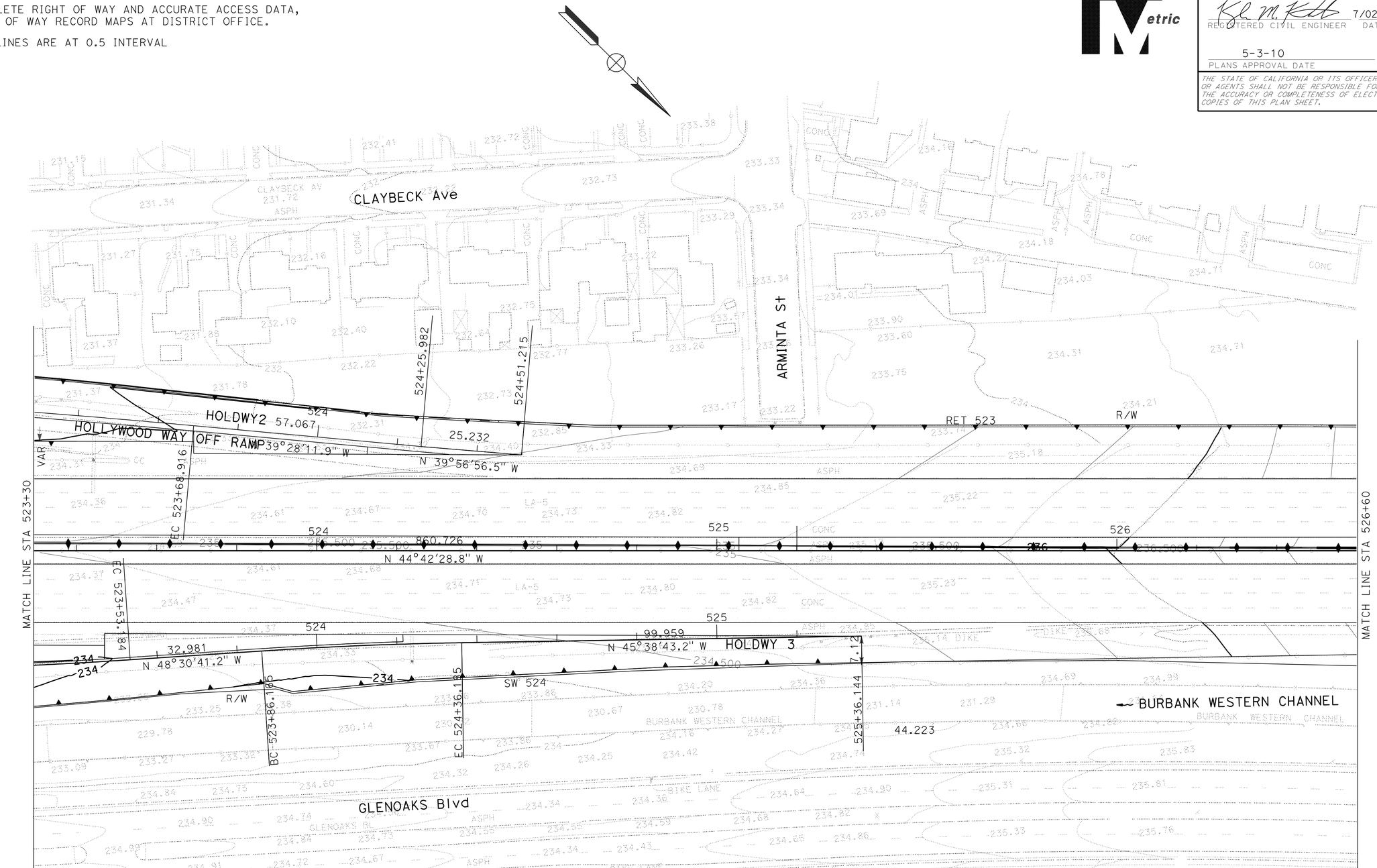

ALL DIMENSIONS ARE IN METERS
UNLESS OTHERWISE SHOWN

CONTOUR GRADING

SCALE 1:500

G-6

THIS PLAN ACCURATE FOR CONTOUR GRADING ONLY

CALCULATED-DESIGNED BY	DAWIT WORKU	REVISED BY	AE
CHECKED BY	JOSEPH KIBE	DATE REVISED	05-08
FUNCTIONAL SUPERVISOR	CELINA AVILES		

STATE OF CALIFORNIA - DEPARTMENT OF TRANSPORTATION
Caltrans
DESIGN

LAST REVISION 02-22-08
DATE PLOTTED => 03-MAY-2010
TIME PLOTTED => 12:55

Dist	COUNTY	ROUTE	KILOMETER POST TOTAL PROJECT	SHEET No.	TOTAL SHEETS
07	LA	5	50.8/58.0	110	869

REGISTERED CIVIL ENGINEER 7/02/08 DATE

5-3-10
PLANS APPROVAL DATE

REGISTERED PROFESSIONAL ENGINEER KYLE M KUNITAKE No. 63726 Exp. 9/30/10 CIVIL STATE OF CALIFORNIA

THE STATE OF CALIFORNIA OR ITS OFFICERS OR AGENTS SHALL NOT BE RESPONSIBLE FOR THE ACCURACY OR COMPLETENESS OF ELECTRONIC COPIES OF THIS PLAN SHEET.

Caltrans Metric

NOTES:

1. FOR COMPLETE RIGHT OF WAY AND ACCURATE ACCESS DATA, SEE RIGHT OF WAY RECORD MAPS AT DISTRICT OFFICE.
2. CONTOUR LINES ARE AT 0.5 INTERVAL

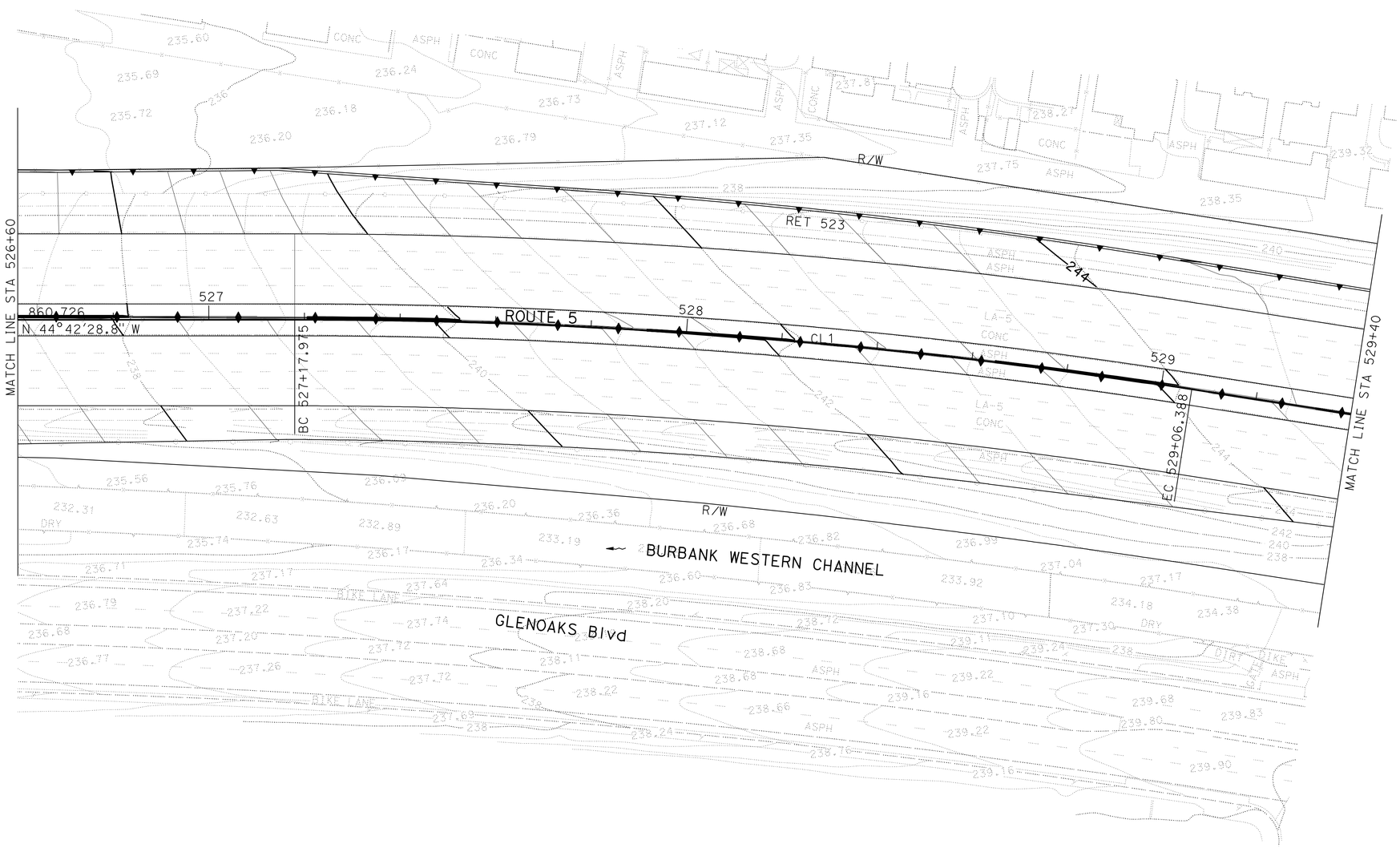

ALL DIMENSIONS ARE IN METERS
UNLESS OTHERWISE SHOWN

CONTOUR GRADING

SCALE 1:500

G-7

THIS PLAN ACCURATE FOR CONTOUR GRADING ONLY

STATE OF CALIFORNIA - DEPARTMENT OF TRANSPORTATION
Caltrans OFFICE OF DESIGN D

FUNCTIONAL SUPERVISOR
CHOLIN VANAVALESES

CALCULATED-DESIGNED BY DAWIT WORKU
CHECKED BY JOSEPH KIBE

REVISED BY AE
DATE REVISED 05-08

LAST REVISION 02-22-08
DATE PLOTTED => 03-MAY-2010
TIME PLOTTED => 12:55

Dist	COUNTY	ROUTE	KILOMETER POST TOTAL PROJECT	SHEET No.	TOTAL SHEETS
07	LA	5	50.8/58.0	111	869

REGISTERED CIVIL ENGINEER 7/02/08 DATE

5-3-10
PLANS APPROVAL DATE

REGISTERED PROFESSIONAL ENGINEER KYLE M KUNITAKE No. 63726 Exp. 9/30/10 CIVIL STATE OF CALIFORNIA

THE STATE OF CALIFORNIA OR ITS OFFICERS OR AGENTS SHALL NOT BE RESPONSIBLE FOR THE ACCURACY OR COMPLETENESS OF ELECTRONIC COPIES OF THIS PLAN SHEET.

Caltrans Metric

NOTES:

1. FOR COMPLETE RIGHT OF WAY AND ACCURATE ACCESS DATA, SEE RIGHT OF WAY RECORD MAPS AT DISTRICT OFFICE.
2. CONTOUR LINES ARE AT 0.5 INTERVAL

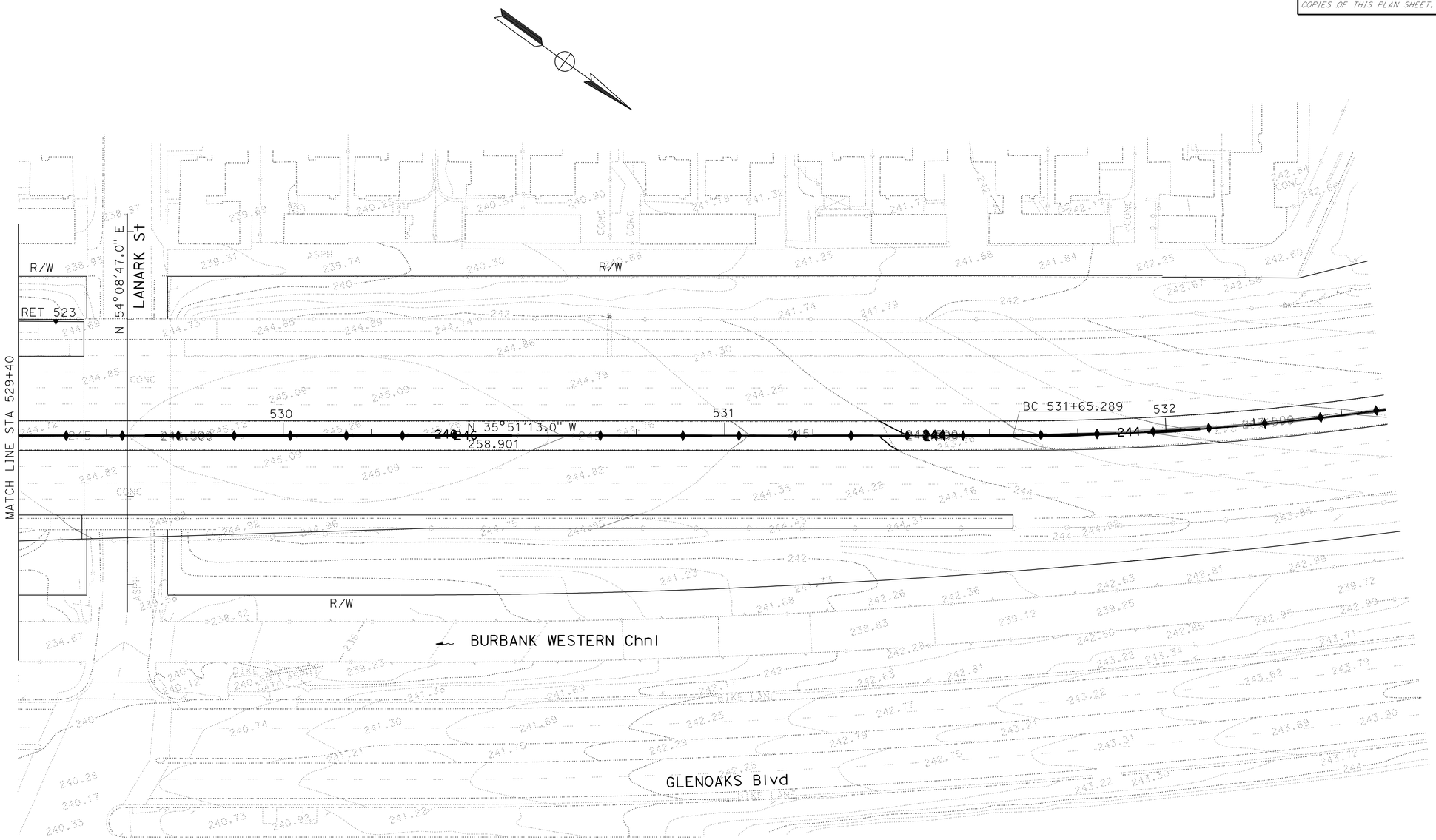

ALL DIMENSIONS ARE IN METERS
UNLESS OTHERWISE SHOWN

CONTOUR GRADING

SCALE 1:500

G-8

THIS PLAN ACCURATE FOR CONTOUR GRADING ONLY

STATE OF CALIFORNIA - DEPARTMENT OF TRANSPORTATION
Caltrans DESIGN

FUNCTIONAL SUPERVISOR: CELINA AVILES
CALCULATED-DESIGNED BY: DAWIT WORKU
CHECKED BY: JOSEPH KIBE
REVISED BY: AE
DATE REVISED: 05-08

LAST REVISION 02-22-08
DATE PLOTTED => 03-MAY-2010
TIME PLOTTED => 12:56

Dist	COUNTY	ROUTE	KILOMETER POST TOTAL PROJECT	SHEET No.	TOTAL SHEETS
07	LA	5	50.8/58.0	112	869

REGISTERED CIVIL ENGINEER 7/02/08 DATE

5-3-10
PLANS APPROVAL DATE

REGISTERED PROFESSIONAL ENGINEER KYLE M KUNITAKE No. 63726 Exp. 9/30/10 CIVIL STATE OF CALIFORNIA

THE STATE OF CALIFORNIA OR ITS OFFICERS OR AGENTS SHALL NOT BE RESPONSIBLE FOR THE ACCURACY OR COMPLETENESS OF ELECTRONIC COPIES OF THIS PLAN SHEET.

Caltrans Metric

NOTES:

1. FOR COMPLETE RIGHT OF WAY AND ACCURATE ACCESS DATA, SEE RIGHT OF WAY RECORD MAPS AT DISTRICT OFFICE.
2. CONTOUR LINES ARE AT 0.5 INTERVAL

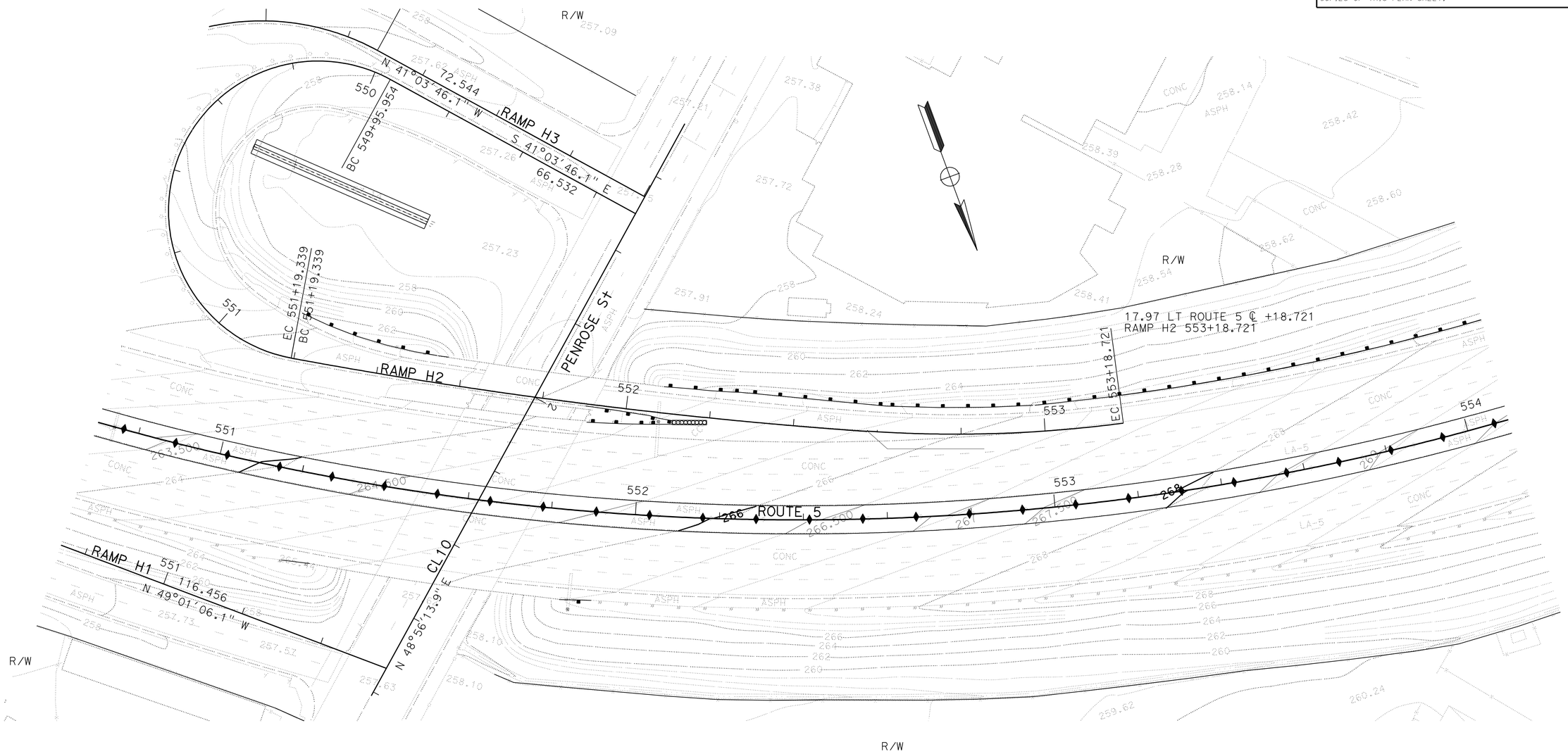

ALL DIMENSIONS ARE IN METERS
UNLESS OTHERWISE SHOWN

CONTOUR GRADING

SCALE 1:500

G-9

THIS PLAN ACCURATE FOR CONTOUR GRADING ONLY

STATE OF CALIFORNIA - DEPARTMENT OF TRANSPORTATION
Caltrans
DESIGN

FUNCTIONAL SUPERVISOR: CELINA AVILES
CALCULATED-DESIGNED BY: DAWIT WORKU
CHECKED BY: JOSEPH KIBE
REVISED BY: AE
DATE REVISED: 05-08

LAST REVISION 02-22-08
DATE PLOTTED => 03-MAY-2010
TIME PLOTTED => 12:56

Dist	COUNTY	ROUTE	KILOMETER POST TOTAL PROJECT	SHEET No.	TOTAL SHEETS
07	LA	5	50.8/58.0	113	869

REGISTERED CIVIL ENGINEER 7/02/08 DATE

5-3-10
PLANS APPROVAL DATE

REGISTERED PROFESSIONAL ENGINEER KYLE M KUNITAKE No. 63726 Exp. 9/30/10 CIVIL STATE OF CALIFORNIA

THE STATE OF CALIFORNIA OR ITS OFFICERS OR AGENTS SHALL NOT BE RESPONSIBLE FOR THE ACCURACY OR COMPLETENESS OF ELECTRONIC COPIES OF THIS PLAN SHEET.

Caltrans Metric

NOTES:

1. FOR COMPLETE RIGHT OF WAY AND ACCURATE ACCESS DATA, SEE RIGHT OF WAY RECORD MAPS AT DISTRICT OFFICE.
2. CONTOUR LINES ARE AT 0.5 INTERVAL

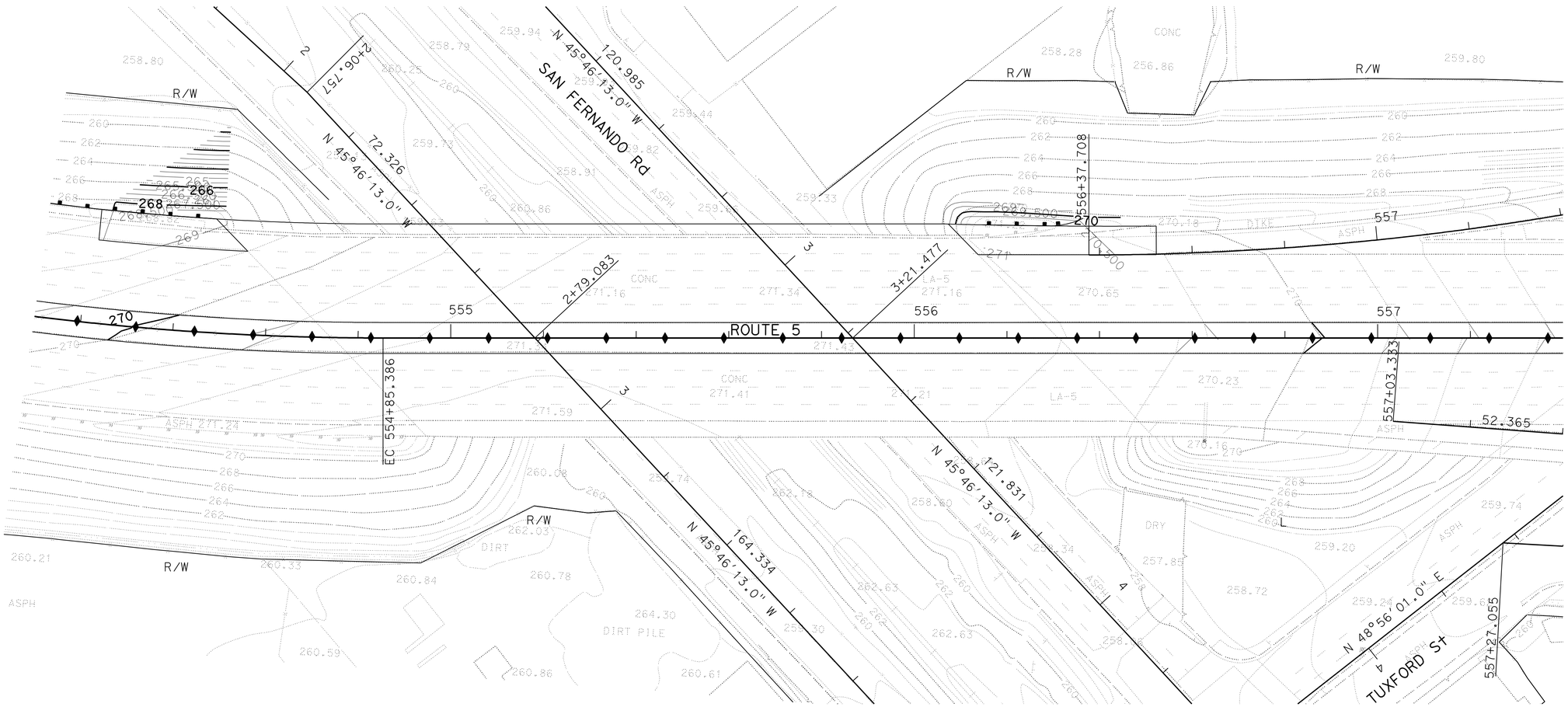

ALL DIMENSIONS ARE IN METERS
UNLESS OTHERWISE SHOWN

CONTOUR GRADING

SCALE 1:500

G-10

THIS PLAN ACCURATE FOR CONTOUR GRADING ONLY

STATE OF CALIFORNIA - DEPARTMENT OF TRANSPORTATION
Caltrans
DESIGN

FUNCTIONAL SUPERVISOR: CELINA AVILES
CALCULATED-DESIGNED BY: DAWIT WORKU
CHECKED BY: JOSEPH KIBE
REVISED BY: AE
DATE REVISED: 05-08

LAST REVISION 02-22-08
DATE PLOTTED => 03-MAY-2010
TIME PLOTTED => 12:56

Dist	COUNTY	ROUTE	KILOMETER POST TOTAL PROJECT	SHEET No.	TOTAL SHEETS
07	LA	5	50.8/58.0	114	869

REGISTERED CIVIL ENGINEER 7/02/08 DATE

5-3-10
PLANS APPROVAL DATE

REGISTERED PROFESSIONAL ENGINEER KYLE M KUNITAKE No. 63726 Exp. 9/30/10 CIVIL STATE OF CALIFORNIA

THE STATE OF CALIFORNIA OR ITS OFFICERS OR AGENTS SHALL NOT BE RESPONSIBLE FOR THE ACCURACY OR COMPLETENESS OF ELECTRONIC COPIES OF THIS PLAN SHEET.

Caltrans Metric

NOTES:

1. FOR COMPLETE RIGHT OF WAY AND ACCURATE ACCESS DATA, SEE RIGHT OF WAY RECORD MAPS AT DISTRICT OFFICE.
2. CONTOUR LINES ARE AT 0.5 INTERVAL

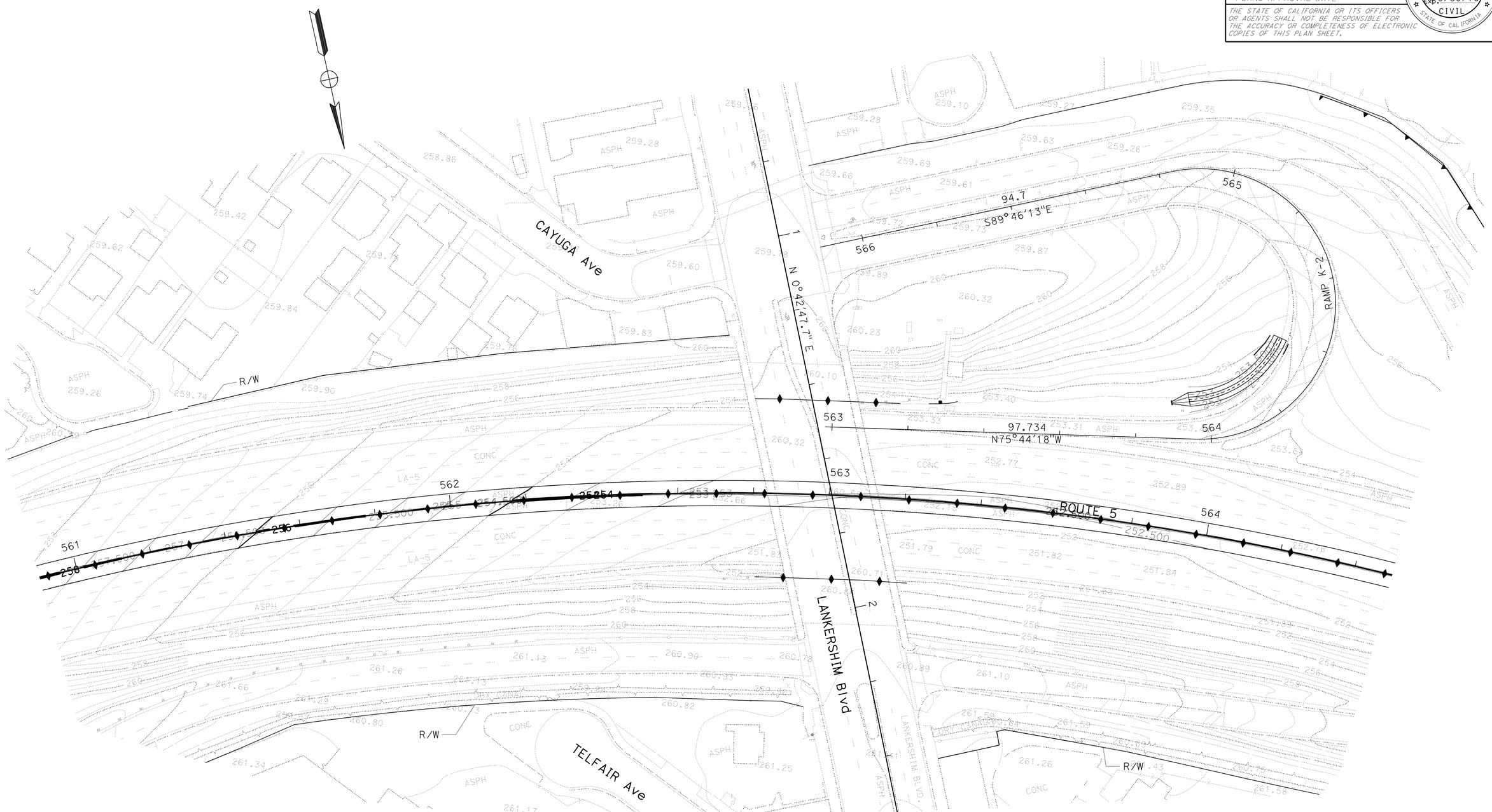

ALL DIMENSIONS ARE IN METERS
UNLESS OTHERWISE SHOWN

CONTOUR GRADING

SCALE 1:500

G-11

THIS PLAN ACCURATE FOR CONTOUR GRADING ONLY

STATE OF CALIFORNIA - DEPARTMENT OF TRANSPORTATION
Caltrans
DESIGN

FUNCTIONAL SUPERVISOR: CELINA AVILES
CALCULATED-DESIGNED BY: DAWIT WORKU
CHECKED BY: JOSEPH KIBE
REVISED BY: AE
DATE REVISED: 05-08

LAST REVISION 02-22-08
DATE PLOTTED => 03-MAY-2010
TIME PLOTTED => 12:56

Dist	COUNTY	ROUTE	KILOMETER POST TOTAL PROJECT	SHEET No.	TOTAL SHEETS
07	LA	5	50.8/58.0	115	869

REGISTERED CIVIL ENGINEER 7/02/08 DATE

5-3-10
PLANS APPROVAL DATE

REGISTERED PROFESSIONAL ENGINEER KYLE M KUNITAKE No. 63726 Exp. 9/30/10 CIVIL STATE OF CALIFORNIA

THE STATE OF CALIFORNIA OR ITS OFFICERS OR AGENTS SHALL NOT BE RESPONSIBLE FOR THE ACCURACY OR COMPLETENESS OF ELECTRONIC COPIES OF THIS PLAN SHEET.

Caltrans Metric

NOTES:

1. FOR COMPLETE RIGHT OF WAY AND ACCURATE ACCESS DATA, SEE RIGHT OF WAY RECORD MAPS AT DISTRICT OFFICE.
2. CONTOUR LINES ARE AT 0.5 INTERVAL

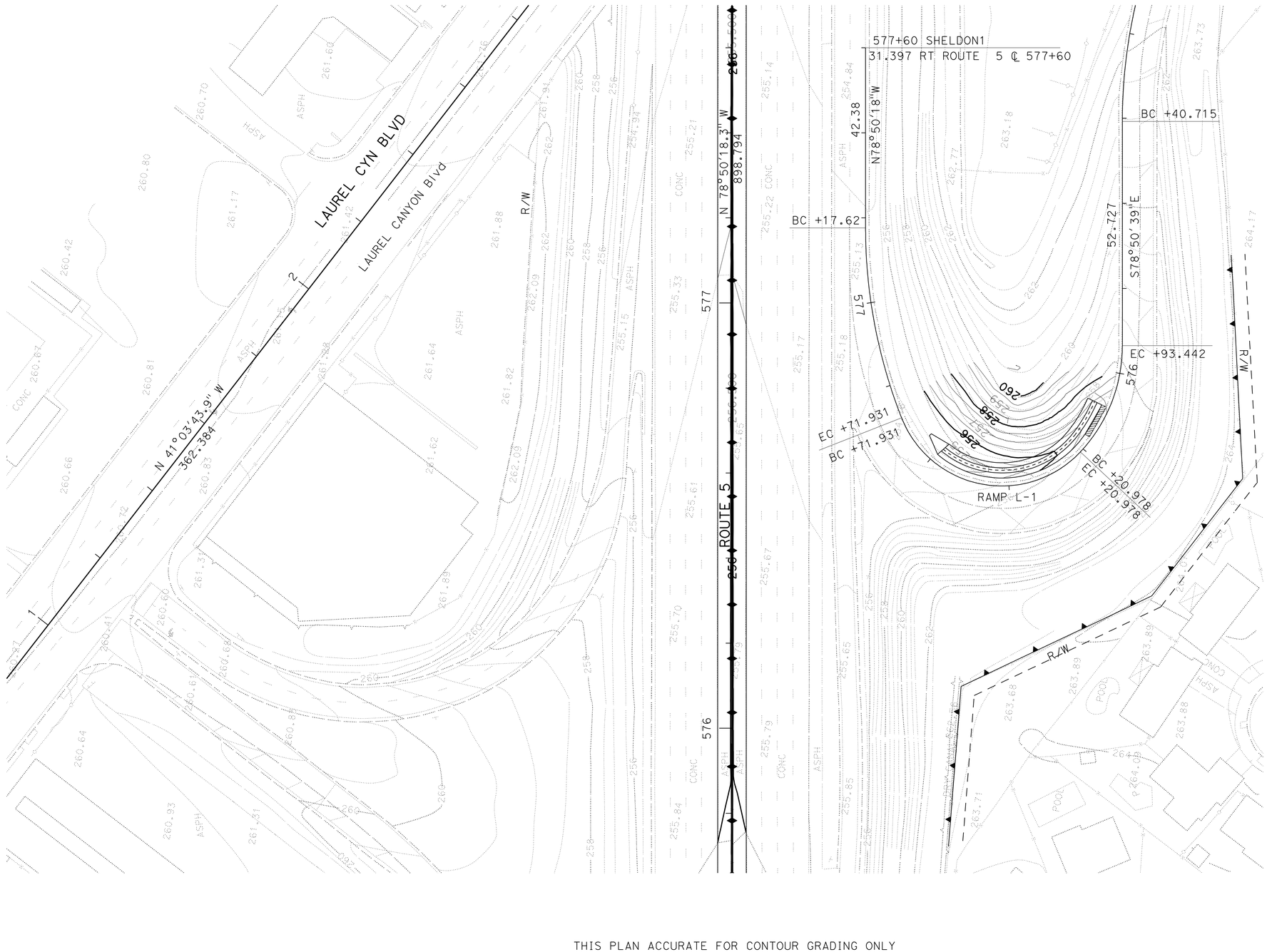

ALL DIMENSIONS ARE IN METERS
UNLESS OTHERWISE SHOWN

CONTOUR GRADING

SCALE 1:500

G-12

THIS PLAN ACCURATE FOR CONTOUR GRADING ONLY

STATE OF CALIFORNIA - DEPARTMENT OF TRANSPORTATION
Caltrans
DESIGN

FUNCTIONAL SUPERVISOR: CELINA AVILES
CALCULATED-DESIGNED BY: DAWIT WORKU
CHECKED BY: JOSEPH KIBE
REVISED BY: AE
DATE REVISED: 05-08

LAST REVISION 02-22-08
DATE PLOTTED => 03-MAY-2010
TIME PLOTTED => 12:56

Dist	COUNTY	ROUTE	KILOMETER POST TOTAL PROJECT	SHEET No.	TOTAL SHEETS
07	LA	5	50.8/58.0	116	869

REGISTERED CIVIL ENGINEER 07/07/08 DATE

5-3-10
PLANS APPROVAL DATE

REGISTERED PROFESSIONAL ENGINEER BALDEV K. BHALLA No. 34350 Exp. 09/30/11 CIVIL STATE OF CALIFORNIA

THE STATE OF CALIFORNIA OR ITS OFFICERS OR AGENTS SHALL NOT BE RESPONSIBLE FOR THE ACCURACY OR COMPLETENESS OF ELECTRONIC COPIES OF THIS PLAN SHEET.

Caltrans Metric

ABBREVIATIONS:

GSRD - GROSS SOLIDS REMOVAL DEVICE

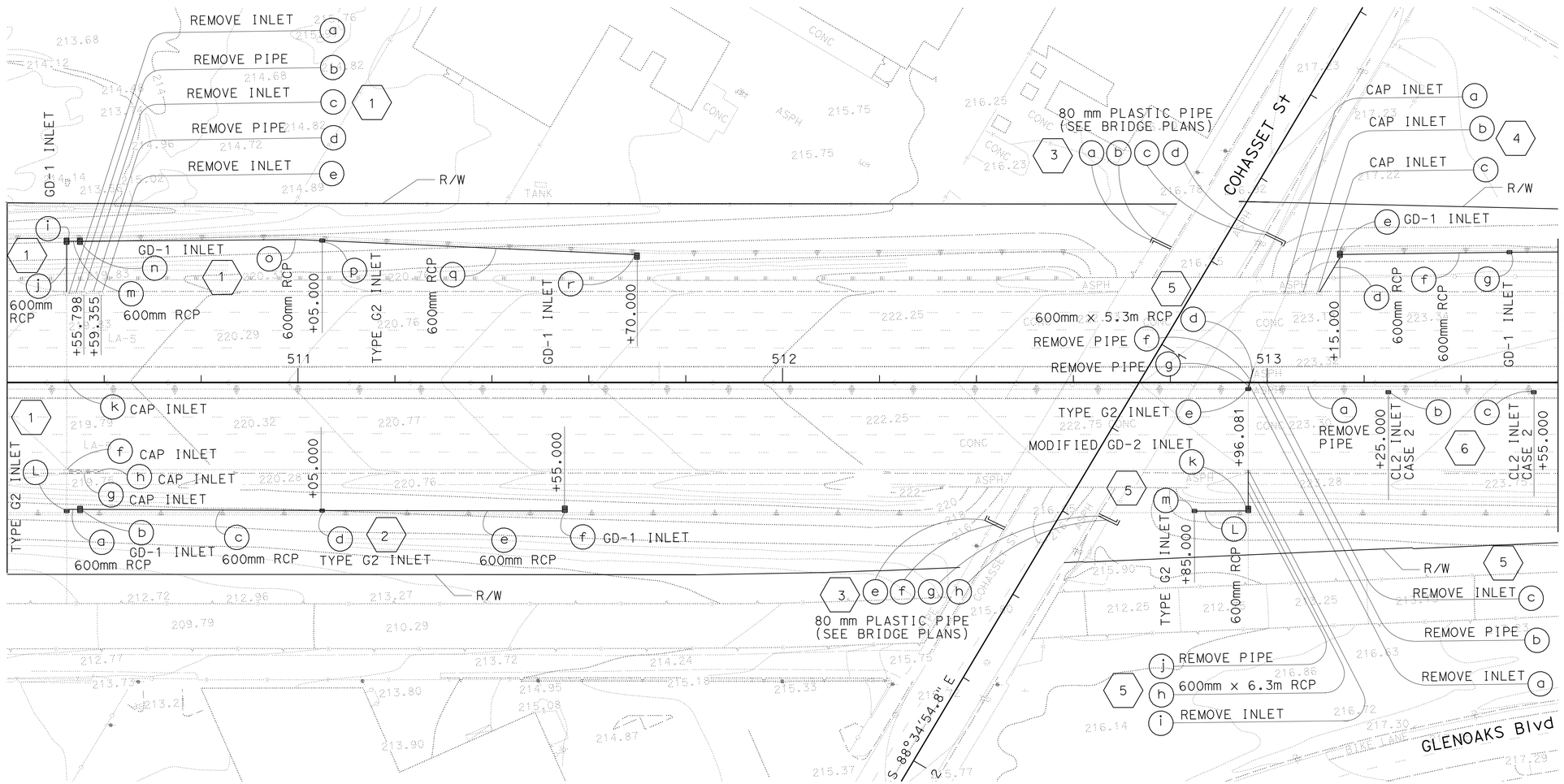

THIS PLAN ACCURATE FOR DRAINAGE WORK ONLY

DRAINAGE PLAN

SCALE 1:500

D-1

REVISED BY	DATE REVISED

CALCULATED-DESIGNED BY: S. THAI
CHECKED BY: C. NGUYEN
FUNCTIONAL SUPERVISOR: DAVE BHALLA

STATE OF CALIFORNIA - DEPARTMENT OF TRANSPORTATION
Caltrans
HYDRAULICS

LAST REVISION 00-00-00
DATE PLOTTED => 03-MAY-2010
TIME PLOTTED => 12:56

Dist	COUNTY	ROUTE	KILOMETER POST TOTAL PROJECT	SHEET No.	TOTAL SHEETS
07	LA	5	50.8/58.0	117	869

REGISTERED CIVIL ENGINEER DATE 07/07/08

5-3-10
PLANS APPROVAL DATE

REGISTERED PROFESSIONAL ENGINEER BALDEV K. BHALLA No. 34350 Exp. 09/30/11 CIVIL STATE OF CALIFORNIA

THE STATE OF CALIFORNIA OR ITS OFFICERS OR AGENTS SHALL NOT BE RESPONSIBLE FOR THE ACCURACY OR COMPLETENESS OF ELECTRONIC COPIES OF THIS PLAN SHEET.

Caltrans Metric

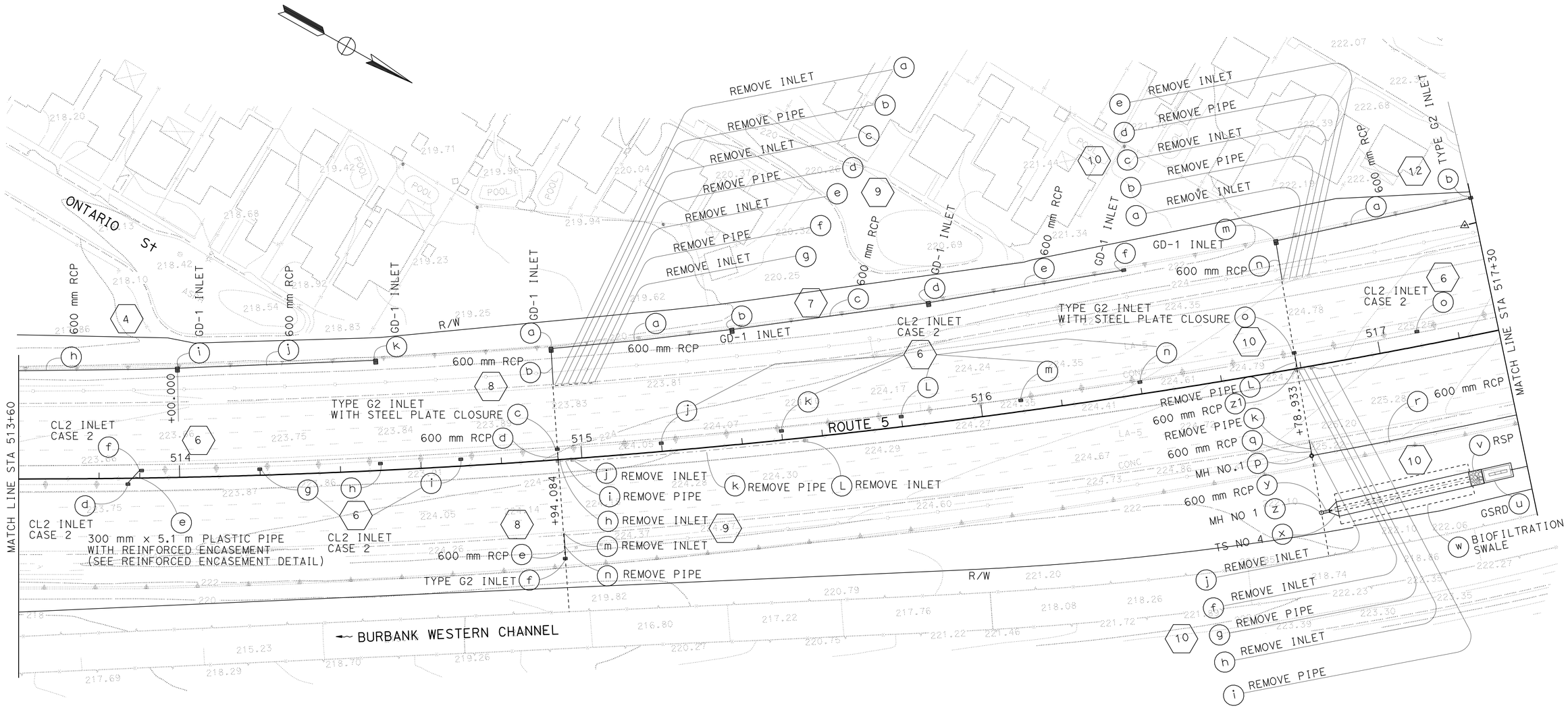

THIS PLAN ACCURATE FOR DRAINAGE WORK ONLY

DRAINAGE PLAN

SCALE 1:500

D-2

STATE OF CALIFORNIA - DEPARTMENT OF TRANSPORTATION
Caltrans **HYDRAULICS**

FUNCTIONAL SUPERVISOR: DAVE BHALLA
CALCULATED-DESIGNED BY: S. THAI
CHECKED BY: C. NGUYEN
REVISED BY / DATE REVISED

LAST REVISION 00-00-00 | DATE PLOTTED => 03-MAY-2010 | TIME PLOTTED => 12:57

BORDER LAST REVISED 3/1/2007 | RELATIVE BORDER SCALE IS IN MILLIMETERS 0 20 40 60 80 | USERNAME => trmariak | DGN FILE => 71218via002.dgn | CU 07314 | EA 1218V1

Dist	COUNTY	ROUTE	KILOMETER POST TOTAL PROJECT	SHEET No.	TOTAL SHEETS
07	LA	5	50.8/58.0	118	869

REGISTERED CIVIL ENGINEER 07/07/08 DATE

5-3-10
PLANS APPROVAL DATE

REGISTERED PROFESSIONAL ENGINEER BALDEV K. BHALLA No. 34350 Exp. 09/30/11 CIVIL STATE OF CALIFORNIA

THE STATE OF CALIFORNIA OR ITS OFFICERS OR AGENTS SHALL NOT BE RESPONSIBLE FOR THE ACCURACY OR COMPLETENESS OF ELECTRONIC COPIES OF THIS PLAN SHEET.

Caltrans Metric

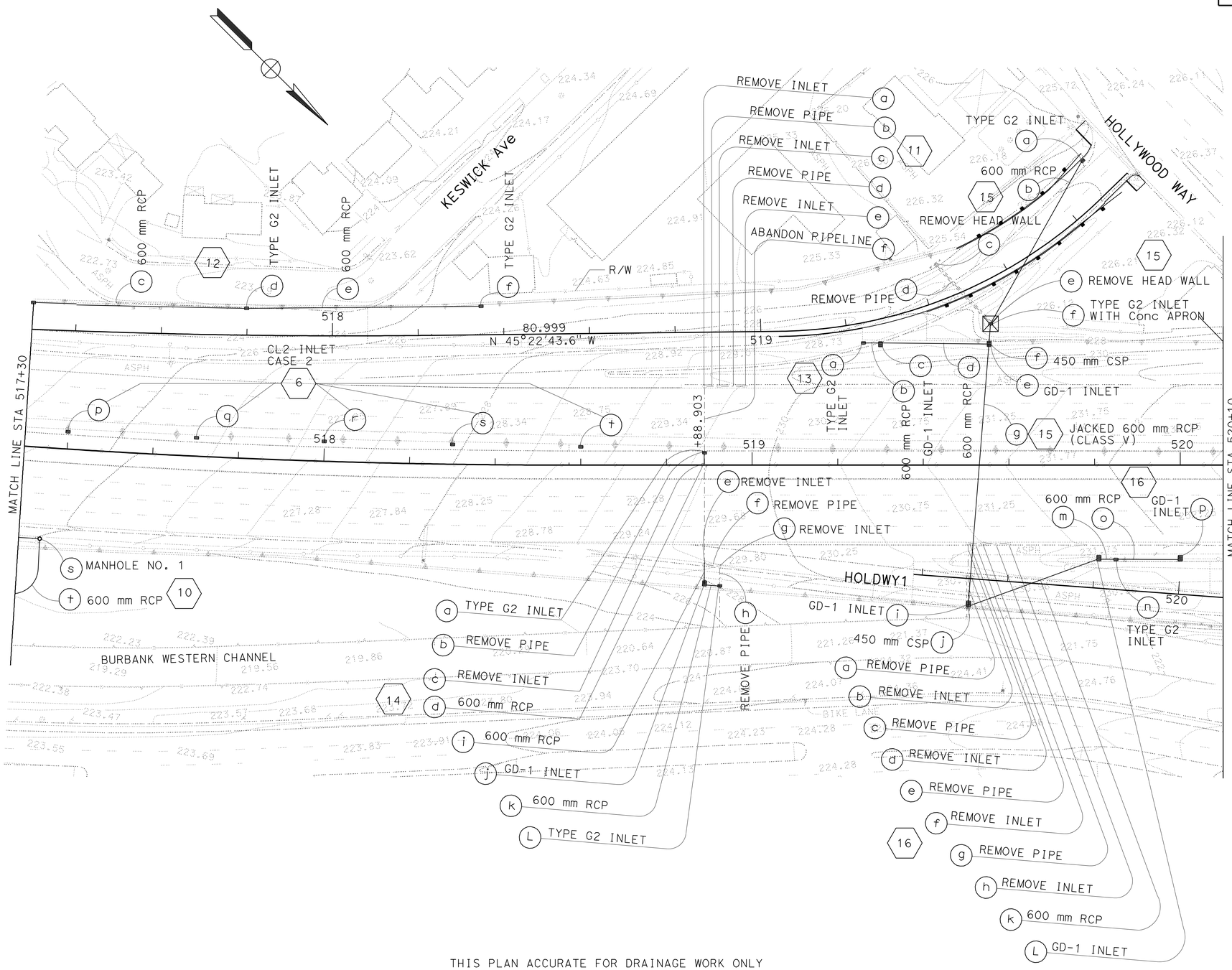

THIS PLAN ACCURATE FOR DRAINAGE WORK ONLY

DRAINAGE PLAN

SCALE 1:500

D-3

STATE OF CALIFORNIA - DEPARTMENT OF TRANSPORTATION
Caltrans
HYDRAULICS

FUNCTIONAL SUPERVISOR: DAVE BHALLA
CALCULATED-DESIGNED BY: S. THAI
CHECKED BY: C. NGUYEN
REVISED BY / DATE REVISED

LAST REVISION 00-00-00 | DATE PLOTTED => 03-MAY-2010 | TIME PLOTTED => 12:57

Dist	COUNTY	ROUTE	KILOMETER POST TOTAL PROJECT	SHEET No.	TOTAL SHEETS
07	LA	5	50.8/58.0	119	869

REGISTERED CIVIL ENGINEER 07/07/08 DATE

5-3-10
PLANS APPROVAL DATE

REGISTERED PROFESSIONAL ENGINEER BALDEV K. BHALLA No. 34350 Exp. 09/30/11 CIVIL STATE OF CALIFORNIA

THE STATE OF CALIFORNIA OR ITS OFFICERS OR AGENTS SHALL NOT BE RESPONSIBLE FOR THE ACCURACY OR COMPLETENESS OF ELECTRONIC COPIES OF THIS PLAN SHEET.

Caltrans Metric

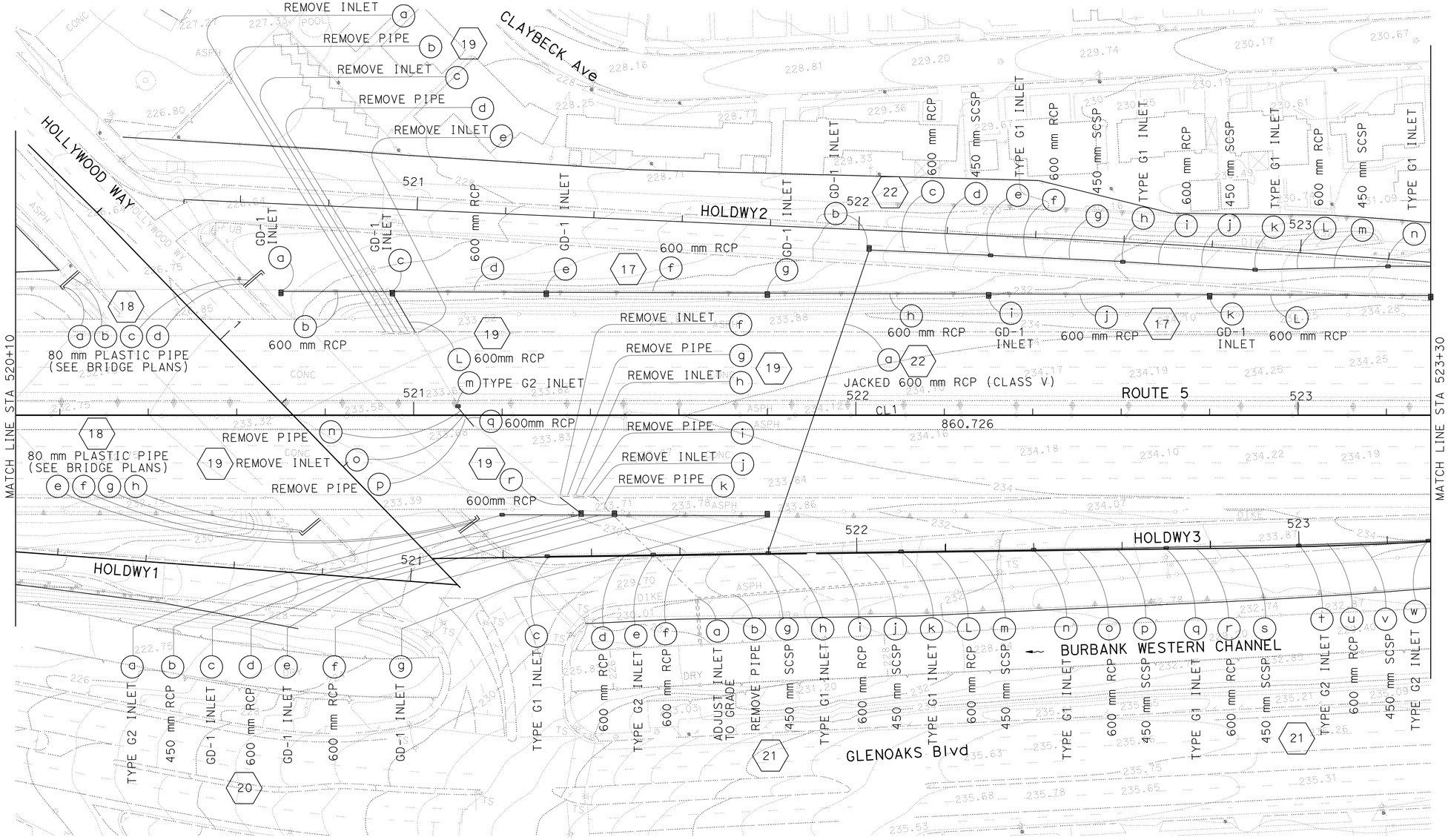

DRAINAGE PLAN

SCALE 1:500

THIS PLAN ACCURATE FOR DRAINAGE WORK ONLY

D-4

STATE OF CALIFORNIA - DEPARTMENT OF TRANSPORTATION
Caltrans
HYDRAULICS

FUNCTIONAL SUPERVISOR: DAVE BHALLA
CALCULATED-DESIGNED BY: S. THAI
CHECKED BY: C. NGUYEN
REVISED BY / DATE REVISED

LAST REVISION 00-00-00
DATE PLOTTED => 03-MAY-2010
TIME PLOTTED => 12:57

Dist	COUNTY	ROUTE	KILOMETER POST TOTAL PROJECT	SHEET No.	TOTAL SHEETS
07	LA	5	50.8/58.0	120	869

REGISTERED CIVIL ENGINEER 07/07/08 DATE

5-3-10
PLANS APPROVAL DATE

REGISTERED PROFESSIONAL ENGINEER BALDEV K. BHALLA No. 34350 Exp. 09/30/11 CIVIL STATE OF CALIFORNIA

THE STATE OF CALIFORNIA OR ITS OFFICERS OR AGENTS SHALL NOT BE RESPONSIBLE FOR THE ACCURACY OR COMPLETENESS OF ELECTRONIC COPIES OF THIS PLAN SHEET.

Caltrans Metric

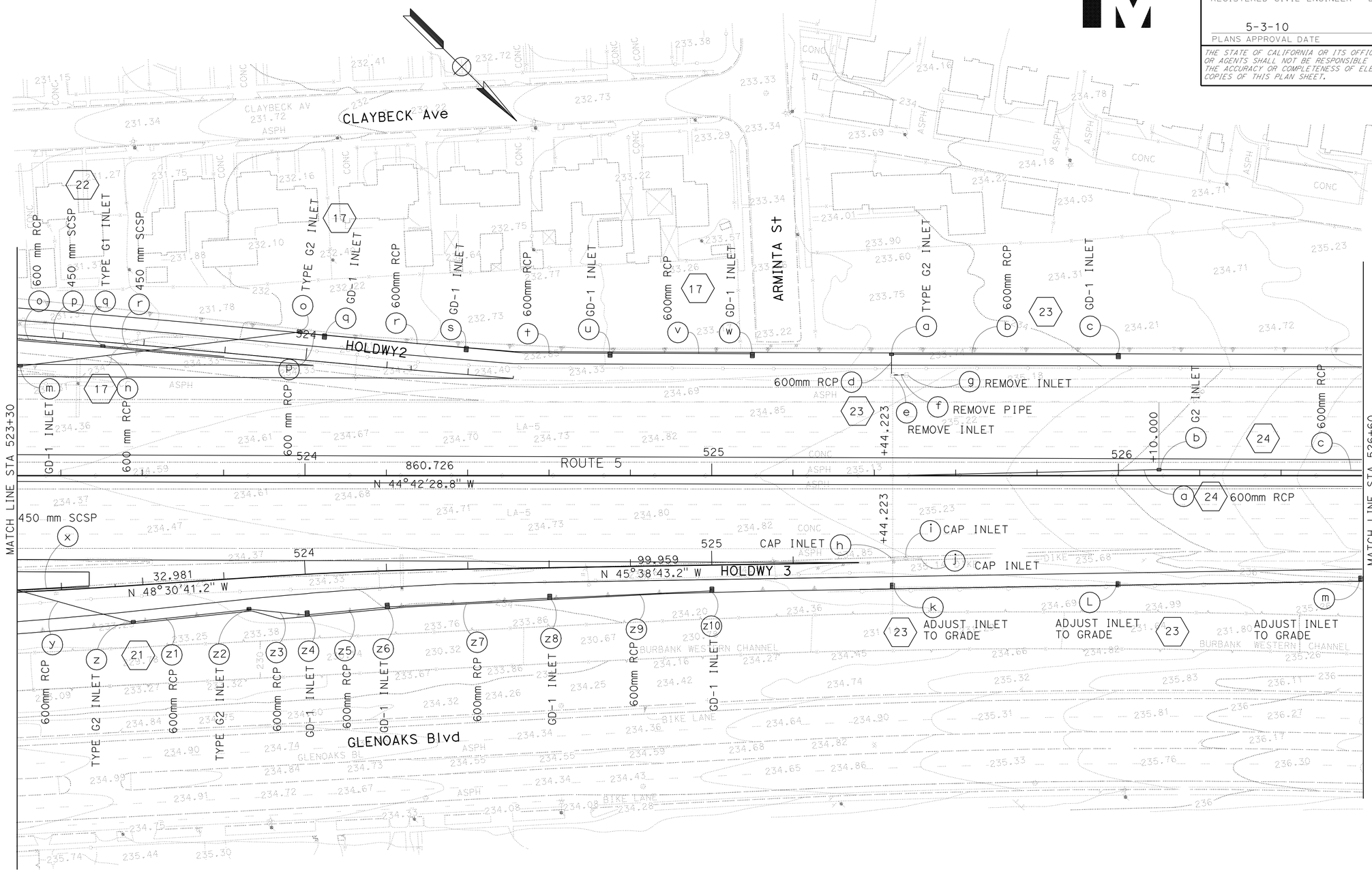

DRAINAGE PLAN

SCALE 1:500

D-5

THIS PLAN ACCURATE FOR DRAINAGE WORK ONLY

STATE OF CALIFORNIA - DEPARTMENT OF TRANSPORTATION
Caltrans
HYDRAULICS

FUNCTIONAL SUPERVISOR: DAVE BHALLA
CALCULATED-DESIGNED BY: S. THAI
CHECKED BY: C. NGUYEN
REVISED BY
DATE REVISED

LAST REVISION 00-00-00
DATE PLOTTED => 03-MAY-2010
TIME PLOTTED => 13:05

Dist	COUNTY	ROUTE	KILOMETER POST TOTAL PROJECT	SHEET No.	TOTAL SHEETS
07	LA	5	50.8/58.0	121	869

REGISTERED CIVIL ENGINEER DATE 07/07/08

5-3-10
PLANS APPROVAL DATE

REGISTERED PROFESSIONAL ENGINEER BALDEV K. BHALLA No. 34350 Exp. 09/30/11 CIVIL STATE OF CALIFORNIA

THE STATE OF CALIFORNIA OR ITS OFFICERS OR AGENTS SHALL NOT BE RESPONSIBLE FOR THE ACCURACY OR COMPLETENESS OF ELECTRONIC COPIES OF THIS PLAN SHEET.

Caltrans Metric

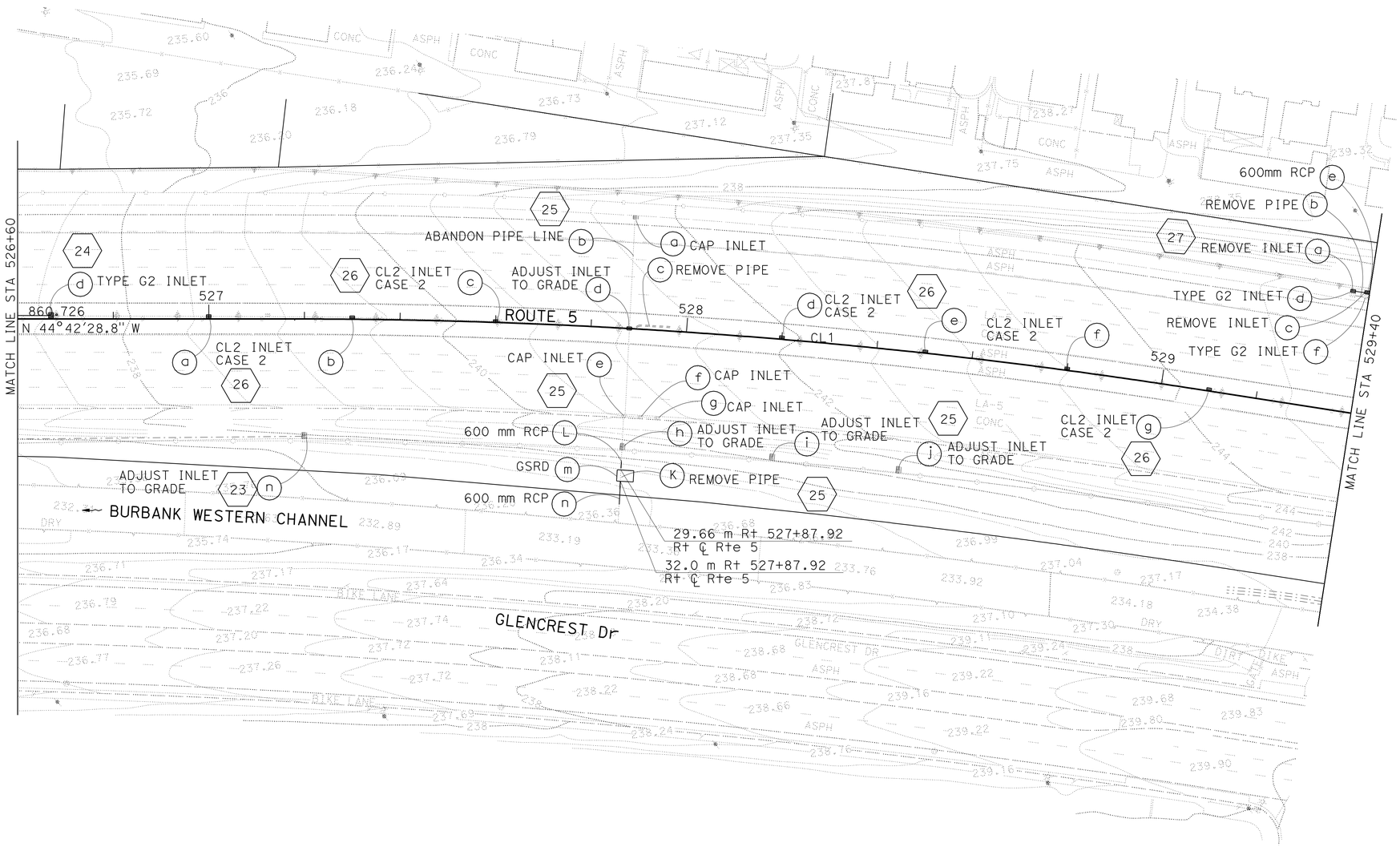

DRAINAGE PLAN

SCALE 1:500

D-6

THIS PLAN ACCURATE FOR DRAINAGE WORK ONLY

STATE OF CALIFORNIA - DEPARTMENT OF TRANSPORTATION
Caltrans
HYDRAULICS

FUNCTIONAL SUPERVISOR: DAVE BHALLA

CALCULATED-DESIGNED BY: S. THAI
CHECKED BY: C. NGUYEN

REVISED BY | DATE REVISED

LAST REVISION 00-00-00 | DATE PLOTTED => 03-MAY-2010 | TIME PLOTTED => 13:05

BORDER LAST REVISED 3/1/2007

RELATIVE BORDER SCALE IS IN MILLIMETERS 0 20 40 60 80

USERNAME => trmariak
DGN FILE => 71218via006.dgn

CU 07314

EA 1218V1

Dist	COUNTY	ROUTE	KILOMETER POST TOTAL PROJECT	SHEET No.	TOTAL SHEETS
07	LA	5	50.8/58.0	122	869

REGISTERED CIVIL ENGINEER DATE 07/07/08

5-3-10
PLANS APPROVAL DATE

REGISTERED PROFESSIONAL ENGINEER BALDEV K. BHALLA No. 34350 Exp. 09/30/11 CIVIL STATE OF CALIFORNIA

THE STATE OF CALIFORNIA OR ITS OFFICERS OR AGENTS SHALL NOT BE RESPONSIBLE FOR THE ACCURACY OR COMPLETENESS OF ELECTRONIC COPIES OF THIS PLAN SHEET.

Caltrans Metric

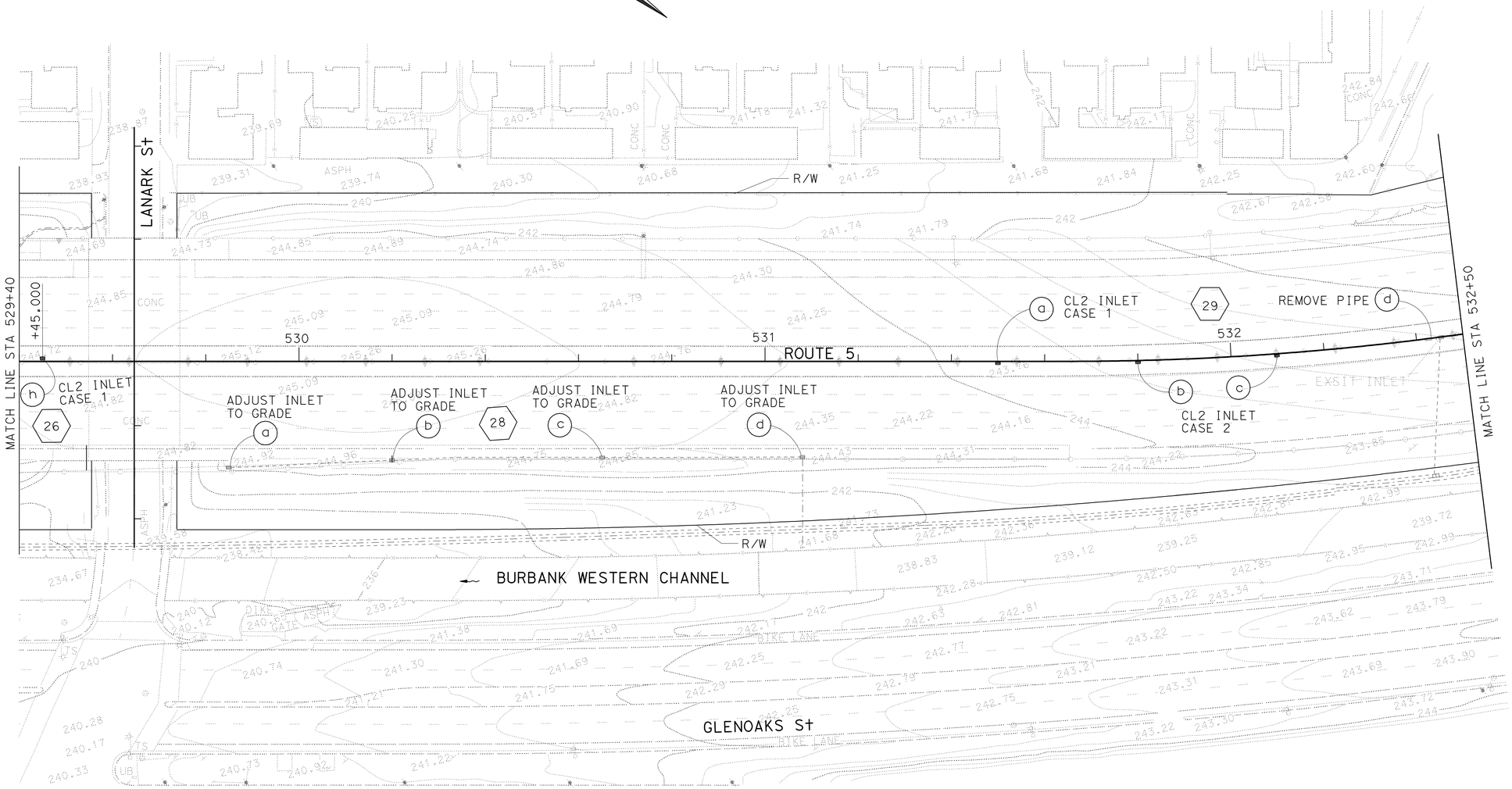

THIS PLAN ACCURATE FOR DRAINAGE WORK ONLY

DRAINAGE PLAN

SCALE 1:500

D-7

STATE OF CALIFORNIA - DEPARTMENT OF TRANSPORTATION
Caltrans HYDRAULICS

FUNCTIONAL SUPERVISOR: DAVE BHALLA
CALCULATED-DESIGNED BY: S. THAI
CHECKED BY: C. NGUYEN
REVISED BY / DATE REVISED

LAST REVISION 00-00-00 DATE PLOTTED => 03-MAY-2010 TIME PLOTTED => 13:06

Dist	COUNTY	ROUTE	KILOMETER POST TOTAL PROJECT	SHEET No.	TOTAL SHEETS
07	LA	5	50.8/58.0	123	869

REGISTERED CIVIL ENGINEER DATE 07/07/08

5-3-10
PLANS APPROVAL DATE

REGISTERED PROFESSIONAL ENGINEER
BALDEV K. BHALLA
No. 34350
Exp. 09/30/11
CIVIL
STATE OF CALIFORNIA

THE STATE OF CALIFORNIA OR ITS OFFICERS OR AGENTS SHALL NOT BE RESPONSIBLE FOR THE ACCURACY OR COMPLETENESS OF ELECTRONIC COPIES OF THIS PLAN SHEET.

Caltrans Metric

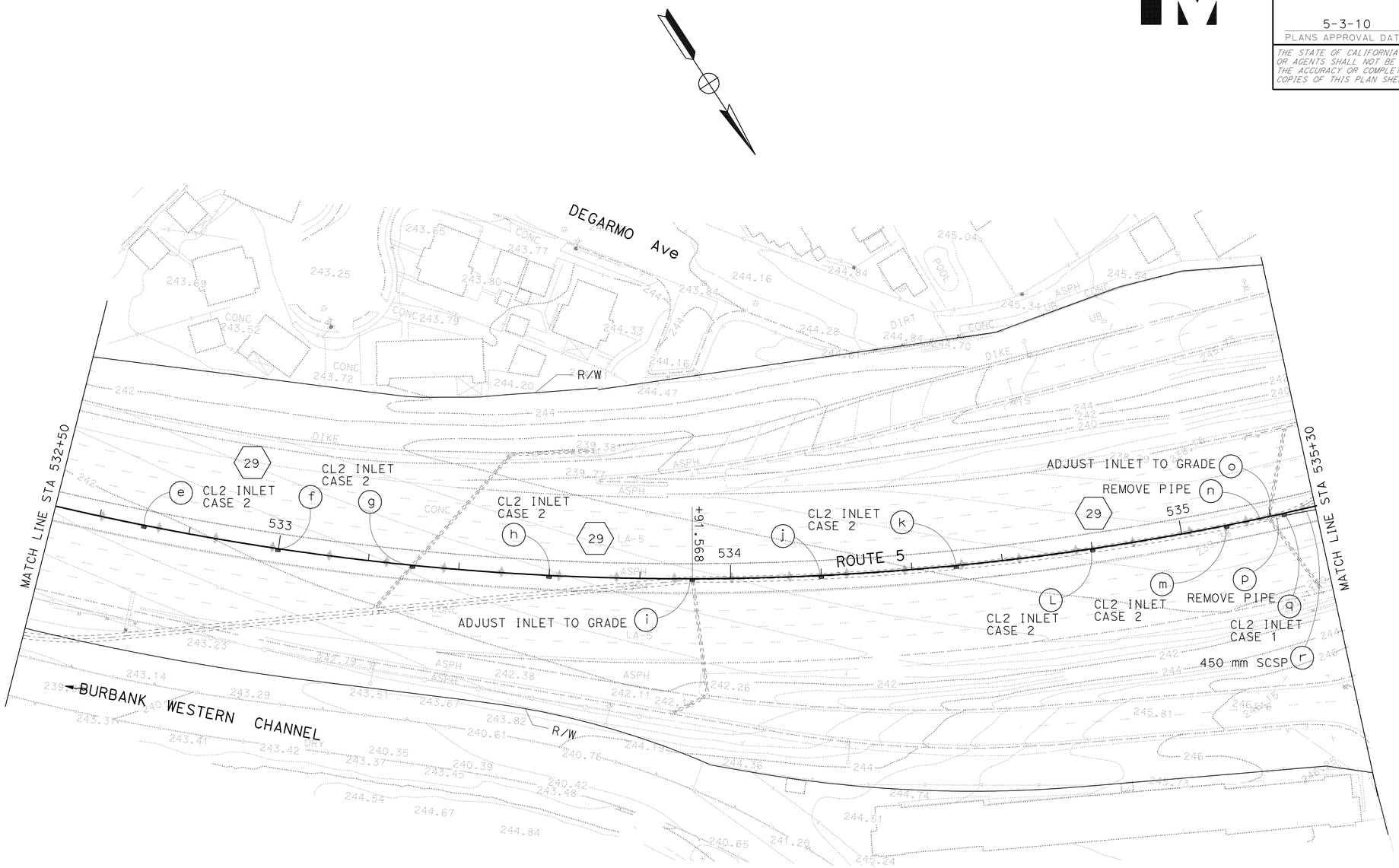

THIS PLAN ACCURATE FOR DRAINAGE WORK ONLY

DRAINAGE PLAN

SCALE 1:500

D-8

STATE OF CALIFORNIA - DEPARTMENT OF TRANSPORTATION
Caltrans **HYDRAULICS**

FUNCTIONAL SUPERVISOR: DAVE BHALLA
CALCULATED-DESIGNED BY: S. THAI
CHECKED BY: C. NGUYEN
REVISED BY / DATE REVISED

LAST REVISION 00-00-00
DATE PLOTTED => 03-MAY-2010
TIME PLOTTED => 13:06

Dist	COUNTY	ROUTE	KILOMETER POST TOTAL PROJECT	SHEET No.	TOTAL SHEETS
07	LA	5	50.8/58.0	124	869

REGISTERED CIVIL ENGINEER DATE 07/07/08

5-3-10
PLANS APPROVAL DATE

REGISTERED PROFESSIONAL ENGINEER
BALDEV K. BHALLA
No. 34350
Exp. 09/30/11
CIVIL
STATE OF CALIFORNIA

THE STATE OF CALIFORNIA OR ITS OFFICERS OR AGENTS SHALL NOT BE RESPONSIBLE FOR THE ACCURACY OR COMPLETENESS OF ELECTRONIC COPIES OF THIS PLAN SHEET.

Caltrans Metric

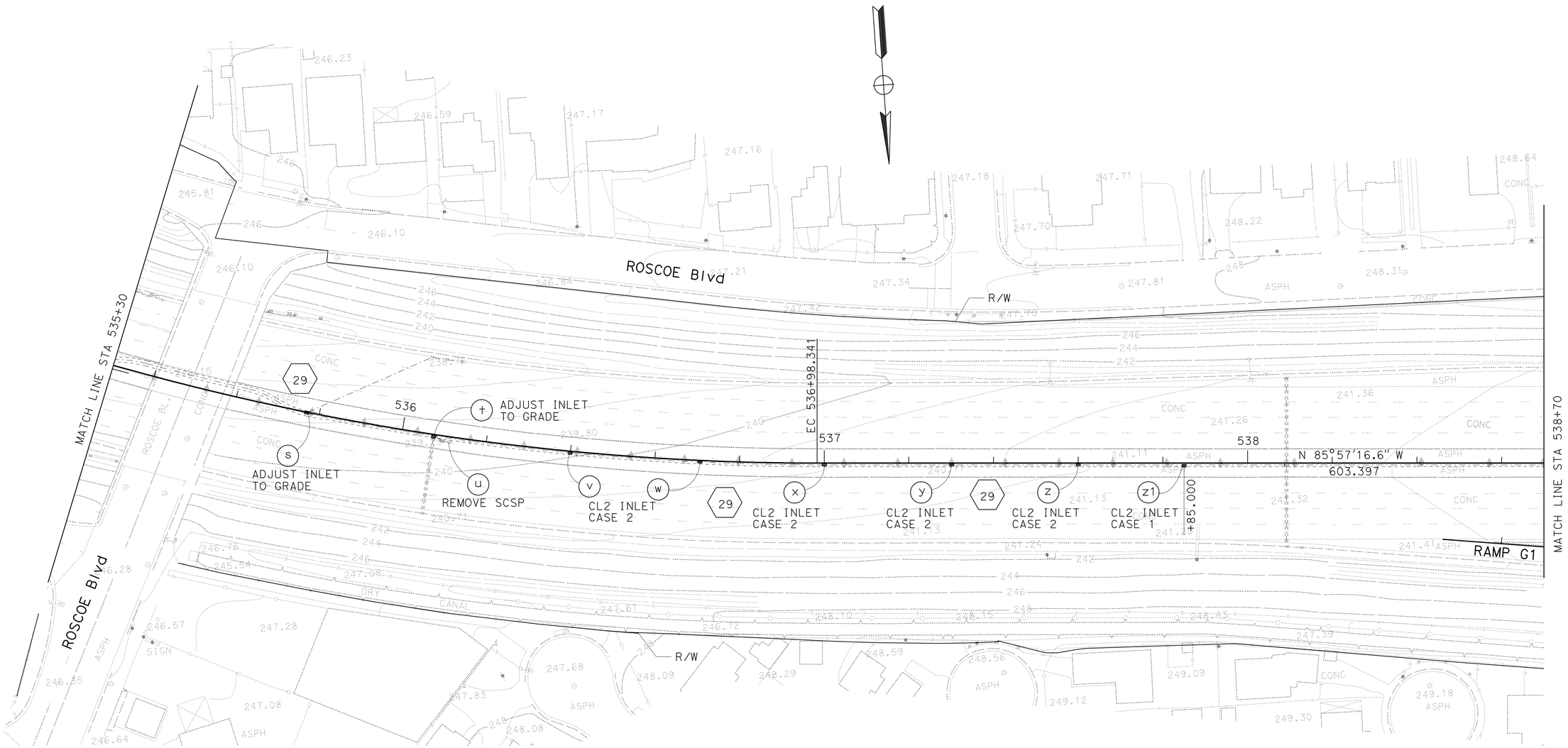

DRAINAGE PLAN

SCALE 1:500

D-9

THIS PLAN ACCURATE FOR DRAINAGE WORK ONLY

STATE OF CALIFORNIA - DEPARTMENT OF TRANSPORTATION
Caltrans
HYDRAULICS

FUNCTIONAL SUPERVISOR: DAVE BHALLA

CALCULATED-DESIGNED BY: S. THAI
CHECKED BY: C. NGUYEN

REVISED BY | DATE REVISED

LAST REVISION 00-00-00 | DATE PLOTTED => 03-MAY-2010 | TIME PLOTTED => 13:06

BORDER LAST REVISED 3/1/2007 | RELATIVE BORDER SCALE IS IN MILLIMETERS 0 20 40 60 80 | USERNAME => trmariak | DGN FILE => 71218via009.dgn | CU 07314 | EA 1218V1

Dist	COUNTY	ROUTE	KILOMETER POST TOTAL PROJECT	SHEET No.	TOTAL SHEETS
07	LA	5	50.8/58.0	125	869

REGISTERED CIVIL ENGINEER DATE 07/07/08

5-3-10
PLANS APPROVAL DATE

REGISTERED PROFESSIONAL ENGINEER BALDEV K. BHALLA No. 34350 Exp. 09/30/11 CIVIL STATE OF CALIFORNIA

THE STATE OF CALIFORNIA OR ITS OFFICERS OR AGENTS SHALL NOT BE RESPONSIBLE FOR THE ACCURACY OR COMPLETENESS OF ELECTRONIC COPIES OF THIS PLAN SHEET.

Caltrans Metric

CURVE DATA

No.	R	Δ	T	L
1	73.43	23°45'51"	15.45	30.46

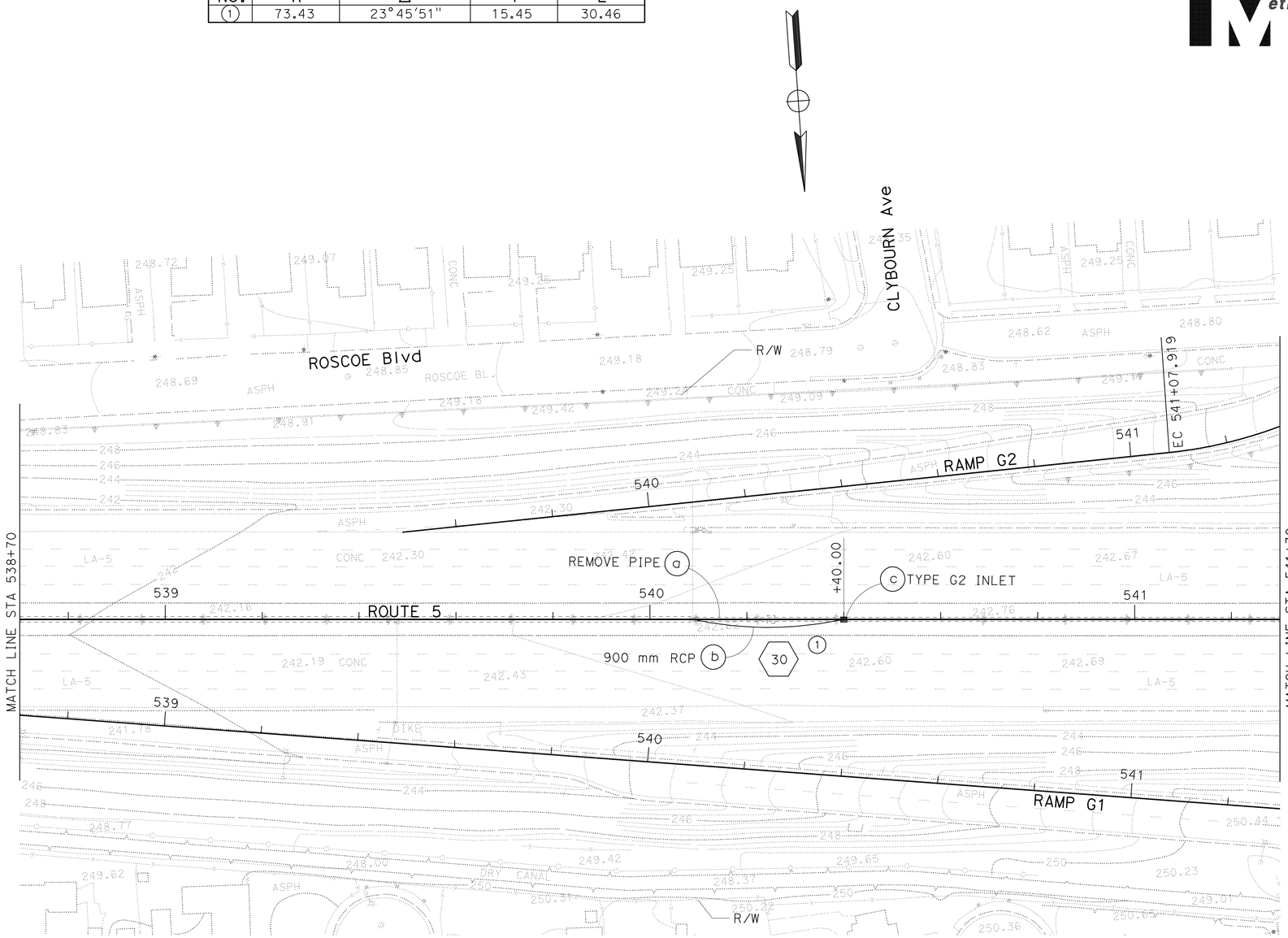

THIS PLAN ACCURATE FOR DRAINAGE WORK ONLY

DRAINAGE PLAN

SCALE 1:500

D-10

STATE OF CALIFORNIA - DEPARTMENT OF TRANSPORTATION
Caltrans
HYDRAULICS

FUNCTIONAL SUPERVISOR: DAVE BHALLA
CALCULATED-DESIGNED BY: S. THAI
CHECKED BY: C. NGUYEN
REVISED BY / DATE REVISED

LAST REVISION 00-00-00 | DATE PLOTTED => 03-MAY-2010 | TIME PLOTTED => 13:06

Dist	COUNTY	ROUTE	KILOMETER POST TOTAL PROJECT	SHEET No.	TOTAL SHEETS
07	LA	5	50.8/58.0	126	869

REGISTERED CIVIL ENGINEER DATE 07/07/08

5-3-10
PLANS APPROVAL DATE

REGISTERED PROFESSIONAL ENGINEER BALDEV K. BHALLA No. 34350 Exp. 09/30/11 CIVIL STATE OF CALIFORNIA

THE STATE OF CALIFORNIA OR ITS OFFICERS OR AGENTS SHALL NOT BE RESPONSIBLE FOR THE ACCURACY OR COMPLETENESS OF ELECTRONIC COPIES OF THIS PLAN SHEET.

Caltrans Metric

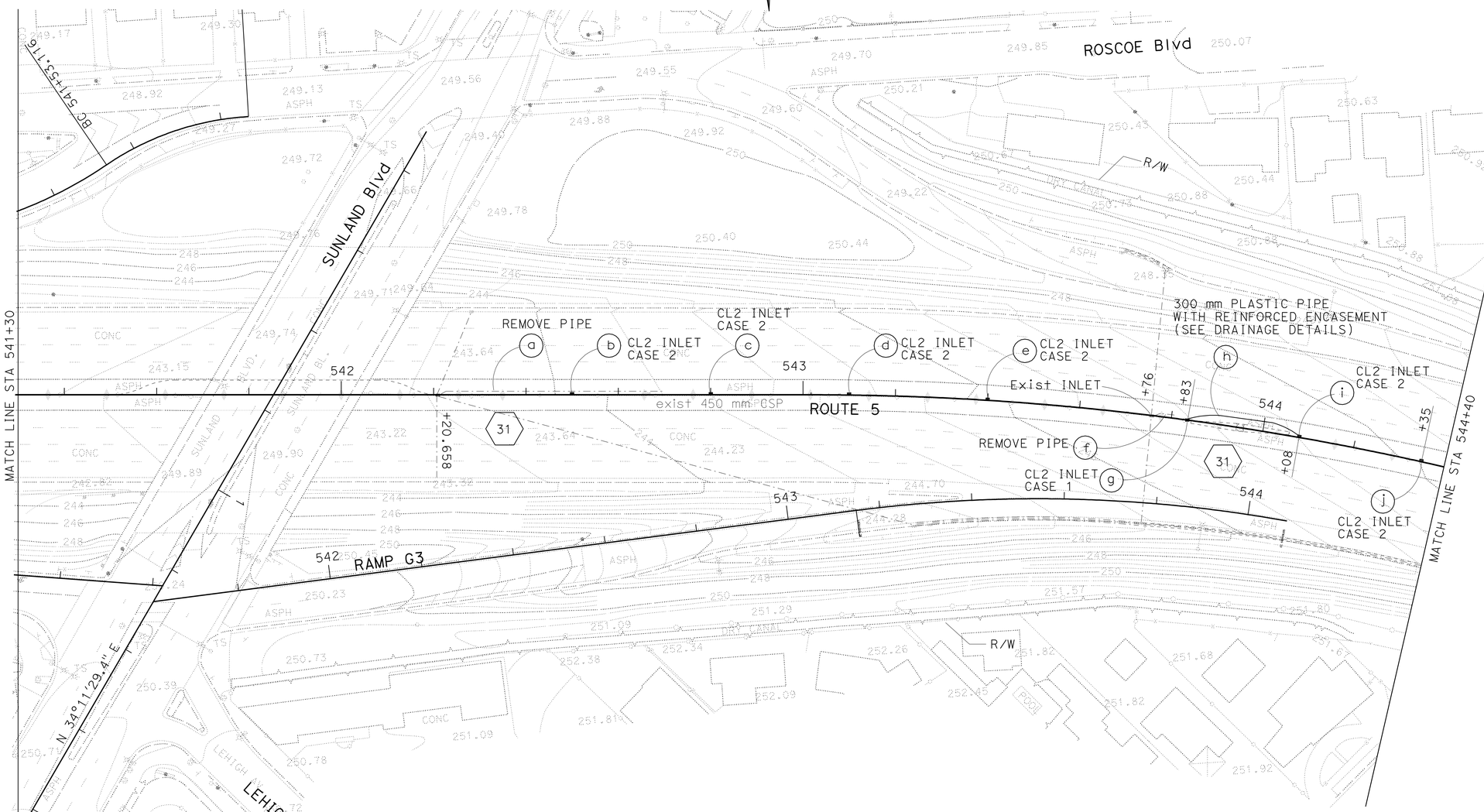

DRAINAGE PLAN

SCALE 1:500

D-11

THIS PLAN ACCURATE FOR DRAINAGE WORK ONLY

STATE OF CALIFORNIA - DEPARTMENT OF TRANSPORTATION
Caltrans HYDRAULICS

FUNCTIONAL SUPERVISOR: DAVE BHALLA

CALCULATED-DESIGNED BY: S. THAI
CHECKED BY: C. NGUYEN

REVISED BY / DATE REVISED

LAST REVISION 00-00-00 | DATE PLOTTED => 03-MAY-2010 | TIME PLOTTED => 13:06

Dist	COUNTY	ROUTE	KILOMETER POST TOTAL PROJECT	SHEET No.	TOTAL SHEETS
07	LA	5	50.8/58.0	127	869

REGISTERED CIVIL ENGINEER 07/07/08 DATE

5-3-10
PLANS APPROVAL DATE

REGISTERED PROFESSIONAL ENGINEER
BALDEV K. BHALLA
No. 34350
Exp. 09/30/11
CIVIL
STATE OF CALIFORNIA

THE STATE OF CALIFORNIA OR ITS OFFICERS OR AGENTS SHALL NOT BE RESPONSIBLE FOR THE ACCURACY OR COMPLETENESS OF ELECTRONIC COPIES OF THIS PLAN SHEET.

Caltrans Metric

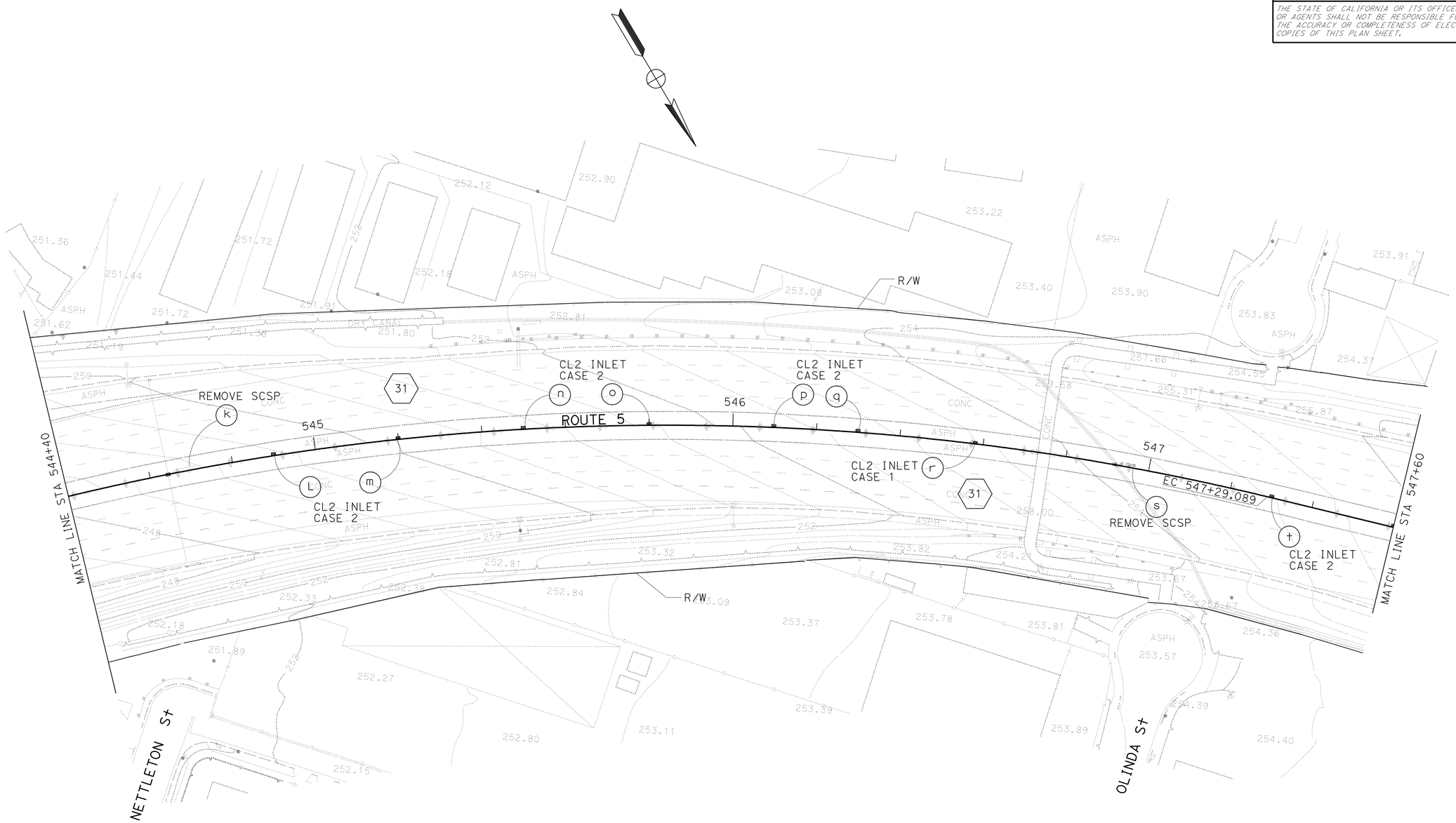

DRAINAGE PLAN

SCALE 1:500

D-12

THIS PLAN ACCURATE FOR DRAINAGE WORK ONLY

STATE OF CALIFORNIA - DEPARTMENT OF TRANSPORTATION
Caltrans
HYDRAULICS

FUNCTIONAL SUPERVISOR: DAVE BHALLA
CALCULATED-DESIGNED BY: S. THAI
CHECKED BY: C. NGUYEN
REVISED BY
DATE REVISED

LAST REVISION 00-00-00
DATE PLOTTED => 03-MAY-2010
TIME PLOTTED => 13:06

Dist	COUNTY	ROUTE	KILOMETER POST TOTAL PROJECT	SHEET No.	TOTAL SHEETS
07	LA	5	50.8/58.0	128	869

REGISTERED CIVIL ENGINEER DATE 07/07/08

5-3-10
PLANS APPROVAL DATE

REGISTERED PROFESSIONAL ENGINEER BALDEV K. BHALLA No. 34350 Exp. 09/30/11 CIVIL STATE OF CALIFORNIA

THE STATE OF CALIFORNIA OR ITS OFFICERS OR AGENTS SHALL NOT BE RESPONSIBLE FOR THE ACCURACY OR COMPLETENESS OF ELECTRONIC COPIES OF THIS PLAN SHEET.

Caltrans Metric

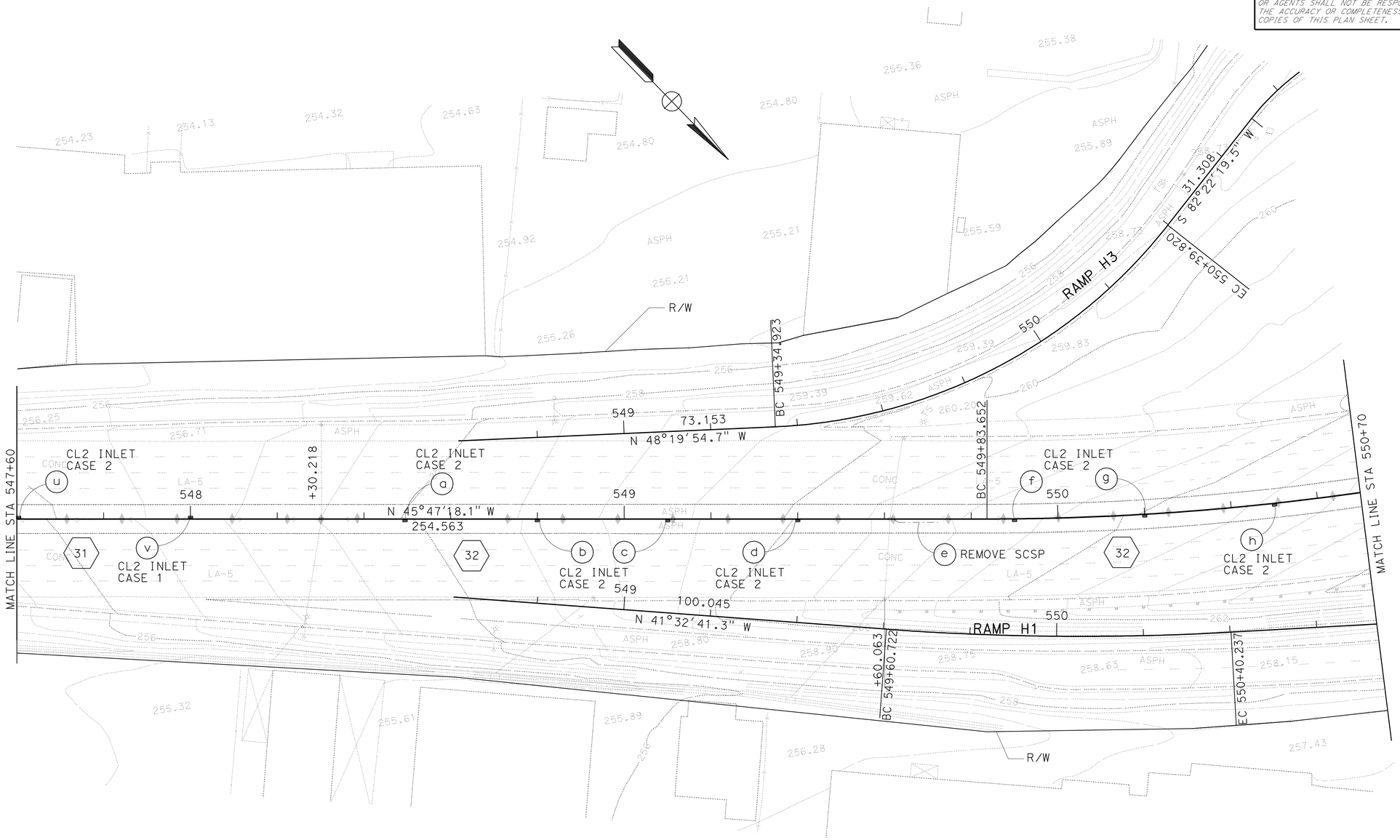

DRAINAGE PLAN

SCALE 1:500

D-13

THIS PLAN ACCURATE FOR DRAINAGE WORK ONLY

STATE OF CALIFORNIA - DEPARTMENT OF TRANSPORTATION
Caltrans
HYDRAULICS

FUNCTIONAL SUPERVISOR: DAVE BHALLA

CALCULATED-DESIGNED BY: S. THAI
CHECKED BY: C. NGUYEN

REVISED BY
DATE REVISED

LAST REVISION 00-00-00
DATE PLOTTED => 03-MAY-2010
TIME PLOTTED => 13:07

Dist	COUNTY	ROUTE	KILOMETER POST TOTAL PROJECT	SHEET No.	TOTAL SHEETS
07	LA	5	50.8/58.0	129	869

REGISTERED CIVIL ENGINEER DATE 07/07/08

5-3-10
PLANS APPROVAL DATE

REGISTERED PROFESSIONAL ENGINEER BALDEV K. BHALLA No. 34350 Exp. 09/30/11 CIVIL STATE OF CALIFORNIA

THE STATE OF CALIFORNIA OR ITS OFFICERS OR AGENTS SHALL NOT BE RESPONSIBLE FOR THE ACCURACY OR COMPLETENESS OF ELECTRONIC COPIES OF THIS PLAN SHEET.

Caltrans Metric

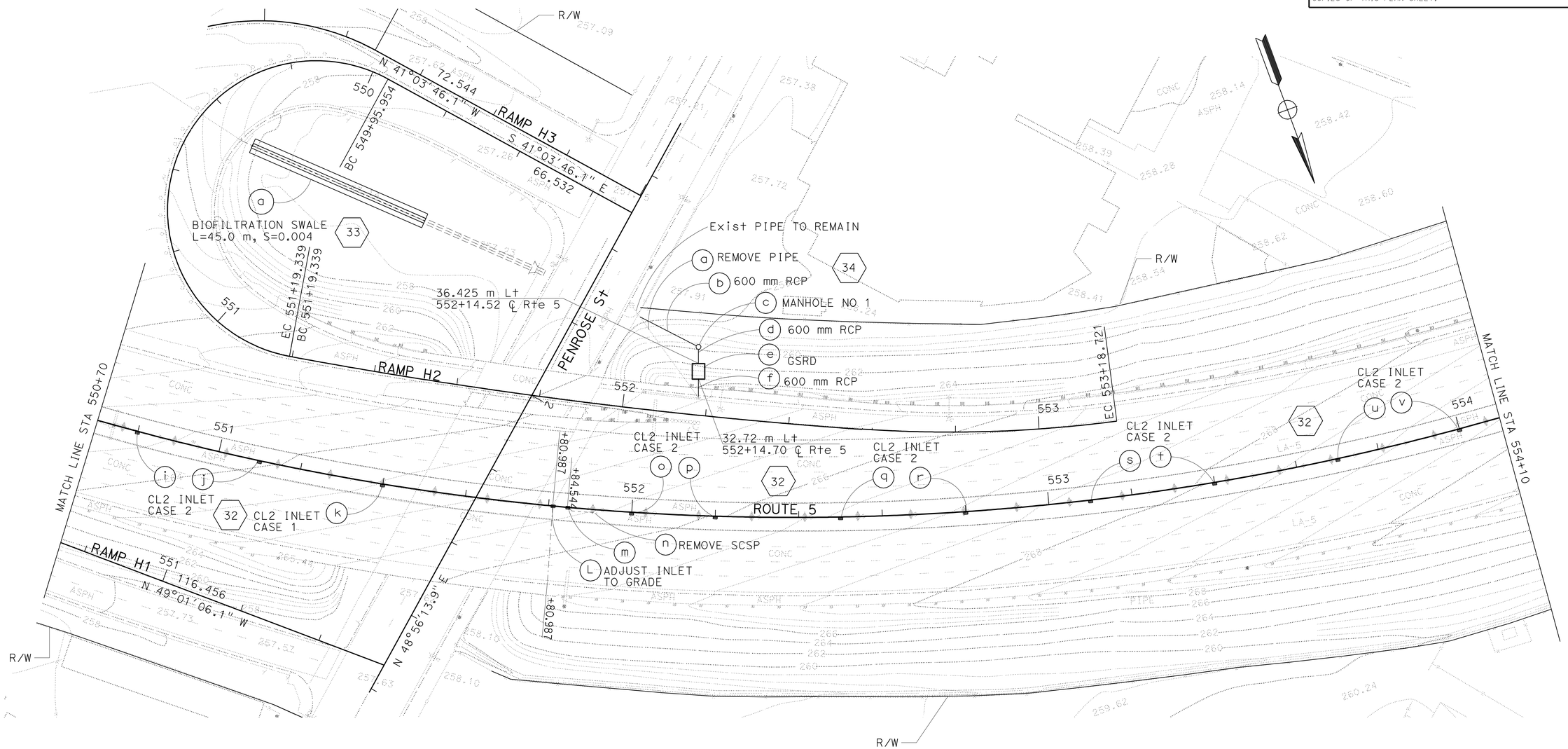

DRAINAGE PLAN

SCALE 1:500

D-14

THIS PLAN ACCURATE FOR DRAINAGE WORK ONLY

STATE OF CALIFORNIA - DEPARTMENT OF TRANSPORTATION
Caltrans
HYDRAULICS

FUNCTIONAL SUPERVISOR: DAVE BHALLA
CALCULATED-DESIGNED BY: S. THAI
CHECKED BY: C. NGUYEN
REVISED BY
DATE REVISED

LAST REVISION 00-00-00
DATE PLOTTED => 03-MAY-2010
TIME PLOTTED => 13:07

Dist	COUNTY	ROUTE	KILOMETER POST TOTAL PROJECT	SHEET No.	TOTAL SHEETS
07	LA	5	50.8/58.0	130	869

REGISTERED CIVIL ENGINEER DATE 07/07/08

5-3-10
PLANS APPROVAL DATE

REGISTERED PROFESSIONAL ENGINEER BALDEV K. BHALLA No. 34350 Exp. 09/30/11 CIVIL STATE OF CALIFORNIA

THE STATE OF CALIFORNIA OR ITS OFFICERS OR AGENTS SHALL NOT BE RESPONSIBLE FOR THE ACCURACY OR COMPLETENESS OF ELECTRONIC COPIES OF THIS PLAN SHEET.

Caltrans Metric

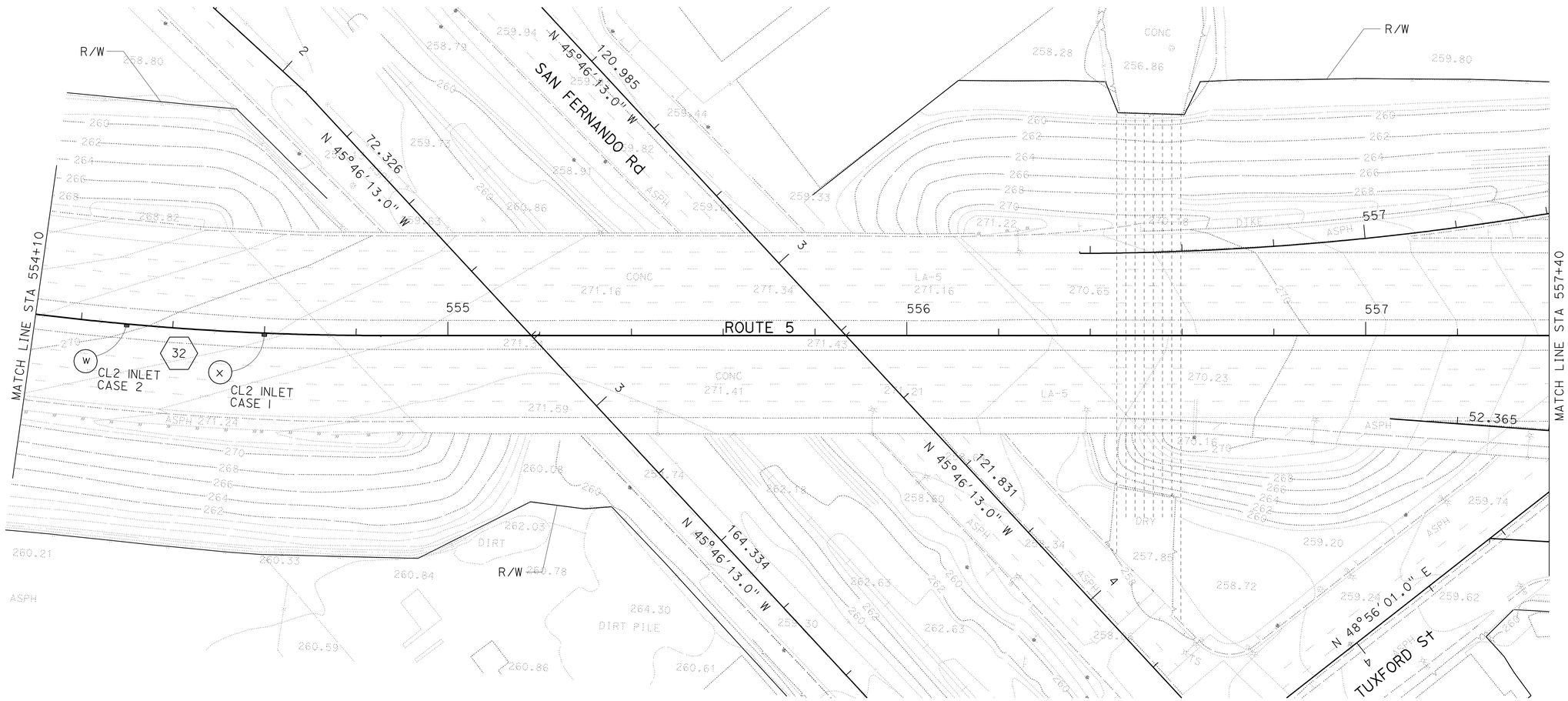

DRAINAGE PLAN

SCALE 1:500

D-15

THIS PLAN ACCURATE FOR DRAINAGE WORK ONLY

STATE OF CALIFORNIA - DEPARTMENT OF TRANSPORTATION
Caltrans
HYDRAULICS

FUNCTIONAL SUPERVISOR: DAVE BHALLA
CALCULATED-DESIGNED BY: S. THAI
CHECKED BY: C. NGUYEN
REVISED BY / DATE REVISED

LAST REVISION 00-00-00
DATE PLOTTED => 03-MAY-2010
TIME PLOTTED => 13:07

Dist	COUNTY	ROUTE	KILOMETER POST TOTAL PROJECT	SHEET No.	TOTAL SHEETS
07	LA	5	50.8/58.0	131	869

REGISTERED CIVIL ENGINEER DATE 07/07/08

5-3-10
PLANS APPROVAL DATE

REGISTERED PROFESSIONAL ENGINEER BALDEV K. BHALLA No. 34350 Exp. 09/30/11 CIVIL STATE OF CALIFORNIA

THE STATE OF CALIFORNIA OR ITS OFFICERS OR AGENTS SHALL NOT BE RESPONSIBLE FOR THE ACCURACY OR COMPLETENESS OF ELECTRONIC COPIES OF THIS PLAN SHEET.

Caltrans Metric

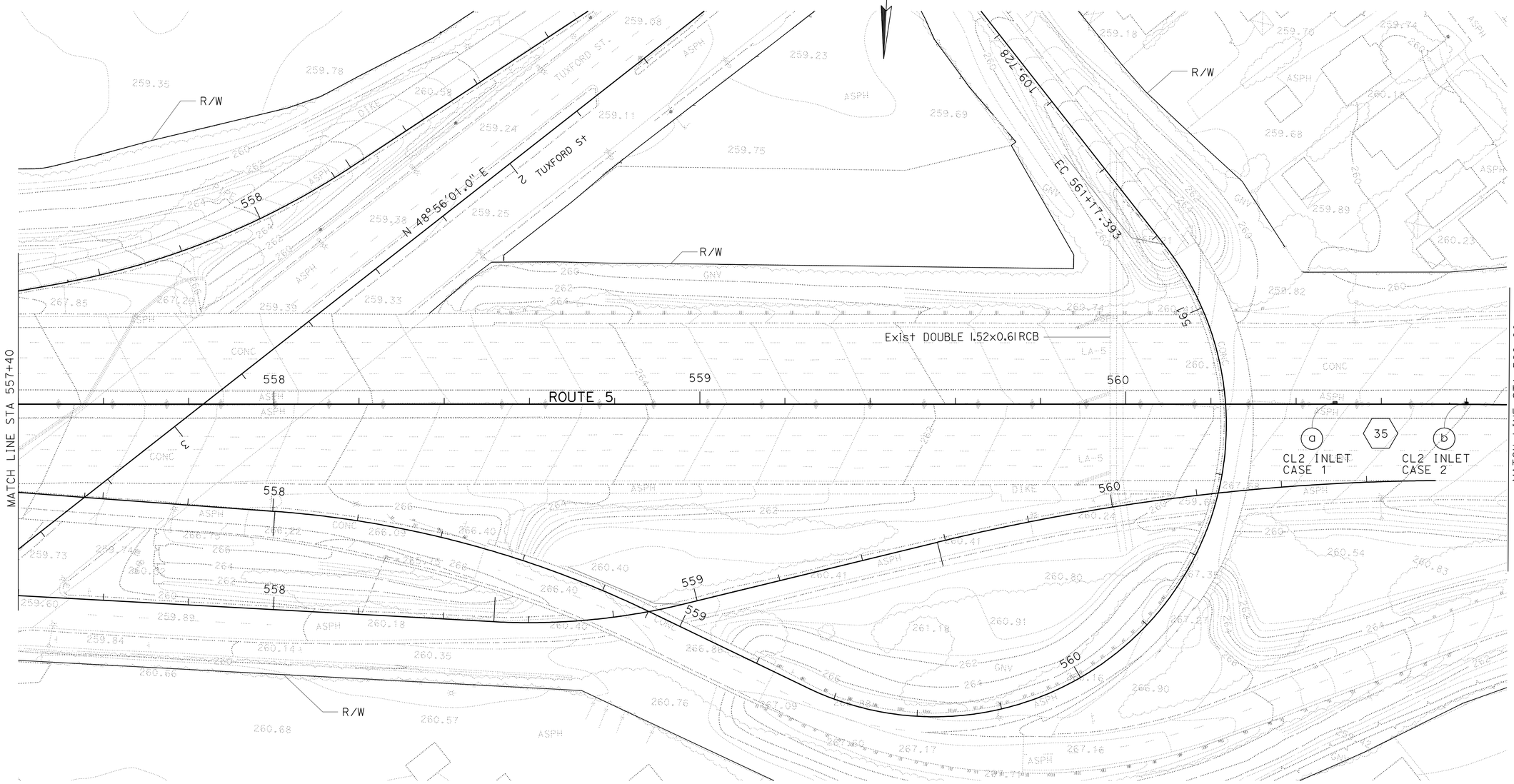

DRAINAGE PLAN

SCALE 1:500

D-16

THIS PLAN ACCURATE FOR DRAINAGE WORK ONLY

STATE OF CALIFORNIA - DEPARTMENT OF TRANSPORTATION
Caltrans HYDRAULICS

FUNCTIONAL SUPERVISOR: DAVE BHALLA
CALCULATED-DESIGNED BY: S. THAI
CHECKED BY: C. NGUYEN
REVISED BY / DATE REVISED

LAST REVISION 00-00-00
DATE PLOTTED => 03-MAY-2010
TIME PLOTTED => 13:16

Dist	COUNTY	ROUTE	KILOMETER POST TOTAL PROJECT	SHEET No.	TOTAL SHEETS
07	LA	5	50.8/58.0	132	869

REGISTERED CIVIL ENGINEER 07/07/08 DATE

5-3-10
PLANS APPROVAL DATE

REGISTERED PROFESSIONAL ENGINEER BALDEV K. BHALLA No. 34350 Exp. 09/30/11 CIVIL STATE OF CALIFORNIA

THE STATE OF CALIFORNIA OR ITS OFFICERS OR AGENTS SHALL NOT BE RESPONSIBLE FOR THE ACCURACY OR COMPLETENESS OF ELECTRONIC COPIES OF THIS PLAN SHEET.

Caltrans Metric

CURVE DATA

No.	R	Δ	T	L
1	27.70	63°6'59"	17.01	30.51

DRAINAGE PLAN

SCALE 1:500

D-17

THIS PLAN ACCURATE FOR DRAINAGE WORK ONLY

STATE OF CALIFORNIA - DEPARTMENT OF TRANSPORTATION
Caltrans
HYDRAULICS

FUNCTIONAL SUPERVISOR: DAVE BHALLA
CALCULATED-DESIGNED BY: S. THAI
CHECKED BY: C. NGUYEN
REVISED BY
DATE REVISED

LAST REVISION 00-00-00
DATE PLOTTED => 03-MAY-2010
TIME PLOTTED => 1317

Dist	COUNTY	ROUTE	KILOMETER POST TOTAL PROJECT	SHEET No.	TOTAL SHEETS
07	LA	5	50.8/58.0	133	869

REGISTERED CIVIL ENGINEER DATE 07/07/08

5-3-10
PLANS APPROVAL DATE

REGISTERED PROFESSIONAL ENGINEER BALDEV K. BHALLA No. 34350 Exp. 09/30/11 CIVIL STATE OF CALIFORNIA

THE STATE OF CALIFORNIA OR ITS OFFICERS OR AGENTS SHALL NOT BE RESPONSIBLE FOR THE ACCURACY OR COMPLETENESS OF ELECTRONIC COPIES OF THIS PLAN SHEET.

Caltrans Metric

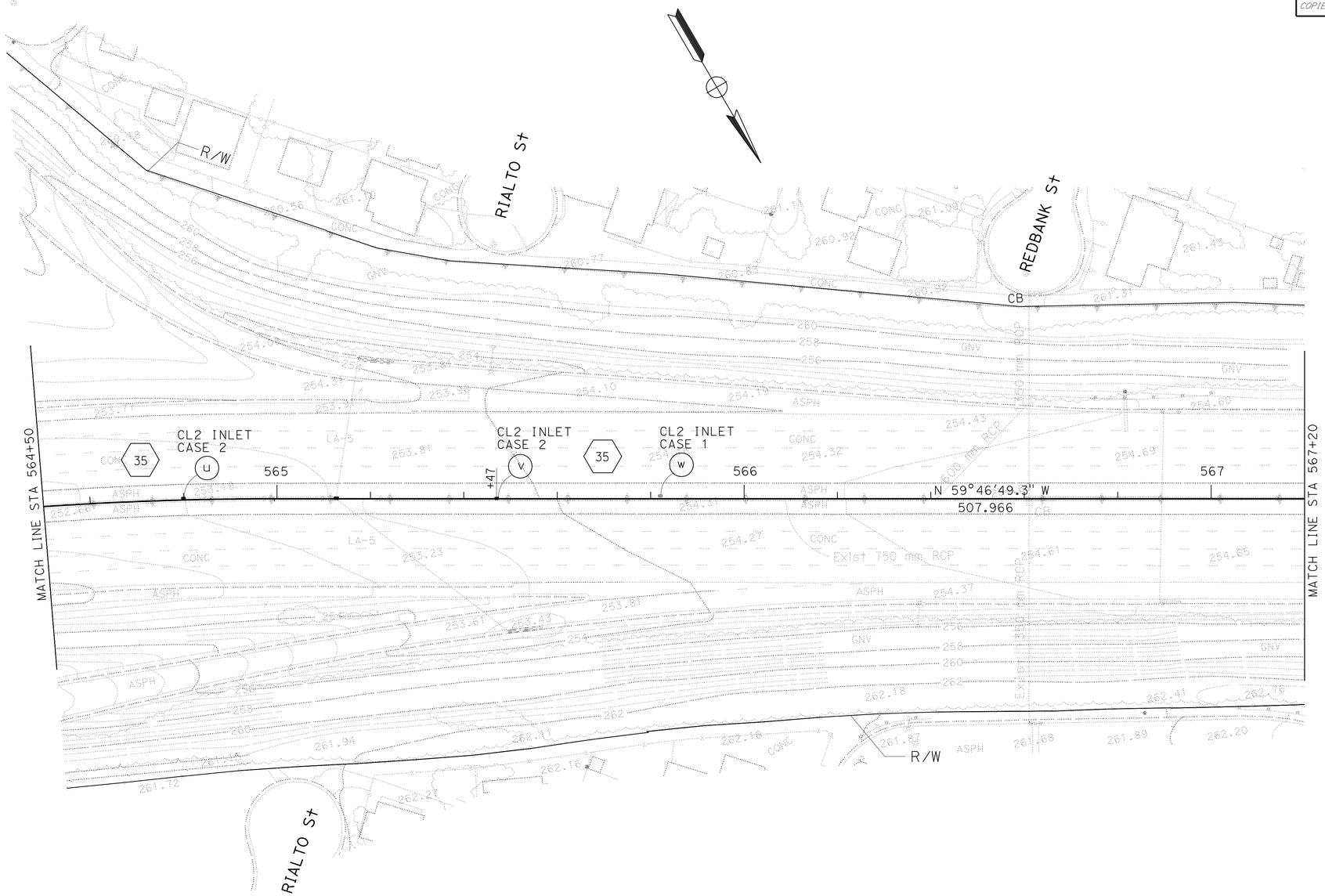

DRAINAGE PLAN

SCALE 1:500

D-18

THIS PLAN ACCURATE FOR DRAINAGE WORK ONLY

REVISED BY	DATE REVISED

CALCULATED-DESIGNED BY	S. THAI
CHECKED BY	C. NGUYEN
FUNCTIONAL SUPERVISOR	DAVE BHALLA

STATE OF CALIFORNIA - DEPARTMENT OF TRANSPORTATION

Caltrans **HYDRAULICS**

LAST REVISION 00-00-00 | DATE PLOTTED => 03-MAY-2010 | TIME PLOTTED => 13:17

Dist	COUNTY	ROUTE	KILOMETER POST TOTAL PROJECT	SHEET No.	TOTAL SHEETS
07	LA	5	50.8/58.0	134	869

REGISTERED CIVIL ENGINEER DATE 07/07/08

5-3-10
PLANS APPROVAL DATE

REGISTERED PROFESSIONAL ENGINEER
BALDEV K. BHALLA
No. 34350
Exp. 09/30/11
CIVIL
STATE OF CALIFORNIA

THE STATE OF CALIFORNIA OR ITS OFFICERS OR AGENTS SHALL NOT BE RESPONSIBLE FOR THE ACCURACY OR COMPLETENESS OF ELECTRONIC COPIES OF THIS PLAN SHEET.

Caltrans Metric

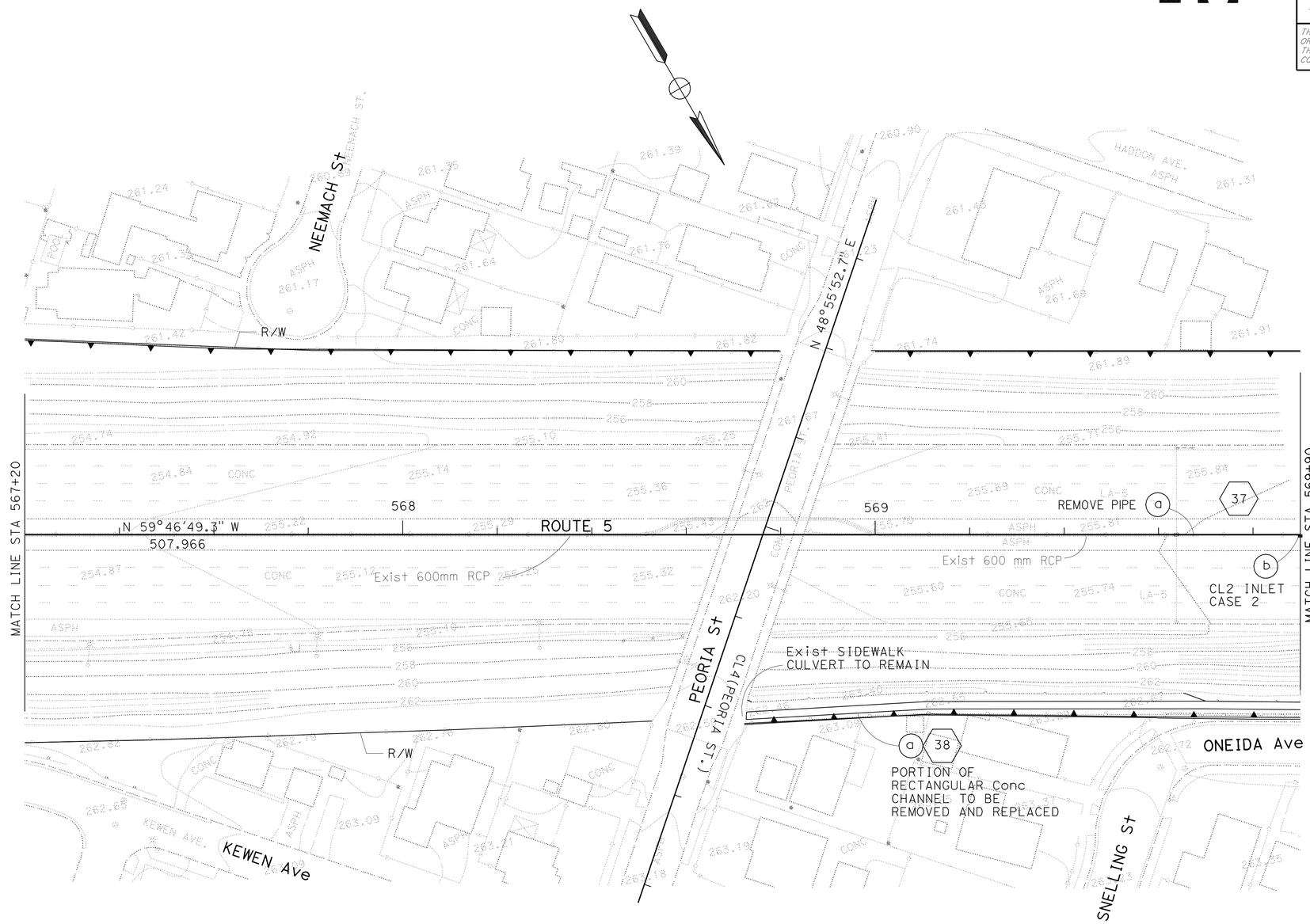

DRAINAGE PLAN

SCALE 1:500

D-19

THIS PLAN ACCURATE FOR DRAINAGE WORK ONLY

STATE OF CALIFORNIA - DEPARTMENT OF TRANSPORTATION
Caltrans
HYDRAULICS

FUNCTIONAL SUPERVISOR: DAVE BHALLA

CALCULATED-DESIGNED BY: S. THAI
CHECKED BY: C. NGUYEN

REVISED BY
DATE REVISED

LAST REVISION 00-00-00
DATE PLOTTED => 03-MAY-2010
TIME PLOTTED => 13:17

Dist	COUNTY	ROUTE	KILOMETER POST TOTAL PROJECT	SHEET No.	TOTAL SHEETS
07	LA	5	50.8/58.0	135	869

REGISTERED CIVIL ENGINEER DATE 07/07/08

PLANS APPROVAL DATE 5-3-10

REGISTERED PROFESSIONAL ENGINEER BALDEV K. BHALLA No. 34350 Exp. 09/30/11 CIVIL STATE OF CALIFORNIA

THE STATE OF CALIFORNIA OR ITS OFFICERS OR AGENTS SHALL NOT BE RESPONSIBLE FOR THE ACCURACY OR COMPLETENESS OF ELECTRONIC COPIES OF THIS PLAN SHEET.

Caltrans Metric

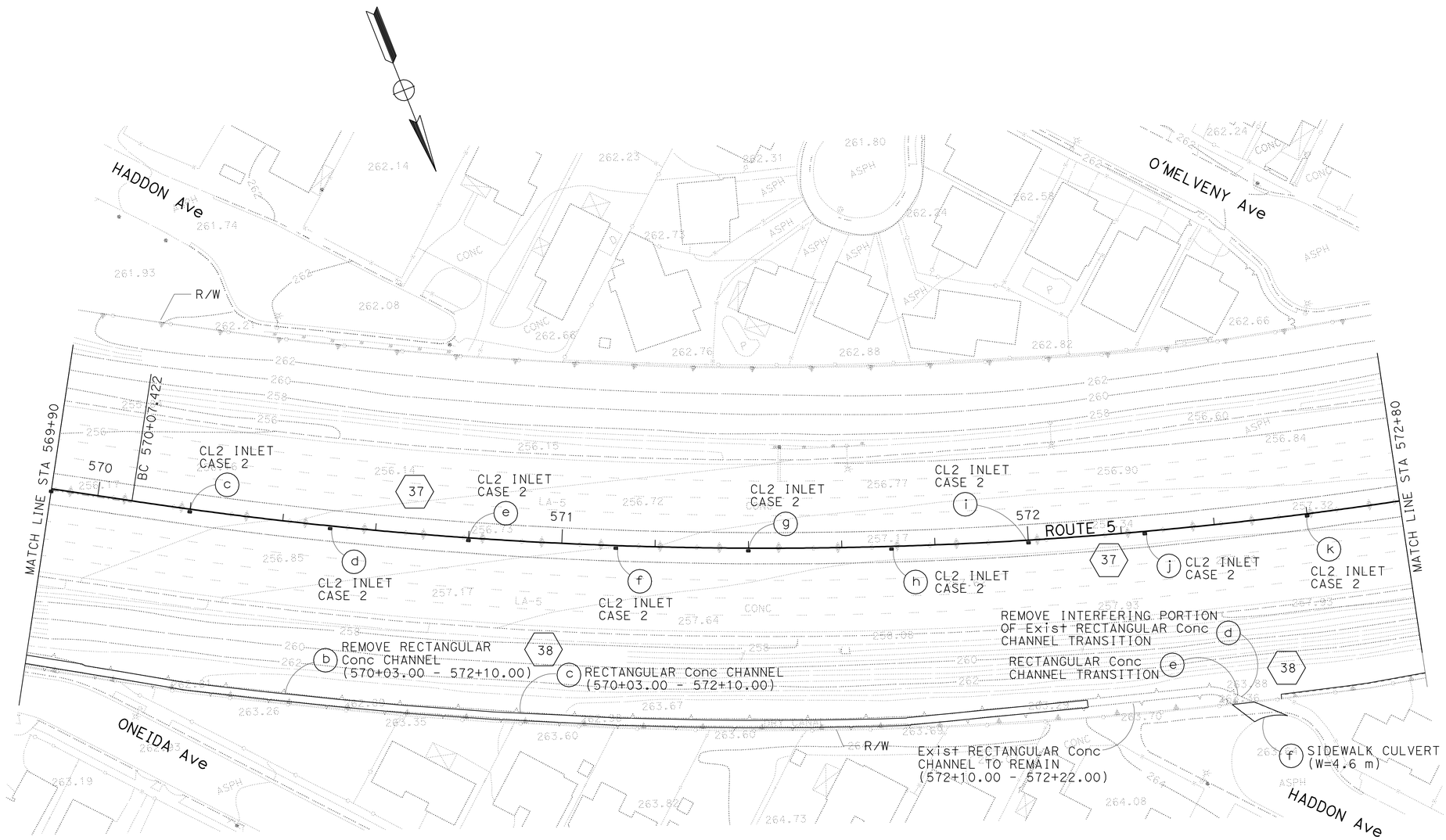

DRAINAGE PLAN

SCALE 1:500

D-20

THIS PLAN ACCURATE FOR DRAINAGE WORK ONLY

STATE OF CALIFORNIA - DEPARTMENT OF TRANSPORTATION

Caltrans HYDRAULICS

FUNCTIONAL SUPERVISOR DAVE BHALLA

CALCULATED-DESIGNED BY S. THAI

CHECKED BY C. NGUYEN

REVISED BY

DATE REVISED

LAST REVISION 00-00-00

DATE PLOTTED => 03-MAY-2010

TIME PLOTTED => 13:17

Dist	COUNTY	ROUTE	KILOMETER POST TOTAL PROJECT	SHEET No.	TOTAL SHEETS
07	LA	5	50.8/58.0	136	869

REGISTERED CIVIL ENGINEER DATE 07/07/08

5-3-10
PLANS APPROVAL DATE

REGISTERED PROFESSIONAL ENGINEER BALDEV K. BHALLA No. 34350 Exp. 09/30/11 CIVIL STATE OF CALIFORNIA

THE STATE OF CALIFORNIA OR ITS OFFICERS OR AGENTS SHALL NOT BE RESPONSIBLE FOR THE ACCURACY OR COMPLETENESS OF ELECTRONIC COPIES OF THIS PLAN SHEET.

Caltrans Metric

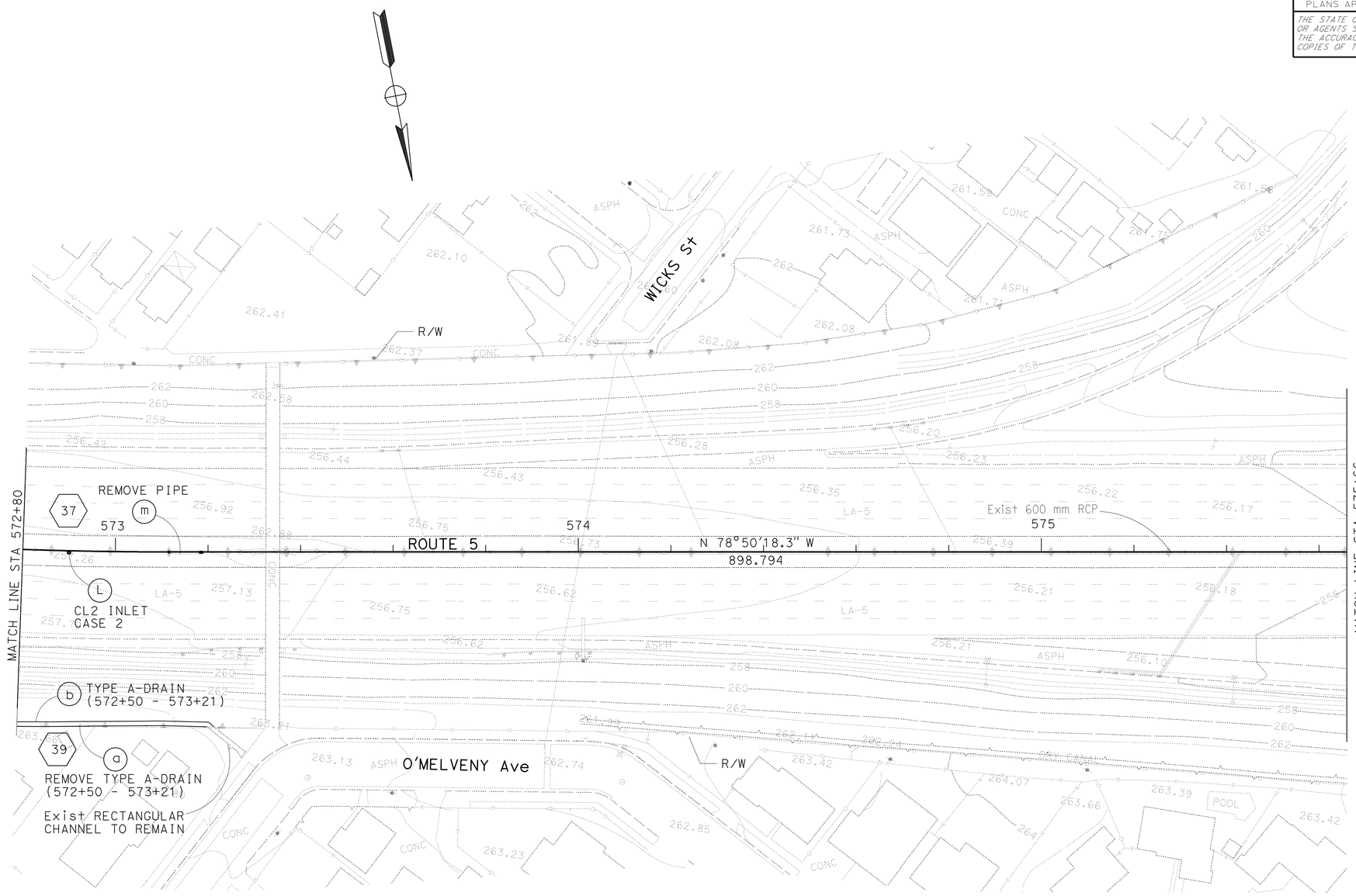

DRAINAGE PLAN

SCALE 1:500

D-21

THIS PLAN ACCURATE FOR DRAINAGE WORK ONLY

REVISED BY	DATE REVISED

CALCULATED-DESIGNED BY	S. THAI
CHECKED BY	C. NGUYEN

FUNCTIONAL SUPERVISOR: DAVE BHALLA

STATE OF CALIFORNIA - DEPARTMENT OF TRANSPORTATION

Caltrans **HYDRAULICS**

LAST REVISION 00-00-00 | DATE PLOTTED => 03-MAY-2010 | TIME PLOTTED => 13:17

Dist	COUNTY	ROUTE	KILOMETER POST TOTAL PROJECT	SHEET No.	TOTAL SHEETS
07	LA	5	50.8/58.0	137	869

REGISTERED CIVIL ENGINEER 07/07/08 DATE

5-3-10
PLANS APPROVAL DATE

REGISTERED PROFESSIONAL ENGINEER BALDEV K. BHALLA No. 34350 Exp. 09/30/11 CIVIL STATE OF CALIFORNIA

THE STATE OF CALIFORNIA OR ITS OFFICERS OR AGENTS SHALL NOT BE RESPONSIBLE FOR THE ACCURACY OR COMPLETENESS OF ELECTRONIC COPIES OF THIS PLAN SHEET.

Caltrans Metric

CURVE DATA

No.	R	Δ	T	L
(1)	21.74	91°5'27"	22.16	34.57
(2)	36.98	14°24'00"	4.67	9.29

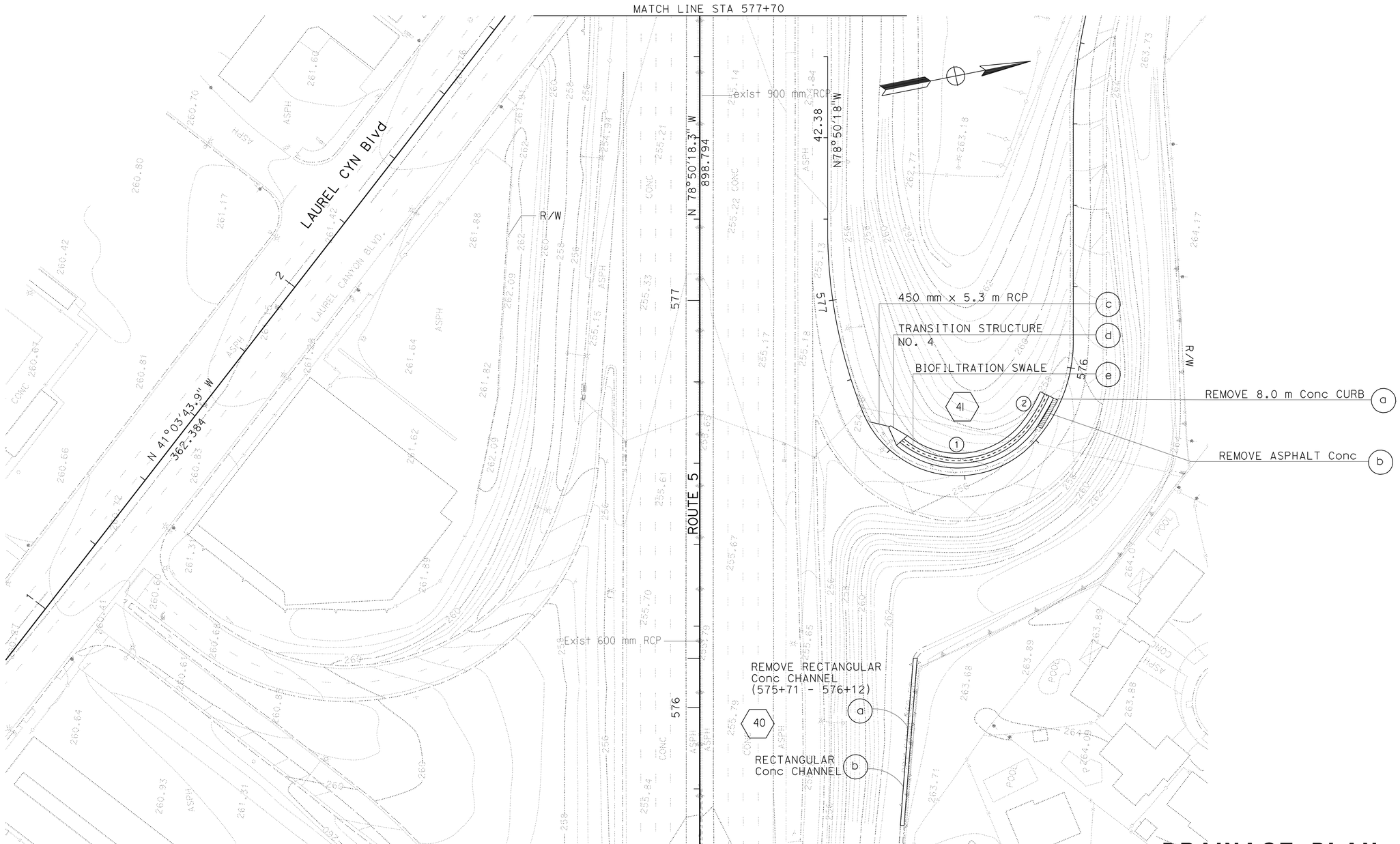

DRAINAGE PLAN

SCALE 1:500

D-22

THIS PLAN ACCURATE FOR DRAINAGE WORK ONLY

STATE OF CALIFORNIA - DEPARTMENT OF TRANSPORTATION
Caltrans
HYDRAULICS

FUNCTIONAL SUPERVISOR: DAVE BHALLA
CALCULATED-DESIGNED BY: S. THAI
CHECKED BY: C. NGUYEN
REVISED BY
DATE REVISED

LAST REVISION 00-00-00
DATE PLOTTED => 03-MAY-2010
TIME PLOTTED => 13:17

Dist	COUNTY	ROUTE	KILOMETER POST TOTAL PROJECT	SHEET No.	TOTAL SHEETS
07	LA	5	50.8/58.0	138	869

REGISTERED CIVIL ENGINEER 07/07/08 DATE

5-3-10
PLANS APPROVAL DATE

REGISTERED PROFESSIONAL ENGINEER BALDEV K. BHALLA No. 34350 Exp. 09/30/11 CIVIL STATE OF CALIFORNIA

THE STATE OF CALIFORNIA OR ITS OFFICERS OR AGENTS SHALL NOT BE RESPONSIBLE FOR THE ACCURACY OR COMPLETENESS OF ELECTRONIC COPIES OF THIS PLAN SHEET.

NOTE: CONTRACTOR SHALL VERIFY ELEVATIONS OF EXISTING DRAINAGE SYSTEMS BEFORE COMMENCEMENT OF WORK.

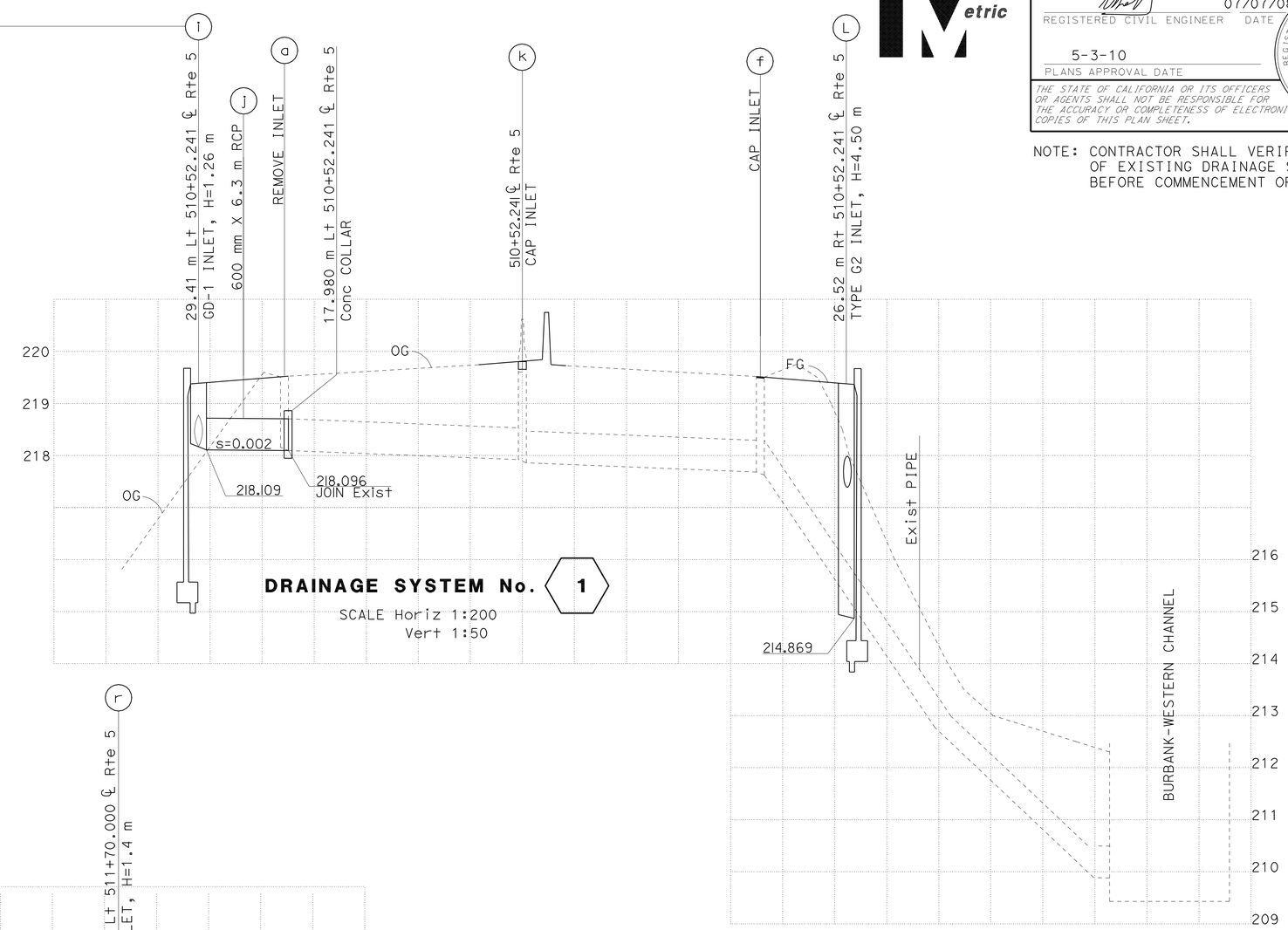

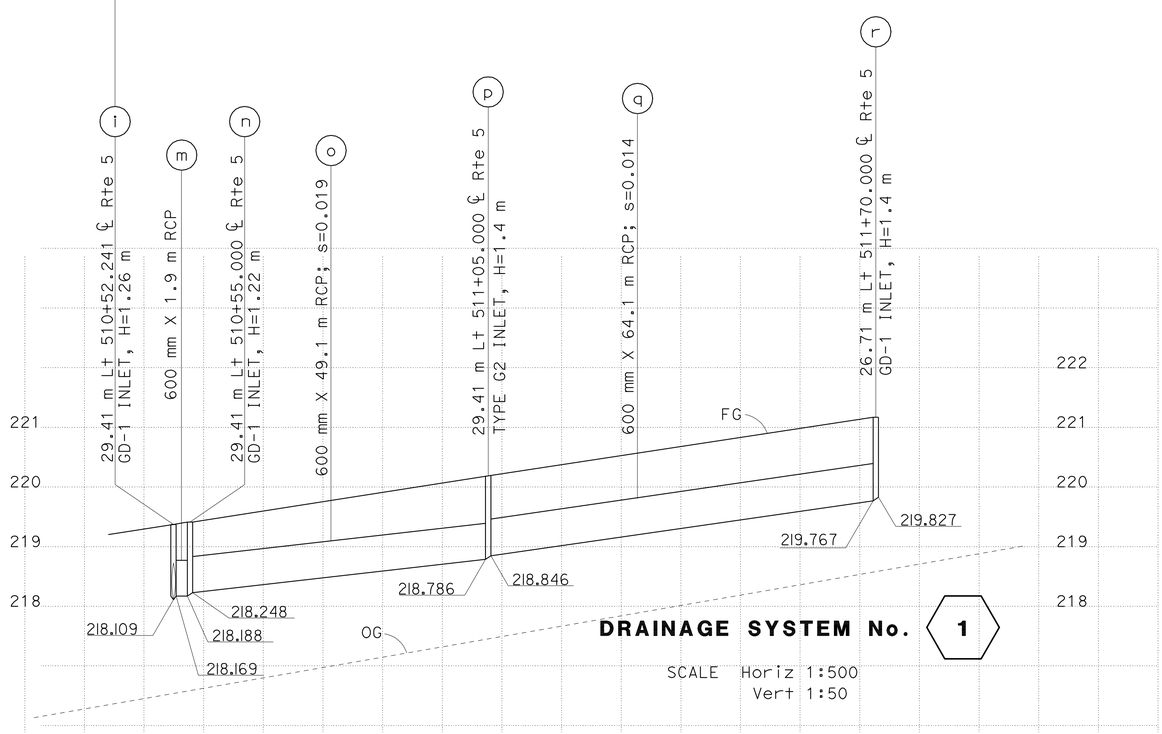

ALL DIMENSIONS ARE IN METERS UNLESS OTHERWISE SHOWN

DRAINAGE PROFILE

DP-1

STATE OF CALIFORNIA - DEPARTMENT OF TRANSPORTATION
Caltrans
HYDRAULICS

FUNCTIONAL SUPERVISOR: DAVE BHALLA
CALCULATED-DESIGNED BY: S. THAI
CHECKED BY: C. NGUYEN
REVISED BY / DATE REVISED

LAST REVISION 00-00-00
DATE PLOTTED => 03-MAY-2010
TIME PLOTTED => 13:18

Dist	COUNTY	ROUTE	KILOMETER POST TOTAL PROJECT	SHEET No.	TOTAL SHEETS
07	LA	5	50.8/58.0	139	869

REGISTERED CIVIL ENGINEER 07/07/08 DATE

5-3-10
PLANS APPROVAL DATE

REGISTERED PROFESSIONAL ENGINEER
BALDEV K. BHALLA
No. 34350
Exp. 09/30/11
CIVIL
STATE OF CALIFORNIA

THE STATE OF CALIFORNIA OR ITS OFFICERS OR AGENTS SHALL NOT BE RESPONSIBLE FOR THE ACCURACY OR COMPLETENESS OF ELECTRONIC COPIES OF THIS PLAN SHEET.

NOTE: CONTRACTOR SHALL VERIFY ELEVATIONS OF EXISTING DRAINAGE SYSTEMS BEFORE COMMENCEMENT OF WORK.

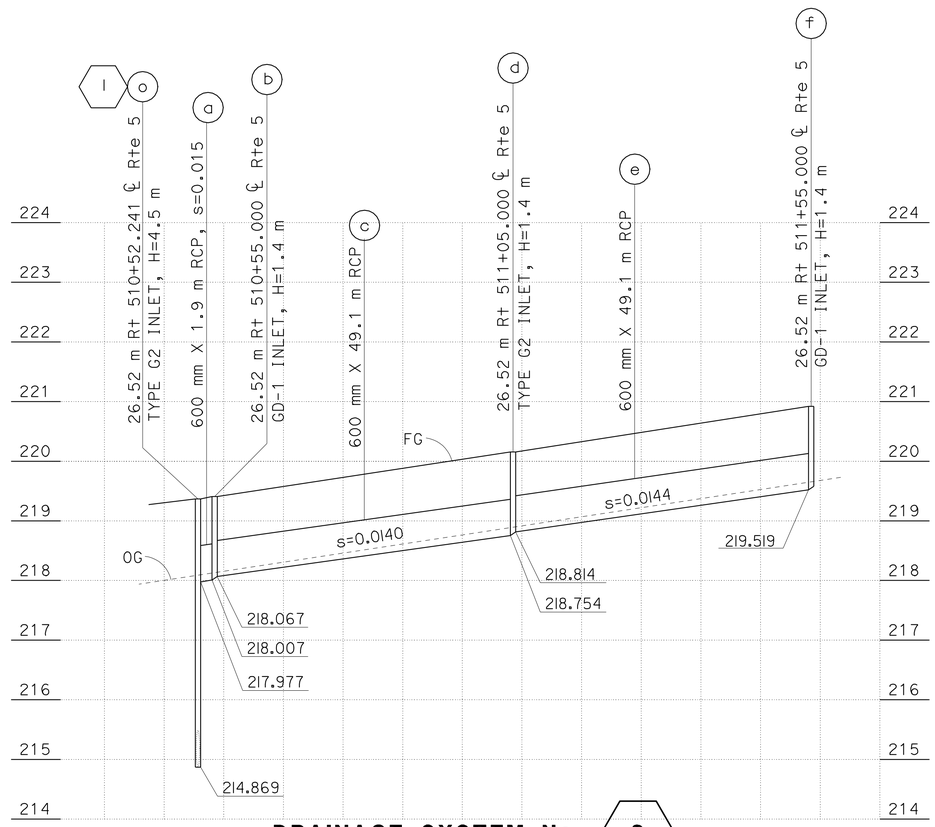

DRAINAGE SYSTEM No. 2

SCALE Horiz 1:500
Vert 1:50

ALL DIMENSIONS ARE IN METERS UNLESS OTHERWISE SHOWN

DRAINAGE PROFILE

DP-2

STATE OF CALIFORNIA - DEPARTMENT OF TRANSPORTATION
Caltrans
HYDRAULICS

FUNCTIONAL SUPERVISOR: DAVE BHALLA
CALCULATED-DESIGNED BY: S. THAI
CHECKED BY: C. NGUYEN
REVISED BY
DATE REVISED

LAST REVISION 00-00-00
DATE PLOTTED => 03-MAY-2010
TIME PLOTTED => 13:18

Dist	COUNTY	ROUTE	KILOMETER POST TOTAL PROJECT	SHEET No.	TOTAL SHEETS
07	LA	5	50.8/58.0	140	869

REGISTERED CIVIL ENGINEER 07/07/08 DATE

5-3-10
PLANS APPROVAL DATE

REGISTERED PROFESSIONAL ENGINEER BALDEV K. BHALLA No. 34350 Exp. 09/30/11 CIVIL STATE OF CALIFORNIA

THE STATE OF CALIFORNIA OR ITS OFFICERS OR AGENTS SHALL NOT BE RESPONSIBLE FOR THE ACCURACY OR COMPLETENESS OF ELECTRONIC COPIES OF THIS PLAN SHEET.

NOTE: CONTRACTOR SHALL VERIFY ELEVATIONS OF EXISTING DRAINAGE SYSTEMS BEFORE COMMENCEMENT OF WORK.

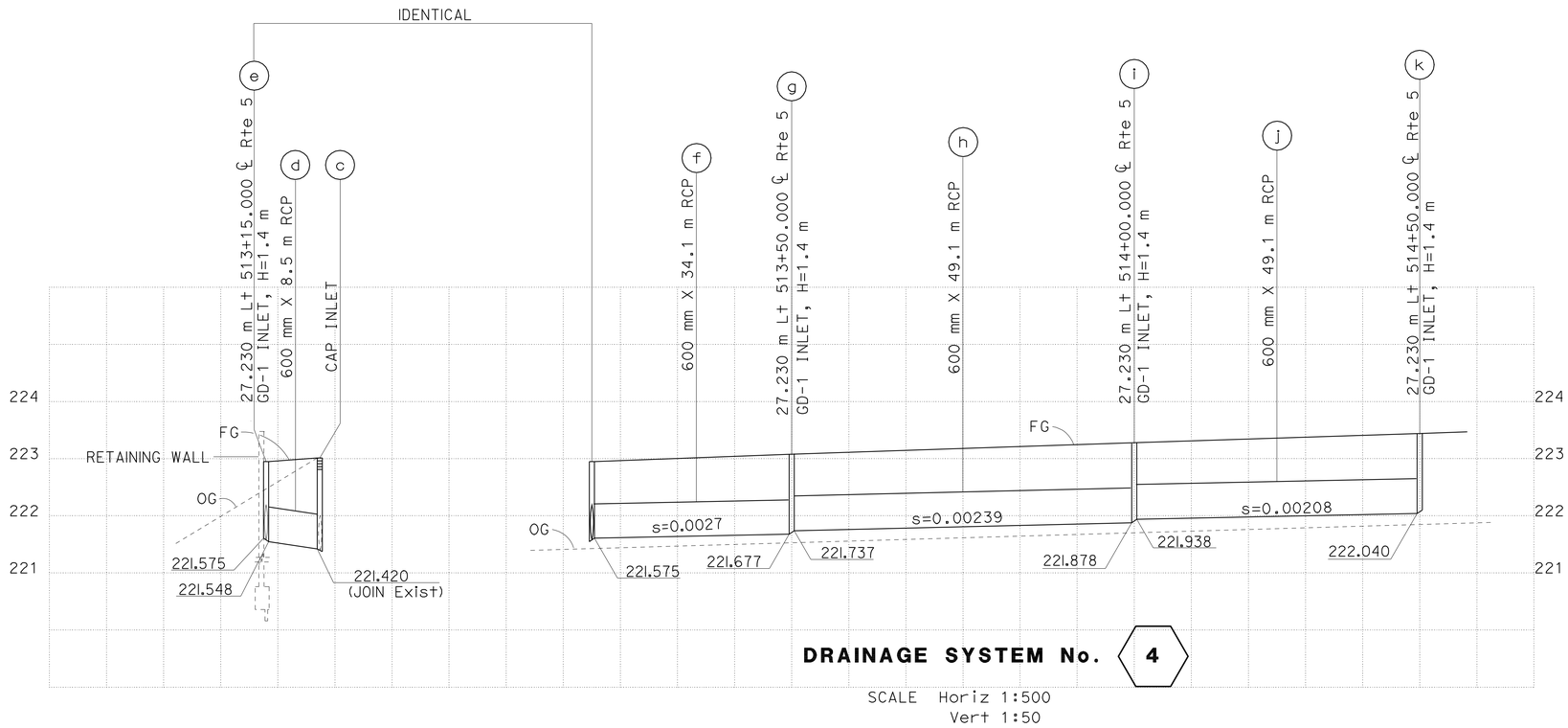

SCALE Horiz 1:500
Vert 1:50

ALL DIMENSIONS ARE IN METERS UNLESS OTHERWISE SHOWN

DRAINAGE PROFILE

DP-3

STATE OF CALIFORNIA - DEPARTMENT OF TRANSPORTATION
Caltrans HYDRAULICS

FUNCTIONAL SUPERVISOR DAVE BHALLA
CALCULATED-DESIGNED BY S. THAI
CHECKED BY C. NGUYEN
REVISED BY
DATE REVISED

LAST REVISION 00-00-00 DATE PLOTTED => 03-MAY-2010 TIME PLOTTED => 13:18

Dist	COUNTY	ROUTE	KILOMETER POST TOTAL PROJECT	SHEET No.	TOTAL SHEETS
07	LA	5	50.8/58.0	141	869

REGISTERED CIVIL ENGINEER 07/07/08 DATE

5-3-10
PLANS APPROVAL DATE

REGISTERED PROFESSIONAL ENGINEER BALDEV K. BHALLA No. 34350 Exp. 09/30/11 CIVIL STATE OF CALIFORNIA

THE STATE OF CALIFORNIA OR ITS OFFICERS OR AGENTS SHALL NOT BE RESPONSIBLE FOR THE ACCURACY OR COMPLETENESS OF ELECTRONIC COPIES OF THIS PLAN SHEET.

Caltrans Metric

NOTE: CONTRACTOR SHALL VERIFY ELEVATIONS OF EXISTING DRAINAGE SYSTEMS BEFORE COMMENCEMENT OF WORK.

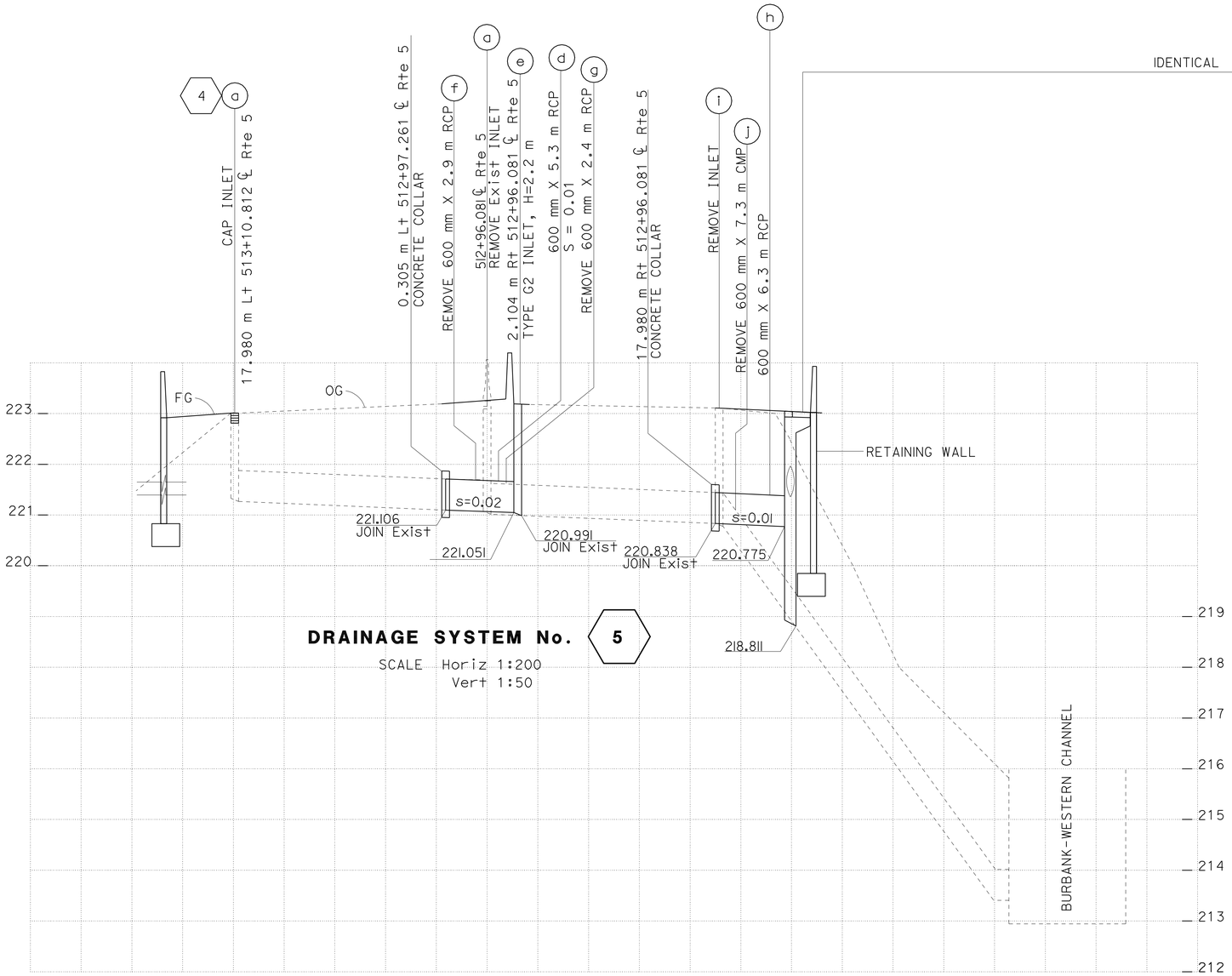

DRAINAGE SYSTEM No. 5

SCALE Horiz 1:200
Vert 1:50

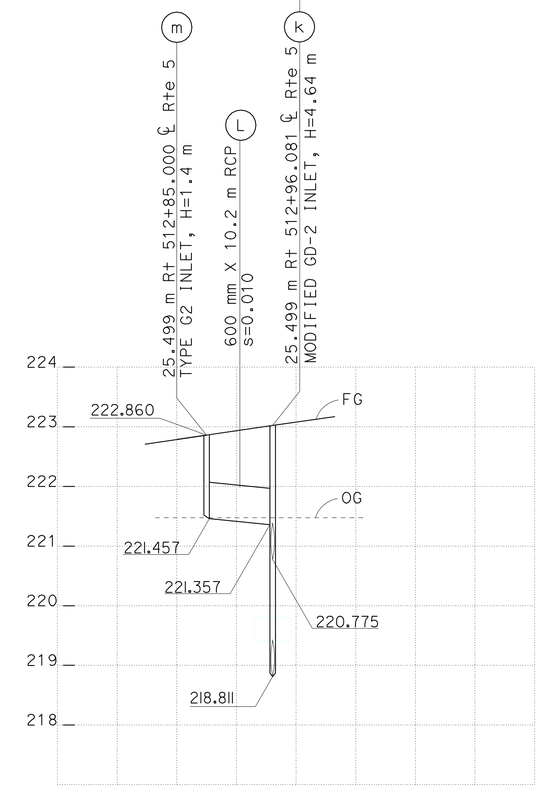

DRAINAGE SYSTEM No. 5

SCALE Horiz 1:500
Vert 1:50

ALL DIMENSIONS ARE IN METERS UNLESS OTHERWISE SHOWN

DRAINAGE PROFILE

DP-4

CALCULATED-DESIGNED BY	S. THAI
CHECKED BY	C. NGUYEN
REVISED BY	
DATE REVISED	
FUNCTIONAL SUPERVISOR	DAVE BHALLA

STATE OF CALIFORNIA - DEPARTMENT OF TRANSPORTATION
Caltrans
HYDRAULICS

LAST REVISION 00-00-00 | DATE PLOTTED => 03-MAY-2010 | TIME PLOTTED => 13:18

Dist	COUNTY	ROUTE	KILOMETER POST TOTAL PROJECT	SHEET No.	TOTAL SHEETS
07	LA	5	50.8/58.0	142	869

REGISTERED CIVIL ENGINEER 07/07/08 DATE

5-3-10
PLANS APPROVAL DATE

REGISTERED PROFESSIONAL ENGINEER BALDEV K. BHALLA No. 34350 Exp. 09/30/11 CIVIL STATE OF CALIFORNIA

THE STATE OF CALIFORNIA OR ITS OFFICERS OR AGENTS SHALL NOT BE RESPONSIBLE FOR THE ACCURACY OR COMPLETENESS OF ELECTRONIC COPIES OF THIS PLAN SHEET.

NOTE: CONTRACTOR SHALL VERIFY ELEVATIONS OF EXISTING DRAINAGE SYSTEMS BEFORE COMMENCEMENT OF WORK.

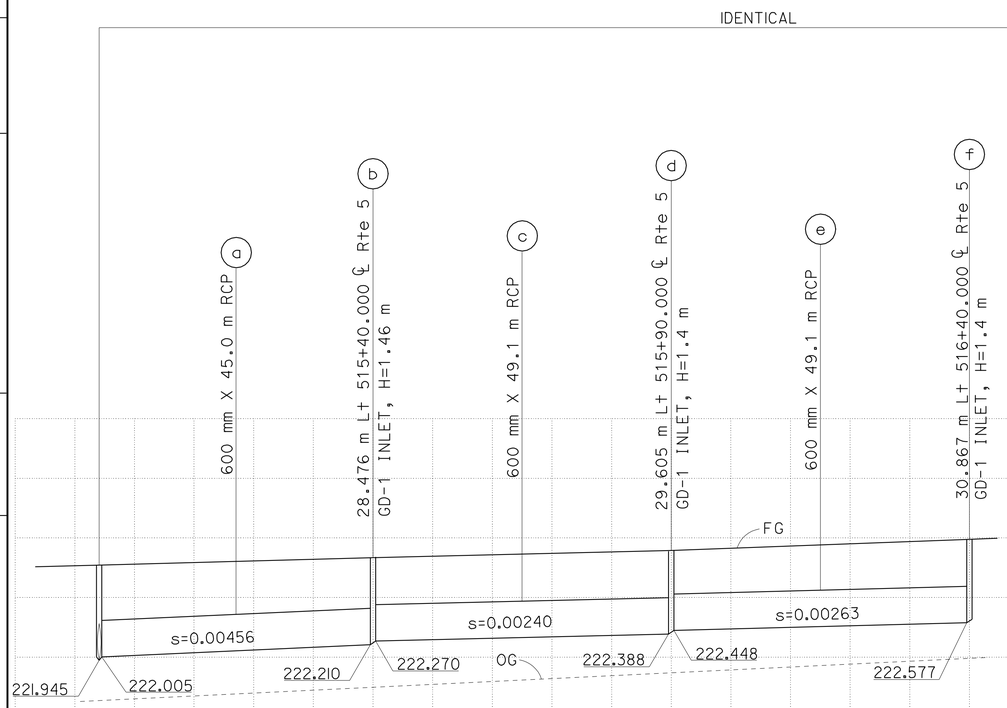

DRAINAGE SYSTEM No. 7
SCALE Horiz 1:500
Vert 1:50

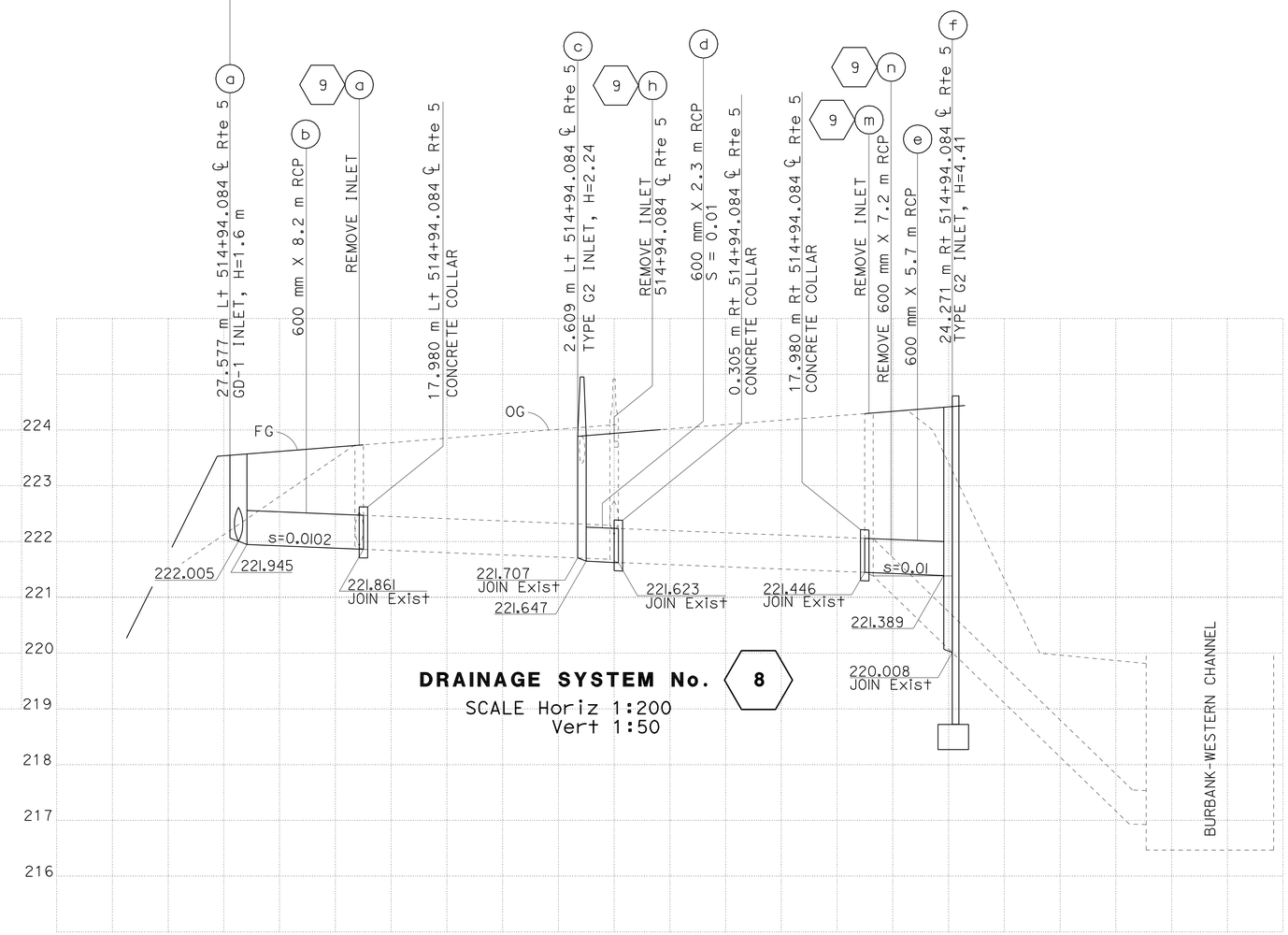

DRAINAGE SYSTEM No. 8
SCALE Horiz 1:200
Vert 1:50

ALL DIMENSIONS ARE IN METERS UNLESS OTHERWISE SHOWN

DRAINAGE PROFILE

DP-5

STATE OF CALIFORNIA - DEPARTMENT OF TRANSPORTATION
Caltrans HYDRAULICS

FUNCTIONAL SUPERVISOR: DAVE BHALLA
CALCULATED-DESIGNED BY: S. THAI
CHECKED BY: C. NGUYEN
REVISED BY / DATE REVISED

LAST REVISION 00-00-00 DATE PLOTTED => 03-MAY-2010 TIME PLOTTED => 13:18

Dist	COUNTY	ROUTE	KILOMETER POST TOTAL PROJECT	SHEET No.	TOTAL SHEETS
07	LA	5	50.8/58.0	143	869

REGISTERED CIVIL ENGINEER DATE 07/07/08

5-3-10
PLANS APPROVAL DATE

REGISTERED PROFESSIONAL ENGINEER BALDEV K. BHALLA No. 34350 Exp. 09/30/11 CIVIL STATE OF CALIFORNIA

THE STATE OF CALIFORNIA OR ITS OFFICERS OR AGENTS SHALL NOT BE RESPONSIBLE FOR THE ACCURACY OR COMPLETENESS OF ELECTRONIC COPIES OF THIS PLAN SHEET.

NOTE: CONTRACTOR SHALL VERIFY ELEVATIONS OF EXISTING DRAINAGE SYSTEMS BEFORE COMMENCEMENT OF WORK.

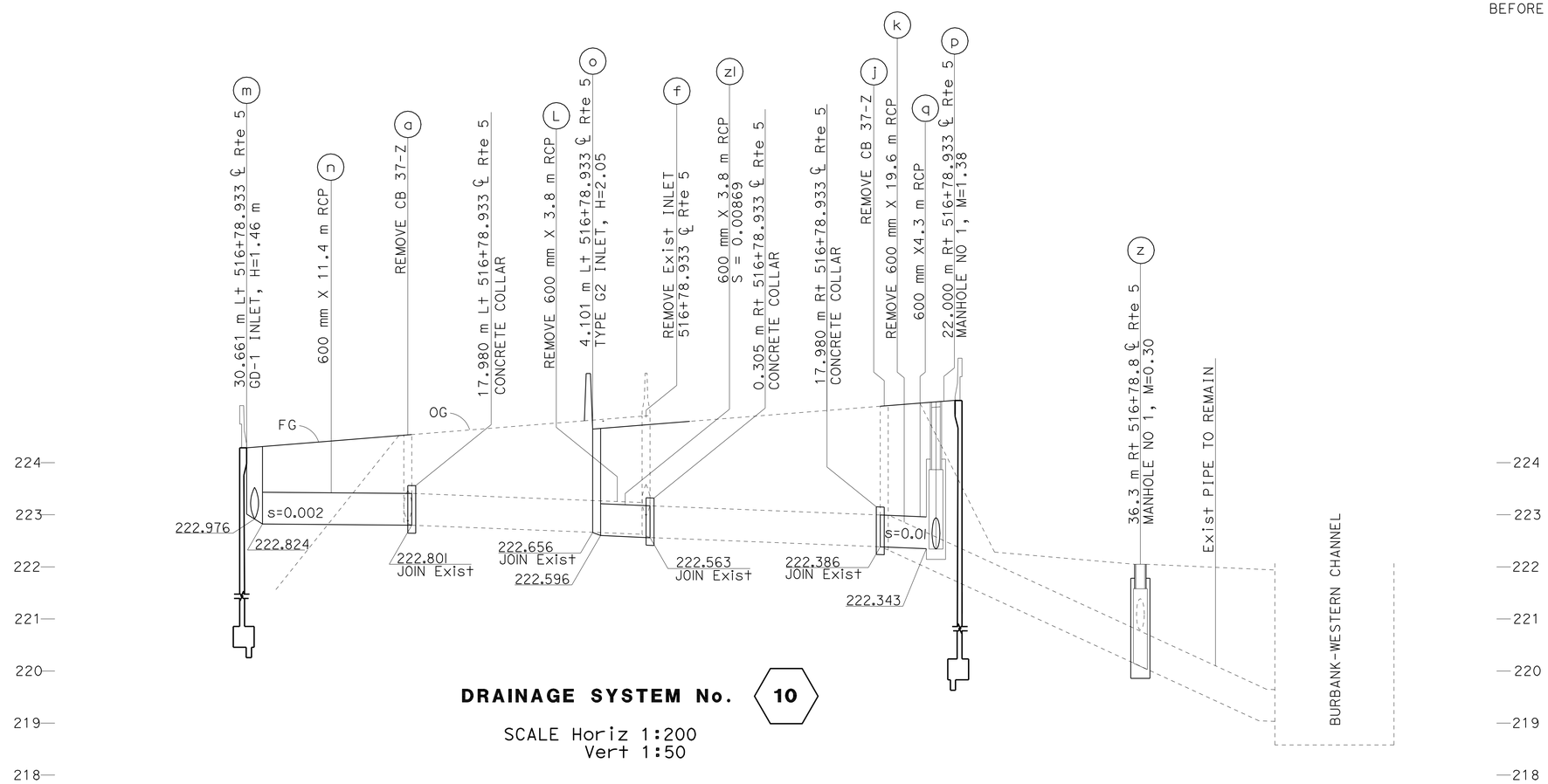

DRAINAGE SYSTEM No. 10

SCALE Horiz 1:200
Vert 1:50

ALL DIMENSIONS ARE IN METERS UNLESS OTHERWISE SHOWN

DRAINAGE PROFILE

DP-6

STATE OF CALIFORNIA - DEPARTMENT OF TRANSPORTATION
Caltrans
HYDRAULICS

FUNCTIONAL SUPERVISOR: DAVE BHALLA
CALCULATED-DESIGNED BY: S. THAI
CHECKED BY: C. NGUYEN
REVISED BY / DATE REVISED

LAST REVISION 00-00-00 | DATE PLOTTED => 03-MAY-2010 | TIME PLOTTED => 13:18

Dist	COUNTY	ROUTE	KILOMETER POST TOTAL PROJECT	SHEET No.	TOTAL SHEETS
07	LA	5	50.8/58.0	144	869

REGISTERED CIVIL ENGINEER DATE 07/07/08

5-3-10
PLANS APPROVAL DATE

REGISTERED PROFESSIONAL ENGINEER BALDEV K. BHALLA No. 34350 Exp. 09/30/11 CIVIL STATE OF CALIFORNIA

THE STATE OF CALIFORNIA OR ITS OFFICERS OR AGENTS SHALL NOT BE RESPONSIBLE FOR THE ACCURACY OR COMPLETENESS OF ELECTRONIC COPIES OF THIS PLAN SHEET.

Caltrans Metric

NOTE: CONTRACTOR SHALL VERIFY ELEVATIONS OF EXISTING DRAINAGE SYSTEMS BEFORE COMMENCEMENT OF WORK.

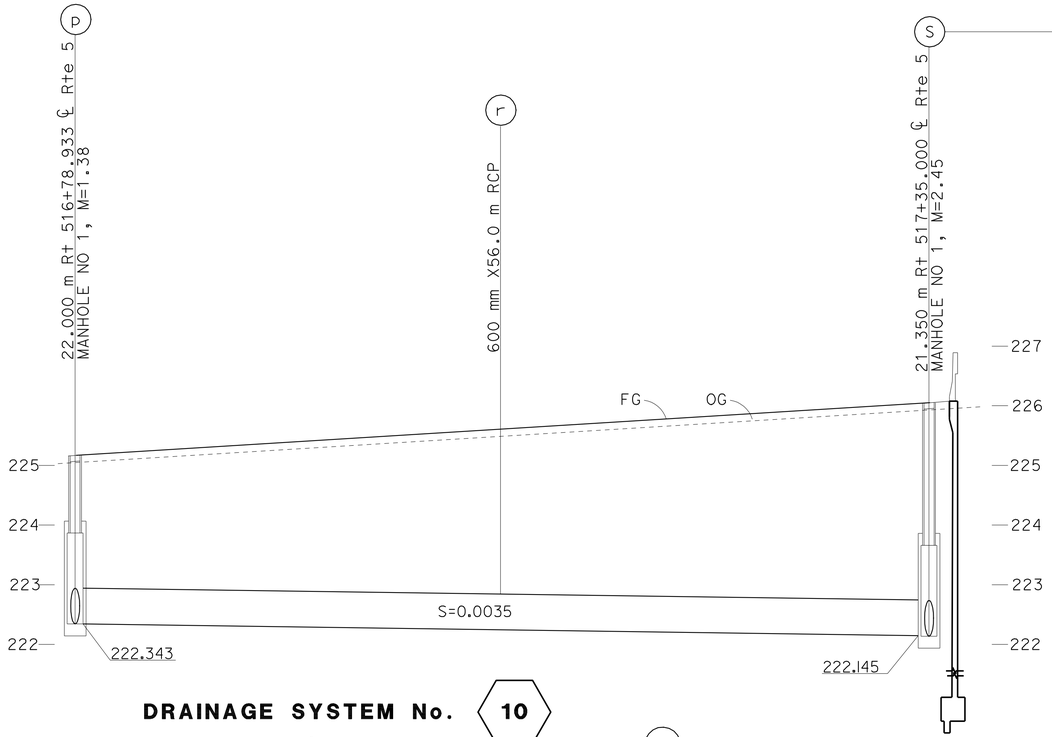

DRAINAGE SYSTEM No. 10

SCALE Horiz 1:200
Vert 1:50

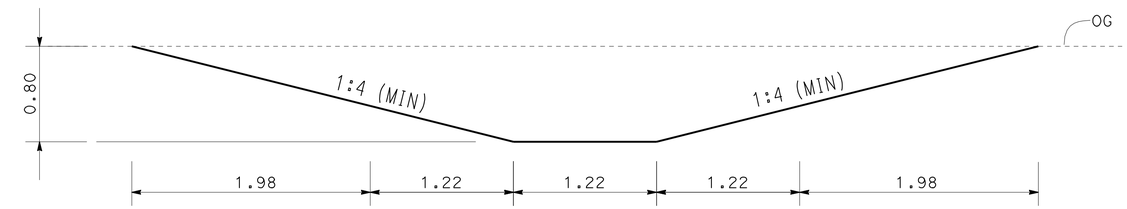

BIOFILTRATION SWALE DETAIL

NOT TO SCALE

IDENTICAL

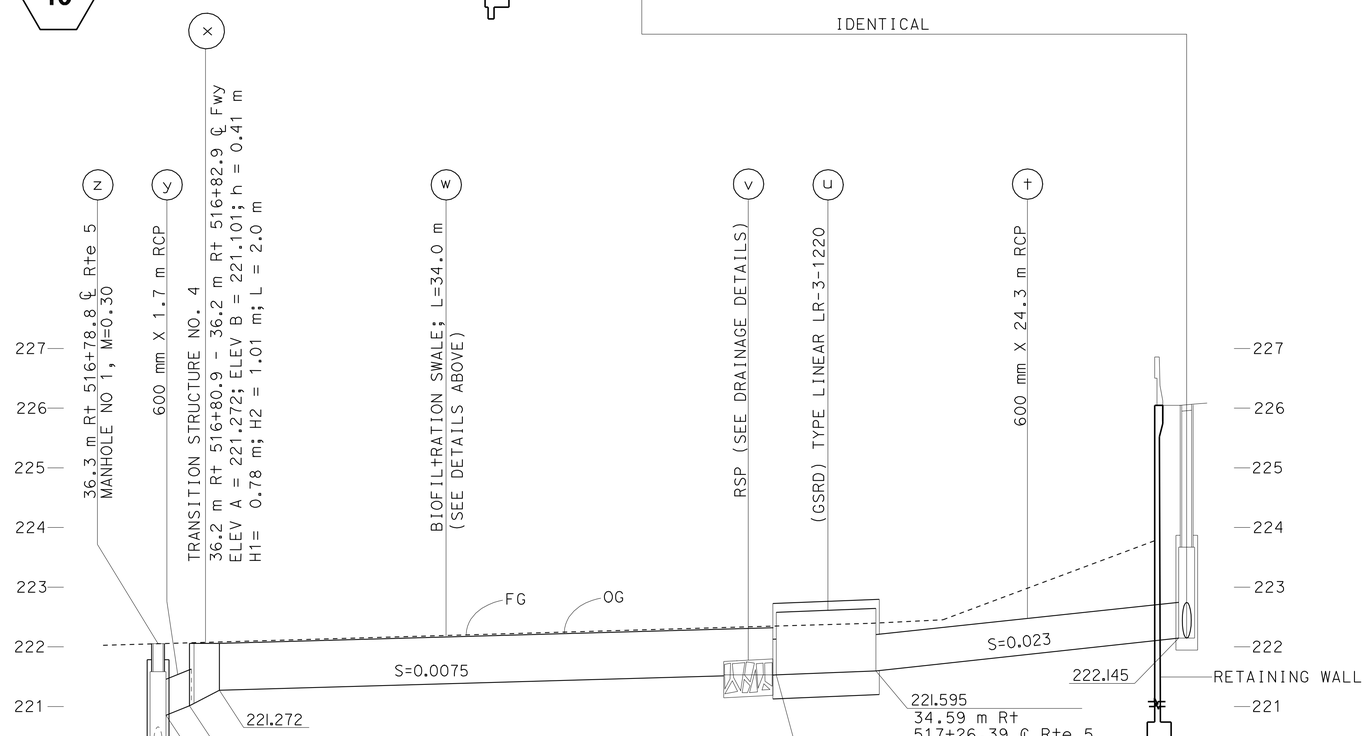

DRAINAGE SYSTEM No. 10

SCALE Horiz 1:200
Vert 1:50

ALL DIMENSIONS ARE IN METERS UNLESS OTHERWISE SHOWN

DRAINAGE PROFILE

DP-7

STATE OF CALIFORNIA - DEPARTMENT OF TRANSPORTATION
Caltrans **HYDRAULICS**

FUNCTIONAL SUPERVISOR: DAVE BHALLA
CALCULATED-DESIGNED BY: S. THAI
CHECKED BY: C. NGUYEN
REVISED BY
DATE REVISED

LAST REVISION 00-00-00
DATE PLOTTED => 03-MAY-2010
TIME PLOTTED => 13:18

Dist	COUNTY	ROUTE	KILOMETER POST TOTAL PROJECT	SHEET No.	TOTAL SHEETS
07	LA	5	50.8/58.0	145	869

REGISTERED CIVIL ENGINEER 07/07/08 DATE

5-3-10
PLANS APPROVAL DATE

REGISTERED PROFESSIONAL ENGINEER BALDEV K. BHALLA No. 34350 Exp. 09/30/11 CIVIL STATE OF CALIFORNIA

THE STATE OF CALIFORNIA OR ITS OFFICERS OR AGENTS SHALL NOT BE RESPONSIBLE FOR THE ACCURACY OR COMPLETENESS OF ELECTRONIC COPIES OF THIS PLAN SHEET.

Caltrans Metric

NOTE: CONTRACTOR SHALL VERIFY ELEVATIONS OF EXISTING DRAINAGE SYSTEMS BEFORE COMMENCEMENT OF WORK.

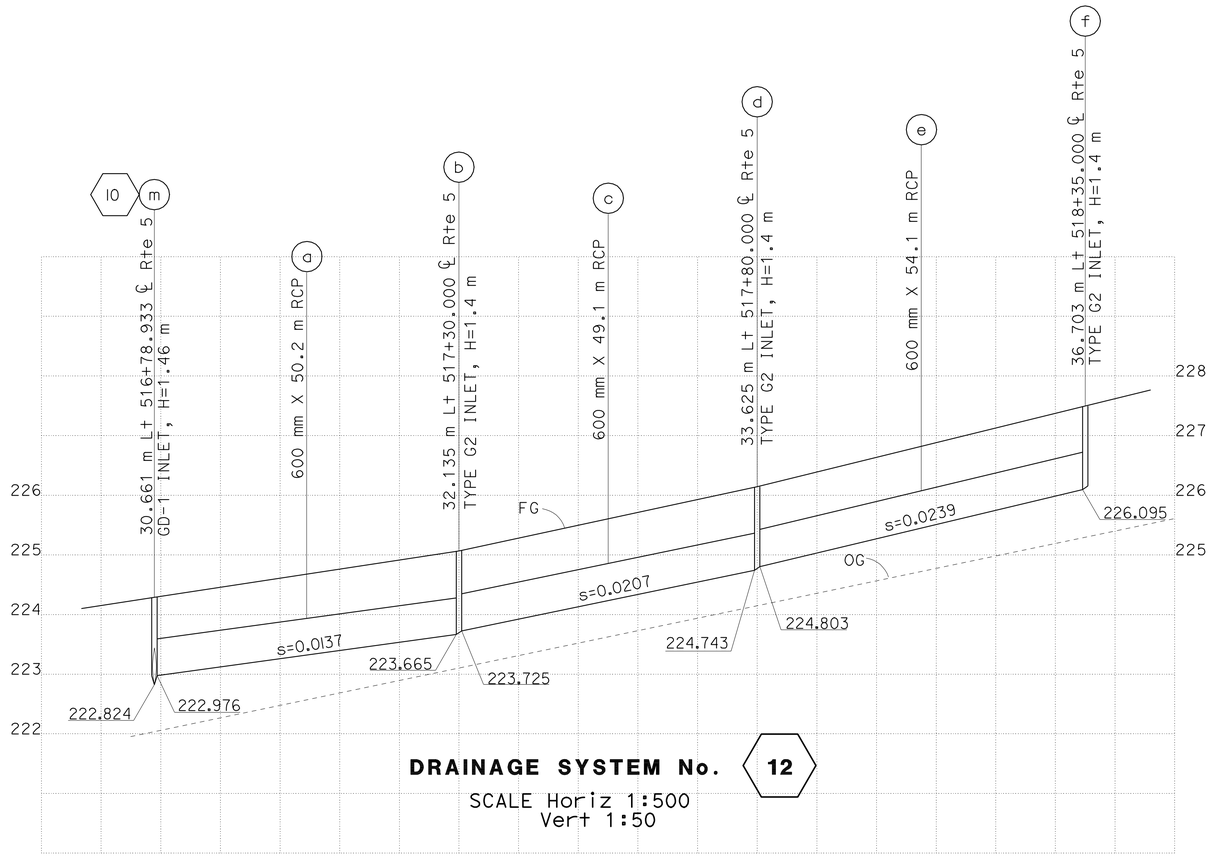

DRAINAGE SYSTEM No. 12

SCALE Horiz 1:500
Vert 1:50

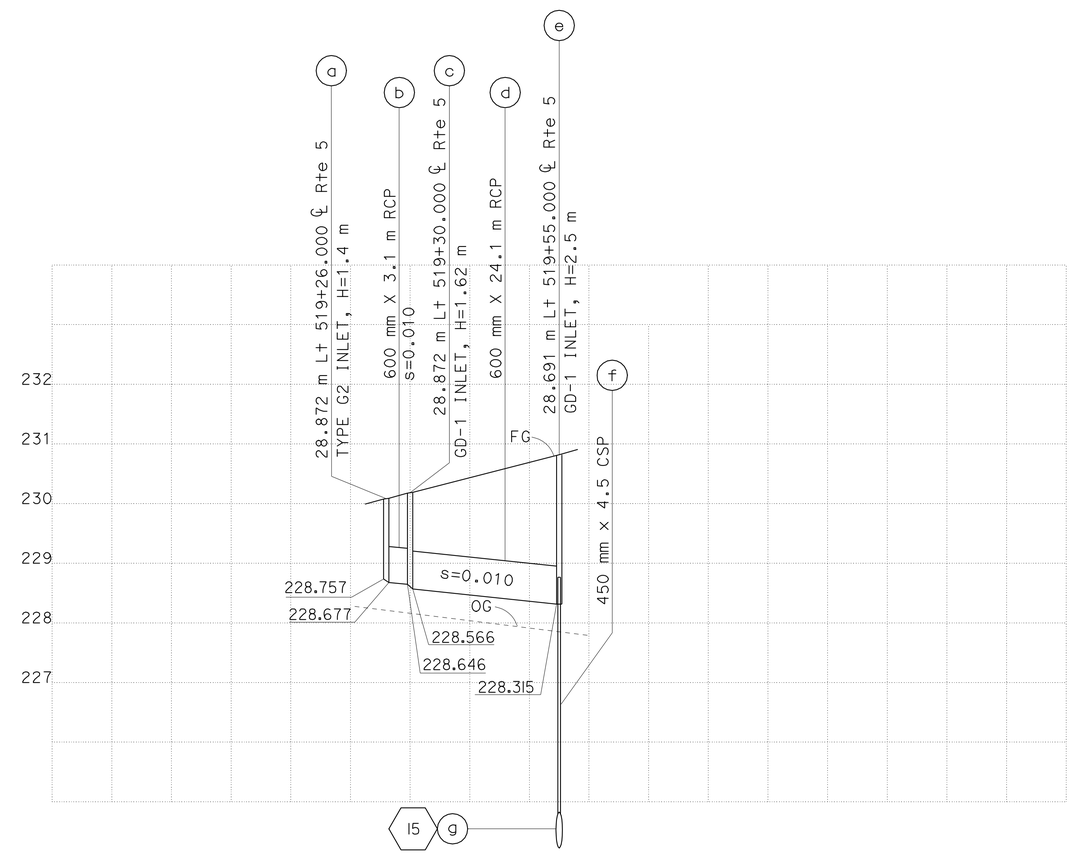

DRAINAGE SYSTEM No. 13

SCALE Horiz 1:500
Vert 1:50

ALL DIMENSIONS ARE IN METERS UNLESS OTHERWISE SHOWN

DRAINAGE PROFILE

DP-8

FUNCTIONAL SUPERVISOR	DAVE BHALLA
CALCULATED-DESIGNED BY	S. THAI
CHECKED BY	C. NGUYEN
REVISED BY	
DATE REVISED	

STATE OF CALIFORNIA - DEPARTMENT OF TRANSPORTATION
Caltrans
HYDRAULICS

LAST REVISION 00-00-00 DATE PLOTTED => 03-MAY-2010 TIME PLOTTED => 13:18

Dist	COUNTY	ROUTE	KILOMETER POST TOTAL PROJECT	SHEET No.	TOTAL SHEETS
07	LA	5	50.8/58.0	146	869

REGISTERED CIVIL ENGINEER 07/07/08 DATE

5-3-10
PLANS APPROVAL DATE

REGISTERED PROFESSIONAL ENGINEER BALDEV K. BHALLA No. 34350 Exp. 09/30/11 CIVIL STATE OF CALIFORNIA

THE STATE OF CALIFORNIA OR ITS OFFICERS OR AGENTS SHALL NOT BE RESPONSIBLE FOR THE ACCURACY OR COMPLETENESS OF ELECTRONIC COPIES OF THIS PLAN SHEET.

NOTE: CONTRACTOR SHALL VERIFY ELEVATIONS OF EXISTING DRAINAGE SYSTEMS BEFORE COMMENCEMENT OF WORK.

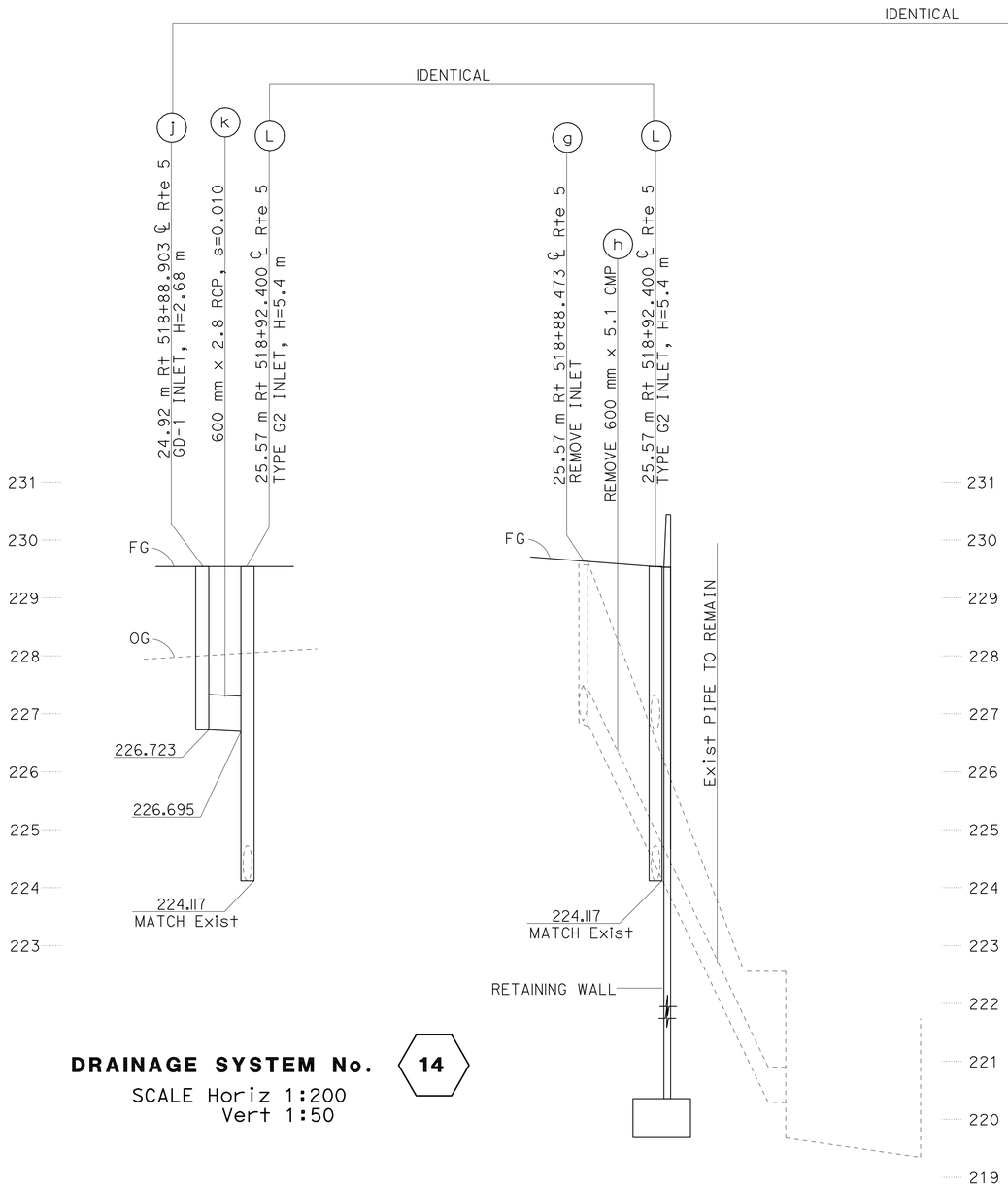

DRAINAGE SYSTEM No. 14

SCALE Horiz 1:200
Vert 1:50

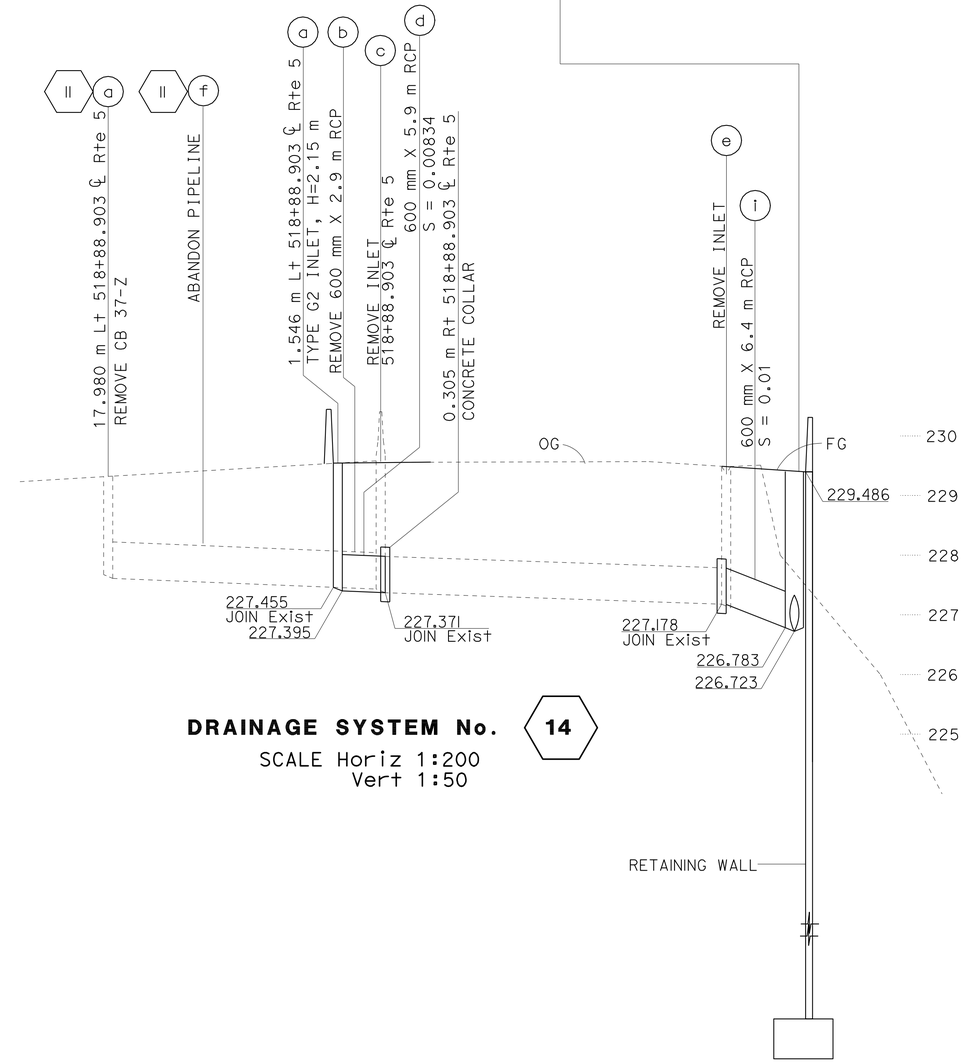

DRAINAGE SYSTEM No. 14

SCALE Horiz 1:200
Vert 1:50

ALL DIMENSIONS ARE IN METERS UNLESS OTHERWISE SHOWN

DRAINAGE PROFILE

DP-9

STATE OF CALIFORNIA - DEPARTMENT OF TRANSPORTATION
Caltrans
HYDRAULICS

FUNCTIONAL SUPERVISOR: DAVE BHALLA
CALCULATED-DESIGNED BY: S. THAI
CHECKED BY: C. NGUYEN
REVISED BY / DATE REVISED

LAST REVISION 00-00-00
DATE PLOTTED => 03-MAY-2010
TIME PLOTTED => 13:18

Dist	COUNTY	ROUTE	KILOMETER POST TOTAL PROJECT	SHEET No.	TOTAL SHEETS
07	LA	5	50.8/58.0	147	869

REGISTERED CIVIL ENGINEER 07/07/08 DATE

5-3-10
PLANS APPROVAL DATE

REGISTERED PROFESSIONAL ENGINEER BALDEV K. BHALLA No. 34350 Exp. 09/30/11 CIVIL STATE OF CALIFORNIA

THE STATE OF CALIFORNIA OR ITS OFFICERS OR AGENTS SHALL NOT BE RESPONSIBLE FOR THE ACCURACY OR COMPLETENESS OF ELECTRONIC COPIES OF THIS PLAN SHEET.

Caltrans Metric

NOTE: CONTRACTOR SHALL VERIFY ELEVATIONS OF EXISTING DRAINAGE SYSTEMS BEFORE COMMENCEMENT OF WORK.

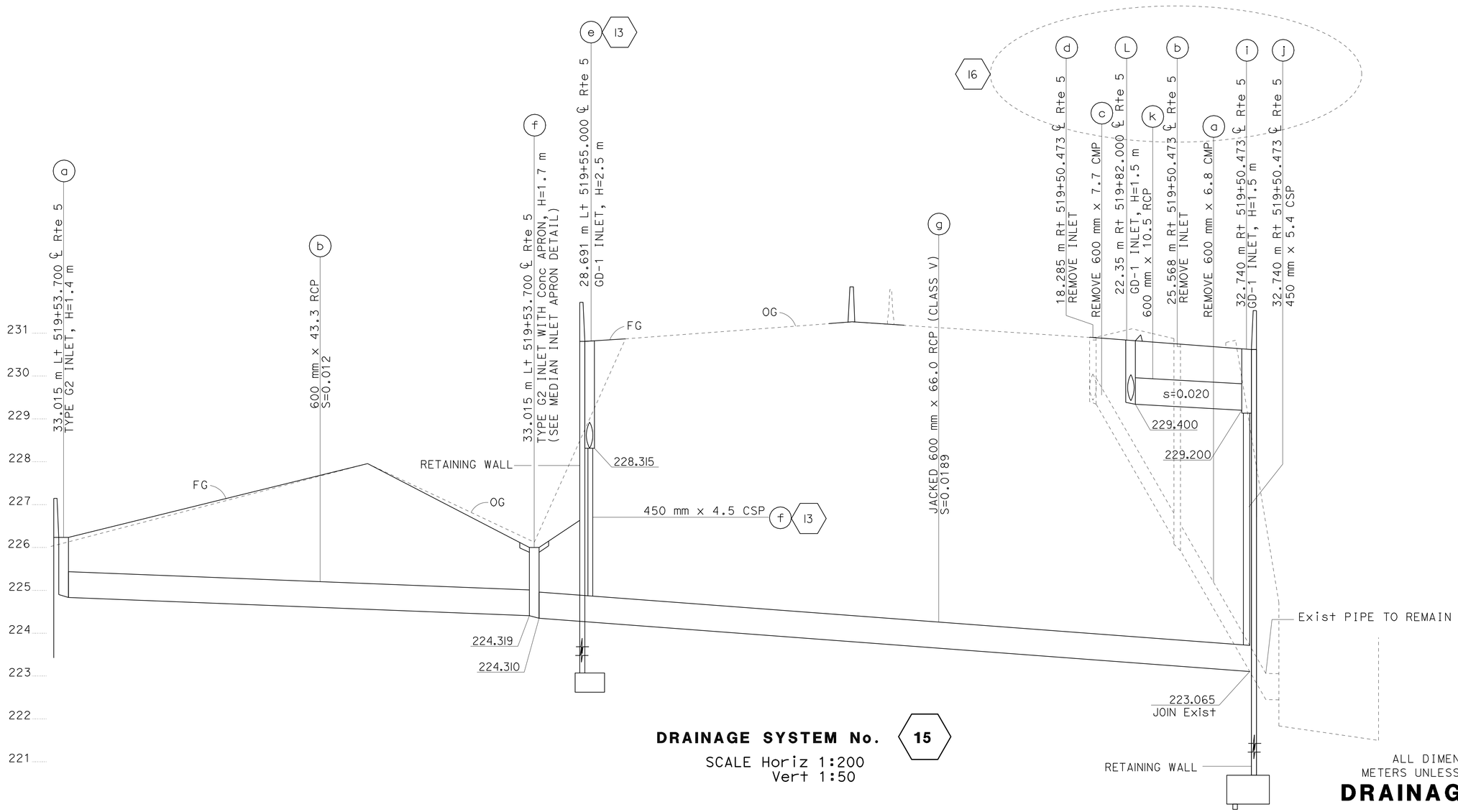

DRAINAGE SYSTEM No. 15

SCALE Horiz 1:200
Vert 1:50

ALL DIMENSIONS ARE IN METERS UNLESS OTHERWISE SHOWN

DRAINAGE PROFILE

DP-10

STATE OF CALIFORNIA - DEPARTMENT OF TRANSPORTATION
Caltrans **HYDRAULICS**

FUNCTIONAL SUPERVISOR: DAVE BHALLA

CALCULATED-DESIGNED BY: S. THAI
CHECKED BY: C. NGUYEN

REVISED BY / DATE REVISED

LAST REVISION 00-00-00
DATE PLOTTED => 03-MAY-2010
TIME PLOTTED => 13:19

Dist	COUNTY	ROUTE	KILOMETER POST TOTAL PROJECT	SHEET No.	TOTAL SHEETS
07	LA	5	50.8/58.0	148	869

REGISTERED CIVIL ENGINEER 07/07/08 DATE

5-3-10
PLANS APPROVAL DATE

REGISTERED PROFESSIONAL ENGINEER BALDEV K. BHALLA No. 34350 Exp. 09/30/11 CIVIL STATE OF CALIFORNIA

THE STATE OF CALIFORNIA OR ITS OFFICERS OR AGENTS SHALL NOT BE RESPONSIBLE FOR THE ACCURACY OR COMPLETENESS OF ELECTRONIC COPIES OF THIS PLAN SHEET.

Caltrans Metric

NOTE: CONTRACTOR SHALL VERIFY ELEVATIONS OF EXISTING DRAINAGE SYSTEMS BEFORE COMMENCEMENT OF WORK.

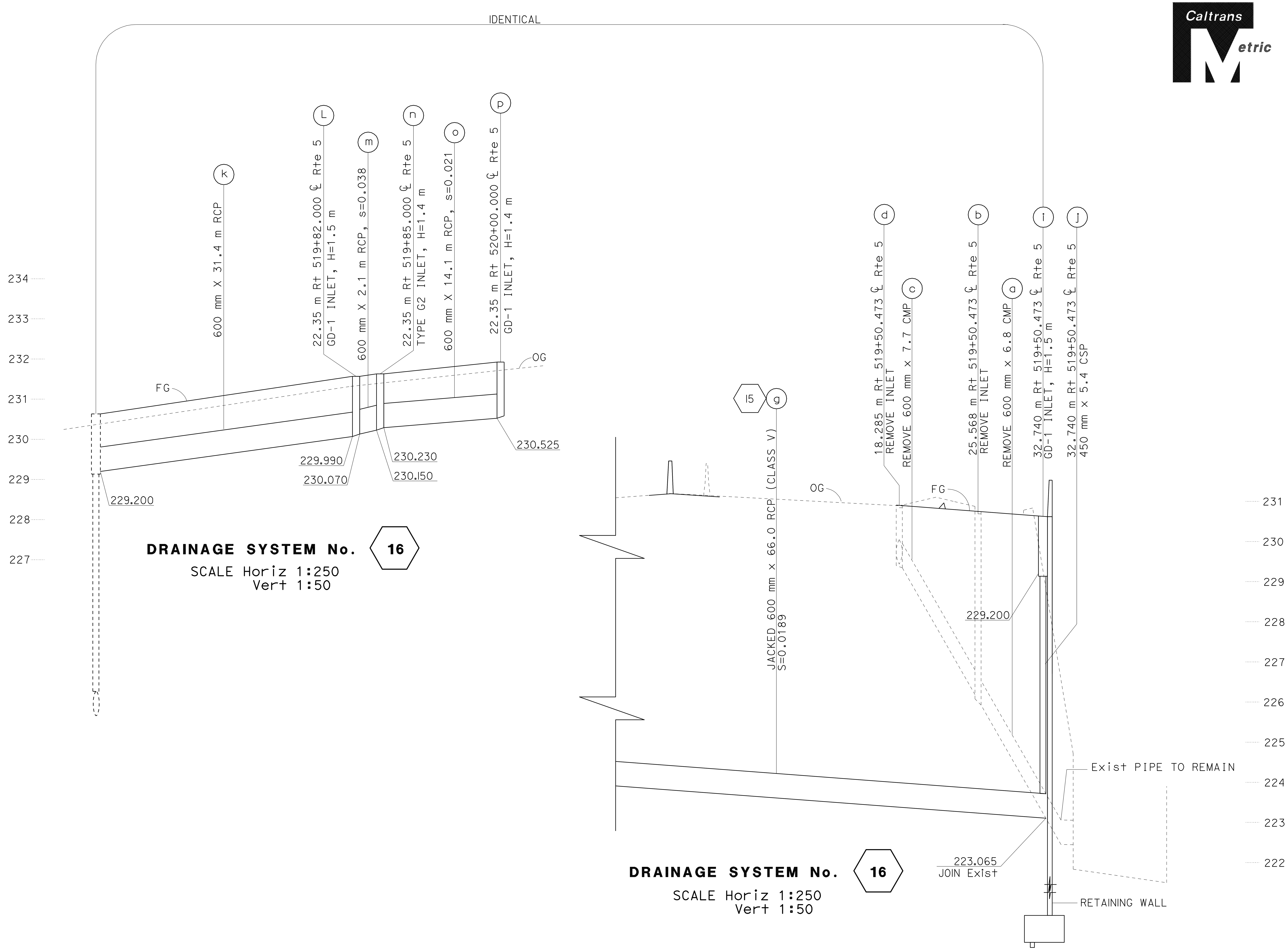

DRAINAGE SYSTEM No. 16

SCALE Horiz 1:250
Vert 1:50

DRAINAGE SYSTEM No. 16

SCALE Horiz 1:250
Vert 1:50

ALL DIMENSIONS ARE IN METERS UNLESS OTHERWISE SHOWN

DRAINAGE PROFILE

DP-11

STATE OF CALIFORNIA - DEPARTMENT OF TRANSPORTATION
Caltrans
HYDRAULICS

FUNCTIONAL SUPERVISOR	DAVE BHALLA
CALCULATED-DESIGNED BY	S. THAI
CHECKED BY	C. NGUYEN
REVISED BY	
DATE REVISED	

LAST REVISION 00-00-00 DATE PLOTTED => 03-MAY-2010 TIME PLOTTED => 13:19

Dist	COUNTY	ROUTE	KILOMETER POST TOTAL PROJECT	SHEET No.	TOTAL SHEETS
07	LA	5	50.8/58.0	149	869

REGISTERED CIVIL ENGINEER 07/07/08 DATE

5-3-10
PLANS APPROVAL DATE

REGISTERED PROFESSIONAL ENGINEER BALDEV K. BHALLA No. 34350 Exp. 09/30/11 CIVIL STATE OF CALIFORNIA

THE STATE OF CALIFORNIA OR ITS OFFICERS OR AGENTS SHALL NOT BE RESPONSIBLE FOR THE ACCURACY OR COMPLETENESS OF ELECTRONIC COPIES OF THIS PLAN SHEET.

Caltrans Metric

NOTE: CONTRACTOR SHALL VERIFY ELEVATIONS OF EXISTING DRAINAGE SYSTEMS BEFORE COMMENCEMENT OF WORK.

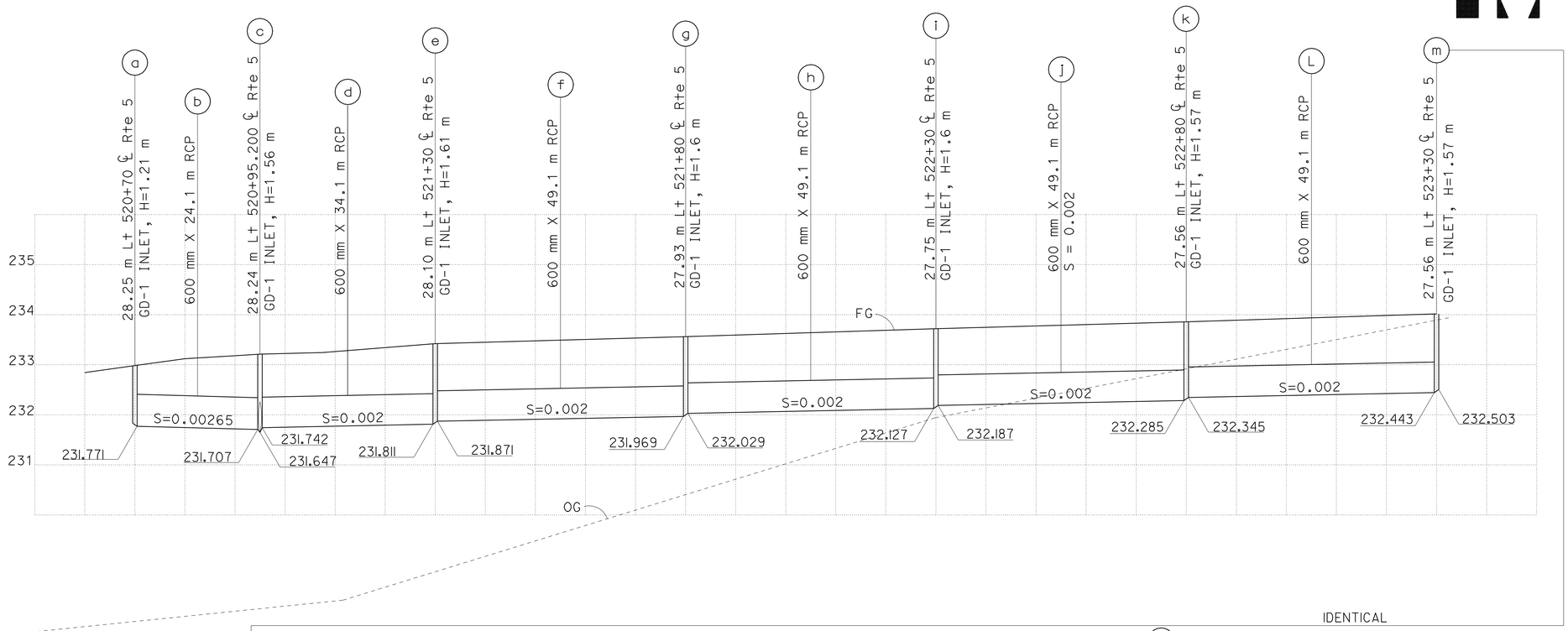

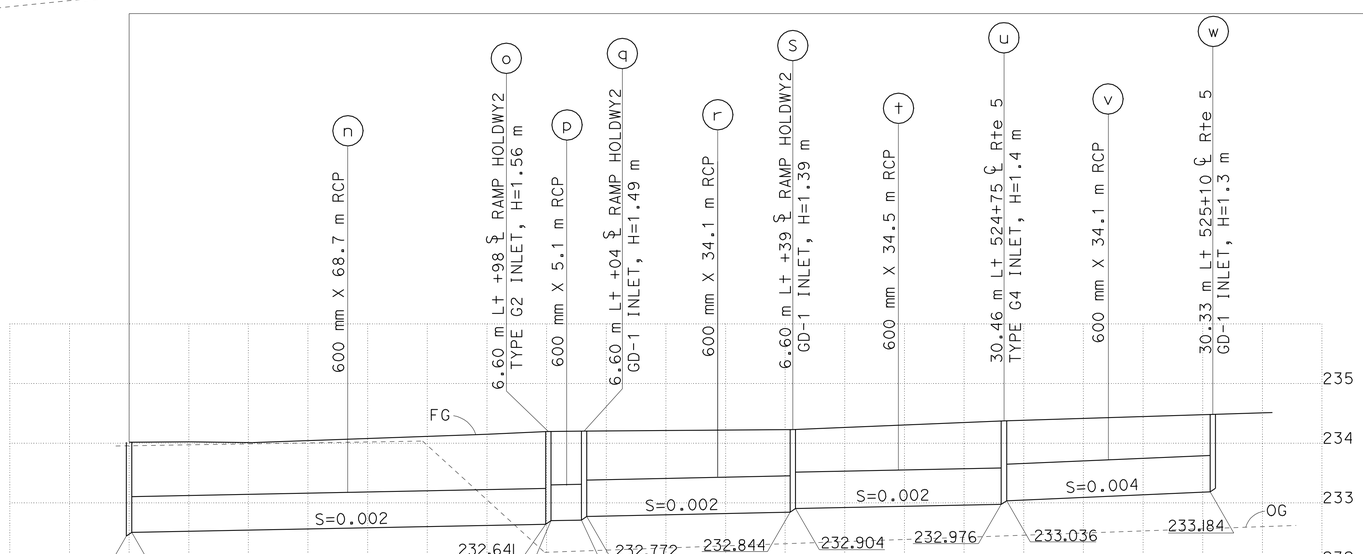

DRAINAGE SYSTEM No. 17

SCALE Horiz 1:500
Vert 1:50

ALL DIMENSIONS ARE IN METERS UNLESS OTHERWISE SHOWN

DRAINAGE PROFILE

DP-12

STATE OF CALIFORNIA - DEPARTMENT OF TRANSPORTATION
Caltrans **HYDRAULICS**

FUNCTIONAL SUPERVISOR: DAVE BHALLA
CALCULATED-DESIGNED BY: S. THAI
CHECKED BY: C. NGUYEN
REVISED BY / DATE REVISED

LAST REVISION 00-00-00 | DATE PLOTTED => 03-MAY-2010 | TIME PLOTTED => 13:19

Dist	COUNTY	ROUTE	KILOMETER POST TOTAL PROJECT	SHEET No.	TOTAL SHEETS
07	LA	5	50.8/58.0	150	869

REGISTERED CIVIL ENGINEER DATE 07/07/08

5-3-10
PLANS APPROVAL DATE

REGISTERED PROFESSIONAL ENGINEER BALDEV K. BHALLA No. 34350 Exp. 09/30/11 CIVIL STATE OF CALIFORNIA

THE STATE OF CALIFORNIA OR ITS OFFICERS OR AGENTS SHALL NOT BE RESPONSIBLE FOR THE ACCURACY OR COMPLETENESS OF ELECTRONIC COPIES OF THIS PLAN SHEET.

NOTE: CONTRACTOR SHALL VERIFY ELEVATIONS OF EXISTING DRAINAGE SYSTEMS BEFORE COMMENCEMENT OF WORK.

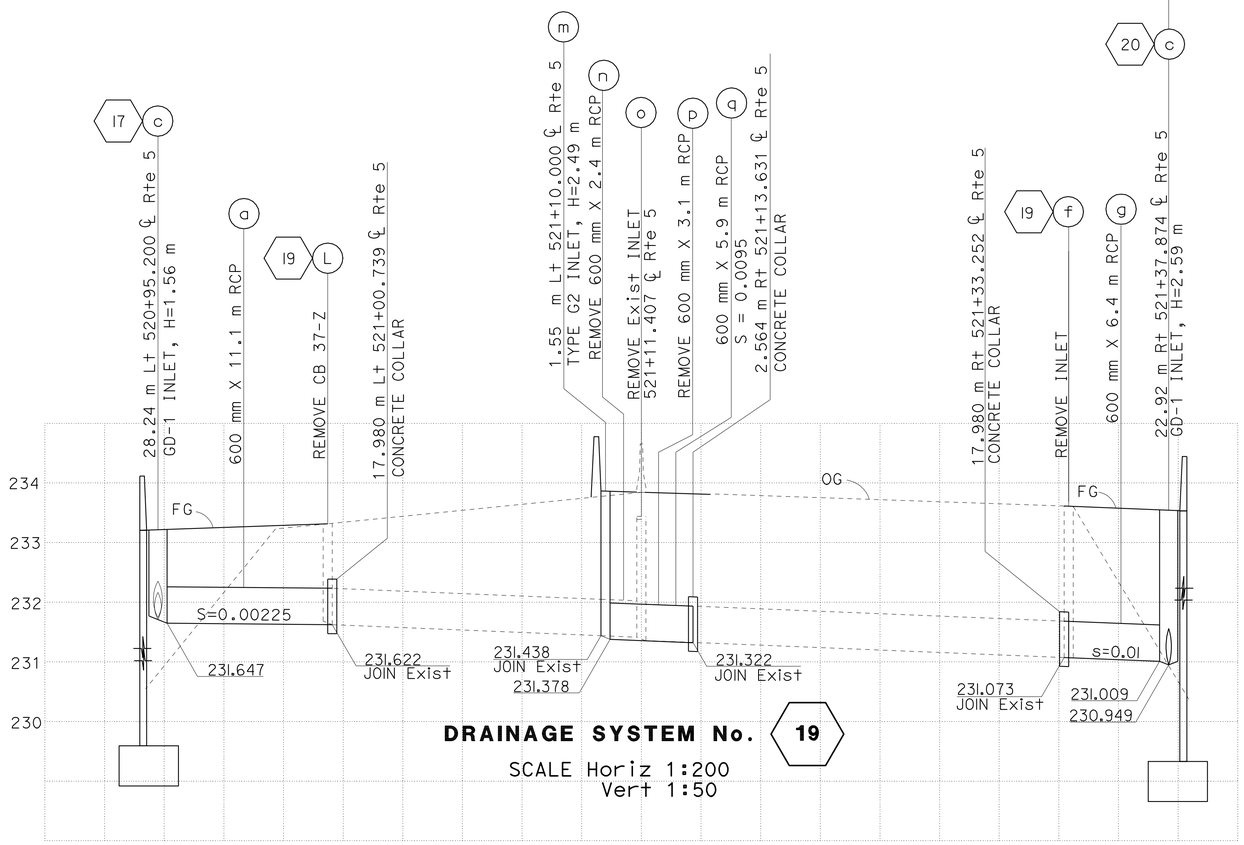

DRAINAGE SYSTEM No. 19

SCALE Horiz 1:200
Vert 1:50

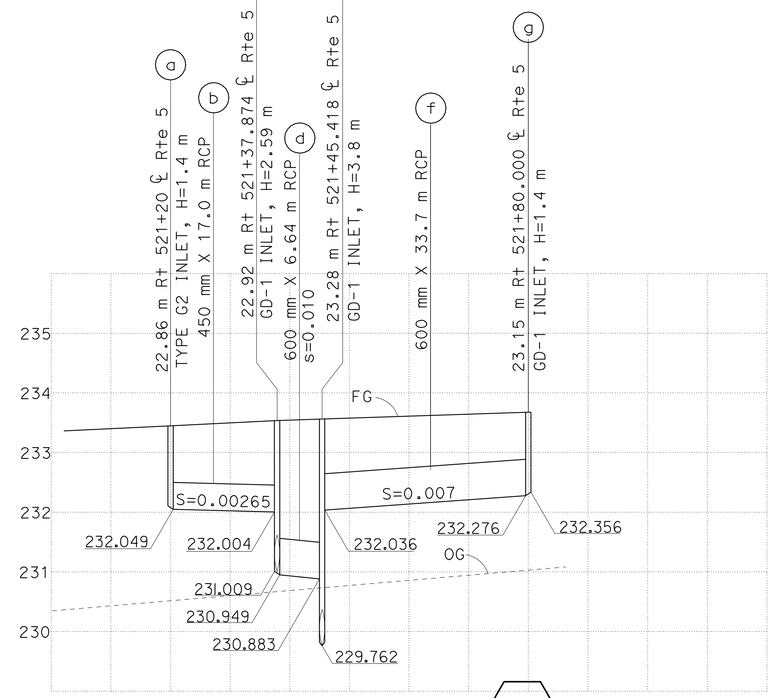

DRAINAGE SYSTEM No. 20

SCALE Horiz 1:500
Vert 1:50

ALL DIMENSIONS ARE IN METERS UNLESS OTHERWISE SHOWN

DRAINAGE PROFILE

DP-13

STATE OF CALIFORNIA - DEPARTMENT OF TRANSPORTATION
Caltrans **HYDRAULICS**

FUNCTIONAL SUPERVISOR: DAVE BHALLA
CALCULATED-DESIGNED BY: S. THAI
CHECKED BY: C. NGUYEN
REVISED BY / DATE REVISED

LAST REVISION 00-00-00 | DATE PLOTTED => 03-MAY-2010 | TIME PLOTTED => 13:19

Dist	COUNTY	ROUTE	KILOMETER POST TOTAL PROJECT	SHEET No.	TOTAL SHEETS
07	LA	5	50.8/58.0	151	869

REGISTERED CIVIL ENGINEER 07/07/08 DATE

5-3-10
PLANS APPROVAL DATE

REGISTERED PROFESSIONAL ENGINEER BALDEV K. BHALLA No. 34350 Exp. 09/30/11 CIVIL STATE OF CALIFORNIA

THE STATE OF CALIFORNIA OR ITS OFFICERS OR AGENTS SHALL NOT BE RESPONSIBLE FOR THE ACCURACY OR COMPLETENESS OF ELECTRONIC COPIES OF THIS PLAN SHEET.

Caltrans Metric

NOTE: CONTRACTOR SHALL VERIFY ELEVATIONS OF EXISTING DRAINAGE SYSTEMS BEFORE COMMENCEMENT OF WORK.

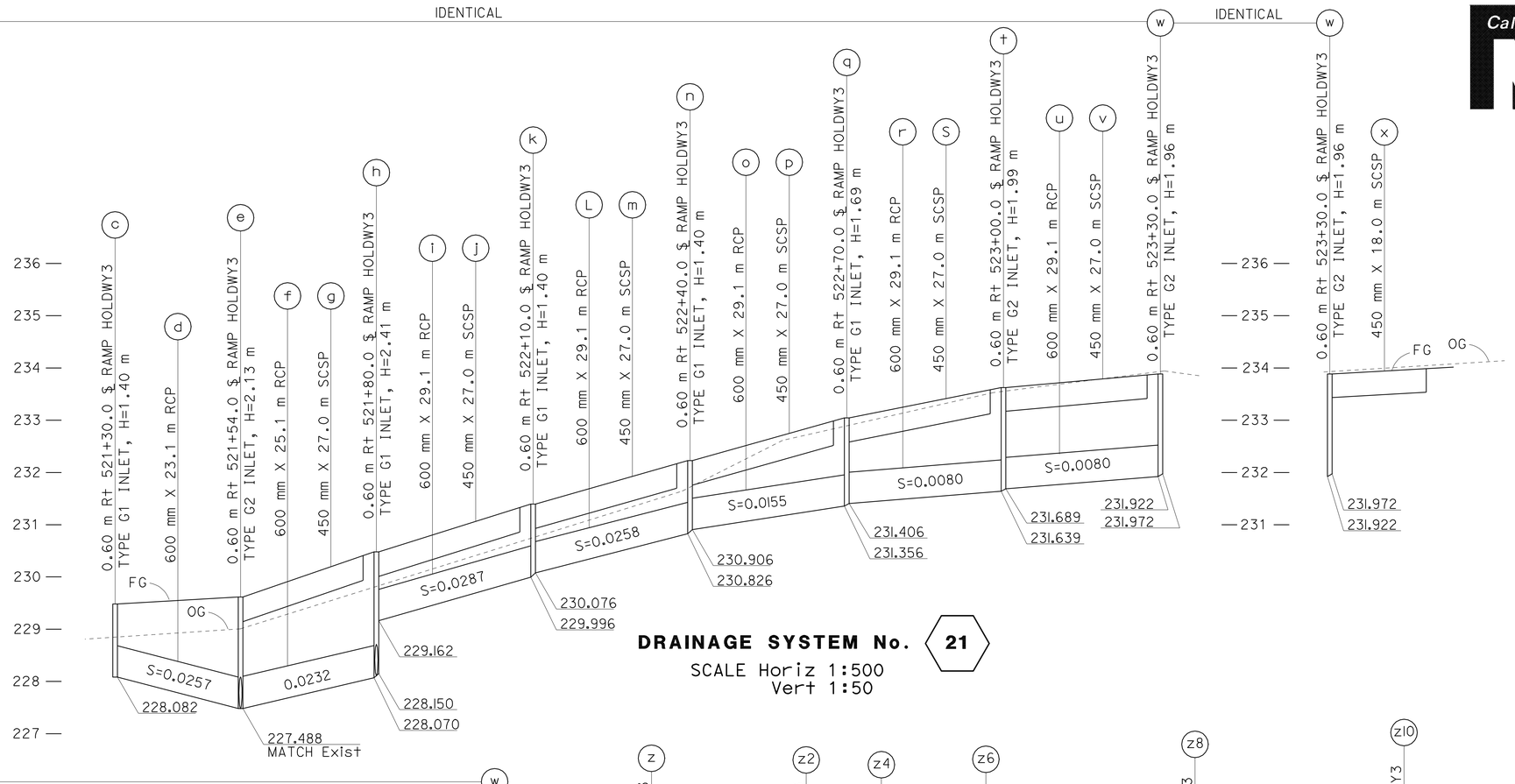

DRAINAGE SYSTEM No. 21

SCALE Horiz 1:500
Vert 1:50

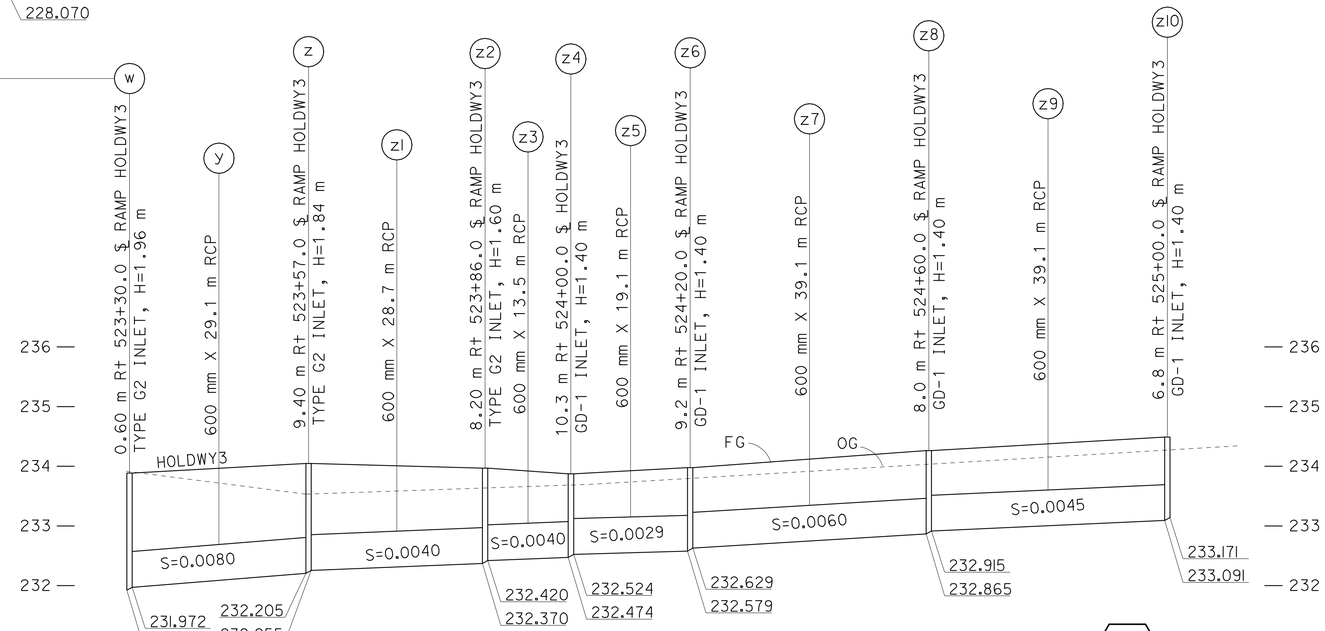

DRAINAGE SYSTEM No. 21

SCALE Horiz 1:500
Vert 1:50

ALL DIMENSIONS ARE IN METERS UNLESS OTHERWISE SHOWN

DRAINAGE PROFILE

DP-14

STATE OF CALIFORNIA - DEPARTMENT OF TRANSPORTATION
Caltrans HYDRAULICS

FUNCTIONAL SUPERVISOR DAVE BHALLA
CALCULATED-DESIGNED BY S. THAI
CHECKED BY C. NGUYEN
REVISED BY
DATE REVISED

LAST REVISION 00-00-00
DATE PLOTTED => 03-MAY-2010
TIME PLOTTED => 13:19

Dist	COUNTY	ROUTE	KILOMETER POST TOTAL PROJECT	SHEET No.	TOTAL SHEETS
07	LA	5	50.8/58.0	152	869

REGISTERED CIVIL ENGINEER 07/07/08 DATE

5-3-10
PLANS APPROVAL DATE

REGISTERED PROFESSIONAL ENGINEER BALDEV K. BHALLA No. 34350 Exp. 09/30/11 CIVIL STATE OF CALIFORNIA

THE STATE OF CALIFORNIA OR ITS OFFICERS OR AGENTS SHALL NOT BE RESPONSIBLE FOR THE ACCURACY OR COMPLETENESS OF ELECTRONIC COPIES OF THIS PLAN SHEET.

Caltrans Metric

NOTE: CONTRACTOR SHALL VERIFY ELEVATIONS OF EXISTING DRAINAGE SYSTEMS BEFORE COMMENCEMENT OF WORK.

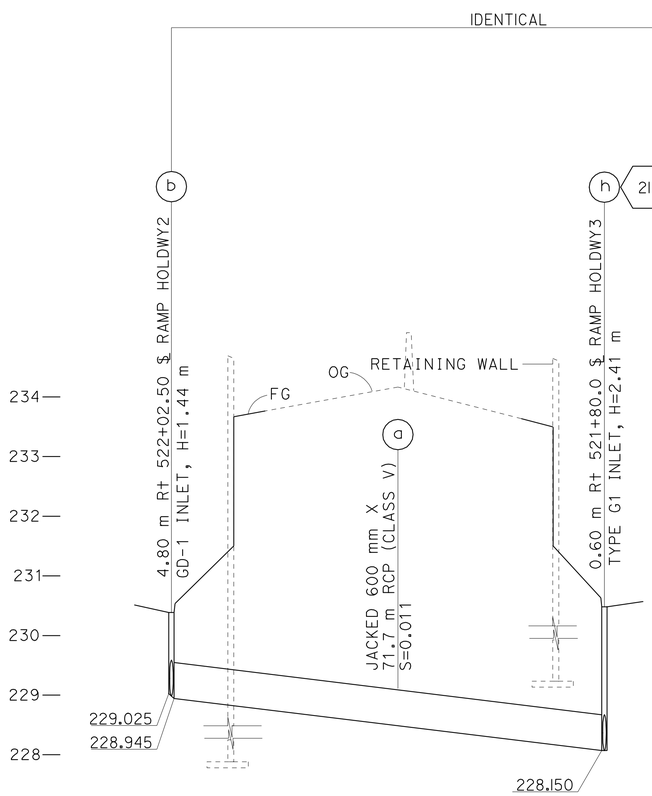

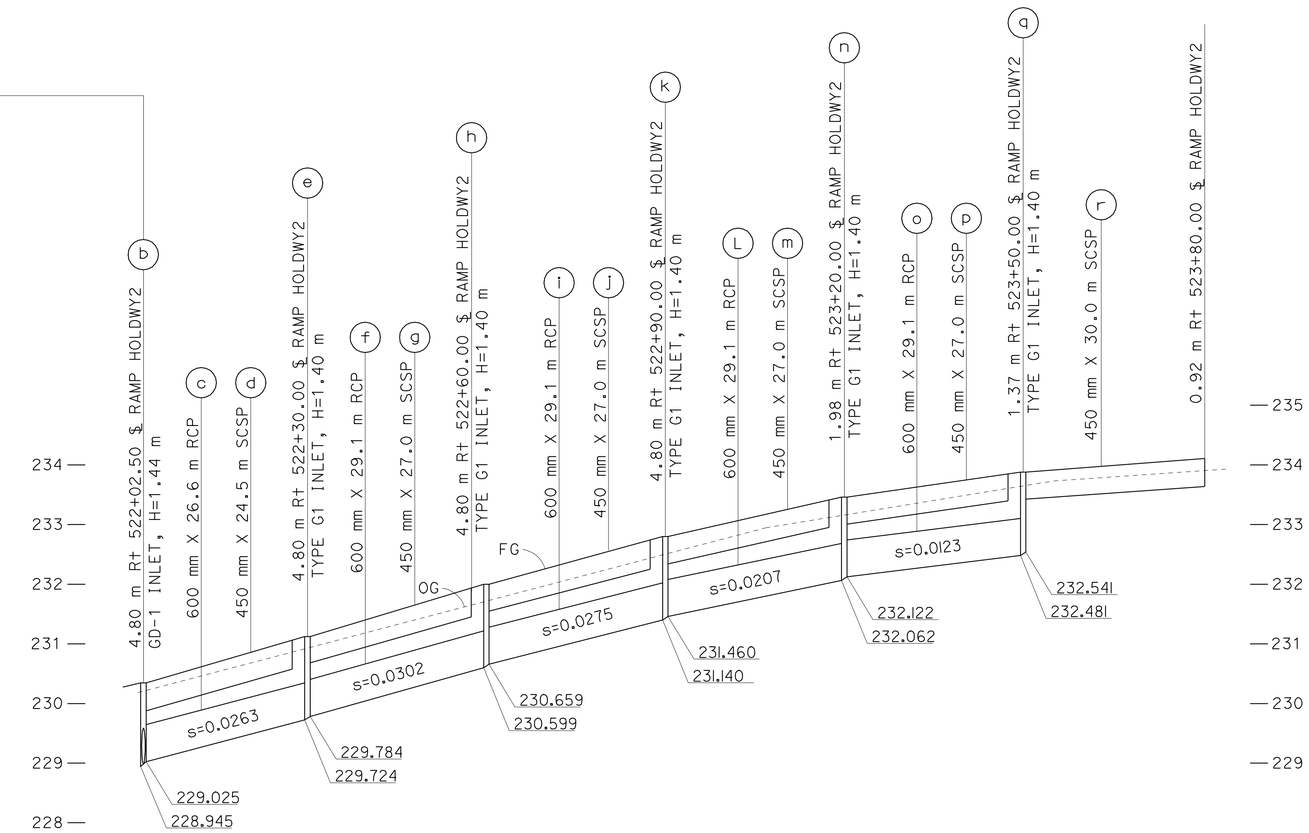

DRAINAGE SYSTEM No. 22

SCALE Horiz 1:500
Vert 1:50

ALL DIMENSIONS ARE IN METERS UNLESS OTHERWISE SHOWN

DRAINAGE PROFILE

DP-15

STATE OF CALIFORNIA - DEPARTMENT OF TRANSPORTATION
Caltrans **HYDRAULICS**

FUNCTIONAL SUPERVISOR: DAVE BHALLA
CALCULATED-DESIGNED BY: S. THAI
CHECKED BY: C. NGUYEN
REVISED BY
DATE REVISED

LAST REVISION 00-00-00 DATE PLOTTED => 03-MAY-2010 TIME PLOTTED => 13:19

Dist	COUNTY	ROUTE	KILOMETER POST TOTAL PROJECT	SHEET No.	TOTAL SHEETS
07	LA	5	50.8/58.0	153	869

REGISTERED CIVIL ENGINEER 07/07/08 DATE

5-3-10
PLANS APPROVAL DATE

REGISTERED PROFESSIONAL ENGINEER BALDEV K. BHALLA No. 34350 Exp. 09/30/11 CIVIL STATE OF CALIFORNIA

THE STATE OF CALIFORNIA OR ITS OFFICERS OR AGENTS SHALL NOT BE RESPONSIBLE FOR THE ACCURACY OR COMPLETENESS OF ELECTRONIC COPIES OF THIS PLAN SHEET.

NOTE: CONTRACTOR SHALL VERIFY ELEVATIONS OF EXISTING DRAINAGE SYSTEMS BEFORE COMMENCEMENT OF WORK.

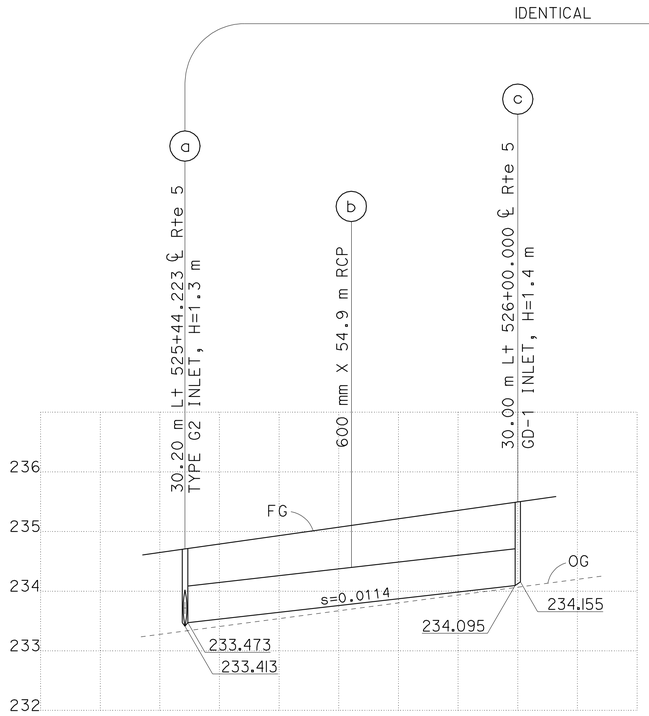

DRAINAGE SYSTEM No. 23

SCALE Horiz 1:500
Vert 1:50

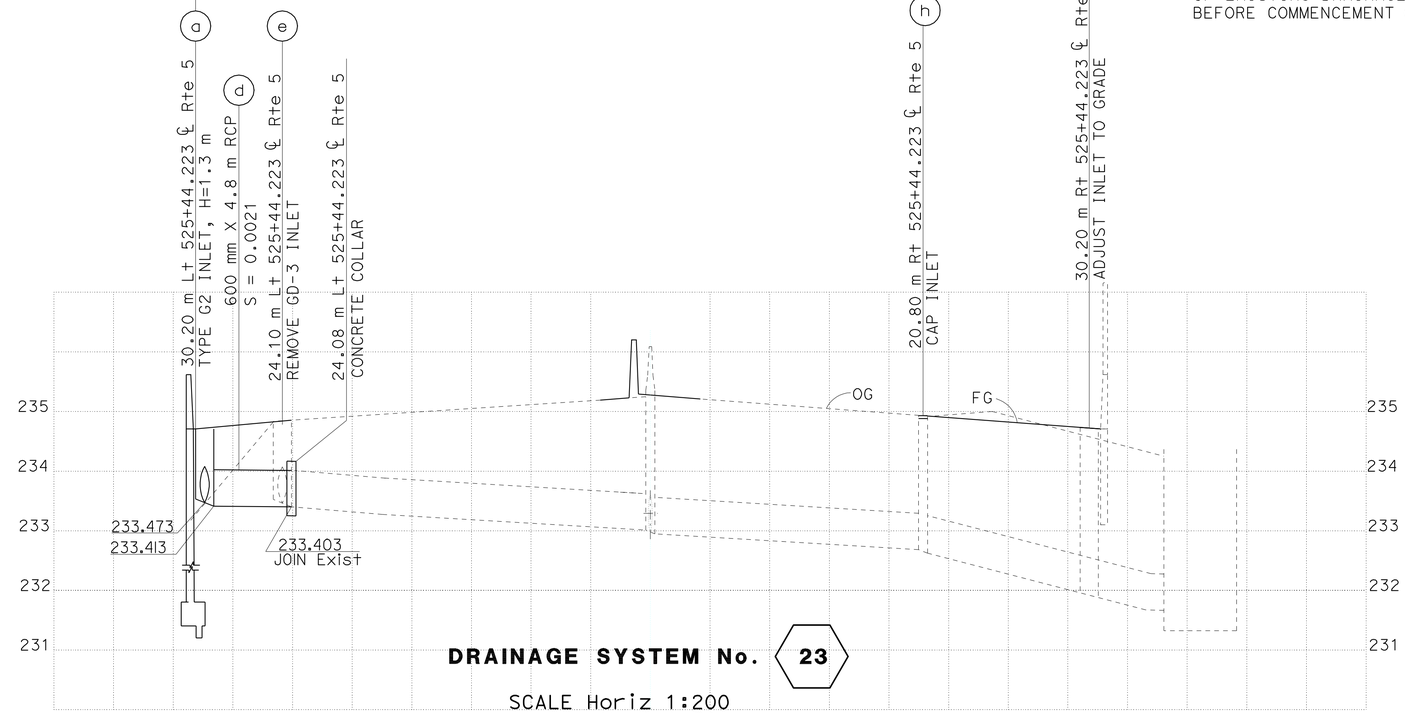

DRAINAGE SYSTEM No. 23

SCALE Horiz 1:200
Vert 1:50

ALL DIMENSIONS ARE IN METERS UNLESS OTHERWISE SHOWN

DRAINAGE PROFILE

DP-16

REVISED BY	DATE REVISED
S. THAI	
C. NGUYEN	

CALCULATED-DESIGNED BY
CHECKED BY

FUNCTIONAL SUPERVISOR
DAVE BHALLA

STATE OF CALIFORNIA - DEPARTMENT OF TRANSPORTATION
Caltrans
HYDRAULICS

LAST REVISION 00-00-00
DATE PLOTTED => 03-MAY-2010
TIME PLOTTED => 13:19

Dist	COUNTY	ROUTE	KILOMETER POST TOTAL PROJECT	SHEET No.	TOTAL SHEETS
07	LA	5	50.8/58.0	154	869

REGISTERED CIVIL ENGINEER DATE 07/07/08

5-3-10
PLANS APPROVAL DATE

REGISTERED PROFESSIONAL ENGINEER BALDEV K. BHALLA No. 34350 Exp. 09/30/11 CIVIL STATE OF CALIFORNIA

THE STATE OF CALIFORNIA OR ITS OFFICERS OR AGENTS SHALL NOT BE RESPONSIBLE FOR THE ACCURACY OR COMPLETENESS OF ELECTRONIC COPIES OF THIS PLAN SHEET.

NOTE: CONTRACTOR SHALL VERIFY ELEVATIONS OF EXISTING DRAINAGE SYSTEMS BEFORE COMMENCEMENT OF WORK.

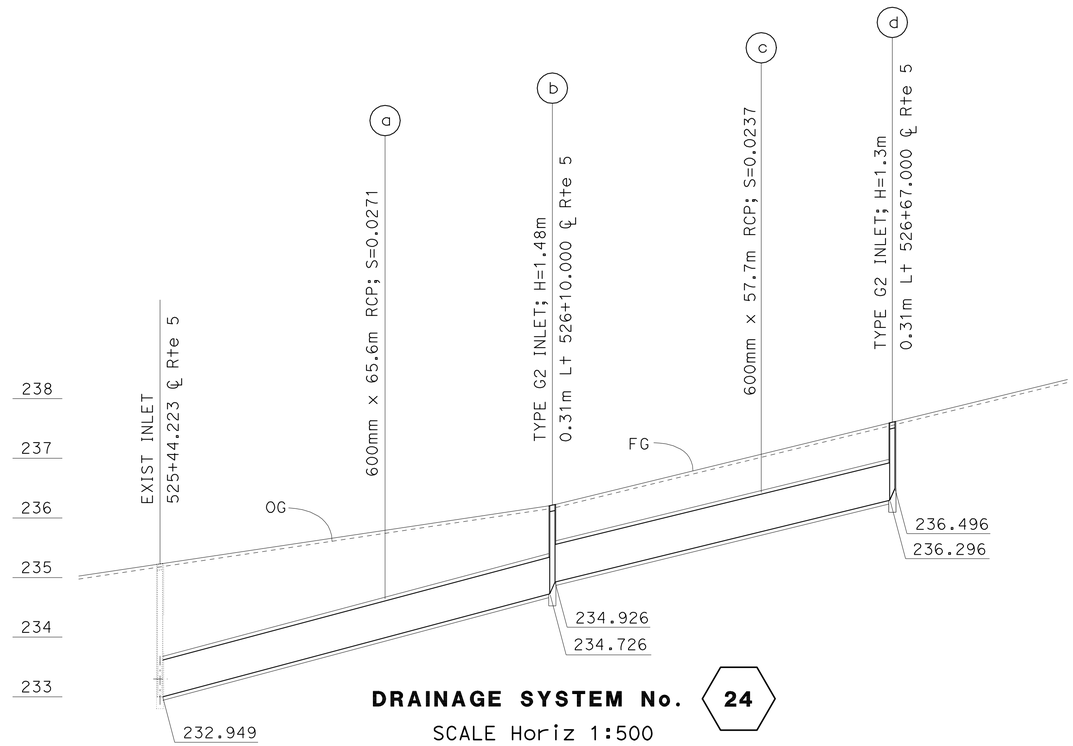

DRAINAGE SYSTEM No. 24

SCALE Horiz 1:500
Vert 1:50

ALL DIMENSIONS ARE IN METERS UNLESS OTHERWISE SHOWN

DRAINAGE PROFILE

DP-17

STATE OF CALIFORNIA - DEPARTMENT OF TRANSPORTATION
Caltrans **HYDRAULICS**

FUNCTIONAL SUPERVISOR: DAVE BHALLA
CALCULATED-DESIGNED BY: S. THAI
CHECKED BY: C. NGUYEN
REVISED BY / DATE REVISED

LAST REVISION 00-00-00 | DATE PLOTTED => 03-MAY-2010 | TIME PLOTTED => 13:19

Dist	COUNTY	ROUTE	KILOMETER POST TOTAL PROJECT	SHEET No.	TOTAL SHEETS
07	LA	5	50.8/58.0	155	869

REGISTERED CIVIL ENGINEER 07/07/08 DATE

5-3-10
PLANS APPROVAL DATE

REGISTERED PROFESSIONAL ENGINEER BALDEV K. BHALLA No. 34350 Exp. 09/30/11 CIVIL STATE OF CALIFORNIA

THE STATE OF CALIFORNIA OR ITS OFFICERS OR AGENTS SHALL NOT BE RESPONSIBLE FOR THE ACCURACY OR COMPLETENESS OF ELECTRONIC COPIES OF THIS PLAN SHEET.

NOTE: CONTRACTOR SHALL VERIFY ELEVATIONS OF EXISTING DRAINAGE SYSTEMS BEFORE COMMENCEMENT OF WORK.

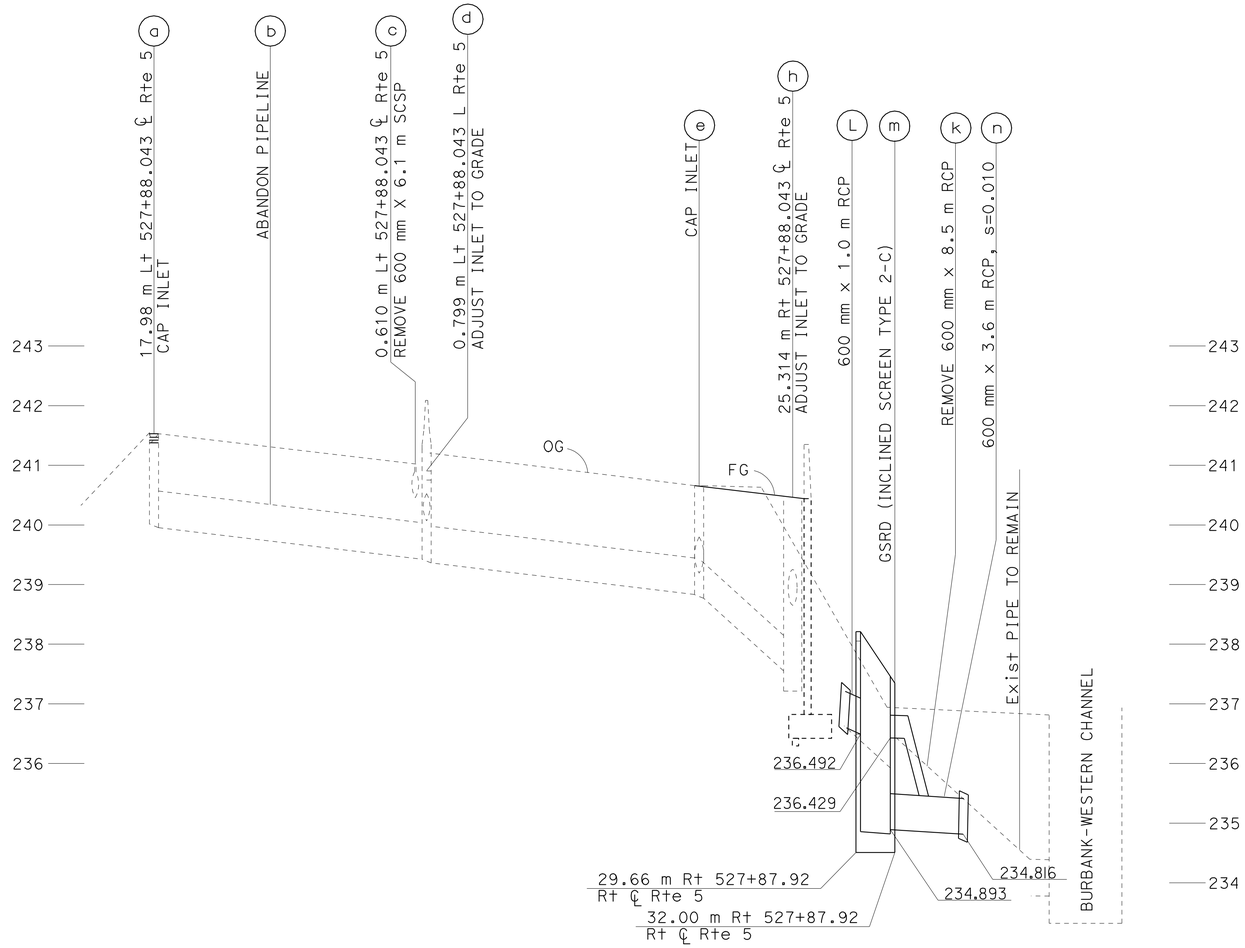

DRAINAGE SYSTEM No. 25

SCALE Horiz 1:200
Vert 1:50

ALL DIMENSIONS ARE IN METERS UNLESS OTHERWISE SHOWN

DRAINAGE PROFILE

DP-18

STATE OF CALIFORNIA - DEPARTMENT OF TRANSPORTATION
Caltrans
HYDRAULICS

FUNCTIONAL SUPERVISOR: DAVE BHALLA
CALCULATED-DESIGNED BY: S. THAI
CHECKED BY: C. NGUYEN
REVISED BY
DATE REVISED

LAST REVISION 00-00-00
DATE PLOTTED => 03-MAY-2010
TIME PLOTTED => 13:20

Dist	COUNTY	ROUTE	KILOMETER POST TOTAL PROJECT	SHEET No.	TOTAL SHEETS
07	LA	5	50.8/58.0	156	869

REGISTERED CIVIL ENGINEER DATE 07/07/08

5-3-10
PLANS APPROVAL DATE

REGISTERED PROFESSIONAL ENGINEER BALDEV K. BHALLA No. 34350 Exp. 09/30/11 CIVIL STATE OF CALIFORNIA

THE STATE OF CALIFORNIA OR ITS OFFICERS OR AGENTS SHALL NOT BE RESPONSIBLE FOR THE ACCURACY OR COMPLETENESS OF ELECTRONIC COPIES OF THIS PLAN SHEET.

NOTE: CONTRACTOR SHALL VERIFY ELEVATIONS OF EXISTING DRAINAGE SYSTEMS BEFORE COMMENCEMENT OF WORK.

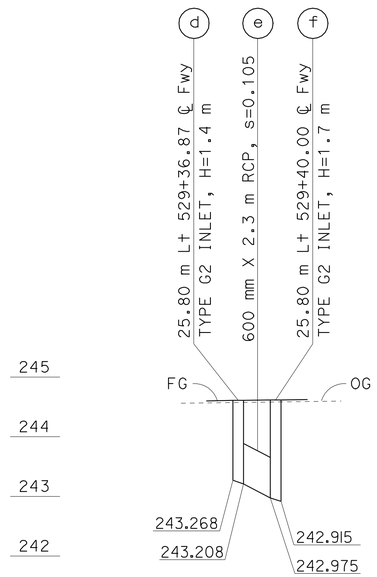

DRAINAGE SYSTEM No. 27

SCALE Horiz 1:250
Vert 1:50

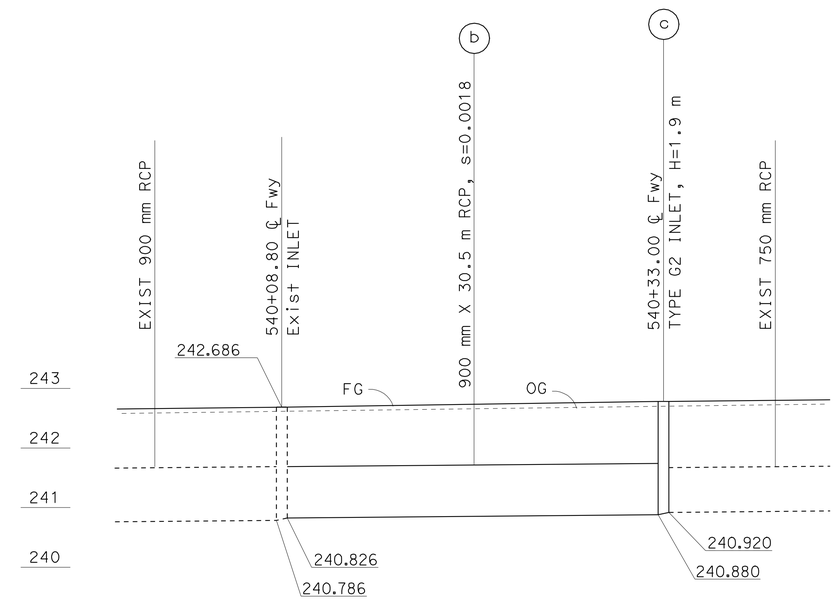

DRAINAGE SYSTEM No. 30

SCALE Horiz 1:250
Vert 1:50

ALL DIMENSIONS ARE IN METERS UNLESS OTHERWISE SHOWN

DRAINAGE PROFILE

DP-19

REVISED BY	DATE REVISED

CALCULATED-DESIGNED BY	S. THAI
CHECKED BY	C. NGUYEN
FUNCTIONAL SUPERVISOR	DAVE BHALLA

STATE OF CALIFORNIA - DEPARTMENT OF TRANSPORTATION
Caltrans HYDRAULICS

LAST REVISION 00-00-00 | DATE PLOTTED => 03-MAY-2010 | TIME PLOTTED => 13:20

Dist	COUNTY	ROUTE	KILOMETER POST TOTAL PROJECT	SHEET No.	TOTAL SHEETS
07	LA	5	50.8/58.0	157	869

REGISTERED CIVIL ENGINEER DATE 07/07/08

5-3-10
PLANS APPROVAL DATE

REGISTERED PROFESSIONAL ENGINEER BALDEV K. BHALLA No. 34350 Exp. 09/30/11 CIVIL STATE OF CALIFORNIA

THE STATE OF CALIFORNIA OR ITS OFFICERS OR AGENTS SHALL NOT BE RESPONSIBLE FOR THE ACCURACY OR COMPLETENESS OF ELECTRONIC COPIES OF THIS PLAN SHEET.

Caltrans Metric

NOTE: CONTRACTOR SHALL VERIFY ELEVATIONS OF EXISTING DRAINAGE SYSTEMS BEFORE COMMENCEMENT OF WORK.

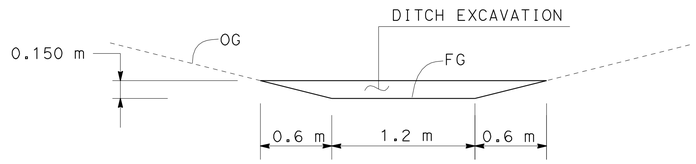

TYPICAL X-SECTION
NOT TO SCALE

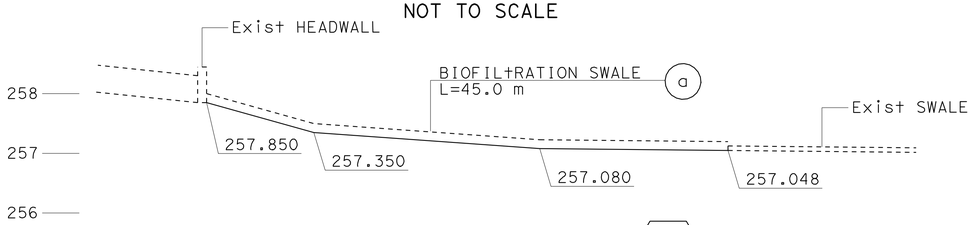

DRAINAGE SYSTEM No. 33
SCALE Horiz 1:250
Vert 1:50

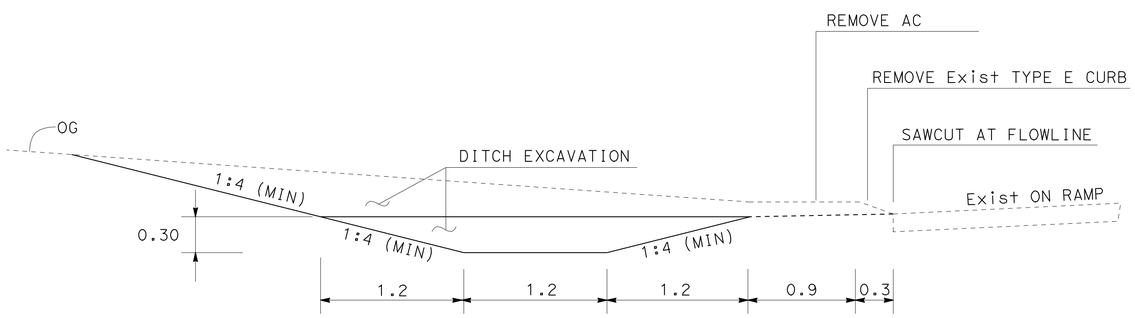

TYPICAL X-SECTION
NOT TO SCALE

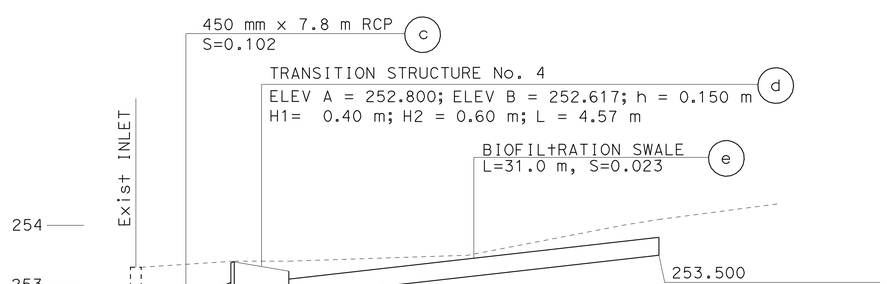

DRAINAGE SYSTEM No. 36
SCALE Horiz 1:250
Vert 1:50

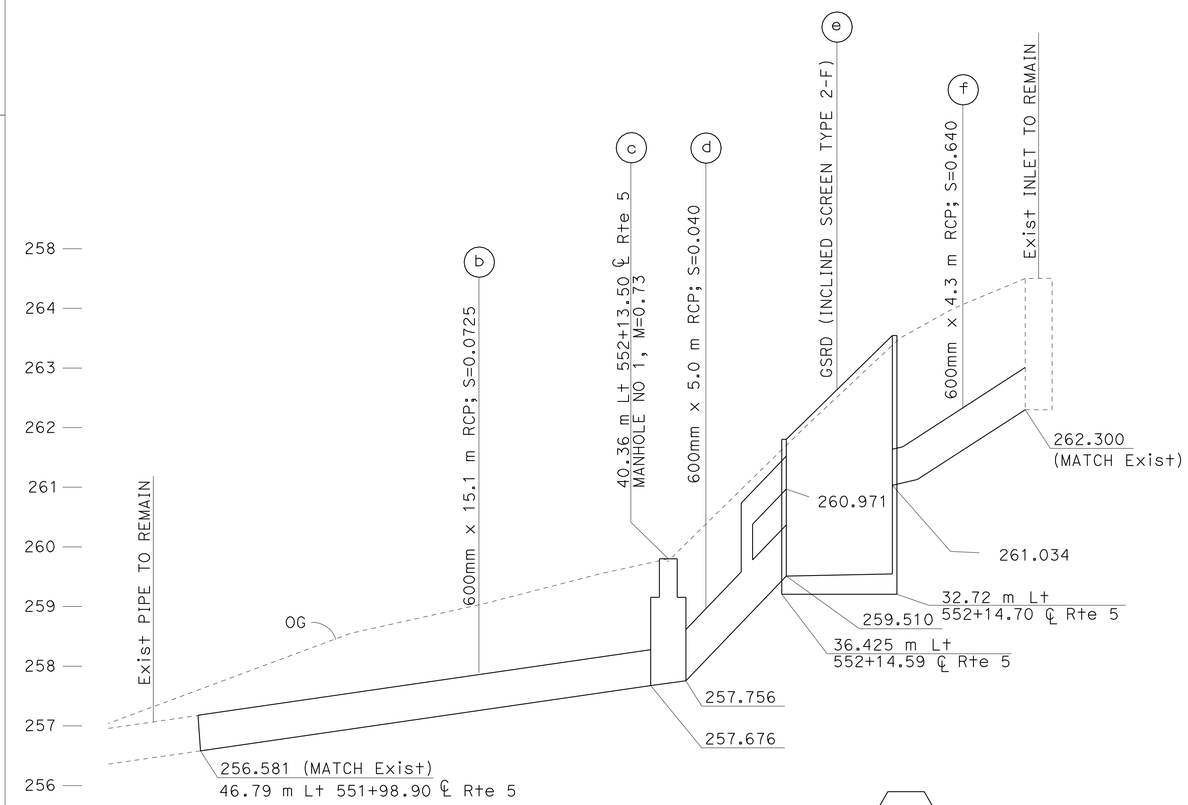

DRAINAGE SYSTEM No. 34
SCALE Horiz 1:100
Vert 1:50

ALL DIMENSIONS ARE IN METERS UNLESS OTHERWISE SHOWN

DRAINAGE PROFILE

DP-20

REVISED BY	DATE REVISED

CALCULATED-DESIGNED BY: S. THAI
CHECKED BY: C. NGUYEN
FUNCTIONAL SUPERVISOR: DAVE BHALLA

STATE OF CALIFORNIA - DEPARTMENT OF TRANSPORTATION
Caltrans
HYDRAULICS

LAST REVISION 00-00-00
DATE PLOTTED => 03-MAY-2010
TIME PLOTTED => 13:20

Dist	COUNTY	ROUTE	KILOMETER POST TOTAL PROJECT	SHEET No.	TOTAL SHEETS
07	LA	5	50.8/58.0	158	869

REGISTERED CIVIL ENGINEER 07/07/08 DATE

5-3-10
PLANS APPROVAL DATE

REGISTERED PROFESSIONAL ENGINEER BALDEV K. BHALLA No. 34350 Exp. 09/30/11 CIVIL STATE OF CALIFORNIA

THE STATE OF CALIFORNIA OR ITS OFFICERS OR AGENTS SHALL NOT BE RESPONSIBLE FOR THE ACCURACY OR COMPLETENESS OF ELECTRONIC COPIES OF THIS PLAN SHEET.

Caltrans Metric

NOTE: CONTRACTOR SHALL VERIFY ELEVATIONS OF EXISTING DRAINAGE SYSTEMS BEFORE COMMENCEMENT OF WORK.

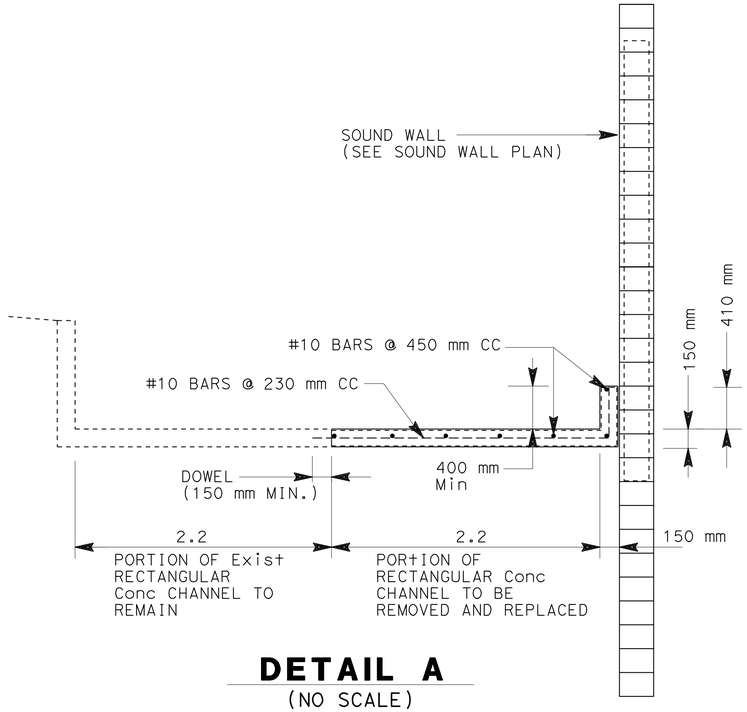

DETAIL A
(NO SCALE)
(568+72.00 - 569+65.50)

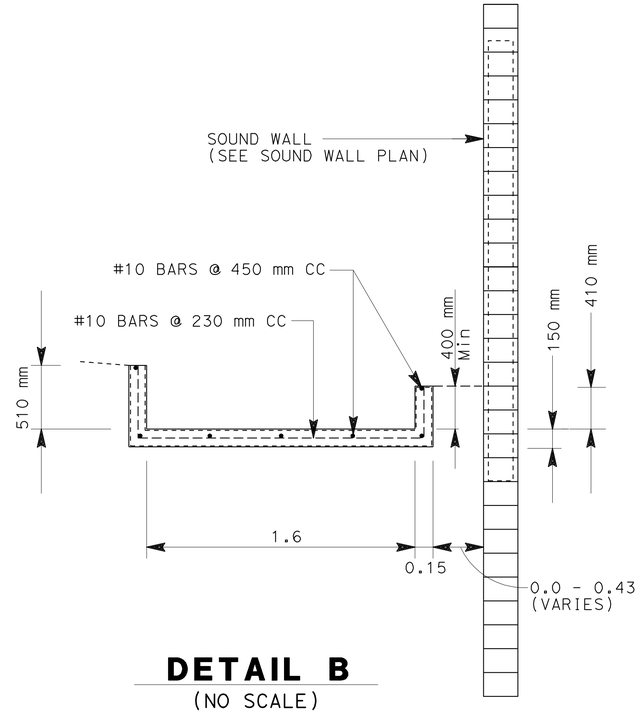

DETAIL B
(NO SCALE)
(569+65.50 - 572+10.00)

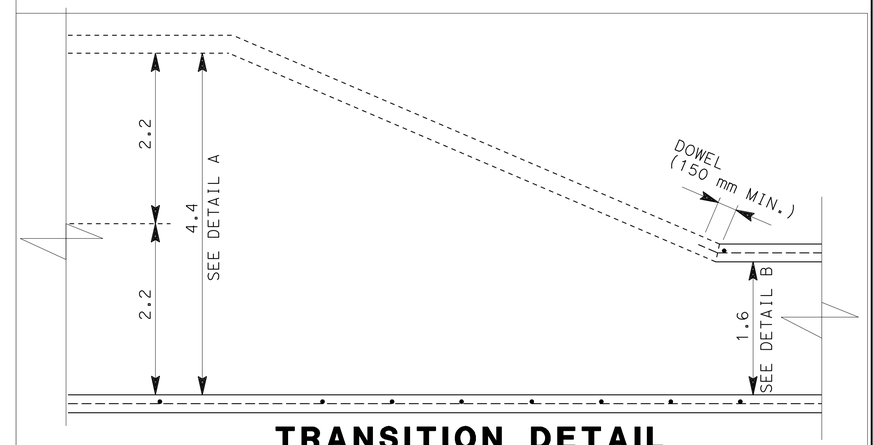

TRANSITION DETAIL
PLAN VIEW (NO SCALE)

RECTANGULAR Conc CHANNEL DETAILS

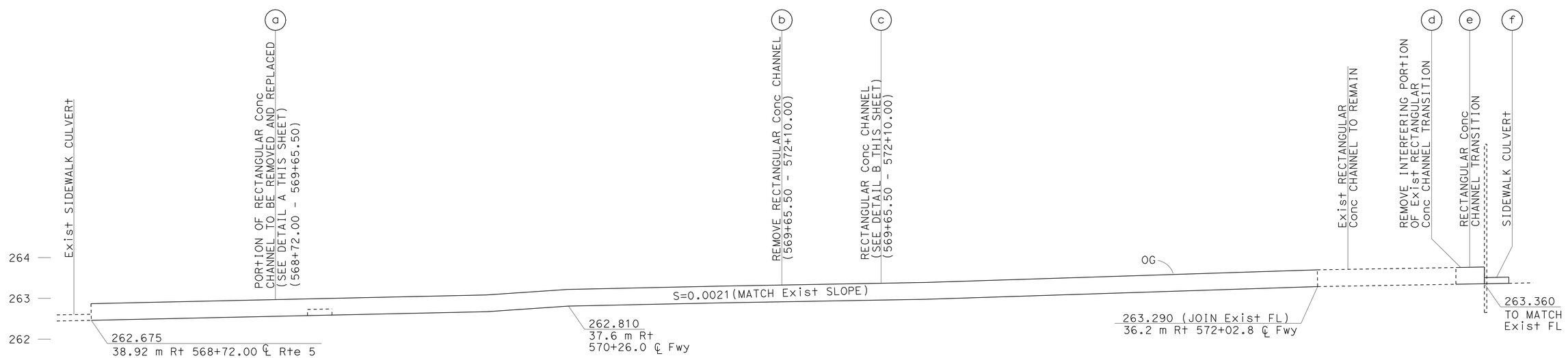

DRAINAGE SYSTEM No. 38

SCALE Horiz 1:500
Vert 1:50

ALL DIMENSIONS ARE IN METERS UNLESS OTHERWISE SHOWN

DRAINAGE PROFILE

DP-21

STATE OF CALIFORNIA - DEPARTMENT OF TRANSPORTATION
Caltrans
HYDRAULICS

FUNCTIONAL SUPERVISOR: DAVE BHALLA
CALCULATED-DESIGNED BY: S. THAI
CHECKED BY: C. NGUYEN
REVISED BY
DATE REVISED

LAST REVISION 00-00-00
DATE PLOTTED => 03-MAY-2010
TIME PLOTTED => 13:20

Dist	COUNTY	ROUTE	KILOMETER POST TOTAL PROJECT	SHEET No.	TOTAL SHEETS
07	LA	5	50.8/58.0	159	869

REGISTERED CIVIL ENGINEER 07/07/08 DATE

5-3-10
PLANS APPROVAL DATE

REGISTERED PROFESSIONAL ENGINEER BALDEV K. BHALLA No. 34350 Exp. 09/30/11 CIVIL STATE OF CALIFORNIA

THE STATE OF CALIFORNIA OR ITS OFFICERS OR AGENTS SHALL NOT BE RESPONSIBLE FOR THE ACCURACY OR COMPLETENESS OF ELECTRONIC COPIES OF THIS PLAN SHEET.

Caltrans Metric

NOTE: CONTRACTOR SHALL VERIFY ELEVATIONS OF EXISTING DRAINAGE SYSTEMS BEFORE COMMENCEMENT OF WORK.

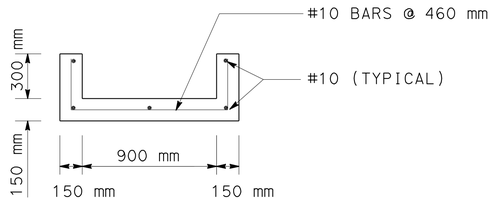

RECTANGULAR Conc CHANNEL DETAIL
NO SCALE

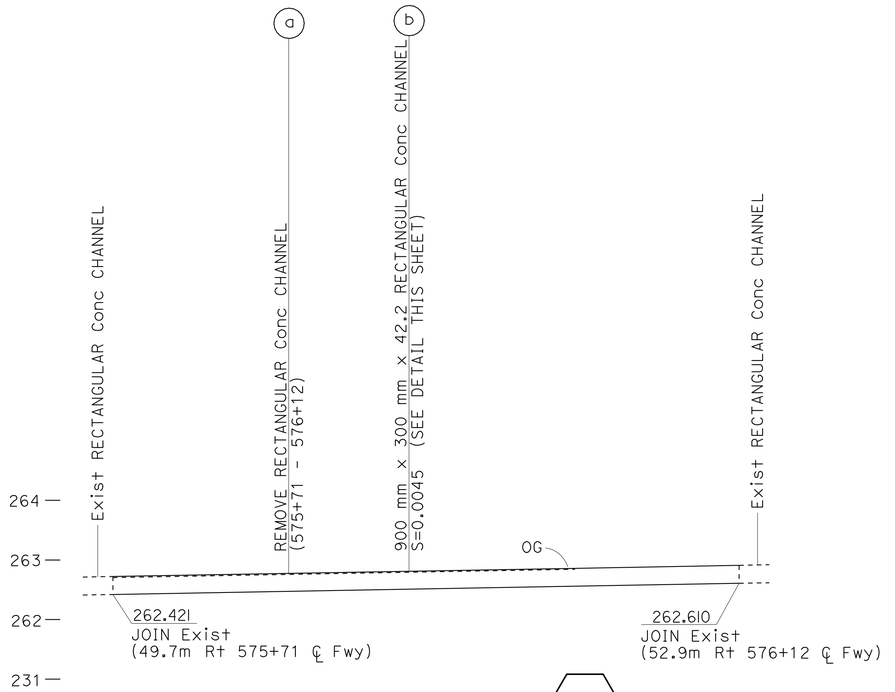

DRAINAGE SYSTEM No. 40
SCALE Horiz 1:200
Vert 1:50

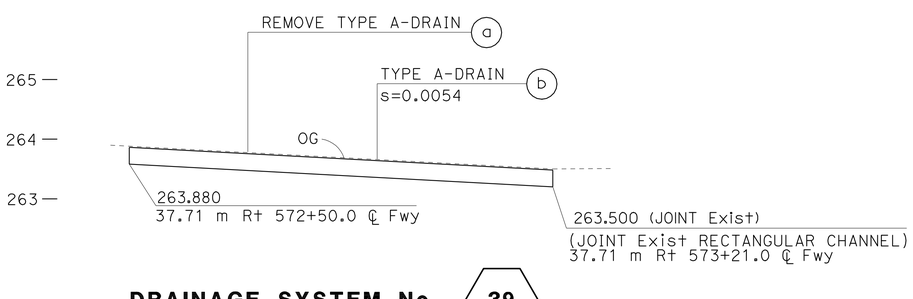

DRAINAGE SYSTEM No. 39
SCALE Horiz 1:500
Vert 1:50

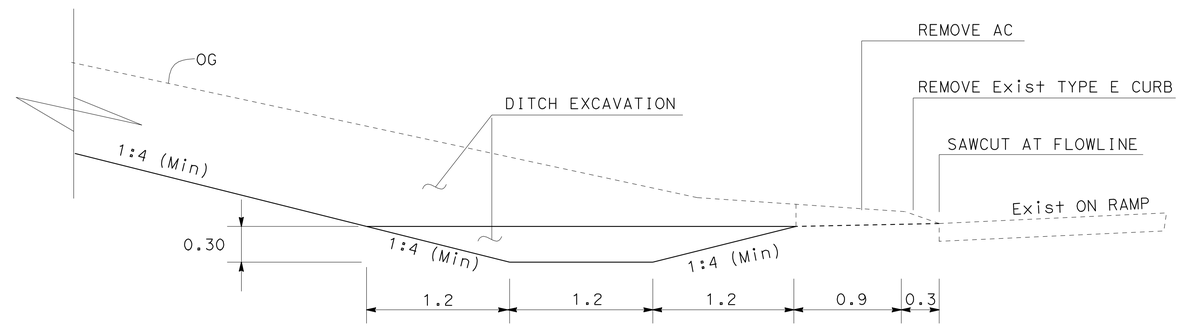

TYPICAL X-SECTION
NO SCALE

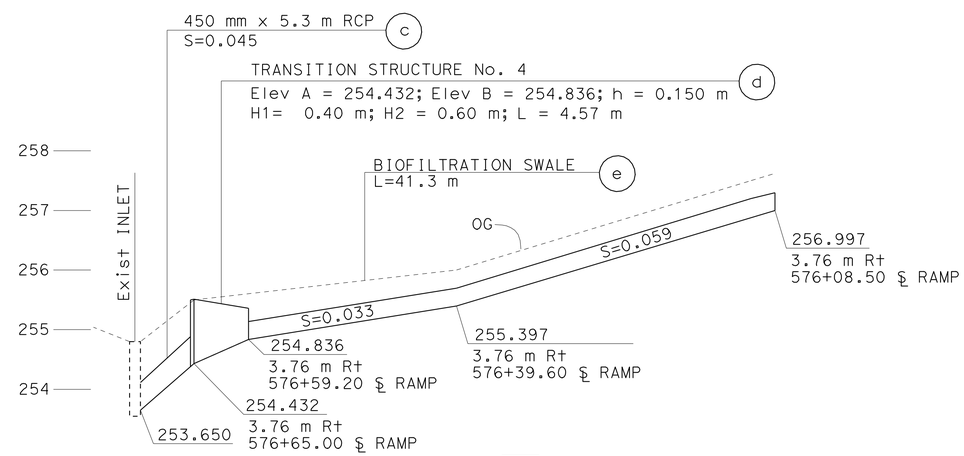

DRAINAGE SYSTEM No. 41
SCALE Horiz 1:250
Vert 1:50

ALL DIMENSIONS ARE IN METERS UNLESS OTHERWISE SHOWN

DRAINAGE PROFILE

DP-22

REVISED BY			
DATE REVISED			

CALCULATED-DESIGNED BY: S. THAI
CHECKED BY: C. NGUYEN
FUNCTIONAL SUPERVISOR: DAVE BHALLA

STATE OF CALIFORNIA - DEPARTMENT OF TRANSPORTATION
Caltrans
HYDRAULICS

LAST REVISION 00-00-00
DATE PLOTTED => 03-MAY-2010
TIME PLOTTED => 13:20

Dist	COUNTY	ROUTE	KILOMETER POST TOTAL PROJECT	SHEET No.	TOTAL SHEETS
07	LA	5	50.8/58.0	160	869

REGISTERED CIVIL ENGINEER 07/07/08 DATE

5-3-10
PLANS APPROVAL DATE

REGISTERED PROFESSIONAL ENGINEER BALDEV K. BHALLA No. 34350 Exp. 09/30/11 CIVIL STATE OF CALIFORNIA

THE STATE OF CALIFORNIA OR ITS OFFICERS OR AGENTS SHALL NOT BE RESPONSIBLE FOR THE ACCURACY OR COMPLETENESS OF ELECTRONIC COPIES OF THIS PLAN SHEET.

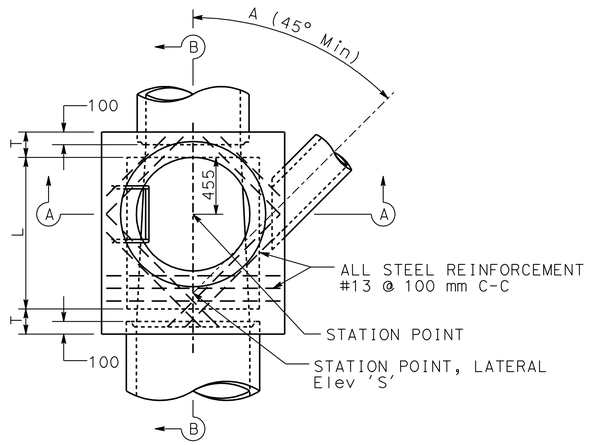

PLAN
(SHAFT NOT SHOWN)

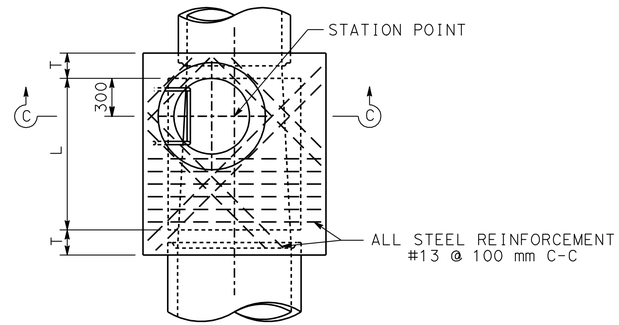

PLAN
DETAIL N
(SHAFT NOT SHOWN)

NOTES:

1. HEIGHT "H" (IN SEC A-A AND SEC B-B) SHALL BE NOT LESS THAN 1.40 m, BUT MAY BE INCREASED PROVIDED THAT THE VALUE OF "M" SHALL NOT BE LESS THAN THE MINIMUM SPECIFIED AND THAT THE REDUCER SHALL BE USED. FOR "H" (IN SEC C-C) SEE NOTE 4.
2. LENGTH "L" SHALL BE 1.20 m UNLESS SHOWN OTHERWISE ON DRAINAGE PLAN.
3. SHAFT SHALL BE CONSTRUCTED AS PER SEC C-C AND DETAIL N WHEN DEPTH "M" FROM STREET GRADE TO TOP OF BOX IS LESS THAN 0.87 m FOR PAVED STREETS OR 1.05 m FOR UNPAVED STREETS.
4. DEPTH "P" MAY BE REDUCED TO AN ABSOLUTE LIMIT OF 150 m WHEN LARGER VALUES OF "P" WOULD REDUCE "H" (IN SEC C-C) TO 1.05 m OR LESS.
5. "T" SHALL BE 200 mm FOR VALUES OF "H" UP TO AND INCLUDING 2.40 m. "T" SHALL BE 250 mm FOR VALUES OF "H" OVER 2.40 m.
6. UNLESS OTHERWISE SHOWN, STEPS SHALL BE PLACED ON 300 mm ON CENTERS. THE LOWEST STEP SHALL BE NOT MORE THAN 400 mm ABOVE THE LEDGE AT THE SIDE OF MANHOLE FLOOR.
7. BODY OF MANHOLE SHALL BE POURED IN ONE CONTINUOUS OPERATION, EXCEPT THAT THE CONTRACTOR SHALL HAVE THE OPTION OF PLACING AT THE SPRING LINE A CONSTRUCTION JOINT WITH A LONGITUDINAL KEYWAY.
8. REINFORCING STEEL SHALL BE 40 mm CLEAR FROM FACE OF CONCRETE.
9. FLOOR OF MANHOLE SHALL BE STEEL-TROWELED TO SPRING LINE.
10. RINGS, REDUCER, AND PIPE FOR ACCESS SHAFT SHALL BE SEATED IN 1:2 CEMENT MORTAR AND NEATLY POINTED OR WIPED INSIDE SHAFT.
11. MANHOLE FRAME AND COVER PER STANDARD PLAN B7-11 DETAIL U45.
12. STEP DETAIL PER STANDARD PLANS D74C AND D75A.

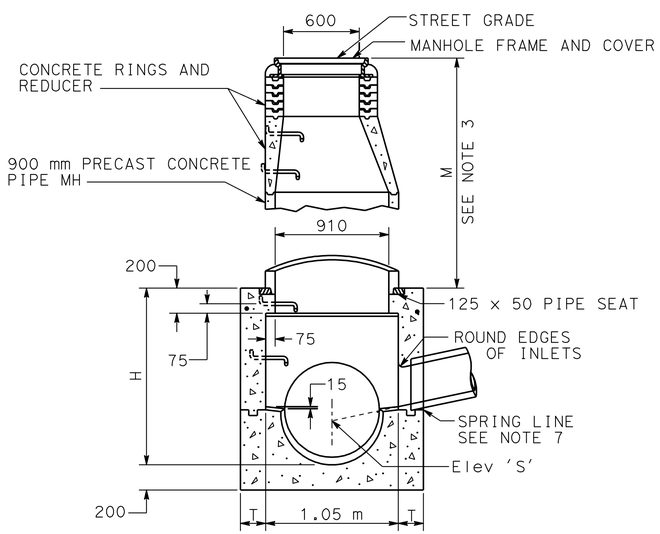

SECTION A-A

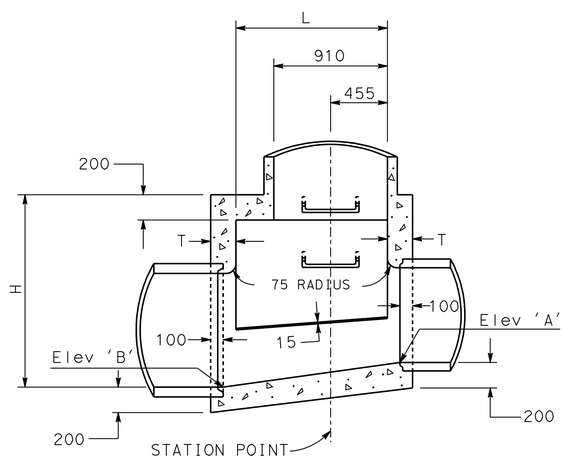

SECTION B-B

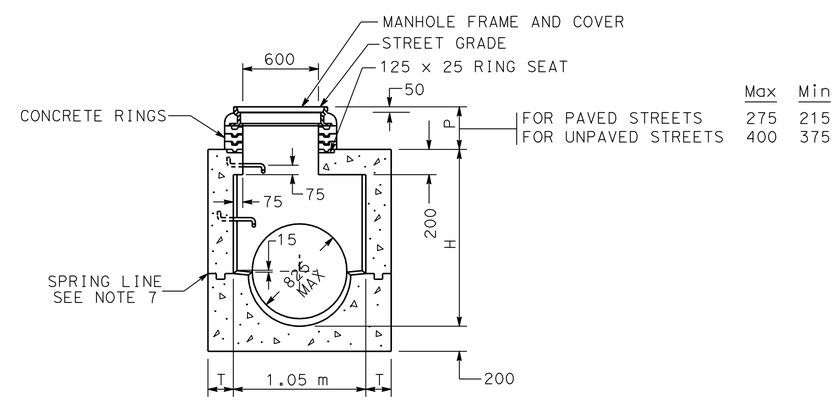

	Max	Min
FOR PAVED STREETS	275	215
FOR UNPAVED STREETS	400	375

SECTION C-C

MANHOLE NO 1 (MH NO 1)

ALL DIMENSIONS ARE IN MILLIMETERS UNLESS OTHERWISE SHOWN

DRAINAGE DETAILS

NO SCALE

DD-1

STATE OF CALIFORNIA - DEPARTMENT OF TRANSPORTATION
Caltrans
HYDRAULICS

FUNCTIONAL SUPERVISOR: DAVE BHALLA

CALCULATED-DESIGNED BY
CHECKED BY
REVISED BY
DATE REVISED

LAST REVISION 00-00-00
DATE PLOTTED => 03-MAY-2010
TIME PLOTTED => 13:20

Dist	COUNTY	ROUTE	KILOMETER POST TOTAL PROJECT	SHEET No.	TOTAL SHEETS
07	LA	5	50.8/58.0	161	869

REGISTERED CIVIL ENGINEER DATE 07/07/08

5-3-10
PLANS APPROVAL DATE

REGISTERED PROFESSIONAL ENGINEER BALDEV K. BHALLA No. 34350 Exp. 09/30/11 CIVIL STATE OF CALIFORNIA

THE STATE OF CALIFORNIA OR ITS OFFICERS OR AGENTS SHALL NOT BE RESPONSIBLE FOR THE ACCURACY OR COMPLETENESS OF ELECTRONIC COPIES OF THIS PLAN SHEET.

Caltrans Metric

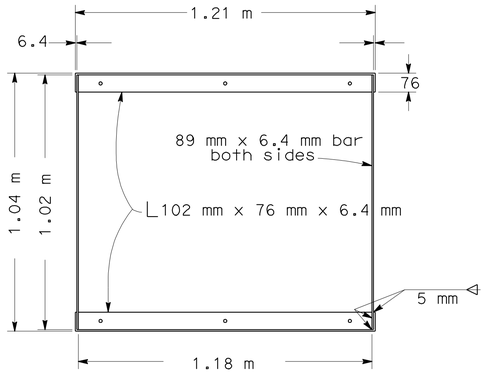

GRATE FRAME DETAIL

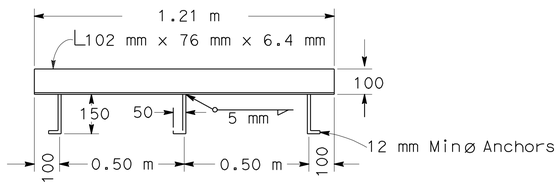

ANCHOR PLACEMENT DETAIL

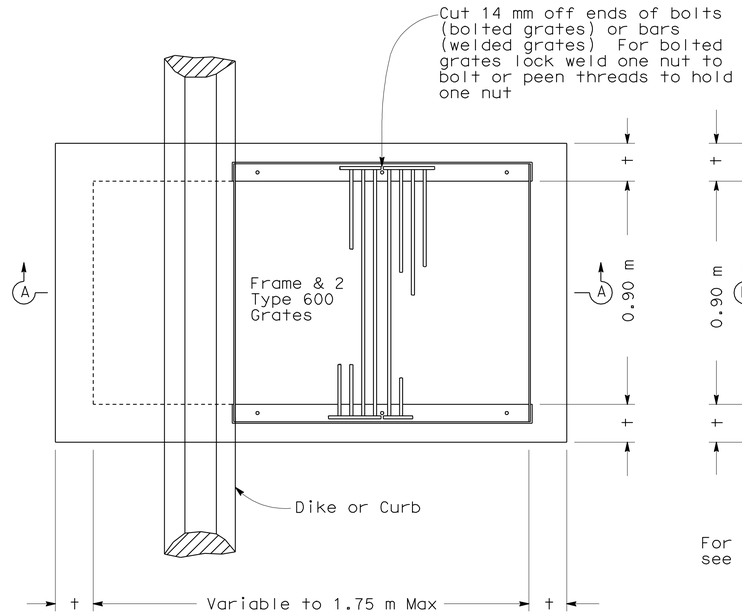

PLAN

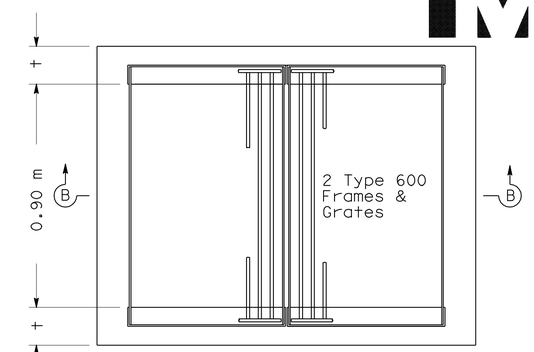

PLAN

For grate, frame and anchor placement details see Standard Plans RSP D77A and Standard Plan D77B

NOTES

1. 'H' is the difference in elevation between the outlet pipe flow line and the flow line of the grates
2. Steps - None required when 'H' is 1.07 m or less. Install one step 400 mm± above floor when 'H' is more than 1.07 m and less than 1.52 m Where 'H' is more than 1.52 m steps shall be evenly spaced @ 300 mm± intervals from 400 mm± above floor to within 300 mm± of the top of the box Place steps in wall without pipe openings. See Standard Plan D74C for step detail
3. Pipe(s) can be placed in any wall
4. Reinforcing steel not required in walls when H=1.81 m or less
5. Reinforcing steel in walls shall be #13 bars @ 450 mm± centers placed 40mm clear to inside of box

MISCELLANEOUS IRON & STEEL

Inlet Type	Grate Type	MASS(kg)
GD-1 & GD-2	600 - 12	288
	600 - 10C	172
	600 - 10S	197
	600 - 12X	206
	600 - 13	159
GD-3	600 - 12	296

H	t
2.50 m or less	150 mm
2.51 m to 6.00 m	200 mm

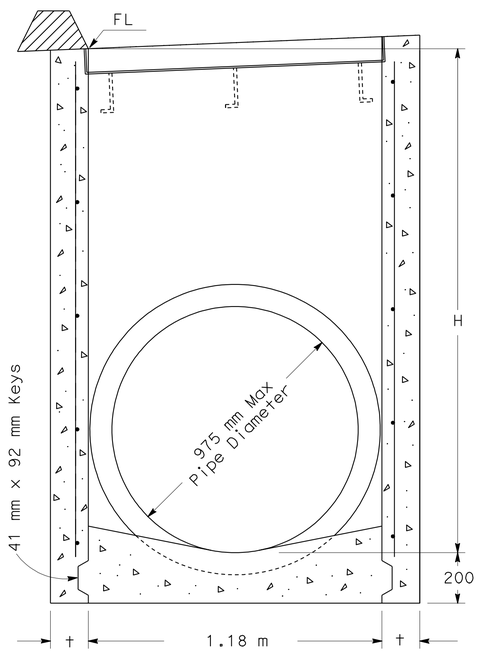

SECTION A-A
(For pipe diameters 975 mm or less)

GD-1

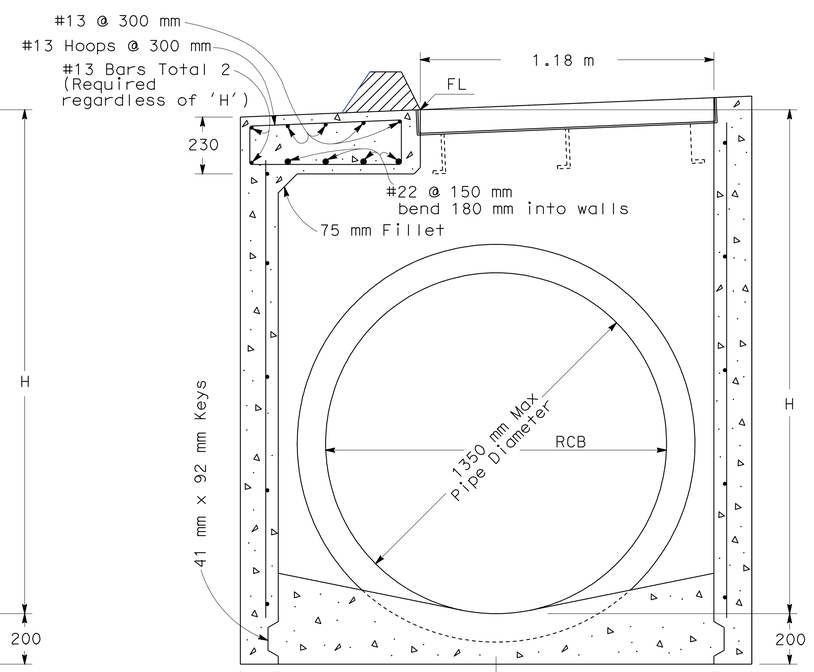

SECTION A-A

GD-2

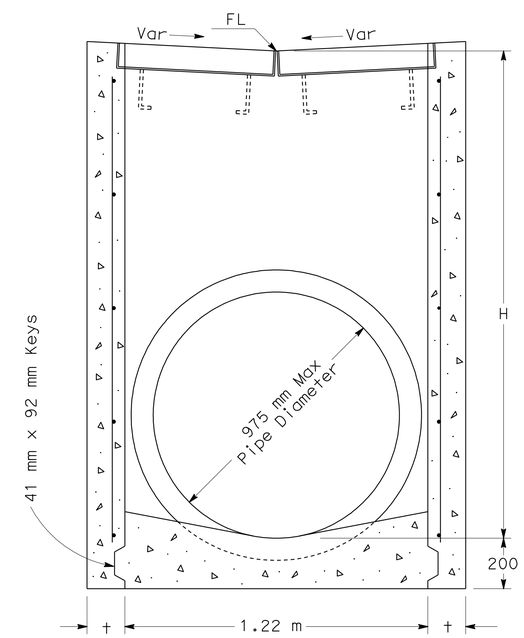

SECTION B-B
(For pipe diameters 975 mm or less)

GD-3

DRAINAGE INLETS

ALL DIMENSIONS ARE IN MILLIMETERS UNLESS OTHERWISE SHOWN

DRAINAGE DETAILS

NO SCALE

DD-2

REVISED BY | DATE REVISED
CALCULATED-DESIGNED BY
CHECKED BY
FUNCTIONAL SUPERVISOR: DAVE BHALLA

STATE OF CALIFORNIA - DEPARTMENT OF TRANSPORTATION
Caltrans
HYDRAULICS

LAST REVISION 00-00-00 | DATE PLOTTED => 03-MAY-2010 | TIME PLOTTED => 13:20

Dist	COUNTY	ROUTE	KILOMETER POST TOTAL PROJECT	SHEET No.	TOTAL SHEETS
07	LA	5	50.8/58.0	162	869

REGISTERED CIVIL ENGINEER 07/07/08 DATE

5-3-10
PLANS APPROVAL DATE

REGISTERED PROFESSIONAL ENGINEER BALDEV K. BHALLA No. 34350 Exp. 09/30/11 CIVIL STATE OF CALIFORNIA

THE STATE OF CALIFORNIA OR ITS OFFICERS OR AGENTS SHALL NOT BE RESPONSIBLE FOR THE ACCURACY OR COMPLETENESS OF ELECTRONIC COPIES OF THIS PLAN SHEET.

Caltrans Metric

INLET TYPE	GRATE TYPE	NO OF GRATES	WEIGHT
OG-1	600-9	1	114

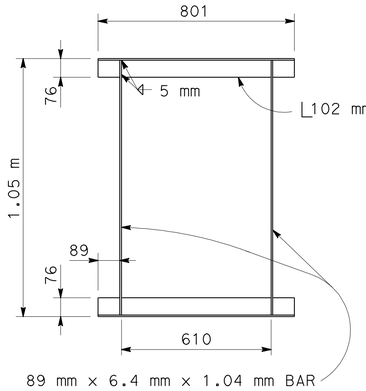

PLAN

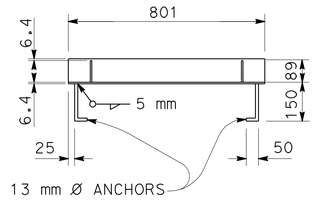

CROSS SECTION

FRAME DETAIL

GENERAL NOTES: SEE STANDARD PLAN D77A

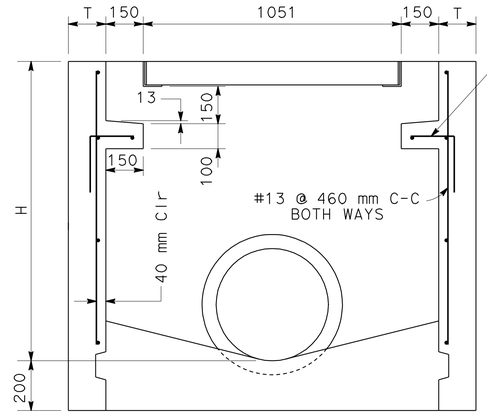

SECTION D-D

GENERAL NOTES: SEE STANDARD PLAN D73

TYPE OG-1 INLET

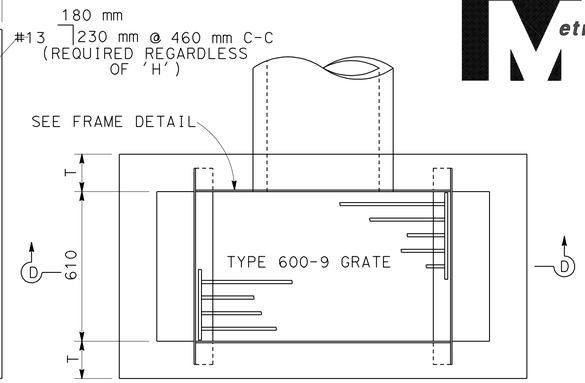

PLAN

H	T
2.44 m OR LESS	150
2.47 m TO 6.10 m	200

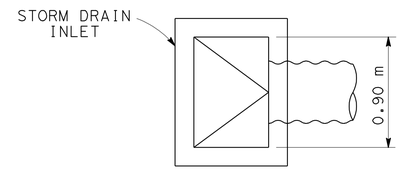

SECTION C-C

NO SCALE

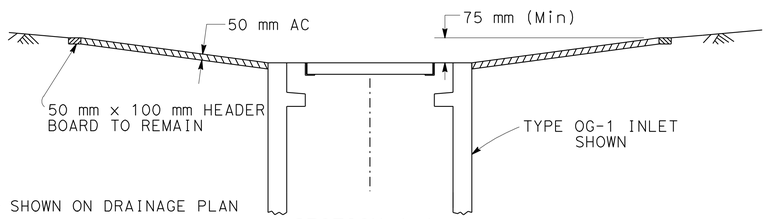

SECTION A-A

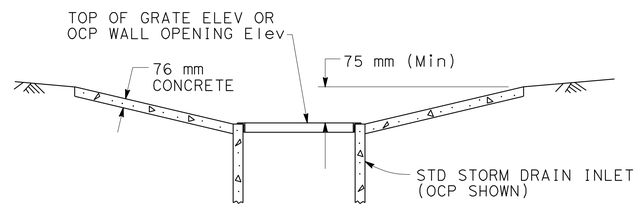

SECTION B-B

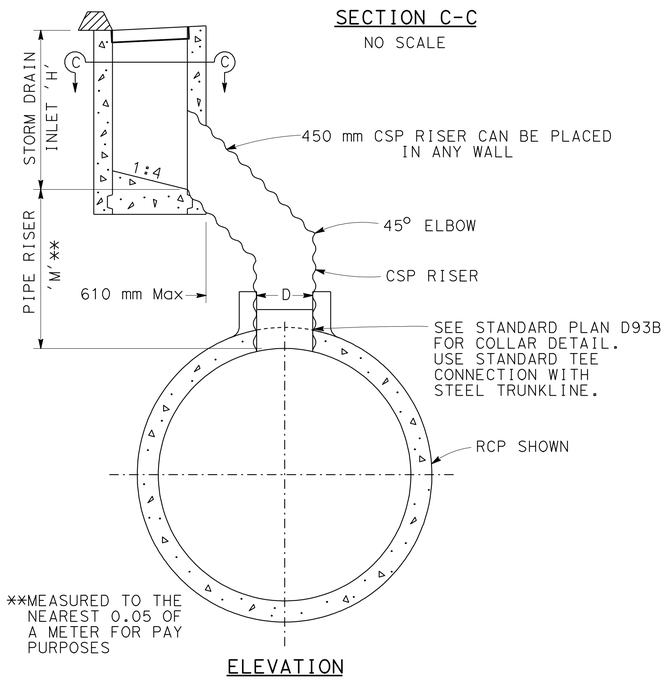

ELEVATION

STORM DRAIN RISER CONNECTION

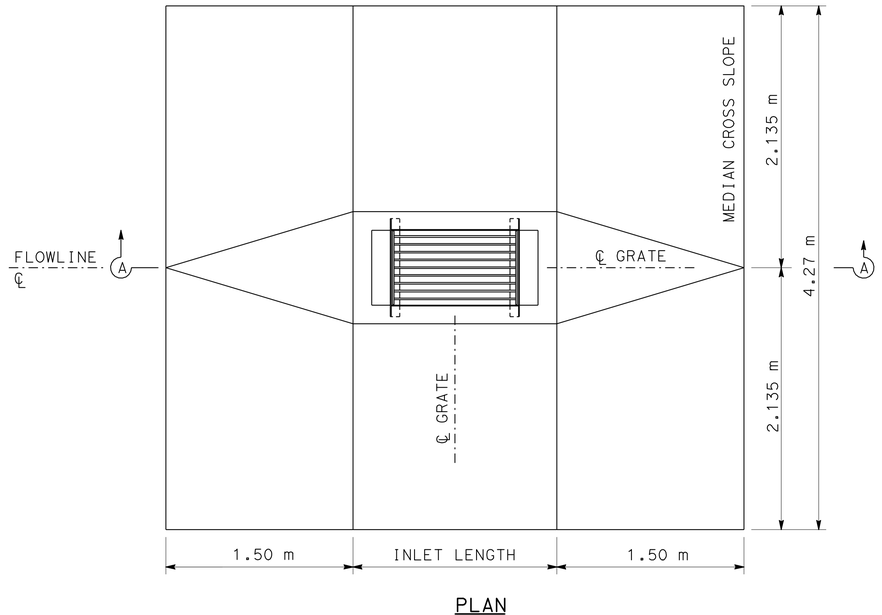

PLAN

MEDIAN INLET APRON DETAIL

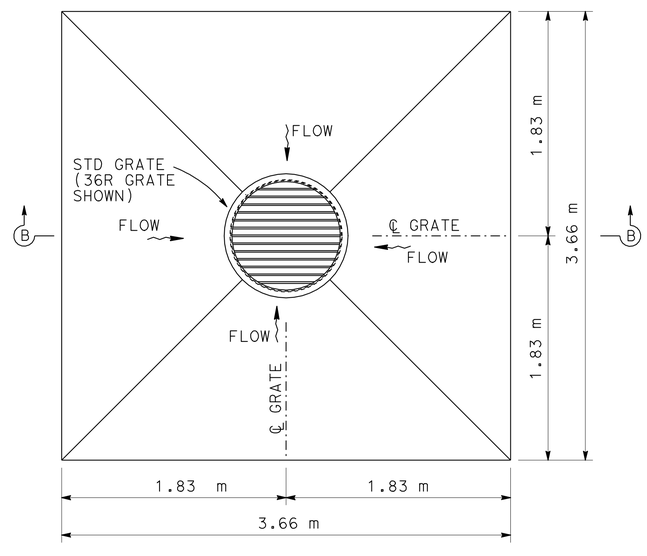

PLAN

DEPRESSED APRON DETAIL

ALL DIMENSIONS ARE IN
MILLIMETERS UNLESS OTHERWISE SHOWN

DRAINAGE DETAILS

NO SCALE **DD-3**

STATE OF CALIFORNIA - DEPARTMENT OF TRANSPORTATION
Caltrans
HYDRAULICS

FUNCTIONAL SUPERVISOR DAVE BHALLA
CALCULATED-DESIGNED BY
CHECKED BY
REVISED BY
DATE REVISED

LAST REVISION 00-00-00 DATE PLOTTED => 03-MAY-2010 TIME PLOTTED => 13:20

Dist	COUNTY	ROUTE	KILOMETER POST TOTAL PROJECT	SHEET No.	TOTAL SHEETS
07	LA	5	50.8/58.0	163	869

REGISTERED CIVIL ENGINEER 07/07/08 DATE

5-3-10
PLANS APPROVAL DATE

REGISTERED PROFESSIONAL ENGINEER BALDEV K. BHALLA No. 34350 Exp. 09/30/11 CIVIL STATE OF CALIFORNIA

THE STATE OF CALIFORNIA OR ITS OFFICERS OR AGENTS SHALL NOT BE RESPONSIBLE FOR THE ACCURACY OR COMPLETENESS OF ELECTRONIC COPIES OF THIS PLAN SHEET.

Caltrans Metric

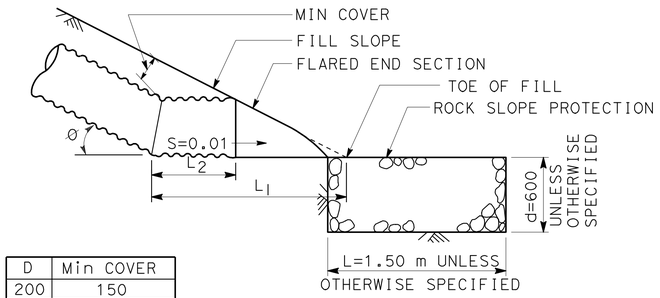

D	Min COVER
200	150
300	150
450	300
600	300

PROFILE

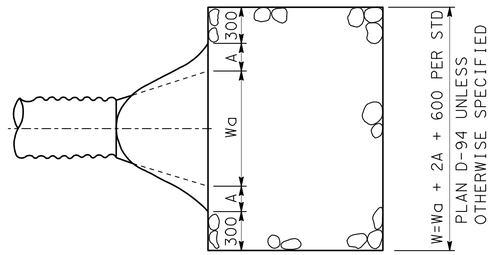

PLAN

ROCK SLOPE PROTECTION DETAIL

PIPE SLOPE S - %	Ø	D=200	D=300		D=450		D=600	
		L_1 (m)	L_1 (m)	L_2 (m)	L_1 (m)	L_2 (m)	L_1 (m)	L_2 (m)
10-15	6°-9°	0.76	0.99	0.38	1.68	0.71	1.98	0.74
15-20	9°-11°	0.79	0.99	0.38	1.68	0.74	2.01	0.74
20-25	11°-14°	0.79	1.02	0.38	1.70	0.74	2.01	0.76
25-30	14°-17°	0.79	1.02	0.41	1.70	0.74	2.03	0.76
30-35	17°-19°	0.79	1.02	0.41	1.70	0.76	2.06	0.79
35-40	19°-22°	0.79	1.04	0.41	1.73	0.76	2.06	0.79
40-45	22°-24°	0.81	1.04	0.43	1.73	0.79	2.08	0.81
45-50	24°-26°	0.81	1.04	0.43	1.73	0.79	2.08	0.81

OUTLET DETAIL FOR CSP @ TOE OF SLOPE

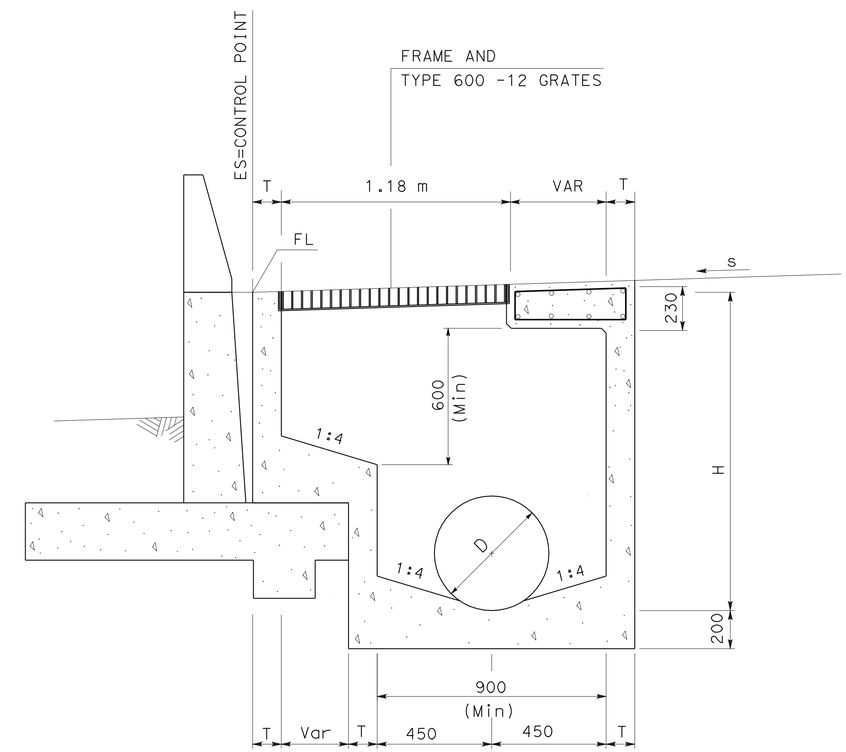

MODIFIED GD-2 INLET

NO SCALE

NOTE:

1. FOR DETAILS AND INFORMATION NOT SHOWN, REFER TO GD-2 INLET.

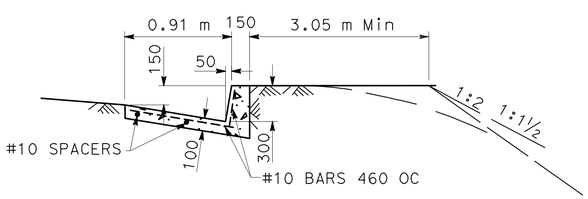

TYPE A DRAIN

ALL DIMENSIONS ARE IN MILLIMETERS UNLESS OTHERWISE SHOWN

DRAINAGE DETAILS

NO SCALE

DD-4

REVISED BY | DATE REVISED

CALCULATED-DESIGNED BY | CHECKED BY

FUNCTIONAL SUPERVISOR: DAVE BHALLA

STATE OF CALIFORNIA - DEPARTMENT OF TRANSPORTATION

Caltrans

HYDRAULICS

LAST REVISION 00-00-00 | DATE PLOTTED => 03-MAY-2010 | TIME PLOTTED => 14:15

Dist	COUNTY	ROUTE	KILOMETER POST TOTAL PROJECT	SHEET No.	TOTAL SHEETS
07	LA	5	50.8/58.0	164	869

REGISTERED CIVIL ENGINEER 07/07/08 DATE

5-3-10
PLANS APPROVAL DATE

REGISTERED PROFESSIONAL ENGINEER BALDEV K. BHALLA No. 34350 Exp. 09/30/11 CIVIL STATE OF CALIFORNIA

THE STATE OF CALIFORNIA OR ITS OFFICERS OR AGENTS SHALL NOT BE RESPONSIBLE FOR THE ACCURACY OR COMPLETENESS OF ELECTRONIC COPIES OF THIS PLAN SHEET.

Caltrans Metric

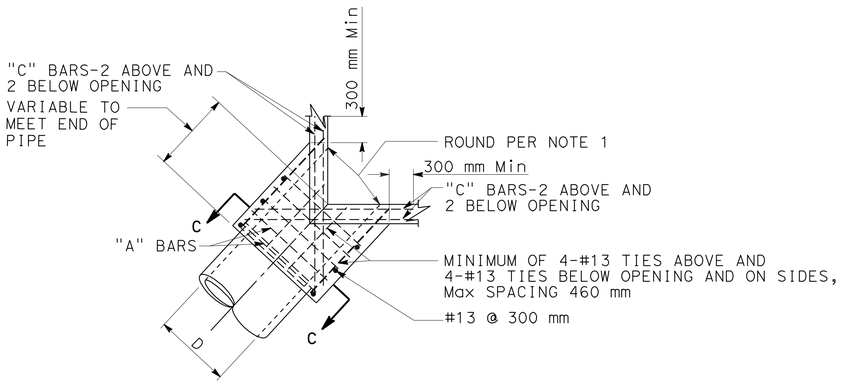

PLAN
CORNER CONNECTION

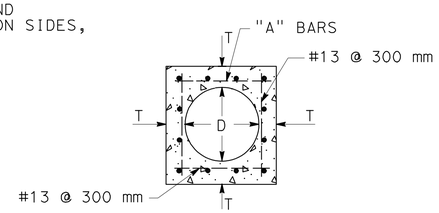

SECTION C-C

D	T	"A"	"B"-"C"
300 mm	115 mm	#13 @ 150 mm	#16
375 mm	115 mm		
450 mm	125 mm		
525 mm	140 mm		
600 mm	150 mm		
675 mm	165 mm		
750 mm	180 mm		
825 mm	180 mm		
900 mm	190 mm		
975 mm	200 mm		
1050 mm	200 mm		
1125 mm	200 mm	#16 @ 150 mm	#19
1200 mm	200 mm		
1275 mm	200 mm		
1350 mm	200 mm		
1425 mm	250 mm		
1500 mm	250 mm		
1575 mm	250 mm		
1650 mm	275 mm		
1725 mm	275 mm		
1800 mm	275 mm		

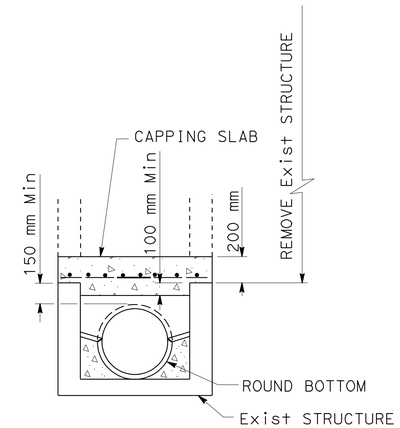

SECTION A-A

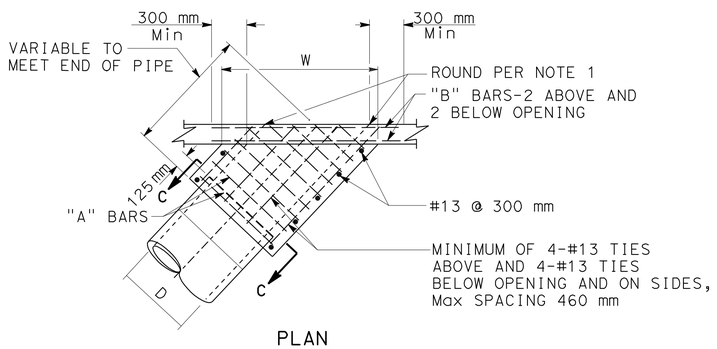

PLAN
SIDE CONNECTION

NOTES:

1. ROUND EDGE OF OUTLET TO 75 mm RADIUS.
2. REINFORCEMENT SHALL BE 40 mm CLEAR FROM THE FACE OF CONCRETE.
3. IN CONNECTING TO AN EXISTING STRUCTURE BREAK OUT PORTIONS OF THE EXISTING STRUCTURE 150 mm OUTSIDE ITS INTERSECTION WITH THE NEW CONNECTION. BEND ENDS OF #13 BARS OVER CONNECTION OPENING AS REQUIRED.

MONOLITHIC CONNECTION
FOR PIPES 300 mm TO 1800 mm INCLUSIVE

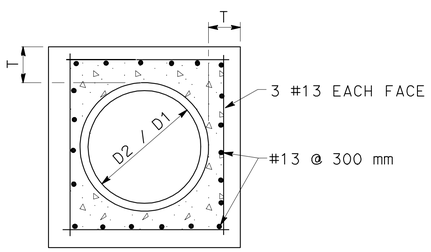

SECTION B-B

D (mm)	L (mm)	T (mm)
300	300	100
450	300	125
600	300	150
900	460	200
1200	460	250
1350	460	250
1500	530	275
1650	530	275
1800	600	300

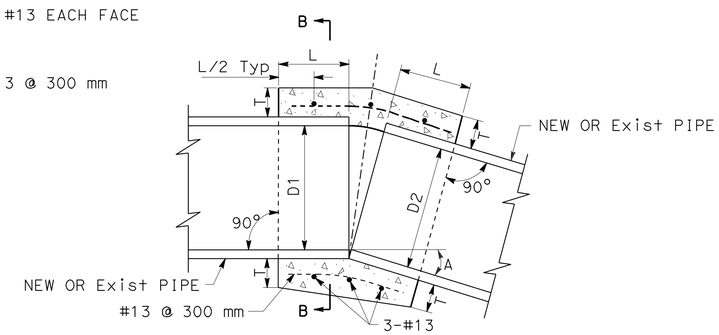

CONCRETE COLLAR

NOTES:

1. WHERE PIPES OF DIFFERENT DIAMETERS ARE JOINED WITH A CONCRETE COLLAR, `L' AND `T' SHALL BE THOSE OF THE LARGER PIPE. D=D1 OR D2, WHICHEVER IS GREATER.
2. FOR PIPE SIZE NOT LISTED USE NEXT SIZE LARGER.
3. OMIT REINFORCING ON PIPES 600 mm AND LESS IN DIAMETER AND ON ALL PIPES WHERE ANGLE A IS LESS THAN 10°.
4. JOIN PIPES AT INVERTS.
5. REINFORCEMENT SHALL BE PLACED 40 mm CLEAR FROM OUTSIDE DIAMETER OF PIPE.

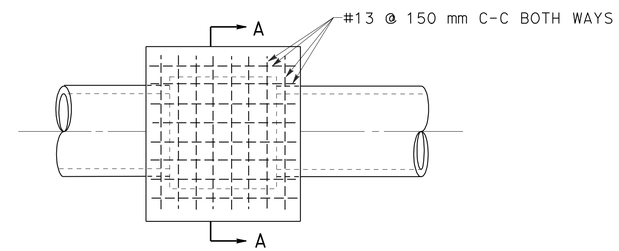

PLAN
CAP INLET DETAIL

ALL DIMENSIONS ARE IN MILLIMETERS UNLESS OTHERWISE SHOWN

DRAINAGE DETAILS

NO SCALE

DD-5

STATE OF CALIFORNIA - DEPARTMENT OF TRANSPORTATION
Caltrans
HYDRAULICS

FUNCTIONAL SUPERVISOR: DAVE BHALLA
CALCULATED-DESIGNED BY
CHECKED BY
REVISED BY
DATE REVISED

LAST REVISION 00-00-00 | DATE PLOTTED => 03-MAY-2010 | TIME PLOTTED => 13:21

Dist	COUNTY	ROUTE	KILOMETER POST TOTAL PROJECT	SHEET No.	TOTAL SHEETS
07	LA	5	50.8/58.0	165	869

REGISTERED CIVIL ENGINEER 07/07/08 DATE

5-3-10
PLANS APPROVAL DATE

REGISTERED PROFESSIONAL ENGINEER BALDEV K. BHALLA No. 34350 Exp. 09/30/11 CIVIL STATE OF CALIFORNIA

THE STATE OF CALIFORNIA OR ITS OFFICERS OR AGENTS SHALL NOT BE RESPONSIBLE FOR THE ACCURACY OR COMPLETENESS OF ELECTRONIC COPIES OF THIS PLAN SHEET.

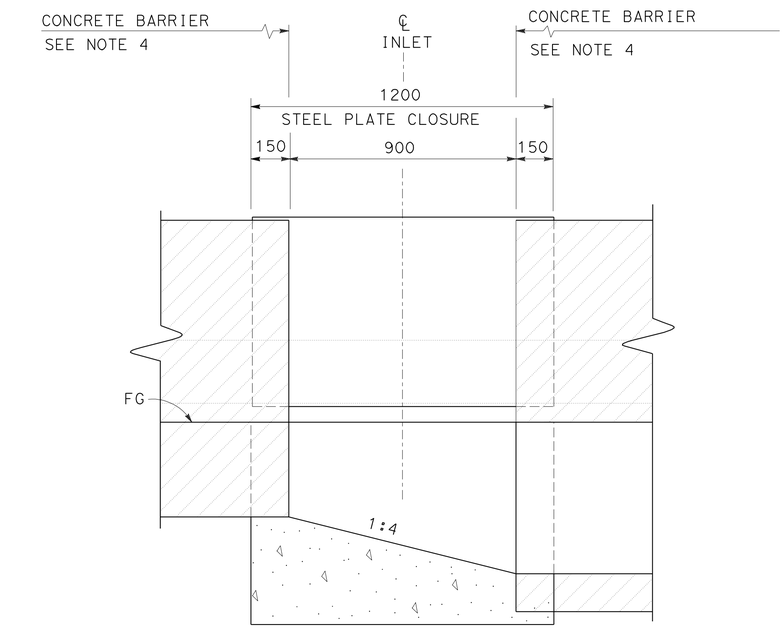

SECTION B-B

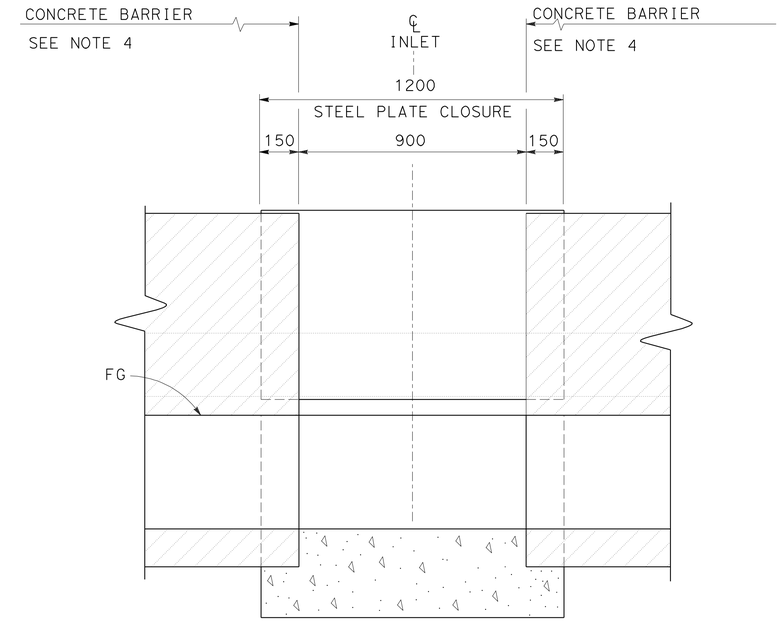

SECTION C-C

NOTES:

1. FOR STEEL PLATE CLOSURE DETAILS. REFER TO SHEET DD-9.
2. ELEVATIONS OF PAVEMENT ON OPPOSITE SIDES OF CONCRETE BARRIER MAY VARY.
3. FOR FRAME AND GRATE INSTALLATION, REFER TO TYPE GO INLET ON STANDARD PLAN D74B.
4. FOR CONCRETE BARRIER END ANCHOR DETAIL, REFER TO SHEET DD-8 AND STANDARD PLAN A76H.
5. FOR DETAILS AND INFORMATION NOT SHOWN REFER TO TYPE G1 INLET ON STANDARD PLAN D73.

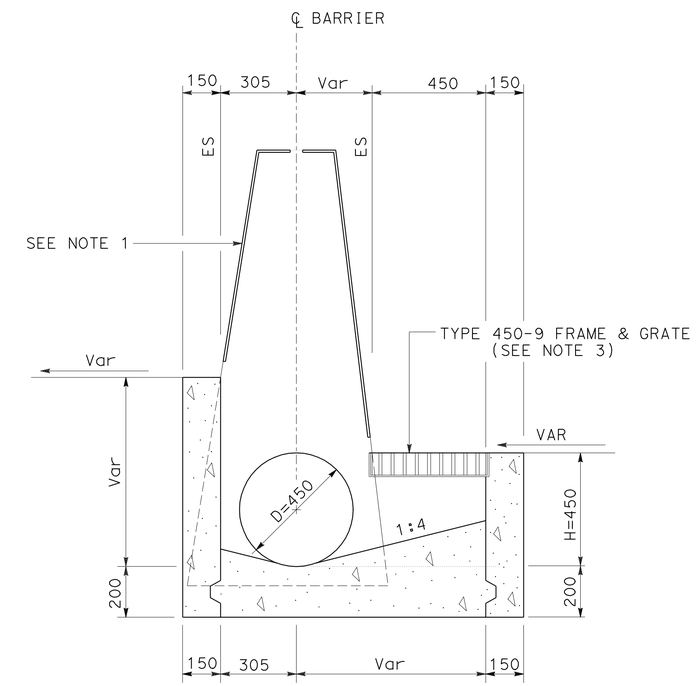

SECTION A-A

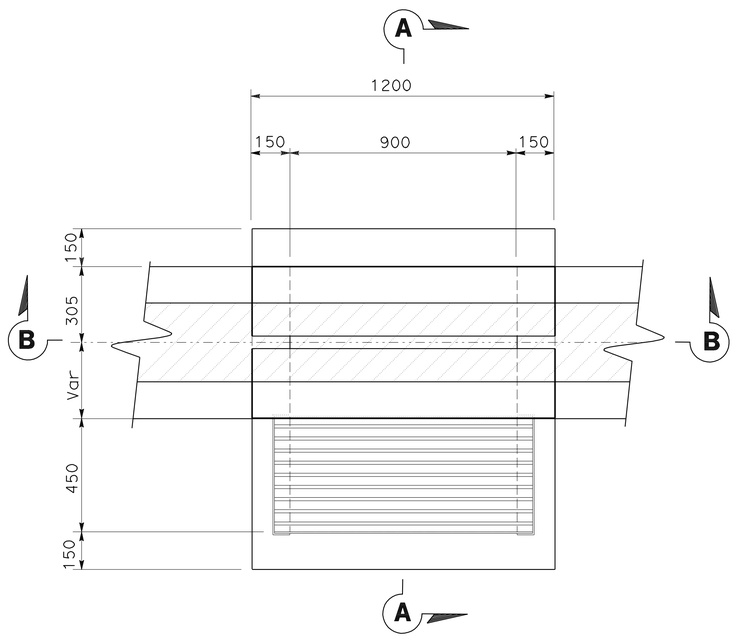

BEGINNING / ENDING CLEANOUT

CASE 1

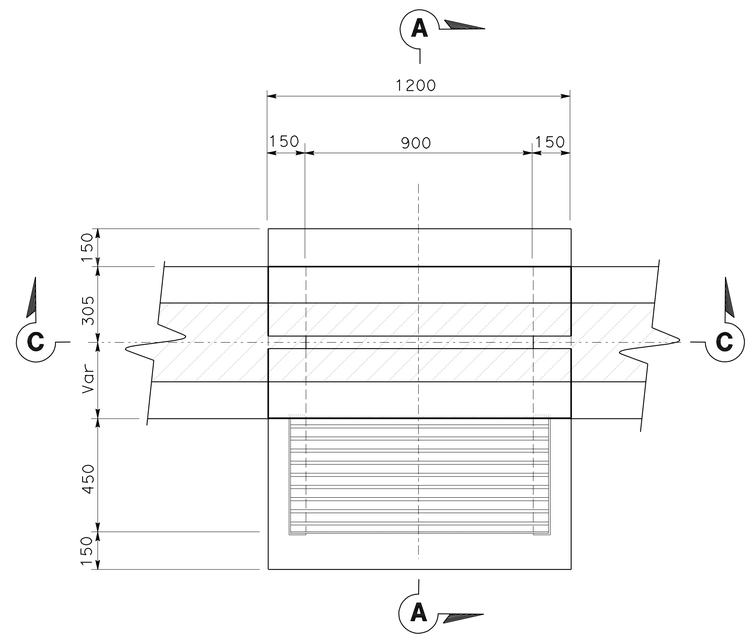

INTERMEDIATE CLEANOUT

CASE 2

PLAN

TYPE CL2 INLET

ALL DIMENSIONS ARE IN MILLIMETERS UNLESS OTHERWISE SHOWN

DRAINAGE DETAILS

NO SCALE

DD-6

STATE OF CALIFORNIA - DEPARTMENT OF TRANSPORTATION
Caltrans
HYDRAULICS

FUNCTIONAL SUPERVISOR: DAVE BHALLA
CALCULATED-DESIGNED BY
CHECKED BY
REVISED BY
DATE REVISED

LAST REVISION 00-00-00
DATE PLOTTED => 03-MAY-2010
TIME PLOTTED => 13:21

Dist	COUNTY	ROUTE	KILOMETER POST TOTAL PROJECT	SHEET No.	TOTAL SHEETS
07	LA	5	50.8/58.0	166	869

REGISTERED CIVIL ENGINEER 07/07/08 DATE

5-3-10
PLANS APPROVAL DATE

REGISTERED PROFESSIONAL ENGINEER BALDEV K. BHALLA No. 34350 Exp. 09/30/11 CIVIL STATE OF CALIFORNIA

THE STATE OF CALIFORNIA OR ITS OFFICERS OR AGENTS SHALL NOT BE RESPONSIBLE FOR THE ACCURACY OR COMPLETENESS OF ELECTRONIC COPIES OF THIS PLAN SHEET.

Caltrans Metric

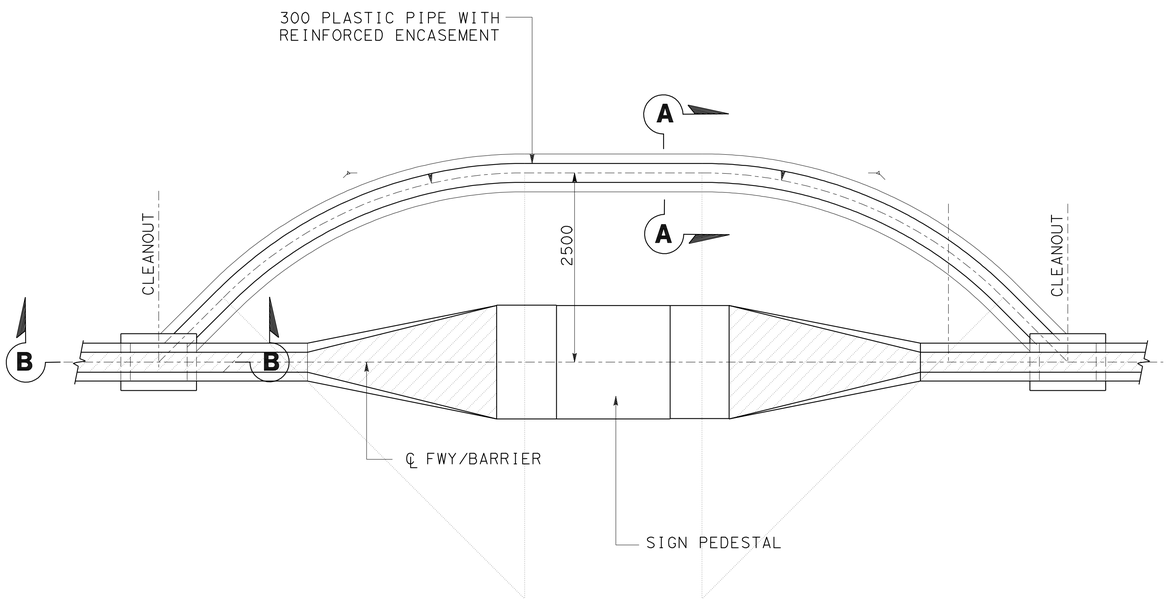

DRAINAGE SYSTEM DETAILS
AT SIGN PEDESTAL

ADJUST INLET TO GRADE - FINISH GRADE

21 a	521+63.9	FG Elev =	230.272
23 k	525+44.2	FG Elev =	235.285
23 L	526+00.0	FG Elev =	235.622
23 m	526+60.0	FG Elev =	237.047
23 n	527+20.0	FG Elev =	238.628
25 d	527+88.0	FG Elev =	240.983
25 h	527+90.5	FG Elev =	240.509
25 i	528+40.0	FG Elev =	241.886
25 j	529+00.0	FG Elev =	243.413
28 a	529+85.0	FG Elev =	244.750
28 b	530+20.0	FG Elev =	244.834
28 c	530+65.0	FG Elev =	244.595
28 d	531+08.1	FG Elev =	244.362
29 i	533+91.6	FG Elev =	240.551
29 o	535+19.6	FG Elev =	238.073
29 s	535+77.0	FG Elev =	239.392
29 t	536+07.5	FG Elev =	239.670
32 L	551+81.0	FG Elev =	265.251
32 m	551+84.5	FG Elev =	265.318
35 j	562+71.7	FG Elev =	252.792
35 k	562+80.1	FG Elev =	252.665
35 n	563+30.0	FG Elev =	252.424
35 o	563+40.0	FG Elev =	252.399

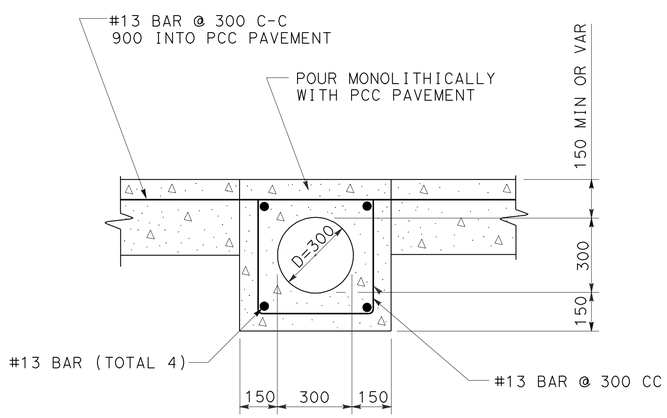

SECTION A-A
REINFORCED ENCASEMENT DETAIL

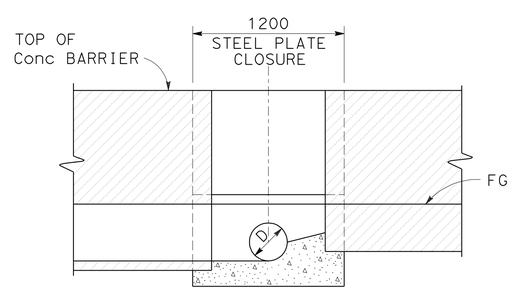

SECTION B-B
AT CLEANOUT

ALL DIMENSIONS ARE IN
MILLIMETERS UNLESS OTHERWISE SHOWN

DRAINAGE DETAILS

NO SCALE

DD-7

STATE OF CALIFORNIA - DEPARTMENT OF TRANSPORTATION
Caltrans HYDRAULICS

FUNCTIONAL SUPERVISOR DAVE BHALLA

CALCULATED-DESIGNED BY
CHECKED BY

REVISED BY
DATE REVISED

LAST REVISION 00-00-00 DATE PLOTTED => 03-MAY-2010 TIME PLOTTED => 13:21

Dist	COUNTY	ROUTE	KILOMETER POST TOTAL PROJECT	SHEET No.	TOTAL SHEETS
07	LA	5	50.8/58.0	167	869

REGISTERED CIVIL ENGINEER 07/07/08 DATE

5-3-10
PLANS APPROVAL DATE

REGISTERED PROFESSIONAL ENGINEER BALDEV K. BHALLA No. 34350 Exp. 09/30/11 CIVIL STATE OF CALIFORNIA

THE STATE OF CALIFORNIA OR ITS OFFICERS OR AGENTS SHALL NOT BE RESPONSIBLE FOR THE ACCURACY OR COMPLETENESS OF ELECTRONIC COPIES OF THIS PLAN SHEET.

Caltrans Metric

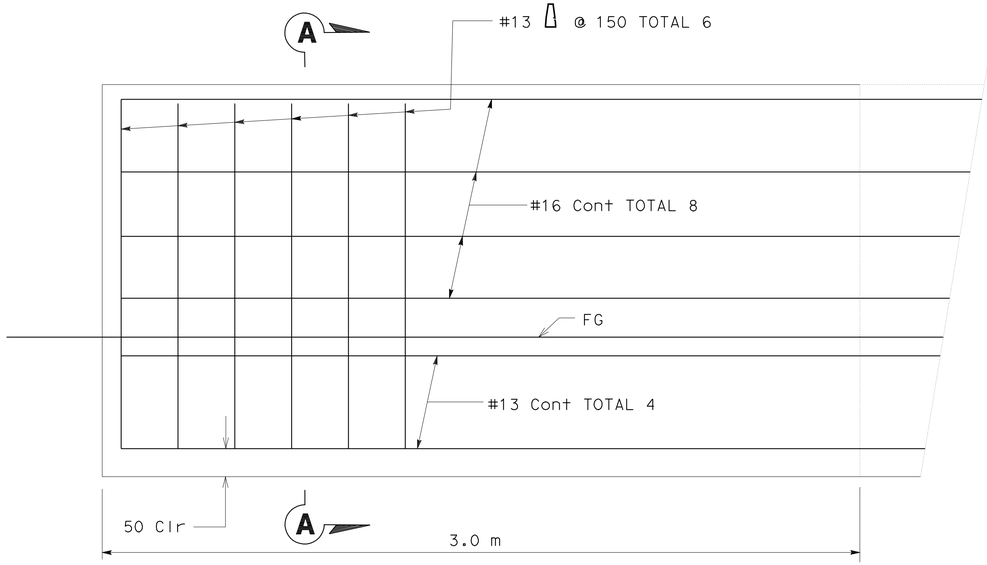

ELEVATION

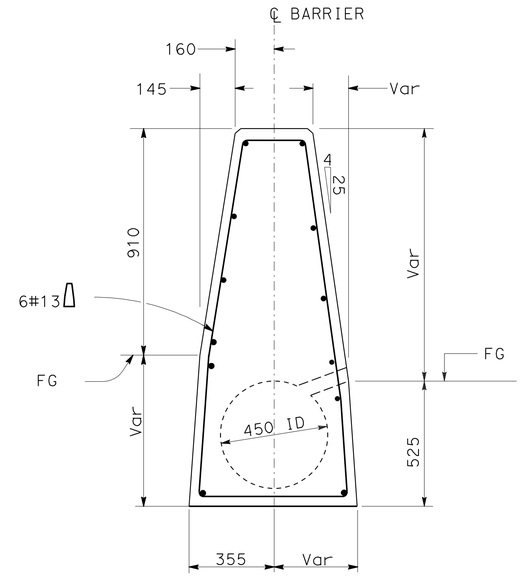

SECTION A-A

END ANCHOR FOR CONCRETE BARRIER (TYPE 60W)

NOTES:

1. END ANCHOR REQUIRED AT BARRIER ENDS AND AT INTERRUPTIONS IN BARRIER.
2. FOR BARRIER DETAILS AND INFORMATION NOT SHOWN, SEE STD PLANS A76A.
3. SINGLE SLOTTED TYPICAL SECTION SHOWN.
4. FOR OTHER TYPES OF END ANCHOR DETAILS, SEE STANDARD PLANS SHT A76B.

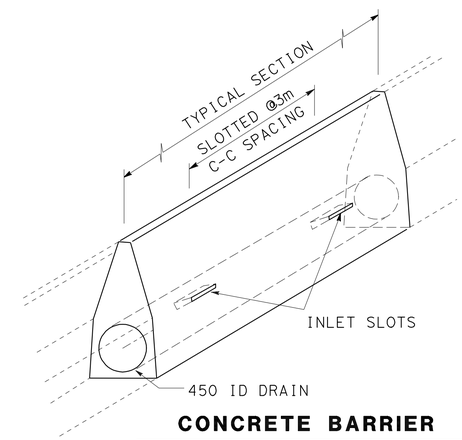

CONCRETE BARRIER

(TYPICAL TO ALL TYPES OF 60W)

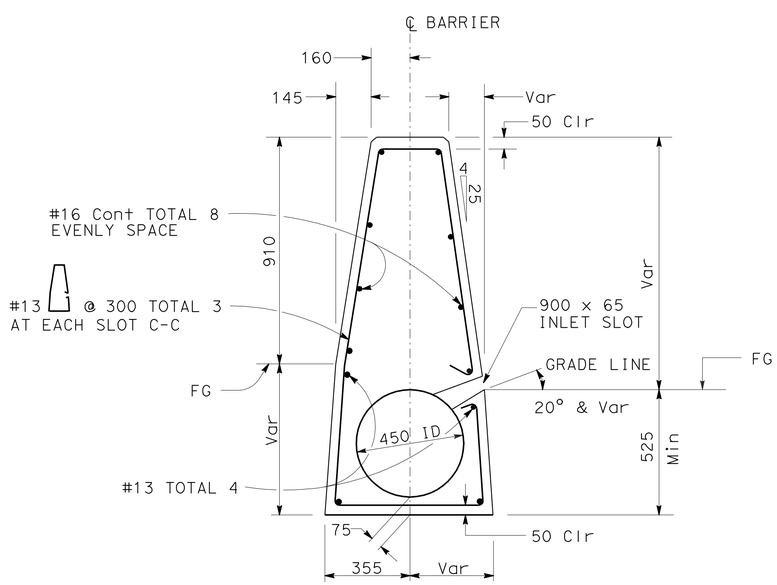

TYPICAL SECTION

CONCRETE BARRIER (TYPE 60W)

SINGLE SLOTTED SECTION CAST IN PLACE

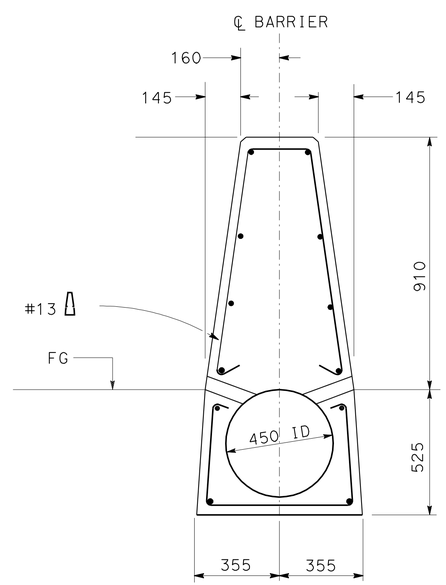

TYPICAL SECTION

MODIFIED CONCRETE BARRIER (TYPE 60W)

DOUBLE SLOTTED SECTION CAST IN PLACE

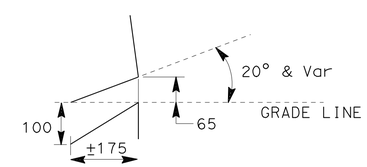

SCUPPER DETAIL

ALL DIMENSIONS ARE IN MILLIMETERS UNLESS OTHERWISE SHOWN

DRAINAGE DETAILS

NO SCALE

DD-8

REVISED BY	DATE REVISED

CALCULATED-DESIGNED BY
CHECKED BY

FUNCTIONAL SUPERVISOR DAVE BHALLA

STATE OF CALIFORNIA - DEPARTMENT OF TRANSPORTATION
Caltrans HYDRAULICS

LAST REVISION 00-00-00 | DATE PLOTTED => 03-MAY-2010 | TIME PLOTTED => 13:21

Dist	COUNTY	ROUTE	KILOMETER POST TOTAL PROJECT	SHEET No.	TOTAL SHEETS
07	LA	5	50.8/58.0	168	869

REGISTERED CIVIL ENGINEER 07/07/08 DATE

5-3-10
PLANS APPROVAL DATE

REGISTERED PROFESSIONAL ENGINEER BALDEV K. BHALLA No. 34350 Exp. 09/30/11 CIVIL STATE OF CALIFORNIA

THE STATE OF CALIFORNIA OR ITS OFFICERS OR AGENTS SHALL NOT BE RESPONSIBLE FOR THE ACCURACY OR COMPLETENESS OF ELECTRONIC COPIES OF THIS PLAN SHEET.

Caltrans Metric

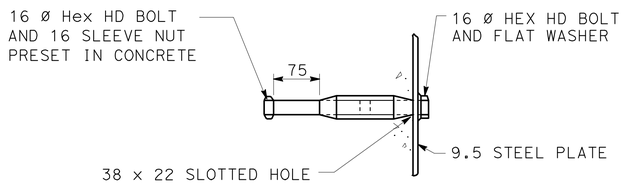

DETAIL "F"

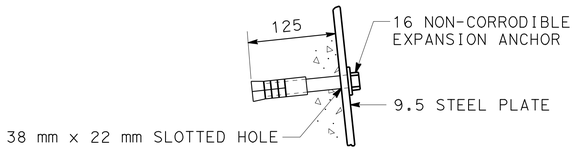

ALTERNATE DETAIL "F"

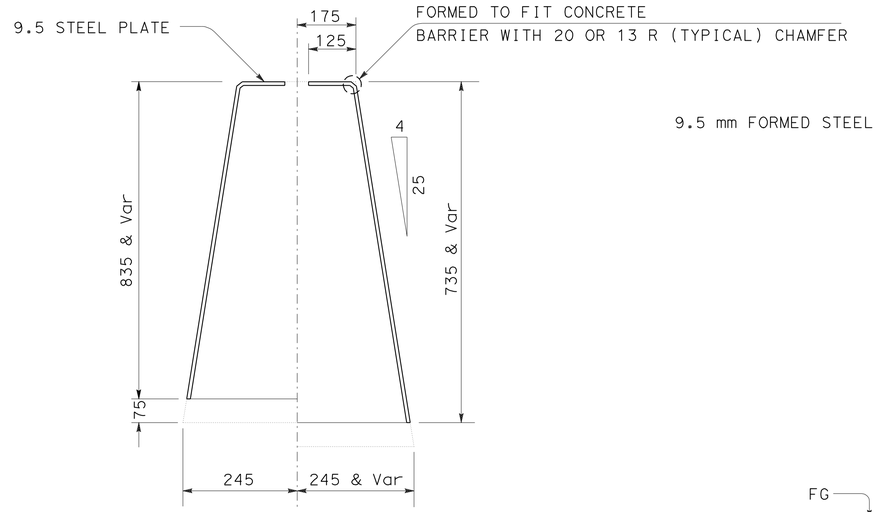

DETAIL "G"

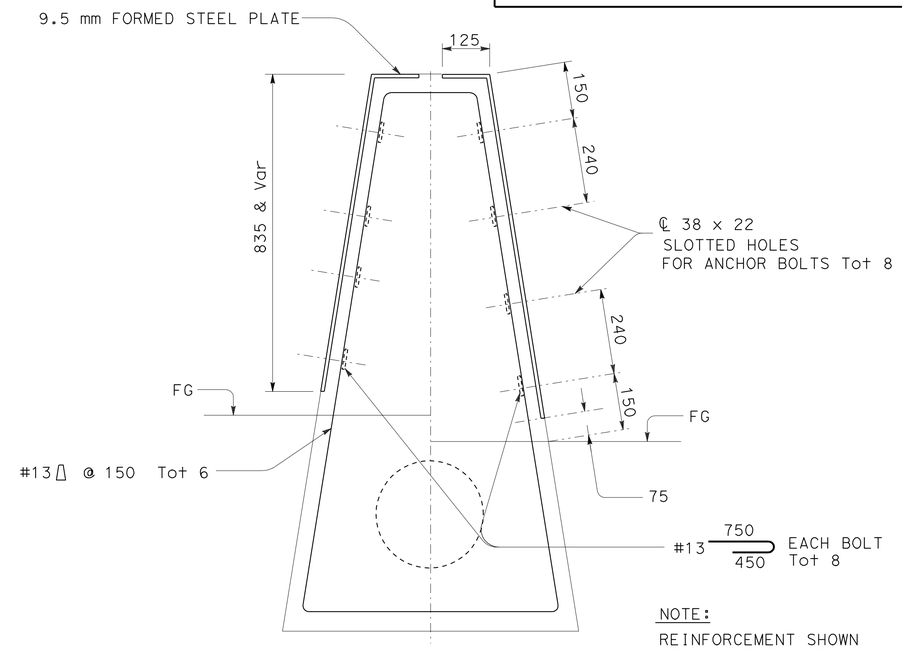

SECTION M-M

NOTE:
REINFORCEMENT SHOWN IS IN ADDITION TO REINFORCEMENT ON C-22

STEEL PLATE CLOSURE ANCHOR BOLT DETAILS

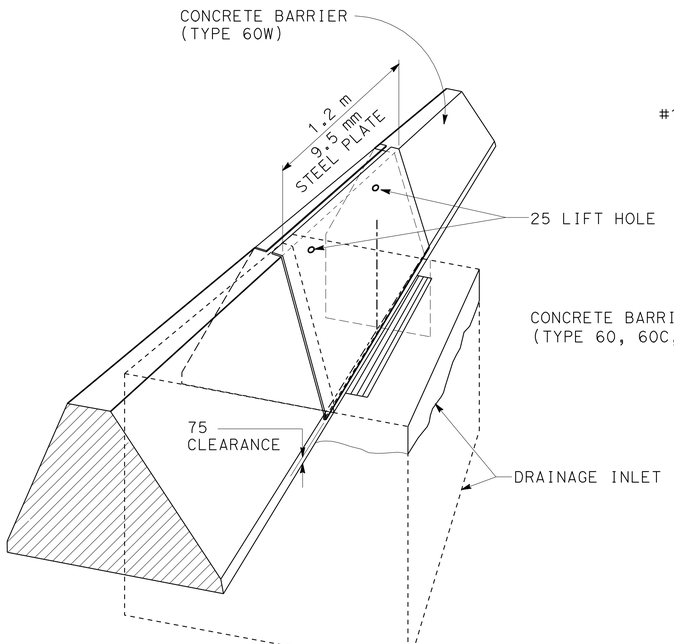

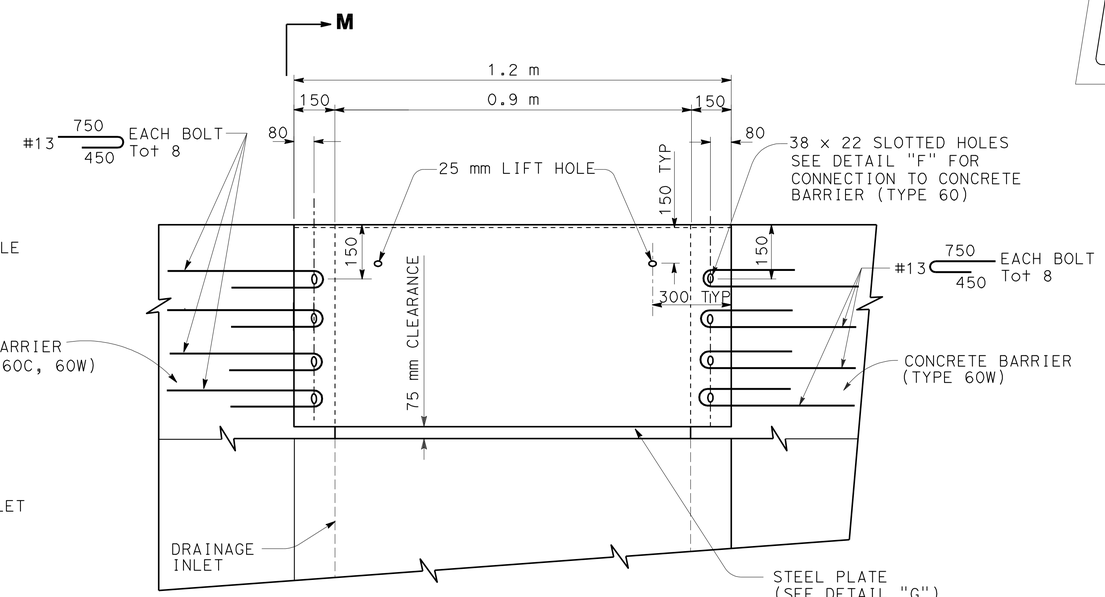

ELEVATION

STEEL PLATE CLOSURE DETAIL

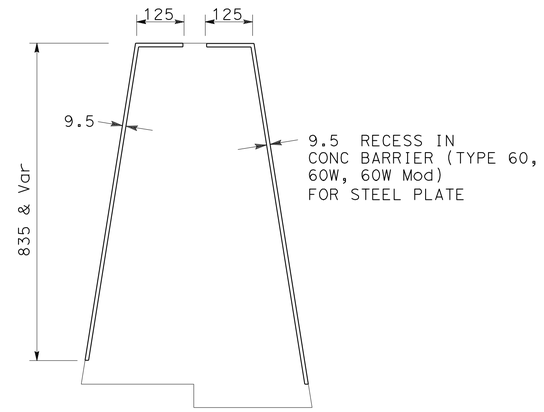

RECESS DETAIL

DETAILS OF CONCRETE BARRIER (TYPE 60W) OVER INLET

ALL DIMENSIONS ARE IN MILLIMETERS UNLESS OTHERWISE SHOWN

DRAINAGE DETAILS

NO SCALE

DD-9

REVISED BY	DATE REVISED

CALCULATED-DESIGNED BY
CHECKED BY
FUNCTIONAL SUPERVISOR DAVE BHALLA

STATE OF CALIFORNIA - DEPARTMENT OF TRANSPORTATION
Caltrans HYDRAULICS

LAST REVISION 00-00-00 | DATE PLOTTED => 06-MAY-2010 | TIME PLOTTED => 12:47

Dist	COUNTY	ROUTE	KILOMETER POST TOTAL PROJECT	SHEET No.	TOTAL SHEETS
07	LA	5	50.8/58.0	169	869

REGISTERED CIVIL ENGINEER 07/07/08 DATE

5-3-10
PLANS APPROVAL DATE

REGISTERED PROFESSIONAL ENGINEER BALDEV K. BHALLA No. 34350 Exp. 09/30/11 CIVIL STATE OF CALIFORNIA

THE STATE OF CALIFORNIA OR ITS OFFICERS OR AGENTS SHALL NOT BE RESPONSIBLE FOR THE ACCURACY OR COMPLETENESS OF ELECTRONIC COPIES OF THIS PLAN SHEET.

Caltrans Metric

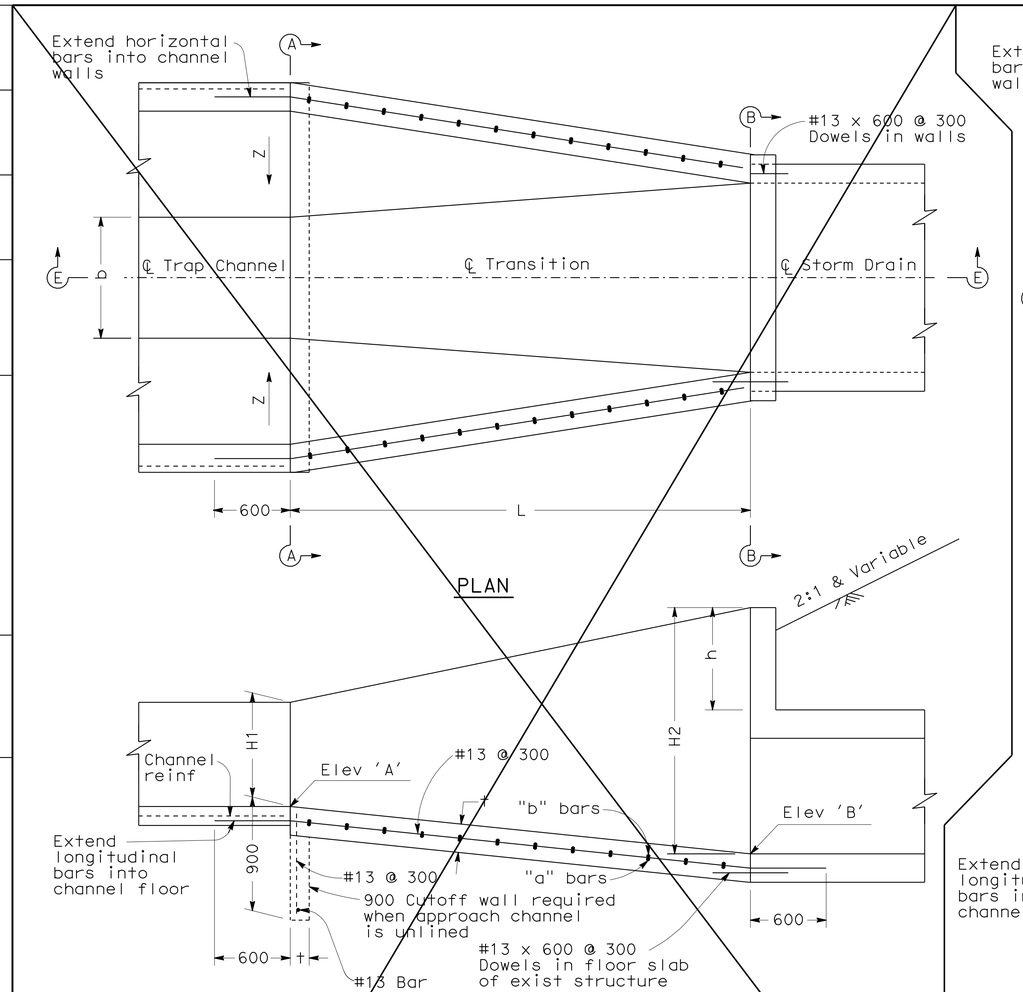

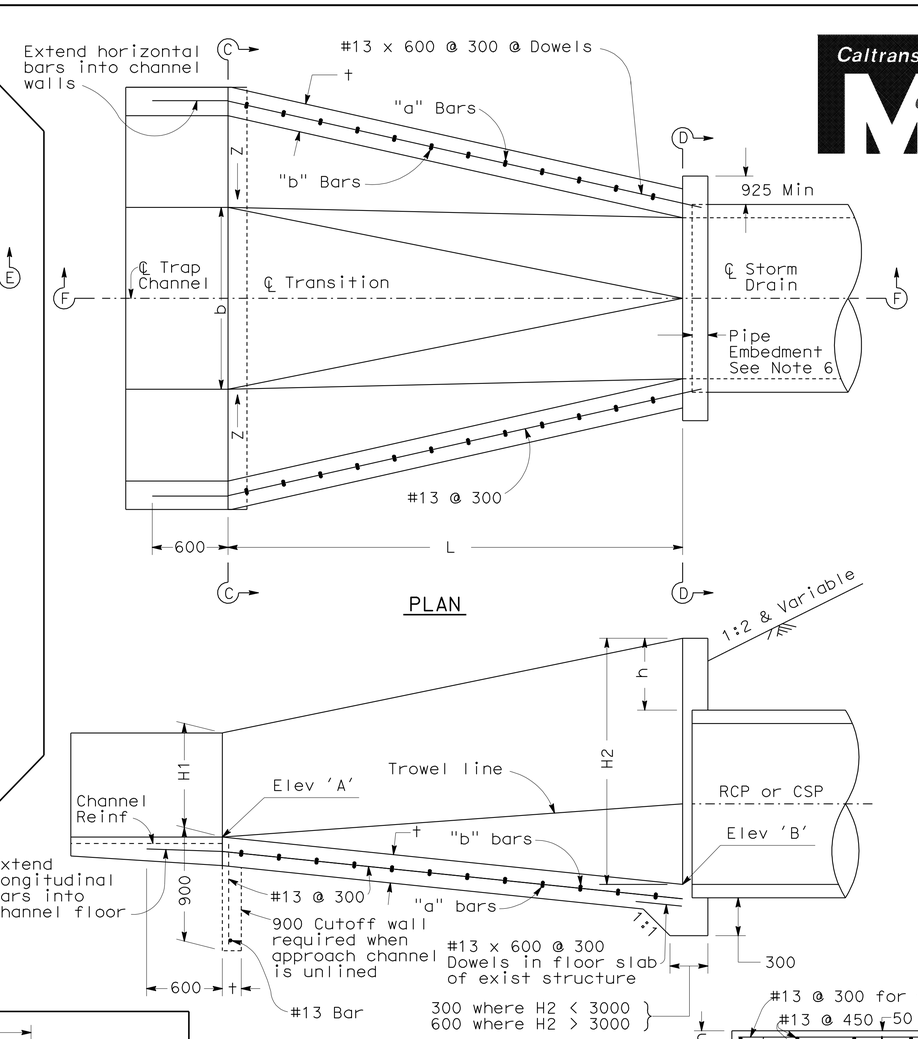

TABLE 1

* DESIGN "H"	†	REINFORCEMENT
0 - 1200	150	#13@300 both ways centered in slab
1200 - 1800	150	"a" bars #16@600 "b" bars #16@600
1800 - 2400	150	"a" bars #16@300 "b" bars #16@300
Greater than 2400	250	"a" bars #19@150 "b" bars #16@300

* Design "H" varies throughout length of transition. Use larger "H" on short transitions (L=4575 or less). For longer transitions, vary reinforcement as indicated above

NOTES

1. Provide a construction joint between the transition and the storm drain
2. Extend the longitudinal reinforcing steel of the transition 600 into the trapezoidal channel
3. In lieu of placing the dowels between the transition and the rectangular storm drain, the longitudinal reinforcing steel extended 600 into the storm drain
4. 'H1', 'H2', 'h', 'L', 'b', Elev 'A' and Elev 'B', and 'Z' shall be shown on the plans
5. This structural detail may be applied to transitions with curved bottoms and curved side walls
6. Pipe embedment shall be 125 for 2400 or less and 200 for over 2400

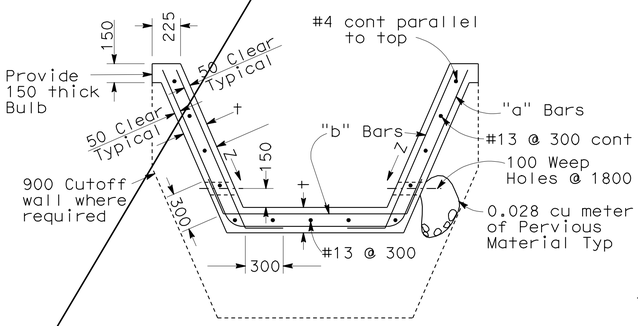

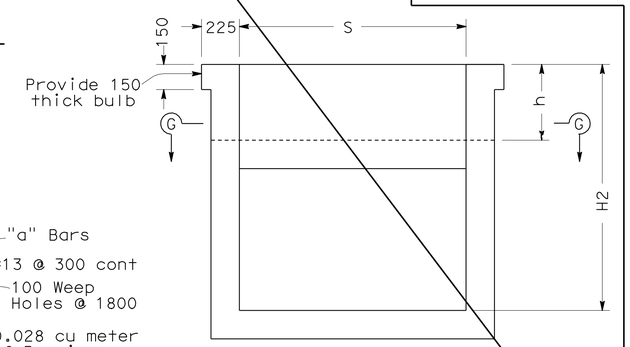

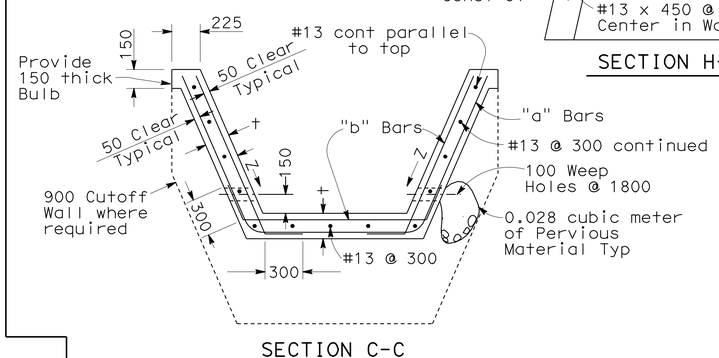

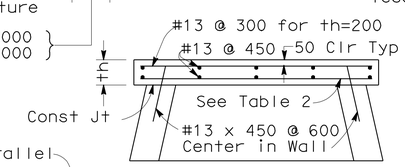

TABLE 2

S or D	th	REINFORCEMENT h=150 to 1200	REINFORCEMENT h=1500 to 2400
450 to 1650	150	#13 @ 300	#13 @ 300
1800 to 3000	150	#13 @ 200	#19 @ 225
3600	200	#16 @ 225	#19 @ 225

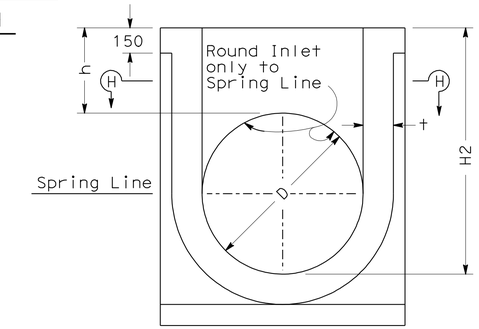

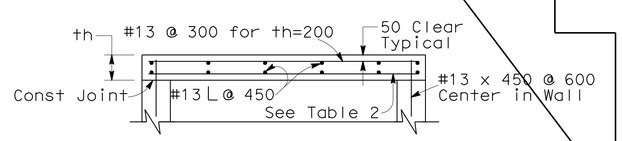

TRANSITION STRUCTURE NO 3
(TS NO 3)

TRANSITION STRUCTURE NO 4
(TS NO 4)

ALL DIMENSIONS ARE IN MILIMETERS UNLESS OTHERWISE SHOWN

DRAINAGE DETAILS

NO SCALE

DD-10

STATE OF CALIFORNIA - DEPARTMENT OF TRANSPORTATION
Caltrans HYDRAULICS
FUNCTIONAL SUPERVISOR DAVE BHALLA
CALCULATED-DESIGNED BY
CHECKED BY
REVISED BY
DATE REVISED

LAST REVISION 00-00-00 DATE PLOTTED => 03-MAY-2010 TIME PLOTTED => 13:22

Dist	COUNTY	ROUTE	KILOMETER POST TOTAL PROJECT	SHEET No.	TOTAL SHEETS
07	LA	5	50.8/58.0	170	869

REGISTERED CIVIL ENGINEER 07/07/08 DATE

5-3-10
PLANS APPROVAL DATE

REGISTERED PROFESSIONAL ENGINEER BALDEV K. BHALLA No. 34350 Exp. 09/30/11 CIVIL STATE OF CALIFORNIA

THE STATE OF CALIFORNIA OR ITS OFFICERS OR AGENTS SHALL NOT BE RESPONSIBLE FOR THE ACCURACY OR COMPLETENESS OF ELECTRONIC COPIES OF THIS PLAN SHEET.

Caltrans Metric

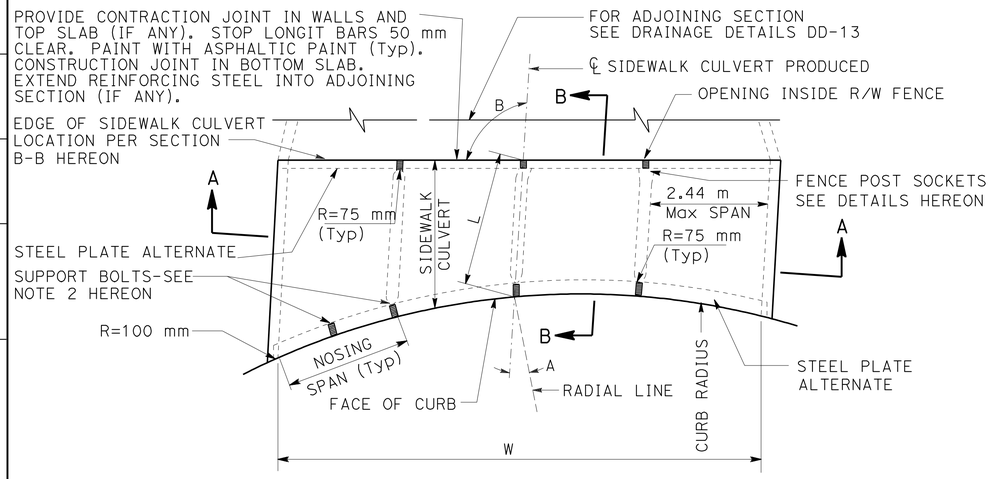

PLAN

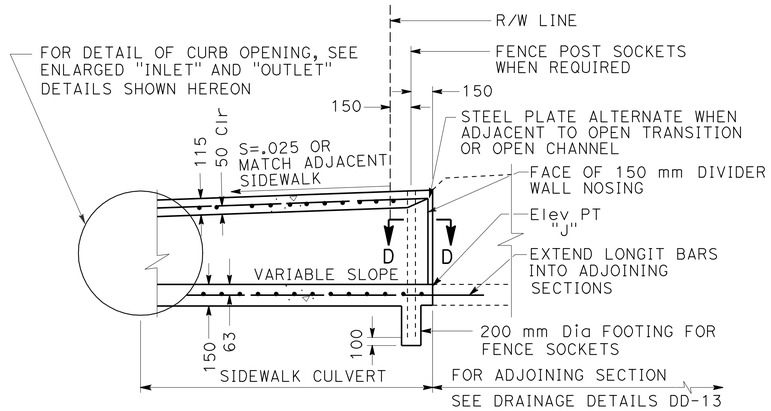

SECTION B-B

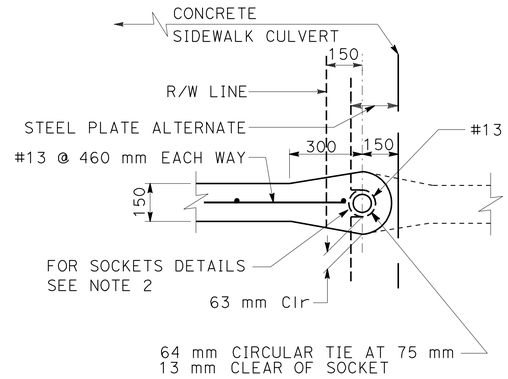

SECTION D-D
POST SOCKET DETAIL

NOTES:

1. CONSTRUCT CULVERT OPENINGS WITH Max 2.13 m CHORDS.
2. SUPPORT BOLTS
   A. SUPPORT BOLTS SHALL BE INSTALLED AT THE NOSE OF EACH DIVIDER WALL.
   B. WHEN NOSING SPAN EXCEEDS 2.13 m INTERMEDIATE SUPPORT BOLT(S) SHALL BE INSTALLED, EQUALLY SPACED AT 2.13 m OC Max SPACING.
   C. SPACING NOTES HEREON SUPERSEDE THOSE SHOWN ON STANDARD PLAN.
   D. SUPPORT BOLTS ARE NOT REQUIRED AT THE DIVIDER WALL NOSE WHEN THE OPENING IS INSIDE THE R/W FENCE.
3. UNLESS OTHERWISE SPECIFIED ON OTHER SHEETS, A=0° @ B=90°.
4. ALL DETAILS ARE APPLICABLE FOR CURB OPENINGS ON A STRAIGHT LINE.
5. CULVERT SHALL BE CONSTRUCTED AS ONE SPAN UNLESS ADDITIONAL CELLS ARE SPECIFIED ON DRAINAGE PLANS.

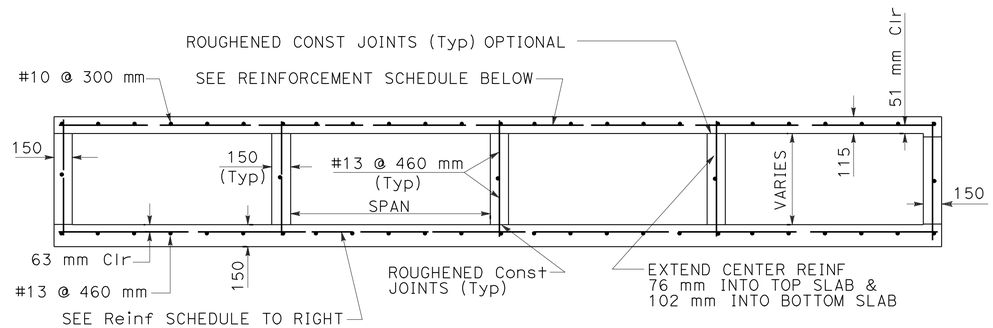

SECTION A-A

SIDEWALK CULVERT REINFORCEMENT			
SPAN (m)	BARS	SPAN (m)	BARS
0.91	#10 @ 300 mm	1.83	#10 @ 150 mm
1.22	#10 @ 250 mm	2.13	#13 @ 200 mm
1.50	#10 @ 200 mm	2.44	#13 @ 150 mm

FOR SPAN DIMENSIONS DIFFERING FROM THOSE SHOWN, USE DESIGN DATA FOR THE NEXT LARGER SPAN.

NOTES:

1. WHERE DIVIDER WALL CONTINUES IN AN ADJOINING STRUCTURE, THE 300 mm TAPER SHOWN SHALL BE REPEATED AS PER DASHED LINES.
2. FENCE POST SOCKETS UNLESS OTHERWISE SPECIFIED SHALL BE FORMED OF LIGHTWEIGHT METAL INSERTS 457 mm LONG. THESE INSERTS SHALL BE SHEET METAL TUBES WITH AN 1D 19 mm GREATER THAN THE OD OF THE FENCE POST USED. POSTS ARE TO BE MORTARED INTO THE INSERTS USING ONE PART CEMENT AND TWO PARTS SAND.

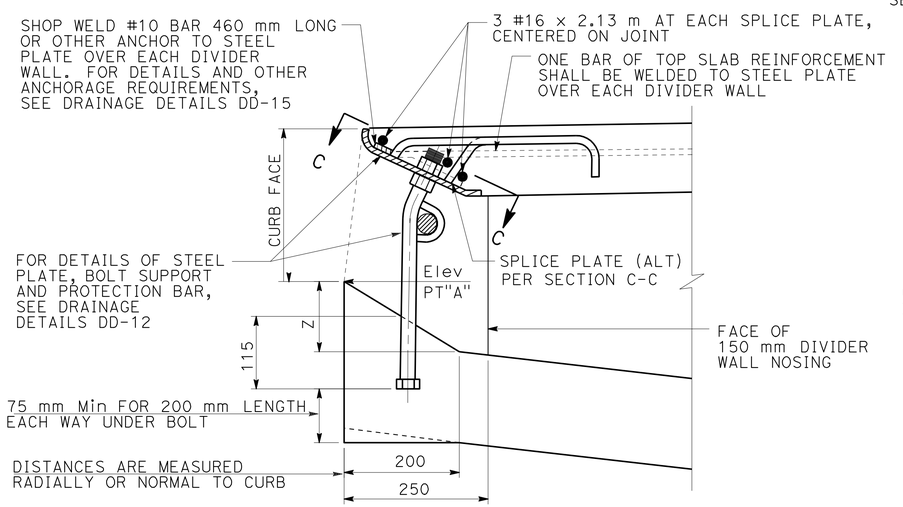

INLET DETAIL

NOTES:

1. SEE NOTE ON OUTLET DETAIL.
2. THE BOTTOM SLAB OF THE SIDEWALK CULVERT SHALL BE CONSTRUCTED ON A UNIFORM GRADE UNLESS OTHERWISE SPECIFIED ON THE PLAN SHEETS.
3. Z=115 mm UNLESS OTHERWISE SPECIFIED ON THE PLAN SHEET.
4. SHOP WELD ONE EXTRA #10 BAR 460 mm LONG OR OTHER ANCHOR (ALT) EACH SIDE OF SPLICE PLATE AND WITHIN 150 mm THEREOF.
5. A. SHOP WELD SPLICE PLATE TO LONGER SPAN SEGMENT.
   B. ALTERNATE SPLICE PLATE MAY BE BOLTED TO EACH SIDE.
6. SPLICE PLATE ALTERNATE SHALL BE USED ONLY WHERE THE SPLICE IS LOCATED OVER SUPPORT BOLTS.

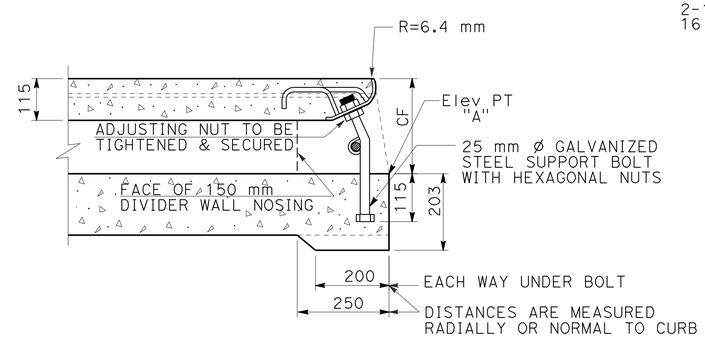

OUTLET DETAIL

NOTES:

1. WHEN REQUIRED BY LENGTH OF OPENING OR CONSTRUCTION OF A CIRCULAR CURB OPENING, STEEL ANGLE MAY BE DELIVERED IN SECTIONS AND BUTT WELDED IN PLACE.
2. REINFORCE STEEL PLATE AS PER INLET DETAIL HEREON.

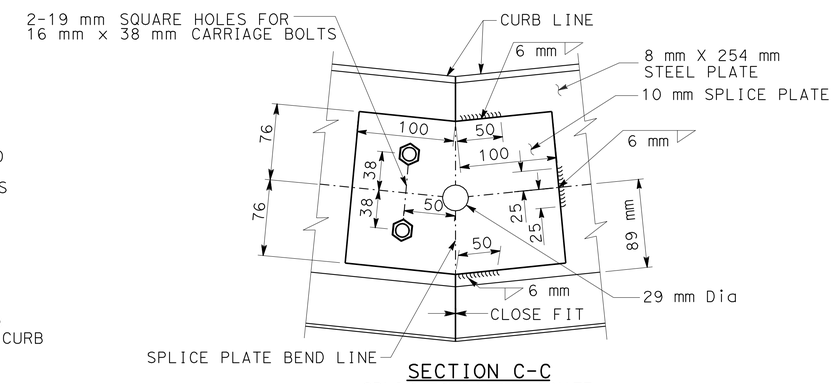

SECTION C-C
SPLICE PLATE ALTERNATE

ALL DIMENSIONS ARE IN MILLIMETERS UNLESS OTHERWISE SHOWN

DRAINAGE DETAILS

NO SCALE

DD-11

SIDEWALK CULVERT

STATE OF CALIFORNIA - DEPARTMENT OF TRANSPORTATION
Caltrans HYDRAULICS
FUNCTIONAL SUPERVISOR DAVE BHALLA
CALCULATED-DESIGNED BY
CHECKED BY
REVISED BY
DATE REVISED

LAST REVISION 00-00-00
DATE PLOTTED => 03-MAY-2010
TIME PLOTTED => 13:22

TOP		
B	t	BOTH WAYS
0.97 m TO 1.22 m	115 mm	#10 @ 150 mm
1.22 m TO 1.83 m	125 mm	#10 @ 125 mm

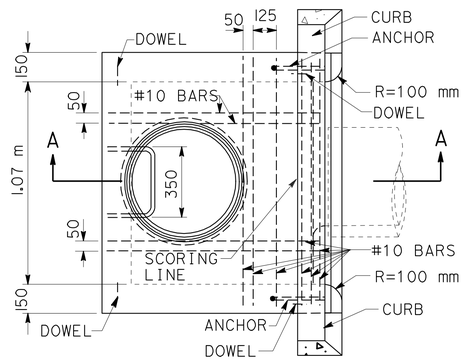

PLAN

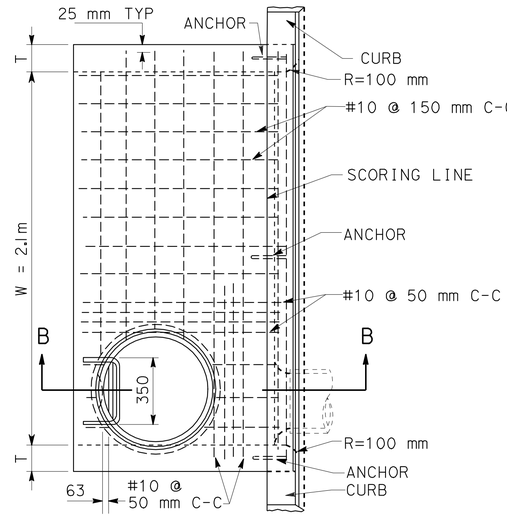

PLAN

STEEL PLATE ANCHORAGE NOTES:

1. WHEN CURB FACE EXCEEDS 180 mm A PLAIN ROUND STEEL PROTECTION BAR 25 mm IN DIAMETER SHALL BE INSTALLED. BAR SHALL BE EMBEDDED 125 mm AT EACH END. WHEN LENGTH OF OPENING IS 2.1 m OR LESS, SAID BAR SHALL BE LOCATED 125 mm BEHIND CURB FACE AND 100 mm ABOVE GUTTER FLOW LINE.
2. A STIRRUP SHALL BE WELDED TO EACH BOLT WHEN BOTH A PROTECTION BAR AND SUPPORT BOLT ARE REQUIRED.
3. ALL EXPOSED METAL PARTS SHALL BE GALVANIZED.
4. WHEN REQUIRED BY LENGTH OF OPENING BULB ANGLE MAY BE DELIVERED IN SECTIONS AND BUTT WELDED IN PLACE. ALL GALVANIZING DAMAGED BY WELDING SHALL RECEIVE TWO COATS OF ALUMINUM PAINT.
5. TYPE A OR TYPE B ANCHORAGE MAY BE USED.
6. SUPPORT BOLTS SHALL BE INSTALLED WHEN LENGTH OF OPENING EXCEEDS 2.1 m. SPACING SHALL BE 2.1 m C-C MAX AND 1.5 m C-C Min.
7. THE STEEL PLATE SHALL BE FABRICATED FROM 7.9 mm x 250 mm UNIVERSAL MILL PLATES.

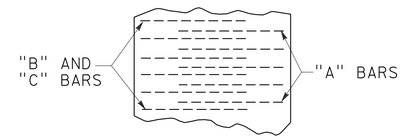

FLOOR

NOTE: ALTERNATE "A" BARS TO BE CUT OFF AT ONE HALF HEIGHT

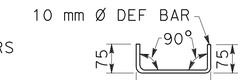

DOWEL DETAIL

(TO BE USED WHEN TOP IS POURED SEPARATELY, ONE AT EACH CORNER)

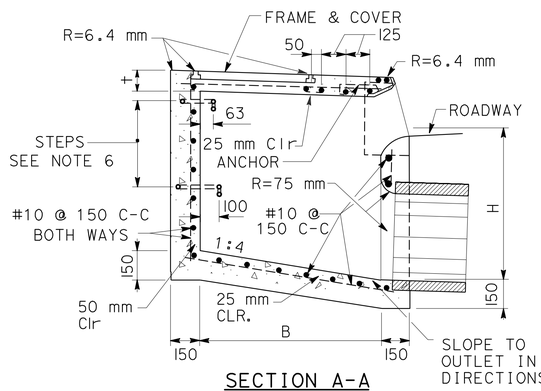

SECTION A-A

TYPE C38

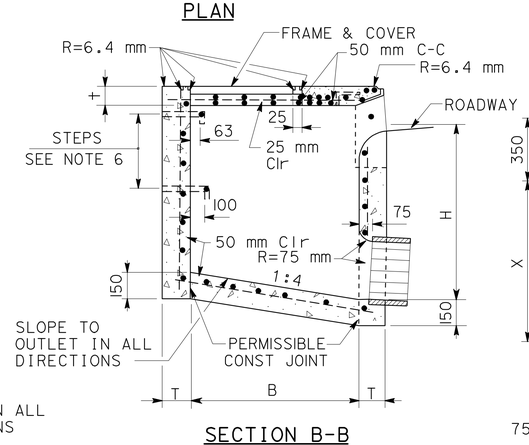

SECTION B-B

TYPE C39

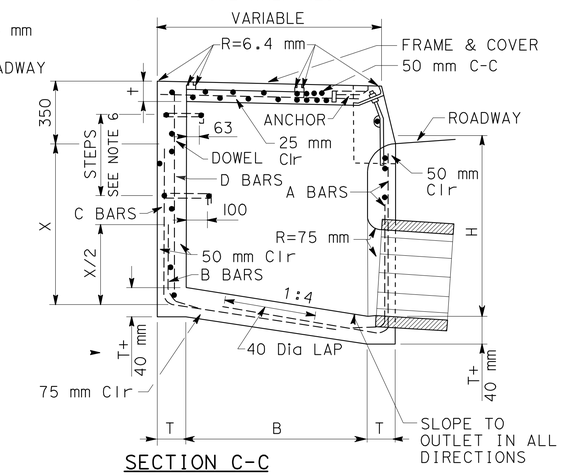

SECTION C-C

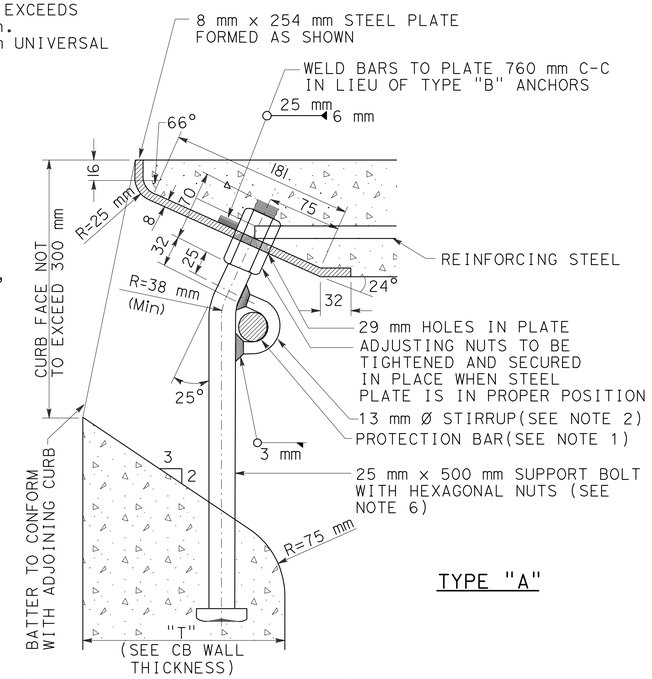

TYPE "A"

STEEL PLATE ANCHORAGE

REINFORCEMENT FOR TYPES C39 & C40 WITH W=2.13 m OR 4.27 m

W (m)	H (m)	T (mm)	FRONT WALL Horiz(mm)	FRONT WALL Vert(mm)	REAR & END WALLS Horiz(mm)	REAR & END WALLS Vert(mm)	FLOOR BOTH WAYS(mm)
2.13	TO 1.22	150	#10 @ 150	#10 @ 150	#10 @ 150	#10 @ 150	#10 @ 150
2.13	1.22 TO 2.44	200	#13 @ 300	#13 @ 300	#13 @ 300	#13 @ 300	#13 @ 300
2.13	2.44 TO 3.66	250	#13 @ 250	#13 @ 250	#13 @ 250	#13 @ 250	#13 @ 250
4.27	TO 1.22	150	#10 @ 150	#10 @ 150	#10 @ 150	#10 @ 150	#10 @ 150
4.27	1.22 TO 2.44	200	#13 @ 300	#13 @ 300	#13 @ 300	#13 @ 300	#13 @ 300
4.27	2.44 TO 3.05	250	#13 @ 200	#13 @ 300	#13 @ 250	#13 @ 250	#13 @ 250
4.27	3.05 TO 3.66	250	#13 @ 150	#13 @ 300	#13 @ 250	#13 @ 250	#13 @ 250

REINFORCEMENT FOR TYPES C39 & C40 WITH W=6.4 m OR MORE

W (m)	H (m)	T (mm)	FRONT WALL "A" BARS (mm)	FRONT WALL Horiz	REAR WALL "B" BARS (mm)	REAR WALL "C" BARS (mm)	REAR WALL "D" BARS Horiz	REAR WALL "D" BARS Vert(mm)	END WALL Horiz & Vert(mm)	FLOOR CONTINUATION OF BAR "A", "B", "C" OF FRONT AND REAR WALLS	FLOOR TIE BARS
6.4 OR OVER	TO 1.22	150	#10 @ 300	#13 @ 600 mm	#10 @ 300		#10 @ 300 mm	#13 @ 600	#10 @ 460	#13 @ 600 mm	
	TO 1.5	200	#10 @ 250		#10 @ 300			#13 @ 600	#10 @ 350		
	TO 1.83	200	#10 @ 150		#10 @ 263			#13 @ 600	#10 @ 350		
	TO 2.13	200	#13 @ 215		#10 @ 215			#13 @ 600	#10 @ 350		
	TO 2.44	200	#13 @ 165		#10 @ 165			#13 @ 600	#10 @ 350		
	TO 2.74	250	#13 @ 191		#10 @ 191			#13 @ 500	#10 @ 275		
	TO 3.05	250	#13 @ 150		#13 @ 300			#13 @ 500	#10 @ 275		
	TO 3.4	250	#16 @ 191		#13 @ 275	#16 @ 572		#13 @ 460	#10 @ 275		
	TO 3.66	250	#19 @ 230		#13 @ 230	#19 @ 648		#13 @ 325	#10 @ 275		

NOTES:

1. "H" IS THE DIFFERENCE IN ELEVATION BETWEEN THE OUTLET PIPE FLOW LINE AND THE NORMAL GUTTER GRADE LINE UNDEPRESSED.
2. CONCRETE: WHERE THE BASIN IS TO BE CONSTRUCTED WITHIN THE LIMITS OF OR CONTIGUOUS TO A PROPOSED SIDEWALK, THE TOP SLAB OF THE BASIN SHALL BE POURED MONOLITHIC WITH THE SIDEWALK USING THE SAME CLASS OF CONCRETE AS IN THE STRUCTURE.
3. CONNECTION PIPES MAY BE PLACED IN ANY POSITION AROUND THE WALLS PROVIDED THEY ALIGN IN THE PROPER DIRECTION AND THEIR POSITIONS ARE OTHERWISE CONSISTENT WITH THE DRAINAGE PLAN. WHERE MONOLITHIC CONNECTIONS ARE NOT USED, PIPES SHALL BE TRIMMED AT SKEWS NECESSARY TO INSURE MINIMUM 75 mm PIPE EMBEDMENT AND ALLOW 75 mm RADIUS ROUNDING OF STRUCTURE CONCRETE ADJACENT TO PIPE ENDS. FOR DETAILS OF MONOLITHIC CONNECTIONS SEE DRAINAGE DETAIL DD-5
4. SURFACE OF ALL EXPOSED CONCRETE SHALL CONFORM IN SLOPE, GRADE, COLOR, FINISH, AND SCORING TO EXISTING OR PROPOSED SIDEWALK ADJACENT TO THE BASIN.
5. FLOOR OF BASIN SHALL BE GIVEN STEEL-TROWELED FINISH AND SHALL SLOPE FROM ALL DIRECTIONS TO THE OUTLET. FOR INLETS TYPE C39 AND C40- THE DEPTH AT THE UPSTREAM END SHALL BE CURB FACE PLUS 460 mm UNLESS OTHERWISE SPECIFIED FOR "W" GREATER THAN 3.05 m.
6. STEPS SHALL BE 19 mm ROUND, GALVANIZED STEEL. NONE REQUIRED WHERE "H" IS 1.07 m OR LESS. INSTALL ONE STEP 400 mm ± ABOVE FLOOR WHEN "H" IS MORE THAN 1.07 m AND LESS THAN 1.5 m. WHERE "H" IS MORE THAN 1.5 m, STEPS SHALL BE EVENLY SPACED AT 300 mm ± INTERVALS FROM 400 mm ± ABOVE FLOOR TO WITHIN 300 mm ± OF THE TOP OF BOX.
7. DIMENSIONS: INLET TYPE C38 - H = 0.91 m UNLESS OTHERWISE SPECIFIED.
   INLETS TYPE C39 & C40 - H = 1.07 m UNLESS OTHERWISE SPECIFIED.
   INLET TYPE C40 - W = 4.27 m UNLESS OTHERWISE SPECIFIED.
   B = 0.97 m UNLESS OTHERWISE SPECIFIED.
   T = 150 mm FOR SIDE WALLS AND BACK WALLS AND 200 mm FOR FRONT IF "H" IS 1.07 m OR LESS.
   T = 200 mm IF "H" IS GREATER THAN 1.07 m AND LESS THAN 2.44 m.
   T = 250 mm IF "H" IS 2.44 m OR MORE.
   CURB FACE = 230 mm UNLESS OTHERWISE SPECIFIED.
8. CURVATURE OF THE SIDE WALLS AT CURB OPENING SHALL BE FORMED BY CURVED FORMS AND SHALL NOT BE MADE BY PLASTERING.
9. MANHOLE SHALL BE PLACED ALONG BACK WALL NEAR OUTLET.
10. FOR FRAME AND COVER DETAIL, SEE STD. PLAN B7-11, DETAIL U46.

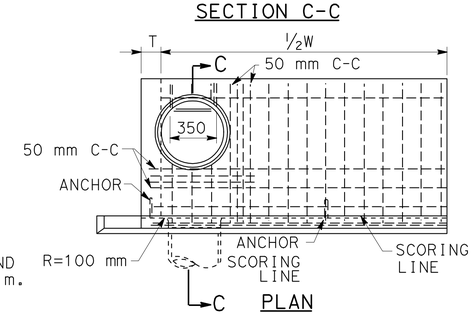

PLAN

TYPE C40

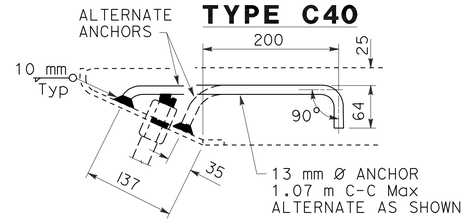

TYPE "B" STEEL PLATE ANCHORAGE

ALL DIMENSIONS ARE IN MILLIMETERS UNLESS OTHERWISE SHOWN

DRAINAGE DETAILS

NO SCALE

DD-12

Dist	COUNTY	ROUTE	KILOMETER POST TOTAL PROJECT	SHEET No.	TOTAL SHEETS
07	LA	5	50.8/58.0	171	869

REGISTERED CIVIL ENGINEER 07/07/08 DATE

5-3-10
PLANS APPROVAL DATE

REGISTERED PROFESSIONAL ENGINEER BALDEV K. BHALLA No. 34350 Exp. 09/30/11 CIVIL STATE OF CALIFORNIA

THE STATE OF CALIFORNIA OR ITS OFFICERS OR AGENTS SHALL NOT BE RESPONSIBLE FOR THE ACCURACY OR COMPLETENESS OF ELECTRONIC COPIES OF THIS PLAN SHEET.

Caltrans Metric

REVISED BY | DATE REVISED
CALCULATED-DESIGNED BY | CHECKED BY
FUNCTIONAL SUPERVISOR: DAVE BHALLA
STATE OF CALIFORNIA - DEPARTMENT OF TRANSPORTATION
Caltrans HYDRAULICS

LAST REVISION 00-00-00 | DATE PLOTTED => 03-MAY-2010 | TIME PLOTTED => 13:22

Dist	COUNTY	ROUTE	KILOMETER POST TOTAL PROJECT	SHEET No.	TOTAL SHEETS
07	LA	5	50.8/58.0	172	869

REGISTERED CIVIL ENGINEER DATE 07/07/08

5-3-10
PLANS APPROVAL DATE

REGISTERED PROFESSIONAL ENGINEER BALDEV K. BHALLA No. 34350 Exp. 09/30/11 CIVIL STATE OF CALIFORNIA

THE STATE OF CALIFORNIA OR ITS OFFICERS OR AGENTS SHALL NOT BE RESPONSIBLE FOR THE ACCURACY OR COMPLETENESS OF ELECTRONIC COPIES OF THIS PLAN SHEET.

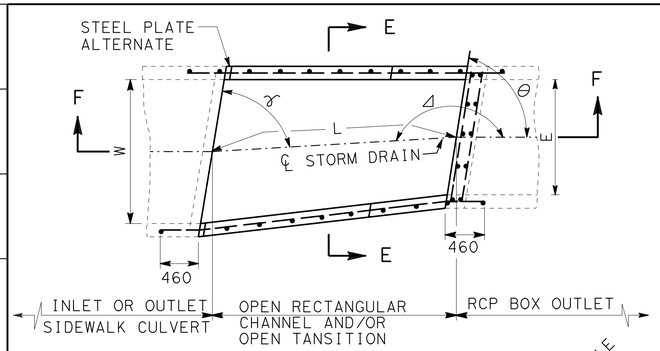

PLAN

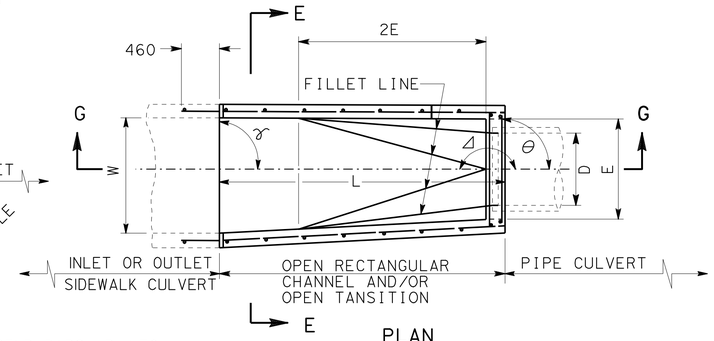

PLAN

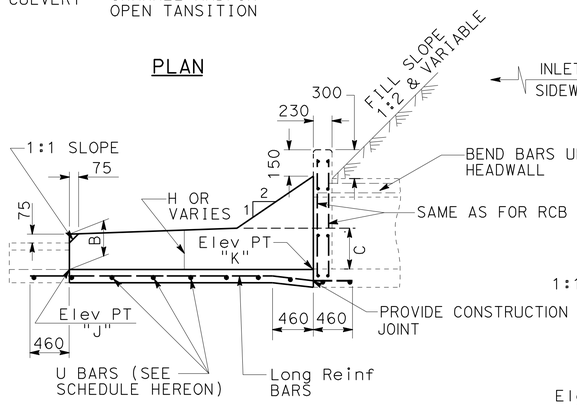

SECTION F-F

NOTE: H=B=C AND γ=90°, θ=90° AND Δ =180° UNLESS OTHERWISE SPECIFIED ON PLANS

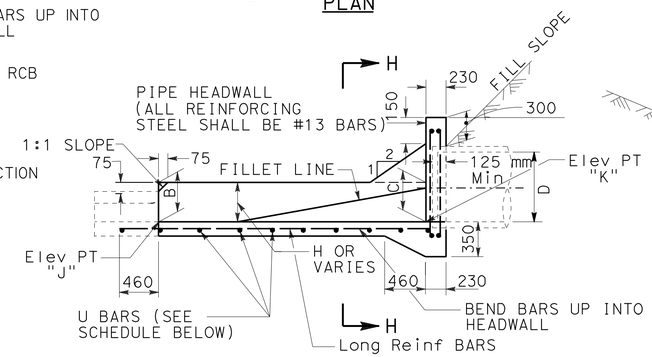

SECTION G-G

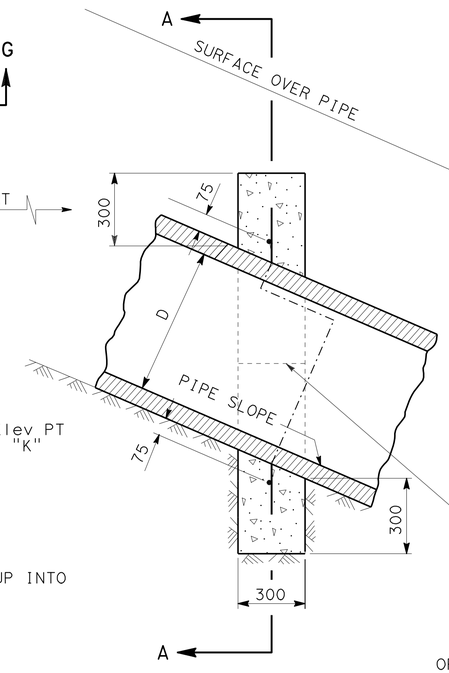

SECTION B-B

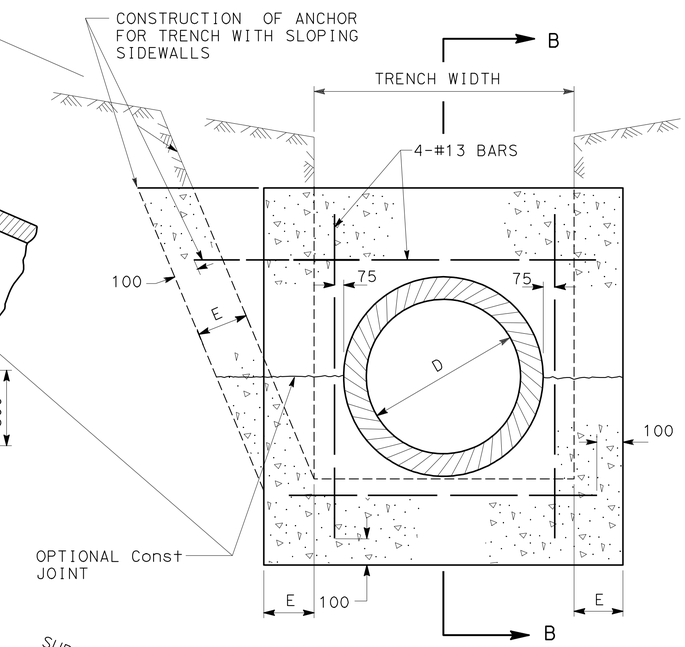

SECTION A-A

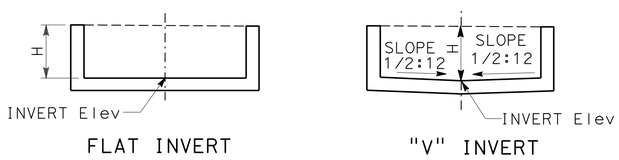

FLAT INVERT "V" INVERT

ALTERNATE INVERTS

OPEN RECTANGULAR CHANNEL AND/OR OPEN TRANSITION REINFORCEMENT	
H(m)	U BARS
0 to 0.61	#10 @ 460 mm
0.64 to 0.76	#10 @ 375 mm
0.79 to 0.91	#10 @ 300 mm
0.94 to 1.07	#10 @ 180 mm
1.09 to 1.22	#10 @ 125 mm

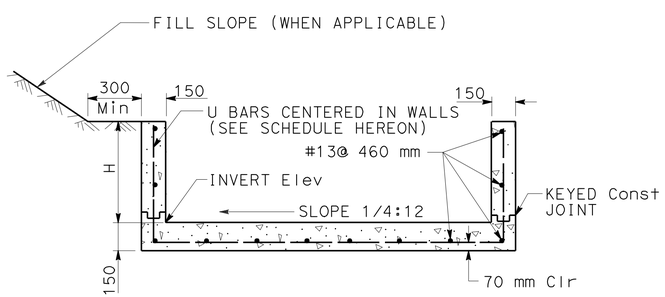

SECTION E-E

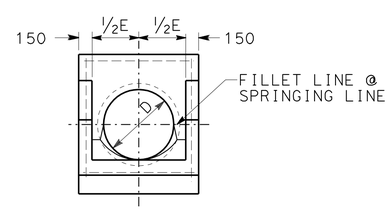

SECTION H-H

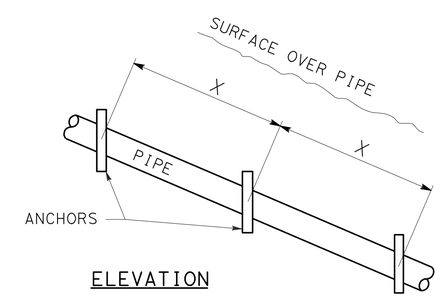

ELEVATION

PIPE SLOPE	X DISTANCE
1:1	3.66 m
1:1½	4.27 m
1:2	4.88 m
1:2½	5.49 m
1:3	6.10 m

CONCRETE PIPE ANCHORS

NOTES:

1. PIPE ANCHORS REQUIRED ON ALL SLOPES OF 1:3 OR STEEPER.
2. ALL REINFORCING STEEL SHALL BE NUMBER 13 BARS.
3. "E" SHALL BE 200 mm UNLESS OTHERWISE SPECIFIED.

SIDEWALK CULVERT TRANSITION

NOTES:

1. H=B=C AND E=D AND γ=90°, θ=90°, AND Δ=180° UNLESS OTHERWISE SPECIFIED ON PLANS.
2. OMIT FLOW LINE FILLETS AT DOWNSTREAM END OF CULVERT.
3. CONSTRUCT ALTERNATE INVERT WHEN SPECIFIED ON PLANS.
4. U BAR SPACING THROUGHOUT THE STRUCTURE SHALL BE DETERMINED BY SPACING REQUIREMENTS FOR THE HIGHER END.
5. ALL EXPOSED EDGE SHALL BE CONSTRUCTED WITH 19 mm CHAMFERS.

ALL DIMENSIONS ARE IN MILLIMETERS UNLESS OTHERWISE SHOWN

DRAINAGE DETAILS

NO SCALE

DD-13

REVISED BY | DATE REVISED
CALCULATED-DESIGNED BY | CHECKED BY
FUNCTIONAL SUPERVISOR: DAVE BHALLA
STATE OF CALIFORNIA - DEPARTMENT OF TRANSPORTATION
HYDRAULICS

LAST REVISION 00-00-00 | DATE PLOTTED => 03-MAY-2010 | TIME PLOTTED => 13:22

DIST	COUNTY	ROUTE	KILOMETER POST TOTAL PROJECT	SHEET No	TOTAL SHEETS
07	LA	5	50.8/58.0	173	869

REGISTERED CIVIL ENGINEER 9-05-08 DATE

5-3-10
PLANS APPROVAL DATE

REGISTERED PROFESSIONAL ENGINEER D. J. DUNRUD No. C 47240 Exp. 12-31-09 CIVIL STATE OF CALIFORNIA

The State of California or its officers or agents shall not be responsible for the accuracy or completeness of electronic copies of this plan sheet.

B0-1
1-3

GENERAL NOTES

Designation:
Types of Gross Solids Removal Devices (GSRDs) are Linear Radial (LR) and Inclined Screen. The Linear Radial has either a standard or high velocity configuration noted as Linear Radial or Linear Radial (HV). All GSRD BMP Detail Drawings are applicable for velocities up to 6.1 mps.

Special Reinforcement Coverage:
GSRD BMP Detail Drawings are not to be used in a corrosive environment or where there is a severe abrasive flow condition or in freeze-thaw locations.

Special Design:
Required for ground water conditions above bottom of GSRD, surcharge loads exceeding HS20 truck load, design bearing pressures or sizes greater than those on this plan.

Traffic Loading:
No traffic load is allowed over GSRDs. As determined by the Engineer, barriers or MBGR shall be provided between GSRDs and traffic lanes.

DESIGN FLOW

LINEAR RADIAL ✳			
GSRD Type	Total Screen Length	Flow Rate (m^3/sec)	Debris Area (hectares)
LR-1	1.52 m	0.10	0.32
LR-2	3.05 m	0.20	0.64
LR-3	4.57 m	0.30	0.91
LR-4	6.10 m	0.41	1.28
LR-5	7.62 m	0.52	1.60
LR-6	9.14 m	0.62	1.92

✳ When maximum inlet velocity exceeds 2.5 m/sec, High Velocity (HV) details, are required.

INCLINED SCREEN - TYPE 2			
GSRD Type	Total Screen Length	Flow Rate (m^3/sec)	Debris Area (hectares)
2-A	1.02 m	0.16	0.57
2-B	1.52 m	0.25	0.86
2-C	2.03 m	0.33	1.15
2-D	2.54 m	0.41	1.43
2-E	3.05 m	0.50	1.72
2-F	3.56 m	0.58	2.01

DESIGN NOTES

Specifications:
Design:
Bridge Design Specification April 2000 (LFD)
(1996 AASHTO) with interims and revisions by Caltrans

Wall (LFD) : 1.5 D + 1.5 E and 1.5D + W
Footing (LFD): 1.5 D + 1.5 E
Where D = Dead Load
E = Earth Load

Capacity reduction factor is included.

Earth Load:
19.6 kPa/m vertical,

Water Load:
9.8 kPa/m horizontal,

Equivalent Fluid Pressure =
15.7 kPa/m horizontal (Case I).

Earth pressure for 2:1 unlimited slope determined from Rankine's formula with ø = 33°42′ (Case II).

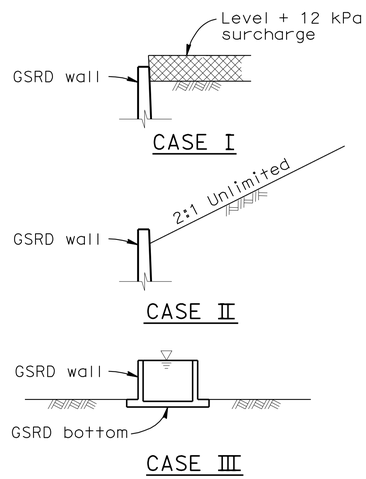

DETAIL OF DESIGN LOADING CASES

CASE I Level + 0.61 m surcharge, GSRD empty
CASE II 2:1 Unlimited slope, GSRD empty
CASE III GSRD full of water, no soil pressure

Grating (LL) Load :
3.6 kPa

Unit Stresses:
f'_c = 24.8 MPa, and 27.6 MPa for Inclined Screen
f_y = 414 MPa (bar reinforcing)

Design Soil Bearing Pressure (Service Load) = 125 kPa

CONSTRUCTION NOTES

Expansion joints:
Inverts - No expansion joints shall be permitted.
Walls - Place 13 mm expansion joint filler vertically at 9.1 m centers with strip water stop.

Construction Joints:
Temporary joints may be permitted if normal (or radial) to ℄ of GSRD. Otherwise, the contractor is to submit a proposal for consideration.

Backfill:
See Standard Specifications, except the difference in backfill shall not exceed 1.22 m between side walls and shall not exceed the lesser of wall height "H" or 2.44 m between inlet and outlet walls.

Earthwork:
Excavation and Backfill with Cut and Exposed conditions -

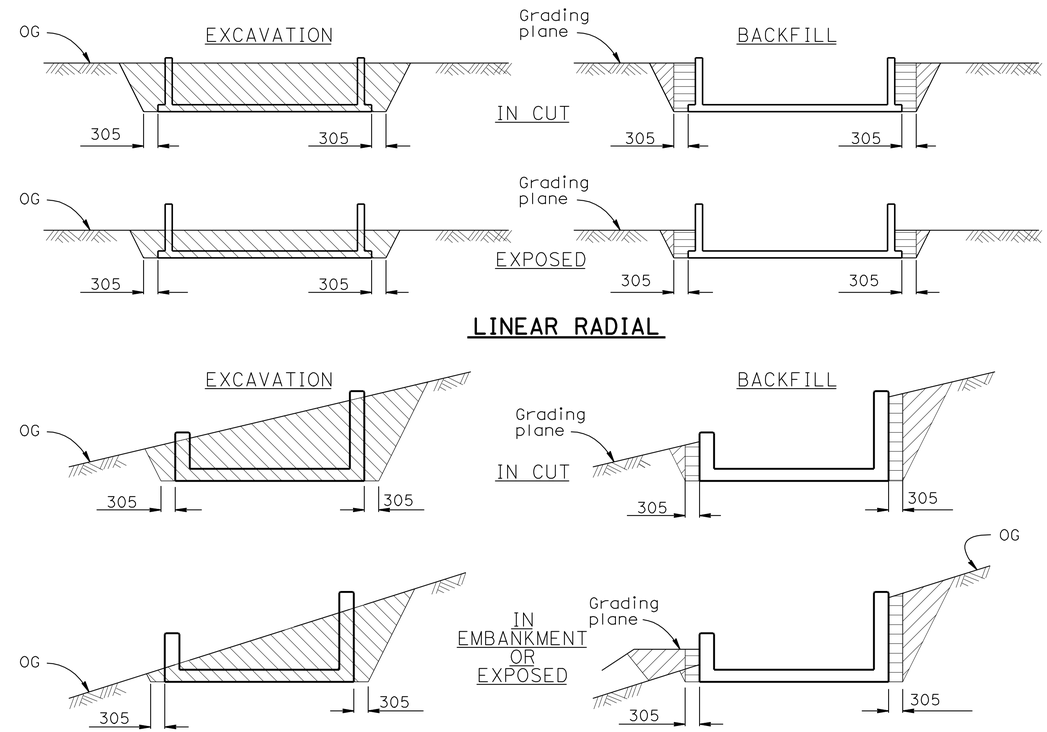

LEGEND:

- Structure excavation (culvert)
- Structure backfill (culvert) 90% relative compaction
- Roadway embankment
- Original ground, OG

NOTES:

1. Slope or shore excavation sides as necessary.
2. Dimensions shown are minimum.
3. Use Structure Backfill (culvert) except where slurry backfill is required around outlet pipes.

NOTE:
THE CONTRACTOR SHALL VERIFY ALL CONTROLLING FIELD DIMENSIONS BEFORE ORDERING OR FABRICATING ANY MATERIAL.

ALL DIMENSIONS ARE IN MILLIMETERS UNLESS OTHERWISE SHOWN

DD-14

Caltrans Metric

	BY	CHECKED
DESIGN	Doug Dunrud	J&P Peterson
DETAILS	J&P Peterson	Doug Dunrud
QUANTITIES		

STATE OF CALIFORNIA
DEPARTMENT OF TRANSPORTATION

DIVISION OF ENGINEERING SERVICES
STRUCTURE DESIGN
DESIGN BRANCH 14

BRIDGE NO.
KILOMETER POST

GROSS SOLIDS REMOVAL DEVICE
GENERAL NOTES

ALL DIMENSIONS ARE IN MILLIMETERS UNLESS OTHERWISE SHOWN

ORIGINAL SCALE IN MILLIMETERS FOR REDUCED PLANS 0 10 20 30 40 50 60 70 80 90 100

CU 07314
EA 1218V1

DISREGARD PRINTS BEARING EARLIER REVISION DATES 12-16-08

REVISION DATES

SHEET 1 OF 15

FILE => 71218vic014.dgn

STRUCTURES DESIGN DETAIL SHEET (METRIC) (REV.03-17-04)

USERNAME => trpierce DATE PLOTTED => 03-MAY-2010 TIME PLOTTED => 13:22

DIST	COUNTY	ROUTE	KILOMETER POST TOTAL PROJECT	SHEET No	TOTAL SHEETS
07	LA	5	50.8/58.0	174	869

REGISTERED CIVIL ENGINEER 9-05-08 DATE

5-3-10
PLANS APPROVAL DATE

REGISTERED PROFESSIONAL ENGINEER D. J. DUNRUD No. C 47240 Exp. 12-31-09 CIVIL STATE OF CALIFORNIA

The State of California or its officers or agents shall not be responsible for the accuracy or completeness of electronic copies of this plan sheet.

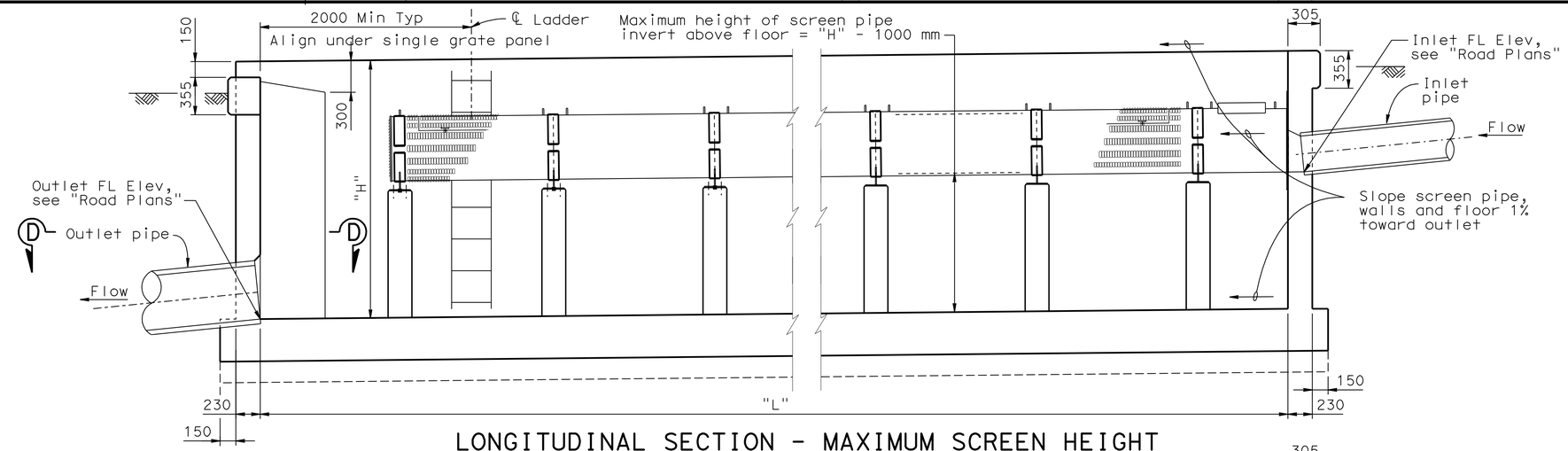

LONGITUDINAL SECTION - MAXIMUM SCREEN HEIGHT

1:25

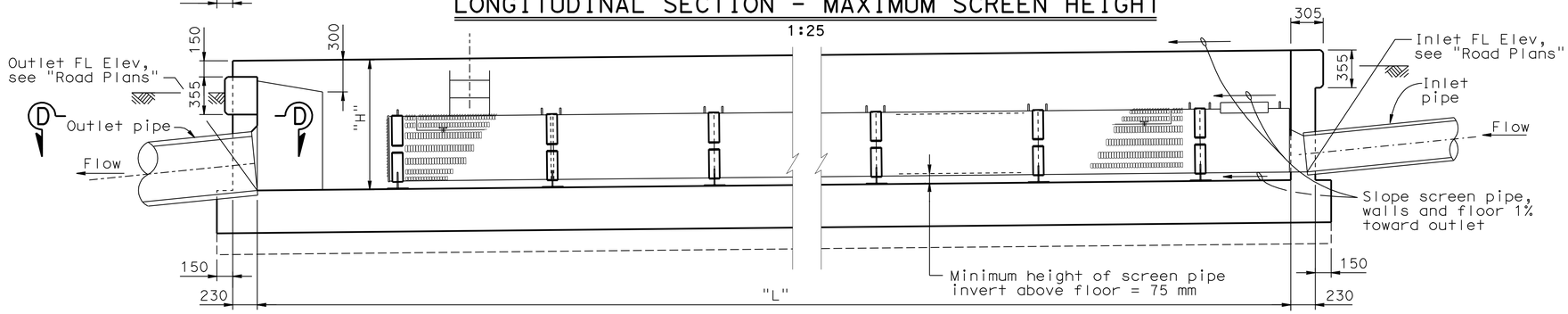

LONGITUDINAL SECTION - MINIMUM SCREEN HEIGHT

1:25

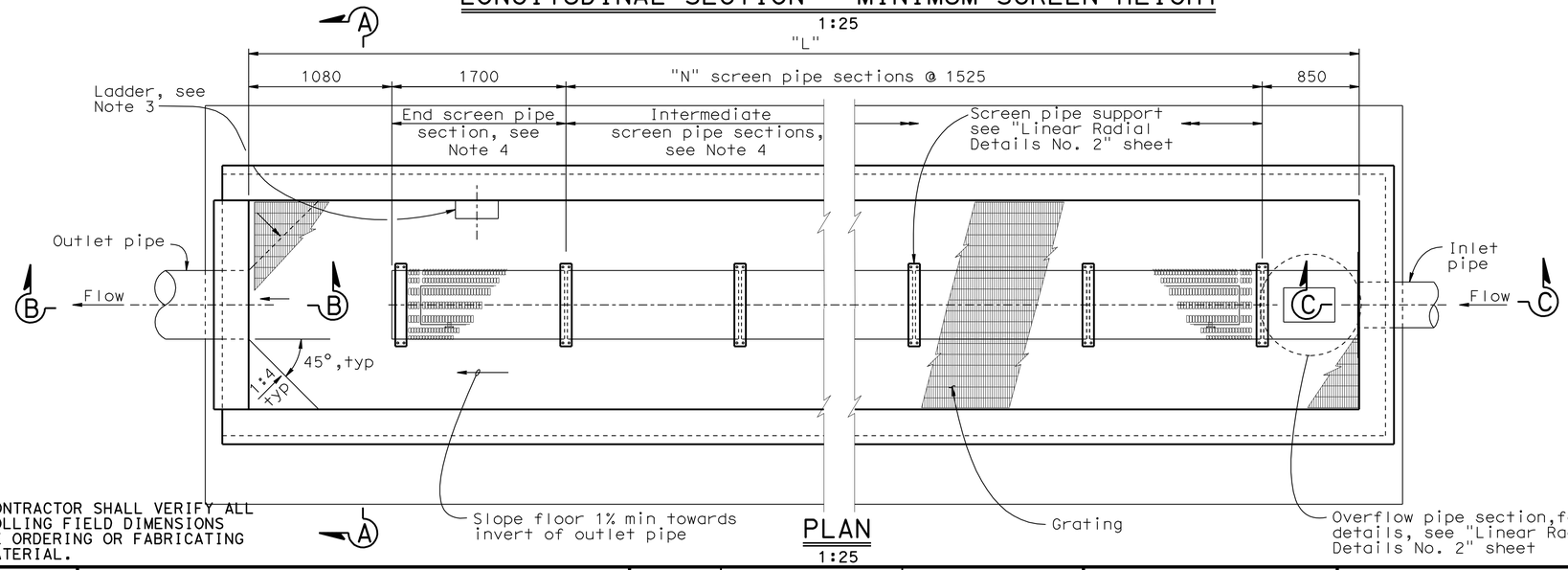

PLAN

1:25

NOTES:

1. For typical section, see "Linear Radial - Details No. 1" sheet.
2. For Section B-B, C-C and D-D, see "Linear Radial - Details No. 1" sheet.
3. For ladder details see "Miscellaneous Details No. 1" sheet.
4. For end screen and intermediate screen pipe details, see "Linear Radial - Details No. 3" sheet.
5. For "N", "H" and other design data, see "Linear Radial - Quantities" sheet.
6. For High Velocity details, see "Linear Radial (HV) - Layout" sheet.
7. For Grating details, see "Linear Radial Details No. 4" sheet.
8. For quantities and additional GSRD data, see table on "Linear Radial - Quantities" sheet.
9. For inlet and outlet pipe details not shown, see "Road Plans"

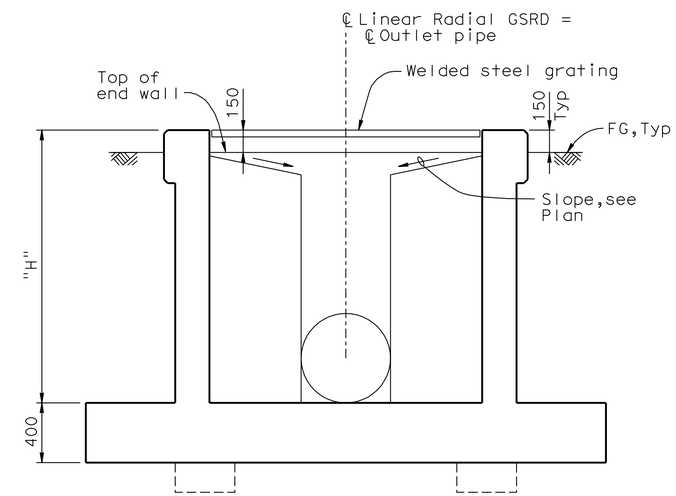

SECTION A-A

1:20

NOTE:
THE CONTRACTOR SHALL VERIFY ALL CONTROLLING FIELD DIMENSIONS BEFORE ORDERING OR FABRICATING ANY MATERIAL.

ALL DIMENSIONS ARE IN MILLIMETERS UNLESS OTHERWISE SHOWN

DD - 15

DESIGN	BY Doug Dunrud	CHECKED J&P Peterson	
DETAILS	BY J&P Peterson	CHECKED Doug Dunrud	
QUANTITIES	BY	CHECKED	

STATE OF CALIFORNIA
DEPARTMENT OF TRANSPORTATION

DIVISION OF ENGINEERING SERVICES
STRUCTURE DESIGN
DESIGN BRANCH 14

BRIDGE NO.
KILOMETER POST

GROSS SOLIDS REMOVAL DEVICE
LINEAR RADIAL - LAYOUT

ALL DIMENSIONS ARE IN MILLIMETERS UNLESS OTHERWISE SHOWN

ORIGINAL SCALE IN MILLIMETERS FOR REDUCED PLANS 0 10 20 30 40 50 60 70 80 90 100

CU 07314
EA 1218V1

DISREGARD PRINTS BEARING EARLIER REVISION DATES 12-16-08

REVISION DATES

SHEET 2 OF 15

FILE => 71218vic015.dgn

STRUCTURES DESIGN DETAIL SHEET (METRIC) (REV.03-17-04)

USERNAME => trpierce DATE PLOTTED => 03-MAY-2010 TIME PLOTTED => 13:23

DIST	COUNTY	ROUTE	KILOMETER POST TOTAL PROJECT	SHEET No	TOTAL SHEETS
07	LA	5	50.8/58.0	175	869

REGISTERED CIVIL ENGINEER 9-05-08 DATE

5-3-10
PLANS APPROVAL DATE

REGISTERED PROFESSIONAL ENGINEER D. J. DUNRUD No. C 47240 Exp. 12-31-09 CIVIL STATE OF CALIFORNIA

The State of California or its officers or agents shall not be responsible for the accuracy or completeness of electronic copies of this plan sheet.

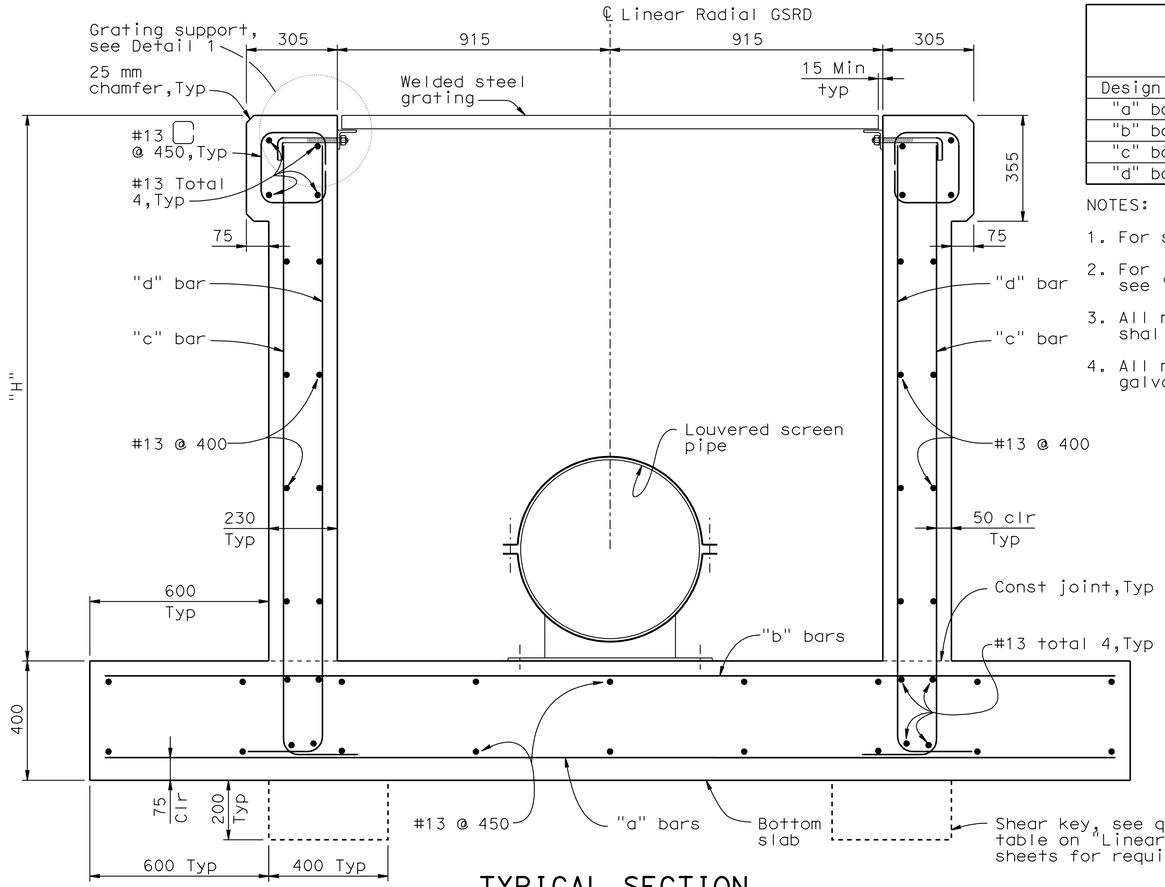

TYPICAL SECTION
1:10

TABLE OF REINFORCING STEEL FOR LINEAR RADIAL GSRD

Design "H"	1220	1830	2440
"a" bars	#13 @ 450	#16 @ 300	#16 @ 200
"b" bars	#13 @ 450	#13 @ 450	#16 @ 400
"c" bars	#16 @ 350	#16 @ 230	#16 @ 100
"d" bars	#16 @ 350	#16 @ 350	#16 @ 300

NOTES:

1. For section locations, see "Linear Radial - Layout" sheet.
2. For invert elevation differential between inlet and outlet, see "Linear Radial - Quantities" sheet.
3. All metal components of screen pipe including connections to concrete shall be stainless steel.
4. All metal components of grating including connections to wall shall be galvanized.

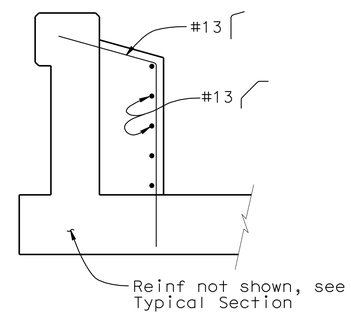

VIEW E-E
1:20
(Outlet end only)

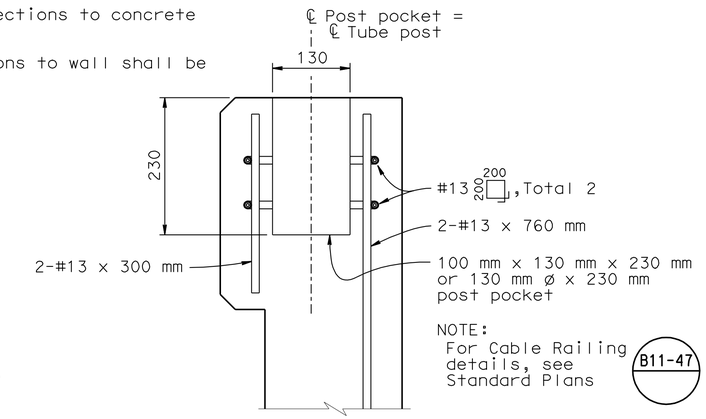

POST ANCHORAGE DETAIL (OPTIONAL)
1:5

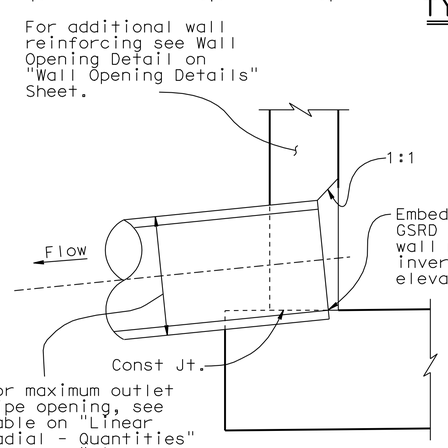

SECTION B-B
1:10

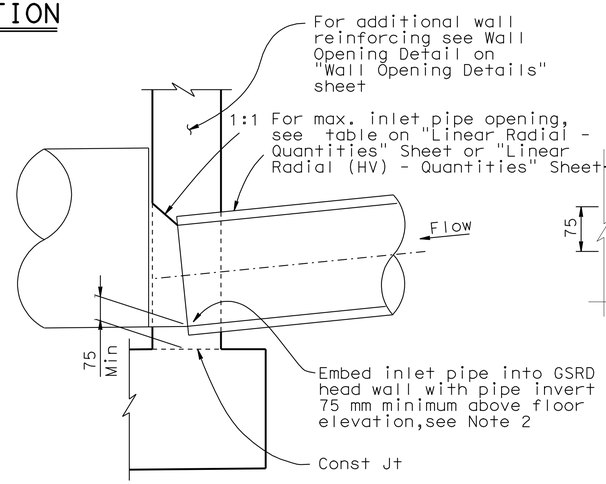

SECTION C-C
1:10

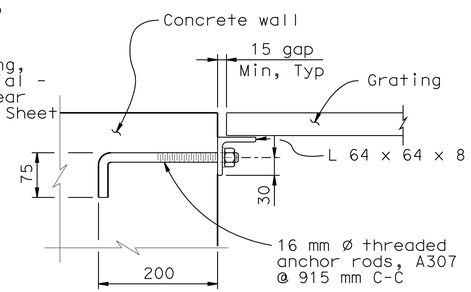

DETAIL 1
1:5

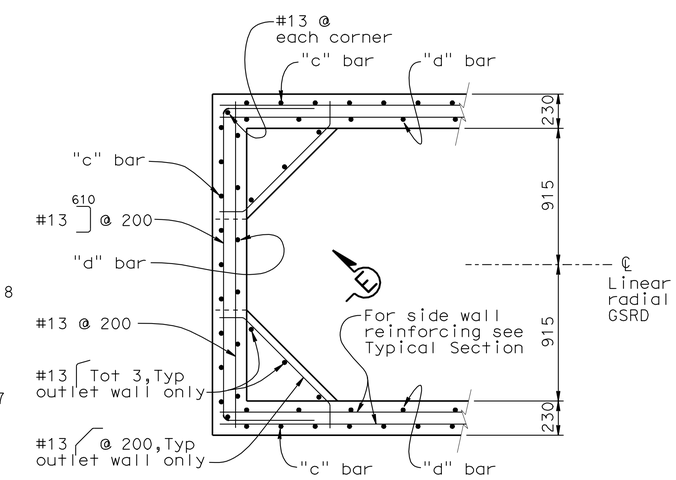

SECTION D-D
1:20
NOTE: Outlet wall shown, inlet wall similar.

NOTE:
THE CONTRACTOR SHALL VERIFY ALL CONTROLLING FIELD DIMENSIONS BEFORE ORDERING OR FABRICATING ANY MATERIAL.

ALL DIMENSIONS ARE IN MILLIMETERS UNLESS OTHERWISE SHOWN **DD-16**

Caltrans Metric

	BY	CHECKED
DESIGN	Doug Dunrud	J&P Peterson
DETAILS	J&P Peterson	Doug Dunrud
QUANTITIES		

STATE OF CALIFORNIA
DEPARTMENT OF TRANSPORTATION

DIVISION OF ENGINEERING SERVICES
STRUCTURE DESIGN
DESIGN BRANCH 14

BRIDGE NO.
KILOMETER POST

GROSS SOLIDS REMOVAL DEVICE
LINEAR RADIAL - DETAILS NO. 1

ALL DIMENSIONS ARE IN MILLIMETERS UNLESS OTHERWISE SHOWN

ORIGINAL SCALE IN MILLIMETERS FOR REDUCED PLANS 0 10 20 30 40 50 60 70 80 90 100

CU 07314
EA 1218V1

DISREGARD PRINTS BEARING EARLIER REVISION DATES 12-16-08

REVISION DATES

SHEET 3 OF 15

FILE => 71218vic016.dgn

STRUCTURES DESIGN DETAIL SHEET (METRIC) (REV.03-17-04)

USERNAME => trpierce DATE PLOTTED => 03-MAY-2010 TIME PLOTTED => 13:23

DIST	COUNTY	ROUTE	KILOMETER POST TOTAL PROJECT	SHEET No	TOTAL SHEETS
07	LA	5	50.8/58.0	176	869

REGISTERED CIVIL ENGINEER 9-05-08 DATE

5-3-10
PLANS APPROVAL DATE

REGISTERED PROFESSIONAL ENGINEER D. J. DUNRUD No. C 47240 Exp. 12-31-09 CIVIL STATE OF CALIFORNIA

The State of California or its officers or agents shall not be responsible for the accuracy or completeness of electronic copies of this plan sheet.

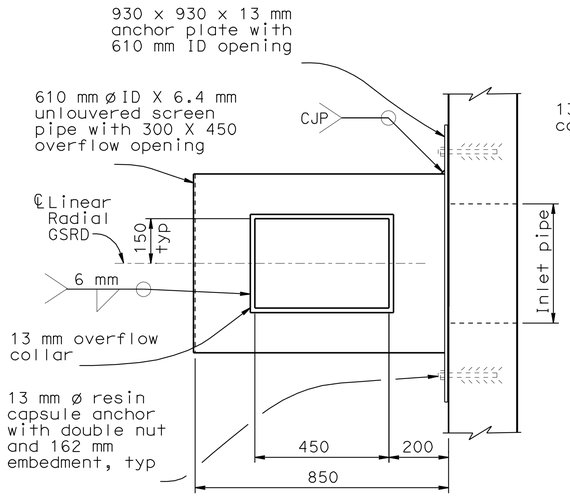

TOP VIEW

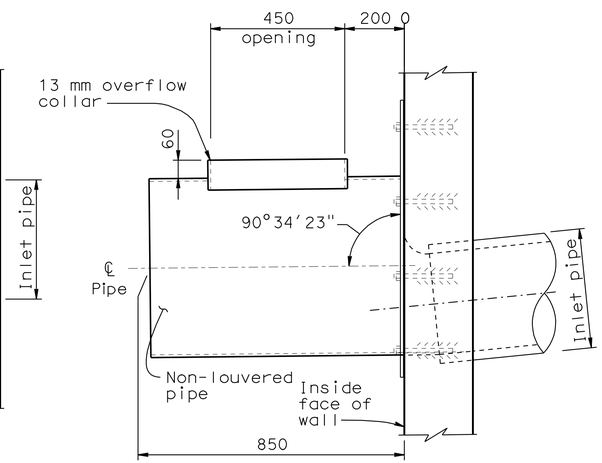

SIDE VIEW

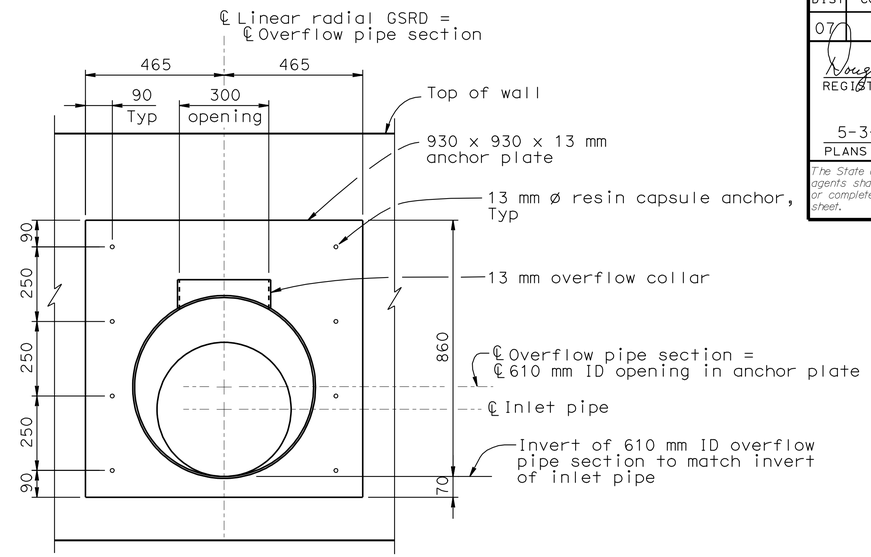

END VIEW

OVERFLOW PIPE SECTION DETAILS

1:10

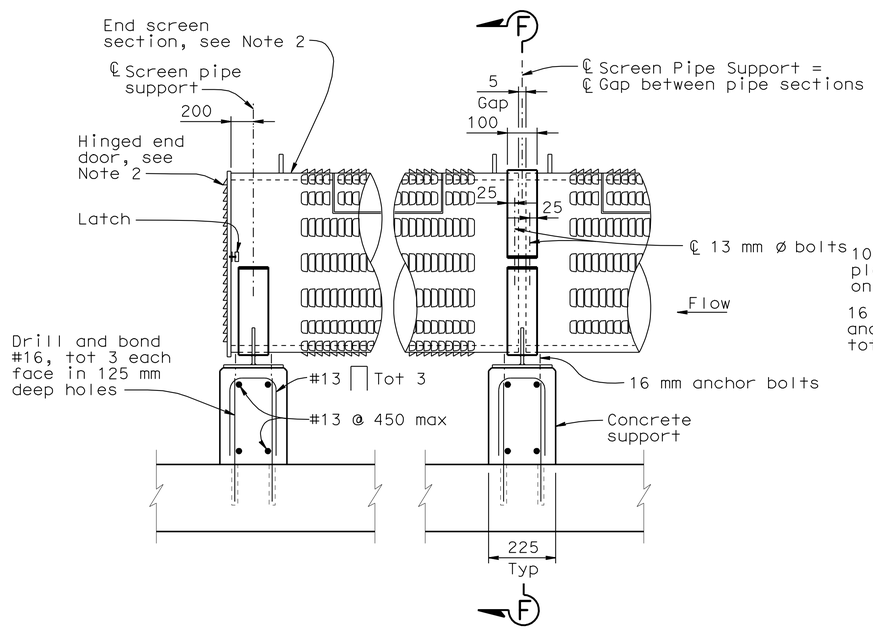

SIDE VIEW

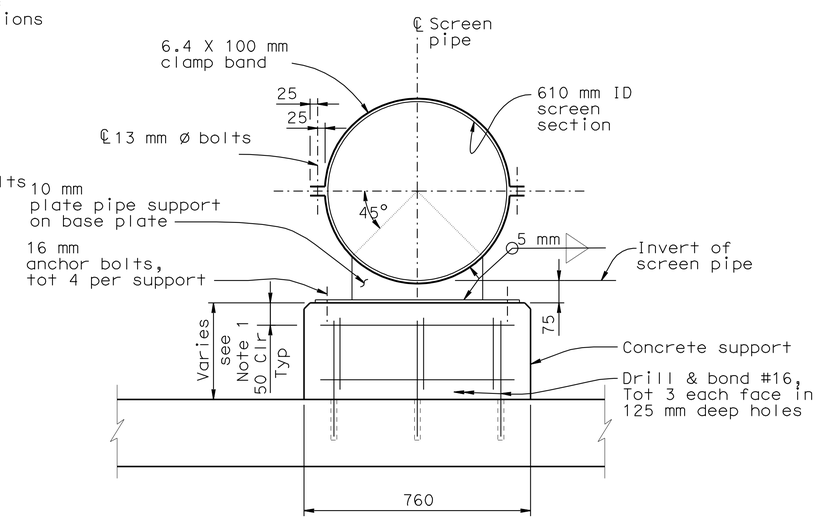

SECTION F-F

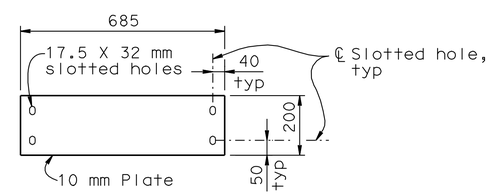

BASE PLATE DETAIL

NOTES:

1. If inlet invert height above floor is at the minimum 75 mm height, use anchor bolts to mount the pipe support base plate to the floor. Otherwise, construct concrete support as shown.
2. For End Screen and Intermediate Screen pipe details, see "Linear Radial - Details No. 3" sheet.
3. All metal components of screen pipe including connections to concrete shall be stainless steel.

NOTE:
THE CONTRACTOR SHALL VERIFY ALL CONTROLLING FIELD DIMENSIONS BEFORE ORDERING OR FABRICATING ANY MATERIAL.

SCREEN PIPE SUPPORT

1:10

ALL DIMENSIONS ARE IN MILLIMETERS UNLESS OTHERWISE SHOWN **DD - 17**

Caltrans Metric

	BY	CHECKED
DESIGN	Doug Dunrud	J&P Peterson
DETAILS	J&P Peterson	Doug Dunrud
QUANTITIES		

STATE OF CALIFORNIA DEPARTMENT OF TRANSPORTATION

DIVISION OF ENGINEERING SERVICES STRUCTURE DESIGN
DESIGN BRANCH 14

CU 07314
EA 1218V1

BRIDGE NO.
KILOMETER POST

GROSS SOLIDS REMOVAL DEVICE
LINEAR RADIAL - DETAILS NO. 2

ALL DIMENSIONS ARE IN MILLIMETERS UNLESS OTHERWISE SHOWN

ORIGINAL SCALE IN MILLIMETERS FOR REDUCED PLANS 0 10 20 30 40 50 60 70 80 90 100

DISREGARD PRINTS BEARING EARLIER REVISION DATES 12-16-08

REVISION DATES | SHEET 4 OF 15

FILE => 71218vic017.dgn

STRUCTURES DESIGN DETAIL SHEET (METRIC) (REV.03-17-04)

USERNAME => trpierce DATE PLOTTED => 03-MAY-2010 TIME PLOTTED => 13:23

DIST	COUNTY	ROUTE	KILOMETER POST TOTAL PROJECT	SHEET No	TOTAL SHEETS
07	LA	5	50.8/58.0	177	869

REGISTERED CIVIL ENGINEER 9-05-08 DATE

5-3-10
PLANS APPROVAL DATE

REGISTERED PROFESSIONAL ENGINEER D. J. DUNRUD No. C 47240 Exp. 12-31-09 CIVIL STATE OF CALIFORNIA

The State of California or its officers or agents shall not be responsible for the accuracy or completeness of electronic copies of this plan sheet.

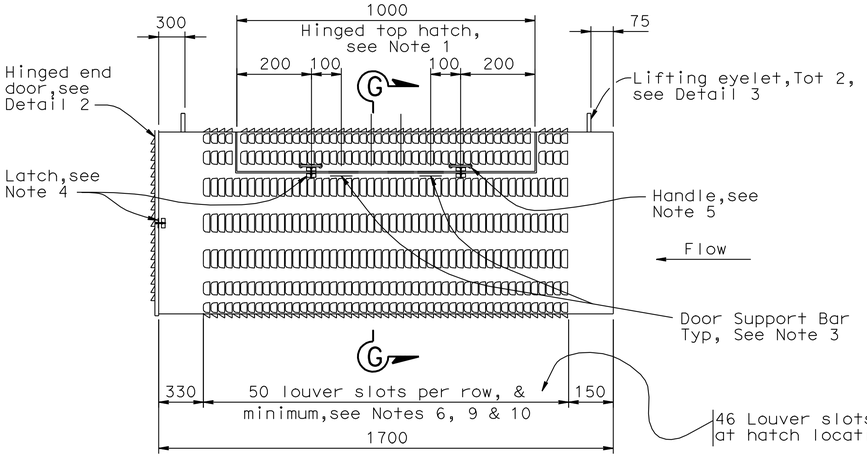

END SCREEN DETAIL

1:10

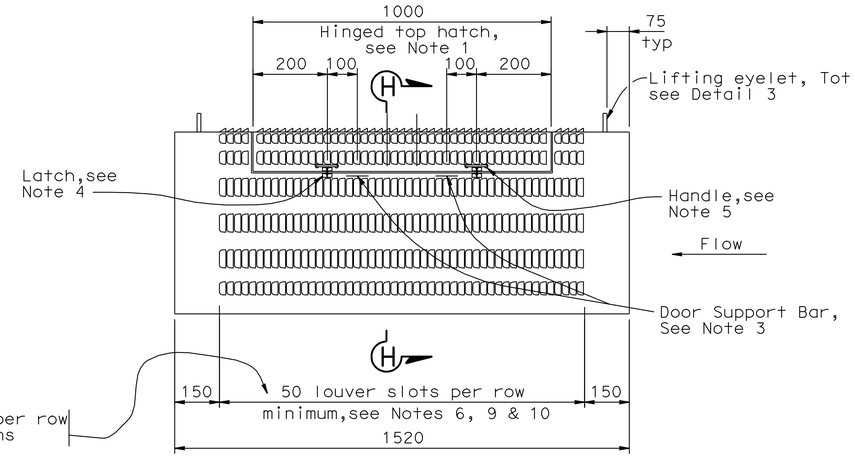

INTERMEDIATE SCREEN DETAIL

1:10

NOTES:

1. Provide 25 x 5 mm stainless steel bar at all cut edges to provide a seat and support for all doors when closed.
2. Provide stainless steel 6.4 mm thick heavy duty hinges 101x101 mm thick with 15.8 mm Dia pin. Use fillet weld at cover and frame. Total two each door, evenly spaced.
3. Attach 2-25 x 25 x 75 mm stainless steel bars (or fabricator equivalent design) to support doors when in an open position. Mechanical Stops can be welded on hinges.
4. Provide latch. Latch shall have threaded U-bolt for adjustment. Latch to have 10 mm total adjustability and 30 mm drawing movement and be rated at 163 KG.
5. Provide stainless steel handles at locations indicated.
6. The aperature size of each louver slot shall be 5.1 mm wide X 63.5 mm long.
7. End door to secured to end screen with 10mm Dia x 250 mm continuous bolt with lock nut through flat bars.
8. All metal components of screen pipe shall be stainless steel.
9. Louver slot apertures shall meet the following requirements:

Width (mm)	% of Total
4.8-5.3	90
4.6-5.3	95
4.3-5.3	100

Length (mm)	% of Total
57-70	90
50-75	100

10. A Certificate of Compliance conforming to the provisions in Section 6-1.07, "Certificate of Compliance," shall be furnished to Engineer, prior to installing Linear Radial GSRD device, certifying that louver slot apertures being furnished conforms to above requirements

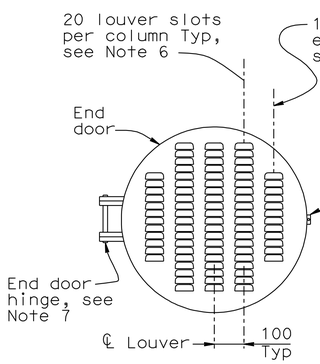

DETAIL 2

1:10

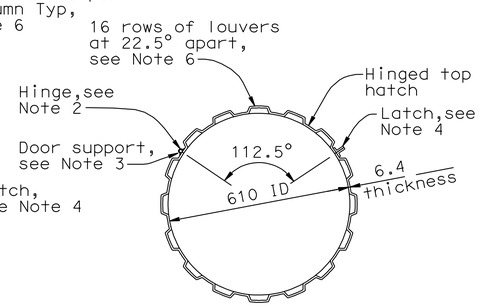

SECTION G-G

1:10

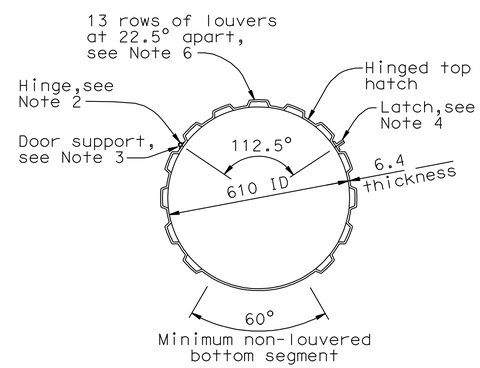

SECTION H-H

1:10

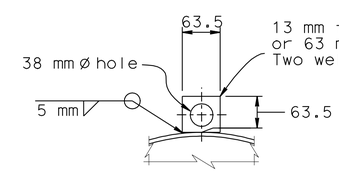

DETAIL 3

NOTE:
THE CONTRACTOR SHALL VERIFY ALL CONTROLLING FIELD DIMENSIONS BEFORE ORDERING OR FABRICATING ANY MATERIAL.

ALL DIMENSIONS ARE IN MILLIMETERS UNLESS OTHERWISE SHOWN **DD - 18**

Caltrans Metric

	BY	CHECKED
DESIGN	Doug Dunrud	J&P Peterson
DETAILS	J&P Peterson	Doug Dunrud
QUANTITIES		

STATE OF CALIFORNIA DEPARTMENT OF TRANSPORTATION

DIVISION OF ENGINEERING SERVICES STRUCTURE DESIGN
DESIGN BRANCH 14

BRIDGE NO.
KILOMETER POST

GROSS SOLIDS REMOVAL DEVICE
LINEAR RADIAL - DETAILS NO. 3

ALL DIMENSIONS ARE IN MILLIMETERS UNLESS OTHERWISE SHOWN

ORIGINAL SCALE IN MILLIMETERS FOR REDUCED PLANS 0 10 20 30 40 50 60 70 80 90 100

CU 07314
EA 1218V1

DISREGARD PRINTS BEARING EARLIER REVISION DATES 12-16-08

REVISION DATES

SHEET 5 OF 15

FILE => 71218vic018.dgn

STRUCTURES DESIGN DETAIL SHEET (METRIC) (REV.03-17-04)

USERNAME => trpierce DATE PLOTTED => 03-MAY-2010 TIME PLOTTED => 13:23

DIST	COUNTY	ROUTE	KILOMETER POST TOTAL PROJECT	SHEET No	TOTAL SHEETS
07	LA	5	50.8/58.0	178	869

REGISTERED CIVIL ENGINEER 9-05-08 DATE

5-3-10
PLANS APPROVAL DATE

REGISTERED PROFESSIONAL ENGINEER D. J. DUNRUD No. C 47240 Exp. 12-31-09 CIVIL STATE OF CALIFORNIA

The State of California or its officers or agents shall not be responsible for the accuracy or completeness of electronic copies of this plan sheet.

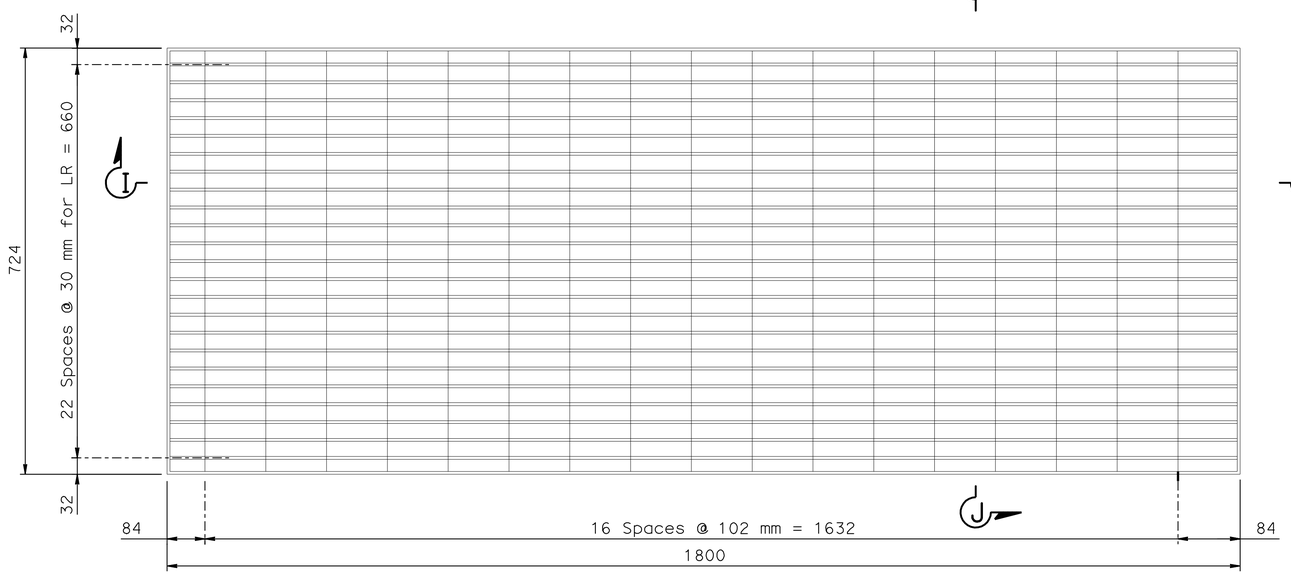

GRATE PANEL
1:5

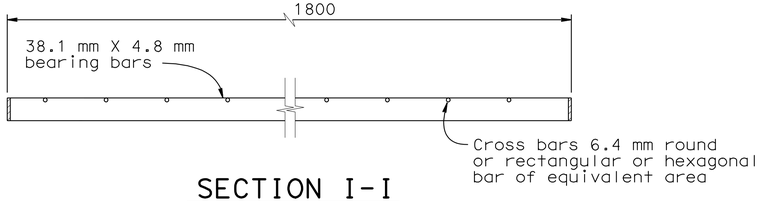

SECTION I-I
1:5

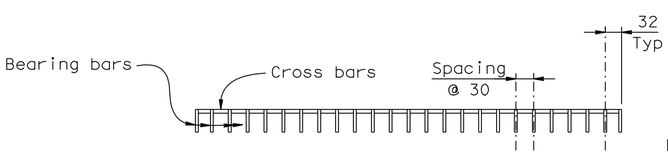

SECTION J-J
1:5

NOTES:

1. For Linear Radial dimension "L" and total number of grate panels, see Quantity Summary Table on "Linear Radial - Quantities" sheet.
2. For Linear Radial (HV) dimension "L" and total number of grate panels, see Quantity Summary Table (HV) on "Linear Radial (HV) - Quantities" sheet.
3. Gap between grate panels shall be equal, 22 Min, 40 Max.
4. All metal components of grating shall be galvanized.

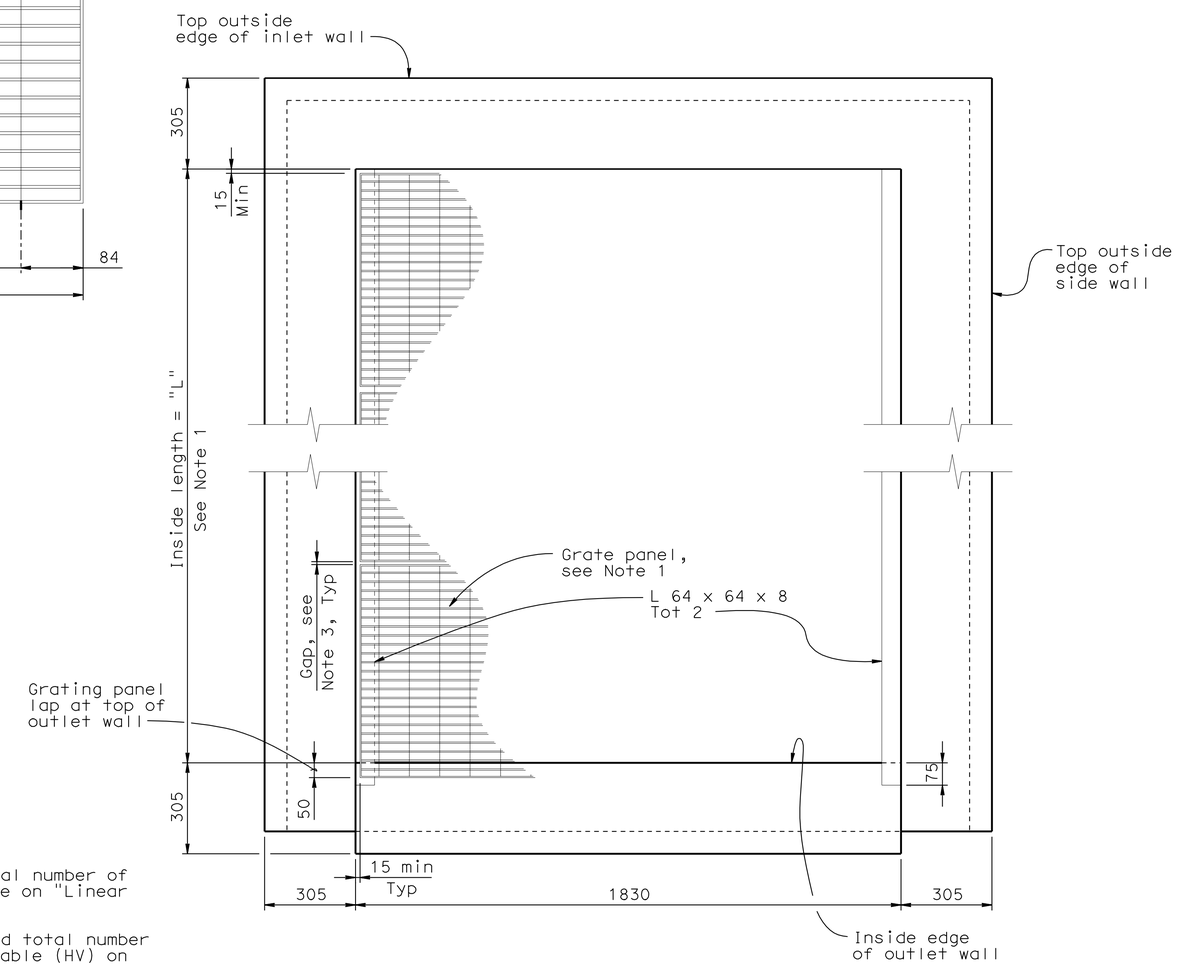

GRATE LAYOUT
(see Note 1)
1:10

NOTE:
THE CONTRACTOR SHALL VERIFY ALL CONTROLLING FIELD DIMENSIONS BEFORE ORDERING OR FABRICATING ANY MATERIAL.

ALL DIMENSIONS ARE IN MILLIMETERS UNLESS OTHERWISE SHOWN

DD - 19

Caltrans Metric

	BY	CHECKED
DESIGN	Doug Dunrud	J&P Peterson
DETAILS	J&P Peterson	Doug Dunrud
QUANTITIES		

STATE OF CALIFORNIA
DEPARTMENT OF TRANSPORTATION

DIVISION OF ENGINEERING SERVICES
STRUCTURE DESIGN
DESIGN BRANCH 14

BRIDGE NO.
KILOMETER POST

GROSS SOLIDS REMOVAL DEVICE
LINEAR RADIAL - DETAILS NO.4

ALL DIMENSIONS ARE IN MILLIMETERS UNLESS OTHERWISE SHOWN

ORIGINAL SCALE IN MILLIMETERS FOR REDUCED PLANS 0 10 20 30 40 50 60 70 80 90 100

CU 07314
EA 1218V1

DISREGARD PRINTS BEARING EARLIER REVISION DATES 12-16-08

REVISION DATES

SHEET 6 OF 15

FILE => 71218vic019.dgn

STRUCTURES DESIGN DETAIL SHEET (METRIC) (REV.03-17-04)

USERNAME => trmikest DATE PLOTTED => 04-MAY-2010 TIME PLOTTED => 07:42

DIST	COUNTY	ROUTE	KILOMETER POST TOTAL PROJECT	SHEET No	TOTAL SHEETS
07	LA	5	50.8/58.0	179	869

REGISTERED CIVIL ENGINEER — DATE 9-05-08

5-3-10
PLANS APPROVAL DATE

REGISTERED PROFESSIONAL ENGINEER — D. J. DUNRUD — No. C 47240 — Exp. 12-31-09 — CIVIL — STATE OF CALIFORNIA

The State of California or its officers or agents shall not be responsible for the accuracy or completeness of electronic copies of this plan sheet.

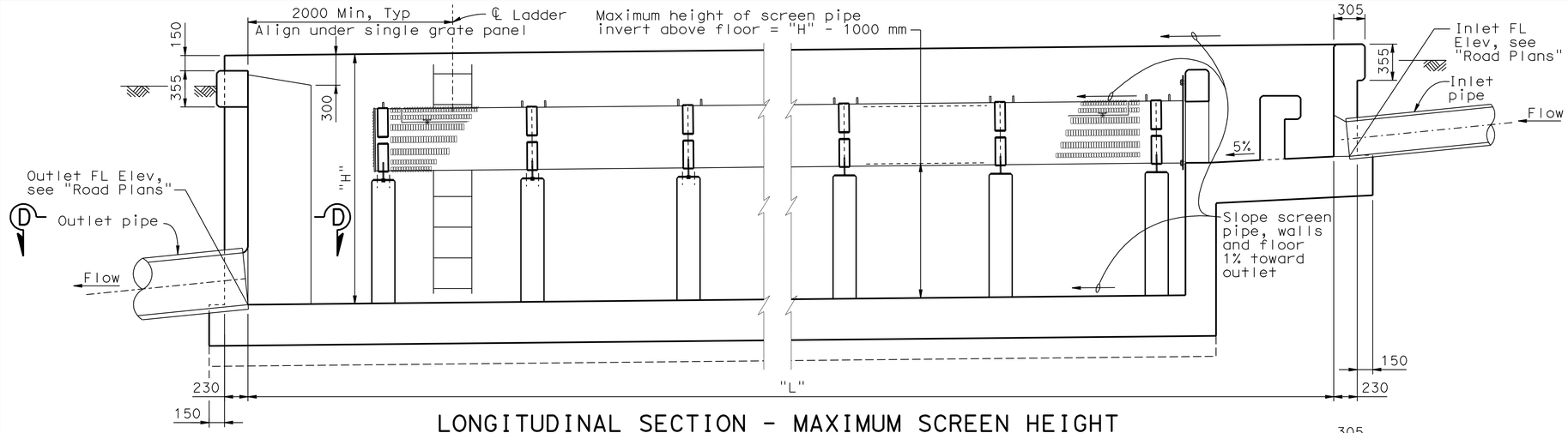

LONGITUDINAL SECTION - MAXIMUM SCREEN HEIGHT
1:25

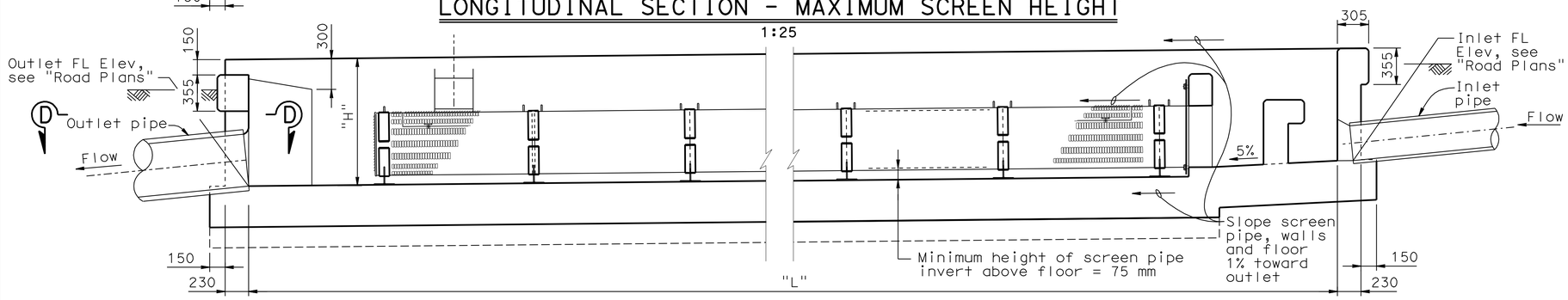

LONGITUDINAL SECTION - MINIMUM SCREEN HEIGHT
1:25

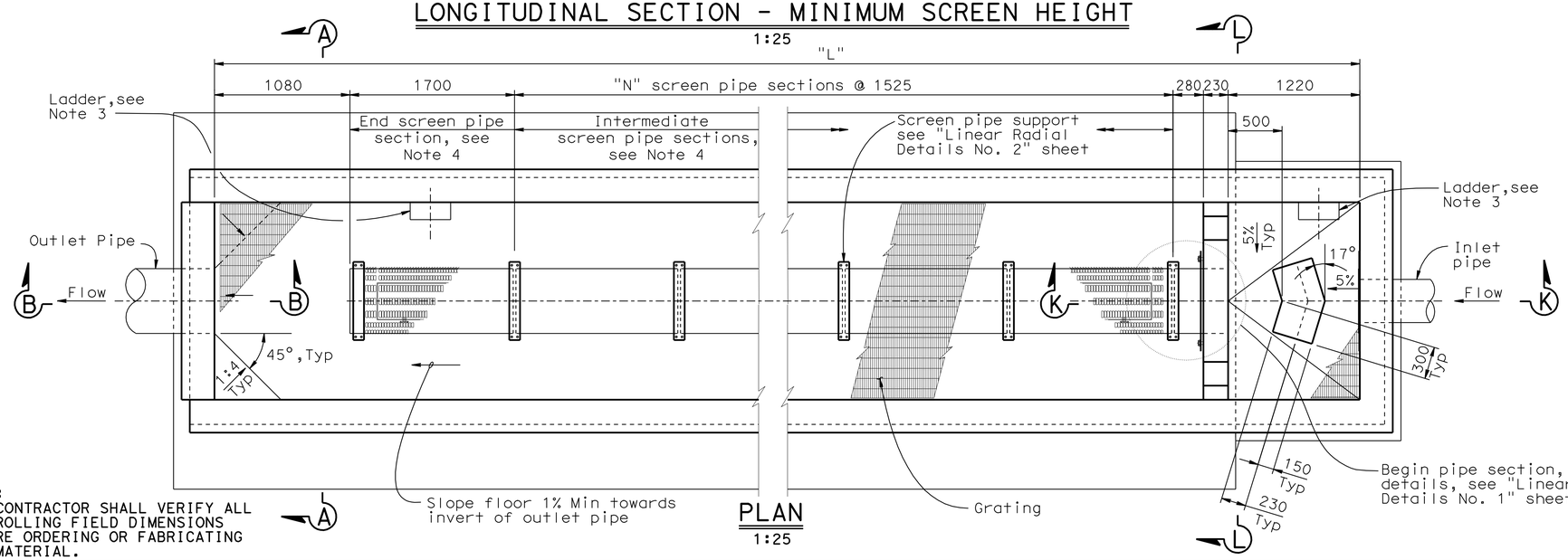

PLAN
1:25

NOTES:

1. For Typical Section, see "Linear Radial - Details No. 1" sheet.
2. For Section B-B and D-D, see "Linear Radial - Details No. 1" sheet.
3. For ladder details see "Miscellaneous Details No. 1" sheet.
4. For end screen and intermediate screen pipe details, see "Linear Radial - Details No. 3" sheet.
5. For "N", "H" and other design data, see "Linear Radial (HV) - Quantities" sheet.
6. For Section K-K and L-L, see "Linear Radial (HV) - Details No. 1" sheet.
7. For Grating details, see "Linear Radial Details No. 4" sheet.
8. For inlet and outlet pipe details not shown, see "Road Plans".

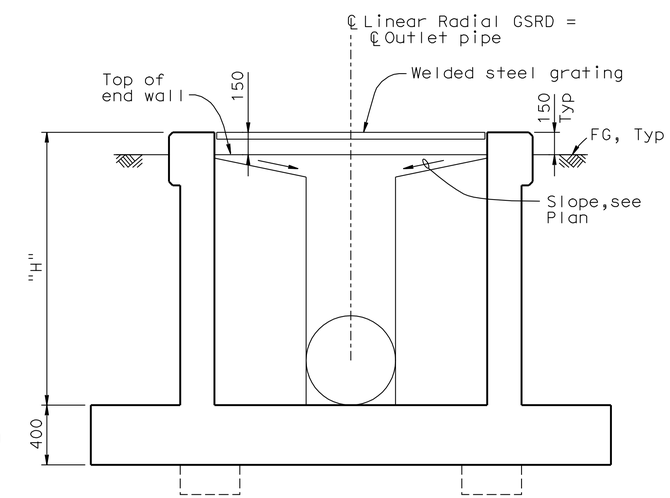

SECTION A-A
1:20

NOTE:
THE CONTRACTOR SHALL VERIFY ALL CONTROLLING FIELD DIMENSIONS BEFORE ORDERING OR FABRICATING ANY MATERIAL.

ALL DIMENSIONS ARE IN MILLIMETERS UNLESS OTHERWISE SHOWN

HIGH VELOCITY **DD-20**

Caltrans Metric

	BY	CHECKED
DESIGN	Doug Dunrud	J&P Peterson
DETAILS	J&P Peterson	Doug Dunrud
QUANTITIES		

STATE OF CALIFORNIA
DEPARTMENT OF TRANSPORTATION

DIVISION OF ENGINEERING SERVICES
STRUCTURE DESIGN
DESIGN BRANCH 14

CU 07314
EA 1218V1

BRIDGE NO.
KILOMETER POST

GROSS SOLIDS REMOVAL DEVICE
LINEAR RADIAL (HV) - LAYOUT

ALL DIMENSIONS ARE IN MILLIMETERS UNLESS OTHERWISE SHOWN

ORIGINAL SCALE IN MILLIMETERS FOR REDUCED PLANS 0 10 20 30 40 50 60 70 80 90 100

DISREGARD PRINTS BEARING EARLIER REVISION DATES 12-16-08

REVISION DATES

SHEET 7 OF 15

FILE => 71218vlc020.dgn

STRUCTURES DESIGN DETAIL SHEET (METRIC) (REV.03-17-04)

USERNAME => trpierce DATE PLOTTED => 03-MAY-2010 TIME PLOTTED => 13:24

DIST.	COUNTY	ROUTE	MILE POST TOTAL PROJECT	SHEET NO.	TOTAL SHEETS
07	LA	5	50.8/58.0	180	869

Caltrans Metric

REGISTERED ENGINEER - CIVIL 9-05-08

5-3-10
PLANS APPROVAL DATE

REGISTERED PROFESSIONAL ENGINEER DOUGLAS DUNRUD No. 47240 Exp. 12/31/09 CIVIL STATE OF CALIFORNIA

The State of California or its officers or agents shall not be responsible for the accuracy or completeness of electronic copies of this plan sheet.

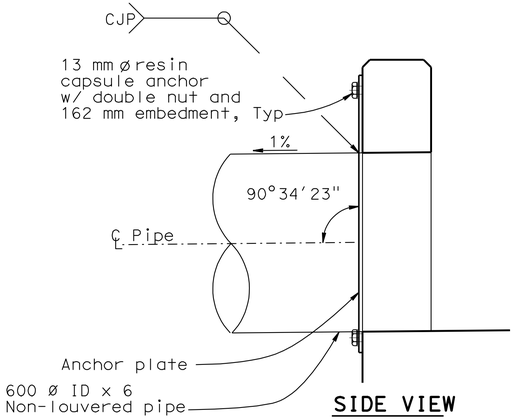

SIDE VIEW

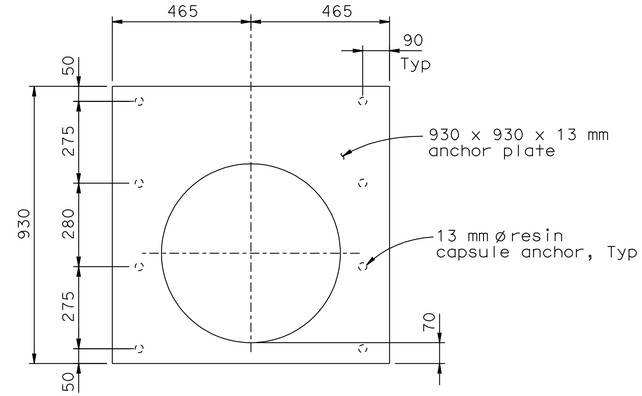

END VIEW
(Anchor Plate only)

ANCHOR PLATE DETAILS
1:10

NOTES:

1. For location of sections K-K and L-L, see "Linear Radial (HV) - Layout" sheet.
2. For bottom slab details and grating support not shown, see Typical Section on "Linear Radial Details No. 1" sheet.
3. All metal components of screen pipe including connections to concrete shall be stainless steel.
4. All metal components of grating including connections to wall shall be galvanized.

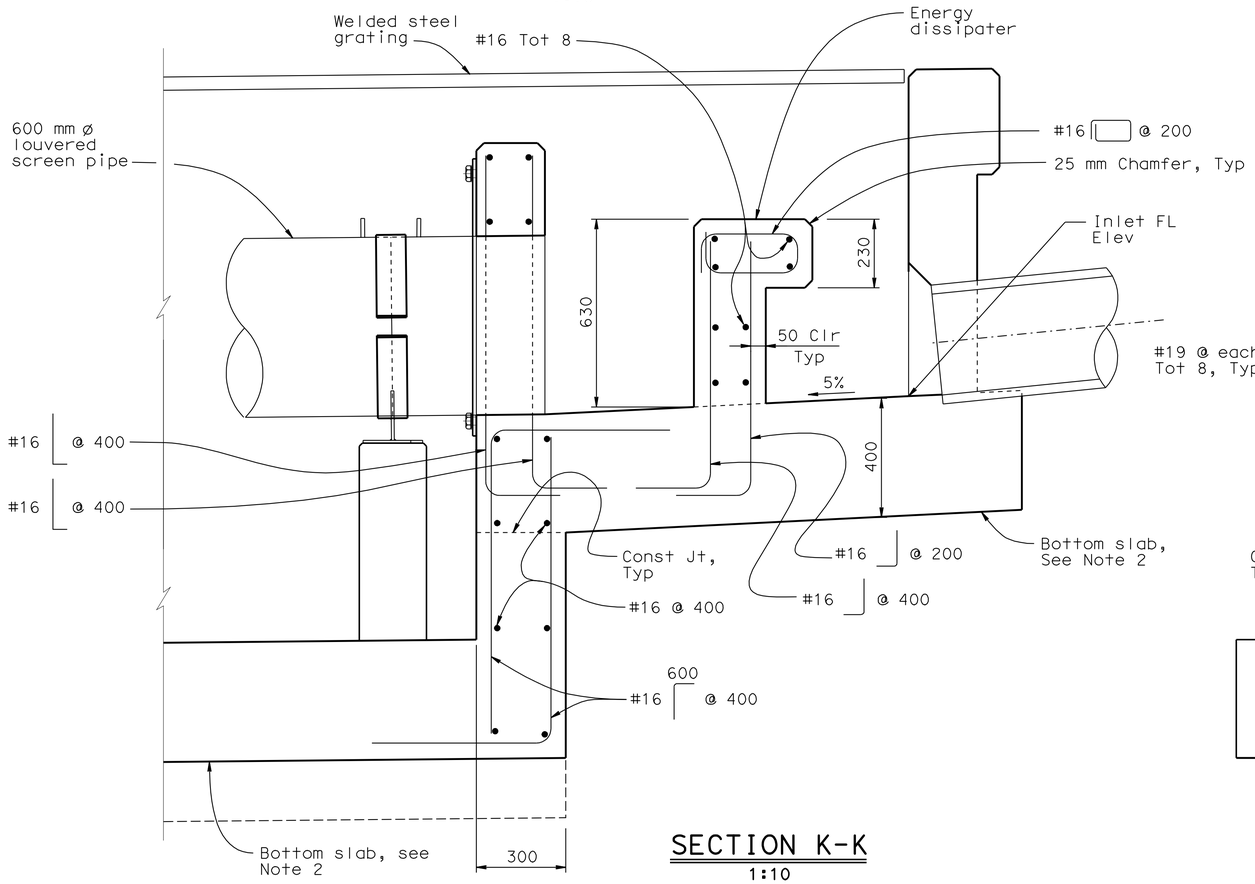

SECTION K-K
1:10

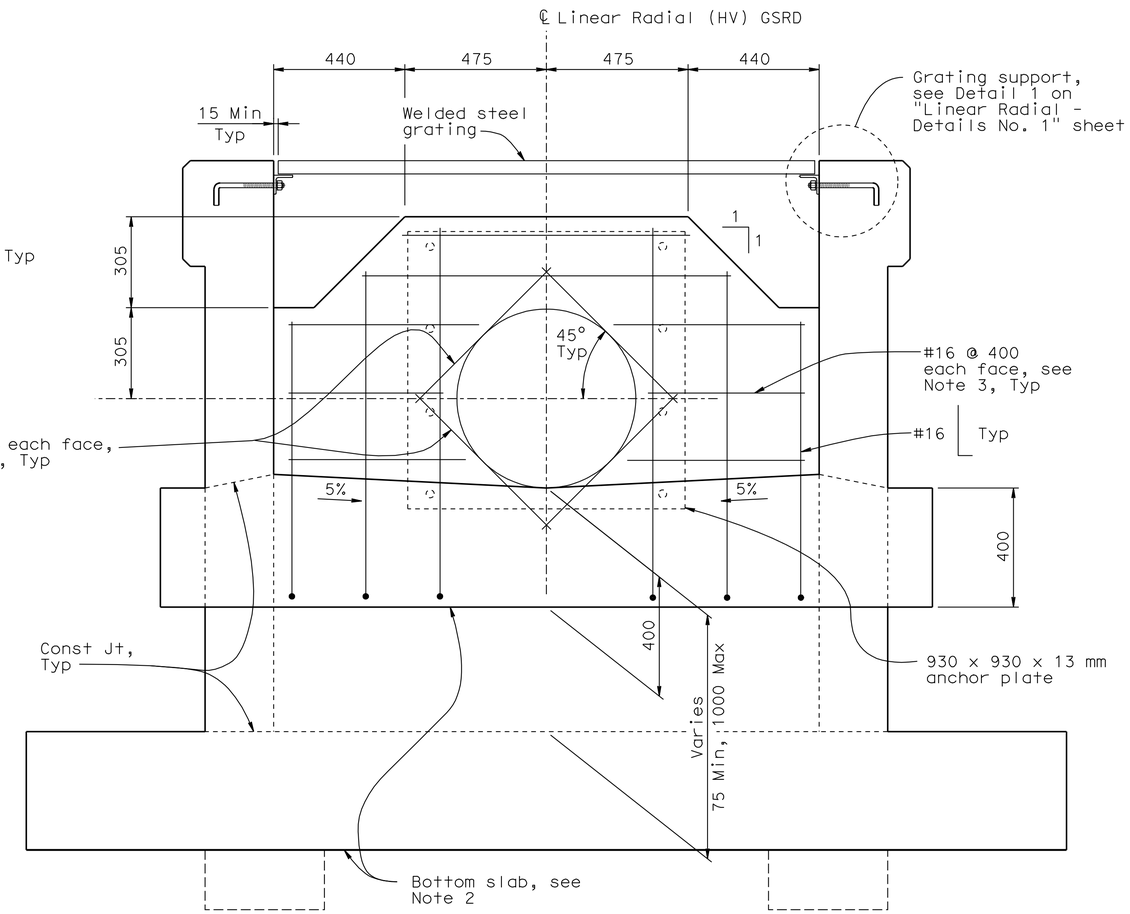

SECTION L-L
1:10

ALL DIMENSIONS ARE IN MILLIMETERS UNLESS OTHERWISE SHOWN

HIGH VELOCITY **DD-21**

RELEASE DATE ---	DESIGN	BY D.Dunrud	CHECKED J&P Peterson
FILE NO. ---	DETAILS	BY J&P Peterson	CHECKED J&P Peterson
	SUBMITTED	BY D.Forester	DRAWING DATE 02/07

STATE OF CALIFORNIA DEPARTMENT OF TRANSPORTATION

DIVISION OF ENGINEERING SERVICES

BRIDGE NO.

MILE POST

GROSS SOLIDS REMOVAL DEVICE

LINEAR RADIAL (HV) - DETAILS NO. 1

ORIGINAL SCALE IN MILLIMETERS FOR REDUCED PLANS 0 10 20 30 40 50 60 70 80 90 100

CU 07314
EA 1218V1

DISREGARD PRINTS BEARING EARLIER REVISION DATES

REVISION DATES (PRELIMINARY STAGE ONLY) 12-16-08

SHEET 8 OF 15

USERNAME => trpierce
DGN FILE => 71218vic021.dgn

DATE PLOTTED => 03-MAY-2010
TIME PLOTTED => 13:24

DIST	COUNTY	ROUTE	KILOMETER POST TOTAL PROJECT	SHEET No	TOTAL SHEETS
07	LA	5	50.8/58.0	181	869

REGISTERED CIVIL ENGINEER 9-05-08 DATE

5-3-10
PLANS APPROVAL DATE

REGISTERED PROFESSIONAL ENGINEER D. J. DUNRUD No. C 47240 Exp. 12-31-09 CIVIL STATE OF CALIFORNIA

The State of California or its officers or agents shall not be responsible for the accuracy or completeness of electronic copies of this plan sheet.

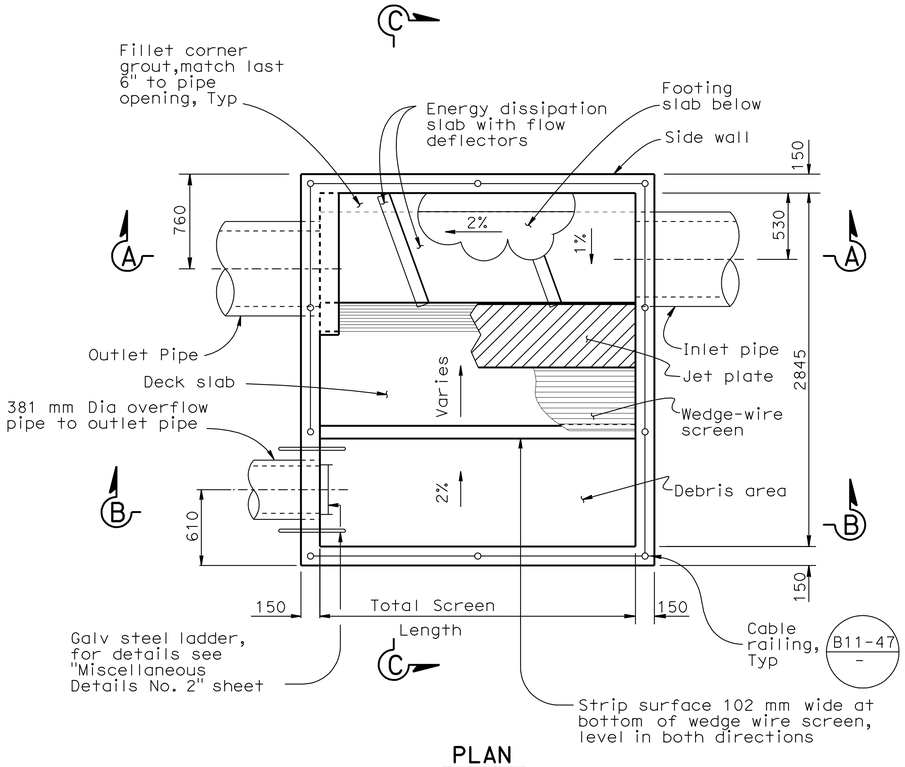

PLAN
NO SCALE

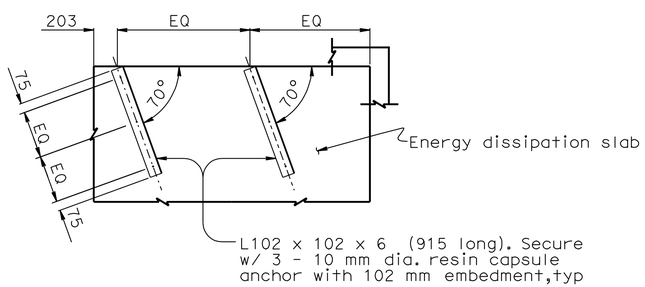

DEFLECTOR PLAN
NO SCALE

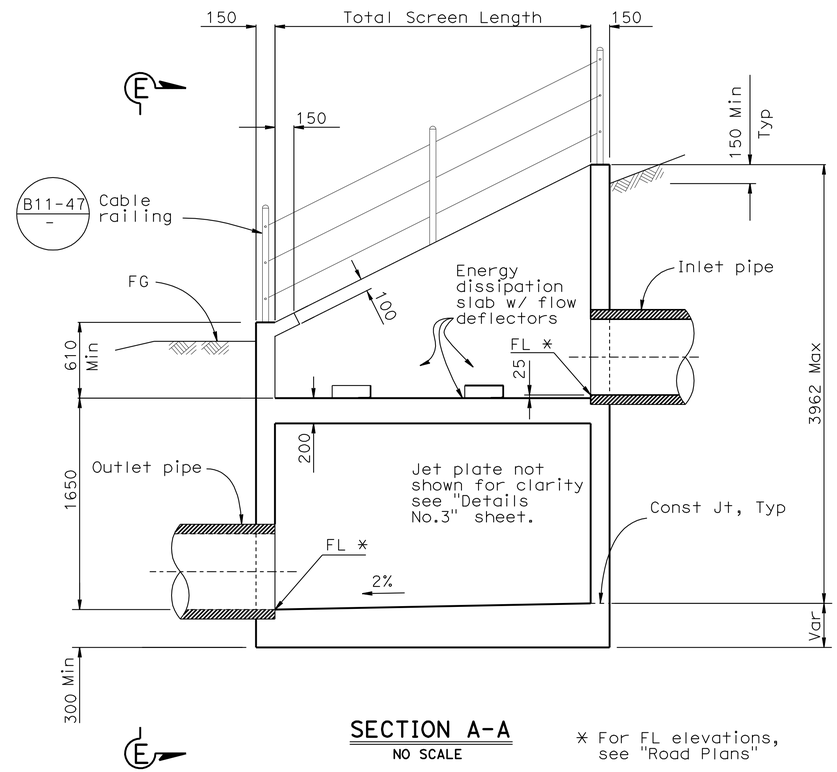

SECTION A-A
NO SCALE

* For FL elevations, see "Road Plans"

NOTES:

1. See "Road Plans" for additional details.
2. Inlet and outlet pipe opening sizes are shown on "Road Plans." The overflow and outlet piping shall be connected via standard elbows and tees.
3. For Sections B-B & C-C see "Type 2 - Detail No. 1" sheet.
4. For reinforcing details see "Type 2 - Detail No. 3" sheet.
5. For inlet and outlet pipe details not shown, see "Road Plans."

NOTE:
THE CONTRACTOR SHALL VERIFY ALL CONTROLLING FIELD DIMENSIONS BEFORE ORDERING OR FABRICATING ANY MATERIAL.

ALL DIMENSIONS ARE IN MILLIMETERS UNLESS OTHERWISE SHOWN

DD - 22

Caltrans Metric

	BY	CHECKED
DESIGN	Doug Dunrud	J&P Peterson
DETAILS	J&P Peterson	Doug Dunrud
QUANTITIES		

STATE OF CALIFORNIA
DEPARTMENT OF TRANSPORTATION

DIVISION OF ENGINEERING SERVICES
STRUCTURE DESIGN
DESIGN BRANCH 14

BRIDGE NO.
KILOMETER POST

GROSS SOLIDS REMOVAL DEVICE
INCLINED SCREEN - LAYOUT

ALL DIMENSIONS ARE IN MILLIMETERS UNLESS OTHERWISE SHOWN

ORIGINAL SCALE IN MILLIMETERS FOR REDUCED PLANS 0 10 20 30 40 50 60 70 80 90 100

CU 07314
EA 1218V1

DISREGARD PRINTS BEARING EARLIER REVISION DATES 12-16-08

REVISION DATES

SHEET 9 OF 15

FILE => 71218vic022.dgn

STRUCTURES DESIGN DETAIL SHEET (METRIC) (REV.03-17-04)

USERNAME => trmikest DATE PLOTTED => 04-MAY-2010 TIME PLOTTED => 07:45

DIST	COUNTY	ROUTE	KILOMETER POST TOTAL PROJECT	SHEET No	TOTAL SHEETS
07	LA	5	50.8/58.0	182	869

REGISTERED CIVIL ENGINEER 9-05-08 DATE

5-3-10
PLANS APPROVAL DATE

REGISTERED PROFESSIONAL ENGINEER D. J. DUNRUD No. C 47240 Exp. 12-31-09 CIVIL STATE OF CALIFORNIA

The State of California or its officers or agents shall not be responsible for the accuracy or completeness of electronic copies of this plan sheet.

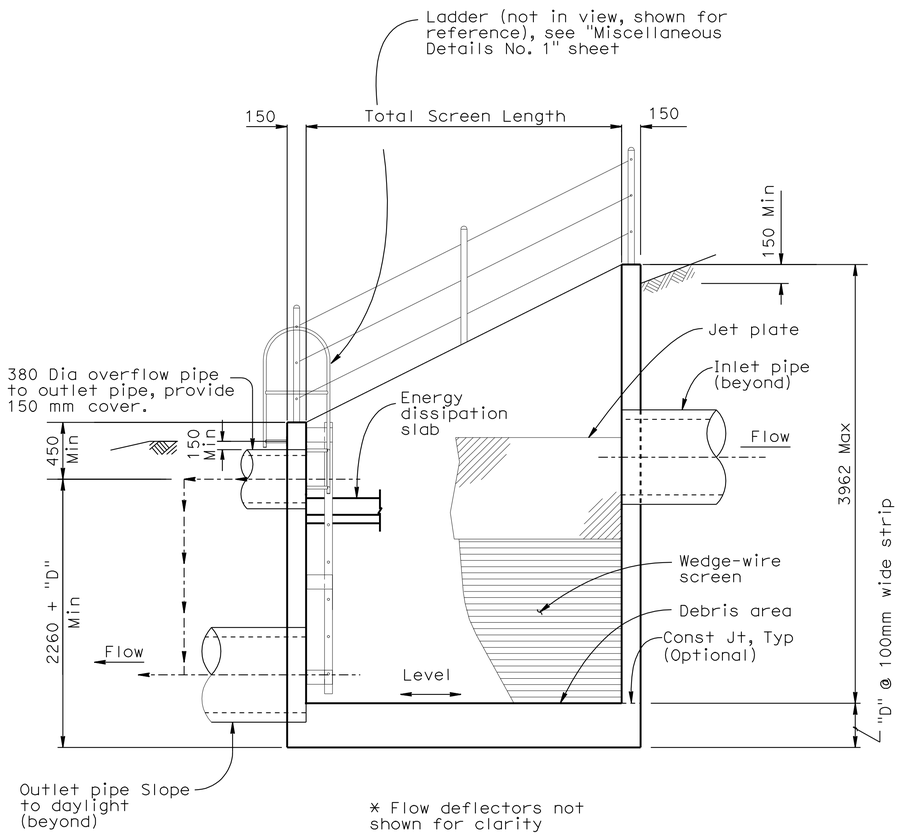

* Flow deflectors not shown for clarity

SECTION B-B

NOT TO SCALE

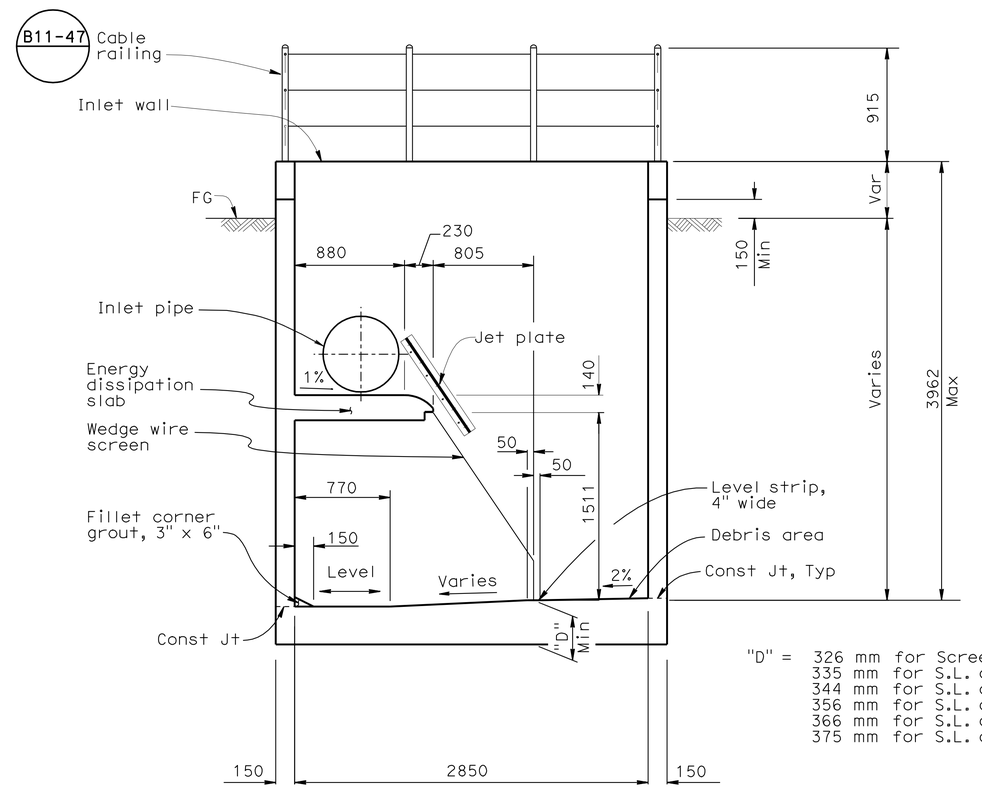

"D" = 326 mm for Screen Length (S.L.) of 1.02 m.
335 mm for S.L. of 1.52 m.
344 mm for S.L. of 2.03 m.
356 mm for S.L. of 2.54 m.
366 mm for S.L. of 3.05 m.
375 mm for S.L. of 3.56 m.

* Flow deflectors not shown for clarity

SECTION C-C

NOT TO SCALE

NOTES:

1. See "Road Plans" for additional details.
2. For Section B-B & C-C locations, see "Type 2 - Layout" sheet.
3. Inlet and outlet piping opening sizes are shown on the "Road Plans." The overflow and outlet piping shall be connected via standard elbows and tees.
4. For inlet and outlet pipe details not shown, see "Road Plans".

NOTE:
THE CONTRACTOR SHALL VERIFY ALL CONTROLLING FIELD DIMENSIONS BEFORE ORDERING OR FABRICATING ANY MATERIAL.

ALL DIMENSIONS ARE IN MILLIMETERS UNLESS OTHERWISE SHOWN **DD-23**

Caltrans Metric

	BY	CHECKED
DESIGN	Doug Dunrud	J&P Peterson
DETAILS	J&P Peterson	Doug Dunrud
QUANTITIES		

STATE OF CALIFORNIA DEPARTMENT OF TRANSPORTATION

DIVISION OF ENGINEERING SERVICES STRUCTURE DESIGN DESIGN BRANCH 14

BRIDGE NO.
KILOMETER POST

GROSS SOLIDS REMOVAL DEVICE
INCLINED SCREEN - DETAILS NO. 1

ALL DIMENSIONS ARE IN MILLIMETERS UNLESS OTHERWISE SHOWN

ORIGINAL SCALE IN MILLIMETERS FOR REDUCED PLANS 0 10 20 30 40 50 60 70 80 90 100

CU 07314
EA 1218V1

DISREGARD PRINTS BEARING EARLIER REVISION DATES 12-16-08

REVISION DATES

SHEET 10 OF 15

FILE => 71218vic023.dgn

STRUCTURES DESIGN DETAIL SHEET (METRIC) (REV.03-17-04)

USERNAME => trmikest DATE PLOTTED => 04-MAY-2010 TIME PLOTTED => 07:48

DIST	COUNTY	ROUTE	KILOMETER POST TOTAL PROJECT	SHEET No	TOTAL SHEETS
07	LA	5	50.8/58.0	183	869

REGISTERED CIVIL ENGINEER 9-05-08 DATE

5-3-10
PLANS APPROVAL DATE

REGISTERED PROFESSIONAL ENGINEER D. J. DUNRUD No. C 47240 Exp. 12-31-09 CIVIL STATE OF CALIFORNIA

The State of California or its officers or agents shall not be responsible for the accuracy or completeness of electronic copies of this plan sheet.

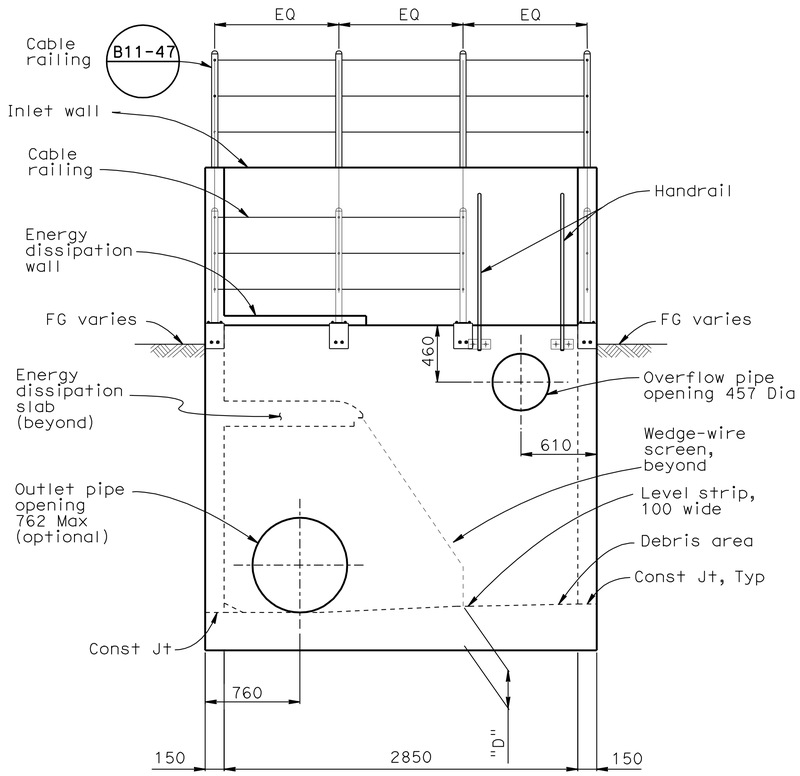

* Jet plate and flow deflectors not shown for clarity

VIEW E-E

No Scale

NOTE:

For Section D-D & View E-E locations, see "Type 2 - Layout" sheet.

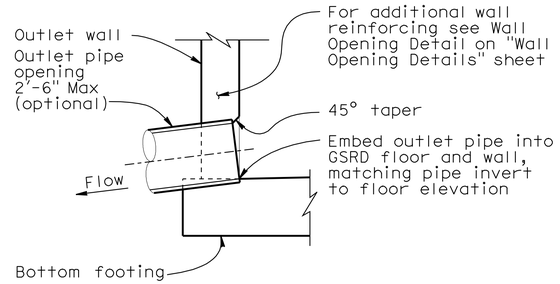

OUTLET DETAIL

PIPE EXIT AT WALL - INCLINED SCREEN
No Scale

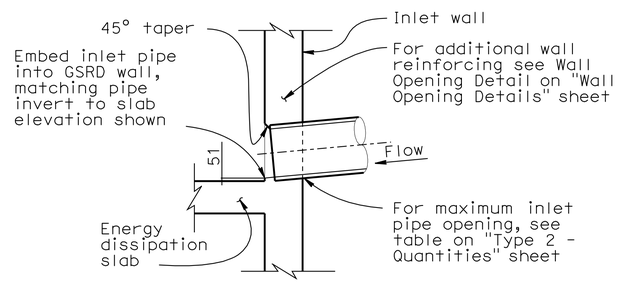

INLET DETAIL

PIPE ENTRANCE AT
WALL - INCLINED SCREEN
No Scale

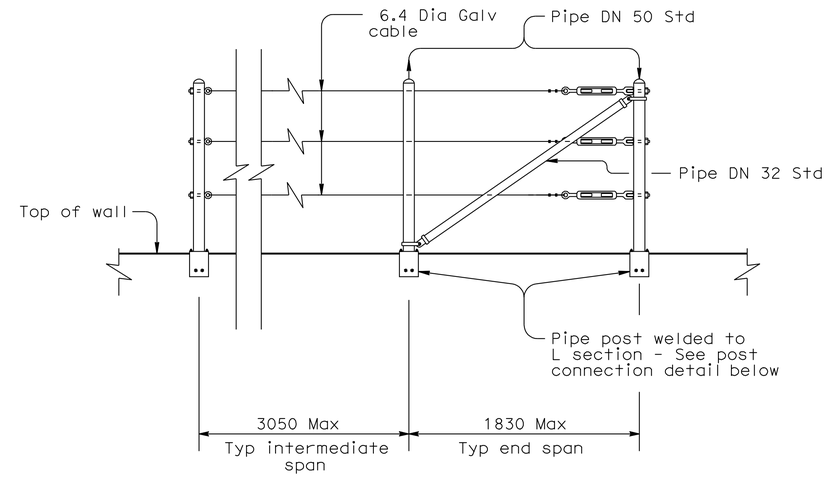

CABLE RAILING

No scale

*** Refer to Standard Plan B11-47 for additional information

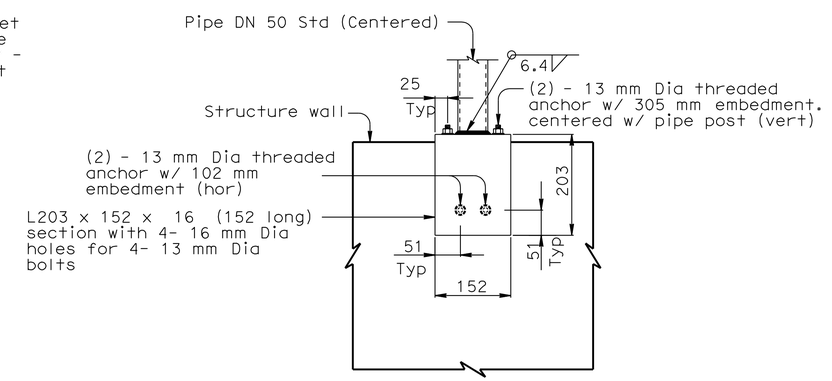

POST ANCHORAGE

No scale

NOTE:
THE CONTRACTOR SHALL VERIFY ALL CONTROLLING FIELD DIMENSIONS BEFORE ORDERING OR FABRICATING ANY MATERIAL.

ALL DIMENSIONS ARE IN MILLIMETERS UNLESS OTHERWISE SHOWN

DD - 24

Caltrans Metric

	BY	CHECKED
DESIGN	Doug Dunrud	J&P Peterson
DETAILS	J&P Peterson	Doug Dunrud
QUANTITIES		

STATE OF CALIFORNIA
DEPARTMENT OF TRANSPORTATION

DIVISION OF ENGINEERING SERVICES
STRUCTURE DESIGN
DESIGN BRANCH 14

BRIDGE NO.
KILOMETER POST

GROSS SOLIDS REMOVAL DEVICE
INCLINED SCREEN - DETAILS NO. 2

ALL DIMENSIONS ARE IN MILLIMETERS UNLESS OTHERWISE SHOWN

ORIGINAL SCALE IN MILLIMETERS FOR REDUCED PLANS 0 10 20 30 40 50 60 70 80 90 100

CU 07314
EA 1218V1

DISREGARD PRINTS BEARING EARLIER REVISION DATES 12-16-08

REVISION DATES

SHEET 11 OF 15

FILE => 71218vic024.dgn

STRUCTURES DESIGN DETAIL SHEET (METRIC) (REV.03-17-04)

USERNAME => ttmikes1 DATE PLOTTED => 04-MAY-2010 TIME PLOTTED => 07:48

DIST	COUNTY	ROUTE	KILOMETER POST TOTAL PROJECT	SHEET No	TOTAL SHEETS
07	LA	5	50.8/58.0	184	869

REGISTERED CIVIL ENGINEER 9-05-08 DATE

5-3-10
PLANS APPROVAL DATE

REGISTERED PROFESSIONAL ENGINEER D. J. DUNRUD No. C 47240 Exp. 12-31-09 CIVIL STATE OF CALIFORNIA

The State of California or its officers or agents shall not be responsible for the accuracy or completeness of electronic copies of this plan sheet.

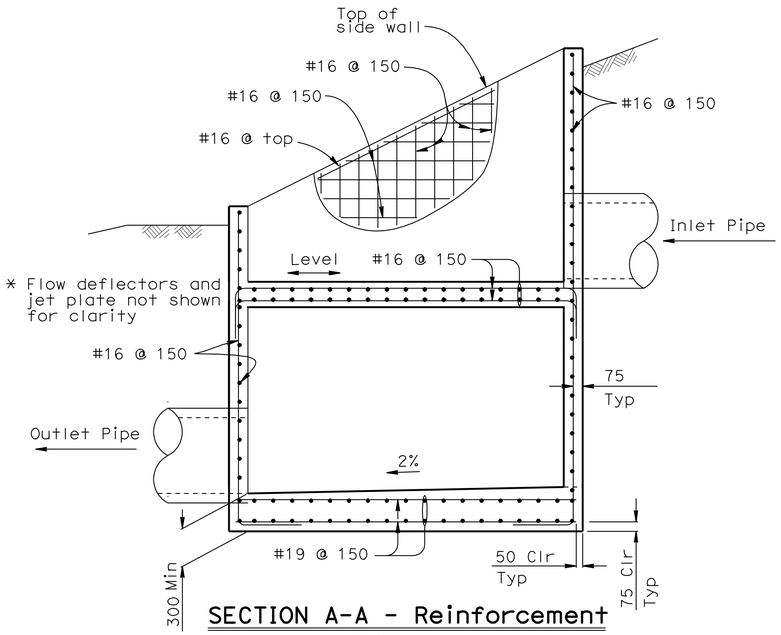

SECTION A-A - Reinforcement
NO SCALE

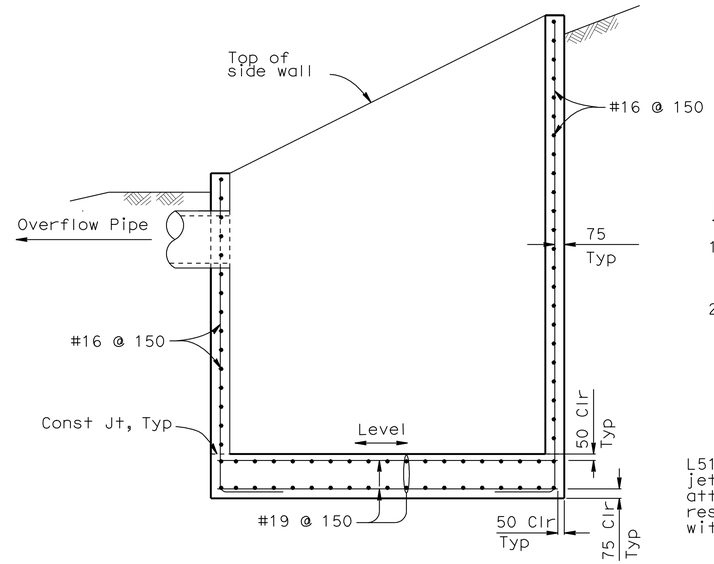

SECTION B-B - Reinforcement
NO SCALE

NOTES:

1. For additional reinforcing at openings, see "Wall Opening Details" sheet.

2. For section locations, see "Inclined Screen - Layout" sheet.

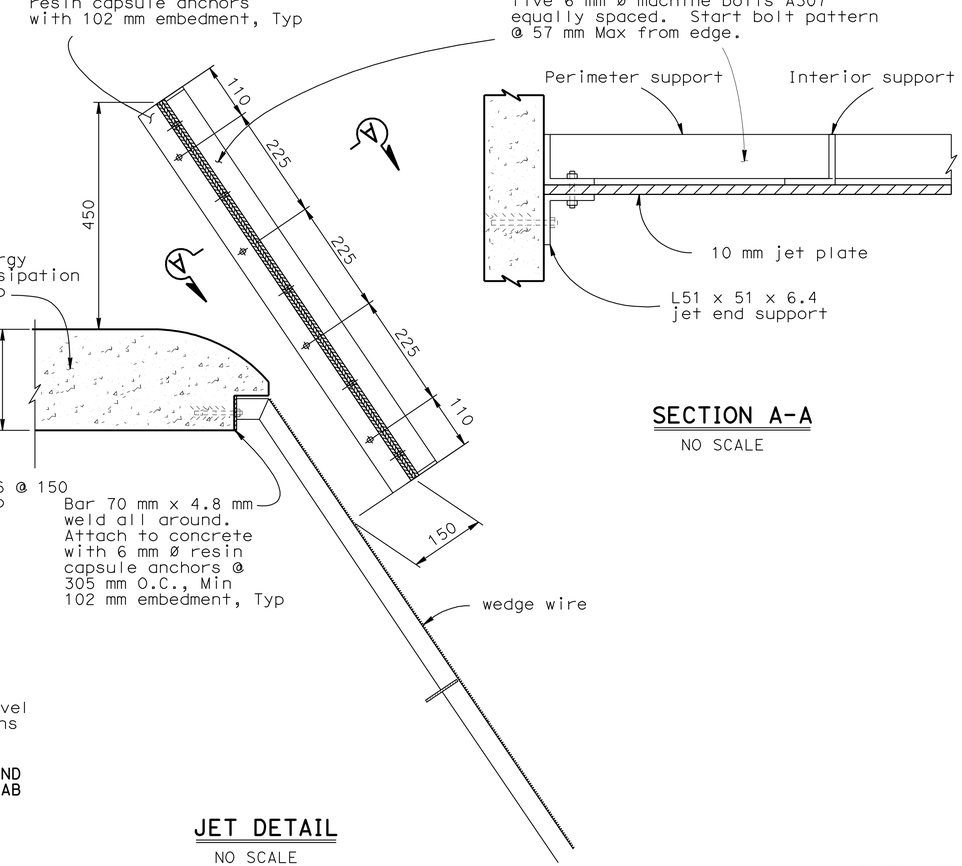

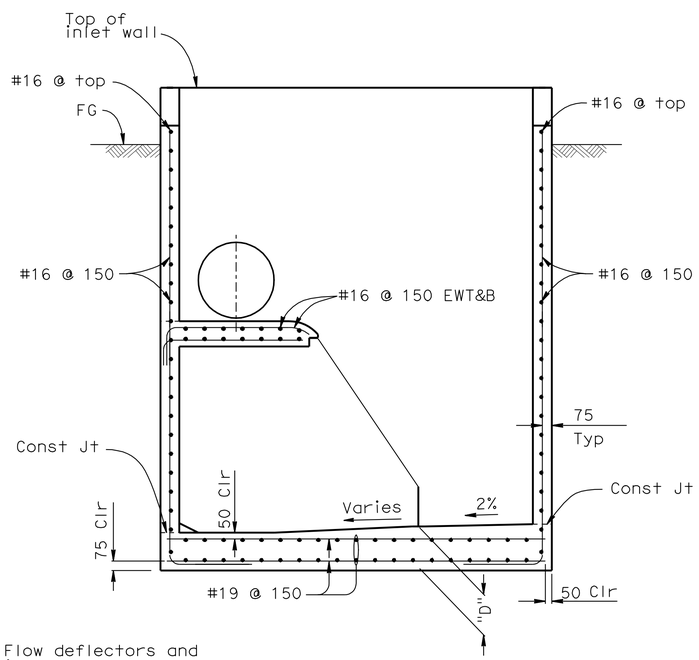

SECTION C-C - REINF
NO SCALE

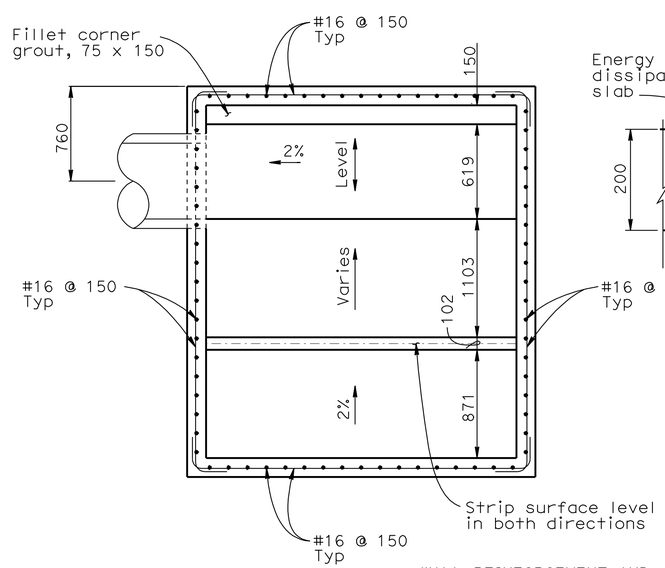

WALL REINFORCEMENT AND GRADES AT FOOTING SLAB

VIEW F-F
NO SCALE

NOTE:
THE CONTRACTOR SHALL VERIFY ALL CONTROLLING FIELD DIMENSIONS BEFORE ORDERING OR FABRICATING ANY MATERIAL.

DD-25

DESIGN	BY Doug Dunrud	CHECKED J&P Peterson	
DETAILS	BY J&P Peterson	CHECKED Doug Dunrud	
QUANTITIES	BY	CHECKED	

STATE OF CALIFORNIA
DEPARTMENT OF TRANSPORTATION

DIVISION OF ENGINEERING SERVICES
STRUCTURE DESIGN
DESIGN BRANCH 14

BRIDGE NO.
KILOMETER POST

GROSS SOLIDS REMOVAL DEVICE
INCLINED SCREEN - DETAILS NO. 3

ALL DIMENSIONS ARE IN MILLIMETERS UNLESS OTHERWISE SHOWN

ORIGINAL SCALE IN MILLIMETERS FOR REDUCED PLANS 0 10 20 30 40 50 60 70 80 90 100

CU 07314
EA 1218V1

DISREGARD PRINTS BEARING EARLIER REVISION DATES 12-16-08

REVISION DATES

SHEET 12 OF 15

FILE => 71218vic025.dgn

STRUCTURES DESIGN DETAIL SHEET (METRIC) (REV.03-17-04)

USERNAME => trmikest DATE PLOTTED => 04-MAY-2010 TIME PLOTTED => 07:48

DIST	COUNTY	ROUTE	KILOMETER POST TOTAL PROJECT	SHEET No	TOTAL SHEETS
07	LA	5	50.8/58.0	185	869

REGISTERED CIVIL ENGINEER 9-05-08 DATE

5-3-10
PLANS APPROVAL DATE

REGISTERED PROFESSIONAL ENGINEER D. J. DUNRUD No. C 47240 Exp. 12-31-09 CIVIL STATE OF CALIFORNIA

The State of California or its officers or agents shall not be responsible for the accuracy or completeness of electronic copies of this plan sheet.

NOTE:

All metal components of screen, including all connections shall be stainless steel unless otherwise noted.

Reference Detail Sheet No. 3A for Jet and Deflectors

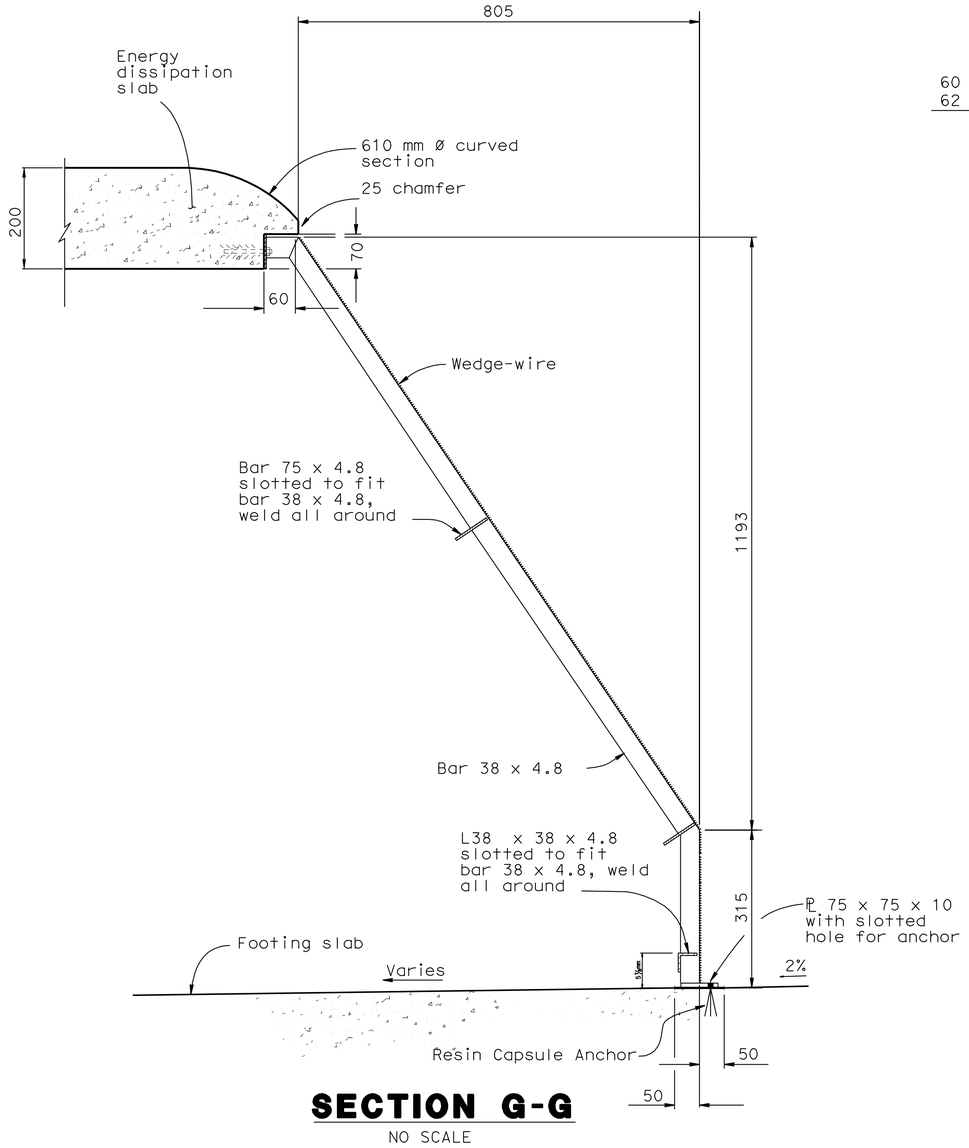

SECTION G-G

NO SCALE

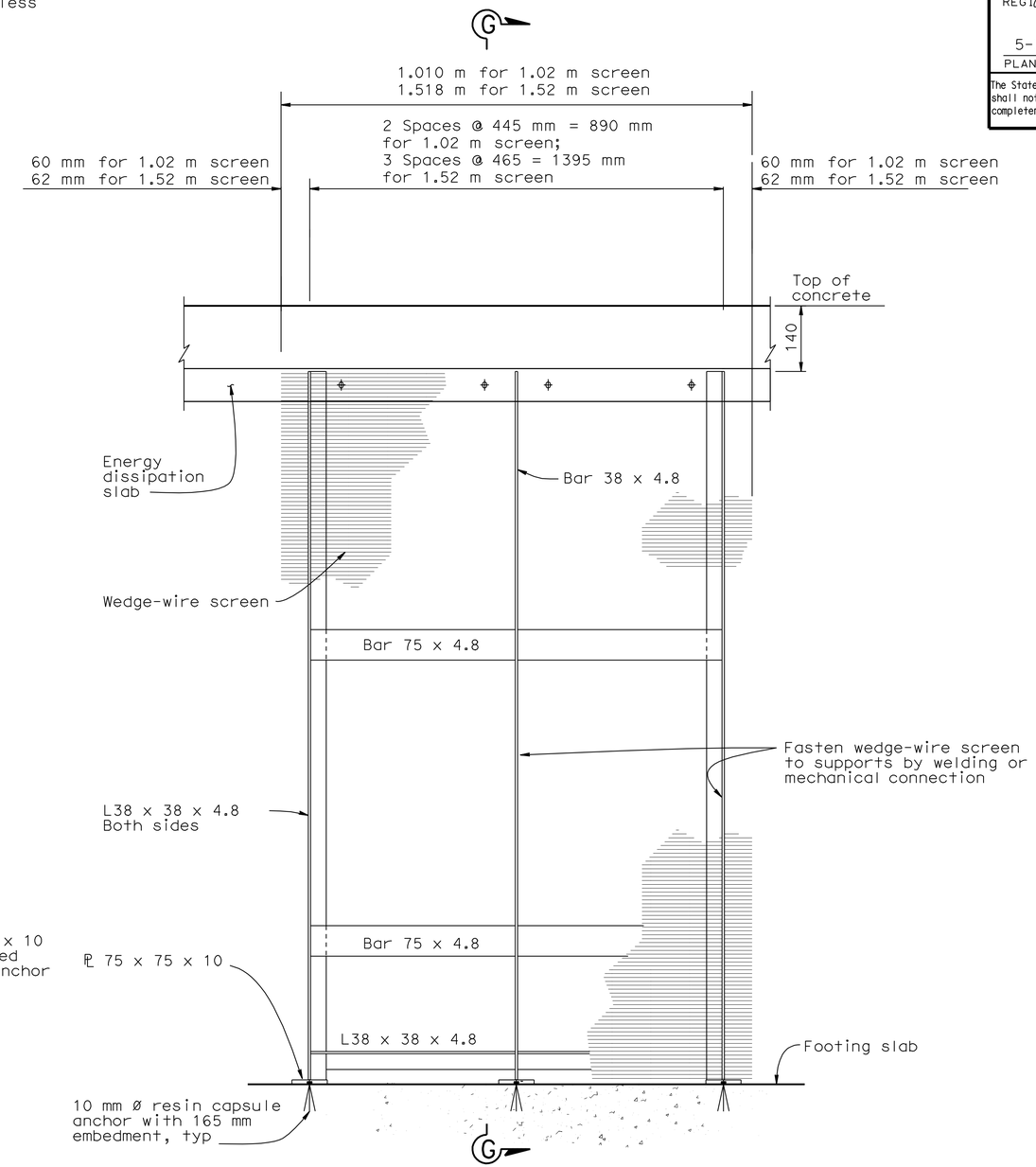

ELEVATION

NO SCALE

For additional information see INCLINED SCREEN - DETAILS NO. 3 /JET DETAIL

Fasten wedge-wire screen to supports by welding or mechanical connection

NOTE:
THE CONTRACTOR SHALL VERIFY ALL CONTROLLING FIELD DIMENSIONS BEFORE ORDERING OR FABRICATING ANY MATERIAL.

DD - 26

	BY	CHECKED
DESIGN	Doug Dunrud	J&P Peterson
DETAILS	J&P Peterson	Doug Dunrud
QUANTITIES		

STATE OF CALIFORNIA DEPARTMENT OF TRANSPORTATION

DIVISION OF ENGINEERING SERVICES STRUCTURE DESIGN DESIGN BRANCH 14

BRIDGE NO.
KILOMETER POST

GROSS SOLIDS REMOVAL DEVICE
INCLINED SCREEN DETAILS

ALL DIMENSIONS ARE IN MILLIMETERS UNLESS OTHERWISE SHOWN

ORIGINAL SCALE IN MILLIMETERS FOR REDUCED PLANS 0 10 20 30 40 50 60 70 80 90 100

CU 07314
EA 1218V1

DISREGARD PRINTS BEARING EARLIER REVISION DATES

REVISION DATES 12-16-08

SHEET 13 OF 15

FILE => 71218vic026.dgn

STRUCTURES DESIGN DETAIL SHEET (METRIC) (REV.03-17-04)

USERNAME => s135318 DATE PLOTTED => 03-MAY-2010 TIME PLOTTED => 12:55

DIST	COUNTY	ROUTE	KILOMETER POST TOTAL PROJECT	SHEET No	TOTAL SHEETS
07	LA	5	50.8/58.0	186	869

REGISTERED CIVIL ENGINEER 9-05-08 DATE

5-3-10
PLANS APPROVAL DATE

REGISTERED PROFESSIONAL ENGINEER D. J. DUNRUD No. C 47240 Exp. 12-31-09 CIVIL STATE OF CALIFORNIA

The State of California or its officers or agents shall not be responsible for the accuracy or completeness of electronic copies of this plan sheet.

NOTES:

1. The distance between rungs shall not exceed 300 mm and shall be uniform throughout the length of wall.
2. The ladder may be constructed in one length at the Contractor's option on concrete walls.
3. All metal components of ladder and handrail including connections shall be galvanized after fabrication. See Standard Specifications or Special Provisions.
4. When ladder rails need to be spliced, see Standard Plan D75C for Ladder Splice Plate details.
5. Grind exposed corners 5 mm radius.
6. For Section I-I, see "Miscellaneous Details No. 1" sheet.

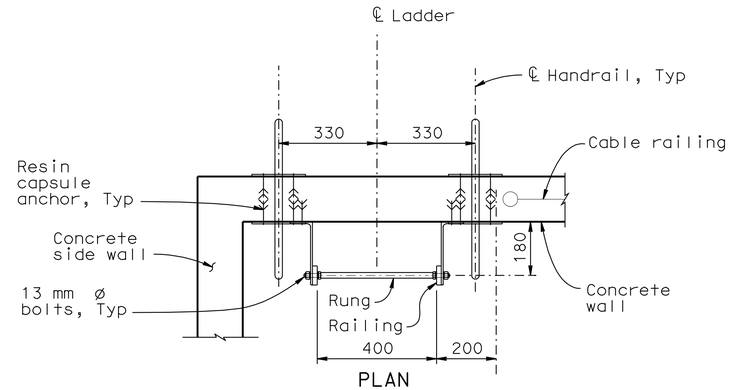

PLAN

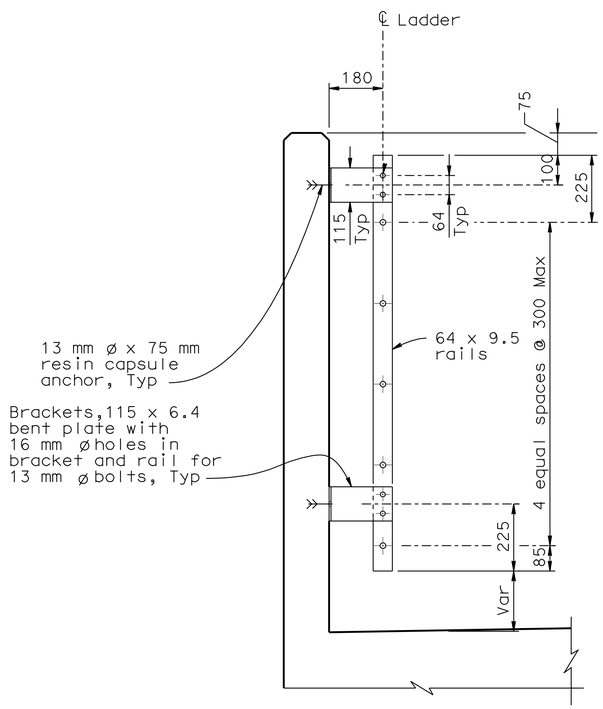

LADDER SECTION

1:10

NOTE: Handrail not shown for clarity.

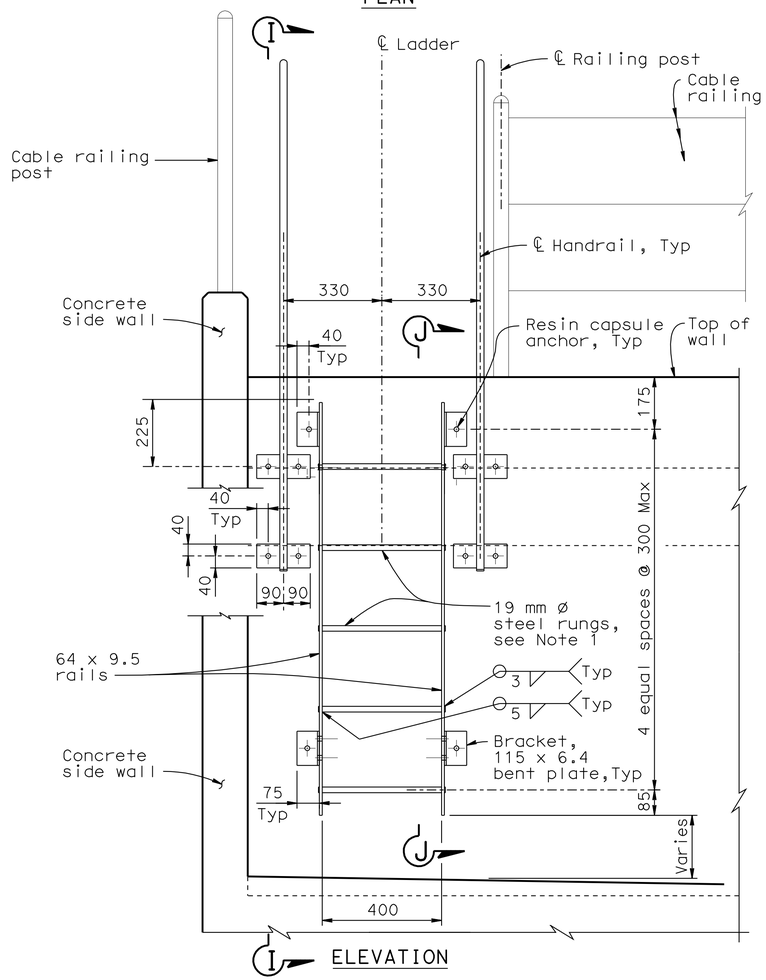

ELEVATION

LADDER - INCLINED SCREEN GSRD

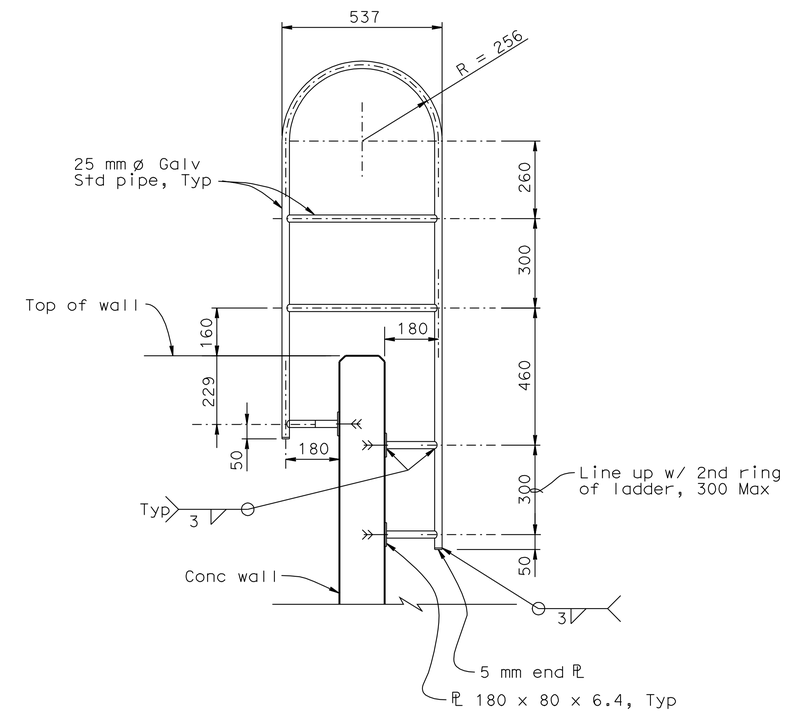

SECTION I - I

1:10

NOTE:
THE CONTRACTOR SHALL VERIFY ALL CONTROLLING FIELD DIMENSIONS BEFORE ORDERING OR FABRICATING ANY MATERIAL.

ALL DIMENSIONS ARE IN MILLIMETERS UNLESS OTHERWISE SHOWN **DD - 27**

Caltrans Metric

	BY	CHECKED
DESIGN	Doug Dunrud	J&P Peterson
DETAILS	J&P Peterson	Doug Dunrud
QUANTITIES		

STATE OF CALIFORNIA DEPARTMENT OF TRANSPORTATION

DIVISION OF ENGINEERING SERVICES STRUCTURE DESIGN DESIGN BRANCH 14

BRIDGE NO.
KILOMETER POST

GROSS SOLIDS REMOVAL DEVICE
MISCELLANEOUS DETAILS

ALL DIMENSIONS ARE IN MILLIMETERS UNLESS OTHERWISE SHOWN

ORIGINAL SCALE IN MILLIMETERS FOR REDUCED PLANS 0 10 20 30 40 50 60 70 80 90 100

CU 07314
EA 1218V1

DISREGARD PRINTS BEARING EARLIER REVISION DATES

REVISION DATES: 12-16-08

SHEET 14 OF 15

FILE => 71218vic027.dgn

STRUCTURES DESIGN DETAIL SHEET (METRIC) (REV.03-17-04)

USERNAME => s135318 DATE PLOTTED => 03-MAY-2010 TIME PLOTTED => 12:55

DIST	COUNTY	ROUTE	KILOMETER POST TOTAL PROJECT	SHEET No	TOTAL SHEETS
07	LA	5	50.8/58.0	187	869

REGISTERED CIVIL ENGINEER 9-05-08 DATE

5-3-10
PLANS APPROVAL DATE

REGISTERED PROFESSIONAL ENGINEER D. J. DUNRUD No. C 47240 Exp. 12-31-09 CIVIL STATE OF CALIFORNIA

The State of California or its officers or agents shall not be responsible for the accuracy or completeness of electronic copies of this plan sheet.

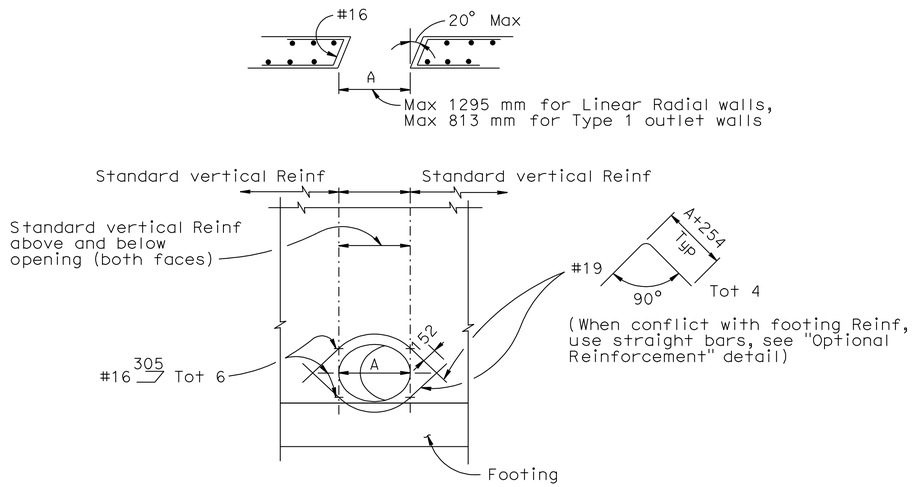

LINEAR RADIAL WALL OPENING

To be used at Linear Radial inlet and outlet pipe locations

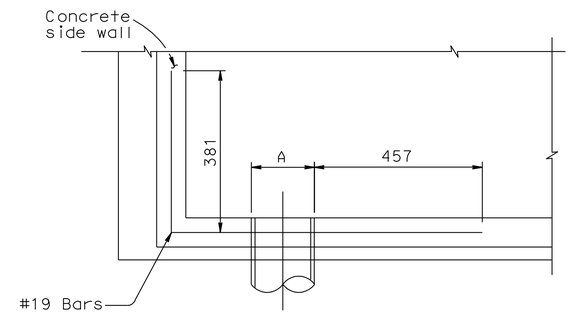

SECTION L-L

No Scale
(Only specified horizontal bars are shown)

NOTES:

1. In all opening locations, horizontal reinforcement to be standard except as shown.
2. All reinforcement to clear opening by 50 mm minimum.

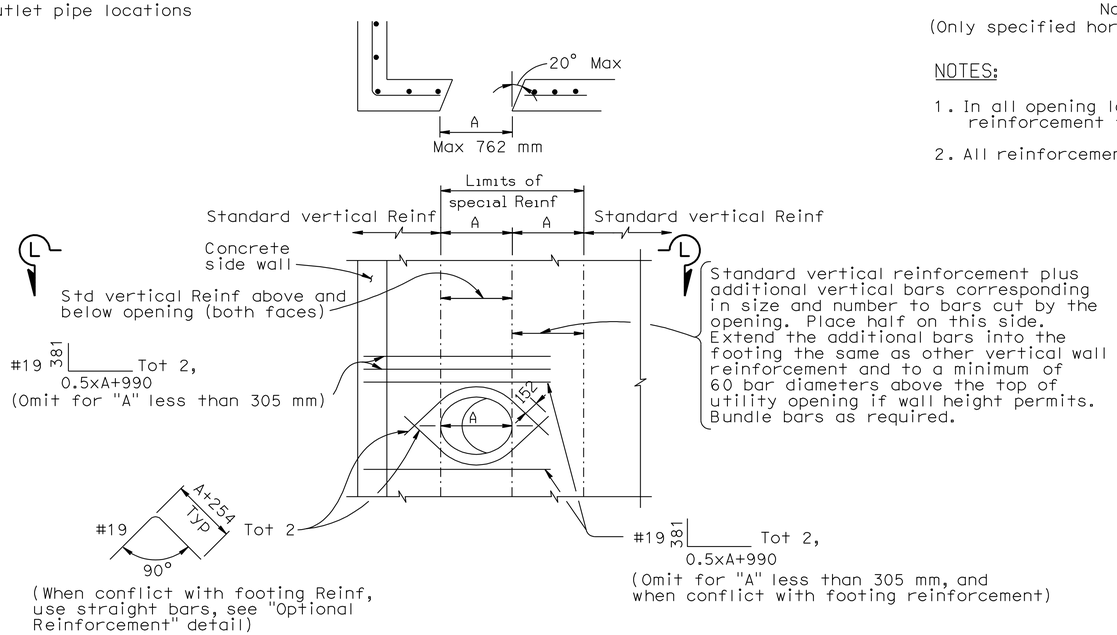

INCLINED SCREEN WALL OPENING

No Scale
To be used at inlet and outlet pipe locations

NOTE:
THE CONTRACTOR SHALL VERIFY ALL CONTROLLING FIELD DIMENSIONS BEFORE ORDERING OR FABRICATING ANY MATERIAL.

ALL DIMENSIONS ARE IN MILLIMETERS UNLESS OTHERWISE SHOWN **DD-28**

Caltrans Metric

	BY	CHECKED
DESIGN	Doug Dunrud	J&P Peterson
DETAILS	J&P Peterson	Doug Dunrud
QUANTITIES		

STATE OF CALIFORNIA
DEPARTMENT OF TRANSPORTATION

DIVISION OF ENGINEERING SERVICES
STRUCTURE DESIGN
DESIGN BRANCH 14

BRIDGE NO.
KILOMETER POST

GROSS SOLIDS REMOVAL DEVICE
WALL OPENING DETAILS

ALL DIMENSIONS ARE IN MILLIMETERS UNLESS OTHERWISE SHOWN

ORIGINAL SCALE IN MILLIMETERS FOR REDUCED PLANS 0 10 20 30 40 50 60 70 80 90 100

CU 07314
EA 1218V1

DISREGARD PRINTS BEARING EARLIER REVISION DATES 12-16-08

REVISION DATES

SHEET 15 OF 15

FILE => 71218vic028.dgn

STRUCTURES DESIGN DETAIL SHEET (METRIC) (REV.03-17-04)

USERNAME => s135318 DATE PLOTTED => 03-MAY-2010 TIME PLOTTED => 12:56

NOTES: PIPE JOINTS ARE STANDARD
OR AS NOTED ON PLANS

(N) NOT A SEPARATE PAY ITEM,
FOR INFORMATION ONLY.

Caltrans Metric

Dist	COUNTY	ROUTE	KILOMETER POST TOTAL PROJECT	SHEET No.	TOTAL SHEETS
07	LA	5	50.8/58.0	188	869

REGISTERED CIVIL ENGINEER 07/07/08 DATE

5-3-10
PLANS APPROVAL DATE

REGISTERED PROFESSIONAL ENGINEER BALDEV K. BHALLA No. 34350 Exp. 09/30/11 CIVIL STATE OF CALIFORNIA

THE STATE OF CALIFORNIA OR ITS OFFICERS OR AGENTS SHALL NOT BE RESPONSIBLE FOR THE ACCURACY OR COMPLETENESS OF ELECTRONIC COPIES OF THIS PLAN SHEET.

DRAINAGE SHEET No.	DRAINAGE SYSTEM No.	DRAINAGE UNIT No.	H OR V	MINOR CONCRETE (MINOR STRUCTURE)	MINOR CONCRETE (CONCRETE DRAIN)	MISCELLANEOUS IRON AND STEEL	GSRD	ABANDON PIPELINE	JACKED 600 mm RCP (CLASS V)	450 mm REINFORCED CONCRETE PIPE	600 mm REINFORCED CONCRETE PIPE	900 mm REINFORCED CONCRETE PIPE	450 mm SLOTTED CORRUGATED STEEL PIPE (1.63 mm THICK)	450 mm CORRUGATED STEEL PIPE (1.63 mm THICK)	80 mm PLASTIC PIPE	300 mm PLASTIC PIPE	900 mm PRECAST CONC PIPE MANHOLE	REMOVE PIPE	REMOVE INLET	REMOVE CONCRETE	REMOVE ASPHALT CONCRETE	REMOVE CONCRETE CURB	ADJUST INLET	CAP INLET	ROCK SLOPE PROTECTION (FACING, METHOD B)	ROCK SLOPE PROTECTION FABRIC	DITCH EXCAVATION	SAND BACKFILL	(N) STEEL PLATE CLOSURE	(N) TYPE 450-9 FRAME AND GRATE	(N) TYPE 600-12 FRAME AND GRATE	(N) MAXIMUM COVER	DESCRIPTION	STATION
			m	m^3	m^3	kg	EA	EA	m	m	m	m	m	m	m	m	m	m	EA	m^3	m^2	m	EA	EA	m^3	m^2	m^3	m^3	EA	EA	EA	m		
1	1	a																	1														REMOVE INLET	17.98 m L+ 510+52.241 ℄ Fwy
		b																2.4															REMOVE 600 mm RCP	
		c																	1														REMOVE INLET	17.98 m L+ 510+55.798 ℄ Fwy
		d																2.4															REMOVE 600 mm RCP	
		e																	1														REMOVE INLET	17.98 m L+ 510+59.355 ℄ Fwy
		f																						1									CAP INLET	17.98 m R+ 510+52.241 ℄ Fwy
		g																						1									CAP INLET	17.98 m R+ 510+55.798 ℄ Fwy
		h																						1									CAP INLET	17.98 m R+ 510+59.355 ℄ Fwy
		i	1.26	1.28		238																								2			GD-1 INLET	29.41 m L+ 510+52.241 ℄ Fwy
		j									6.3																				0.65		600 mm RCP	
		k																						1									CAP INLET	510+52.241 ℄ Fwy
		L	4.5	3.25		148																								1			TYPE G2 INLET	26.52 m R+ 510+52.241 ℄ Fwy
		m									1.9																				0.79		600 mm RCP	
		n	1.22	1.25		238																								2			GD-1 INLET	29.41 m L+ 510+55.000 ℄ Fwy
		o									49.1																				0.79		600 mm RCP	
		p	1.4	1.33		148																								1			TYPE G2 INLET	29.41 m L+ 511+05.000 ℄ Fwy
		q									64.1																				0.79		600 mm RCP	
		r	1.4	1.38		238																								2			GD-1 INLET	26.71 m L+ 511+70.000 ℄ Fwy
SHEET TOTAL				8.49		1010					121.4							4.8	3					4						8				

DRAINAGE QUANTITIES
DQ-1

STATE OF CALIFORNIA - DEPARTMENT OF TRANSPORTATION
Caltrans HYDRAULICS

FUNCTIONAL SUPERVISOR: DAVE BHALLA
CALCULATED-DESIGNED BY: S. THAI
CHECKED BY: C. NGUYEN
REVISED BY
DATE REVISED

LAST REVISION 00-00-00
DATE PLOTTED => 03-MAY-2010
TIME PLOTTED => 12:56

NOTES: PIPE JOINTS ARE STANDARD
OR AS NOTED ON PLANS

(N) NOT A SEPARATE PAY ITEM,
FOR INFORMATION ONLY.

Caltrans Metric

Dist	COUNTY	ROUTE	KILOMETER POST TOTAL PROJECT	SHEET No.	TOTAL SHEETS
07	LA	5	50.8/58.0	189	869

REGISTERED CIVIL ENGINEER 07/07/08 DATE

5-3-10
PLANS APPROVAL DATE

REGISTERED PROFESSIONAL ENGINEER BALDEV K. BHALLA No. 34350 Exp. 09/30/11 CIVIL STATE OF CALIFORNIA

THE STATE OF CALIFORNIA OR ITS OFFICERS OR AGENTS SHALL NOT BE RESPONSIBLE FOR THE ACCURACY OR COMPLETENESS OF ELECTRONIC COPIES OF THIS PLAN SHEET.

DRAINAGE SHEET No.	DRAINAGE SYSTEM No.	DRAINAGE UNIT No.	H OR V	MINOR CONCRETE (MINOR STRUCTURE)	MINOR CONCRETE (CONCRETE DRAIN)	MISCELLANEOUS IRON AND STEEL	GSRD	ABANDON PIPELINE	JACKED 600 mm RCP (CLASS V)	450 mm REINFORCED CONCRETE PIPE	600 mm REINFORCED CONCRETE PIPE	900 mm REINFORCED CONCRETE PIPE	450 mm SLOTTED CORRUGATED STEEL PIPE (1.63 mm THICK)	450 mm CORRUGATED STEEL PIPE (1.63 mm THICK)	80 mm PLASTIC PIPE	300 mm PLASTIC PIPE	900 mm PRECAST CONC PIPE MANHOLE	REMOVE PIPE	REMOVE INLET	REMOVE CONCRETE	REMOVE ASPHALT CONCRETE	REMOVE CONCRETE CURB	ADJUST INLET	CAP INLET	ROCK SLOPE PROTECTION (FACING, METHOD B)	ROCK SLOPE PROTECTION FABRIC	DITCH EXCAVATION	SAND BACKFILL	STEEL PLATE CLOSURE (N)	TYPE 450-9 FRAME AND GRATE (N)	TYPE 600-12 FRAME AND GRATE (N)	MAXIMUM COVER (N)	DESCRIPTION	STATION
	⬡	○																																
			m	m^3	m^3	kg	EA	EA	m	m	m	m	m	m	m	m	m	m	EA	m^3	m^2	m	EA	EA	m^3	m^2	m^3	m^3	EA	EA	EA	m		
1	2	a									1.9																					0.9	600 mm RCP	
		b	1.4	1.38		238																									2		GD-1 INLET	26.52 m R† 510+55.000 ℄ Fwy
		c									49.1																					0.9	600 mm RCP	
		d	1.4	1.33		148																									1		TYPE G2 INLET	26.52 m R† 511+05.000 ℄ Fwy
		e									49.1																					0.9	600 mm RCP	
		f	1.4	1.38		238																									2		GD-1 INLET	26.52 m R† 511+55.000 ℄ Fwy
1	3	a													5.5																		80 mm PLASTIC PIPE	
		b													5.5																		80 mm PLASTIC PIPE	
		c													5.5																		80 mm PLASTIC PIPE	
		d													5.5																		80 mm PLASTIC PIPE	
		e													5.5																		80 mm PLASTIC PIPE	
		f													5.5																		80 mm PLASTIC PIPE	
		g													5.5																		80 mm PLASTIC PIPE	
		H													5.5																		80 mm PLASTIC PIPE	
1	4	a																						1									CAP INLET	17.98 m L† 513+03.701 ℄ Fwy
		b																						1									CAP INLET	17.98 m L† 513+07.258 ℄ Fwy
		c																						1									CAP INLET	17.98 m L† 513+10.812 ℄ Fwy
		d									8.5																					0.79	600 mm RCP	
		e	1.4	1.38		238																									2		GD-1 INLET	27.230 m L† 513+15.000 ℄ Fwy
SHEET TOTAL				5.47		862					108.6				44.0									3							7			

DRAINAGE QUANTITIES
DQ-2

STATE OF CALIFORNIA - DEPARTMENT OF TRANSPORTATION
Caltrans HYDRAULICS

FUNCTIONAL SUPERVISOR: DAVE BHALLA
CALCULATED-DESIGNED BY: S. THAI
CHECKED BY: C. NGUYEN
REVISED BY
DATE REVISED

LAST REVISION 00-00-00
DATE PLOTTED => 03-MAY-2010
TIME PLOTTED => 12:56

NOTES: PIPE JOINTS ARE STANDARD
OR AS NOTED ON PLANS

(N) NOT A SEPARATE PAY ITEM,
FOR INFORMATION ONLY.

Caltrans Metric

Dist	COUNTY	ROUTE	KILOMETER POST TOTAL PROJECT	SHEET No.	TOTAL SHEETS
07	LA	5	50.8/58.0	190	869

REGISTERED CIVIL ENGINEER 07/07/08 DATE

5-3-10
PLANS APPROVAL DATE

REGISTERED PROFESSIONAL ENGINEER BALDEV K. BHALLA No. 34350 Exp. 09/30/11 CIVIL STATE OF CALIFORNIA

THE STATE OF CALIFORNIA OR ITS OFFICERS OR AGENTS SHALL NOT BE RESPONSIBLE FOR THE ACCURACY OR COMPLETENESS OF ELECTRONIC COPIES OF THIS PLAN SHEET.

DRAINAGE SHEET No.	DRAINAGE SYSTEM No.	DRAINAGE UNIT No.	H OR V	MINOR CONCRETE (MINOR STRUCTURE)	MINOR CONCRETE (CONCRETE DRAIN)	MISCELLANEOUS IRON AND STEEL	GSRD	ABANDON PIPELINE	JACKED 600 mm RCP (CLASS V)	450 mm REINFORCED CONCRETE PIPE	600 mm REINFORCED CONCRETE PIPE	900 mm REINFORCED CONCRETE PIPE	450 mm SLOTTED CORRUGATED STEEL PIPE (1.63 mm THICK)	450 mm CORRUGATED STEEL PIPE (1.63 mm THICK)	80 mm PLASTIC PIPE	300 mm PLASTIC PIPE	900 mm PRECAST CONC PIPE MANHOLE	REMOVE PIPE	REMOVE INLET	REMOVE CONCRETE	REMOVE ASPHALT CONCRETE	REMOVE CONCRETE CURB	ADJUST INLET	CAP INLET	ROCK SLOPE PROTECTION (FACING, METHOD B)	ROCK SLOPE PROTECTION FABRIC	DITCH EXCAVATION	SAND BACKFILL	STEEL PLATE CLOSURE (N)	TYPE 450-9 FRAME AND GRATE (N)	TYPE 600-12 FRAME AND GRATE (N)	MAXIMUM COVER (N)	DESCRIPTION	STATION
			m	m^3	m^3	kg	EA	EA	m	m	m	m	m	m	m	m	m	m	EA	m^3	m^2	m	EA	EA	m^3	m^2	m^3	m^3	EA	EA	EA	m		
1	4	f									34.1																					0.79	600 mm RCP	
		g	1.4	1.38		238																									2		GD-1 INLET	27.230 Lt 513+50.000 ℄ Fwy
		h									49.1																					0.79	600 mm RCP	
		i	1.4	1.38		238																									2		GD-1 INLET	27.230 Lt 514+00.000 ℄ Fwy
		j									49.1																					0.79	600 mm RCP	
		k	1.4	1.38		238																									2		GD-1 INLET	27.230 Lt 514+50.000 ℄ Fwy
1	5	a																	1														REMOVE INLET	512+96.1 ℄ Fwy
		b																2.4															REMOVE 600 mm RCP	
		c																	1														REMOVE INLET	512+99.6 ℄ Fwy
		d									5.3																					1.59	600 mm RCP	
		e	2.2	1.83		148																									1		TYPE G2 INLET	2.10 m Rt 512+96.081 ℄ Fwy
		f																2.9															REMOVE 600 mm RCP	
		g																2.4															REMOVE 600 mm RCP	
		h									6.3																					1.64	600 mm RCP	
		i																	1														REMOVE INLET	17.98 m Rt 512+96.081 ℄ Fwy
		j																7.3															REMOVE 600 mm RCP	
		k	4.64	5.47		238																									2		MODIFIED GD-2 INLET	25.499 m Rt 512+96.081 ℄ Fwy
		L									10.2																					1.19	600 mm RCP	
		m	1.4	1.33		148																									1		TYPE G2 INLET	25.499 m Rt 512+85.000 ℄ Fwy
SHEET TOTAL				12.77		1248					154.1							15.0	3												10			

DRAINAGE QUANTITIES
DQ-3

STATE OF CALIFORNIA - DEPARTMENT OF TRANSPORTATION
Caltrans HYDRAULICS

FUNCTIONAL SUPERVISOR: DAVE BHALLA
CALCULATED-DESIGNED BY: S. THAI
CHECKED BY: C. NGUYEN
REVISED BY
DATE REVISED

LAST REVISION 00-00-00
DATE PLOTTED => 03-MAY-2010
TIME PLOTTED => 12:56

NOTES: PIPE JOINTS ARE STANDARD
OR AS NOTED ON PLANS

(N) NOT A SEPARATE PAY ITEM,
FOR INFORMATION ONLY.

Dist	COUNTY	ROUTE	KILOMETER POST TOTAL PROJECT	SHEET No.	TOTAL SHEETS
07	LA	5	50.8/58.0	191	869

REGISTERED CIVIL ENGINEER 07/07/08 DATE

5-3-10
PLANS APPROVAL DATE

REGISTERED PROFESSIONAL ENGINEER BALDEV K. BHALLA No. 34350 Exp. 09/30/11 CIVIL STATE OF CALIFORNIA

THE STATE OF CALIFORNIA OR ITS OFFICERS OR AGENTS SHALL NOT BE RESPONSIBLE FOR THE ACCURACY OR COMPLETENESS OF ELECTRONIC COPIES OF THIS PLAN SHEET.

Caltrans Metric

DRAINAGE SHEET No.	DRAINAGE SYSTEM No.	DRAINAGE UNIT No.	H OR V	MINOR CONCRETE (MINOR STRUCTURE)	MINOR CONCRETE (CONCRETE DRAIN)	MISCELLANEOUS IRON AND STEEL	GSRD	ABANDON PIPELINE	JACKED 600 mm RCP (CLASS V)	450 mm REINFORCED CONCRETE PIPE	600 mm REINFORCED CONCRETE PIPE	900 mm REINFORCED CONCRETE PIPE	450 mm SLOTTED CORRUGATED STEEL PIPE (1.63 mm THICK)	450 mm CORRUGATED STEEL PIPE (1.63 mm THICK)	80 mm PLASTIC PIPE	300 mm PLASTIC PIPE	900 mm PRECAST CONC PIPE MANHOLE	REMOVE PIPE	REMOVE INLET	REMOVE CONCRETE	REMOVE ASPHALT CONCRETE	REMOVE CONCRETE CURB	ADJUST INLET	CAP INLET	ROCK SLOPE PROTECTION (FACING, METHOD B)	ROCK SLOPE PROTECTION FABRIC	DITCH EXCAVATION	SAND BACKFILL	STEEL PLATE CLOSURE (N)	TYPE 450-9 FRAME AND GRATE (N)	TYPE 600-12 FRAME AND GRATE (N)	MAXIMUM COVER (N)	DESCRIPTION	STATION
			m	m^3	m^3	kg	EA	EA	m	m	m	m	m	m	m	m	m	m	EA	m^3	m^2	m	EA	EA	m^3	m^2	m^3	m^3	EA	EA	EA	m		
1	6	a																36.6															REMOVE PIPE SCSP	
		b	0.45	0.63		113																							1	1			CL2 INLET (CASE 2)	1.8 m R+ 513+25.0 ℄ Fwy
		c	0.45	0.63		113																							1	1			CL2 INLET (CASE 2)	1.8 m R+ 513+55.0 ℄ Fwy
2		d	0.45	0.63		113																								1			CL2 INLET (CASE 2)	1.8 m R+ 513+87.7 ℄ Fwy
		e		1.5												5.1																0.15	300 mm PLASTIC PIPE WITH REINFORCED ENCASEMENT	
		f	0.45	0.63		113																								1			CL2 INLET (CASE 2)	2.1 m L+ 513+90.7 ℄ Fwy
		g	0.45	0.63		113																							1	1			CL2 INLET (CASE 2)	2.1 m L+ 514+20.0 ℄ Fwy
		h	0.45	0.63		113																							1	1			CL2 INLET (CASE 2)	2.2 m L+ 514+50.0 ℄ Fwy
		i	0.45	0.63		113																							1	1			CL2 INLET (CASE 2)	2.3 m L+ 514+70.0 ℄ Fwy
		j	0.45	0.63		113																							1	1			CL2 INLET (CASE 2)	2.6 m L+ 515+20.0 ℄ Fwy
		k	0.45	0.63		113																							1	1			CL2 INLET (CASE 2)	2.7 m L+ 515+50.0 ℄ Fwy
		L	0.45	0.63		113																							1	1			CL2 INLET (CASE 2)	2.8 m L+ 515+80.0 ℄ Fwy
		m	0.45	0.63		113																							1	1			CL2 INLET (CASE 2)	2.9 m L+ 516+10.0 ℄ Fwy
		n	0.45	0.63		113																							1	1			CL2 INLET (CASE 2)	3.0 m L+ 516+40.0 ℄ Fwy
		o	0.45	0.63		113																							1	1			CL2 INLET (CASE 2)	3.4 m L+ 517+10.0 ℄ Fwy
		p	0.45	0.63		113																							1	1			CL2 INLET (CASE 2)	3.5 m L+ 517+40.0 ℄ Fwy
3		q	0.45	0.63		113																							1	1			CL2 INLET (CASE 2)	3.6 m L+ 517+70.0 ℄ Fwy
		r	0.45	0.63		113																							1	1			CL2 INLET (CASE 2)	3.7 m L+ 518+00.0 ℄ Fwy
		s	0.45	0.63		113																							1	1			CL2 INLET (CASE 2)	3.8 m L+ 518+30.0 ℄ Fwy
		t	0.45	0.63		113																							1	1			CL2 INLET (CASE 2)	3.9 m L+ 518+60.0 ℄ Fwy
SHEET TOTAL				12.84		2034										5.1		36.6											16	18				

DRAINAGE QUANTITIES
DQ-4

STATE OF CALIFORNIA - DEPARTMENT OF TRANSPORTATION
Caltrans HYDRAULICS

FUNCTIONAL SUPERVISOR: DAVE BHALLA

CALCULATED-DESIGNED BY: S. THAI
CHECKED BY: C. NGUYEN

REVISED BY
DATE REVISED

LAST REVISION 00-00-00
DATE PLOTTED => 03-MAY-2010
TIME PLOTTED => 12:56

NOTES: PIPE JOINTS ARE STANDARD
OR AS NOTED ON PLANS

(N) NOT A SEPARATE PAY ITEM,
FOR INFORMATION ONLY.

Caltrans Metric

Dist	COUNTY	ROUTE	KILOMETER POST TOTAL PROJECT	SHEET No.	TOTAL SHEETS
07	LA	5	50.8/58.0	192	869

REGISTERED CIVIL ENGINEER 07/07/08 DATE

5-3-10
PLANS APPROVAL DATE

REGISTERED PROFESSIONAL ENGINEER BALDEV K. BHALLA No. 34350 Exp. 09/30/11 CIVIL STATE OF CALIFORNIA

THE STATE OF CALIFORNIA OR ITS OFFICERS OR AGENTS SHALL NOT BE RESPONSIBLE FOR THE ACCURACY OR COMPLETENESS OF ELECTRONIC COPIES OF THIS PLAN SHEET.

DRAINAGE SHEET No.	DRAINAGE SYSTEM No.	DRAINAGE UNIT No.	H OR V	MINOR CONCRETE (MINOR STRUCTURE)	MINOR CONCRETE (CONCRETE DRAIN)	MISCELLANEOUS IRON AND STEEL	GSRD	ABANDON PIPELINE	JACKED 600 mm RCP (CLASS V)	450 mm REINFORCED CONCRETE PIPE	600 mm REINFORCED CONCRETE PIPE	900 mm REINFORCED CONCRETE PIPE	450 mm SLOTTED CORRUGATED STEEL PIPE (1.63 mm THICK)	450 mm CORRUGATED STEEL PIPE (1.63 mm THICK)	80 mm PLASTIC PIPE	300 mm PLASTIC PIPE	900 mm PRECAST CONC PIPE MANHOLE	REMOVE PIPE	REMOVE INLET	REMOVE CONCRETE	REMOVE ASPHALT CONCRETE	REMOVE CONCRETE CURB	ADJUST INLET	CAP INLET	ROCK SLOPE PROTECTION (FACING, METHOD B)	ROCK SLOPE PROTECTION FABRIC	DITCH EXCAVATION	SAND BACKFILL	(N) STEEL PLATE CLOSURE	(N) TYPE 450-9 FRAME AND GRATE	(N) TYPE 600-12 FRAME AND GRATE	(N) MAXIMUM COVER	DESCRIPTION	STATION
			m	m^3	m^3	kg	EA	EA	m	m	m	m	m	m	m	m	m	m	EA	m^3	m^2	m	EA	EA	m^3	m^2	m^3	m^3	EA	EA	EA	m		
2	7	a									45.0																					0.99	600 mm RCP	
		b	1.46	1.40		238																									2		GD-1 INLET	28.476 m L+ 515+40.000 ℄ Fwy
		c									49.1																					0.85	600 mm RCP	
		d	1.4	1.38		238																									2		GD-1 INLET	29.605 m L+ 515+90.000 ℄ Fwy
		e									49.1																					0.79	600 mm RCP	
		f	1.4	1.38		238																									2		GD-1 INLET	30.867 m L+ 516+40.000 ℄ Fwy
2	8	a	1.6	1.50		238																									2		GD-1 INLET	27.557 m L+ 514+94.084 ℄ Fwy
		b									8.2																					1.31	600 mm RCP	
		c	2.24	1.85		148																							1		1		TYPE G2 INLET	2.609 m L+ 514+94.084 ℄ Fwy
		d									2.3																					1.71	600 mm RCP	
		e									5.7																					2.45	600 mm RCP	
		f	4.41	3.22		148																									1		TYPE G2 INLET	24.271 m R+ 514+94.084 ℄ Fwy
2	9	a																	1														REMOVE INLET	17.98 m L+ 514+94.084 ℄ Fwy
		b																2.4															REMOVE 600 mm RCP	
		c																	1														REMOVE INLET	17.98 m L+ 514+97.641 ℄ Fwy
		d																2.4															REMOVE 600 mm RCP	
		e																	1														REMOVE INLET	17.98 m L+ 515+01.198 ℄ Fwy
		f																2.4															REMOVE 600 mm RCP	
		g																	1														REMOVE INLET	17.98 m L+ 515+04.755 ℄ Fwy
		h																	1														REMOVE INLET	17.980 R+ 514+94.084 ℄ Fwy
SHEET TOTAL				10.73		1248					159.4							7.2	5										1		10			

DRAINAGE QUANTITIES
DQ-5

STATE OF CALIFORNIA - DEPARTMENT OF TRANSPORTATION
Caltrans HYDRAULICS

FUNCTIONAL SUPERVISOR: DAVE BHALLA
CALCULATED-DESIGNED BY: S. THAI
CHECKED BY: C. NGUYEN
REVISED BY
DATE REVISED

LAST REVISION 00-00-00
DATE PLOTTED => 03-MAY-2010
TIME PLOTTED => 12:56

NOTES: PIPE JOINTS ARE STANDARD
OR AS NOTED ON PLANS

(N) NOT A SEPARATE PAY ITEM,
FOR INFORMATION ONLY.

Caltrans Metric

Dist	COUNTY	ROUTE	KILOMETER POST TOTAL PROJECT	SHEET No.	TOTAL SHEETS
07	LA	5	50.8/58.0	193	869

REGISTERED CIVIL ENGINEER 07/07/08 DATE

5-3-10
PLANS APPROVAL DATE

REGISTERED PROFESSIONAL ENGINEER BALDEV K. BHALLA No. 34350 Exp. 09/30/11 CIVIL STATE OF CALIFORNIA

THE STATE OF CALIFORNIA OR ITS OFFICERS OR AGENTS SHALL NOT BE RESPONSIBLE FOR THE ACCURACY OR COMPLETENESS OF ELECTRONIC COPIES OF THIS PLAN SHEET.

DRAINAGE SHEET No.	DRAINAGE SYSTEM No. (⬡)	DRAINAGE UNIT No. (◯)	H OR V (m)	MINOR CONCRETE (MINOR STRUCTURE) (m^3)	MINOR CONCRETE (CONCRETE DRAIN) (m^3)	MISCELLANEOUS IRON AND STEEL (kg)	GSRD (EA)	ABANDON PIPELINE (EA)	JACKED 600 mm RCP (CLASS V) (m)	450 mm REINFORCED CONCRETE PIPE (m)	600 mm REINFORCED CONCRETE PIPE (m)	900 mm REINFORCED CONCRETE PIPE (m)	450 mm SLOTTED CORRUGATED STEEL PIPE (1.63 mm THICK) (m)	450 mm CORRUGATED STEEL PIPE (1.63 mm THICK) (m)	80 mm PLASTIC PIPE (m)	300 mm PLASTIC PIPE (m)	900 mm PRECAST CONC PIPE MANHOLE (m)	REMOVE PIPE (m)	REMOVE INLET (EA)	REMOVE CONCRETE (m^3)	REMOVE ASPHALT CONCRETE (m^2)	REMOVE CONCRETE CURB (m)	ADJUST INLET (EA)	CAP INLET (EA)	ROCK SLOPE PROTECTION (FACING, METHOD B) (m^3)	ROCK SLOPE PROTECTION FABRIC (m^2)	DITCH EXCAVATION (m^3)	SAND BACKFILL (m^3)	(N) STEEL PLATE CLOSURE (EA)	(N) TYPE 450-9 FRAME AND GRATE (EA)	(N) TYPE 600-12 FRAME AND GRATE (EA)	(N) MAXIMUM COVER (m)	DESCRIPTION	STATION
2	9	i																2.4															REMOVE 600 mm RCP	
		j																	1														REMOVE INLET	514+97.641 ℄ Fwy
		k																62.8															REMOVE 450 mm SCSP	
		L																	1														REMOVE GI INLET	515+55.044 ℄ Fwy
		m																	1														REMOVE INLET	18.50 Rt 514+94.084 ℄ Fwy
		n																7.2															REMOVE PIPE	
2	10	a																	1														REMOVE INLET	17.98 m Lt 516+78.933 ℄ Fwy
		b																2.4															REMOVE 600 mm RCP	
		c																	1														REMOVE INLET	17.98 m Lt 516+82.460 ℄ Fwy
		d																2.4															REMOVE 600 mm RCP	
		e																	1														REMOVE INLET	17.98 m Lt 516+85.743 ℄ Fwy
		f																	1														REMOVE INLET	516+78.933 ℄ Fwy
3		g																2.4															REMOVE 600 mm RCP	
		h																	1														REMOVE INLET	516+882.490 ℄ Fwy
		i																9.1															REMOVE 450 mm SCSP	
		j																	1														REMOVE INLET	17.98 m Rt 516+78.933 ℄ Fwy
		k																19.6															REMOVE PIPE	
		L																3.8															REMOVE PIPE	
		m	1.46	1.55		238																								2			GD-1 INLET	30.661 m Lt 516+78.933 ℄ Fwy
		n									11.4																				0.95	600 mm RCP	
SHEET TOTAL				1.55		238					11.4							112.1	9											2				

DRAINAGE QUANTITIES
DQ-6

STATE OF CALIFORNIA - DEPARTMENT OF TRANSPORTATION
Caltrans HYDRAULICS

FUNCTIONAL SUPERVISOR: DAVE BHALLA
CALCULATED-DESIGNED BY: C. NGUYEN
CHECKED BY
REVISED BY: S. THAI
DATE REVISED

LAST REVISION 00-00-00
DATE PLOTTED => 03-MAY-2010
TIME PLOTTED => 12:56

NOTES: PIPE JOINTS ARE STANDARD
OR AS NOTED ON PLANS

(N) NOT A SEPARATE PAY ITEM,
FOR INFORMATION ONLY.

Caltrans Metric

Dist	COUNTY	ROUTE	KILOMETER POST TOTAL PROJECT	SHEET No.	TOTAL SHEETS
07	LA	5	50.8/58.0	194	869

REGISTERED CIVIL ENGINEER 07/07/08 DATE

5-3-10
PLANS APPROVAL DATE

REGISTERED PROFESSIONAL ENGINEER BALDEV K. BHALLA No. 34350 Exp. 09/30/11 CIVIL STATE OF CALIFORNIA

THE STATE OF CALIFORNIA OR ITS OFFICERS OR AGENTS SHALL NOT BE RESPONSIBLE FOR THE ACCURACY OR COMPLETENESS OF ELECTRONIC COPIES OF THIS PLAN SHEET.

DRAINAGE SHEET No.	DRAINAGE SYSTEM No.	DRAINAGE UNIT No.	H OR V	MINOR CONCRETE (MINOR STRUCTURE)	MINOR CONCRETE (CONCRETE DRAIN)	MISCELLANEOUS IRON AND STEEL	GSRD	ABANDON PIPELINE	JACKED 600 mm RCP (CLASS V)	450 mm REINFORCED CONCRETE PIPE	600 mm REINFORCED CONCRETE PIPE	900 mm REINFORCED CONCRETE PIPE	450 mm SLOTTED CORRUGATED STEEL PIPE (1.63 mm THICK)	450 mm CORRUGATED STEEL PIPE (1.63 mm THICK)	80 mm PLASTIC PIPE	300 mm PLASTIC PIPE	900 mm PRECAST CONC PIPE MANHOLE	REMOVE PIPE	REMOVE INLET	REMOVE CONCRETE	REMOVE ASPHALT CONCRETE	REMOVE CONCRETE CURB	ADJUST INLET	CAP INLET	ROCK SLOPE PROTECTION (FACING, METHOD B)	ROCK SLOPE PROTECTION FABRIC	DITCH EXCAVATION	SAND BACKFILL	(N) STEEL PLATE CLOSURE	(N) TYPE 450-9 FRAME AND GRATE	(N) TYPE 600-12 FRAME AND GRATE	(N) MAXIMUM COVER	DESCRIPTION	STATION
	⬡	○	m	m^3	m^3	kg	EA	EA	m	m	m	m	m	m	m	m	m	m	EA	m^3	m^2	m	EA	EA	m^3	m^2	m^3	m^3	EA	EA	EA	m		
3	10	o	2.05	1.77		148																							1		1		TYPE G2 INLET WITH STEEL PLATE CLOSURE	4.101 m Lt 516+78.933 ℄ Fwy
		p	1.38	2.34		208											1.38																MANHOLE No. 1	22.000m Rt 516+78.933 ℄ Fwy
		q									4.3																					2.23	600 mm RCP	
		r									56.0																					3.41	600 mm RCP	
		s	2.51	2.34		208											2.45																MANHOLE No. 1	22.867 m Rt 517+35.000 ℄ Fwy
		t									24.3																					3.25	600 mm RCP	
		u					1																										(GSRD) TYPE LINEAR LR-3-1220	
		v																							7.2	21.6							RSP (FACING, METHOD B)	
		w																									27						BIOFILTRATION SWALE	
		x		5.4																													TRANSITION No. 4	36.2 m Rt 516+80.9 - 36.2 m Rt 516+82.9 ℄ Fwy
		y									1.7																						600 mm RCP	
		z	1.98	2.34		208											0.30																MANHOLE No. 1	36.3 m Rt 516+78.8 ℄ Fwy
		z1									3.8																						600 mm RCP	
3	11	a																	1														REMOVE INLET	18.40 m Lt 518+98.456 ℄ Fwy
		b																5.0															REMOVE PIPE	
		c																	1														REMOVE INLET	18.40 m Lt 518+92.460 ℄ Fwy
		d																2.6															REMOVE PIPE	
		e																	1														REMOVE INLET	18.40 m Lt 518+88.903 ℄ Fwy
		f						1																				4.4					ABANDON PIPELINE	
SHEET TOTAL				14.19		772	1	1			90.1						4.13	7.6	3						7.2	21.6	27	4.4	1		1			

DRAINAGE QUANTITIES
DQ-7

STATE OF CALIFORNIA - DEPARTMENT OF TRANSPORTATION
Caltrans HYDRAULICS

FUNCTIONAL SUPERVISOR: DAVE BHALLA
CALCULATED-DESIGNED BY: S. THAI
CHECKED BY: C. NGUYEN
REVISED BY
DATE REVISED

LAST REVISION 00-00-00
DATE PLOTTED => 03-MAY-2010
TIME PLOTTED => 12:56

NOTES: PIPE JOINTS ARE STANDARD
OR AS NOTED ON PLANS

(N) NOT A SEPARATE PAY ITEM,
FOR INFORMATION ONLY.

Caltrans Metric

Dist	COUNTY	ROUTE	KILOMETER POST TOTAL PROJECT	SHEET No.	TOTAL SHEETS
07	LA	5	50.8/58.0	195	869

REGISTERED CIVIL ENGINEER 07/07/08 DATE

5-3-10
PLANS APPROVAL DATE

REGISTERED PROFESSIONAL ENGINEER BALDEV K. BHALLA No. 34350 Exp. 09/30/11 CIVIL STATE OF CALIFORNIA

THE STATE OF CALIFORNIA OR ITS OFFICERS OR AGENTS SHALL NOT BE RESPONSIBLE FOR THE ACCURACY OR COMPLETENESS OF ELECTRONIC COPIES OF THIS PLAN SHEET.

DRAINAGE SHEET No.	DRAINAGE SYSTEM No.	DRAINAGE UNIT No.	H OR V	MINOR CONCRETE (MINOR STRUCTURE)	MINOR CONCRETE (CONCRETE DRAIN)	MISCELLANEOUS IRON AND STEEL	GSRD	ABANDON PIPELINE	JACKED 600 mm RCP (CLASS V)	450 mm REINFORCED CONCRETE PIPE	600 mm REINFORCED CONCRETE PIPE	900 mm REINFORCED CONCRETE PIPE	450 mm SLOTTED CORRUGATED STEEL PIPE (1.63 mm THICK)	450 mm CORRUGATED STEEL PIPE (1.63 mm THICK)	80 mm PLASTIC PIPE	300 mm PLASTIC PIPE	900 mm PRECAST CONC PIPE MANHOLE	REMOVE PIPE	REMOVE INLET	REMOVE CONCRETE	REMOVE ASPHALT CONCRETE	REMOVE CONCRETE CURB	ADJUST INLET	CAP INLET	ROCK SLOPE PROTECTION (FACING, METHOD B)	ROCK SLOPE PROTECTION FABRIC	DITCH EXCAVATION	SAND BACKFILL	(N) STEEL PLATE CLOSURE	(N) TYPE 450-9 FRAME AND GRATE	(N) TYPE 600-12 FRAME AND GRATE	(N) MAXIMUM COVER	DESCRIPTION	STATION
			m	m^3	m^3	kg	EA	EA	m	m	m	m	m	m	m	m	m	m	EA	m^3	m^2	m	EA	EA	m^3	m^2	m^3	m^3	EA	EA	EA	m		
3	12	a									50.2																					0.85	600 mm RCP	
		b	1.4	1.33		148																									1		TYPE G2 INLET	32.135 m Lt 517+30.000 ℄ Fwy
		c									49.1																					0.85	600 mm RCP	
		d	1.4	1.33		148																									1		TYPE G2 INLET	33.625 m Lt 517+80.000 ℄ Fwy
		e									54.1																					0.85	600 mm RCP	
		f	1.4	1.33		148																									1		TYPE G2 INLET	36.703 m Lt 518+35.000 ℄ Fwy
3	13	a	1.40	1.33		148																									1		TYPE G2 INLET	28.872 m Rt 519+26.000 ℄ Fwy
		b									3.1																					0.80	600 mm RCP	
		c	1.62	1.54		238																									2		GD-1 INLET	28.872 m Rt 519+30.000 ℄ Fwy
		d									24.1																					0.80	600 mm RCP	
		e	2.5	2.96		238																									2		GD-1 INLET	28.691 m Rt 519+55.000 ℄ Fwy
		f												4.5																			450 mm CSP	
3	14	a	2.15	1.83		148																									1		TYPE G2 INLET	3.10 m Lt 518+88.903 ℄ Fwy
		b																2.9															REMOVE PIPE	
		c																	1														REMOVE INLET	518+88.903 ℄ Fwy
		d									5.9																					1.54	600 mm RCP	
		e																	1														REMOVE INLET	
		f																2.9															REMOVE PIPE	
		g																	1														REMOVE INLET	
SHEET TOTAL				11.65		1216					186.5			4.5				5.8	3												9			

DRAINAGE QUANTITIES
DQ-8

STATE OF CALIFORNIA - DEPARTMENT OF TRANSPORTATION
Caltrans HYDRAULICS

FUNCTIONAL SUPERVISOR: DAVE BHALLA
CALCULATED-DESIGNED BY: S. THAI
CHECKED BY: C. NGUYEN
REVISED BY
DATE REVISED

LAST REVISION 00-00-00
DATE PLOTTED => 03-MAY-2010
TIME PLOTTED => 12:56

NOTES: PIPE JOINTS ARE STANDARD
OR AS NOTED ON PLANS

(N) NOT A SEPARATE PAY ITEM,
FOR INFORMATION ONLY.

Caltrans Metric

Dist	COUNTY	ROUTE	KILOMETER POST TOTAL PROJECT	SHEET No.	TOTAL SHEETS
07	LA	5	50.8/58.0	196	869

REGISTERED CIVIL ENGINEER 07/07/08 DATE

5-3-10
PLANS APPROVAL DATE

REGISTERED PROFESSIONAL ENGINEER BALDEV K. BHALLA No. 34350 Exp. 09/30/11 CIVIL STATE OF CALIFORNIA

THE STATE OF CALIFORNIA OR ITS OFFICERS OR AGENTS SHALL NOT BE RESPONSIBLE FOR THE ACCURACY OR COMPLETENESS OF ELECTRONIC COPIES OF THIS PLAN SHEET.

DRAINAGE SHEET No.	DRAINAGE SYSTEM No.	DRAINAGE UNIT No.	H OR V	MINOR CONCRETE (MINOR STRUCTURE)	MINOR CONCRETE (CONCRETE DRAIN)	MISCELLANEOUS IRON AND STEEL	GSRD	ABANDON PIPELINE	JACKED 600 mm RCP (CLASS V)	450 mm REINFORCED CONCRETE PIPE	600 mm REINFORCED CONCRETE PIPE	900 mm REINFORCED CONCRETE PIPE	450 mm SLOTTED CORRUGATED STEEL PIPE (1.63 mm THICK)	450 mm CORRUGATED STEEL PIPE (1.63 mm THICK)	80 mm PLASTIC PIPE	300 mm PLASTIC PIPE	900 mm PRECAST CONC PIPE MANHOLE	REMOVE PIPE	REMOVE INLET	REMOVE CONCRETE	REMOVE ASPHALT CONCRETE	REMOVE CONCRETE CURB	ADJUST INLET	CAP INLET	ROCK SLOPE PROTECTION (FACING, METHOD B)	ROCK SLOPE PROTECTION FABRIC	DITCH EXCAVATION	SAND BACKFILL	STEEL PLATE CLOSURE (N)	TYPE 450-9 FRAME AND GRATE (N)	TYPE 600-12 FRAME AND GRATE (N)	MAXIMUM COVER (N)	DESCRIPTION	STATION
			m	m^3	m^3	kg	EA	EA	m	m	m	m	m	m	m	m	m	m	EA	m^3	m^2	m	EA	EA	m^3	m^2	m^3	m^3	EA	EA	EA	m		
3	14	h																5.1														REMOVE PIPE	
		i									6.4																				2.7	600 mm RCP	
		j	2.68	3.14		238																								2		GD-1 INLET	24.92 m Rt 518+88.903 ℄ Fwy
		k									2.8																				2.10	600 mm RCP	
		L	5.4	3.85		148																								1		TYPE G2 INLET	25.57 m Rt 518+92.400 ℄ Fwy
3	15	a	1.4	1.33		148																								1		TYPE G2 INLET	33.015 m Lt 519+53.700 ℄ Rte 5
		b									43.3																				4.3	600 mm RCP	
		c																		0.77												REMOVE HEADWALL	
		d																19.2														REMOVE PIPE	
		e																		0.77												REMOVE HEADWALL	
		f	1.7	1.51	0.99	148																								1		TYPE G2 INLET WITH CONC APRON	33.015 m Lt 519+53.700 ℄ Rte 5
		g							66.0																						6.92	JACKED 600 mm RCP (CLASS V)	
3	16	a																6.8														REMOVE PIPE	
		b																	1													REMOVE INLET	25.568 m Rt 519+50.473 ℄ Fwy
		c																7.7														REMOVE PIPE	
		d																	1													REMOVE INLET	18.285 m Rt 519+50.473 ℄ Fwy
		e																2.6														REMOVE PIPE	
SHEET TOTAL				9.82	0.99	682			66.0		52.5							41.4	2	1.54										5			

DRAINAGE QUANTITIES
DQ-9

STATE OF CALIFORNIA - DEPARTMENT OF TRANSPORTATION
Caltrans HYDRAULICS

FUNCTIONAL SUPERVISOR: DAVE BHALLA
CALCULATED-DESIGNED BY: S. THAI
CHECKED BY: C. NGUYEN
REVISED BY
DATE REVISED

LAST REVISION 00-00-00
DATE PLOTTED => 03-MAY-2010
TIME PLOTTED => 12:56

NOTES: PIPE JOINTS ARE STANDARD
OR AS NOTED ON PLANS

(N) NOT A SEPARATE PAY ITEM,
FOR INFORMATION ONLY.

Caltrans Metric

Dist	COUNTY	ROUTE	KILOMETER POST TOTAL PROJECT	SHEET No.	TOTAL SHEETS
07	LA	5	50.8/58.0	197	869

REGISTERED CIVIL ENGINEER 07/07/08 DATE

5-3-10
PLANS APPROVAL DATE

REGISTERED PROFESSIONAL ENGINEER BALDEV K. BHALLA No. 34350 Exp. 09/30/11 CIVIL STATE OF CALIFORNIA

THE STATE OF CALIFORNIA OR ITS OFFICERS OR AGENTS SHALL NOT BE RESPONSIBLE FOR THE ACCURACY OR COMPLETENESS OF ELECTRONIC COPIES OF THIS PLAN SHEET.

DRAINAGE SHEET No.	DRAINAGE SYSTEM No.	DRAINAGE UNIT No.	H OR V	MINOR CONCRETE (MINOR STRUCTURE)	MINOR CONCRETE (CONCRETE DRAIN)	MISCELLANEOUS IRON AND STEEL	GSRD	ABANDON PIPELINE	JACKED 600 mm RCP (CLASS V)	450 mm REINFORCED CONCRETE PIPE	600 mm REINFORCED CONCRETE PIPE	900 mm REINFORCED CONCRETE PIPE	450 mm SLOTTED CORRUGATED STEEL PIPE (1.63 mm THICK)	450 mm CORRUGATED STEEL PIPE (1.63 mm THICK)	80 mm PLASTIC PIPE	300 mm PLASTIC PIPE	900 mm PRECAST CONC PIPE MANHOLE	REMOVE PIPE	REMOVE INLET	REMOVE CONCRETE	REMOVE ASPHALT CONCRETE	REMOVE CONCRETE CURB	ADJUST INLET	CAP INLET	ROCK SLOPE PROTECTION (FACING, METHOD B)	ROCK SLOPE PROTECTION FABRIC	DITCH EXCAVATION	SAND BACKFILL	(N) STEEL PLATE CLOSURE	(N) TYPE 450-9 FRAME AND GRATE	(N) TYPE 600-12 FRAME AND GRATE	(N) MAXIMUM COVER	DESCRIPTION	STATION
	⬡	○	m	m^3	m^3	kg	EA	EA	m	m	m	m	m	m	m	m	m	m	EA	m^3	m^2	m	EA	EA	m^3	m^2	m^3	m^3	EA	EA	EA	m		
3	16	f																	1														REMOVE INLET	25.60 m R† 519+54.030 ℄ Fwy
		g																5.0															REMOVE PIPE	
		h																	1														REMOVE INLET	18.40 m R† 519+60.025 ℄ Fwy
		i	1.5	1.90		238																								2			GD-1 INLET	32.740 m R† 519+50.473 ℄ Fwy
		j												5.4																			450 mm CSP	
		k									31.4																				0.8		600 mm RCP	
		L	1.5	1.45		238																								2			GD-1 INLET	22.35 m R† 519+82.000 ℄ Fwy
		m									2.1																				0.8		600 mm RCP	
		n	1.4	1.33		148																								1			TYPE G2 INLET	22.35 m R† 519+85.000 ℄ Fwy
		o									14.1																				0.8		600 mm RCP	
		p	1.4	1.38		238																								2			GD-1 INLET	22.35 m R† 520+00.000 ℄ Fwy
4	17	a	1.21	1.22		238																								2			GD-1 INLET	28.25 m L† 520+70.000 ℄ Fwy
		b									24.1																				0.95		600 mm RCP	
		c	1.56	1.41		238																								2			GD-1 INLET	28.24 m L† 520+95.000 ℄ Fwy
		d									34.1																				1.00		600 mm RCP	
		e	1.61	1.51		238																								2			GD-1 INLET	28.10 m L† 521+30.000 ℄ Fwy
		f									49.1																				1.00		600 mm RCP	
		g	1.60	1.50		238																								2			GD-1 INLET	27.93 m L† 521+80.000 ℄ Fwy
		h									49.1																				1.00		600 mm RCP	
		i	1.60	1.50		238																								2			GD-1 INLET	27.75 m L† 522+30.000 ℄ Fwy
		j									49.1																				1.00		600 mm RCP	
SHEET TOTAL				13.20		2052					253.1			5.4				5.0	2											17				

DRAINAGE QUANTITIES
DQ-10

STATE OF CALIFORNIA - DEPARTMENT OF TRANSPORTATION
Caltrans HYDRAULICS

FUNCTIONAL SUPERVISOR: DAVE BHALLA
CALCULATED-DESIGNED BY: S. THAI
CHECKED BY: C. NGUYEN
REVISED BY
DATE REVISED

LAST REVISION 00-00-00
DATE PLOTTED => 03-MAY-2010
TIME PLOTTED => 12:56

NOTES: PIPE JOINTS ARE STANDARD
OR AS NOTED ON PLANS

(N) NOT A SEPARATE PAY ITEM,
FOR INFORMATION ONLY.

Caltrans Metric

Dist	COUNTY	ROUTE	KILOMETER POST TOTAL PROJECT	SHEET No.	TOTAL SHEETS
07	LA	5	50.8/58.0	198	869

REGISTERED CIVIL ENGINEER 07/07/08 DATE

5-3-10
PLANS APPROVAL DATE

REGISTERED PROFESSIONAL ENGINEER BALDEV K. BHALLA No. 34350 Exp. 09/30/11 CIVIL STATE OF CALIFORNIA

THE STATE OF CALIFORNIA OR ITS OFFICERS OR AGENTS SHALL NOT BE RESPONSIBLE FOR THE ACCURACY OR COMPLETENESS OF ELECTRONIC COPIES OF THIS PLAN SHEET.

DRAINAGE SHEET NO	DRAINAGE SYSTEM NO (⬡)	DRAINAGE UNIT NO (◯)	H OR V (m)	MINOR CONCRETE (MINOR STRUCTURE) (m^3)	MINOR CONCRETE (CONCRETE DRAIN) (m^3)	MISCELLANEOUS IRON AND STEEL (kg)	GSRD (EA)	ABANDON PIPELINE (EA)	JACKED 600 mm RCP (CLASS V) (m)	450 mm REINFORCED CONCRETE PIPE (m)	600 mm REINFORCED CONCRETE PIPE (m)	900 mm REINFORCED CONCRETE PIPE (m)	450 mm SLOTTED CORRUGATED STEEL PIPE (1.63 mm THICK) (m)	450 mm CORRUGATED STEEL PIPE (1.63 mm THICK) (m)	80 mm PLASTIC PIPE (m)	300 mm PLASTIC PIPE (m)	900 mm PRECAST CONC PIPE MANHOLE (m)	REMOVE PIPE (m)	REMOVE INLET (EA)	REMOVE CONCRETE (m^3)	REMOVE ASPHALT CONCRETE (m^2)	REMOVE CONCRETE CURB (m)	ADJUST INLET (EA)	CAP INLET (EA)	ROCK SLOPE PROTECTION (FACING, METHOD B) (m^3)	ROCK SLOPE PROTECTION FABRIC (m^2)	DITCH EXCAVATION (m^3)	SAND BACKFILL (m^3)	(N) STEEL PLATE CLOSURE (EA)	(N) TYPE 450-9 FRAME AND GRATE (EA)	(N) TYPE 600-12 FRAME AND GRATE (EA)	(N) MAXIMUM COVER (m)	DESCRIPTION	STATION
4	17	k	1.57	1.48		238																									2		GD-1 INLET	27.56m L+ 522+80.000 ℄ Fwy
		l									49.1																					1.00	600 mm RCP	
		m	1.57	1.48		238																									2		GD-1 INLET	27.56m L+ 523+30.000 ℄ Fwy
		n									68.7																					0.96	600 mm RCP	
		o	1.56	1.45		148																									1		TYPE G2 INLET	6.60m L+ 523+98.000 ₤ RAMP
		p									5.1																					0.84	600 mm RCP	
		q	1.49	1.45		238																									2		GD-1 INLET	6.60m L+ 524+04.000 ₤ RAMP
		r									34.1																					0.79	600 mm RCP	
		s	1.40	1.38		238																									2		GD-1 INLET	6.60m L+ 524+39.000 ₤ RAMP
		t									34.5																					0.79	600 mm RCP	
		u	1.40	1.38		238																									2		GD-1 INLET	30.46m L+ 524+75.000 ℄ Fwy
		v									34.1																					0.79	600 mm RCP	
		w	1.3	1.28		238																									2		GD-1 INLET	30.33m L+ 525+10.000 ℄ Fwy
4	18	a													6.5																		80 mm PLASTIC PIPE	
		b													6.5																		80 mm PLASTIC PIPE	
		c													6.5																		80 mm PLASTIC PIPE	
		d													6.5																		80 mm PLASTIC PIPE	
		e													6.5																		80 mm PLASTIC PIPE	
		f													6.5																		80 mm PLASTIC PIPE	
		g													6.5																		80 mm PLASTIC PIPE	
		h													6.5																		80 mm PLASTIC PIPE	
SHEET TOTAL				9.90		1576					225.6				52.0																13			

DRAINAGE QUANTITIES
DQ-11

STATE OF CALIFORNIA - DEPARTMENT OF TRANSPORTATION
Caltrans HYDRAULICS

FUNCTIONAL SUPERVISOR: DAVE BHALLA
CALCULATED-DESIGNED BY: S. THAI
CHECKED BY: C. NGUYEN
REVISED BY
DATE REVISED

LAST REVISION 00-00-00
DATE PLOTTED => 03-MAY-2010
TIME PLOTTED => 12:57

NOTES: PIPE JOINTS ARE STANDARD
OR AS NOTED ON PLANS

(N) NOT A SEPARATE PAY ITEM,
FOR INFORMATION ONLY.

Caltrans Metric

Dist	COUNTY	ROUTE	KILOMETER POST TOTAL PROJECT	SHEET No.	TOTAL SHEETS
07	LA	5	50.8/58.0	199	869

REGISTERED CIVIL ENGINEER 07/07/08 DATE

5-3-10
PLANS APPROVAL DATE

REGISTERED PROFESSIONAL ENGINEER BALDEV K. BHALLA No. 34350 Exp. 09/30/11 CIVIL STATE OF CALIFORNIA

THE STATE OF CALIFORNIA OR ITS OFFICERS OR AGENTS SHALL NOT BE RESPONSIBLE FOR THE ACCURACY OR COMPLETENESS OF ELECTRONIC COPIES OF THIS PLAN SHEET.

DRAINAGE SHEET NO	DRAINAGE SYSTEM NO ⬡	DRAINAGE UNIT NO ○	H OR V (m)	MINOR CONCRETE (MINOR STRUCTURE) (m^3)	MINOR CONCRETE (CONCRETE DRAIN) (m^3)	MISCELLANEOUS IRON AND STEEL (kg)	GSRD (EA)	ABANDON PIPELINE (EA)	JACKED 600 mm RCP (CLASS V) (m)	450 mm REINFORCED CONCRETE PIPE (m)	600 mm REINFORCED CONCRETE PIPE (m)	900 mm REINFORCED CONCRETE PIPE (m)	450 mm SLOTTED CORRUGATED STEEL PIPE (1.63 mm THICK) (m)	450 mm CORRUGATED STEEL PIPE (1.63 mm THICK) (m)	80 mm PLASTIC PIPE (m)	300 mm PLASTIC PIPE (m)	900 mm PRECAST CONC PIPE MANHOLE (m)	REMOVE PIPE (m)	REMOVE INLET (EA)	REMOVE CONCRETE (m^3)	REMOVE ASPHALT CONCRETE (m^2)	REMOVE CONCRETE CURB (m)	ADJUST INLET (EA)	CAP INLET (EA)	ROCK SLOPE PROTECTION (FACING, METHOD B) (m^3)	ROCK SLOPE PROTECTION FABRIC (m^2)	DITCH EXCAVATION (m^3)	SAND BACKFILL (m^3)	(N) STEEL PLATE CLOSURE (EA)	(N) TYPE 450-9 FRAME AND GRATE (EA)	(N) TYPE 600-12 FRAME AND GRATE (EA)	(N) MAXIMUM COVER (m)	DESCRIPTION	STATION
4	19	a																	1														REMOVE INLET	17.98m Lt 520+93.625 ℄ Fwy
		b																2.4															REMOVE 600 mm RCP	
		c																	1														REMOVE INLET	17.98m Lt 520+97.182 ℄ Fwy
		d																2.4															REMOVE 600 mm RCP	
		e																	1														REMOVE INLET	17.98m Lt 521+00.739 ℄ Fwy
		f																	1														REMOVE INLET	17.98m Rt 521+33.252 ℄ Fwy
		g																2.4															REMOVE 600 mm RCP	
		h																	1														REMOVE INLET	17.98m Rt 521+36.809 ℄ Fwy
		i																2.4															REMOVE 600 mm RCP	
		j																	1														REMOVE INLET	17.98m Rt 521+40.366 ℄ Fwy
		k																6.5															REMOVE 600 mm RCP	
		L									11.1																					0.95	600 mm RCP	
		m	2.49	2.02		148																							1		1		TYPE G2 INLET	1.55m Lt 521+10.000 ℄ Fwy
		n																2.4															REMOVE 600 mm RCP	
		o																	1														REMOVE EXIST INLET	521+11.407 Fwy ℄
		p																3.1															REMOVE 600 mm RCP	
		q									5.9																					1.84	600 mm RCP	
		r									6.4																					1.98	600 mm RCP	
SHEET TOTAL				2.02		148					23.4							21.6	7										1		1			

DRAINAGE QUANTITIES
DQ-12

STATE OF CALIFORNIA - DEPARTMENT OF TRANSPORTATION
Caltrans HYDRAULICS

FUNCTIONAL SUPERVISOR: DAVE BHALLA
CALCULATED-DESIGNED BY: S. THAI
CHECKED BY: C. NGUYEN
REVISED BY
DATE REVISED

LAST REVISION 00-00-00
DATE PLOTTED => 03-MAY-2010
TIME PLOTTED => 12:57

NOTES: PIPE JOINTS ARE STANDARD
OR AS NOTED ON PLANS

(N) NOT A SEPARATE PAY ITEM,
FOR INFORMATION ONLY.

Caltrans Metric

Dist	COUNTY	ROUTE	KILOMETER POST TOTAL PROJECT	SHEET No.	TOTAL SHEETS
07	LA	5	50.8/58.0	200	869

REGISTERED CIVIL ENGINEER 07/07/08 DATE

5-3-10
PLANS APPROVAL DATE

REGISTERED PROFESSIONAL ENGINEER BALDEV K. BHALLA No. 34350 Exp. 09/30/11 CIVIL STATE OF CALIFORNIA

THE STATE OF CALIFORNIA OR ITS OFFICERS OR AGENTS SHALL NOT BE RESPONSIBLE FOR THE ACCURACY OR COMPLETENESS OF ELECTRONIC COPIES OF THIS PLAN SHEET.

DRAINAGE SHEET NO	DRAINAGE SYSTEM NO (⬡)	DRAINAGE UNIT NO (◯)	H OR V (m)	MINOR CONCRETE (MINOR STRUCTURE) (m^3)	MINOR CONCRETE (CONCRETE DRAIN) (m^3)	MISCELLANEOUS IRON AND STEEL (kg)	GSRD (EA)	ABANDON PIPELINE (EA)	JACKED 600 mm RCP (CLASS V) (m)	450 mm REINFORCED CONCRETE PIPE (m)	600 mm REINFORCED CONCRETE PIPE (m)	900 mm REINFORCED CONCRETE PIPE (m)	450 mm SLOTTED CORRUGATED STEEL PIPE (1.63 mm THICK) (m)	450 mm CORRUGATED STEEL PIPE (1.63 mm THICK) (m)	80 mm PLASTIC PIPE (m)	300 mm PLASTIC PIPE (m)	900 mm PRECAST CONC PIPE MANHOLE (m)	REMOVE PIPE (m)	REMOVE INLET (EA)	REMOVE CONCRETE (m^3)	REMOVE ASPHALT CONCRETE (m^2)	REMOVE CONCRETE CURB (m)	ADJUST INLET (EA)	CAP INLET (EA)	ROCK SLOPE PROTECTION (FACING, METHOD B) (m^3)	ROCK SLOPE PROTECTION FABRIC (m^2)	DITCH EXCAVATION (m^3)	SAND BACKFILL (m^3)	(N) STEEL PLATE CLOSURE (EA)	(N) TYPE 450-9 FRAME AND GRATE (EA)	(N) TYPE 600-12 FRAME AND GRATE (EA)	(N) MAXIMUM COVER (m)	DESCRIPTION	STATION
4	20	a	1.4	1.33		148																									1		TYPE G2 INLET	22.86m R† 521+20.000 ℄ Fwy
		b								17.0																						0.95	450 mm RCP	
		c	2.59	2.97		238																									2		GD-1 INLET	22.92m R† 521+37.874 ℄ Fwy
		d									6.64																					3.20	600 mm RCP	
		e	3.8	4.08		238																									2		GD-1 INLET	23.28m R† 521+45.418 ℄ Fwy
		f									33.7																					1.00	600 mm RCP	
		g	1.4	1.81		238																									2		GD-1 INLET	23.15m R† 521+80.000 ℄ Fwy
4	21	a																					1										ADJUST INLET TO GRADE	9.97 m R† 521+63.9 ⅊ WOLDWY3
		b																45.0															REMOVE PIPE	
		c	1.4	0.97		148																									1		TYPE G1 INLET	0.60 m R† 521+30.0 ⅊ HOLDWY3
		d									23.1																					0.8	600 mm RCP	
		e	2.13	1.40		148																									1		TYPE G2 INLET	0.60 m R† 521+54.0 ⅊ HOLDWY3
		f									25.1																					0.8	600 mm RCP	
		g											27.0																				450 mm SCSP	
		h	2.4	1.52		148																									1		TYPE G1 INLET	0.60 m R† 521+80.0 ⅊ HOLDWY3
		i									29.1																					0.8	600 mm RCP	
		j											27.0																				450 mm SCSP	
		k	1.4	0.97		148																									1		TYPE G1 INLET	0.60 m R† 522+10.0 ⅊ HOLDWY3
		l									29.1																					0.8	600 mm RCP	
		m											27.0																				450 mm SCSP	
SHEET TOTAL				15.05		1454				17.0	146.7		81.0					45.0					1								11			

DRAINAGE QUANTITIES
DQ-13

STATE OF CALIFORNIA - DEPARTMENT OF TRANSPORTATION
Caltrans HYDRAULICS

FUNCTIONAL SUPERVISOR: DAVE BHALLA
CALCULATED-DESIGNED BY: S. THAI
CHECKED BY: C. NGUYEN
REVISED BY
DATE REVISED

LAST REVISION 00-00-00
DATE PLOTTED => 03-MAY-2010
TIME PLOTTED => 12:57