DIST	COUNTY	ROUTE	KILOMETER POST TOTAL PROJECT	SHEET No	TOTAL SHEETS
07	LA	5	42.8/47.3	801	1073

Andrew Rittenhouse 12-05-08
REGISTERED CIVIL ENGINEER DATE

6-8-09
PLANS APPROVAL DATE

REGISTERED PROFESSIONAL ENGINEER Andrew P. Rittenhouse No. 61006 Exp. 12-31-10 CIVIL STATE OF CALIFORNIA

The State of California or its officers or agents shall not be responsible for the accuracy or completeness of electronic copies of this plan sheet.

Notes:

1. For "View C1-C1", "View D1-D1", "Section E1-E1", "Section F1-F1" and "Section G1-G1" see "ABUTMENT DETAILS NO. 14" sheet.
2. For "Section N1-N1", "Section P1-P1" and "Section Q1-Q1" see "ABUTMENT DETAILS NO. 16" sheet.
3. For median widen construction details see "ABUTMENT 1 LAYOUT NO. 3" sheet.
4. End casing at 1.5 m past Structure Approach. For Utility details not shown, see "MISCELLANEOUS DETAILS NO. 23" sheet.
5. For "Pipe Anchor Type 1" details not shown see H9
6. For "Footing Plan Abutment 1 Left Widen" detail see "ABUTMENT DETAILS NO. 17" sheet.

Legend:

- Indicates Bridge Removal (Portion)
- Indicates existing structure
- * Retain existing backwall horizontal reinforcement
- ** Retain existing footing longitudinal reinforcement

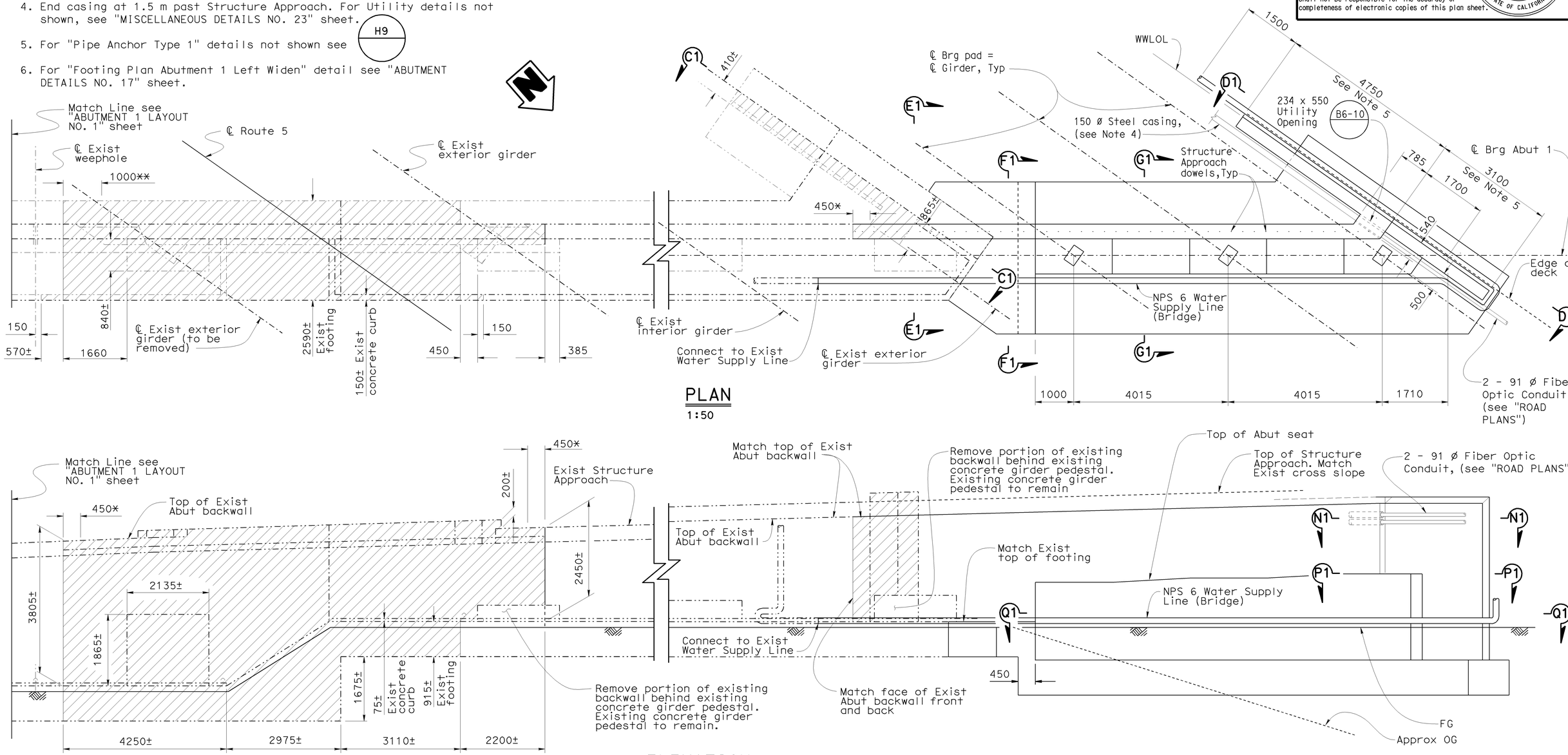

PLAN
1:50

ELEVATION
1:50

NOTE:
THE CONTRACTOR SHALL VERIFY ALL CONTROLLING FIELD DIMENSIONS BEFORE ORDERING OR FABRICATING ANY MATERIAL.

MEDIAN WIDEN (REMOVAL)

LEFT WIDEN

Caltrans Metric

	BY	CHECKED
DESIGN	Ulysses Smpardos	F. Feng/C. Chan
DETAILS	Steven Schenck	F. Feng/C. Chan
QUANTITIES	E. Hall	R. Odell

STATE OF CALIFORNIA
DEPARTMENT OF TRANSPORTATION

DIVISION OF ENGINEERING SERVICES
STRUCTURE DESIGN
DESIGN BRANCH 15

BRIDGE NO. 53-1085
KILOMETER POST 46.1

PROVIDENCIA AVENUE OH (WIDEN)
ABUTMENT 1 LAYOUT NO. 2

ALL DIMENSIONS ARE IN MILLIMETERS UNLESS OTHERWISE SHOWN

ORIGINAL SCALE IN MILLIMETERS FOR REDUCED PLANS 0 10 20 30 40 50 60 70 80 90 100

CU 07
EA 121841

DISREGARD PRINTS BEARING EARLIER REVISION DATES

REVISION DATES 7-02-08 9-02-08 10-8-08 11-18-08 11-29-08 1-12-09 1-23-09 2-11-09 2-19-09

SHEET 12 OF 152

FILE => 53-1085-g-a21-lo2.dgn

STRUCTURES DESIGN DETAIL SHEET (METRIC) (REV.03-17-04)

USERNAME => trlim DATE PLOTTED => 12-JUN-2009 TIME PLOTTED => 15:19

DIST	COUNTY	ROUTE	KILOMETER POST TOTAL PROJECT	SHEET No	TOTAL SHEETS
07	LA	5	42.8/47.3	802	1073

Andrew P. Rittenhouse 12-05-08
REGISTERED CIVIL ENGINEER DATE

6-8-09
PLANS APPROVAL DATE

The State of California or its officers or agents shall not be responsible for the accuracy or completeness of electronic copies of this plan sheet.

REGISTERED PROFESSIONAL ENGINEER
Andrew P. Rittenhouse
No. 61006
Exp. 12-31-10
CIVIL
STATE OF CALIFORNIA

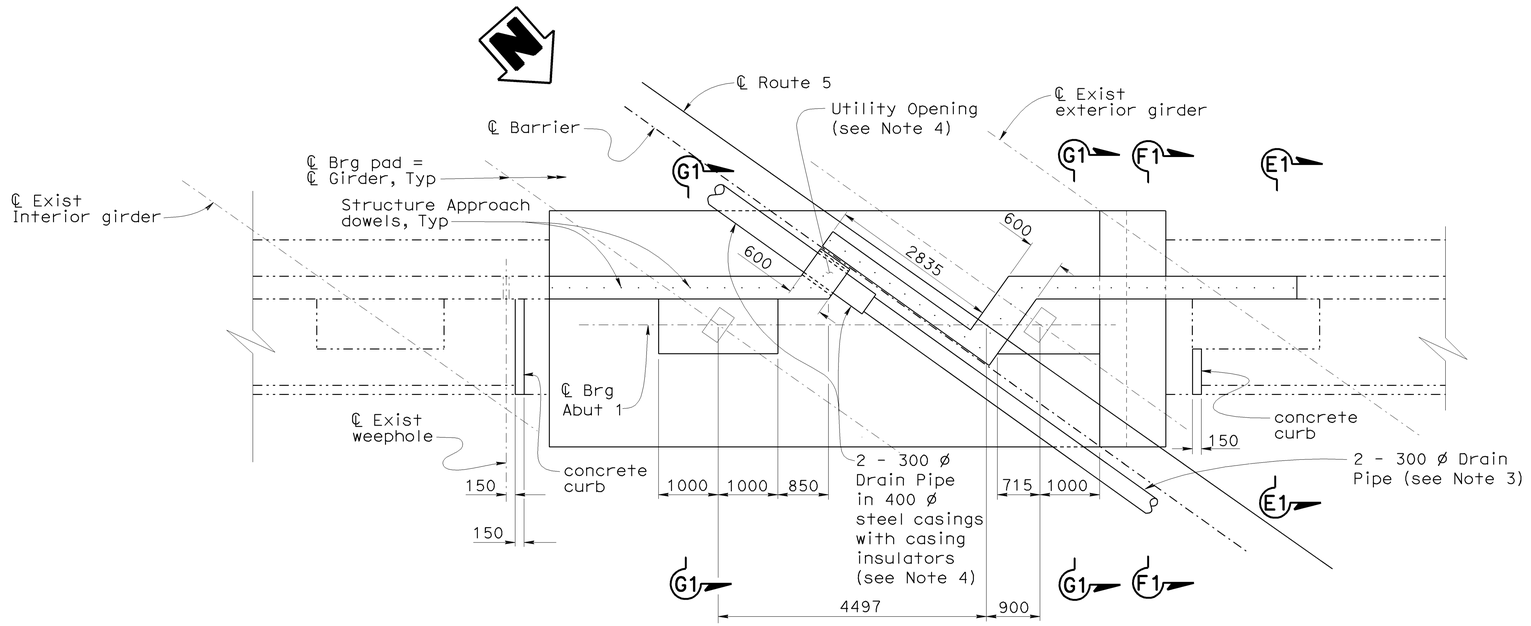

PLAN
1:50

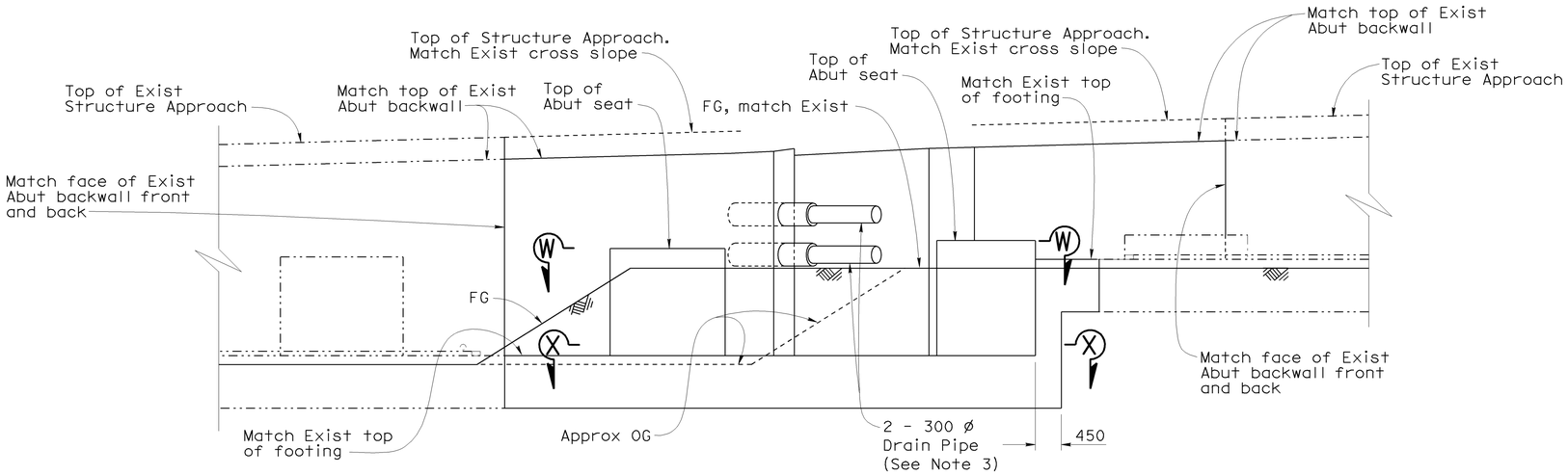

MEDIAN WIDEN

ELEVATION
1:50

NOTE:
THE CONTRACTOR SHALL VERIFY ALL CONTROLLING FIELD DIMENSIONS BEFORE ORDERING OR FABRICATING ANY MATERIAL.

Notes:

1. For "Section E1-E1", "Section F1-F1" and "Section G1-G1" see "ABUTMENT DETAILS NO. 14" sheet.
2. For "Section W-W" and "Section X-X" see "ABUTMENT DETAILS NO. 11" sheet.
3. See "DECK DRAINAGE LAYOUT" sheet for drain pipe location.
4. See "DECK DRAIN DETAILS NO. 3" sheet for details. End casing at 1.5 m past Structure Approach.
5. For "Footing Plan Abutment 1 Median Widen" detail see "ABUTMENT DETAILS NO. 13" sheet.

Legend:

—·—·— - Indicates existing structure

	BY	CHECKED
DESIGN	Ulysses Smpardos	F. Feng/C. Chan
DETAILS	Steven Schenck	F. Feng/C. Chan
QUANTITIES	E. Hall	R. Odell

STATE OF CALIFORNIA
DEPARTMENT OF TRANSPORTATION

DIVISION OF ENGINEERING SERVICES
STRUCTURE DESIGN
DESIGN BRANCH 15

CU 07
EA 121841

BRIDGE NO. 53-1085
KILOMETER POST 46.1

PROVIDENCIA AVENUE OH (WIDEN)
ABUTMENT 1 LAYOUT NO. 3

ALL DIMENSIONS ARE IN MILLIMETERS UNLESS OTHERWISE SHOWN

ORIGINAL SCALE IN MILLIMETERS FOR REDUCED PLANS 0 10 20 30 40 50 60 70 80 90 100

DISREGARD PRINTS BEARING EARLIER REVISION DATES →

REVISION DATES: 2-20-08 | 7-31-08 | 10-31-08 | 11-14-08 | 1-15-09 | 1-23-09 | 2-13-09 | 2-18-09 | 5-6-09

SHEET 13 OF 152

STRUCTURES DESIGN DETAIL SHEET (METRIC) (REV.03-17-04)

FILE => 53-1085-g-a21-lo3.dgn

USERNAME => trl1mm DATE PLOTTED => 12-JUN-2009 TIME PLOTTED => 15:19

Notes:

1. For "Section E1-E1", "Section F1-F1" and "Section G1-G1" see "ABUTMENT DETAILS NO. 14" sheet.
2. For "View U1-U1" and "View V1-V1" see "ABUTMENT DETAILS NO. 19" sheet.
3. For "Section Y1-Y1", "Section Z1-Z1" and "Section A2-A2" see "ABUTMENT DETAILS NO. 20" sheet.
4. For median widen construction details see "ABUTMENT 9 LAYOUT NO. 3" sheet.
5. End casing at 1.5 m past Structure Approach. For utility information not shown, see "MISCELLANEOUS DETAILS NO. 23" sheet.
6. For "Pipe Anchor Type 1" details not shown see H9
7. For "Footing Plan Abutment 9 Left Widen" detail see "ABUTMENT DETAILS NO. 22" sheet.

Legend:

- Indicates Bridge Removal (Portion)
- Indicates existing structure
- * Retain existing backwall horizontal reinforcement
- ** Retain existing footing longitudinal reinforcement
- *** Dimension measured along WWLOL

DIST	COUNTY	ROUTE	KILOMETER POST TOTAL PROJECT	SHEET No	TOTAL SHEETS
07	LA	5	42.8/47.3	803	1073

Andrew P. Rittenhouse 12-05-08
REGISTERED CIVIL ENGINEER DATE

6-8-09
PLANS APPROVAL DATE

REGISTERED PROFESSIONAL ENGINEER Andrew P. Rittenhouse No. 61006 Exp. 12-31-10 CIVIL STATE OF CALIFORNIA

The State of California or its officers or agents shall not be responsible for the accuracy or completeness of electronic copies of this plan sheet.

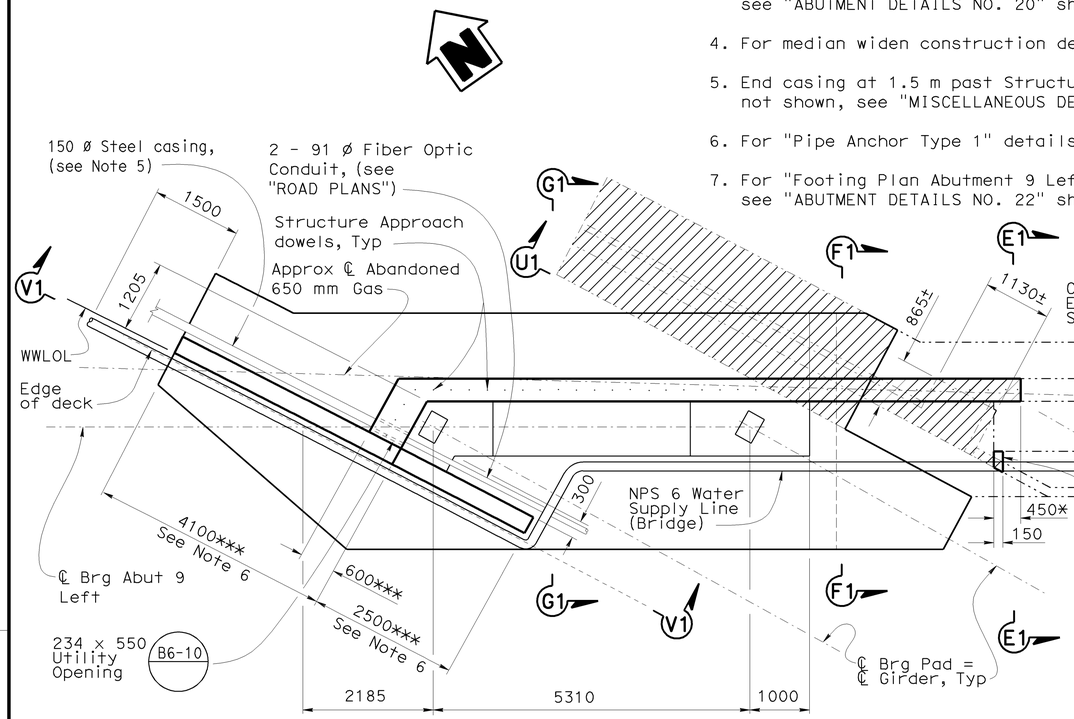

PLAN
1:50

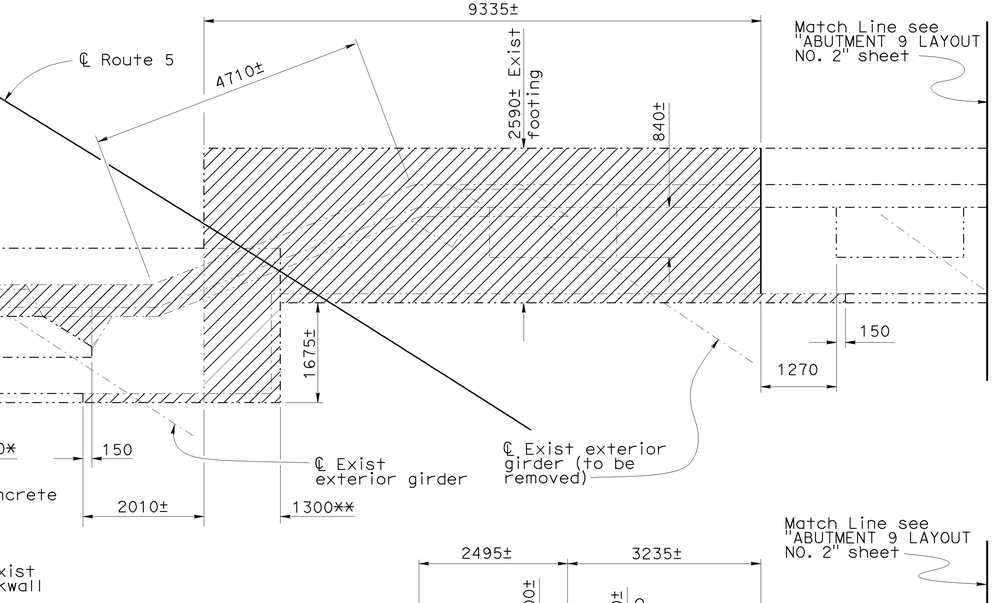

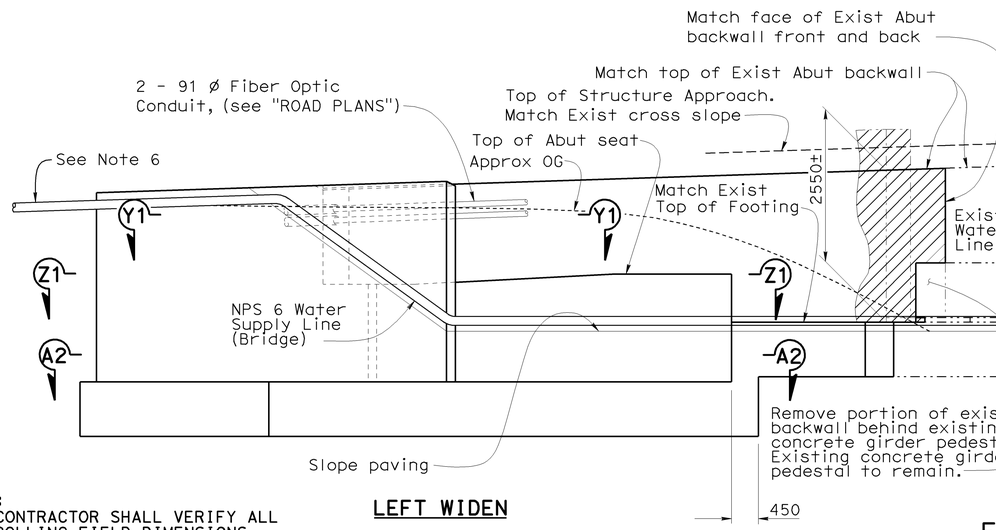

LEFT WIDEN

ELEVATION
1:50

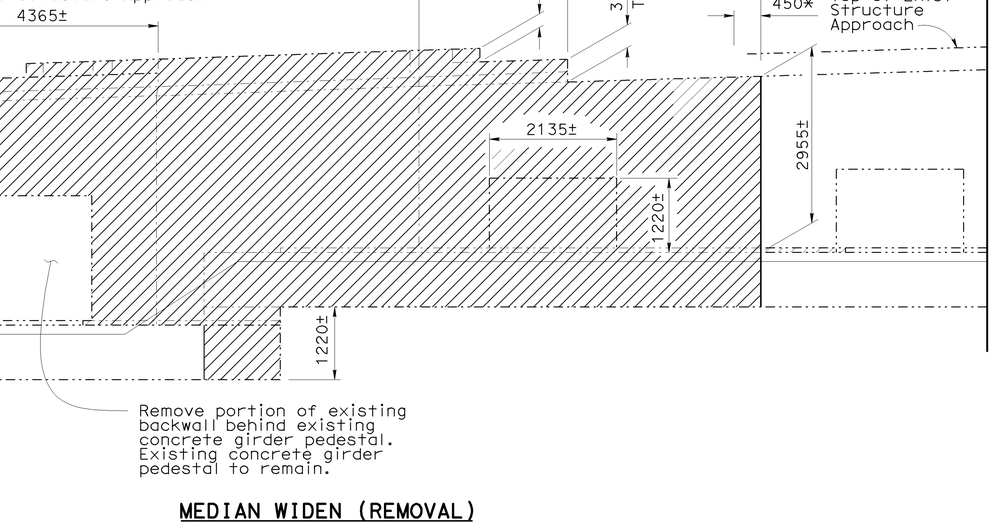

MEDIAN WIDEN (REMOVAL)

NOTE:
THE CONTRACTOR SHALL VERIFY ALL CONTROLLING FIELD DIMENSIONS BEFORE ORDERING OR FABRICATING ANY MATERIAL.

	BY	CHECKED
DESIGN	Ulysses Smpardos	F. Feng/C. Chan
DETAILS	Steven Schenck	F. Feng/C. Chan
QUANTITIES	E. Hall	R. Odell

STATE OF CALIFORNIA
DEPARTMENT OF TRANSPORTATION

DIVISION OF ENGINEERING SERVICES
STRUCTURE DESIGN
DESIGN BRANCH 15

BRIDGE NO. 53-1085
KILOMETER POST 46.1

PROVIDENCIA AVENUE OH (WIDEN)
ABUTMENT 9 LAYOUT NO. 1

ALL DIMENSIONS ARE IN MILLIMETERS UNLESS OTHERWISE SHOWN

ORIGINAL SCALE IN MILLIMETERS FOR REDUCED PLANS 0 10 20 30 40 50 60 70 80 90 100

CU 07
EA 121841

FILE => 53-1085-g-a21-lo4.dgn

DISREGARD PRINTS BEARING EARLIER REVISION DATES →

REVISION DATES: 2-19-09 | 2-19-09 | 2-19-09 | 10-30-08 | 11-14-08 | 11-14-08 | 11-14-08 | 11-14-08 | 11-14-08 | 1-1-09

SHEET 14 OF 152

STRUCTURES DESIGN DETAIL SHEET (METRIC) (REV.03-17-04)

DATE PLOTTED => 12-JUN-2009 TIME PLOTTED => 15:19
USERNAME => tfrim

Notes:

1. For "Section A-A" and "Section B-B" see "ABUTMENT DETAILS NO. 1" sheet.
2. For "View K2-K2", "View L2-L2 and "View M2-M2" see "ABUTMENT DETAILS NO. 26" sheet.
3. For "Section Q2-Q2" and "Section R2-R2" see "ABUTMENT DETAILS NO. 27" sheet.
4. For "Section S2-S2" and "Section T2-T2" see "ABUTMENT DETAILS NO. 28" sheet.
5. For "Section V2-V2", "Section W2-W2" and "Section X2-X2" see "ABUTMENT DETAILS NO. 29" sheet.
6. For "Footing Plan Abutment 9 Right Widen" detail see "ABUTMENT DETAILS NO. 31" sheet.

Legend:

- Indicates Bridge Removal (Portion)
- Indicates existing structure
- ✳ Retain existing backwall horizontal reinforcement

DIST	COUNTY	ROUTE	KILOMETER POST TOTAL PROJECT	SHEET No	TOTAL SHEETS
07	LA	5	42.8/47.3	804	1073

Andrew Rittenhouse 12-05-08
REGISTERED CIVIL ENGINEER DATE

6-8-09
PLANS APPROVAL DATE

The State of California or its officers or agents shall not be responsible for the accuracy or completeness of electronic copies of this plan sheet.

REGISTERED PROFESSIONAL ENGINEER — Andrew P. Rittenhouse — No. 61006 — Exp. 12-31-10 — CIVIL — STATE OF CALIFORNIA

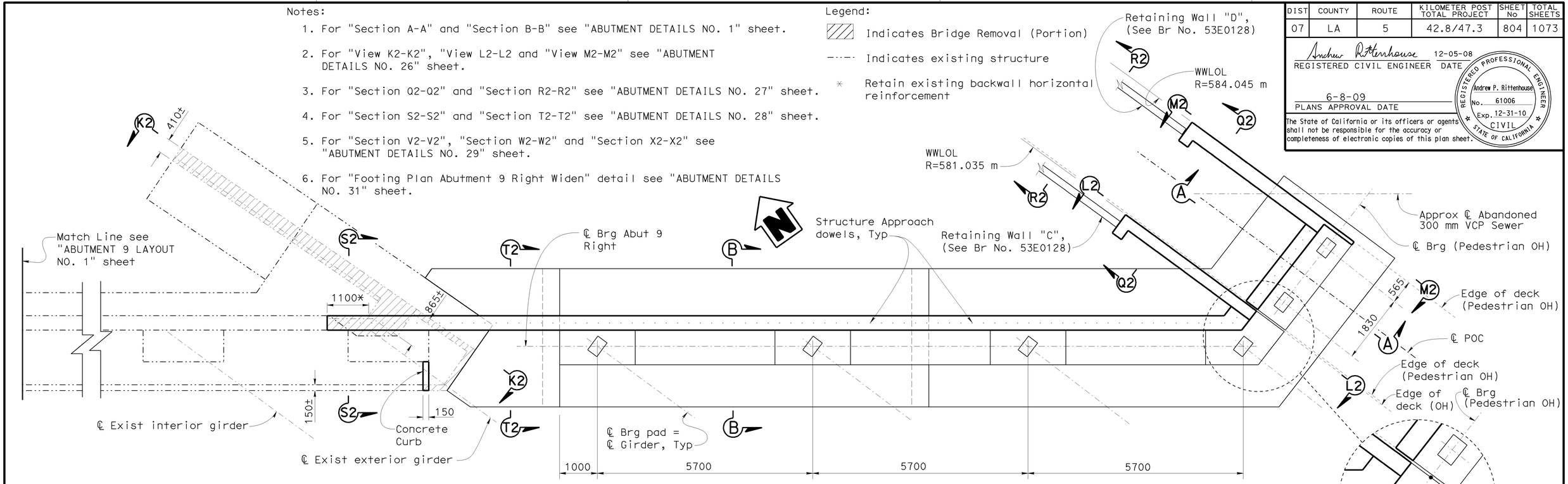

PLAN
1:50

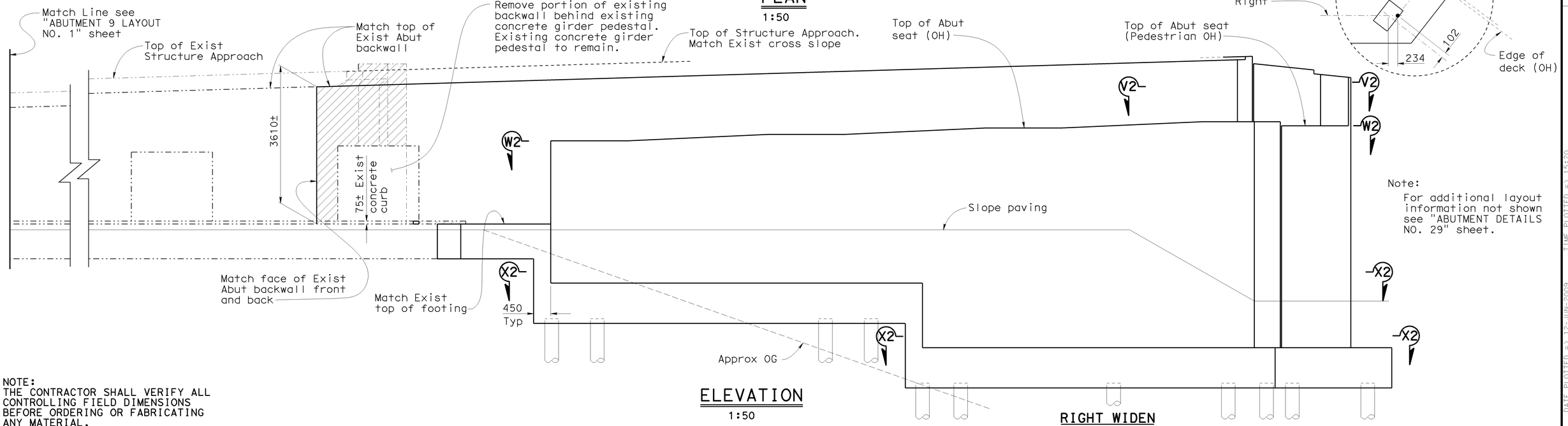

ELEVATION
1:50

RIGHT WIDEN

NOTE:
THE CONTRACTOR SHALL VERIFY ALL CONTROLLING FIELD DIMENSIONS BEFORE ORDERING OR FABRICATING ANY MATERIAL.

	BY	CHECKED
DESIGN	Ulysses Smpardos	F. Feng/C. Chan
DETAILS	Steven Schenck	F. Feng/C. Chan
QUANTITIES	E. Hall	R. Odell

STATE OF CALIFORNIA
DEPARTMENT OF TRANSPORTATION

DIVISION OF ENGINEERING SERVICES
STRUCTURE DESIGN
DESIGN BRANCH 15

CU 07
EA 121841

BRIDGE NO. 53-1085
KILOMETER POST 46.1

PROVIDENCIA AVENUE OH (WIDEN)
ABUTMENT 9 LAYOUT NO. 2

ALL DIMENSIONS ARE IN MILLIMETERS UNLESS OTHERWISE SHOWN

ORIGINAL SCALE IN MILLIMETERS FOR REDUCED PLANS 0 10 20 30 40 50 60 70 80 90 100

DISREGARD PRINTS BEARING EARLIER REVISION DATES →

REVISION DATES: 08-07-08 | 11-20-08 | 01-16-09 | 1-23-09 | 2-11-09 | 2-19-09 | 3-12-09

SHEET 15 OF 152

FILE => 53-1085-g-a21-lo5.dgn

STRUCTURES DESIGN DETAIL SHEET (METRIC) (REV.03-17-04)

USERNAME => tfrlim DATE PLOTTED => 12-JUN-2009 TIME PLOTTED => 15:20

DIST	COUNTY	ROUTE	KILOMETER POST TOTAL PROJECT	SHEET No	TOTAL SHEETS
07	LA	5	42.8/47.3	805	1073

Andrew Rittenhouse 12-05-08
REGISTERED CIVIL ENGINEER DATE

6-8-09
PLANS APPROVAL DATE

REGISTERED PROFESSIONAL ENGINEER
Andrew P. Rittenhouse
No. 61006
Exp. 12-31-10
CIVIL
STATE OF CALIFORNIA

The State of California or its officers or agents shall not be responsible for the accuracy or completeness of electronic copies of this plan sheet.

Notes:

1. For "Section E1-E1", "Section F1-F1" and "Section G1-G1" see "ABUTMENT DETAILS NO. 14" sheet.
2. For "Section E2-E2" and "Section F2-F2" see "ABUTMENT DETAILS NO. 23" sheet.
3. For "Footing Plan Abutment 9 Median Widen" detail see "ABUTMENT DETAILS NO. 25" sheet.

Legend:

—··—· Indicates existing structure

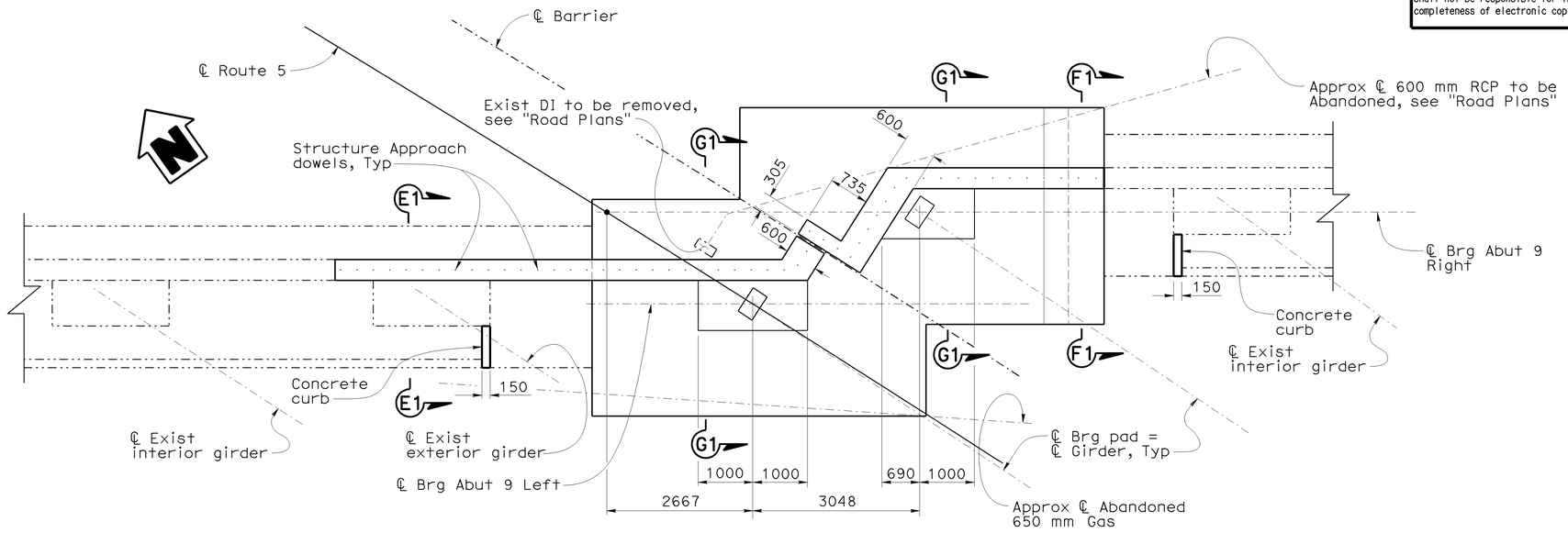

PLAN
1:50

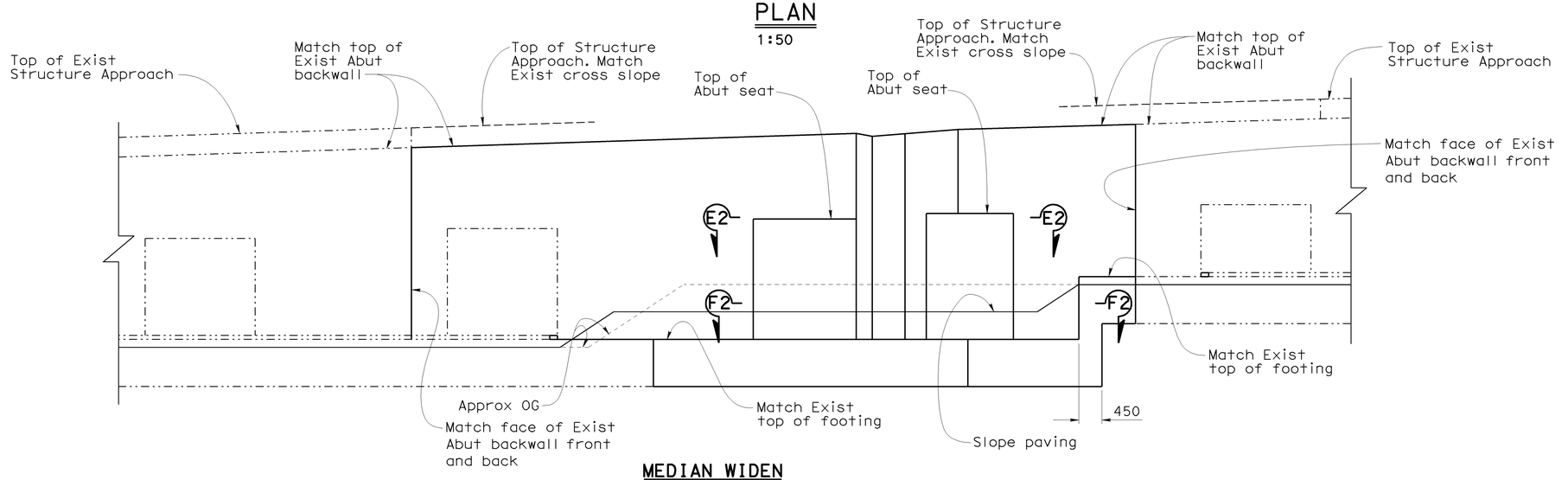

MEDIAN WIDEN

ELEVATION
1:50

NOTE:
THE CONTRACTOR SHALL VERIFY ALL CONTROLLING FIELD DIMENSIONS BEFORE ORDERING OR FABRICATING ANY MATERIAL.

Caltrans Metric

	BY	CHECKED
DESIGN	Ulysses Smpardos	F. Feng/C. Chan
DETAILS	Steven Schenck	F. Feng/C. Chan
QUANTITIES	E. Hall	R. Odell

ALL DIMENSIONS ARE IN MILLIMETERS UNLESS OTHERWISE SHOWN

ORIGINAL SCALE IN MILLIMETERS FOR REDUCED PLANS 0 10 20 30 40 50 60 70 80 90 100

STATE OF CALIFORNIA
DEPARTMENT OF TRANSPORTATION

DIVISION OF ENGINEERING SERVICES
STRUCTURE DESIGN
DESIGN BRANCH 15

CU 07
EA 121841

BRIDGE NO. 53-1085
KILOMETER POST 46.1

PROVIDENCIA AVENUE OH (WIDEN)
ABUTMENT 9 LAYOUT NO. 3

DISREGARD PRINTS BEARING EARLIER REVISION DATES

REVISION DATES: 06/05/08 06/24/08 10/10/08 11/20/08 01/15/09 1-21-09 1-23-09 2-11-09 2-19-09

SHEET 16 OF 152

FILE => 53-1085-g-a21lo6.dgn

STRUCTURES DESIGN DETAIL SHEET (METRIC) (REV.03-17-04)

USERNAME => trlim DATE PLOTTED => 12-JUN-2009 TIME PLOTTED => 15:20

DIST	COUNTY	ROUTE	KILOMETER POST TOTAL PROJECT	SHEET No	TOTAL SHEETS
07	LA	5	42.8/47.3	806	1073

Andrew Rittenhouse 12-05-08
REGISTERED CIVIL ENGINEER DATE

6-8-09
PLANS APPROVAL DATE

REGISTERED PROFESSIONAL ENGINEER
Andrew P. Rittenhouse
No. 61006
Exp. 12-31-10
CIVIL
STATE OF CALIFORNIA

The State of California or its officers or agents shall not be responsible for the accuracy or completeness of electronic copies of this plan sheet.

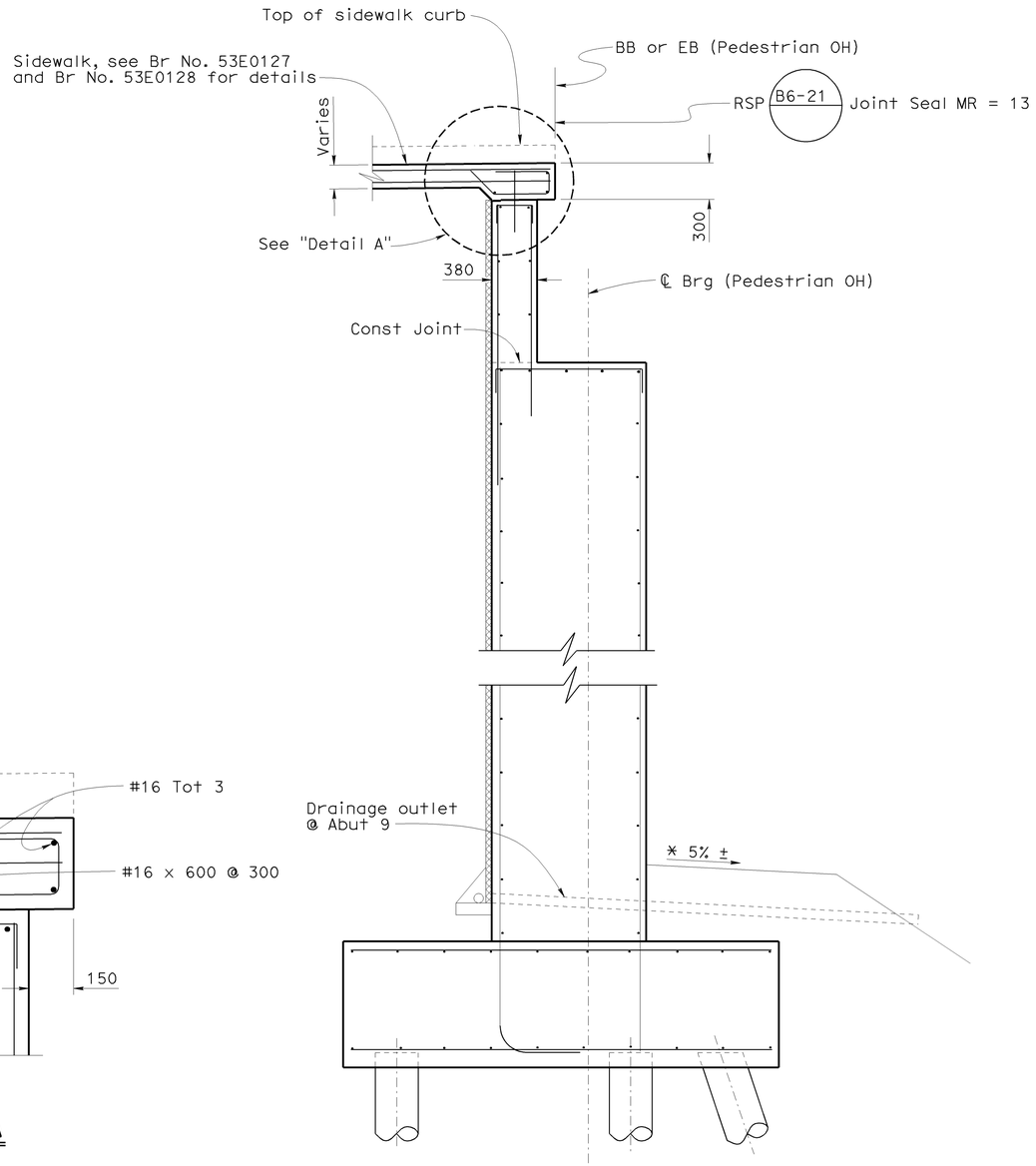

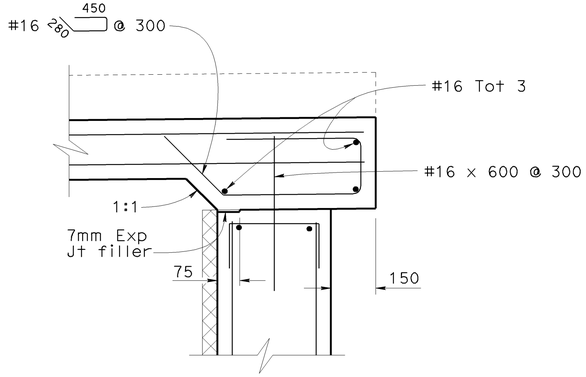

DETAIL A
1:10

Note:
For information not shown
or noted see "Section B-B".

SECTION A-A
1:25

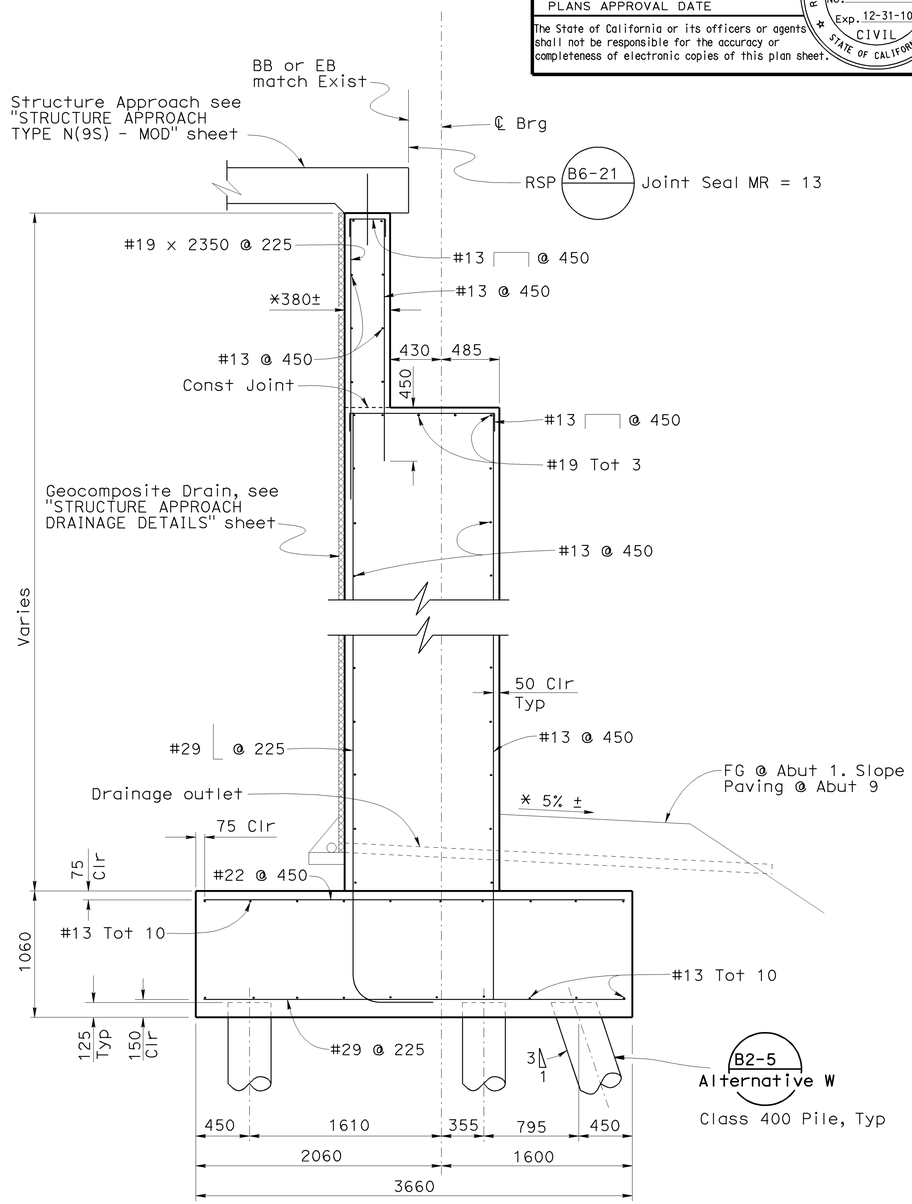

SECTION B-B
1:25

Legend:
* Match existing
-·-·- Indicates existing structure

NOTE:
THE CONTRACTOR SHALL VERIFY ALL CONTROLLING FIELD DIMENSIONS BEFORE ORDERING OR FABRICATING ANY MATERIAL.

DESIGN	BY Ulysses Smpardos	CHECKED F. Feng/C. Chan	
DETAILS	BY Steven Schenck	CHECKED F. Feng/C. Chan	
QUANTITIES	BY E. Hall	CHECKED R. Odell	

STATE OF CALIFORNIA
DEPARTMENT OF TRANSPORTATION

DIVISION OF ENGINEERING SERVICES
STRUCTURE DESIGN
DESIGN BRANCH 15

CU 07
EA 121841

BRIDGE NO. 53-1085
KILOMETER POST 46.1

PROVIDENCIA AVENUE OH (WIDEN)
ABUTMENT DETAILS NO. 1

ALL DIMENSIONS ARE IN MILLIMETERS UNLESS OTHERWISE SHOWN

ORIGINAL SCALE IN MILLIMETERS FOR REDUCED PLANS 0 10 20 30 40 50 60 70 80 90 100

DISREGARD PRINTS BEARING EARLIER REVISION DATES

REVISION DATES: 10-16-08 | 01-16-09 | 1-23-09 | 2-11-09 | 2-19-09 | 3-12-09

SHEET 17 OF 152

FILE => 53-1085-h-a21d01.dgn

STRUCTURES DESIGN DETAIL SHEET (METRIC) (REV.03-17-04)

USERNAME = rtritm DATE PLOTTED => 12-JUN-2009 TIME PLOTTED => 15:20

DIST	COUNTY	ROUTE	KILOMETER POST TOTAL PROJECT	SHEET No	TOTAL SHEETS
07	LA	5	42.8/47.3	807	1073

Andrew P. Rittenhouse 12-05-08
REGISTERED CIVIL ENGINEER DATE

6-8-09
PLANS APPROVAL DATE

REGISTERED PROFESSIONAL ENGINEER
Andrew P. Rittenhouse
No. 61006
Exp. 12-31-10
CIVIL
STATE OF CALIFORNIA

The State of California or its officers or agents shall not be responsible for the accuracy or completeness of electronic copies of this plan sheet.

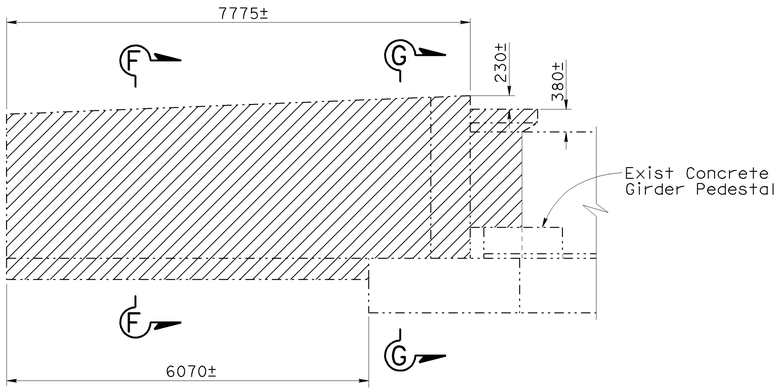

VIEW C-C
1:50

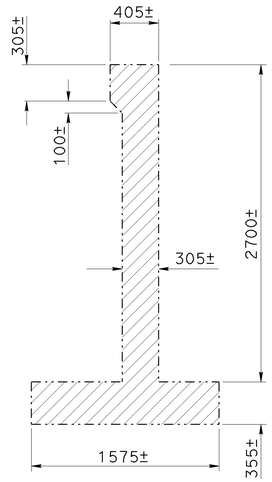

SECTION F-F
1:25

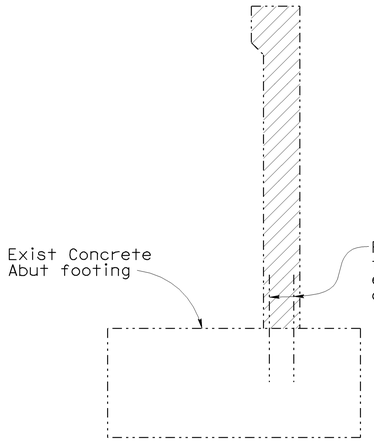

SECTION G-G
1:25

Note:

See "Section F-F" for details not shown or noted.

Notes:

1. Chain Link Railing not shown.
2. For details of interface between wingwall and MSE Wall see "Section N2-N2" on "ABUTMENT DETAILS NO. 26" sheet.
3. For additional curtain wall details see "Section P2-P2" on "ABUTMENT DETAILS NO. 26" sheet.
4. For "Section K-K" see "ABUTMENT DETAILS NO. 3" sheet.
5. For architectural treatment not shown see "ARCHITECTURAL DETAILS" sheet.

Legend:

Indicates Bridge Removal (Portion)

Indicates existing structure

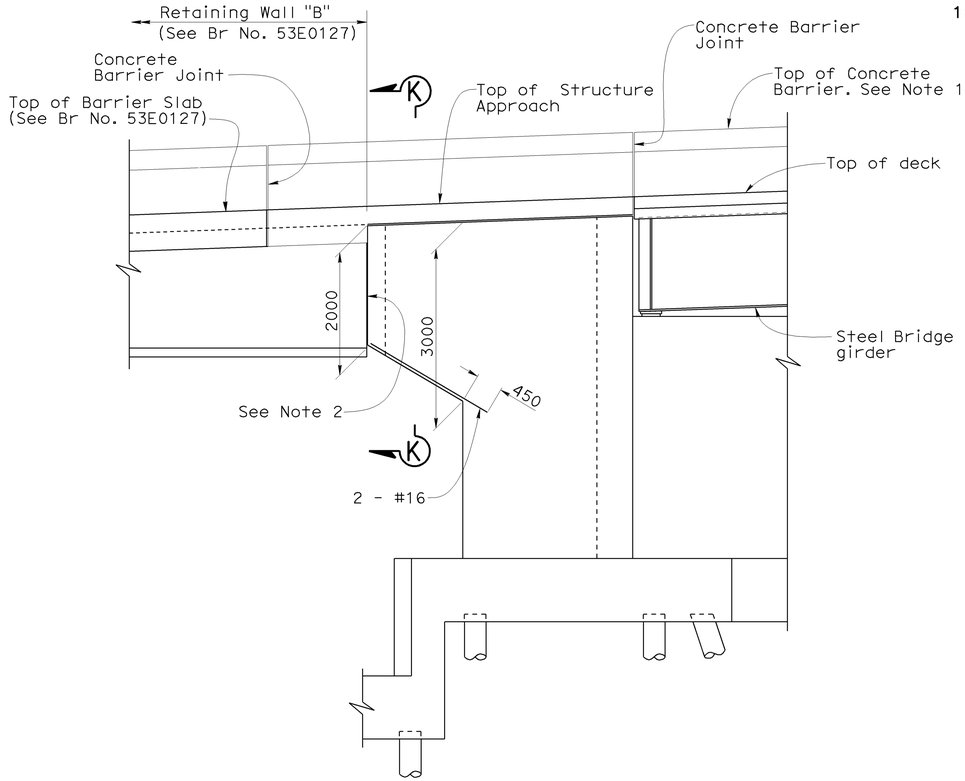

VIEW D-D
1:50

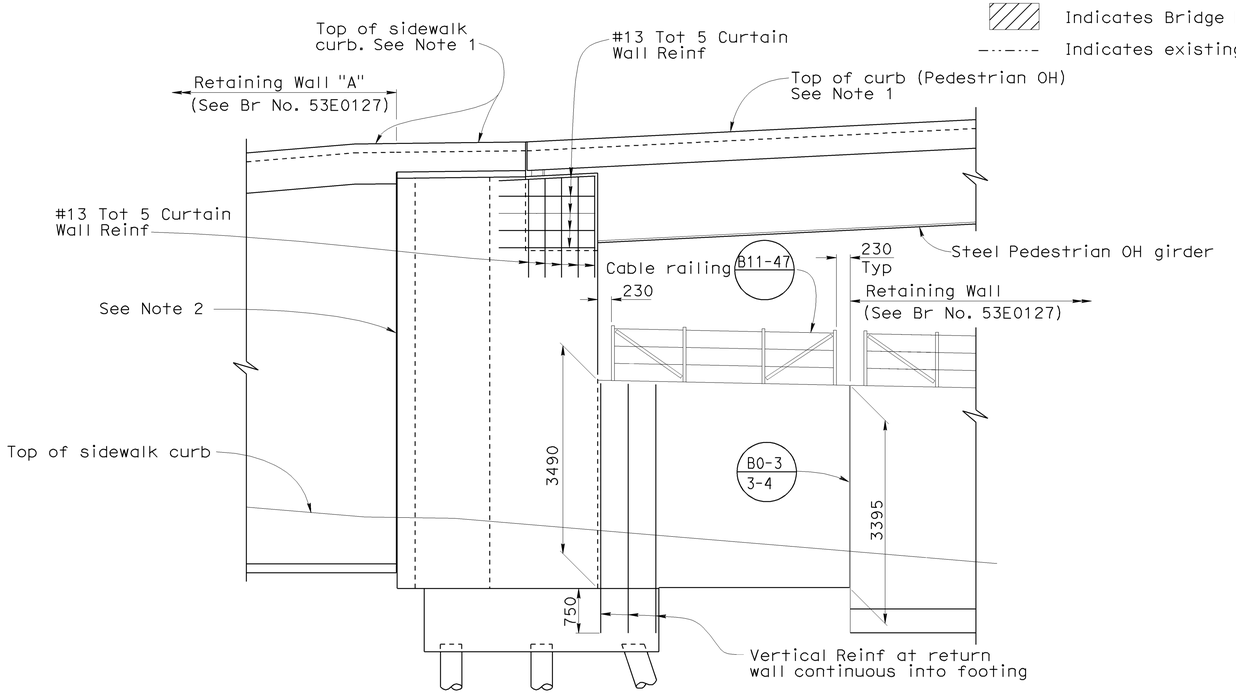

VIEW E-E
1:50

NOTE:
THE CONTRACTOR SHALL VERIFY ALL CONTROLLING FIELD DIMENSIONS BEFORE ORDERING OR FABRICATING ANY MATERIAL.

DESIGN	BY Ulysses Smpardos	CHECKED F. Feng/C. Chan	STATE OF CALIFORNIA DEPARTMENT OF TRANSPORTATION	DIVISION OF ENGINEERING SERVICES STRUCTURE DESIGN	BRIDGE NO. 53-1085
DETAILS	BY Steven Schenck	CHECKED F. Feng/C. Chan		DESIGN BRANCH 15	KILOMETER POST 46.1
QUANTITIES	BY E. Hall	CHECKED R. Odell		CU 07 EA 121841	

PROVIDENCIA AVENUE OH (WIDEN)

ABUTMENT DETAILS NO. 2

ALL DIMENSIONS ARE IN MILLIMETERS UNLESS OTHERWISE SHOWN

ORIGINAL SCALE IN MILLIMETERS FOR REDUCED PLANS 0 10 20 30 40 50 60 70 80 90 100

DISREGARD PRINTS BEARING EARLIER REVISION DATES →

REVISION DATES: 10-16-08 | 11-21-08 | 01-16-09 | 1-23-09 | 2-11-09 | 2-19-09 | 3-12-09

SHEET 18 OF 152

FILE => 53-1085-h-a21d02.dgn

STRUCTURES DESIGN DETAIL SHEET (METRIC) (REV.03-17-04)

USERNAME => rtrimm DATE PLOTTED => 12-JUN-2009 TIME PLOTTED => 15:20

DIST	COUNTY	ROUTE	KILOMETER POST TOTAL PROJECT	SHEET No	TOTAL SHEETS
07	LA	5	42.8/47.3	808	1073

Andrew P. Rittenhouse 12-05-08
REGISTERED CIVIL ENGINEER DATE

6-8-09
PLANS APPROVAL DATE

REGISTERED PROFESSIONAL ENGINEER
Andrew P. Rittenhouse
No. 61006
Exp. 12-31-10
CIVIL
STATE OF CALIFORNIA

The State of California or its officers or agents shall not be responsible for the accuracy or completeness of electronic copies of this plan sheet.

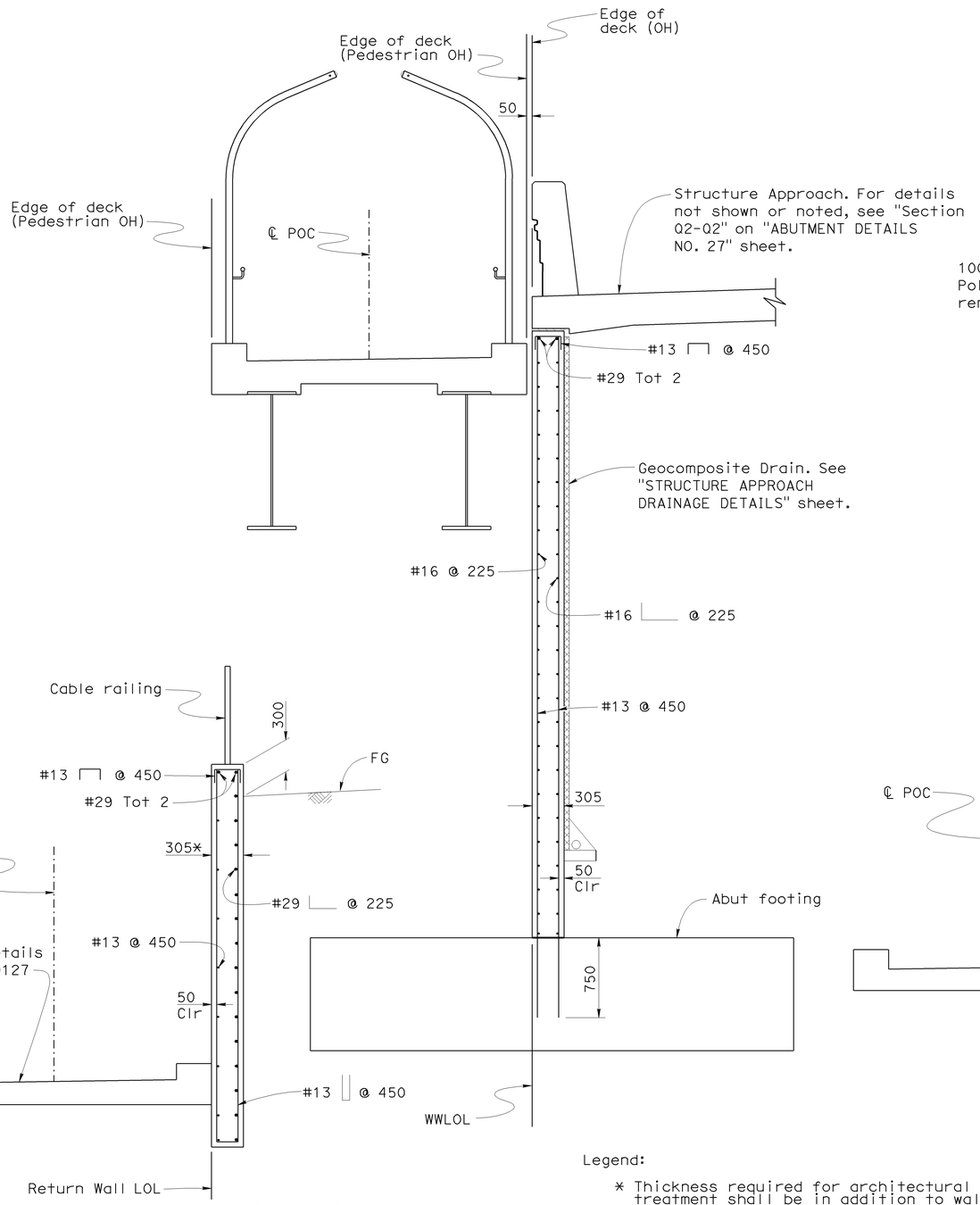

SECTION H-H

1:25

NOTE:
THE CONTRACTOR SHALL VERIFY ALL CONTROLLING FIELD DIMENSIONS BEFORE ORDERING OR FABRICATING ANY MATERIAL.

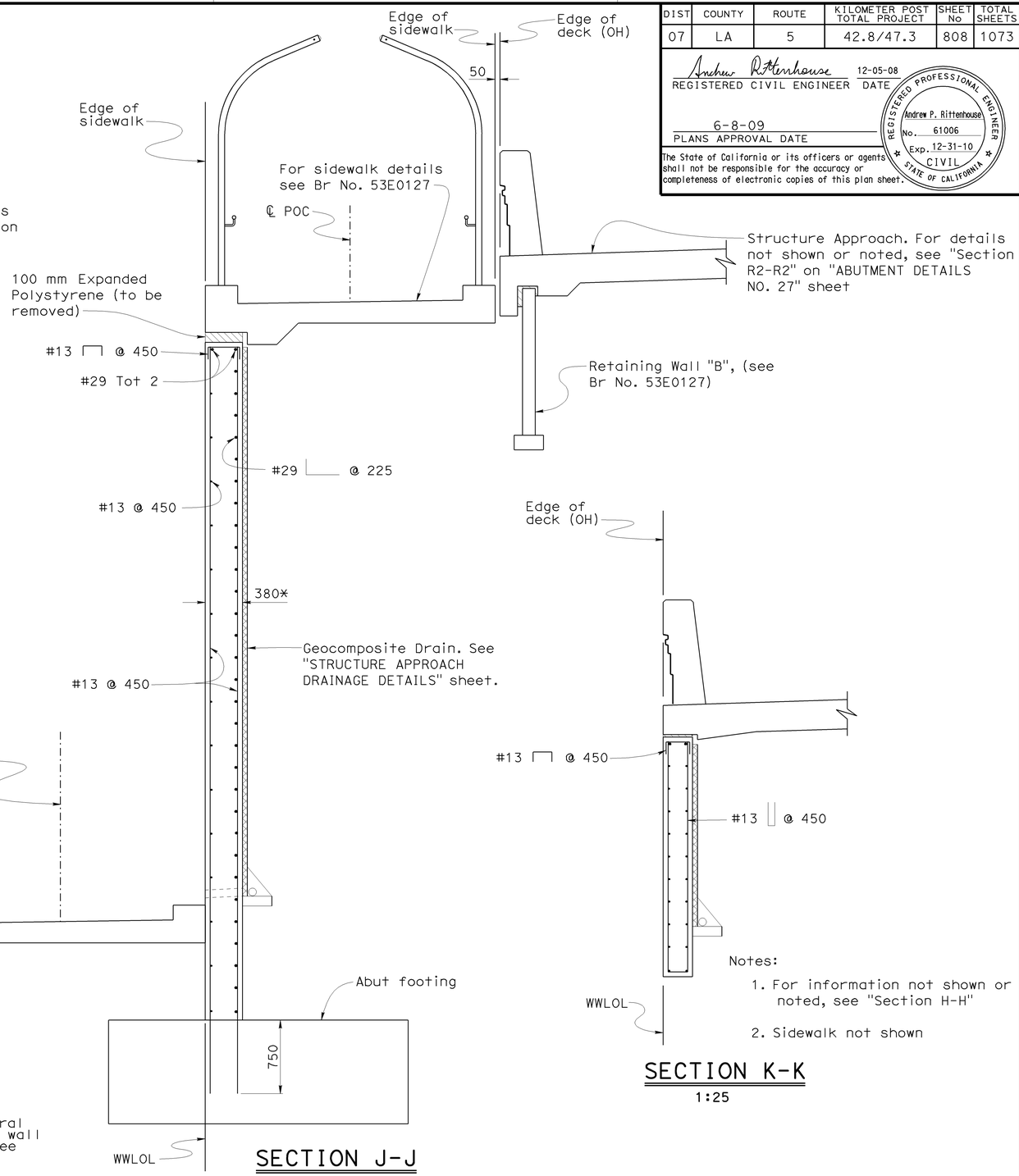

SECTION J-J

1:25

Legend:

* Thickness required for architectural treatment shall be in addition to wall thickness indicated in details. See "ARCHITECTURAL DETAILS" sheet for additional information.

Notes:

1. For information not shown or noted, see "Section H-H"
2. Sidewalk not shown

SECTION K-K

1:25

DESIGN	BY Ulysses Smpardos	CHECKED F. Feng/C. Chan	
DETAILS	BY Steven Schenck	CHECKED F. Feng/C. Chan	
QUANTITIES	BY E. Hall	CHECKED R. Odell	

STATE OF CALIFORNIA
DEPARTMENT OF TRANSPORTATION

DIVISION OF ENGINEERING SERVICES
STRUCTURE DESIGN
DESIGN BRANCH 15

CU 07
EA 121841

BRIDGE NO. 53-1085
KILOMETER POST 46.1

PROVIDENCIA AVENUE OH (WIDEN)
ABUTMENT DETAILS NO. 3

ALL DIMENSIONS ARE IN MILLIMETERS UNLESS OTHERWISE SHOWN

ORIGINAL SCALE IN MILLIMETERS FOR REDUCED PLANS 0 10 20 30 40 50 60 70 80 90 100

DISREGARD PRINTS BEARING EARLIER REVISION DATES →

REVISION DATES: 10-16-08 | 01-16-09 | 1-23-09 | 2-11-09 | 2-23-09 | 3-12-09 | 3-18-09

SHEET 19 OF 152

FILE => 53-1085-h-a21d03.dgn

STRUCTURES DESIGN DETAIL SHEET (METRIC) (REV.03-17-04)

DATE PLOTTED => 12-JUN-2009 TIME PLOTTED => 16:20
USERNAME => rtrim

DIST	COUNTY	ROUTE	KILOMETER POST TOTAL PROJECT	SHEET No	TOTAL SHEETS
07	LA	5	42.8/47.3	809	1073

Andrew Rittenhouse 12-05-08
REGISTERED CIVIL ENGINEER DATE

6-8-09
PLANS APPROVAL DATE

REGISTERED PROFESSIONAL ENGINEER
Andrew P. Rittenhouse
No. 61006
Exp. 12-31-10
CIVIL
STATE OF CALIFORNIA

The State of California or its officers or agents shall not be responsible for the accuracy or completeness of electronic copies of this plan sheet.

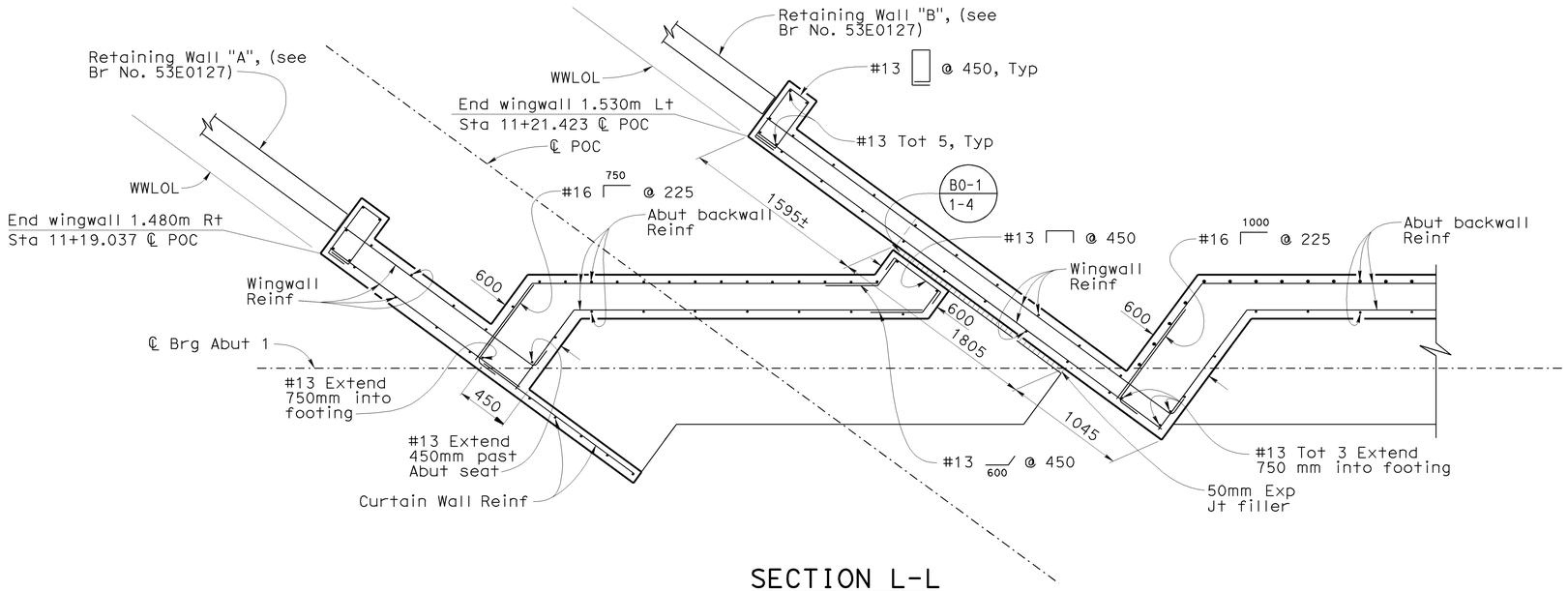

SECTION L-L

1:25

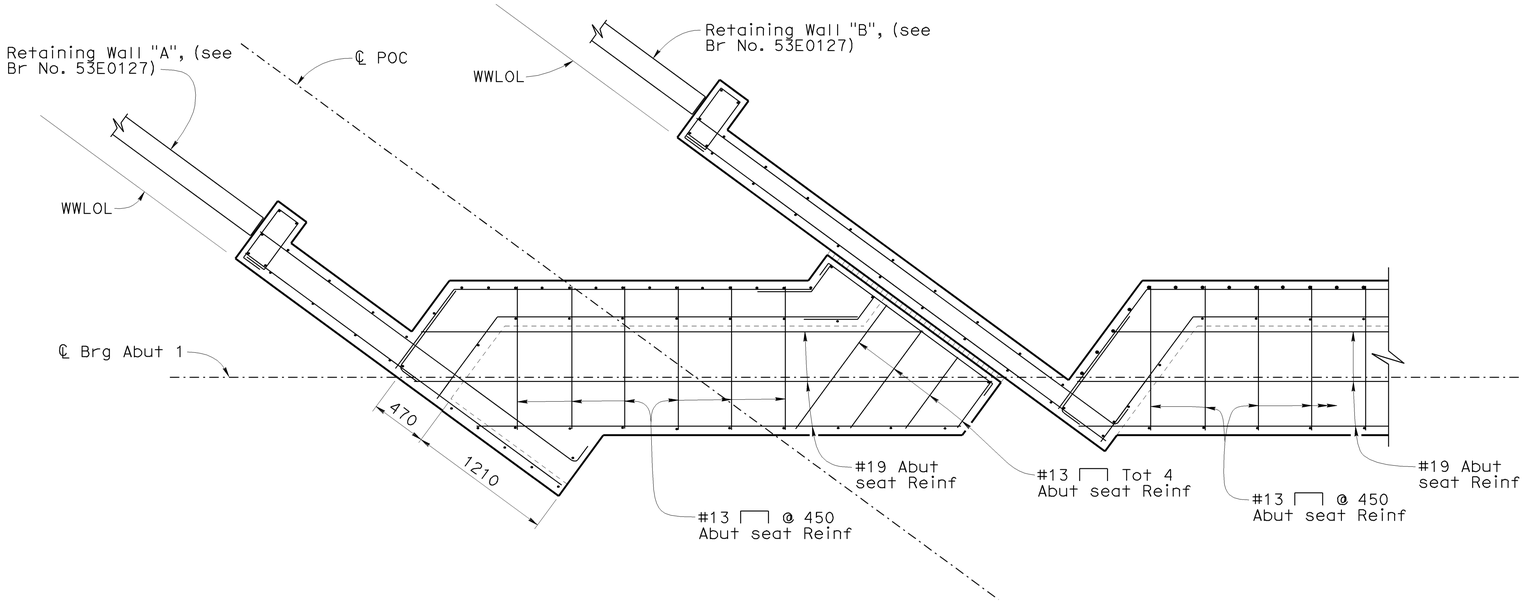

SECTION M-M

1:25

NOTE:
THE CONTRACTOR SHALL VERIFY ALL CONTROLLING FIELD DIMENSIONS BEFORE ORDERING OR FABRICATING ANY MATERIAL.

Caltrans Metric

	BY	CHECKED
DESIGN	Ulysses Smpardos	F. Feng/C. Chan
DETAILS	Steven Schenck	F. Feng/C. Chan
QUANTITIES	E. Hall	R. Odell

STATE OF CALIFORNIA
DEPARTMENT OF TRANSPORTATION

DIVISION OF ENGINEERING SERVICES
STRUCTURE DESIGN
DESIGN BRANCH 15

BRIDGE NO. 53-1085
KILOMETER POST 46.1

PROVIDENCIA AVENUE OH (WIDEN)
ABUTMENT DETAILS NO. 4

ALL DIMENSIONS ARE IN MILLIMETERS UNLESS OTHERWISE SHOWN

ORIGINAL SCALE IN MILLIMETERS FOR REDUCED PLANS 0 10 20 30 40 50 60 70 80 90 100

CU 07
EA 121841

DISREGARD PRINTS BEARING EARLIER REVISION DATES

REVISION DATES: 10-14-08 11-21-08 01-20-09 1-23-09 2-10-09 2-23-09

SHEET 20 OF 152

FILE => 53-1085-h-a21d04.dgn

STRUCTURES DESIGN DETAIL SHEET (METRIC) (REV.03-17-04)

USERNAME => trlim DATE PLOTTED => 12-JUN-2009 TIME PLOTTED => 15:20

DIST	COUNTY	ROUTE	KILOMETER POST TOTAL PROJECT	SHEET No	TOTAL SHEETS
07	LA	5	42.8/47.3	810	1073

Andrew Rittenhouse 12-5-08
REGISTERED CIVIL ENGINEER DATE

6-8-09
PLANS APPROVAL DATE

REGISTERED PROFESSIONAL ENGINEER — Andrew P. Rittenhouse — No. 61006 — Exp. 12-31-08 — CIVIL — STATE OF CALIFORNIA

The State of California or its officers or agents shall not be responsible for the accuracy or completeness of electronic copies of this plan sheet.

Legend:
* Extend reinforcement 750mm into footing.

Note:
Footing step reinforcement not shown.

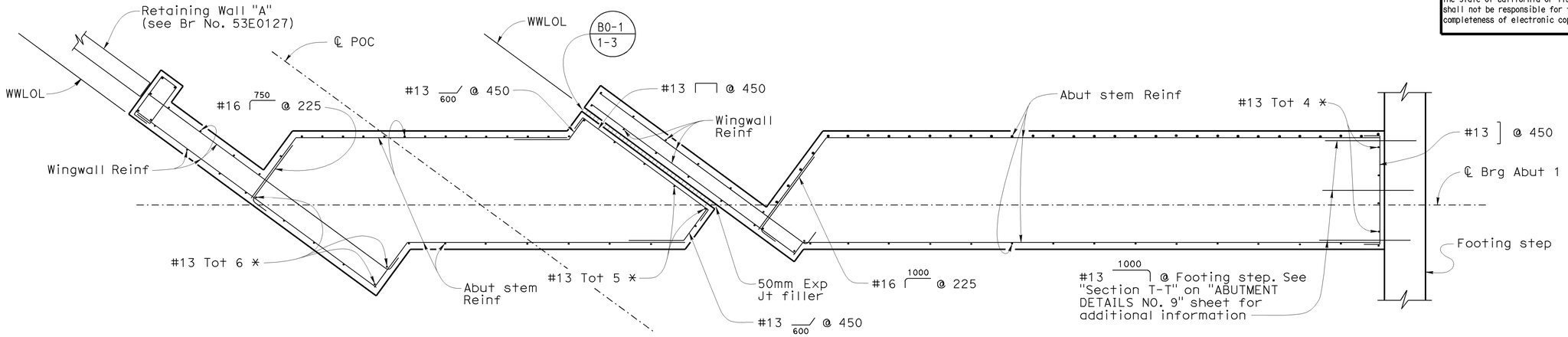

SECTION N-N
1:25

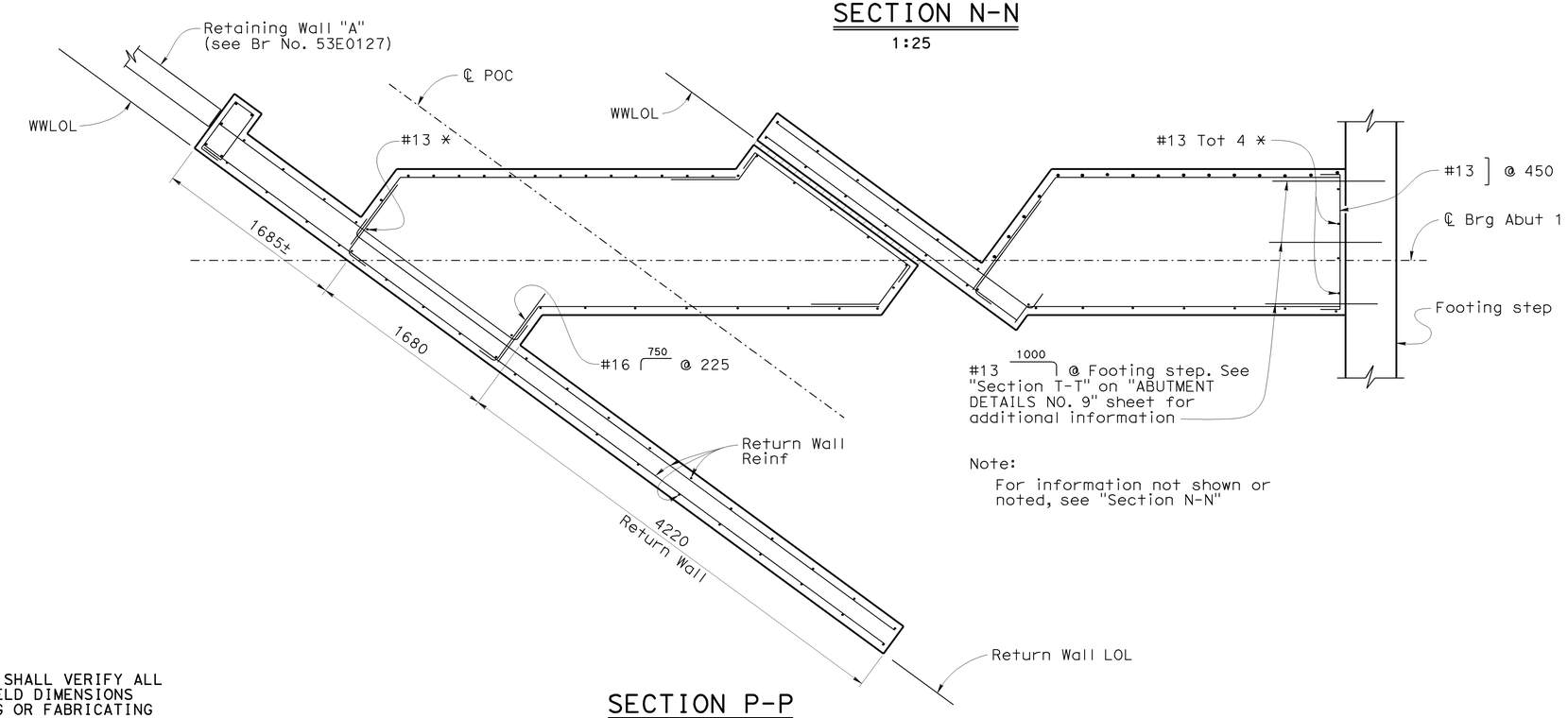

Note:
For information not shown or noted, see "Section N-N"

SECTION P-P
1:25

NOTE:
THE CONTRACTOR SHALL VERIFY ALL CONTROLLING FIELD DIMENSIONS BEFORE ORDERING OR FABRICATING ANY MATERIAL.

DESIGN	BY Ulysses Smpardos	CHECKED F. Feng/C. Chan	STATE OF CALIFORNIA DEPARTMENT OF TRANSPORTATION	DIVISION OF ENGINEERING SERVICES STRUCTURE DESIGN DESIGN BRANCH 15	BRIDGE NO. 53-1085 / KILOMETER POST 46.1
DETAILS	BY Steven Schenck	CHECKED F. Feng/C. Chan			
QUANTITIES	BY E. Hall	CHECKED R. Odell		CU 07 EA 121841	DISREGARD PRINTS BEARING EARLIER REVISION DATES →

PROVIDENCIA AVENUE OH (WIDEN)
ABUTMENT DETAILS NO. 5

Caltrans Metric

ALL DIMENSIONS ARE IN MILLIMETERS UNLESS OTHERWISE SHOWN

ORIGINAL SCALE IN MILLIMETERS FOR REDUCED PLANS 0 10 20 30 40 50 60 70 80 90 100

REVISION DATES: 10-15-08 | 1-23-09 | 1-23-09 | 2-10-09 | 2-23-09

SHEET 21 OF 152

FILE => 53-1085-h-a21d05.dgn

STRUCTURES DESIGN DETAIL SHEET (METRIC) (REV.03-17-04)

USERNAME = tfrith DATE PLOTTED => 12-JUN-2009 TIME PLOTTED => 16:20

DIST	COUNTY	ROUTE	KILOMETER POST TOTAL PROJECT	SHEET No	TOTAL SHEETS
07	LA	5	42.8/47.3	811	1073

Andrew Rittenhouse 12-05-08
REGISTERED CIVIL ENGINEER DATE

6-8-09
PLANS APPROVAL DATE

REGISTERED PROFESSIONAL ENGINEER
Andrew P. Rittenhouse
No. 61006
Exp. 12-31-10
CIVIL
STATE OF CALIFORNIA

The State of California or its officers or agents shall not be responsible for the accuracy or completeness of electronic copies of this plan sheet.

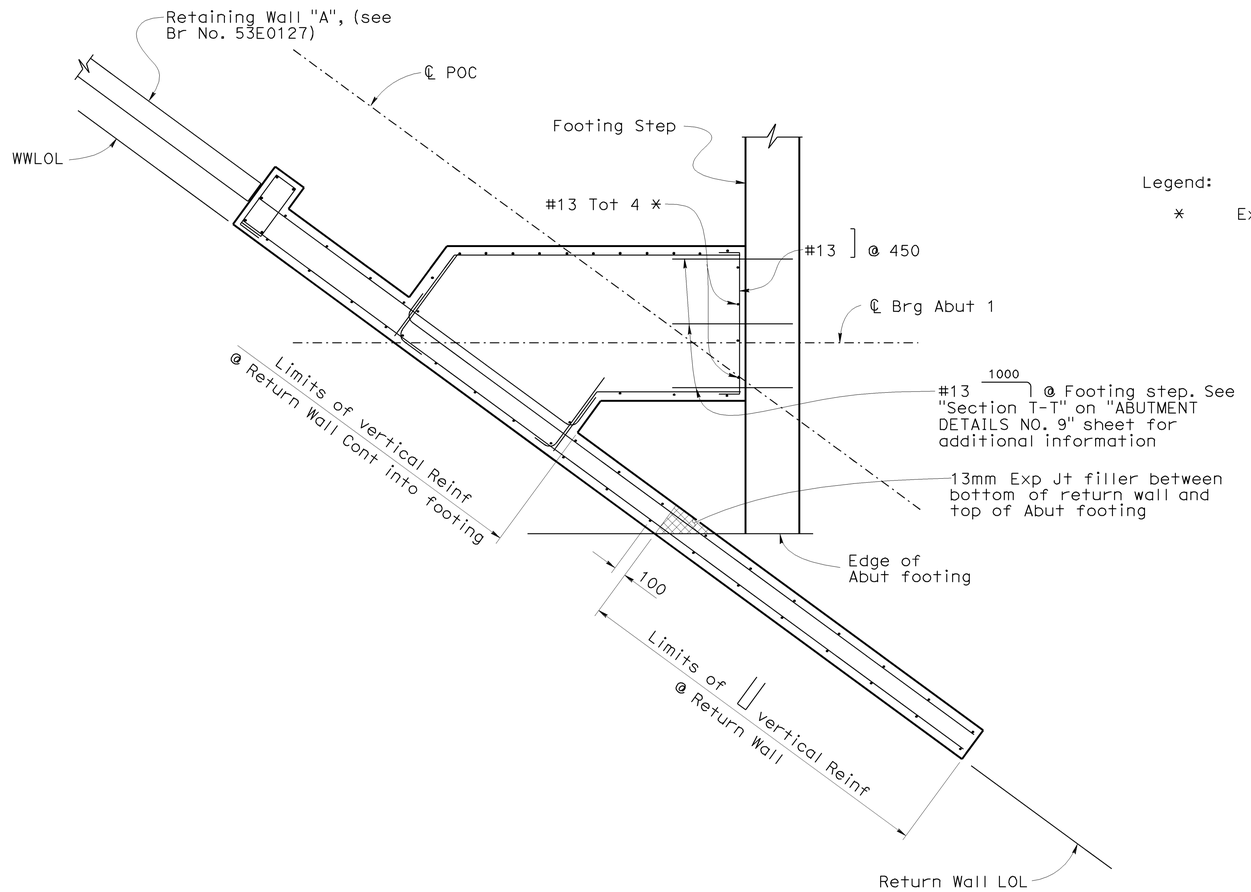

Legend:

* Extend reinforcement 750 mm into footing

SECTION Q-Q

1:25

Notes:

1. For information not shown or noted, see "Section N-N" and "Section P-P" on "ABUTMENT DETAILS NO. 5" sheet.
2. Footing step reinforcement not shown.

NOTE:
THE CONTRACTOR SHALL VERIFY ALL CONTROLLING FIELD DIMENSIONS BEFORE ORDERING OR FABRICATING ANY MATERIAL.

Caltrans Metric

	BY	CHECKED
DESIGN	Ulysses Smpardos	F.Feng/C. Chan
DETAILS	Steven Schenck	F. Feng/C. Chan
QUANTITIES	E. Hall	R. Odell

STATE OF CALIFORNIA
DEPARTMENT OF TRANSPORTATION

DIVISION OF ENGINEERING SERVICES
STRUCTURE DESIGN
DESIGN BRANCH 15

BRIDGE NO. 53-1085
KILOMETER POST 46.1

PROVIDENCIA AVENUE OH (WIDEN)
ABUTMENT DETAILS NO. 6

ALL DIMENSIONS ARE IN MILLIMETERS UNLESS OTHERWISE SHOWN

ORIGINAL SCALE IN MILLIMETERS FOR REDUCED PLANS 0 10 20 30 40 50 60 70 80 90 100

CU 07
EA 121841

DISREGARD PRINTS BEARING EARLIER REVISION DATES

REVISION DATES 10-15-08 1-15-09 1-23-09 2-23-09

SHEET 22 OF 152

FILE => 53-1085-h-a21d06.dgn

STRUCTURES DESIGN DETAIL SHEET (METRIC) (REV.03-17-04)

USERNAME => trlim DATE PLOTTED => 12-JUN-2009 TIME PLOTTED => 15:20

DIST	COUNTY	ROUTE	KILOMETER POST TOTAL PROJECT	SHEET No	TOTAL SHEETS
07	LA	5	42.8/47.3	812	1073

Andrew Rittenhouse 12-5-08
REGISTERED CIVIL ENGINEER DATE

6-8-09
PLANS APPROVAL DATE

The State of California or its officers or agents shall not be responsible for the accuracy or completeness of electronic copies of this plan sheet.

REGISTERED PROFESSIONAL ENGINEER
Andrew P. Rittenhouse
No. 61006
Exp. 12-31-10
CIVIL
STATE OF CALIFORNIA

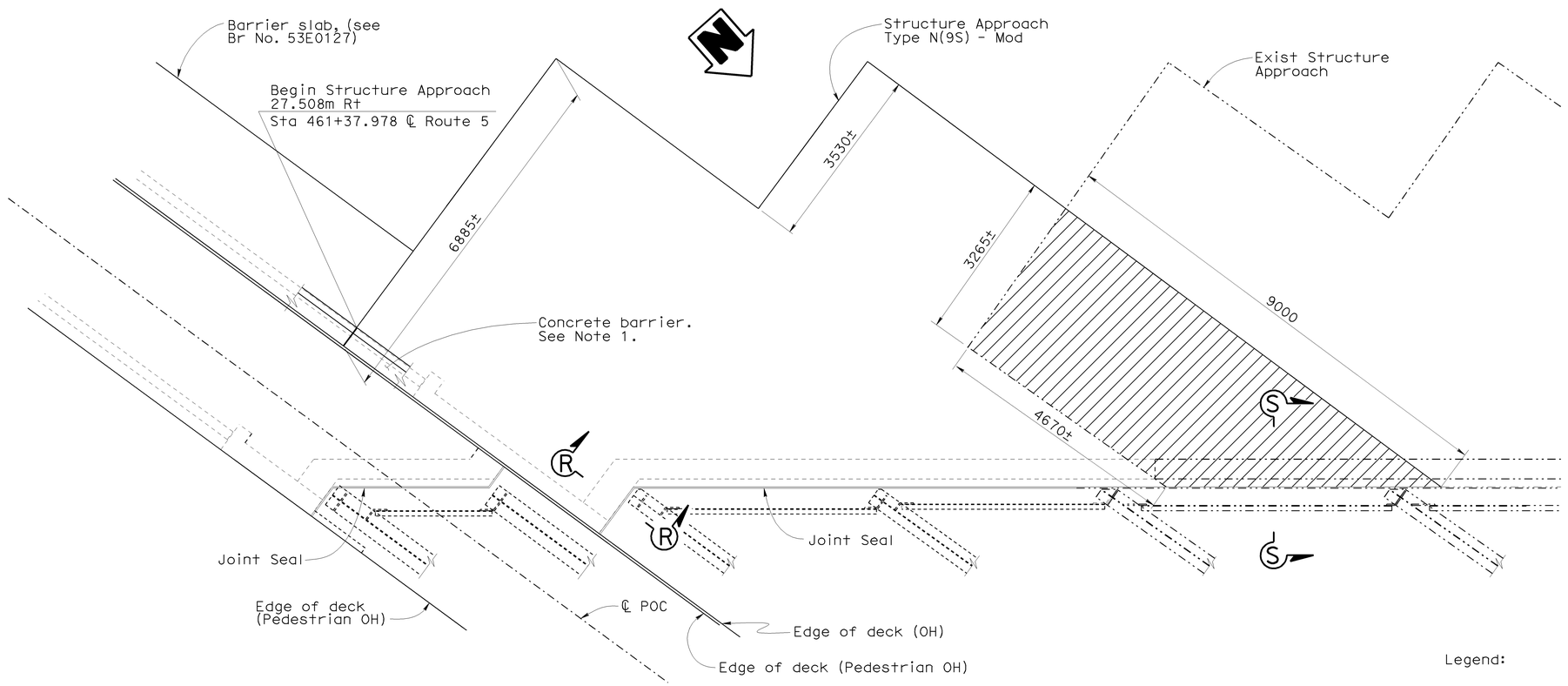

DECK PLAN VIEW AT ABUTMENT 1 RIGHT WIDEN

1:50

Legend:

Remove existing structure approach

Indicates existing structure

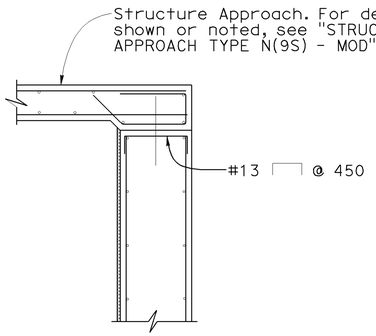

SECTION R-R

1:25

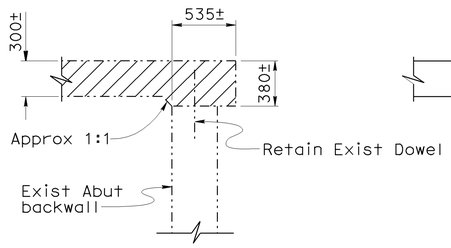

REMOVAL

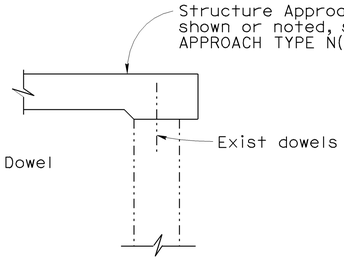

REPLACEMENT

Note:

1. Provide 13 mm open joint in concrete barrier at location of contact joint between barrier slab and structure approach.

NOTE:
THE CONTRACTOR SHALL VERIFY ALL CONTROLLING FIELD DIMENSIONS BEFORE ORDERING OR FABRICATING ANY MATERIAL.

SECTION S-S

1:25

DESIGN	BY Ulysses Smpardos	CHECKED F. Feng/C. Chan	
DETAILS	BY Steven Schenck	CHECKED F. Feng/C. Chan	
QUANTITIES	BY E. Hall	CHECKED R. Odell	

Caltrans Metric

ALL DIMENSIONS ARE IN MILLIMETERS UNLESS OTHERWISE SHOWN

ORIGINAL SCALE IN MILLIMETERS FOR REDUCED PLANS 0 10 20 30 40 50 60 70 80 90 100

STATE OF CALIFORNIA
DEPARTMENT OF TRANSPORTATION

DIVISION OF ENGINEERING SERVICES
STRUCTURE DESIGN
DESIGN BRANCH 15

CU 07
EA 121841

FILE => 53-1085-h-a21d07.dgn

BRIDGE NO. 53-1085
KILOMETER POST 46.1

PROVIDENCIA AVENUE OH (WIDEN)
ABUTMENT DETAILS NO. 7

DISREGARD PRINTS BEARING EARLIER REVISION DATES →

REVISION DATES: 10-17-08 | 1-23-09 | 2-23-09

SHEET 23 OF 152

STRUCTURES DESIGN DETAIL SHEET (METRIC) (REV.03-17-04)

USERNAME => rtritim DATE PLOTTED => 12-JUN-2009 TIME PLOTTED => 15:20

DIST	COUNTY	ROUTE	KILOMETER POST TOTAL PROJECT	SHEET No	TOTAL SHEETS
07	LA	5	42.8/47.3	813	1073

Andrew Rittenhouse 1-22-09
REGISTERED CIVIL ENGINEER DATE

6-8-09
PLANS APPROVAL DATE

REGISTERED PROFESSIONAL ENGINEER
Andrew P. Rittenhouse
No. 61006
Exp. 12-31-10
CIVIL
STATE OF CALIFORNIA

The State of California or its officers or agents shall not be responsible for the accuracy or completeness of electronic copies of this plan sheet.

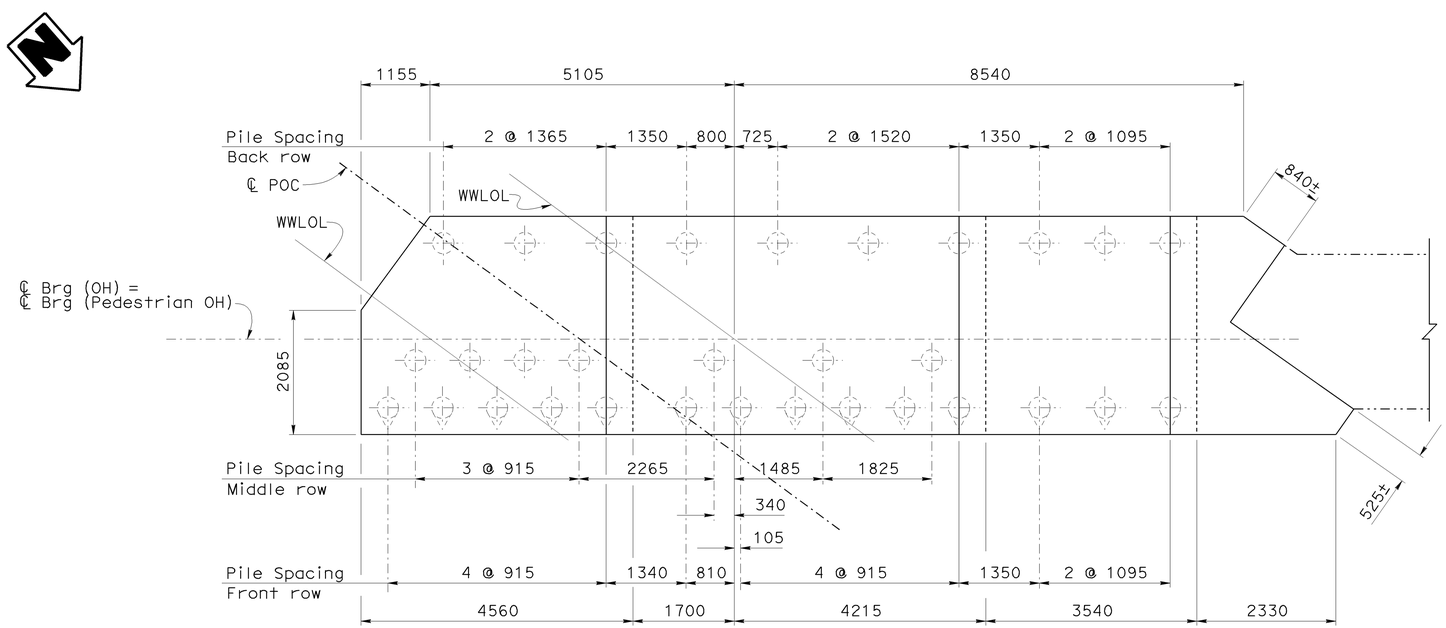

FOOTING PLAN ABUTMENT 1 RIGHT WIDEN

1:50

Legend:

- Indicates existing structure
- Indicates vertical pile
- Indicates battered pile

NOTE:
THE CONTRACTOR SHALL VERIFY ALL CONTROLLING FIELD DIMENSIONS BEFORE ORDERING OR FABRICATING ANY MATERIAL.

Caltrans Metric

	BY	CHECKED
DESIGN	Ulysses Smpardos	F.Feng/C. Chan
DETAILS	Steven Schenck	F. Feng/C. Chan
QUANTITIES	E. Hall	R. Odell

STATE OF CALIFORNIA
DEPARTMENT OF TRANSPORTATION

DIVISION OF ENGINEERING SERVICES
STRUCTURE DESIGN
DESIGN BRANCH 15

CU 07
EA 121841

BRIDGE NO. 53-1085
KILOMETER POST 46.1

PROVIDENCIA AVENUE OH (WIDEN)
ABUTMENT DETAILS NO. 8

ALL DIMENSIONS ARE IN MILLIMETERS UNLESS OTHERWISE SHOWN

ORIGINAL SCALE IN MILLIMETERS FOR REDUCED PLANS 0 10 20 30 40 50 60 70 80 90 100

DISREGARD PRINTS BEARING EARLIER REVISION DATES →

REVISION DATES: 1-22-09 | 1-23-09 | 2-23-09

SHEET 24 OF 152

FILE => 53-1085-h-a21d08.dgn

STRUCTURES DESIGN DETAIL SHEET (METRIC) (REV.03-17-04)

DATE PLOTTED => 12-JUN-2009 TIME PLOTTED => 15:20
USERNAME = trlim

DIST	COUNTY	ROUTE	KILOMETER POST TOTAL PROJECT	SHEET No	TOTAL SHEETS
07	LA	5	42.8/47.3	814	1073

Andrew Rittenhouse 12-05-08
REGISTERED CIVIL ENGINEER DATE

6-8-09
PLANS APPROVAL DATE

REGISTERED PROFESSIONAL ENGINEER
Andrew P. Rittenhouse
No. 61006
Exp. 12-31-10
CIVIL
STATE OF CALIFORNIA

The State of California or its officers or agents shall not be responsible for the accuracy or completeness of electronic copies of this plan sheet.

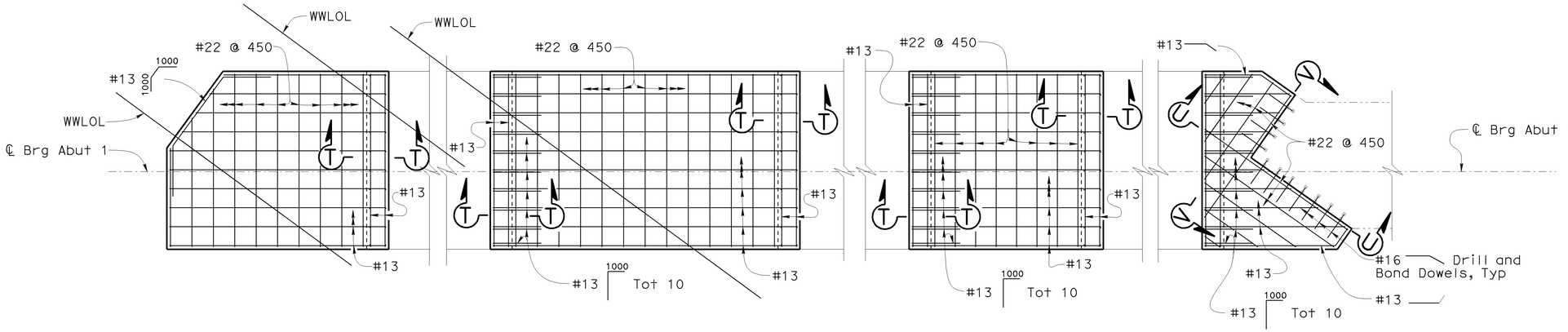

FOOTING TOP REINFORCEMENT ABUTMENT 1 RIGHT WIDEN

1:50

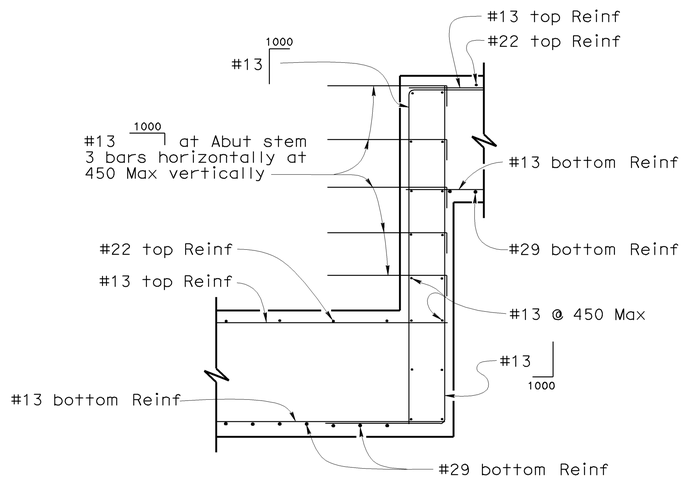

SECTION T-T

1:25

Note:
For "Section U-U" and "Section V-V" see "ABUTMENT DETAILS NO. 10" sheet.

Legend:
Indicates existing structure

NOTE:
THE CONTRACTOR SHALL VERIFY ALL CONTROLLING FIELD DIMENSIONS BEFORE ORDERING OR FABRICATING ANY MATERIAL.

Caltrans Metric

ALL DIMENSIONS ARE IN MILLIMETERS UNLESS OTHERWISE SHOWN

ORIGINAL SCALE IN MILLIMETERS FOR REDUCED PLANS 0 10 20 30 40 50 60 70 80 90 100

	BY	CHECKED
DESIGN	Ulysses Smpardos	F. Feng/C. Chan
DETAILS	Steven Schenck	F. Feng/C. Chan
QUANTITIES	E. Hall	R. Odell

STATE OF CALIFORNIA
DEPARTMENT OF TRANSPORTATION

DIVISION OF ENGINEERING SERVICES
STRUCTURE DESIGN
DESIGN BRANCH 15

CU 07
EA 121841

FILE => 53-1085-h-a21d09.dgn

BRIDGE NO.	PROVIDENCIA AVENUE OH (WIDEN)
53-1085	ABUTMENT DETAILS NO. 9
KILOMETER POST 46.1	

DISREGARD PRINTS BEARING EARLIER REVISION DATES →

REVISION DATES								SHEET	OF
01-23-09	1-23-09							25	152

STRUCTURES DESIGN DETAIL SHEET (METRIC) (REV.03-17-04)

DATE PLOTTED => 12-JUN-2009 TIME PLOTTED => 15:20
USERNAME => ttrim

DIST	COUNTY	ROUTE	KILOMETER POST TOTAL PROJECT	SHEET No	TOTAL SHEETS
07	LA	5	42.8/47.3	815	1073

Andrew Rittenhouse 12-05-08
REGISTERED CIVIL ENGINEER DATE

6-8-09
PLANS APPROVAL DATE

REGISTERED PROFESSIONAL ENGINEER
Andrew P. Rittenhouse
No. 61006
Exp. 12-31-10
CIVIL
STATE OF CALIFORNIA

The State of California or its officers or agents shall not be responsible for the accuracy or completeness of electronic copies of this plan sheet.

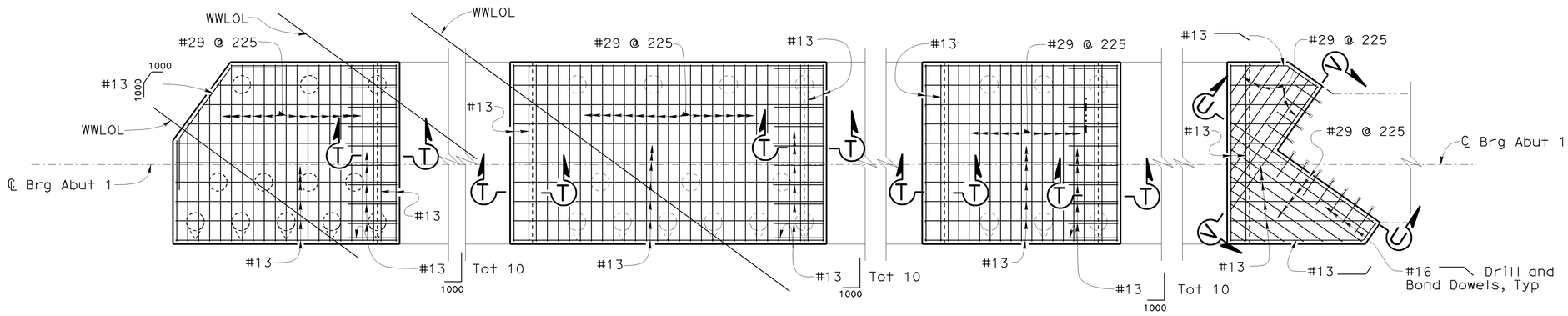

FOOTING BOTTOM REINFORCEMENT ABUTMENT 1 RIGHT WIDEN

1:50

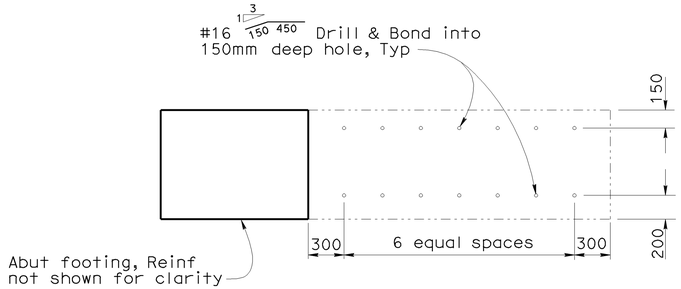

SECTION U-U

1:25

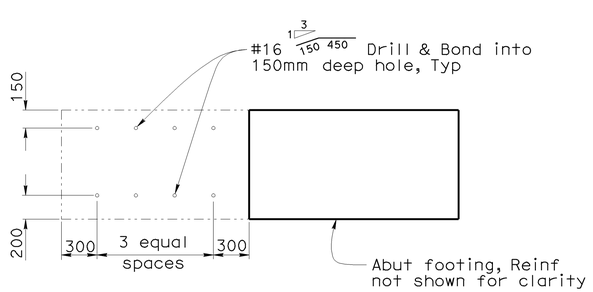

SECTION V-V

1:25

Note:
For "Section T-T" see "ABUTMENT DETAILS NO. 9" sheet.

Legend:

- Indicates existing structure
- Indicates vertical pile
- Indicates battered pile

NOTE:
THE CONTRACTOR SHALL VERIFY ALL CONTROLLING FIELD DIMENSIONS BEFORE ORDERING OR FABRICATING ANY MATERIAL.

	BY	CHECKED
DESIGN	Ulysses Smpardos	F. Feng/C. Chan
DETAILS	Steven Schenck	F. Feng/C. Chan
QUANTITIES	E. Hall	R. Odell

STATE OF CALIFORNIA
DEPARTMENT OF TRANSPORTATION

DIVISION OF ENGINEERING SERVICES
STRUCTURE DESIGN
DESIGN BRANCH 15

CU 07
EA 121841

BRIDGE NO. 53-1085
KILOMETER POST 46.1

PROVIDENCIA AVENUE OH (WIDEN)
ABUTMENT DETAILS NO. 10

ALL DIMENSIONS ARE IN MILLIMETERS UNLESS OTHERWISE SHOWN

ORIGINAL SCALE IN MILLIMETERS FOR REDUCED PLANS 0 10 20 30 40 50 60 70 80 90 100

DISREGARD PRINTS BEARING EARLIER REVISION DATES →

REVISION DATES: 1-28-09

SHEET 26 OF 152

FILE => 53-1085-h-a21d10.dgn

STRUCTURES DESIGN DETAIL SHEET (METRIC) (REV.03-17-04)

USERNAME => sfrith DATE PLOTTED => 12-JUN-2009 TIME PLOTTED => 15:20

DIST	COUNTY	ROUTE	KILOMETER POST TOTAL PROJECT	SHEET No	TOTAL SHEETS
07	LA	5	42.8/47.3	816	1073

Andrew Rittenhouse 12-05-08
REGISTERED CIVIL ENGINEER DATE

6-8-09
PLANS APPROVAL DATE

REGISTERED PROFESSIONAL ENGINEER
Andrew P. Rittenhouse
No. 61006
Exp. 12-31-10
CIVIL
STATE OF CALIFORNIA

The State of California or its officers or agents shall not be responsible for the accuracy or completeness of electronic copies of this plan sheet.

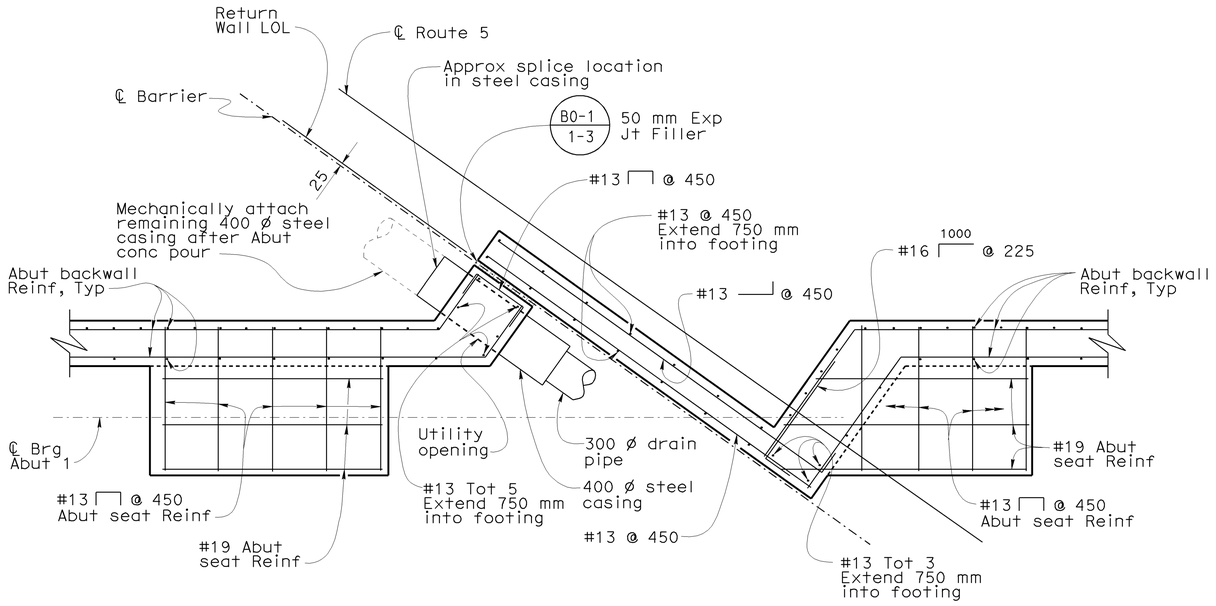

SECTION W-W

1:25

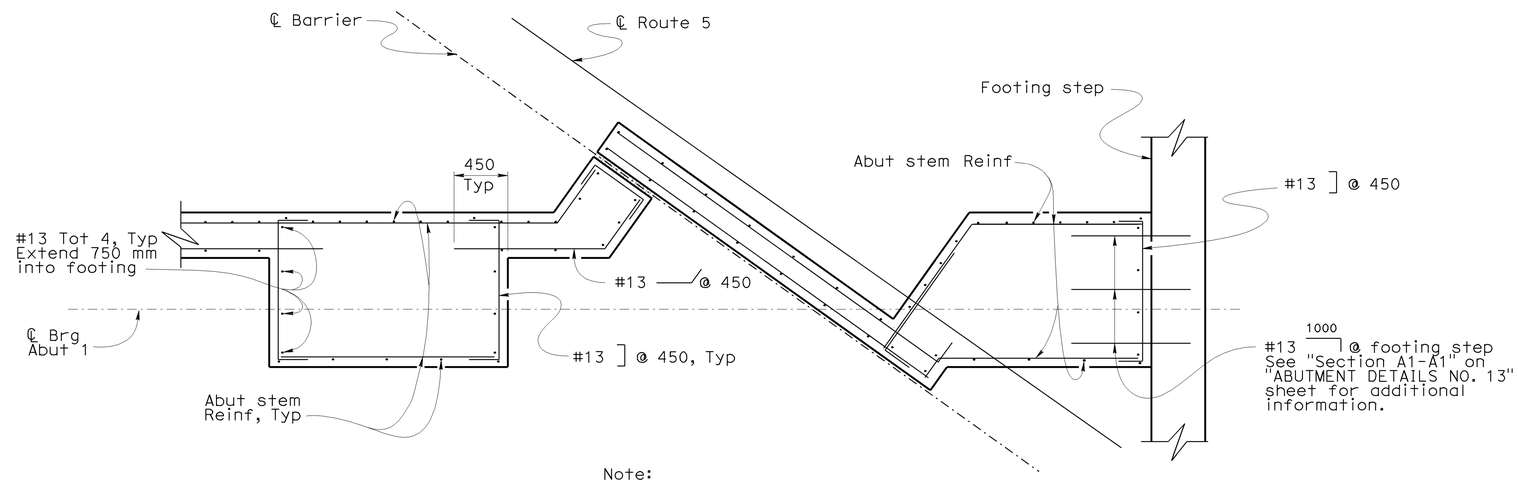

Note:

For information not shown or noted, see "Section W-W".

SECTION X-X

1:25

NOTE:
THE CONTRACTOR SHALL VERIFY ALL CONTROLLING FIELD DIMENSIONS BEFORE ORDERING OR FABRICATING ANY MATERIAL.

Caltrans Metric

	BY	CHECKED
DESIGN	Ulysses Smpardos	F. Feng/C. Chan
DETAILS	Steven Schenck	F. Feng/C. Chan
QUANTITIES	E. Hall	R. Odell

STATE OF CALIFORNIA
DEPARTMENT OF TRANSPORTATION

DIVISION OF ENGINEERING SERVICES
STRUCTURE DESIGN
DESIGN BRANCH 15

BRIDGE NO. 53-1085
KILOMETER POST 46.1

PROVIDENCIA AVENUE OH (WIDEN)
ABUTMENT DETAILS NO. 11

ALL DIMENSIONS ARE IN MILLIMETERS UNLESS OTHERWISE SHOWN

ORIGINAL SCALE IN MILLIMETERS FOR REDUCED PLANS 0 10 20 30 40 50 60 70 80 90 100

CU 07
EA 121841

DISREGARD PRINTS BEARING EARLIER REVISION DATES

REVISION DATES: 2-22-08 7-11-08 10-15-08 1-11-09 1-21-09 2-23-09

SHEET 27 OF 152

STRUCTURES DESIGN DETAIL SHEET (METRIC) (REV.03-17-04)

FILE => 53-1085-h-a21d11.dgn

USERNAME => trlim DATE PLOTTED => 12-JUN-2009 TIME PLOTTED => 15:21

DIST	COUNTY	ROUTE	KILOMETER POST TOTAL PROJECT	SHEET No	TOTAL SHEETS
07	LA	5	42.8/47.3	817	1073

Andrew P. Rittenhouse 12-05-08
REGISTERED CIVIL ENGINEER DATE

6-8-09
PLANS APPROVAL DATE

REGISTERED PROFESSIONAL ENGINEER
Andrew P. Rittenhouse
No. 61006
Exp. 12-31-10
CIVIL
STATE OF CALIFORNIA

The State of California or its officers or agents shall not be responsible for the accuracy or completeness of electronic copies of this plan sheet.

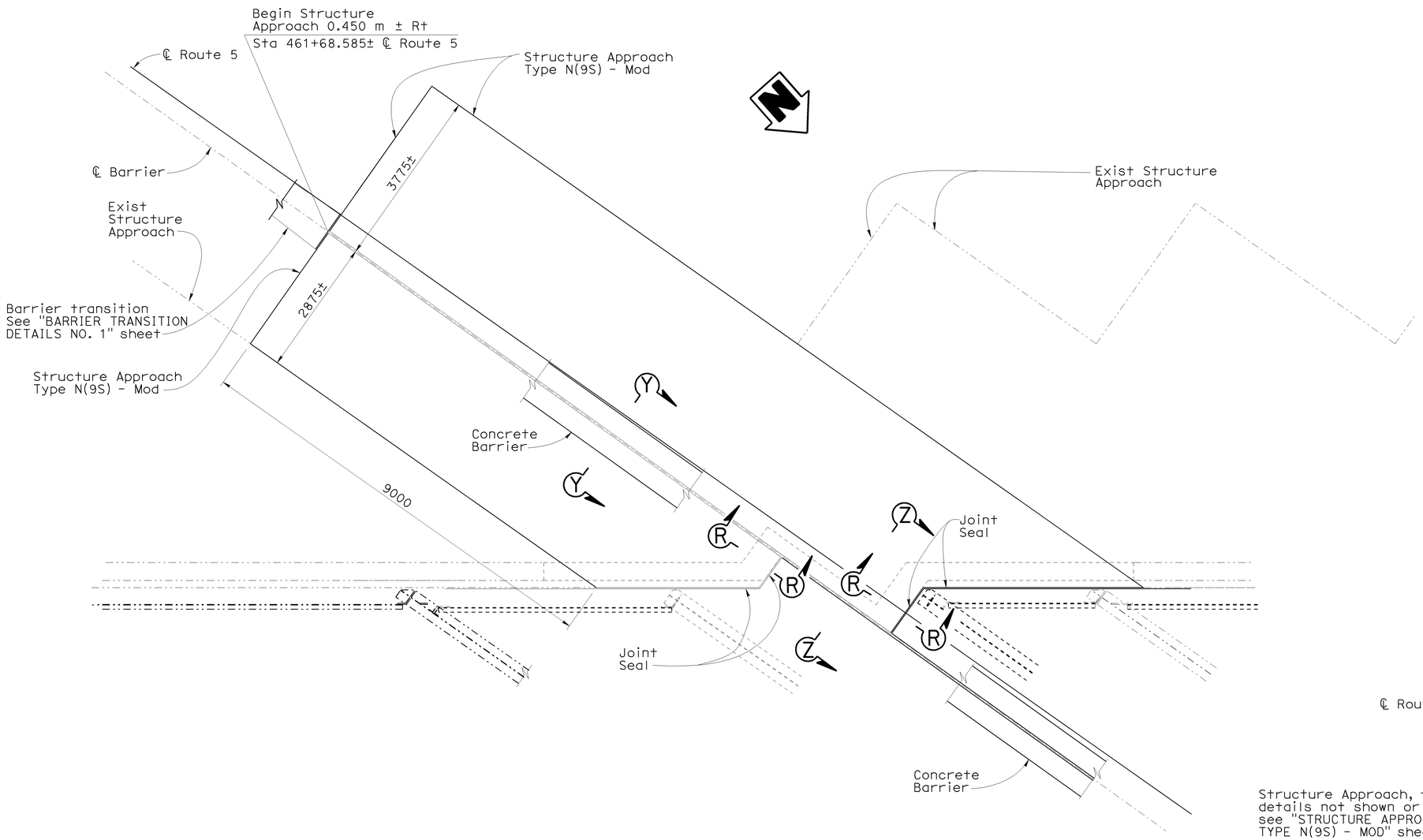

DECK PLAN VIEW AT ABUTMENT 1 MEDIAN WIDEN

1:50

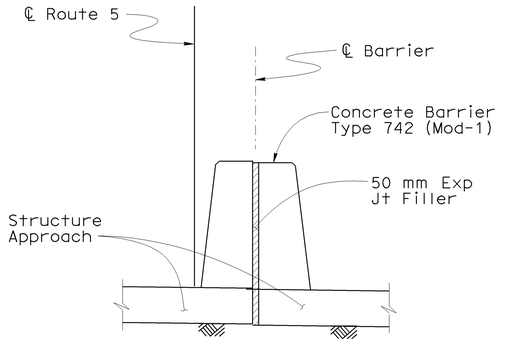

SECTION Y-Y

1:25

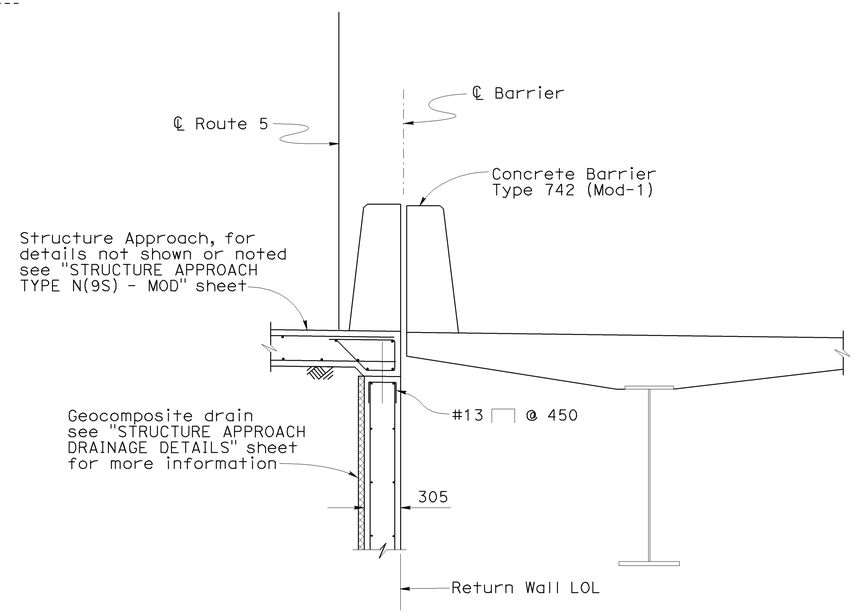

SECTION Z-Z

1:25

Notes:

For "Section R-R" see "ABUTMENT DETAILS NO. 7" sheet

Legend:

----- Indicates existing structure

NOTE:
THE CONTRACTOR SHALL VERIFY ALL CONTROLLING FIELD DIMENSIONS BEFORE ORDERING OR FABRICATING ANY MATERIAL.

DESIGN	BY Ulysses Smpardos	CHECKED F. Feng/C. Chan	STATE OF CALIFORNIA DEPARTMENT OF TRANSPORTATION	DIVISION OF ENGINEERING SERVICES STRUCTURE DESIGN	BRIDGE NO. 53-1085
DETAILS	BY Steven Schenck	CHECKED F. Feng/C. Chan		DESIGN BRANCH 15	KILOMETER POST 46.1
QUANTITIES	BY E. Hall	CHECKED R. Odell		CU 07 EA 121841	DISREGARD PRINTS BEARING EARLIER REVISION DATES →

PROVIDENCIA AVENUE OH (WIDEN)

ABUTMENT DETAILS NO. 12

ALL DIMENSIONS ARE IN MILLIMETERS UNLESS OTHERWISE SHOWN

ORIGINAL SCALE IN MILLIMETERS FOR REDUCED PLANS 0 10 20 30 40 50 60 70 80 90 100

REVISION DATES: 7-9-08 | 9-02-08 | 10-14-08 | 1-14-09 | 1-23-09 | 2-23-09

SHEET 28 OF 152

FILE => 53-1085-h-a21d12.dgn

STRUCTURES DESIGN DETAIL SHEET (METRIC) (REV.03-17-04)

USERNAME = trhim DATE PLOTTED => 12-JUN-2009 TIME PLOTTED => 15:21

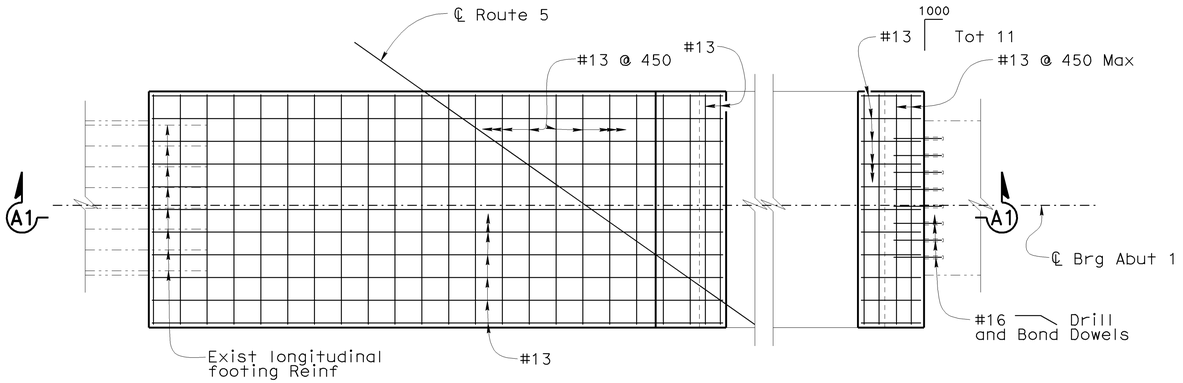

FOOTING TOP REINFORCEMENT ABUTMENT 1 MEDIAN WIDEN

1:50

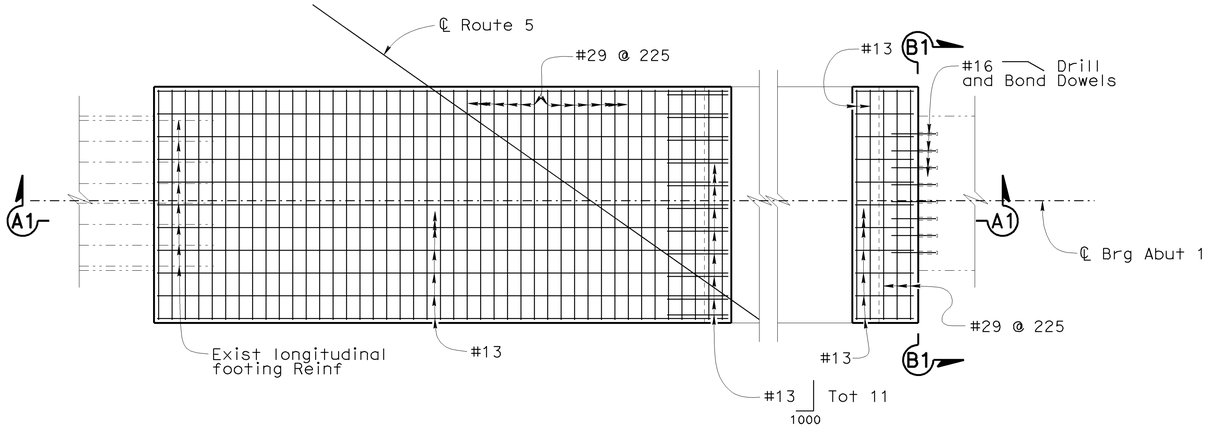

FOOTING BOTTOM REINFORCEMENT ABUTMENT 1 MEDIAN WIDEN

1:50

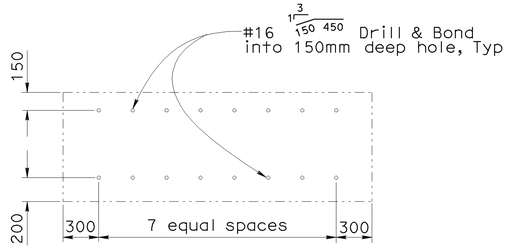

SECTION B1-B1

1:25

NOTE:
THE CONTRACTOR SHALL VERIFY ALL CONTROLLING FIELD DIMENSIONS BEFORE ORDERING OR FABRICATING ANY MATERIAL.

Legend:

Indicates existing structure

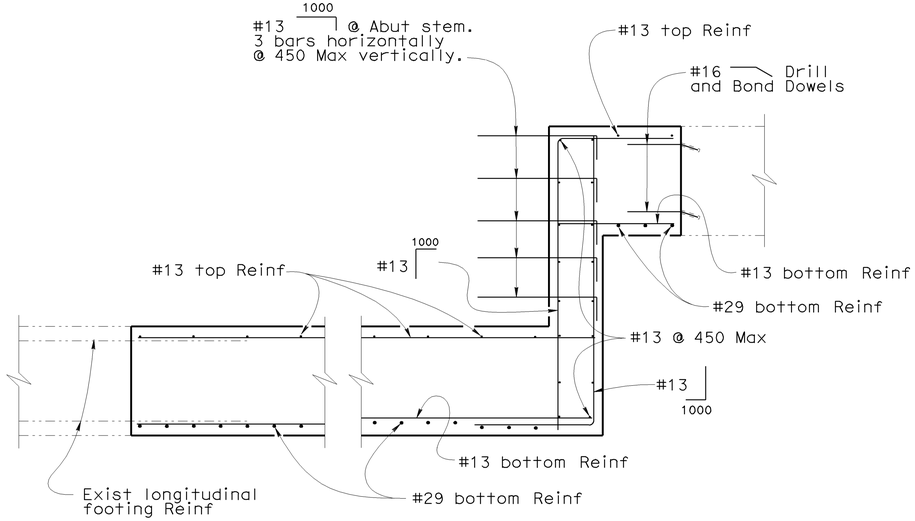

SECTION A1-A1

1:25

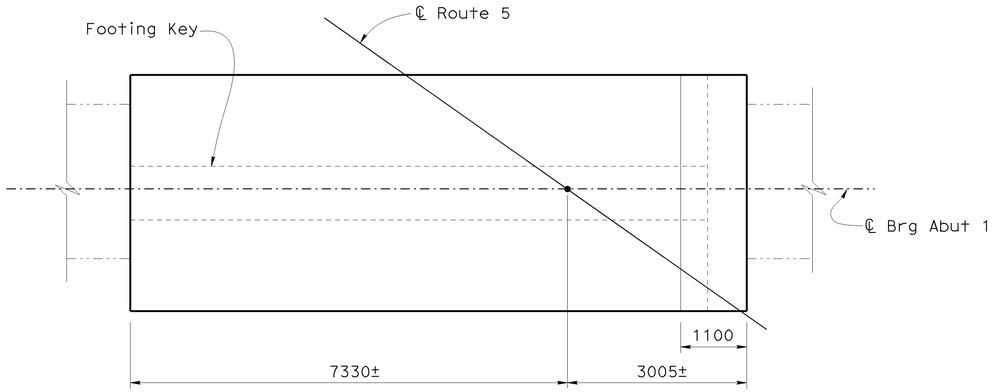

FOOTING PLAN ABUTMENT 1 MEDIAN WIDEN

1:50

DIST	COUNTY	ROUTE	KILOMETER POST TOTAL PROJECT	SHEET No	TOTAL SHEETS
07	LA	5	42.8/47.3	818	1073

Andrew Rittenhouse 12-05-08
REGISTERED CIVIL ENGINEER DATE

6-8-09
PLANS APPROVAL DATE

REGISTERED PROFESSIONAL ENGINEER
Andrew P. Rittenhouse
No. 61006
Exp. 12-31-10
CIVIL
STATE OF CALIFORNIA

The State of California or its officers or agents shall not be responsible for the accuracy or completeness of electronic copies of this plan sheet.

	BY	CHECKED
DESIGN	Ulysses Smpardos	F. Feng/C. Chan
DETAILS	Steven Schenck	F. Feng/C. Chan
QUANTITIES	E. Hall	R. Odell

STATE OF CALIFORNIA
DEPARTMENT OF TRANSPORTATION

DIVISION OF ENGINEERING SERVICES
STRUCTURE DESIGN
DESIGN BRANCH 15

CU 07
EA 121841

BRIDGE NO. 53-1085
KILOMETER POST 46.1

PROVIDENCIA AVENUE OH (WIDEN)
ABUTMENT DETAILS NO. 13

ALL DIMENSIONS ARE IN MILLIMETERS UNLESS OTHERWISE SHOWN

ORIGINAL SCALE IN MILLIMETERS FOR REDUCED PLANS 0 10 20 30 40 50 60 70 80 90 100

DISREGARD PRINTS BEARING EARLIER REVISION DATES →

REVISION DATES: 9-09-08 | 10-14-08 | 1-14-09 | 1-23-09

SHEET 29 OF 152

FILE => 53-1085-h-a21d13.dgn

STRUCTURES DESIGN DETAIL SHEET (METRIC) (REV.03-17-04)

DATE PLOTTED => 12-JUN-2009 TIME PLOTTED => 15:21
USERNAME => trlim

DIST	COUNTY	ROUTE	KILOMETER POST TOTAL PROJECT	SHEET No	TOTAL SHEETS
07	LA	5	42.8/47.3	819	1073

Andrew P. Rittenhouse 12-05-08
REGISTERED CIVIL ENGINEER DATE

6-8-09
PLANS APPROVAL DATE

REGISTERED PROFESSIONAL ENGINEER — Andrew P. Rittenhouse — No. 61006 — Exp. 12-31-10 — CIVIL — STATE OF CALIFORNIA

The State of California or its officers or agents shall not be responsible for the accuracy or completeness of electronic copies of this plan sheet.

Notes:

1. For "Section H1-H1", "Section J1-J1", "Section K1-K1", "Section L1-L1" and "Section M1-M1" see "ABUTMENT DETAILS NO. 15" sheet.
2. For architectural treatment not shown see "ARCHITECTURAL DETAILS" sheet.

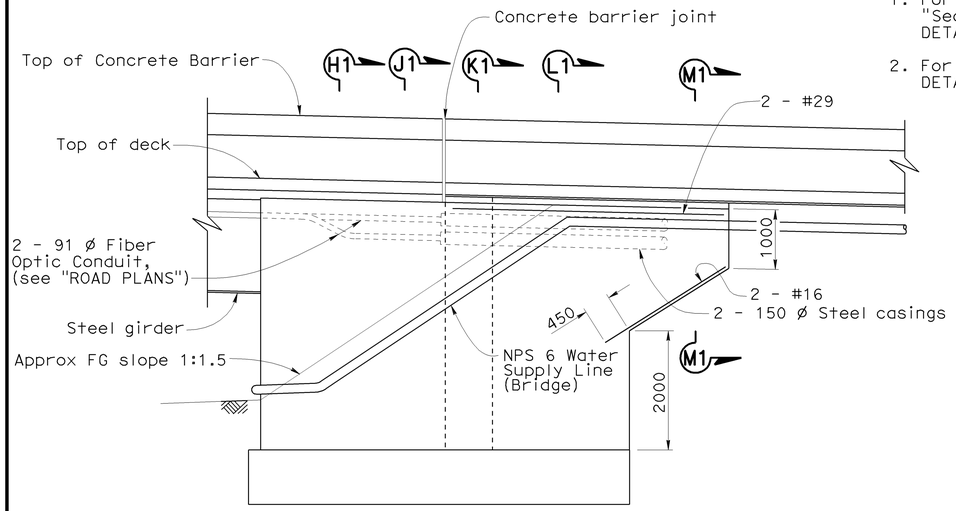

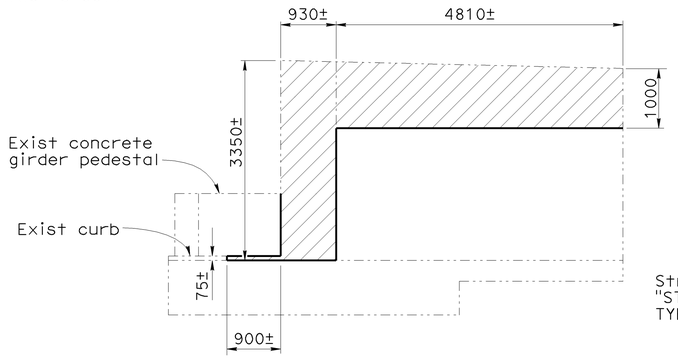

VIEW C1-C1
1:50

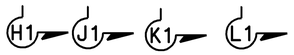

Note:
Chain link railing not shown.

VIEW D1-D1
1:50

Legend:

-----	Indicates existing structure
▨	Indicates Bridge Removal (Portion)
*	Match existing

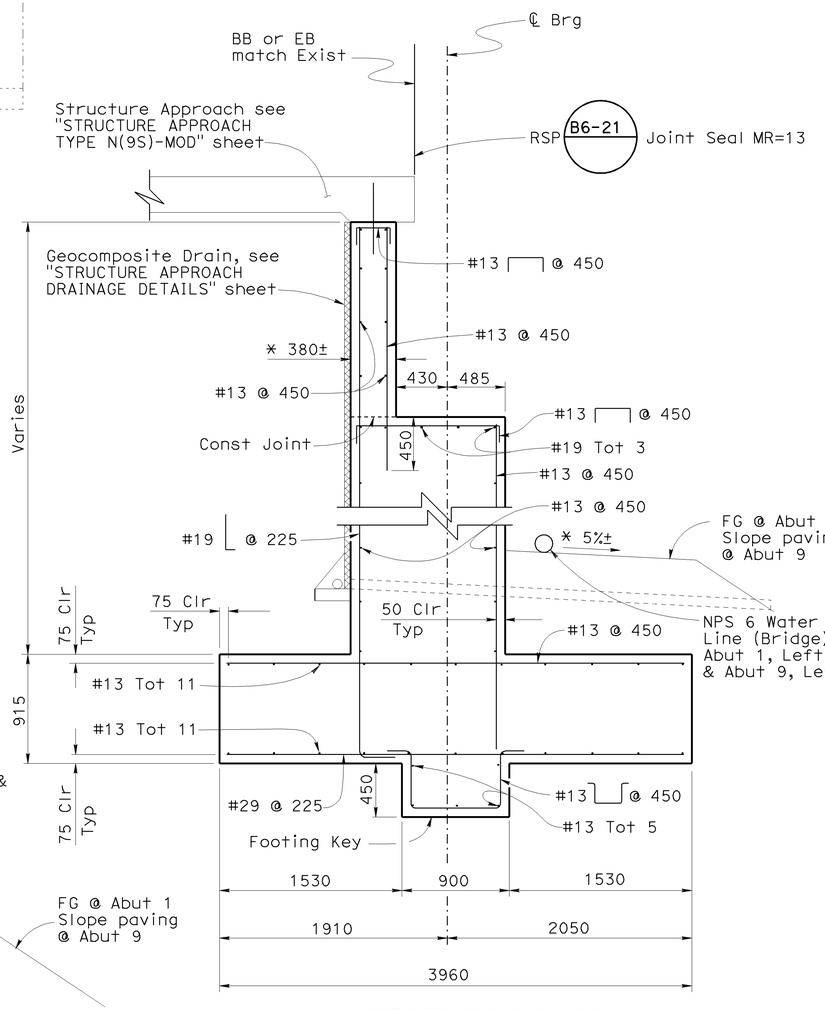

SECTION G1-G1
1:25

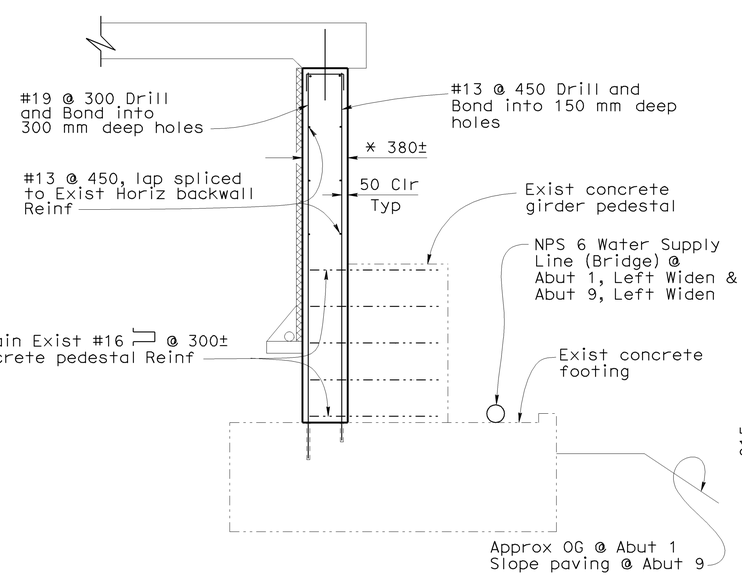

SECTION E1-E1
1:25

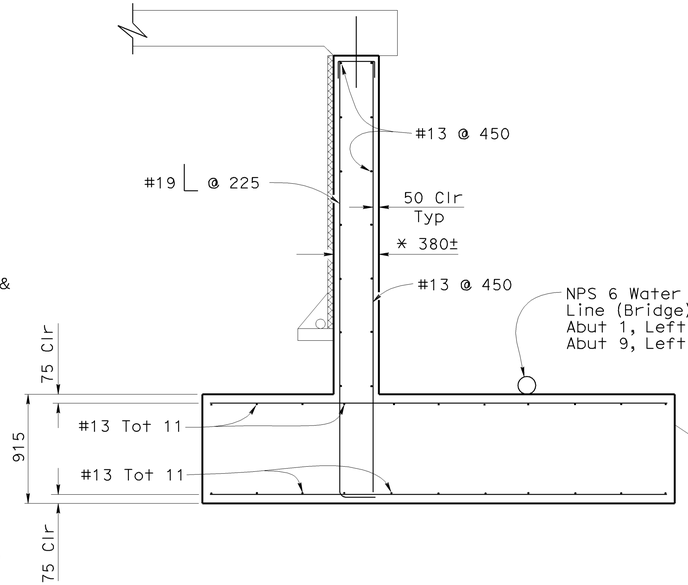

SECTION F1-F1
1:25

NOTE:
THE CONTRACTOR SHALL VERIFY ALL CONTROLLING FIELD DIMENSIONS BEFORE ORDERING OR FABRICATING ANY MATERIAL.

Note:
For information not shown or noted see "Section G1-G1"

Caltrans Metric

	BY	CHECKED
DESIGN	Ulysses Smpardos	F. Feng/C. Chan
DETAILS	Steven Schenck	F. Feng/C. Chan
QUANTITIES	E. Hall	R. Odell

STATE OF CALIFORNIA
DEPARTMENT OF TRANSPORTATION

DIVISION OF ENGINEERING SERVICES
STRUCTURE DESIGN
DESIGN BRANCH 15

CU 07
EA 121841

BRIDGE NO. 53-1085
KILOMETER POST 46.1

PROVIDENCIA AVENUE OH (WIDEN)
ABUTMENT DETAILS NO. 14

ALL DIMENSIONS ARE IN MILLIMETERS UNLESS OTHERWISE SHOWN

ORIGINAL SCALE IN MILLIMETERS FOR REDUCED PLANS 0 10 20 30 40 50 60 70 80 90 100

DISREGARD PRINTS BEARING EARLIER REVISION DATES →

REVISION DATES: 1-15-08 | 4-15-08 | 6-6-08 | 8-11-08 | 10-14-08 | 11-30-08 | 1-14-09 | 1-23-09 | 2-23-09 | 3-12-09

SHEET 30 OF 152

STRUCTURES DESIGN DETAIL SHEET (METRIC) (REV.03-17-04)

FILE => 53-1085-h-a21d14.dgn

USERNAME => tfrith DATE PLOTTED => 12-JUN-2009 TIME PLOTTED => 15:21

DIST	COUNTY	ROUTE	KILOMETER POST TOTAL PROJECT	SHEET No	TOTAL SHEETS
07	LA	5	42.8/47.3	820	1073

Andrew P. Rittenhouse 12-05-08
REGISTERED CIVIL ENGINEER DATE

6-8-09
PLANS APPROVAL DATE

REGISTERED PROFESSIONAL ENGINEER — Andrew P. Rittenhouse — No. 61006 — Exp. 12-31-10 — CIVIL — STATE OF CALIFORNIA

The State of California or its officers or agents shall not be responsible for the accuracy or completeness of electronic copies of this plan sheet.

Note:

1. Slope paving gutter at Abutment 9 not shown.

Legend:

* Thickness required for architectural treatment shall be in addition to wall thickness indicated in details. See "ARCHITECTURAL DETAILS" sheet for additional information.

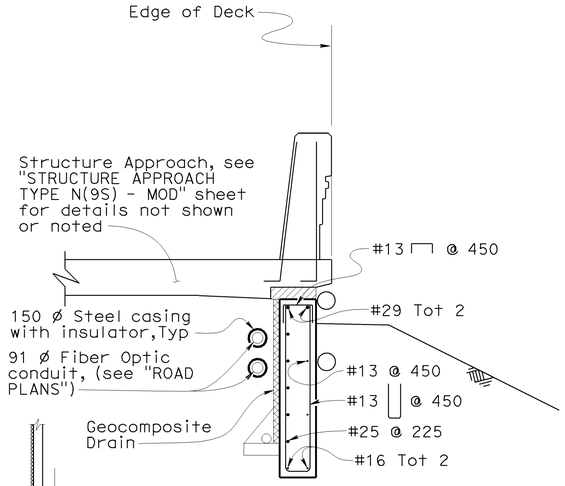

SECTION M1-M1
1:25

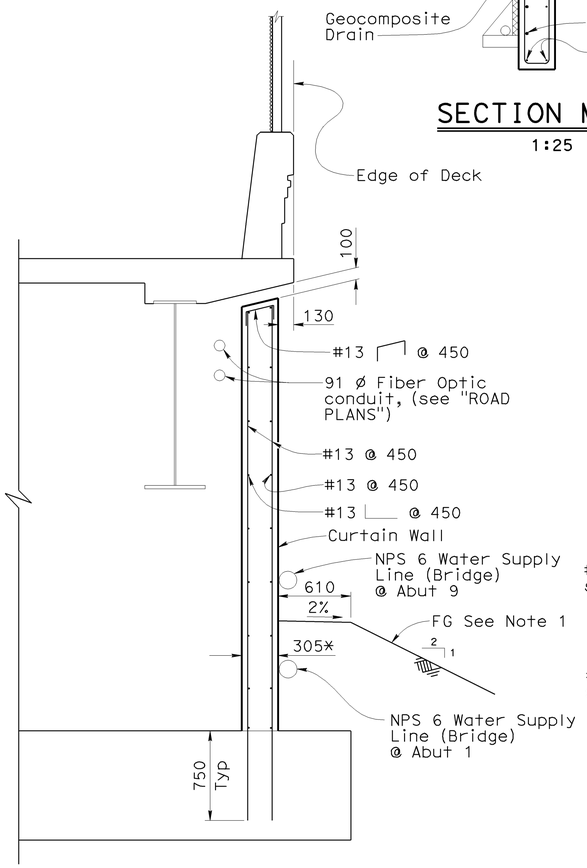

SECTION H1-H1
1:25

NOTE:
THE CONTRACTOR SHALL VERIFY ALL CONTROLLING FIELD DIMENSIONS BEFORE ORDERING OR FABRICATING ANY MATERIAL.

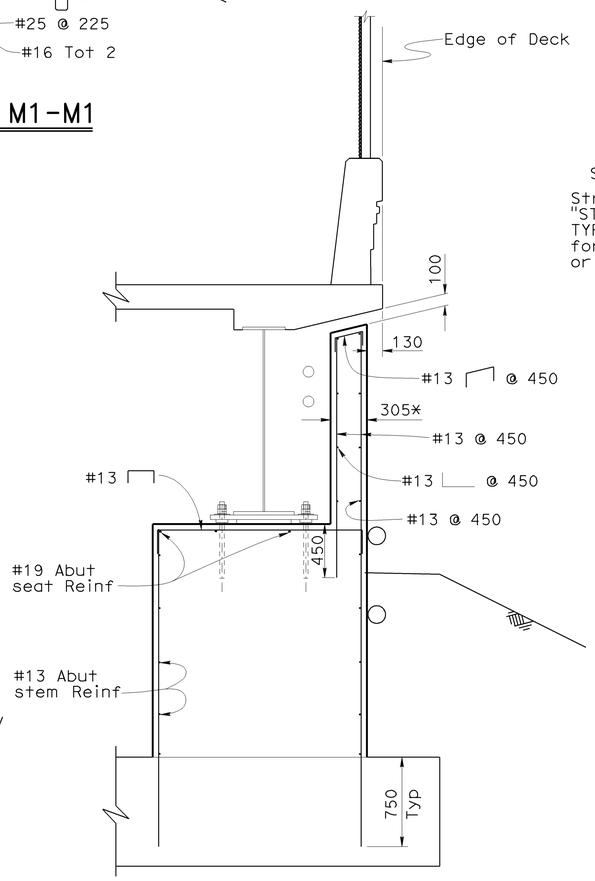

SECTION J1-J1
1:25

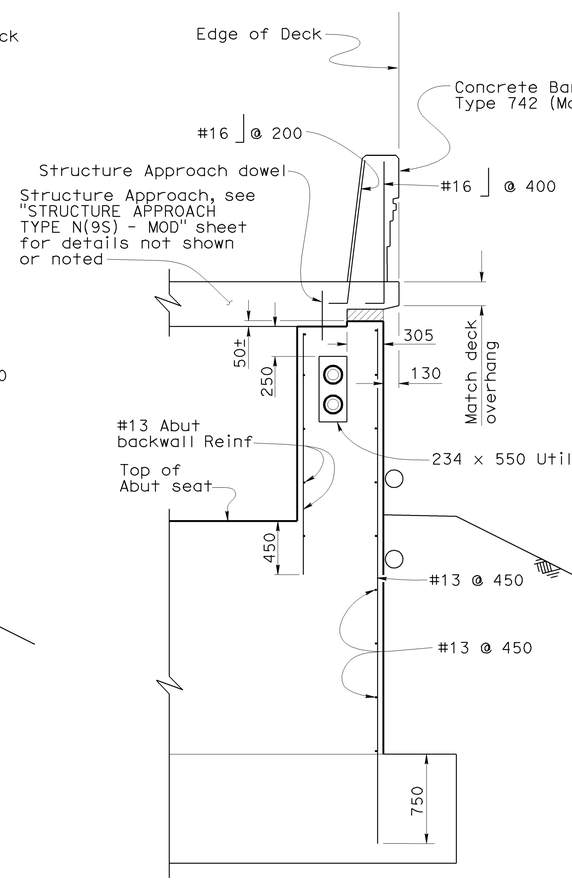

SECTION K1-K1
1:25

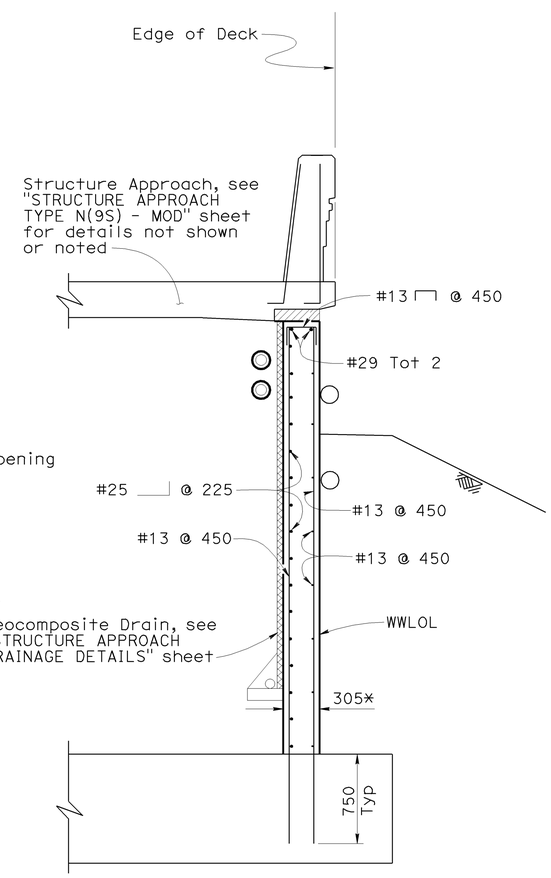

SECTION L1-L1
1:25

DESIGN	BY Ulysses Smpardos	CHECKED F. Feng/C. Chan	STATE OF CALIFORNIA DEPARTMENT OF TRANSPORTATION
DETAILS	BY Steven Schenck	CHECKED F. Feng/C. Chan	DIVISION OF ENGINEERING SERVICES STRUCTURE DESIGN DESIGN BRANCH 15
QUANTITIES	BY E. Hall	CHECKED R. Odell	CU 07 EA 121841

BRIDGE NO. 53-1085
KILOMETER POST 46.1

PROVIDENCIA AVENUE OH (WIDEN)
ABUTMENT DETAILS NO. 15

Caltrans Metric

ALL DIMENSIONS ARE IN MILLIMETERS UNLESS OTHERWISE SHOWN

ORIGINAL SCALE IN MILLIMETERS FOR REDUCED PLANS 0 10 20 30 40 50 60 70 80 90 100

DISREGARD PRINTS BEARING EARLIER REVISION DATES →

REVISION DATES: 1-25-08 | 10-14-08 | 11-21-08 | 1-23-09 | 1-26-09 | 2-24-09 | 3-12-09

SHEET 31 OF 152

FILE => 53-1085-h-a21d15.dgn

STRUCTURES DESIGN DETAIL SHEET (METRIC) (REV.03-17-04)

USERNAME => tfrlim DATE PLOTTED => 12-JUN-2009 TIME PLOTTED => 15:21

DIST	COUNTY	ROUTE	KILOMETER POST TOTAL PROJECT	SHEET No	TOTAL SHEETS
07	LA	5	42.8/47.3	821	1073

Andrew R. Rittenhouse 12-05-08
REGISTERED CIVIL ENGINEER DATE

6-8-09
PLANS APPROVAL DATE

Andrew P. Rittenhouse No. 61006 Exp. 12-31-10 CIVIL — REGISTERED PROFESSIONAL ENGINEER — STATE OF CALIFORNIA

The State of California or its officers or agents shall not be responsible for the accuracy or completeness of electronic copies of this plan sheet.

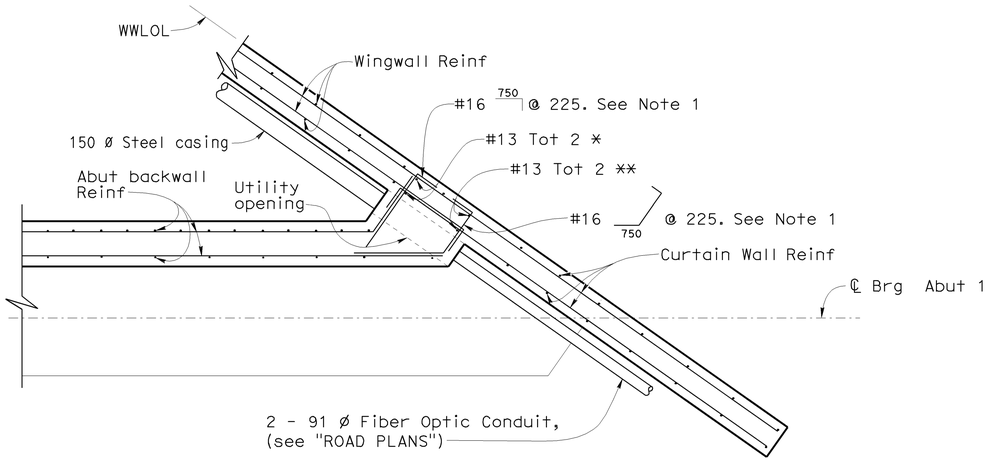

SECTION N1-N1
1:25

Notes:

1. Adjust spacing of reinforcement to avoid utility opening.

Legend:

* Extend reinforcement 750mm into footing

** Extend reinforcement 450mm past abutment seat

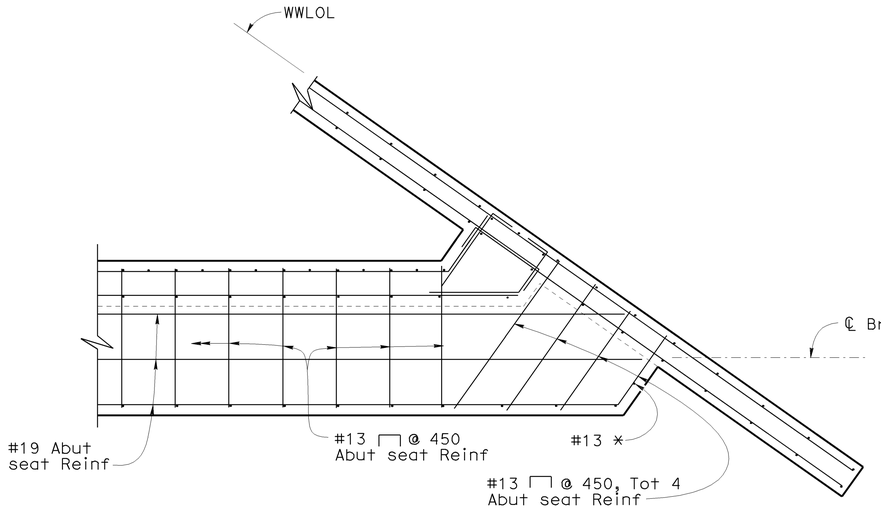

SECTION P1-P1
1:25

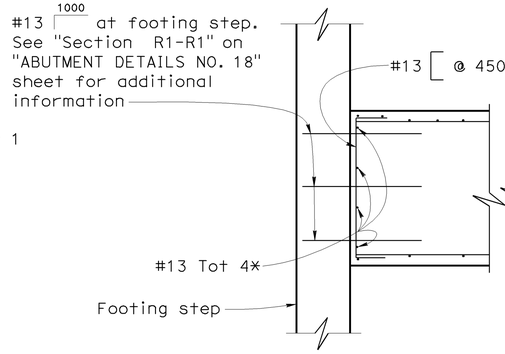

Note:

For information not shown or noted, see "Section N1-N1" and "Section Q1-Q1"

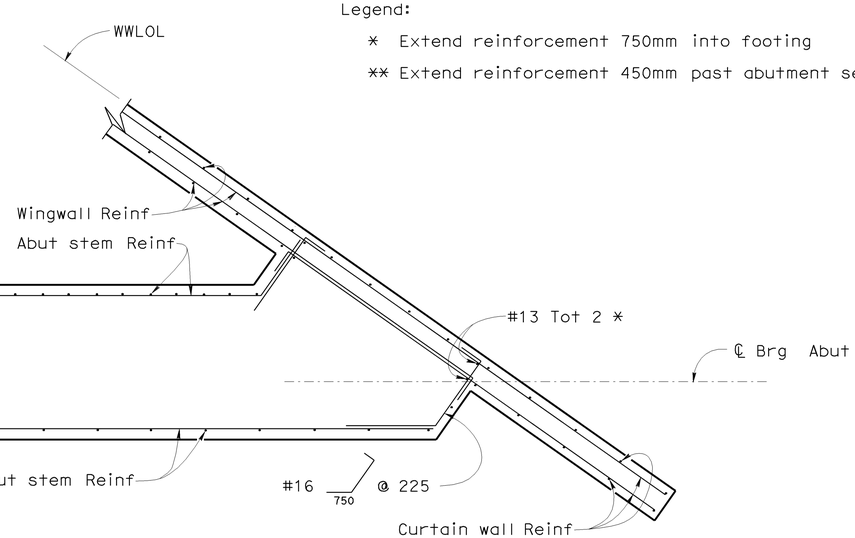

SECTION Q1-Q1
1:25

NOTE:
THE CONTRACTOR SHALL VERIFY ALL CONTROLLING FIELD DIMENSIONS BEFORE ORDERING OR FABRICATING ANY MATERIAL.

Caltrans Metric

	BY	CHECKED
DESIGN	Ulysses Smpardos	F. Feng/C. Chan
DETAILS	Steven Schenck	F. Feng/C. Chan
QUANTITIES	E. Hall	R. Odell

STATE OF CALIFORNIA
DEPARTMENT OF TRANSPORTATION

DIVISION OF ENGINEERING SERVICES
STRUCTURE DESIGN
DESIGN BRANCH 15

BRIDGE NO. 53-1085
KILOMETER POST 46.1

PROVIDENCIA AVENUE OH (WIDEN)
ABUTMENT DETAILS NO. 16

ALL DIMENSIONS ARE IN MILLIMETERS UNLESS OTHERWISE SHOWN

ORIGINAL SCALE IN MILLIMETERS FOR REDUCED PLANS 0 10 20 30 40 50 60 70 80 90 100

CU 07
EA 121841

DISREGARD PRINTS BEARING EARLIER REVISION DATES →

REVISION DATES: 1-24-08 | 4-18-08 | 10-14-08 | 11-28-08 | 1-23-09 | 1-27-09 | 2-24-09

SHEET 32 OF 152

FILE => 53-1085-h-a21d16.dgn

STRUCTURES DESIGN DETAIL SHEET (METRIC) (REV.03-17-04)

DATE PLOTTED => 12-JUN-2009 TIME PLOTTED => 15:21
USERNAME => rtrim

DIST	COUNTY	ROUTE	KILOMETER POST TOTAL PROJECT	SHEET No	TOTAL SHEETS
07	LA	5	42.8/47.3	822	1073

Andrew Rittenhouse 12-05-08
REGISTERED CIVIL ENGINEER DATE

6-8-09
PLANS APPROVAL DATE

REGISTERED PROFESSIONAL ENGINEER
Andrew P. Rittenhouse
No. 61006
Exp. 12-31-10
CIVIL
STATE OF CALIFORNIA

The State of California or its officers or agents shall not be responsible for the accuracy or completeness of electronic copies of this plan sheet.

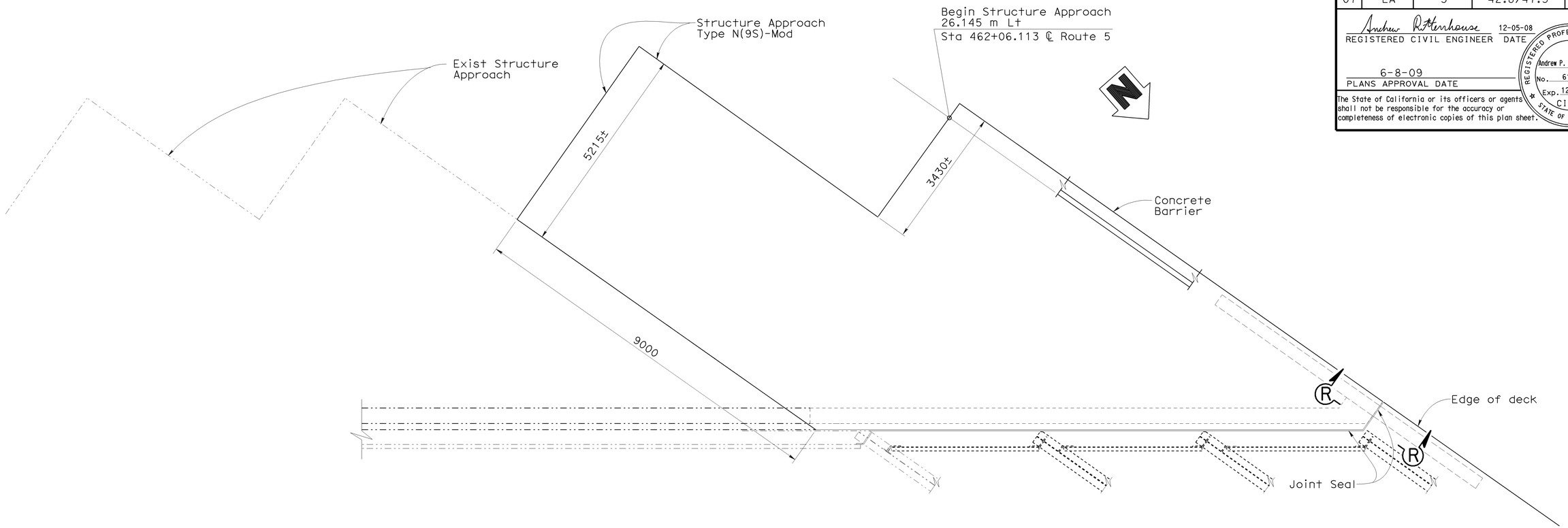

DECK PLAN VIEW AT ABUTMENT 1 LEFT WIDEN

1:50

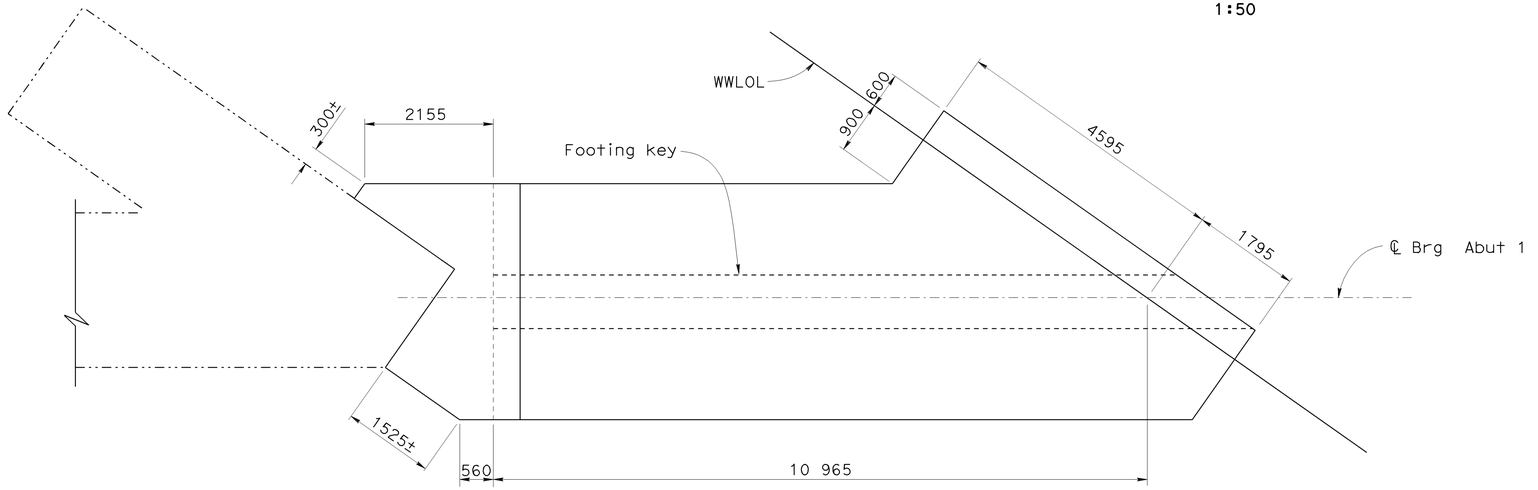

FOOTING PLAN ABUTMENT 1 LEFT WIDEN

1:50

NOTE:
THE CONTRACTOR SHALL VERIFY ALL CONTROLLING FIELD DIMENSIONS BEFORE ORDERING OR FABRICATING ANY MATERIAL.

Notes:

For "Section R-R" see "ABUTMENT DETAILS NO. 7" sheet

Legend:

Indicates existing structure

DESIGN	BY Ulysses Smpardos	CHECKED F. Feng/C. Chan	STATE OF CALIFORNIA DEPARTMENT OF TRANSPORTATION
DETAILS	BY Steven Schenck	CHECKED F. Feng/C. Chan	DIVISION OF ENGINEERING SERVICES STRUCTURE DESIGN
QUANTITIES	BY E. Hall	CHECKED R. Odell	DESIGN BRANCH 15

Caltrans Metric

ALL DIMENSIONS ARE IN MILLIMETERS UNLESS OTHERWISE SHOWN

ORIGINAL SCALE IN MILLIMETERS FOR REDUCED PLANS 0 10 20 30 40 50 60 70 80 90 100

CU 07
EA 121841

BRIDGE NO. 53-1085
KILOMETER POST 46.1

DISREGARD PRINTS BEARING EARLIER REVISION DATES →

REVISION DATES: 1-24-08 | 4-18-08 | 10-14-08 | 10-31-08 | 1-23-09 | 1-22-09 | 2-24-09

PROVIDENCIA AVENUE OH (WIDEN)

ABUTMENT DETAILS NO. 17

SHEET 33 OF 152

FILE => 53-1085-h-a21d17.dgn

STRUCTURES DESIGN DETAIL SHEET (METRIC) (REV.03-17-04)

USERNAME => trlim DATE PLOTTED => 12-JUN-2009 TIME PLOTTED => 15:21

DIST	COUNTY	ROUTE	KILOMETER POST TOTAL PROJECT	SHEET No	TOTAL SHEETS
07	LA	5	42.8/47.3	823	1073

Legend:
-·-·-·- Indicates existing structure

REGISTERED CIVIL ENGINEER 12-05-08 DATE

6-8-09
PLANS APPROVAL DATE

The State of California or its officers or agents shall not be responsible for the accuracy or completeness of electronic copies of this plan sheet.

REGISTERED PROFESSIONAL ENGINEER Andrew P. Rittenhouse No. 61006 Exp. 12-31-10 CIVIL STATE OF CALIFORNIA

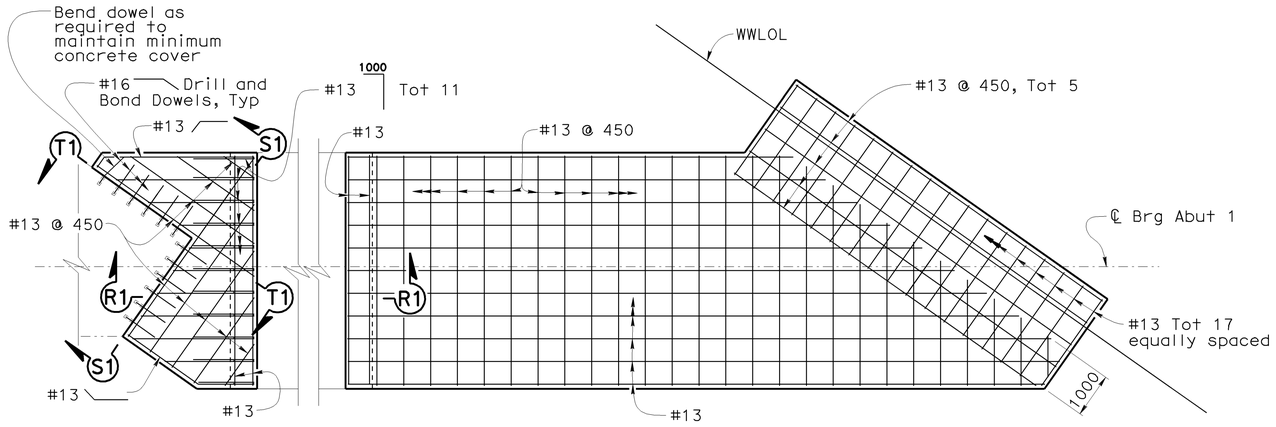

FOOTING TOP REINFORCEMENT ABUTMENT 1 LEFT WIDEN

1:50

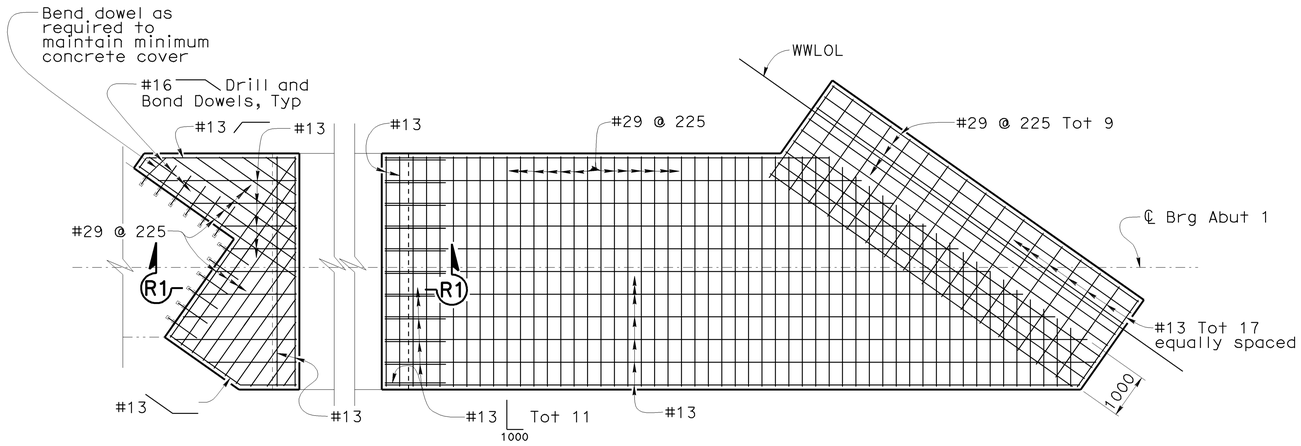

FOOTING BOTTOM REINFORCEMENT ABUTMENT 1 LEFT WIDEN

1:50

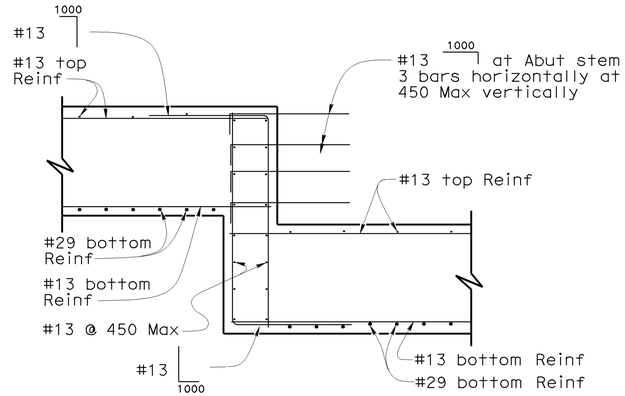

SECTION R1-R1

1:25

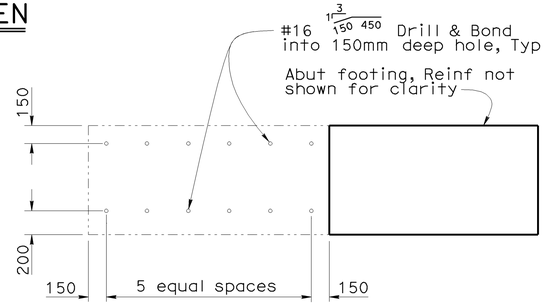

SECTION S1-S1

1:25

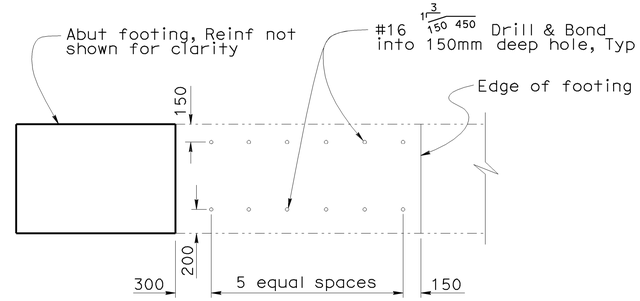

SECTION T1-T1

1:25

NOTE:
THE CONTRACTOR SHALL VERIFY ALL CONTROLLING FIELD DIMENSIONS BEFORE ORDERING OR FABRICATING ANY MATERIAL.

Caltrans Metric

	BY	CHECKED
DESIGN	Ulysses Smpardos	F. Feng/C. Chan
DETAILS	Steven Schenck	F. Feng/C. Chan
QUANTITIES	E. Hall	R. Odell

STATE OF CALIFORNIA
DEPARTMENT OF TRANSPORTATION

DIVISION OF ENGINEERING SERVICES
STRUCTURE DESIGN
DESIGN BRANCH 15

BRIDGE NO. 53-1085
KILOMETER POST 46.1

PROVIDENCIA AVENUE OH (WIDEN)
ABUTMENT DETAILS NO. 18

ALL DIMENSIONS ARE IN MILLIMETERS UNLESS OTHERWISE SHOWN

ORIGINAL SCALE IN MILLIMETERS FOR REDUCED PLANS 0 10 20 30 40 50 60 70 80 90 100

CU 07
EA 121841

DISREGARD PRINTS BEARING EARLIER REVISION DATES

REVISION DATES: 4-12-08 7-1-08 10-14-08 10-31-08 1-23-09 1-29-09

SHEET 34 OF 152

FILE => 53-1085-h-a21d18.dgn

STRUCTURES DESIGN DETAIL SHEET (METRIC) (REV.03-17-04)

USERNAME => trlim DATE PLOTTED => 12-JUN-2009 TIME PLOTTED => 15:21

DIST	COUNTY	ROUTE	KILOMETER POST TOTAL PROJECT	SHEET No	TOTAL SHEETS
07	LA	5	42.8/47.3	824	1073

Andrew R Rittenhouse 12-05-08
REGISTERED CIVIL ENGINEER DATE

6-8-09
PLANS APPROVAL DATE

The State of California or its officers or agents shall not be responsible for the accuracy or completeness of electronic copies of this plan sheet.

REGISTERED PROFESSIONAL ENGINEER
Andrew P. Rittenhouse
No. 61006
Exp. 12-31-10
CIVIL
STATE OF CALIFORNIA

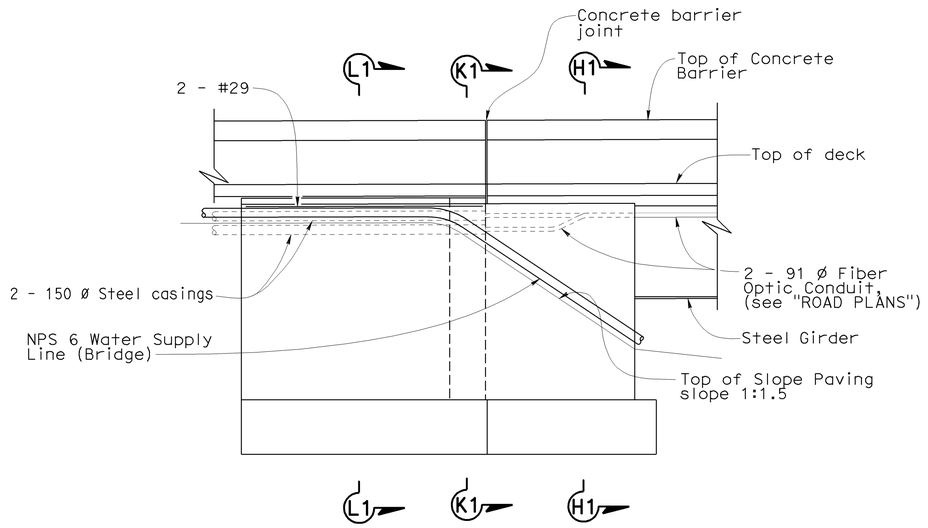

VIEW V1-V1
1:50

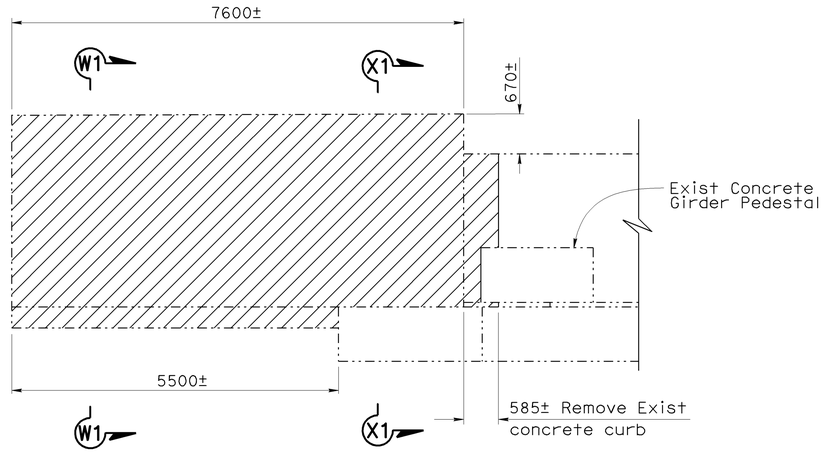

VIEW U1-U1
1:50

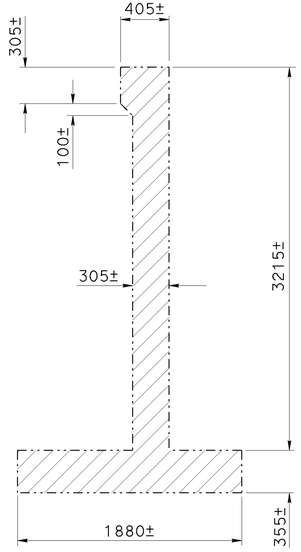

SECTION W1-W1
1:25

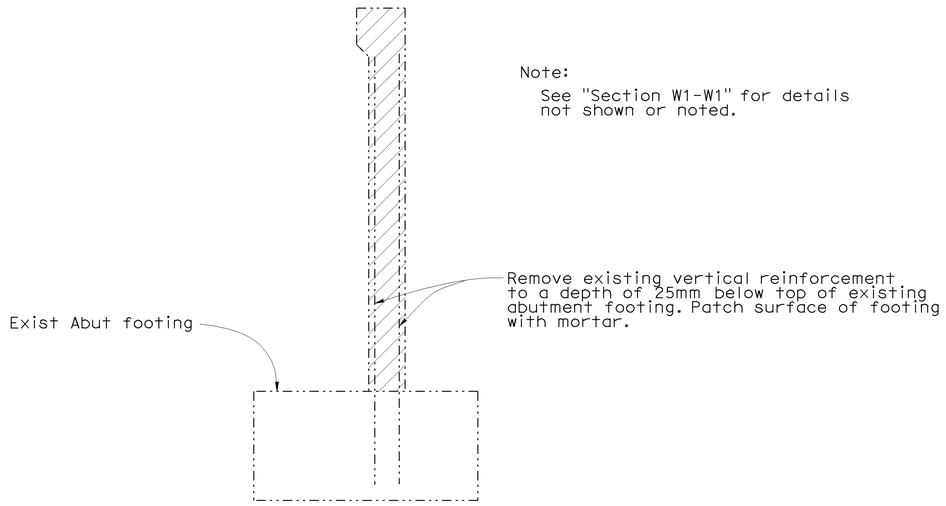

SECTION X1-X1
1:25

Note:
See "Section W1-W1" for details not shown or noted.

Notes:

1. For "Section H1-H1", "Section K1-K1" and "Section L1-L1" see "ABUTMENT DETAILS NO. 15" sheet.
2. For architectural treatment not shown see "ARCHITECTURAL DETAILS" sheet.

Legend:

Indicates Bridge Removal (Portion)

Indicates existing structure

NOTE:
THE CONTRACTOR SHALL VERIFY ALL CONTROLLING FIELD DIMENSIONS BEFORE ORDERING OR FABRICATING ANY MATERIAL.

Caltrans Metric

ALL DIMENSIONS ARE IN MILLIMETERS UNLESS OTHERWISE SHOWN

ORIGINAL SCALE IN MILLIMETERS FOR REDUCED PLANS 0 10 20 30 40 50 60 70 80 90 100

	BY	CHECKED
DESIGN	Ulysses Smpardos	F. Feng/C. Chan
DETAILS	Steven Schenck	F. Feng/C. Chan
QUANTITIES	E. Hall	R. Odell

STATE OF CALIFORNIA
DEPARTMENT OF TRANSPORTATION

DIVISION OF ENGINEERING SERVICES
STRUCTURE DESIGN
DESIGN BRANCH 15

CU 07
EA 121841

BRIDGE NO. 53-1085
KILOMETER POST 46.1

PROVIDENCIA AVENUE OH (WIDEN)
ABUTMENT DETAILS NO. 19

DISREGARD PRINTS BEARING EARLIER REVISION DATES →

REVISION DATES: 6-17-08 | 8-12-08 | 10-14-08 | 11-30-08 | 1-23-09 | 1-28-09 | 2-24-09 | 3-12-09

SHEET 35 OF 152

STRUCTURES DESIGN DETAIL SHEET (METRIC) (REV.03-17-04)

FILE => 53-1085-h-a21d19.dgn

USERNAME = tfrith DATE PLOTTED => 12-JUN-2009 TIME PLOTTED => 15:21

DIST	COUNTY	ROUTE	KILOMETER POST TOTAL PROJECT	SHEET No	TOTAL SHEETS
07	LA	5	42.8/47.3	825	1073

Andrew Rittenhouse 12-05-08
REGISTERED CIVIL ENGINEER DATE

6-8-09
PLANS APPROVAL DATE

REGISTERED PROFESSIONAL ENGINEER
Andrew P. Rittenhouse
No. 61006
Exp. 12-31-10
CIVIL
STATE OF CALIFORNIA

The State of California or its officers or agents shall not be responsible for the accuracy or completeness of electronic copies of this plan sheet.

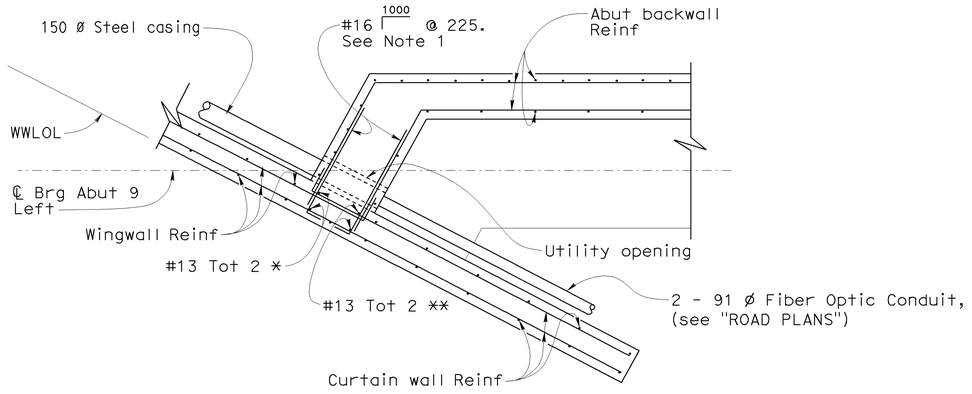

SECTION Y1-Y1
1:25

Notes:

1. Adjust spacing of reinforcement to avoid utility opening.

Legend:

* Extend reinforcement 750mm into footing.

** Extend reinforcement 450mm past abutment seat.

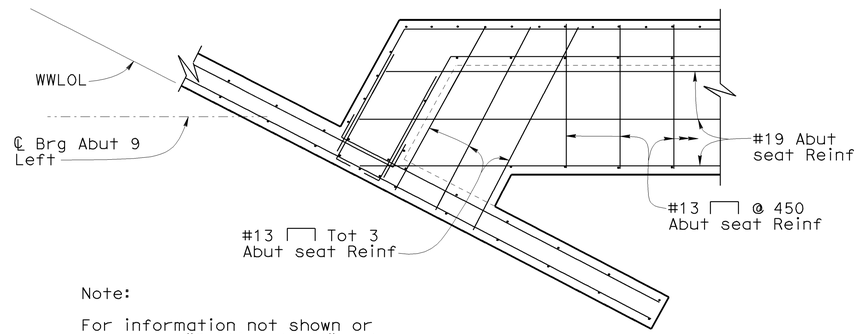

Note:

For information not shown or noted see "Section Y1-Y1" and "Section A2-A2".

SECTION Z1-Z1
1:25

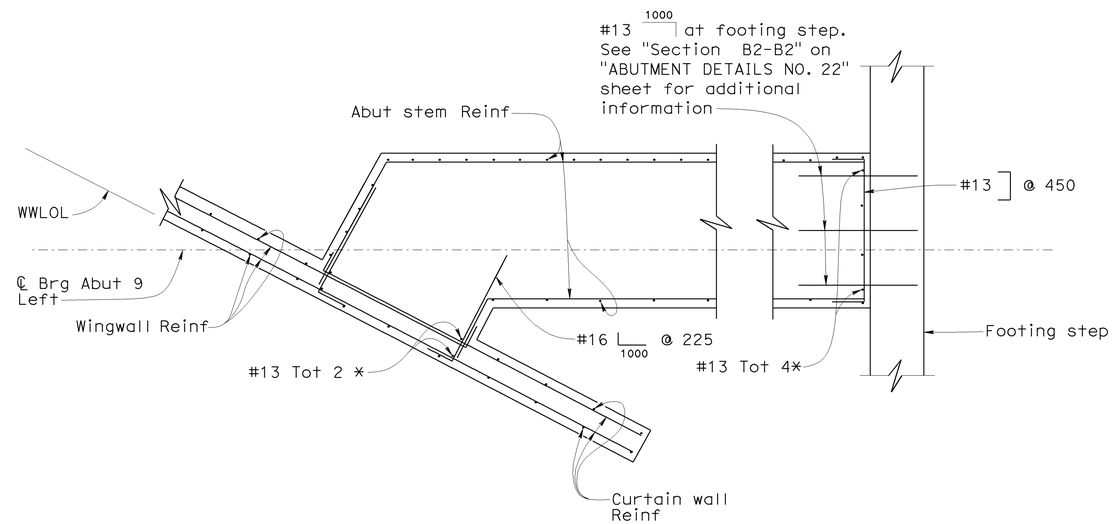

SECTION A2-A2
1:25

NOTE:
THE CONTRACTOR SHALL VERIFY ALL CONTROLLING FIELD DIMENSIONS BEFORE ORDERING OR FABRICATING ANY MATERIAL.

Caltrans Metric

	BY	CHECKED
DESIGN	Ulysses Smpardos	F. Feng/C. Chan
DETAILS	Steven Schenck	F. Feng/C. Chan
QUANTITIES	E. Hall	R. Odell

STATE OF CALIFORNIA
DEPARTMENT OF TRANSPORTATION

DIVISION OF ENGINEERING SERVICES
STRUCTURE DESIGN
DESIGN BRANCH 15

BRIDGE NO. 53-1085
KILOMETER POST 46.1

PROVIDENCIA AVENUE OH (WIDEN)
ABUTMENT DETAILS NO. 20

ALL DIMENSIONS ARE IN MILLIMETERS UNLESS OTHERWISE SHOWN

ORIGINAL SCALE IN MILLIMETERS FOR REDUCED PLANS 0 10 20 30 40 50 60 70 80 90 100

CU 07
EA 121841

DISREGARD PRINTS BEARING EARLIER REVISION DATES

REVISION DATES 10-14-08 11-22-08 1-23-09 1-29-09 2-24-09

SHEET 36 OF 152

FILE => 53-1085-h-a21d20.dgn

STRUCTURES DESIGN DETAIL SHEET (METRIC) (REV.03-17-04)

USERNAME => trlim DATE PLOTTED => 12-JUN-2009 TIME PLOTTED => 15:21

DIST	COUNTY	ROUTE	KILOMETER POST TOTAL PROJECT	SHEET No	TOTAL SHEETS
07	LA	5	42.8/47.3	826	1073

Andrew R. Rittenhouse 12-05-08
REGISTERED CIVIL ENGINEER DATE

6-8-09
PLANS APPROVAL DATE

REGISTERED PROFESSIONAL ENGINEER
Andrew P. Rittenhouse
No. 61006
Exp. 12-31-10
CIVIL
STATE OF CALIFORNIA

The State of California or its officers or agents shall not be responsible for the accuracy or completeness of electronic copies of this plan sheet.

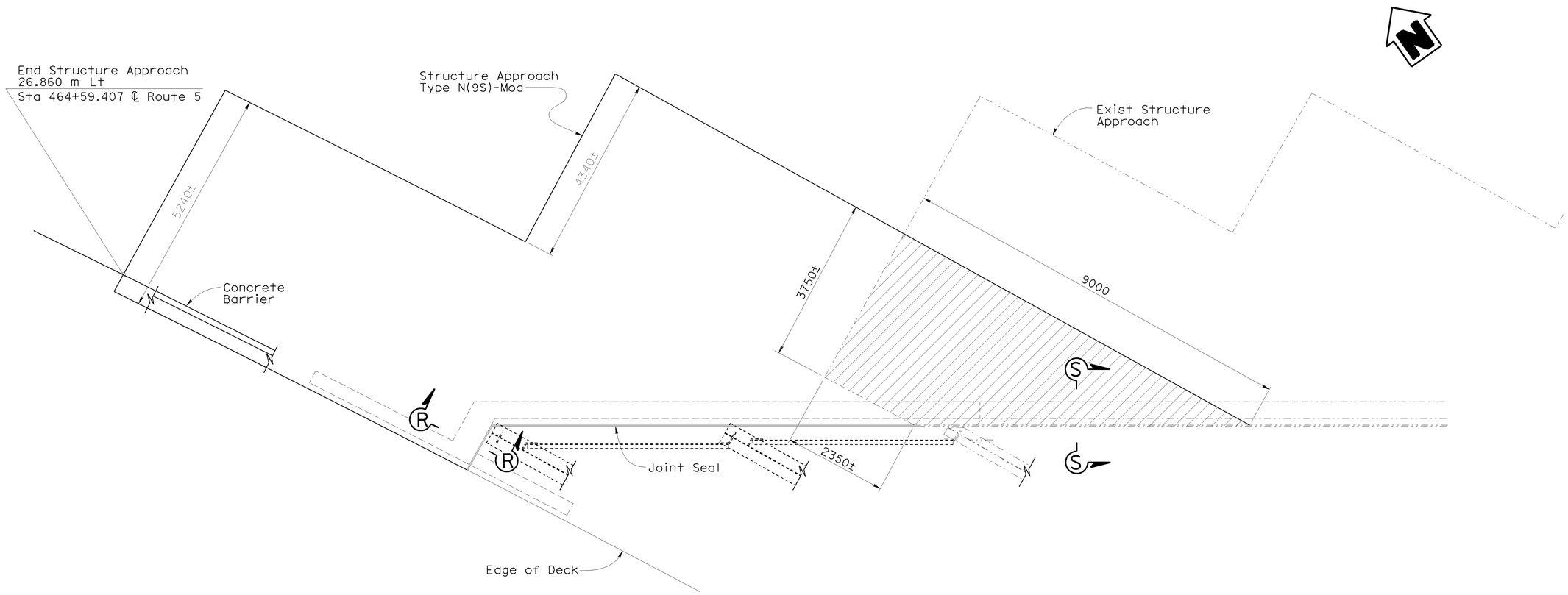

DECK PLAN VIEW AT ABUTMENT 9 LEFT WIDEN

1:50

Note:

For "Section R-R" and "Section S-S" see "ABUTMENT DETAILS NO. 7" sheet.

Legend:

Remove existing structure approach

Indicates existing structure

NOTE:
THE CONTRACTOR SHALL VERIFY ALL CONTROLLING FIELD DIMENSIONS BEFORE ORDERING OR FABRICATING ANY MATERIAL.

Caltrans Metric

	BY	CHECKED
DESIGN	Ulysses Smpardos	F. Feng/C. Chan
DETAILS	Steven Schenck	F. Feng/C. Chan
QUANTITIES	E. Hall	R. Odell

STATE OF CALIFORNIA
DEPARTMENT OF TRANSPORTATION

DIVISION OF ENGINEERING SERVICES
STRUCTURE DESIGN
DESIGN BRANCH 15

BRIDGE NO. 53-1085
KILOMETER POST 46.1

PROVIDENCIA AVENUE OH (WIDEN)
ABUTMENT DETAILS NO. 21

ALL DIMENSIONS ARE IN MILLIMETERS UNLESS OTHERWISE SHOWN

ORIGINAL SCALE IN MILLIMETERS FOR REDUCED PLANS 0 10 20 30 40 50 60 70 80 90 100

CU 07
EA 121841

DISREGARD PRINTS BEARING EARLIER REVISION DATES

REVISION DATES: 10-17-08 | 1-23-09 | 2-24-09

SHEET 37 OF 152

FILE => 53-1085-h-a21d21.dgn

STRUCTURES DESIGN DETAIL SHEET (METRIC) (REV.03-17-04)

USERNAME => tfrith DATE PLOTTED => 12-JUN-2009 TIME PLOTTED => 15:21

DIST	COUNTY	ROUTE	KILOMETER POST TOTAL PROJECT	SHEET No	TOTAL SHEETS
07	LA	5	42.8/47.3	827	1073

Legend:
-·-·-·- Indicates existing structure

Andrew Rittenhouse 12-05-08
REGISTERED CIVIL ENGINEER DATE

6-8-09
PLANS APPROVAL DATE

REGISTERED PROFESSIONAL ENGINEER
Andrew P. Rittenhouse
No. 61006
Exp. 12-31-10
CIVIL
STATE OF CALIFORNIA

The State of California or its officers or agents shall not be responsible for the accuracy or completeness of electronic copies of this plan sheet.

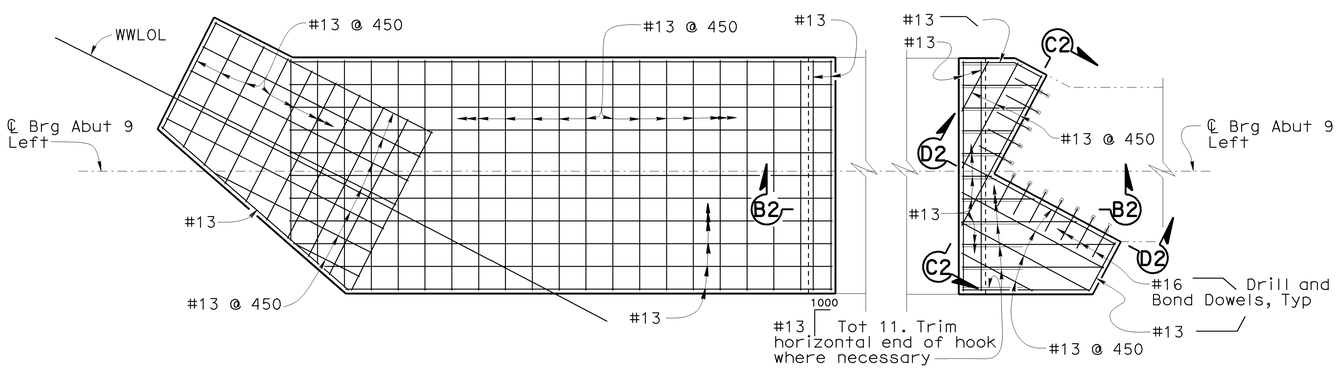

FOOTING TOP REINFORCEMENT ABUTMENT 9 LEFT WIDEN

1:50

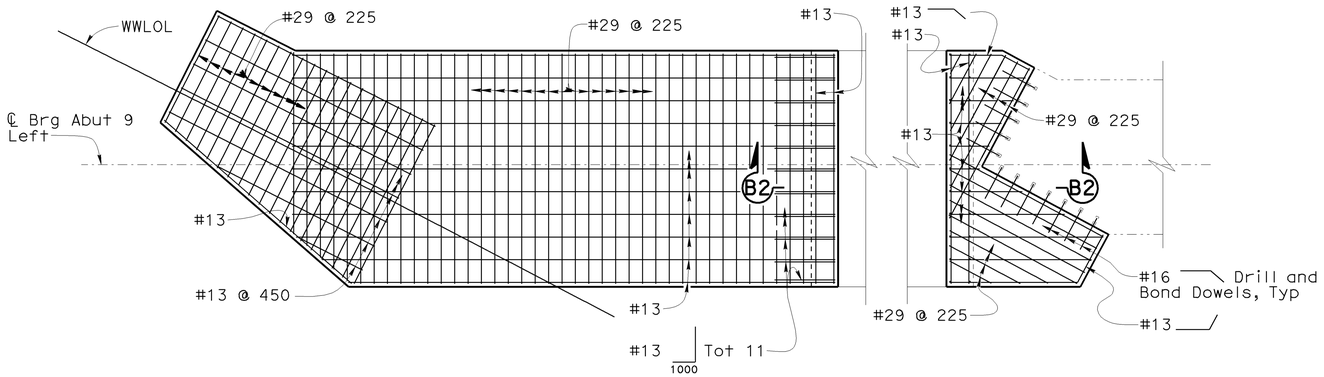

FOOTING BOTTOM REINFORCEMENT ABUTMENT 9 LEFT WIDEN

1:50

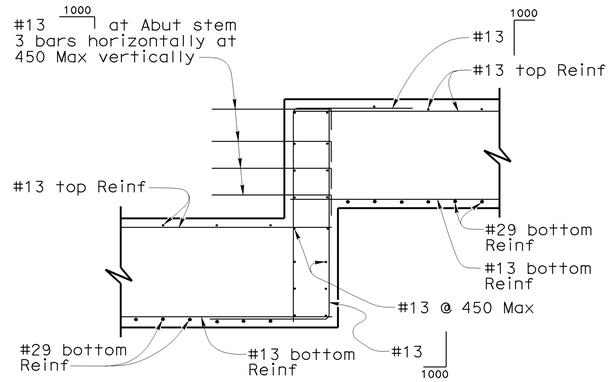

SECTION B2-B2

1:25

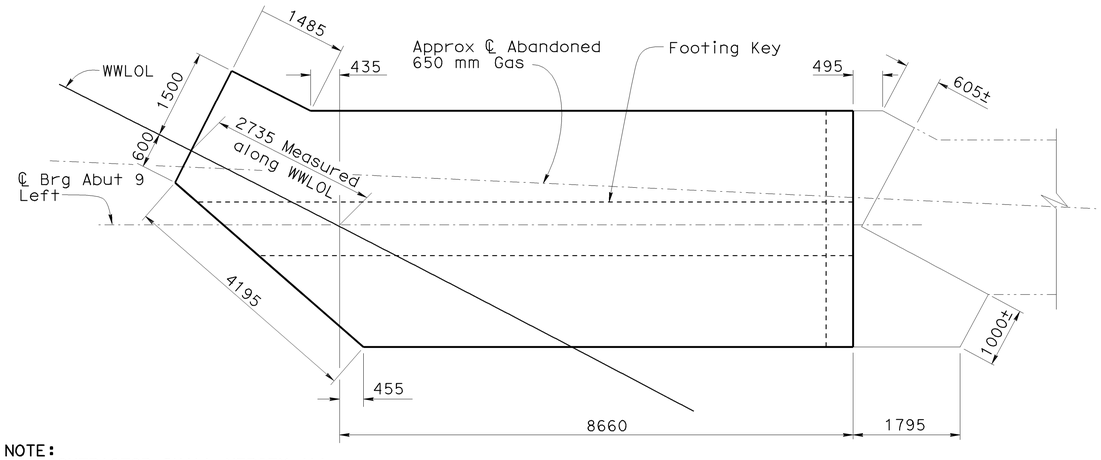

NOTE:
THE CONTRACTOR SHALL VERIFY ALL CONTROLLING FIELD DIMENSIONS BEFORE ORDERING OR FABRICATING ANY MATERIAL.

FOOTING PLAN ABUTMENT 9 LEFT WIDEN

1:50

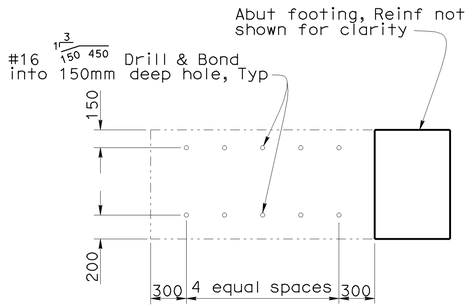

SECTION C2-C2

1:25

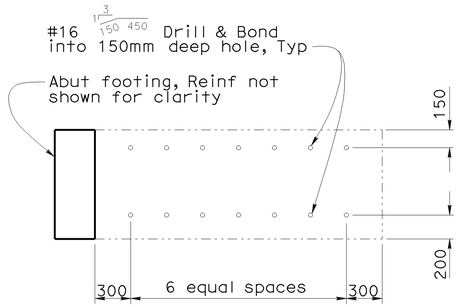

SECTION D2-D2

1:25

Caltrans Metric

DESIGN	BY Ulysses Smpardos	CHECKED F. Feng/C. Chan	
DETAILS	BY Steven Schenck	CHECKED F. Feng/C. Chan	
QUANTITIES	BY E. Hall	CHECKED R. Odell	

ALL DIMENSIONS ARE IN MILLIMETERS UNLESS OTHERWISE SHOWN

ORIGINAL SCALE IN MILLIMETERS FOR REDUCED PLANS 0 10 20 30 40 50 60 70 80 90 100

STATE OF CALIFORNIA
DEPARTMENT OF TRANSPORTATION

DIVISION OF ENGINEERING SERVICES
STRUCTURE DESIGN
DESIGN BRANCH 15

CU 07
EA 121841

BRIDGE NO. 53-1085
KILOMETER POST 46.1

PROVIDENCIA AVENUE OH (WIDEN)
ABUTMENT DETAILS NO. 22

DISREGARD PRINTS BEARING EARLIER REVISION DATES

REVISION DATES 9-09-08 10-14-08 1-21-09 1-23-09 1-28-09

SHEET 38 OF 152

FILE => 53-1085-h-a21d22.dgn

STRUCTURES DESIGN DETAIL SHEET (METRIC) (REV.03-17-04)

USERNAME => trlim DATE PLOTTED => 12-JUN-2009 TIME PLOTTED => 15:22

DIST	COUNTY	ROUTE	KILOMETER POST TOTAL PROJECT	SHEET No	TOTAL SHEETS
07	LA	5	42.8/47.3	828	1073

Andrew P. Rittenhouse 12-5-08
REGISTERED CIVIL ENGINEER DATE

6-8-09
PLANS APPROVAL DATE

REGISTERED PROFESSIONAL ENGINEER
Andrew P. Rittenhouse
No. 61006
Exp. 12-31-10
CIVIL
STATE OF CALIFORNIA

The State of California or its officers or agents shall not be responsible for the accuracy or completeness of electronic copies of this plan sheet.

Legend:
* Extend reinforcement 750 mm into footing

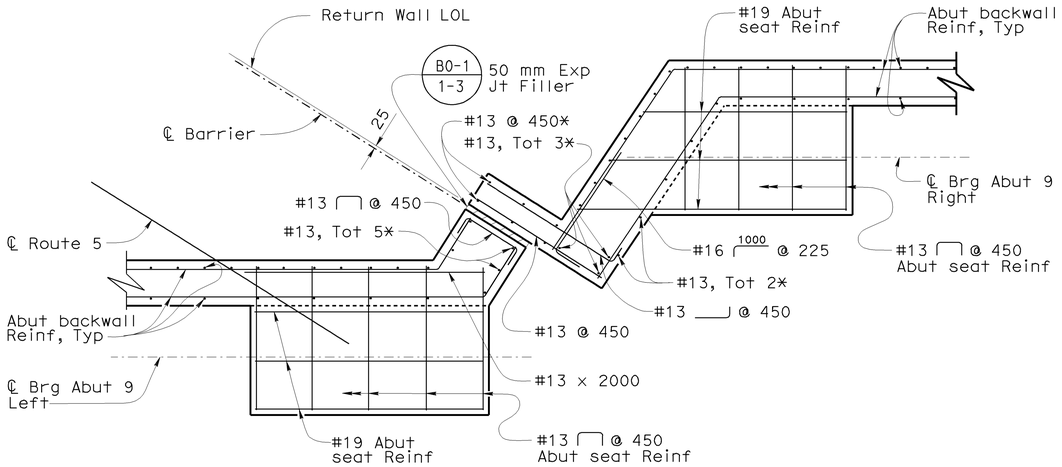

SECTION E2-E2
1:25

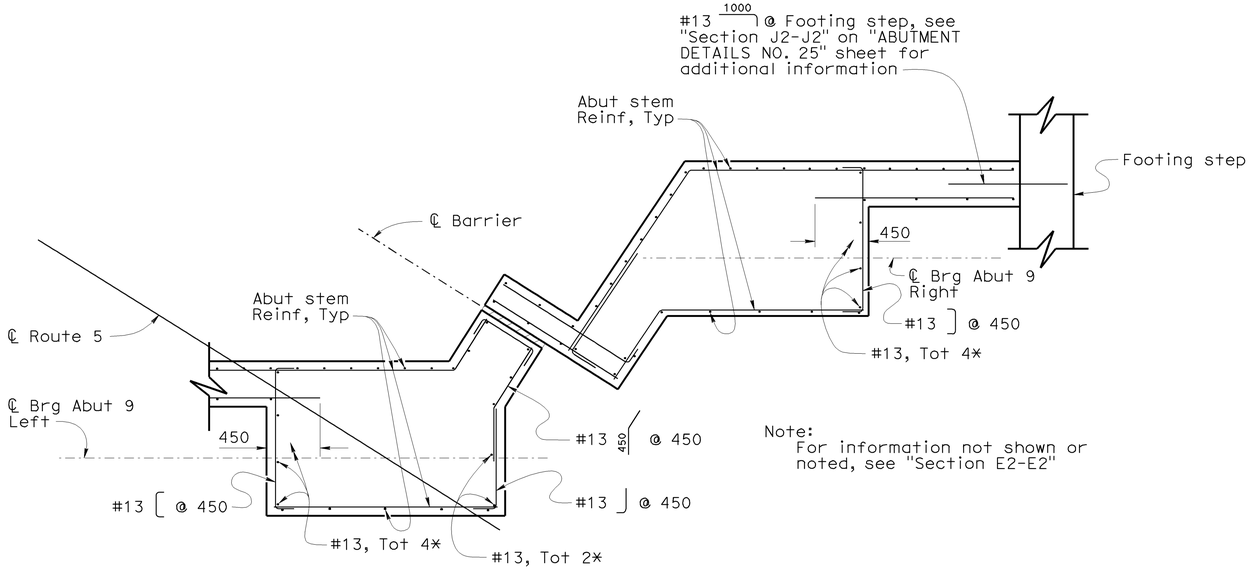

Note:
For information not shown or noted, see "Section E2-E2"

SECTION F2-F2
1:25

NOTE:
THE CONTRACTOR SHALL VERIFY ALL CONTROLLING FIELD DIMENSIONS BEFORE ORDERING OR FABRICATING ANY MATERIAL.

	BY	CHECKED
DESIGN	Ulysses Smpardos	F. Feng/C. Chan
DETAILS	Steven Schenck	F. Feng/C. Chan
QUANTITIES	E. Hall	R. Odell

STATE OF CALIFORNIA
DEPARTMENT OF TRANSPORTATION

DIVISION OF ENGINEERING SERVICES
STRUCTURE DESIGN
DESIGN BRANCH 15

CU 07
EA 121841

BRIDGE NO. 53-1085
KILOMETER POST 46.1

PROVIDENCIA AVENUE OH (WIDEN)
ABUTMENT DETAILS NO. 23

ALL DIMENSIONS ARE IN MILLIMETERS UNLESS OTHERWISE SHOWN

ORIGINAL SCALE IN MILLIMETERS FOR REDUCED PLANS 0 10 20 30 40 50 60 70 80 90 100

DISREGARD PRINTS BEARING EARLIER REVISION DATES →

REVISION DATES: 10-15-08 | 1-23-09 | 1-23-09 | 2-24-09

SHEET 39 OF 152

FILE => 53-1085-h-a21d23.dgn

STRUCTURES DESIGN DETAIL SHEET (METRIC) (REV.03-17-04)

DATE PLOTTED => 12-JUN-2009 TIME PLOTTED => 15:22
USERNAME => trlim

DIST	COUNTY	ROUTE	KILOMETER POST TOTAL PROJECT	SHEET No	TOTAL SHEETS
07	LA	5	42.8/47.3	829	1073

Andrew Rittenhouse 12-5-08
REGISTERED CIVIL ENGINEER DATE

6-8-09
PLANS APPROVAL DATE

REGISTERED PROFESSIONAL ENGINEER
Andrew P. Rittenhouse
No. 61006
Exp. 12-31-10
CIVIL
STATE OF CALIFORNIA

The State of California or its officers or agents shall not be responsible for the accuracy or completeness of electronic copies of this plan sheet.

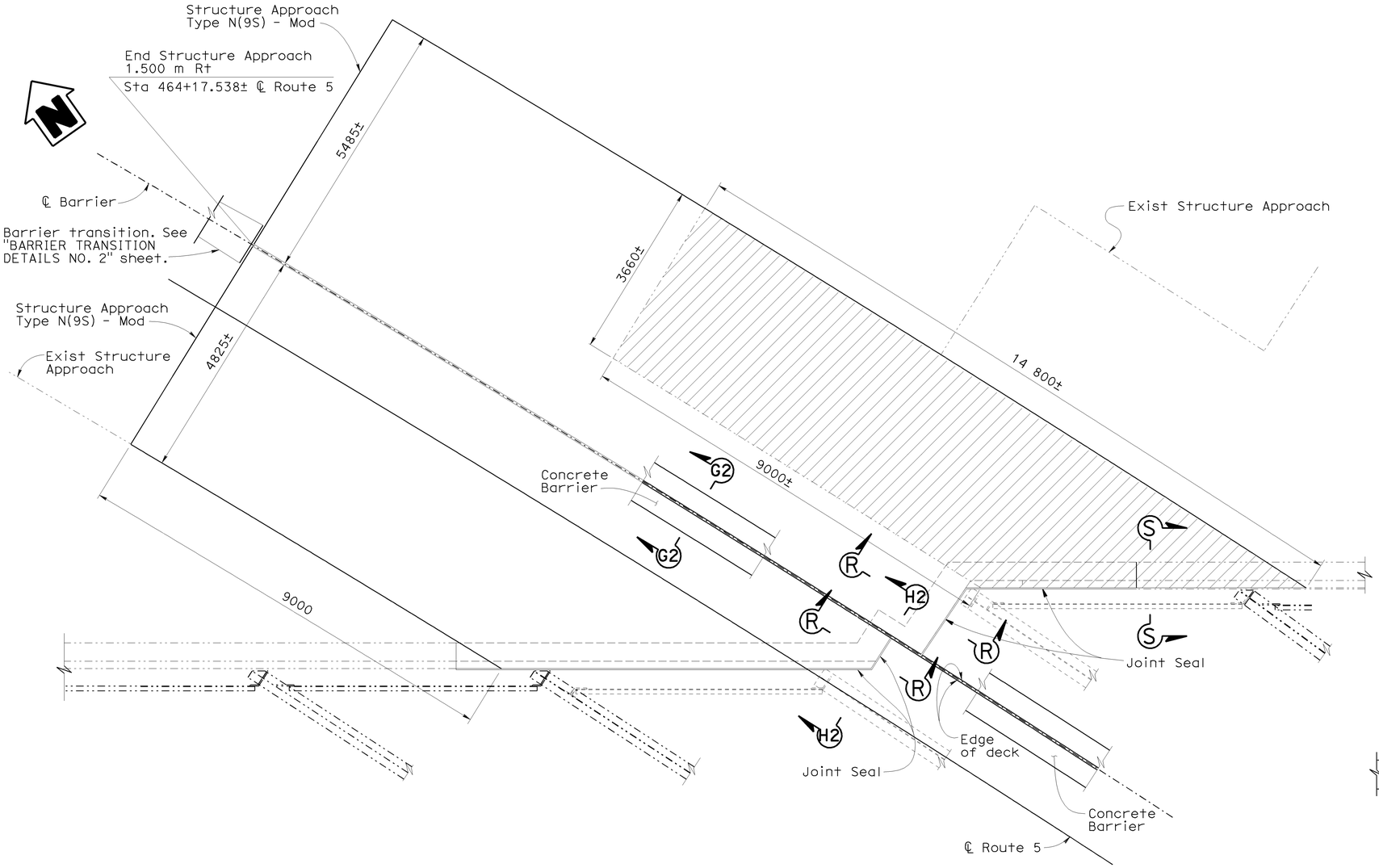

DECK PLAN VIEW AT ABUTMENT 9 MEDIAN WIDEN

1:50

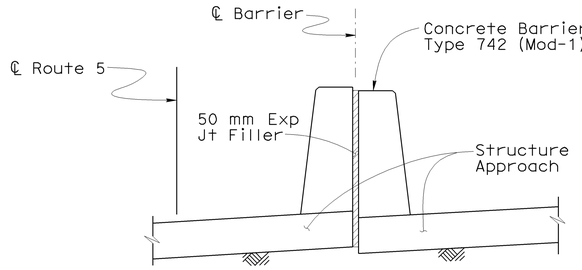

SECTION G2-G2

1:25

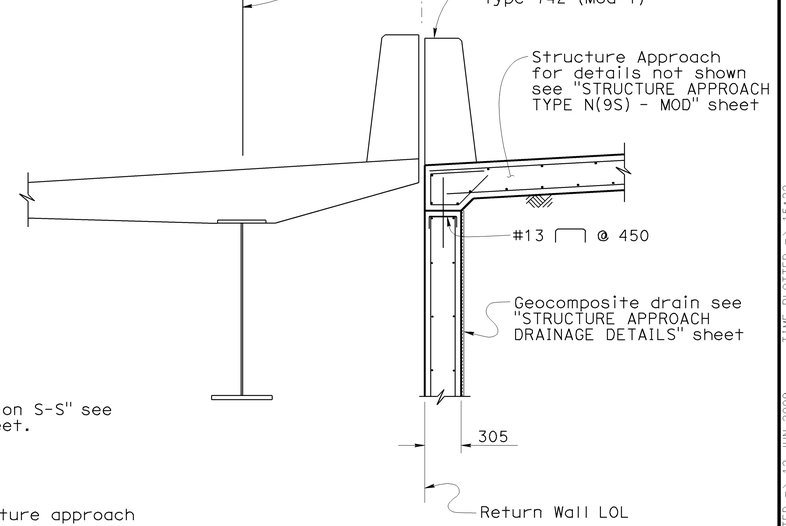

SECTION H2-H2

1:25

Note:

For "Section R-R" and "Section S-S" see "ABUTMENT DETAILS NO. 7" sheet.

Legend:

Remove existing structure approach

Indicates existing structure

NOTE:
THE CONTRACTOR SHALL VERIFY ALL CONTROLLING FIELD DIMENSIONS BEFORE ORDERING OR FABRICATING ANY MATERIAL.

	BY	CHECKED
DESIGN	Ulysses Smpardos	F. Feng/C. Chan
DETAILS	Steven Schenck	F. Feng/C. Chan
QUANTITIES	E. Hall	R. Odell

STATE OF CALIFORNIA
DEPARTMENT OF TRANSPORTATION

DIVISION OF ENGINEERING SERVICES
STRUCTURE DESIGN
DESIGN BRANCH 15

BRIDGE NO. 53-1085
KILOMETER POST 46.1

PROVIDENCIA AVENUE OH (WIDEN)
ABUTMENT DETAILS NO. 24

ALL DIMENSIONS ARE IN MILLIMETERS UNLESS OTHERWISE SHOWN

ORIGINAL SCALE IN MILLIMETERS FOR REDUCED PLANS 0 10 20 30 40 50 60 70 80 90 100

CU 07
EA 121841

DISREGARD PRINTS BEARING EARLIER REVISION DATES →

REVISION DATES: 06-04-08 | 9-03-08 | 11-26-08 | 1-30-09 | 1-23-09 | 2-24-09

SHEET 40 OF 152

FILE => 53-1085-h-a21d24.dgn

STRUCTURES DESIGN DETAIL SHEET (METRIC) (REV.03-17-04)

DATE PLOTTED => 12-JUN-2009 TIME PLOTTED => 15:22
USERNAME => tfrihm

DIST	COUNTY	ROUTE	KILOMETER POST TOTAL PROJECT	SHEET No	TOTAL SHEETS
07	LA	5	42.8/47.3	830	1073

Andrew Rittenhouse 12-05-08
REGISTERED CIVIL ENGINEER DATE

6-8-09
PLANS APPROVAL DATE

REGISTERED PROFESSIONAL ENGINEER
Andrew P. Rittenhouse
No. 61006
Exp. 12-31-10
CIVIL
STATE OF CALIFORNIA

The State of California or its officers or agents shall not be responsible for the accuracy or completeness of electronic copies of this plan sheet.

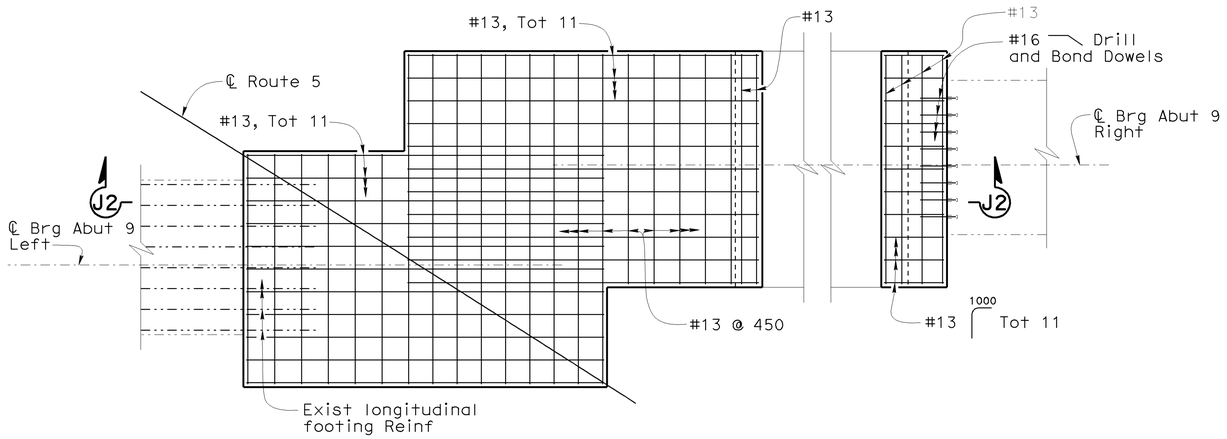

FOOTING TOP REINFORCEMENT ABUTMENT 9 MEDIAN WIDEN

1:50

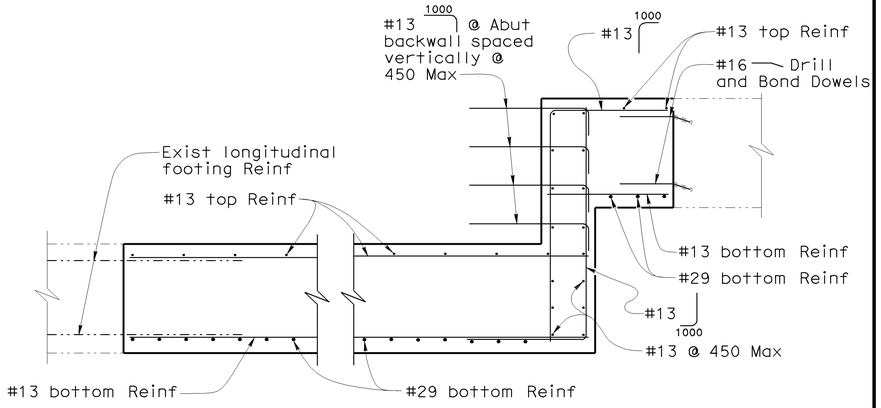

SECTION J2-J2

1:25

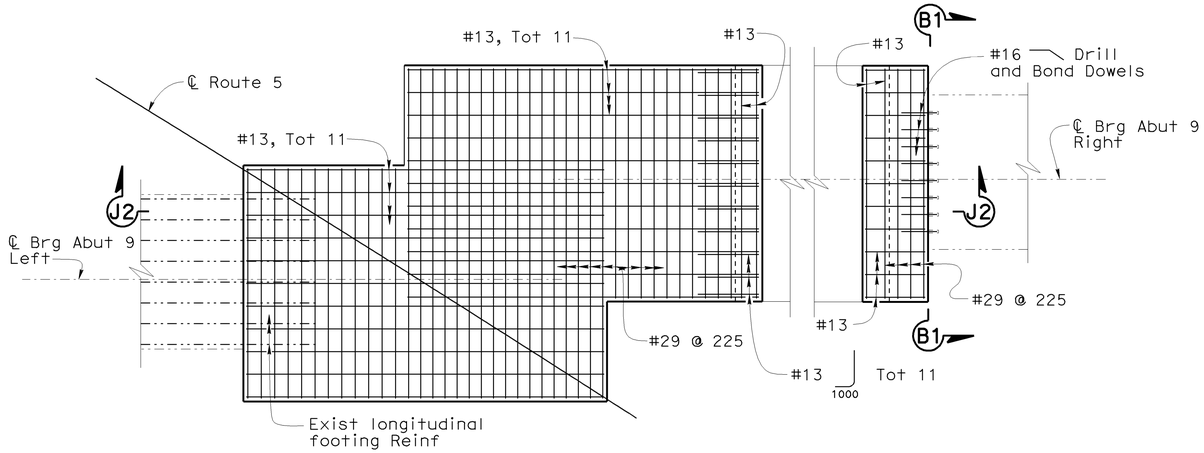

FOOTING BOTTOM REINFORCEMENT ABUTMENT 9 MEDIAN WIDEN

1:50

Note:
For "Section B1-B1" see "ABUTMENT DETAILS NO. 13" sheet.

Legend:
Indicates existing structure

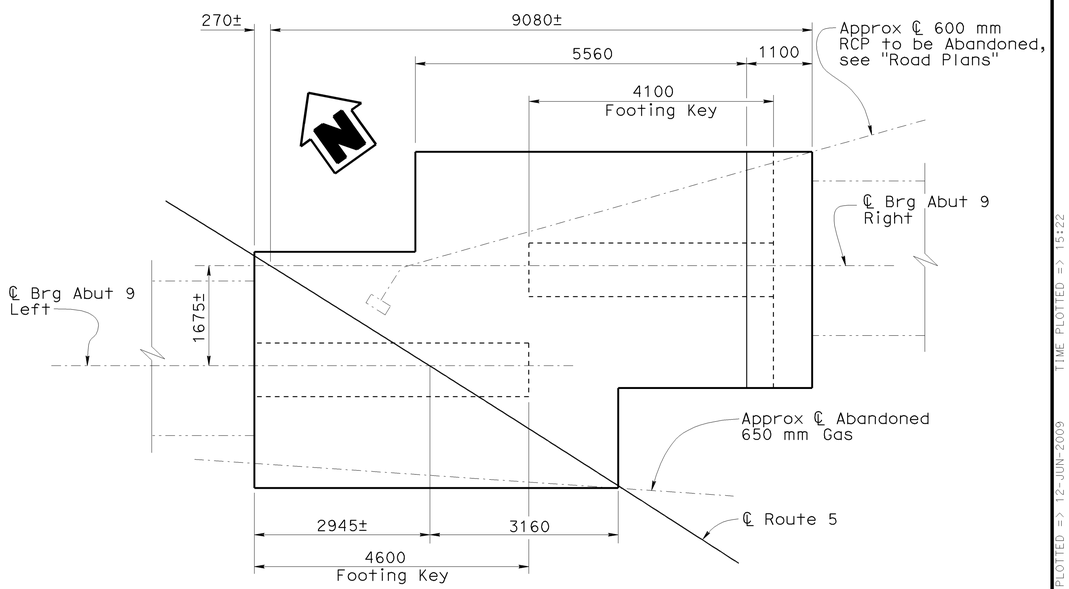

FOOTING PLAN ABUTMENT 9 MEDIAN WIDEN

1:50

NOTE:
THE CONTRACTOR SHALL VERIFY ALL CONTROLLING FIELD DIMENSIONS BEFORE ORDERING OR FABRICATING ANY MATERIAL.

Caltrans Metric

	BY	CHECKED
DESIGN	Ulysses Smpardos	F. Feng/C. Chan
DETAILS	Steven Schenck	F. Feng/C. Chan
QUANTITIES	E. Hall	R. Odell

STATE OF CALIFORNIA
DEPARTMENT OF TRANSPORTATION

DIVISION OF ENGINEERING SERVICES
STRUCTURE DESIGN
DESIGN BRANCH 15

CU 07
EA 121841

BRIDGE NO. 53-1085
KILOMETER POST 46.1

PROVIDENCIA AVENUE OH (WIDEN)
ABUTMENT DETAILS NO. 25

ALL DIMENSIONS ARE IN MILLIMETERS UNLESS OTHERWISE SHOWN

ORIGINAL SCALE IN MILLIMETERS FOR REDUCED PLANS 0 10 20 30 40 50 60 70 80 90 100

DISREGARD PRINTS BEARING EARLIER REVISION DATES →

REVISION DATES: 9-08-08 | 10-14-08 | 1-26-09 | 1-23-09

SHEET 41 OF 152

FILE => 53-1085-h-a21d25.dgn

STRUCTURES DESIGN DETAIL SHEET (METRIC) (REV.03-17-04)

DATE PLOTTED => 12-JUN-2009 TIME PLOTTED => 15:22
USERNAME => trlim

DIST	COUNTY	ROUTE	KILOMETER POST TOTAL PROJECT	SHEET No	TOTAL SHEETS
07	LA	5	42.8/47.3	831	1073

Andrew Rittenhouse 12-05-08
REGISTERED CIVIL ENGINEER DATE

6-8-09
PLANS APPROVAL DATE

REGISTERED PROFESSIONAL ENGINEER — Andrew P. Rittenhouse — No. 61006 — Exp. 12-31-10 — CIVIL — STATE OF CALIFORNIA

The State of California or its officers or agents shall not be responsible for the accuracy or completeness of electronic copies of this plan sheet.

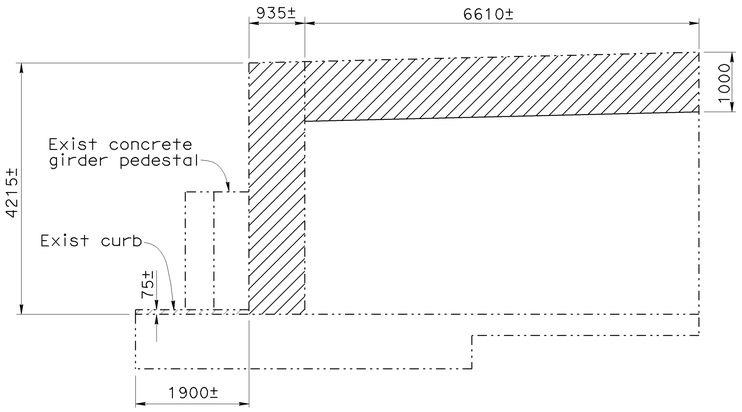

VIEW K2-K2
1:50

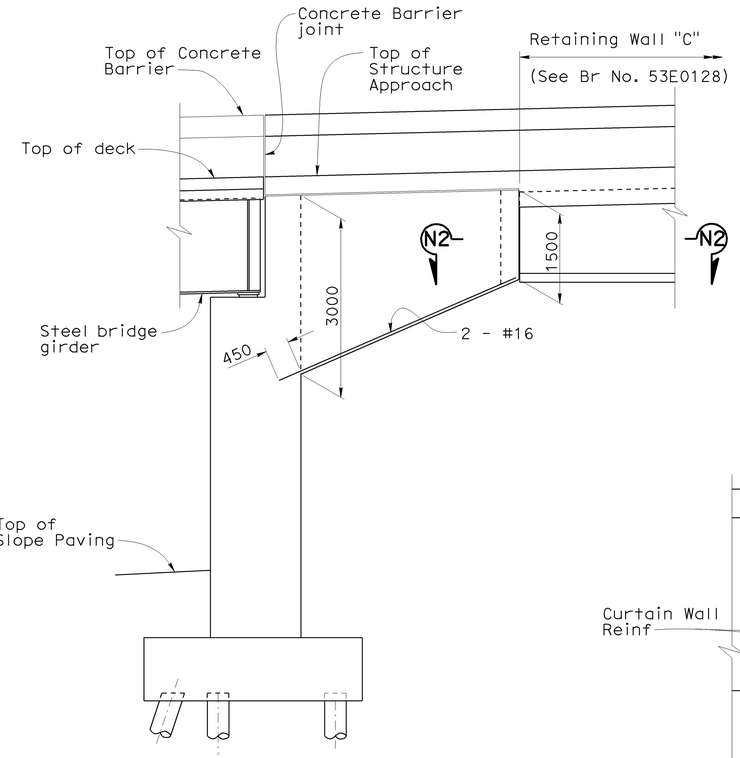

VIEW L2-L2
1:50

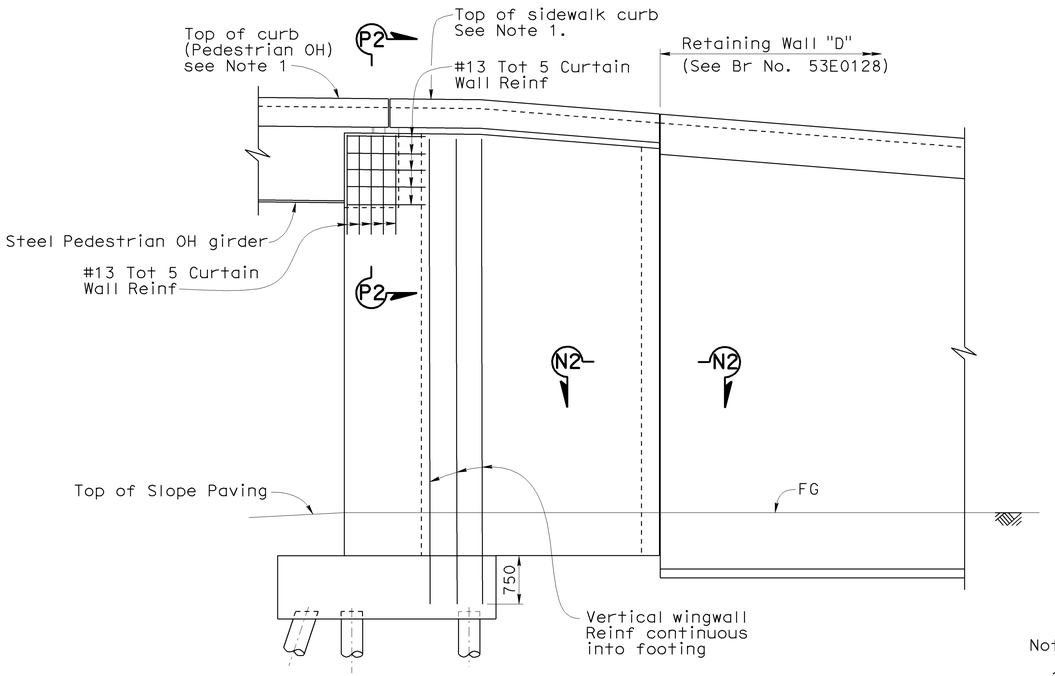

VIEW M2-M2
1:50

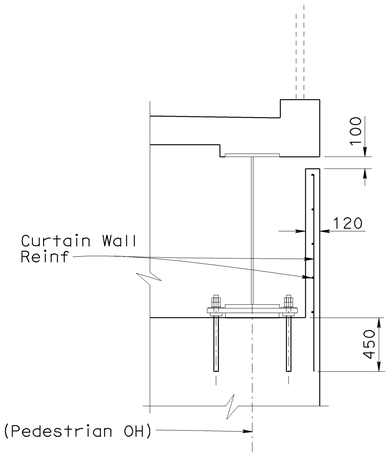

SECTION P2-P2
1:25

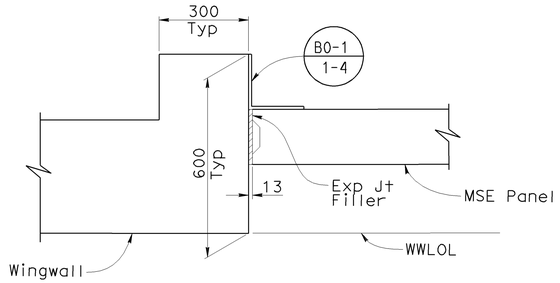

ALTERNATIVE 1

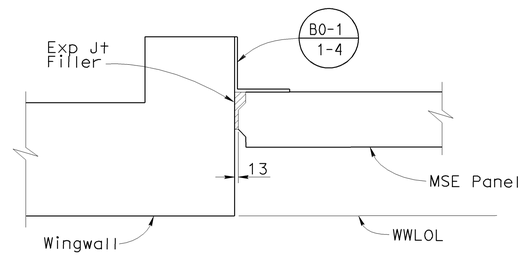

ALTERNATIVE 2

SECTION N2-N2
1:10

Notes:

1. Chain link railing not shown.
2. For architectural treatment not shown see "ARCHITECTURAL DETAILS" sheet.

Legend:

-·-·- Indicates existing structure

▨ Indicates Bridge Removal (Portion)

NOTE:
THE CONTRACTOR SHALL VERIFY ALL CONTROLLING FIELD DIMENSIONS BEFORE ORDERING OR FABRICATING ANY MATERIAL.

DESIGN	BY Ulysses Smpardos	CHECKED F. Feng/C. Chan	
DETAILS	BY Steven Schenck	CHECKED F. Feng/C. Chan	
QUANTITIES	BY E. Hall	CHECKED R. Odell	

STATE OF CALIFORNIA
DEPARTMENT OF TRANSPORTATION

DIVISION OF ENGINEERING SERVICES
STRUCTURE DESIGN
DESIGN BRANCH 15

BRIDGE NO. 53-1085
KILOMETER POST 46.1

PROVIDENCIA AVENUE OH (WIDEN)
ABUTMENT DETAILS NO. 26

ALL DIMENSIONS ARE IN MILLIMETERS UNLESS OTHERWISE SHOWN

ORIGINAL SCALE IN MILLIMETERS FOR REDUCED PLANS 0 10 20 30 40 50 60 70 80 90 100

CU 07
EA 121841

DISREGARD PRINTS BEARING EARLIER REVISION DATES

REVISION DATES: 10-17-08 | 1-23-09 | 2-24-09 | 3-12-09

SHEET 42 OF 152

FILE => 53-1085-h-a21d26.dgn

STRUCTURES DESIGN DETAIL SHEET (METRIC) (REV.03-17-04)

USERNAME => ttromndo DATE PLOTTED => 12-JUN-2009 TIME PLOTTED => 15:04

DIST	COUNTY	ROUTE	KILOMETER POST TOTAL PROJECT	SHEET No	TOTAL SHEETS
07	LA	5	42.8/47.3	832	1073

Andrew Rittenhouse 12-05-08
REGISTERED CIVIL ENGINEER DATE

6-8-09
PLANS APPROVAL DATE

The State of California or its officers or agents shall not be responsible for the accuracy or completeness of electronic copies of this plan sheet.

REGISTERED PROFESSIONAL ENGINEER
Andrew P. Rittenhouse
No. 61006
Exp. 12-31-10
CIVIL
STATE OF CALIFORNIA

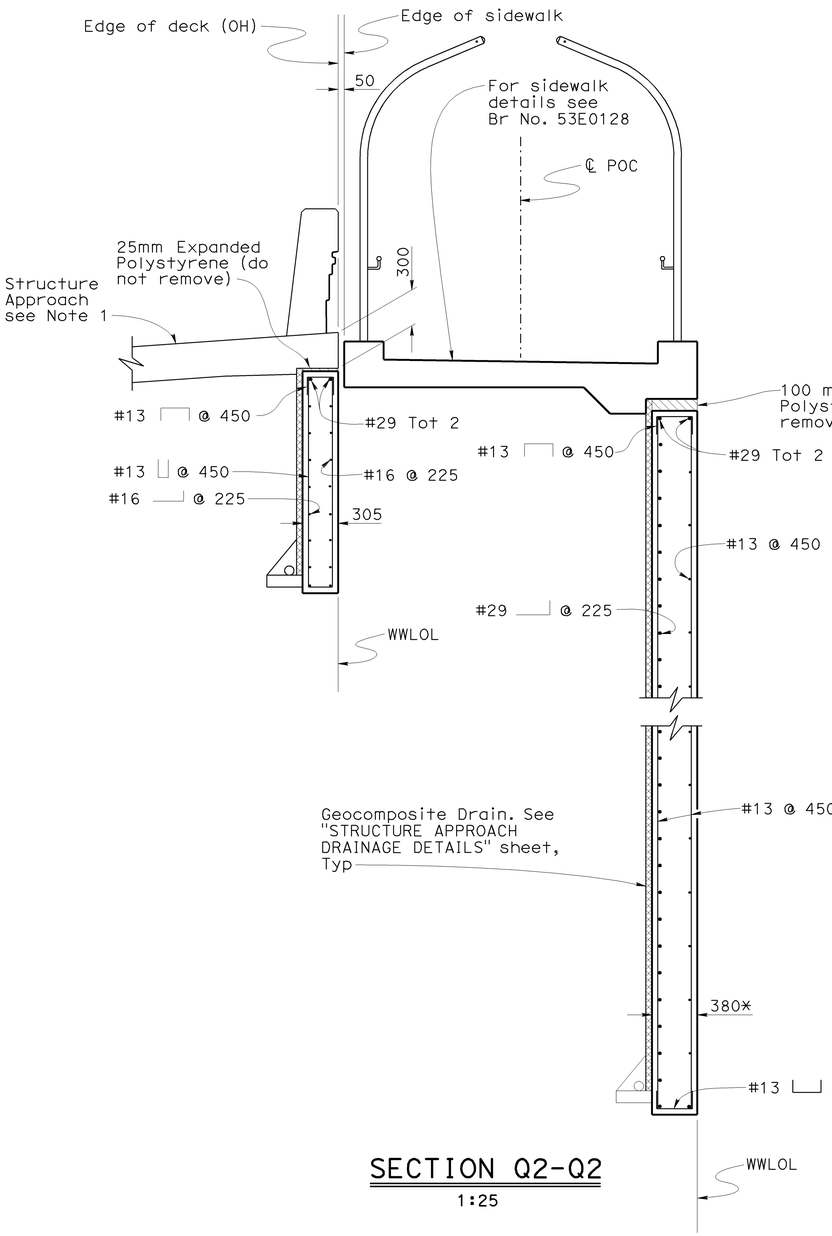

SECTION Q2-Q2
1:25

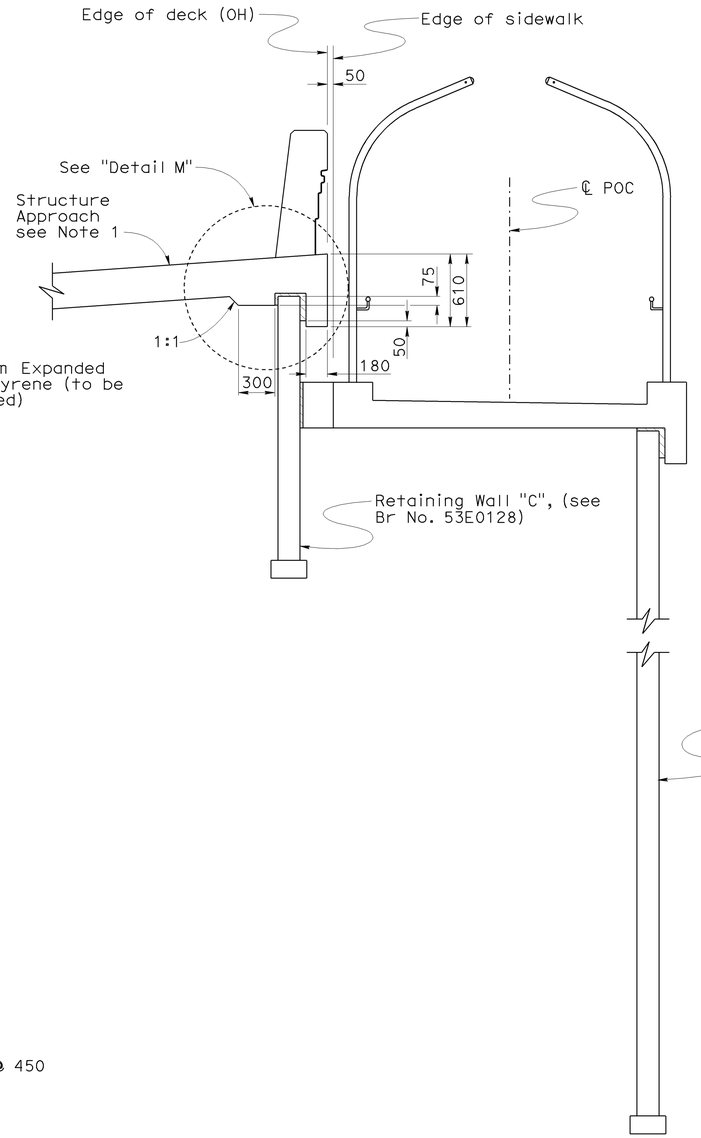

SECTION R2-R2
1:25

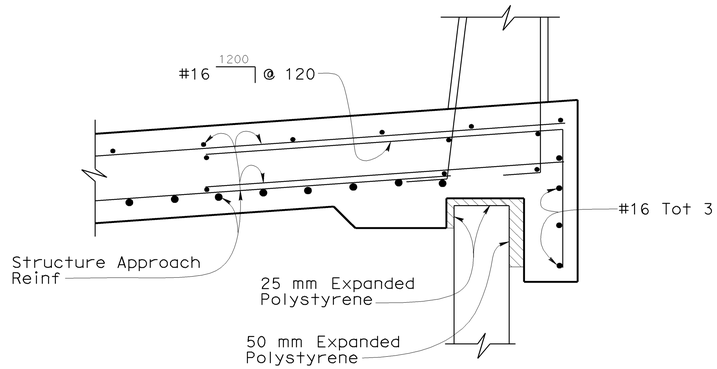

DETAIL M
1:10

NOTE:
THE CONTRACTOR SHALL VERIFY ALL CONTROLLING FIELD DIMENSIONS BEFORE ORDERING OR FABRICATING ANY MATERIAL.

Notes:

1. For typical structure approach reinforcement and other information not shown or noted, see "STRUCTURE APPROACH TYPE N(9S) - MOD" sheet.

Legend:

* Thickness required for architectural treatment shall be in addition to wall thickness indicated in details. See "ARCHITECTURAL DETAILS" sheet for additional information.

DESIGN	BY Ulysses Smpardos	CHECKED F. Feng/C. Chan	
DETAILS	BY Steven Schenck	CHECKED F. Feng/C. Chan	
QUANTITIES	BY E. Hall	CHECKED R. Odell	

Caltrans Metric

ALL DIMENSIONS ARE IN MILLIMETERS UNLESS OTHERWISE SHOWN

ORIGINAL SCALE IN MILLIMETERS FOR REDUCED PLANS 0 10 20 30 40 50 60 70 80 90 100

STATE OF CALIFORNIA
DEPARTMENT OF TRANSPORTATION

DIVISION OF ENGINEERING SERVICES
STRUCTURE DESIGN
DESIGN BRANCH 15

CU 07
EA 121841

BRIDGE NO. 53-1085
KILOMETER POST 46.1

DISREGARD PRINTS BEARING EARLIER REVISION DATES →

REVISION DATES: 1-23-09 | 2-05-09 | 2-25-09 | 3-12-09

SHEET 43 OF 152

PROVIDENCIA AVENUE OH (WIDEN)
ABUTMENT DETAILS NO. 27

FILE => 53-1085-h-a21d27.dgn

STRUCTURES DESIGN DETAIL SHEET (METRIC) (REV.03-17-04)

USERNAME => tromondo DATE PLOTTED => 12-JUN-2009 TIME PLOTTED => 15:04

DIST	COUNTY	ROUTE	KILOMETER POST TOTAL PROJECT	SHEET No	TOTAL SHEETS
07	LA	5	42.8/47.3	833	1073

Andrew Rittenhouse 12-05-08
REGISTERED CIVIL ENGINEER DATE

6-8-09
PLANS APPROVAL DATE

The State of California or its officers or agents shall not be responsible for the accuracy or completeness of electronic copies of this plan sheet.

REGISTERED PROFESSIONAL ENGINEER
Andrew P. Rittenhouse
No. 61006
Exp. 12-31-10
CIVIL
STATE OF CALIFORNIA

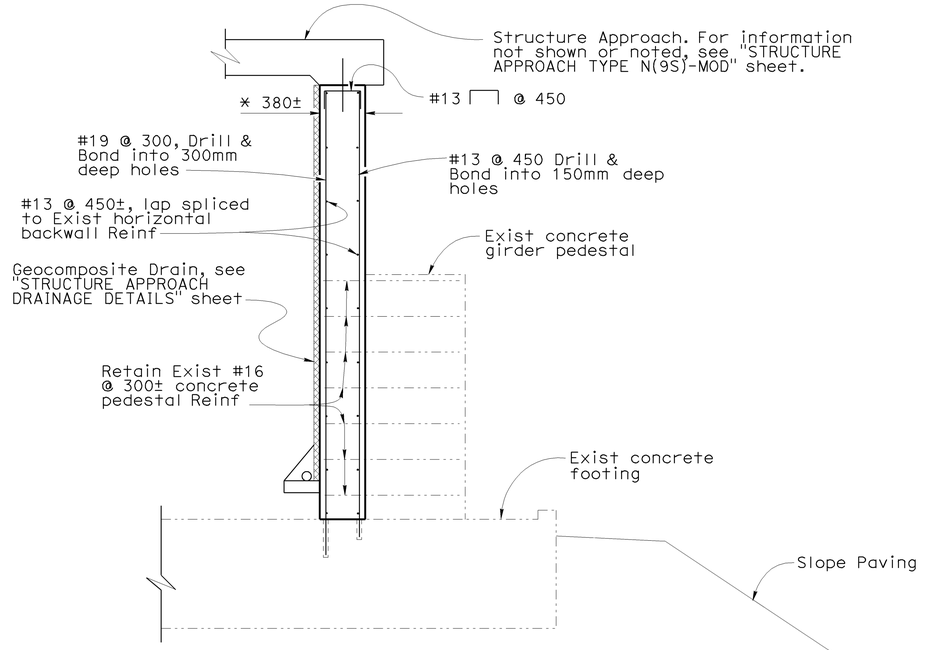

SECTION S2-S2

1:25

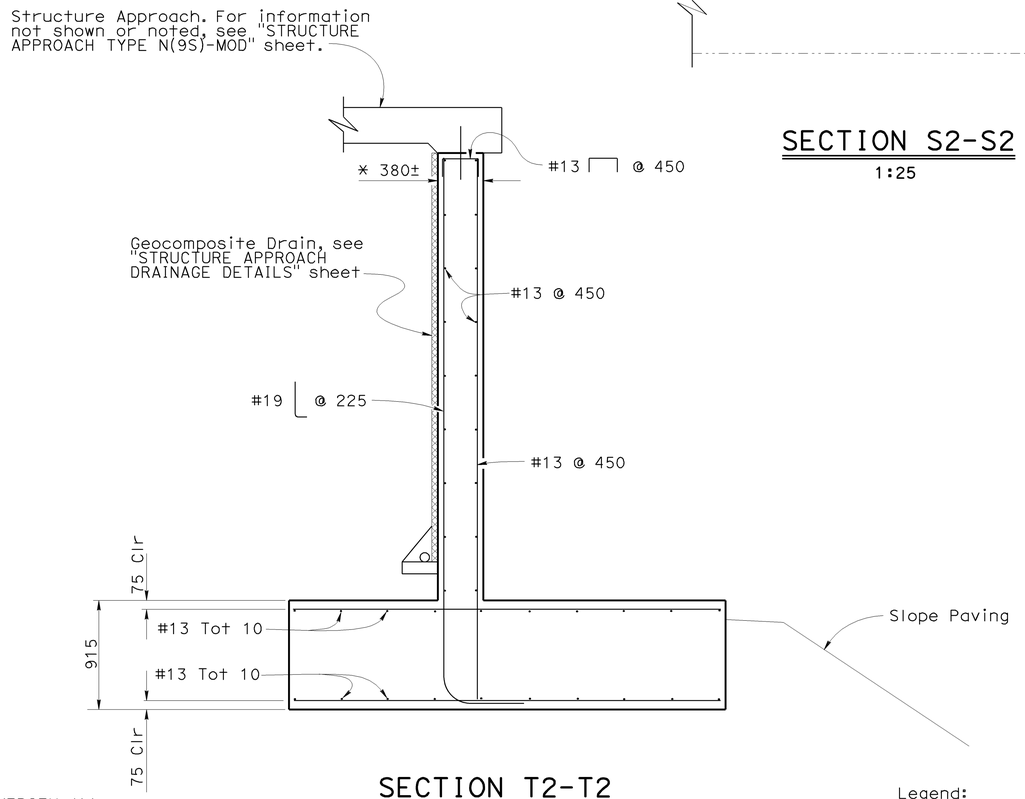

SECTION T2-T2

1:25

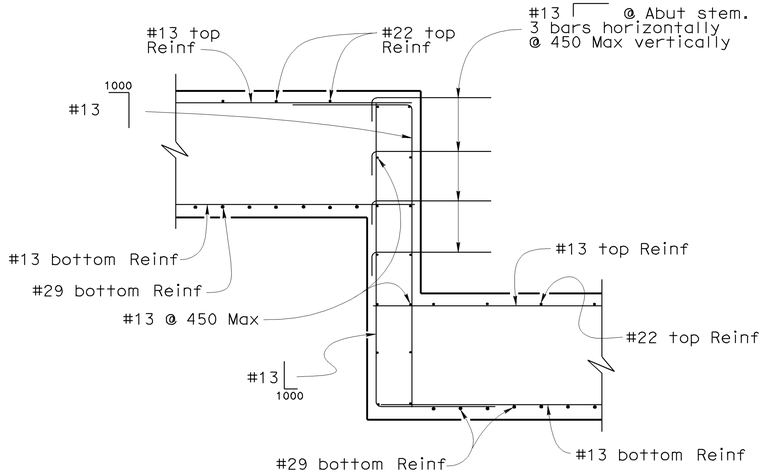

Note:

For location of "Section U2-U2" see "ABUTMENT DETAILS NO. 32" sheet.

SECTION U2-U2

1:25

NOTE:
THE CONTRACTOR SHALL VERIFY ALL CONTROLLING FIELD DIMENSIONS BEFORE ORDERING OR FABRICATING ANY MATERIAL.

Legend:
—·—·— Indicates existing structure
* Match existing

Caltrans Metric

	BY	CHECKED
DESIGN	Ulysses Smpardos	F. Feng/C. Chan
DETAILS	Steven Schenck	F. Feng/C. Chan
QUANTITIES	E. Hall	R. Odell

STATE OF CALIFORNIA
DEPARTMENT OF TRANSPORTATION

DIVISION OF ENGINEERING SERVICES
STRUCTURE DESIGN
DESIGN BRANCH 15

CU 07
EA 121841

BRIDGE NO. 53-1085
KILOMETER POST 46.1

PROVIDENCIA AVENUE OH (WIDEN)
ABUTMENT DETAILS NO. 28

ALL DIMENSIONS ARE IN MILLIMETERS UNLESS OTHERWISE SHOWN

ORIGINAL SCALE IN MILLIMETERS FOR REDUCED PLANS 0 10 20 30 40 50 60 70 80 90 100

DISREGARD PRINTS BEARING EARLIER REVISION DATES →

REVISION DATES: 10-11-08 | 1-23-09 | 2-3-09 | 2-25-09

SHEET 44 OF 152

FILE => 53-1085-h-a21d28.dgn

STRUCTURES DESIGN DETAIL SHEET (METRIC) (REV.03-17-04)

USERNAME => tromondo DATE PLOTTED => 12-JUN-2009 TIME PLOTTED => 15:04

DIST	COUNTY	ROUTE	KILOMETER POST TOTAL PROJECT	SHEET No	TOTAL SHEETS
07	LA	5	42.8/47.3	834	1073

Andrew P. Rittenhouse 12-05-08
REGISTERED CIVIL ENGINEER DATE

6-8-09
PLANS APPROVAL DATE

The State of California or its officers or agents shall not be responsible for the accuracy or completeness of electronic copies of this plan sheet.

REGISTERED PROFESSIONAL ENGINEER
Andrew P. Rittenhouse
No. 61006
Exp. 12-31-10
CIVIL
STATE OF CALIFORNIA

Legend:

* Extend reinforcement 750 mm into footing
** Extend reinforcement 450 mm past abutment seat
*** Measured along WWLOL

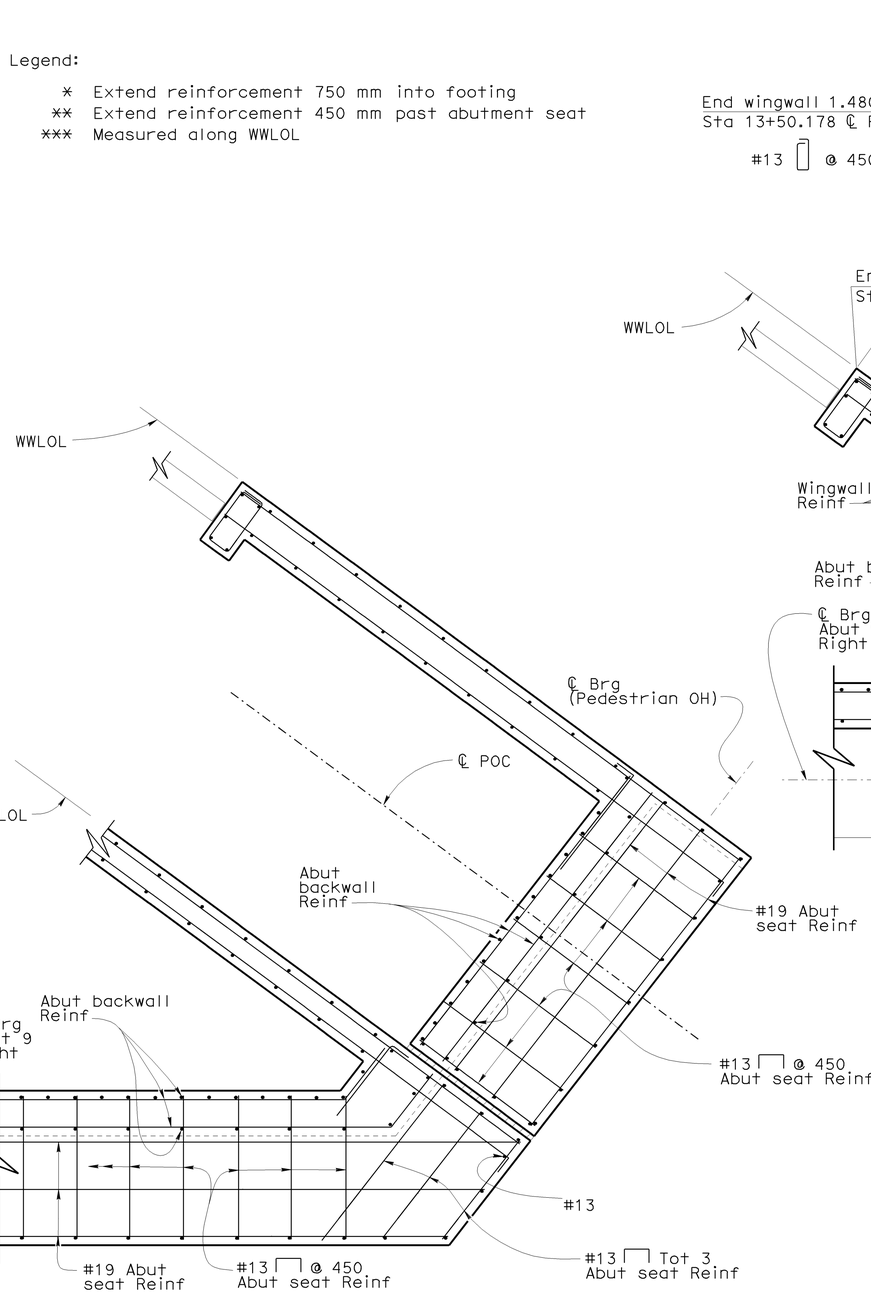

SECTION W2-W2

1:25

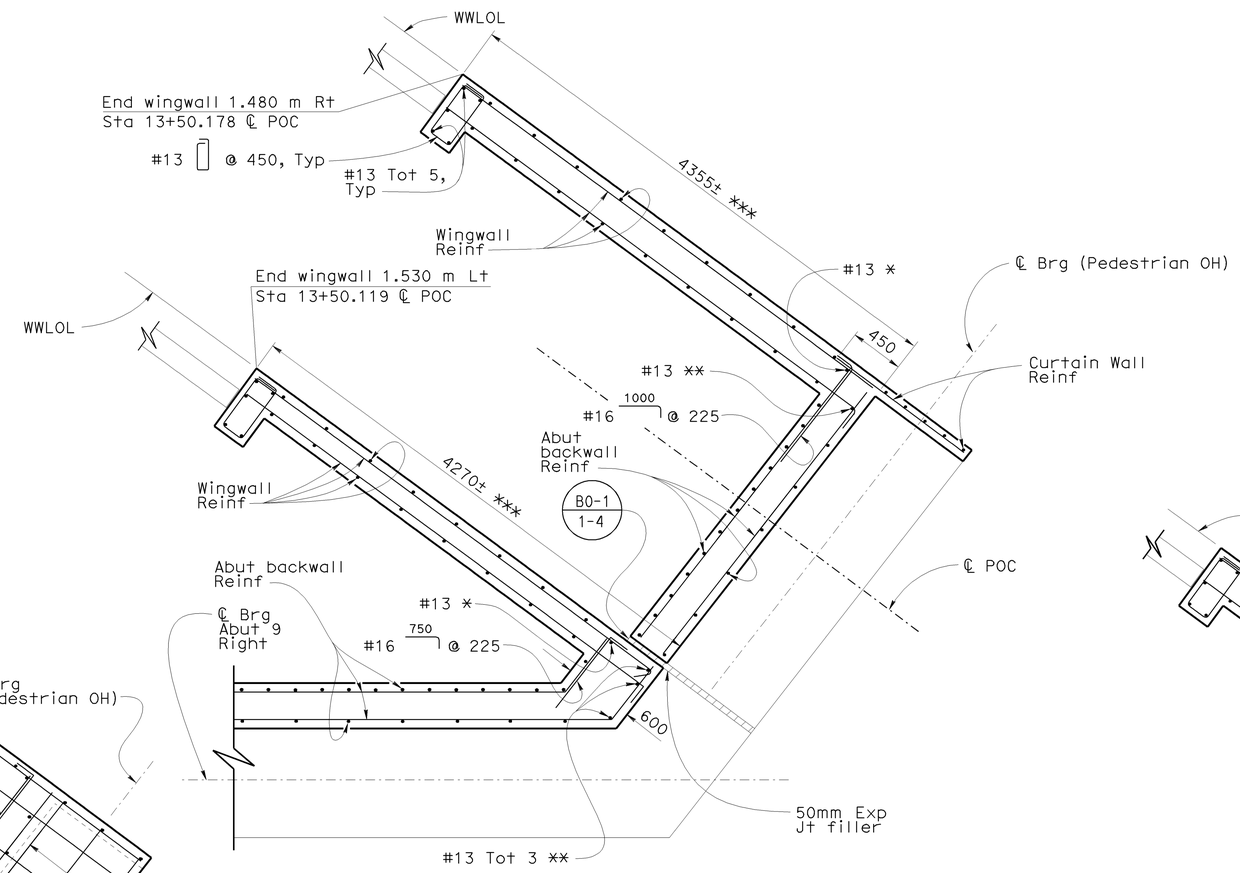

SECTION V2-V2

1:25

#13 ⌐ 1000 @ footing step.
See "Section U2-U2" on "ABUTMENT DETAILS NO. 28" sheet for additional information

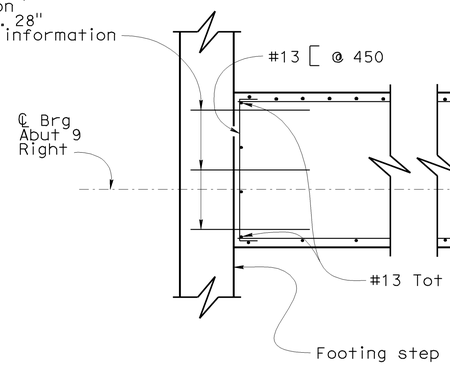

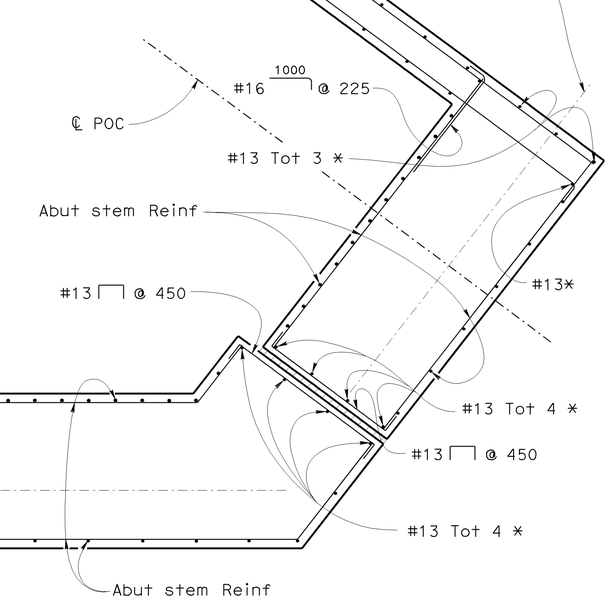

SECTION X2-X2

1:25

NOTE:
THE CONTRACTOR SHALL VERIFY ALL CONTROLLING FIELD DIMENSIONS BEFORE ORDERING OR FABRICATING ANY MATERIAL.

Note:

For information not shown or noted, see "Section V2-V2" and "Section X2-X2"

Caltrans Metric

	BY	CHECKED
DESIGN	Ulysses Smpardos	F.Feng/C. Chan
DETAILS	Steven Schenck	F. Feng/C. Chan
QUANTITIES	E. Hall	R. Odell

STATE OF CALIFORNIA
DEPARTMENT OF TRANSPORTATION

DIVISION OF ENGINEERING SERVICES
STRUCTURE DESIGN
DESIGN BRANCH 15

CU 07
EA 121841

BRIDGE NO. 53-1085
KILOMETER POST 46.1

PROVIDENCIA AVENUE OH (WIDEN)
ABUTMENT DETAILS NO. 29

ALL DIMENSIONS ARE IN MILLIMETERS UNLESS OTHERWISE SHOWN

ORIGINAL SCALE IN MILLIMETERS FOR REDUCED PLANS 0 10 20 30 40 50 60 70 80 90 100

DISREGARD PRINTS BEARING EARLIER REVISION DATES →

REVISION DATES: 10-15-08 | 1-21-09 | 2-3-09 | 2-25-09 | 3-12-09

SHEET 45 OF 152

FILE => 53-1085-h-a21d29.dgn

USERNAME => ttromndo DATE PLOTTED => 12-JUN-2009 TIME PLOTTED => 15:04

STRUCTURES DESIGN DETAIL SHEET (METRIC) (REV.03-17-04)

DIST	COUNTY	ROUTE	KILOMETER POST TOTAL PROJECT	SHEET No	TOTAL SHEETS
07	LA	5	42.8/47.3	835	1073

Andrew Rittenhouse 12-05-08
REGISTERED CIVIL ENGINEER DATE

6-8-09
PLANS APPROVAL DATE

The State of California or its officers or agents shall not be responsible for the accuracy or completeness of electronic copies of this plan sheet.

REGISTERED PROFESSIONAL ENGINEER
Andrew P. Rittenhouse
No. 61006
Exp. 12-31-10
CIVIL
STATE OF CALIFORNIA

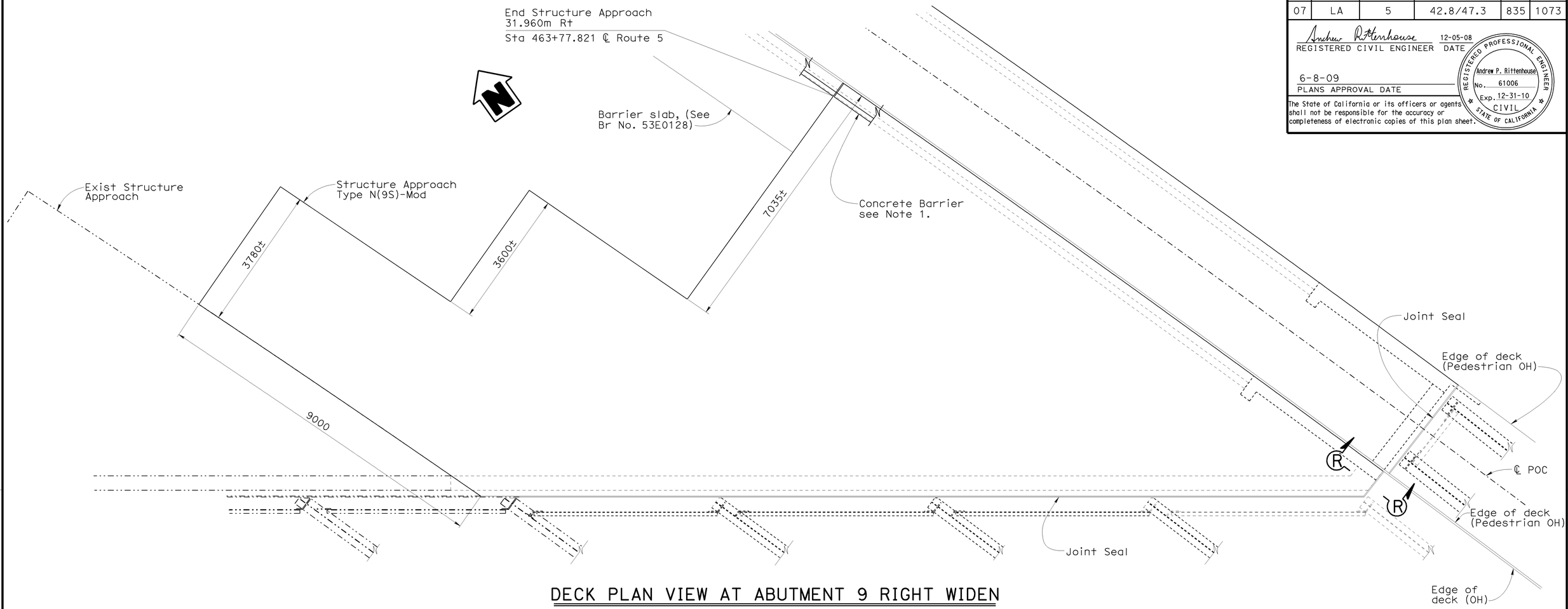

DECK PLAN VIEW AT ABUTMENT 9 RIGHT WIDEN

1:50

Notes:

1. Provide 13mm open joint in concrete barrier at location of contact joint between barrier slab and structure approach.
2. For "Section R-R" see "ABUTMENT DETAILS NO. 7" sheet

Legend:

—·—·— Indicates existing structure

NOTE:
THE CONTRACTOR SHALL VERIFY ALL CONTROLLING FIELD DIMENSIONS BEFORE ORDERING OR FABRICATING ANY MATERIAL.

	BY	CHECKED
DESIGN	Ulysses Smpardos	F. Feng/C. Chan
DETAILS	Steven Schenck	F. Feng/C. Chan
QUANTITIES	E. Hall	R. Odell

STATE OF CALIFORNIA
DEPARTMENT OF TRANSPORTATION

DIVISION OF ENGINEERING SERVICES
STRUCTURE DESIGN
DESIGN BRANCH 15

CU 07
EA 121841

BRIDGE NO. 53-1085
KILOMETER POST 46.1

PROVIDENCIA AVENUE OH (WIDEN)
ABUTMENT DETAILS NO. 30

ALL DIMENSIONS ARE IN MILLIMETERS UNLESS OTHERWISE SHOWN

ORIGINAL SCALE IN MILLIMETERS FOR REDUCED PLANS 0 10 20 30 40 50 60 70 80 90 100

DISREGARD PRINTS BEARING EARLIER REVISION DATES →

REVISION DATES: 1-23-09 | 2-25-09

SHEET 46 OF 152

FILE => 53-1085-h-a21d30.dgn

STRUCTURES DESIGN DETAIL SHEET (METRIC) (REV.03-17-04)

USERNAME => rramos DATE PLOTTED => 12-JUN-2009 TIME PLOTTED => 15:04

DIST	COUNTY	ROUTE	KILOMETER POST TOTAL PROJECT	SHEET No	TOTAL SHEETS
07	LA	5	42.8/47.3	836	1073

Andrew Rittenhouse 12-05-08
REGISTERED CIVIL ENGINEER DATE

6-8-09
PLANS APPROVAL DATE

REGISTERED PROFESSIONAL ENGINEER
Andrew P. Rittenhouse
No. 61006
Exp. 12-31-10
CIVIL
STATE OF CALIFORNIA

The State of California or its officers or agents shall not be responsible for the accuracy or completeness of electronic copies of this plan sheet.

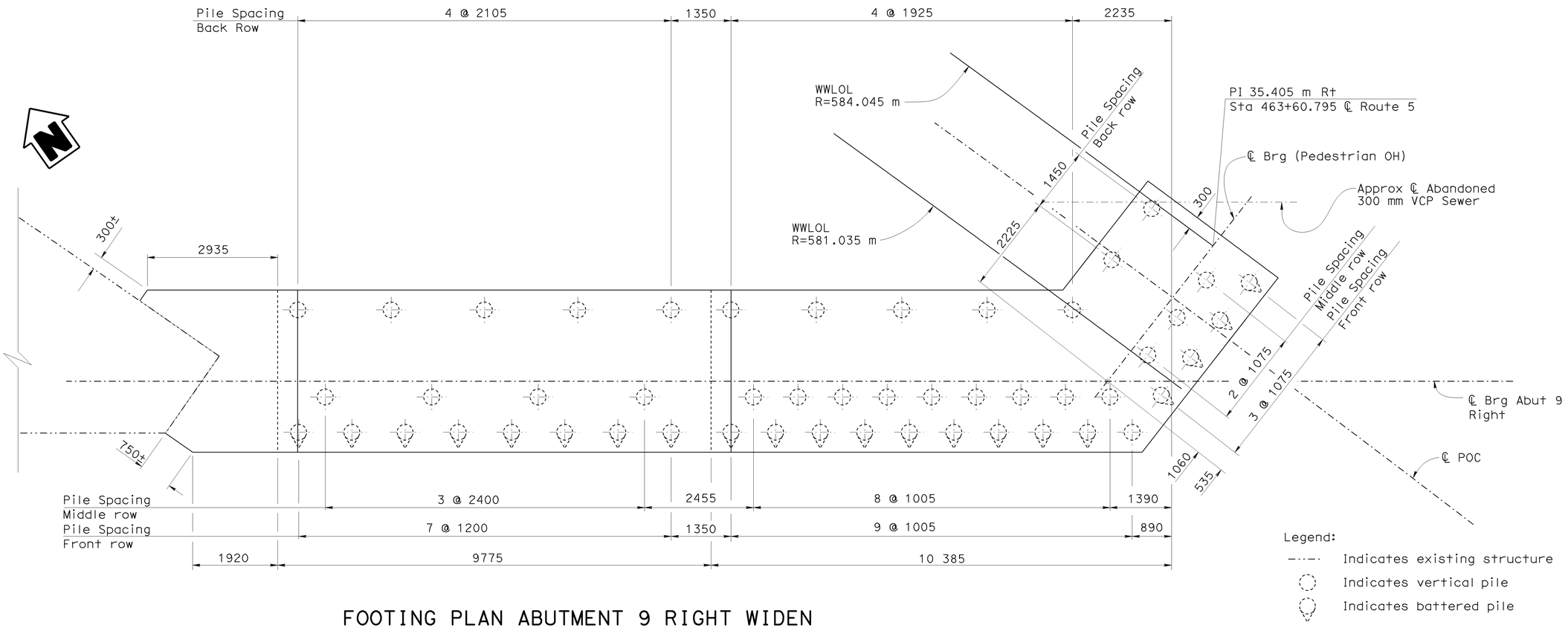

FOOTING PLAN ABUTMENT 9 RIGHT WIDEN

1:50

NOTE:
THE CONTRACTOR SHALL VERIFY ALL CONTROLLING FIELD DIMENSIONS BEFORE ORDERING OR FABRICATING ANY MATERIAL.

DESIGN	BY Ulysses Smpardos	CHECKED F. Feng/C. Chan	STATE OF CALIFORNIA DEPARTMENT OF TRANSPORTATION	DIVISION OF ENGINEERING SERVICES STRUCTURE DESIGN DESIGN BRANCH 15	BRIDGE NO. 53-1085
DETAILS	BY Steven Schenck	CHECKED F. Feng/C. Chan			KILOMETER POST 46.1
QUANTITIES	BY E. Hall	CHECKED R. Odell		CU 07 EA 121841	

PROVIDENCIA AVENUE OH (WIDEN)
ABUTMENT DETAILS NO. 31

ALL DIMENSIONS ARE IN MILLIMETERS UNLESS OTHERWISE SHOWN

ORIGINAL SCALE IN MILLIMETERS FOR REDUCED PLANS 0 10 20 30 40 50 60 70 80 90 100

DISREGARD PRINTS BEARING EARLIER REVISION DATES →

REVISION DATES: 1-21-09 | 1-23-09 | 1-26-09 | 2-2-09 | 3-12-09

SHEET 47 OF 152

STRUCTURES DESIGN DETAIL SHEET (METRIC) (REV.03-17-04)

FILE => 53-1085-h-a21d31.dgn

USERNAME = tfromdo DATE PLOTTED => 12-JUN-2009 TIME PLOTTED => 15:04

DIST	COUNTY	ROUTE	KILOMETER POST TOTAL PROJECT	SHEET No	TOTAL SHEETS
07	LA	5	42.8/47.3	837	1073

Andrew Rittenhouse 12-05-08
REGISTERED CIVIL ENGINEER DATE

6-8-09
PLANS APPROVAL DATE

The State of California or its officers or agents shall not be responsible for the accuracy or completeness of electronic copies of this plan sheet.

REGISTERED PROFESSIONAL ENGINEER
Andrew P. Rittenhouse
No. 61006
Exp. 12-31-10
CIVIL
STATE OF CALIFORNIA

Notes:
1. For "Section U2-U2" see "ABUTMENT DETAILS NO. 28" sheet.
2. For "Section S1-S1" and "Section T1-T1" see "ABUTMENT DETAILS NO. 18" sheet.

Legend:

Indicates existing structure

Indicates vertical pile

Indicates battered pile

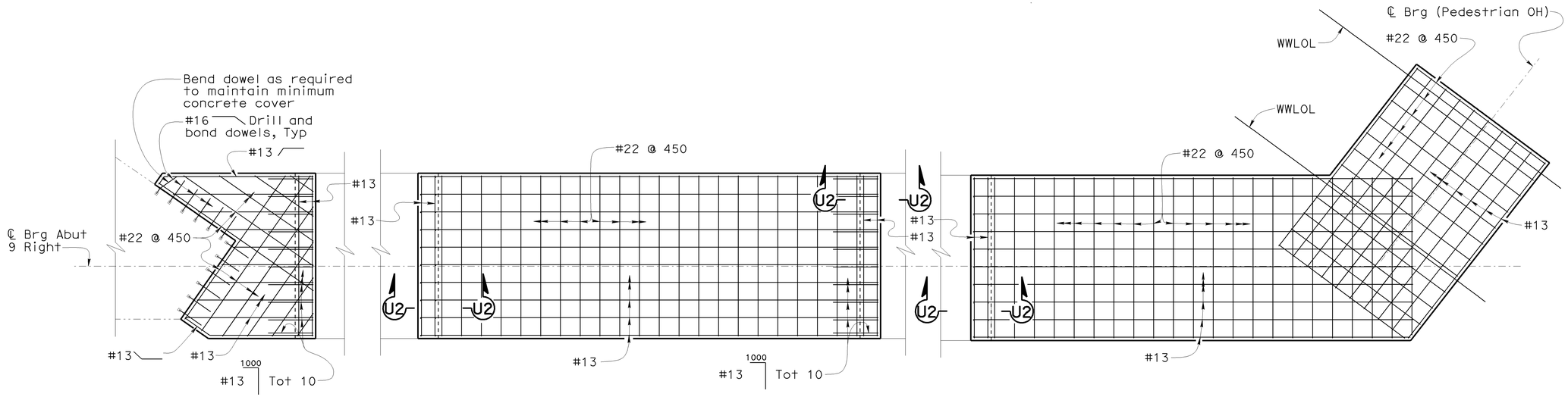

FOOTING TOP REINFORCEMENT ABUTMENT 9 RIGHT WIDEN

1:50

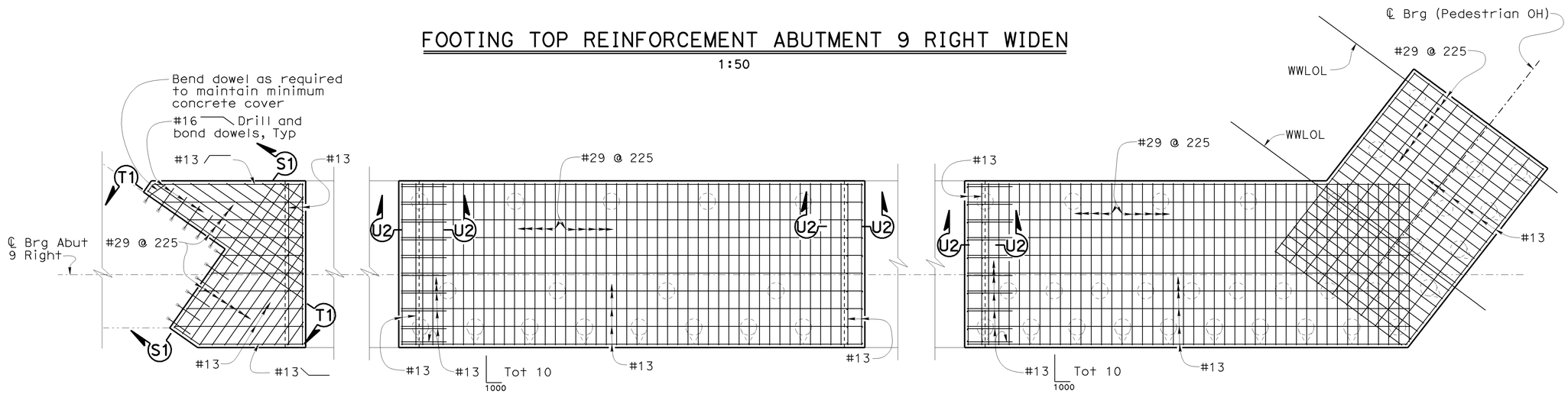

FOOTING BOTTOM REINFORCEMENT ABUTMENT 9 RIGHT WIDEN

1:50

NOTE:
THE CONTRACTOR SHALL VERIFY ALL CONTROLLING FIELD DIMENSIONS BEFORE ORDERING OR FABRICATING ANY MATERIAL.

DESIGN	BY Ulysses Smpardos	CHECKED F. Feng/C. Chan	STATE OF CALIFORNIA DEPARTMENT OF TRANSPORTATION
DETAILS	BY Steven Schenck	CHECKED F. Feng/C. Chan	DIVISION OF ENGINEERING SERVICES STRUCTURE DESIGN DESIGN BRANCH 15
QUANTITIES	BY E. Hall	CHECKED R. Odell	CU 07 EA 121841

BRIDGE NO. 53-1085
KILOMETER POST 46.1

PROVIDENCIA AVENUE OH (WIDEN)
ABUTMENT DETAILS NO. 32

ALL DIMENSIONS ARE IN MILLIMETERS UNLESS OTHERWISE SHOWN

ORIGINAL SCALE IN MILLIMETERS FOR REDUCED PLANS 0 10 20 30 40 50 60 70 80 90 100

DISREGARD PRINTS BEARING EARLIER REVISION DATES

REVISION DATES: 11-25-08 | 1-29-09 | 1-29-09

SHEET 48 OF 152

FILE => 53-1085-h-a21d32.dgn

STRUCTURES DESIGN DETAIL SHEET (METRIC) (REV.03-17-04)

USERNAME => tromondo DATE PLOTTED => 12-JUN-2009 TIME PLOTTED => 15:04

DIST	COUNTY	ROUTE	KILOMETER POST TOTAL PROJECT	SHEET No	TOTAL SHEETS
07	LA	5	42.8/47.3	838	1073

Andrew Rittenhouse 12-05-08
REGISTERED CIVIL ENGINEER DATE

6-8-09
PLANS APPROVAL DATE

The State of California or its officers or agents shall not be responsible for the accuracy or completeness of electronic copies of this plan sheet.

REGISTERED PROFESSIONAL ENGINEER
Andrew P. Rittenhouse
No. 61006
Exp. 12-31-10
CIVIL
STATE OF CALIFORNIA

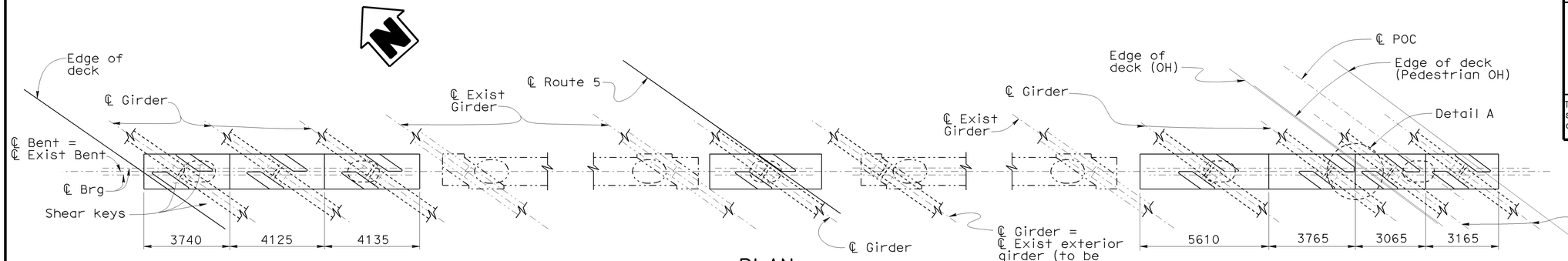

PLAN
1:100

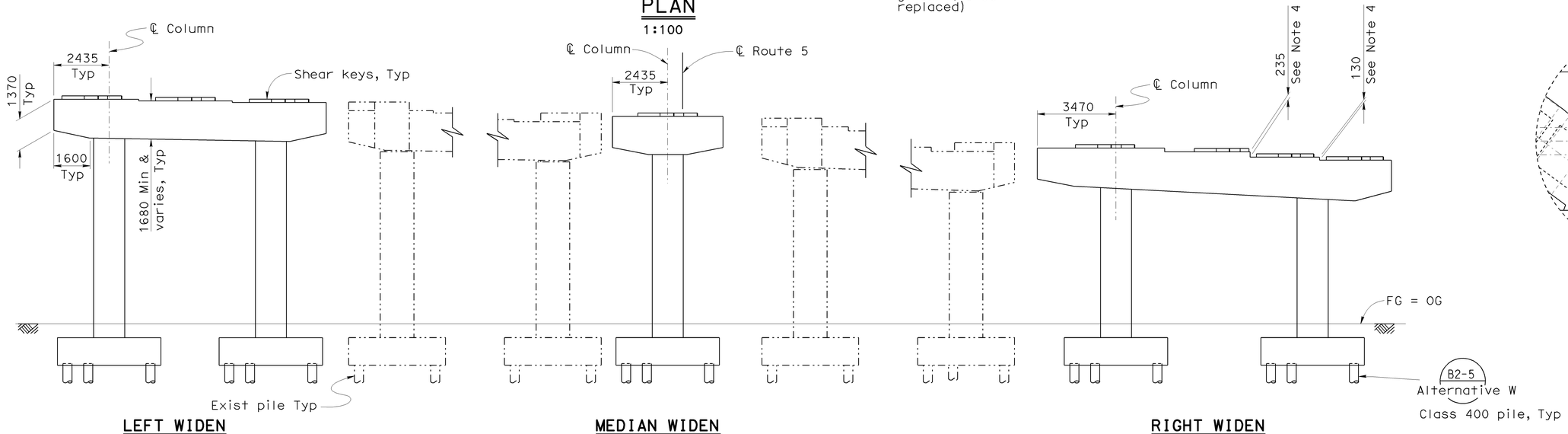

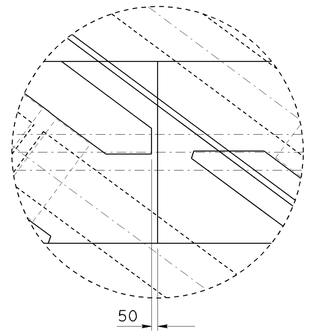

DETAIL A
1:25

ELEVATION
1:100

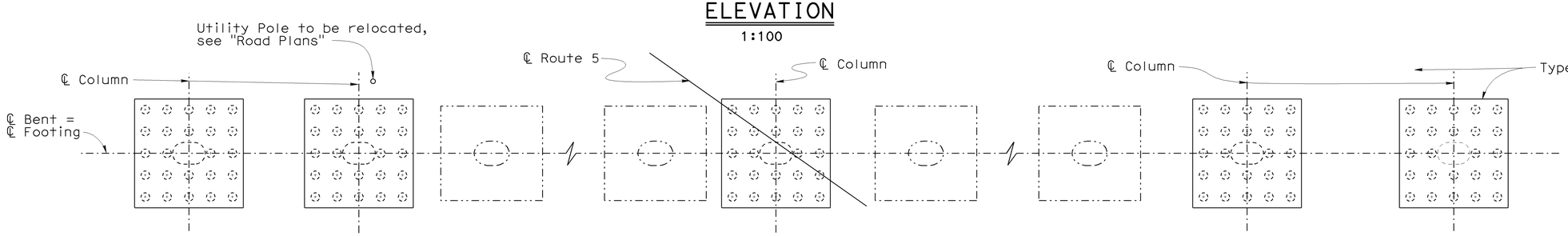

FOOTING PLAN
1:100

NOTE:
THE CONTRACTOR SHALL VERIFY ALL CONTROLLING FIELD DIMENSIONS BEFORE ORDERING OR FABRICATING ANY MATERIAL.

Legend:

-·-·- Indicates existing structure

Notes:

1. For "Type 1 Footing" details see "BENT DETAILS NO. 4" sheet.
2. For details not shown see "BENT DETAILS NO. 1", "BENT DETAILS NO. 2", and "BENT DETAILS NO. 3" sheets.
3. For shear key details, see "GIRDER DETAILS NO. 6" sheet.
4. Step dimension shown for location indicated only. Other step dimensions to be based on deck cross slope, profile grade and structure depth.

Caltrans Metric

	BY	CHECKED
DESIGN	Ulysses Smpardos	F. Feng/C. Chan
DETAILS	Steven Schenck	F. Feng/C. Chan
QUANTITIES	E. Hall	R. Odell

STATE OF CALIFORNIA
DEPARTMENT OF TRANSPORTATION

DIVISION OF ENGINEERING SERVICES
STRUCTURE DESIGN
DESIGN BRANCH 15

CU 07
EA 121841

BRIDGE NO.	PROVIDENCIA AVENUE OH (WIDEN)
53-1085	
KILOMETER POST	BENT 2 LAYOUT
46.1	

ALL DIMENSIONS ARE IN MILLIMETERS UNLESS OTHERWISE SHOWN

ORIGINAL SCALE IN MILLIMETERS FOR REDUCED PLANS 0 10 20 30 40 50 60 70 80 90 100

DISREGARD PRINTS BEARING EARLIER REVISION DATES

REVISION DATES: 4-12-08 | 4-24-08 | 9-11-08 | 10-28-08 | 11-24-08 | 1-23-09 | 1-23-09 | 1-30-09

SHEET 49 OF 152

FILE => 53-1085-j-b21-lo1.dgn

STRUCTURES DESIGN DETAIL SHEET (METRIC) (REV.03-17-04)

USERNAME => tromondo DATE PLOTTED => 12-JUN-2009 TIME PLOTTED => 15:05

DIST	COUNTY	ROUTE	KILOMETER POST TOTAL PROJECT	SHEET No	TOTAL SHEETS
07	LA	5	42.8/47.3	839	1073

Andrew Rittenhouse 12-05-08
REGISTERED CIVIL ENGINEER DATE

6-8-09
PLANS APPROVAL DATE

REGISTERED PROFESSIONAL ENGINEER
Andrew P. Rittenhouse
No. 61006
Exp. 12-31-10
CIVIL
STATE OF CALIFORNIA

The State of California or its officers or agents shall not be responsible for the accuracy or completeness of electronic copies of this plan sheet.

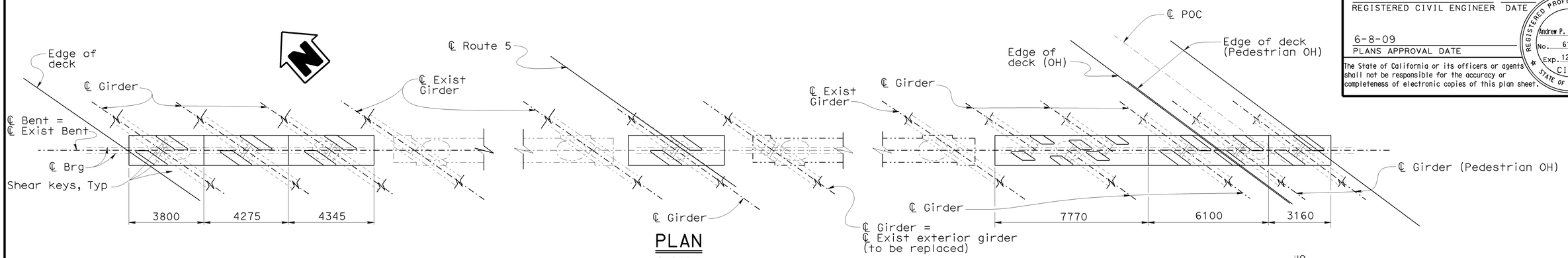

PLAN
1:100

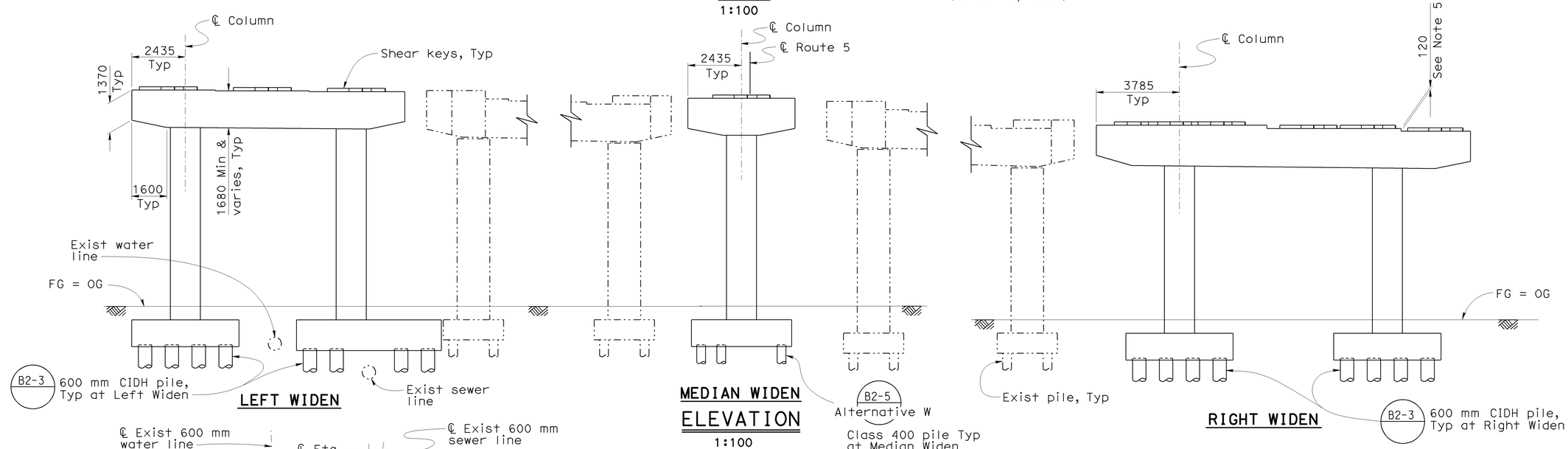

ELEVATION
1:100

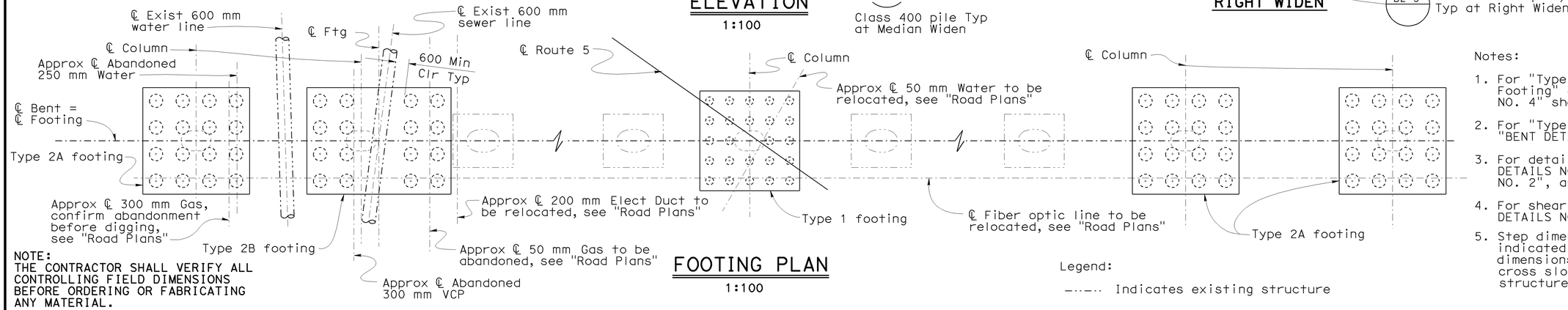

FOOTING PLAN
1:100

NOTE:
THE CONTRACTOR SHALL VERIFY ALL CONTROLLING FIELD DIMENSIONS BEFORE ORDERING OR FABRICATING ANY MATERIAL.

Legend:

—·—·— Indicates existing structure

Notes:

1. For "Type 1 Footing" and "Type 2A Footing" details, see "BENT DETAILS NO. 4" sheet.
2. For "Type 2B Footing" details see "BENT DETAILS NO. 5" sheet.
3. For details not shown, see "BENT DETAILS NO. 1", "BENT DETAILS NO. 2", and "BENT DETAILS NO. 3" sheets.
4. For shear key details, see "GIRDER DETAILS NO. 6" sheet.
5. Step dimension shown for location indicated only. Other step dimensions to be based on deck cross slope, profile grade and structure depth.

Caltrans Metric

	BY	CHECKED
DESIGN	Ulysses Smpardos	F. Feng/C. Chan
DETAILS	Steven Schenck	F. Feng/C. Chan
QUANTITIES	E. Hall	R. Odell

STATE OF CALIFORNIA
DEPARTMENT OF TRANSPORTATION

DIVISION OF ENGINEERING SERVICES
STRUCTURE DESIGN
DESIGN BRANCH 15

CU 07
EA 121841

BRIDGE NO. 53-1085
KILOMETER POST 46.1

PROVIDENCIA AVENUE OH (WIDEN)
BENT 3 LAYOUT

ALL DIMENSIONS ARE IN MILLIMETERS UNLESS OTHERWISE SHOWN

ORIGINAL SCALE IN MILLIMETERS FOR REDUCED PLANS 0 10 20 30 40 50 60 70 80 90 100

DISREGARD PRINTS BEARING EARLIER REVISION DATES

REVISION DATES: 9-11-08 | 10-10-08 | 11-14-08 | 1-02-09 | 1-05-09 | 1-30-09

SHEET 50 OF 152

FILE => 53-1085-j-b21-lo2.dgn

STRUCTURES DESIGN DETAIL SHEET (METRIC) (REV.03-17-04)

USERNAME => fromondo DATE PLOTTED => 12-JUN-2009 TIME PLOTTED => 15:05

DIST	COUNTY	ROUTE	KILOMETER POST TOTAL PROJECT	SHEET No	TOTAL SHEETS
07	LA	5	42.8/47.3	840	1073

Andrew Rittenhouse 12-05-08
REGISTERED CIVIL ENGINEER DATE

6-8-09
PLANS APPROVAL DATE

The State of California or its officers or agents shall not be responsible for the accuracy or completeness of electronic copies of this plan sheet.

REGISTERED PROFESSIONAL ENGINEER
Andrew P. Rittenhouse
No. 61006
Exp. 12-31-10
CIVIL
STATE OF CALIFORNIA

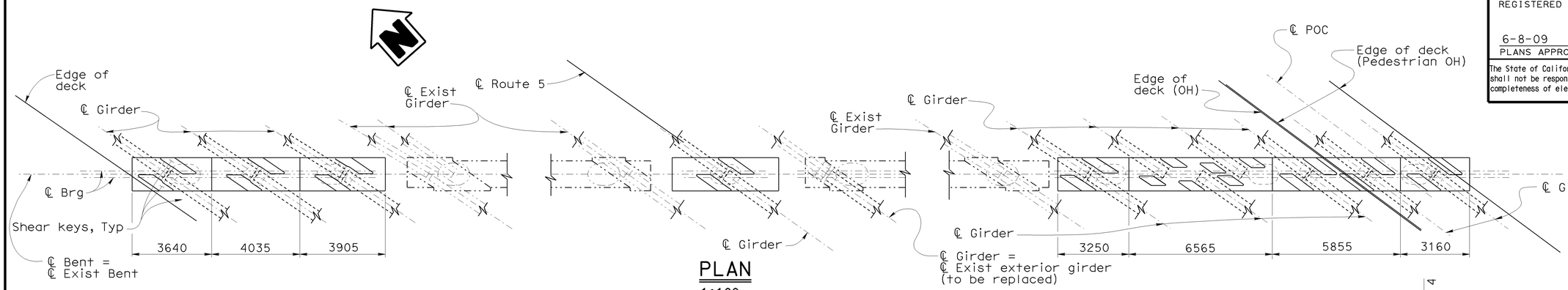

PLAN
1:100

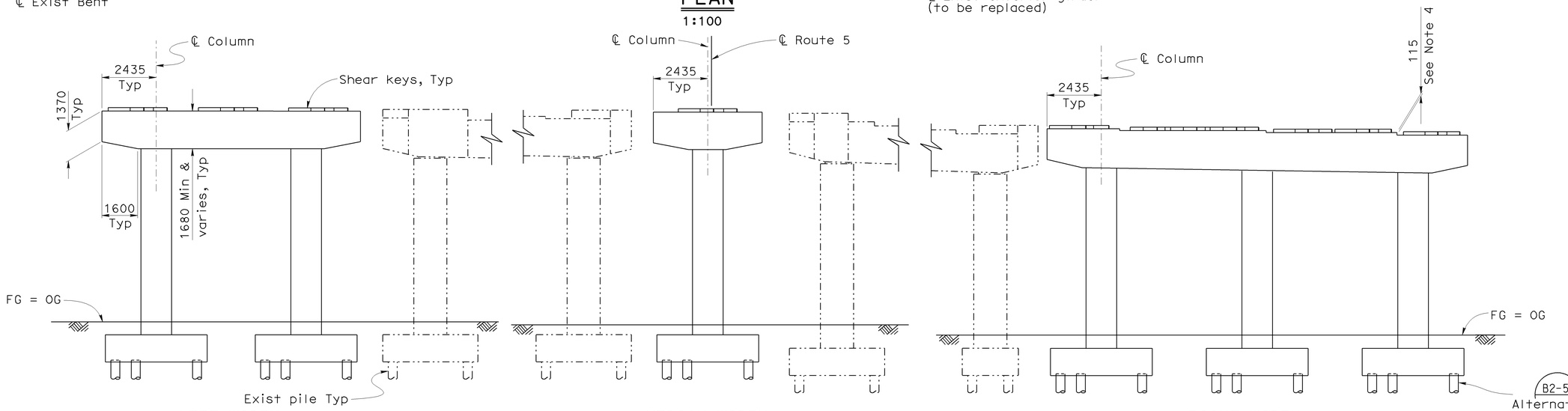

LEFT WIDEN | MEDIAN WIDEN | RIGHT WIDEN

ELEVATION
1:100

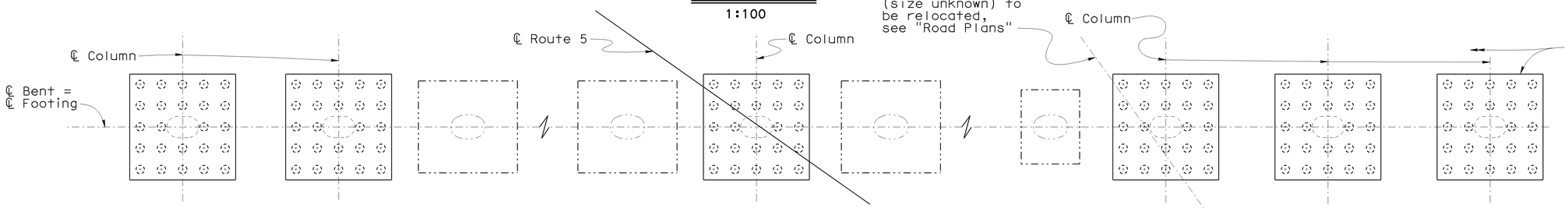

NOTE:
THE CONTRACTOR SHALL VERIFY ALL CONTROLLING FIELD DIMENSIONS BEFORE ORDERING OR FABRICATING ANY MATERIAL.

FOOTING PLAN
1:100

Legend:

—··—·· Indicates existing structure

Notes:

1. For "Type 1 Footing" details see "BENT DETAILS NO. 4" sheet.
2. For details not shown see "BENT DETAILS NO. 1", "BENT DETAILS NO. 2", and "BENT DETAILS NO. 3" sheets.
3. For shear key details, see "GIRDER DETAILS NO. 6" sheet.
4. Step dimension shown for location indicated only. Other step dimensions to be based on deck cross slope, profile grade and structure depth.

Caltrans Metric

	BY	CHECKED
DESIGN	Ulysses Smpardos	F. Feng/C. Chan
DETAILS	Steven Schenck	F. Feng/C. Chan
QUANTITIES	E. Hall	R. Odell

STATE OF CALIFORNIA
DEPARTMENT OF TRANSPORTATION

DIVISION OF ENGINEERING SERVICES
STRUCTURE DESIGN
DESIGN BRANCH 15

BRIDGE NO. 53-1085
KILOMETER POST 46.1

PROVIDENCIA AVENUE OH (WIDEN)
BENT 4 LAYOUT

ALL DIMENSIONS ARE IN MILLIMETERS UNLESS OTHERWISE SHOWN

ORIGINAL SCALE IN MILLIMETERS FOR REDUCED PLANS 0 10 20 30 40 50 60 70 80 90 100

CU 07
EA 121841

DISREGARD PRINTS BEARING EARLIER REVISION DATES →

REVISION DATES: 9-17-08 | 10-22-08 | 11-24-08 | 1-21-09 | 1-23-09 | 1-30-09 | 2-24-09

SHEET 51 OF 152

FILE => 53-1085-j-b21-lo4.dgn

USERNAME => tfrondo DATE PLOTTED => 12-JUN-2009 TIME PLOTTED => 15:05

STRUCTURES DESIGN DETAIL SHEET (METRIC) (REV.03-17-04)

DIST	COUNTY	ROUTE	KILOMETER POST TOTAL PROJECT	SHEET No	TOTAL SHEETS
07	LA	5	42.8/47.3	841	1073

Andrew Rittenhouse 12-05-08
REGISTERED CIVIL ENGINEER DATE

6-8-09
PLANS APPROVAL DATE

The State of California or its officers or agents shall not be responsible for the accuracy or completeness of electronic copies of this plan sheet.

REGISTERED PROFESSIONAL ENGINEER
Andrew P. Rittenhouse
No. 61006
Exp. 12-31-10
CIVIL
STATE OF CALIFORNIA

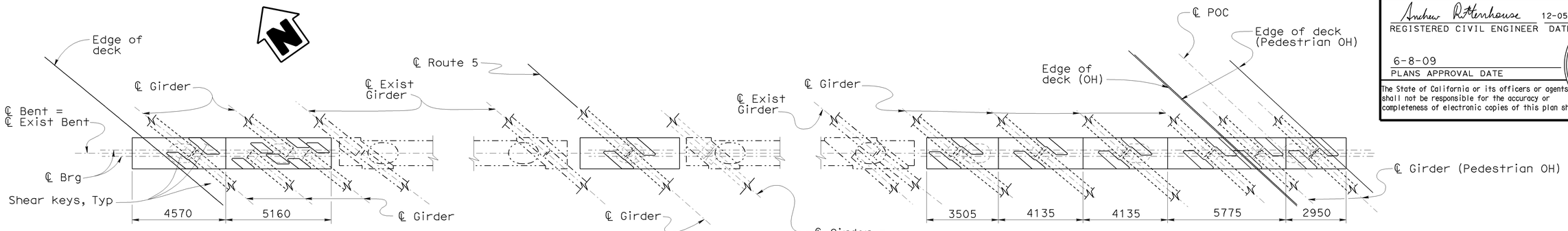

PLAN
1:100

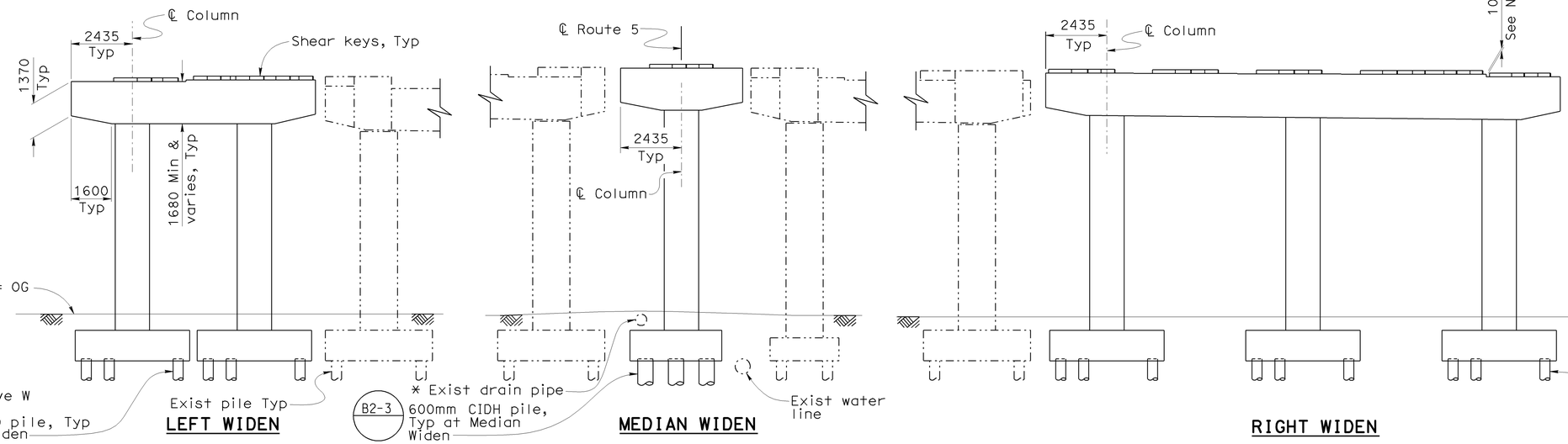

ELEVATION
1:100

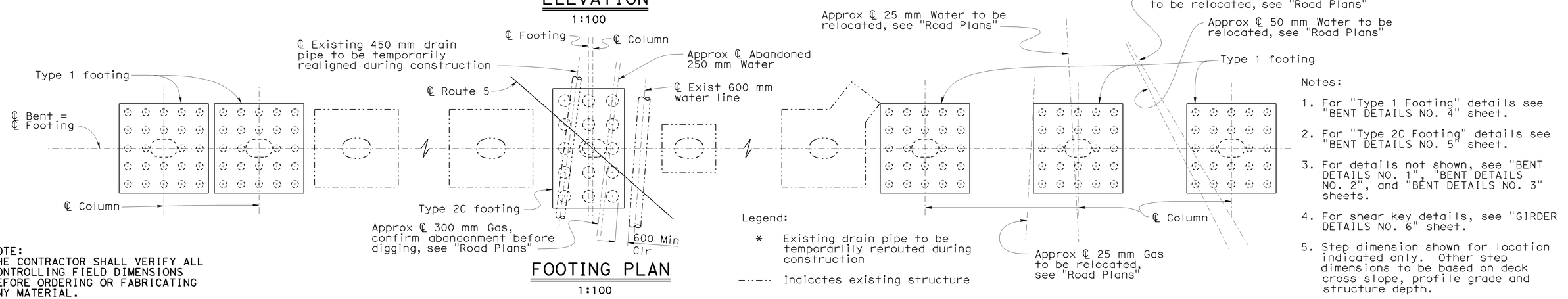

FOOTING PLAN
1:100

NOTE:
THE CONTRACTOR SHALL VERIFY ALL CONTROLLING FIELD DIMENSIONS BEFORE ORDERING OR FABRICATING ANY MATERIAL.

Legend:

* Existing drain pipe to be temporarily rerouted during construction

—·—·— Indicates existing structure

Notes:

1. For "Type 1 Footing" details see "BENT DETAILS NO. 4" sheet.
2. For "Type 2C Footing" details see "BENT DETAILS NO. 5" sheet.
3. For details not shown, see "BENT DETAILS NO. 1", "BENT DETAILS NO. 2", and "BENT DETAILS NO. 3" sheets.
4. For shear key details, see "GIRDER DETAILS NO. 6" sheet.
5. Step dimension shown for location indicated only. Other step dimensions to be based on deck cross slope, profile grade and structure depth.

Caltrans Metric

	BY	CHECKED
DESIGN	Ulysses Smpardos	F. Feng/C. Chan
DETAILS	Steven Schenck	F. Feng/C. Chan
QUANTITIES	E. Hall	R. Odell

STATE OF CALIFORNIA
DEPARTMENT OF TRANSPORTATION

DIVISION OF ENGINEERING SERVICES
STRUCTURE DESIGN
DESIGN BRANCH 15

CU 07
EA 121841

BRIDGE NO.	PROVIDENCIA AVENUE OH (WIDEN)
53-1085	BENT 5 LAYOUT
KILOMETER POST 46.1	

ALL DIMENSIONS ARE IN MILLIMETERS UNLESS OTHERWISE SHOWN

ORIGINAL SCALE IN MILLIMETERS FOR REDUCED PLANS 0 10 20 30 40 50 60 70 80 90 100

DISREGARD PRINTS BEARING EARLIER REVISION DATES →

REVISION DATES: 2-29-08 | 3-31-08 | 10-31-08 | 11-26-08 | 1-21-09 | 1-28-09 | 1-30-09

SHEET 52 OF 152

FILE => 53-1085-j-b21-lo5.dgn

STRUCTURES DESIGN DETAIL SHEET (METRIC) (REV.03-17-04)

USERNAME => ttromndo DATE PLOTTED => 12-JUN-2009 TIME PLOTTED => 15:05

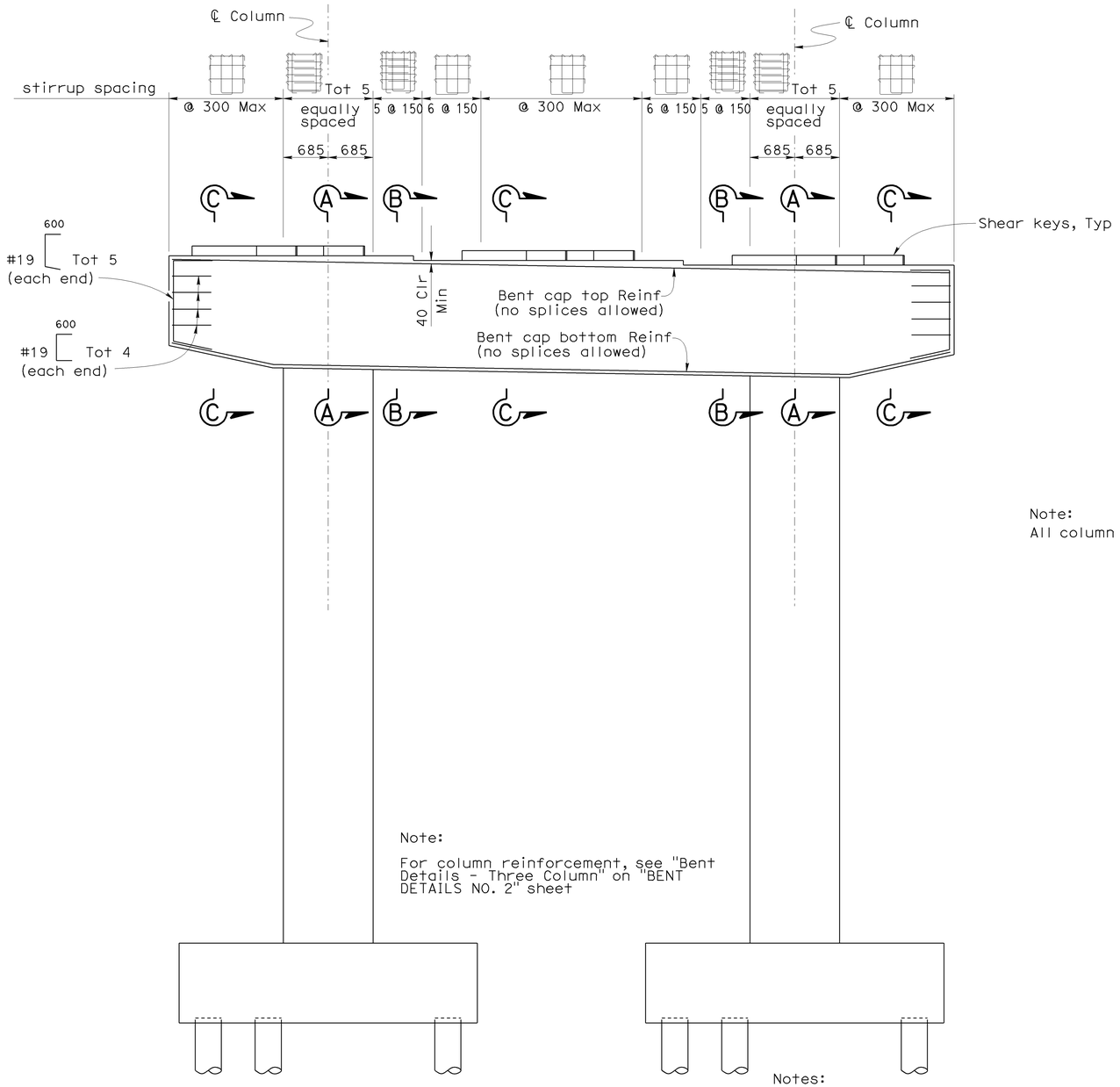

Note:

For column reinforcement, see "Bent Details - Three Column" on "BENT DETAILS NO. 2" sheet

Notes:

1. For "Section A-A", "Section B-B", "Section C-C", and "Section D-D" see "BENT DETAILS NO. 3" sheet.
2. For footing details, see "BENT DETAILS NO. 4" and "BENT DETAILS NO. 5" sheets.
3. All hoops are Ultimate Butt Spliced continuous.

NOTE:
THE CONTRACTOR SHALL VERIFY ALL CONTROLLING FIELD DIMENSIONS BEFORE ORDERING OR FABRICATING ANY MATERIAL.

BENT DETAILS - TWO COLUMN

1:40

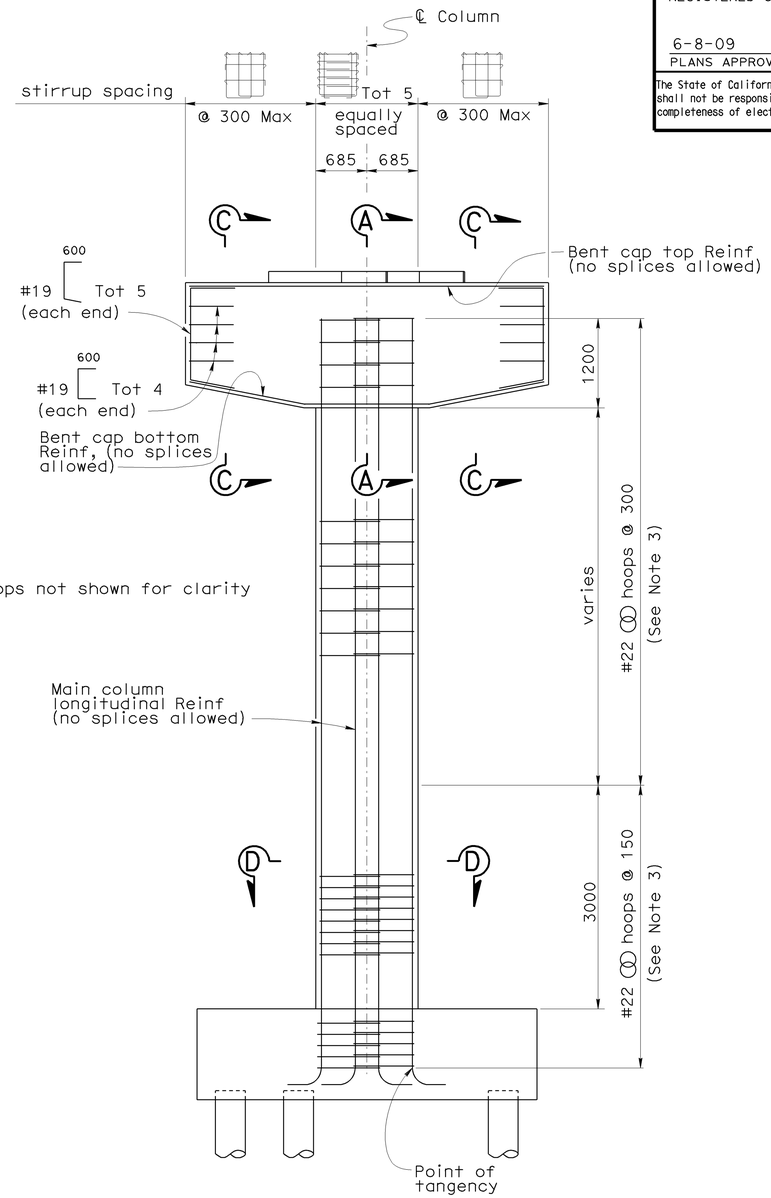

Note:
All column hoops not shown for clarity

BENT DETAILS - SINGLE COLUMN

1:40

REGISTERED CIVIL ENGINEER — DATE 12-05-08

6-8-09
PLANS APPROVAL DATE

The State of California or its officers or agents shall not be responsible for the accuracy or completeness of electronic copies of this plan sheet.

REGISTERED PROFESSIONAL ENGINEER — Andrew P. Rittenhouse — No. 61006 — Exp. 12-31-10 — CIVIL — STATE OF CALIFORNIA

DIST	COUNTY	ROUTE	KILOMETER POST TOTAL PROJECT	SHEET No	TOTAL SHEETS
07	LA	5	42.8/47.3	842	1073

DESIGN	BY Ulysses Smpardos	CHECKED F. Feng/C. Chan
DETAILS	BY Steven Schenck	CHECKED F. Feng/C. Chan
QUANTITIES	BY E. Hall	CHECKED R. Odell

STATE OF CALIFORNIA
DEPARTMENT OF TRANSPORTATION

DIVISION OF ENGINEERING SERVICES
STRUCTURE DESIGN
DESIGN BRANCH 15

CU 07
EA 121841

BRIDGE NO. 53-1085
KILOMETER POST 46.1

PROVIDENCIA AVENUE OH (WIDEN)

BENT DETAILS NO. 1

ALL DIMENSIONS ARE IN MILLIMETERS UNLESS OTHERWISE SHOWN

ORIGINAL SCALE IN MILLIMETERS FOR REDUCED PLANS 0 10 20 30 40 50 60 70 80 90 100

DISREGARD PRINTS BEARING EARLIER REVISION DATES →

REVISION DATES: 4-30-08 | 10-31-08 | 11-26-08 | 1-23-09 | 1-30-09

SHEET 53 OF 152

FILE => 53-1085-j-bnt01.dgn

STRUCTURES DESIGN DETAIL SHEET (METRIC) (REV.03-17-04)

USERNAME => tromndo DATE PLOTTED => 12-JUN-2009 TIME PLOTTED => 15:05

DIST	COUNTY	ROUTE	KILOMETER POST TOTAL PROJECT	SHEET No	TOTAL SHEETS
07	LA	5	42.8/47.3	843	1073

Andrew Rittenhouse 12-05-08
REGISTERED CIVIL ENGINEER DATE

6-8-09
PLANS APPROVAL DATE

REGISTERED PROFESSIONAL ENGINEER
Andrew P. Rittenhouse
No. 61006
Exp. 12-31-10
CIVIL
STATE OF CALIFORNIA

The State of California or its officers or agents shall not be responsible for the accuracy or completeness of electronic copies of this plan sheet.

Note:

Stirrup reinforcement symmetrical about ℄ structure

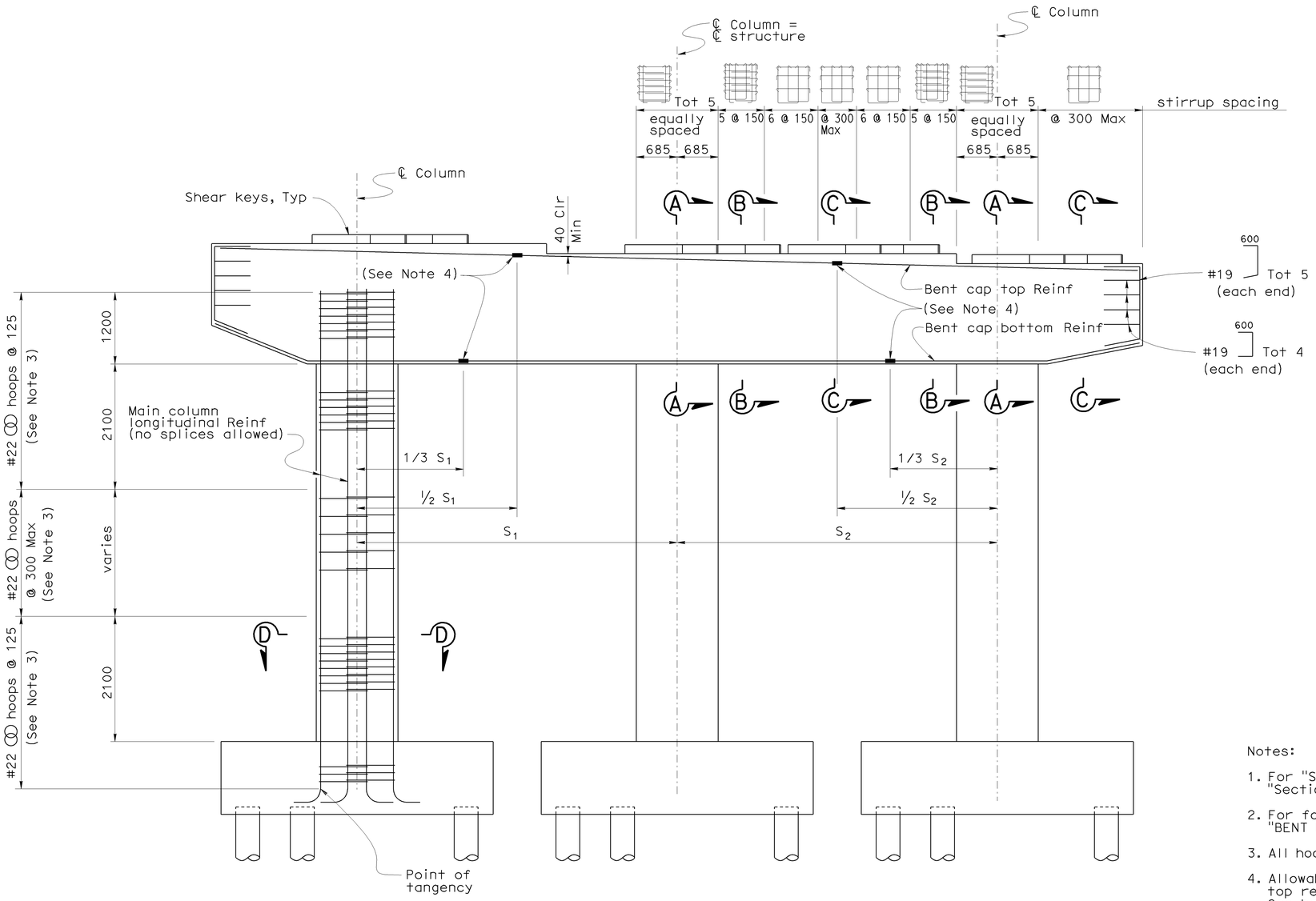

Note: All column hoops not shown for clarity

Notes:

1. For "Section A-A", "Section B-B", "Section C-C", and "Section D-D", see "BENT DETAILS NO. 3" sheet.
2. For footing details see "BENT DETAILS NO. 4" and "BENT DETAILS NO. 5" sheets.
3. All hoops are Ultimate Butt Spliced continuous.
4. Allowable Service Butt Splice location for bent cap top reinforcing and bent cap bottom reinforcing. One bar per bundle to be spliced at each allowable splice location.
5. Column reinforcement shown is typical for all columns in bent.

NOTE:
THE CONTRACTOR SHALL VERIFY ALL CONTROLLING FIELD DIMENSIONS BEFORE ORDERING OR FABRICATING ANY MATERIAL.

BENT DETAILS - THREE COLUMN

1:40

Caltrans Metric

	BY	CHECKED
DESIGN	Ulysses Smpardos	F. Feng/C. Chan
DETAILS	Steven Schenck	F. Feng/C. Chan
QUANTITIES	E. Hall	R. Odell

STATE OF CALIFORNIA
DEPARTMENT OF TRANSPORTATION

DIVISION OF ENGINEERING SERVICES
STRUCTURE DESIGN
DESIGN BRANCH 15

BRIDGE NO. 53-1085
KILOMETER POST 46.1

PROVIDENCIA AVENUE OH (WIDEN)
BENT DETAILS NO. 2

ALL DIMENSIONS ARE IN MILLIMETERS UNLESS OTHERWISE SHOWN

ORIGINAL SCALE IN MILLIMETERS FOR REDUCED PLANS 0 10 20 30 40 50 60 70 80 90 100

CU 07
EA 121841

DISREGARD PRINTS BEARING EARLIER REVISION DATES

REVISION DATES: 05-11-08 10-21-08 11-24-08 1-23-09 1-30-09 2-24-09 3-12-09

SHEET 54 OF 152

FILE => 53-1085-j-bnt02.dgn

STRUCTURES DESIGN DETAIL SHEET (METRIC) (REV.03-17-04)

USERNAME => trannda DATE PLOTTED => 12-JUN-2009 TIME PLOTTED => 15:05

DIST	COUNTY	ROUTE	KILOMETER POST TOTAL PROJECT	SHEET No	TOTAL SHEETS
07	LA	5	42.8/47.3	844	1073

Andrew Rittenhouse 12-05-08
REGISTERED CIVIL ENGINEER DATE

6-8-09
PLANS APPROVAL DATE

REGISTERED PROFESSIONAL ENGINEER — Andrew P. Rittenhouse — No. 61006 — Exp. 12-31-10 — CIVIL — STATE OF CALIFORNIA

The State of California or its officers or agents shall not be responsible for the accuracy or completeness of electronic copies of this plan sheet.

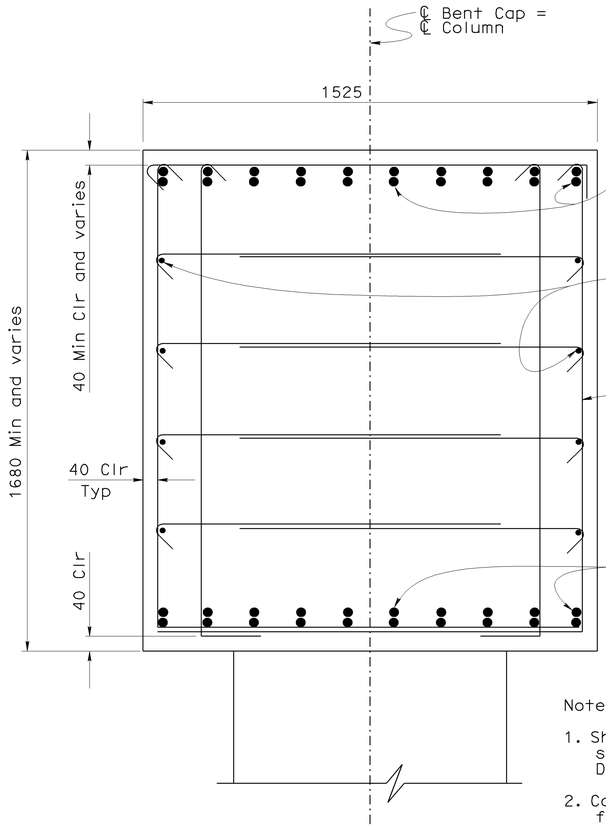

Notes:

1. Shear keys not shown. For shear key details see "GIRDER DETAILS NO. 6" sheet.
2. Column reinforcement not shown for clarity.

SECTION A-A
1:10

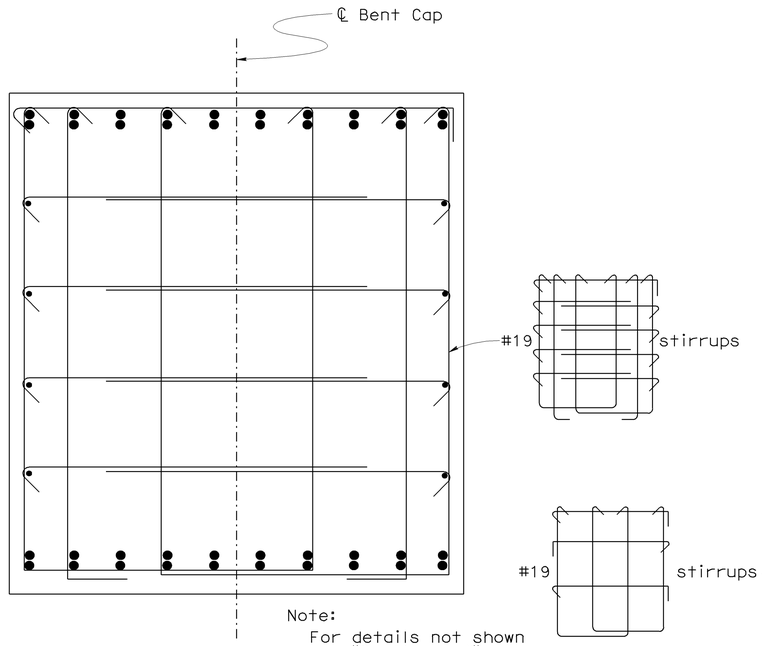

Note:
For details not shown see "Section A-A".

SECTION B-B
1:10

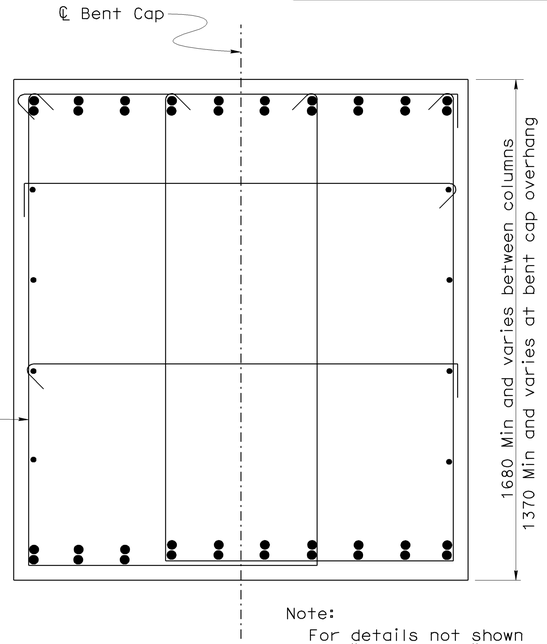

Note:
For details not shown see "Section A-A".

SECTION C-C
1:10

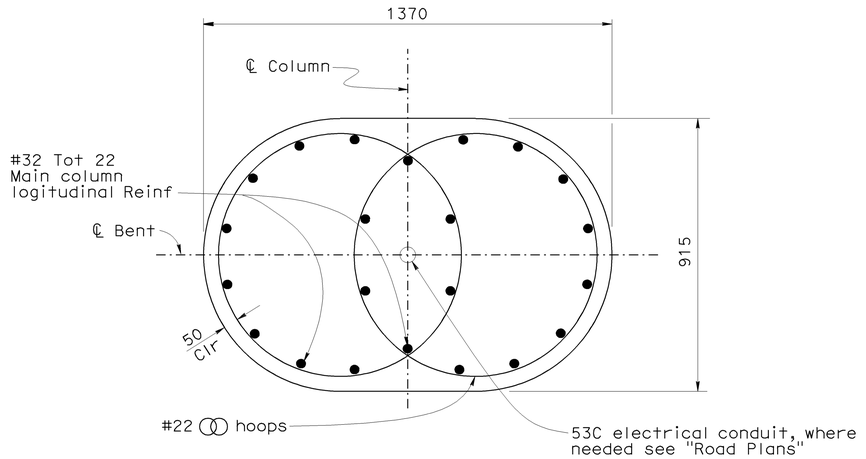

SECTION D-D
1:10

NOTE:
THE CONTRACTOR SHALL VERIFY ALL CONTROLLING FIELD DIMENSIONS BEFORE ORDERING OR FABRICATING ANY MATERIAL.

	BY	CHECKED
DESIGN	Ulysses Smpardos	F. Feng/C. Chan
DETAILS	Steven Schenck	F. Feng/C. Chan
QUANTITIES	E. Hall	R. Odell

STATE OF CALIFORNIA
DEPARTMENT OF TRANSPORTATION

DIVISION OF ENGINEERING SERVICES
STRUCTURE DESIGN
DESIGN BRANCH 15

BRIDGE NO. 53-1085
KILOMETER POST 46.1

PROVIDENCIA AVENUE OH (WIDEN)
BENT DETAILS NO. 3

ALL DIMENSIONS ARE IN MILLIMETERS UNLESS OTHERWISE SHOWN

ORIGINAL SCALE IN MILLIMETERS FOR REDUCED PLANS 0 10 20 30 40 50 60 70 80 90 100

CU 07
EA 121841

DISREGARD PRINTS BEARING EARLIER REVISION DATES →

REVISION DATES: 4-14-08 | 9-22-08 | 10-20-08 | 11-24-08 | 1-21-09 | 1-30-09 | 2-24-09

SHEET 55 OF 152

FILE => 53-1085-j-bnt03.dgn

STRUCTURES DESIGN DETAIL SHEET (METRIC) (REV.03-17-04)

USERNAME => tfrondo DATE PLOTTED => 12-JUN-2009 TIME PLOTTED => 15:05

DIST	COUNTY	ROUTE	KILOMETER POST TOTAL PROJECT	SHEET No	TOTAL SHEETS
07	LA	5	42.8/47.3	845	1073

Andrew Rittenhouse 12-05-08
REGISTERED CIVIL ENGINEER DATE

6-8-09
PLANS APPROVAL DATE

The State of California or its officers or agents shall not be responsible for the accuracy or completeness of electronic copies of this plan sheet.

REGISTERED PROFESSIONAL ENGINEER
Andrew P. Rittenhouse
No. 61006
Exp. 12-31-10
CIVIL
STATE OF CALIFORNIA

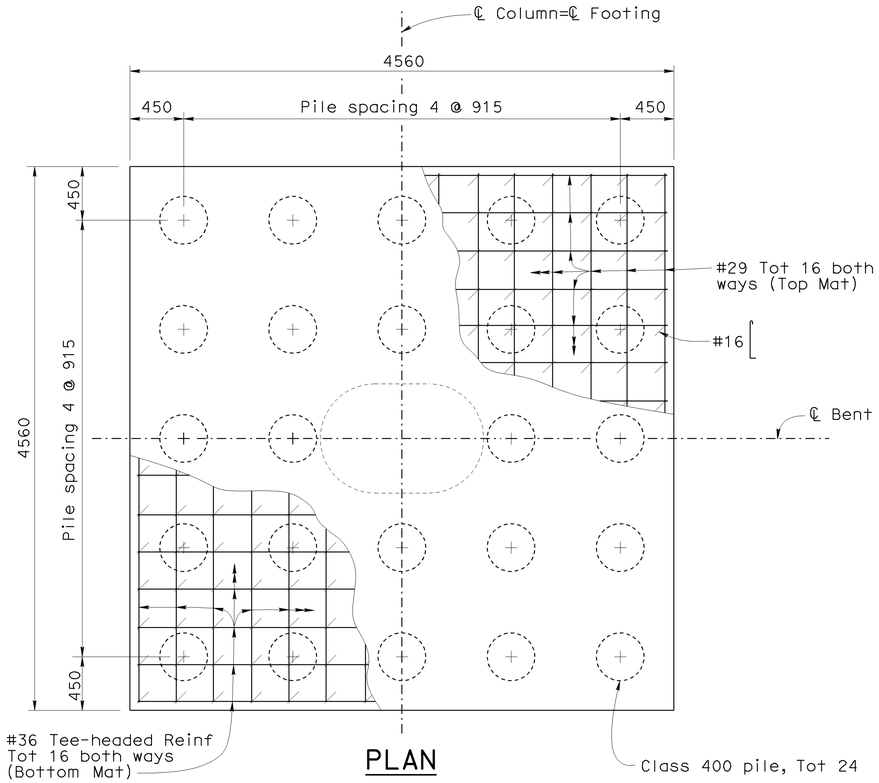

PLAN

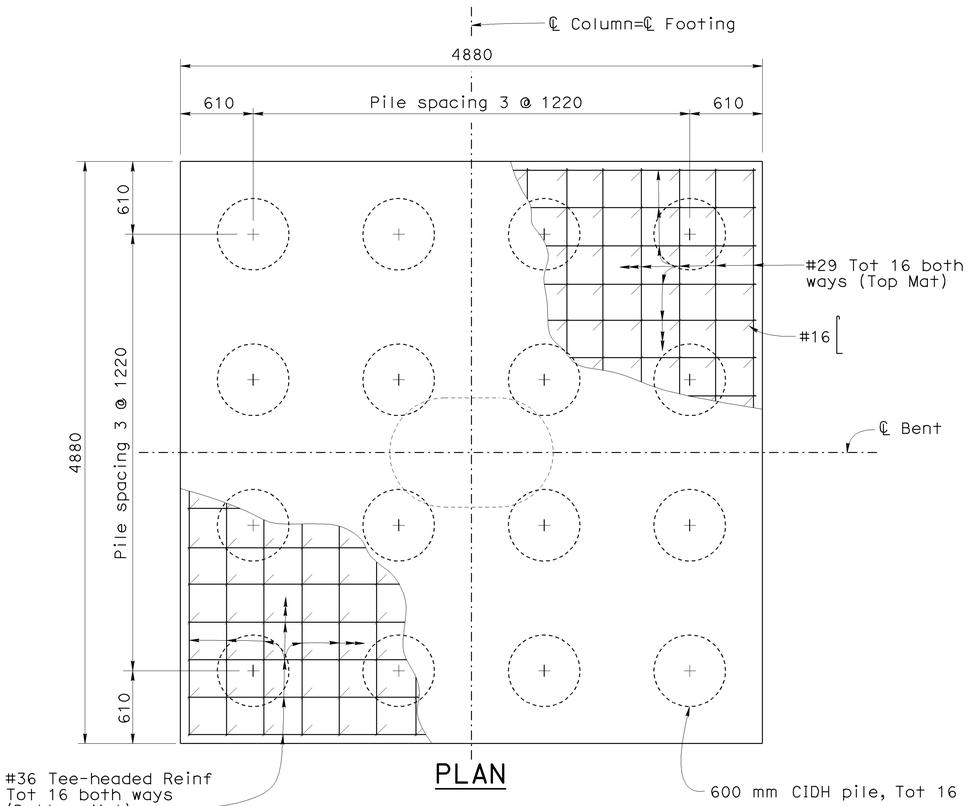

PLAN

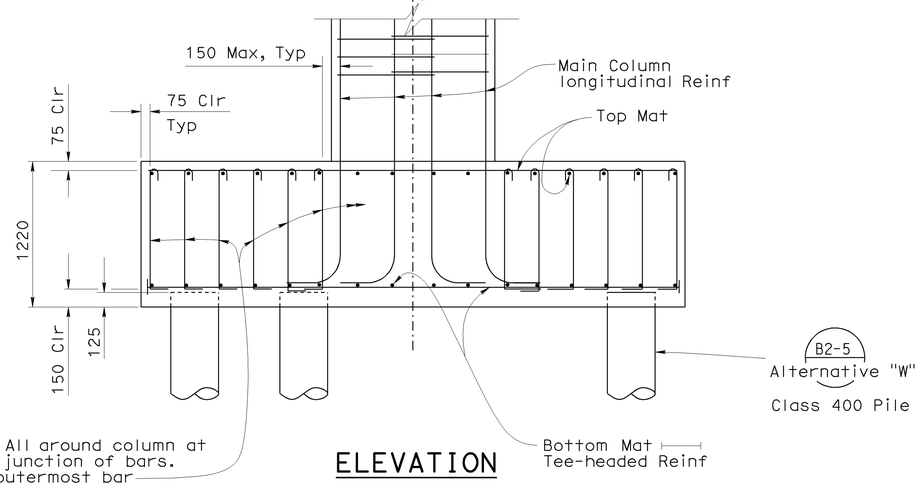

ELEVATION

TYPE 1 FOOTING

1:25

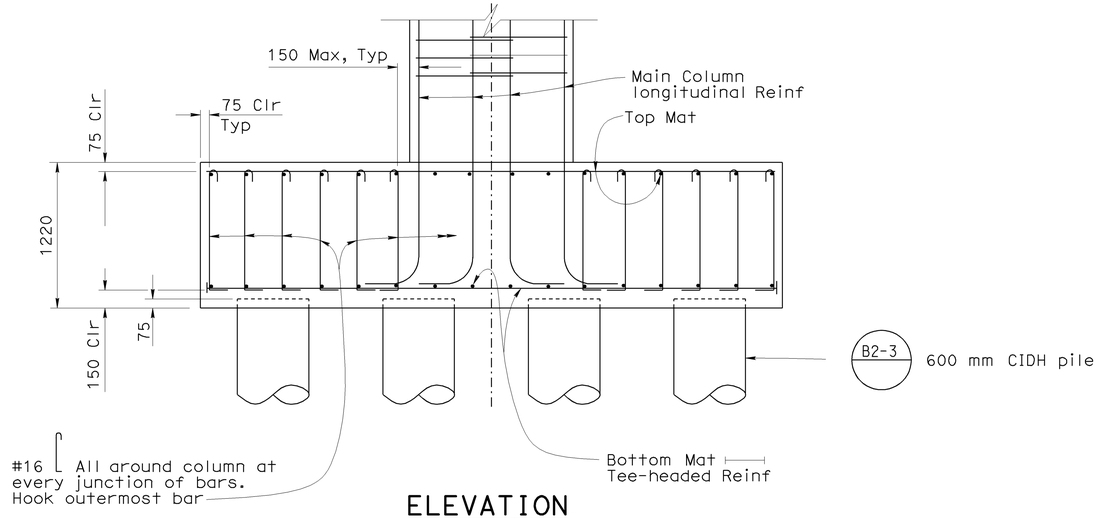

ELEVATION

TYPE 2A FOOTING

1:25

NOTE:
THE CONTRACTOR SHALL VERIFY ALL CONTROLLING FIELD DIMENSIONS BEFORE ORDERING OR FABRICATING ANY MATERIAL.

Caltrans Metric

ALL DIMENSIONS ARE IN MILLIMETERS UNLESS OTHERWISE SHOWN

ORIGINAL SCALE IN MILLIMETERS FOR REDUCED PLANS 0 10 20 30 40 50 60 70 80 90 100

	BY	CHECKED
DESIGN	Ulysses Smpardos	F. Feng/C. Chan
DETAILS	Steven Schenck	F. Feng/C. Chan
QUANTITIES	E. Hall	R. Odell

STATE OF CALIFORNIA
DEPARTMENT OF TRANSPORTATION

DIVISION OF ENGINEERING SERVICES
STRUCTURE DESIGN
DESIGN BRANCH 15

CU 07
EA 121841

FILE => 53-1085-j-bnt04.dgn

BRIDGE NO. 53-1085
KILOMETER POST 46.1

PROVIDENCIA AVENUE OH (WIDEN)

BENT DETAILS NO. 4

DISREGARD PRINTS BEARING EARLIER REVISION DATES →

REVISION DATES: 9-11-08 | 10-20-08 | 11-24-08 | 1-20-09 | 1-23-09 | 1-30-09

SHEET 56 OF 152

STRUCTURES DESIGN DETAIL SHEET (METRIC) (REV.03-17-04)

USERNAME => s135318 DATE PLOTTED => 12-JUN-2009 TIME PLOTTED => 15:09

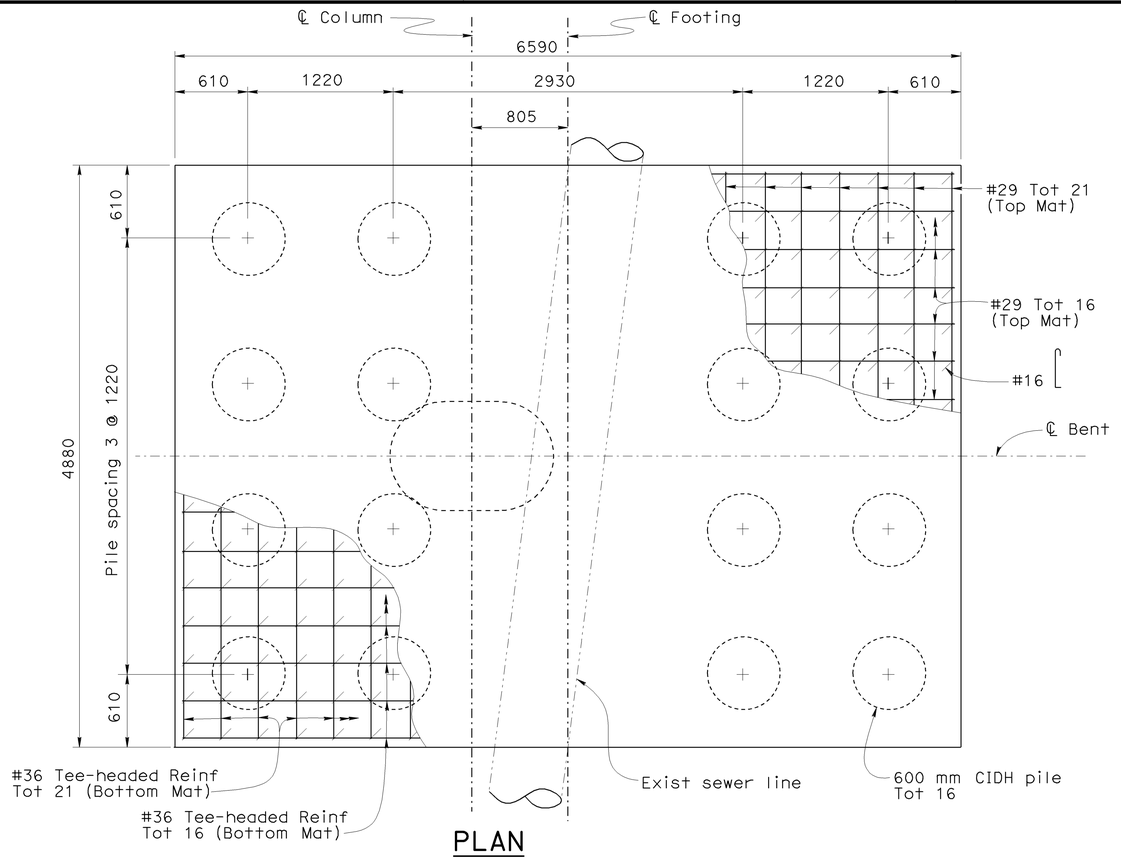

PLAN

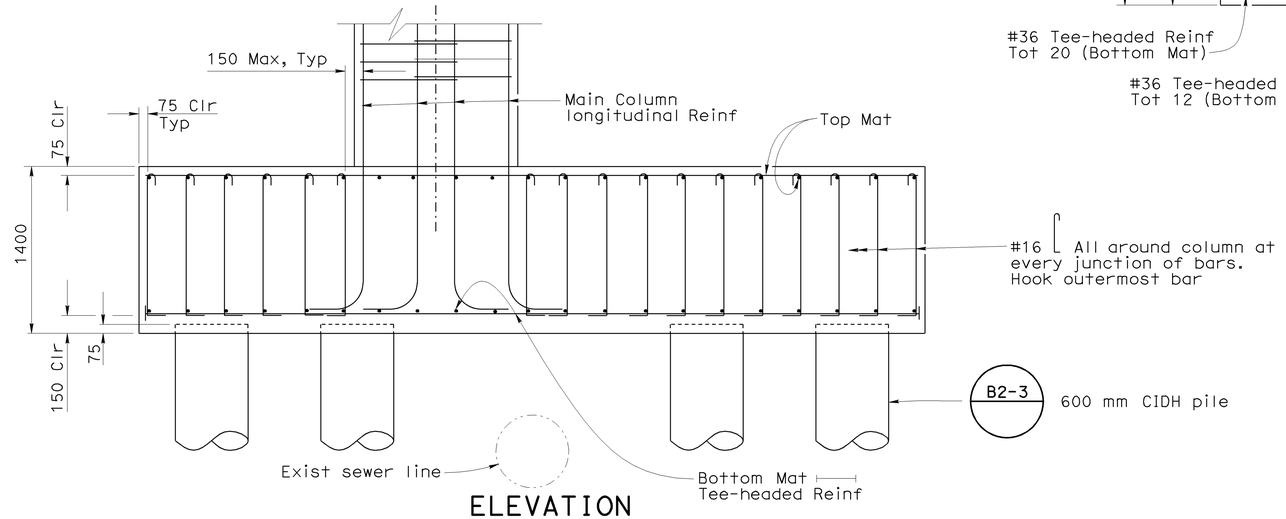

ELEVATION

TYPE 2B FOOTING

1:25

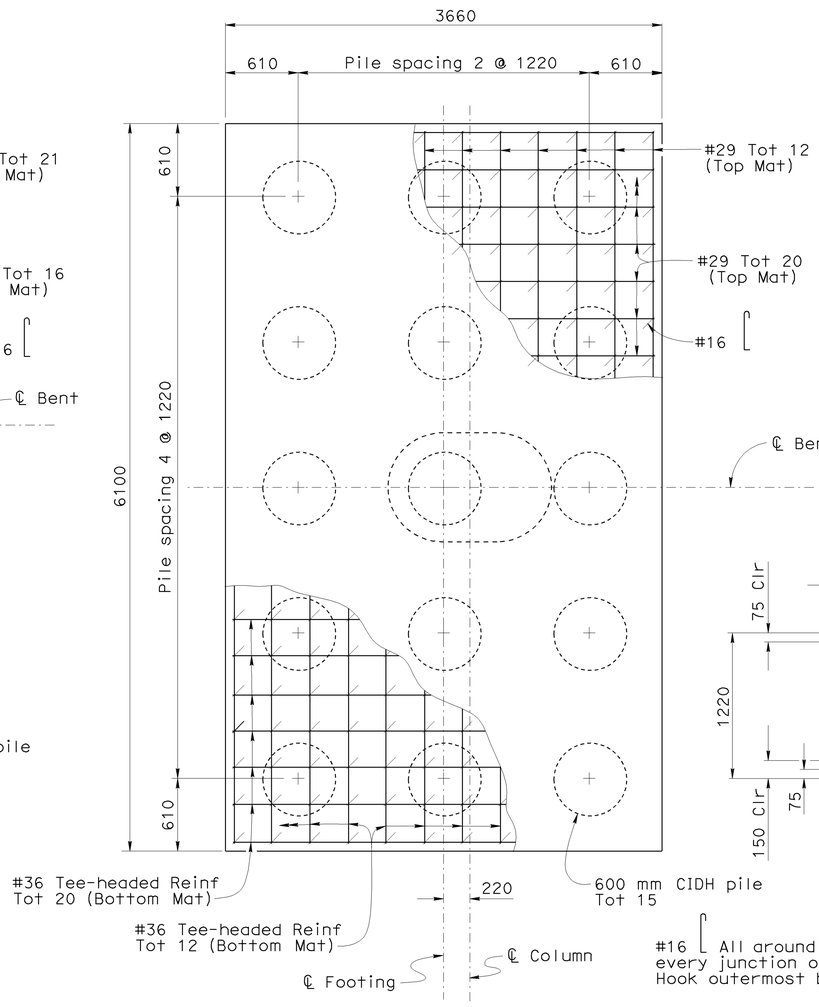

PLAN

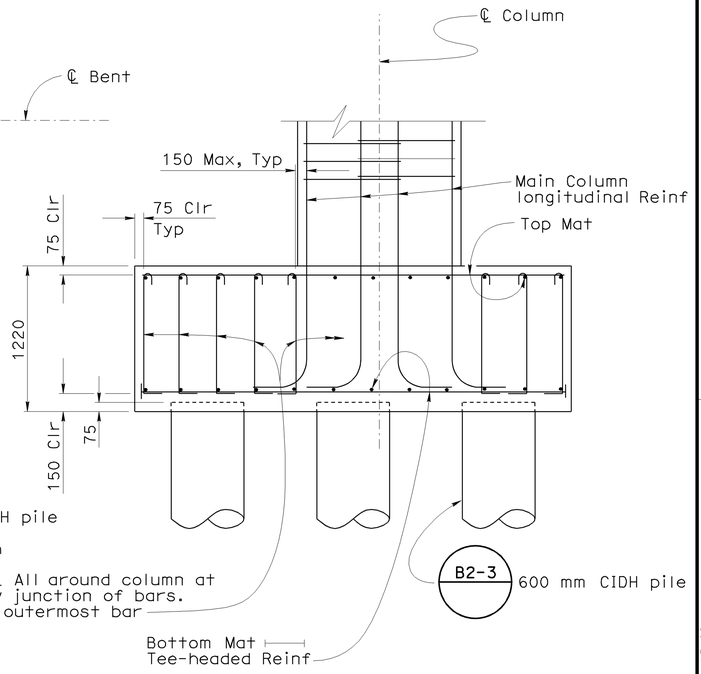

ELEVATION

TYPE 2C FOOTING

1:25

NOTE:
THE CONTRACTOR SHALL VERIFY ALL CONTROLLING FIELD DIMENSIONS BEFORE ORDERING OR FABRICATING ANY MATERIAL.

DIST	COUNTY	ROUTE	KILOMETER POST TOTAL PROJECT	SHEET No	TOTAL SHEETS
07	LA	5	42.8/47.3	846	1073

Andrew P. Rittenhouse 12-05-08
REGISTERED CIVIL ENGINEER DATE

6-8-09
PLANS APPROVAL DATE

REGISTERED PROFESSIONAL ENGINEER — Andrew P. Rittenhouse — No. 61006 — Exp. 12-31-10 — CIVIL — STATE OF CALIFORNIA

The State of California or its officers or agents shall not be responsible for the accuracy or completeness of electronic copies of this plan sheet.

Caltrans Metric

	BY	CHECKED
DESIGN	Ulysses Smpardos	F. Feng/C. Chan
DETAILS	Steven Schenck	F. Feng/C. Chan
QUANTITIES	E. Hall	R. Odell

ALL DIMENSIONS ARE IN MILLIMETERS UNLESS OTHERWISE SHOWN

ORIGINAL SCALE IN MILLIMETERS FOR REDUCED PLANS 0 10 20 30 40 50 60 70 80 90 100

STATE OF CALIFORNIA
DEPARTMENT OF TRANSPORTATION

DIVISION OF ENGINEERING SERVICES
STRUCTURE DESIGN
DESIGN BRANCH 15

CU 07
EA 121841

BRIDGE NO. 53-1085
KILOMETER POST 46.1

PROVIDENCIA AVENUE OH (WIDEN)
BENT DETAILS NO. 5

DISREGARD PRINTS BEARING EARLIER REVISION DATES →

REVISION DATES: 9-02-08 | 10-20-08 | 11-24-08 | 1-23-09

SHEET 57 OF 152

FILE => 53-1085-j-bnt05.dgn

STRUCTURES DESIGN DETAIL SHEET (METRIC) (REV.03-17-04)

USERNAME => s135318 DATE PLOTTED => 12-JUN-2009 TIME PLOTTED => 15:09

Notes:
1. For "Section F-F" see "PIER DETAILS NO. 1" sheet.
2. For "Section G-G" see "PIER DETAILS NO. 2" sheet.
3. For details see "Pier 6 Footing Corner Reinforcement Detail" on "PIER DETAILS NO. 2" sheet.
4. For details not shown, see "PIER DETAILS NO. 3" and "PIER DETAILS NO. 4" sheets.
5. For shear key details, see "GIRDER DETAILS NO. 6" sheet.
6. Step dimension shown for location indicated only. Other step dimensions to be based on deck cross slope, profile grade and structure depth.

Legend:
-·-·- Indicates existing structure
* See "Offset Detail"
** Fiberglass handholes will be replaced with concrete manholes by others.

DIST	COUNTY	ROUTE	KILOMETER POST TOTAL PROJECT	SHEET No	TOTAL SHEETS
07	LA	5	42.8/47.3	847	1073

Andrew Rittenhouse 12-05-08
REGISTERED CIVIL ENGINEER DATE

6-8-09
PLANS APPROVAL DATE

The State of California or its officers or agents shall not be responsible for the accuracy or completeness of electronic copies of this plan sheet.

REGISTERED PROFESSIONAL ENGINEER Andrew P. Rittenhouse No. 61006 Exp. 12-31-10 CIVIL STATE OF CALIFORNIA

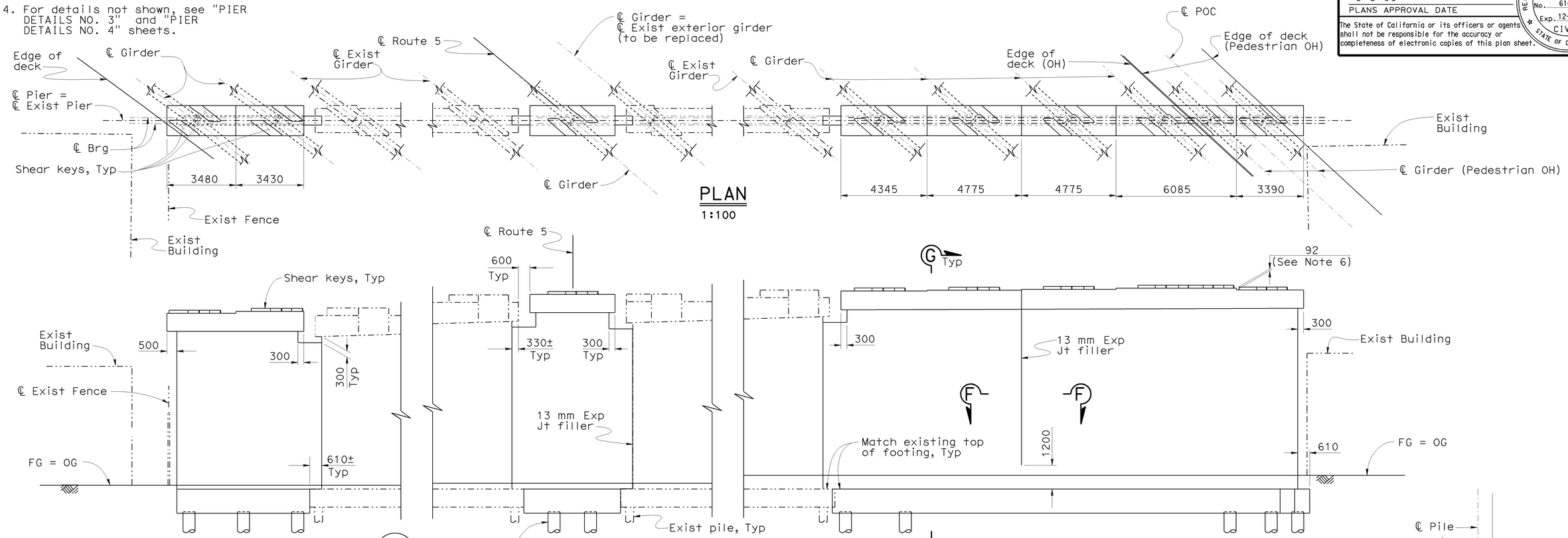

PLAN
1:100

LEFT WIDEN
MEDIAN WIDEN
RIGHT WIDEN

ELEVATION
1:100

OFFSET DETAIL
NO SCALE

FOOTING PLAN
1:100

NOTE:
THE CONTRACTOR SHALL VERIFY ALL CONTROLLING FIELD DIMENSIONS BEFORE ORDERING OR FABRICATING ANY MATERIAL.

Caltrans Metric

	BY	CHECKED
DESIGN	Ulysses Smpardos	F. Feng/C. Chan
DETAILS	Steven Schenck	F. Feng/C. Chan
QUANTITIES	E. Hall	R. Odell

STATE OF CALIFORNIA
DEPARTMENT OF TRANSPORTATION

DIVISION OF ENGINEERING SERVICES
STRUCTURE DESIGN
DESIGN BRANCH 15

BRIDGE NO. 53-1085
KILOMETER POST 46.1

PROVIDENCIA AVENUE OH (WIDEN)
PIER 6 LAYOUT

ALL DIMENSIONS ARE IN MILLIMETERS UNLESS OTHERWISE SHOWN

ORIGINAL SCALE IN MILLIMETERS FOR REDUCED PLANS 0 10 20 30 40 50 60 70 80 90 100

CU 07
EA 121841

DISREGARD PRINTS BEARING EARLIER REVISION DATES

REVISION DATES: 5-22-08 9-11-08 10-20-08 11-24-08 1-22-09 1-23-09 2-24-09 6-3-09

SHEET 58 OF 152

FILE => 53-1085-k-p21-lo6.dgn

STRUCTURES DESIGN DETAIL SHEET (METRIC) (REV.03-17-04)

USERNAME => trmikesl DATE PLOTTED => 15-JUN-2009 TIME PLOTTED => 13:20

DIST	COUNTY	ROUTE	KILOMETER POST TOTAL PROJECT	SHEET No	TOTAL SHEETS
07	LA	5	42.8/47.3	848	1073

Andrew P. Rittenhouse 12-05-08
REGISTERED CIVIL ENGINEER DATE

6-8-09
PLANS APPROVAL DATE

REGISTERED PROFESSIONAL ENGINEER — Andrew P. Rittenhouse — No. 61006 — Exp. 12-31-10 — CIVIL — STATE OF CALIFORNIA

The State of California or its officers or agents shall not be responsible for the accuracy or completeness of electronic copies of this plan sheet.

Legend:

-·-·- Indicates existing structure

* See "Offset Detail"

Notes:
1. For "Section E-E" and "Section F-F" see "PIER DETAILS NO. 1" sheet.
2. For details not shown, see "PIER DETAILS NO. 3" and "PIER DETAILS NO. 4" sheets.
3. For shear key details, see "GIRDER DETAILS NO. 6" sheet.
4. Step dimension shown for location indicated only. Other step dimensions to be based on deck cross slope, profile grade and structure depth.

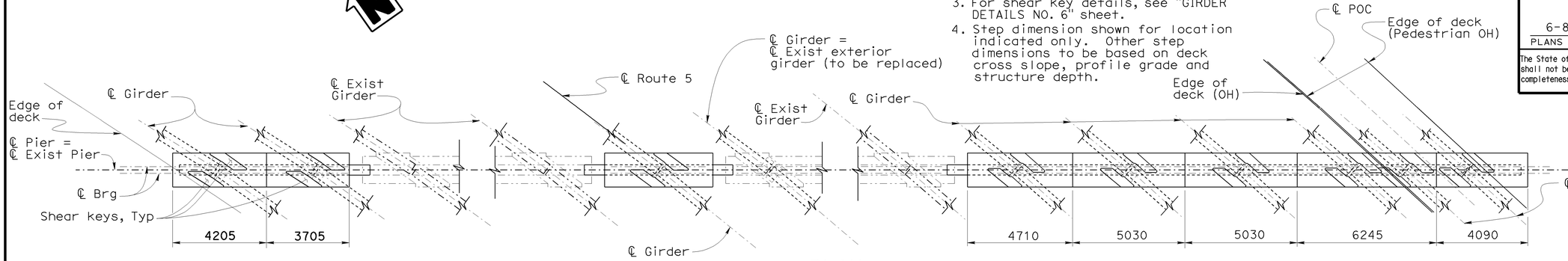

PLAN
1:100

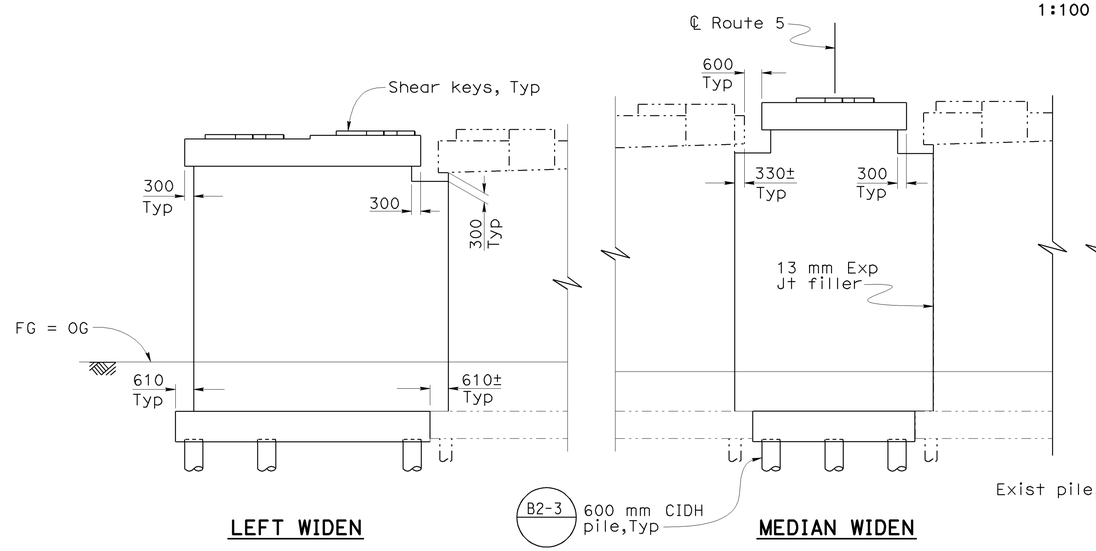

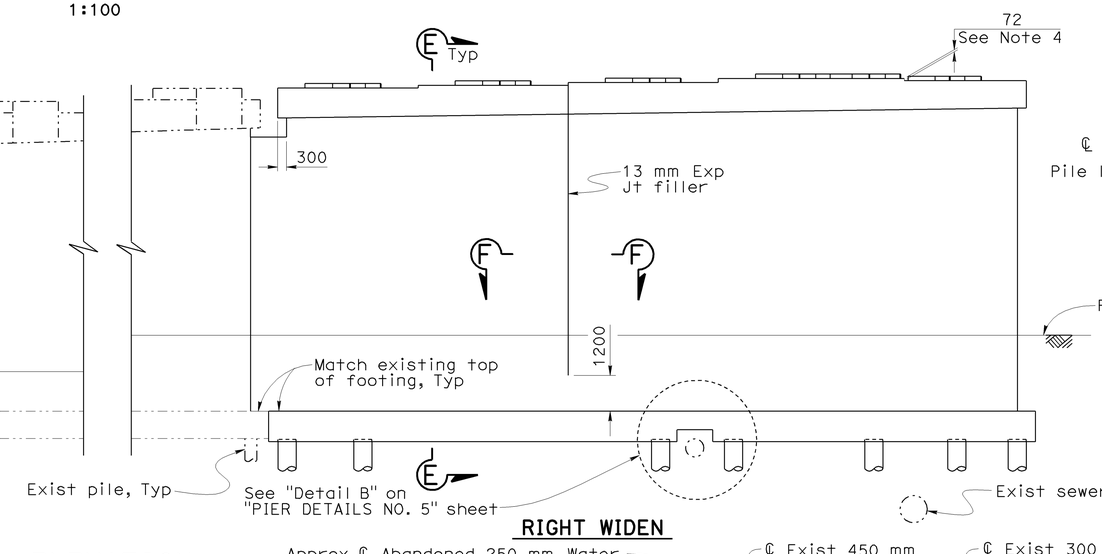

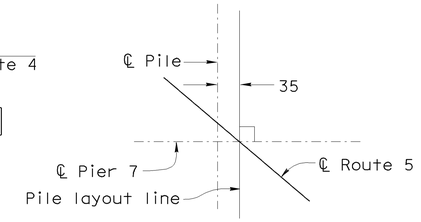

OFFSET DETAIL
NO SCALE

ELEVATION
1:100

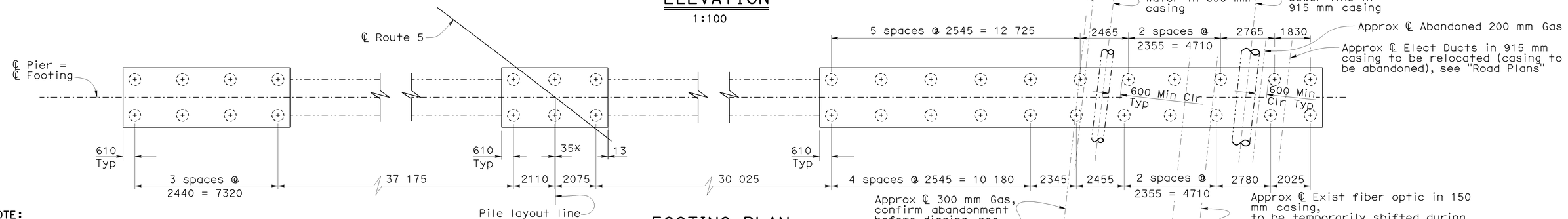

FOOTING PLAN
1:100

NOTE:
THE CONTRACTOR SHALL VERIFY ALL CONTROLLING FIELD DIMENSIONS BEFORE ORDERING OR FABRICATING ANY MATERIAL.

DESIGN	BY Ulysses Smpardos	CHECKED F. Feng/C. Chan	
DETAILS	BY Steven Schenck	CHECKED F. Feng/C. Chan	
QUANTITIES	BY E. Hall	CHECKED R. Odell	

STATE OF CALIFORNIA
DEPARTMENT OF TRANSPORTATION

DIVISION OF ENGINEERING SERVICES
STRUCTURE DESIGN
DESIGN BRANCH 15

CU 07
EA 121841

BRIDGE NO. 53-1085
KILOMETER POST 46.1

PROVIDENCIA AVENUE OH (WIDEN)
PIER 7 LAYOUT

ALL DIMENSIONS ARE IN MILLIMETERS UNLESS OTHERWISE SHOWN

ORIGINAL SCALE IN MILLIMETERS FOR REDUCED PLANS 0 10 20 30 40 50 60 70 80 90 100

DISREGARD PRINTS BEARING EARLIER REVISION DATES →

REVISION DATES: 9-11-08 | 10-13-08 | 11-24-08 | 1-22-09 | 1-26-09 | 2-24-09

SHEET 59 OF 152

FILE => 53-1085-k-p21-1o7.dgn

STRUCTURES DESIGN DETAIL SHEET (METRIC) (REV.03-17-04)

USERNAME => s1353518 DATE PLOTTED => 12-JUN-2009 TIME PLOTTED => 15:09

Notes:
1. For "Section F-F" see "PIER DETAILS NO. 1" sheet.
2. For "Section G-G" see "PIER DETAILS NO. 2" sheet.
3. For details not shown, see "PIER DETAILS NO. 3" and "PIER DETAILS NO. 4" sheets.
4. For shear key details, see "GIRDER DETAILS NO. 6" sheet.
5. Step dimension shown for location indicated only. Other step dimensions to be based on deck cross slope, profile grade and structure depth.

Legend:
- Indicates existing structure
- ⁎ See "Offset Detail"

DIST	COUNTY	ROUTE	KILOMETER POST TOTAL PROJECT	SHEET No	TOTAL SHEETS
07	LA	5	42.8/47.3	849	1073

Andrew Rittenhouse 12-05-08
REGISTERED CIVIL ENGINEER DATE

6-8-09
PLANS APPROVAL DATE

The State of California or its officers or agents shall not be responsible for the accuracy or completeness of electronic copies of this plan sheet.

REGISTERED PROFESSIONAL ENGINEER — Andrew P. Rittenhouse — No. 61006 — Exp. 12-31-10 — CIVIL — STATE OF CALIFORNIA

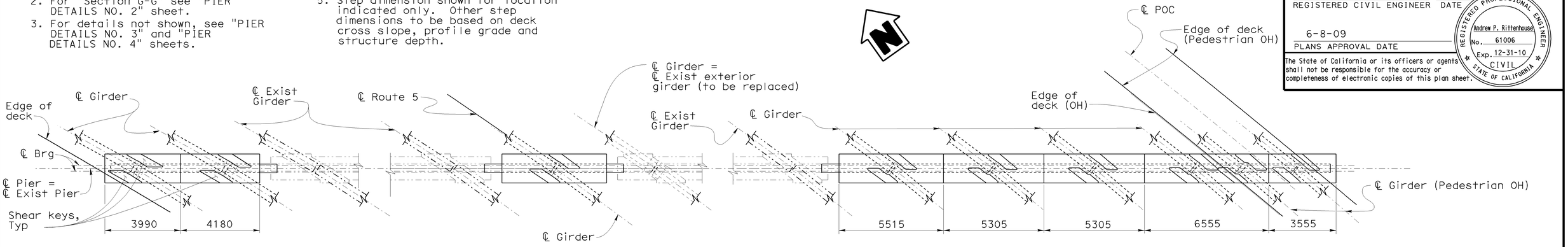

PLAN
1:100

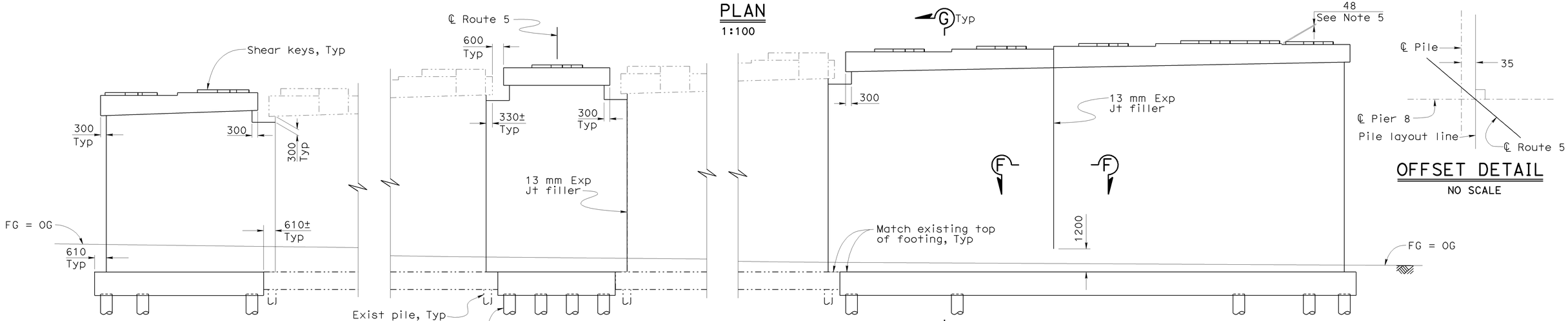

OFFSET DETAIL
NO SCALE

ELEVATION
1:100

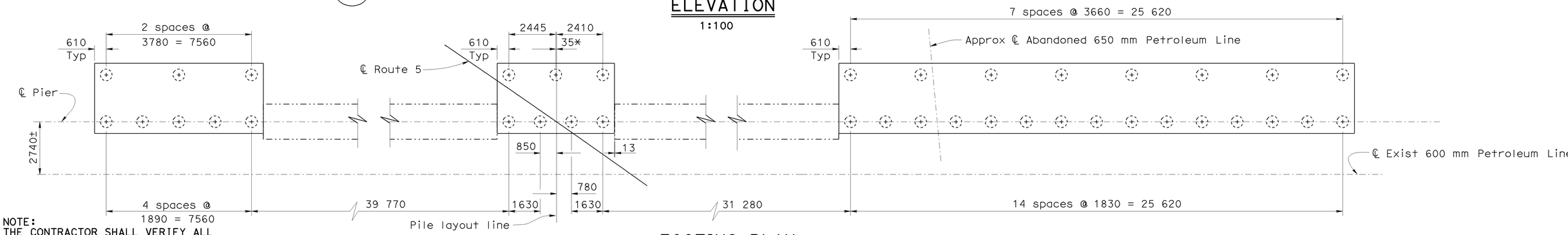

FOOTING PLAN
1:100

NOTE:
THE CONTRACTOR SHALL VERIFY ALL CONTROLLING FIELD DIMENSIONS BEFORE ORDERING OR FABRICATING ANY MATERIAL.

	BY	CHECKED
DESIGN	Ulysses Smpardos	F. Feng/C. Chan
DETAILS	Steven Schenck	F. Feng/C. Chan
QUANTITIES	E. Hall	R. Odell

STATE OF CALIFORNIA
DEPARTMENT OF TRANSPORTATION

DIVISION OF ENGINEERING SERVICES
STRUCTURE DESIGN
DESIGN BRANCH 15

CU 07
EA 121841

BRIDGE NO. 53-1085
KILOMETER POST 46.1

PROVIDENCIA AVENUE OH (WIDEN)
PIER 8 LAYOUT

ALL DIMENSIONS ARE IN MILLIMETERS UNLESS OTHERWISE SHOWN

ORIGINAL SCALE IN MILLIMETERS FOR REDUCED PLANS 0 10 20 30 40 50 60 70 80 90 100

DISREGARD PRINTS BEARING EARLIER REVISION DATES

REVISION DATES: 5-22-08 | 9-11-08 | 10-16-08 | 11-13-08 | 1-21-09 | 1-23-09 | 2-24-09

SHEET 60 OF 152

FILE => 53-1085-k-p21-1o8.dgn

STRUCTURES DESIGN DETAIL SHEET (METRIC) (REV.03-17-04)

USERNAME = s135318 DATE PLOTTED => 12-JUN-2009 TIME PLOTTED => 15:10

DIST	COUNTY	ROUTE	KILOMETER POST TOTAL PROJECT	SHEET No	TOTAL SHEETS
07	LA	5	42.8/47.3	850	1073

Andrew Rittenhouse 12-05-08
REGISTERED CIVIL ENGINEER DATE

6-8-09
PLANS APPROVAL DATE

The State of California or its officers or agents shall not be responsible for the accuracy or completeness of electronic copies of this plan sheet.

REGISTERED PROFESSIONAL ENGINEER
Andrew P. Rittenhouse
No. 61006
Exp. 12-31-10
CIVIL
STATE OF CALIFORNIA

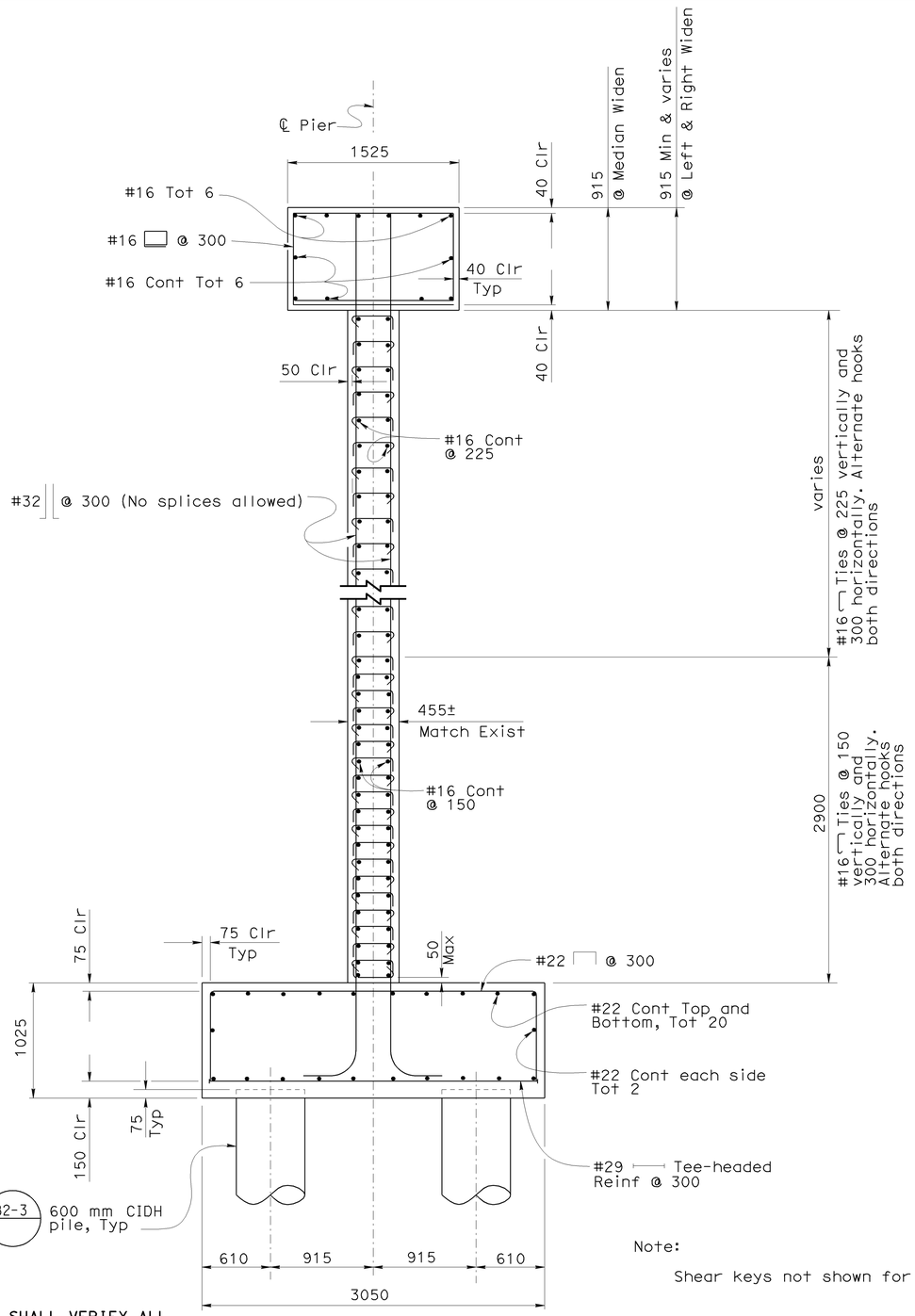

SECTION E-E
1:25

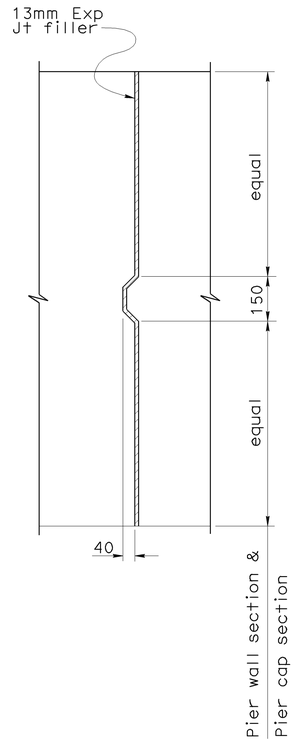

SECTION F-F
1:10

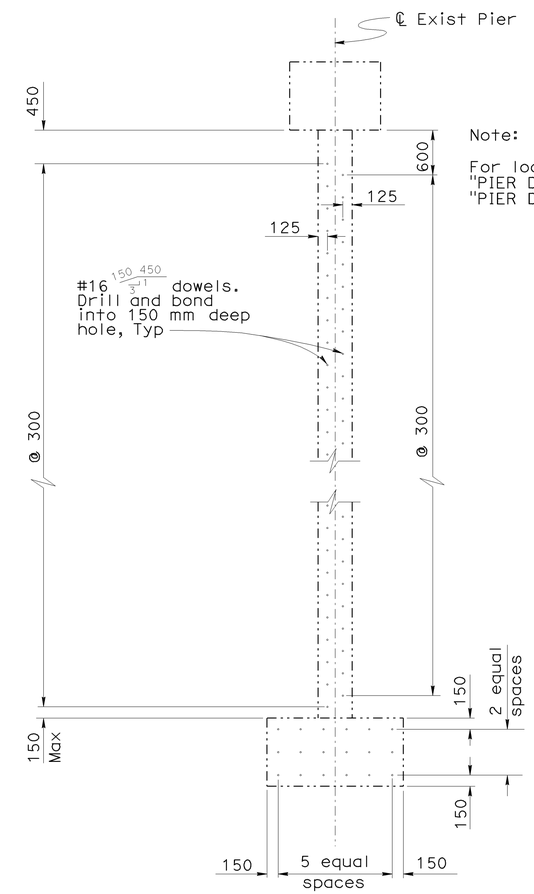

DOWEL LAYOUT AT EXISTING PIER 7
1:40

Note:
For location of dowels, see "PIER DETAILS NO. 3" and "PIER DETAILS NO. 4" sheets.

Note:
Shear keys not shown for clarity

Legend:
-··-·· Indicates existing structure

NOTE:
THE CONTRACTOR SHALL VERIFY ALL CONTROLLING FIELD DIMENSIONS BEFORE ORDERING OR FABRICATING ANY MATERIAL.

Caltrans Metric

	BY	CHECKED
DESIGN	Ulysses Smpardos	F. Feng/C. Chan
DETAILS	Steven Schenck	F. Feng/C. Chan
QUANTITIES	E. Hall	R. Odell

STATE OF CALIFORNIA
DEPARTMENT OF TRANSPORTATION

DIVISION OF ENGINEERING SERVICES
STRUCTURE DESIGN
DESIGN BRANCH 15

BRIDGE NO. 53-1085
KILOMETER POST 46.1

PROVIDENCIA AVENUE OH (WIDEN)
PIER DETAILS NO. 1

ALL DIMENSIONS ARE IN MILLIMETERS UNLESS OTHERWISE SHOWN

ORIGINAL SCALE IN MILLIMETERS FOR REDUCED PLANS 0 10 20 30 40 50 60 70 80 90 100

CU 07
EA 121841

DISREGARD PRINTS BEARING EARLIER REVISION DATES

REVISION DATES 4-28-08 9-11-08 10-15-08 11-24-08 1-27-09 2-24-09

SHEET 61 OF 152

FILE => 53-1085-k-pie01.dgn

STRUCTURES DESIGN DETAIL SHEET (METRIC) (REV.03-17-04)

USERNAME => s135318 DATE PLOTTED => 12-JUN-2009 TIME PLOTTED => 15:10

DIST	COUNTY	ROUTE	KILOMETER POST TOTAL PROJECT	SHEET No	TOTAL SHEETS
07	LA	5	42.8/47.3	851	1073

Andrew P. Rittenhouse 12-05-08
REGISTERED CIVIL ENGINEER DATE

6-8-09
PLANS APPROVAL DATE

REGISTERED PROFESSIONAL ENGINEER
Andrew P. Rittenhouse
No. 61006
Exp. 12-31-10
CIVIL
STATE OF CALIFORNIA

The State of California or its officers or agents shall not be responsible for the accuracy or completeness of electronic copies of this plan sheet.

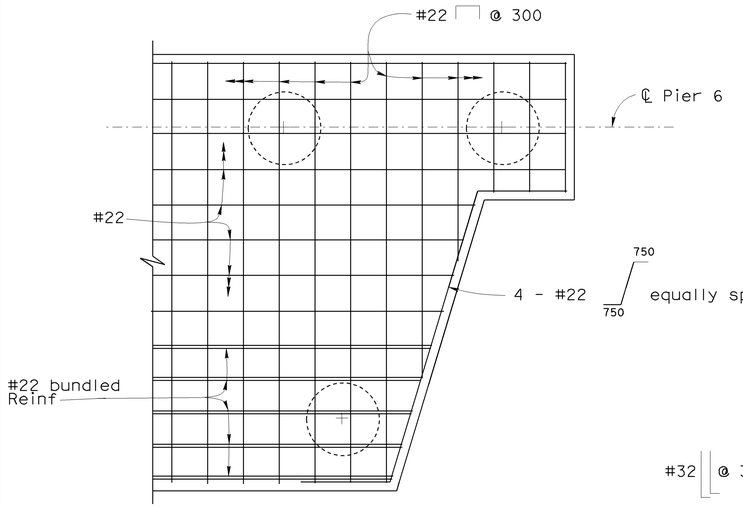

TOP REINFORCEMENT

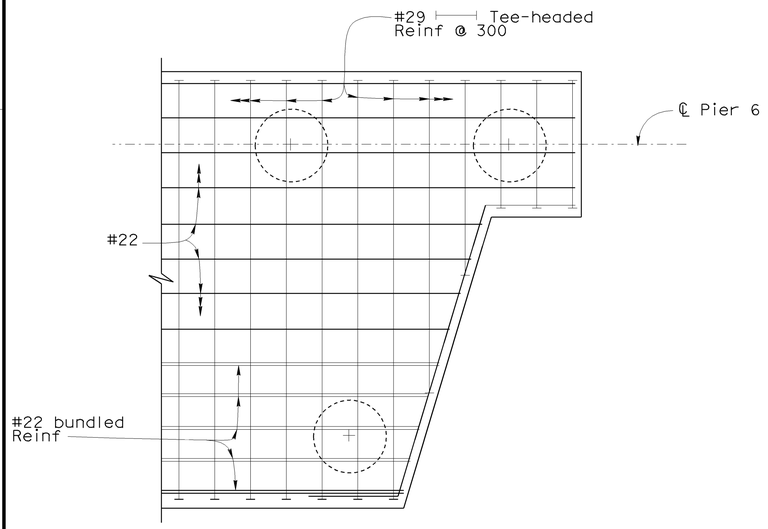

BOTTOM REINFORCEMENT

PIER 6 FOOTING CORNER REINFORCEMENT DETAIL

1:25

NOTE:
THE CONTRACTOR SHALL VERIFY ALL CONTROLLING FIELD DIMENSIONS BEFORE ORDERING OR FABRICATING ANY MATERIAL.

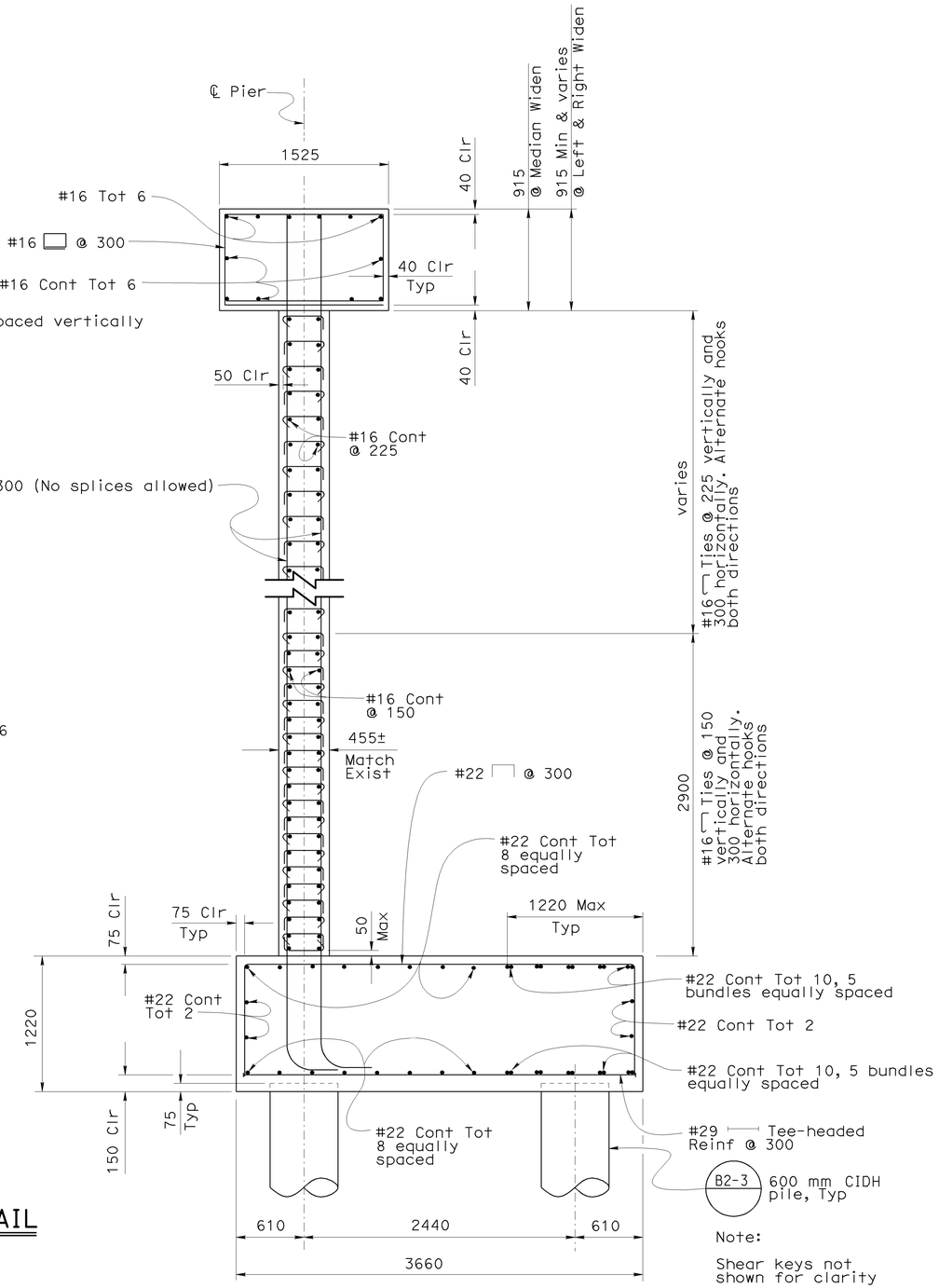

SECTION G-G

1:25

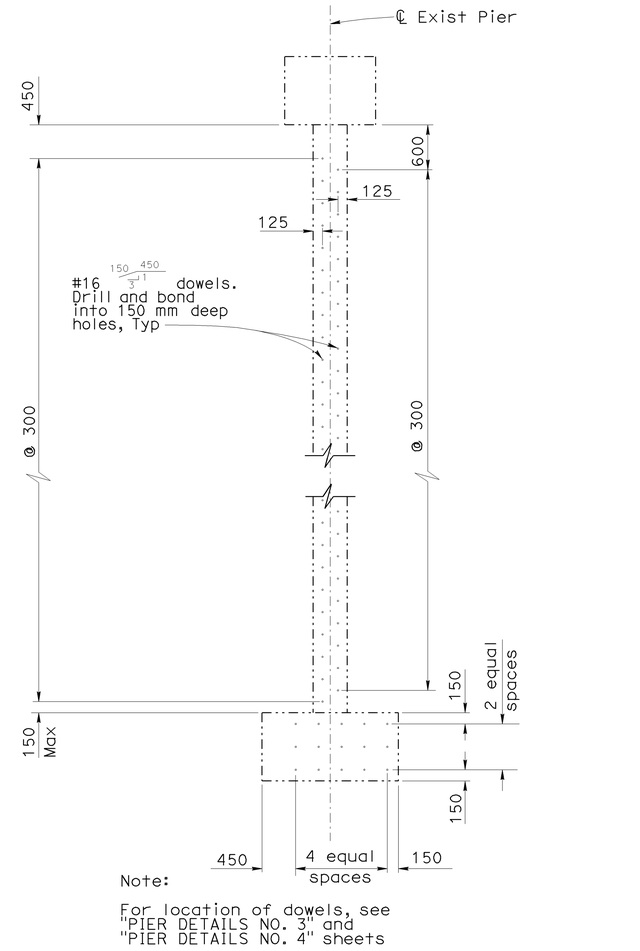

DOWEL LAYOUT AT EXISTING PIERS 6 & 8

1:40

Legend:

–·–·– Indicates existing structure

DESIGN	BY Ulysses Smpardos	CHECKED F. Feng/C. Chan	STATE OF CALIFORNIA DEPARTMENT OF TRANSPORTATION
DETAILS	BY Steven Schenck	CHECKED F. Feng/C. Chan	DIVISION OF ENGINEERING SERVICES STRUCTURE DESIGN DESIGN BRANCH 15
QUANTITIES	BY E. Hall	CHECKED R. Odell	BRIDGE NO. 53-1085 KILOMETER POST 46.1

PROVIDENCIA AVENUE OH (WIDEN)

PIER DETAILS NO. 2

ALL DIMENSIONS ARE IN MILLIMETERS UNLESS OTHERWISE SHOWN

ORIGINAL SCALE IN MILLIMETERS FOR REDUCED PLANS 0 10 20 30 40 50 60 70 80 90 100

CU 07
EA 121841

DISREGARD PRINTS BEARING EARLIER REVISION DATES →

REVISION DATES: 5-22-08 | 9-11-08 | 11-24-08 | 1-23-09

SHEET 62 OF 152

FILE => 53-1085-k-pie02.dgn

STRUCTURES DESIGN DETAIL SHEET (METRIC) (REV.03-17-04)

DATE PLOTTED => 15-JUN-2009 TIME PLOTTED => 08:08
USERNAME => trrene

Notes:

1. For dowel details, see "Dowel Layout at Existing Pier 7" on "PIER DETAILS NO. 1" sheet, or "Dowel Layout at Existing Piers 6 & 8" on "PIER DETAILS NO. 2" sheet.

2. #16 ⌐ Ties not shown for clarity.

3. Pier 7 shown, Piers 6 & 8 similar.

Legend:
—·—·— Indicates existing structure

DIST	COUNTY	ROUTE	KILOMETER POST TOTAL PROJECT	SHEET No	TOTAL SHEETS
07	LA	5	42.8/47.3	852	1073

Andrew P. Rittenhouse 12-05-08
REGISTERED CIVIL ENGINEER DATE

6-8-09
PLANS APPROVAL DATE

REGISTERED PROFESSIONAL ENGINEER
Andrew P. Rittenhouse
No. 61006
Exp. 12-31-10
CIVIL
STATE OF CALIFORNIA

The State of California or its officers or agents shall not be responsible for the accuracy or completeness of electronic copies of this plan sheet.

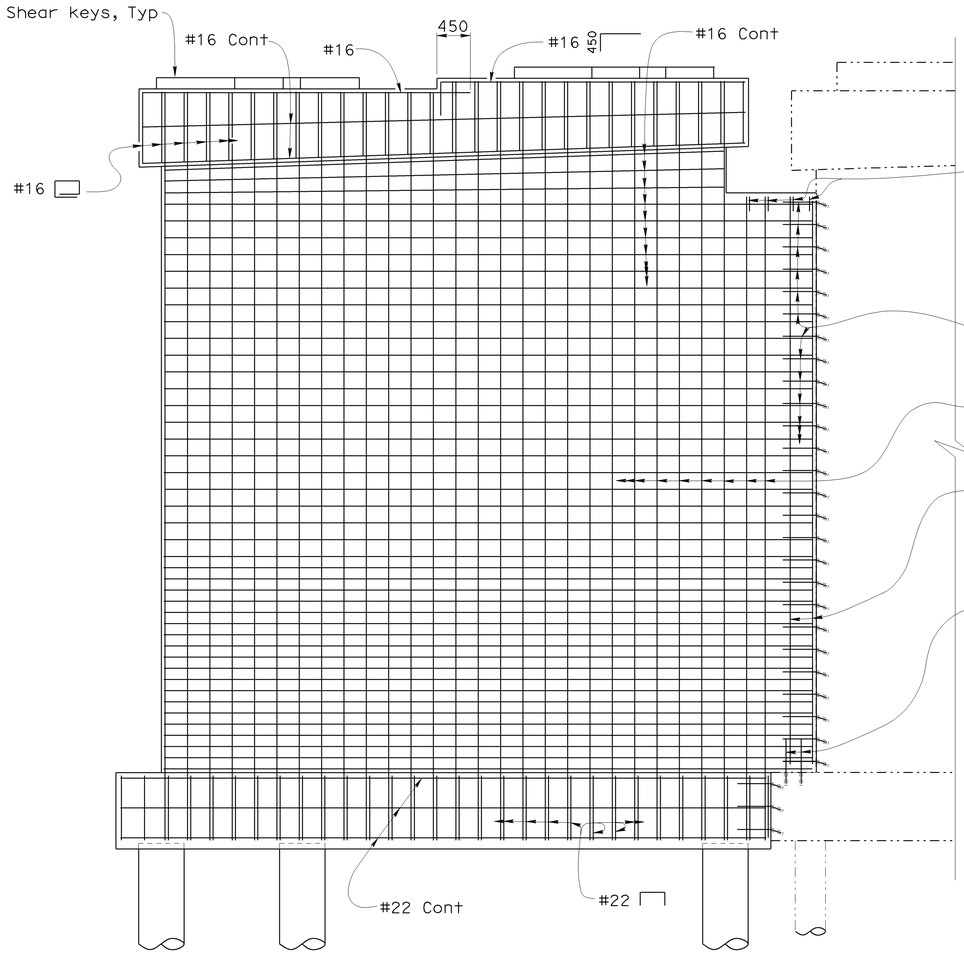

LEFT WIDEN

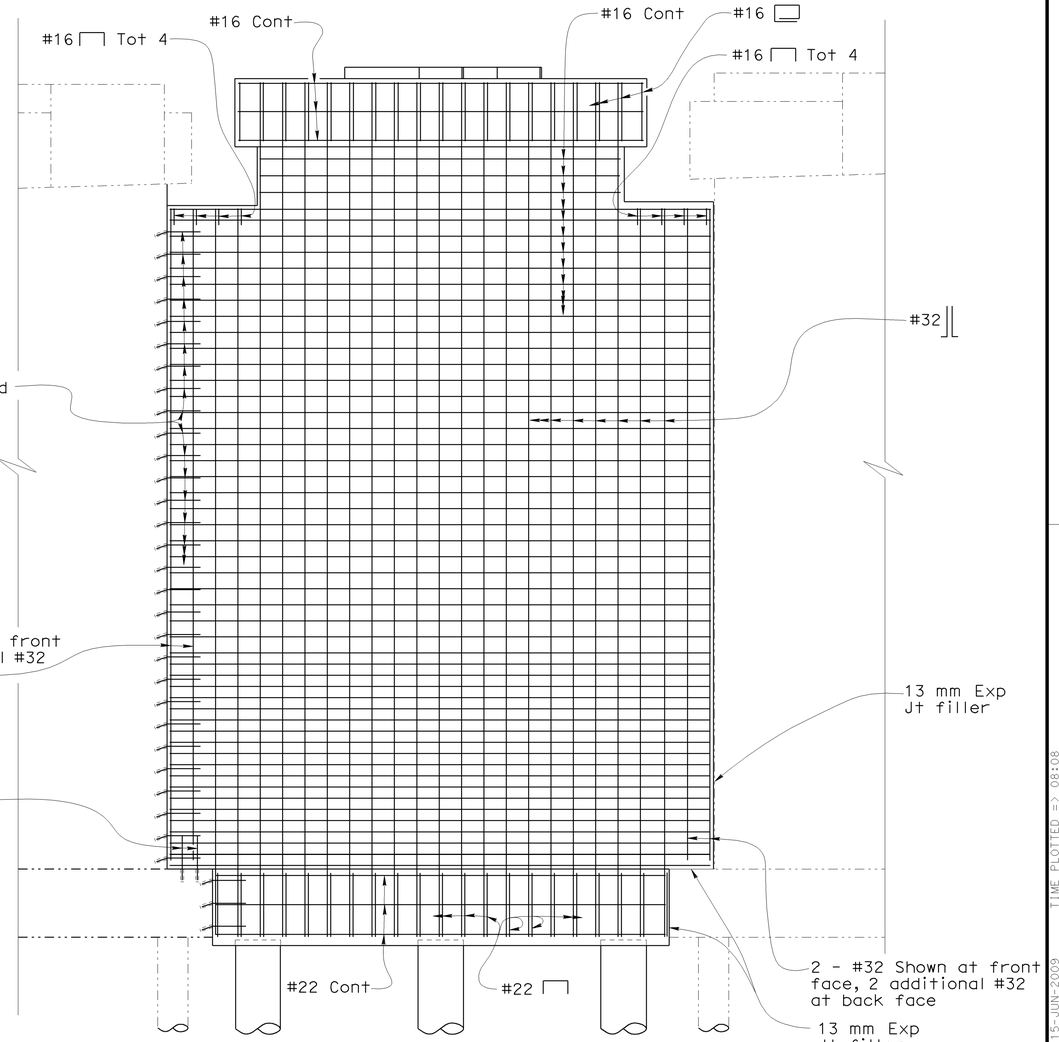

MEDIAN WIDEN

NOTE:
THE CONTRACTOR SHALL VERIFY ALL CONTROLLING FIELD DIMENSIONS BEFORE ORDERING OR FABRICATING ANY MATERIAL.

PIER DETAILS

1:40

DESIGN	BY Ulysses Smpardos	CHECKED F. Feng/C. Chan	STATE OF CALIFORNIA DEPARTMENT OF TRANSPORTATION
DETAILS	BY Steven Schenck	CHECKED F. Feng/C. Chan	DIVISION OF ENGINEERING SERVICES STRUCTURE DESIGN DESIGN BRANCH 15
QUANTITIES	BY E. Hall	CHECKED R. Odell	CU 07 EA 121841

Caltrans Metric

ALL DIMENSIONS ARE IN MILLIMETERS UNLESS OTHERWISE SHOWN

ORIGINAL SCALE IN MILLIMETERS FOR REDUCED PLANS 0 10 20 30 40 50 60 70 80 90 100

BRIDGE NO. 53-1085
KILOMETER POST 46.1

PROVIDENCIA AVENUE OH (WIDEN)
PIER DETAILS NO. 3

DISREGARD PRINTS BEARING EARLIER REVISION DATES →
REVISION DATES: 5-22-08 | 9-11-08 | 10-16-08 | 11-17-08 | 1-21-09 | 2-24-09

SHEET 63 OF 152

FILE => 53-1085-k-pie03.dgn

STRUCTURES DESIGN DETAIL SHEET (METRIC) (REV.03-17-04)

DATE PLOTTED => 15-JUN-2009 TIME PLOTTED => 08:08
USERNAME => rfrene

Notes:

1. For dowel details, see "Dowel Layout at Existing Pier 7" on "PIER DETAILS NO. 1" sheet, or "Dowel Layout at Existing Piers 6 & 8" on "PIER DETAILS NO. 2" sheet.

2. #16 ⌐¬ Ties not shown for clarity.

3. Pier 8 shown, Piers 6 & 7 similar.

Legend:
-·-·-·- Indicates existing structure

DIST	COUNTY	ROUTE	KILOMETER POST TOTAL PROJECT	SHEET No	TOTAL SHEETS
07	LA	5	42.8/47.3	853	1073

Andrew P. Rittenhouse 12-05-08
REGISTERED CIVIL ENGINEER DATE

6-8-09
PLANS APPROVAL DATE

REGISTERED PROFESSIONAL ENGINEER
Andrew P. Rittenhouse
No. 61006
Exp. 12-31-10
CIVIL
STATE OF CALIFORNIA

The State of California or its officers or agents shall not be responsible for the accuracy or completeness of electronic copies of this plan sheet.

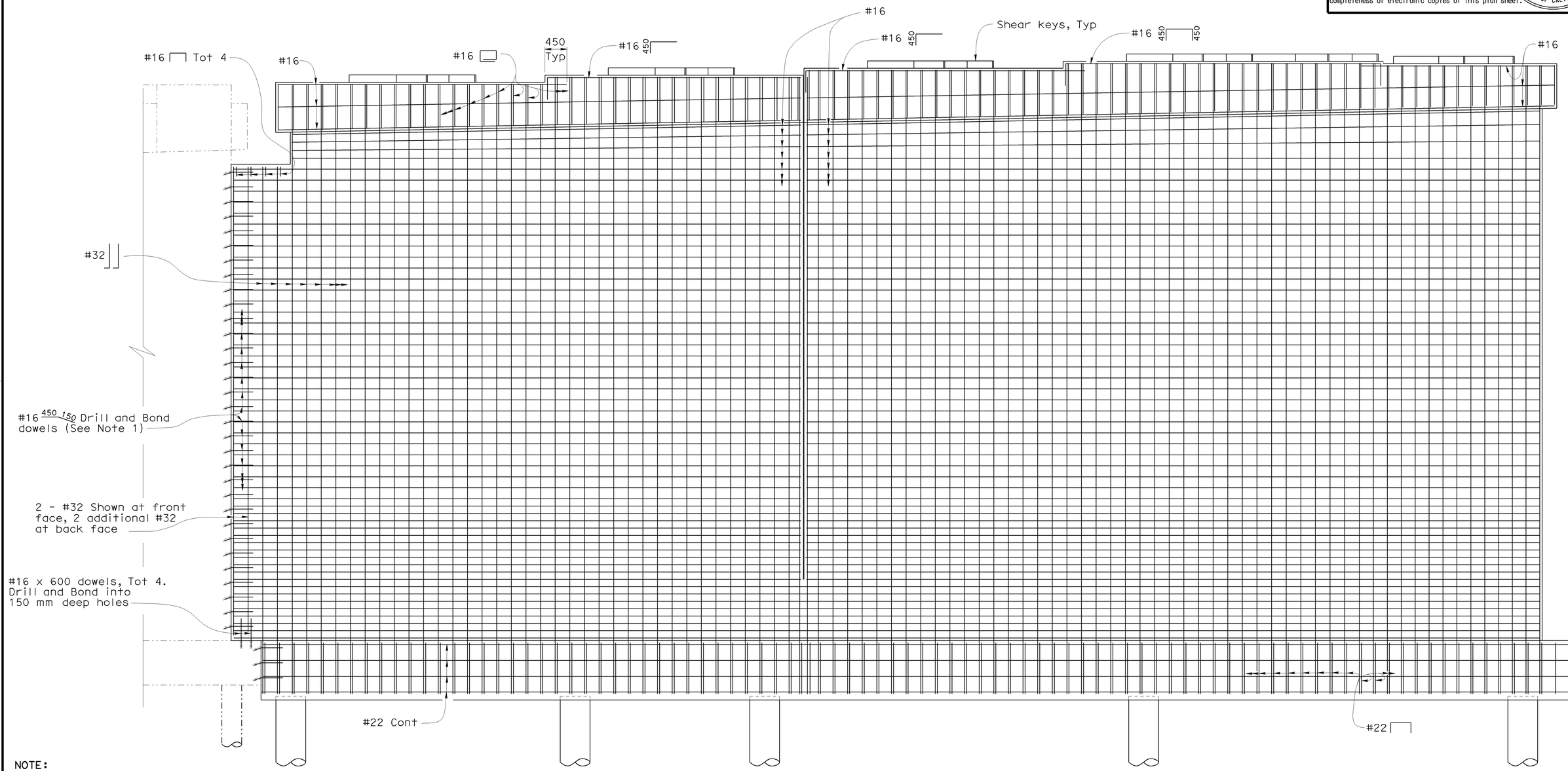

NOTE:
THE CONTRACTOR SHALL VERIFY ALL CONTROLLING FIELD DIMENSIONS BEFORE ORDERING OR FABRICATING ANY MATERIAL.

RIGHT WIDEN PIER DETAILS

1:40

Caltrans Metric

	BY	CHECKED
DESIGN	Ulysses Smpardos	F. Feng/C. Chan
DETAILS	Steven Schenck	F. Feng/C. Chan
QUANTITIES	E. Hall	R. Odell

ALL DIMENSIONS ARE IN MILLIMETERS UNLESS OTHERWISE SHOWN

ORIGINAL SCALE IN MILLIMETERS FOR REDUCED PLANS 0 10 20 30 40 50 60 70 80 90 100

STATE OF CALIFORNIA
DEPARTMENT OF TRANSPORTATION

DIVISION OF ENGINEERING SERVICES
STRUCTURE DESIGN
DESIGN BRANCH 15

CU 07
EA 121841

FILE => 53-1085-K-pie04.dgn

BRIDGE NO. 53-1085
KILOMETER POST 46.1

PROVIDENCIA AVENUE OH (WIDEN)
PIER DETAILS NO. 4

DISREGARD PRINTS BEARING EARLIER REVISION DATES →
REVISION DATES: 9-11-08 | 10-20-08 | 11-24-08 | 1-23-09 | 2-24-09

SHEET 64 OF 152

STRUCTURES DESIGN DETAIL SHEET (METRIC) (REV.03-17-04)

USERNAME => ttrone DATE PLOTTED => 15-JUN-2009 TIME PLOTTED => 08:08

DIST	COUNTY	ROUTE	KILOMETER POST TOTAL PROJECT	SHEET No	TOTAL SHEETS
07	LA	5	42.8/47.3	854	1073

Andrew P. Rittenhouse 12-05-08
REGISTERED CIVIL ENGINEER DATE

6-8-09
PLANS APPROVAL DATE

REGISTERED PROFESSIONAL ENGINEER
Andrew P. Rittenhouse
No. 61006
Exp. 12-31-10
CIVIL
STATE OF CALIFORNIA

The State of California or its officers or agents shall not be responsible for the accuracy or completeness of electronic copies of this plan sheet.

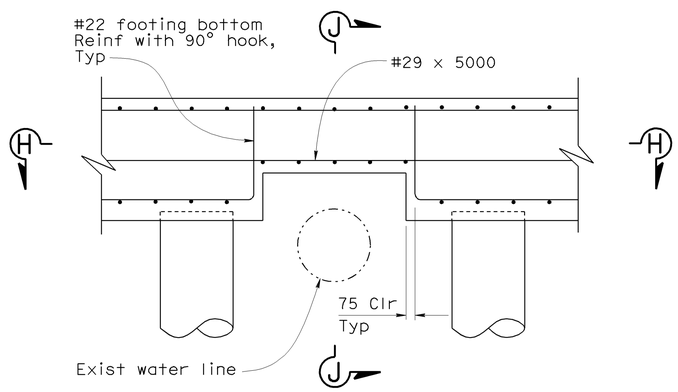

DETAIL B
1:25

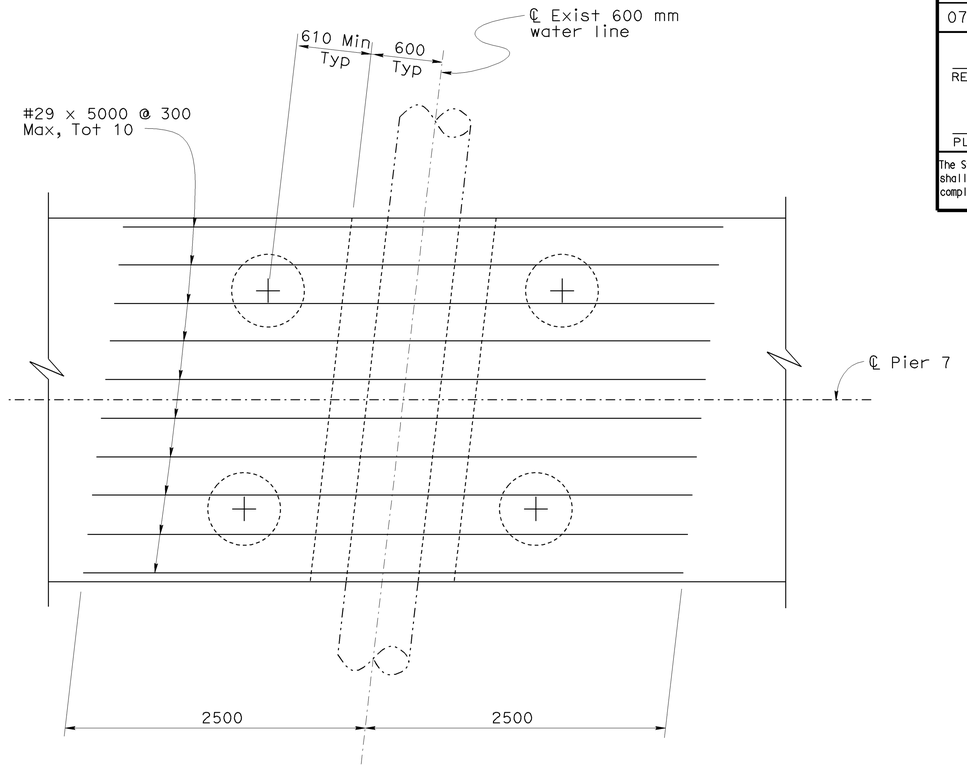

SECTION H-H
1:25

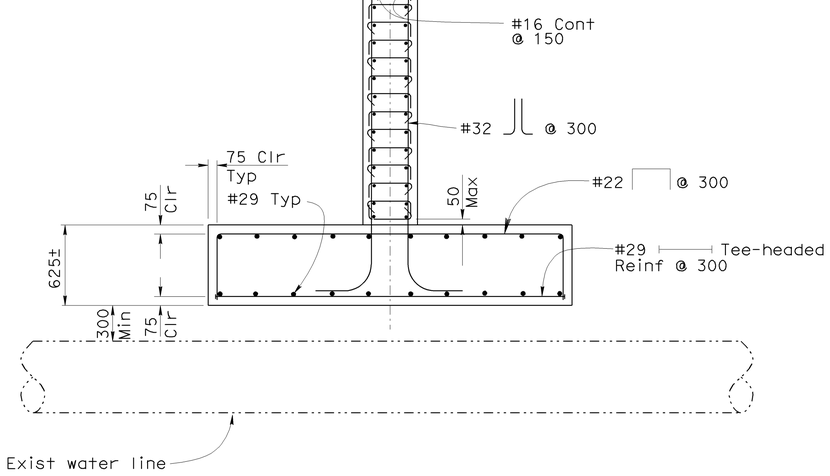

SECTION J-J
1:25

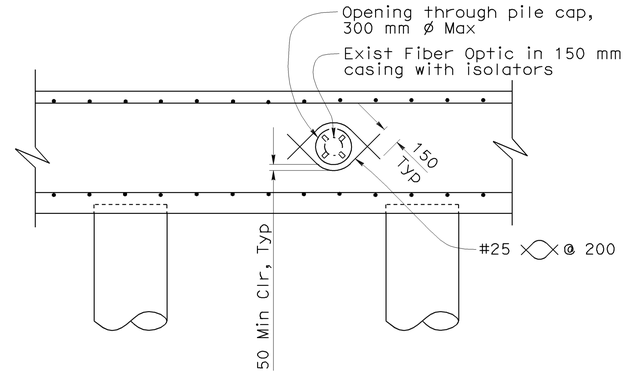

DETAIL C1
1:25

Note:

For information not shown or noted see "Section E-E" on "PIER DETAILS NO. 1" sheet

NOTE:
THE CONTRACTOR SHALL VERIFY ALL CONTROLLING FIELD DIMENSIONS BEFORE ORDERING OR FABRICATING ANY MATERIAL.

DESIGN	BY Ulysses Smpardos	CHECKED F. Feng/C. Chan	STATE OF CALIFORNIA DEPARTMENT OF TRANSPORTATION
DETAILS	BY Steven Schenck	CHECKED F. Feng/C. Chan	DIVISION OF ENGINEERING SERVICES STRUCTURE DESIGN DESIGN BRANCH 15
QUANTITIES	BY E. Hall	CHECKED R. Odell	CU 07 EA 121841

Caltrans Metric

ALL DIMENSIONS ARE IN MILLIMETERS UNLESS OTHERWISE SHOWN

ORIGINAL SCALE IN MILLIMETERS FOR REDUCED PLANS 0 10 20 30 40 50 60 70 80 90 100

DISREGARD PRINTS BEARING EARLIER REVISION DATES →

BRIDGE NO.	PROVIDENCIA AVENUE OH (WIDEN)
53-1085	
KILOMETER POST 46.1	PIER DETAILS NO. 5

REVISION DATES: 9-11-08 | 10-16-08 | 11-24-08 | 1-16-09 | 1-23-09

SHEET 65 OF 152

STRUCTURES DESIGN DETAIL SHEET (METRIC) (REV.03-17-04)

FILE => 53-1085-k-pie05.dgn

DATE PLOTTED => 15-JUN-2009 TIME PLOTTED => 08:08
USERNAME => frrene

DIST	COUNTY	ROUTE	KILOMETER POST TOTAL PROJECT	SHEET No	TOTAL SHEETS
07	LA	5	42.8/47.3	855	1073

Andrew Rittenhouse 12-05-08
REGISTERED CIVIL ENGINEER DATE

6-8-09
PLANS APPROVAL DATE

REGISTERED PROFESSIONAL ENGINEER Andrew P. Rittenhouse No. 61006 Exp. 12-31-10 CIVIL STATE OF CALIFORNIA

The State of California or its officers or agents shall not be responsible for the accuracy or completeness of electronic copies of this plan sheet.

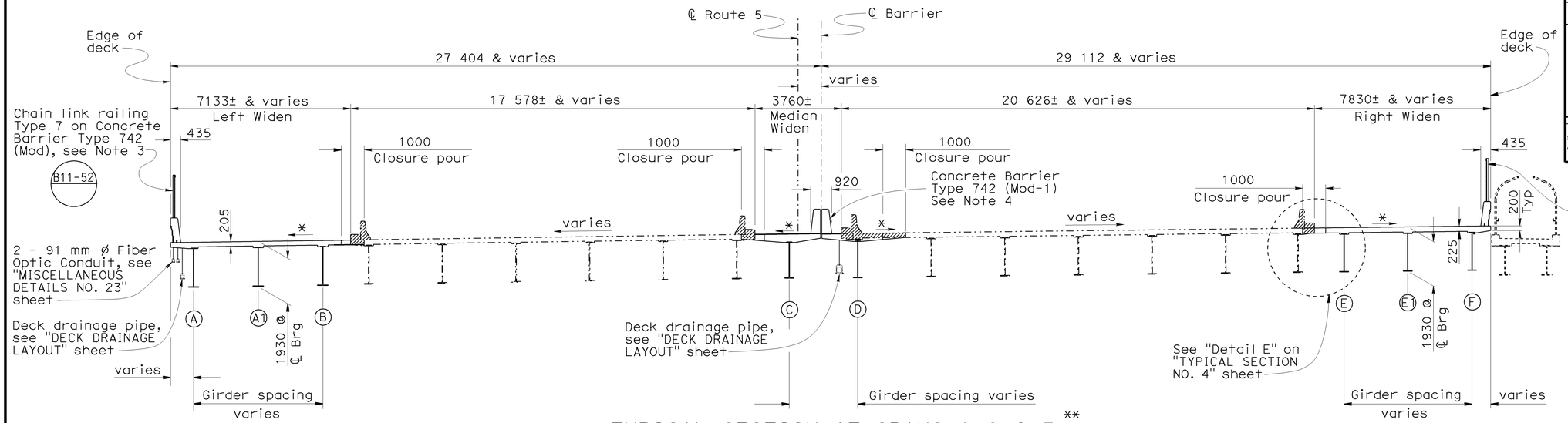

TYPICAL SECTION AT SPANS 1,2 & 3 **

1:100

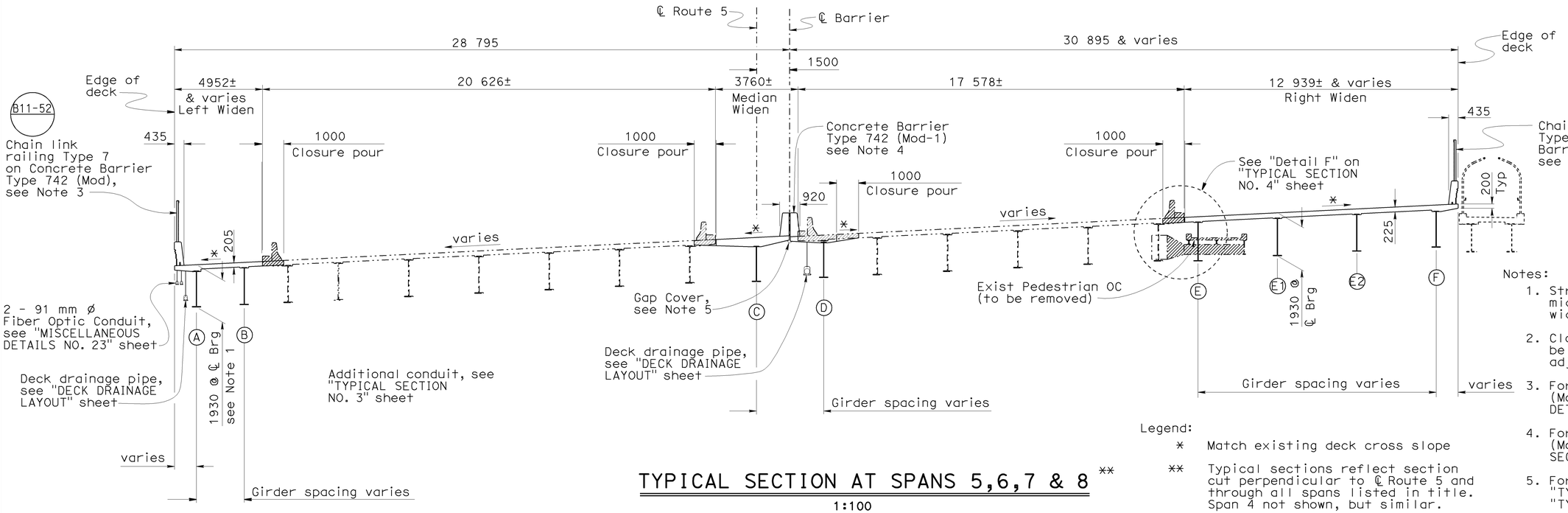

TYPICAL SECTION AT SPANS 5,6,7 & 8 **

1:100

Notes:

1. Structure depth = 1500 mm at midspan of Spans 6 and 7, left widen only.
2. Closure pour concrete shall not be placed until 7 days after adjacent deck pours are complete.
3. For "Concrete Barrier Type 742 (Mod)" detail, see "ARCHITECTURAL DETAILS" sheet.
4. For "Concrete Barrier Type 742 (Mod-1)" detail, see "TYPICAL SECTION NO. 4" sheet.
5. For details not shown, see "TYPICAL SECTION NO. 2" and "TYPICAL SECTION NO. 4" sheets.
6. For "Typical Section" detail at Pedestrian Overhead, see "PEDESTRIAN OH DETAILS NO.1" sheet.

Legend:

- * Match existing deck cross slope
- ** Typical sections reflect section cut perpendicular to ℄ Route 5 and through all spans listed in title. Span 4 not shown, but similar.
- Indicates Bridge Removal (Portion)
- Indicates existing structure

NOTE:
THE CONTRACTOR SHALL VERIFY ALL CONTROLLING FIELD DIMENSIONS BEFORE ORDERING OR FABRICATING ANY MATERIAL.

Caltrans Metric

	BY	CHECKED
DESIGN	Ulysses Smpardos	Mark Okimura
DETAILS	Steven Schenck	Mark Okimura
QUANTITIES	E. Hall	R. Odell

STATE OF CALIFORNIA
DEPARTMENT OF TRANSPORTATION

DIVISION OF ENGINEERING SERVICES
STRUCTURE DESIGN
DESIGN BRANCH 15

BRIDGE NO. 53-1085
KILOMETER POST 46.1

PROVIDENCIA AVENUE OH (WIDEN)
TYPICAL SECTION NO. 1

ALL DIMENSIONS ARE IN MILLIMETERS UNLESS OTHERWISE SHOWN

ORIGINAL SCALE IN MILLIMETERS FOR REDUCED PLANS 0 10 20 30 40 50 60 70 80 90 100

CU 07
EA 121841

DISREGARD PRINTS BEARING EARLIER REVISION DATES

REVISION DATES 1-30-09 2-23-09 2-25-09 3-18-09 4-01-09 11-14-08 11-24-08 1-22-09 1-27-09

SHEET 66 OF 152

STRUCTURES DESIGN DETAIL SHEET (METRIC) (REV.03-17-04)

FILE => 53-1085-m-ts1.dgn

USERNAME => trrene DATE PLOTTED => 15-JUN-2009 TIME PLOTTED => 08:08

DIST	COUNTY	ROUTE	KILOMETER POST TOTAL PROJECT	SHEET No	TOTAL SHEETS
07	LA	5	42.8/47.3	856	1073

Andrew P. Rittenhouse 12-05-08
REGISTERED CIVIL ENGINEER DATE

6-8-09
PLANS APPROVAL DATE

REGISTERED PROFESSIONAL ENGINEER
Andrew P. Rittenhouse
No. 61006
Exp. 12-31-10
CIVIL
STATE OF CALIFORNIA

The State of California or its officers or agents shall not be responsible for the accuracy or completeness of electronic copies of this plan sheet.

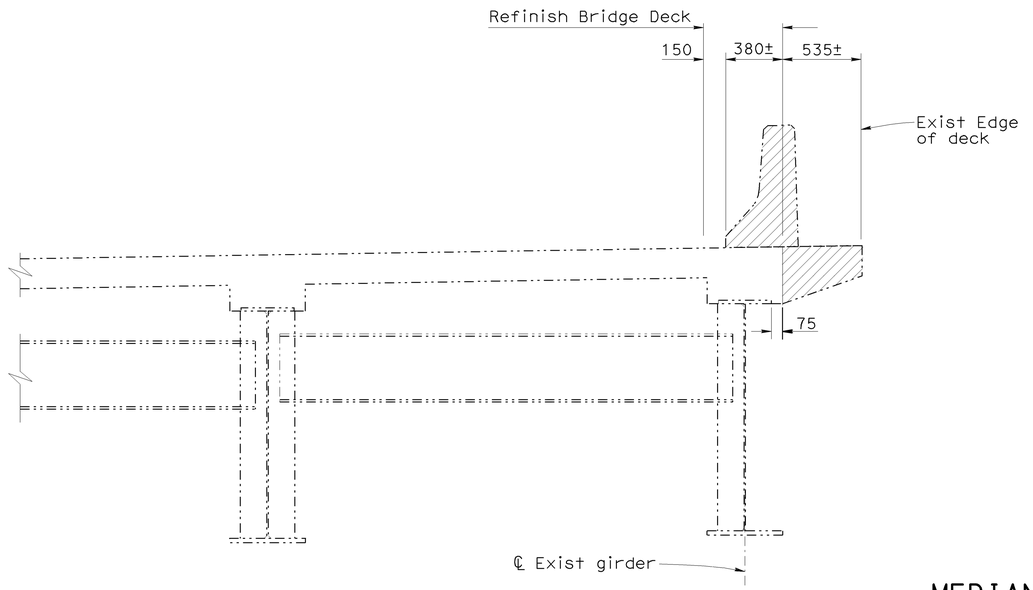

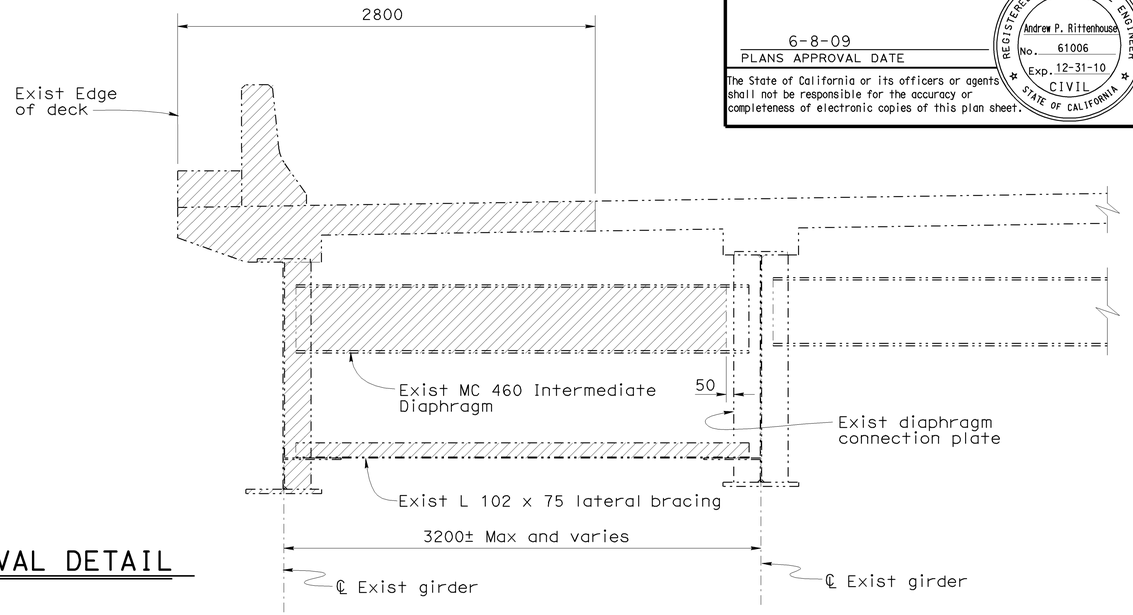

MEDIAN WIDEN-REMOVAL DETAIL

1:20

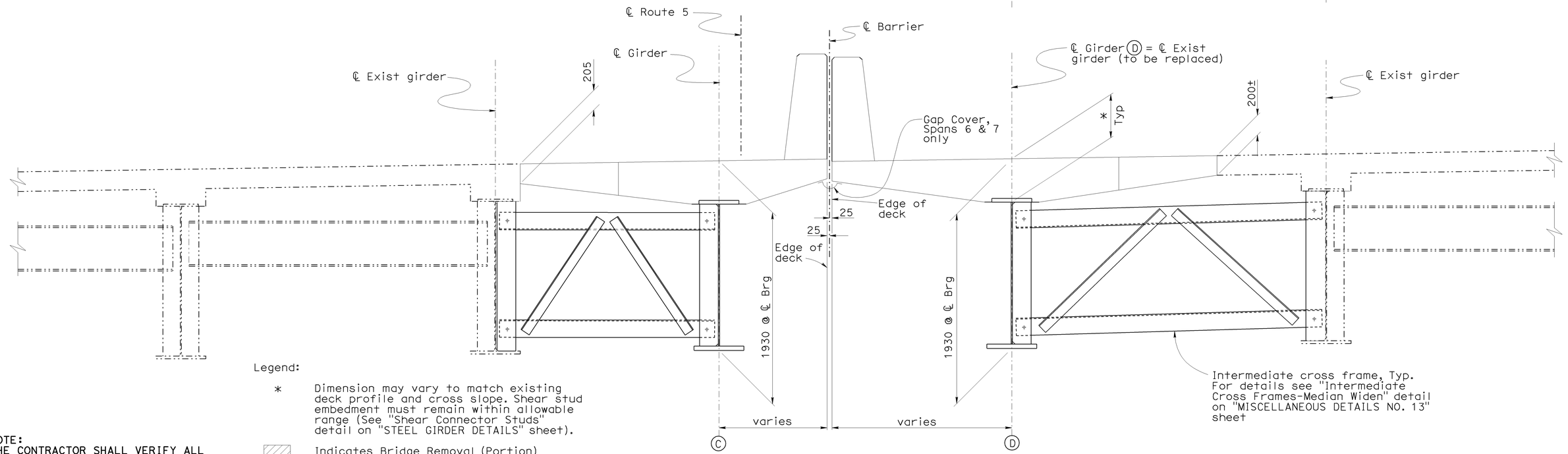

TYPICAL SECTION - MEDIAN WIDEN

1:20

Legend:

* Dimension may vary to match existing deck profile and cross slope. Shear stud embedment must remain within allowable range (See "Shear Connector Studs" detail on "STEEL GIRDER DETAILS" sheet).

Indicates Bridge Removal (Portion)

Indicates existing structure

NOTE:
THE CONTRACTOR SHALL VERIFY ALL CONTROLLING FIELD DIMENSIONS BEFORE ORDERING OR FABRICATING ANY MATERIAL.

	BY	CHECKED
DESIGN	Ulysses Smpardos	Mark Okimura
DETAILS	Steven Schenck	Mark Okimura
QUANTITIES	E. Hall	R. Odell

STATE OF CALIFORNIA
DEPARTMENT OF TRANSPORTATION

DIVISION OF ENGINEERING SERVICES
STRUCTURE DESIGN
DESIGN BRANCH 15

CU 07
EA 121841

BRIDGE NO. 53-1085
KILOMETER POST 46.1

PROVIDENCIA AVENUE OH (WIDEN)

TYPICAL SECTION NO. 2

ALL DIMENSIONS ARE IN MILLIMETERS UNLESS OTHERWISE SHOWN

ORIGINAL SCALE IN MILLIMETERS FOR REDUCED PLANS 0 10 20 30 40 50 60 70 80 90 100

DISREGARD PRINTS BEARING EARLIER REVISION DATES →

REVISION DATES: 11-14-08 | 11-24-08 | 1-20-09 | 1-23-09 | 2-23-09

SHEET 67 OF 152

FILE => 53-1085-m-ts2.dgn

STRUCTURES DESIGN DETAIL SHEET (METRIC) (REV.03-17-04)

USERNAME => ttrent DATE PLOTTED => 15-JUN-2009 TIME PLOTTED => 08:08

DIST	COUNTY	ROUTE	KILOMETER POST TOTAL PROJECT	SHEET No	TOTAL SHEETS
07	LA	5	42.8/47.3	857	1073

Andrew P. Rittenhouse 12-05-08
REGISTERED CIVIL ENGINEER DATE

6-8-09
PLANS APPROVAL DATE

The State of California or its officers or agents shall not be responsible for the accuracy or completeness of electronic copies of this plan sheet.

REGISTERED PROFESSIONAL ENGINEER
Andrew P. Rittenhouse
No. 61006
Exp. 12-31-10
CIVIL
STATE OF CALIFORNIA

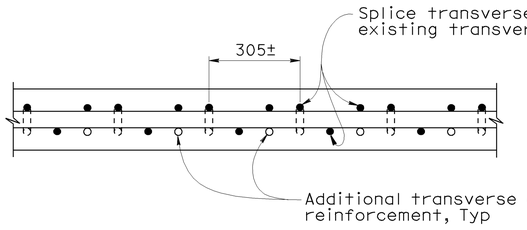

DETAIL C

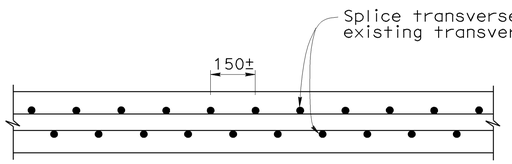

DETAIL D

BAR SPLICE LAYOUT

1:10

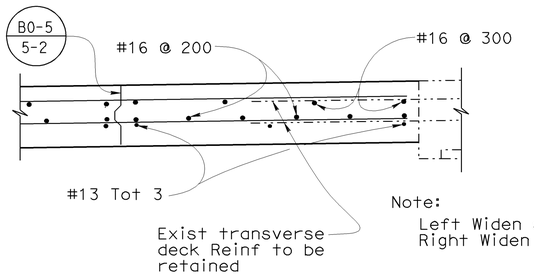

Note:
Left Widen shown.
Right Widen similar

CLOSURE POUR DETAIL

1:10

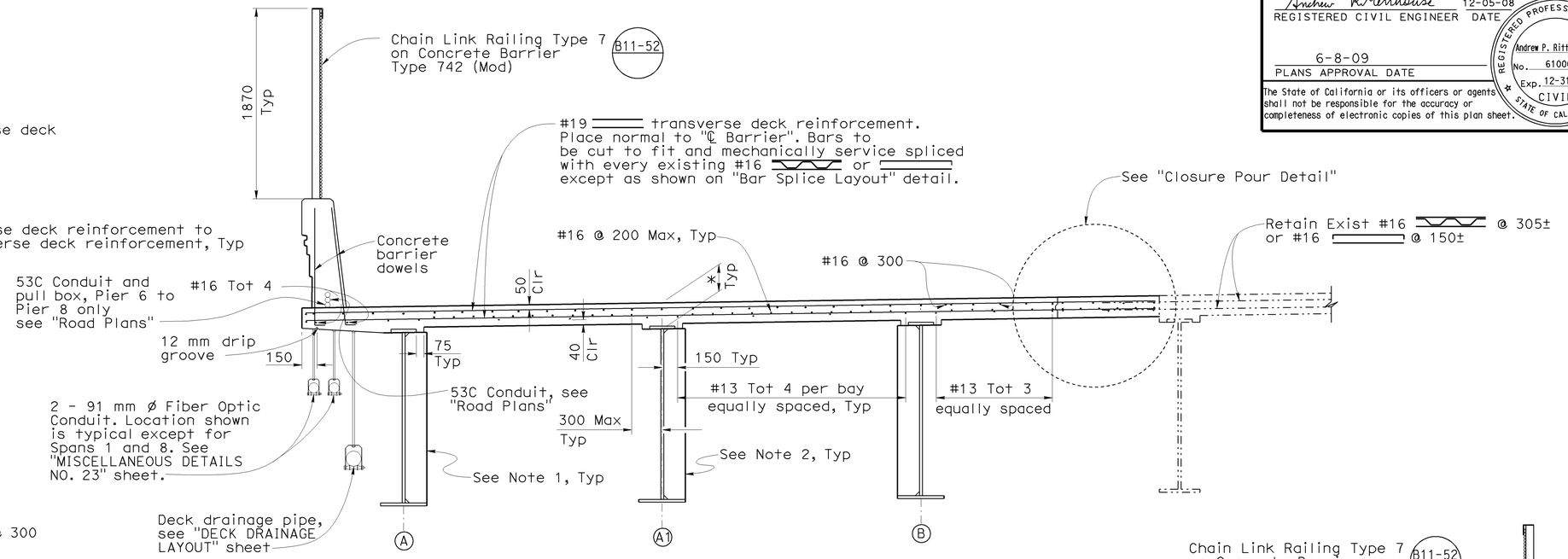

PART TYPICAL SECTION LEFT WIDEN

1:25

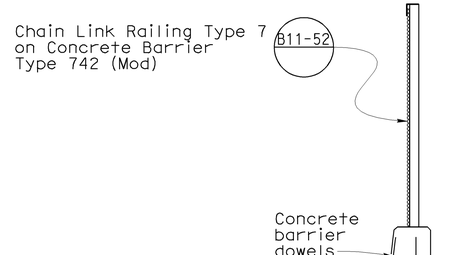

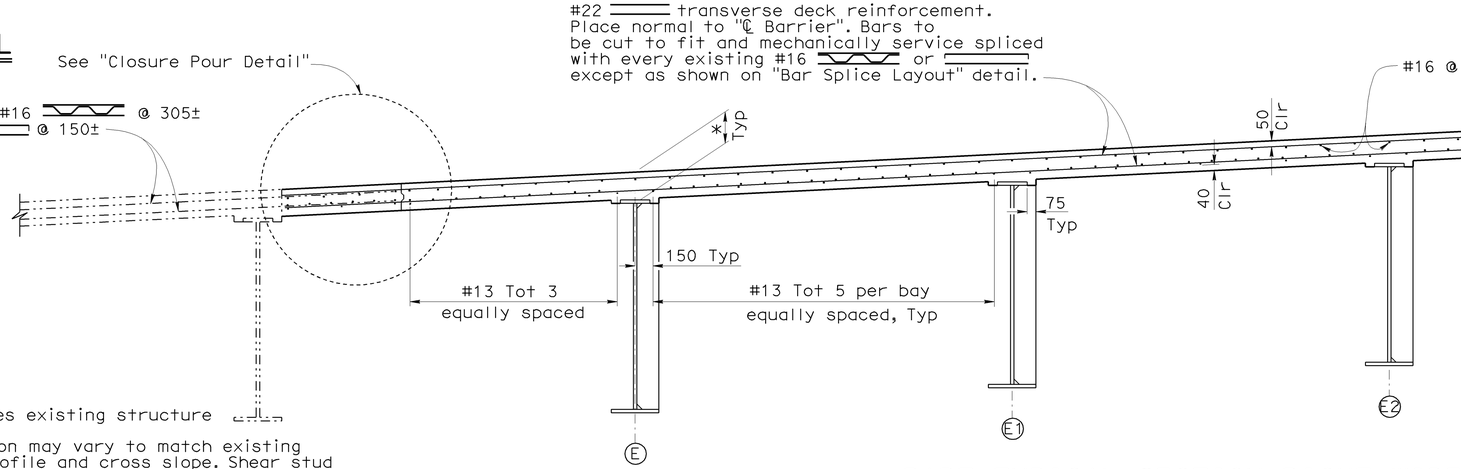

Notes:

1. Place intermediate stiffeners on inside of exterior girders.
2. Intermediate stiffeners at interior girders may be placed on either side of girders.
3. Intermediate cross frames not shown. For details see "MISCELLANEOUS DETAILS NO. 12" sheet.

Legend:

Indicates existing structure

* Dimension may vary to match existing deck profile and cross slope. Shear stud embedment must remain within allowable range (See "Shear Connector Studs" detail on "STEEL GIRDER DETAILS" sheet).

NOTE:
THE CONTRACTOR SHALL VERIFY ALL CONTROLLING FIELD DIMENSIONS BEFORE ORDERING OR FABRICATING ANY MATERIAL.

PART TYPICAL SECTION RIGHT WIDEN

1:25

	BY	CHECKED
DESIGN	Ulysses Smpardos	Mark Okimura
DETAILS	Steven Schenck	Mark Okimura
QUANTITIES	E. Hall	R. Odell

STATE OF CALIFORNIA
DEPARTMENT OF TRANSPORTATION

DIVISION OF ENGINEERING SERVICES
STRUCTURE DESIGN
DESIGN BRANCH 15

BRIDGE NO. 53-1085
KILOMETER POST 46.1

PROVIDENCIA AVENUE OH (WIDEN)

TYPICAL SECTION NO. 3

ALL DIMENSIONS ARE IN MILLIMETERS UNLESS OTHERWISE SHOWN

ORIGINAL SCALE IN MILLIMETERS FOR REDUCED PLANS 0 10 20 30 40 50 60 70 80 90 100

CU 07
EA 121841

FILE => 53-1085-m-ts3.dgn

DISREGARD PRINTS BEARING EARLIER REVISION DATES →

REVISION DATES: 8-16-06 | 2-25-09 | 4-03-09 | | 11-13-08 | 11-24-08 | 11-26-08 | 1-28-09 | 1-23-09 | 2-23-09

SHEET 68 OF 152

STRUCTURES DESIGN DETAIL SHEET (METRIC) (REV.03-17-04)

USERNAME => ttrrone DATE PLOTTED => 15-JUN-2009 TIME PLOTTED => 08:08

DIST	COUNTY	ROUTE	KILOMETER POST TOTAL PROJECT	SHEET No	TOTAL SHEETS
07	LA	5	42.8/47.3	858	1073

Andrew P. Rittenhouse 12-05-08
REGISTERED CIVIL ENGINEER DATE

6-8-09
PLANS APPROVAL DATE

REGISTERED PROFESSIONAL ENGINEER — Andrew P. Rittenhouse — No. 61006 — Exp. 12-31-10 — CIVIL — STATE OF CALIFORNIA

The State of California or its officers or agents shall not be responsible for the accuracy or completeness of electronic copies of this plan sheet.

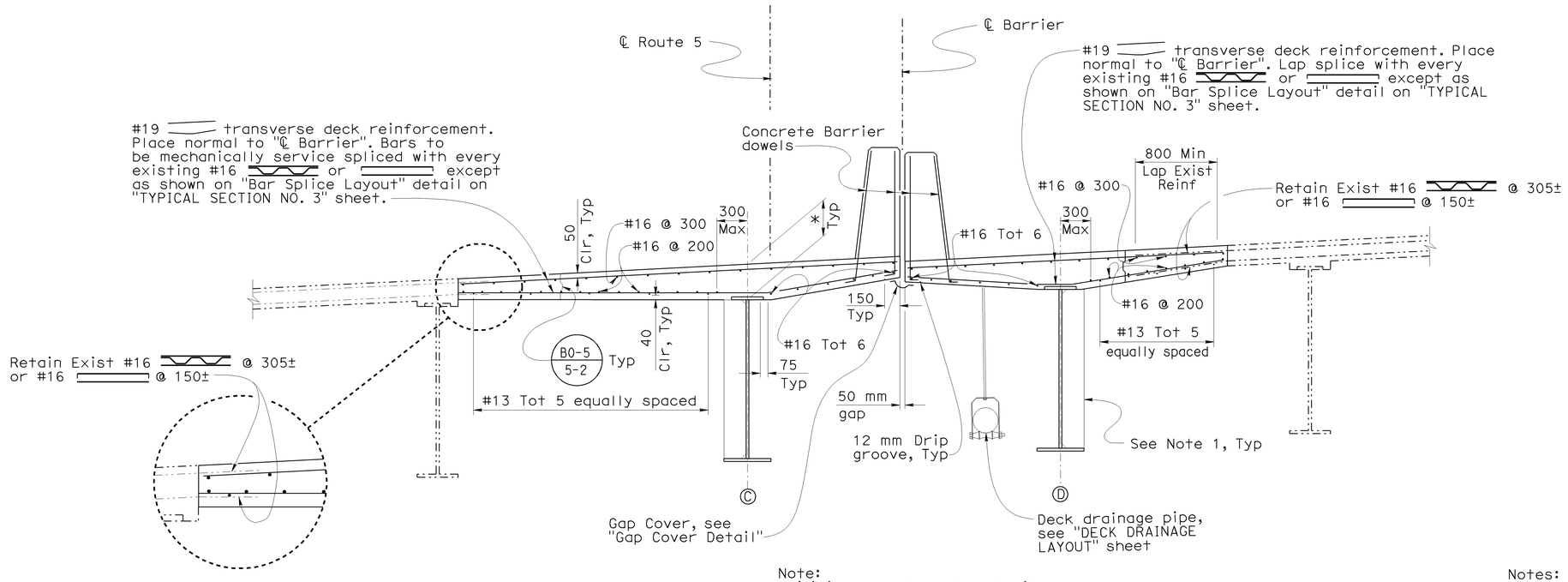

Note:
Utilities not shown for clarity

PART TYPICAL SECTION MEDIAN WIDEN

1:25

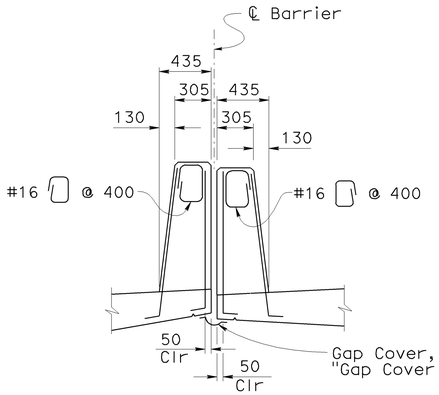

B11-57

Notes:

For other details not shown, see

For barrier transition see "BARRIER TRANSITION DETAILS NO. 1" and "BARRIER TRANSITION DETAILS NO. 2" sheets

CONCRETE BARRIER TYPE 742 (Mod-1)

1:25

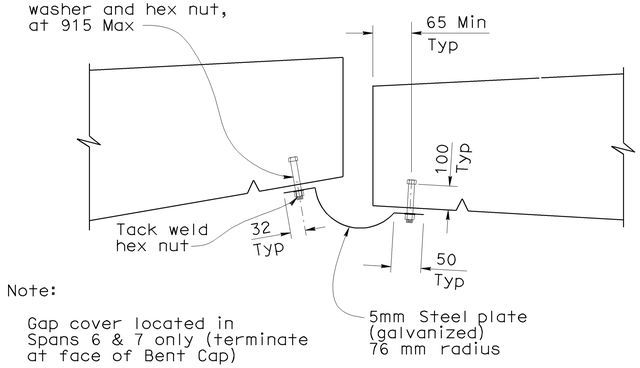

Note:

Gap cover located in Spans 6 & 7 only (terminate at face of Bent Cap)

GAP COVER DETAIL

1:5

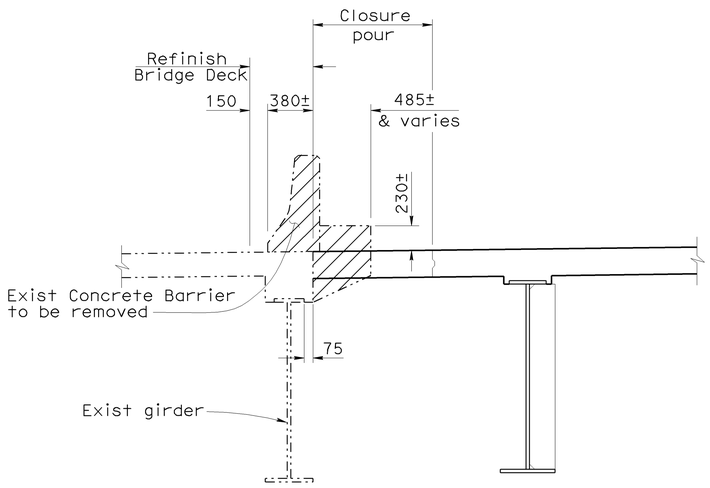

DETAIL E

1:25

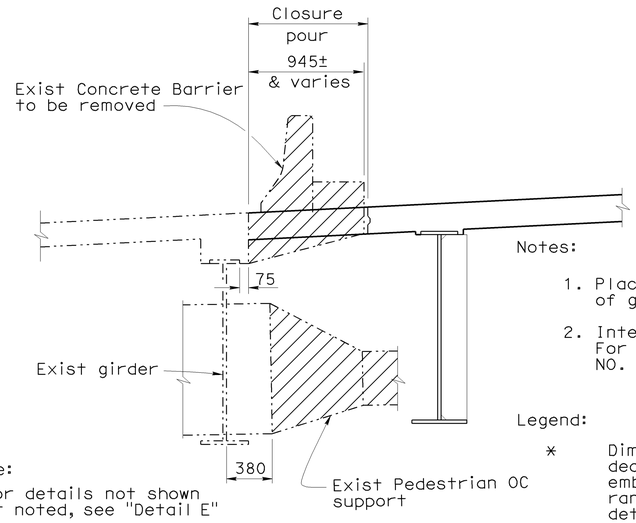

Note:

For details not shown or noted, see "Detail E"

DETAIL F

1:25

Notes:

1. Place intermediate stiffeners on inside of girders "C" and "D".
2. Intermediate cross frames not shown. For details see "MISCELLANEOUS DETAILS NO. 13" sheet.

Legend:

* Dimension may vary to match existing deck profile and cross slope. Shear stud embedment must remain within allowable range (See "Shear Connector Studs" detail on "STEEL GIRDER DETAILS" sheet).

Indicates Bridge Removal (Portion)

Indicates existing structure

NOTE:
THE CONTRACTOR SHALL VERIFY ALL CONTROLLING FIELD DIMENSIONS BEFORE ORDERING OR FABRICATING ANY MATERIAL.

Caltrans Metric

ALL DIMENSIONS ARE IN MILLIMETERS UNLESS OTHERWISE SHOWN

ORIGINAL SCALE IN MILLIMETERS FOR REDUCED PLANS 0 10 20 30 40 50 60 70 80 90 100

	BY	CHECKED
DESIGN	Ulysses Smpardos	Mark Okimura
DETAILS	Steven Schenck	Mark Okimura
QUANTITIES	E. Hall	R. Odell

STATE OF CALIFORNIA
DEPARTMENT OF TRANSPORTATION

DIVISION OF ENGINEERING SERVICES
STRUCTURE DESIGN
DESIGN BRANCH 15

CU 07
EA 121841

FILE => 53-1085-m-ts4.dgn

BRIDGE NO. 53-1085
KILOMETER POST 46.1

PROVIDENCIA AVENUE OH (WIDEN)
TYPICAL SECTION NO. 4

DISREGARD PRINTS BEARING EARLIER REVISION DATES →

REVISION DATES: 8-16-06 | 2-25-09 | 4-01-09 | 4-6-09 | | 11-24-08 | 11-25-08 | 1-28-09 | 1-23-09 | 2-23-09

SHEET 69 OF 152

STRUCTURES DESIGN DETAIL SHEET (METRIC) (REV.03-17-04)

USERNAME => ttirone DATE PLOTTED => 15-JUN-2009 TIME PLOTTED => 08:08

Girder	Length (m) ±	Bearing ±
1A	27.520	N 13° 46′ 16" W
1A1	27.440	N 13° 36′ 36" W
1B	27.360	N 13° 26′ 53" W
2A	33.385	N 13° 49′ 28" W
2A1	33.255	N 13° 41′ 30" W
2B	33.130	N 13° 33′ 27" W
3A	27.985	N 13° 49′ 34" W
3A1	28.170	N 14° 06′ 19" W
3B	28.355	N 14° 22′ 51" W
4A	17.910	N 13° 57′ 11" W
4A1	19.145	N 15° 27′ 21" W
4B	20.390	N 16° 46′ 33" W
1C	27.390	N 13° 06′ 17" W
1D	27.575	N 13° 26′ 12" W
2C	32.610	N 13° 06′ 37" W
2D	32.905	N 13° 24′ 25" W
3C	27.365	N 13° 06′ 53" W
3D	27.470	N 13° 23′ 27" W
4C	24.755	N 13° 08′ 43" W
4D	25.760	N 13° 24′ 34" W
1E	27.090	N 12° 49′ 24" W
1F	26.600	N 12° 04′ 41" W
2E	32.225	N 12° 40′ 28" W
2F	31.645	N 11° 56′ 04" W
3E	28.575	N 14° 50′ 50" W
3E1	27.580	N 13° 26′ 48" W
3F	26.600	N 11° 56′ 32" W
4E	33.185	N 15° 58′ 30" W
4E1	32.970	N 14° 51′ 13" W
4E2	32.770	N 13° 43′ 06" W
4F	32.045	N 11° 52′ 14" W

Notes:

1. Girder lengths are given as horizontal distances from ℄ Brg to ℄ Brg.
2. 1A = "Span 1, girder A", etc.

DIST	COUNTY	ROUTE	KILOMETER POST TOTAL PROJECT	SHEET No	TOTAL SHEETS
07	LA	5	42.8/47.3	859	1073

Andrew R Rittenhouse 12-05-08
REGISTERED CIVIL ENGINEER DATE

6-8-09
PLANS APPROVAL DATE

REGISTERED PROFESSIONAL ENGINEER — Andrew P. Rittenhouse — No. 61006 — Exp. 12-31-10 — CIVIL — STATE OF CALIFORNIA

The State of California or its officers or agents shall not be responsible for the accuracy or completeness of electronic copies of this plan sheet.

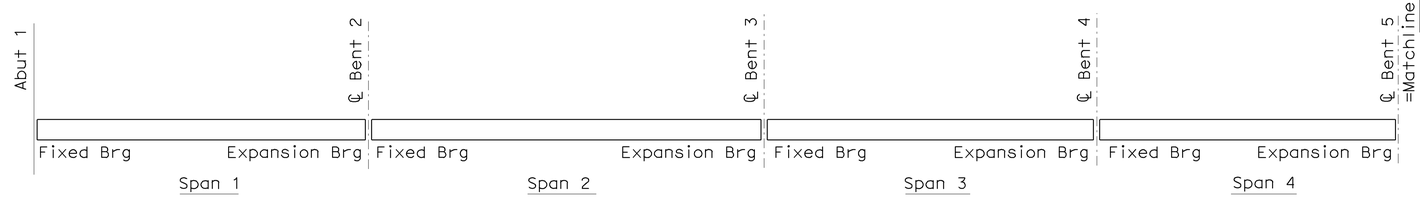

LONGITUDINAL SECTION

1:250

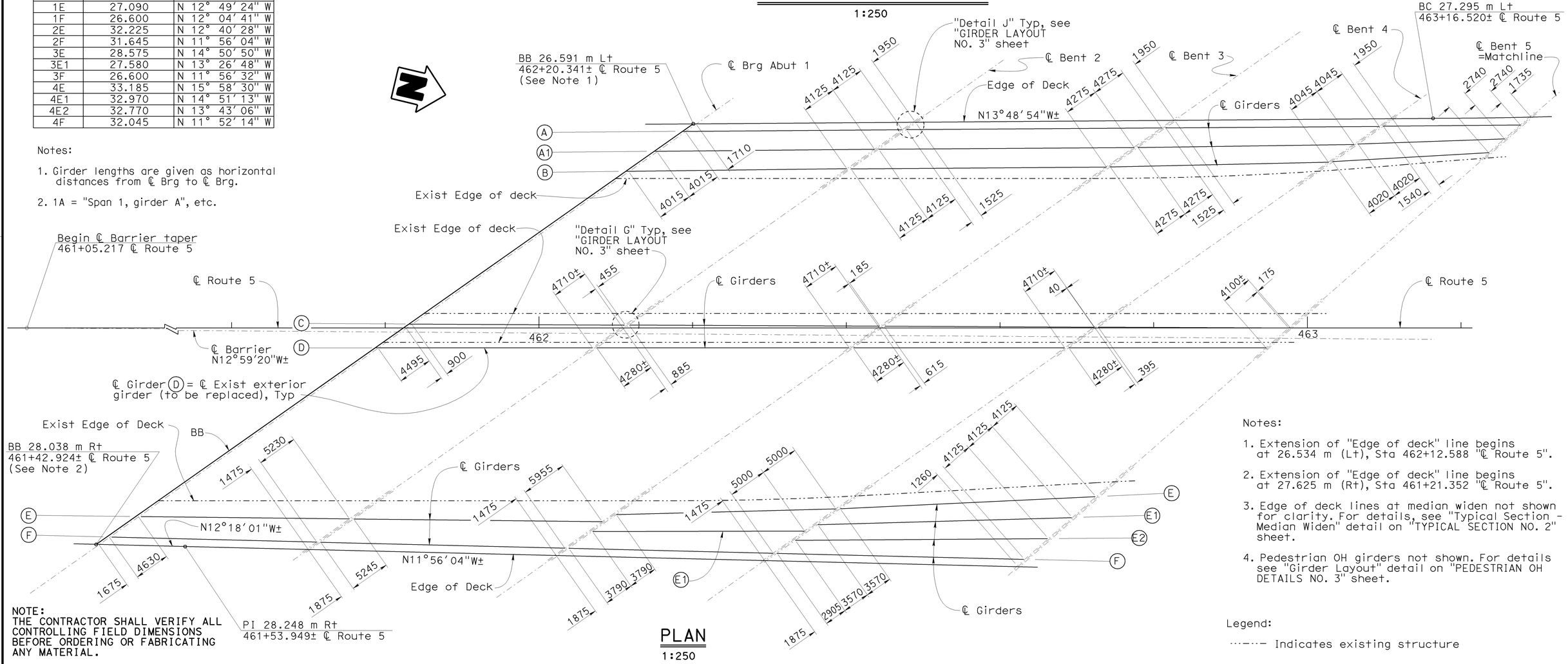

PLAN

1:250

NOTE:
THE CONTRACTOR SHALL VERIFY ALL CONTROLLING FIELD DIMENSIONS BEFORE ORDERING OR FABRICATING ANY MATERIAL.

Notes:

1. Extension of "Edge of deck" line begins at 26.534 m (Lt), Sta 462+12.588 "℄ Route 5".
2. Extension of "Edge of deck" line begins at 27.625 m (Rt), Sta 461+21.352 "℄ Route 5".
3. Edge of deck lines at median widen not shown for clarity. For details, see "Typical Section - Median Widen" detail on "TYPICAL SECTION NO. 2" sheet.
4. Pedestrian OH girders not shown. For details see "Girder Layout" detail on "PEDESTRIAN OH DETAILS NO. 3" sheet.

Legend:

····—···— Indicates existing structure

Caltrans Metric

	BY	CHECKED
DESIGN	Ulysses Smpardos	Mark Okimura
DETAILS	Steven Schenck	Mark Okimura
QUANTITIES	E. Hall	R. Odell

STATE OF CALIFORNIA
DEPARTMENT OF TRANSPORTATION

DIVISION OF ENGINEERING SERVICES
STRUCTURE DESIGN
DESIGN BRANCH 15

CU 07
EA 121841

BRIDGE NO. 53-1085
KILOMETER POST 46.1

PROVIDENCIA AVENUE OH (WIDEN)

GIRDER LAYOUT NO. 1

ALL DIMENSIONS ARE IN MILLIMETERS UNLESS OTHERWISE SHOWN

ORIGINAL SCALE IN MILLIMETERS FOR REDUCED PLANS 0 10 20 30 40 50 60 70 80 90 100

DISREGARD PRINTS BEARING EARLIER REVISION DATES →

REVISION DATES: 06-23-06 | 10-31-07 | 07-14-08 | 09-15-08 | 12-31-08 | 10-23-09 | 11-24-08 | 1-23-09 | 2-23-09 | 2-25-09

SHEET 70 OF 152

FILE => 53-1085-n-gl01.dgn

STRUCTURES DESIGN DETAIL SHEET (METRIC) (REV.03-17-04)

USERNAME => trrene DATE PLOTTED => 15-JUN-2009 TIME PLOTTED => 08:08

Girder	Length (m) ±	Bearing ±
5A	28.620	N 16° 14′ 16" W
5B	29.140	N 16° 56′ 21" W
6A	27.160	N 19° 18′ 13" W
6B	26.935	N 19° 03′ 40" W
7A	28.915	N 22° 29′ 43" W
7B	28.585	N 22° 04′ 46" W
8A	28.760	N 25° 44′ 54" W
8B	28.315	N 25° 14′ 49" W
5C	27.665	N 13° 32′ 36" W
5D	27.370	N 13° 23′ 02" W
6C	24.375	N 15° 39′ 56" W
6D	23.800	N 14° 19′ 24" W
7C	25.990	N 18° 21′ 05" W
7D	25.870	N 17° 56′ 23" W
8C	25.170	N 21° 05′ 34" W
8D	27.830	N 20° 43′ 56" W
5E	28.195	N 14° 31′ 52" W
5E1	27.720	N 13° 39′ 38" W
5E2	27.255	N 12° 45′ 36" W
5F	26.795	N 11° 49′ 42" W
6E	23.030	N 13° 00′ 17" W
6E1	22.830	N 12° 36′ 43" W
6E2	22.630	N 12° 12′ 43" W
6F	22.430	N 11° 48′ 18" W
7E	24.335	N 15° 11′ 49" W
7E1	24.130	N 14° 47′ 53" W
7E2	23.930	N 14° 23′ 33" W
7F	23.725	N 13° 58′ 49" W
8E	26.580	N 18° 27′ 00" W
8E1	26.280	N 17° 53′ 26" W
8E2	25.980	N 17° 19′ 06" W
8F	25.685	N 16° 43′ 58" W

Notes:

1. Girder lengths are given as horizontal distances from ℄ Brg to ℄ Brg.
2. 1A = "Span 1, girder A", etc.

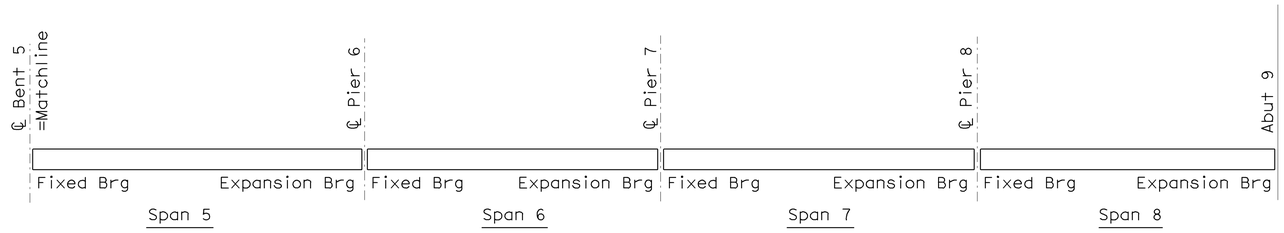

LONGITUDINAL SECTION

1:250

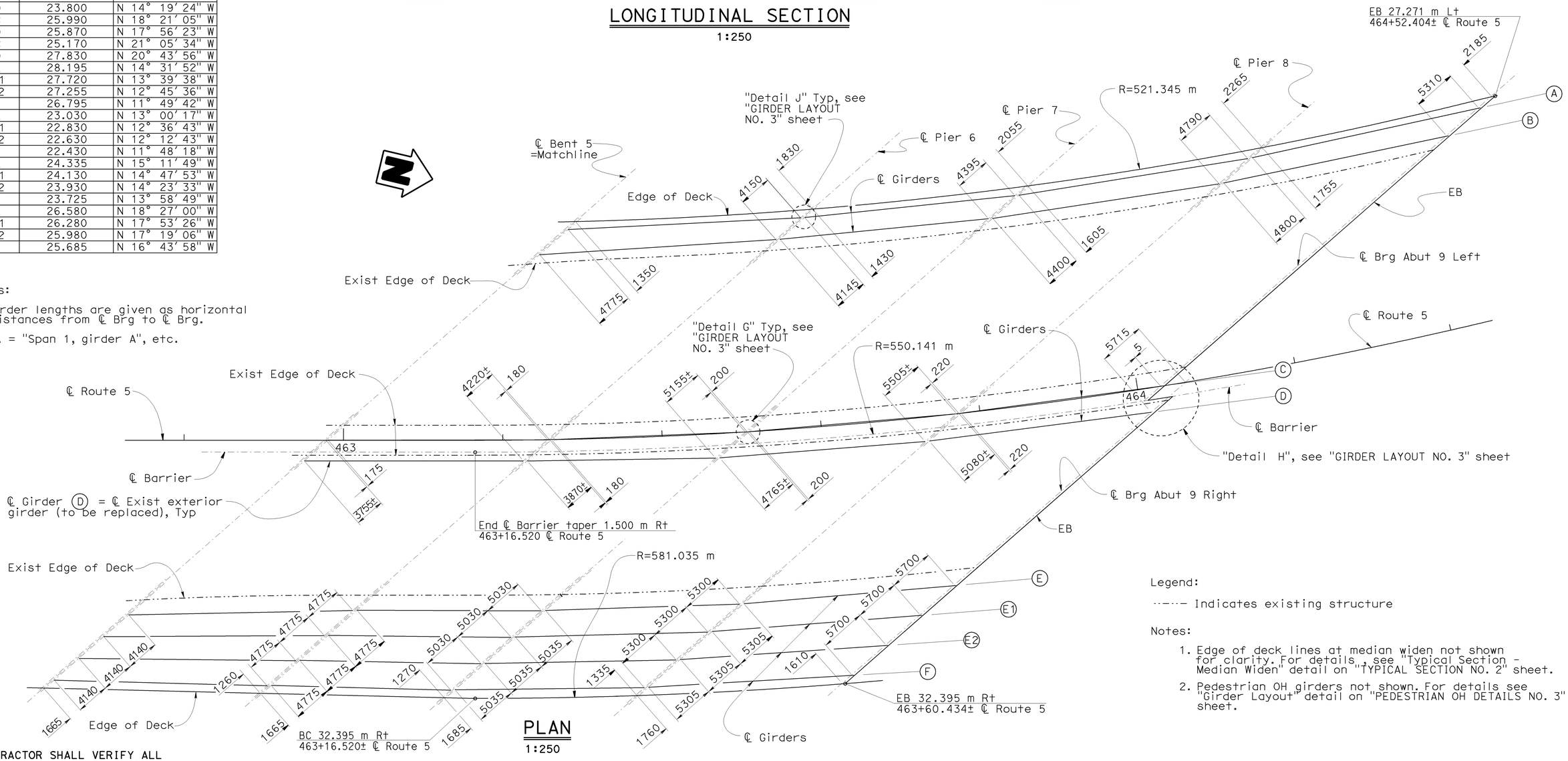

PLAN

1:250

Legend:

·–·–· Indicates existing structure

Notes:

1. Edge of deck lines at median widen not shown for clarity. For details, see "Typical Section - Median Widen" detail on "TYPICAL SECTION NO. 2" sheet.
2. Pedestrian OH girders not shown. For details see "Girder Layout" detail on "PEDESTRIAN OH DETAILS NO. 3" sheet.

NOTE:
THE CONTRACTOR SHALL VERIFY ALL CONTROLLING FIELD DIMENSIONS BEFORE ORDERING OR FABRICATING ANY MATERIAL.

DIST	COUNTY	ROUTE	KILOMETER POST TOTAL PROJECT	SHEET No	TOTAL SHEETS
07	LA	5	42.8/47.3	860	1073

Andrew P. Rittenhouse 12-05-08
REGISTERED CIVIL ENGINEER DATE

6-8-09
PLANS APPROVAL DATE

The State of California or its officers or agents shall not be responsible for the accuracy or completeness of electronic copies of this plan sheet.

REGISTERED PROFESSIONAL ENGINEER — Andrew P. Rittenhouse — No. 61006 — Exp. 12-31-10 — CIVIL — STATE OF CALIFORNIA

Caltrans Metric

	BY	CHECKED
DESIGN	Ulysses Smpardos	Mark Okimura
DETAILS	Steven Schenck	Mark Okimura
QUANTITIES	E. Hall	R. Odell

STATE OF CALIFORNIA
DEPARTMENT OF TRANSPORTATION

DIVISION OF ENGINEERING SERVICES
STRUCTURE DESIGN
DESIGN BRANCH 15

BRIDGE NO. 53-1085
KILOMETER POST 46.1

PROVIDENCIA AVENUE OH (WIDEN)

GIRDER LAYOUT NO. 2

ALL DIMENSIONS ARE IN MILLIMETERS UNLESS OTHERWISE SHOWN

ORIGINAL SCALE IN MILLIMETERS FOR REDUCED PLANS 0 10 20 30 40 50 60 70 80 90 100

CU 07
EA 121841

DISREGARD PRINTS BEARING EARLIER REVISION DATES →

REVISION DATES: 06-30-06 | 03-12-09 | 12-31-07 | 04-01-08 | 10-23-08 | 11-24-08 | 1-23-09 | 2-24-09 | 2-25-09

SHEET 71 OF 152

FILE => 53-1085-n-gl02.dgn

STRUCTURES DESIGN DETAIL SHEET (METRIC) (REV.03-17-04)

USERNAME => trrene DATE PLOTTED => 15-JUN-2009 TIME PLOTTED => 08:08

DIST	COUNTY	ROUTE	KILOMETER POST TOTAL PROJECT	SHEET No	TOTAL SHEETS
07	LA	5	42.8/47.3	861	1073

Andrew Rittenhouse 12-05-08
REGISTERED CIVIL ENGINEER DATE

6-8-09
PLANS APPROVAL DATE

The State of California or its officers or agents shall not be responsible for the accuracy or completeness of electronic copies of this plan sheet.

REGISTERED PROFESSIONAL ENGINEER
Andrew P. Rittenhouse
No. 61006
Exp. 12-31-10
CIVIL
STATE OF CALIFORNIA

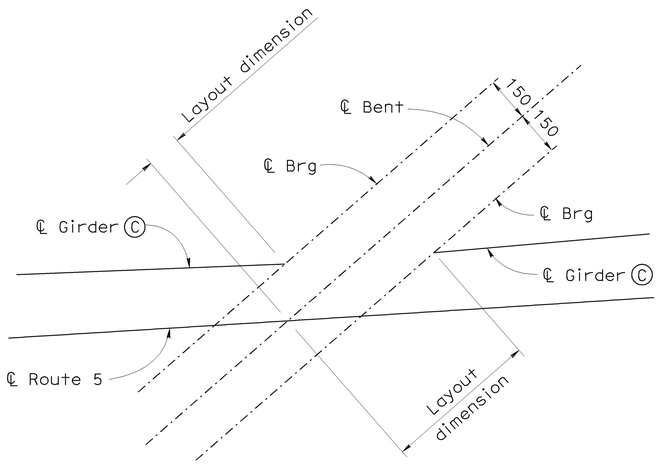

AT BENTS 2 & 3

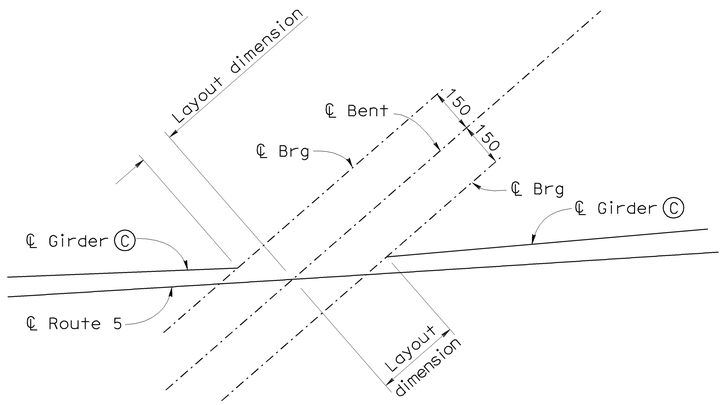

AT BENT 4

DETAIL G
No Scale

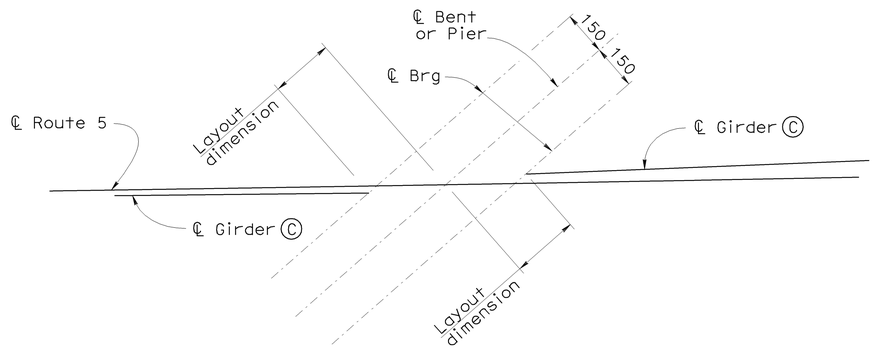

AT BENT 5 & PIERS 6-8

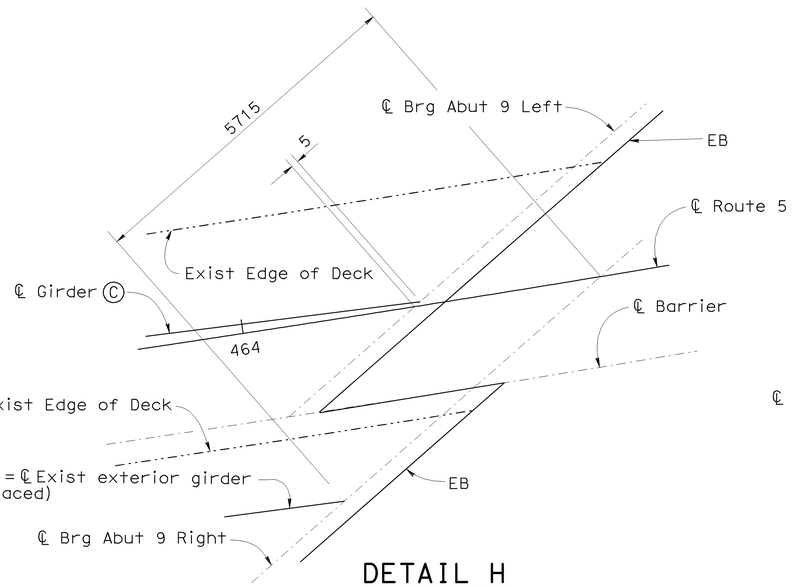

DETAIL H
No Scale

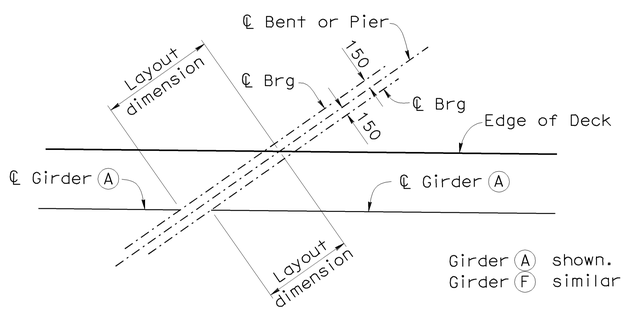

DETAIL J
1:50

Legend:

—·—·— Indicates existing structure

NOTE:
THE CONTRACTOR SHALL VERIFY ALL CONTROLLING FIELD DIMENSIONS BEFORE ORDERING OR FABRICATING ANY MATERIAL.

Caltrans Metric

	BY	CHECKED
DESIGN	Ulysses Smpardos	Mark Okimura
DETAILS	Steven Schenck	Mark Okimura
QUANTITIES	E. Hall	R. Odell

STATE OF CALIFORNIA
DEPARTMENT OF TRANSPORTATION

DIVISION OF ENGINEERING SERVICES
STRUCTURE DESIGN
DESIGN BRANCH 15

BRIDGE NO. 53-1085
KILOMETER POST 46.1

PROVIDENCIA AVENUE OH (WIDEN)
GIRDER LAYOUT NO. 3

ALL DIMENSIONS ARE IN MILLIMETERS UNLESS OTHERWISE SHOWN

ORIGINAL SCALE IN MILLIMETERS FOR REDUCED PLANS 0 10 20 30 40 50 60 70 80 90 100

CU 07
EA 121841

DISREGARD PRINTS BEARING EARLIER REVISION DATES →

REVISION DATES: 2-16-07 | 10-3-07 | 4-03-08 | 10-28-08 | 11-24-08 | 1-23-09 | 2-24-09

SHEET 72 OF 152

FILE => 53-1085-n-gl03.dgn

STRUCTURES DESIGN DETAIL SHEET (METRIC) (REV.03-17-04)

USERNAME => trrene DATE PLOTTED => 15-JUN-2009 TIME PLOTTED => 08:09

DIST	COUNTY	ROUTE	KILOMETER POST TOTAL PROJECT	SHEET No	TOTAL SHEETS
07	LA	5	42.8/47.3	862	1073

Andrew Rittenhouse 12-05-08
REGISTERED CIVIL ENGINEER DATE

6-8-09
PLANS APPROVAL DATE

The State of California or its officers or agents shall not be responsible for the accuracy or completeness of electronic copies of this plan sheet.

REGISTERED PROFESSIONAL ENGINEER
Andrew P. Rittenhouse
No. 61006
Exp. 12-31-10
CIVIL
STATE OF CALIFORNIA

Span	Dim L1	Dim L2	Dim L3
1	23 500±	4500±	11 200±
2	28 800±	4500±	11 200±
3	19 000±	10 000±	10 300±
4	15 700±	6200±	6500±
5	22 000±	7300±	6900±
6	17 700±	8500±	7700±
7	18 800±	9800±	8700±
8	16 900±	11 200±	10 300±

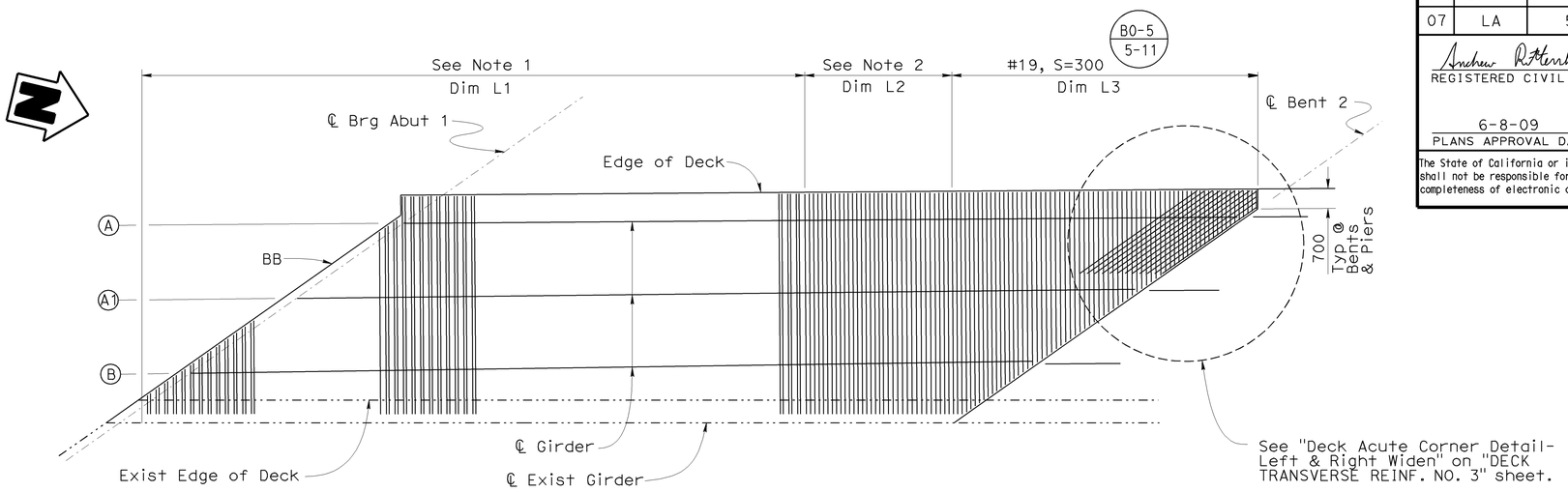

LEFT WIDEN

Span	Dim R1	Dim R2	Dim R3
1	8200±	4500±	23 600±
2	8800±	4500±	28 900±
3	10 000±	8900±	20 000±
4	11 800±	8000±	25 400±
5	12 500±	7900±	21 200±
6	14 500±	3700±	20 700±
7	15 700±	4000±	21 800±
8	17 200±	4400±	23 200±

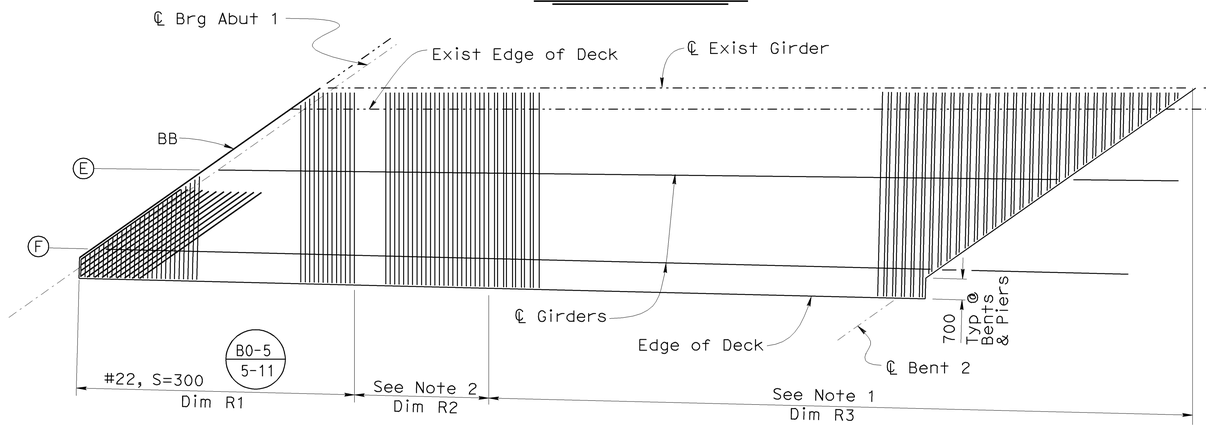

RIGHT WIDEN

DECK TRANSVERSE REINFORCEMENT

1:100

Notes:

1. See "Bar Splice Layout-Detail C" on "TYPICAL SECTION NO. 3" sheet.
2. See "Bar Splice Layout-Detail D" on "TYPICAL SECTION NO. 3" sheet.
3. Span 1 shown, Spans 2 - 8 similar, except as noted.

Legend:

··–··– Indicates existing structure

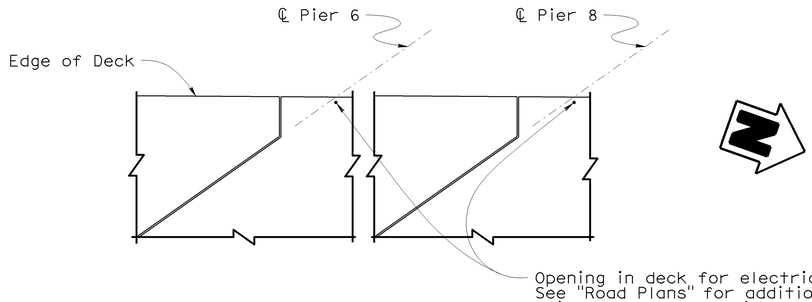

CONDUIT PENETRATION DETAIL

1:100

NOTE:
THE CONTRACTOR SHALL VERIFY ALL CONTROLLING FIELD DIMENSIONS BEFORE ORDERING OR FABRICATING ANY MATERIAL.

Caltrans Metric

ALL DIMENSIONS ARE IN MILLIMETERS UNLESS OTHERWISE SHOWN

ORIGINAL SCALE IN MILLIMETERS FOR REDUCED PLANS 0 10 20 30 40 50 60 70 80 90 100

	BY	CHECKED
DESIGN	Ulysses Smpardos	Mark Okimura
DETAILS	Steven Schenck	Mark Okimura
QUANTITIES	E. Hall	R. Odell

STATE OF CALIFORNIA
DEPARTMENT OF TRANSPORTATION

DIVISION OF ENGINEERING SERVICES
STRUCTURE DESIGN
DESIGN BRANCH 15

CU 07
EA 121841

FILE => 53-1085-p-tr01.dgn

BRIDGE NO. 53-1085
KILOMETER POST 46.1

PROVIDENCIA AVENUE OH (WIDEN)
DECK TRANSVERSE REINF. NO. 1

DISREGARD PRINTS BEARING EARLIER REVISION DATES →
REVISION DATES: 10-28-08 | 11-24-08 | 1-20-09 | 1-23-09 | 2-24-09

SHEET 73 OF 152

STRUCTURES DESIGN DETAIL SHEET (METRIC) (REV.03-17-04)

USERNAME => ttmirkes| DATE PLOTTED => 15-JUN-2009 TIME PLOTTED => 11:05

DIST	COUNTY	ROUTE	KILOMETER POST TOTAL PROJECT	SHEET No	TOTAL SHEETS
07	LA	5	42.8/47.3	863	1073

Andrew Rittenhouse 12-05-08
REGISTERED CIVIL ENGINEER DATE

6-8-09
PLANS APPROVAL DATE

REGISTERED PROFESSIONAL ENGINEER
Andrew P. Rittenhouse
No. 61006
Exp. 12-31-10
CIVIL
STATE OF CALIFORNIA

The State of California or its officers or agents shall not be responsible for the accuracy or completeness of electronic copies of this plan sheet.

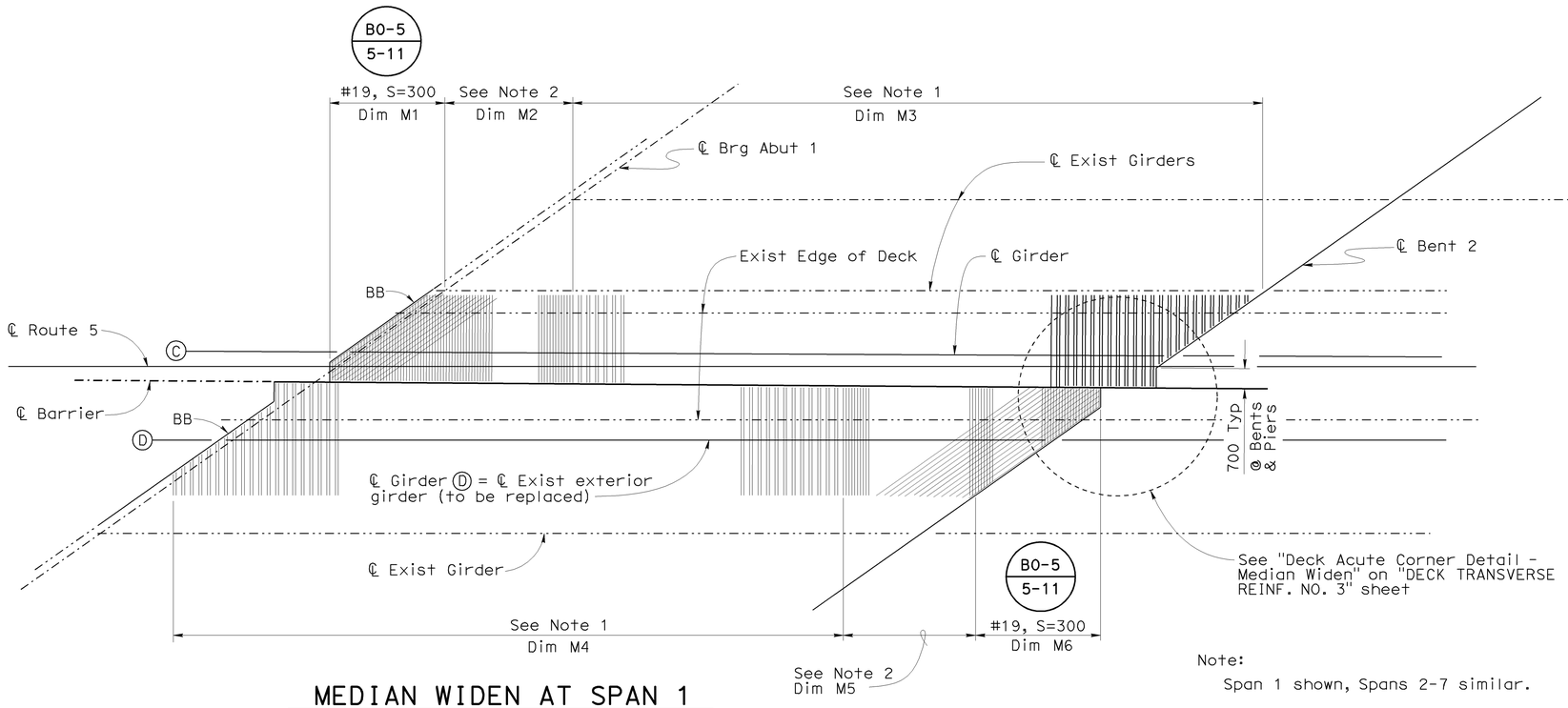

MEDIAN WIDEN AT SPAN 1

Span	Dim M1	Dim M2	Dim M3	Dim M4	Dim M5	Dim M6
1	3900±	4500±	23 500±	26 800±	1600±	4600±
2	3800±	4500±	28 900±	31 800±	1600±	4300±
3	4200±	4500±	23 500±	26 500±	1600±	4000±
4	4400±	4500±	20 200±	25 500±	1300±	3000±
5	3800±	3700±	25 000±	26 600±	1300±	2900±
6	4600±	4000±	21 300±	19 000±	5300±	3100±
7	5000±	4300±	22 900±	20 000±	6000±	3500±
8	5600±	4700±	21 900±	21 600±	6500±	4300±

Note:
Span 1 shown, Spans 2-7 similar.

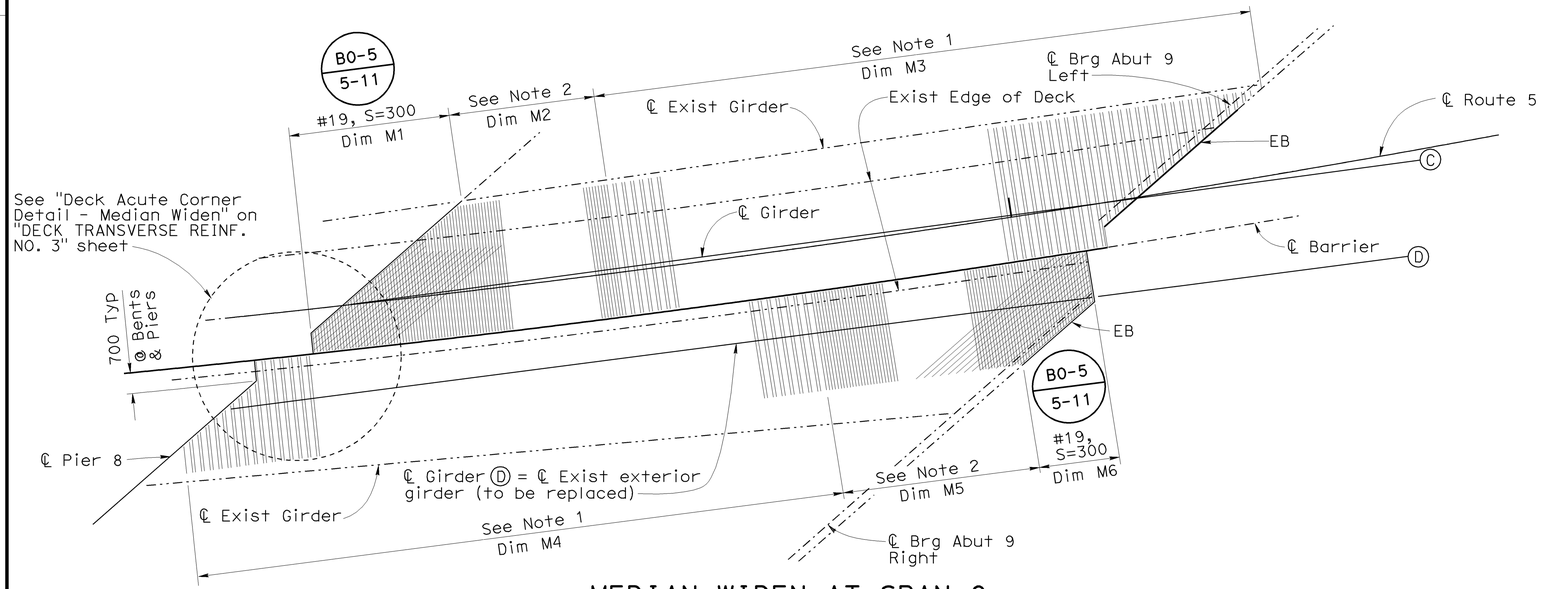

MEDIAN WIDEN AT SPAN 8

DECK TRANSVERSE REINFORCEMENT

1:100

NOTE:
THE CONTRACTOR SHALL VERIFY ALL CONTROLLING FIELD DIMENSIONS BEFORE ORDERING OR FABRICATING ANY MATERIAL.

Notes:

1. See "Bar Splice Layout - Detail C" on "TYPICAL SECTION NO. 3" sheet.
2. See "Bar Splice Layout - Detail D" on "TYPICAL SECTION NO. 3" sheet.

Legend:

—·—·— Indicates existing structure

Caltrans Metric

	BY	CHECKED
DESIGN	Ulysses Smpardos	Mark Okimura
DETAILS	Steven Schenck	Mark Okimura
QUANTITIES	E. Hall	R. Odell

STATE OF CALIFORNIA
DEPARTMENT OF TRANSPORTATION

DIVISION OF ENGINEERING SERVICES
STRUCTURE DESIGN
DESIGN BRANCH 15

BRIDGE NO. 53-1085
KILOMETER POST 46.1

PROVIDENCIA AVENUE OH (WIDEN)
DECK TRANSVERSE REINF. NO. 2

ALL DIMENSIONS ARE IN MILLIMETERS UNLESS OTHERWISE SHOWN

ORIGINAL SCALE IN MILLIMETERS FOR REDUCED PLANS 0 10 20 30 40 50 60 70 80 90 100

CU 07
EA 121841

DISREGARD PRINTS BEARING EARLIER REVISION DATES →

REVISION DATES: 10-23-08 | 11-21-08 | 1-26-09 | 2-24-09

SHEET 74 OF 152

FILE => 53-1085-p-tr02.dgn

STRUCTURES DESIGN DETAIL SHEET (METRIC) (REV.03-17-04)

USERNAME => tfrtene DATE PLOTTED => 15-JUN-2009 TIME PLOTTED => 08:09

DIST	COUNTY	ROUTE	KILOMETER POST TOTAL PROJECT	SHEET No	TOTAL SHEETS
07	LA	5	42.8/47.3	864	1073

Andrew Rittenhouse 12-05-08
REGISTERED CIVIL ENGINEER DATE

6-8-09
PLANS APPROVAL DATE

The State of California or its officers or agents shall not be responsible for the accuracy or completeness of electronic copies of this plan sheet.

REGISTERED PROFESSIONAL ENGINEER
Andrew P. Rittenhouse
No. 61006
Exp. 12-31-10
CIVIL
STATE OF CALIFORNIA

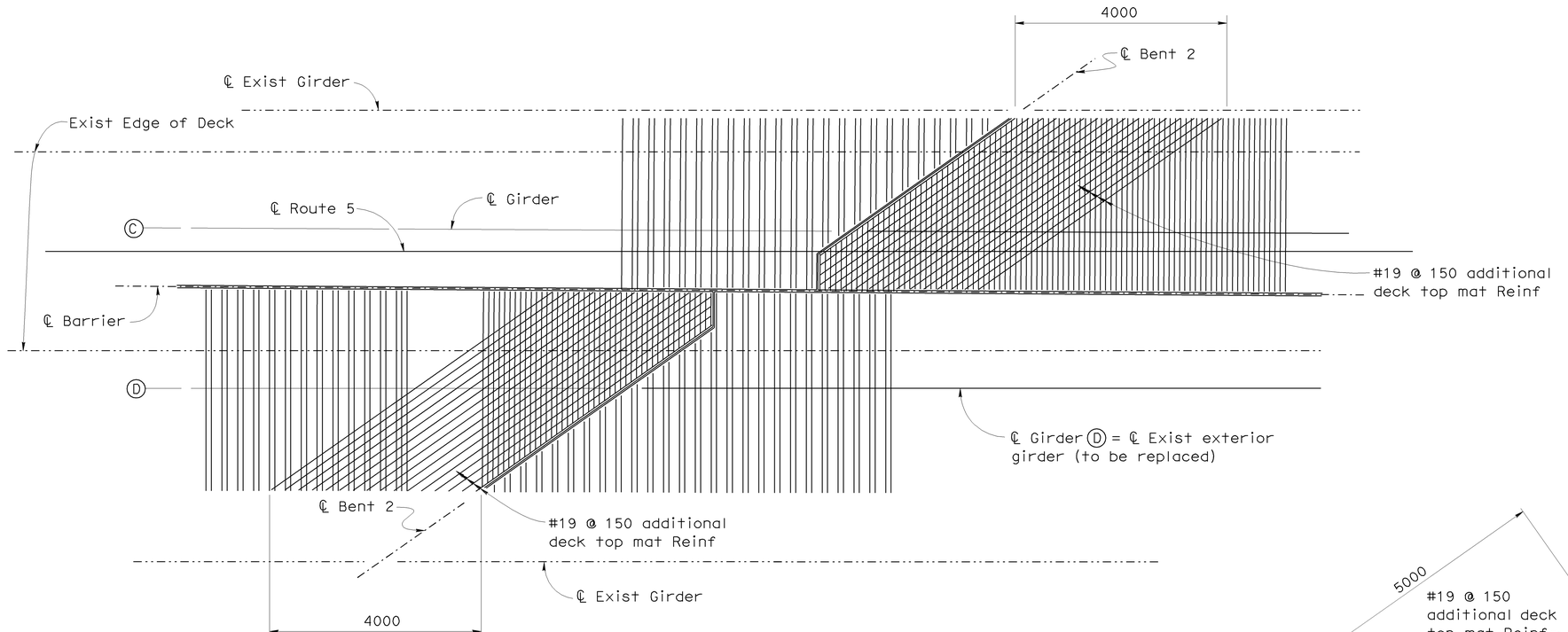

Note:
Bent 2 shown. Deck acute corners similar at other bents, piers and abutments at Median Widen.

DECK ACUTE CORNER DETAIL - MEDIAN WIDEN

1:50

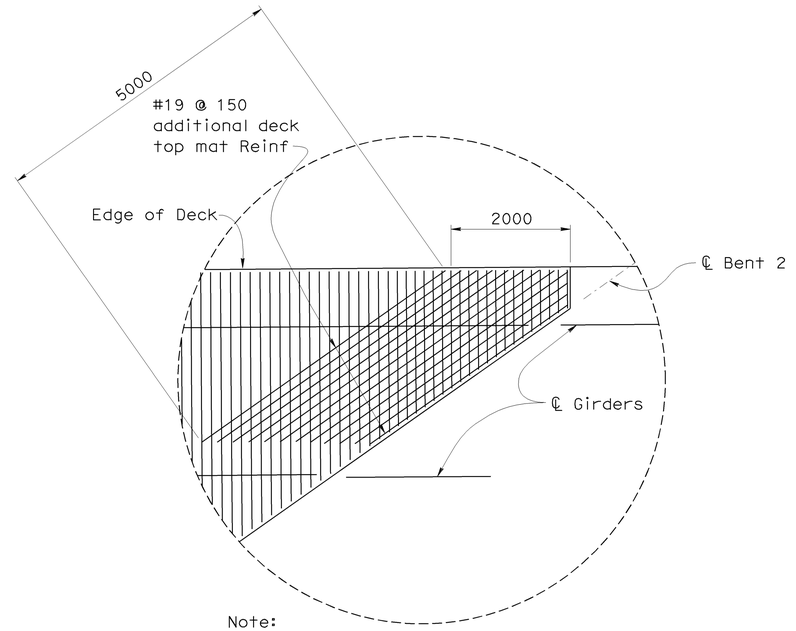

Note:
Bent 2, Left Widen shown. Deck acute corners similar at other bents, piers and abutments at Left Widen and Right Widen.

DECK ACUTE CORNER DETAIL - LEFT & RIGHT WIDEN

1:50

Legend:

·–·–· Indicates existing structure

NOTE:
THE CONTRACTOR SHALL VERIFY ALL CONTROLLING FIELD DIMENSIONS BEFORE ORDERING OR FABRICATING ANY MATERIAL.

DESIGN	BY Ulysses Smpardos	CHECKED Mark Okimura	
DETAILS	BY Steven Schenck	CHECKED Mark Okimura	
QUANTITIES	BY E. Hall	CHECKED R. Odell	

STATE OF CALIFORNIA
DEPARTMENT OF TRANSPORTATION

DIVISION OF ENGINEERING SERVICES
STRUCTURE DESIGN
DESIGN BRANCH 15

BRIDGE NO. 53-1085
KILOMETER POST 46.1

PROVIDENCIA AVENUE OH (WIDEN)
DECK TRANSVERSE REINF. NO. 3

ALL DIMENSIONS ARE IN MILLIMETERS UNLESS OTHERWISE SHOWN

ORIGINAL SCALE IN MILLIMETERS FOR REDUCED PLANS 0 10 20 30 40 50 60 70 80 90 100

CU 07
EA 121841

DISREGARD PRINTS BEARING EARLIER REVISION DATES →

REVISION DATES: 10-24-08 | 11-24-08 | 1-23-09 | 2-24-09

SHEET 75 OF 152

FILE => 53-1085-p-tr03.dgn

STRUCTURES DESIGN DETAIL SHEET (METRIC) (REV.03-17-04)

DATE PLOTTED => 15-JUN-2009 TIME PLOTTED => 08:09
USERNAME => trrene

DIST	COUNTY	ROUTE	KILOMETER POST TOTAL PROJECT	SHEET No	TOTAL SHEETS
07	LA	5	42.8/47.3	865	1073

Andrew Rittenhouse 12-05-08
REGISTERED CIVIL ENGINEER DATE

6-8-09
PLANS APPROVAL DATE

REGISTERED PROFESSIONAL ENGINEER
Andrew P. Rittenhouse
No. 61006
Exp. 12-31-10
CIVIL
STATE OF CALIFORNIA

The State of California or its officers or agents shall not be responsible for the accuracy or completeness of electronic copies of this plan sheet.

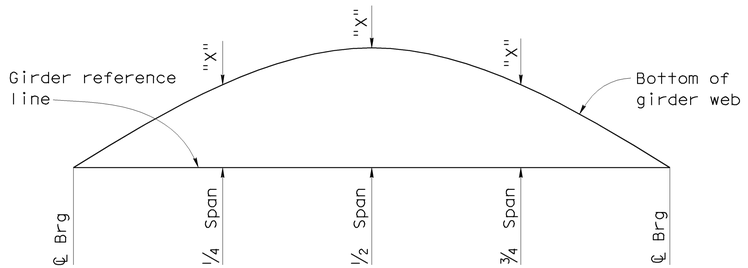

CAMBER DIAGRAM
No Scale

Note:
"X" - For value see "Camber Diagram Table"

CAMBER DIAGRAM TABLE

GIRDER	CAMBER COMPONENT	1/4Span	1/2Span	3/4Span
Span 4 girders Ⓒ and Ⓓ Span 6 girders Ⓒ and Ⓓ Span 7 girder Ⓓ	Steel Girder Dead Load	5	7	5
	Deck Slab Dead Load	27	37	27
	Added Dead Load	8	12	8
	Total Camber	40	56	40
Span 1 girders Ⓒ and Ⓓ Span 3 girders Ⓒ and Ⓓ Span 5 girders Ⓒ and Ⓓ Span 7 girder Ⓒ Span 8 girders Ⓒ and Ⓓ	Steel Girder Dead Load	6	8	6
	Deck Slab Dead Load	35	49	35
	Added Dead Load	10	14	10
	Total Camber	51	71	51
Span 2 girders Ⓒ and Ⓓ	Steel Girder Dead Load	11	15	11
	Deck Slab Dead Load	50	70	50
	Added Dead Load	18	25	18
	Total Camber	79	110	79

Note:
In addition to camber values shown, girder fabrication shall account for structure geometry including profile grade, superelevation, and changes in thickness of bottom flange.

Notes:
1. No intermediate stiffeners on outside face of Ⓒ or Ⓓ girders.
2. For details not shown, see "STEEL GIRDER DETAILS" sheet.
3. Intermediate stiffener = ℙ 12.7 x 125 at locations where no cross frame is attached.

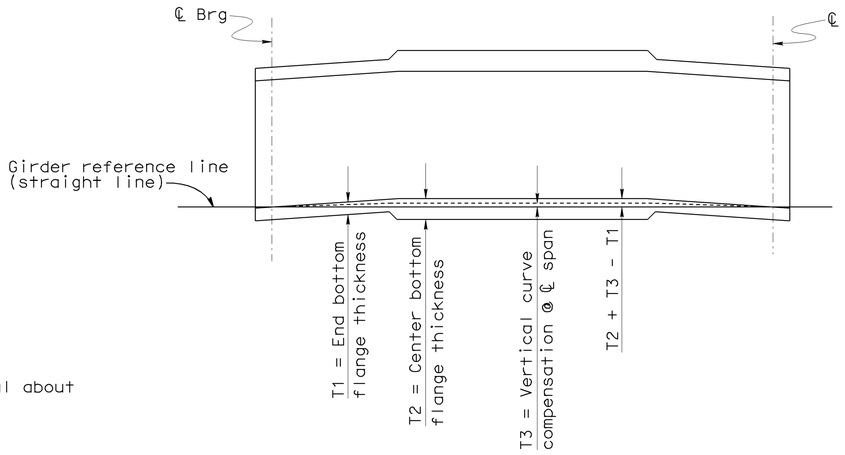

POSITION OF TYPICAL GIRDER AFTER FULL DEAD LOAD
No Scale

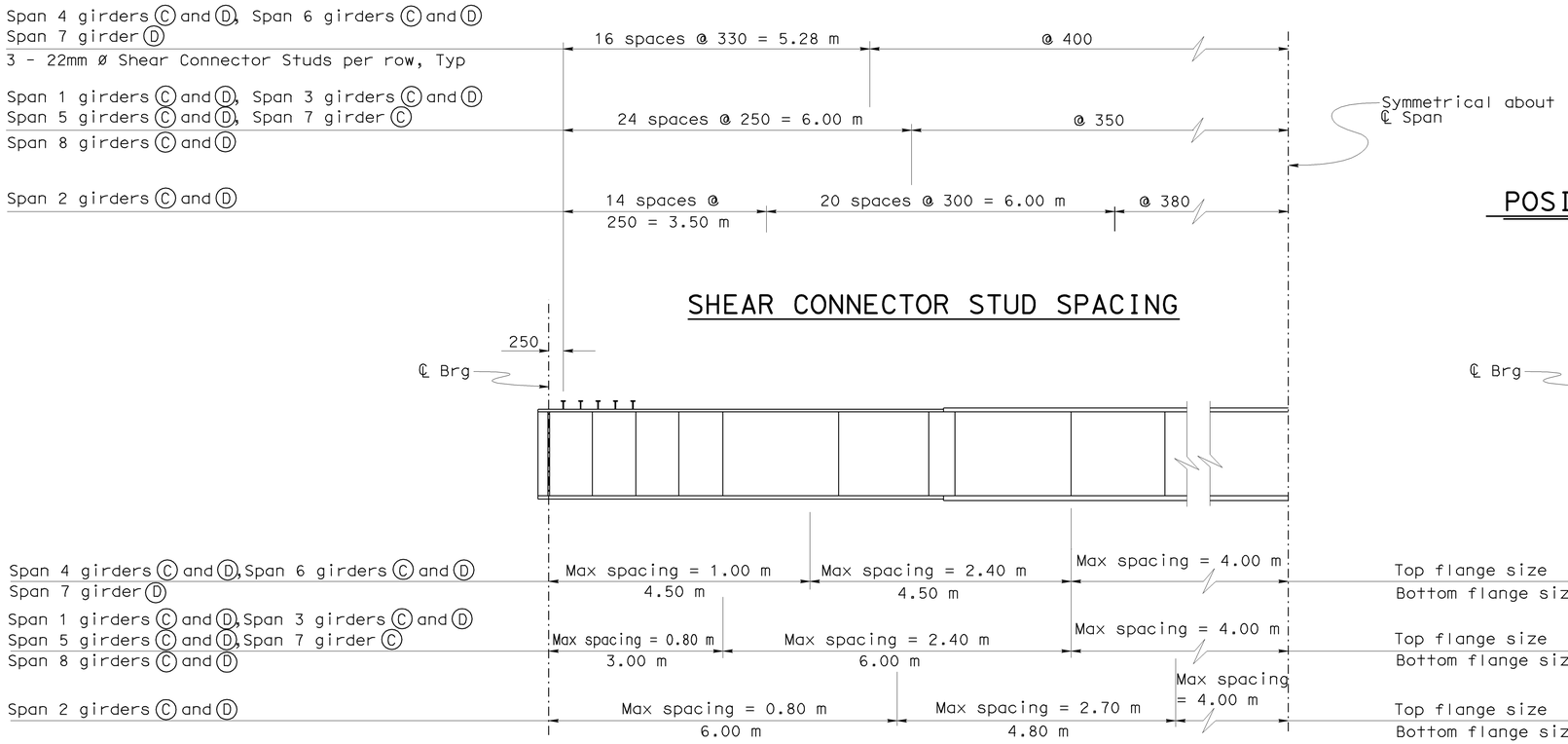

SHEAR CONNECTOR STUD SPACING

STIFFENER SPACING

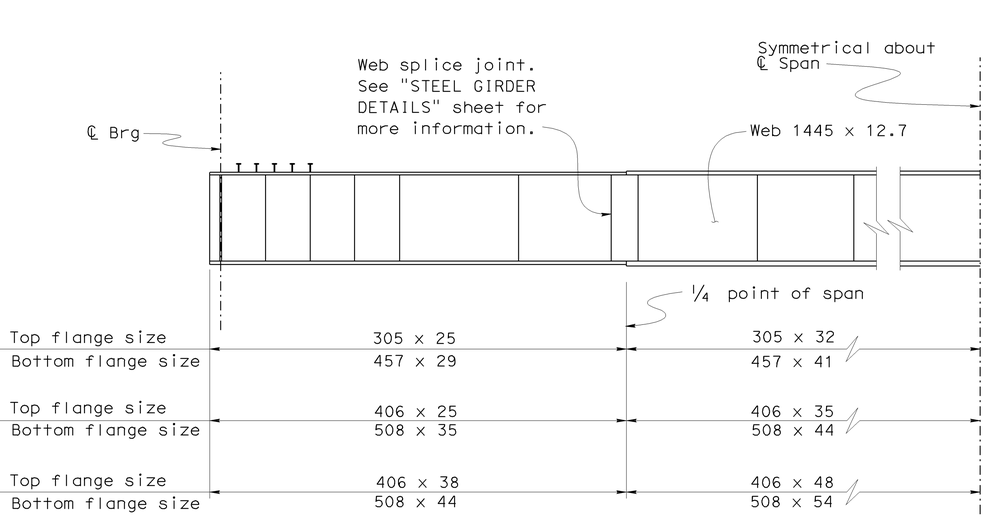

GIRDER SIZE

NOTE:
THE CONTRACTOR SHALL VERIFY ALL CONTROLLING FIELD DIMENSIONS BEFORE ORDERING OR FABRICATING ANY MATERIAL.

GIRDER ELEVATION MEDIAN WIDEN
1:50

Caltrans Metric

	BY	CHECKED
DESIGN	Ulysses Smpardos	Mark Okimura
DETAILS	Steven Schenck	Mark Okimura
QUANTITIES	E. Hall	R. Odell

STATE OF CALIFORNIA
DEPARTMENT OF TRANSPORTATION

DIVISION OF ENGINEERING SERVICES
STRUCTURE DESIGN
DESIGN BRANCH 15

CU 07
EA 121841

BRIDGE NO. 53-1085
KILOMETER POST 46.1

PROVIDENCIA AVENUE OH (WIDEN)
GIRDER DETAILS NO. 1

ALL DIMENSIONS ARE IN MILLIMETERS UNLESS OTHERWISE SHOWN

ORIGINAL SCALE IN MILLIMETERS FOR REDUCED PLANS 0 10 20 30 40 50 60 70 80 90 100

DISREGARD PRINTS BEARING EARLIER REVISION DATES

REVISION DATES: 2-16-07 | 9-13-07 | 10-1-07 | 1-13-08 | 11-3-08 | 11-24-08 | 1-23-09 | 1-29-09 | 2-24-09

SHEET 76 OF 152

FILE => 53-1085-g-g-rf01.dgn

STRUCTURES DESIGN DETAIL SHEET (METRIC) (REV.03-17-04)

USERNAME => ttrone DATE PLOTTED => 15-JUN-2009 TIME PLOTTED => 08:09

DIST	COUNTY	ROUTE	KILOMETER POST TOTAL PROJECT	SHEET No	TOTAL SHEETS
07	LA	5	42.8/47.3	866	1073

Andrew P. Rittenhouse 12-05-08
REGISTERED CIVIL ENGINEER DATE

6-8-09
PLANS APPROVAL DATE

REGISTERED PROFESSIONAL ENGINEER — Andrew P. Rittenhouse — No. 61006 — Exp. 12-31-10 — CIVIL — STATE OF CALIFORNIA

The State of California or its officers or agents shall not be responsible for the accuracy or completeness of electronic copies of this plan sheet.

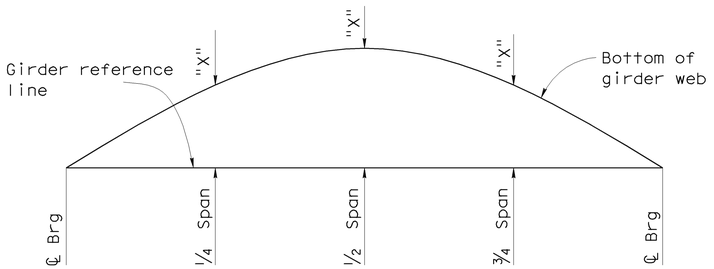

CAMBER DIAGRAM

No Scale

Note:

"X" - For value see "Camber Diagram Table"

CAMBER DIAGRAM TABLE

GIRDER	CAMBER COMPONENT	¼Span	½Span	¾Span
Span 1 girders Ⓐ, Ⓐ1 and Ⓑ Span 3 girders Ⓐ, Ⓐ1 and Ⓑ Span 5 girders Ⓐ and Ⓑ Span 8 girders Ⓐ and Ⓑ	Steel Girder Dead Load	7	10	7
	Deck Slab Dead Load	30	41	30
	Added Dead Load	9	13	9
	Total Camber	46	64	46
Span 2 girders Ⓐ, Ⓐ1 and Ⓑ	Steel Girder Dead Load	9	13	9
	Deck Slab Dead Load	45	62	45
	Added Dead Load	9	13	9
	Total Camber	63	88	63
Span 4 girders Ⓐ, Ⓐ1 and Ⓑ	Steel Girder Dead Load	2	2	2
	Deck Slab Dead Load	7	10	7
	Added Dead Load	2	3	2
	Total Camber	11	15	11

Note:

In addition to camber values shown, girder fabrication shall account for structure geometry including profile grade, superelevation, and changes in thickness of bottom flange.

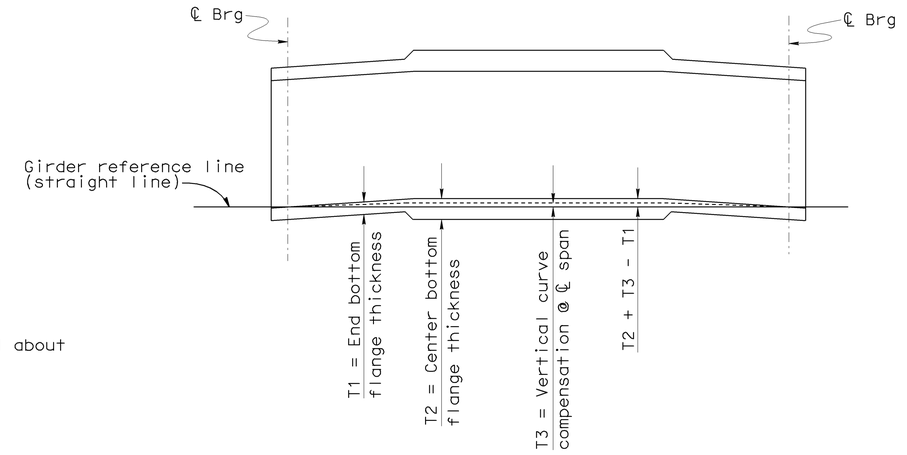

POSITION OF TYPICAL GIRDER AFTER FULL DEAD LOAD

No Scale

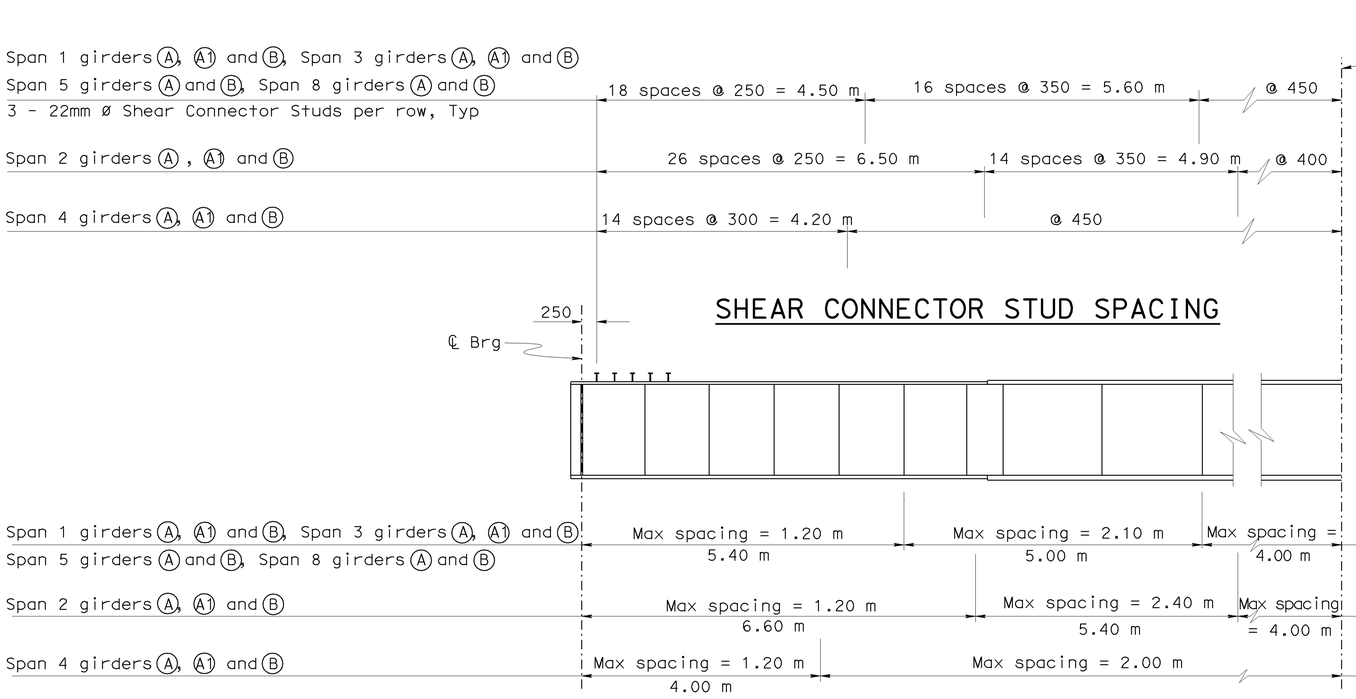

SHEAR CONNECTOR STUD SPACING

STIFFENER SPACING

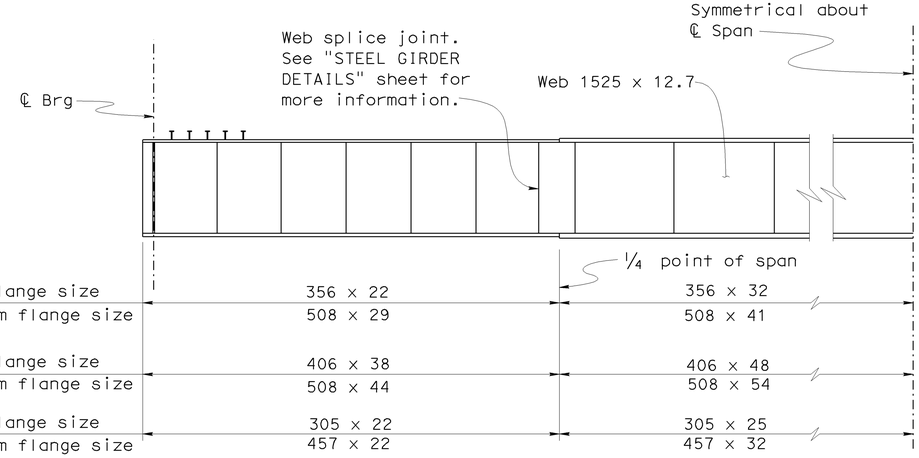

GIRDER ELEVATION LEFT WIDEN

1:50

GIRDER SIZE

Notes:

1. No intermediate stiffeners on outside face of Ⓐ girders
2. For details not shown, see "STEEL GIRDER DETAILS" sheet.
3. Intermediate stiffener = ℙ 12.7 x 125 at locations where no cross frame is attached

NOTE:
THE CONTRACTOR SHALL VERIFY ALL CONTROLLING FIELD DIMENSIONS BEFORE ORDERING OR FABRICATING ANY MATERIAL.

Caltrans Metric

ALL DIMENSIONS ARE IN MILLIMETERS UNLESS OTHERWISE SHOWN

ORIGINAL SCALE IN MILLIMETERS FOR REDUCED PLANS 0 10 20 30 40 50 60 70 80 90 100

	BY	CHECKED
DESIGN	Ulysses Smpardos	Mark Okimura
DETAILS	Steven Schenck	Mark Okimura
QUANTITIES	E. Hall	R. Odell

STATE OF CALIFORNIA
DEPARTMENT OF TRANSPORTATION

DIVISION OF ENGINEERING SERVICES
STRUCTURE DESIGN
DESIGN BRANCH 15

CU 07
EA 121841

FILE => 53-1085-g-g-rf02.dgn

BRIDGE NO. 53-1085
KILOMETER POST 46.1

PROVIDENCIA AVENUE OH (WIDEN)

GIRDER DETAILS NO. 2

DISREGARD PRINTS BEARING EARLIER REVISION DATES →

REVISION DATES: 2-20-07 | 9-13-07 | 10-1-07 | 1-17-08 | 11-4-08 | 11-24-08 | 1-26-09 | 1-29-09 | 2-24-09

SHEET 77 OF 152

STRUCTURES DESIGN DETAIL SHEET (METRIC) (REV.03-17-04)

USERNAME => ttrone DATE PLOTTED => 15-JUN-2009 TIME PLOTTED => 08:09

DIST	COUNTY	ROUTE	KILOMETER POST TOTAL PROJECT	SHEET No	TOTAL SHEETS
07	LA	5	42.8/47.3	867	1073

Andrew P. Rittenhouse 12-05-08
REGISTERED CIVIL ENGINEER DATE

6-8-09
PLANS APPROVAL DATE

REGISTERED PROFESSIONAL ENGINEER — Andrew P. Rittenhouse — No. 61006 — Exp. 12-31-10 — CIVIL — STATE OF CALIFORNIA

The State of California or its officers or agents shall not be responsible for the accuracy or completeness of electronic copies of this plan sheet.

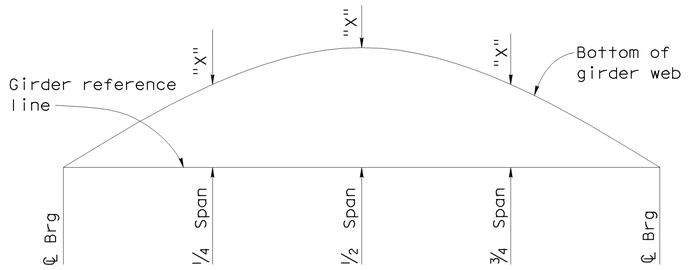

CAMBER DIAGRAM

No Scale

Note:
"X" - For value see "Camber Diagram Table"

CAMBER DIAGRAM TABLE

GIRDER	CAMBER COMPONENT	¼Span	½Span	¾Span
Span 6 girders (E), (E1), (E2) and (F) Span 7 girders (E), (E1), (E2) and (F)	Steel Girder Dead Load	4	5	4
	Deck Slab Dead Load	26	36	26
	Added Dead Load	3	5	3
	Total Camber	33	46	33
Span 1 girders (E) and (F) Span 3 girders (E1) and (F) Span 5 girders (E2) and (F) Span 8 girders (E), (E1), (E2) and (F)	Steel Girder Dead Load	6	8	6
	Deck Slab Dead Load	32	44	32
	Added Dead Load	7	9	7
	Total Camber	45	61	45
Span 5 girders (E) and (E1) Span 3 girder (E)	Steel Girder Dead Load	7	10	7
	Deck Slab Dead Load	30	41	30
	Added Dead Load	9	13	9
	Total Camber	46	64	46
Span 2 girders (E) and (F) Span 4 girders (E), (E1), (E2) and (F)	Steel Girder Dead Load	9	13	9
	Deck Slab Dead Load	45	62	45
	Added Dead Load	9	13	9
	Total Camber	63	88	63

Note:
In addition to camber values shown, girder fabrication shall account for structure geometry including profile grade, superelevation, and changes in thickness of bottom flange.

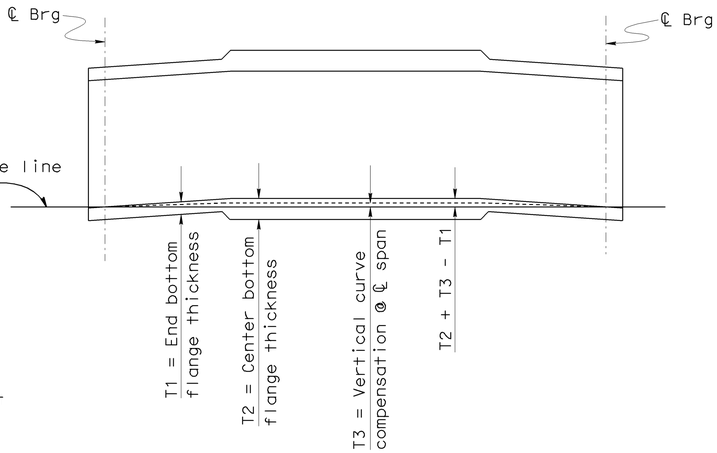

POSITION OF TYPICAL GIRDER AFTER FULL DEAD LOAD

No Scale

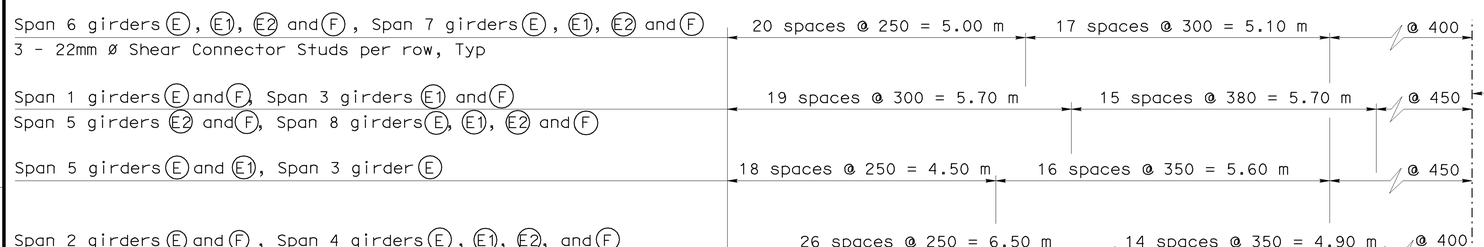

SHEAR CONNECTOR STUD SPACING

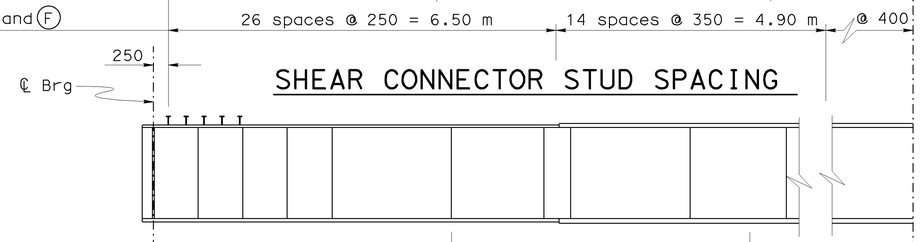

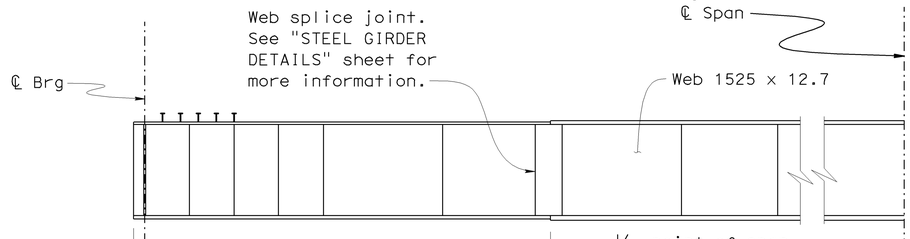

STIFFENER SPACING

Span 6 girders (E), (E1), (E2) and (F), Span 7 girders (E), (E1), (E2) and (F)	Max spacing = 1.20 m 5.00 m	Max spacing = 2.00 m 5.00 m	Max spacing = 4.00 m	Top flange size Bottom flange size	305 x 22 457 x 25	305 x 29 457 x 38
Span 1 girders (E) and (F), Span 3 girders (E1) and (F) Span 5 girders (E2) and (F), Span 8 girders (E), (E1), (E2) and (F)	Max spacing = 1.20 m 5.00 m	Max spacing = 2.40 m 6.00 m	Max spacing = 4.00 m	Top flange size Bottom flange size	356 x 22 508 x 29	356 x 29 508 x 38
Span 5 girders (E) and (E1), Span 3 girder (E)	Max spacing = 1.20 m 5.40 m	Max spacing = 2.10 m 5.00 m	Max spacing = 4.00 m	Top flange size Bottom flange size	356 x 22 508 x 29	356 x 32 508 x 41
Span 2 girders (E) and (F), Span 4 girders (E), (E1), (E2), and (F)	Max spacing = 1.20 m 6.60 m	Max spacing = 2.40 m 5.40 m	Max spacing = 4.00 m	Top flange size Bottom flange size	406 x 38 508 x 44	406 x 48 508 x 54

GIRDER ELEVATION RIGHT WIDEN

1:50

GIRDER SIZE

Notes:
1. No intermediate stiffeners on outside face of (F) girders
2. For details not shown, see "STEEL GIRDER DETAILS" sheet.
3. Intermediate stiffener = PL 12.7 x 125 at locations where no cross frame is attached

NOTE:
THE CONTRACTOR SHALL VERIFY ALL CONTROLLING FIELD DIMENSIONS BEFORE ORDERING OR FABRICATING ANY MATERIAL.

Caltrans Metric

	BY	CHECKED
DESIGN	Ulysses Smpardos	Mark Okimura
DETAILS	Steven Schenck	Mark Okimura
QUANTITIES	E. Hall	R. Odell

STATE OF CALIFORNIA
DEPARTMENT OF TRANSPORTATION

DIVISION OF ENGINEERING SERVICES
STRUCTURE DESIGN
DESIGN BRANCH 15

CU 07
EA 121841

BRIDGE NO. 53-1085
KILOMETER POST 46.1

PROVIDENCIA AVENUE OH (WIDEN)
GIRDER DETAILS NO. 3

ALL DIMENSIONS ARE IN MILLIMETERS UNLESS OTHERWISE SHOWN

ORIGINAL SCALE IN MILLIMETERS FOR REDUCED PLANS 0 10 20 30 40 50 60 70 80 90 100

DISREGARD PRINTS BEARING EARLIER REVISION DATES →

REVISION DATES: 2-20-07, 9-14-07, 1-17-08, 11-5-08, 11-24-08, 1-26-09, 1-29-09, 2-24-09, 2-25-09

SHEET 78 OF 152

FILE => 53-1085-g-g-rf03.dgn

STRUCTURES DESIGN DETAIL SHEET (METRIC) (REV.03-17-04)

USERNAME => rtrente DATE PLOTTED => 15-JUN-2009 TIME PLOTTED => 08:09

DIST	COUNTY	ROUTE	KILOMETER POST TOTAL PROJECT	SHEET No	TOTAL SHEETS
07	LA	5	42.8/47.3	868	1073

Andrew Rittenhouse 12-05-08
REGISTERED CIVIL ENGINEER DATE

6-8-09
PLANS APPROVAL DATE

REGISTERED PROFESSIONAL ENGINEER
Andrew P. Rittenhouse
No. 61006
Exp. 12-31-10
CIVIL
STATE OF CALIFORNIA

The State of California or its officers or agents shall not be responsible for the accuracy or completeness of electronic copies of this plan sheet.

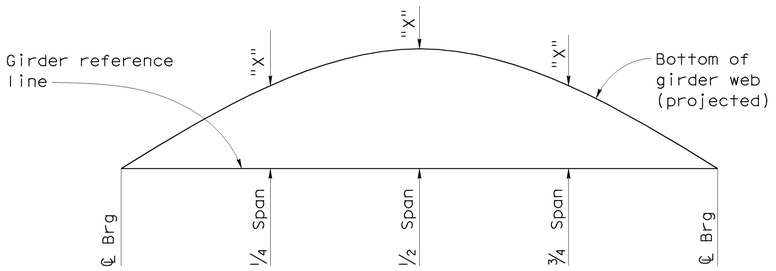

CAMBER DIAGRAM
No Scale

Note:
"X" - For value see "Camber Diagram Table"

CAMBER DIAGRAM TABLE

GIRDER	CAMBER COMPONENT	1/4Span	1/2Span	3/4Span
Span 6 girders Ⓐ and Ⓑ Span 7 girders Ⓐ and Ⓑ	Steel Girder Dead Load	11	15	11
	Deck Slab Dead Load	40	55	40
	Added Dead Load	12	17	12
	Total Camber	63	87	63

Note:
In addition to camber values shown, girder fabrication shall account for structure geometry including profile grade, superelevation, and changes in thickness of bottom flange.

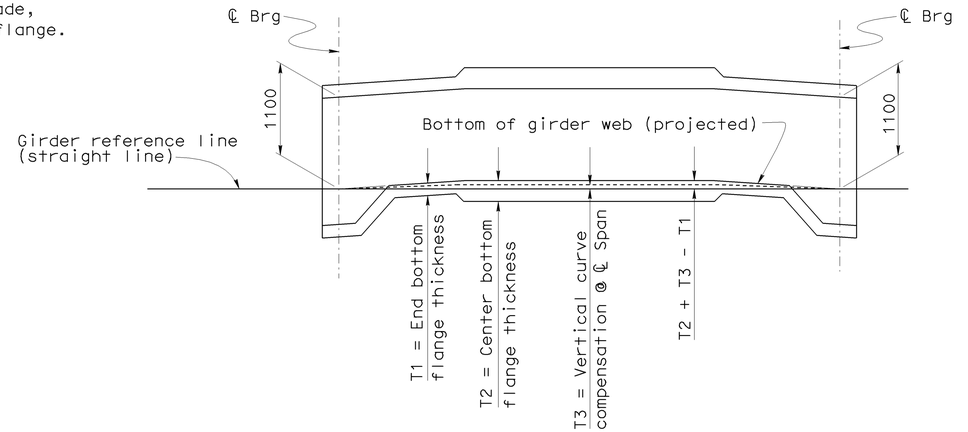

POSITION OF TYPICAL GIRDER AFTER FULL DEAD LOAD
No Scale

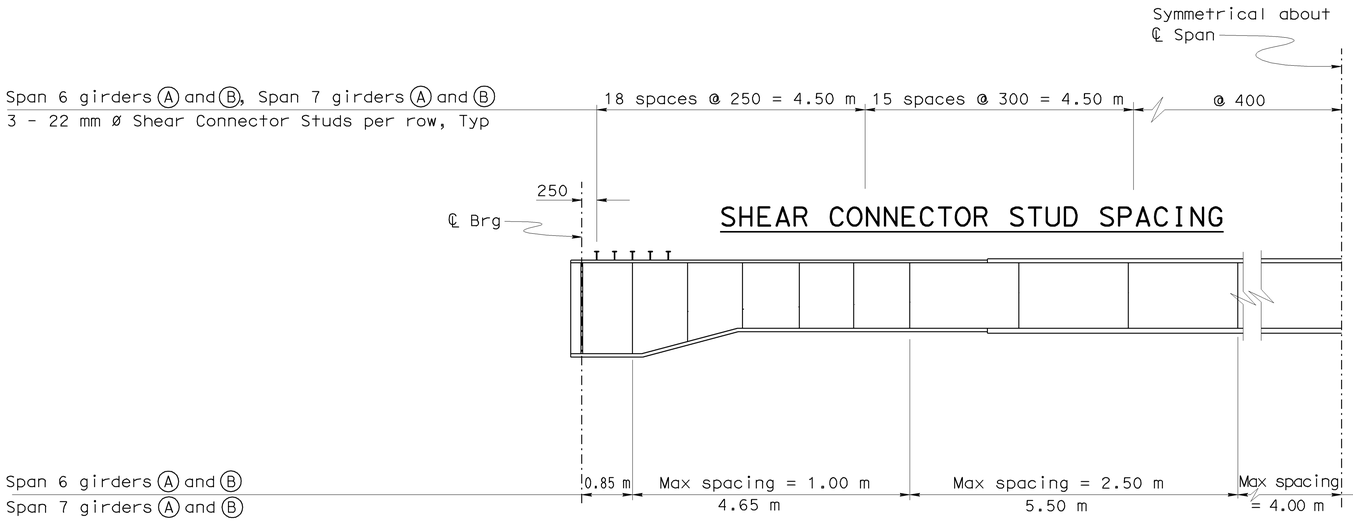

SHEAR CONNECTOR STUD SPACING

STIFFENER SPACING

GIRDER SIZE

NOTE:
THE CONTRACTOR SHALL VERIFY ALL CONTROLLING FIELD DIMENSIONS BEFORE ORDERING OR FABRICATING ANY MATERIAL.

GIRDER ELEVATION LEFT WIDEN
1:50

Notes:
1. No intermediate stiffeners on outside face of Ⓐ girders.
2. For details not shown, see "STEEL GIRDER DETAILS" sheet.
3. Intermediate stiffener = ℙ 12.7 x 125 at locations where no cross frame is attached.

Caltrans Metric

	BY	CHECKED
DESIGN	Ulysses Smpardos	Mark Okimura
DETAILS	Steven Schenck	Mark Okimura
QUANTITIES	E. Hall	R. Odell

STATE OF CALIFORNIA
DEPARTMENT OF TRANSPORTATION

DIVISION OF ENGINEERING SERVICES
STRUCTURE DESIGN
DESIGN BRANCH 15

CU 07
EA 121841

BRIDGE NO. 53-1085
KILOMETER POST 46.1

PROVIDENCIA AVENUE OH (WIDEN)
GIRDER DETAILS NO. 4

ALL DIMENSIONS ARE IN MILLIMETERS UNLESS OTHERWISE SHOWN

ORIGINAL SCALE IN MILLIMETERS FOR REDUCED PLANS 0 10 20 30 40 50 60 70 80 90 100

DISREGARD PRINTS BEARING EARLIER REVISION DATES →

REVISION DATES: 1-13-08 | 11-5-08 | 11-24-08 | 1-28-09 | 1-29-09 | 2-24-09 | 2-25-09

SHEET 79 OF 152

FILE => 53-1085-g-g-rf04.dgn

STRUCTURES DESIGN DETAIL SHEET (METRIC) (REV.03-17-04)

USERNAME => tfrene DATE PLOTTED => 15-JUN-2009 TIME PLOTTED => 08:09

DIST	COUNTY	ROUTE	KILOMETER POST TOTAL PROJECT	SHEET No	TOTAL SHEETS
07	LA	5	42.8/47.3	869	1073

Andrew Rittenhouse 12-05-08
REGISTERED CIVIL ENGINEER DATE

6-8-09
PLANS APPROVAL DATE

REGISTERED PROFESSIONAL ENGINEER
Andrew P. Rittenhouse
No. 61006
Exp. 12-31-10
CIVIL
STATE OF CALIFORNIA

The State of California or its officers or agents shall not be responsible for the accuracy or completeness of electronic copies of this plan sheet.

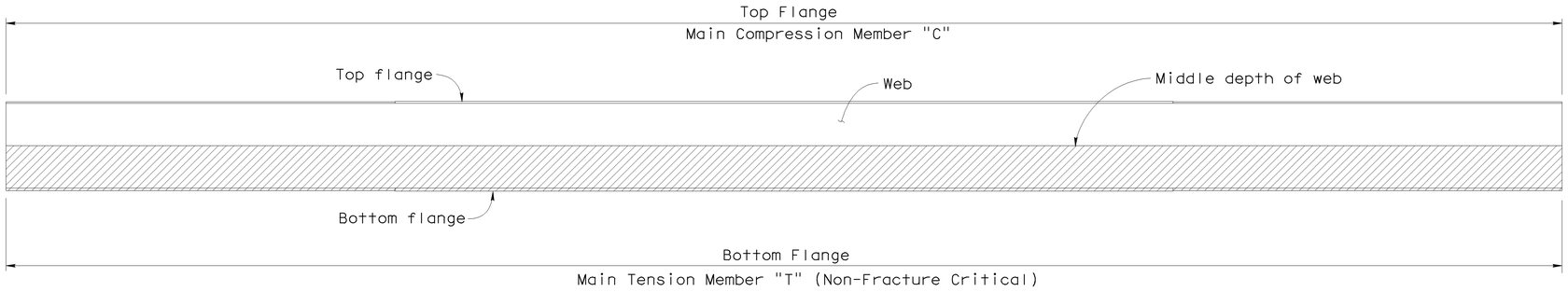

ALL GIRDERS EXCEPT SPANS 6 & 7 GIRDERS A & B

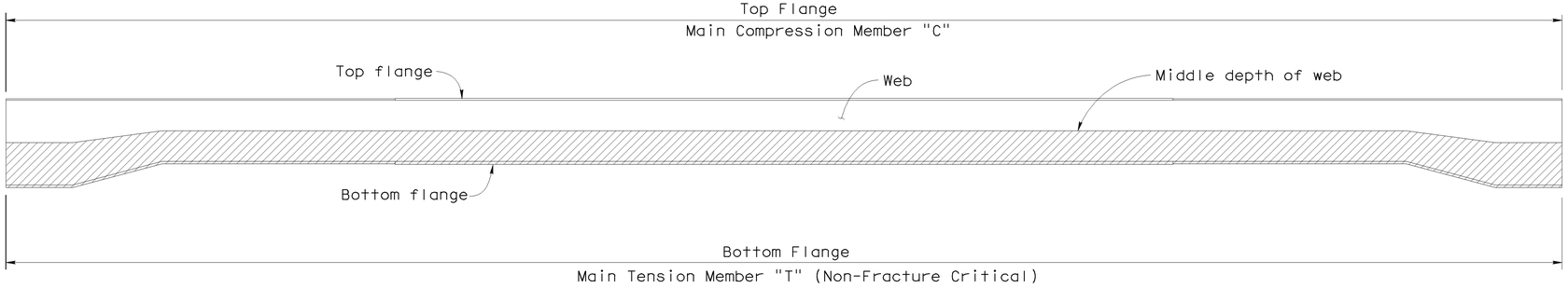

SPANS 6 & 7 GIRDERS A & B

MAIN MEMBER DESIGNATIONS

1:50

Legend:

- Denotes Main Tension Member "T" (Non-Fracture Critical)
- Denotes Main Compression Member "C"

Notes:

1. "Primary Components of Main Members" are flanges, webs, splice plates and cover plates, transverse and longitudinal stiffeners and bearing stiffeners.
2. "Secondary Members" are all members not designated as either Fracture Critical Member or Main Members.

NOTE:
THE CONTRACTOR SHALL VERIFY ALL CONTROLLING FIELD DIMENSIONS BEFORE ORDERING OR FABRICATING ANY MATERIAL.

	BY	CHECKED
DESIGN	Ulysses Smpardos	Mark Okimura
DETAILS	Steven Schenck	Mark Okimura
QUANTITIES	E. Hall	R. Odell

STATE OF CALIFORNIA
DEPARTMENT OF TRANSPORTATION

DIVISION OF ENGINEERING SERVICES
STRUCTURE DESIGN
DESIGN BRANCH 15

CU 07
EA 121841

BRIDGE NO. 53-1085
KILOMETER POST 46.1

PROVIDENCIA AVENUE OH (WIDEN)
GIRDER DETAILS NO. 5

ALL DIMENSIONS ARE IN MILLIMETERS UNLESS OTHERWISE SHOWN

ORIGINAL SCALE IN MILLIMETERS FOR REDUCED PLANS 0 10 20 30 40 50 60 70 80 90 100

DISREGARD PRINTS BEARING EARLIER REVISION DATES →

REVISION DATES: 11-5-08 | 11-24-08 | 1-26-09

SHEET 80 OF 152

FILE => 53-1085-g-g-rf05.dgn

STRUCTURES DESIGN DETAIL SHEET (METRIC) (REV.03-17-04)

USERNAME => ttrrene DATE PLOTTED => 15-JUN-2009 TIME PLOTTED => 08:09

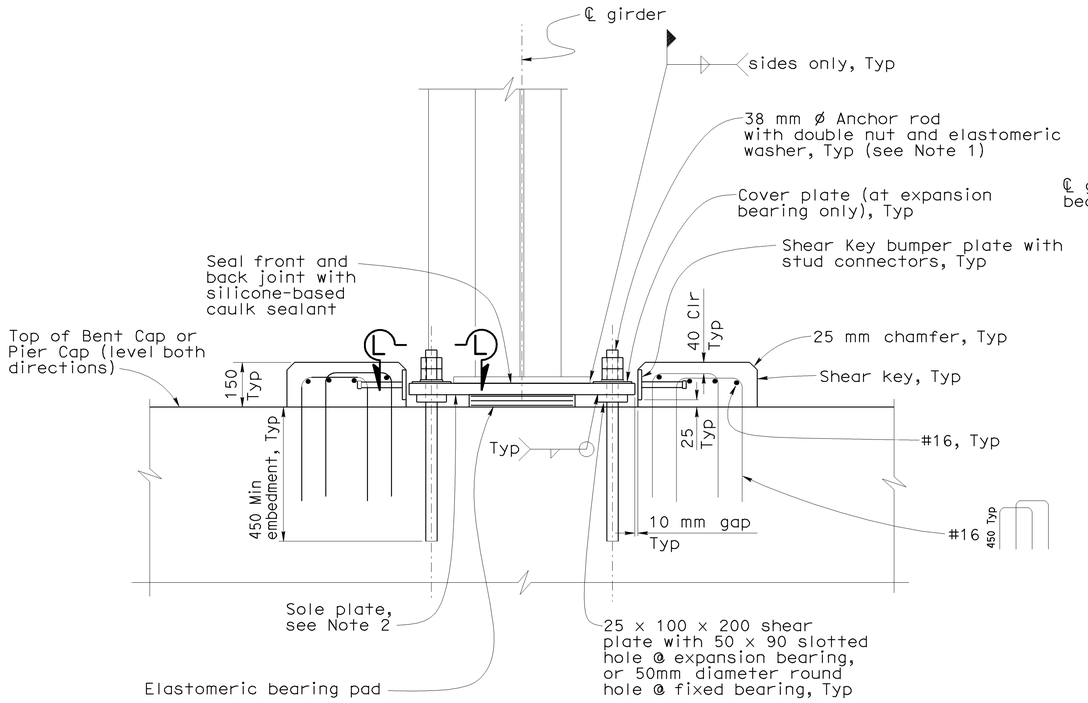

SECTION K-K

1:10

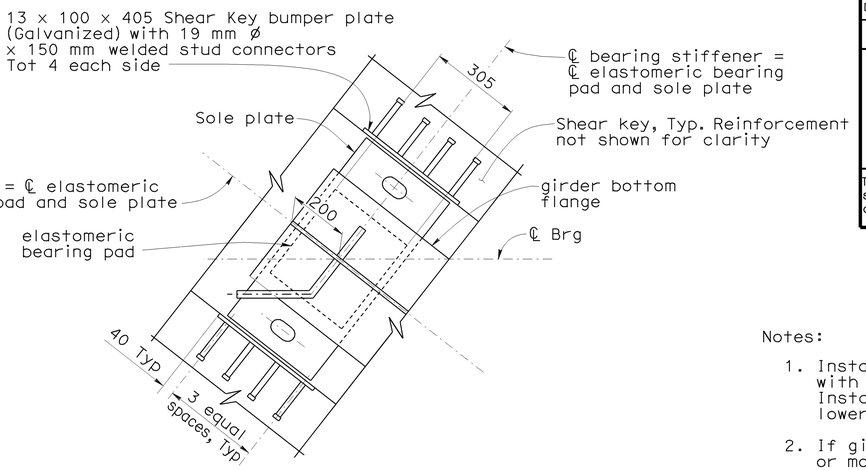

DETAIL K

1:10

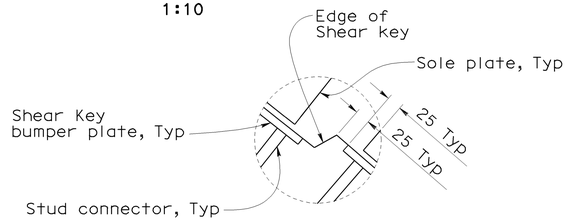

DETAIL L

1:5

Notes:

1. Install washer and lower nut in contact with plate and then back off ½ turn. Install upper nut snug tight to prevent lower nut from loosening.
2. If girder has a longitudinal slope of 1% or more, bevel the sole plate to provide a level bearing surface. Minimum thickness of sole plate = 38mm after beveling. If the difference in sole plate thickness due to beveling is less than 5mm, the fabricator shall mark the plate in order to indicate the thick and thin ends.
3. For "Section L-L" see "GIRDER DETAILS NO. 7" sheet.
4. For Bearing Pad dimensions see "Steel Reinforced Elastomeric Bearing Pads" table on "GIRDER DETAILS NO. 7" sheet.
5. End diaphragms and end diaphragm connection details not shown for clarity.

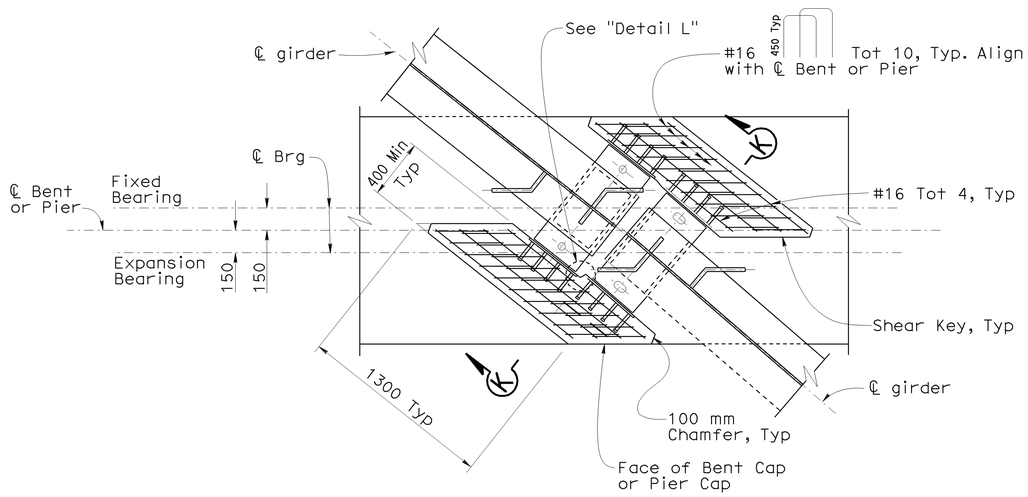

AT ALIGNED GIRDERS

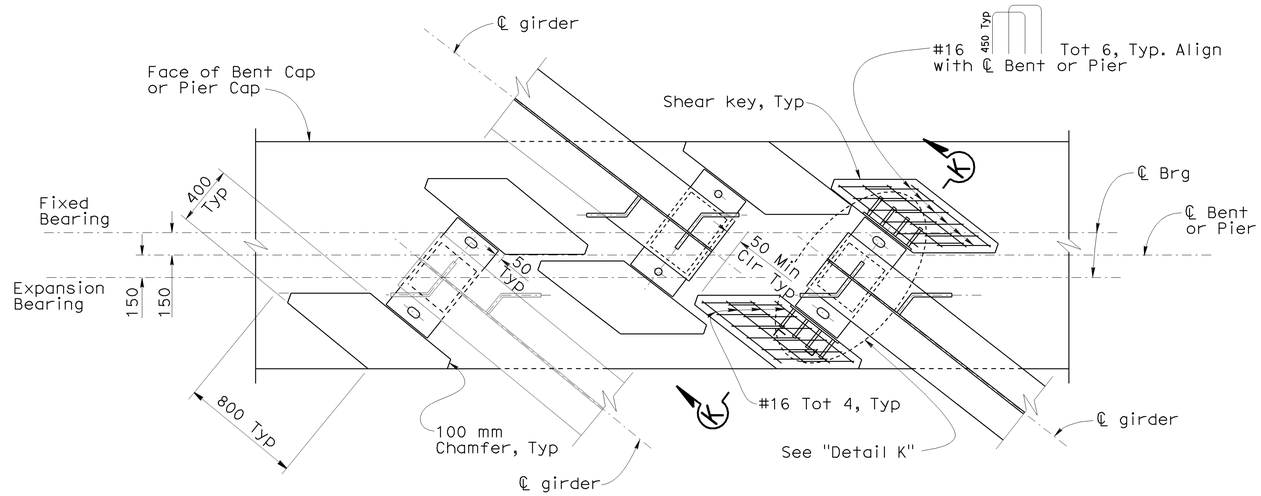

AT OFFSET GIRDERS

NOTE:
THE CONTRACTOR SHALL VERIFY ALL CONTROLLING FIELD DIMENSIONS BEFORE ORDERING OR FABRICATING ANY MATERIAL.

GIRDER BEARINGS AND SHEAR KEYS PLAN

1:20

DIST	COUNTY	ROUTE	KILOMETER POST TOTAL PROJECT	SHEET No	TOTAL SHEETS
07	LA	5	42.8/47.3	870	1073

Andrew P. Rittenhouse 12-05-08
REGISTERED CIVIL ENGINEER DATE

6-8-09
PLANS APPROVAL DATE

REGISTERED PROFESSIONAL ENGINEER — Andrew P. Rittenhouse — No. 61006 — Exp. 12-31-10 — CIVIL — STATE OF CALIFORNIA

The State of California or its officers or agents shall not be responsible for the accuracy or completeness of electronic copies of this plan sheet.

Caltrans Metric

	BY	CHECKED
DESIGN	Ulysses Smpardos	Mark Okimura
DETAILS	Steven Schenck	Mark Okimura
QUANTITIES	E. Hall	R. Odell

STATE OF CALIFORNIA
DEPARTMENT OF TRANSPORTATION

DIVISION OF ENGINEERING SERVICES
STRUCTURE DESIGN
DESIGN BRANCH 15

BRIDGE NO. 53-1085
KILOMETER POST 46.1

PROVIDENCIA AVENUE OH (WIDEN)
GIRDER DETAILS NO. 6

ALL DIMENSIONS ARE IN MILLIMETERS UNLESS OTHERWISE SHOWN

ORIGINAL SCALE IN MILLIMETERS FOR REDUCED PLANS 0 10 20 30 40 50 60 70 80 90 100

CU 07
EA 121841

DISREGARD PRINTS BEARING EARLIER REVISION DATES

REVISION DATES: 7-08-08 | 11-7-08 | 11-24-08 | 1-26-09 | 1-29-09 | 2-24-09 | 2-25-09

SHEET 81 OF 152

FILE => 53-1085-g-g-rf06.dgn

STRUCTURES DESIGN DETAIL SHEET (METRIC) (REV.03-17-04)

DATE PLOTTED => 15-JUN-2009 TIME PLOTTED => 08:09
USERNAME => tfrene

DIST	COUNTY	ROUTE	KILOMETER POST TOTAL PROJECT	SHEET No	TOTAL SHEETS
07	LA	5	42.8/47.3	871	1073

Andrew Rittenhouse 12-05-08
REGISTERED CIVIL ENGINEER DATE

6-8-09
PLANS APPROVAL DATE

REGISTERED PROFESSIONAL ENGINEER
Andrew P. Rittenhouse
No. 61006
Exp. 12-31-10
CIVIL
STATE OF CALIFORNIA

The State of California or its officers or agents shall not be responsible for the accuracy or completeness of electronic copies of this plan sheet.

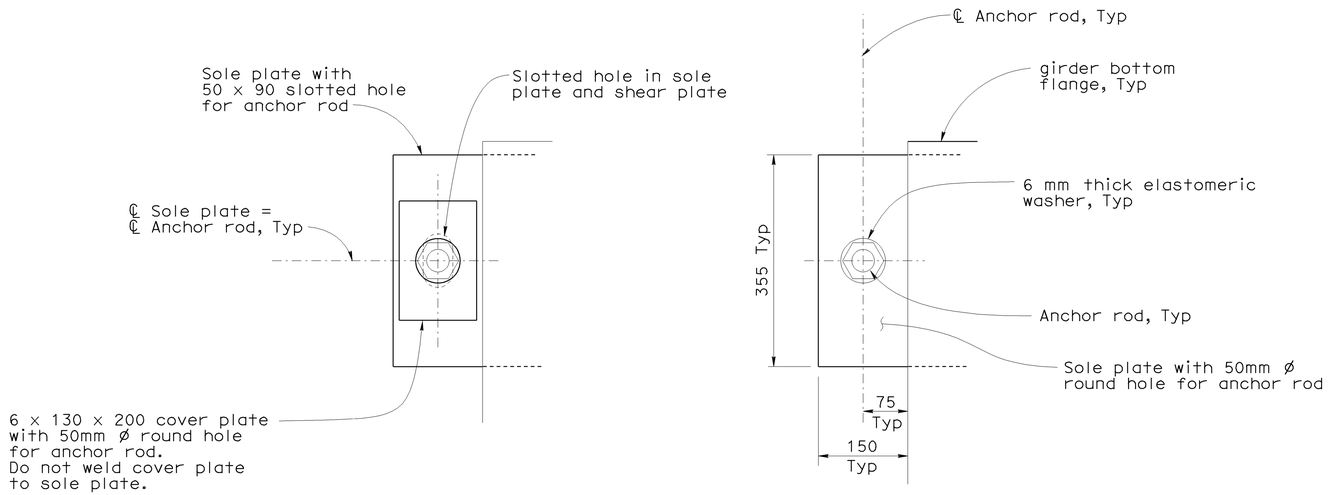

AT EXPANSION BEARING AT FIXED BEARING

SECTION L-L

1:5

STEEL REINFORCED ELASTOMERIC BEARING PADS			
LEFT WIDEN GIRDERS	MEDIAN WIDEN GIRDERS	RIGHT WIDEN GIRDERS	BEARING PAD DIMENSIONS
Span 4 girders (A), (A1) and (B)			36 x 305 x 355
Span 6 girders (A) and (B) Span 7 girders (A) and (B)			36 x 305 x 405
Span 1 girders (A), (A1) and (B) Span 3 girders (A), (A1) and (B) Span 5 girders (A) and (B) Span 8 girders (A) and (B)	Span 4 girders (C) and (D) Span 6 girders (C) and (D) Span 7 girder (D)	Span 1 girders (E) and (F) Span 3 girders (E), (E1) and (F) Span 5 girders (E), (E1), (E2) and (F) Span 6 girders (E), (E1), (E2) and (F) Span 7 girders (E), (E1), (E2) and (F) Span 8 girders (E), (E1), (E2) and (F)	36 x 305 x 455
Span 2 girders (A), (A1) and (B)	Span 1 girders (C) and (D) Span 2 girders (C) and (D) Span 3 girders (C) and (D) Span 5 girders (C) and (D) Span 7 girder (C) Span 8 girders (C) and (D)	Span 2 girders (E) and (F) Span 4 girders (E), (E1), (E2) and (F)	36 x 305 x 505

NOTE:
THE CONTRACTOR SHALL VERIFY ALL CONTROLLING FIELD DIMENSIONS BEFORE ORDERING OR FABRICATING ANY MATERIAL.

Caltrans Metric

ALL DIMENSIONS ARE IN MILLIMETERS UNLESS OTHERWISE SHOWN

ORIGINAL SCALE IN MILLIMETERS FOR REDUCED PLANS 0 10 20 30 40 50 60 70 80 90 100

	BY	CHECKED
DESIGN	Ulysses Smpardos	Mark Okimura
DETAILS	Steven Schenck	Mark Okimura
QUANTITIES	E. Hall	R. Odell

STATE OF CALIFORNIA
DEPARTMENT OF TRANSPORTATION

DIVISION OF ENGINEERING SERVICES
STRUCTURE DESIGN
DESIGN BRANCH 15

CU 07
EA 121841

FILE => 53-1085-g-g-rf07.dgn

BRIDGE NO. 53-1085
KILOMETER POST 46.1

PROVIDENCIA AVENUE OH (WIDEN)

GIRDER DETAILS NO. 7

DISREGARD PRINTS BEARING EARLIER REVISION DATES →

REVISION DATES: 4-14-08 | 11-3-08 | 11-24-08 | 1-26-09 | 2-24-09

SHEET 82 OF 152

STRUCTURES DESIGN DETAIL SHEET (METRIC) (REV.03-17-04)

USERNAME => tfrene DATE PLOTTED => 15-JUN-2009 TIME PLOTTED => 08:10

DIST	COUNTY	ROUTE	KILOMETER POST TOTAL PROJECT	SHEET No	TOTAL SHEETS
07	LA	5	42.8/47.3	872	1073

Andrew P. Rittenhouse 12-05-08
REGISTERED CIVIL ENGINEER DATE

6-8-09
PLANS APPROVAL DATE

REGISTERED PROFESSIONAL ENGINEER — Andrew P. Rittenhouse — No. 61006 — Exp. 12-31-10 — CIVIL — STATE OF CALIFORNIA

The State of California or its officers or agents shall not be responsible for the accuracy or completeness of electronic copies of this plan sheet.

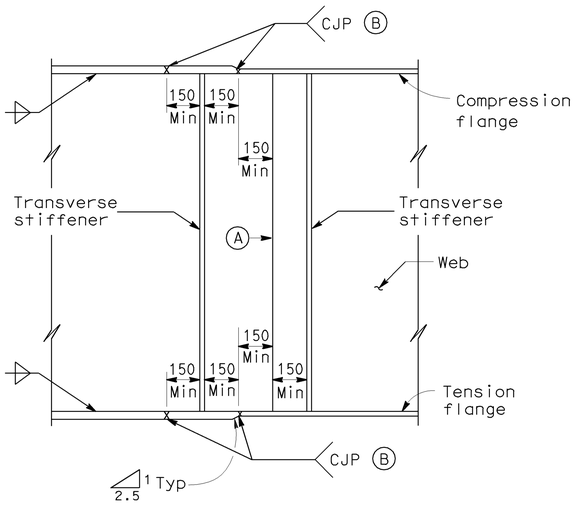

GIRDER SHOP SPLICE

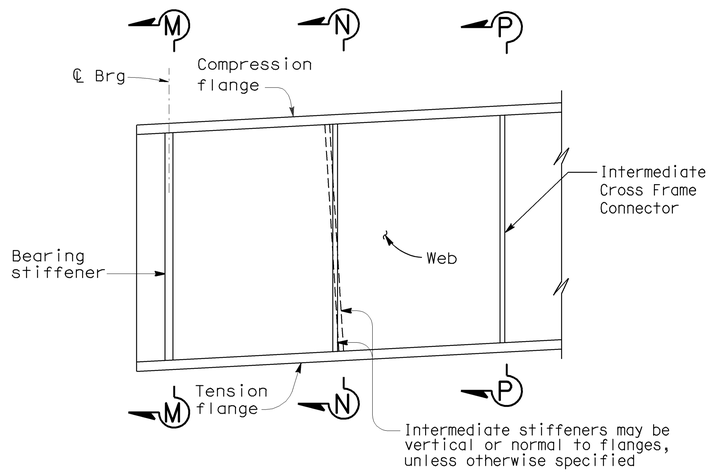

TRANSVERSE STIFFENERS

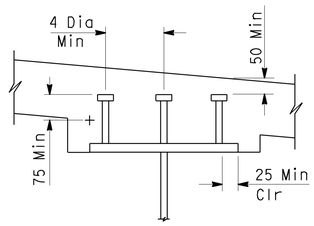

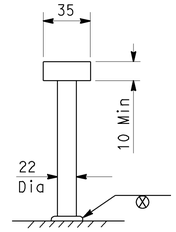

Lengths to be determined by the Contractor unless otherwise shown. Minimum length is 125 mm.
The top of deck is designed to be approximately parallel to the top of web for determining girder stud connector height. Alternative types of shear connectors will be permitted subject to approval by the Engineer.

SHEAR CONNECTOR STUDS

NOTES:

Alternative girder splices will be permitted subject to approval by the Engineer.

Under full dead load as shown on the camber diagram, girder ends and bearing stiffeners shall be vertical except they may be normal to grade for grades less than 2 percent.

(A) Web splice joints shall be complete joint penetration welds (CJP). All weld areas on the exterior face of exterior girders shall be ground flush.

(B) Grind all surfaces flush on tension flanges. Grind all surfaces flush on compression flanges when required for non-destructive testing (NDT).

25 mm Max diameter drilled hole at 1.2 m ± Min spacing to be used for falsework support when specified by the Contractor. Contractor to determine location, size and spacing.

50 mm Max diameter hole to be drilled where lighting conduit passes through girder web. For location and size of hole see ''Road Plans''.

HOLES FOR CONDUIT AND FALSEWORK

NOTE:
THE CONTRACTOR SHALL VERIFY ALL CONTROLLING FIELD DIMENSIONS BEFORE ORDERING OR FABRICATING ANY MATERIAL.

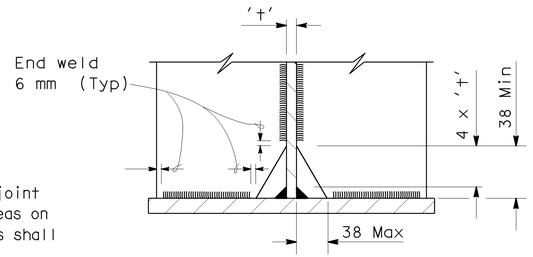

DETAIL M

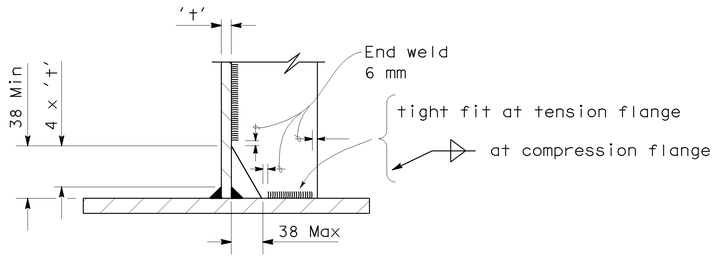

DETAIL N

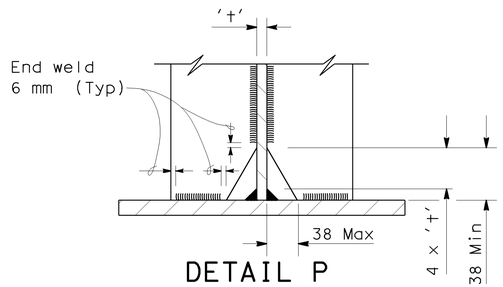

DETAIL P

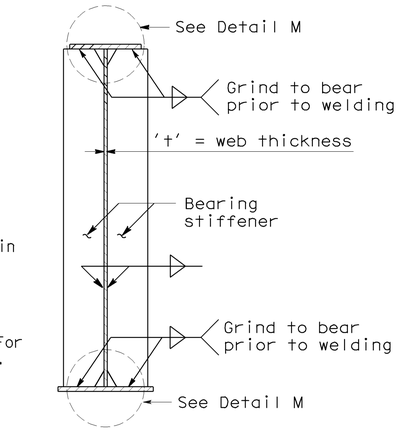

SECTION M-M

(Bearing Stiffeners)

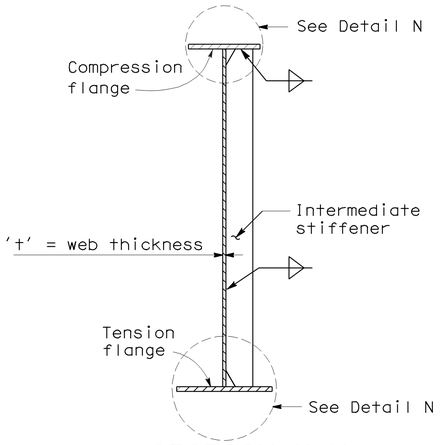

SECTION N-N

(Intermediate Stiffeners)

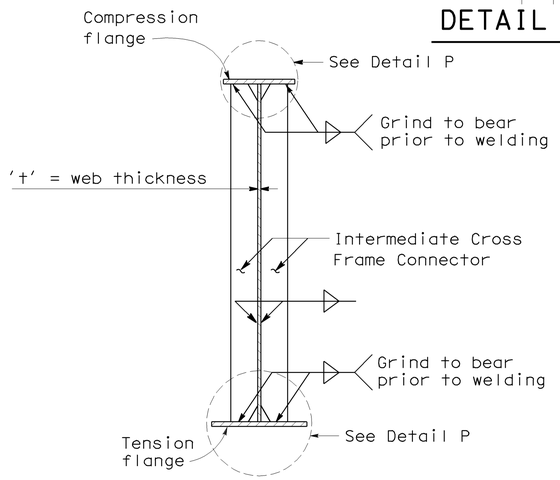

SECTION P-P

(Intermediate Cross Frame Connectors)

DESIGN	BY Ulysses Smpardos	CHECKED Mark Okimura	STATE OF CALIFORNIA DEPARTMENT OF TRANSPORTATION
DETAILS	BY Steven Schenck	CHECKED Mark Okimura	DIVISION OF ENGINEERING SERVICES STRUCTURE DESIGN DESIGN BRANCH 15
QUANTITIES	BY E. Hall	CHECKED R. Odell	CU 07 EA 121841

BRIDGE NO. 53-1085 | KILOMETER POST 46.1

PROVIDENCIA AVENUE OH (WIDEN)

STEEL GIRDER DETAILS

ALL DIMENSIONS ARE IN MILLIMETERS UNLESS OTHERWISE SHOWN

ORIGINAL SCALE IN MILLIMETERS FOR REDUCED PLANS 0 10 20 30 40 50 60 70 80 90 100

DISREGARD PRINTS BEARING EARLIER REVISION DATES

REVISION DATES: 2-23-07 | 11-10-08 | 11-24-08 | 1-26-09 | 1-29-09 | 2-24-09 | 2-25-09

SHEET 83 OF 152

FILE => 53-1085-q-g-rf11.dgn

STRUCTURES DESIGN DETAIL SHEET (METRIC) (REV.03-17-04)

USERNAME => trrene DATE PLOTTED => 15-JUN-2009 TIME PLOTTED => 08:10

DIST	COUNTY	ROUTE	KILOMETER POST TOTAL PROJECT	SHEET No	TOTAL SHEETS
07	LA	5	42.8/47.3	873	1073

Anchor Rittenhouse 12-05-08
REGISTERED CIVIL ENGINEER DATE

6-8-09
PLANS APPROVAL DATE

REGISTERED PROFESSIONAL ENGINEER
Andrew P. Rittenhouse
No. 61006
Exp. 12-31-10
CIVIL
STATE OF CALIFORNIA

The State of California or its officers or agents shall not be responsible for the accuracy or completeness of electronic copies of this plan sheet.

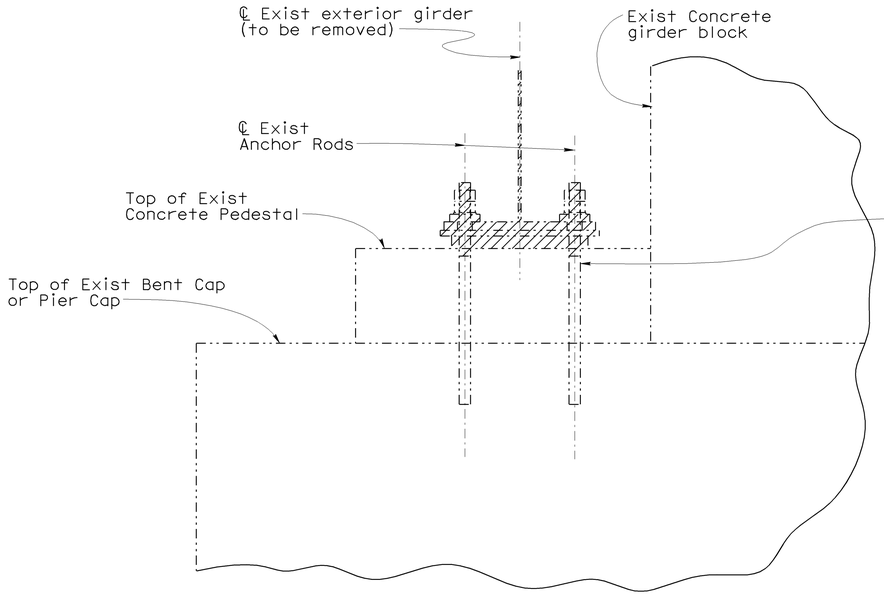

Note:
Remove existing sole plate and bearing pad.

Remove existing Anchor Rods to a depth of 25 mm below top of existing concrete pedestal. Patch top of existing concrete pedestal with mortar to provide smooth bearing surface.

SECTION Q-Q
1:10

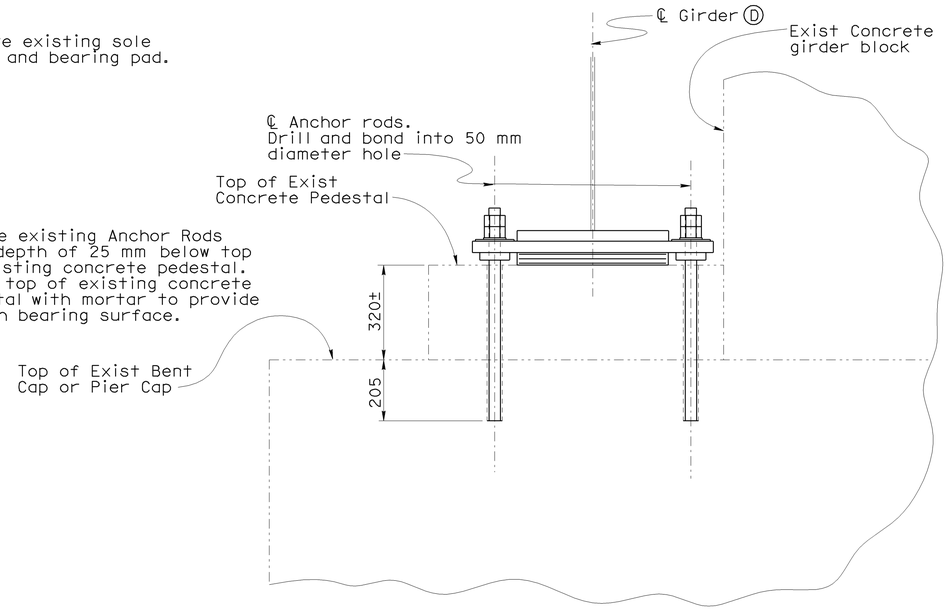

SECTION R-R
1:10

Notes:

1. For girder bearing details not shown or noted, see "Section K-K" on "GIRDER DETAILS NO. 6" sheet. Elastomeric bearing pad to be placed on top of existing concrete pedestal.
2. Bearing stiffeners and end diaphragm connection details not shown. For details, see "Detail V" on "MISCELLANEOUS DETAILS NO. 8" sheet.

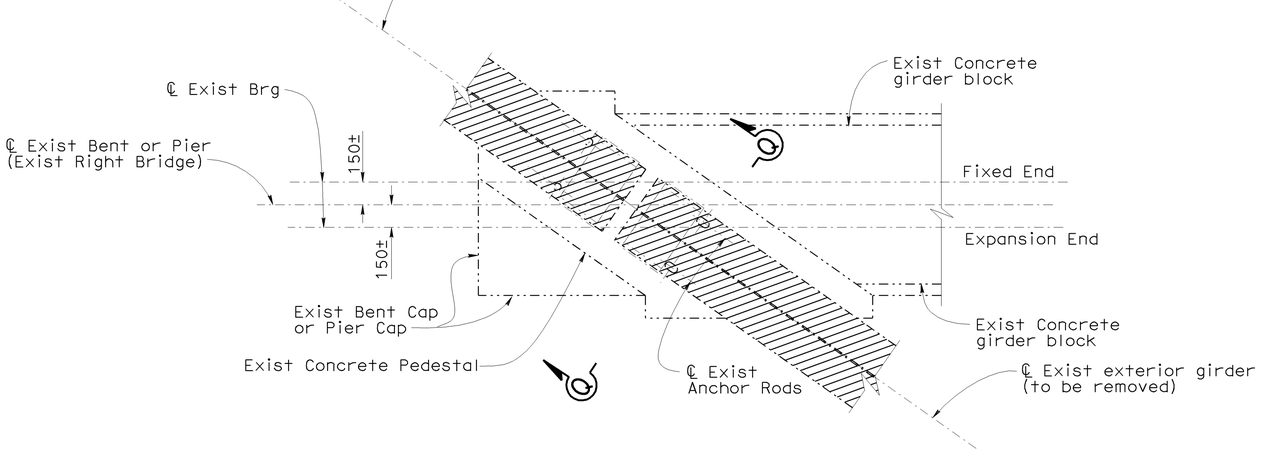

REMOVAL DETAIL
1:20

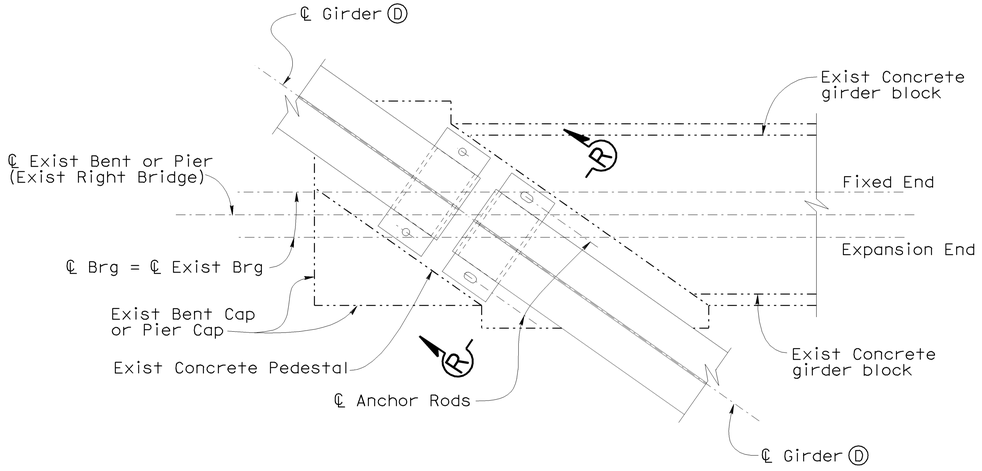

REPLACEMENT DETAIL
1:20

NOTE:
THE CONTRACTOR SHALL VERIFY ALL CONTROLLING FIELD DIMENSIONS BEFORE ORDERING OR FABRICATING ANY MATERIAL.

PLAN OF EXISTING GIRDER REMOVAL AND REPLACEMENT AT BOTTOM FLANGE
1:20

Legend:
Indicates existing structure
Indicates Bridge Removal (Portion)

DESIGN	BY Ulysses Smpardos	CHECKED Mark Okimura	STATE OF CALIFORNIA DEPARTMENT OF TRANSPORTATION	DIVISION OF ENGINEERING SERVICES STRUCTURE DESIGN DESIGN BRANCH 15	BRIDGE NO. 53-1085
DETAILS	BY Steven Schenck	CHECKED Mark Okimura			KILOMETER POST 46.1
QUANTITIES	BY E. Hall	CHECKED R. Odell		CU 07 EA 121841	

PROVIDENCIA AVENUE OH (WIDEN)
GIRDER REPLACEMENT DETAILS

ALL DIMENSIONS ARE IN MILLIMETERS UNLESS OTHERWISE SHOWN
ORIGINAL SCALE IN MILLIMETERS FOR REDUCED PLANS 0 10 20 30 40 50 60 70 80 90 100

DISREGARD PRINTS BEARING EARLIER REVISION DATES →
REVISION DATES: 4-14-08 | 9-02-08 | 11-24-08 | 1-26-09 | 1-29-09 | 2-24-09 | 2-25-09

SHEET 84 OF 152

FILE => 53-1085-r-brgdet2.dgn

STRUCTURES DESIGN DETAIL SHEET (METRIC) (REV.03-17-04)

USERNAME => trrene DATE PLOTTED => 15-JUN-2009 TIME PLOTTED => 08:10

DIST	COUNTY	ROUTE	KILOMETER POST TOTAL PROJECT	SHEET No	TOTAL SHEETS
07	LA	5	42.8/47.3	874	1073

Andrew P. Rittenhouse 12-05-08
REGISTERED CIVIL ENGINEER DATE

6-8-09
PLANS APPROVAL DATE

REGISTERED PROFESSIONAL ENGINEER — Andrew P. Rittenhouse — No. 61006 — Exp. 12-31-10 — CIVIL — STATE OF CALIFORNIA

The State of California or its officers or agents shall not be responsible for the accuracy or completeness of electronic copies of this plan sheet.

Notes:

1. For details of end diaphragms at bents and piers of Left Widen and Right Widen, see "MISCELLANEOUS DETAILS NO. 3" through "MISCELLANEOUS DETAILS NO. 7" sheet.
2. For details of end diaphragms at bents and piers of Median Widen, see "MISCELLANEOUS DETAILS NO. 8" through "MISCELLANEOUS DETAILS NO. 11" sheets.
3. For details of intermediate cross frames, see "MISCELLANEOUS DETAILS NO. 12" and "MISCELLANEOUS DETAILS NO. 13" sheets.
4. For details of end diaphragms at abutments, see "MISCELLANEOUS DETAILS NO. 14" through "MISCELLANEOUS DETAILS NO. 22" sheets.
5. Pedestrian OH not shown. For details see "PEDESTRIAN OH DETAILS NO. 2" sheet.

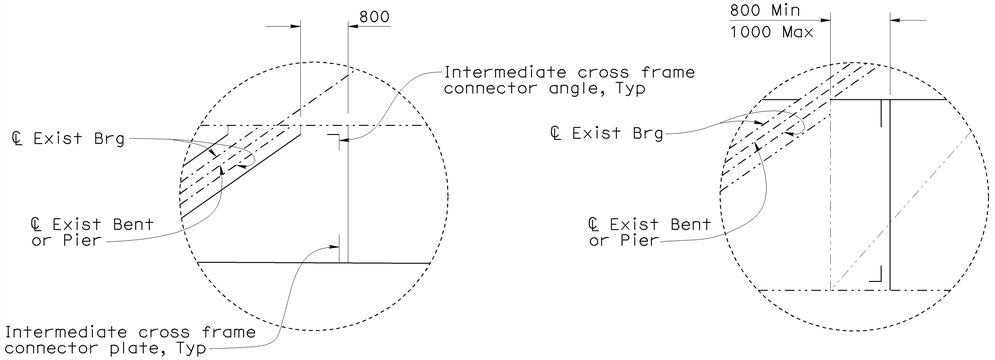

DETAIL Q
1:50

DETAIL R
1:50

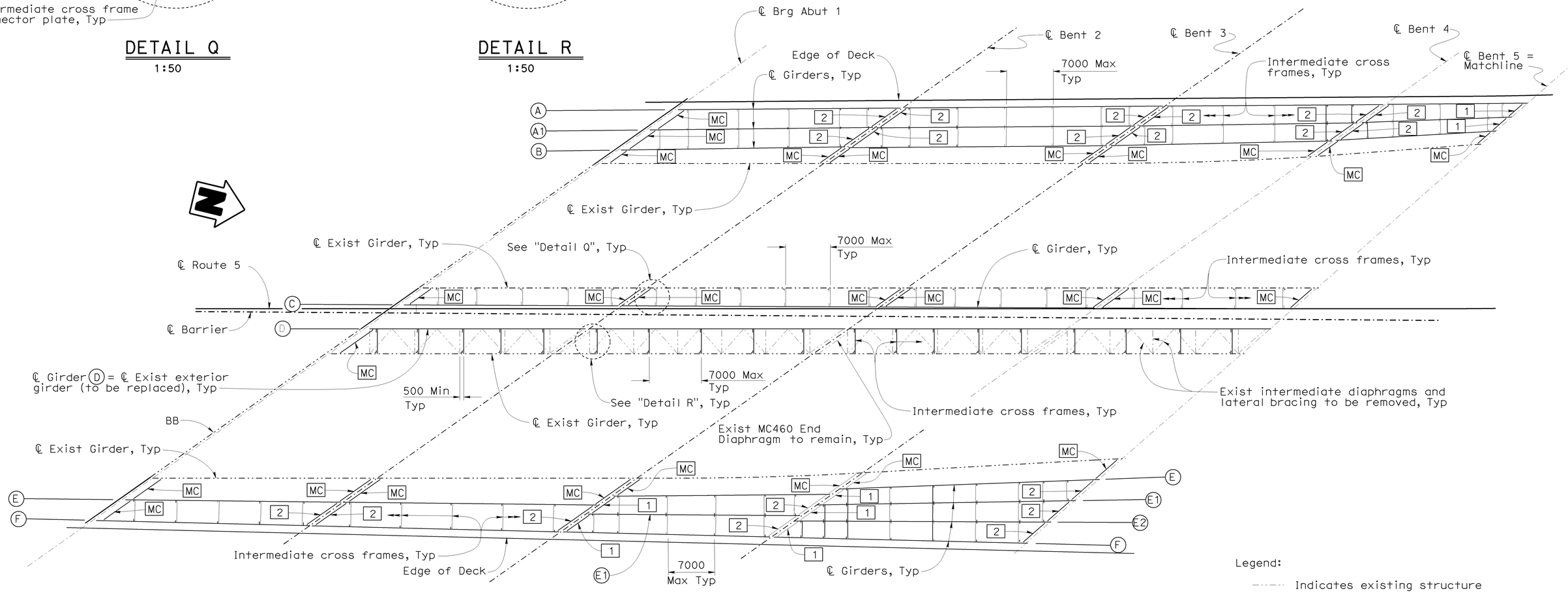

Legend:

- Indicates existing structure
- [1] Indicates End Diaphragm, Type 1
- [2] Indicates End Diaphragm, Type 2
- [MC] Indicates MC460 X 63.5

NOTE:
THE CONTRACTOR SHALL VERIFY ALL CONTROLLING FIELD DIMENSIONS BEFORE ORDERING OR FABRICATING ANY MATERIAL.

END DIAPHRAGM AND INTERMEDIATE CROSS FRAME LAYOUT
1:250

DESIGN	BY Ulysses Smpardos	CHECKED Mark Okimura	STATE OF CALIFORNIA DEPARTMENT OF TRANSPORTATION
DETAILS	BY Steven Schenck	CHECKED Mark Okimura	DIVISION OF ENGINEERING SERVICES STRUCTURE DESIGN DESIGN BRANCH 15
QUANTITIES	BY E. Hall	CHECKED R. Odell	CU 07 EA 121841

Caltrans Metric

ALL DIMENSIONS ARE IN MILLIMETERS UNLESS OTHERWISE SHOWN

ORIGINAL SCALE IN MILLIMETERS FOR REDUCED PLANS 0 10 20 30 40 50 60 70 80 90 100

BRIDGE NO. 53-1085
KILOMETER POST 46.1

PROVIDENCIA AVENUE OH (WIDEN)
MISCELLANEOUS DETAILS NO. 1

DISREGARD PRINTS BEARING EARLIER REVISION DATES →

REVISION DATES: 6-27-07 | 9-19-07 | 12-18-07 | 11-14-08 | 11-24-08 | 1-26-09 | 2-25-09 | 3-12-09

SHEET 85 OF 152

STRUCTURES DESIGN DETAIL SHEET (METRIC) (REV.03-17-04)

FILE => 53-1085-r-miscd01.dgn

USERNAME => trrene DATE PLOTTED => 15-JUN-2009 TIME PLOTTED => 08:10

DIST	COUNTY	ROUTE	KILOMETER POST TOTAL PROJECT	SHEET No	TOTAL SHEETS
07	LA	5	42.8/47.3	875	1073

Andrew P. Rittenhouse 12-05-08
REGISTERED CIVIL ENGINEER DATE

6-8-09
PLANS APPROVAL DATE

REGISTERED PROFESSIONAL ENGINEER — Andrew P. Rittenhouse — No. 61006 — Exp. 12-31-10 — CIVIL — STATE OF CALIFORNIA

The State of California or its officers or agents shall not be responsible for the accuracy or completeness of electronic copies of this plan sheet.

Notes:

1. For "Detail Q" and "Detail R" see "MISCELLANEOUS DETAILS NO. 1" sheet.
2. For details of end diaphragms at bents and piers of Left Widen and Right Widen, see "MISCELLANEOUS DETAILS NO. 3" through "MISCELLANEOUS DETAILS NO. 7" sheets.
3. For details of end diaphragms at bents and piers of Median Widen, see "MISCELLANEOUS DETAILS NO. 8" through "MISCELLANEOUS DETAILS NO. 11" sheets.
4. For details of intermediate cross frames, see "MISCELLANEOUS DETAILS NO. 12" and "MISCELLANEOUS DETAILS NO. 13" sheets.
5. For details of end diaphragms at abutments, see "MISCELLANEOUS DETAILS NO. 14" through "MISCELLANEOUS DETAILS NO. 22" sheets.
6. Pedestrian OH not shown. For details see "PEDESTRIAN OH DETAILS NO. 2" sheet.

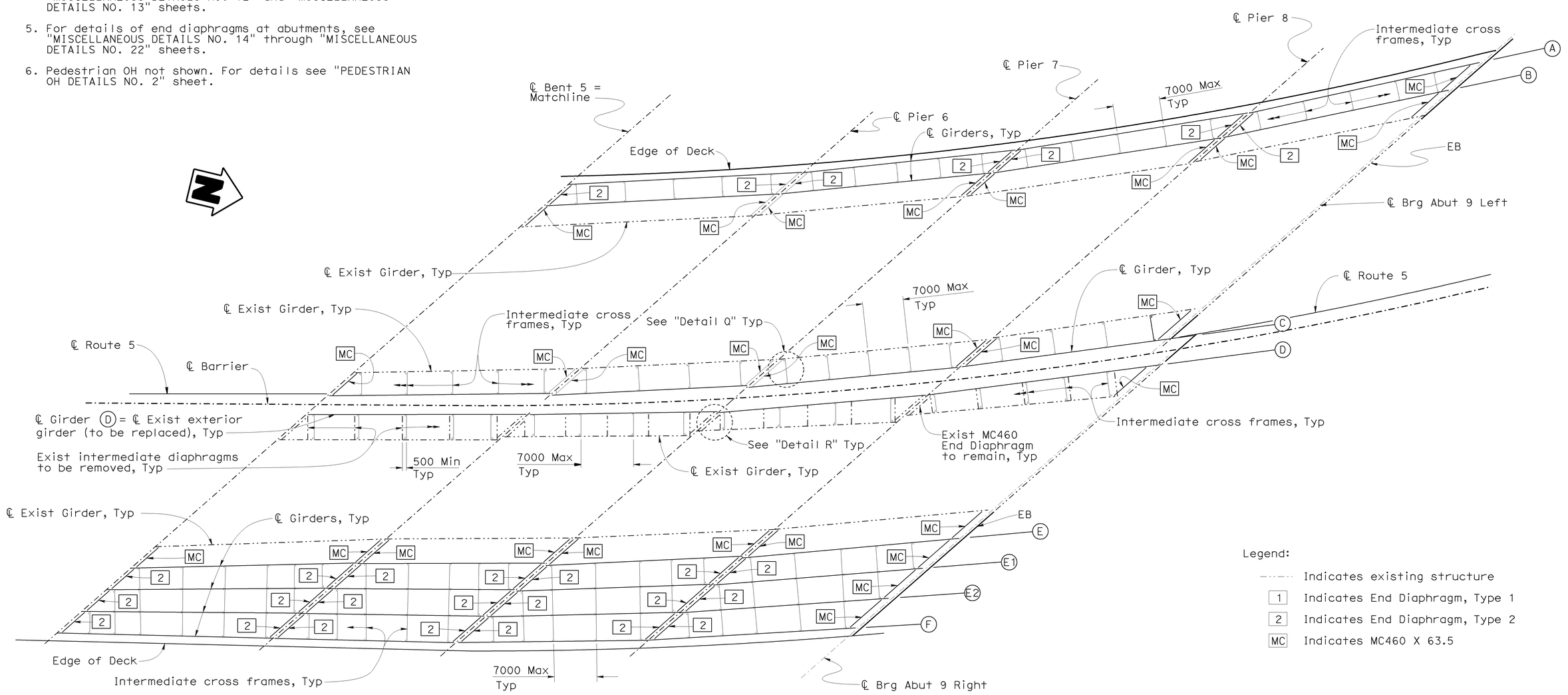

Legend:

- Indicates existing structure
- 1 Indicates End Diaphragm, Type 1
- 2 Indicates End Diaphragm, Type 2
- MC Indicates MC460 X 63.5

NOTE:
THE CONTRACTOR SHALL VERIFY ALL CONTROLLING FIELD DIMENSIONS BEFORE ORDERING OR FABRICATING ANY MATERIAL.

END DIAPHRAGM AND INTERMEDIATE CROSS FRAME LAYOUT

1:250

	BY	CHECKED
DESIGN	Ulysses Smpardos	Mark Okimura
DETAILS	Steven Schenck	Mark Okimura
QUANTITIES	E. Hall	R. Odell

STATE OF CALIFORNIA
DEPARTMENT OF TRANSPORTATION

DIVISION OF ENGINEERING SERVICES
STRUCTURE DESIGN
DESIGN BRANCH 15

CU 07
EA 121841

BRIDGE NO. 53-1085
KILOMETER POST 46.1

PROVIDENCIA AVENUE OH (WIDEN)
MISCELLANEOUS DETAILS NO. 2

ALL DIMENSIONS ARE IN MILLIMETERS UNLESS OTHERWISE SHOWN

ORIGINAL SCALE IN MILLIMETERS FOR REDUCED PLANS 0 10 20 30 40 50 60 70 80 90 100

DISREGARD PRINTS BEARING EARLIER REVISION DATES

REVISION DATES: 6-23-07 | 9-24-07 | 12-18-07 | 11-13-08 | 11-24-08 | 1-26-09 | 2-26-09 | 3-12-09

SHEET 86 OF 152

FILE => 53-1085-r-miscd02.dgn

STRUCTURES DESIGN DETAIL SHEET (METRIC) (REV.03-17-04)

USERNAME => trrene DATE PLOTTED => 15-JUN-2009 TIME PLOTTED => 08:10

DIST	COUNTY	ROUTE	KILOMETER POST TOTAL PROJECT	SHEET No	TOTAL SHEETS
07	LA	5	42.8/47.3	876	1073

Andrew Rittenhouse 12-05-08
REGISTERED CIVIL ENGINEER DATE

6-8-09
PLANS APPROVAL DATE

REGISTERED PROFESSIONAL ENGINEER
Andrew P. Rittenhouse
No. 61006
Exp. 12-31-10
CIVIL
STATE OF CALIFORNIA

The State of California or its officers or agents shall not be responsible for the accuracy or completeness of electronic copies of this plan sheet.

Notes:

1. Bent 5 shown, other Bents and Piers similar.
2. For "Section U-U" and "Section V-V" see "MISCELLANEOUS DETAILS NO. 5" sheet.
3. Utilities not shown for clarity.
4. For additional details, see "Detail S" and "Detail T" on "MISCELLANEOUS DETAILS NO. 6" sheet.

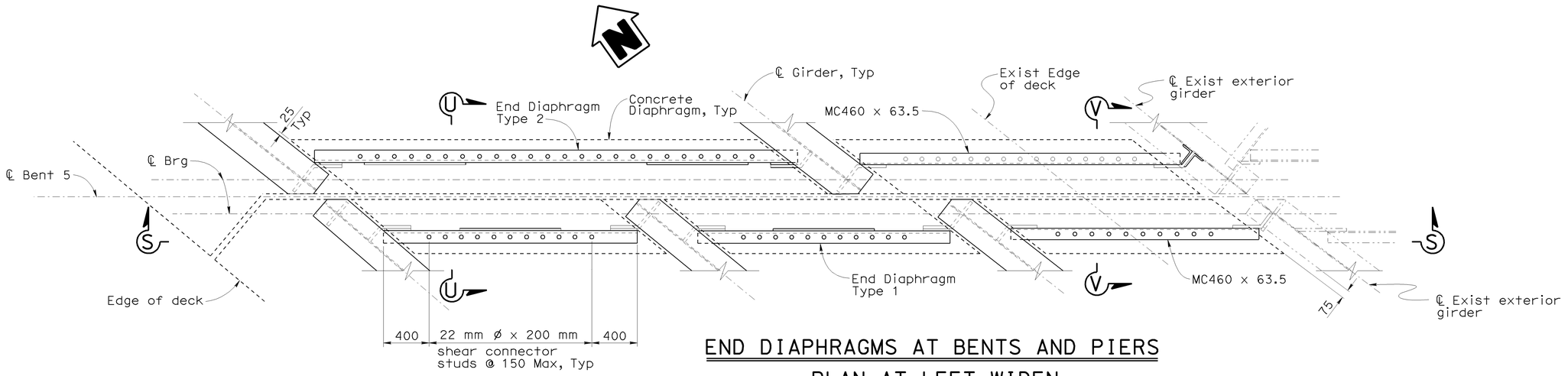

END DIAPHRAGMS AT BENTS AND PIERS

PLAN AT LEFT WIDEN

1:20

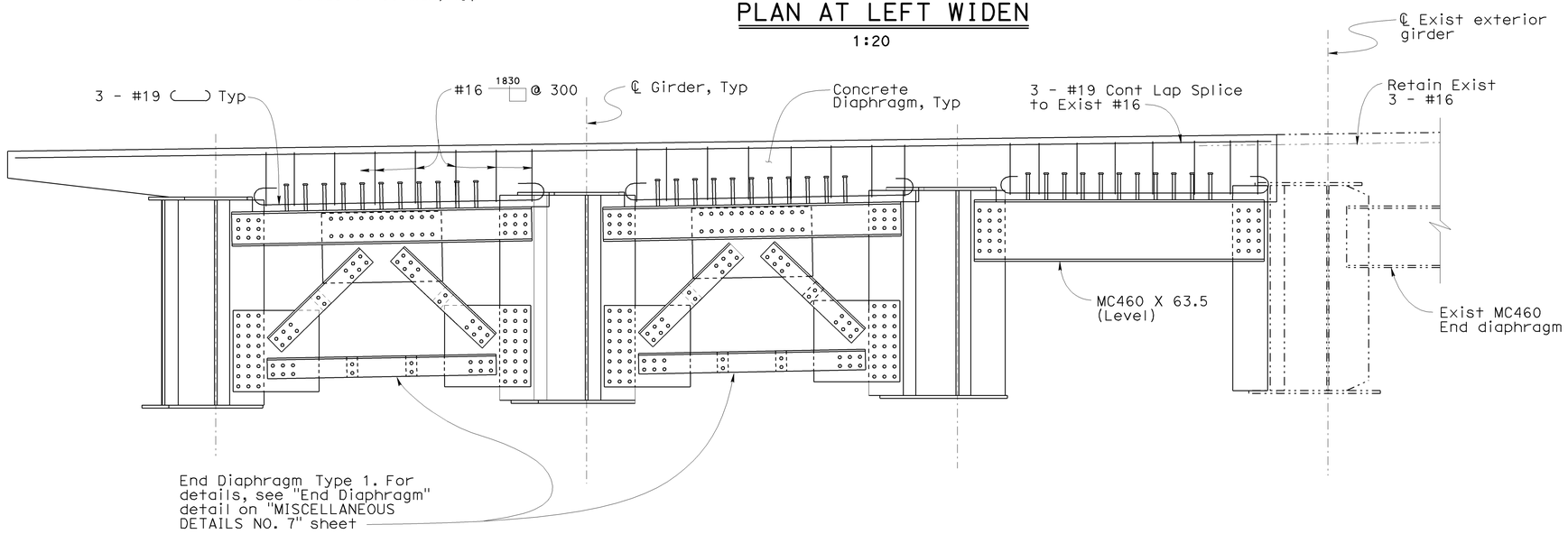

SECTION S-S

1:20

NOTE:
THE CONTRACTOR SHALL VERIFY ALL CONTROLLING FIELD DIMENSIONS BEFORE ORDERING OR FABRICATING ANY MATERIAL.

Legend:
Indicates existing structure

Caltrans Metric

	BY	CHECKED
DESIGN	Ulysses Smpardos	Mark Okimura
DETAILS	Steven Schenck	Mark Okimura
QUANTITIES	E. Hall	R. Odell

STATE OF CALIFORNIA
DEPARTMENT OF TRANSPORTATION

DIVISION OF ENGINEERING SERVICES
STRUCTURE DESIGN
DESIGN BRANCH 15

BRIDGE NO. 53-1085
KILOMETER POST 46.1

PROVIDENCIA AVENUE OH (WIDEN)
MISCELLANEOUS DETAILS NO. 3

ALL DIMENSIONS ARE IN MILLIMETERS UNLESS OTHERWISE SHOWN

ORIGINAL SCALE IN MILLIMETERS FOR REDUCED PLANS 0 10 20 30 40 50 60 70 80 90 100

CU 07
EA 121841

DISREGARD PRINTS BEARING EARLIER REVISION DATES

REVISION DATES: 7-5-07 8-15-08 11-22-08 11-24-08 12-22-08 1-26-09 2-26-09

SHEET 87 OF 152

STRUCTURES DESIGN DETAIL SHEET (METRIC) (REV.03-17-04)

FILE => 53-1085-r-miscd03.dgn

USERNAME => trrene DATE PLOTTED => 15-JUN-2009 TIME PLOTTED => 08:10

DIST	COUNTY	ROUTE	KILOMETER POST TOTAL PROJECT	SHEET No	TOTAL SHEETS
07	LA	5	42.8/47.3	877	1073

Andrew Rittenhouse 12-05-08
REGISTERED CIVIL ENGINEER DATE

6-8-09
PLANS APPROVAL DATE

REGISTERED PROFESSIONAL ENGINEER
Andrew P. Rittenhouse
No. 61006
Exp. 12-31-10
CIVIL
STATE OF CALIFORNIA

The State of California or its officers or agents shall not be responsible for the accuracy or completeness of electronic copies of this plan sheet.

Notes:

1. Bent 3 shown, other Bents and Piers similar.
2. For "Section U-U" and "Section V-V" see "MISCELLANEOUS DETAILS NO. 5" sheet.
3. For "Detail S" and "Detail T" see "MISCELLANEOUS DETAILS NO. 6" sheet.

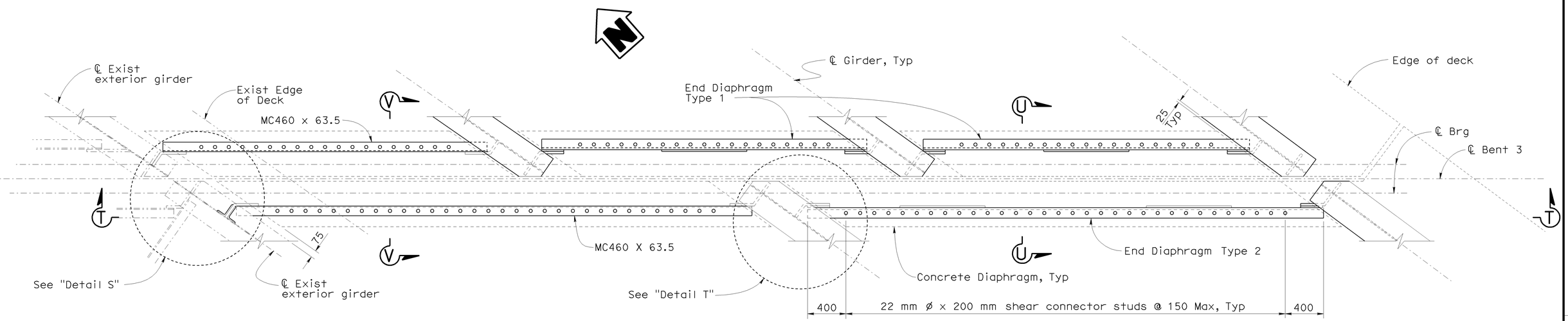

END DIAPHRAGMS AT BENTS AND PIERS

PLAN AT RIGHT WIDEN

1:20

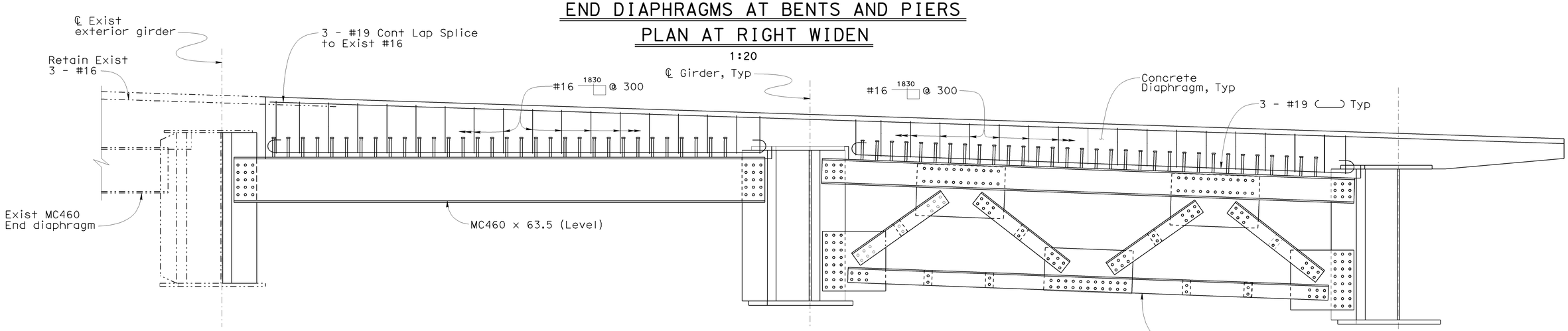

SECTION T-T

1:20

NOTE:
THE CONTRACTOR SHALL VERIFY ALL CONTROLLING FIELD DIMENSIONS BEFORE ORDERING OR FABRICATING ANY MATERIAL.

Legend:

Indicates existing structure

DESIGN	BY Ulysses Smpardos	CHECKED Mark Okimura	STATE OF CALIFORNIA DEPARTMENT OF TRANSPORTATION
DETAILS	BY Steven Schenck	CHECKED Mark Okimura	DIVISION OF ENGINEERING SERVICES STRUCTURE DESIGN DESIGN BRANCH 15
QUANTITIES	BY E. Hall	CHECKED R. Odell	CU 07 EA 121841

BRIDGE NO. 53-1085
KILOMETER POST 46.1

PROVIDENCIA AVENUE OH (WIDEN)

MISCELLANEOUS DETAILS NO. 4

Caltrans Metric

ALL DIMENSIONS ARE IN MILLIMETERS UNLESS OTHERWISE SHOWN

ORIGINAL SCALE IN MILLIMETERS FOR REDUCED PLANS 0 10 20 30 40 50 60 70 80 90 100

DISREGARD PRINTS BEARING EARLIER REVISION DATES →

REVISION DATES: 6-8-09 | 11-14-08 | 11-14-08 | 12-11-08 | 1-26-09 | 2-26-09

SHEET 88 OF 152

FILE => 53-1085-r-miscd04.dgn

STRUCTURES DESIGN DETAIL SHEET (METRIC) (REV.03-17-04)

USERNAME => tirrene DATE PLOTTED => 15-JUN-2009 TIME PLOTTED => 08:10

DIST	COUNTY	ROUTE	KILOMETER POST TOTAL PROJECT	SHEET No	TOTAL SHEETS
07	LA	5	42.8/47.3	878	1073

Andrew Rittenhouse 12-05-08
REGISTERED CIVIL ENGINEER DATE

6-8-09
PLANS APPROVAL DATE

REGISTERED PROFESSIONAL ENGINEER
Andrew P. Rittenhouse
No. 61006
Exp. 12-31-10
CIVIL
STATE OF CALIFORNIA

The State of California or its officers or agents shall not be responsible for the accuracy or completeness of electronic copies of this plan sheet.

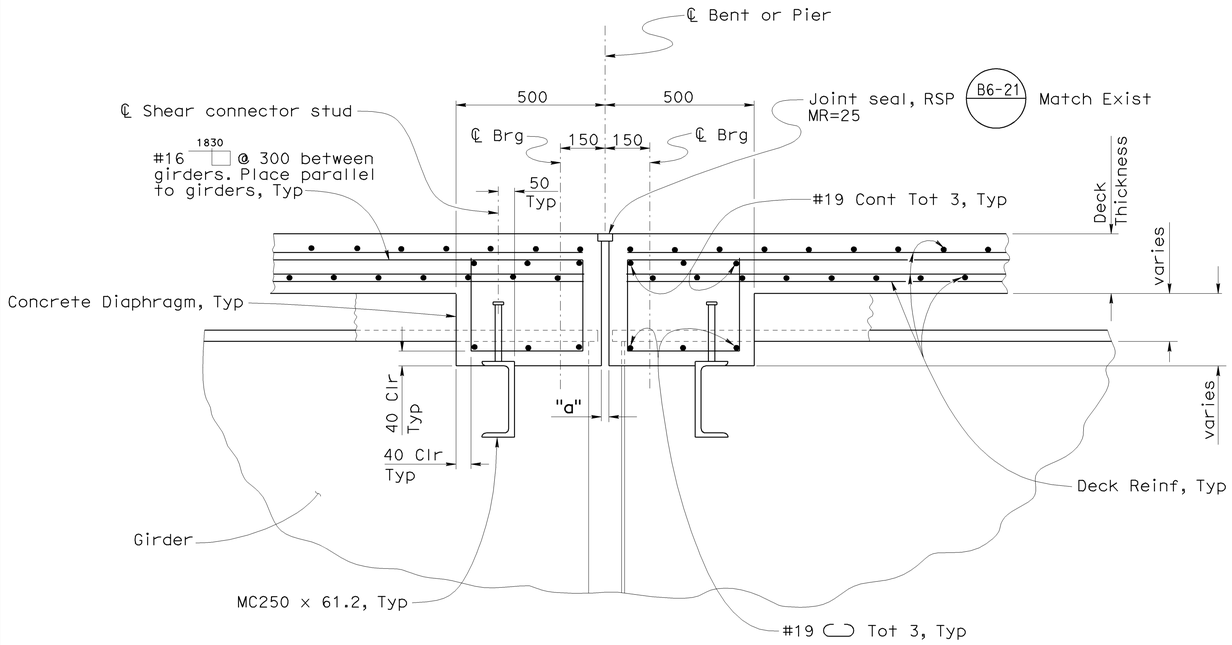

SECTION U-U

1:10

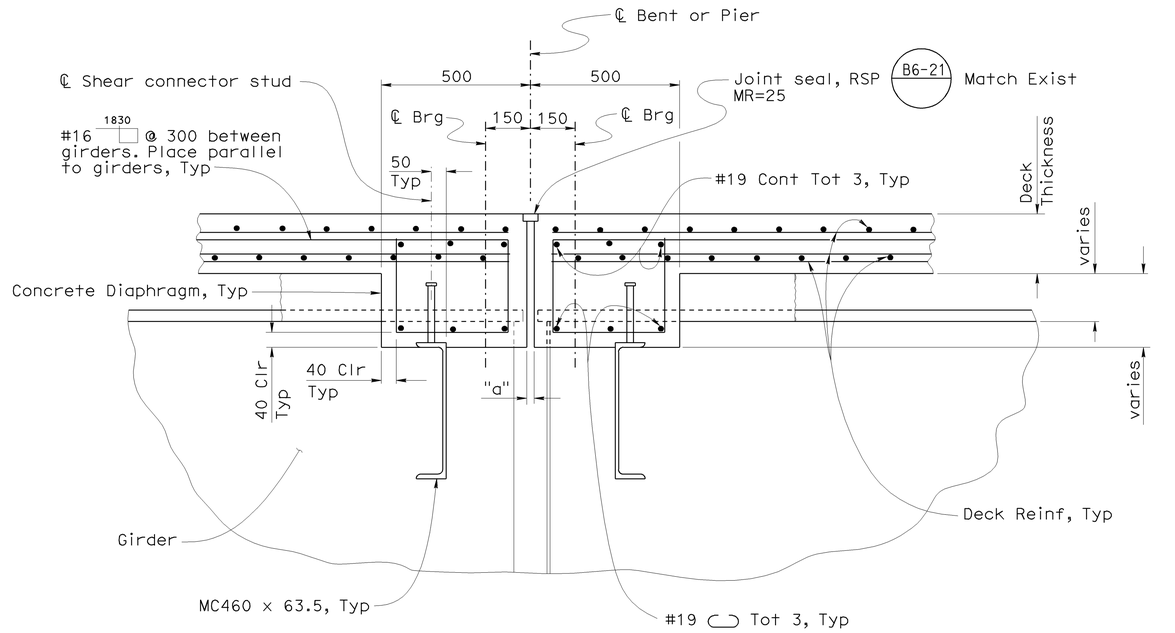

SECTION V-V

1:10

Note:

1. For details of shear connector studs not shown or noted, see "Shear Connector Studs" detail on "STEEL GIRDER DETAILS" sheet.

NOTE:
THE CONTRACTOR SHALL VERIFY ALL CONTROLLING FIELD DIMENSIONS BEFORE ORDERING OR FABRICATING ANY MATERIAL.

Caltrans Metric

ALL DIMENSIONS ARE IN MILLIMETERS UNLESS OTHERWISE SHOWN

ORIGINAL SCALE IN MILLIMETERS FOR REDUCED PLANS 0 10 20 30 40 50 60 70 80 90 100

	BY	CHECKED
DESIGN	Ulysses Smpardos	Mark Okimura
DETAILS	Steven Schenck	Mark Okimura
QUANTITIES	E. Hall	R. Odell

STATE OF CALIFORNIA
DEPARTMENT OF TRANSPORTATION

DIVISION OF ENGINEERING SERVICES
STRUCTURE DESIGN
DESIGN BRANCH 15

CU 07
EA 121841

BRIDGE NO. 53-1085
KILOMETER POST 46.1

PROVIDENCIA AVENUE OH (WIDEN)
MISCELLANEOUS DETAILS NO. 5

DISREGARD PRINTS BEARING EARLIER REVISION DATES →

REVISION DATES: 11-24-08 | 11-28-08 | 12-04-08 | 1-26-09 | 2-26-09

SHEET 89 OF 152

FILE => 53-1085-r-miscd05.dgn

STRUCTURES DESIGN DETAIL SHEET (METRIC) (REV.03-17-04)

USERNAME => ttrone DATE PLOTTED => 15-JUN-2009 TIME PLOTTED => 08:10

DIST	COUNTY	ROUTE	KILOMETER POST TOTAL PROJECT	SHEET No	TOTAL SHEETS
07	LA	5	42.8/47.3	879	1073

Andrew P. Rittenhouse 12-05-08
REGISTERED CIVIL ENGINEER DATE

6-8-09
PLANS APPROVAL DATE

REGISTERED PROFESSIONAL ENGINEER — Andrew P. Rittenhouse — No. 61006 — Exp. 12-31-10 — CIVIL — STATE OF CALIFORNIA

The State of California or its officers or agents shall not be responsible for the accuracy or completeness of electronic copies of this plan sheet.

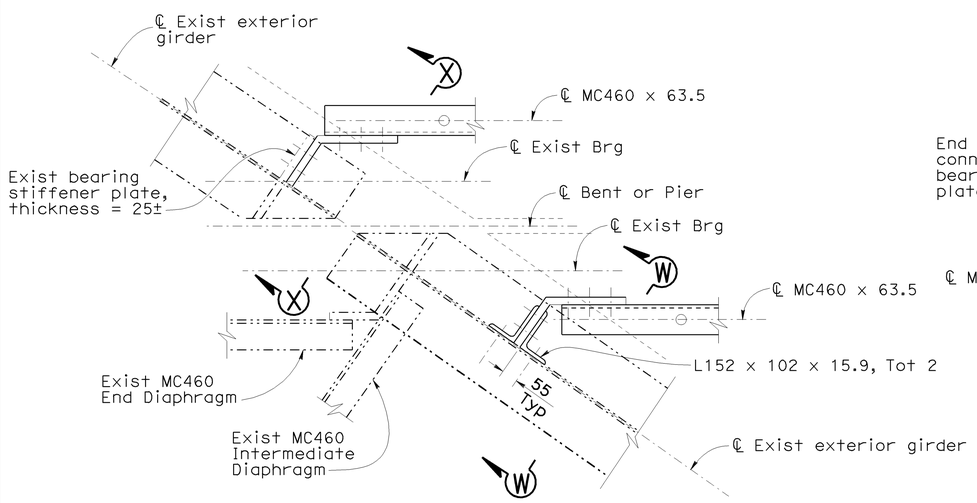

DETAIL S
1:10

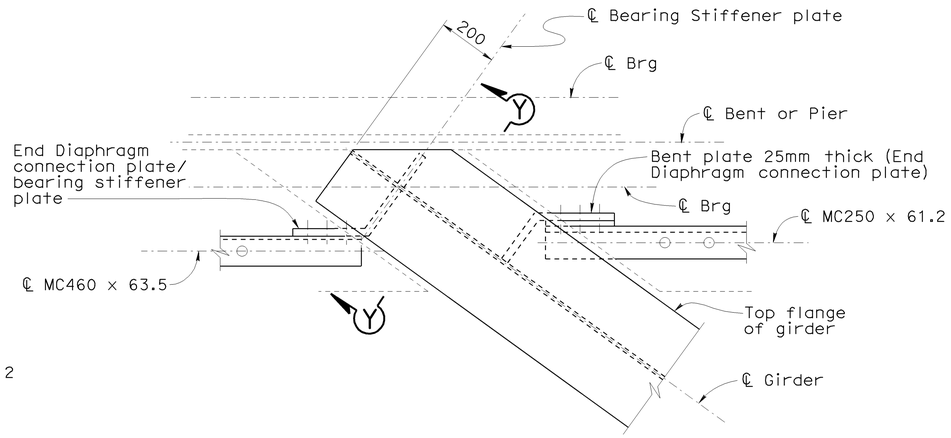

DETAIL T
1:10

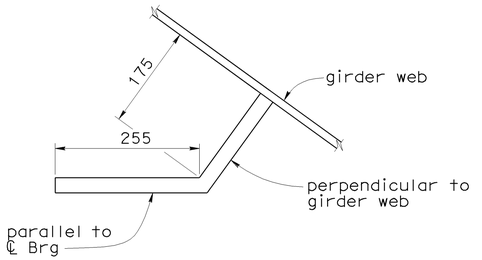

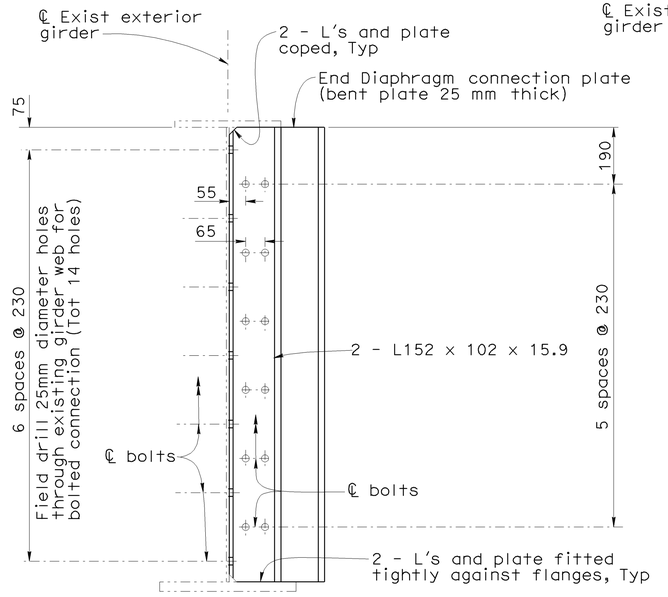

SECTION W-W
1:10

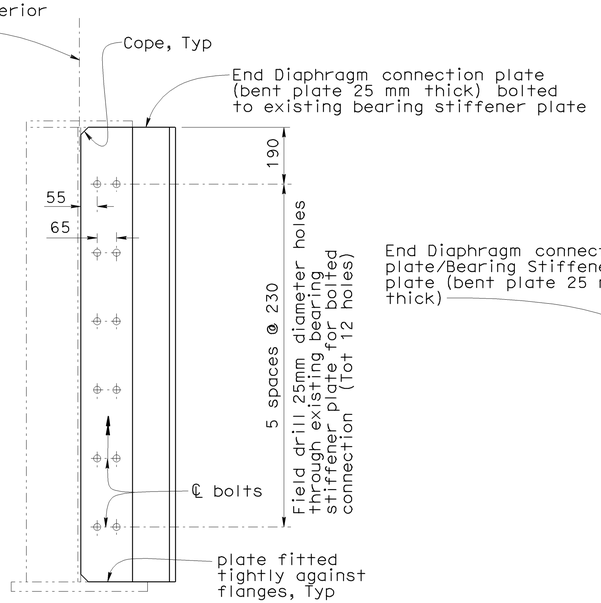

SECTION X-X
1:10

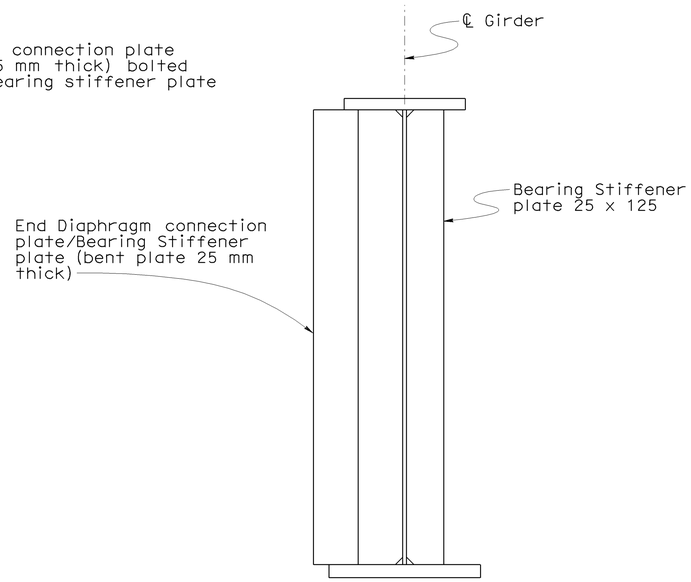

SECTION Y-Y
1:10

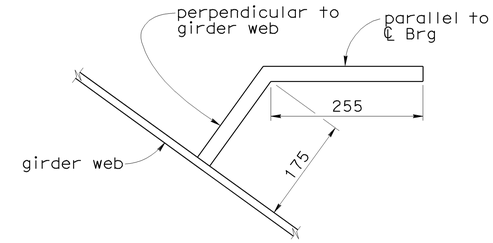

Note:
Bent plates to be coped and welded to girder web and flanges similarly to bearing stiffener plates, except where details indicate bolted connections to existing girder.

TYPICAL BENT PLATE DIMENSIONS
1:5

NOTE:
THE CONTRACTOR SHALL VERIFY ALL CONTROLLING FIELD DIMENSIONS BEFORE ORDERING OR FABRICATING ANY MATERIAL.

Notes:
1. End Diaphragms not shown in "Section W-W", "Section X-X" and "Section Y-Y" for clarity.
2. For End Diaphragm details not shown or noted, see "MISCELLANEOUS DETAILS NO. 7" sheet.
3. For Bearing Stiffener details not shown or noted, see "Section M-M" on "STEEL GIRDER DETAILS" sheet.

Legend:
- - - - - - Indicates existing structure

Caltrans Metric

	BY	CHECKED
DESIGN	Ulysses Smpardos	Mark Okimura
DETAILS	Steven Schenck	Mark Okimura
QUANTITIES	E. Hall	R. Odell

STATE OF CALIFORNIA
DEPARTMENT OF TRANSPORTATION

DIVISION OF ENGINEERING SERVICES
STRUCTURE DESIGN
DESIGN BRANCH 15

CU 07
EA 121841

BRIDGE NO. 53-1085
KILOMETER POST 46.1

PROVIDENCIA AVENUE OH (WIDEN)
MISCELLANEOUS DETAILS NO. 6

ALL DIMENSIONS ARE IN MILLIMETERS UNLESS OTHERWISE SHOWN

ORIGINAL SCALE IN MILLIMETERS FOR REDUCED PLANS 0 10 20 30 40 50 60 70 80 90 100

DISREGARD PRINTS BEARING EARLIER REVISION DATES →

REVISION DATES: 6-08-07 | 11-22-06 | 11-24-06 | 12-14-08 | 1-26-09 | 3-2-09

SHEET 90 OF 152

FILE => 53-1085-r-miscd06.dgn

STRUCTURES DESIGN DETAIL SHEET (METRIC) (REV.03-17-04)

USERNAME => trrene DATE PLOTTED => 15-JUN-2009 TIME PLOTTED => 08:10

DIST	COUNTY	ROUTE	KILOMETER POST TOTAL PROJECT	SHEET No	TOTAL SHEETS
07	LA	5	42.8/47.3	880	1073

Andrew Rittenhouse 12-05-08
REGISTERED CIVIL ENGINEER DATE

6-8-09
PLANS APPROVAL DATE

REGISTERED PROFESSIONAL ENGINEER
Andrew P. Rittenhouse
No. 61006
Exp. 12-31-10
CIVIL
STATE OF CALIFORNIA

The State of California or its officers or agents shall not be responsible for the accuracy or completeness of electronic copies of this plan sheet.

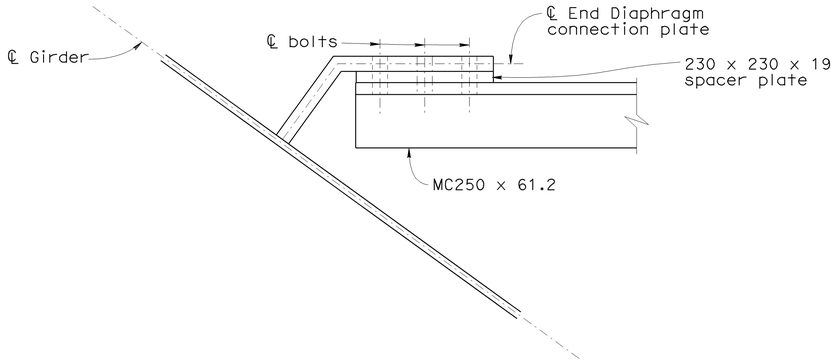

SECTION Z-Z
1:5

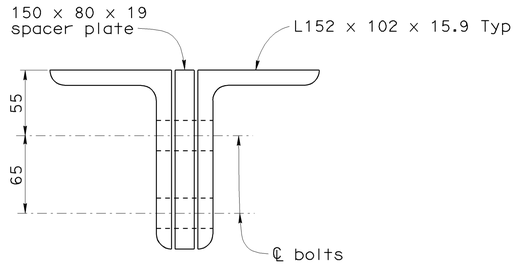

SECTION A1-A1
1:2.5

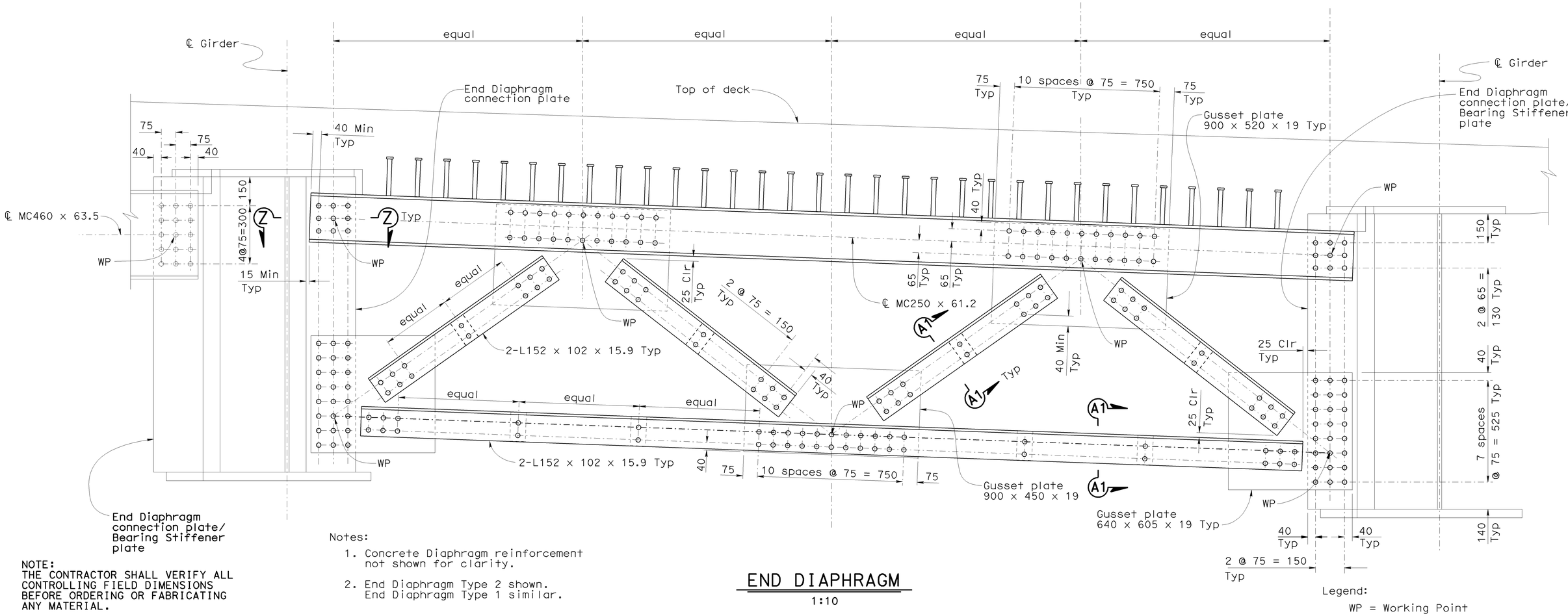

End Diaphragm connection plate/ Bearing Stiffener plate

NOTE:
THE CONTRACTOR SHALL VERIFY ALL CONTROLLING FIELD DIMENSIONS BEFORE ORDERING OR FABRICATING ANY MATERIAL.

Notes:

1. Concrete Diaphragm reinforcement not shown for clarity.
2. End Diaphragm Type 2 shown. End Diaphragm Type 1 similar.

Legend:
WP = Working Point

END DIAPHRAGM
1:10

	BY	CHECKED
DESIGN	Ulysses Smpardos	Mark Okimura
DETAILS	Steven Schenck	Mark Okimura
QUANTITIES	E. Hall	R. Odell

STATE OF CALIFORNIA
DEPARTMENT OF TRANSPORTATION

DIVISION OF ENGINEERING SERVICES
STRUCTURE DESIGN
DESIGN BRANCH 15

BRIDGE NO. 53-1085
KILOMETER POST 46.1

PROVIDENCIA AVENUE OH (WIDEN)
MISCELLANEOUS DETAILS NO. 7

ALL DIMENSIONS ARE IN MILLIMETERS UNLESS OTHERWISE SHOWN

ORIGINAL SCALE IN MILLIMETERS FOR REDUCED PLANS 0 10 20 30 40 50 60 70 80 90 100

CU 07
EA 121841

DISREGARD PRINTS BEARING EARLIER REVISION DATES

REVISION DATES: 11-24-08 | 12-16-08 | 1-26-09 | 3-2-09

SHEET 91 OF 152

FILE => 53-1085-r-miscd07.dgn

STRUCTURES DESIGN DETAIL SHEET (METRIC) (REV.03-17-04)

USERNAME => ftpierce DATE PLOTTED => 15-JUN-2009 TIME PLOTTED => 06:46

DIST	COUNTY	ROUTE	KILOMETER POST TOTAL PROJECT	SHEET No	TOTAL SHEETS
07	LA	5	42.8/47.3	881	1073

Andrew Rittenhouse 12-05-08
REGISTERED CIVIL ENGINEER DATE

6-8-09
PLANS APPROVAL DATE

The State of California or its officers or agents shall not be responsible for the accuracy or completeness of electronic copies of this plan sheet.

REGISTERED PROFESSIONAL ENGINEER — Andrew P. Rittenhouse — No. 61006 — Exp. 12-31-10 — CIVIL — STATE OF CALIFORNIA

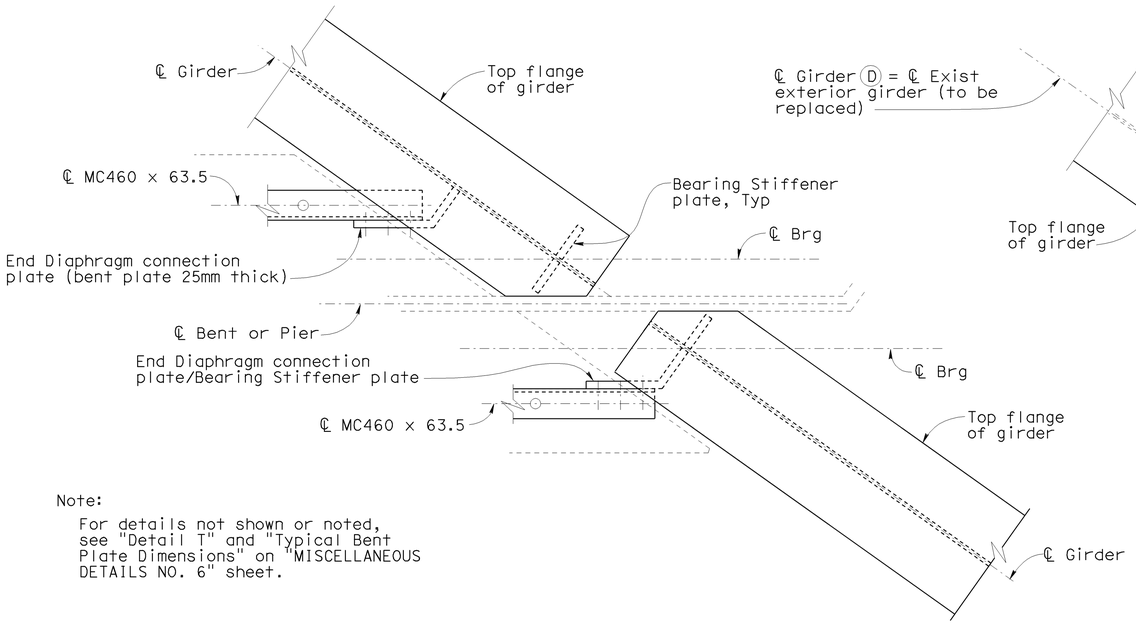

Note:

For details not shown or noted, see "Detail T" and "Typical Bent Plate Dimensions" on "MISCELLANEOUS DETAILS NO. 6" sheet.

DETAIL U
1:10

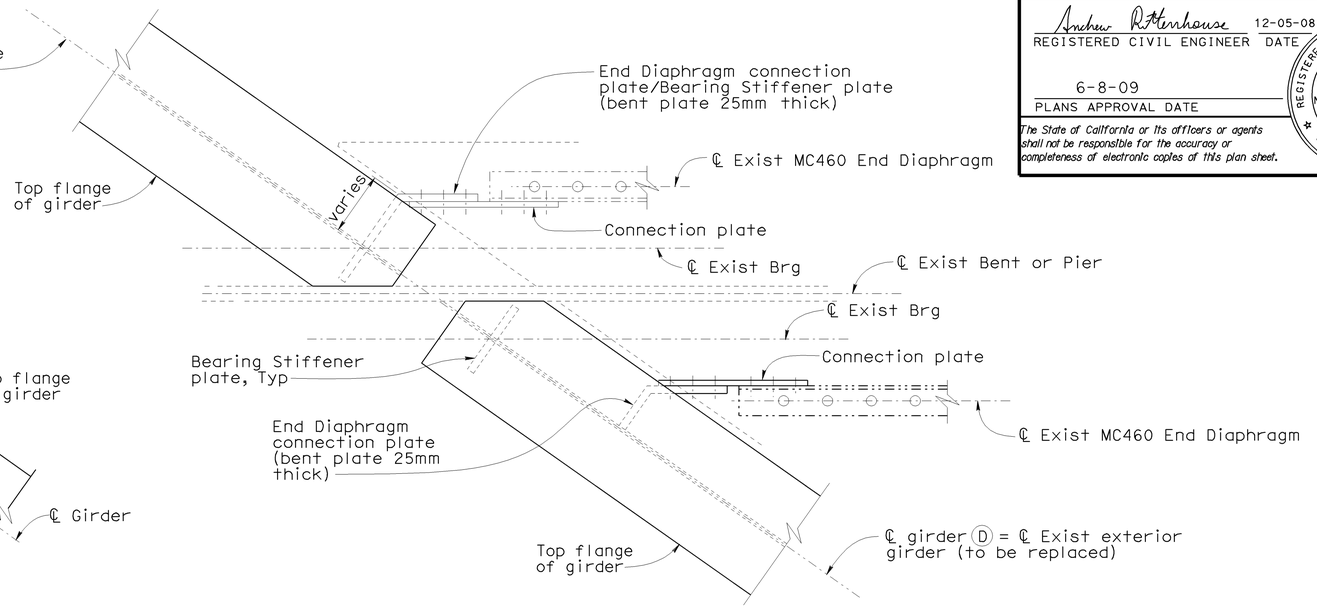

DETAIL V
1:10

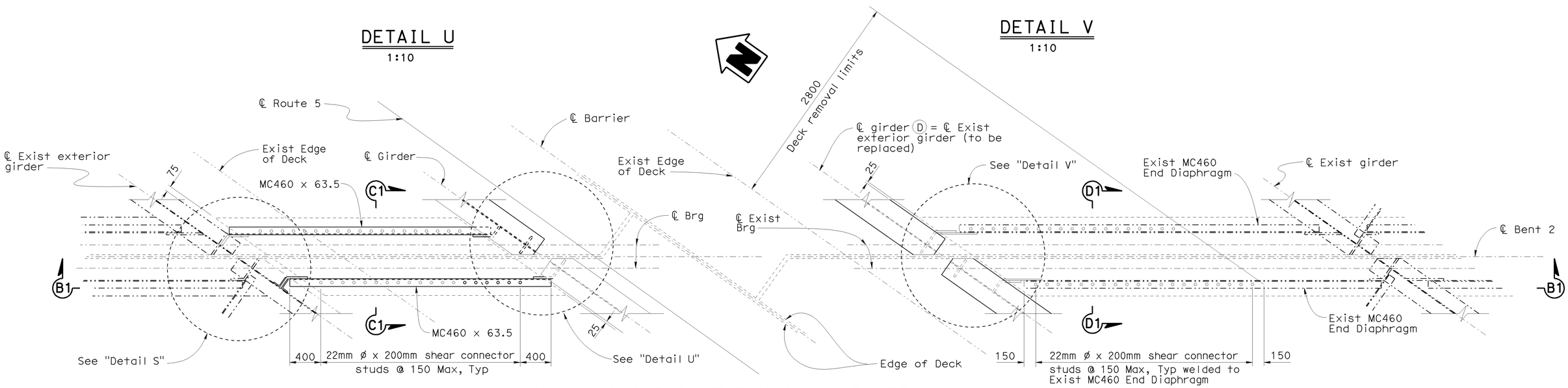

END DIAPHRAGMS AT BENTS AND PIERS
PLAN AT MEDIAN WIDEN
1:25

NOTE:
THE CONTRACTOR SHALL VERIFY ALL CONTROLLING FIELD DIMENSIONS BEFORE ORDERING OR FABRICATING ANY MATERIAL.

Legend:

—·—·— Indicates existing structure

Notes:

1. For "Section B1-B1" see "MISCELLANEOUS DETAILS NO. 9" sheet.
2. For "Section C1-C1" and "Section D1-D1" see "MISCELLANEOUS DETAILS NO. 10" sheet.
3. Bent 2 shown, other Bents and Piers similar.
4. For "Detail S" see "MISCELLANEOUS DETAILS NO. 6" sheet.

Caltrans Metric

	BY	CHECKED
DESIGN	Ulysses Smpardos	Mark Okimura
DETAILS	Steven Schenck	Mark Okimura
QUANTITIES	E. Hall	R. Odell

STATE OF CALIFORNIA
DEPARTMENT OF TRANSPORTATION

DIVISION OF ENGINEERING SERVICES
STRUCTURE DESIGN
DESIGN BRANCH 15

CU 07
EA 121841

ALL DIMENSIONS ARE IN MILLIMETERS UNLESS OTHERWISE SHOWN

ORIGINAL SCALE IN MILLIMETERS FOR REDUCED PLANS 0 10 20 30 40 50 60 70 80 90 100

DISREGARD PRINTS BEARING EARLIER REVISION DATES →

REVISION DATES: 11-24-08 | 11-26-08 | 12-16-08 | 1-26-09 | 3-2-09 | 3-12-09

BRIDGE NO.	PROVIDENCIA AVENUE OH (WIDEN)
53-1085	
KILOMETER POST 46.1	MISCELLANEOUS DETAILS NO. 8

SHEET 92 OF 152

FILE => 53-1085-r-miscd08.dgn

STRUCTURES DESIGN DETAIL SHEET (METRIC) (REV.03-17-04)

USERNAME => \\tpfiere DATE PLOTTED => 15-JUN-2009 TIME PLOTTED => 06:46

DIST	COUNTY	ROUTE	KILOMETER POST TOTAL PROJECT	SHEET No	TOTAL SHEETS
07	LA	5	42.8/47.3	882	1073

Andrew R. Rittenhouse 12-05-08
REGISTERED CIVIL ENGINEER DATE

6-8-09
PLANS APPROVAL DATE

The State of California or its officers or agents shall not be responsible for the accuracy or completeness of electronic copies of this plan sheet.

REGISTERED PROFESSIONAL ENGINEER
Andrew P. Rittenhouse
No. 61006
Exp. 12-31-10
CIVIL
STATE OF CALIFORNIA

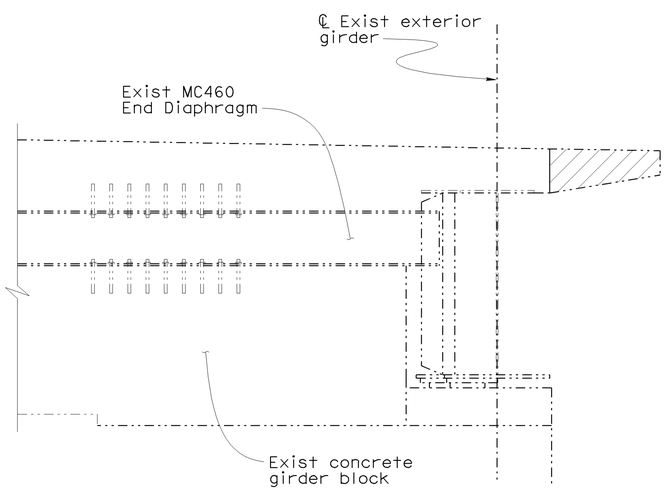

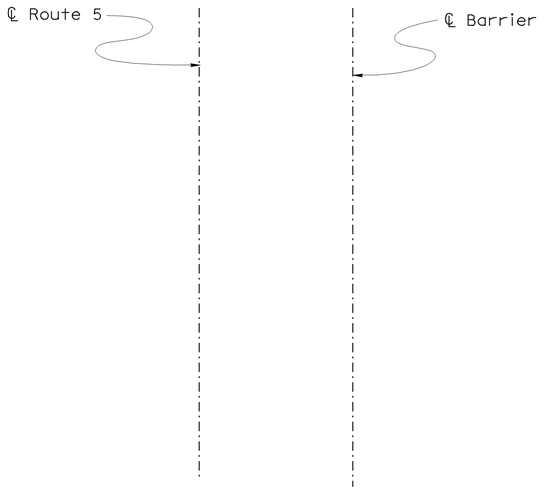

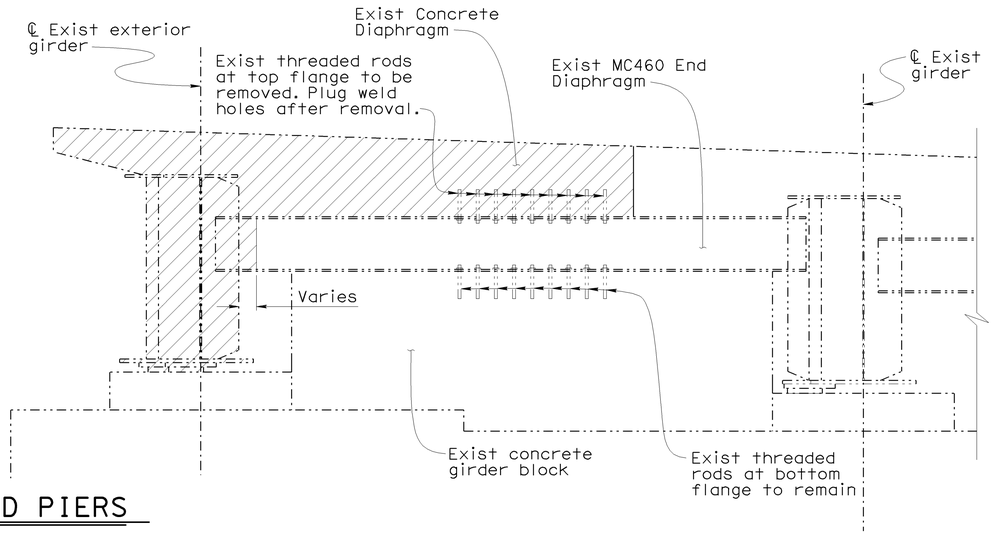

MEDIAN WIDEN-REMOVAL DETAIL AT BENTS AND PIERS

1:25

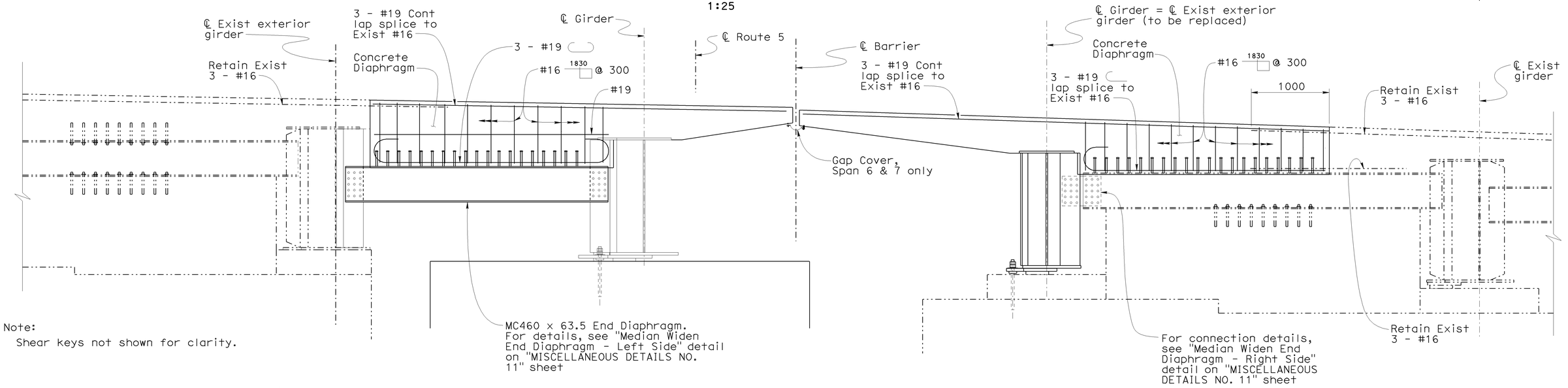

Note:
Shear keys not shown for clarity.

SECTION B1-B1

1:25

NOTE:
THE CONTRACTOR SHALL VERIFY ALL CONTROLLING FIELD DIMENSIONS BEFORE ORDERING OR FABRICATING ANY MATERIAL.

Legend:

Indicates Bridge Removal (Portion)

Indicates existing structure

	BY	CHECKED
DESIGN	Ulysses Smpardos	Mark Okimura
DETAILS	Steven Schenck	Mark Okimura
QUANTITIES	E. Hall	R. Odell

STATE OF CALIFORNIA
DEPARTMENT OF TRANSPORTATION

DIVISION OF ENGINEERING SERVICES
STRUCTURE DESIGN
DESIGN BRANCH 15

CU 07
EA 121841

BRIDGE NO. 53-1085
KILOMETER POST 46.1

PROVIDENCIA AVENUE OH (WIDEN)
MISCELLANEOUS DETAILS NO. 9

ALL DIMENSIONS ARE IN MILLIMETERS UNLESS OTHERWISE SHOWN

ORIGINAL SCALE IN MILLIMETERS FOR REDUCED PLANS 0 10 20 30 40 50 60 70 80 90 100

DISREGARD PRINTS BEARING EARLIER REVISION DATES →

REVISION DATES: 11-26-08 | 12-11-08 | 1-26-09 | 3-2-09

SHEET 93 OF 152

FILE => 53-1085-r-miscd09.dgn

STRUCTURES DESIGN DETAIL SHEET (METRIC) (REV.03-17-04)

USERNAME => trpierce DATE PLOTTED => 15-JUN-2009 TIME PLOTTED => 08:46

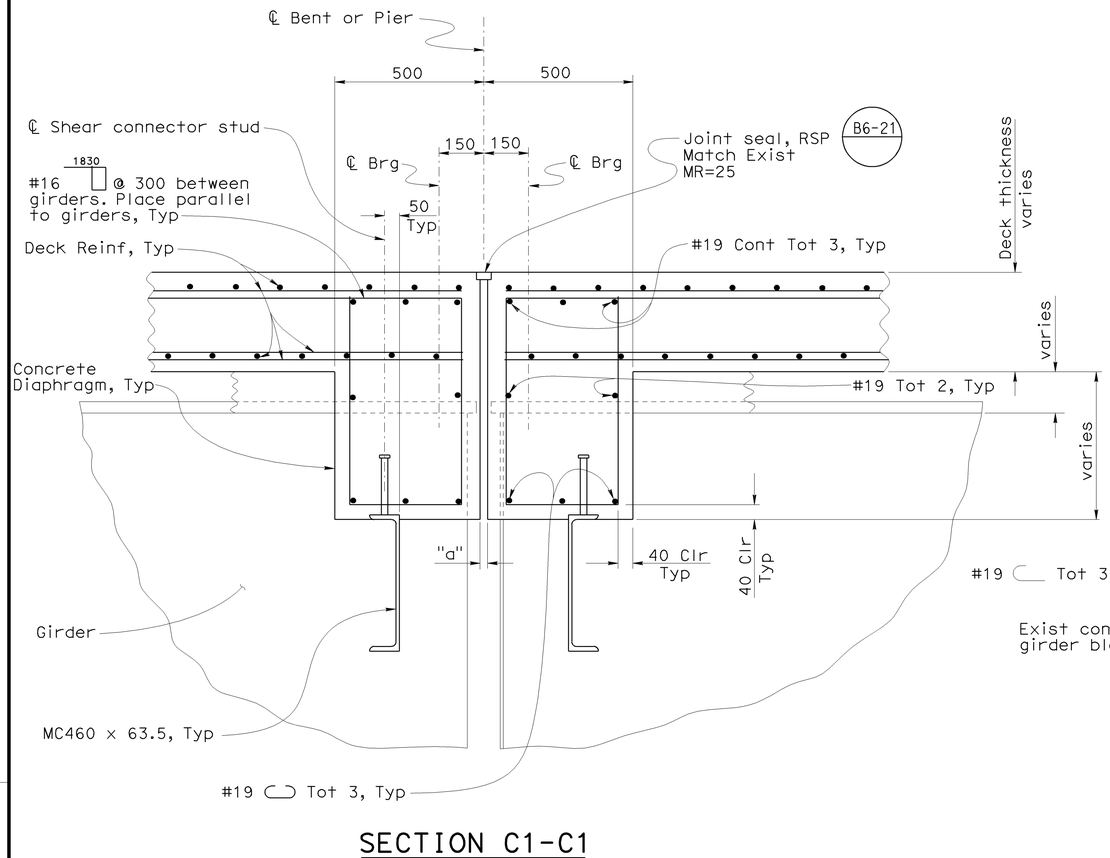

SECTION C1-C1

1:10

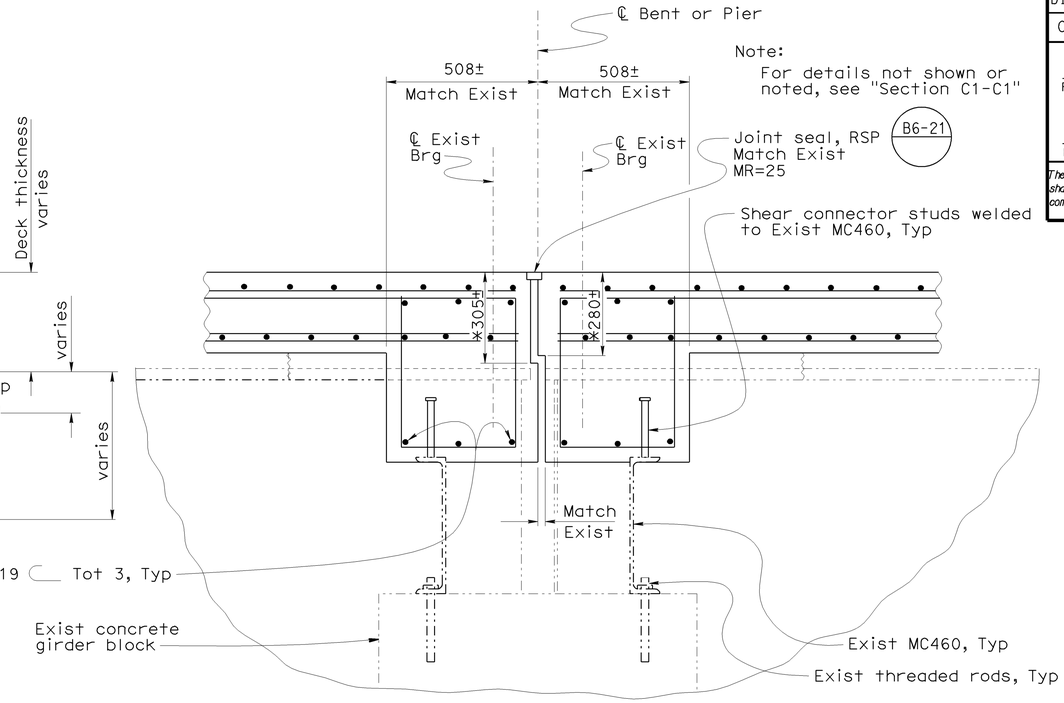

SECTION D1-D1

1:10

NOTE:
THE CONTRACTOR SHALL VERIFY ALL CONTROLLING FIELD DIMENSIONS BEFORE ORDERING OR FABRICATING ANY MATERIAL.

Note:

1. For details of shear connector studs not shown or noted, see "Shear Connector Studs" detail on "STEEL GIRDER DETAILS" sheet.

Legend:

—·—·— Indicates existing structure

* Match existing

DIST	COUNTY	ROUTE	KILOMETER POST TOTAL PROJECT	SHEET No	TOTAL SHEETS
07	LA	5	42.8/47.3	883	1073

Andrew Rittenhouse 12-05-08
REGISTERED CIVIL ENGINEER DATE

6-8-09
PLANS APPROVAL DATE

REGISTERED PROFESSIONAL ENGINEER — Andrew P. Rittenhouse — No. 81006 — Exp. 12-31-10 — CIVIL — STATE OF CALIFORNIA

The State of California or its officers or agents shall not be responsible for the accuracy or completeness of electronic copies of this plan sheet.

DESIGN	BY Ulysses Smpardos	CHECKED Mark Okimura	STATE OF CALIFORNIA DEPARTMENT OF TRANSPORTATION
DETAILS	BY Steven Schenck	CHECKED Mark Okimura	DIVISION OF ENGINEERING SERVICES STRUCTURE DESIGN
QUANTITIES	BY E. Hall	CHECKED R. Odell	DESIGN BRANCH 15

Caltrans Metric

ALL DIMENSIONS ARE IN MILLIMETERS UNLESS OTHERWISE SHOWN

ORIGINAL SCALE IN MILLIMETERS FOR REDUCED PLANS 0 10 20 30 40 50 60 70 80 90 100

CU 07
EA 121841

BRIDGE NO. 53-1085
KILOMETER POST 46.1

PROVIDENCIA AVENUE OH (WIDEN)
MISCELLANEOUS DETAILS NO. 10

DISREGARD PRINTS BEARING EARLIER REVISION DATES →

REVISION DATES: 11-21-08 | 12-05-08 | 1-26-09 | 3-2-09

SHEET 94 OF 152

STRUCTURES DESIGN DETAIL SHEET (METRIC) (REV.03-17-04)

FILE => 53-1085-r-miscd10.dgn

USERNAME => trpierce DATE PLOTTED => 15-JUN-2009 TIME PLOTTED => 06:47

DIST	COUNTY	ROUTE	KILOMETER POST TOTAL PROJECT	SHEET No	TOTAL SHEETS
07	LA	5	42.8/47.3	884	1073

Andrew Rittenhouse 12-05-08
REGISTERED CIVIL ENGINEER DATE

6-8-09
PLANS APPROVAL DATE

REGISTERED PROFESSIONAL ENGINEER
Andrew P. Rittenhouse
No. 81006
Exp. 12-31-10
CIVIL
STATE OF CALIFORNIA

The State of California or its officers or agents shall not be responsible for the accuracy or completeness of electronic copies of this plan sheet.

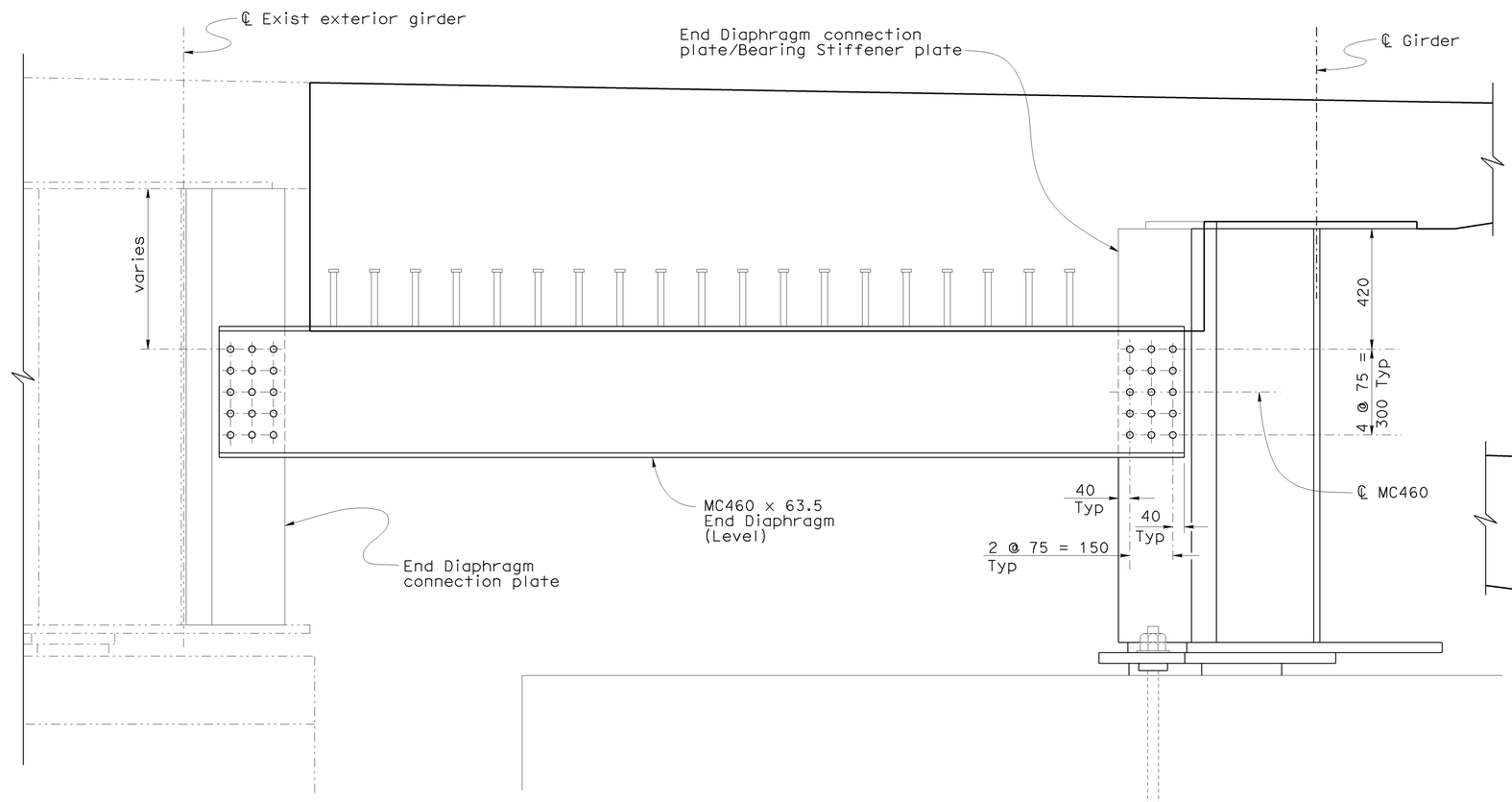

MEDIAN WIDEN END DIAPHRAGM - LEFT SIDE

1:10

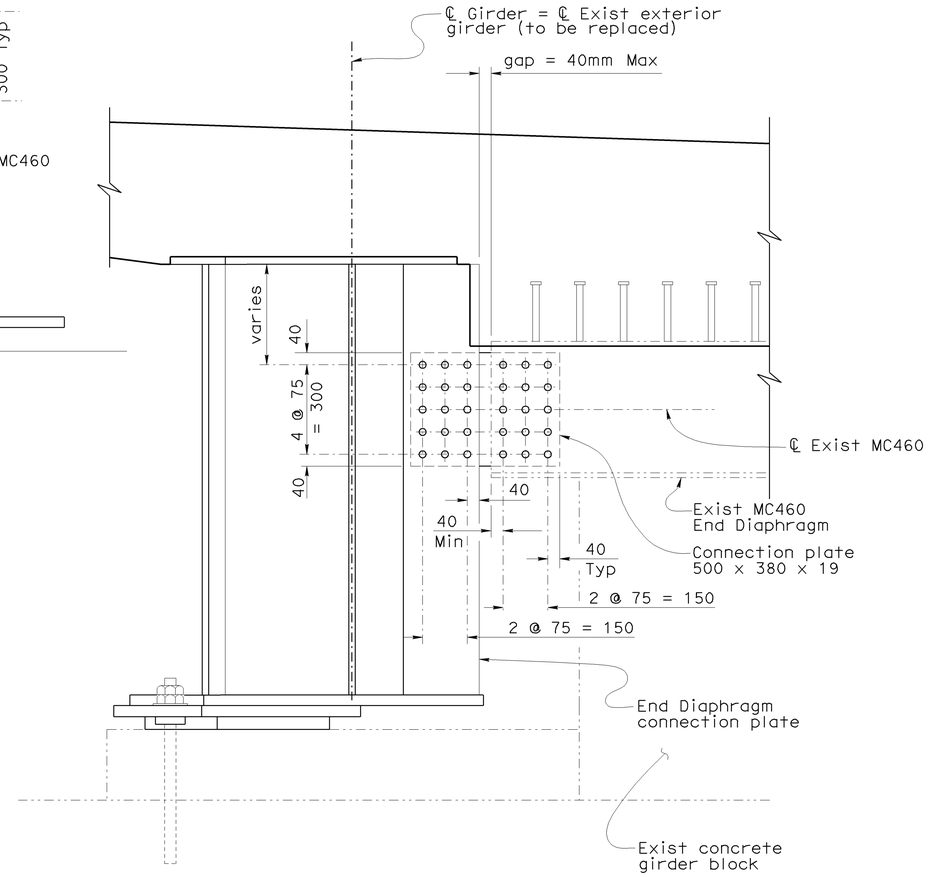

MEDIAN WIDEN END DIAPHRAGM - RIGHT SIDE

1:10

Legend:

-·-·-·- Indicates existing structure

Notes:

1. Shear keys not shown for clarity.
2. Concrete Diaphragm reinforcement not shown.

NOTE:
THE CONTRACTOR SHALL VERIFY ALL CONTROLLING FIELD DIMENSIONS BEFORE ORDERING OR FABRICATING ANY MATERIAL.

Caltrans Metric

	BY	CHECKED
DESIGN	Ulysses Smpardos	Mark Okimura
DETAILS	Steven Schenck	Mark Okimura
QUANTITIES	E. Hall	R. Odell

STATE OF CALIFORNIA
DEPARTMENT OF TRANSPORTATION

DIVISION OF ENGINEERING SERVICES
STRUCTURE DESIGN
DESIGN BRANCH 15

BRIDGE NO. 53-1085
KILOMETER POST 46.1

PROVIDENCIA AVENUE OH (WIDEN)
MISCELLANEOUS DETAILS NO. 11

ALL DIMENSIONS ARE IN MILLIMETERS UNLESS OTHERWISE SHOWN

ORIGINAL SCALE IN MILLIMETERS FOR REDUCED PLANS 0 10 20 30 40 50 60 70 80 90 100

CU 07
EA 121841

DISREGARD PRINTS BEARING EARLIER REVISION DATES

REVISION DATES: 11-21-08 11-26-08 12-02-08 1-26-09 3-3-09

SHEET 95 OF 152

STRUCTURES DESIGN DETAIL SHEET (METRIC) (REV.03-17-04)

FILE => 53-1085-r-miscd11.dgn

USERNAME => trpierce DATE PLOTTED => 15-JUN-2009 TIME PLOTTED => 06:47

DIST	COUNTY	ROUTE	KILOMETER POST TOTAL PROJECT	SHEET No	TOTAL SHEETS
07	LA	5	42.8/47.3	885	1073

Andrew Rittenhouse 12-05-08
REGISTERED CIVIL ENGINEER DATE

6-8-09
PLANS APPROVAL DATE

REGISTERED PROFESSIONAL ENGINEER Andrew P. Rittenhouse No. 61006 Exp. 12-31-10 CIVIL STATE OF CALIFORNIA

The State of California or its officers or agents shall not be responsible for the accuracy or completeness of electronic copies of this plan sheet.

Notes:

1. Right widen shown, left widen similar except at spans 6 and 7.
2. Intermediate cross frames shall be in place prior to placement of deck concrete. Bolts shall be snug tight to allow deflection. Tighten bolts to specifications after placing closure pour.
3. Utilities not shown for clarity.

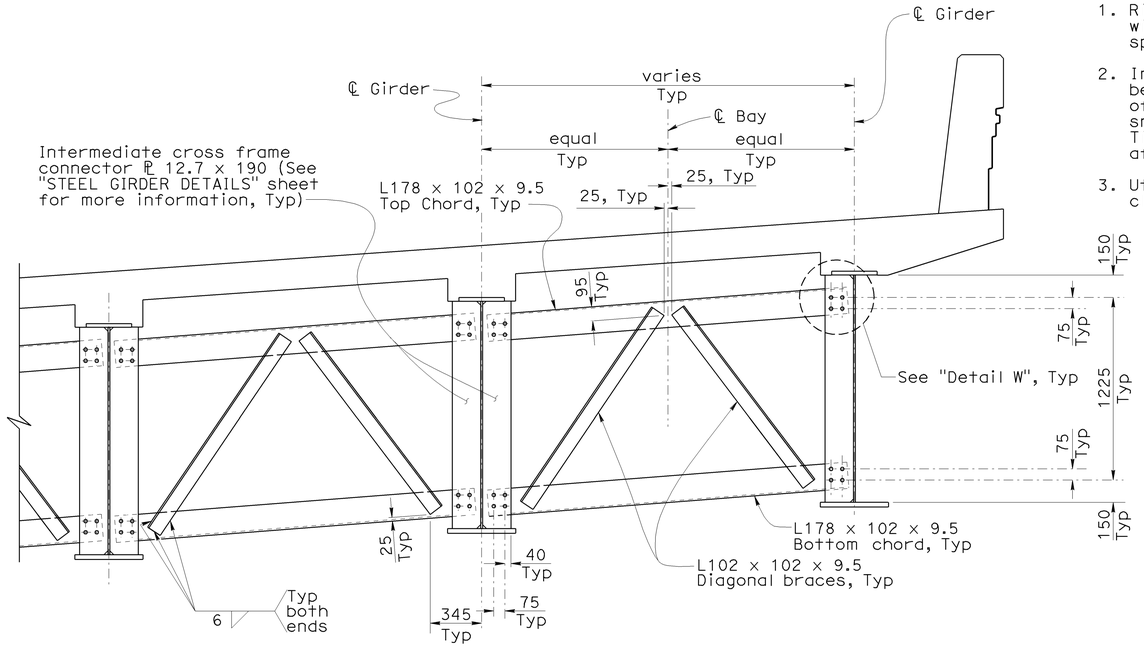

INTERMEDIATE CROSS FRAMES-LEFT AND RIGHT WIDEN

1:20

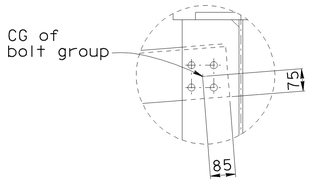

DETAIL W

1:10

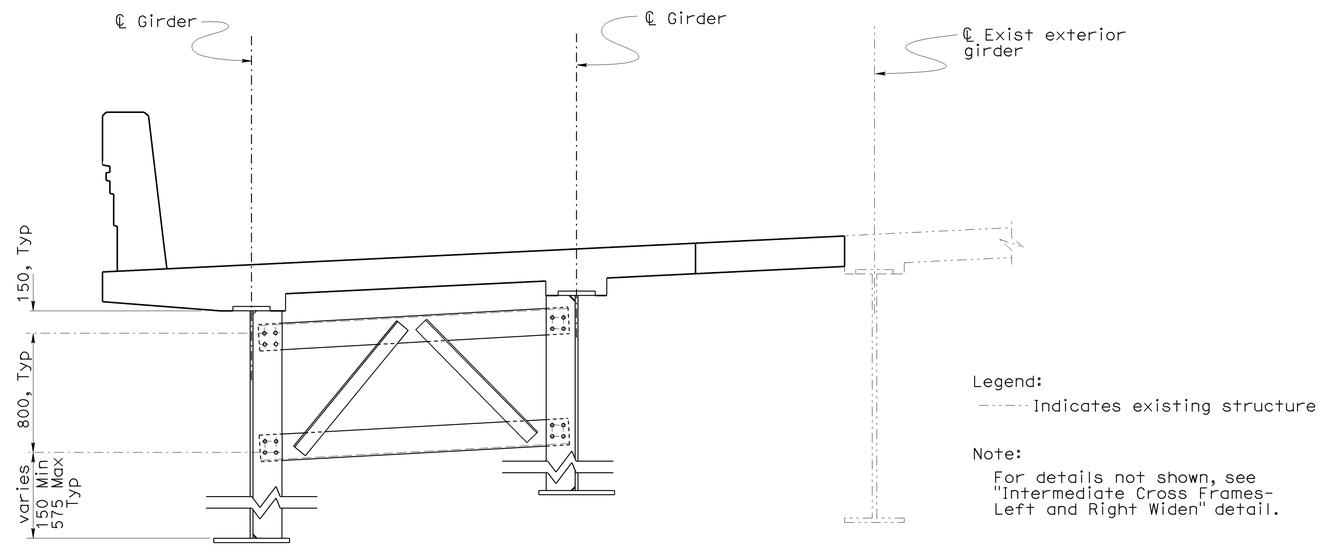

Legend:
Indicates existing structure

Note:
For details not shown, see "Intermediate Cross Frames-Left and Right Widen" detail.

INTERMEDIATE CROSS FRAMES - SPANS 6 & 7 LEFT WIDEN

1:20

NOTE:
THE CONTRACTOR SHALL VERIFY ALL CONTROLLING FIELD DIMENSIONS BEFORE ORDERING OR FABRICATING ANY MATERIAL.

Caltrans Metric

	BY	CHECKED
DESIGN	Ulysses Smpardos	Mark Okimura
DETAILS	Steven Schenck	Mark Okimura
QUANTITIES	E. Hall	R. Odell

STATE OF CALIFORNIA
DEPARTMENT OF TRANSPORTATION

DIVISION OF ENGINEERING SERVICES
STRUCTURE DESIGN
DESIGN BRANCH 15

BRIDGE NO. 53-1085
KILOMETER POST 46.1

PROVIDENCIA AVENUE OH (WIDEN)
MISCELLANEOUS DETAILS NO. 12

ALL DIMENSIONS ARE IN MILLIMETERS UNLESS OTHERWISE SHOWN

ORIGINAL SCALE IN MILLIMETERS FOR REDUCED PLANS 0 10 20 30 40 50 60 70 80 90 100

CU 07
EA 121841

DISREGARD PRINTS BEARING EARLIER REVISION DATES

REVISION DATES: 6-22-07 4-14-08 11-22-08 11-24-08 12-08-08 1-26-09 3-4-09 3-16-09

SHEET 96 OF 152

FILE => 53-1085-r-miscd12.dgn

STRUCTURES DESIGN DETAIL SHEET (METRIC) (REV.03-17-04)

USERNAME => trpierce DATE PLOTTED => 15-JUN-2009 TIME PLOTTED => 06:47

DIST	COUNTY	ROUTE	KILOMETER POST TOTAL PROJECT	SHEET No	TOTAL SHEETS
07	LA	5	42.8/47.3	886	1073

Andrew Rittenhouse 12-05-08
REGISTERED CIVIL ENGINEER DATE

6-8-09
PLANS APPROVAL DATE

REGISTERED PROFESSIONAL ENGINEER Andrew P. Rittenhouse No. 61006 Exp. 12-31-10 CIVIL STATE OF CALIFORNIA

The State of California or its officers or agents shall not be responsible for the accuracy or completeness of electronic copies of this plan sheet.

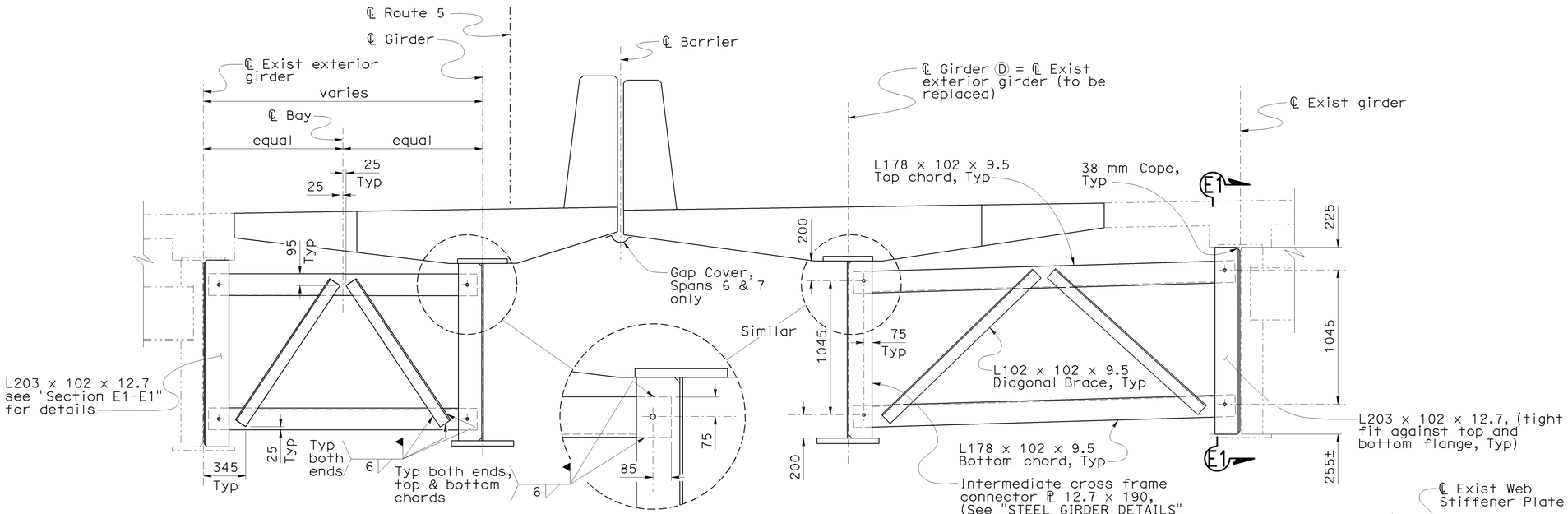

TYPICAL CONNECTION DETAIL

INTERMEDIATE CROSS FRAMES-MEDIAN WIDEN

1:20

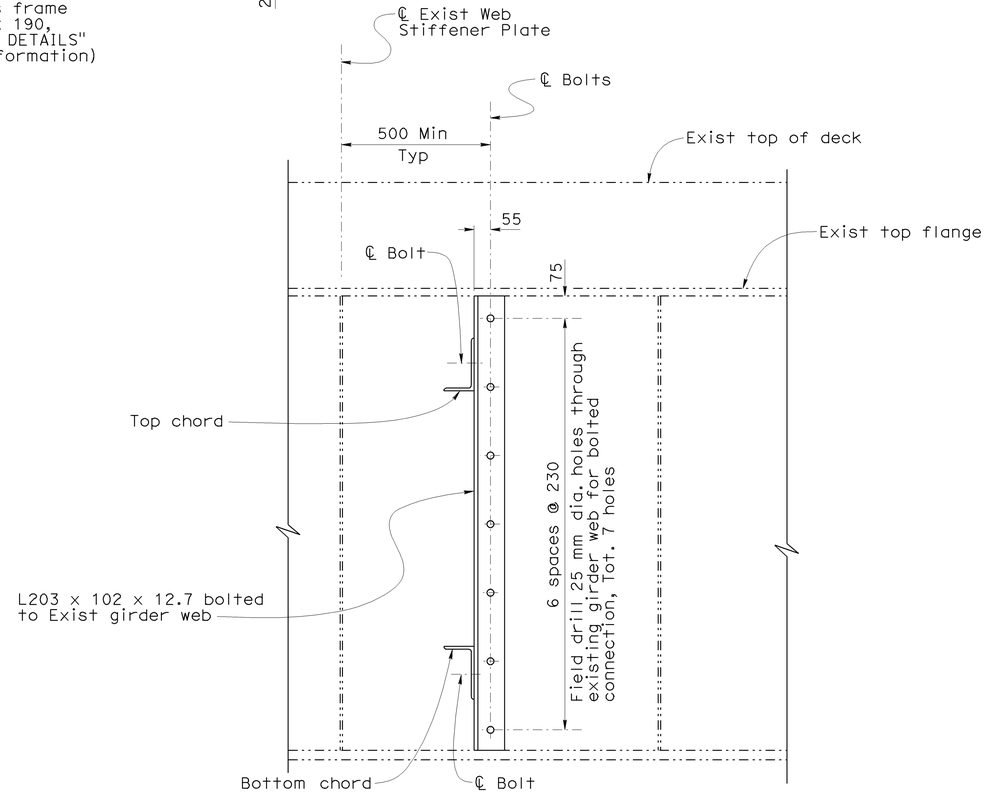

SECTION E1-E1

1:10

Legend:

-·-·-·- Indicates existing structure

Notes:

1. Top and bottom chords shall be held in place with bolts prior to placement of deck concrete. Bolts shall be snug tight to allow free deflection of girders during deck placement. Field-welding of top and bottom chords shall not be performed until after placement of closure pour concrete.
2. Field-welding of diagonal braces shall not be performed until after field-welding of top and bottom chords.
3. Tighten bolts to specifications after field-welding diagonal braces.

NOTE:
THE CONTRACTOR SHALL VERIFY ALL CONTROLLING FIELD DIMENSIONS BEFORE ORDERING OR FABRICATING ANY MATERIAL.

Caltrans Metric

	BY	CHECKED
DESIGN	Ulysses Smpardos	Mark Okimura
DETAILS	Steven Schenck	Mark Okimura
QUANTITIES	E. Hall	R. Odell

STATE OF CALIFORNIA
DEPARTMENT OF TRANSPORTATION

DIVISION OF ENGINEERING SERVICES
STRUCTURE DESIGN
DESIGN BRANCH 15

BRIDGE NO. 53-1085
KILOMETER POST 46.1

PROVIDENCIA AVENUE OH (WIDEN)
MISCELLANEOUS DETAILS NO. 13

ALL DIMENSIONS ARE IN MILLIMETERS UNLESS OTHERWISE SHOWN

ORIGINAL SCALE IN MILLIMETERS FOR REDUCED PLANS 0 10 20 30 40 50 60 70 80 90 100

CU 07
EA 121841

DISREGARD PRINTS BEARING EARLIER REVISION DATES

REVISION DATES 06-22-07 11-14-08 11-20-08 12-3-08 1-29-09 3-4-09

SHEET 97 OF 152

FILE => 53-1085-r-miscd13.dgn

STRUCTURES DESIGN DETAIL SHEET (METRIC) (REV.03-17-04)

USERNAME => trpierce DATE PLOTTED => 15-JUN-2009 TIME PLOTTED => 06:47

DIST	COUNTY	ROUTE	KILOMETER POST TOTAL PROJECT	SHEET No	TOTAL SHEETS
07	LA	5	42.8/47.3	887	1073

Andrew Rittenhouse 12-05-08
REGISTERED CIVIL ENGINEER DATE

6-8-09
PLANS APPROVAL DATE

The State of California or its officers or agents shall not be responsible for the accuracy or completeness of electronic copies of this plan sheet.

REGISTERED PROFESSIONAL ENGINEER
Andrew P. Rittenhouse
No. 61006
Exp. 12-31-10
CIVIL
STATE OF CALIFORNIA

Notes:

1. For "Section P1-P1" and "Section Q1-Q1" see "MISCELLANEOUS DETAILS NO. 22" sheet.
2. For "End Diaphragm Connection Detail" see "MISCELLANEOUS DETAILS NO. 22" sheet.
3. For End Diaphragm details at Pedestrian OH, see "PEDESTRIAN OH DETAILS NO. 10" sheet.

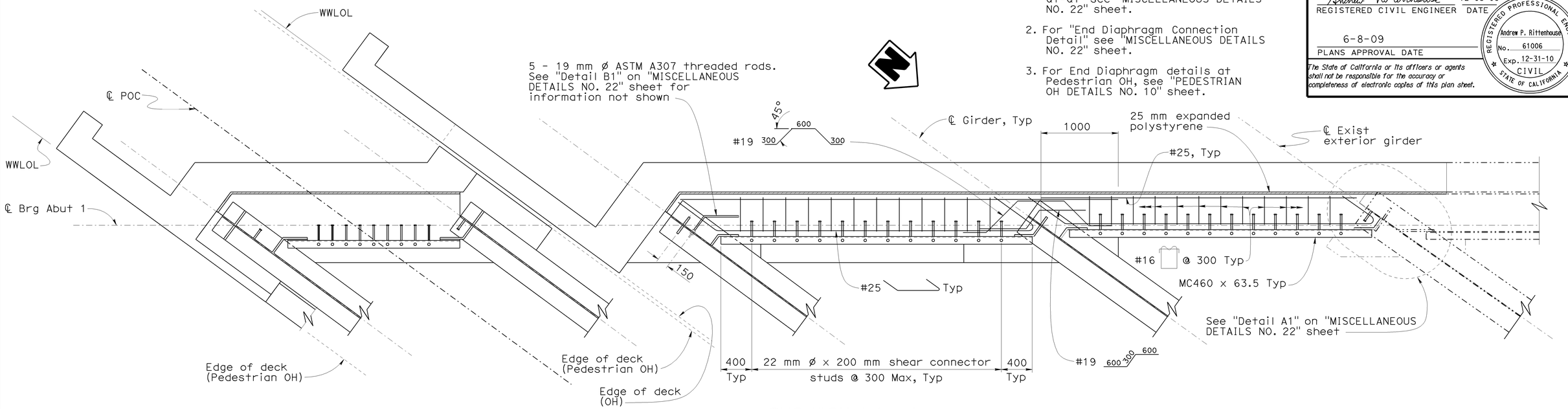

SECTION F1-F1

1:25

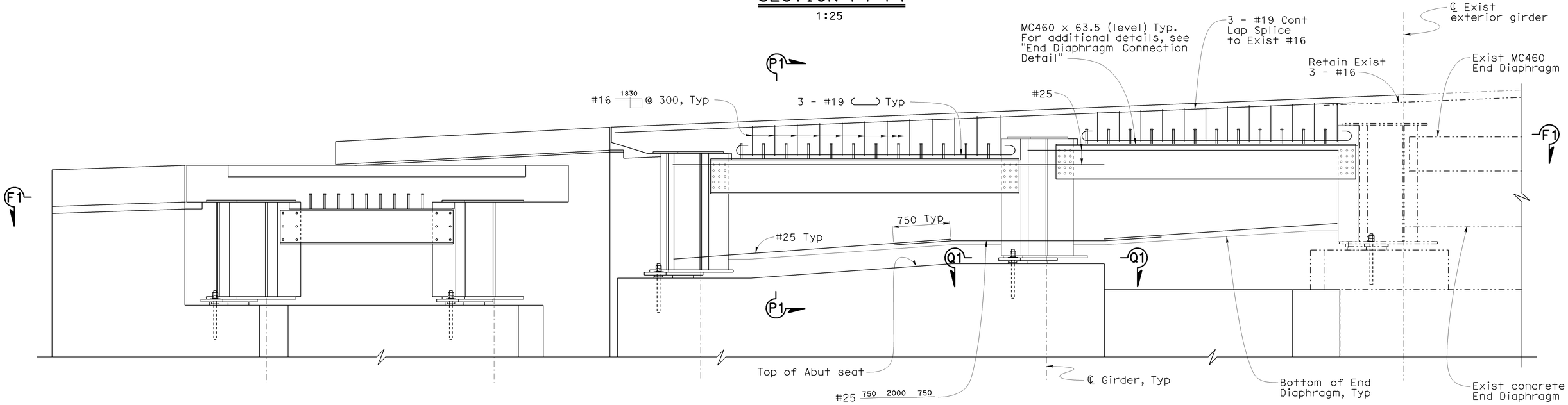

END DIAPHRAGM ELEVATION AT ABUTMENT 1 RIGHT WIDEN

1:25

NOTE:
THE CONTRACTOR SHALL VERIFY ALL CONTROLLING FIELD DIMENSIONS BEFORE ORDERING OR FABRICATING ANY MATERIAL.

Legend:
Indicates existing structure

DESIGN	BY Ulysses Smpardos	CHECKED Mark Okimura	STATE OF CALIFORNIA DEPARTMENT OF TRANSPORTATION	DIVISION OF ENGINEERING SERVICES STRUCTURE DESIGN DESIGN BRANCH 15	BRIDGE NO. 53-1085 / KILOMETER POST 46.1
DETAILS	BY Steven Schenck	CHECKED Mark Okimura			
QUANTITIES	BY E. Hall	CHECKED R. Odell			

PROVIDENCIA AVENUE OH (WIDEN)
MISCELLANEOUS DETAILS NO. 14

ALL DIMENSIONS ARE IN MILLIMETERS UNLESS OTHERWISE SHOWN

ORIGINAL SCALE IN MILLIMETERS FOR REDUCED PLANS 0 10 20 30 40 50 60 70 80 90 100

CU 07
EA 121841

FILE => 53-1085-r-miscd14.dgn

DISREGARD PRINTS BEARING EARLIER REVISION DATES

REVISION DATES: 11-24-08 | 12-01-08 | 12-24-08 | 1-26-09 | 3-4-09 | 3-16-09

SHEET 98 OF 152

STRUCTURES DESIGN DETAIL SHEET (METRIC) (REV.03-17-04)

USERNAME => ?ttpierce DATE PLOTTED => 15-JUN-2009 TIME PLOTTED => 06:47

DIST	COUNTY	ROUTE	KILOMETER POST TOTAL PROJECT	SHEET No	TOTAL SHEETS
07	LA	5	42.8/47.3	888	1073

Andrew P. Rittenhouse 12-05-08
REGISTERED CIVIL ENGINEER DATE

6-8-09
PLANS APPROVAL DATE

REGISTERED PROFESSIONAL ENGINEER
Andrew P. Rittenhouse
No. 61006
Exp. 12-31-10
CIVIL
STATE OF CALIFORNIA

The State of California or its officers or agents shall not be responsible for the accuracy or completeness of electronic copies of this plan sheet.

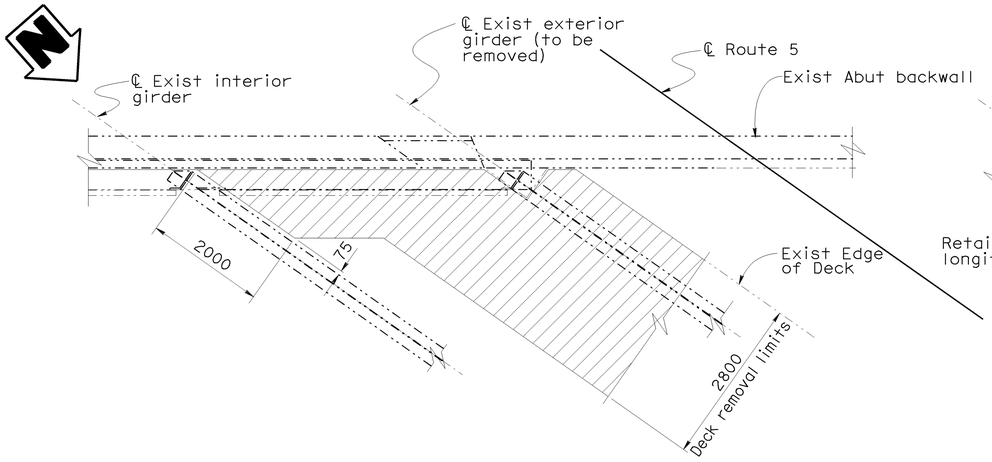

CONCRETE REMOVAL

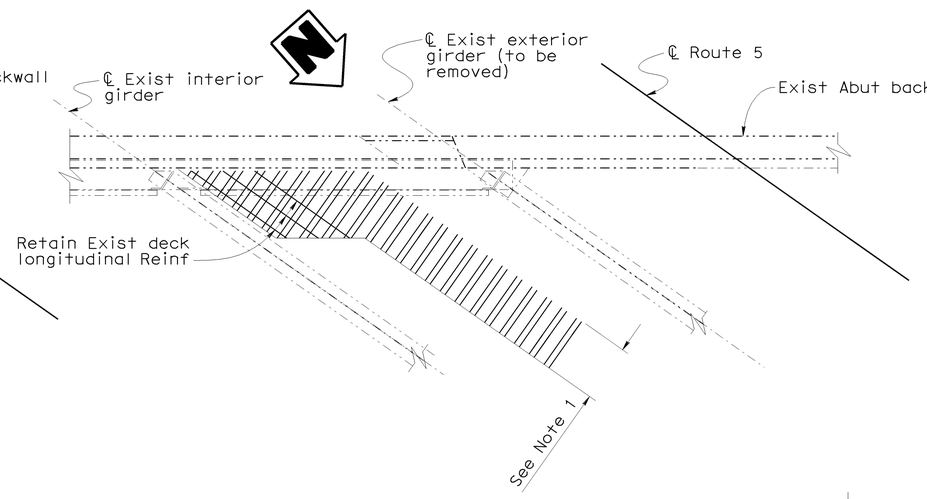

DECK REINFORCEMENT

DECK REMOVAL DETAIL AT ABUTMENT 1 MEDIAN WIDEN

1:50

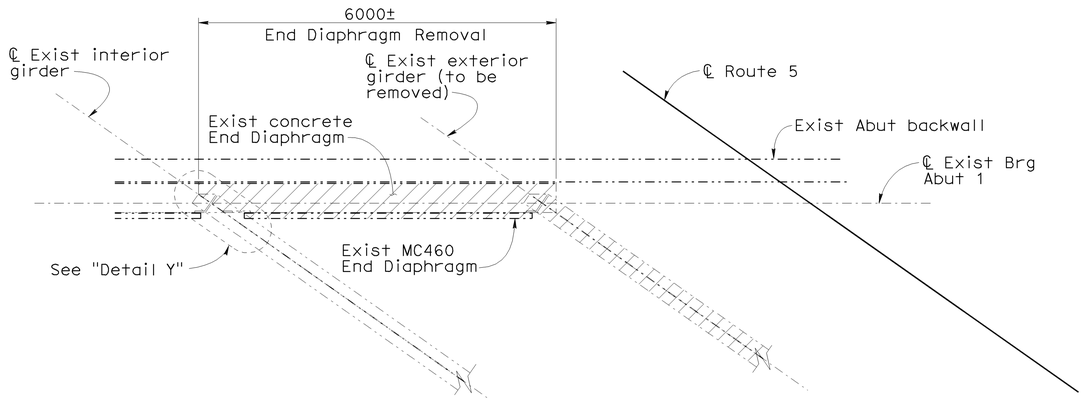

REMOVAL DETAIL - EXISTING END DIAPHRAGM AND EXTERIOR GIRDER AT ABUTMENT 1 MEDIAN WIDEN

1:50

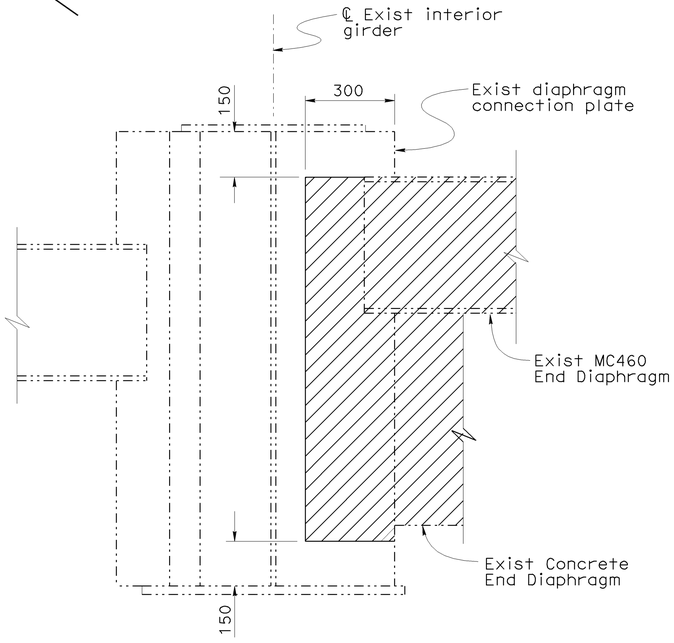

SECTION G1-G1

1:10

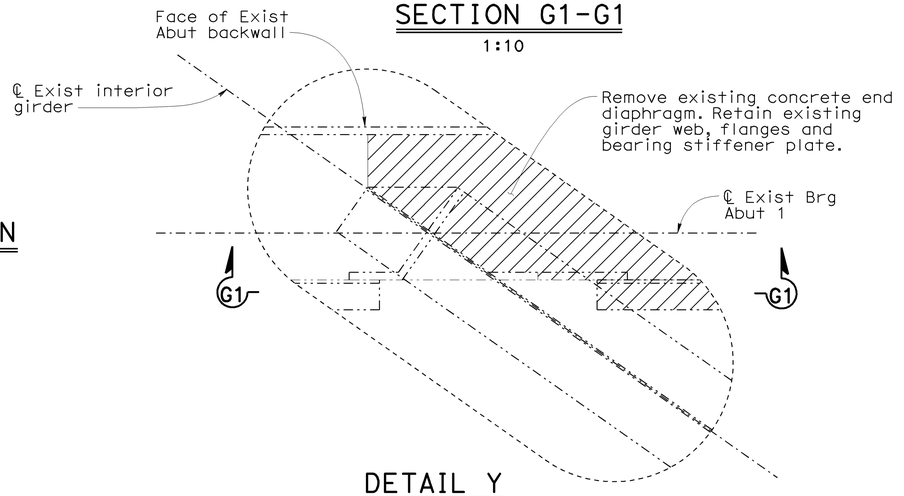

DETAIL Y

1:10

Notes:

1. Retain existing deck transverse reinforcement, see "Part Typical Section Median Widen" detail on "TYPICAL SECTION NO. 4" sheet for additional information.

Legend:

Indicates Bridge Removal (Portion)

Indicates existing structure

NOTE:
THE CONTRACTOR SHALL VERIFY ALL CONTROLLING FIELD DIMENSIONS BEFORE ORDERING OR FABRICATING ANY MATERIAL.

	BY	CHECKED
DESIGN	Ulysses Smpardos	F. Feng/C. Chan
DETAILS	Steven Schenck	F. Feng/C. Chan
QUANTITIES	E. Hall	R. Odell

STATE OF CALIFORNIA
DEPARTMENT OF TRANSPORTATION

DIVISION OF ENGINEERING SERVICES
STRUCTURE DESIGN
DESIGN BRANCH 15

BRIDGE NO. 53-1085
KILOMETER POST 46.1

PROVIDENCIA AVENUE OH (WIDEN)
MISCELLANEOUS DETAILS NO. 15

ALL DIMENSIONS ARE IN MILLIMETERS UNLESS OTHERWISE SHOWN

ORIGINAL SCALE IN MILLIMETERS FOR REDUCED PLANS 0 10 20 30 40 50 60 70 80 90 100

CU 07
EA 121841

DISREGARD PRINTS BEARING EARLIER REVISION DATES

REVISION DATES: 12-24-08 | 1-26-09 | 3-4-09

SHEET 99 OF 152

FILE => 53-1085-r-miscd15.dgn

STRUCTURES DESIGN DETAIL SHEET (METRIC) (REV.03-17-04)

USERNAME => ttpierce DATE PLOTTED => 15-JUN-2009 TIME PLOTTED => 06:47

DIST	COUNTY	ROUTE	KILOMETER POST TOTAL PROJECT	SHEET No	TOTAL SHEETS
07	LA	5	42.8/47.3	889	1073

Andrew P. Rittenhouse 12-05-08
REGISTERED CIVIL ENGINEER DATE

6-8-09
PLANS APPROVAL DATE

REGISTERED PROFESSIONAL ENGINEER
Andrew P. Rittenhouse
No. 61006
Exp. 12-31-10
CIVIL
STATE OF CALIFORNIA

The State of California or its officers or agents shall not be responsible for the accuracy or completeness of electronic copies of this plan sheet.

Notes:

1. For "Section P1-P1" and "Section Q1-Q1" see "MISCELLANEOUS DETAILS NO. 22" sheet.
2. For "End Diaphragm Connection Detail" see "MISCELLANEOUS DETAILS NO. 22" sheet.

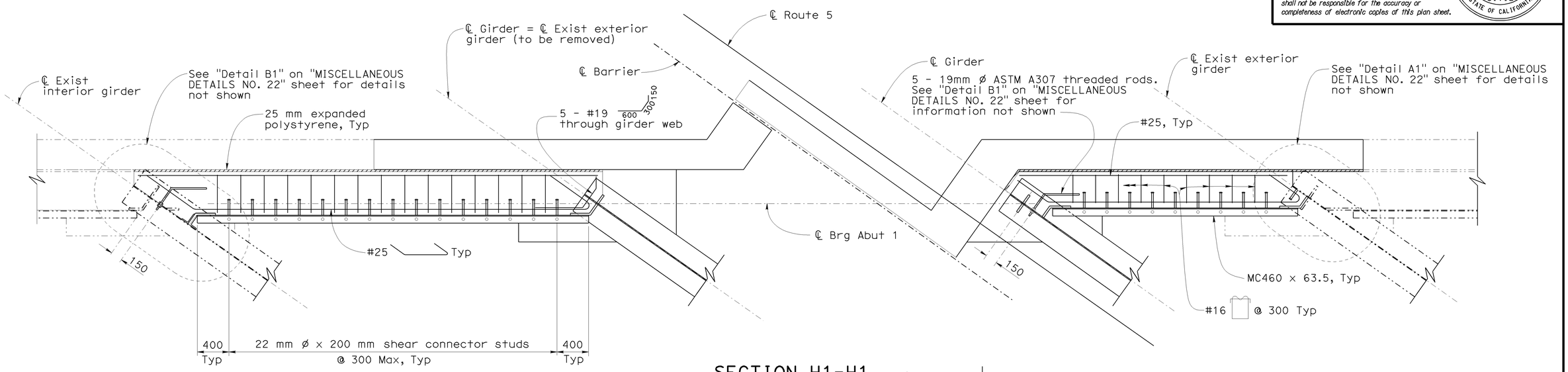

SECTION H1-H1

1:25

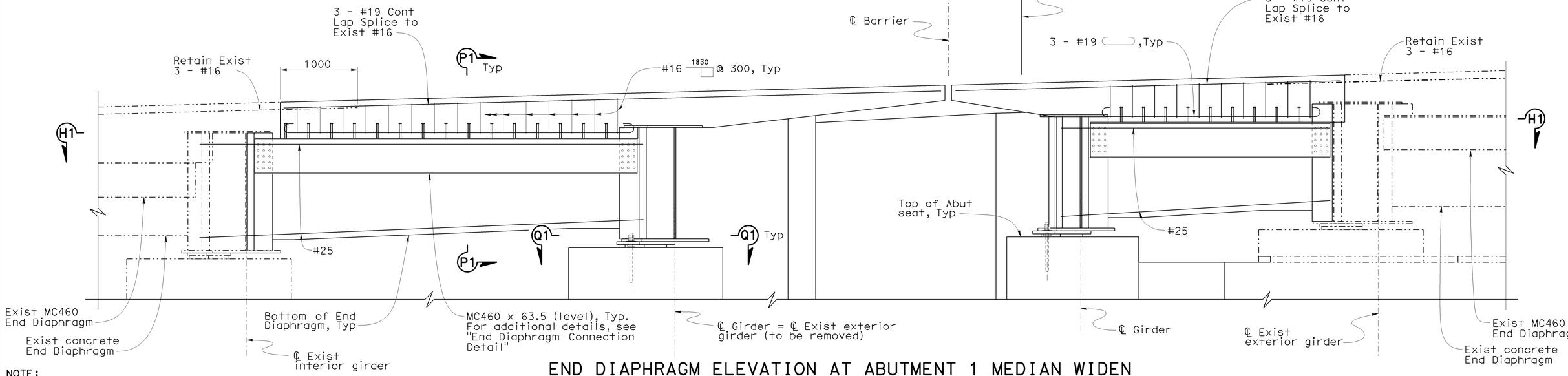

END DIAPHRAGM ELEVATION AT ABUTMENT 1 MEDIAN WIDEN

1:25

NOTE:
THE CONTRACTOR SHALL VERIFY ALL CONTROLLING FIELD DIMENSIONS BEFORE ORDERING OR FABRICATING ANY MATERIAL.

Legend:
-·-·-·- Indicates existing structure

DESIGN	BY Ulysses Smpardos	CHECKED Mark Okimura	
DETAILS	BY Steven Schenck	CHECKED Mark Okimura	
QUANTITIES	BY E. Hall	CHECKED R. Odell	

STATE OF CALIFORNIA
DEPARTMENT OF TRANSPORTATION

DIVISION OF ENGINEERING SERVICES
STRUCTURE DESIGN
DESIGN BRANCH 15

CU 07
EA 121841

BRIDGE NO. 53-1085
KILOMETER POST 46.1

PROVIDENCIA AVENUE OH (WIDEN)
MISCELLANEOUS DETAILS NO. 16

ALL DIMENSIONS ARE IN MILLIMETERS UNLESS OTHERWISE SHOWN

ORIGINAL SCALE IN MILLIMETERS FOR REDUCED PLANS 0 10 20 30 40 50 60 70 80 90 100

DISREGARD PRINTS BEARING EARLIER REVISION DATES →

REVISION DATES: 7-14-08 | 11-24-08 | 11-26-08 | 1-5-09 | 1-26-09 | 3-4-09 | 3-17-09

SHEET 100 OF 152

FILE => 53-1085-r-miscd16.dgn

STRUCTURES DESIGN DETAIL SHEET (METRIC) (REV.03-17-04)

USERNAME => rtpierce DATE PLOTTED => 15-JUN-2009 TIME PLOTTED => 06:47

DIST	COUNTY	ROUTE	KILOMETER POST TOTAL PROJECT	SHEET No	TOTAL SHEETS
07	LA	5	42.8/47.3	890	1073

Andrew P. Rittenhouse 12-05-08
REGISTERED CIVIL ENGINEER DATE

6-8-09
PLANS APPROVAL DATE

REGISTERED PROFESSIONAL ENGINEER — Andrew P. Rittenhouse — No. 61006 — Exp. 12-31-10 — CIVIL — STATE OF CALIFORNIA

The State of California or its officers or agents shall not be responsible for the accuracy or completeness of electronic copies of this plan sheet.

Notes:

1. For "Section P1-P1" and "Section Q1-Q1" see "MISCELLANEOUS DETAILS NO. 22" sheet.
2. For utility information not shown see "MISCELLANEOUS DETAILS NO. 23" sheet.
3. For "End Diaphragm Connection Detail" see "MISCELLANEOUS DETAILS NO. 22" sheet.

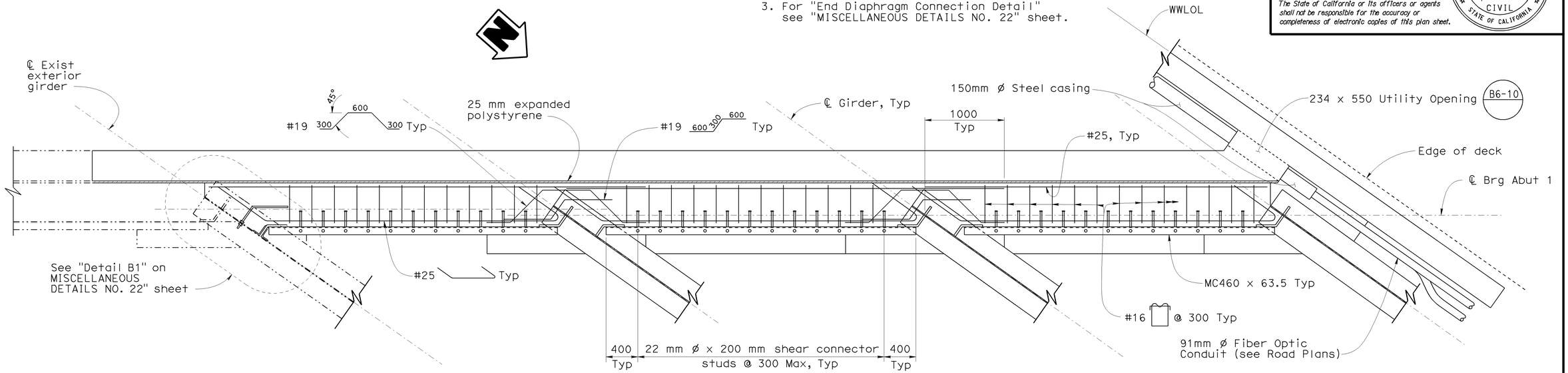

SECTION J1-J1

1:25

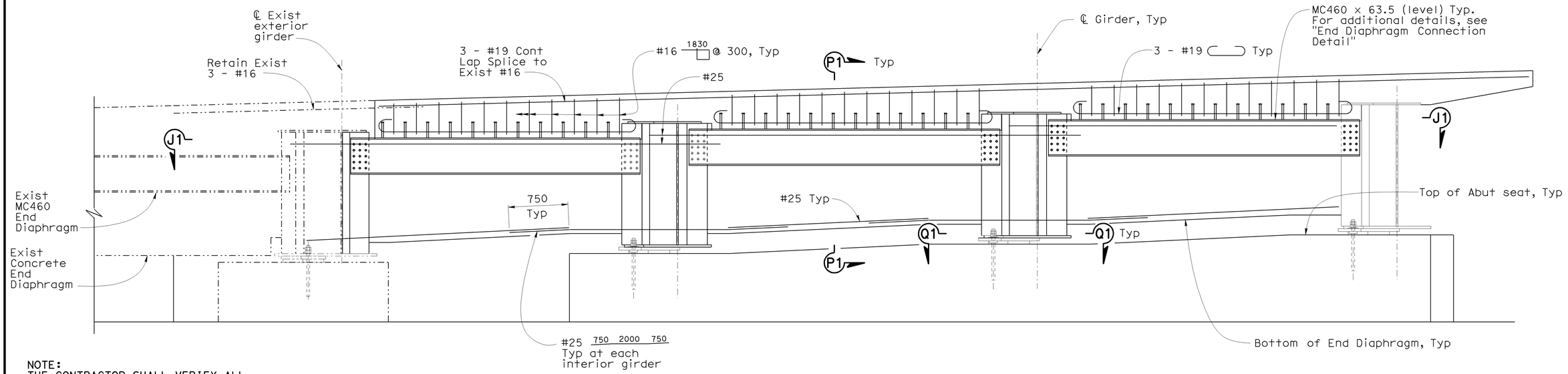

END DIAPHRAGM ELEVATION AT ABUTMENT 1 LEFT WIDEN

1:25

NOTE:
THE CONTRACTOR SHALL VERIFY ALL CONTROLLING FIELD DIMENSIONS BEFORE ORDERING OR FABRICATING ANY MATERIAL.

Legend:

-·-·-·- Indicates existing structure

Caltrans Metric

	BY	CHECKED
DESIGN	Ulysses Smpardos	Mark Okimura
DETAILS	Steven Schenck	Mark Okimura
QUANTITIES	E. Hall	R. Odell

STATE OF CALIFORNIA
DEPARTMENT OF TRANSPORTATION

DIVISION OF ENGINEERING SERVICES
STRUCTURE DESIGN
DESIGN BRANCH 15

CU 07
EA 121841

BRIDGE NO. 53-1085
KILOMETER POST 46.1

PROVIDENCIA AVENUE OH (WIDEN)
MISCELLANEOUS DETAILS NO.17

ALL DIMENSIONS ARE IN MILLIMETERS UNLESS OTHERWISE SHOWN

ORIGINAL SCALE IN MILLIMETERS FOR REDUCED PLANS 0 10 20 30 40 50 60 70 80 90 100

DISREGARD PRINTS BEARING EARLIER REVISION DATES →

REVISION DATES: 6-30-08 | 11-24-08 | 11-26-08 | 12-22-08 | 1-26-09 | 3-4-09 | 3-17-09

SHEET 101 OF 152

FILE => 53-1085-r-miscd17.dgn

STRUCTURES DESIGN DETAIL SHEET (METRIC) (REV.03-17-04)

USERNAME => trpierce DATE PLOTTED => 15-JUN-2009 TIME PLOTTED => 06:47

DIST	COUNTY	ROUTE	KILOMETER POST TOTAL PROJECT	SHEET No	TOTAL SHEETS
07	LA	5	42.8/47.3	891	1073

Andrew P. Rittenhouse 12-05-08
REGISTERED CIVIL ENGINEER DATE

6-8-09
PLANS APPROVAL DATE

REGISTERED PROFESSIONAL ENGINEER
Andrew P. Rittenhouse
No. 61006
Exp. 12-31-10
CIVIL
STATE OF CALIFORNIA

The State of California or its officers or agents shall not be responsible for the accuracy or completeness of electronic copies of this plan sheet.

Notes:

1. For "Section P1-P1" and "Section Q1-Q1" see "MISCELLANEOUS DETAILS NO. 22" sheet.
2. For "End Diaphragm Connection Detail" see "MISCELLANEOUS DETAILS NO. 22" sheet.
3. For utility information not shown see "MISCELLANEOUS DETAILS NO. 23" sheet.

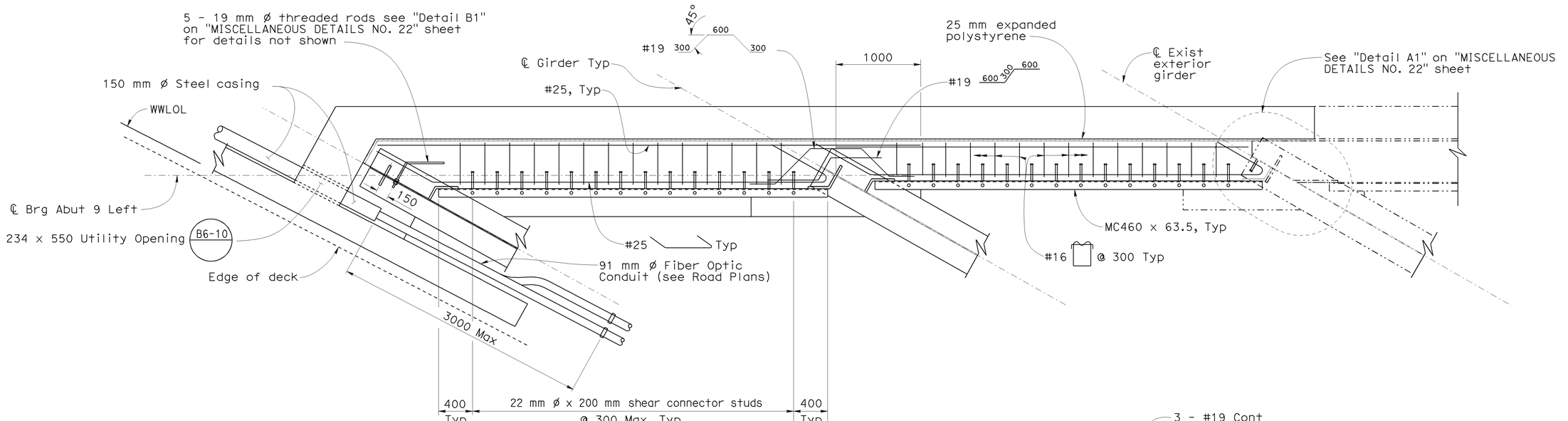

SECTION K1-K1

1:25

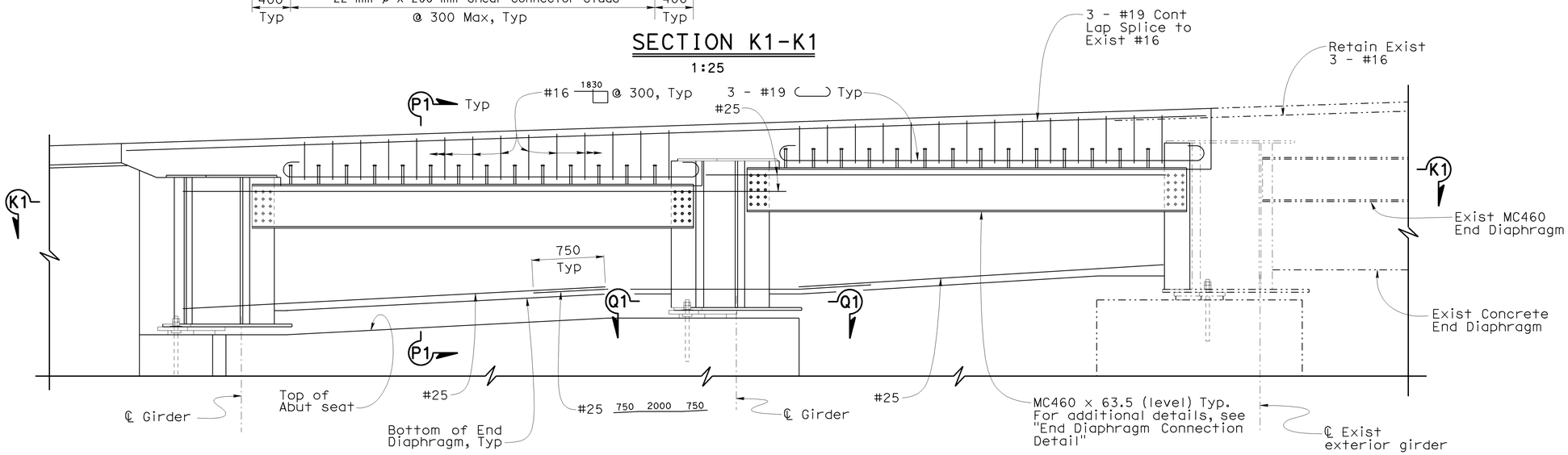

END DIAPHRAGM ELEVATION AT ABUTMENT 9 LEFT WIDEN

1:25

NOTE:
THE CONTRACTOR SHALL VERIFY ALL CONTROLLING FIELD DIMENSIONS BEFORE ORDERING OR FABRICATING ANY MATERIAL.

Legend:

-·-·-·- Indicates existing structure

Caltrans Metric

	BY	CHECKED
DESIGN	Ulysses Smpardos	Mark Okimura
DETAILS	Steven Schenck	Mark Okimura
QUANTITIES	E. Hall	R. Odell

STATE OF CALIFORNIA
DEPARTMENT OF TRANSPORTATION

DIVISION OF ENGINEERING SERVICES
STRUCTURE DESIGN
DESIGN BRANCH 15

CU 07
EA 121841

BRIDGE NO. 53-1085
KILOMETER POST 46.1

PROVIDENCIA AVENUE OH (WIDEN)
MISCELLANEOUS DETAILS NO. 18

ALL DIMENSIONS ARE IN MILLIMETERS UNLESS OTHERWISE SHOWN

ORIGINAL SCALE IN MILLIMETERS FOR REDUCED PLANS 0 10 20 30 40 50 60 70 80 90 100

DISREGARD PRINTS BEARING EARLIER REVISION DATES →

REVISION DATES: 11-24-08 | 12-03-08 | 12-11-08 | 1-26-09 | 3-5-09 | 3-17-09

SHEET 102 OF 152

FILE => 53-1085-r-miscd18.dgn

STRUCTURES DESIGN DETAIL SHEET (METRIC) (REV.03-17-04)

USERNAME => trpierce DATE PLOTTED => 15-JUN-2009 TIME PLOTTED => 06:47

DIST	COUNTY	ROUTE	KILOMETER POST TOTAL PROJECT	SHEET No	TOTAL SHEETS
07	LA	5	42.8/47.3	892	1073

Andrew P. Rittenhouse 12-05-08
REGISTERED CIVIL ENGINEER DATE

6-8-09
PLANS APPROVAL DATE

The State of California or its officers or agents shall not be responsible for the accuracy or completeness of electronic copies of this plan sheet.

REGISTERED PROFESSIONAL ENGINEER — Andrew P. Rittenhouse — No. 61006 — Exp. 12-31-10 — CIVIL — STATE OF CALIFORNIA

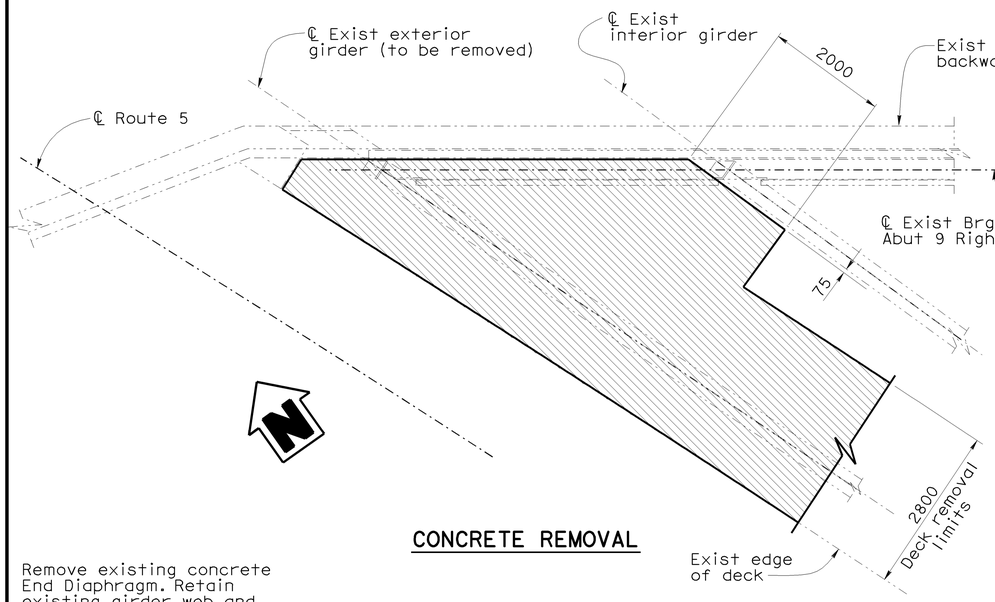

CONCRETE REMOVAL

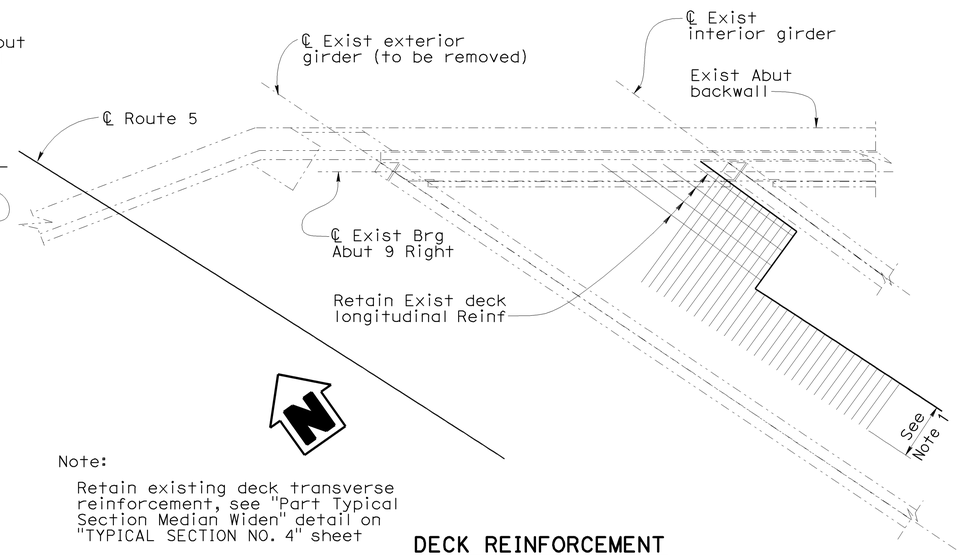

Note:

Retain existing deck transverse reinforcement, see "Part Typical Section Median Widen" detail on "TYPICAL SECTION NO. 4" sheet

DECK REINFORCEMENT

DECK REMOVAL DETAIL AT ABUTMENT 9 MEDIAN WIDEN

1:50

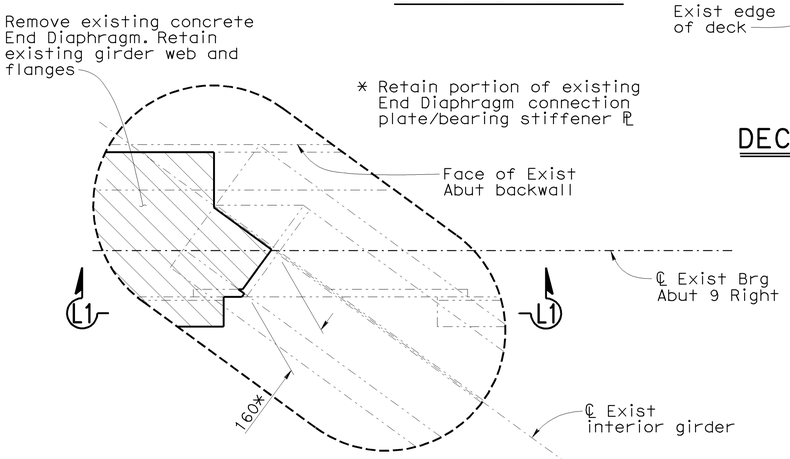

DETAIL Z

1:10

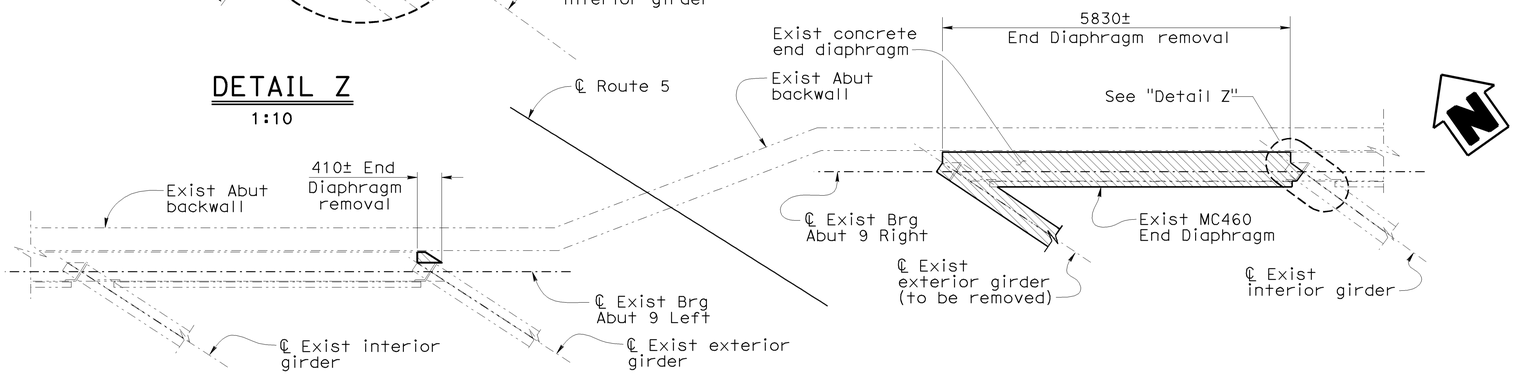

REMOVAL DETAIL - EXISTING END DIAPHRAGM AND EXTERIOR GIRDER AT ABUTMENT 9 MEDIAN WIDEN

1:50

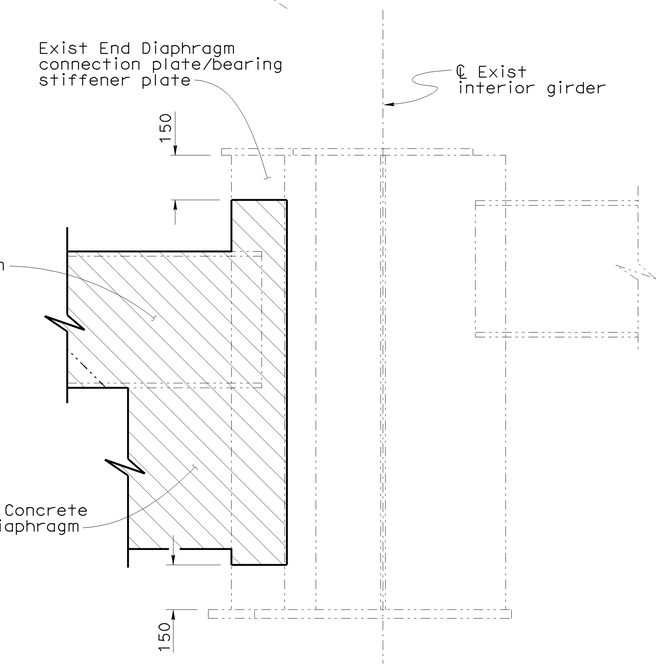

SECTION L1-L1

1:10

NOTE:
THE CONTRACTOR SHALL VERIFY ALL CONTROLLING FIELD DIMENSIONS BEFORE ORDERING OR FABRICATING ANY MATERIAL.

Legend:

Indicates Bridge Removal (Portion)

Indicates existing structure

DESIGN	BY Ulysses Smpardos	CHECKED F. Feng/C. Chan	
DETAILS	BY Steven Schenck	CHECKED F. Feng/C. Chan	
QUANTITIES	BY E. Hall	CHECKED R. Odell	

STATE OF CALIFORNIA
DEPARTMENT OF TRANSPORTATION

DIVISION OF ENGINEERING SERVICES
STRUCTURE DESIGN
DESIGN BRANCH 15

CU 07
EA 121841

BRIDGE NO. 53-1085
KILOMETER POST 46.1

PROVIDENCIA AVENUE OH (WIDEN)
MISCELLANEOUS DETAILS NO. 19

ALL DIMENSIONS ARE IN MILLIMETERS UNLESS OTHERWISE SHOWN

ORIGINAL SCALE IN MILLIMETERS FOR REDUCED PLANS 0 10 20 30 40 50 60 70 80 90 100

DISREGARD PRINTS BEARING EARLIER REVISION DATES →

REVISION DATES: 5-22-08 | 10-16-12 | 1-26-09 | 3-5-09 | 3-17-09

SHEET 103 OF 152

FILE => 53-1085-r-miscd19.dgn

STRUCTURES DESIGN DETAIL SHEET (METRIC) (REV.03-17-04)

USERNAME => srpierce DATE PLOTTED => 15-JUN-2009 TIME PLOTTED => 06:47

Notes:
1. For "Section P1-P1" and "Section Q1-Q1", see "MISCELLANEOUS DETAILS NO. 22" sheet.

2. For "End Diaphragm Connection Detail" see "MISCELLANEOUS DETAILS NO. 22" sheet.

DIST	COUNTY	ROUTE	KILOMETER POST TOTAL PROJECT	SHEET No	TOTAL SHEETS
07	LA	5	42.8/47.3	893	1073

Andrew R. Rittenhouse 12-05-08
REGISTERED CIVIL ENGINEER DATE

6-8-09
PLANS APPROVAL DATE

The State of California or its officers or agents shall not be responsible for the accuracy or completeness of electronic copies of this plan sheet.

REGISTERED PROFESSIONAL ENGINEER
Andrew P. Rittenhouse
No. 61006
Exp. 12-31-10
CIVIL
STATE OF CALIFORNIA

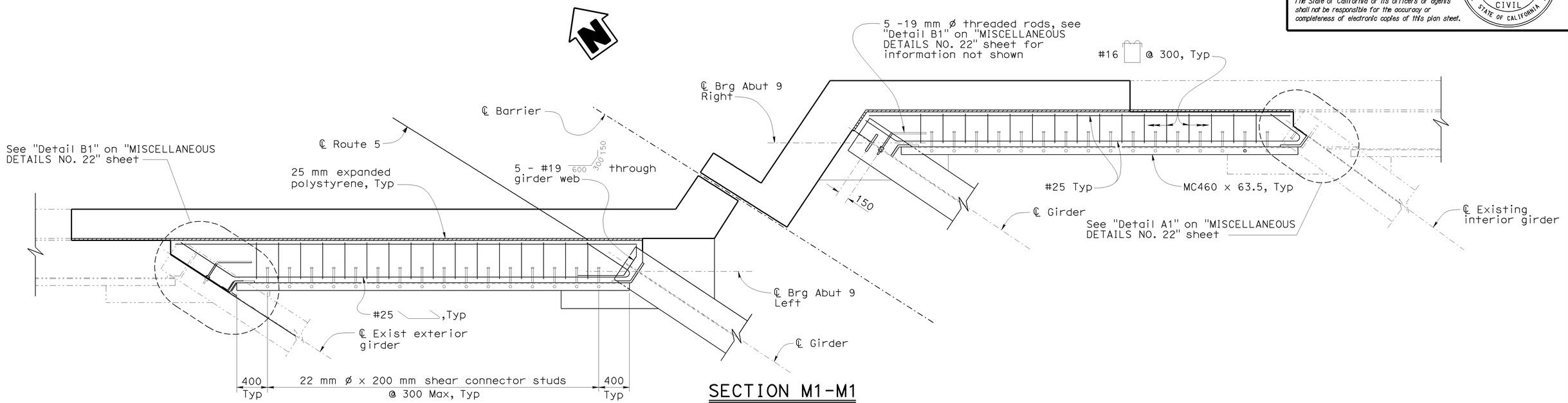

SECTION M1-M1
1:25

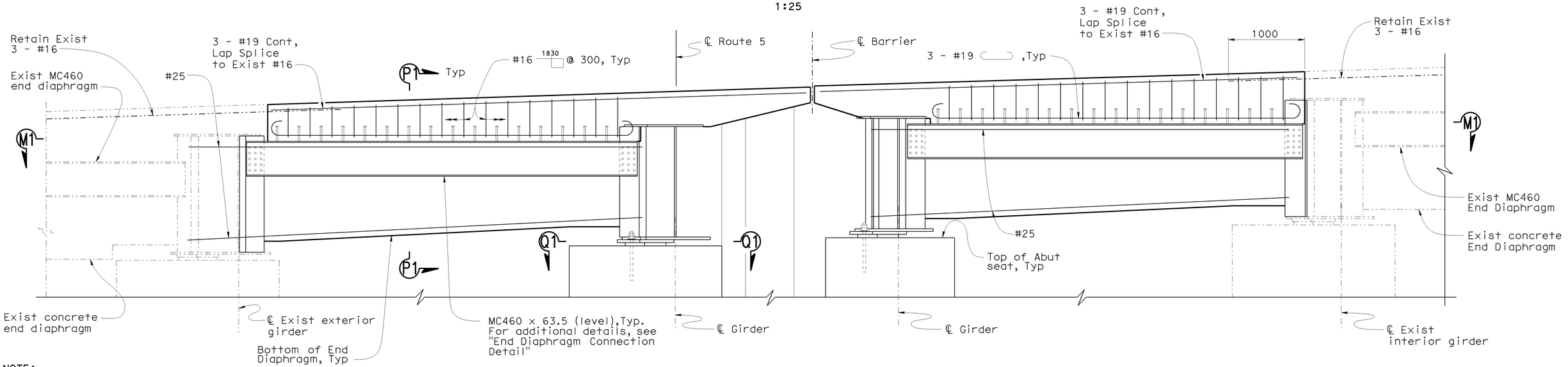

END DIAPHRAGM ELEVATION AT ABUTMENT 9 MEDIAN WIDEN
1:25

NOTE:
THE CONTRACTOR SHALL VERIFY ALL CONTROLLING FIELD DIMENSIONS BEFORE ORDERING OR FABRICATING ANY MATERIAL.

Legend:
Indicates existing structure

Caltrans Metric

ALL DIMENSIONS ARE IN MILLIMETERS UNLESS OTHERWISE SHOWN

ORIGINAL SCALE IN MILLIMETERS FOR REDUCED PLANS 0 10 20 30 40 50 60 70 80 90 100

	BY	CHECKED
DESIGN	Ulysses Smpardos	Mark Okimura
DETAILS	Steven Schenck	Mark Okimura
QUANTITIES	E. Hall	R. Odell

STATE OF CALIFORNIA
DEPARTMENT OF TRANSPORTATION

DIVISION OF ENGINEERING SERVICES
STRUCTURE DESIGN
DESIGN BRANCH 15

CU 07
EA 121841

BRIDGE NO. 53-1085
KILOMETER POST 46.1

PROVIDENCIA AVENUE OH (WIDEN)
MISCELLANEOUS DETAILS NO. 20

DISREGARD PRINTS BEARING EARLIER REVISION DATES →
REVISION DATES: 06-11-08 | 11-11-08 | 12-15-08 | 1-26-09 | 3-9-09 | 3-17-09

SHEET 104 OF 152

STRUCTURES DESIGN DETAIL SHEET (METRIC) (REV.03-17-04)

FILE => 53-1085-r-miscd20.dgn

USERNAME => ttpierce DATE PLOTTED => 15-JUN-2009 TIME PLOTTED => 06:48

DIST	COUNTY	ROUTE	KILOMETER POST TOTAL PROJECT	SHEET No	TOTAL SHEETS
07	LA	5	42.8/47.3	894	1073

Andrew P. Rittenhouse 12-05-08
REGISTERED CIVIL ENGINEER DATE

6-8-09
PLANS APPROVAL DATE

The State of California or its officers or agents shall not be responsible for the accuracy or completeness of electronic copies of this plan sheet.

REGISTERED PROFESSIONAL ENGINEER
Andrew P. Rittenhouse
No. 61006
Exp. 12-31-10
CIVIL
STATE OF CALIFORNIA

Notes:

1. For "Section P1-P1" and "Section Q1-Q1", see "MISCELLANEOUS DETAILS NO. 22" sheet.
2. For "End Diaphragm Connection Detail" see "MISCELLANEOUS DETAILS NO. 22" sheet.
3. For End Diaphragm details at Pedestrian OH, see "PEDESTRIAN OH DETAILS NO. 15" sheet.

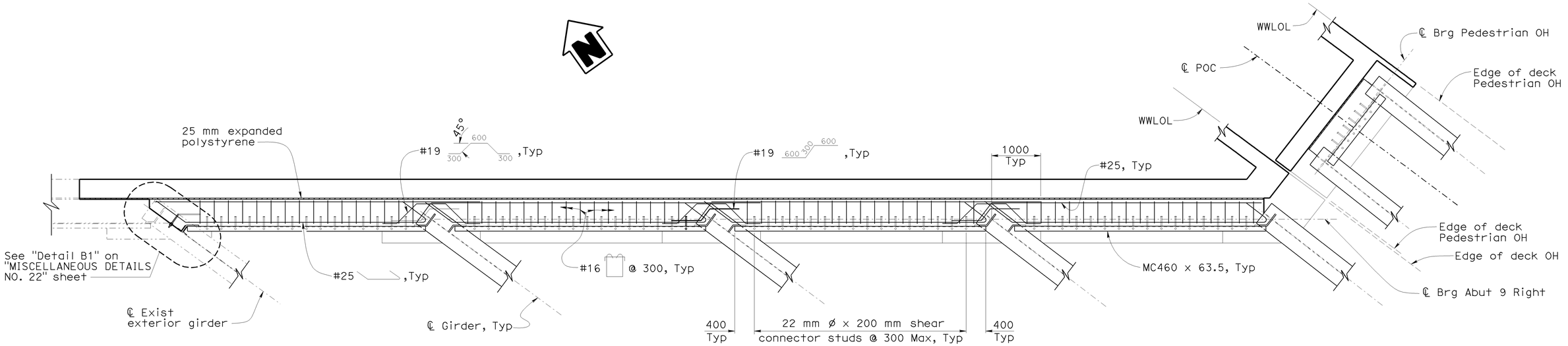

SECTION N1-N1

1:40

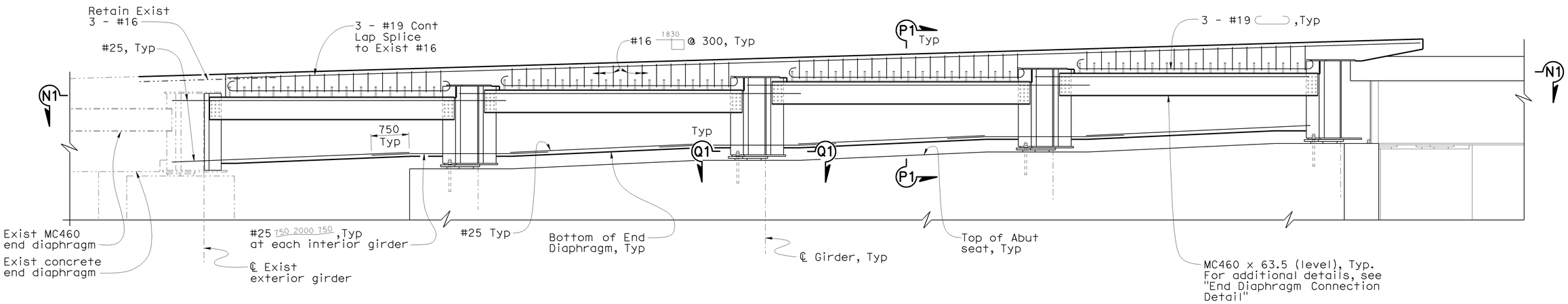

END DIAPHRAGM ELEVATION AT ABUTMENT 9 RIGHT WIDEN

1:40

NOTE:
THE CONTRACTOR SHALL VERIFY ALL CONTROLLING FIELD DIMENSIONS BEFORE ORDERING OR FABRICATING ANY MATERIAL.

Legend:

Indicates existing structure

Caltrans Metric

ALL DIMENSIONS ARE IN MILLIMETERS UNLESS OTHERWISE SHOWN

ORIGINAL SCALE IN MILLIMETERS FOR REDUCED PLANS 0 10 20 30 40 50 60 70 80 90 100

	BY	CHECKED
DESIGN	Ulysses Smpardos	Mark Okimura
DETAILS	Steven Schenck	Mark Okimura
QUANTITIES	E. Hall	R. Odell

STATE OF CALIFORNIA
DEPARTMENT OF TRANSPORTATION

DIVISION OF ENGINEERING SERVICES
STRUCTURE DESIGN
DESIGN BRANCH 15

CU 07
EA 121841

BRIDGE NO. 53-1085
KILOMETER POST 46.1

PROVIDENCIA AVENUE OH (WIDEN)
MISCELLANEOUS DETAILS NO. 21

DISREGARD PRINTS BEARING EARLIER REVISION DATES →

REVISION DATES: 11-24-08 | 11-26-08 | 1-26-09 | 3-9-09 | 3-17-09

SHEET 105 OF 152

FILE => 53-1085-r-miscd21.dgn

STRUCTURES DESIGN DETAIL SHEET (METRIC) (REV.03-17-04)

USERNAME => ttpierce DATE PLOTTED => 15-JUN-2009 TIME PLOTTED => 06:48

DIST	COUNTY	ROUTE	KILOMETER POST TOTAL PROJECT	SHEET No	TOTAL SHEETS
07	LA	5	42.8/47.3	895	1073

Andrew Rittenhouse 12-05-08
REGISTERED CIVIL ENGINEER DATE

6-8-09
PLANS APPROVAL DATE

The State of California or its officers or agents shall not be responsible for the accuracy or completeness of electronic copies of this plan sheet.

REGISTERED PROFESSIONAL ENGINEER — Andrew P. Rittenhouse — No. 61006 — Exp. 12-31-10 — CIVIL — STATE OF CALIFORNIA

Notes:

1. For additional details of sole plate, bearing pad and anchor rods, see "Section K-K" on "GIRDER DETAILS NO. 6" sheet.
2. For details of bearing stiffener plate and end diaphragm connection plate, see "Detail T" on "MISCELLANEOUS DETAILS NO. 6" sheet.
3. For details of shear connector stud not shown or noted see "Shear Connector Studs" detail on "STEEL GIRDER DETAILS" sheet.

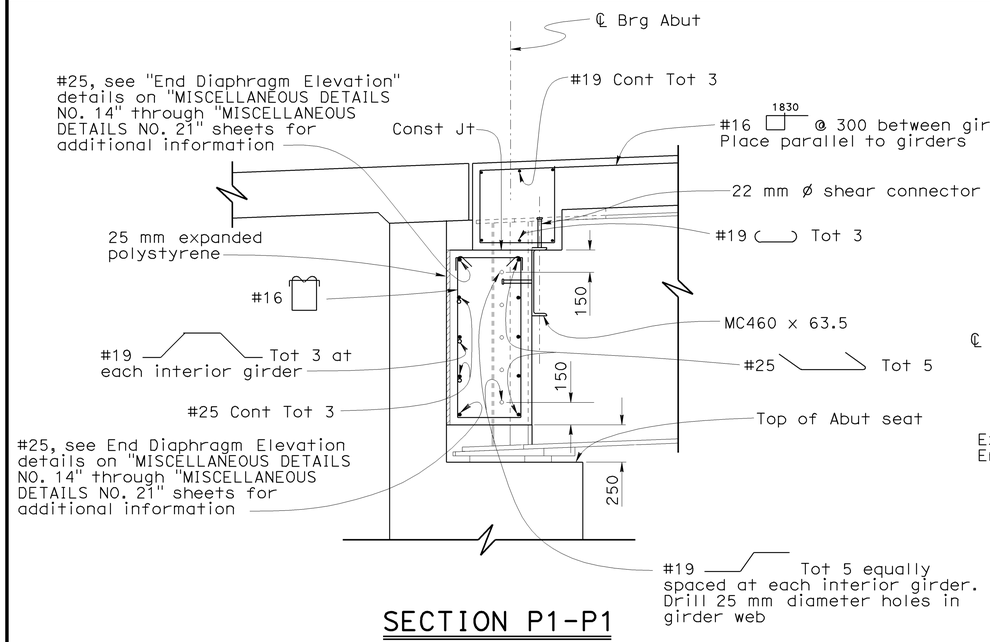

SECTION P1-P1

1:20

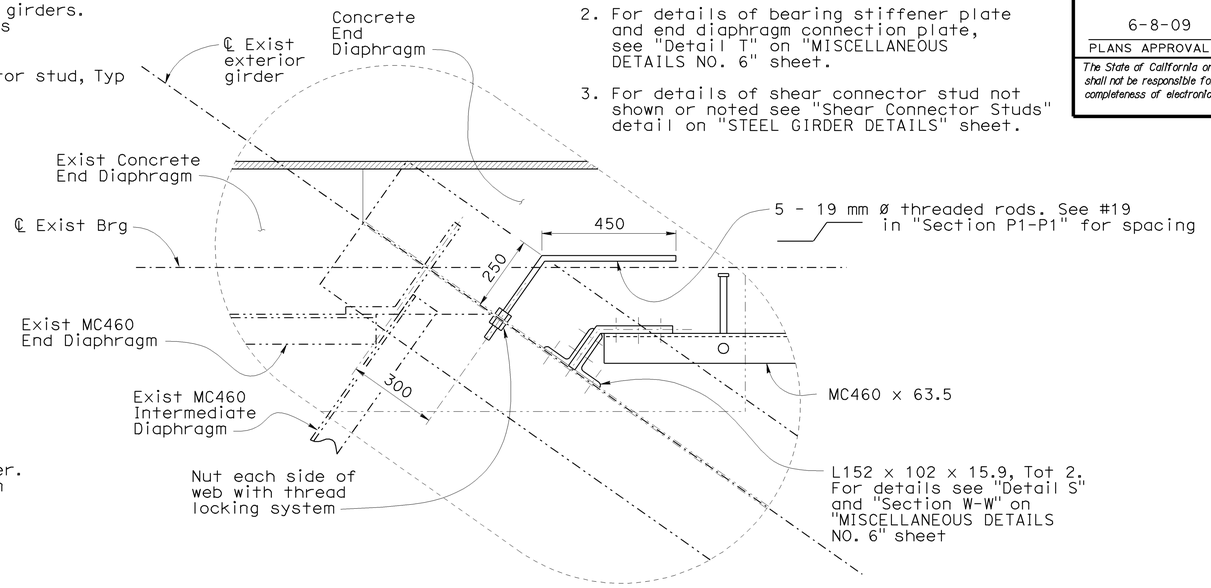

DETAIL B1

1:10

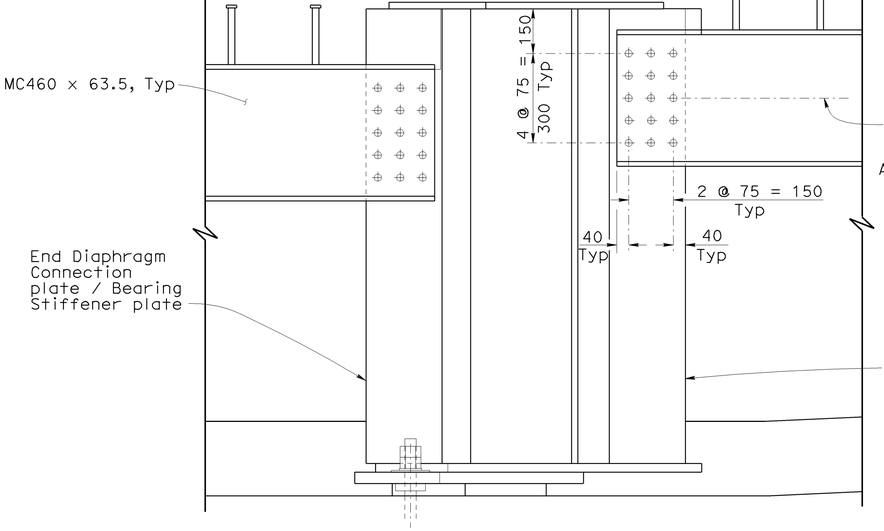

END DIAPHRAGM CONNECTION DETAIL

1:10

NOTE:
THE CONTRACTOR SHALL VERIFY ALL CONTROLLING FIELD DIMENSIONS BEFORE ORDERING OR FABRICATING ANY MATERIAL.

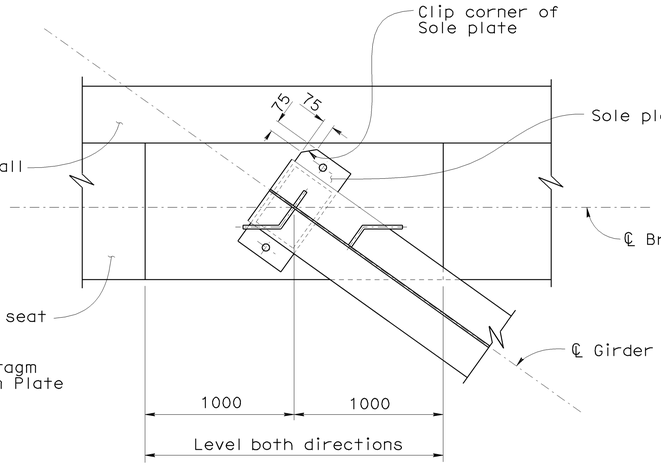

Note:

Fixed bearing detail shown. Expansion bearing similar.

SECTION Q1-Q1

1:20

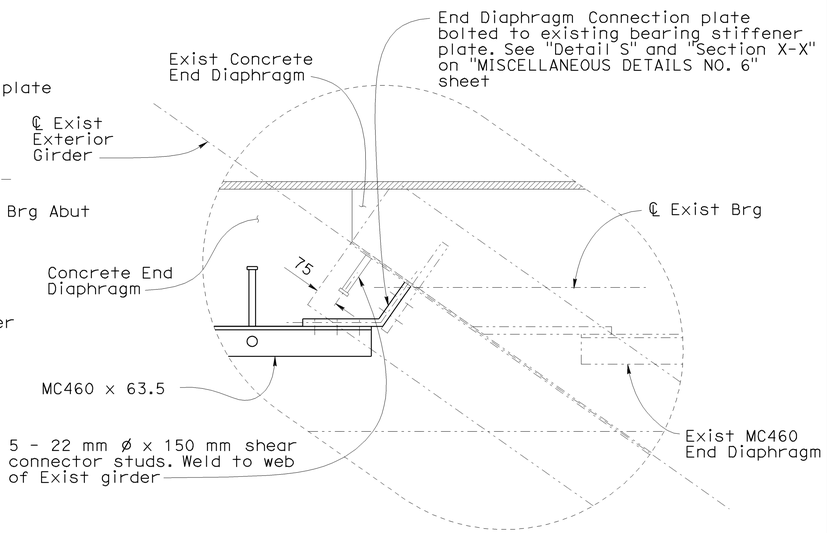

Legend:

-·-·-·- Indicates existing structure

DETAIL A1

1:10

DESIGN	BY Ulysses Smpardos	CHECKED Mark Okimura	
DETAILS	BY Steven Schenck	CHECKED Mark Okimura	
QUANTITIES	BY E. Hall	CHECKED R. Odell	

STATE OF CALIFORNIA
DEPARTMENT OF TRANSPORTATION

DIVISION OF ENGINEERING SERVICES
STRUCTURE DESIGN
DESIGN BRANCH 15

BRIDGE NO. 53-1085
KILOMETER POST 46.1

PROVIDENCIA AVENUE OH (WIDEN)
MISCELLANEOUS DETAILS NO. 22

ALL DIMENSIONS ARE IN MILLIMETERS UNLESS OTHERWISE SHOWN

ORIGINAL SCALE IN MILLIMETERS FOR REDUCED PLANS 0 10 20 30 40 50 60 70 80 90 100

CU 07
EA 121841

FILE => 53-1085-r-miscd22.dgn

DISREGARD PRINTS BEARING EARLIER REVISION DATES →

REVISION DATES: 6-30-08 | 11-24-08 | 11-26-08 | 12-10-08 | 1-26-09 | 3-3-09 | 3-18-09

SHEET 106 OF 152

STRUCTURES DESIGN DETAIL SHEET (METRIC) (REV.03-17-04)

USERNAME => ttpierce DATE PLOTTED => 15-JUN-2009 TIME PLOTTED => 06:48

DIST	COUNTY	ROUTE	KILOMETER POST TOTAL PROJECT	SHEET No	TOTAL SHEETS
07	LA	5	42.8/47.3	896	1073

Andrew Rittenhouse 12-05-08
REGISTERED CIVIL ENGINEER DATE

6-8-09
PLANS APPROVAL DATE

REGISTERED PROFESSIONAL ENGINEER
Andrew P. Rittenhouse
No. 61006
Exp. 12-31-10
CIVIL
STATE OF CALIFORNIA

The State of California or its officers or agents shall not be responsible for the accuracy or completeness of electronic copies of this plan sheet.

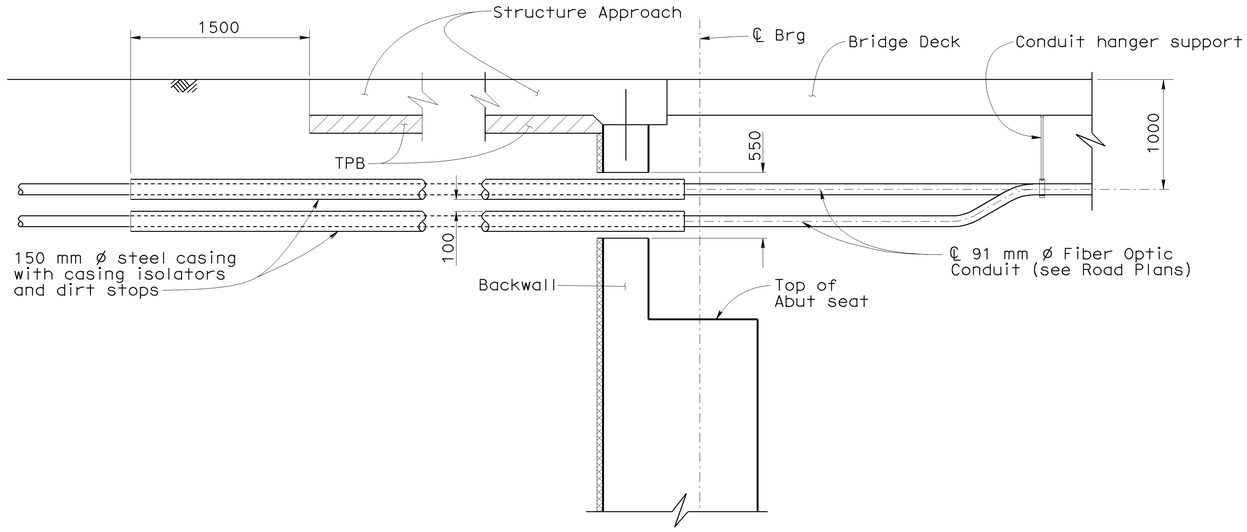

CONDUIT TRANSITION ELEVATION

1:25

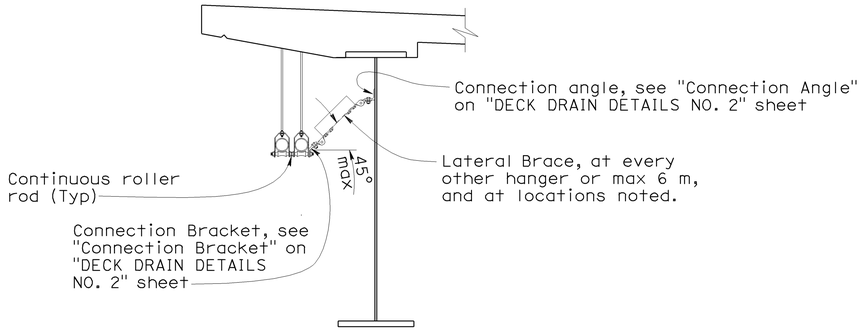

91 mm Ø FIBER OPTIC CONDUIT HANGER DETAIL

1:20

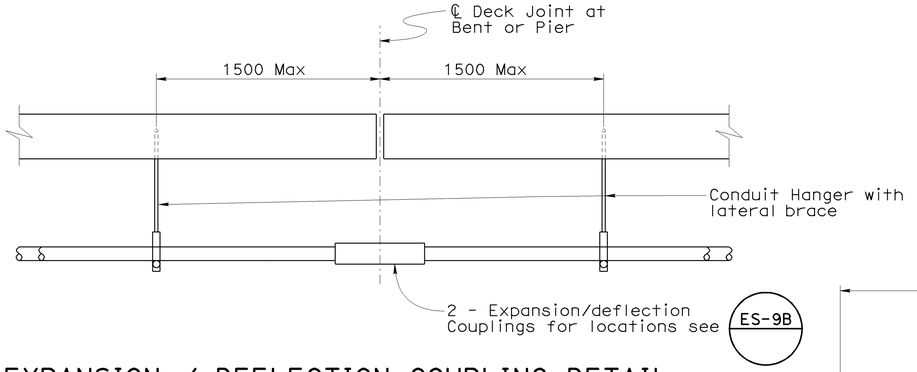

EXPANSION / DEFLECTION COUPLING DETAIL

1:20

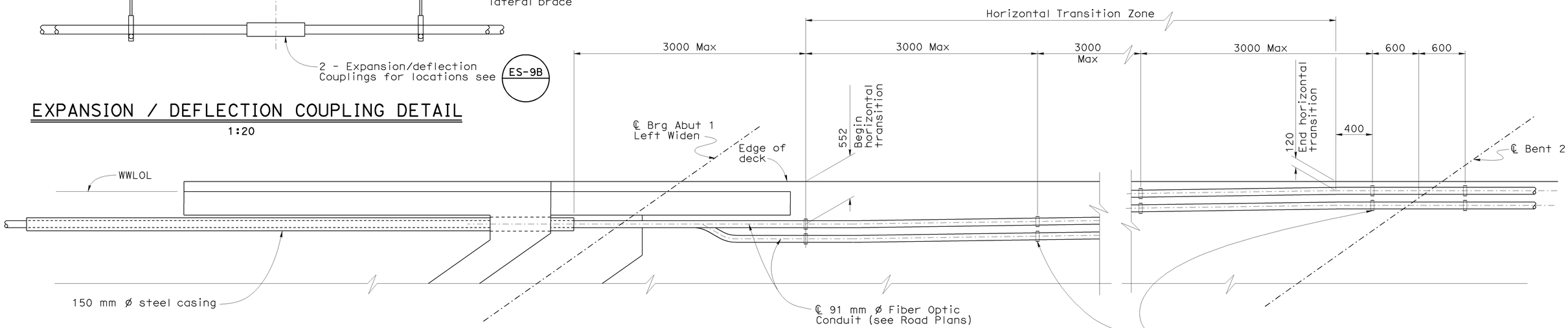

CONDUIT TRANSITION PLAN

1:25

Note:
Span 1 shown,
Span 8 similar.

Caltrans Metric

DESIGN	BY Christine Chan	CHECKED Andrew Rittenhouse	
DETAILS	BY Steven Schenck	CHECKED Traci Menard	
QUANTITIES	BY Christine Chan	CHECKED Fred Feng	

STATE OF CALIFORNIA
DEPARTMENT OF TRANSPORTATION

DIVISION OF ENGINEERING SERVICES
STRUCTURE DESIGN
DESIGN BRANCH 15

BRIDGE NO. 53-1085
KILOMETER POST 46.1

PROVIDENCIA AVENUE OH (WIDEN)
MISCELLANEOUS DETAILS NO. 23

ALL DIMENSIONS ARE IN MILLIMETERS UNLESS OTHERWISE SHOWN

ORIGINAL SCALE IN MILLIMETERS FOR REDUCED PLANS 0 10 20 30 40 50 60 70 80 90 100

CU 07
EA 121841

DISREGARD PRINTS BEARING EARLIER REVISION DATES

REVISION DATES: 11-24-08 11-29-08 1-26-09 3-9-09 3-18-09 4-02-09 5-14-09 6-10-09

SHEET 107 OF 152

FILE => 53-1085-r-miscd23.dgn

STRUCTURES DESIGN DETAIL SHEET (METRIC) (REV.03-17-04)

USERNAME => trmikesl DATE PLOTTED => 15-JUN-2009 TIME PLOTTED => 13:20

DIST	COUNTY	ROUTE	KILOMETER POST TOTAL PROJECT	SHEET No	TOTAL SHEETS
07	LA	5	42.8/47.3	897	1073

Andrew Rittenhouse 12-05-08
REGISTERED CIVIL ENGINEER DATE

6-8-09
PLANS APPROVAL DATE

The State of California or its officers or agents shall not be responsible for the accuracy or completeness of electronic copies of this plan sheet.

REGISTERED PROFESSIONAL ENGINEER
Andrew P. Rittenhouse
No. 61006
Exp. 12-31-10
CIVIL
STATE OF CALIFORNIA

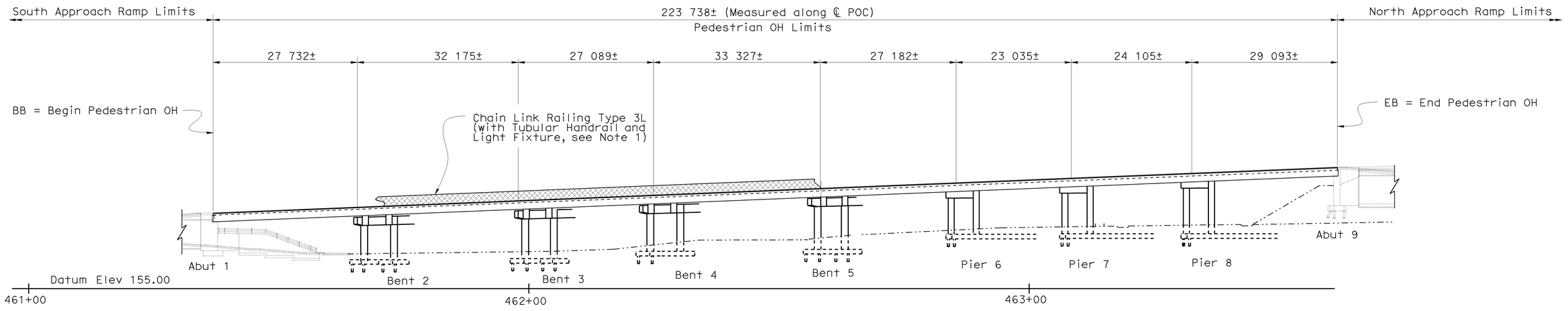

ELEVATION
1:400

Note:

1. BB (Abut 1) and EB (Abut 9) determine Chain Link Railing Limits for Pedestrian OH. For Chain Link Railing details, see "PEDESTRIAN OH DETAILS NO. 23" sheet.

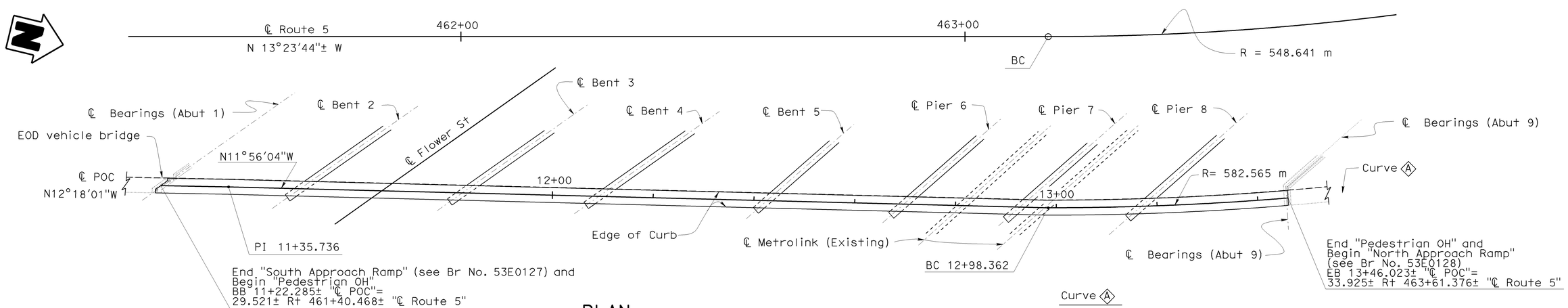

PLAN
1:400

Curve A
R= 582.565 m
Δ= 13°8'32"
T= 67.107 m
L= 133.625 m

NOTE:
THE CONTRACTOR SHALL VERIFY ALL CONTROLLING FIELD DIMENSIONS BEFORE ORDERING OR FABRICATING ANY MATERIAL.

Caltrans Metric

ALL DIMENSIONS ARE IN MILLIMETERS UNLESS OTHERWISE SHOWN

ORIGINAL SCALE IN MILLIMETERS FOR REDUCED PLANS 0 10 20 30 40 50 60 70 80 90 100

	BY	CHECKED
DESIGN	A. Logus	C. Moulton
DETAILS	S. Cholda	C. Chan
QUANTITIES	A. Logus	D. Kubochi

STATE OF CALIFORNIA
DEPARTMENT OF TRANSPORTATION

DESIGN BRANCH 15

CU 07
EA 121841

FILE => 53-1085-s-mr_alo.dgn

BRIDGE NO. 53-1085
KILOMETER POST 46.1

PROVIDENCIA AVENUE OH (WIDEN)
PEDESTRIAN OH LAYOUT

DISREGARD PRINTS BEARING EARLIER REVISION DATES →

REVISION DATES: 01-04-08 | 10-28-08 | 11-04-08 | 11-20-08 | 12-16-08 | 01-15-09 | 01-21-09 | 01-27-09

SHEET 108 OF 152

STRUCTURES DESIGN DETAIL SHEET (METRIC) (REV.03-17-04)

USERNAME => ttpierce DATE PLOTTED => 15-JUN-2009 TIME PLOTTED => 06:48

DIST	COUNTY	ROUTE	KILOMETER POST TOTAL PROJECT	SHEET No	TOTAL SHEETS
07	LA	5	42.8/47.3	898	1073

Andrew Rittenhouse 12-05-08
REGISTERED CIVIL ENGINEER DATE

6-8-09
PLANS APPROVAL DATE

The State of California or its officers or agents shall not be responsible for the accuracy or completeness of electronic copies of this plan sheet.

REGISTERED PROFESSIONAL ENGINEER — Andrew P. Rittenhouse — No. 61006 — Exp. 12-31-10 — CIVIL — STATE OF CALIFORNIA

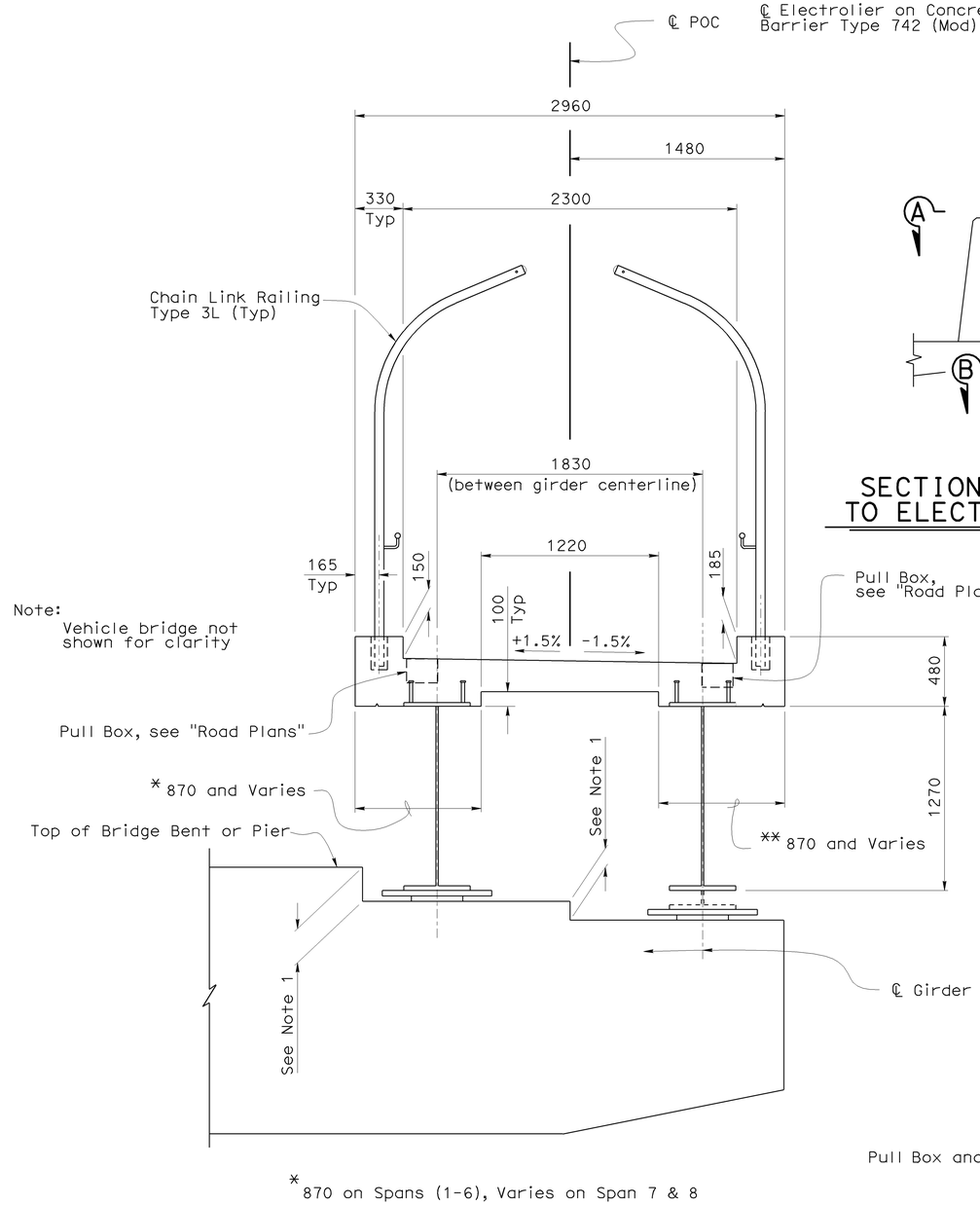

TYPICAL SECTION
1:20

NOTE:
THE CONTRACTOR SHALL VERIFY ALL CONTROLLING FIELD DIMENSIONS BEFORE ORDERING OR FABRICATING ANY MATERIAL.

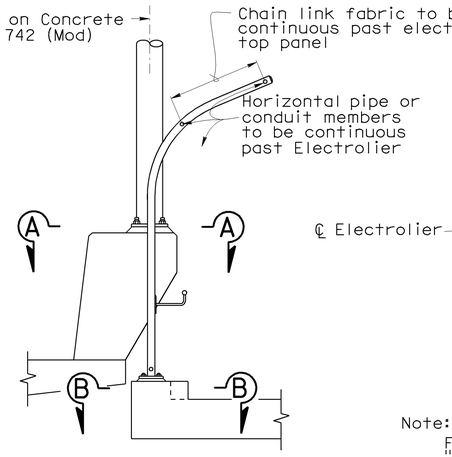

SECTION VIEW ADJACENT TO ELECTROLIER LOCATION
1:25

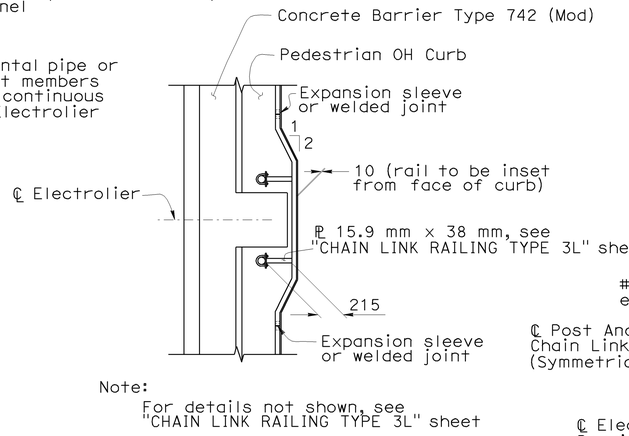

Note:
For details not shown, see "CHAIN LINK RAILING TYPE 3L" sheet

VIEW A-A
1:25

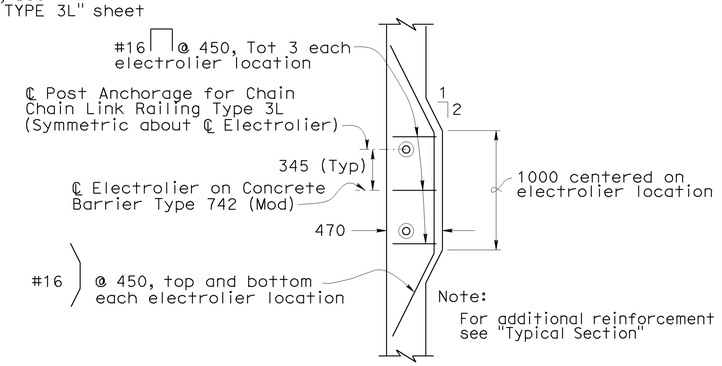

Note:
For additional reinforcement see "Typical Section"

SECTION B-B
1:25

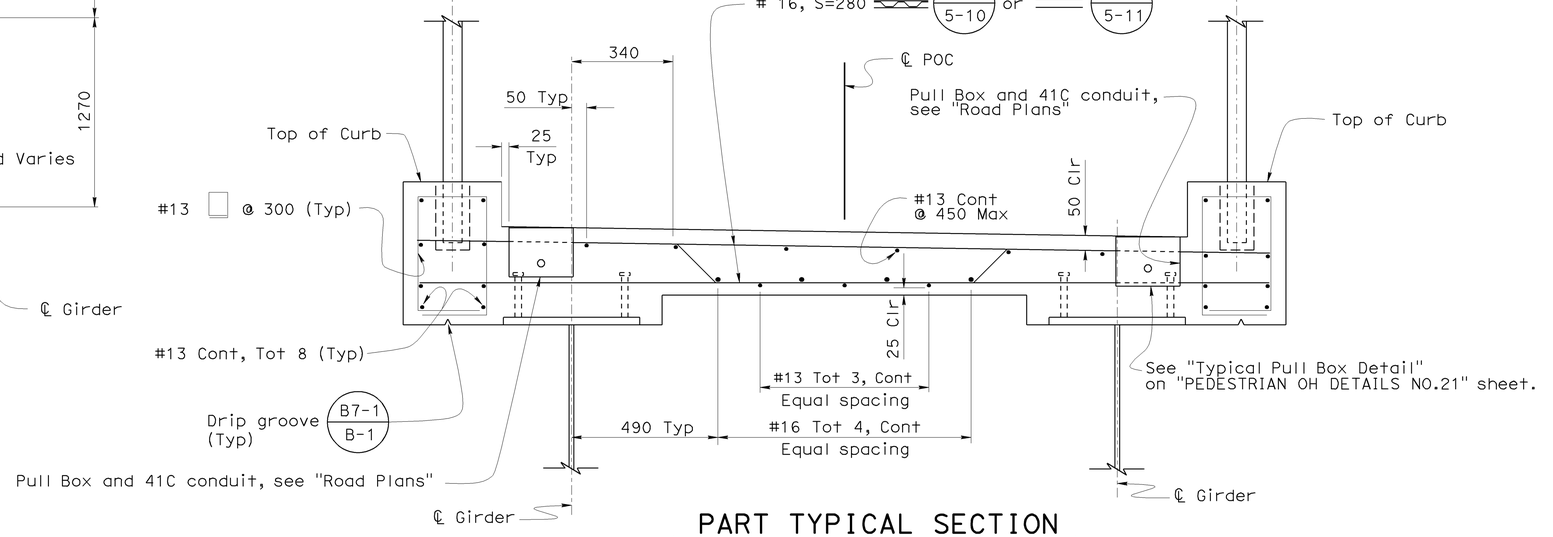

PART TYPICAL SECTION
1:10

Notes:

1. See detail structure drawings on "BENT 2 LAYOUT" through "BENT 5 LAYOUT" sheets, and "PIER 6 LAYOUT" through "PIER 8 LAYOUT" sheets.
2. Top of curbs to be level across sidewalk.
3. 41C conduit to be vertically centered between top and bottom transverse reinforcement.
4. For pullbox and lighting locations, see "Road Plans".

Caltrans Metric

	BY	CHECKED
DESIGN	A. Logus	C. Moulton
DETAILS	S. Cholda	C. Chan
QUANTITIES	A. Logus	D. Kubochi

STATE OF CALIFORNIA
DEPARTMENT OF TRANSPORTATION

DIVISION OF ENGINEERING SERVICES
STRUCTURE DESIGN
DESIGN BRANCH 15

CU 07
EA 121841

BRIDGE NO. 53-1085
KILOMETER POST 46.1

PROVIDENCIA AVENUE OH (WIDEN)
PEDESTRIAN OH DETAILS NO.1

ALL DIMENSIONS ARE IN MILLIMETERS UNLESS OTHERWISE SHOWN

ORIGINAL SCALE IN MILLIMETERS FOR REDUCED PLANS 0 10 20 30 40 50 60 70 80 90 100

DISREGARD PRINTS BEARING EARLIER REVISION DATES →

REVISION DATES: 01-05-08 | 02-03-09 | 10-28-08 | 10-29-08 | 10-31-08 | 11-04-08 | 11-20-08 | 01-16-09 | 1-26-09 | 1-27-09

SHEET 109 OF 152

STRUCTURES DESIGN DETAIL SHEET (METRIC) (REV.03-17-04)

FILE => 53-1085-s-mr_det01.dgn

USERNAME => prpierce DATE PLOTTED => 15-JUN-2009 TIME PLOTTED => 06:48

DIST	COUNTY	ROUTE	KILOMETER POST TOTAL PROJECT	SHEET No	TOTAL SHEETS
07	LA	5	42.8/47.3	899	1073

Andrew Rittenhouse 12-05-08
REGISTERED CIVIL ENGINEER DATE

6-8-09
PLANS APPROVAL DATE

The State of California or its officers or agents shall not be responsible for the accuracy or completeness of electronic copies of this plan sheet.

REGISTERED PROFESSIONAL ENGINEER
Andrew P. Rittenhouse
No. 61006
Exp. 12-31-10
CIVIL
STATE OF CALIFORNIA

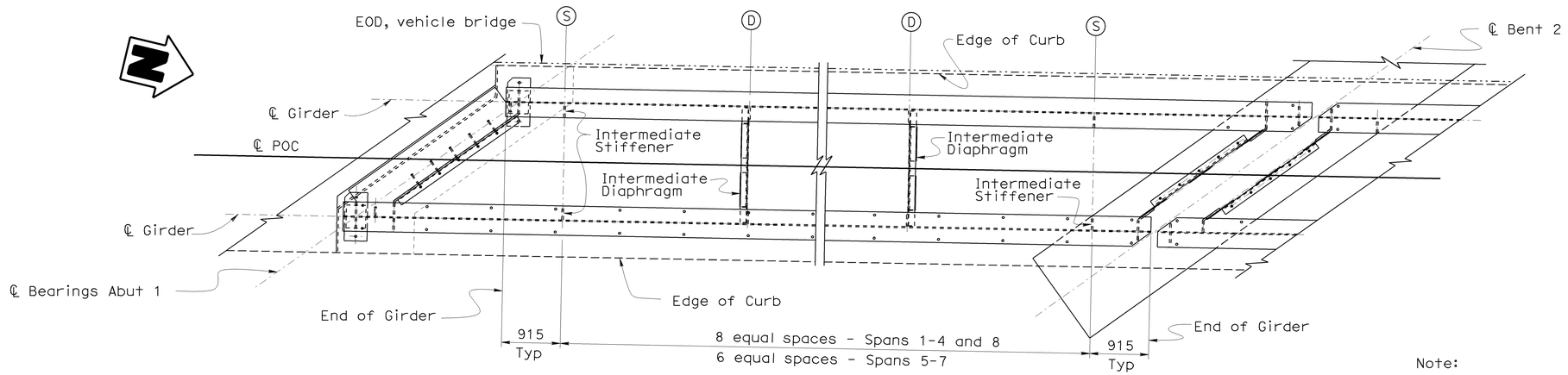

Note:
Span 1 shown, Spans 2-8 similar

Note:
1. For Intermediate Stiffener and Intermediate Diaphragm details, see "Pedestrian OH Details No.4" sheet.

PART PLAN (SPAN I)
1:40

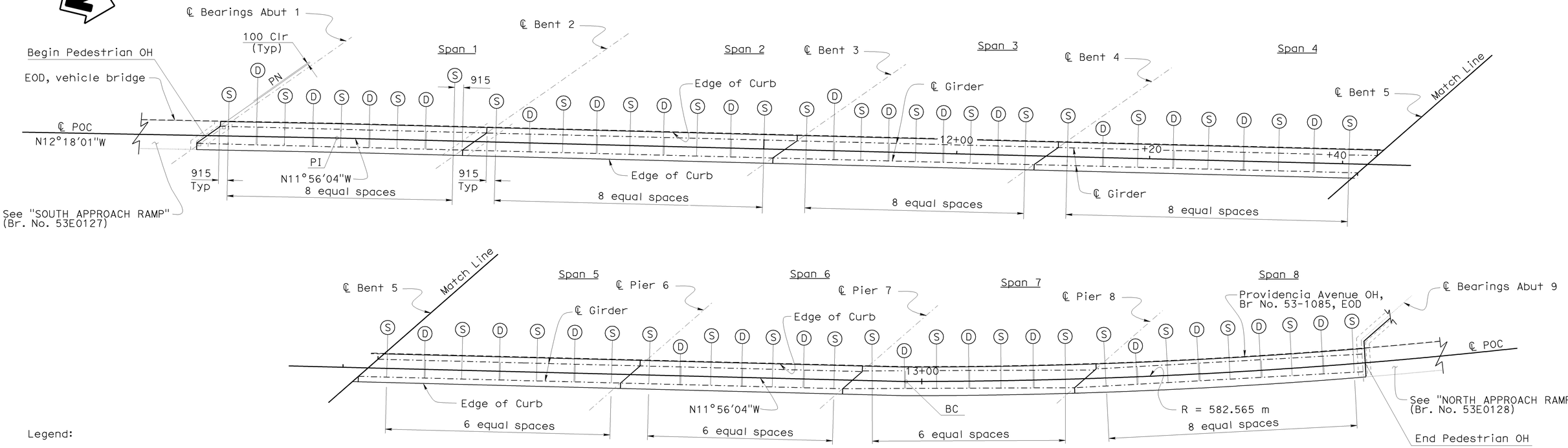

Legend:

Ⓓ Indicates Intermediate Diaphragm location

Ⓢ Indicates Intermediate Stiffeners location

PLAN
1:200

NOTE:
THE CONTRACTOR SHALL VERIFY ALL CONTROLLING FIELD DIMENSIONS BEFORE ORDERING OR FABRICATING ANY MATERIAL.

INTERMEDIATE DIAPHRAGM AND INTERMEDIATE STIFFENER LAYOUT

Caltrans Metric

	BY	CHECKED
DESIGN	A. Logus	C. Moulton
DETAILS	S. Cholda	C. Chan
QUANTITIES	A. Logus	D. Kubochi

STATE OF CALIFORNIA
DEPARTMENT OF TRANSPORTATION

DIVISION OF ENGINEERING SERVICES
STRUCTURE DESIGN
DESIGN BRANCH 15

CU 07
EA 121841

BRIDGE NO.	PROVIDENCIA AVENUE OH (WIDEN)
53-1085	
KILOMETER POST	PEDESTRIAN OH DETAILS NO.2
46.1	

ALL DIMENSIONS ARE IN MILLIMETERS UNLESS OTHERWISE SHOWN

ORIGINAL SCALE IN MILLIMETERS FOR REDUCED PLANS 0 10 20 30 40 50 60 70 80 90 100

DISREGARD PRINTS BEARING EARLIER REVISION DATES →

REVISION DATES: 01-04-08 | 01-14-08 | 11-26-08 | 12-16-08 | 01-16-09 | 1-26-09 | 1-27-09

SHEET 110 OF 152

FILE => 53-1085-s-mr_det02.dgn

STRUCTURES DESIGN DETAIL SHEET (METRIC) (REV.03-17-04)

USERNAME => trpierce DATE PLOTTED => 15-JUN-2009 TIME PLOTTED => 06:48

DIST	COUNTY	ROUTE	KILOMETER POST TOTAL PROJECT	SHEET No	TOTAL SHEETS
07	LA	5	42.8/47.3	900	1073

Andrew Rittenhouse 12-05-08
REGISTERED CIVIL ENGINEER DATE

6-8-09
PLANS APPROVAL DATE

REGISTERED PROFESSIONAL ENGINEER
Andrew P. Rittenhouse
No. 61006
Exp. 12-31-10
CIVIL
STATE OF CALIFORNIA

The State of California or its officers or agents shall not be responsible for the accuracy or completeness of electronic copies of this plan sheet.

Girder Length			
Span	Left Girder (m±)	Right Girder (m±)	Bearing
1	27.400	27.400	N11°56′04"W
2	32.065	32.105	N11°56′04"W
3	27.000	27.000	N11°56′04"W
4	33.010	33.490	N11°56′04"W
5	27.110	27.110	N11°56′04"W
6	22.960	22.960	N11°56′04"W
7	23.955	23.955	N13°37′07"W
8	27.640	23.960	N16°34′55"W

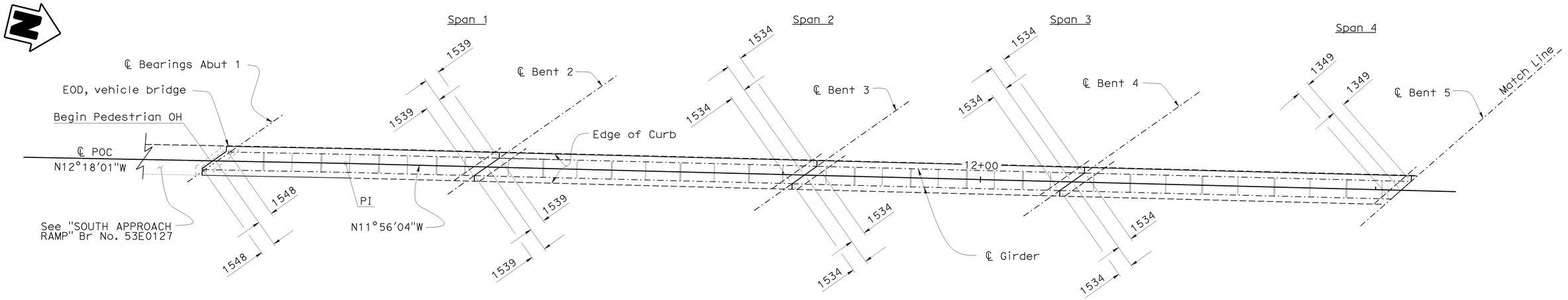

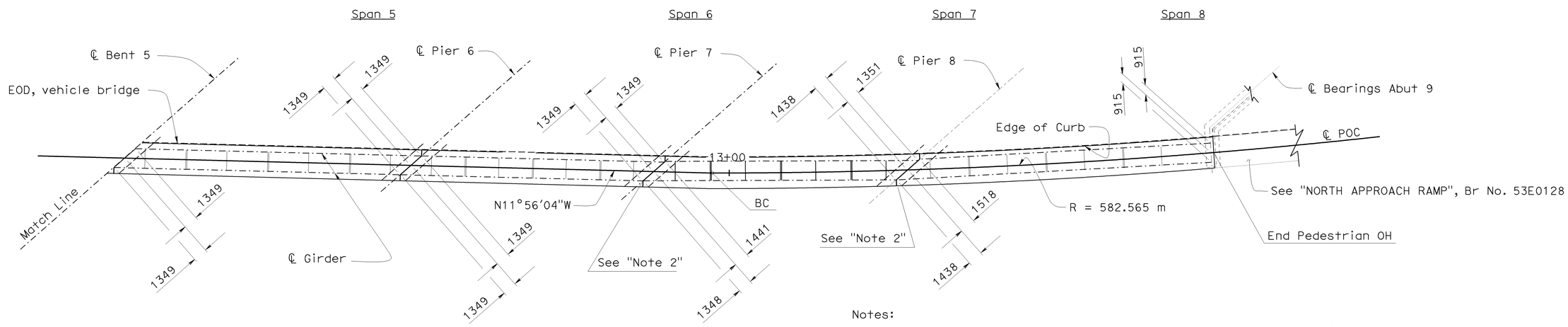

PLAN
1:200

Notes:

1. To lay out steel girders on Span 1 use "℄ POC" bearing N11°56′04"W and start at Bent 2.
2. Center lines of right side girders to be matched at ℄ of piers (on Pier 7 and Pier 8).

NOTE:
THE CONTRACTOR SHALL VERIFY ALL CONTROLLING FIELD DIMENSIONS BEFORE ORDERING OR FABRICATING ANY MATERIAL.

GIRDER LAYOUT

Caltrans Metric

	BY	CHECKED
DESIGN	A. Logus	C. Moulton
DETAILS	S. Cholda	C. Chan
QUANTITIES	A. Logus	D. Kubochi

ALL DIMENSIONS ARE IN MILLIMETERS UNLESS OTHERWISE SHOWN

ORIGINAL SCALE IN MILLIMETERS FOR REDUCED PLANS 0 10 20 30 40 50 60 70 80 90 100

STATE OF CALIFORNIA
DEPARTMENT OF TRANSPORTATION

DIVISION OF ENGINEERING SERVICES
STRUCTURE DESIGN
DESIGN BRANCH 15

CU 07
EA 121841

FILE => 53-1085-s-mr_det03.dgn

BRIDGE NO. 53-1085
KILOMETER POST 46.1

DISREGARD PRINTS BEARING EARLIER REVISION DATES →

REVISION DATES: 01-04-08 | 01-14-08 | 11-04-08 | 11-04-08 | 11-20-08 | 12-16-08 | 1-26-09 | 1-22-09 | 2-25-09

SHEET 111 OF 152

PROVIDENCIA AVENUE OH (WIDEN)
PEDESTRIAN OH DETAILS NO.3

STRUCTURES DESIGN DETAIL SHEET (METRIC) (REV.03-17-04)

USERNAME => trpierce DATE PLOTTED => 15-JUN-2009 TIME PLOTTED => 06:48