DIST	COUNTY	ROUTE	KILOMETER POST TOTAL PROJECT	SHEET No	TOTAL SHEETS
07	LA	5	42.8/47.3	701	1073

Caltrans Metric

Andrew Rittenhouse 12-05-08
REGISTERED CIVIL ENGINEER DATE

6-8-09
PLANS APPROVAL DATE

REGISTERED PROFESSIONAL ENGINEER Andrew P. Rittenhouse No. 61006 Exp. 12-31-10 CIVIL STATE OF CALIFORNIA

The State of California or its officers or agents shall not be responsible for the accuracy or completeness of electronic copies of this plan sheet.

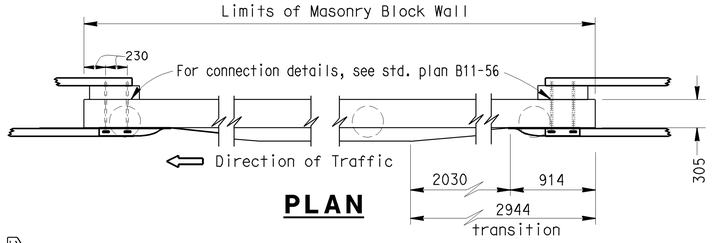

PLAN

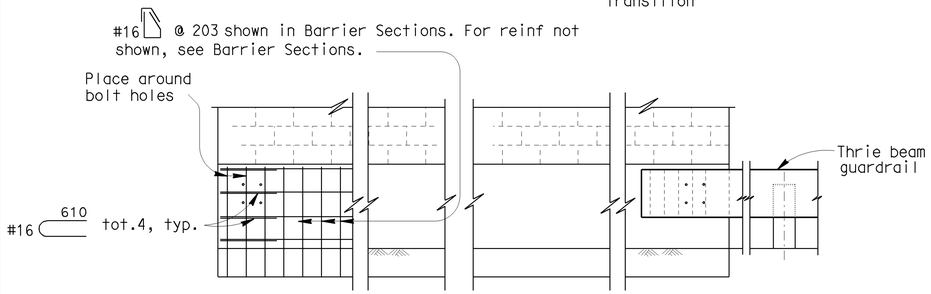

ELEVATION

METAL BEAM GUARDRAIL ANCHORAGE

For details not shown, see std. plan B11-56.

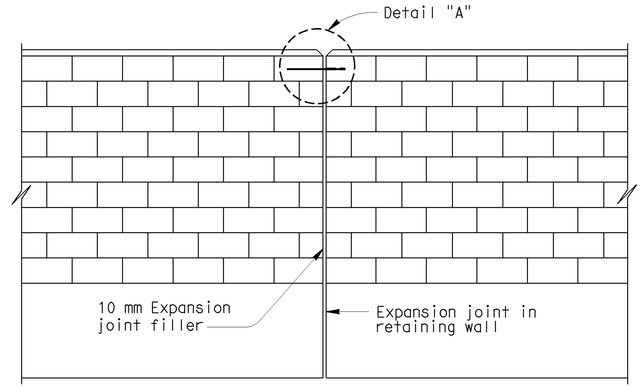

ALIGNMENT KEY DETAIL

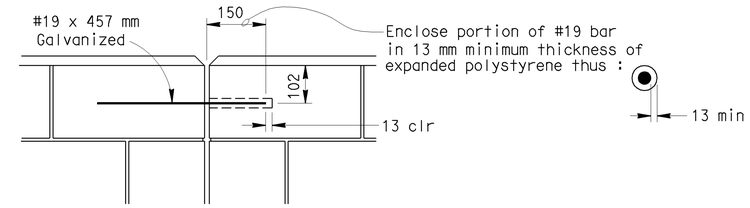

DETAIL A

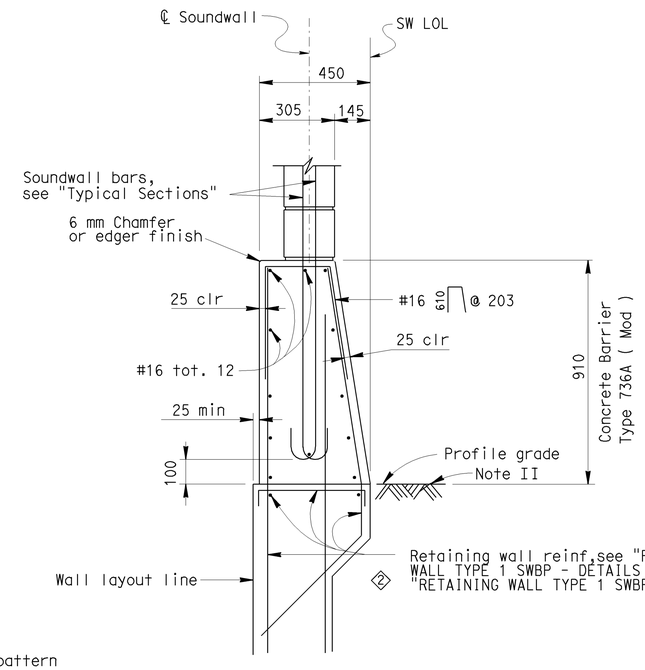

BARRIER SECTION

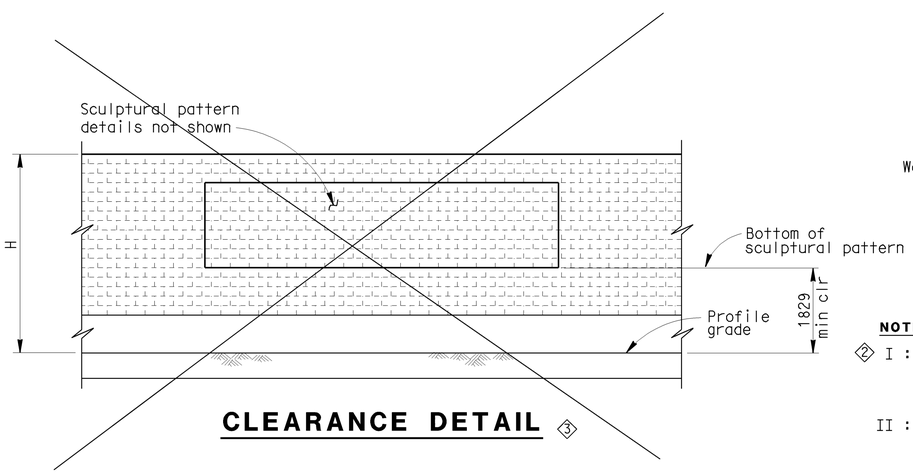

CLEARANCE DETAIL ③

DESIGN NOTES

DESIGN

Uniform Building Code,1997 Edition and the Bridge Design Specifications.

DESIGN WIND LOAD

1293 Pa

DESIGN SEISMIC LOAD

0.57 Dead load

REINFORCED CONCRETE

f'c = 22.408 Mpa
fy = 413.688 MPa

CONCRETE MASONRY

REGULAR STRENGTH	HIGH STRENGTH	
f'm = 10.34 MPa	f'm = 13.79 MPa	f'm = 17.24 MPa
fb = 3.41 MPa	fb = 4.55 MPa	fb = 5.72 MPa
fs = 165.5 MPa	fs = 165.5 MPa	fs = 165.5 MPa
n = 25.8	n = 19.3	n = 15.5

LOAD FACTORS AND LOAD COMBINATIONS

Working Stress Design (WSD) Percentage of unit stress

Group 1: D + E + SC 100%
Group 2: D + W + SC + E 100%
Group 3: D + 0.71 EQD + E 100%

Where:

D = Dead load
E = Lateral earth pressure
SC = Live load surcharge
W = Wind load
EQD = Seismic dead load

Load Factor Design (LFD)

Group A: βD +1.7 E + 1.7 SC
Group B: βD +1.7 E + 1.3 W
Group C: βD +1.3 E + 1.0 EQE
Group D: βD +1.3 E + 1.0 EQD
Group E: βD +1.1 E + 0.85 (EQE + EQD)

Where : β = 0.9 or 1.2, whichever controls in design
D = Dead load
E = Lateral earth pressure
SC = Live load surcharge
W = Wind load
EQD = Seismic dead load
EQE = Seismic earth load

STRENGTH REDUCTION FACTORS, Ø

Reinforced concrete:
For flexure _____ Ø=0.90
For shear _____ Ø=0.85

Concrete masonry:
For flexure _____ Ø=0.80
For shear _____ Ø=0.60

Retaining Walls:
See "RETAINING WALL TYPE 1 SWBP - DETAILS NO. 1" sheet. ②

NOTES:

② I : For details not shown,see "RETAINING WALL TYPE 1 SWBP - DETAILS NO. 1", "RETAINING WALL TYPE 1 SWBP - DETAILS NO. 2", and "SOUNDWALL MASONRY BLOCK MISCELLANEOUS DETAILS" sheets.

II : Slope ground at traffic side of barrier to drain. Maximum slope ±10%. See Standard Plan B11-56, Note D.

④ III : Running Bond shown. For type of block, bond, and Architectural details see "Road Plans"

SPECIAL DETAILS

NO SCALE

ALL DIMENSIONS ARE IN MILLIMETERS UNLESS OTHERWISE SHOWN

STANDARD DRAWING				
RELEASE DATE REVISED	DESIGN BY D. DUNRUD	CHECKED W.C. WALKER	RELEASED BY Roberto Lovalle OFFICE CHIEF
FILE NO. xs15-130-2	DETAILS BY R. YEE	CHECKED W.C. WALKER	
	SUBMITTED BY D. DUNRUD	DRAWING DATE 11/94	

DS OSD 2147A (METRIC) (REV. 2/25/97)

① Modified Title
② Modified note
③ Detail does not apply
④ Added note

STATE OF CALIFORNIA
DEPARTMENT OF TRANSPORTATION

DIVISION OF ENGINEERING SERVICES

CU 07
EA 121841

BRIDGE NO. 53-1077
KILOMETER POST 44.32

SONORA AVENUE UC WIDEN & RETROFIT

① SOUNDWALL WITH BARRIER ON RETAINING WALL - MASONRY BLOCK DETAILS NO. 2

ORIGINAL SCALE IN MILLIMETERS FOR REDUCED PLANS 0 10 20 30 40 50 60 70 80 90 100

DISREGARD PRINTS BEARING EARLIER REVISION DATES

REVISION DATES (PRELIMINARY STAGE ONLY) 10-25-07 2-15-08 11-24-08 1-12-09

SHEET 52 OF 59

FILE => 53-1077r1-xs15-130-2.dgn

USERNAME => trmikes1 DATE PLOTTED => 12-JUN-2009 TIME PLOTTED => 10:05

DIST	COUNTY	ROUTE	KILOMETER POST TOTAL PROJECT	SHEET No	TOTAL SHEETS
07	LA	5	42.8/47.3	702	1073

Andrew Rittenhouse 12-05-08
REGISTERED CIVIL ENGINEER DATE

6-8-09
PLANS APPROVAL DATE

REGISTERED PROFESSIONAL ENGINEER Andrew P. Rittenhouse No. 61006 Exp. 12-31-10 CIVIL STATE OF CALIFORNIA

The State of California or its officers or agents shall not be responsible for the accuracy or completeness of electronic copies of this plan sheet.

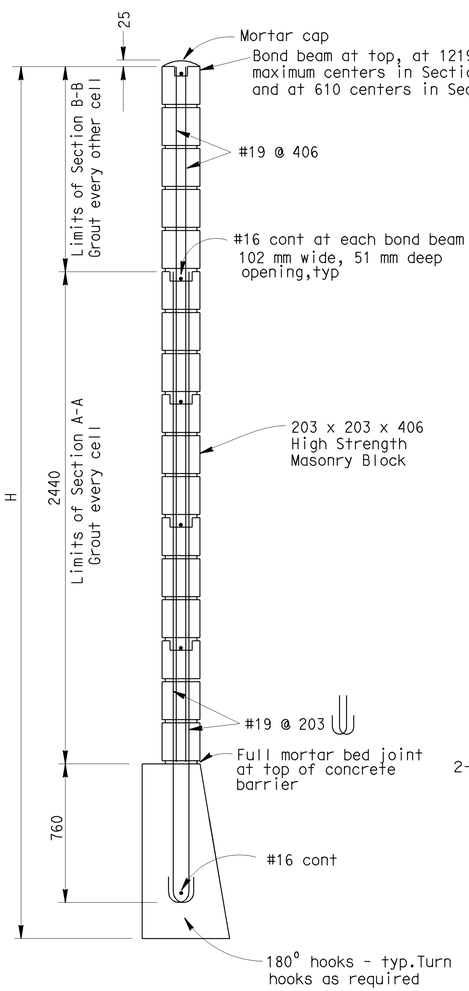

SOUND WALL SECTION

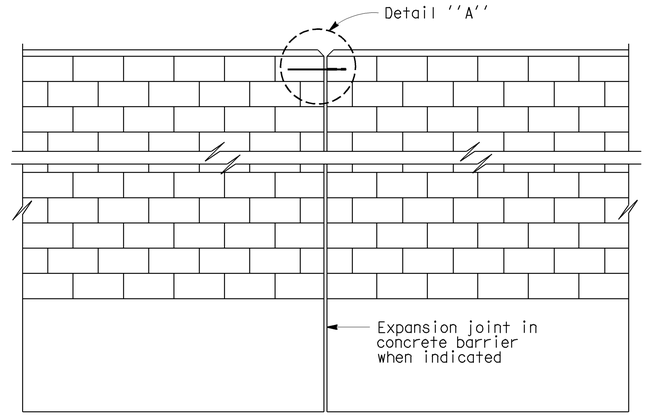

ALIGNMENT KEY DETAIL

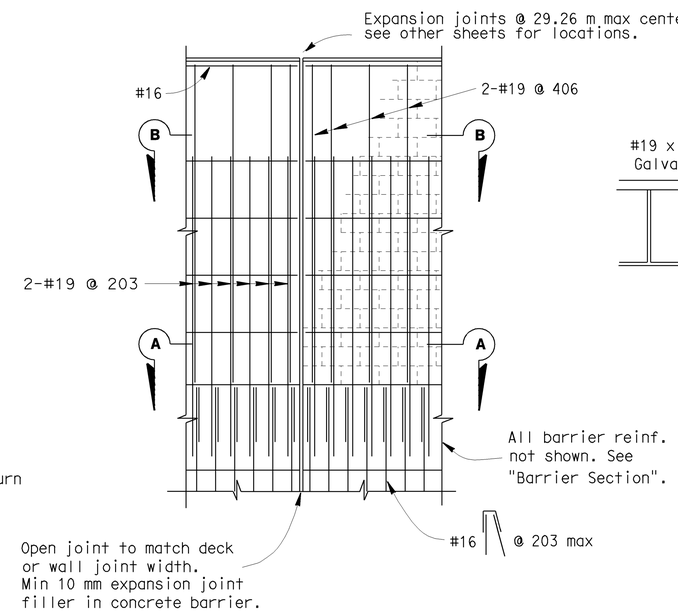

DECK AND WALL JOINT ELEVATION

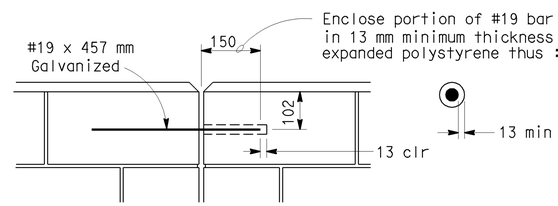

DETAIL A

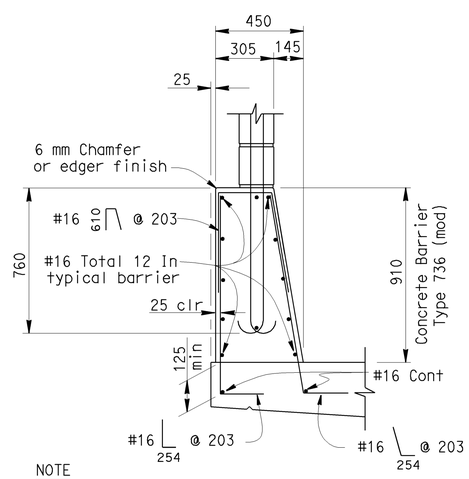

NOTE

For dimensions and reinforcement not shown, see Std. Plan B11-56

BARRIER SECTION

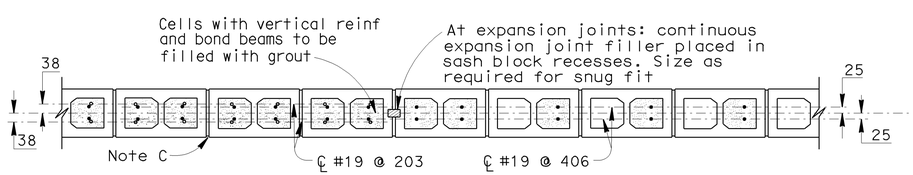

SECTION A-A

SECTION B-B

GENERAL NOTES

Note A: For type of block, type of block bond and joint finish, see "Road Plans".

Note B: When blocks are laid in stacked bond, ladder type, galvanized joint reinforcement shall be provided. A minimum of 2 - 3.76 mm wires continuous at 1219 maximum to be used. Locate reinforcement in joints that are at the approximate midpoint between bond beams.

Note C: Horizontal joints shall be tooled concave or may be weathered. Vertical joints shall be tooled concave or may be raked.

Note D: All masonry to be high strength unless otherwise noted.

Note E: Class 2 concrete to be used for barrier.

Note F: Expansion joints in concrete barrier and masonry block to match deck joints and at ends of wing walls.

Note G: Expansion joints in Sound Wall (Masonry Block) shall be at each support, center of span, and at ends of each wingwall.

Note H: For dimensions and reinforcement not shown see "Typical Section" sheet.

DESIGN NOTES

DESIGN

Uniform Building Code,1997 Edition and the Bridge Design Specifications.

DESIGN WIND LOAD

1772 Pa

DESIGN SEISMIC LOAD

2.0 Dead load

REINFORCED CONCRETE

f'c = 22.41 Mpa
fy = 413.7 MPa

CONCRETE MASONRY HIGH STRENGTH

f'm = 17.24 MPa
fy = 413.7 MPa

LOAD FACTORS AND LOAD COMBINATIONS

Load Factor Design (LFD)

Group A: βD +1.7 E + 1.7 SC
Group B: βD +1.7 E + 1.3 W
Group C: βD +1.3 E + 1.0 EQE
Group D: βD +1.3 E + 1.0 EQD
Group E: βD +1.1 E + 0.85 (EQE + EQD)

Where : β = 0.9 or 1.2, whichever controls in design
D = Dead load
E = Lateral earth pressure
SC = Live load surcharge
W = Wind load
EQD = Seismic dead load
EQE = Seismic earth load

STRENGTH REDUCTION FACTORS, Ø

Reinforced Concrete :

For flexure ..... Ø = 0.90
For shear ..... Ø = 0.85

Concrete masonry:

For flexure ..... Ø = 0.80
For shear ..... Ø = 0.60

Note 1:

Barrier, Deck and Concrete Masonry are designed by the Strength Design Method.

Running bond shown for illustative purposes, see "Note A".

NO SCALE

Caltrans Metric

	BY	CHECKED
DESIGN	Hogni Setberg	Gabriel Galo
DETAILS	Herman Mauroschadt	Gabriel Galo
QUANTITIES	Gabriel Galo	Herman Mauroschadt

STATE OF CALIFORNIA
DEPARTMENT OF TRANSPORTATION

DIVISION OF ENGINEERING SERVICES
STRUCTURE DESIGN
DESIGN BRANCH 15

BRIDGE NO. 53-1077
KILOMETER POST 44.32

SONORA AVENUE UC WIDEN & RETROFIT
SOUNDWALL - MASONRY BLOCK ON BRIDGE

ALL DIMENSIONS ARE IN MILLIMETERS UNLESS OTHERWISE SHOWN

ORIGINAL SCALE IN MILLIMETERS FOR REDUCED PLANS 0 10 20 30 40 50 60 70 80 90 100

CU 07
EA 121841

DISREGARD PRINTS BEARING EARLIER REVISION DATES

REVISION DATES 12-14-07 2-15-08 11-24-08 1-12-09

SHEET 53 OF 59

FILE => 53-1077rl-xs16-100.dgn

STRUCTURES DESIGN DETAIL SHEET (METRIC) (REV.03-17-04)

USERNAME => trmikesl DATE PLOTTED => 12-JUN-2009 TIME PLOTTED => 10:05

DIST	COUNTY	ROUTE	KILOMETER POST TOTAL PROJECT	SHEET No	TOTAL SHEETS
07	LA	5	42.8/47.3	703	1073

Caltrans Metric

Andrew P. Rittenhouse 12-05-08
REGISTERED CIVIL ENGINEER DATE

6-8-09
PLANS APPROVAL DATE

REGISTERED PROFESSIONAL ENGINEER Andrew P. Rittenhouse No. 61006 Exp. 12-31-10 CIVIL STATE OF CALIFORNIA

The State of California or its officers or agents shall not be responsible for the accuracy or completeness of electronic copies of this plan sheet.

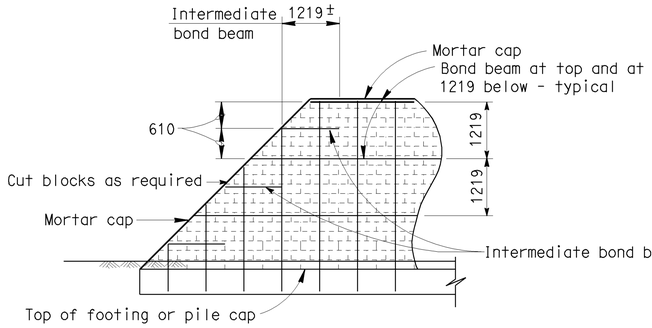

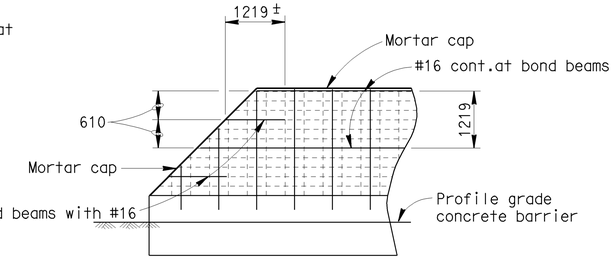

All blocks which have a cut surface shall have cells filled with grout.
For end slope, see "Road Plans"

TYPE I ①③

Note : Slope batter shall not be flatter than 1:1

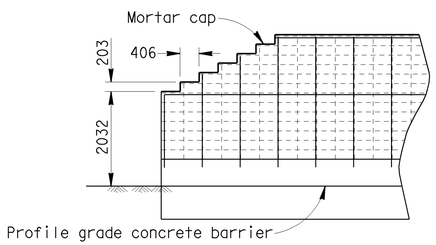

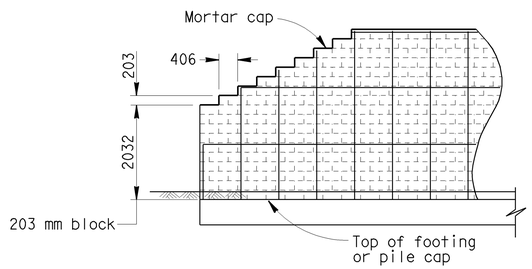

TYPE II

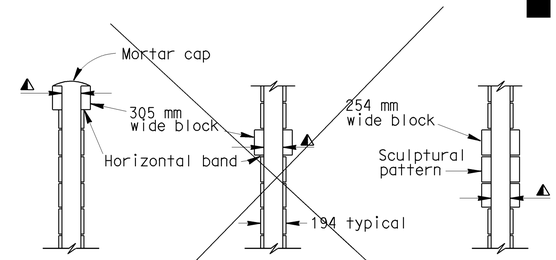

② ARCHITECTURAL ALTERNATIVES

◭ Cell width to match 203 mm block

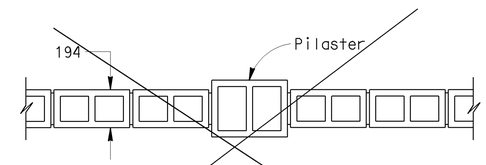

② 305 mm WIDE PROJECTING BLOCK

NOTES:

305 mm wide block not allowed within 1829 mm of profile grade.

Alternatives using 305 mm wide projecting block will not be permitted on standard sheet: "SOUNDWALL - MASONRY BLOCK ON PILES".

For structural details,see other sheets.

Type III not permitted for soundwalls with "H" less than 3048 mm.

The end of the wall details may be used with any of the standard supporting foundations for masonry block. The foundations shown for the different types are for the purpose of illustration only.

① Running bond shown for illustration only.

① For type of block, type of bond, and Architectural details, see "Road Plans"

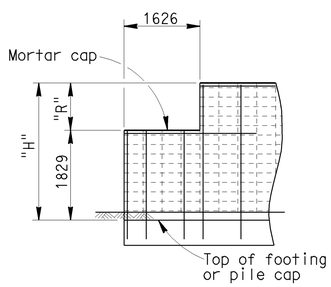

H=3048

SINGLE STEP

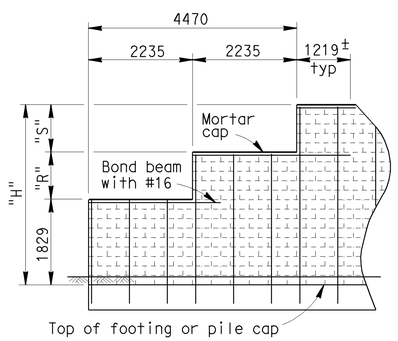

H=3251 TO H=4267

2 STEPS

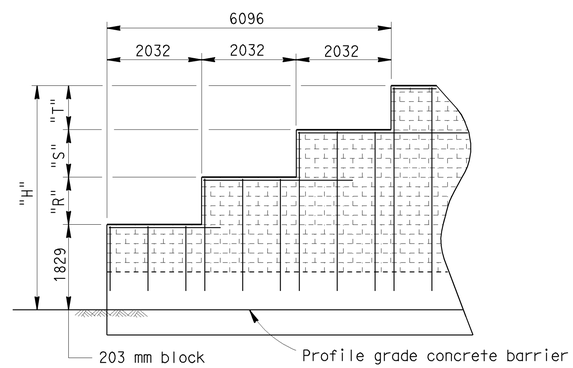

H=4470 TO H=4877

3 STEPS

TYPE III

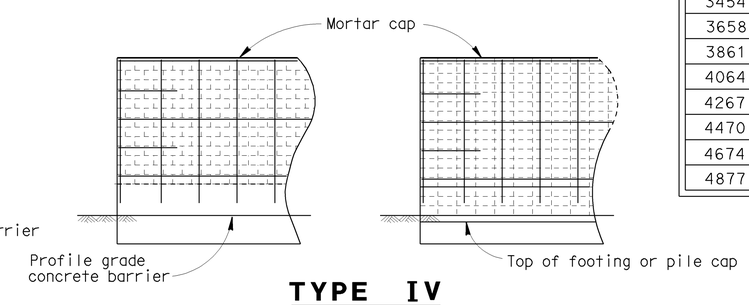

TYPE IV
END OF WALL DETAILS

203 mm x 203 mm x 406 mm BLOCK

H	R	S	T
3048	1219	—	—
3251	813	610	—
3454	813	813	—
3658	1016	813	—
3861	1016	1016	—
4064	1219	1016	—
4267	1219	1219	—
4470	1016	813	813
4674	1016	1016	813
4877	1016	1016	1016

NOTE:
THE CONTRACTOR SHALL VERIFY ALL CONTROLLING FIELD DIMENSIONS BEFORE ORDERING OR FABRICATING ANY MATERIAL.

SPECIAL DETAILS

NO SCALE

ALL DIMENSIONS ARE IN MILLIMETERS UNLESS OTHERWISE SHOWN

STANDARD DRAWING

RELEASE DATE	7/3/03	DESIGN	BY D. DUNRUD	CHECKED W.C. WALKER	RELEASED BY
FILE NO.	xs15-210	DETAILS	BY R. YEE	CHECKED W.C. WALKER	OFFICE CHIEF
		SUBMITTED	BY D. DUNRUD	DRAWING DATE 11/94	

① Added note
② Detail does not apply
③ Modified detail

STATE OF CALIFORNIA
DEPARTMENT OF TRANSPORTATION

DIVISION OF ENGINEERING SERVICES

BRIDGE NO. 53-1077
KILOMETER POST 44.32

SONORA AVENUE UC WIDEN & RETROFIT
SOUNDWALL MASONRY BLOCK MISCELLANEOUS DETAILS

DS OSD 2147A (METRIC) (REV. 2/25/97)

ORIGINAL SCALE IN MILLIMETERS FOR REDUCED PLANS 0 10 20 30 40 50 60 70 80 90 100

CU 07
EA 121841

DISREGARD PRINTS BEARING EARLIER REVISION DATES

REVISION DATES (PRELIMINARY STAGE ONLY) 10-17-07 10-29-08 11-14-08 1-13-09 1-20-09

SHEET 54 OF 59

FILE => 53-1077rl-xs16-210.dgn

USERNAME => trmikest DATE PLOTTED => 12-JUN-2009 TIME PLOTTED => 10:05

DIST	COUNTY	ROUTE	KILOMETER POST TOTAL PROJECT	SHEET No	TOTAL SHEETS
07	LA	5	42.8/47.3	704	1073

Caltrans Metric

Andrew Rittenhouse 12-05-08
REGISTERED CIVIL ENGINEER DATE

6-8-09
PLANS APPROVAL DATE

REGISTERED PROFESSIONAL ENGINEER Andrew P. Rittenhouse No. 61006 Exp. 12-31-10 CIVIL STATE OF CALIFORNIA

The State of California or its officers or agents shall not be responsible for the accuracy or completeness of electronic copies of this plan sheet.

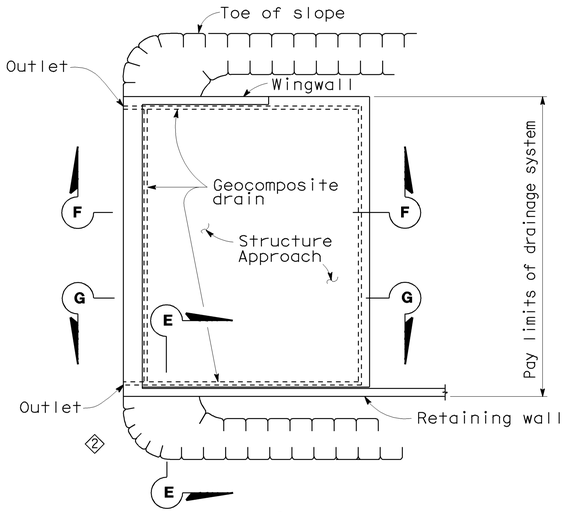

TYPICAL PLAN

*For pipe layout at staggered end,see "Detail B".

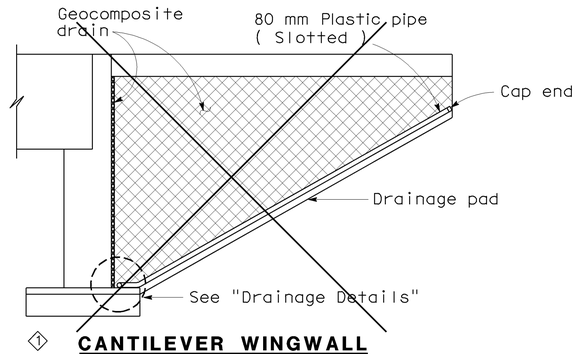

CANTILEVER WINGWALL
SECTION F-F

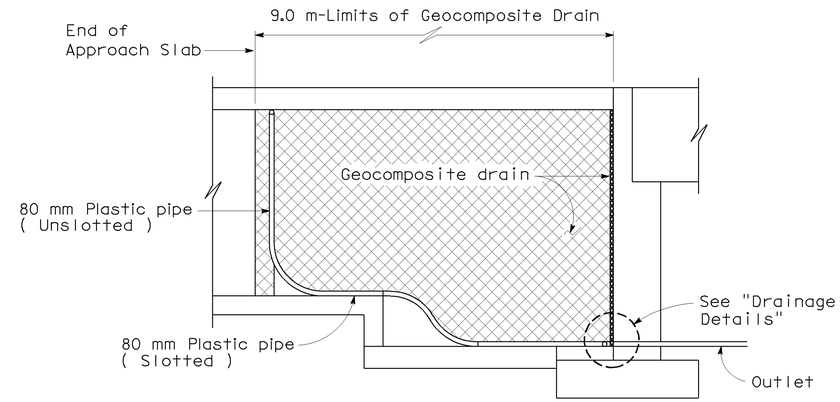

RETAINING WALL WINGWALL
SECTION G-G

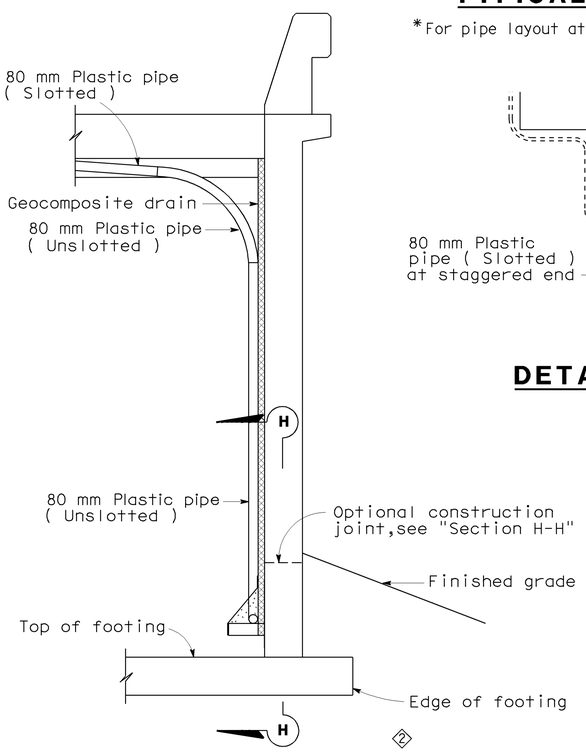

SECTION E-E

NOTE: Bends and junctions in 80 mm plastic pipe are 750 mm radius min.

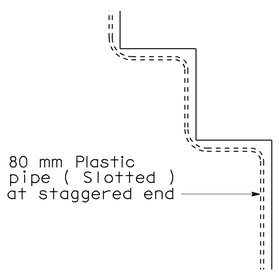

DETAIL B

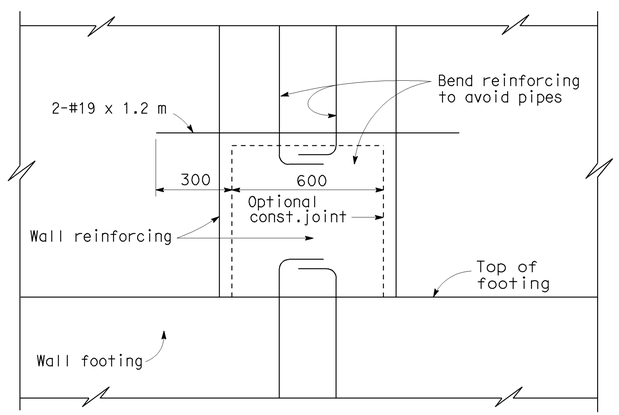

SECTION H-H

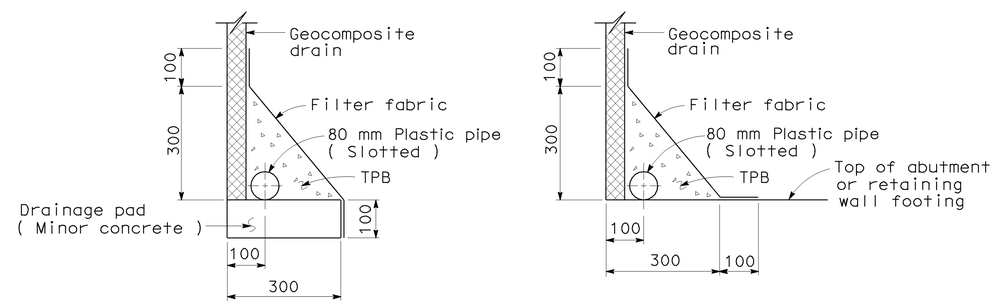

WITHOUT FOOTING

WITH FOOTING

DRAINAGE DETAILS

SPECIAL DETAILS

NO SCALE

ALL DIMENSIONS ARE IN MILLIMETERS UNLESS OTHERWISE SHOWN

STANDARD DRAWING

RELEASE DATE	REVISED	DESIGN	BY M. TRAFFALIS	CHECKED E. THORKILDSEN	RELEASED BY
FILE NO.	xs3-110	DETAILS	BY R. YEE	CHECKED E. THORKILDSEN	OFFICE CHIEF
		SUBMITTED	BY M. HA	DRAWING DATE 4/98	

DS OSD 2147A (METRIC) (REV. 2/25/97)

1 Detail does not apply
2 Modified Detail

STATE OF CALIFORNIA
DEPARTMENT OF TRANSPORTATION

DIVISION OF ENGINEERING SERVICES

CU 07
EA 121841

BRIDGE NO. 53-1077
KILOMETER POST 44.32

SONORA AVENUE UC WIDEN & RETROFIT
STRUCTURE APPROACH DRAINAGE DETAILS

ORIGINAL SCALE IN MILLIMETERS FOR REDUCED PLANS 0 10 20 30 40 50 60 70 80 90 100

DISREGARD PRINTS BEARING EARLIER REVISION DATES

REVISION DATES (PRELIMINARY STAGE ONLY) 10-25-07 2-15-08 11-14-08 1-15-09 1-30-09

SHEET 55 OF 59

FILE => 53-1077rl-xs3-110.dgn

USERNAME => trmikes1 DATE PLOTTED => 12-JUN-2009 TIME PLOTTED => 10:05

DIST	COUNTY	ROUTE	KILOMETER POST TOTAL PROJECT	SHEET No	TOTAL SHEETS
07	LA	5	42.8/47.3	705	1073

Caltrans Metric

Andrew Rittenhouse 12-05-08
REGISTERED CIVIL ENGINEER DATE

6-8-09
PLANS APPROVAL DATE

REGISTERED PROFESSIONAL ENGINEER Andrew P. Rittenhouse No. 61006 Exp. 12-31-10 CIVIL STATE OF CALIFORNIA

The State of California or its officers or agents shall not be responsible for the accuracy or completeness of electronic copies of this plan sheet.

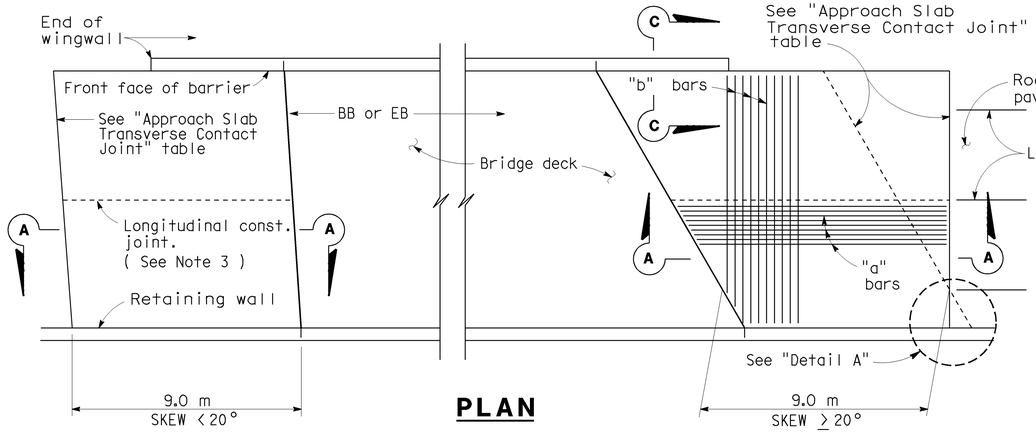

PLAN

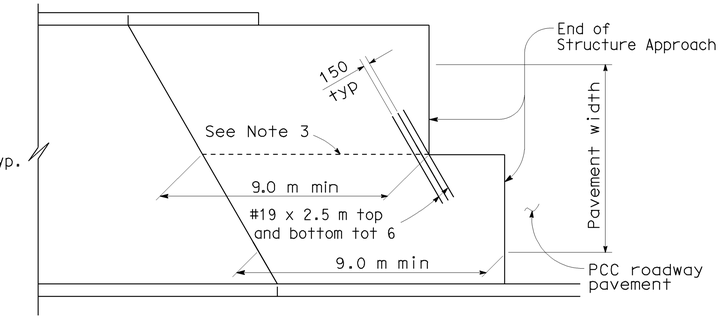

STRUCTURE APPROACH - END STAGGER DETAIL

APPROACH SLAB TRANSVERSE CONTACT JOINT		
APPROACH SKEW	WITH AC ROADWAY PAVEMENT	WITH PCC ROADWAY PAVEMENT
< 20°	Parallel to face of paving notch	Parallel to face of paving notch
20°- 45°	Parallel to face of P N use (Detail A)	Stagger lines 7.2 m to 10.8 m apart.
> 45°	Parallel to face of P N use (Detail A)	Stagger at each lane line.

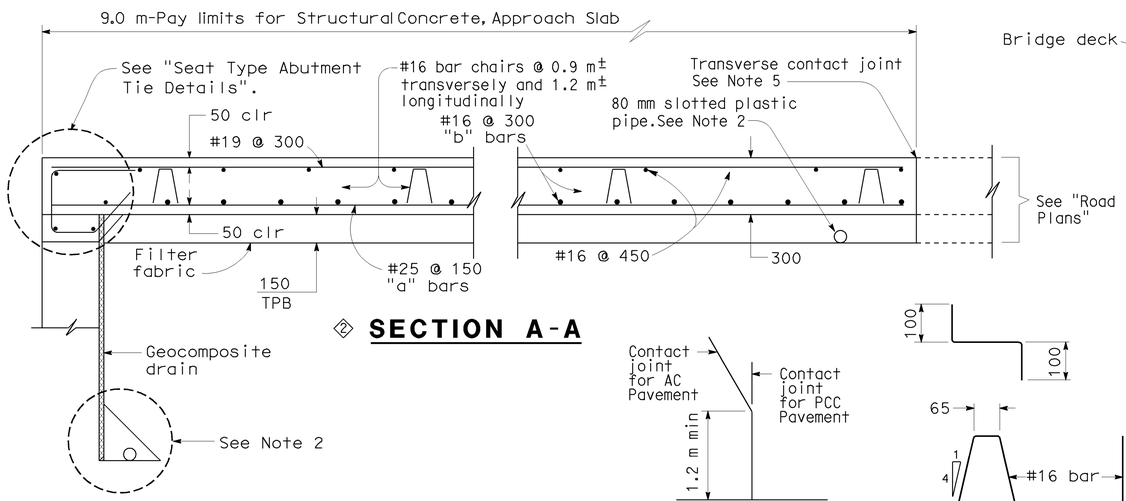

SECTION A-A

DETAIL A

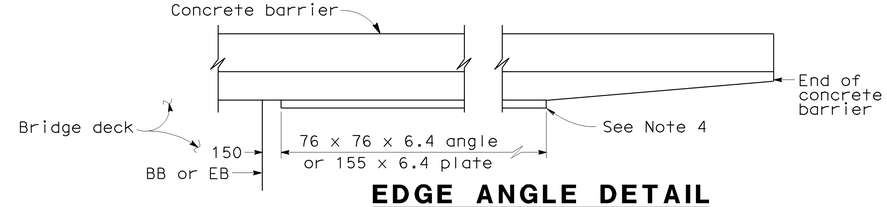

EDGE ANGLE DETAIL

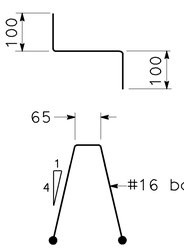

BAR CHAIR DETAIL

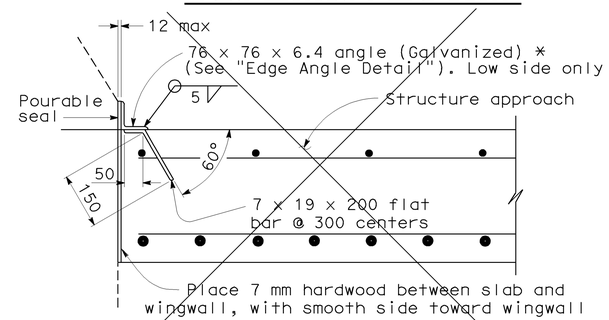

(TO BE USED WITH TYPE 25 OR TYPE 27 CONCRETE BARRIER)

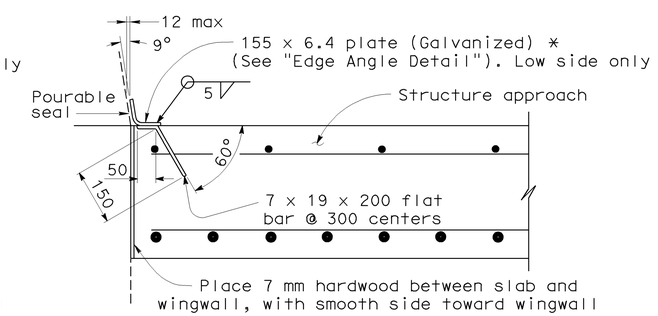

*(TO BE USED WITH TYPE 732 OR TYPE 736 CONCRETE BARRIER)

DETAIL B

NOTES:

1. For details not shown,see Structure Plans. For MR ≤ 50 mm,adjust bar reinforcement to clear a sawcut for sealed joint,when required.
2. For drainage details,see "Structure Approach Drainage Details" sheet.
3. Longitudinal construction joints,when permitted by the Engineer, shall be located on lane lines.
4. End angle or plate at beginning of barrier transition, end of wingwall or end of structure approach as applicable.
5. For transverse contact joint with new PCC paving, refer to Standard Plan P10.
6. At the contractor's option, approach slab transverse reinforcement may be placed parallel to paving notch. Spacing of transverse reinforcement is measured along ℄ roadway.
7. For longitudinal construction joint between new and existing approach slab see "Longitudinal Construction Joint Alternatives" on the "STRUCTURE APPROACH TYPE R(9S)" sheet
8. For details to attach approach slab to existing abutment, see "STRUCTURE APPROACH TYPE R(9S) sheet.

Remove all polystyrene.

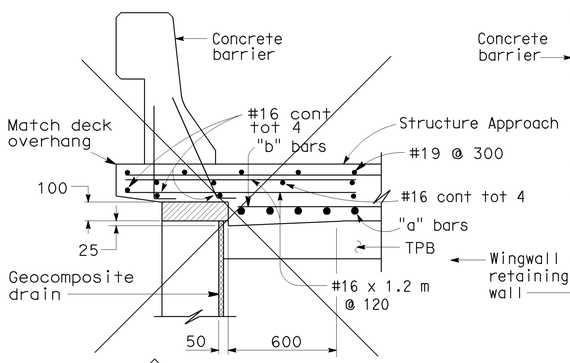

TYPE E-1

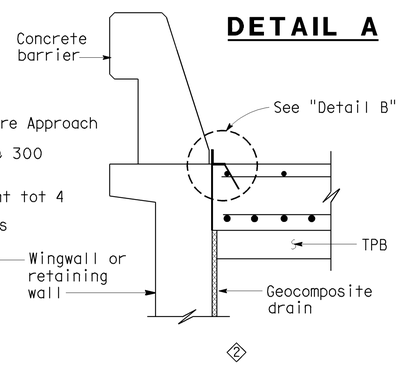

TYPE E-2

SECTION C-C

(Type E-1 to be used, unless otherwise shown on plans)

NOTE:
THE CONTRACTOR SHALL VERIFY ALL CONTROLLING FIELD DIMENSIONS BEFORE ORDERING OR FABRICATING ANY MATERIAL.

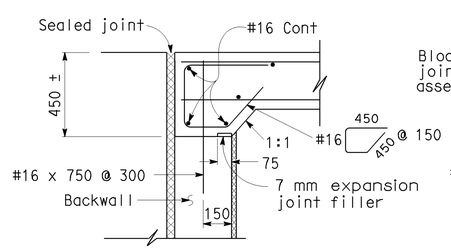

MR ≤ 50 mm

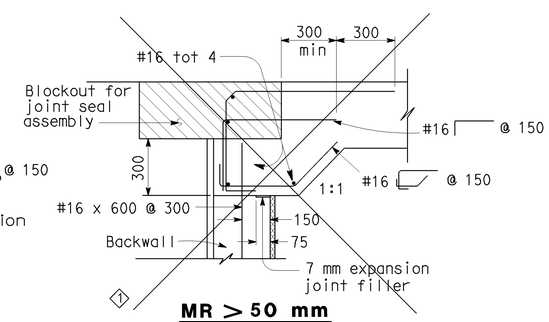

MR > 50 mm

SEAT TYPE ABUTMENT TIE DETAILS (SEE NOTE 1)

SPECIAL DETAILS

NO SCALE

ALL DIMENSIONS ARE IN MILLIMETERS UNLESS OTHERWISE SHOWN

STANDARD DRAWING				
RELEASE DATE REVISED	DESIGN	BY M. TRAFFALIS	CHECKED E. THORKILDSEN	RELEASED BY
FILE NO. xs3-120	DETAILS	BY R. YEE	CHECKED E. THORKILDSEN	OFFICE CHIEF
	SUBMITTED	BY M. HA	DRAWING DATE 4/98	

1. Detail does not apply
2. Modified Detail
3. Added notes

STATE OF CALIFORNIA
DEPARTMENT OF TRANSPORTATION

DIVISION OF ENGINEERING SERVICES

BRIDGE NO. 53-1077
KILOMETER POST 44.32

SONORA AVENUE UC WIDEN & RETROFIT

STRUCTURE APPROACH TYPE N(9S)

DS OSD 2147a (METRIC) (REV. 2/25/97)

ORIGINAL SCALE IN MILLIMETERS FOR REDUCED PLANS 0 10 20 30 40 50 60 70 80 90 100

CU 07
EA 121841

DISREGARD PRINTS BEARING EARLIER REVISION DATES

REVISION DATES (PRELIMINARY STAGE ONLY) 10-31-07 10-29-08 11-14-08 1-15-09 2-2-09 2-25-09

SHEET 56 OF 59

FILE => 53-1077r1-xs3-120.dgn

USERNAME => trmikes1 DATE PLOTTED => 12-JUN-2009 TIME PLOTTED => 10:05

DIST	COUNTY	ROUTE	KILOMETER POST TOTAL PROJECT	SHEET No	TOTAL SHEETS
07	LA	5	42.8/47.3	706	1073

Caltrans Metric

REGISTERED CIVIL ENGINEER — Andrew P. Rittenhouse — DATE 12-05-08

PLANS APPROVAL DATE 6-8-09

REGISTERED PROFESSIONAL ENGINEER — Andrew P. Rittenhouse — No. 61006 — Exp. 12-31-10 — CIVIL — STATE OF CALIFORNIA

The State of California or its officers or agents shall not be responsible for the accuracy or completeness of electronic copies of this plan sheet.

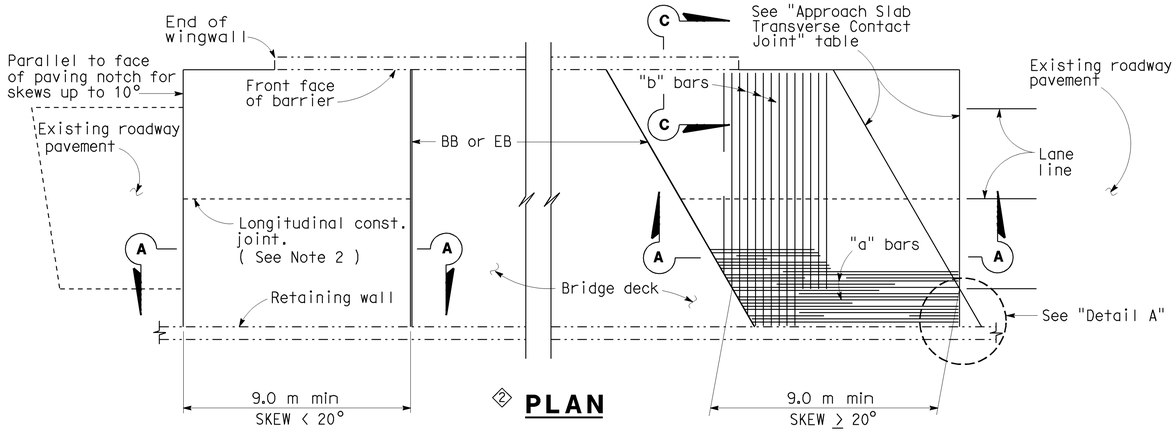

② PLAN

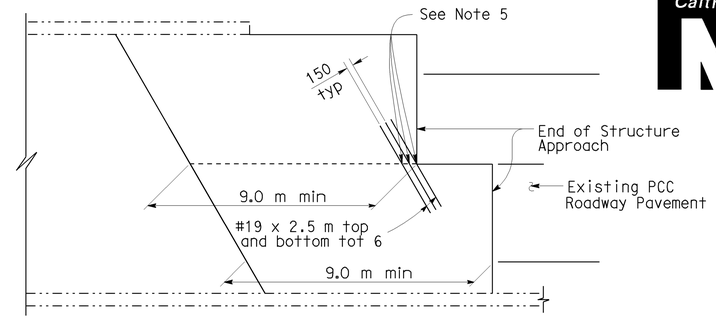

STRUCTURE APPROACH - END STAGGER DETAIL

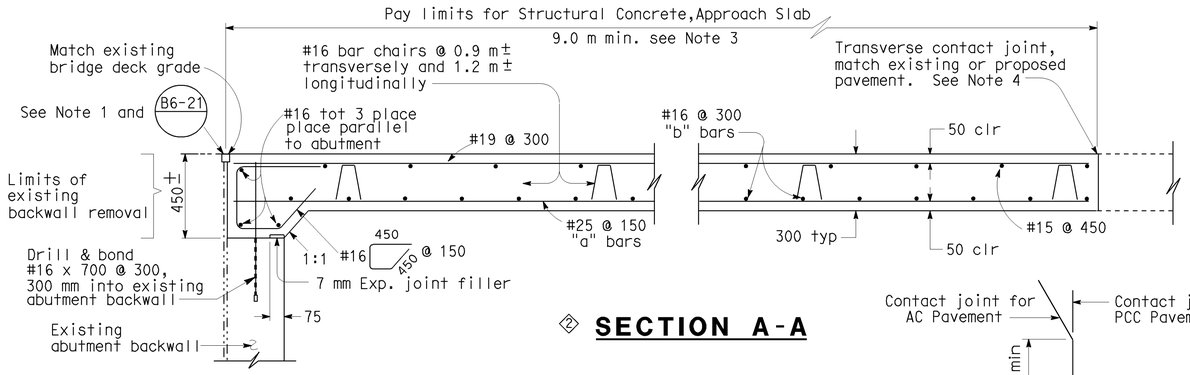

② SECTION A-A

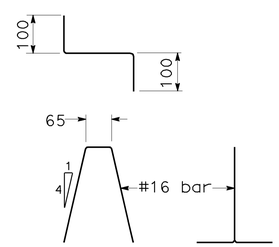

BAR CHAIR DETAIL

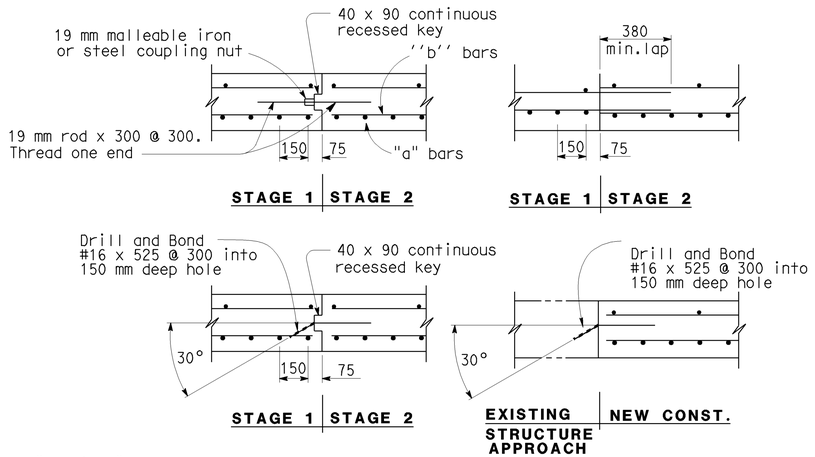

LONGITUDINAL CONSTRUCTION JOINT ALTERNATIVES

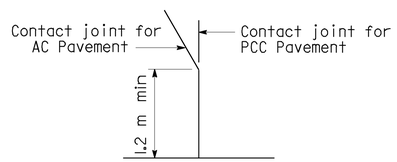

DETAIL A

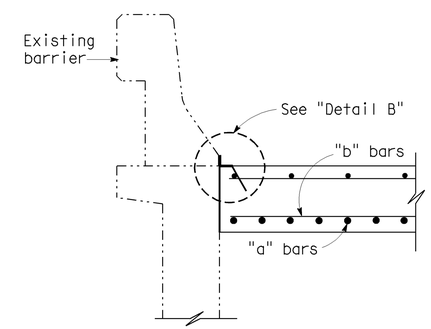

SECTION C-C

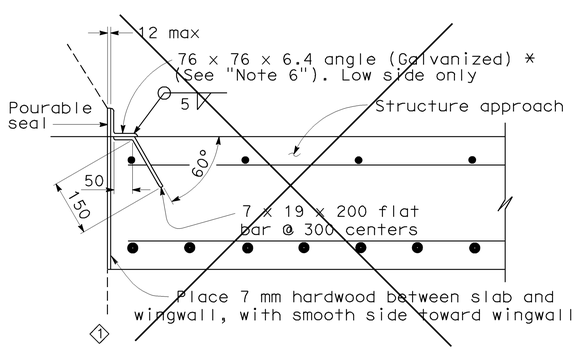

*(TO BE USED WITH TYPE 25 OR TYPE 27 CONCRETE BARRIER)

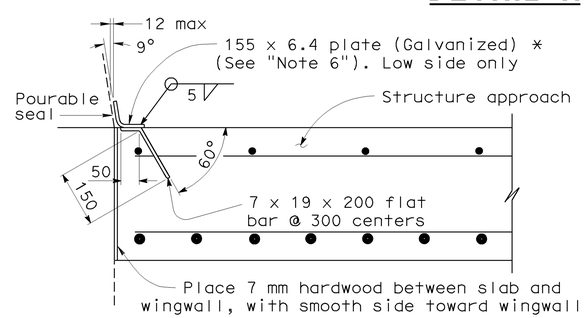

*(TO BE USED WITH TYPE 732 OR TYPE 736 CONCRETE BARRIER)

DETAIL B

NOTE:

THE CONTRACTOR SHALL VERIFY ALL CONTROLLING FIELD DIMENSIONS BEFORE ORDERING OR FABRICATING ANY MATERIAL.

③

APPROACH SLAB TRANSVERSE CONTACT JOINT		
APPROACH SKEW	WITH AC ROADWAY PAVEMENT	WITH PCC ROADWAY PAVEMENT
< 20°	Parallel to face of paving notch	Parallel to face of paving notch
20°- 45°	Parallel to face of P N use (Detail A)	Stagger lines 7.2 m to 10.8 m apart
> 45°	Parallel to face of P N use (Detail A)	Stagger at each lane line

NOTES:

1. Sealed joint,for M.R.see Structure Plans. Adjust bar reinforcement to clear a sawcut for sealed joint,when required.
2. Longitudinal construction joints,when permitted by Engineer,shall be located on lane lines.
3. Transverse contact joint shall be a minimum of 1.5 m from an existing or constructed weakened plane joint.
4. For transverse contact joint with new PCC paving, refer to Standard Plan P10.
5. Couplers are required for stage construction.
6. End angle or plate at beginning of barrier transition, end of wingwall or end of structure approach as applicable.

SPECIAL DETAILS

NO SCALE

ALL DIMENSIONS ARE IN MILLIMETERS UNLESS OTHERWISE SHOWN

STANDARD DRAWING

RELEASE DATE	REVISED	DESIGN	BY M. TRAFFALIS	CHECKED E. THORKILDSEN	RELEASED BY
FILE NO.	xs3-130	DETAILS	BY R. YEE	CHECKED E. THORKILDSEN	
		SUBMITTED	BY M. HA	DRAWING DATE 8/92	OFFICE CHIEF

① Detail does not apply
② Modified Detail
③ Modified Table

STATE OF CALIFORNIA DEPARTMENT OF TRANSPORTATION

DIVISION OF ENGINEERING SERVICES

BRIDGE NO. 53-1077

KILOMETER POST 44.32

SONORA AVENUE UC WIDEN & RETROFIT

STRUCTURE APPROACH TYPE R(9S)

DS OSD 2147A (METRIC) (REV. 2/25/97)

ORIGINAL SCALE IN MILLIMETERS FOR REDUCED PLANS 0 10 20 30 40 50 60 70 80 90 100

CU 07
EA 121841

DISREGARD PRINTS BEARING EARLIER REVISION DATES

REVISION DATES (PRELIMINARY STAGE ONLY) 10-29-07 11-24-08

SHEET 57 OF 59

FILE => 53-1077r1-xs3-130.dgn

USERNAME => trmikest DATE PLOTTED => 12-JUN-2009 TIME PLOTTED => 10:05

DIST	COUNTY	ROUTE	KILOMETER POST TOTAL PROJECT	SHEET No	TOTAL SHEETS
07	LA	5	42.8/47.3	707	1073

REGISTERED CIVIL ENGINEER 5-7-08

6-8-09
PLANS APPROVAL DATE

REGISTERED PROFESSIONAL ENGINEER Qiang Huang No. C055671 Exp. 12-31-08 CIVIL STATE OF CALIFORNIA

The State of California or its officers or agents shall not be responsible for the accuracy or completeness of electronic copies of this plan sheet.

NOTE:

The information presented on this drawing was not the result of any work developed, performed or completed this Department (Caltrans). The following party should account for all this information:
URS Corp.

It should be expressly understood that Caltrans assumes no responsibility whatsoever in respect to the sufficiency, accuracy, completeness, and interpretation set forth therein or any other aspect of the information shown or represented on this drawing.

BENCH MARK

SURVEY CONTROL

PRHV-1001
Fnd CONTROL POINT C NAIL
34.884 m Rt. ℄ "Route 5"
Sta. 443+22.186
N 573408.927
E 1972991.196
Elev. = 145.827

PRHV-1260
Fnd CONTROL POINT 1260
37.049 m Lt. ℄ "Route 5"
Sta. 442+90.143
N 573348.909
E 1972940.216
Elev. = 145.631

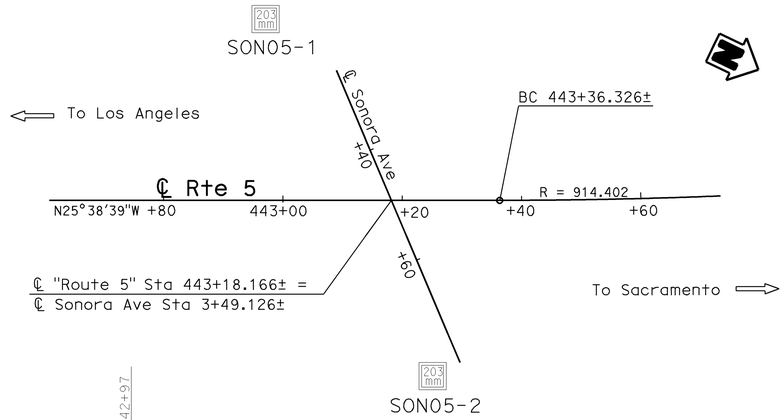

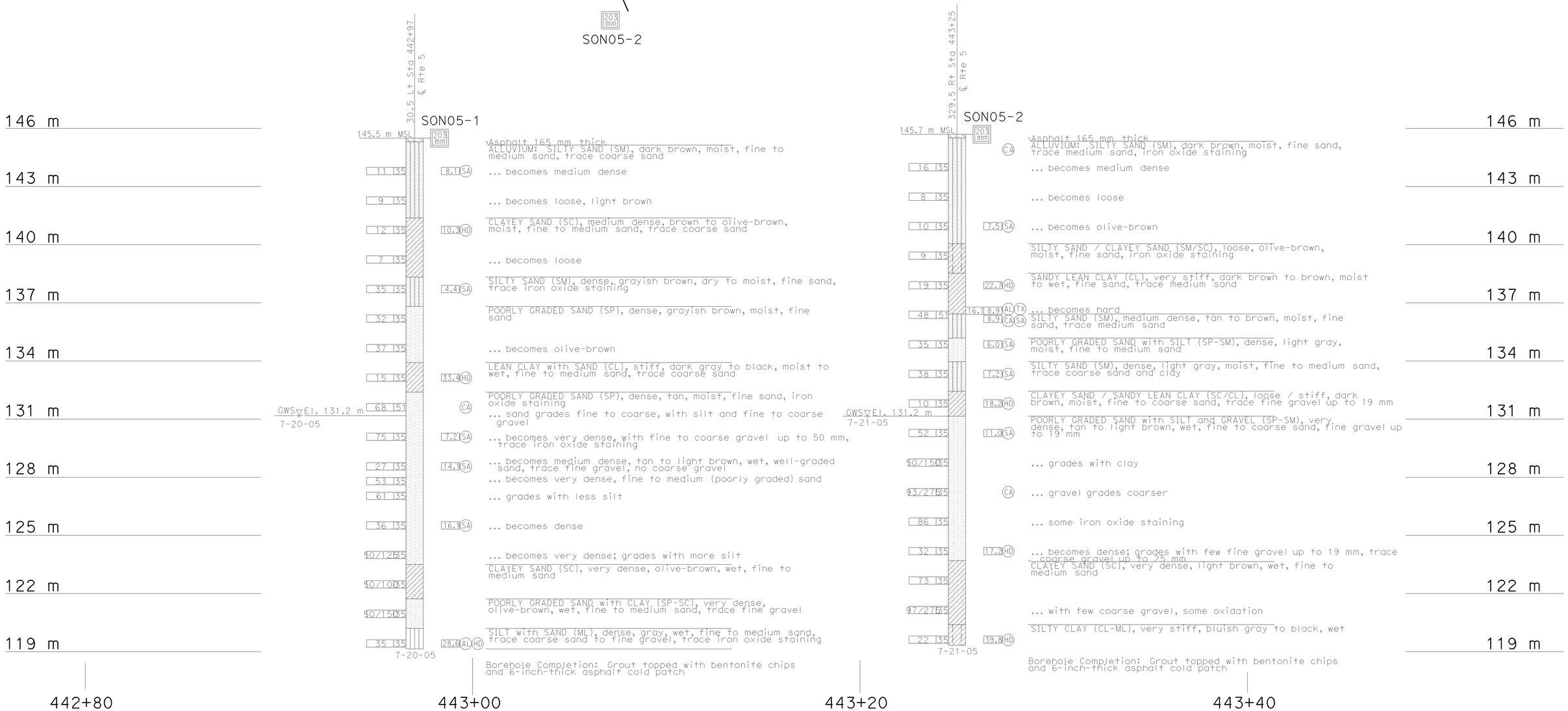

GEOTECHNICAL SERVICES	
PREPARED BY	I.G-Remmen 1/06
CHECKED BY	B. Bertucci

FIELD INVESTIGATION BY: URS Corp.

STATE OF CALIFORNIA
DEPARTMENT OF TRANSPORTATION

DIVISION OF ENGINEERING SERVICES
STRUCTURE DESIGN
DESIGN BRANCH 15

BRIDGE NO. 53-1077
KILOMETER POST 44.32

SONORA AVENUE UC WIDEN & RETROFIT
LOG OF TEST BORINGS 1 OF 2

Caltrans Metric

OGS CIVIL LOG OF TEST BORINGS SHEET (METRIC) (REV. 4/04)

ALL DIMENSIONS ARE IN METERS UNLESS OTHERWISE SHOWN

ORIGINAL SCALE IN MILLIMETERS FOR REDUCED PLANS 0 10 20 30 40 50 60 70 80 90 100

CU 07
EA 121841

DISREGARD PRINTS BEARING EARLIER REVISION DATES

REVISION DATES (PRELIMINARY STAGE ONLY) 04-09-08 11-24-08

SHEET 58 OF 59

FILE => 53-1077r1-y-lotb1.dgn

USERNAME => trmikesl DATE PLOTTED => 12-JUN-2009 TIME PLOTTED => 10:05

FED. ROAD DIST. No	STATE	PROJ. No.	FISCAL YEAR	SHEET No.	TOTAL SHEETS
7	CAL.				

(OM-VII-LA-4)

DIST	COUNTY	ROUTE	SECTION	SHEET No.	TOTAL SHEETS
07	LA	5	28/47.7	307	435

BRIDGE ENGINEER — CIVIL ENGINEER—LICENSE 1088

DATE APPROVED September 13, 1965

BRIDGE DEPARTMENT

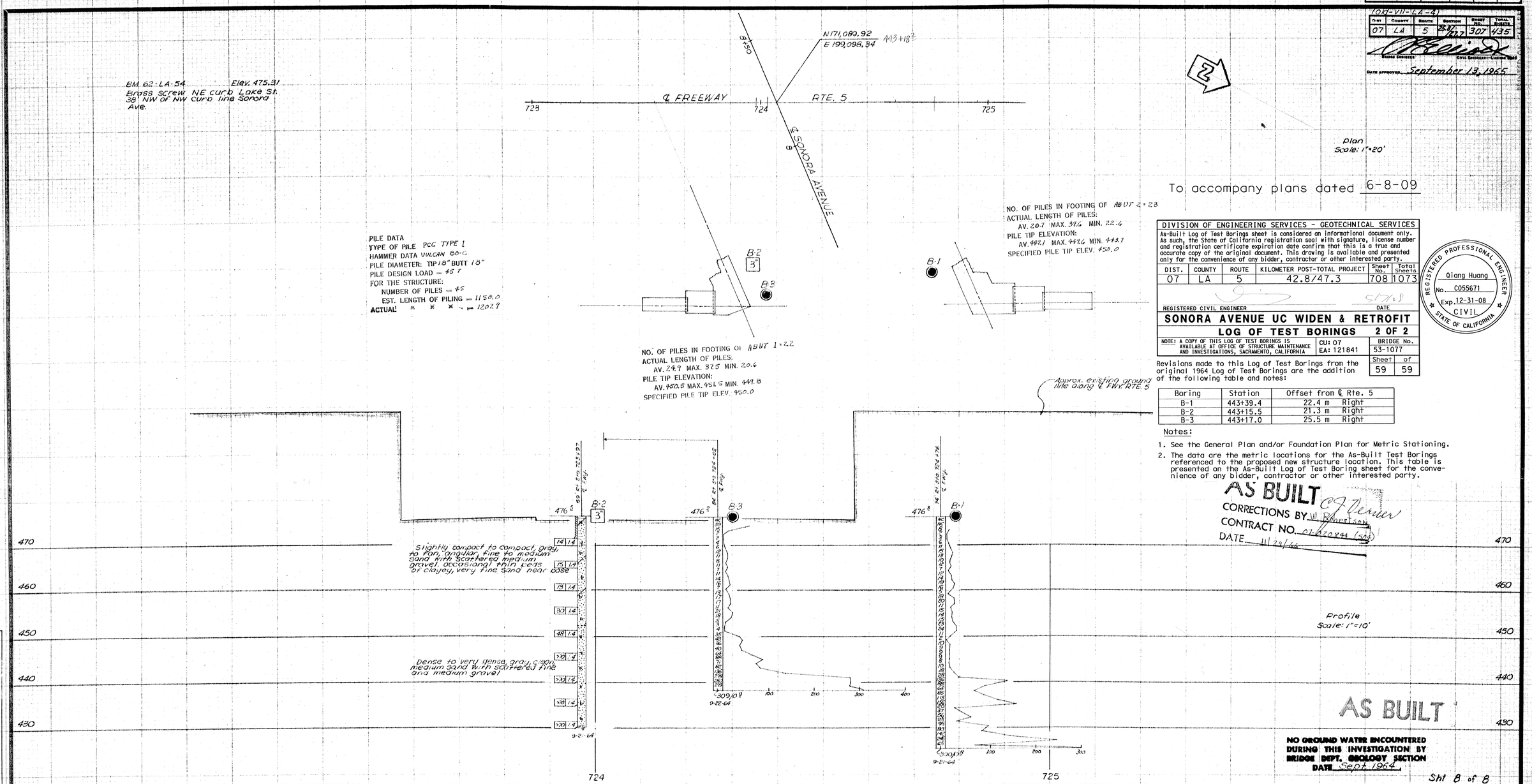

DIVISION OF ENGINEERING SERVICES - GEOTECHNICAL SERVICES

As-Built Log of Test Borings sheet is considered an informational document only. As such, the State of California registration seal with signature, license number and registration certificate expiration date confirm that this is a true and accurate copy of the original document. This drawing is available and presented only for the convenience of any bidder, contractor or other interested party.

DIST.	COUNTY	ROUTE	KILOMETER POST-TOTAL PROJECT	Sheet No.	Total Sheets
07	LA	5	42.8/47.3	708	1073

REGISTERED CIVIL ENGINEER — DATE

REGISTERED PROFESSIONAL ENGINEER — Qiang Huang — No. C055671 — Exp. 12-31-08 — CIVIL — STATE OF CALIFORNIA

SONORA AVENUE UC WIDEN & RETROFIT

LOG OF TEST BORINGS 2 OF 2

NOTE: A COPY OF THIS LOG OF TEST BORINGS IS AVAILABLE AT OFFICE OF STRUCTURE MAINTENANCE AND INVESTIGATIONS, SACRAMENTO, CALIFORNIA

CU: 07
EA: 121841

BRIDGE No. 53-1077

Sheet 59 of 59

Revisions made to this Log of Test Borings from the original 1964 Log of Test Borings are the addition of the following table and notes:

Boring	Station	Offset from ℄ Rte. 5
B-1	443+39.4	22.4 m Right
B-2	443+15.5	21.3 m Right
B-3	443+17.0	25.5 m Right

Notes:

1. See the General Plan and/or Foundation Plan for Metric Stationing.
2. The data are the metric locations for the As-Built Test Borings referenced to the proposed new structure location. This table is presented on the As-Built Log of Test Boring sheet for the convenience of any bidder, contractor or other interested party.

AS BUILT
CORRECTIONS BY W. Robertson
CONTRACT NO. 07-020244 (SAP)
DATE 11/29/66

FIELD STUDY — C.G. Bemis 9-22-64
DRAWN — F.F. Rhein 10-6-64
CHECKED — W.C. Gibbons 11-9-64
Approval Recommended by — Engineering Geologist

CLASSIFICATION OF MATERIAL BASED ON STANDARD GRADE SIZE LIMITS

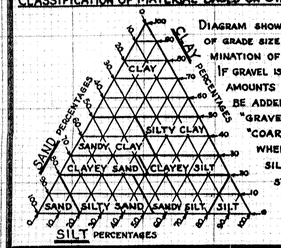

DIAGRAM SHOWING THE BASIS FOR ESTIMATES OF GRADE SIZE DISTRIBUTION USED IN DETERMINATION OF CLASS NAMES.

IF GRAVEL IS PRESENT IN APPRECIABLE AMOUNTS THE TERM "GRAVELLY" MAY BE ADDED TO THE CLASS NAME, VIZ. "GRAVELLY SAND." THE TERMS "COARSE", "MEDIUM" AND "FINE" WHEN USED TO DESCRIBE SAND, SILT AND GRAVEL REFER TO STANDARD GRADE SIZE LIMITS.

LEGEND OF EARTH MATERIALS

- GRAVEL
- SAND
- SILT
- CLAY
- SANDY CLAY OR CLAYEY SAND
- SANDY SILT OR SILTY SAND
- SILTY CLAY OR CLAYEY SILT
- PEAT AND/OR ORGANIC MATTER
- FILL MATERIAL
- IGNEOUS ROCK
- SEDIMENTARY ROCK
- METAMORPHIC ROCK

LEGEND OF BORING OPERATIONS

- PENETROMETER
- 2¼" CONE PENETROMETER
- SAMPLER BORING (DRY)
- ROTARY BORING (WET)
- AUGER BORING (DRY)
- JET BORING
- CORE BORING
- TEST PIT

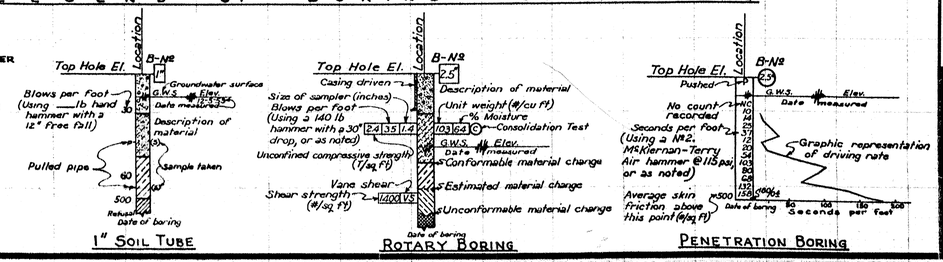

NOTE

Classification of earth material as shown on this sheet is based upon field inspection and is not to be construed to imply mechanical analysis.

STATE OF CALIFORNIA
DEPARTMENT OF PUBLIC WORKS
DIVISION OF HIGHWAYS

SONORA AVENUE UNDERCROSSING (WIDEN)

LOG OF TEST BORINGS

SCALE	BRIDGE	FILE	DRAWING
As Noted	53-1077R		53/077-7

07-020844

307

DIST	COUNTY	ROUTE	KILOMETER POST TOTAL PROJECT	SHEET No	TOTAL SHEETS
07	LA	5	42.8/47.3	709	1073

Andrew Rittenhouse 12-05-08
REGISTERED CIVIL ENGINEER DATE

6-8-09
PLANS APPROVAL DATE

REGISTERED PROFESSIONAL ENGINEER Andrew P. Rittenhouse No. C 61006 Exp. 12-31-10 CIVIL STATE OF CALIFORNIA

The State of California or its officers or agents shall not be responsible for the accuracy or completeness of electronic copies of this plan sheet.

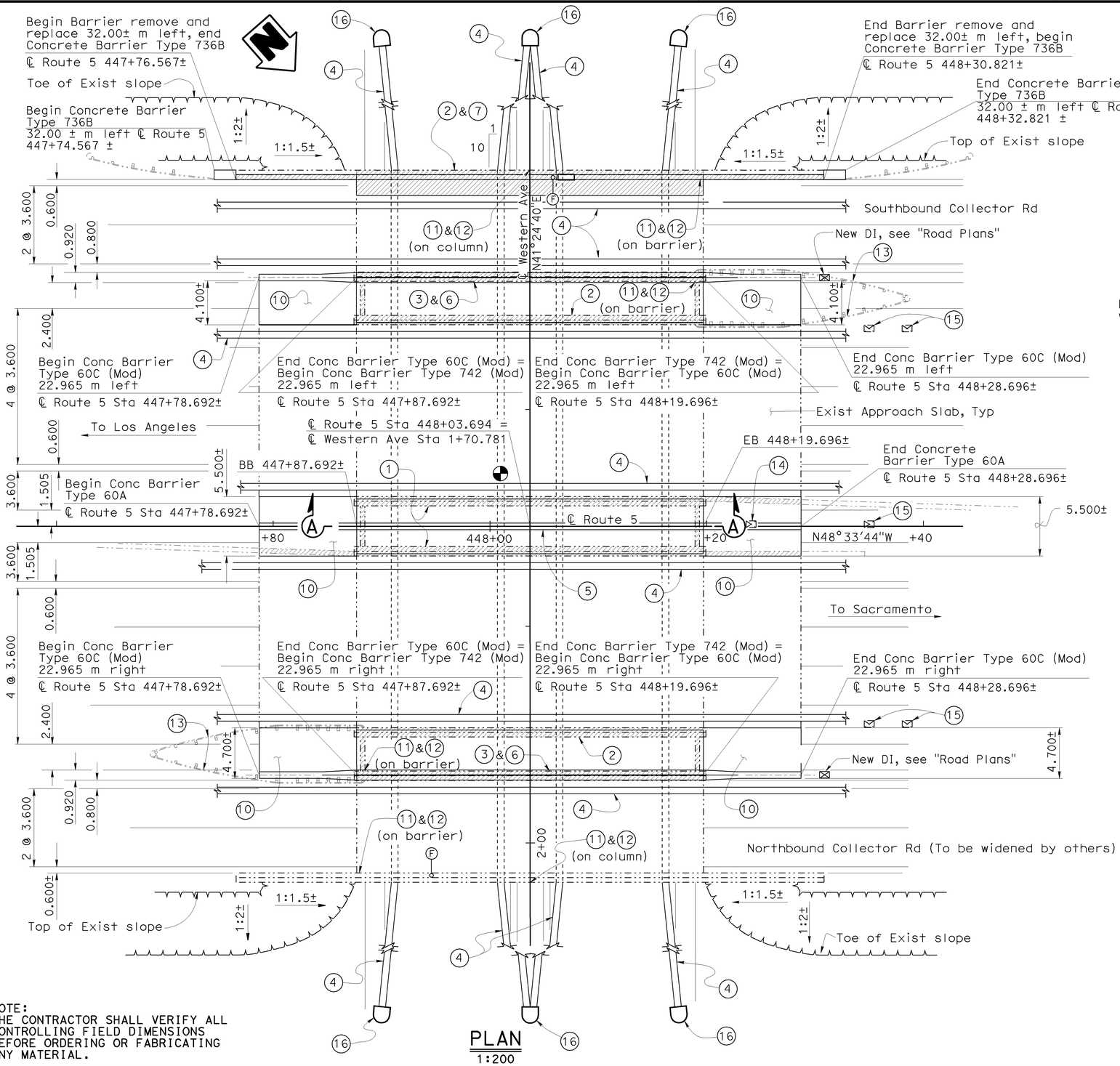

PLAN
1:200

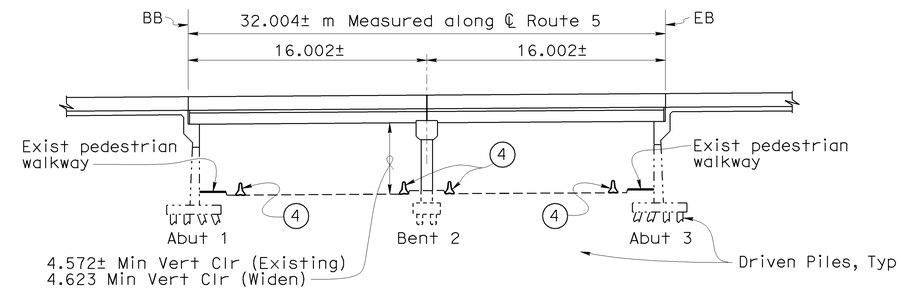

ELEVATION A-A
1:200

QUANTITIES

BRIDGE REMOVAL (PORTION), LOCATION D	LUMP	SUM
STRUCTURE EXCAVATION (BRIDGE)	46	m^3
STRUCTURE BACKFILL (BRIDGE)	28	m^3
NPS 3.5 SUPPLY LINE (BRIDGE)	58	m
FURNISH PILING (CLASS 625) (ALTERNATIVE W)	272	m
DRIVE PILE (CLASS 625) (ALTERNATIVE W)	18	EA
STRUCTURAL CONCRETE, BRIDGE FOOTING	17	m^3
STRUCTURAL CONCRETE, BRIDGE	159	m^3
STRUCTURAL CONCRETE, APPROACH SLAB (TYPE N)	82	m^3
DRILL AND BOND DOWEL	22	m
REFINISH BRIDGE DECK	45	m^2
JOINT SEAL (MR 13 mm)	30	m
JOINT SEAL (MR 25 mm)	15	m
BAR REINFORCING STEEL (BRIDGE)	16 750	kg
FURNISH STRUCTURAL STEEL (BRIDGE)	61 200	kg
ERECT STRUCTURAL STEEL (BRIDGE)	61 200	kg
CLEAN AND PAINT STRUCTURAL STEEL	LUMP	SUM
SPOT BLAST CLEAN AND PAINT UNDERCOAT	3	m^2
WORK AREA MONITORING	LUMP	SUM
MISCELLANEOUS METAL (BRIDGE)	1 406	kg
CONCRETE BARRIER (TYPE 60C MODIFIED)	36	m
CONCRETE BARRIER (TYPE 60A)	50	m
CONCRETE BARRIER (TYPE 736 MODIFIED)	58	m
CONCRETE BARRIER (TYPE 736B)	4	m
CONCRETE BARRIER (TYPE 742 MODIFIED)	128	m

Notes:

-For information not shown see, "GENERAL PLAN NO. 2" sheet

-For "General Notes" and "Index To Plans", see "INDEX TO PLANS" sheet

Indicates existing structure

Indicates Bridge Removal (Portion)

Indicates point of Minimum Vertical Clearance

Electrolier foundation location, see "Road Plans" and MISCELLANEOUS DETAILS" sheets

Pullbox, see "Road Plans"

KP (PM) Indicates Kilometer Post (Post Mile)

NOTE:
THE CONTRACTOR SHALL VERIFY ALL CONTROLLING FIELD DIMENSIONS BEFORE ORDERING OR FABRICATING ANY MATERIAL.

Caltrans Metric

Traci Menard
DESIGN ENGINEER

	BY	CHECKED
DESIGN	Gabriel Galo	James Ralston
DETAILS	Dale Kubochi	James Ralston
QUANTITIES	James Ralston	Traci Menard

LOAD FACTOR DESIGN — LIVE LOADING: HS20-44 AND ALTERNATIVE AND PERMIT DESIGN LOAD

	BY	CHECKED
LAYOUT	Gabriel Galo	James Ralston
SPECIFICATIONS	T. Chen	PLANS AND SPECS COMPARED A. Rittenhouse

STATE OF CALIFORNIA
DEPARTMENT OF TRANSPORTATION

DIVISION OF ENGINEERING SERVICES
STRUCTURE DESIGN
DESIGN BRANCH 15

BRIDGE NO. 53-1079
KP (PM) 44.8 (27.8)

WESTERN AVENUE UNDERCROSSING (WIDEN)
GENERAL PLAN NO. 1

ALL DIMENSIONS ARE IN METERS UNLESS OTHERWISE SHOWN

ORIGINAL SCALE IN MILLIMETERS FOR REDUCED PLANS 0 10 20 30 40 50 60 70 80 90 100

CU 07
EA 121841

DISREGARD PRINTS BEARING EARLIER REVISION DATES

REVISION DATES: 2-1-09 3-1-09 5-01-09 7-1-09 8-31-09 11-30-09 12-31-09 1-1-09 1-31-09

SHEET 1 OF 28

FILE => 53-1079lrks-a-gp1.dgn

STRUCTURES DESIGN GENERAL PLAN SHEET (METRIC) (REV.03-17-04)

USERNAME => trmikest DATE PLOTTED => 12-JUN-2009 TIME PLOTTED => 10:06

DIST	COUNTY	ROUTE	KILOMETER POST TOTAL PROJECT	SHEET No	TOTAL SHEETS
07	LA	5	42.8/47.3	710	1073

Andrew Rittenhouse 12-05-08
REGISTERED CIVIL ENGINEER DATE

6-8-09
PLANS APPROVAL DATE

REGISTERED PROFESSIONAL ENGINEER Andrew P. Rittenhouse No. C 61006 Exp. 12-31-10 CIVIL STATE OF CALIFORNIA

The State of California or its officers or agents shall not be responsible for the accuracy or completeness of electronic copies of this plan sheet.

Notes:

1. Remove existing Concrete Barrier Type 50 A.C., curb and deck overhang
2. Remove existing Concrete Barrier Type 27RM, curb, and deck
3. Remove existing Concrete Barrier Type 27RM and curb
4. Temporary Railing (Type K), see "Road Plans"
5. Concrete Barrier Type 60A
6. Concrete Barrier Type 742 (Mod)
7. Overhang replacement with Concrete Barrier Type 736 (Mod) with utilities
8. Elastomeric Bearing Pad, Typ
9. Steel Girder, Typ
10. Structure Approach Type N(9S)
11. Paint "Br. No. 53-1079" as needed at direction of the Engineer
12. Paint "Western Avenue UC" as needed at direction of the Engineer
13. Existing MBGR to be removed, see "Road Plans"
14. Existing DI to be removed, see "Road Plans"
15. Existing DI, see "Road Plans"
16. Temporary Crash Cushion, see "Road Plans"
17. Temporary Irrigation, see "Road Plans"
18. Existing Steel Girder, Typ

* Match existing cross slope

Indicates existing structure

Indicates Bridge Removal (Portion)

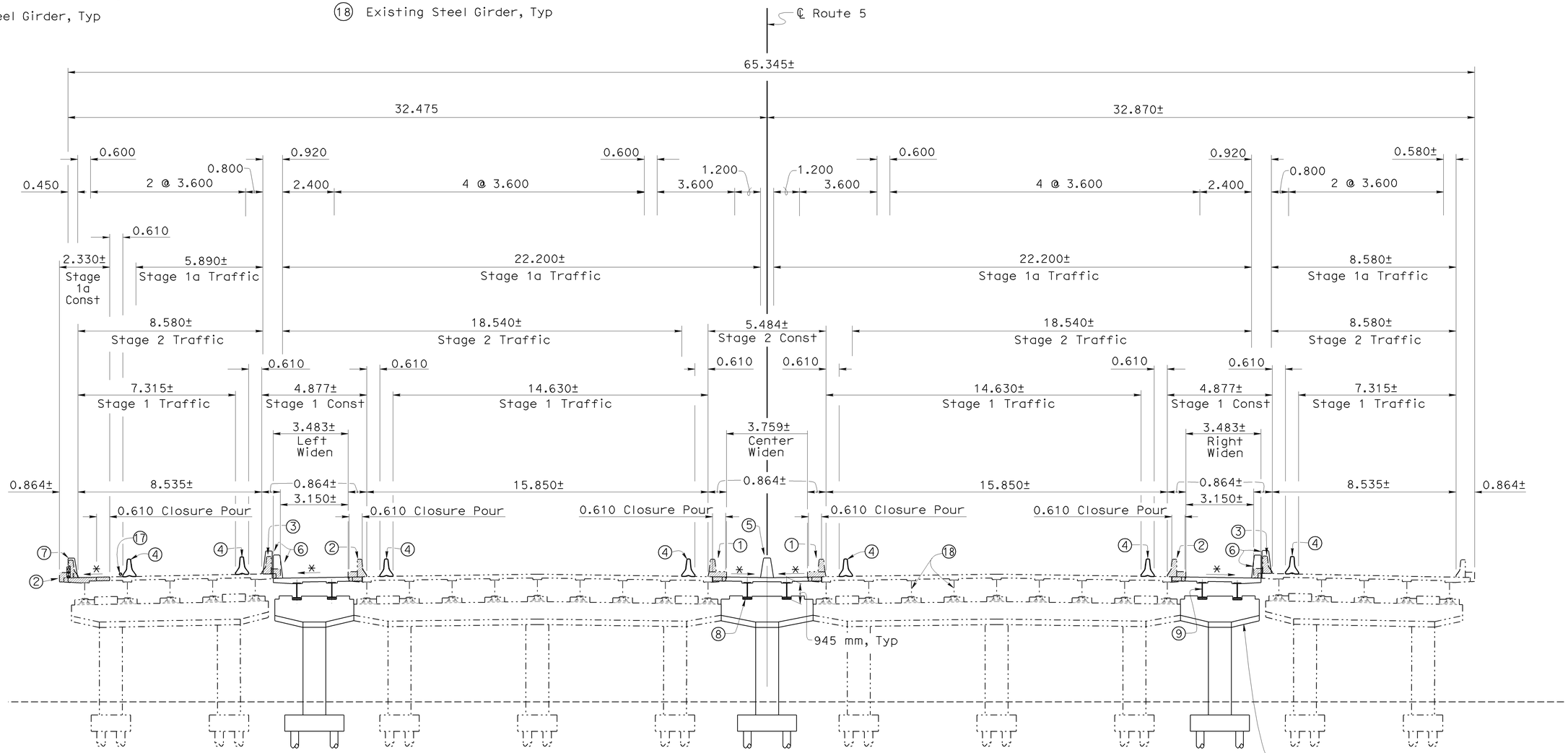

NOTE:
THE CONTRACTOR SHALL VERIFY ALL CONTROLLING FIELD DIMENSIONS BEFORE ORDERING OR FABRICATING ANY MATERIAL.

TYPICAL SECTION

1:100

KP (PM) Indicates Kilometer Post (Post Mile)

Caltrans Metric

DESIGN ENGINEER

	BY	CHECKED
DESIGN	Gabriel Galo	James Ralston
DETAILS	Dale Kubochi	James Ralston
QUANTITIES	James Ralston	Traci Menard

LOAD FACTOR DESIGN	LIVE LOADING: HS20-44 AND ALTERNATIVE AND PERMIT DESIGN LOAD	
LAYOUT	BY Gabriel Galo	CHECKED James Ralston
SPECIFICATIONS	BY T. Chen	PLANS AND SPECS COMPARED A. Rittenhouse

ALL DIMENSIONS ARE IN METERS UNLESS OTHERWISE SHOWN

ORIGINAL SCALE IN MILLIMETERS FOR REDUCED PLANS 0 10 20 30 40 50 60 70 80 90 100

STATE OF CALIFORNIA
DEPARTMENT OF TRANSPORTATION

DIVISION OF ENGINEERING SERVICES
STRUCTURE DESIGN
DESIGN BRANCH 15

CU 07
EA 121841

BRIDGE NO. 53-1079
KP (PM) 44.8 (27.8)

WESTERN AVENUE UNDERCROSSING (WIDEN)
GENERAL PLAN NO. 2

DISREGARD PRINTS BEARING EARLIER REVISION DATES

REVISION DATES: 12-12-08 1-7-09 5-7-01 2-20-08 3-7-08 4-8-08 7-1-08 8-28-08 11-7-08

SHEET 2 OF 28

FILE => 53-1079lrks-a-gp2.dgn

STRUCTURES DESIGN GENERAL PLAN SHEET (METRIC) (REV.03-17-04)

USERNAME => trmikesl DATE PLOTTED => 12-JUN-2009 TIME PLOTTED => 10:06

DIST	COUNTY	ROUTE	KILOMETER POST TOTAL PROJECT	SHEET No	TOTAL SHEETS
07	LA	5	42.8/47.3	711	1073

Andrew Rittenhouse 12-05-08
REGISTERED CIVIL ENGINEER DATE

6-8-09
PLANS APPROVAL DATE

REGISTERED PROFESSIONAL ENGINEER Andrew P. Rittenhouse No. C 61006 Exp. 12-31-10 CIVIL STATE OF CALIFORNIA

The State of California or its officers or agents shall not be responsible for the accuracy or completeness of electronic copies of this plan sheet.

INDEX TO PLANS

SHEET NO.	TITLE
1	GENERAL PLAN NO. 1
2	GENERAL PLAN NO. 2
3	INDEX TO PLANS
4	FOUNDATION PLAN
5	ABUTMENT LAYOUT
6	ABUTMENT DETAILS NO. 1
7	ABUTMENT DETAILS NO. 2
8	ABUTMENT DETAILS NO. 3
9	ABUTMENT DETAILS NO. 4
10	ABUTMENT DETAILS NO. 5
11	ABUTMENT DETAILS NO. 6
12	BENT LAYOUT
13	BENT DETAILS NO. 1
14	BENT DETAILS NO. 2
15	BENT DETAILS NO. 3
16	BENT DETAILS NO. 4
17	BENT DETAILS NO. 5
18	TYPICAL SECTION
19	GIRDER LAYOUT
20	GIRDER DETAILS NO. 1
21	GIRDER DETAILS NO. 2
22	MISCELLANEOUS DETAILS NO. 1
23	MISCELLANEOUS DETAILS NO. 2
24	MISCELLANEOUS DETAILS NO. 3
25	STEEL GIRDER DETAILS
26	STRUCTURE APPROACH TYPE N(9S)
27	LOG OF TEST BORINGS 1 OF 2
28	LOG OF TEST BORINGS 2 OF 2

PILE DATA

Location	Pile Type	Alt	Load Factor Design Nominal Resistance		Cut-off Elevation	Design Tip Elevation	Specified Tip Elevation
			Compression	Tension			
Bent 2	Class 625	W	900 kN	625 kN	148.33 m	133.2 m (1) 134.5 m (2)	133.2 m

Design tip elevations are controlled by the following demands:
(1) Compression, (2) Tension

GENERAL NOTES
LOAD FACTOR DESIGN

DESIGN: BRIDGE DESIGN SPECIFICATIONS (1996 AASHTO with Interims and Revisions by CALTRANS)

SEISMIC DESIGN: Caltrans Seismic Design Criteria (SDC), Version 1.4 June 2006

DEAD LOAD: Includes 1.675 KPa for future wearing surface.

LIVE LOADING: HS20-44 and alternative and permit design load.

SEISMIC LOADING: Site Specific Acceleration Response Spectra Curve

ANCHOR RODS: All Anchor Rods shall be ASTM F1554, f_y = 725 MPa (Threads excluded from shear plane)

REINFORCED CONCRETE: f_y = 420 MPa
f'_c = 25 MPa & 28 MPa
n = 8

STRUCTURAL STEEL: f_y = 345 MPa (ASTM A709M Grade 345)

TRANSVERSE DECK SLABS: (Working Stress Design) f_s = 138 MPa
f_c = 8.3 MPa
n = 10

HS BOLTS: All ASTM A325 Bolts shall be, (f_y = 635 MPa) (With threads excluded from shear plane)

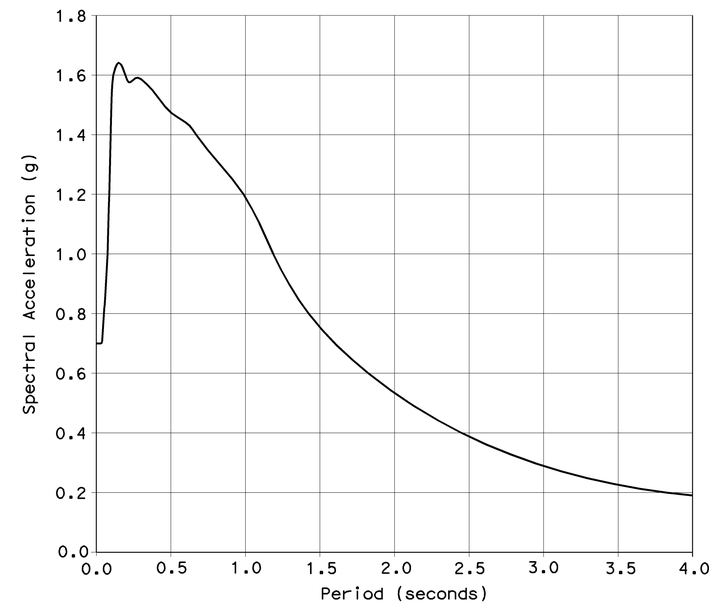

STANDARD PLANS DATED JULY 2004

A10A	ACRONYMS AND ABBREVIATIONS (A-L)
A10B	ACRONYMS AND ABBREVIATIONS (M-Z)
A62C	LIMITS OF PAYMENT FOR EXCAVATION AND BACKFILL BRIDGE
A76A	CONCRETE BARRIER TYPE 60
H9	PLANTING AND IRRIGATION DETAILS
T3	TEMPORARY RAILING (TYPE K)
B0-1	BRIDGE DETAILS
B0-3	BRIDGE DETAILS
B0-5	BRIDGE DETAILS
B2-5	PILE DETAILS CLASS 400 AND CLASS 625
RSP B6-21	JOINT SEALS (MAXIMUM MOVEMENT RATING = 50 mm)
B11-56	CONCRETE BARRIER TYPE 736
B11-57	CONCRETE BARRIER TYPE 742
B14-4	WATER SUPPLY LINE (BRIDGE) (PIPE SIZES LESS THAN NPS 4)
H9	PLANTING AND IRRIGATION DETAILS

STANDARD PLAN SHEET NO.
DETAIL NO.

NOTE:
THE CONTRACTOR SHALL VERIFY ALL CONTROLLING FIELD DIMENSIONS BEFORE ORDERING OR FABRICATING ANY MATERIAL.

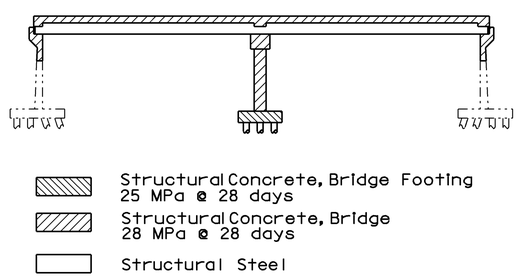

CONCRETE STRENGTH AND TYPE LIMITS

No Scale

Caltrans Metric

	BY	CHECKED
DESIGN	Gabriel Galo	James Ralston
DETAILS	Dale Kubochi	James Ralston
QUANTITIES	James Ralston	Traci Menard

STATE OF CALIFORNIA
DEPARTMENT OF TRANSPORTATION

DIVISION OF ENGINEERING SERVICES
STRUCTURE DESIGN
DESIGN BRANCH 15

BRIDGE NO. 53-1079
KILOMETER POST 44.8

WESTERN AVENUE UNDERCROSSING (WIDEN)
INDEX TO PLANS

ALL DIMENSIONS ARE IN MILLIMETERS UNLESS OTHERWISE SHOWN

ORIGINAL SCALE IN MILLIMETERS FOR REDUCED PLANS 0 10 20 30 40 50 60 70 80 90 100

CU 07
EA 121841

DISREGARD PRINTS BEARING EARLIER REVISION DATES

REVISION DATES: 8-25-08 11-14-08 12-12-08 01-12-09 02-13-09 3-23-09 5-8-08 6-18-08 7-7-08

SHEET 3 OF 28

FILE => 53-1079lrks-a-itp.dgn

STRUCTURES DESIGN DETAIL SHEET (METRIC) (REV.03-17-04)

USERNAME => trmikesl DATE PLOTTED => 12-JUN-2009 TIME PLOTTED => 10:06

DIST	COUNTY	ROUTE	KILOMETER POST TOTAL PROJECT	SHEET No	TOTAL SHEETS
07	LA	5	42.8/47.3	712	1073

Caltrans Metric

Andrew Rittenhouse 12-05-08
REGISTERED CIVIL ENGINEER DATE

6-8-09
PLANS APPROVAL DATE

REGISTERED PROFESSIONAL ENGINEER Andrew P. Rittenhouse No. C 61006 Exp. 12-31-10 CIVIL STATE OF CALIFORNIA

The State of California or its officers or agents shall not be responsible for the accuracy or completeness of electronic copies of this plan sheet.

CURVE DATA

NO	R	Δ	T	L
A	914.402	22°55'5"	185.355	365.754

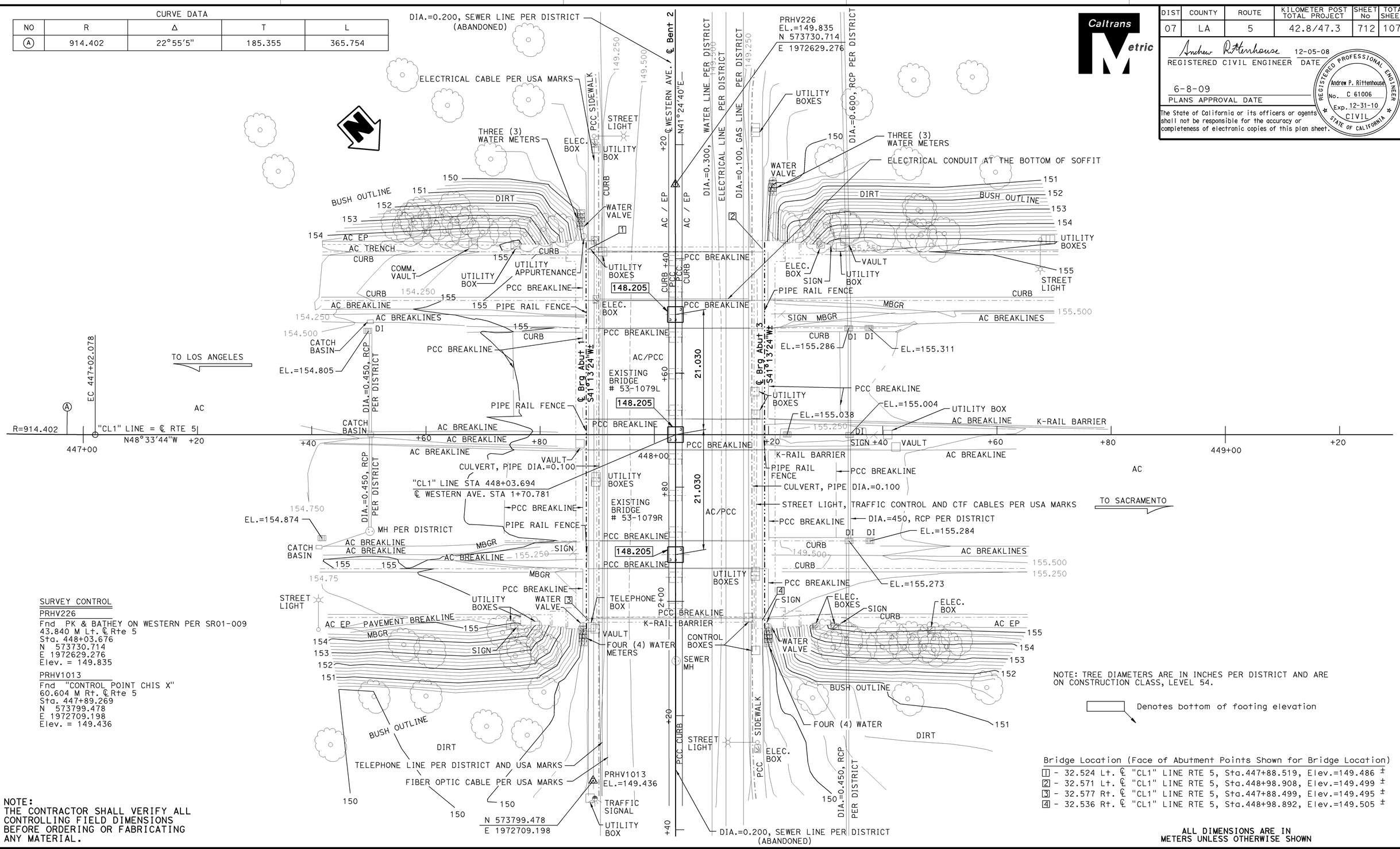

SURVEY CONTROL

PRHV226
Fnd PK & BATHEY ON WESTERN PER SR01-009
43.840 M Lt. ℄ Rte 5
Sta. 448+03.676
N 573730.714
E 1972629.276
Elev. = 149.835

PRHV1013
Fnd "CONTROL POINT CHIS X"
60.604 M Rt. ℄ Rte 5
Sta. 447+89.269
N 573799.478
E 1972709.198
Elev. = 149.436

NOTE: TREE DIAMETERS ARE IN INCHES PER DISTRICT AND ARE ON CONSTRUCTION CLASS, LEVEL 54.

Denotes bottom of footing elevation

Bridge Location (Face of Abutment Points Shown for Bridge Location)

1 - 32.524 Lt. ℄ "CL1" LINE RTE 5, Sta.447+88.519, Elev.=149.486 ±
2 - 32.571 Lt. ℄ "CL1" LINE RTE 5, Sta.448+98.908, Elev.=149.499 ±
3 - 32.577 Rt. ℄ "CL1" LINE RTE 5, Sta.447+88.499, Elev.=149.495 ±
4 - 32.536 Rt. ℄ "CL1" LINE RTE 5, Sta.448+98.892, Elev.=149.505 ±

NOTE:
THE CONTRACTOR SHALL VERIFY ALL CONTROLLING FIELD DIMENSIONS BEFORE ORDERING OR FABRICATING ANY MATERIAL.

ALL DIMENSIONS ARE IN METERS UNLESS OTHERWISE SHOWN

PRELIMINARY INVESTIGATION SECTION

SCALE	VERT. DATUM NAVD88	PHOTOGRAMMETRY AS OF:		
1:300	HORZ. DATUM NAD83 (1991.35)	SURVEYED	BY H.REDERER/DISTRICT	DRAFTED BY T.ZOLNIKOVA 05/2004
ALIGNMENT TIES DIST.TRAVERSE SHEET		FIELD CHECKED BY		CHECKED BY F.BANDA 05/2004

	BY	CHECKED
DESIGN	Gabriel Galo	James Ralston
DETAILS	Dale Kubochi	James Ralston
QUANTITIES	James Ralston	Traci Menard

STATE OF CALIFORNIA
DEPARTMENT OF TRANSPORTATION

DIVISION OF STRUCTURES
STRUCTURE DESIGN 15

BRIDGE NO. 53-1079
KILOMETER POST 44.8

WESTERN AVENUE UNDERCROSSING (WIDEN)

FOUNDATION PLAN

STRUCTURES FOUNDATION PLAN SHEET (METRIC) (REV.12-1-01)

ORIGINAL SCALE IN MILLIMETERS FOR REDUCED PLANS 0 10 20 30 40 50 60 70 80 90 100

CU 07
EA 121841

DISREGARD PRINTS BEARING EARLIER REVISION DATES

REVISION DATES (PRELIMINARY STAGE ONLY): 5-28-04 1-24-07 3-2-07 3-7-08 1-16-08 4-4-08 8-29-08 11-21-08

SHEET 4 OF 28

FILE => 53-1079lrks-e-fp.dgn

USERNAME => trmikest DATE PLOTTED => 12-JUN-2009 TIME PLOTTED => 10:06

DIST	COUNTY	ROUTE	KILOMETER POST TOTAL PROJECT	SHEET No	TOTAL SHEETS
07	LA	5	42.8/47.3	713	1073

Andrew Rittenhouse 12-05-08
REGISTERED CIVIL ENGINEER DATE

6-8-09
PLANS APPROVAL DATE

REGISTERED PROFESSIONAL ENGINEER Andrew P. Rittenhouse No. C 61006 Exp. 12-31-10 CIVIL STATE OF CALIFORNIA

The State of California or its officers or agents shall not be responsible for the accuracy or completeness of electronic copies of this plan sheet.

Notes:
- Abutment 1 shown, Abutment 3 similar.
- Piles not shown on plan view for clarity.
- For "Section A-A" & "Section B-B", see "ABUTMENT DETAILS NO. 2" sheet.
- New Construction not shown for clarity.
- Denotes Bridge Removal (Portion)

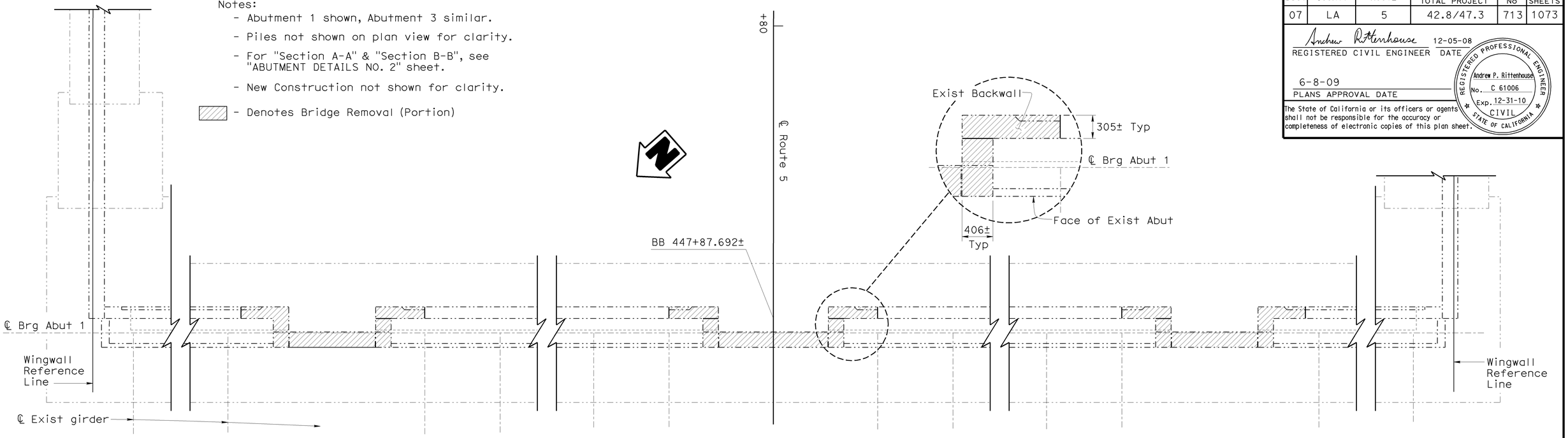

PLAN
1:50

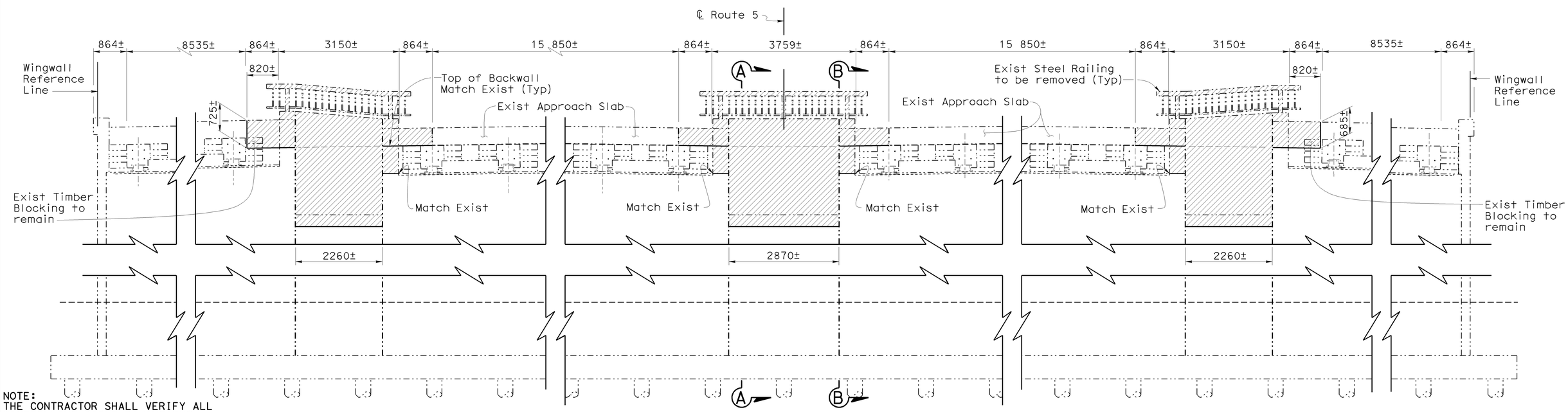

ELEVATION
1:50

NOTE:
THE CONTRACTOR SHALL VERIFY ALL CONTROLLING FIELD DIMENSIONS BEFORE ORDERING OR FABRICATING ANY MATERIAL.

Caltrans Metric

	BY	CHECKED
DESIGN	Gabriel Galo	James Ralston
DETAILS	Dale Kubochi	James Ralston
QUANTITIES	James Ralston	Traci Menard

STATE OF CALIFORNIA
DEPARTMENT OF TRANSPORTATION

DIVISION OF ENGINEERING SERVICES
STRUCTURE DESIGN
DESIGN BRANCH 15

BRIDGE NO. 53-1079
KILOMETER POST 44.8

WESTERN AVENUE UNDERCROSSING (WIDEN)
ABUTMENT LAYOUT

ALL DIMENSIONS ARE IN MILLIMETERS UNLESS OTHERWISE SHOWN

ORIGINAL SCALE IN MILLIMETERS FOR REDUCED PLANS 0 10 20 30 40 50 60 70 80 90 100

CU 07
EA 121841

DISREGARD PRINTS BEARING EARLIER REVISION DATES

REVISION DATES: 11-21-08 | 3-14-07 | 5-1-07 | 2-15-08 | 2-29-08 | 3-21-08 | 3-25-08 | 4-4-08 | 8-29-08

SHEET 5 OF 28

FILE => 53-1079lrks-h-ab1o01.dgn

STRUCTURES DESIGN DETAIL SHEET (METRIC) (REV.03-17-04)

USERNAME => trmikesl DATE PLOTTED => 12-JUN-2009 TIME PLOTTED => 10:06

DIST	COUNTY	ROUTE	KILOMETER POST TOTAL PROJECT	SHEET No	TOTAL SHEETS
07	LA	5	42.8/47.3	714	1073

Andrew Rittenhouse 12-05-08
REGISTERED CIVIL ENGINEER DATE

6-8-09
PLANS APPROVAL DATE

REGISTERED PROFESSIONAL ENGINEER Andrew P. Rittenhouse No. C 61006 Exp. 12-31-10 CIVIL STATE OF CALIFORNIA

The State of California or its officers or agents shall not be responsible for the accuracy or completeness of electronic copies of this plan sheet.

Notes:
- Abutment 1 shown, Abutment 3 similar.
- Abutment for Left & Center Widen shown, Right Widen similar to Left Widen.
- For "Section C-C" and "Section D-D", see "ABUTMENT DETAILS NO. 2" sheet.

✳ - Limits for Neoprene Strip and Expansion Joint Filler

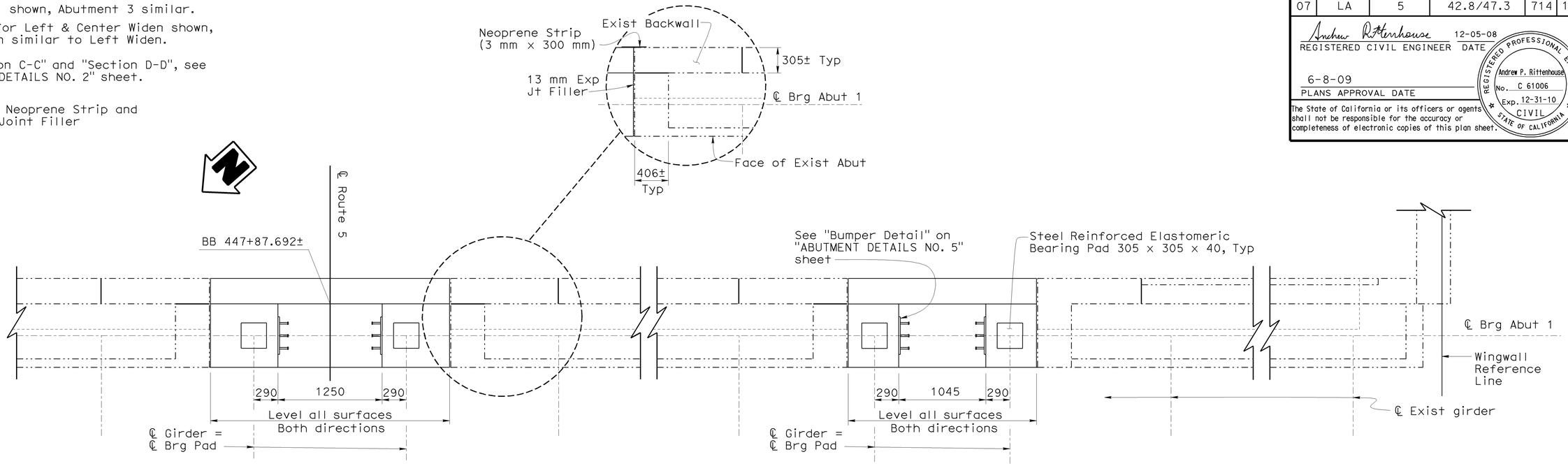

PLAN
1:25

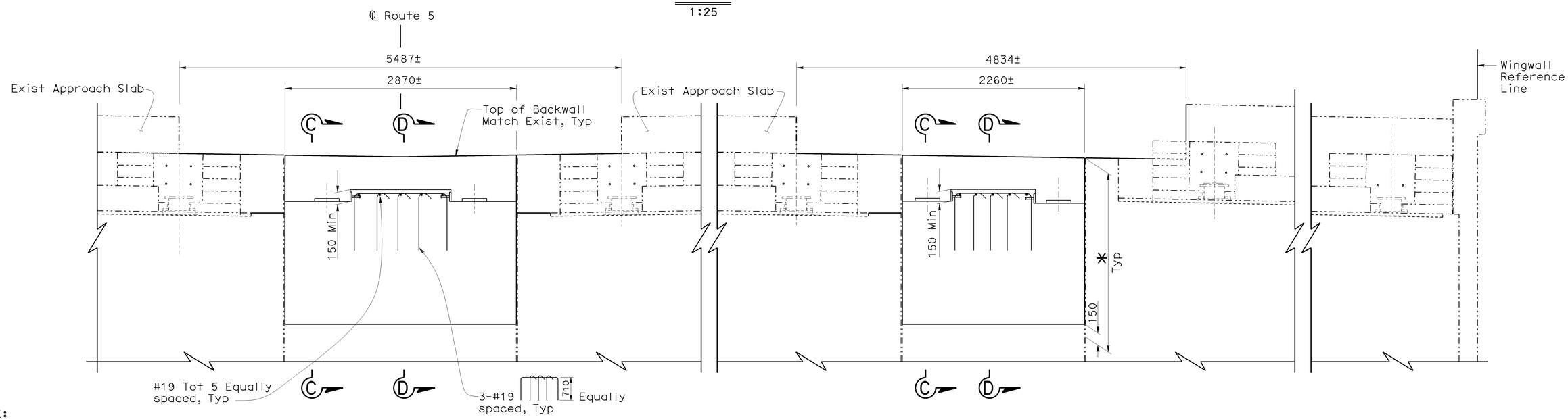

ELEVATION
1:25

NOTE:
THE CONTRACTOR SHALL VERIFY ALL CONTROLLING FIELD DIMENSIONS BEFORE ORDERING OR FABRICATING ANY MATERIAL.

	BY	CHECKED
DESIGN	Gabriel Galo	James Ralston
DETAILS	Dale Kubochi	James Ralston
QUANTITIES	James Ralston	Traci Menard

STATE OF CALIFORNIA
DEPARTMENT OF TRANSPORTATION

DIVISION OF ENGINEERING SERVICES
STRUCTURE DESIGN
DESIGN BRANCH 15

BRIDGE NO. 53-1079
KILOMETER POST 44.8

WESTERN AVENUE UNDERCROSSING (WIDEN)
ABUTMENT DETAILS NO. 1

ALL DIMENSIONS ARE IN MILLIMETERS UNLESS OTHERWISE SHOWN

ORIGINAL SCALE IN MILLIMETERS FOR REDUCED PLANS 0 10 20 30 40 50 60 70 80 90 100

CU 07
EA 121841

DISREGARD PRINTS BEARING EARLIER REVISION DATES

REVISION DATES: 12-22-06 3-14-07 8-30-07 2-15-08 2-26-08 3-27-08 4-3-08 8-28-08 11-21-08

SHEET 6 OF 28

FILE => 53-1079lrks-i-abdet01.dgn

STRUCTURES DESIGN DETAIL SHEET (METRIC) (REV.03-17-04)

USERNAME => trmikesl DATE PLOTTED => 12-JUN-2009 TIME PLOTTED => 10:06

DIST	COUNTY	ROUTE	KILOMETER POST TOTAL PROJECT	SHEET No	TOTAL SHEETS
07	LA	5	42.8/47.3	715	1073

Andrew Rittenhouse 12-05-08
REGISTERED CIVIL ENGINEER DATE

6-8-09
PLANS APPROVAL DATE

REGISTERED PROFESSIONAL ENGINEER
Andrew P. Rittenhouse
No. C 61006
Exp. 12-31-10
CIVIL
STATE OF CALIFORNIA

The State of California or its officers or agents shall not be responsible for the accuracy or completeness of electronic copies of this plan sheet.

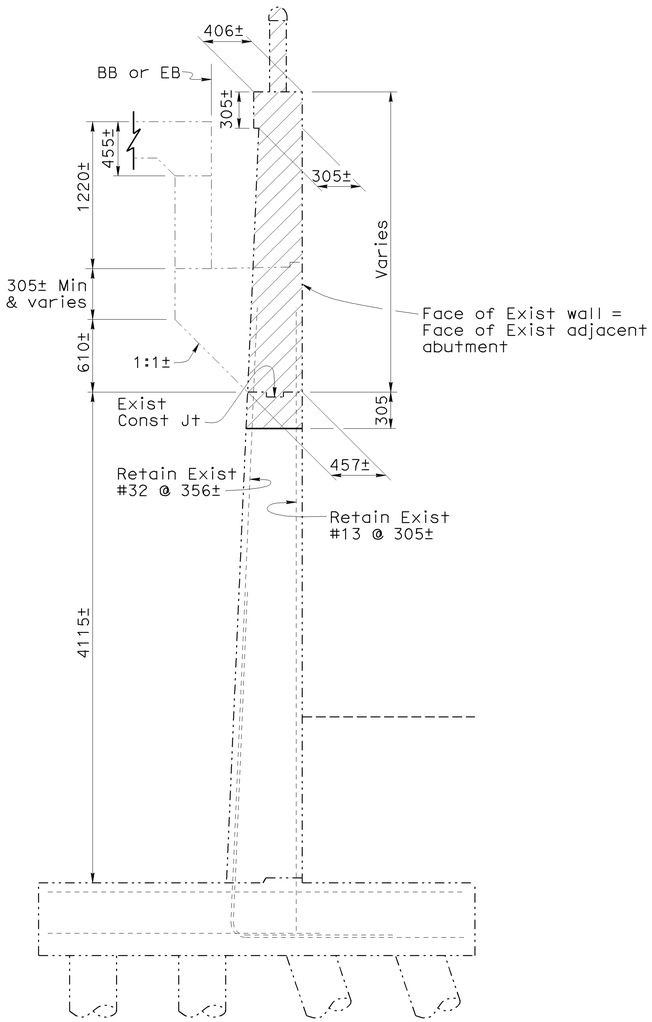

SECTION A-A
1:25

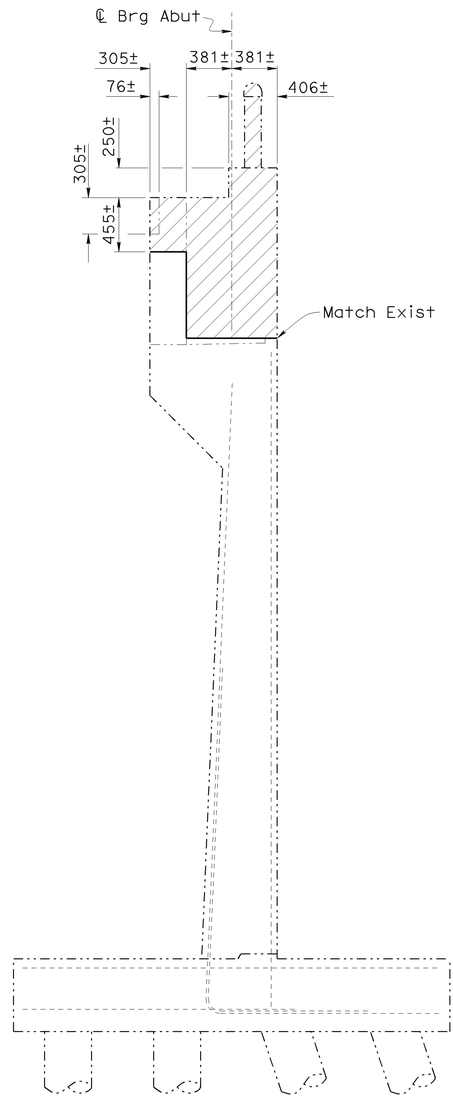

SECTION B-B
1:25

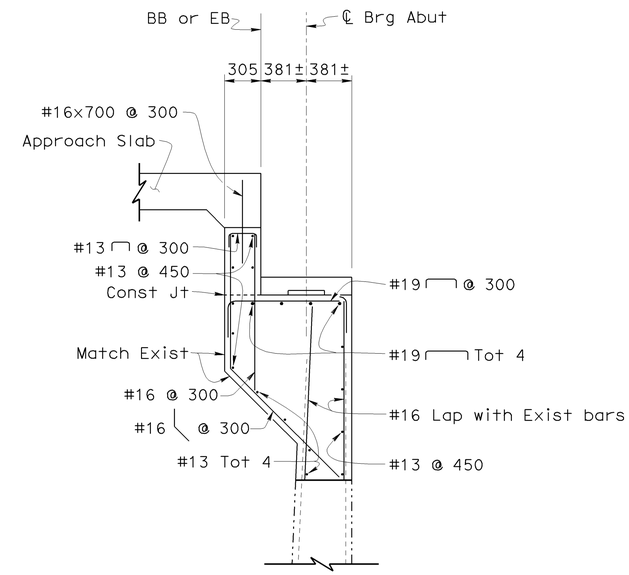

SECTION C-C
1:25

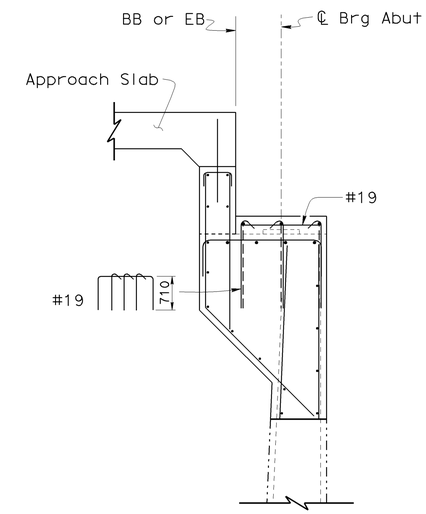

SECTION D-D
1:25

Note:
For details not noted, see "Section C-C"

Note:
Details shown for Center Widen, Left and Right Widens similar.

Indicates Bridge Removal (Portion)

NOTE:
THE CONTRACTOR SHALL VERIFY ALL CONTROLLING FIELD DIMENSIONS BEFORE ORDERING OR FABRICATING ANY MATERIAL.

Caltrans Metric

	BY	CHECKED
DESIGN	Gabriel Galo	James Ralston
DETAILS	Dale Kubochi	James Ralston
QUANTITIES	James Ralston	Traci Menard

STATE OF CALIFORNIA
DEPARTMENT OF TRANSPORTATION

DIVISION OF ENGINEERING SERVICES
STRUCTURE DESIGN
DESIGN BRANCH 15

BRIDGE NO. 53-1079
KILOMETER POST 44.8

WESTERN AVENUE UNDERCROSSING (WIDEN)
ABUTMENT DETAILS NO. 2

ALL DIMENSIONS ARE IN MILLIMETERS UNLESS OTHERWISE SHOWN

ORIGINAL SCALE IN MILLIMETERS FOR REDUCED PLANS 0 10 20 30 40 50 60 70 80 90 100

CU 07
EA 121841

DISREGARD PRINTS BEARING EARLIER REVISION DATES

REVISION DATES: 12-1-06 3-1-07 4-20-07 4-8-08 5-29-08 11-21-08

SHEET 7 OF 28

STRUCTURES DESIGN DETAIL SHEET (METRIC) (REV.03-17-04)

FILE => 53-1079lrks-i-abdet02.dgn

USERNAME => trmikesl DATE PLOTTED => 12-JUN-2009 TIME PLOTTED => 10:06

DIST	COUNTY	ROUTE	KILOMETER POST TOTAL PROJECT	SHEET No	TOTAL SHEETS
07	LA	5	42.8/47.3	716	1073

Andrew Rittenhouse 12-05-08
REGISTERED CIVIL ENGINEER DATE

6-8-09
PLANS APPROVAL DATE

REGISTERED PROFESSIONAL ENGINEER Andrew P. Rittenhouse No. C 61006 Exp. 12-31-10 CIVIL STATE OF CALIFORNIA

The State of California or its officers or agents shall not be responsible for the accuracy or completeness of electronic copies of this plan sheet.

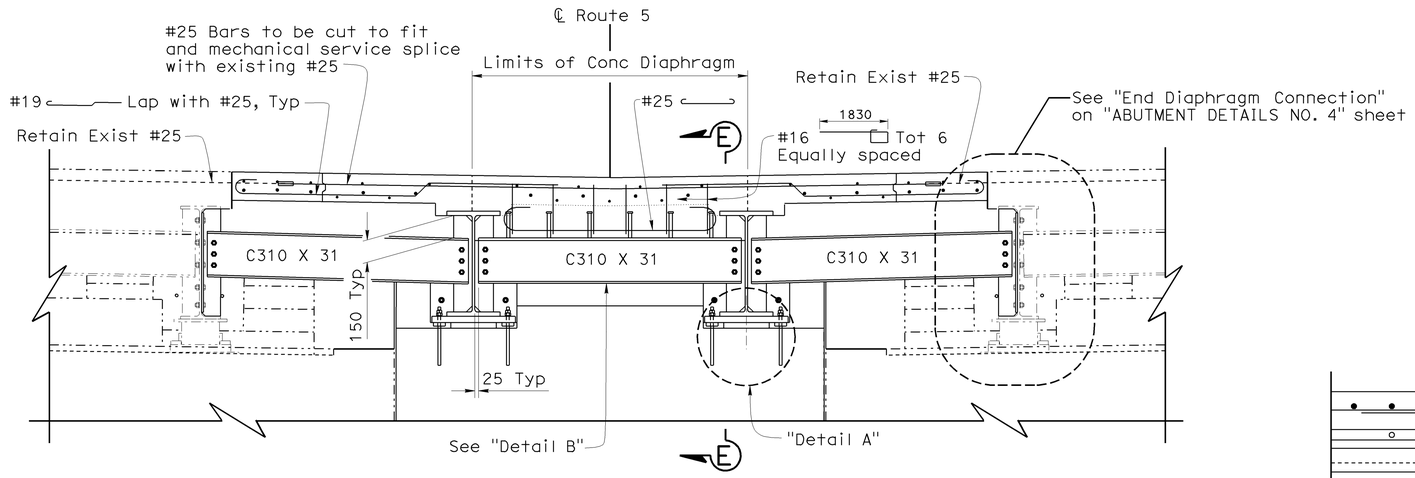

CENTER WIDEN

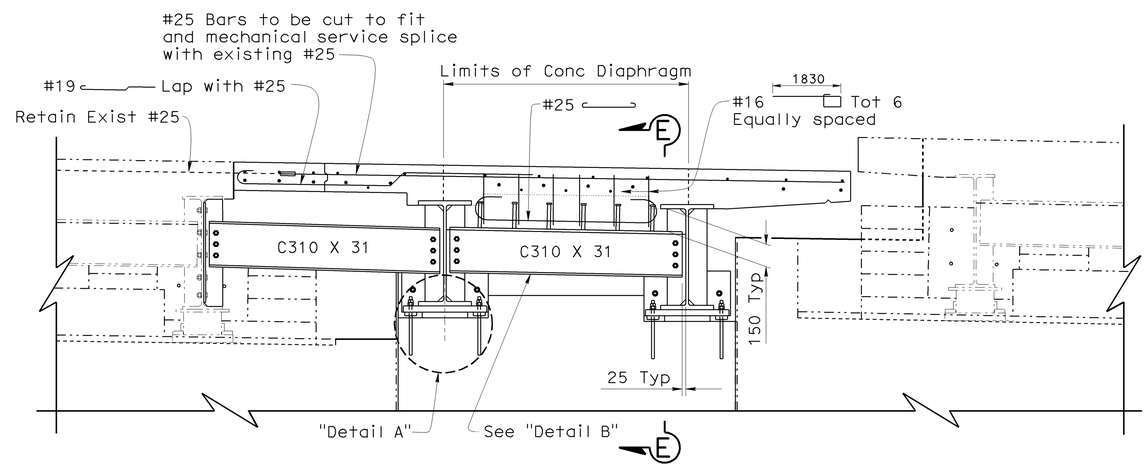

LEFT WIDEN

END DIAPHRAGM ELEVATION

1:20

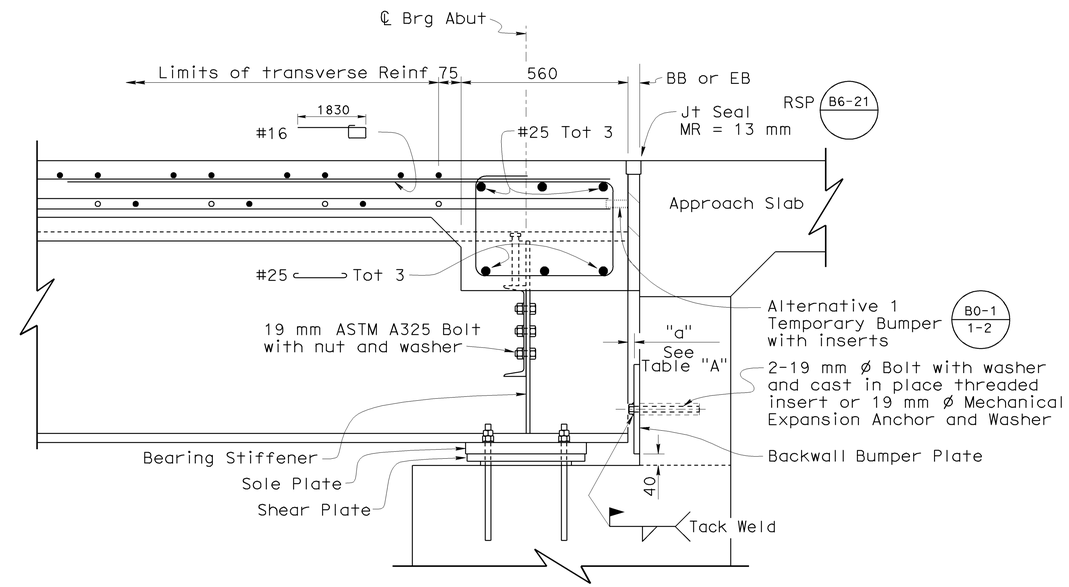

SECTION E-E

1:10

TABLE A Dimension "a"			
Location	Winter	Fall/Spring	Summer
Abut 1&3	20	20	13

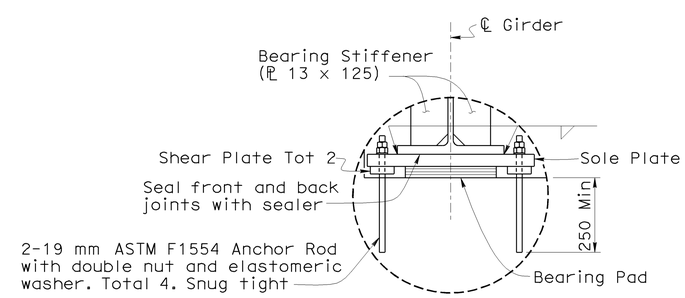

DETAIL A

1:10

Notes:
- Abutment 1 shown, Abutment 3 similar.
- Abutment for Center & Left Widen shown, Right Widen similar to Left Widen.
- For "Detail B", see "ABUTMENT DETAILS NO. 5" sheet.
- For "Sole Plate", "Shear Plate" and "Backwall Plate" details, see "ABUTMENT DETAILS NO. 5" sheet.

NOTE:
THE CONTRACTOR SHALL VERIFY ALL CONTROLLING FIELD DIMENSIONS BEFORE ORDERING OR FABRICATING ANY MATERIAL.

Caltrans Metric

	BY	CHECKED
DESIGN	Gabriel Galo	James Ralston
DETAILS	Dale Kubochi	James Ralston
QUANTITIES	James Ralston	Traci Menard

STATE OF CALIFORNIA
DEPARTMENT OF TRANSPORTATION

DIVISION OF ENGINEERING SERVICES
STRUCTURE DESIGN
DESIGN BRANCH 15

CU 07
EA 121841

BRIDGE NO. 53-1079
KILOMETER POST 44.8

WESTERN AVENUE UNDERCROSSING (WIDEN)
ABUTMENT DETAILS NO. 3

ALL DIMENSIONS ARE IN MILLIMETERS UNLESS OTHERWISE SHOWN

ORIGINAL SCALE IN MILLIMETERS FOR REDUCED PLANS 0 10 20 30 40 50 60 70 80 90 100

DISREGARD PRINTS BEARING EARLIER REVISION DATES

REVISION DATES: 02-17-09 | 3-13-07 | 5-1-07 | 8-20-07 | 2-11-08 | 2-22-08 | 4-1-08 | 8-25-08 | 11-24-08

SHEET 8 OF 28

FILE => 53-1079lrks-i-abdet03.dgn

STRUCTURES DESIGN DETAIL SHEET (METRIC) (REV.03-17-04)

USERNAME => trmikesl DATE PLOTTED => 12-JUN-2009 TIME PLOTTED => 10:06

DIST	COUNTY	ROUTE	KILOMETER POST TOTAL PROJECT	SHEET No	TOTAL SHEETS
07	LA	5	42.8/47.3	717	1073

Andrew Rittenhouse 12-05-08
REGISTERED CIVIL ENGINEER DATE

6-8-09
PLANS APPROVAL DATE

REGISTERED PROFESSIONAL ENGINEER Andrew P. Rittenhouse No. C 61006 Exp. 12-31-10 CIVIL STATE OF CALIFORNIA

The State of California or its officers or agents shall not be responsible for the accuracy or completeness of electronic copies of this plan sheet.

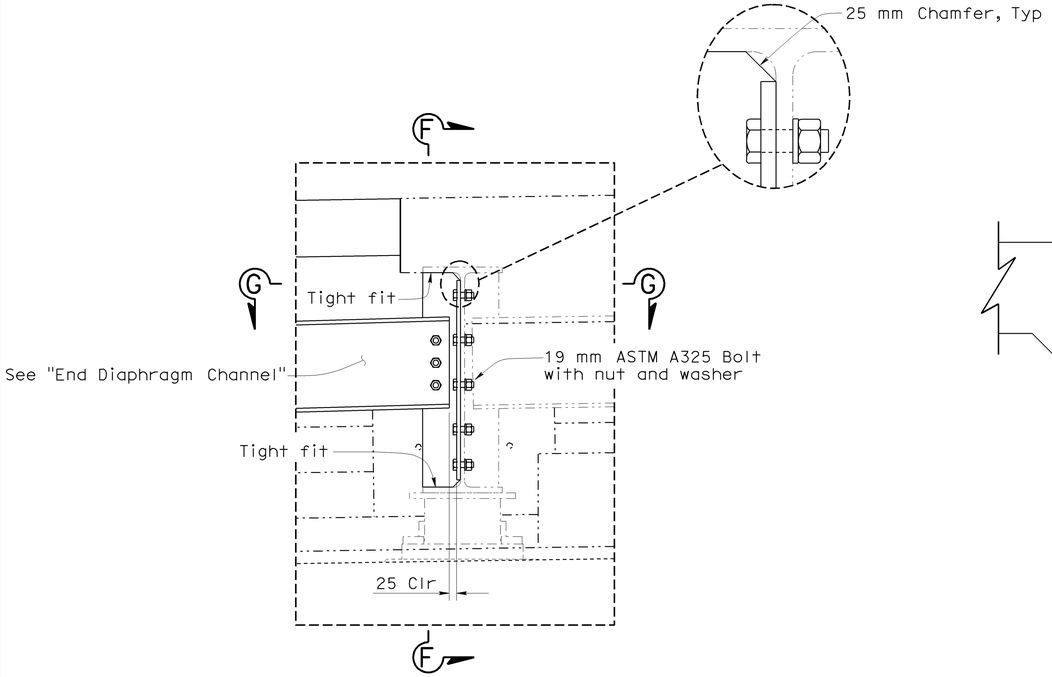

END DIAPHRAGM CONNECTION
1:10

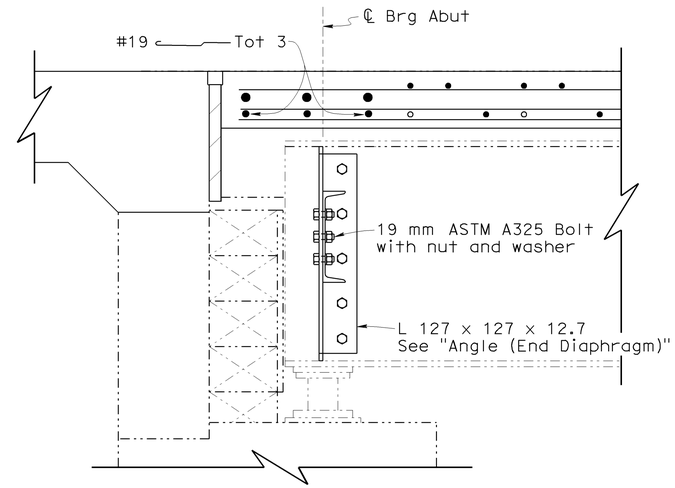

SECTION F-F
1:10

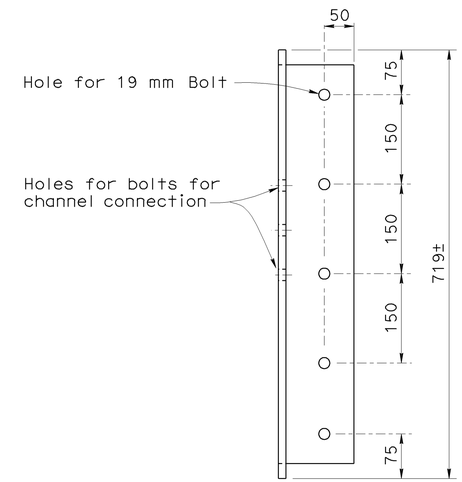

ANGLE (End Diaphragm)
1:5

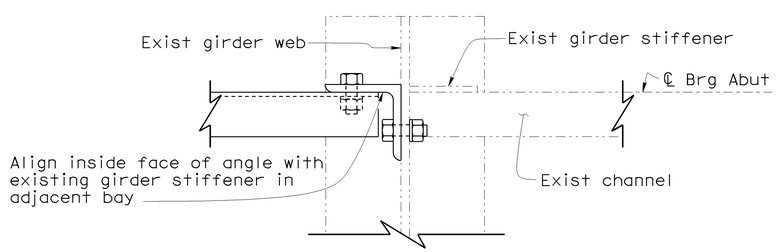

SECTION G-G
1:5

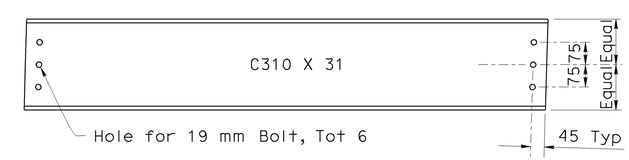

END DIAPHRAGM CHANNEL
1:10

NOTE:
THE CONTRACTOR SHALL VERIFY ALL CONTROLLING FIELD DIMENSIONS BEFORE ORDERING OR FABRICATING ANY MATERIAL.

Caltrans Metric

	BY	CHECKED
DESIGN	Gabriel Galo	James Ralston
DETAILS	Dale Kubochi	James Ralston
QUANTITIES	James Ralston	Traci Menard

STATE OF CALIFORNIA
DEPARTMENT OF TRANSPORTATION

DIVISION OF ENGINEERING SERVICES
STRUCTURE DESIGN
DESIGN BRANCH 15

BRIDGE NO. 53-1079
KILOMETER POST 44.8

WESTERN AVENUE UNDERCROSSING (WIDEN)
ABUTMENT DETAILS NO. 4

ALL DIMENSIONS ARE IN MILLIMETERS UNLESS OTHERWISE SHOWN

ORIGINAL SCALE IN MILLIMETERS FOR REDUCED PLANS 0 10 20 30 40 50 60 70 80 90 100

CU 07
EA 121841

DISREGARD PRINTS BEARING EARLIER REVISION DATES

REVISION DATES: 8-25-07 4-4-08 8-22-08 11-21-08

SHEET 9 OF 28

FILE => 53-1079lrks-i-abdet04.dgn

STRUCTURES DESIGN DETAIL SHEET (METRIC) (REV.03-17-04)

USERNAME => trmrkesl DATE PLOTTED => 12-JUN-2009 TIME PLOTTED => 10:06

DIST	COUNTY	ROUTE	KILOMETER POST TOTAL PROJECT	SHEET No	TOTAL SHEETS
07	LA	5	42.8/47.3	718	1073

Andrew Rittenhouse 12-05-08
REGISTERED CIVIL ENGINEER DATE

6-8-09
PLANS APPROVAL DATE

REGISTERED PROFESSIONAL ENGINEER Andrew P. Rittenhouse No. C 61006 Exp. 12-31-10 CIVIL STATE OF CALIFORNIA

The State of California or its officers or agents shall not be responsible for the accuracy or completeness of electronic copies of this plan sheet.

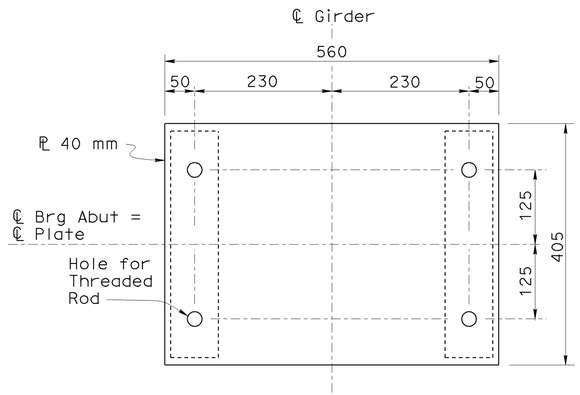

SOLE PLATE
1:5

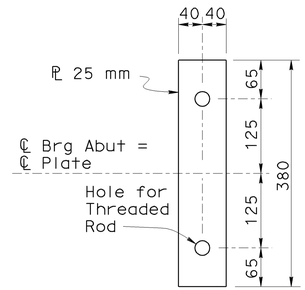

SHEAR PLATE
1:5

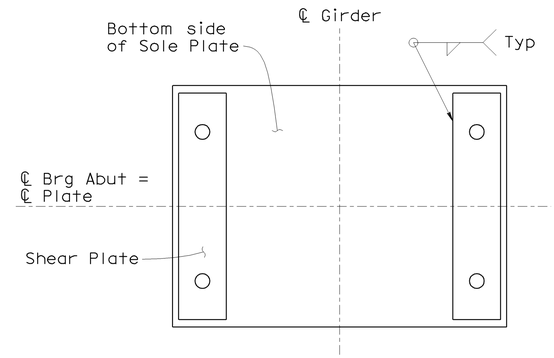

SHEAR PLATE CONNECTION TO SOLE PLATE
1:5

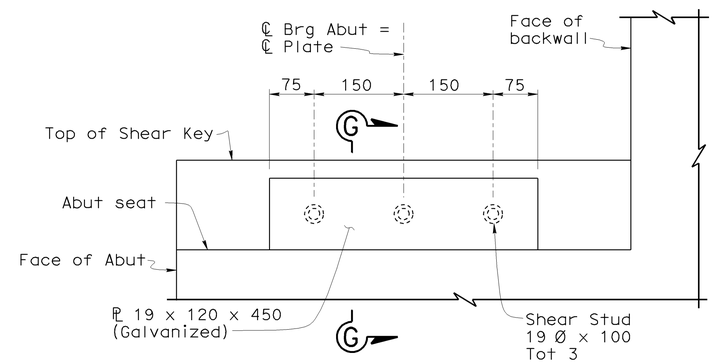

ELEVATION

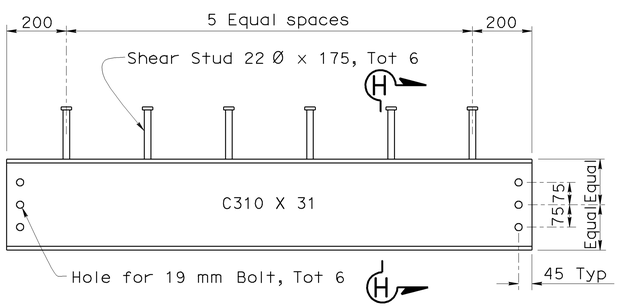

DETAIL B
1:10

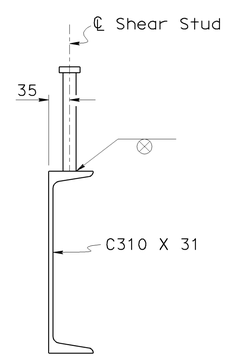

SECTION H-H
1:5

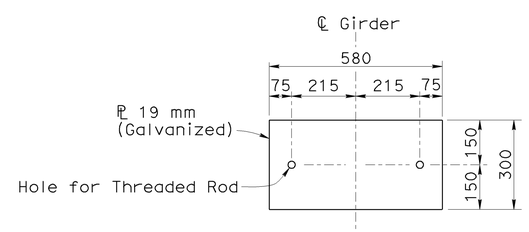

BACKWALL BUMPER PLATE
1:10

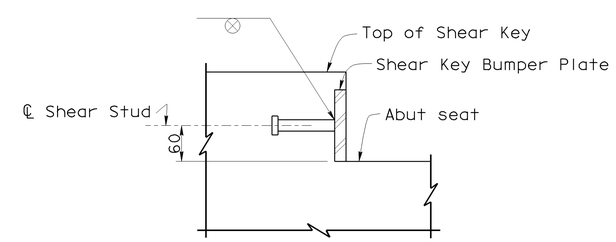

SECTION G-G

BUMPER DETAIL
1:5

NOTE:
THE CONTRACTOR SHALL VERIFY ALL CONTROLLING FIELD DIMENSIONS BEFORE ORDERING OR FABRICATING ANY MATERIAL.

Caltrans Metric

	BY	CHECKED
DESIGN	Gabriel Galo	James Ralston
DETAILS	Dale Kubochi	James Ralston
QUANTITIES	James Ralston	Traci Menard

STATE OF CALIFORNIA
DEPARTMENT OF TRANSPORTATION

DIVISION OF ENGINEERING SERVICES
STRUCTURE DESIGN
DESIGN BRANCH 15

BRIDGE NO. 53-1079
KILOMETER POST 44.8

WESTERN AVENUE UNDERCROSSING (WIDEN)
ABUTMENT DETAILS NO. 5

ALL DIMENSIONS ARE IN MILLIMETERS UNLESS OTHERWISE SHOWN

ORIGINAL SCALE IN MILLIMETERS FOR REDUCED PLANS 0 10 20 30 40 50 60 70 80 90 100

CU 07
EA 121841

DISREGARD PRINTS BEARING EARLIER REVISION DATES

REVISION DATES: 10-5-06 10-26-06 1-16-07 3-12-07 3-27-07 4-6-08 8-29-08 11-27-08 01-23-09

SHEET 10 OF 28

FILE => 53-1079lrks-i-abdet05.dgn

STRUCTURES DESIGN DETAIL SHEET (METRIC) (REV.03-17-04)

USERNAME => trmikesl DATE PLOTTED => 12-JUN-2009 TIME PLOTTED => 10:07

DIST	COUNTY	ROUTE	KILOMETER POST TOTAL PROJECT	SHEET No	TOTAL SHEETS
07	LA	5	42.8/47.3	719	1073

Andrew P. Rittenhouse 12-05-08
REGISTERED CIVIL ENGINEER DATE

6-8-09
PLANS APPROVAL DATE

REGISTERED PROFESSIONAL ENGINEER Andrew P. Rittenhouse No. C 61006 Exp. 12-31-10 CIVIL STATE OF CALIFORNIA

The State of California or its officers or agents shall not be responsible for the accuracy or completeness of electronic copies of this plan sheet.

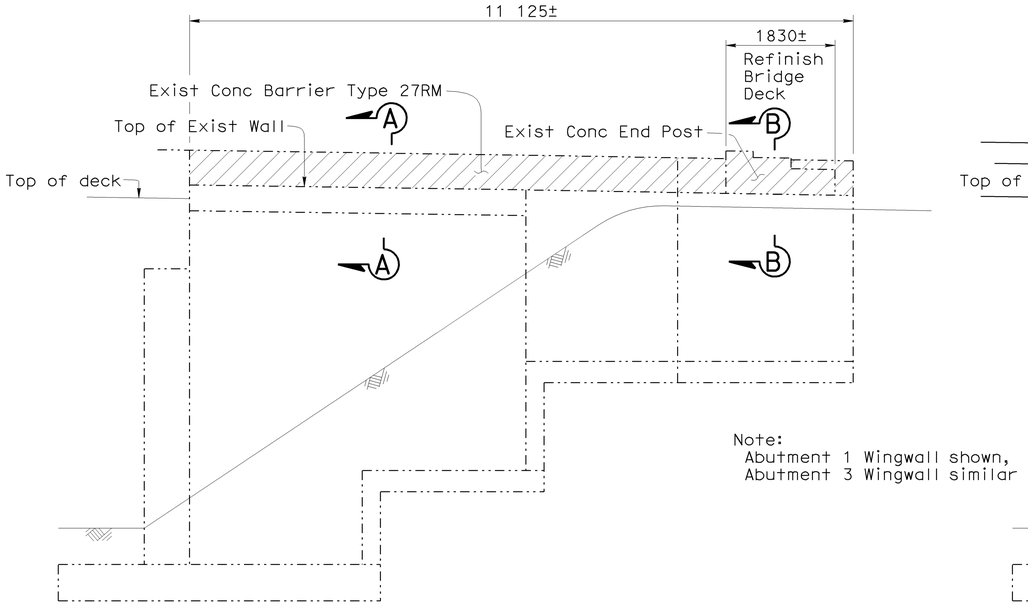

Note:
Abutment 1 Wingwall shown,
Abutment 3 Wingwall similar

BARRIER RAIL REMOVAL AT WINGWALL
1:50

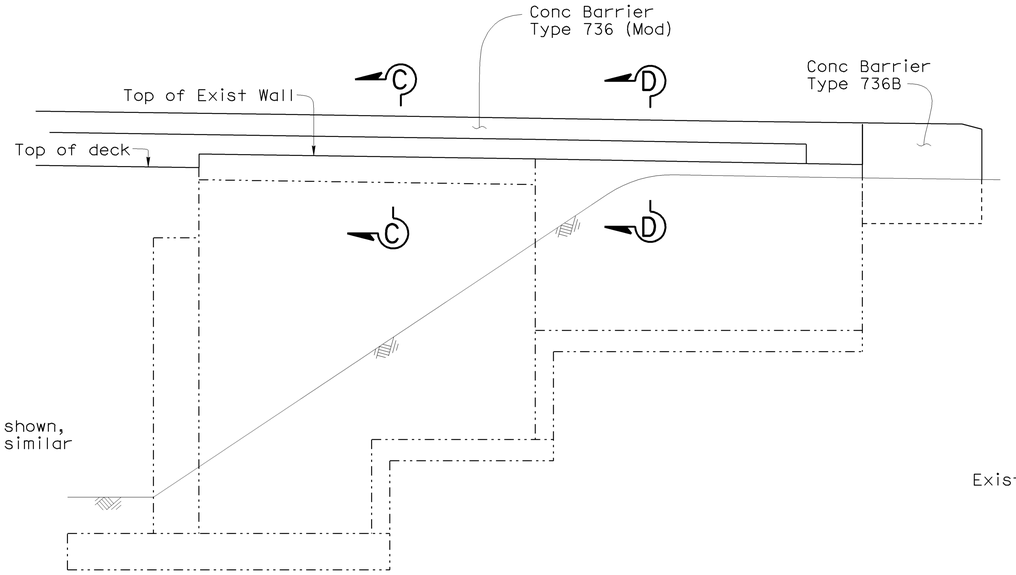

BARRIER RAIL REPLACEMENT AT WINGWALL
1:50

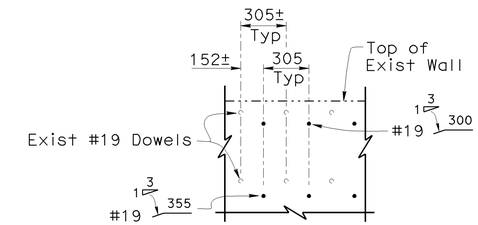

DOWEL LAYOUT
1:20

Concrete removal

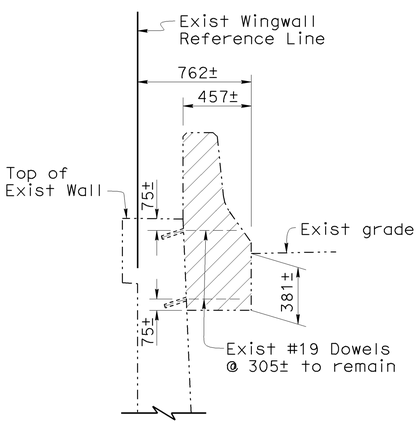

SECTION A-A
1:20

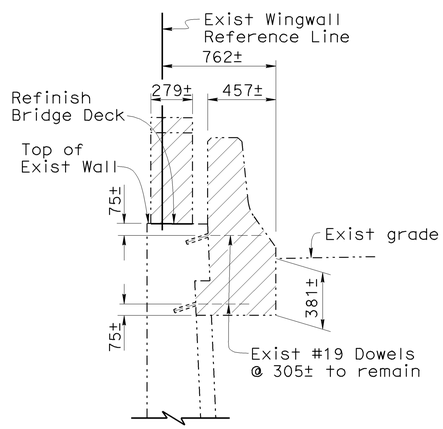

SECTION B-B
1:20

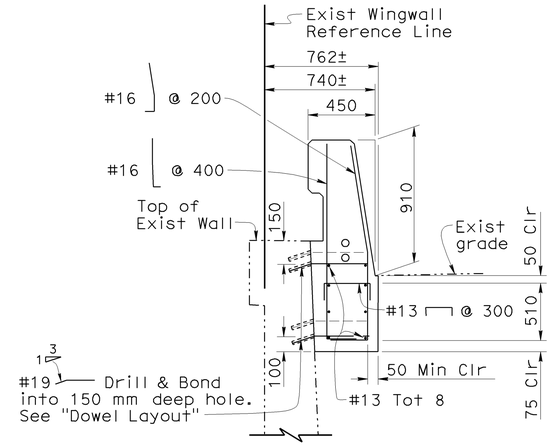

SECTION C-C
1:20

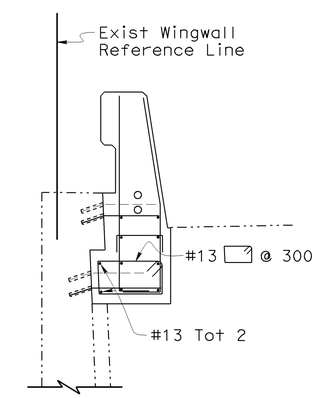

SECTION D-D
1:20

Note: For details not noted, see "Section C-C"

Note: For barrier rail details not shown, see B11-56

NOTE:
THE CONTRACTOR SHALL VERIFY ALL CONTROLLING FIELD DIMENSIONS BEFORE ORDERING OR FABRICATING ANY MATERIAL.

CONCRETE BARRIER TYPE 736 (MOD)

For additional details, see "MISCELLANEOUS DETAILS" Sheet

Caltrans Metric

	BY	CHECKED
DESIGN	Gabriel Galo	James Ralston
DETAILS	Dale Kubochi	James Ralston
QUANTITIES	James Ralston	Traci Menard

STATE OF CALIFORNIA
DEPARTMENT OF TRANSPORTATION

DIVISION OF ENGINEERING SERVICES
STRUCTURE DESIGN
DESIGN BRANCH 15

BRIDGE NO. 53-1079
KILOMETER POST 44.8

WESTERN AVENUE UNDERCROSSING (WIDEN)
ABUTMENT DETAILS NO. 6

ALL DIMENSIONS ARE IN MILLIMETERS UNLESS OTHERWISE SHOWN

ORIGINAL SCALE IN MILLIMETERS FOR REDUCED PLANS 0 10 20 30 40 50 60 70 80 90 100

CU 07
EA 121841

DISREGARD PRINTS BEARING EARLIER REVISION DATES

REVISION DATES: 3-13-07 5-11-07 2-11-08 4-4-08 4-22-08 8-26-08 11-21-08

SHEET 11 OF 28

FILE => 53-1079lrks-i-abdet06.dgn

STRUCTURES DESIGN DETAIL SHEET (METRIC) (REV.03-17-04)

USERNAME => trmrkest DATE PLOTTED => 12-JUN-2009 TIME PLOTTED => 10:07

DIST	COUNTY	ROUTE	KILOMETER POST TOTAL PROJECT	SHEET No	TOTAL SHEETS
07	LA	5	42.8/47.3	720	1073

Andrew Rittenhouse 12-05-08
REGISTERED CIVIL ENGINEER DATE

6-8-09
PLANS APPROVAL DATE

REGISTERED PROFESSIONAL ENGINEER
Andrew P. Rittenhouse
No. C 61006
Exp. 12-31-10
CIVIL
STATE OF CALIFORNIA

The State of California or its officers or agents shall not be responsible for the accuracy or completeness of electronic copies of this plan sheet.

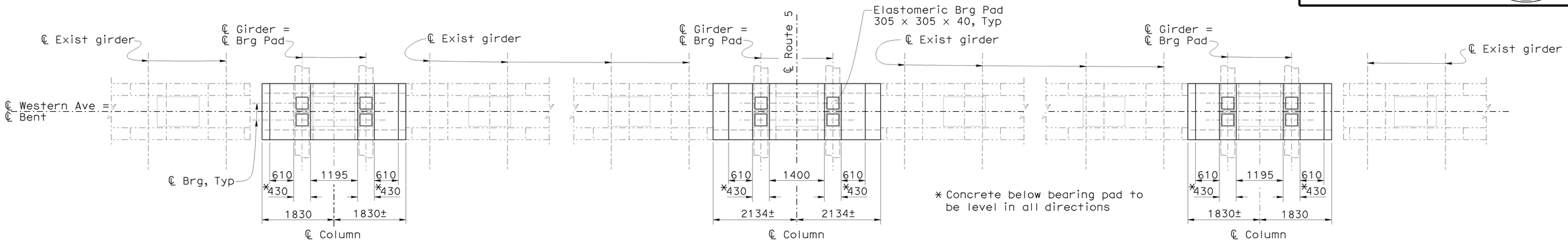

* Concrete below bearing pad to be level in all directions

PLAN
1:50

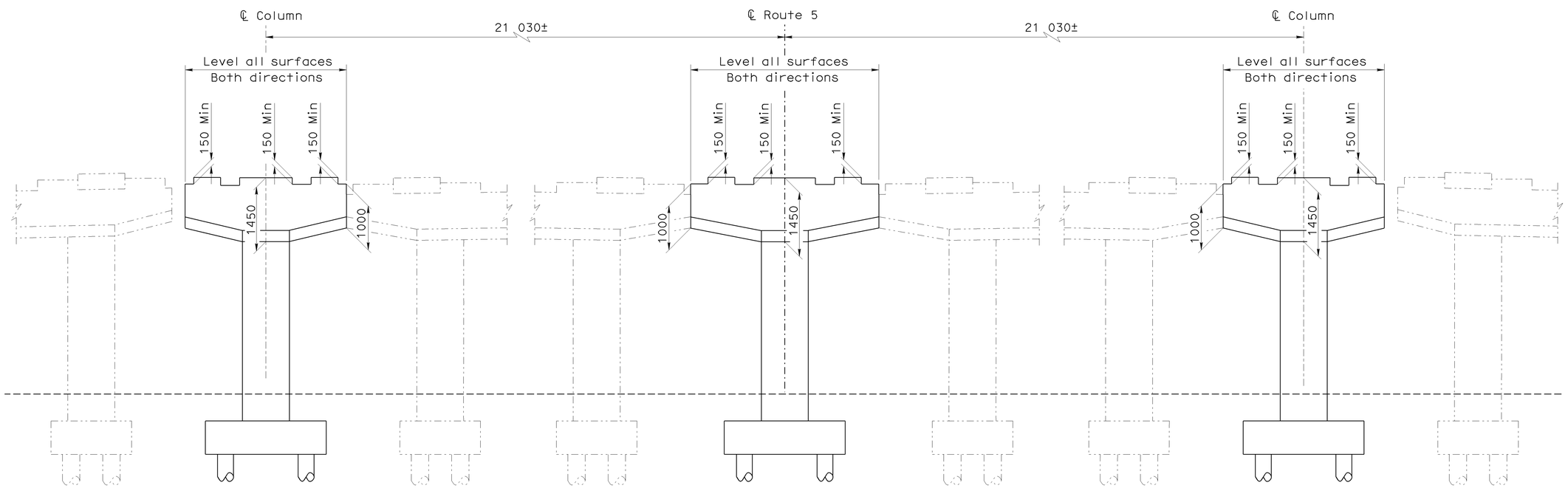

ELEVATION
1:50

NOTE:
THE CONTRACTOR SHALL VERIFY ALL CONTROLLING FIELD DIMENSIONS BEFORE ORDERING OR FABRICATING ANY MATERIAL.

	BY	CHECKED
DESIGN	Gabriel Galo	James Ralston
DETAILS	Dale Kubochi	James Ralston
QUANTITIES	James Ralston	Traci Menard

STATE OF CALIFORNIA
DEPARTMENT OF TRANSPORTATION

DIVISION OF ENGINEERING SERVICES
STRUCTURE DESIGN
DESIGN BRANCH 15

BRIDGE NO. 53-1079
KILOMETER POST 44.8

WESTERN AVENUE UNDERCROSSING (WIDEN)
BENT LAYOUT

ALL DIMENSIONS ARE IN MILLIMETERS UNLESS OTHERWISE SHOWN

ORIGINAL SCALE IN MILLIMETERS FOR REDUCED PLANS 0 10 20 30 40 50 60 70 80 90 100

CU 07
EA 121841

DISREGARD PRINTS BEARING EARLIER REVISION DATES

REVISION DATES: 12-05-06 11-17-07 3-14-07 4-2-08 8-26-08 11-21-08

SHEET 12 OF 28

FILE => 53-1079lrks-j-bt1o.dgn

STRUCTURES DESIGN DETAIL SHEET (METRIC) (REV.03-17-04)

USERNAME => trmnkest DATE PLOTTED => 12-JUN-2009 TIME PLOTTED => 10:07

DIST	COUNTY	ROUTE	KILOMETER POST TOTAL PROJECT	SHEET No	TOTAL SHEETS
07	LA	5	42.8/47.3	721	1073

Andrew P. Rittenhouse 12-05-08
REGISTERED CIVIL ENGINEER DATE

6-8-09
PLANS APPROVAL DATE

REGISTERED PROFESSIONAL ENGINEER Andrew P. Rittenhouse No. C 61006 Exp. 12-31-10 CIVIL STATE OF CALIFORNIA

The State of California or its officers or agents shall not be responsible for the accuracy or completeness of electronic copies of this plan sheet.

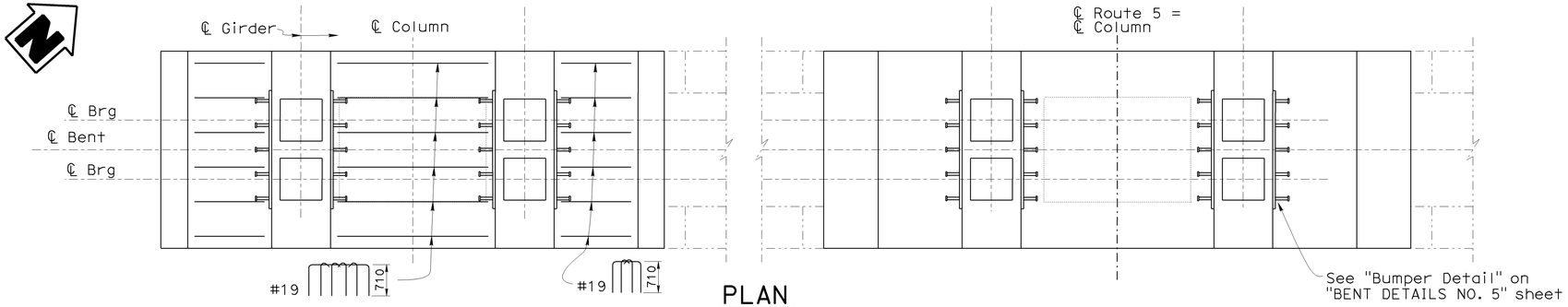

PLAN
1:20

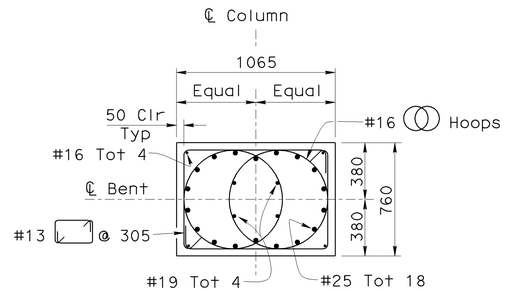

SECTION I-I
1:20

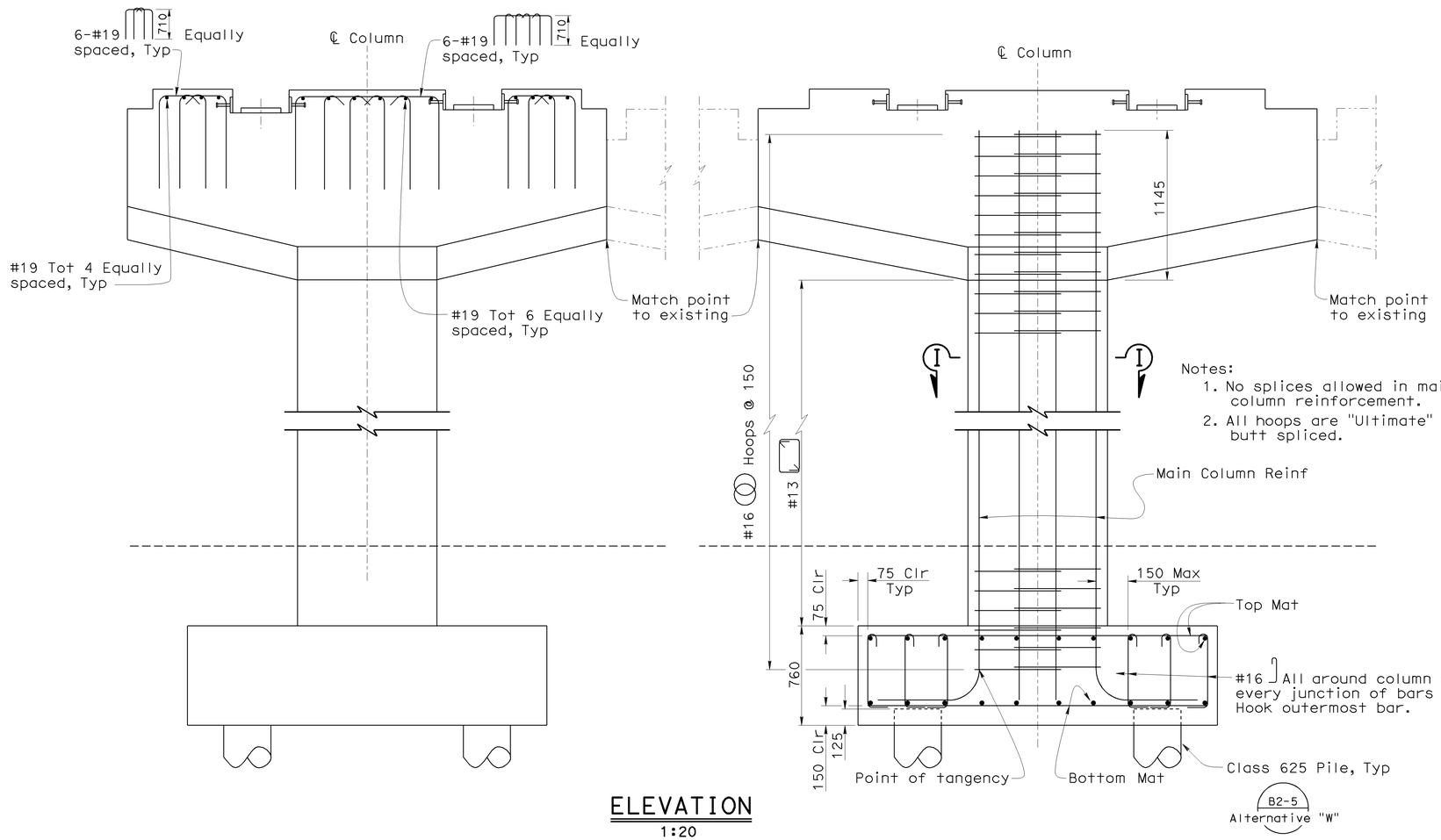

Notes:
1. No splices allowed in main column reinforcement.
2. All hoops are "Ultimate" butt spliced.

ELEVATION
1:20

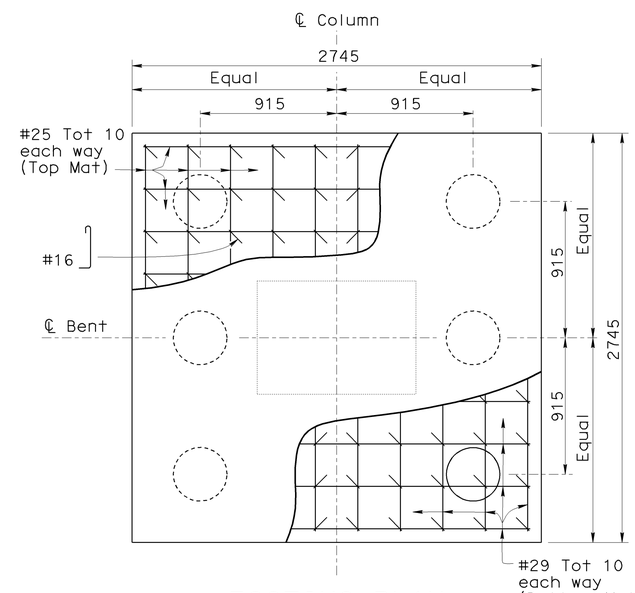

FOOTING PLAN
1:20

NOTE:
THE CONTRACTOR SHALL VERIFY ALL CONTROLLING FIELD DIMENSIONS BEFORE ORDERING OR FABRICATING ANY MATERIAL.

Notes:
1. Details shown for Bent, Column and Footing are typical.
2. Bent for Left & Center Widen shown, Right Widen similar to Left Widen.
3. For other Bent details not shown, see "BENT DETAILS NO. 2 & 3" sheets.

Caltrans Metric

	BY	CHECKED
DESIGN	Gabriel Galo	James Ralston
DETAILS	Dale Kubochi	James Ralston
QUANTITIES	James Ralston	Traci Menard

STATE OF CALIFORNIA
DEPARTMENT OF TRANSPORTATION

DIVISION OF ENGINEERING SERVICES
STRUCTURE DESIGN
DESIGN BRANCH 15

BRIDGE NO. 53-1079
KILOMETER POST 44.8

WESTERN AVENUE UNDERCROSSING (WIDEN)
BENT DETAILS NO. 1

ALL DIMENSIONS ARE IN MILLIMETERS UNLESS OTHERWISE SHOWN

ORIGINAL SCALE IN MILLIMETERS FOR REDUCED PLANS 0 10 20 30 40 50 60 70 80 90 100

CU 07
EA 121841

DISREGARD PRINTS BEARING EARLIER REVISION DATES

REVISION DATES: 10-11-06 10-26-06 1-11-07 3-13-07 8-30-07 4-4-08 8-28-08 11-21-08

SHEET 13 OF 28

FILE => 53-1079lrks-k-btdet01.dgn

STRUCTURES DESIGN DETAIL SHEET (METRIC) (REV.03-17-04)

USERNAME => trmikesl DATE PLOTTED => 12-JUN-2009 TIME PLOTTED => 10:07

DIST	COUNTY	ROUTE	KILOMETER POST TOTAL PROJECT	SHEET No	TOTAL SHEETS
07	LA	5	42.8/47.3	722	1073

Andrew Rittenhouse 12-05-08
REGISTERED CIVIL ENGINEER DATE

6-8-09
PLANS APPROVAL DATE

REGISTERED PROFESSIONAL ENGINEER Andrew P. Rittenhouse No. C 61006 Exp. 12-31-10 CIVIL STATE OF CALIFORNIA

The State of California or its officers or agents shall not be responsible for the accuracy or completeness of electronic copies of this plan sheet.

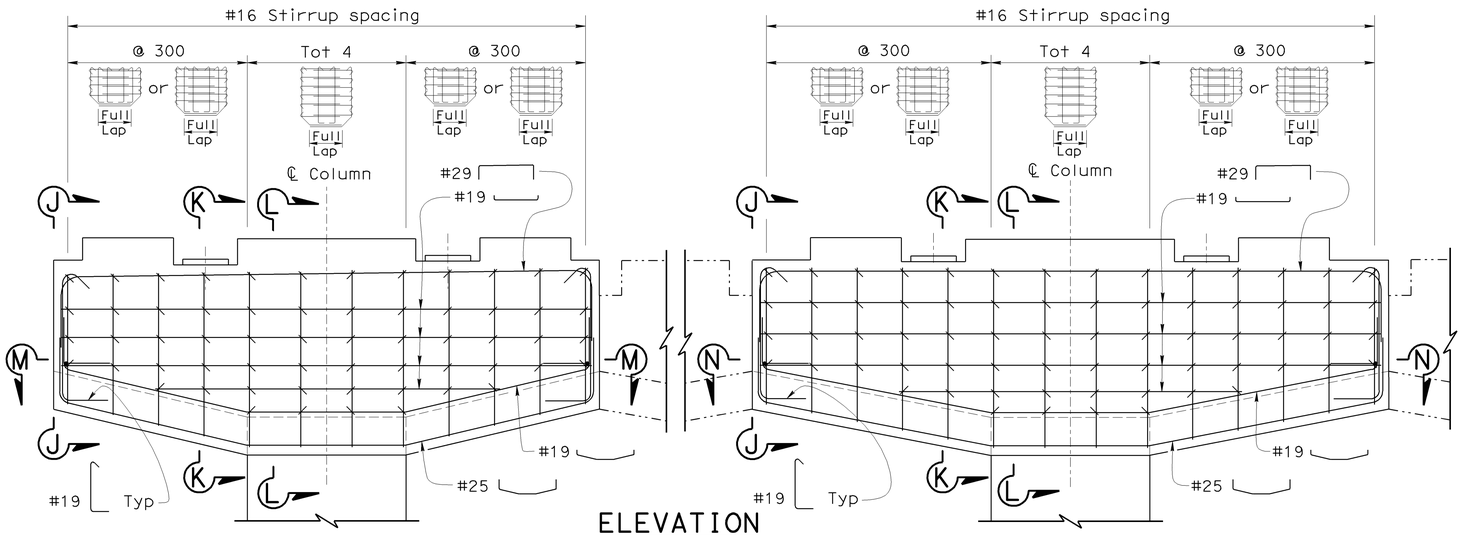

ELEVATION
1:20

Notes:
1. Bent for Left & Center Widen shown, Right Widen similar to Left Widen.
2. For other Bent details not shown, see "BENT DETAILS NO. 3" sheet.

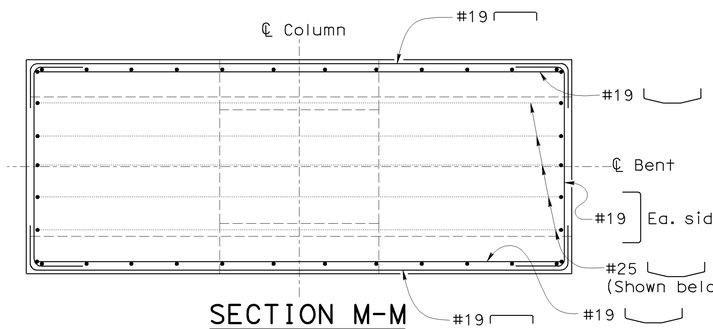

SECTION M-M
1:20

NOTE:
Ties not shown for clarity

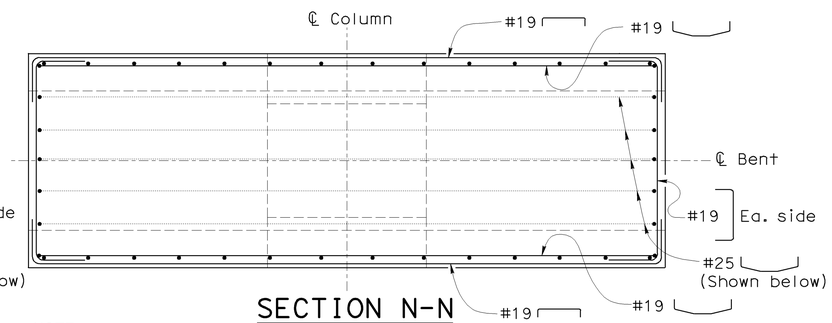

SECTION N-N
1:20

NOTE:
Ties not shown for clarity

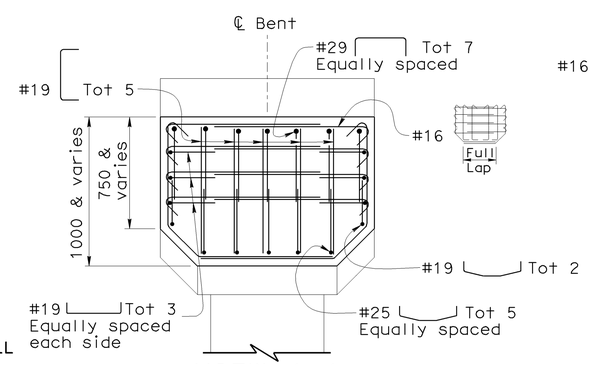

VIEW J-J
1:20

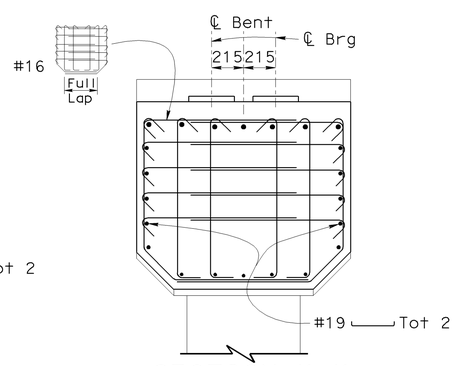

SECTION K-K
1:20

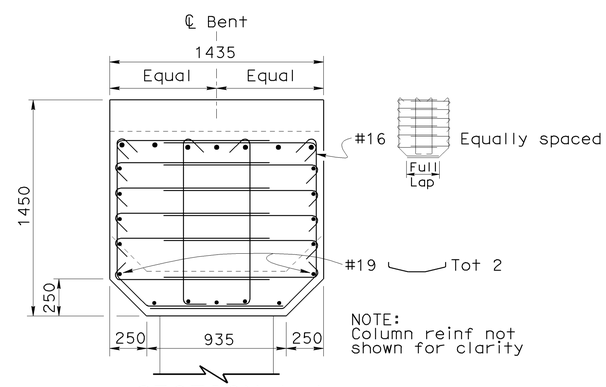

NOTE:
Column reinf not shown for clarity

SECTION L-L
1:20

NOTE:
THE CONTRACTOR SHALL VERIFY ALL CONTROLLING FIELD DIMENSIONS BEFORE ORDERING OR FABRICATING ANY MATERIAL.

Caltrans Metric

	BY	CHECKED
DESIGN	Gabriel Galo	James Ralston
DETAILS	Dale Kubochi	James Ralston
QUANTITIES	James Ralston	Traci Menard

STATE OF CALIFORNIA
DEPARTMENT OF TRANSPORTATION

DIVISION OF ENGINEERING SERVICES
STRUCTURE DESIGN
DESIGN BRANCH 15

CU 07
EA 121841

BRIDGE NO. 53-1079
KILOMETER POST 44.8

WESTERN AVENUE UNDERCROSSING (WIDEN)
BENT DETAILS NO. 2

ALL DIMENSIONS ARE IN MILLIMETERS UNLESS OTHERWISE SHOWN

ORIGINAL SCALE IN MILLIMETERS FOR REDUCED PLANS 0 10 20 30 40 50 60 70 80 90 100

DISREGARD PRINTS BEARING EARLIER REVISION DATES

REVISION DATES 1-11-07 3-22-07 4-4-08 8-25-08 11-21-08 1-7-09

SHEET 14 OF 28

FILE => 53-1079lrks-k-btdet02.dgn

STRUCTURES DESIGN DETAIL SHEET (METRIC) (REV.03-17-04)

USERNAME => trmikesl DATE PLOTTED => 12-JUN-2009 TIME PLOTTED => 10:07

DIST	COUNTY	ROUTE	KILOMETER POST TOTAL PROJECT	SHEET No	TOTAL SHEETS
07	LA	5	42.8/47.3	723	1073

Andrew Rittenhouse 12-05-08
REGISTERED CIVIL ENGINEER DATE

6-8-09
PLANS APPROVAL DATE

REGISTERED PROFESSIONAL ENGINEER Andrew P. Rittenhouse No. C 61006 Exp. 12-31-10 CIVIL STATE OF CALIFORNIA

The State of California or its officers or agents shall not be responsible for the accuracy or completeness of electronic copies of this plan sheet.

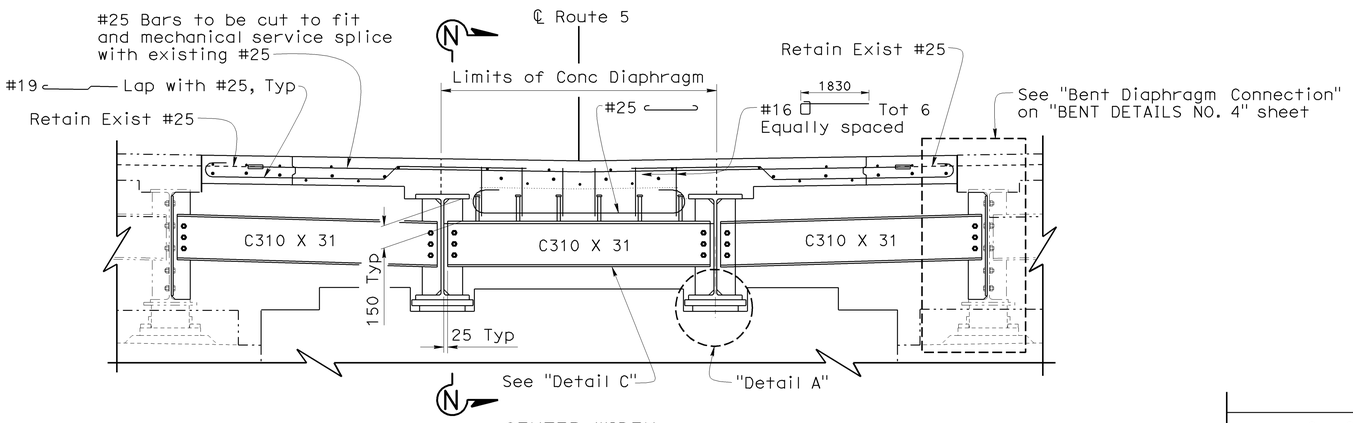

CENTER WIDEN

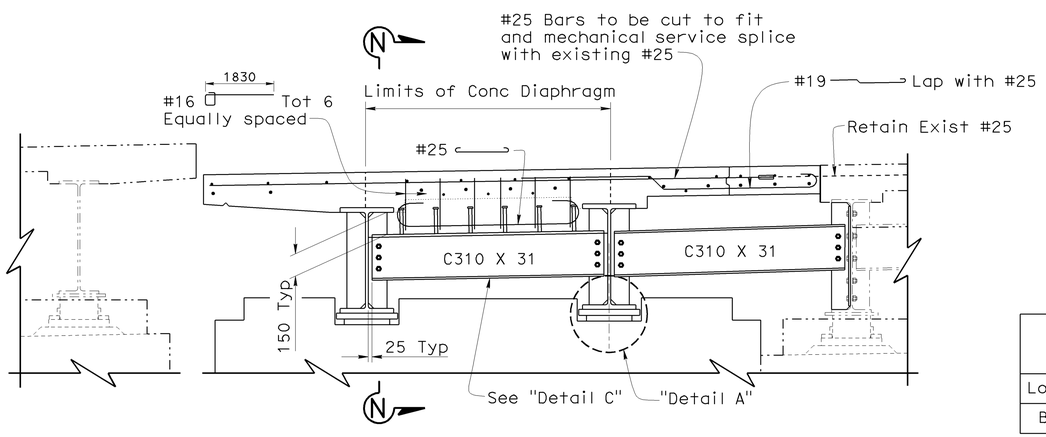

LEFT WIDEN

BENT DIAPHRAGM ELEVATION

1:20

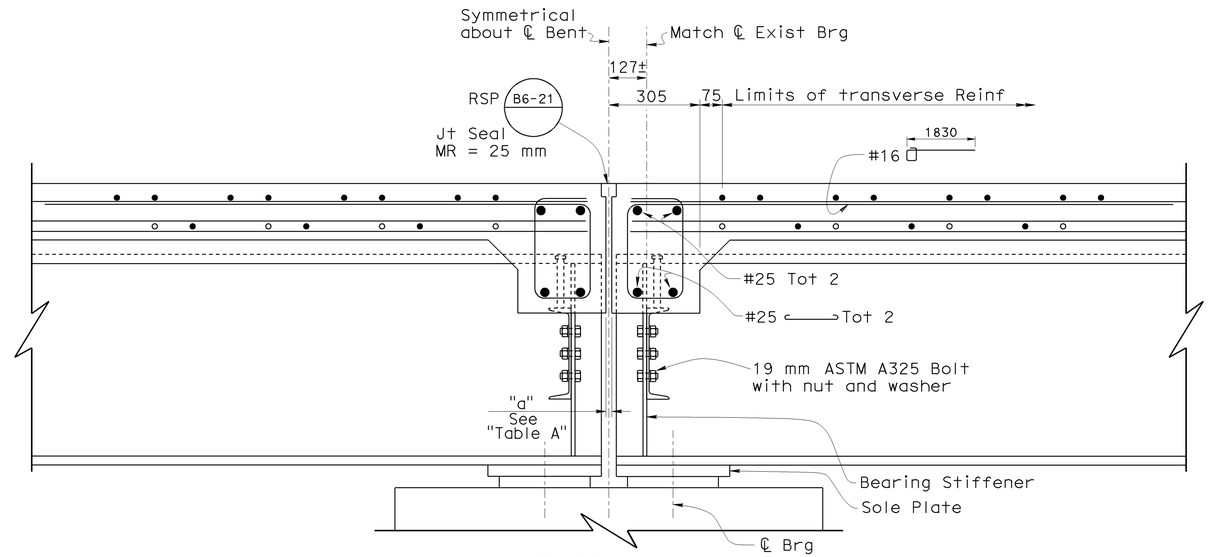

SECTION N-N

1:10

TABLE A Dimension "a"			
Location	Winter	Fall/Spring	Summer
Bent 2	25	20	13

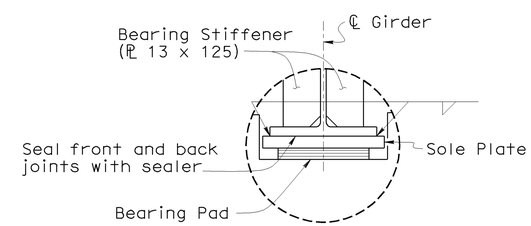

DETAIL A

1:10

Notes:

- Diaphragm for Center & Left Widen shown, Right Widen similar to Left Widen.
- For "Detail C", see "BENT DETAILS NO. 5" sheet.
- For "Sole Plate" details, see "BENT DETAILS NO. 5" sheet.

NOTE:
THE CONTRACTOR SHALL VERIFY ALL CONTROLLING FIELD DIMENSIONS BEFORE ORDERING OR FABRICATING ANY MATERIAL.

Caltrans Metric

	BY	CHECKED
DESIGN	Gabriel Galo	James Ralston
DETAILS	Dale Kubochi	James Ralston
QUANTITIES	James Ralston	Traci Menard

STATE OF CALIFORNIA
DEPARTMENT OF TRANSPORTATION

DIVISION OF ENGINEERING SERVICES
STRUCTURE DESIGN
DESIGN BRANCH 15

BRIDGE NO. 53-1079
KILOMETER POST 44.8

WESTERN AVENUE UNDERCROSSING (WIDEN)

BENT DETAILS NO. 3

ALL DIMENSIONS ARE IN MILLIMETERS UNLESS OTHERWISE SHOWN

ORIGINAL SCALE IN MILLIMETERS FOR REDUCED PLANS 0 10 20 30 40 50 60 70 80 90 100

CU 07
EA 121841

DISREGARD PRINTS BEARING EARLIER REVISION DATES

REVISION DATES: 1-4-07 3-14-07 1-22-07 5-1-07 8-29-07 2-14-08 4-8-08 8-29-08 11-21-08

SHEET 15 OF 28

FILE => 53-1079lrks-k-btdet03.dgn

STRUCTURES DESIGN DETAIL SHEET (METRIC) (REV.03-17-04)

USERNAME => trmikest DATE PLOTTED => 12-JUN-2009 TIME PLOTTED => 10:07

DIST	COUNTY	ROUTE	KILOMETER POST TOTAL PROJECT	SHEET No	TOTAL SHEETS
07	LA	5	42.8/47.3	724	1073

Andrew Rittenhouse 12-05-08
REGISTERED CIVIL ENGINEER DATE

6-8-09
PLANS APPROVAL DATE

REGISTERED PROFESSIONAL ENGINEER Andrew P. Rittenhouse No. C 61006 Exp. 12-31-10 CIVIL STATE OF CALIFORNIA

The State of California or its officers or agents shall not be responsible for the accuracy or completeness of electronic copies of this plan sheet.

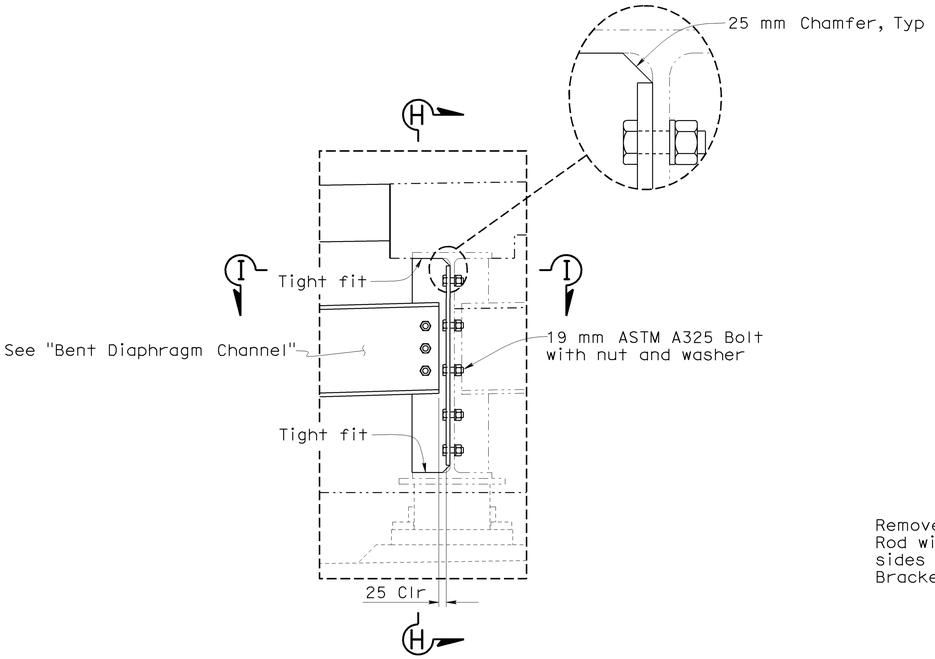

BENT DIAPHRAGM CONNECTION
1:10

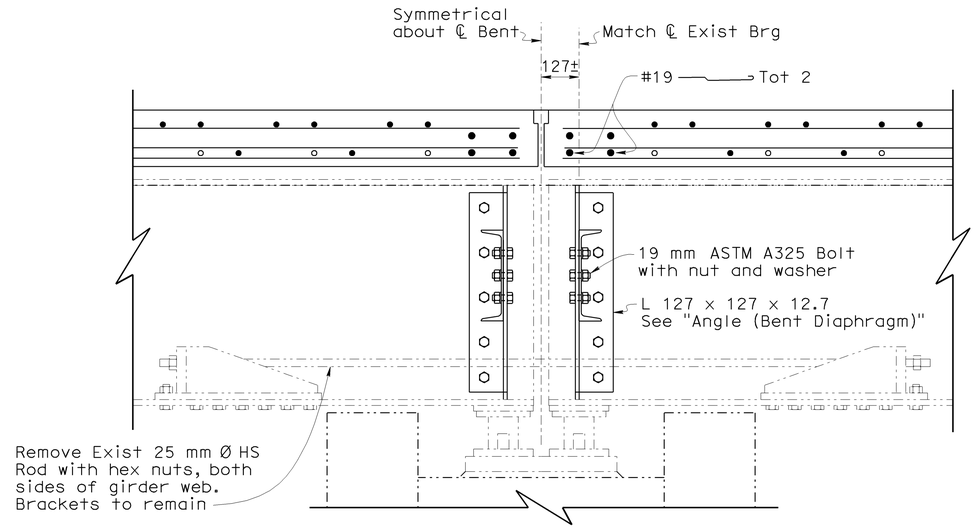

SECTION H-H
1:10

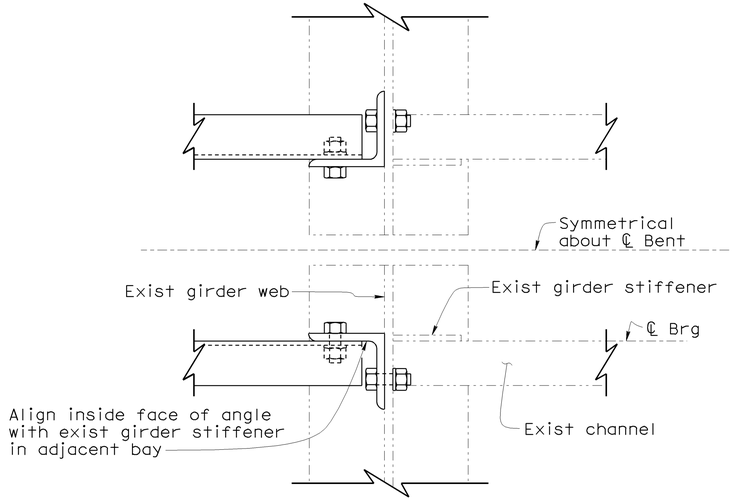

SECTION I-I
1:5

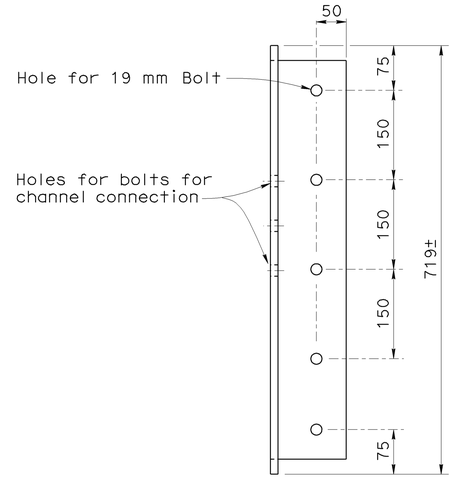

ANGLE (Bent Diaphragm)
1:5

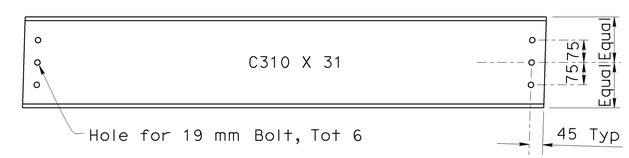

BENT DIAPHRAGM CHANNEL
1:10

NOTE:
THE CONTRACTOR SHALL VERIFY ALL CONTROLLING FIELD DIMENSIONS BEFORE ORDERING OR FABRICATING ANY MATERIAL.

Caltrans Metric

	BY	CHECKED
DESIGN	Gabriel Galo	James Ralston
DETAILS	Dale Kubochi	James Ralston
QUANTITIES	James Ralston	Traci Menard

STATE OF CALIFORNIA
DEPARTMENT OF TRANSPORTATION

DIVISION OF ENGINEERING SERVICES
STRUCTURE DESIGN
DESIGN BRANCH 15

BRIDGE NO. 53-1079
KILOMETER POST 44.8

WESTERN AVENUE UNDERCROSSING (WIDEN)
BENT DETAILS NO. 4

ALL DIMENSIONS ARE IN MILLIMETERS UNLESS OTHERWISE SHOWN

ORIGINAL SCALE IN MILLIMETERS FOR REDUCED PLANS 0 10 20 30 40 50 60 70 80 90 100

CU 07
EA 121841

DISREGARD PRINTS BEARING EARLIER REVISION DATES

REVISION DATES: 8-29-07 4-8-08 8-22-08 11-21-08

SHEET 16 OF 28

FILE => 53-1079lrks-k-btdet04.dgn

STRUCTURES DESIGN DETAIL SHEET (METRIC) (REV.03-17-04)

USERNAME => ttmirkes1 DATE PLOTTED => 12-JUN-2009 TIME PLOTTED => 10:07

DIST	COUNTY	ROUTE	KILOMETER POST TOTAL PROJECT	SHEET No	TOTAL SHEETS
07	LA	5	42.8/47.3	725	1073

Andrew Rittenhouse 12-05-08
REGISTERED CIVIL ENGINEER DATE

6-8-09
PLANS APPROVAL DATE

REGISTERED PROFESSIONAL ENGINEER Andrew P. Rittenhouse No. C 61006 Exp. 12-31-10 CIVIL STATE OF CALIFORNIA

The State of California or its officers or agents shall not be responsible for the accuracy or completeness of electronic copies of this plan sheet.

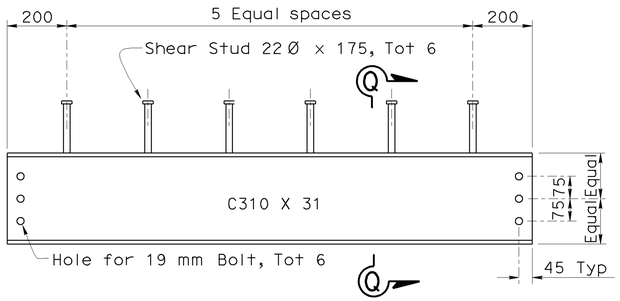

DETAIL C
1:10

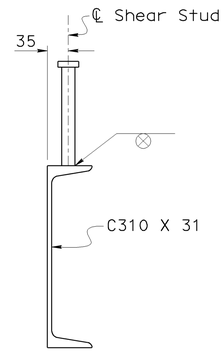

SECTION Q-Q
1:5

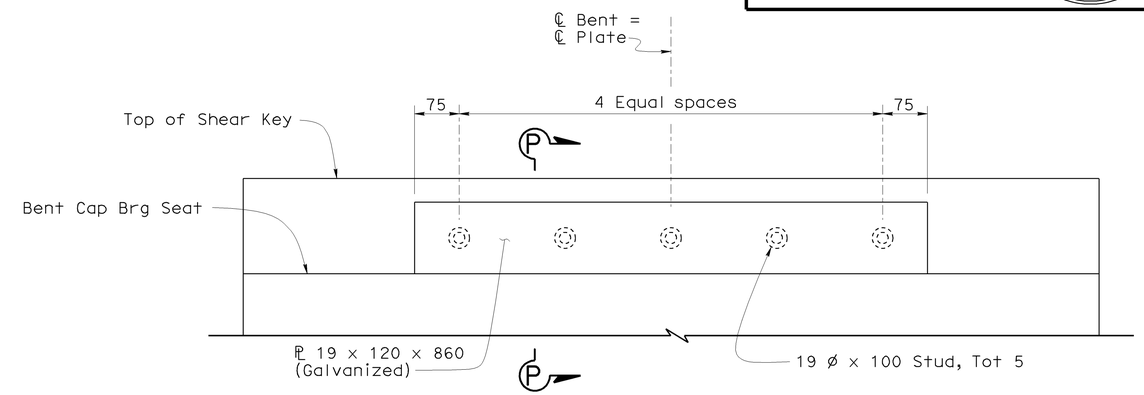

ELEVATION

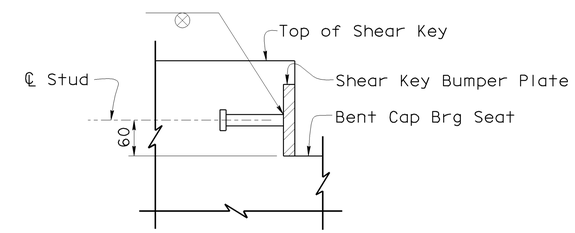

SECTION P-P

BUMPER DETAIL
1:5

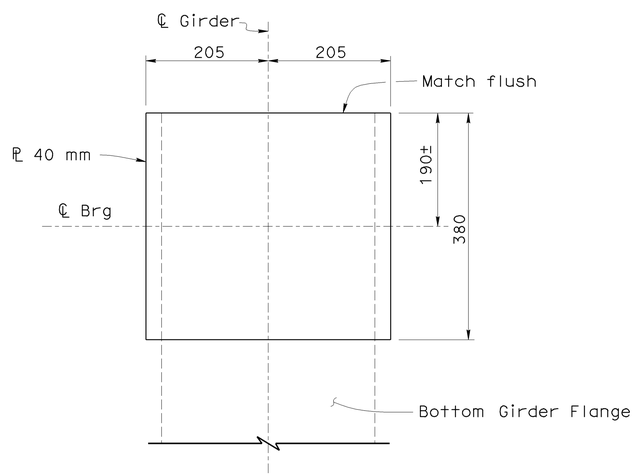

SOLE PLATE
1:5

NOTE:
THE CONTRACTOR SHALL VERIFY ALL CONTROLLING FIELD DIMENSIONS BEFORE ORDERING OR FABRICATING ANY MATERIAL.

DESIGN	BY Gabriel Galo	CHECKED James Ralston	
DETAILS	BY Dale Kubochi	CHECKED James Ralston	
QUANTITIES	BY James Ralston	CHECKED Traci Menard	

STATE OF CALIFORNIA
DEPARTMENT OF TRANSPORTATION

DIVISION OF ENGINEERING SERVICES
STRUCTURE DESIGN
DESIGN BRANCH 15

BRIDGE NO. 53-1079
KILOMETER POST 44.8

WESTERN AVENUE UNDERCROSSING (WIDEN)
BENT DETAILS NO. 5

ALL DIMENSIONS ARE IN MILLIMETERS UNLESS OTHERWISE SHOWN

ORIGINAL SCALE IN MILLIMETERS FOR REDUCED PLANS 0 10 20 30 40 50 60 70 80 90 100

CU 07
EA 121841

DISREGARD PRINTS BEARING EARLIER REVISION DATES

REVISION DATES: 12-22-06 | 3-14-07 | 4-4-08 | 8-25-08 | 11-21-08 | 01-22-09

SHEET 17 OF 28

FILE => 53-1079lrks-k-btdet05.dgn

STRUCTURES DESIGN DETAIL SHEET (METRIC) (REV.03-17-04)

USERNAME => ttmirkes1 DATE PLOTTED => 12-JUN-2009 TIME PLOTTED => 10:07

DIST	COUNTY	ROUTE	KILOMETER POST TOTAL PROJECT	SHEET No	TOTAL SHEETS
07	LA	5	42.8/47.3	726	1073

Andrew P. Rittenhouse 12-05-08
REGISTERED CIVIL ENGINEER DATE

6-8-09
PLANS APPROVAL DATE

REGISTERED PROFESSIONAL ENGINEER Andrew P. Rittenhouse No. C 61006 Exp. 12-31-10 CIVIL STATE OF CALIFORNIA

The State of California or its officers or agents shall not be responsible for the accuracy or completeness of electronic copies of this plan sheet.

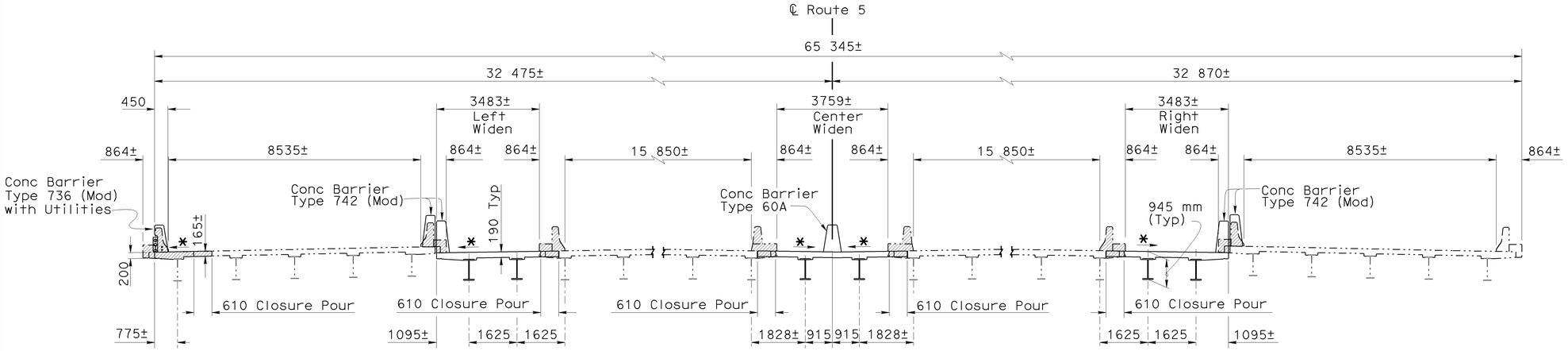

TYPICAL SECTION
1:80

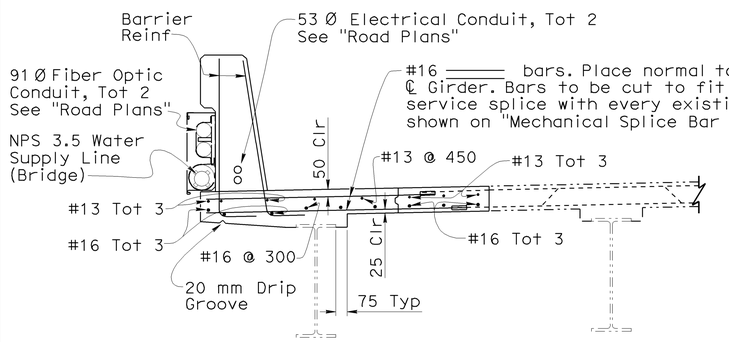

PART TYPICAL OVERHANG REPLACEMENT
1:20

Notes:

1. Closure pour concrete shall not be placed until 7 days after adjacent deck pours are completed.
2. Dimensions may be varied to match the existing deck profile and cross slope. Shear stud embedment must remain within the allowable range (See "Stud Connector" detail on "STEEL GIRDER DETAILS" sheet).

Legend:

* Match existing cross slope
Indicates Existing Structure
Bridge Removal (Portion)

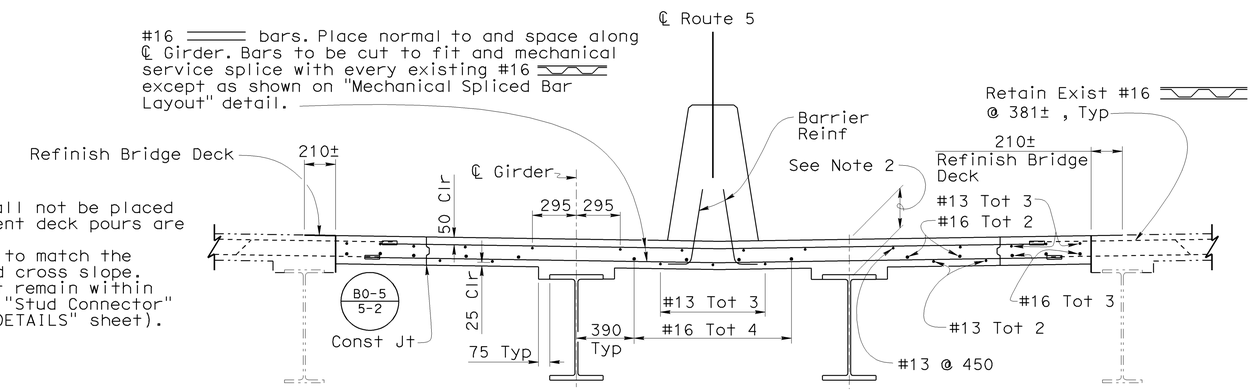

PART TYPICAL CENTER WIDEN
1:20

Note: Details similar about ℄ Route 5

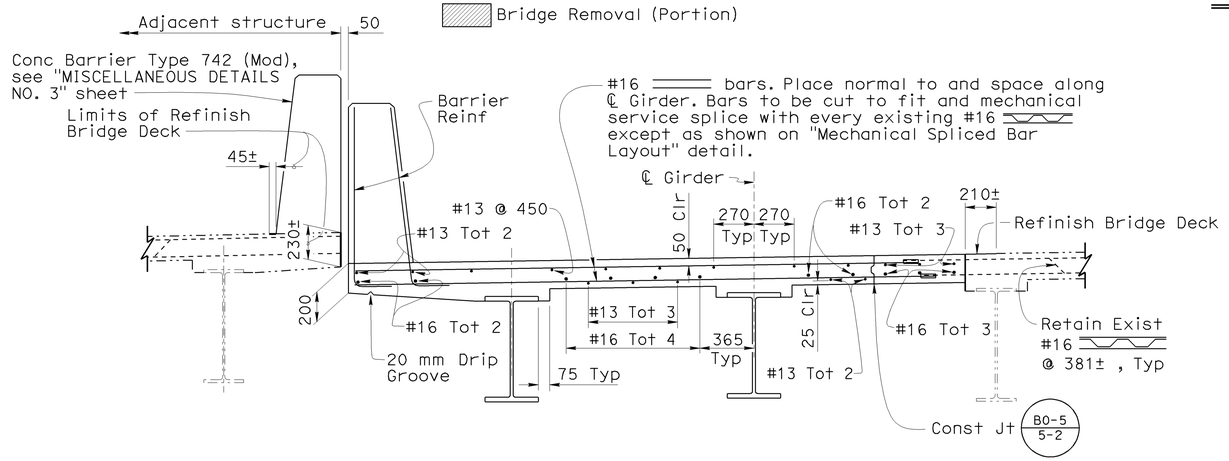

PART TYPICAL LEFT WIDEN
1:20

Note: Right Widen similar

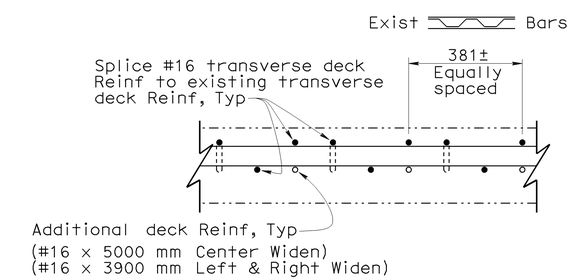

MECHANICAL SERVICE SPLICE BAR LAYOUT
1:10

NOTE:
THE CONTRACTOR SHALL VERIFY ALL CONTROLLING FIELD DIMENSIONS BEFORE ORDERING OR FABRICATING ANY MATERIAL.

Caltrans Metric

	BY	CHECKED
DESIGN	Gabriel Galo	James Ralston
DETAILS	Dale Kubochi	James Ralston
QUANTITIES	James Ralston	Traci Menard

STATE OF CALIFORNIA
DEPARTMENT OF TRANSPORTATION

DIVISION OF ENGINEERING SERVICES
STRUCTURE DESIGN
DESIGN BRANCH 15

BRIDGE NO. 53-1079
KILOMETER POST 44.8

WESTERN AVENUE UNDERCROSSING (WIDEN)
TYPICAL SECTION

ALL DIMENSIONS ARE IN MILLIMETERS UNLESS OTHERWISE SHOWN

ORIGINAL SCALE IN MILLIMETERS FOR REDUCED PLANS 0 10 20 30 40 50 60 70 80 90 100

CU 07
EA 121841

DISREGARD PRINTS BEARING EARLIER REVISION DATES

REVISION DATES: 11-20-08 1-7-09 1-30-07 2-5-07 2-14-08 3-7-08 3-14-08 3-28-08 8-2-08

SHEET 18 OF 28

FILE => 53-1079lrks-m-ts1.dgn

STRUCTURES DESIGN DETAIL SHEET (METRIC) (REV.03-17-04)

USERNAME => trmikesl DATE PLOTTED => 12-JUN-2009 TIME PLOTTED => 10:08

DIST	COUNTY	ROUTE	KILOMETER POST TOTAL PROJECT	SHEET No	TOTAL SHEETS
07	LA	5	42.8/47.3	727	1073

Andrew Rittenhouse 12-05-08
REGISTERED CIVIL ENGINEER DATE

6-8-09
PLANS APPROVAL DATE

REGISTERED PROFESSIONAL ENGINEER
Andrew P. Rittenhouse
No. C 61006
Exp. 12-31-10
CIVIL
STATE OF CALIFORNIA

The State of California or its officers or agents shall not be responsible for the accuracy or completeness of electronic copies of this plan sheet.

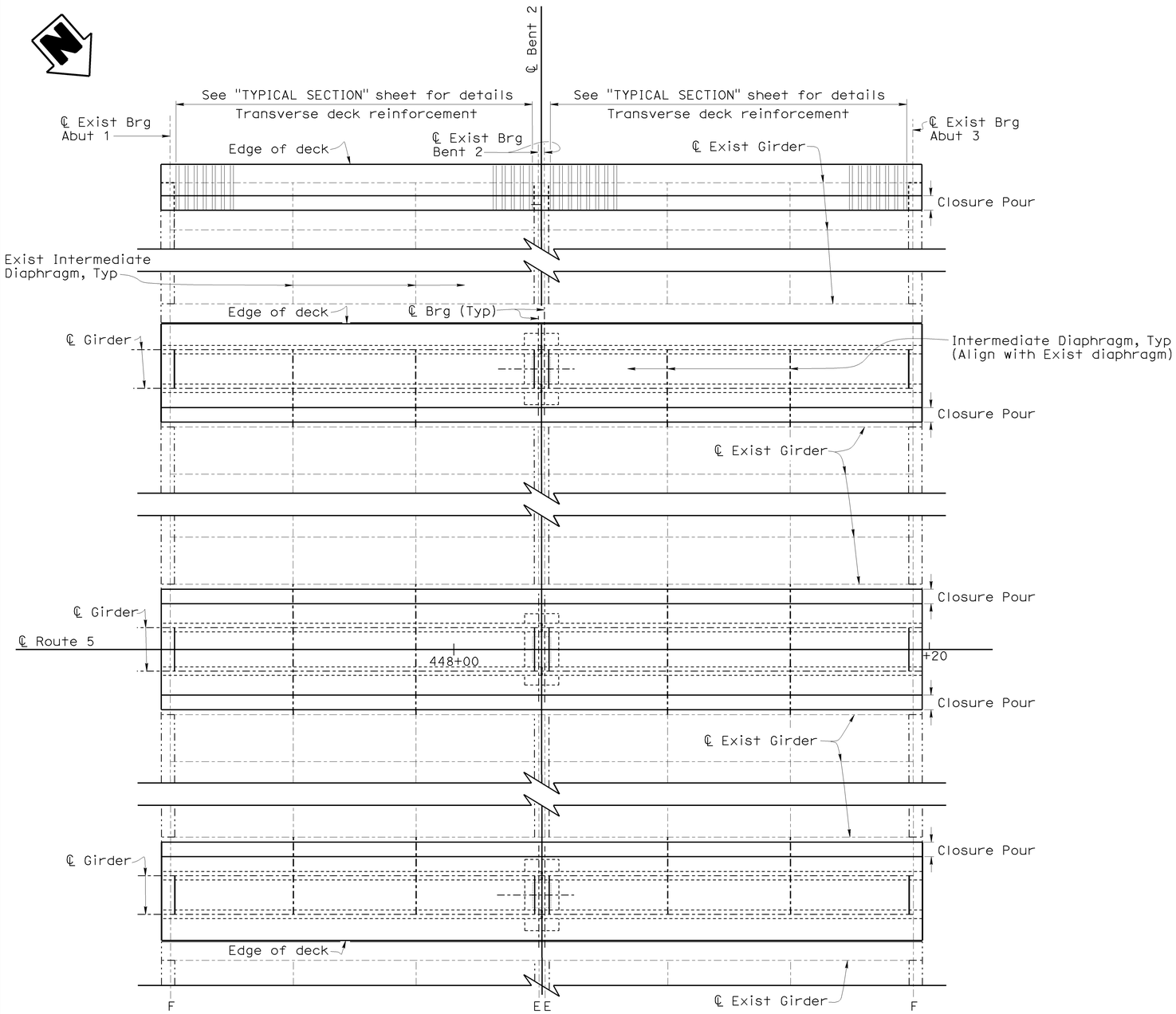

PLAN
1:100

Note:
E = Expansion End
F = Fixed End

NOTE:
THE CONTRACTOR SHALL VERIFY ALL CONTROLLING FIELD DIMENSIONS BEFORE ORDERING OR FABRICATING ANY MATERIAL.

Camber Curve value components in mm	Middle Widen						Left & Right Widen					
	Span 1			Span 2			Span 1			Span 2		
	1/4	1/2	3/4	1/4	1/2	3/4	1/4	1/2	3/4	1/4	1/2	3/4
1 - Deck Dead Load (+)	12	16	12	12	16	12	9	12	9	9	12	9
2 - Curb + Rail + AC (+)	4	5	4	4	5	4	4	5	4	4	5	4
3 - Girder Dead Load (+)	2	4	2	2	4	2	2	4	2	2	4	2
Total Camber	18	25	18	18	25	18	15	21	15	15	21	15

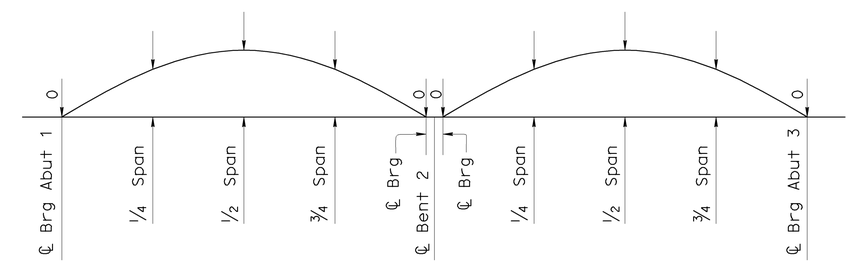

CAMBER DIAGRAM
No Scale

NOTE:
In addition to camber values shown, girder fabrication shall account for structure geometry including profile grade, superelevation, and changes in thickness of bottom flange.

Caltrans Metric

	BY	CHECKED
DESIGN	Gabriel Galo	James Ralston
DETAILS	Dale Kubochi	James Ralston
QUANTITIES	James Ralston	Traci Menard

STATE OF CALIFORNIA
DEPARTMENT OF TRANSPORTATION

DIVISION OF ENGINEERING SERVICES
STRUCTURE DESIGN
DESIGN BRANCH 15

BRIDGE NO. 53-1079
KILOMETER POST 44.8

WESTERN AVENUE UNDERCROSSING (WIDEN)
GIRDER LAYOUT

ALL DIMENSIONS ARE IN MILLIMETERS UNLESS OTHERWISE SHOWN

ORIGINAL SCALE IN MILLIMETERS FOR REDUCED PLANS 0 10 20 30 40 50 60 70 80 90 100

CU 07
EA 121841

DISREGARD PRINTS BEARING EARLIER REVISION DATES

REVISION DATES: 1-11-07 3-14-07 2-14-08 4-4-08 8-25-08 11-21-08

SHEET 19 OF 28

FILE => 53-1079lrks-n-glo.dgn

STRUCTURES DESIGN DETAIL SHEET (METRIC) (REV.03-17-04)

USERNAME => trmitkes! DATE PLOTTED => 12-JUN-2009 TIME PLOTTED => 10:08

DIST	COUNTY	ROUTE	KILOMETER POST TOTAL PROJECT	SHEET No	TOTAL SHEETS
07	LA	5	42.8/47.3	728	1073

Andrew P. Rittenhouse 12-05-08
REGISTERED CIVIL ENGINEER DATE

6-8-09
PLANS APPROVAL DATE

REGISTERED PROFESSIONAL ENGINEER Andrew P. Rittenhouse No. C 61006 Exp. 12-31-10 CIVIL STATE OF CALIFORNIA

The State of California or its officers or agents shall not be responsible for the accuracy or completeness of electronic copies of this plan sheet.

Note:
- Girder lengths given are horizontal distances, center to center of bearings.

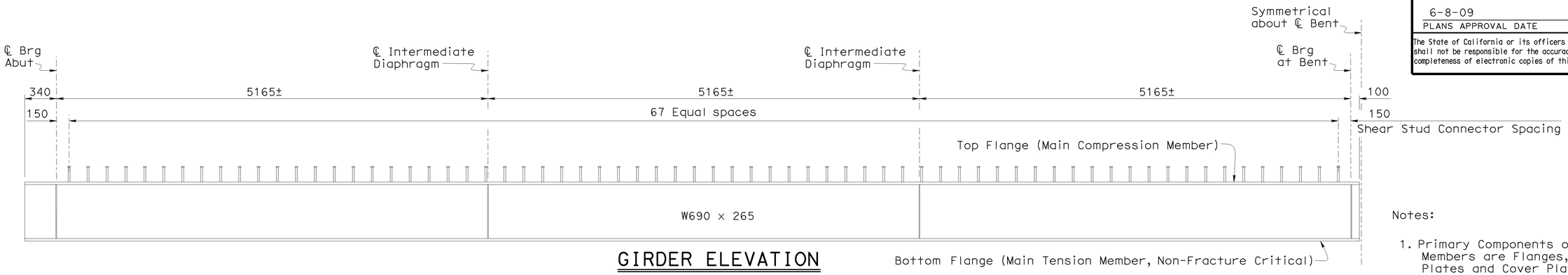

GIRDER ELEVATION
1:25

Notes:

1. Primary Components of Main Members are Flanges, Webs, Splice Plates and Cover Plates, Transverse and Longitudinal Stiffeners and Bearing Stiffeners
2. All members not designated as either Fracture Critical Members, or Main Members are Secondary Members

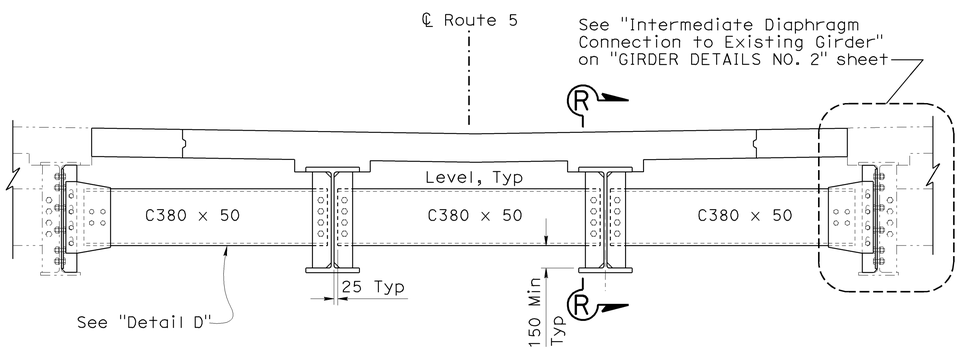

CENTER WIDEN

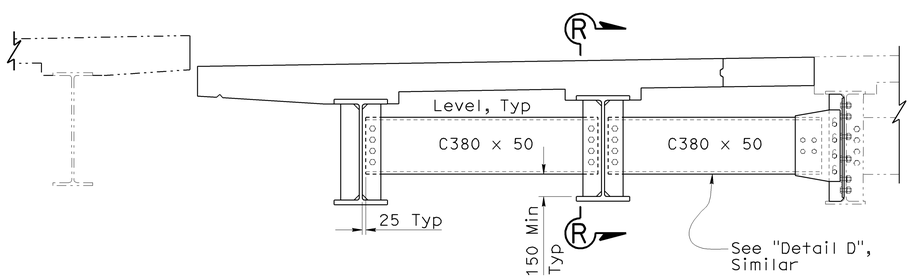

LEFT WIDEN

INTERMEDIATE DIAPHRAGM ELEVATION
1:20

Note:
- Intermediate Diaphragm for Center & Left Widen shown, Right Widen similar.

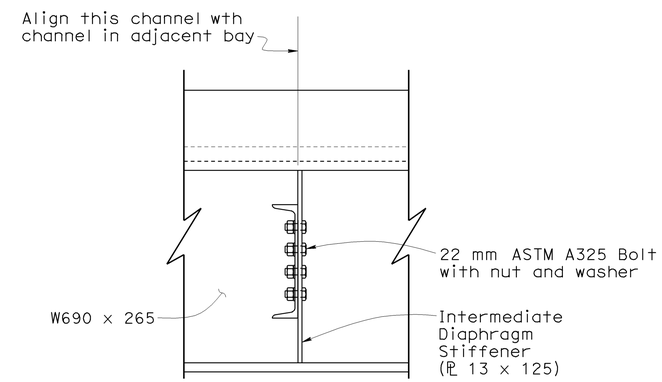

SECTION R-R
1:10

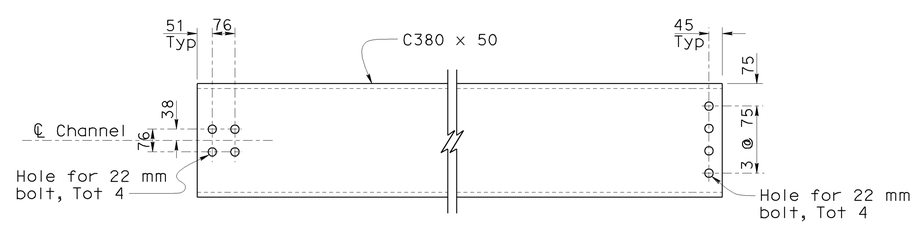

TO GUSSET PLATE AND EXISTING GIRDER

CONNECTION TO NEW GIRDER

DETAIL D
1:10

NOTE:
THE CONTRACTOR SHALL VERIFY ALL CONTROLLING FIELD DIMENSIONS BEFORE ORDERING OR FABRICATING ANY MATERIAL.

	BY	CHECKED
DESIGN	Gabriel Galo	James Ralston
DETAILS	Dale Kubochi	James Ralston
QUANTITIES	James Ralston	Traci Menard

STATE OF CALIFORNIA
DEPARTMENT OF TRANSPORTATION

DIVISION OF ENGINEERING SERVICES
STRUCTURE DESIGN
DESIGN BRANCH 15

BRIDGE NO. 53-1079
KILOMETER POST 44.8

WESTERN AVENUE UNDERCROSSING (WIDEN)
GIRDER DETAILS NO. 1

ALL DIMENSIONS ARE IN MILLIMETERS UNLESS OTHERWISE SHOWN

ORIGINAL SCALE IN MILLIMETERS FOR REDUCED PLANS 0 10 20 30 40 50 60 70 80 90 100

CU 07
EA 121841

DISREGARD PRINTS BEARING EARLIER REVISION DATES

REVISION DATES: 1-1-09 | 8-24-07 | 10-1-07 | 2-14-08 | 4-4-08 | 8-25-08 | 11-25-08 | 12-12-08 | 12-2-08

SHEET 20 OF 28

STRUCTURES DESIGN DETAIL SHEET (METRIC) (REV.03-17-04)

FILE => 53-1079lrks-o-girdet01.dgn

USERNAME => trmikest DATE PLOTTED => 12-JUN-2009 TIME PLOTTED => 10:08

DIST	COUNTY	ROUTE	KILOMETER POST TOTAL PROJECT	SHEET No	TOTAL SHEETS
07	LA	5	42.8/47.3	729	1073

Andrew Rittenhouse 12-05-08
REGISTERED CIVIL ENGINEER DATE

6-8-09
PLANS APPROVAL DATE

REGISTERED PROFESSIONAL ENGINEER Andrew P. Rittenhouse No. C 61006 Exp. 12-31-10 CIVIL STATE OF CALIFORNIA

The State of California or its officers or agents shall not be responsible for the accuracy or completeness of electronic copies of this plan sheet.

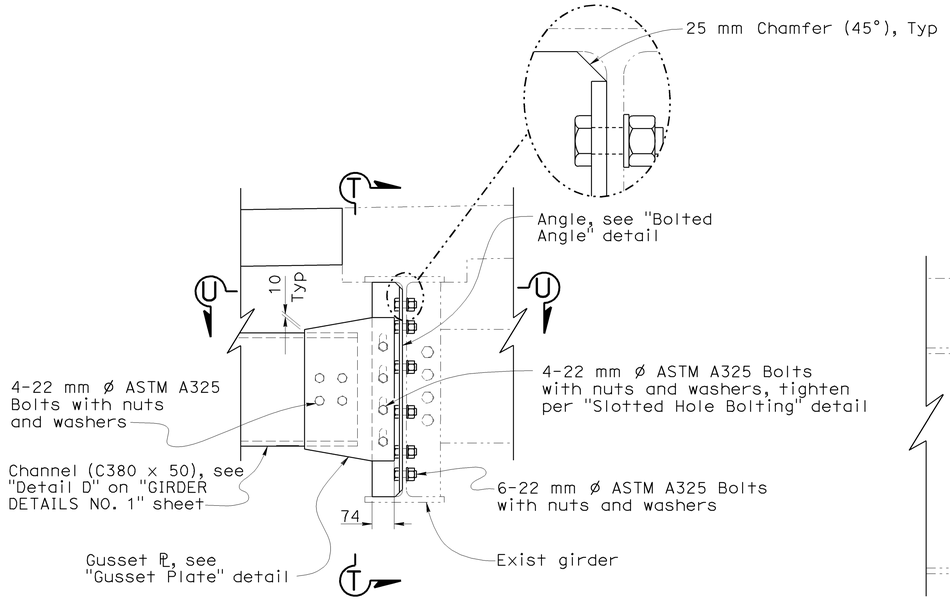

INTERMEDIATE DIAPHRAGM CONNECTION TO EXISTING GIRDER

1:10

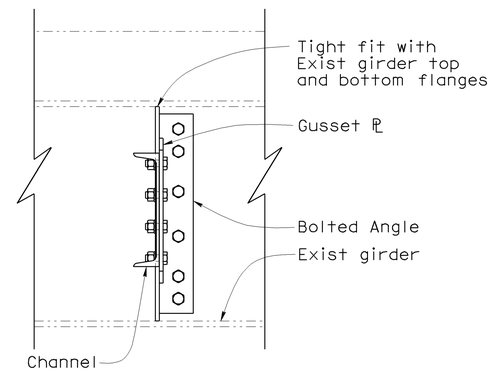

VIEW T-T

1:10

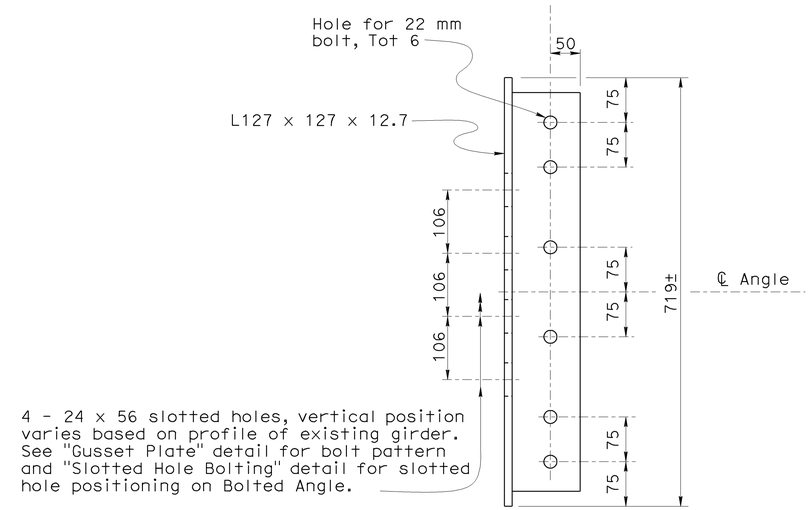

BOLTED ANGLE

1:5

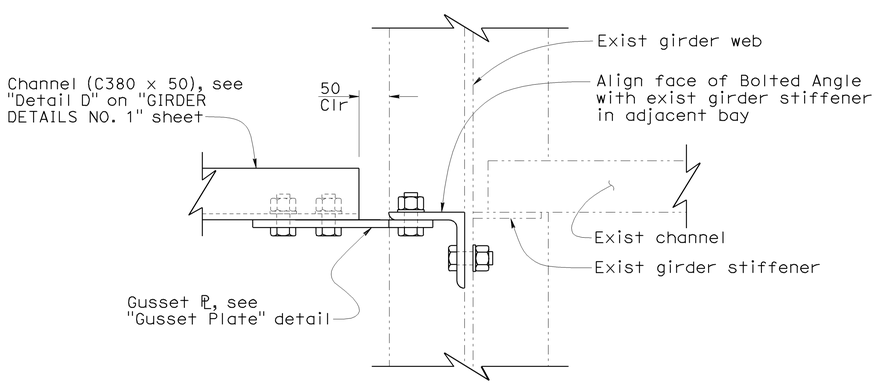

VIEW U-U

1:5

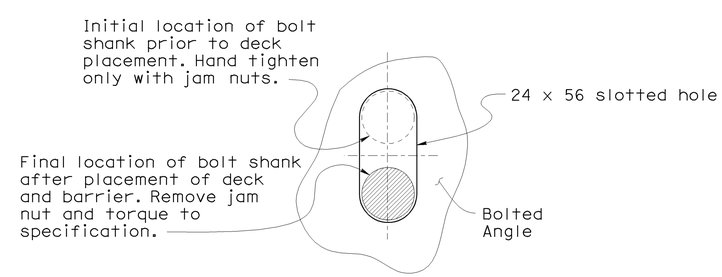

SLOTTED HOLE BOLTING

No Scale

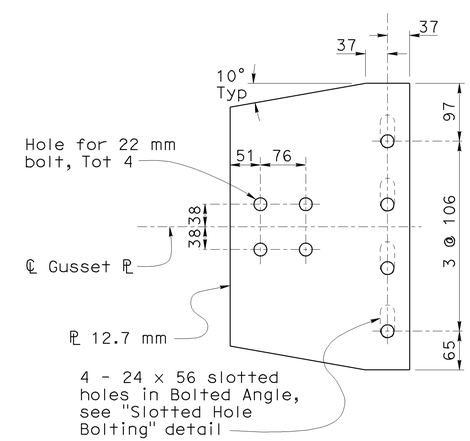

GUSSET PLATE

1:5

NOTE:
THE CONTRACTOR SHALL VERIFY ALL CONTROLLING FIELD DIMENSIONS BEFORE ORDERING OR FABRICATING ANY MATERIAL.

Caltrans Metric

ALL DIMENSIONS ARE IN MILLIMETERS UNLESS OTHERWISE SHOWN

ORIGINAL SCALE IN MILLIMETERS FOR REDUCED PLANS 0 10 20 30 40 50 60 70 80 90 100

	BY	CHECKED
DESIGN	Gabriel Galo	James Ralston
DETAILS	Dale Kubochi	James Ralston
QUANTITIES	James Ralston	Traci Menard

STATE OF CALIFORNIA
DEPARTMENT OF TRANSPORTATION

DIVISION OF ENGINEERING SERVICES
STRUCTURE DESIGN
DESIGN BRANCH 15

CU 07
EA 121841

BRIDGE NO. 53-1079
KILOMETER POST 44.8

WESTERN AVENUE UNDERCROSSING (WIDEN)

GIRDER DETAILS NO. 2

DISREGARD PRINTS BEARING EARLIER REVISION DATES

REVISION DATES: 2-1-07 3-1-07 8-3-07 4-4-08 8-25-08 11-14-08 12-1-08 12-22-08 1-7-09

SHEET 21 OF 28

STRUCTURES DESIGN DETAIL SHEET (METRIC) (REV.03-17-04)

FILE => 53-1079lrks-o-girdet02.dgn

USERNAME => trmikesl DATE PLOTTED => 12-JUN-2009 TIME PLOTTED => 10:08

DIST	COUNTY	ROUTE	KILOMETER POST TOTAL PROJECT	SHEET No	TOTAL SHEETS
07	LA	5	42.8/47.3	730	1073

Andrew Rittenhouse 12-05-08
REGISTERED CIVIL ENGINEER DATE

6-8-09
PLANS APPROVAL DATE

REGISTERED PROFESSIONAL ENGINEER Andrew P. Rittenhouse No. C 61006 Exp. 12-31-10 CIVIL STATE OF CALIFORNIA

The State of California or its officers or agents shall not be responsible for the accuracy or completeness of electronic copies of this plan sheet.

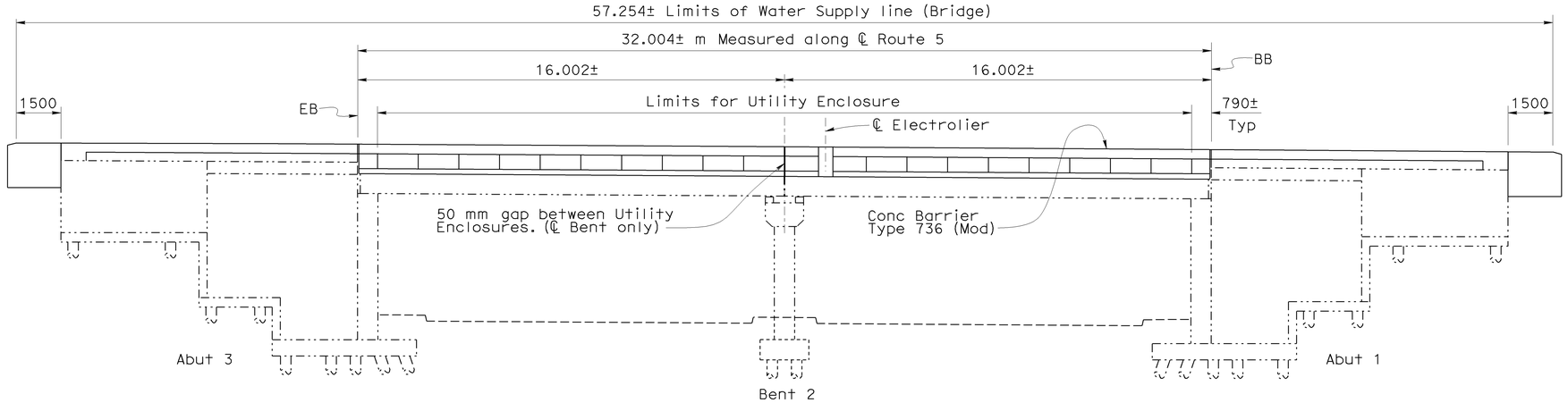

ELEVATION LEFT SIDE STRUCTURE

1:100

Notes:

- For "Utility Enclosure" and "Strap" details see "MISCELLANEOUS DETAILS NO. 2" sheet.
- For "Section A-A", "Section B-B", "Section C-C" and "Section D-D" see "MISCELLANEOUS DETAILS NO. 2" sheet.

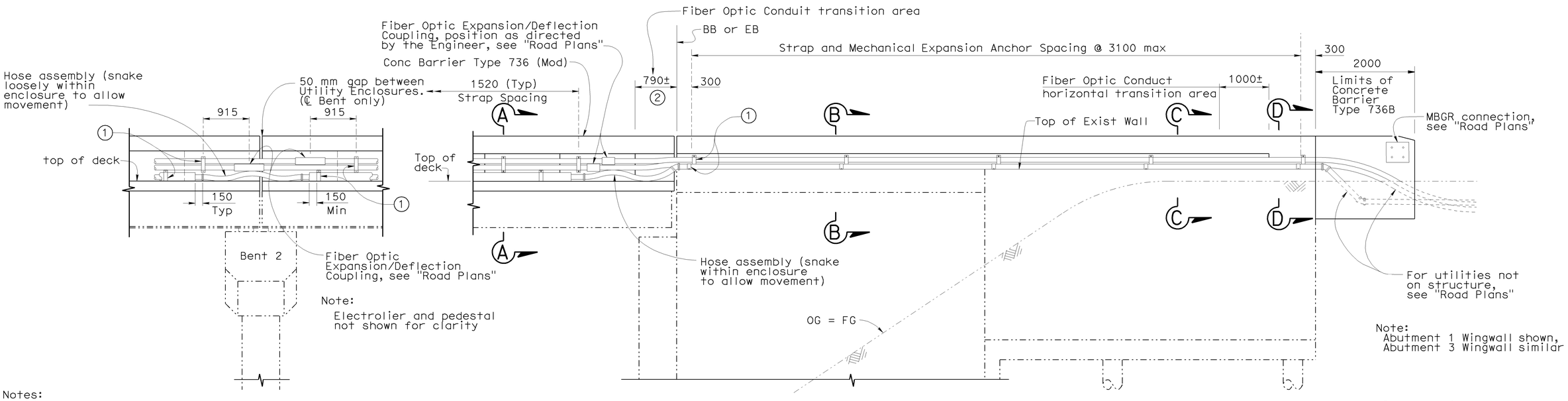

Note:
Electrolier and pedestal not shown for clarity

Note:
Abutment 1 Wingwall shown, Abutment 3 Wingwall similar

Notes:

1. Straps indicated shall provide tight connection to restrain longitudinal utility movement.
2. Distance between BB or EB and edge of Utility Enclosure.

Utility Enclosure Front Cover not shown for clarity

UTILITY TRANSITION

No Scale

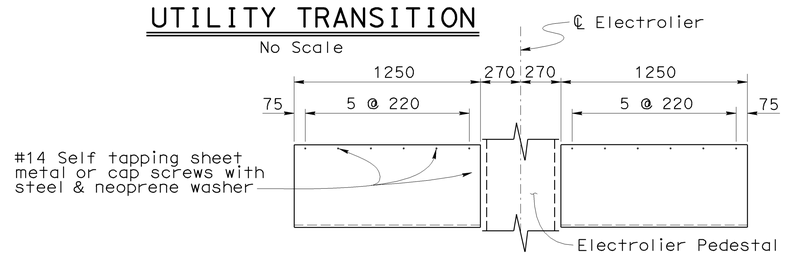

FRONT COVER AT ELECTROLIER

1:20

Notes:
Adjust location of electrolier foundation to match Utility Enclosure pattern.
See "Utility Enclosure" for additional details.

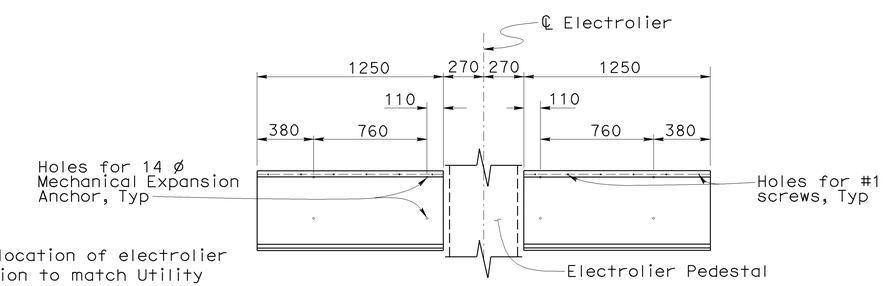

BACK COVER AT ELECTROLIER

1:20

NOTE:
THE CONTRACTOR SHALL VERIFY ALL CONTROLLING FIELD DIMENSIONS BEFORE ORDERING OR FABRICATING ANY MATERIAL.

Caltrans Metric

	BY	CHECKED
DESIGN	A. Rittenhouse	James Ralston
DETAILS	Dale Kubochi	James Ralston
QUANTITIES	James Ralston	Traci Menard

STATE OF CALIFORNIA
DEPARTMENT OF TRANSPORTATION

DIVISION OF ENGINEERING SERVICES
STRUCTURE DESIGN
DESIGN BRANCH 15

BRIDGE NO. 53-1079
KILOMETER POST 44.8

WESTERN AVENUE UNDERCROSSING (WIDEN)
MISCELLANEOUS DETAILS NO. 1

ALL DIMENSIONS ARE IN MILLIMETERS UNLESS OTHERWISE SHOWN

ORIGINAL SCALE IN MILLIMETERS FOR REDUCED PLANS 0 10 20 30 40 50 60 70 80 90 100

CU 07
EA 121841

DISREGARD PRINTS BEARING EARLIER REVISION DATES

REVISION DATES: 5-04-09 | 4-24-07 | 2-12-08 | 4-8-08 | 4-18-08 | 4-22-08 | 8-25-08 | 11-21-08 | 12-23-08

SHEET 22 OF 28

FILE => 53-1079lrks-v-misc01.dgn

STRUCTURES DESIGN DETAIL SHEET (METRIC) (REV.03-17-04)

USERNAME => trmikest DATE PLOTTED => 12-JUN-2009 TIME PLOTTED => 10:08

DIST	COUNTY	ROUTE	KILOMETER POST TOTAL PROJECT	SHEET No	TOTAL SHEETS
07	LA	5	42.8/47.3	731	1073

Andrew P. Rittenhouse 12-05-08
REGISTERED CIVIL ENGINEER DATE

6-8-09
PLANS APPROVAL DATE

REGISTERED PROFESSIONAL ENGINEER Andrew P. Rittenhouse No. C 61006 Exp. 12-31-10 CIVIL STATE OF CALIFORNIA

The State of California or its officers or agents shall not be responsible for the accuracy or completeness of electronic copies of this plan sheet.

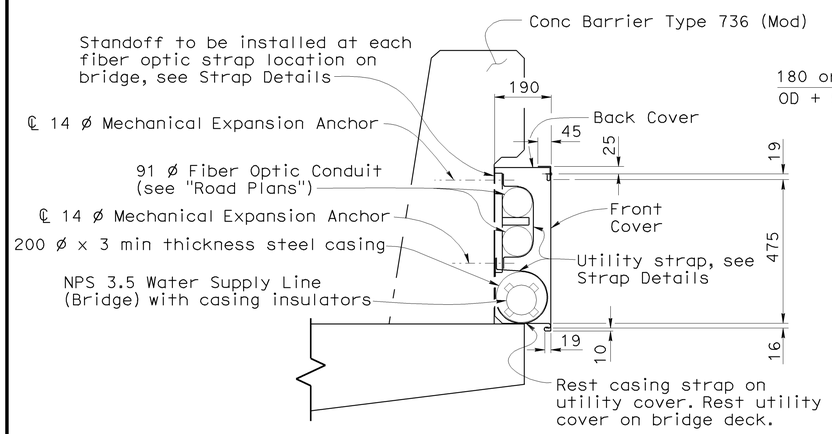

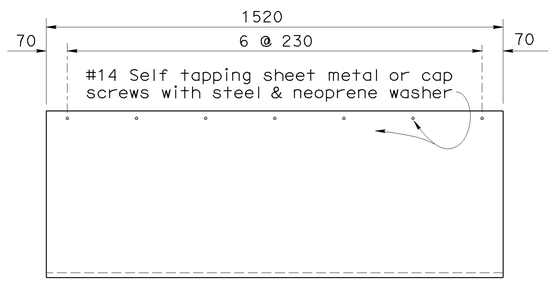

FRONT COVER

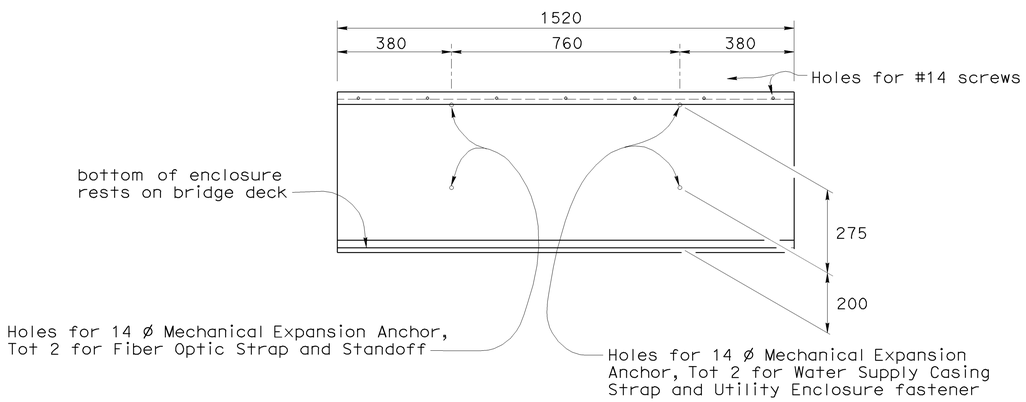

BACK COVER

For details not shown see H9

Notes:
Straps for fiber optic conduits and water casing alternate per "Back Cover" detail.
Holes for anchors may be field drilled through back cover.
Front and Back Covers 14 Gage galvanized sheet metal.

UTILITY ENCLOSURE
1:10

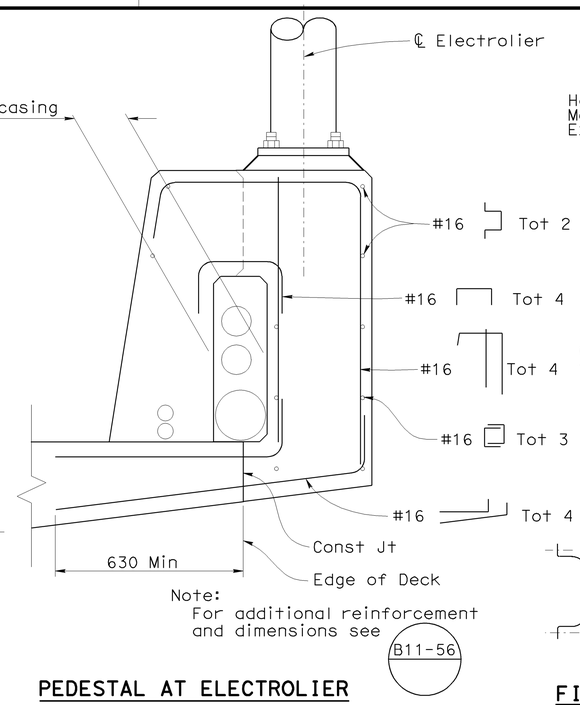

PEDESTAL AT ELECTROLIER

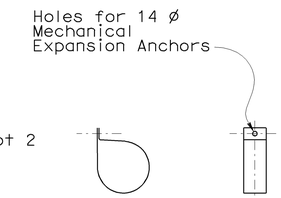

WATER CASING STRAP

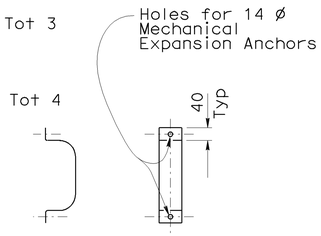

FIBER OPTIC STRAP

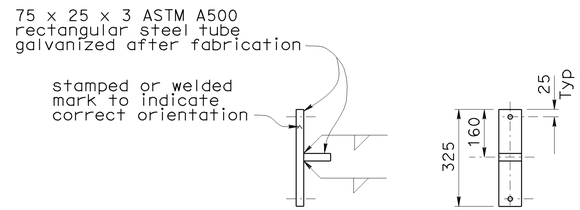

FIBER OPTIC STANDOFF

UTILITY STRAPS ON BRIDGE BARRIER

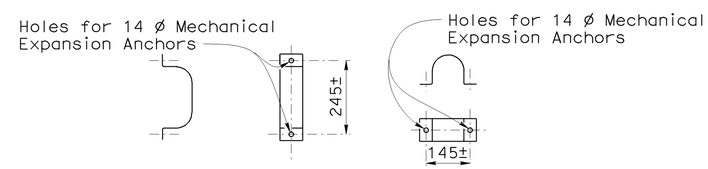

FIBER OPTIC STRAP WATER PIPE STRAP

UTILITY STRAPS ON RETAINING WALL

All straps to be 75 x 3 and galvanized after fabrication.
Lengths of straps as required to allow longitudinal movement of pipes, casings, or conduits through straps, except as noted in "Utility Transition" detail.

STRAP DETAILS
1:10

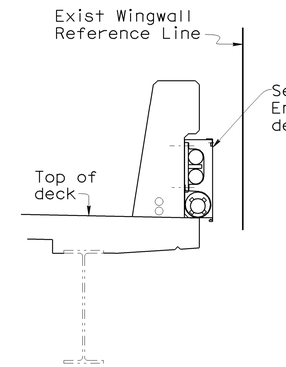

SECTION A-A
1:20

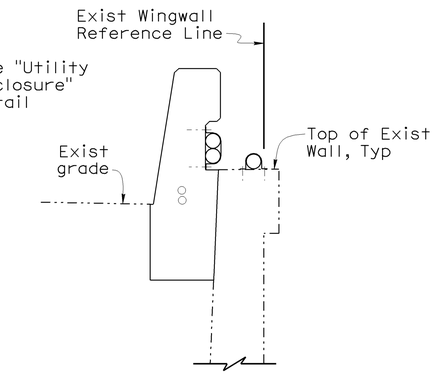

SECTION B-B
1:20

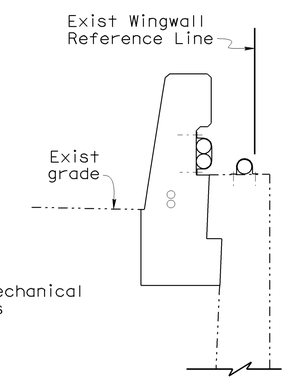

SECTION C-C
1:20

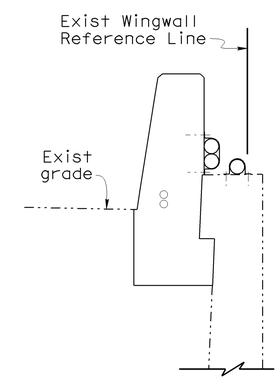

SECTION D-D
1:20

CONCRETE BARRIER TYPE 736 (MOD)

NOTE:
THE CONTRACTOR SHALL VERIFY ALL CONTROLLING FIELD DIMENSIONS BEFORE ORDERING OR FABRICATING ANY MATERIAL.

DESIGN	BY A. Rittenhouse	CHECKED James Ralston	
DETAILS	BY Dale Kubochi	CHECKED James Ralston	
QUANTITIES	BY James Ralston	CHECKED Traci Menard	

Caltrans Metric

ALL DIMENSIONS ARE IN MILLIMETERS UNLESS OTHERWISE SHOWN

ORIGINAL SCALE IN MILLIMETERS FOR REDUCED PLANS 0 10 20 30 40 50 60 70 80 90 100

STATE OF CALIFORNIA DEPARTMENT OF TRANSPORTATION

DIVISION OF ENGINEERING SERVICES STRUCTURE DESIGN
DESIGN BRANCH 15

CU 07
EA 121841

BRIDGE NO. 53-1079
KILOMETER POST 44.8

WESTERN AVENUE UNDERCROSSING (WIDEN)
MISCELLANEOUS DETAILS NO. 2

DISREGARD PRINTS BEARING EARLIER REVISION DATES

REVISION DATES 4-4-07 4-20-07 4-1-08 4-11-08 4-22-08 8-29-08 11-14-08 12-23-08 5-5-09

SHEET 23 OF 28

STRUCTURES DESIGN DETAIL SHEET (METRIC) (REV.03-17-04)

FILE => 53-1079lrks-v-misc02.dgn

USERNAME => trmikesl DATE PLOTTED => 12-JUN-2009 TIME PLOTTED => 10:08

DIST	COUNTY	ROUTE	KILOMETER POST TOTAL PROJECT	SHEET No	TOTAL SHEETS
07	LA	5	42.8/47.3	732	1073

Andrew Rittenhouse 12-05-08
REGISTERED CIVIL ENGINEER DATE

6-8-09
PLANS APPROVAL DATE

REGISTERED PROFESSIONAL ENGINEER Andrew P. Rittenhouse No. C 61006 Exp. 12-31-10 CIVIL STATE OF CALIFORNIA

The State of California or its officers or agents shall not be responsible for the accuracy or completeness of electronic copies of this plan sheet.

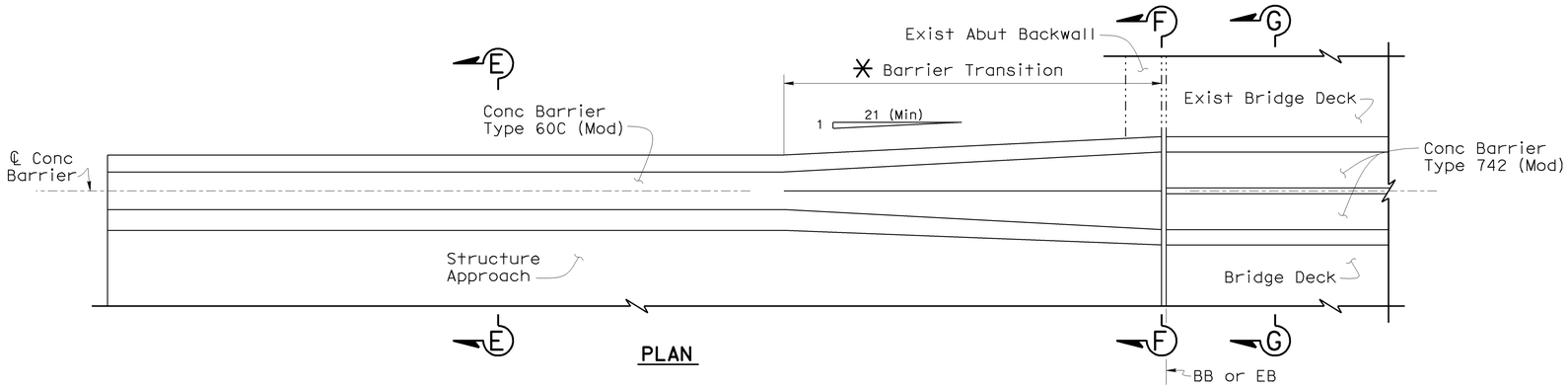

PLAN

Vertical and Horizontal Barrier Transition to end at same location.

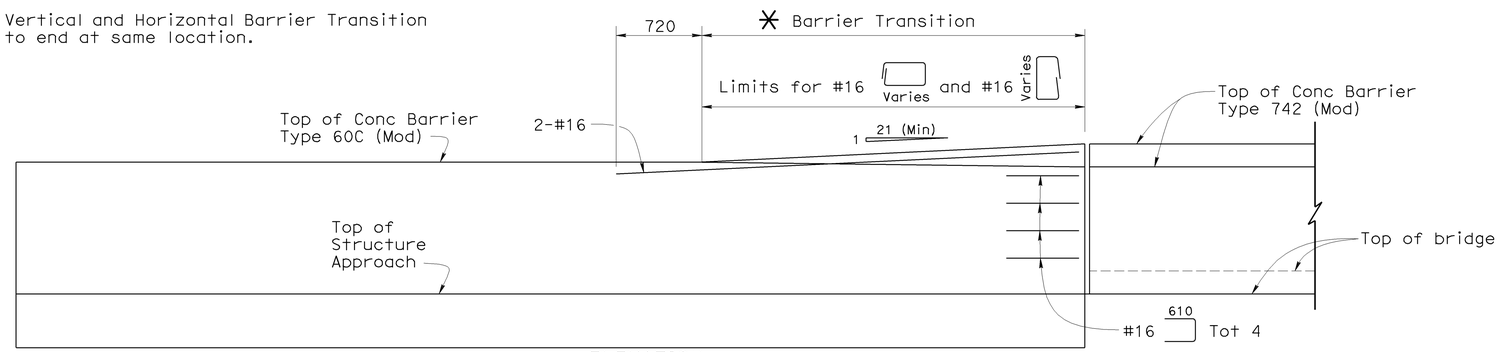

ELEVATION

BARRIER TRANSITION DETAIL

1:25

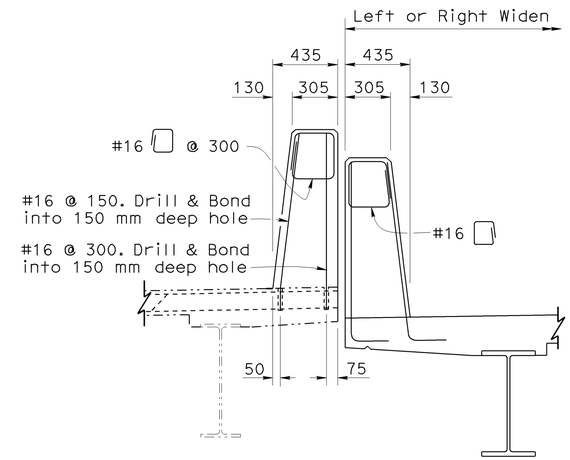

CONCRETE BARRIER TYPE 742 (Mod)

1:20

Note:
For other details not shown, see B11-57

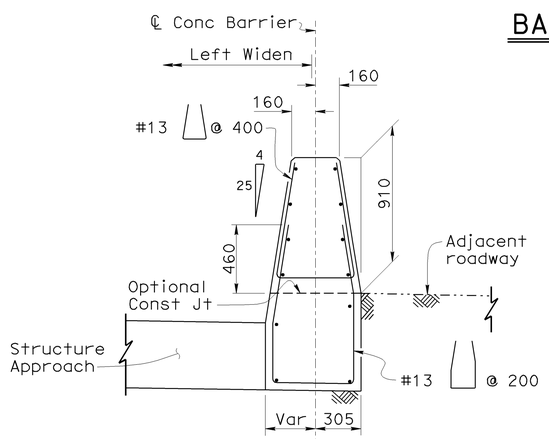

SECTION E-E

1:20

CONCRETE BARRIER TYPE 60C (MOD)

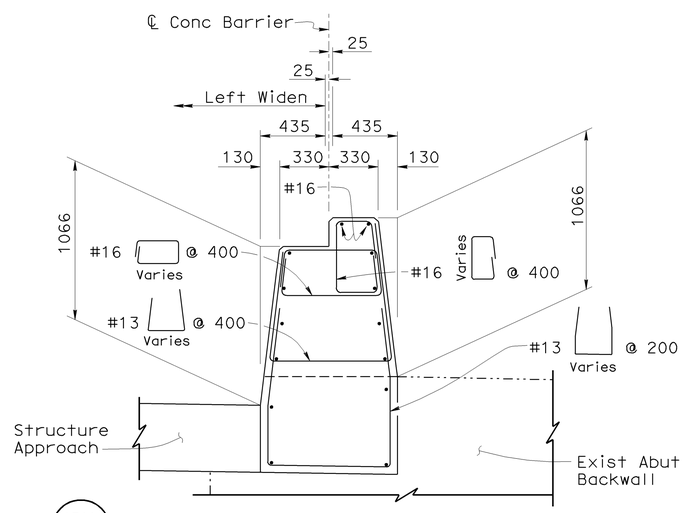

SECTION F-F

1:20

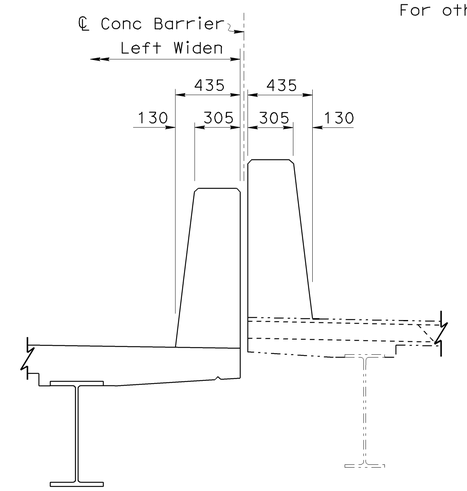

For details not shown, see "Concrete Barrier Type 742 (Mod)"

SECTION G-G

1:20

NOTE:
THE CONTRACTOR SHALL VERIFY ALL CONTROLLING FIELD DIMENSIONS BEFORE ORDERING OR FABRICATING ANY MATERIAL.

Notes:
-For details not shown or noted, see A76A
-Left Widen shown, Right Widen similar.

Caltrans Metric

	BY	CHECKED
DESIGN	Gabriel Galo	James Ralston
DETAILS	Dale Kubochi	James Ralston
QUANTITIES	James Ralston	Traci Menard

STATE OF CALIFORNIA
DEPARTMENT OF TRANSPORTATION

DIVISION OF ENGINEERING SERVICES
STRUCTURE DESIGN
DESIGN BRANCH 15

BRIDGE NO. 53-1079
KILOMETER POST 44.8

WESTERN AVENUE UNDERCROSSING (WIDEN)
MISCELLANEOUS DETAILS NO. 3

ALL DIMENSIONS ARE IN MILLIMETERS UNLESS OTHERWISE SHOWN

ORIGINAL SCALE IN MILLIMETERS FOR REDUCED PLANS 0 10 20 30 40 50 60 70 80 90 100

CU 07
EA 121841

DISREGARD PRINTS BEARING EARLIER REVISION DATES

REVISION DATES: 2-25-08 3-4-08 4-1-08 6-25-08 11-17-08 12-17-08

SHEET 24 OF 28

FILE => 53-1079lrks-v-misc03.dgn

STRUCTURES DESIGN DETAIL SHEET (METRIC) (REV.03-17-04)

USERNAME => trmikesl DATE PLOTTED => 12-JUN-2009 TIME PLOTTED => 10:08

DIST.	COUNTY	ROUTE	KILOMETER POST TOTAL PROJECT	SHEET NO.	TOTAL SHEETS
07	LA	5	42.8/47.3	733	1073

Caltrans Metric

Andrew Rittenhouse 12-05-08
REGISTERED ENGINEER - CIVIL

6-8-09
PLANS APPROVAL DATE

REGISTERED PROFESSIONAL ENGINEER Andrew P. Rittenhouse No. C 61006 Exp. 12-31-10 CIVIL STATE OF CALIFORNIA

The State of California or its officers or agents shall not be responsible for the accuracy or completeness of electronic copies of this plan sheet.

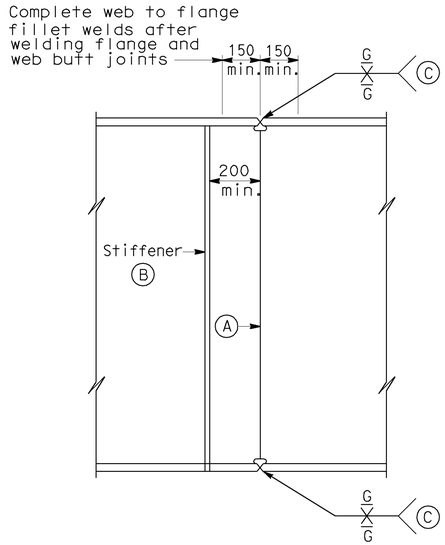

GIRDER SPLICE

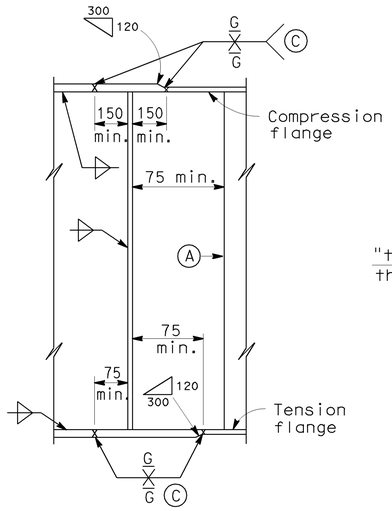

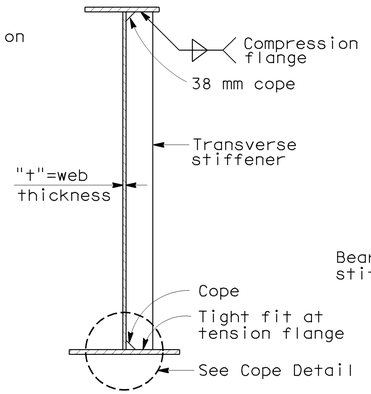

ASSEMBLY AND FABRICATION DETAILS

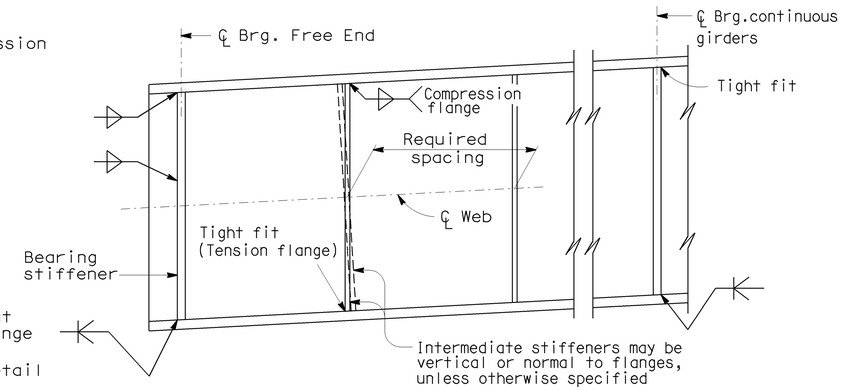

TRANSVERSE STIFFENERS

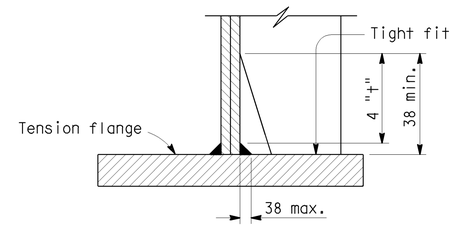

COPE DETAIL

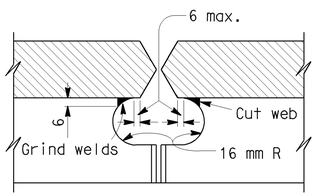

WEB COPE AT GIRDER SPLICE

NOTES:

Alternative girder splices will be permitted subject to approval by the Engineer.

(A) Web butt joints shall be full penetration groove welds. All weld areas on the exterior face of exterior girders shall be ground flush.

Under full dead load and deck shrinkage, as shown on the camber diagram, girder ends and bearing stiffeners shall be vertical except they may be normal to grade for grades less than 2 percent.

(B) Stiffeners adjacent to a girder splice may be field welded.

(C) Grind all surfaces flush on tension flanges.

Grind all surfaces on compression flanges when required for NDI.

Grind all exterior surfaces flush on all bottom compression flanges.

(D) Stop fillet welds 6 mm from end of plate.

(E) Size fillet weld to match the strength of connection required for the joint.

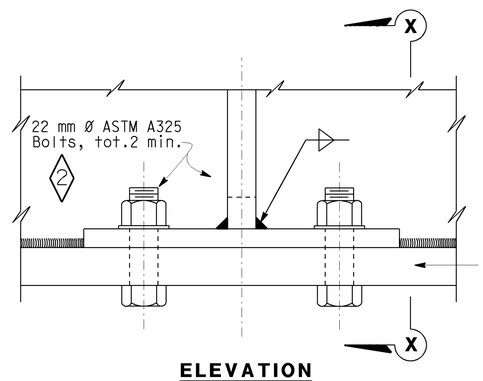

ELEVATION

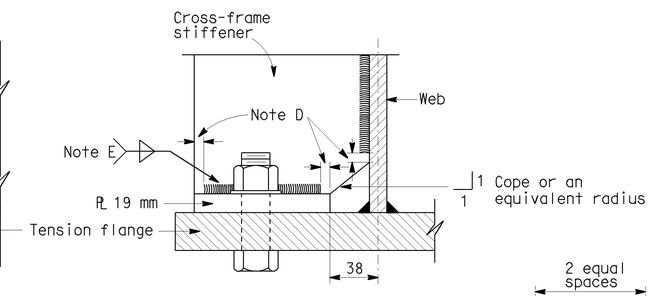

VIEW X-X

CROSS FRAME STIFFENER DETAIL

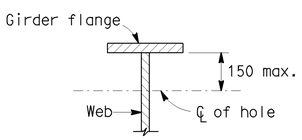

25 mm max.diameter hole at 1.2 m± min. spacing to be used for falsework support when specified by the Contractor. Contractor to determine location, size and spacing.

50 mm max.diameter hole to be drilled where lighting conduit passes through girder web. For location and size of hole see "Lighting Plan".

HOLES FOR CONDUIT AND FALSEWORK

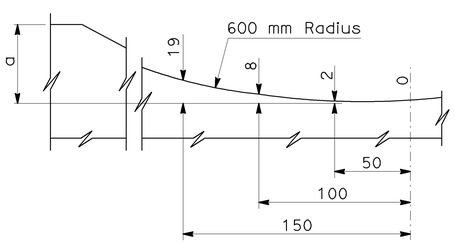

ELEVATION

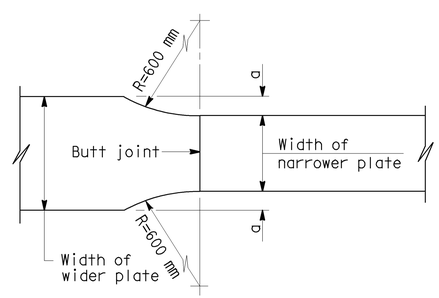

TRANSITION OF WIDTH

FLANGE TRANSITION DETAIL

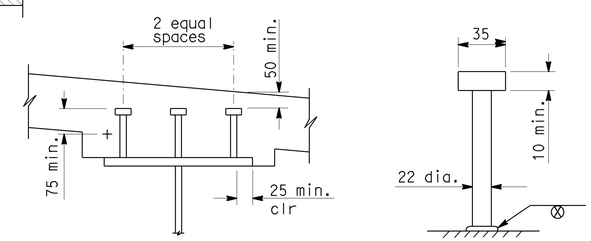

Lengths to be determined by the Contractor, unless otherwise shown.

Minimum length is 150 mm.

The top of deck is designed to be approximately parallel to the top of web for determining girder stud connector height.

Alternative types of shear connectors will be permitted subject to approval by the Engineer.

STUD CONNECTOR (1)

NO SCALE

ALL DIMENSIONS ARE IN MILLIMETERS UNLESS OTHERWISE SHOWN

SPECIAL DETAILS

STANDARD DRAWING

RELEASE DATE	REVISED	DESIGN	BY G. INENEGA	CHECKED D. FUKUSHIMA	RELEASED BY
		DETAILS	BY R. YEE	CHECKED D. FUKUSHIMA	
FILE NO.	xs1-410	SUBMITTED	BY R.C. ANDERSON	DRAWING DATE 1/89	OFFICE CHIEF

(1) Modified detail
(2) Modified note

STATE OF CALIFORNIA
DEPARTMENT OF TRANSPORTATION

DIVISION OF ENGINEERING SERVICES

BRIDGE NO. 53-1079
KILOMETER POST 44.8

WESTERN AVENUE UNDERCROSSING (WIDEN)

STEEL GIRDER DETAILS

DS OSD 2147A (METRIC) (REV. 2/25/97)

ORIGINAL SCALE IN MILLIMETERS FOR REDUCED PLANS 0 10 20 30 40 50 60 70 80 90 100

CU 07
EA 121841

DISREGARD PRINTS BEARING EARLIER REVISION DATES

REVISION DATES (PRELIMINARY STAGE ONLY) 3-1-07 4-3-08 8-25-08 11-7-08 1-7-09

SHEET 25 OF 28

USERNAME => trmikesl

53-1079lrks-w-xs1-410.dgn

DATE PLOTTED => 12-JUN-2009 TIME PLOTTED => 10:08

DIST.	COUNTY	ROUTE	KILOMETER POST TOTAL PROJECT	SHEET NO.	TOTAL SHEETS
07	LA	5	42.8/47.3	734	1073

Caltrans Metric

Andrew Rittenhouse 12-05-08
REGISTERED ENGINEER - CIVIL

6-8-09
PLANS APPROVAL DATE

REGISTERED PROFESSIONAL ENGINEER Andrew P. Rittenhouse No. C 61006 Exp. 12-31-10 CIVIL STATE OF CALIFORNIA

The State of California or its officers or agents shall not be responsible for the accuracy or completeness of electronic copies of this plan sheet.

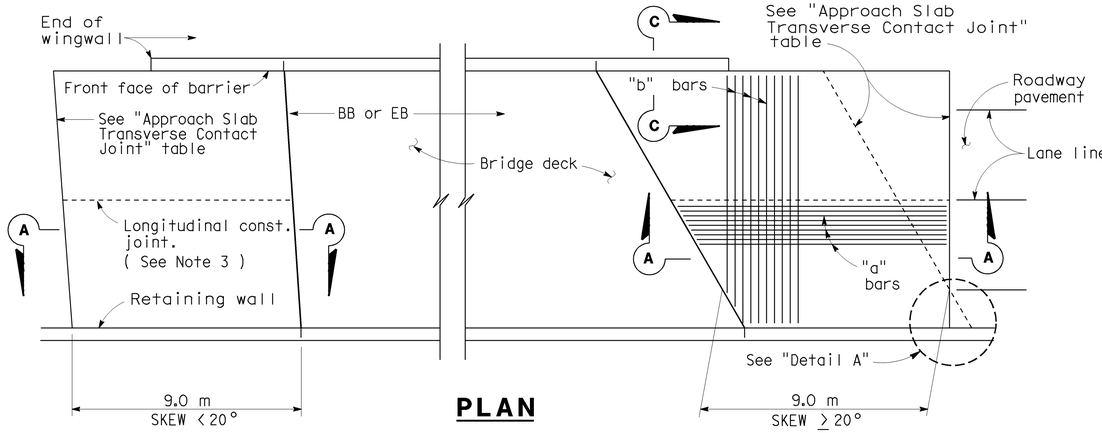

PLAN

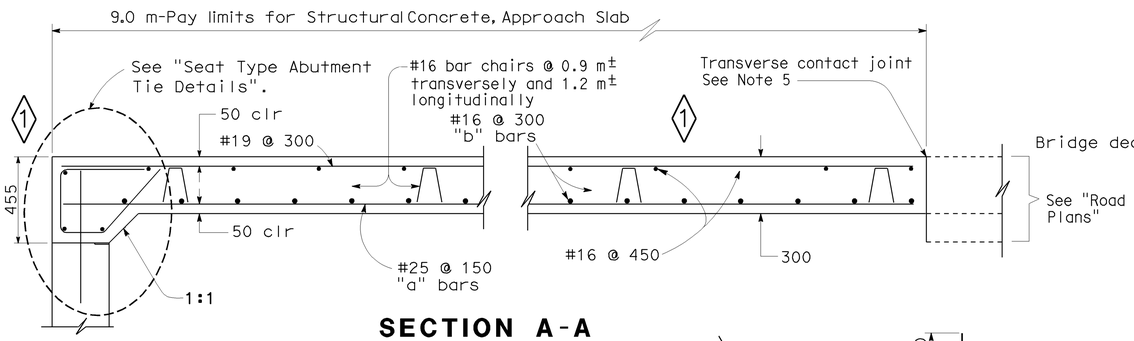

SECTION A-A

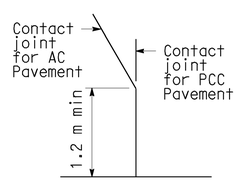

DETAIL A

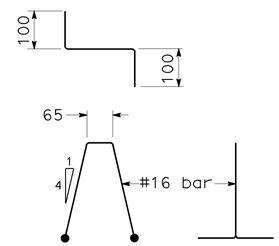

BAR CHAIR DETAIL

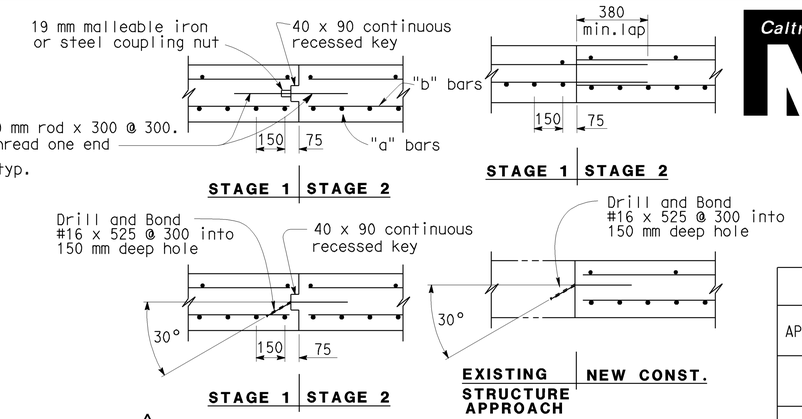

LONGITUDINAL CONSTRUCTION JOINT ALTERNATIVES

APPROACH SLAB TRANSVERSE CONTACT JOINT		
APPROACH SKEW	WITH AC ROADWAY PAVEMENT	WITH PCC ROADWAY PAVEMENT
< 20°	Parallel to face of paving notch	Parallel to face of paving notch
20°- 45°	Parallel to face of P N use (Detail A)	Stagger lines 7.2 m to 10.8 m apart.
> 45°	Parallel to face of P N use (Detail A)	Stagger at each lane line.

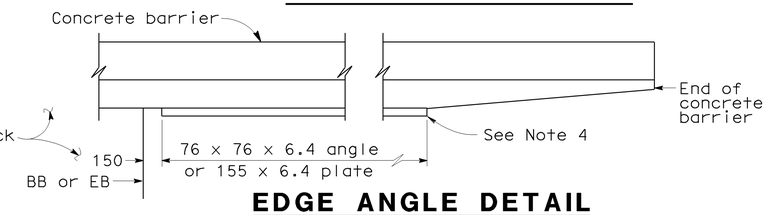

EDGE ANGLE DETAIL

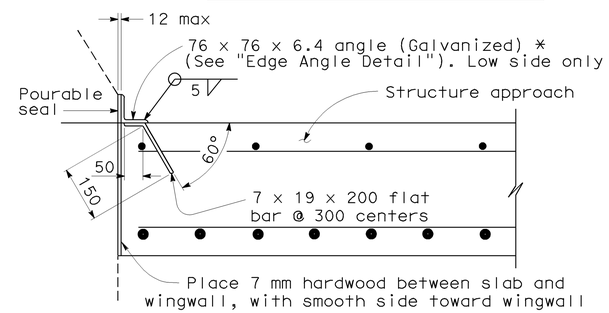

*(TO BE USED WITH TYPE 25 OR TYPE 27 CONCRETE BARRIER)

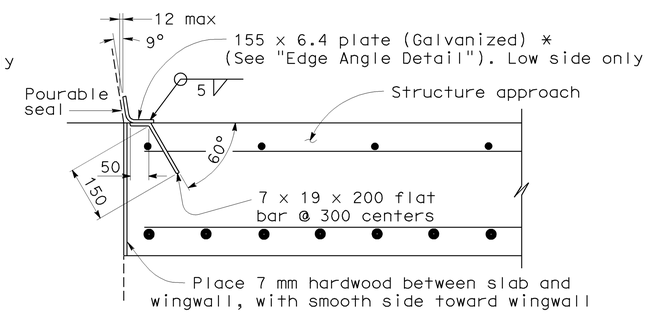

*(TO BE USED WITH TYPE 732 OR TYPE 736 CONCRETE BARRIER)

DETAIL B

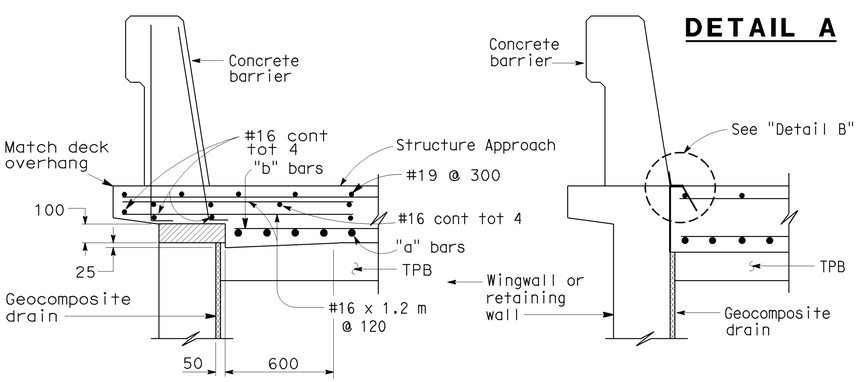

TYPE E-1 TYPE E-2

SECTION C-C

(Type E-1 to be used, unless otherwise shown on plans)

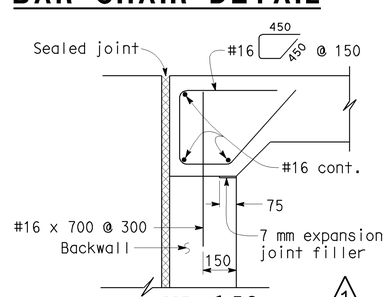

MR ≤ 50 mm

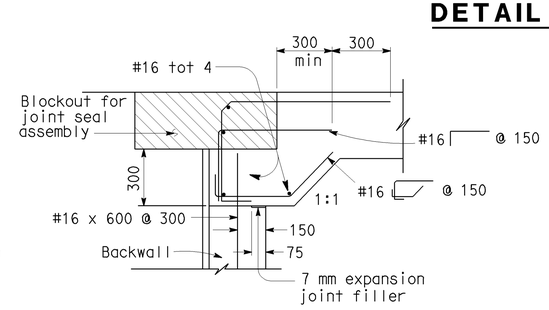

MR > 50 mm

SEAT TYPE ABUTMENT TIE DETAILS (SEE NOTE 1)

NOTES:

1. For details not shown, see Structure Plans. For MR ≤ 50 mm, adjust bar reinforcement to clear a sawcut for sealed joint, when required.
2. For drainage details, see "Structure Approach Drainage Details" sheet.
3. Longitudinal construction joints, when permitted by the Engineer, shall be located on lane lines.
4. End angle or plate at beginning of barrier transition, end of wingwall or end of structure approach as applicable.
5. For transverse contact joint with new PCC paving, refer to Standard Plan P10.
6. At the contractor's option, approach slab transverse reinforcement may be placed parallel to paving notch. Spacing of transverse reinforcement is measured along ℄ roadway.

Remove all polystyrene.

NO SCALE

ALL DIMENSIONS ARE IN MILLIMETERS UNLESS OTHERWISE SHOWN

SPECIAL DETAILS

STANDARD DRAWING

RELEASE DATE	REVISED	DESIGN	BY M. TRAFFALIS	CHECKED E. THORKILDSEN	RELEASED BY
		DETAILS	BY R. YEE	CHECKED E. THORKILDSEN	
FILE NO.	xs3-120	SUBMITTED	BY M. HA	DRAWING DATE 4/98	OFFICE CHIEF

1 MODIFIED DETAIL
2 ADDED DETAIL

STATE OF CALIFORNIA
DEPARTMENT OF TRANSPORTATION

DIVISION OF ENGINEERING SERVICES

BRIDGE NO. 53-1079
KILOMETER POST 44.8

WESTERN AVENUE UNDERCROSSING (WIDEN)

STRUCTURE APPROACH TYPE N(9S)

DS OSD 2147A (METRIC) (REV. 2/25/97)

ORIGINAL SCALE IN MILLIMETERS FOR REDUCED PLANS 0 10 20 30 40 50 60 70 80 90 100

CU 07
EA 121841

DISREGARD PRINTS BEARING EARLIER REVISION DATES

REVISION DATES (PRELIMINARY STAGE ONLY) 2-2-07 4-8-08 8-25-08 11-7-08 1-7-09 2-10-09

SHEET 26 OF 28

USERNAME => trmikesl

53-1079lrks-x2-xs3-120.dgn

DATE PLOTTED => 12-JUN-2009 TIME PLOTTED => 10:09

DIST	COUNTY	ROUTE	KILOMETER POST TOTAL PROJECT	SHEET No	TOTAL SHEETS
07	LA	5	42.8/47.3	735	1073

REGISTERED CIVIL ENGINEER 5-7-08

6-8-09
PLANS APPROVAL DATE

REGISTERED PROFESSIONAL ENGINEER Qiang Huang No. C055671 Exp. 12-31-08 CIVIL STATE OF CALIFORNIA

The State of California or its officers or agents shall not be responsible for the accuracy or completeness of electronic copies of this plan sheet.

NOTE:

The information presented on this drawing was not the result of any work developed, performed or completed this Department (Caltrans). The following party should account for all this information:

URS Corp.

It should be expressly understood that Caltrans assumes no responsibility whatsoever in respect to the sufficiency, accuracy, completeness, and interpretation set forth therein or any other aspect of the information shown or represented on this drawing.

BENCH MARK

SURVEY CONTROL

PRHV226
Fnd PK & BATHEY ON WESTERN PER SR01-009
43.840 m Lt.℄ Rte 5
Sta. 448+03.676
N 573730.714
E 1972629.276
Elev. = 149.835

PRHV1013
Fnd "CONTROL POINT CHIS X"
60.604 m Rt.℄ Rte 5
Sta. 447+89.269
N 573799.478
E 1972709.198
Elev. = 149.436

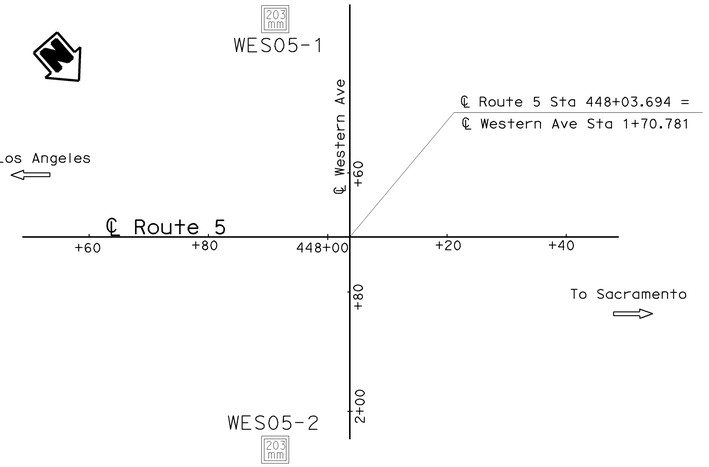

PLAN
1:500

GEOTECHNICAL SERVICES	
PREPARED BY	I.G-Remmen 1/06
CHECKED BY	B. Bertucci

FIELD INVESTIGATION BY: URS Corp.

STATE OF CALIFORNIA DEPARTMENT OF TRANSPORTATION

DIVISION OF ENGINEERING SERVICES STRUCTURE DESIGN
DESIGN BRANCH 15

BRIDGE NO. 53-1079
KILOMETER POST 44.8

WESTERN AVENUE UNDERCROSSING (WIDEN)
LOG OF TEST BORINGS 1 OF 2

Caltrans Metric

OGS CIVIL LOG OF TEST BORINGS SHEET (METRIC) (REV. 4/04)

ALL DIMENSIONS ARE IN METERS UNLESS OTHERWISE SHOWN

ORIGINAL SCALE IN MILLIMETERS FOR REDUCED PLANS 0 10 20 30 40 50 60 70 80 90 100

CU 07
EA 121841

DISREGARD PRINTS BEARING EARLIER REVISION DATES

REVISION DATES (PRELIMINARY STAGE ONLY) 04-28-08 8-25-08

SHEET 27 OF 28

FILE => 53-1079rks-x-lotb1.dgn

USERNAME => trmikesi DATE PLOTTED => 12-JUN-2009 TIME PLOTTED => 10:08

FED. ROAD DIV. NO.	STATE	PROJ. NO.	FISCAL YEAR	SHEET NO.	TOTAL SHEETS
7	CAL.	IM-281(8)		193	235

DIST.	COUNTY	ROUTE	SECTION	SHEET NO.	TOTAL SHEETS
VII	LA	~~5~~	~~5-A~~	20	22

DATE APPROVED AUGUST 22 1955

BRIDGE DEPARTMENT

ORIGINAL

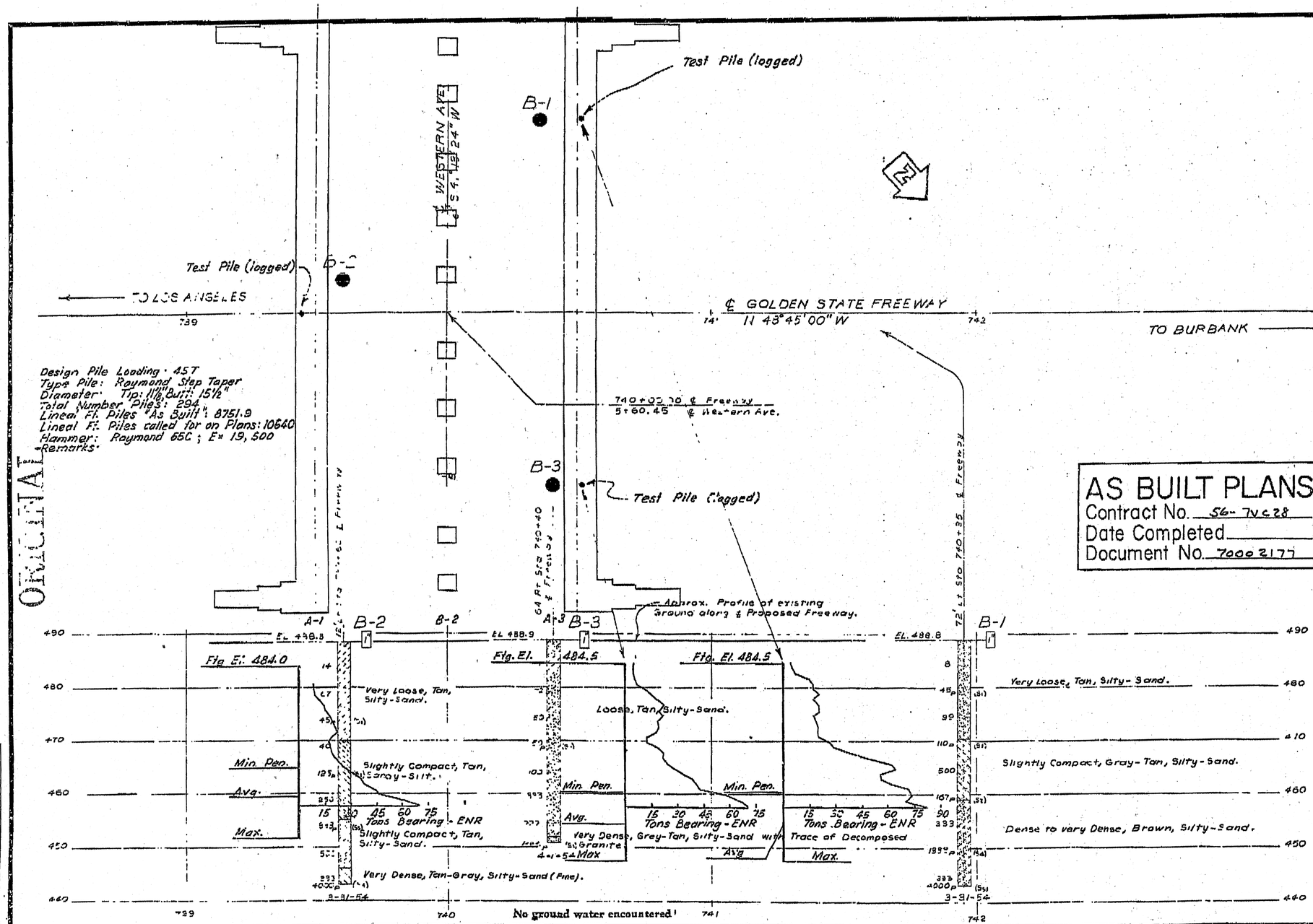

AS BUILT PLANS
Contract No. 56-7VC28
Date Completed
Document No. 70002177

T.B.M.
Spike in Lead in East P.C.C.
Curb Western Ave. Approx.
50' North of intersect on
℄ Flower St. and ℄ Western Ave.
El. 487.545

To accompany plans dated 6-8-09

DIVISION OF ENGINEERING SERVICES - GEOTECHNICAL SERVICES

As-Built Log of Test Borings sheet is considered an informational document only. As such, the State of California registration seal with signature, license number and registration certificate expiration date confirm that this is a true and accurate copy of the original document. This drawing is available and presented only for the convenience of any bidder, contractor or other interested party.

DIST.	COUNTY	ROUTE	KILOMETER POST-TOTAL PROJECT	Sheet No.	Total Sheets
07	LA	5	42.8/47.3	736	1073

REGISTERED CIVIL ENGINEER — DATE

REGISTERED PROFESSIONAL ENGINEER
Qiang Huang
No. C055671
Exp. 12-31-08
CIVIL
STATE OF CALIFORNIA

WESTERN AVENUE UNDERCROSSING (WIDEN)

LOG OF TEST BORINGS 2 OF 2

NOTE: A COPY OF THIS LOG OF TEST BORINGS IS AVAILABLE AT OFFICE OF STRUCTURE MAINTENANCE AND INVESTIGATIONS, SACRAMENTO, CALIFORNIA

CU: 07
EA: 121841

BRIDGE NO.	
53-1079	
Sheet	of
28	28

Revisions made to this Log of Test Borings from the original 1954 Log of Test Borings are the addition of the following table and notes:

Boring	Station	Offset from ℄ Rte. 5
B-1	448+14.4	14.3 m Left
B-2	447+91.5	3.6 m Left
B-3	448+16.2	19.2 m Right

Notes:

1. See the General Plan and/or Foundation Plan for Metric Stationing.
2. The data are the metric locations for the As-Built Test Borings referenced to the proposed new structure location. This table is presented on the As-Built Log of Test Boring sheet for the convenience of any bidder, contractor or other interested party.

CONTRACT NO. 56-7VC28-F
RESIDENT ENGR. G. L. Woodbridge
DATE March 27 1956

FIELD STUDY
DRAWN V.H.H. 8/10/54
CHECKED J.M. 8-11-54

Approval Recommended by: Engineering Geologist — Materials Engineer — Bridge Engineer

CLASSIFICATION OF MATERIAL BASED ON STANDARD GRADE SIZE LIMITS

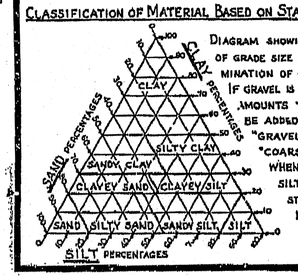

DIAGRAM SHOWING THE BASIS FOR ESTIMATES OF GRADE SIZE DISTRIBUTION USED IN DETERMINATION OF CLASS NAMES. IF GRAVEL IS PRESENT IN APPRECIABLE AMOUNTS THE TERM "GRAVELLY" MAY BE ADDED TO THE CLASS NAME, VIZ. "GRAVELLY SAND." THE TERMS "COARSE", "MEDIUM" AND "FINE" WHEN USED TO DESCRIBE SAND, SILT AND GRAVEL REFER TO STANDARD GRADE SIZE LIMITS.

LEGEND OF EARTH MATERIALS

- GRAVEL
- SAND
- SILT
- CLAY
- SANDY CLAY OR CLAYEY SAND
- SANDY SILT OR SILTY SAND
- SILTY CLAY OR CLAYEY SILT
- PEAT AND/OR ORGANIC MATTER
- FILL MATERIAL
- IGNEOUS ROCK
- SEDIMENTARY ROCK
- METAMORPHIC ROCK

LEGEND OF BORING OPERATIONS

- PLAN OF ANY BORING
- PENETROMETER
- 2¼" CONE PENETROMETER
- SAMPLER BORING (DRY)
- ROTARY BORING (WET)
- AUGER BORING (DRY)
- JET BORING
- CORE BORING
- TEST PIT

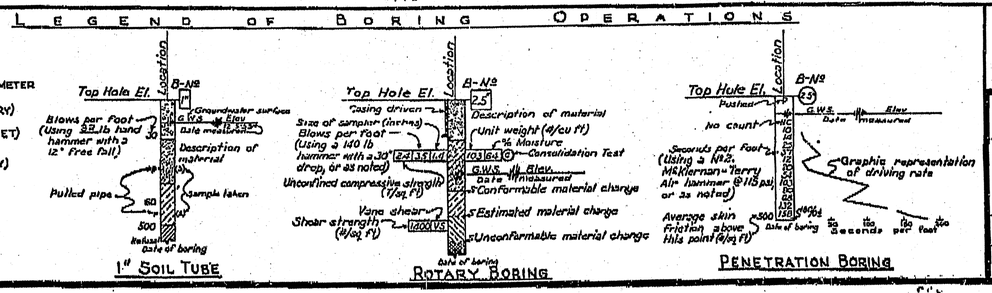

NOTES

The contractor's attention is directed to Section 2, Article (c) of the Standard Specifications and to the Special Provisions accompanying this set of plans.

Classification of earth material as shown on this sheet is based upon field inspection and is not to be construed to imply mechanical analysis.

STATE OF CALIFORNIA
DEPARTMENT OF PUBLIC WORKS
DIVISION OF HIGHWAYS

WESTERN AVE U.C.

LOG OF TEST BORINGS

SCALE Horiz. 1" = 20' Vert. 1" = 10' | BRIDGE 53-1079 | FILE E-53 | DRAWING B-3771-20

PRFL. DRAWING NO. P-3771 | 27 | 47

DIST	COUNTY	ROUTE	KILOMETER POST TOTAL PROJECT	SHEET No	TOTAL SHEETS
07	LA	5	42.8/47.3	737	1073

Andrew Rittenhouse 12-05-08
REGISTERED CIVIL ENGINEER DATE

6-8-09
PLANS APPROVAL DATE

REGISTERED PROFESSIONAL ENGINEER Andrew P. Rittenhouse No. 61006 Exp. 12-31-10 CIVIL STATE OF CALIFORNIA

The State of California or its officers or agents shall not be responsible for the accuracy or completeness of electronic copies of this plan sheet.

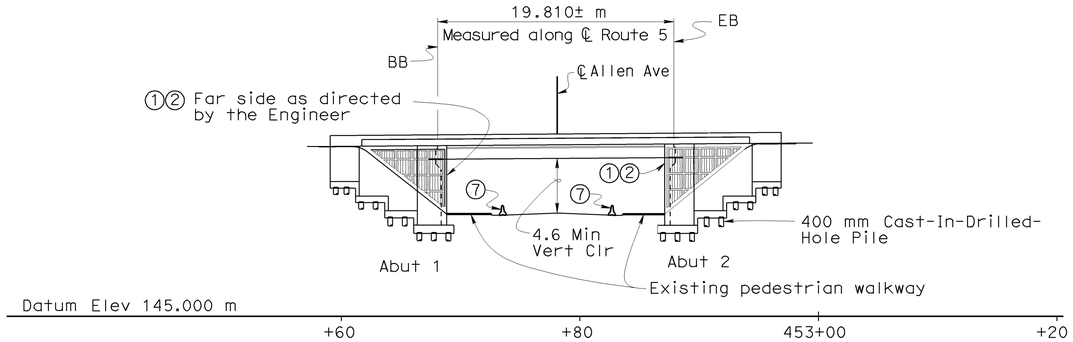

ELEVATION A-A

1:250

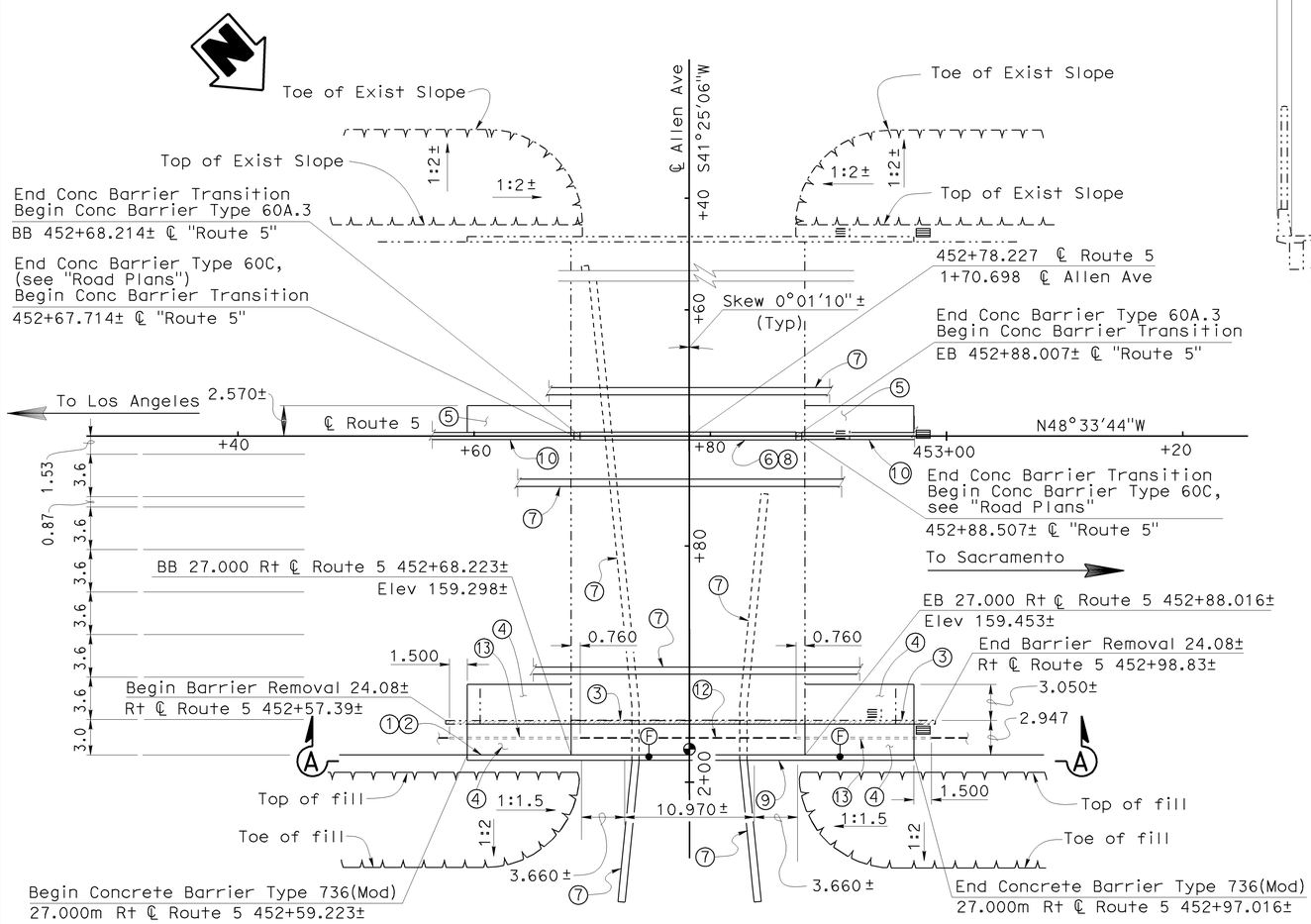

NOTE:
THE CONTRACTOR SHALL VERIFY ALL CONTROLLING FIELD DIMENSIONS BEFORE ORDERING OR FABRICATING ANY MATERIAL.

PLAN

1:250

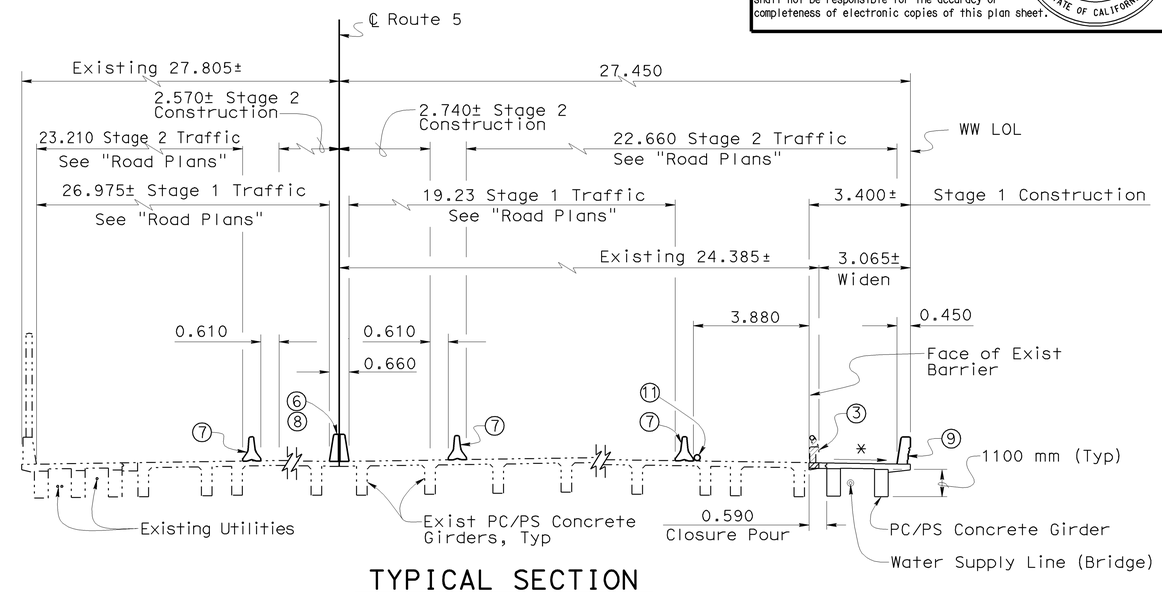

TYPICAL SECTION

1:100

Legend:

- Bridge Removal (Portion)
- Existing Structure
- Indicates point of minimum vertical clearance
- Match existing slope
- Exist DI to be removed, see "Road Plans"
- New DI, see "Road Plans"
- Electrolier Foundation and Pull Box location, see "Road Plans"

Notes:

1. Paint "Br. No. 53-1081"
2. Paint "Allen Ave Undercrossing"
3. Remove existing Concrete Barrier Type 1
4. Structure Approach Type N(9D)
5. Structure Approach Type R(9D)
6. Remove existing Concrete Barrier Type 50A.3
7. Temporary Railing (Type K), see "Road Plans"
8. Concrete Barrier Type 60A.3
9. Concrete Barrier Type 736 (Mod)
10. Concrete Barrier Type 60 (See "Road Plans")
11. Temporary Irrigation (See "Road Plans")
12. Limits of Water Supply line (Bridge)
13. NPS 12 casing

QUANTITIES

BRIDGE REMOVAL (PORTION), LOCATION E	LUMP	SUM
STRUCTURE EXCAVATION (BRIDGE)	301	m^3
STRUCTURE EXCAVATION (TYPE Y-2) (AERIALLY DEPOSITED LEAD)	13	m^3
STRUCTURE BACKFILL (BRIDGE)	520	m^3
NPS 3.5 SUPPLY LINE (BRIDGE)	41	m
AGGREGATE BASE (APPROACH SLAB)	2	m^3
400 mm CAST-IN-DRILLED-HOLE CONCRETE PILING	602	m
STRUCTURAL CONCRETE, BRIDGE FOOTING	44	m^3
STRUCTURAL CONCRETE, BRIDGE	132	m^3
STRUCTURAL CONCRETE, APPROACH SLAB (TYPE N)	34	m^3
STRUCTURAL CONCRETE, APPROACH SLAB (TYPE R)	14	m^3
FRACTURED RIB TEXTURE	46	m^2
DRILL AND BOND DOWEL	93	m
FURNISH PRECAST PRESTRESSED CONCRETE GIRDER (15 m - 20 m)	2	EA
ERECT PRECAST PRESTRESSED CONCRETE GIRDER	2	EA
CORE CONCRETE (0 - 50 mm)	4	m
CORE CONCRETE (101 mm - 150 mm)	2	m
JOINT SEAL (MR 13 mm)	7	m
BAR REINFORCING STEEL (BRIDGE)	13 000	kg
MISCELLANEOUS METAL (BRIDGE)	90	kg
CONCRETE BARRIER (TYPE 60C MODIFIED)	1	m
CONCRETE BARRIER (TYPE 60A.3)	22	m
CONCRETE BARRIER (TYPE 736 MODIFIED)	38	m

KP (PM) Indicates Kilometer Post (Post Mile)

Caltrans Metric

Traci Menard
DESIGN ENGINEER

	BY	CHECKED
DESIGN	J. Zhang/T. Menard	S. Moradi
DETAILS	Stan Cholda	S. Moradi
QUANTITIES	T. Menard	S. Moradi

LOAD FACTOR DESIGN — LIVE LOADING: HS20-44 AND ALTERNATIVE AND PERMIT DESIGN LOAD

	BY	CHECKED
LAYOUT	Jenny Zhang	S. Moradi
SPECIFICATIONS	T. Chen	T. Chen (PLANS AND SPECS COMPARED)

ALL DIMENSIONS ARE IN METERS UNLESS OTHERWISE SHOWN

ORIGINAL SCALE IN MILLIMETERS FOR REDUCED PLANS 0 10 20 30 40 50 60 70 80 90 100

STATE OF CALIFORNIA
DEPARTMENT OF TRANSPORTATION

DIVISION OF ENGINEERING SERVICES
STRUCTURE DESIGN
DESIGN BRANCH 15

CU 07
EA 121841

BRIDGE NO. 53-1081
KP (PM) 45.2 (28.1)

ALLEN AVENUE UNDERCROSSING (WIDEN)

GENERAL PLAN

DISREGARD PRINTS BEARING EARLIER REVISION DATES

REVISION DATES: 01-25-08 01-14-09 01-15-09 2-5-09 2-6-09 2-10-09 2-17-09 4-23-09 5-05-09

SHEET 1 OF 20

STRUCTURES DESIGN GENERAL PLAN SHEET (METRIC) (REV.03-17-04)

FILE => 53-1081-a-gp01.dgn

USERNAME => trmikesl DATE PLOTTED => 12-JUN-2009 TIME PLOTTED => 11:09

DIST	COUNTY	ROUTE	KILOMETER POST TOTAL PROJECT	SHEET No	TOTAL SHEETS
07	LA	5	42.8/47.3	738	1073

Andrew Rittenhouse 12-05-08
REGISTERED CIVIL ENGINEER DATE

6-8-09
PLANS APPROVAL DATE

REGISTERED PROFESSIONAL ENGINEER Andrew P. Rittenhouse No. 61006 Exp. 12-31-10 CIVIL STATE OF CALIFORNIA

The State of California or its officers or agents shall not be responsible for the accuracy or completeness of electronic copies of this plan sheet.

SHEET NO. TITLE

SHEET NO.	TITLE
1.	GENERAL PLAN
2.	INDEX TO PLANS
3.	FOUNDATION PLAN
4.	ABUTMENT LAYOUT
5.	ABUTMENT DETAILS NO. 1
6.	ABUTMENT DETAILS NO. 2
7.	ABUTMENT DETAILS NO. 3
8.	ABUTMENT DETAILS NO. 4
9.	TYPICAL SECTION
10.	GIRDER LAYOUT
11.	GIRDER DETAILS NO. 1
12.	GIRDER DETAILS NO. 2
13.	PRESTRESSED GIRDER
14.	ARCHITECTURAL TREATMENT DETAILS
15.	BARRIER - CONCRETE TYPE 60A AND 60SA MODIFIED
16.	STRUCTURE APPROACH DRAINAGE DETAILS
17.	STRUCTURE APPROACH TYPE R(9D)
18.	STRUCTURE APPROACH TYPE N(9D)
19.	LOG OF TEST BORINGS 1 OF 2
20.	LOG OF TEST BORINGS 2 OF 2

STANDARD PLANS DATED JULY 2004

A10-A	ACRONYMS AND ABBREVIATIONS (A-L)
A10-B	ACRONYMS AND ABBREVIATIONS (M-Z)
A62-C	LIMITS OF PAYMENT FOR EXCAVATION AND BACKFILL-BRIDGE
T3	TEMPORARY RAILING (TYPE K)
B0-1	BRIDGE DETAILS
B0-3	BRIDGE DETAILS
B0-5	BRIDGE DETAILS
B2-3	400 mm AND 600 mm CAST-IN-DRILLED-HOLE CONCRETE PILE
B3-1	RETAINING WALL TYPE 1 H=1200 THROUGH 9100 mm
B3-8	RETAINING WALL DETAILS NO. 1
B6-10	UTILITY OPENINGS T-BEAM
RSP B6-21	JOINT SEALS (MAXIMUM MOVEMENT RATING = 50 mm)
B11-56	CONCRETE BARRIER TYPE 736
B14-4	WATER SUPPLY LINE (BRIDGE) (PIPE SIZES LESS THAN NPS 4)

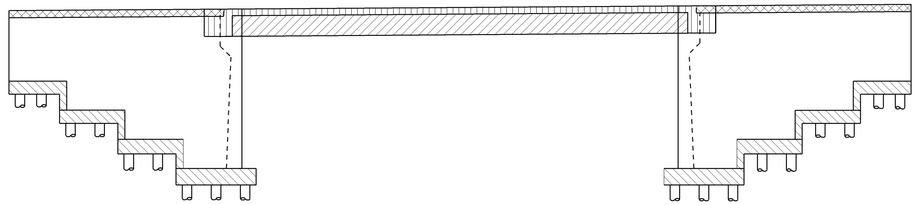

STANDARD PLAN SHEET NO.
DETAIL NO.

Structural Concrete, Bridge
Structural Concrete, Bridge, 28 Mpa @ 28 days
Structural Concrete, Bridge Footing
PC/PS Rectangular Girder (see "PRESTRESSED GIRDER" sheet)
Structural Concrete, Approach Slab

CONCRETE STRENGTH AND TYPE LIMITS

NO SCALE

PILE DATA TABLE

LOCATION	PILE TYPE	DESIGN LOADING	NOMINAL RESISTANCE COMPRESSION	NOMINAL RESISTANCE TENSION	DESIGN TIP ELEVATION	SPECIFIED TIP ELEVATION
Abutment 1	400 mm, 625 kN CIDH	N/A	1200 kN	0	140.8	140.8
Abutment 2	400 mm, 625 kN CIDH	N/A	1200 kN	0	140.8	140.8
Abutment 1 Counterfort	400 mm, 625 kN CIDH	N/A	1200 kN	0	140.8	140.8
Abutment 2 Counterfort	400 mm, 625 kN CIDH	N/A	1200 kN	0	140.8	140.8

Design tip elevations are controlled by compression

GENERAL NOTES
LOAD FACTOR DESIGN

DESIGN: CALTRANS BRIDGE DESIGN SPECIFICATIONS LFD Version April 2000 (1996 AASHTO with Interims and Revision by Caltrans)

SEISMIC DESIGN: CALTRANS SEISMIC DESIGN CRITERIA (SDC) Version 1.3, February 2004

DEAD LOAD: Includes 1675 Pa for Future Wearing Surface

LIVE LOAD: HS20-44 and Alternative and Permit Design Load

SEISMIC LOAD: SDC ARS Curve for soil Profile ***D*** (M=7.50 ± 0.25) Peak Rock Acceleration = 0.6g

REINFORCED CONCRETE: f_y = 420 MPa
f'_c = 25 MPa (except as shown on Concrete Strength & Type Limits Diagram)

Transverse Deck Slabs (Working Stress):
f_s = 140 MPa
f_c = 9 MPa
n = 10

PRESTRESSED CONCRETE: See "Prestressing Notes" on "PRESTRESSED GIRDER" sheet

HS BOLTS: All ASTM A325 Bolts shall be f_y = 635 MPa with threads excluded from shear plane

THREADED RODS: All ASTM A307 Threaded Rods shall be f_y = 250 MPa

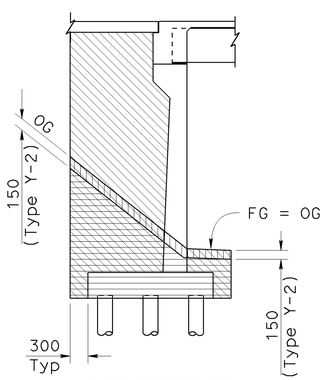

ABUTMENT

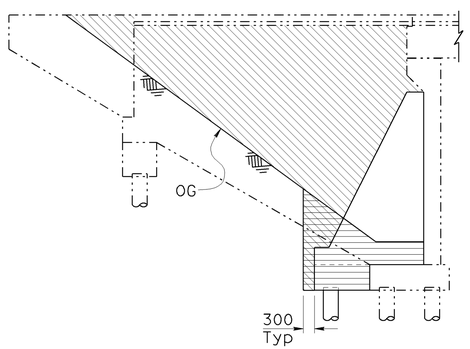

COUNTERFORT

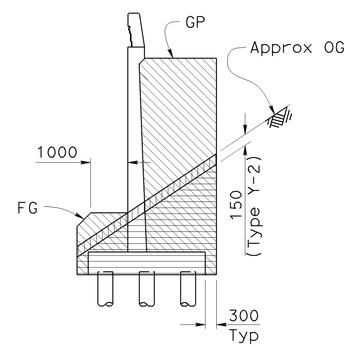

WINGWALL

Indicates Structure Excavation (Bridge)
Indicates Structure Backfill (Bridge)
Indicates Structure Excavation (Type Y-2) (Aerially Deposited Lead)

LIMITS OF EXCAVATION AND BACKFILL

1:80

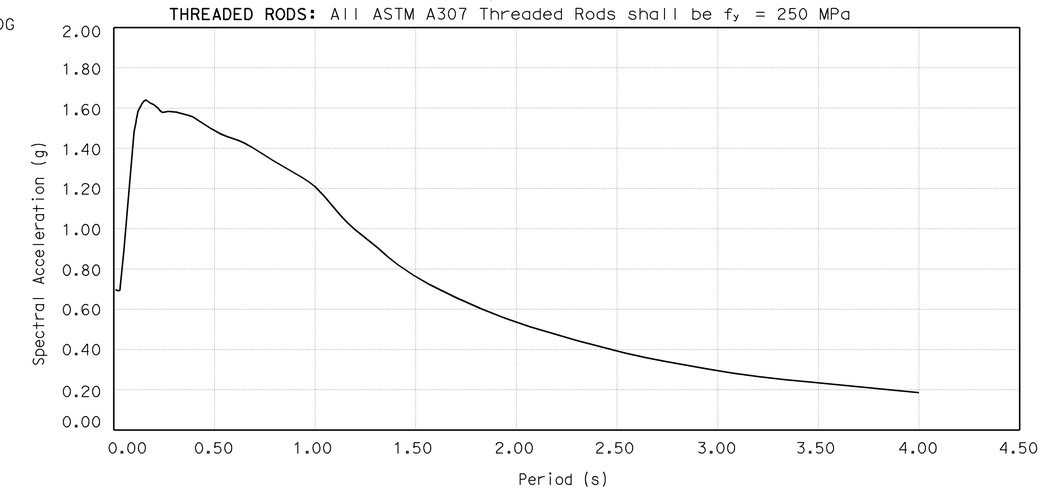

SITE SPECIFIC ACCELERATION RESPONSE SPECTRUM

KP (PM) Indicates Kilometer Post (Post Mile)

NOTE:
THE CONTRACTOR SHALL VERIFY ALL CONTROLLING FIELD DIMENSIONS BEFORE ORDERING OR FABRICATING ANY MATERIAL.

Caltrans Metric

	BY	CHECKED
DESIGN	J. Zhang/T. Menard	S. Moradi
DETAILS	S. Cholda/H. Mauroschadt	S. Moradi
QUANTITIES	T. Menard	S. Moradi

STATE OF CALIFORNIA
DEPARTMENT OF TRANSPORTATION

DIVISION OF ENGINEERING SERVICES
STRUCTURE DESIGN
DESIGN BRANCH 15

BRIDGE NO. 53 1081
KP (PM) 45.2

ALLEN AVENUE UNDERCROSSING (WIDEN)
INDEX TO PLANS

ALL DIMENSIONS ARE IN MILLIMETERS UNLESS OTHERWISE SHOWN

ORIGINAL SCALE IN MILLIMETERS FOR REDUCED PLANS 0 10 20 30 40 50 60 70 80 90 100

CU 07
EA 121841

DISREGARD PRINTS BEARING EARLIER REVISION DATES

REVISION DATES: 8-08-08 1-22-09 2-4-09 2-10-09 2-17-09 9-11-09 11-25-08 12-12-08 1-12-09 1-22-09

SHEET 2 OF 20

FILE => 53-1081-a-itp.dgn

STRUCTURES DESIGN DETAIL SHEET (METRIC) (REV.03-17-04)

USERNAME => trmikest DATE PLOTTED => 12-JUN-2009 TIME PLOTTED => 11:09

DIST	COUNTY	ROUTE	KILOMETER POST TOTAL PROJECT	SHEET No	TOTAL SHEETS
07	LA	5	42.8/47.3	739	1073

Caltrans Metric

Andrew Rittenhouse 12-05-08
REGISTERED CIVIL ENGINEER DATE

6-8-09
PLANS APPROVAL DATE

REGISTERED PROFESSIONAL ENGINEER Andrew P. Rittenhouse No. 61006 Exp. 12-31-10 CIVIL STATE OF CALIFORNIA

The State of California or its officers or agents shall not be responsible for the accuracy or completeness of electronic copies of this plan sheet.

Bridge Location

(A) 24.047m Lt. ℄ "LA-5" LINE, Sta.452+68.185 , Elev.= 159.372
(B) 24.066m Lt. ℄ "LA-5" LINE, Sta.452+88.006 , Elev.= 159.512
(C) 24.050m Rt. ℄ "LA-5" LINE, Sta.452+88.016 , Elev.= 159.503
(D) 24.056m Rt. ℄ "LA-5" LINE, Sta.452+68.223 , Elev.= 159.349

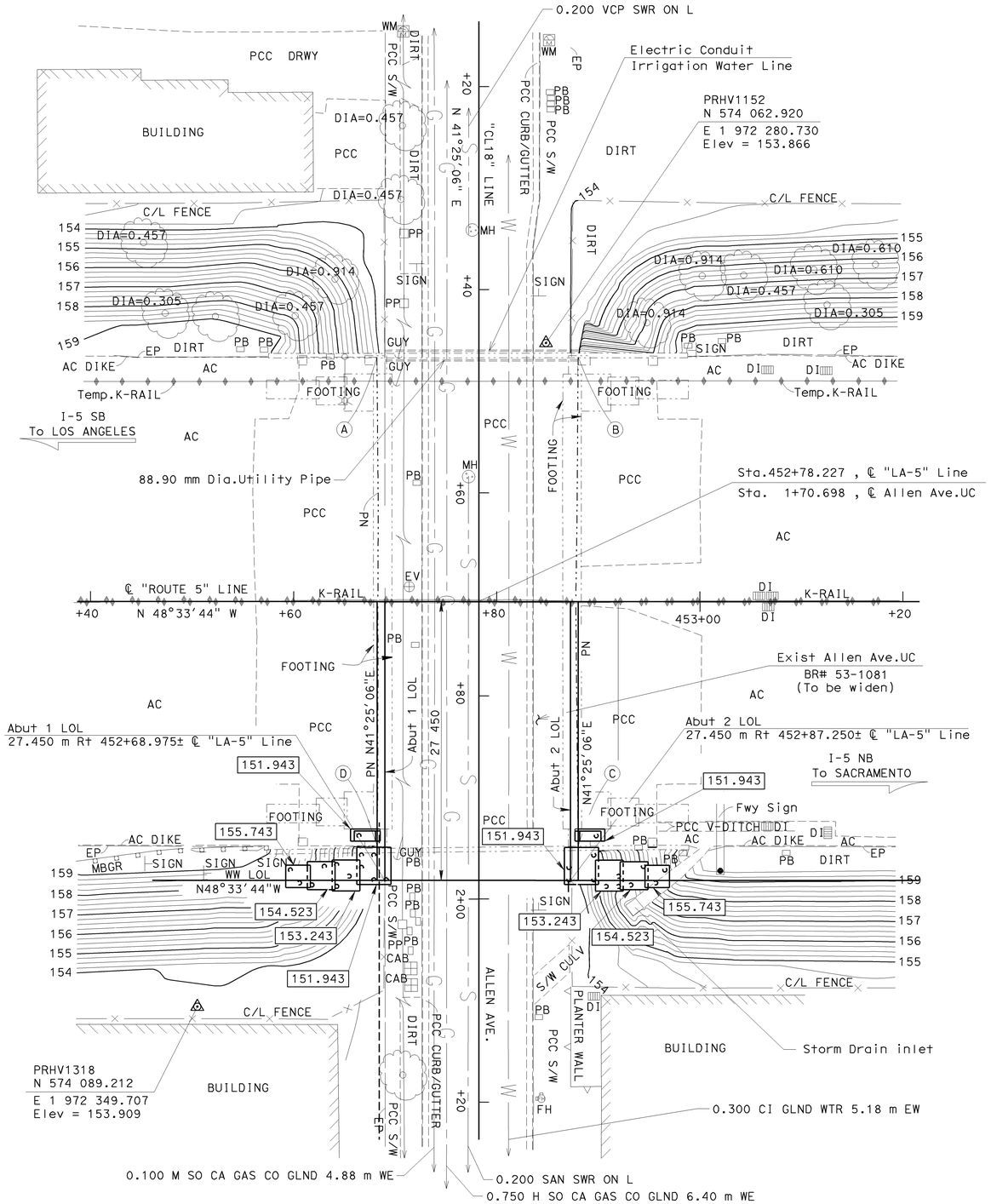

Notes:

1. Not all piles shown.

XXX.XXX Indicates bottom of footing elevation

SURVEY CONTROL

PRHV1152

Fd Control Point Chis X
25.463m Lt. of ℄ "LA-5" LINE
Sta. 452+84.829
N 574 062.920
E 1 972 280.730
Elev = 153.866

PRHV1318

Fd Control Point 60D
39.896m Rt. of ℄ "LA-5" LINE
Sta. 452+50.518
N 574 089.212
E 1 972 349.707
Elev = 153.909

NOTE:
THE CONTRACTOR SHALL VERIFY ALL CONTROLLING FIELD DIMENSIONS BEFORE ORDERING OR FABRICATING ANY MATERIAL.

NOTES

⊞ denotes cabinet
□ denotes pull box
⊕ denotes vault

Underground Utilities As shown are approximate

ALL DIMENSIONS ARE IN METERS UNLESS OTHERWISE SHOWN

PRELIMINARY INVESTIGATION SECTION

SCALE	VERT. DATUM NAVD88	PHOTOGRAMMETRY AS OF:			
1:250	HORZ. DATUM NAD 83	SURVEYED	BY H. REDERER 02/04	DRAFTED	BY V.PHAM 08/2004
ALIGNMENT TIES Dist.Trav. Sheets		FIELD CHECKED	BY	CHECKED	BY

	BY	CHECKED
DESIGN	J. Zhang/T. Menard	S. Moradi
DETAILS	S. Cholda	S. Moradi
QUANTITIES	T. Menard	S. Moradi

STATE OF CALIFORNIA DEPARTMENT OF TRANSPORTATION

DIVISION OF STRUCTURES
STRUCTURE DESIGN

CU 07
EA 121841

BRIDGE NO. 53-1081
KILOMETER POST 45.2

ALLEN AVENUE UNDERCROSSING (WIDEN)

FOUNDATION PLAN

STRUCTURES FOUNDATION PLAN SHEET (METRIC) (REV.12-1-01)

ORIGINAL SCALE IN MILLIMETERS FOR REDUCED PLANS 0 10 20 30 40 50 60 70 80 90 100

DISREGARD PRINTS BEARING EARLIER REVISION DATES

REVISION DATES (PRELIMINARY STAGE ONLY) 9-7-06 9-18-06 11-29-06 01-29-09 02-10-09 02-18-09 4-29-09 6-05-09 7-02-09 8-6-09

SHEET 3 OF 20

FILE => 53-1081-e-fp101.dgn

USERNAME => rtmrkest DATE PLOTTED => 12-JUN-2009 TIME PLOTTED => 11:09

DIST	COUNTY	ROUTE	KILOMETER POST TOTAL PROJECT	SHEET No	TOTAL SHEETS
07	LA	5	42.8/47.3	740	1073

Andrew Rittenhouse 12-05-08
REGISTERED CIVIL ENGINEER DATE

6-8-09
PLANS APPROVAL DATE

REGISTERED PROFESSIONAL ENGINEER Andrew P. Rittenhouse No. 61006 Exp. 12-31-10 CIVIL STATE OF CALIFORNIA

The State of California or its officers or agents shall not be responsible for the accuracy or completeness of electronic copies of this plan sheet.

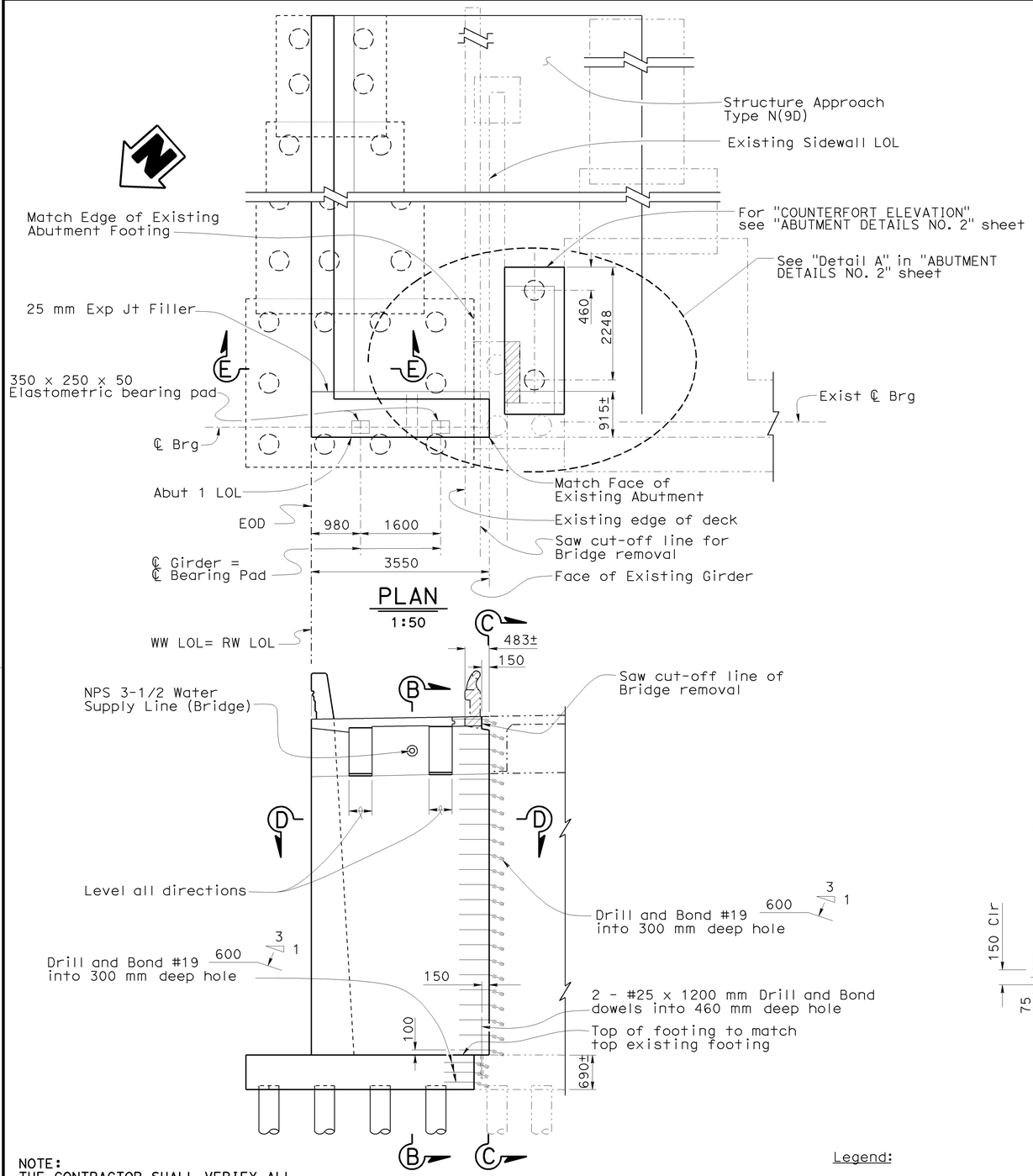

NOTE:
THE CONTRACTOR SHALL VERIFY ALL CONTROLLING FIELD DIMENSIONS BEFORE ORDERING OR FABRICATING ANY MATERIAL.

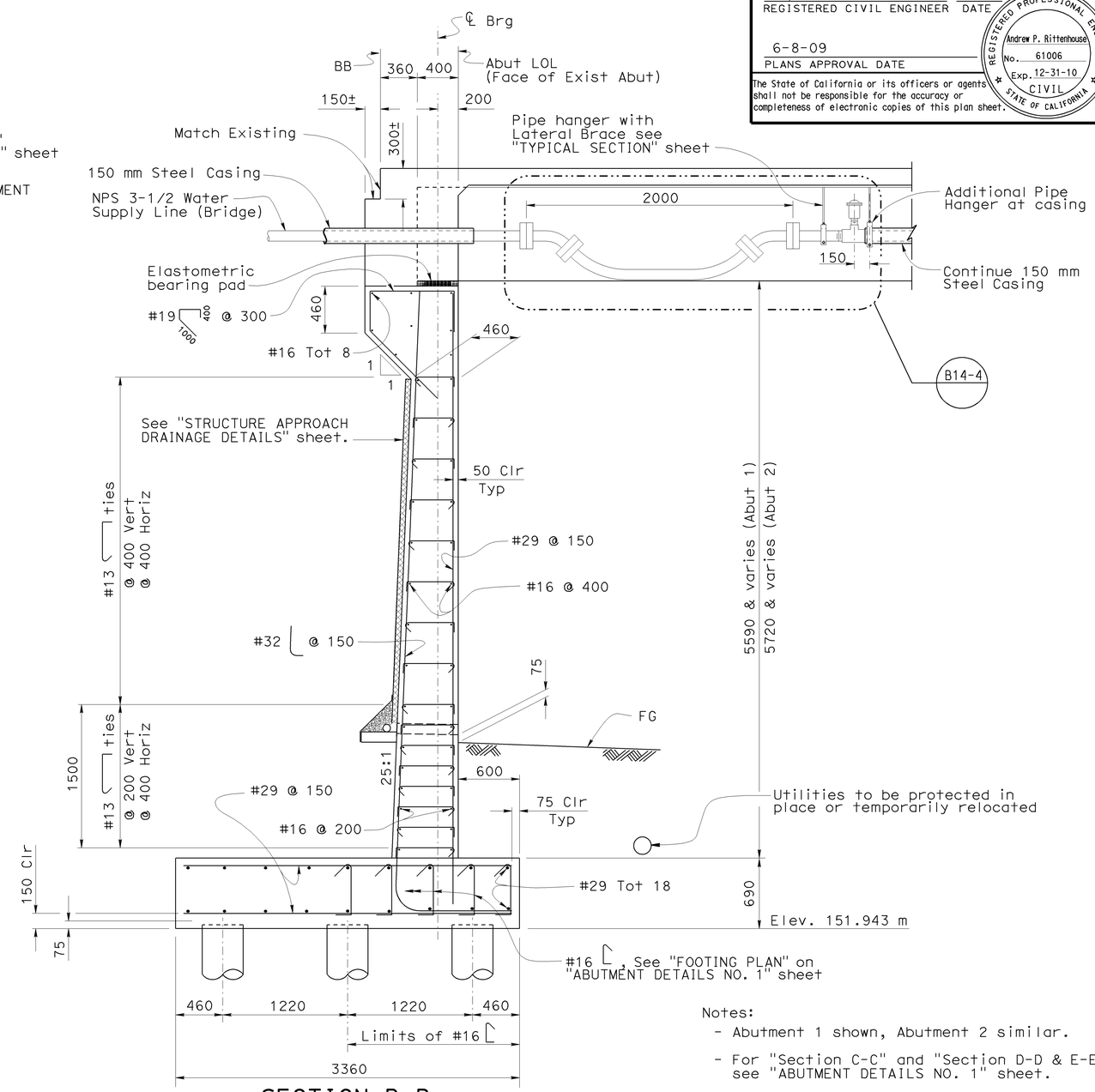

Legend:

Indicates Existing Structure

Indicates Structure Removal

Notes:

- Abutment 1 shown, Abutment 2 similar.
- For "Section C-C" and "Section D-D & E-E", see "ABUTMENT DETAILS NO. 1" sheet.
- For Joint Seal Details, see "GIRDER DETAILS NO. 2" sheet.
- For reinforcement not shown, see "GIRDER DETAILS NO. 2" sheet.

Caltrans Metric

	BY	CHECKED
DESIGN	J. Zhang/T. Menard	S. Moradi
DETAILS	S. Cholda/H. Mauroschadt	S. Moradi
QUANTITIES	T. Menard	S. Moradi

STATE OF CALIFORNIA
DEPARTMENT OF TRANSPORTATION

DIVISION OF ENGINEERING SERVICES
STRUCTURE DESIGN
DESIGN BRANCH 15

BRIDGE NO. 53-1081
KILOMETER POST 45.2

ALLEN AVENUE UNDERCROSSING (WIDEN)

ABUTMENT LAYOUT

ALL DIMENSIONS ARE IN MILLIMETERS UNLESS OTHERWISE SHOWN

ORIGINAL SCALE IN MILLIMETERS FOR REDUCED PLANS 0 10 20 30 40 50 60 70 80 90 100

CU 07
EA 121841

DISREGARD PRINTS BEARING EARLIER REVISION DATES

REVISION DATES: 8-1-08 8-11-08 9-11-08 11-10-08 12-12-08 1-12-09 01-13-09 02-10-09 6-10-09

SHEET 4 OF 20

FILE => 53-1081-f-a01_to01.dgn

STRUCTURES DESIGN DETAIL SHEET (METRIC) (REV.03-17-04)

USERNAME => trmikesl DATE PLOTTED => 15-JUN-2009 TIME PLOTTED => 13:20

DIST	COUNTY	ROUTE	KILOMETER POST TOTAL PROJECT	SHEET No	TOTAL SHEETS
07	LA	5	42.8/47.3	741	1073

Andrew Rittenhouse 12-05-08
REGISTERED CIVIL ENGINEER DATE

6-8-09
PLANS APPROVAL DATE

REGISTERED PROFESSIONAL ENGINEER Andrew P. Rittenhouse No. 61006 Exp. 12-31-10 CIVIL STATE OF CALIFORNIA

The State of California or its officers or agents shall not be responsible for the accuracy or completeness of electronic copies of this plan sheet.

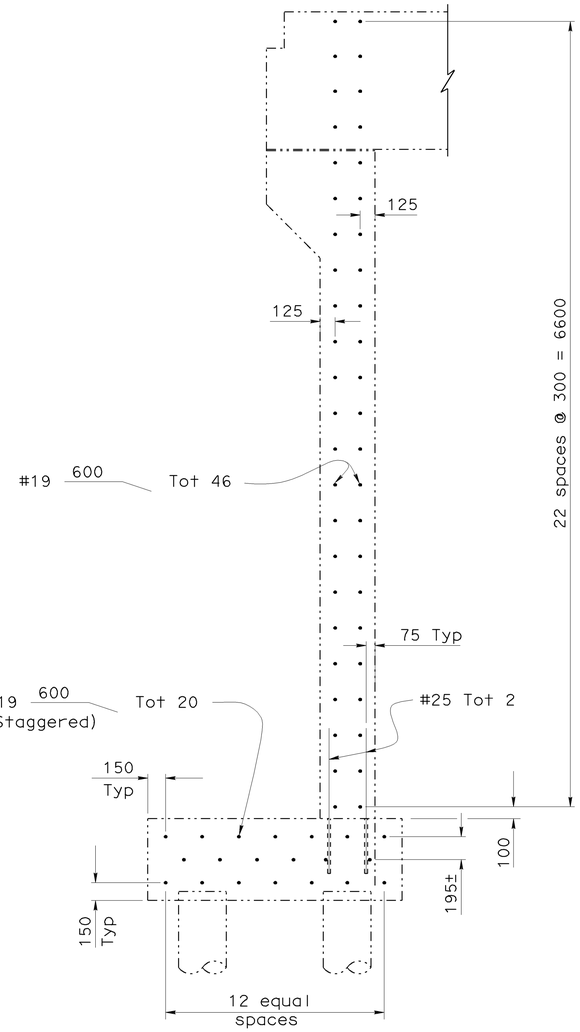

SECTION C-C
1:25

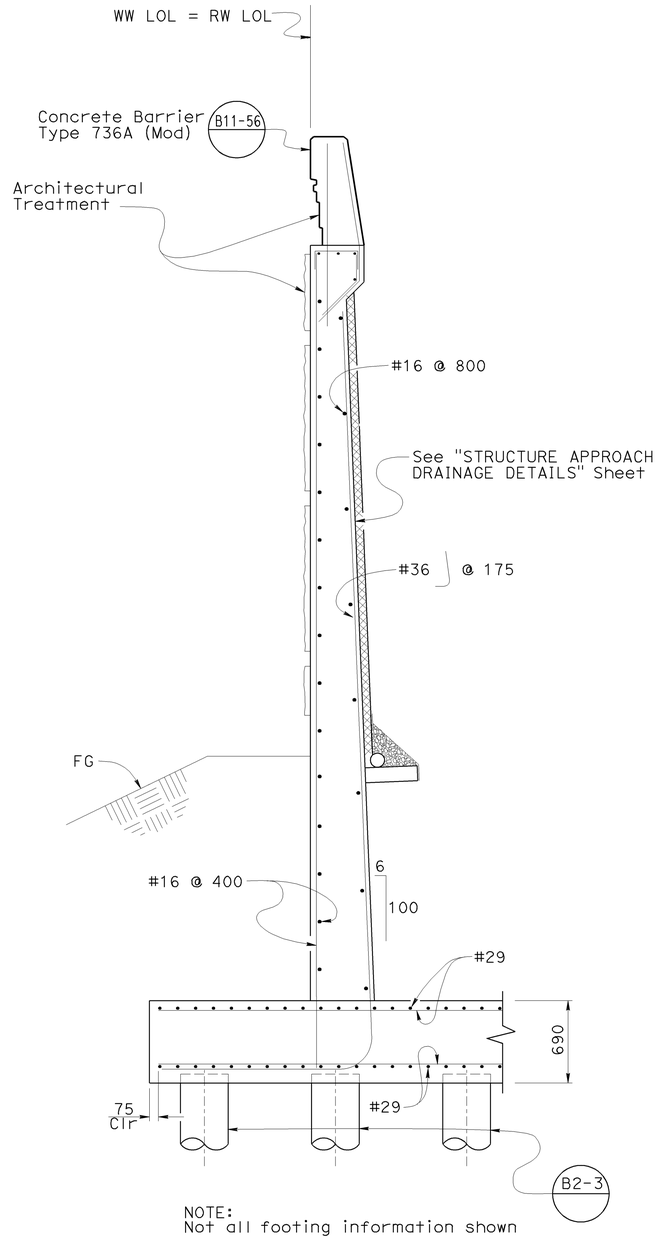

NOTE:
Not all footing information shown

SECTION E-E
1:25

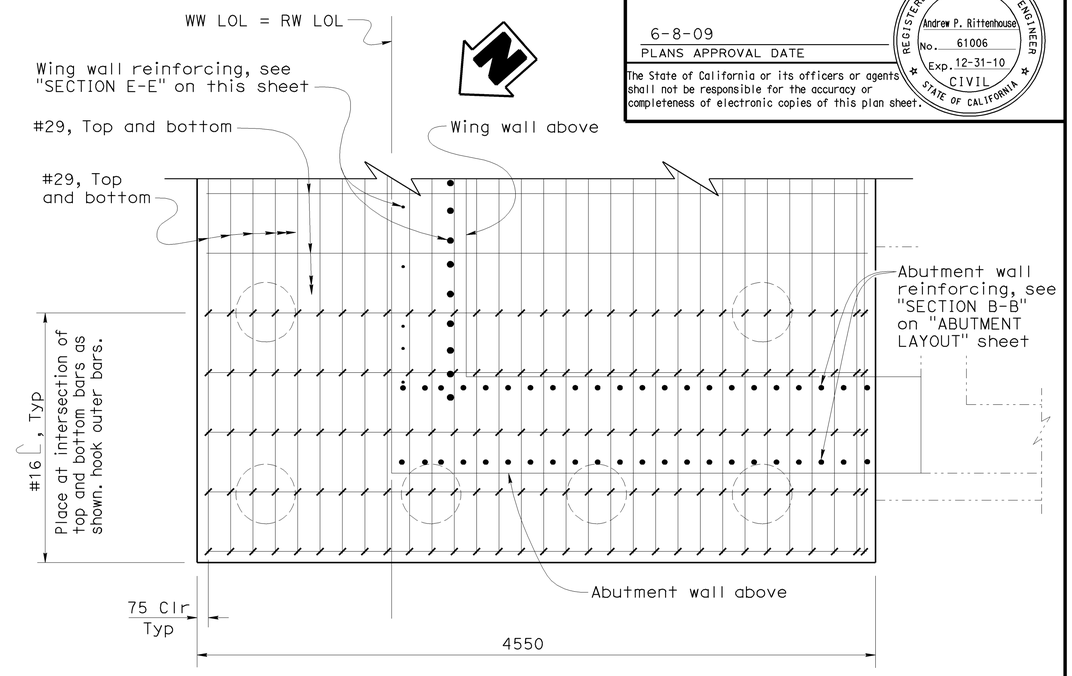

FOOTING PLAN
1:20

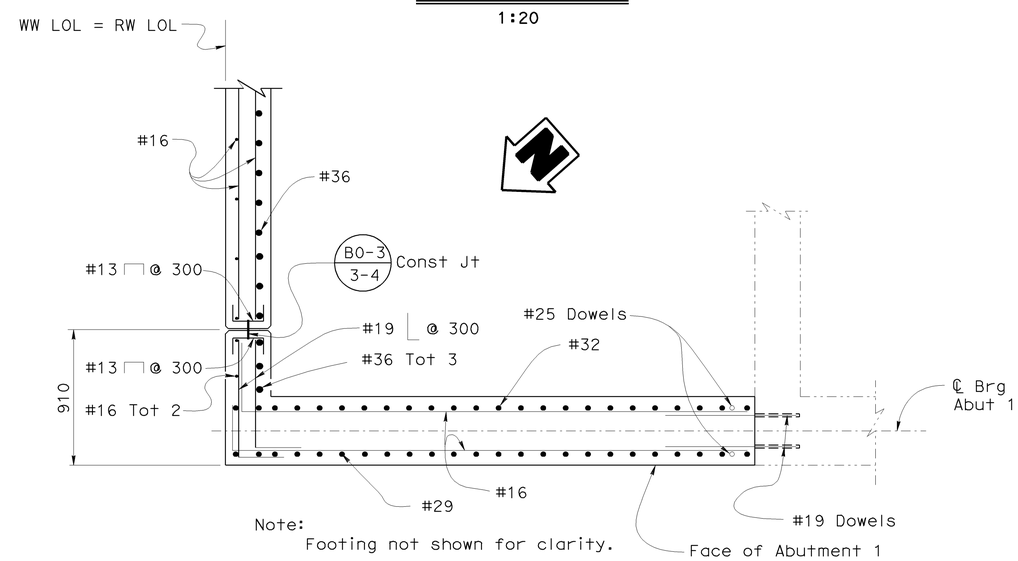

Note:
Footing not shown for clarity.

SECTION D-D
1:20

Legend:

—··—·· Existing Structure

Note:
- Abutment 1 shown, Abutment 2 similar.

NOTE:
THE CONTRACTOR SHALL VERIFY ALL CONTROLLING FIELD DIMENSIONS BEFORE ORDERING OR FABRICATING ANY MATERIAL.

Caltrans Metric

ALL DIMENSIONS ARE IN MILLIMETERS UNLESS OTHERWISE SHOWN

ORIGINAL SCALE IN MILLIMETERS FOR REDUCED PLANS 0 10 20 30 40 50 60 70 80 90 100

	BY	CHECKED
DESIGN	J. Zhang / S. Yip	S. Moradi
DETAILS	S. Cholda	S. Moradi
QUANTITIES	T. Menard	S. Moradi

STATE OF CALIFORNIA
DEPARTMENT OF TRANSPORTATION

DIVISION OF ENGINEERING SERVICES
STRUCTURE DESIGN
DESIGN BRANCH 15

CU 07
EA 121841

BRIDGE NO. 53-1081
KILOMETER POST 45.2

ALLEN AVENUE UNDERCROSSING (WIDEN)
ABUTMENT DETAILS NO. 1

DISREGARD PRINTS BEARING EARLIER REVISION DATES

REVISION DATES: 12-15-08 01-26-09 01-28-09 2-10-09 2-13-09 2-25-09 04-2-09 2-23-09 3-2-09 11-2-09

SHEET 5 OF 20

STRUCTURES DESIGN DETAIL SHEET (METRIC) (REV.03-17-04)

FILE => 53-1081-f-a01dt01.dgn

USERNAME => trmikes1 DATE PLOTTED => 12-JUN-2009 TIME PLOTTED => 11:09

DIST	COUNTY	ROUTE	KILOMETER POST TOTAL PROJECT	SHEET No	TOTAL SHEETS
07	LA	5	42.8/47.3	742	1073

Andrew Rittenhouse 12-05-08
REGISTERED CIVIL ENGINEER DATE

6-8-09
PLANS APPROVAL DATE

REGISTERED PROFESSIONAL ENGINEER Andrew P. Rittenhouse No. 61006 Exp. 12-31-10 CIVIL STATE OF CALIFORNIA

The State of California or its officers or agents shall not be responsible for the accuracy or completeness of electronic copies of this plan sheet.

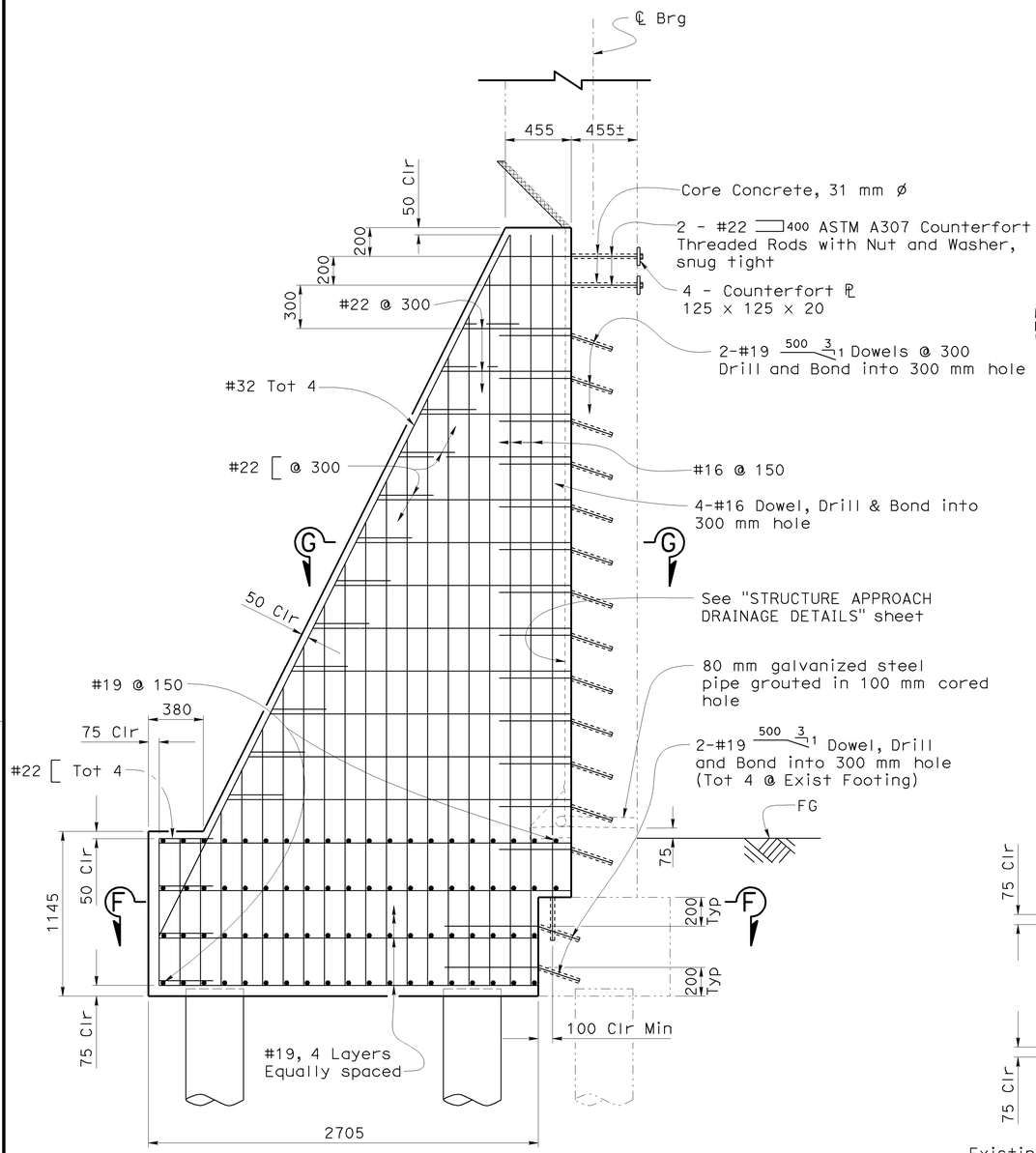

COUNTERFORT ELEVATION
1:20

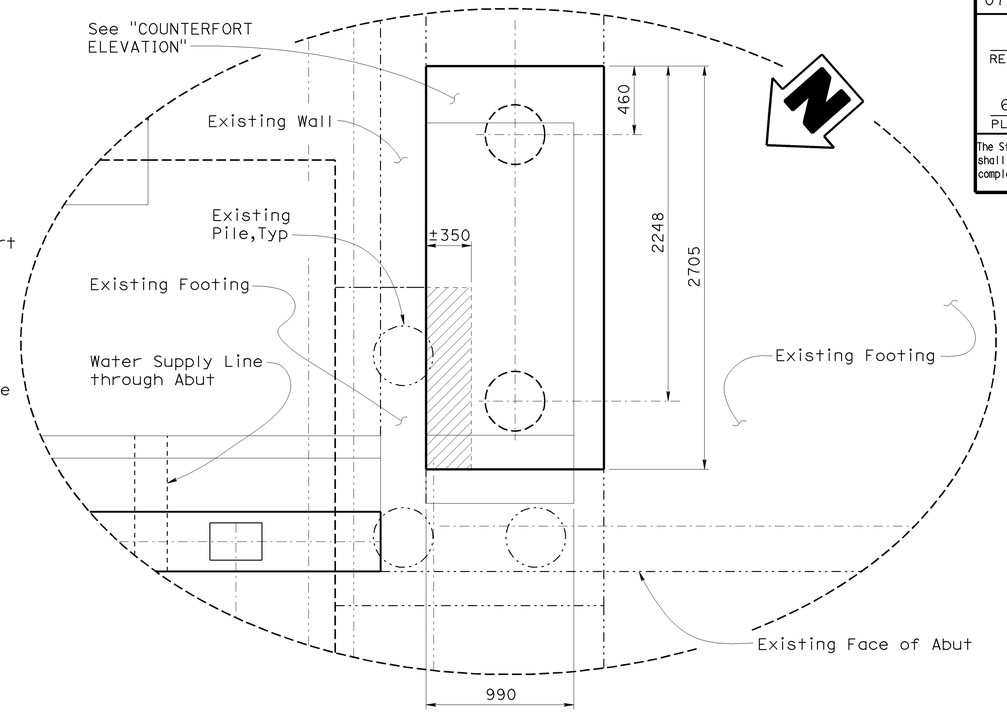

DETAIL A
1:20

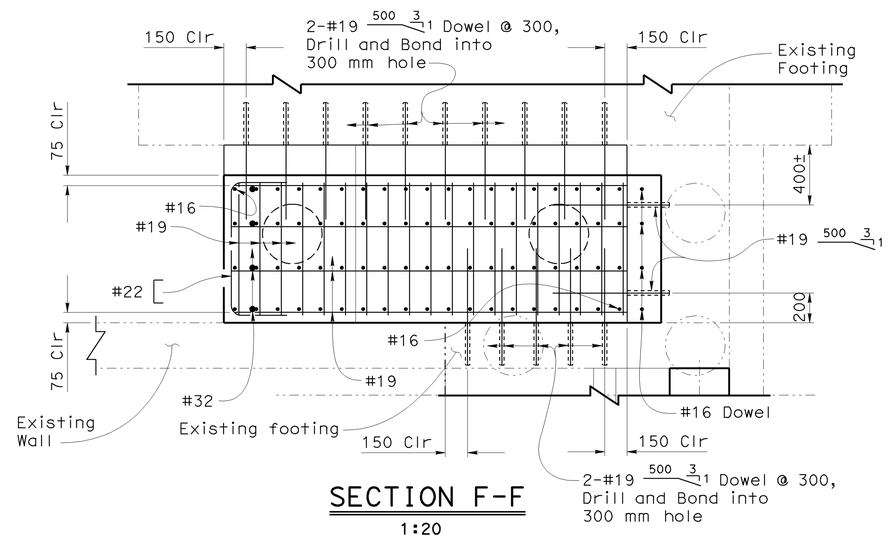

SECTION F-F
1:20

Legend:

Indicates Existing Structure

Indicates Structure Removal

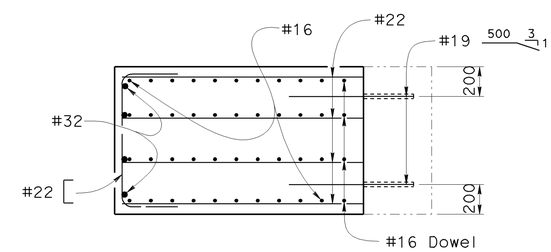

SECTION G-G
1:20

NOTE:
THE CONTRACTOR SHALL VERIFY ALL CONTROLLING FIELD DIMENSIONS BEFORE ORDERING OR FABRICATING ANY MATERIAL.

Note:

- Abutment 1 shown, Abutment 2 similar.

Caltrans Metric

	BY	CHECKED
DESIGN	S. Yip	A. Logus
DETAILS	H. Mauroschadt	A. Logus
QUANTITIES	S. Yip	R. Novik

STATE OF CALIFORNIA
DEPARTMENT OF TRANSPORTATION

DIVISION OF ENGINEERING SERVICES
STRUCTURE DESIGN
DESIGN BRANCH 15

BRIDGE NO. 53-1081
KILOMETER POST 45.2

ALLEN AVENUE UNDERCROSSING (WIDEN)
ABUTMENT DETAILS NO. 2

ALL DIMENSIONS ARE IN MILLIMETERS UNLESS OTHERWISE SHOWN

ORIGINAL SCALE IN MILLIMETERS FOR REDUCED PLANS 0 10 20 30 40 50 60 70 80 90 100

CU 07
EA 121841

DISREGARD PRINTS BEARING EARLIER REVISION DATES

REVISION DATES: 11-25-08 12-12-08 1-14-09 1-15-09 1-21-09 1-28-09 1-29-09 2-10-09 9-2-09 9-11-09

SHEET 6 OF 20

STRUCTURES DESIGN DETAIL SHEET (METRIC) (REV.03-17-04)

FILE => 53-1081-f-a01dt02-1.dgn

USERNAME => trmikesl DATE PLOTTED => 12-JUN-2009 TIME PLOTTED => 11:09

DIST	COUNTY	ROUTE	KILOMETER POST TOTAL PROJECT	SHEET No	TOTAL SHEETS
07	LA	5	42.8/47.3	743	1073

Andrew Rittenhouse 12-05-08
REGISTERED CIVIL ENGINEER DATE

6-8-09
PLANS APPROVAL DATE

REGISTERED PROFESSIONAL ENGINEER Andrew P. Rittenhouse No. 61006 Exp. 12-31-10 CIVIL STATE OF CALIFORNIA

The State of California or its officers or agents shall not be responsible for the accuracy or completeness of electronic copies of this plan sheet.

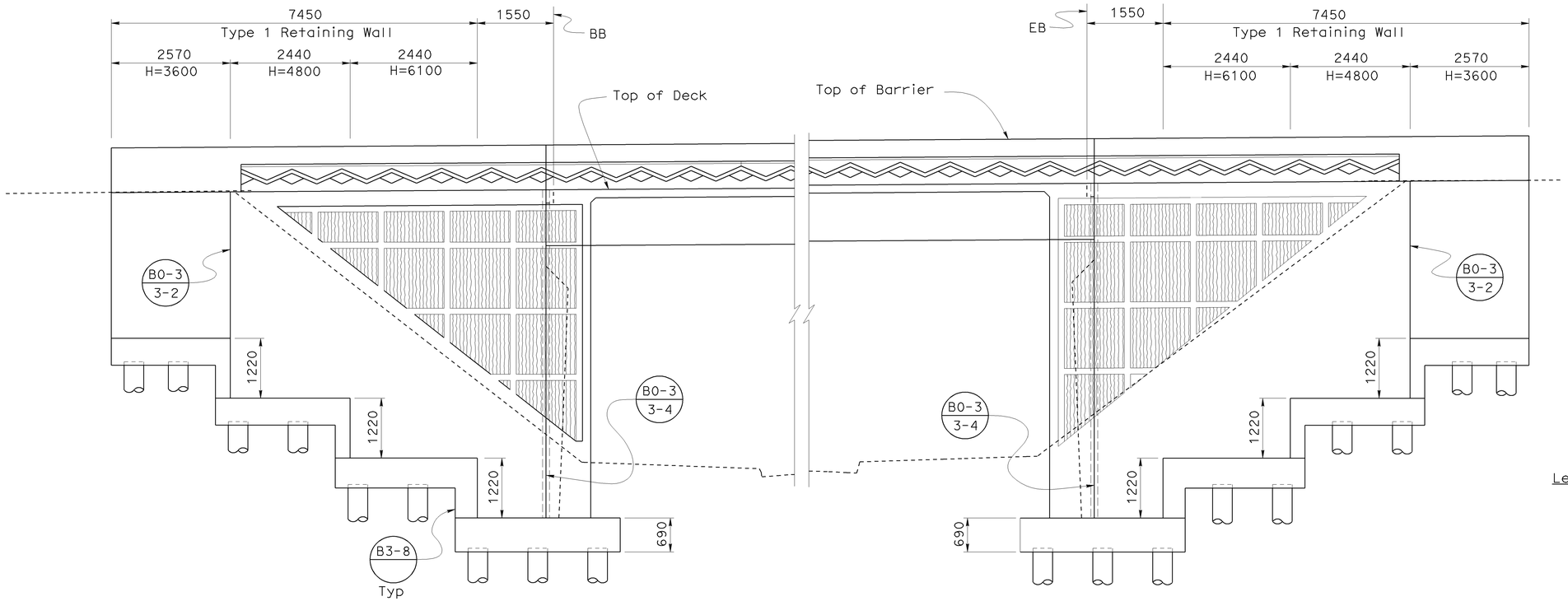

ABUTMENT 1

ABUTMENT 2

WINGWALL ELEVATION

1:50

Legend:

Indicates Existing Structure

Indicates CIDH Pile

Indicates Abut and Wingwalls

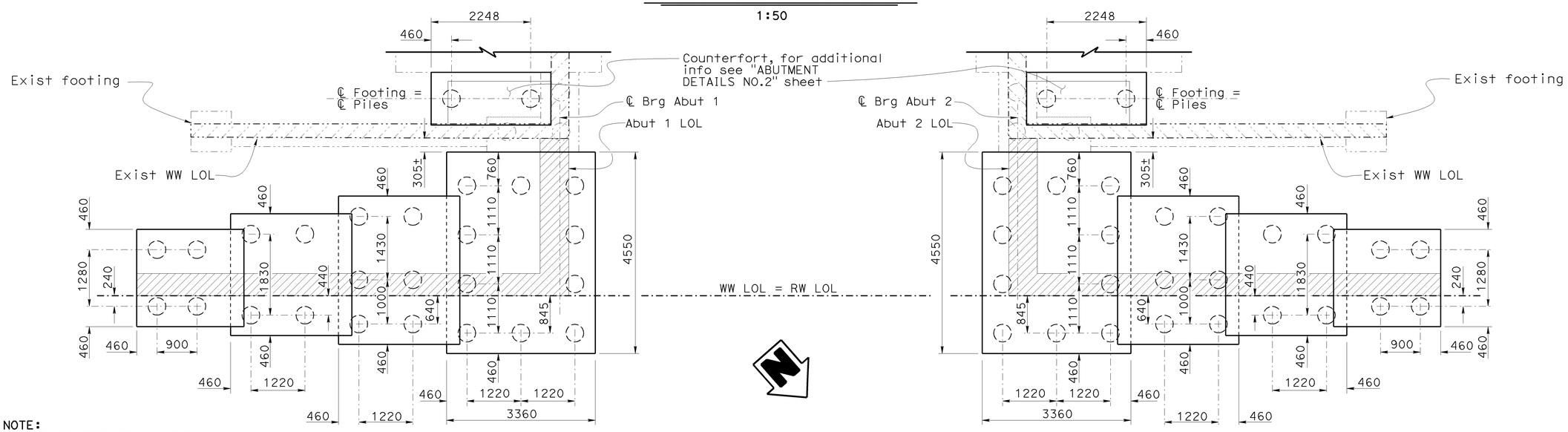

FOOTING LAYOUT

1:50

NOTE:
THE CONTRACTOR SHALL VERIFY ALL CONTROLLING FIELD DIMENSIONS BEFORE ORDERING OR FABRICATING ANY MATERIAL.

DESIGN	BY J. Zhang / S. Yip	CHECKED S. Moradi	
DETAILS	BY S. Cholda	CHECKED S. Moradi	
QUANTITIES	BY T. Menard	CHECKED S. Moradi	

STATE OF CALIFORNIA
DEPARTMENT OF TRANSPORTATION

DIVISION OF ENGINEERING SERVICES
STRUCTURE DESIGN
DESIGN BRANCH 15

BRIDGE NO. 53-1081
KILOMETER POST 45.2

ALLEN AVENUE UNDERCROSSING (WIDEN)

ABUTMENT DETAILS NO. 3

ALL DIMENSIONS ARE IN MILLIMETERS UNLESS OTHERWISE SHOWN

ORIGINAL SCALE IN MILLIMETERS FOR REDUCED PLANS 0 10 20 30 40 50 60 70 80 90 100

CU 07
EA 121841

DISREGARD PRINTS BEARING EARLIER REVISION DATES

REVISION DATES: 9-2-08 9-11-08 11-26-08 12-12-08 01-26-09 02-10-09 04-24-09 06-26-09 07-14-09 8-6-09

SHEET 7 OF 20

FILE => 53-1081-f-a01dt03.dgn

STRUCTURES DESIGN DETAIL SHEET (METRIC) (REV.03-17-04)

USERNAME => trmikesl DATE PLOTTED => 12-JUN-2009 TIME PLOTTED => 11:10

DIST	COUNTY	ROUTE	KILOMETER POST TOTAL PROJECT	SHEET No	TOTAL SHEETS
07	LA	5	42.8/47.3	744	1073

Andrew Rittenhouse 12-05-08
REGISTERED CIVIL ENGINEER DATE

6-8-09
PLANS APPROVAL DATE

REGISTERED PROFESSIONAL ENGINEER Andrew P. Rittenhouse No. 61006 Exp. 12-31-10 CIVIL STATE OF CALIFORNIA

The State of California or its officers or agents shall not be responsible for the accuracy or completeness of electronic copies of this plan sheet.

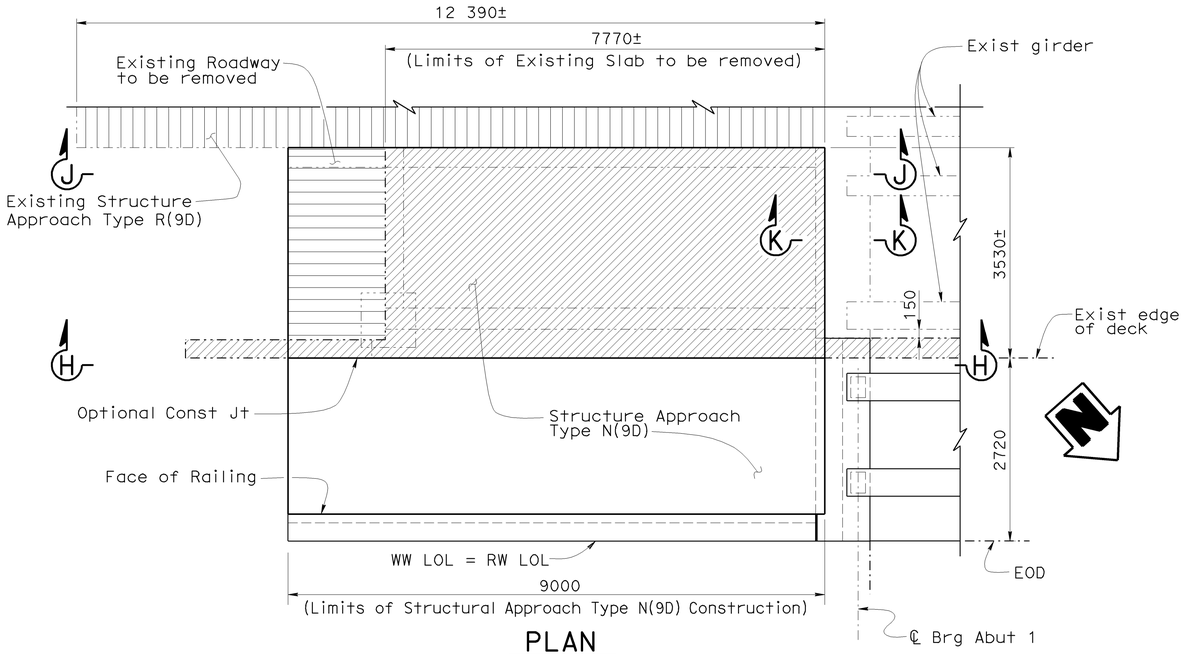

PLAN
1:50

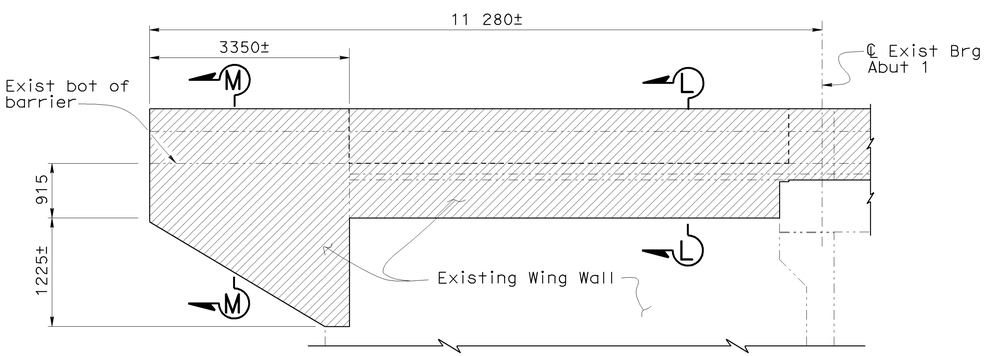

SECTION H-H
1:50

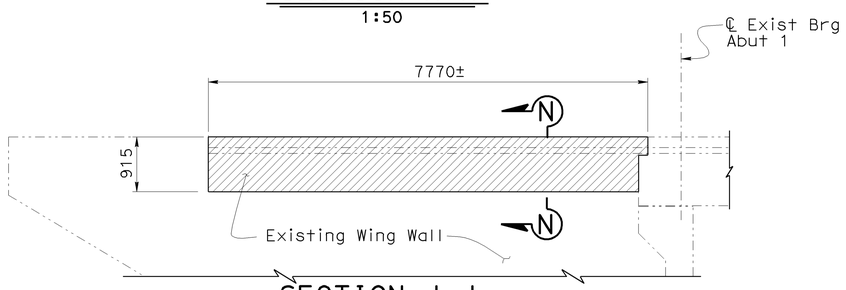

SECTION J-J
1:50

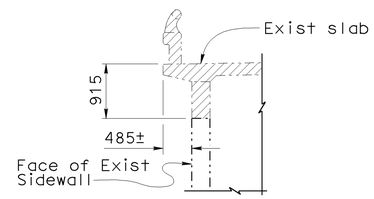

SECTION L-L
1:50

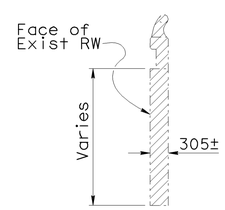

SECTION M-M
1:50

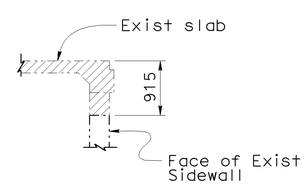

SECTION N-N
1:50

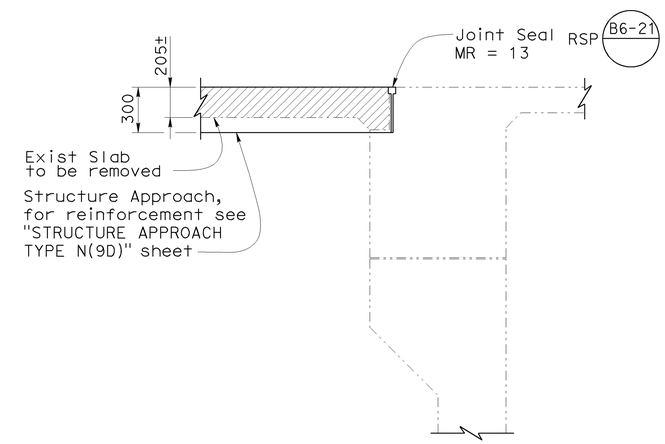

SECTION K-K
1:20

NOTE:
THE CONTRACTOR SHALL VERIFY ALL CONTROLLING FIELD DIMENSIONS BEFORE ORDERING OR FABRICATING ANY MATERIAL.

EXISTING SIDEWALL REMOVAL

Legend:

- Limits of Existing Approach Slab
- Limits of Existing Roadway
- Indicates Structure Removal
- Existing Structure

Note:

- Abutment 1 shown, Abutment 2 similar.

DESIGN	BY J. Zhang/S. Yip	CHECKED S. Moradi	
DETAILS	BY S. Cholda/H.Mauroschadt	CHECKED S. Moradi	
QUANTITIES	BY T. Menard	CHECKED S. Moradi	

STATE OF CALIFORNIA
DEPARTMENT OF TRANSPORTATION

DIVISION OF ENGINEERING SERVICES
STRUCTURE DESIGN
DESIGN BRANCH 15

CU 07
EA 121841

BRIDGE NO. 53-1081
KILOMETER POST 45.2

ALLEN AVENUE UNDERCROSSING (WIDEN)
ABUTMENT DETAILS NO. 4

ALL DIMENSIONS ARE IN MILLIMETERS UNLESS OTHERWISE SHOWN

ORIGINAL SCALE IN MILLIMETERS FOR REDUCED PLANS 0 10 20 30 40 50 60 70 80 90 100

DISREGARD PRINTS BEARING EARLIER REVISION DATES

REVISION DATES: 07-16-08 8-5-08 9-4-08 9-11-08 11-25-08 1-16-09 1-28-09 1-30-09 2-10-09 06-12-09

SHEET 8 OF 20

FILE => 53-1081-f-a01dt04.dgn

STRUCTURES DESIGN DETAIL SHEET (METRIC) (REV.03-17-04)

USERNAME => trmithes1 DATE PLOTTED => 12-JUN-2009 TIME PLOTTED => 11:10

DIST	COUNTY	ROUTE	KILOMETER POST TOTAL PROJECT	SHEET No	TOTAL SHEETS
07	LA	5	42.8/47.3	745	1073

REGISTERED CIVIL ENGINEER — DATE 12-05-08

6-8-09
PLANS APPROVAL DATE

REGISTERED PROFESSIONAL ENGINEER — Andrew P. Rittenhouse — No. 61006 — Exp. 12-31-10 — CIVIL — STATE OF CALIFORNIA

The State of California or its officers or agents shall not be responsible for the accuracy or completeness of electronic copies of this plan sheet.

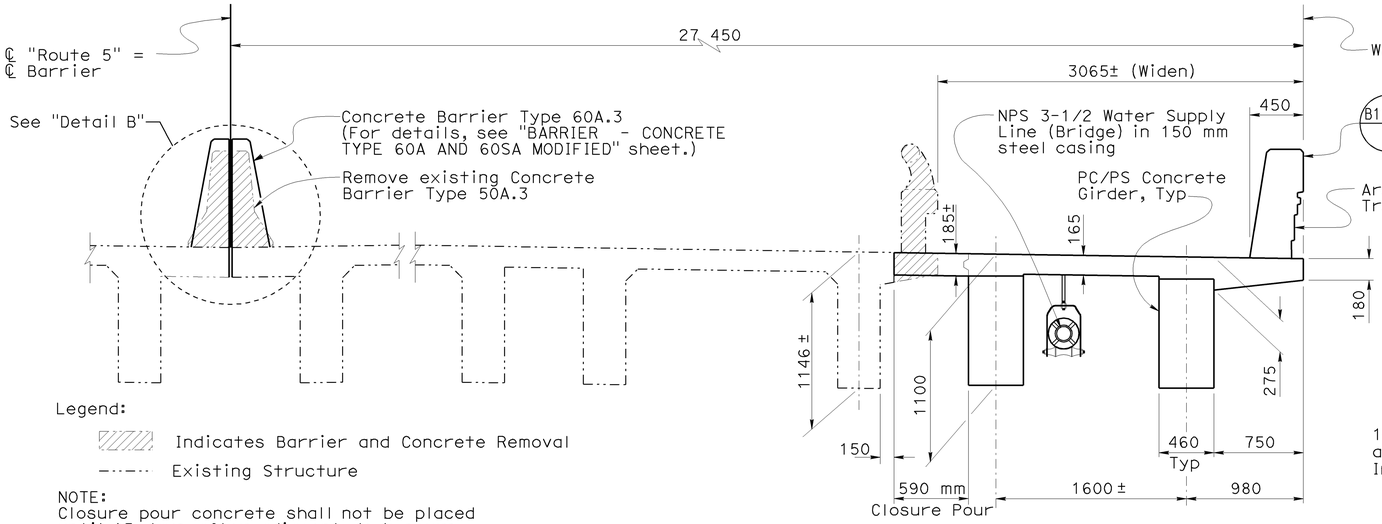

Legend:

Indicates Barrier and Concrete Removal

Existing Structure

NOTE:
Closure pour concrete shall not be placed until 15 days after adjacent deck pours are complete

TYPICAL SECTION
1:25

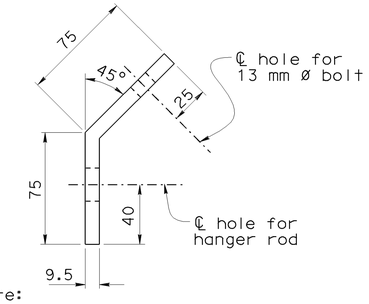

Note:
Width of bracket is 65 mm

CONNECTION BRACKET
1:2

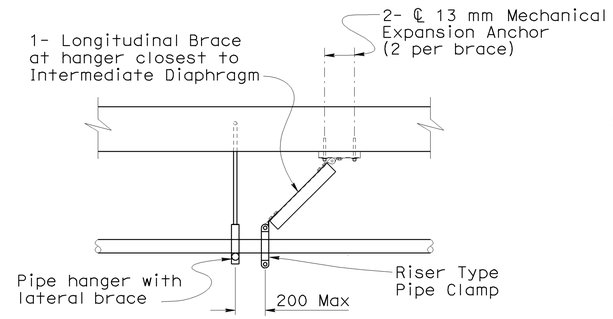

LONGITUDINAL BRACE
1:20

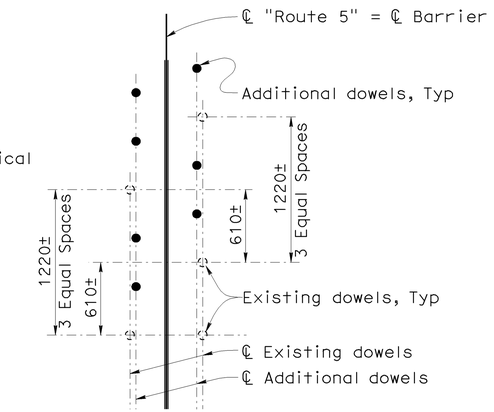

DOWEL LAYOUT
1:25

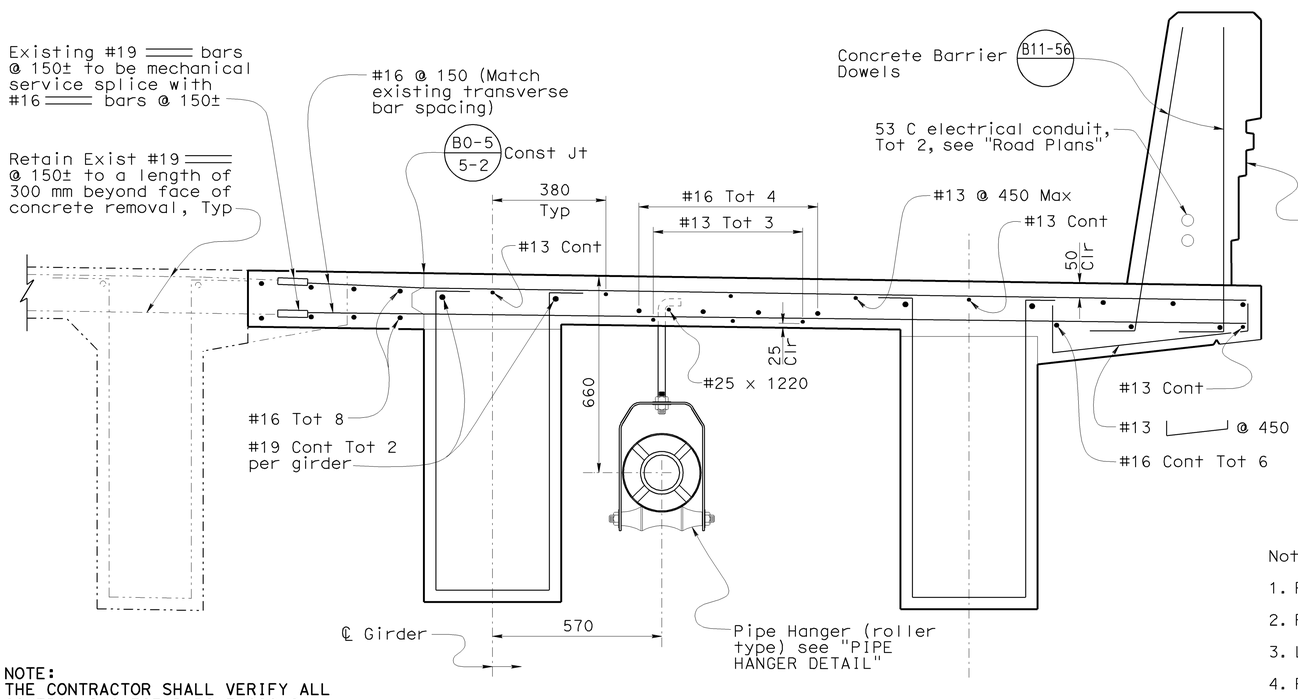

NOTE:
THE CONTRACTOR SHALL VERIFY ALL CONTROLLING FIELD DIMENSIONS BEFORE ORDERING OR FABRICATING ANY MATERIAL.

PART TYPICAL SECTION
1:10

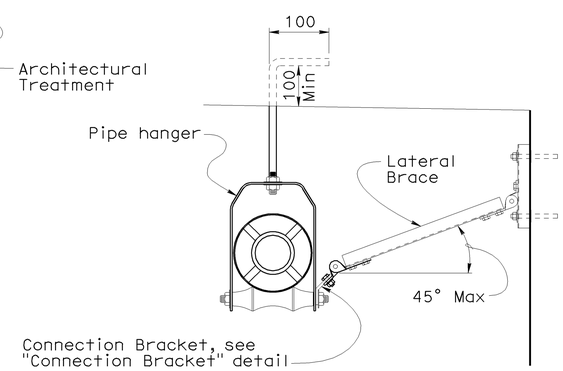

Notes:

1. Pipe hanger and bracing to be galvanized.
2. Pipe hanger spacing 3 m max.
3. Lateral Bracing to be located at every other hanger or 6 m max.
4. For Longitudinal Brace see "LONGITUDINAL BRACE" detail

PIPE HANGER DETAIL
1:10

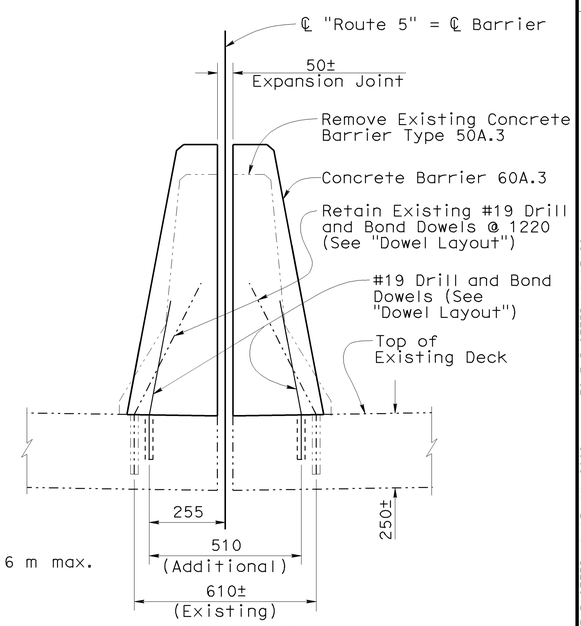

DETAIL B
1:10

DESIGN	BY J. Zhang /T. Menard	CHECKED S. Moradi	
DETAILS	BY S. Cholda	CHECKED S. Moradi	
QUANTITIES	BY T. Menard	CHECKED S. Moradi	

STATE OF CALIFORNIA
DEPARTMENT OF TRANSPORTATION

DIVISION OF ENGINEERING SERVICES
STRUCTURE DESIGN
DESIGN BRANCH 15

BRIDGE NO. 53-1081
KILOMETER POST 45.2

ALLEN AVENUE UNDERCROSSING (WIDEN)
TYPICAL SECTION

Caltrans Metric

ALL DIMENSIONS ARE IN MILLIMETERS UNLESS OTHERWISE SHOWN

ORIGINAL SCALE IN MILLIMETERS FOR REDUCED PLANS 0 10 20 30 40 50 60 70 80 90 100

CU 07
EA 121841

DISREGARD PRINTS BEARING EARLIER REVISION DATES

REVISION DATES: 9-1-08 9-11-08 11-25-08 1-13-09 1-15-09 1-22-09 1-23-09 2-13-09 6-10-09

SHEET 9 OF 20

STRUCTURES DESIGN DETAIL SHEET (METRIC) (REV.03-17-04)

FILE => 53-1081-g-ts01.dgn

USERNAME => trmikest DATE PLOTTED => 15-JUN-2009 TIME PLOTTED => 13:20

DIST	COUNTY	ROUTE	KILOMETER POST TOTAL PROJECT	SHEET No	TOTAL SHEETS
07	LA	5	42.8/47.3	746	1073

Andrew Rittenhouse 12-05-08
REGISTERED CIVIL ENGINEER DATE

6-8-09
PLANS APPROVAL DATE

REGISTERED PROFESSIONAL ENGINEER
Andrew P. Rittenhouse
No. 61006
Exp. 12-31-10
CIVIL
STATE OF CALIFORNIA

The State of California or its officers or agents shall not be responsible for the accuracy or completeness of electronic copies of this plan sheet.

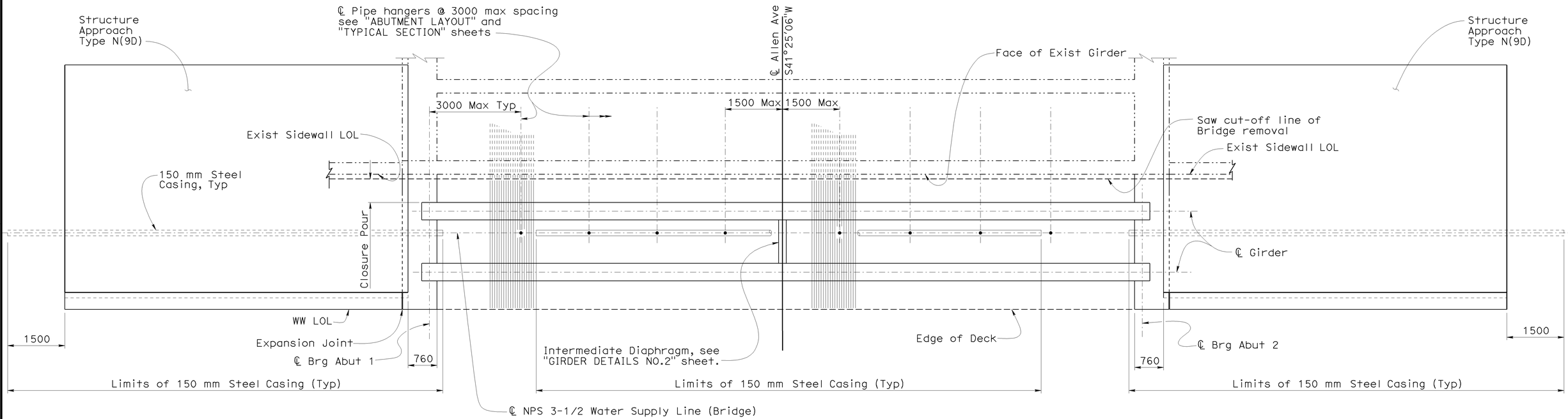

GIRDER LAYOUT

1:50

NOTE:
THE CONTRACTOR SHALL VERIFY ALL CONTROLLING FIELD DIMENSIONS BEFORE ORDERING OR FABRICATING ANY MATERIAL.

Caltrans Metric

ALL DIMENSIONS ARE IN MILLIMETERS UNLESS OTHERWISE SHOWN

ORIGINAL SCALE IN MILLIMETERS FOR REDUCED PLANS 0 10 20 30 40 50 60 70 80 90 100

	BY	CHECKED
DESIGN	J. Zhang / T. Menard	S. Moradi
DETAILS	S. Cholda / H. Mauroschadt	S. Moradi
QUANTITIES	T. Menard	S. Moradi

STATE OF CALIFORNIA
DEPARTMENT OF TRANSPORTATION

DIVISION OF ENGINEERING SERVICES
STRUCTURE DESIGN
DESIGN BRANCH 15

CU 07
EA 121841

BRIDGE NO. 53-1081
KILOMETER POST 45.2

ALLEN AVENUE UNDERCROSSING (WIDEN)
GIRDER LAYOUT

DISREGARD PRINTS BEARING EARLIER REVISION DATES

REVISION DATES: 7-28-08 8-7-08 8-15-08 11-20-08 12-15-08 1-15-09 1-28-09 2-13-09 6-10-09

SHEET 10 OF 20

STRUCTURES DESIGN DETAIL SHEET (METRIC) (REV.03-17-04)

FILE => 53-1081-k-gl01.dgn

USERNAME => trmikesl DATE PLOTTED => 15-JUN-2009 TIME PLOTTED => 13:20

DIST	COUNTY	ROUTE	KILOMETER POST TOTAL PROJECT	SHEET No	TOTAL SHEETS
07	LA	5	42.8/47.3	747	1073

Andrew Rittenhouse 12-05-08
REGISTERED CIVIL ENGINEER DATE

6-8-09
PLANS APPROVAL DATE

REGISTERED PROFESSIONAL ENGINEER
Andrew P. Rittenhouse
No. 61006
Exp. 12-31-10
CIVIL
STATE OF CALIFORNIA

The State of California or its officers or agents shall not be responsible for the accuracy or completeness of electronic copies of this plan sheet.

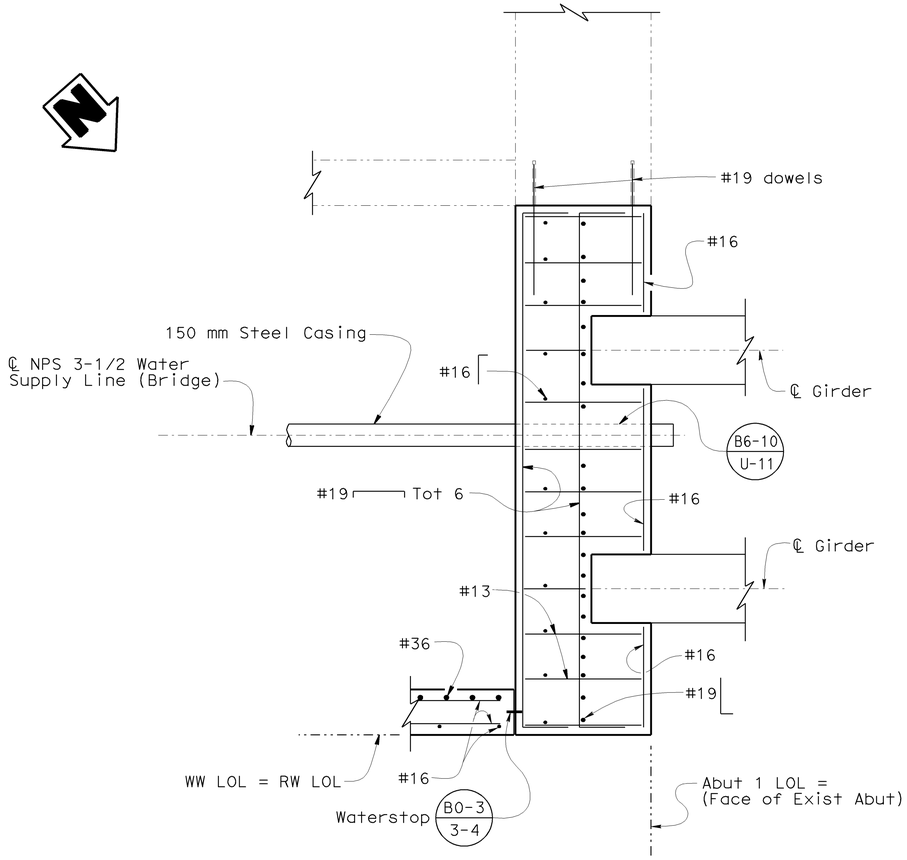

SECTION O-O
1:20

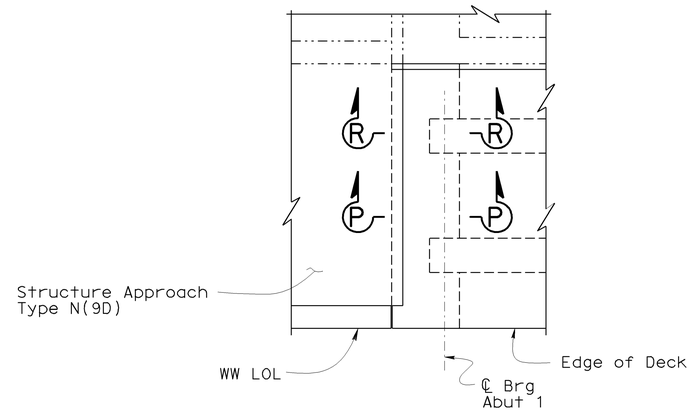

PLAN
1:40

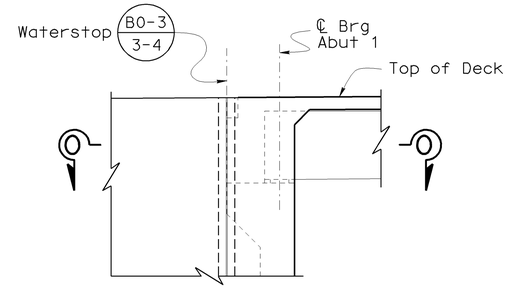

ELEVATION
1:40

END DIAPHRAGM

Legend:

—·—·— Existing Structure

Notes:
1. Abutment 1 shown, Abutment 2 similar.
2. For "Section P-P, and Section R-R", see "GIRDER DETAILS NO. 2" sheet.
3. Water Supply Line (Bridge) not shown in all views.

NOTE:
THE CONTRACTOR SHALL VERIFY ALL CONTROLLING FIELD DIMENSIONS BEFORE ORDERING OR FABRICATING ANY MATERIAL.

Caltrans Metric

	BY	CHECKED
DESIGN	J. Zhang/T. Menard	S. Moradi
DETAILS	S. Cholda	S. Moradi
QUANTITIES	T. Menard	S. Moradi

STATE OF CALIFORNIA
DEPARTMENT OF TRANSPORTATION

DIVISION OF ENGINEERING SERVICES
STRUCTURE DESIGN
DESIGN BRANCH 15

BRIDGE NO. 53-1081
KILOMETER POST 45.2

ALLEN AVENUE UNDERCROSSING (WIDEN)
GIRDER DETAILS NO. 1

ALL DIMENSIONS ARE IN MILLIMETERS UNLESS OTHERWISE SHOWN

ORIGINAL SCALE IN MILLIMETERS FOR REDUCED PLANS 0 10 20 30 40 50 60 70 80 90 100

CU 07
EA 121841

DISREGARD PRINTS BEARING EARLIER REVISION DATES

REVISION DATES: 01-23-09 02-10-09 04-17-06 4-27-06 01-26-06 8-4-06 9-7-06 9-15-06 11-22-06 12-14-06

SHEET 11 OF 20

FILE => 53-1081-1-gdt01.dgn

STRUCTURES DESIGN DETAIL SHEET (METRIC) (REV.03-17-04)

USERNAME => trmikest DATE PLOTTED => 12-JUN-2009 TIME PLOTTED => 11:10

DIST	COUNTY	ROUTE	KILOMETER POST TOTAL PROJECT	SHEET No	TOTAL SHEETS
07	LA	5	42.8/47.3	748	1073

Andrew Rittenhouse 12-05-08
REGISTERED CIVIL ENGINEER DATE

6-8-09
PLANS APPROVAL DATE

REGISTERED PROFESSIONAL ENGINEER Andrew P. Rittenhouse No. 61006 Exp. 12-31-10 CIVIL STATE OF CALIFORNIA

The State of California or its officers or agents shall not be responsible for the accuracy or completeness of electronic copies of this plan sheet.

LEGEND:

-·-·- Indicates Existing Structure.

—□— Indicates Service Butt Splice.

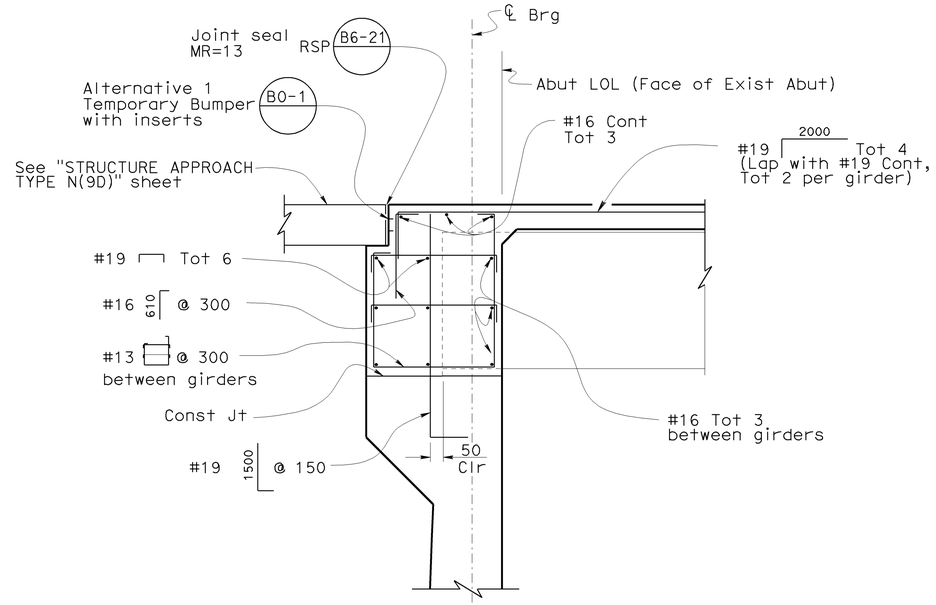

SECTION P-P

1:20

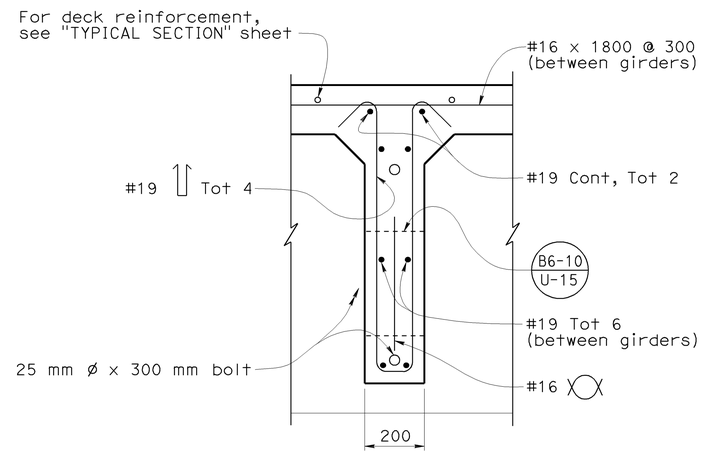

SECTION S-S

1:10

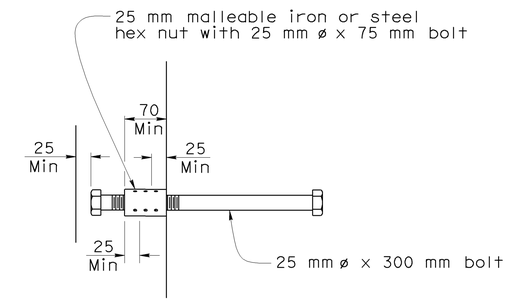

INSERT ASSEMBLY

1:5

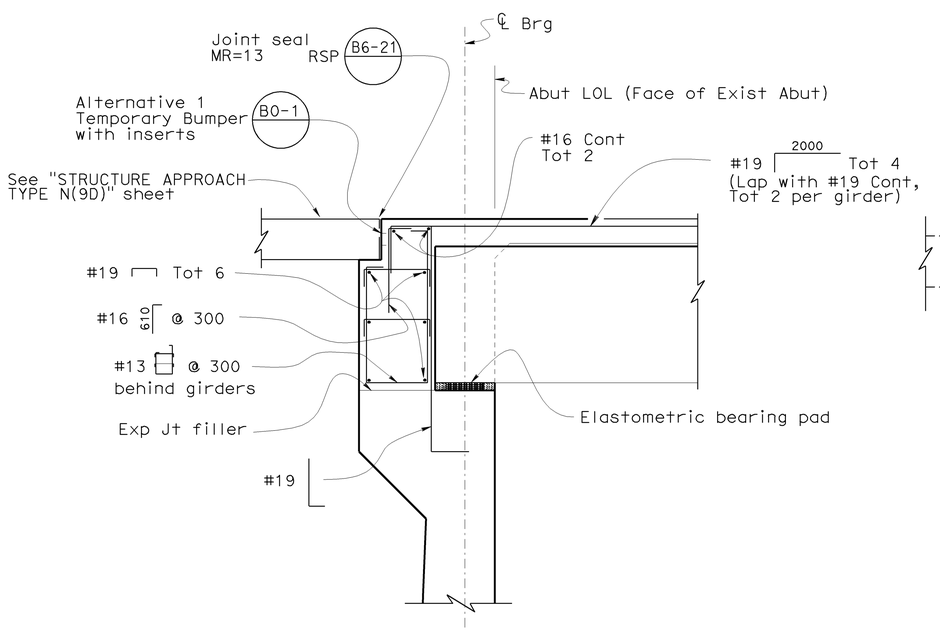

SECTION R-R

1:20

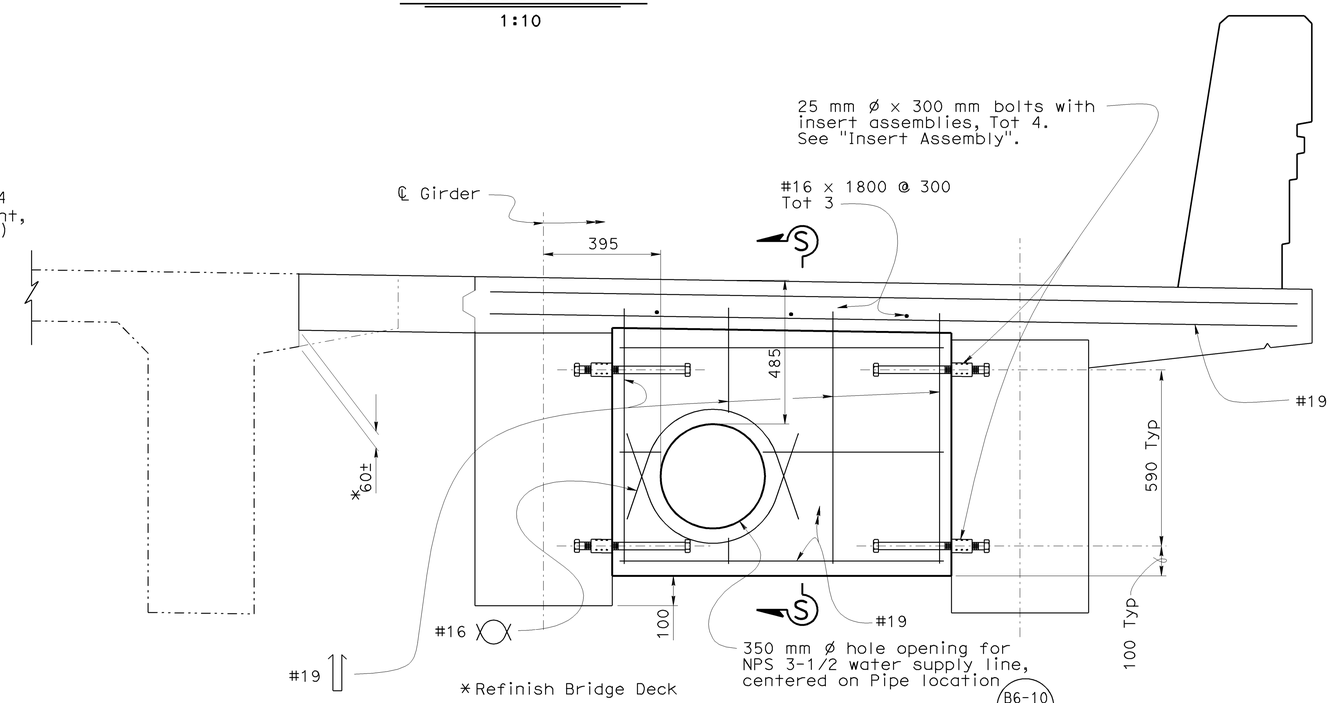

INTERMEDIATE DIAPHRAGM

1:10

NOTE:
THE CONTRACTOR SHALL VERIFY ALL CONTROLLING FIELD DIMENSIONS BEFORE ORDERING OR FABRICATING ANY MATERIAL.

Caltrans Metric

	BY	CHECKED
DESIGN	J. Zhang/T. Menard	S. Moradi
DETAILS	S. Cholda	S. Moradi
QUANTITIES	T. Menard	S. Moradi

STATE OF CALIFORNIA
DEPARTMENT OF TRANSPORTATION

DIVISION OF ENGINEERING SERVICES
STRUCTURE DESIGN
DESIGN BRANCH 15

BRIDGE NO. 53-1081
KILOMETER POST 45.2

ALLEN AVENUE UNDERCROSSING (WIDEN)
GIRDER DETAILS NO. 2

ALL DIMENSIONS ARE IN MILLIMETERS UNLESS OTHERWISE SHOWN

ORIGINAL SCALE IN MILLIMETERS FOR REDUCED PLANS 0 10 20 30 40 50 60 70 80 90 100

CU 07
EA 121841

DISREGARD PRINTS BEARING EARLIER REVISION DATES

REVISION DATES: 9-1-08 9-15-08 11-13-08 12-12-08 01-12-09 02-10-09 04-27-09 07-02-08 7-7-08 8-1-08

SHEET 12 OF 20

FILE => 53-1081-1-gdt02.dgn

STRUCTURES DESIGN DETAIL SHEET (METRIC) (REV.03-17-04)

USERNAME => rtrmikes1 DATE PLOTTED => 12-JUN-2009 TIME PLOTTED => 11:10

DIST	COUNTY	ROUTE	KILOMETER POST TOTAL PROJECT	SHEET No	TOTAL SHEETS
07	LA	5	42.8/47.3	749	1073

Andrew Rittenhouse 12-05-08
REGISTERED CIVIL ENGINEER DATE

6-8-09
PLANS APPROVAL DATE

REGISTERED PROFESSIONAL ENGINEER Andrew P. Rittenhouse No. 61006 Exp. 12-31-10 CIVIL STATE OF CALIFORNIA

The State of California or its officers or agents shall not be responsible for the accuracy or completeness of electronic copies of this plan sheet.

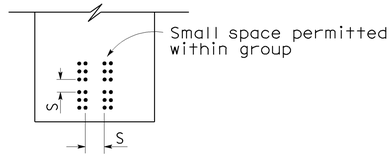

CLEARANCES FOR PRETENSIONED STRANDS

1. Strands may be bundled in groups consisting of 3 vertically 2 horizontally, and separated at the ends.
2. The Min distance "S" between groups or individual strands is 40 mm for 9.5 mm strands, 45 mm for 11 and 13 mm strands and 50 mm for 15 mm strands.
3. "S" is measured between centers of adjacent strands.
4. Engineer's approval is required for deviation.

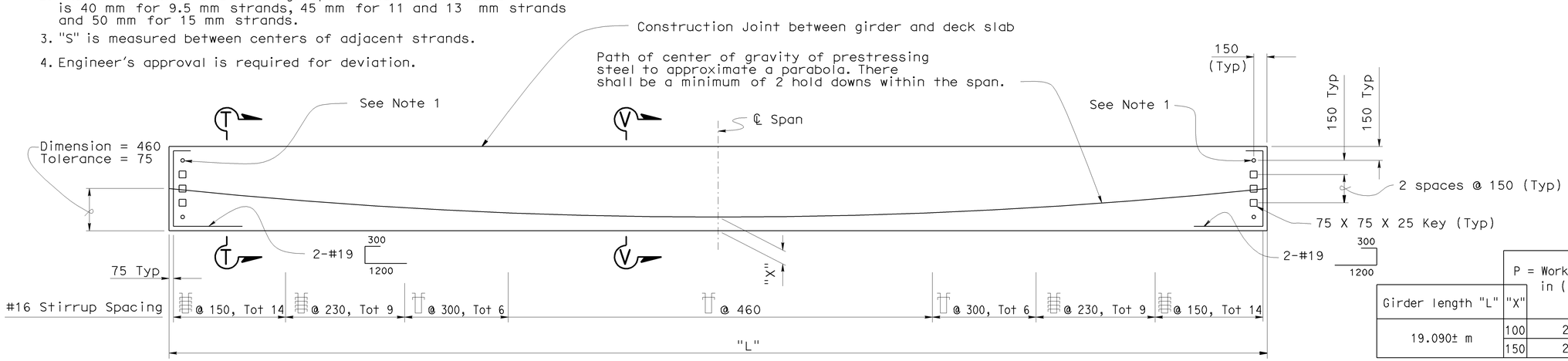

Girder length "L"	"X"	P = Working force in (kN)	Concrete Strength f'_{ci}	Concrete Strength f'_c	Deflection Components (mm) ① Deck DL	Deflection Components (mm) ② Rail DL
19.090± m	100	2225	28	42	26	23
	150	2450				

ELEVATION

HOR 1:40
VERT 1:25

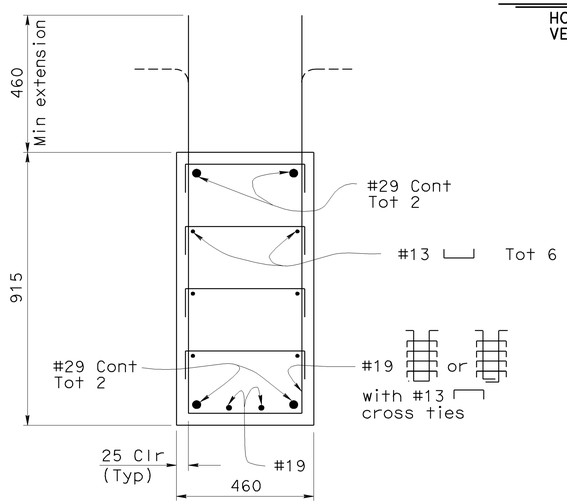

SECTION T-T

1:10

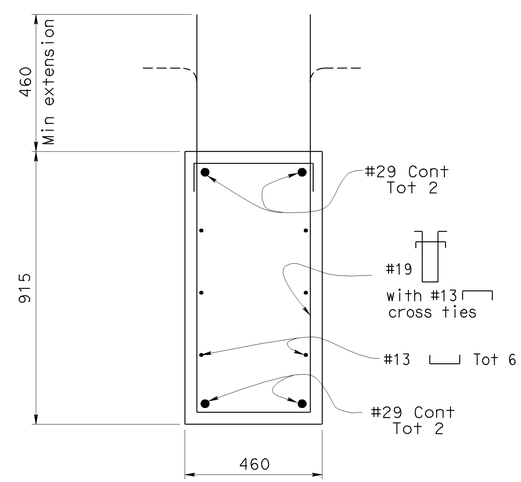

SECTION V-V

1:10

PRESTRESSING NOTES

Working force : The force required at center of span after all losses.

Concrete strength : f'_{ci} is at time of initial stressing, f'_c is at 28 days, MPa.

Deflection components : Informational - to be used in setting screed line elevations.

Screed line elevations for deck concrete will be determined by the Engineer.

Contractor may interpolate "P" and "X" values between limits shown, as approved by the Engineer.

Camber: Girder camber immediately after the deck and barrier rail have been placed.

Notes:

1. #25 x 1200 through 40 mm Ø hole at each end. 25 mm Ø x 300 mm bolt required for exterior girder. See "Insert Assembly" on "GIRDER DETAILS NO. 2" sheet.
2. Details shown are for pretensioned girders. The Contractor may submit details for post-tensioning which shall meet the approval of the Engineer.

NOTE:
THE CONTRACTOR SHALL VERIFY ALL CONTROLLING FIELD DIMENSIONS BEFORE ORDERING OR FABRICATING ANY MATERIAL.

Caltrans Metric

	BY	CHECKED
DESIGN	J. Zhang/T. Menard	S. Moradi
DETAILS	Stan Cholda	S. Moradi
QUANTITIES	T. Menard	S. Moradi

STATE OF CALIFORNIA
DEPARTMENT OF TRANSPORTATION

DIVISION OF ENGINEERING SERVICES
STRUCTURE DESIGN
DESIGN BRANCH 15

BRIDGE NO. 53-1081
KILOMETER POST 45.2

ALLEN AVENUE UNDERCROSSING (WIDEN)
PRESTRESSED GIRDER

ALL DIMENSIONS ARE IN MILLIMETERS UNLESS OTHERWISE SHOWN

ORIGINAL SCALE IN MILLIMETERS FOR REDUCED PLANS 0 10 20 30 40 50 60 70 80 90 100

CU 07
EA 121841

DISREGARD PRINTS BEARING EARLIER REVISION DATES

REVISION DATES 01-15-09 01-16-09 02-10-09 01-15-08 02-15-08 01-16-08 04-18-08 3-2-08 04-18-08 11-18-08

SHEET 13 OF 20

FILE => 53-1081-o-gd1.dgn

STRUCTURES DESIGN DETAIL SHEET (METRIC) (REV.03-17-04)

USERNAME => trmrkest DATE PLOTTED => 12-JUN-2009 TIME PLOTTED => 11:10

DIST	COUNTY	ROUTE	KILOMETER POST TOTAL PROJECT	SHEET No	TOTAL SHEETS
07	LA	5	42.8/47.3	750	1073

Andrew Rittenhouse 12-05-08
REGISTERED CIVIL ENGINEER DATE

6-8-09
PLANS APPROVAL DATE

REGISTERED PROFESSIONAL ENGINEER
Andrew P. Rittenhouse
No. 61006
Exp. 12-31-10
CIVIL
STATE OF CALIFORNIA

The State of California or its officers or agents shall not be responsible for the accuracy or completeness of electronic copies of this plan sheet.

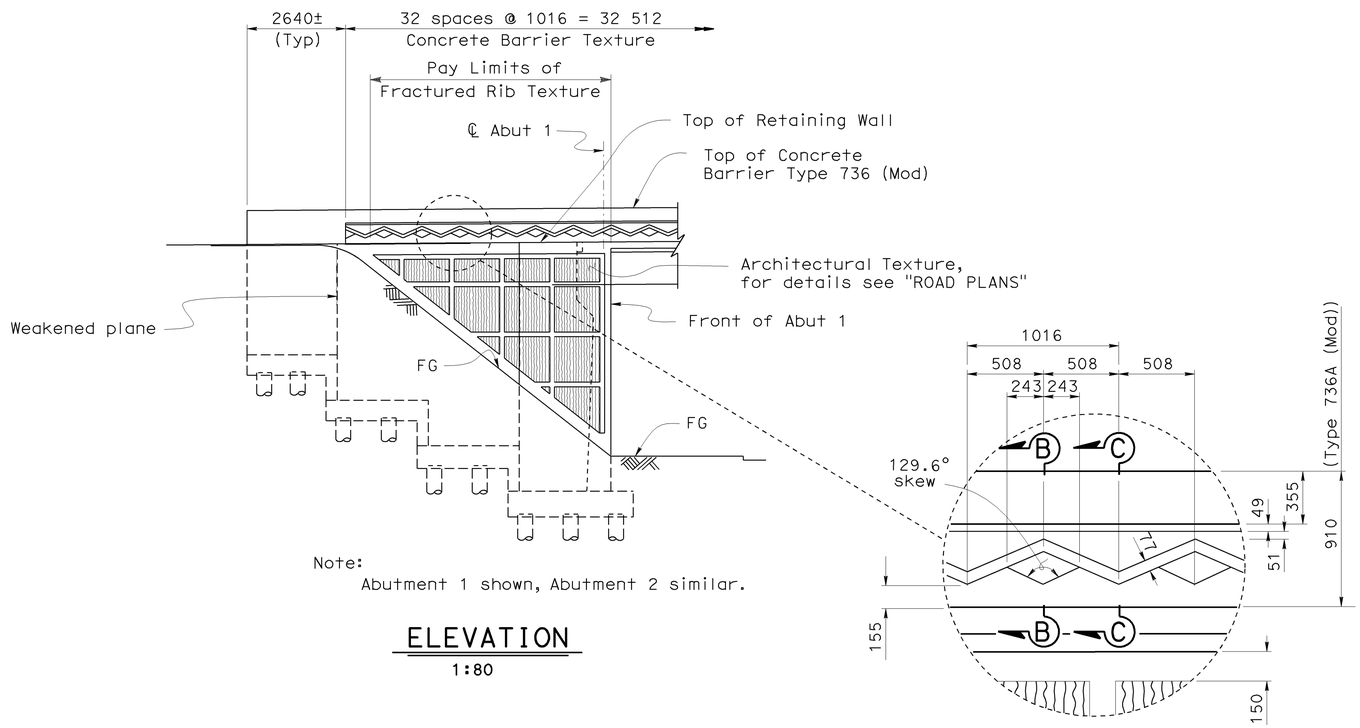

Note:
Abutment 1 shown, Abutment 2 similar.

ELEVATION
1:80

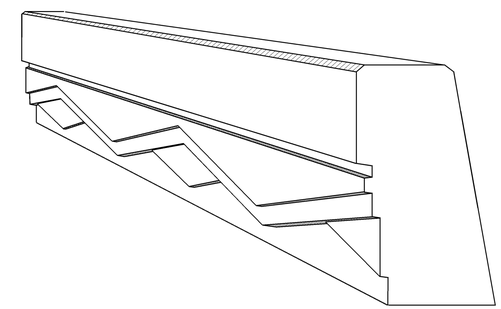

PERSPECTIVE VIEW

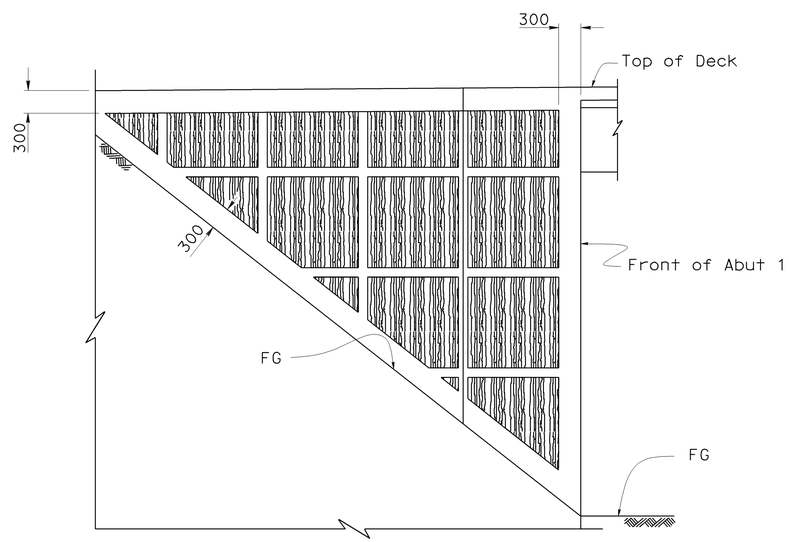

PART ELEVATION
1:40

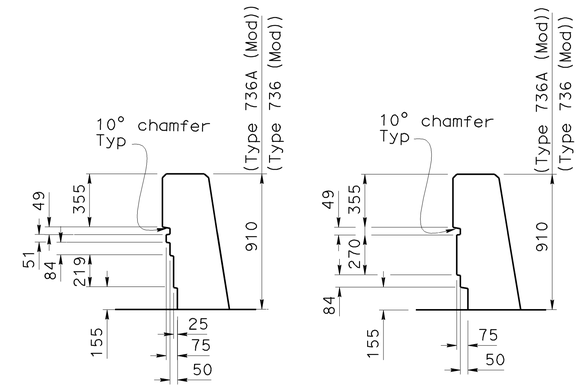

SECTION B-B

SECTION C-C

NOTE:
THE CONTRACTOR SHALL VERIFY ALL CONTROLLING FIELD DIMENSIONS BEFORE ORDERING OR FABRICATING ANY MATERIAL.

CONCRETE BARRIER TYPE 736 (MOD) & TYPE 736A (MOD)
No Scale

Caltrans Metric

	BY	CHECKED
DESIGN	J. Zhang /T. Menard	S. Moradi
DETAILS	S. Cholda	S. Moradi
QUANTITIES	T. Menard	S. Moradi

STATE OF CALIFORNIA
DEPARTMENT OF TRANSPORTATION

DIVISION OF ENGINEERING SERVICES
STRUCTURE DESIGN
DESIGN BRANCH 15

BRIDGE NO. 53-1081
KILOMETER POST 45.2

ALLEN AVENUE UNDERCROSSING (WIDEN)
ARCHITECTURAL TREATMENT DETAILS

ALL DIMENSIONS ARE IN MILLIMETERS UNLESS OTHERWISE SHOWN

ORIGINAL SCALE IN MILLIMETERS FOR REDUCED PLANS 0 10 20 30 40 50 60 70 80 90 100

CU 07
EA 121841

DISREGARD PRINTS BEARING EARLIER REVISION DATES

REVISION DATES: 01-15-09 02-10-09 5-08-08 2-25-08 2-27-08 3-17-08 6-6-08 7-25-08 8-1-08 11-7-08

SHEET 14 OF 20

STRUCTURES DESIGN DETAIL SHEET (METRIC) (REV.03-17-04)

FILE => 53-1081-w-arch01.dgn

USERNAME => trmikesl DATE PLOTTED => 12-JUN-2009 TIME PLOTTED => 11:10

DIST	COUNTY	ROUTE	KILOMETER POST TOTAL PROJECT	SHEET No	TOTAL SHEETS
07	LA	5	42.8/47.3	751	1073

Caltrans Metric

Andrew P. Rittenhouse 12-05-08
REGISTERED CIVIL ENGINEER DATE

6-8-09
PLANS APPROVAL DATE

REGISTERED PROFESSIONAL ENGINEER Andrew P. Rittenhouse No. 61006 Exp. 12-31-10 CIVIL STATE OF CALIFORNIA

The State of California or its officers or agents shall not be responsible for the accuracy or completeness of electronic copies of this plan sheet.

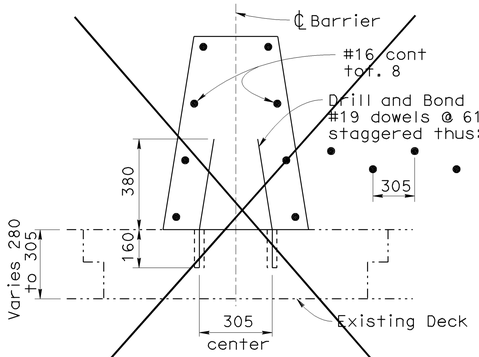

MODIFIED TYPE 60SA.1 OR 60A.1 (1)

SEE NOTE 10 FOR RESPECTIVE BARRIER DIMENSIONS

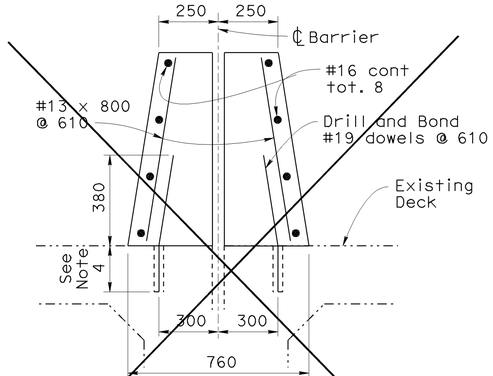

MODIFIED TYPE 60SA.4 OR 60A.4 (1)

ONLY VERTICAL DIMENSION VARIES ACCORDING TO RESPECTIVE BARRIER HEIGHT. SEE NOTE 10.

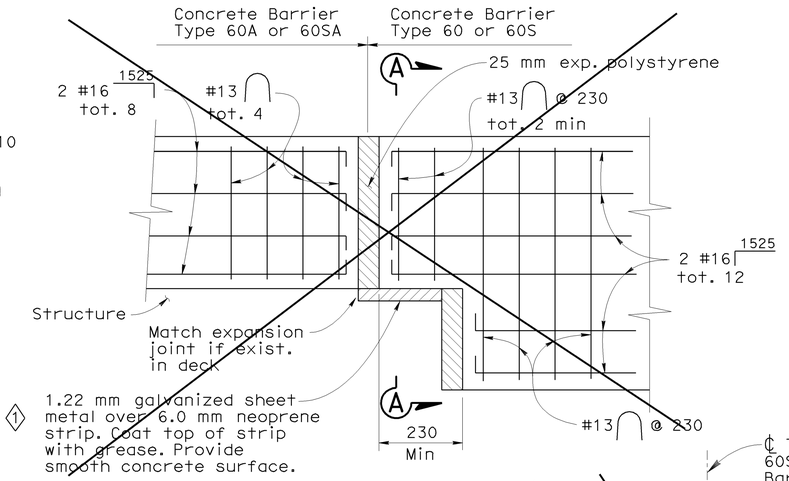

ELEVATION (1)

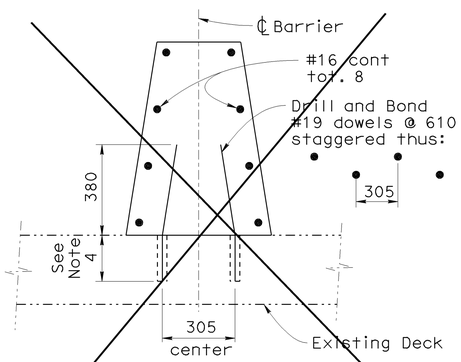

MODIFIED TYPE 60SA.2 OR 60A.2 (1)

SEE NOTE 10 FOR RESPECTIVE BARRIER DIMENSIONS

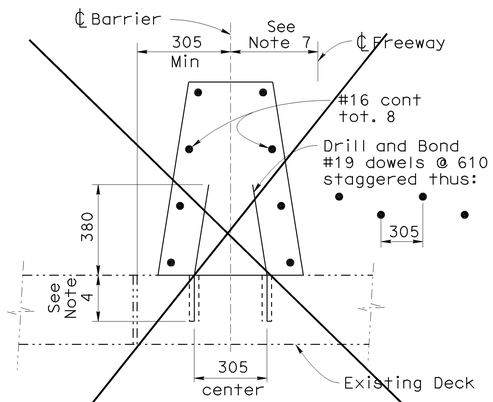

MODIFIED TYPE 60SA.5 OR 60A.5 (1)

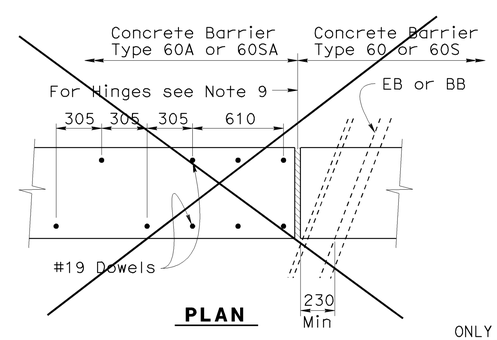

PLAN

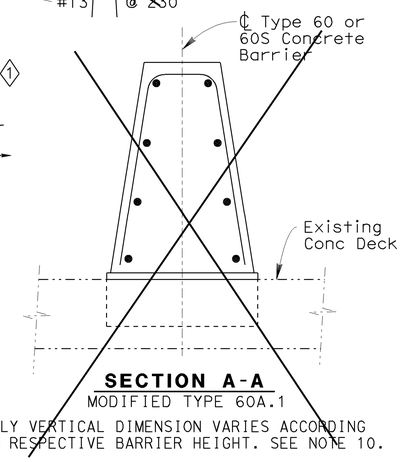

SECTION A-A

MODIFIED TYPE 60A.1

ONLY VERTICAL DIMENSION VARIES ACCORDING TO RESPECTIVE BARRIER HEIGHT. SEE NOTE 10.

CONNECTION TO STRUCTURE AT EXPANSION JOINTS (1)

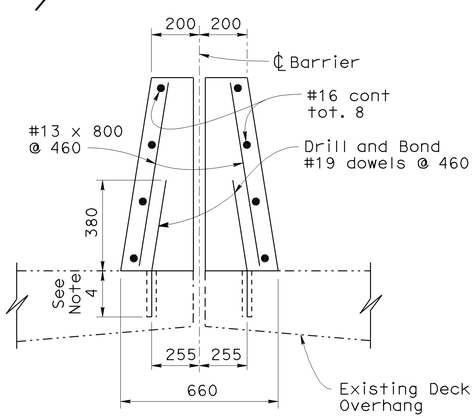

(2) TYPE 60SA.3 OR 60A.3

ONLY VERTICAL DIMENSION VARIES ACCORDING TO RESPECTIVE BARRIER HEIGHT. SEE NOTE 10.

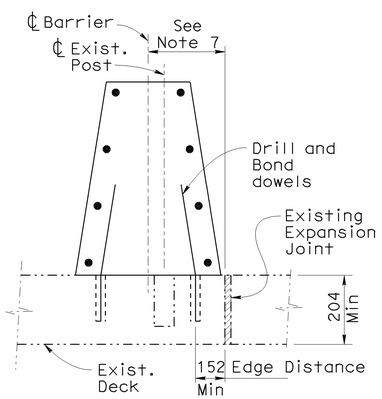

EXISTING POST HOLE

TYPE 1

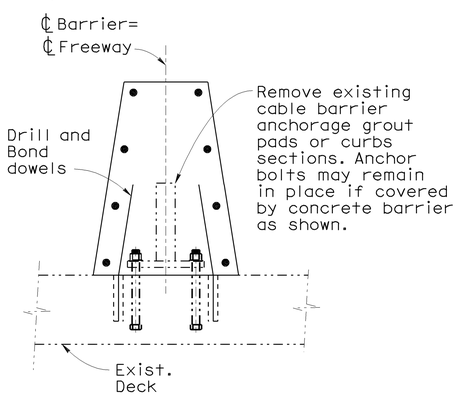

AT BOLTED ANCHORAGE PLATE

TYPE 2

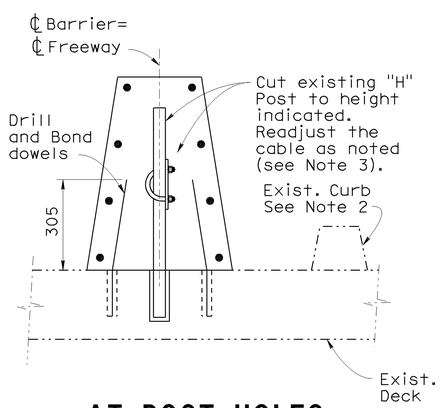

AT POST HOLES

TYPE 3

ASSUMED EXISTING ANCHORAGE CONDITIONS AND DETAILS

ALL DIMENSIONS ARE IN MILLIMETERS UNLESS OTHERWISE SHOWN

SPECIAL DETAILS

NOTES:

(3) 1. Transverse expansion joints in concrete barrier shall match all deck joints.

(3) 2. Remove all existing curbs and dikes.

(3) 3. Existing components of Cable Barrier may be altered and incorporated in Concrete Barriers as indicated. The existing Cable Barrier shall be removed when it is not on the centerline of the new Concrete Barrier.

4. Depth of drilled hole equals depth of slab minus 40 mm, up to 150 mm maximum.

5. Minor adjustments may be made in dowel spacing to clear main reinforcement.

(3) 6. Transitions to match adjacent "Type 60A" Barrier shall have minimum flare of 20:1 off the structure and shall be paid as Concrete Barrier Type 60C (Mod).

7. ℄ Barrier is either left, right, or on ℄ of freeway.

8. The Contractor shall verify all dependent dimensions in the field.

9. Barrier to be doweled on either side of deck joints. On skewed hinges, place sheet metal detail across joint and adjust dowels.

10. Barrier Dimensions-Type 60A & Type 60SA, See sketch below.

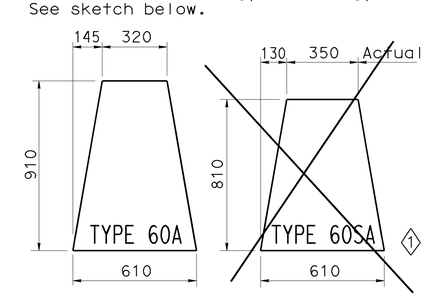

(1)

STANDARD DRAWING					
RELEASE DATE Revised	DESIGN	BY Ralph Bishop	CHECKED Bob Anderson	RELEASED BY Roberto Anella OFFICE CHIEF	
FILE NO. xs16-100	DETAILS	BY L. Charlot	CHECKED Ralph Bishop		
	SUBMITTED	BY Ralph Bishop	DRAWING DATE 6/99		

(1) Deleted Detail (3) Note does not apply
(2) Changed Detail Name

STATE OF CALIFORNIA DEPARTMENT OF TRANSPORTATION

DIVISION OF ENGINEERING SERVICES

BRIDGE NO. 53-1081
KILOMETER POST 45.2

ALLEN AVENUE UNDERCROSSING (WIDEN)

BARRIER - CONCRETE TYPE 60A AND 60SA MODIFIED

DS OSD 2147A (METRIC) (REV. 2/25/97)

ORIGINAL SCALE IN MILLIMETERS FOR REDUCED PLANS 0 10 20 30 40 50 60 70 80 90 100

CU 07
EA 121841

DISREGARD PRINTS BEARING EARLIER REVISION DATES

REVISION DATES (PRELIMINARY STAGE ONLY) 1-17-08 2-21-08 7-22-08 9-2-08 11-13-08 01-26-09 02-10-09 4-27-09

SHEET 15 OF 20

FILE => 53-1081-w-xs16-100.dgn

STRUCTURES DESIGN DETAIL SHEET (METRIC) (REV.03-17-04)

USERNAME => tmrikes DATE PLOTTED => 12-JUN-2009 TIME PLOTTED => 13:38

DIST	COUNTY	ROUTE	KILOMETER POST TOTAL PROJECT	SHEET No	TOTAL SHEETS
07	LA	5	42.8/47.3	752	1073

Caltrans Metric

Andrew Rittenhouse 12-05-08
REGISTERED CIVIL ENGINEER DATE

6-8-09
PLANS APPROVAL DATE

REGISTERED PROFESSIONAL ENGINEER Andrew P. Rittenhouse No. 61006 Exp. 12-31-10 CIVIL STATE OF CALIFORNIA

The State of California or its officers or agents shall not be responsible for the accuracy or completeness of electronic copies of this plan sheet.

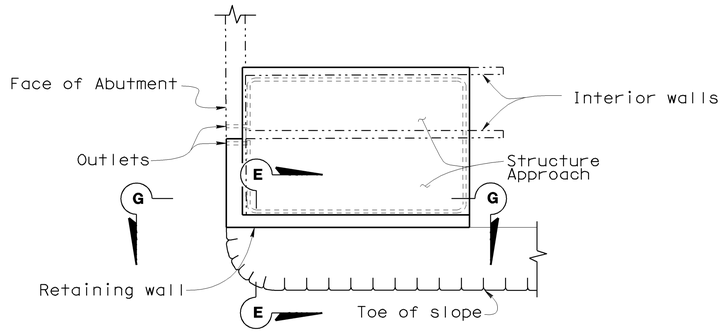

TYPICAL PLAN 2

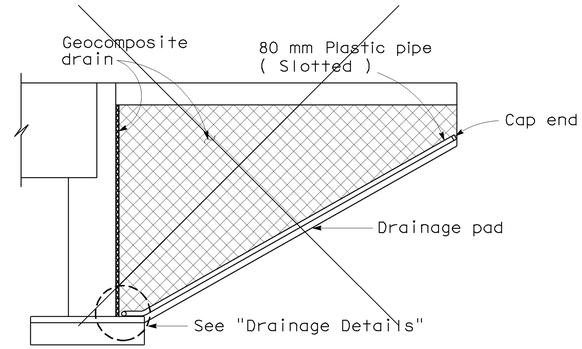

CANTILEVER WINGWALL
SECTION F-F 3

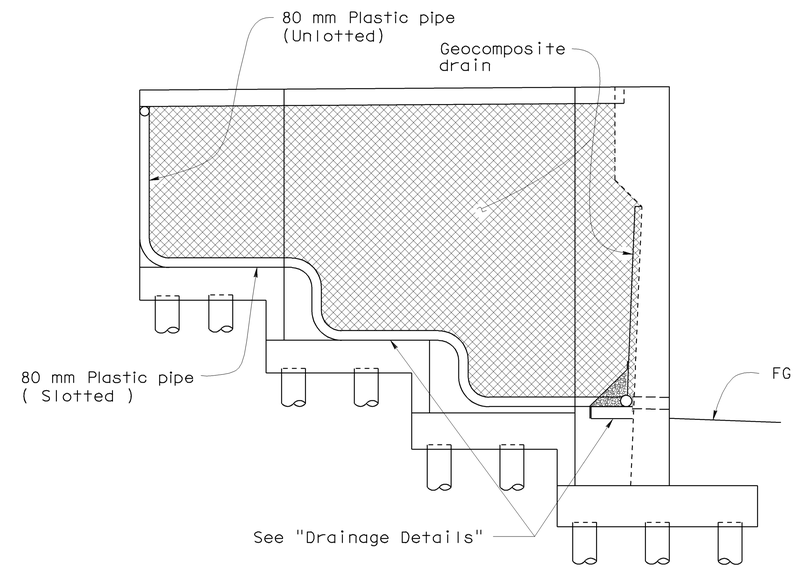

RETAINING WALL WINGWALL
2 **SECTION G-G**

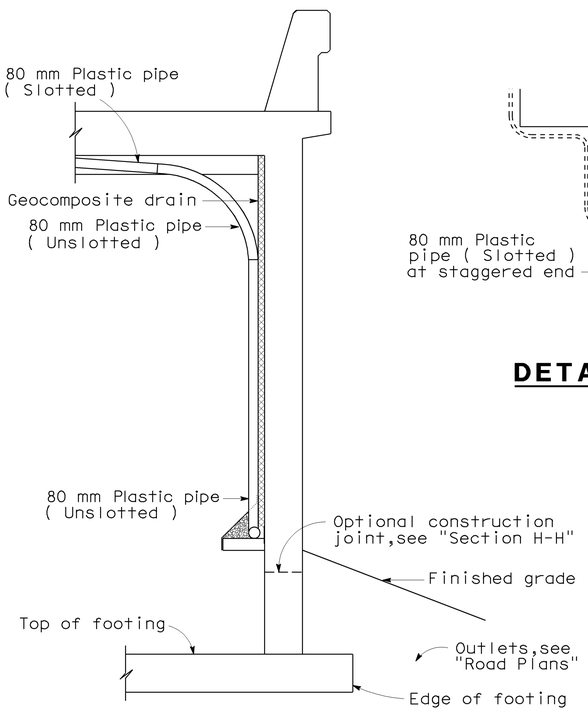

SECTION E-E 2

NOTE: Bends and junctions in 80 mm plastic pipe are 750 mm radius min.

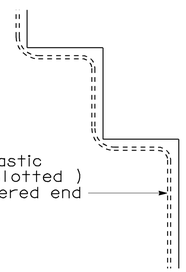

DETAIL B

1 **SECTION H-H**

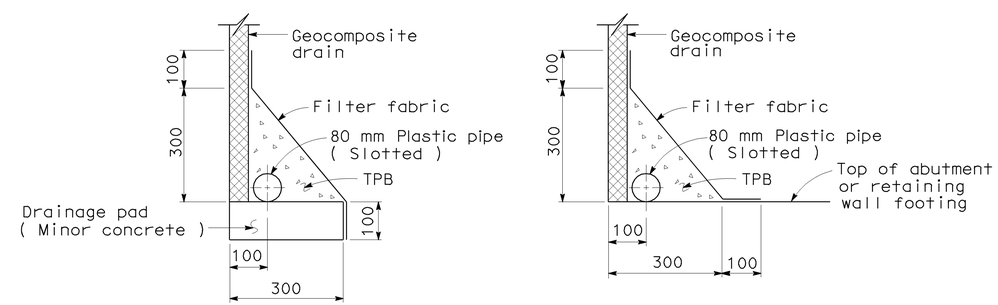

WITHOUT FOOTING **WITH FOOTING**

DRAINAGE DETAILS

NO SCALE

ALL DIMENSIONS ARE IN MILLIMETERS UNLESS OTHERWISE SHOWN

STANDARD DRAWING					
RELEASE DATE REVISED	DESIGN	BY M. TRAFFALIS	CHECKED E. THORKILDSEN	RELEASED BY	
FILE NO. xs3-110	DETAILS	BY R. YEE	CHECKED E. THORKILDSEN		
	SUBMITTED	BY M. HA	DRAWING DATE 4/98	OFFICE CHIEF	

1 Deleted Detail
2 Modified Detail
3 Detail does not apply

STATE OF CALIFORNIA
DEPARTMENT OF TRANSPORTATION

DIVISION OF ENGINEERING SERVICES

BRIDGE NO. 53-1081
KILOMETER POST 45.2

ALLEN AVENUE UNDERCROSSING (WIDEN)
STRUCTURE APPROACH DRAINAGE DETAILS

DS OSD 2147A (METRIC) (REV. 2/25/97)

ORIGINAL SCALE IN MILLIMETERS FOR REDUCED PLANS 0 10 20 30 40 50 60 70 80 90 100

CU 07
EA 121841

DISREGARD PRINTS BEARING EARLIER REVISION DATES

REVISION DATES (PRELIMINARY STAGE ONLY) 02-25-08 04-24-08 06-26-08 07-25-08 9-2-08 9-18-08 11-25-08 1-22-09 1-28-09 2-10-09

SHEET 16 OF 20

FILE => 53-1081-xs3-110.dgn

STRUCTURES DESIGN DETAIL SHEET (METRIC) (REV.03-17-04)

USERNAME => trmikes1 DATE PLOTTED => 12-JUN-2009 TIME PLOTTED => 13:38

DIST	COUNTY	ROUTE	KILOMETER POST TOTAL PROJECT	SHEET No	TOTAL SHEETS
07	LA	5	42.8/47.3	753	1073

Caltrans Metric

Andrew Rittenhouse 12-05-08
REGISTERED CIVIL ENGINEER DATE

6-8-09
PLANS APPROVAL DATE

REGISTERED PROFESSIONAL ENGINEER Andrew P. Rittenhouse No. 61006 Exp. 12-31-10 CIVIL STATE OF CALIFORNIA

The State of California or its officers or agents shall not be responsible for the accuracy or completeness of electronic copies of this plan sheet.

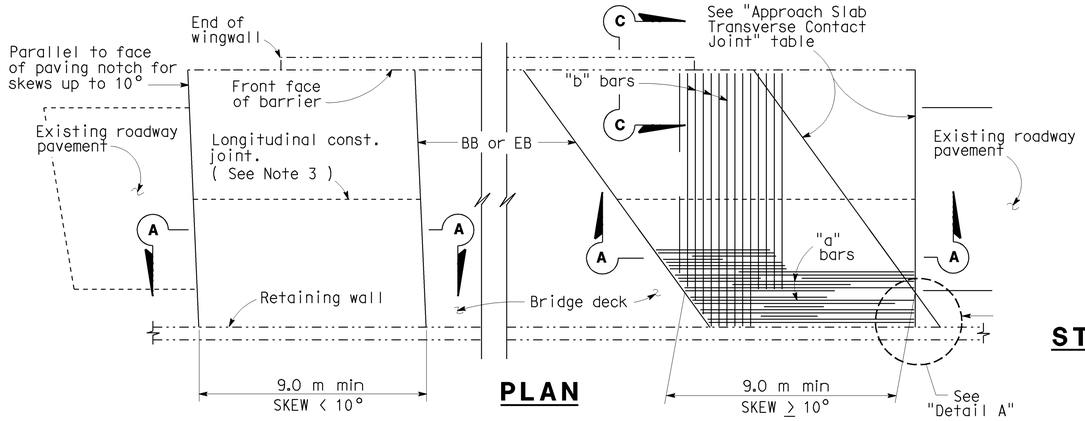

PLAN

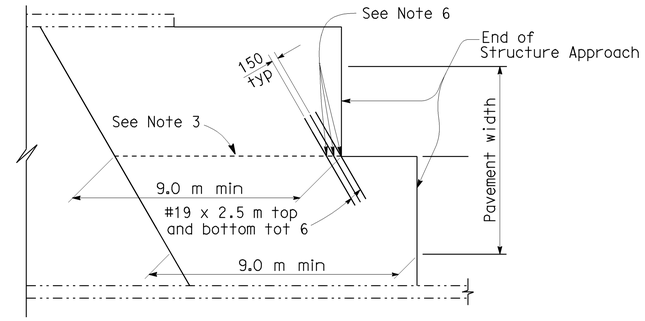

STRUCTURE APPROACH - END STAGGER DETAIL

APPROACH SLAB TRANSVERSE CONTACT JOINT		
APPROACH SKEW	WITH AC ROADWAY PAVEMENT	WITH PCC ROADWAY PAVEMENT
< 10°	Parallel to face of paving notch	Parallel to face of paving notch
10°- 45°	Parallel to face of P N use (Detail A)	Stagger lines 7.2 m to 10.8 m apart
> 45°	Parallel to face of P N use (Detail A)	Stagger at each lane line

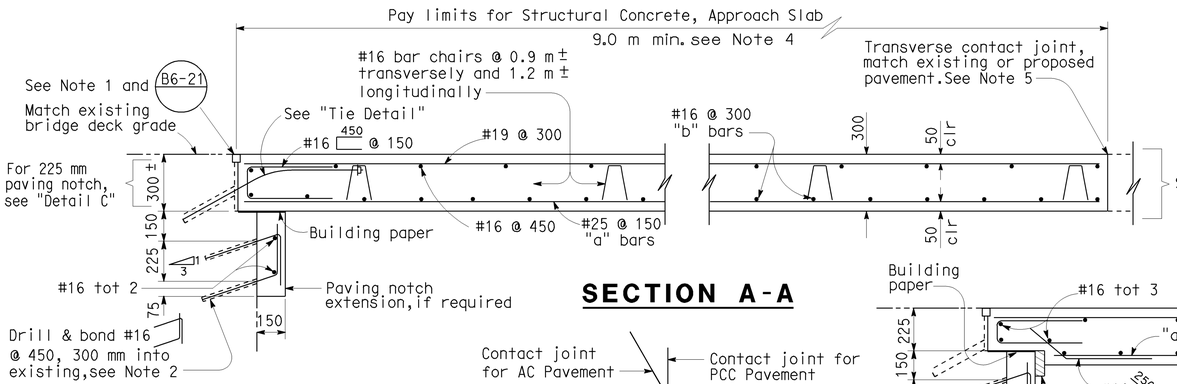

SECTION A-A

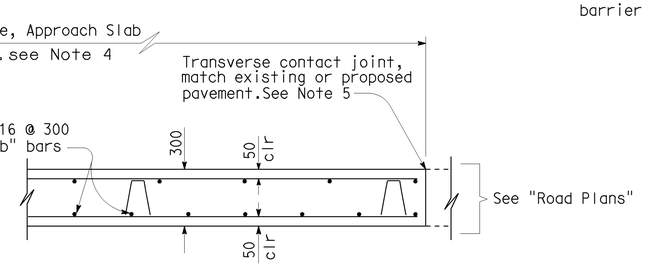

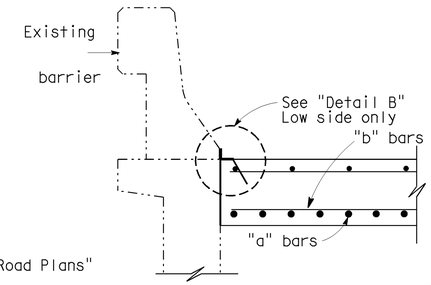

SECTION C-C

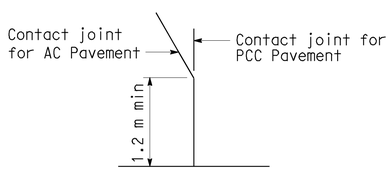

DETAIL A

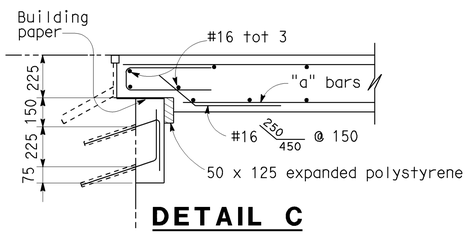

DETAIL C

NOTE: For details not shown, see "Section A-A".

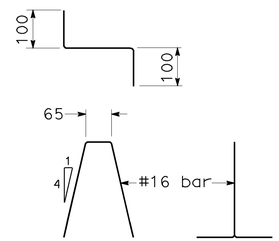

BAR CHAIR DETAIL

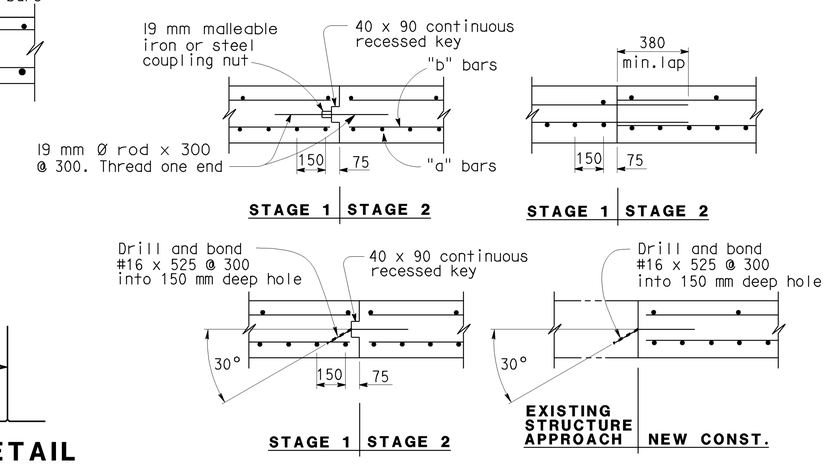

LONGITUDINAL CONSTRUCTION JOINT ALTERNATIVES

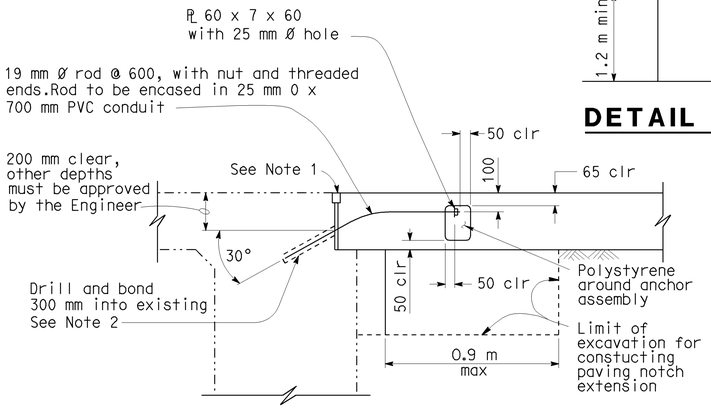

TIE DETAIL (1)

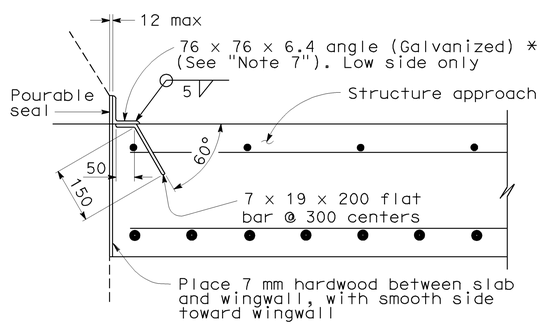

*(TO BE USED WITH TYPE 25 OR TYPE 27 CONCRETE BARRIER)

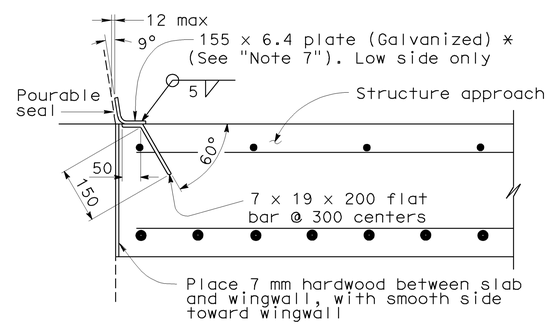

*(TO BE USED WITH TYPE 732 OR TYPE 736 CONCRETE BARRIER)

DETAIL B

NOTES:

1. For details not shown or noted, see Structure Plans. Adjust bar reinforcement to clear a sawcut for sealed joint, when required.
2. Space to avoid existing prestress anchorages and main reinforcement.
3. Longitudinal construction joints, when permitted by the Engineer, shall be located on lane lines.
4. Transverse contact joint shall be a minimum of 1.5 m from an existing or constructed weakened plane joint.
5. For transverse contact joint with new PCC paving. refer to Standard Plan P10.
6. Couplers are required for stage construction.
7. End angle or plate at beginning of barrier transition, end of wingwall or end of structure approach as applicable.

NO SCALE
ALL DIMENSIONS ARE IN MILLIMETERS UNLESS OTHERWISE SHOWN

NOTE:
THE CONTRACTOR SHALL VERIFY ALL CONTROLLING FIELD DIMENSIONS BEFORE ORDERING OR FABRICATING ANY MATERIAL.

(1) Modified detail

STANDARD DRAWING

RELEASE DATE	3/14/05	DESIGN	BY M. TRAFFALIS	CHECKED E. THORKILDSEN	RELEASED BY
FILE NO.	xs3-140	DETAILS	BY R. YEE	CHECKED E. THORKILDSEN	
		SUBMITTED	BY M. HA	DRAWING DATE 8/92	OFFICE CHIEF

STATE OF CALIFORNIA
DEPARTMENT OF TRANSPORTATION

DIVISION OF ENGINEERING SERVICES

BRIDGE NO. 53-1081
KILOMETER POST 45.2(28.1)

ALLEN AVENUE UNDERCROSSING (WIDEN)

STRUCTURE APPROACH TYPE R(9D)

DS OSD 2147A (METRIC) (REV. 2/25/97)

ORIGINAL SCALE IN MILLIMETERS FOR REDUCED PLANS 0 10 20 30 40 50 60 70 80 90 100

CU 07
EA 121841

DISREGARD PRINTS BEARING EARLIER REVISION DATES

REVISION DATES (PRELIMINARY STAGE ONLY) 01-29-08 01-29-08 01-29-08 12-10-09

SHEET 17 OF 20

FILE => 53-1081-xs3-140.dgn

STRUCTURES DESIGN DETAIL SHEET (METRIC) (REV.03-17-04)

USERNAME => trmikes1 DATE PLOTTED => 12-JUN-2009 TIME PLOTTED => 13:38

DIST.	COUNTY	ROUTE	KILOMETER POST TOTAL PROJECT	SHEET NO.	TOTAL SHEETS
07	LA	5	42.8/47.3	754	1073

Caltrans Metric

Andrew Rittenhouse 12-05-08
REGISTERED ENGINEER - CIVIL

6-8-09
PLANS APPROVAL DATE

The State of California or its officers or agents shall not be responsible for the accuracy or completeness of electronic copies of this plan sheet.

REGISTERED PROFESSIONAL ENGINEER Andrew P. Rittenhouse No. 61006 Exp. 12-31-10 CIVIL STATE OF CALIFORNIA

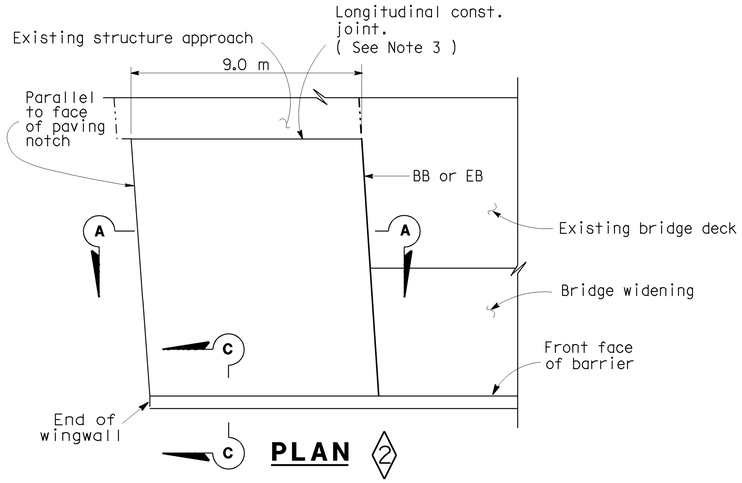

PLAN 2

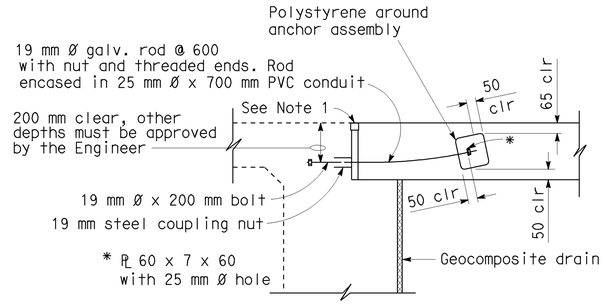

CONNECTION TO NEW ABUTMENT

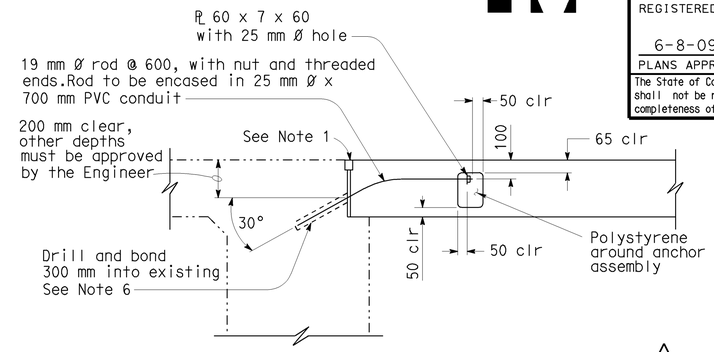

CONNECTION TO EXISTING ABUTMENT 1

TIE DETAILS

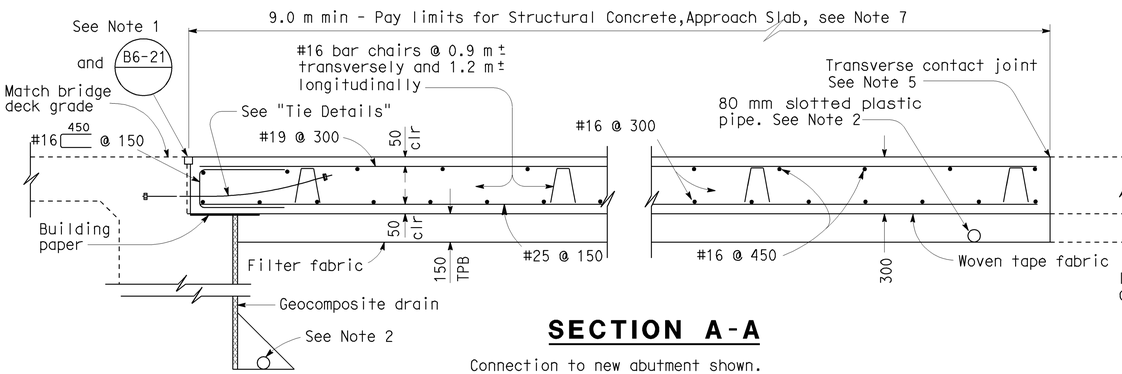

SECTION A-A

Connection to new abutment shown.
See "Tie Details" for connection to existing abutment.

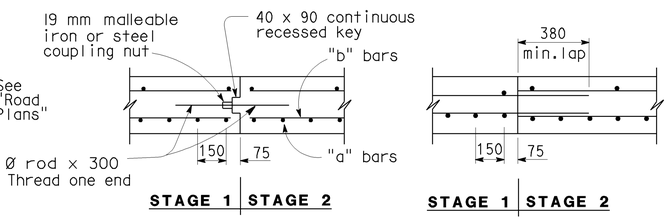

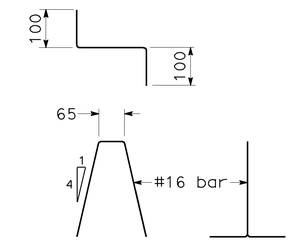

BAR CHAIR DETAIL

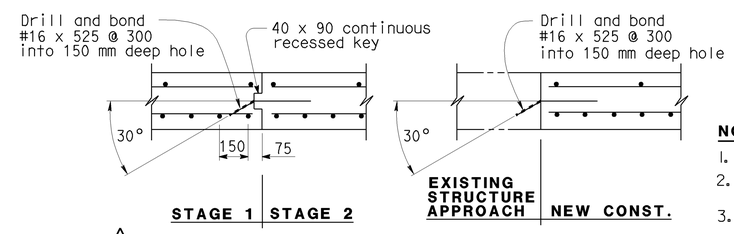

1 LONGITUDINAL CONSTRUCTION JOINT ALTERNATIVES

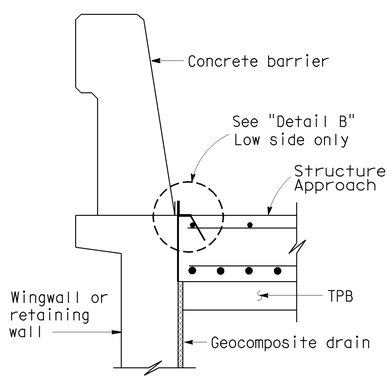

SECTION C-C

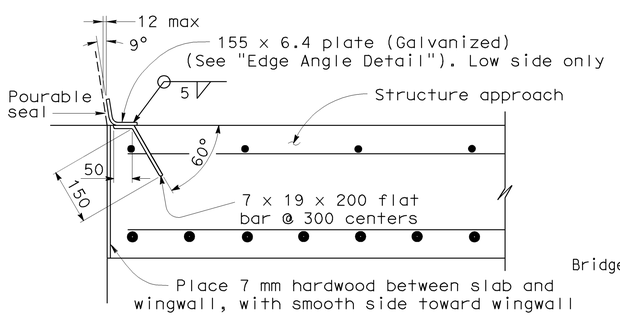

DETAIL B

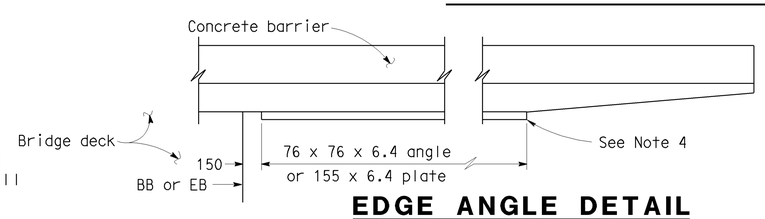

EDGE ANGLE DETAIL

NO SCALE

NOTES:

1. For details not noted or shown, see Structure Plans.
2. For drainage details, see "Structure Approach Drainage Details" sheet.
3. Longitudinal construction joints, when permitted by the Engineer,shall be located on lane lines.
4. End angle or plate at beginning of barrier transition, end of wingwall or end of structure approach, as applicable.
5. For transverse contact joint with new PCC paving, refer to Standard Plan P10.
6. Space to avoid existing prestress anchorages and main reinforcement.
7. Transverse contact joint shall be a minimum of 1.5 m from an existing or constructed weakened plane joint.
8. Couplers are required for stage construction.

THE CONTRACTOR SHALL VERIFY ALL CONTROLLING FIELD DIMENSIONS BEFORE ORDERING OR FABRICATING ANY MATERIAL.

ALL DIMENSIONS ARE IN MILLIMETERS UNLESS OTHERWISE SHOWN

STANDARD DRAWING					
RELEASE DATE 3/14/05	DESIGN	BY M. TRAFFALIS	CHECKED E. THORKILDSEN	RELEASED BY	
FILE NO. xs3-180	DETAILS	BY R. YEE	CHECKED E. THORKILDSEN		
	SUBMITTED	BY M. HA	DRAWING DATE 4/98	OFFICE CHIEF	

1 ADDED DETAIL
2 MODIFIED DETAIL

STATE OF CALIFORNIA
DEPARTMENT OF TRANSPORTATION

DIVISION OF ENGINEERING SERVICES

BRIDGE NO. 53-1081
KILOMETER POST 45.2

ALLEN AVENUE UNDERCROSSING (WIDEN)

STRUCTURE APPROACH TYPE N(9D)

DS OSD 2147A (METRIC) (REV. 2/25/97)

ORIGINAL SCALE IN MILLIMETERS FOR REDUCED PLANS 0 10 20 30 40 50 60 70 80 90 100

CU 07
EA 121841

DISREGARD PRINTS BEARING EARLIER REVISION DATES

REVISION DATES (PRELIMINARY STAGE ONLY) 3-15-06 4-13-06 2-06-08 4-08-08 12-12-08 11-25-08 01-26-09 02-10-09

SHEET 18 OF 20

USERNAME => trmikesl

53-1081-xs3-180.dgn

DATE PLOTTED => 12-JUN-2009 TIME PLOTTED => 13:38

DIST	COUNTY	ROUTE	KILOMETER POST TOTAL PROJECT	SHEET No	TOTAL SHEETS
07	LA	5	42.8/47.3	755	1073

REGISTERED CIVIL ENGINEER 5-7-08

6-8-09
PLANS APPROVAL DATE

REGISTERED PROFESSIONAL ENGINEER Qiang Huang No. C055671 Exp. 12-31-08 CIVIL STATE OF CALIFORNIA

The State of California or its officers or agents shall not be responsible for the accuracy or completeness of electronic copies of this plan sheet.

NOTE:

The information presented on this drawing was not the result of any work developed, performed or completed this Department (Caltrans). The following party should account for all this information:

URS Corp.

It should be expressly understood that Caltrans assumes no responsibility whatsoever in respect to the sufficiency, accuracy, completeness, and interpretation set forth therein or any other aspect of the information shown or represented on this drawing.

BENCH MARK

SURVEY CONTROL

PRHV1152

Fd Control Point Chis X
25.463m Lt. of ℄ "LA-5" LINE
Sta. 452+84.829
N 574 062.920
E 1 972 280.730
Elev = 153.866

PRHV1318

Fd Control Point 60D
39.896m Rt. of ℄ "LA-5" LINE
Sta. 452+50.518
N 574 089.212
E 1 972 349.707
Elev = 153.909

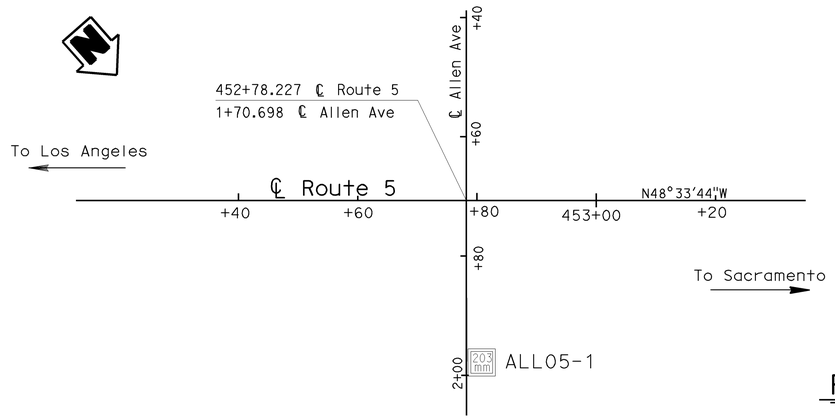

PLAN
1:500

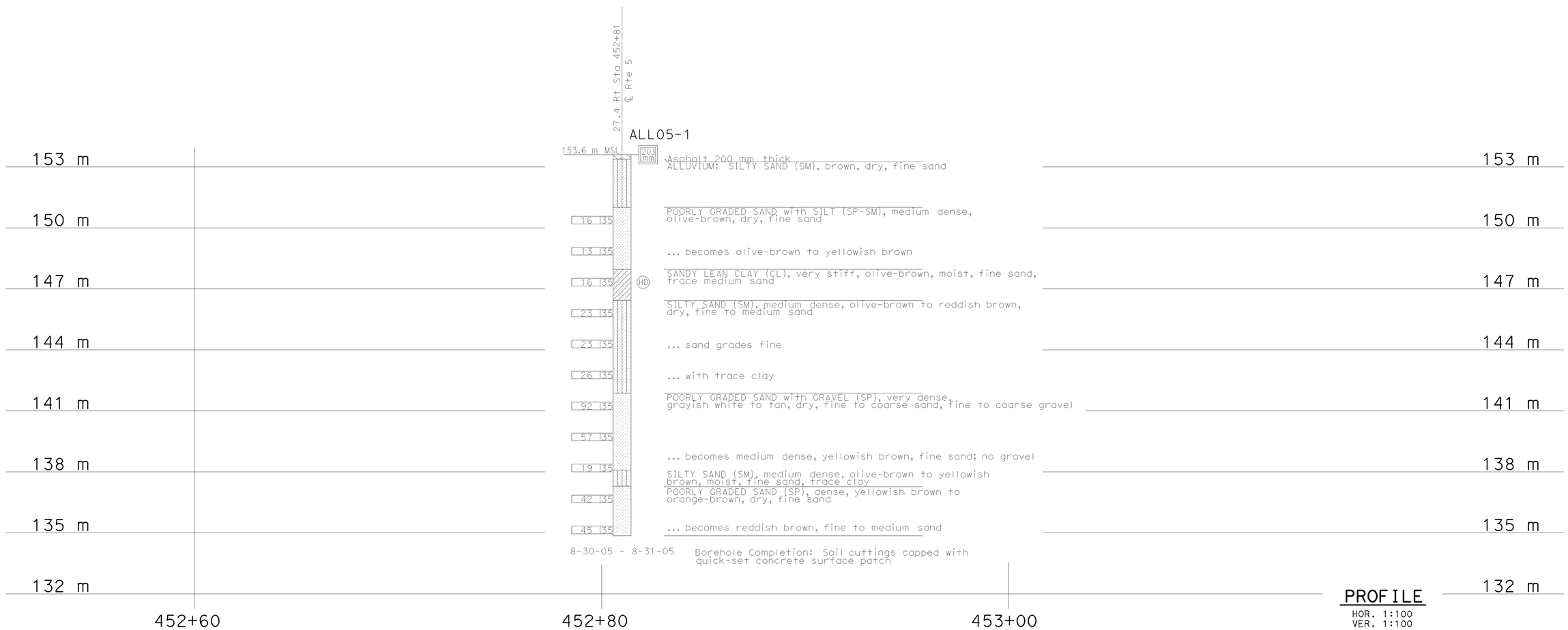

PROFILE
HOR. 1:100
VER. 1:100

Caltrans Metric	GEOTECHNICAL SERVICES PREPARED BY I.G-Remmen 1/06 CHECKED BY B. Bertucci	FIELD INVESTIGATION BY: URS Corp.	STATE OF CALIFORNIA DEPARTMENT OF TRANSPORTATION	DIVISION OF ENGINEERING SERVICES STRUCTURE DESIGN DESIGN BRANCH	BRIDGE NO. 53-1081 KILOMETER POST 45.2	ALLEN AVENUE UNDERCROSSING (WIDEN) LOG OF TEST BORINGS 1 OF 2
OGS CIVIL LOG OF TEST BORINGS SHEET (METRIC) (REV. 4/04)	ALL DIMENSIONS ARE IN METERS UNLESS OTHERWISE SHOWN	ORIGINAL SCALE IN MILLIMETERS FOR REDUCED PLANS 0 10 20 30 40 50 60 70 80 90 100	CU 07 EA 121841		DISREGARD PRINTS BEARING EARLIER REVISION DATES →	REVISION DATES (PRELIMINARY STAGE ONLY) 04-29-08 11-25-08 01-26-09 02-10-09 SHEET 19 OF 20

FILE => 53-1081-z-lotb1.dgn

USERNAME => rrmikest DATE PLOTTED => 12-JUN-2009 TIME PLOTTED => 13:38

FED. ROAD DIV. NO	STATE	PROJ. No.	FISCAL YEAR	SHEET No.	TOTAL SHEETS
7	CAL.				

DIST.	COUNTY	ROUTE	SECTION	SHEET No.	TOTAL SHEETS
VII	L.A.	[illegible]	[illegible]	72	72

BRIDGE ENGINEER — CIVIL ENGINEER—LICENSE 5889

DATE APPROVED December 2, 1963

BRIDGE DEPARTMENT

BM #71-LA-54 Elev. 501.885
L&E nail in S.E. curb Allen Ave. 11± N.E. of BCR-56' N.E. of Flower Street

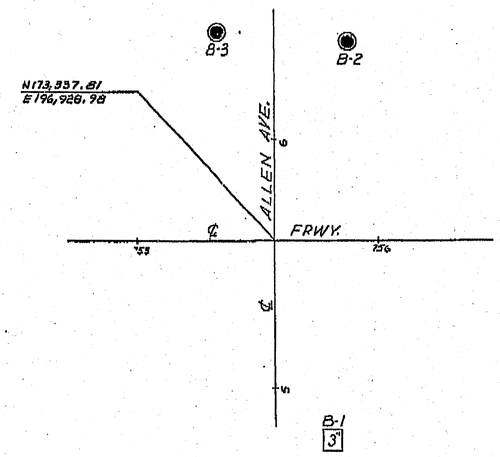

PLAN
SCALE: 1"=30'

To accompany plans dated 6-8-09

DIVISION OF ENGINEERING SERVICES - GEOTECHNICAL SERVICES

As-Built Log of Test Borings sheet is considered an informational document only. As such, the State of California registration seal with signature, license number and registration certificate expiration date confirm that this is a true and accurate copy of the original document. This drawing is available and presented only for the convenience of any bidder, contractor or other interested party.

DIST.	COUNTY	ROUTE	KILOMETER POST-TOTAL PROJECT	Sheet No.	Total Sheets
07	LA	5	42.8/47.3	756	1073

REGISTERED CIVIL ENGINEER — DATE 5/7/08

REGISTERED PROFESSIONAL ENGINEER — Qiang Huang — No. C055671 — Exp. 12-31-08 — CIVIL — STATE OF CALIFORNIA

ALLEN AVENUE UNDERCROSSING (WIDEN)

LOG OF TEST BORINGS 2 OF 2

NOTE: A COPY OF THIS LOG OF TEST BORINGS IS AVAILABLE AT OFFICE OF STRUCTURE MAINTENANCE AND INVESTIGATIONS, SACRAMENTO, CALIFORNIA

CU: 07
EA: 121841

BRIDGE No. 53-1081

Sheet 20 of 20

Revisions made to this Log of Test Borings from the original 1963 Log of Test Borings are the addition of the following table and notes:

Boring	Station	Offset from ℄ Rte. 5
B-1	452+76.8	25.3 m Left
B-2	452+62.5	24.4 m Left
B-3	452+77.4	25.5 m Right

Notes:

1. See the General Plan and/or Foundation Plan for Metric Stationing.
2. The data are the metric locations for the As-Built Test Borings referenced to the proposed new structure location. This table is presented on the As-Built Log of Test Boring sheet for the convenience of any bidder, contractor or other interested party.

AS BUILT PLANS
Contract No. 64-7V135C92
Date Completed
Document No. 70002388

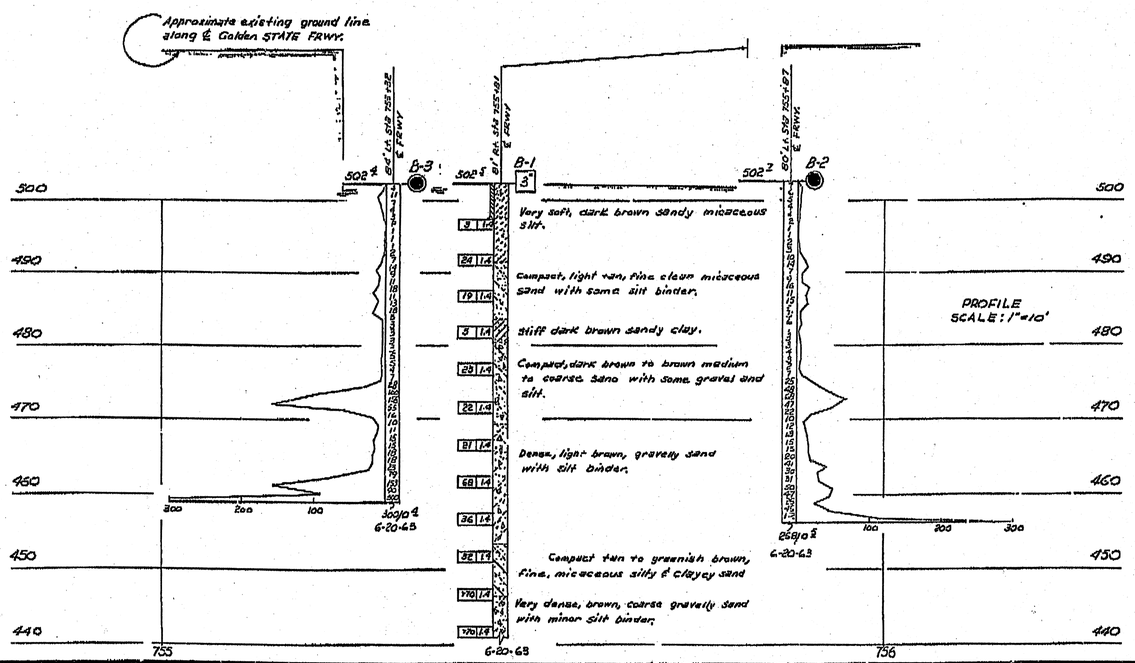

NO GROUND WATER ENCOUNTERED DURING THIS INVESTIGATION BY BRIDGE DEPT. GEOLOGY SECTION
DATE June 1963

SHEET OF

FIELD STUDY — H. S.L. Champlin 6-20-63
DRAWN — W. H. Ryan 6-25-63
CHECKED — H. Tachino 6-25-63
Approval Recommended by — Supervising Geologist

CLASSIFICATION OF MATERIAL BASED ON STANDARD GRADE SIZE LIMITS

DIAGRAM SHOWING THE BASIS FOR ESTIMATES OF GRADE SIZE DISTRIBUTION USED IN DETERMINATION OF CLASS NAMES.

IF GRAVEL IS PRESENT IN APPRECIABLE AMOUNTS THE TERM "GRAVELLY" MAY BE ADDED TO THE CLASS NAME, VIZ. "GRAVELLY SAND". THE TERMS "COARSE", "MEDIUM" AND "FINE" WHEN USED TO DESCRIBE SAND, SILT AND GRAVEL REFER TO STANDARD GRADE SIZE LIMITS.

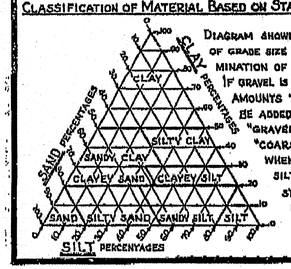

LEGEND OF EARTH MATERIALS

- GRAVEL
- SAND
- SILT
- CLAY
- SANDY CLAY OR CLAYEY SAND
- SANDY SILT OR SILTY SAND
- SILTY CLAY OR CLAYEY SILT
- PEAT AND/OR ORGANIC MATTER
- FILL MATERIAL
- IGNEOUS ROCK
- SEDIMENTARY ROCK
- METAMORPHIC ROCK

LEGEND OF BORING OPERATIONS

- PENETROMETER
- 2½" CONE PENETROMETER
- SAMPLER BORING (DRY)
- ROTARY BORING (WET)
- AUGER BORING (DRY)
- JET BORING
- CORE BORING
- TEST PIT

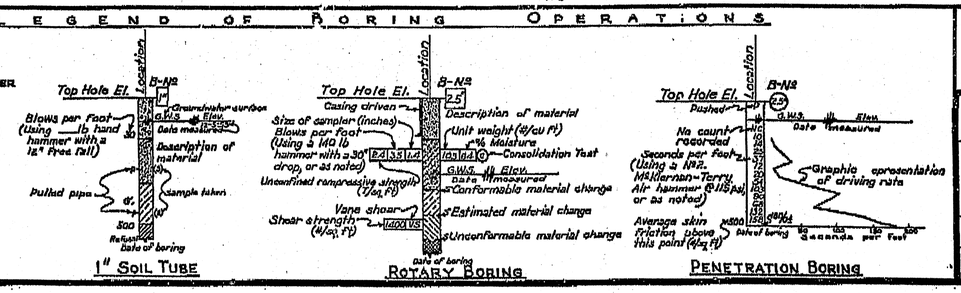

NOTE

Classification of earth material as shown on this sheet is based upon field inspection and is not to be construed to imply mechanical analysis.

STATE OF CALIFORNIA
DEPARTMENT OF PUBLIC WORKS
DIVISION OF HIGHWAYS

ALLEN AVE. UC. (WIDEN)

LOG OF TEST BORINGS

SCALE As Noted	BRIDGE 53-1081	FILE	DRAWING 53-1081-7

PREL. DRAWING NO. P-

of 72

FILENAME= 53-1081-z-lotb2.tif

803

DIST	COUNTY	ROUTE	KILOMETER POST TOTAL PROJECT	SHEET No	TOTAL SHEETS
07	LA	5	42.8/47.3	757	1073

Andrew P. Rittenhouse 12-05-08
REGISTERED CIVIL ENGINEER DATE

6-8-09
PLANS APPROVAL DATE

REGISTERED PROFESSIONAL ENGINEER Andrew P. Rittenhouse No. C 61006 Exp. 12-31-10 CIVIL STATE OF CALIFORNIA

The State of California or its officers or agents shall not be responsible for the accuracy or completeness of electronic copies of this plan sheet.

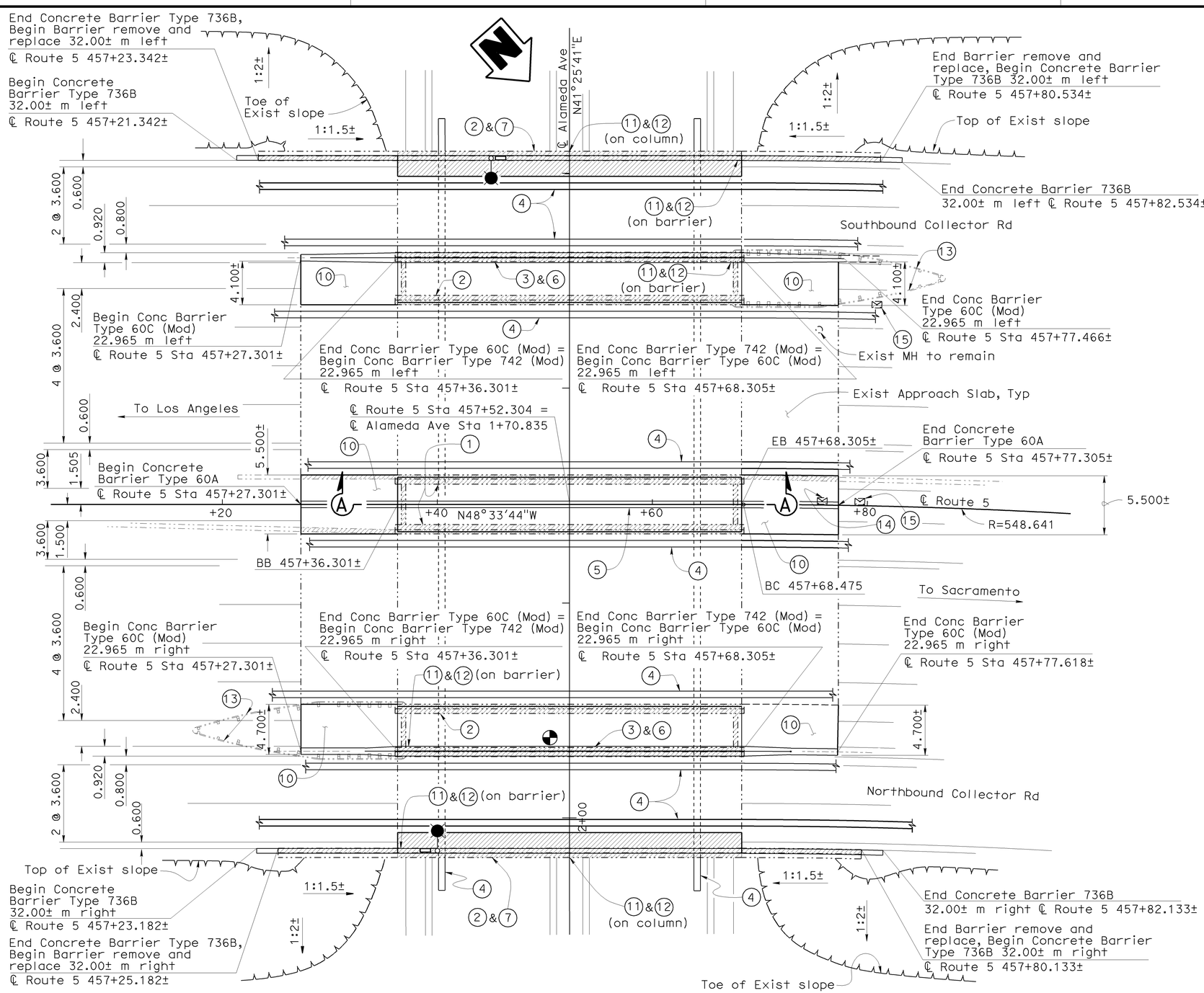

NOTE:
THE CONTRACTOR SHALL VERIFY ALL CONTROLLING FIELD DIMENSIONS BEFORE ORDERING OR FABRICATING ANY MATERIAL.

PLAN
1:200

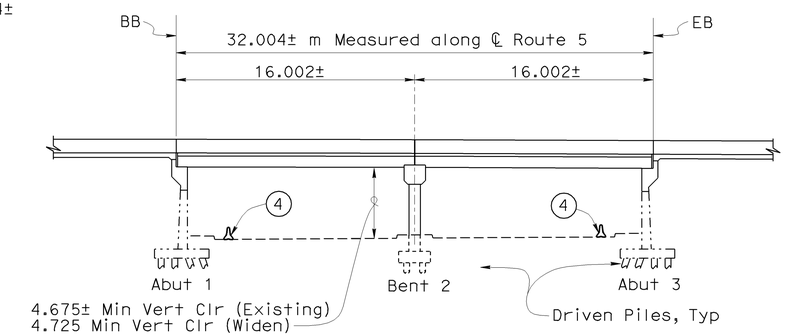

ELEVATION A-A
1:200

QUANTITIES

BRIDGE REMOVAL (PORTION), LOCATION F	LUMP	SUM
STRUCTURE EXCAVATION (BRIDGE)	46	m^3
STRUCTURE BACKFILL (BRIDGE)	28	m^3
NPS 3.5 SUPPLY LINE (BRIDGE)	116	m
FURNISH PILING (CLASS 625) (ALTERNATIVE W)	249	m
DRIVE PILE (CLASS 625) (ALTERNATIVE W)	18	EA
STRUCTURAL CONCRETE, BRIDGE FOOTING	17	m^3
STRUCTURAL CONCRETE, BRIDGE	170	m^3
STRUCTURAL CONCRETE, APPROACH SLAB (TYPE N)	82	m^3
DRILL AND BOND DOWEL	47	m
REFINISH BRIDGE DECK	45	m^2
JOINT SEAL (MR 13 mm)	34	m
JOINT SEAL (MR 25 mm)	17	m
BAR REINFORCING STEEL (BRIDGE)	17 800	kg
FURNISH STRUCTURAL STEEL (BRIDGE)	61 000	kg
ERECT STRUCTURAL STEEL (BRIDGE)	61 000	kg
CLEAN AND PAINT STRUCTURAL STEEL	LUMP	SUM
SPOT BLAST CLEAN AND PAINT UNDERCOAT	3	m^2
WORK AREA MONITORING	LUMP	SUM
MISCELLANEOUS METAL (BRIDGE)	2 100	kg
CONCRETE BARRIER (TYPE 60C MODIFIED)	37	m
CONCRETE BARRIER (TYPE 60A)	50	m
CONCRETE BARRIER (TYPE 736 MODIFIED)	112	m
CONCRETE BARRIER (TYPE 736B)	8	m
CONCRETE BARRIER (TYPE 742 MODIFIED)	129	m

Notes:
For information not shown see, "GENERAL PLAN NO. 2" sheet

Indicates existing structure
Indicates Bridge Removal (Portion)
Indicates point of Minimum Vertical Clearance
Electrolier foundation & pull box location, see "Road Plans" and 'MISCELLANEOUS DETAILS" sheets
Pullbox, see "Road Plans"

KP (PM) Indicates Kilometer Post (Post Mile)

Caltrans Metric

Traci Menard
DESIGN ENGINEER

	BY	CHECKED
DESIGN	Gabriel Galo	James Ralston
DETAILS	S. Cholda	James Ralston
QUANTITIES	James Ralston	Traci Menard

LOAD FACTOR DESIGN — LIVE LOADING: HS20-44 AND ALTERNATIVE AND PERMIT DESIGN LOAD

	BY	CHECKED
LAYOUT	Gabriel Galo	James Ralston
SPECIFICATIONS	T. Chen	PLANS AND SPECS COMPARED A. Rittenhouse

STATE OF CALIFORNIA
DEPARTMENT OF TRANSPORTATION

DIVISION OF ENGINEERING SERVICES
STRUCTURE DESIGN
DESIGN BRANCH 15

BRIDGE NO. 53-1082
KP (PM) 45.7 (28.4)

ALAMEDA AVENUE UNDERCROSSING (WIDEN)
GENERAL PLAN NO. 1

ALL DIMENSIONS ARE IN METERS UNLESS OTHERWISE SHOWN

ORIGINAL SCALE IN MILLIMETERS FOR REDUCED PLANS 0 10 20 30 40 50 60 70 80 90 100

CU 07
EA 121841

DISREGARD PRINTS BEARING EARLIER REVISION DATES

REVISION DATES: 1-8-09 1-23-09 2-11-09 3-30-09 5-13-09 3-14-08 4-07-08 7-8-08 11-7-08

SHEET 1 OF 33

STRUCTURES DESIGN GENERAL PLAN SHEET (METRIC) (REV.03-17-04)

FILE => 53-1082lrks-a-gp01.dgn

USERNAME => rtmrkes1 DATE PLOTTED => 15-JUN-2009 TIME PLOTTED => 13:20

DIST	COUNTY	ROUTE	KILOMETER POST TOTAL PROJECT	SHEET No	TOTAL SHEETS
07	LA	5	42.8/47.3	758	1073

Andrew Rittenhouse 12-05-08
REGISTERED CIVIL ENGINEER DATE

6-8-09
PLANS APPROVAL DATE

REGISTERED PROFESSIONAL ENGINEER
Andrew P. Rittenhouse
No. C 61006
Exp. 12-31-10
CIVIL
STATE OF CALIFORNIA

The State of California or its officers or agents shall not be responsible for the accuracy or completeness of electronic copies of this plan sheet.

Notes:

1. Remove existing Concrete Barrier Type 50 A.C., curb and deck overhang
2. Remove existing Concrete Barrier Type 27RM, curb, and deck overhang
3. Remove existing Concrete Barrier Type 27RM and curb
4. Temporary Railing, see "Road Plans"
5. Concrete Barrier Type 60A
6. Concrete Barrier Type 742 (Mod)
7. Overhang replacement with Concrete Barrier Type 736 (Mod) with utilities
8. Bearing Assembly
9. Steel Girder, Typ
10. Structure Approach Type N(9S)
11. Paint "Alameda Avenue UC", as needed at direction of Engineer
12. Paint "Br. No. 53-1082", as needed at direction of Engineer
13. Existing MBGR to be removed, see "Road Plans"
14. Existing DI to be removed, see "Road Plans"
15. Existing DI, see "Road Plans"
16. Temporary Crash Cushion, see "Road Plans"
17. Temporary Irrigation, see "Road Plans"
18. Existing Steel Girder, Typ

* Match existing cross slope

Indicates existing structure

Indicates Bridge Removal (Portion)

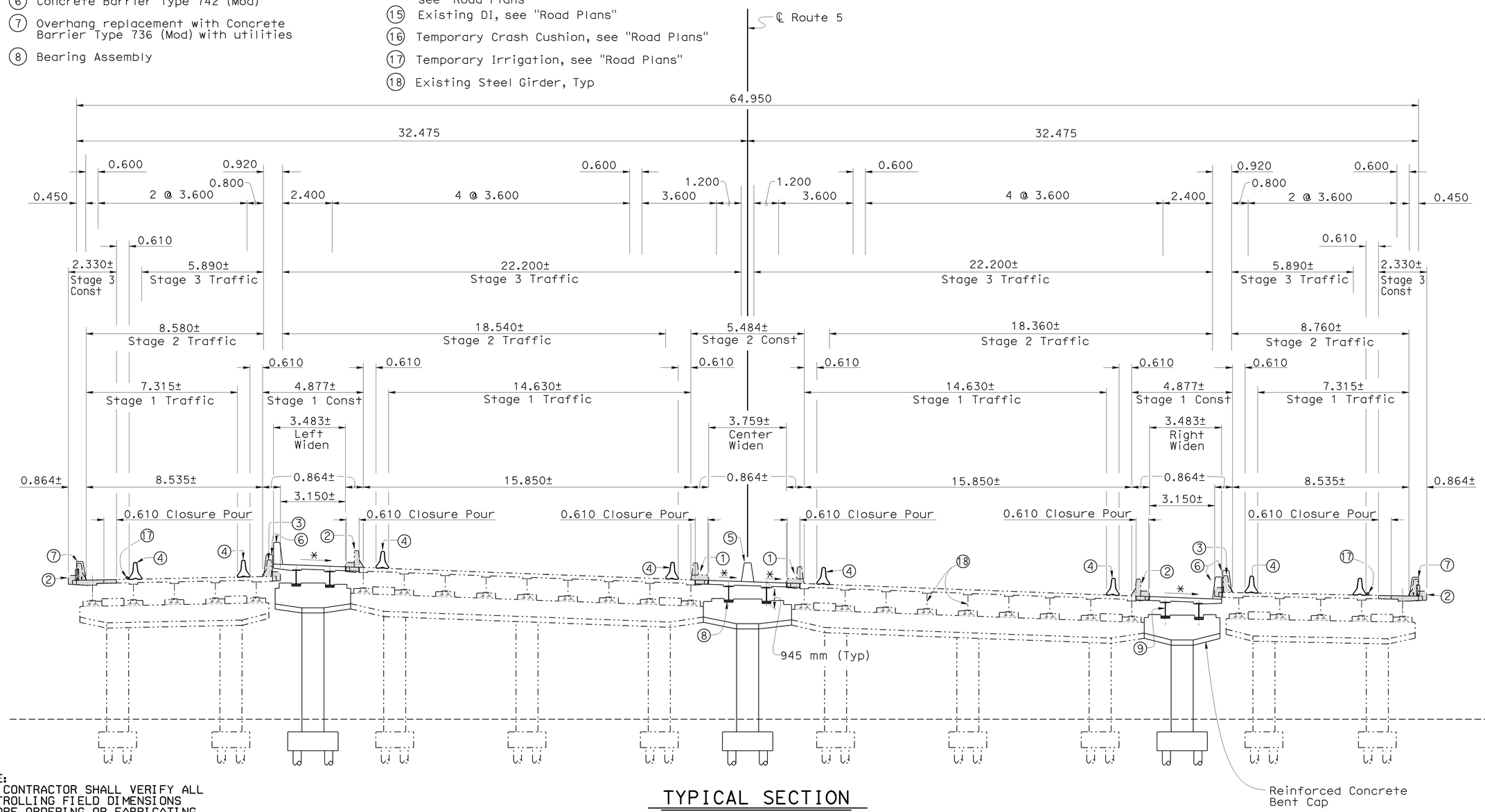

NOTE:
THE CONTRACTOR SHALL VERIFY ALL CONTROLLING FIELD DIMENSIONS BEFORE ORDERING OR FABRICATING ANY MATERIAL.

TYPICAL SECTION

1:100

KP (PM) Indicates Kilometer Post (Post Mile)

Caltrans Metric

Traci Menard
DESIGN ENGINEER

	BY	CHECKED
DESIGN	Gabriel Galo	James Ralston
DETAILS	S. Cholda/D. Kubochi	James Ralston
QUANTITIES	James Ralston	Traci Menard

LOAD FACTOR DESIGN	LIVE LOADING: HS20-44 AND ALTERNATIVE AND PERMIT DESIGN LOAD		
LAYOUT	BY Gabriel Galo	CHECKED James Ralston	
SPECIFICATIONS	BY	PLANS AND SPECS COMPARED	

STATE OF CALIFORNIA
DEPARTMENT OF TRANSPORTATION

DIVISION OF ENGINEERING SERVICES
STRUCTURE DESIGN
DESIGN BRANCH 15

BRIDGE NO. 53-1082
KILOMETER POST 45.7 (28.4)

ALAMEDA AVENUE UNDERCROSSING (WIDEN)
GENERAL PLAN NO. 2

ALL DIMENSIONS ARE IN METERS UNLESS OTHERWISE SHOWN

ORIGINAL SCALE IN MILLIMETERS FOR REDUCED PLANS 0 10 20 30 40 50 60 70 80 90 100

CU 07
EA 121841

DISREGARD PRINTS BEARING EARLIER REVISION DATES

REVISION DATES: 12-12-08 | 1-7-09 | 1-29-06 | 4-4-07 | 4-18-07 | 5-7-07 | 2-12-08 | 4-07-08 | 11-21-08

SHEET 2 OF 33

FILE => 53-1082lrks-a-gp02.dgn

STRUCTURES DESIGN GENERAL PLAN SHEET (METRIC) (REV.03-17-04)

USERNAME => trmihkes1 DATE PLOTTED => 12-JUN-2009 TIME PLOTTED => 13:38

DIST	COUNTY	ROUTE	KILOMETER POST TOTAL PROJECT	SHEET No	TOTAL SHEETS
07	LA	5	42.8/47.3	759	1073

Andrew Rittenhouse 12-05-08
REGISTERED CIVIL ENGINEER DATE

6-8-09
PLANS APPROVAL DATE

REGISTERED PROFESSIONAL ENGINEER Andrew P. Rittenhouse No. C 61006 Exp. 12-31-10 CIVIL STATE OF CALIFORNIA

The State of California or its officers or agents shall not be responsible for the accuracy or completeness of electronic copies of this plan sheet.

INDEX TO PLANS

SHEET NO.	TITLE
1	GENERAL PLAN NO. 1
2	GENERAL PLAN NO. 2
3	INDEX TO PLANS
4	FOUNDATION PLAN
5	ABUTMENT 1 LAYOUT
6	ABUTMENT 3 LAYOUT
7	ABUTMENT DETAILS NO. 1
8	ABUTMENT DETAILS NO. 2
9	ABUTMENT DETAILS NO. 3
10	ABUTMENT DETAILS NO. 4
11	ABUTMENT DETAILS NO. 5
12	ABUTMENT DETAILS NO. 6
13	ABUTMENT DETAILS NO. 7
14	BENT LAYOUT
15	BENT DETAILS NO. 1
16	BENT DETAILS NO. 2
17	BENT DETAILS NO. 3
18	BENT DETAILS NO. 4
19	BENT DETAILS NO. 5
20	TYPICAL SECTION
21	GIRDER LAYOUT
22	GIRDER DETAILS NO. 1
23	GIRDER DETAILS NO. 2
24	MISCELLANEOUS DETAILS NO. 1
25	MISCELLANEOUS DETAILS NO. 2
26	MISCELLANEOUS DETAILS NO. 3
27	MISCELLANEOUS DETAILS NO. 4
28	MISCELLANEOUS DETAILS NO. 5
29	STEEL GIRDER DETAILS
30	STRUCTURE APPROACH TYPE N(9S)
31	LOG OF TEST BORINGS 1 OF 3
32	LOG OF TEST BORINGS 2 OF 3
33	LOG OF TEST BORINGS 3 OF 3

STANDARD PLANS DATED JULY 2004

A10A	ACRONYMS AND ABBREVIATIONS (A-L)
A10B	ACRONYMS AND ABBREVIATIONS (M-Z)
A62C	LIMITS OF PAYMENT FOR EXCAVATION AND BACKFILL BRIDGE
A76A	CONCRETE BARRIER TYPE 60
T3	TEMPORARY RAILING (TYPE K)
B0-1	BRIDGE DETAILS
B0-3	BRIDGE DETAILS
B0-5	BRIDGE DETAILS
B2-5	PILE DETAILS CLASS 400 AND CLASS 625
RSP B6-21	JOINT SEALS (MAXIMUM MOVEMENT RATING = 50 mm)
B11-56	CONCRETE BARRIER TYPE 736
B11-57	CONCRETE BARRIER TYPE 742
B14-4	WATER SUPPLY LINE (BRIDGE) (PIPE SIZE LESS THAN NPS 4)
H9	PLANTING AND IRRIGATION DETAILS

STANDARD PLAN SHEET NO.

DETAIL NO.

NOTE:
THE CONTRACTOR SHALL VERIFY ALL CONTROLLING FIELD DIMENSIONS BEFORE ORDERING OR FABRICATING ANY MATERIAL.

PILE DATA

Location	Pile Type	Alt	Load Factor Design Nominal Resistance		Cut-off Elevation	Design Tip Elevation	Specified Tip Elevation
			Compression	Tension			
Bent 2	Class 625	W	1000 kN	500 kN	156.11 m	142.3 m (1) 143.5 m (2)	142.3 m

Design tip elevations are controlled by the following demands:
(1) Compression, (2) Tension

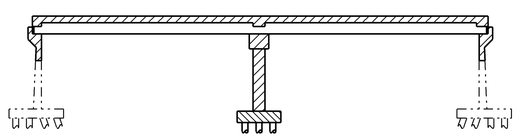

Structural Concrete, Bridge Footing 25 MPa @ 28 days

Structural Concrete, Bridge 28 MPa @ 28 days

Structural Steel

CONCRETE STRENGTH AND TYPE LIMITS

No Scale

GENERAL NOTES
LOAD FACTOR DESIGN

DESIGN: BRIDGE DESIGN SPECIFICATIONS (1996 AASHTO with Interims and Revisions by CALTRANS)

SEISMIC DESIGN: Caltrans Seismic Design Criteria (SDC), Version 1.4 June 2006

DEAD LOAD: Includes 1.675 KPa for future wearing surface.

LIVE LOADING: HS20-44 and alternative and permit design load.

SEISMIC LOADING: Site Specific Acceleration Response Spectra Curve

ANCHOR RODS: All Anchor Rods shall be ASTM F1554 (f_y = 725 MPa)

HS BOLTS: All ASTM A325 Bolts shall be f_y = 635 MPa with threads excluded from shear plane

REINFORCED CONCRETE: f_y = 420 MPa; f'_c = 25 MPa & 28 MPa; n = 8

Transverse Deck Slabs: (Working Stress Design) f_s = 138 MPa; f_c = 8.3 MPa; n = 10

STRUCTURAL STEEL: f_y = 345 MPa (ASTM A709M Grade 345)

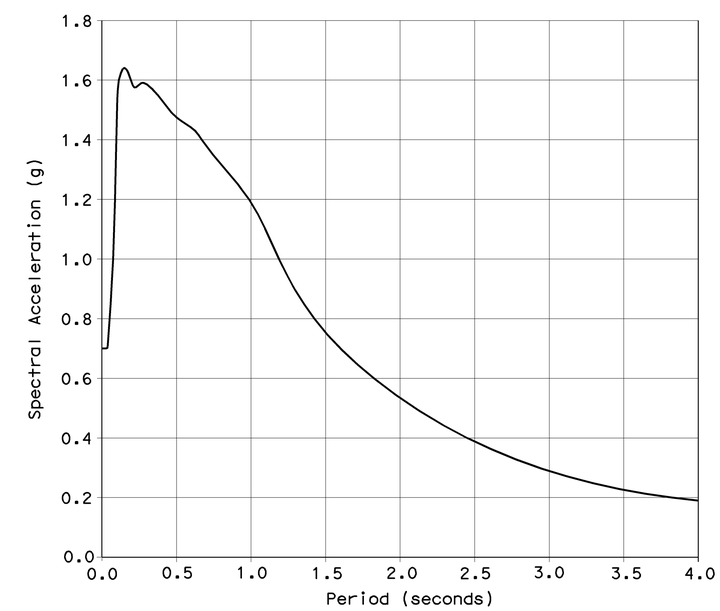

Caltrans Metric

	BY	CHECKED
DESIGN	Gabriel Galo	James Ralston
DETAILS	Dale Kubochi	James Ralston
QUANTITIES	James Ralston	Traci Menard

STATE OF CALIFORNIA
DEPARTMENT OF TRANSPORTATION

DIVISION OF ENGINEERING SERVICES
STRUCTURE DESIGN
DESIGN BRANCH 15

BRIDGE NO. 53-1082
KILOMETER POST 45.7

ALAMEDA AVENUE UNDERCROSSING (WIDEN)
INDEX TO PLANS

ALL DIMENSIONS ARE IN MILLIMETERS UNLESS OTHERWISE SHOWN

ORIGINAL SCALE IN MILLIMETERS FOR REDUCED PLANS 0 10 20 30 40 50 60 70 80 90 100

CU 07
EA 121841

DISREGARD PRINTS BEARING EARLIER REVISION DATES

REVISION DATES: 1-22-09 2-13-09 3-23-09 3-13-09 3-13-09 4-07-09 6-15-09 11-21-08 12-5-08

SHEET 3 OF 33

STRUCTURES DESIGN DETAIL SHEET (METRIC) (REV.03-17-04)

FILE => 53-1082irks-a-itp.dgn

USERNAME => trmikest DATE PLOTTED => 12-JUN-2009 TIME PLOTTED => 13:38

DIST	COUNTY	ROUTE	KILOMETER POST TOTAL PROJECT	SHEET No	TOTAL SHEETS
07	LA	5	42.8/47.3	760	1073

Andrew Rittenhouse 12-05-08
REGISTERED CIVIL ENGINEER DATE

6-8-09
PLANS APPROVAL DATE

REGISTERED PROFESSIONAL ENGINEER Andrew P. Rittenhouse No. C 61006 Exp. 12-31-10 CIVIL STATE OF CALIFORNIA

The State of California or its officers or agents shall not be responsible for the accuracy or completeness of electronic copies of this plan sheet.

Caltrans Metric

CURVE DATA

NO	R	Δ	T	L
(A)	548.641	35°10'0"	173.864	336.742

NOTE:
TREE DIAMETERS PER DISTRICT ARE LEVEL 54 CONSTRUCTION CLASS

Denotes bottom of footing elevation

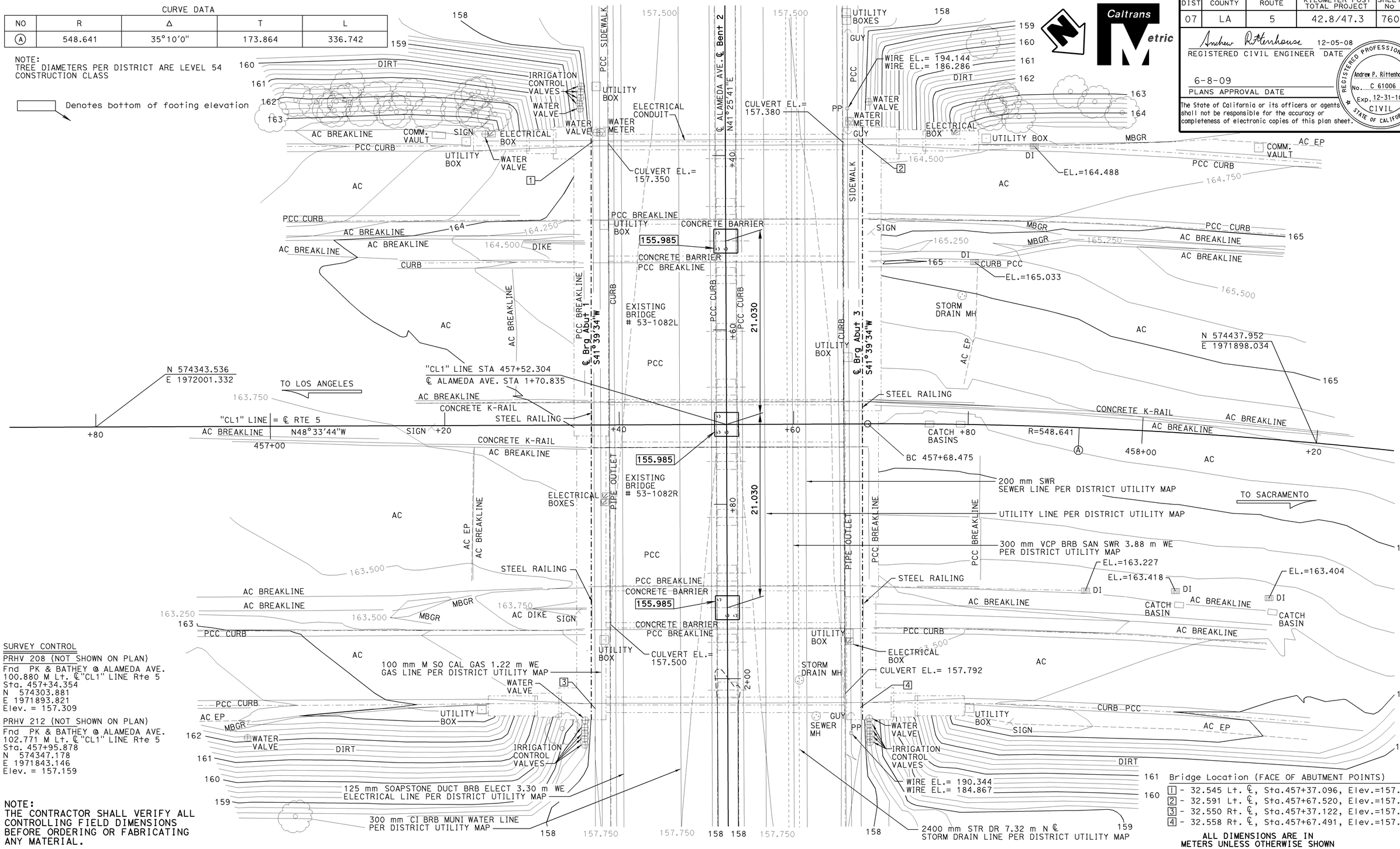

SURVEY CONTROL

PRHV 208 (NOT SHOWN ON PLAN)
Fnd PK & BATHEY @ ALAMEDA AVE.
100.880 M Lt. ℄ "CL1" LINE Rte 5
Sta. 457+34.354
N 574303.881
E 1971893.821
Elev. = 157.309

PRHV 212 (NOT SHOWN ON PLAN)
Fnd PK & BATHEY @ ALAMEDA AVE.
102.771 M Lt. ℄ "CL1" LINE Rte 5
Sta. 457+95.878
N 574347.178
E 1971843.146
Elev. = 157.159

NOTE:
THE CONTRACTOR SHALL VERIFY ALL CONTROLLING FIELD DIMENSIONS BEFORE ORDERING OR FABRICATING ANY MATERIAL.

Bridge Location (FACE OF ABUTMENT POINTS)
1 - 32.545 Lt. ℄, Sta.457+37.096, Elev.=157.624 ±
2 - 32.591 Lt. ℄, Sta.457+67.520, Elev.=157.638 ±
3 - 32.550 Rt. ℄, Sta.457+37.122, Elev.=157.797 ±
4 - 32.558 Rt. ℄, Sta.457+67.491, Elev.=157.754 ±

ALL DIMENSIONS ARE IN METERS UNLESS OTHERWISE SHOWN

PRELIMINARY INVESTIGATION SECTION

SCALE	VERT. DATUM NAVD88	PHOTOGRAMMETRY AS OF:		
1:200	HORZ. DATUM NAD83 (1991.35)	SURVEYED BY H.REDERER 02/2004	DRAFTED BY T.ZOLNIKOVA 07/2004	
ALIGNMENT TIES DIST.TRAVERSE SHEET		FIELD CHECKED BY	CHECKED BY F.BANDA 07/2004	

	BY	CHECKED
DESIGN	Gabriel Galo	James Ralston
DETAILS	Dale Kubochi	James Ralston
QUANTITIES	James Ralston	Traci Menard

STATE OF CALIFORNIA
DEPARTMENT OF TRANSPORTATION

DIVISION OF STRUCTURES
STRUCTURE DESIGN 15

CU 07
EA 121841

BRIDGE NO. 53-1082
KILOMETER POST 45.7

ALAMEDA AVENUE UNDERCROSSING (WIDEN)

FOUNDATION PLAN

STRUCTURES FOUNDATION PLAN SHEET (METRIC) (REV.12-1-01)

ORIGINAL SCALE IN MILLIMETERS FOR REDUCED PLANS 0 10 20 30 40 50 60 70 80 90 100

DISREGARD PRINTS BEARING EARLIER REVISION DATES

REVISION DATES (PRELIMINARY STAGE ONLY) 3-15-04 1-25-07 3-14-08 3-19-08 4-07-08 11-21-08

SHEET 4 OF 33

FILE => 53-1082lrks-e-fp.dgn

USERNAME => rtmrkes| DATE PLOTTED => 12-JUN-2009 TIME PLOTTED => 13:38

DIST	COUNTY	ROUTE	KILOMETER POST TOTAL PROJECT	SHEET No	TOTAL SHEETS
07	LA	5	42.8/47.3	761	1073

Andrew Rittenhouse 12-05-08
REGISTERED CIVIL ENGINEER DATE

6-8-09
PLANS APPROVAL DATE

REGISTERED PROFESSIONAL ENGINEER Andrew P. Rittenhouse No. C 61006 Exp. 12-31-10 CIVIL STATE OF CALIFORNIA

The State of California or its officers or agents shall not be responsible for the accuracy or completeness of electronic copies of this plan sheet.

Notes:
- Piles not shown on plan view for clarity.
- For "Section B-B", "Section C-C" and "Section D-D", see "ABUTMENT DETAILS NO. 3" sheet.
- Denotes Bridge Removal (Portion)

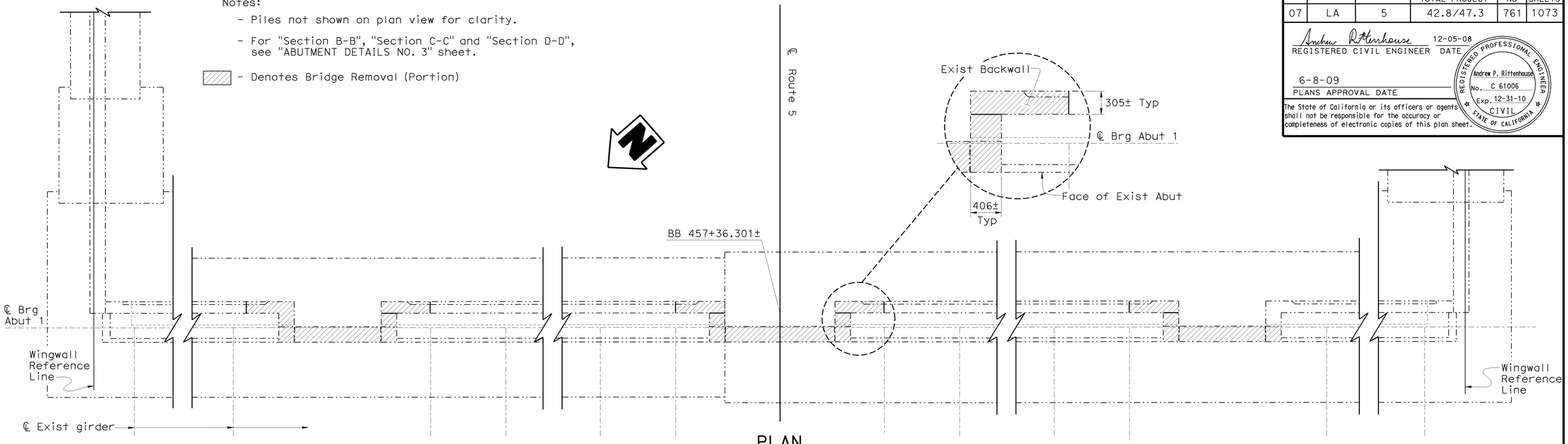

PLAN
1:50

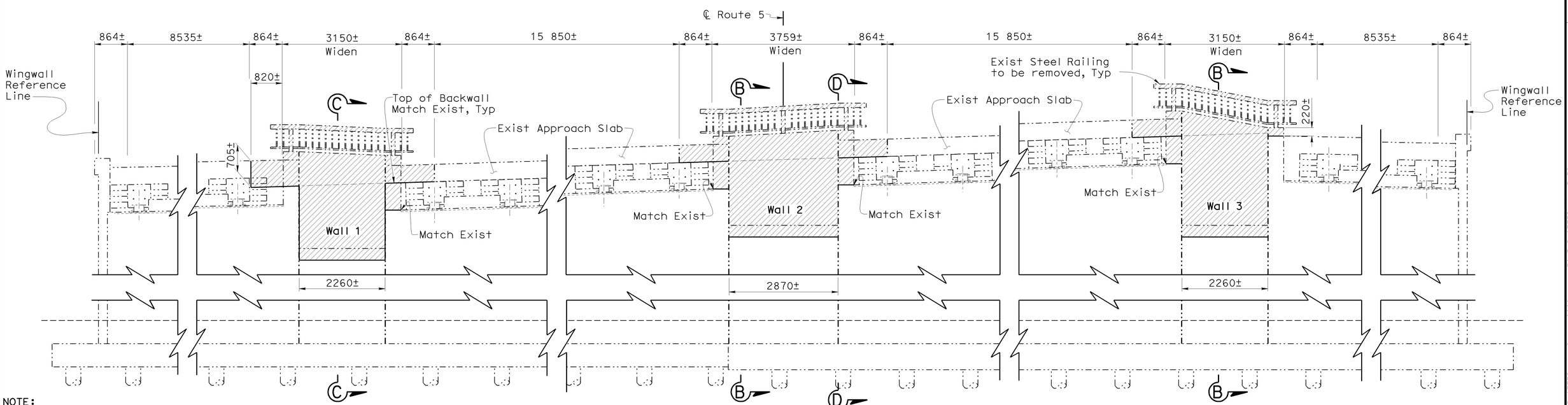

ELEVATION
1:50

NOTE:
THE CONTRACTOR SHALL VERIFY ALL CONTROLLING FIELD DIMENSIONS BEFORE ORDERING OR FABRICATING ANY MATERIAL.

Caltrans Metric

	BY	CHECKED
DESIGN	Gabriel Galo	James Ralston
DETAILS	Dale Kubochi	James Ralston
QUANTITIES	James Ralston	Traci Menard

STATE OF CALIFORNIA
DEPARTMENT OF TRANSPORTATION

DIVISION OF ENGINEERING SERVICES
STRUCTURE DESIGN
DESIGN BRANCH 15

BRIDGE NO. 53-1082
KILOMETER POST 45.7

ALAMEDA AVENUE UNDERCROSSING (WIDEN)
ABUTMENT 1 LAYOUT

ALL DIMENSIONS ARE IN MILLIMETERS UNLESS OTHERWISE SHOWN

ORIGINAL SCALE IN MILLIMETERS FOR REDUCED PLANS 0 10 20 30 40 50 60 70 80 90 100

CU 07
EA 121841

DISREGARD PRINTS BEARING EARLIER REVISION DATES

REVISION DATES: 12-29-06 12-29-06 4-14-07 5-5-08 6-26-08 11-21-08

SHEET 5 OF 33

FILE => 53-1082lrks-h-ab1lo.dgn

STRUCTURES DESIGN DETAIL SHEET (METRIC) (REV.03-17-04)

USERNAME => trmikest DATE PLOTTED => 12-JUN-2009 TIME PLOTTED => 13:39

DIST	COUNTY	ROUTE	KILOMETER POST TOTAL PROJECT	SHEET No	TOTAL SHEETS
07	LA	5	42.8/47.3	762	1073

Andrew P. Rittenhouse 12-05-08
REGISTERED CIVIL ENGINEER DATE

6-8-09
PLANS APPROVAL DATE

REGISTERED PROFESSIONAL ENGINEER Andrew P. Rittenhouse No. C 61006 Exp. 12-31-10 CIVIL STATE OF CALIFORNIA

The State of California or its officers or agents shall not be responsible for the accuracy or completeness of electronic copies of this plan sheet.

Notes:

- Piles not shown on plan view for clarity.
- For "Section A-A", "Section B-B" and "Section C-C" & "Section D-D", see "ABUTMENT DETAILS NO. 3" sheet.
- Denotes Bridge Removal (Portion)

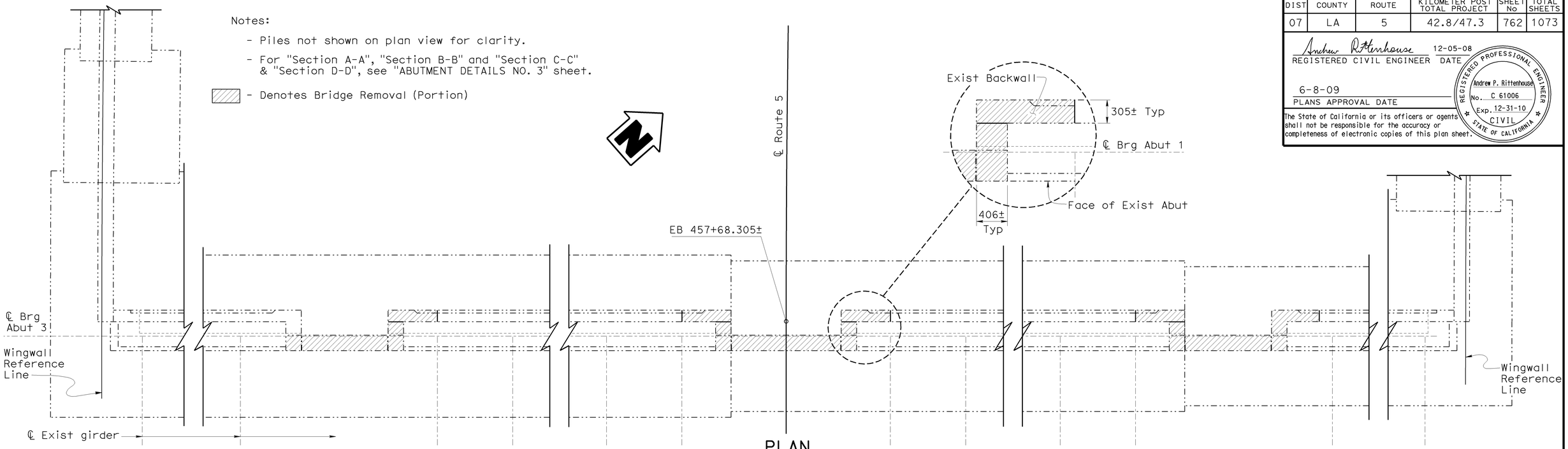

PLAN
1:50

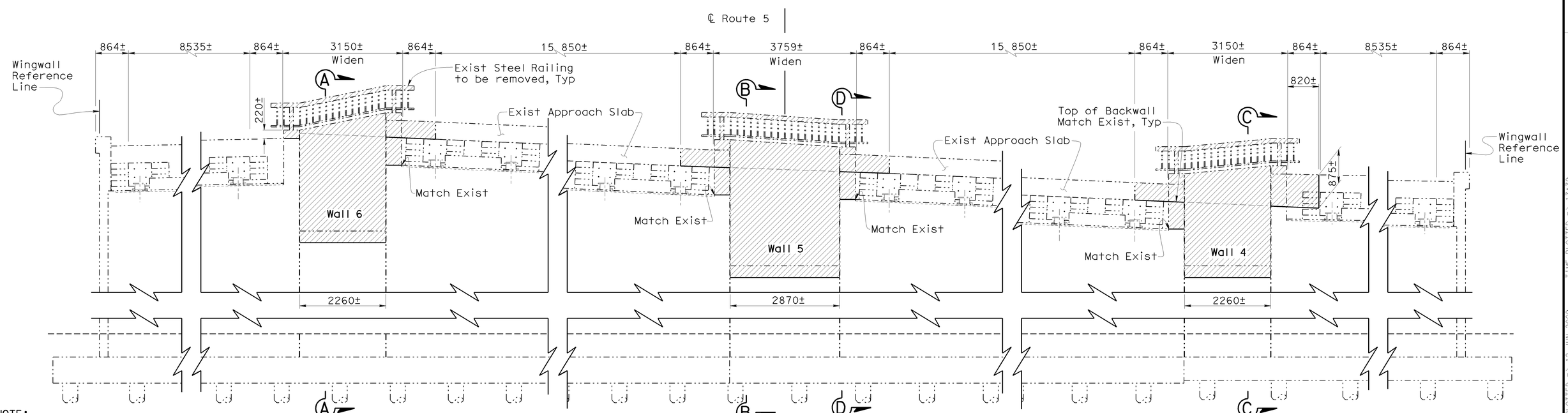

ELEVATION
1:50

NOTE:
THE CONTRACTOR SHALL VERIFY ALL CONTROLLING FIELD DIMENSIONS BEFORE ORDERING OR FABRICATING ANY MATERIAL.

DESIGN	BY Gabriel Galo	CHECKED James Ralston	
DETAILS	BY Dale Kubochi	CHECKED James Ralston	
QUANTITIES	BY James Ralston	CHECKED Traci Menard	

STATE OF CALIFORNIA
DEPARTMENT OF TRANSPORTATION

DIVISION OF ENGINEERING SERVICES
STRUCTURE DESIGN
DESIGN BRANCH 15

BRIDGE NO. 53 1082
KILOMETER POST 45.7

ALAMEDA AVENUE UNDERCROSSING (WIDEN)
ABUTMENT 3 LAYOUT

Caltrans Metric

ALL DIMENSIONS ARE IN MILLIMETERS UNLESS OTHERWISE SHOWN

ORIGINAL SCALE IN MILLIMETERS FOR REDUCED PLANS 0 10 20 30 40 50 60 70 80 90 100

CU 07
EA 121841

DISREGARD PRINTS BEARING EARLIER REVISION DATES

REVISION DATES: 12-15-06 12-15-06 3-5-08 4-08-08 11-21-08

SHEET 6 OF 33

FILE => 53-1082lrks-h-ab3lo.dgn

STRUCTURES DESIGN DETAIL SHEET (METRIC) (REV.03-17-04)

USERNAME => trmrkesl DATE PLOTTED => 12-JUN-2009 TIME PLOTTED => 13:39

DIST	COUNTY	ROUTE	KILOMETER POST TOTAL PROJECT	SHEET No	TOTAL SHEETS
07	LA	5	42.8/47.3	763	1073

Andrew Rittenhouse 12-05-08
REGISTERED CIVIL ENGINEER DATE

6-8-09
PLANS APPROVAL DATE

REGISTERED PROFESSIONAL ENGINEER Andrew P. Rittenhouse No. C 61006 Exp. 12-31-10 CIVIL STATE OF CALIFORNIA

The State of California or its officers or agents shall not be responsible for the accuracy or completeness of electronic copies of this plan sheet.

Notes:
- For "Section E-E" and "Section F-F", see "ABUTMENT DETAILS NO. 3" sheet.

✳ - Limits for Neoprene Strip and Expansion Joint Filler

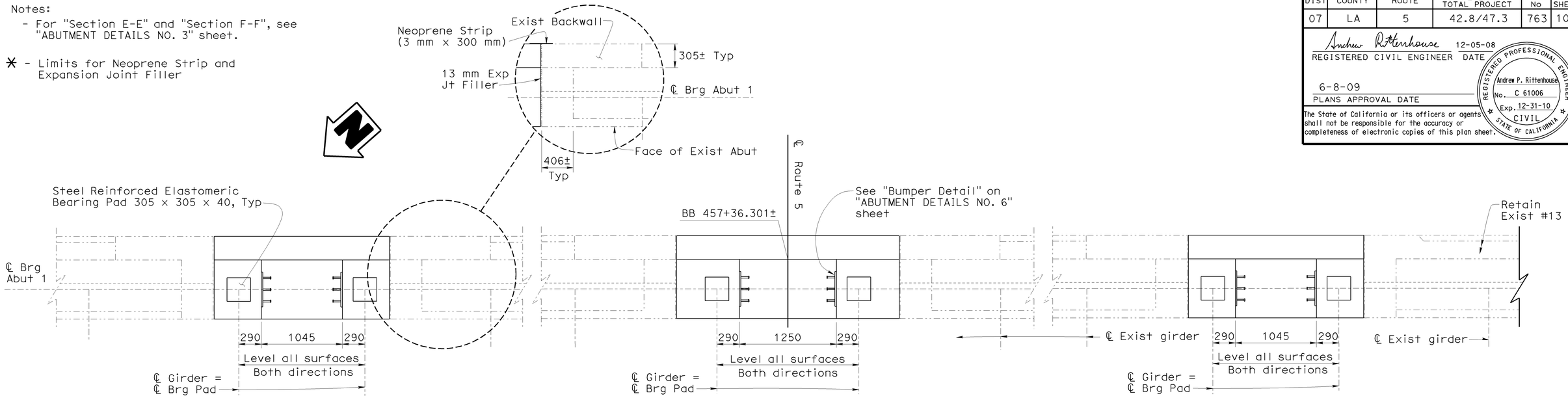

PLAN (ABUTMENT 1)
1:25

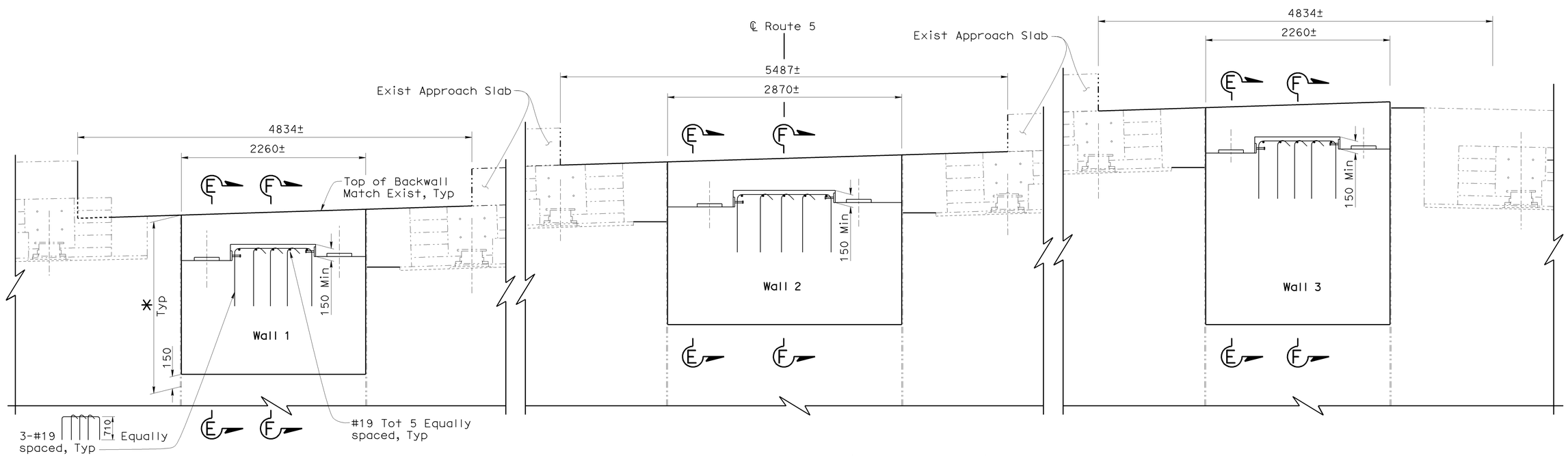

ELEVATION (ABUTMENT 1)
1:25

NOTE:
THE CONTRACTOR SHALL VERIFY ALL CONTROLLING FIELD DIMENSIONS BEFORE ORDERING OR FABRICATING ANY MATERIAL.

Caltrans Metric

ALL DIMENSIONS ARE IN MILLIMETERS UNLESS OTHERWISE SHOWN

ORIGINAL SCALE IN MILLIMETERS FOR REDUCED PLANS 0 10 20 30 40 50 60 70 80 90 100

	BY	CHECKED
DESIGN	Gabriel Galo	James Ralston
DETAILS	Dale Kubochi	James Ralston
QUANTITIES	James Ralston	Traci Menard

STATE OF CALIFORNIA
DEPARTMENT OF TRANSPORTATION

DIVISION OF ENGINEERING SERVICES
STRUCTURE DESIGN
DESIGN BRANCH 15

CU 07
EA 121841

BRIDGE NO. 53-1082
KILOMETER POST 45.7

ALAMEDA AVENUE UNDERCROSSING (WIDEN)
ABUTMENT DETAILS NO. 1

DISREGARD PRINTS BEARING EARLIER REVISION DATES

REVISION DATES: 12-29-06 4-13-07 8-14-07 4-5-08 4-08-08 11-21-08

SHEET 7 OF 33

FILE => 53-1082lrks-h-abdet01.dgn

STRUCTURES DESIGN DETAIL SHEET (METRIC) (REV.03-17-04)

USERNAME => trmthest DATE PLOTTED => 12-JUN-2009 TIME PLOTTED => 13:39

DIST	COUNTY	ROUTE	KILOMETER POST TOTAL PROJECT	SHEET No	TOTAL SHEETS
07	LA	5	42.8/47.3	764	1073

Andrew Rittenhouse 12-05-08
REGISTERED CIVIL ENGINEER DATE

6-8-09
PLANS APPROVAL DATE

REGISTERED PROFESSIONAL ENGINEER Andrew P. Rittenhouse No. C 61006 Exp. 12-31-10 CIVIL STATE OF CALIFORNIA

The State of California or its officers or agents shall not be responsible for the accuracy or completeness of electronic copies of this plan sheet.

Notes:
- For "Section E-E" and "Section F-F", see "ABUTMENT DETAILS NO. 3" sheet.

✱ - Limits for Neoprene Strip and Expansion Joint Filler

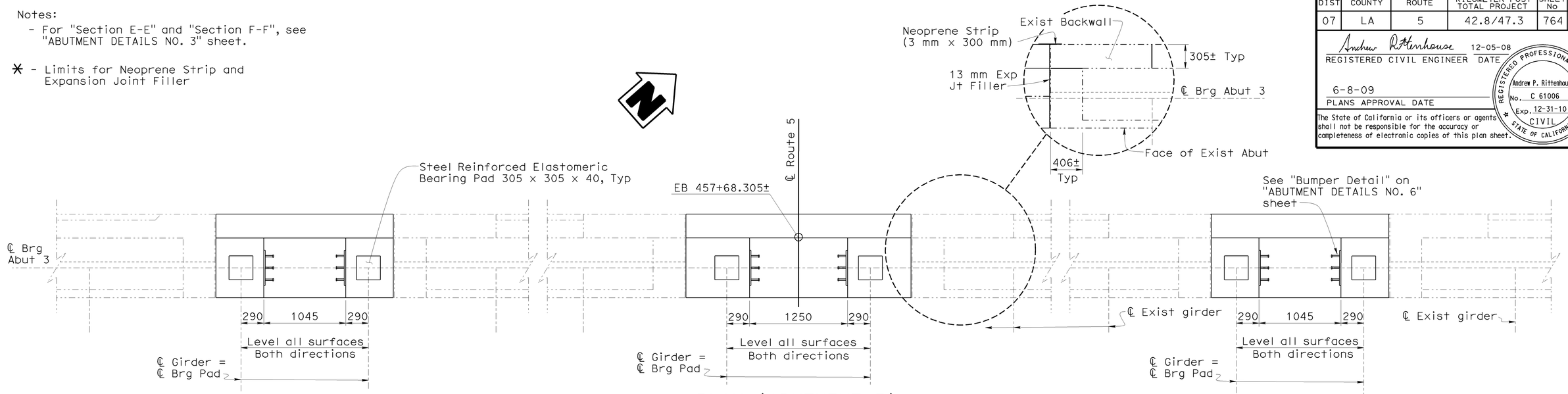

PLAN (ABUTMENT 3)

1:25

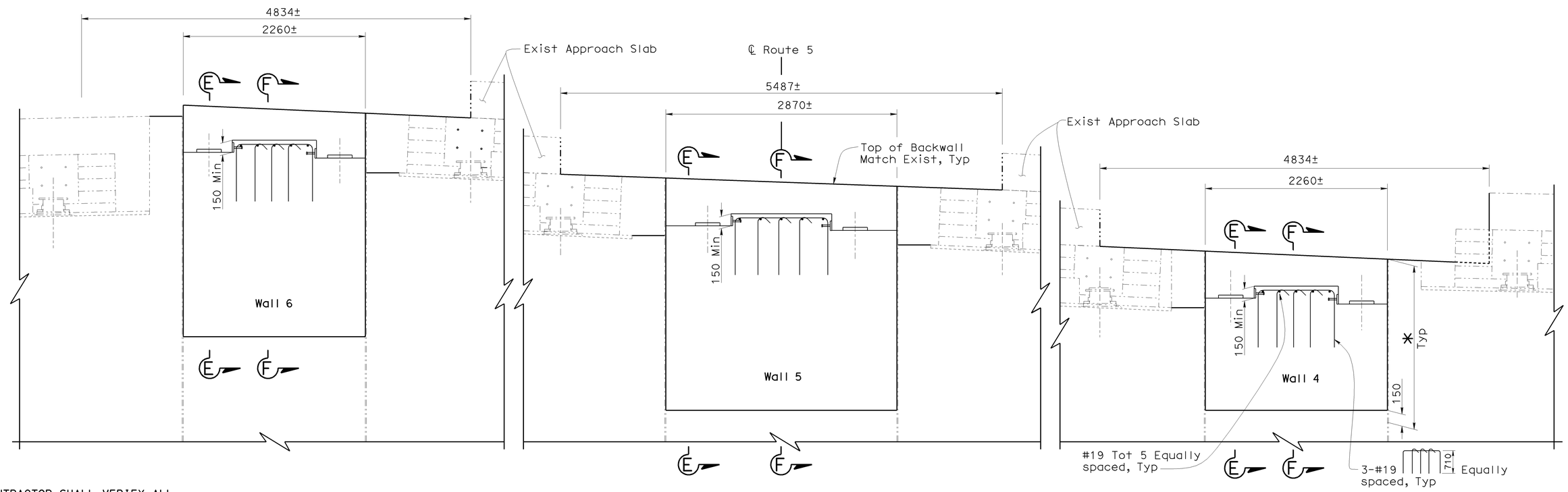

ELEVATION (ABUTMENT 3)

1:25

NOTE:
THE CONTRACTOR SHALL VERIFY ALL CONTROLLING FIELD DIMENSIONS BEFORE ORDERING OR FABRICATING ANY MATERIAL.

Caltrans Metric

	BY	CHECKED
DESIGN	Gabriel Galo	James Ralston
DETAILS	Dale Kubochi	James Ralston
QUANTITIES	James Ralston	Traci Menard

STATE OF CALIFORNIA
DEPARTMENT OF TRANSPORTATION

DIVISION OF ENGINEERING SERVICES
STRUCTURE DESIGN
DESIGN BRANCH 15

BRIDGE NO. 53 1082
KILOMETER POST 45.7

ALAMEDA AVENUE UNDERCROSSING (WIDEN)
ABUTMENT DETAILS NO. 2

ALL DIMENSIONS ARE IN MILLIMETERS UNLESS OTHERWISE SHOWN

ORIGINAL SCALE IN MILLIMETERS FOR REDUCED PLANS 0 10 20 30 40 50 60 70 80 90 100

CU 07
EA 121841

DISREGARD PRINTS BEARING EARLIER REVISION DATES

REVISION DATES: 1-5-07 4-13-07 8-30-07 3-5-08 4-08-08 11-21-08

SHEET 8 OF 33

FILE => 53-1082lrks-h-abdet02.dgn

STRUCTURES DESIGN DETAIL SHEET (METRIC) (REV.03-17-04)

USERNAME => ttmirkes| DATE PLOTTED => 12-JUN-2009 TIME PLOTTED => 13:39

DIST	COUNTY	ROUTE	KILOMETER POST TOTAL PROJECT	SHEET No	TOTAL SHEETS
07	LA	5	42.8/47.3	765	1073

Andrew Rittenhouse 12-05-08
REGISTERED CIVIL ENGINEER DATE

6-8-09
PLANS APPROVAL DATE

REGISTERED PROFESSIONAL ENGINEER Andrew P. Rittenhouse No. C 61006 Exp. 12-31-10 CIVIL STATE OF CALIFORNIA

The State of California or its officers or agents shall not be responsible for the accuracy or completeness of electronic copies of this plan sheet.

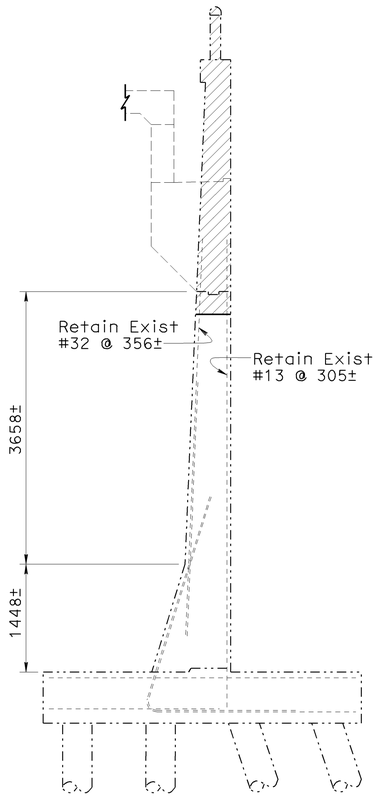

SECTION A-A
(Wall 6)
1:40

Note:
For dimensions and details not noted, see "Section C-C (Walls 1 & 4)"

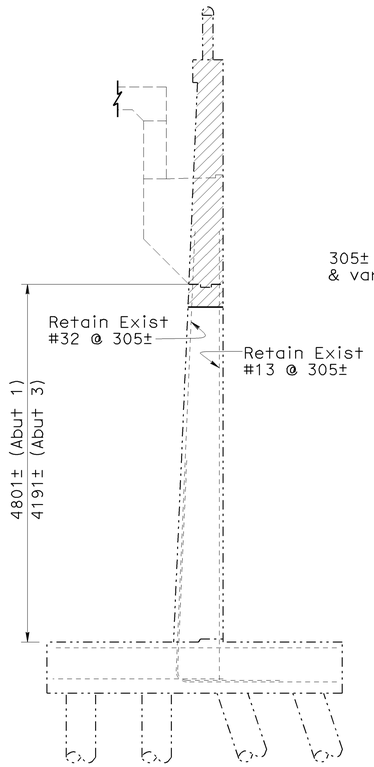

SECTION B-B
(Walls 2, 3 & 5)
1:40

Note:
For dimensions and details not noted, see "Section C-C (Walls 1 & 4)"

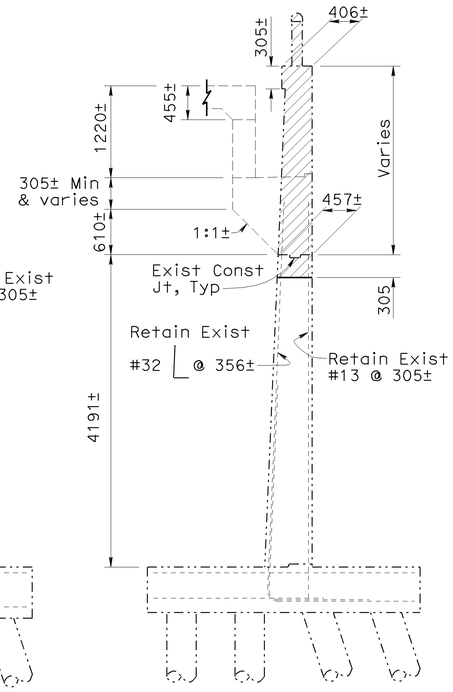

SECTION C-C
(Walls 1 & 4)
1:40

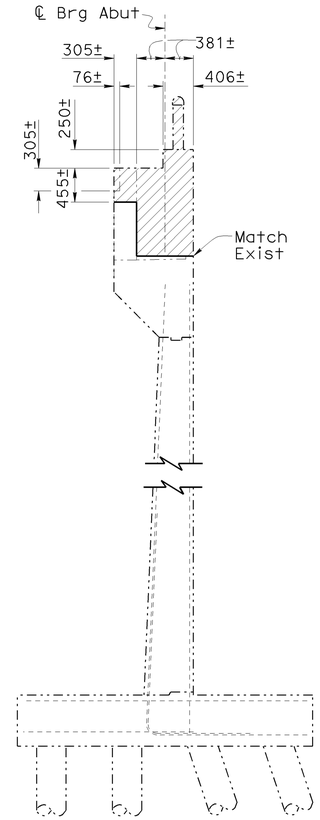

SECTION D-D
(For All Walls)
1:40

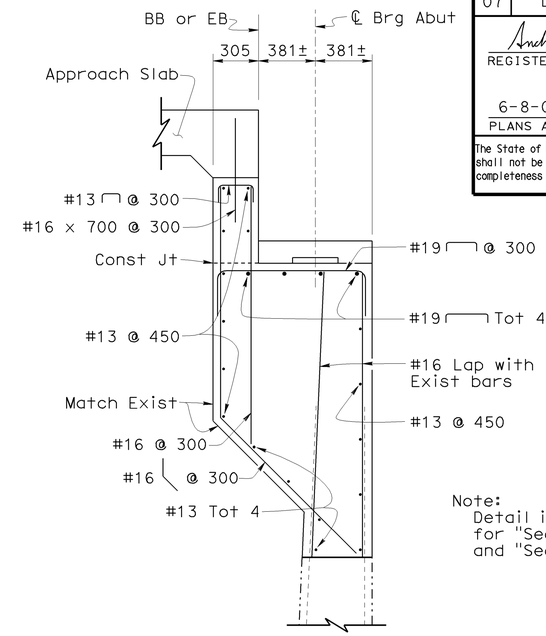

Note:
Detail is typical for replacement for "Section A-A", "Section B-B" and "Section C-C"

SECTION E-E
1:20

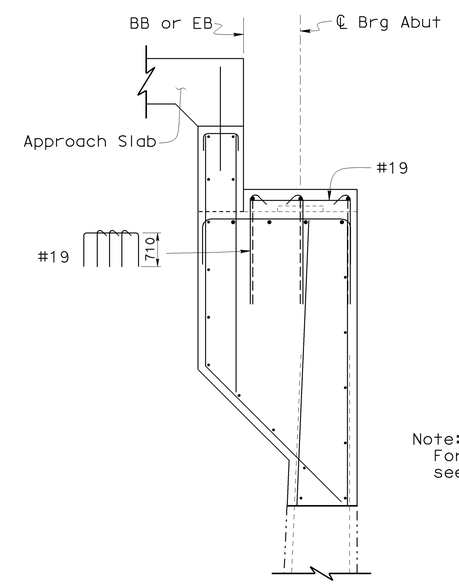

Note:
For details not noted, see "Section C-C"

SECTION F-F
1:20

Note:
Indicates Bridge Removal (Portion)

NOTE:
THE CONTRACTOR SHALL VERIFY ALL CONTROLLING FIELD DIMENSIONS BEFORE ORDERING OR FABRICATING ANY MATERIAL.

	BY	CHECKED
DESIGN	Gabriel Galo	James Ralston
DETAILS	Dale Kubochi	James Ralston
QUANTITIES	James Ralston	Traci Menard

STATE OF CALIFORNIA
DEPARTMENT OF TRANSPORTATION

DIVISION OF ENGINEERING SERVICES
STRUCTURE DESIGN
DESIGN BRANCH 15

BRIDGE NO. 53 1082
KILOMETER POST 45.7

ALAMEDA AVENUE UNDERCROSSING (WIDEN)
ABUTMENT DETAILS NO. 3

ALL DIMENSIONS ARE IN MILLIMETERS UNLESS OTHERWISE SHOWN

ORIGINAL SCALE IN MILLIMETERS FOR REDUCED PLANS 0 10 20 30 40 50 60 70 80 90 100

CU 07
EA 121841

DISREGARD PRINTS BEARING EARLIER REVISION DATES
REVISION DATES 4-20-07 4-08-08 11-21-08

SHEET 9 OF 33

FILE => 53-1082rks-h-abdet03.dgn

STRUCTURES DESIGN DETAIL SHEET (METRIC) (REV.03-17-04)

USERNAME => trmikesl DATE PLOTTED => 12-JUN-2009 TIME PLOTTED => 13:33

DIST	COUNTY	ROUTE	KILOMETER POST TOTAL PROJECT	SHEET No	TOTAL SHEETS
07	LA	5	42.8/47.3	766	1073

Andrew Rittenhouse 12-05-08
REGISTERED CIVIL ENGINEER DATE

6-8-09
PLANS APPROVAL DATE

REGISTERED PROFESSIONAL ENGINEER Andrew P. Rittenhouse No. C 61006 Exp. 12-31-10 CIVIL STATE OF CALIFORNIA

The State of California or its officers or agents shall not be responsible for the accuracy or completeness of electronic copies of this plan sheet.

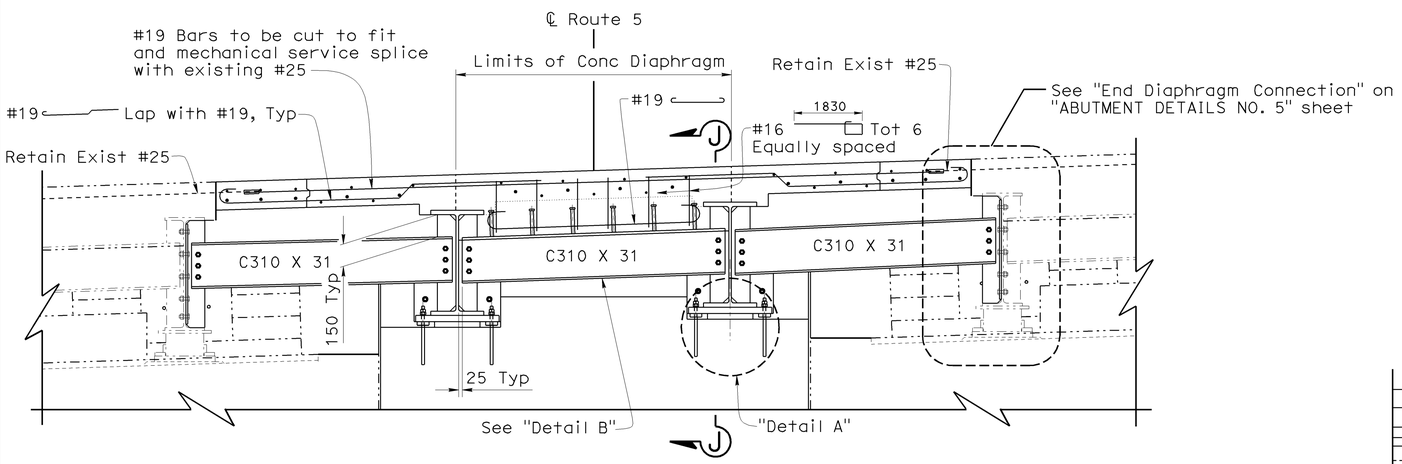

CENTER WIDEN

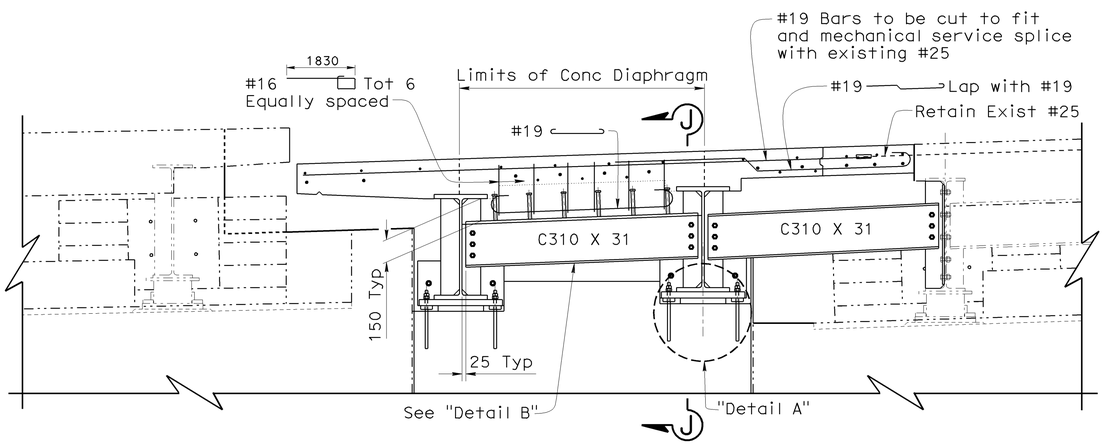

RIGHT WIDEN

END DIAPHRAGM ELEVATION

1:20

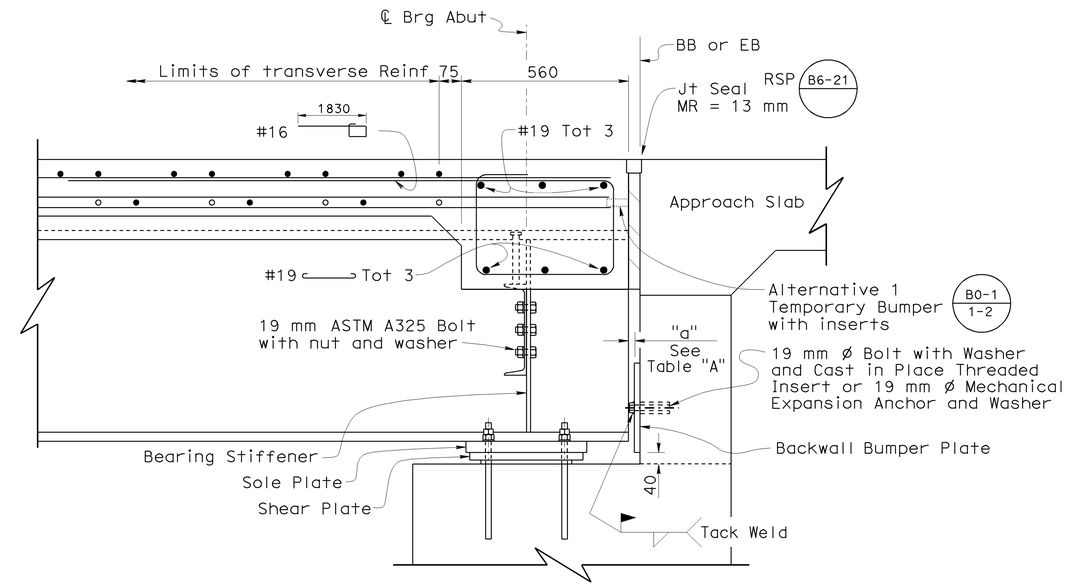

SECTION J-J

1:10

TABLE A Dimension "a"			
Location	Winter	Fall/Spring	Summer
Abut 1&3	20	20	13

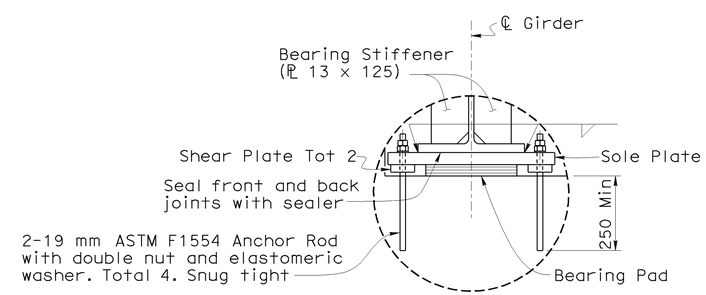

DETAIL A

1:10

Notes:

- Abutment 1 shown, Abutment 3 similar.
- Abutment for Center & Right Widen shown, Left Widen similar to Right Widen.
- For "Detail B", see "ABUTMENT DETAILS NO. 6" sheet.
- For "Sole Plate", ""Shear Plate" and "Backwall Plate" details, see "ABUTMENT DETAILS NO. 6" sheet.

NOTE:
THE CONTRACTOR SHALL VERIFY ALL CONTROLLING FIELD DIMENSIONS BEFORE ORDERING OR FABRICATING ANY MATERIAL.

Caltrans Metric

	BY	CHECKED
DESIGN	Gabriel Galo	James Ralston
DETAILS	Dale Kubochi	James Ralston
QUANTITIES	James Ralston	Traci Menard

STATE OF CALIFORNIA
DEPARTMENT OF TRANSPORTATION

DIVISION OF ENGINEERING SERVICES
STRUCTURE DESIGN
DESIGN BRANCH 15

BRIDGE NO. 53-1082
KILOMETER POST 45.7

ALAMEDA AVENUE UNDERCROSSING (WIDEN)
ABUTMENT DETAILS NO. 4

ALL DIMENSIONS ARE IN MILLIMETERS UNLESS OTHERWISE SHOWN

ORIGINAL SCALE IN MILLIMETERS FOR REDUCED PLANS 0 10 20 30 40 50 60 70 80 90 100

CU 07
EA 121841

DISREGARD PRINTS BEARING EARLIER REVISION DATES

REVISION DATES: 3-15-07 4-13-07 4-13-07 8-23-07 3-5-08 4-04-08 4-24-08 11-13-08 2-18-09

SHEET 10 OF 33

FILE => 53-1082lrks-h-abdet04.dgn

STRUCTURES DESIGN DETAIL SHEET (METRIC) (REV.03-17-04)

USERNAME => trmikesl DATE PLOTTED => 12-JUN-2009 TIME PLOTTED => 13:39

DIST	COUNTY	ROUTE	KILOMETER POST TOTAL PROJECT	SHEET No	TOTAL SHEETS
07	LA	5	42.8/47.3	767	1073

Andrew Rittenhouse 12-05-08
REGISTERED CIVIL ENGINEER DATE

6-8-09
PLANS APPROVAL DATE

REGISTERED PROFESSIONAL ENGINEER Andrew P. Rittenhouse No. C 61006 Exp. 12-31-10 CIVIL STATE OF CALIFORNIA

The State of California or its officers or agents shall not be responsible for the accuracy or completeness of electronic copies of this plan sheet.

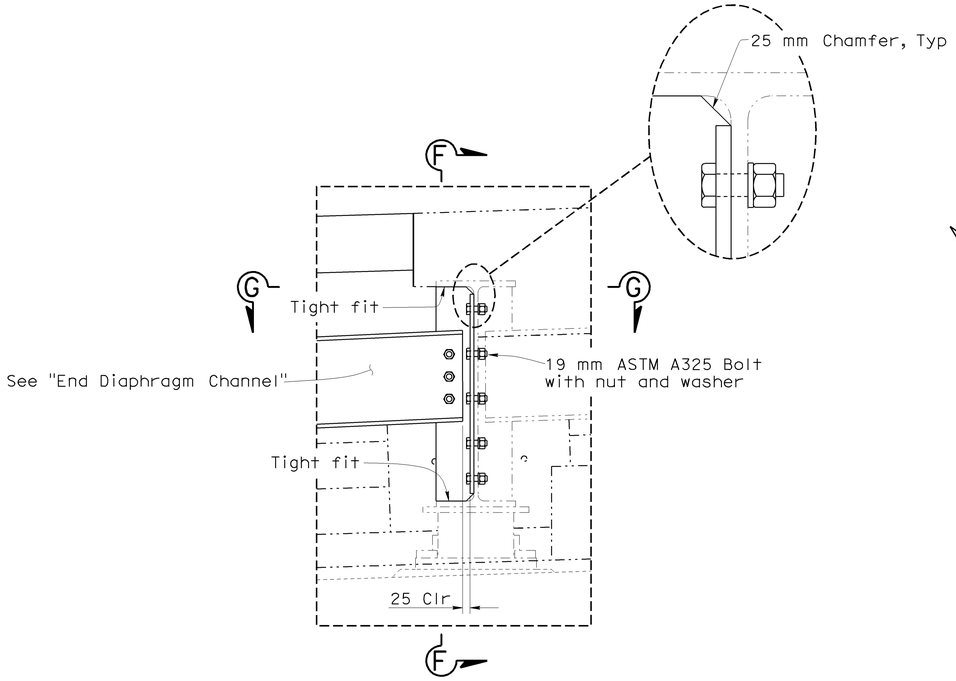

END DIAPHRAGM CONNECTION
1:10

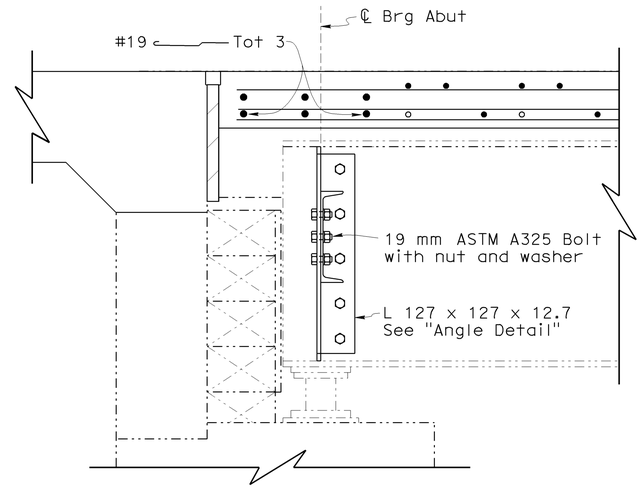

SECTION F-F
1:10

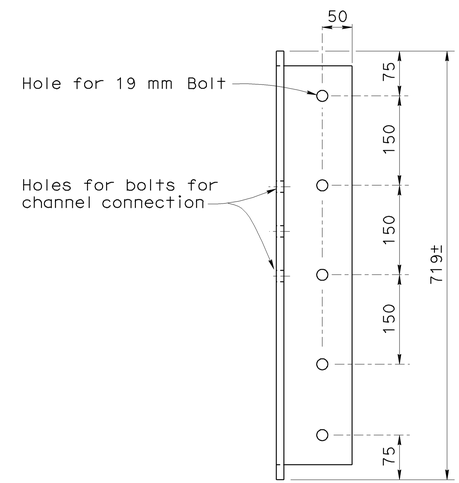

ANGLE DETAIL
1:5

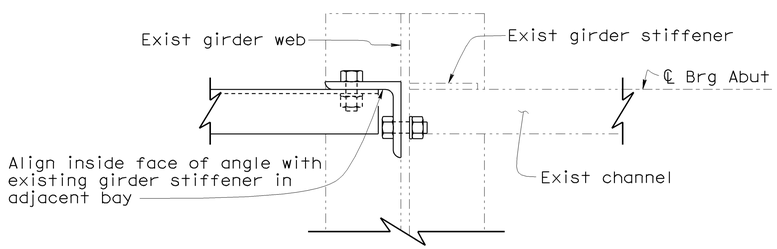

SECTION G-G
1:5

END DIAPHRAGM CHANNEL
1:10

NOTE:
THE CONTRACTOR SHALL VERIFY ALL CONTROLLING FIELD DIMENSIONS BEFORE ORDERING OR FABRICATING ANY MATERIAL.

Caltrans Metric

	BY	CHECKED
DESIGN	Gabriel Galo	James Ralston
DETAILS	Dale Kubochi	James Ralston
QUANTITIES	James Ralston	Traci Menard

STATE OF CALIFORNIA
DEPARTMENT OF TRANSPORTATION

DIVISION OF ENGINEERING SERVICES
STRUCTURE DESIGN
DESIGN BRANCH 15

BRIDGE NO. 53-1082
KILOMETER POST 45.7

ALAMEDA AVENUE UNDERCROSSING (WIDEN)
ABUTMENT DETAILS NO. 5

ALL DIMENSIONS ARE IN MILLIMETERS UNLESS OTHERWISE SHOWN

ORIGINAL SCALE IN MILLIMETERS FOR REDUCED PLANS 0 10 20 30 40 50 60 70 80 90 100

CU 07
EA 121841

DISREGARD PRINTS BEARING EARLIER REVISION DATES
REVISION DATES 9-5-07 3-17-08 4-18-08 11-21-08

SHEET 11 OF 33

STRUCTURES DESIGN DETAIL SHEET (METRIC) (REV.03-17-04)

FILE => 53-1082lrks-h-abdet05.dgn

USERNAME => ttmirkes1 DATE PLOTTED => 12-JUN-2009 TIME PLOTTED => 13:39

DIST	COUNTY	ROUTE	KILOMETER POST TOTAL PROJECT	SHEET No	TOTAL SHEETS
07	LA	5	42.8/47.3	768	1073

Andrew Rittenhouse 12-05-08
REGISTERED CIVIL ENGINEER DATE

6-8-09
PLANS APPROVAL DATE

REGISTERED PROFESSIONAL ENGINEER Andrew P. Rittenhouse No. C 61006 Exp. 12-31-10 CIVIL STATE OF CALIFORNIA

The State of California or its officers or agents shall not be responsible for the accuracy or completeness of electronic copies of this plan sheet.

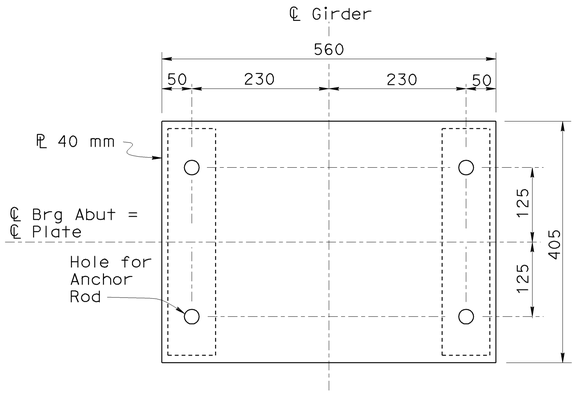

SOLE PLATE
1:5

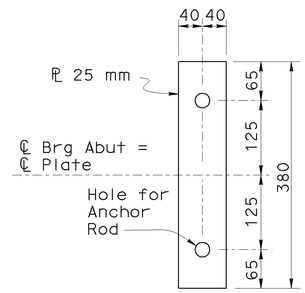

SHEAR PLATE
1:5

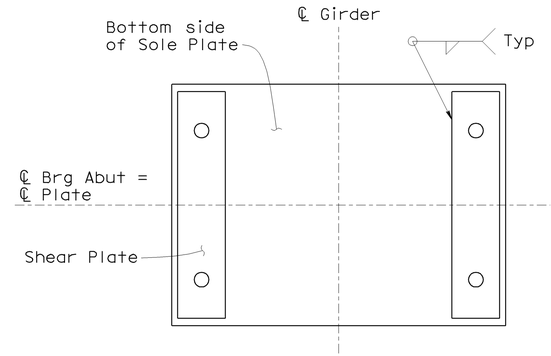

SHEAR PLATE CONNECTION TO SOLE PLATE
1:5

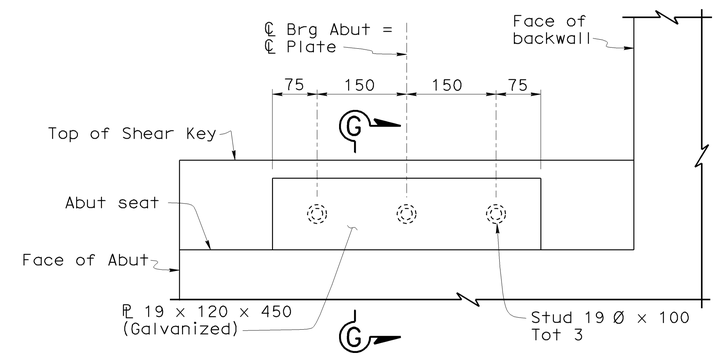

ELEVATION

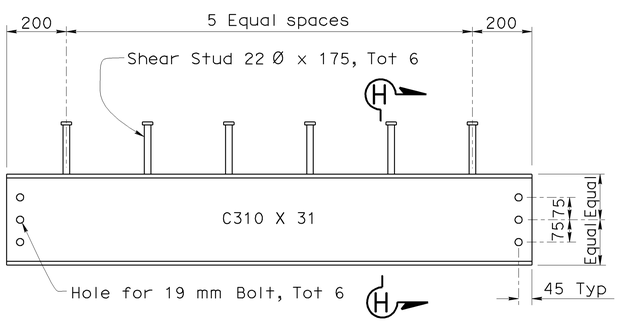

DETAIL B
1:10

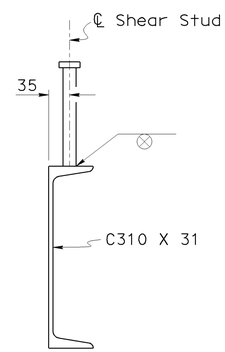

SECTION H-H
1:5

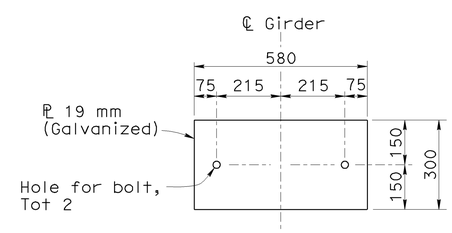

BACKWALL BUMPER PLATE
1:10

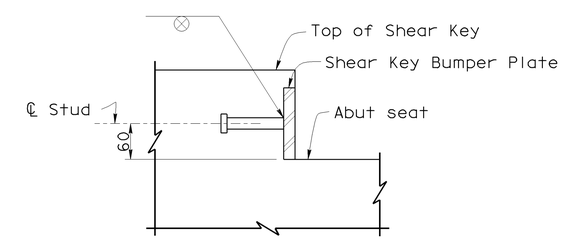

SECTION G-G

BUMPER DETAIL
1:5

NOTE:
THE CONTRACTOR SHALL VERIFY ALL CONTROLLING FIELD DIMENSIONS BEFORE ORDERING OR FABRICATING ANY MATERIAL.

Caltrans Metric

	BY	CHECKED
DESIGN	Gabriel Galo	James Ralston
DETAILS	Dale Kubochi	James Ralston
QUANTITIES	James Ralston	Traci Menard

STATE OF CALIFORNIA
DEPARTMENT OF TRANSPORTATION

DIVISION OF ENGINEERING SERVICES
STRUCTURE DESIGN
DESIGN BRANCH 15

BRIDGE NO. 53-1082
KILOMETER POST 45.7

ALAMEDA AVENUE UNDERCROSSING (WIDEN)
ABUTMENT DETAILS NO. 6

ALL DIMENSIONS ARE IN MILLIMETERS UNLESS OTHERWISE SHOWN

ORIGINAL SCALE IN MILLIMETERS FOR REDUCED PLANS 0 10 20 30 40 50 60 70 80 90 100

CU 07
EA 121841

DISREGARD PRINTS BEARING EARLIER REVISION DATES

REVISION DATES: 1-16-07 4-6-07 4-14-07 4-9-08 11-24-08 1-26-09 2-18-09

SHEET 12 OF 33

FILE => 53-1082lrks-h-abdet06.dgn

STRUCTURES DESIGN DETAIL SHEET (METRIC) (REV.03-17-04)

USERNAME => trmikest DATE PLOTTED => 12-JUN-2009 TIME PLOTTED => 13:39

DIST	COUNTY	ROUTE	KILOMETER POST TOTAL PROJECT	SHEET No	TOTAL SHEETS
07	LA	5	42.8/47.3	769	1073

Andrew Rittenhouse 12-05-08
REGISTERED CIVIL ENGINEER DATE

6-8-09
PLANS APPROVAL DATE

REGISTERED PROFESSIONAL ENGINEER Andrew P. Rittenhouse No. C 61006 Exp. 12-31-10 CIVIL STATE OF CALIFORNIA

The State of California or its officers or agents shall not be responsible for the accuracy or completeness of electronic copies of this plan sheet.

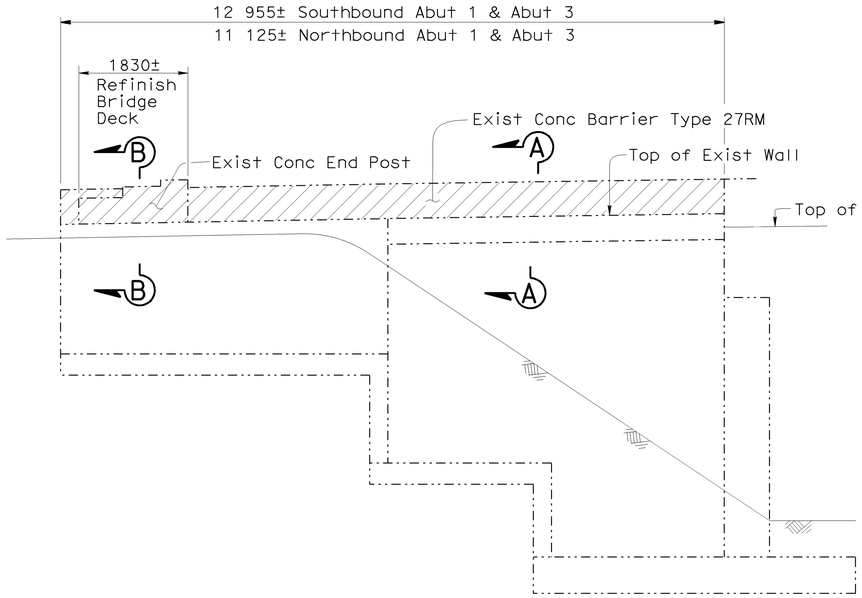

BARRIER RAIL REMOVAL AT WINGWALL

No Scale

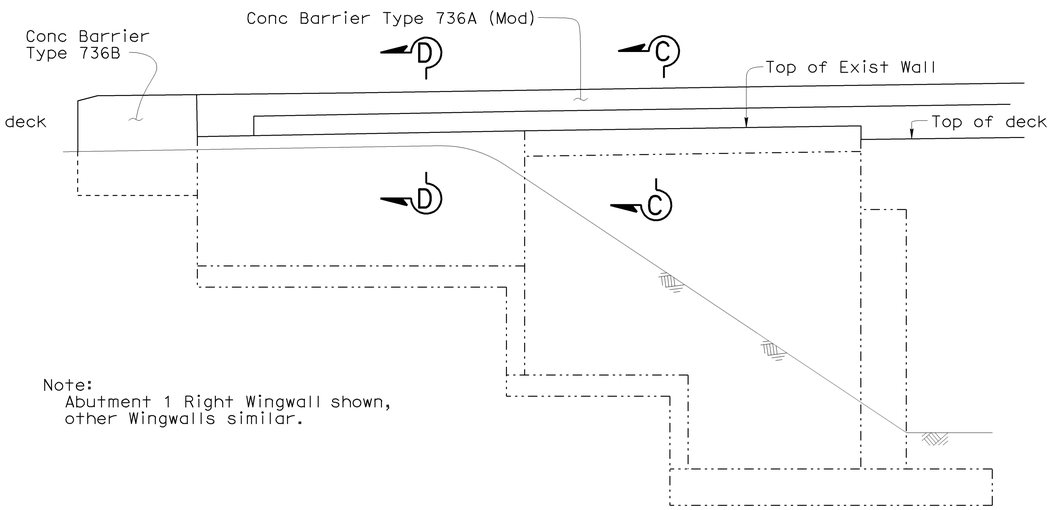

Note:
Abutment 1 Right Wingwall shown, other Wingwalls similar.

BARRIER RAIL REPLACEMENT AT WINGWALL

1:50

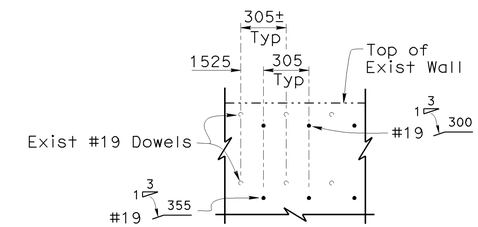

DOWEL LAYOUT

1:20

Concrete removal

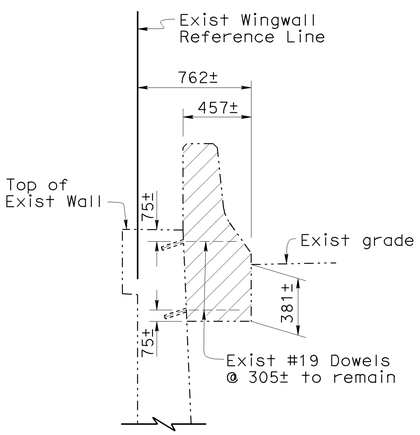

SECTION A-A

1:20

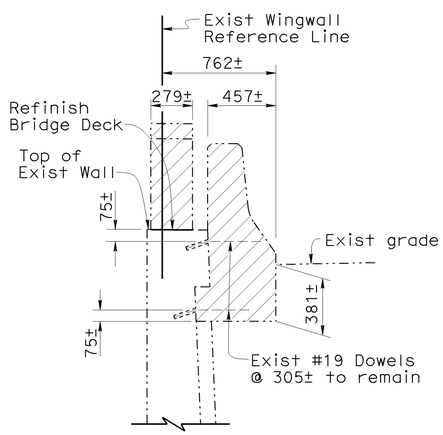

SECTION B-B

1:20

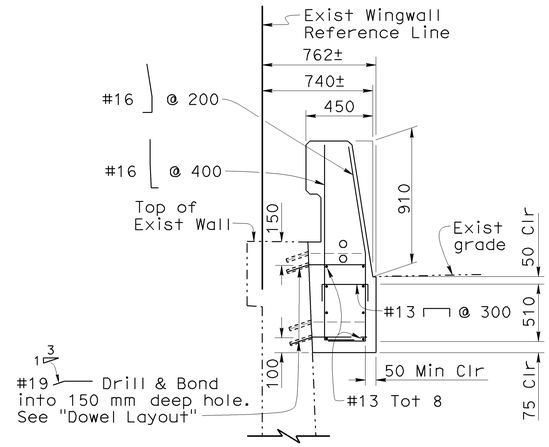

SECTION C-C

1:20

Note: For barrier rail details not shown, see B11-56

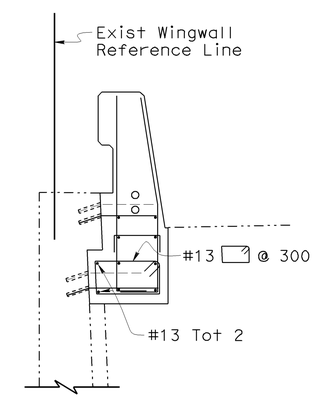

SECTION D-D

1:20

Note: For details not noted, see "Section C-C"

NOTE:
THE CONTRACTOR SHALL VERIFY ALL CONTROLLING FIELD DIMENSIONS BEFORE ORDERING OR FABRICATING ANY MATERIAL.

For additional details, see "MISCELLANEOUS DETAILS" Sheets

Caltrans Metric

	BY	CHECKED
DESIGN	Gabriel Galo	James Ralston
DETAILS	Dale Kubochi	James Ralston
QUANTITIES	James Ralston	Traci Menard

STATE OF CALIFORNIA
DEPARTMENT OF TRANSPORTATION

DIVISION OF ENGINEERING SERVICES
STRUCTURE DESIGN
DESIGN BRANCH 15

BRIDGE NO. 53-1082
KILOMETER POST 45.7

ALAMEDA AVENUE UNDERCROSSING (WIDEN)
ABUTMENT DETAILS NO. 7

ALL DIMENSIONS ARE IN MILLIMETERS UNLESS OTHERWISE SHOWN

ORIGINAL SCALE IN MILLIMETERS FOR REDUCED PLANS 0 10 20 30 40 50 60 70 80 90 100

CU 07
EA 121841

DISREGARD PRINTS BEARING EARLIER REVISION DATES

REVISION DATES: 2-13-06 4-13-07 3-7-08 4-4-08 4-14-08 11-21-08

SHEET 13 OF 33

FILE => 53-1082lrks-h-abdet07.dgn

STRUCTURES DESIGN DETAIL SHEET (METRIC) (REV.03-17-04)

USERNAME => trmikesl DATE PLOTTED => 12-JUN-2009 TIME PLOTTED => 13:39

DIST	COUNTY	ROUTE	KILOMETER POST TOTAL PROJECT	SHEET No	TOTAL SHEETS
07	LA	5	42.8/47.3	770	1073

Andrew Rittenhouse 12-05-08
REGISTERED CIVIL ENGINEER DATE

6-8-09
PLANS APPROVAL DATE

REGISTERED PROFESSIONAL ENGINEER
Andrew P. Rittenhouse
No. C 61006
Exp. 12-31-10
CIVIL
STATE OF CALIFORNIA

The State of California or its officers or agents shall not be responsible for the accuracy or completeness of electronic copies of this plan sheet.

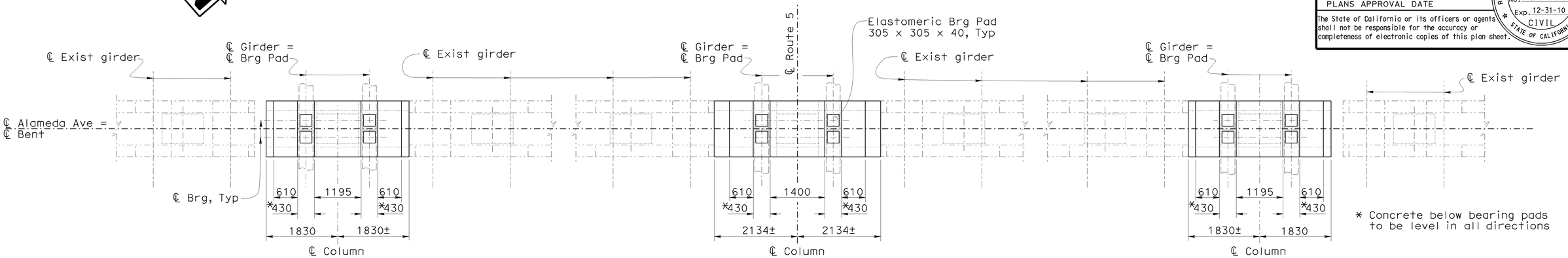

* Concrete below bearing pads to be level in all directions

PLAN
1:50

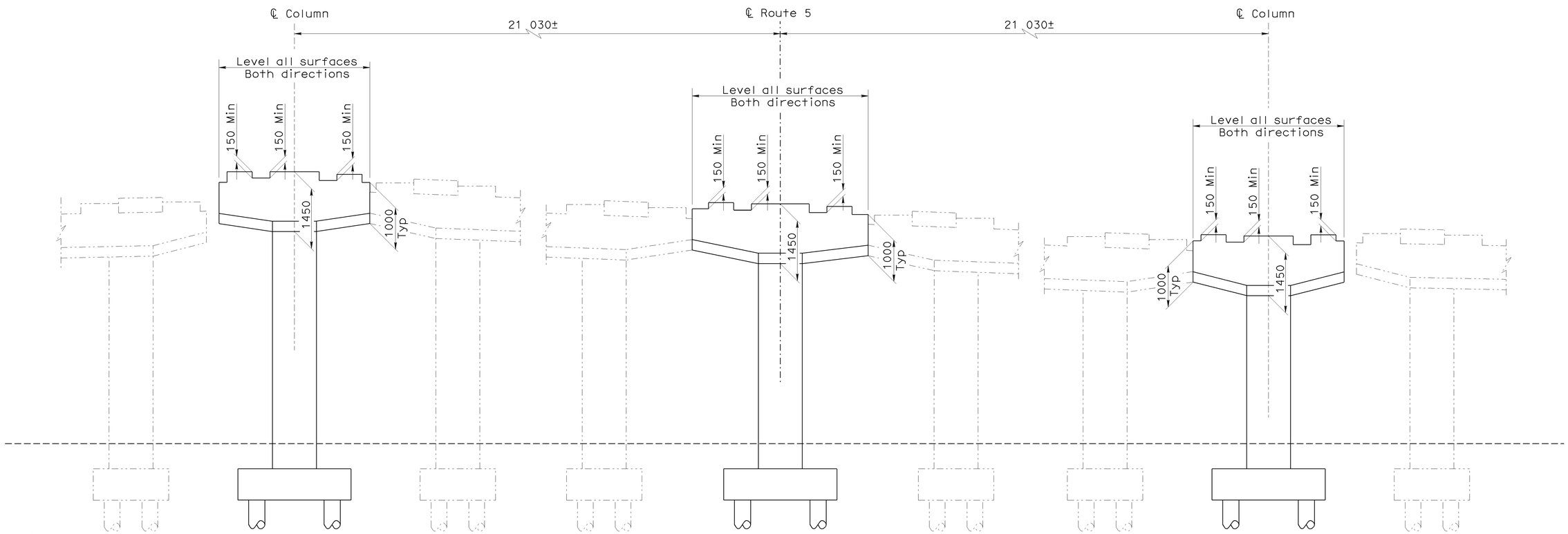

ELEVATION
1:50

NOTE:
THE CONTRACTOR SHALL VERIFY ALL CONTROLLING FIELD DIMENSIONS BEFORE ORDERING OR FABRICATING ANY MATERIAL.

	BY	CHECKED
DESIGN	Gabriel Galo	James Ralston
DETAILS	Dale Kubochi	James Ralston
QUANTITIES	James Ralston	Traci Menard

STATE OF CALIFORNIA
DEPARTMENT OF TRANSPORTATION

DIVISION OF ENGINEERING SERVICES
STRUCTURE DESIGN
DESIGN BRANCH 15

BRIDGE NO. 53-1082
KILOMETER POST 45.7

ALAMEDA AVENUE UNDERCROSSING (WIDEN)
BENT LAYOUT

ALL DIMENSIONS ARE IN MILLIMETERS UNLESS OTHERWISE SHOWN

ORIGINAL SCALE IN MILLIMETERS FOR REDUCED PLANS 0 10 20 30 40 50 60 70 80 90 100

CU 07
EA 121841

DISREGARD PRINTS BEARING EARLIER REVISION DATES

REVISION DATES: 11-17-06 1-17-07 4-30-08 6-05-08 11-21-08

SHEET 14 OF 33

FILE => 53-1082rks-i-bt1o.dgn

STRUCTURES DESIGN DETAIL SHEET (METRIC) (REV.03-17-04)

USERNAME => rtmrkes1 DATE PLOTTED => 12-JUN-2009 TIME PLOTTED => 13:40

DIST	COUNTY	ROUTE	KILOMETER POST TOTAL PROJECT	SHEET No	TOTAL SHEETS
07	LA	5	42.8/47.3	771	1073

Andrew P. Rittenhouse 12-05-08
REGISTERED CIVIL ENGINEER DATE

6-8-09
PLANS APPROVAL DATE

REGISTERED PROFESSIONAL ENGINEER Andrew P. Rittenhouse No. C 61006 Exp. 12-31-108 CIVIL STATE OF CALIFORNIA

The State of California or its officers or agents shall not be responsible for the accuracy or completeness of electronic copies of this plan sheet.

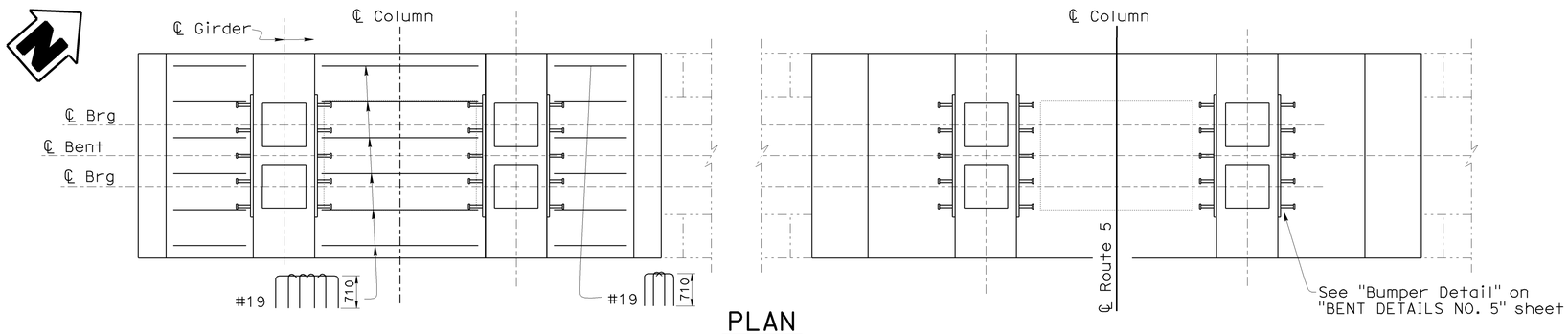

PLAN
1:20

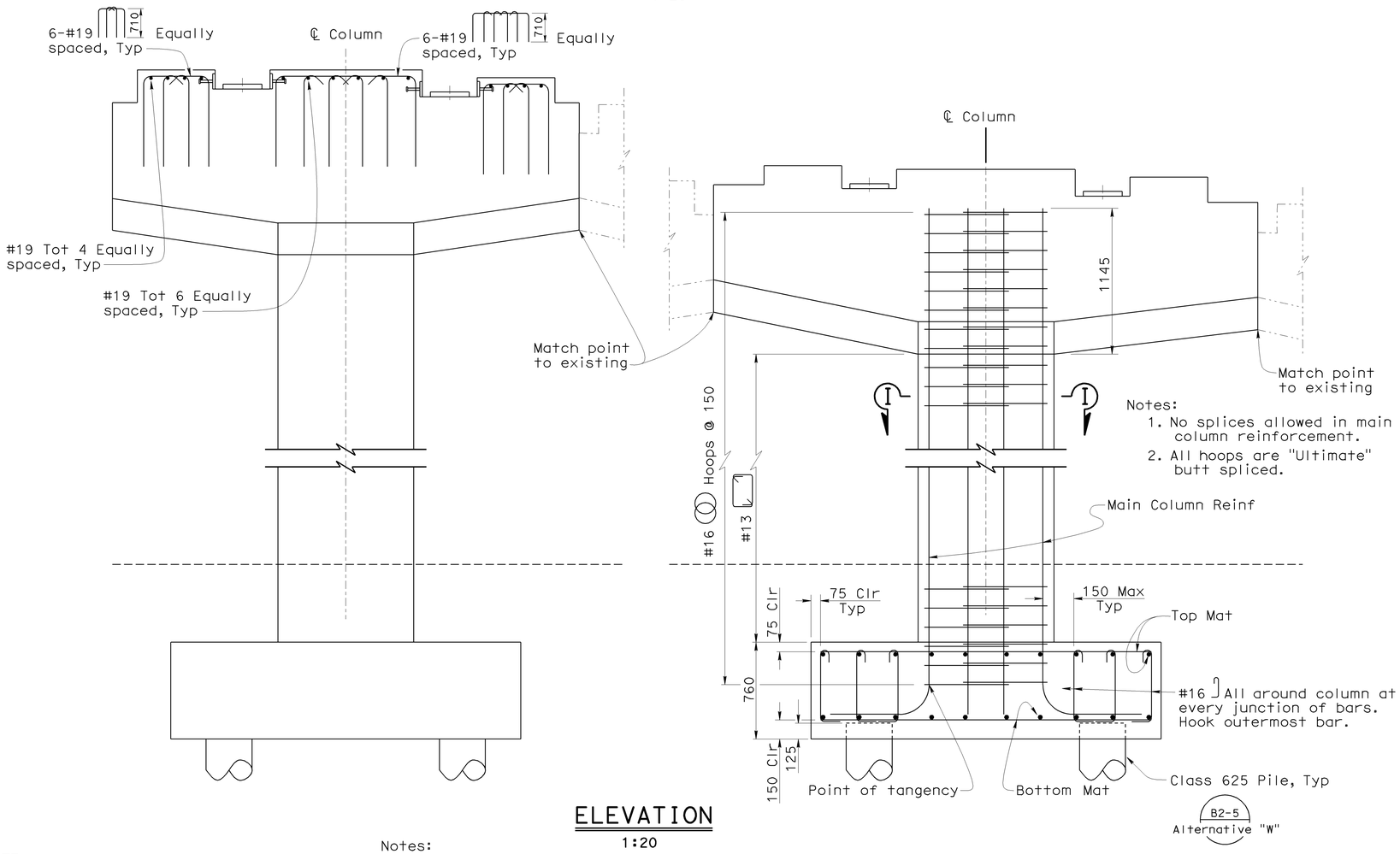

ELEVATION
1:20

Notes:
1. No splices allowed in main column reinforcement.
2. All hoops are "Ultimate" butt spliced.

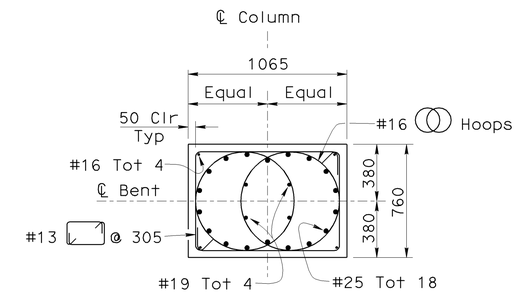

SECTION I-I
1:20

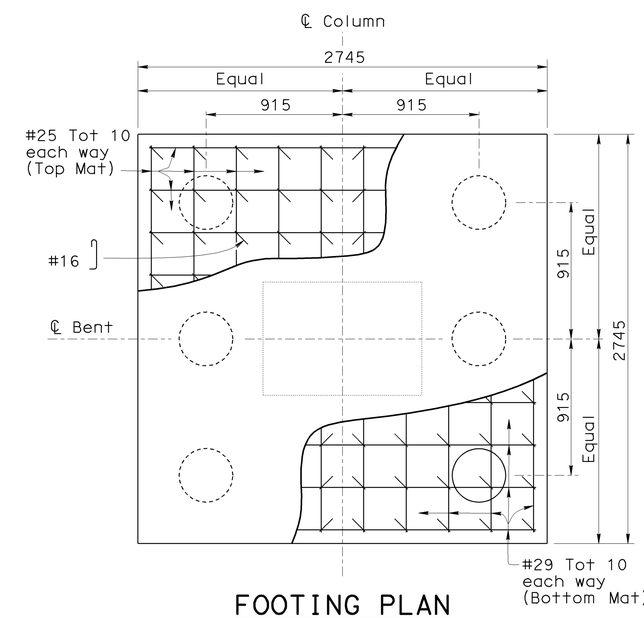

FOOTING PLAN
1:20

NOTE:
THE CONTRACTOR SHALL VERIFY ALL CONTROLLING FIELD DIMENSIONS BEFORE ORDERING OR FABRICATING ANY MATERIAL.

Notes:
1. Details shown for Bent, Column and Footing are typical.
2. Bent for Left & Center Widen shown, Right Widen similar to Left Widen.
3. For other Bent details not shown, see "BENT DETAILS NO. 2 & 3" sheets.

Caltrans Metric

	BY	CHECKED
DESIGN	Gabriel Galo	James Ralston
DETAILS	Dale Kubochi	James Ralston
QUANTITIES	James Ralston	Traci Menard

STATE OF CALIFORNIA
DEPARTMENT OF TRANSPORTATION

DIVISION OF ENGINEERING SERVICES
STRUCTURE DESIGN
DESIGN BRANCH 15

BRIDGE NO. 53-1082
KILOMETER POST 45.7

ALAMEDA AVENUE UNDERCROSSING (WIDEN)
BENT DETAILS NO. 1

ALL DIMENSIONS ARE IN MILLIMETERS UNLESS OTHERWISE SHOWN

ORIGINAL SCALE IN MILLIMETERS FOR REDUCED PLANS 0 10 20 30 40 50 60 70 80 90 100

CU 07
EA 121841

DISREGARD PRINTS BEARING EARLIER REVISION DATES

REVISION DATES: 11-14-06 1-12-07 4-16-07 6-30-07 8-30-08 11-21-08

SHEET 15 OF 33

STRUCTURES DESIGN DETAIL SHEET (METRIC) (REV.03-17-04)

FILE => 53-1082lrks-j-btdet01.dgn

USERNAME => trmikes1 DATE PLOTTED => 12-JUN-2009 TIME PLOTTED => 13:40

DIST	COUNTY	ROUTE	KILOMETER POST TOTAL PROJECT	SHEET No	TOTAL SHEETS
07	LA	5	42.8/47.3	772	1073

Andrew Rittenhouse 12-05-08
REGISTERED CIVIL ENGINEER DATE

6-8-09
PLANS APPROVAL DATE

REGISTERED PROFESSIONAL ENGINEER
Andrew P. Rittenhouse
No. C 61006
Exp. 12-31-10
CIVIL
STATE OF CALIFORNIA

The State of California or its officers or agents shall not be responsible for the accuracy or completeness of electronic copies of this plan sheet.

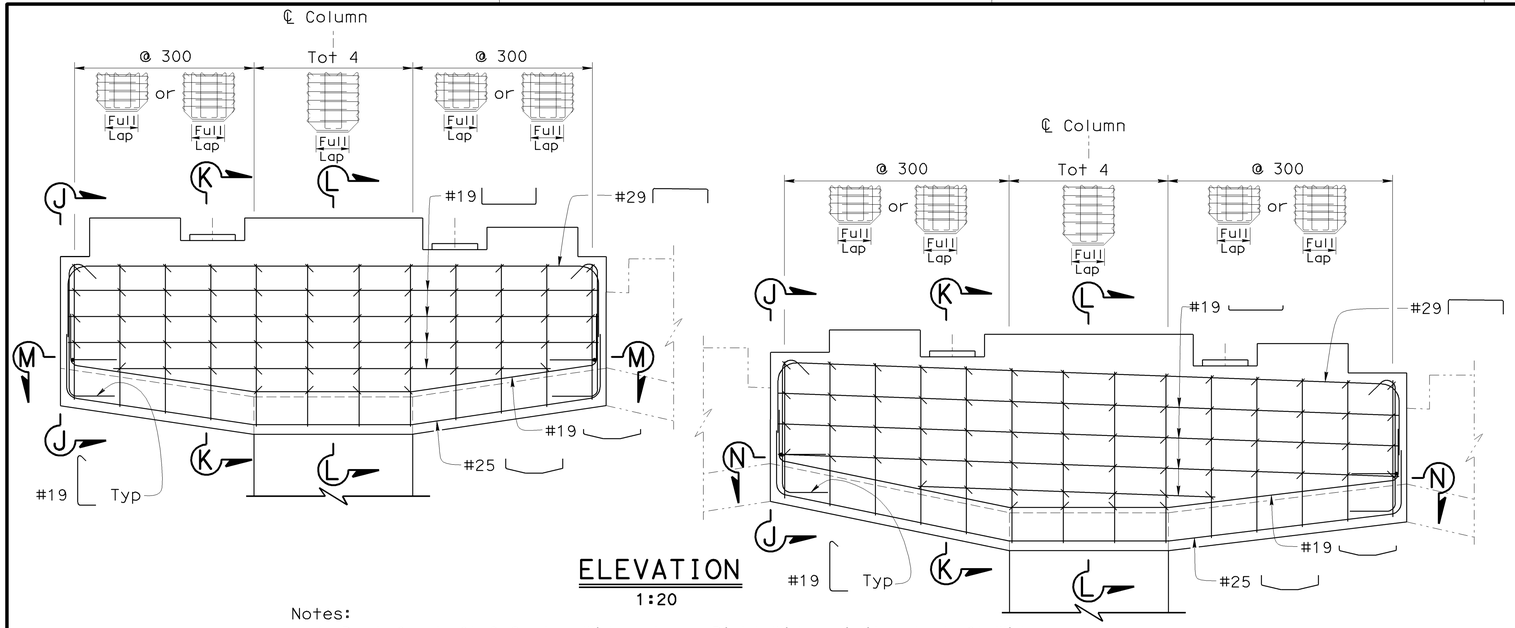

ELEVATION
1:20

Notes:
1. Bent for Left & Center Widen shown, Right Widen similar to Left Widen.
2. For other Bent details not shown, see "BENT DETAILS NO. 3" sheet.

Note:
Ties not shown for clarity

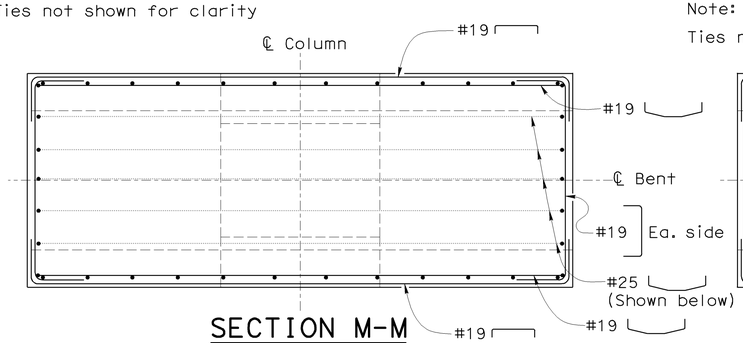

SECTION M-M
1:20

Note:
Ties not shown for clarity

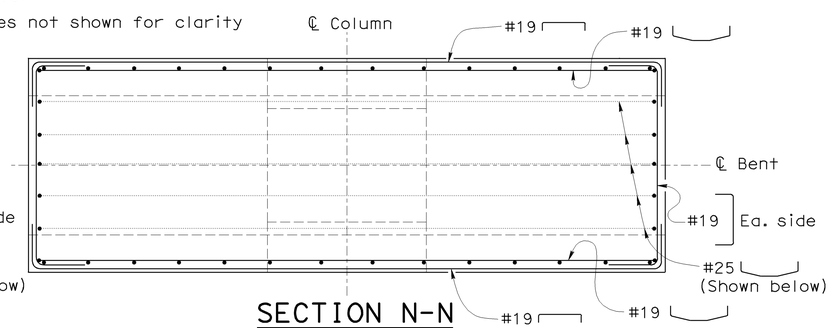

SECTION N-N
1:20

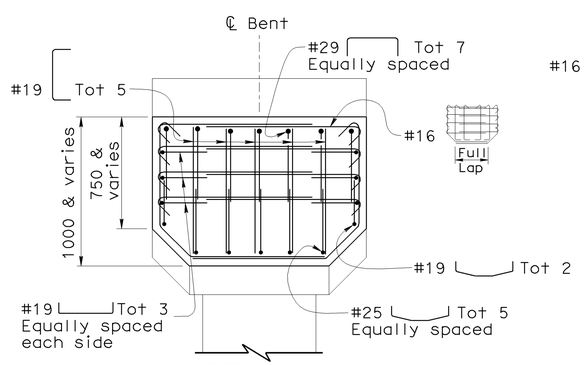

VIEW J-J
1:20

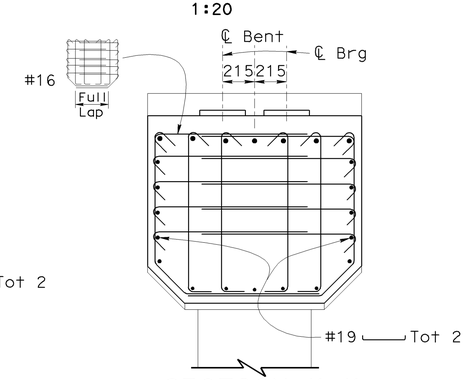

SECTION K-K
1:20

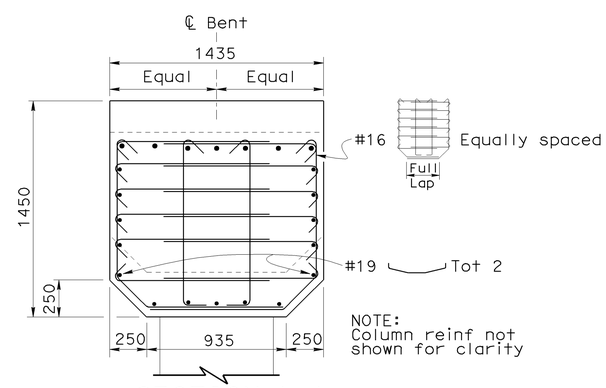

NOTE:
Column reinf not shown for clarity

SECTION L-L
1:20

NOTE:
THE CONTRACTOR SHALL VERIFY ALL CONTROLLING FIELD DIMENSIONS BEFORE ORDERING OR FABRICATING ANY MATERIAL.

Caltrans Metric

	BY	CHECKED
DESIGN	Gabriel Galo	James Ralston
DETAILS	Dale Kubochi	James Ralston
QUANTITIES	James Ralston	Traci Menard

STATE OF CALIFORNIA
DEPARTMENT OF TRANSPORTATION

DIVISION OF ENGINEERING SERVICES
STRUCTURE DESIGN
DESIGN BRANCH 15

BRIDGE NO. 53-1082
KILOMETER POST 45.7

ALAMEDA AVENUE UNDERCROSSING (WIDEN)
BENT DETAILS NO. 2

ALL DIMENSIONS ARE IN MILLIMETERS UNLESS OTHERWISE SHOWN

ORIGINAL SCALE IN MILLIMETERS FOR REDUCED PLANS 0 10 20 30 40 50 60 70 80 90 100

CU 07
EA 121841

DISREGARD PRINTS BEARING EARLIER REVISION DATES
REVISION DATES 1-18-07 4-9-08 11-14-08 1-6-09

SHEET 16 OF 33

FILE => 53-1082lrks-j-btdet02.dgn

STRUCTURES DESIGN DETAIL SHEET (METRIC) (REV.03-17-04)

USERNAME => ttmirkes1 DATE PLOTTED => 12-JUN-2009 TIME PLOTTED => 13:40

DIST	COUNTY	ROUTE	KILOMETER POST TOTAL PROJECT	SHEET No	TOTAL SHEETS
07	LA	5	42.8/47.3	773	1073

Andrew Rittenhouse 12-05-08
REGISTERED CIVIL ENGINEER DATE

6-8-09
PLANS APPROVAL DATE

REGISTERED PROFESSIONAL ENGINEER Andrew P. Rittenhouse No. C 61006 Exp. 12-31-10 CIVIL STATE OF CALIFORNIA

The State of California or its officers or agents shall not be responsible for the accuracy or completeness of electronic copies of this plan sheet.

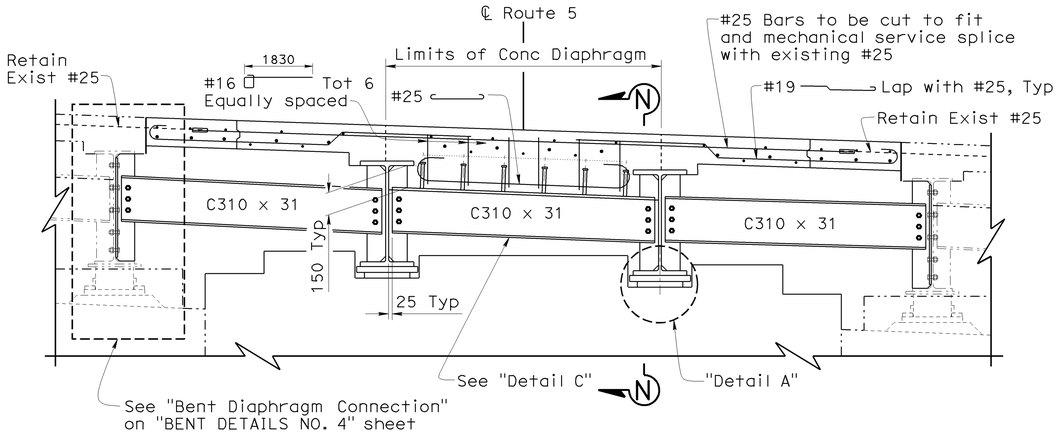

CENTER WIDEN

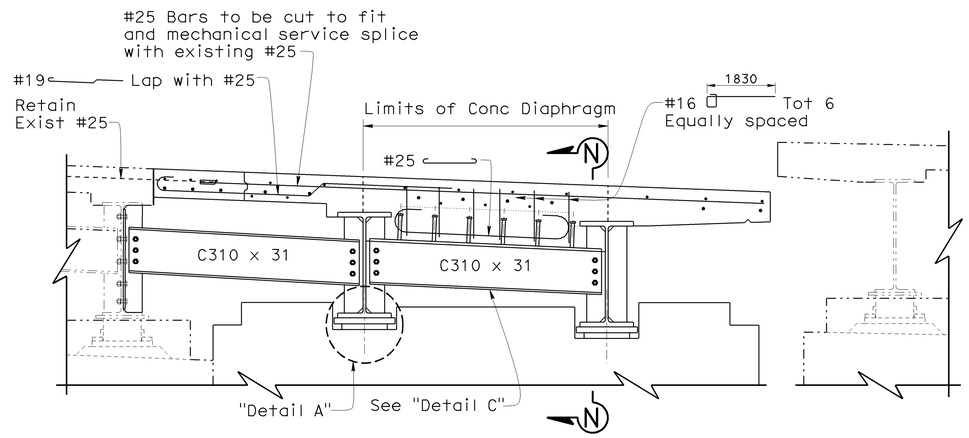

RIGHT WIDEN

BENT DIAPHRAGM ELEVATION

1:20

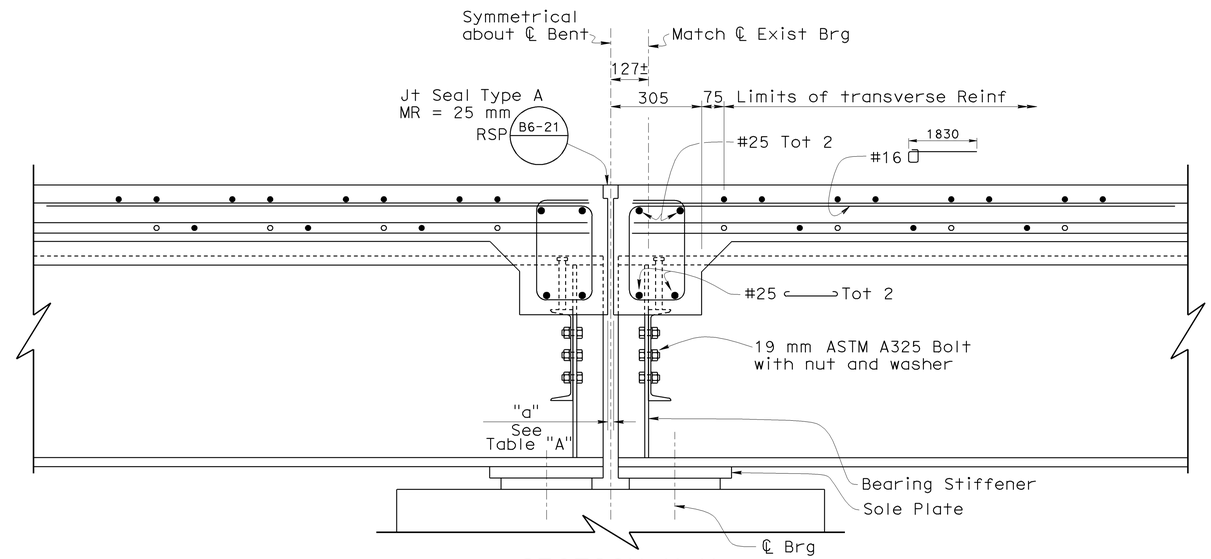

SECTION N-N

1:10

TABLE A Dimension "a"			
Location	Winter	Fall/Spring	Summer
Bent 2	25	20	13

Notes:

- Diaphragm for Center & Right Widen shown, Left Widen similar to Right Widen.
- For "Detail C", see "BENT DETAILS NO. 5" sheet.
- For "Sole Plate" details, see "BENT DETAILS NO. 5" sheet.

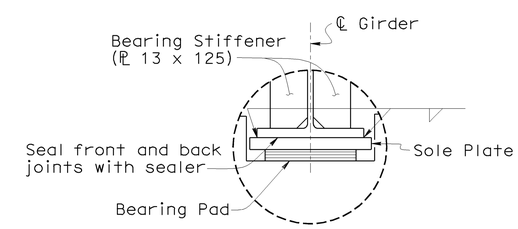

DETAIL A

1:10

NOTE:
THE CONTRACTOR SHALL VERIFY ALL CONTROLLING FIELD DIMENSIONS BEFORE ORDERING OR FABRICATING ANY MATERIAL.

Caltrans Metric

	BY	CHECKED
DESIGN	Gabriel Galo	James Ralston
DETAILS	Dale Kubochi	James Ralston
QUANTITIES	James Ralston	Traci Menard

STATE OF CALIFORNIA
DEPARTMENT OF TRANSPORTATION

DIVISION OF ENGINEERING SERVICES
STRUCTURE DESIGN
DESIGN BRANCH 15

BRIDGE NO. 53-1082
KILOMETER POST 45.7

ALAMEDA AVENUE UNDERCROSSING (WIDEN)
BENT DETAILS NO. 3

ALL DIMENSIONS ARE IN MILLIMETERS UNLESS OTHERWISE SHOWN

ORIGINAL SCALE IN MILLIMETERS FOR REDUCED PLANS 0 10 20 30 40 50 60 70 80 90 100

CU 07
EA 121841

DISREGARD PRINTS BEARING EARLIER REVISION DATES

REVISION DATES: 1-22-07 4-5-07 4-11-07 4-5-07 3-5-08 4-9-08 11-21-08

SHEET 17 OF 33

FILE => 53-1082lrks-k-btdet03.dgn

STRUCTURES DESIGN DETAIL SHEET (METRIC) (REV.03-17-04)

USERNAME => trmikesl DATE PLOTTED => 12-JUN-2009 TIME PLOTTED => 13:40

DIST	COUNTY	ROUTE	KILOMETER POST TOTAL PROJECT	SHEET No	TOTAL SHEETS
07	LA	5	42.8/47.3	774	1073

Andrew Rittenhouse 12-05-08
REGISTERED CIVIL ENGINEER DATE

6-8-09
PLANS APPROVAL DATE

REGISTERED PROFESSIONAL ENGINEER Andrew P. Rittenhouse No. C 61006 Exp. 12-31-10 CIVIL STATE OF CALIFORNIA

The State of California or its officers or agents shall not be responsible for the accuracy or completeness of electronic copies of this plan sheet.

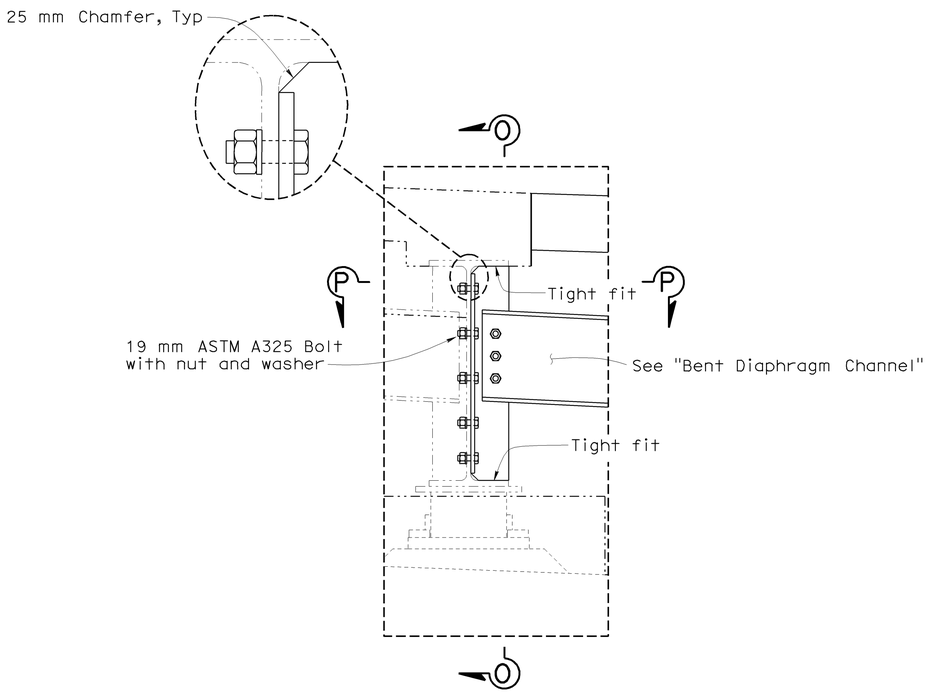

BENT DIAPHRAGM CONNECTION
1:10

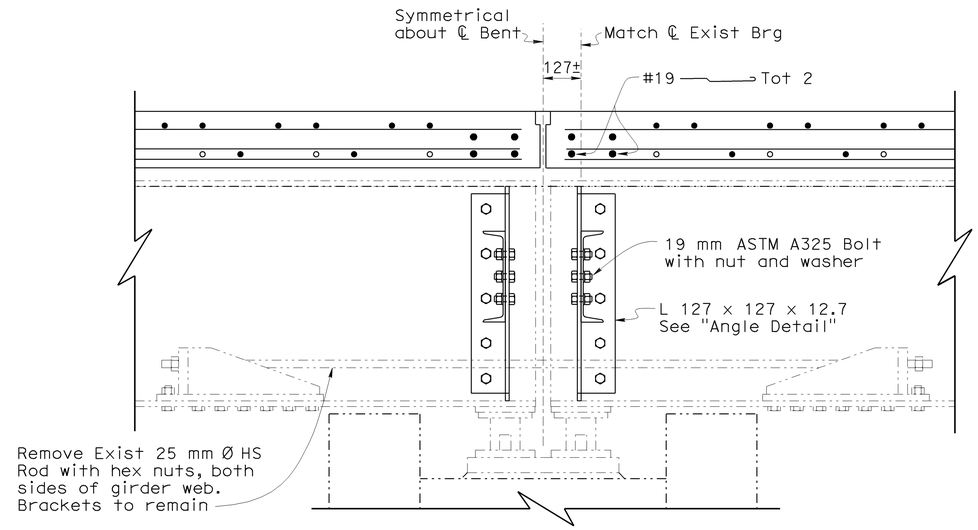

SECTION O-O
1:10

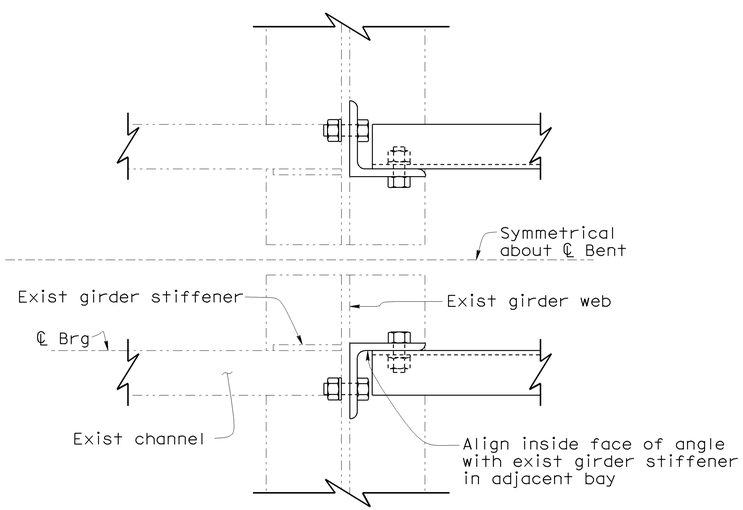

SECTION P-P
1:5

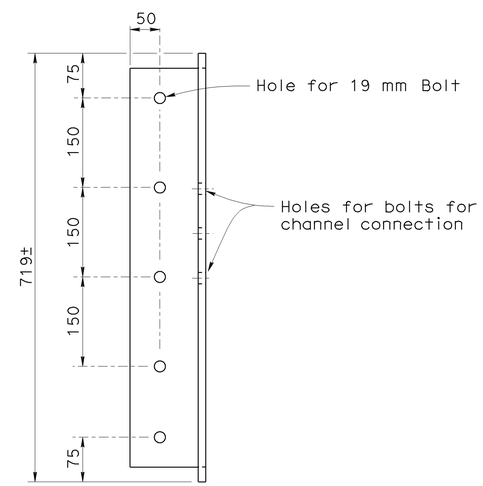

ANGLE DETAIL
1:5

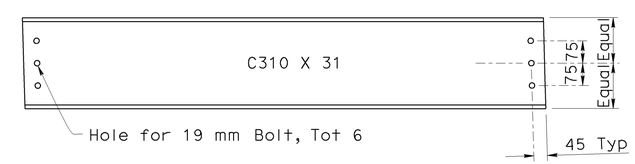

BENT DIAPHRAGM CHANNEL
1:10

NOTE:
THE CONTRACTOR SHALL VERIFY ALL CONTROLLING FIELD DIMENSIONS BEFORE ORDERING OR FABRICATING ANY MATERIAL.

Caltrans Metric

	BY	CHECKED
DESIGN	Gabriel Galo	James Ralston
DETAILS	Dale Kubochi	James Ralston
QUANTITIES	James Ralston	Traci Menard

STATE OF CALIFORNIA
DEPARTMENT OF TRANSPORTATION

DIVISION OF ENGINEERING SERVICES
STRUCTURE DESIGN
DESIGN BRANCH 15

BRIDGE NO. 53-1082
KILOMETER POST 45.7

ALAMEDA AVENUE UNDERCROSSING (WIDEN)
BENT DETAILS NO. 4

ALL DIMENSIONS ARE IN MILLIMETERS UNLESS OTHERWISE SHOWN

ORIGINAL SCALE IN MILLIMETERS FOR REDUCED PLANS 0 10 20 30 40 50 60 70 80 90 100

CU 07
EA 121841

DISREGARD PRINTS BEARING EARLIER REVISION DATES

REVISION DATES: 8-31-07 9-5-07 3-14-08 4-8-08 11-21-08

SHEET 18 OF 33

FILE => 53-1082lrks-k-btdet04.dgn

STRUCTURES DESIGN DETAIL SHEET (METRIC) (REV.03-17-04)

USERNAME => ttmirkes| DATE PLOTTED => 12-JUN-2009 TIME PLOTTED => 13:40

DIST	COUNTY	ROUTE	KILOMETER POST TOTAL PROJECT	SHEET No	TOTAL SHEETS
07	LA	5	42.8/47.3	775	1073

Andrew Rittenhouse 12-05-08
REGISTERED CIVIL ENGINEER DATE

6-8-09
PLANS APPROVAL DATE

REGISTERED PROFESSIONAL ENGINEER
Andrew P. Rittenhouse
No. C 61006
Exp. 12-31-10
CIVIL
STATE OF CALIFORNIA

The State of California or its officers or agents shall not be responsible for the accuracy or completeness of electronic copies of this plan sheet.

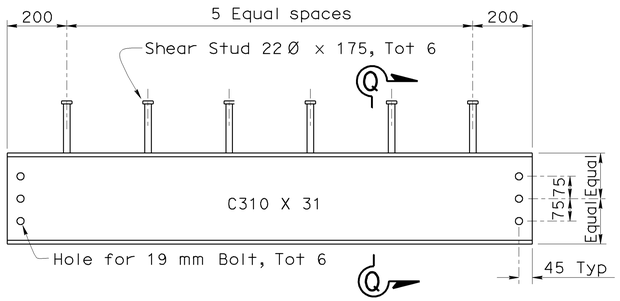

DETAIL C
1:10

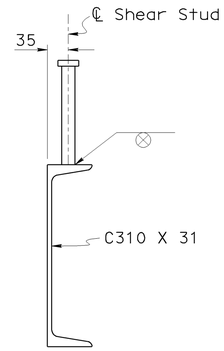

SECTION Q-Q
1:5

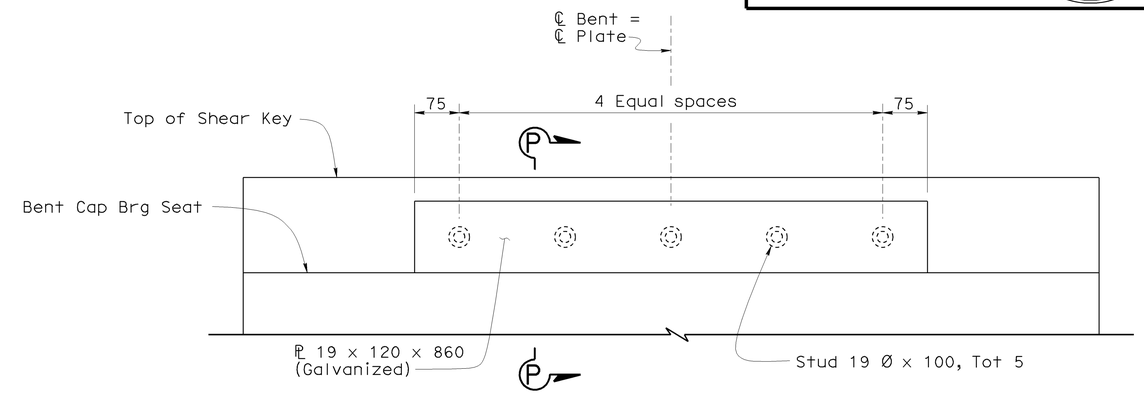

ELEVATION

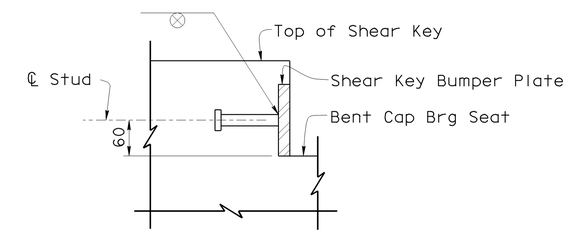

SECTION P-P

BUMPER DETAIL
1:5

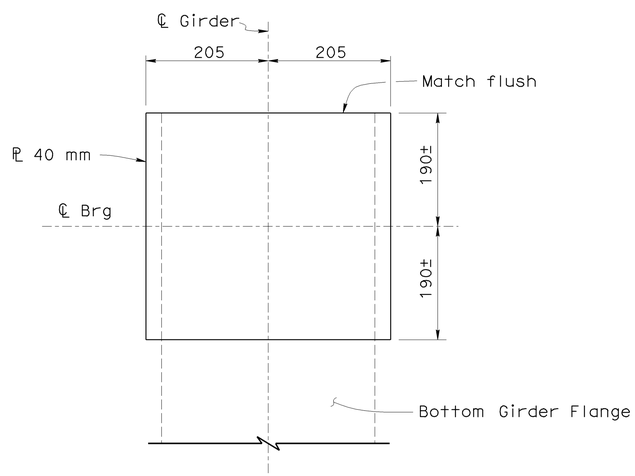

SOLE PLATE
1:5

NOTE:
THE CONTRACTOR SHALL VERIFY ALL CONTROLLING FIELD DIMENSIONS BEFORE ORDERING OR FABRICATING ANY MATERIAL.

Caltrans Metric

	BY	CHECKED
DESIGN	Gabriel Galo	James Ralston
DETAILS	Dale Kubochi	James Ralston
QUANTITIES	James Ralston	Traci Menard

STATE OF CALIFORNIA
DEPARTMENT OF TRANSPORTATION

DIVISION OF ENGINEERING SERVICES
STRUCTURE DESIGN
DESIGN BRANCH 15

BRIDGE NO. 53-1082
KILOMETER POST 45.7

ALAMEDA AVENUE UNDERCROSSING (WIDEN)
BENT DETAILS NO. 5

ALL DIMENSIONS ARE IN MILLIMETERS UNLESS OTHERWISE SHOWN

ORIGINAL SCALE IN MILLIMETERS FOR REDUCED PLANS 0 10 20 30 40 50 60 70 80 90 100

CU 07
EA 121841

DISREGARD PRINTS BEARING EARLIER REVISION DATES

REVISION DATES: 11-22-07 4-14-07 4-13-06 11-17-08 01-22-09 02-18-09

SHEET 19 OF 33

FILE => 53-1082lrks-k-btdet05.dgn

STRUCTURES DESIGN DETAIL SHEET (METRIC) (REV.03-17-04)

USERNAME => ttmirkes1 DATE PLOTTED => 12-JUN-2009 TIME PLOTTED => 13:40

DIST	COUNTY	ROUTE	KILOMETER POST TOTAL PROJECT	SHEET No	TOTAL SHEETS
07	LA	5	42.8/47.3	776	1073

Andrew Rittenhouse 12-05-08
REGISTERED CIVIL ENGINEER DATE

6-8-09
PLANS APPROVAL DATE

REGISTERED PROFESSIONAL ENGINEER Andrew P. Rittenhouse No. C 61006 Exp. 12-31-10 CIVIL STATE OF CALIFORNIA

The State of California or its officers or agents shall not be responsible for the accuracy or completeness of electronic copies of this plan sheet.

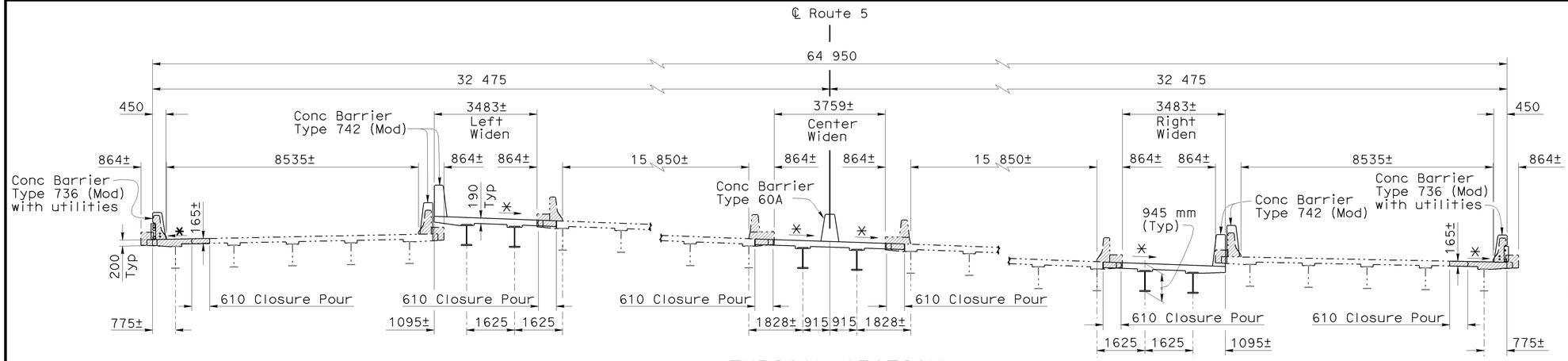

TYPICAL SECTION

1:80

Notes:

1. Closure pour concrete shall not be placed until 7 days after adjacent deck pours are completed.
2. Dimension may be varied to match the existing deck profile and cross slope. Shear stud embedment must remain within the allowable range (See"Stud Connector" detail on "STEEL GIRDER DETAILS" sheet).

Legend:

✱ Match existing cross slope

Indicates Existing Structure

Bridge Removal (Portion)

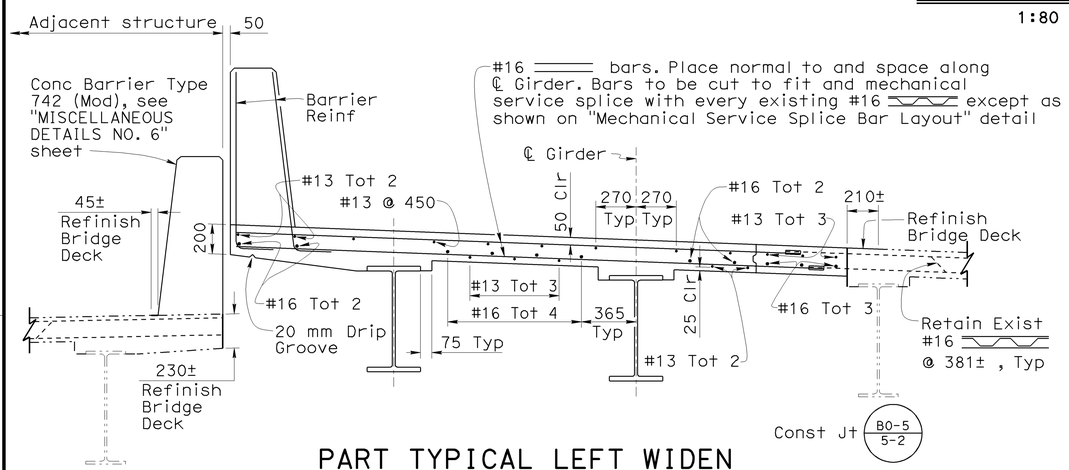

PART TYPICAL LEFT WIDEN

1:20

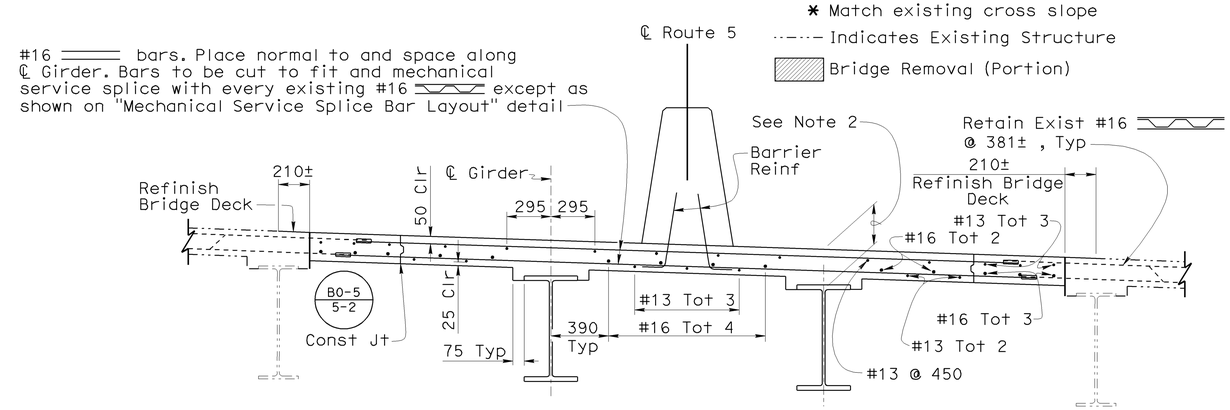

PART TYPICAL CENTER WIDEN

1:20

Note:
Details similar about ℄ Route 5

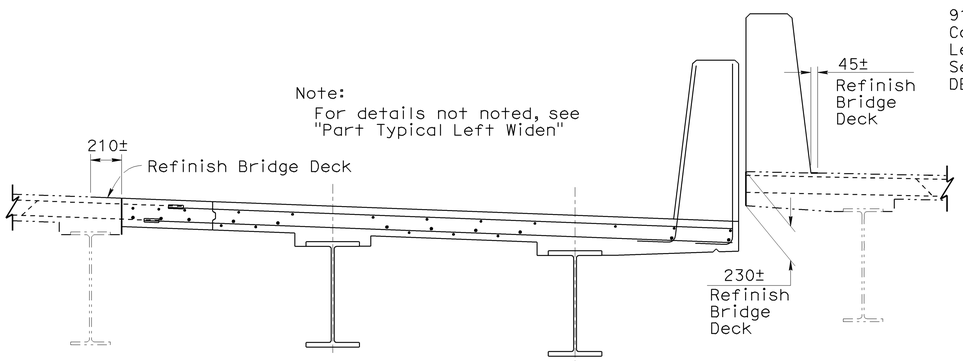

PART TYPICAL RIGHT WIDEN

1:20

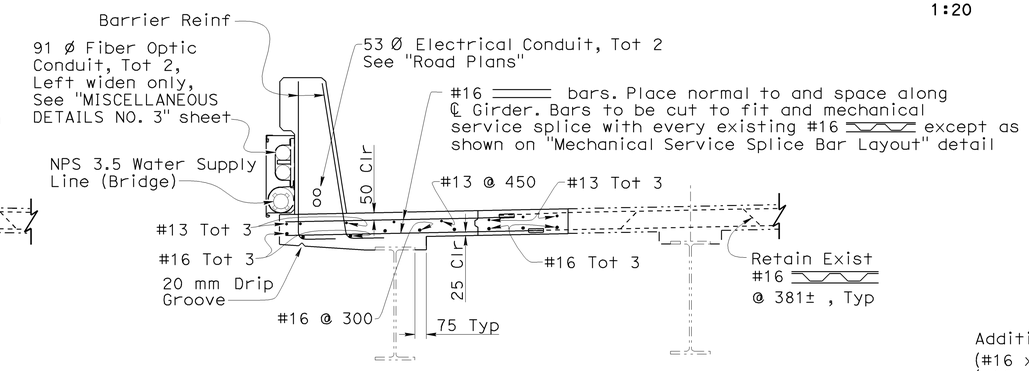

PART TYPICAL LEFT OVERHANG REPLACEMENT

1:20

Notes:
1. Right Overhang Replacement similar, except as noted.
2. For Electrolier foundation, see "MISCELLANEOUS DETAILS" sheets.

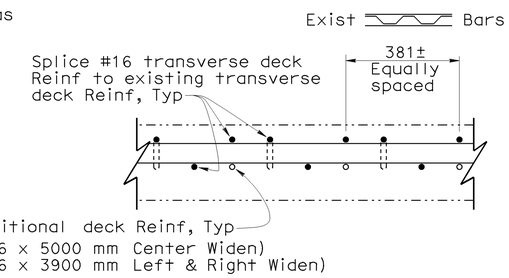

MECHANICAL SERVICE SPLICE BAR LAYOUT

1:10

NOTE:
THE CONTRACTOR SHALL VERIFY ALL CONTROLLING FIELD DIMENSIONS BEFORE ORDERING OR FABRICATING ANY MATERIAL.

Caltrans Metric

	BY	CHECKED
DESIGN	Gabriel Galo	James Ralston
DETAILS	S. Schenck/D. Kubochi	James Ralston
QUANTITIES	James Ralston	Traci Menard

STATE OF CALIFORNIA
DEPARTMENT OF TRANSPORTATION

DIVISION OF ENGINEERING SERVICES
STRUCTURE DESIGN
DESIGN BRANCH 15

BRIDGE NO. 53-1082
KILOMETER POST 45.7

ALAMEDA AVENUE UNDERCROSSING (WIDEN)

TYPICAL SECTION

ALL DIMENSIONS ARE IN MILLIMETERS UNLESS OTHERWISE SHOWN

ORIGINAL SCALE IN MILLIMETERS FOR REDUCED PLANS 0 10 20 30 40 50 60 70 80 90 100

CU 07
EA 121841

DISREGARD PRINTS BEARING EARLIER REVISION DATES

REVISION DATES: 5-05-09 | 4-18-06 | 4-19-07 | 3-3-08 | 3-13-08 | 4-4-08 | 4-11-08 | 11-21-08 | 1-5-09

SHEET 20 OF 33

FILE => 53-1082lrks-m-ts1.dgn

STRUCTURES DESIGN DETAIL SHEET (METRIC) (REV.03-17-04)

USERNAME => ttmirkes1 DATE PLOTTED => 12-JUN-2009 TIME PLOTTED => 13:48

DIST	COUNTY	ROUTE	KILOMETER POST TOTAL PROJECT	SHEET No	TOTAL SHEETS
07	LA	5	42.8/47.3	777	1073

Andrew Rittenhouse 12-05-08
REGISTERED CIVIL ENGINEER DATE

6-8-09
PLANS APPROVAL DATE

REGISTERED PROFESSIONAL ENGINEER
Andrew P. Rittenhouse
No. C 61006
Exp. 12-31-10
CIVIL
STATE OF CALIFORNIA

The State of California or its officers or agents shall not be responsible for the accuracy or completeness of electronic copies of this plan sheet.

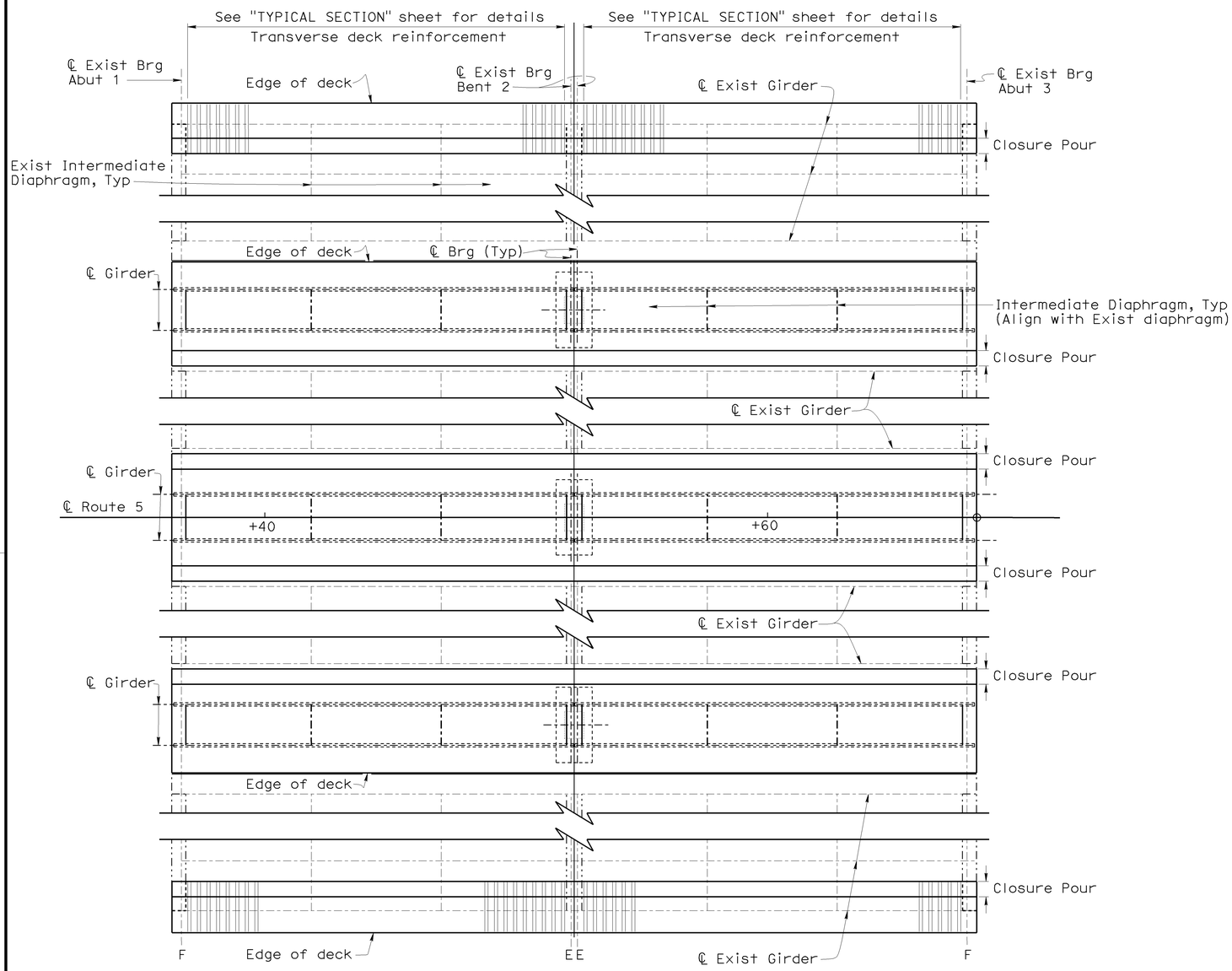

PLAN
1:100

Camber Curve value components in mm	Middle Widen						Left & Right Widen					
	Span 1			Span 2			Span 1			Span 2		
	1/4	1/2	3/4	1/4	1/2	3/4	1/4	1/2	3/4	1/4	1/2	3/4
1 - Deck Dead Load (+)	12	16	12	12	16	12	9	12	9	9	12	9
2 - Curb + Rail + AC (+)	4	5	4	4	5	4	4	5	4	4	5	4
3 - Girder Dead Load (+)	2	4	2	2	4	2	2	4	2	2	4	2
Total Camber	18	25	18	18	25	18	15	21	15	15	21	15

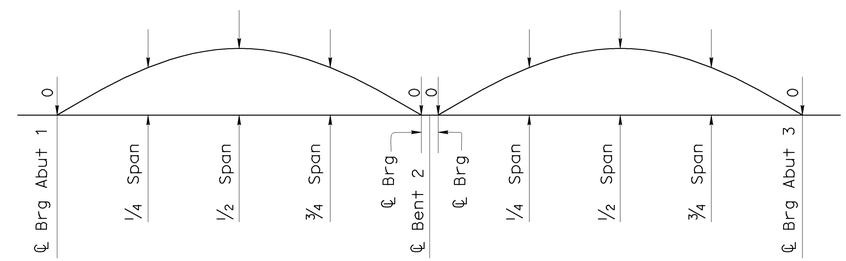

CAMBER DIAGRAM
No Scale

NOTE:
THE CONTRACTOR SHALL VERIFY ALL CONTROLLING FIELD DIMENSIONS BEFORE ORDERING OR FABRICATING ANY MATERIAL.

Note:
E = Expansion End
F = Fixed End

NOTE:
In addition to camber values shown, girder fabrication shall account for structure geometry including profile grade, superelevation, and changes in thickness of bottom flange.

Caltrans Metric

	BY	CHECKED
DESIGN	Gabriel Galo	James Ralston
DETAILS	Dale Kubochi	James Ralston
QUANTITIES	James Ralston	Traci Menard

STATE OF CALIFORNIA
DEPARTMENT OF TRANSPORTATION

DIVISION OF ENGINEERING SERVICES
STRUCTURE DESIGN
DESIGN BRANCH 15

BRIDGE NO. 53-1082
KILOMETER POST 45.7

ALAMEDA AVENUE UNDERCROSSING (WIDEN)
GIRDER LAYOUT

ALL DIMENSIONS ARE IN MILLIMETERS UNLESS OTHERWISE SHOWN

ORIGINAL SCALE IN MILLIMETERS FOR REDUCED PLANS 0 10 20 30 40 50 60 70 80 90 100

CU 07
EA 121841

DISREGARD PRINTS BEARING EARLIER REVISION DATES

REVISION DATES: 1-22-07 4-13-07 3-5-08 4-9-08 11-21-08

SHEET 21 OF 33

FILE => 53-1082lrks-n-gio.dgn

STRUCTURES DESIGN DETAIL SHEET (METRIC) (REV.03-17-04)

USERNAME => trmikesl DATE PLOTTED => 12-JUN-2009 TIME PLOTTED => 13:48

DIST	COUNTY	ROUTE	KILOMETER POST TOTAL PROJECT	SHEET No	TOTAL SHEETS
07	LA	5	42.8/47.3	778	1073

Andrew P. Rittenhouse 12-05-08
REGISTERED CIVIL ENGINEER DATE

6-8-09
PLANS APPROVAL DATE

REGISTERED PROFESSIONAL ENGINEER Andrew P. Rittenhouse No. C 61006 Exp. 12-31-10 CIVIL STATE OF CALIFORNIA

The State of California or its officers or agents shall not be responsible for the accuracy or completeness of electronic copies of this plan sheet.

Note:
- Girder lengths given are horizontal distances, center to center of bearings.

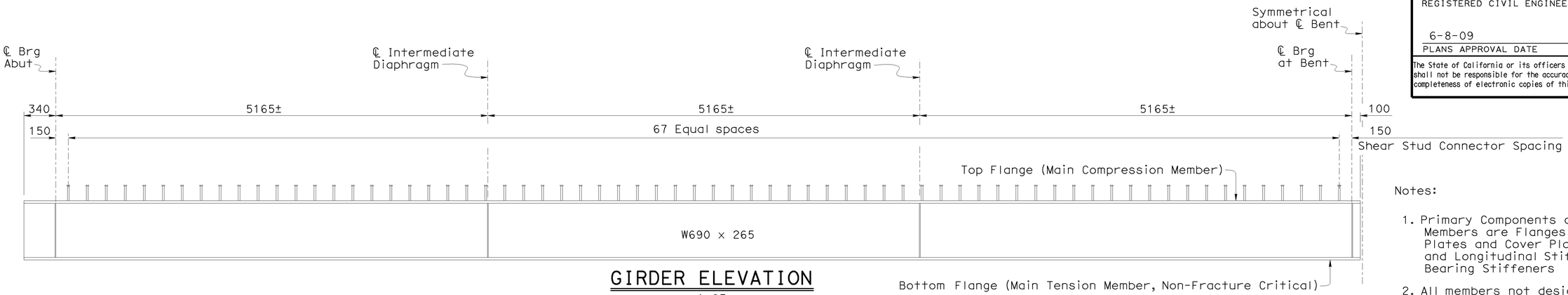

GIRDER ELEVATION
1:25

Notes:

1. Primary Components of Main Members are Flanges, Webs, Splice Plates and Cover Plates, Transverse and Longitudinal Stiffeners and Bearing Stiffeners
2. All members not designated as either Fracture Critical Members, or Main Members are Secondary Members

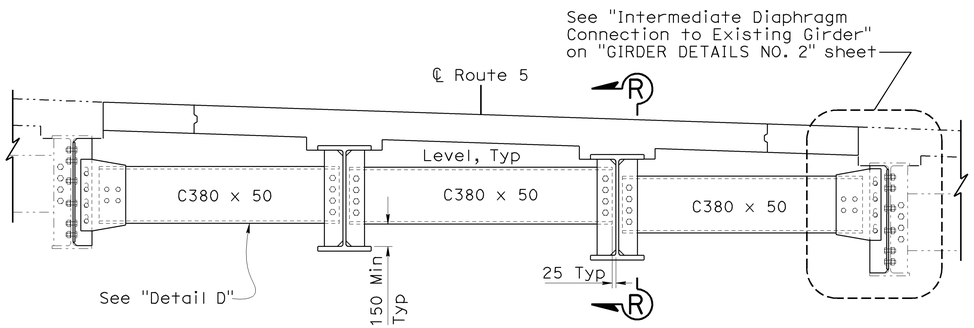

CENTER WIDEN

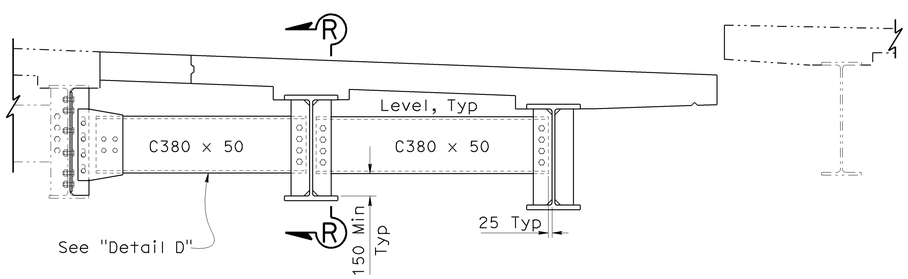

RIGHT WIDEN

INTERMEDIATE DIAPHRAGM ELEVATION
1:20

Note:
- Intermediate Diaphragm for Center & Right Widen shown, Left Widen similar.

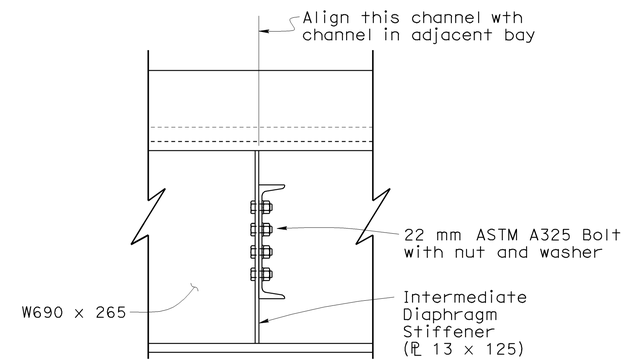

SECTION R-R
1:10

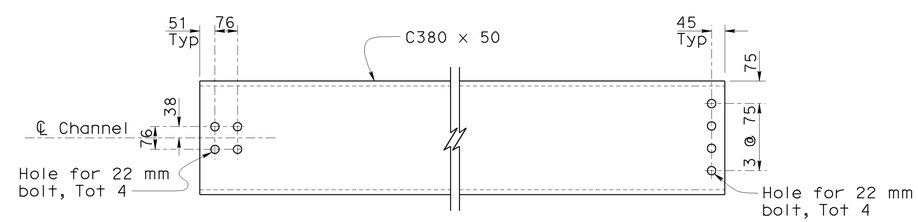

CONNECTION TO GUSSET PLATE AND EXISTING GIRDER

CONNECTION TO NEW GIRDER

DETAIL D
1:10

NOTE:
THE CONTRACTOR SHALL VERIFY ALL CONTROLLING FIELD DIMENSIONS BEFORE ORDERING OR FABRICATING ANY MATERIAL.

	BY	CHECKED
DESIGN	Gabriel Galo	James Ralston
DETAILS	Dale Kubochi	James Ralston
QUANTITIES	James Ralston	Traci Menard

STATE OF CALIFORNIA
DEPARTMENT OF TRANSPORTATION

DIVISION OF ENGINEERING SERVICES
STRUCTURE DESIGN
DESIGN BRANCH 15

BRIDGE NO. 53-1082
KILOMETER POST 45.7

ALAMEDA AVENUE UNDERCROSSING (WIDEN)
GIRDER DETAILS NO. 1

ALL DIMENSIONS ARE IN MILLIMETERS UNLESS OTHERWISE SHOWN

ORIGINAL SCALE IN MILLIMETERS FOR REDUCED PLANS 0 10 20 30 40 50 60 70 80 90 100

CU 07
EA 121841

DISREGARD PRINTS BEARING EARLIER REVISION DATES

REVISION DATES: 1-25-07 9-5-07 10-1-07 3-7-08 4-24-08 11-21-08 12-12-08 1-6-09

SHEET 22 OF 33

FILE => 53-1082lrks-o-girdet01.dgn

STRUCTURES DESIGN DETAIL SHEET (METRIC) (REV.03-17-04)

USERNAME => trmikesl DATE PLOTTED => 12-JUN-2009 TIME PLOTTED => 13:49

DIST	COUNTY	ROUTE	KILOMETER POST TOTAL PROJECT	SHEET No	TOTAL SHEETS
07	LA	5	42.8/47.3	779	1073

Andrew Rittenhouse 12-05-08
REGISTERED CIVIL ENGINEER DATE

6-8-09
PLANS APPROVAL DATE

REGISTERED PROFESSIONAL ENGINEER Andrew P. Rittenhouse No. C 61006 Exp. 12-31-10 CIVIL STATE OF CALIFORNIA

The State of California or its officers or agents shall not be responsible for the accuracy or completeness of electronic copies of this plan sheet.

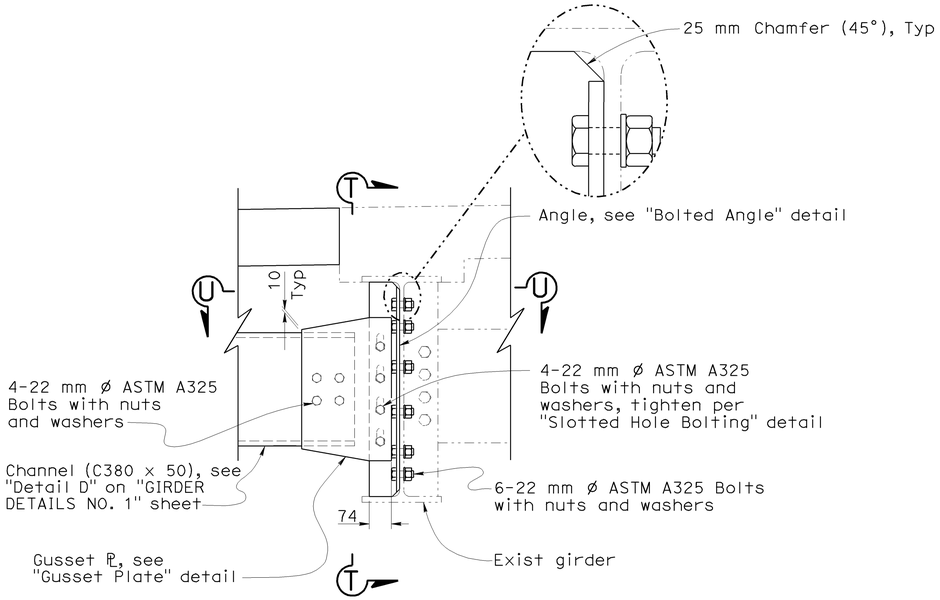

INTERMEDIATE DIAPHRAGM CONNECTION TO EXISTING GIRDER

1:10

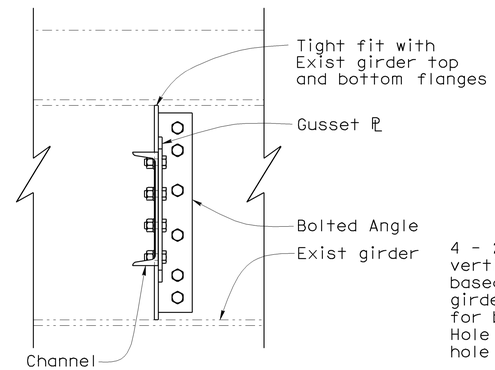

VIEW T-T

1:10

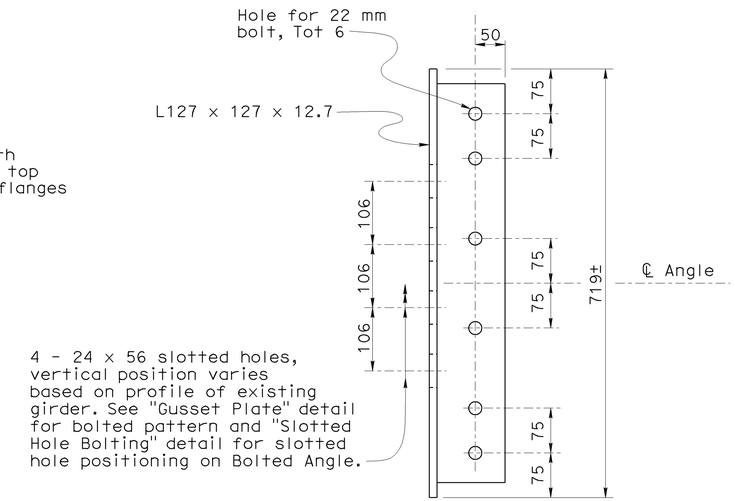

BOLTED ANGLE

1:5

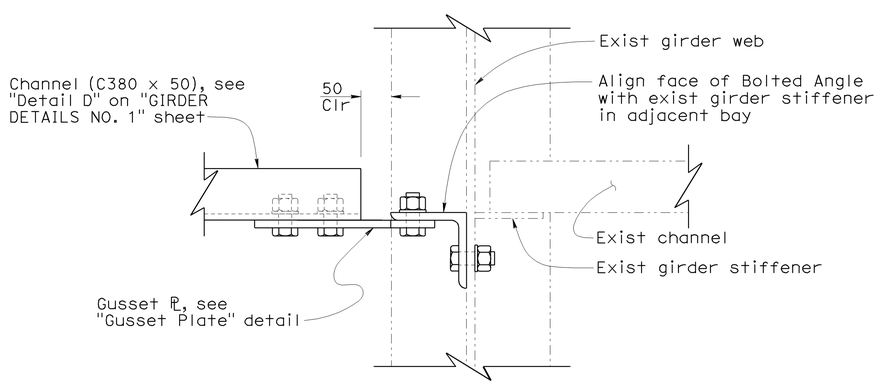

VIEW U-U

1:5

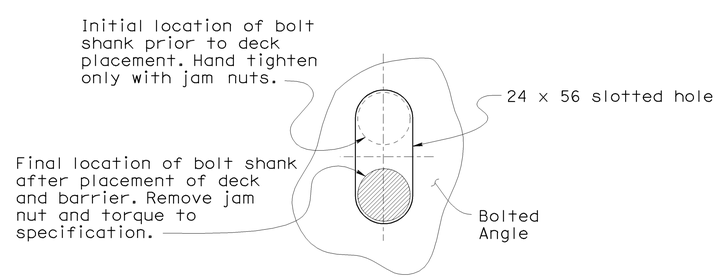

SLOTTED HOLE BOLTING

No Scale

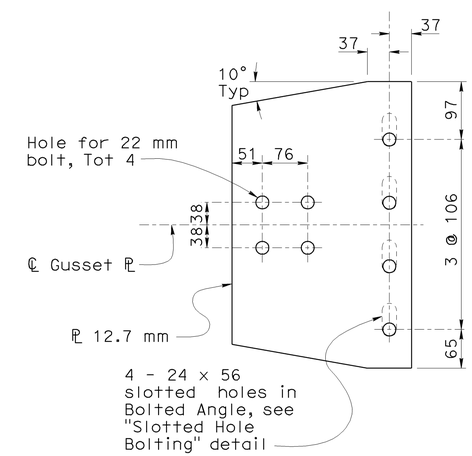

GUSSET PLATE

1:5

NOTE:
THE CONTRACTOR SHALL VERIFY ALL CONTROLLING FIELD DIMENSIONS BEFORE ORDERING OR FABRICATING ANY MATERIAL.

Caltrans Metric

ALL DIMENSIONS ARE IN MILLIMETERS UNLESS OTHERWISE SHOWN

ORIGINAL SCALE IN MILLIMETERS FOR REDUCED PLANS 0 10 20 30 40 50 60 70 80 90 100

	BY	CHECKED
DESIGN	Gabriel Galo	James Ralston
DETAILS	Dale Kubochi	James Ralston
QUANTITIES	James Ralston	Traci Menard

STATE OF CALIFORNIA
DEPARTMENT OF TRANSPORTATION

DIVISION OF ENGINEERING SERVICES
STRUCTURE DESIGN
DESIGN BRANCH 15

CU 07
EA 121841

BRIDGE NO. 53-1082
KILOMETER POST 45.7

ALAMEDA AVENUE UNDERCROSSING (WIDEN)

GIRDER DETAILS NO. 2

DISREGARD PRINTS BEARING EARLIER REVISION DATES

REVISION DATES 3-1-07 4-1-08 11-1-08 12-1-08 1-6-09

SHEET 23 OF 33

FILE => 53-1082lrks-o-girdet02.dgn

STRUCTURES DESIGN DETAIL SHEET (METRIC) (REV.03-17-04)

USERNAME => trmikesl DATE PLOTTED => 12-JUN-2009 TIME PLOTTED => 13:49

DIST	COUNTY	ROUTE	KILOMETER POST TOTAL PROJECT	SHEET No	TOTAL SHEETS
07	LA	5	42.8/47.3	780	1073

Andrew Rittenhouse 12-05-08
REGISTERED CIVIL ENGINEER DATE

6-8-09
PLANS APPROVAL DATE

REGISTERED PROFESSIONAL ENGINEER
Andrew P. Rittenhouse
No. C 61006
Exp. 12-31-10
CIVIL
STATE OF CALIFORNIA

The State of California or its officers or agents shall not be responsible for the accuracy or completeness of electronic copies of this plan sheet.

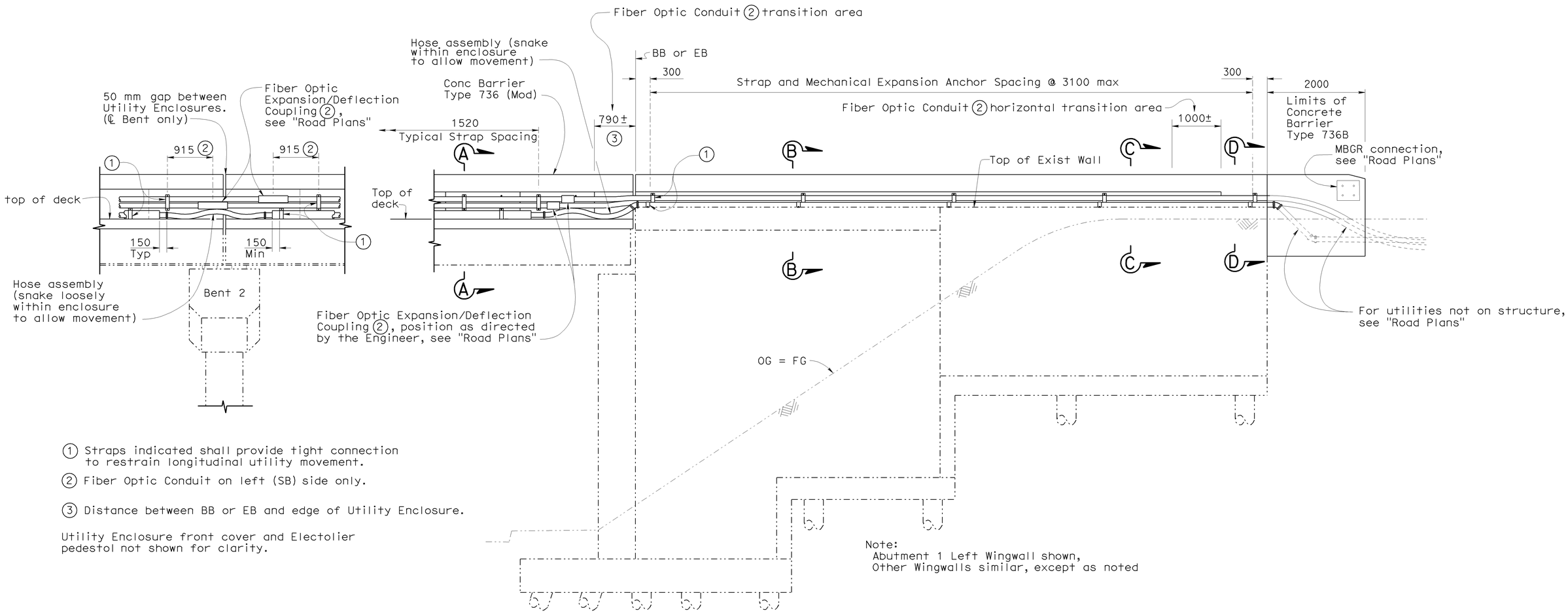

(1) Straps indicated shall provide tight connection to restrain longitudinal utility movement.

(2) Fiber Optic Conduit on left (SB) side only.

(3) Distance between BB or EB and edge of Utility Enclosure.

Utility Enclosure front cover and Electolier pedestol not shown for clarity.

Note:
Abutment 1 Left Wingwall shown,
Other Wingwalls similar, except as noted

UTILITY TRANSITION
1:40

Notes:

1. For "Utility Enclosure" details and other Mechanical Expansion Anchor spacing not shown, see "MISCELLANEOUS DETAILS NO. 3" sheet.
2. For "Section A-A", "Section B-B", "Section C-C" and "Section D-D" see MISCELLANEOUS DETAILS NO. 2" sheet.

NOTE:
THE CONTRACTOR SHALL VERIFY ALL CONTROLLING FIELD DIMENSIONS BEFORE ORDERING OR FABRICATING ANY MATERIAL.

Caltrans Metric

	BY	CHECKED
DESIGN	A. Rittenhouse	James Ralston
DETAILS	Dale Kubochi	James Ralston
QUANTITIES	James Ralston	Traci Menard

STATE OF CALIFORNIA
DEPARTMENT OF TRANSPORTATION

DIVISION OF ENGINEERING SERVICES
STRUCTURE DESIGN
DESIGN BRANCH 15

BRIDGE NO. 53-1082
KILOMETER POST 45.7

ALAMEDA AVENUE UNDERCROSSING (WIDEN)
MISCELLANEOUS DETAILS NO. 1

ALL DIMENSIONS ARE IN MILLIMETERS UNLESS OTHERWISE SHOWN

ORIGINAL SCALE IN MILLIMETERS FOR REDUCED PLANS 0 10 20 30 40 50 60 70 80 90 100

CU 07
EA 121841

DISREGARD PRINTS BEARING EARLIER REVISION DATES

REVISION DATES: 4-13-07 4-26-07 3-6-08 4-4-08 4-18-08 4-25-08 11-24-08 5-05-09

SHEET 24 OF 33

STRUCTURES DESIGN DETAIL SHEET (METRIC) (REV.03-17-04)

FILE => 53-1082lrks-v-misc01.dgn

USERNAME => ttmirkes1 DATE PLOTTED => 12-JUN-2009 TIME PLOTTED => 13:49

DIST	COUNTY	ROUTE	KILOMETER POST TOTAL PROJECT	SHEET No	TOTAL SHEETS
07	LA	5	42.8/47.3	781	1073

Andrew Rittenhouse 12-05-08
REGISTERED CIVIL ENGINEER DATE

6-8-09
PLANS APPROVAL DATE

REGISTERED PROFESSIONAL ENGINEER Andrew P. Rittenhouse No. C 61006 Exp. 12-31-10 CIVIL STATE OF CALIFORNIA

The State of California or its officers or agents shall not be responsible for the accuracy or completeness of electronic copies of this plan sheet.

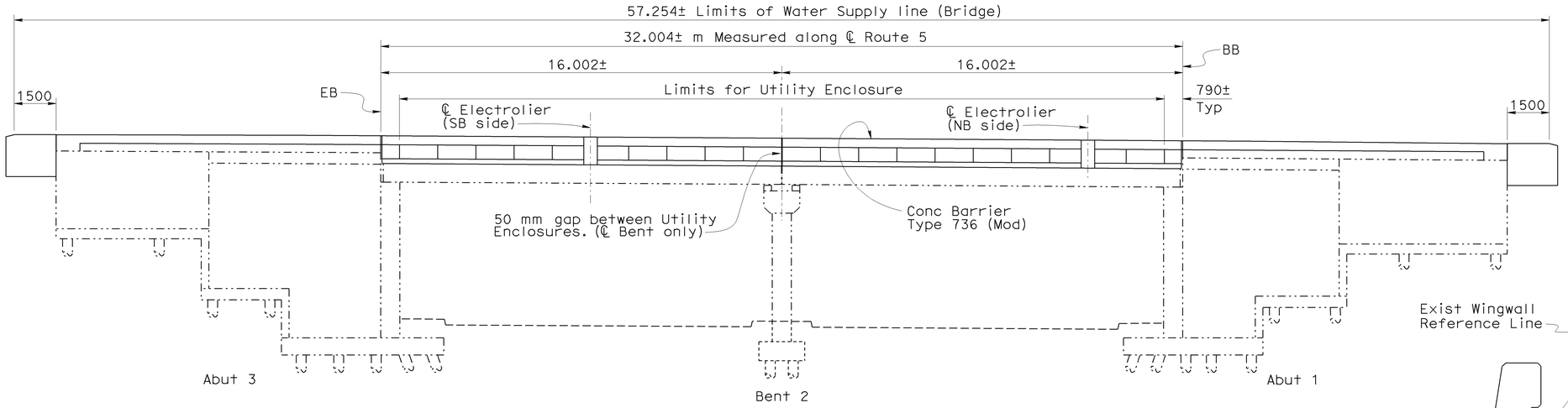

ELEVATION LEFT SIDE STRUCTURE
1:100

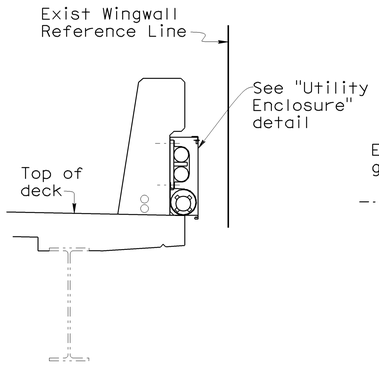

SECTION A-A

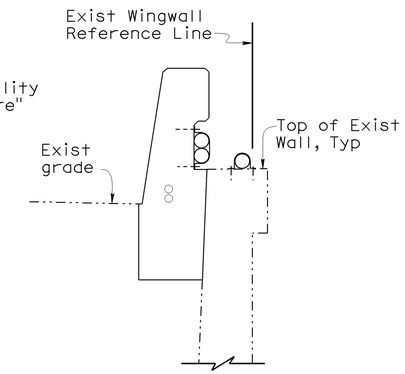

SECTION B-B

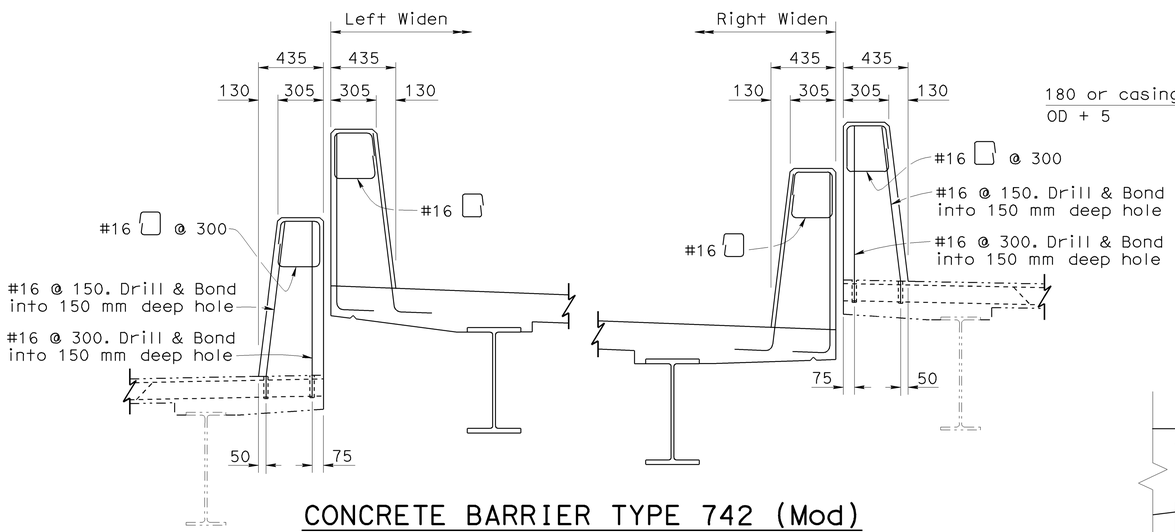

CONCRETE BARRIER TYPE 742 (Mod)
1:20

Note:
For details not shown, see B11-57

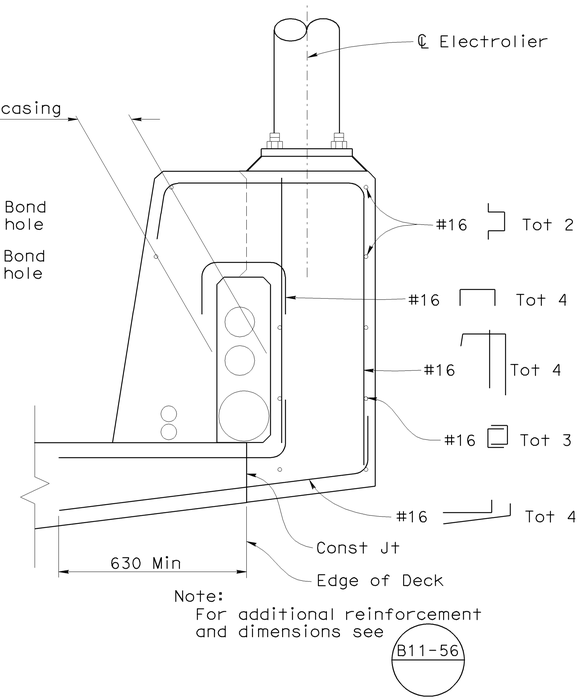

Note:
For additional reinforcement
and dimensions see B11-56

PEDESTAL AT ELECTROLIER
1:20

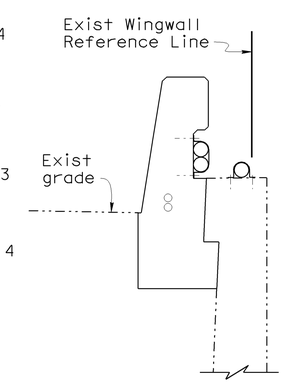

SECTION C-C

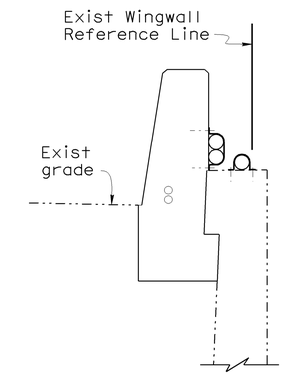

SECTION D-D

CONCRETE BARRIER TYPE 736 (Mod)
1:20

NOTE:
THE CONTRACTOR SHALL VERIFY ALL CONTROLLING FIELD DIMENSIONS BEFORE ORDERING OR FABRICATING ANY MATERIAL.

Notes:
- For "Utility Enclosure" details and other Mechanical Expansion Anchor spacing not shown, see "MISCELLANEOUS DETAILS NO. 3" sheet.
- Adjust Electrolier locations to match Utility Enclosures.

Caltrans Metric

	BY	CHECKED
DESIGN	Gabriel Galo	James Ralston
DETAILS	Dale Kubochi	James Ralston
QUANTITIES	James Ralston	Traci Menard

STATE OF CALIFORNIA
DEPARTMENT OF TRANSPORTATION

DIVISION OF ENGINEERING SERVICES
STRUCTURE DESIGN
DESIGN BRANCH 15

BRIDGE NO. 53-1082
KILOMETER POST 45.7

ALAMEDA AVENUE UNDERCROSSING (WIDEN)
MISCELLANEOUS DETAILS NO. 2

ALL DIMENSIONS ARE IN MILLIMETERS UNLESS OTHERWISE SHOWN

ORIGINAL SCALE IN MILLIMETERS FOR REDUCED PLANS 0 10 20 30 40 50 60 70 80 90 100

CU 07
EA 121841

DISREGARD PRINTS BEARING EARLIER REVISION DATES

REVISION DATES: 4-13-07 4-24-07 3-6-08 4-3-08 4-18-08 4-25-08 11-24-08 12-24-08 1-7-09 5-5-09

SHEET 25 OF 33

FILE => 53-1082lrks-v-misc02.dgn

STRUCTURES DESIGN DETAIL SHEET (METRIC) (REV.03-17-04)

USERNAME => trmikest DATE PLOTTED => 12-JUN-2009 TIME PLOTTED => 13:49

DIST	COUNTY	ROUTE	KILOMETER POST TOTAL PROJECT	SHEET No	TOTAL SHEETS
07	LA	5	42.8/47.3	782	1073

Andrew Rittenhouse 12-05-08
REGISTERED CIVIL ENGINEER DATE

6-8-09
PLANS APPROVAL DATE

REGISTERED PROFESSIONAL ENGINEER Andrew P. Rittenhouse No. C 61006 Exp. 12-31-10 CIVIL STATE OF CALIFORNIA

The State of California or its officers or agents shall not be responsible for the accuracy or completeness of electronic copies of this plan sheet.

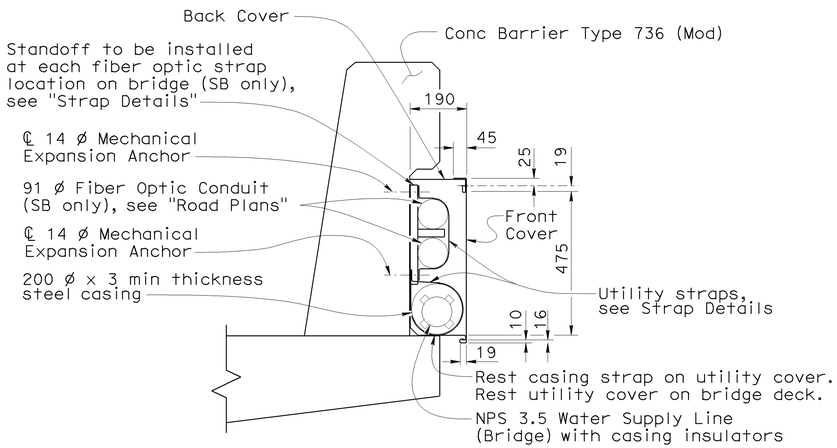

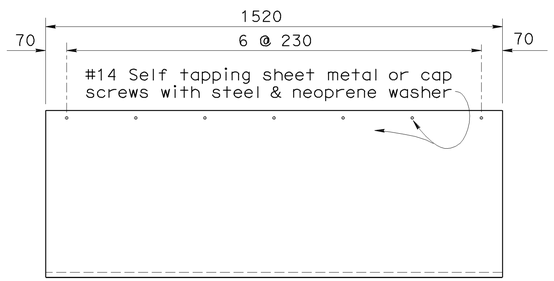

FRONT COVER

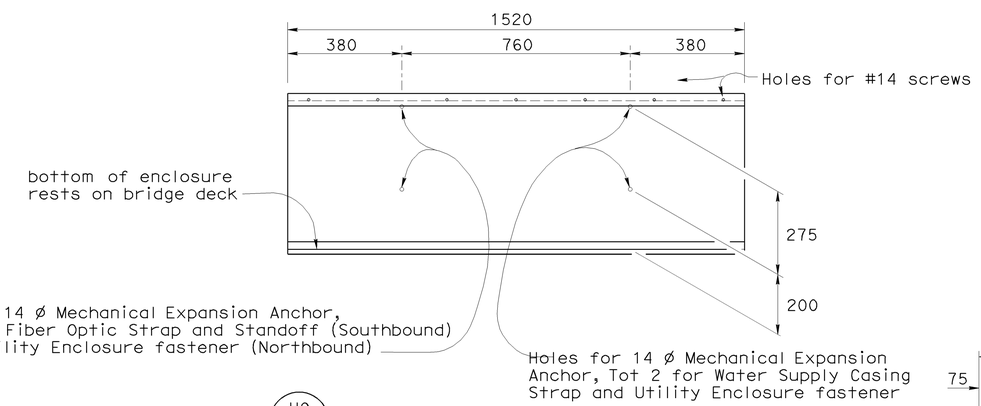

BACK COVER

Note:
Straps for fiber optic conduit (SB only) and water casing alternate per "Back Cover" detail.
Holes for anchors may be field drilled through back cover.
Front and Back Covers 14 Gage galvanized sheet metal.

NOTE:
THE CONTRACTOR SHALL VERIFY ALL CONTROLLING FIELD DIMENSIONS BEFORE ORDERING OR FABRICATING ANY MATERIAL.

UTILITY ENCLOSURE
1:10

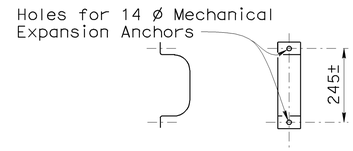

FIBER OPTIC STRAP

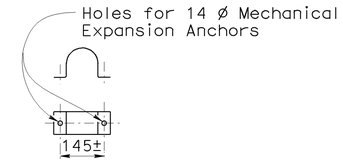

WATER PIPE STRAP

UTILITY STRAPS ON RETAINING WALL

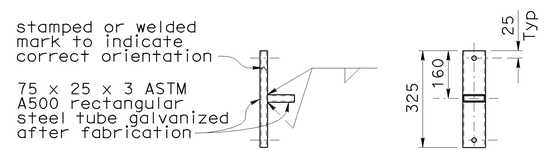

FIBER OPTIC STANDOFF

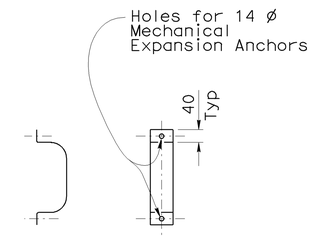

FIBER OPTIC STRAP

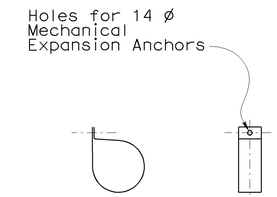

WATER CASING STRAP

UTILITY STRAPS ON BRIDGE BARRIER

Note:
All straps to be 75 x 3 and galvanized after fabrication. Lengths of straps as required to allow longitudinal movement of pipes, casings, or conduit through straps, except as noted in "Utility Transition" detail.

STRAP DETAILS
1:10

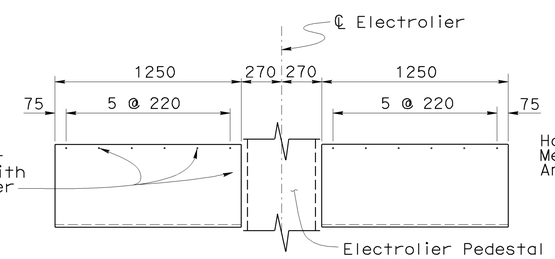

FRONT COVER AT ELECTROLIER
1:20

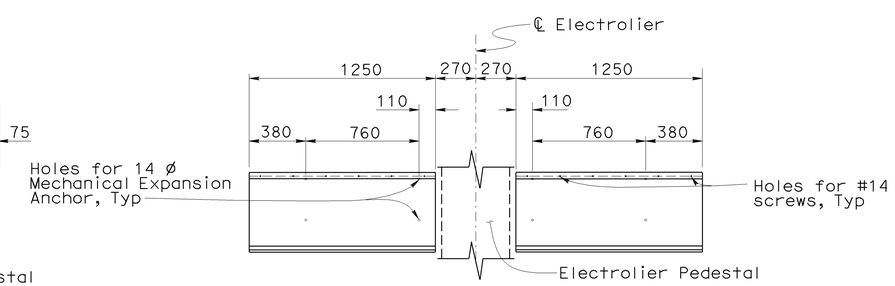

BACK COVER AT ELECTROLIER
1:20

Notes:
Adjust location of electrolier foundation to match Utility Enclosure pattern.
See "Utility Enclosure" for additional details.

DESIGN	BY A. Rittenhouse	CHECKED James Ralston	
DETAILS	BY Dale Kubochi	CHECKED James Ralston	
QUANTITIES	BY James Ralston	CHECKED Traci Menard	

STATE OF CALIFORNIA
DEPARTMENT OF TRANSPORTATION

DIVISION OF ENGINEERING SERVICES
STRUCTURE DESIGN
DESIGN BRANCH 15

BRIDGE NO. 53-1082
KILOMETER POST 45.7

ALAMEDA AVENUE UNDERCROSSING (WIDEN)
MISCELLANEOUS DETAILS NO. 3

ALL DIMENSIONS ARE IN MILLIMETERS UNLESS OTHERWISE SHOWN

ORIGINAL SCALE IN MILLIMETERS FOR REDUCED PLANS 0 10 20 30 40 50 60 70 80 90 100

CU 07
EA 121841

DISREGARD PRINTS BEARING EARLIER REVISION DATES

REVISION DATES: 2-13-07 2-28-07 3-5-08 4-8-08 4-18-08 4-24-08 11-24-08 5-6-09

SHEET 26 OF 33

FILE => 53-1082lrks-v-misc03.dgn

STRUCTURES DESIGN DETAIL SHEET (METRIC) (REV.03-17-04)

USERNAME => trmikesl DATE PLOTTED => 12-JUN-2009 TIME PLOTTED => 13:49

DIST	COUNTY	ROUTE	KILOMETER POST TOTAL PROJECT	SHEET No	TOTAL SHEETS
07	LA	5	42.8/47.3	783	1073

Andrew Rittenhouse 12-05-08
REGISTERED CIVIL ENGINEER DATE

6-8-09
PLANS APPROVAL DATE

REGISTERED PROFESSIONAL ENGINEER Andrew P. Rittenhouse No. C 61006 Exp. 12-31-10 CIVIL STATE OF CALIFORNIA

The State of California or its officers or agents shall not be responsible for the accuracy or completeness of electronic copies of this plan sheet.

Notes:

- "Section E-E", "Section F-F" and "Section G-G" are similar for Barrier transition at Abutment 3.

✳ Vertical and Horizontal Barrier Transition to end at same location.

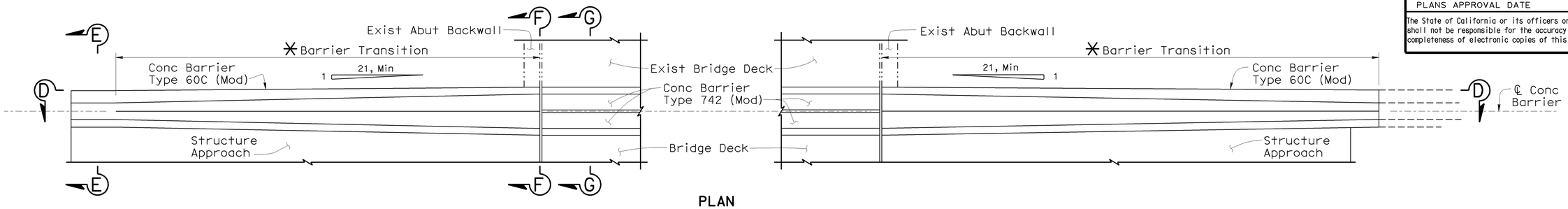

PLAN

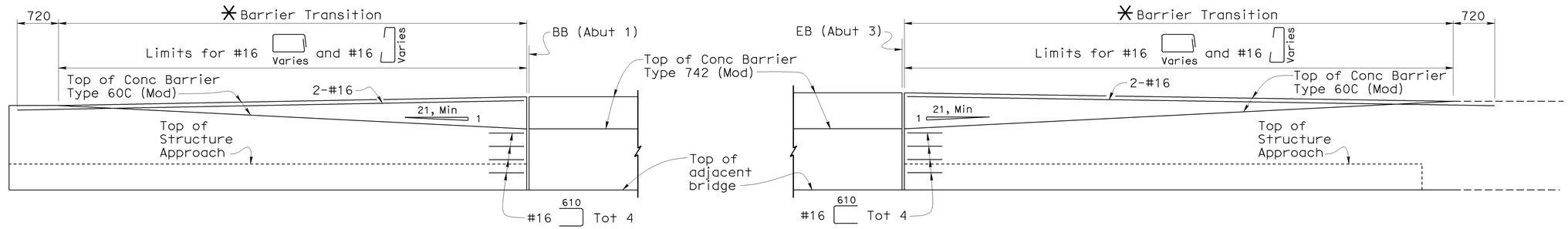

ELEVATION D-D

BARRIER TRANSITION DETAILS (LEFT WIDEN)

1:40

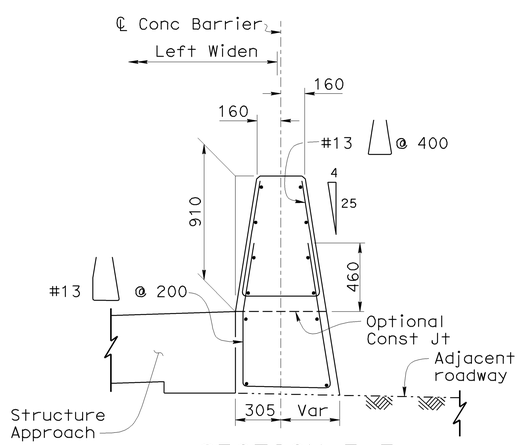

SECTION E-E

1:20

Note: For details not shown or noted, see A76A

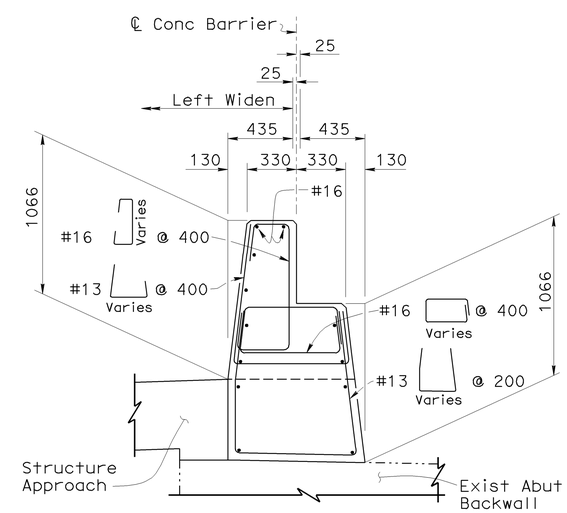

SECTION F-F

1:20

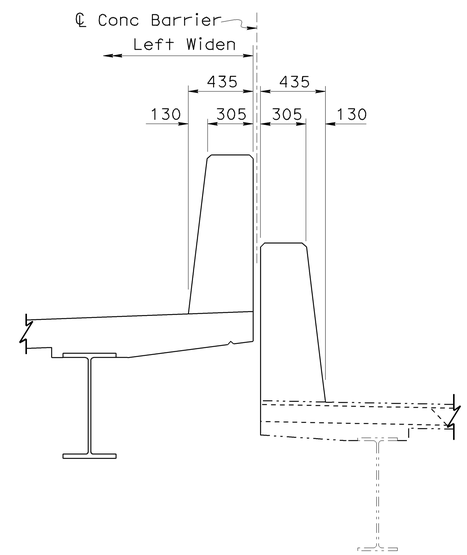

For details not shown, see "Concrete Barrier Type 742 (Mod)" on "MISCELLANEOUS DETAILS NO. 6" sheet

SECTION G-G

1:20

NOTE:
THE CONTRACTOR SHALL VERIFY ALL CONTROLLING FIELD DIMENSIONS BEFORE ORDERING OR FABRICATING ANY MATERIAL.

DESIGN	BY Gabriel Galo	CHECKED James Ralston	
DETAILS	BY Dale Kubochi	CHECKED James Ralston	
QUANTITIES	BY James Ralston	CHECKED Traci Menard	

STATE OF CALIFORNIA
DEPARTMENT OF TRANSPORTATION

DIVISION OF ENGINEERING SERVICES
STRUCTURE DESIGN
DESIGN BRANCH 15

BRIDGE NO. 53-1082
KILOMETER POST 45.7

ALAMEDA AVENUE UNDERCROSSING (WIDEN)
MISCELLANEOUS DETAILS NO. 4

Caltrans Metric

ALL DIMENSIONS ARE IN MILLIMETERS UNLESS OTHERWISE SHOWN

ORIGINAL SCALE IN MILLIMETERS FOR REDUCED PLANS 0 10 20 30 40 50 60 70 80 90 100

CU 07
EA 121841

DISREGARD PRINTS BEARING EARLIER REVISION DATES

REVISION DATES: 3-13-08, 11-21-08

SHEET 27 OF 33

FILE => 53-1082lrks-v-misc04.dgn

STRUCTURES DESIGN DETAIL SHEET (METRIC) (REV.03-17-04)

USERNAME => trmikest DATE PLOTTED => 12-JUN-2009 TIME PLOTTED => 13:49

DIST	COUNTY	ROUTE	KILOMETER POST TOTAL PROJECT	SHEET No	TOTAL SHEETS
07	LA	5	42.8/47.3	784	1073

Andrew Rittenhouse 12-05-08
REGISTERED CIVIL ENGINEER DATE

6-8-09
PLANS APPROVAL DATE

REGISTERED PROFESSIONAL ENGINEER Andrew P. Rittenhouse No. C 61006 Exp. 12-31-10 CIVIL STATE OF CALIFORNIA

The State of California or its officers or agents shall not be responsible for the accuracy or completeness of electronic copies of this plan sheet.

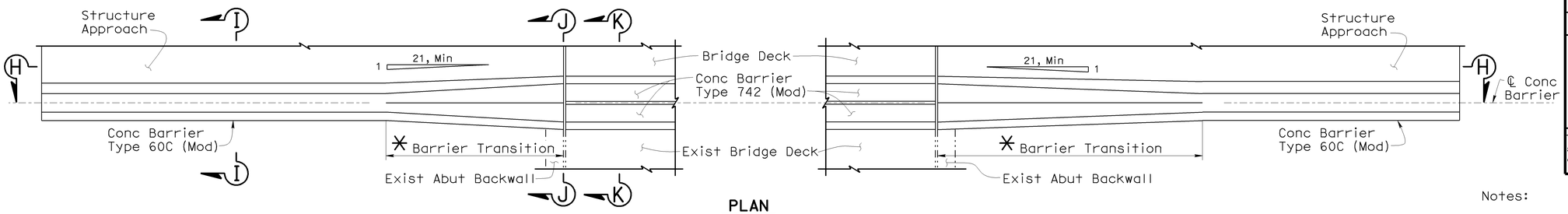

PLAN

Notes:

- "Section I-I", "Section J-J" and "Section K-K" are similar for Barrier transition at Abutment 3.

✳ Vertical and Horizontal Barrier Transition to end at same location.

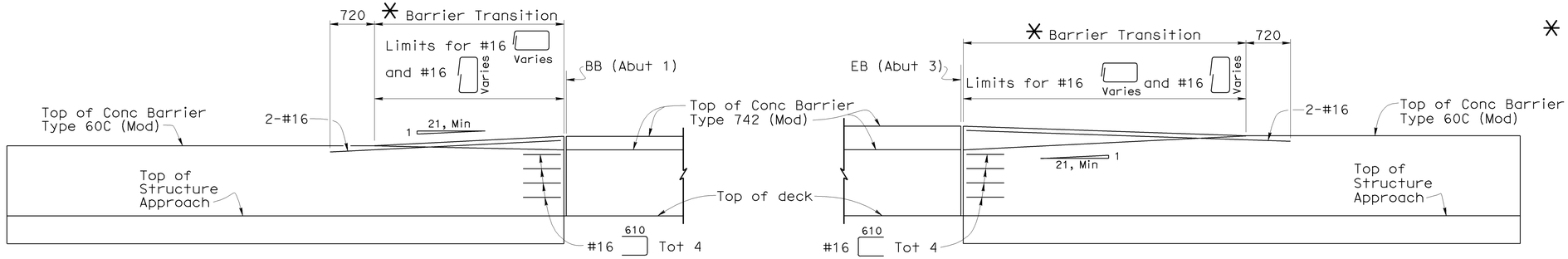

ELEVATION H-H

BARRIER TRANSITION DETAILS (RIGHT WIDEN)

1:40

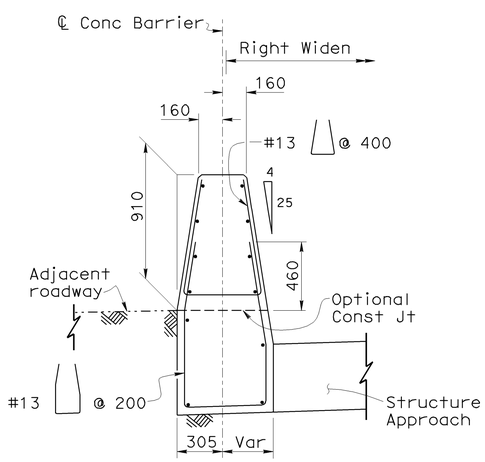

SECTION I-I

1:20

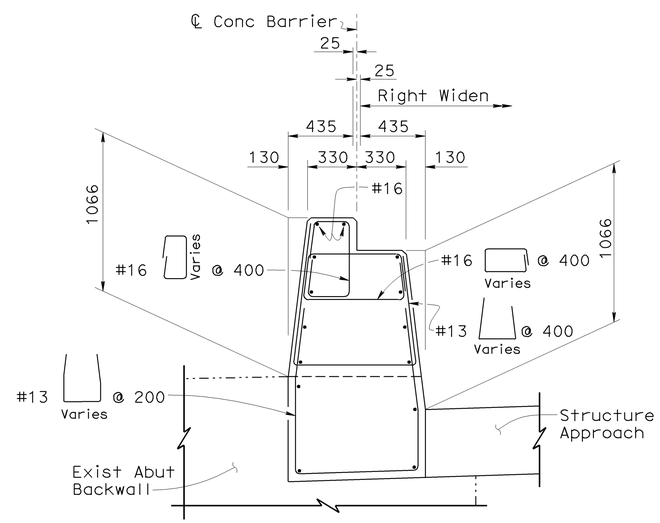

SECTION J-J

1:20

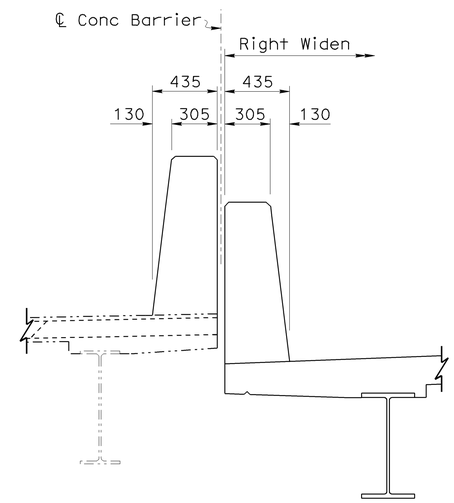

For details not shown, see "Concrete Barrier Type 742 (Mod)" on "MISCELLANEOUS DETAILS NO. 6" sheet

SECTION K-K

1:20

NOTE:
THE CONTRACTOR SHALL VERIFY ALL CONTROLLING FIELD DIMENSIONS BEFORE ORDERING OR FABRICATING ANY MATERIAL.

Note: For details not shown or noted, see A76A

	BY	CHECKED
DESIGN	Gabriel Galo	James Ralston
DETAILS	Dale Kubochi	James Ralston
QUANTITIES	James Ralston	Traci Menard

STATE OF CALIFORNIA
DEPARTMENT OF TRANSPORTATION

DIVISION OF ENGINEERING SERVICES
STRUCTURE DESIGN
DESIGN BRANCH 15

BRIDGE NO. 53-1082
KILOMETER POST 45.7

ALAMEDA AVENUE UNDERCROSSING (WIDEN)
MISCELLANEOUS DETAILS NO. 5

ALL DIMENSIONS ARE IN MILLIMETERS UNLESS OTHERWISE SHOWN

ORIGINAL SCALE IN MILLIMETERS FOR REDUCED PLANS 0 10 20 30 40 50 60 70 80 90 100

CU 07
EA 121841

DISREGARD PRINTS BEARING EARLIER REVISION DATES 4-13-08 11-21-08

REVISION DATES

SHEET 28 OF 33

FILE => 53-1082lrks-v-misc05.dgn

STRUCTURES DESIGN DETAIL SHEET (METRIC) (REV.03-17-04)

USERNAME => trmikes| DATE PLOTTED => 12-JUN-2009 TIME PLOTTED => 13:49

DIST.	COUNTY	ROUTE	KILOMETER POST TOTAL PROJECT	SHEET NO.	TOTAL SHEETS
07	LA	5	42.8/47.3	785	1073

Caltrans Metric

Andrew Rittenhouse 12-05-08
REGISTERED ENGINEER - CIVIL

6-8-09
PLANS APPROVAL DATE

REGISTERED PROFESSIONAL ENGINEER Andrew P. Rittenhouse No. C 61006 Exp. 12-31-10 CIVIL STATE OF CALIFORNIA

The State of California or its officers or agents shall not be responsible for the accuracy or completeness of electronic copies of this plan sheet.

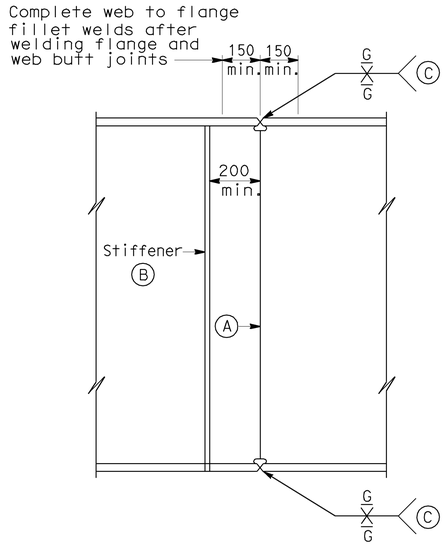

GIRDER SPLICE

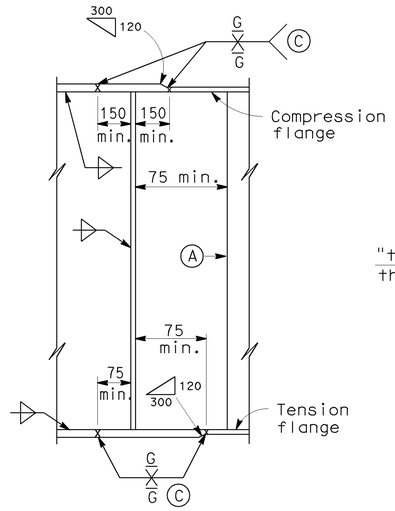

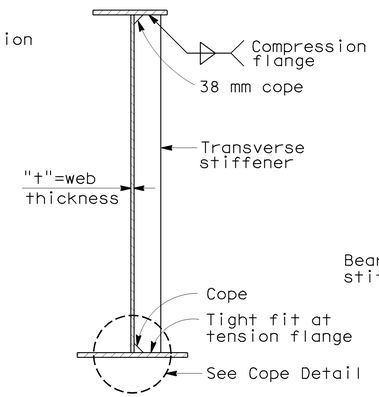

ASSEMBLY AND FABRICATION DETAILS

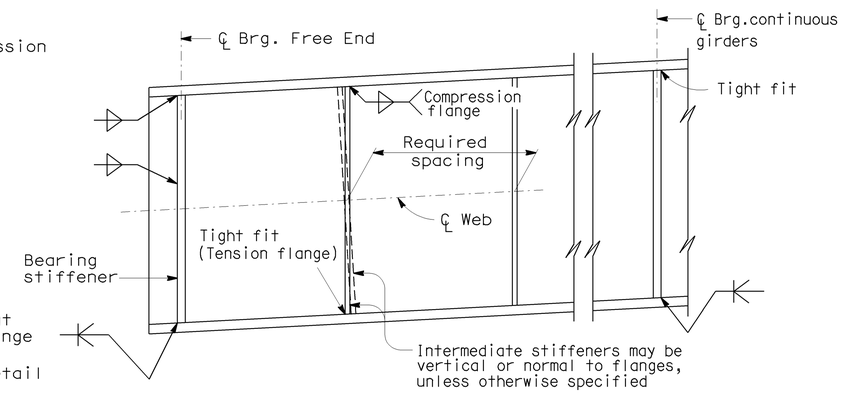

TRANSVERSE STIFFENERS

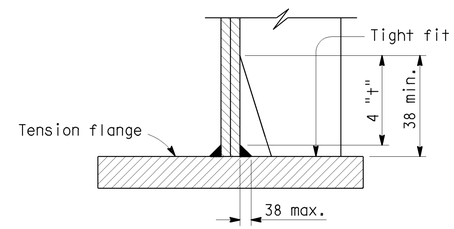

COPE DETAIL

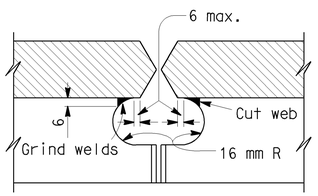

WEB COPE AT GIRDER SPLICE

NOTES:

Alternative girder splices will be permitted subject to approval by the Engineer.

(A) Web butt joints shall be full penetration groove welds. All weld areas on the exterior face of exterior girders shall be ground flush.

Under full dead load and deck shrinkage, as shown on the camber diagram, girder ends and bearing stiffeners shall be vertical except they may be normal to grade for grades less than 2 percent.

(B) Stiffeners adjacent to a girder splice may be field welded.

(C) Grind all surfaces flush on tension flanges.

Grind all surfaces on compression flanges when required for NDI.

Grind all exterior surfaces flush on all bottom compression flanges.

(D) Stop fillet welds 6 mm from end of plate.

(E) Size fillet weld to match the strength of connection required for the joint.

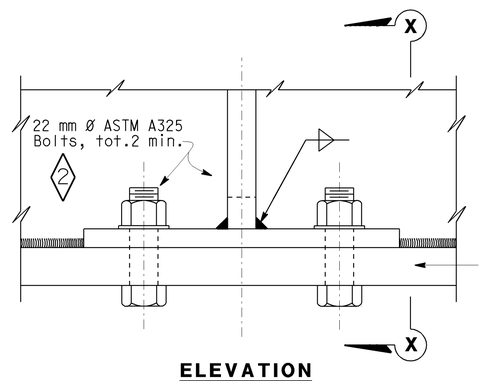

ELEVATION

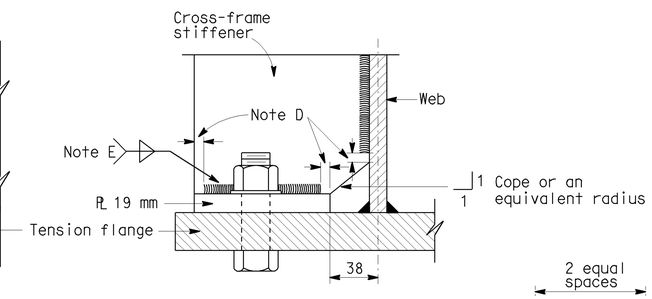

VIEW X-X

CROSS FRAME STIFFENER DETAIL

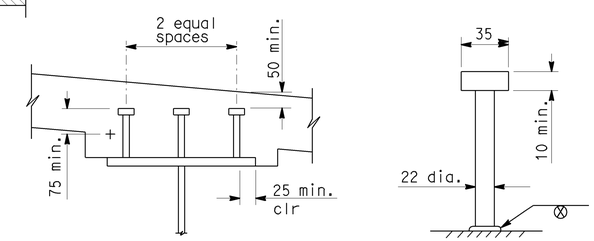

Lengths to be determined by the Contractor, unless otherwise shown.

Minimum length is 150 mm.

The top of deck is designed to be approximately parallel to the top of web for determining girder stud connector height.

Alternative types of shear connectors will be permitted subject to approval by the Engineer.

STUD CONNECTOR (1)

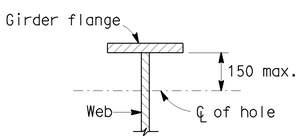

25 mm max.diameter hole at 1.2 m± min. spacing to be used for falsework support when specified by the Contractor. Contractor to determine location, size and spacing.

50 mm max.diameter hole to be drilled where lighting conduit passes through girder web. For location and size of hole see "Lighting Plan".

HOLES FOR CONDUIT AND FALSEWORK

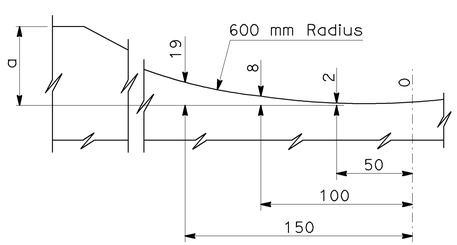

ELEVATION

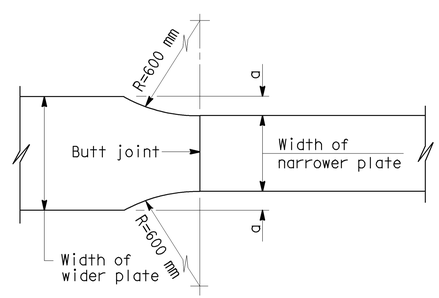

TRANSITION OF WIDTH

FLANGE TRANSITION DETAIL

NO SCALE

ALL DIMENSIONS ARE IN MILLIMETERS UNLESS OTHERWISE SHOWN

SPECIAL DETAILS

STANDARD DRAWING				
RELEASE DATE REVISED	DESIGN	BY G. INENEGA	CHECKED D. FUKUSHIMA	RELEASED BY
	DETAILS	BY R. YEE	CHECKED D. FUKUSHIMA	
FILE NO. xs1-410	SUBMITTED	BY R.C. ANDERSON	DRAWING DATE 1/89	OFFICE CHIEF

(1) Modified detail
(2) Modified note

STATE OF CALIFORNIA
DEPARTMENT OF TRANSPORTATION

DIVISION OF ENGINEERING SERVICES

BRIDGE NO. 53-1082
KILOMETER POST 45.7

ALAMEDA AVENUE UNDERCROSSING (WIDEN)

STEEL GIRDER DETAILS

DS OSD 2147A (METRIC) (REV. 2/25/97)

ORIGINAL SCALE IN MILLIMETERS FOR REDUCED PLANS 0 10 20 30 40 50 60 70 80 90 100

CU 07
EA 121841

DISREGARD PRINTS BEARING EARLIER REVISION DATES

REVISION DATES (PRELIMINARY STAGE ONLY) 4-13-07 4-13-08 11-14-08 1-7-09

SHEET 29 OF 33

USERNAME => trmikesl

53-1082lrks-w-xs1-410.dgn

DATE PLOTTED => 12-JUN-2009 TIME PLOTTED => 13:49

DIST.	COUNTY	ROUTE	KILOMETER POST TOTAL PROJECT	SHEET NO.	TOTAL SHEETS
07	LA	5	42.8/47.3	786	1073

Andrew P. Rittenhouse 12-05-08
REGISTERED ENGINEER - CIVIL

6-8-09
PLANS APPROVAL DATE

REGISTERED PROFESSIONAL ENGINEER Andrew P. Rittenhouse No. C 61006 Exp. 12-31-10 CIVIL STATE OF CALIFORNIA

The State of California or its officers or agents shall not be responsible for the accuracy or completeness of electronic copies of this plan sheet.

Caltrans Metric

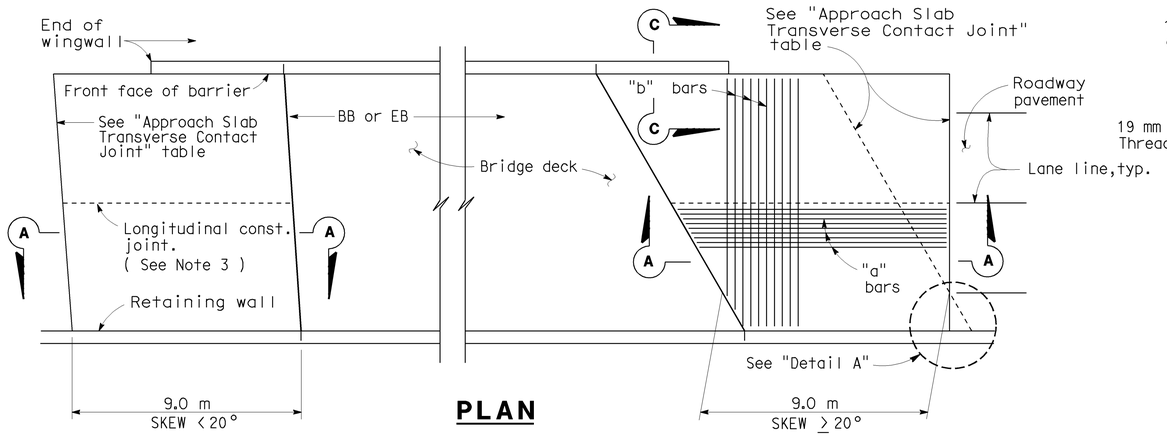

PLAN

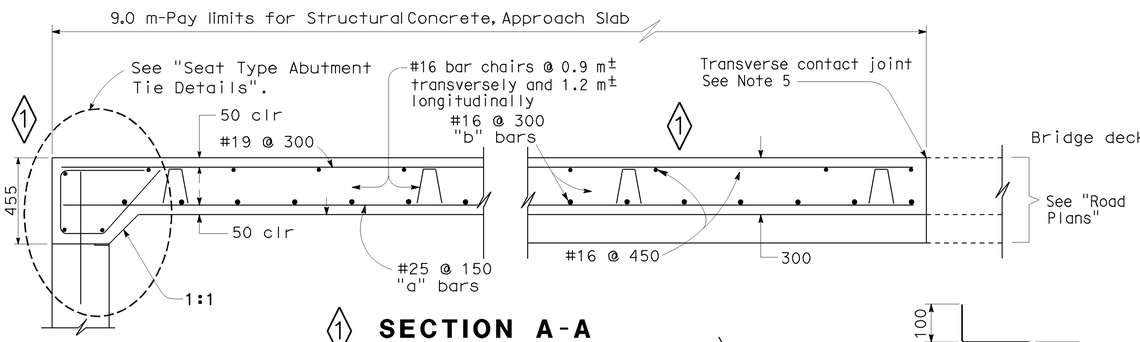

1 SECTION A-A

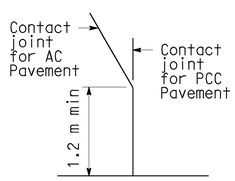

DETAIL A

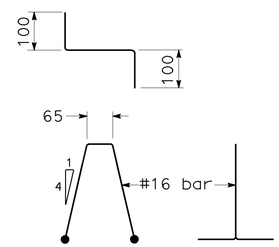

BAR CHAIR DETAIL

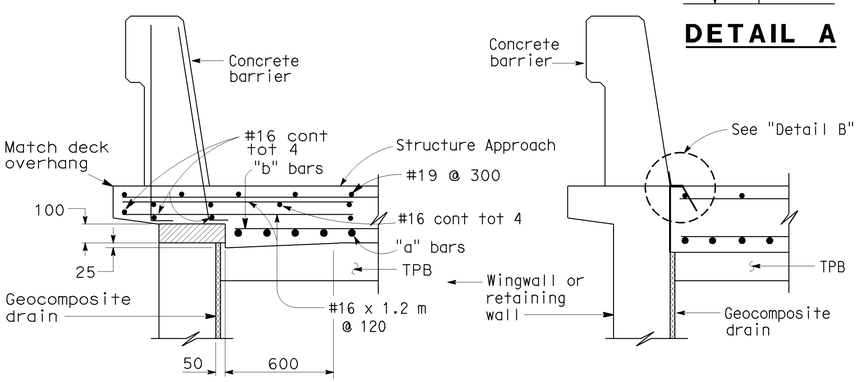

TYPE E-1 TYPE E-2

SECTION C-C 1

(Type E-1 to be used,unless otherwise shown on plans)

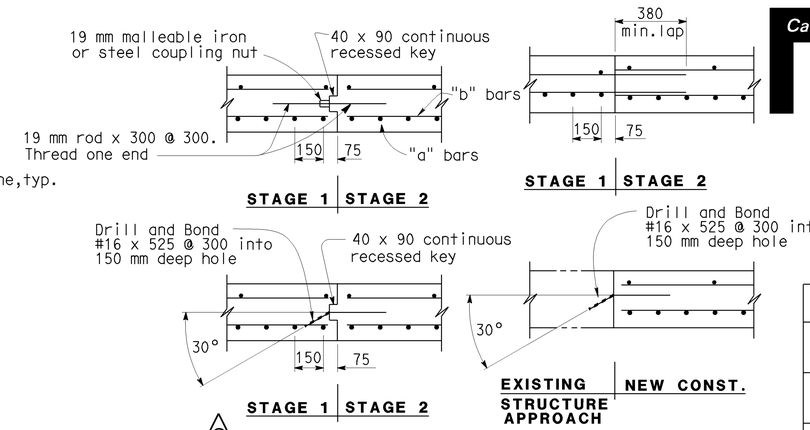

2 LONGITUDINAL CONSTRUCTION JOINT ALTERNATIVES

APPROACH SLAB TRANSVERSE CONTACT JOINT		
APPROACH SKEW	WITH AC ROADWAY PAVEMENT	WITH PCC ROADWAY PAVEMENT
< 20°	Parallel to face of paving notch	Parallel to face of paving notch
20°- 45°	Parallel to face of P N use (Detail A)	Stagger lines 7.2 m to 10.8 m apart.
> 45°	Parallel to face of P N use (Detail A)	Stagger at each lane line.

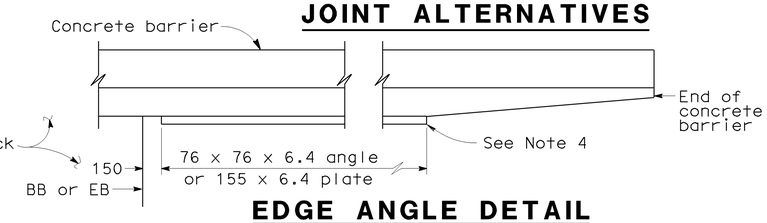

EDGE ANGLE DETAIL

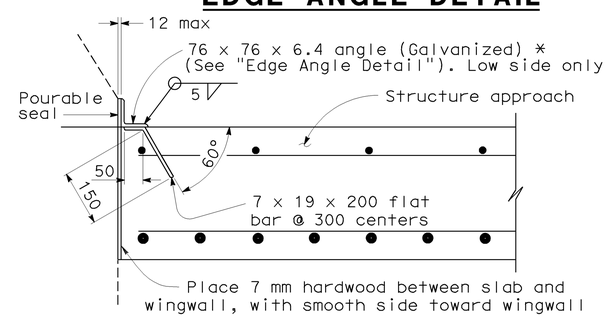

*(TO BE USED WITH TYPE 25 OR TYPE 27 CONCRETE BARRIER)

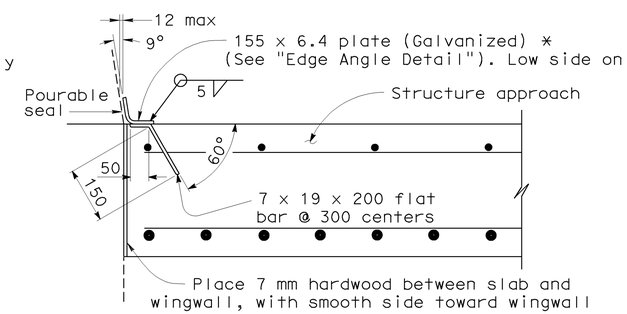

*(TO BE USED WITH TYPE 732 OR TYPE 736 CONCRETE BARRIER)

DETAIL B

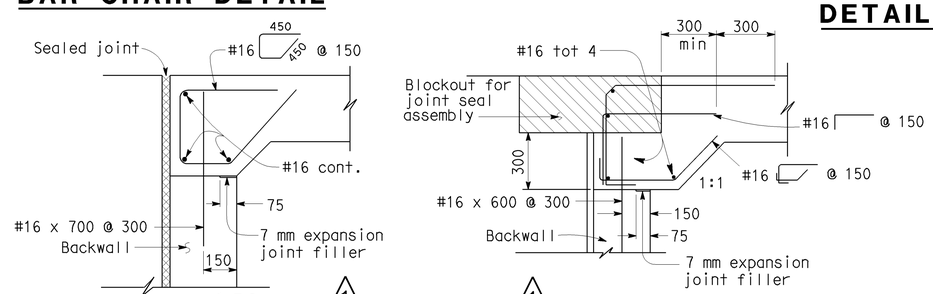

MR ≤ 50 mm 1 MR > 50 mm

SEAT TYPE ABUTMENT TIE DETAILS (SEE NOTE 1)

NOTES:

1. For details not shown,see Structure Plans. For MR ≤ 50 mm,adjust bar reinforcement to clear a sawcut for sealed joint,when required.
2. For drainage details,see "Structure Approach Drainage Details" sheet.
3. Longitudinal construction joints,when permitted by the Engineer, shall be located on lane lines.
4. End angle or plate at beginning of barrier transition, end of wingwall or end of structure approach as applicable.
5. For transverse contact joint with new PCC paving, refer to Standard Plan P10.
6. At the contractor's option, approach slab transverse reinforcement may be placed parallel to paving notch. Spacing of transverse reinforcement is measured along ℄ roadway.

Remove all polystyrene.

NO SCALE

ALL DIMENSIONS ARE IN MILLIMETERS UNLESS OTHERWISE SHOWN

SPECIAL DETAILS

STANDARD DRAWING				
RELEASE DATE REVISED	DESIGN	BY M. TRAFFALIS	CHECKED E. THORKILDSEN	RELEASED BY
FILE NO. xs3-120	DETAILS	BY R. YEE	CHECKED E. THORKILDSEN	
	SUBMITTED	BY M. HA	DRAWING DATE 4/98	OFFICE CHIEF

1 MODIFIED DETAIL
2 ADDED DETAIL

STATE OF CALIFORNIA
DEPARTMENT OF TRANSPORTATION

DIVISION OF ENGINEERING SERVICES

BRIDGE NO. 53-1082
KILOMETER POST 45.7

ALAMEDA AVENUE UNDERCROSSING (WIDEN)

STRUCTURE APPROACH TYPE N(9S)

DS OSD 2147A (METRIC) (REV. 2/25/97)

ORIGINAL SCALE IN MILLIMETERS FOR REDUCED PLANS 0 10 20 30 40 50 60 70 80 90 100

CU 07
EA 121841

DISREGARD PRINTS BEARING EARLIER REVISION DATES

REVISION DATES (PRELIMINARY STAGE ONLY) 5-3-07 4-8-08 11-14-08 1-7-09

SHEET 30 OF 33

USERNAME => trmikesl

53-1082lrks-w-xs3-

DATE PLOTTED => 12-JUN-2009 TIME PLOTTED => 13:49

DIST	COUNTY	ROUTE	KILOMETER POST TOTAL PROJECT	SHEET No	TOTAL SHEETS
07	LA	5	42.8/47.3	787	1073

REGISTERED CIVIL ENGINEER 5-7-08

6-8-09
PLANS APPROVAL DATE

REGISTERED PROFESSIONAL ENGINEER
Qiang Huang
No. C055671
Exp. 12-31-08
CIVIL
STATE OF CALIFORNIA

The State of California or its officers or agents shall not be responsible for the accuracy or completeness of electronic copies of this plan sheet.

BENCH MARK

PRHV 208
Fnd PK & BATHEY @ Alameda Ave
100.880 m Lt C/L "CL1" Line Rte 5
Sta 457+34.354
N 574303.881
E 1971893.821
Elev = 157.309

PRHV 212
Fnd PK & BATHEY @ Alameda Ave
102.771 m Lt C/L "CL1" Line Rte 5
Sta 457+95.878
N 574347.178
E 1971843.146
Elev = 157.159

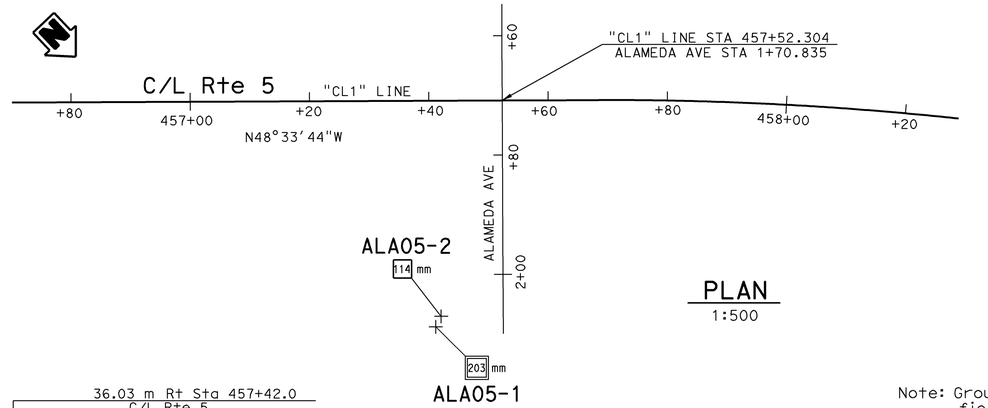

PLAN
1:500

Note: Ground water was not measured during field investigation.

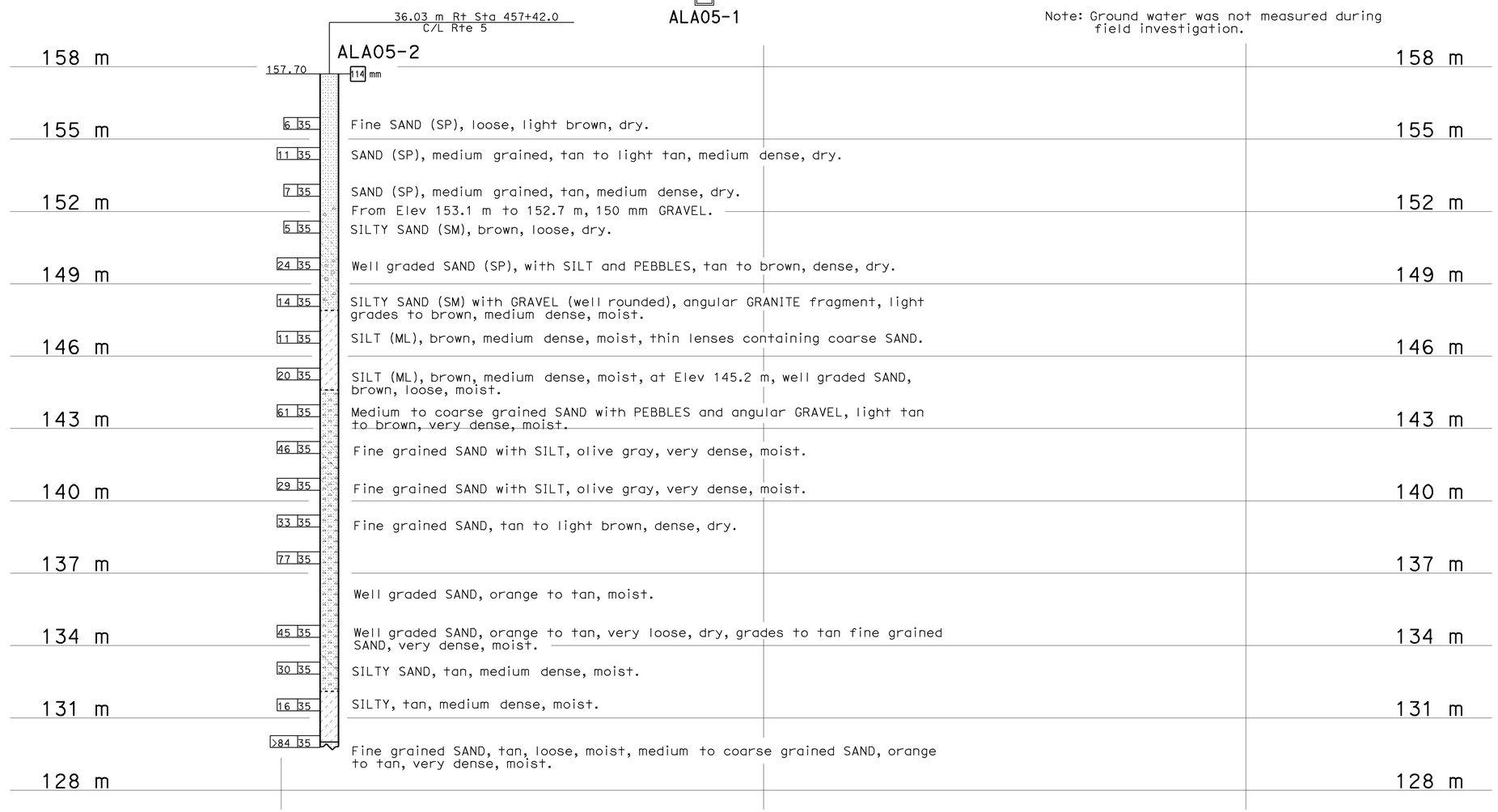

PROFILE
HOR. 1:100
VER. 1:100

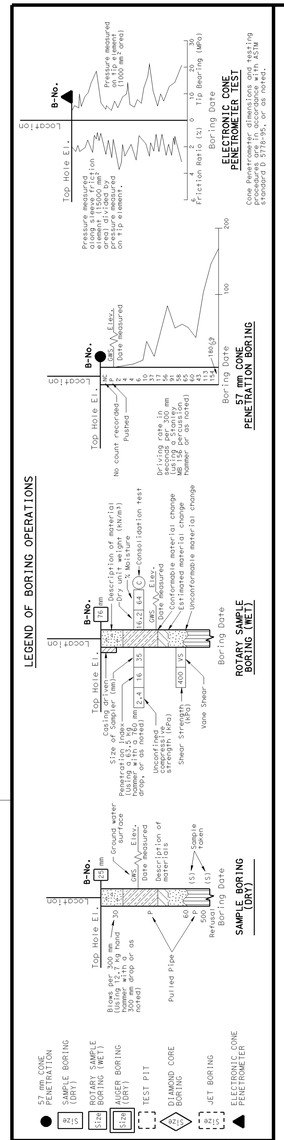

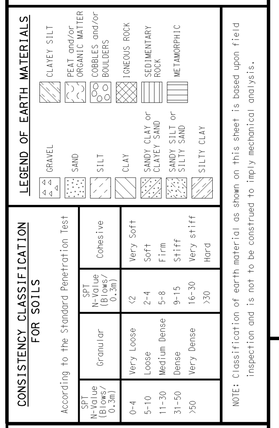

CONSISTENCY CLASSIFICATION FOR SOILS

According to the Standard Penetration Test

SPT N-Value (Blows/0.3m)	Granular	SPT N-Value (Blows/0.3m)	Cohesive
0-4	Very Loose	<2	Very Soft
5-10	Loose	2-4	Soft
11-30	Medium Dense	5-8	Firm
31-50	Dense	9-15	Stiff
>50	Very Dense	16-30	Very stiff
		>30	Hard

NOTE: Classification of earth material as shown on this sheet is based upon field inspection and is not to be construed to imply mechanical analysis.

OGS CIVIL LOG OF TEST BORINGS SHEET (METRIC) (REV. 4/04)

Caltrans Metric

GEOTECHNICAL SERVICES	
DRAWN BY	W. Tang 11/05
CHECKED BY	W. Bertucci

FIELD INVESTIGATION BY: W. Bertucci, C. Kark

STATE OF CALIFORNIA DEPARTMENT OF TRANSPORTATION

DIVISION OF ENGINEERING SERVICES STRUCTURE DESIGN
DESIGN BRANCH

BRIDGE NO. 53-1082
KILOMETER POST 45.7

ALAMEDA AVENUE UNDERCROSSING (WIDEN)
LOG OF TEST BORINGS 1 OF 3

ALL DIMENSIONS ARE IN METERS UNLESS OTHERWISE SHOWN

ORIGINAL SCALE IN MILLIMETERS FOR REDUCED PLANS 0 10 20 30 40 50 60 70 80 90 100

CU 07
EA 121841

DISREGARD PRINTS BEARING EARLIER REVISION DATES

REVISION DATES (PRELIMINARY STAGE ONLY): 04-29-08 11-21-08

SHEET 31 OF 33

FILE => 53-1082irks-x-lotb1.dgn

USERNAME => rtrmikes1 DATE PLOTTED => 12-JUN-2009 TIME PLOTTED => 13:50

DIST	COUNTY	ROUTE	KILOMETER POST TOTAL PROJECT	SHEET No	TOTAL SHEETS
07	LA.	5	42.8/47.3	788	1073

REGISTERED CIVIL ENGINEER 5-7-08

6-8-09
PLANS APPROVAL DATE

REGISTERED PROFESSIONAL ENGINEER
Qiang Huang
No. C055671
Exp. 12-31-08
CIVIL
STATE OF CALIFORNIA

The State of California or its officers or agents shall not be responsible for the accuracy or completeness of electronic copies of this plan sheet.

NOTE:

The information presented on this drawing was not the result of any work developed, performed or completed this Department (Caltrans). The following party should account for all this information:

URS Corp.

It should be expressly understood that Caltrans assumes no responsibility whatsoever in respect to the sufficiency, accuracy, completeness, and interpretation set forth therein or any other aspect of the information shown or represented on this drawing.

FOR PLAN VIEW, SEE
"LOG OF TEST BORINGS" 1 OF 3

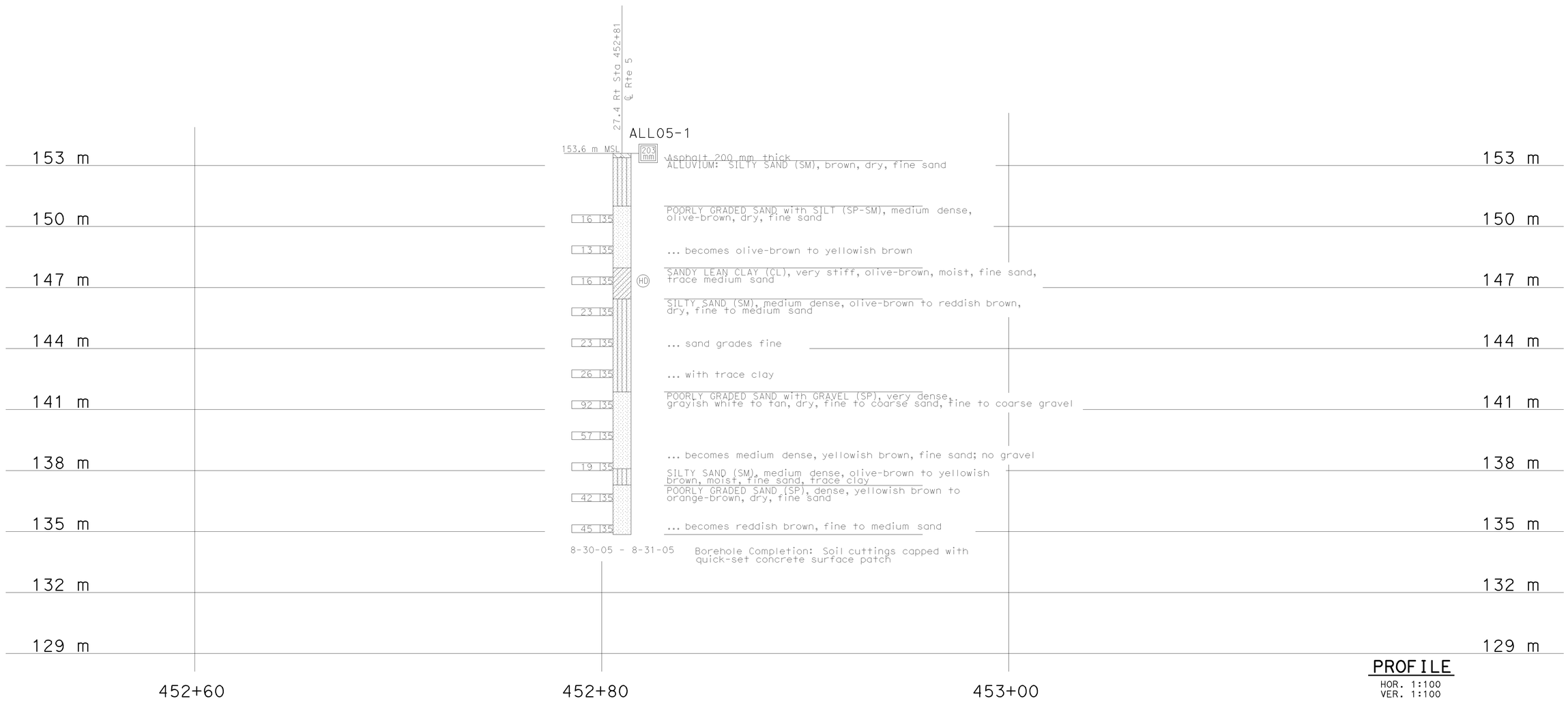

PROFILE
HOR. 1:100
VER. 1:100

Caltrans Metric	GEOTECHNICAL SERVICES PREPARED BY I.G-Remmen 1/06 CHECKED BY B. Bertucci	FIELD INVESTIGATION BY: URS Corp.	STATE OF CALIFORNIA DEPARTMENT OF TRANSPORTATION	DIVISION OF ENGINEERING SERVICES STRUCTURE DESIGN DESIGN BRANCH	BRIDGE NO. 53-1082 KILOMETER POST 45.7	ALAMEDA AVENUE UNDERCROSSING (WIDEN) LOG OF TEST BORINGS 2 OF 3
OGS CIVIL LOG OF TEST BORINGS SHEET (METRIC) (REV. 4/04)	ALL DIMENSIONS ARE IN METERS UNLESS OTHERWISE SHOWN	ORIGINAL SCALE IN MILLIMETERS FOR REDUCED PLANS 0 10 20 30 40 50 60 70 80 90 100	CU 07 EA 121841	DISREGARD PRINTS BEARING EARLIER REVISION DATES	REVISION DATES (PRELIMINARY STAGE ONLY) 04-29-08 11-21-08	SHEET 32 OF 33

FILE => 53-1082lrks-x-lotb2.dgn

USERNAME => trmikesl DATE PLOTTED => 12-JUN-2009 TIME PLOTTED => 13:50

FED. ROAD DIV. No	STATE	PROJ. No.	FISCAL YEAR	SHEET No	TOTAL SHEETS
7	CAL.	IM-28(8)		233	235

DIST.	COUNTY	ROUTE	SECTION	SHEET No.	TOTAL SHEETS
VII	LA	~~Var.~~	~~Brdg.~~	22	24

BRIDGE ENGINEER CIVIL ENGINEER

DATE APPROVED AUGUST 22 1955

BRIDGE DEPARTMENT

OFFICIAL

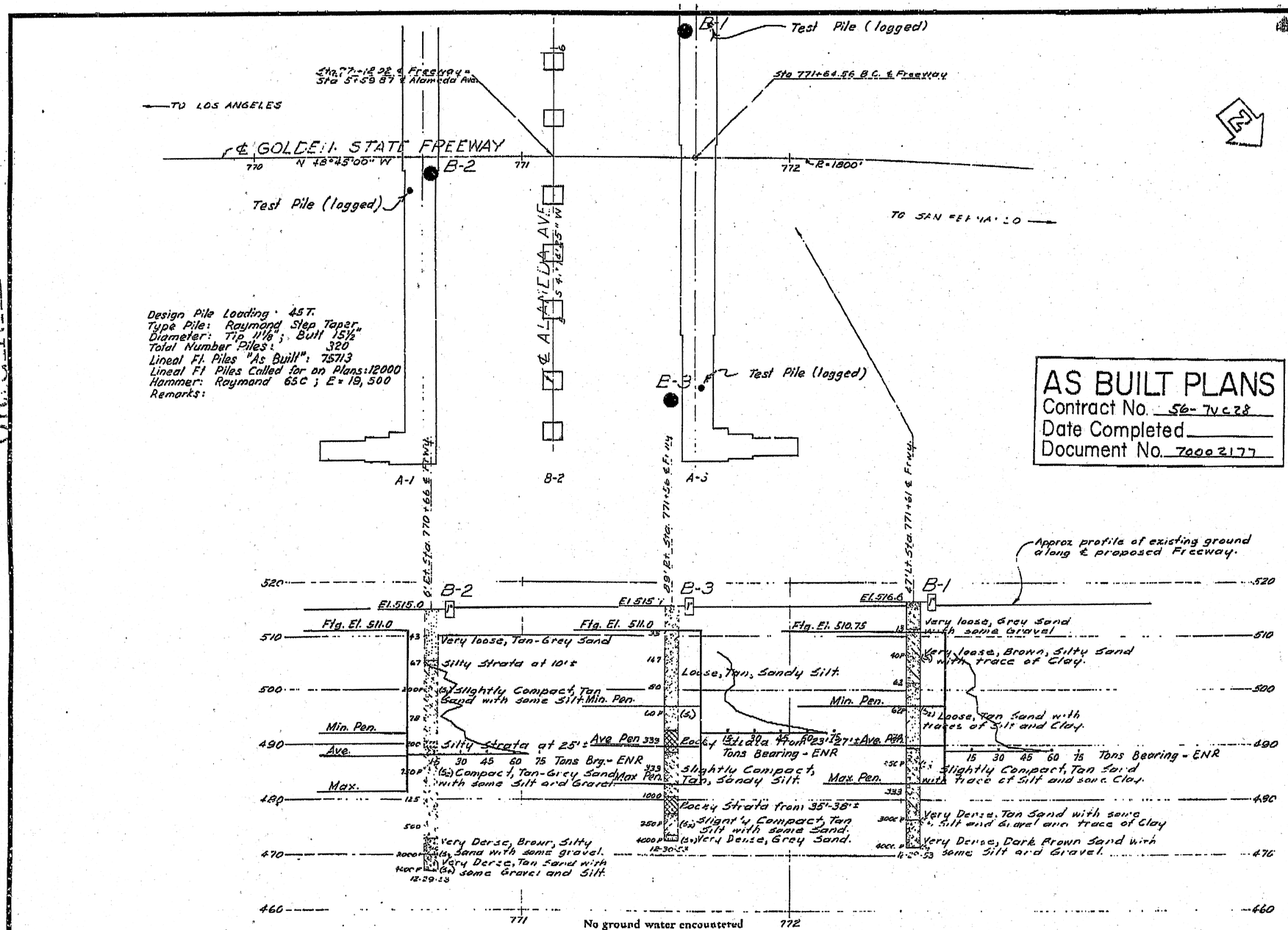

AS BUILT PLANS
Contract No. 56-7VC28
Date Completed
Document No. 70002177

To accompany plans dated 6-8-09

DIVISION OF ENGINEERING SERVICES - GEOTECHNICAL SERVICES

As-Built Log of Test Borings sheet is considered an informational document only. As such, the State of California registration seal with signature, license number and registration certificate expiration date confirm that this is a true and accurate copy of the original document. This drawing is available and presented only for the convenience of any bidder, contractor or other interested party.

DIST.	COUNTY	ROUTE	KILOMETER POST-TOTAL PROJECT	Sheet No.	Total Sheets
07	LA	5	42.8/47.3	789	1073

REGISTERED CIVIL ENGINEER — DATE 5/20/08

REGISTERED PROFESSIONAL ENGINEER — Qiang Huang — No. C055671 — Exp. 12-31-08 — CIVIL — STATE OF CALIFORNIA

ALAMEDA AVENUE UNDERCROSSING (WIDEN)

LOG OF TEST BORINGS 3 OF 3

NOTE: A COPY OF THIS LOG OF TEST BORINGS IS AVAILABLE AT OFFICE OF STRUCTURE MAINTENANCE AND INVESTIGATIONS, SACRAMENTO, CALIFORNIA

CU: 07
EA: 121841

BRIDGE No. 53-1082

Sheet 33 of 33

Revisions made to this Log of Test Borings from the original 1953 Log of Test Borings are the addition of the following table and notes:

Boring	Station	Offset from ℄ Rte. 5
B-1	457+67.4	14.3 m Left
B-2	457+38.5	2.0 m Right
B-3	457+65.9	25.3 m Right

Notes:

1. See the General Plan and/or Foundation Plan for Metric Stationing.
2. The data are the metric locations for the As-Built Test Borings referenced to the proposed new structure location. This table is presented on the As-Built Log of Test Boring sheet for the convenience of any bidder, contractor or other interested party.

T.B.M.
Nail in lead southeast corner of Alameda Ave. & Lake St. P.C.C. curb return approx. 30' Lt. Sta. 7+70 on Alameda Ave.
Elev. 512.64

T.B.M.
Brass nail in lead in south P.C.C. curb Flower St. approx. 70' Lt. Sta. 0+18± ℄ Alameda Ave.
Elev. 515.390

AS BUILT
CONTRACT NO. 56-7VC28-F
RESIDENT ENGR. C.J. Woodbridge
DATE March 27, 1956

1.	M.H.B.	8-16-54
2.	W.H. MINSER	8-16-54

DRAWN
CHECKED
Approval Recommended by
Engineering Geologist
Materials Engineer

CLASSIFICATION OF MATERIAL BASED ON STANDARD GRADE SIZE LIMITS

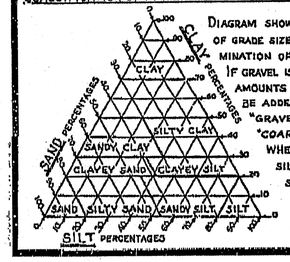

DIAGRAM SHOWING THE BASIS FOR ESTIMATES OF GRADE SIZE DISTRIBUTION USED IN DETERMINATION OF CLASS NAMES.

IF GRAVEL IS PRESENT IN APPRECIABLE AMOUNTS THE TERM "GRAVELLY" MAY BE ADDED TO THE CLASS NAME, VIZ, "GRAVELLY SAND". THE TERMS "COARSE", "MEDIUM" AND "FINE" WHEN USED TO DESCRIBE SAND, SILT AND GRAVEL REFER TO STANDARD GRADE SIZE LIMITS.

LEGEND OF EARTH MATERIALS

- GRAVEL
- SAND
- SILT
- CLAY
- SANDY CLAY OR CLAYEY SAND
- SANDY SILT OR SILTY SAND
- SILTY CLAY OR CLAYEY SILT
- PEAT AND/OR ORGANIC MATTER
- FILL MATERIAL
- IGNEOUS ROCK
- SEDIMENTARY ROCK
- METAMORPHIC ROCK

LEGEND OF BORING OPERATIONS

- PLAN OF ANY BORING
- PENETROMETER
- 2¼" CONE PENETROMETER
- SAMPLER BORING (DRY)
- ROTARY BORING (WET)
- AUGER BORING (DRY)
- JET BORING
- CORE BORING
- TEST PIT

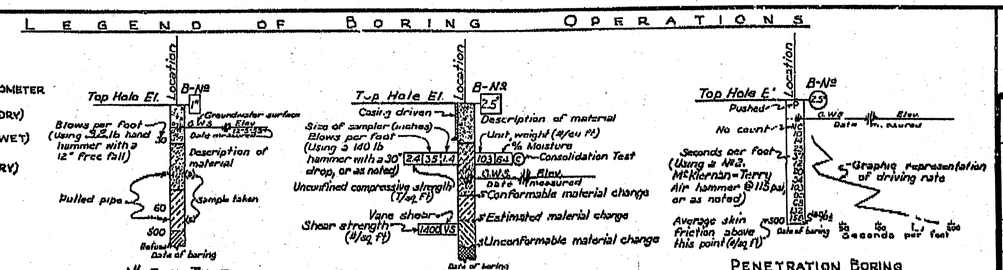

NOTES

The contractor's attention is directed to Section 2, Article (c) of the Standard Specifications and to the Special Provisions accompanying this set of plans.

Classification of earth material as shown on this sheet is based upon field inspection and is not to be construed to imply mechanical analysis.

STATE OF CALIFORNIA
DEPARTMENT OF PUBLIC WORKS
DIVISION OF HIGHWAYS

ALAMEDA AVE. U.C. (RTE. 4/161 SEP.)

LOG OF TEST BORINGS

SCALE Horiz. 1"=20' Vert. 1"=10' | BRIDGE 53-1082 | FILE E-53 | DRAWING 3774-22

PREL. DRAWING NO. P-3774 26 47

122-4

DIST	COUNTY	ROUTE	KILOMETER POST TOTAL PROJECT	SHEET No	TOTAL SHEETS
07	LA	5	42.8/47.3	790	1073

Andrew Rittenhouse 12-05-08
REGISTERED CIVIL ENGINEER DATE

6-8-09
PLANS APPROVAL DATE

REGISTERED PROFESSIONAL ENGINEER Andrew P. Rittenhouse No. 61006 Exp. 12-31-10 CIVIL STATE OF CALIFORNIA

The State of California or its officers or agents shall not be responsible for the accuracy or completeness of electronic copies of this plan sheet.

Notes:

1. Paint "Bridge No. 53-1085"
2. Paint "Providencia Avenue Overhead"
3. MBGR, see "Road Plans"
4. Remove existing MBGR, see "Road Plans"
5. Drainage from the overhead shall be diverted away from Metrolink tracks and not discharge onto the tracks.
6. All temporary shoring must be designed to meet the Metrolink's requirements.
7. Temporary Railing (Type K), see "Road Plans"
8. Temporary Crash Cushion, see "Road Plans"

Indicates existing structure.

Indicates direction of traffic.

Minimum Vertical clearance

For "Typical Section" and information not shown see "GENERAL PLAN NO. 2" and "GENERAL PLAN NO. 3" sheets.

For "General Notes" and "Quantities" see "GENERAL PLAN NO. 4" sheet.

For ℄ Barrier Layout Information see "GIRDER LAYOUT NO. 1 & NO. 2" sheets

For "Index to Plans" see "INDEX TO PLANS" sheet.

Indicates Electrolier on Barrier, for location see "Road Plans"

Indicates Pullbox in Concrete Barrier, see "Road Plans"

CURVE DATA
℄ ROUTE 5

R = 548.640
Δ = 38°52'00"
T = 193.566
L = 372.171

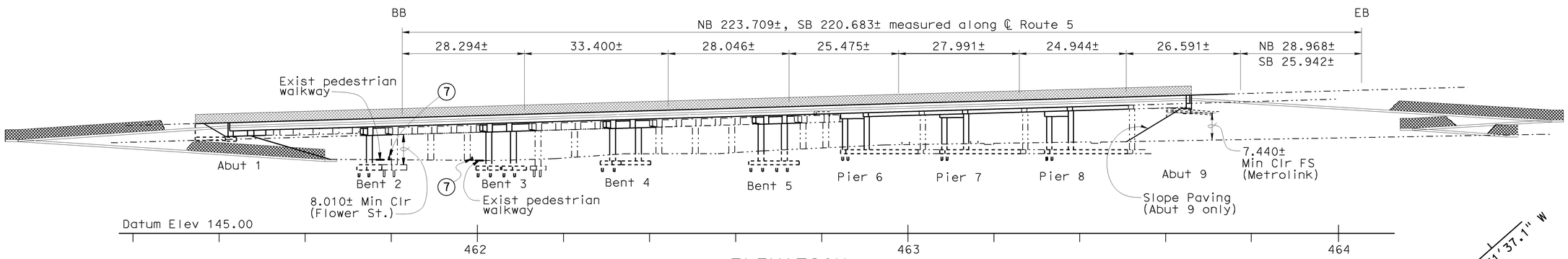

ELEVATION
1:500

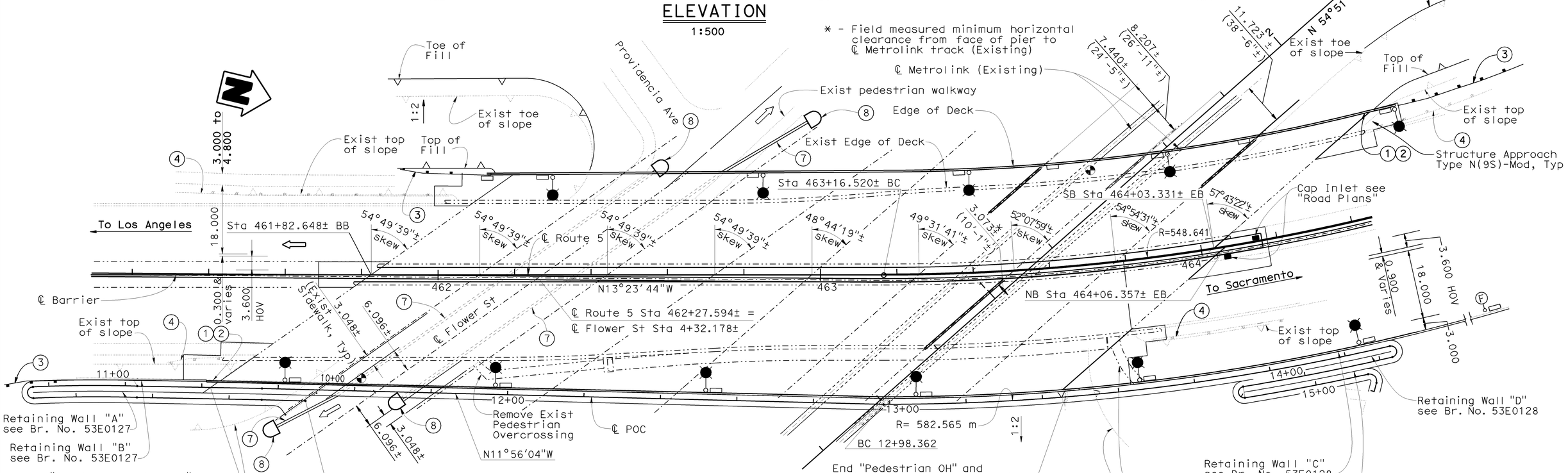

PLAN
1:500

NOTE:
THE CONTRACTOR SHALL VERIFY ALL CONTROLLING FIELD DIMENSIONS BEFORE ORDERING OR FABRICATING ANY MATERIAL.

Caltrans Metric	DESIGN ENGINEER	DESIGN	BY Ulysses Smpardos	CHECKED Mark Okimura	LOAD FACTOR DESIGN	LIVE LOADING: HS20-44 AND ALTERNATIVE AND PERMIT DESIGN LOAD
		DETAILS	BY J Ramirez/S Schenck	CHECKED Mark Okimura	LAYOUT	BY Ulysses Smpardos / CHECKED Mark Okimura
		QUANTITIES	BY E. Hall/A. Logus	CHECKED R. Odell/D. Kubochi	SPECIFICATIONS	BY T. Chen / PLANS AND SPECS COMPARED A. Rittenhouse

ALL DIMENSIONS ARE IN METERS UNLESS OTHERWISE SHOWN

ORIGINAL SCALE IN MILLIMETERS FOR REDUCED PLANS 0 10 20 30 40 50 60 70 80 90 100

STATE OF CALIFORNIA DEPARTMENT OF TRANSPORTATION

DIVISION OF ENGINEERING SERVICES STRUCTURE DESIGN
DESIGN BRANCH 15

CU 07
EA 121841

BRIDGE NO. 53-1085
KP (PM) 46.1(28.7)

PROVIDENCIA AVENUE OH (WIDEN)
GENERAL PLAN NO. 1

DISREGARD PRINTS BEARING EARLIER REVISION DATES

REVISION DATES: 5-13-09 | 9-01-08 | 11-11-08 | 1-16-09 | 1-23-09 | 1-30-09 | 2-13-09 | 3-11-09 | 5-01-09

SHEET 1 OF 152

FILE => 53-1085-a-gp01.dgn

STRUCTURES DESIGN GENERAL PLAN SHEET (METRIC) (REV.03-17-04)

USERNAME => ttmikesl DATE PLOTTED => 15-JUN-2009 TIME PLOTTED => 13:20

DIST	COUNTY	ROUTE	KILOMETER POST TOTAL PROJECT	SHEET No	TOTAL SHEETS
07	LA	5	42.8/47.3	791	1073

Andrew Rittenhouse 12-05-08
REGISTERED CIVIL ENGINEER DATE

6-8-09
PLANS APPROVAL DATE

REGISTERED PROFESSIONAL ENGINEER Andrew P. Rittenhouse No. 61006 Exp. 12-31-10 CIVIL STATE OF CALIFORNIA

The State of California or its officers or agents shall not be responsible for the accuracy or completeness of electronic copies of this plan sheet.

Legend:

- Indicates existing structure
- Indicates Bridge Removal (Portion)
- * Match existing cross slope
- KP (PM) Indicates Kilometer Post (Post Mile)

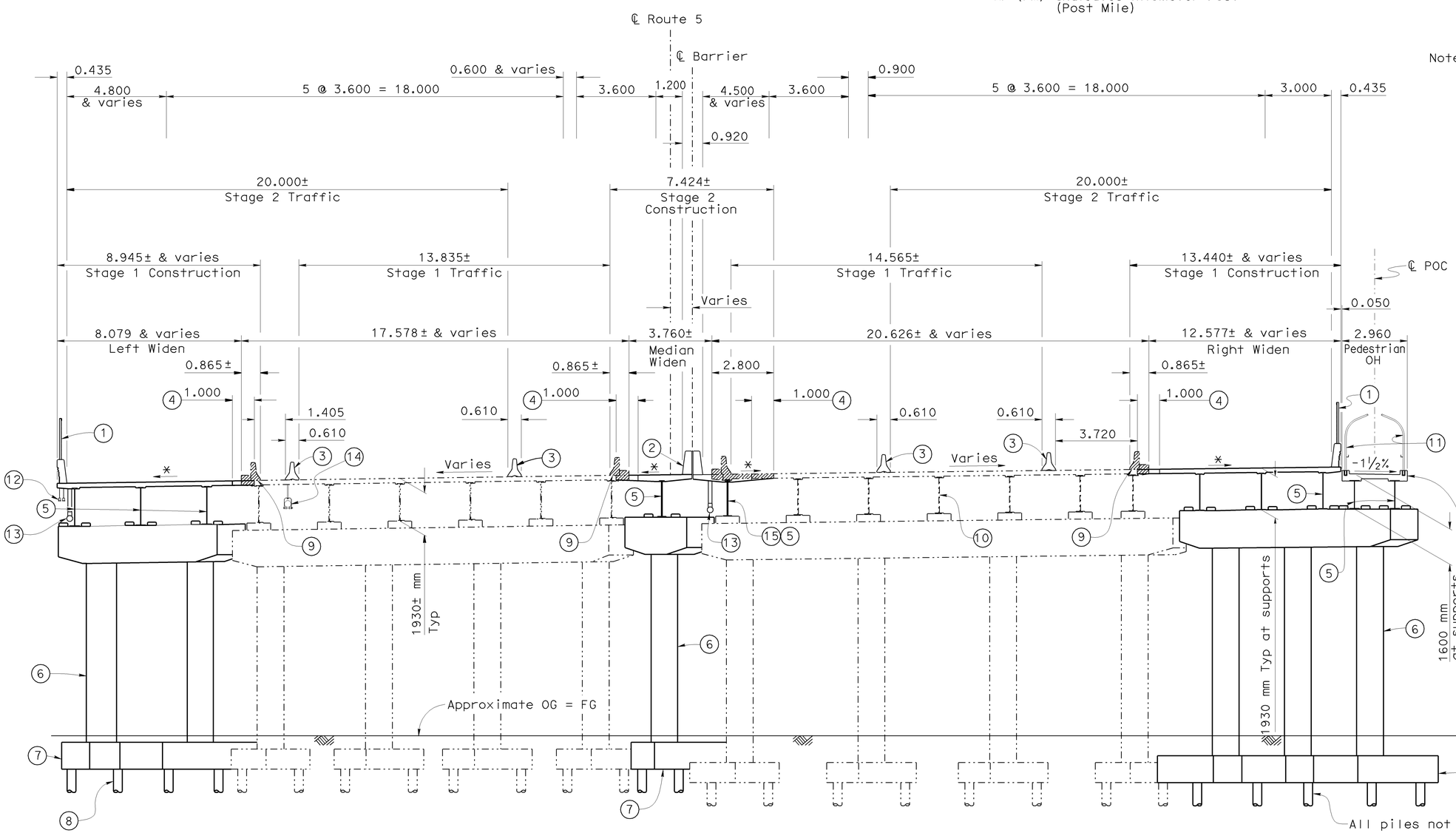

Notes:

1. Chain Link Railing Type 7 on Concrete Barrier Type 742 (Mod)
2. Concrete Barrier Type 742 (Mod-1)
3. Temporary Railing (Type K), see "Road Plans" for railing on freeway
4. Closure Pour
5. Composite Welded Steel I Girders
6. Reinforced concrete column
7. Reinforced concrete pile footing
8. 360 mm x 9.5 mm steel pipe piles or 600 mm Cast-In-Drilled-Hole piles. See "Pile Data Table" on "GENERAL PLAN NO. 4" sheet.
9. Refinish bridge deck
10. Existing Composite Welded Steel I Girders
11. Chain Link Railing Type 3L
12. 2 - 91 mm ø Fiber Optic Conduit, see "MISCELLANEOUS DETAILS NO. 23" sheet
13. Deck drainage pipe, see "DECK DRAINAGE LAYOUT" sheet
14. Existing water line
15. Remove existing girder

Note:
End Diaphragms not shown.

NOTE:
THE CONTRACTOR SHALL VERIFY ALL CONTROLLING FIELD DIMENSIONS BEFORE ORDERING OR FABRICATING ANY MATERIAL.

TYPICAL SECTION

1:100
@ Bents 2, 3, 4 and 5

Caltrans Metric

	BY	CHECKED			
DESIGN	Ulysses Smpardos	Mark Okimura	LOAD FACTOR DESIGN	LIVE LOADING: HS20-44 AND ALTERNATIVE AND PERMIT DESIGN LOAD	
DETAILS	J Ramirez/S Schenck	Mark Okimura	LAYOUT	Ulysses Smpardos	Mark Okimura
QUANTITIES	E. Hall	Ryan Odell	SPECIFICATIONS	T. Chen	A. Rittenhouse (PLANS AND SPECS COMPARED)

DESIGN ENGINEER

ALL DIMENSIONS ARE IN METERS UNLESS OTHERWISE SHOWN

ORIGINAL SCALE IN MILLIMETERS FOR REDUCED PLANS 0 10 20 30 40 50 60 70 80 90 100

STATE OF CALIFORNIA DEPARTMENT OF TRANSPORTATION

DIVISION OF ENGINEERING SERVICES STRUCTURE DESIGN
DESIGN BRANCH 15

CU 07
EA 121841

BRIDGE NO. 53-1085
KP (PM) 46.1 (28.7)

PROVIDENCIA AVENUE OH (WIDEN)
GENERAL PLAN NO. 2

DISREGARD PRINTS BEARING EARLIER REVISION DATES

REVISION DATES: 4-20-05 3-12-09 3-12-09 4-01-09 11-14-08 11-18-09 1-23-09 1-30-09 2-12-09

SHEET 2 OF 152

STRUCTURES DESIGN GENERAL PLAN SHEET (METRIC) (REV.03-17-04)

FILE => 53-1085-a-gp02b.dgn

USERNAME => trmikesl DATE PLOTTED => 12-JUN-2009 TIME PLOTTED => 13:59

DIST	COUNTY	ROUTE	KILOMETER POST TOTAL PROJECT	SHEET No	TOTAL SHEETS
07	LA	5	42.8/47.3	792	1073

Andrew Rittenhouse 12-05-08
REGISTERED CIVIL ENGINEER DATE

6-8-09
PLANS APPROVAL DATE

REGISTERED PROFESSIONAL ENGINEER Andrew P. Rittenhouse No. 61006 Exp. 12-31-10 CIVIL STATE OF CALIFORNIA

The State of California or its officers or agents shall not be responsible for the accuracy or completeness of electronic copies of this plan sheet.

Legend:

- Indicates existing structure
- Indicates Bridge Removal (Portion)
- * Match existing cross slope
- ** Varies at Spans 6 & 7 midspan
- KP (PM) Indicates Kilometer Post (Post Mile)

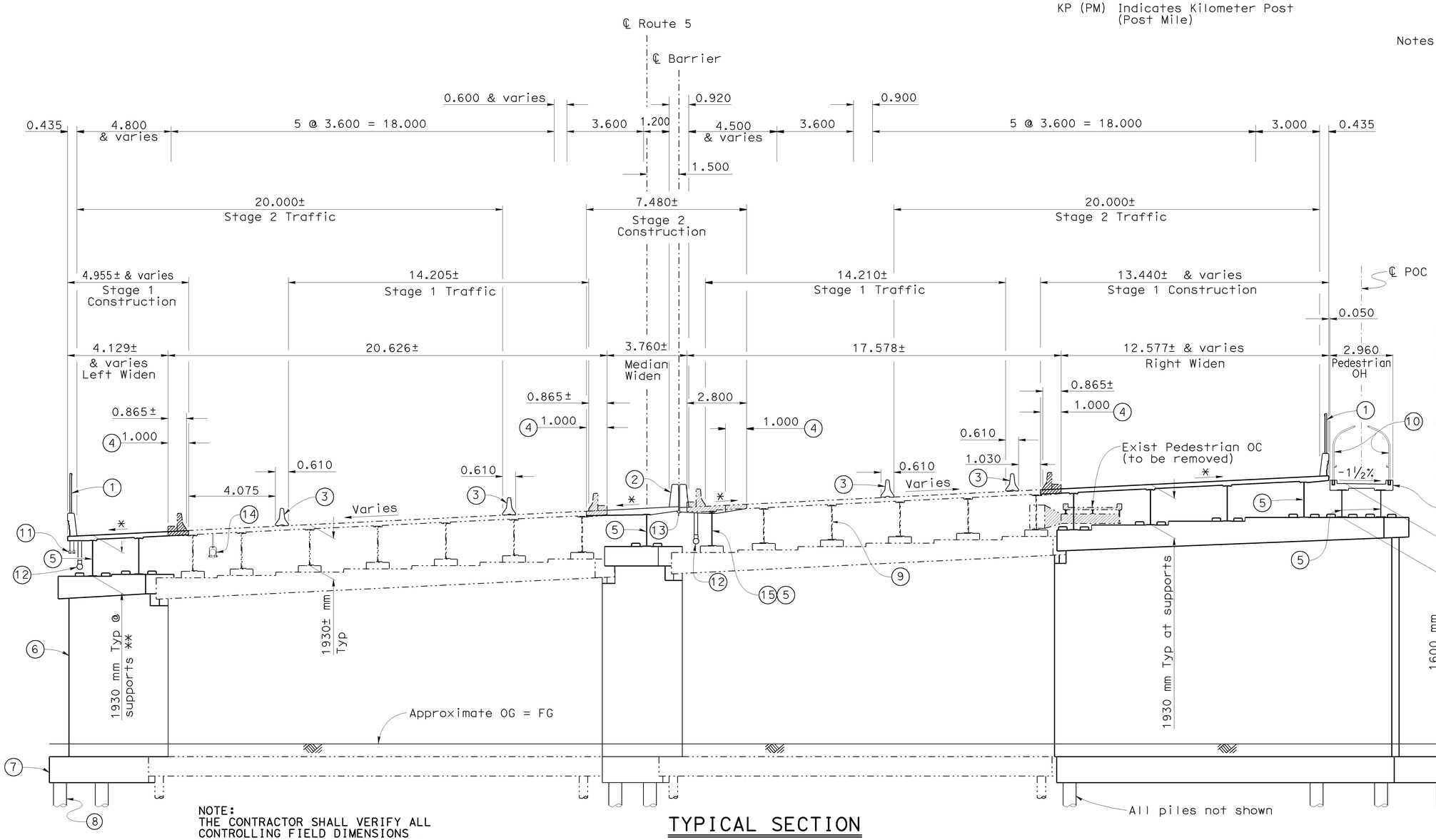

Notes:

1. Chain Link Railing Type 7 on Concrete Barrier Type 742 (Mod)
2. Concrete Barrier Type 742 (Mod-1)
3. Temporary Railing (Type K), see "Road Plans" for railing on freeway
4. Closure Pour
5. Composite Welded Steel I Girders
6. Reinforced concrete pier wall
7. Reinforced concrete pile footing
8. 600 mm Cast-In-Drilled-Hole piles. See "Pile Data Table" on "GENERAL PLAN NO. 4" sheet.
9. Existing Composite Welded Steel I Girders
10. Chain Link Railing Type 3L
11. 2 - 91 mm ø Fiber Optic Conduit, see "MISCELLANEOUS DETAILS NO. 23" sheet
12. Deck drainage pipe, see "DECK DRAINAGE LAYOUT" sheet
13. Gap Cover, see "TYPICAL SECTION NO. 2" sheet
14. Existing water line
15. Remove existing girder

Note:

End Diaphragms not shown.

NOTE:
THE CONTRACTOR SHALL VERIFY ALL CONTROLLING FIELD DIMENSIONS BEFORE ORDERING OR FABRICATING ANY MATERIAL.

TYPICAL SECTION

1:100
@ Piers 6, 7 and 8

Caltrans Metric

DESIGN ENGINEER

	BY	CHECKED
DESIGN	Ulysses Smpardos	Mark Okimura
DETAILS	J Ramirez/S Schenck	Mark Okimura
QUANTITIES	E. Hall	Ryan Odell

LOAD FACTOR DESIGN — LIVE LOADING: HS20-44 AND ALTERNATIVE AND PERMIT DESIGN LOAD

	BY	CHECKED
LAYOUT	Ulysses Smpardos	Mark Okimura
SPECIFICATIONS	T. Chen	PLANS AND SPECS COMPARED A. Rittenhouse

STATE OF CALIFORNIA
DEPARTMENT OF TRANSPORTATION

DIVISION OF ENGINEERING SERVICES
STRUCTURE DESIGN
DESIGN BRANCH 15

BRIDGE NO. 53-1085
KP (PM) 46.1(28.7)

PROVIDENCIA AVENUE OH (WIDEN)
GENERAL PLAN NO. 3

ALL DIMENSIONS ARE IN METERS UNLESS OTHERWISE SHOWN

ORIGINAL SCALE IN MILLIMETERS FOR REDUCED PLANS 0 10 20 30 40 50 60 70 80 90 100

CU 07
EA 121841

DISREGARD PRINTS BEARING EARLIER REVISION DATES

REVISION DATES: 1-23-09 2-4-09 2-18-09 2-24-09 3-12-09 3-18-09 4-01-09 11-14-08 1-13-09

SHEET 3 OF 152

FILE => 53-1085-a-gp03b.dgn

STRUCTURES DESIGN GENERAL PLAN SHEET (METRIC) (REV.03-17-04)

USERNAME => trmikesl DATE PLOTTED => 12-JUN-2009 TIME PLOTTED => 13:59

DIST	COUNTY	ROUTE	KILOMETER POST TOTAL PROJECT	SHEET No	TOTAL SHEETS
07	LA	5	42.8/47.3	793	1073

Andrew P. Rittenhouse 12-5-08
REGISTERED CIVIL ENGINEER DATE

6-8-09
PLANS APPROVAL DATE

REGISTERED PROFESSIONAL ENGINEER Andrew P. Rittenhouse No. 61006 Exp. 12-31-10 CIVIL STATE OF CALIFORNIA

The State of California or its officers or agents shall not be responsible for the accuracy or completeness of electronic copies of this plan sheet.

GENERAL NOTES
LOAD FACTOR DESIGN

DESIGN: BRIDGE DESIGN SPECIFICATIONS (1996 AASHTO with Interims and Revisions by CALTRANS)

SEISMIC DESIGN: Caltrans Seismic Design Criteria (SDC), Version 1.4 June 2006

DEAD LOAD: Includes 1.675 KPa for future wearing surface.

LIVE LOADING: HS20-44, Alternative Military and Permit design load.

SEISMIC LOADING: Site Specific Acceleration Response Spectra Curve

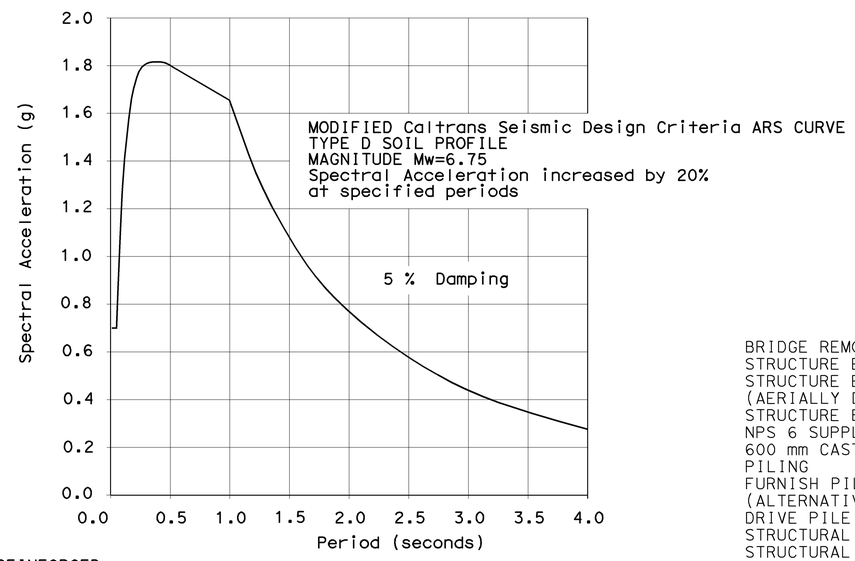

REINFORCED CONCRETE: f_y = 420 MPa
f'_c = 25 MPa
n = 8

Transverse Deck Slabs (Working Stress Design) f_s = 138 MPa
f_c = 8.3 MPa
n = 10

STRUCTURAL STEEL: f_y = 345 MPa (ASTM A709M Grade 345)

ANCHOR RODS:

All anchor rods shall be ASTM F1554 (f_y = 725 MPa)

THREADED RODS:

All threaded rods shall be ASTM A307 (f_y = 250 MPa)

HS BOLTS:

All bolts shall be 22 mm ø ASTM A325 (f_y = 635 MPa) with threads excluded from the shear plane (unless noted otherwise).

QUANTITIES

BRIDGE REMOVAL (PORTION), LOCATION G	LUMP	SUM
STRUCTURE EXCAVATION (BRIDGE)	1 930	m^3
STRUCTURE EXCAVATION (TYPE Y-2) (AERIALLY DEPOSITED LEAD)	973	m^3
STRUCTURE BACKFILL (BRIDGE)	1 730	m^3
NPS 6 SUPPLY LINE (BRIDGE)	52	m
600 mm CAST-IN-DRILLED-HOLE CONCRETE PILING	3 147	m
FURNISH PILING (CLASS 400) (ALTERNATIVE W)	7 048	m
DRIVE PILE (CLASS 400) (ALTERNATIVE W)	489	EA
STRUCTURAL CONCRETE, BRIDGE FOOTING	1 460	m^3
STRUCTURAL CONCRETE, BRIDGE	4 950	m^3
STRUCTURAL CONCRETE, APPROACH SLAB (TYPE N MODIFIED)	227	m^3
FRACTURED RIB TEXTURE	39	m^2
DRILL AND BOND DOWEL	139	m
REFINISH BRIDGE DECK	255	m^2
JOINT SEAL (MR 13 mm)	87	m
JOINT SEAL (MR 25 mm)	306	m
BAR REINFORCING STEEL (BRIDGE)	608 000	kg
HEADED BAR REINFORCEMENT	2 146	EA
FURNISH STRUCTURAL STEEL (BRIDGE)	1 070 000	kg
ERECT STRUCTURAL STEEL (BRIDGE)	1 070 000	kg
CLEAN AND PAINT STRUCTURAL STEEL	LUMP	SUM
SPOT BLAST CLEAN AND PAINT UNDERCOAT	26	m^2
WORK AREA MONITORING	LUMP	SUM
SLOPE PAVING (STAMPED CONCRETE)	2 300	m^2
MISCELLANEOUS METAL (BRIDGE)	3 930	kg
BRIDGE DECK DRAINAGE SYSTEM	23 180	kg
CHAIN LINK RAILING (TYPE 3L)	442	m
CHAIN LINK RAILING (TYPE 7)	482	m
CABLE RAILING	5	m
CONCRETE BARRIER (TYPE 60C MODIFIED)	8	m
CONCRETE BARRIER (TYPE 742 MOD-1)	500	m
CONCRETE BARRIER (TYPE 742 MODIFIED)	490	m

KP (PM) Indicates Kilometer Post (Post Mile)

PILE DATA TABLE

LOCATION		PILE TYPE	DESIGN LOADING (kN)	NOMINAL RESISTANCE (kN) COMPRESSION	NOMINAL RESISTANCE (kN) TENSION	PILE DESIGN TIP ELEVATION (m)	SPECIFIED TIP ELEVATION (m)
ABUT 1	Right Widen	Class 400 Alt W	400	800	400	146.9(1);148.9(2);151.8(3)	146.9
BENT 2	Left Widen	Class 400 Alt W	400	800	400	145.5(1);147.3(2);150.1(3)	145.5
	Median Widen	Class 400 Alt W	400	800	400	145.5(1);147.3(2);150.1(3)	145.5
	Right Widen	Class 400 Alt W	400	800	400	145.5(1);147.3(2);150.1(3)	145.5
BENT 3	Left Widen	600mm CIDH	NA	1,800	900	145.2(1);146.7(3)	145.2
	Median Widen	Class 400 Alt W	400	800	400	146.6(1);148.6(2);150.4(3)	146.6
	Right Widen	600mm CIDH	NA	1,800	900	143.3(1);146.3(3)	143.3
BENT 4	Left Widen	Class 400 Alt W	400	800	400	147.6(1);149.1(2);152.2(3)	147.6
	Median Widen	Class 400 Alt W	400	800	400	147.6(1);149.1(2);152.2(3)	147.6
	Right Widen	Class 400 Alt W	400	800	400	147.0(1);148.5(2);151.6(3)	147.0
BENT 5	Left Widen	Class 400 Alt W	400	800	400	151.9(1);155.3(2);154.1(3)	151.9
	Median Widen	600mm CIDH	NA	1,800	900	145.9(1);148.7(3)	145.9
	Right Widen	Class 400 Alt W	400	800	400	148.4(1);149.4(2);154.1(3)	148.4
PIER 6	Left Widen	600mm CIDH	NA	1,800	900	145.5(1);148.5(3)	145.5
	Median Widen	600mm CIDH	NA	1,800	900	145.5(1);148.5(3)	145.5
	Right Widen	600mm CIDH	NA	2,200	900	144.5(1);149.6(3)	144.5
PIER 7	Left Widen	600mm CIDH	NA	1,800	900	148.9(1);150.8(3)	148.9
	Median Widen	600mm CIDH	NA	1,800	900	146.7(1);148.2(3)	146.7
	Right Widen	600mm CIDH	NA	1,800	900	146.7(1);148.2(3)	146.7
PIER 8	Left Widen	600mm CIDH	NA	1,800	900	147.0(1);151.6(3)	147.0
	Median Widen	600mm CIDH	NA	1,800	900	147.0(1);151.6(3)	147.0
	Right Widen	600mm CIDH	NA	1,800	900	147.6(1);151.6(3)	147.6
ABUT 9	Right Widen	Class 400 Alt W	400	800	400	156.5(1);158.2(2);160.3(3)	156.5

Notes:

1. Pile tip controlled by: (1) Compression (2) Tension (3) Lateral Demands

SPREAD FOOTING DATA TABLE

LOCATION	RECOMMENDED SOIL BEARING PRESSURE (kPa) WSD GROSS ALLOWABLE SOIL BEARING PRESSURE (q_{all})	MAXIMUM CONTACT PRESSURE (q_{max}) (kPa)
ABUTMENT 1 Median and Left Widen	150	150
ABUTMENT 9 Median and Left Widen	150	150

NOTE:
THE CONTRACTOR SHALL VERIFY ALL CONTROLLING FIELD DIMENSIONS BEFORE ORDERING OR FABRICATING ANY MATERIAL.

DIST	COUNTY	ROUTE	KILOMETER POST TOTAL PROJECT	SHEET No	TOTAL SHEETS
07	LA	5	42.8/47.3	794	1073

Andrew P. Rittenhouse 12-05-08
REGISTERED CIVIL ENGINEER DATE

6-8-09
PLANS APPROVAL DATE

REGISTERED PROFESSIONAL ENGINEER
Andrew P. Rittenhouse
No. 61006
Exp. 12-31-10
CIVIL
STATE OF CALIFORNIA

The State of California or its officers or agents shall not be responsible for the accuracy or completeness of electronic copies of this plan sheet.

INDEX TO PLANS

Sheet No.	Title
1	GENERAL PLAN NO. 1
2	GENERAL PLAN NO. 2
3	GENERAL PLAN NO. 3
4	GENERAL PLAN NO. 4
5	INDEX TO PLANS
6	FOUNDATION PLAN NO. 1
7	FOUNDATION PLAN NO. 2
8	EXCAVATION DETAILS NO. 1
9	EXCAVATION DETAILS NO. 2
10	CONCRETE STRENGTH AND TYPE LIMITS
11	ABUTMENT 1 LAYOUT NO. 1
12	ABUTMENT 1 LAYOUT NO. 2
13	ABUTMENT 1 LAYOUT NO. 3
14	ABUTMENT 9 LAYOUT NO. 1
15	ABUTMENT 9 LAYOUT NO. 2
16	ABUTMENT 9 LAYOUT NO. 3
17	ABUTMENT DETAILS NO. 1
18	ABUTMENT DETAILS NO. 2
19	ABUTMENT DETAILS NO. 3
20	ABUTMENT DETAILS NO. 4
21	ABUTMENT DETAILS NO. 5
22	ABUTMENT DETAILS NO. 6
23	ABUTMENT DETAILS NO. 7
24	ABUTMENT DETAILS NO. 8
25	ABUTMENT DETAILS NO. 9
26	ABUTMENT DETAILS NO. 10
27	ABUTMENT DETAILS NO. 11
28	ABUTMENT DETAILS NO. 12
29	ABUTMENT DETAILS NO. 13
30	ABUTMENT DETAILS NO. 14
31	ABUTMENT DETAILS NO. 15
32	ABUTMENT DETAILS NO. 16
33	ABUTMENT DETAILS NO. 17
34	ABUTMENT DETAILS NO. 18
35	ABUTMENT DETAILS NO. 19
36	ABUTMENT DETAILS NO. 20
37	ABUTMENT DETAILS NO. 21
38	ABUTMENT DETAILS NO. 22
39	ABUTMENT DETAILS NO. 23
40	ABUTMENT DETAILS NO. 24
41	ABUTMENT DETAILS NO. 25
42	ABUTMENT DETAILS NO. 26
43	ABUTMENT DETAILS NO. 27
44	ABUTMENT DETAILS NO. 28
45	ABUTMENT DETAILS NO. 29
46	ABUTMENT DETAILS NO. 30
47	ABUTMENT DETAILS NO. 31
48	ABUTMENT DETAILS NO. 32
49	BENT 2 LAYOUT
50	BENT 3 LAYOUT
51	BENT 4 LAYOUT
52	BENT 5 LAYOUT
53	BENT DETAILS NO. 1
54	BENT DETAILS NO. 2
55	BENT DETAILS NO. 3
56	BENT DETAILS NO. 4
57	BENT DETAILS NO. 5
58	PIER 6 LAYOUT
59	PIER 7 LAYOUT
60	PIER 8 LAYOUT
61	PIER DETAILS NO. 1
62	PIER DETAILS NO. 2
63	PIER DETAILS NO. 3
64	PIER DETAILS NO. 4
65	PIER DETAILS NO. 5
66	TYPICAL SECTION NO. 1
67	TYPICAL SECTION NO. 2
68	TYPICAL SECTION NO. 3
69	TYPICAL SECTION NO. 4
70	GIRDER LAYOUT NO. 1
71	GIRDER LAYOUT NO. 2
72	GIRDER LAYOUT NO. 3
73	DECK TRANSVERSE REINF. NO. 1
74	DECK TRANSVERSE REINF. NO. 2
75	DECK TRANSVERSE REINF. NO. 3
76	GIRDER DETAILS NO. 1
77	GIRDER DETAILS NO. 2
78	GIRDER DETAILS NO. 3
79	GIRDER DETAILS NO. 4
80	GIRDER DETAILS NO. 5
81	GIRDER DETAILS NO. 6
82	GIRDER DETAILS NO. 7
83	STEEL GIRDER DETAILS
84	GIRDER REPLACEMENT DETAILS
85	MISCELLANEOUS DETAILS NO. 1
86	MISCELLANEOUS DETAILS NO. 2
87	MISCELLANEOUS DETAILS NO. 3
88	MISCELLANEOUS DETAILS NO. 4
89	MISCELLANEOUS DETAILS NO. 5
90	MISCELLANEOUS DETAILS NO. 6
91	MISCELLANEOUS DETAILS NO. 7
92	MISCELLANEOUS DETAILS NO. 8
93	MISCELLANEOUS DETAILS NO. 9
94	MISCELLANEOUS DETAILS NO. 10
95	MISCELLANEOUS DETAILS NO. 11
96	MISCELLANEOUS DETAILS NO. 12
97	MISCELLANEOUS DETAILS NO. 13
98	MISCELLANEOUS DETAILS NO. 14
99	MISCELLANEOUS DETAILS NO. 15
100	MISCELLANEOUS DETAILS NO. 16
101	MISCELLANEOUS DETAILS NO. 17
102	MISCELLANEOUS DETAILS NO. 18
103	MISCELLANEOUS DETAILS NO. 19
104	MISCELLANEOUS DETAILS NO. 20
105	MISCELLANEOUS DETAILS NO. 21
106	MISCELLANEOUS DETAILS NO. 22
107	MISCELLANEOUS DETAILS NO. 23
108	PEDESTRIAN OH LAYOUT
109	PEDESTRIAN OH DETAILS NO. 1
110	PEDESTRIAN OH DETAILS NO. 2
111	PEDESTRIAN OH DETAILS NO. 3
112	PEDESTRIAN OH DETAILS NO. 4
113	PEDESTRIAN OH DETAILS NO. 5
114	PEDESTRIAN OH DETAILS NO. 6
115	PEDESTRIAN OH DETAILS NO. 7
116	PEDESTRIAN OH DETAILS NO. 8
117	PEDESTRIAN OH DETAILS NO. 9
118	PEDESTRIAN OH DETAILS NO. 10
119	PEDESTRIAN OH DETAILS NO. 11
120	PEDESTRIAN OH DETAILS NO. 12
121	PEDESTRIAN OH DETAILS NO. 13
122	PEDESTRIAN OH DETAILS NO. 14
123	PEDESTRIAN OH DETAILS NO. 15
124	PEDESTRIAN OH DETAILS NO. 16
125	PEDESTRIAN OH DETAILS NO. 17
126	PEDESTRIAN OH DETAILS NO. 18
127	PEDESTRIAN OH DETAILS NO. 19
128	PEDESTRIAN OH DETAILS NO. 20
129	PEDESTRIAN OH DETAILS NO. 21
130	PEDESTRIAN OH DETAILS NO. 22
131	ARCHITECTURAL DETAILS
132	DECK DRAINAGE LAYOUT
133	DECK DRAIN DETAILS NO. 1
134	DECK DRAIN DETAILS NO. 2
135	DECK DRAIN DETAILS NO. 3
136	BARRIER TRANSITION DETAILS NO. 1
137	BARRIER TRANSITION DETAILS NO. 2
138	STRUCTURE APPROACH DRAINAGE LAYOUT NO. 1
139	STRUCTURE APPROACH DRAINAGE LAYOUT NO. 2
140	STRUCTURE APPROACH DRAINAGE DETAILS
141	STRUCTURE APPROACH TYPE N(9S) - MOD
142	SLOPE PAVING DETAILS
143	CHAIN LINK RAILING TYPE 3L
144	LOG OF TEST BORINGS 1 OF 9
145	LOG OF TEST BORINGS 2 OF 9
146	LOG OF TEST BORINGS 3 OF 9
147	LOG OF TEST BORINGS 4 OF 9
148	LOG OF TEST BORINGS 5 OF 9
149	LOG OF TEST BORINGS 6 OF 9
150	LOG OF TEST BORINGS 7 OF 9
151	LOG OF TEST BORINGS 8 OF 9
152	LOG OF TEST BORINGS 9 OF 9

STANDARD PLAN SHEET NO.

DETAIL NO.

STANDARD PLANS DATED JULY 2004

	A10A	ACRONYMS AND ABBREVIATIONS (A-L)
	A10B	ACRONYMS AND ABBREVIATIONS (M-Z)
	A62C	LIMITS OF PAYMENT FOR EXCAVATION AND BACKFILL BRIDGE
	A76A	CONCRETE BARRIER TYPE 60
	H9	PLANTING AND IRRIGATION DETAILS
	T3	TEMPORARY RAILING (TYPE K)
	B0-1	BRIDGE DETAILS
	B0-3	BRIDGE DETAILS
	B0-5	BRIDGE DETAILS
	B2-3	400mm AND 600mm CAST-IN-DRILLED-HOLE CONCRETE PILE
	B2-5	PILE DETAILS CLASS 400 AND CLASS 625
	B6-10	UTILITY OPENINGS T-BEAM
RSP	B6-21	JOINT SEALS (MAXIMUM MOVEMENT RATING = 50 mm)
	B7-6	DECK DRAINS TYPES D-1 AND D-2
	B11-47	CABLE RAILING
	B11-52	CHAIN LINK RAILING TYPE 7
	B11-57	CONCRETE BARRIER TYPE 742
	B14-3	COMMUNICATION AND SPRINKLER CONTROL CONDUITS (CONDUIT LESS THAN SIZE 103)
	B14-4	WATER SUPPLY LINE (BRIDGE) (PIPE SIZES LESS THAN NPS 4)

NOTE:
THE CONTRACTOR SHALL VERIFY ALL CONTROLLING FIELD DIMENSIONS BEFORE ORDERING OR FABRICATING ANY MATERIAL.

Caltrans Metric

	BY	CHECKED
DESIGN	Ulysses Smpardos	Mark Okimura
DETAILS	Steven Schenck	Mark Okimura
QUANTITIES	E. Hall/A. Logus	R. Odell/D. Kubochi

STATE OF CALIFORNIA
DEPARTMENT OF TRANSPORTATION

DIVISION OF ENGINEERING SERVICES
STRUCTURE DESIGN
DESIGN BRANCH 15

BRIDGE NO. 53-1085
KILOMETER POST 46.1

PROVIDENCIA AVENUE OH (WIDEN)
INDEX TO PLANS

ALL DIMENSIONS ARE IN MILLIMETERS UNLESS OTHERWISE SHOWN

ORIGINAL SCALE IN MILLIMETERS FOR REDUCED PLANS 0 10 20 30 40 50 60 70 80 90 100

CU 07
EA 121841

DISREGARD PRINTS BEARING EARLIER REVISION DATES

REVISION DATES: 2-15-08 3-18-09 3-27-09 11-20-08 1-14-09 1-23-09 2-10-09 2-18-09 3-12-09

SHEET 5 OF 152

FILE => 53-1085-a-itp.dgn

STRUCTURES DESIGN DETAIL SHEET (METRIC) (REV.03-17-04)

USERNAME => trmikesl DATE PLOTTED => 12-JUN-2009 TIME PLOTTED => 13:59

DIST	COUNTY	ROUTE	KILOMETER POST TOTAL PROJECT	SHEET No	TOTAL SHEETS
07	LA	5	42.8/47.3	795	1073

Andrew Rittenhouse 12-05-08
REGISTERED CIVIL ENGINEER DATE

6-8-09
PLANS APPROVAL DATE

REGISTERED PROFESSIONAL ENGINEER Andrew P. Rittenhouse No. 61006 Exp. 12-31-10 CIVIL STATE OF CALIFORNIA

The State of California or its officers or agents shall not be responsible for the accuracy or completeness of electronic copies of this plan sheet.

Caltrans Metric

CURVE DATA

NO	R	Δ	T	L
(A)	548.641	35°10'00"	173.864	336.742
(B)	6843.316	1°55'01"	114.486	228.950

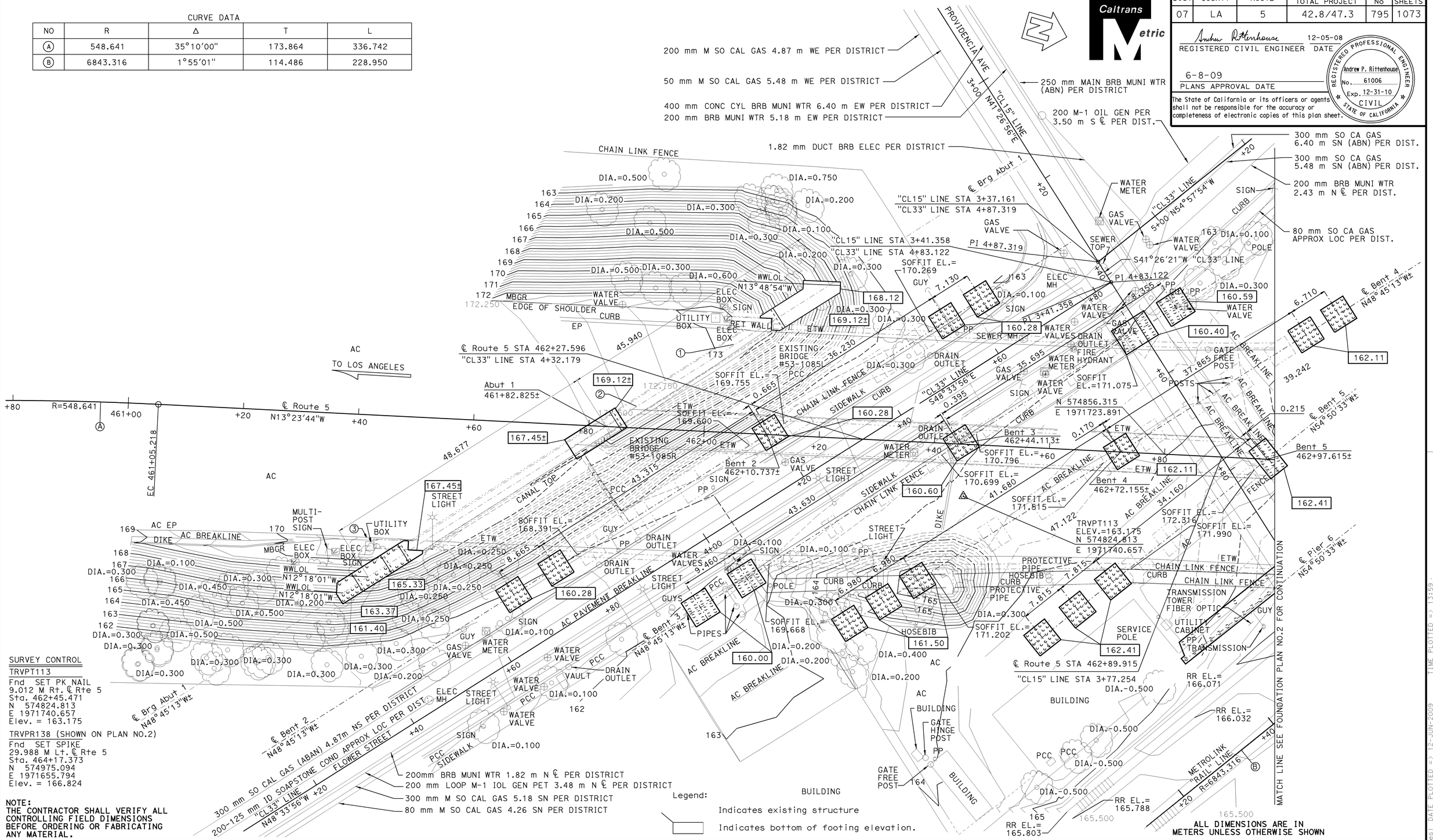

SURVEY CONTROL

TRVPT113
Fnd SET PK NAIL
9.012 M Rt. ℄ Rte 5
Sta. 462+45.471
N 574824.813
E 1971740.657
Elev. = 163.175

TRVPR138 (SHOWN ON PLAN NO.2)
Fnd SET SPIKE
29.988 M Lt. ℄ Rte 5
Sta. 464+17.373
N 574975.094
E 1971655.794
Elev. = 166.824

NOTE:
THE CONTRACTOR SHALL VERIFY ALL CONTROLLING FIELD DIMENSIONS BEFORE ORDERING OR FABRICATING ANY MATERIAL.

Legend:
Indicates existing structure
Indicates bottom of footing elevation.

PRELIMINARY INVESTIGATION SECTION

SCALE	VERT. DATUM NAVD88	PHOTOGRAMMETRY AS OF:			
1:300	HORZ. DATUM NAD83 (1991.35)	SURVEYED	BY DISTRICT	DRAFTED	BY T.ZOLNIKOVA 05/2005
ALIGNMENT TIES DIST.TRAVERSE SHEET		FIELD CHECKED	BY	CHECKED	BY F.BANDA 05/2005

	BY	CHECKED
DESIGN	Ulysses Smpardos	C. Chan/A. Rittenhouse
DETAILS	Steven Schenck	Ulysses Smpardos
QUANTITIES	E. Hall/A. Logus	R. Odell/D. Kubochi

STATE OF CALIFORNIA
DEPARTMENT OF TRANSPORTATION

DIVISION OF STRUCTURES
STRUCTURE DESIGN 15

BRIDGE NO. 53-1085
KILOMETER POST 46.1

PROVIDENCIA AVE OH
FOUNDATION PLAN NO. 1

CU 07
EA 121841

DISREGARD PRINTS BEARING EARLIER REVISION DATES

REVISION DATES (PRELIMINARY STAGE ONLY) 05-27-05 11-7-08 11-14-08 1-23-09 2-18-09 2-25-09

SHEET 6 OF 152

STRUCTURES FOUNDATION PLAN SHEET (METRIC) (REV.12-1-01)

ORIGINAL SCALE IN MILLIMETERS FOR REDUCED PLANS 0 10 20 30 40 50 60 70 80 90 100

FILE => 53-1085-e-fp101.dgn

USERNAME => trmikesl DATE PLOTTED => 12-JUN-2009 TIME PLOTTED => 13:59

DIST	COUNTY	ROUTE	KILOMETER POST TOTAL PROJECT	SHEET No	TOTAL SHEETS
07	LA	5	42.8/47.3	796	1073

Andrew P. Rittenhouse 12-05-08
REGISTERED CIVIL ENGINEER DATE

6-8-09
PLANS APPROVAL DATE

REGISTERED PROFESSIONAL ENGINEER Andrew P. Rittenhouse No. 61006 Exp. 12-31-10 CIVIL STATE OF CALIFORNIA

The State of California or its officers or agents shall not be responsible for the accuracy or completeness of electronic copies of this plan sheet.

Caltrans Metric

CURVE DATA

NO	R	Δ	T	L
Ⓒ	548.641	38°52'00"	193.566	336.742

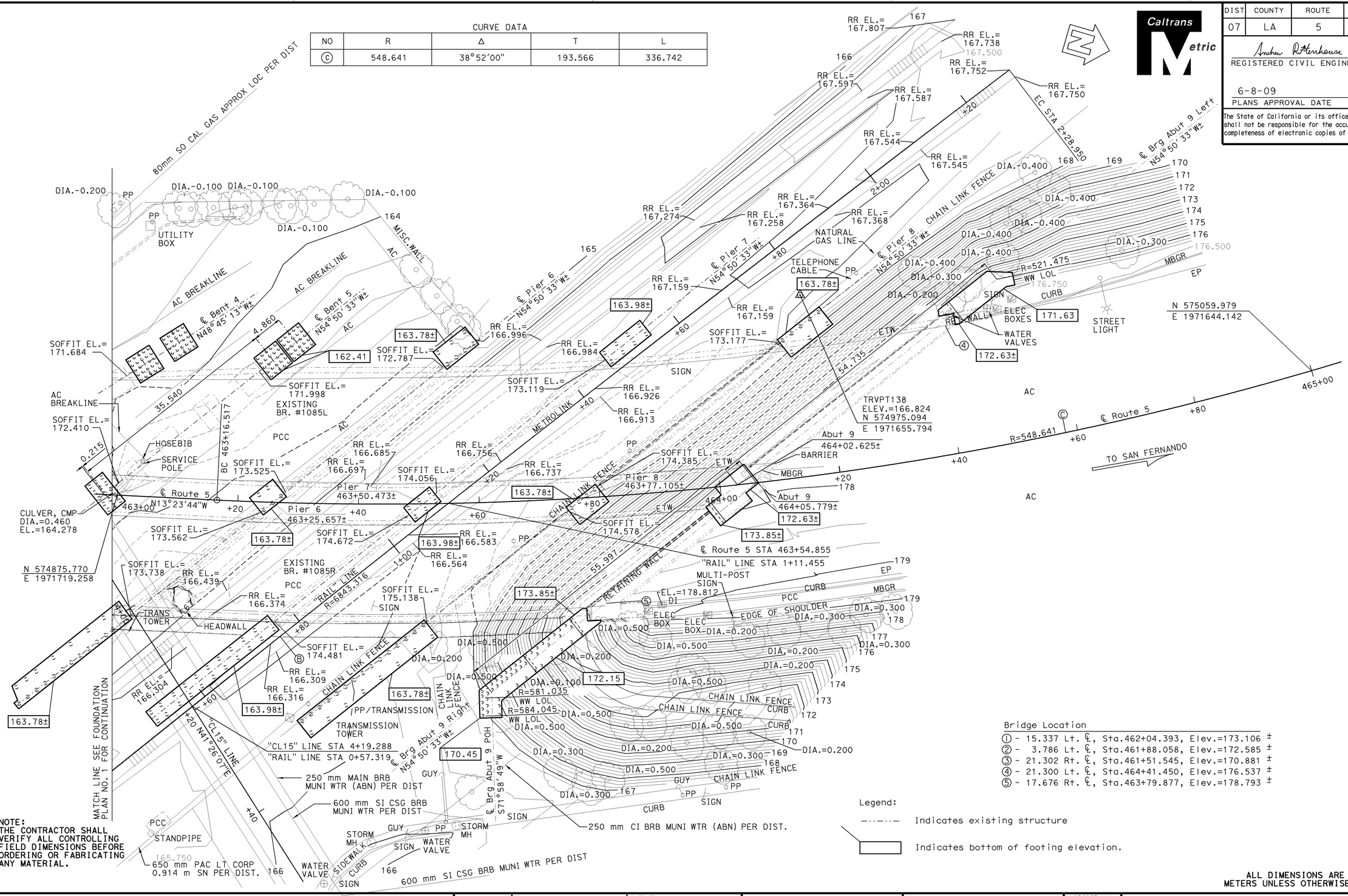

Bridge Location

① - 15.337 Lt. ℄, Sta.462+04.393, Elev.=173.106 ±
② - 3.786 Lt. ℄, Sta.461+88.058, Elev.=172.585 ±
③ - 21.302 Rt. ℄, Sta.461+51.545, Elev.=170.881 ±
④ - 21.300 Lt. ℄, Sta.464+41.450, Elev.=176.537 ±
⑤ - 17.676 Rt. ℄, Sta.463+79.877, Elev.=178.793 ±

Legend:

Indicates existing structure

Indicates bottom of footing elevation.

NOTE:
THE CONTRACTOR SHALL VERIFY ALL CONTROLLING FIELD DIMENSIONS BEFORE ORDERING OR FABRICATING ANY MATERIAL.

ALL DIMENSIONS ARE IN METERS UNLESS OTHERWISE SHOWN

PRELIMINARY INVESTIGATION SECTION

SCALE	VERT. DATUM NAVD88	PHOTOGRAMMETRY AS OF:		
1:300	HORZ. DATUM NAD83 (1991.35)	SURVEYED	BY DISTRICT	DRAFTED BY T.ZOLNIKOVA 05/2005
ALIGNMENT TIES DIST.TRAVERSE SHEET		FIELD CHECKED BY		CHECKED BY F.BANDA 05/2005

	BY	CHECKED
DESIGN	Ulysses Smpardos	C. Chan/A. Rittenhouse
DETAILS	Steven Schenck	Ulysses Smpardos
QUANTITIES	E. Hall	R. Odell

STATE OF CALIFORNIA
DEPARTMENT OF TRANSPORTATION

DIVISION OF STRUCTURES
STRUCTURE DESIGN 15

BRIDGE NO. 53-1085
KILOMETER POST 46.1

PROVIDENCIA AVE OH
FOUNDATION PLAN NO. 2

STRUCTURES FOUNDATION PLAN SHEET (METRIC) (REV.12-1-01)

ORIGINAL SCALE IN MILLIMETERS FOR REDUCED PLANS 0 10 20 30 40 50 60 70 80 90 100

CU 07
EA 121841

DISREGARD PRINTS BEARING EARLIER REVISION DATES

REVISION DATES (PRELIMINARY STAGE ONLY) 05-02-05 9-26-05 11-17-06 6-27-09 2-24-09 2-16-09 2-26-09

SHEET 7 OF 152

FILE => 53-1085-e-fp102.dgn

USERNAME => rrmikest DATE PLOTTED => 12-JUN-2009 TIME PLOTTED => 13:59

DIST	COUNTY	ROUTE	KILOMETER POST TOTAL PROJECT	SHEET No	TOTAL SHEETS
07	LA	5	42.8/47.3	797	1073

Andrew Rittenhouse 12-05-08
REGISTERED CIVIL ENGINEER DATE

6-8-09
PLANS APPROVAL DATE

REGISTERED PROFESSIONAL ENGINEER
Andrew P. Rittenhouse
No. 61006
Exp. 12-31-10
CIVIL
STATE OF CALIFORNIA

The State of California or its officers or agents shall not be responsible for the accuracy or completeness of electronic copies of this plan sheet.

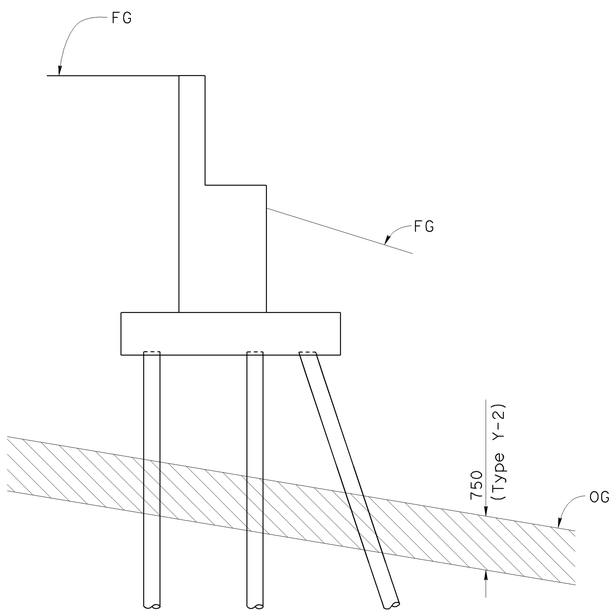

Note:
Right Widen Abut on piles shown,
Abut on spread ftg similar.

ABUTMENT

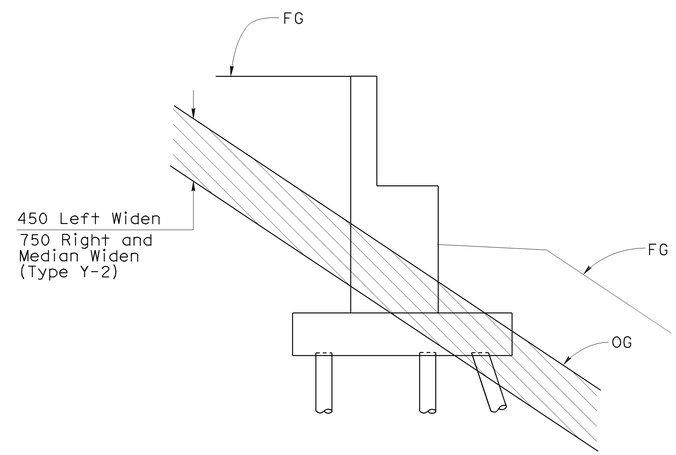

Note:
Abut on piles shown,
Abut on spread ftg similar.

ABUTMENT

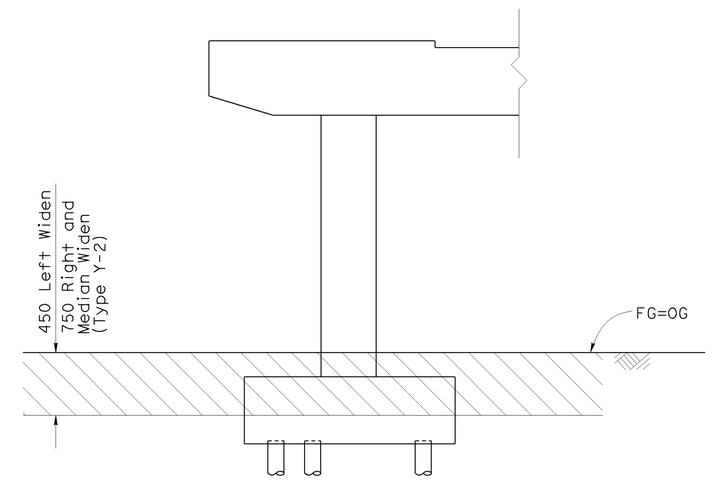

Note:
Typ bent footing shown,
pier footing similar.

BENT

LIMITS OF LEAD CONTAMINATED MATERIAL

No Scale

Notes:

1. Limits of Structure Excavation (Type Y-2) (Aerially Deposited Lead) are defined by the overlap between lead contaminated material and the limits shown on A62C
2. For limits of excavation and backfill not shown, see A62C

Legend:

Indicates contaminated material (Type Y-2) (Aerially Deposited Lead)

NOTE:
THE CONTRACTOR SHALL VERIFY ALL CONTROLLING FIELD DIMENSIONS BEFORE ORDERING OR FABRICATING ANY MATERIAL.

Caltrans Metric

	BY	CHECKED
DESIGN	R. Novik	T. Menard
DETAILS	T. Trefz	T. Menard
QUANTITIES	R. Novik	S. Moradi

STATE OF CALIFORNIA
DEPARTMENT OF TRANSPORTATION

DIVISION OF ENGINEERING SERVICES
STRUCTURE DESIGN
DESIGN BRANCH 15

BRIDGE NO. 53-1085
KILOMETER POST 46.1

PROVIDENCIA AVENUE OH (WIDEN)
EXCAVATION DETAILS NO. 1

ALL DIMENSIONS ARE IN MILLIMETERS UNLESS OTHERWISE SHOWN

ORIGINAL SCALE IN MILLIMETERS FOR REDUCED PLANS 0 10 20 30 40 50 60 70 80 90 100

CU 07
EA 121841

DISREGARD PRINTS BEARING EARLIER REVISION DATES

REVISION DATES: 10-1-08 11-17-08 1-22-09 4-27-09 2-18-09 3-30-09

SHEET 8 OF 152

FILE => 53-1085-f-miscdt01.dgn

STRUCTURES DESIGN DETAIL SHEET (METRIC) (REV.03-17-04)

USERNAME => trmikesl DATE PLOTTED => 12-JUN-2009 TIME PLOTTED => 14:00

DIST	COUNTY	ROUTE	KILOMETER POST TOTAL PROJECT	SHEET No	TOTAL SHEETS
07	LA	5	42.8/47.3	798	1073

Andrew P. Rittenhouse 12-05-08
REGISTERED CIVIL ENGINEER DATE

6-8-09
PLANS APPROVAL DATE

REGISTERED PROFESSIONAL ENGINEER Andrew P. Rittenhouse No. 61006 Exp. 12-31-10 CIVIL STATE OF CALIFORNIA

The State of California or its officers or agents shall not be responsible for the accuracy or completeness of electronic copies of this plan sheet.

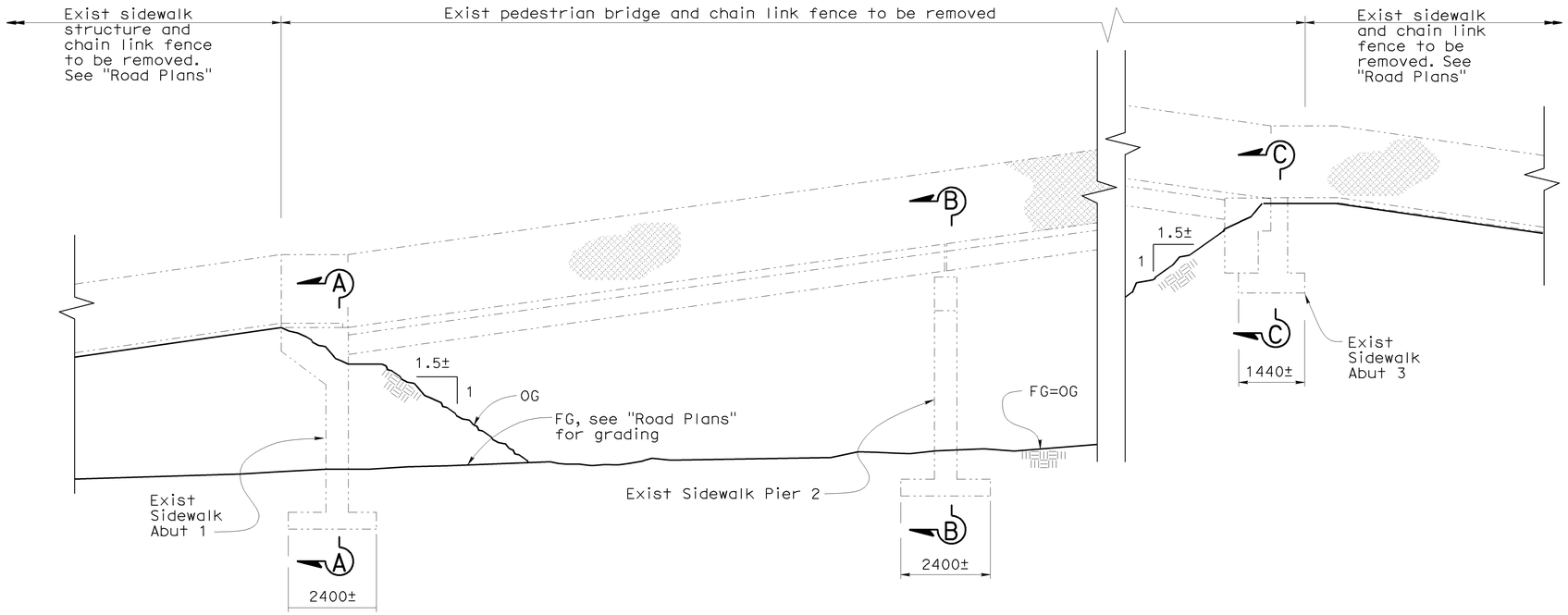

ELEVATION
EXISTING SIDEWALK
No Scale

Legend:

Indicates existing structure to be removed

Indicates Contaminated Material (Type Y-2) (Aerially Deposited Lead)

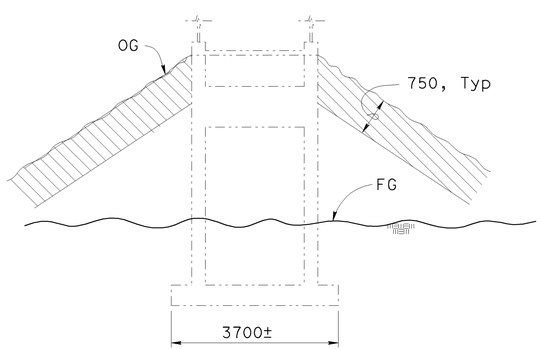

SECTION A-A
EXISTING SIDEWALK ABUTMENT 1
No Scale

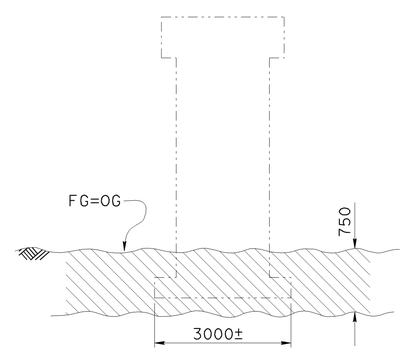

SECTION B-B
EXISTING SIDEWALK PIER 2
No Scale

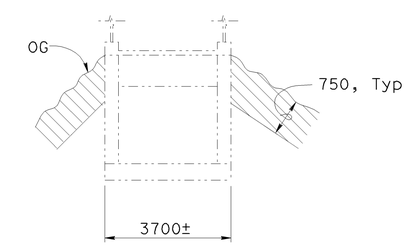

SECTION C-C
EXISTING SIDEWALK ABUTMENT 3
No Scale

NOTE:
THE CONTRACTOR SHALL VERIFY ALL CONTROLLING FIELD DIMENSIONS BEFORE ORDERING OR FABRICATING ANY MATERIAL.

Caltrans Metric

	BY	CHECKED
DESIGN	R. Novik	T. Menard
DETAILS	T. Trefz	T. Menard
QUANTITIES	R. Novik	S. Moradi

STATE OF CALIFORNIA
DEPARTMENT OF TRANSPORTATION

DIVISION OF ENGINEERING SERVICES
STRUCTURE DESIGN
DESIGN BRANCH 15

BRIDGE NO. 53-1085
KILOMETER POST 46.1

PROVIDENCIA AVENUE OH (WIDEN)
EXCAVATION DETAILS NO. 2

ALL DIMENSIONS ARE IN MILLIMETERS UNLESS OTHERWISE SHOWN

ORIGINAL SCALE IN MILLIMETERS FOR REDUCED PLANS 0 10 20 30 40 50 60 70 80 90 100

CU 07
EA 121841

DISREGARD PRINTS BEARING EARLIER REVISION DATES

REVISION DATES: 11-14-08 1-27-09 1-23-09 2-18-09 3-30-09

SHEET 9 OF 152

STRUCTURES DESIGN DETAIL SHEET (METRIC) (REV.03-17-04)

FILE => 53-1085-f-miscdt02.dgn

USERNAME => trmikesl DATE PLOTTED => 12-JUN-2009 TIME PLOTTED => 14:00

DIST	COUNTY	ROUTE	KILOMETER POST TOTAL PROJECT	SHEET No	TOTAL SHEETS
07	LA	5	42.8/47.3	799	1073

Andrew P. Rittenhouse 12-05-08
REGISTERED CIVIL ENGINEER DATE

6-8-09
PLANS APPROVAL DATE

REGISTERED PROFESSIONAL ENGINEER
Andrew P. Rittenhouse
No. 61006
Exp. 12-31-10
CIVIL
STATE OF CALIFORNIA

The State of California or its officers or agents shall not be responsible for the accuracy or completeness of electronic copies of this plan sheet.

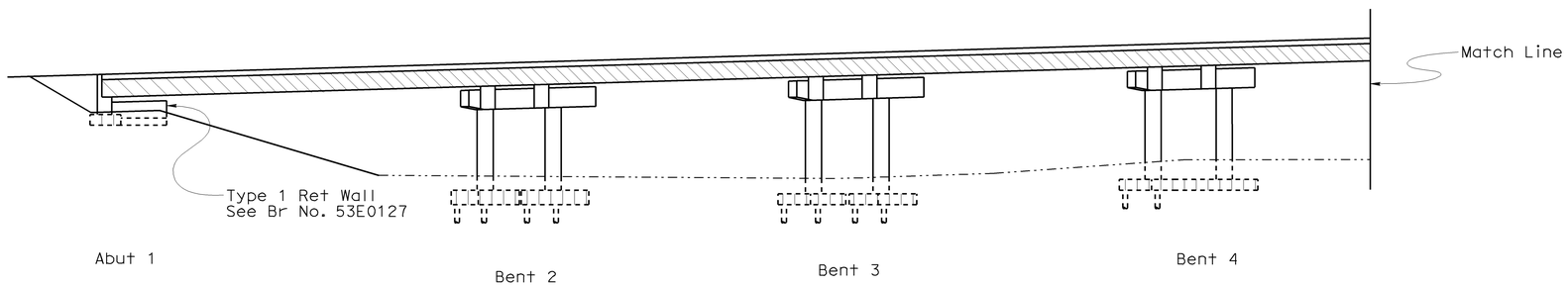

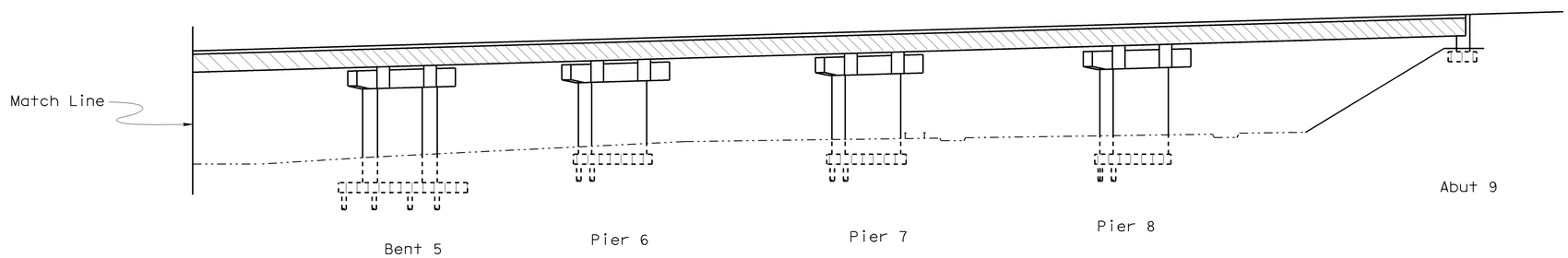

Structural Concrete, Bridge (28MPa @ 28 days)

Structural Concrete, Bridge Footing

Welded Steel Plate Girders

NOTE:
THE CONTRACTOR SHALL VERIFY ALL CONTROLLING FIELD DIMENSIONS BEFORE ORDERING OR FABRICATING ANY MATERIAL.

CONCRETE STRENGTH AND TYPE LIMITS

No Scale

Caltrans Metric

	BY	CHECKED
DESIGN	Traci Menard	Ulysses Smpardos
DETAILS	Steven Schenck	Ulysses Smpardos
QUANTITIES	E. Hall/A.Logus	R. Odell/D. Kubochi

STATE OF CALIFORNIA
DEPARTMENT OF TRANSPORTATION

DIVISION OF ENGINEERING SERVICES
STRUCTURE DESIGN
DESIGN BRANCH 15

BRIDGE NO. 53-1085
KILOMETER POST 46.1

PROVIDENCIA AVENUE OH (WIDEN)
CONCRETE STRENGTH AND TYPE LIMITS

ALL DIMENSIONS ARE IN MILLIMETERS UNLESS OTHERWISE SHOWN

ORIGINAL SCALE IN MILLIMETERS FOR REDUCED PLANS 0 10 20 30 40 50 60 70 80 90 100

CU 07
EA 121841

DISREGARD PRINTS BEARING EARLIER REVISION DATES
REVISION DATES: 9-27-08 11-18-08 1-23-09

SHEET 10 OF 152

FILE => 53-1085-f-tcon.dgn

STRUCTURES DESIGN DETAIL SHEET (METRIC) (REV.03-17-04)

USERNAME => ttmirkes1 DATE PLOTTED => 12-JUN-2009 TIME PLOTTED => 14:00

DIST	COUNTY	ROUTE	KILOMETER POST TOTAL PROJECT	SHEET No	TOTAL SHEETS
07	LA	5	42.8/47.3	800	1073

Andrew Rittenhouse 12-05-08
REGISTERED CIVIL ENGINEER DATE

6-8-09
PLANS APPROVAL DATE

REGISTERED PROFESSIONAL ENGINEER Andrew P. Rittenhouse No. 61006 Exp. 12-31-10 CIVIL STATE OF CALIFORNIA

The State of California or its officers or agents shall not be responsible for the accuracy or completeness of electronic copies of this plan sheet.

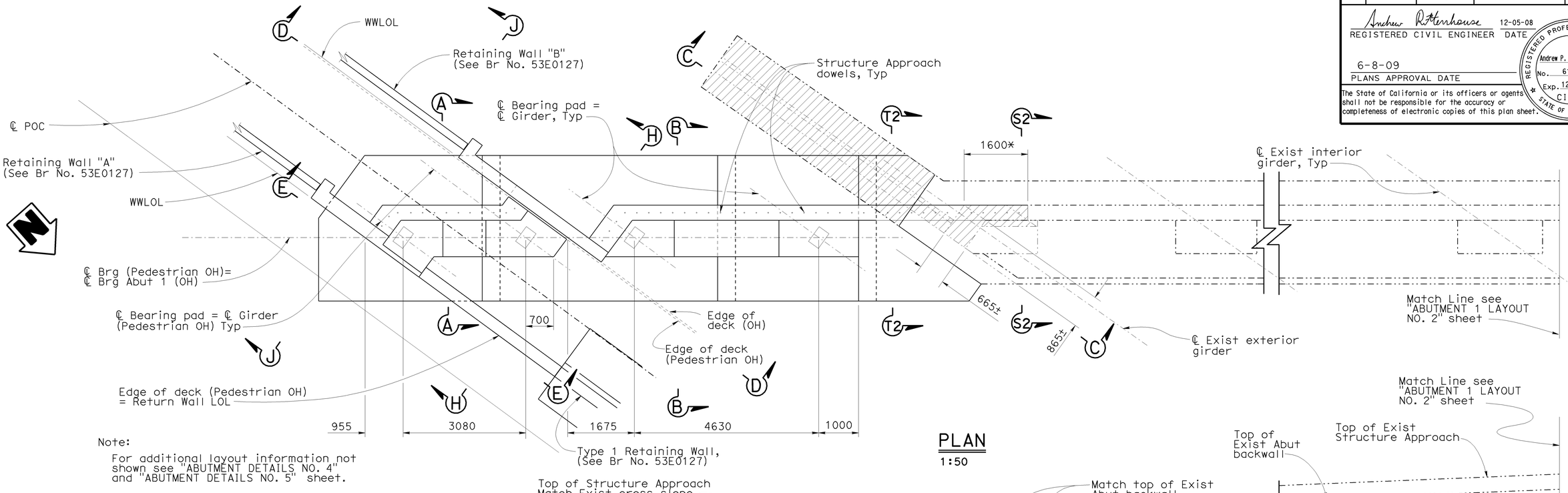

PLAN
1:50

Note:
For additional layout information not shown see "ABUTMENT DETAILS NO. 4" and "ABUTMENT DETAILS NO. 5" sheet.

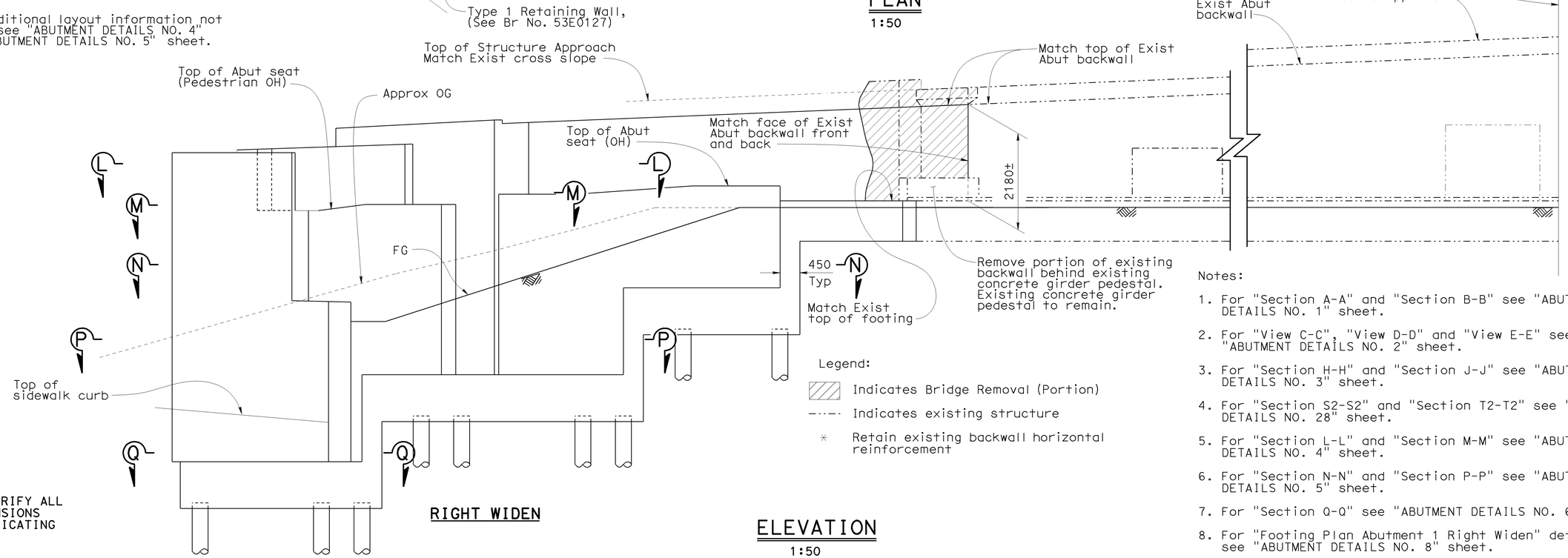

Legend:

- Indicates Bridge Removal (Portion)
- Indicates existing structure
- * Retain existing backwall horizontal reinforcement

Notes:

1. For "Section A-A" and "Section B-B" see "ABUTMENT DETAILS NO. 1" sheet.
2. For "View C-C", "View D-D" and "View E-E" see "ABUTMENT DETAILS NO. 2" sheet.
3. For "Section H-H" and "Section J-J" see "ABUTMENT DETAILS NO. 3" sheet.
4. For "Section S2-S2" and "Section T2-T2" see "ABUTMENT DETAILS NO. 28" sheet.
5. For "Section L-L" and "Section M-M" see "ABUTMENT DETAILS NO. 4" sheet.
6. For "Section N-N" and "Section P-P" see "ABUTMENT DETAILS NO. 5" sheet.
7. For "Section Q-Q" see "ABUTMENT DETAILS NO. 6" sheet.
8. For "Footing Plan Abutment 1 Right Widen" detail see "ABUTMENT DETAILS NO. 8" sheet.

NOTE:
THE CONTRACTOR SHALL VERIFY ALL CONTROLLING FIELD DIMENSIONS BEFORE ORDERING OR FABRICATING ANY MATERIAL.

RIGHT WIDEN

ELEVATION
1:50

Caltrans Metric

	BY	CHECKED
DESIGN	Ulysses Smpardos	F. Feng/C. Chan
DETAILS	Steven Schenck	F. Feng/C. Chan
QUANTITIES	E. Hall	R. Odell

STATE OF CALIFORNIA
DEPARTMENT OF TRANSPORTATION

DIVISION OF ENGINEERING SERVICES
STRUCTURE DESIGN
DESIGN BRANCH 15

BRIDGE NO. 53-1085
KILOMETER POST 46.1

PROVIDENCIA AVENUE OH (WIDEN)
ABUTMENT 1 LAYOUT NO. 1

ALL DIMENSIONS ARE IN MILLIMETERS UNLESS OTHERWISE SHOWN

ORIGINAL SCALE IN MILLIMETERS FOR REDUCED PLANS 0 10 20 30 40 50 60 70 80 90 100

CU 07
EA 121841

DISREGARD PRINTS BEARING EARLIER REVISION DATES

REVISION DATES: 4-01-08 2-19-09 9-22-08 10-8-08 10-31-08 11-14-08 1-01-09 1-23-09 2-10-09

SHEET 11 OF 152

FILE => 53-1085-g-a21-lo1.dgn

STRUCTURES DESIGN DETAIL SHEET (METRIC) (REV.03-17-04)

USERNAME => trmikesl DATE PLOTTED => 12-JUN-2009 TIME PLOTTED => 14:00