Dist	COUNTY	ROUTE	KILOMETER POST TOTAL PROJECT	SHEET No.	TOTAL SHEETS
07	LA	5	42.8/47.3	301	1073

Vincent Nguyen 11/06/08
REGISTERED CIVIL ENGINEER DATE

6-8-09
PLANS APPROVAL DATE

REGISTERED PROFESSIONAL ENGINEER — VINCENT NGUYEN No. 57797 Exp 3/31/10 CIVIL — STATE OF CALIFORNIA

THE STATE OF CALIFORNIA OR ITS OFFICERS OR AGENTS SHALL NOT BE RESPONSIBLE FOR THE ACCURACY OR COMPLETENESS OF ELECTRONIC COPIES OF THIS PLAN SHEET.

Caltrans Metric

FSBT
Western Ave 1/2
134 Freeway EAST 1 1/2
Colorado St 2 1/2

FNBT
Olive Ave 1/2
Burbank Blvd 1
Scott Rd 1 3/4

BACK TO BACK

SIGN 10A R
STA 457+18
OVERHEAD SIGN STRUCTURE

R87-1(CA)
CARPOOLS ONLY
2 OR MORE PERSONS PER VEHICLE

G85-7
134 EAST
1008 I SS

SIGN 10B I
FSBT STA 458+85
OVERHEAD SIGN STRUCTURE
(SEE SIGN DETAIL SHEETS)

MATCH LINE STA 456+05

ALAMEDA OFF RAMP

ROUTE 5

457 458 459

ALAMEDA ON RAMP

W4-1 E

ALAMEDA

MATCH LINE STA 459+40

ALAMEDA ON RAMP

W4-1 E

G77(CA) E

ALAMEDA OFF RAMP

R86-2
LEFT LANE
CARPOOLS ONLY

FNBT STA 458+85
1006 I SS

W13-2 E

FSBT
SR50-2
CARPOOL VIOLATION $ 341 MINIMUM FINE

STA 457+00
1003 I B

FNBT
SR50-2
CARPOOL VIOLATION $ 341 MINIMUM FINE

BACK TO BACK

ALL DIMENSIONS ARE IN METERS UNLESS OTHERWISE SHOWN

SIGN PLAN

NO SCALE

THIS PLAN ACCURATE FOR SIGNING ONLY

S-10

STATE OF CALIFORNIA - DEPARTMENT OF TRANSPORTATION
Caltrans
TRAFFIC DESIGN

FUNCTIONAL SUPERVISOR: GRISH BIGLARIAN

CALCULATED-DESIGNED BY: AHMED GABER
CHECKED BY: VINCENT NGUYEN

REVISED BY
DATE REVISED 11/07

LAST REVISION DATE PLOTTED => 12-JUN-2009
TIME PLOTTED => 10:18
00-00-00

BORDER LAST REVISED 3/1/2007

RELATIVE BORDER SCALE IS IN MILLIMETERS 0 20 40 60 80

USERNAME => trpierce
DGN FILE => 712184oa010.dgn

CU 07380

EA 121841

Dist	COUNTY	ROUTE	KILOMETER POST TOTAL PROJECT	SHEET No.	TOTAL SHEETS
07	LA	5	42.8/47.3	302	1073

Vincent Nguyen 11/06/08
REGISTERED CIVIL ENGINEER DATE

6-8-09
PLANS APPROVAL DATE

REGISTERED PROFESSIONAL ENGINEER — VINCENT NGUYEN — No. 57797 — Exp 3/31/10 — CIVIL — STATE OF CALIFORNIA

THE STATE OF CALIFORNIA OR ITS OFFICERS OR AGENTS SHALL NOT BE RESPONSIBLE FOR THE ACCURACY OR COMPLETENESS OF ELECTRONIC COPIES OF THIS PLAN SHEET.

Caltrans Metric

G83-5 EXIT 145A: Western Ave To (134) WEST ½ MILE
G85-CA EXIT 145B: Alameda Ave EXIT ONLY

SIGN (11B I)
FSBT STA 461+25
OVERHEAD SIGN STRUCTURE
(SEE SIGN DETAIL SHEETS)

G86-8: (134) EAST NEXT EXIT

FSBT STA 461+30 (1106 I B)

Alameda Ave

SIGN (11C R)
FSBT STA 462+03
OVERHEAD SIGN STRUCTURE

G84(CA) 1102 R
G84-3(CA)(145A) 1104 I B
W13-2(25) 1105 RL

460 461 462
ALAMEDA OFF RAMP
ROUTE 5
ALAMEDA ON RAMP
MATCH LINE STA 459+40
MATCH LINE STA 462+20
FLOWER ST
ASPH

W4-1 1101 RL
W4-1 1103 RL

G83-CA EXIT 146A: Olive Ave EXIT ONLY

SIGN (11A I)
FNBT STA 460+80
OVERHEAD SIGN STRUCTURE
(SEE SIGN DETAIL SHEETS)

W74(CA) 1108 SS

G83(CA) 1107 R

R84-2: CARPOOL LANE ENDS ½ MILE

FNBT STA 461+30 (1106 I B)

ALL DIMENSIONS ARE IN METERS UNLESS OTHERWISE SHOWN

SIGN PLAN

NO SCALE

THIS PLAN ACCURATE FOR SIGNING ONLY

S-11

STATE OF CALIFORNIA - DEPARTMENT OF TRANSPORTATION
Caltrans
TRAFFIC DESIGN

FUNCTIONAL SUPERVISOR: GRISH BIGLARIAN
CALCULATED-DESIGNED BY: AHMED GABER
CHECKED BY: VINCENT NGUYEN
REVISED BY
DATE REVISED: 11/07

LAST REVISION DATE PLOTTED => 12-JUN-2009
00-00-00 TIME PLOTTED => 10:19

BORDER LAST REVISED 3/1/2007
RELATIVE BORDER SCALE IS IN MILLIMETERS 0 20 40 60 80
USERNAME => trpierce
DGN FILE => 712184oa011.dgn
CU 07380
EA 121841

Dist	COUNTY	ROUTE	KILOMETER POST TOTAL PROJECT	SHEET No.	TOTAL SHEETS
07	LA	5	42.8/47.3	303	1073

Vincent Nguyen 11/06/08
REGISTERED CIVIL ENGINEER DATE

6-8-09
PLANS APPROVAL DATE

REGISTERED PROFESSIONAL ENGINEER
VINCENT NGUYEN
No. 57797
Exp 3/31/10
CIVIL
STATE OF CALIFORNIA

THE STATE OF CALIFORNIA OR ITS OFFICERS OR AGENTS SHALL NOT BE RESPONSIBLE FOR THE ACCURACY OR COMPLETENESS OF ELECTRONIC COPIES OF THIS PLAN SHEET.

Caltrans Metric

R93-2
CARPOOL IS **2** OR MORE PERSONS PER VEHICLE

FSBT STA 464+40
1201 I B

G83(CA)
EXIT 145B
Alameda Ave
EXIT ONLY

SIGN 12A I

FSBT STA 464+50
OVERHEAD SIGN STRUCTURE
(SEE SIGN DETAIL SHEETS)

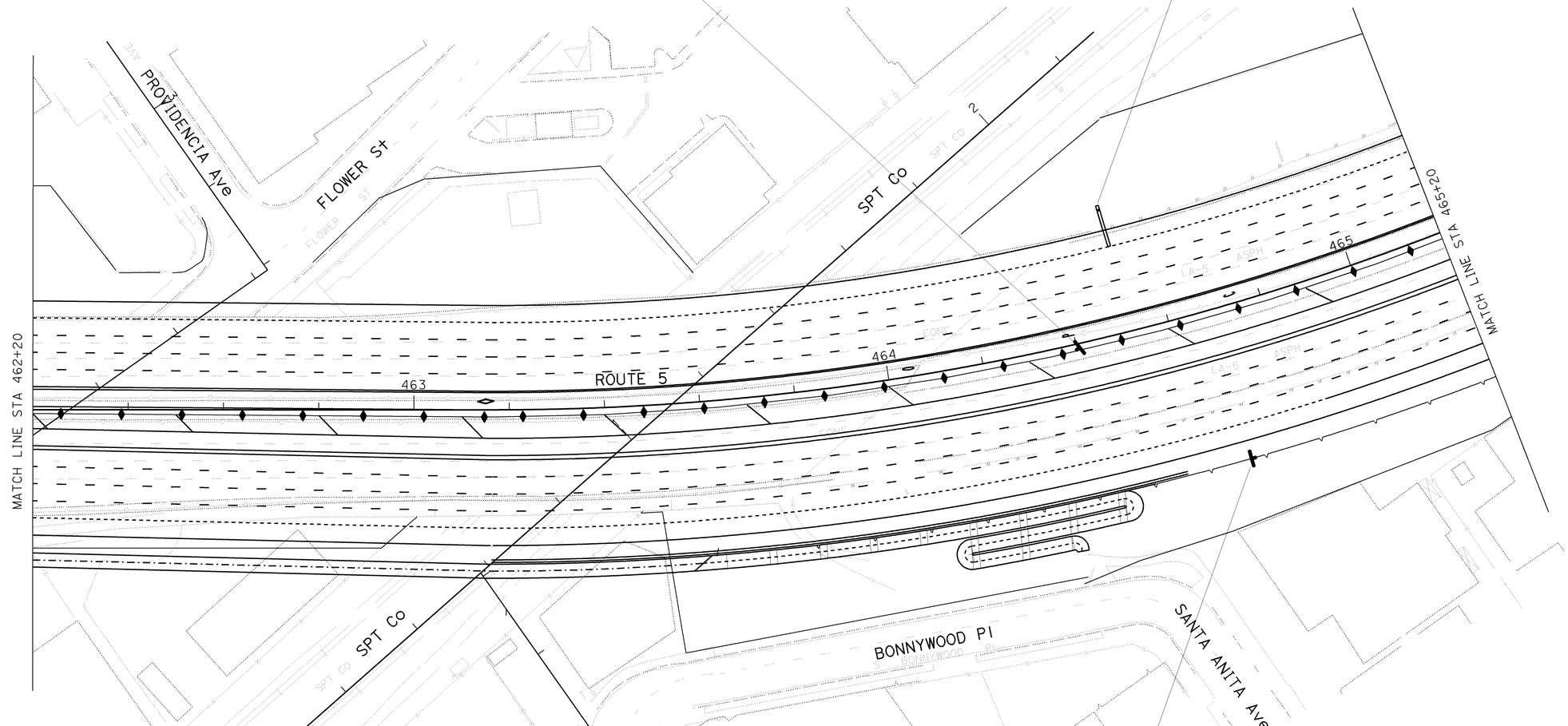

ALL DIMENSIONS ARE IN METERS UNLESS OTHERWISE SHOWN

SIGN PLAN

NO SCALE

THIS PLAN ACCURATE FOR SIGNING ONLY

S-12

CALCULATED-DESIGNED BY
CHECKED BY
AHMED GABER
VINCENT NGUYEN
REVISED BY
DATE REVISED 11/07

FUNCTIONAL SUPERVISOR
GRISH BIGLARIAN

STATE OF CALIFORNIA - DEPARTMENT OF TRANSPORTATION
Caltrans **TRAFFIC DESIGN**

LAST REVISION DATE PLOTTED => 12-JUN-2009
00-00-00 TIME PLOTTED => 10:19

BORDER LAST REVISED 3/1/2007

RELATIVE BORDER SCALE IS IN MILLIMETERS 0 20 40 60 80

USERNAME => trpierce
DGN FILE => 712184oa012.dgn

CU 07380

EA 121841

Dist	COUNTY	ROUTE	KILOMETER POST TOTAL PROJECT	SHEET No.	TOTAL SHEETS
07	LA	5	42.8/47.3	304	1073

Caltrans Metric

REGISTERED CIVIL ENGINEER 11/06/08 DATE

6-8-09
PLANS APPROVAL DATE

REGISTERED PROFESSIONAL ENGINEER VINCENT NGUYEN No. 57797 Exp. 3/31/10 CIVIL STATE OF CALIFORNIA

THE STATE OF CALIFORNIA OR ITS OFFICERS OR AGENTS SHALL NOT BE RESPONSIBLE FOR THE ACCURACY OR COMPLETENESS OF ELECTRONIC COPIES OF THIS PLAN SHEET.

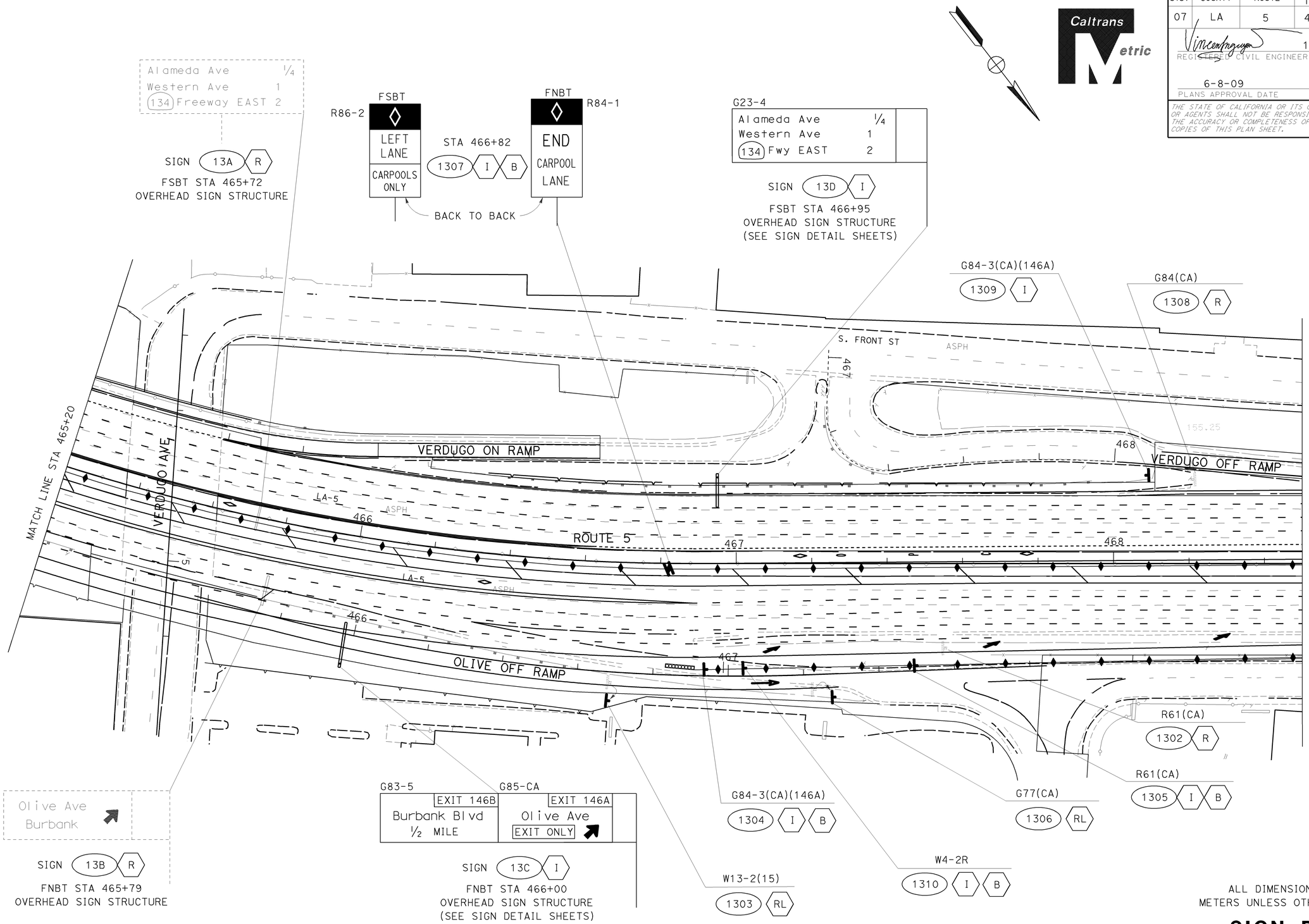

ALL DIMENSIONS ARE IN METERS UNLESS OTHERWISE SHOWN

SIGN PLAN

NO SCALE

THIS PLAN ACCURATE FOR SIGNING ONLY

S-13

STATE OF CALIFORNIA - DEPARTMENT OF TRANSPORTATION
Caltrans TRAFFIC DESIGN

FUNCTIONAL SUPERVISOR: GRISH BIGLARIAN
CALCULATED-DESIGNED BY: AHMED GABER
CHECKED BY: VINCENT NGUYEN
REVISED BY
DATE REVISED: 11/07

LAST REVISION 00-00-00
DATE PLOTTED => 12-JUN-2009
TIME PLOTTED => 10:19

BORDER LAST REVISED 3/1/2007
RELATIVE BORDER SCALE IS IN MILLIMETERS 0 20 40 60 80
USERNAME => trpierce
DGN FILE => 712184oa013.dgn
CU 07380
EA 121841

Dist	COUNTY	ROUTE	KILOMETER POST TOTAL PROJECT	SHEET No.	TOTAL SHEETS
07	LA	5	42.8/47.3	305	1073

Vincent Nguyen 11/06/08
REGISTERED CIVIL ENGINEER DATE

6-8-09
PLANS APPROVAL DATE

REGISTERED PROFESSIONAL ENGINEER — VINCENT NGUYEN — No. 57797 — Exp 3/31/10 — CIVIL — STATE OF CALIFORNIA

THE STATE OF CALIFORNIA OR ITS OFFICERS OR AGENTS SHALL NOT BE RESPONSIBLE FOR THE ACCURACY OR COMPLETENESS OF ELECTRONIC COPIES OF THIS PLAN SHEET.

Caltrans Metric

Verdugo Ave

SIGN 14C RP
FSBT STA 469+35
BRIDGE MOUNTED OVERHEAD SIGN

G83-5 EXIT 145B
Alameda Ave
½ MILE

G85(CA) EXIT 146A
Verdugo Ave

SIGN 14D I
FSBT STA 469+45
OVERHEAD SIGN STRUCTURE
(SEE SIGN DETAIL SHEETS)

R87-1(CA)
CARPOOLS ONLY
2 OR MORE PERSONS
PER VEHICLE

SR50-2
CARPOOL VIOLATION $341 MINIMUM FINE

SIGN 14E I
FSBT STA 469+87
OVERHEAD SIGN STRUCTURE
(SEE SIGN DETAIL SHEETS)

R93-2
CARPOOL IS 2 OR MORE PERSONS PER VEHICLE

FSBT STA 470+62
1403 I B

1404 I SS
W13-2(25 MPH)

FSBT STA 469+87
1402 I SS

MATCH LINE STA 468+50

MATCH LINE STA 471+80

VERDUGO OFF RAMP

ROUTE 5

OLIVE ON RAMP

OLIVE

ORANGE GROVE Ave

R/W

ASPH

CONC

PARKING AREA

G23-1

Burbank Blvd	¼
Scott Rd	1
Lincoln St	1½

SIGN 14A IP
FNBT STA 469+10
BRIDGE MOUNTED OVERHEAD SIGN
(SEE SIGN DETAIL SHEETS)

Burbank Blvd	½
Scott Rd	1¼
Lincoln St	1½

SIGN 14B RP
FNBT STA 469+10
BRIDGE MOUNTED OVERHEAD SIGN

ALL DIMENSIONS ARE IN METERS UNLESS OTHERWISE SHOWN

SIGN PLAN

NO SCALE

S-14

THIS PLAN ACCURATE FOR SIGNING ONLY

CALCULATED-DESIGNED BY AHMED GABER
CHECKED BY VINCENT NGUYEN
REVISED BY
DATE REVISED 11/07
FUNCTIONAL SUPERVISOR GRISH BIGLARIAN
STATE OF CALIFORNIA - DEPARTMENT OF TRANSPORTATION
Caltrans TRAFFIC DESIGN

LAST REVISION DATE PLOTTED => 12-JUN-2009
00-00-00 TIME PLOTTED => 10:19

BORDER LAST REVISED 3/1/2007
RELATIVE BORDER SCALE IS IN MILLIMETERS 0 20 40 60 80
USERNAME => trpierce
DGN FILE => 712184oa014.dgn
CU 07380
EA 121841

Dist	COUNTY	ROUTE	KILOMETER POST TOTAL PROJECT	SHEET No.	TOTAL SHEETS
07	LA	5	42.8/47.3	306	1073

Vincent Nguyen 11/06/08
REGISTERED CIVIL ENGINEER DATE

6-8-09
PLANS APPROVAL DATE

REGISTERED PROFESSIONAL ENGINEER — VINCENT NGUYEN No. 57797 Exp. 3/31/10 CIVIL — STATE OF CALIFORNIA

THE STATE OF CALIFORNIA OR ITS OFFICERS OR AGENTS SHALL NOT BE RESPONSIBLE FOR THE ACCURACY OR COMPLETENESS OF ELECTRONIC COPIES OF THIS PLAN SHEET.

Caltrans Metric

Verdugo Ave
1/4 MILE

SIGN 15C RP
FSBT STA 473+00
BRIDGE MOUNTED OVERHEAD SIGN

G86-13
EXIT 146A
Verdugo Ave
NEXT RIGHT

SIGN 15D IP
FSBT STA 473+00
BRIDGE MOUNTED OVERHEAD SIGN
(SEE SIGN DETAIL SHEETS)

R82-1
CARPOOL LANE AHEAD 1/2 MILE

FSBT
STA 478+62
1502 I B

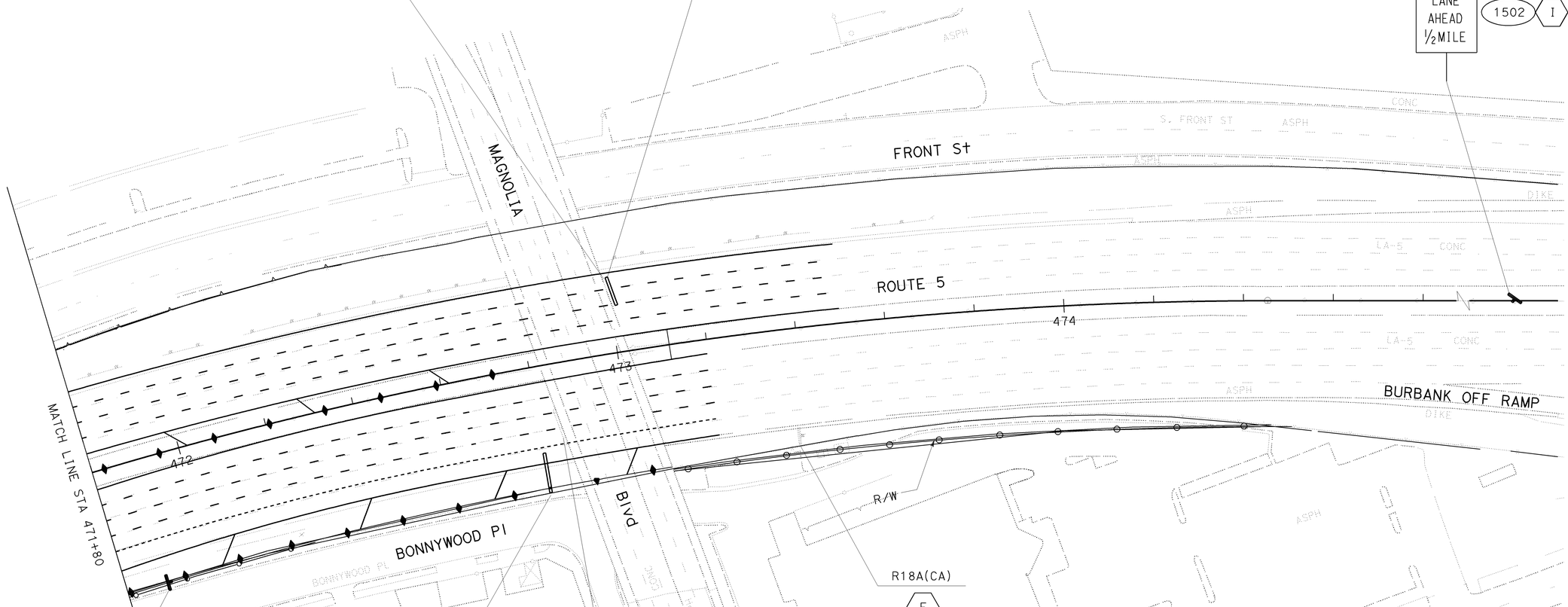

W74(CA)
1501 I B

G85(CA)
EXIT 146B
Burbank Blvd
EXIT ONLY

SIGN 15A I
FNBT STA 472+80
OVERHEAD SIGN STRUCTURE
(SEE SIGN DETAIL SHEETS)

Burbank Blvd
ONLY

SIGN 15B R
FNBT STA 472+85
BRIDGE MOUNTED OVERHEAD SIGN

THIS PLAN ACCURATE FOR SIGNING ONLY

ALL DIMENSIONS ARE IN
METERS UNLESS OTHERWISE SHOWN

SIGN PLAN

NO SCALE

S-15

STATE OF CALIFORNIA - DEPARTMENT OF TRANSPORTATION
Caltrans
TRAFFIC DESIGN

FUNCTIONAL SUPERVISOR: GRISH BIGLARIAN
CALCULATED-DESIGNED BY: AHMED GABER
CHECKED BY: VINCENT NGUYEN
REVISED BY
DATE REVISED

LAST REVISION DATE PLOTTED => 12-JUN-2009
00-00-00 TIME PLOTTED => 10:19

BORDER LAST REVISED 3/1/2007

RELATIVE BORDER SCALE IS IN MILLIMETERS 0 20 40 60 80

USERNAME => trpierce
DGN FILE => 712184oa015.dgn

CU 07380

EA 121841

Dist	COUNTY	ROUTE	KILOMETER POST TOTAL PROJECT	SHEET No.	TOTAL SHEETS
07	LA	5	42.8/47.3	307	1073

Vincent Nguyen 11/06/08
REGISTERED CIVIL ENGINEER DATE

6-8-09
PLANS APPROVAL DATE

REGISTERED PROFESSIONAL ENGINEER — VINCENT NGUYEN No. 57797 Exp. 3/31/10 CIVIL — STATE OF CALIFORNIA

THE STATE OF CALIFORNIA OR ITS OFFICERS OR AGENTS SHALL NOT BE RESPONSIBLE FOR THE ACCURACY OR COMPLETENESS OF ELECTRONIC COPIES OF THIS PLAN SHEET.

Caltrans Metric

NOTES:

1. OVERHEAD SIGN INSTALLATIONS SHALL MAINTAIN A MINIMUM CLEARANCE OF 5.64 m BETWEEN THE HIGH POINT OF FINISHED SURFACE OF THE ROADBED AND THE BOTTOM OF THE WALKWAY.
2. SIGN PANELS FOR OVERHEAD SIGNS SHALL BE FORMED PANELS WITH REMOVABLE SIGN PANEL FRAME (RSPF)
3. REPLACEMENT SIGN PANEL DIMENSIONS SHALL BE VERIFIED IN THE FIELD BEFORE ORDERING MATERIAL.
4. PEDESTAL FOUNDATIONS SHALL BE SQUARE
5. SEE ELECTRICAL PLANS FOR SIGN ILLUMINATION
6. ALL NEW OVERHEAD SIGN STRUCTURE SHALL BE TRUSS STRUCTURE
7. ALL DIMENSIONS SHALL BE FIELD VERIFIED BY THE CONTRACTOR BEFORE PLACING ANY ORDER

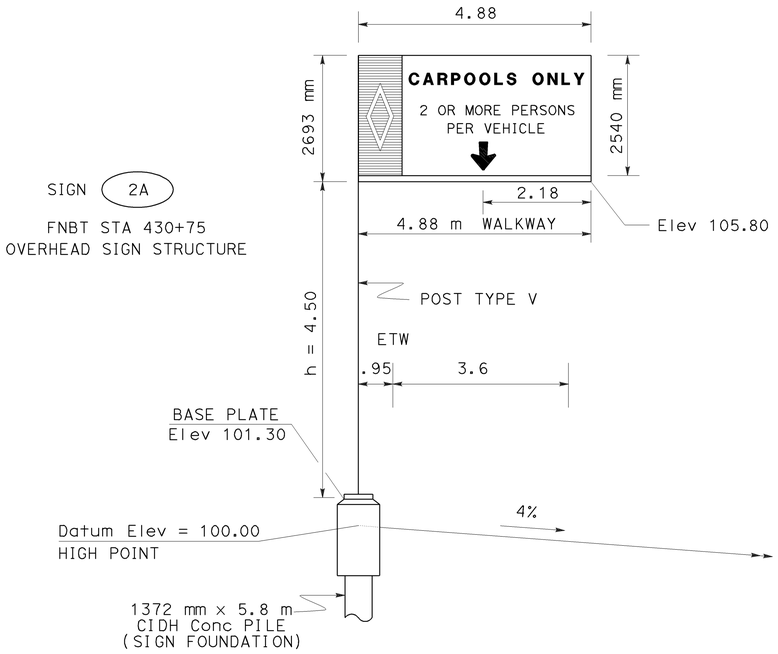

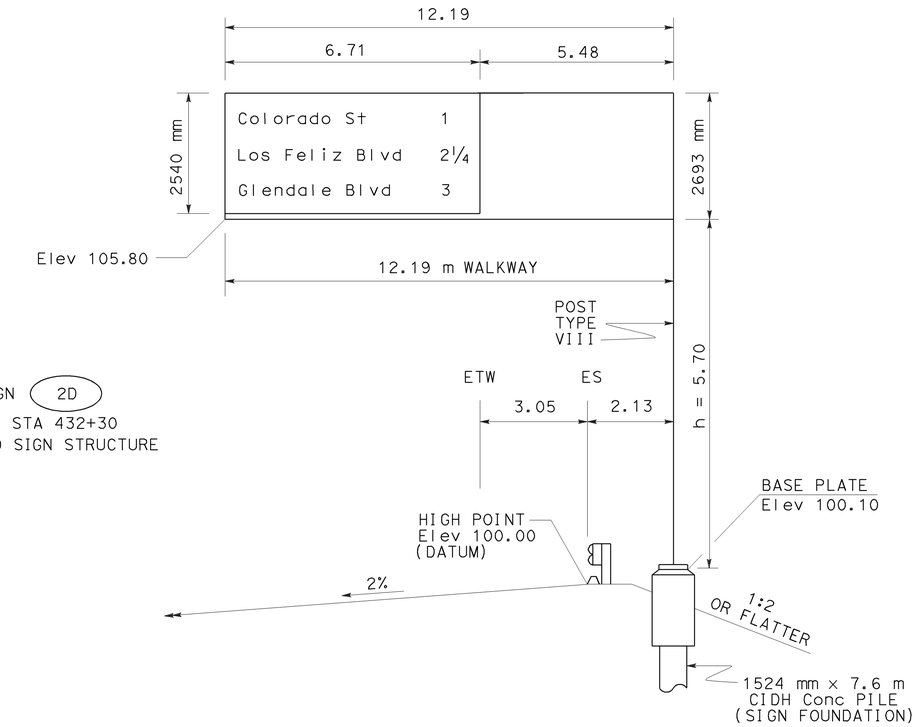

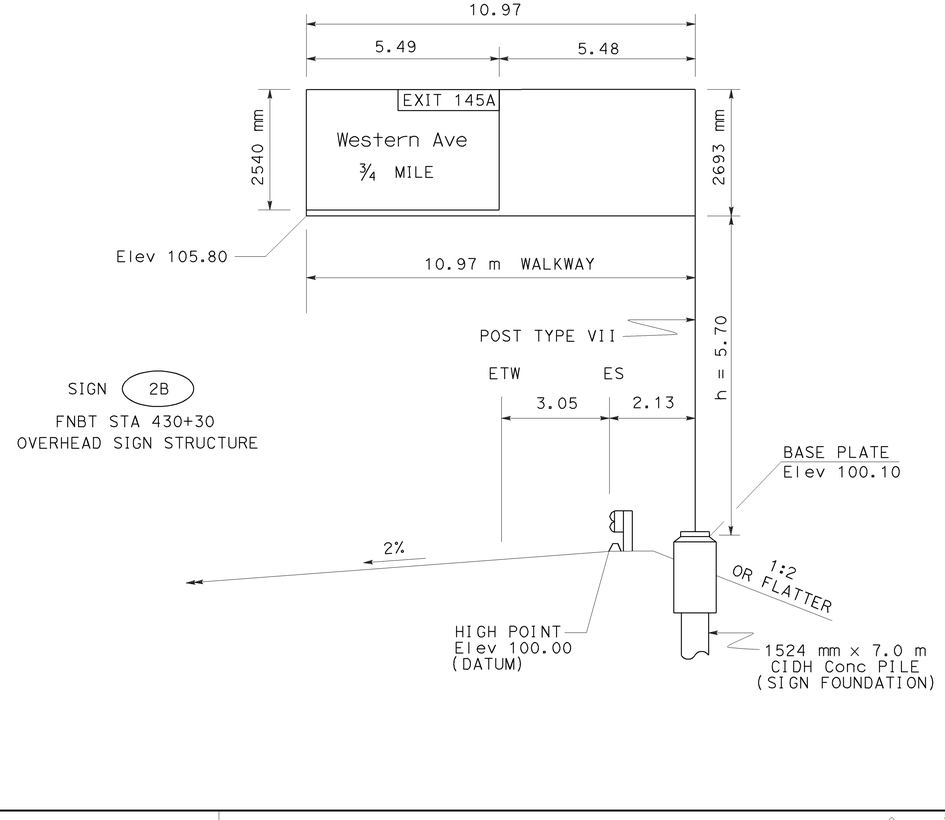

ALL DIMENSIONS ARE IN METERS UNLESS OTHERWISE SHOWN

SIGN DETAILS

NO SCALE

SD-1

STATE OF CALIFORNIA - DEPARTMENT OF TRANSPORTATION
Caltrans
TRAFFIC DESIGN

FUNCTIONAL SUPERVISOR: GRISH BIGLARIAN
CALCULATED-DESIGNED BY: AHMED GABER
CHECKED BY: VINCENT NGUYEN
REVISED BY
DATE REVISED: 11/07

LAST REVISION: 00-00-00
DATE PLOTTED => 12-JUN-2009
TIME PLOTTED => 10:19

BORDER LAST REVISED 3/1/2007

RELATIVE BORDER SCALE IS IN MILLIMETERS 0 20 40 60 80

USERNAME => trpierce
DGN FILE => 712184ab001.dgn

CU 07380

EA 121841

Dist	COUNTY	ROUTE	KILOMETER POST TOTAL PROJECT	SHEET No.	TOTAL SHEETS
07	LA	5	42.8/47.3	308	1073

11/06/08
REGISTERED CIVIL ENGINEER DATE

6-8-09
PLANS APPROVAL DATE

REGISTERED PROFESSIONAL ENGINEER
VINCENT NGUYEN
No. 57797
Exp. 3/31/10
CIVIL
STATE OF CALIFORNIA

THE STATE OF CALIFORNIA OR ITS OFFICERS OR AGENTS SHALL NOT BE RESPONSIBLE FOR THE ACCURACY OR COMPLETENESS OF ELECTRONIC COPIES OF THIS PLAN SHEET.

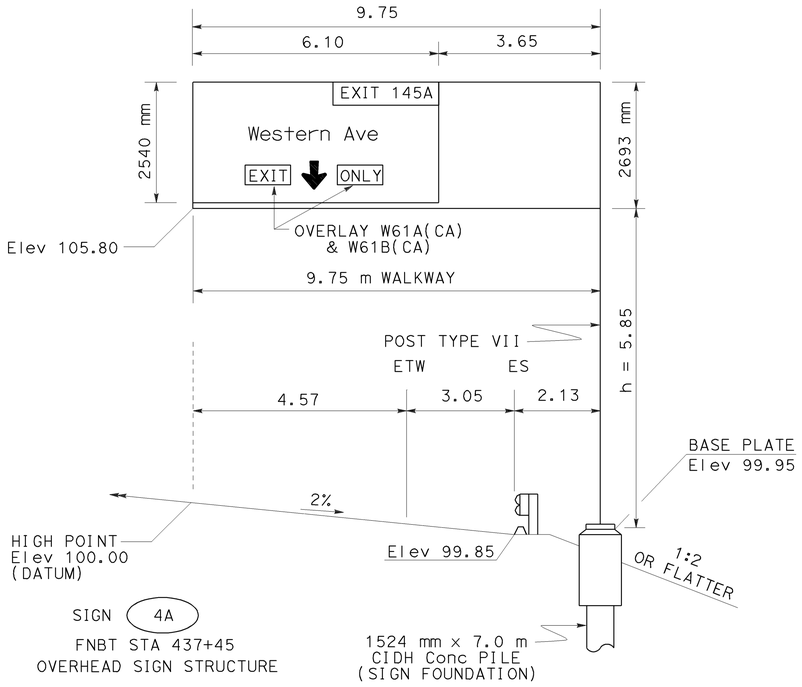

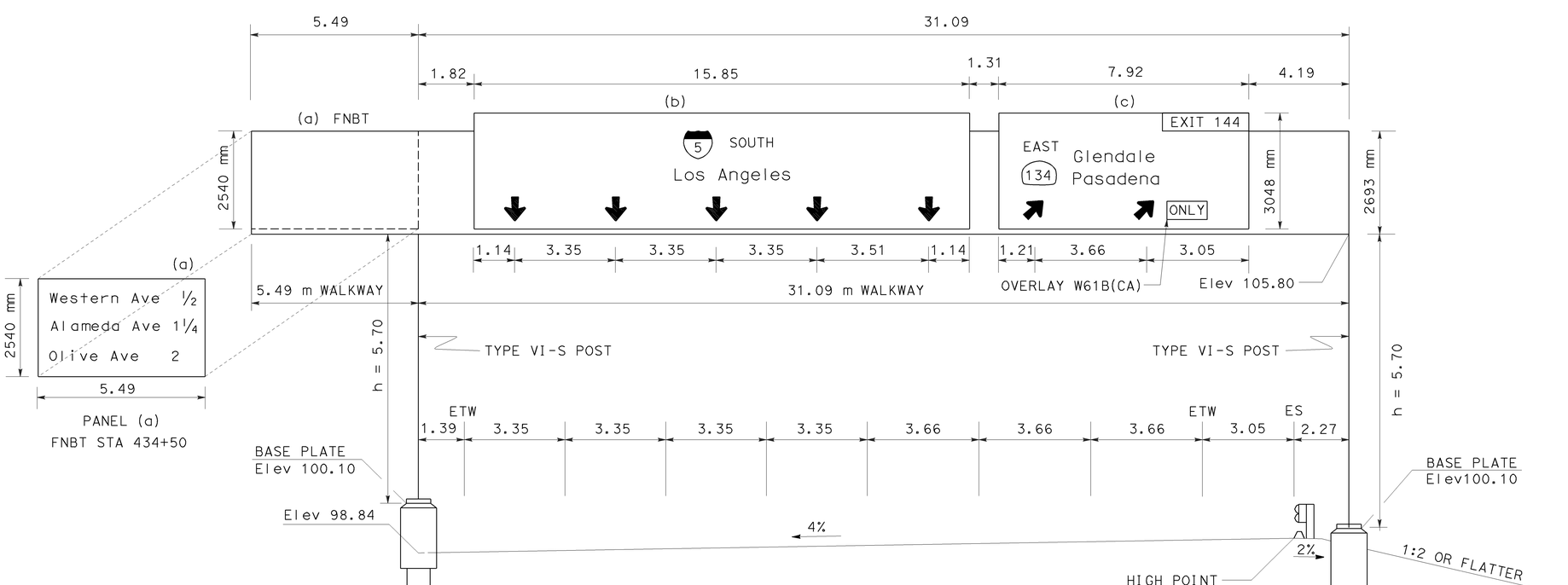

ALL DIMENSIONS ARE IN METERS UNLESS OTHERWISE SHOWN

SIGN DETAILS

NO SCALE

SD-2

STATE OF CALIFORNIA - DEPARTMENT OF TRANSPORTATION
Caltrans **TRAFFIC DESIGN**

FUNCTIONAL SUPERVISOR: GRISH BIGLARIAN
CALCULATED-DESIGNED BY: AHMED GABER
CHECKED BY: VINCENT NGUYEN
REVISED BY
DATE REVISED: 11/07

LAST REVISION DATE PLOTTED => 12-JUN-2009
TIME PLOTTED => 10:19
00-00-00

BORDER LAST REVISED 3/1/2007
RELATIVE BORDER SCALE IS IN MILLIMETERS 0 20 40 60 80
USERNAME => trpierce
DGN FILE => 712184ob002.dgn
CU 07380
EA 121841

Dist	COUNTY	ROUTE	KILOMETER POST TOTAL PROJECT	SHEET No.	TOTAL SHEETS
07	LA	5	42.8/47.3	309	1073

Vincent Nguyen 11/06/08
REGISTERED CIVIL ENGINEER DATE

6-8-09
PLANS APPROVAL DATE

REGISTERED PROFESSIONAL ENGINEER — VINCENT NGUYEN — No. 57797 — Exp. 3/31/10 — CIVIL — STATE OF CALIFORNIA

THE STATE OF CALIFORNIA OR ITS OFFICERS OR AGENTS SHALL NOT BE RESPONSIBLE FOR THE ACCURACY OR COMPLETENESS OF ELECTRONIC COPIES OF THIS PLAN SHEET.

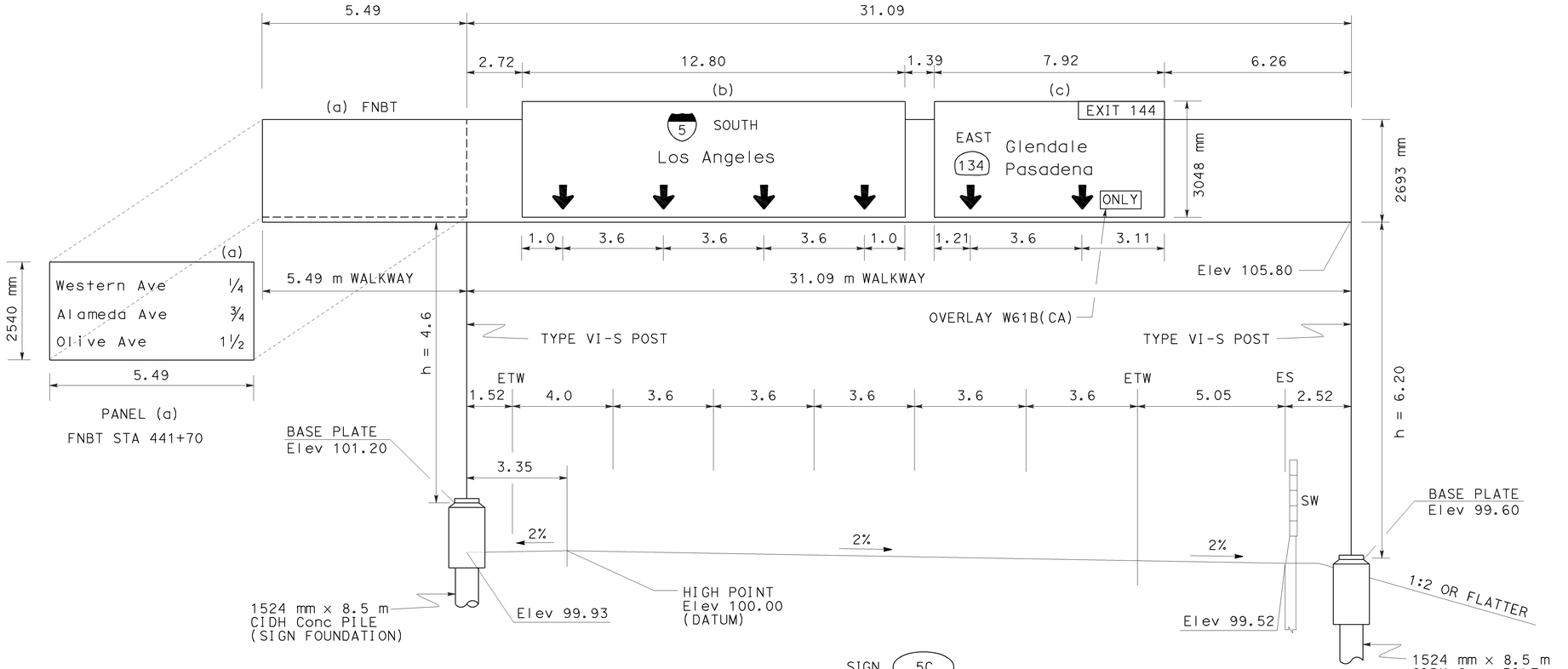

ALL DIMENSIONS ARE IN METERS UNLESS OTHERWISE SHOWN

SIGN DETAILS

NO SCALE

SD-3

CALCULATED-DESIGNED BY: AHMED GABER
CHECKED BY: VINCENT NGUYEN
REVISED BY
DATE REVISED: 11/07
FUNCTIONAL SUPERVISOR: GRISH BIGLARIAN
STATE OF CALIFORNIA - DEPARTMENT OF TRANSPORTATION
Caltrans
TRAFFIC DESIGN

LAST REVISION DATE PLOTTED => 12-JUN-2009
00-00-00 TIME PLOTTED => 10:19

BORDER LAST REVISED 3/1/2007
RELATIVE BORDER SCALE IS IN MILLIMETERS 0 20 40 60 80
USERNAME => trpierce
DGN FILE => 712184ob003.dgn
CU 07380
EA 121841

Dist	COUNTY	ROUTE	KILOMETER POST TOTAL PROJECT	SHEET No.	TOTAL SHEETS
07	LA	5	42.8/47.3	310	1073

Caltrans Metric

Vincent Nguyen 11/06/08
REGISTERED CIVIL ENGINEER DATE

6-8-09
PLANS APPROVAL DATE

REGISTERED PROFESSIONAL ENGINEER
VINCENT NGUYEN
No. 57797
Exp. 3/31/10
CIVIL
STATE OF CALIFORNIA

THE STATE OF CALIFORNIA OR ITS OFFICERS OR AGENTS SHALL NOT BE RESPONSIBLE FOR THE ACCURACY OR COMPLETENESS OF ELECTRONIC COPIES OF THIS PLAN SHEET.

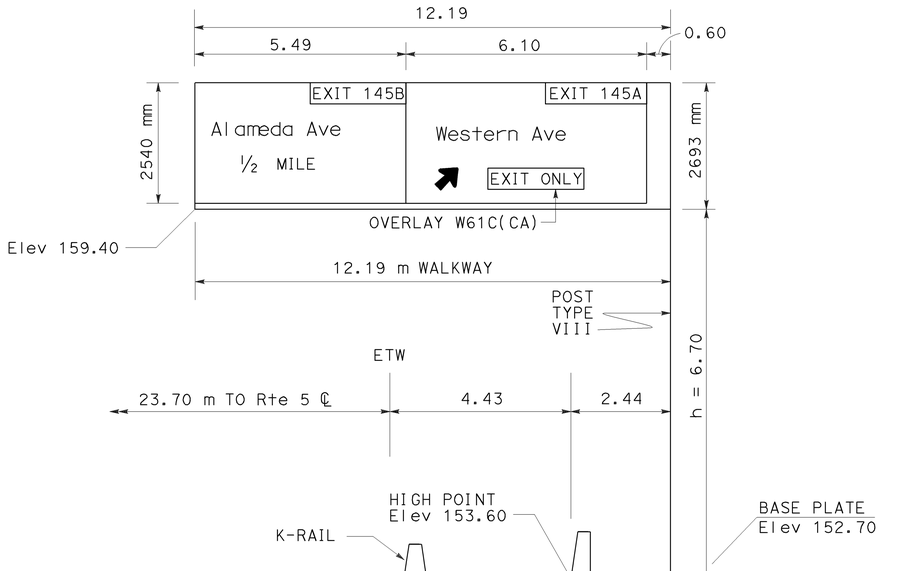

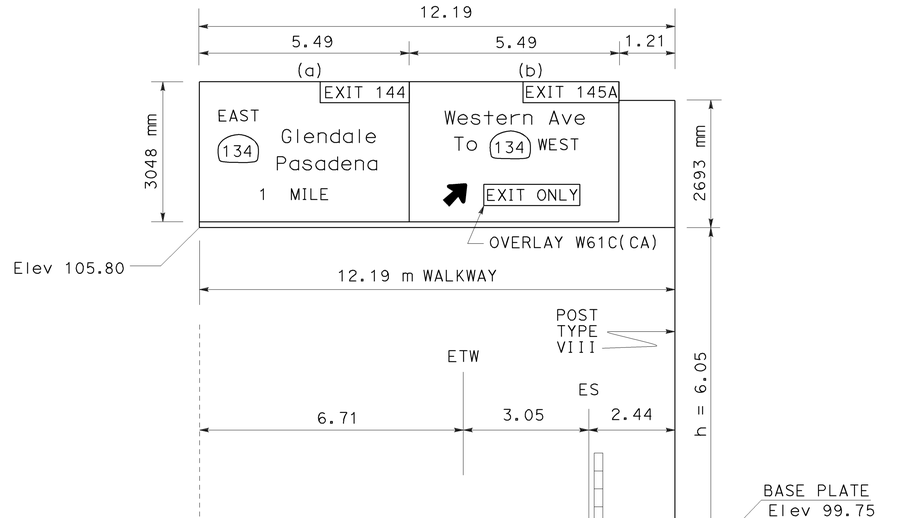

ALL DIMENSIONS ARE IN METERS UNLESS OTHERWISE SHOWN

SIGN DETAILS

NO SCALE

SD-4

CALCULATED-DESIGNED BY	AHMED GABER	REVISED BY	
CHECKED BY	VINCENT NGUYEN	DATE REVISED	11/07
FUNCTIONAL SUPERVISOR	GRISH BIGLARIAN		

STATE OF CALIFORNIA - DEPARTMENT OF TRANSPORTATION
Caltrans
TRAFFIC DESIGN

LAST REVISION DATE PLOTTED => 12-JUN-2009
00-00-00 TIME PLOTTED => 10:19

Dist	COUNTY	ROUTE	KILOMETER POST TOTAL PROJECT	SHEET No.	TOTAL SHEETS
07	LA	5	42.8/47.3	311	1073

Caltrans Metric

Vincent Nguyen 11/06/08
REGISTERED CIVIL ENGINEER DATE

6-8-09
PLANS APPROVAL DATE

REGISTERED PROFESSIONAL ENGINEER — VINCENT NGUYEN — No. 57797 — Exp. 3/31/10 — CIVIL — STATE OF CALIFORNIA

THE STATE OF CALIFORNIA OR ITS OFFICERS OR AGENTS SHALL NOT BE RESPONSIBLE FOR THE ACCURACY OR COMPLETENESS OF ELECTRONIC COPIES OF THIS PLAN SHEET.

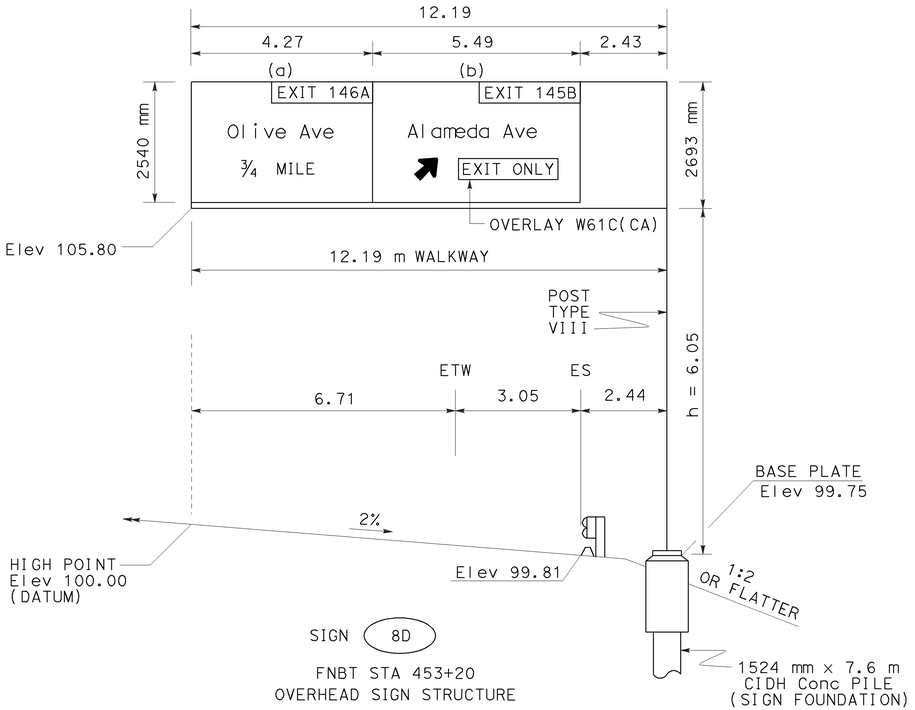

FNBT STA 453+20
OVERHEAD SIGN STRUCTURE

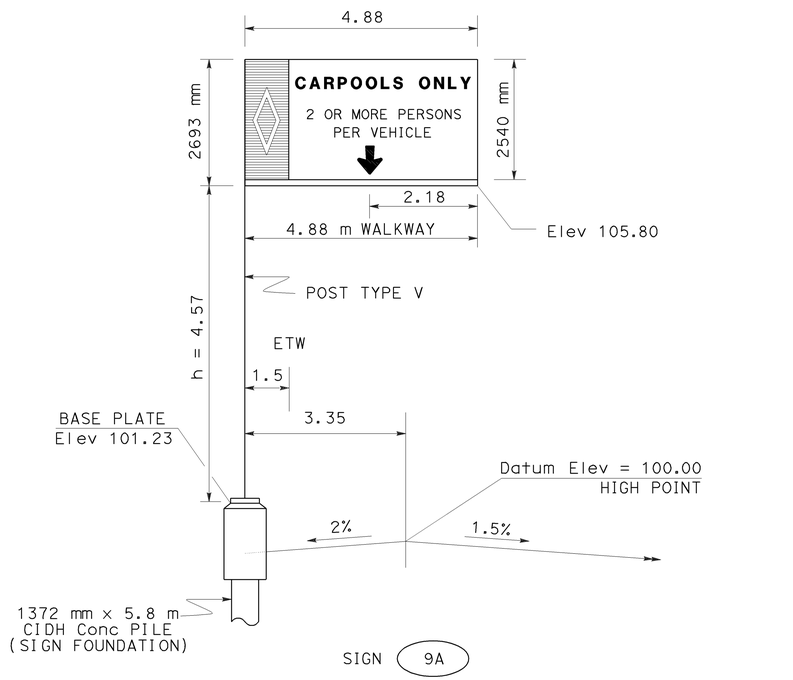

FNBT STA 455+15
OVERHEAD SIGN STRUCTURE

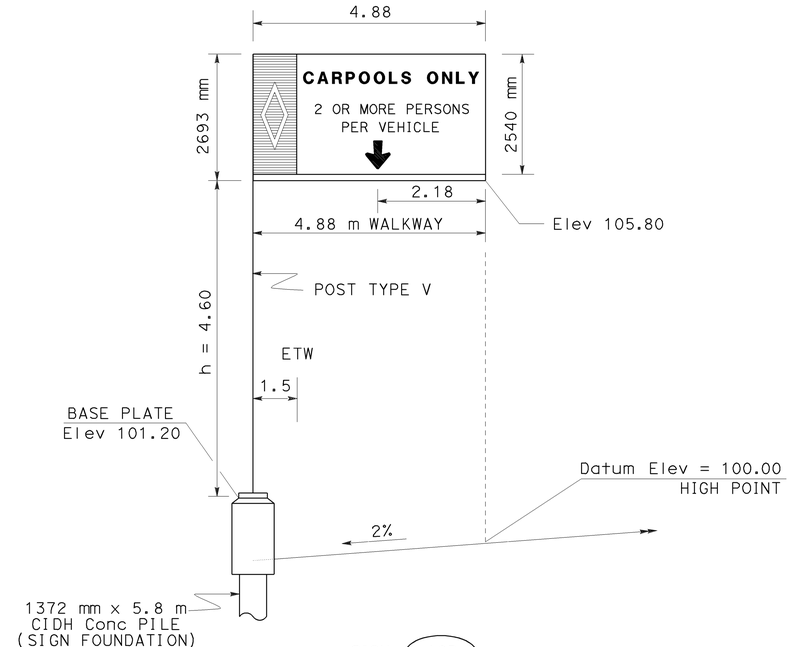

FSBT STA 458+85
OVERHEAD SIGN STRUCTURE

ALL DIMENSIONS ARE IN
METERS UNLESS OTHERWISE SHOWN

SIGN DETAILS

NO SCALE

SD-5

CALCULATED-DESIGNED BY	CHECKED BY	REVISED BY	DATE REVISED
AHMED GABER	VINCENT NGUYEN		11/07

FUNCTIONAL SUPERVISOR: GRISH BIGLARIAN

STATE OF CALIFORNIA - DEPARTMENT OF TRANSPORTATION
Caltrans
TRAFFIC DESIGN

LAST REVISION DATE PLOTTED => 12-JUN-2009
00-00-00 TIME PLOTTED => 10:19

BORDER LAST REVISED 3/1/2007 | RELATIVE BORDER SCALE IS IN MILLIMETERS 0 20 40 60 80 | USERNAME => trpierce | DGN FILE => 712184ob005.dgn | CU 07380 | EA 121841

Dist	COUNTY	ROUTE	KILOMETER POST TOTAL PROJECT	SHEET No.	TOTAL SHEETS
07	LA	5	42.8/47.3	312	1073

Vincent Nguyen 11/06/08
REGISTERED CIVIL ENGINEER DATE

6-8-09
PLANS APPROVAL DATE

REGISTERED PROFESSIONAL ENGINEER — VINCENT NGUYEN — No. 57797 — Exp. 3/31/10 — CIVIL — STATE OF CALIFORNIA

THE STATE OF CALIFORNIA OR ITS OFFICERS OR AGENTS SHALL NOT BE RESPONSIBLE FOR THE ACCURACY OR COMPLETENESS OF ELECTRONIC COPIES OF THIS PLAN SHEET.

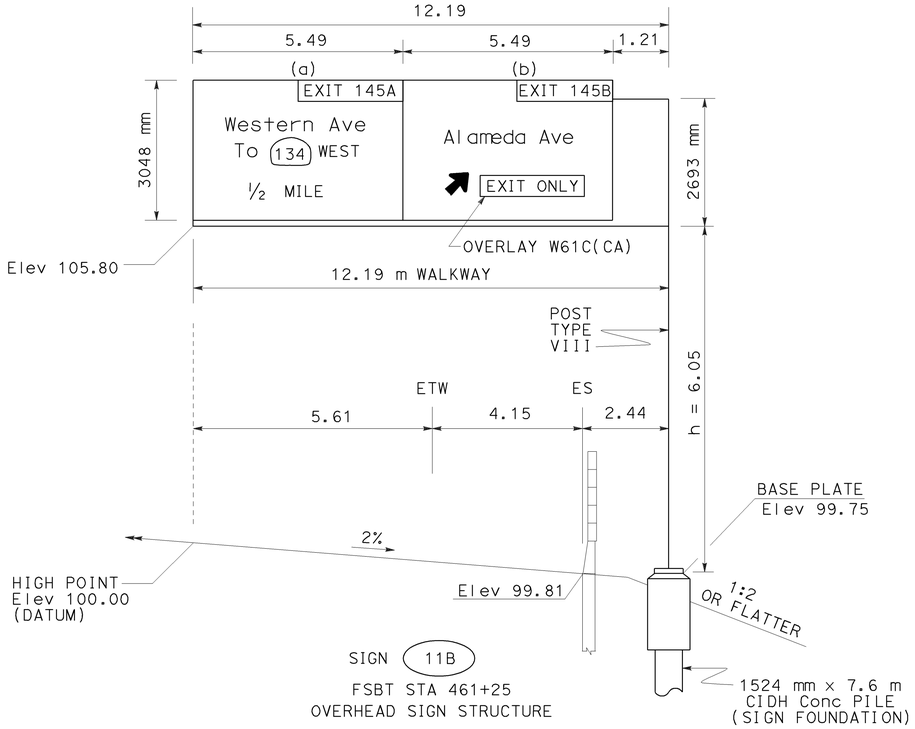

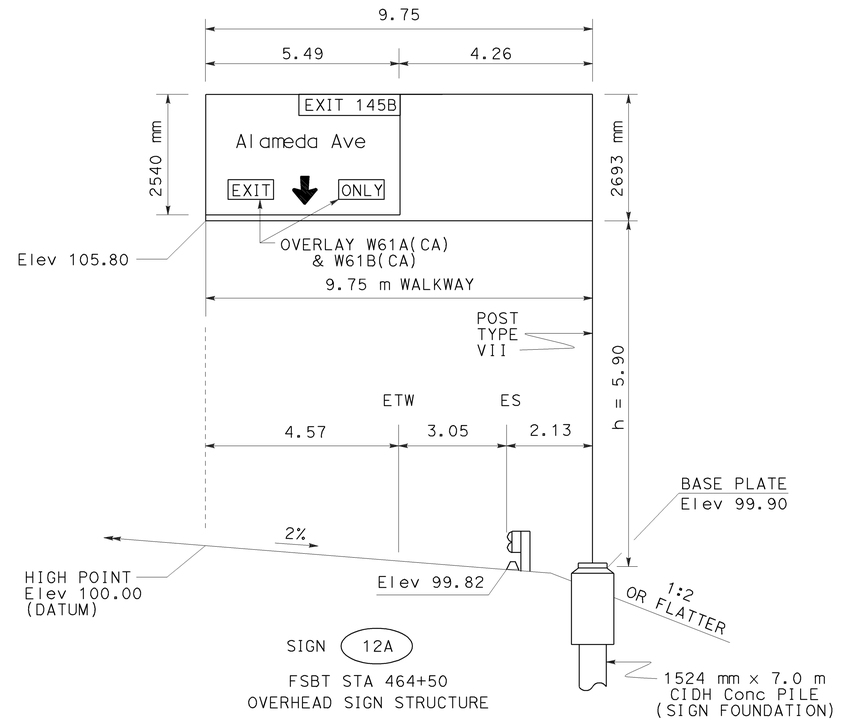

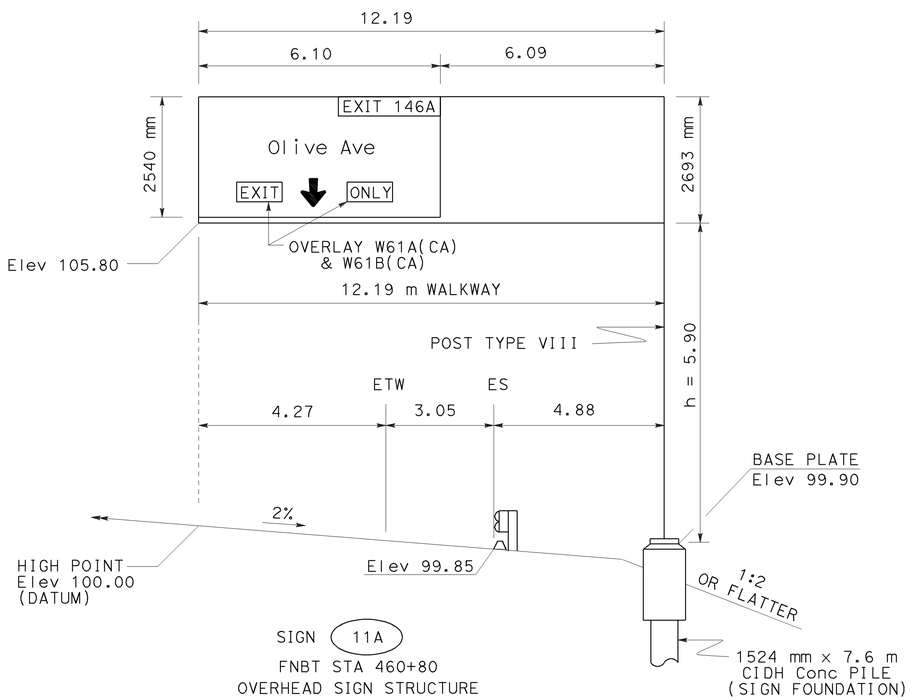

ALL DIMENSIONS ARE IN METERS UNLESS OTHERWISE SHOWN

SIGN DETAILS

NO SCALE

SD-6

LAST REVISION DATE PLOTTED => 12-JUN-2009
00-00-00 TIME PLOTTED => 10:20

STATE OF CALIFORNIA - DEPARTMENT OF TRANSPORTATION
Caltrans
TRAFFIC DESIGN

FUNCTIONAL SUPERVISOR: GRISH BIGLARIAN
CALCULATED-DESIGNED BY: AHMED GABER
CHECKED BY: VINCENT NGUYEN
REVISED BY
DATE REVISED: 11/07

BORDER LAST REVISED 3/1/2007

RELATIVE BORDER SCALE IS IN MILLIMETERS
0 20 40 60 80

USERNAME => trpierce
DGN FILE => 712184ob006.dgn

CU 07380

EA 121841

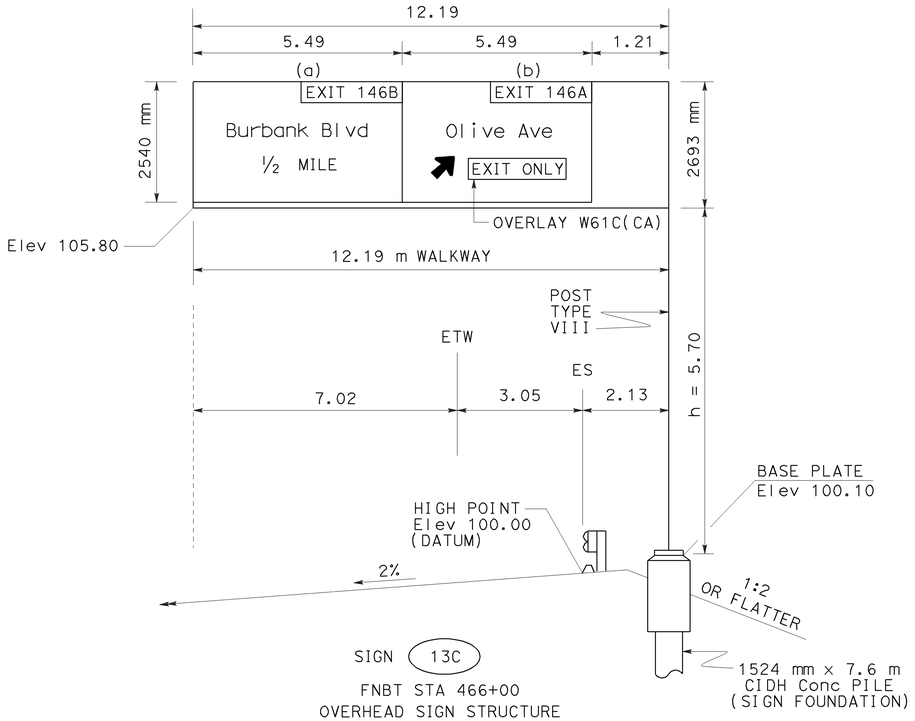

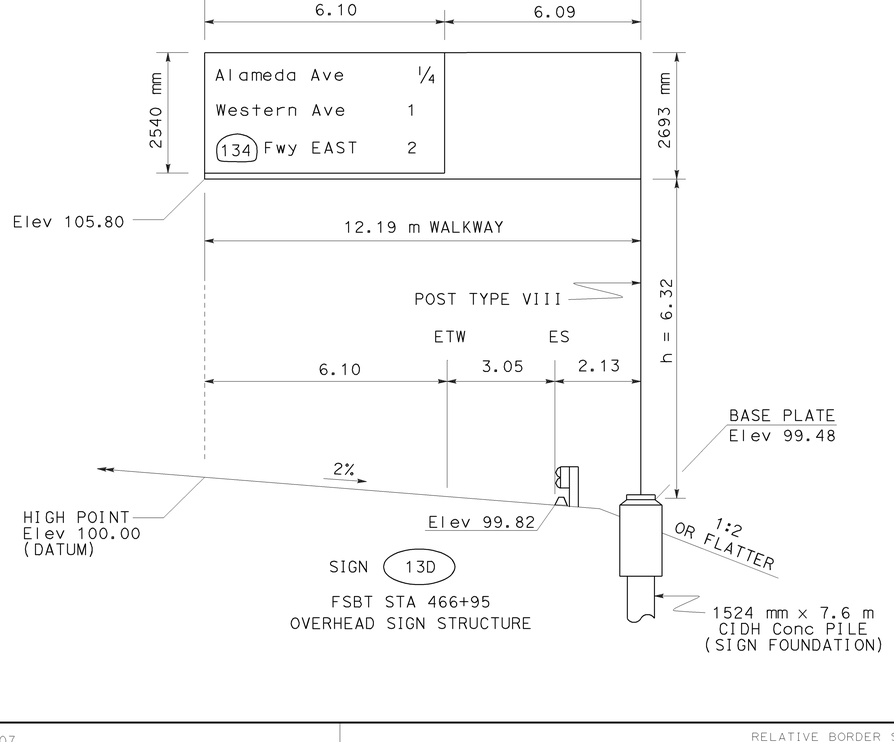

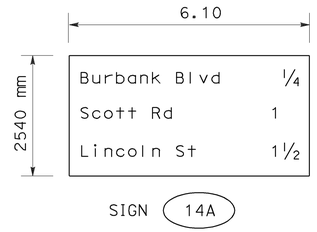

Dist	COUNTY	ROUTE	KILOMETER POST TOTAL PROJECT	SHEET No.	TOTAL SHEETS
07	LA	5	42.8/47.3	313	1073

Vincent Nguyen 11/06/08
REGISTERED CIVIL ENGINEER DATE

6-8-09
PLANS APPROVAL DATE

REGISTERED PROFESSIONAL ENGINEER
VINCENT NGUYEN
No. 57797
Exp. 3/31/10
CIVIL
STATE OF CALIFORNIA

THE STATE OF CALIFORNIA OR ITS OFFICERS OR AGENTS SHALL NOT BE RESPONSIBLE FOR THE ACCURACY OR COMPLETENESS OF ELECTRONIC COPIES OF THIS PLAN SHEET.

ALL DIMENSIONS ARE IN METERS UNLESS OTHERWISE SHOWN

SIGN DETAILS

NO SCALE

SD-7

STATE OF CALIFORNIA - DEPARTMENT OF TRANSPORTATION
Caltrans TRAFFIC DESIGN

FUNCTIONAL SUPERVISOR: GRISH BIGLARIAN
CALCULATED-DESIGNED BY: AHMED GABER
CHECKED BY: VINCENT NGUYEN
REVISED BY
DATE REVISED: 11/07

LAST REVISION DATE PLOTTED => 12-JUN-2009
TIME PLOTTED => 10:20
00-00-00

BORDER LAST REVISED 3/1/2007
RELATIVE BORDER SCALE IS IN MILLIMETERS 0 20 40 60 80
USERNAME => trpierce
DGN FILE => 712184ob007.dgn
CU 07380
EA 121841

Dist	COUNTY	ROUTE	KILOMETER POST TOTAL PROJECT	SHEET No.	TOTAL SHEETS
07	LA	5	42.8/47.3	314	1073

Caltrans Metric

Vincent Nguyen 11/06/08
REGISTERED CIVIL ENGINEER DATE

6-8-09
PLANS APPROVAL DATE

REGISTERED PROFESSIONAL ENGINEER — VINCENT NGUYEN — No. 57797 — Exp. 3/31/10 — CIVIL — STATE OF CALIFORNIA

THE STATE OF CALIFORNIA OR ITS OFFICERS OR AGENTS SHALL NOT BE RESPONSIBLE FOR THE ACCURACY OR COMPLETENESS OF ELECTRONIC COPIES OF THIS PLAN SHEET.

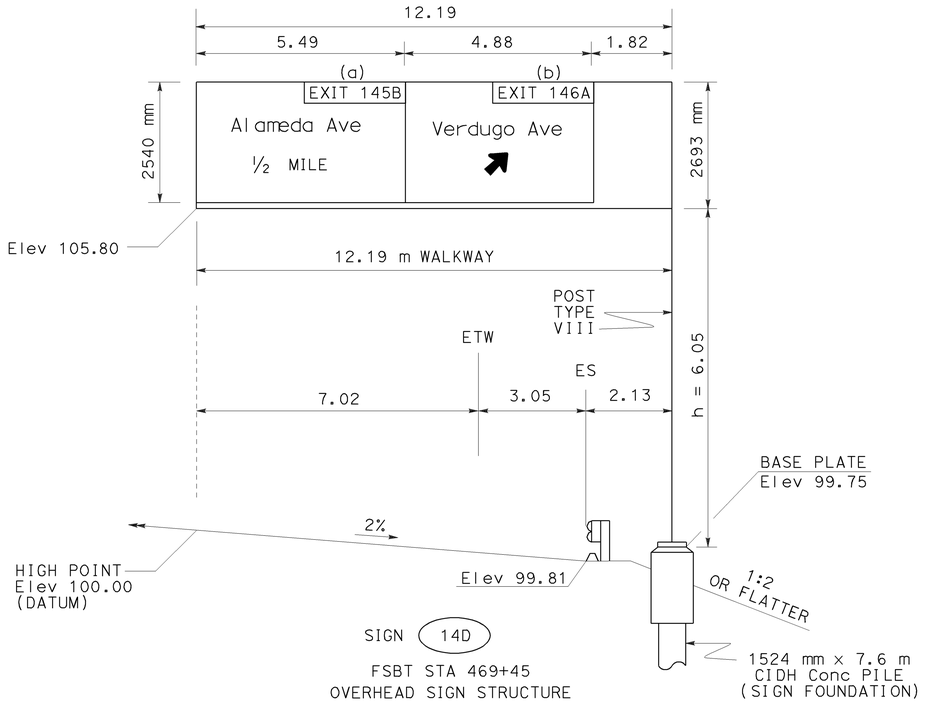

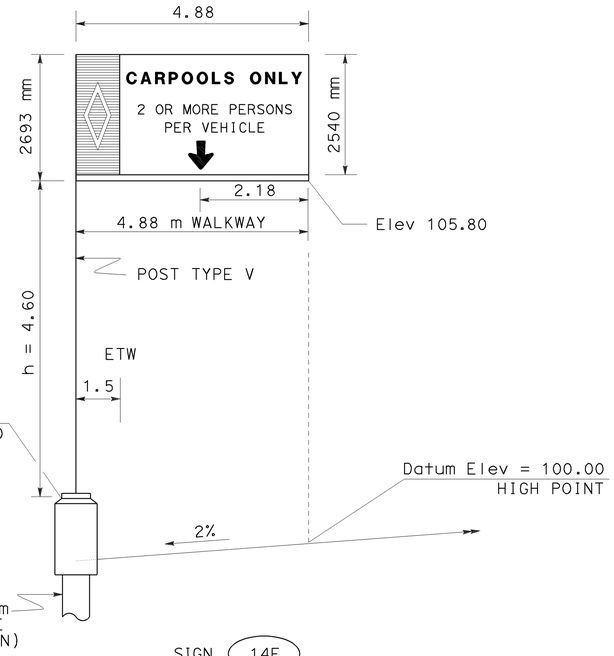

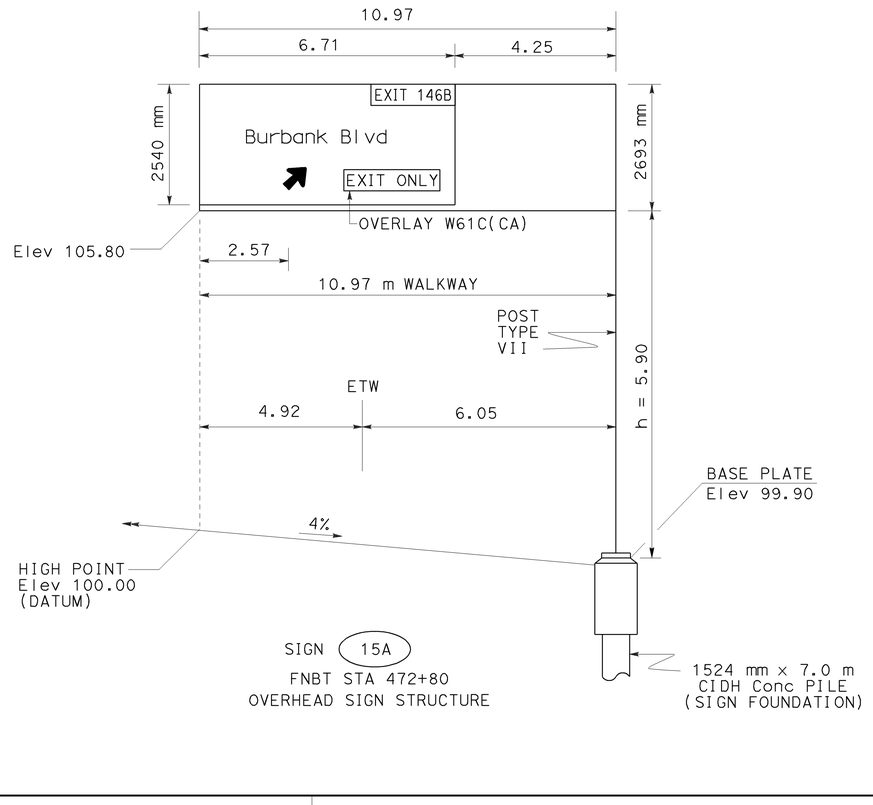

ALL DIMENSIONS ARE IN METERS UNLESS OTHERWISE SHOWN

SIGN DETAILS

NO SCALE

SD-8

STATE OF CALIFORNIA - DEPARTMENT OF TRANSPORTATION
Caltrans
TRAFFIC DESIGN

FUNCTIONAL SUPERVISOR: GRISH BIGLARIAN
CALCULATED-DESIGNED BY: AHMED GABER
CHECKED BY: VINCENT NGUYEN
REVISED BY
DATE REVISED: 11/07

LAST REVISION DATE PLOTTED => 12-JUN-2009
00-00-00 TIME PLOTTED => 10:20

BORDER LAST REVISED 3/1/2007
RELATIVE BORDER SCALE IS IN MILLIMETERS 0 20 40 60 80
USERNAME => trpierce
DGN FILE => 712184ab008.dgn
CU 07380
EA 121841

Dist	COUNTY	ROUTE	KILOMETER POST TOTAL PROJECT	SHEET No.	TOTAL SHEETS
07	LA	5	42.8/47.3	315	1073

Caltrans Metric

Vincent Nguyen 11/06/08
REGISTERED CIVIL ENGINEER DATE

6-8-09
PLANS APPROVAL DATE

REGISTERED PROFESSIONAL ENGINEER — VINCENT NGUYEN — No. 57797 — Exp. 3/31/10 — CIVIL — STATE OF CALIFORNIA

THE STATE OF CALIFORNIA OR ITS OFFICERS OR AGENTS SHALL NOT BE RESPONSIBLE FOR THE ACCURACY OR COMPLETENESS OF ELECTRONIC COPIES OF THIS PLAN SHEET.

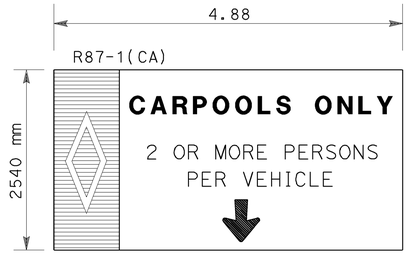

LEGEND				ARROW DEG (mm × mm)	ROUTE SHIELD SIZE (mm × mm)
LINE #	UC (mm)	LC (mm)	NUM (mm)		
1	300 D				
2	200 E		250 E		
3	200 E				
4				610 × 412 DOWN ARROW	

SIGN 2A
FNBT STA 430+75

SIGN 9A
FNBT STA 455+15

SIGN 10B
FSBT STA 458+85

SIGN 14E
FSBT STA 469+87

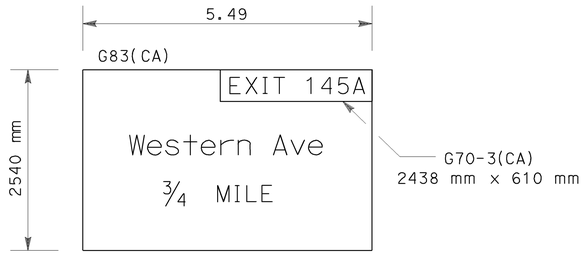

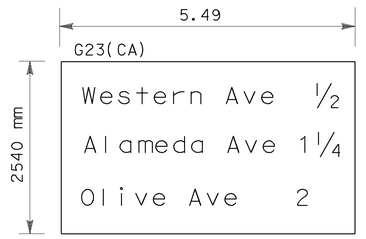

LEGEND				ARROW DEG (mm × mm)	ROUTE SHIELD SIZE (mm × mm)
LINE #	UC (mm)	LC (mm)	NUM (mm)		
1	200 E		300 E		
2	400	300			
3	300 E		300 D		

SIGN 2B
FNBT STA 430+30

LEGEND				ARROW DEG (mm × mm)	ROUTE SHIELD SIZE (mm × mm)
LINE #	UC (mm)	LC (mm)	NUM (mm)		
1	340	250			
2	340	250			
3	340	250			

SIGN 2D
FSBT STA 432+30

LEGEND				ARROW DEG (mm × mm)	ROUTE SHIELD SIZE (mm × mm)
LINE #	UC (mm)	LC (mm)	NUM (mm)		
1	340	250			
2	340	250			
3	340	250			

SIGN 3B
FNBT STA 434+50

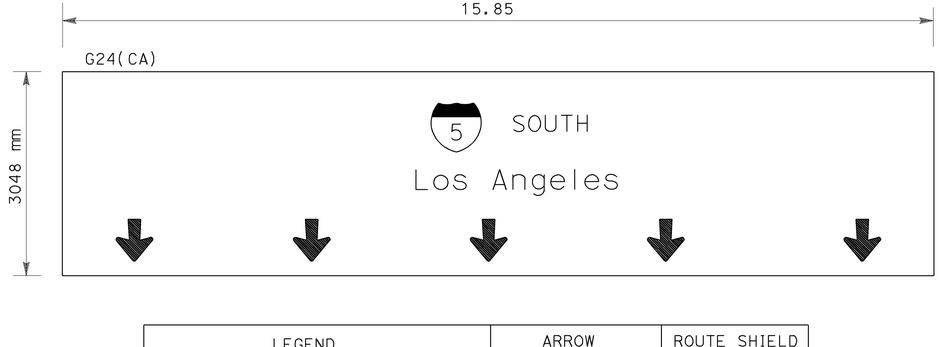

LEGEND				ARROW DEG (mm × mm)	ROUTE SHIELD SIZE (mm × mm)
LINE #	UC (mm)	LC (mm)	NUM (mm)		
1	300E		380 D		915 × 915
2	400	300			
3				813 × 559 DOWN ARROWS	

SIGN 3B
FSBT STA 434+50

LEGEND				ARROW DEG (mm × mm)	ROUTE SHIELD SIZE (mm × mm)
LINE #	UC (mm)	LC (mm)	NUM (mm)		
1	200E		300 E		
2	300E				
3 & 4	400	300	380 D		1145 × 915
5				45 - RT	

SIGN 3B
FSBT STA 434+50

ALL DIMENSIONS ARE IN METERS UNLESS OTHERWISE SHOWN

SIGN DETAILS

NO SCALE

SD-9

STATE OF CALIFORNIA - DEPARTMENT OF TRANSPORTATION
Caltrans TRAFFIC DESIGN

FUNCTIONAL SUPERVISOR: GRISH BIGLARIAN
CALCULATED-DESIGNED BY: AHMED GABER
CHECKED BY: VINCENT NGUYEN
REVISED BY
DATE REVISED: 11/07

LAST REVISION DATE PLOTTED => 12-JUN-2009
TIME PLOTTED => 10:20
00-00-00

Dist	COUNTY	ROUTE	KILOMETER POST TOTAL PROJECT	SHEET No.	TOTAL SHEETS
07	LA	5	42.8/47.3	316	1073

Vincent Nguyen 11/06/08
REGISTERED CIVIL ENGINEER DATE

6-8-09
PLANS APPROVAL DATE

REGISTERED PROFESSIONAL ENGINEER — VINCENT NGUYEN — No. 57797 — Exp. 3/31/10 — CIVIL — STATE OF CALIFORNIA

THE STATE OF CALIFORNIA OR ITS OFFICERS OR AGENTS SHALL NOT BE RESPONSIBLE FOR THE ACCURACY OR COMPLETENESS OF ELECTRONIC COPIES OF THIS PLAN SHEET.

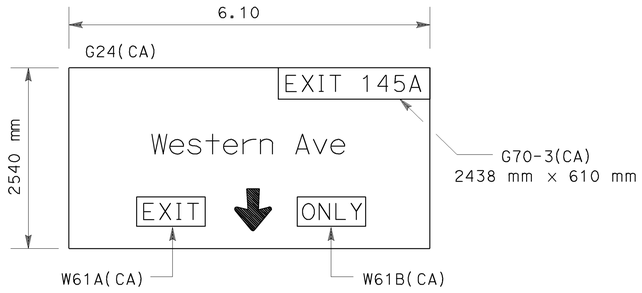

LEGEND				ARROW DEG (mm x mm)	ROUTE SHIELD SIZE (mm x mm)
LINE #	UC (mm)	LC (mm)	NUM (mm)		
1	200 E		300 E		
2	400	300			
3				813 x 559 DOWN ARROWS	

SIGN 4A
FNBT STA 437+45

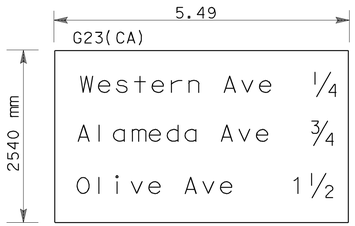

LEGEND				ARROW DEG (mm x mm)	ROUTE SHIELD SIZE (mm x mm)
LINE #	UC (mm)	LC (mm)	NUM (mm)		
1	340	250			
2	340	250			
3	340	250			

SIGN 5C
FNBT STA 441+70

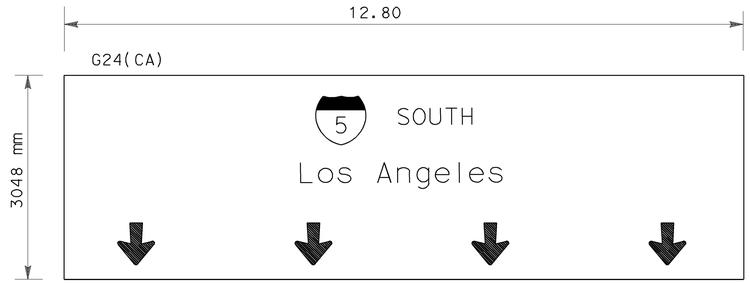

LEGEND				ARROW DEG (mm x mm)	ROUTE SHIELD SIZE (mm x mm)
LINE #	UC (mm)	LC (mm)	NUM (mm)		
1	300E		380 D		915 x 915
2	400	300			
3				813 x 559 DOWN ARROWS	

SIGN 5C
FSBT STA 441+70

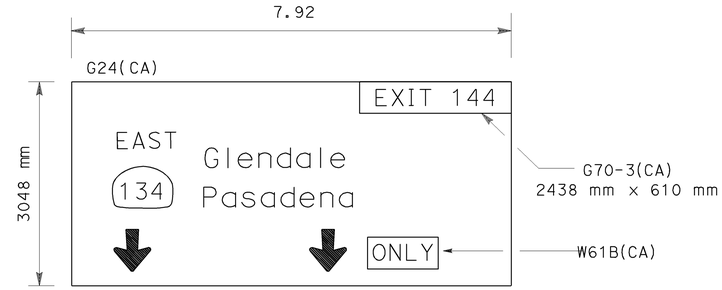

LEGEND				ARROW DEG (mm x mm)	ROUTE SHIELD SIZE (mm x mm)
LINE #	UC (mm)	LC (mm)	NUM (mm)		
1	200E		300 E		
2	300E				
3 & 4	400	300	380 D		1145 x 915
5				813 x 559 DOWN ARROWS	

SIGN 5C
FSBT STA 441+70

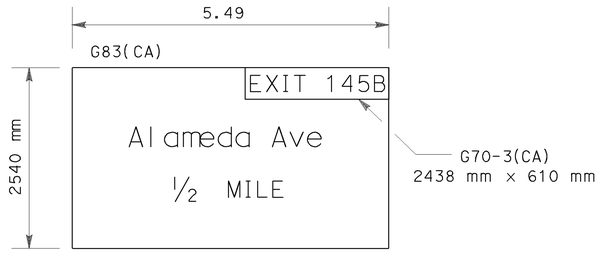

LEGEND				ARROW DEG (mm x mm)	ROUTE SHIELD SIZE (mm x mm)
LINE #	UC (mm)	LC (mm)	NUM (mm)		
1	200 E		300 E		
2	400	300			
3	300 E		300 D		

SIGN 6B
FNBT STA 433+80

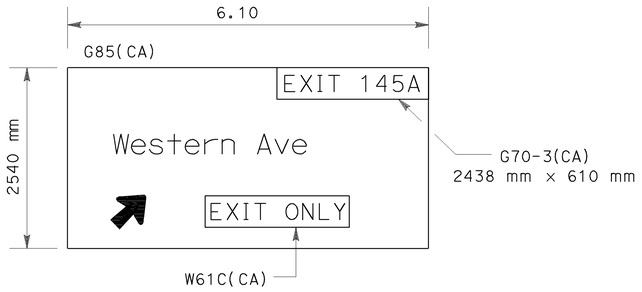

LEGEND				ARROW DEG (mm x mm)	ROUTE SHIELD SIZE (mm x mm)
LINE #	UC (mm)	LC (mm)	NUM (mm)		
1	200 E		300 E		
2	400	300			
3				45 - RT	

SIGN 6B
FNBT STA 433+80

ALL DIMENSIONS ARE IN METERS UNLESS OTHERWISE SHOWN

SIGN DETAILS

NO SCALE

SD-10

CALCULATED-DESIGNED BY: AHMED GABER
CHECKED BY: VINCENT NGUYEN
REVISED BY / DATE REVISED: 11/07
FUNCTIONAL SUPERVISOR: GRISH BIGLARIAN
STATE OF CALIFORNIA - DEPARTMENT OF TRANSPORTATION
Caltrans TRAFFIC DESIGN

LAST REVISION DATE PLOTTED => 12-JUN-2009
TIME PLOTTED => 10:20
00-00-00

BORDER LAST REVISED 3/1/2007
RELATIVE BORDER SCALE IS IN MILLIMETERS 0 20 40 60 80
USERNAME => trpierce
DGN FILE => 712184ob010.dgn
CU 07380
EA 121841

Dist	COUNTY	ROUTE	KILOMETER POST TOTAL PROJECT	SHEET No.	TOTAL SHEETS
07	LA	5	42.8/47.3	317	1073

Vincent Nguyen 11/06/08
REGISTERED CIVIL ENGINEER DATE

REGISTERED PROFESSIONAL ENGINEER
VINCENT NGUYEN
No. 57797
Exp. 3/31/10
CIVIL
STATE OF CALIFORNIA

6-8-09
PLANS APPROVAL DATE

THE STATE OF CALIFORNIA OR ITS OFFICERS OR AGENTS SHALL NOT BE RESPONSIBLE FOR THE ACCURACY OR COMPLETENESS OF ELECTRONIC COPIES OF THIS PLAN SHEET.

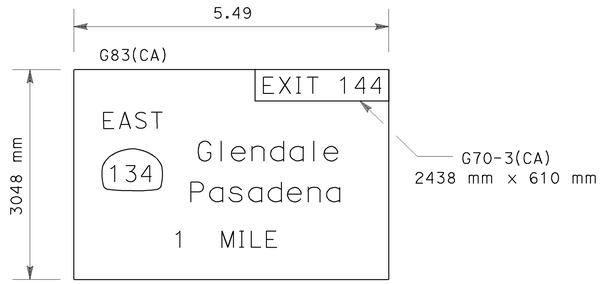

LEGEND				ARROW DEG (mm x mm)	ROUTE SHIELD SIZE (mm x mm)
LINE #	UC (mm)	LC (mm)	NUM (mm)		
1	200E		300 E		
2	300E				
3 & 4	400	300	380 D		1145 x 915
5	300E		380 D		

SIGN 8B
FSBT STA 452+30

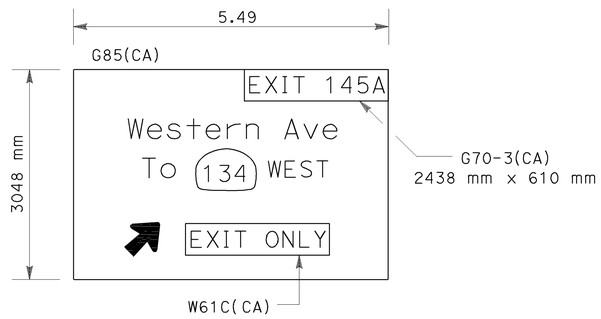

LEGEND				ARROW DEG (mm x mm)	ROUTE SHIELD SIZE (mm x mm)
LINE #	UC (mm)	LC (mm)	NUM (mm)		
1	200 E		300 E		
2	400	300			
3	300 E		380 D		1145 x 915
4				45 - RT	

SIGN 8B
FSBT STA 452+30

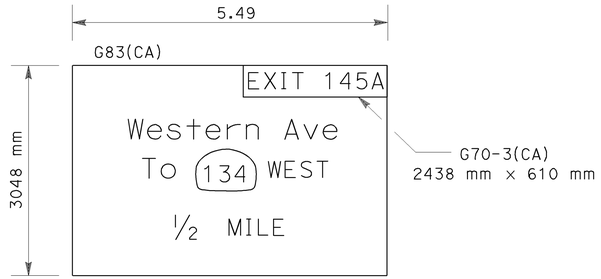

LEGEND				ARROW DEG (mm x mm)	ROUTE SHIELD SIZE (mm x mm)
LINE #	UC (mm)	LC (mm)	NUM (mm)		
1	200 E		300 E		
2	400	300			
3	300 E		380 D		1145 x 915
4	300E		300 D		

SIGN 11B
FSBT STA 461+25

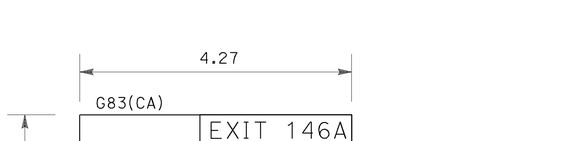

LEGEND				ARROW DEG (mm x mm)	ROUTE SHIELD SIZE (mm x mm)
LINE #	UC (mm)	LC (mm)	NUM (mm)		
1	200 E		300 E		
2	400	300			
3	300 E		300 D		

SIGN 8D
FNBT STA 453+20

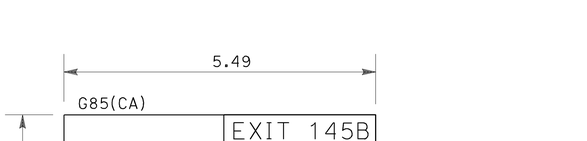

LEGEND				ARROW DEG (mm x mm)	ROUTE SHIELD SIZE (mm x mm)
LINE #	UC (mm)	LC (mm)	NUM (mm)		
1	200 E		300 E		
2	400	300			
3				45 - RT	

SIGN 8D
FNBT STA 453+20

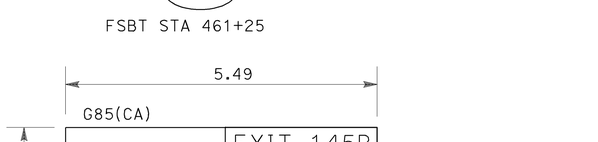

LEGEND				ARROW DEG (mm x mm)	ROUTE SHIELD SIZE (mm x mm)
LINE #	UC (mm)	LC (mm)	NUM (mm)		
1	200 E		300 E		
2	400	300			
3				45 - RT	

SIGN 11B
FSBT STA 461+25

ALL DIMENSIONS ARE IN METERS UNLESS OTHERWISE SHOWN

SIGN DETAILS

NO SCALE

SD-11

STATE OF CALIFORNIA - DEPARTMENT OF TRANSPORTATION
Caltrans TRAFFIC DESIGN

FUNCTIONAL SUPERVISOR: GRISH BIGLARIAN
CALCULATED-DESIGNED BY: AHMED GABER
CHECKED BY: VINCENT NGUYEN
REVISED BY: DATE REVISED: 11/07

LAST REVISION DATE PLOTTED => 12-JUN-2009
TIME PLOTTED => 10:20
00-00-00

BORDER LAST REVISED 3/1/2007
RELATIVE BORDER SCALE IS IN MILLIMETERS 0 20 40 60 80
USERNAME => trpierce
DGN FILE => 712184ob011.dgn
CU 07380
EA 121841

Dist	COUNTY	ROUTE	KILOMETER POST TOTAL PROJECT	SHEET No.	TOTAL SHEETS
07	LA	5	42.8/47.3	318	1073

Vincent Nguyen 11/06/08
REGISTERED CIVIL ENGINEER DATE

6-8-09
PLANS APPROVAL DATE

REGISTERED PROFESSIONAL ENGINEER — VINCENT NGUYEN — No. 57797 — Exp. 3/31/10 — CIVIL — STATE OF CALIFORNIA

THE STATE OF CALIFORNIA OR ITS OFFICERS OR AGENTS SHALL NOT BE RESPONSIBLE FOR THE ACCURACY OR COMPLETENESS OF ELECTRONIC COPIES OF THIS PLAN SHEET.

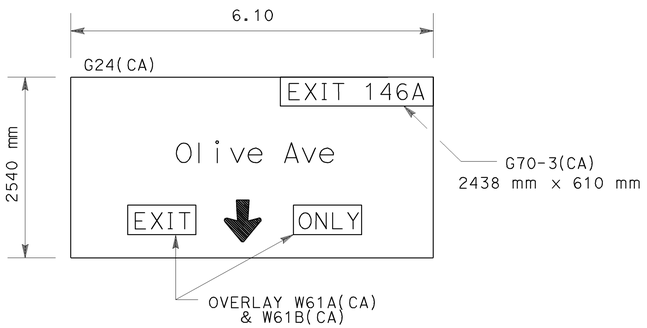

LEGEND				ARROW DEG (mm x mm)	ROUTE SHIELD SIZE (mm x mm)
LINE #	UC (mm)	LC (mm)	NUM (mm)		
1	200 E		300 E		
2	400	300			
3				813 x 559 DOWN ARROW	

SIGN (11A)
FNBT STA 460+80

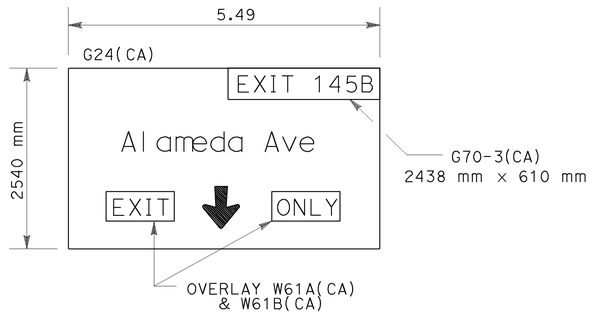

LEGEND				ARROW DEG (mm x mm)	ROUTE SHIELD SIZE (mm x mm)
LINE #	UC (mm)	LC (mm)	NUM (mm)		
1	200 E		300 E		
2	400	300			
3				813 x 559 DOWN ARROW	

SIGN (12A)
FSBT STA 464+50

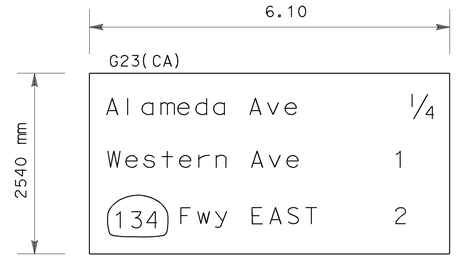

LEGEND				ARROW DEG (mm x mm)	ROUTE SHIELD SIZE (mm x mm)
LINE #	UC (mm)	LC (mm)	NUM (mm)		
1	340	250			
2	340	250			
3	340	250	250E		815 x 635
	250E				

SIGN (13D)
FSBT STA 466+95

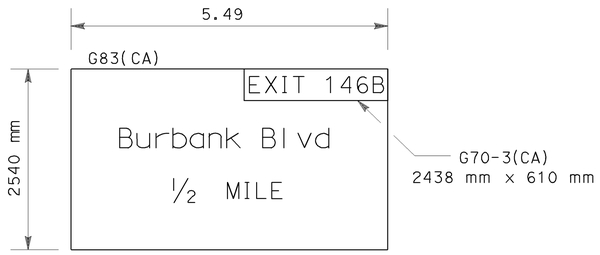

LEGEND				ARROW DEG (mm x mm)	ROUTE SHIELD SIZE (mm x mm)
LINE #	UC (mm)	LC (mm)	NUM (mm)		
1	200 E		300 E		
2	400	300			
3	300 E		300 D		

SIGN (13C)
FNBT STA 466+20

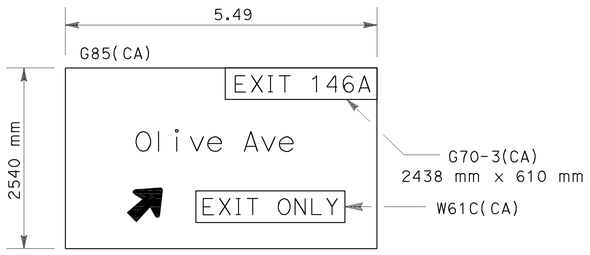

LEGEND				ARROW DEG (mm x mm)	ROUTE SHIELD SIZE (mm x mm)
LINE #	UC (mm)	LC (mm)	NUM (mm)		
1	200 E		300 E		
2	400	300			
3				45 - RT	

SIGN (13C)
FNBT STA 466+20

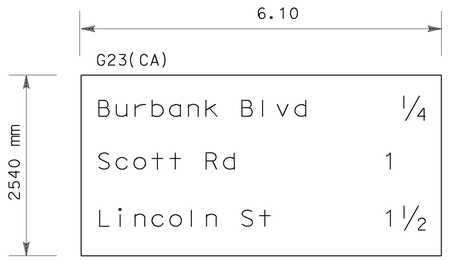

LEGEND				ARROW DEG (mm x mm)	ROUTE SHIELD SIZE (mm x mm)
LINE #	UC (mm)	LC (mm)	NUM (mm)		
1	340	250			
2	340	250			
3	340	250			

SIGN (14A)
FNBT STA 469+10

ALL DIMENSIONS ARE IN METERS UNLESS OTHERWISE SHOWN

SIGN DETAILS

NO SCALE

SD-12

STATE OF CALIFORNIA - DEPARTMENT OF TRANSPORTATION
Caltrans **TRAFFIC DESIGN**

FUNCTIONAL SUPERVISOR: GRISH BIGLARIAN
CALCULATED-DESIGNED BY: AHMED GABER
CHECKED BY: VINCENT NGUYEN
REVISED BY
DATE REVISED: 11/07

LAST REVISION DATE PLOTTED => 12-JUN-2009
00-00-00 TIME PLOTTED => 10:20

BORDER LAST REVISED 3/1/2007
RELATIVE BORDER SCALE IS IN MILLIMETERS 0 20 40 60 80
USERNAME => trpierce
DGN FILE => 712184ab012.dgn
CU 07380
EA 121841

Dist	COUNTY	ROUTE	KILOMETER POST TOTAL PROJECT	SHEET No.	TOTAL SHEETS
07	LA	5	42.8/47.3	319	1073

REGISTERED CIVIL ENGINEER — 11/06/08 DATE

6-8-09
PLANS APPROVAL DATE

REGISTERED PROFESSIONAL ENGINEER — VINCENT NGUYEN — No. 57797 — Exp. 3/31/10 — CIVIL — STATE OF CALIFORNIA

THE STATE OF CALIFORNIA OR ITS OFFICERS OR AGENTS SHALL NOT BE RESPONSIBLE FOR THE ACCURACY OR COMPLETENESS OF ELECTRONIC COPIES OF THIS PLAN SHEET.

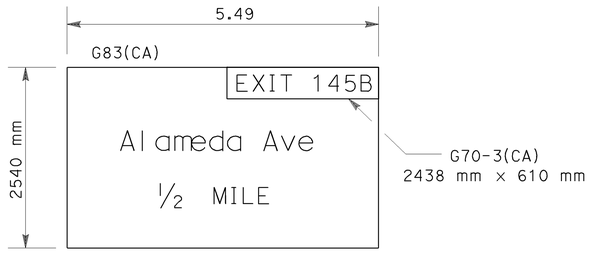

LEGEND				ARROW DEG (mm x mm)	ROUTE SHIELD SIZE (mm x mm)
LINE #	UC (mm)	LC (mm)	NUM (mm)		
1	200 E		300 E		
2	400	300			
3	300 E		300 D		

SIGN (14D)
FSBT STA 469+45

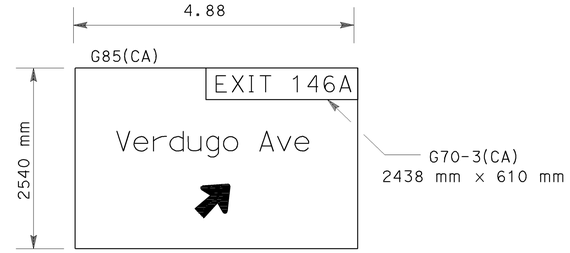

LEGEND				ARROW DEG (mm x mm)	ROUTE SHIELD SIZE (mm x mm)
LINE #	UC (mm)	LC (mm)	NUM (mm)		
1	200 E		300 E		
2	400	300			
3				45 - RT	

SIGN (14D)
FSBT STA 469+45

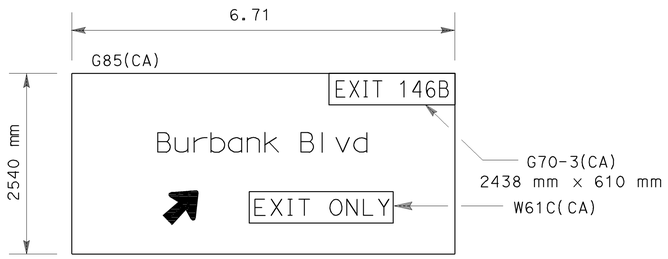

LEGEND				ARROW DEG (mm x mm)	ROUTE SHIELD SIZE (mm x mm)
LINE #	UC (mm)	LC (mm)	NUM (mm)		
1	200 E		300 E		
2	400	300			
3				45 - RT	

SIGN (15A)
FNBT STA 472+80

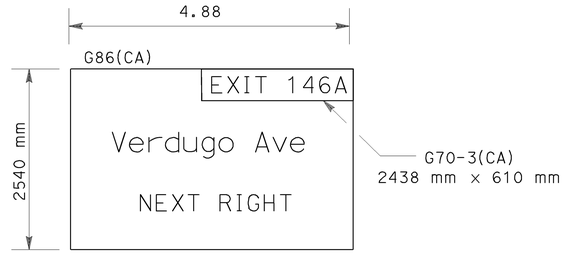

LEGEND				ARROW DEG (mm x mm)	ROUTE SHIELD SIZE (mm x mm)
LINE #	UC (mm)	LC (mm)	NUM (mm)		
1	200 E		300 E		
2	400	300			
3	300 E				

SIGN (15D)
FSBT STA 473+00

ALL DIMENSIONS ARE IN METERS UNLESS OTHERWISE SHOWN

SIGN DETAILS

NO SCALE

SD-13

STATE OF CALIFORNIA - DEPARTMENT OF TRANSPORTATION
Caltrans **TRAFFIC DESIGN**

REVISED BY	DATE REVISED

AHMED GABER — CALCULATED-DESIGNED BY
VINCENT NGUYEN — CHECKED BY
GRISH BIGLARIAN — FUNCTIONAL SUPERVISOR

LAST REVISION 00-00-00 — DATE PLOTTED => 12-JUN-2009 — TIME PLOTTED => 10:20

Dist	COUNTY	ROUTE	KILOMETER POST TOTAL PROJECT	SHEET No.	TOTAL SHEETS
07	LA	5	42.8/47.3	320	1073

Vincent Nguyen 11/06/08
REGISTERED CIVIL ENGINEER DATE

6-8-09
PLANS APPROVAL DATE

REGISTERED PROFESSIONAL ENGINEER — VINCENT NGUYEN No. 57797 Exp. 3/31/10 CIVIL — STATE OF CALIFORNIA

THE STATE OF CALIFORNIA OR ITS OFFICERS OR AGENTS SHALL NOT BE RESPONSIBLE FOR THE ACCURACY OR COMPLETENESS OF ELECTRONIC COPIES OF THIS PLAN SHEET.

Caltrans Metric

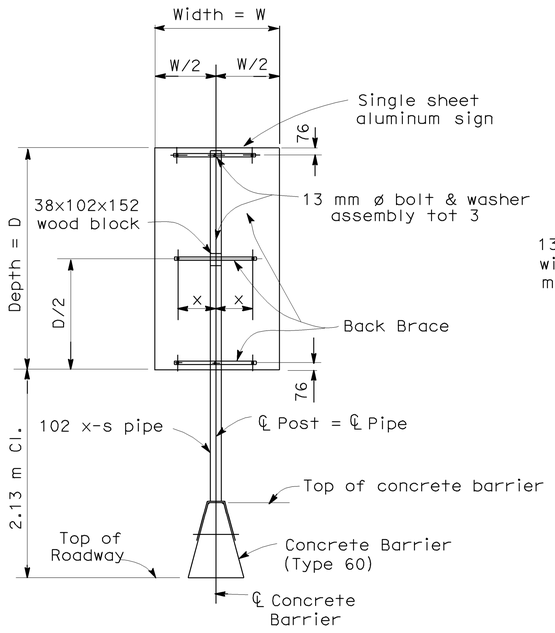

ELEVATION

SIGN POST ON CONCRETE BARRIER

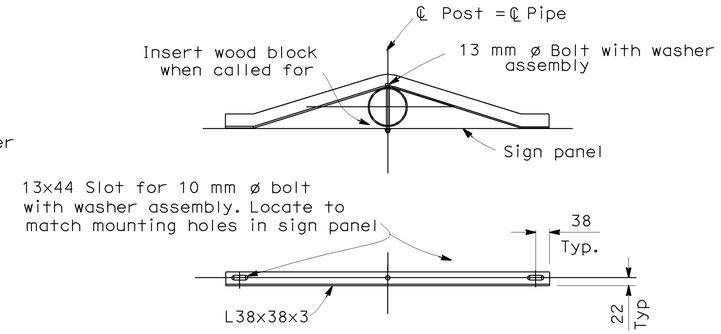

BACK BRACE DETAILS

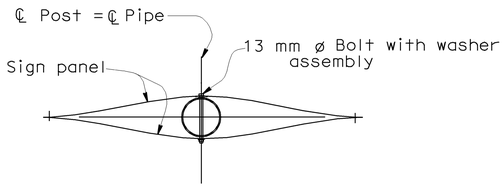

PLAN VIEW

BACK TO BACK SIGNS

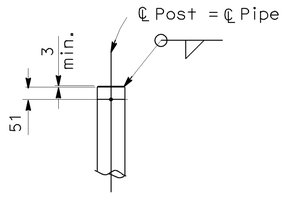

TOP OF POST DETAIL

SIGN TABLE

Depth = D	Width = W	Back Brace= X
1500	900	305
1650	900	305
1950	900	305
2100	900	305
1500	1050	457
1650	1050	457
1800	1050	457
1950	1050	457
2100	1050	457

NOTES:

1. For details not shown see STANDARD PLANS.
2. Washer assembly consist of two flat washers, nut, fiber washer and jam nut.
3. Sign panels will be state furnished.
4. Steel shall be galvanized after fabrication.
5. For location of signs and concrete barrier details see PROJECT PLANS.

ELEVATION

MOUNTING BRACKET

SECTION A-A

ALL DIMENSIONS ARE IN MILLIMETERS UNLESS OTHERWISE SHOWN

SIGN POST MOUNTING DETAILS ON CONCRETE BARRIER (TYPE 60)

NO SCALE

SD-14

STATE OF CALIFORNIA - DEPARTMENT OF TRANSPORTATION
Caltrans
TRAFFIC DESIGN
FUNCTIONAL SUPERVISOR: GRISH BIGLARIAN
CALCULATED-DESIGNED BY: AHMED GABER
CHECKED BY: VINCENT NGUYEN
REVISED BY
DATE REVISED 11/07

LAST REVISION DATE PLOTTED => 12-JUN-2009
00-00-00 TIME PLOTTED => 10:20

BORDER LAST REVISED 3/1/2007
RELATIVE BORDER SCALE IS IN MILLIMETERS 0 20 40 60 80
USERNAME => trpierce
DGN FILE => 712184ob014.dgn
CU 07380
EA 121841

Dist	COUNTY	ROUTE	KILOMETER POST TOTAL PROJECT	SHEET No.	TOTAL SHEETS
07	LA	5	42.8/47.3	321	1073

Caltrans Metric

Vincent Nguyen 11/06/08
REGISTERED CIVIL ENGINEER DATE

6-8-09
PLANS APPROVAL DATE

REGISTERED PROFESSIONAL ENGINEER — VINCENT NGUYEN No. 57797 Exp. 3/31/10 CIVIL — STATE OF CALIFORNIA

THE STATE OF CALIFORNIA OR ITS OFFICERS OR AGENTS SHALL NOT BE RESPONSIBLE FOR THE ACCURACY OR COMPLETENESS OF ELECTRONIC COPIES OF THIS PLAN SHEET.

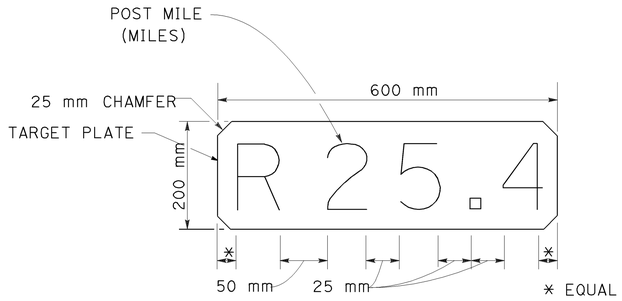

TYPICAL MEDIAN MILEAGE PANEL
WHITE BACKGROUND WITH BLACK LETTERS

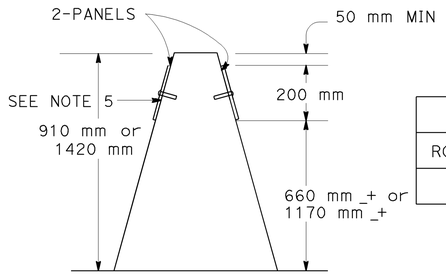

CONCRETE BARRIER

QUANTITIES

MEDIAN MILEAGE PANEL		
ROUTE	KILO POST	INSTALL (EA)
5	42.8/47.3	30
	TOTALS	30

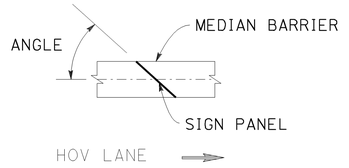

PANEL WIDTH (mm)	MAXIMUM ANGLE
900	42°
1050	35°

MEDIAN MILEAGE PANEL AND INSTALLATION DETAILS

NOTES:

1. INSTALL HORIZONTAL FACING EP ON BOTH SIDES OF BARRIER AT 322 METER INTERVALS AS LOCATED BY THE ENGINEER.
2. LETTERS AND NUMERALS SHALL BE 150 MM SERIES D DIE CUT NON-REFLECTIVE PRESSURE SENSITIVE BLACK VINYL FROM AN APPROVED MANUFACTURER.
3. NUTS, BOLTS, WASHERS, ETC. ON PANEL FACE SHALL BE NEATLY PAINTED IN APPROPRIATE COLOR.
4. 56 mm EXPANSION ANCHORAGE DEVICES, ONE @ EACH END. HOLE DEPTH AND DIAMETER TO BE DETERMINED BY MANUFACTURER'S SPECIFICATIONS.
5. TARGET PLATE LEGEND SHALL BE IN POST MILES AS DIRECTED BY THE ENGINEER.

NOTE:

1. SIGNS PLACED ON MEDIAN BARRIER SHALL NOT PROJECT BEYOND THE MEDIAN BARRIER BASE.

ALL DIMENSIONS ARE IN MILLIMETERS UNLESS OTHERWISE SHOWN

SIGN DETAILS

NO SCALE

SD-15

STATE OF CALIFORNIA - DEPARTMENT OF TRANSPORTATION
Caltrans TRAFFIC DESIGN

FUNCTIONAL SUPERVISOR: GRISH BIGLARIAN
CALCULATED-DESIGNED BY: AHMED GABER
CHECKED BY: VINCENT NGUYEN
REVISED BY
DATE REVISED: 11/07

LAST REVISION DATE PLOTTED => 12-JUN-2009
00-00-00 TIME PLOTTED => 10:20

BORDER LAST REVISED 3/1/2007
RELATIVE BORDER SCALE IS IN MILLIMETERS 0 20 40 60 80
USERNAME => trpierce
DGN FILE => 712184ab015.dgn
CU 07380
EA 121841

Dist	COUNTY	ROUTE	KILOMETER POST TOTAL PROJECT	SHEET No.	TOTAL SHEETS
07	LA	5	42.8/47.3	322	1073

Vincent Nguyen 11/06/08
REGISTERED CIVIL ENGINEER DATE

6-8-09
PLANS APPROVAL DATE

REGISTERED PROFESSIONAL ENGINEER — VINCENT NGUYEN No. 57797 Exp. 3/31/10 CIVIL — STATE OF CALIFORNIA

THE STATE OF CALIFORNIA OR ITS OFFICERS OR AGENTS SHALL NOT BE RESPONSIBLE FOR THE ACCURACY OR COMPLETENESS OF ELECTRONIC COPIES OF THIS PLAN SHEET.

Caltrans Metric

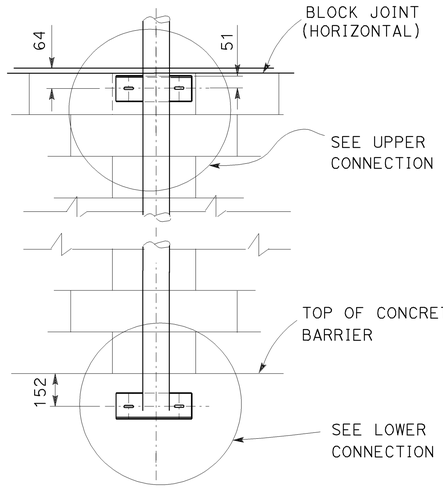

PART SIDE ELEVATION

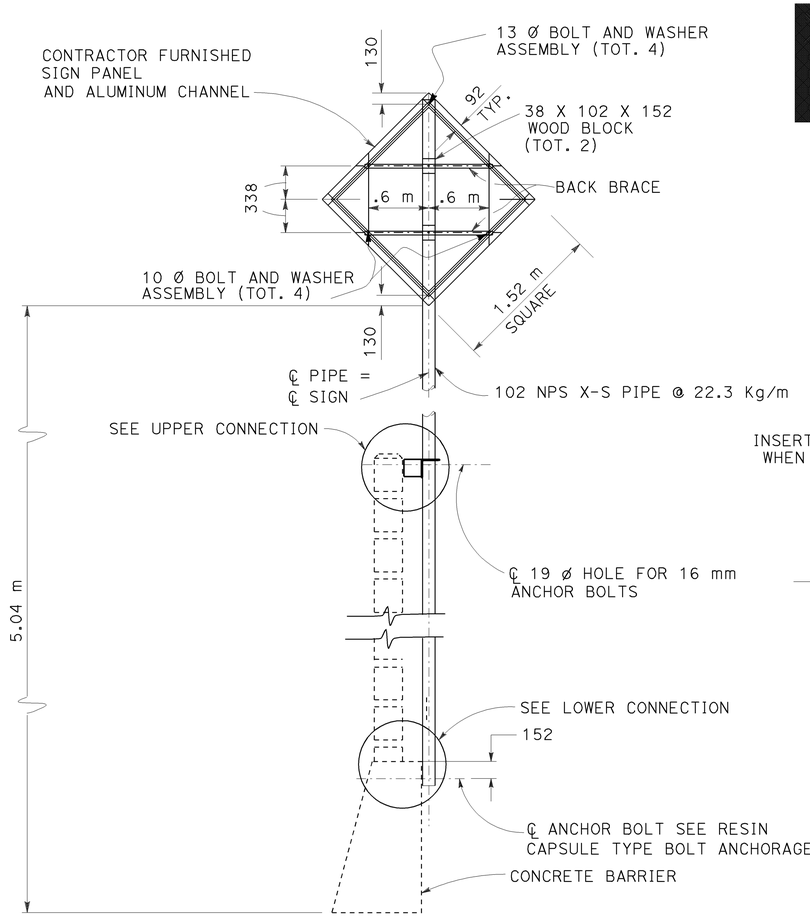

ELEVATION

SIGN W74(CA)

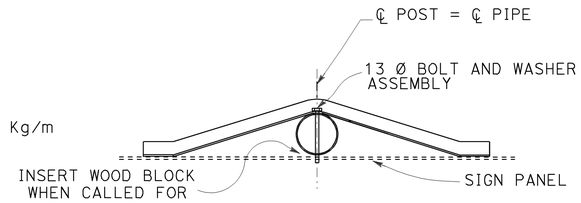

PLAN

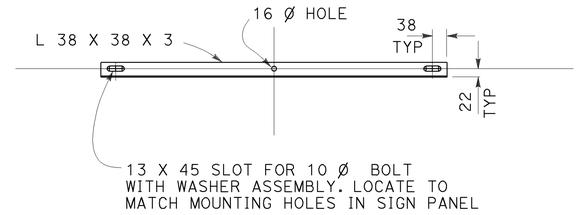

ELEVATION

BACK BRACE DETAILS

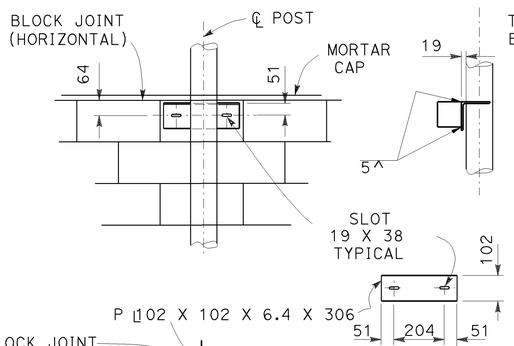

UPPER CONNECTION

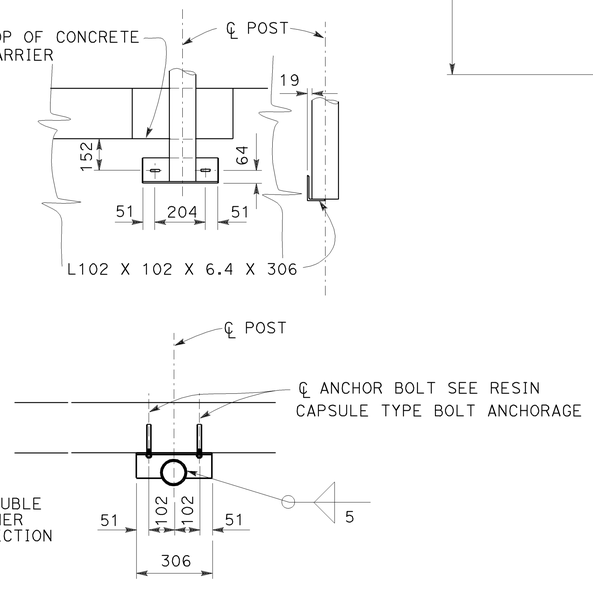

LOWER CONNECTION

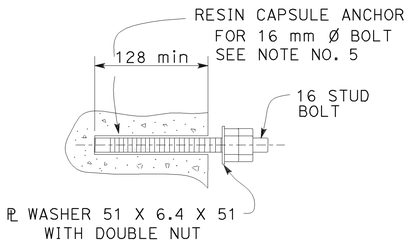

RESIN CAPSULE TYPE BOLT ANCHORAGE

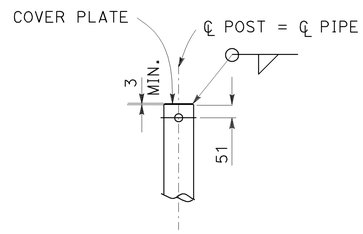

TOP OF POST DETAIL

NOTES:

1. THE CONTRACTOR SHALL VERIFY CONTROLLING FIELD DIMENSIONS BEFORE ORDERING OR FABRICATING MATERIAL.
2. FOR DETAILS NOT SHOWN, SEE STANDARD PLANS.
3. DAMAGED SOUNDWALL BLOCKS SHALL BE REPLACED IN KIND.
4. STEEL SHALL TO BE GALVANIZED AFTER FABRICATION.
5. RESIN CAPSULE ANCHORAGE IS SUBJECT TO APPROVAL OF THE ENGINEER. INSTALLATION PROCEDURES SHALL COMPLY WITH MANUFACTURER'S INSTRUCTIONS.
6. WASHER ASSEMBLY CONSISTS OF TWO OVERSIZED WASHERS, NUT AND JAM NUT.
7. SEE SIGN PLANS FOR SIGN LOCATIONS.

ALL DIMENSIONS ARE IN MILLIMETERS UNLESS OTHERWISE SHOWN

ROADSIDE SIGNS ON CONCRETE BARRIER/SOUNDWALL MOUNTING DETAILS

NO SCALE

SD-16

CALCULATED-DESIGNED BY	AHMED GABER	REVISED BY	
CHECKED BY	VINCENT NGUYEN	DATE REVISED	11/07
FUNCTIONAL SUPERVISOR	GRISH BIGLARIAN		

STATE OF CALIFORNIA - DEPARTMENT OF TRANSPORTATION
Caltrans TRAFFIC DESIGN

LAST REVISION DATE PLOTTED => 12-JUN-2009
00-00-00 TIME PLOTTED => 10:21

BORDER LAST REVISED 3/1/2007 | RELATIVE BORDER SCALE IS IN MILLIMETERS 0 20 40 60 80 | USERNAME => trpierce DGN FILE => 712184ob016.dgn | CU 07380 | EA 121841

Dist	COUNTY	ROUTE	KILOMETER POST TOTAL PROJECT	SHEET No.	TOTAL SHEETS
07	LA	5	42.8/47.3	323	1073

REGISTERED CIVIL ENGINEER 12/12/08 DATE

6-8-09
PLANS APPROVAL DATE

REGISTERED PROFESSIONAL ENGINEER VINCENT NGUYEN No. 57797 Exp. 3/31/10 CIVIL STATE OF CALIFORNIA

THE STATE OF CALIFORNIA OR ITS OFFICERS OR AGENTS SHALL NOT BE RESPONSIBLE FOR THE ACCURACY OR COMPLETENESS OF ELECTRONIC COPIES OF THIS PLAN SHEET.

Caltrans Metric

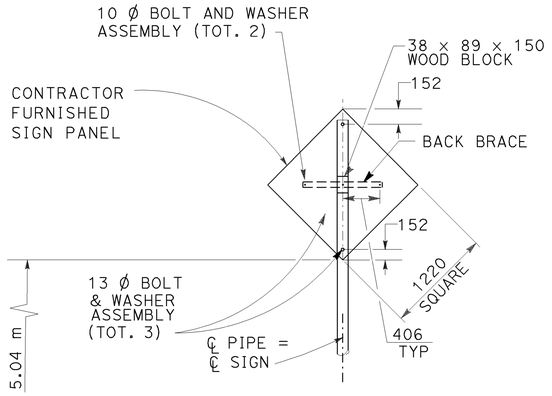

ELEVATION

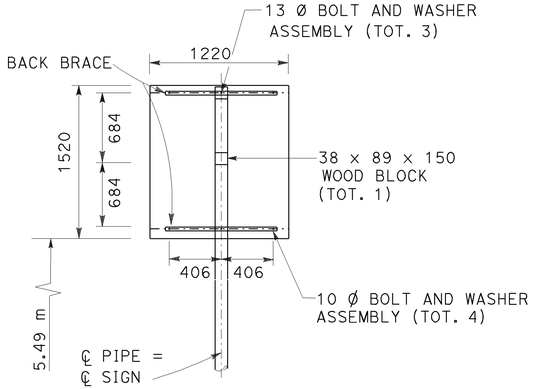

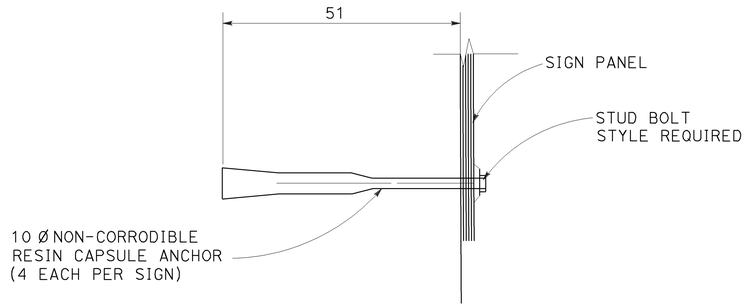

DETAIL

SIGN PANEL ON SOUNDWALL (BOLTED)

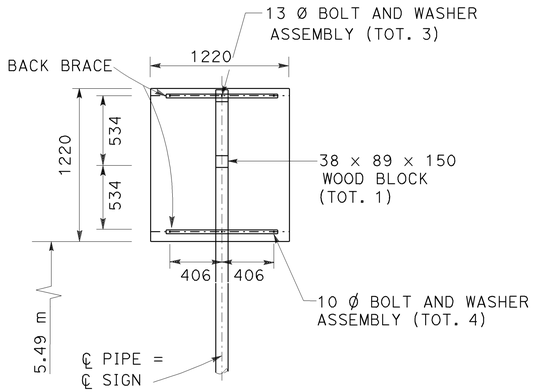

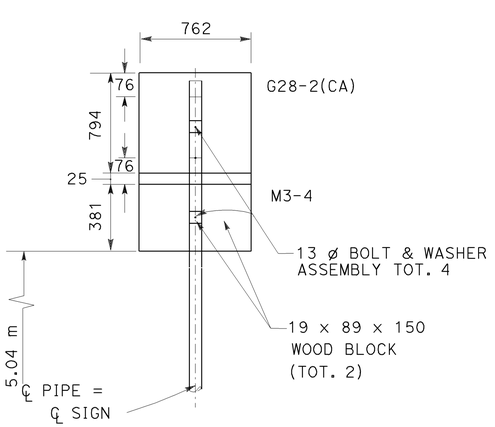

SIGN R18A(CA)

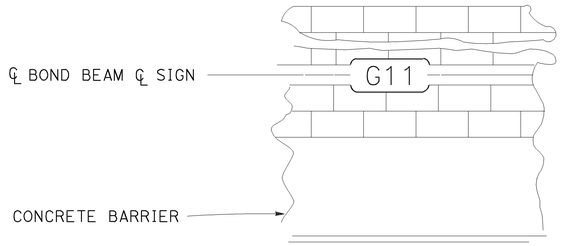

BOLT ON SOUNDWALL
TYPICAL FOR G11

NOTES:
1. FOR DETAILS NOT SHOWN, SEE SD-16

ALL DIMENSIONS ARE IN MILLIMETERS UNLESS OTHERWISE SHOWN

ROADSIDE SIGNS ON CONCRETE BARRIER/SOUNDWALL MOUNTING DETAILS

NO SCALE

SD-17

STATE OF CALIFORNIA - DEPARTMENT OF TRANSPORTATION
Caltrans TRAFFIC DESIGN

FUNCTIONAL SUPERVISOR: GRISH BIGLARIAN
CALCULATED-DESIGNED BY: AHMED GABER
CHECKED BY: VINCENT NGUYEN
REVISED BY
DATE REVISED: 11/07

LAST REVISION 00-00-00
DATE PLOTTED => 12-JUN-2009
TIME PLOTTED => 12:53

Dist	COUNTY	ROUTE	KILOMETER POST TOTAL PROJECT	SHEET No.	TOTAL SHEETS
07	LA	5	42.8/47.3	324	1073

Vincent Nguyen 11/06/08
REGISTERED CIVIL ENGINEER DATE

6-8-09
PLANS APPROVAL DATE

REGISTERED PROFESSIONAL ENGINEER — VINCENT NGUYEN No. 57797 Exp. 3/31/10 CIVIL — STATE OF CALIFORNIA

THE STATE OF CALIFORNIA OR ITS OFFICERS OR AGENTS SHALL NOT BE RESPONSIBLE FOR THE ACCURACY OR COMPLETENESS OF ELECTRONIC COPIES OF THIS PLAN SHEET.

ROADSIDE SIGN QUANTITIES

SHEET No.	LOCATION	SIGN CODE	PANEL SIZE (m x m)	SIGN FACING MATERIAL								FURNISH SINGLE SHEET ALUMINUM SIGN (m^2)			POST DATA	REMOVE ROADSIDE SIGN	RELOCATE ROADSIDE SIGN	METAL(BARRIER MOUNTED SIGN)	INSTALL ROADSIDE SIGN		INSTALL SIGN (STRAP & SADDLE BRACKET METHOD)	REMARKS
				PANEL NUMBER	SIGN AREA m^2	SINGL FACED	BACKGROUND SHEETING COLOR	BACKGROUND RETRO - REFLECTIVE ASTM TYPE	LEGEND SHEETING COLOR	LEGEND RETRO - REFLECTIVE ASTM TYPE	GRAFFITI.FILM PREMIUM	UNFRAMED ALUMINUM (mm) 1.6	UNFRAMED ALUMINUM (mm) 2.0	FRAMED ALUMINUM (mm) 1.6	SIZE (mm) x (mm)				ONE POST	TWO POST		
																EA	EA	kg	EA	EA	EA	
S-1	0101	R86-2(CA)	0.914 x 1.676	1	1.53	X	W	III	B	III	X	1.53						95				
S-2	0201	SR50-2(CA)	0.914 x 1.981	1	1.81	X	W	III	B	III	X	1.81									1	
S-3	0301	G84-3(CA)	1.20 x 1.50	1	1.80	X	G	IV	W	IV	X		1.80		140 x 140				1			EXIT 144
	0302	R86-2(CA)	0.914 x 1.676	1	1.53	X	W	III	B	III	X	1.53						95				
	0303	R93-2(CA)	0.914 x 2.134	1	1.95	X	W	III	B	III	X	1.95						106				
S-5	0501	R84-1(CA)	0.914 x 1.524	1	1.39	X	W	III	B	III	X	1.39						92				BACK TO BACK
		R86-2(CA)	0.914 x 1.676	1	1.53	X	W	III	B	III	X	1.53										
S-6	0601	R18A(CA)	1.676 x 1.219	1	2.04	X	W	III	B	III	X			2.04	89 x 140					1		
	0602	R18A(CA)	1.219 x 1.219	1	1.49	X	W	III	B	III	X	1.49						106				
	0603																					DO NOT USE
	0604	G84(CA)														1						
	0605	G84-3(CA)	1.20 x 1.50	1	1.80	X	G	IV	W	IV	X		1.80					95				EXIT 145A
	0606	R93-2(CA)	0.914 x 2.134	2	3.90	X	W	III	B	III	X	3.90						106				BACK TO BACK
	0607	W4-3															1					
S-7	0701	R86-2(CA)	0.914 x 1.676	1	1.53	X	W	III	B	III	X	1.53						95				
S-8	0801	G9-5(CA)															1					
	0802	R84-2(CA)	0.914 x 1.676	1	1.53	X	W	III	B	III	X	1.53						92				
	0803	W4-1															1					
	0804	G84(CA)														1						
	0805	G86-9(CA)	0.914 x 1.829	1	1.67	X	G	IV	W	IV	X	1.67						100				
	0806	G84-3(CA)	1.20 x 1.50	1	1.80	X	G	IV	W	IV	X		1.80					95				EXIT 145A
	SUB TOTAL											19.86	5.40	2.04		2	3	1077	1	1	1	

LEGEND: B = BLACK ; Y = YELLOW ; R = RED ; W = WHITE ; G = GREEN

SIGN QUANTITIES
SQ-1

CALCULATED-DESIGNED BY
CHECKED BY
REVISED BY
DATE REVISED
AHMED GABER
VINCENT NGUYEN
FUNCTIONAL SUPERVISOR
GRISH BIGLARIAN
STATE OF CALIFORNIA - DEPARTMENT OF TRANSPORTATION
Caltrans TRAFFIC DESIGN

LAST REVISION DATE PLOTTED => 12-JUN-2009
00-00-00 TIME PLOTTED => 12:53

Dist	COUNTY	ROUTE	KILOMETER POST TOTAL PROJECT	SHEET No.	TOTAL SHEETS
07	LA	5	42.8/47.3	325	1073

Vincent Nguyen 11/06/08
REGISTERED CIVIL ENGINEER DATE

6-8-09
PLANS APPROVAL DATE

REGISTERED PROFESSIONAL ENGINEER — VINCENT NGUYEN No. 57797 Exp. 3/31/10 CIVIL — STATE OF CALIFORNIA

THE STATE OF CALIFORNIA OR ITS OFFICERS OR AGENTS SHALL NOT BE RESPONSIBLE FOR THE ACCURACY OR COMPLETENESS OF ELECTRONIC COPIES OF THIS PLAN SHEET.

ROADSIDE SIGN QUANTITIES

SHEET No.	LOCATION	SIGN CODE	PANEL SIZE (m x m)	SIGN FACING MATERIAL								FURNISH SINGLE SHEET ALUMINUM SIGN (m^2)			POST DATA	REMOVE ROADSIDE SIGN	RELOCATE ROADSIDE SIGN	METAL(BARRIER MOUNTED SIGN)	INSTALL ROADSIDE SIGN		INSTALL SIGN (STRAP & SADDLE BRACKET METHOD)	REMARKS
				PANEL NUMBER	SIGN AREA m^2	SINGL FACED	BACKGROUND		LEGEND		GRAFFITI.FILM	UNFRAMED ALUMINUM (mm)		FRAMED ALUMINUM (mm)	SIZE (mm) x (mm)				ONE POST	TWO POST		
							SHEETING COLOR	RETRO - REFLECTIVE ASTM TYPE	SHEETING COLOR	RETRO - REFLECTIVE ASTM TYPE	PREMIUM	1.6	2.0	1.6		EA	EA	kg	EA	EA	EA	
S-8	0807	M3-1															1					
		G27-1(5)																				
	0808	R93-2(CA)	0.914 x 2.134	1	1.95	X	W	III	B	III	X	1.95						106				
	0809	R18A(CA)	1.676 x 1.219	1	2.04	X	W	III	B	III	X			2.04	89 x 140					1		
S-9	0901	G86-3(CA)															1					
	0902	W74(CA)															1					
	0903	G84-3(CA)	1.20 x 1.50	1	1.80	X	G	IV	W	IV	X		1.80		140 x 140				1			EXIT 145B
	0904	W13-2															1					
	0905	G84(CA)														1						
	0906	G85-8(CA)	0.914 x 2.134	1	1.95	X	G	IV	W	IV	X	1.95									1	
	0907	R86-2	0.914 x 1.676	1	1.53	X	W	III	B	III	X	1.53									1	
	0908	W4-1	1.219 x 1.219	1	1.49	X	Y	III	W	III	X	1.49						95				
	0909	W4-1															1					
	0910	W4-1														1						
S-10	1003	SR50-2(CA)	0.914 x 1.981	2	3.62	X	W	III	B	III	X	3.62						102				BACK TO BACK
	1006	R86-2(CA)	0.914 x 1.676	1	1.53	X	W	III	B	III	X	1.53									1	
	1008	G85-7(CA)	0.914 x 1.829	1	1.67	X	G	IV	W	IV	X	1.67									1	
S-11	1101,1103	W4-1															2					
	1102	G84(CA)														1						
	1104	G84-3(CA)	1.20 x 1.50	1	1.80	X	G	IV	W	IV	X		1.80					95				EXIT 145A
	1105	W13-2(25)															1					
	1106	R84-2(CA)	0.914 x 1.676	1	1.53	X	W	III	B	III	X	1.53						106				BACK TO BACK
		G86-8	0.914 x 1.981	1	1.81	X	G	IV	W	IV	X	1.81										
	1107	G83(CA)														1						
	1108	W74(CA)	1.219 x 1.219	1	1.49	X	Y	III	W	III	X	1.49									1	TO OVERHEAD SIGN 11A
	SUB TOTAL											18.57	3.60	2.04		4	8	504	1	1	5	

LEGEND: B = BLACK ; Y = YELLOW ; R = RED ; W = WHITE ; G = GREEN

SIGN QUANTITIES
SQ-2

STATE OF CALIFORNIA - DEPARTMENT OF TRANSPORTATION
Caltrans TRAFFIC DESIGN
FUNCTIONAL SUPERVISOR: GRISH BIGLARIAN
CALCULATED-DESIGNED BY: AHMED GABER
CHECKED BY: VINCENT NGUYEN
REVISED BY
DATE REVISED

LAST REVISION DATE PLOTTED => 12-JUN-2009
00-00-00 TIME PLOTTED => 12:54

Dist	COUNTY	ROUTE	KILOMETER POST TOTAL PROJECT	SHEET No.	TOTAL SHEETS
07	LA	5	42.8/47.3	326	1073

Vincent Nguyen 11/06/08
REGISTERED CIVIL ENGINEER DATE

6-8-09
PLANS APPROVAL DATE

REGISTERED PROFESSIONAL ENGINEER — VINCENT NGUYEN — No. 57797 — Exp. 3/31/10 — CIVIL — STATE OF CALIFORNIA

THE STATE OF CALIFORNIA OR ITS OFFICERS OR AGENTS SHALL NOT BE RESPONSIBLE FOR THE ACCURACY OR COMPLETENESS OF ELECTRONIC COPIES OF THIS PLAN SHEET.

ROADSIDE SIGN QUANTITIES

SHEET No.	LOCATION	SIGN CODE	PANEL SIZE (m x m)	SIGN FACING MATERIAL								FURNISH SINGLE SHEET ALUMINUM SIGN (m^2)			POST DATA	REMOVE ROADSIDE SIGN	RELOCATE ROADSIDE SIGN	METAL (BARRIER MOUNTED SIGN)	INSTALL ROADSIDE SIGN		INSTALL SIGN (STRAP &SADDLE, BRACKET METHOD)	REMARKS
				PANEL NUMBER	SIGN AREA (m^2)	SINGLE FACED	BACKGROUND		LEGEND		GRAFFITI.FILM	UNFRAMED ALUMINUM (mm)		FRAMED ALUMINUM (mm)	SIZE (mm x mm)				ONE POST	TWO POST		
							SHEETING COLOR	RETRO-REFLECTIVE ASTM TYPE	SHEETING COLOR	RETRO-REFLECTIVE ASTM TYPE	PREMIUM	1.6	2.0	1.6		EA	EA	kg	EA	EA	EA	
S-12	1201	R93-2(CA)	0.914 x 2.134	1	1.95	X	W	III	B	III	X	1.95						106				
	1202	R18A(CA)	1.219 x 1.219	1	1.49	X	W	III	B	III	X	1.49						106				
S-13	1302	R61(CA)														1						
	1303	W13-2															1					
	1304	G84-3(CA)	1.20 x 1.50	1	1.80	X	G	IV	W	IV	X		1.80					95				EXIT 146A
	1305	R61(CA)																92				
	1306	G77(CA)															1					
	1307	R86-2(CA)	0.914 x 1.676	1	1.53	X	W	III	B	III	X	1.53						95				BACK TO BACK
		R84-1(CA)	0.914 x 1.524	1	1.39	X	W	III	B	III	X	1.39										
	1308	G84(CA)														1						
	1309	G84-3(CA)	1.20 x 1.50	1	1.80	X	G	IV	W	IV	X		1.80		140 x 140				1			EXIT 146A
	1310	W4-2R	0.914 x 0.914	1	0.84	X	Y	III	B	III	X	0.84						92				
S-14	1401																					DO NOT USE
	1402	SR50-2(CA)	0.914 x 1.981	1	1.81	X	W	III	B	III	X	1.81									1	
	1403	R93-2(CA)	0.914 x 2.134	1	1.95	X	W	III	B	III	X	1.95						106				
	1404	W13-2(25)	1.219 x 1.524	1	1.86	X	Y	III	B	III	X		1.86								1	TO ELECTROLIER #29141
S-15	1501	W74(CA)	1.219 x 1.219	1	1.49	X	Y	III	B	III	X	1.49						106				
	1502	R82-1(CA)	0.914 x 1.676	1	1.53	X	W	III	B	III	X	1.53						95				
	SUB TOTAL											13.98	5.46	0.00		2	2	893	1	0	2	
	SUB TOTAL SQ-1											19.86	5.40	2.04		2	3	1077	1	1	1	
	SUB TOTAL SQ-2											18.57	3.60	2.04		4	8	504	1	1	5	
	GRAND TOTAL											**52.41**	**14.46**	**4.08**		**8**	**13**	**2474**	**3**	**2**	**8**	

LEGEND: B = BLACK ; Y = YELLOW ; R = RED ; W = WHITE ; G = GREEN

SIGN QUANTITIES
SQ-3

CALCULATED-DESIGNED BY	AHMED GABER	REVISED BY	
CHECKED BY	VINCENT NGUYEN	DATE REVISED	
FUNCTIONAL SUPERVISOR	GRISH BIGLARIAN		
STATE OF CALIFORNIA - DEPARTMENT OF TRANSPORTATION	TRAFFIC DESIGN		

LAST REVISION 00-00-00 — DATE PLOTTED => 12-JUN-2009 — TIME PLOTTED => 12:54

BORDER LAST REVISED 3/1/2007 — RELATIVE BORDER SCALE IS IN MILLIMETERS 0 20 40 60 80 — USERNAME => trmnguye — DGN FILE => 712184oc003.dgn — CU 07380 — EA 121841

(N) - NOT A SEPARATE PAY ITEM, FOR INFORMATION ONLY

Caltrans Metric

Dist	COUNTY	ROUTE	KILOMETER POST TOTAL PROJECT	SHEET No.	TOTAL SHEETS
07	LA	5	42.8/47.3	327	1073

Vincent Nguyen 11/06/08
REGISTERED CIVIL ENGINEER DATE

6-8-09
PLANS APPROVAL DATE

REGISTERED PROFESSIONAL ENGINEER — VINCENT NGUYEN — No. 57797 — Exp 3/31/10 — CIVIL — STATE OF CALIFORNIA

THE STATE OF CALIFORNIA OR ITS OFFICERS OR AGENTS SHALL NOT BE RESPONSIBLE FOR THE ACCURACY OR COMPLETENESS OF ELECTRONIC COPIES OF THIS PLAN SHEET.

OVERHEAD SIGNS

SHEET No.	SIGN No.	DIRECTION AND STATION	CIDH CONCRETE PILE (SIGN FOUNDATION) 1372 mm Lt	1372 mm Rt	1524 mm Lt	1524 mm Rt	SIGN STRUCTURE (TRUSS) FURNISH	SIGN STRUCTURE (TRUSS) INSTALL	REMOVE SIGN STRUCTURE	REMOVE SIGN PANEL (N)	INSTALL SIGN PANEL ON EXISTING FRAME	REMOVE BRIDGE MOUNTED SIGN	REMARKS
			m	m	m	m	kg	kg	EA	EA	m^2	EA	
S-2	2A	FNBT STA 430+75	5.8				4610	4610					
	2B	FSBT STA 432+30				7.0	8710	8710					
	2C	STA 432+10							1				
	2D	FSBT STA 432+30				7.6	10000	10000					
S-3	3A	FSBT STA 433+70							1				
	3B	FSBT STA 434+50			8.5	8.5	26780	26780					
S-4	4A	FNBT STA 437+45				7.0	8330	8330					
S-5	5A	FNBT STA 439+62							1				
	5B	FSBT STA 441+64							1				
	5C	FSBT STA 441+70			8.5	8.5	26421	26421					
S-6	6A	FNBT STA 443+59							1				
	6B	FNBT STA 443+80				7.6	10550	10550					
S-7	7B	STA 448+20							1				
S-8	8A	FSBT STA 451+44							1				
	8B	FSBT STA 452+30				7.6	10350	10350					
	8C	FNBT STA 453+02							1				
	8D	FNBT STA 453+20				7.6	10270	10270					
S-9	9A	FNBT STA 455+15	5.8				4620	4620					
S-10	10A	STA 457+18							1				
	10B	FSBT STA 458+85	5.8				4620	4620					
S-11	11A	FNBT STA 460+80				7.6	10060	10060					
	11B	FSBT STA 461+25				7.6	10300	10300					
	11C	FSBT STA 462+03							1				
S-12	12A	FSBT STA 464+50				7.0	9190	9190					
S-13	13A	FSBT STA 465+72							1				
	13B	FNBT STA 465+79							1				
	13C	FNBT STA 466+20				7.6	10180	10180					
	13D	FSBT STA 466+95				7.6	10210	10210					
S-14	14A	FNBT STA 469+10									15.50		
	14B	FNBT STA 469+10								1			
	14C	FSBT STA 469+35										1	
	14D	FSBT STA 469+45				7.6	10270	10270					
	14E	FSBT STA 469+87	5.8				4610	4610					
S-15	15A	FNBT STA 472+80				7.0	9670	9670					
	15B	FNBT STA 472+85										1	
	15C	FSBT STA 473+00								1			
	15D	FSBT STA 473+00									12.40		
		SUB-TOTAL	23.2		17.0	113.4			12	2	27.90	2	
		TOTAL	23.2		130.4		199751	199751	12	2	27.90	2	

SIGN QUANTITIES

SQ-4

STATE OF CALIFORNIA - DEPARTMENT OF TRANSPORTATION
Caltrans TRAFFIC DESIGN
FUNCTIONAL SUPERVISOR: GRISH BIGLARIAN
CALCULATED-DESIGNED BY: AHMED GABER
CHECKED BY: VINCENT NGUYEN
REVISED BY
DATE REVISED 11/07

LAST REVISION DATE PLOTTED => 12-JUN-2009
00-00-00 TIME PLOTTED => 12:54

BORDER LAST REVISED 3/1/2007 | RELATIVE BORDER SCALE IS IN MILLIMETERS 0 20 40 60 80 | USERNAME => trmnguye | DGN FILE => 712184oc004.dgn | CU 07380 | EA 121841

Dist	COUNTY	ROUTE	KILOMETER POST TOTAL PROJECT	SHEET No.	TOTAL SHEETS
07	LA	5	42.8/47.3	328	1073

Vincent Nguyen 11/06/08
REGISTERED CIVIL ENGINEER DATE

6-8-09
PLANS APPROVAL DATE

REGISTERED PROFESSIONAL ENGINEER — VINCENT NGUYEN — No. 57797 — Exp 3/31/10 — CIVIL — STATE OF CALIFORNIA

THE STATE OF CALIFORNIA OR ITS OFFICERS OR AGENTS SHALL NOT BE RESPONSIBLE FOR THE ACCURACY OR COMPLETENESS OF ELECTRONIC COPIES OF THIS PLAN SHEET.

CONTRACTOR FURNISHED SIGNS

MATERIAL SUMMARY

SHEET No.	SIGN No.	SIGN CODE	SIGN SIZE L x D (mm x mm)	SIGN AREA (m^2)	SINGLE FACED	DOUBLE FACED	BACKGROUND			LEGEND			GRAFFITI FILM		OVERHEAD			REMARKS
							NON REFLECTIVE	SHEETING COLOR	RETROREFLECTIVE ASTM TYPE	SHEETING COLOR	RETROREFLECTIVE ASTM TYPE	NON REFLECTIVE	STANDARD	PREMIUM	LAMINATED (25.4 mm TYPE A)	FORMED W/O RSPF	FORMED WITH RSPF	
S-2	2A	R87-1(CA)	4877 x 2540	12.39	X			White	III	Black	III			X			X	
	2B	G83(CA)	5490 x 2540	13.94	X			Green	IV	White	IV			X			X	
	2D	G23(CA)	6170 x 2540	17.04	X			Green	IV	White	IV			X			X	
S-3	3B	G23(CA)	5490 x 2540	13.94	X			Green	IV	White	IV			X			X	
	3B	G24(CA)	15850 x 3048	43.31	X			Green	IV	White	IV			X			X	
	3B	G85(CA)	7920 x 3048	24.14	X			Green	IV	White	IV			X			X	
S-4	4A	G24(CA)	6100 x 2540	15.49	X			Green	IV	White	IV			X			X	
S-5	5C	G23(CA)	5490 x 2540	13.94	X			Green	IV	White	IV			X			X	
	5C	G24(CA)	12800 x 3048	39.01	X			Green	IV	White	IV			X			X	
	5C	G24(CA)	7920 x 3048	24.14	X			Green	IV	White	IV			X			X	
S-6	6B	G85(CA)	6100 x 2540	15.49	X			Green	IV	White	IV			X			X	
	6B	G83(CA)	5490 x 2540	13.94	X			Green	IV	White	IV			X			X	
S-8	8B	G83(CA)	5490 x 3048	16.73	X			Green	IV	White	IV			X			X	
	8B	G85(CA)	5490 x 3048	16.73	X			Green	IV	White	IV			X			X	
	8D	G83(CA)	4270 x 2540	10.85	X			Green	IV	White	IV			X			X	
	8D	G85(CA)	5490 x 2540	13.95	X			Green	IV	White	IV			X			X	
S-9	9A	R87-1(CA)	4877 x 2540	12.39	X			White	III	Black	III			X			X	
S-10	10B	R87-1(CA)	4877 x 2540	12.39	X			White	III	Black	III			X			X	
S-11	11A	G24(CA)	6100 x 2540	15.49	X			Green	IV	White	IV			X			X	
	11B	G85(CA)	5490 x 2540	13.95	X			Green	IV	White	IV			X			X	
	11B	G83(CA)	5490 x 2540	13.94	X			Green	IV	White	IV			X			X	
S-12	12A	G24(CA)	5490 x 2540	13.95	X			Green	IV	White	IV			X			X	
S-13	13C	G83(CA)	5490 x 2540	13.95	X			Green	IV	White	IV			X			X	
	13C	G85(CA)	5490 x 2540	13.94	X			Green	IV	White	IV			X			X	
	13D	G23(CA)	6100 x 2540	15.50	X			Green	IV	White	IV			X			X	
S-14	14D	G83(CA)	5490 x 2540	13.95	X			Green	IV	White	IV			X			X	
	14D	G85(CA)	4880 x 2540	12.40	X			Green	IV	White	IV			X			X	
	14A	G23(CA)	6100 x 2540	15.50	X			Green	IV	White	IV			X			X	
	14E	R87-1(CA)	4877 x 2540	12.39	X			White	III	Black	III			X			X	
S-15	15A	G85(CA)	6710 x 2540	17.04	X			Green	IV	White	IV			X			X	
	15D	G86(CA)	4880 x 2540	12.40	X			Green	IV	White	IV			X			X	
Total sign panel quantity				514.21														

SIGN QUANTITIES
SQ-5

CALCULATED-DESIGNED BY	AHMED GABER	REVISED BY			
CHECKED BY	VINCENT NGUYEN	DATE REVISED	11/07		
FUNCTIONAL SUPERVISOR	GRISH BIGLARIAN				

STATE OF CALIFORNIA - DEPARTMENT OF TRANSPORTATION
Caltrans TRAFFIC DESIGN

LAST REVISION DATE PLOTTED => 12-JUN-2009
00-00-00 TIME PLOTTED => 12:54

BORDER LAST REVISED 3/1/2007

RELATIVE BORDER SCALE IS IN MILLIMETERS 0 20 40 60 80

USERNAME => trmnguye
DGN FILE => 712184oc005.dgn

CU 07380

EA 121841

Dist	COUNTY	ROUTE	KILOMETER POST TOTAL PROJECT	SHEET No.	TOTAL SHEETS
07	LA	5	42.8/47.3	329	1073

REGISTERED CIVIL ENGINEER — DATE 3-04-09

MUNSHI MOHSIN No. 61916 Exp. 9/30/09 CIVIL — REGISTERED PROFESSIONAL ENGINEER — STATE OF CALIFORNIA

PLANS APPROVAL DATE 6-8-09

THE STATE OF CALIFORNIA OR ITS OFFICERS OR AGENTS SHALL NOT BE RESPONSIBLE FOR THE ACCURACY OR COMPLETENESS OF ELECTRONIC COPIES OF THIS PLAN SHEET.

PAVEMENT STRUCTURAL SECTION (MAIN LINE)

SHEET No.	STATION	ROADWAY EXCAVATION	ROADWAY EXCAVATION (TYPE Y-1) (AERIALLY DEPOSITED LEAD)	ROADWAY EXCAVATION (TYPE Y-2) (AERIALLY DEPOSITED LEAD)	ROADWAY EXCAVATION (TYPE Z-3) (AERIALLY DEPOSITED LEAD)	STRUCTURE EXCAVATION (TYPE Y-1) (AERIALLY DEPOSITED LEAD)	STRUCTURE EXCAVATION (TYPE Y-2) (AERIALLY DEPOSITED LEAD)	STRUCTURE EXCAVATION (TYPE Z-3) (AERIALLY DEPOSITED LEAD)	ROADWAY EXCAVATION (LOCAL BORROW) (N)	EMBANKMENT (N)	IMPORTED BORROW	HMA (TYPE B)	SEAL LONGITUDINAL ISOLATION JOINT	SEAL PAVEMENT JOINT	JOINTED PLAIN Conc PAVEMENT	Conc PAVEMENT (RAPID STRENGTH Conc)	LCB (RAPID SETTING)	LEAN CONCRETE BASE	CLASS 3 AB	GEOSYNTHETIC PAVEMENT INTERLAYER
		m^3	m^3	m^3	m^3	m^3	m^3	m^3	m^3	m^3	m^3	TONNE	m	m	m^3	m^3	m^3	m^3	m^3	m^2
L-1	428+80.150 to 429+40.000	224											112.91	148.36	130.5			56.7	81.3	
L-2	429+40.000 to 433+00.000	1380										38.42	720.00	946.15	832.1			360.3	516.5	
L-3	433+00.000 to 436+40.000	996											510.72	671.13	572.1			248.3	356.8	
L-4	436+40.000 to 439+60.000	1102	24	27		89	49		218	617			697.34	800.76	751.1			370.4	507.1	
L-5	439+60.000 to 442+80.000	1980	260	293		161	80		912	2475			1280.00	2333.32	1924.1			897.8	1245.1	
L-6	442+80.000 to 446+37.000	2747	403	39	22	125	76	10	739	3097			1179.12	2038.30	2161.5	180.4	78.4	940.5	1407.3	
L-7	446+37.000 to 449+90.000	2339	235	83	64	22	33	21	429			38.42	1412.00	1732.25	2073.5			901.5	1173.0	
L-8	449+90.000 to 453+40.000	2874		155			9		188	1088	1088		1318.70	2425.13	2227.8	229.3	99.7	968.6	1531.2	
L-9	453+40.000 to 456+05.000	3711		51	8				68	2402	1273		1060.00	2218.21	1384.5	614.1	267.0	601.9	1245.4	
L-10	456+05.000 to 459+40.000	1216		474	28		188	4	762	3		38.42	1148.00	2144.43	1856.1	260.9	113.5	806.9	1319.6	
L-11	459+40.000 to 462+20.000	1362		564			114		779	4666			970.04	1868.69	934.4	438.1	190.5	507.3	906.8	
L-12	462+20.000 to 465+20.000	96	25		253		385		472	4848			459.11	1181.93	832.9	78.7	34.2	362.6	568.11	
L-13	465+20.000 to 468+50.000	3062		648	36		111		873	1281			1160.00	2141.33	1775.4	122.8	53.4	771.9	1182.9	
L-14	468+50.000 to 471+80.000	2467		743	67		318	103	1220	815			1320.00	1888.78	1884.5	142.2	61.8	819.4	1263.1	
L-15	471+80.000 to 472+90.000	1269		175	26		246		484	556			523.00	907.63	650.8	136.6	59.4	282.9	490.7	
	SUB-TOTAL MAIN LINE	26825	947	3252	504	397	1609	138	7144	21848	2361	115.26	13870.94	23446.40	19991.3	2203.1	957.9	8897.0	13794.9	

PAVEMENT STRUCTURAL SECTION (RAMPS)

SHEET No.	STATION	ROADWAY EXCAVATION	ROADWAY EXCAVATION (TYPE Y-1) (AERIALLY DEPOSITED LEAD)	ROADWAY EXCAVATION (TYPE Y-2) (AERIALLY DEPOSITED LEAD)	ROADWAY EXCAVATION (TYPE Z-3) (AERIALLY DEPOSITED LEAD)	STRUCTURE EXCAVATION (TYPE Y-1) (AERIALLY DEPOSITED LEAD)*	STRUCTURE EXCAVATION (TYPE Y-2) (AERIALLY DEPOSITED LEAD)*	STRUCTURE EXCAVATION (TYPE Z-3) (AERIALLY DEPOSITED LEAD)*	ROADWAY EXCAVATION (LOCAL BORROW) (N)	EMBANKMENT (N)	IMPORTED BORROW	HMA (TYPE B)	SEAL LONGITUDINAL ISOLATION JOINT	SEAL PAVEMENT JOINT	JOINTED PLAIN Conc PAVEMENT (JPCP)	Conc PAVEMENT (RAPID STRENGTH Conc)	LCB (RAPID SETTING)	LEAN CONCRETE BASE	CLASS 3 AB	GEOSYNTHETIC PAVEMENT INTERLAYER
		m^3	m^3	m^3	m^3	m^3	m^3	m^3	m^3	m^3	m^3	TONNE	m	m	m^3	m^3	m^3	m^3	m^3	m^2
L-6	442+80.000 to 446+37.000	1051								613		796.0					587.8		306.2	734.00
L-7	446+37.000 to 449+90.000	1273								117		831.9					692.6		360.7	2926.00
L-8	449+90.000 to 453+40.000	1018								93		543.8					892.3		278.9	1117.00
L-9	453+40.000 to 456+05.000	1493		54					62	1178	1129	885.3					1081.2	16.0	403.7	685.00
L-10	456+05.000 to 459+40.000	217								43		190.6					151.1	89.8	87.6	1304.00
L-11	459+40.000 to 462+20.000	1401								477		886.7					1430.9	24.2	454.7	219.00
L-13	465+20.000 to 468+50.000	3149		614					706			1007.9					711.8	30.8	387.7	1433.00
L-14	468+50.000 to 471+80.000	643		129					149			367.3					243.9	26.5	141.3	1340.00
	SUB-TOTAL RAMPS	10245		797					917	2521	1129	5509.5					5791.6	187.3	2420.8	9758.00
	SUB-TOTAL MAIN LINE	26825	947	3252	504	397	1609	138	7144	21848	2361	115.26	13870.94	23446.40	19991.3	2203.1	957.9	8897.0	13794.9	
	FROM SHEET WQ-4			5689			5383		12730											
	FROM SHEET Q-3											284.97							180.48	
	GRAND TOTAL	37070	947	9738	504	397	6992	138	20791	24369	3490	5909.73	13870.94	23446.40	19991.3	2203.1	6749.5	9084.3	16396.18	9758.00

N - NOT A PAY ITEM, FOR INFORMATION ONLY
*SEE STRUCTURE PLANS FOR ADDITIONAL QUANTITIES

SUMMARY OF QUANTITIES

Q-1

DAWIT T. WORKU — CALCULATED-DESIGNED BY
MUNSHI MOHSIN — CHECKED BY
MM — REVISED BY
03/2009 — DATE REVISED
CELINA AVILES — FUNCTIONAL SUPERVISOR

STATE OF CALIFORNIA - DEPARTMENT OF TRANSPORTATION
Caltrans OFFICE OF DESIGN D

LAST REVISION DATE PLOTTED => 12-JUN-2009
TIME PLOTTED => 12:54

BORDER LAST REVISED 3/1/2007 — RELATIVE BORDER SCALE IS IN MILLIMETERS 0 20 40 60 80 — USERNAME => trmnguye — DGN FILE => 712184pa001.dgn — CU 07276 — EA 121841

Dist	COUNTY	ROUTE	KILOMETER POST TOTAL PROJECT	SHEET No.	TOTAL SHEETS
07	LA	5	42.8/47.3	330	1073

REGISTERED CIVIL ENGINEER — DATE 3-04-09

PLANS APPROVAL DATE 6-8-09

REGISTERED PROFESSIONAL ENGINEER — MUNSHI MOHSIN — No. 61916 — Exp. 9/30/09 — CIVIL — STATE OF CALIFORNIA

THE STATE OF CALIFORNIA OR ITS OFFICERS OR AGENTS SHALL NOT BE RESPONSIBLE FOR THE ACCURACY OR COMPLETENESS OF ELECTRONIC COPIES OF THIS PLAN SHEET.

METAL BEAM GUARD RAILING

SHEET No.	STATION FROM	STATION TO	DIRECTION	LAYOUT	REMOVE METAL BEAM GUARD RAILING	METAL BEAM GUARD RAILING	RECONSTRUCT MBGR	TRANSITION RAILING (TYPE WB)	END ANCHOR ASSEMBLY (TYPE SFT)	ALTERNATIVE FLARED TERMINAL SYSTEM	ALTERNATIVE IN-LINE TERMINAL SYSTEM	END CAP (TYPE A)
					m	m	m	EA	EA	EA	EA	EA
L-1	429+23.352	429+40.000	SB	12C	16.7	9.1		1				
L-2	429+40.000	429+68.952	SB	12B		29.0				1		
	430+32.358	430+47.558	NB	12B	15.2	7.6		1		1		
	429+40.000	429+79.300	SB		39.3							
L-3	435+38+988	435+54.188	SB			7.6		1				
L-4	437+75.754	439+03.890	SB		128.1							
	437+40.000	439+13.995	NB		174.0							
	437+40.000	439+13.995	NB	12D		158.7		1				1
L-6	446+29.360	446+37.000	SB				7.6					
	446+38.940	446+39.000	SB		0.1							
L-7	446+39.000	446+76.620	SB		37.6							
	446+37.000	446+49.140	SB				12.1					
	448+32.820	448+55.000	SB		22.2							
	448+18.845	448+42.580	SB		47.5							
	447+46.700	447+76.700	NB		30.0							
	447+64.870	447+87.680	NB		45.6							
	448+32.820	448+70.820	SB	12A		30.4		1			1	
	447+19.700	447+76.700	NB	12A		49.4		1			1	
	447+21.370	447+74.570	SB	12DD		53.2			1			1
	448+29.260	448+63.460	NB	12DD		34.2			1			1
L-8	450+41.650	450+80.660	SB		39.0							
	451+40.000	451+62.180	SB		22.2							
	452+97.280	453+20.000	SB		22.7							
	452+42.660	452+56.500	NB		13.8							
	451+99.500	452+56.500	NB	12B		49.4		1		1		
	453+00.350	453+40.000	NB	12DD		39.7						1
L-9	453+40.000	454+02.950	NB	12DD		63.0			1			
L-10	457+68.350	457+91.080	SB		45.5							
	457+80.000	458+06.766	SB		26.8							
	456+95.021	457+25.182	NB		30.2							
	457+13.100	457+36.360	NB		46.5							
	456+30.900	457+23.182	NB	12A		92.3		1		1		
	457+82.534	458+39.534	SB	12A		57.0		1			1	
	457+82.133	458+20.133	NB	12DD		38.0			1			1
	456+68.142	457.21.342	SB	12DD		53.2			1			1
SUB-TOTAL 1					803.0	771.8	19.7	9	5	4	3	6

METAL BEAM GUARD RAILING

SHEET No.	STATION FROM	STATION TO	DIRECTION	LAYOUT	REMOVE METAL BEAM GUARD RAILING	METAL BEAM GUARD RAILING	RECONSTRUCT MBGR	TRANSITION RAILING (TYPE WB)	END ANCHOR ASSEMBLY (TYPE SFT)	ALTERNATIVE FLARED TERMINAL SYSTEM	ALTERNATIVE IN-LINE TERMINAL SYSTEM	END CAP (TYPE A)
					m	m	m	EA	EA	EA	EA	EA
L-11	461+24.940	461+50.911	NB		26.0							
	459+82.935	460.85.535	NB	12B		95.0		1		1		
	461.67.000	462+12.600	SB	12D		38.0		1				1
L-12	464+49.375	465+17.775	SB		68.4							
	463+84.780	465+20.000	NB		135.2							
	464+49.375	465+17.775	SB	12D		60.8		1				1
L-13	465+65.140	465+78.920	SB		13.8							
	465+20.000	465+28.250	NB		8.3							
	465+77.650	466+60.000	NB		82.4							
	465+67.513	466+24.513	SB	12A		49.4		1			1	
	465+81.300	466+78.780	NB	12D		89.9		1				1
L-14	469+03.400	469+45.000	SB		41.6							
	470+60.000	471+80.000	SB		120.0							
	469+00.000	469+30.000	NB		30.0							
	469+36.850	471+80.000	SB			235.6		1				
L-15	471+80.000	473+10.000	SB		130.0				1			
	471+80.000	473+10.000	SB			130.0						
	472+71.630	473+03.000	NB		31.4							
SUB-TOTAL 2					687.1	698.7		6	1	1	1	3
SUB-TOTAL 1					803.0	771.8	19.7	9	5	4	3	6
TOTAL					1490.1	1470.5	19.7	15	6	5	4	9

SUMMARY OF QUANTITIES

Q-2

STATE OF CALIFORNIA - DEPARTMENT OF TRANSPORTATION
Caltrans OFFICE OF DESIGN D

FUNCTIONAL SUPERVISOR: CELINA AVILES

CALCULATED-DESIGNED BY: DAWIT T. WORKU
CHECKED BY: MUNSHI MOHSIN

REVISED BY: KP — DATE REVISED: 02/2009
CTT — 03/2009

LAST REVISION DATE PLOTTED => 12-JUN-2009
TIME PLOTTED => 12:54
03-15-09

BORDER LAST REVISED 3/1/2007

RELATIVE BORDER SCALE IS IN MILLIMETERS 0 20 40 60 80

USERNAME => trmnguye
DGN FILE => 712184pa002.dgn

CU 07276

EA 121841

Dist	COUNTY	ROUTE	KILOMETER POST TOTAL PROJECT	SHEET No.	TOTAL SHEETS
07	LA	5	42.8/47.3	331	1073

REGISTERED CIVIL ENGINEER — DATE 3-04-09

MUNSHI MOHSIN No. 61916 Exp. 9/30/09 CIVIL — REGISTERED PROFESSIONAL ENGINEER — STATE OF CALIFORNIA

6-8-09
PLANS APPROVAL DATE

THE STATE OF CALIFORNIA OR ITS OFFICERS OR AGENTS SHALL NOT BE RESPONSIBLE FOR THE ACCURACY OR COMPLETENESS OF ELECTRONIC COPIES OF THIS PLAN SHEET.

MISCELLANEOUS HMA (TYPE B)

SHEET No.	DIRECTION/ ALIGNMENT	STATIONS		MAINTENANCE VEHICLE PULLOUT AREA		PLACE HMA DIKE		
		FROM	TO	PLACE HMA (Misc AREA)	CLASS 3 AB	TYPE C	TYPE F	TYPE E
				m^2	m^3	m	m	m
L-1	ROUTE 5(SB)	429+23.352	429+40.000				16.7	
L-2	ROUTE 5(SB)	429+40.000	429+68.952				29.0	
	ROUTE 5(SB)	429+68.952	429+88.000			19.1		
	ROUTE 5(SB)	431+76.140	432+02.140	70	30.08			
	ROUTE 5(NB)	430+20.938	430+32.358			11.4		
	ROUTE 5(NB)	430+32.358	430+47.558				15.3	
L-6	WSTRN2	446+06.473	446+37.000					30.5
	ROUTE 5(SB)	446+29.360	446+37.000				7.6	
L-7	ROUTE 5(SB)	446+81.000	446+96.000					15.0
	ROUTE 5(SB)	449+09.000	449+83.160					74.2
	RAMP(SB)	446+37.000	447+19.799					82.8
	RAMP(SB)	449+80.000	449+84.500					4.5
	ROUTE 5(NB)	447+19.700	447+76.700				57.0	
	ROUTE 5(SB)	448+26.000	448+71.600				45.6	
	ROUTE 5(SB)	446+37.000	446+55.000				18.0	
	ROUTE 5(SB)	448+71.600	448+86.840			15.2		
	RAMP(NB)	447+04.460	447+19.700			15.2		
	RAMP(SB)	446+55.00	446+81.00	70	30.08			
L-8	ROUTE 5(NB)	450+81.300	451+99.500					118.2
	ROUTE 5(NB)	451+99.500	452+56.500				57.0	
L-9	RAMP(SB)	455+70.495	456+00.000					29.5
	ROUTE 5(SB)	455+70.495	456+05.000					34.5
	RAMP(NB)	455+73.000	455+74.954					2.0
	ROUTE 5(NB)	455+75.710	456+05.000					29.3
L-10	ROUTE 5(SB)	456+05.000	456+48.420					43.4
	ROUTE 5(SB)	459+03.161	459+20.000					16.8
	RAMP(SB)	459+00.000	459+11.600					11.6
	ROUTE 5(SB)	458+52.000	458+75.350					23.4
	ALMD1	2+18.338	2+29.344			11.0		
	ROUTE 5(SB)	458+39.534	458+54.774			15.2		
	RAMP(SB)	457+82.534	458+39.534				57.0	
	ROUTE 5(NB)	456+05.000	456+45.050					40.1
	ROUTE 5(NB)	458+66.000	459+40.000					74.0
	RAMP(NB)	456+30.900	457+23.182				92.3	
	RAMP(NB)	458+91.002	459+46.255	280	120.32			55.3
	RAMP(SB)	458+91.002	459+46.255					55.3
SUB-TOTAL 1				420	180.48**	87.1	395.5	740.4

MISCELLANEOUS HMA (TYPE B)

SHEET No.	DIRECTION/ ALIGNMENT	STATIONS		MAINTENANCE VEHICLE PULLOUT AREA		PLACE HMA DIKE		
		FROM	TO	PLACE HMA (Misc AREA)	CLASS 3 AB	TYPE C	TYPE F	TYPE E
				m^2	m^3	m	m	m
L-11	RAMP(SB)	461+67.000	462+12.600				45.6	
	RAMP(NB)	459+82.935	460+85.535				102.6	
	RAMP(NB)	459+46.255	459+59.300					13.0
	RAMP(NB)	459+46.255	459+71.515					25.3
	ROUTE 5(NB)	459+40.000	459+50.044					10.0
	ROUTE 5(NB)	459+71.515	459+82.935			11.4		
L-12	ROUTE 5(SB)	464+49.375	465+17.775				68.4	
L-13	ROUTE 5(SB)	465+67.513	466+24.513				57.0	
	ROUTE 5(SB)	468+11.000	468+50.000					39.0
L-14	ROUTE 5(SB)	469+36.850	471+80.000				243.2	
	ROUTE 5(SB)	468+50.000	469+03.400					53.4
	ROUTE 5(NB)	470+54.604	471+05.675					51.1
	ROUTE 5(NB)	470+54.604	471+05.675					125.4
L-15	ROUTE 5(SB)	471+80.000	473+10.000				130.0	
	ROUTE 5(NB)	471+80.000	473+03.000					123.0
SUB-TOTAL 2						11.4	646.8	440.2
SUB-TOTAL 1					180.48	87.1	395.5	740.4
TOTAL				420	180.48**	98.5	1042.3	1180.6
HMA TYPE B (TONNE)				166.32		2.13	40.02	76.50
TOTAL HMA (TONNE)				284.97**				

**ADDED IN ROADWAY QUANTITY SHEET (Q-1)

REMOVE AC DIKE

SHEET NO.	STATION		DIRECTION	REMOVE AC DIKE
	FROM	TO		m
L-1	429+30.339	429+40.000	SB	9.7
L-2	429+40.000	429+90.000	SB	50.0
L-8	453+01.580	453+40.000	NB	38.4
L-9	453+40.000	454.71.832	NB	131.8
L-13	465+67.513	466+60.000	SB	92.5
TOTAL REMOVE AC DIKE				322.4

SUMMARY OF QUANTITIES

Q-3

REVISED BY	DATE REVISED
KDP	02/2009
CTT	03/2009

CALCULATED-DESIGNED BY: O. BLACKSTOCK
CHECKED BY: MUNSHI MOHSIN
FUNCTIONAL SUPERVISOR: CELINA AVILES

STATE OF CALIFORNIA - DEPARTMENT OF TRANSPORTATION
Caltrans OFFICE OF DESIGN D

LAST REVISION DATE PLOTTED => 12-JUN-2009
TIME PLOTTED => 12:54

BORDER LAST REVISED 3/1/2007

RELATIVE BORDER SCALE IS IN MILLIMETERS 0 20 40 60 80

USERNAME => trmnguye
DGN FILE => 712184pa003.dgn

CU 07276

EA 121841

Dist	COUNTY	ROUTE	KILOMETER POST TOTAL PROJECT	SHEET No.	TOTAL SHEETS
07	LA	5	42.8/47.3	332	1073

3-04-09
REGISTERED CIVIL ENGINEER DATE

MUNSHI MOHSIN
No. 61916
Exp. 9/30/09
CIVIL
REGISTERED PROFESSIONAL ENGINEER
STATE OF CALIFORNIA

6-8-09
PLANS APPROVAL DATE

THE STATE OF CALIFORNIA OR ITS OFFICERS OR AGENTS SHALL NOT BE RESPONSIBLE FOR THE ACCURACY OR COMPLETENESS OF ELECTRONIC COPIES OF THIS PLAN SHEET.

CONCRETE BARRIER

SHEET No.	STATION FROM	STATION TO	REMOVE Conc BARRIER m	TYPE 60R m	TYPE 60W m	TYPE 60C m	TYPE 60W (Mod) m	TYPE 60 m	TYPE 60K m	REMOVE Conc BARRIER (TYPE K) m
L-1	428+80.000	429+40.000	56.5		56.5					
L-2	429+40.000	433+00.000	360.0	38.0	322					
L-3	433+00.000	436+40.000	424.7	40.0	130.0	68.2				
L-4	436+40.000	439+60.000	422.3		204.9					
L-5	439+60.000	442+80.000	320.0	38.0	10.0		272.0			
L-6	442+80.000	446+37.000	391.0		304.8	181.5			280.6	
L-7	446+37.000	449.90.000	418.1		141.7	606.0	161.3			
L-8	449+90.000	453+40.000	350.0	39.7		153.9	255.7			
L-9	453+40.000	456+05.000	265.0	37.0		234.4	228.0			
L-10	456+05.000	459+40.000	335.0	38.0	124.7	627.0	65.0			
L-11	459+40.000	462+20.000	314.5		110.0	249.0				259.9
L-12	462+20.000	465.20.000	483.2		35.0	64.1				
L-13	465.20.000	468+50.000	330.0		225.5	161.9	60.0			
L-14	468+50.000	471.80.000	330.0	35.0	150.0	171.6	55.0	155.5		
L-15	471+80.000	473+00.000	131.7	38.9	92.8	91.6		31.4		
		TOTAL	4932.0	304.6	1907.9	2609.2	1097.0	186.9	280.6	259.9

RETAINING WALL QUANTITIES

SHEET No.	STATION FROM	STATION TO	REMOVE RETAINING WALL m	STRUCTURAL CONCRETE, RETAINING WALL * m^3	BAR REINFORCING STEEL (RETAINING WALL) * Kg	STRUCTURE EXCAVATION (RETAINING WALL) * m^3	STRUCTURE BACKFILL (RETAINING WALL) * m^3	CABLE RAILING * m
R-1	470+40.000	471+50.000		224.7	9635.9	155.6	485.8	110.0
R-1	470+69.991	471+50.000	80.0					
R-2	471+50.000	472+50.000		342.8	102.4	299.0	433.7	100.0
R-2	471+50.000	471+93.435	43.4					
		TOTAL	123.4	567.5	9738.3	454.6	919.5	210

* SEE STRUCTURES PLANS FOR ADDITIONAL QUANTITIES.

SOUND WALL QUANTITIES

SHEET No.	STATION FROM	STATION TO	REMOVE SOUND WALL m^2	* SOUND WALL (MASONRY BLOCK) m^2	CONCRETE BARRIER (TYPE 736SV) m	* 400 mm CIDH CONCRETE PILING m	* 600 mm CIDH CONCRETE PILING m
SW-1	437+81.370	439+15.268		449.9	133.9	262.2	
SW-2	439+15.268	440+53.723		465.2	138.5	363.4	10.6
SW-4	442+17.742	443+70.133		292.5	83.3	248.4	
SW-5	443+70.133	445+20.287		504.5	150.2	423.2	11.2
SW-6	445+20.287	446+63.921		482.6	143.6	299.0	10.6
SW-7	446+63.921	447+96.139		113.9	33.9	55.2	
L-4 SB	439+03.890	439+60.000	171.1				
L-5 SB	439+60.000	442+80.000	976.0				
L-6 SB	442+80.000	446+37.000	1088.9				
SW-8	439+13.995	440+40.000		290.7	86.5	239.2	11.2
SW-9	440+40.000	441+70.000		161.4	48.0	110.4	
SW-10	441+70.000	442+96.374		404.4	113.7	285.2	
L-4 NB	439+13.995	439+60.000	140.3				
L-5 NB	439+60.000	442+80.000	976.0				
L-6 NB	442+80.000	443+00.000	61.0				
		TOTAL	3413.3	3164.2	931.6	2286.2	43.6

MINOR CONCRETE (GUTTER)

SHEET No.	STATION FROM	STATION TO	MINOR Conc (GUTTER) m^3
R-1	470+62.00	471+50.00	7.6
R-2	471+50.00	472+24.00	6.4
		TOTAL	14.0

SUMMARY OF QUANTITIES

Q-4

STATE OF CALIFORNIA - DEPARTMENT OF TRANSPORTATION
Caltrans OFFICE OF DESIGN D
FUNCTIONAL SUPERVISOR: CELINA AVILES
CALCULATED-DESIGNED BY: MUNSHI MOHSIN
CHECKED BY: CUONG T TRAN
REVISED BY: KDP
DATE REVISED: 02/2009

LAST REVISION DATE PLOTTED => 12-JUN-2009
TIME PLOTTED => 12:54
12-01-08

BORDER LAST REVISED 3/1/2007
RELATIVE BORDER SCALE IS IN MILLIMETERS 0 20 40 60 80
USERNAME => trmnguye
DGN FILE => 712184pa004.dgn
CU 07276
EA 121841

Dist	COUNTY	ROUTE	KILOMETER POST TOTAL PROJECT	SHEET No.	TOTAL SHEETS
07	LA	5	42.8/47.3	333	1073

REGISTERED CIVIL ENGINEER — DATE 3-04-09

PLANS APPROVAL DATE 6-8-09

REGISTERED PROFESSIONAL ENGINEER — MUNSHI MOHSIN — No. 61916 — Exp. 9/30/09 — CIVIL — STATE OF CALIFORNIA

THE STATE OF CALIFORNIA OR ITS OFFICERS OR AGENTS SHALL NOT BE RESPONSIBLE FOR THE ACCURACY OR COMPLETENESS OF ELECTRONIC COPIES OF THIS PLAN SHEET.

CABLE RAILING / CHAIN LINK FENCE CHANNELIZERS

SHEET No.	STATIONS FROM	STATIONS TO	REMOVE CHANNELIZERS	CABLE RAILING	CHAIN LINK FENCE (TYPE CL-1.8)	REMOVE CHAIN LINK FENCE
			EA	m	m	m
L-7	447+89.310	447+95.150			5.84	
L-8	450+20.000	452+59.223	14			
L-13	466+88.120	468+50.000		161.9		
	467+70.000	468+50.000				80.0
L-14	468+50.000	470+69.000				219.0
	468+50.000	470+53.570		203.6		
	470+40.000	471+80.000				140.0
	470+40.000	471+80.000		140.0		
	471+02.439	471+80.000		77.6		77.6
L-15	471+80.000	472+30.000				70.0
	471+80.000	473+03.000		123.0		123.0
	471+80.000	472+50.000		70.0		
		TOTAL	14	776.1	5.84	709.6

TACK COAT

SHEET No.	TACK COAT (TONN)
L-6	0.74
L-7	0.91
L-8	0.92
L-9	0.39
L-10	0.40
L-11	0.96
L-13	0.52
L-14	0.15
TOTAL	4.99

CHAIN LINK GATE

SHEET No.	CHAIN LINK GATE (TYPE CL-1.8) 1.5 m	1.8 m	3.0 m	3.7 m	4.3 m	4.9 m	CHAIN LINK GATE (TYPE CL-2.4) 7.6 m	12.0 m
	EA	EA	EA	EA	EA	EA	EA	EA
L-4		2		4				
L-5						5		
L-6	1	1			2			
L-8			3					
L-9			2					
L-11			1					
L-12			1				1	2
L-13			2					
TOTAL	1	3	9	4	2	5	1	2

COLD PLANE ASPHALT CONCRETE PAVEMENT

SHEET No.	COLD PLANE ASPHALT CONCRETE Pvmt (m^2)
L-7	100.0
L-9	35.0
L-10	105.5
L-13	63.0
L-14	42.5
TOTAL	346.0

TIE BAR (DRILL AND BOND)

SHEET No.	TIE BAR (DRILL AND BOND) (EA)
L-6	368
L-8	694
L-9	545
L-10	366
L-11	659
L-12	235
L-13	190
L-14	392
L-15	361
TOTAL	3810

CRASH CUSHION

SHEET No.	CRASH CUSHION TYPE REACT 9SCBS (EA)	CRASH CUSHION TYPE REACT 9CBB (EA)
L-6	2	
L-8		1
L-9	1	
L-11	1	
L-14		1
TOTAL	4	2

TEMPORARY WATER POLLUTION CONTROL

TEMPORARY FIBER ROLL	TEMPORARY SILT FENCE	TEMPORARY GRAVEL BAG BERM	TEMPORARY CONCRETE WASHOUT FACILITY	TEMPORARY CONSTRUCTION ENTRANCE	TEMPORARY STRAW BALE BARRIER	MOVE-IN/MOVE-OUT (TEMPORARY EROSION CONTROL)	TEMPORARY DRAINAGE INLET PROTECTION	TEMPORARY COVER
m	m	m	EA	EA	m	EA	EA	m^2
1500.0	1500.0	300.0	4	20	250.0	8	60	10,000

SUMMARY OF QUANTITIES

Q-5

REVISED BY: KDP — DATE REVISED: 02/2009

CALCULATED-DESIGNED BY: MUNSHI MOHSIN

CHECKED BY:

FUNCTIONAL SUPERVISOR: CELINA AVILES

STATE OF CALIFORNIA - DEPARTMENT OF TRANSPORTATION
Caltrans OFFICE OF DESIGN D

LAST REVISION: 03-11-09
DATE PLOTTED => 23-JUN-2009
TIME PLOTTED => 06:26

BORDER LAST REVISED 3/1/2007

RELATIVE BORDER SCALE IS IN MILLIMETERS 0 20 40 60 80

USERNAME => trmikesl
DGN FILE => 712184pa005.dgn

CU 07276

EA 121841

Dist	COUNTY	ROUTE	KILOMETER POST TOTAL PROJECT	SHEET No.	TOTAL SHEETS
07	LA	5	42.8/47.3	334	1073

REGISTERED CIVIL ENGINEER — DATE 3-04-09

MUNSHI MOHSIN No. 61916 Exp. 9/30/09 CIVIL — REGISTERED PROFESSIONAL ENGINEER — STATE OF CALIFORNIA

6-8-09
PLANS APPROVAL DATE

THE STATE OF CALIFORNIA OR ITS OFFICERS OR AGENTS SHALL NOT BE RESPONSIBLE FOR THE ACCURACY OR COMPLETENESS OF ELECTRONIC COPIES OF THIS PLAN SHEET.

GRIND EXISTING CONCRETE PAVEMENT

SHEET No.	STATIONS		DIRECTION	LENGTH (N)	GRIND EXISTING Conc PAVEMENT
	FROM	TO		m	m^2
L-12	464+34.870	465+20.000	Lt	85.13	306.5
	464+10.000	465+20.000	Med	110.00	396.0
	464+00.000	465+20.000	Med	120.00	432.0
	463+80.560	465+20.000	Rt	139.44	502.0
L-13	465+20.000	465+32.000	Lt	12.00	43.2
	465+20.000	465+35.660	Med	15.66	56.4
	465+20.000	465+37.240	Med	17.24	62.1
	465+20.000	465+32.440	Rt	12.44	44.8
	465+68.792	468+50.000	Lt	281.21	1012.4
	465+60.600	468+50.000	Med	289.40	1041.8
	465+61.880	468+50.000	Med	288.12	1037.2
	465+76.620	468+50.000	Rt	273.38	984.2
L-14	468+50.000	471+80.000	Lt	330.00	1188.0
	468+50.000	471+80.000	Med	330.00	1188.0
	468+50.000	471+80.000	Med	330.00	1188.0
	468+50.000	471+80.000	Rt	330.00	1188.0
L-15	471+80.000	472+98.980	Lt	118.98	428.3
	471+80.000	473+11+670	Med	131.67	474.0
	471+80.000	473+11.670	Med	131.67	474.0
	471+80.000	473+06.400	Rt	126.40	455.0
		TOTAL			12501.9

(N) NOT A SEPERATE PAY ITEM, FOR INFORMATION ONLY

MINOR CONCRETE

SHEET No.	LOCATION		REMOVE CONCRETE CURB	REMOVE CONCRETE SIDEWALK	MINOR CONCRETE (CURB)	* MINOR CONCRETE (SIDEWALK)	MINOR CONCRETE (TEXTURED PAVING)
	FROM	TO	m	m^2	m^3	m^3	m^2
L-6	442+80.000	446+37.000	481.4	52.9		7.9	
L-7	446+37.000	449+90.000	1136.3	27.8	3.7	4.2	372
L-8	449+90.000	453+40.000	277.0	21.3		3.2	
L-9	453+40.000	456+05.000	497.1				113
L-10	456+05.000	459+40.000	1004.3	27.8	3.7	4.2	636
L-11	459+40.000	462+20.000	343.8	70.2		10.5	57
L-12	462+20.000	465+20.000	182.7	73.5		11.0	
L-13	465+20.000	468+50.000	906.2	50.3	3.9	7.6	264
L-14	468+50.000	471+80.000	796.0	252.0		25.2	398
L-15	471+80.000	473+00.000	249.0	114.3		11.4	76
		FROM SHEET WQ-4	317.7				
		TOTAL	6191.5	690.1	11.3	85.2	1916

* FOR ADDITIONAL QUANTITIES, SEE STRUCTURES PLANS.

REPAIR SPALLED JOINTS

SHEET No.	LOCATION	AREA
		m^2
L-13	467+18.000	0.3
L-13	467+72.000	0.3
L-14	471+00.000	0.4
	TOTAL	1.0

ALL DIMENSIONS ARE IN METERS
UNLESS OTHERWISE SHOWN

SUMMARY OF QUANTITIES

Q-6

	REVISED BY	DATE REVISED
CALCULATED-DESIGNED BY	KDP	02/2009
CHECKED BY	CTT	03/2009
CUONG T TRAN		
MUNSHI MOHSIN		

FUNCTIONAL SUPERVISOR: CELINA AVILES

STATE OF CALIFORNIA - DEPARTMENT OF TRANSPORTATION
Caltrans OFFICE OF DESIGN D

LAST REVISION 03-15-09
DATE PLOTTED => 12-JUN-2009
TIME PLOTTED => 12:54

BORDER LAST REVISED 3/1/2007 | RELATIVE BORDER SCALE IS IN MILLIMETERS 0 20 40 60 80 | USERNAME => trmnguye DGN FILE => 712184pq006.dgn | CU 07276 | EA 121841

Dist	COUNTY	ROUTE	KILOMETER POST TOTAL PROJECT	SHEET No.	TOTAL SHEETS
07	LA	5	42.8/47.3	335	1073

REGISTERED CIVIL ENGINEER — DATE 2-09-09

MUNSHI MOHSIN No. 61916 Exp. 9/30/09 CIVIL — REGISTERED PROFESSIONAL ENGINEER — STATE OF CALIFORNIA

6-8-09
PLANS APPROVAL DATE

THE STATE OF CALIFORNIA OR ITS OFFICERS OR AGENTS SHALL NOT BE RESPONSIBLE FOR THE ACCURACY OR COMPLETENESS OF ELECTRONIC COPIES OF THIS PLAN SHEET.

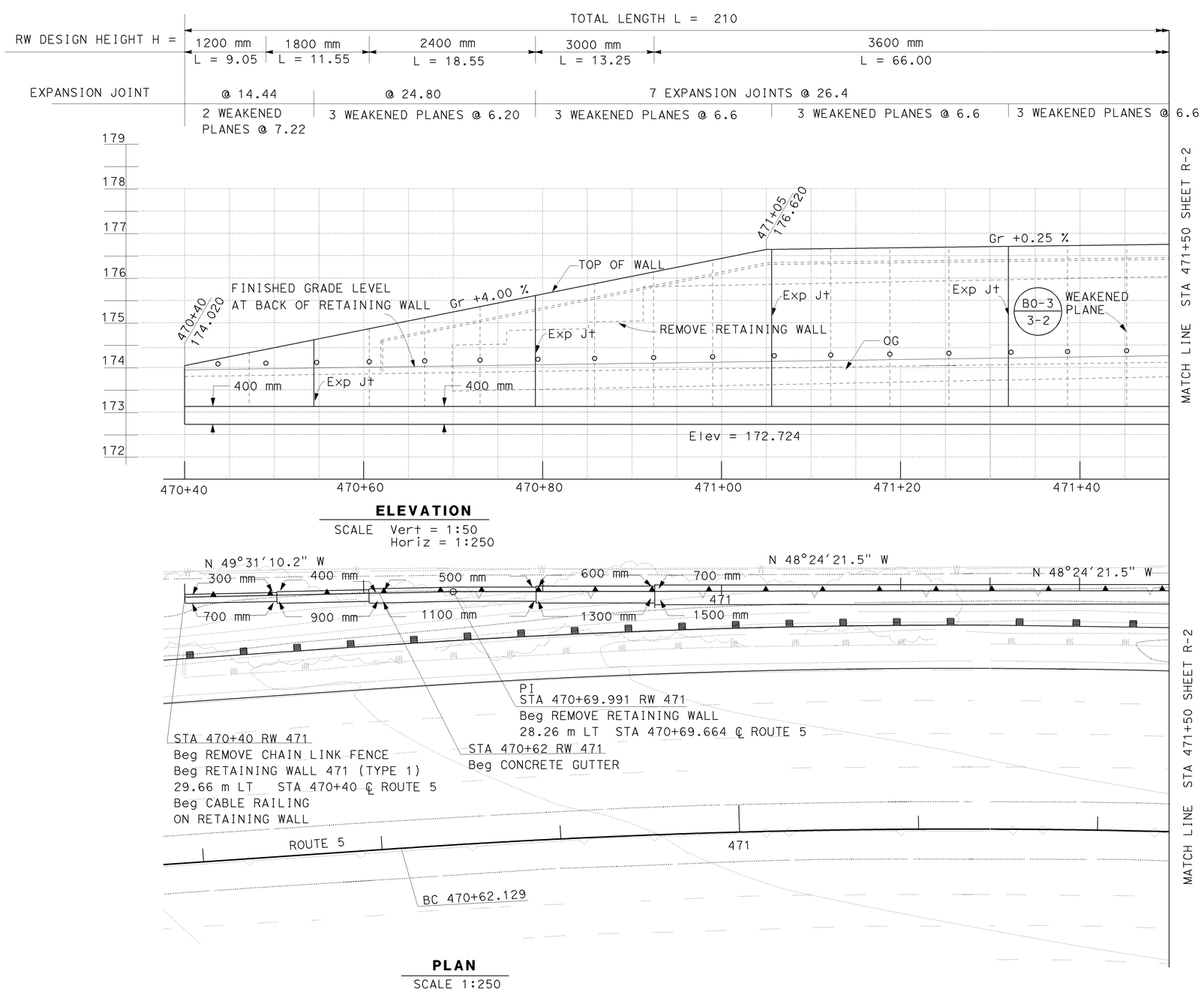

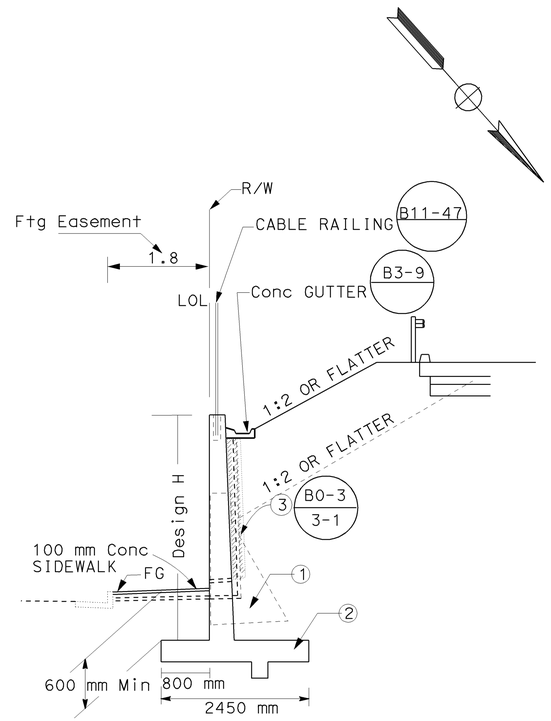

NO SCALE

NOTE:

① REMOVE RETAINING WALL

② TYPE 1 RETAINING WALL

③ PERVIOUS BACKFILL

THIS PLAN ACCURATE FOR RETAINING WALL WORK ONLY.

ALL DIMENSIONS ARE IN METERS
UNLESS OTHERWISE SHOWN

RETAINING WALL PLAN

RETAINING WALL 471

SCALE AS SHOWN

R-1

LAST REVISION DATE PLOTTED => 12-JUN-2009
12-02-08 TIME PLOTTED => 12:54

CALCULATED-DESIGNED BY	CHECKED BY	FUNCTIONAL SUPERVISOR	REVISED BY	DATE REVISED
DAWIT WORKU	MUNSHI MOHSIN	CELINA AVILES	JK	12/08
			KP	01/09

STATE OF CALIFORNIA - DEPARTMENT OF TRANSPORTATION
Caltrans OFFICE OF DESIGN D

BORDER LAST REVISED 3/1/2007 | RELATIVE BORDER SCALE IS IN MILLIMETERS 0 20 40 60 80 | USERNAME => trmnguye DGN FILE => 712184qa001.dgn | CU 07276 | EA 121841

Dist	COUNTY	ROUTE	KILOMETER POST TOTAL PROJECT	SHEET No.	TOTAL SHEETS
07	LA	5	42.8/47.3	336	1073

REGISTERED CIVIL ENGINEER — DATE 2-09-09

MUNSHI MOHSIN No. 61916 Exp. 9/30/09 CIVIL — REGISTERED PROFESSIONAL ENGINEER — STATE OF CALIFORNIA

PLANS APPROVAL DATE 6-8-09

THE STATE OF CALIFORNIA OR ITS OFFICERS OR AGENTS SHALL NOT BE RESPONSIBLE FOR THE ACCURACY OR COMPLETENESS OF ELECTRONIC COPIES OF THIS PLAN SHEET.

Caltrans Metric

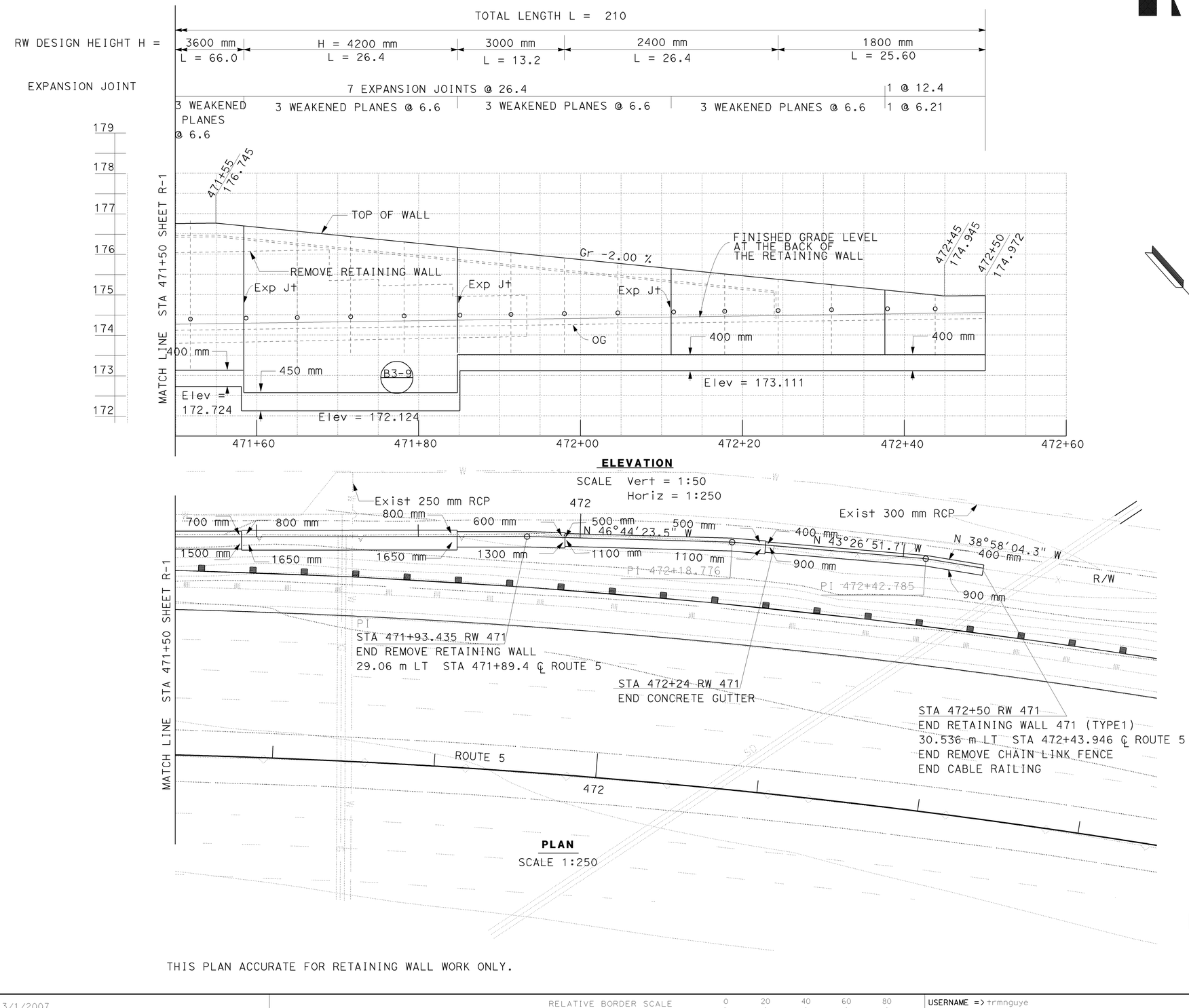

THIS PLAN ACCURATE FOR RETAINING WALL WORK ONLY.

ALL DIMENSIONS ARE IN METERS UNLESS OTHERWISE SHOWN

RETAINING WALL PLAN

RETAINING WALL 471

SCALE AS SHOWN

R-2

	REVISED BY	DATE REVISED
KP		01/09
JK		12/08

CALCULATED-DESIGNED BY: DAWIT WORKU
CHECKED BY: MUNSHI MOHSIN

FUNCTIONAL SUPERVISOR: CELINA AVILES

STATE OF CALIFORNIA - DEPARTMENT OF TRANSPORTATION
Caltrans OFFICE OF DESIGN D

LAST REVISION DATE PLOTTED => 12-JUN-2009
TIME PLOTTED => 12:55
12-02-08

BORDER LAST REVISED 3/1/2007

RELATIVE BORDER SCALE IS IN MILLIMETERS 0 20 40 60 80

USERNAME => trmnguye
DGN FILE => 712184qa002.dgn

CU 07276

EA 121841

Dist	COUNTY	ROUTE	KILOMETER POST TOTAL PROJECT	SHEET No.	TOTAL SHEETS
07	LA	5	42.8/47.3	337	1073

LICENSED LANDSCAPE ARCHITECT

6-8-09
PLANS APPROVAL DATE

THE STATE OF CALIFORNIA OR ITS OFFICERS OR AGENTS SHALL NOT BE RESPONSIBLE FOR THE ACCURACY OR COMPLETENESS OF ELECTRONIC COPIES OF THIS PLAN SHEET.

LICENSED LANDSCAPE ARCHITECT — JOSEPH MILLMAN — NO. 1893 — EXP. DATE 07/31/10 — RENEWAL DATE 02/17/09 — STATE OF CALIFORNIA

NOTE:

CONCRETE COLOR SHALL BE 'SANDSTONE' (FEDERAL STANDARD COLOR 30318)
FRACTURED GRANITE TEXTURE SHALL RUN PERPENDICULAR TO PLUMB.

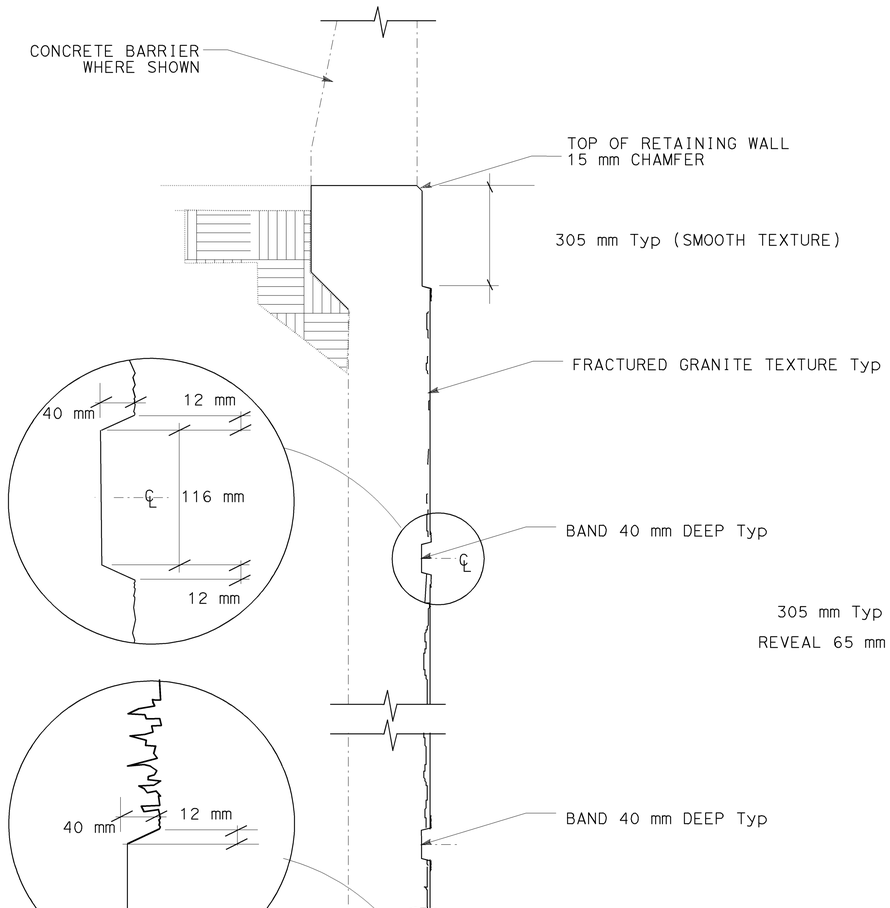

RETAINING WALL
TYPICAL SECTION

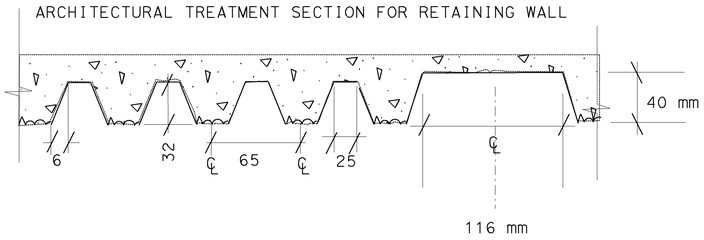

FRACTURED GRANITE TEXTURE & BAND

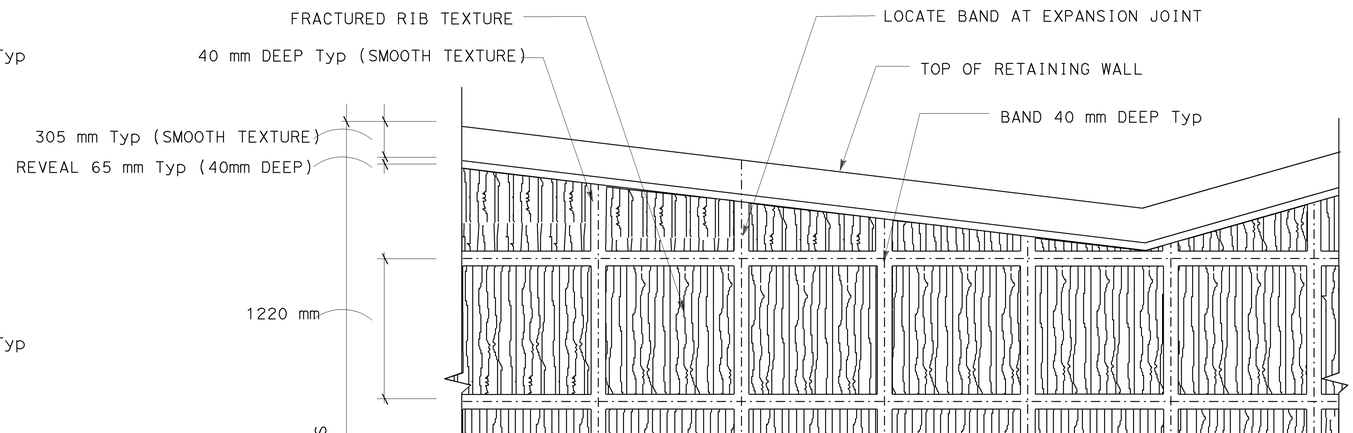

RETAINING WALL
TYPICAL ELEVATION

ALL DIMENSIONS ARE IN
MILLIMETERS UNLESS OTHERWISE SHOWN

RETAINING WALL ARCHITECTURAL TREATMENT

NO SCALE

R-3

ACCURATE FOR SOUNDWALL AESTHETIC FEATURES ONLY

CALCULATED-DESIGNED BY	CHECKED BY	REVISED BY	DATE REVISED
J MILLMAN	D PERSOFF		
11/20/07	11/20/07		

STATE OF CALIFORNIA - DEPARTMENT OF TRANSPORTATION
Caltrans
LANDSCAPE ARCHITECTURE
SENIOR LANDSCAPE ARCHITECT
PATRICIA WATANABE

LAST REVISION 11-10-08 | DATE PLOTTED => 12-JUN-2009 | TIME PLOTTED => 12:55

BORDER LAST REVISED 3/1/2007 | RELATIVE BORDER SCALE IS IN MILLIMETERS 0 20 40 60 80 | USERNAME => trmnguye | DGN FILE => 712184qa003.dgn | CU 07341 | EA 121841

NOTE: 1. FOR COMPLETE RIGHT OF WAY AND ACCURATE ACCESS DATA, SEE RIGHT OF WAY RECORD MAPS AT DISTRICT OFFICE.

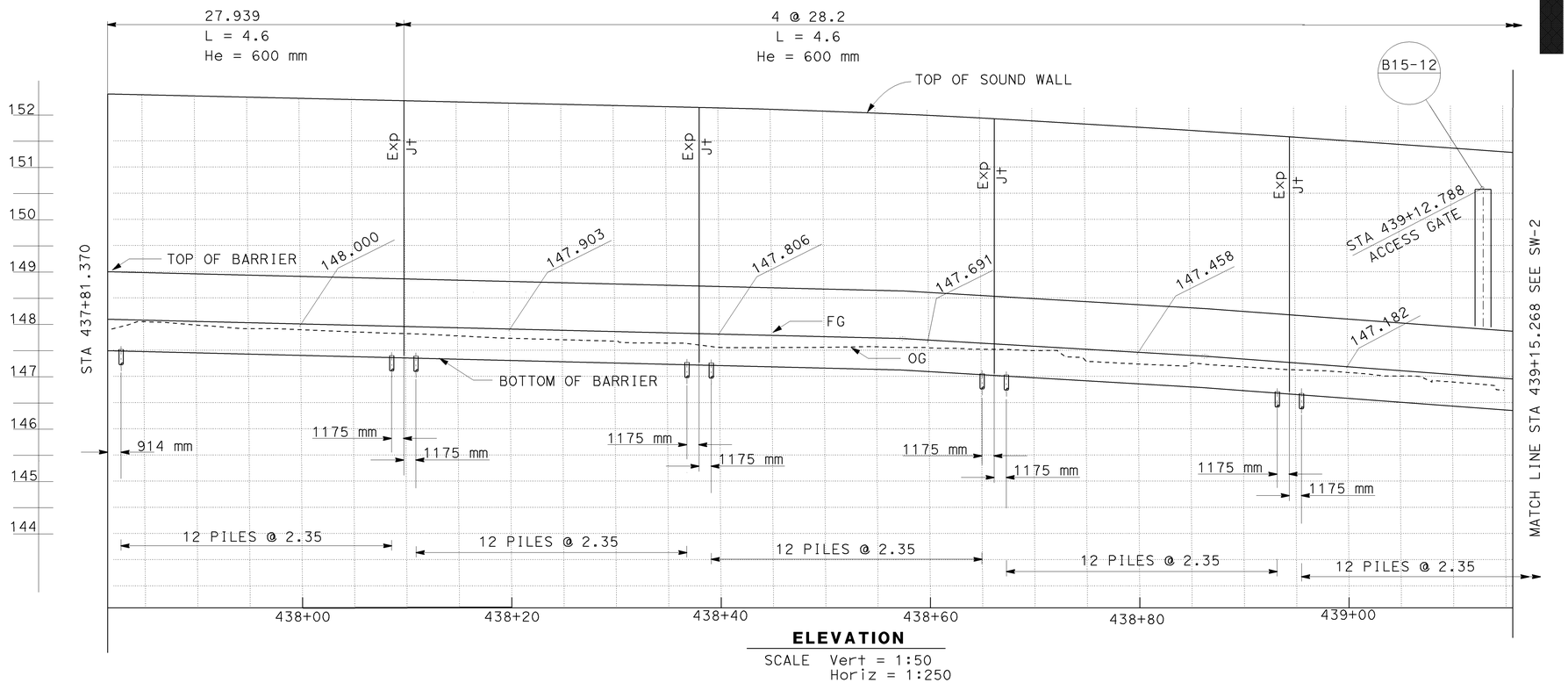

ELEVATION
SCALE Vert = 1:50
Horiz = 1:250

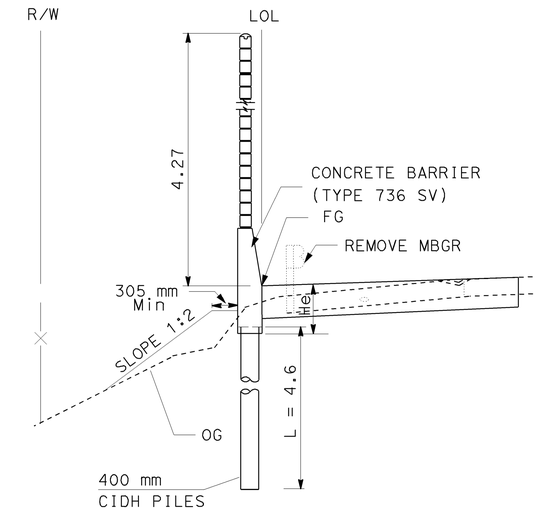

TYPICAL SECTION
NO SCALE

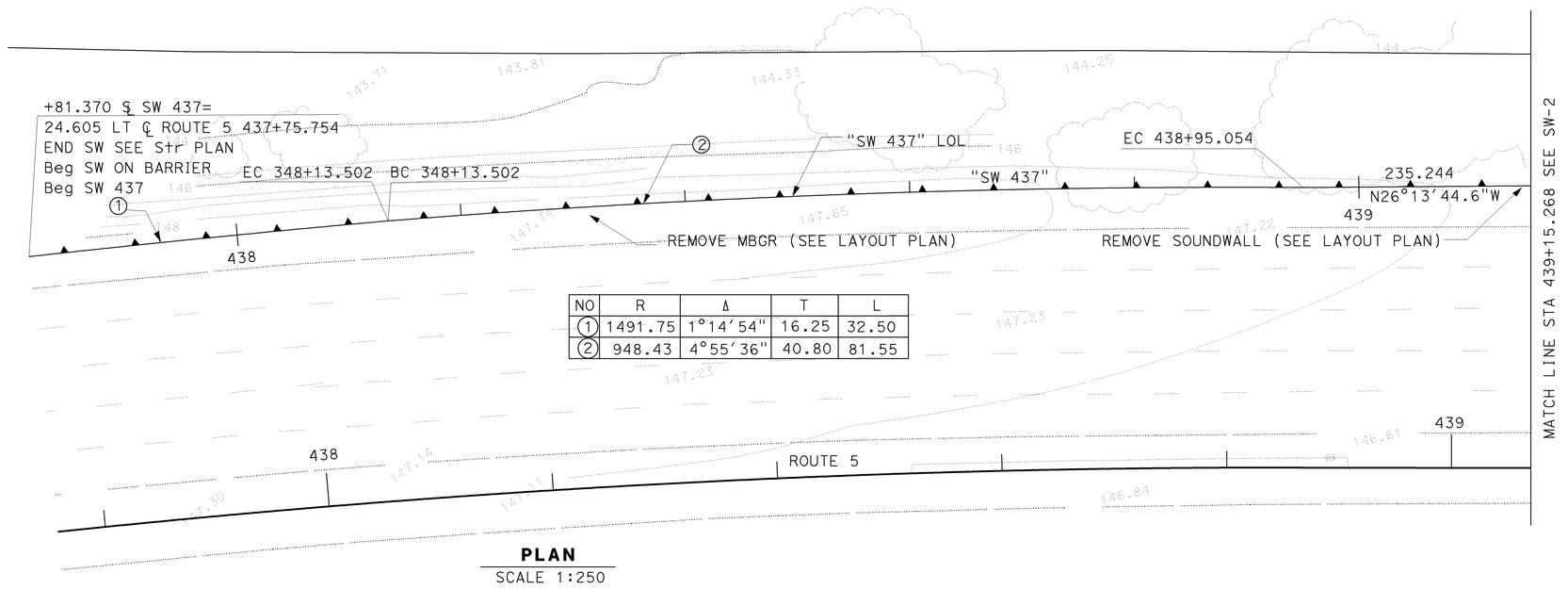

NO	R	Δ	T	L
①	1491.75	1°14'54"	16.25	32.50
②	948.43	4°55'36"	40.80	81.55

PLAN
SCALE 1:250

THIS PLAN ACCURATE FOR SOUND WALL WORK ONLY.

ALL DIMENSIONS ARE IN METERS
UNLESS OTHERWISE SHOWN

SOUND WALL PLAN

SOUND WALL 437

SW-1

Dist	COUNTY	ROUTE	KILOMETER POST TOTAL PROJECT	SHEET No.	TOTAL SHEETS
07	LA	5	42.8/47.3	338	1073

REGISTERED CIVIL ENGINEER — DATE 2-09-09

MUNSHI MOHSIN No. 61916 Exp. 9/30/09 CIVIL — REGISTERED PROFESSIONAL ENGINEER — STATE OF CALIFORNIA

6-8-09
PLANS APPROVAL DATE

THE STATE OF CALIFORNIA OR ITS OFFICERS OR AGENTS SHALL NOT BE RESPONSIBLE FOR THE ACCURACY OR COMPLETENESS OF ELECTRONIC COPIES OF THIS PLAN SHEET.

REVISED BY	DATE REVISED
MM	12/08
KP	01/09

CALCULATED-DESIGNED BY: DAWIT WORKU
CHECKED BY: MUNSHI MOHSIN
FUNCTIONAL SUPERVISOR: CELINA AVILES

STATE OF CALIFORNIA - DEPARTMENT OF TRANSPORTATION
Caltrans OFFICE OF DESIGN D

LAST REVISION DATE PLOTTED => 12-JUN-2009
TIME PLOTTED => 12:55
12-01-08

Dist	COUNTY	ROUTE	KILOMETER POST TOTAL PROJECT	SHEET No.	TOTAL SHEETS
07	LA	5	42.8/47.3	339	1073

REGISTERED CIVIL ENGINEER — DATE 2-09-09

REGISTERED PROFESSIONAL ENGINEER — MUNSHI MOHSIN — No. 61916 — Exp. 9/30/09 — CIVIL — STATE OF CALIFORNIA

PLANS APPROVAL DATE 6-8-09

THE STATE OF CALIFORNIA OR ITS OFFICERS OR AGENTS SHALL NOT BE RESPONSIBLE FOR THE ACCURACY OR COMPLETENESS OF ELECTRONIC COPIES OF THIS PLAN SHEET.

REVISED BY	DATE REVISED
KP	01/09
MM	10/08

DESIGNED BY: DAWIT WORKU
CALCULATED-DESIGNED BY:
CHECKED BY: MUNSHI MOHSIN
FUNCTIONAL SUPERVISOR: CELINA AVILES

STATE OF CALIFORNIA - DEPARTMENT OF TRANSPORTATION
Caltrans OFFICE OF DESIGN D

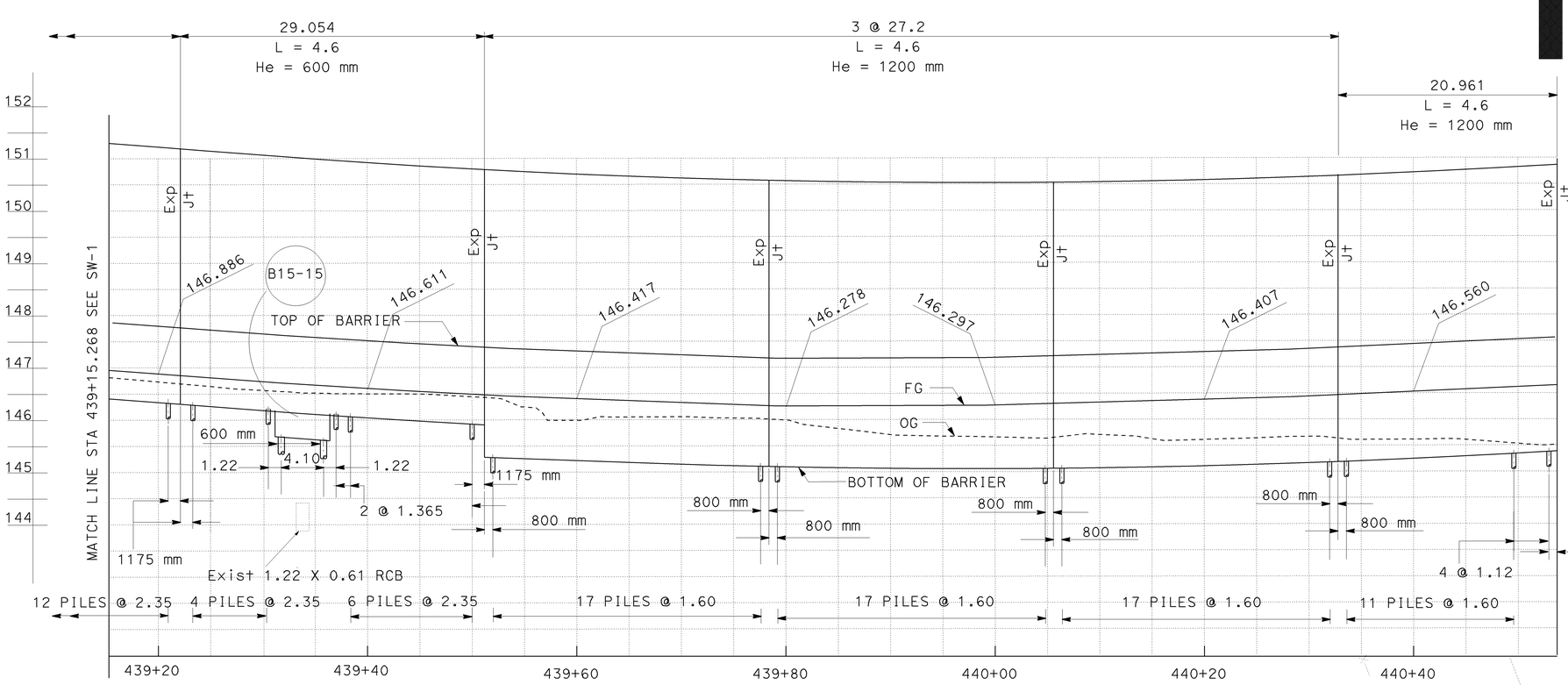

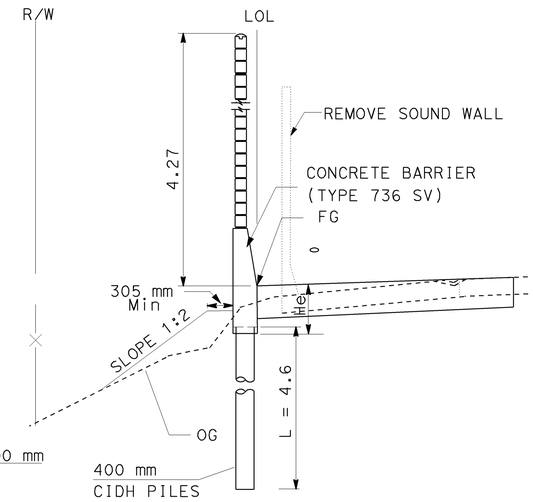

TYPICAL SECTION
NO SCALE

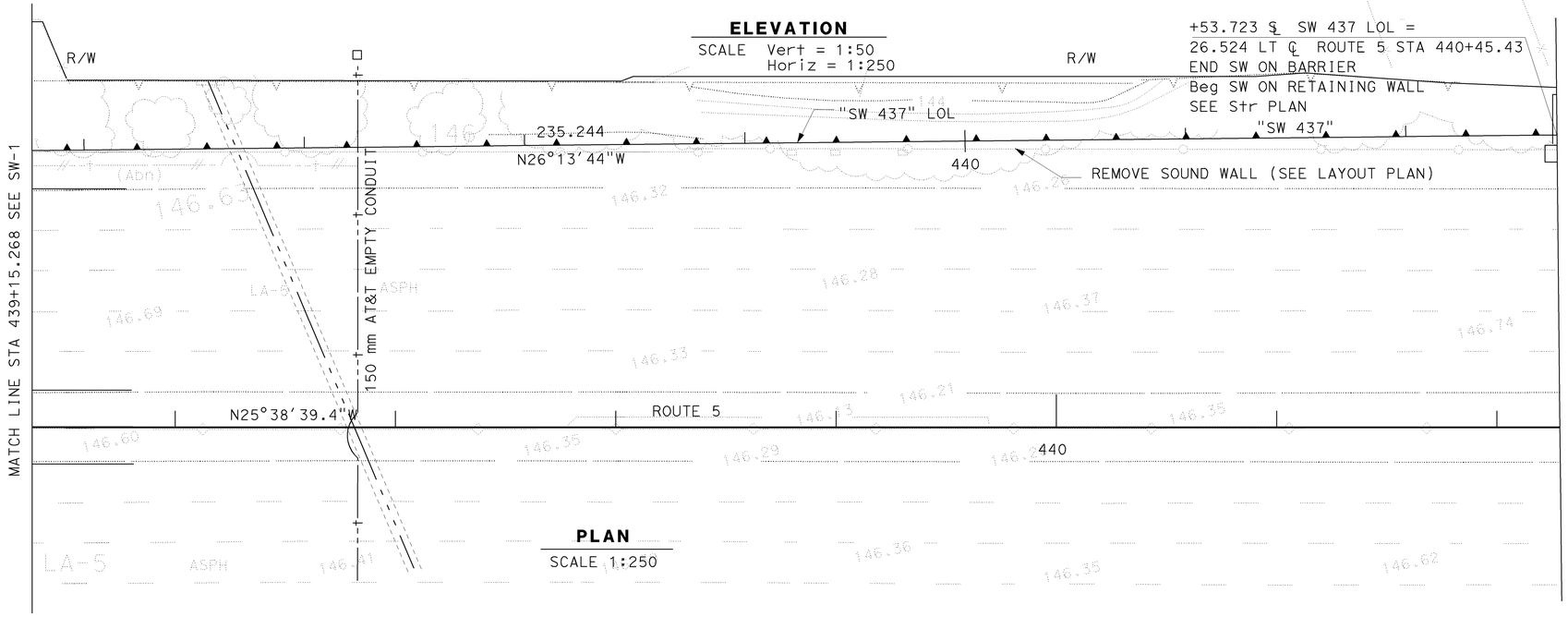

ALL DIMENSIONS ARE IN METERS
UNLESS OTHERWISE SHOWN

SOUND WALL PLAN

SOUND WALL 437

SW-2

THIS PLAN ACCURATE FOR SOUND WALL WORK ONLY.

LAST REVISION DATE PLOTTED => 12-JUN-2009
TIME PLOTTED => 13:05
12-01-08

Dist	COUNTY	ROUTE	KILOMETER POST TOTAL PROJECT	SHEET No.	TOTAL SHEETS
07	LA	5	42.8/47.3	340	1073

REGISTERED CIVIL ENGINEER — DATE 2-09-09

MUNSHI MOHSIN No. 61916 Exp. 9/30/09 CIVIL — REGISTERED PROFESSIONAL ENGINEER — STATE OF CALIFORNIA

6-8-09
PLANS APPROVAL DATE

THE STATE OF CALIFORNIA OR ITS OFFICERS OR AGENTS SHALL NOT BE RESPONSIBLE FOR THE ACCURACY OR COMPLETENESS OF ELECTRONIC COPIES OF THIS PLAN SHEET.

		REVISED BY	DATE REVISED
CALCULATED-DESIGNED BY	DAWIT WORKU	MM	10/08
CHECKED BY	MUNSHI MOHSIN	KP	01/09
FUNCTIONAL SUPERVISOR	CELINA AVILES		

STATE OF CALIFORNIA - DEPARTMENT OF TRANSPORTATION
Caltrans OFFICE OF DESIGN D

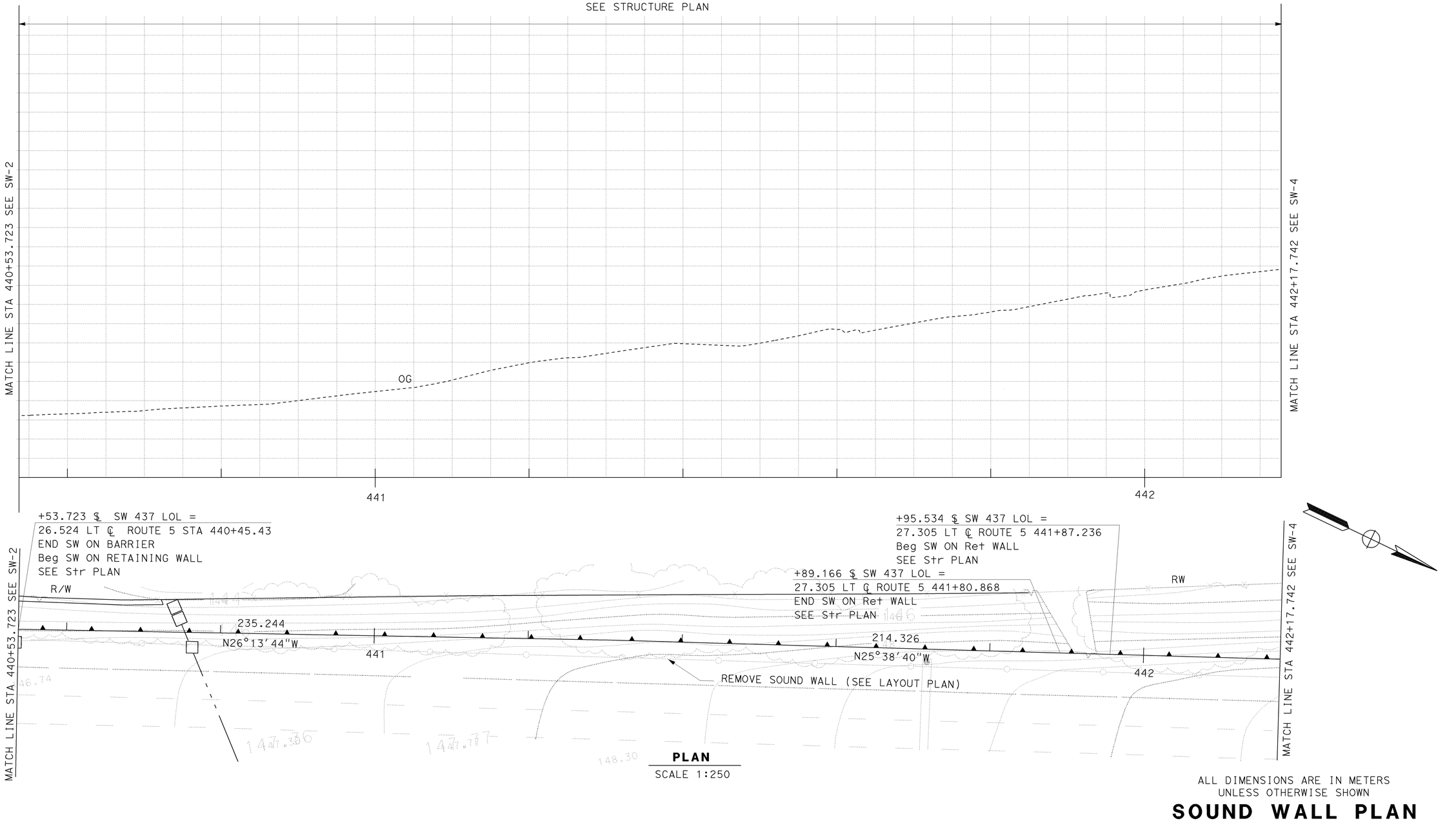

PLAN
SCALE 1:250

ALL DIMENSIONS ARE IN METERS
UNLESS OTHERWISE SHOWN

SOUND WALL PLAN

SOUND WALL 437

SW-3

THIS PLAN ACCURATE FOR SOUNDWALL WORK ONLY.

LAST REVISION 12-01-08 | DATE PLOTTED => 12-JUN-2009 | TIME PLOTTED => 12:55

BORDER LAST REVISED 3/1/2007 | RELATIVE BORDER SCALE IS IN MILLIMETERS 0 20 40 60 80 | USERNAME => trmnguye | DGN FILE => 712184rq003.dgn | CU 07276 | EA 121841

Dist	COUNTY	ROUTE	KILOMETER POST TOTAL PROJECT	SHEET No.	TOTAL SHEETS
07	LA	5	42.8/47.3	341	1073

REGISTERED CIVIL ENGINEER — DATE 2-09-09

REGISTERED PROFESSIONAL ENGINEER — MUNSHI MOHSIN No. 61916 Exp. 9/30/09 CIVIL — STATE OF CALIFORNIA

6-8-09
PLANS APPROVAL DATE

THE STATE OF CALIFORNIA OR ITS OFFICERS OR AGENTS SHALL NOT BE RESPONSIBLE FOR THE ACCURACY OR COMPLETENESS OF ELECTRONIC COPIES OF THIS PLAN SHEET.

Caltrans Metric

27.2 | 24.0 | 15.075 | SONORA AVENUE UC SEE STRUCTURE PLAN | 17.054

L = 4.6
He = 1200 mm

L = 4.6
He = 1200 mm

TOP OF SOUND WALL

TOP OF BARRIER

FG

OG

BOTTOM OF BARRIER

Exp J†

150.480 | 150.956 | 151.285 | 151.451 | 151.596

MATCH LINE STA 442+17.742 SEE SW-3

MATCH LINE STA 443+70.133 SEE SW-5

800 mm | 800 mm | 800 mm | 800 mm | 618 mm | 457 mm | 597 mm | 457 mm

2 PILES @ 1.2

17 PILES @ 1.6 | 15 PILES @ 1.6 | 9 PILES @ 1.6 | 11 PILES @ 1.6

156 155 154 153 152 151 150 149 148 147 146 145

442+20 | 442+40 | 442+60 | 442+80 | 443+00 | 443+20 | 443+40 | 443+60

ELEVATION

SCALE Vert = 1:50
Horiz = 1:250

R/W | LOL | REMOVE SOUND WALL | CONCRETE BARRIER (TYPE 736 SV) | FG | 4.27 | He | SLOPE 1:2 | 305 mm Min | L=4.6 | 400 mm CIDH PILES

TYPICAL SECTION
NO SCALE

R/W

+17.742 ℄ SW 437 LOL =
27.305 LT ℄ ROUTE 5 442+09.445
END SW ON Ret WALL
Beg SW ON BARRIER

+84.017 ℄ SW 437 LOL=
27.305 LT ℄ ROUTE 5 442+75.720
END SW ON BARRIER

+49.630 ℄ SW 437 LOL=
27.305 LT ℄ ROUTE 5 443+41.443
Beg SW ON BARRIER

214.326
N25°38'40"W

"SW 437" LOL

REMOVE SOUND WALL (SEE LAYOUT PLAN)

BC 443+44.623

"SW 437"

③

SONORA Ave

ROUTE 5

443

NO	R	Δ	T	L
③	797.00	7°28'08"	52.02	103.90

THIS PLAN ACCURATE FOR SOUND WALL WORK ONLY.

PLAN
SCALE 1:250

ALL DIMENSIONS ARE IN METERS
UNLESS OTHERWISE SHOWN

SOUND WALL PLAN

SOUND WALL 437

SW-4

REVISED BY	DATE REVISED
MM	12/08
KP	01/09

DAWIT WORKU — CALCULATED-DESIGNED BY
MUNSHI MOHSIN — CHECKED BY

FUNCTIONAL SUPERVISOR: CELINA ALIVES

STATE OF CALIFORNIA - DEPARTMENT OF TRANSPORTATION
Caltrans OFFICE OF DESIGN D

LAST REVISION DATE PLOTTED => 12-JUN-2009
TIME PLOTTED => 12:55
12-01-08

BORDER LAST REVISED 3/1/2007 | RELATIVE BORDER SCALE IS IN MILLIMETERS 0 20 40 60 80 | USERNAME => trmnguye | DGN FILE => 712184rq004.dgn | CU 07276 | EA 121841

Dist	COUNTY	ROUTE	KILOMETER POST TOTAL PROJECT	SHEET No.	TOTAL SHEETS
07	LA	5	42.8/47.3	342	1073

REGISTERED CIVIL ENGINEER — DATE 2-09-09

REGISTERED PROFESSIONAL ENGINEER — MUNSHI MOHSIN — No. 61916 — Exp. 9/30/09 — CIVIL — STATE OF CALIFORNIA

6-8-09
PLANS APPROVAL DATE

THE STATE OF CALIFORNIA OR ITS OFFICERS OR AGENTS SHALL NOT BE RESPONSIBLE FOR THE ACCURACY OR COMPLETENESS OF ELECTRONIC COPIES OF THIS PLAN SHEET.

REVISED BY	DATE REVISED
MM	12/08
KP	01/09

CALCULATED-DESIGNED BY: DAWIT WORKU
CHECKED BY: MUNSHI MOHSIN

FUNCTIONAL SUPERVISOR: CELINA AVILES

STATE OF CALIFORNIA - DEPARTMENT OF TRANSPORTATION
Caltrans OFFICE OF DESIGN D

6 @ 25.6
L = 4.600
HE = 1200 mm

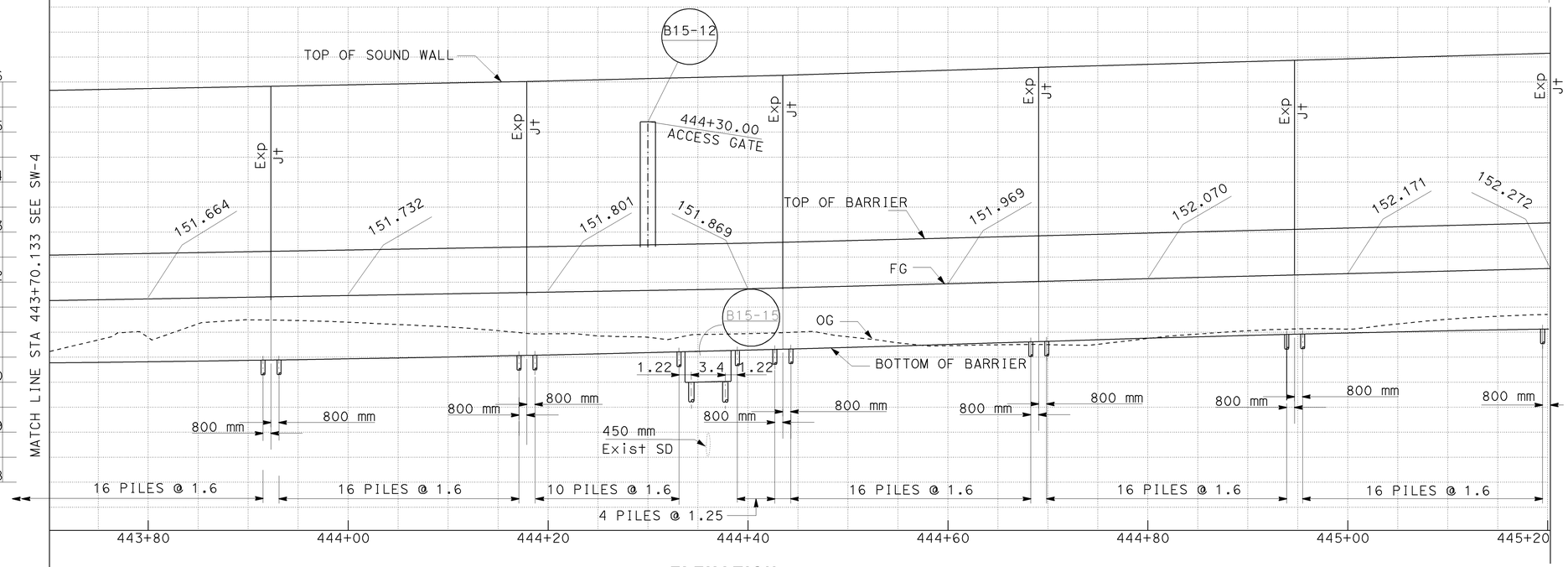

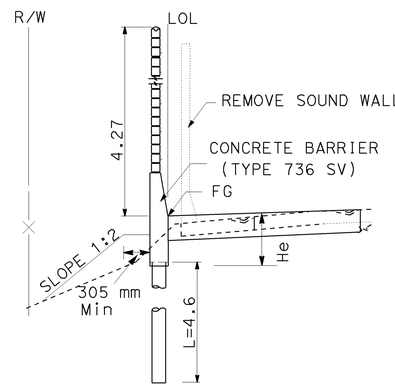

TYPICAL SECTION
NO SCALE

ELEVATION
SCALE Vert = 1:50
Horiz = 1:250

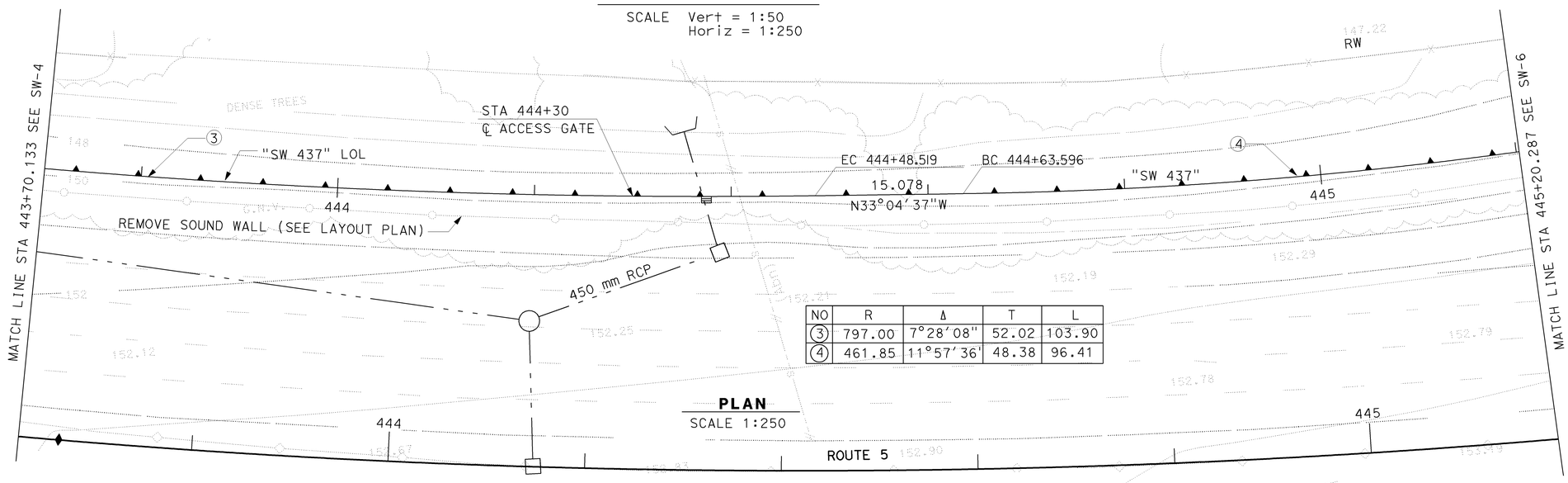

NO	R	Δ	T	L
③	797.00	7°28'08"	52.02	103.90
④	461.85	11°57'36"	48.38	96.41

PLAN
SCALE 1:250

THIS PLAN ACCURATE FOR SOUND WALL WORK ONLY.

ALL DIMENSIONS ARE IN METERS
UNLESS OTHERWISE SHOWN

SOUND WALL PLAN

SOUND WALL 437

SW-5

LAST REVISION DATE PLOTTED => 12-JUN-2009
TIME PLOTTED => 12:55
12-01-08

BORDER LAST REVISED 3/1/2007 | RELATIVE BORDER SCALE IS IN MILLIMETERS 0 20 40 60 80 | USERNAME => trmnguye | DGN FILE => 712184ra005.dgn | CU 07276 | EA 121841

Dist	COUNTY	ROUTE	KILOMETER POST TOTAL PROJECT	SHEET No.	TOTAL SHEETS
07	LA	5	42.8/47.3	343	1073

REGISTERED CIVIL ENGINEER 2-09-09 DATE

6-8-09
PLANS APPROVAL DATE

REGISTERED PROFESSIONAL ENGINEER MUNSHI MOHSIN No. 61916 Exp. 9/30/09 CIVIL STATE OF CALIFORNIA

THE STATE OF CALIFORNIA OR ITS OFFICERS OR AGENTS SHALL NOT BE RESPONSIBLE FOR THE ACCURACY OR COMPLETENESS OF ELECTRONIC COPIES OF THIS PLAN SHEET.

Caltrans Metric

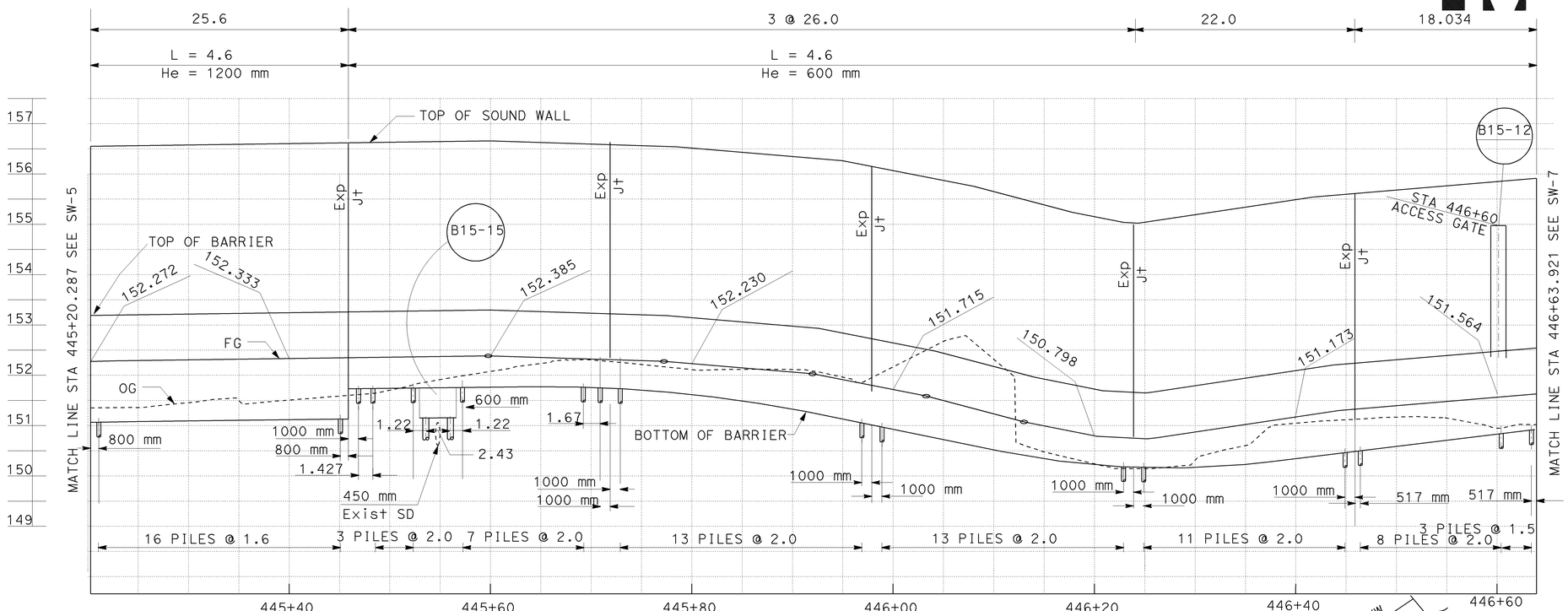

ELEVATION
SCALE Vert = 1:50
Horiz = 1:250

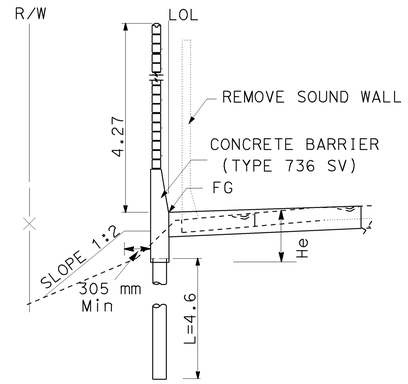

TYPICAL SECTION
NO SCALE

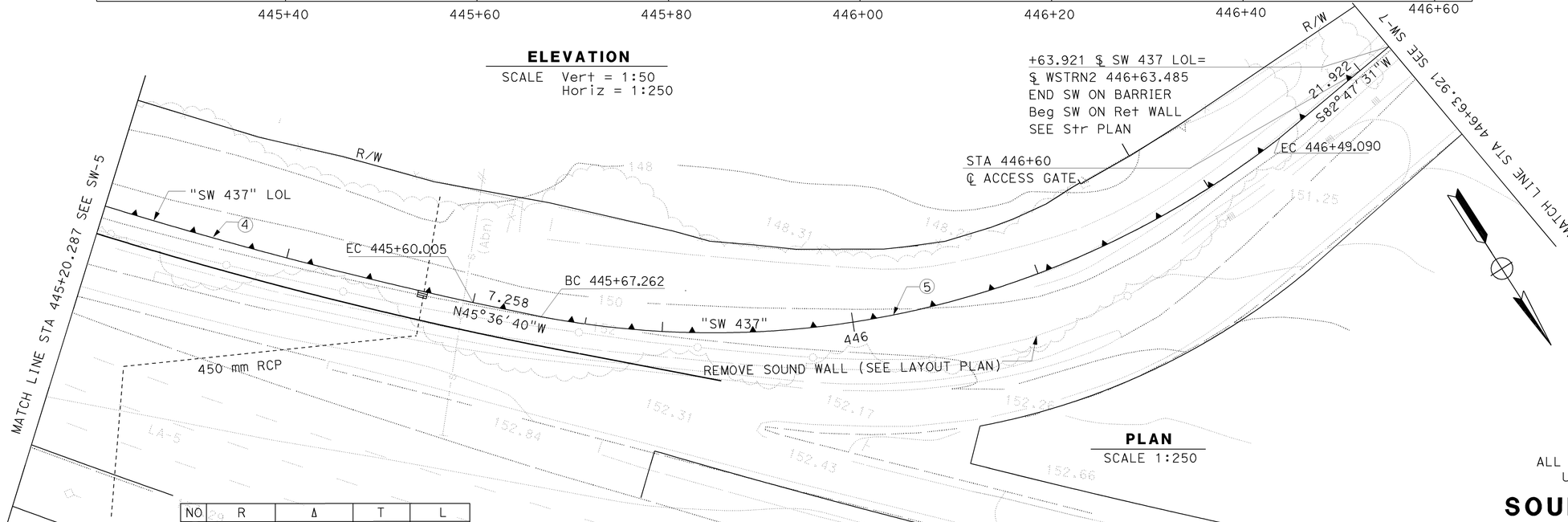

PLAN
SCALE 1:250

NO	R	Δ	T	L
4	461.85	11°57'36"	48.38	96.41
5	96.26	48°42'17"	43.57	81.83

ALL DIMENSIONS ARE IN METERS UNLESS OTHERWISE SHOWN

SOUND WALL PLAN

SOUND WALL 437

THIS PLAN ACCURATE FOR SOUND WALL WORK ONLY.

SW-6

STATE OF CALIFORNIA - DEPARTMENT OF TRANSPORTATION
Caltrans OFFICE OF DESIGN D

FUNCTIONAL SUPERVISOR: CELINA AVILES
CALCULATED-DESIGNED BY: DAWIT WORKU
CHECKED BY: MUNSHI MOHSIN
REVISED BY: MM
DATE REVISED: 12/08
KP 01/09

LAST REVISION 12-01-08
DATE PLOTTED => 12-JUN-2009
TIME PLOTTED => 12:55

Dist	COUNTY	ROUTE	KILOMETER POST TOTAL PROJECT	SHEET No.	TOTAL SHEETS
07	LA	5	42.8/47.3	344	1073

REGISTERED CIVIL ENGINEER — 2-09-09 DATE

MUNSHI MOHSIN No. 61916 Exp. 9/30/09 CIVIL — REGISTERED PROFESSIONAL ENGINEER — STATE OF CALIFORNIA

6-8-09
PLANS APPROVAL DATE

THE STATE OF CALIFORNIA OR ITS OFFICERS OR AGENTS SHALL NOT BE RESPONSIBLE FOR THE ACCURACY OR COMPLETENESS OF ELECTRONIC COPIES OF THIS PLAN SHEET.

Caltrans Metric

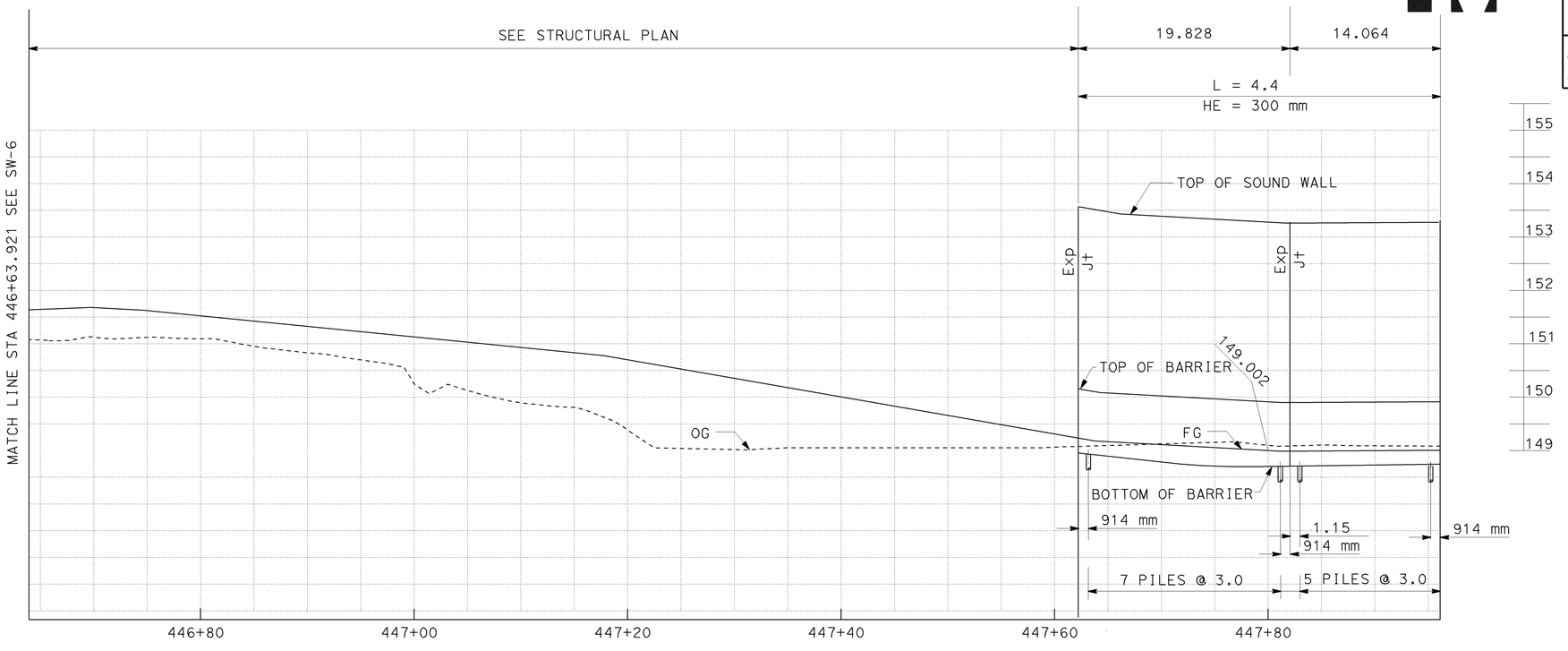

ELEVATION

SCALE Vert = 1:50
Horiz = 1:250

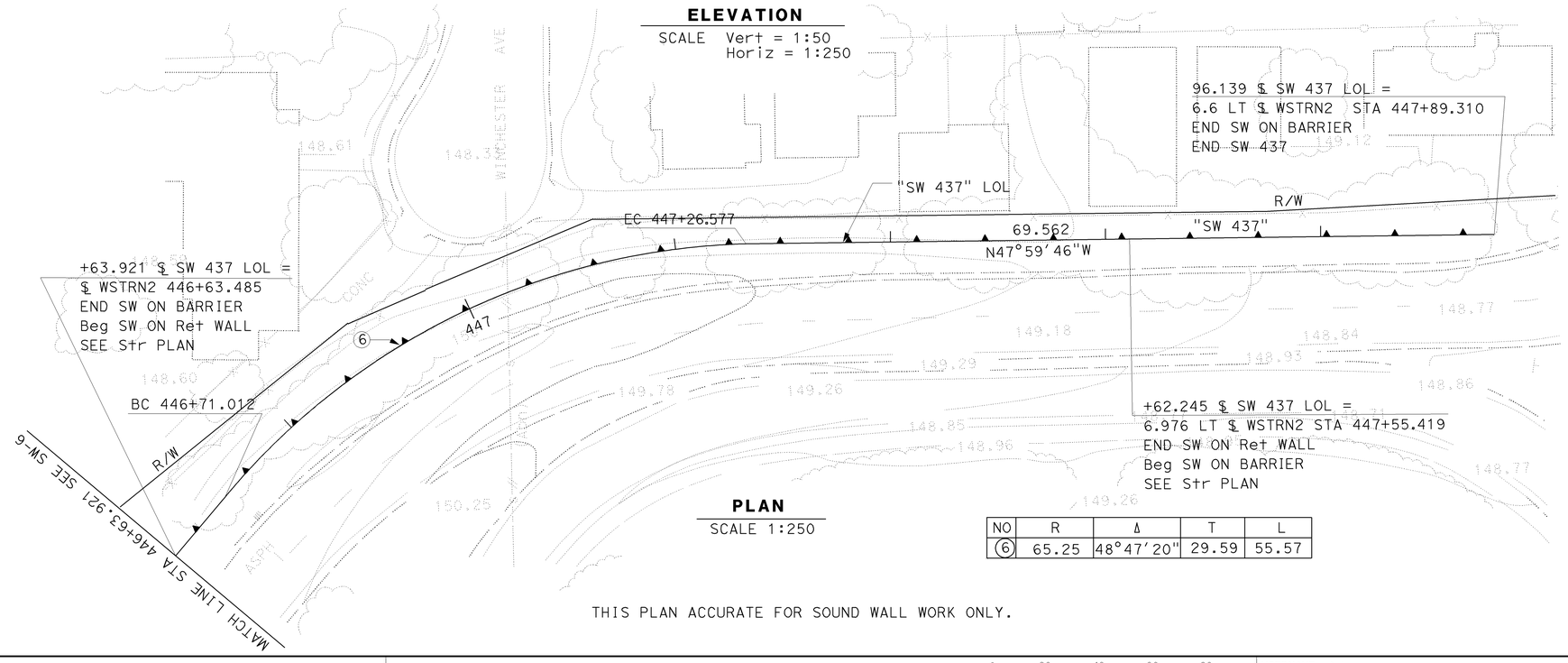

PLAN

SCALE 1:250

NO	R	Δ	T	L
⑥	65.25	48°47'20"	29.59	55.57

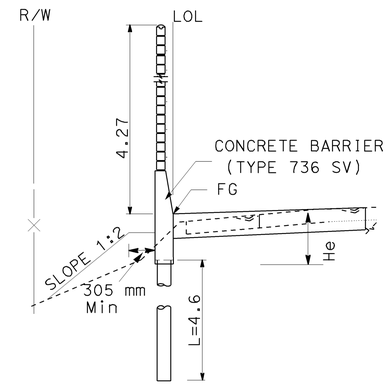

TYPICAL SECTION

NO SCALE

THIS PLAN ACCURATE FOR SOUND WALL WORK ONLY.

ALL DIMENSIONS ARE IN METERS
UNLESS OTHERWISE SHOWN

SOUND WALL PLAN

SOUND WALL 437

SW-7

FUNCTIONAL SUPERVISOR	CELINA AVILES	REVISED BY	KP
CALCULATED-DESIGNED BY	DAWIT WORKU	DATE REVISED	01/09
CHECKED BY	MUNSHI MOHSIN		12/08

STATE OF CALIFORNIA - DEPARTMENT OF TRANSPORTATION
Caltrans OFFICE OF DESIGN D

LAST REVISION DATE PLOTTED => 12-JUN-2009
TIME PLOTTED => 12:55
12-01-08

Dist	COUNTY	ROUTE	KILOMETER POST TOTAL PROJECT	SHEET No.	TOTAL SHEETS
07	LA	5	42.8/47.3	345	1073

REGISTERED CIVIL ENGINEER — DATE 2-09-09

MUNSHI MOHSIN No. 61916 Exp. 9/30/09 CIVIL — REGISTERED PROFESSIONAL ENGINEER — STATE OF CALIFORNIA

6-8-09
PLANS APPROVAL DATE

THE STATE OF CALIFORNIA OR ITS OFFICERS OR AGENTS SHALL NOT BE RESPONSIBLE FOR THE ACCURACY OR COMPLETENESS OF ELECTRONIC COPIES OF THIS PLAN SHEET.

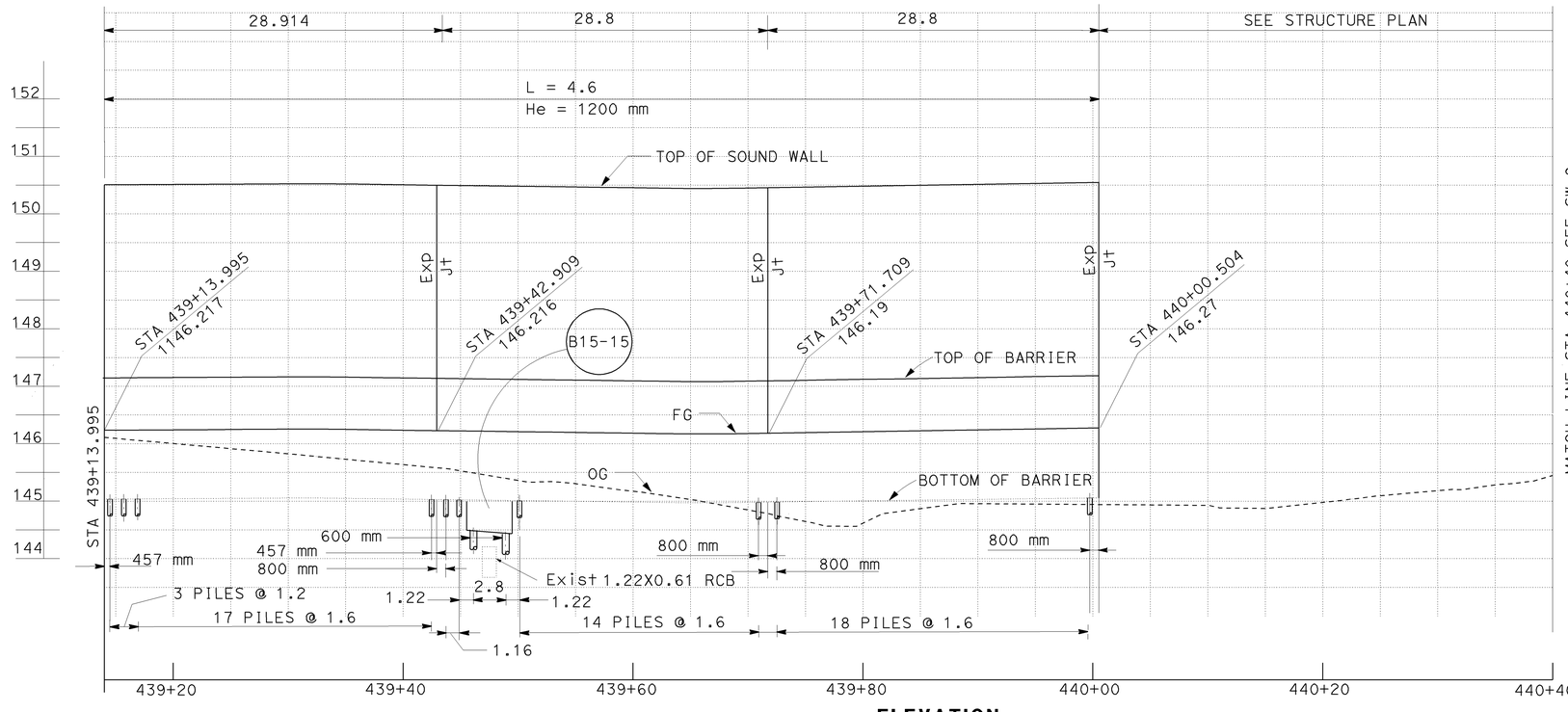

ELEVATION

SCALE Vert = 1:50
Horiz = 1:250

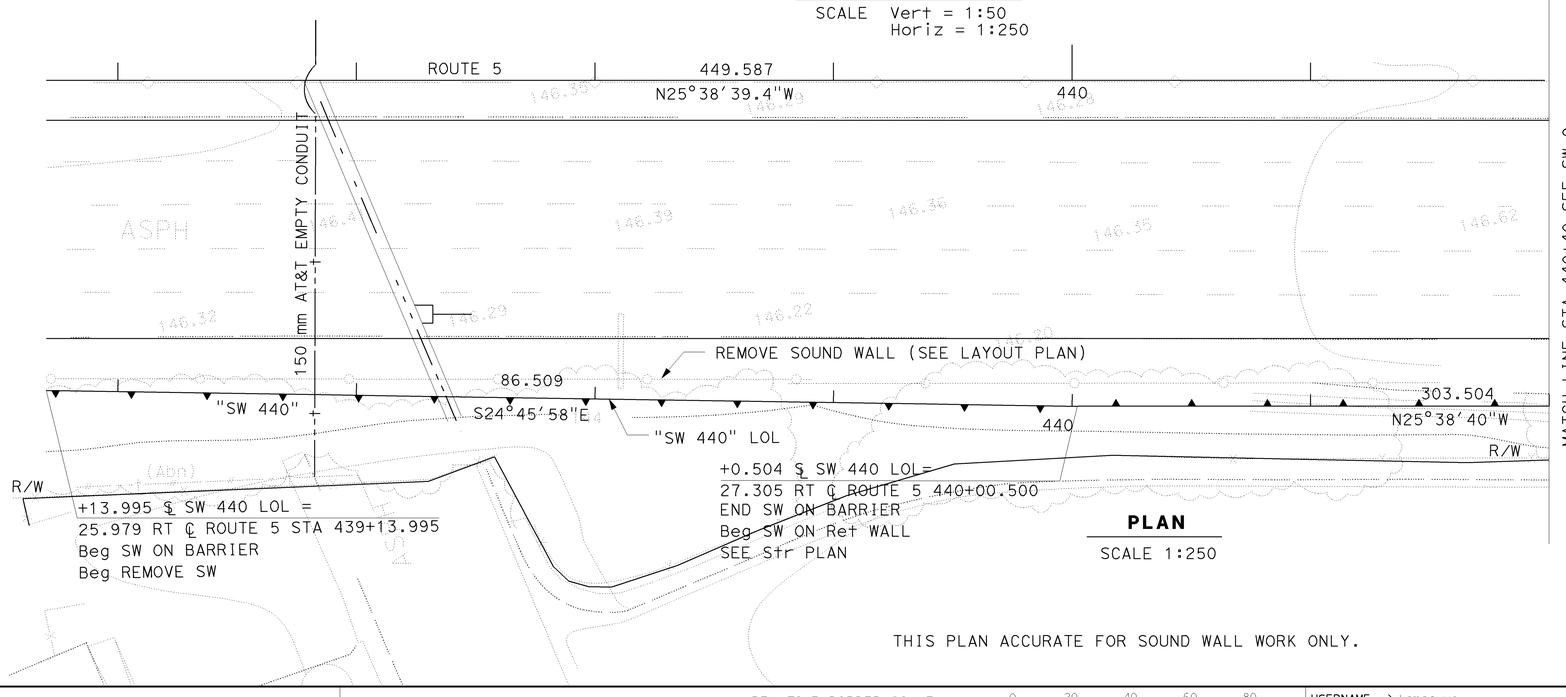

PLAN

SCALE 1:250

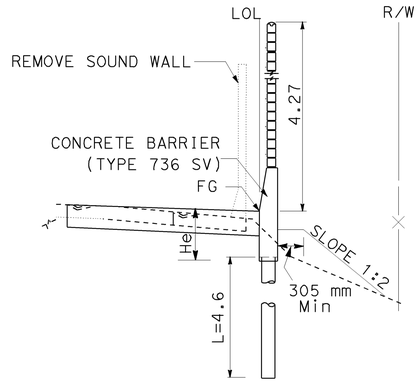

TYPICAL SECTION

NO SCALE

THIS PLAN ACCURATE FOR SOUND WALL WORK ONLY.

ALL DIMENSIONS ARE IN METERS
UNLESS OTHERWISE SHOWN

SOUND WALL PLAN

SOUND WALL 437

SW-8

STATE OF CALIFORNIA - DEPARTMENT OF TRANSPORTATION
Caltrans OFFICE OF DESIGN D

FUNCTIONAL SUPERVISOR: CELINA AVILES
CALCULATED-DESIGNED BY: DAWIT WORKU
CHECKED BY: MUNSHI MOHSIN
REVISED BY: MM KP
DATE REVISED: 12/08 01/09

LAST REVISION DATE PLOTTED => 12-JUN-2009
TIME PLOTTED => 12:55
12-01-08

BORDER LAST REVISED 3/1/2007

RELATIVE BORDER SCALE IS IN MILLIMETERS 0 20 40 60 80

USERNAME => trmnguye
DGN FILE => 712184rq008.dgn

CU 07276

EA 121841

Dist	COUNTY	ROUTE	KILOMETER POST TOTAL PROJECT	SHEET No.	TOTAL SHEETS
07	LA	5	42.8/47.3	346	1073

REGISTERED CIVIL ENGINEER — DATE 2-09-09

MUNSHI MOHSIN No. 61916 Exp. 9/30/09 CIVIL — REGISTERED PROFESSIONAL ENGINEER — STATE OF CALIFORNIA

6-8-09
PLANS APPROVAL DATE

THE STATE OF CALIFORNIA OR ITS OFFICERS OR AGENTS SHALL NOT BE RESPONSIBLE FOR THE ACCURACY OR COMPLETENESS OF ELECTRONIC COPIES OF THIS PLAN SHEET.

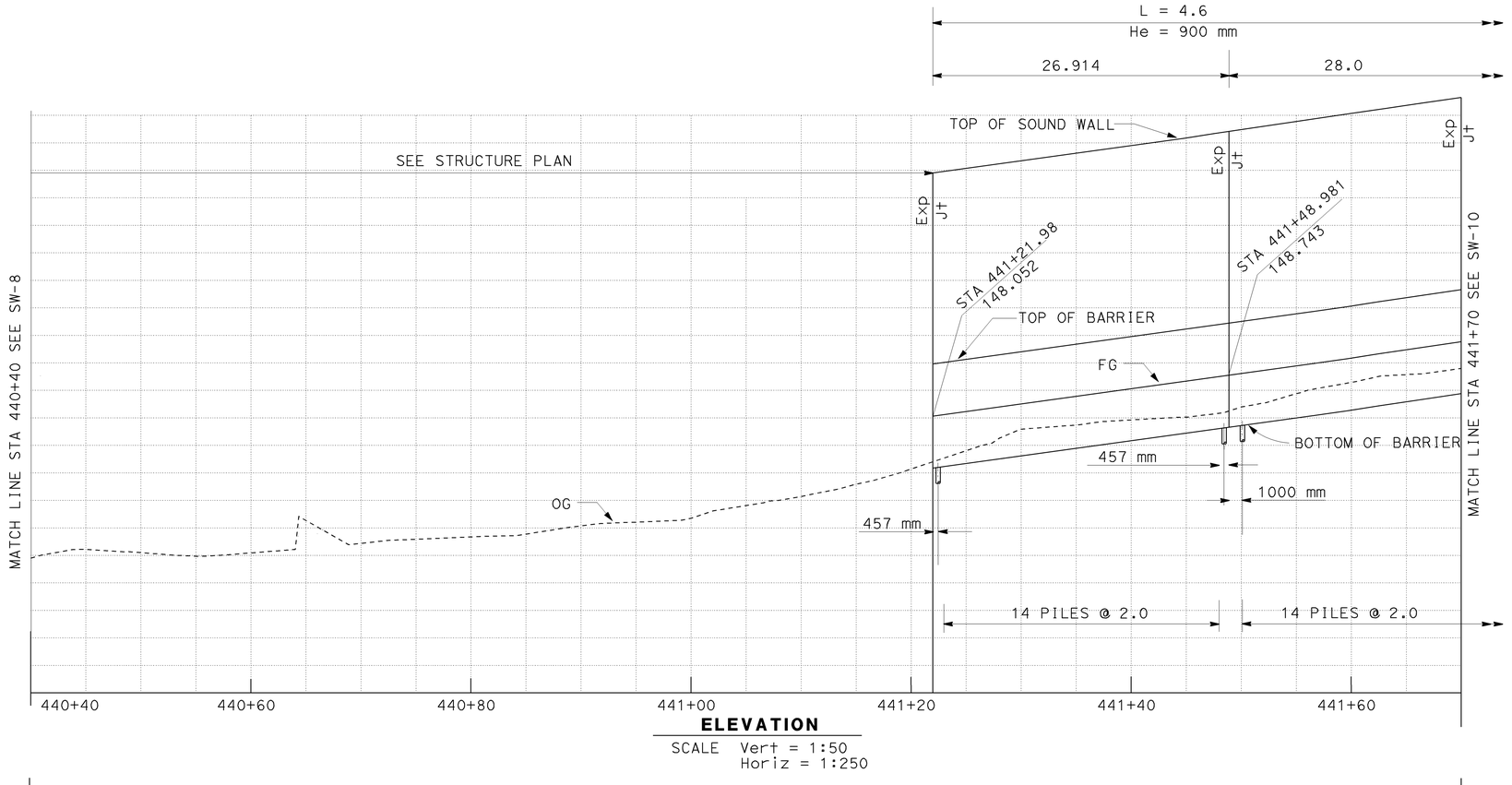

ELEVATION

SCALE Vert = 1:50
Horiz = 1:250

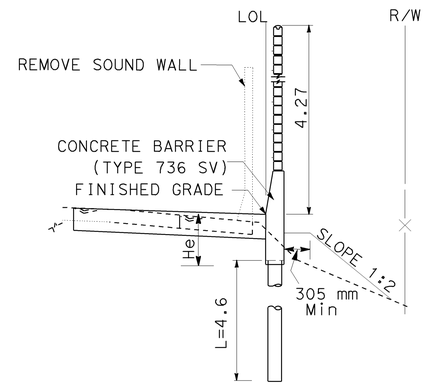

TYPICAL SECTION

NO SCALE

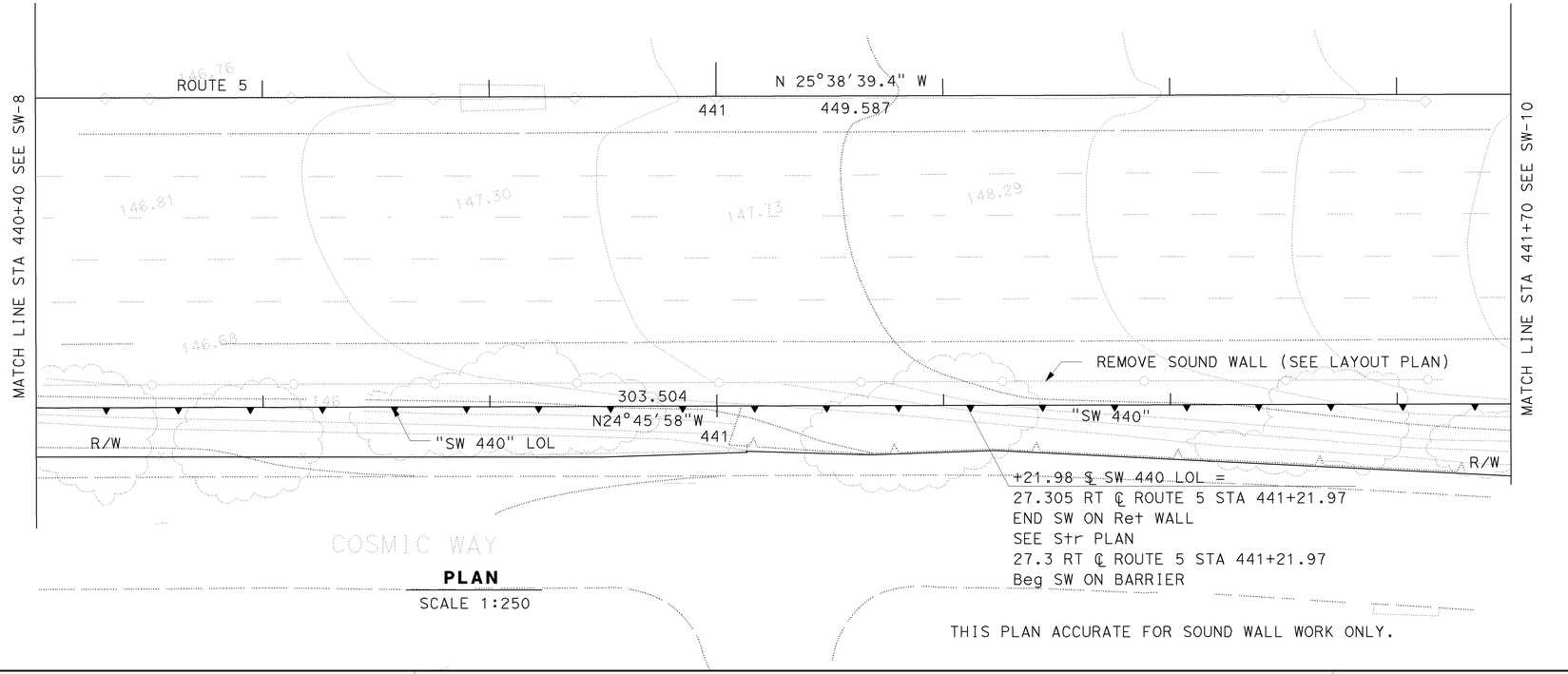

PLAN

SCALE 1:250

THIS PLAN ACCURATE FOR SOUND WALL WORK ONLY.

ALL DIMENSIONS ARE IN METERS
UNLESS OTHERWISE SHOWN

SOUND WALL PLAN

SOUND WALL 440

SW-9

	REVISED BY	DATE REVISED
DESIGNED BY	MM	12/08
CHECKED BY	KP	01/09
CALCULATED-	DAWIT WORKU	
CHECKED BY	MUNSHI MOHSIN	

FUNCTIONAL SUPERVISOR: CELINA AVILES

STATE OF CALIFORNIA - DEPARTMENT OF TRANSPORTATION
Caltrans OFFICE OF DESIGN D

LAST REVISION DATE PLOTTED => 12-JUN-2009
12-01-08 TIME PLOTTED => 12:55

BORDER LAST REVISED 3/1/2007

RELATIVE BORDER SCALE IS IN MILLIMETERS 0 20 40 60 80

USERNAME => trmnguye
DGN FILE => 712184ra009.dgn

CU 07276

EA 121841

Dist	COUNTY	ROUTE	KILOMETER POST TOTAL PROJECT	SHEET No.	TOTAL SHEETS
07	LA	5	42.8/47.3	347	1073

REGISTERED CIVIL ENGINEER — DATE 2-09-09

REGISTERED PROFESSIONAL ENGINEER — MUNSHI MOHSIN No. 61916 Exp. 9/30/09 CIVIL — STATE OF CALIFORNIA

6-8-09
PLANS APPROVAL DATE

THE STATE OF CALIFORNIA OR ITS OFFICERS OR AGENTS SHALL NOT BE RESPONSIBLE FOR THE ACCURACY OR COMPLETENESS OF ELECTRONIC COPIES OF THIS PLAN SHEET.

Caltrans Metric

REVISED BY	DATE REVISED
KP	01/09
MM	12/08

CALCULATED-DESIGNED BY: DAWIT WORKU
CHECKED BY: MUNSHI MOHSIN
FUNCTIONAL SUPERVISOR: CELINA AVILES

STATE OF CALIFORNIA - DEPARTMENT OF TRANSPORTATION
Caltrans OFFICE OF DESIGN D

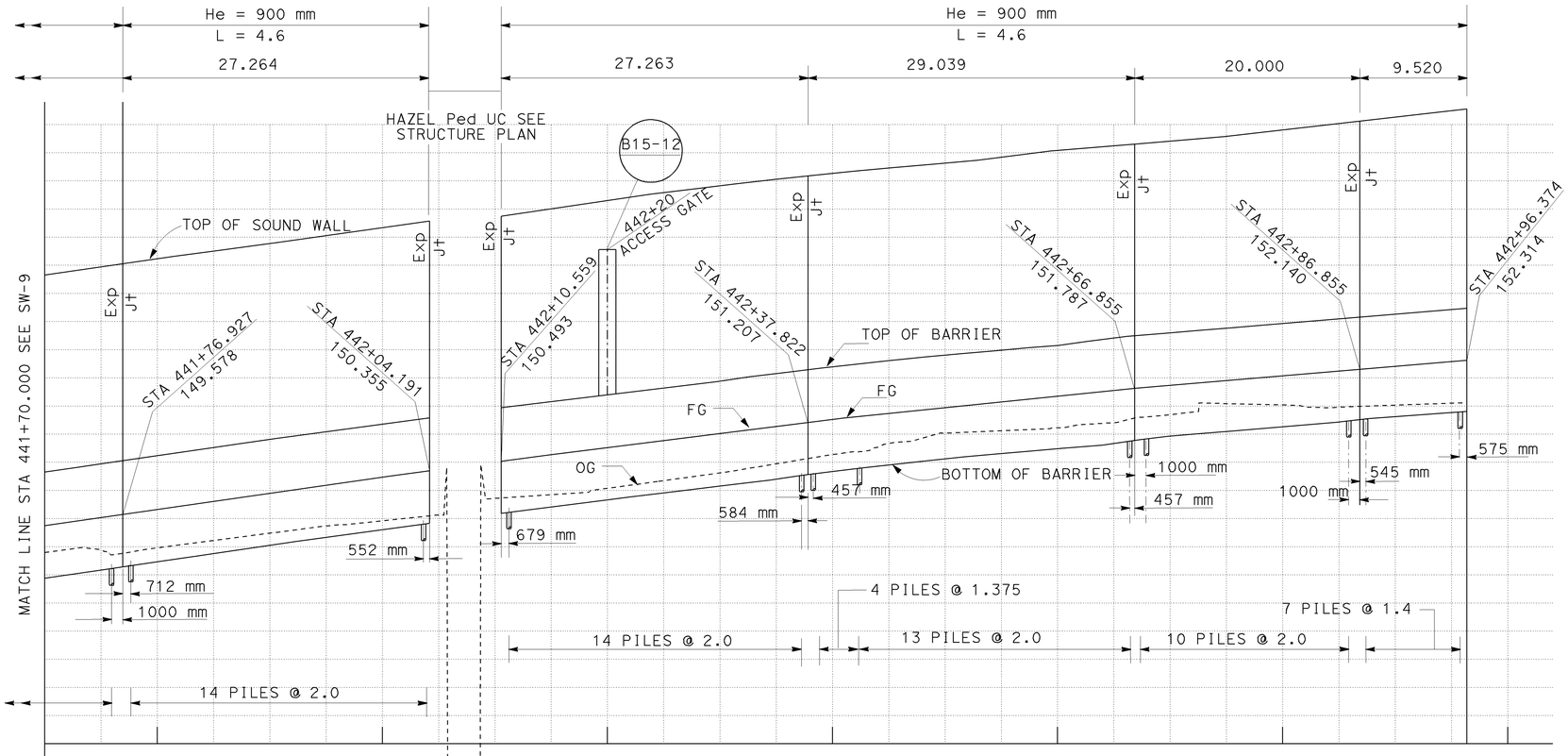

ELEVATION
SCALE Vert = 1:50
Horiz = 1:250

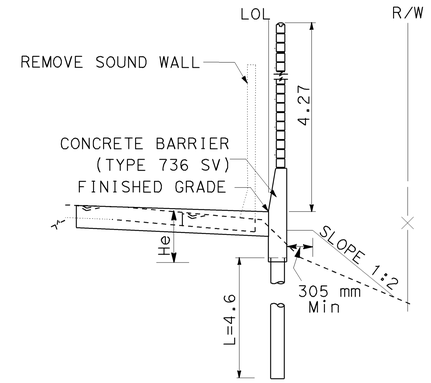

TYPICAL SECTION
NO SCALE

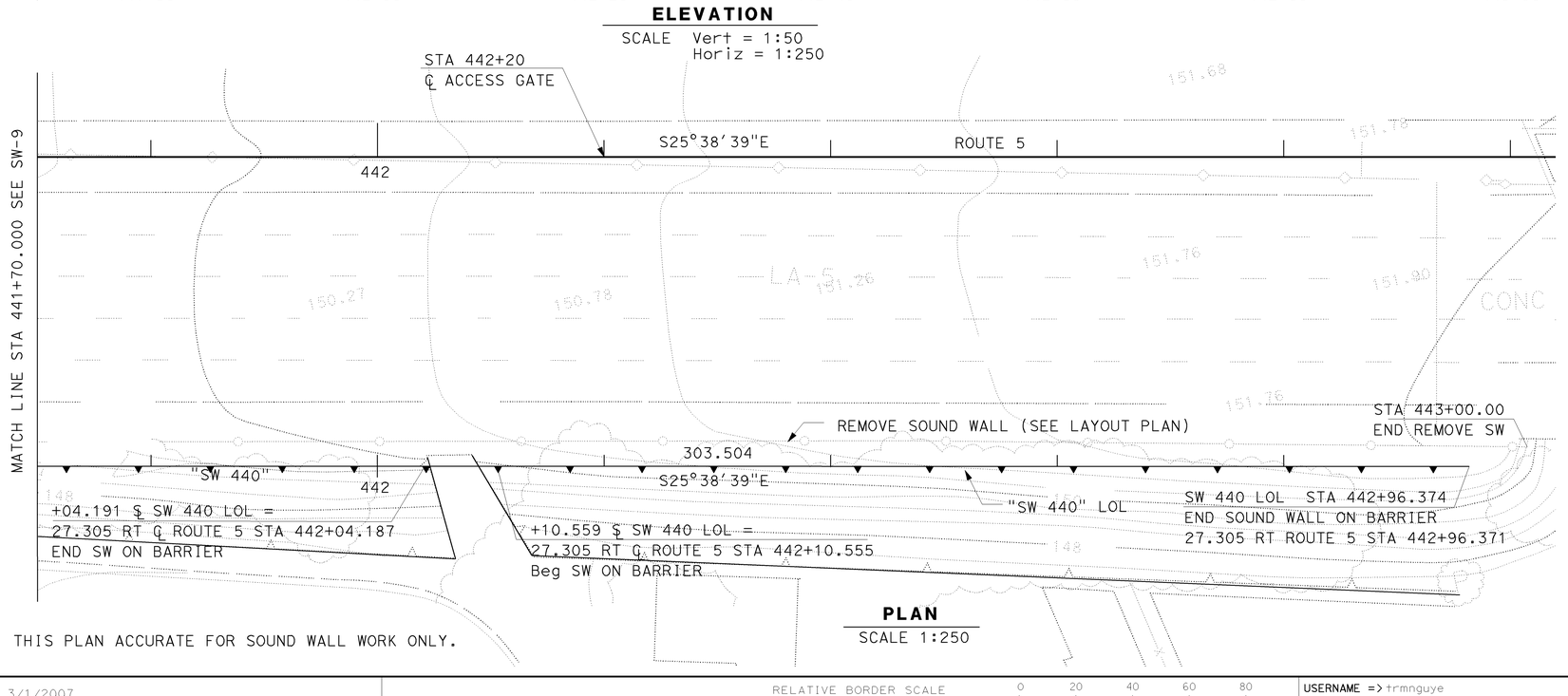

PLAN
SCALE 1:250

THIS PLAN ACCURATE FOR SOUND WALL WORK ONLY.

ALL DIMENSIONS ARE IN METERS
UNLESS OTHERWISE SHOWN

SOUND WALL PLAN

SOUND WALL 440

SW-10

LAST REVISION: DATE PLOTTED => 12-JUN-2009
12-01-08 TIME PLOTTED => 12:55

BORDER LAST REVISED 3/1/2007 — RELATIVE BORDER SCALE IS IN MILLIMETERS 0 20 40 60 80 — USERNAME => trmnguye — DGN FILE => 712184rq010.dgn — CU 07276 — EA 121841

Dist	COUNTY	ROUTE	KILOMETER POST TOTAL PROJECT	SHEET No.	TOTAL SHEETS
07	LA	5	42.8/47.3	348	1073

LICENSED LANDSCAPE ARCHITECT

6-8-09
PLANS APPROVAL DATE

THE STATE OF CALIFORNIA OR ITS OFFICERS OR AGENTS SHALL NOT BE RESPONSIBLE FOR THE ACCURACY OR COMPLETENESS OF ELECTRONIC COPIES OF THIS PLAN SHEET.

LICENSED LANDSCAPE ARCHITECT — JOSEPH MILLMAN — NO. 1837 — RENEWAL DATE 07/31/10 — ORIGINAL DATE 02/17/09 — STATE OF CALIFORNIA

LEGEND:

	SYMBOL	NOMINAL SIZE	TEXTURE	COLOR
(A)		203 mm × 203 mm × 406 mm	4-SCORE SPLIT FACE REVERSE SIDE PRECISION BLOCK	TAN *
(B)		203 mm × 203 mm × 406 mm	PRECISION FACE REVERSE SIDE 4-SCORE SPLIT FACE	TAN *

* MATCH ANGELES BLOCK COMPANY COLOR # 207 OR EQUAL

NOTES:

1. BOND (TYPE 1) STAKED BOND.
2. MORTAR COLOR TO MATCH BLOCK.
3. TOOLED JOINTS.
4. BLOCKS ON BRIDGE SHALL BE PRECISION BLOCK BOTH SIDES (MEDIUM WEIGHT).
5. PILASTER EFFECT (PRECISION SIDE TO FREEWAY) IS NOT TO BE USED ON END ADJACENT TO BRIDGE.
6. PLACE ELEVATION CHANGE AT EXPANSION JOINTS WHERE POSSIBLE

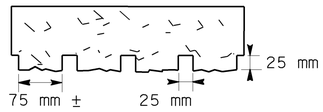

4 SCORE SPLIT FACE

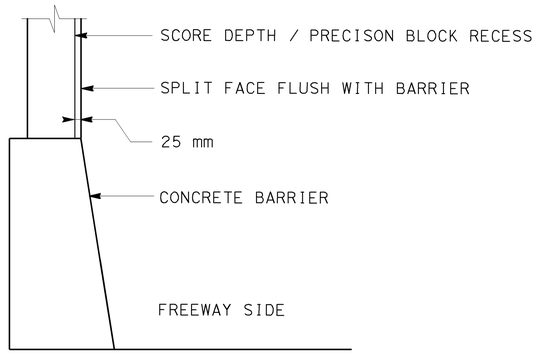

BARRIER SECTION

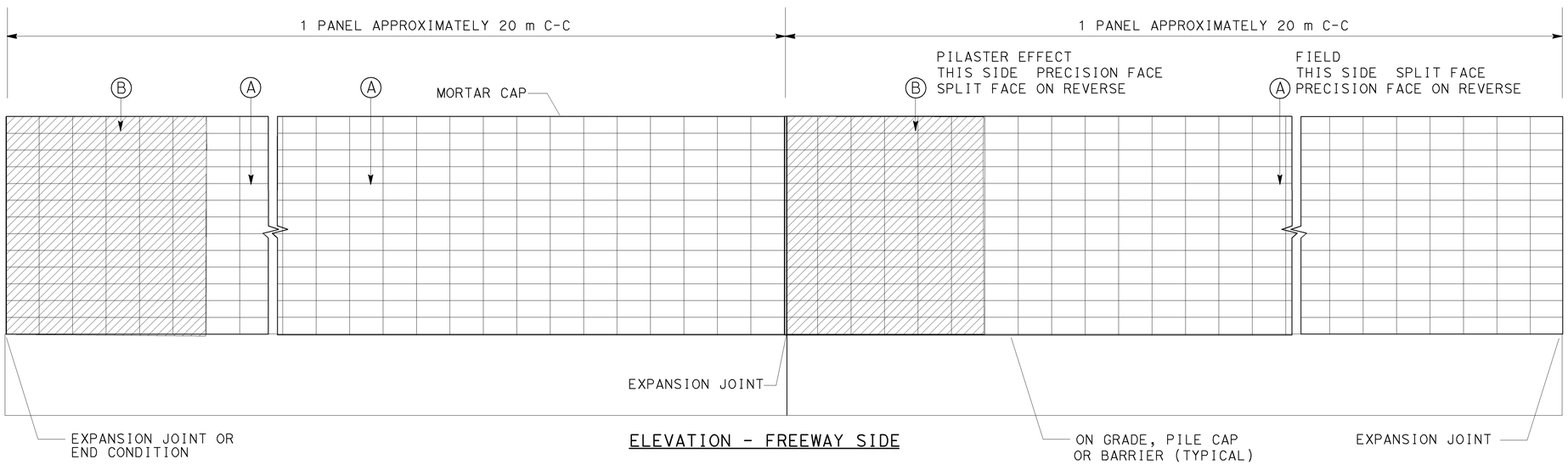

ELEVATION - FREEWAY SIDE

WALL PATTERN

ALL DIMENSIONS ARE IN METERS UNLESS OTHERWISE SHOWN

AESTHETIC SOUND WALL DETAILS

NO SCALE

SW-11

THIS PLAN IS ACCURATE FOR AESTHETIC WORK ONLY

11/20/07	J MILLMAN	CALCULATED-DESIGNED BY	SENIOR LANDSCAPE ARCHITECT
11/20/07	D PERSOFF	CHECKED BY	PATRICIA WATANABE
REVISED BY			
DATE REVISED			

STATE OF CALIFORNIA - DEPARTMENT OF TRANSPORTATION
Caltrans
LANDSCAPE ARCHITECTURE

LAST REVISION 11-10-08 | DATE PLOTTED => 12-JUN-2009 | TIME PLOTTED => 12:56

BORDER LAST REVISED 3/1/2007 | RELATIVE BORDER SCALE IS IN MILLIMETERS 0 20 40 60 80 | USERNAME => trmnguye | DGN FILE => 712184rg011.dgn | CU 07341 | EA 121841

Dist	COUNTY	ROUTE	KILOMETER POST TOTAL PROJECT	SHEET No.	TOTAL SHEETS
07	LA	5	42.8/47.3	349	1073

LICENSED LANDSCAPE ARCHITECT

6-8-09
PLANS APPROVAL DATE

JOSEPH MILLMAN — No. 1837 — Exp. Date 07/31/10 — Renewal Date 02/17/09 — STATE OF CALIFORNIA — LICENSED LANDSCAPE ARCHITECT

THE STATE OF CALIFORNIA OR ITS OFFICERS OR AGENTS SHALL NOT BE RESPONSIBLE FOR THE ACCURACY OR COMPLETENESS OF ELECTRONIC COPIES OF THIS PLAN SHEET.

ABBREVIATIONS

AMEND — amendment
B & B — balled and burlapped
DIA — diameter
EA — each
g — gram
kg — kilogram
m — meter
m^2 — square meter
m^3 — cubic meter
MAX — maximum
MIN — minimum
mm — millimeter
No — number
Pkt — packet
PLT ESTB — plant establishment
PVMT — pavement
R/W — right of way
SF — state furnished
TRVD — traveled

NOTE:
Underlined portions of botanical name indicate abbreviations used on Planting Plans.

PLANT LIST AND PLANTING SPECIFICATIONS

PLANT GROUP	PLANT No	SYMBOL	BOTANICAL NAME	COMMON NAME	SIZE	QUANTITY EACH	HOLE SIZE (mm) DIA	HOLE SIZE (mm) DEPTH	BASIN TYPE	IRON SULFATE ①	SOIL AMEND ①	COMMERCIAL FERTILIZER ① PLANTING	COMMERCIAL FERTILIZER ① PLT ESTB	BASIN MULCH m3	STAKING	PLANTING LIMITS MINIMUM DISTANCE (m) FROM TRVD WAY	PVMT	FENCE	WALL	PAVED DITCH	EARTH DITCH	ON CENTER (m)	REMARKS
A			ACACIA REDOLENS DESERT CARPET	PROSTRATE ACACIA	No 1	79	450	②	I	---	---	1 PKTS	0.023 Kg	0.04	---	---	6.0	6.0	6.0	6.0	7.0	4.5	SHRUB GROUNDCOVER
			ALOE ARBORENSIS	TREE ALOE	No 1	160	450	②	I	---	---	1 PKTS	0.023 Kg	0.04	---	---	1.5	2.0	2.0	2.0	2.5	2.0	SHRUB
			PARTHENOCISSUS TRICUSPIDATA	BOSTON IVY	No 1	716	450	②	I	---	---	1 PKTS	0.023 Kg	0.04	⑥	---	---	---	---	4.0	4.5	3.0	VINE
			PITTOSPORUM CRASSIFOLIUM	NCN	No 1	143	450	②	I	---	---	1 PKTS	0.023 Kg	0.04	---	---	4.5	3.0	3.0	3.0	3.5	3.0	SHRUB
			QUERCUS AGRIFOLIA	COAST LIVE OAK	No 1	7	450	②	I	---	---	---	---	0.04	⑥	9.5	---	6.0	4.5	4.5	5.0	---	TREE
			RHUS OVATA	SUGAR BUSH	No 1	28	450	②	I	---	---	1 PKTS	0.023 Kg	0.04	---	---	4.5	3.0	3.0	3.0	3.5	3.0	SHRUB
B			PINUS CANARIENSIS	CANARY ISLAND PINE	No 5	79	900	②	I	---	---	2 PKTS	0.069 Kg	0.12	⑥	12.5	---	6.0	6.0	3.0	3.5	---	TREE
			TRISTANIOPSIS LAURINA	SWAMP MYRTLE	No 5	38	900	②	I	---	---	2 PKTS	0.069 Kg	0.12	⑥	6.0	---	4.5	4.5	4.5	5.0	---	TREE
F			CARPOBROTUS EDULIS	HOTTENTOT FIG	CUTTING	120264	②	②	---	---	---	5 Kg/ 1000m^2	5 Kg/ 1000m^2	---	---	---	1.5	2.0	2.0	2.0	2.5	0.4	GROUND COVER
H			HEDERA CANARIENSIS	ALGERIAN IVY	IN FLATS	207446	②	②	---	---	---	5 Kg/ 1000m^2	5 Kg/ 1000m^2	---	---	---	1.5	2.0	2.0	2.0	2.5	0.4	GROUND COVER
U			LAGERSTROEMIA INDICA 'MUSCOGEE'	CRAPE MYRTLE	No 15	76	1200	②	I	---	---	---	0.18 Kg	0.36	⑥	9.5	---	4.5	4.5	3.0	3.5	---	TREE
			PLATANUS RACEMOSA	CALIFORNIA SYCAMORE	No 15	36	1200	②	I	---	---	---	0.18 Kg	0.36	⑥	12.5	---	6.0	6.0	3.0	3.5	---	TREE
			SCHINUS MOLLE	CALIFORNIA PEPPER	No 15	173	1200	②	I	---	---	---	0.18 Kg	0.36	⑥	12.5	---	6.0	5.0	3.0	3.5	---	TREE

APPLICABLE WHEN CIRCLED:

① - Quantities shown are "per plant" unless shown as m^2 application rates.
② - Sufficient to receive root ball.
3 - Does not apply to mulch areas.
4 - As shown on plans.
5 - Unless otherwise shown on plans.
⑥ - See detail.
7 - See Special Provisions.

NOTE:

Roadside Clearing in new groundcover areas shall remove Acacia and dead plants, cutting stumps to grade and not removing roots. Stumps shall be killed. Same species groundcovers shall remain.

LEGEND:

RC XX m^2 — ROADSIDE CLEARING
MC XX m^2 — MINOR CONCRETE (TEXTURED PAVING) (SEE LAYOUT PLANS)
EC XX m^2 — EROSION CONTROL (TYPE D)
M XX m^3 — MULCH (100 mm DEEP)
MP XX m^2 — Exist PLANTS
XX m^2 — ROCK BLANKET
Exist TREES

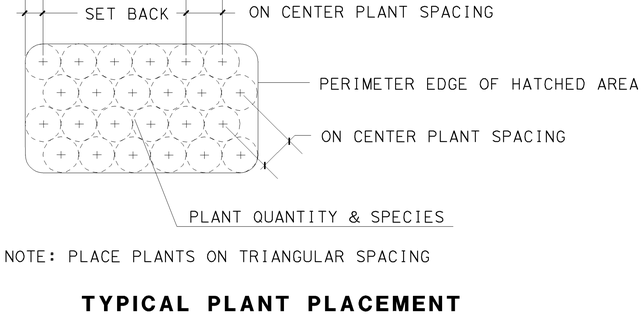

NOTE: PLACE PLANTS ON TRIANGULAR SPACING

TYPICAL PLANT PLACEMENT
NO SCALE

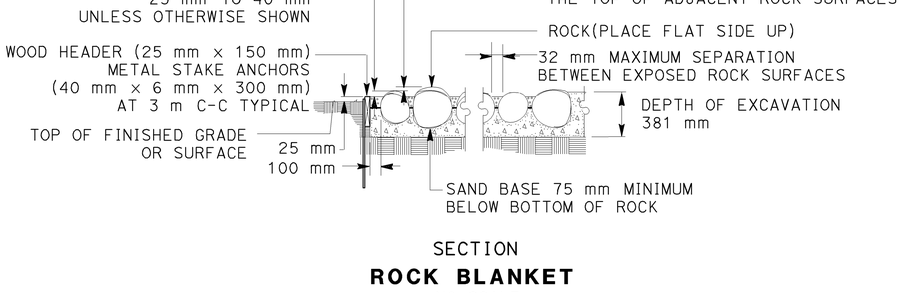

SECTION
ROCK BLANKET
NO SCALE

ALL DIMENSIONS ARE IN MILLIMETERS UNLESS OTHERWISE NOTED

PLANT LIST

PL-1

THIS PLAN IS ACCURATE FOR LANDSCAPE WORK ONLY

STATE OF CALIFORNIA - DEPARTMENT OF TRANSPORTATION
LANDSCAPE ARCHITECTURE
SENIOR LANDSCAPE ARCHITECT
PATRICIA WATANABE
CALCULATED-DESIGNED BY
CHECKED BY
J MILLMAN
D PERSOFF
REVISED BY
DATE REVISED
12/11/07
12/11/07

LAST REVISION 12-05-08
DATE PLOTTED => 12-JUN-2009
TIME PLOTTED => 12:56

BORDER LAST REVISED 3/1/2007
RELATIVE BORDER SCALE IS IN MILLIMETERS 0 20 40 60 80
USERNAME => trmnguye
DGN FILE => 712184te001.dgn
CU 07341
EA 121841

NOTE: FOR COMPLETE RIGHT OF WAY AND ACCURATE ACCESS DATA, SEE RIGHT OF WAY RECORD MAPS AT DISTRICT OFFICE.

ALL WORK SHALL BE WITHIN THE STATE R/W.

Dist	COUNTY	ROUTE	KILOMETER POST TOTAL PROJECT	SHEET No.	TOTAL SHEETS
07	LA	5	42.8/47.3	350	1073

LICENSED LANDSCAPE ARCHITECT

6-8-09
PLANS APPROVAL DATE

THE STATE OF CALIFORNIA OR ITS OFFICERS OR AGENTS SHALL NOT BE RESPONSIBLE FOR THE ACCURACY OR COMPLETENESS OF ELECTRONIC COPIES OF THIS PLAN SHEET.

LICENSED LANDSCAPE ARCHITECT — JOSEPH MILLMAN — NO. 1837 — 07/31/10 RENEWAL DATE — 02/17/09 DATE — STATE OF CALIFORNIA

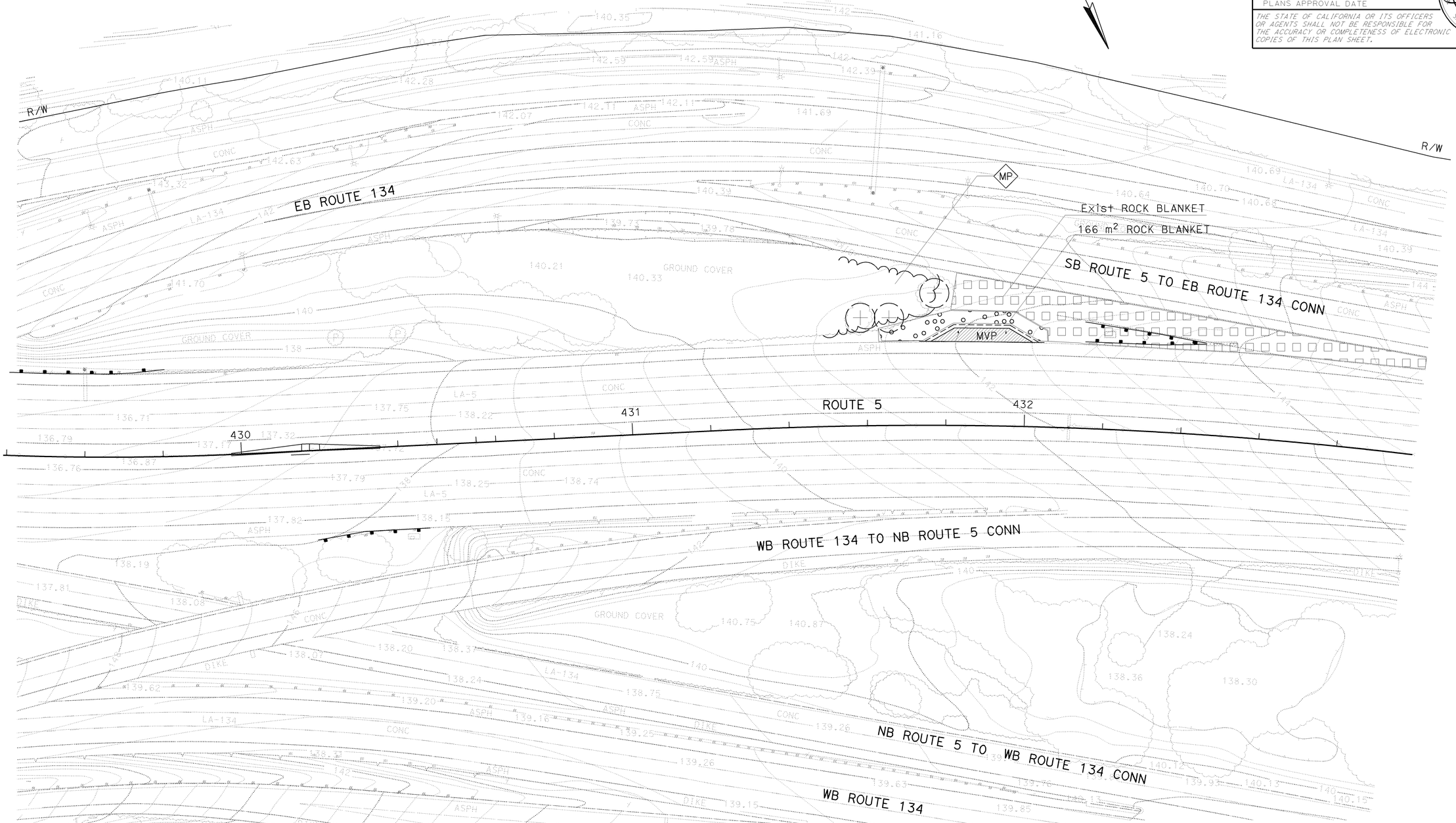

ALL DIMENSIONS ARE IN METERS UNLESS OTHERWISE NOTED

PLANTING PLAN

SCALE 1:500

PP-1

THIS PLAN IS ACCURATE FOR LANDSCAPE WORK ONLY

STATE OF CALIFORNIA - DEPARTMENT OF TRANSPORTATION
LANDSCAPE ARCHITECTURE
SENIOR LANDSCAPE ARCHITECT PATRICIA WATANABE
CALCULATED-DESIGNED BY
CHECKED BY
J MILLMAN
D PERSOFF
REVISED BY
DATE REVISED
12/11/07
12/11/07

LAST REVISION DATE PLOTTED => 12-JUN-2009
TIME PLOTTED => 12:56
11-10-08

BORDER LAST REVISED 3/1/2007

RELATIVE BORDER SCALE IS IN MILLIMETERS 0 20 40 60 80

USERNAME => trmnguye
DGN FILE => 712184ti001.dgn

CU 07341

EA 121841

NOTE: FOR COMPLETE RIGHT OF WAY AND ACCURATE ACCESS DATA, SEE RIGHT OF WAY RECORD MAPS AT DISTRICT OFFICE.

ALL WORK SHALL BE WITHIN THE STATE R/W.

Dist	COUNTY	ROUTE	KILOMETER POST TOTAL PROJECT	SHEET No.	TOTAL SHEETS
07	LA	5	42.8/47.3	351	1073

LICENSED LANDSCAPE ARCHITECT

6-8-09

PLANS APPROVAL DATE

THE STATE OF CALIFORNIA OR ITS OFFICERS OR AGENTS SHALL NOT BE RESPONSIBLE FOR THE ACCURACY OR COMPLETENESS OF ELECTRONIC COPIES OF THIS PLAN SHEET.

LICENSED LANDSCAPE ARCHITECT JOSEPH MILLMAN NO. 1831 Signature 07/31/10 Renewal Date 02/17/09 Date STATE OF CALIFORNIA

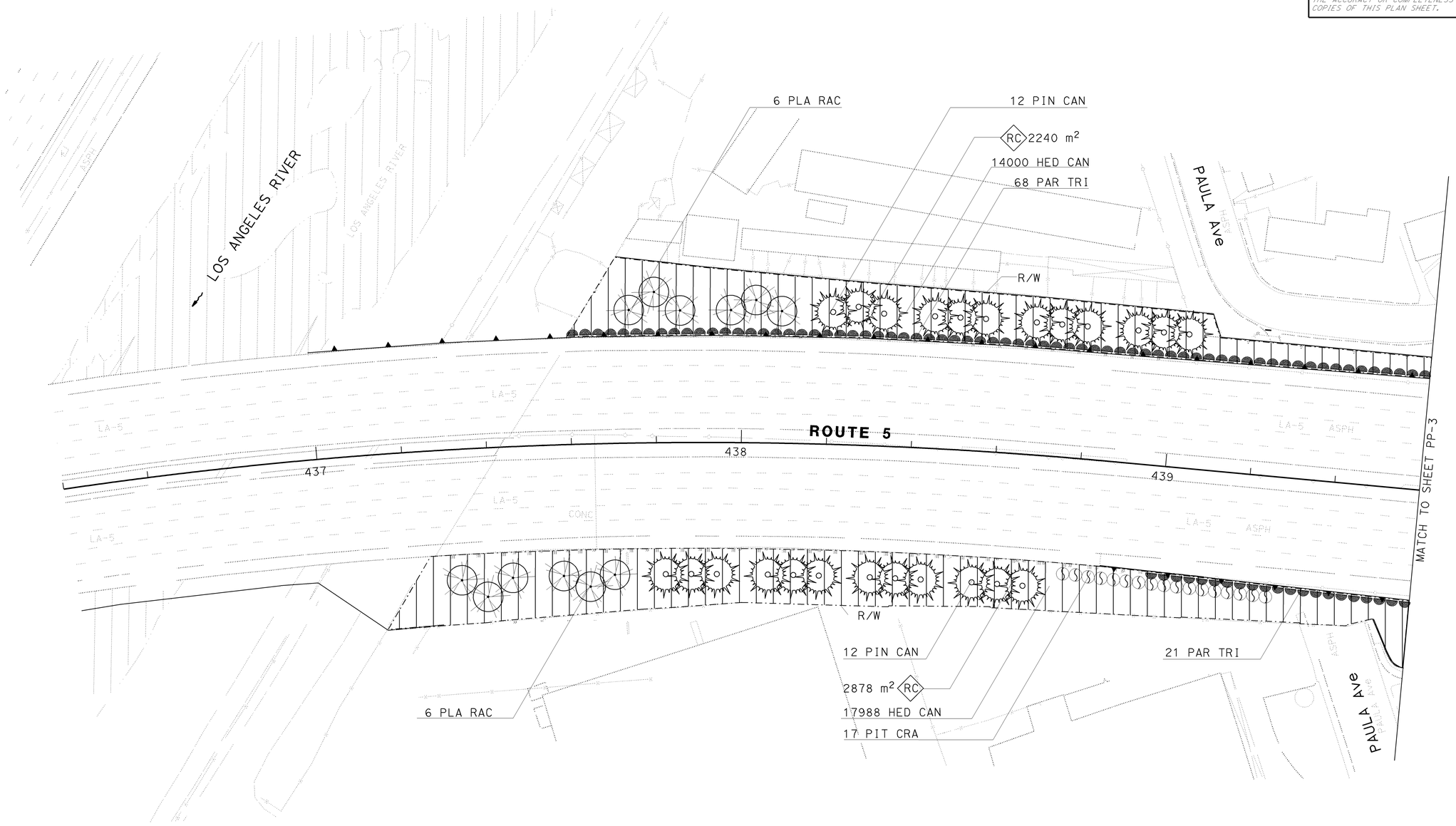

ALL DIMENSIONS ARE IN METERS UNLESS OTHERWISE NOTED

PLANTING PLAN

SCALE 1:500

PP-2

THIS PLAN IS ACCURATE FOR LANDSCAPE WORK ONLY

STATE OF CALIFORNIA - DEPARTMENT OF TRANSPORTATION

Caltrans LANDSCAPE ARCHITECTURE

SENIOR LANDSCAPE ARCHITECT: PATRICIA WATANABE

CALCULATED-DESIGNED BY: J MILLMAN

CHECKED BY: D PERSOFF

REVISED BY: 10-20-07

DATE REVISED: 10-20-07

LAST REVISION 11-10-08

DATE PLOTTED => 12-JUN-2009

TIME PLOTTED => 11:16

NOTE: FOR COMPLETE RIGHT OF WAY AND ACCURATE ACCESS DATA, SEE RIGHT OF WAY RECORD MAPS AT DISTRICT OFFICE.

ALL WORK SHALL BE WITHIN THE STATE R/W.

Dist	COUNTY	ROUTE	KILOMETER POST TOTAL PROJECT	SHEET No.	TOTAL SHEETS
07	LA	5	42.8/47.3	352	1073

LICENSED LANDSCAPE ARCHITECT

6-8-09

PLANS APPROVAL DATE

THE STATE OF CALIFORNIA OR ITS OFFICERS OR AGENTS SHALL NOT BE RESPONSIBLE FOR THE ACCURACY OR COMPLETENESS OF ELECTRONIC COPIES OF THIS PLAN SHEET.

LICENSED LANDSCAPE ARCHITECT JOSEPH MILLMAN NO. 1831 Signature 07/31/10 Renewal Date 02/17/09 Date STATE OF CALIFORNIA

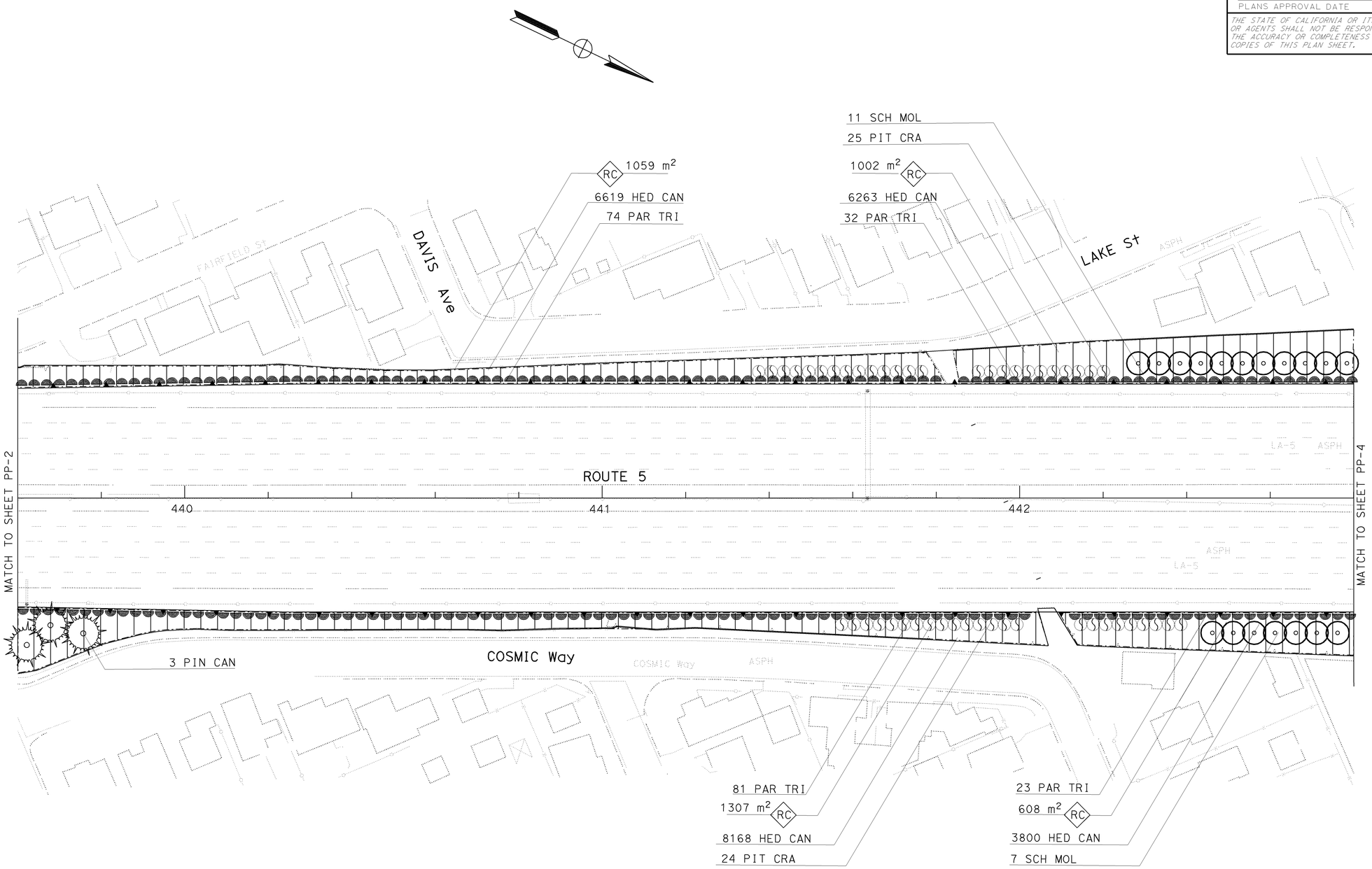

ALL DIMENSIONS ARE IN METERS UNLESS OTHERWISE NOTED

PLANTING PLAN

SCALE 1:500

PP-3

THIS PLAN IS ACCURATE FOR LANDSCAPE WORK ONLY

STATE OF CALIFORNIA - DEPARTMENT OF TRANSPORTATION

Caltrans LANDSCAPE ARCHITECTURE

SENIOR LANDSCAPE ARCHITECT: PATRICIA WATANABE

CALCULATED-DESIGNED BY: J MILLMAN

CHECKED BY: D PERSOFF

REVISED BY: 11/20/07

DATE REVISED: 11/20/07

LAST REVISION 11-10-08 DATE PLOTTED => 12-JUN-2009 TIME PLOTTED => 11:17

NOTE: FOR COMPLETE RIGHT OF WAY AND ACCURATE ACCESS DATA, SEE RIGHT OF WAY RECORD MAPS AT DISTRICT OFFICE.

ALL WORK SHALL BE WITHIN THE STATE R/W.

Dist	COUNTY	ROUTE	KILOMETER POST TOTAL PROJECT	SHEET No.	TOTAL SHEETS
07	LA	5	42.8/47.3	353	1073

LICENSED LANDSCAPE ARCHITECT

6-8-09

PLANS APPROVAL DATE

THE STATE OF CALIFORNIA OR ITS OFFICERS OR AGENTS SHALL NOT BE RESPONSIBLE FOR THE ACCURACY OR COMPLETENESS OF ELECTRONIC COPIES OF THIS PLAN SHEET.

LICENSED LANDSCAPE ARCHITECT JOSEPH MILLMAN NO. 1831 Signature 07/31/10 Renewal Date 02/17/09 Date STATE OF CALIFORNIA

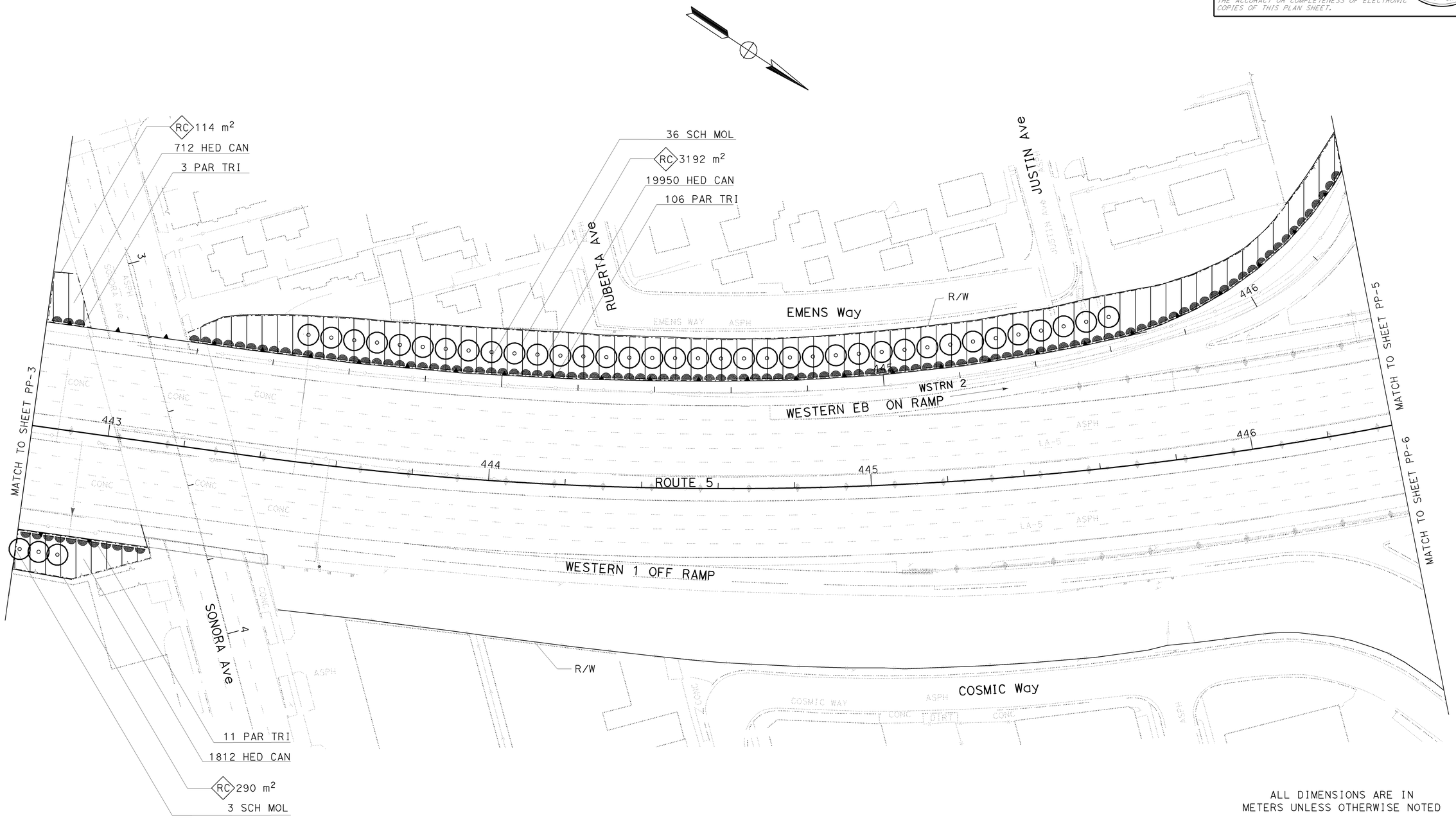

ALL DIMENSIONS ARE IN METERS UNLESS OTHERWISE NOTED

PLANTING PLAN

SCALE 1:500

PP-4

THIS PLAN IS ACCURATE FOR LANDSCAPE WORK ONLY

STATE OF CALIFORNIA - DEPARTMENT OF TRANSPORTATION

Caltrans LANDSCAPE ARCHITECTURE

SENIOR LANDSCAPE ARCHITECT: PATRICIA WATANABE

CALCULATED-DESIGNED BY: J MILLMAN

CHECKED BY: D PERSOFF

REVISED BY: 11/20/07

DATE REVISED: 11/20/07

LAST REVISION: 11-10-08

DATE PLOTTED => 12-JUN-2009

TIME PLOTTED => 11:17

BORDER LAST REVISED 3/1/2007

RELATIVE BORDER SCALE IS IN MILLIMETERS 0 20 40 60 80

USERNAME => s135318

DGN FILE => 712184ti004.dgn

CU 07341

EA 121841

Dist	COUNTY	ROUTE	KILOMETER POST TOTAL PROJECT	SHEET No.	TOTAL SHEETS
07	LA	5	42.8/47.3	354	1073

LICENSED LANDSCAPE ARCHITECT

6-8-09

PLANS APPROVAL DATE

THE STATE OF CALIFORNIA OR ITS OFFICERS OR AGENTS SHALL NOT BE RESPONSIBLE FOR THE ACCURACY OR COMPLETENESS OF ELECTRONIC COPIES OF THIS PLAN SHEET.

LICENSED LANDSCAPE ARCHITECT JOSEPH MILLMAN NO. 1831 Signature 07/31/10 Renewal Date 02/17/09 Date STATE OF CALIFORNIA

NOTE: FOR COMPLETE RIGHT OF WAY AND ACCURATE ACCESS DATA, SEE RIGHT OF WAY RECORD MAPS AT DISTRICT OFFICE.

ALL WORK SHALL BE WITHIN THE STATE R/W.

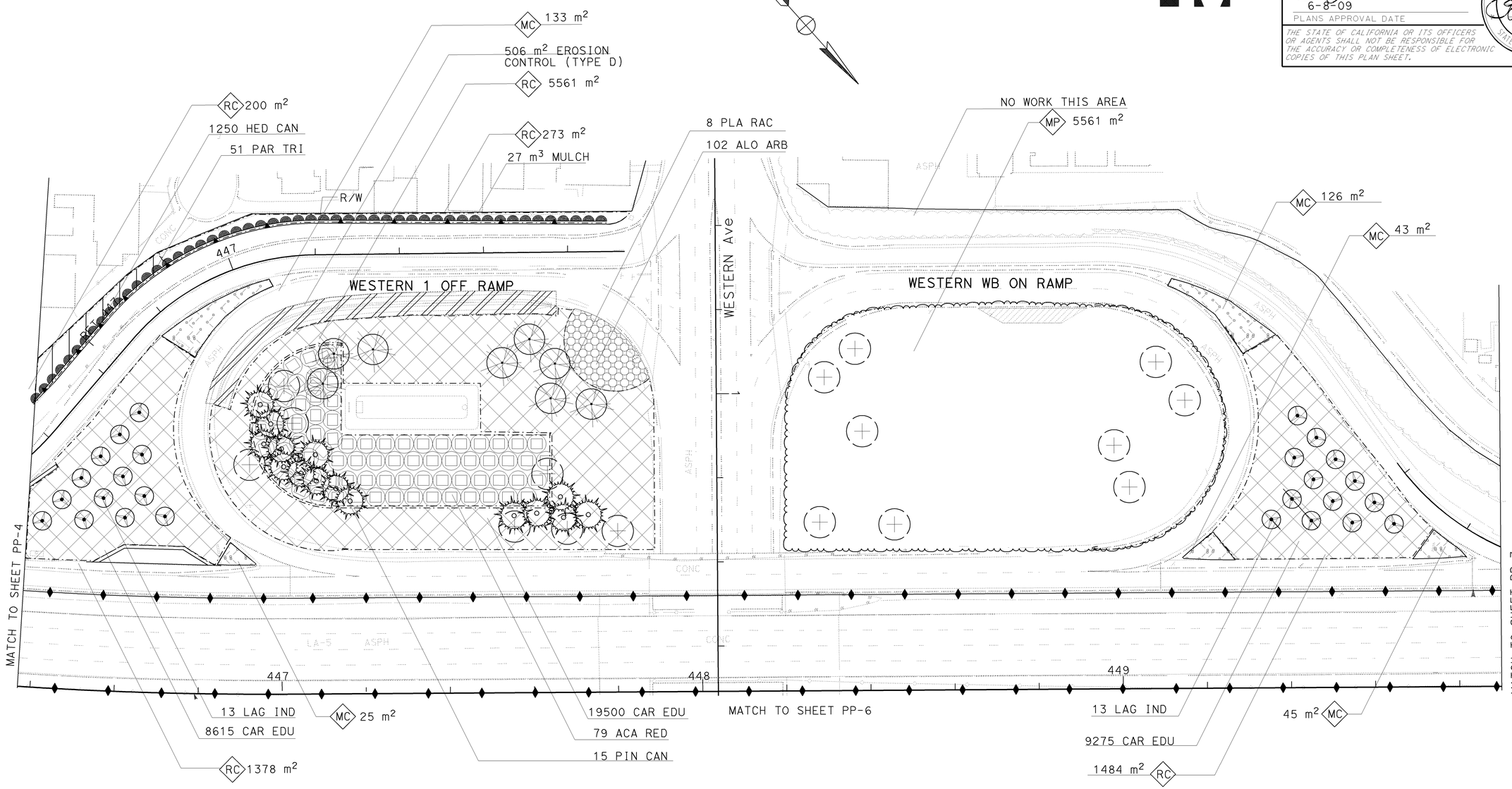

ALL DIMENSIONS ARE IN METERS UNLESS OTHERWISE NOTED

PLANTING PLAN

SCALE 1:500

PP-5

THIS PLAN IS ACCURATE FOR LANDSCAPE WORK ONLY

STATE OF CALIFORNIA - DEPARTMENT OF TRANSPORTATION

Caltrans LANDSCAPE ARCHITECTURE

SENIOR LANDSCAPE ARCHITECT: PATRICIA WATANABE

CALCULATED-DESIGNED BY: J MILLMAN

CHECKED BY: D PERSOFF

REVISED BY: 11/20/07

DATE REVISED: 11/20/07

LAST REVISION 11-10-08

DATE PLOTTED => 12-JUN-2009

TIME PLOTTED => 11:17

BORDER LAST REVISED 3/1/2007

RELATIVE BORDER SCALE IS IN MILLIMETERS 0 201 40 60 80

USERNAME => s135318

DGN FILE => 712184ti005.dgn

CU 07341

EA 121841

NOTE: FOR COMPLETE RIGHT OF WAY AND ACCURATE ACCESS DATA, SEE RIGHT OF WAY RECORD MAPS AT DISTRICT OFFICE.

ALL WORK SHALL BE WITHIN THE STATE R/W.

Dist	COUNTY	ROUTE	KILOMETER POST TOTAL PROJECT	SHEET No.	TOTAL SHEETS
07	LA	5	42.8/47.3	355	1073

LICENSED LANDSCAPE ARCHITECT

6-8-09

PLANS APPROVAL DATE

THE STATE OF CALIFORNIA OR ITS OFFICERS OR AGENTS SHALL NOT BE RESPONSIBLE FOR THE ACCURACY OR COMPLETENESS OF ELECTRONIC COPIES OF THIS PLAN SHEET.

LICENSED LANDSCAPE ARCHITECT JOSEPH MILLMAN NO. 1831 Signature 07/31/10 Renewal Date 02/17/09 Date STATE OF CALIFORNIA

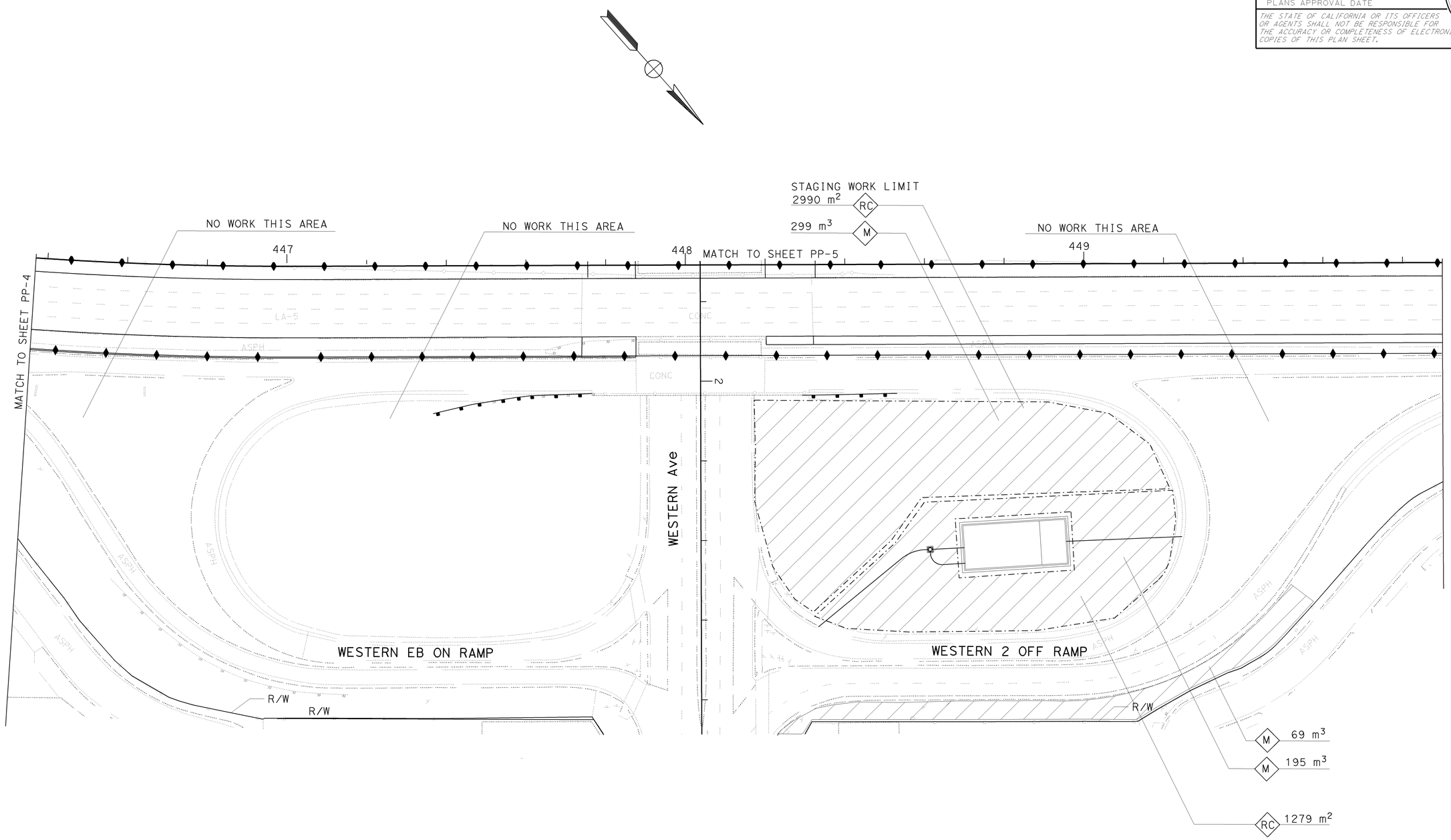

ALL DIMENSIONS ARE IN METERS UNLESS OTHERWISE NOTED

PLANTING PLAN

SCALE 1:500

PP-6

THIS PLAN IS ACCURATE FOR LANDSCAPE WORK ONLY

STATE OF CALIFORNIA - DEPARTMENT OF TRANSPORTATION

Caltrans LANDSCAPE ARCHITECTURE

SENIOR LANDSCAPE ARCHITECT: PATRICIA WATANABE

CALCULATED-DESIGNED BY: J MILLMAN

CHECKED BY: D PERSOFF

REVISED BY: 11/20/07

DATE REVISED: 11/20/07

LAST REVISION 03-16-09

DATE PLOTTED => 12-JUN-2009

TIME PLOTTED => 11:17

BORDER LAST REVISED 3/1/2007

RELATIVE BORDER SCALE IS IN MILLIMETERS 0 20 40 60 80

USERNAME => s135318

DGN FILE => 712184ti006.dgn

CU 07341

EA 121841

NOTE: FOR COMPLETE RIGHT OF WAY AND ACCURATE ACCESS DATA, SEE RIGHT OF WAY RECORD MAPS AT DISTRICT OFFICE.

ALL WORK SHALL BE WITHIN THE STATE R/W.

Dist	COUNTY	ROUTE	KILOMETER POST TOTAL PROJECT	SHEET No.	TOTAL SHEETS
07	LA	5	42.8/47.3	356	1073

LICENSED LANDSCAPE ARCHITECT

6-8-09
PLANS APPROVAL DATE

THE STATE OF CALIFORNIA OR ITS OFFICERS OR AGENTS SHALL NOT BE RESPONSIBLE FOR THE ACCURACY OR COMPLETENESS OF ELECTRONIC COPIES OF THIS PLAN SHEET.

LICENSED LANDSCAPE ARCHITECT — JOSEPH MILLMAN — NO. 1837 — STATE OF CALIFORNIA
RENEWAL DATE 07/31/10
ORIGINAL DATE 02/17/09

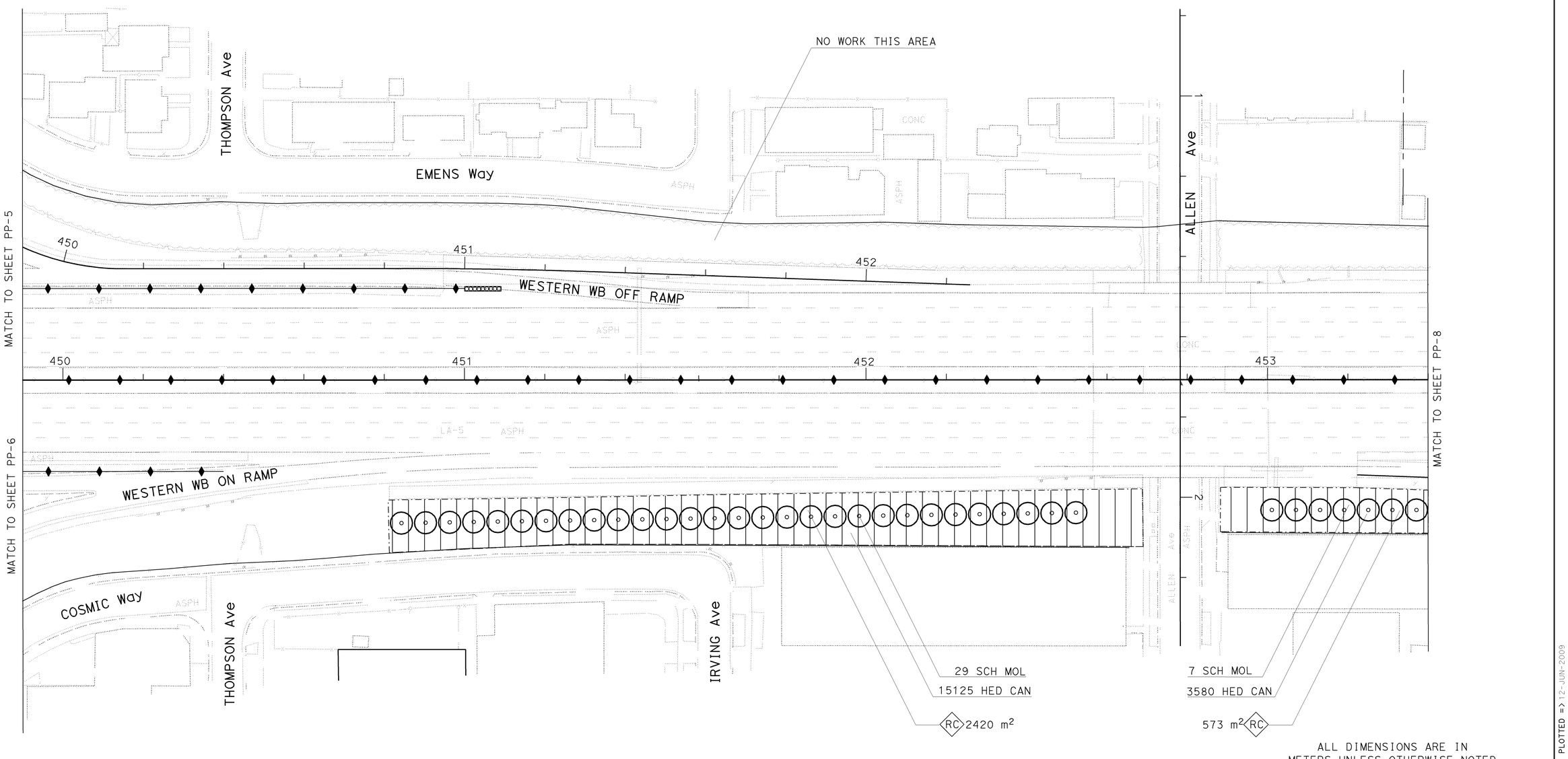

ALL DIMENSIONS ARE IN METERS UNLESS OTHERWISE NOTED

PLANTING PLAN

SCALE 1:500

PP-7

THIS PLAN IS ACCURATE FOR LANDSCAPE WORK ONLY

STATE OF CALIFORNIA - DEPARTMENT OF TRANSPORTATION
Caltrans LANDSCAPE ARCHITECTURE

SENIOR LANDSCAPE ARCHITECT: PATRICIA WATANABE
CALCULATED-DESIGNED BY
CHECKED BY
J MILLMAN — REVISED BY
D PERSOFF — DATE REVISED
11/20/07
11/20/07

LAST REVISION — DATE PLOTTED => 12-JUN-2009 — TIME PLOTTED => 11:17
11-10-08

BORDER LAST REVISED 3/1/2007

RELATIVE BORDER SCALE IS IN MILLIMETERS 0 20 40 60 80

USERNAME => s135318
DGN FILE => 712184ti007.dgn

CU 07341

EA 121841

NOTE: FOR COMPLETE RIGHT OF WAY AND ACCURATE ACCESS DATA, SEE RIGHT OF WAY RECORD MAPS AT DISTRICT OFFICE.

ALL WORK SHALL BE WITHIN THE STATE R/W.

Dist	COUNTY	ROUTE	KILOMETER POST TOTAL PROJECT	SHEET No.	TOTAL SHEETS
07	LA	5	42.8/47.3	357	1073

LICENSED LANDSCAPE ARCHITECT

6-8-09
PLANS APPROVAL DATE

THE STATE OF CALIFORNIA OR ITS OFFICERS OR AGENTS SHALL NOT BE RESPONSIBLE FOR THE ACCURACY OR COMPLETENESS OF ELECTRONIC COPIES OF THIS PLAN SHEET.

LICENSED LANDSCAPE ARCHITECT — JOSEPH MILLMAN — NO. 1837 — RENEWAL DATE 07/31/10 — INITIAL DATE 02/17/09 — STATE OF CALIFORNIA

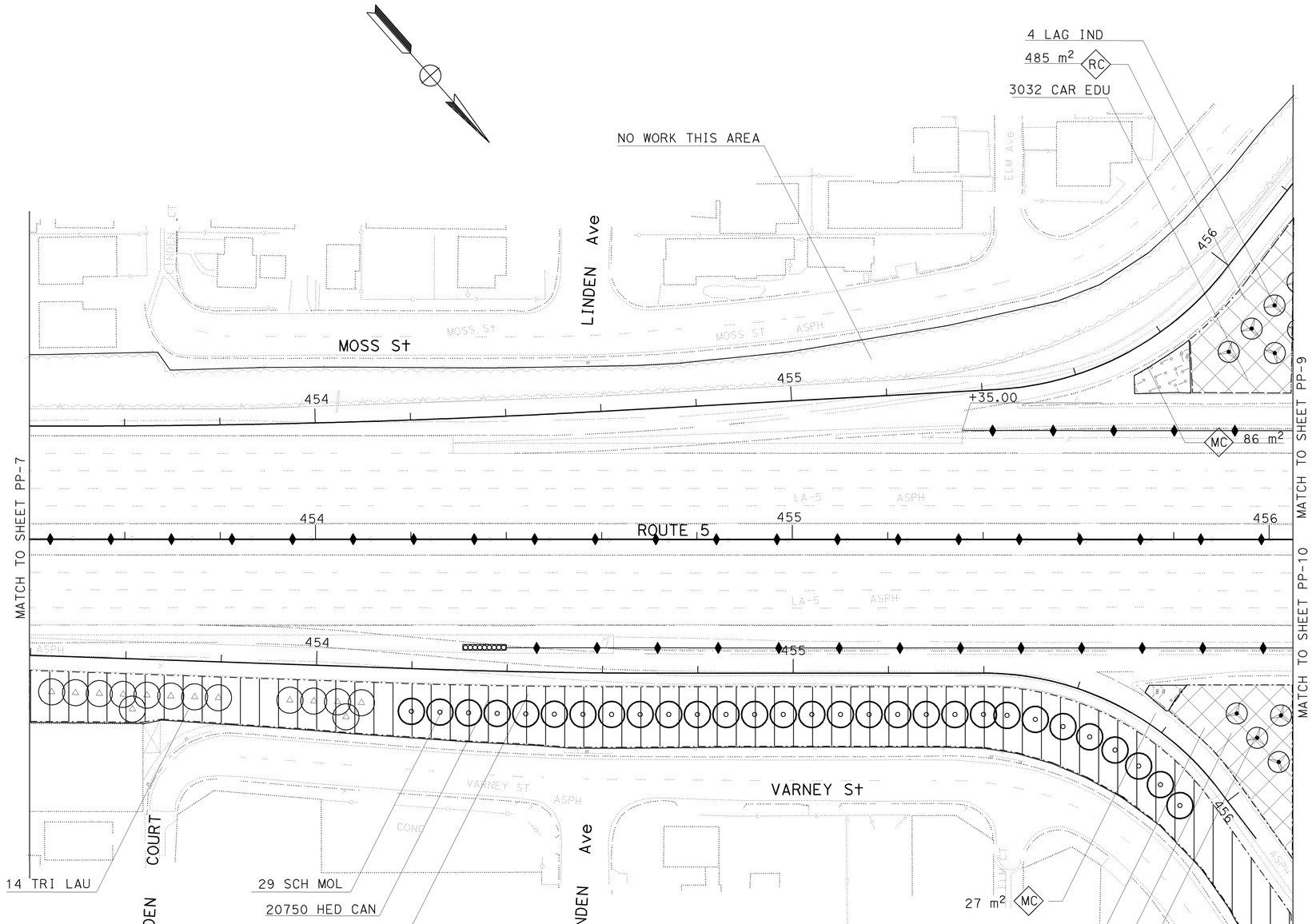

ALL DIMENSIONS ARE IN METERS UNLESS OTHERWISE NOTED

PLANTING PLAN

SCALE 1:500

PP-8

THIS PLAN IS ACCURATE FOR LANDSCAPE WORK ONLY

STATE OF CALIFORNIA - DEPARTMENT OF TRANSPORTATION
LANDSCAPE ARCHITECTURE
SENIOR LANDSCAPE ARCHITECT: PATRICIA WATANABE
CALCULATED-DESIGNED BY: J MILLMAN
CHECKED BY: D PERSOFF
REVISED BY / DATE REVISED: 11/20/07 / 11/20/07

LAST REVISION DATE PLOTTED => 12-JUN-2009
TIME PLOTTED => 11:17

BORDER LAST REVISED 3/1/2007
RELATIVE BORDER SCALE IS IN MILLIMETERS 0 20 40 60 80
USERNAME => s135318
DGN FILE => 712184ti008.dgn
CU 07341
EA 121841

NOTE: FOR COMPLETE RIGHT OF WAY AND ACCURATE ACCESS DATA, SEE RIGHT OF WAY RECORD MAPS AT DISTRICT OFFICE.

ALL WORK SHALL BE WITHIN THE STATE R/W.

Dist	COUNTY	ROUTE	KILOMETER POST TOTAL PROJECT	SHEET No.	TOTAL SHEETS
07	LA	5	42.8/47.3	358	1073

LICENSED LANDSCAPE ARCHITECT

6-8-09
PLANS APPROVAL DATE

THE STATE OF CALIFORNIA OR ITS OFFICERS OR AGENTS SHALL NOT BE RESPONSIBLE FOR THE ACCURACY OR COMPLETENESS OF ELECTRONIC COPIES OF THIS PLAN SHEET.

LICENSED LANDSCAPE ARCHITECT — JOSEPH MILLMAN — NO. 1893 — RENEWAL DATE 07/31/10 — INITIAL DATE 02/17/09 — STATE OF CALIFORNIA

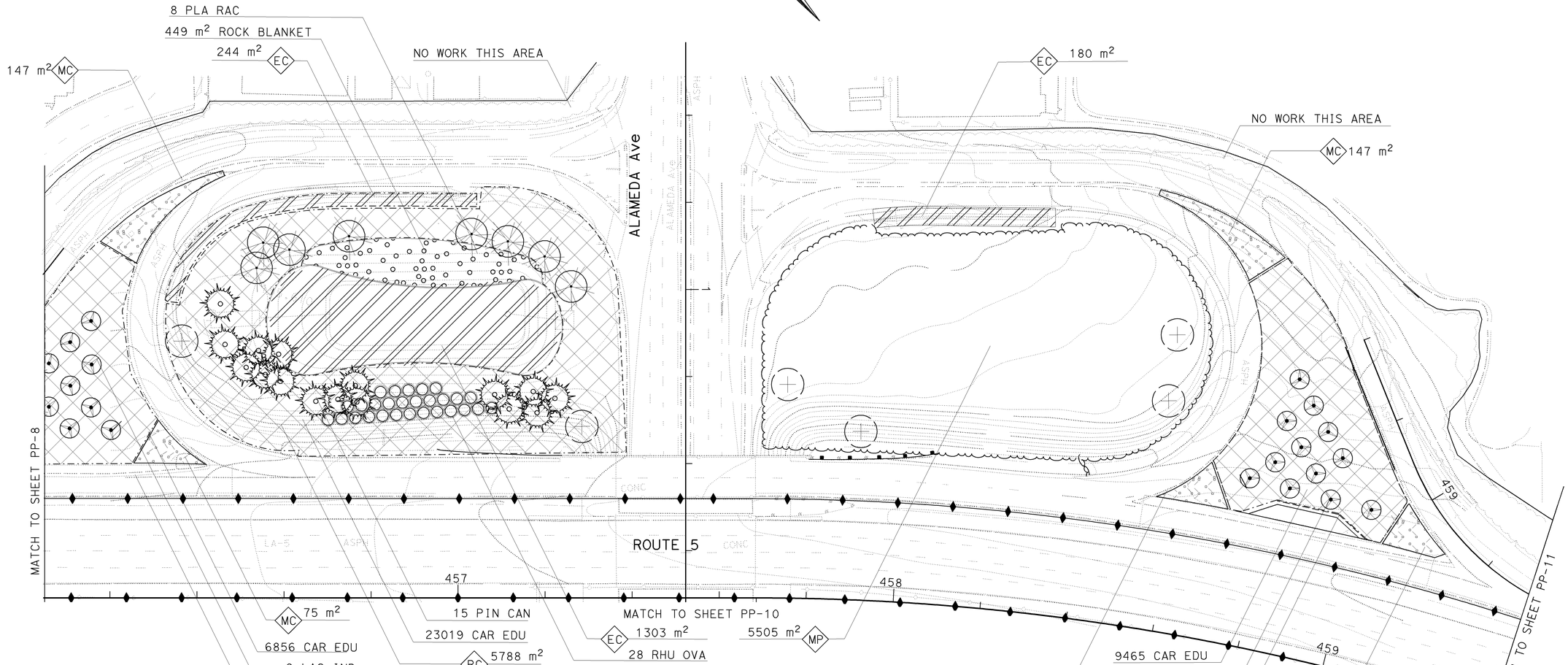

ALL DIMENSIONS ARE IN METERS UNLESS OTHERWISE NOTED

PLANTING PLAN

SCALE 1:500

PP-9

THIS PLAN IS ACCURATE FOR LANDSCAPE WORK ONLY

STATE OF CALIFORNIA - DEPARTMENT OF TRANSPORTATION	SENIOR LANDSCAPE ARCHITECT	PATRICIA WATANABE	
Caltrans LANDSCAPE ARCHITECTURE	CALCULATED-DESIGNED BY	J MILLMAN	11/20/07
	CHECKED BY	D PERSOFF	11/20/07
		REVISED BY	
		DATE REVISED	

LAST REVISION DATE PLOTTED => 12-JUN-2009
TIME PLOTTED => 11:17

BORDER LAST REVISED 3/1/2007

RELATIVE BORDER SCALE IS IN MILLIMETERS 0 20 40 60 80

USERNAME => s135318
DGN FILE => 712184ti009.dgn

CU 07341

EA 121841

NOTE: FOR COMPLETE RIGHT OF WAY AND ACCURATE ACCESS DATA, SEE RIGHT OF WAY RECORD MAPS AT DISTRICT OFFICE.

ALL WORK SHALL BE WITHIN THE STATE R/W.

Dist	COUNTY	ROUTE	KILOMETER POST TOTAL PROJECT	SHEET No.	TOTAL SHEETS
07	LA	5	42.8/47.3	359	1073

LICENSED LANDSCAPE ARCHITECT

6-8-09
PLANS APPROVAL DATE

THE STATE OF CALIFORNIA OR ITS OFFICERS OR AGENTS SHALL NOT BE RESPONSIBLE FOR THE ACCURACY OR COMPLETENESS OF ELECTRONIC COPIES OF THIS PLAN SHEET.

LICENSED LANDSCAPE ARCHITECT — JOSEPH MILLMAN — NO. 1837 — 07/31/10 RENEWAL DATE — 02/17/09 DATE — STATE OF CALIFORNIA

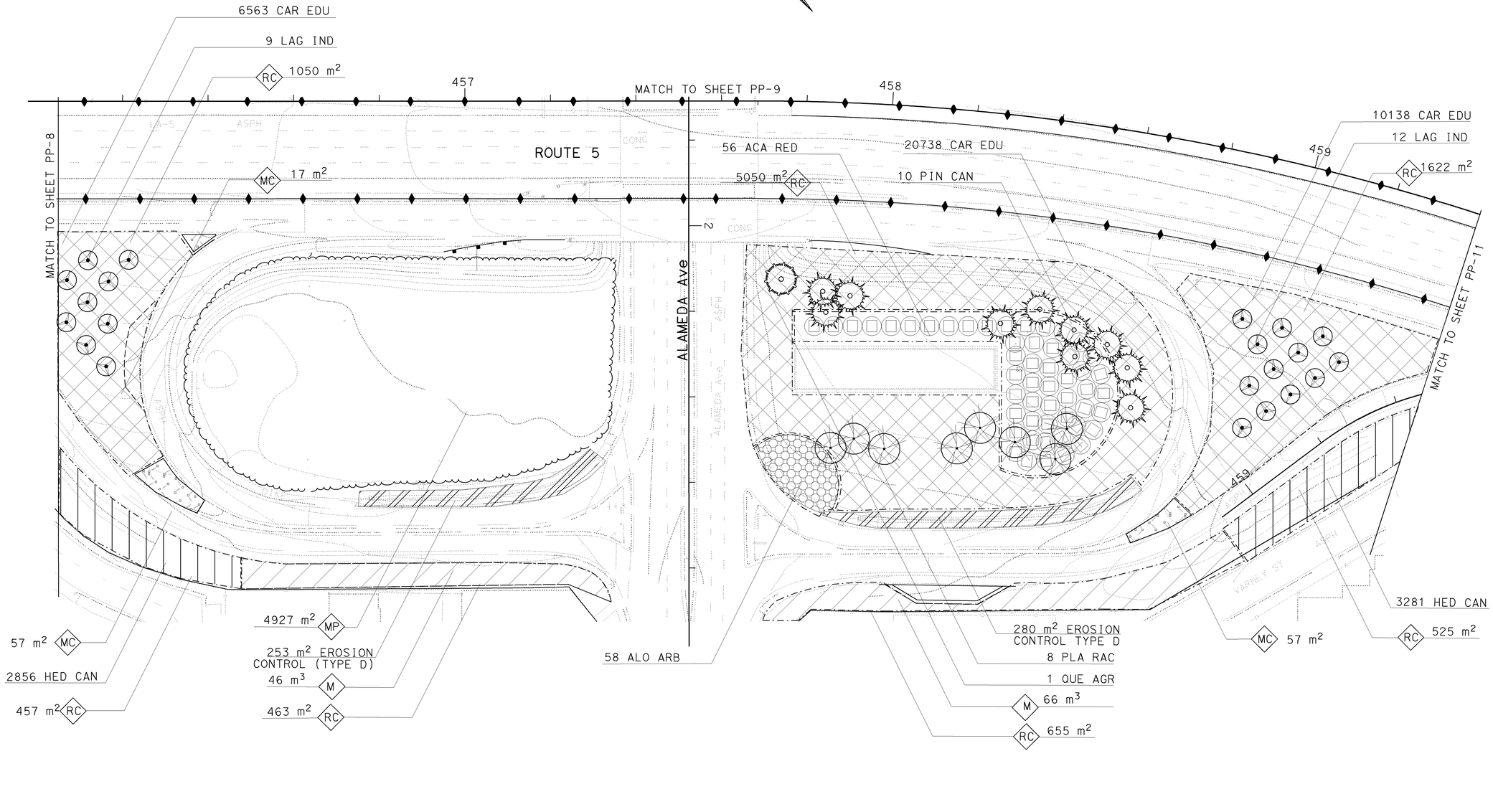

ALL DIMENSIONS ARE IN METERS UNLESS OTHERWISE NOTED

PLANTING PLAN

SCALE 1:500

PP-10

THIS PLAN IS ACCURATE FOR LANDSCAPE WORK ONLY

J MILLMAN	11/20/07	CALCULATED-DESIGNED BY	SENIOR LANDSCAPE ARCHITECT
D PERSOFF	11/20/07	CHECKED BY	PATRICIA WATANABE

REVISED BY / DATE REVISED

STATE OF CALIFORNIA - DEPARTMENT OF TRANSPORTATION
Caltrans
LANDSCAPE ARCHITECTURE

LAST REVISION DATE PLOTTED => 12-JUN-2009
TIME PLOTTED => 11:17
11-10-08

BORDER LAST REVISED 3/1/2007

RELATIVE BORDER SCALE IS IN MILLIMETERS 0 20 40 60 80

USERNAME => s135318
DGN FILE => 712184ti010.dgn

CU 07341

EA 121841

NOTE: FOR COMPLETE RIGHT OF WAY AND ACCURATE ACCESS DATA, SEE RIGHT OF WAY RECORD MAPS AT DISTRICT OFFICE.

ALL WORK SHALL BE WITHIN THE STATE R/W.

Dist	COUNTY	ROUTE	KILOMETER POST TOTAL PROJECT	SHEET No.	TOTAL SHEETS
07	LA	5	42.8/47.3	360	1073

LICENSED LANDSCAPE ARCHITECT

6-8-09
PLANS APPROVAL DATE

THE STATE OF CALIFORNIA OR ITS OFFICERS OR AGENTS SHALL NOT BE RESPONSIBLE FOR THE ACCURACY OR COMPLETENESS OF ELECTRONIC COPIES OF THIS PLAN SHEET.

LICENSED LANDSCAPE ARCHITECT — JOSEPH MILLMAN — NO. 1837 — RENEWAL DATE 07/31/10 — ORIGINAL DATE 02/17/09 — STATE OF CALIFORNIA

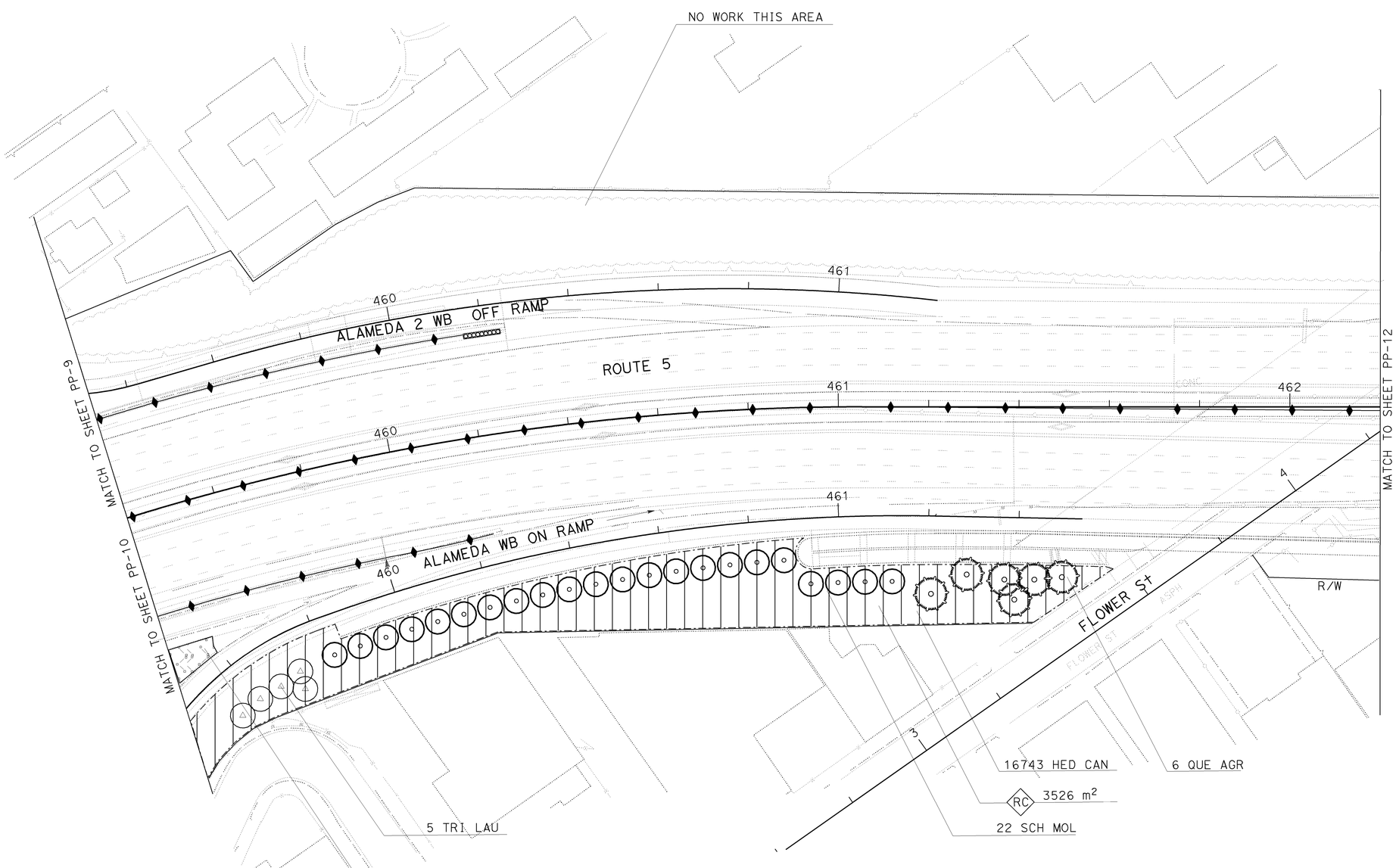

ALL DIMENSIONS ARE IN METERS UNLESS OTHERWISE NOTED

PLANTING PLAN

SCALE 1:500

PP-11

THIS PLAN IS ACCURATE FOR LANDSCAPE WORK ONLY

STATE OF CALIFORNIA - DEPARTMENT OF TRANSPORTATION
LANDSCAPE ARCHITECTURE
SENIOR LANDSCAPE ARCHITECT: PATRICIA WATANABE
CALCULATED-DESIGNED BY
CHECKED BY
J MILLMAN
D PERSOFF
REVISED BY
DATE REVISED
11/20/07
11/20/07

LAST REVISION DATE PLOTTED => 12-JUN-2009
TIME PLOTTED => 11:17

BORDER LAST REVISED 3/1/2007

RELATIVE BORDER SCALE IS IN MILLIMETERS 0 20 40 60 80

USERNAME => s135318
DGN FILE => 712184ti011.dgn

CU 07341

EA 121841

NOTE: FOR COMPLETE RIGHT OF WAY AND ACCURATE ACCESS DATA, SEE RIGHT OF WAY RECORD MAPS AT DISTRICT OFFICE.

ALL WORK SHALL BE WITHIN THE STATE R/W.

Dist	COUNTY	ROUTE	KILOMETER POST TOTAL PROJECT	SHEET No.	TOTAL SHEETS
07	LA	5	42.8/47.3	361	1073

LICENSED LANDSCAPE ARCHITECT

6-8-09

PLANS APPROVAL DATE

THE STATE OF CALIFORNIA OR ITS OFFICERS OR AGENTS SHALL NOT BE RESPONSIBLE FOR THE ACCURACY OR COMPLETENESS OF ELECTRONIC COPIES OF THIS PLAN SHEET.

LICENSED LANDSCAPE ARCHITECT JOSEPH MILLMAN NO. 1831 Signature 07/31/10 Renewal Date 02/17/09 Date STATE OF CALIFORNIA

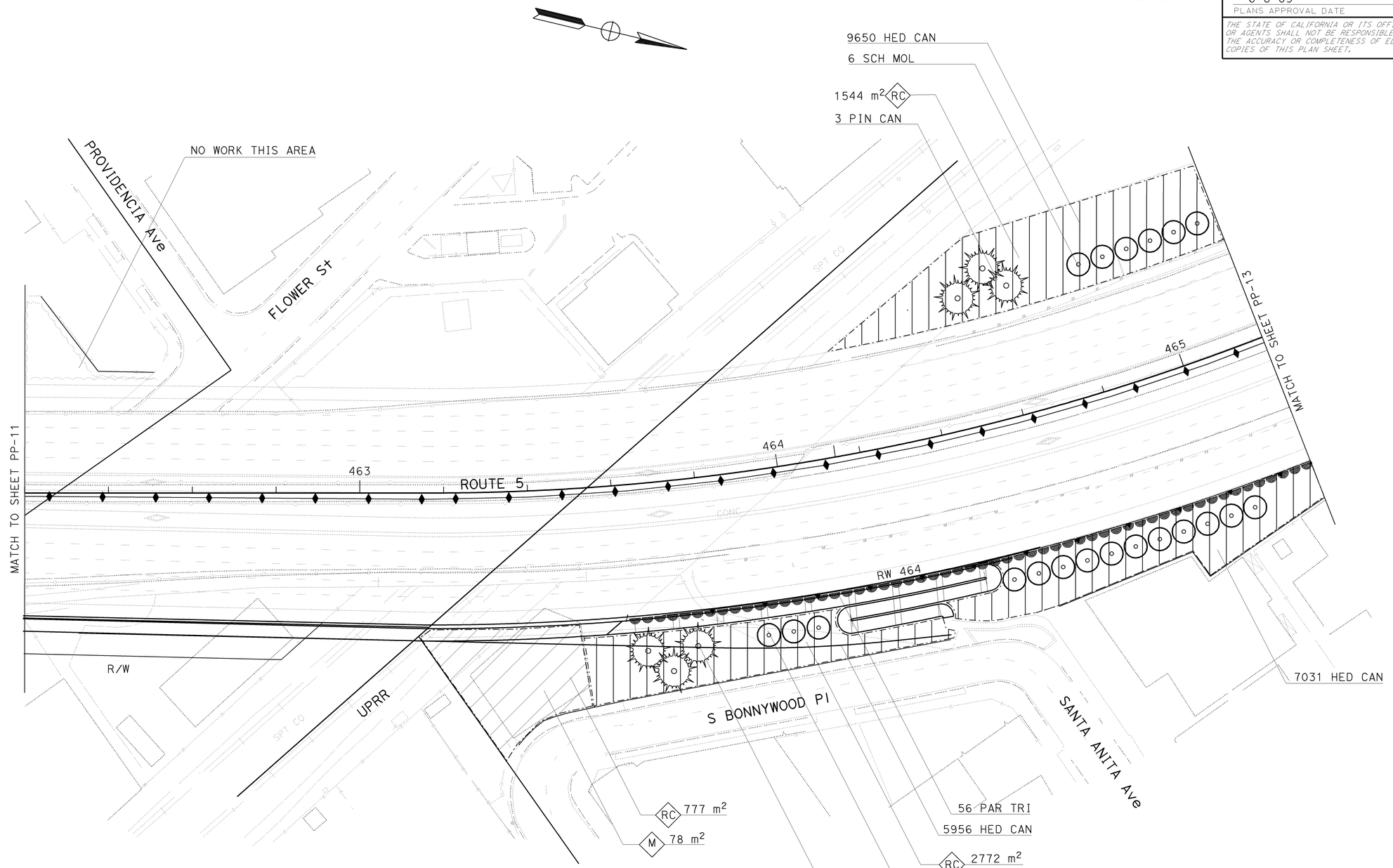

ALL DIMENSIONS ARE IN METERS UNLESS OTHERWISE NOTED

PLANTING PLAN

SCALE 1:500

PP-12

THIS PLAN IS ACCURATE FOR LANDSCAPE WORK ONLY

STATE OF CALIFORNIA - DEPARTMENT OF TRANSPORTATION

Caltrans LANDSCAPE ARCHITECTURE

SENIOR LANDSCAPE ARCHITECT: PATRICIA WATANABE

CALCULATED-DESIGNED BY: J MILLMAN

CHECKED BY: D PERSOFF

REVISED BY: 11/20/07

DATE REVISED: 11/20/07

LAST REVISION 11-10-08

DATE PLOTTED => 12-JUN-2009

TIME PLOTTED => 11:17

NOTE: FOR COMPLETE RIGHT OF WAY AND ACCURATE ACCESS DATA, SEE RIGHT OF WAY RECORD MAPS AT DISTRICT OFFICE.

ALL WORK SHALL BE WITHIN THE STATE R/W.

Dist	COUNTY	ROUTE	KILOMETER POST TOTAL PROJECT	SHEET No.	TOTAL SHEETS
07	LA	5	42.8/47.3	362	1073

LICENSED LANDSCAPE ARCHITECT

6-8-09

PLANS APPROVAL DATE

THE STATE OF CALIFORNIA OR ITS OFFICERS OR AGENTS SHALL NOT BE RESPONSIBLE FOR THE ACCURACY OR COMPLETENESS OF ELECTRONIC COPIES OF THIS PLAN SHEET.

LICENSED LANDSCAPE ARCHITECT JOSEPH MILLMAN NO. 1831 Signature 07/31/10 Renewal Date 02/17/09 Date STATE OF CALIFORNIA

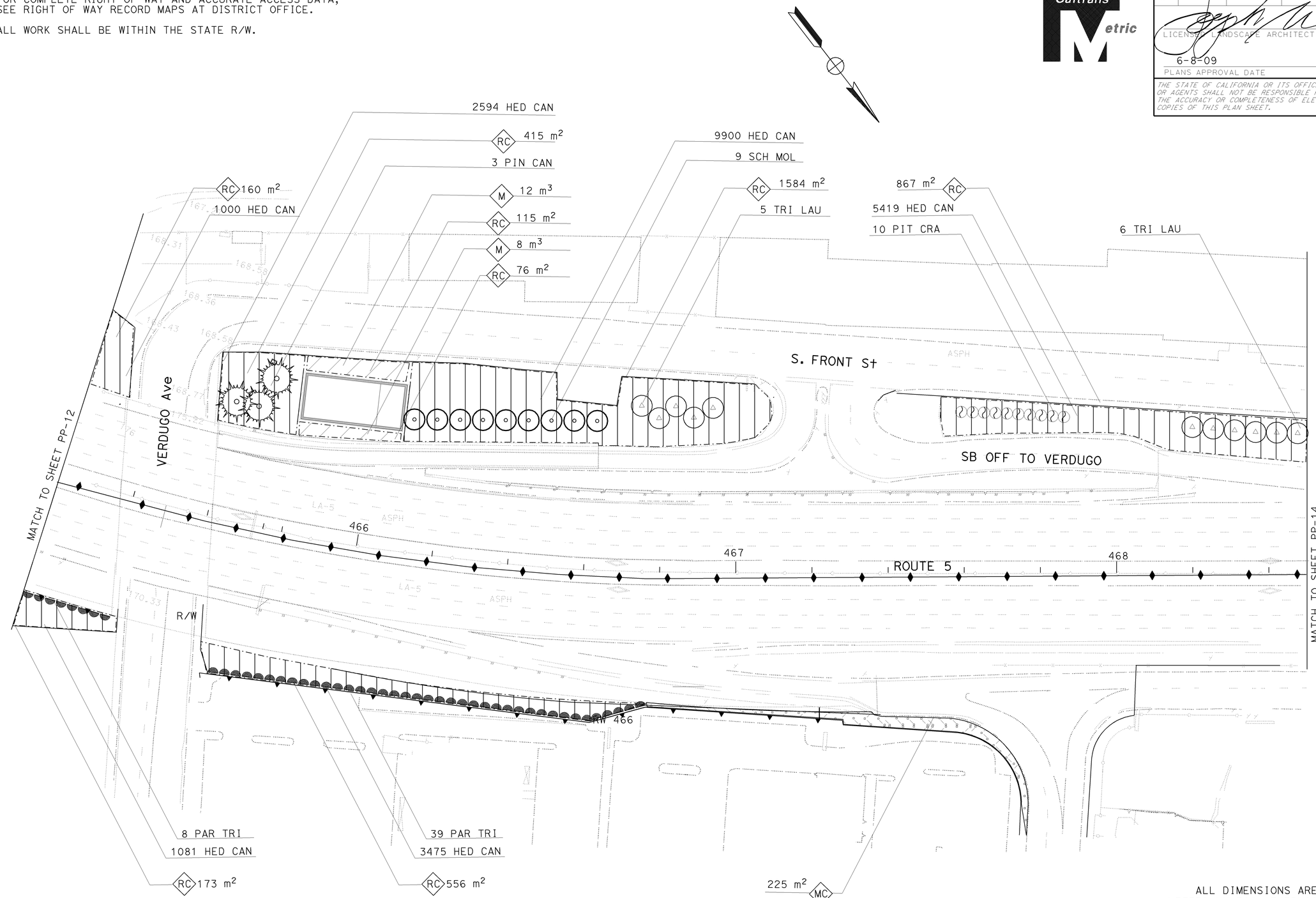

ALL DIMENSIONS ARE IN METERS UNLESS OTHERWISE NOTED

PLANTING PLAN

SCALE 1:500

PP-13

THIS PLAN IS ACCURATE FOR LANDSCAPE WORK ONLY

STATE OF CALIFORNIA - DEPARTMENT OF TRANSPORTATION

Caltrans LANDSCAPE ARCHITECTURE

SENIOR LANDSCAPE ARCHITECT: PATRICIA WATANABE

CALCULATED-DESIGNED BY: J MILLMAN

CHECKED BY: D PERSOFF

REVISED BY: 11/20/07

DATE REVISED: 11/20/07

LAST REVISION 12-05-08

DATE PLOTTED => 12-JUN-2009

TIME PLOTTED => 11:17

NOTE: FOR COMPLETE RIGHT OF WAY AND ACCURATE ACCESS DATA, SEE RIGHT OF WAY RECORD MAPS AT DISTRICT OFFICE.

ALL WORK SHALL BE WITHIN THE STATE R/W.

Dist	COUNTY	ROUTE	KILOMETER POST TOTAL PROJECT	SHEET No.	TOTAL SHEETS
07	LA	5	42.8/47.3	363	1073

LICENSED LANDSCAPE ARCHITECT

6-8-09
PLANS APPROVAL DATE

THE STATE OF CALIFORNIA OR ITS OFFICERS OR AGENTS SHALL NOT BE RESPONSIBLE FOR THE ACCURACY OR COMPLETENESS OF ELECTRONIC COPIES OF THIS PLAN SHEET.

LICENSED LANDSCAPE ARCHITECT — JOSEPH MILLMAN — NO. 1837 — RENEWAL DATE 07/31/10 — DATE SIGNED 02/17/09 — STATE OF CALIFORNIA

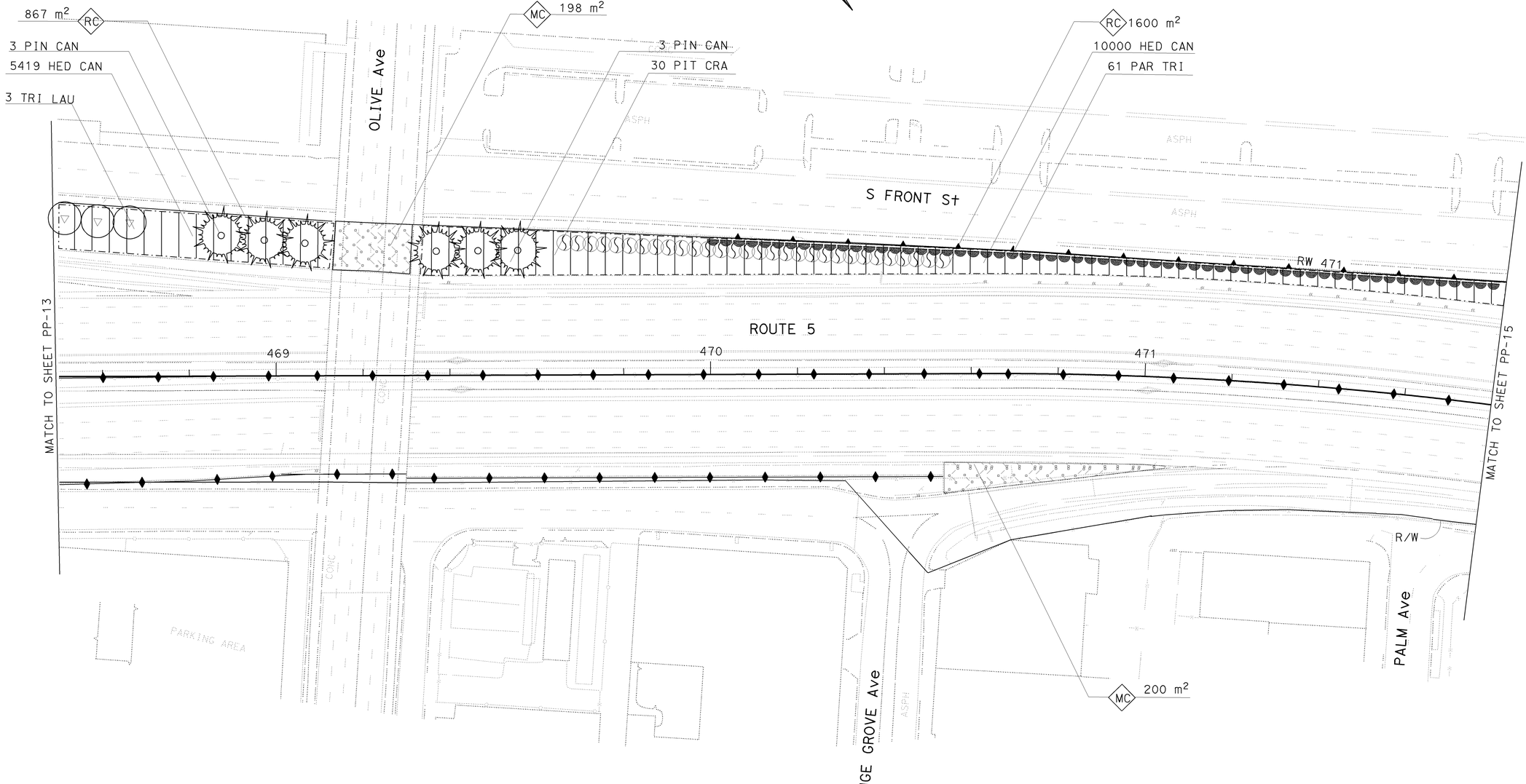

ALL DIMENSIONS ARE IN METERS UNLESS OTHERWISE NOTED

PLANTING PLAN

SCALE 1:500

PP-14

THIS PLAN IS ACCURATE FOR LANDSCAPE WORK ONLY

STATE OF CALIFORNIA - DEPARTMENT OF TRANSPORTATION Caltrans LANDSCAPE ARCHTECTURE	SENIOR LANDSCAPE ARCHITECT PATRICIA WATANABE	CALCULATED-DESIGNED BY CHECKED BY	REVISED BY DATE REVISED J MILLMAN D PERSOFF 11/20/07 11/20/07

BORDER LAST REVISED 3/1/2007

RELATIVE BORDER SCALE IS IN MILLIMETERS 0 20 40 60 80

USERNAME => s135318
DGN FILE => 712184ti014.dgn

CU 07341

EA 121841

LAST REVISION
DATE PLOTTED => 12-JUN-2009
TIME PLOTTED => 11:17
11-10-08

NOTE: FOR COMPLETE RIGHT OF WAY AND ACCURATE ACCESS DATA, SEE RIGHT OF WAY RECORD MAPS AT DISTRICT OFFICE.

ALL WORK SHALL BE WITHIN THE STATE R/W.

Dist	COUNTY	ROUTE	KILOMETER POST TOTAL PROJECT	SHEET No.	TOTAL SHEETS
07	LA	5	42.8/47.3	364	1073

LICENSED LANDSCAPE ARCHITECT

6-8-09
PLANS APPROVAL DATE

THE STATE OF CALIFORNIA OR ITS OFFICERS OR AGENTS SHALL NOT BE RESPONSIBLE FOR THE ACCURACY OR COMPLETENESS OF ELECTRONIC COPIES OF THIS PLAN SHEET.

LICENSED LANDSCAPE ARCHITECT
JOSEPH MILLMAN
NO. 1837
07/31/10
RENEWAL DATE
02/17/09
DATE
STATE OF CALIFORNIA

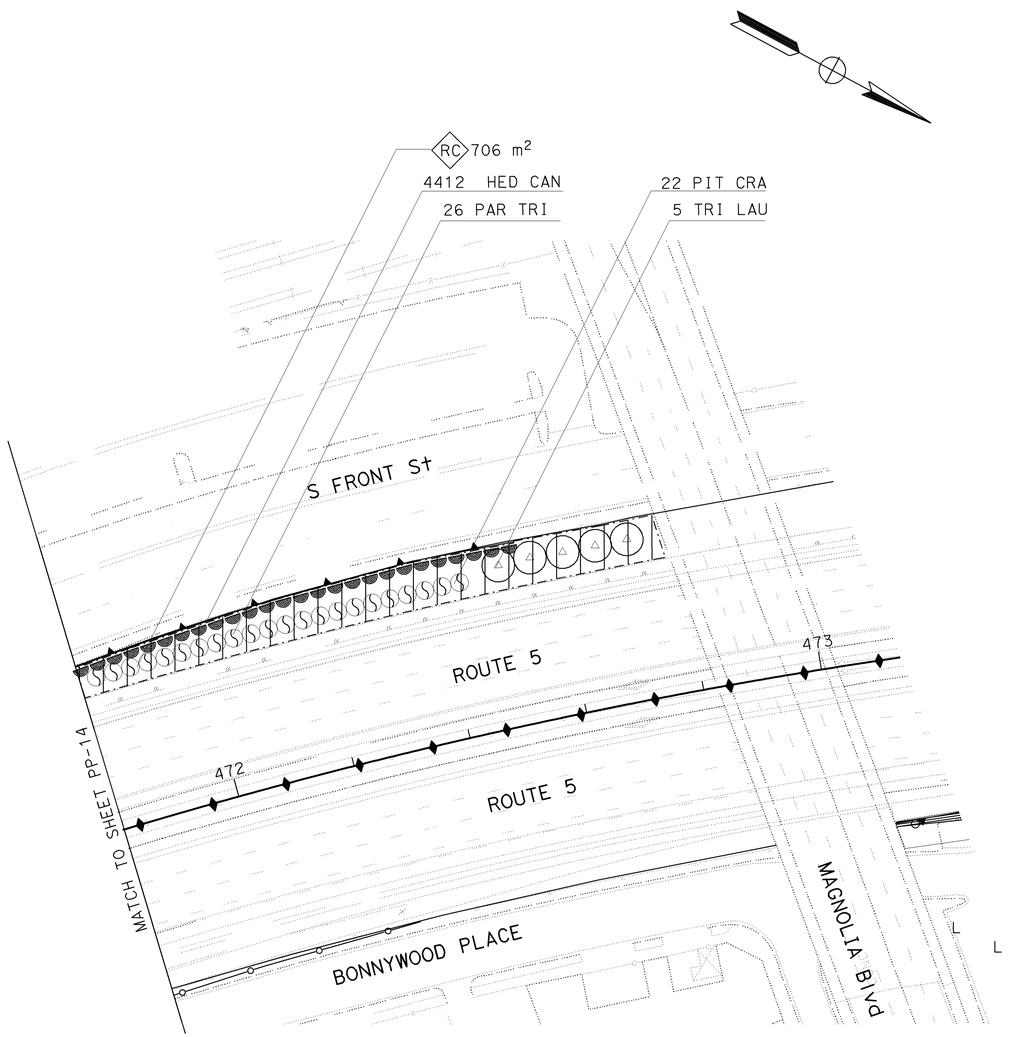

ALL DIMENSIONS ARE IN METERS UNLESS OTHERWISE NOTED

PLANTING PLAN

SCALE 1:500

PP-15

THIS PLAN IS ACCURATE FOR LANDSCAPE WORK ONLY

CALCULATED-DESIGNED BY	J MILLMAN	11/20/07
CHECKED BY	D PERSOFF	11/20/07
	REVISED BY	DATE REVISED

SENIOR LANDSCAPE ARCHITECT
PATRICIA WATANABE

STATE OF CALIFORNIA - DEPARTMENT OF TRANSPORTATION
Caltrans
LANDSCAPE ARCHITECTURE

LAST REVISION DATE PLOTTED => 12-JUN-2009
03-16-09 TIME PLOTTED => 11:17

BORDER LAST REVISED 3/1/2007

RELATIVE BORDER SCALE IS IN MILLIMETERS 0 20 40 60 80

USERNAME => s135318
DGN FILE => 712184ti015.dgn

CU 07341

EA 121841

NOTE: FOR COMPLETE RIGHT OF WAY AND ACCURATE ACCESS DATA, SEE RIGHT OF WAY RECORD MAPS AT DISTRICT OFFICE.

ALL WORK SHALL BE WITHIN THE STATE R/W.

Dist	COUNTY	ROUTE	KILOMETER POST TOTAL PROJECT	SHEET No.	TOTAL SHEETS
07	LA	5	42.8/47.3	365	1073

LICENSED LANDSCAPE ARCHITECT

6-8-09
PLANS APPROVAL DATE

THE STATE OF CALIFORNIA OR ITS OFFICERS OR AGENTS SHALL NOT BE RESPONSIBLE FOR THE ACCURACY OR COMPLETENESS OF ELECTRONIC COPIES OF THIS PLAN SHEET.

LICENSED LANDSCAPE ARCHITECT
JOSEPH MILLMAN
NO. 1831
07/31/10
RENEWAL DATE
02/17/09
DATE
STATE OF CALIFORNIA

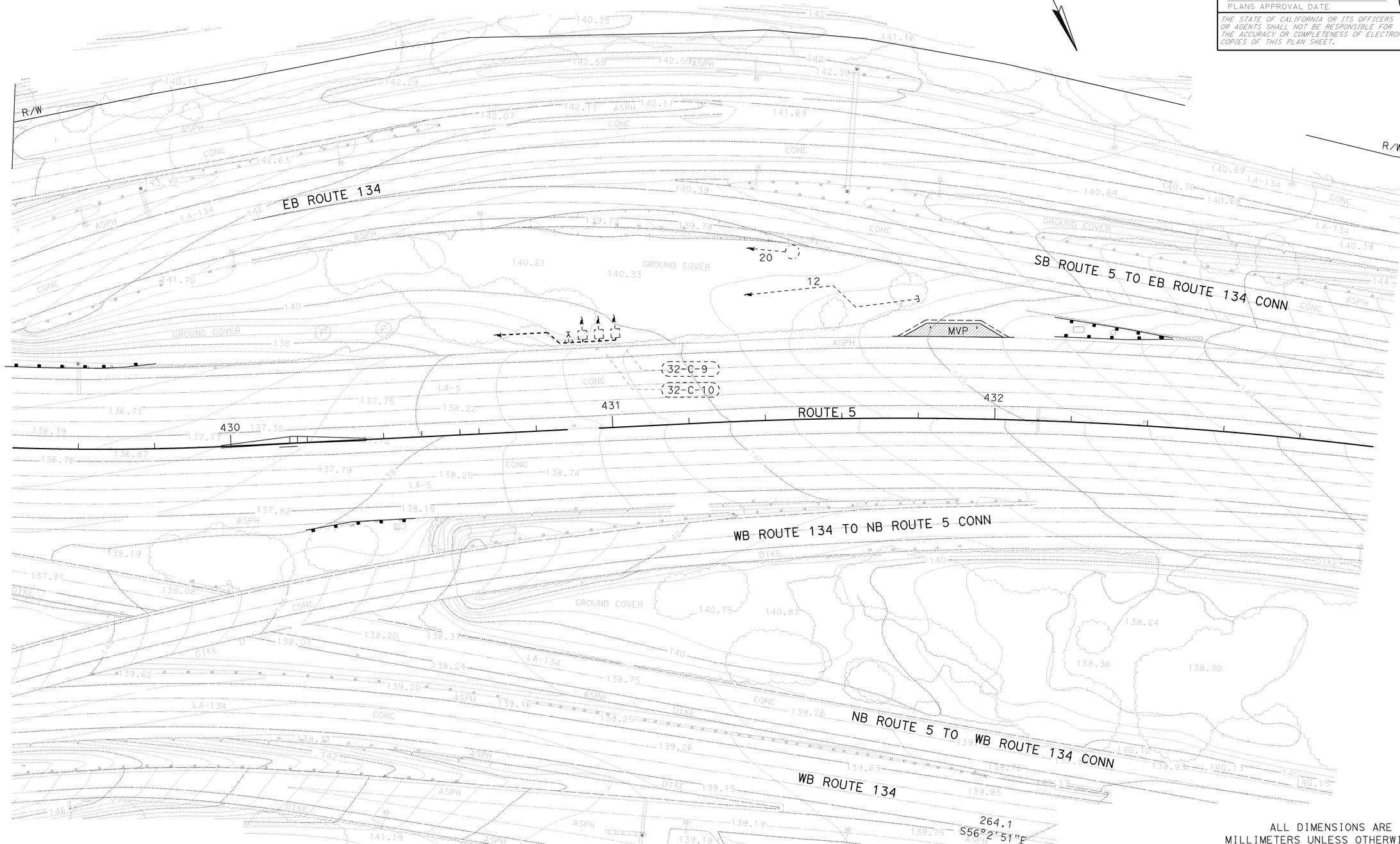

ALL DIMENSIONS ARE IN MILLIMETERS UNLESS OTHERWISE NOTED

IRRIGATION PLAN

SCALE 1:500

IP-1

THIS PLAN IS ACCURATE FOR LANDSCAPE WORK ONLY

STATE OF CALIFORNIA - DEPARTMENT OF TRANSPORTATION
LANDSCAPE ARCHITECTURE

SENIOR LANDSCAPE ARCHITECT
PATRICIA WATANABE

CALCULATED-DESIGNED BY
CHECKED BY

J MILLMAN
D PERSOFF

REVISED BY
DATE REVISED

12/11/07
12/11/07

LAST REVISION
DATE PLOTTED => 12-JUN-2009
TIME PLOTTED => 11:18
11-10-08

BORDER LAST REVISED 3/1/2007

RELATIVE BORDER SCALE IS IN MILLIMETERS
0 20 40 60 80

USERNAME => s135318
DGN FILE => 712184t1001.dgn

CU 07341

EA 121841

NOTE: FOR COMPLETE RIGHT OF WAY AND ACCURATE ACCESS DATA, SEE RIGHT OF WAY RECORD MAPS AT DISTRICT OFFICE.

ALL WORK SHALL BE WITHIN THE STATE R/W.

Dist	COUNTY	ROUTE	KILOMETER POST TOTAL PROJECT	SHEET No.	TOTAL SHEETS
07	LA	5	42.8/47.3	366	1073

LICENSED LANDSCAPE ARCHITECT

6-8-09

PLANS APPROVAL DATE

THE STATE OF CALIFORNIA OR ITS OFFICERS OR AGENTS SHALL NOT BE RESPONSIBLE FOR THE ACCURACY OR COMPLETENESS OF ELECTRONIC COPIES OF THIS PLAN SHEET.

LICENSED LANDSCAPE ARCHITECT JOSEPH MILLMAN NO. 1831 Signature 07/31/10 Renewal Date 02/17/09 Date STATE OF CALIFORNIA

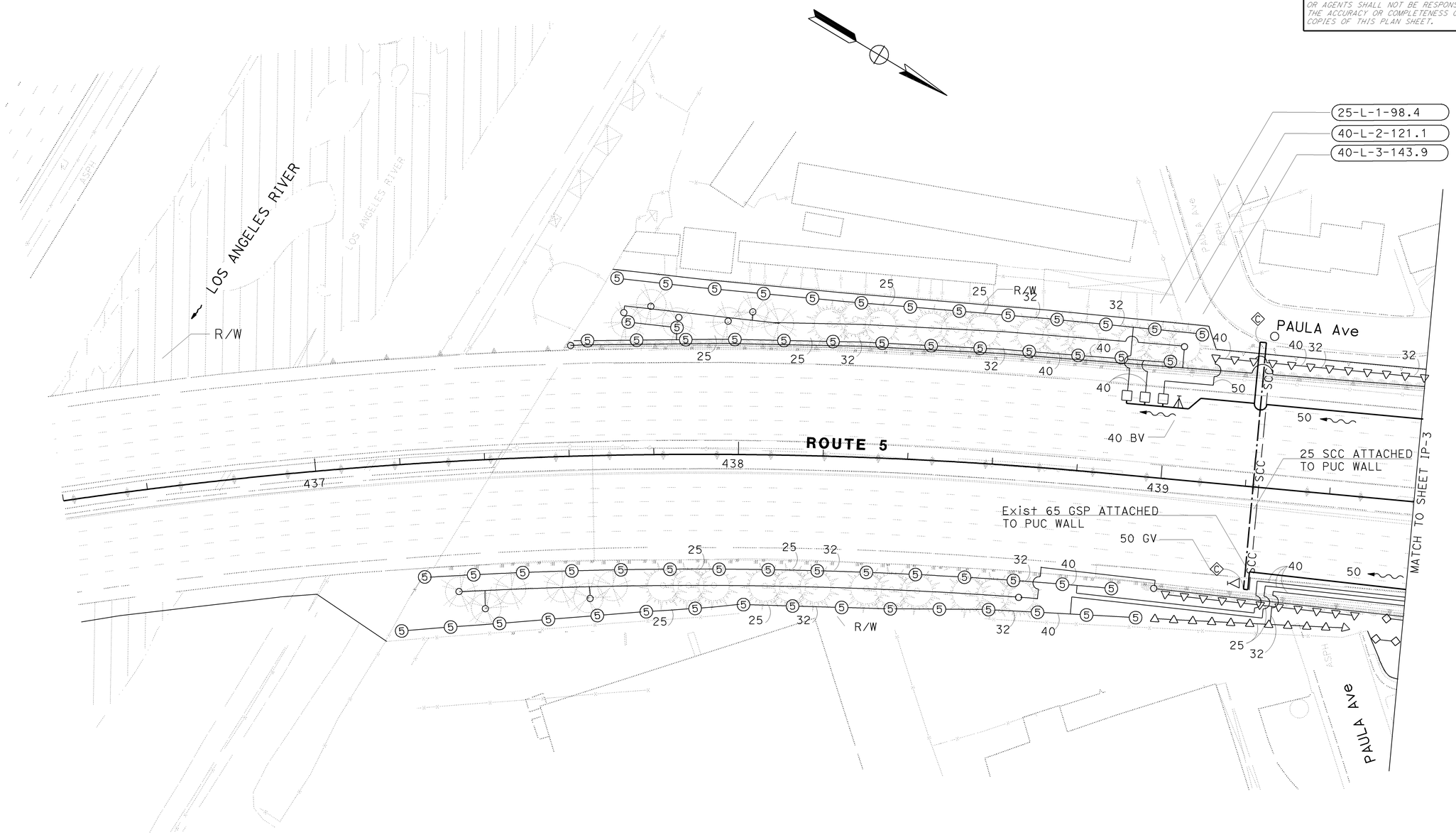

ALL DIMENSIONS ARE IN MILLIMETERS UNLESS OTHERWISE NOTED

IRRIGATION PLAN

SCALE 1:500

IP-2

THIS PLAN IS ACCURATE FOR IRRIGATION WORK ONLY

STATE OF CALIFORNIA - DEPARTMENT OF TRANSPORTATION

Caltrans LANDSCAPE ARCHITECTURE

SENIOR LANDSCAPE ARCHITECT: PATRICIA WATANABE

CALCULATED-DESIGNED BY: J MILLMAN

CHECKED BY: D PERSOFF

REVISED BY: 11-20-07

DATE REVISED: 11-20-07

LAST REVISION 11-10-08

DATE PLOTTED => 12-JUN-2009

TIME PLOTTED => 11:18

BORDER LAST REVISED 3/1/2007

RELATIVE BORDER SCALE IS IN MILLIMETERS 0 20 40 60 80

USERNAME => s135318

DGN FILE => 712184t1002.dgn

CU 07341

EA 121841

NOTE: FOR COMPLETE RIGHT OF WAY AND ACCURATE ACCESS DATA, SEE RIGHT OF WAY RECORD MAPS AT DISTRICT OFFICE.

ALL WORK SHALL BE WITHIN THE STATE R/W.

Dist	COUNTY	ROUTE	KILOMETER POST TOTAL PROJECT	SHEET No.	TOTAL SHEETS
07	LA	5	42.8/47.3	367	1073

LICENSED LANDSCAPE ARCHITECT

6-8-09
PLANS APPROVAL DATE

THE STATE OF CALIFORNIA OR ITS OFFICERS OR AGENTS SHALL NOT BE RESPONSIBLE FOR THE ACCURACY OR COMPLETENESS OF ELECTRONIC COPIES OF THIS PLAN SHEET.

LICENSED LANDSCAPE ARCHITECT — JOSEPH MILLMAN — NO. 1837 — RENEWAL DATE 07/31/10 — INTERNET DATE 02/17/09 — STATE OF CALIFORNIA

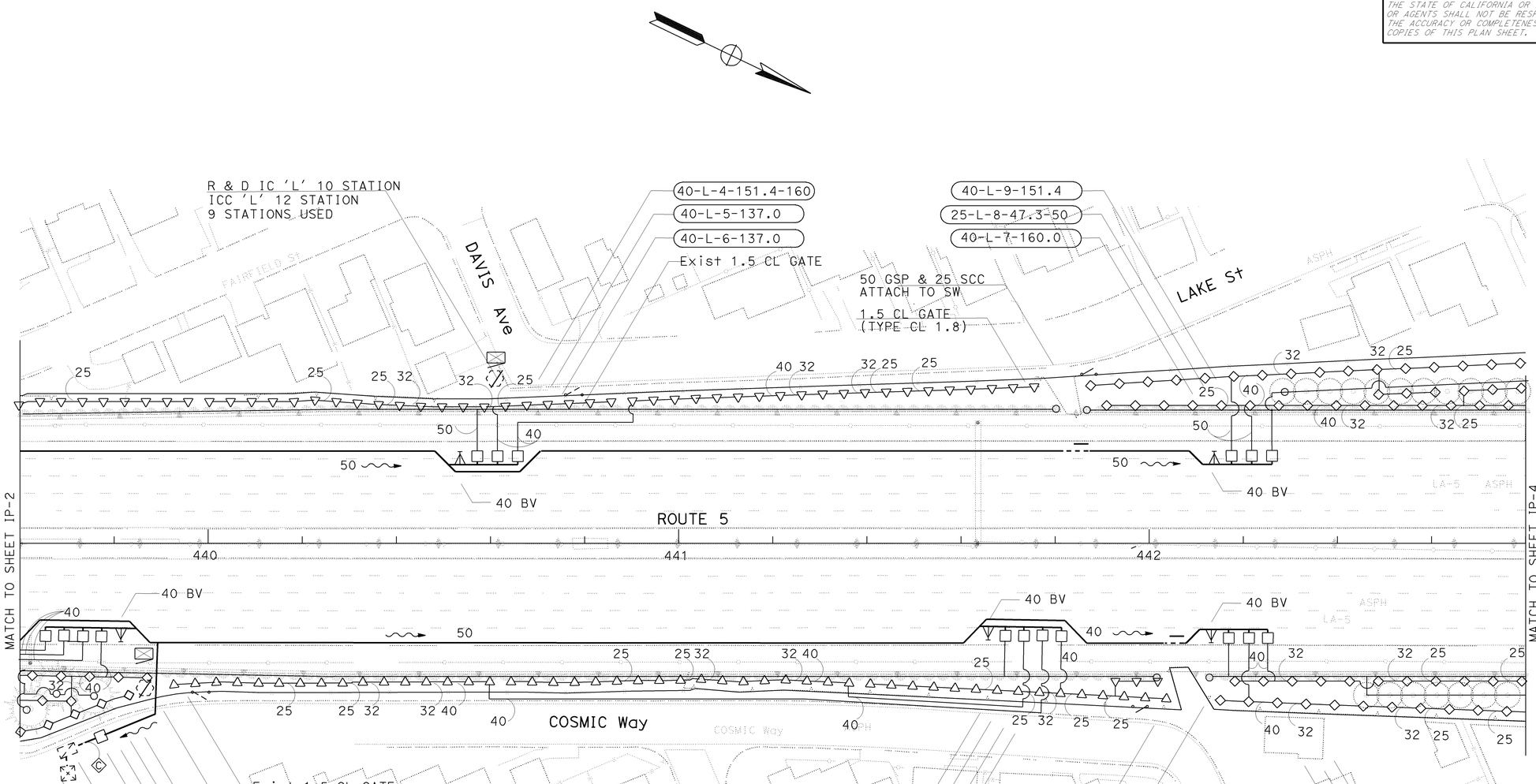

ALL DIMENSIONS ARE IN MILLIMETERS UNLESS OTHERWISE NOTED

IRRIGATION PLAN

SCALE 1:500

IP-3

THIS PLAN IS ACCURATE FOR IRRIGATION WORK ONLY

	REVISED BY	DATE REVISED
CALCULATED-DESIGNED BY	J MILLMAN	11/20/07
CHECKED BY	D PERSOFF	11/20/07

SENIOR LANDSCAPE ARCHITECT
PATRICIA WATANABE

STATE OF CALIFORNIA - DEPARTMENT OF TRANSPORTATION
Caltrans
LANDSCAPE ARCHITECTURE

LAST REVISION 11-10-08
DATE PLOTTED => 12-JUN-2009
TIME PLOTTED => 11:18

BORDER LAST REVISED 3/1/2007

RELATIVE BORDER SCALE IS IN MILLIMETERS 0 20 40 60 80

USERNAME => s135318
DGN FILE => 712184t1003.dgn

CU 07341

EA 121841

NOTE: FOR COMPLETE RIGHT OF WAY AND ACCURATE ACCESS DATA, SEE RIGHT OF WAY RECORD MAPS AT DISTRICT OFFICE.

ALL WORK SHALL BE WITHIN THE STATE R/W.

Dist	COUNTY	ROUTE	KILOMETER POST TOTAL PROJECT	SHEET No.	TOTAL SHEETS
07	LA	5	42.8/47.3	368	1073

LICENSED LANDSCAPE ARCHITECT

6-8-09

PLANS APPROVAL DATE

THE STATE OF CALIFORNIA OR ITS OFFICERS OR AGENTS SHALL NOT BE RESPONSIBLE FOR THE ACCURACY OR COMPLETENESS OF ELECTRONIC COPIES OF THIS PLAN SHEET.

LICENSED LANDSCAPE ARCHITECT JOSEPH MILLMAN NO. 1831 Signature 07/31/10 Renewal Date 02/17/09 Date STATE OF CALIFORNIA

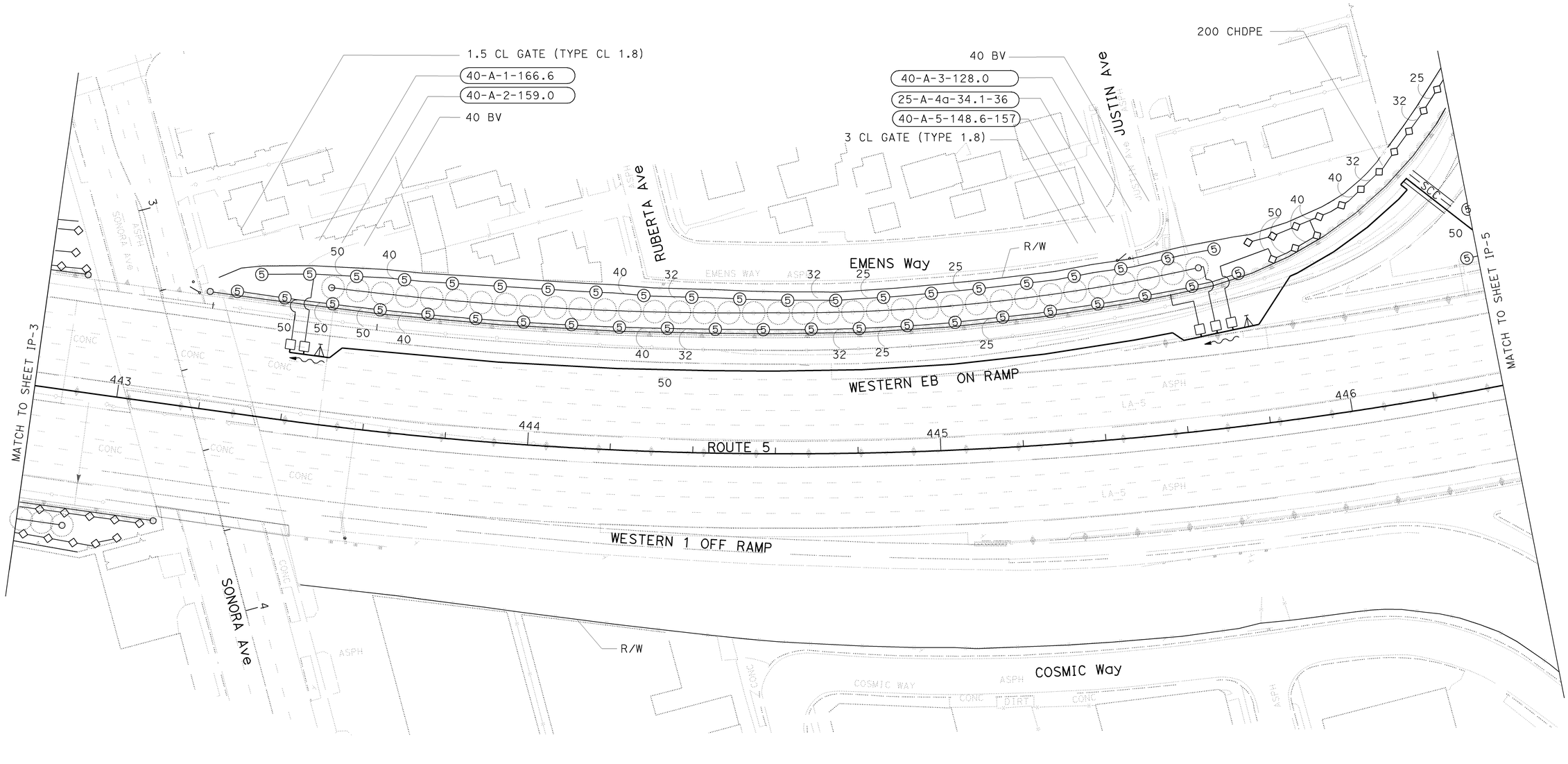

ALL DIMENSIONS ARE IN MILLIMETERS UNLESS OTHERWISE NOTED

IRRIGATION PLAN

SCALE 1:500

IP-4

THIS PLAN IS ACCURATE FOR IRRIGATION WORK ONLY

STATE OF CALIFORNIA - DEPARTMENT OF TRANSPORTATION

Caltrans LANDSCAPE ARCHITECTURE

SENIOR LANDSCAPE ARCHITECT: PATRICIA WATANABE

CALCULATED-DESIGNED BY: J MILLMAN

CHECKED BY: D PERSOFF

REVISED BY: 11/20/07

DATE REVISED: 11/20/07

LAST REVISION 11-10-08

DATE PLOTTED => 12-JUN-2009

TIME PLOTTED => 11:18

BORDER LAST REVISED 3/1/2007

RELATIVE BORDER SCALE IS IN MILLIMETERS 0 20 40 60 80

USERNAME => s135318

DGN FILE => 712184t1004.dgn

CU 07341

EA 121841

NOTE: FOR COMPLETE RIGHT OF WAY AND ACCURATE ACCESS DATA, SEE RIGHT OF WAY RECORD MAPS AT DISTRICT OFFICE.

ALL WORK SHALL BE WITHIN THE STATE R/W.

Dist	COUNTY	ROUTE	KILOMETER POST TOTAL PROJECT	SHEET No.	TOTAL SHEETS
07	LA	5	42.8/47.3	369	1073

LICENSED LANDSCAPE ARCHITECT

6-8-09
PLANS APPROVAL DATE

THE STATE OF CALIFORNIA OR ITS OFFICERS OR AGENTS SHALL NOT BE RESPONSIBLE FOR THE ACCURACY OR COMPLETENESS OF ELECTRONIC COPIES OF THIS PLAN SHEET.

LICENSED LANDSCAPE ARCHITECT — JOSEPH MILLMAN — NO. 1893 — RENEWAL DATE 07/31/10 — DATE 02/17/09 — STATE OF CALIFORNIA

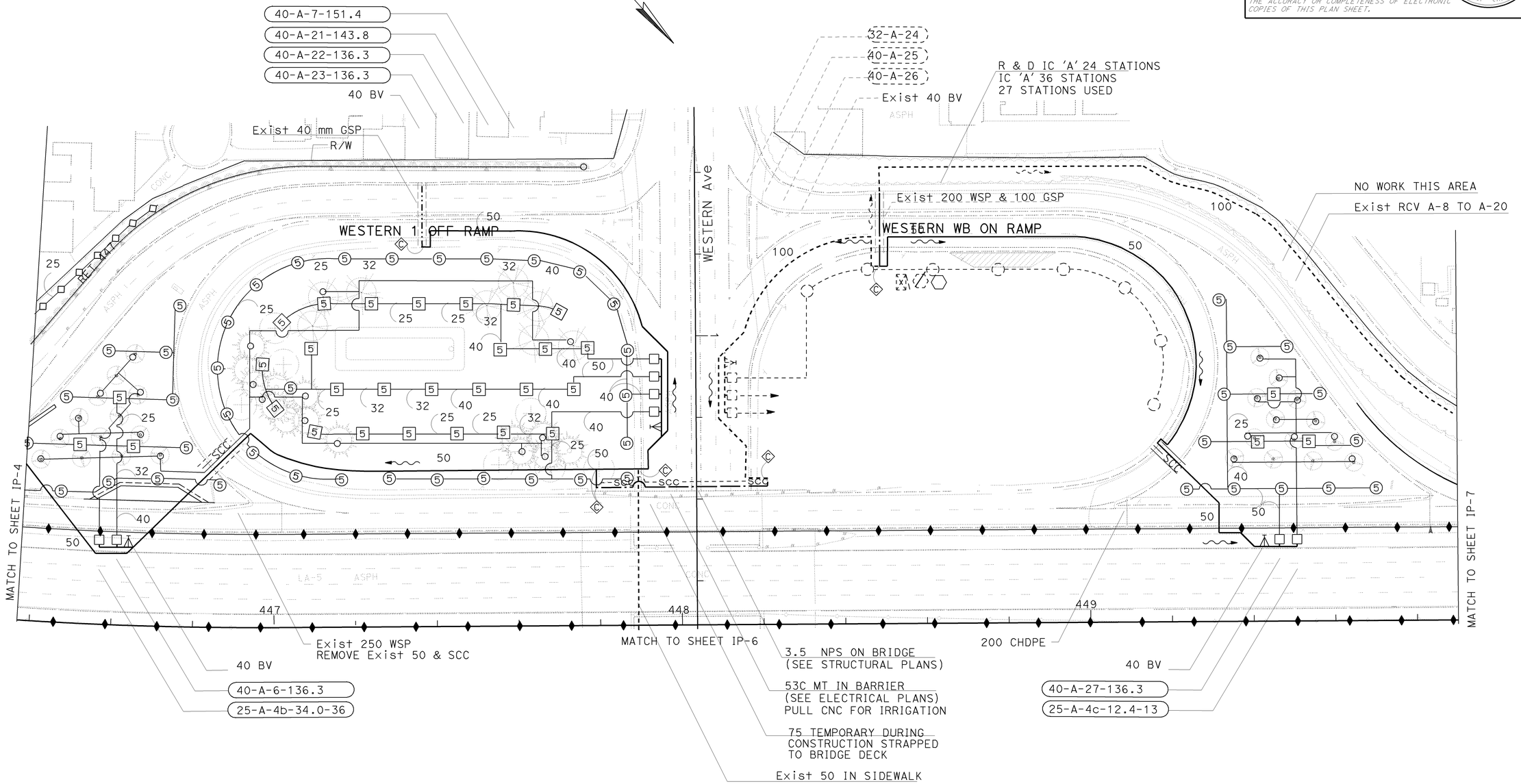

ALL DIMENSIONS ARE IN MILLIMETERS UNLESS OTHERWISE NOTED

IRRIGATION PLAN

SCALE 1:500

IP-5

THIS PLAN IS ACCURATE FOR IRRIGATION WORK ONLY

CALCULATED-DESIGNED BY	J MILLMAN	09-20-07
CHECKED BY	D PERSOFF	09-20-07
	REVISED BY	DATE REVISED

SENIOR LANDSCAPE ARCHITECT — PATRICIA WATANABE

STATE OF CALIFORNIA - DEPARTMENT OF TRANSPORTATION
Caltrans
LANDSCAPE ARCHITECTURE

LAST REVISION DATE PLOTTED => 12-JUN-2009
TIME PLOTTED => 11:18

NOTE: FOR COMPLETE RIGHT OF WAY AND ACCURATE ACCESS DATA, SEE RIGHT OF WAY RECORD MAPS AT DISTRICT OFFICE.

ALL WORK SHALL BE WITHIN THE STATE R/W.

REMOVE EXISTING IRRIGATION FACILITIES		
DESCRIPTION	UNIT	QUANTITY
RCV	EA	---
IMPACT HEAD	EA	6
NOZZLE LINE	m	---
BPA	EA	---

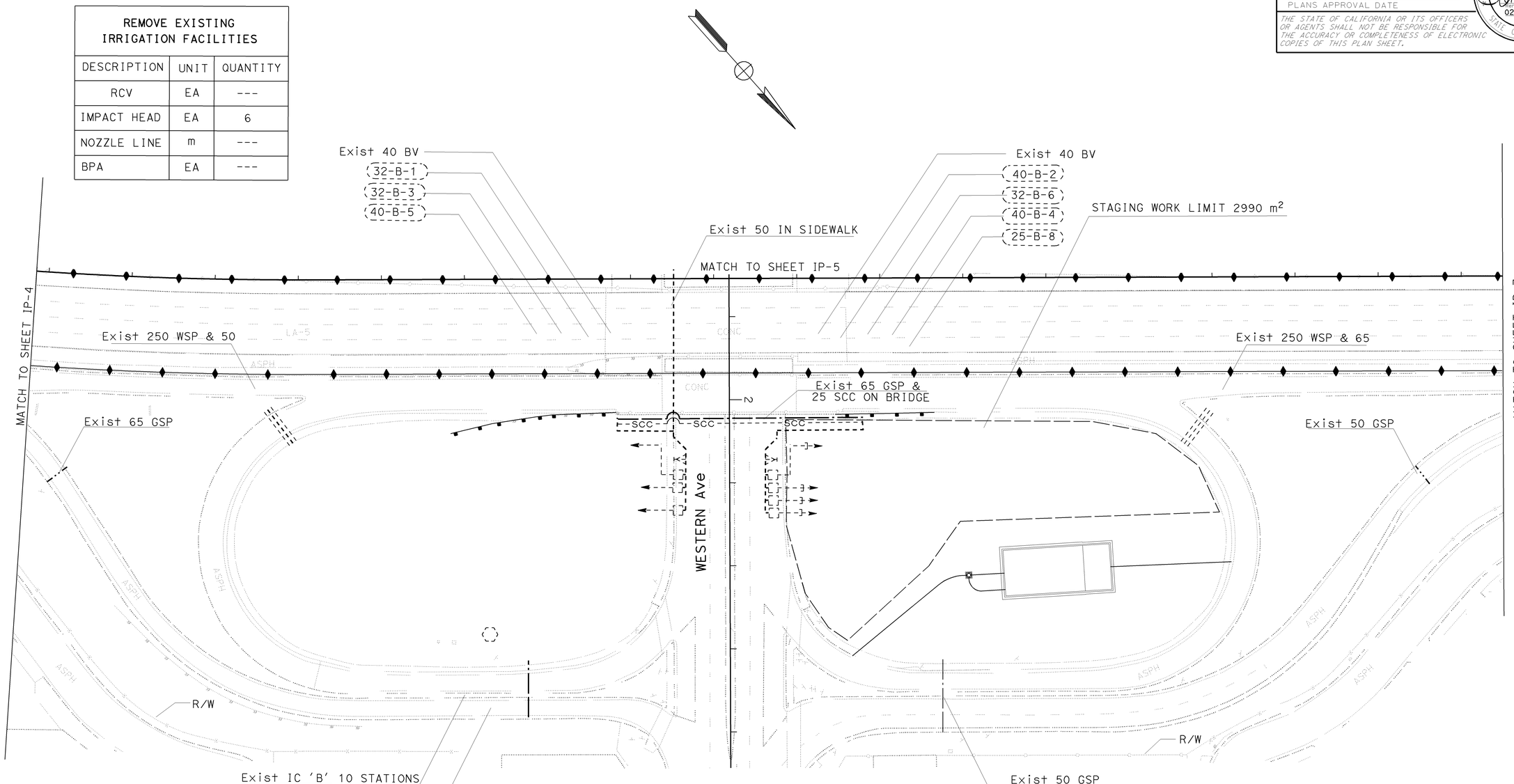

Dist	COUNTY	ROUTE	KILOMETER POST TOTAL PROJECT	SHEET No.	TOTAL SHEETS
07	LA	5	42.8/47.3	370	1073

LICENSED LANDSCAPE ARCHITECT

6-8-09
PLANS APPROVAL DATE

THE STATE OF CALIFORNIA OR ITS OFFICERS OR AGENTS SHALL NOT BE RESPONSIBLE FOR THE ACCURACY OR COMPLETENESS OF ELECTRONIC COPIES OF THIS PLAN SHEET.

LICENSED LANDSCAPE ARCHITECT — JOSEPH MILLMAN — NO. 1837 — RENEWAL DATE 07/31/10 — DATE SIGNED 02/17/09 — STATE OF CALIFORNIA

CALCULATED-DESIGNED BY			
CHECKED BY	D PERSOFF	DATE REVISED	11/20/07
	J MILLMAN	REVISED BY	11/20/07

STATE OF CALIFORNIA - DEPARTMENT OF TRANSPORTATION
LANDSCAPE ARCHITECTURE
SENIOR LANDSCAPE ARCHITECT
PATRICIA WATANABE

ALL DIMENSIONS ARE IN MILLIMETERS UNLESS OTHERWISE NOTED

IRRIGATION PLAN

SCALE 1:500

IP-6

THIS PLAN IS ACCURATE FOR IRRIGATION WORK ONLY

LAST REVISION DATE PLOTTED => 12-JUN-2009
TIME PLOTTED => 11:18
03-16-09

BORDER LAST REVISED 3/1/2007

RELATIVE BORDER SCALE IS IN MILLIMETERS 0 20 40 60 80

USERNAME => s135318
DGN FILE => 712184tl006.dgn

CU 07341

EA 121841

NOTE: FOR COMPLETE RIGHT OF WAY AND ACCURATE ACCESS DATA, SEE RIGHT OF WAY RECORD MAPS AT DISTRICT OFFICE.

ALL WORK SHALL BE WITHIN THE STATE R/W.

Dist	COUNTY	ROUTE	KILOMETER POST TOTAL PROJECT	SHEET No.	TOTAL SHEETS
07	LA	5	42.8/47.3	371	1073

LICENSED LANDSCAPE ARCHITECT

6-8-09

PLANS APPROVAL DATE

THE STATE OF CALIFORNIA OR ITS OFFICERS OR AGENTS SHALL NOT BE RESPONSIBLE FOR THE ACCURACY OR COMPLETENESS OF ELECTRONIC COPIES OF THIS PLAN SHEET.

LICENSED LANDSCAPE ARCHITECT JOSEPH MILLMAN NO. 1831 Signature 07/31/10 Renewal Date 02/17/09 Date STATE OF CALIFORNIA

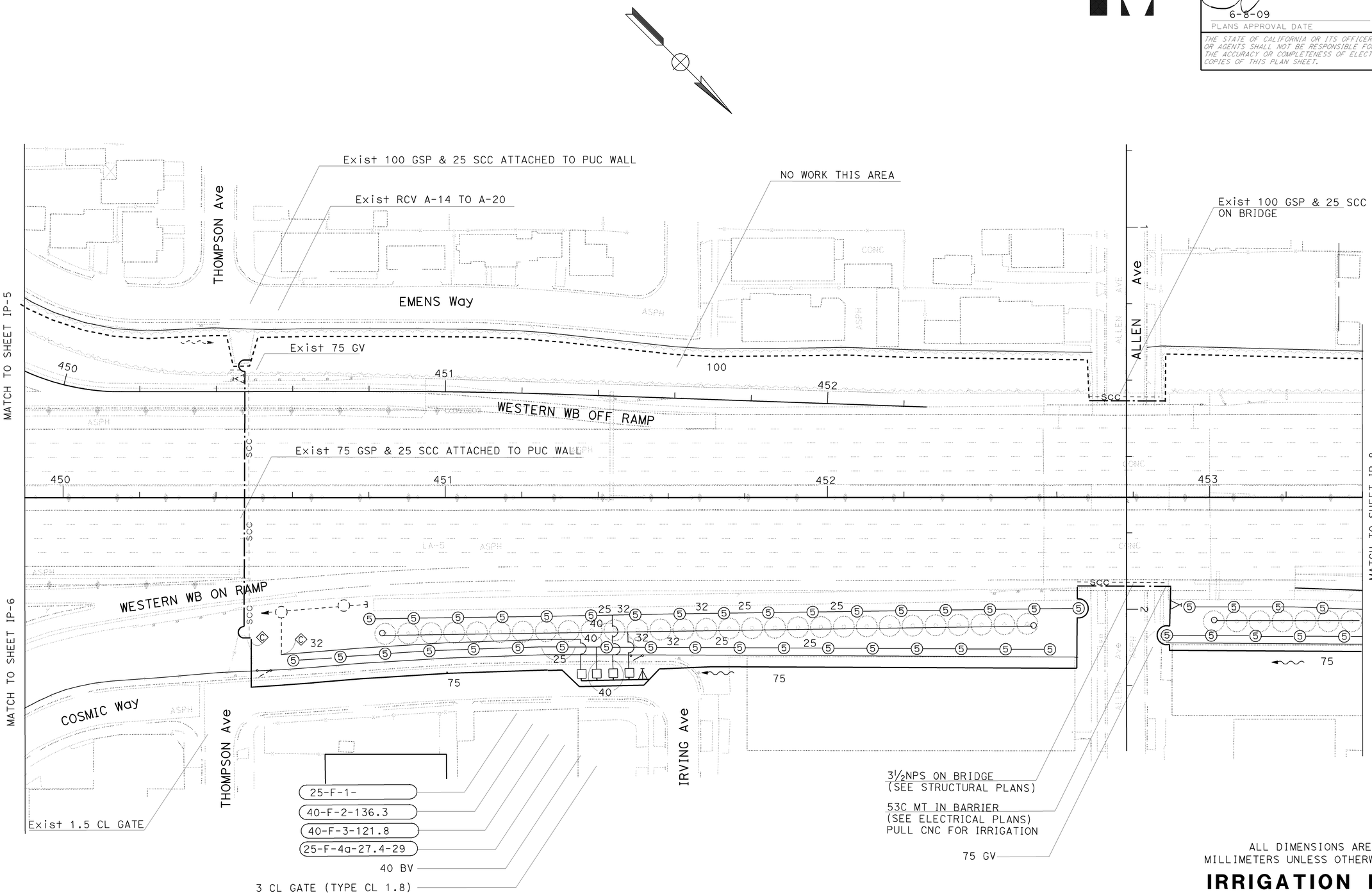

ALL DIMENSIONS ARE IN MILLIMETERS UNLESS OTHERWISE NOTED

IRRIGATION PLAN

SCALE 1:500

IP-7

THIS PLAN IS ACCURATE FOR IRRIGATION WORK ONLY

STATE OF CALIFORNIA - DEPARTMENT OF TRANSPORTATION

Caltrans LANDSCAPE ARCHITECTURE

SENIOR LANDSCAPE ARCHITECT: PATRICIA WATANABE

CALCULATED-DESIGNED BY: J MILLMAN

CHECKED BY: D PERSOFF

REVISED BY: 11/20/07

DATE REVISED: 11/20/07

LAST REVISION 12-09-08

DATE PLOTTED => 12-JUN-2009

TIME PLOTTED => 10:56

NOTE: FOR COMPLETE RIGHT OF WAY AND ACCURATE ACCESS DATA, SEE RIGHT OF WAY RECORD MAPS AT DISTRICT OFFICE.

ALL WORK SHALL BE WITHIN THE STATE R/W.

Dist	COUNTY	ROUTE	KILOMETER POST TOTAL PROJECT	SHEET No.	TOTAL SHEETS
07	LA	5	42.8/47.3	372	1073

LICENSED LANDSCAPE ARCHITECT

6-8-09
PLANS APPROVAL DATE

THE STATE OF CALIFORNIA OR ITS OFFICERS OR AGENTS SHALL NOT BE RESPONSIBLE FOR THE ACCURACY OR COMPLETENESS OF ELECTRONIC COPIES OF THIS PLAN SHEET.

LICENSED LANDSCAPE ARCHITECT — JOSEPH MILLMAN — NO. 1893 — RENEWAL DATE 07/31/10 — EXPIRATION DATE 02/17/09 — STATE OF CALIFORNIA

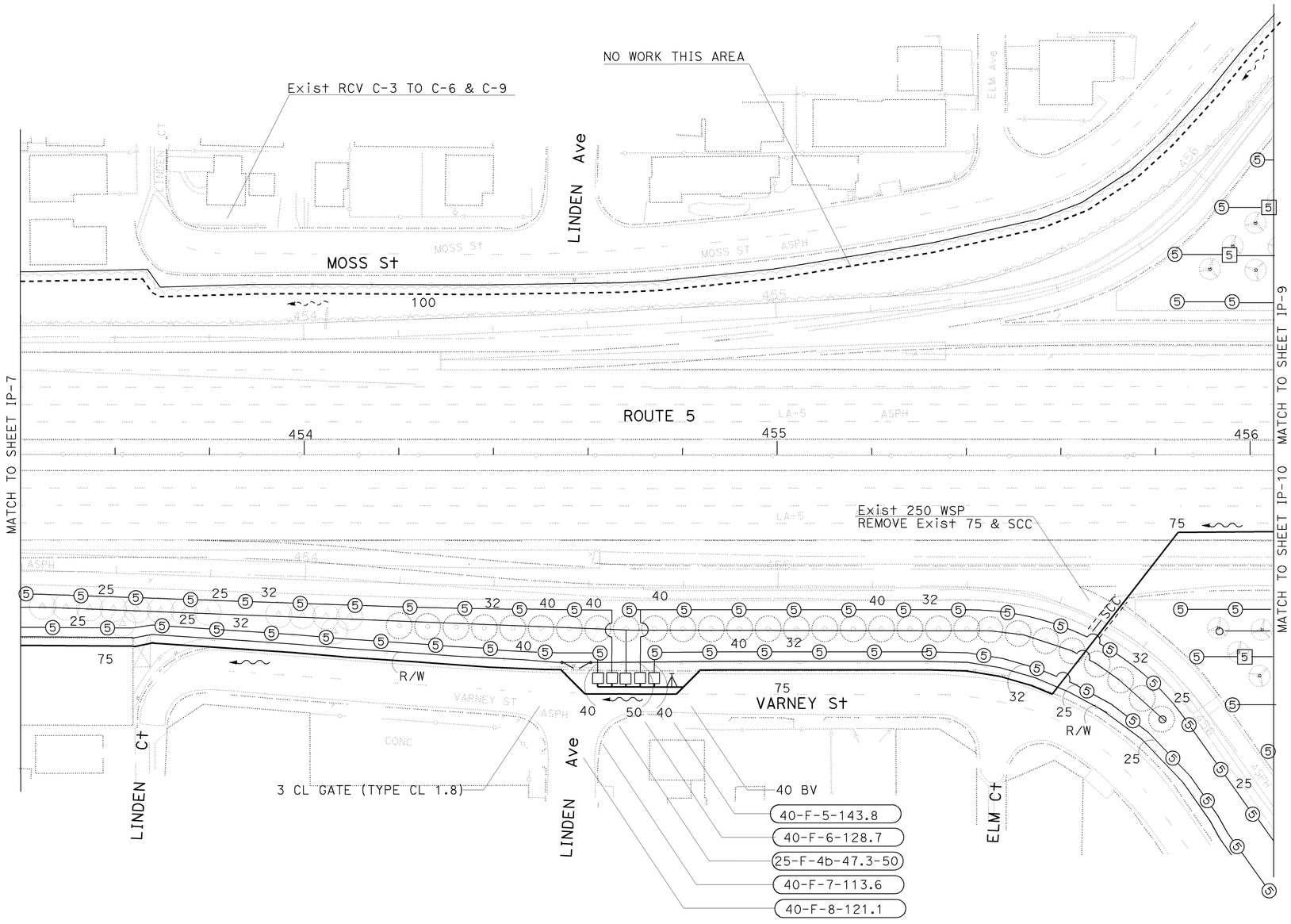

ALL DIMENSIONS ARE IN MILLIMETERS UNLESS OTHERWISE NOTED

IRRIGATION PLAN

SCALE 1:500

IP-8

THIS PLAN IS ACCURATE FOR IRRIGATION WORK ONLY

CALCULATED-DESIGNED BY		
CHECKED BY	D PERSOFF	11/20/07
REVISED BY	J MILLMAN	11/20/07
DATE REVISED		

SENIOR LANDSCAPE ARCHITECT
PATRICIA WATANABE

STATE OF CALIFORNIA - DEPARTMENT OF TRANSPORTATION
Caltrans
LANDSCAPE ARCHITECTURE

LAST REVISION — DATE PLOTTED => 12-JUN-2009 — TIME PLOTTED => 10:56 — 11-10-08

BORDER LAST REVISED 3/1/2007

RELATIVE BORDER SCALE IS IN MILLIMETERS 0 20 40 60 80

USERNAME => trrichf
DGN FILE => 712184t1008.dgn

CU 07341

EA 121841

Dist	COUNTY	ROUTE	KILOMETER POST TOTAL PROJECT	SHEET No.	TOTAL SHEETS
07	LA	5	42.8/47.3	373	1073

LICENSED LANDSCAPE ARCHITECT

6-8-09

PLANS APPROVAL DATE

THE STATE OF CALIFORNIA OR ITS OFFICERS OR AGENTS SHALL NOT BE RESPONSIBLE FOR THE ACCURACY OR COMPLETENESS OF ELECTRONIC COPIES OF THIS PLAN SHEET.

LICENSED LANDSCAPE ARCHITECT JOSEPH MILLMAN NO. 1831 Signature 07/31/10 Renewal Date 02/17/09 Date STATE OF CALIFORNIA

NOTE: FOR COMPLETE RIGHT OF WAY AND ACCURATE ACCESS DATA, SEE RIGHT OF WAY RECORD MAPS AT DISTRICT OFFICE.

ALL WORK SHALL BE WITHIN THE STATE R/W.

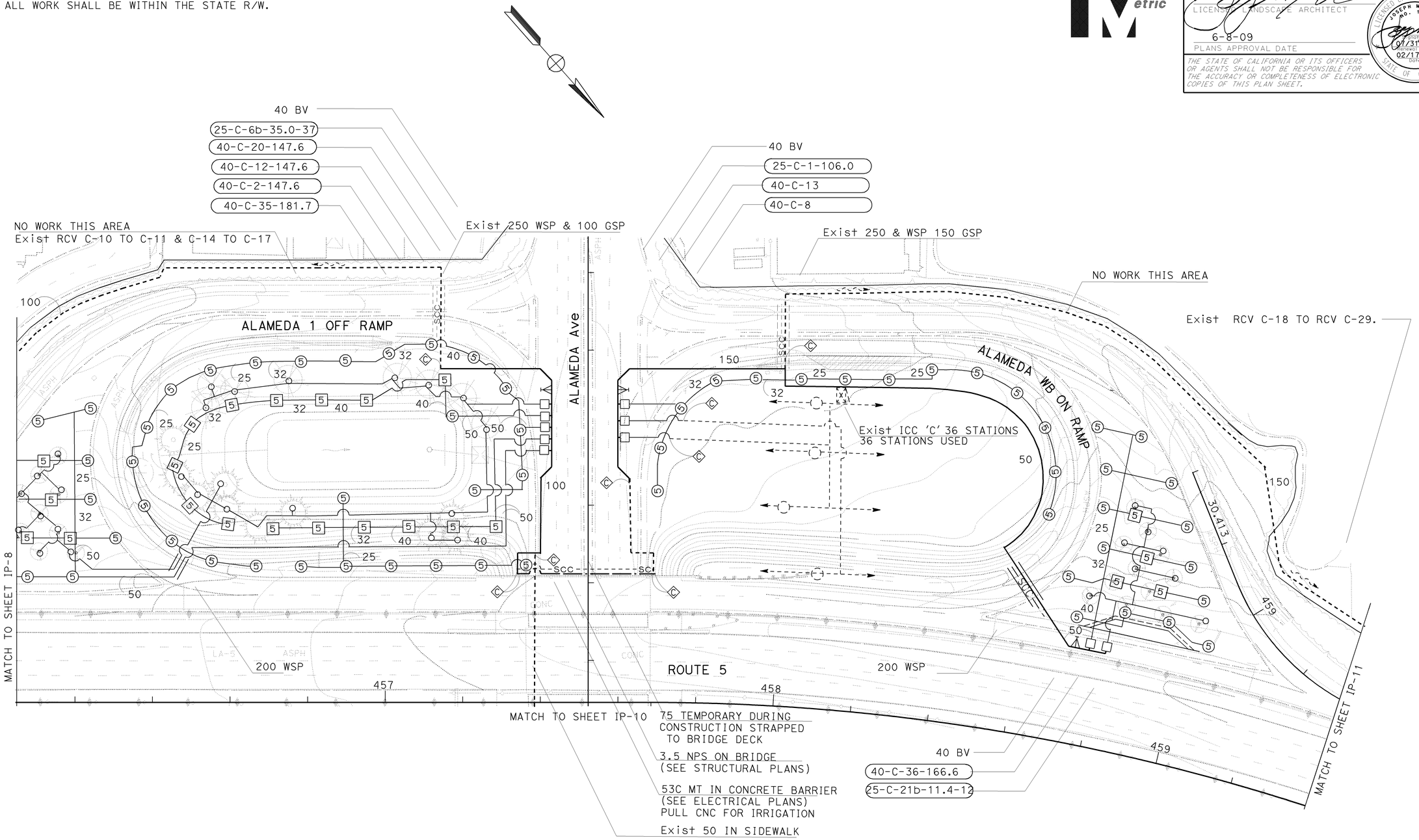

ALL DIMENSIONS ARE IN MILLIMETERS UNLESS OTHERWISE NOTED

IRRIGATION PLAN

SCALE 1:500

IP-9

THIS PLAN IS ACCURATE FOR IRRIGATION WORK ONLY

STATE OF CALIFORNIA - DEPARTMENT OF TRANSPORTATION

Caltrans LANDSCAPE ARCHITECTURE

SENIOR LANDSCAPE ARCHITECT: PATRICIA WATANABE

CALCULATED-DESIGNED BY: J MILLMAN

CHECKED BY: D PERSOFF

REVISED BY: 11/20/07

DATE REVISED: 11/20/07

LAST REVISION 11-10-08

DATE PLOTTED => 12-JUN-2009

TIME PLOTTED => 10:56

NOTE: FOR COMPLETE RIGHT OF WAY AND ACCURATE ACCESS DATA, SEE RIGHT OF WAY RECORD MAPS AT DISTRICT OFFICE.

ALL WORK SHALL BE WITHIN THE STATE R/W.

Dist	COUNTY	ROUTE	KILOMETER POST TOTAL PROJECT	SHEET No.	TOTAL SHEETS
07	LA	5	42.8/47.3	374	1073

Caltrans Metric

LICENSED LANDSCAPE ARCHITECT

6-8-09

PLANS APPROVAL DATE

THE STATE OF CALIFORNIA OR ITS OFFICERS OR AGENTS SHALL NOT BE RESPONSIBLE FOR THE ACCURACY OR COMPLETENESS OF ELECTRONIC COPIES OF THIS PLAN SHEET.

LICENSED LANDSCAPE ARCHITECT JOSEPH MILLMAN NO. 1831 STATE OF CALIFORNIA 07/31/10 Renewal Date 02/17/09 Date

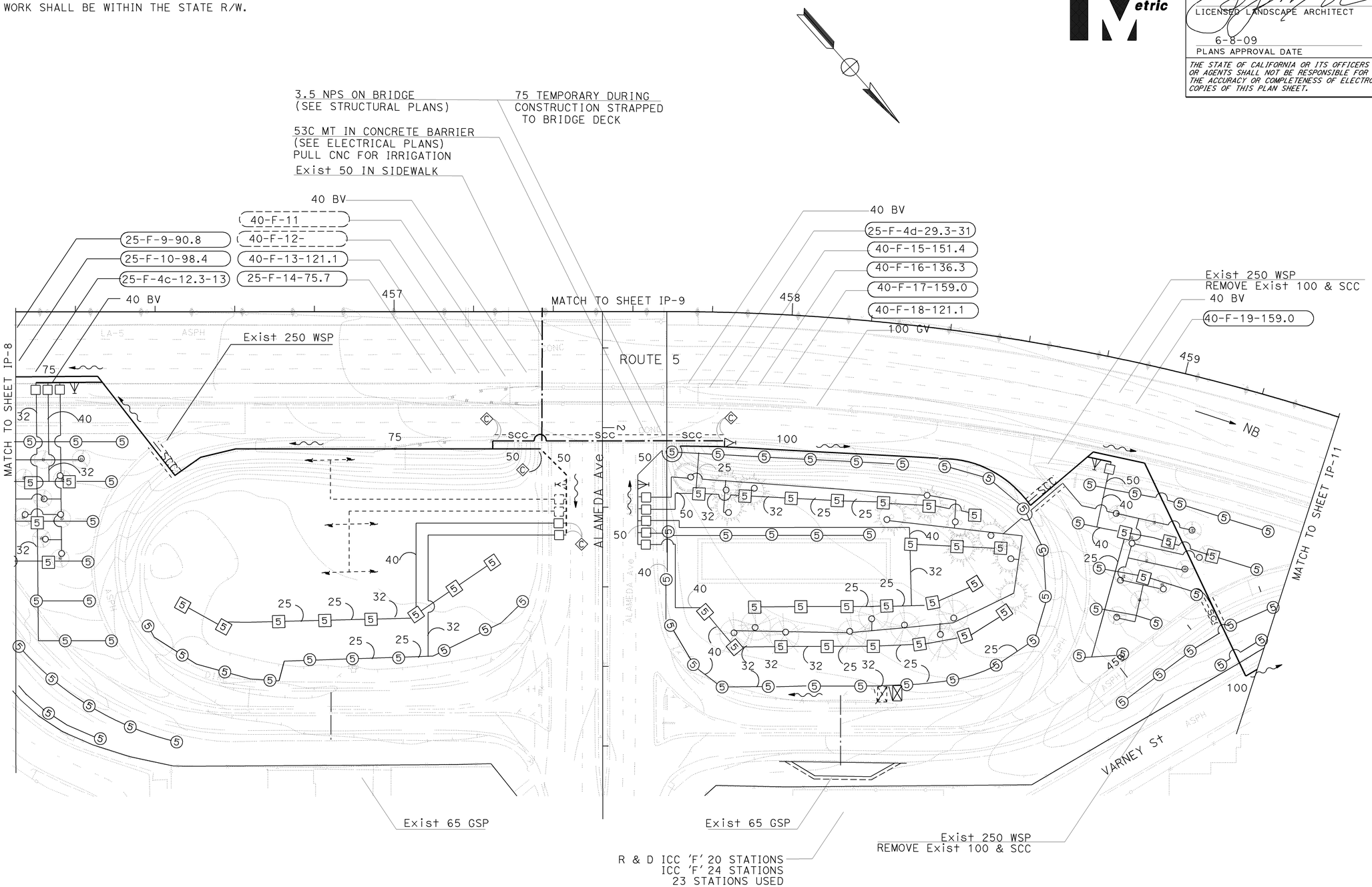

ALL DIMENSIONS ARE IN MILLIMETERS UNLESS OTHERWISE NOTED

IRRIGATION PLAN

SCALE 1:500

IP-10

THIS PLAN IS ACCURATE FOR IRRIGATION WORK ONLY

STATE OF CALIFORNIA - DEPARTMENT OF TRANSPORTATION

Caltrans LANDSCAPE ARCHITECTURE

SENIOR LANDSCAPE ARCHITECT: PATRICIA WATANABE

CALCULATED-DESIGNED BY: J MILLMAN

CHECKED BY: D PERSOFF

REVISED BY: 11/20/07

DATE REVISED: 11/20/07

LAST REVISION 11-10-08

DATE PLOTTED => 12-JUN-2009

TIME PLOTTED => 10:56

NOTE: FOR COMPLETE RIGHT OF WAY AND ACCURATE ACCESS DATA, SEE RIGHT OF WAY RECORD MAPS AT DISTRICT OFFICE.

ALL WORK SHALL BE WITHIN THE STATE R/W.

Dist	COUNTY	ROUTE	KILOMETER POST TOTAL PROJECT	SHEET No.	TOTAL SHEETS
07	LA	5	42.8/47.3	375	1073

LICENSED LANDSCAPE ARCHITECT

6-8-09
PLANS APPROVAL DATE

THE STATE OF CALIFORNIA OR ITS OFFICERS OR AGENTS SHALL NOT BE RESPONSIBLE FOR THE ACCURACY OR COMPLETENESS OF ELECTRONIC COPIES OF THIS PLAN SHEET.

LICENSED LANDSCAPE ARCHITECT — JOSEPH MILLMAN — NO. 1893 — RENEWAL DATE 07/31/10 — EXPIRATION DATE 02/17/09 — STATE OF CALIFORNIA

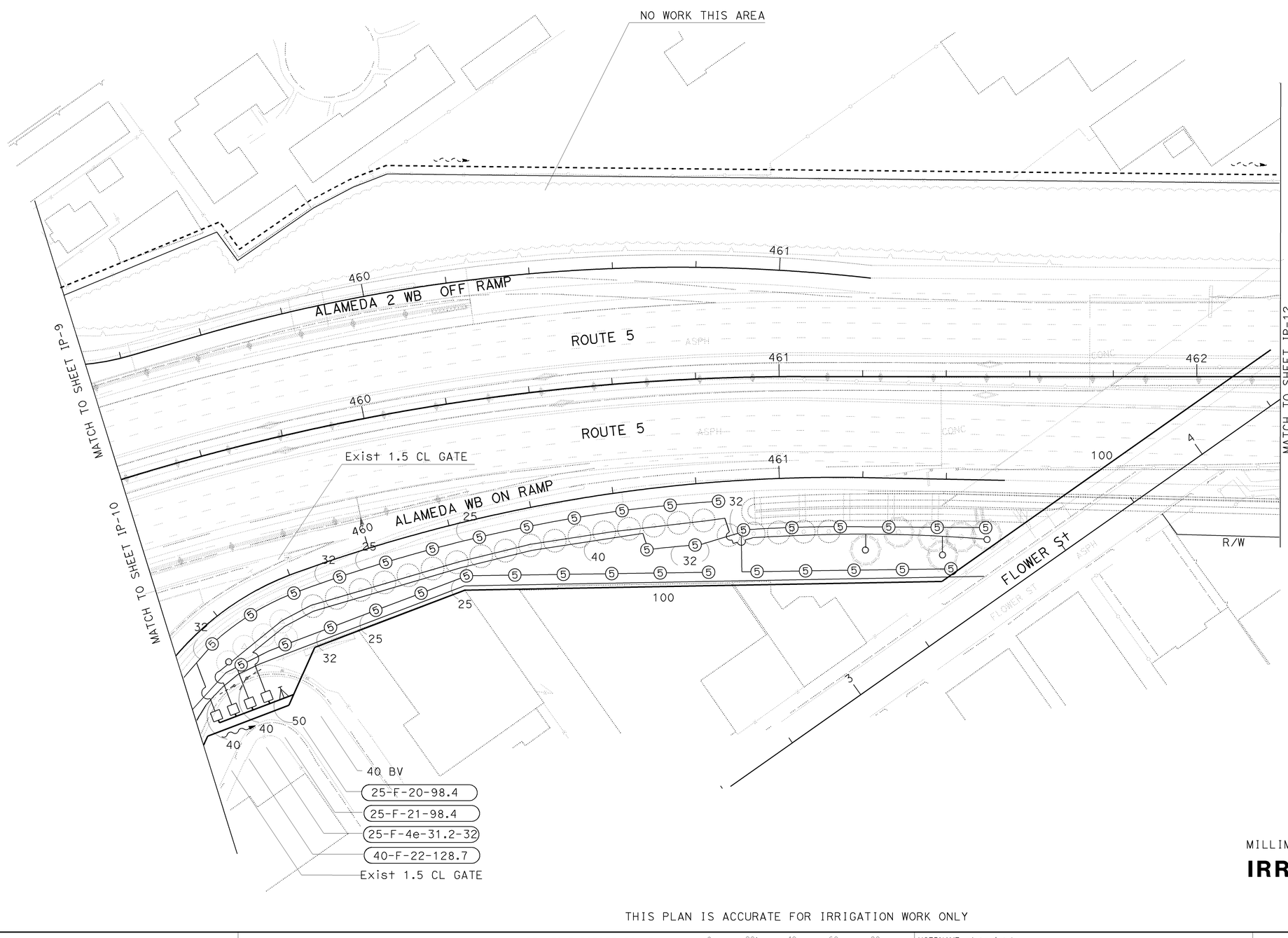

ALL DIMENSIONS ARE IN MILLIMETERS UNLESS OTHERWISE NOTED

IRRIGATION PLAN

SCALE 1:500

IP-11

THIS PLAN IS ACCURATE FOR IRRIGATION WORK ONLY

STATE OF CALIFORNIA - DEPARTMENT OF TRANSPORTATION
Caltrans
LANDSCAPE ARCHITECTURE
SENIOR LANDSCAPE ARCHITECT: PATRICIA WATANABE
CALCULATED-DESIGNED BY
CHECKED BY
J MILLMAN — REVISED BY — 11/20/07
D PERSOFF — DATE REVISED — 11/20/07

LAST REVISION DATE PLOTTED => 12-JUN-2009
TIME PLOTTED => 0557

BORDER LAST REVISED 3/1/2007

RELATIVE BORDER SCALE IS IN MILLIMETERS 0 20 40 60 80

USERNAME => trrichf
DGN FILE => 712184tI011.dgn

CU 07341

EA 121841

NOTE: FOR COMPLETE RIGHT OF WAY AND ACCURATE ACCESS DATA, SEE RIGHT OF WAY RECORD MAPS AT DISTRICT OFFICE.

ALL WORK SHALL BE WITHIN THE STATE R/W.

Caltrans Metric

Dist	COUNTY	ROUTE	KILOMETER POST TOTAL PROJECT	SHEET No.	TOTAL SHEETS
07	LA	5	42.8/47.3	376	1073

LICENSED LANDSCAPE ARCHITECT

6-8-09

PLANS APPROVAL DATE

THE STATE OF CALIFORNIA OR ITS OFFICERS OR AGENTS SHALL NOT BE RESPONSIBLE FOR THE ACCURACY OR COMPLETENESS OF ELECTRONIC COPIES OF THIS PLAN SHEET.

LICENSED LANDSCAPE ARCHITECT JOSEPH MILLMAN NO. 1831 Signature 07/31/10 Renewal Date 02/17/09 Date STATE OF CALIFORNIA

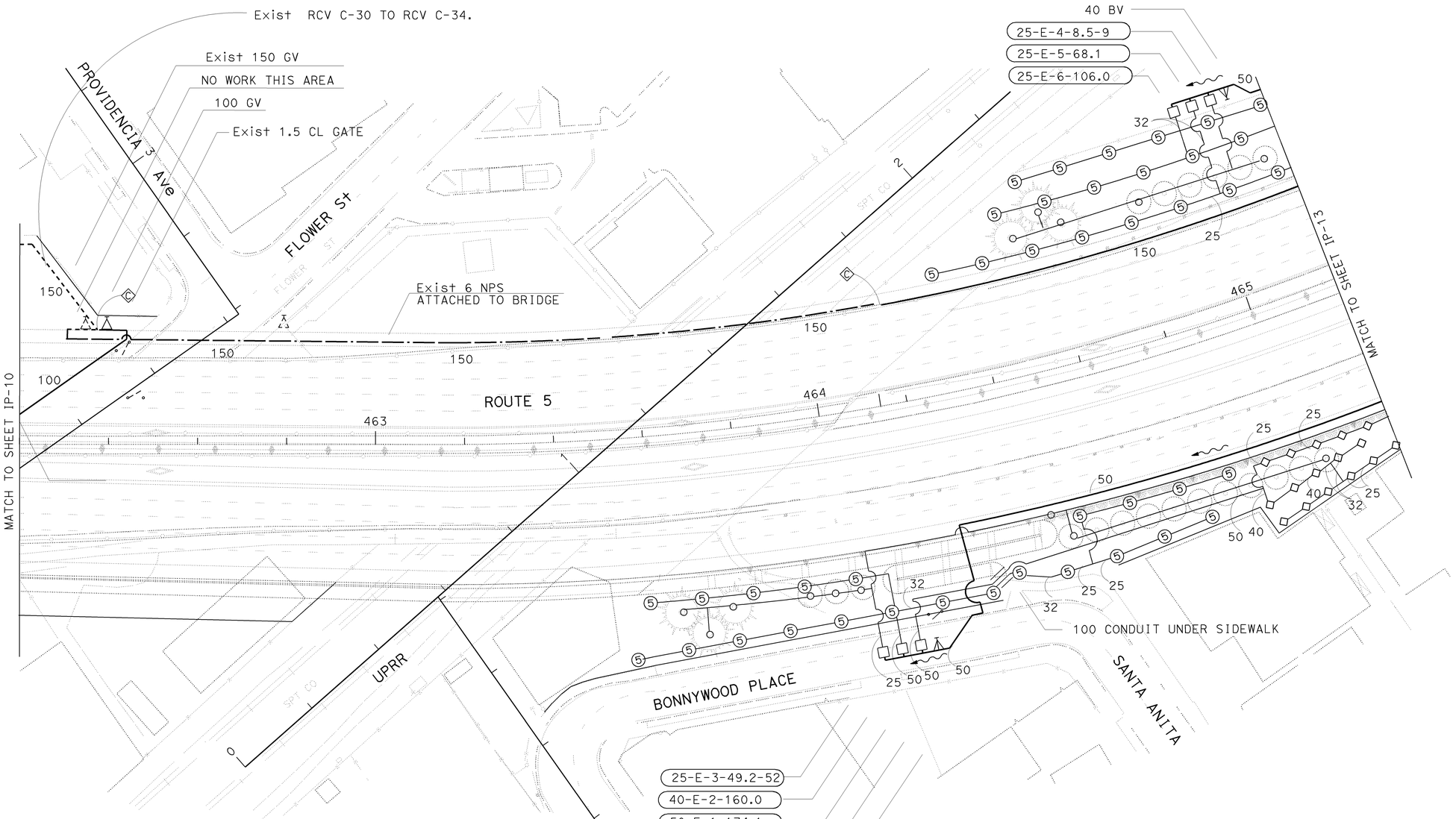

ALL DIMENSIONS ARE IN MILLIMETERS UNLESS OTHERWISE NOTED

IRRIGATION PLAN

SCALE 1:500

IP-12

THIS PLAN IS ACCURATE FOR IRRIGATION WORK ONLY

STATE OF CALIFORNIA - DEPARTMENT OF TRANSPORTATION

Caltrans LANDSCAPE ARCHITECTURE

SENIOR LANDSCAPE ARCHITECT: PATRICIA WATANABE

CALCULATED-DESIGNED BY: J MILLMAN

CHECKED BY: D PERSOFF

REVISED BY: 11/20/07

DATE REVISED: 11/20/07

LAST REVISION 11-10-08

DATE PLOTTED => 12-JUN-2009

TIME PLOTTED => 10:57

BORDER LAST REVISED 3/1/2007

RELATIVE BORDER SCALE IS IN MILLIMETERS 0 20 40 60 80

USERNAME => trrichf

DGN FILE => 712184t1012.dgn

CU 07341

EA 121841

Dist	COUNTY	ROUTE	KILOMETER POST TOTAL PROJECT	SHEET No.	TOTAL SHEETS
07	LA	5	42.8/47.3	377	1073

LICENSED LANDSCAPE ARCHITECT

6-8-09

PLANS APPROVAL DATE

THE STATE OF CALIFORNIA OR ITS OFFICERS OR AGENTS SHALL NOT BE RESPONSIBLE FOR THE ACCURACY OR COMPLETENESS OF ELECTRONIC COPIES OF THIS PLAN SHEET.

LICENSED LANDSCAPE ARCHITECT JOSEPH MILLMAN NO. 1831 Signature 07/31/10 Renewal Date 02/17/09 Date STATE OF CALIFORNIA

NOTE: FOR COMPLETE RIGHT OF WAY AND ACCURATE ACCESS DATA, SEE RIGHT OF WAY RECORD MAPS AT DISTRICT OFFICE.

ALL WORK SHALL BE WITHIN THE STATE R/W.

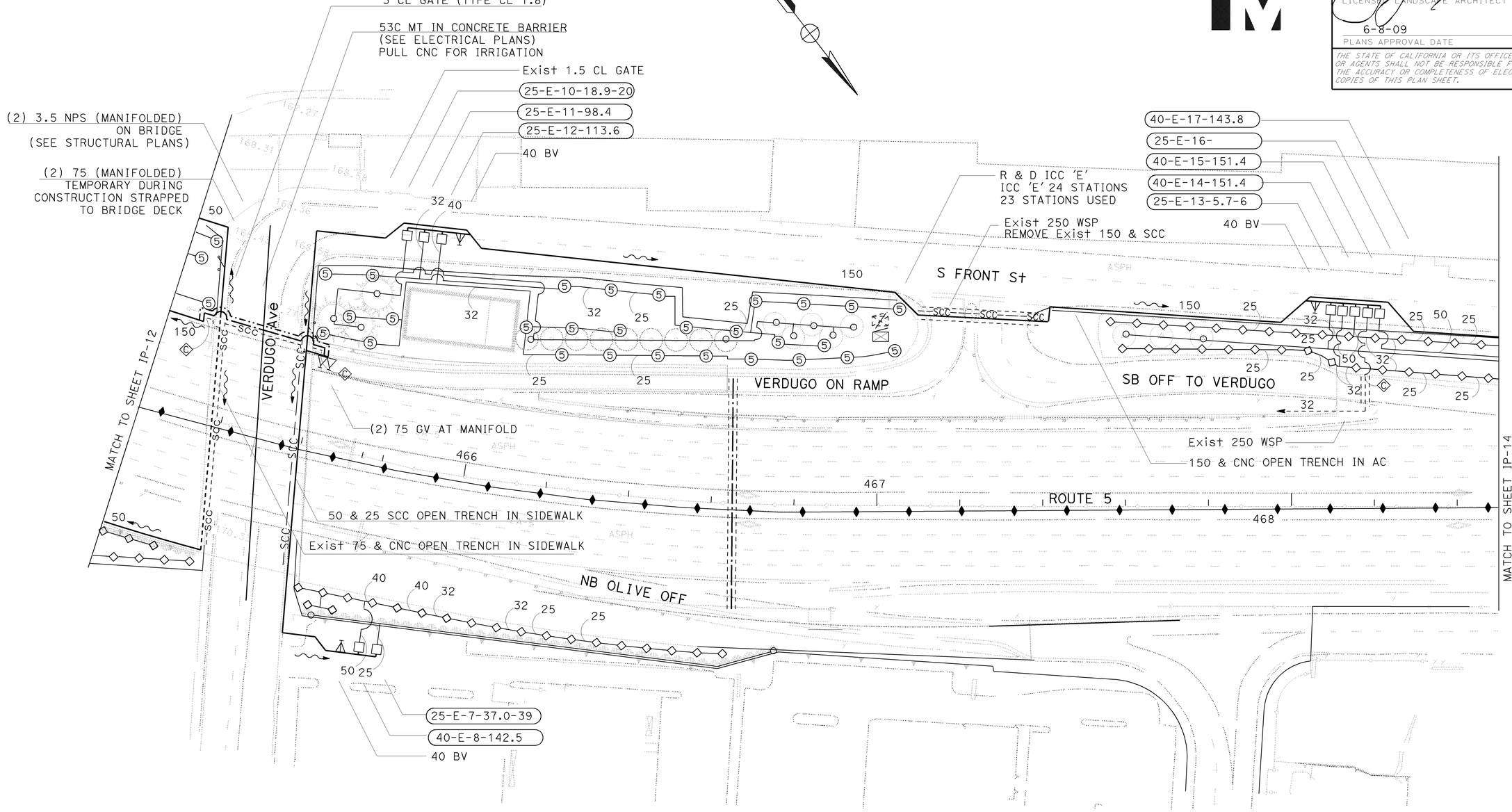

ALL DIMENSIONS ARE IN MILLIMETERS UNLESS OTHERWISE NOTED

IRRIGATION PLAN

SCALE 1:500

IP-13

THIS PLAN IS ACCURATE FOR IRRIGATION WORK ONLY

STATE OF CALIFORNIA - DEPARTMENT OF TRANSPORTATION

Caltrans LANDSCAPE ARCHITECTURE

SENIOR LANDSCAPE ARCHITECT: PATRICIA WATANABE

CALCULATED-DESIGNED BY: J MILLMAN

CHECKED BY: D PERSOFF

REVISED BY: 11/20/07

DATE REVISED: 11/20/07

LAST REVISION 12-09-08

DATE PLOTTED => 12-JUN-2009

TIME PLOTTED => 10:57

BORDER LAST REVISED 3/1/2007

RELATIVE BORDER SCALE IS IN MILLIMETERS 0 20 40 60 80

CU 07341

EA 121841

NOTE: FOR COMPLETE RIGHT OF WAY AND ACCURATE ACCESS DATA, SEE RIGHT OF WAY RECORD MAPS AT DISTRICT OFFICE.

ALL WORK SHALL BE WITHIN THE STATE R/W.

Dist	COUNTY	ROUTE	KILOMETER POST TOTAL PROJECT	SHEET No.	TOTAL SHEETS
07	LA	5	42.8/47.3	378	1073

LICENSED LANDSCAPE ARCHITECT

6-8-09
PLANS APPROVAL DATE

THE STATE OF CALIFORNIA OR ITS OFFICERS OR AGENTS SHALL NOT BE RESPONSIBLE FOR THE ACCURACY OR COMPLETENESS OF ELECTRONIC COPIES OF THIS PLAN SHEET.

LICENSED LANDSCAPE ARCHITECT — JOSEPH MILLMAN — NO. 1837 — RENEWAL DATE 07/31/10 — DATE 02/17/09 — STATE OF CALIFORNIA

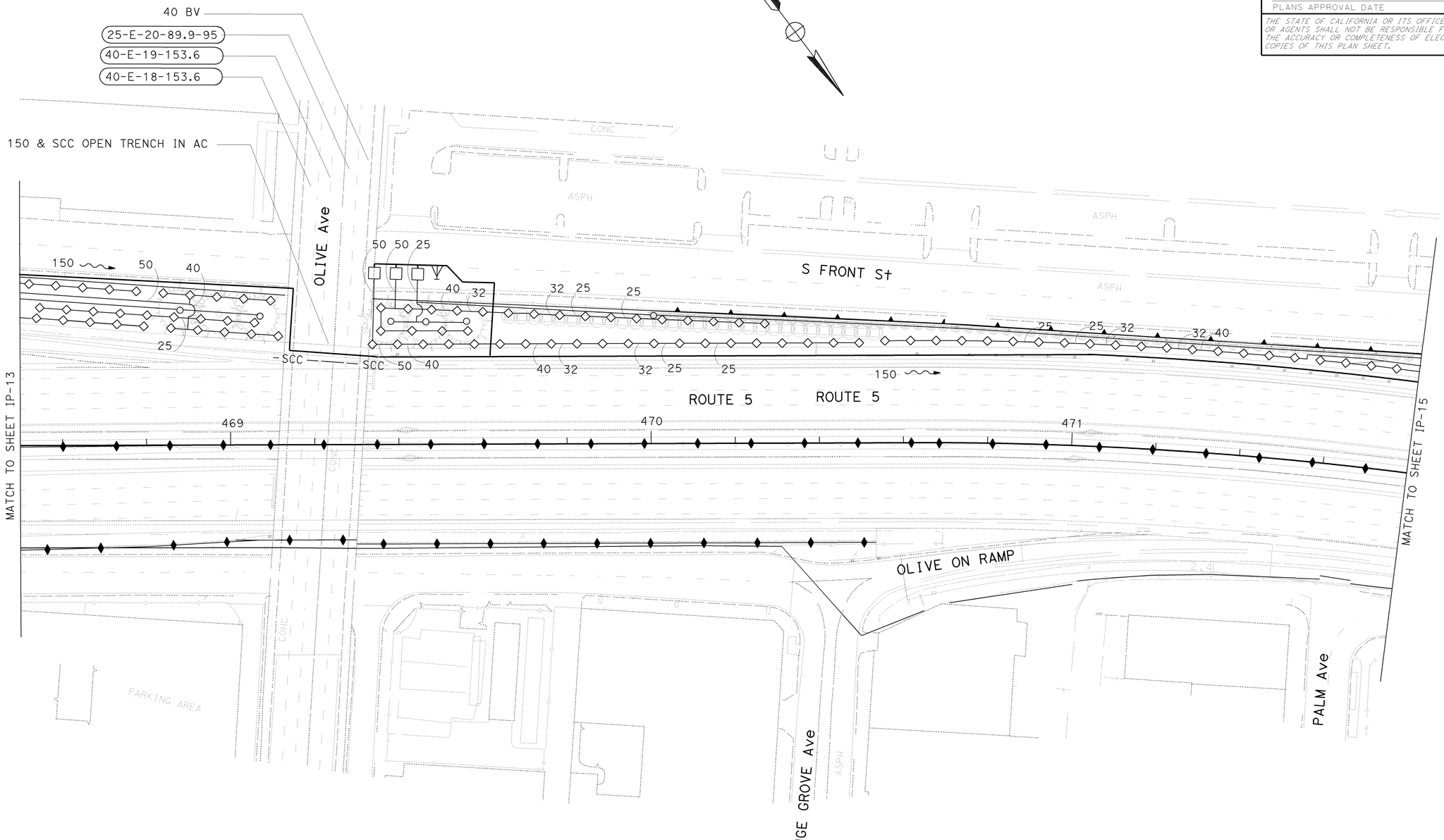

ALL DIMENSIONS ARE IN MILLIMETERS UNLESS OTHERWISE NOTED

IRRIGATION PLAN

SCALE 1:500

IP-14

THIS PLAN IS ACCURATE FOR IRRIGATION WORK ONLY

CALCULATED-DESIGNED BY	J MILLMAN	11/20/07	
CHECKED BY	D PERSOFF	11/20/07	
SENIOR LANDSCAPE ARCHITECT	PATRICIA WATANABE		
STATE OF CALIFORNIA - DEPARTMENT OF TRANSPORTATION	LANDSCAPE ARCHITECTURE		

LAST REVISION 11-10-08 | DATE PLOTTED => 12-JUN-2009 | TIME PLOTTED => 10:57

BORDER LAST REVISED 3/1/2007 | RELATIVE BORDER SCALE IS IN MILLIMETERS 0 20 40 60 80 | USERNAME => trrichf | DGN FILE => 712184tl014.dgn | CU 07341 | EA 121841

NOTE: FOR COMPLETE RIGHT OF WAY AND ACCURATE ACCESS DATA, SEE RIGHT OF WAY RECORD MAPS AT DISTRICT OFFICE.

ALL WORK SHALL BE WITHIN THE STATE R/W.

Dist	COUNTY	ROUTE	KILOMETER POST TOTAL PROJECT	SHEET No.	TOTAL SHEETS
07	LA	5	42.8/47.3	379	1073

LICENSED LANDSCAPE ARCHITECT

6-8-09

PLANS APPROVAL DATE

THE STATE OF CALIFORNIA OR ITS OFFICERS OR AGENTS SHALL NOT BE RESPONSIBLE FOR THE ACCURACY OR COMPLETENESS OF ELECTRONIC COPIES OF THIS PLAN SHEET.

LICENSED LANDSCAPE ARCHITECT JOSEPH MILLMAN NO. 1831 Signature 07/31/10 Renewal Date 02/17/09 Date STATE OF CALIFORNIA

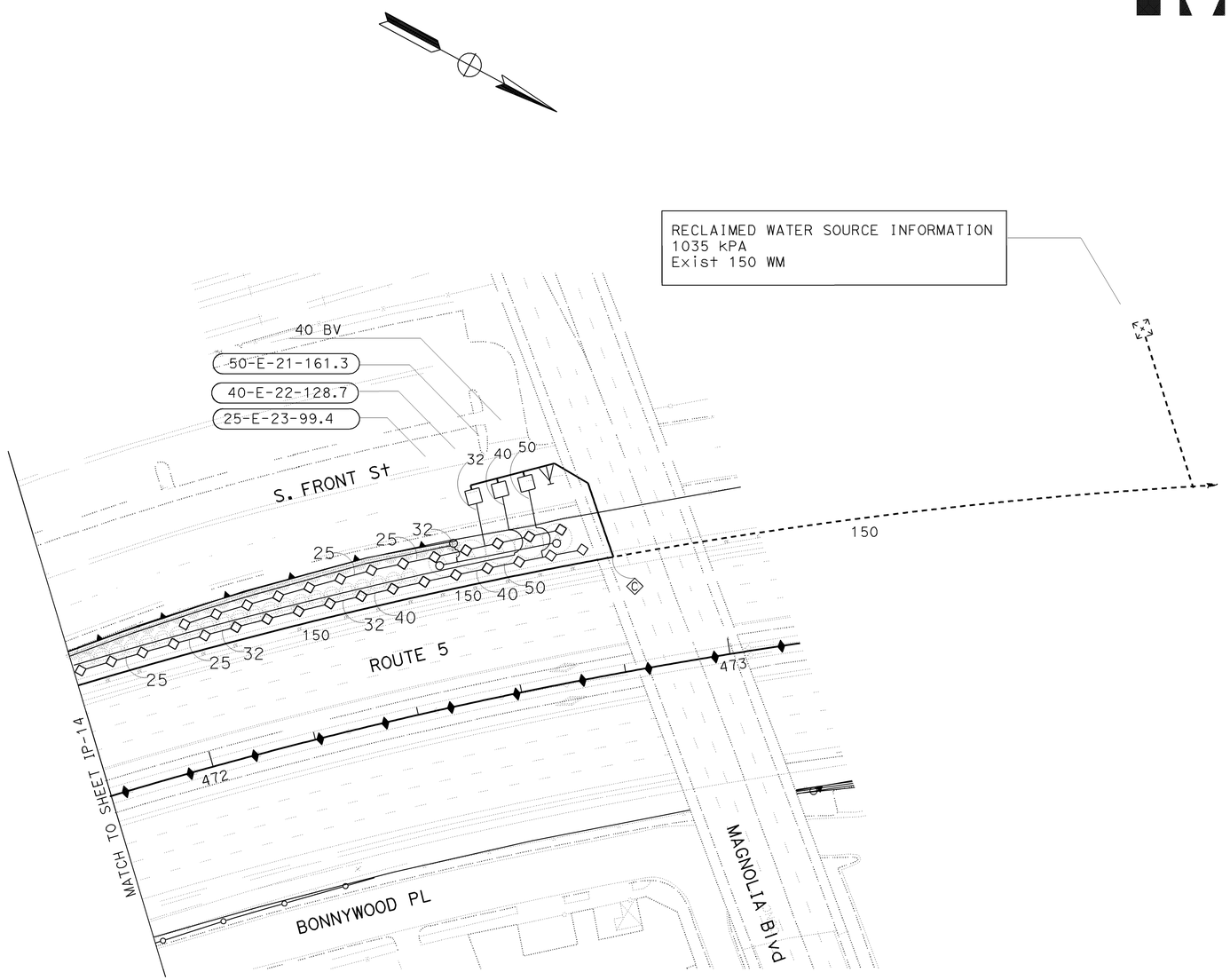

ALL DIMENSIONS ARE IN MILLIMETERS UNLESS OTHERWISE NOTED

IRRIGATION PLAN

SCALE 1:500

IP-15

THIS PLAN IS ACCURATE FOR IRRIGATION WORK ONLY

STATE OF CALIFORNIA - DEPARTMENT OF TRANSPORTATION

Caltrans LANDSCAPE ARCHITECTURE

SENIOR LANDSCAPE ARCHITECT: PATRICIA WATANABE

CALCULATED-DESIGNED BY: J MILLMAN

CHECKED BY: D PERSOFF

REVISED BY: 11/20/07

DATE REVISED: 11/20/07

LAST REVISION 11-10-08

DATE PLOTTED => 12-JUN-2009

TIME PLOTTED => 10:57

BORDER LAST REVISED 3/1/2007

RELATIVE BORDER SCALE IS IN MILLIMETERS 0 20 40 60 80

USERNAME => trrichf

DGN FILE => 712184t1015.dgn

CU 07341

EA 121841

SPRINKLER SCHEDULE

SYMBOL	TYPE	DESCRIPTION	SPRAY PATTERN	OPERATING PRESSURE (KILOPASCAL)	PRESSURE COMPENSATING	PLUS / MINUS 5% ② DISCHARGE: LITERS PER SECOND L/s	LITERS PER MINUTE L/min	LITERS PER HOUR L/h	RADIUS (IN METERS)(m)	WIDTH x LENGTH (IN METERS)(m)	MATERIAL	INLET CONNECTION (NPT) (DN IN MILLIMETERS)(mm)	ADJUSTABLE DISCHARGE	RISER: TYPE	RISER: MATERIAL: PLASTIC	RISER: MATERIAL: GALVANIZED	RISER: SIZE (IPS) (IN MILLIMETERS)(mm)	RISER: HEIGHT (IN MILLIMETERS)(mm)	RISER: FLOW SHUTOFF DEVICE	⑤ SWING JOINT (TYPE)	RISER SUPPORT	SPRINKLER PROTECTOR (TYPE)	REMARKS
⑤	A-5	GEAR DRIVE	Q\H	206-482	---	---	7.6	---	11.6	---	PL	20	X	IV	---	X	20	450	X	I	X	---	
5	A-5	GEAR DRIVE	F	206-482	---	---	15.2	---	11.6	---	PL	20	X	IV	---	X	20	450	X	I	X	---	
△	B-1	SPRAY HEAD	Q	103-482	---	---	3.5	---	4.5	---	PL	15	X	II	X	---	15	300	---	III	---	---	
△	B-1	SPRAY HEAD	H	103-482	---	---	7.0	---	4.5	---	PL	15	X	II	X	---	15	300	---	III	---	---	
◇	B-5	ROTARY STREAM	Q	138-380	---	---	3.9	---	7.4	---	PL	15	X	II	X	---	15	300	---	III	---	---	
◇	B-5	ROTARY STREAM	H	138-380	---	---	7.7	---	7.4	---	PL	15	X	II	X	---	15	300	---	III	---	---	
◇	B-5	ROTARY STREAM	F	138-380	---	---	15.4	---	7.4	---	PL	15	X	II	X	---	15	300	---	III	---	---	
o	C-2	FLOOD BUBBLER	---	103-482	X	---	0.95	---	1.5	---	PL	15	---	V	X	---	15	300	---	---	---	---	③

X IN BOX DENOTES REQUIREMENT

APPLICABLE WHEN CIRCLED BELOW:

1 - See Special Provisions.
② - If a pressure compensating device is specified, the discharge and radii shown reflect its use.
③ -Pressure Compensating full circle bubbler.
4 - Vinyl-coated cast iron housing.
⑤ - Swing Joints required adjacent to shoulders, curbs, sidewalks, and dikes.
6 - Unless otherwise shown on plans.

ABBREVIATIONS

ADJ — adjustable
B/B — brass/bronze
B/B/PL — brass/bronze/plastic
B/PL — brass/plastic
CST — center strip
DN — diameter nominal
EST — end strip
F — full circle
F/P — full/part circle
H — half circle
IPS — iron pipe size
kPa — kilopascal
L/h — liters per hour
L/min — liters per minute
L/s — liters per second
m — meters
mm — millimeters
NPT — national pipe thread
P — part circle
PL — plastic
Q — quarter circle
SST — side strip
T — third circle
TQ — three quarter circle
TT — two thirds circle

IRRIGATION CROSSOVERS

LOCATION LINE	LOCATION STATION	SIDE R†	SIDE L†	CONDUIT TYPE ③ SIZE (mm) DN / LENGTH (m)		(N) WATER LINE CROSSOVER SIZE (mm) DN	(N) SPRINKLER CONTROL CROSSOVER SIZE (mm) DN
LA 5	446+20		X	200	10	50	25
LA 5	449+20		X	200	12	50	----
LA 5	456+45		X	200	12	50	25
TOTAL					34		

(N) - NOT A SEPARATE PAY ITEM FOR INFORMATION ONLY
DN - DIAMETER NOMINAL
X - DENOTES REQUIREMENT

CONDUIT TYPE
(Applicable when circled below and shown under the 'CONDUIT TYPE' column heading)

1 BITUMINOUS COATED CORRUGATED STEEL PIPE (1.626 mm THICK)
2 CORRUGATED STEEL PIPE (1.626 mm THICK)
③ CORRUGATED HIGH DENSITY POLYETHYLENE PIPE
4 ALTERNATIVE CONDUIT

NOTE:

1. Irrigation lines shall be 20 mm nominal unless otherwise noted or sized by chart.
2. CNC shall typically follow supply line (main) in direction of arrow, not shown continuously for clarity.
3. Connect CNC from controller to valves.
4. Locate RCV manifolds adjacent to CL gate where possible.
5. Add two extra cnc to last RCV's on mainline.

PIPE SIZING FOR C-2 SYSTEMS	
NUMBER OF SPRINKLERS	SIZE OF PIPE
1 --- 40	20 mm
41 -- 60	25 mm
61 -- 100	32 mm
101-- 140	40 mm
141 -- 220	50 mm

Dist	COUNTY	ROUTE	KILOMETER POST TOTAL PROJECT	SHEET No.	TOTAL SHEETS
07	LA	5	42.8/47.3	380	1073

LICENSED LANDSCAPE ARCHITECT
6-8-09
PLANS APPROVAL DATE

JOSEPH MILLMAN No. 1891 — LICENSED LANDSCAPE ARCHITECT — 07/31/10 RENEWAL DATE — 02/17/09 DATE — STATE OF CALIFORNIA

THE STATE OF CALIFORNIA OR ITS OFFICERS OR AGENTS SHALL NOT BE RESPONSIBLE FOR THE ACCURACY OR COMPLETENESS OF ELECTRONIC COPIES OF THIS PLAN SHEET.

ALL DIMENSIONS ARE IN MILLIMETERS UNLESS OTHERWISE SHOWN

SPRINKLER SCHEDULE

LD-1

THIS PLAN IS ACCURATE FOR IRRIGATION WORK ONLY

REVISED BY	DATE REVISED
J MILLMAN	11/20/07
D PERSOFF	11/20/07

CALCULATED-DESIGNED BY
CHECKED BY

SENIOR LANDSCAPE ARCHITECT PATRICIA WATANABE

STATE OF CALIFORNIA - DEPARTMENT OF TRANSPORTATION
Caltrans LANDSCAPE ARCHITECTURE

LAST REVISION DATE PLOTTED => 12-JUN-2009
TIME PLOTTED => 10:57
11-10-08

BORDER LAST REVISED 3/1/2007 | RELATIVE BORDER SCALE IS IN MILLIMETERS 0 201 40 60 80 | USERNAME => trrichf DGN FILE => 712184tn001.dgn | CU 07341 | EA 121841

Dist	COUNTY	ROUTE	KILOMETER POST TOTAL PROJECT	SHEET No.	TOTAL SHEETS
07	LA	5	42.8/47.3	381	1073

LICENSED LANDSCAPE ARCHITECT

6-8-09
PLANS APPROVAL DATE

THE STATE OF CALIFORNIA OR ITS OFFICERS OR AGENTS SHALL NOT BE RESPONSIBLE FOR THE ACCURACY OR COMPLETENESS OF ELECTRONIC COPIES OF THIS PLAN SHEET.

LICENSED LANDSCAPE ARCHITECT
JOSEPH MILLMAN
NO. 1837
RENEWAL DATE
07/31/10
DATE
02/17/09
STATE OF CALIFORNIA

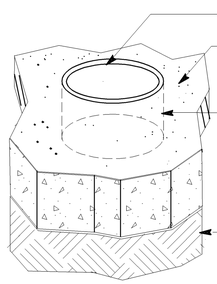

COLLAR DETAIL

NOTE:
PLACE 300 mm DIA. CHDPE COLLAR (125 mm LENGTH)
AS FORM (CLEAR) AROUND POST

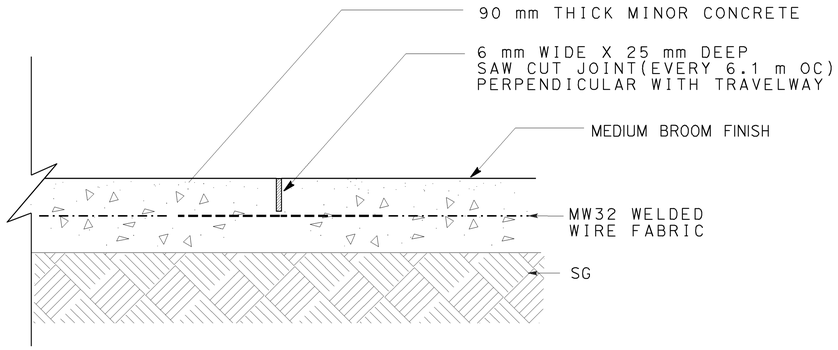

EXPANSION JOINT DETAIL

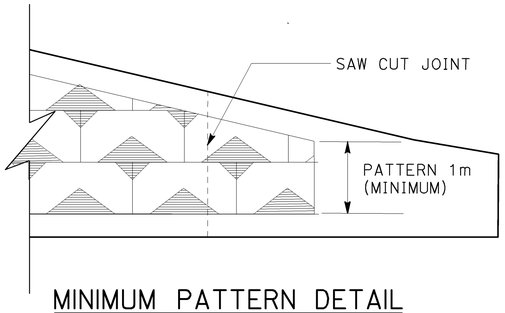

MINIMUM PATTERN DETAIL

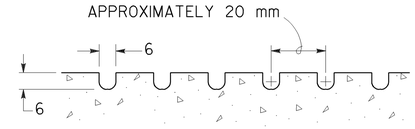

GROOVE SHALL BE 6 MM GROOVES
APPROXIMATELY 20 MM ON CENTER

GROOVING DETAIL

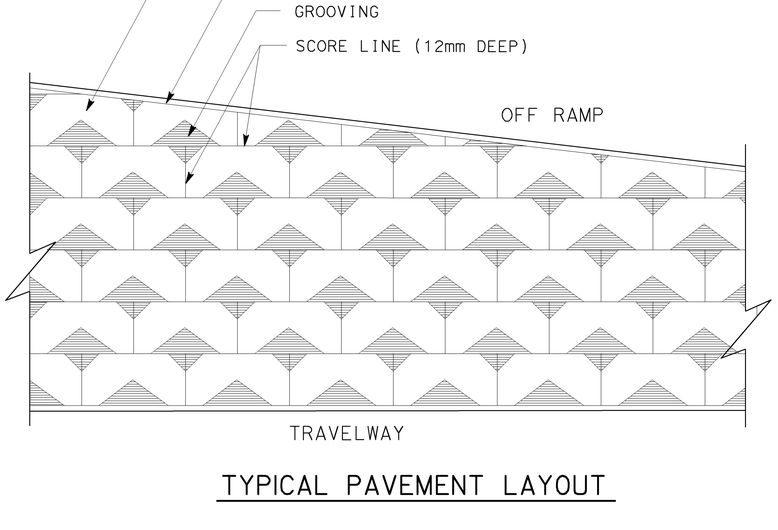

TYPICAL PAVEMENT LAYOUT

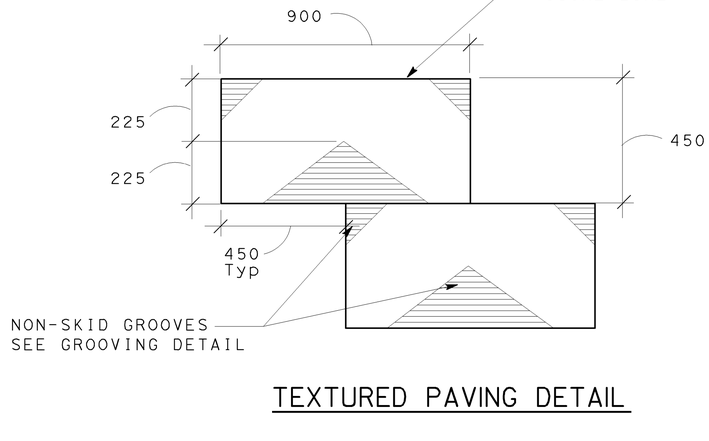

TEXTURED PAVING DETAIL

ALL DIMENSIONS ARE IN
MILLIMETERS UNLESS OTHERWISE SHOWN

MINOR CONCRETE (TEXTURED PAVING)

NO SCALE

LD-2

THIS PLAN IS ACCURATE FOR LANDSCAPE WORK ONLY

STATE OF CALIFORNIA - DEPARTMENT OF TRANSPORTATION
Caltrans
LANDSCAPE ARCHITECTURE

SENIOR LANDSCAPE ARCHITECT
PATRICIA WATANABE

CALCULATED-DESIGNED BY
CHECKED BY
J MILLMAN
D PERSOFF

REVISED BY
DATE REVISED
11/20/07
11/20/07

LAST REVISION
DATE PLOTTED => 12-JUN-2009
TIME PLOTTED => 10:57
12-09-08

BORDER LAST REVISED 3/1/2007

RELATIVE BORDER SCALE
IS IN MILLIMETERS
0 20 40 60 80

USERNAME => trrichf
DGN FILE => 712184tn002.dgn

CU 07341

EA 121841

Dist	COUNTY	ROUTE	KILOMETER POST TOTAL PROJECT	SHEET No.	TOTAL SHEETS
07	LA	5	42.8/47.3	382	1073

Caltrans Metric

5/5/08
REGISTERED ELECTRICAL ENGINEER

6-8-09
PLANS APPROVAL DATE

REGISTERED PROFESSIONAL ENGINEER
CANDACE FUNG
No. E16936
Exp. 06/30/09
ELECTRICAL
STATE OF CALIFORNIA

THE STATE OF CALIFORNIA OR ITS OFFICERS OR AGENTS SHALL NOT BE RESPONSIBLE FOR THE ACCURACY OR COMPLETENESS OF ELECTRONIC COPIES OF THIS PLAN SHEET.

GENERAL NOTES:

1. CONDUITS CONTAINING FIBER OPTIC CABLE SHALL ENTER PULL BOXES ON THE SHORT SIDE ONLY.
2. EXISTING IRRIGATION SYSTEMS ARE NOT SHOWN FOR CLARITY.
3. FIBER OPTICS CONDUITS SHALL HAVE A TRACER WIRE, EXCEPT IN TYPE 1 CONDUITS. SEE E-27 FOR DETAILS.
4. COMMUNICATION CONDUIT SHALL BE CENTERED IN THE PAVED SHOULDER OR AS SHOWN ON PLANS OR AS DIRECTED BY THE ENGINEER.
5. AT VARIOUS LOCATIONS, CONDUITS SHALL BE INSTALLED ACROSS NEW WALLS. THE CONTRACTOR SHALL EITHER CORE THROUGH THE WALL OR INSTALL THE CONDUITS DURING SOUNDWALL CONSTRUCTION.
6. INSTALL CONTROLLER CABINETS 9.1 m FROM ETW OR 1.2 m BEHIND GUARD RAILING.

ABBREVIATIONS:

36SMFO	-	36 SINGLEMODE FIBER OPTIC CABLE
72SMFO	-	72 SINGLEMODE FIBER OPTIC CABLE
4WTO	-	FOUR WIRE TRANSMIT ONLY
AWG	-	AMERICAN WIRE GAUGE
CCM	-	CAMERA CONTROL MODEM
CCR	-	CAMERA CONTROL RECEIVER
COAX	-	COAXIAL CABLE
DN	-	DATA NODE
FDU	-	FIBER DISTRIBUTION UNIT
FOCM	-	FIBER OPTIC CONTROL MODEM
FOTM	-	FIBER OPTIC TRAFFIC MODEM
LCU	-	LOCAL CONTROL UNIT
MMFO	-	MULTIMODE FIBER OPTIC CABLE
P19	-	PAIR 19 AMERICAN WIRE GAUGE
P22	-	PAIR 22 AMERICAN WIRE GAUGE
PDA	-	POWER DISTRIBUTION ASSEMBLY
PR	-	PAIR
RX	-	RECEIVE
SM	-	SINGLEMODE
SMFO	-	SINGLEMODE FIBER OPTIC CABLE
TB	-	TERMINAL BLOCK
TDM	-	TIME DIVISION MULTIPLEXER
TPC	-	TWISTED PAIR CABLE
TX	-	TRANSMIT
VN	-	VIDEO NODE
VMX	-	VIDEO MULTIPLEXER
VR	-	VIDEO RECEIVER
VRD	-	VIDEO RECEIVER/DATA TRANSCEIVER
VTD	-	VIDEO TRANSMITTER/DATA TRANSCEIVER

LEGENDS:

DN	EXISTING DATA NODE
VN	EXISTING VIDEO NODE
CCTV	EXISTING CCTV CABINET
CCTV	RELOCATED CCTV CABINET
V	NEW SPLICE VAULT
V	EXISTING SPLICE VAULT
	COIL CABLE IN PULL BOX
	SINGLE SPLICE IN FIBER OPTIC SPLICE CLOSURE
	MULTIPLE SPLICES IN FIBER OPTIC SPLICE CLOSURE

MODIFY COMMUNICATION SYSTEM
MODIFY CLOSED CIRCUIT TELEVISION CAMERA
(LEGEND AND NOTES)

NO SCALE

THIS PLAN IS ACCURATE FOR ELECTRICAL WORK ONLY.

E-1

STATE OF CALIFORNIA - DEPARTMENT OF TRANSPORTATION
Caltrans OFFICE OF ITS

FUNCTIONAL SUPERVISOR: JACQUELINE C. TAN
CALCULATED-DESIGNED BY: CANDACE FUNG
CHECKED BY: JACQUELINE C. TAN
REVISED BY
DATE REVISED

LAST REVISION 00-00-00
DATE PLOTTED => 12-JUN-2009
TIME PLOTTED => 10:57

FOR COMPLETE R/W AND ACCURATE ACCESS DATA,
SEE R/W RECORD MAPS AT THE DISTRICT OFFICE.

Dist	COUNTY	ROUTE	KILOMETER POST TOTAL PROJECT	SHEET No.	TOTAL SHEETS
07	LA	5	42.8/47.3	383	1073

5/5/08
REGISTERED ELECTRICAL ENGINEER

CANDACE FUNG
No. E16936
Exp 06/30/09
ELECTRICAL
REGISTERED PROFESSIONAL ENGINEER
STATE OF CALIFORNIA

6-8-09
PLANS APPROVAL DATE

THE STATE OF CALIFORNIA OR ITS OFFICERS OR AGENTS SHALL NOT BE RESPONSIBLE FOR THE ACCURACY OR COMPLETENESS OF ELECTRONIC COPIES OF THIS PLAN SHEET.

Caltrans Metric

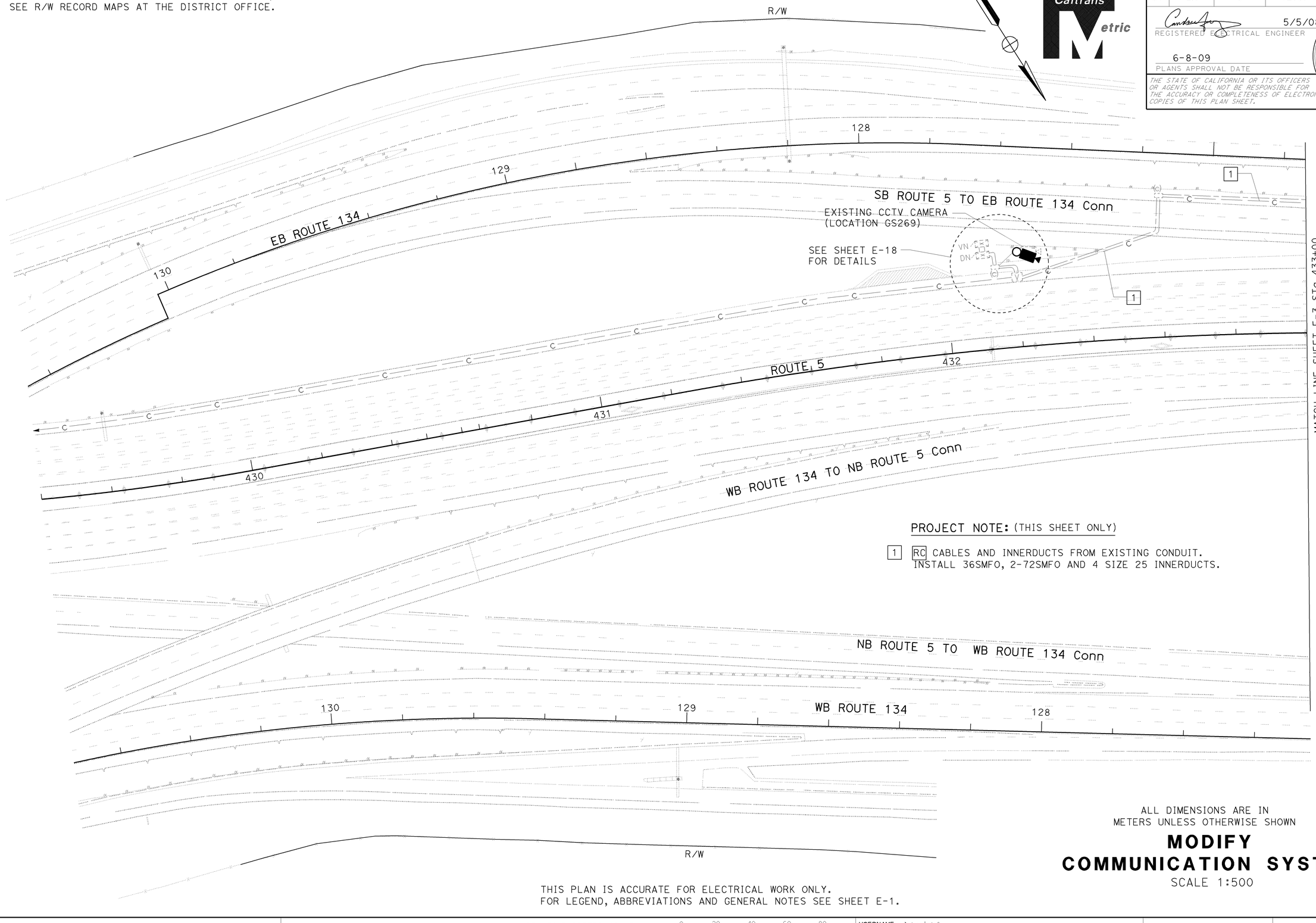

PROJECT NOTE: (THIS SHEET ONLY)

[1] RC CABLES AND INNERDUCTS FROM EXISTING CONDUIT.
INSTALL 36SMFO, 2-72SMFO AND 4 SIZE 25 INNERDUCTS.

ALL DIMENSIONS ARE IN
METERS UNLESS OTHERWISE SHOWN

MODIFY COMMUNICATION SYSTEM

SCALE 1:500

THIS PLAN IS ACCURATE FOR ELECTRICAL WORK ONLY.
FOR LEGEND, ABBREVIATIONS AND GENERAL NOTES SEE SHEET E-1.

E-2

STATE OF CALIFORNIA - DEPARTMENT OF TRANSPORTATION
Caltrans
OFFICE OF ITS

FUNCTIONAL SUPERVISOR: JACQUELINE C. TAN
CALCULATED-DESIGNED BY: CANDACE FUNG
CHECKED BY: JACQUELINE C. TAN
REVISED BY
DATE REVISED

LAST REVISION DATE PLOTTED => 12-JUN-2009
00-00-00 TIME PLOTTED => 10:57

BORDER LAST REVISED 3/1/2007
RELATIVE BORDER SCALE IS IN MILLIMETERS 0 20 40 60 80
USERNAME => trrichf
DGN FILE => 712184ua002.dgn
CU 07388
EA 121841

Dist	COUNTY	ROUTE	KILOMETER POST TOTAL PROJECT	SHEET No.	TOTAL SHEETS
07	LA	5	42.8/47.3	384	1073

5/5/08
REGISTERED ELECTRICAL ENGINEER

CANDACE FUNG
No. E16936
Exp 06/30/09
ELECTRICAL
REGISTERED PROFESSIONAL ENGINEER
STATE OF CALIFORNIA

6-8-09
PLANS APPROVAL DATE

THE STATE OF CALIFORNIA OR ITS OFFICERS OR AGENTS SHALL NOT BE RESPONSIBLE FOR THE ACCURACY OR COMPLETENESS OF ELECTRONIC COPIES OF THIS PLAN SHEET.

FOR COMPLETE T/W AND ACCURATE ACCESS DATA,
SEE R/W RECORD MAPS AT THE DISTRICT OFFICE.

PROJECT NOTES: (THIS SHEET ONLY)

1. RC CABLES AND INNERDUCTS FROM EXISTING CONDUIT. INSTALL 36SMFO, 2-72SMFO AND 4 SIZE 25 INNERDUCTS.
2. INSTALL 91C, 36SMFO, 2-72SMFO AND 4 SIZE 25 INNERDUCTS. INSTALL SPARE 91C, MT. SEE BRIDGE STRUCTURE PLANS FOR DETAILS.
3. INSTALL 103C, 36SMFO, 2-72SMFO AND 4 SIZE 25 INNERDUCTS. INSTALL SPARE 103C, MT.
4. TRENCH AND INSTALL CONDUIT(S) IN PAVEMENT. SEE SHEET E-27 FOR DETAILS.
5. TRENCH AND INSTALL CONDUIT(S) IN SOIL. SEE SHEET E-27 FOR DETAILS.
6. INSTALL 53C, 2#4, 1#8G.

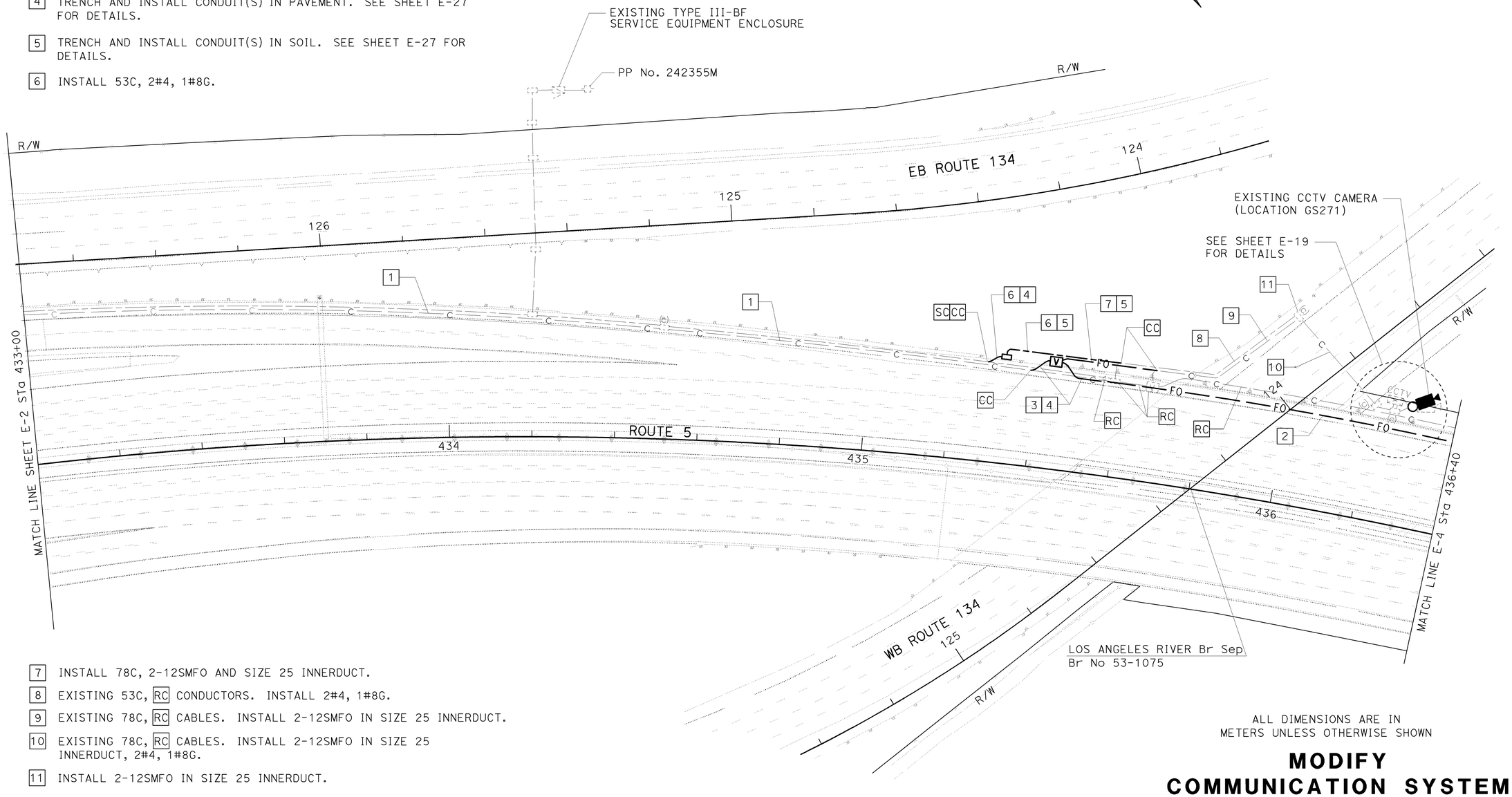

7. INSTALL 78C, 2-12SMFO AND SIZE 25 INNERDUCT.
8. EXISTING 53C, RC CONDUCTORS. INSTALL 2#4, 1#8G.
9. EXISTING 78C, RC CABLES. INSTALL 2-12SMFO IN SIZE 25 INNERDUCT.
10. EXISTING 78C, RC CABLES. INSTALL 2-12SMFO IN SIZE 25 INNERDUCT, 2#4, 1#8G.
11. INSTALL 2-12SMFO IN SIZE 25 INNERDUCT.

ALL DIMENSIONS ARE IN
METERS UNLESS OTHERWISE SHOWN

MODIFY COMMUNICATION SYSTEM

SCALE 1:500

THIS PLAN IS ACCURATE FOR ELECTRICAL WORK ONLY.
FOR LEGEND, ABBREVIATIONS AND GENERAL NOTES SEE SHEET E-1.

E-3

CANDACE FUNG — CALCULATED-DESIGNED BY
JACQUELINE C. TAN — CHECKED BY
REVISED BY — DATE REVISED
FUNCTIONAL SUPERVISOR: JACQUELINE C. TAN
STATE OF CALIFORNIA - DEPARTMENT OF TRANSPORTATION
Caltrans OFFICE OF ITS

LAST REVISION DATE PLOTTED => 12-JUN-2009
00-00-00 TIME PLOTTED => 10:57

FOR COMPLETE R/W AND ACCURATE ACCESS DATA,
SEE R/W RECORD MAPS AT THE DISTRICT OFFICE.

Dist	COUNTY	ROUTE	KILOMETER POST TOTAL PROJECT	SHEET No.	TOTAL SHEETS
07	LA	5	42.8/47.3	385	1073

5/5/08
REGISTERED ELECTRICAL ENGINEER

CANDACE FUNG
No. E16936
Exp 06/30/09
ELECTRICAL
REGISTERED PROFESSIONAL ENGINEER
STATE OF CALIFORNIA

6-8-09
PLANS APPROVAL DATE

THE STATE OF CALIFORNIA OR ITS OFFICERS OR AGENTS SHALL NOT BE RESPONSIBLE FOR THE ACCURACY OR COMPLETENESS OF ELECTRONIC COPIES OF THIS PLAN SHEET.

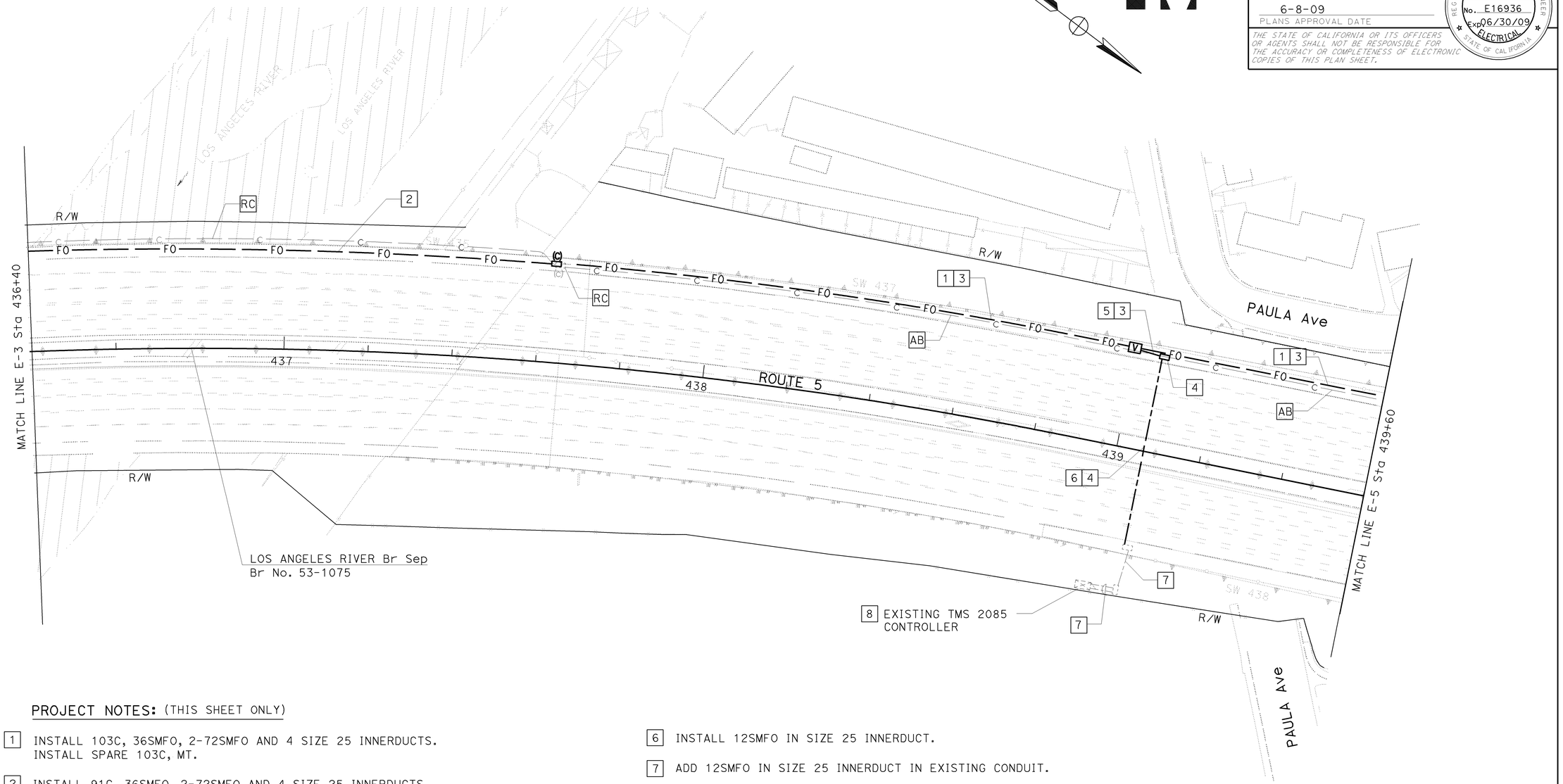

PROJECT NOTES: (THIS SHEET ONLY)

1. INSTALL 103C, 36SMFO, 2-72SMFO AND 4 SIZE 25 INNERDUCTS. INSTALL SPARE 103C, MT.
2. INSTALL 91C, 36SMFO, 2-72SMFO AND 4 SIZE 25 INNERDUCTS. INSTALL SPARE 91C, MT. SEE BRIDGE STRUCTURE PLANS FOR DETAILS.
3. TRENCH AND INSTALL CONDUIT(S) IN PAVEMENT. SEE SHEET E-27 FOR DETAILS.
4. NEW CONDUIT(S) OR PULL BOX(ES) SHOWN FOR REFERENCE ONLY. SEE SHEET E-52 FOR INSTALLATION DETAILS.
5. INSTALL 78C, 12SMFO AND SIZE 25 INNERDUCT.
6. INSTALL 12SMFO IN SIZE 25 INNERDUCT.
7. ADD 12SMFO IN SIZE 25 INNERDUCT IN EXISTING CONDUIT.
8. INSTALL FOTM, FDU AND INTERFACE CABLES IN EXISTING CONTROLLER CABINET. CONNECT 12SMFO. SEE SHEET E-30 FOR DETAILS.

ALL DIMENSIONS ARE IN METERS UNLESS OTHERWISE SHOWN

THIS PLAN IS ACCURATE FOR ELECTRICAL WORK ONLY.
FOR LEGEND, ABBREVIATIONS AND GENERAL NOTES SEE SHEET E-1.

MODIFY COMMUNICATION SYSTEM

SCALE 1:500

E-4

STATE OF CALIFORNIA - DEPARTMENT OF TRANSPORTATION
Caltrans OFFICE OF ITS
FUNCTIONAL SUPERVISOR: JACQUELINE C. TAN
CALCULATED-DESIGNED BY: CANDACE FUNG
CHECKED BY: JACQUELINE C. TAN
REVISED BY
DATE REVISED

LAST REVISION DATE PLOTTED => 12-JUN-2009
TIME PLOTTED => 10:57
00-00-00

BORDER LAST REVISED 3/1/2007
RELATIVE BORDER SCALE IS IN MILLIMETERS 0 20 40 60 80
USERNAME => trrichf
DGN FILE => 712184ua004.dgn
CU 07388
EA 121841

FOR COMPLETE R/W AND ACCURATE ACCESS DATA,
SEE R/W RECORD MAPS AT THE DISTRICT OFFICE.

Dist	COUNTY	ROUTE	KILOMETER POST TOTAL PROJECT	SHEET No.	TOTAL SHEETS
07	LA	5	42.8/47.3	386	1073

5/5/08
REGISTERED ELECTRICAL ENGINEER

CANDACE FUNG
No. E16936
Exp 06/30/09
ELECTRICAL
REGISTERED PROFESSIONAL ENGINEER
STATE OF CALIFORNIA

6-8-09
PLANS APPROVAL DATE

THE STATE OF CALIFORNIA OR ITS OFFICERS OR AGENTS SHALL NOT BE RESPONSIBLE FOR THE ACCURACY OR COMPLETENESS OF ELECTRONIC COPIES OF THIS PLAN SHEET.

PROJECT NOTES: (THIS SHEET ONLY)

1 INSTALL 103C, 36SMFO, 2-72SMFO AND 4 SIZE 25 INNERDUCTS. INSTALL SPARE 103C, MT.

2 TRENCH AND INSTALL CONDUIT(S) IN PAVEMENT. SEE SHEET E-27 FOR DETAILS.

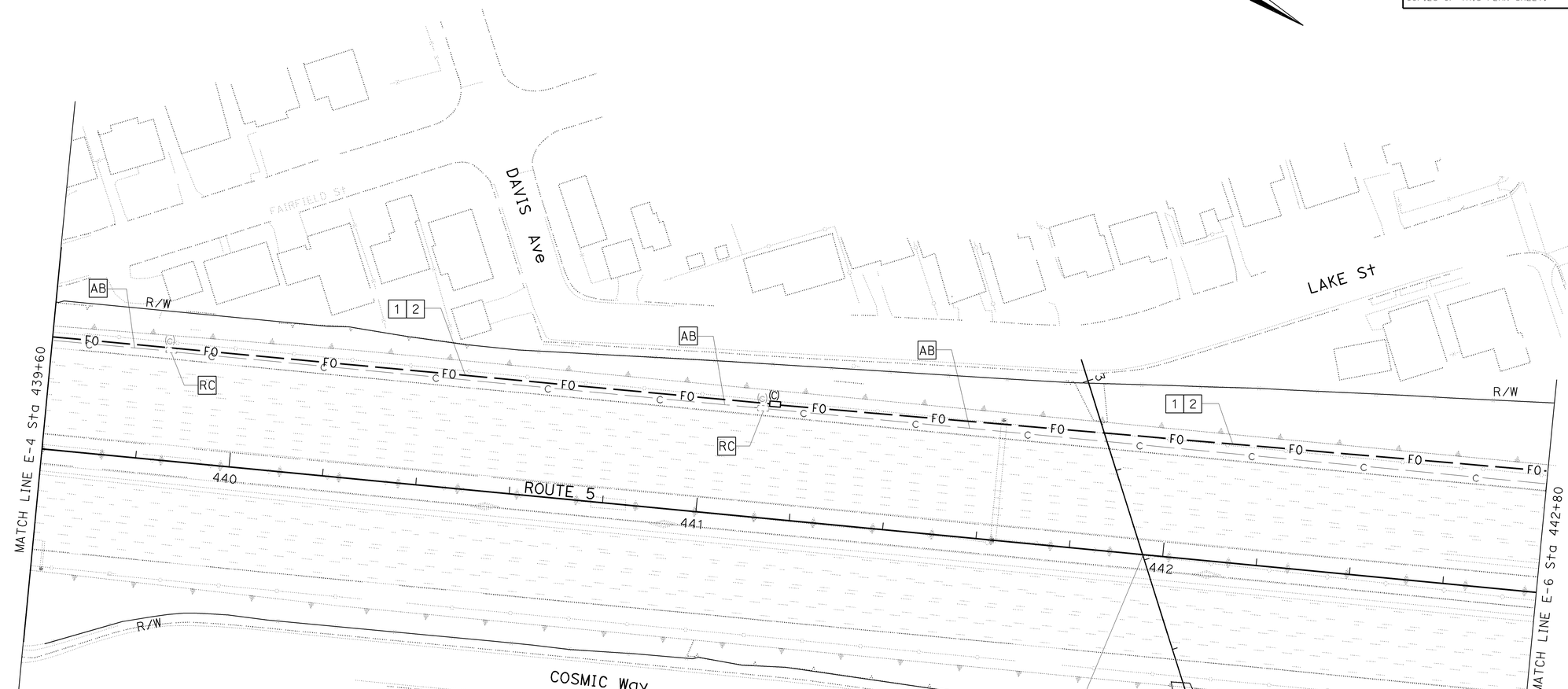

ALL DIMENSIONS ARE IN
METERS UNLESS OTHERWISE SHOWN

MODIFY COMMUNICATION SYSTEM

SCALE 1:500

E-5

THIS PLAN IS ACCURATE FOR ELECTRICAL WORK ONLY.
FOR LEGEND, ABBREVIATIONS AND GENERAL NOTES SEE SHEET E-1.

STATE OF CALIFORNIA - DEPARTMENT OF TRANSPORTATION
Caltrans
OFFICE OF ITS
FUNCTIONAL SUPERVISOR: JACQUELINE C. TAN
CALCULATED-DESIGNED BY: CANDACE FUNG
CHECKED BY: JACQUELINE C. TAN
REVISED BY
DATE REVISED

LAST REVISION 00-00-00
DATE PLOTTED => 12-JUN-2009
TIME PLOTTED => 10:57

BORDER LAST REVISED 3/1/2007
RELATIVE BORDER SCALE IS IN MILLIMETERS 0 20 40 60 80
USERNAME => trrichf
DGN FILE => 712184ua005.dgn
CU 07388
EA 121841

FOR COMPLETE R/W AND ACCURATE ACCESS DATA,
SEE R/W RECORD MAPS AT THE DISTRICT OFFICE.

PROJECT NOTES: (THIS SHEET ONLY)

1. INSTALL 103C, 36SMFO, 2-72SMFO AND 4 SIZE 25 INNERDUCTS. INSTALL SPARE 103C, MT.
2. INSTALL 91C, 36SMFO, 2-72SMFO AND 4 SIZE 25 INNERDUCTS. INSTALL SPARE 91C, MT. SEE BRIDGE STRUCTURE PLANS FOR DETAILS.
3. TRENCH AND INSTALL CONDUIT(S) IN PAVEMENT. SEE SHEET E-27 FOR DETAILS.
4. JACK CONDUIT(S) UNDER ROADWAY. SEE SHEET E-28 FOR DETAILS.

Dist	COUNTY	ROUTE	KILOMETER POST TOTAL PROJECT	SHEET No.	TOTAL SHEETS
07	LA	5	42.8/47.3	387	1073

5/5/08
REGISTERED ELECTRICAL ENGINEER

CANDACE FUNG
No. E16936
Exp 06/30/09
ELECTRICAL
REGISTERED PROFESSIONAL ENGINEER
STATE OF CALIFORNIA

6-8-09
PLANS APPROVAL DATE

THE STATE OF CALIFORNIA OR ITS OFFICERS OR AGENTS SHALL NOT BE RESPONSIBLE FOR THE ACCURACY OR COMPLETENESS OF ELECTRONIC COPIES OF THIS PLAN SHEET.

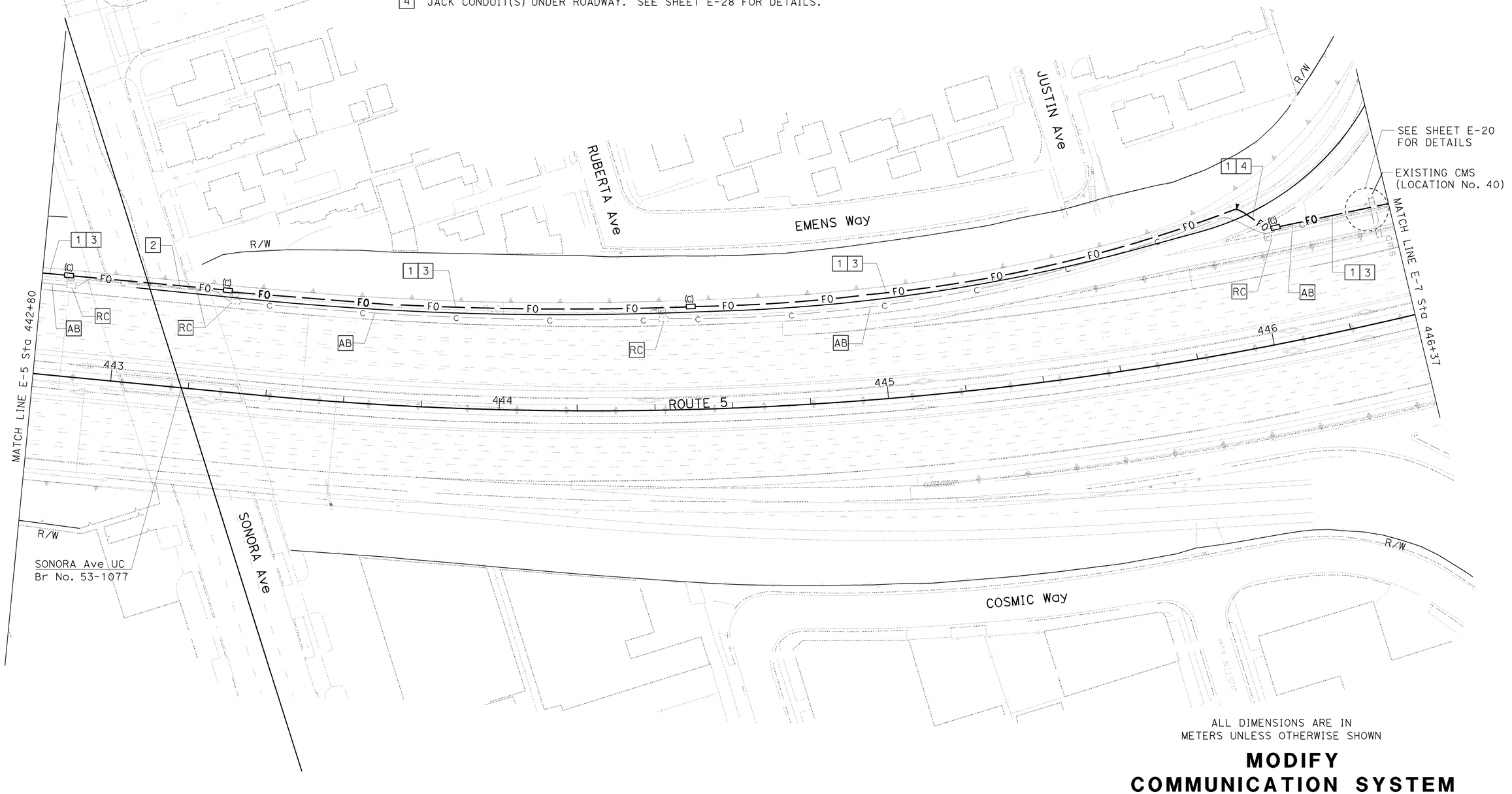

ALL DIMENSIONS ARE IN METERS UNLESS OTHERWISE SHOWN

MODIFY COMMUNICATION SYSTEM

SCALE 1:500

E-6

THIS PLAN IS ACCURATE FOR ELECTRICAL WORK ONLY.
FOR LEGEND, ABBREVIATIONS AND GENERAL NOTES SEE SHEET E-1.

STATE OF CALIFORNIA - DEPARTMENT OF TRANSPORTATION
Caltrans
OFFICE OF ITS
FUNCTIONAL SUPERVISOR: JACQUELINE C. TAN
CALCULATED-DESIGNED BY: CANDACE FUNG
CHECKED BY: JACQUELINE C. TAN
REVISED BY
DATE REVISED

LAST REVISION DATE PLOTTED => 12-JUN-2009
00-00-00 TIME PLOTTED => 10:58

BORDER LAST REVISED 3/1/2007
RELATIVE BORDER SCALE IS IN MILLIMETERS 0 20 40 60 80
USERNAME => trrichf
DGN FILE => 712184ya006.dgn
CU 07388
EA 121841

FOR COMPLETE R/W AND ACCURATE ACCESS DATA,
SEE R/W RECORD MAPS AT THE DISTRICT OFFICE.

Dist	COUNTY	ROUTE	KILOMETER POST TOTAL PROJECT	SHEET No.	TOTAL SHEETS
07	LA	5	42.8/47.3	388	1073

5/5/08
REGISTERED ELECTRICAL ENGINEER

CANDACE FUNG
No. E16936
Exp 06/30/09
ELECTRICAL
REGISTERED PROFESSIONAL ENGINEER
STATE OF CALIFORNIA

6-8-09
PLANS APPROVAL DATE

THE STATE OF CALIFORNIA OR ITS OFFICERS OR AGENTS SHALL NOT BE RESPONSIBLE FOR THE ACCURACY OR COMPLETENESS OF ELECTRONIC COPIES OF THIS PLAN SHEET.

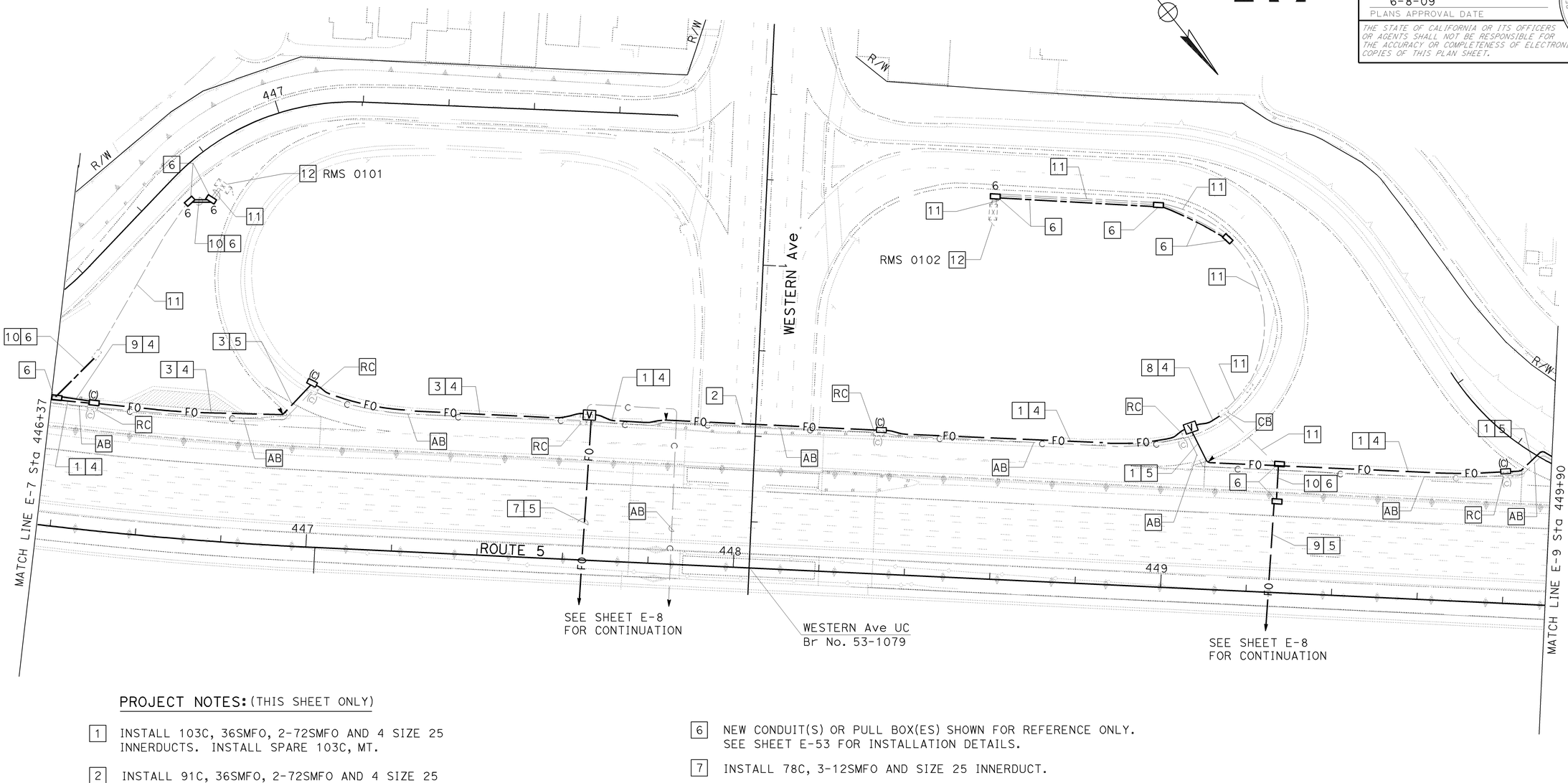

PROJECT NOTES: (THIS SHEET ONLY)

1. INSTALL 103C, 36SMFO, 2-72SMFO AND 4 SIZE 25 INNERDUCTS. INSTALL SPARE 103C, MT.
2. INSTALL 91C, 36SMFO, 2-72SMFO AND 4 SIZE 25 INNERDUCTS. INSTALL SPARE 91C, MT. SEE BRIDGE STRUCTURE PLANS FOR DETAILS.
3. INSTALL 103C, 2-12SMFO, 36SMFO, 2-72SMFO AND 4 SIZE 25 INNERDUCTS. INSTALL SPARE 103C, MT.
4. TRENCH AND INSTALL CONDUIT(S) IN PAVEMENT. SEE SHEET E-27 FOR DETAILS.
5. JACK CONDUIT(S) UNDER ROADWAY. SEE SHEET E-28 FOR DETAILS.
6. NEW CONDUIT(S) OR PULL BOX(ES) SHOWN FOR REFERENCE ONLY. SEE SHEET E-53 FOR INSTALLATION DETAILS.
7. INSTALL 78C, 3-12SMFO AND SIZE 25 INNERDUCT.
8. INSTALL 78C, 2-12SMFO AND SIZE 25 INNERDUCT.
9. INSTALL 78C, 12SMFO AND SIZE 25 INNERDUCT.
10. INSTALL 12SMFO IN SIZE 25 INNERDUCT.
11. ADD 12SMFO IN SIZE 25 INNERDUCT IN EXISTING CONDUIT.
12. INSTALL FOTM, FDU AND INTERFACE CABLES IN EXISTING CONTROLLER CABINET. CONNECT 12SMFO. SEE SHEET E-30 FOR DETAILS.

ALL DIMENSIONS ARE IN METERS UNLESS OTHERWISE SHOWN

THIS PLAN IS ACCURATE FOR ELECTRICAL WORK ONLY.
FOR LEGEND, ABBREVIATIONS AND GENERAL NOTES SEE SHEET E-1.

MODIFY COMMUNICATION SYSTEM

SCALE 1:500

E-7

CALCULATED-DESIGNED BY: CANDACE FUNG
CHECKED BY: JACQUELINE C. TAN
REVISED BY
DATE REVISED
FUNCTIONAL SUPERVISOR: JACQUELINE C. TAN
STATE OF CALIFORNIA - DEPARTMENT OF TRANSPORTATION
Caltrans
OFFICE OF ITS

LAST REVISION DATE PLOTTED => 12-JUN-2009
00-00-00 TIME PLOTTED => 10:58

BORDER LAST REVISED 3/1/2007
RELATIVE BORDER SCALE IS IN MILLIMETERS 0 20 40 60 80
USERNAME => trrichf
DGN FILE => 712184ua007.dgn
CU 07388
EA 121841

FOR COMPLETE RIGHT OF WAY AND ACCURATE ACCESS DATA,
SEE RIGHT OF WAY RECORD MAPS AT DISTRICT OFFICE.

Dist	COUNTY	ROUTE	KILOMETER POST TOTAL PROJECT	SHEET No.	TOTAL SHEETS
07	LA	5	42.8/47.3	389	1073

REGISTERED ELECTRICAL ENGINEER — 5/5/08

CANDACE FUNG No. E16936 Exp 06/30/09 ELECTRICAL — REGISTERED PROFESSIONAL ENGINEER — STATE OF CALIFORNIA

6-8-09
PLANS APPROVAL DATE

THE STATE OF CALIFORNIA OR ITS OFFICERS OR AGENTS SHALL NOT BE RESPONSIBLE FOR THE ACCURACY OR COMPLETENESS OF ELECTRONIC COPIES OF THIS PLAN SHEET.

PROJECT NOTES: (THIS SHEET ONLY)

1. EXISTING 78C, RC CABLES. INSTALL 3-12SMFO IN SIZE 25 INNERDUCT.
2. JACK CONDUIT(S) UNDER ROADWAY. SEE SHEET E-28 FOR DETAILS.
3. TRENCH AND INSTALL CONDUIT(S) IN PAVEMENT. SEE SHEET E-27 FOR DETAILS.
4. INSTALL 78C, 3-12SMFO AND SIZE 25 INNERDUCT.
5. INSTALL 78C, 12SMFO AND SIZE 25 INNERDUCT.
6. INSTALL 12SMFO IN SIZE 25 INNERDUCT.
7. ADD 12SMFO IN SIZE 25 INNERDUCT IN EXISTING CONDUIT.
8. INSTALL FOTM, FDU AND INTERFACE CABLES IN EXISTING CONTROLLER CABINET. CONNECT 12SMFO. SEE SHEET E-30 FOR DETAILS.

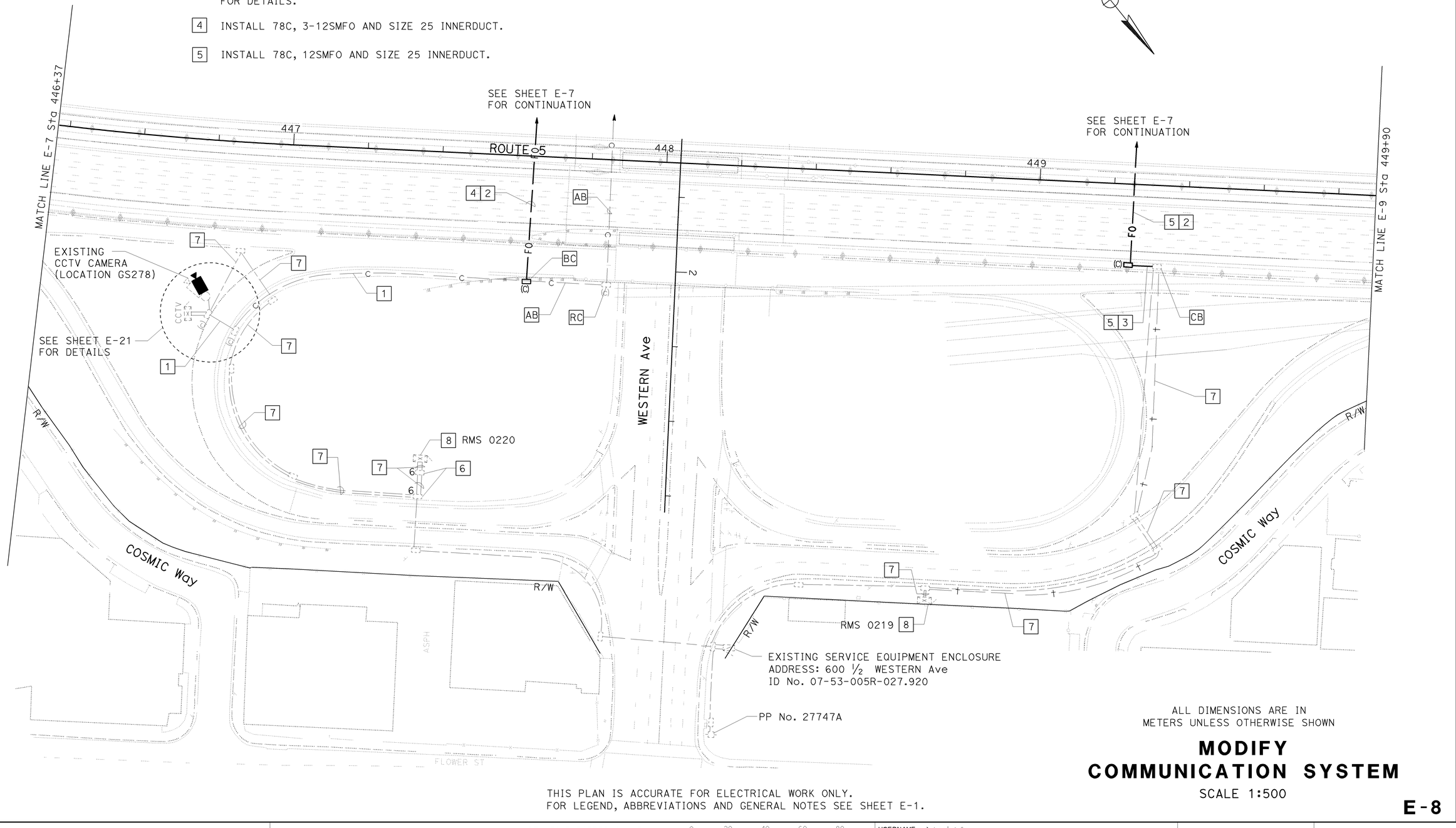

ALL DIMENSIONS ARE IN METERS UNLESS OTHERWISE SHOWN

MODIFY COMMUNICATION SYSTEM

SCALE 1:500

THIS PLAN IS ACCURATE FOR ELECTRICAL WORK ONLY.
FOR LEGEND, ABBREVIATIONS AND GENERAL NOTES SEE SHEET E-1.

E-8

STATE OF CALIFORNIA - DEPARTMENT OF TRANSPORTATION
Caltrans
OFFICE OF ITS
FUNCTIONAL SUPERVISOR: JACQUELINE C. TAN
CALCULATED-DESIGNED BY: CANDACE FUNG
CHECKED BY: JACQUELINE C. TAN
REVISED BY | DATE REVISED

LAST REVISION | DATE PLOTTED => 12-JUN-2009 | 00-00-00 | TIME PLOTTED => 10:56

BORDER LAST REVISED 3/1/2007 | RELATIVE BORDER SCALE IS IN MILLIMETERS 0 20 40 60 80 | USERNAME => trrichf | DGN FILE => 712184ua008.dgn | CU 07388 | EA 121841

FOR COMPLETE RIGHT OF WAY AND ACCURATE ACCESS DATA,
SEE RIGHT OF WAY RECORD MAPS AT DISTRICT OFFICE.

PROJECT NOTES: (THIS SHEET ONLY)

1. INSTALL 103C, 36SMFO, 2-72SMFO AND 4 SIZE 25 INNERDUCTS.
   INSTALL SPARE 103C, MT.
2. INSTALL 36SMFO, 2-72SMFO AND 4 SIZE 25 INNERDUCTS IN EXISTING 91C.
3. TRENCH AND INSTALL CONDUIT(S) IN PAVEMENT. SEE SHEET E-27 FOR DETAILS.

Dist	COUNTY	ROUTE	KILOMETER POST TOTAL PROJECT	SHEET No.	TOTAL SHEETS
07	LA	5	42.8/47.3	390	1073

5/5/08
REGISTERED ELECTRICAL ENGINEER

CANDACE FUNG
No. E16936
Exp 06/30/09
ELECTRICAL
REGISTERED PROFESSIONAL ENGINEER
STATE OF CALIFORNIA

6-8-09
PLANS APPROVAL DATE

THE STATE OF CALIFORNIA OR ITS OFFICERS OR AGENTS SHALL NOT BE RESPONSIBLE FOR THE ACCURACY OR COMPLETENESS OF ELECTRONIC COPIES OF THIS PLAN SHEET.

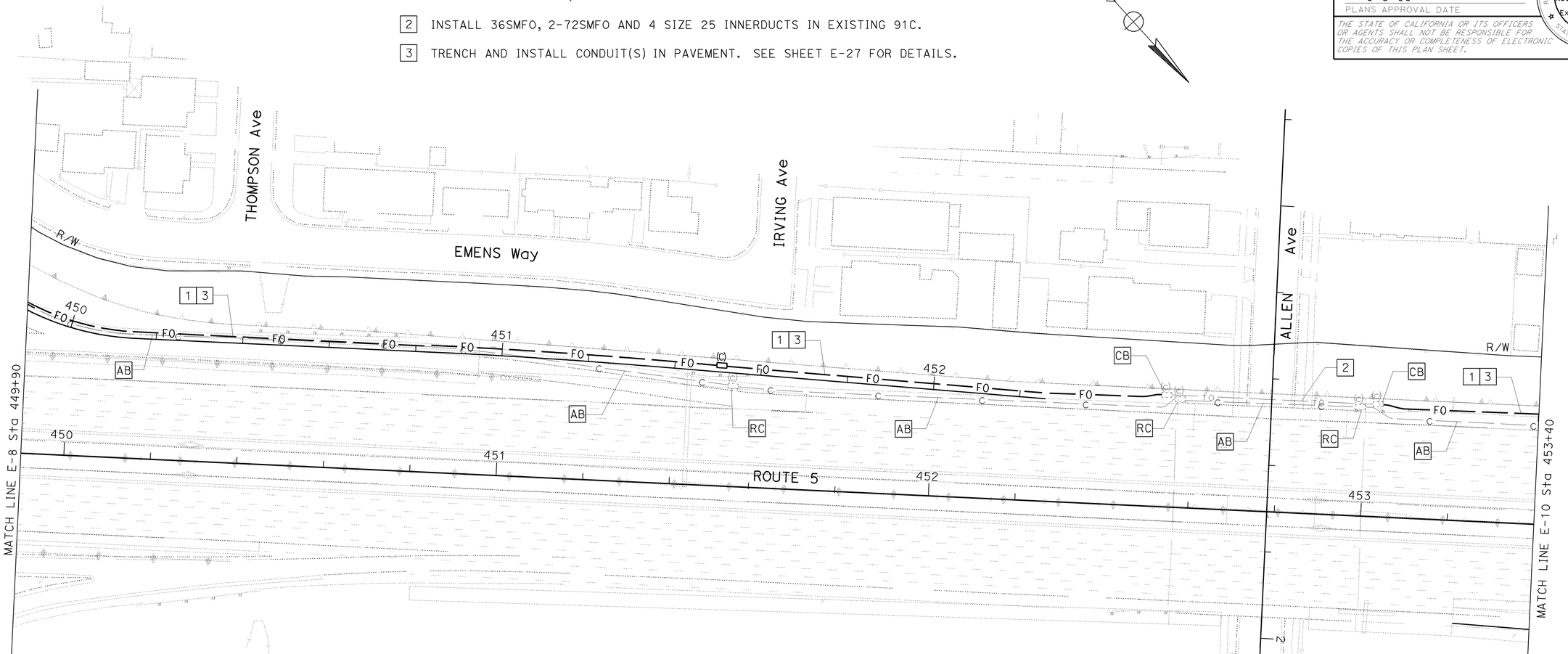

ALL DIMENSIONS ARE IN
METERS UNLESS OTHERWISE SHOWN

MODIFY COMMUNICATION SYSTEM

SCALE 1:500

THIS PLAN IS ACCURATE FOR ELECTRICAL WORK ONLY.
FOR LEGEND, ABBREVIATIONS AND GENERAL NOTES SEE SHEET E-1.

E-9

REVISED BY	DATE REVISED

CALCULATED-DESIGNED BY: CANDACE FUNG
CHECKED BY: JACQUELINE C. TAN
FUNCTIONAL SUPERVISOR: JACQUELINE C. TAN
STATE OF CALIFORNIA - DEPARTMENT OF TRANSPORTATION
Caltrans
OFFICE OF ITS

LAST REVISION DATE PLOTTED => 12-JUN-2009
00-00-00 TIME PLOTTED => 10:58

BORDER LAST REVISED 3/1/2007
RELATIVE BORDER SCALE IS IN MILLIMETERS 0 20 40 60 80
USERNAME => trrichf
DGN FILE => 712184ua009.dgn
CU 07388
EA 121841

FOR COMPLETE RIGHT OF WAY AND ACCURATE ACCESS DATA,
SEE RIGHT OF WAY RECORD MAPS AT DISTRICT OFFICE.

Dist	COUNTY	ROUTE	KILOMETER POST TOTAL PROJECT	SHEET No.	TOTAL SHEETS
07	LA	5	42.8/47.3	391	1073

5/5/08
REGISTERED ELECTRICAL ENGINEER

CANDACE FUNG
No. E16936
Exp 06/30/09
ELECTRICAL
REGISTERED PROFESSIONAL ENGINEER
STATE OF CALIFORNIA

6-8-09
PLANS APPROVAL DATE

THE STATE OF CALIFORNIA OR ITS OFFICERS OR AGENTS SHALL NOT BE RESPONSIBLE FOR THE ACCURACY OR COMPLETENESS OF ELECTRONIC COPIES OF THIS PLAN SHEET.

PROJECT NOTES: (THIS SHEET ONLY)

1. INSTALL 103C, 36SMFO, 2-72SMFO AND 4 SIZE 25 INNERDUCTS. INSTALL SPARE 103C, MT.
2. TRENCH AND INSTALL CONDUIT(S) IN PAVEMENT. SEE SHEET E-27 FOR DETAILS.
3. JACK CONDUIT(S) UNDER ROADWAY. SEE SHEET E-28 FOR DETAILS.
4. NEW CONDUIT(S) OR PULL BOX(ES) SHOWN FOR REFERENCE ONLY. SEE SHEET E-55 FOR INSTALLATION DETAILS.
5. INSTALL 78C, 2-12SMFO AND SIZE 25 INNERDUCT.

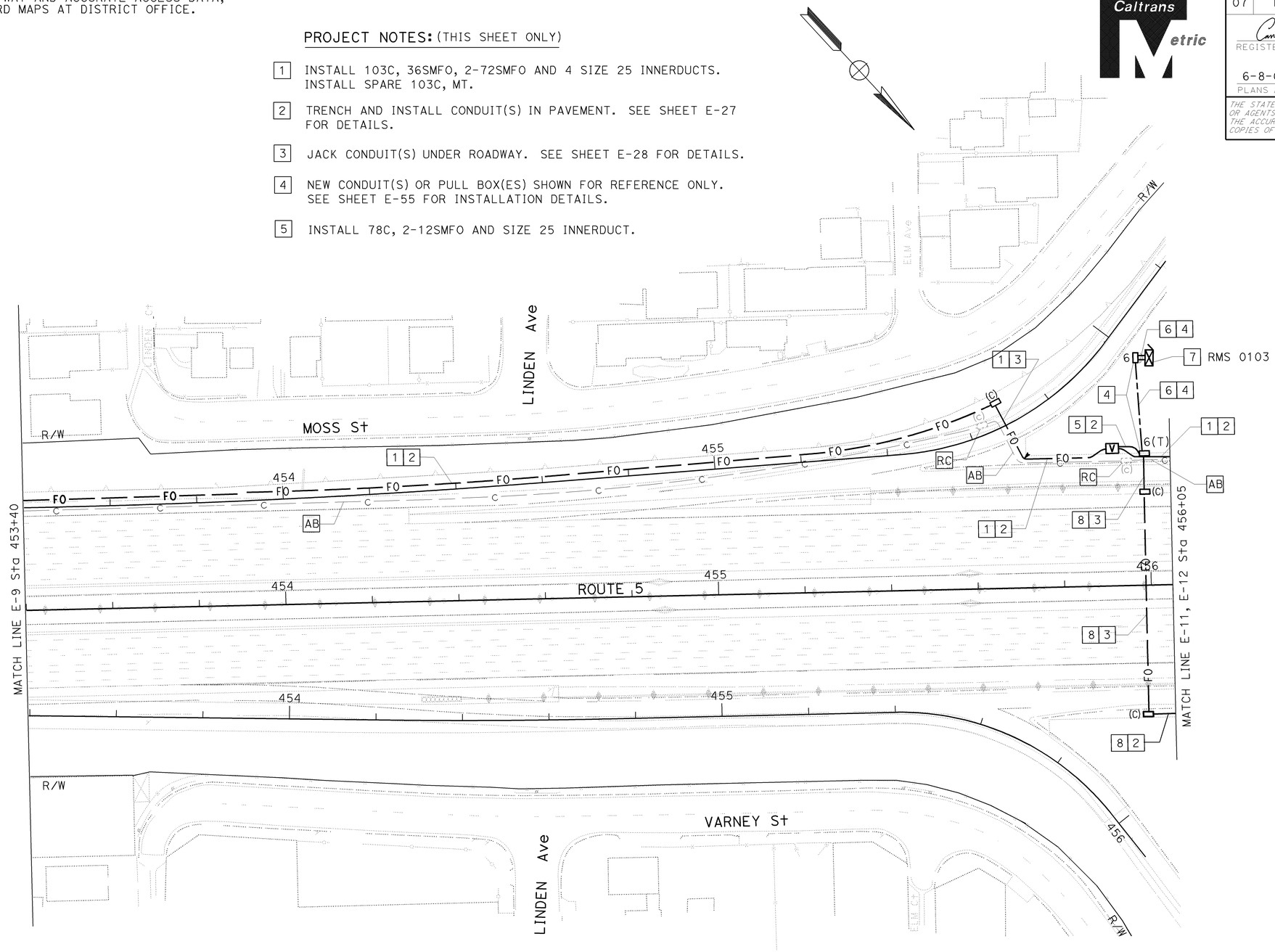

6. INSTALL 12SMFO IN SIZE 25 INNERDUCT.
7. INSTALL FOTM, FDU AND INTERFACE CABLES IN CONTROLLER CABINET. CONNECT 12SMFO. SEE SHEET E-30 FOR DETAILS. CONTROLLER CABINET SHOWN FOR REFERENCE ONLY. SEE SHEET E-55 FOR DETAILS.
8. INSTALL 78C, 12SMFO AND SIZE 25 INNERDUCT.

THIS PLAN IS ACCURATE FOR ELECTRICAL WORK ONLY.
FOR LEGEND, ABBREVIATIONS AND GENERAL NOTES SEE SHEET E-1.

ALL DIMENSIONS ARE IN METERS UNLESS OTHERWISE SHOWN

MODIFY COMMUNICATION SYSTEM

SCALE 1:500

E-10

REVISED BY	DATE REVISED

CALCULATED-DESIGNED BY: CANDACE FUNG
CHECKED BY: JACQUELINE C. TAN
FUNCTIONAL SUPERVISOR: JACQUELINE C. TAN

STATE OF CALIFORNIA - DEPARTMENT OF TRANSPORTATION
Caltrans
OFFICE OF ITS

LAST REVISION DATE PLOTTED => 12-JUN-2009
00-00-00 TIME PLOTTED => 14:34

BORDER LAST REVISED 3/1/2007
RELATIVE BORDER SCALE IS IN MILLIMETERS 0 20 40 60 80
USERNAME => trannda
DGN FILE => 712184ua010.dgn
CU 07388
EA 121841

FOR COMPLETE RIGHT OF WAY AND ACCURATE ACCESS DATA,
SEE RIGHT OF WAY RECORD MAPS AT DISTRICT OFFICE.

Dist	COUNTY	ROUTE	KILOMETER POST TOTAL PROJECT	SHEET No.	TOTAL SHEETS
07	LA	5	42.8/47.3	392	1073

Caltrans Metric

5/5/08
REGISTERED ELECTRICAL ENGINEER

CANDACE FUNG
No. E16936
Exp 06/30/09
ELECTRICAL
REGISTERED PROFESSIONAL ENGINEER
STATE OF CALIFORNIA

6-8-09
PLANS APPROVAL DATE

THE STATE OF CALIFORNIA OR ITS OFFICERS OR AGENTS SHALL NOT BE RESPONSIBLE FOR THE ACCURACY OR COMPLETENESS OF ELECTRONIC COPIES OF THIS PLAN IS SHEET.

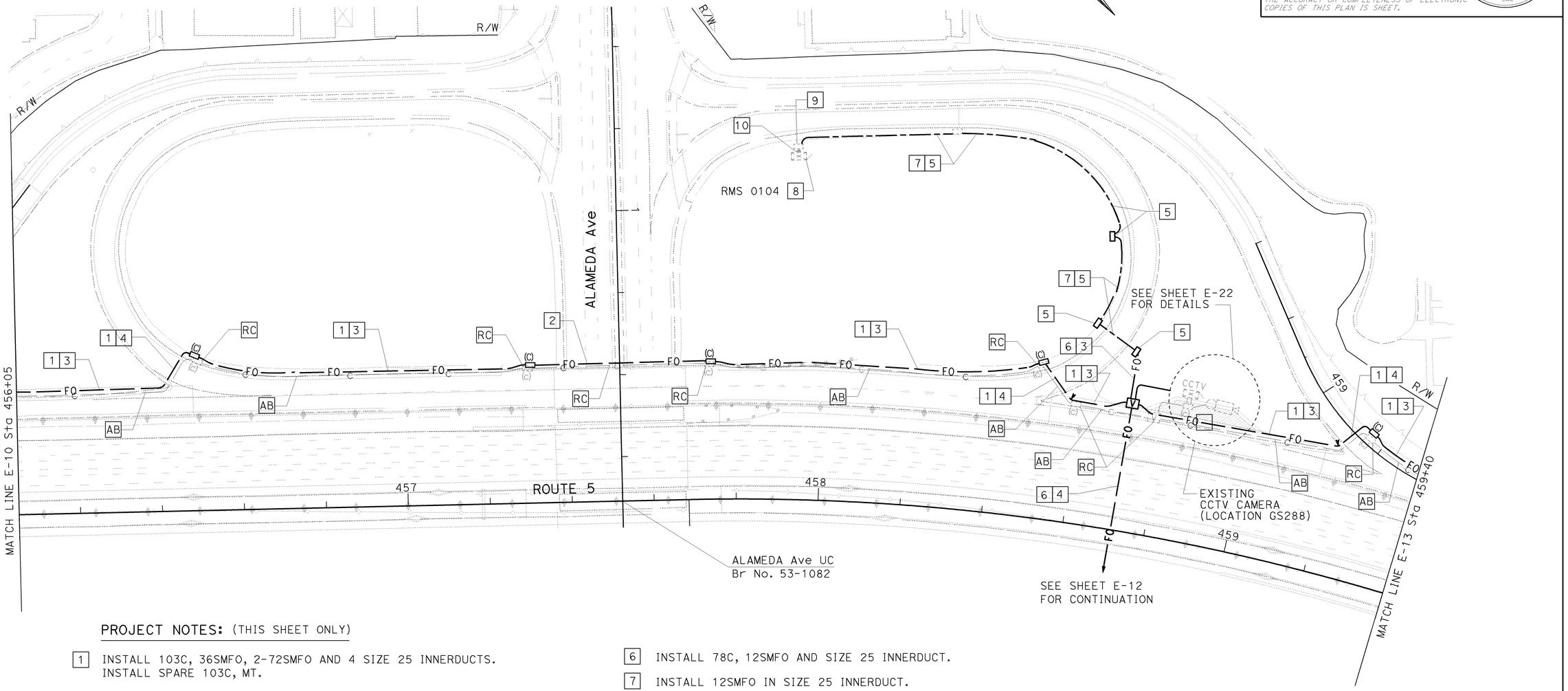

PROJECT NOTES: (THIS SHEET ONLY)

1. INSTALL 103C, 36SMFO, 2-72SMFO AND 4 SIZE 25 INNERDUCTS. INSTALL SPARE 103C, MT.
2. INSTALL 91C, 36SMFO, 2-72SMFO AND 4 SIZE 25 INNERDUCTS. INSTALL SPARE 91C, MT. SEE BRIDGE STRUCTURE PLANS FOR DETAILS.
3. TRENCH AND INSTALL CONDUIT(S) IN PAVEMENT. SEE SHEET E-27 FOR DETAILS.
4. JACK CONDUIT(S) UNDER ROADWAY. SEE SHEET E-28 FOR DETAILS.
5. NEW CONDUIT(S) OR PULL BOX(ES) SHOWN FOR REFERENCE ONLY. SEE SHEET E-55 FOR INSTALLATION DETAILS.
6. INSTALL 78C, 12SMFO AND SIZE 25 INNERDUCT.
7. INSTALL 12SMFO IN SIZE 25 INNERDUCT.
8. INSTALL FOTM, FDU AND INTERFACE CABLES IN EXISTING CONTROLLER CABINET. CONNECT 12SMFO. SEE SHEET E-30 FOR DETAILS.
9. INSTALL 12SMFO IN SIZE 25 INNERDUCT.
10. ADD 12SMFO IN SIZE 25 INNERDUCT IN EXISTING CONDUIT.

ALL DIMENSIONS ARE IN METERS UNLESS OTHERWISE SHOWN

MODIFY COMMUNICATION SYSTEM

SCALE 1:500

THIS PLAN IS ACCURATE FOR ELECTRICAL WORK ONLY.
FOR LEGEND, ABBREVIATIONS AND GENERAL NOTES SEE SHEET E-1.

E-11

CALCULATED-DESIGNED BY: CANDACE FUNG
CHECKED BY: JACQUELINE C. TAN
REVISED BY | DATE REVISED
FUNCTIONAL SUPERVISOR: JACQUELINE C. TAN
STATE OF CALIFORNIA - DEPARTMENT OF TRANSPORTATION
Caltrans
OFFICE OF ITS

LAST REVISION 00-00-00 | DATE PLOTTED => 12-JUN-2009 | TIME PLOTTED => 13:11

BORDER LAST REVISED 3/1/2007 | RELATIVE BORDER SCALE IS IN MILLIMETERS 0 20 40 60 80 | USERNAME => trannda | DGN FILE => 712184ya011.dgn | CU 07388 | EA 121841

FOR COMPLETE RIGHT OF WAY AND ACCURATE ACCESS DATA,
SEE RIGHT OF WAY RECORD MAPS AT DISTRICT OFFICE.

Dist	COUNTY	ROUTE	KILOMETER POST TOTAL PROJECT	SHEET No.	TOTAL SHEETS
07	LA	5	42.8/47.3	393	1073

5/5/08
REGISTERED ELECTRICAL ENGINEER

CANDACE FUNG
No. E16936
Exp 06/30/09
ELECTRICAL
REGISTERED PROFESSIONAL ENGINEER
STATE OF CALIFORNIA

6-8-09
PLANS APPROVAL DATE

THE STATE OF CALIFORNIA OR ITS OFFICERS OR AGENTS SHALL NOT BE RESPONSIBLE FOR THE ACCURACY OR COMPLETENESS OF ELECTRONIC COPIES OF THIS PLAN IS SHEET.

PROJECT NOTES: (THIS SHEET ONLY)

1. ADD 12SMFO IN SIZE 25 INNERDUCT IN EXISTING CONDUIT.
2. INSTALL 78C, 12SMFO AND SIZE 25 INNERDUCT.
3. TRENCH AND INSTALL CONDUIT(S) IN PAVEMENT. SEE SHEET E-27 FOR DETAILS.
4. JACK CONDUIT(S) UNDER ROADWAY. SEE SHEET E-28 FOR DETAILS.
5. NEW CONDUIT(S) OR PULL BOX(ES) SHOWN FOR REFERENCE ONLY. SEE SHEET E-56 FOR INSTALLATION DETAILS.
6. INSTALL 12SMFO IN SIZE 25 INNERDUCT.
7. INSTALL FOTM, FDU AND INTERFACE CABLES IN EXISTING CONTROLLER CABINET. CONNECT 12SMFO. SEE SHEET E-30 FOR DETAILS.

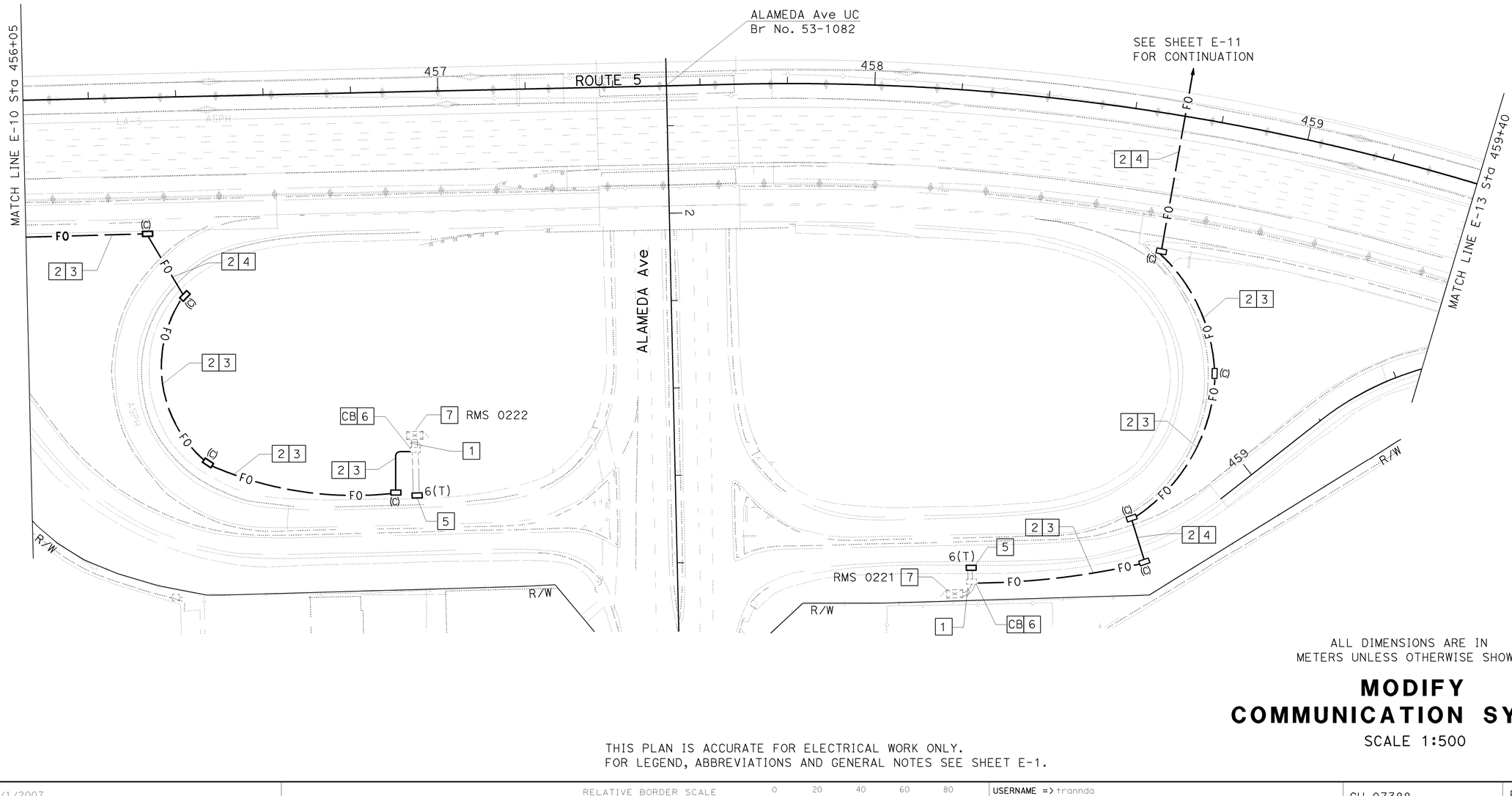

ALL DIMENSIONS ARE IN
METERS UNLESS OTHERWISE SHOWN

MODIFY COMMUNICATION SYSTEM

SCALE 1:500

THIS PLAN IS ACCURATE FOR ELECTRICAL WORK ONLY.
FOR LEGEND, ABBREVIATIONS AND GENERAL NOTES SEE SHEET E-1.

E-12

CALCULATED-DESIGNED BY: CANDACE FUNG
CHECKED BY: JACQUELINE C. TAN
FUNCTIONAL SUPERVISOR: JACQUELINE C. TAN
REVISED BY | DATE REVISED

STATE OF CALIFORNIA - DEPARTMENT OF TRANSPORTATION
Caltrans OFFICE OF ITS

LAST REVISION DATE PLOTTED => 12-JUN-2009
00-00-00 TIME PLOTTED => 13:11

BORDER LAST REVISED 3/1/2007
RELATIVE BORDER SCALE IS IN MILLIMETERS 0 20 40 60 80
USERNAME => trannda
DGN FILE => 712184ua012.dgn
CU 07388
EA 121841

FOR COMPLETE RIGHT OF WAY AND ACCURATE ACCESS DATA,
SEE RIGHT OF WAY RECORD MAPS AT DISTRICT OFFICE.

PROJECT NOTES: (THIS SHEET ONLY)

1. INSTALL 103C, 36SMFO, 2-72SMFO AND 4 SIZE 25 INNERDUCTS. INSTALL SPARE 103C, MT.
2. INSTALL 91C, 36SMFO, 2-72SMFO AND 4 SIZE 25 INNERDUCTS. INSTALL SPARE 91C, MT. SEE STRUCTURE PLANS FOR DETAILS.
3. TRENCH AND INSTALL CONDUIT(S) IN PAVEMENT. SEE SHEET E-27 FOR DETAILS.

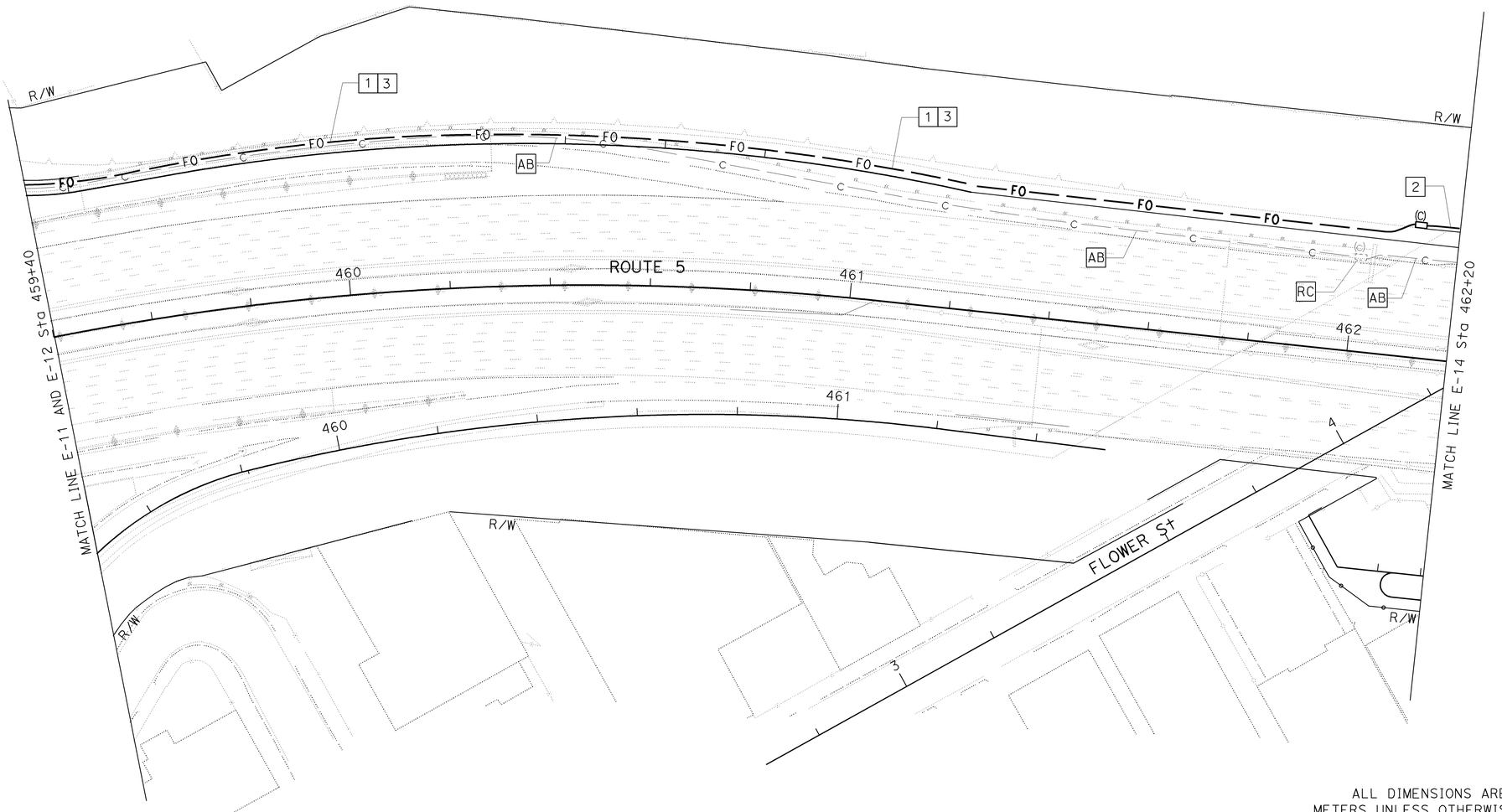

ALL DIMENSIONS ARE IN
METERS UNLESS OTHERWISE SHOWN

MODIFY COMMUNICATION SYSTEM

SCALE 1:500

THIS PLAN IS ACCURATE FOR ELECTRICAL WORK ONLY.
FOR LEGEND, ABBREVIATIONS AND GENERAL NOTES SEE SHEET E-1.

E-13

Dist	COUNTY	ROUTE	KILOMETER POST TOTAL PROJECT	SHEET No.	TOTAL SHEETS
07	LA	5	42.8/47.3	394	1073

Caltrans Metric

5/5/08
REGISTERED ELECTRICAL ENGINEER

CANDACE FUNG
No. E16936
Exp 06/30/09
ELECTRICAL
REGISTERED PROFESSIONAL ENGINEER
STATE OF CALIFORNIA

6-8-09
PLANS APPROVAL DATE

THE STATE OF CALIFORNIA OR ITS OFFICERS OR AGENTS SHALL NOT BE RESPONSIBLE FOR THE ACCURACY OR COMPLETENESS OF ELECTRONIC COPIES OF THIS PLAN IS SHEET.

REVISED BY	DATE REVISED

CALCULATED-DESIGNED BY: CANDACE FUNG
CHECKED BY: JACQUELINE C. TAN
FUNCTIONAL SUPERVISOR: JACQUELINE C. TAN

STATE OF CALIFORNIA - DEPARTMENT OF TRANSPORTATION
Caltrans
OFFICE OF ITS

LAST REVISION DATE PLOTTED => 12-JUN-2009
00-00-00 TIME PLOTTED => 13:11

FOR COMPLETE RIGHT OF WAY AND ACCURATE ACCESS DATA,
SEE RIGHT OF WAY RECORD MAPS AT DISTRICT OFFICE.

Dist	COUNTY	ROUTE	KILOMETER POST TOTAL PROJECT	SHEET No.	TOTAL SHEETS
07	LA	5	42.8/47.3	395	1073

5/5/08
REGISTERED ELECTRICAL ENGINEER

CANDACE FUNG
No. E16936
Exp 06/30/09
ELECTRICAL
REGISTERED PROFESSIONAL ENGINEER
STATE OF CALIFORNIA

6-8-09
PLANS APPROVAL DATE

THE STATE OF CALIFORNIA OR ITS OFFICERS OR AGENTS SHALL NOT BE RESPONSIBLE FOR THE ACCURACY OR COMPLETENESS OF ELECTRONIC COPIES OF THIS PLAN IS SHEET.

PROJECT NOTES: (THIS SHEET ONLY)

1. INSTALL 103C, 36SMFO, 2-72SMFO AND 4 SIZE 25 INNERDUCTS. INSTALL SPARE 103C, MT.
2. INSTALL 91C, 36SMFO, 2-72SMFO AND 4 SIZE 25 INNERDUCTS. INSTALL SPARE 91C, MT. SEE STRUCTURE PLANS FOR DETAILS.
3. TRENCH AND INSTALL CONDUIT(S) IN PAVEMENT. SEE SHEET E-27 FOR DETAILS.

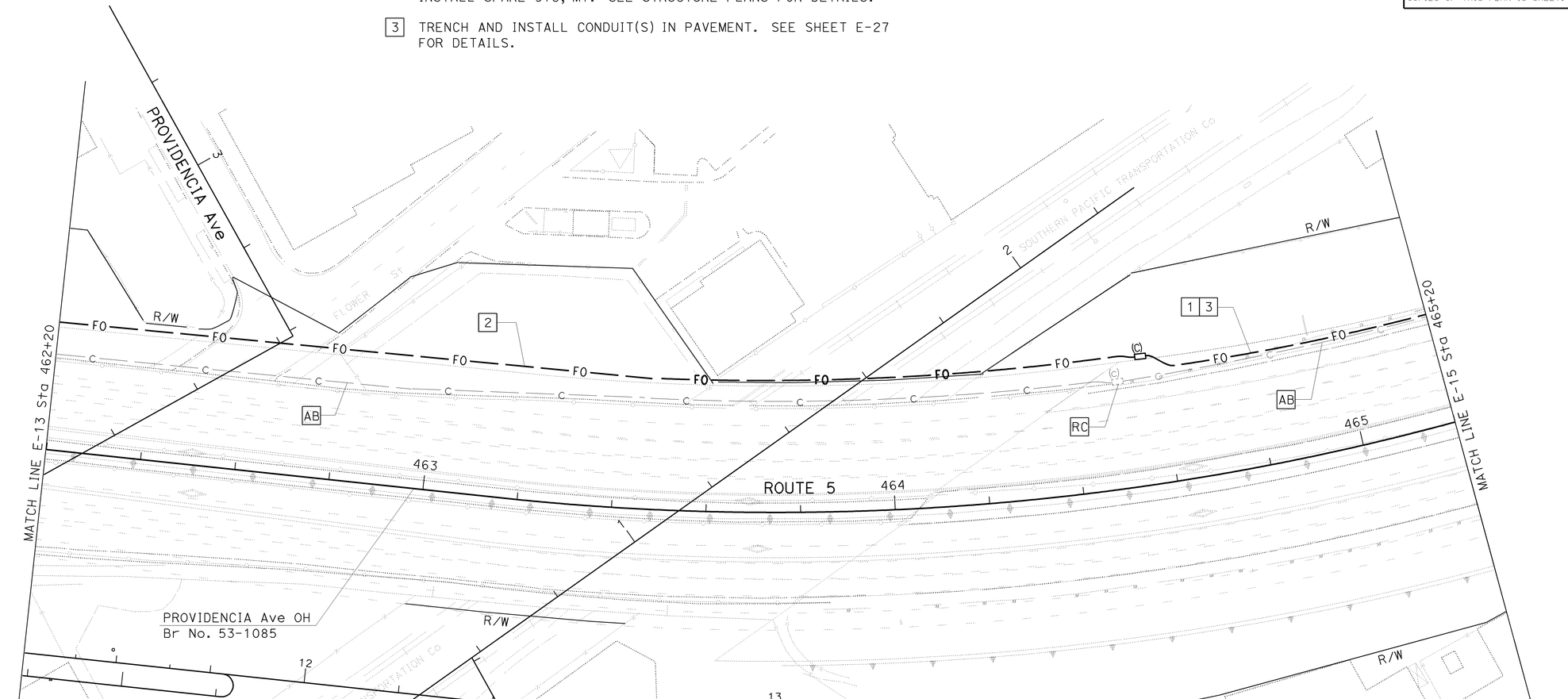

ALL DIMENSIONS ARE IN
METERS UNLESS OTHERWISE SHOWN

MODIFY COMMUNICATION SYSTEM

SCALE 1:500

THIS PLAN IS ACCURATE FOR ELECTRICAL WORK ONLY.
FOR LEGEND, ABBREVIATIONS AND GENERAL NOTES SEE SHEET E-1.

E-14

CALCULATED-DESIGNED BY: CANDACE FUNG
CHECKED BY: JACQUELINE C. TAN
REVISED BY
DATE REVISED
FUNCTIONAL SUPERVISOR: JACQUELINE C. TAN
STATE OF CALIFORNIA - DEPARTMENT OF TRANSPORTATION
Caltrans
OFFICE OF ITS

LAST REVISION 00-00-00
DATE PLOTTED => 12-JUN-2009
TIME PLOTTED => 13:11

BORDER LAST REVISED 3/1/2007
RELATIVE BORDER SCALE IS IN MILLIMETERS 0 20 40 60 80
USERNAME => trannda
DGN FILE => 712184ua014.dgn
CU 07388
EA 121841

FOR COMPLETE RIGHT OF WAY AND ACCURATE ACCESS DATA,
SEE RIGHT OF WAY RECORD MAPS AT DISTRICT OFFICE.

Dist	COUNTY	ROUTE	KILOMETER POST TOTAL PROJECT	SHEET No.	TOTAL SHEETS
07	LA	5	42.8/47.3	396	1073

REGISTERED ELECTRICAL ENGINEER — 5/5/08

CANDACE FUNG No. E16936 Exp 06/30/09 ELECTRICAL — REGISTERED PROFESSIONAL ENGINEER — STATE OF CALIFORNIA

6-8-09
PLANS APPROVAL DATE

THE STATE OF CALIFORNIA OR ITS OFFICERS OR AGENTS SHALL NOT BE RESPONSIBLE FOR THE ACCURACY OR COMPLETENESS OF ELECTRONIC COPIES OF THIS PLAN IS SHEET.

PROJECT NOTES: (THIS SHEET ONLY)

1. INSTALL 103C, 36SMFO, 2-72SMFO AND 4 SIZE 25 INNERDUCTS. INSTALL SPARE 103C, MT.
2. INSTALL 91C, 36SMFO, 2-72SMFO AND 4 SIZE 25 INNERDUCTS. INSTALL SPARE 91C, MT. SEE STRUCTURE PLANS FOR DETAILS.
3. INSTALL 78C, 2-12SMFO AND 2 SIZE 25 INNERDUCTS.
4. TRENCH AND INSTALL CONDUIT(S) IN PAVEMENT. SEE SHEET E-27 FOR DETAILS.
5. JACK CONDUIT(S) UNDER ROADWAY. SEE SHEET E-28 FOR DETAILS.
6. NEW CONDUIT(S) OR PULL BOX(ES) SHOWN FOR REFERENCE ONLY. SEE SHEET E-57 FOR INSTALLATION DETAILS.
7. INSTALL 103C, 2-12SMFO, 36SMFO, 2-72SMFO AND 4 SIZE 25 INNERDUCTS. INSTALL SPARE 103C, MT.
8. INSTALL 78C, 12SMFO AND SIZE 25 INNERDUCT.
9. INSTALL 78C, 2#6 1#8G.
10. INSTALL FOTM, FDU AND INTERFACE CABLES IN CONTROLLER CABINET. CONNECT 12SMFO. SEE SHEET E-30 FOR DETAILS. CONTROLLER CABINET SHOWN FOR REFERENCE ONLY. SEE SHEET E-57 FOR DETAILS.
11. INSTALL CONDUIT(S) IN SAME TRENCH.
12. INSTALL 2#6 1#8G.
13. INSTALL 78C, 2-12SMFO AND 2 SIZE 25 INNERDUCTS.
14. SERVICE EQUIPMENT ENCLOSURE SHOWN FOR REFERENCE ONLY. SEE SHEET E-57 FOR DETAILS.

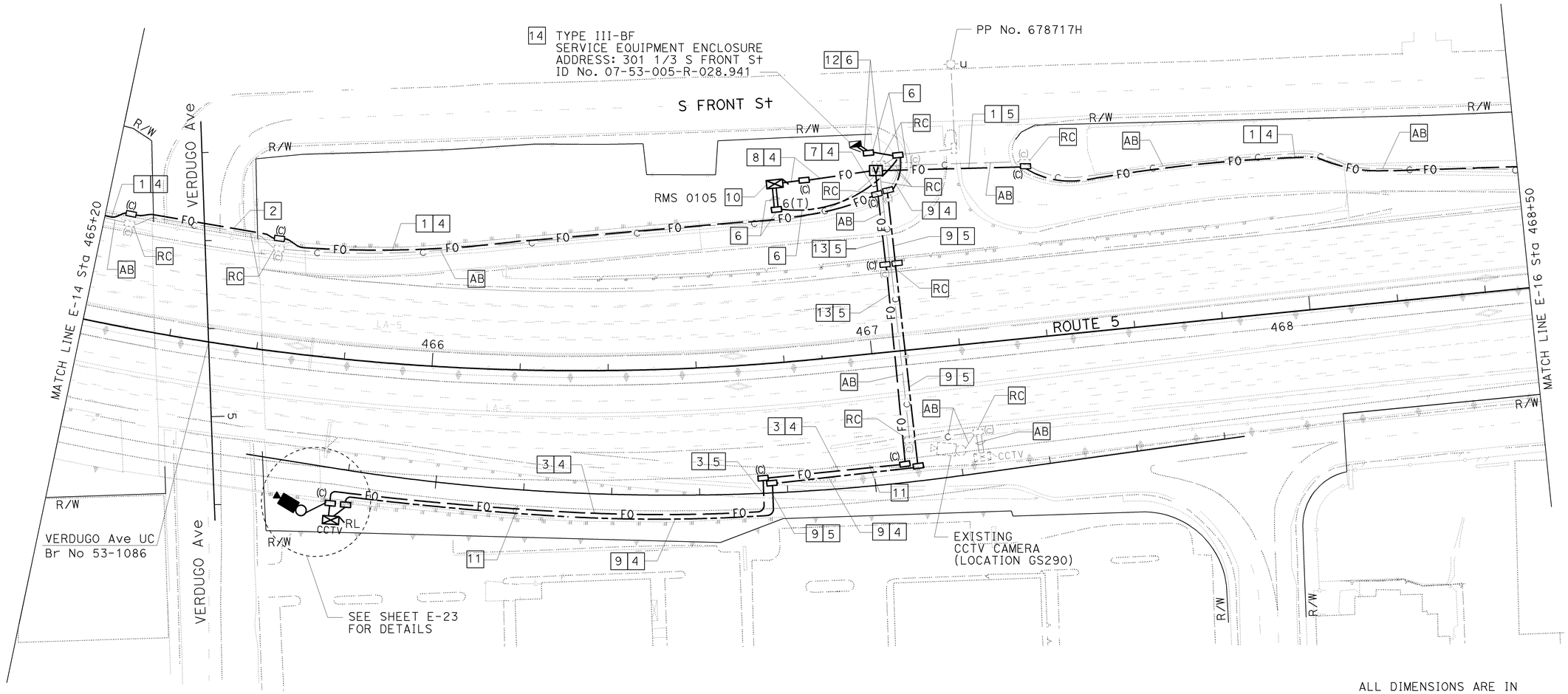

ALL DIMENSIONS ARE IN METERS UNLESS OTHERWISE SHOWN

MODIFY COMMUNICATION SYSTEM

SCALE 1:500

THIS PLAN IS ACCURATE FOR ELECTRICAL WORK ONLY.
FOR LEGEND, ABBREVIATIONS AND GENERAL NOTES SEE SHEET E-1.

E-15

STATE OF CALIFORNIA - DEPARTMENT OF TRANSPORTATION
Caltrans OFFICE OF ITS
FUNCTIONAL SUPERVISOR: JACQUELINE C. TAN
CALCULATED-DESIGNED BY: CANDACE FUNG
CHECKED BY: JACQUELINE C. TAN
REVISED BY | DATE REVISED

LAST REVISION DATE PLOTTED => 12-JUN-2009
00-00-00 TIME PLOTTED => 13:11

BORDER LAST REVISED 3/1/2007 | RELATIVE BORDER SCALE IS IN MILLIMETERS 0 20 40 60 80 | USERNAME => trannda | DGN FILE => 712184ua015.dgn | CU 07388 | EA 121841

FOR COMPLETE RIGHT OF WAY AND ACCURATE ACCESS DATA,
SEE RIGHT OF WAY RECORD MAPS AT DISTRICT OFFICE.

PROJECT NOTES: (THIS SHEET ONLY)

1. INSTALL 103C, 36SMFO, 2-72SMFO AND 4 SIZE 25 INNERDUCTS. INSTALL SPARE 103C, MT.
2. INSTALL 78C, 12SMFO AND SIZE 25 INNERDUCT.
3. TRENCH AND INSTALL CONDUIT(S) IN PAVEMENT. SEE SHEET E-27 FOR DETAILS.
4. JACK CONDUIT(S) UNDER ROADWAY. SEE SHEET E-28 FOR DETAILS.
5. NEW CONDUIT(S) OR PULL BOX(ES) SHOWN FOR REFERENCE ONLY. SEE SHEET E-58 FOR INSTALLATION DETAILS.
6. INSTALL 12SMFO AND SIZE 25 INNERDUCT.
7. INSTALL FOTM, FDU AND INTERFACE CABLES IN CONTROLLER CABINET. CONNECT 12SMFO. SEE SHEET E-30 FOR DETAILS. CONTROLLER CABINET SHOWN FOR REFERENCE ONLY. SEE SHEET E-58 FOR DETAILS.

Dist	COUNTY	ROUTE	KILOMETER POST TOTAL PROJECT	SHEET No.	TOTAL SHEETS
07	LA	5	42.8/47.3	397	1073

5/5/08
REGISTERED ELECTRICAL ENGINEER

CANDACE FUNG
No. E16936
Exp 06/30/09
ELECTRICAL
REGISTERED PROFESSIONAL ENGINEER
STATE OF CALIFORNIA

6-8-09
PLANS APPROVAL DATE

THE STATE OF CALIFORNIA OR ITS OFFICERS OR AGENTS SHALL NOT BE RESPONSIBLE FOR THE ACCURACY OR COMPLETENESS OF ELECTRONIC COPIES OF THIS PLAN IS IS SHEET.

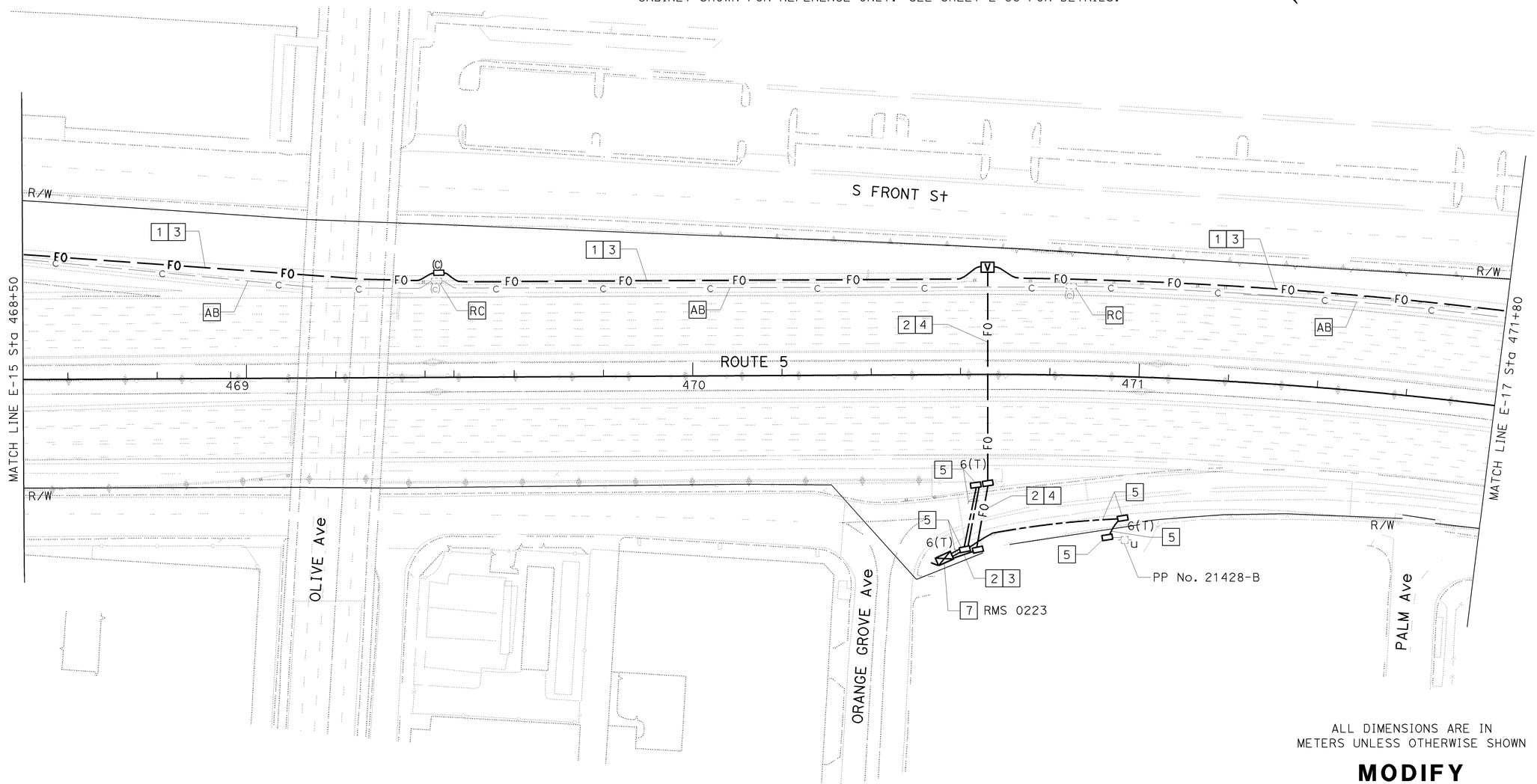

ALL DIMENSIONS ARE IN METERS UNLESS OTHERWISE SHOWN

MODIFY COMMUNICATION SYSTEM

SCALE 1:500

THIS PLAN IS ACCURATE FOR ELECTRICAL WORK ONLY.
FOR LEGEND, ABBREVIATIONS AND GENERAL NOTES SEE SHEET E-1.

E-16

STATE OF CALIFORNIA - DEPARTMENT OF TRANSPORTATION
Caltrans
OFFICE OF ITS

FUNCTIONAL SUPERVISOR: JACQUELINE C. TAN
CALCULATED-DESIGNED BY: CANDACE FUNG
CHECKED BY: JACQUELINE C. TAN
REVISED BY
DATE REVISED

LAST REVISION DATE PLOTTED => 12-JUN-2009
00-00-00 TIME PLOTTED => 13:11

BORDER LAST REVISED 3/1/2007
RELATIVE BORDER SCALE IS IN MILLIMETERS 0 20 40 60 80
USERNAME => trannda
DGN FILE => 712184ua016.dgn
CU 07388
EA 121841

FOR COMPLETE RIGHT OF WAY AND ACCURATE ACCESS DATA,
SEE RIGHT OF WAY RECORD MAPS AT DISTRICT OFFICE.

PROJECT NOTES: (THIS SHEET ONLY)

1. INSTALL 103C, 36SMFO AND 2-72SMFO AND 4 SIZE 25 INNERDUCTS. INSTALL SPARE 103C, MT.
2. TRENCH AND INSTALL CONDUIT(S) IN PAVEMENT. SEE SHEET E-27 FOR DETAILS.
3. COIL 10 m 36SMFO AND 2-72SMFO FOR FUTURE USE, CAP AND SEAL EACH CABLE. TO BE SPLICED IN COOPERATION WITH ADJACENT ONGOING CONTRACT.

Dist	COUNTY	ROUTE	KILOMETER POST TOTAL PROJECT	SHEET No.	TOTAL SHEETS
07	LA	5	42.8/47.3	398	1073

5/5/08
REGISTERED ELECTRICAL ENGINEER

CANDACE FUNG
No. E16936
Exp 06/30/09
ELECTRICAL
REGISTERED PROFESSIONAL ENGINEER
STATE OF CALIFORNIA

6-8-09
PLANS APPROVAL DATE

THE STATE OF CALIFORNIA OR ITS OFFICERS OR AGENTS SHALL NOT BE RESPONSIBLE FOR THE ACCURACY OR COMPLETENESS OF ELECTRONIC COPIES OF THIS PLAN IS SHEET.

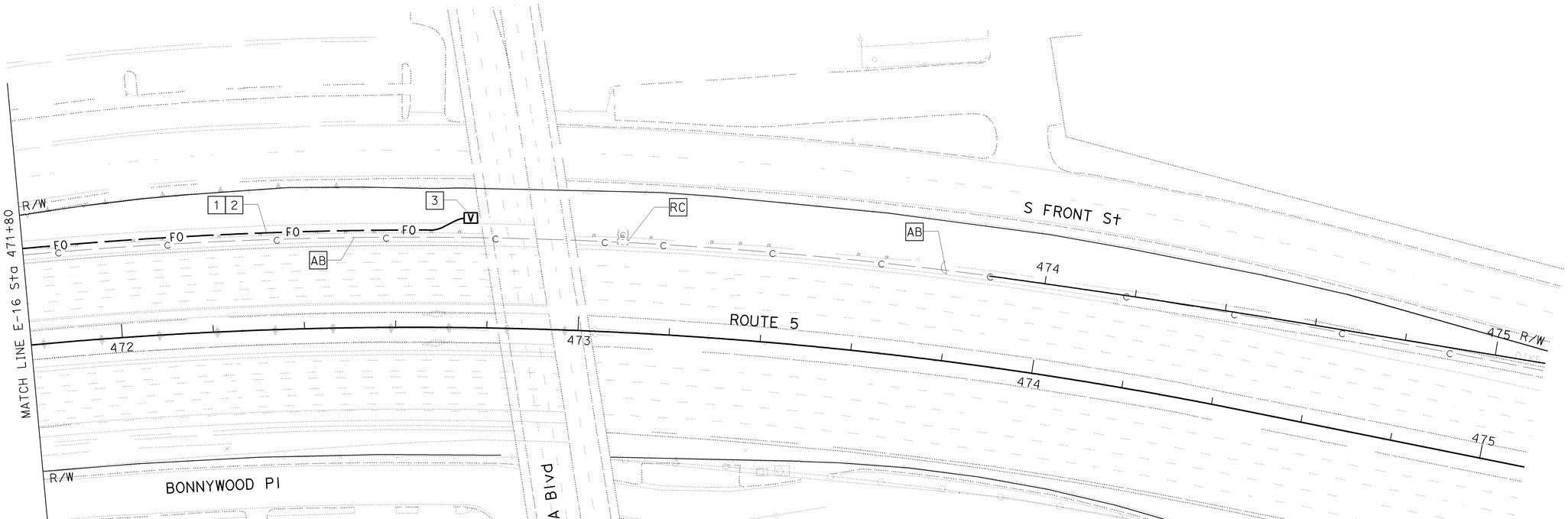

ALL DIMENSIONS ARE IN
METERS UNLESS OTHERWISE SHOWN

MODIFY COMMUNICATION SYSTEM

SCALE 1:500

THIS PLAN IS ACCURATE FOR ELECTRICAL WORK ONLY.
FOR LEGEND, ABBREVIATIONS AND GENERAL NOTES SEE SHEET E-1.

E-17

CALCULATED-DESIGNED BY: CANDACE FUNG
CHECKED BY: JACQUELINE C. TAN
FUNCTIONAL SUPERVISOR: JACQUELINE C. TAN
STATE OF CALIFORNIA - DEPARTMENT OF TRANSPORTATION
Caltrans OFFICE OF ITS
REVISED BY | DATE REVISED

LAST REVISION | DATE PLOTTED => 12-JUN-2009 | TIME PLOTTED => 13:11 | 00-00-00

BORDER LAST REVISED 3/1/2007
RELATIVE BORDER SCALE IS IN MILLIMETERS 0 20 40 60 80
USERNAME => trannda
DGN FILE => 712184ua017.dgn
CU 07388
EA 121841

FOR COMPLETE R/W AND ACCURATE ACCESS DATA,
SEE R/W RECORD MAPS AT THE DISTRICT OFFICE.

Dist	COUNTY	ROUTE	KILOMETER POST TOTAL PROJECT	SHEET No.	TOTAL SHEETS
07	LA	5	42.8/47.3	399	1073

5/5/08
REGISTERED ELECTRICAL ENGINEER

CANDACE FUNG
No. E16936
Exp 06/30/09
ELECTRICAL
REGISTERED PROFESSIONAL ENGINEER
STATE OF CALIFORNIA

6-8-09
PLANS APPROVAL DATE

THE STATE OF CALIFORNIA OR ITS OFFICERS OR AGENTS SHALL NOT BE RESPONSIBLE FOR THE ACCURACY OR COMPLETENESS OF ELECTRONIC COPIES OF THIS PLAN IS SHEET.

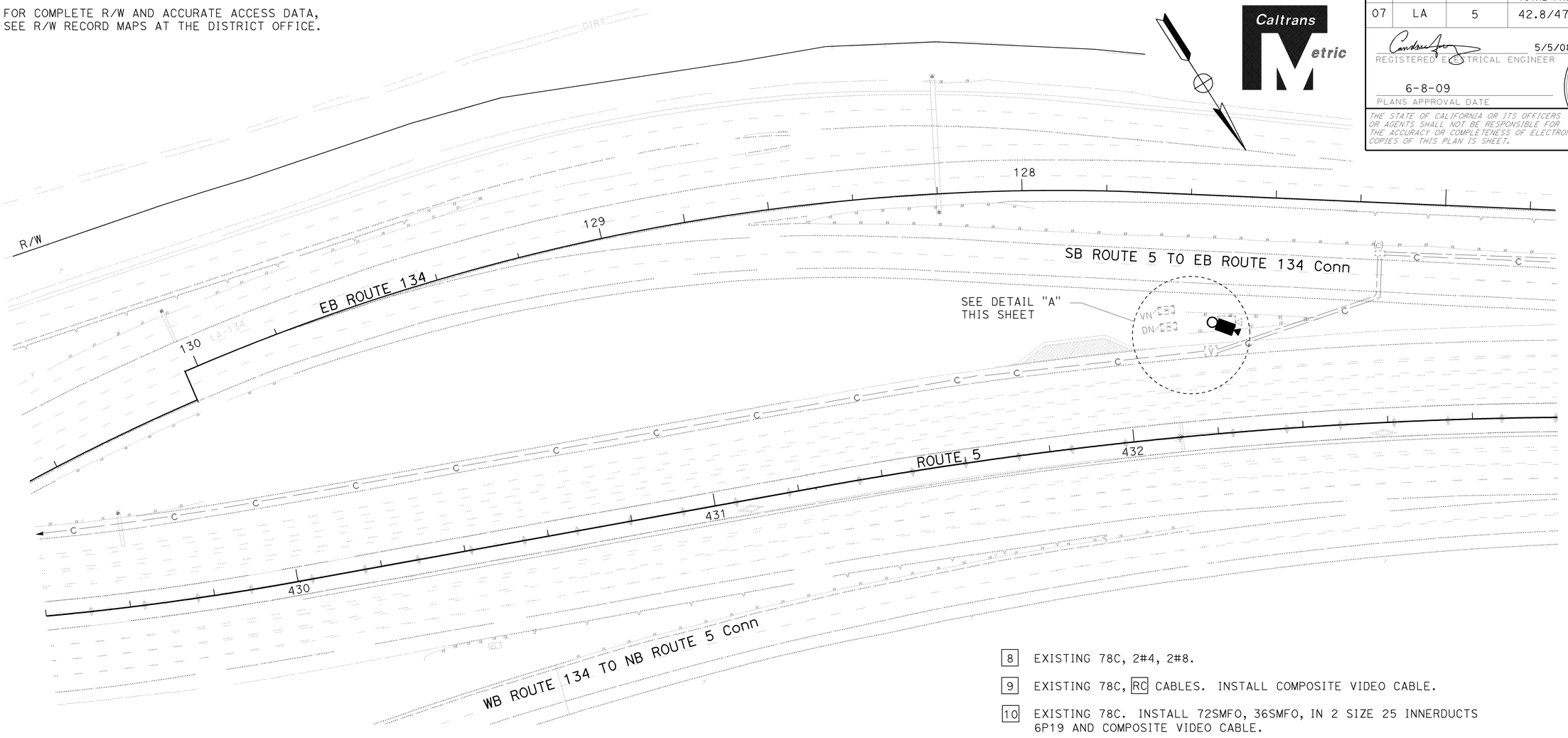

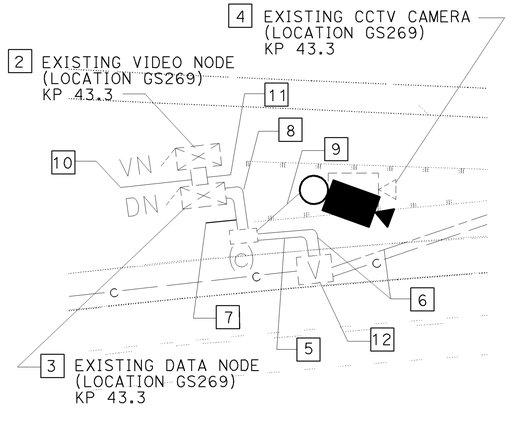

DETAIL "A"
NO SCALE

PROJECT NOTES: (THIS SHEET ONLY)

2 RS CCR AND MODEM. INSTALL NEW EQUIPMENT IN VIDEO NODE MODEL 334-TV CONTROLLER CABINET AS PER SHEET E-33.

3 INSTALL NEW EQUIPMENT IN DATA NODE MODEL 334-TV CONTROLLER CABINET AS PER SHEET E-33.

4 RS CCTV CAMERA ASSEMBLY AND INSTALL NEW CCTV CAMERA ASSEMBLY ON NEW TYPE 45 CCTV POLE.

5 EXISTING 78C. INSTALL 2-72SMFO, 36SMFO AND 12SMFO CABLE IN 2 SIZE 25 INNERDUCTS.

6 EXISTING 53C, 2#4, 1#8.

7 EXISTING 78C. INSTALL 2-72SMFO, 36SMFO, 12SMFO AND COMPOSITE VIDEO CABLE IN 2 SIZE 25 INNERDUCTS.

8 EXISTING 78C, 2#4, 2#8.

9 EXISTING 78C, RC CABLES. INSTALL COMPOSITE VIDEO CABLE.

10 EXISTING 78C. INSTALL 72SMFO, 36SMFO, IN 2 SIZE 25 INNERDUCTS 6P19 AND COMPOSITE VIDEO CABLE.

11 EXISTING 78C, 3#8.

12 INSTALL FIBER OPTIC SPLICE CLOSURE.

ALL DIMENSIONS ARE IN
METERS UNLESS OTHERWISE SHOWN

MODIFY CLOSED CIRCUIT TELEVISION CAMERA (LOCATION GS269)

MODIFY DATA NODE (LOCATION GS269)

MODIFY VIDEO NODE (LOCATION GS269)

SCALE 1:500

THIS PLAN IS ACCURATE FOR ELECTRICAL WORK ONLY.
FOR LEGEND, ABBREVIATIONS AND GENERAL NOTES SEE SHEET E-1.

E-18

CALCULATED-DESIGNED BY: CANDACE FUNG
CHECKED BY: JACQUELINE C. TAN
FUNCTIONAL SUPERVISOR: JACQUELINE C. TAN
STATE OF CALIFORNIA - DEPARTMENT OF TRANSPORTATION
Caltrans OFFICE OF ITS
REVISED BY | DATE REVISED

LAST REVISION DATE PLOTTED => 17-JUN-2009
00-00-00 TIME PLOTTED => 12:46

BORDER LAST REVISED 3/1/2007
RELATIVE BORDER SCALE IS IN MILLIMETERS 0 20 40 60 80
USERNAME => trpierce
DGN FILE => 712184ua018.dgn
CU 07388
EA 121841

FOR COMPLETE RIGHT OF WAY AND ACCURATE ACCESS DATA,
SEE RIGHT OF WAY RECORD MAPS AT DISTRICT OFFICE.

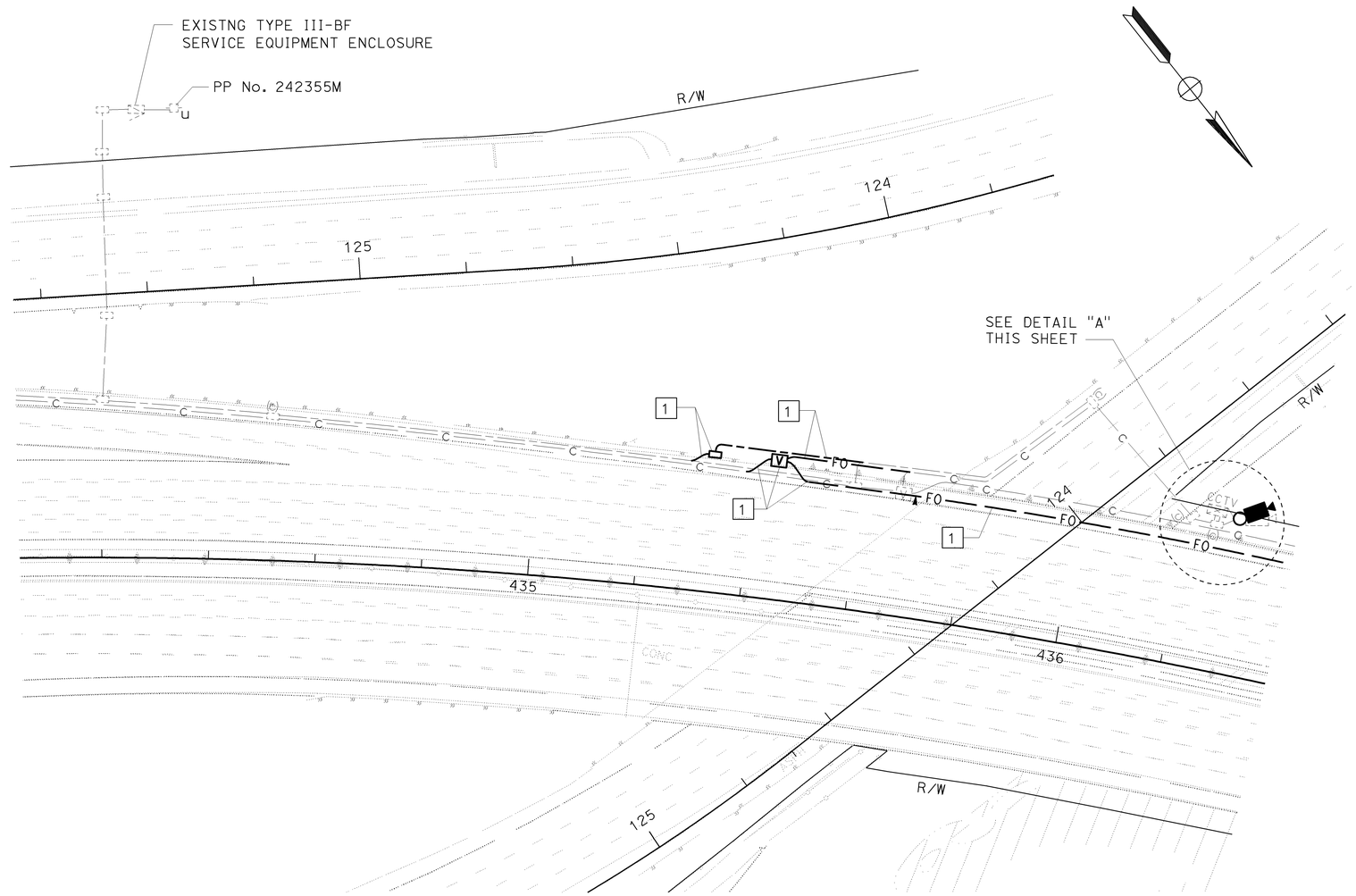

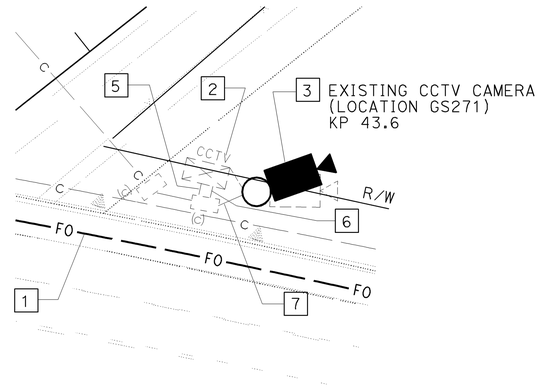

DETAIL "A"
NO SCALE

PROJECT NOTES: (THIS SHEET ONLY)

1. SHOWN FOR REFERENCE ONLY. SEE MODIFY COMMUNICATION SYSTEM PLAN FOR DETAILS.
2. RS CCR, MODEM, VIDEO TRANSMITTER AND TERMINAL BLOCK. INSTALL NEW EQUIPMENT IN MODEL 334-TV CONTROLLER CABINET AS PER SHEET E-32.
3. RS CCTV CAMERA ASSEMBLY AND POLE AND INSTALL NEW CCTV CAMERA ASSEMBLY ON NEW TYPE 40 CCTV POLE ON EXISTING FOUNDATION.
4. EXISTING 78C, RC CABLES. INSTALL 2-12SMFO IN 2 SIZE 25 INNERDUCT, 2#4, 1#8G.
5. EXISTING 78C, RC CABLES. INSTALL 2#4, 1#8G.
6. EXISTING 78C, RC CABLES. INSTALL 2-12SMFO AND COMPOSITE VIDEO CABLE.
7. EXISTING 78C, RC CABLES. INSTALL COMPOSITE VIDEO CABLE.

ALL DIMENSIONS ARE IN
METERS UNLESS OTHERWISE SHOWN

MODIFY CLOSED CIRCUIT TELEVISION CAMERA
(LOCATION GS271)

SCALE 1:500

THIS PLAN IS ACCURATE FOR ELECTRICAL WORK ONLY.
FOR LEGEND, ABBREVIATIONS AND GENERAL NOTES SEE SHEET E-1.

E-19

Dist	COUNTY	ROUTE	KILOMETER POST TOTAL PROJECT	SHEET No.	TOTAL SHEETS
07	LA	5	42.8/47.3	400	1073

5/5/08
REGISTERED ELECTRICAL ENGINEER
CANDACE FUNG No. E16936 Exp 06/30/09 ELECTRICAL
REGISTERED PROFESSIONAL ENGINEER STATE OF CALIFORNIA

6-8-09
PLANS APPROVAL DATE

THE STATE OF CALIFORNIA OR ITS OFFICERS OR AGENTS SHALL NOT BE RESPONSIBLE FOR THE ACCURACY OR COMPLETENESS OF ELECTRONIC COPIES OF THIS PLAN IS SHEET.

REVISED BY	DATE REVISED

CANDACE FUNG — CALCULATED-DESIGNED BY
JACQUELINE C. TAN — CHECKED BY
JACQUELINE C. TAN — FUNCTIONAL SUPERVISOR

STATE OF CALIFORNIA - DEPARTMENT OF TRANSPORTATION
Caltrans OFFICE OF ITS

LAST REVISION DATE PLOTTED => 17-JUN-2009
00-00-00 TIME PLOTTED => 12:47

BORDER LAST REVISED 3/1/2007 | RELATIVE BORDER SCALE IS IN MILLIMETERS 0 20 40 60 80 | USERNAME => trpierce DGN FILE => 712184ua019.dgn | CU 07388 | EA 121841