DIST.	COUNTY	ROUTE	MILE POST TOTAL PROJECT	SHEET NO.	TOTAL SHEETS
07	LA	5	42.8/47.3	101	1073

REGISTERED ENGINEER - CIVIL

6-8-09

PLANS APPROVAL DATE

REGISTERED PROFESSIONAL ENGINEER DOUGLAS DUNRUD No. 47240 Exp. 12/31/09 CIVIL STATE OF CALIFORNIA

The State of California or its officers or agents shall not be responsible for the accuracy or completeness of electronic copies of this plan sheet.

Caltrans Metric

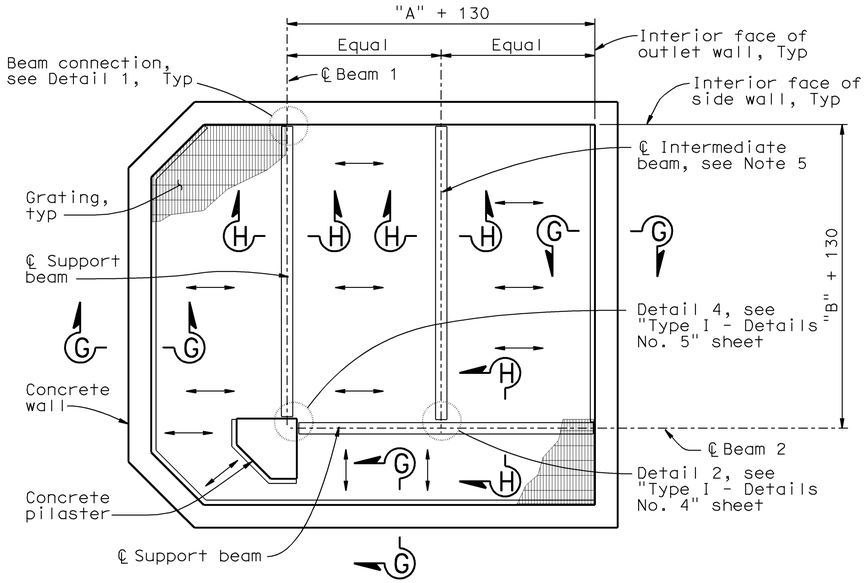

PLAN - TYPE 1L GRATE SUPPORT FRAME

1:40

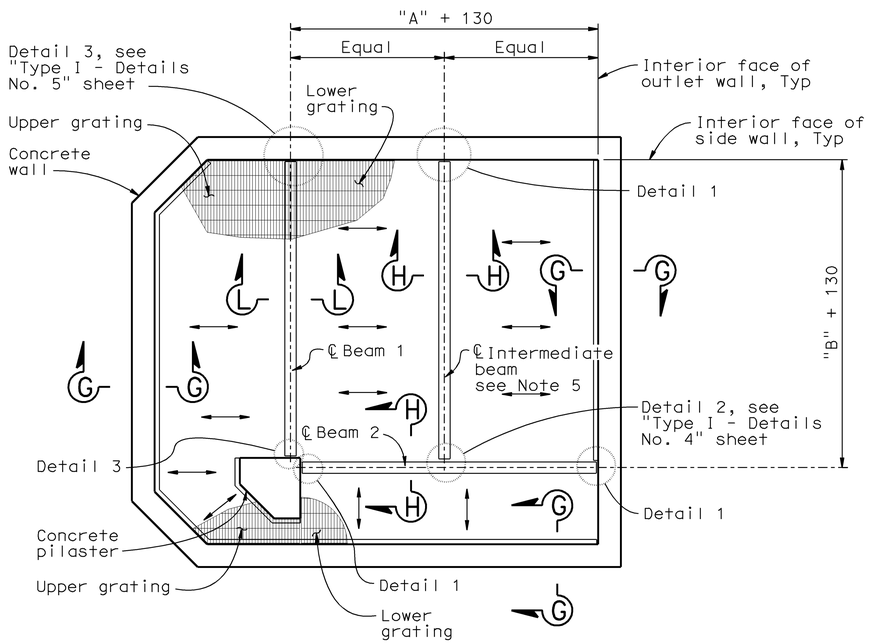

PLAN - TYPE 1S GRATE SUPPORT FRAME

1:40

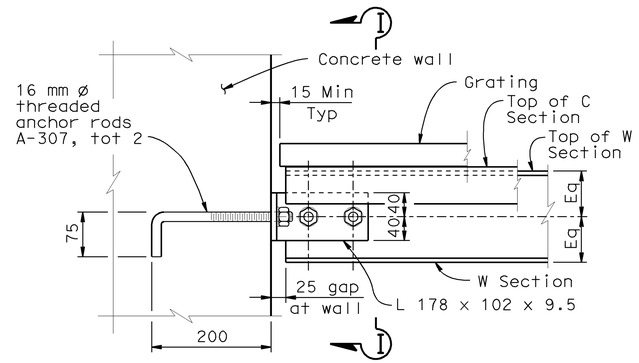

ELEVATION

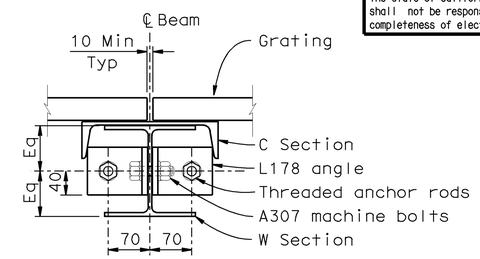

SECTION I-I

("A" & "B" = 4000 mm)

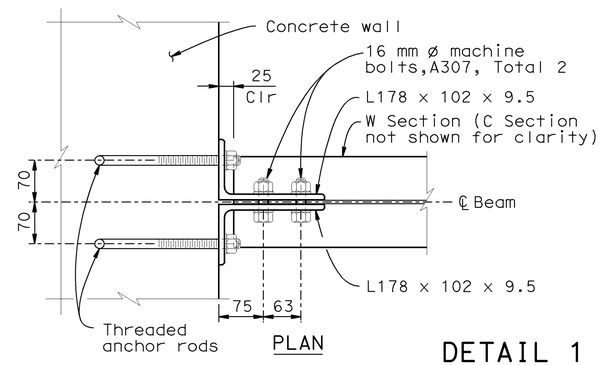

PLAN

DETAIL 1

STEEL BEAM CONNECTION TO CONCRETE WALL

1:5

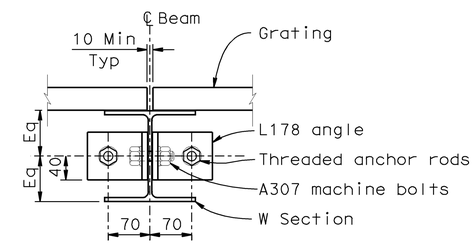

SECTION I-I

("A" & "B" = 2000 mm or 3000 mm)

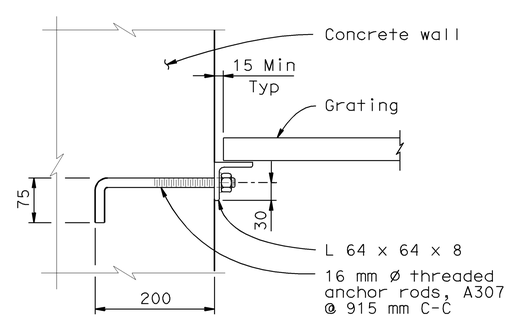

SECTION G-G

GRATE SUPPORT AT WALL

1:5

NOTES:

1. For grating details and manufacturing requirements, see grating details sheets and specifications.
2. All joints in frame shall be mitered and continuous weld both sides, grind exposed weld smooth.
3. Edge band all openings and perimeter of each grating section.
4. Fasteners shall be supplied to anchor type grating furnished.
5. Provide intermediate support beam when "A" and "B" dimensions are equal to or greater than 3000.
6. ⟷ Indicates direction of grating panel span.
7. For sections H-H, J-J and L-L see "Type 1 - Detail No. 4" sheet.
8. For Detail 3 see "Type 1 - Detail No. 5" sheet.
9. All metal components shall be galvanized.
10. For W Section and C Section size and weight designation, see "Design Data Table" on "Type 1 - Layout No.1" Sheet.

WATER POLLUTION CONTROL DETAILS

ALL DIMENSIONS ARE IN MILLIMETERS UNLESS OTHERWISE SHOWN

WD-26

RELEASE DATE ---	DESIGN	BY D. Dunrud	CHECKED J&P Peterson
FILE NO. ---	DETAILS	BY J&P Peterson	CHECKED J&P Peterson
	SUBMITTED	BY D. Forester	DRAWING DATE 02/07

STATE OF CALIFORNIA DEPARTMENT OF TRANSPORTATION

DIVISION OF ENGINEERING SERVICES

BRIDGE NO.

MILE POST

GROSS SOLIDS REMOVAL DEVICE

TYPE 1 - DETAILS NO. 3

ORIGINAL SCALE IN MILLIMETERS FOR REDUCED PLANS 0 10 20 30 40 50 60 70 80 90 100

CU 07314
EA 121841

DISREGARD PRINTS BEARING EARLIER REVISION DATES

REVISION DATES (PRELIMINARY STAGE ONLY)

SHEET 15 OF 32

USERNAME => trmnguye
DGN FILE => 7121841h026.dgn

DATE PLOTTED => 12-JUN-2009 TIME PLOTTED => 08:15

DIST.	COUNTY	ROUTE	MILE POST TOTAL PROJECT	SHEET NO.	TOTAL SHEETS
07	LA	5	42.8/47.3	102	1073

REGISTERED ENGINEER - CIVIL

6-8-09

PLANS APPROVAL DATE

REGISTERED PROFESSIONAL ENGINEER DOUGLAS DUNRUD No. 47240 Exp. 12/31/09 CIVIL STATE OF CALIFORNIA

The State of California or its officers or agents shall not be responsible for the accuracy or completeness of electronic copies of this plan sheet.

Caltrans Metric

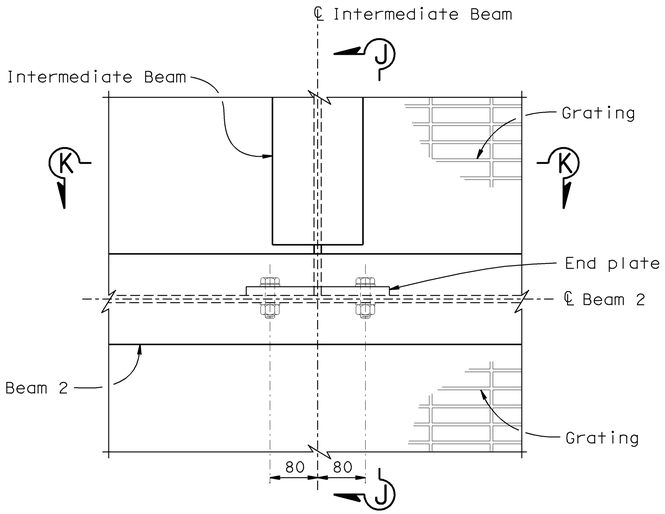

PLAN

DETAIL 2

CONNECTION BETWEEN STEEL BEAMS
1:5

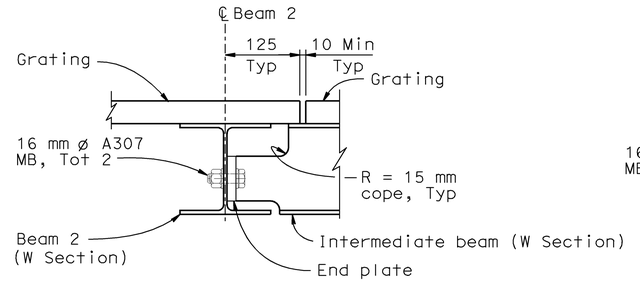

SECTION J-J

"A" & "B" = 3000
1:5

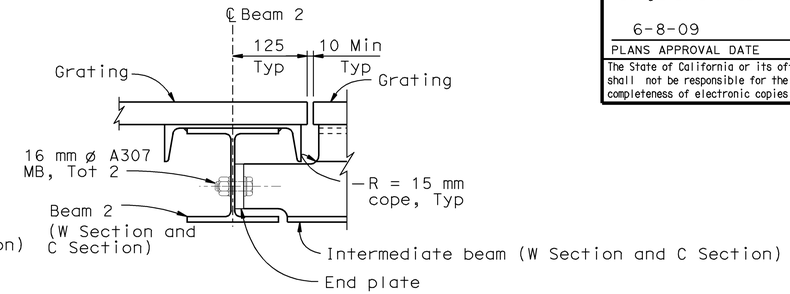

SECTION J-J

"A" & "B" = 4000
1:5

NOTES:

1. All metal components of grating including supporting beams and connections shall be galvanized.
2. For W Section and C Section size and weight designation, see "Design Data Table" on "Type 1 - Layout No.1" sheet.

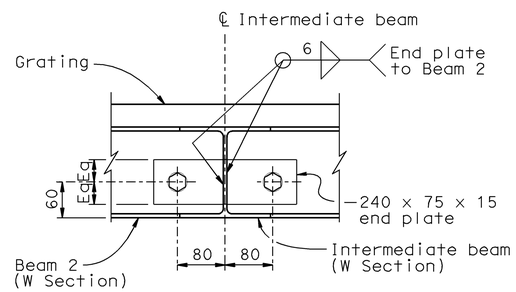

SECTION K-K

"A" & "B" = 3000
1:5

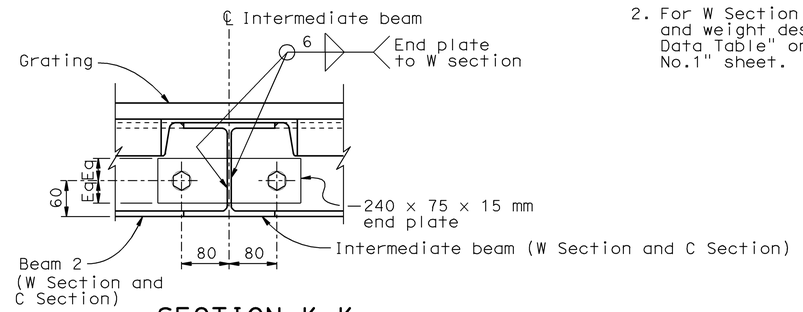

SECTION K-K

"A" & "B" = 4000
1:5

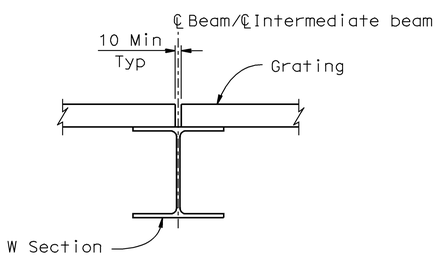

SECTION H-H

"A" & "B" = 2000 or 3000
1:5

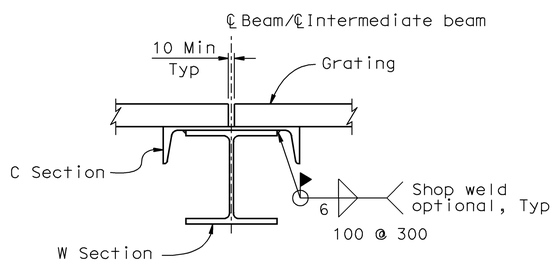

SECTION H-H

"A" & "B" = 4000
1:5

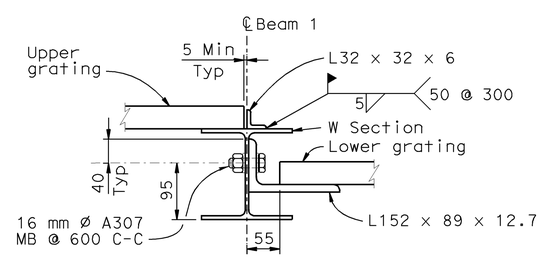

SECTION L-L

"A" & "B" = 2000 & 3000
1:5

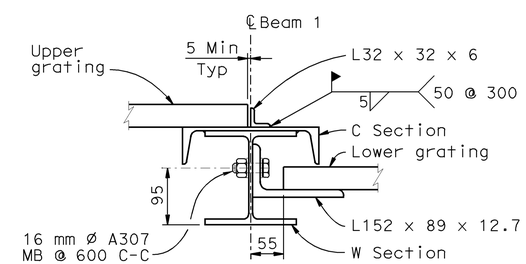

SECTION L-L

"A" & "B" = 4000
1:5

WATER POLLUTION CONTROL DETAILS

ALL DIMENSIONS ARE IN MILLIMETERS UNLESS OTHERWISE SHOWN

WD-27

RELEASE DATE ---	DESIGN	BY D.Dunrud	CHECKED J&P Peterson	---
	DETAILS	BY J&P Peterson	CHECKED J&P Peterson	
FILE NO. ---	SUBMITTED	BY D.Forester	DRAWING DATE 02/07	

STATE OF CALIFORNIA
DEPARTMENT OF TRANSPORTATION

DIVISION OF ENGINEERING SERVICES

BRIDGE NO.

MILE POST

GROSS SOLIDS REMOVAL DEVICE

TYPE 1 - DETAILS NO. 4

ORIGINAL SCALE IN MILLIMETERS FOR REDUCED PLANS 0 10 20 30 40 50 60 70 80 90 100

CU 07314
EA 121841

DISREGARD PRINTS BEARING EARLIER REVISION DATES

REVISION DATES (PRELIMINARY STAGE ONLY)

SHEET 16 OF 32

USERNAME => trmnguye
DGN FILE => 7121841h027.dgn

DATE PLOTTED => 12-JUN-2009 TIME PLOTTED => 08:15

DIST.	COUNTY	ROUTE	MILE POST TOTAL PROJECT	SHEET NO.	TOTAL SHEETS
07	LA	5	42.8/47.3	103	1073

REGISTERED ENGINEER - CIVIL

6-8-09

PLANS APPROVAL DATE

REGISTERED PROFESSIONAL ENGINEER DOUGLAS DUNRUD No. 47240 Exp. 12/31/09 CIVIL STATE OF CALIFORNIA

The State of California or its officers or agents shall not be responsible for the accuracy or completeness of electronic copies of this plan sheet.

Caltrans Metric

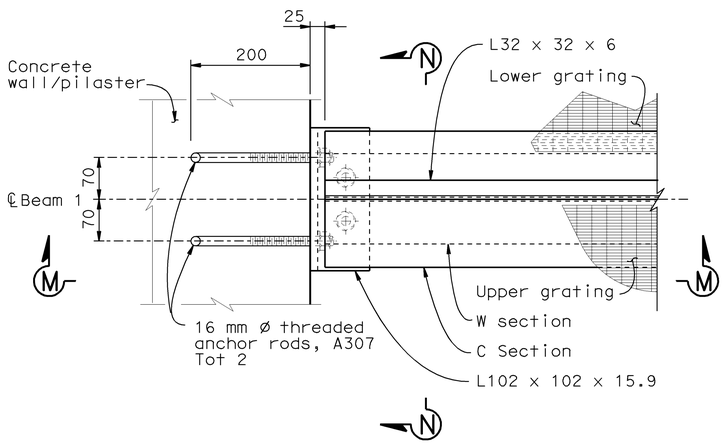

PLAN

Note: Provide C Section only when "A" & "B" = 4000

DETAIL 3

CONNECTION BETWEEN STEEL BEAM AND CONCRETE WALL - TYPE 1S ONLY

1:5

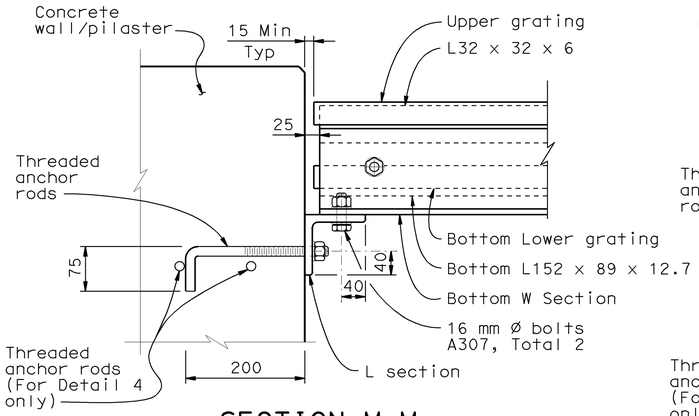

SECTION M-M

"A" & "B" = 2000 or 3000

1:5

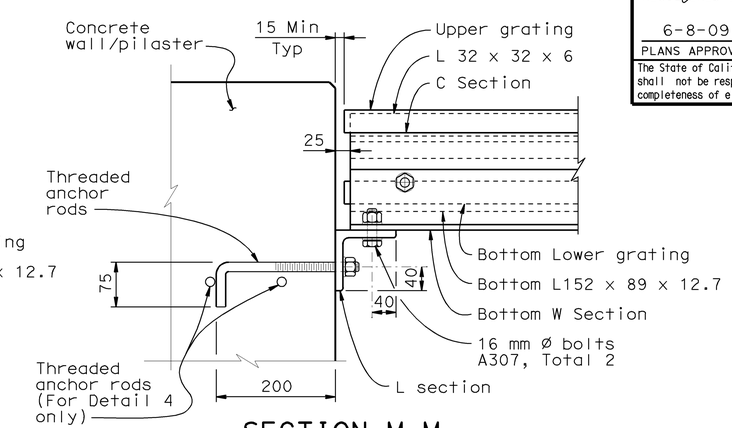

SECTION M-M

"A" & "B" = 4000

1:5

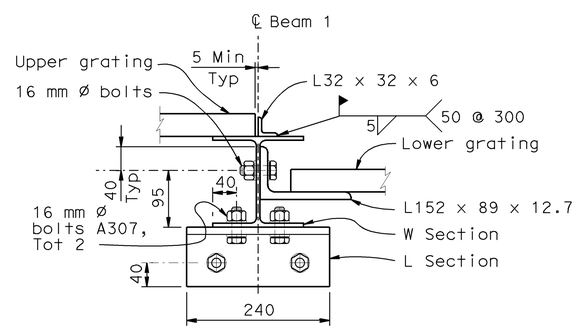

SECTION N-N

"A" & "B" = 2000 or 3000

1:5

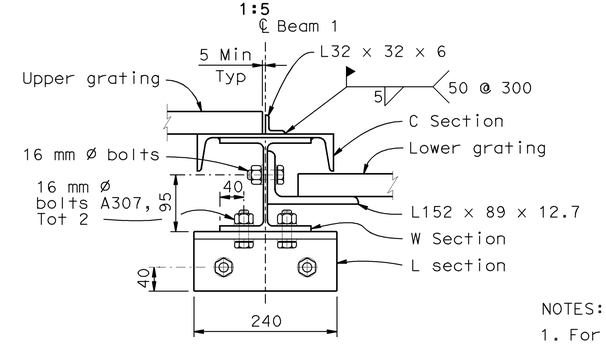

SECTION N-N

"A" & "B" = 4000

1:5

NOTES:

1. For location of various sections & details, see "Type 1 - Details No. 3" sheet.
2. All metal components of grating including supporting beams and connections shall be galvanized.
3. For W Section and C Section size and weight designation, see "Design Data Table" on "Type 1 - Layout No.1" sheet.

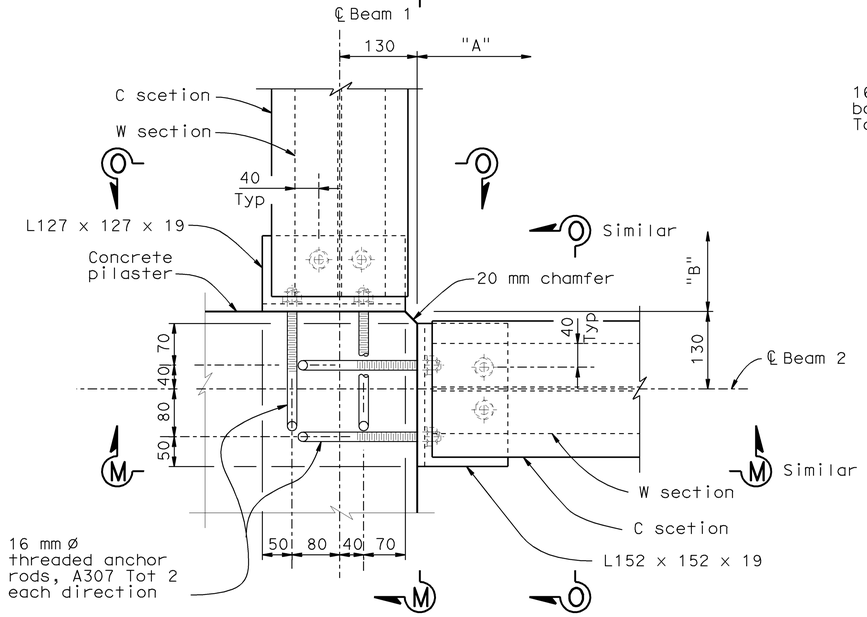

DETAIL 4

1:5

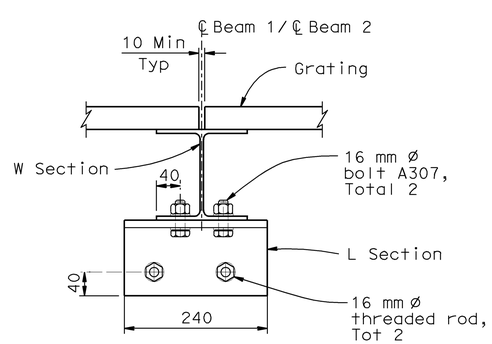

SECTION O-O

"A" & "B" = 2000 or 3000

1:5

Note: Pilaster not shown for clarity.

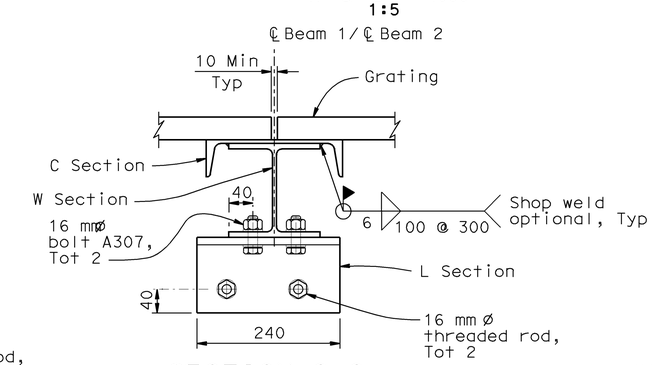

SECTION O-O

"A" & "B" = 4000

1:5

ALL DIMENSIONS ARE IN MILLIMETERS UNLESS OTHERWISE SHOWN

WATER POLLUTION CONTROL DETAILS

WD-28

RELEASE DATE ---	DESIGN	BY D.Dunrud	CHECKED J&P Peterson
FILE NO. ---	DETAILS	BY J&P Peterson	CHECKED J&P Peterson
	SUBMITTED	BY D.Forester	DRAWING DATE 02/07

STATE OF CALIFORNIA DEPARTMENT OF TRANSPORTATION

DIVISION OF ENGINEERING SERVICES

BRIDGE NO.

MILE POST

GROSS SOLIDS REMOVAL DEVICE

TYPE 1 - DETAILS NO. 5

ORIGINAL SCALE IN MILLIMETERS FOR REDUCED PLANS 0 10 20 30 40 50 60 70 80 90 100

CU 07314
EA 121841

DISREGARD PRINTS BEARING EARLIER REVISION DATES

REVISION DATES (PRELIMINARY STAGE ONLY)

SHEET 17 OF 32

USERNAME => trmnguye
DGN FILE => 712184in028.dgn

DATE PLOTTED => 12-JUN-2009 TIME PLOTTED => 08:16

DIST.	COUNTY	ROUTE	MILE POST TOTAL PROJECT	SHEET NO.	TOTAL SHEETS
07	LA	5	42.8/47.3	104	1073

REGISTERED ENGINEER - CIVIL

6-8-09

PLANS APPROVAL DATE

The State of California or its officers or agents shall not be responsible for the accuracy or completeness of electronic copies of this plan sheet.

REGISTERED PROFESSIONAL ENGINEER DOUGLAS DUNRUD No. 47240 Exp. 12/31/09 CIVIL STATE OF CALIFORNIA

Caltrans Metric

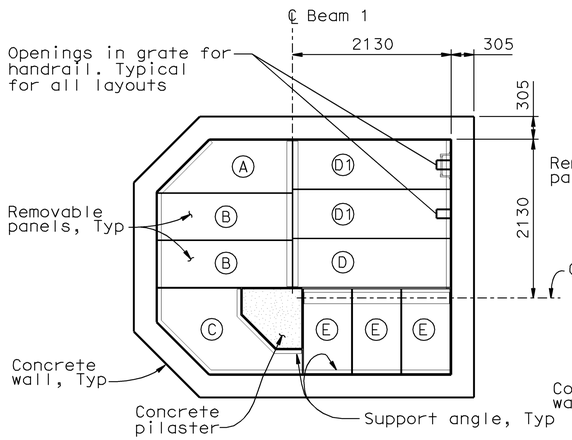

CASE 1 - "A" & "B" = 2000

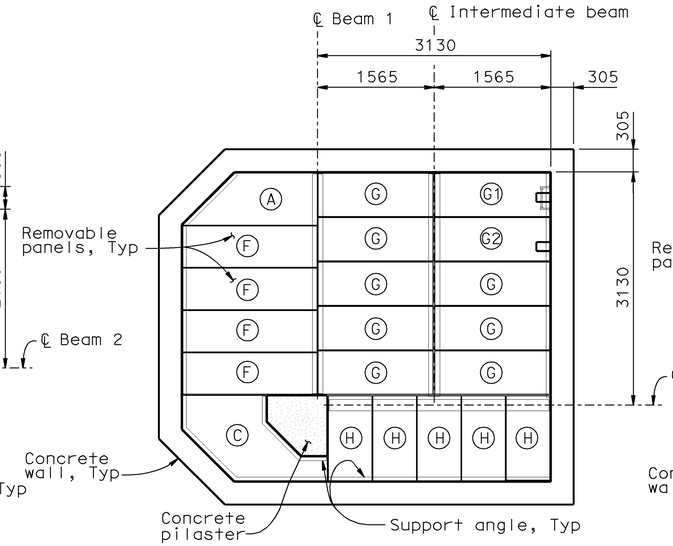

CASE 2 - "A" & "B" = 3000

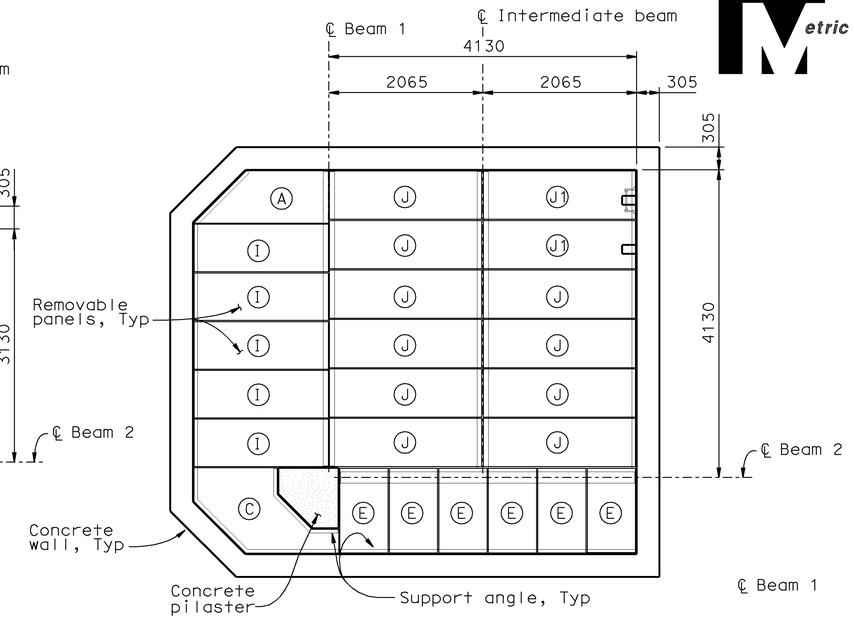

CASE 3 - "A" & "B" = 4000

GRATING PANEL LAYOUT - TYPE 1L

1:40

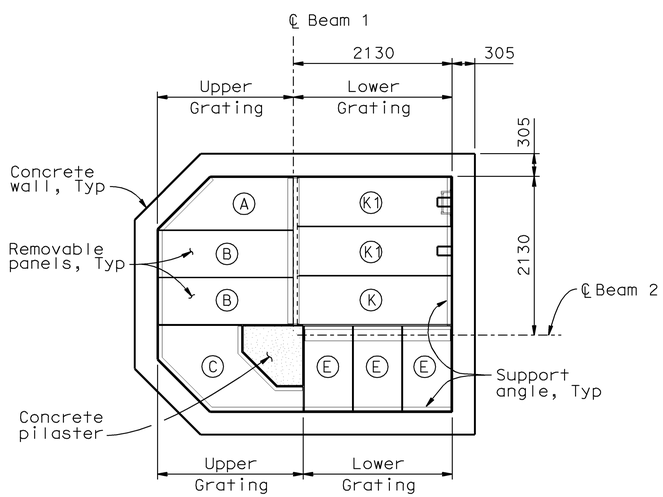

CASE 1 - "A" & "B" = 2000

Panels (E) and (K) are lower grating

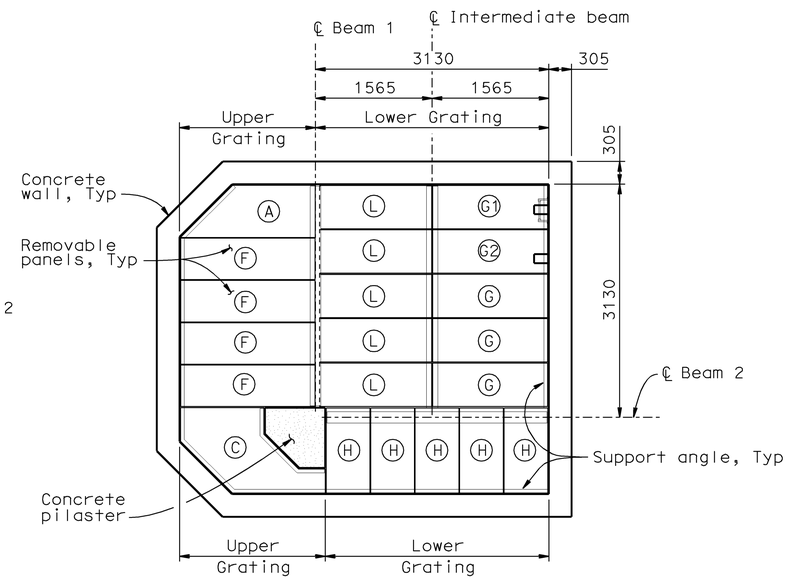

CASE 2 - "A" & "B" = 3000

Panels (G), (H) and (L) are lower grating

GRATING PANEL LAYOUT - TYPE 1S

1:40

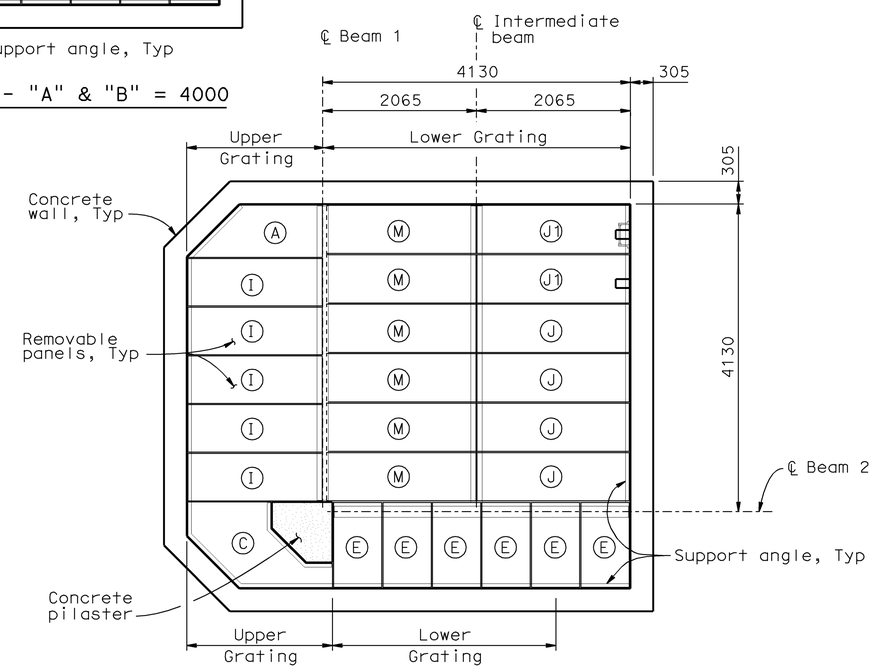

CASE 3 - "A" & "B" = 4000

Panels (E), (J) and (M) are lower grating

ALL DIMENSIONS ARE IN MILLIMETERS UNLESS OTHERWISE SHOWN

WATER POLLUTION CONTROL DETAILS

WD-29

RELEASE DATE ---	DESIGN	BY D.Dunrud	CHECKED J&P Peterson
FILE NO. ---	DETAILS	BY J&P Peterson	CHECKED J&P Peterson
	SUBMITTED	BY D.Forester	DRAWING DATE 02/07

STATE OF CALIFORNIA DEPARTMENT OF TRANSPORTATION

DIVISION OF ENGINEERING SERVICES

BRIDGE NO.

MILE POST

GROSS SOLIDS REMOVAL DEVICE

TYPE 1 - GRATING LAYOUT

ORIGINAL SCALE IN MILLIMETERS FOR REDUCED PLANS 0 10 20 30 40 50 60 70 80 90 100

CU 07314
EA 121841

DISREGARD PRINTS BEARING EARLIER REVISION DATES

REVISION DATES (PRELIMINARY STAGE ONLY)

SHEET 18 OF 32

USERNAME => trmnguye
DGN FILE => 7121841h029.dgn

DATE PLOTTED => 12-JUN-2009 TIME PLOTTED => 08:16

DIST.	COUNTY	ROUTE	MILE POST TOTAL PROJECT	SHEET NO.	TOTAL SHEETS
07	LA	5	42.8/47.3	105	1073

REGISTERED ENGINEER - CIVIL

6-8-09

PLANS APPROVAL DATE

REGISTERED PROFESSIONAL ENGINEER DOUGLAS DUNRUD No. 47240 Exp. 12/31/09 CIVIL STATE OF CALIFORNIA

The State of California or its officers or agents shall not be responsible for the accuracy or completeness of electronic copies of this plan sheet.

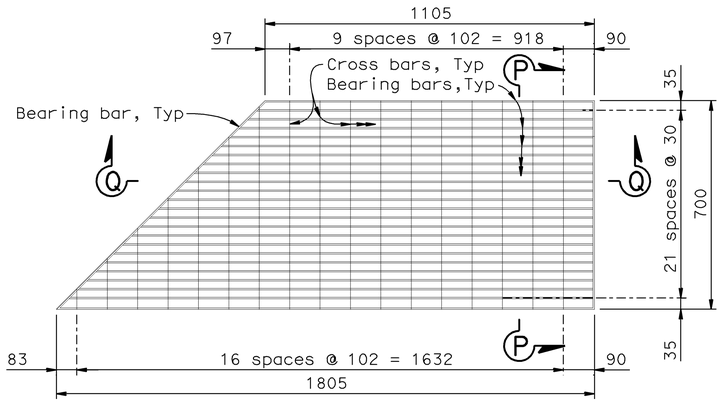

PANEL A

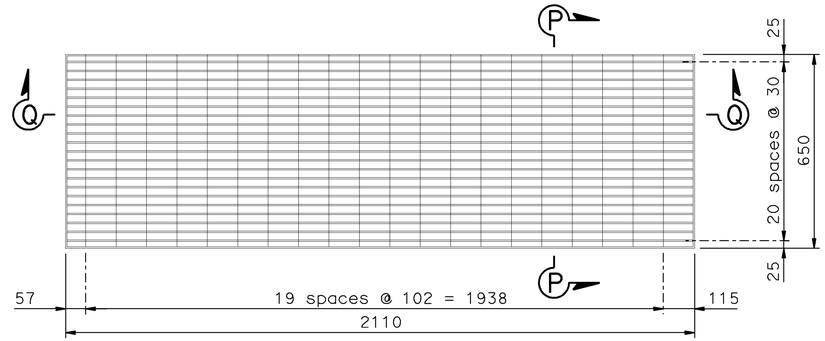

PANEL D

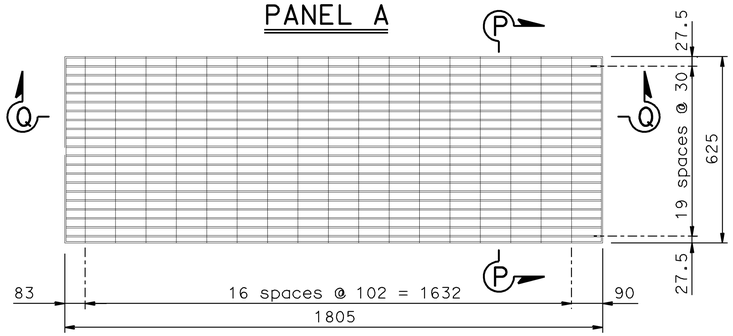

PANEL B

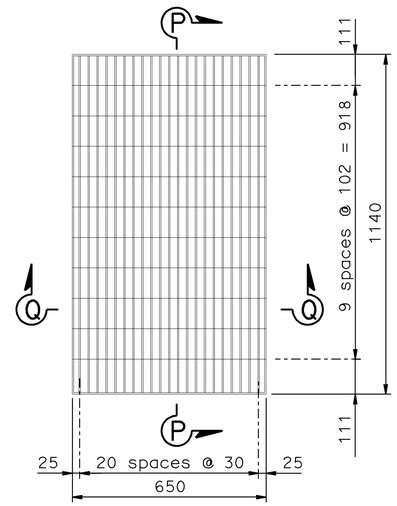

PANEL E

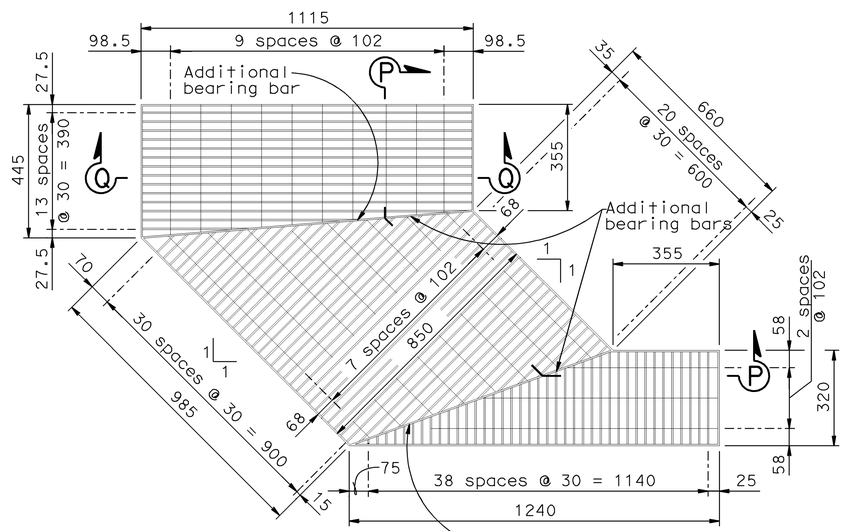

PANEL C

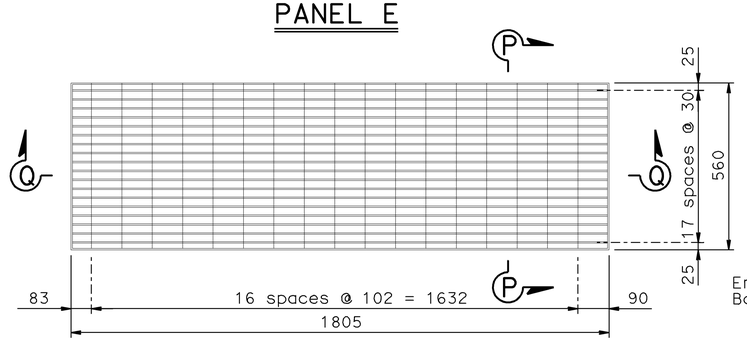

PANEL F

NOTES:

1. Bearing bars shall be 38 mm x 4.8 mm with ASTM A36 steel.
2. Cross bars shall be 6.4 mm rounded or rectangular or hexagonal bar of equivalent area.
3. Bearing bars shall be welded with cross bars and end bearing bars with one fillet weld at each intersection.
4. A serrated or slip resistant surface needs to be provided.
5. All metal components shall be galvanized prior to installation.
6. Additional bearing bars shall be welded with bearing bars and end bearing bars with one fillet weld at each intersection.
7. Contractor shall fasten grate panels with saddle clips when structure is located in public area or as directed by Engineer.

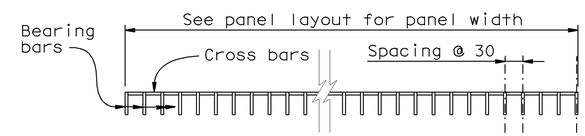

SECTION P-P
1:5

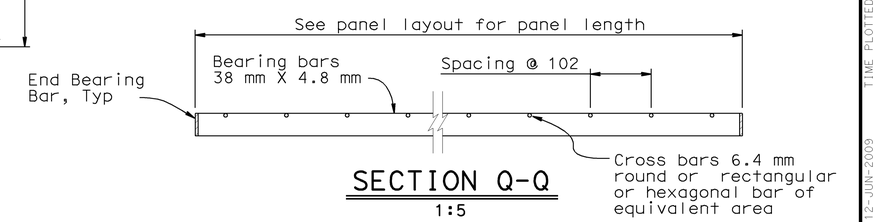

SECTION Q-Q
1:5

WATER POLLUTION CONTROL DETAILS

ALL DIMENSIONS ARE IN MILLIMETERS UNLESS OTHERWISE SHOWN

WD-30

RELEASE DATE ---	DESIGN	BY D.Dunrud	CHECKED J&P Peterson
FILE NO. ---	DETAILS	BY J&P Peterson	CHECKED J&P Peterson
	SUBMITTED	BY D.Forester	DRAWING DATE 02/07

STATE OF CALIFORNIA DEPARTMENT OF TRANSPORTATION

DIVISION OF ENGINEERING SERVICES

BRIDGE NO.

MILE POST

GROSS SOLIDS REMOVAL DEVICE

TYPE 1 - GRATING DETAILS NO. 1

ORIGINAL SCALE IN MILLIMETERS FOR REDUCED PLANS 0 10 20 30 40 50 60 70 80 90 100

CU 07314
EA 121841

DISREGARD PRINTS BEARING EARLIER REVISION DATES

REVISION DATES (PRELIMINARY STAGE ONLY)

SHEET 19 OF 32

USERNAME => trmnguye
DGN FILE => 712184ih030.dgn

DATE PLOTTED => 12-JUN-2009 TIME PLOTTED => 08:16

DIST.	COUNTY	ROUTE	MILE POST TOTAL PROJECT	SHEET NO.	TOTAL SHEETS
07	LA	5	42.8/47.3	106	1073

REGISTERED ENGINEER - CIVIL

6-8-09

PLANS APPROVAL DATE

REGISTERED PROFESSIONAL ENGINEER DOUGLAS DUNRUD No. 47240 Exp. 12/31/09 CIVIL STATE OF CALIFORNIA

The State of California or its officers or agents shall not be responsible for the accuracy or completeness of electronic copies of this plan sheet.

Caltrans Metric

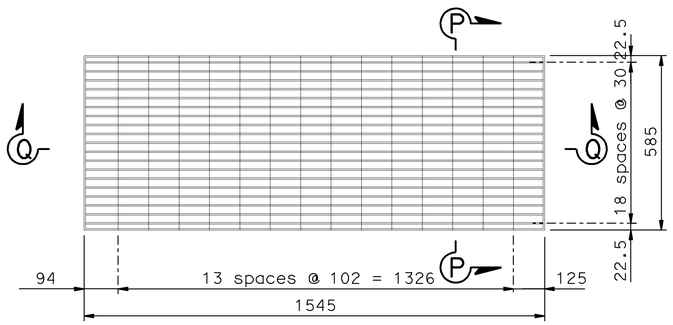

PANEL G

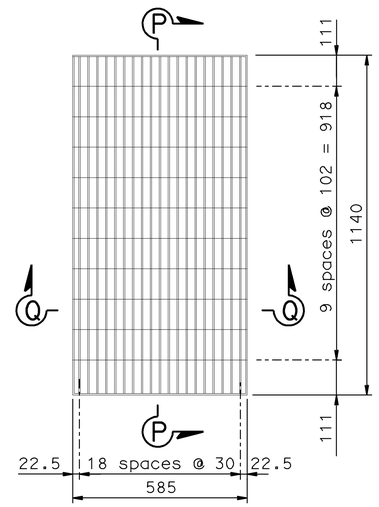

PANEL H

NOTE:

1. For Sections Q-Q & P-P see "Type 1 - Grating Details No. 3" sheet.

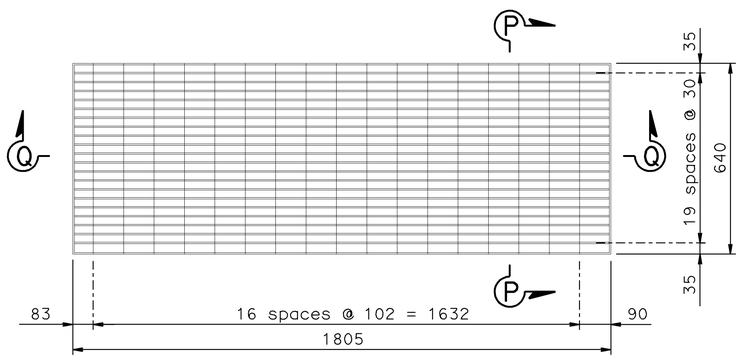

PANEL I

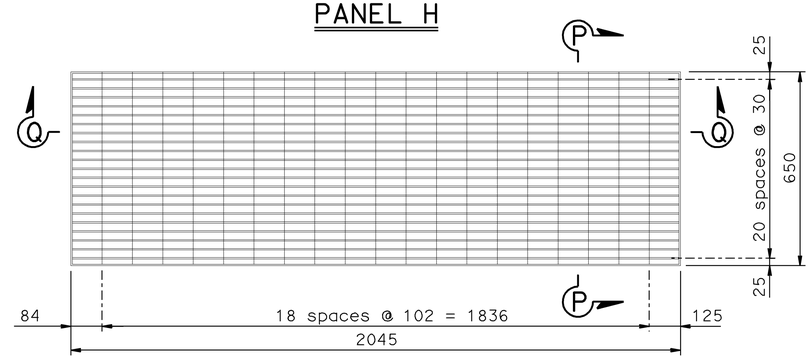

PANEL J

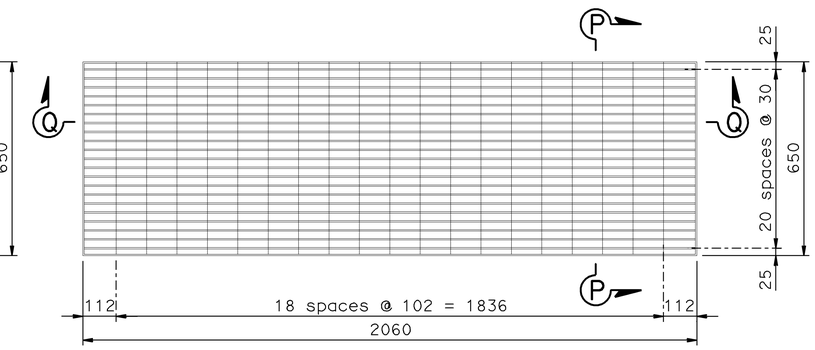

PANEL K

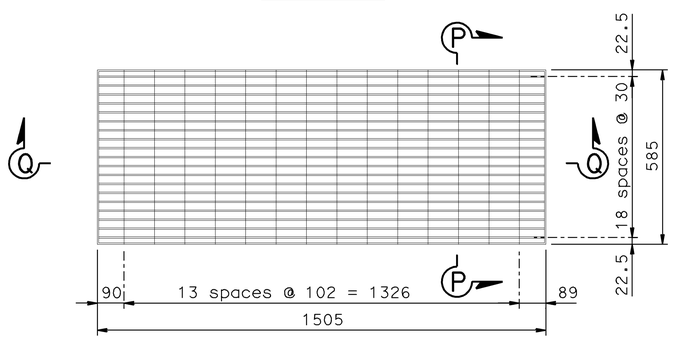

PANEL L

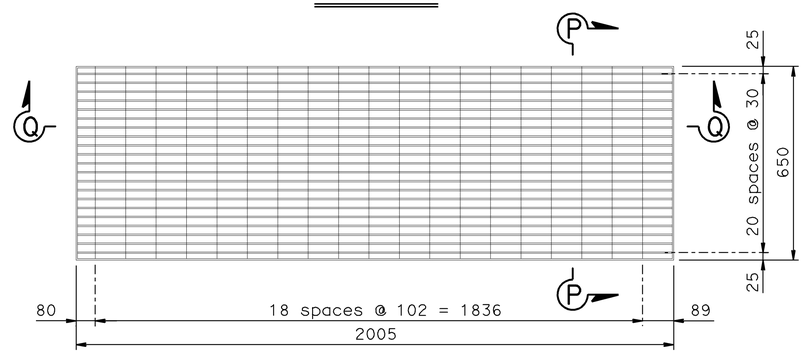

PANEL M

ALL DIMENSIONS ARE IN MILLIMETERS UNLESS OTHERWISE SHOWN

WATER POLLUTION CONTROL DETAILS

WD-31

RELEASE DATE ---	DESIGN	BY D.Dunrud	CHECKED J&P Peterson	---
	DETAILS	BY J&P Peterson	CHECKED J&P Peterson	
FILE NO. ---	SUBMITTED	BY D.Forester	DRAWING DATE 02/07	

STATE OF CALIFORNIA DEPARTMENT OF TRANSPORTATION

DIVISION OF ENGINEERING SERVICES

BRIDGE NO.

MILE POST

GROSS SOLIDS REMOVAL DEVICE

TYPE 1 - GRATING DETAILS NO. 2

ORIGINAL SCALE IN MILLIMETERS FOR REDUCED PLANS 0 10 20 30 40 50 60 70 80 90 100

CU 07314
EA 121841

DISREGARD PRINTS BEARING EARLIER REVISION DATES

REVISION DATES (PRELIMINARY STAGE ONLY)

SHEET 20 OF 32

USERNAME => trmnguye
DGN FILE => 7121841h031.dgn

DATE PLOTTED => 12-JUN-2009 TIME PLOTTED => 08:16

DIST.	COUNTY	ROUTE	MILE POST TOTAL PROJECT	SHEET NO.	TOTAL SHEETS
07	LA	5	42.8/47.3	107	1073

REGISTERED ENGINEER - CIVIL

6-8-09
PLANS APPROVAL DATE

REGISTERED PROFESSIONAL ENGINEER DOUGLAS DUNRUD No. 47240 Exp. 12/31/09 CIVIL STATE OF CALIFORNIA

The State of California or its officers or agents shall not be responsible for the accuracy or completeness of electronic copies of this plan sheet.

Caltrans Metric

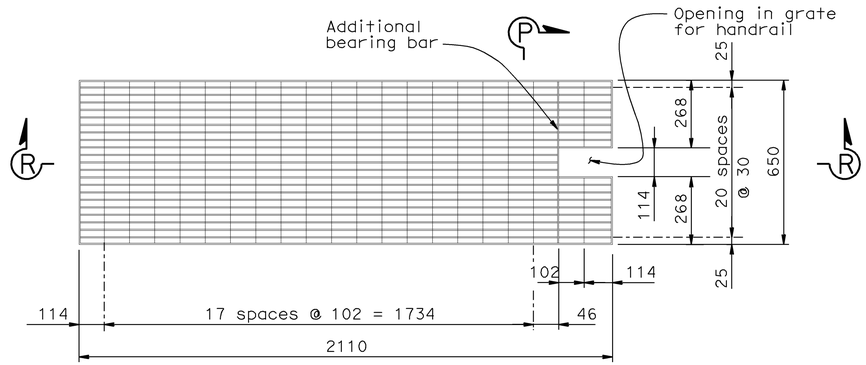

PANEL D1

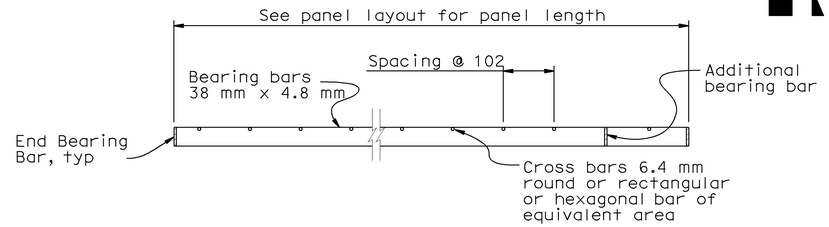

SECTION R-R

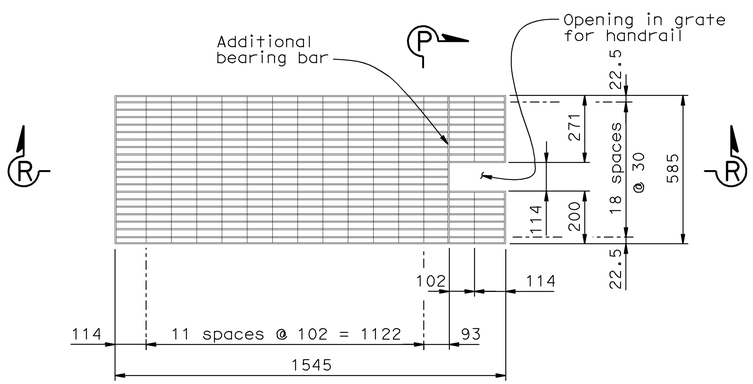

PANEL G1

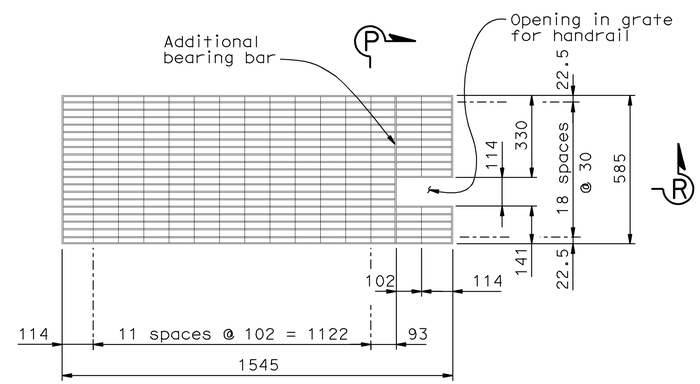

PANEL G2

NOTE:

For Sections P-P see "Type 1 - Grating Details No. 1" sheet.

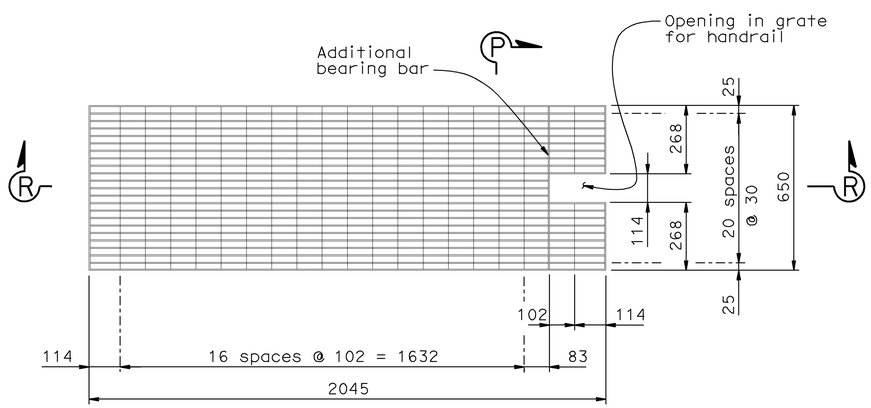

PANEL J1

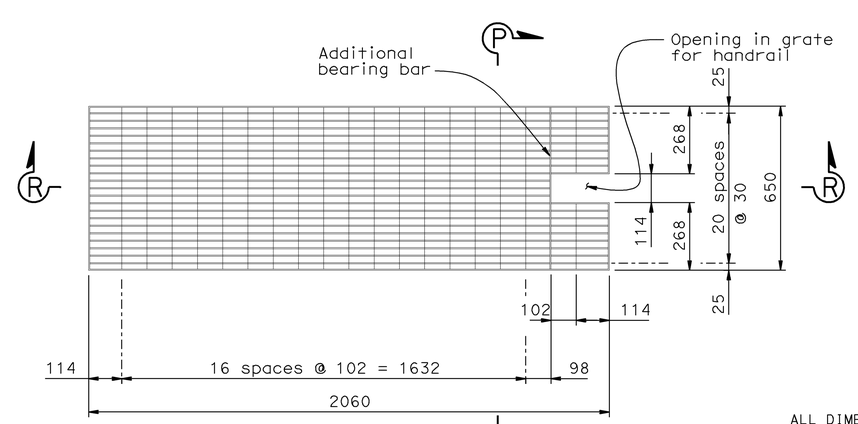

PANEL K1

ALL DIMENSIONS ARE IN MILLIMETERS UNLESS OTHERWISE SHOWN

WATER POLLUTION CONTROL DETAILS
WD-32

RELEASE DATE ---	DESIGN	BY D.Dunrud	CHECKED J&P Peterson	---
FILE NO. ---	DETAILS	BY J&P Peterson	CHECKED J&P Peterson	
	SUBMITTED	BY D.Forester	DRAWING DATE 02/07	

STATE OF CALIFORNIA
DEPARTMENT OF TRANSPORTATION

DIVISION OF ENGINEERING SERVICES

BRIDGE NO.
MILE POST

GROSS SOLIDS REMOVAL DEVICE
TYPE 1 - GRATING DETAILS NO. 3

ORIGINAL SCALE IN MILLIMETERS FOR REDUCED PLANS 0 10 20 30 40 50 60 70 80 90 100

CU 07314
EA 121841

DISREGARD PRINTS BEARING EARLIER REVISION DATES

REVISION DATES (PRELIMINARY STAGE ONLY)

SHEET 21 OF 32

USERNAME => trmnguye
DGN FILE => 7121841h032.dgn

DATE PLOTTED => 12-JUN-2009 TIME PLOTTED => 08:16

DIST.	COUNTY	ROUTE	MILE POST TOTAL PROJECT	SHEET NO.	TOTAL SHEETS
07	LA	5	42.8/47.3	108	1073

REGISTERED ENGINEER - CIVIL

6-8-09
PLANS APPROVAL DATE

REGISTERED PROFESSIONAL ENGINEER DOUGLAS DUNRUD No. 47240 Exp. 12/31/09 CIVIL STATE OF CALIFORNIA

The State of California or its officers or agents shall not be responsible for the accuracy or completeness of electronic copies of this plan sheet.

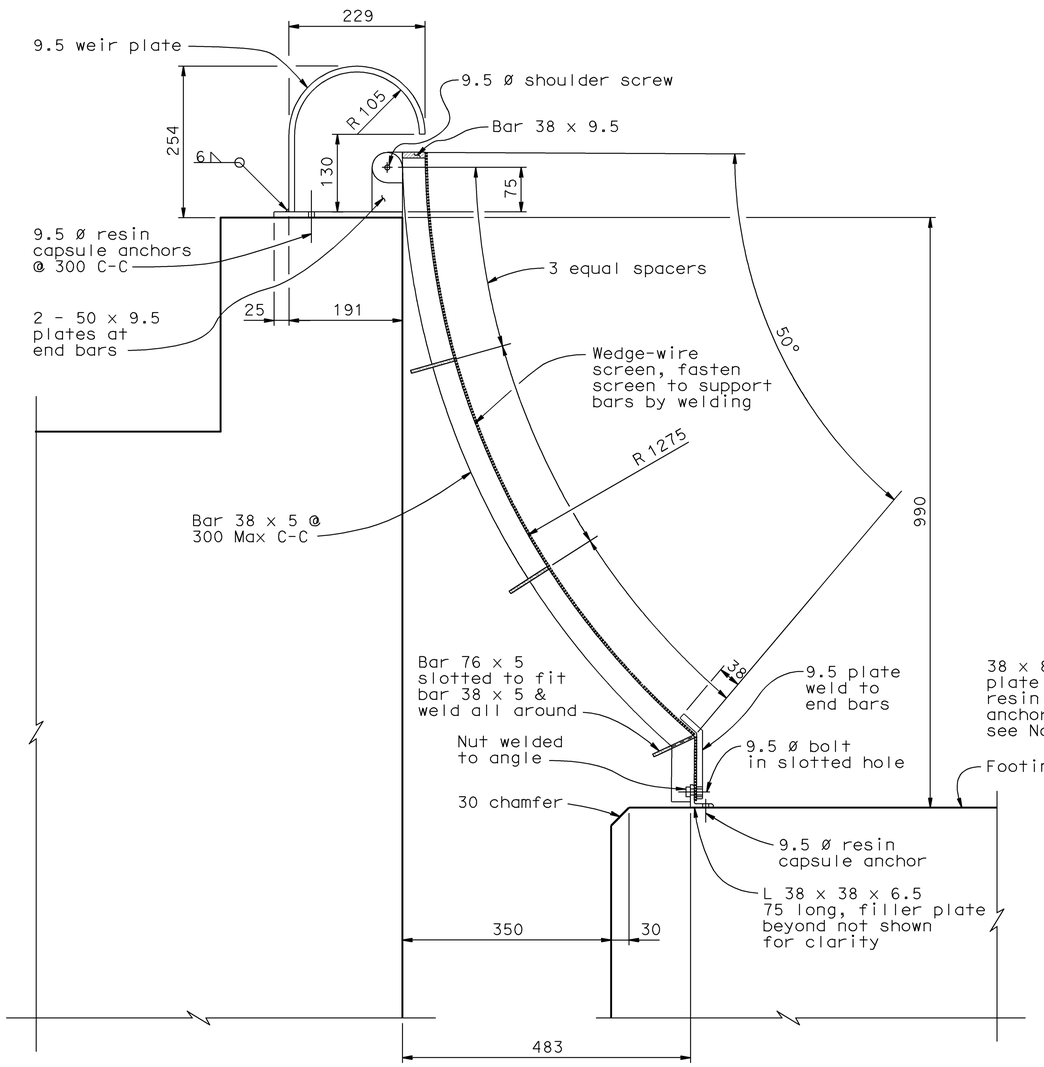

SECTION S-S
1:5

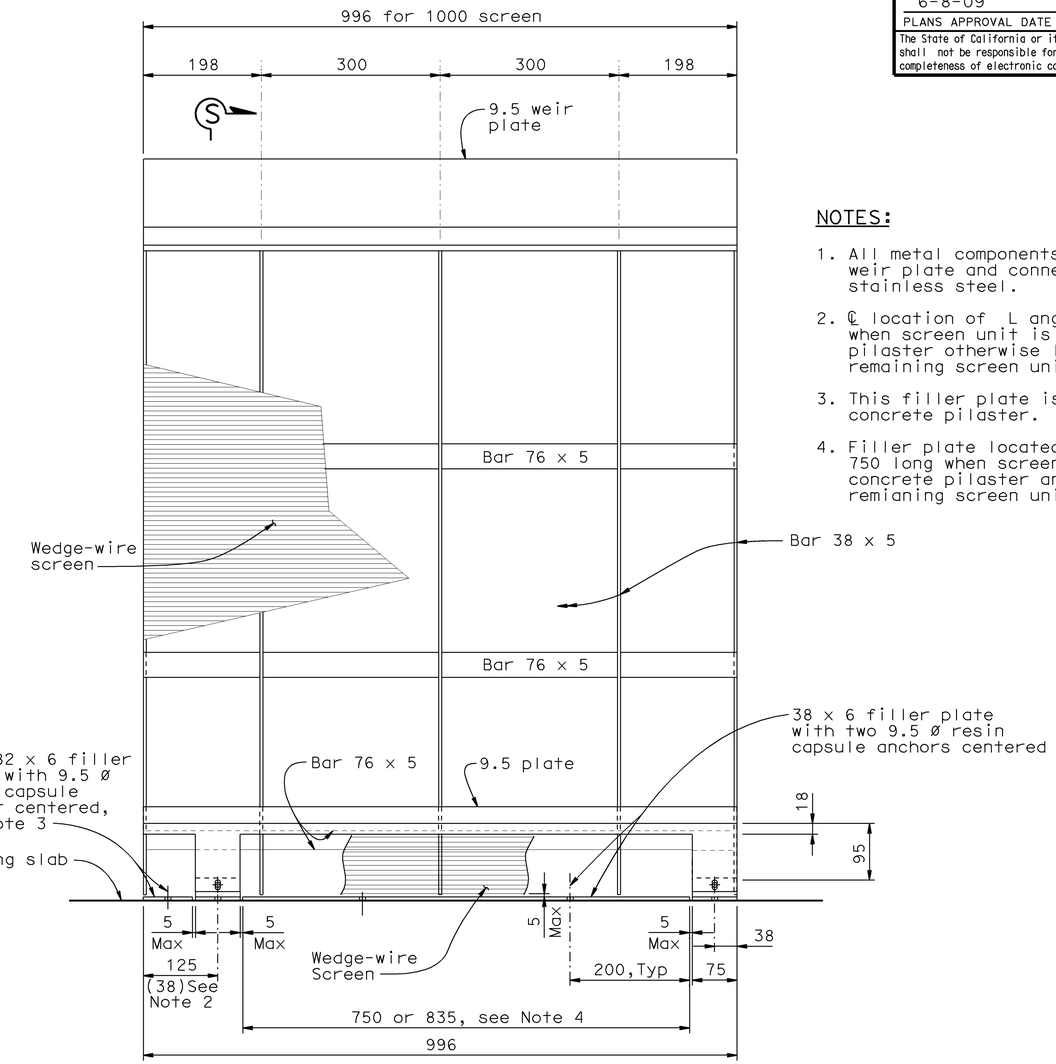

ELEVATION
1:5

NOTES:

1. All metal components of screen, including weir plate and connections shall be stainless steel.
2. ℄ location of L angle is 125 when screen unit is adjacent to concrete pilaster otherwise location is 38 at remaining screen unit locations.
3. This filler plate is located adjacent to concrete pilaster.
4. Filler plate located between L angles is 750 long when screen unit is adjacent to concrete pilaster and 835 long at remianing screen unit locations.

ALL DIMENSIONS ARE IN MILLIMETERS UNLESS OTHERWISE SHOWN

WATER POLLUTION CONTROL DETAILS
WD-33

RELEASE DATE ---	DESIGN	BY D.Dunrud	CHECKED J&P Peterson	
FILE NO. ---	DETAILS	BY J&P Peterson	CHECKED J&P Peterson	
	SUBMITTED	BY D.Forester	DRAWING DATE 02/07	

STATE OF CALIFORNIA
DEPARTMENT OF TRANSPORTATION

DIVISION OF ENGINEERING SERVICES

BRIDGE NO.
MILE POST

GROSS SOLIDS REMOVAL DEVICE
TYPE 1 - INCLINED SCREEN DETAILS

ORIGINAL SCALE IN MILLIMETERS FOR REDUCED PLANS 0 10 20 30 40 50 60 70 80 90 100

CU 07314
EA 121841

DISREGARD PRINTS BEARING EARLIER REVISION DATES

REVISION DATES (PRELIMINARY STAGE ONLY)

SHEET 22 OF 32

USERNAME => trmnguye
DGN FILE => 712184ih033.dgn

DATE PLOTTED => 12-JUN-2009 TIME PLOTTED => 08:16

DIST.	COUNTY	ROUTE	MILE POST TOTAL PROJECT	SHEET NO.	TOTAL SHEETS
07	LA	5	42.8/47.3	109	1073

REGISTERED ENGINEER - CIVIL

6-8-09

PLANS APPROVAL DATE

REGISTERED PROFESSIONAL ENGINEER DOUGLAS DUNRUD No. 47240 Exp. 12/31/09 CIVIL STATE OF CALIFORNIA

The State of California or its officers or agents shall not be responsible for the accuracy or completeness of electronic copies of this plan sheet.

Caltrans Metric

QUANTITY SUMMARY TABLE FOR TYPE 1 GSRD

GSRD Configuration Type-H(IN)-H(OUT)	Inlet Wall Height "H" (mm)	Screen Length "A"	Screen Length "B"	Screen Length Total	Side Wall Slope	Out-to-Out Concrete Wall Dimensions Length	Out-to-Out Concrete Wall Dimensions Width	Stainless Steel Screen (kg)	Concrete (m3)	Bar Reinforcing Steel (kg)	Miscellaneous Metal (kg)	Cable Railing (m)	Maximum Pipe Opening Inlet Wall	Maximum Pipe Opening Outet Wall
1-A-1L-2800-3200	2800	2000	2000	4000	-	5165	4070	291	28.5	3334	918		1115	
1-B-1L-2800-3200	2800	3000	3000	6000	-	6165	5070	436	38.7	4234	1534		1525	810
1-C-1L-2800-3200	2800	4000	4000	8000	-	7165	6070	582	50.0	5287	2402		1525	
1-A-1L-3400-3800	3400	2000	2000	4000	-	5165	4070	291	31.5	4251	926		1115	
1-B-1L-3400-3800	3400	3000	3000	6000	-	6165	5070	436	42.4	5404	1542		1525	810
1-C-1L-3400-3800	3400	4000	4000	8000	-	7165	6070	582	54.5	6728	2514		1525	
1-A-1L-4000-4400	4000	2000	2000	4000	-	5165	4070	291	34.5	5522	931		1115	
1-B-1L-4000-4400	4000	3000	3000	6000	-	6165	5070	436	46.1	7082	1547		1525	810
1-C-1L-4000-4400	4000	4000	4000	8000	-	7165	6070	582	58.9	8831	2519		1525	
1-A-1S-2800-1750	2800	2000	2000	4000	1:2.73	5165	4070	291	24.6	2848	941	7.73	1115	
1-B-1S-2800-1750	2800	3000	3000	6000	1:3.42	6165	5070	436	34.0	3627	1582	10.75	1345	810
1-C-1S-2800-1750	2800	4000	4000	8000	1:4.11	7165	6070	582	44.6	4522	2590	13.76	1345	
1-A-1S-3400-1750	3400	2000	2000	4000	1:1.93	5165	4070	291	25.9	3365	950	8.05	1115	
1-B-1S-3400-1750	3400	3000	3000	6000	1:2.42	6165	5070	436	35.6	4226	1592	11.03	1345	810
1-C-1S-3400-1750	3400	4000	4000	8000	1:2.91	7165	6070	582	46.5	5254	2590	14.02	1345	
1-A-1S-4000-1750	4000	2000	2000	4000	1:1.50	5165	4070	291	27.1	4056	949	8.46	1115	
1-B-1S-4000-1750	4000	3000	3000	6000	1:1.87	6165	5070	436	37.2	5122	1592	11.41	1345	810
1-C-1S-4000-1750	4000	4000	4000	8000	1:2.25	7165	6070	582	48.5	6269	2590	14.36	1345	
1-A-1S-2800-2250	2800	2000	2000	4000	1:4.17	5165	4070	291	26.1	3038	956	7.55	1115	
1-B-1S-2800-2250	2800	3000	3000	6000	1:5.22	6165	5070	436	35.8	3818	1599	10.58	1525	810
1-C-1S-2800-2250	2800	4000	4000	8000	1:6.27	7165	6070	582	46.7	4662	2597	13.61	1525	
1-A-1S-3400-2250	3400	2000	2000	4000	1:2.56	5165	4070	291	27.3	3556	957	7.78	1115	
1-B-1S-3400-2250	3400	3000	3000	6000	1:3.20	6165	5070	436	37.4	4501	1599	10.79	1525	810
1-C-1S-3400-2250	3400	4000	4000	8000	1;3.85	7165	6070	582	48.6	5522	2597	13.80	1525	
1-A-1S-4000-2250	4000	2000	2000	4000	1:1.84	5165	4070	291	28.5	4368	957	8.11	1115	
1-B-1S-4000-2250	4000	3000	3000	6000	1:2.31	6165	5070	436	39.0	5522	1599	11.09	1525	810
1-C-1S-4000-2250	4000	4000	4000	8000	1:2.77	7165	6070	582	50.5	6671	2597	14.07	1525	

Note:

1. Elevation differential of the inverts between inlet and outlet flow lines shall be 1670 mm for all Type 1 configurations

2. Pipe opening size is equal to pipe outside diameter.

ALL DIMENSIONS ARE IN MILLIMETERS UNLESS OTHERWISE SHOWN

WATER POLLUTION CONTROL DETAILS

WD-34

RELEASE DATE ---	DESIGN	BY D.Dunrud	CHECKED J&P Peterson
FILE NO. ---	DETAILS	BY J&P Peterson	CHECKED J&P Peterson
	SUBMITTED	BY D.Forester	DRAWING DATE 02/07

STATE OF CALIFORNIA DEPARTMENT OF TRANSPORTATION

DIVISION OF ENGINEERING SERVICES

BRIDGE NO.

MILE POST

GROSS SOLIDS REMOVAL DEVICE

TYPE 1 - QUANTITIES

ORIGINAL SCALE IN MILLIMETERS FOR REDUCED PLANS 0 10 20 30 40 50 60 70 80 90 100

CU 07314
EA 121841

DISREGARD PRINTS BEARING EARLIER REVISION DATES

REVISION DATES (PRELIMINARY STAGE ONLY)

SHEET 23 OF 32

USERNAME => trmnguye
DGN FILE => 712184ih034.dgn

DATE PLOTTED => 12-JUN-2009 TIME PLOTTED => 08:16

DIST.	COUNTY	ROUTE	MILE POST TOTAL PROJECT	SHEET NO.	TOTAL SHEETS
07	LA	5	42.8/47.3	110	1073

Caltrans Metric

REGISTERED ENGINEER - CIVIL

6-8-09

PLANS APPROVAL DATE

REGISTERED PROFESSIONAL ENGINEER DOUGLAS DUNRUD No. 47240 Exp. 12/31/09 CIVIL STATE OF CALIFORNIA

The State of California or its officers or agents shall not be responsible for the accuracy or completeness of electronic copies of this plan sheet.

DESIGN DATA TABLE FOR TYPE 2 GSRD

Screen Length "C"	1000			1500			2000			2500		
Inlet Wall Height "H"	4000	3400	2800	4000	3400	2800	4000	3400	2800	4000	3400	2800
"a" bars	#22 @ 150	#19 @ 150	#16 @ 150	#22 @ 150	#19 @ 150	#16 @ 150	#22 @ 150	#19 @ 150	#16 @ 150	#22 @ 150	#19 @ 150	#16 @ 150
"b" bars	#22 @ 300	#19 @ 300	#16 @ 300	#22 @ 300	#19 @ 300	#16 @ 300	#22 @ 300	#19 @ 300	#16 @ 300	#22 @ 300	#19 @ 300	#16 @ 300
"K"	610	460	305	610	460	305	610	460	305	610	460	305
"f" bars	#19 @ 300	#16 @ 300	#13 @ 300	#19 @ 300	#16 @ 300	#13 @ 300	#19 @ 300	#16 @ 300	#13 @ 300	#19 @ 300	#16 @ 300	#13 @ 300
"g" bars	#19 @ 150	#16 @ 150	#16 @ 150	#19 @ 150	#16 @ 150	#16 @ 150	#19 @ 150	#16 @ 150	#16 @ 150	#19 @ 150	#16 @ 150	#16 @ 150
"D"	505			515			525			535		

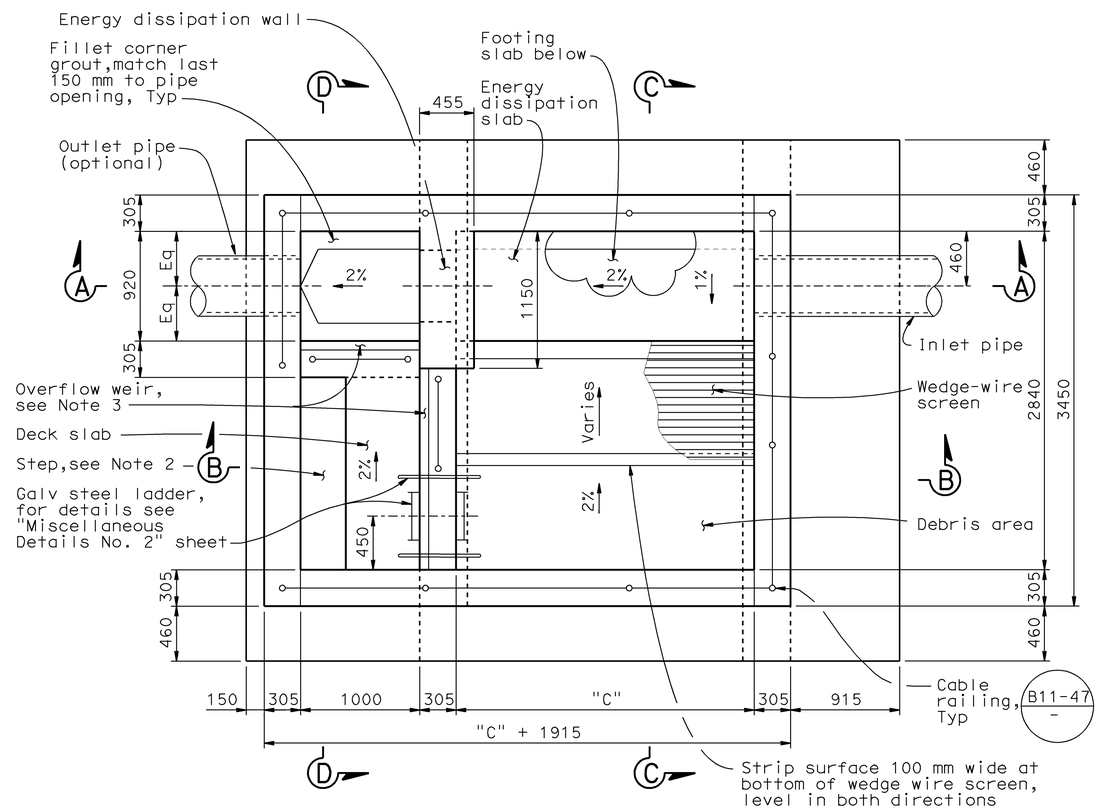

PLAN

1:25

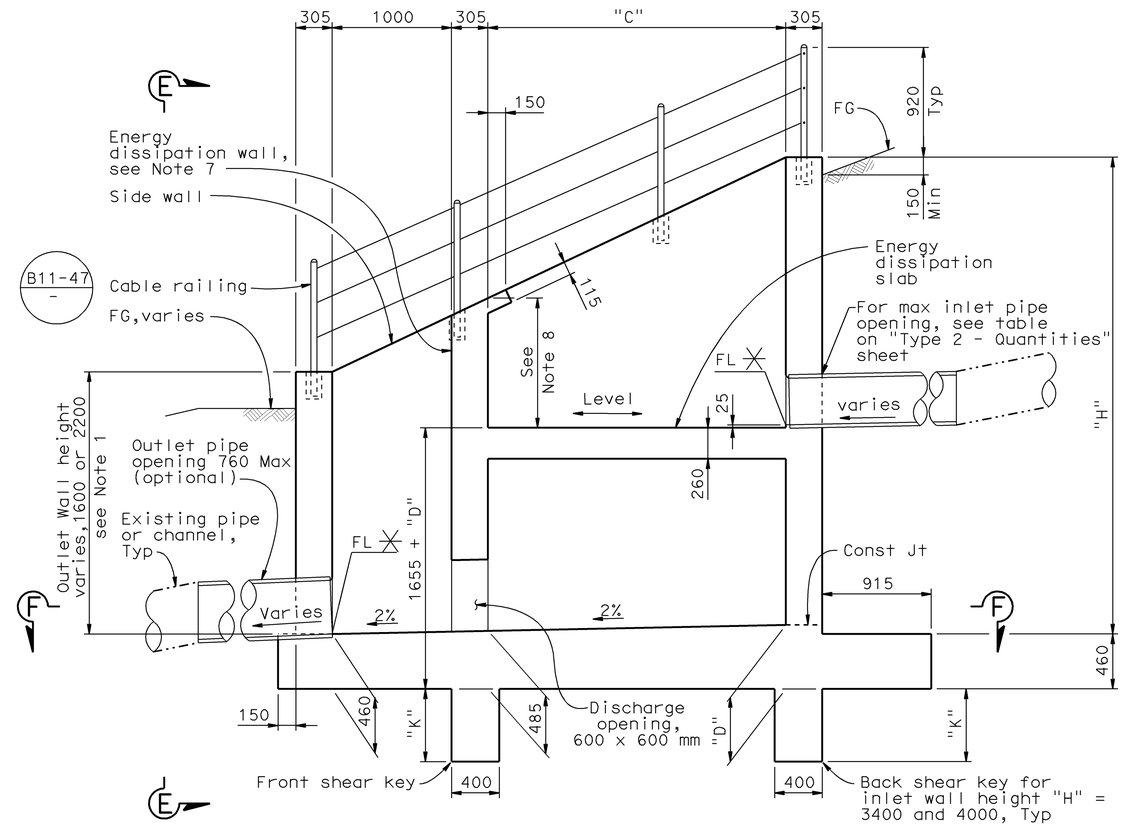

SECTION A-A

1:25

✳ For FL elevations, see "Road Plans"

NOTES:

1. The Engineer will determine outlet wall height according to configuration of existing grade. See Road Plans for details.
2. Provide step when using Outlet Wall Height of 2200 mm. For details, see "Type 2 - Details No. 3" sheet.
3. For concrete overflow weir details, see "Type 2 - Details No. 1" sheet
4. For Sections B-B & C-C see "Type 2 - Detail No. 1" sheet.
5. For Section D-D and View E-E see "Type 2 - Detail No. 2" sheet.
6. For View F-F and reinforcing details see "Type 2 - Detail No. 3" sheet.
7. Slope top of energy dissipation wall to match sidewall slope.
8. Top of energy dissipation wall shall match top of side wall but shall not be less than 180 mm.
9. For quantities and other GSRD data, see "Type 2 - Quantities" sheet.
10. For inlet and outlet pipe details not shown, see "Road Plans".

ALL DIMENSIONS ARE IN MILLIMETERS UNLESS OTHERWISE SHOWN

WATER POLLUTION CONTROL DETAILS

WD-35

RELEASE DATE ---	DESIGN	BY D.Dunrud	CHECKED J&P Peterson
FILE NO. ---	DETAILS	BY J&P Peterson	CHECKED J&P Peterson
	SUBMITTED	BY D.Forester	DRAWING DATE 02/07

STATE OF CALIFORNIA DEPARTMENT OF TRANSPORTATION

DIVISION OF ENGINEERING SERVICES

BRIDGE NO.

MILE POST

GROSS SOLIDS REMOVAL DEVICE

TYPE 2 - LAYOUT

ORIGINAL SCALE IN MILLIMETERS FOR REDUCED PLANS 0 10 20 30 40 50 60 70 80 90 100

CU 07314
EA 121841

DISREGARD PRINTS BEARING EARLIER REVISION DATES

REVISION DATES (PRELIMINARY STAGE ONLY)

SHEET 24 OF 32

USERNAME => trmnguye
DGN FILE => 7121841h035.dgn

DATE PLOTTED => 12-JUN-2009 TIME PLOTTED => 08:16

DIST.	COUNTY	ROUTE	MILE POST TOTAL PROJECT	SHEET NO.	TOTAL SHEETS
07	LA	5	42.8/47.3	111	1073

REGISTERED ENGINEER - CIVIL

6-8-09

PLANS APPROVAL DATE

REGISTERED PROFESSIONAL ENGINEER DOUGLAS DUNRUD No. 47240 Exp. 12/31/09 CIVIL STATE OF CALIFORNIA

The State of California or its officers or agents shall not be responsible for the accuracy or completeness of electronic copies of this plan sheet.

Caltrans Metric

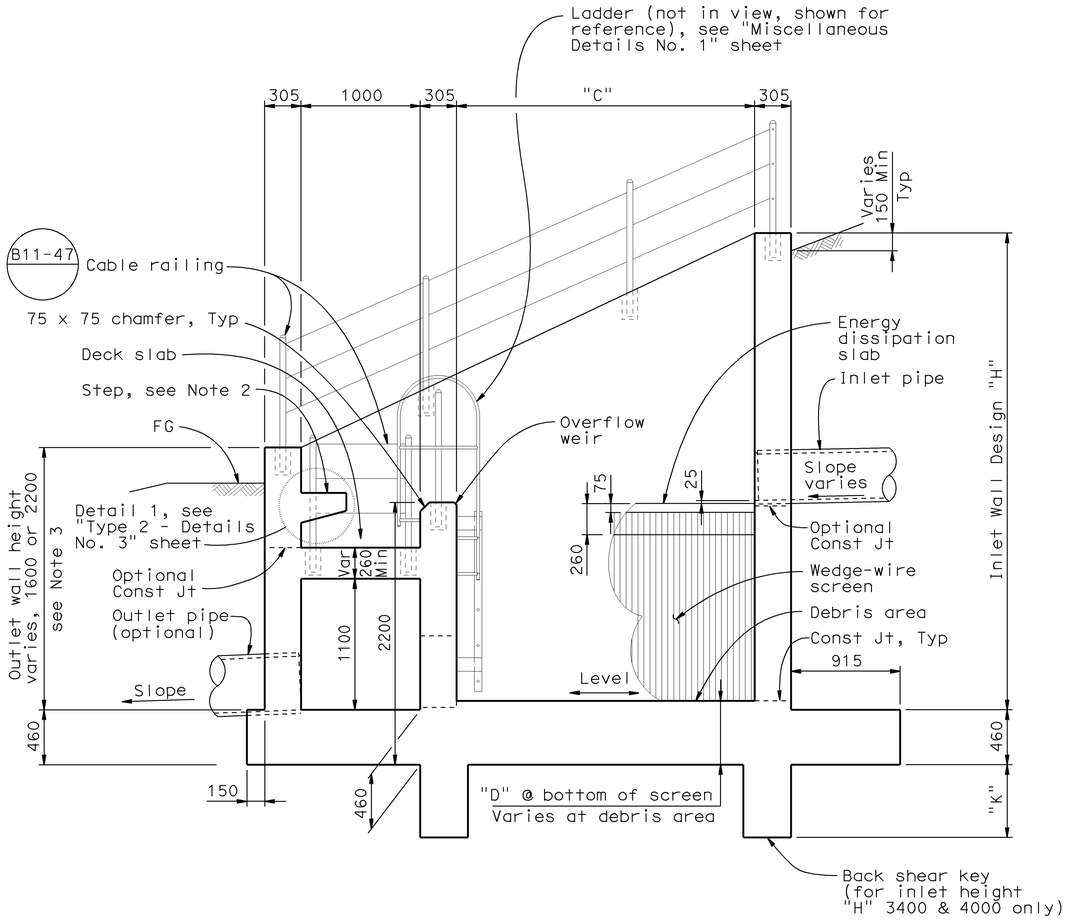

SECTION B-B

1:25

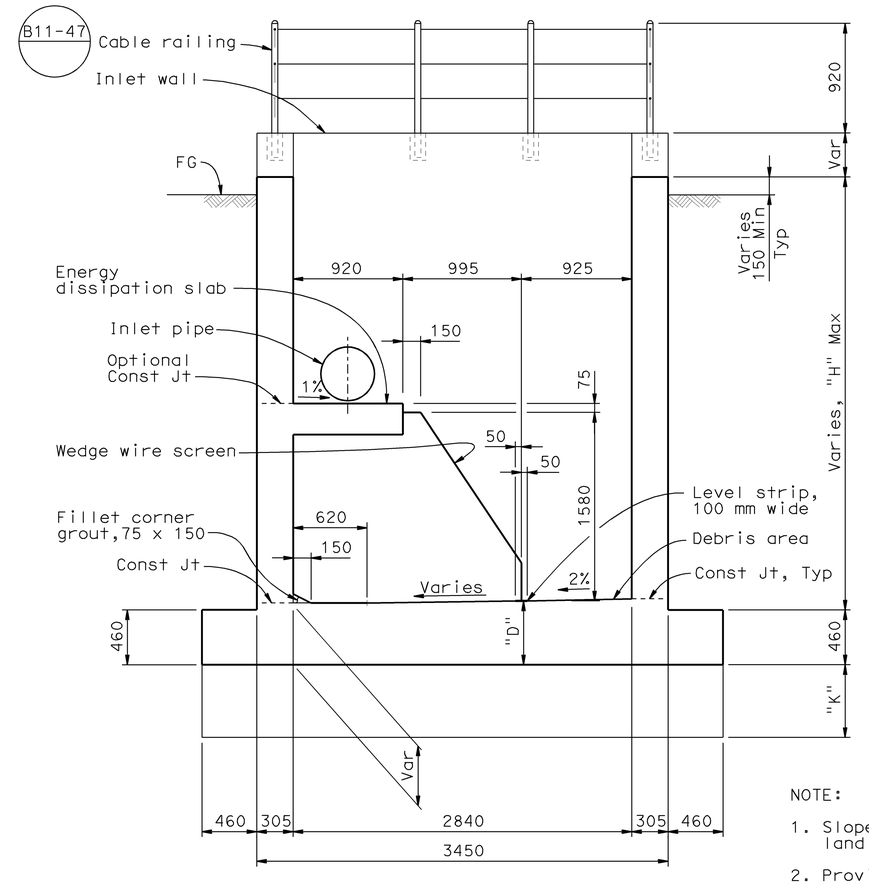

SECTION C-C

1:25

NOTE:

1. Slope finish surface of landing to drain
2. Provide a step when using 2200 mm outlet wall height. For details see "Type 2 - Details No. 3" sheet.
3. Engineer will determine outlet wall height according to configuration of existing grade. See Road Plans for details.
4. For Section B-B & C-C locations, see "Type 2 - Layout" sheet.

ALL DIMENSIONS ARE IN MILLIMETERS UNLESS OTHERWISE SHOWN

WATER POLLUTION CONTROL DETAILS

WD-36

RELEASE DATE ---	DESIGN	BY D.Dunrud	CHECKED J&P Peterson
FILE NO. ---	DETAILS	BY J&P Peterson	CHECKED J&P Peterson
	SUBMITTED	BY D.Forester	DRAWING DATE 02/07

STATE OF CALIFORNIA DEPARTMENT OF TRANSPORTATION

DIVISION OF ENGINEERING SERVICES

BRIDGE NO.

MILE POST

GROSS SOLIDS REMOVAL DEVICE

TYPE 2 - DETAILS NO. 1

ORIGINAL SCALE IN MILLIMETERS FOR REDUCED PLANS 0 10 20 30 40 50 60 70 80 90 100

CU 07314
EA 121841

DISREGARD PRINTS BEARING EARLIER REVISION DATES

REVISION DATES (PRELIMINARY STAGE ONLY)

SHEET 25 OF 32

USERNAME => trmnguye
DGN FILE => 7121841h036.dgn

DATE PLOTTED => 12-JUN-2009 TIME PLOTTED => 08:17

DIST.	COUNTY	ROUTE	MILE POST TOTAL PROJECT	SHEET NO.	TOTAL SHEETS
07	LA	5	42.8/47.3	112	1073

REGISTERED ENGINEER - CIVIL

6-8-09

PLANS APPROVAL DATE

REGISTERED PROFESSIONAL ENGINEER DOUGLAS DUNRUD No. 47240 Exp. 12/31/09 CIVIL STATE OF CALIFORNIA

The State of California or its officers or agents shall not be responsible for the accuracy or completeness of electronic copies of this plan sheet.

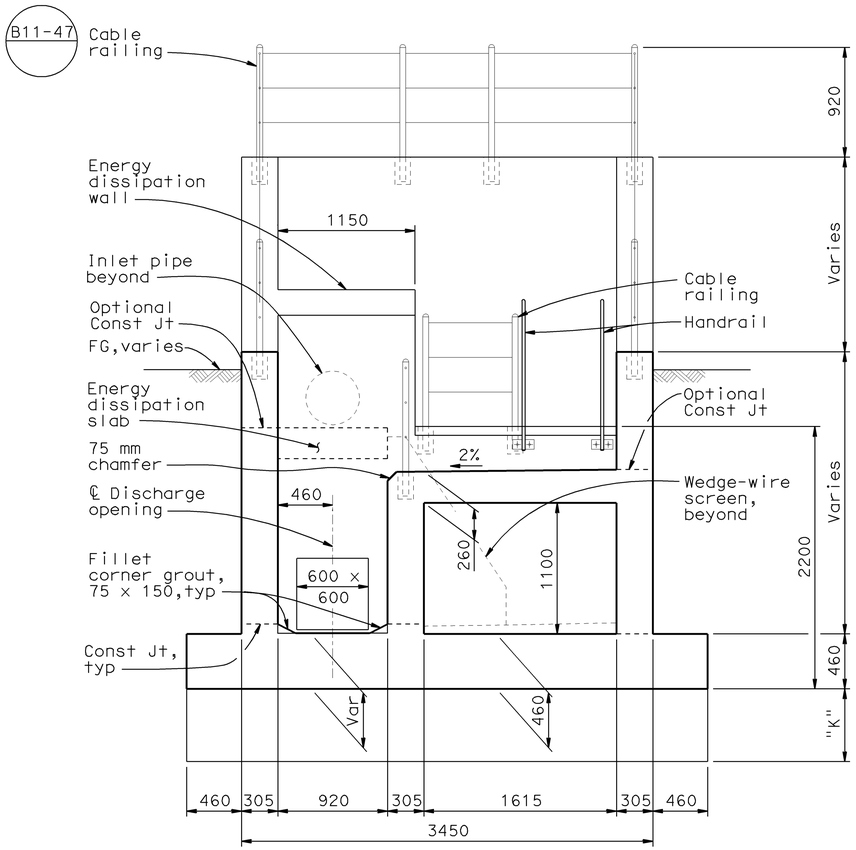

SECTION D-D

1:25

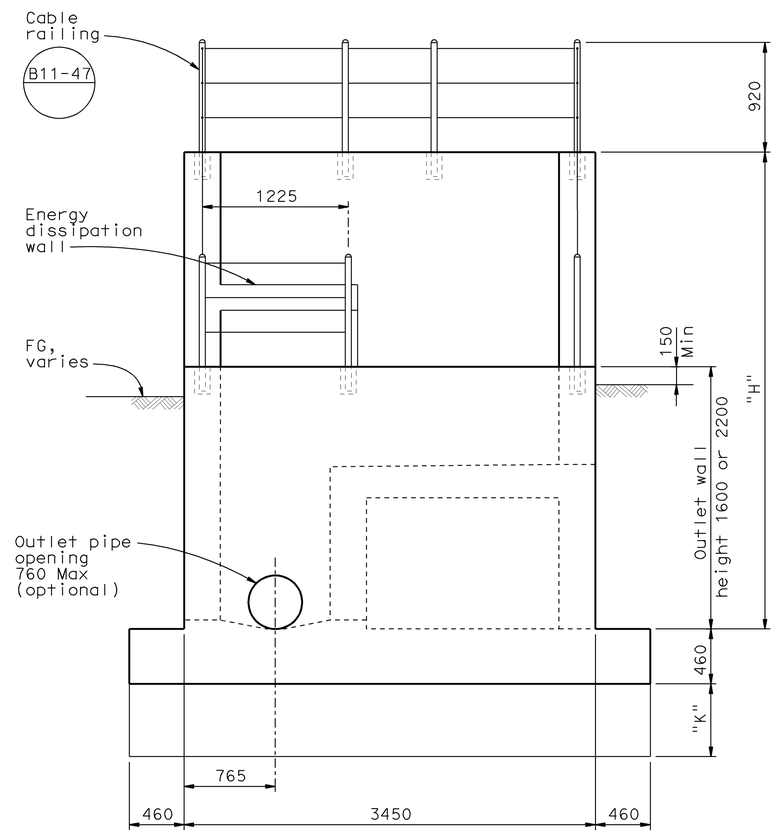

VIEW E-E

1:25

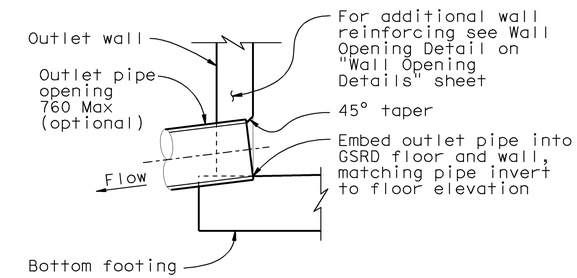

OUTLET DETAIL

PIPE EXIT AT WALL - TYPE 2
1:25

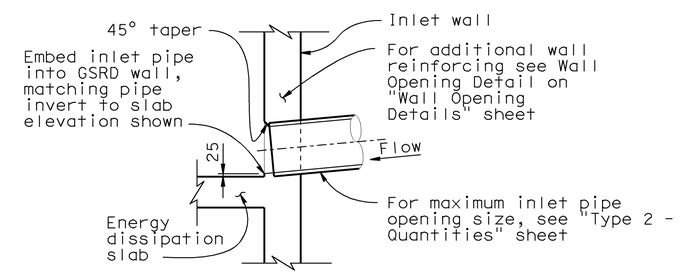

INLET DETAIL

PIPE ENTRANCE AT WALL - TYPE 2
1:25

NOTE:

1. For Section D-D & View E-E locations, see "Type 2 - Layout" sheet.

ALL DIMENSIONS ARE IN MILLIMETERS UNLESS OTHERWISE SHOWN

WATER POLLUTION CONTROL DETAILS

WD-37

RELEASE DATE ---	DESIGN	BY D.Dunrud	CHECKED J&P Peterson
FILE NO. ---	DETAILS	BY J&P Peterson	CHECKED J&P Peterson
	SUBMITTED	BY D.Forester	DRAWING DATE 02/07

STATE OF CALIFORNIA DEPARTMENT OF TRANSPORTATION

DIVISION OF ENGINEERING SERVICES

BRIDGE NO.

MILE POST

GROSS SOLIDS REMOVAL DEVICE

TYPE 2 - DETAILS NO. 2

ORIGINAL SCALE IN MILLIMETERS FOR REDUCED PLANS 0 10 20 30 40 50 60 70 80 90 100

CU 07314
EA 121841

DISREGARD PRINTS BEARING EARLIER REVISION DATES

REVISION DATES (PRELIMINARY STAGE ONLY)

SHEET 26 OF 32

USERNAME => trmnguye
DGN FILE => 712184ih037.dgn

DATE PLOTTED => 12-JUN-2009 TIME PLOTTED => 08:17

DIST.	COUNTY	ROUTE	MILE POST TOTAL PROJECT	SHEET NO.	TOTAL SHEETS
07	LA	5	42.8/47.3	113	1073

REGISTERED ENGINEER - CIVIL

6-8-09
PLANS APPROVAL DATE

REGISTERED PROFESSIONAL ENGINEER DOUGLAS DUNRUD No. 47240 Exp. 12/31/09 CIVIL STATE OF CALIFORNIA

The State of California or its officers or agents shall not be responsible for the accuracy or completeness of electronic copies of this plan sheet.

Caltrans Metric

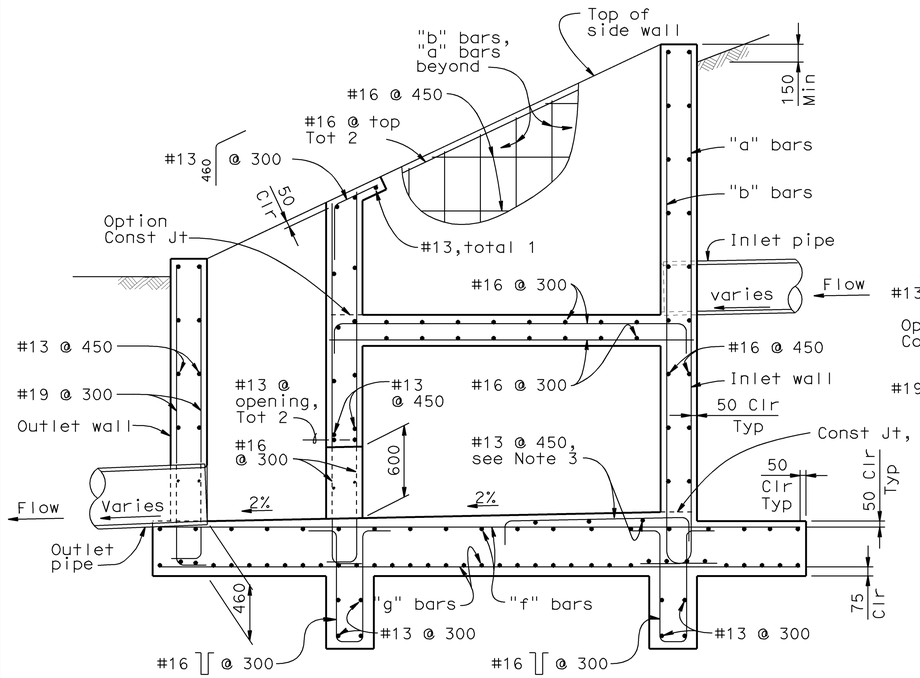

SECTION A-A - REINF
1:25

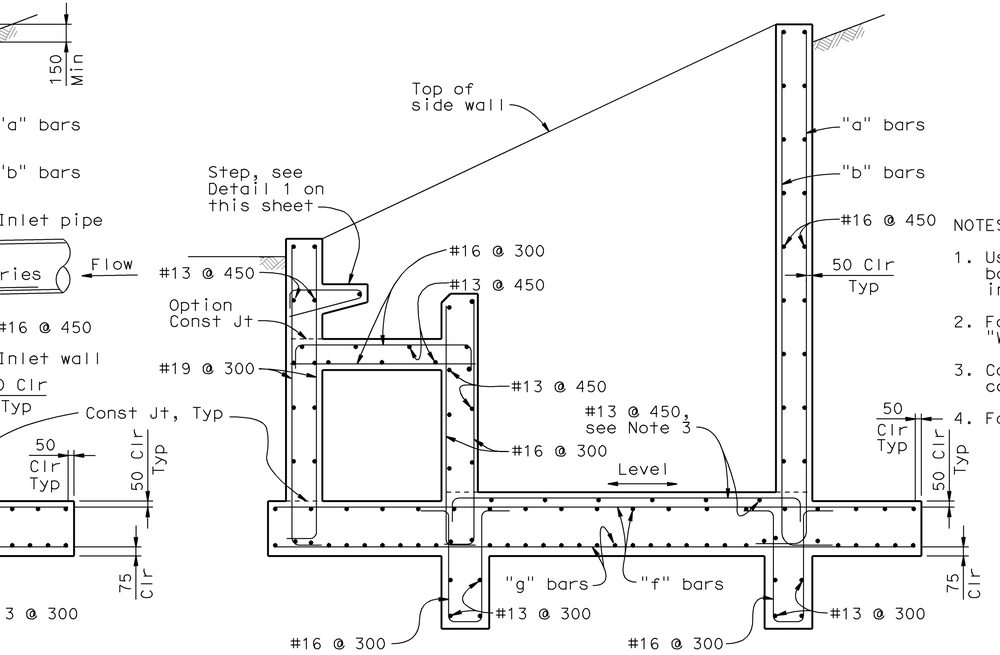

SECTION B-B - REINF
1:25

NOTES:

1. Use #19 @ 300 when wall height is 2500 or below. Use "a" and "b" bars shown in the table when wall height exceeds 2500. "a" bars indicate exterior bars, "b" bars indicate interior bars.
2. For additional reinforcing at openings, see "Wall Opening Details" sheet.
3. Contractor shall provide #13 @ 450 each direction with 50 mm concrete cover when concrete cover to top of footing rebars exceeds 100 mm.
4. For section locations, see "Type 2 - Layout" sheet.

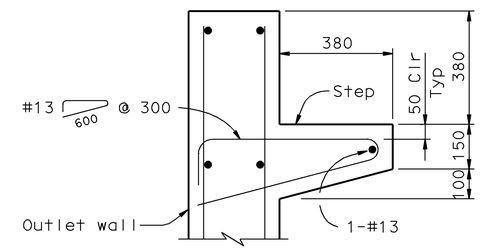

DETAIL 1
1:10

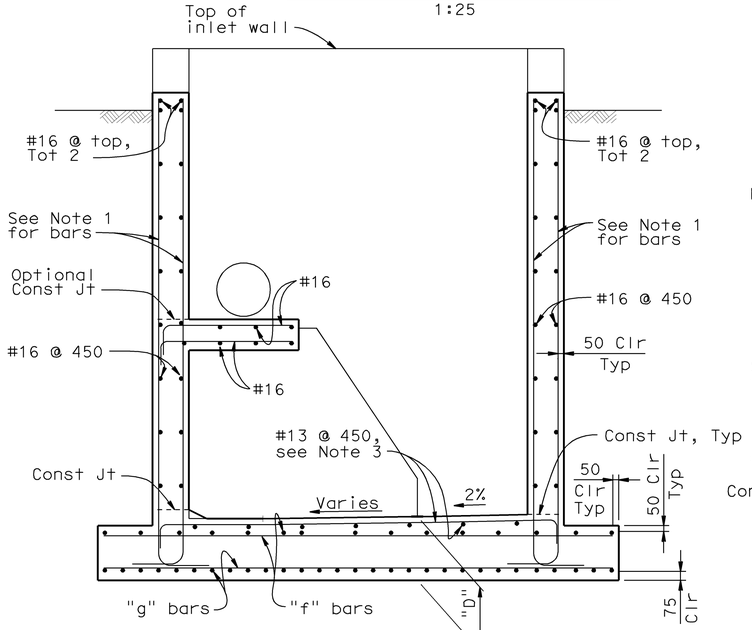

SECTION C-C - REINF
1:25

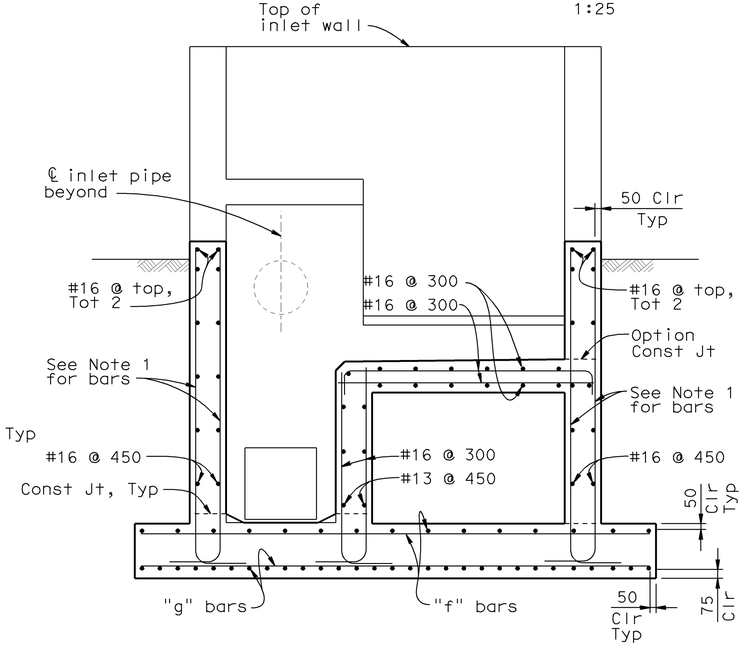

SECTION D-D - REINF
1:25

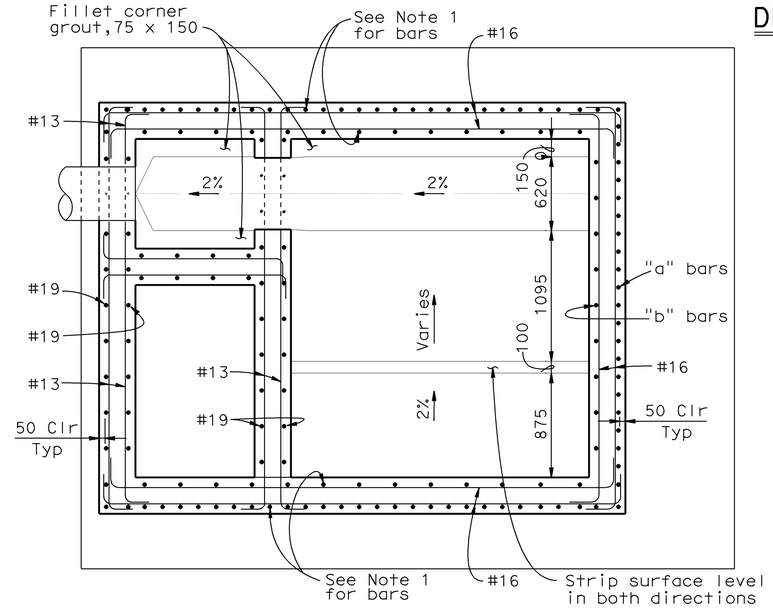

VIEW F-F
1:25

WALL REINFORCEMENT AND GRADES AT FOOTING SLAB

WATER POLLUTION CONTROL DETAILS

ALL DIMENSIONS ARE IN MILLIMETERS UNLESS OTHERWISE SHOWN

WD-38

RELEASE DATE ---	DESIGN	BY D.Dunrud	CHECKED J&P Peterson
FILE NO. ---	DETAILS	BY J&P Peterson	CHECKED J&P Peterson
	SUBMITTED	BY D.Forester	DRAWING DATE 02/07

STATE OF CALIFORNIA DEPARTMENT OF TRANSPORTATION

DIVISION OF ENGINEERING SERVICES

BRIDGE NO.

MILE POST

GROSS SOLIDS REMOVAL DEVICE

TYPE 2 - DETAILS NO. 3

ORIGINAL SCALE IN MILLIMETERS FOR REDUCED PLANS 0 10 20 30 40 50 60 70 80 90 100

CU 07314
EA 121841

DISREGARD PRINTS BEARING EARLIER REVISION DATES

REVISION DATES (PRELIMINARY STAGE ONLY)

SHEET 27 OF 32

USERNAME => trmnguye
DGN FILE => 712184ih038.dgn

DATE PLOTTED => 12-JUN-2009 TIME PLOTTED => 08:17

DIST.	COUNTY	ROUTE	MILE POST TOTAL PROJECT	SHEET NO.	TOTAL SHEETS
07	LA	5	42.8/47.3	114	1073

REGISTERED ENGINEER - CIVIL

6-8-09

PLANS APPROVAL DATE

REGISTERED PROFESSIONAL ENGINEER DOUGLAS DUNRUD No. 47240 Exp. 12/31/09 CIVIL STATE OF CALIFORNIA

The State of California or its officers or agents shall not be responsible for the accuracy or completeness of electronic copies of this plan sheet.

Caltrans Metric

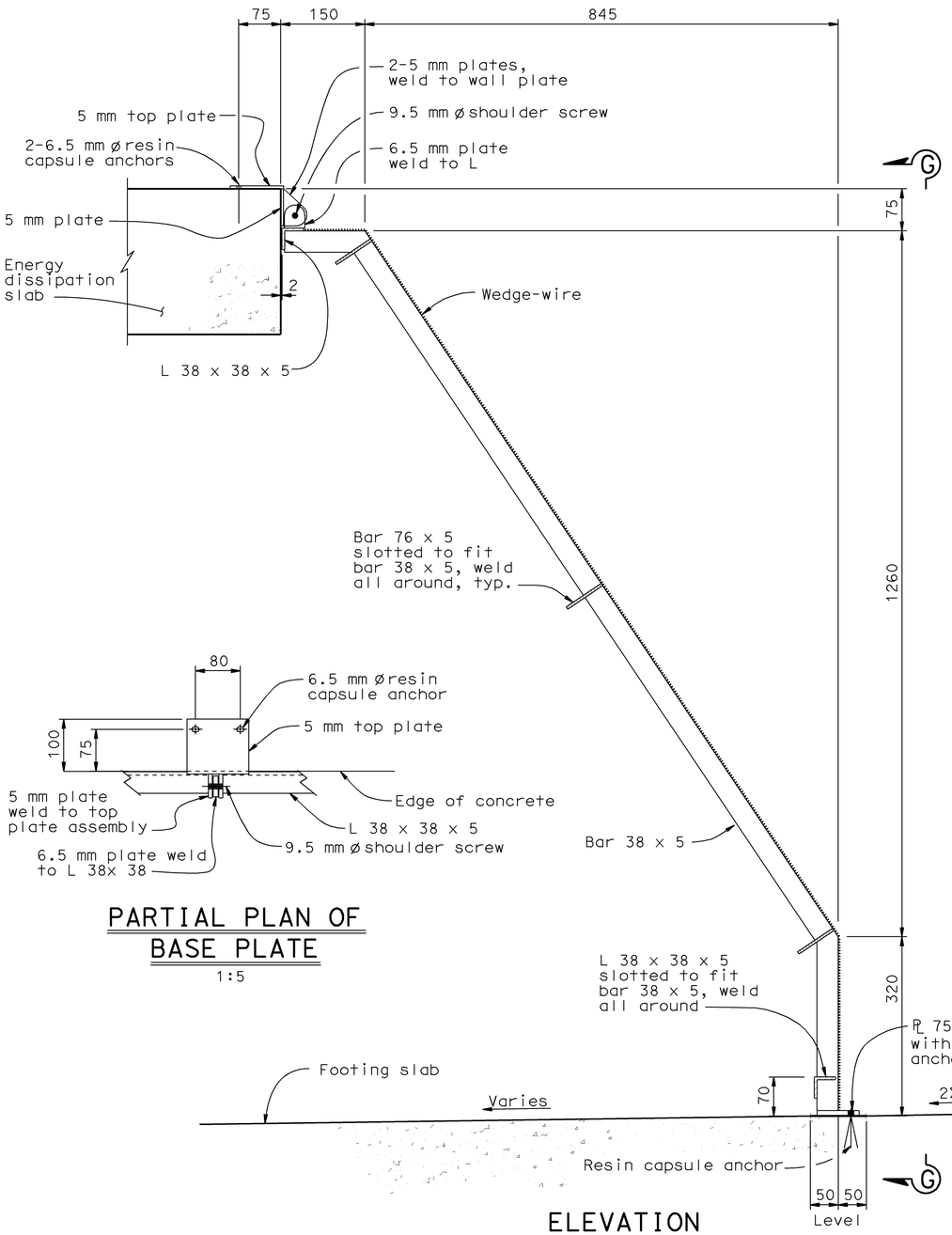

ELEVATION

1:5

PARTIAL PLAN OF BASE PLATE

1:5

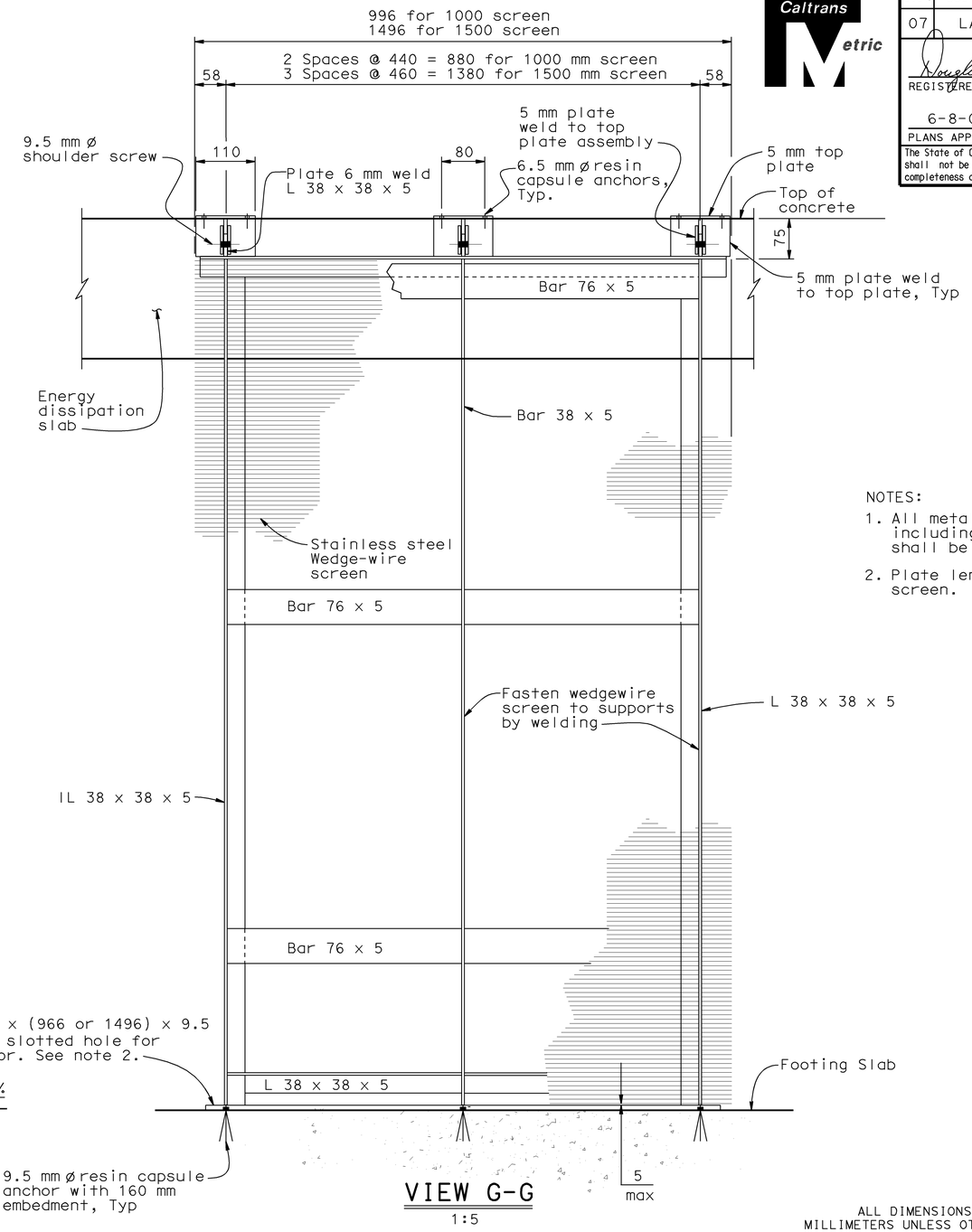

VIEW G-G

1:5

NOTES:

1. All metal components of screen including all connections shall be stainless steel.
2. Plate length is 1496 for 1500 mm screen.

ALL DIMENSIONS ARE IN MILLIMETERS UNLESS OTHERWISE SHOWN

WATER POLLUTION CONTROL DETAILS

WD-39

RELEASE DATE ---	DESIGN	BY D.Dunrud	CHECKED J&P Peterson	---
FILE NO. ---	DETAILS	BY J&P Peterson	CHECKED J&P Peterson	
	SUBMITTED	BY D.Forester	DRAWING DATE 02/07	

STATE OF CALIFORNIA DEPARTMENT OF TRANSPORTATION

DIVISION OF ENGINEERING SERVICES

BRIDGE NO.

MILE POST

GROSS SOLIDS REMOVAL DEVICE

TYPE 2 - INCLINED SCREEN DETAILS

ORIGINAL SCALE IN MILLIMETERS FOR REDUCED PLANS 0 10 20 30 40 50 60 70 80 90 100

CU 07314
EA 121841

DISREGARD PRINTS BEARING EARLIER REVISION DATES

REVISION DATES (PRELIMINARY STAGE ONLY)

SHEET 28 OF 32

USERNAME => trmnguye
DGN FILE => 712184ih039.dgn

DATE PLOTTED => 12-JUN-2009 TIME PLOTTED => 08:17

DIST.	COUNTY	ROUTE	MILE POST TOTAL PROJECT	SHEET NO.	TOTAL SHEETS
07	LA	5	42.8/47.3	115	1073

Caltrans Metric

REGISTERED ENGINEER - CIVIL

6-8-09
PLANS APPROVAL DATE

REGISTERED PROFESSIONAL ENGINEER DOUGLAS DUNRUD No. 47240 Exp. 12/31/09 CIVIL STATE OF CALIFORNIA

The State of California or its officers or agents shall not be responsible for the accuracy or completeness of electronic copies of this plan sheet.

QUANTITY SUMMARY TABLE FOR TYPE 2 GSRD

GSRD Configuration Type-H(IN)-H(OUT)	Inlet Wall Height "H" (mm)	Screen Length (mm) "C"	Side Wall Slope	Out-to-Out Concrete Dimensions (mm) Length	Out-to-Out Concrete Dimensions (mm) Width	Invert Elevation Differential Between Inlet and Outlet (mm)	Stainless Steel Screen (kg)	Concrete (m3)	Bar Reinforcing Steel (kg)	Miscellaneous Metal (kg)	Cable Railing (m)	Maximum Pipe Opening Inlet Wall	Maximum Pipe Opening Outlet Wall
2-A-2800-1600	2800	1000	1:2.0	3980	4370	1725	73	18.8	1828	55		710	760
2-B-2800-1600	2800	1500	1:2.4	4480	4370	1735	105	20.6	1963	55			
2-C-2800-1600	2800	2000	1:2.8	4980	4370	1745	146	22.5	2124	55			
2-D-2800-1600	2800	2500	1:3.2	5480	4370	1755	179	24.2	2237	55			
2-A-3400-1600	3400	1000	1:2.0	3980	4370	1725	73	20.8	2230	55	12.36	760	
2-B-3400-1600	3400	1500	1:2.4	4480	4370	1735	105	22.6	2436	55	13.21		
2-C-3400-1600	3400	2000	1:2.8	4980	4370	1745	146	24.6	2648	55	14.09		
2-D-3400-1600	3400	2500	1:3.2	5480	4370	1755	179	26.4	2847	55	14.99		
2-A-4000-1600	4000	1000	1:2.0	3980	4370	1725	73	22.3	2878	55	13.11	760	
2-B-4000-1600	4000	1500	1:2.4	4480	4370	1735	105	24.3	3160	55	13.88		
2-C-4000-1600	4000	2000	1:2.8	4980	4370	1745	146	26.3	3432	55	14.69		
2-D-4000-1600	4000	2500	1:3.2	5480	4370	1755	179	28.2	3660	55	15.54		
2-A-2800-2200	2800	1000	1:2.0	3980	4370	1725	73	20.2	1904	55	11.38	710	
2-B-2800-2200	2800	1500	1:2.4	4480	4370	1735	105	22.1	2080	55	12.36		
2-C-2800-2200	2800	2000	1:2.8	4980	4370	1745	146	24.0	2197	55	13.34		
2-D-2800-2200	2800	2500	1:3.2	5480	4370	1755	179	25.9	2360	55	14.33		
2-A-3400-2200	3400	1000	1:2.0	3980	4370	1725	73	22.1	2423	55	11.77	760	
2-B-3400-2200	3400	1500	1:2.4	4480	4370	1735	105	24.1	2621	55	12.69		
2-C-3400-2200	3400	2000	1:2.8	4980	4370	1745	146	26.1	2825	55	13.63		
2-D-3400-2200	3400	2500	1:3.2	5480	4370	1755	179	28.1	2996	55	14.58		
2-A-4000-2200	4000	1000	1:2.0	3980	4370	1725	73	23.7	3085	55	12.36	760	
2-B-4000-2200	4000	1500	1:2.4	4480	4370	1735	105	25.7	3386	55	13.21		
2-C-4000-2200	4000	2000	1:2.8	4980	4370	1745	146	27.8	3682	55	14.09		
2-D-4000-2200	4000	2500	1:3.2	5480	4370	1755	179	29.9	3956	55	14.99		

NOTE:
1. Pipe size is equal to pipe outside diameter.

ALL DIMENSIONS ARE IN MILLIMETERS UNLESS OTHERWISE SHOWN

WATER POLLUTION CONTROL DETAILS
WD-40

RELEASE DATE ---
FILE NO. ---

DESIGN	BY D.Dunrud	CHECKED D.Dunrud	
DETAILS	BY J&P Peterson	CHECKED J&P Peterson	
SUBMITTED	BY D.Forester	DRAWING DATE 02/07	

STATE OF CALIFORNIA
DEPARTMENT OF TRANSPORTATION

DIVISION OF ENGINEERING SERVICES

BRIDGE NO.
MILE POST

GROSS SOLIDS REMOVAL DEVICE
TYPE 2 - QUANTITIES

ORIGINAL SCALE IN MILLIMETERS FOR REDUCED PLANS 0 10 20 30 40 50 60 70 80 90 100

CU 07314
EA 121841

DISREGARD PRINTS BEARING EARLIER REVISION DATES

REVISION DATES (PRELIMINARY STAGE ONLY)

SHEET 29 OF 32

USERNAME => trmnguye
DGN FILE => 712184ih040.dgn

DATE PLOTTED => 12-JUN-2009 TIME PLOTTED => 08:17

DIST.	COUNTY	ROUTE	MILE POST TOTAL PROJECT	SHEET NO.	TOTAL SHEETS
07	LA	5	42.8/47.3	116	1073

REGISTERED ENGINEER - CIVIL

6-8-09

PLANS APPROVAL DATE

REGISTERED PROFESSIONAL ENGINEER DOUGLAS DUNRUD No. 47240 Exp. 12/31/09 CIVIL STATE OF CALIFORNIA

The State of California or its officers or agents shall not be responsible for the accuracy or completeness of electronic copies of this plan sheet.

Caltrans Metric

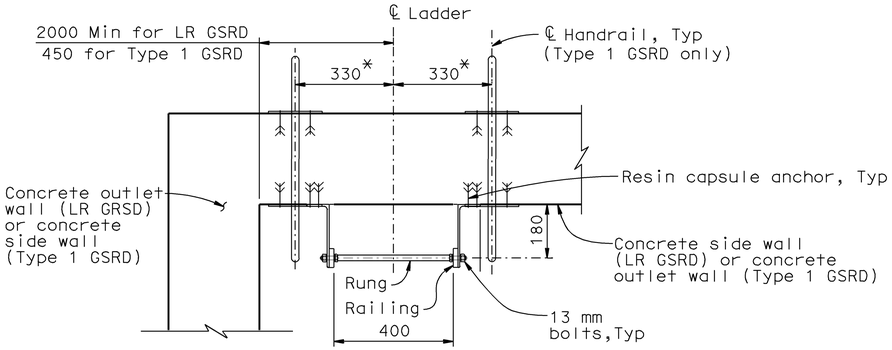

PLAN

* See Note 6

NOTES:

1. The distance between rungs shall not exceed 300 mm and shall be uniform throughout the length of wall.
2. The ladder may be constructed in one length at the Contractor's option.
3. All metal components of ladder and handrail including connections to concrete shall be galvanized after fabrication. See Standard Specifications or Special Provisions.
4. When ladder rails need to be spliced see Standard Plan D75C for Ladder Splice Plate details.
5. Grind exposed corners 5 mm radius.
6. For Type 1 GSRD, the ladder handrails shall be positioned and installed through the opeinings in modified grating panels, as shown in the details on "Type 1 - Grating Details No.3" sheet.

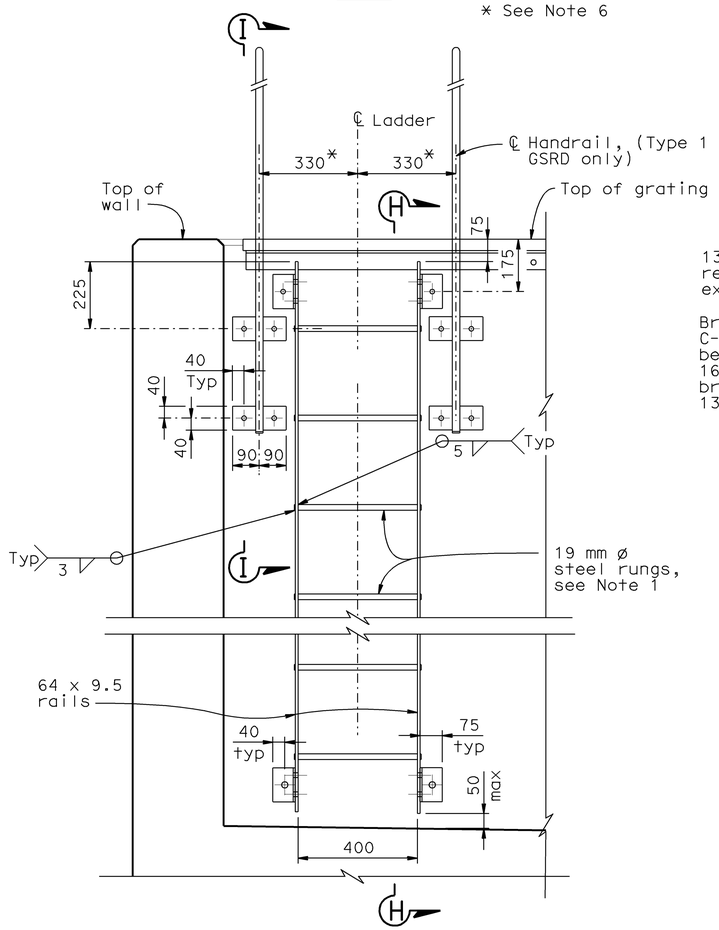

ELEVATION

LADDER - INCLINED SCREEN TYPE 1 GSRD

1:10

(Linear Radial similar without handrail)

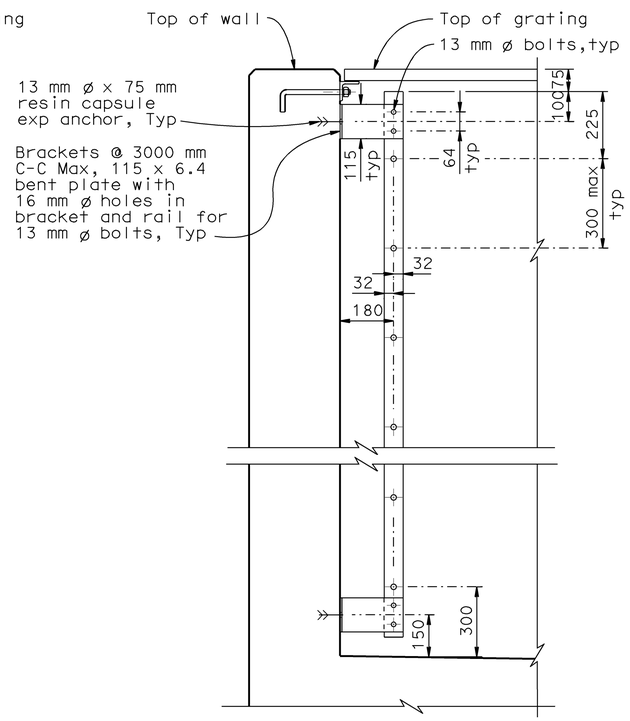

SECTION H - H

1:10

NOTE: Handrail not shown for clarity.

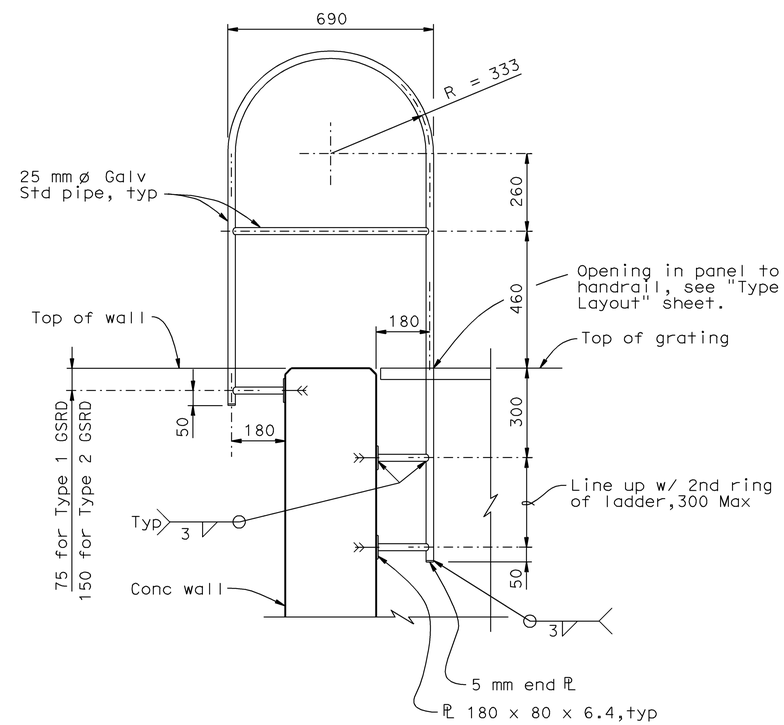

SECTION I - I

1:10

ALL DIMENSIONS ARE IN MILLIMETERS UNLESS OTHERWISE SHOWN

WATER POLLUTION CONTROL DETAILS

WD-41

RELEASE DATE ---	DESIGN	BY D.Dunrud	CHECKED J&P Peterson	---
FILE NO. ---	DETAILS	BY J&P Peterson	CHECKED J&P Peterson	
	SUBMITTED	BY D.Forester	DRAWING DATE 02/07	

STATE OF CALIFORNIA DEPARTMENT OF TRANSPORTATION

DIVISION OF ENGINEERING SERVICES

BRIDGE NO.

MILE POST

GROSS SOLIDS REMOVAL DEVICE

MISCELLANEOUS DETAILS NO. 1

ORIGINAL SCALE IN MILLIMETERS FOR REDUCED PLANS 0 10 20 30 40 50 60 70 80 90 100

CU 07314
EA 121841

DISREGARD PRINTS BEARING EARLIER REVISION DATES

REVISION DATES (PRELIMINARY STAGE ONLY)

SHEET 30 OF 32

USERNAME => trmnguye
DGN FILE => 7121841h041.dgn

DATE PLOTTED => 12-JUN-2009 TIME PLOTTED => 08:17

DIST.	COUNTY	ROUTE	MILE POST TOTAL PROJECT	SHEET NO.	TOTAL SHEETS
07	LA	5	42.8/47.3	117	1073

REGISTERED ENGINEER - CIVIL

6-8-09

PLANS APPROVAL DATE

REGISTERED PROFESSIONAL ENGINEER DOUGLAS DUNRUD No. 47240 Exp. 12/31/09 CIVIL STATE OF CALIFORNIA

The State of California or its officers or agents shall not be responsible for the accuracy or completeness of electronic copies of this plan sheet.

Caltrans Metric

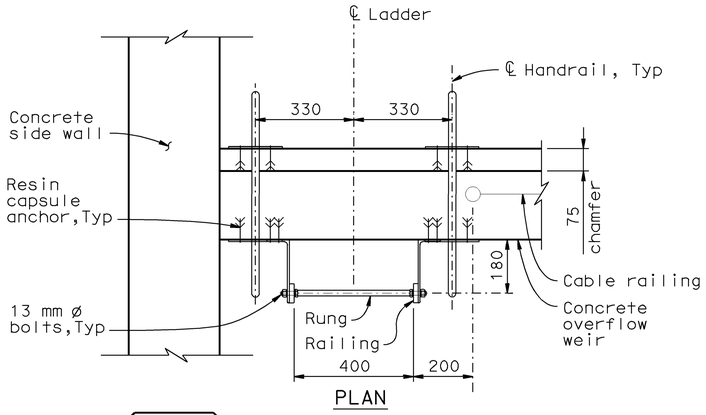

PLAN

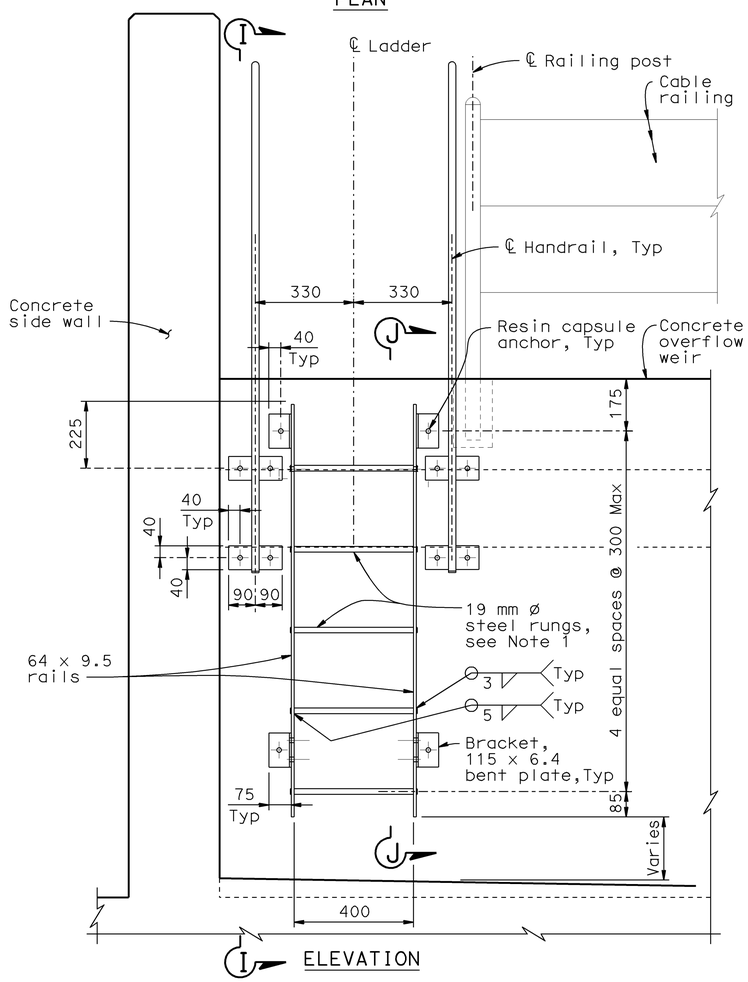

I ELEVATION

LADDER - INCLINED SCREEN TYPE 2 GSRD

1:10

NOTES:

1. The distance between rungs shall not exceed 300 mm and shall be uniform throughout the length of wall.
2. The ladder may be constructed in one length at the Contractor's option on concrete walls.
3. All metal components of ladder and handrail including connections shall be galvanized after fabrication. See Standard Specifications or Special Provisions.
4. When ladder rails need to be spliced, see Standard Plan D75C for Ladder Splice Plate details.
5. Grind exposed corners 5 mm radius.
6. For Section I-I, see "Miscellaneous Details No. 1" sheet.

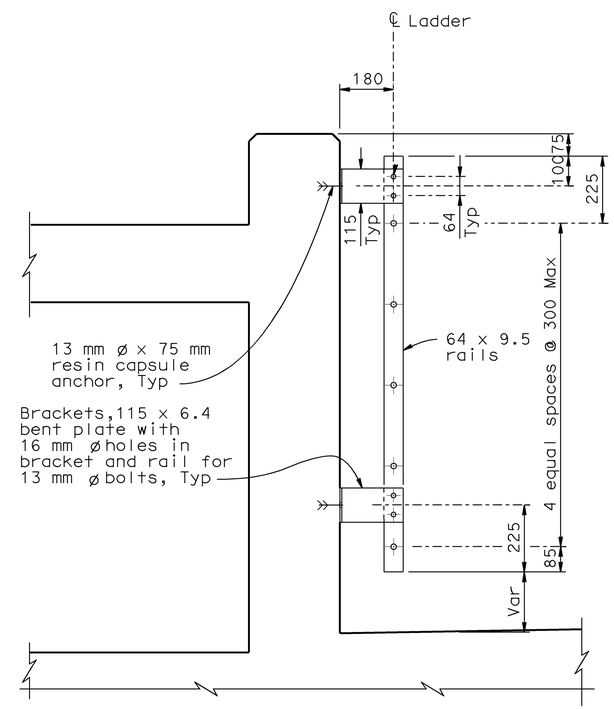

SECTION J - J

1:10

NOTE: Handrail not shown for clarity.

ALL DIMENSIONS ARE IN MILLIMETERS UNLESS OTHERWISE SHOWN

WATER POLLUTION CONTROL DETAILS

WD-42

RELEASE DATE ---	DESIGN	BY D.Dunrud	CHECKED J&P Peterson
FILE NO. ---	DETAILS	BY J&P Peterson	CHECKED J&P Peterson
	SUBMITTED	BY D.Forester	DRAWING DATE 02/07

STATE OF CALIFORNIA DEPARTMENT OF TRANSPORTATION

DIVISION OF ENGINEERING SERVICES

BRIDGE NO.

MILE POST

GROSS SOLIDS REMOVAL DEVICE

MISCELLANEOUS DETAILS NO. 2

ORIGINAL SCALE IN MILLIMETERS FOR REDUCED PLANS 0 10 20 30 40 50 60 70 80 90 100

CU 07314
EA 121841

DISREGARD PRINTS BEARING EARLIER REVISION DATES

REVISION DATES (PRELIMINARY STAGE ONLY)

SHEET 31 OF 32

USERNAME => trmnguye
DGN FILE => 7121841h042.dgn

DATE PLOTTED => 12-JUN-2008 TIME PLOTTED => 08:17

DIST.	COUNTY	ROUTE	MILE POST TOTAL PROJECT	SHEET NO.	TOTAL SHEETS
07	LA	5	42.8/47.3	118	1073

REGISTERED ENGINEER - CIVIL

6-8-09
PLANS APPROVAL DATE

REGISTERED PROFESSIONAL ENGINEER DOUGLAS DUNRUD No. 47240 Exp. 12/31/09 CIVIL STATE OF CALIFORNIA

The State of California or its officers or agents shall not be responsible for the accuracy or completeness of electronic copies of this plan sheet.

Caltrans Metric

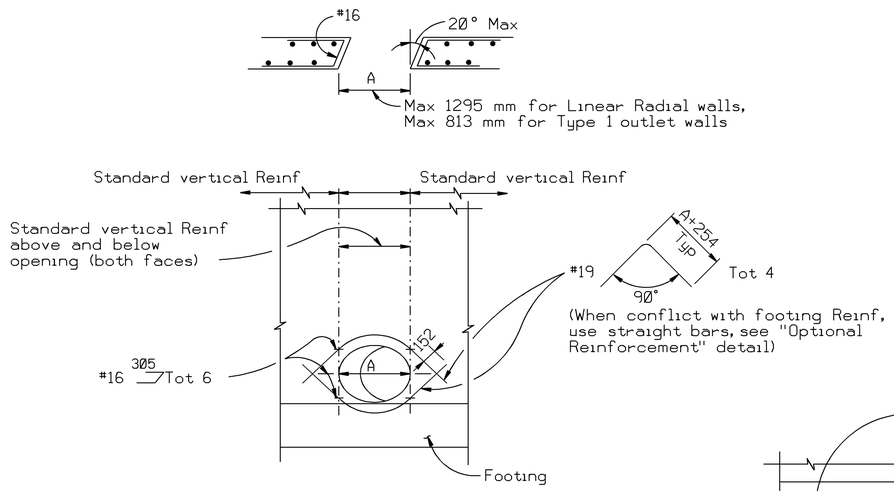

LINEAR RADIAL WALL OPENING

To be used at Linear Radial inlet and outlet pipe locations

& TYPE 1 OUTLET WALL OPENING

To be used at Type 1 outlet pipe locations only

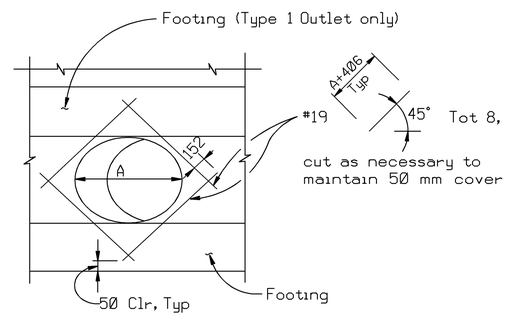

OPTIONAL REINFORCEMENT

(See Wall Opening Details for reinforcement not shown)

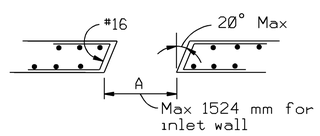

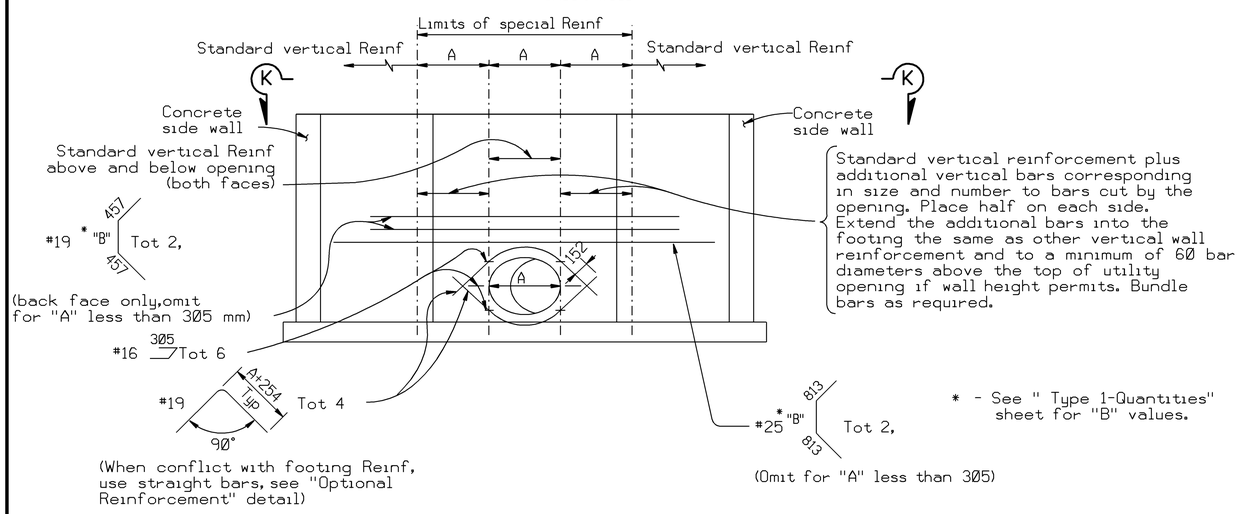

* - See " Type 1-Quantities" sheet for "B" values.

TYPE 1 INLET WALL OPENING

To be used at inlet pipe locations only

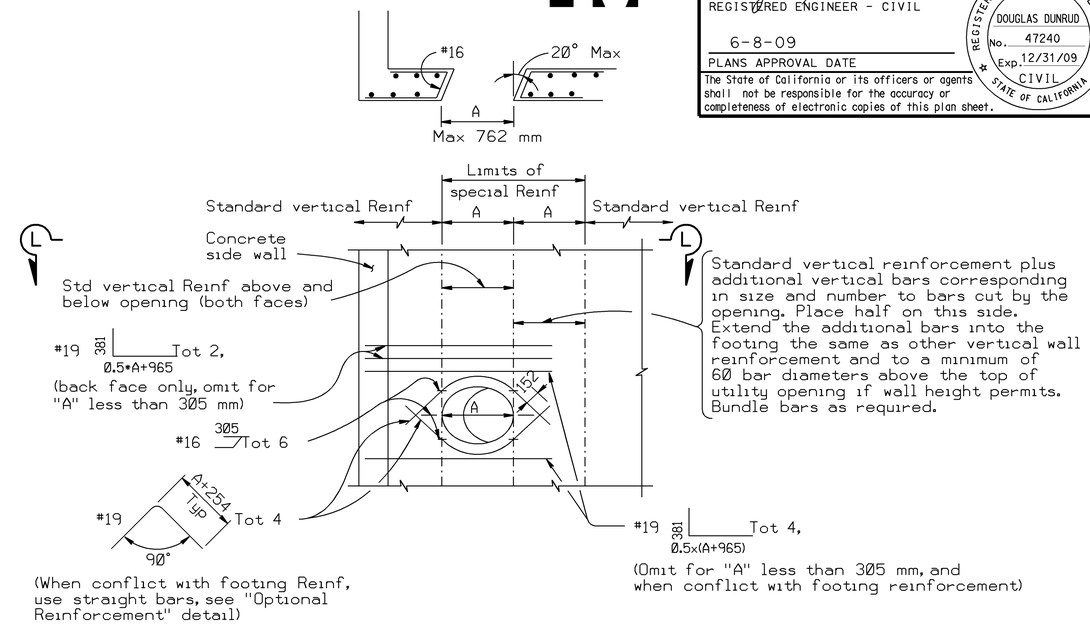

TYPE 2 WALL OPENING

No Scale
To be used at inlet and outlet pipe locations

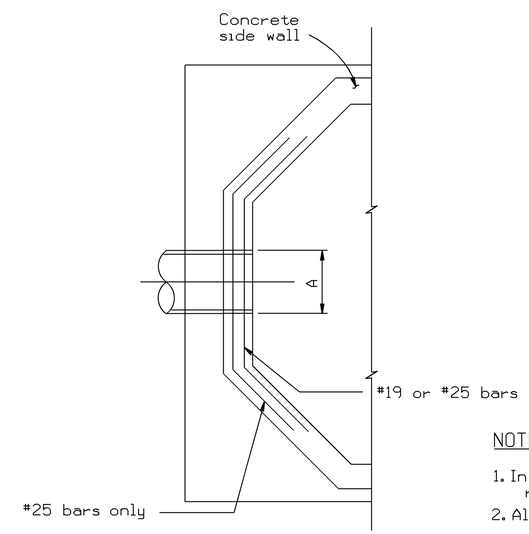

SECTION K-K

No Scale
(Only specified horizontal bars are shown)

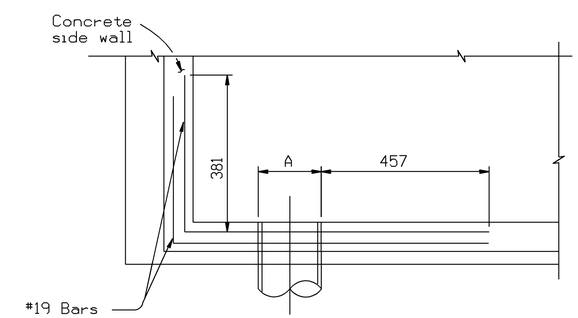

SECTION L-L

No Scale
(Only specified horizontal bars are shown)

NOTES:

1. In all opening locations, horizontal reinforcement to be standard except as shown.
2. All reinforcement to clear opening by 50 mm minimum.

WATER POLLUTION CONTROL DETAILS

ALL DIMENSIONS ARE IN MILLIMETERS UNLESS OTHERWISE SHOWN

WD-43

RELEASE DATE ---	DESIGN	BY D.Dunrud	CHECKED J&P Peterson
FILE NO. ---	DETAILS	BY J&P Peterson	CHECKED J&P Peterson
	SUBMITTED	BY D.Forester	DRAWING DATE 02/07

STATE OF CALIFORNIA DEPARTMENT OF TRANSPORTATION

DIVISION OF ENGINEERING SERVICES

BRIDGE NO.

MILE POST

GROSS SOLIDS REMOVAL DEVICE

WALL OPENING DETAILS

ORIGINAL SCALE IN MILLIMETERS FOR REDUCED PLANS 0 10 20 30 40 50 60 70 80 90 100

CU 07314
EA 121841

DISREGARD PRINTS BEARING EARLIER REVISION DATES

REVISION DATES (PRELIMINARY STAGE ONLY)

SHEET 32 OF 32

USERNAME => trmnguye
DGN FILE => 7121841h043.dgn

DATE PLOTTED => 12-JUN-2009 TIME PLOTTED => 08:17

Dist	COUNTY	ROUTE	KILOMETER POST TOTAL PROJECT	SHEET No.	TOTAL SHEETS
07	LA	5	42.8/47.3	119	1073

REGISTERED CIVIL ENGINEER 12-17-08 DATE

6-8-09
PLANS APPROVAL DATE

REGISTERED PROFESSIONAL ENGINEER BALDEV K. BHALLA No. 34350 Exp. 9/30/09 CIVIL STATE OF CALIFORNIA

THE STATE OF CALIFORNIA OR ITS OFFICERS OR AGENTS SHALL NOT BE RESPONSIBLE FOR THE ACCURACY OR COMPLETENESS OF ELECTRONIC COPIES OF THIS PLAN SHEET.

Caltrans Metric

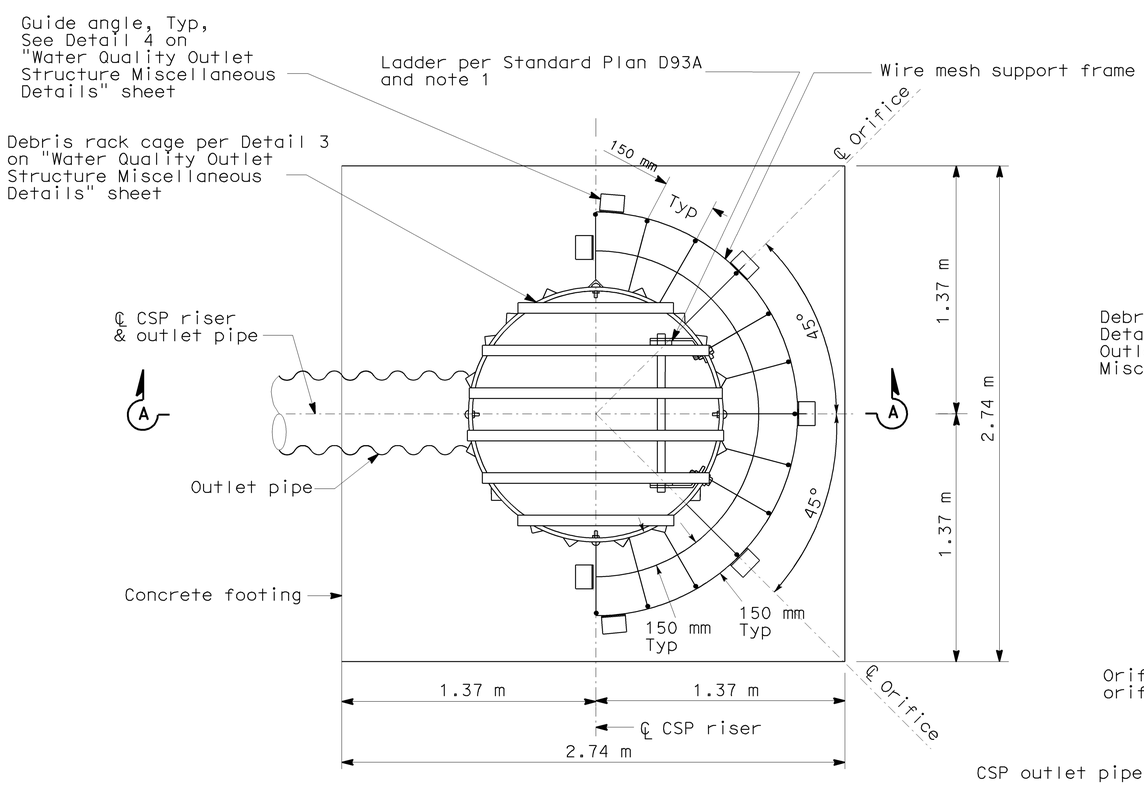

PLAN

NOTE:

1. Seal bolt holes and coat connection steel with asphalt mastic (ASTM A491). Trowel asphalt mastic a minimum of 13 mm thick on and around connection steel. Use mastic to fill corrugations behind washer plates.

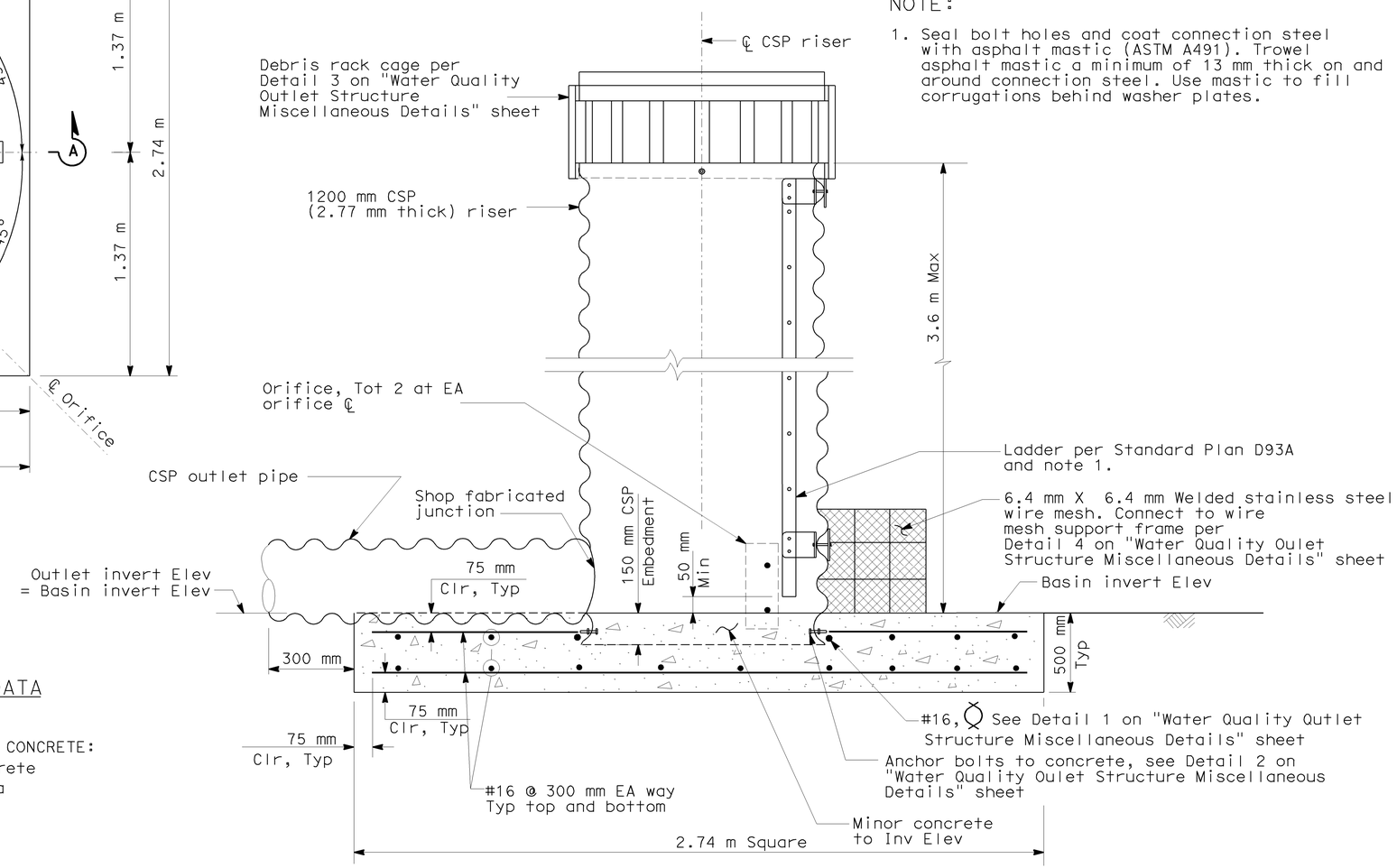

SECTION A-A

QUANTITIES

Minor Concrete
(Water Quality Outlet Structure): 4.0 m3

Miscellaneous Metal (Overflow Riser):

Ladder	15 Kg/m
Debris Rack Cage	93 Kg
Anchor Bolts	4 Kg
Wire Mesh & Support Frame	49 Kg
Guide Angles	4 Kg
Band Clamp	4 Kg

DESIGN DATA

REINFORCED CONCRETE:
Minor Concrete
F_y = 420 MPa

DETENTION BASIN OUTLET STRUCTURE

WATER POLLUTION CONTROL DETAILS

NO SCALE

WD-44

STATE OF CALIFORNIA - DEPARTMENT OF TRANSPORTATION
Caltrans HYDRAULICS

FUNCTIONAL SUPERVISOR DAVE BHALLA
CALCULATED-DESIGNED BY C.P.NGUYEN
CHECKED BY S.THAI
REVISED BY
DATE REVISED

LAST REVISION 00-00-00
DATE PLOTTED => 12-JUN-2009
TIME PLOTTED => 08:17

Dist	COUNTY	ROUTE	KILOMETER POST TOTAL PROJECT	SHEET No.	TOTAL SHEETS
07	LA	5	42.8/47.3	120	1073

REGISTERED CIVIL ENGINEER 12-17-08 DATE

6-8-09
PLANS APPROVAL DATE

REGISTERED PROFESSIONAL ENGINEER BALDEV K. BHALLA No. 34350 Exp. 9/30/09 CIVIL STATE OF CALIFORNIA

THE STATE OF CALIFORNIA OR ITS OFFICERS OR AGENTS SHALL NOT BE RESPONSIBLE FOR THE ACCURACY OR COMPLETENESS OF ELECTRONIC COPIES OF THIS PLAN SHEET.

Caltrans Metric

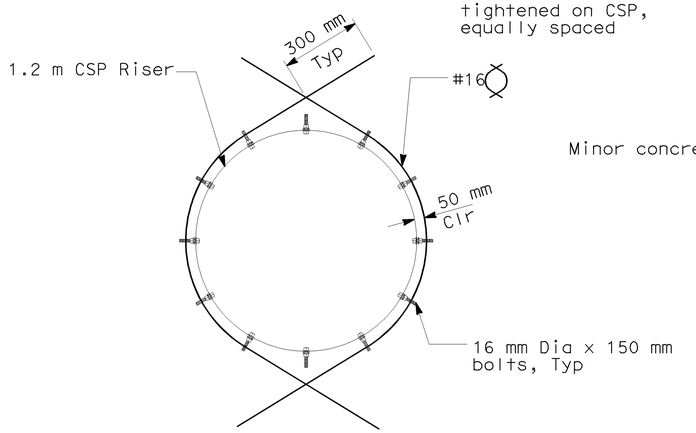

DETAIL 1

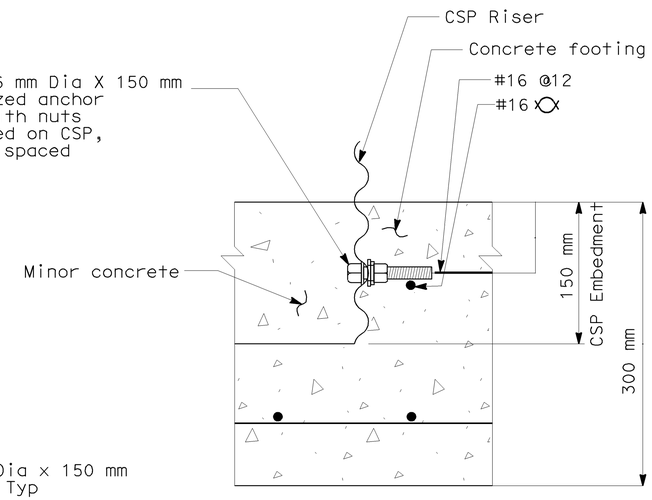

DETAIL 2

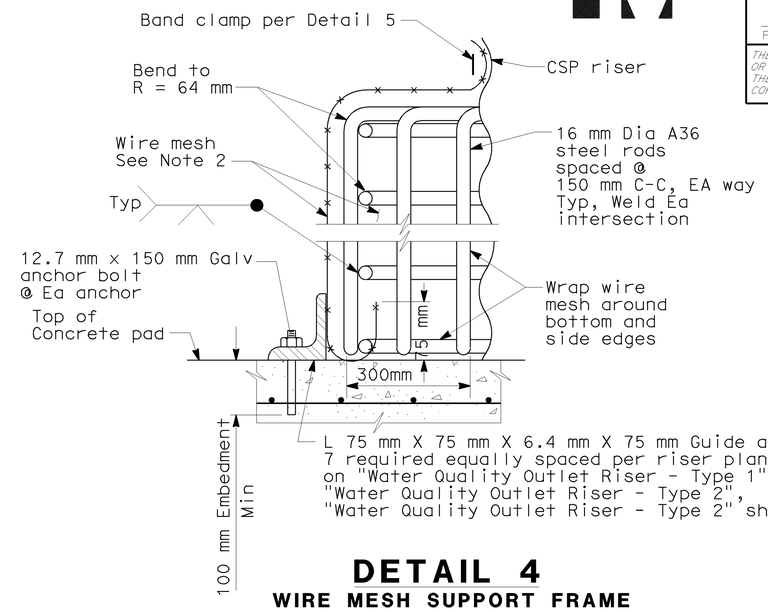

DETAIL 4
WIRE MESH SUPPORT FRAME

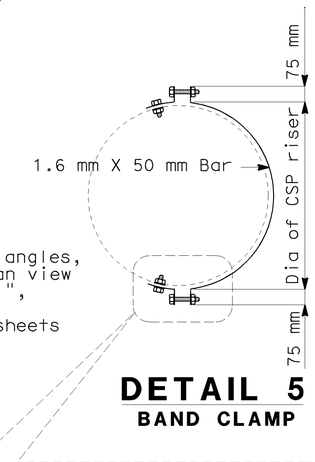

DETAIL 5
BAND CLAMP

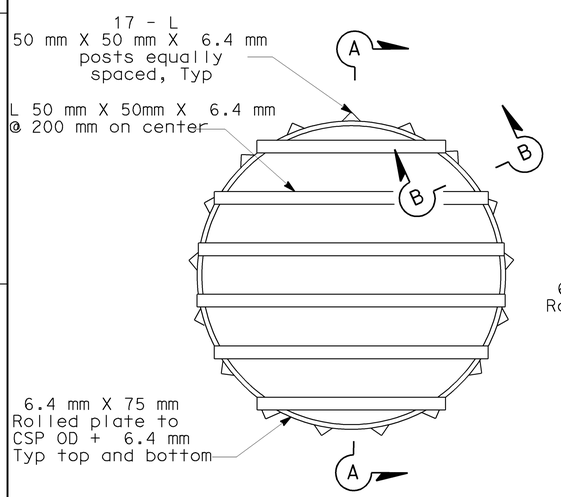

PLAN

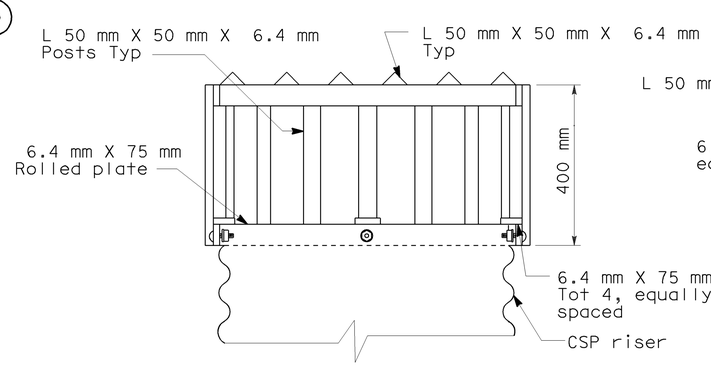

SECTION A-A

DETAIL 3
DEBRIS RACK CAGE

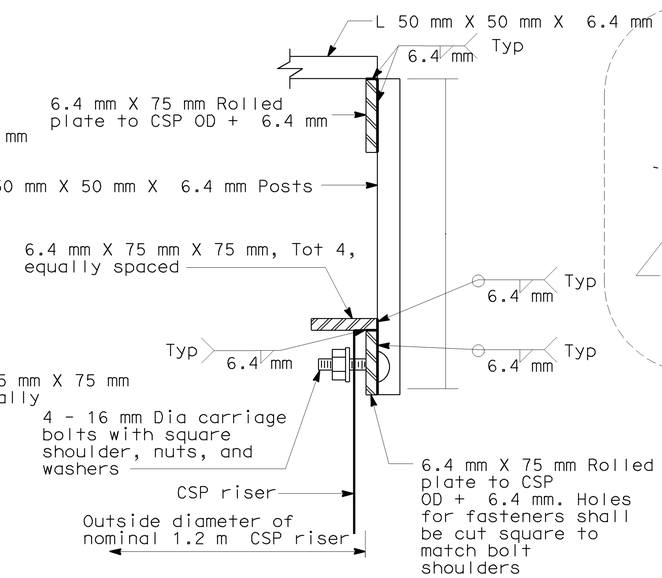

SECTION B-B

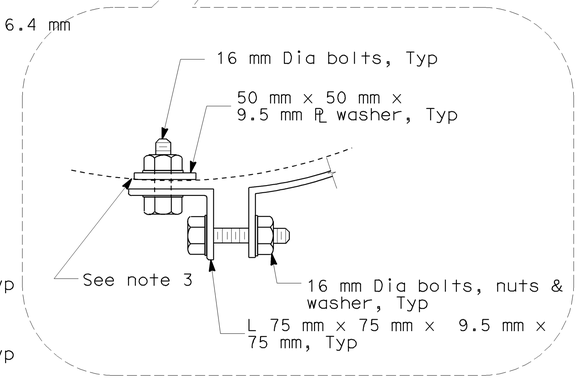

NOTES:

1. All hardware and fabrication materials shall be galvanized except as noted.
2. 6.4 mm X 6.4 mm (4 mesh per 25 mm) 0.8 mm wire Dia, type 304 stainless steel.
3. Seal bolt holes and coat connection steel with asphalt mastic (ASTM A491). Trowel asphalt mastic a minimum of 12.7 mm thick on and around connection steel. Use mastic to fill corrugations behind washer plates.

WATER QUALITY OUTLET STRUCTURE MISCELLANEOUS DETAILS

WATER POLLUTION CONTROL DETAILS

NO SCALE

WD-45

STATE OF CALIFORNIA - DEPARTMENT OF TRANSPORTATION
Caltrans
HYDRAULICS
FUNCTIONAL SUPERVISOR: DAVE BHALLA
CALCULATED-DESIGNED BY: C.P.NGUYEN
CHECKED BY: S.THAI
REVISED BY / DATE REVISED

LAST REVISION 00-00-00 | DATE PLOTTED => 12-JUN-2009 | TIME PLOTTED => 08:17

Dist	COUNTY	ROUTE	KILOMETER POST TOTAL PROJECT	SHEET No.	TOTAL SHEETS
07	LA	5	42.8/47.3	121	1073

REGISTERED CIVIL ENGINEER 12-17-08 DATE

6-8-09
PLANS APPROVAL DATE

REGISTERED PROFESSIONAL ENGINEER BALDEV K. BHALLA No. 34350 Exp. 9/30/09 CIVIL STATE OF CALIFORNIA

THE STATE OF CALIFORNIA OR ITS OFFICERS OR AGENTS SHALL NOT BE RESPONSIBLE FOR THE ACCURACY OR COMPLETENESS OF ELECTRONIC COPIES OF THIS PLAN SHEET.

NOTE: CONTRACTOR SHALL VERIFY ELEVATIONS OF EXISTING DRAINAGE SYSTEMS BEFORE COMMENCEMENT OF WORK.

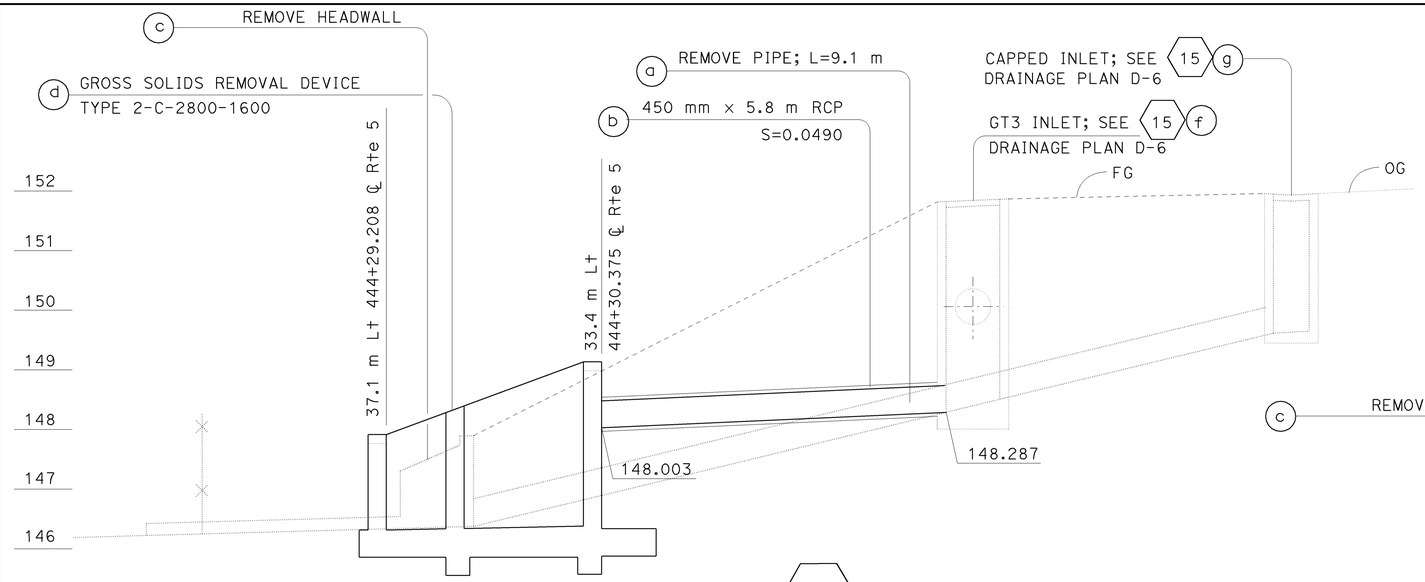

SYSTEM No 1
SCALE Horiz 1:50
Vert 1:50

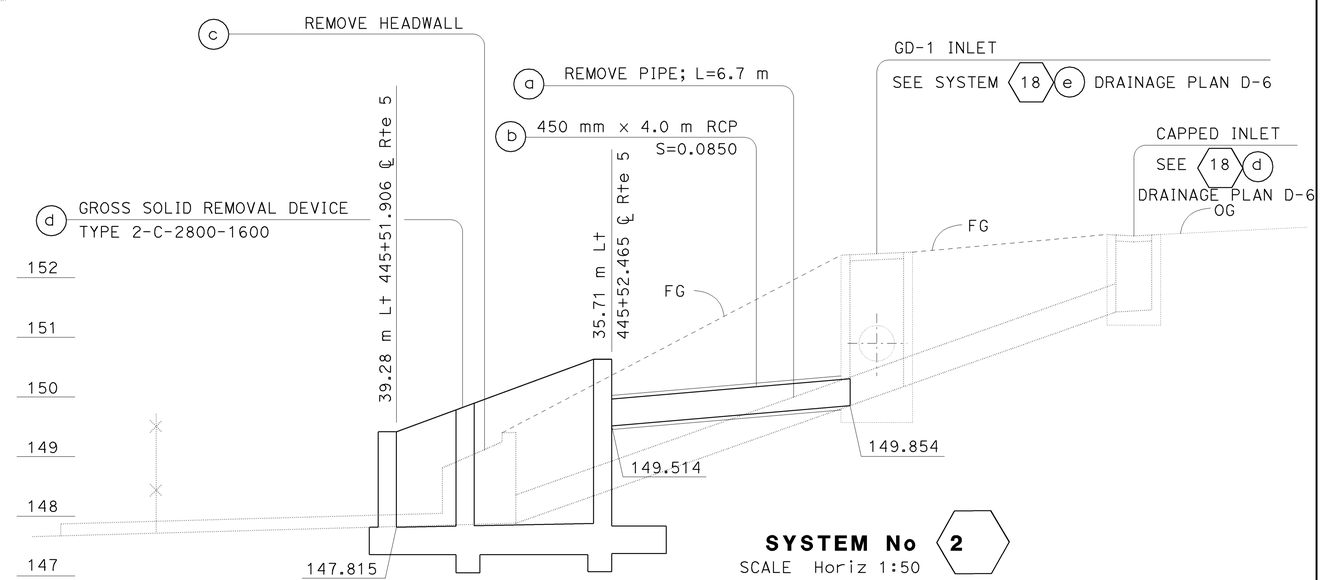

SYSTEM No 2
SCALE Horiz 1:50
Vert 1:50

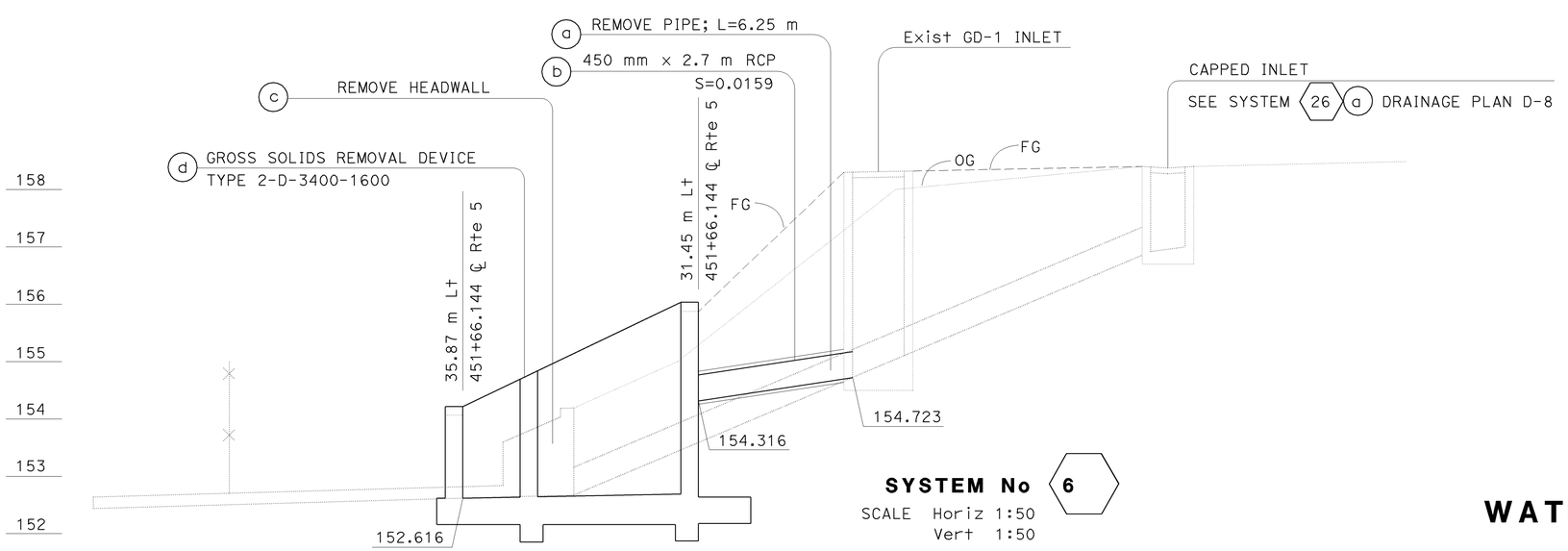

SYSTEM No 6
SCALE Horiz 1:50
Vert 1:50

THIS PLAN ACCURATE FOR WATER POLLUTION CONTROL ONLY

ALL DIMENSIONS ARE IN METERS UNLESS OTHERWISE SHOWN

WATER POLLUTION CONTROL PROFILE
WP-1

REVISED BY	DATE REVISED

CALCULATED-DESIGNED BY: C.P.NGUYEN
CHECKED BY: S.THAI
FUNCTIONAL SUPERVISOR: DAVE BHALLA

STATE OF CALIFORNIA - DEPARTMENT OF TRANSPORTATION
Caltrans
HYDRAULICS

LAST REVISION 00-00-00 | DATE PLOTTED => 12-JUN-2009 | TIME PLOTTED => 13:02

Dist	COUNTY	ROUTE	KILOMETER POST TOTAL PROJECT	SHEET No.	TOTAL SHEETS
07	LA	5	42.8/47.3	122	1073

REGISTERED CIVIL ENGINEER 12-17-08 DATE

6-8-09
PLANS APPROVAL DATE

REGISTERED PROFESSIONAL ENGINEER BALDEV K. BHALLA No. 34350 Exp. 9/30/09 CIVIL STATE OF CALIFORNIA

THE STATE OF CALIFORNIA OR ITS OFFICERS OR AGENTS SHALL NOT BE RESPONSIBLE FOR THE ACCURACY OR COMPLETENESS OF ELECTRONIC COPIES OF THIS PLAN SHEET.

Caltrans Metric

WALL DESIGN TABLE

Design wall No.	Design H	Top of Wall Elevation								Top of Footing Elevation			
		WE1	WE2	WE3	WE4	WE5	WE6	WE7	WE8	FE1	FE2	FE3	FE4
H1	2.40	150.886	150.921	151.001	151.003	151.003	151.001	150.921	150.886	148.461	148.318	147.556	147.364
H2	3.05												
H3	3.66												
H4	3.66												
H5	3.66												
H6	3.66												
H7	3.66												
H8	3.05												

NOTE: CONTRACTOR SHALL VERIFY ELEVATIONS OF EXISTING DRAINAGE SYSTEMS BEFORE COMMENCEMENT OF WORK.

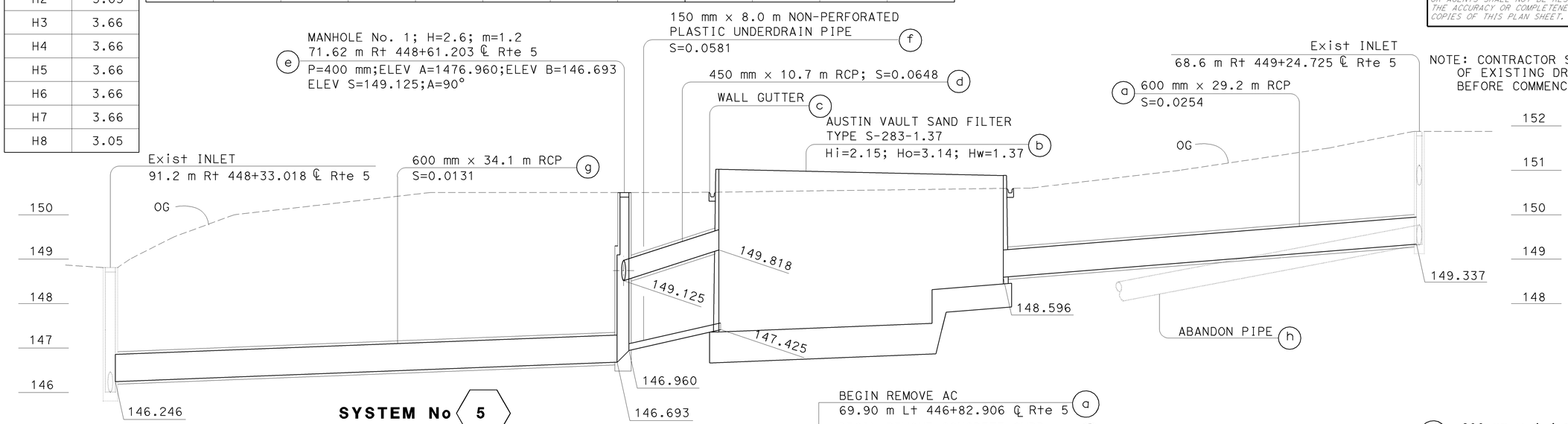

SYSTEM No 5
SCALE Horiz 1:200
Vert 1:50

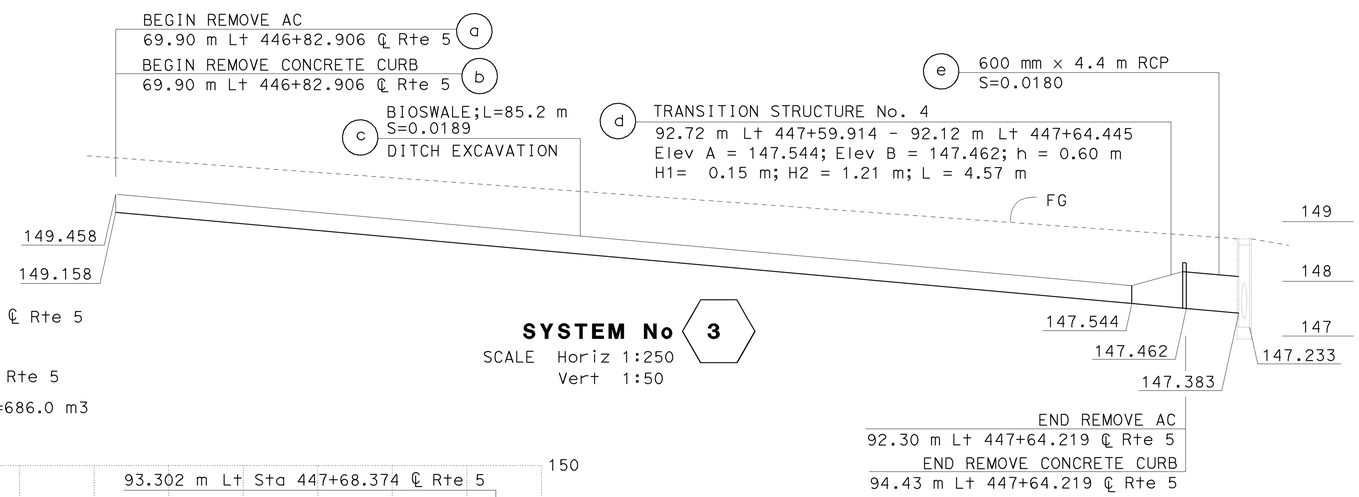

SYSTEM No 3
SCALE Horiz 1:250
Vert 1:50

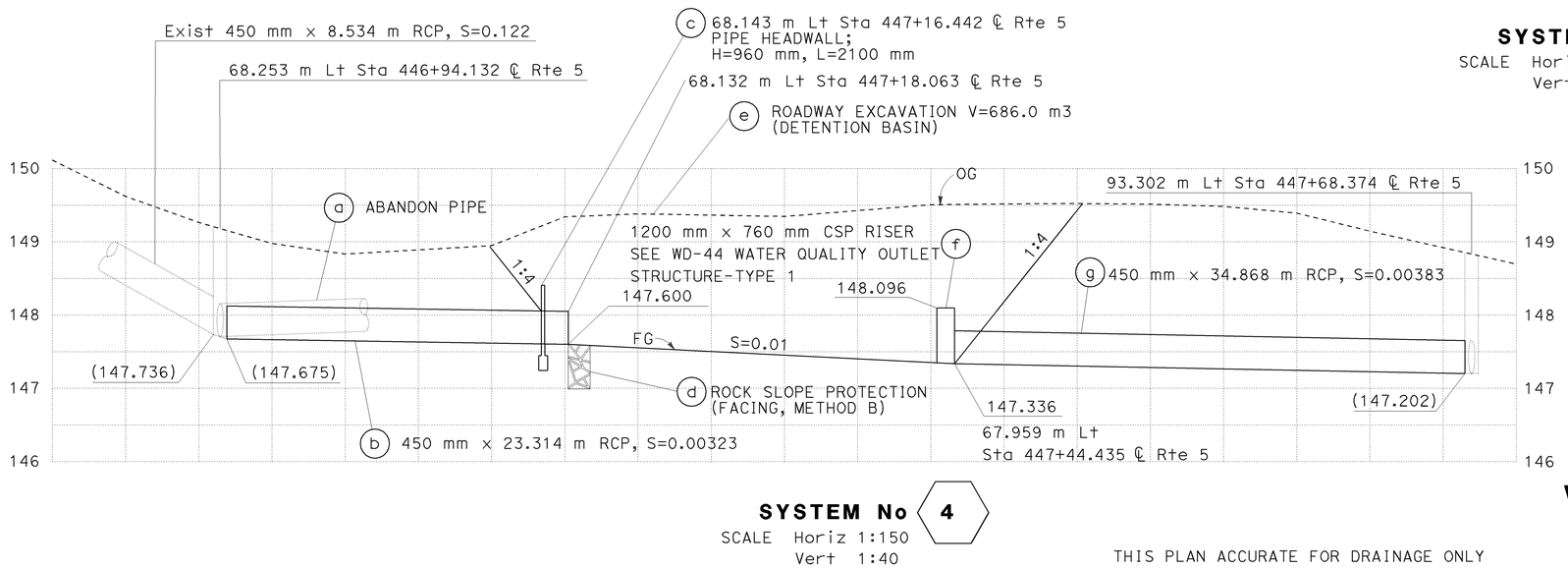

SYSTEM No 4
SCALE Horiz 1:150
Vert 1:40

ALL DIMENSIONS ARE IN METERS UNLESS OTHERWISE SHOWN

THIS PLAN ACCURATE FOR DRAINAGE ONLY

WATER POLLUTION CONTROL PROFILE
WP-2

FUNCTIONAL SUPERVISOR: DAVE BHALLA
CALCULATED-DESIGNED BY: C.P.NGUYEN
CHECKED BY: S.THAI
REVISED BY / DATE REVISED

STATE OF CALIFORNIA - DEPARTMENT OF TRANSPORTATION
Caltrans HYDRAULICS

LAST REVISION 00-00-00
DATE PLOTTED => 12-JUN-2009
TIME PLOTTED => 13:02

Dist	COUNTY	ROUTE	KILOMETER POST TOTAL PROJECT	SHEET No.	TOTAL SHEETS
07	LA	5	42.8/47.3	123	1073

REGISTERED CIVIL ENGINEER 12-17-08 DATE

6-8-09
PLANS APPROVAL DATE

REGISTERED PROFESSIONAL ENGINEER BALDEV K. BHALLA No. 34350 Exp. 9/30/09 CIVIL STATE OF CALIFORNIA

THE STATE OF CALIFORNIA OR ITS OFFICERS OR AGENTS SHALL NOT BE RESPONSIBLE FOR THE ACCURACY OR COMPLETENESS OF ELECTRONIC COPIES OF THIS PLAN SHEET.

NOTE: CONTRACTOR SHALL VERIFY ELEVATIONS OF EXISTING DRAINAGE SYSTEMS BEFORE COMMENCEMENT OF WORK.

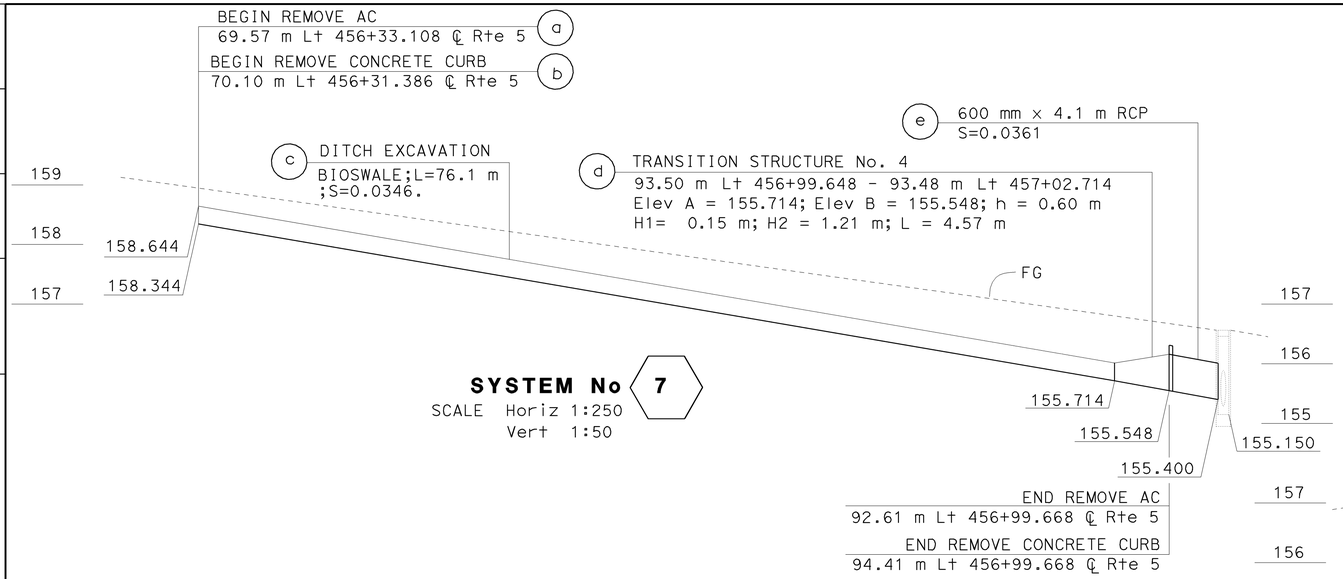

SYSTEM No 7
SCALE Horiz 1:250
Vert 1:50

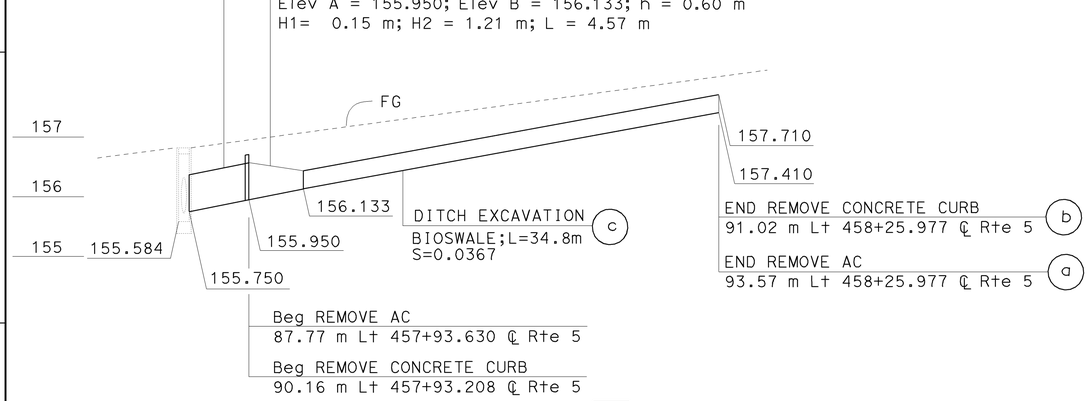

SYSTEM No 8
SCALE Horiz 1:250
Vert 1:50

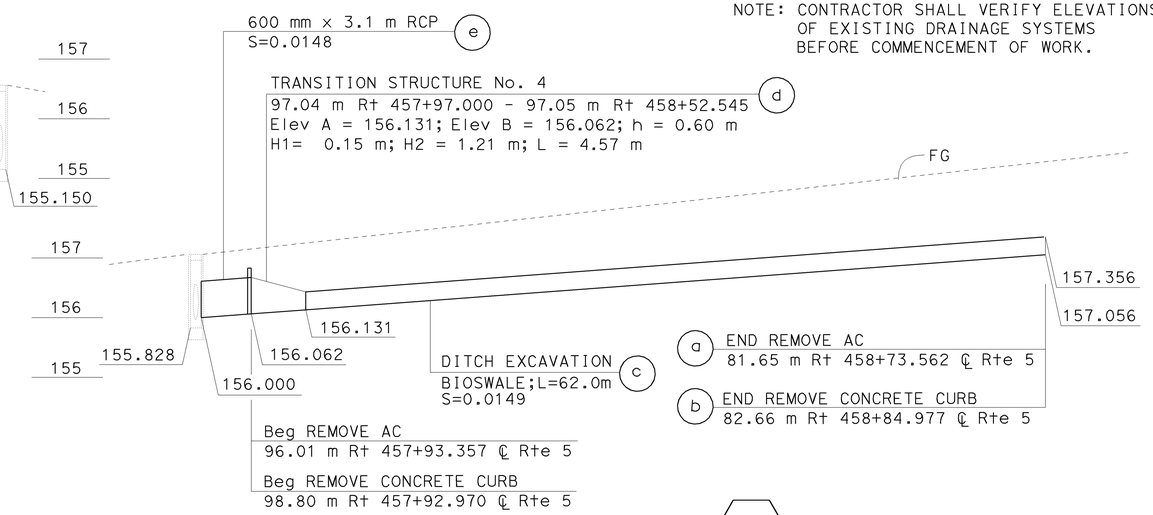

SYSTEM No 9
SCALE Horiz 1:250
Vert 1:50

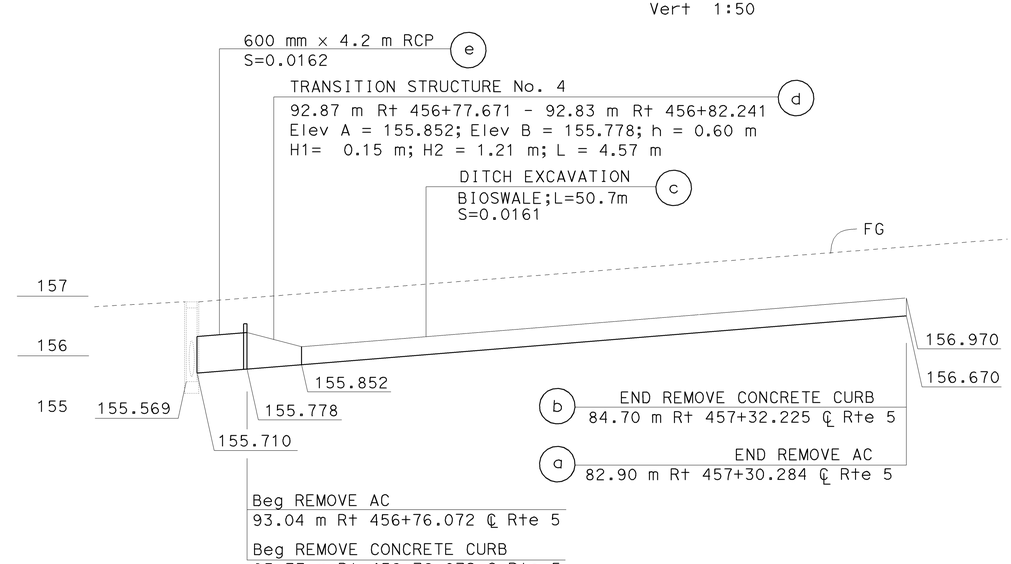

SYSTEM No 10
SCALE Horiz 1:250
Vert 1:50

ALL DIMENSIONS ARE IN METERS UNLESS OTHERWISE SHOWN

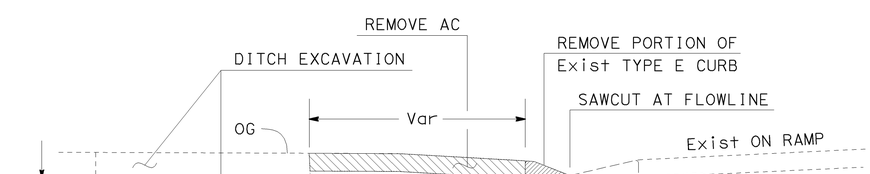

TYPICAL X-SECTION
NOT TO SCALE

THIS PLAN ACCURATE FOR WATER POLLUTION CONTROL ONLY

WATER POLLUTION CONTROL PROFILE
WP-3

STATE OF CALIFORNIA - DEPARTMENT OF TRANSPORTATION
Caltrans
HYDRAULICS
FUNCTIONAL SUPERVISOR: DAVE BHALLA
CALCULATED-DESIGNED BY: C.P.NGUYEN
CHECKED BY: S.THAI
REVISED BY / DATE REVISED

LAST REVISION 00-00-00
DATE PLOTTED => 12-JUN-2009
TIME PLOTTED => 13:03

Dist	COUNTY	ROUTE	KILOMETER POST TOTAL PROJECT	SHEET No.	TOTAL SHEETS
07	LA	5	42.8/47.3	124	1073

REGISTERED CIVIL ENGINEER 12-17-08 DATE

6-8-09
PLANS APPROVAL DATE

REGISTERED PROFESSIONAL ENGINEER BALDEV K. BHALLA No. 34350 Exp. 9/30/09 CIVIL STATE OF CALIFORNIA

THE STATE OF CALIFORNIA OR ITS OFFICERS OR AGENTS SHALL NOT BE RESPONSIBLE FOR THE ACCURACY OR COMPLETENESS OF ELECTRONIC COPIES OF THIS PLAN SHEET.

Caltrans Metric

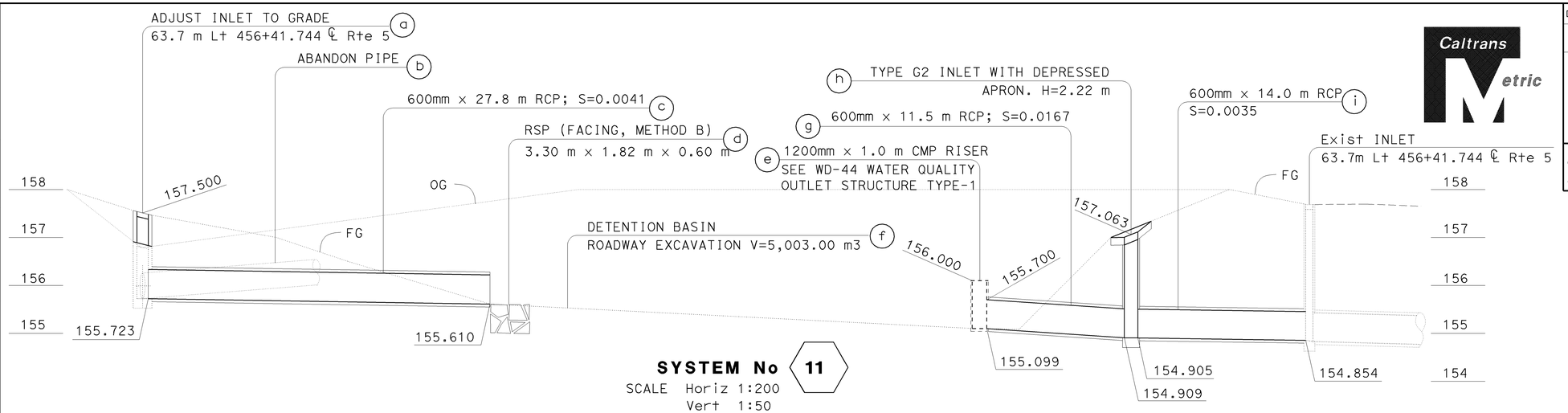

SYSTEM No 11
SCALE Horiz 1:200
Vert 1:50

NOTE: CONTRACTOR SHALL VERIFY ELEVATIONS OF EXISTING DRAINAGE SYSTEMS BEFORE COMMENCEMENT OF WORK.

WALL DESIGN TABLE

Design wall No.	Design H	Top of Wall Elevation			
		WE1	WE2	WE3	WE4
H1	3.05	159.576	159.475	159.209	159.169
H2	3.05	WE5	WE6	WE7	WE8
H3	3.66	159.169	159.209	159.475	159.576
H4	3.66				
H5	3.66				
H6	3.66				
H7	3.66				
H8	3.05				

Top of Footing Elevation			
FE1	FE2	FE3	FE4
156.670	156.502	156.009	155.508

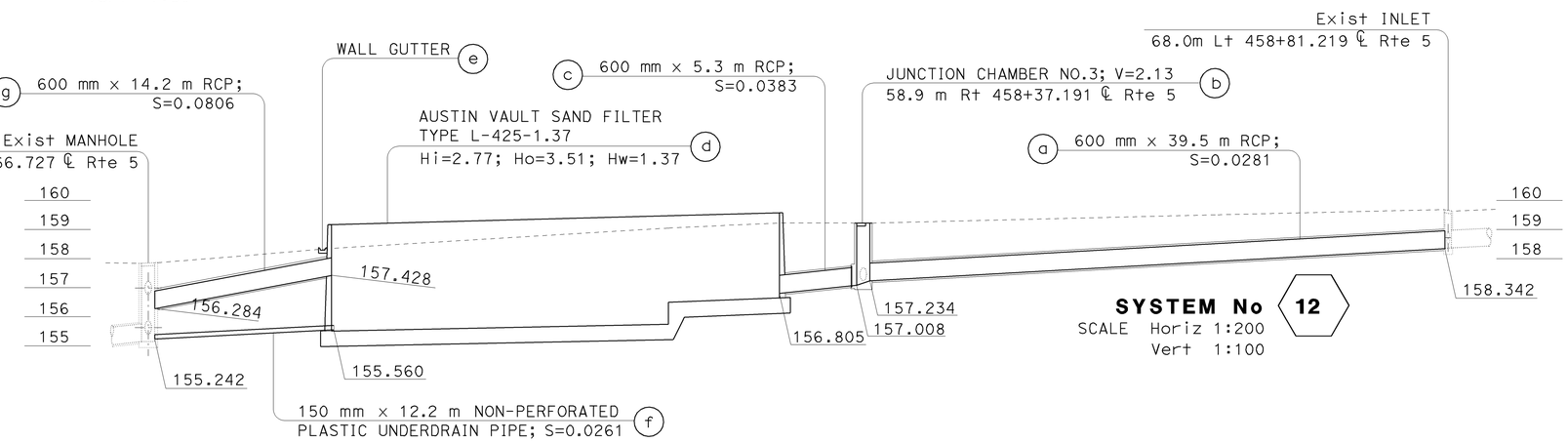

SYSTEM No 12
SCALE Horiz 1:200
Vert 1:100

WALL DESIGN TABLE

Design wall No.	Design H	Top of Wall Elevation			
		WE1	WE2	WE3	WE4
H1	3.05	172.636	172.733	172.957	173.000
H2	3.66	WE5	WE6	WE7	WE8
H3	4.88	171.168	171.200	171.360	171.424
H4	4.88				
H5	4.27				
H6	4.88				
H7	3.05				
H8	2.44				

Top of Footing Elevation			
FE1	FE2	FE3	FE4
169.383	169.255	168.493	168.301

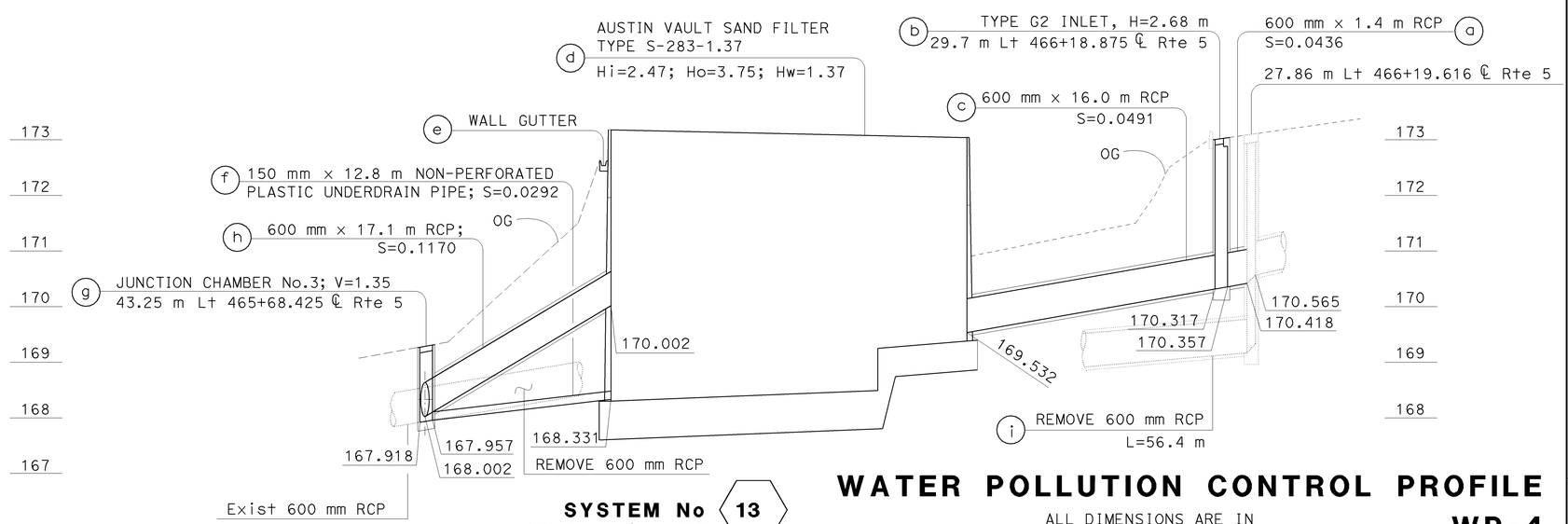

SYSTEM No 13
SCALE Horiz 1:200
Vert 1:50

THIS PLAN ACCURATE FOR WATER POLLUTION CONTROL WORK ONLY

WATER POLLUTION CONTROL PROFILE

ALL DIMENSIONS ARE IN METERS UNLESS OTHERWISE SHOWN

WP-4

STATE OF CALIFORNIA - DEPARTMENT OF TRANSPORTATION
Caltrans
HYDRAULICS

FUNCTIONAL SUPERVISOR: DAVE BHALLA
CALCULATED-DESIGNED BY: C.P.NGUYEN
CHECKED BY: S.THAI
REVISED BY / DATE REVISED

LAST REVISION 00-00-00
DATE PLOTTED => 12-JUN-2009
TIME PLOTTED => 13:03

NOTES: PIPE JOINTS ARE STANDARD
OR AS NOTED ON PLANS
* ADDED IN ROADWAY QUANTITY SHEET Q-1
** ADDED IN DRAINAGE QUANTITY SHEET DQ-22
*** FOR ADDITIONAL QUANTITIES, SEE STRUCTURE PLANS AND ROADWAY QUANTITY SHEETS

Dist	COUNTY	ROUTE	KILOMETER POST TOTAL PROJECT	SHEET No.	TOTAL SHEETS
07	LA	5	42.8/47.3	125	1073

REGISTERED CIVIL ENGINEER 11-17-08 DATE

6-8-09
PLANS APPROVAL DATE

REGISTERED PROFESSIONAL ENGINEER BALDEV K. BHALLA No. 34350 Exp. 9/30/09 CIVIL STATE OF CALIFORNIA

THE STATE OF CALIFORNIA OR ITS OFFICERS OR AGENTS SHALL NOT BE RESPONSIBLE FOR THE ACCURACY OR COMPLETENESS OF ELECTRONIC COPIES OF THIS PLAN SHEET.

DRAINAGE SHEET No.	DRAINAGE SYSTEM No.	DRAINAGE UNIT No.	H OR V	MINOR CONCRETE (MINOR STRUCTURE) **	MISCELLANEOUS IRON AND STEEL **	450 mm REINFORCED CONCRETE PIPE **	600 mm REINFORCED CONCRETE PIPE **	SAND BACKFILL **	ABANDON PIPELINE **	STRUCTURE EXCAVATION (TYPE Y-2) (AERIALLY DEPOSITED LEAD) ***	STRUCTURE BACKFILL (AUSTIN VAULT & GSRD)	STRUCTURAL CONCRETE (AUSTIN VAULT & GSRD)	BAR REINFORCING STEEL (AUSTIN VAULT & GSRD)	BIOSWALE: REMOVE ASPHALT CONCRETE	BIOSWALE: REMOVE CONCRETE CURB	BIOSWALE: DITCH EXCAVATION	DETENTION BASIN: REMOVE HEADWALL	DETENTION BASIN: 1200 mm CORRUGATED STEEL PIPE RISER (2.77mm THICK)	DETENTION BASIN: ROADWAY EXCAVATION (TYPE Y-2) (AERIALLY DEPOSITED LEAD)	DETENTION BASIN: ROCK SLOPE PROTECTION (FACING, METHOD B)	DETENTION BASIN: ROCK SLOPE PROTECTION FABRIC	AUSTIN VAULT SAND FILTER: 900 mm PRECAST CONCRETE PIPE MANHOLE	AUSTIN VAULT SAND FILTER: REMOVE PIPE **	AUSTIN VAULT SAND FILTER: SAND BED (AUSTIN VAULT)	AUSTIN VAULT SAND FILTER: MINOR CONCRETE (GUTTER LINING)	AUSTIN VAULT SAND FILTER: 150 mm PERFORATED UNDERDRAIN PIPE (AUSTIN VAULT)	AUSTIN VAULT SAND FILTER: 150 mm NON-PERFORATED UNDERDRAIN PIPE (AUSTIN VAULT)	AUSTIN VAULT SAND FILTER: FILTER FABRIC (AUSTIN VAULT)	AUSTIN VAULT SAND FILTER: PERMEABLE MATERIAL (AUSTIN VAULT)	AUSTIN VAULT SAND FILTER: GABION	GROSS SOLIDS REMOVAL DEVICE: CABLE RAILING ***	GROSS SOLIDS REMOVAL DEVICE: MISCELLANEOUS METAL (AUSTIN VAULT & GSRD)	GROSS SOLIDS REMOVAL DEVICE: STAINLESS STEEL (GSRD) INCLINED (TYPE 2)	DESCRIPTION	STATION	DRAINAGE SYSTEM No.	DRAINAGE UNIT No.
			m	m^3	kg	m	m	m^3	EA	m^3	m^3	m^3	kg	m^2	m	m^3	EA	m	m^3	m^3	m^2	m	m	m^3	m^3	m	m	m^2	m^3	m^3	m	kg	kg				
W-1	1	a																					9.1										REMOVE PIPE		1	a
		b				5.8																											450 mm RCP			b
		c															1																REMOVE HEADWALL			c
		d								96.9	43.3	22.5	2186																		13.7	55.0	146.0	GROSS SOLIDS REMOVAL DEVICE TYPE 2-C-2800-1600	37.10 m Lt 444+29.208 ℄ Rte 5 33.40 m Lt 444+30.375 ℄ Rte 5		d
W-1	2	a																					6.7										REMOVE PIPE		2	a
		b				4.0																											450 mm RCP			b
		c															1																REMOVE HEADWALL			c
		d								96.9	43.3	22.5	2186																		13.7	55.0	146.0	GROSS SOLIDS REMOVAL DEVICE TYPE 2-C-2800-1600	32.98 m Lt 445+51.906 ℄ Rte 5 39.28 m Lt 445+51.906 ℄ Rte 5		d
W-2	3	a												149.9																			REMOVE AC	FROM 69.90 m Lt 446+82.906 ℄ Rte 5 TO 92.30 m Lt 447+64.219 ℄ Rte 5	3	a
		b													89.8																		REMOVE CONCRETE CURB	FROM 69.90 m Lt 446+82.906 ℄ Rte 5 TO 94.43 m Lt 447+64.219 ℄ Rte 5		b
		c														64.6																	DITCH EXCAVATION	FROM 69.63 m Lt 446+83.861 ℄ Rte 5 TO 92.72 m Lt 447+59.914 ℄ Rte 5		c
		d		3.04																													TRANSITION STRUCTURE No. 4	FROM 92.72 m Lt 447+59.914 ℄ Rte 5 TO 92.12 m Lt 447+64.445 ℄ Rte 5		d
		e					4.4																										600 mm RCP			e
W-2	4	a						7.4	1																								ABANDON PIPELINE		60	a
		b				23.3																											450 mm RCP			b
		c		0.68	22																												PIPE HEADWALL	68.143 m Lt Sta 447+16.442 ℄ Rte 5		c
		d																		2.4	9.1												ROCK SLOPE PROTECTION (FACING, METHOD B)			d
		e																	686.0														ROADWAY EXCAVATION	DETENTION BASIN AT WESTERN 1 OFF-RAMP		e
		f		4.00														0.8														169.0	1200 mm CSP RISER			f
		g				34.9																											450 mm RCP			g
SHEET TOTAL				7.72	22	68.0	4.4	7.4	1	193.8	86.6	45.0	4372	149.9	89.8	64.60	2	0.8	686.0*	2.4	9.1		15.8								27.4	279.0	292.0				

WATER POLLUTION CONTROL QUANTITIES WQ-1

STATE OF CALIFORNIA - DEPARTMENT OF TRANSPORTATION
Caltrans HYDRAULICS

FUNCTIONAL SUPERVISOR: DAVE BHALLA
CALCULATED-DESIGNED BY: C.P.NGUYEN
CHECKED BY: S.THAI
REVISED BY: CTT
DATE REVISED: 03-2009

LAST REVISION 03-15-09
DATE PLOTTED => 12-JUN-2009
TIME PLOTTED => 13:03

NOTES: PIPE JOINTS ARE STANDARD
OR AS NOTED ON PLANS
* ADDED IN ROADWAY QUANTITY SHEET Q-1
** ADDED IN DRAINAGE QUANTITY SHEET DQ-22
*** FOR ADDITIONAL QUANTITIES, SEE STRUCTURE PLANS AND ROADWAY QUANTITY SHEETS

Dist	COUNTY	ROUTE	KILOMETER POST TOTAL PROJECT	SHEET No.	TOTAL SHEETS
07	LA	5	42.8/47.3	126	1073

REGISTERED CIVIL ENGINEER 11-17-08 DATE

6-8-09
PLANS APPROVAL DATE

REGISTERED PROFESSIONAL ENGINEER BALDEV K. BHALLA No. 34350 Exp. 9/30/09 CIVIL STATE OF CALIFORNIA

THE STATE OF CALIFORNIA OR ITS OFFICERS OR AGENTS SHALL NOT BE RESPONSIBLE FOR THE ACCURACY OR COMPLETENESS OF ELECTRONIC COPIES OF THIS PLAN SHEET.

Caltrans Metric

DRAINAGE SHEET No.	DRAINAGE SYSTEM No.	DRAINAGE UNIT No.	H OR V	MINOR CONCRETE (MINOR STRUCTURE) **	MISCELLANEOUS IRON AND STEEL **	450 mm REINFORCED CONCRETE PIPE **	600 mm REINFORCED CONCRETE PIPE **	SAND BACKFILL **	ABANDON PIPELINE **	STRUCTURE EXCAVATION (TYPE Y-2) (AERIALLY DEPOSITED LEAD) ***	STRUCTURE BACKFILL (AUSTIN VAULT & GSRD)	STRUCTURAL CONCRETE (AUSTIN VAULT & GSRD)	BAR REINFORCING STEEL (AUSTIN VAULT & GSRD)	BIOSWALE: REMOVE ASPHALT CONCRETE	BIOSWALE: REMOVE CONCRETE CURB	BIOSWALE: DITCH EXCAVATION	DETENTION BASIN: REMOVE HEADWALL	DETENTION BASIN: 1200 mm CORRUGATED STEEL PIPE RISER (2.77mm THICK)	DETENTION BASIN: ROADWAY EXCAVATION (TYPE Y-2) (AERIALLY DEPOSITED LEAD) ***	DETENTION BASIN: ROCK SLOPE PROTECTION (FACING, METHOD B)	DETENTION BASIN: ROCK SLOPE PROTECTION FABRIC	AUSTIN VAULT SAND FILTER: 900 mm PRECAST CONCRETE PIPE MANHOLE	AUSTIN VAULT SAND FILTER: REMOVE PIPE **	AUSTIN VAULT SAND FILTER: SAND BED (AUSTIN VAULT)	AUSTIN VAULT SAND FILTER: MINOR CONCRETE (GUTTER LINING)	AUSTIN VAULT SAND FILTER: 150 mm PERFORATED UNDERDRAIN PIPE (AUSTIN VAULT)	AUSTIN VAULT SAND FILTER: 150 mm NON-PERFORATED UNDERDRAIN PIPE (AUSTIN VAULT)	AUSTIN VAULT SAND FILTER: FILTER FABRIC (AUSTIN VAULT)	AUSTIN VAULT SAND FILTER: PERMEABLE MATERIAL (AUSTIN VAULT)	AUSTIN VAULT SAND FILTER: GABION	GROSS SOLIDS REMOVAL DEVICE: CABLE RAILING ***	GROSS SOLIDS REMOVAL DEVICE: MISCELLANEOUS METAL (AUSTIN VAULT & GSRD)	GROSS SOLIDS REMOVAL DEVICE: STAINLESS STEEL (GSRD) INCLINED (TYPE 2)	DESCRIPTION	STATION	DRAINAGE SYSTEM No.	DRAINAGE UNIT No.
			m	m^3	kg	m	m	m^3	EA	m^3	m^3	m^3	kg	m^2	m	m^3	EA	m	m^3	m^3	m^2	m	m	m^3	m^3	m	m	m^2	m^3	m^3	m	kg	kg				
W-2	5	a					29.2																										600 mm RCP		5	a
		b								1301.0	312.2	251.4	27844											96.4		109.0	14.3	238.3	84.2	13.8	72.3	50.0		AUSTIN VAULT SAND FILTER S-283-1.37			b
		c																							5.95									WALL GUTTER			c
		d				10.7																												450 mm RCP			d
		e		4.33	208																	0.8												MANHOLE No.1	71.62 m Rt 448+61.203 ℄ Rte 5		e
		f																									8.0							150 mm PLASTIC PIPE			f
		g					34.1																											600 mm RCP			g
		h						10.1	1																									ABANDON PIPELINE			h
W-3	6	a				2.7																	6.3											450 mm RCP		6	a
		b																																REMOVE PIPE			b
		c															1																	REMOVE HEADWALL			c
		d								96.9	43.3	26.4	3121																		15.0	55.0	179.0	GROSS SOLIDS REMOVAL DEVICE TYPE 2-D-3400-1600	35.87 m Lt 451+66.144 ℄ Rte 5 31.45 m Lt 451+66.144 ℄ Rte 5		d
W-4	7	a												117.2																				REMOVE AC	FROM 69.57 m Lt 456+33.108 ℄ Rte 5 TO 92.61 m Lt 456+99.668 ℄ Rte 5	7	a
		b													66.6																			REMOVE CONCRETE CURB	FROM 70.10 m Lt 456+31.386 ℄ Rte 5 TO 94.41 m Lt 456+99.668 ℄ Rte 5		b
		c														54.8																		DITCH EXCAVATION	FROM 69.57 m Lt 456+33.108 ℄ Rte 5 TO 93.50 m Lt 456+99.648 ℄ Rte 5		c
		d		3.04																														TRANSITION STRUCTURE No. 4	FROM 93.50 m Lt 456+99.648 ℄ Rte 5 TO 93.48 m Lt 457+02.714 ℄ Rte 5		d
		e					4.1																											600 mm RCP			e
SHEET TOTAL				7.37	208	13.4	67.4	10.1	1	1397.9	355.5	277.8	30965	117.2	66.6	54.8	1					0.8	6.3	96.4	5.95	109.0	22.3	238.3	84.2	13.8	87.3	105.0	179.0				

WATER POLLUTION CONTROL QUANTITIES

WQ-2

STATE OF CALIFORNIA - DEPARTMENT OF TRANSPORTATION
Caltrans
HYDRAULICS

FUNCTIONAL SUPERVISOR: DAVE BHALLA
CALCULATED-DESIGNED BY: C.P.NGUYEN
CHECKED BY: S.THAI
REVISED BY: CTT
DATE REVISED: 03-2009

LAST REVISION 03-15-09
DATE PLOTTED => 12-JUN-2009
TIME PLOTTED => 13:03

NOTES: PIPE JOINTS ARE STANDARD
OR AS NOTED ON PLANS
* ADDED IN ROADWAY QUANTITY SHEET Q-1
** ADDED IN DRAINAGE QUANTITY SHEET DQ-22
*** FOR ADDITIONAL QUANTITIES, SEE STRUCTURE PLANS AND ROADWAY QUANTITY SHEETS

Dist	COUNTY	ROUTE	KILOMETER POST TOTAL PROJECT	SHEET No.	TOTAL SHEETS
07	LA	5	42.8/47.3	127	1073

REGISTERED CIVIL ENGINEER 11-17-08 DATE

6-8-09
PLANS APPROVAL DATE

REGISTERED PROFESSIONAL ENGINEER BALDEV K. BHALLA No. 34350 Exp. 9/30/09 CIVIL STATE OF CALIFORNIA

THE STATE OF CALIFORNIA OR ITS OFFICERS OR AGENTS SHALL NOT BE RESPONSIBLE FOR THE ACCURACY OR COMPLETENESS OF ELECTRONIC COPIES OF THIS PLAN SHEET.

Caltrans Metric

DRAINAGE SHEET No.	DRAINAGE SYSTEM No.	DRAINAGE UNIT No.	H OR V	MINOR CONCRETE (MINOR STRUCTURE) **	MISCELLANEOUS IRON AND STEEL **	450 mm REINFORCED CONCRETE PIPE **	600 mm REINFORCED CONCRETE PIPE **	SAND BACKFILL **	ABANDON PIPELINE **	STRUCTURE EXCAVATION (TYPE Y-2) (AERIALLY DEPOSITED LEAD) ***	STRUCTURE BACKFILL (AUSTIN VAULT & GSRD)	STRUCTURAL CONCRETE (AUSTIN VAULT & GSRD)	BAR REINFORCING STEEL (AUSTIN VAULT & GSRD)	BIOSWALE: REMOVE ASPHALT CONCRETE	BIOSWALE: REMOVE CONCRETE CURB	BIOSWALE: DITCH EXCAVATION	DETENTION BASIN: REMOVE HEADWALL	DETENTION BASIN: 1200 mm CORRUGATED STEEL PIPE RISER (2.77mm THICK)	DETENTION BASIN: ROADWAY EXCAVATION (TYPE Y-2) (AERIALLY DEPOSITED LEAD) ***	DETENTION BASIN: ROCK SLOPE PROTECTION (FACING, METHOD B)	DETENTION BASIN: ROCK SLOPE PROTECTION FABRIC	AUSTIN VAULT SAND FILTER: 900 mm PRECAST CONCRETE PIPE MANHOLE	AUSTIN VAULT SAND FILTER: REMOVE PIPE **	AUSTIN VAULT SAND FILTER: SAND BED (AUSTIN VAULT)	AUSTIN VAULT SAND FILTER: MINOR CONCRETE (GUTTER LINING)	AUSTIN VAULT SAND FILTER: 150 mm PERFORATED UNDERDRAIN PIPE (AUSTIN VAULT)	AUSTIN VAULT SAND FILTER: 150 mm NON-PERFORATED UNDERDRAIN PIPE (AUSTIN VAULT)	AUSTIN VAULT SAND FILTER: FILTER FABRIC (AUSTIN VAULT)	AUSTIN VAULT SAND FILTER: PERMEABLE MATERIAL (AUSTIN VAULT)	AUSTIN VAULT SAND FILTER: GABION	GROSS SOLIDS REMOVAL DEVICE: CABLE RAILING ***	GROSS SOLIDS REMOVAL DEVICE: MISCELLANEOUS METAL (AUSTIN VAULT & GSRD)	GROSS SOLIDS REMOVAL DEVICE: STAINLESS STEEL (GSRD) INCLINED (TYPE 2)	DESCRIPTION	STATION	DRAINAGE SYSTEM No.	DRAINAGE UNIT No.
			m	m^3	kg	m	m	m^3	EA	m^3	m^3	m^3	kg	m^2	m	m^3	EA	m	m^3	m^3	m^2	m	m	m^3	m^3	m	m	m^2	m^3	m^3	m	kg	kg				
W-4	8	a												65.8																			REMOVE AC	FROM 87.77 m Lt 457+93.630 ℄ Rte 5 TO 93.57 m Lt 458+25.977 ℄ Rte 5	8	a
		b													39.4																		REMOVE CONCRETE CURB	FROM 90.16 m Lt 457+93.208 ℄ Rte 5 TO 91.02 m Lt 458+25.977 ℄ Rte 5		b
		c														25.1																	DITCH EXCAVATION	FROM 88.00 m Lt 457+96.246 ℄ Rte 5 TO 90.90 m Lt 458+26.048 ℄ Rte 5		c
		d		3.04																													TRANSITION STRUCTURE No. 4	FROM 87.29 m Lt 457+92.353 ℄ Rte 5 TO 88.00 m Lt 457+96.246 ℄ Rte 5		d
		e					5.0																										600 mm RCP			e
W-4	9	a												111.2																			REMOVE AC	FROM 96.01 m Rt 457+93.357 ℄ Rte 5 TO 81.65 m Rt 458+73.562 ℄ Rte 5	9	a
		b													66.6																		REMOVE CONCRETE CURB	FROM 98.80 m Rt 457+92.970 ℄ Rte 5 TO 82.66 m Rt 458+84.977 ℄ Rte 5		b
		c														47.9																	DITCH EXCAVATION	FROM 97.05 m Rt 458+52.545 ℄ Rte 5 TO 81.07 m Rt 458+72.753 ℄ Rte 5		c
		d		3.04																													TRANSITION STRUCTURE No. 4	FROM 97.04 m Rt 457+97.000 ℄ Rte 5 TO 97.05 m Rt 458+52.545 ℄ Rte 5		d
		e					3.1																										600 mm RCP			e
W-4	10	a												92.3																			REMOVE AC	FROM 93.04 m Rt 456+76.072 ℄ Rte 5 TO 82.90 m Rt 457+30.284 ℄ Rte 5	10	a
		b													55.3																		REMOVE CONCRETE CURB	FROM 95.33 m Rt 456+76.072 ℄ Rte 5 TO 84.70 m Rt 457+32.225 ℄ Rte 5		b
		c														39.8																	DITCH EXCAVATION	FROM 92.83 m Rt 456+82.241 ℄ Rte 5 TO 82.98 m Rt 457+30.388 ℄ Rte 5		c
		d		3.04																													TRANSITION STRUCTURE No. 4	FROM 92.87 m Rt 456+77.671 ℄ Rte 5 TO 92.83 m Rt 456+82.241 ℄ Rte 5		d
		e					4.2																										600 mm RCP			e
W-4	11	a	0.70	0.54	148																												ADJUST INLET TO GRADE	63.7 m Lt 456+41.687 ℄ Rte 5	11	a
		b						9.8	1																								ABANDON PIPELINE			b
		c					27.8																										600 mm RCP			c
		d																		6.0	13.6												ROCK SLOPE PROTECTION (FACING, METHOD B)			d
		e		4.0														1.0													169.0		1200 mm CSP RISER	65.18m Lt 457+11.414 ℄ Rte 5		e
		f																	5002.8														ROADWAY EXCAVATION	DETENTION BASIN AT ALAMEDA 1OFF-RAMP		f
		g					11.5																										600 mm RCP			g
SHEET TOTAL				13.66	148		51.6	9.8	1					269.3	161.3	112.8		1.0	5002.8*	6.0	13.6										169.0					

WATER POLLUTION CONTROL QUANTITIES WQ-3

C.P.NGUYEN	CTT	CALCULATED-DESIGNED BY	
S.THAI	03-2009	CHECKED BY	
REVISED BY	DATE REVISED		

FUNCTIONAL SUPERVISOR: DAVE BHALLA

STATE OF CALIFORNIA - DEPARTMENT OF TRANSPORTATION
Caltrans HYDRAULICS

LAST REVISION 03-15-09 | DATE PLOTTED => 12-JUN-2009 | TIME PLOTTED => 13:03

NOTES: PIPE JOINTS ARE STANDARD
OR AS NOTED ON PLANS
* ADDED IN ROADWAY QUANTITY SHEET Q-1
** ADDED IN DRAINAGE QUANTITY SHEET DQ-22
*** FOR ADDITIONAL QUANTITIES, SEE STRUCTURE PLANS AND ROADWAY QUANTITY SHEETS

Dist	COUNTY	ROUTE	KILOMETER POST TOTAL PROJECT	SHEET No.	TOTAL SHEETS
07	LA	5	42.8/47.3	128	1073

REGISTERED CIVIL ENGINEER 12-17-07 DATE

6-8-09
PLANS APPROVAL DATE

REGISTERED PROFESSIONAL ENGINEER BALDEV K. BHALLA No. 34350 Exp. 9/30/09 CIVIL STATE OF CALIFORNIA

THE STATE OF CALIFORNIA OR ITS OFFICERS OR AGENTS SHALL NOT BE RESPONSIBLE FOR THE ACCURACY OR COMPLETENESS OF ELECTRONIC COPIES OF THIS PLAN SHEET.

Caltrans Metric

DRAINAGE SHEET No.	DRAINAGE SYSTEM No.	DRAINAGE UNIT No.	H OR V	MINOR CONCRETE (MINOR STRUCTURE) **	MISCELLANEOUS IRON AND STEEL **	450 mm REINFORCED CONCRETE PIPE **	600 mm REINFORCED CONCRETE PIPE **	SAND BACKFILL **	ABANDON PIPELINE **	STRUCTURE EXCAVATION (TYPE Y-2) (AERIALLY DEPOSITED LEAD) ***	STRUCTURE BACKFILL (AUSTIN VAULT & GSRD)	STRUCTURAL CONCRETE (AUSTIN VAULT & GSRD)	BAR REINFORCING STEEL (AUSTIN VAULT & GSRD)	BIOSWALE: REMOVE ASPHALT CONCRETE	BIOSWALE: REMOVE CONCRETE CURB	BIOSWALE: DITCH EXCAVATION	DETENTION BASIN: REMOVE HEADWALL	DETENTION BASIN: 1200 mm CORRUGATED STEEL PIPE RISER (2.77mm THICK)	DETENTION BASIN: ROADWAY EXCAVATION (TYPE Y-2) (AERIALLY DEPOSITED LEAD) ***	DETENTION BASIN: ROCK SLOPE PROTECTION (FACING, METHOD B)	DETENTION BASIN: ROCK SLOPE PROTECTION FABRIC	AUSTIN VAULT SAND FILTER: 900mm PRECAST CONCRETE PIPE MANHOLE	AUSTIN VAULT SAND FILTER: REMOVE PIPE **	AUSTIN VAULT SAND FILTER: SAND BED (AUSTIN VAULT)	AUSTIN VAULT SAND FILTER: MINOR CONCRETE (GUTTER LINING)	AUSTIN VAULT SAND FILTER: 150 mm PERFORATED UNDERDRAIN PIPE (AUSTIN VAULT)	AUSTIN VAULT SAND FILTER: 150 mm NON-PERFORATED UNDERDRAIN PIPE (AUSTIN VAULT)	AUSTIN VAULT SAND FILTER: FILTER FABRIC (AUSTIN VAULT)	AUSTIN VAULT SAND FILTER: PERMEABLE MATERIAL (AUSTIN VAULT)	AUSTIN VAULT SAND FILTER: GABION	GROSS SOLIDS REMOVAL DEVICE: CABLE RAILING ***	GROSS SOLIDS REMOVAL DEVICE: MISCELLANEOUS METAL (AUSTIN VAULT & GSRD)	GROSS SOLIDS REMOVAL DEVICE: STAINLESS STEEL (GSRD) INCLINED (TYPE 2)	DESCRIPTION	STATION	DRAINAGE SYSTEM No.	DRAINAGE UNIT No.
			m	m^3	kg	m	m	m^3	EA	m^3	m^3	m^3	kg	m^2	m	m^3	EA	m	m^3	m^3	m^2	m	m	m^3	m^3	m	m	m^2	m^3	m^3	m	kg	kg				
W-4	11	h	2.22	3.98	148																												TYPE G2 INLET WITH DEPRESSED APRON	63.8m Lt 457+24.442 ℄ Rte 5	11	h
		i					14.0																										600 mm RCP			i
W-4	12	a					39.5																										600 mm RCP		12	a
		b	2.13	1.88	59																												JUNCTION CHAMBER No. 3	58.9m Rt 458+37.363 ℄ Rte 5		b
		c					5.3																										600 mm RCP			c
		d								2356.6	525.8	343.0	40380											145.0		135.0	24.0	351.0	134.0	17.6	88.1	50.0		AUSTIN VAULT SAND FILTER L-425-1.37			d
		e																							15.51								WALL GUTTER			e
		f																									12.2						150 mm PLASTIC PIPE			f
		g					14.2																										600 mm RCP			g
W-5	13	a					1.4																										600 mm RCP		13	a
		b	2.68	3.51	148																												TYPE G2 INLET (GRATE TYPE 600-12)			b
		c					16.0																										600 mm RCP			c
		d								1434.5	349.6	317.28	32906											96.4		109.0	14.3	238.3	84.2	13.8	72.3	50.0		AUSTIN VAULT SAND FILTER S-283-1.37			d
		e																							5.95								WALL GUTTER			e
		f																									12.8						150 mm PLASTIC PIPE			f
		g	1.35	1.38	178																												JUNCTION CHAMBER No.3 MANHOLE FRAME & COVER Std PLANS B7-11	43.25 m Lt 465+68.2425 ℄ Rte 5		g
		h					17.1																										600 mm RCP			h
		i																				56.4											REMOVE 600 mm RCP			i
SHEET TOTAL				10.75	533.0		107.5			3791.1	875.4	660.28	73286									56.4	241.4	21.46	244.0	63.3	589.3	218.2	31.4	160.4	100.0					
GRAND TOTAL				39.50	911	81.4	230.9	27.3	3	5382.8	1317.5	983.1	108623	536.4	317.7	232.2	3	1.8	5688.8	8.4	22.7	0.8	78.5	337.8	27.4	353.0	85.6	827.6	302.4	45.2	275.1	653.0	471.2				

WATER POLLUTION CONTROL QUANTITIES

WQ-4

C.P.NGUYEN — CALCULATED-DESIGNED BY
S.THAI — CHECKED BY
CTT — REVISED BY
03-2009 — DATE REVISED
DAVE BHALLA — FUNCTIONAL SUPERVISOR

STATE OF CALIFORNIA - DEPARTMENT OF TRANSPORTATION
HYDRAULICS
Caltrans

LAST REVISION 03-15-09 DATE PLOTTED => 12-JUN-2009 TIME PLOTTED => 13:03

Dist	COUNTY	ROUTE	KILOMETER POST TOTAL PROJECT	SHEET No.	TOTAL SHEETS
07	LA	5	42.8/47.3	129	1073

REGISTERED CIVIL ENGINEER 2-24-09 DATE

6-8-09
PLANS APPROVAL DATE

REGISTERED PROFESSIONAL ENGINEER
MUNSHI MOHSIN
No. 61916
Exp. 9/30/09
CIVIL
STATE OF CALIFORNIA

THE STATE OF CALIFORNIA OR ITS OFFICERS OR AGENTS SHALL NOT BE RESPONSIBLE FOR THE ACCURACY OR COMPLETENESS OF ELECTRONIC COPIES OF THIS PLAN SHEET.

Caltrans Metric

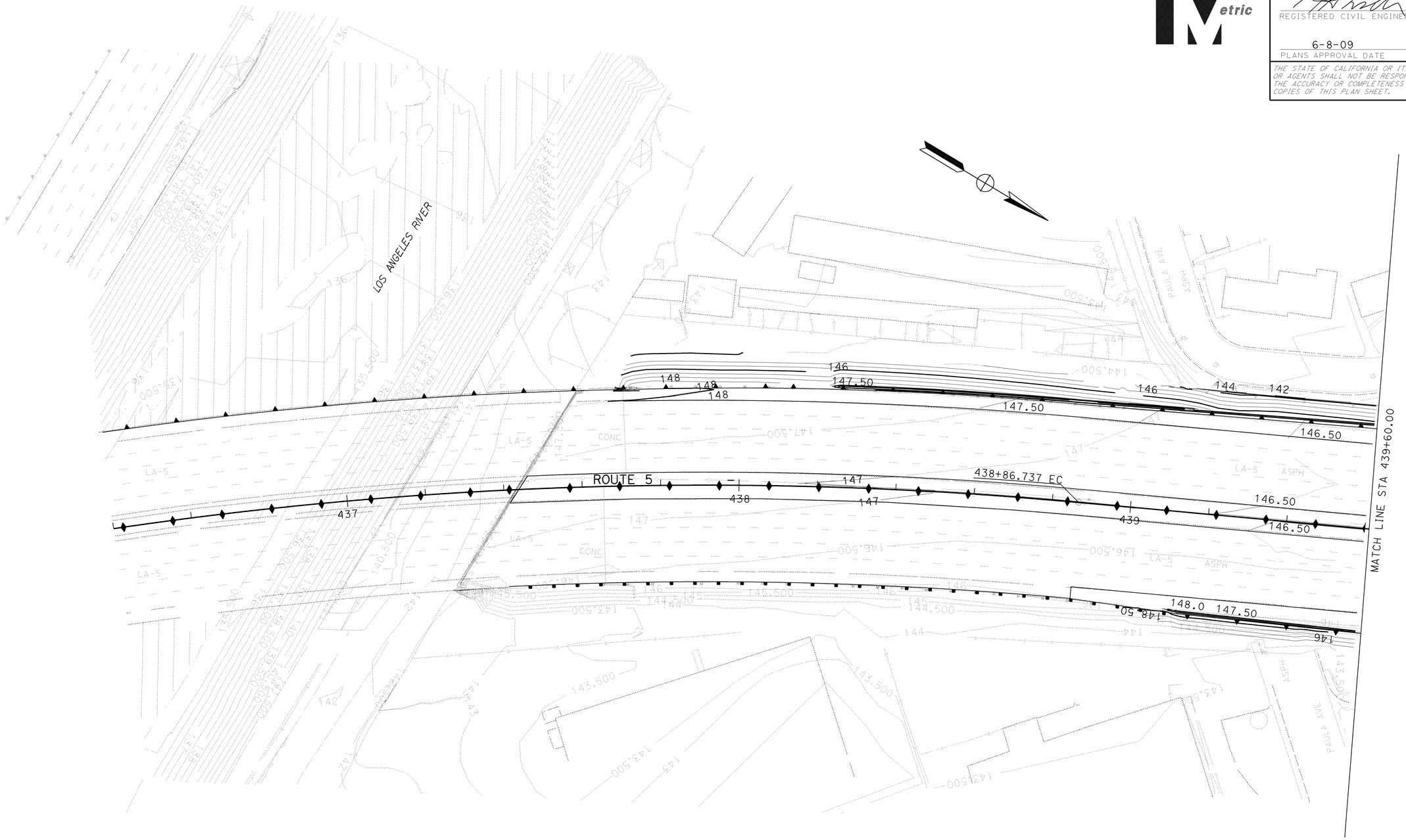

THIS PLAN ACCURATE FOR CONTOUR GRADING WORK ONLY.

ALL DIMENSIONS ARE IN METERS
UNLESS OTHERWISE SHOWN

CONTOUR GRADING

SCALE 1:500

G-1

STATE OF CALIFORNIA - DEPARTMENT OF TRANSPORTATION
Caltrans OFFICE OF DESIGN D

FUNCTIONAL SUPERVISOR: CELINA AVILES

CALCULATED-DESIGNED BY: DAWIT WORKU
CHECKED BY: MUNSHI MOHSIN

REVISED BY | DATE REVISED

LAST REVISION 12-02-08 | DATE PLOTTED => 12-JUN-2009 | TIME PLOTTED => 13:03

Dist	COUNTY	ROUTE	KILOMETER POST TOTAL PROJECT	SHEET No.	TOTAL SHEETS
07	LA	5	42.8/47.3	130	1073

REGISTERED CIVIL ENGINEER 2-24-09 DATE

6-8-09
PLANS APPROVAL DATE

REGISTERED PROFESSIONAL ENGINEER
MUNSHI MOHSIN
No. 61916
Exp. 9/30/09
CIVIL
STATE OF CALIFORNIA

THE STATE OF CALIFORNIA OR ITS OFFICERS OR AGENTS SHALL NOT BE RESPONSIBLE FOR THE ACCURACY OR COMPLETENESS OF ELECTRONIC COPIES OF THIS PLAN SHEET.

Caltrans Metric

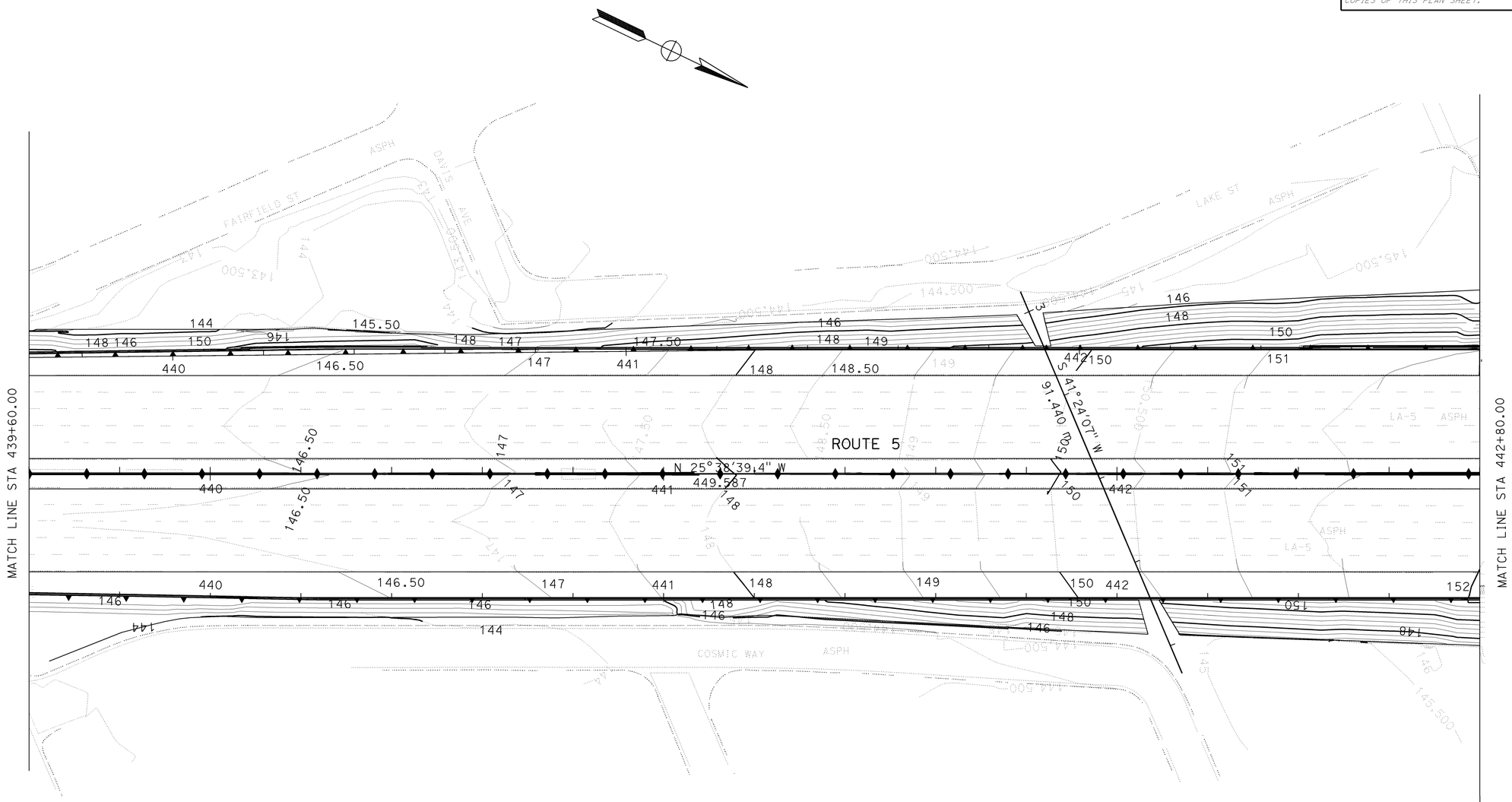

ALL DIMENSIONS ARE IN METERS
UNLESS OTHERWISE SHOWN

THIS PLAN ACCURATE FOR CONTOUR GRADING WORK ONLY.

CONTOUR GRADING

SCALE 1:500

G-2

STATE OF CALIFORNIA - DEPARTMENT OF TRANSPORTATION
Caltrans OFFICE OF DESIGN D

FUNCTIONAL SUPERVISOR: CELINA AVILES

CALCULATED-DESIGNED BY: DAWIT WORKU
CHECKED BY: MUNSHI MOHSIN

REVISED BY | DATE REVISED

LAST REVISION 12-02-08
DATE PLOTTED => 12-JUN-2009
TIME PLOTTED => 13:03

Dist	COUNTY	ROUTE	KILOMETER POST TOTAL PROJECT	SHEET No.	TOTAL SHEETS
07	LA	5	42.8/47.3	131	1073

REGISTERED CIVIL ENGINEER 2-24-09 DATE

6-8-09
PLANS APPROVAL DATE

REGISTERED PROFESSIONAL ENGINEER MUNSHI MOHSIN No. 61916 Exp. 9/30/09 CIVIL STATE OF CALIFORNIA

THE STATE OF CALIFORNIA OR ITS OFFICERS OR AGENTS SHALL NOT BE RESPONSIBLE FOR THE ACCURACY OR COMPLETENESS OF ELECTRONIC COPIES OF THIS PLAN SHEET.

Caltrans Metric

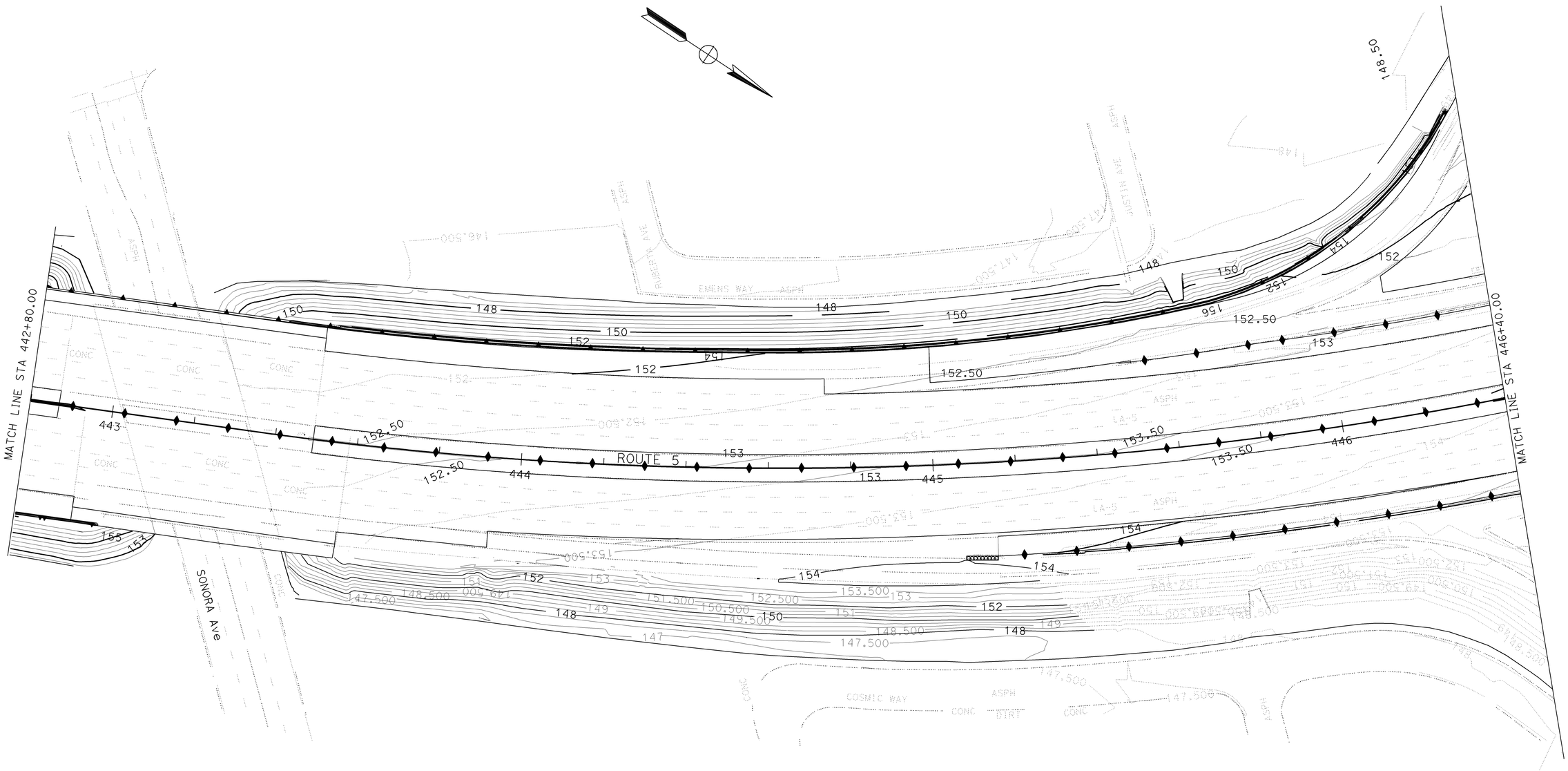

ALL DIMENSIONS ARE IN METERS
UNLESS OTHERWISE SHOWN

THIS PLAN ACCURATE FOR CONTOUR GRADING WORK ONLY.

CONTOUR GRADING

SCALE 1:500

G-3

STATE OF CALIFORNIA - DEPARTMENT OF TRANSPORTATION
Caltrans OFFICE OF DESIGN D

FUNCTIONAL SUPERVISOR: CELINA AVILES

CALCULATED-DESIGNED BY: DAWIT WORKU
CHECKED BY: MUNSHI MOHSIN

REVISED BY / DATE REVISED

LAST REVISION 12-02-08 DATE PLOTTED => 12-JUN-2009 TIME PLOTTED => 13:03

Dist	COUNTY	ROUTE	KILOMETER POST TOTAL PROJECT	SHEET No.	TOTAL SHEETS
07	LA	5	42.8/47.3	132	1073

REGISTERED CIVIL ENGINEER 2-17-09 DATE

6-8-09
PLANS APPROVAL DATE

REGISTERED PROFESSIONAL ENGINEER MUNSHI MOHSIN No. 61916 Exp. 9/30/09 CIVIL STATE OF CALIFORNIA

THE STATE OF CALIFORNIA OR ITS OFFICERS OR AGENTS SHALL NOT BE RESPONSIBLE FOR THE ACCURACY OR COMPLETENESS OF ELECTRONIC COPIES OF THIS PLAN SHEET.

Caltrans Metric

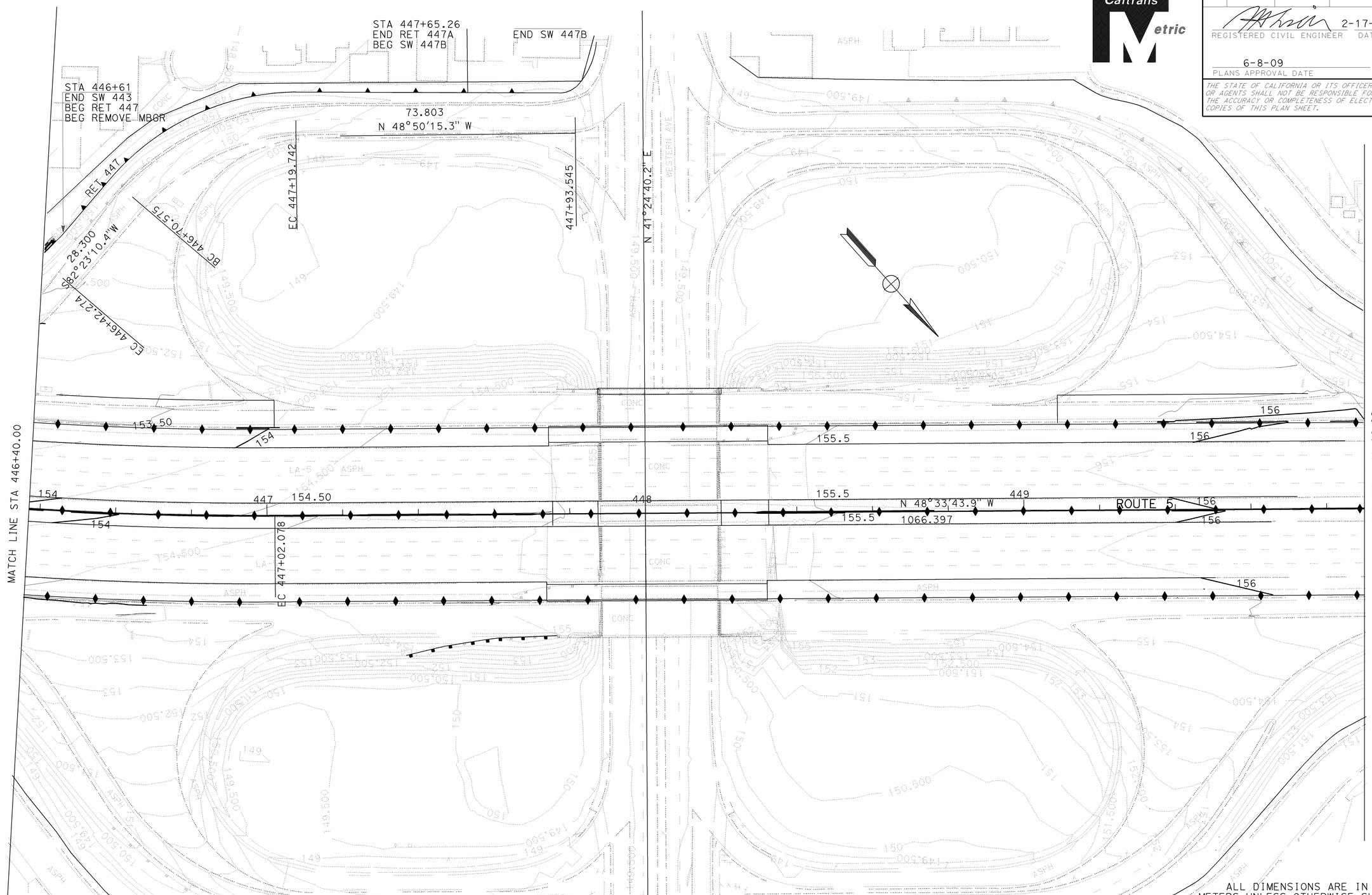

ALL DIMENSIONS ARE IN METERS UNLESS OTHERWISE SHOWN

CONTOUR GRADING

SCALE 1:500

THIS PLAN ACCURATE FOR CONTOUR GRADING WORK ONLY.

G-4

STATE OF CALIFORNIA - DEPARTMENT OF TRANSPORTATION
Caltrans OFFICE OF DESIGN D

FUNCTIONAL SUPERVISOR: CELINA AVILES

CALCULATED-DESIGNED BY: DAWIT WORKU
CHECKED BY: MUNSHI MOHSIN

REVISED BY | DATE REVISED

LAST REVISION 02-29-08 | DATE PLOTTED => 12-JUN-2009 | TIME PLOTTED => 13:03

Dist	COUNTY	ROUTE	KILOMETER POST TOTAL PROJECT	SHEET No.	TOTAL SHEETS
07	LA	5	42.8/47.3	133	1073

REGISTERED CIVIL ENGINEER 2-17-09 DATE

6-8-09
PLANS APPROVAL DATE

REGISTERED PROFESSIONAL ENGINEER MUNSHI MOHSIN No. 61916 Exp. 9/30/09 CIVIL STATE OF CALIFORNIA

THE STATE OF CALIFORNIA OR ITS OFFICERS OR AGENTS SHALL NOT BE RESPONSIBLE FOR THE ACCURACY OR COMPLETENESS OF ELECTRONIC COPIES OF THIS PLAN SHEET.

Caltrans Metric

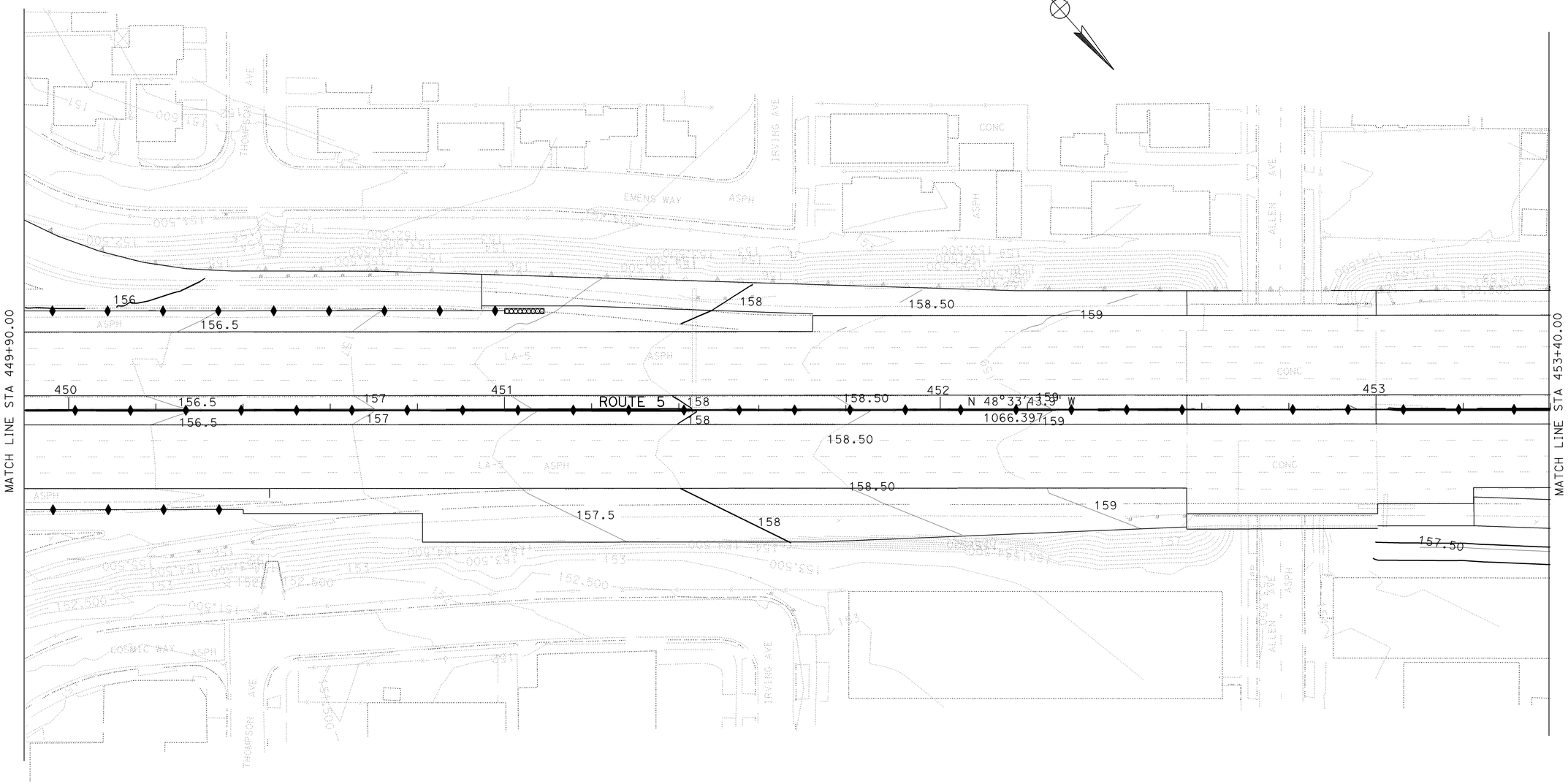

ALL DIMENSIONS ARE IN METERS UNLESS OTHERWISE SHOWN

CONTOUR GRADING

SCALE 1:500

THIS PLAN ACCURATE FOR CONTOUR GRADING WORK ONLY.

G-5

STATE OF CALIFORNIA - DEPARTMENT OF TRANSPORTATION
Caltrans OFFICE OF DESIGN D

FUNCTIONAL SUPERVISOR: CELINA AVILES

CALCULATED-DESIGNED BY: DAWIT WORKU
CHECKED BY: MUNSHI MOHSIN

REVISED BY | DATE REVISED

LAST REVISION 02-29-08 | DATE PLOTTED => 12-JUN-2009 | TIME PLOTTED => 13:03

Dist	COUNTY	ROUTE	KILOMETER POST TOTAL PROJECT	SHEET No.	TOTAL SHEETS
07	LA	5	42.8/47.3	134	1073

REGISTERED CIVIL ENGINEER 2-24-09 DATE

6-8-09
PLANS APPROVAL DATE

REGISTERED PROFESSIONAL ENGINEER
MUNSHI MOHSIN
No. 61916
Exp. 9/30/09
CIVIL
STATE OF CALIFORNIA

THE STATE OF CALIFORNIA OR ITS OFFICERS OR AGENTS SHALL NOT BE RESPONSIBLE FOR THE ACCURACY OR COMPLETENESS OF ELECTRONIC COPIES OF THIS PLAN SHEET.

Caltrans Metric

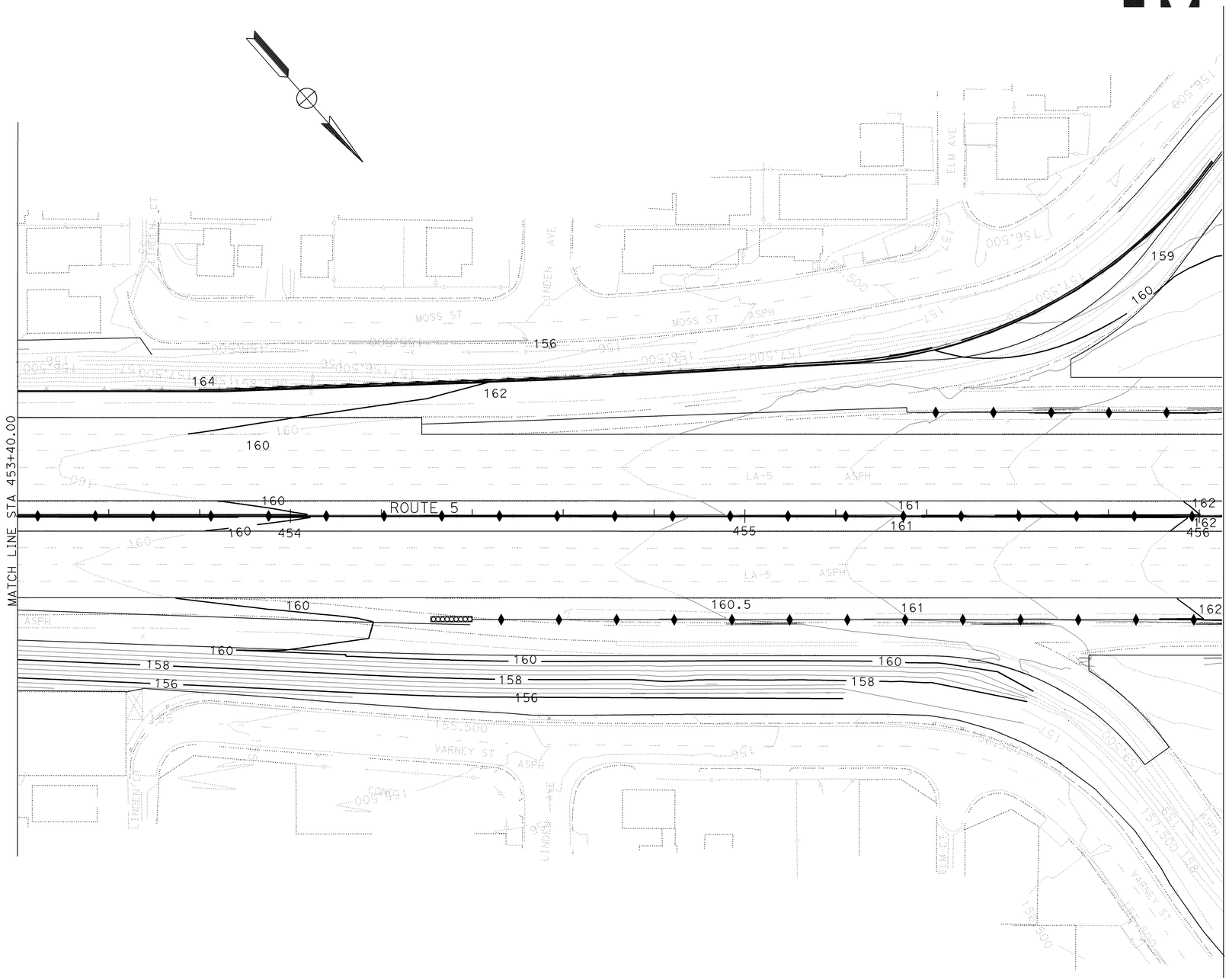

THIS PLAN ACCURATE FOR CONTOUR GRADING WORK ONLY.

ALL DIMENSIONS ARE IN METERS
UNLESS OTHERWISE SHOWN

CONTOUR GRADING

SCALE 1:500

G-6

STATE OF CALIFORNIA - DEPARTMENT OF TRANSPORTATION
Caltrans OFFICE OF DESIGN D

FUNCTIONAL SUPERVISOR: CELINA AVILES

CALCULATED-DESIGNED BY: DAWIT WORKU
CHECKED BY: MUNSHI MOHSIN

REVISED BY / DATE REVISED

LAST REVISION 12-02-08 | DATE PLOTTED => 12-JUN-2009 | TIME PLOTTED => 13:03

Dist	COUNTY	ROUTE	KILOMETER POST TOTAL PROJECT	SHEET No.	TOTAL SHEETS
07	LA	5	42.8/47.3	135	1073

REGISTERED CIVIL ENGINEER 2-17-09 DATE

6-8-09
PLANS APPROVAL DATE

REGISTERED PROFESSIONAL ENGINEER
MUNSHI MOHSIN
No. 61916
Exp. 9/30/09
CIVIL
STATE OF CALIFORNIA

THE STATE OF CALIFORNIA OR ITS OFFICERS OR AGENTS SHALL NOT BE RESPONSIBLE FOR THE ACCURACY OR COMPLETENESS OF ELECTRONIC COPIES OF THIS PLAN SHEET.

Caltrans Metric

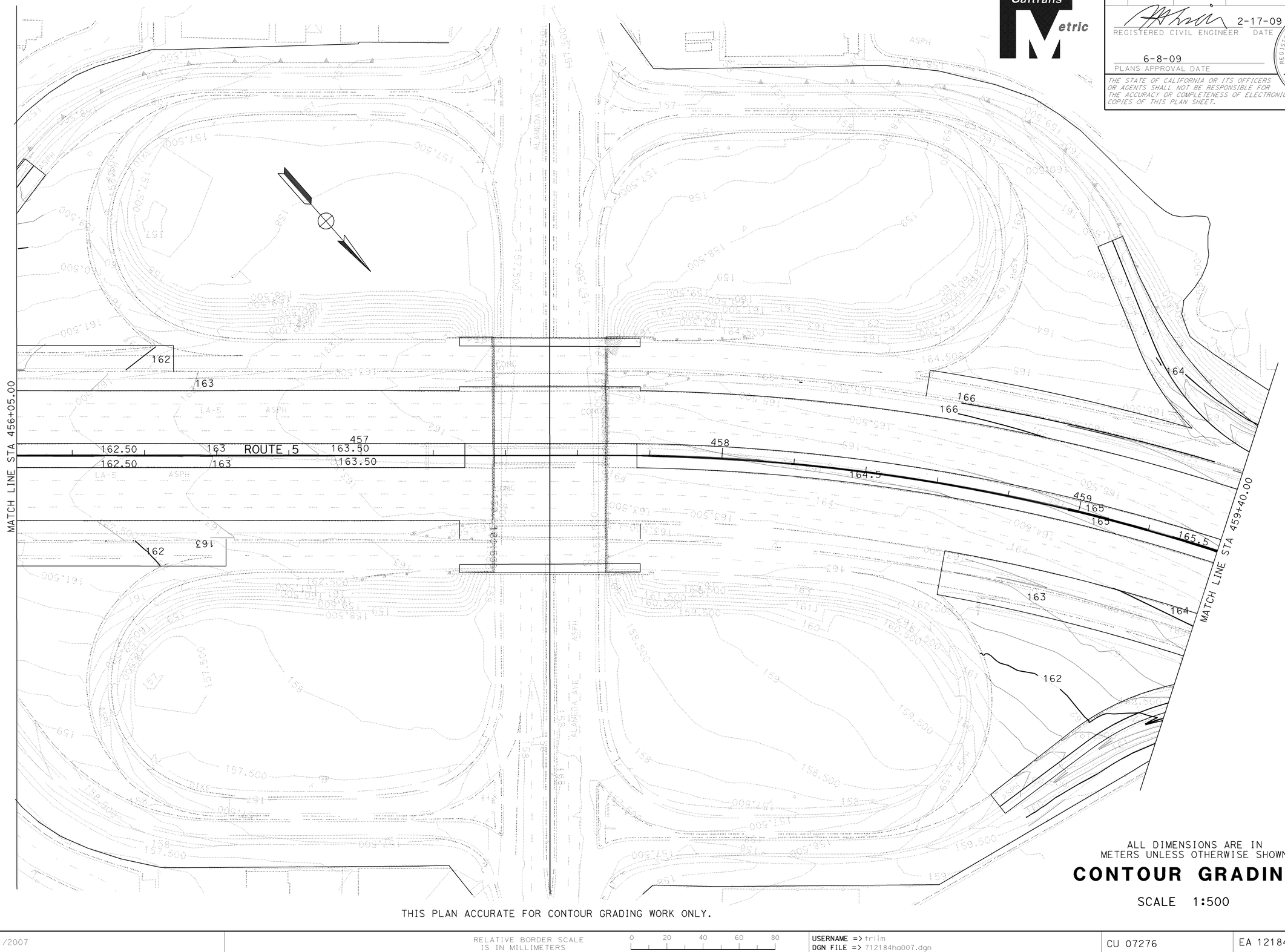

ALL DIMENSIONS ARE IN METERS UNLESS OTHERWISE SHOWN

CONTOUR GRADING

SCALE 1:500

THIS PLAN ACCURATE FOR CONTOUR GRADING WORK ONLY.

G-7

STATE OF CALIFORNIA - DEPARTMENT OF TRANSPORTATION
Caltrans OFFICE OF DESIGN D

FUNCTIONAL SUPERVISOR: CELINA AVILES

CALCULATED-DESIGNED BY: DAWIT WORKU
CHECKED BY: MUNSHI MOHSIN

REVISED BY | DATE REVISED

LAST REVISION 02-29-08 | DATE PLOTTED => 12-JUN-2009 | TIME PLOTTED => 13:04

Dist	COUNTY	ROUTE	KILOMETER POST TOTAL PROJECT	SHEET No.	TOTAL SHEETS
07	LA	5	42.8/47.3	136	1073

REGISTERED CIVIL ENGINEER 2-24-09 DATE

6-8-09
PLANS APPROVAL DATE

REGISTERED PROFESSIONAL ENGINEER MUNSHI MOHSIN No. 61916 Exp. 9/30/09 CIVIL STATE OF CALIFORNIA

THE STATE OF CALIFORNIA OR ITS OFFICERS OR AGENTS SHALL NOT BE RESPONSIBLE FOR THE ACCURACY OR COMPLETENESS OF ELECTRONIC COPIES OF THIS PLAN SHEET.

Caltrans Metric

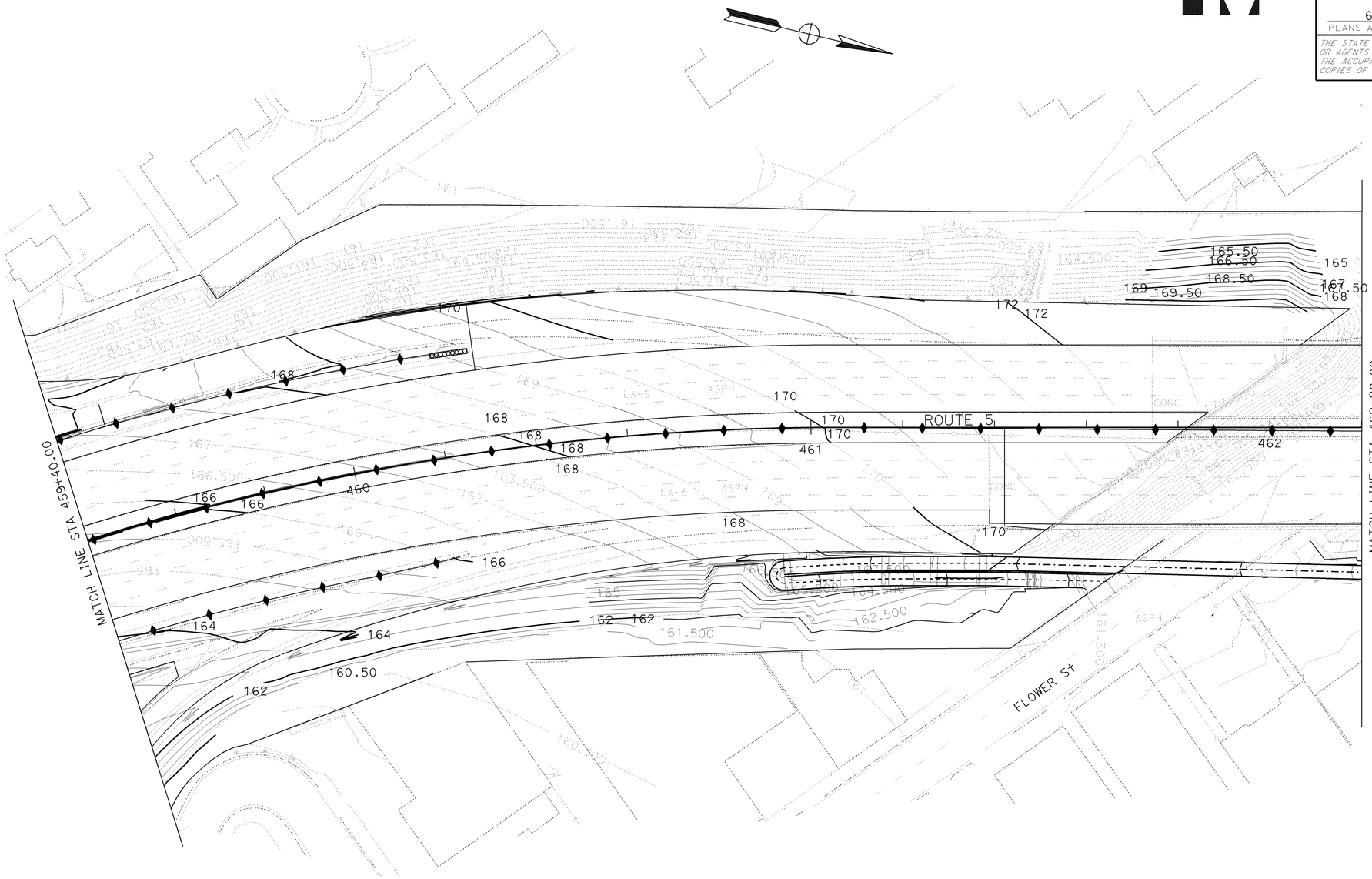

THIS PLAN ACCURATE FOR CONTOUR GRADING WORK ONLY.

ALL DIMENSIONS ARE IN METERS
UNLESS OTHERWISE SHOWN

CONTOUR GRADING

SCALE 1:500

G-8

STATE OF CALIFORNIA - DEPARTMENT OF TRANSPORTATION
Caltrans OFFICE OF DESIGN D

FUNCTIONAL SUPERVISOR: CELINA AVILES

CALCULATED-DESIGNED BY: DAWIT WORKU
CHECKED BY

REVISED BY
DATE REVISED

LAST REVISION 03-09-09 | DATE PLOTTED => 12-JUN-2009 | TIME PLOTTED => 13:04

Dist	COUNTY	ROUTE	KILOMETER POST TOTAL PROJECT	SHEET No.	TOTAL SHEETS
07	LA	5	42.8/47.3	137	1073

REGISTERED CIVIL ENGINEER 2-24-09 DATE

6-8-09
PLANS APPROVAL DATE

REGISTERED PROFESSIONAL ENGINEER MUNSHI MOHSIN No. 61916 Exp. 9/30/09 CIVIL STATE OF CALIFORNIA

THE STATE OF CALIFORNIA OR ITS OFFICERS OR AGENTS SHALL NOT BE RESPONSIBLE FOR THE ACCURACY OR COMPLETENESS OF ELECTRONIC COPIES OF THIS PLAN SHEET.

Caltrans Metric

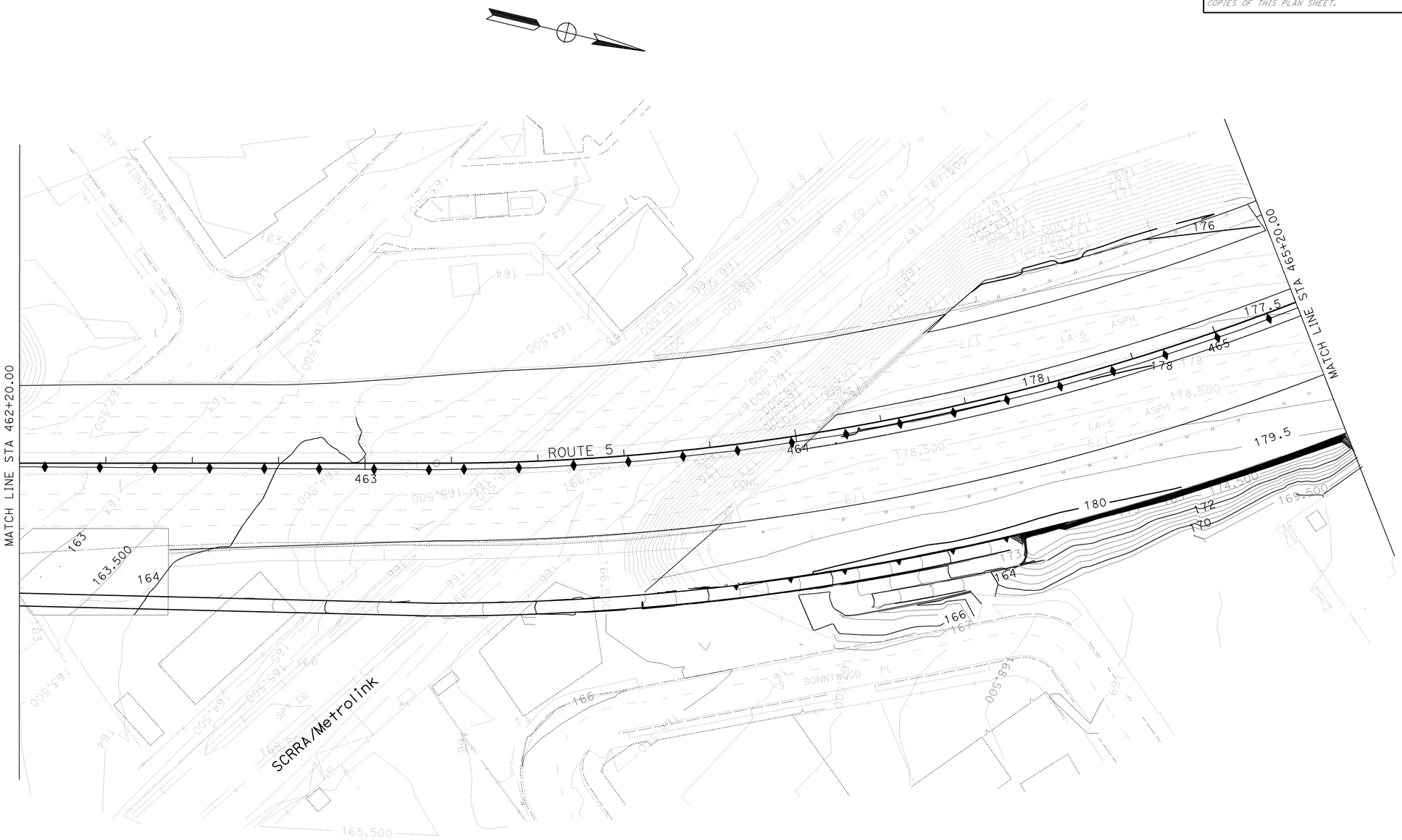

ALL DIMENSIONS ARE IN METERS
UNLESS OTHERWISE SHOWN

THIS PLAN ACCURATE FOR CONTOUR GRADING WORK ONLY.

CONTOUR GRADING

SCALE 1:500

G-9

STATE OF CALIFORNIA - DEPARTMENT OF TRANSPORTATION
Caltrans OFFICE OF DESIGN D

FUNCTIONAL SUPERVISOR: CELINA AVILES

DAWIT WORKU

CALCULATED-DESIGNED BY
CHECKED BY

REVISED BY
DATE REVISED

LAST REVISION 03-09-09
DATE PLOTTED => 12-JUN-2009
TIME PLOTTED => 13:04

Dist	COUNTY	ROUTE	KILOMETER POST TOTAL PROJECT	SHEET No.	TOTAL SHEETS
07	LA	5	42.8/47.3	138	1073

REGISTERED CIVIL ENGINEER 2-24-09 DATE

6-8-09
PLANS APPROVAL DATE

REGISTERED PROFESSIONAL ENGINEER
MUNSHI MOHSIN
No. 61916
Exp. 9/30/09
CIVIL
STATE OF CALIFORNIA

THE STATE OF CALIFORNIA OR ITS OFFICERS OR AGENTS SHALL NOT BE RESPONSIBLE FOR THE ACCURACY OR COMPLETENESS OF ELECTRONIC COPIES OF THIS PLAN SHEET.

Caltrans Metric

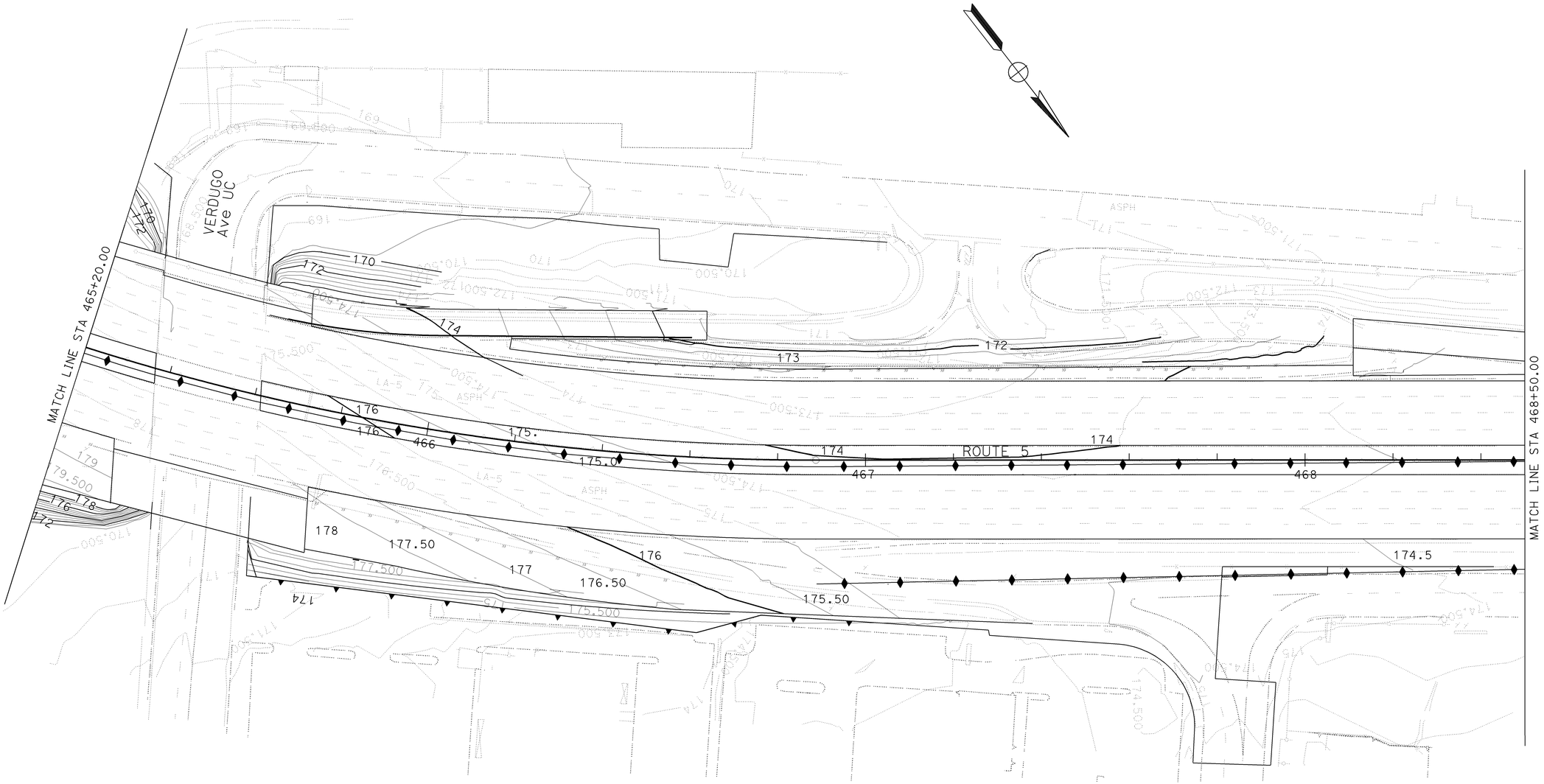

THIS PLAN ACCURATE FOR CONTOUR GRADING WORK ONLY.

ALL DIMENSIONS ARE IN METERS
UNLESS OTHERWISE SHOWN

CONTOUR GRADING

SCALE 1:500

G-10

STATE OF CALIFORNIA - DEPARTMENT OF TRANSPORTATION
Caltrans OFFICE OF DESIGN D

FUNCTIONAL SUPERVISOR: CELINA AVILES

CALCULATED-DESIGNED BY
CHECKED BY

DAWIT WORKU

REVISED BY
DATE REVISED

LAST REVISION 03-09-09 | DATE PLOTTED => 12-JUN-2009 | TIME PLOTTED => 13:04

Dist	COUNTY	ROUTE	KILOMETER POST TOTAL PROJECT	SHEET No.	TOTAL SHEETS
07	LA	5	42.8/47.3	139	1073

REGISTERED CIVIL ENGINEER 2-24-09 DATE

6-8-09
PLANS APPROVAL DATE

REGISTERED PROFESSIONAL ENGINEER
MUNSHI MOHSIN
No. 61916
Exp. 9/30/09
CIVIL
STATE OF CALIFORNIA

THE STATE OF CALIFORNIA OR ITS OFFICERS OR AGENTS SHALL NOT BE RESPONSIBLE FOR THE ACCURACY OR COMPLETENESS OF ELECTRONIC COPIES OF THIS PLAN SHEET.

Caltrans Metric

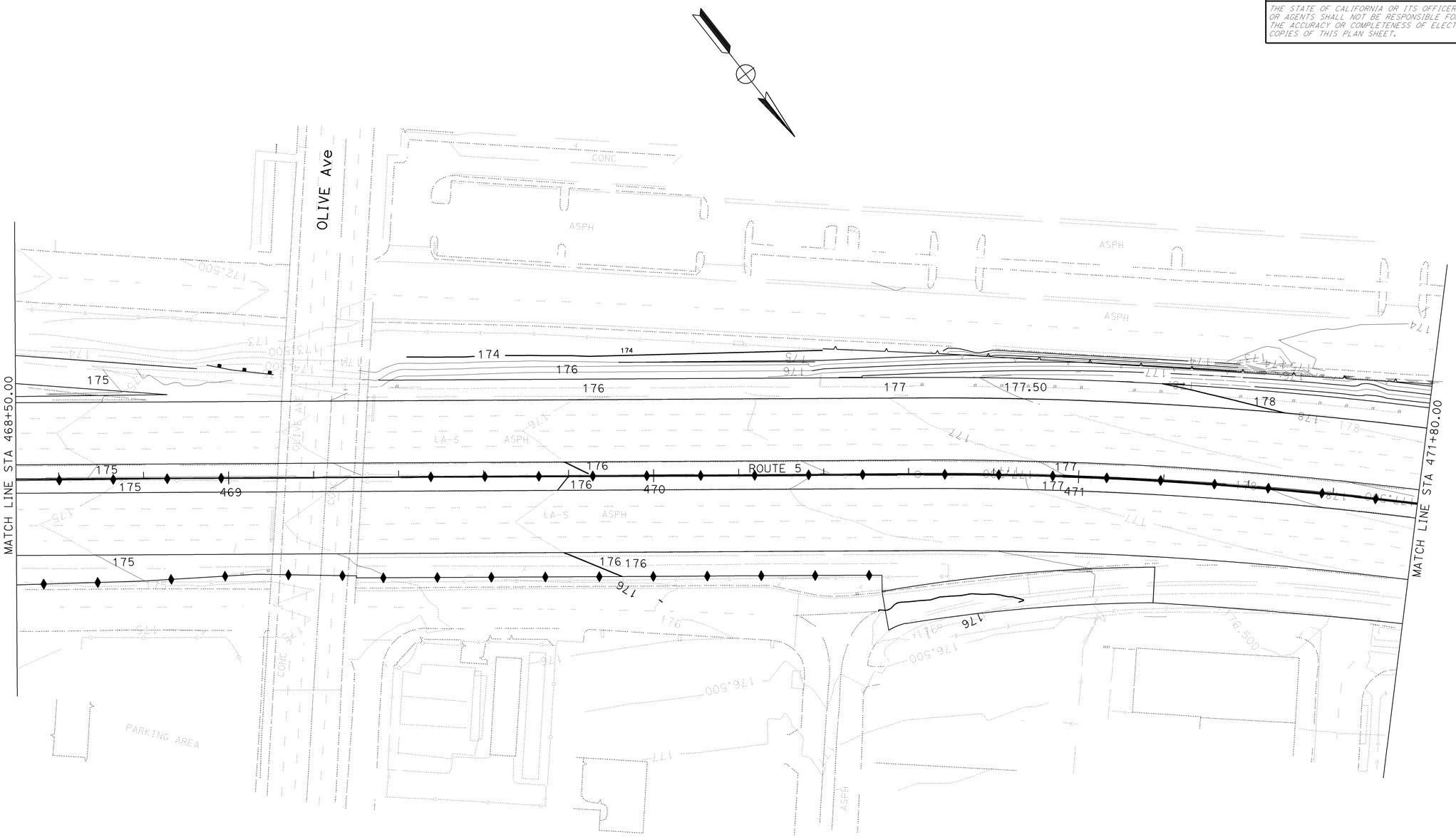

ALL DIMENSIONS ARE IN METERS
UNLESS OTHERWISE SHOWN

THIS PLAN ACCURATE FOR CONTOUR GRADING WORK ONLY.

CONTOUR GRADING

SCALE 1:500

G-11

STATE OF CALIFORNIA - DEPARTMENT OF TRANSPORTATION
Caltrans OFFICE OF DESIGN D

FUNCTIONAL SUPERVISOR: CELINA AVILES

CALCULATED-DESIGNED BY: DAWIT WORKU
CHECKED BY

REVISED BY
DATE REVISED

LAST REVISION 03-09-09
DATE PLOTTED => 12-JUN-2009
TIME PLOTTED => 13:04

Dist	COUNTY	ROUTE	KILOMETER POST TOTAL PROJECT	SHEET No.	TOTAL SHEETS
07	LA	5	42.8/47.3	140	1073

REGISTERED CIVIL ENGINEER 2-24-09 DATE

6-8-09
PLANS APPROVAL DATE

REGISTERED PROFESSIONAL ENGINEER MUNSHI MOHSIN No. 61916 Exp. 9/30/09 CIVIL STATE OF CALIFORNIA

THE STATE OF CALIFORNIA OR ITS OFFICERS OR AGENTS SHALL NOT BE RESPONSIBLE FOR THE ACCURACY OR COMPLETENESS OF ELECTRONIC COPIES OF THIS PLAN SHEET.

Caltrans Metric

THIS PLAN ACCURATE FOR CONTOUR GRADING WORK ONLY.

ALL DIMENSIONS ARE IN METERS
UNLESS OTHERWISE SHOWN

CONTOUR GRADING

SCALE 1:500

G-12

STATE OF CALIFORNIA - DEPARTMENT OF TRANSPORTATION
Caltrans OFFICE OF DESIGN D

FUNCTIONAL SUPERVISOR: CELINA AVILES

CALCULATED-DESIGNED BY: DAWIT WORKU
CHECKED BY

REVISED BY
DATE REVISED

LAST REVISION 03-09-09
DATE PLOTTED => 12-JUN-2009
TIME PLOTTED => 13:04

Dist	COUNTY	ROUTE	KILOMETER POST TOTAL PROJECT	SHEET No.	TOTAL SHEETS
07	LA	5	42.8/47.3	141	1073

REGISTERED CIVIL ENGINEER DATE 12-17-08

PLANS APPROVAL DATE 6-8-09

REGISTERED PROFESSIONAL ENGINEER BALDEV K. BHALLA No. 34350 Exp. 9/30/09 CIVIL STATE OF CALIFORNIA

THE STATE OF CALIFORNIA OR ITS OFFICERS OR AGENTS SHALL NOT BE RESPONSIBLE FOR THE ACCURACY OR COMPLETENESS OF ELECTRONIC COPIES OF THIS PLAN SHEET.

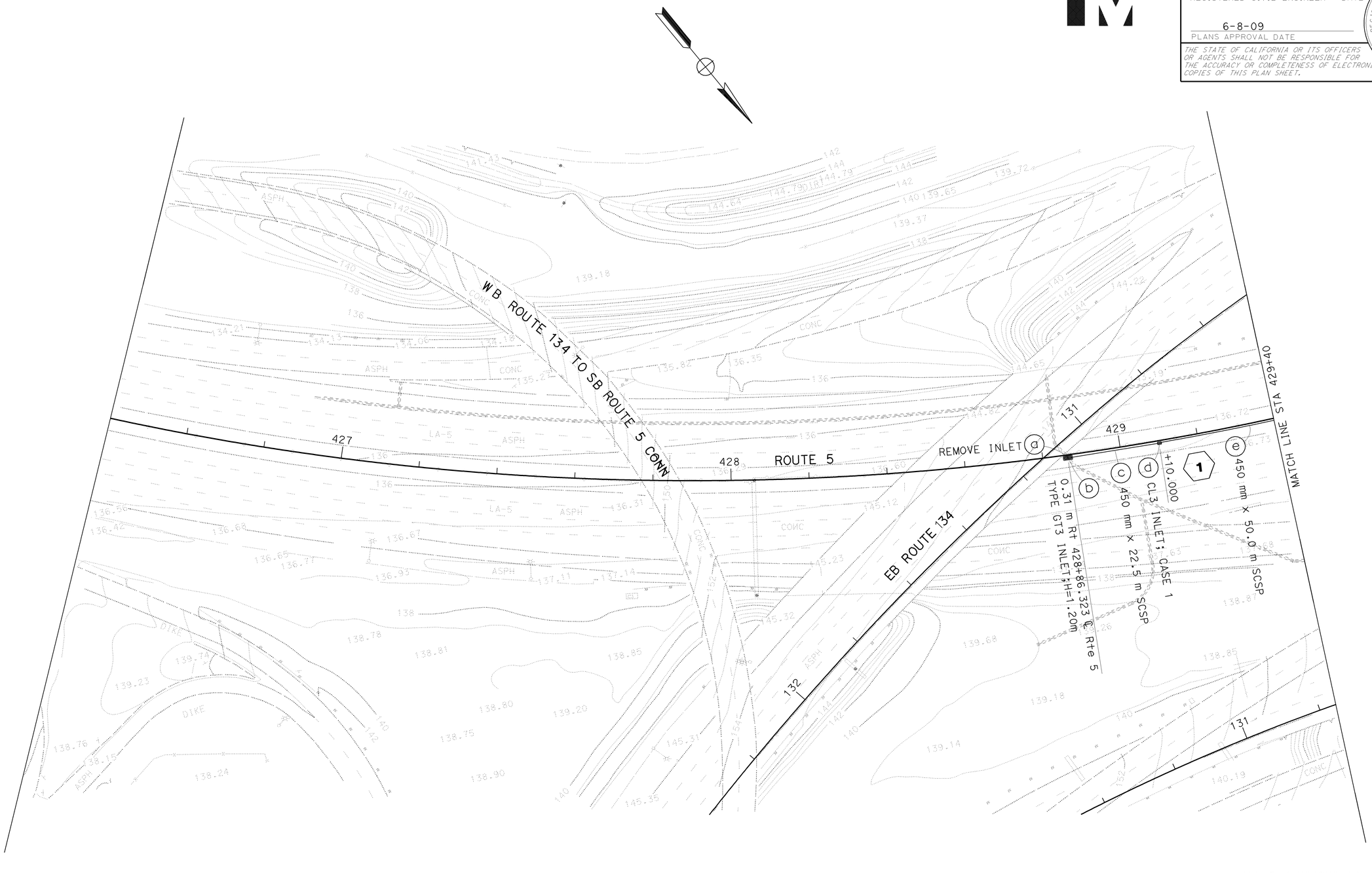

ALL DIMENSIONS ARE IN METERS UNLESS OTHERWISE SHOWN

DRAINAGE PLAN

SCALE 1:500

D-1

THIS PLAN ACCURATE FOR DRAINAGE WORK ONLY

STATE OF CALIFORNIA - DEPARTMENT OF TRANSPORTATION

Caltrans

HYDRAULICS

FUNCTIONAL SUPERVISOR: DAVE BHALLA

CALCULATED-DESIGNED BY: C.P.NGUYEN

CHECKED BY: S.THAI

REVISED BY / DATE REVISED

LAST REVISION 00-00-00 DATE PLOTTED => 12-JUN-2009 TIME PLOTTED => 13:04

Dist	COUNTY	ROUTE	KILOMETER POST TOTAL PROJECT	SHEET No.	TOTAL SHEETS
07	LA	5	42.8/47.3	142	1073

REGISTERED CIVIL ENGINEER 12-17-08 DATE

6-8-09
PLANS APPROVAL DATE

REGISTERED PROFESSIONAL ENGINEER BALDEV K. BHALLA No. 34350 Exp. 9/30/09 CIVIL STATE OF CALIFORNIA

THE STATE OF CALIFORNIA OR ITS OFFICERS OR AGENTS SHALL NOT BE RESPONSIBLE FOR THE ACCURACY OR COMPLETENESS OF ELECTRONIC COPIES OF THIS PLAN SHEET.

Caltrans Metric

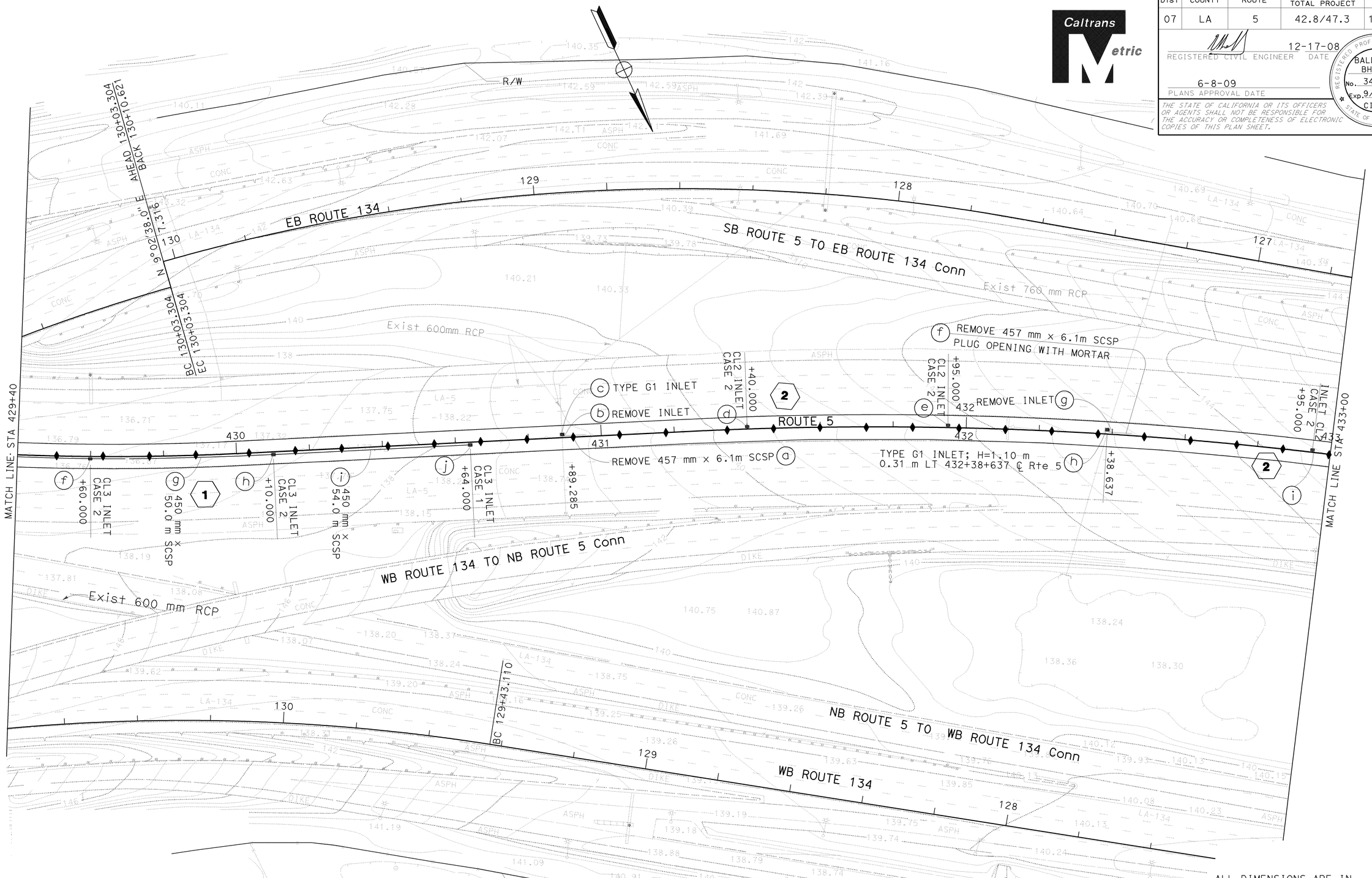

ALL DIMENSIONS ARE IN METERS UNLESS OTHERWISE SHOWN

THIS PLAN ACCURATE FOR DRAINAGE WORK ONLY

DRAINAGE PLAN

SCALE 1:500

D-2

STATE OF CALIFORNIA - DEPARTMENT OF TRANSPORTATION
Caltrans
HYDRAULICS

FUNCTIONAL SUPERVISOR: DAVE BHALLA
CALCULATED-DESIGNED BY: C.P.NGUYEN
CHECKED BY: S.THAI
REVISED BY / DATE REVISED

LAST REVISION 00-00-00 | DATE PLOTTED => 12-JUN-2009 | TIME PLOTTED => 13:04

BORDER LAST REVISED 3/1/2007 | RELATIVE BORDER SCALE IS IN MILLIMETERS 0 20 40 60 80 | USERNAME => trlim | DGN FILE => 712184ia002.dgn | CU 07314 | EA 121841

Dist	COUNTY	ROUTE	KILOMETER POST TOTAL PROJECT	SHEET No.	TOTAL SHEETS
07	LA	5	42.8/47.3	143	1073

REGISTERED CIVIL ENGINEER 12-17-08 DATE

6-8-09
PLANS APPROVAL DATE

REGISTERED PROFESSIONAL ENGINEER
BALDEV K. BHALLA
No. 34350
Exp. 9/30/09
CIVIL
STATE OF CALIFORNIA

THE STATE OF CALIFORNIA OR ITS OFFICERS OR AGENTS SHALL NOT BE RESPONSIBLE FOR THE ACCURACY OR COMPLETENESS OF ELECTRONIC COPIES OF THIS PLAN SHEET.

Caltrans Metric

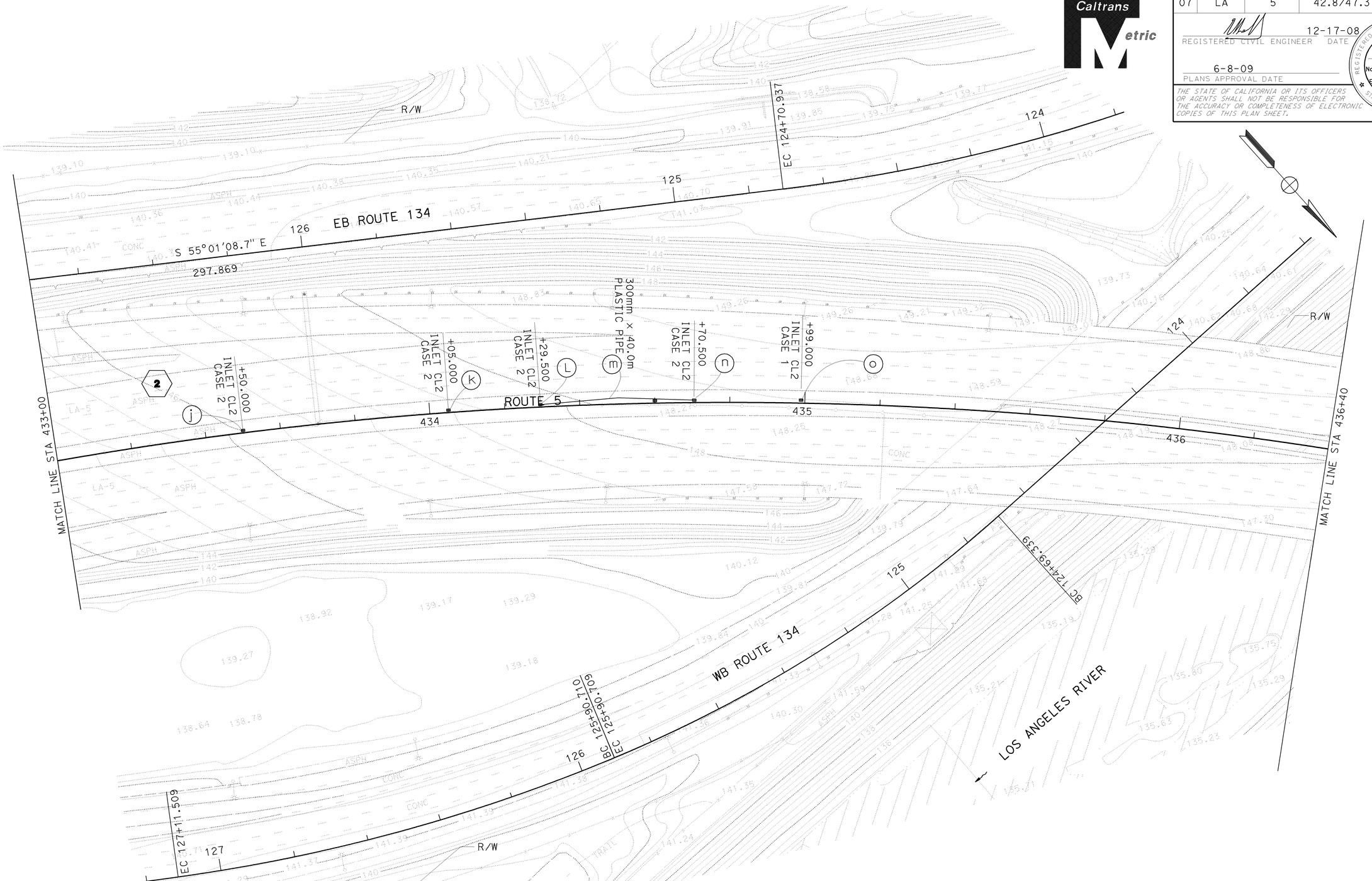

ALL DIMENSIONS ARE IN METERS UNLESS OTHERWISE SHOWN

DRAINAGE PLAN

SCALE 1:500

D-3

THIS PLAN ACCURATE FOR DRAINAGE WORK ONLY

STATE OF CALIFORNIA - DEPARTMENT OF TRANSPORTATION
Caltrans
HYDRAULICS

FUNCTIONAL SUPERVISOR: DAVE BHALLA
CALCULATED-DESIGNED BY: C.P.NGUYEN
CHECKED BY: S.THAI
REVISED BY
DATE REVISED

LAST REVISION 00-00-00
DATE PLOTTED => 12-JUN-2009
TIME PLOTTED => 13:04

Dist	COUNTY	ROUTE	KILOMETER POST TOTAL PROJECT	SHEET No.	TOTAL SHEETS
07	LA	5	42.8/47.3	144	1073

REGISTERED CIVIL ENGINEER 12-17-08 DATE

6-8-09
PLANS APPROVAL DATE

REGISTERED PROFESSIONAL ENGINEER
BALDEV K. BHALLA
No. 34350
Exp. 9/30/09
CIVIL
STATE OF CALIFORNIA

THE STATE OF CALIFORNIA OR ITS OFFICERS OR AGENTS SHALL NOT BE RESPONSIBLE FOR THE ACCURACY OR COMPLETENESS OF ELECTRONIC COPIES OF THIS PLAN SHEET.

Caltrans Metric

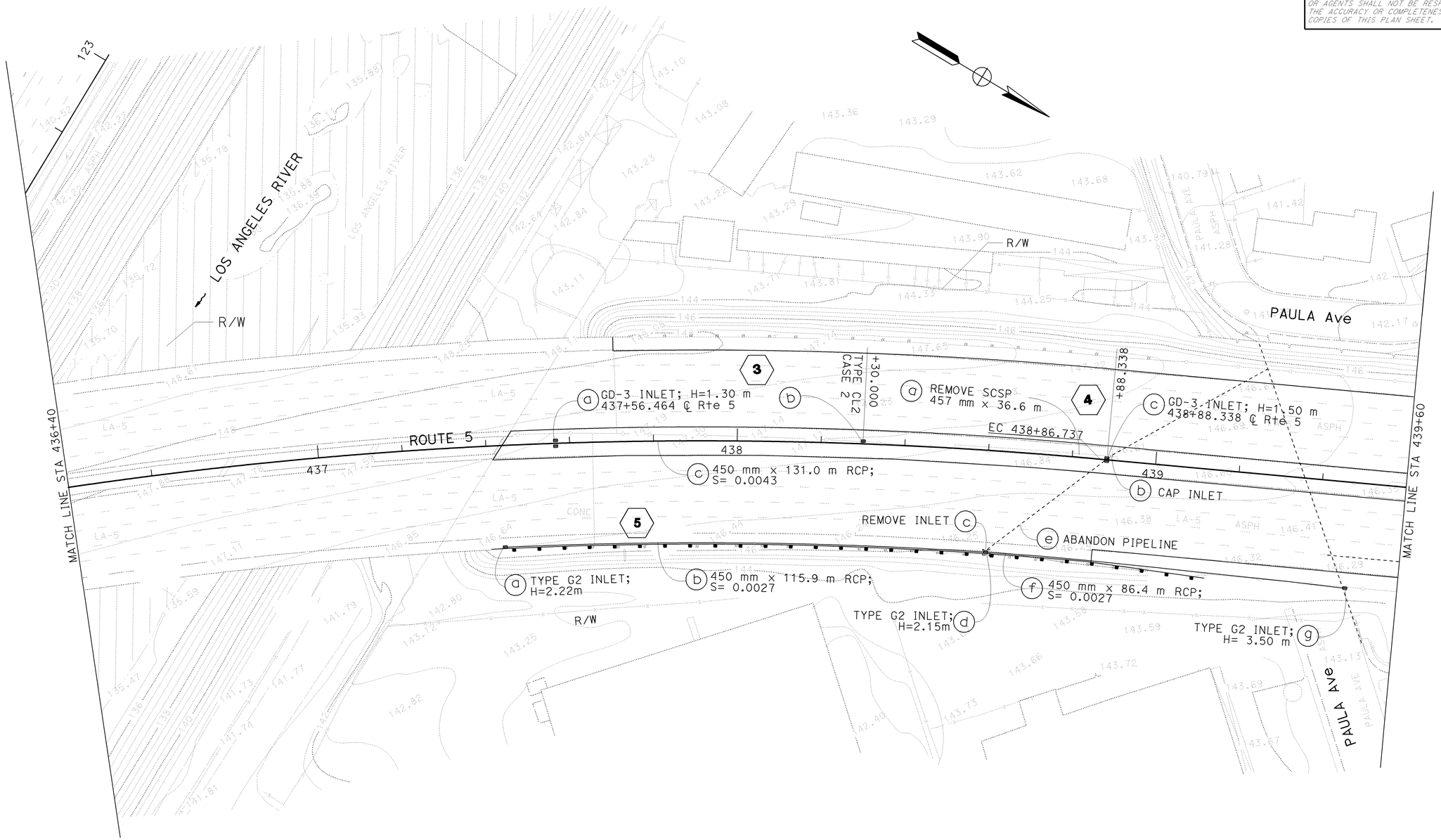

ALL DIMENSIONS ARE IN METERS UNLESS OTHERWISE SHOWN

DRAINAGE PLAN

SCALE 1:500

D-4

THIS PLAN ACCURATE FOR DRAINAGE WORK ONLY

CALCULATED-DESIGNED BY	C.P.NGUYEN
CHECKED BY	S.THAI
REVISED BY	
DATE REVISED	
FUNCTIONAL SUPERVISOR	DAVE BHALLA

STATE OF CALIFORNIA - DEPARTMENT OF TRANSPORTATION
Caltrans
HYDRAULICS

LAST REVISION 00-00-00 DATE PLOTTED => 12-JUN-2009 TIME PLOTTED => 13:04

Dist	COUNTY	ROUTE	KILOMETER POST TOTAL PROJECT	SHEET No.	TOTAL SHEETS
07	LA	5	42.8/47.3	145	1073

REGISTERED CIVIL ENGINEER 12-17-08 DATE

6-8-09
PLANS APPROVAL DATE

REGISTERED PROFESSIONAL ENGINEER BALDEV K. BHALLA No. 34350 Exp. 9/30/09 CIVIL STATE OF CALIFORNIA

THE STATE OF CALIFORNIA OR ITS OFFICERS OR AGENTS SHALL NOT BE RESPONSIBLE FOR THE ACCURACY OR COMPLETENESS OF ELECTRONIC COPIES OF THIS PLAN SHEET.

Caltrans Metric

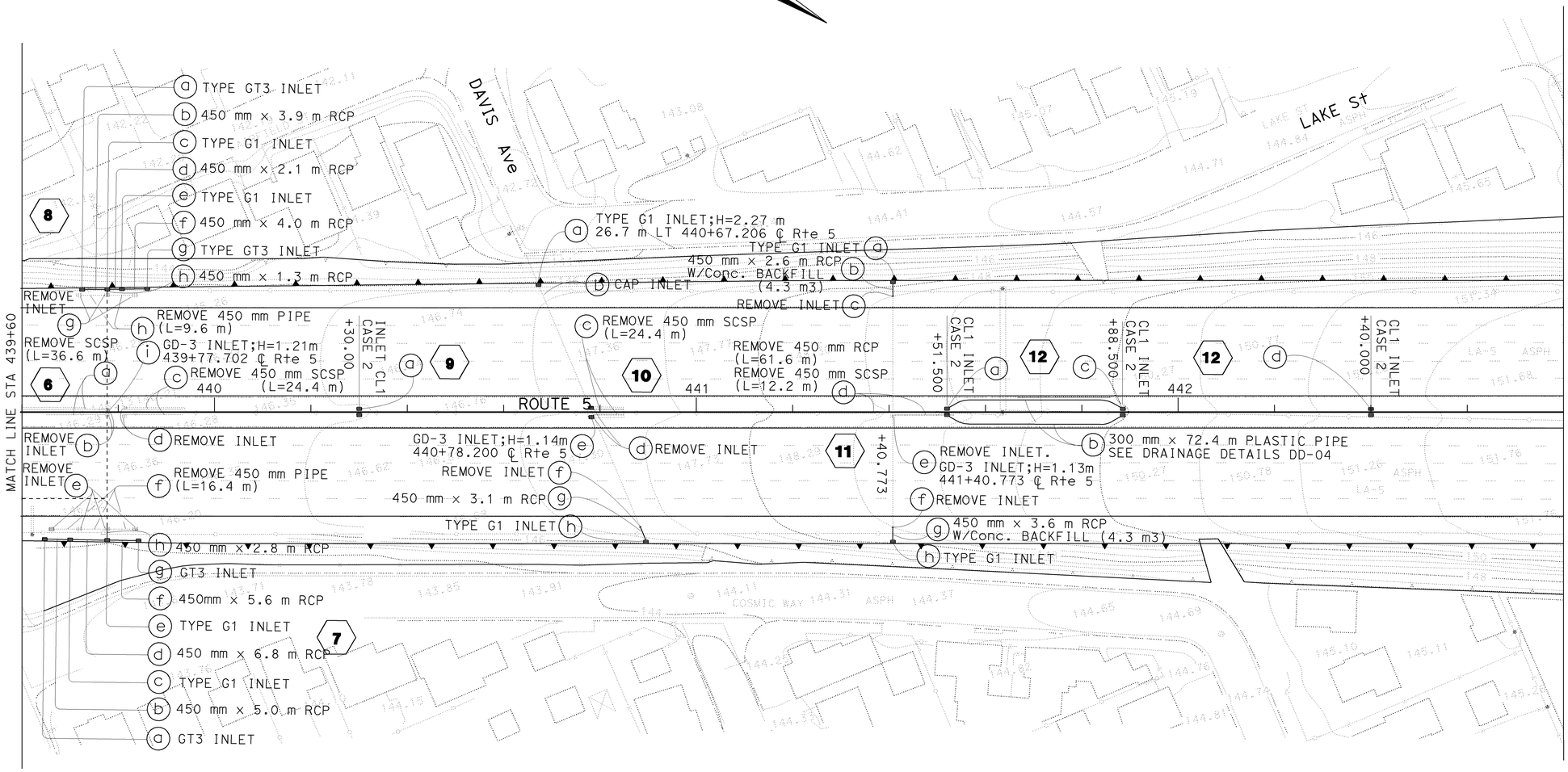

ALL DIMENSIONS ARE IN METERS UNLESS OTHERWISE SHOWN

DRAINAGE PLAN

SCALE 1:500

D-5

THIS PLAN ACCURATE FOR DRAINAGE WORK ONLY

STATE OF CALIFORNIA - DEPARTMENT OF TRANSPORTATION
Caltrans
HYDRAULICS

FUNCTIONAL SUPERVISOR: DAVE BHALLA
CALCULATED-DESIGNED BY: C.P.NGUYEN
CHECKED BY: S.THAI
REVISED BY
DATE REVISED

LAST REVISION 00-00-00
DATE PLOTTED => 12-JUN-2009
TIME PLOTTED => 13:04

Dist	COUNTY	ROUTE	KILOMETER POST TOTAL PROJECT	SHEET No.	TOTAL SHEETS
07	LA	5	42.8/47.3	146	1073

REGISTERED CIVIL ENGINEER 12-17-08 DATE

6-8-09
PLANS APPROVAL DATE

REGISTERED PROFESSIONAL ENGINEER
BALDEV K. BHALLA
No. 34350
Exp. 9/30/09
CIVIL
STATE OF CALIFORNIA

THE STATE OF CALIFORNIA OR ITS OFFICERS OR AGENTS SHALL NOT BE RESPONSIBLE FOR THE ACCURACY OR COMPLETENESS OF ELECTRONIC COPIES OF THIS PLAN SHEET.

Caltrans Metric

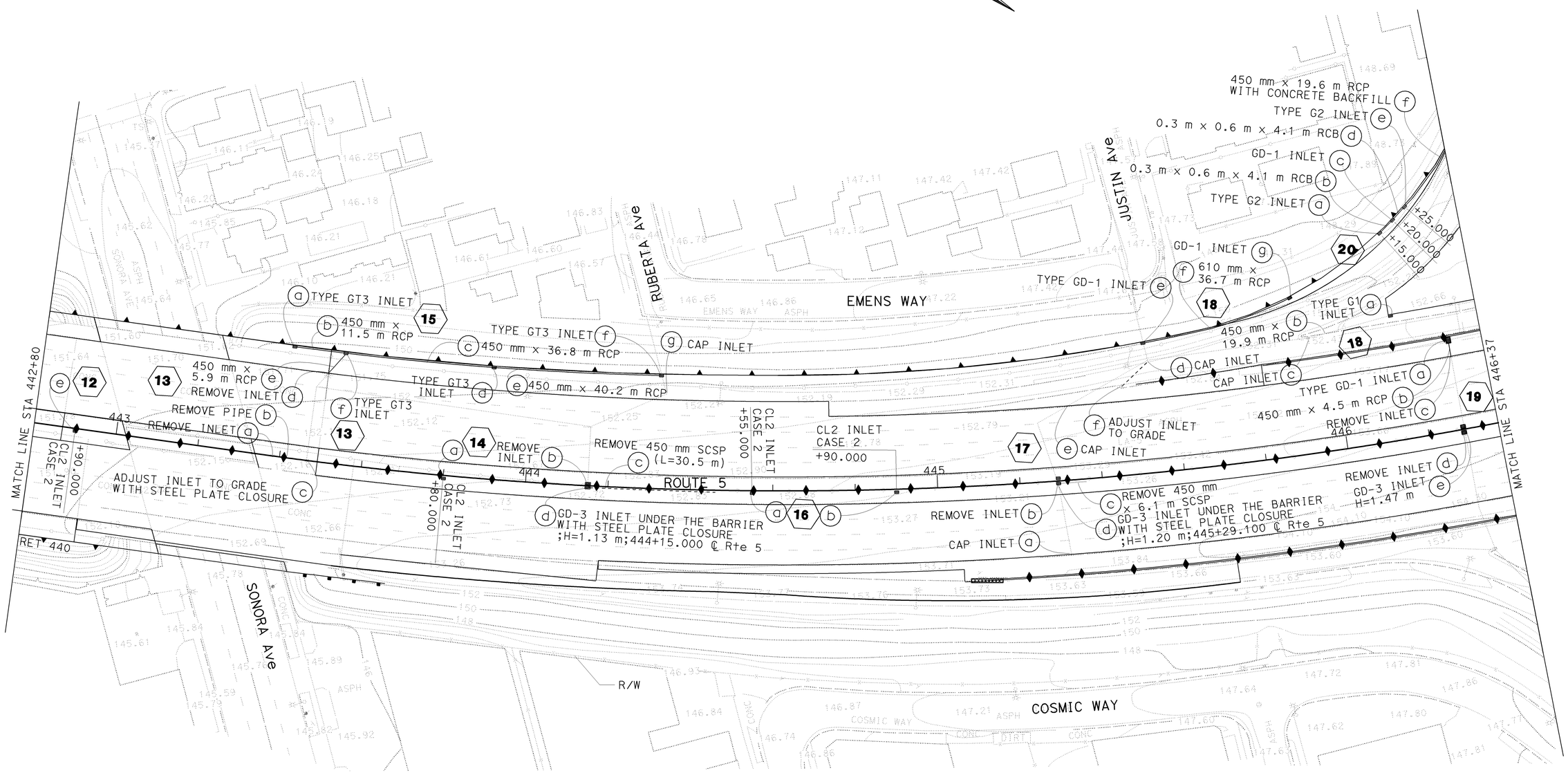

ALL DIMENSIONS ARE IN
METERS UNLESS OTHERWISE SHOWN

DRAINAGE PLAN

SCALE 1:500

D-6

STATE OF CALIFORNIA - DEPARTMENT OF TRANSPORTATION
Caltrans
HYDRAULICS

FUNCTIONAL SUPERVISOR: DAVE BHALLA
CALCULATED-DESIGNED BY: C.P.NGUYEN
CHECKED BY: S.THAI
REVISED BY
DATE REVISED

LAST REVISION 00-00-00
DATE PLOTTED => 12-JUN-2009
TIME PLOTTED => 13:05

Dist	COUNTY	ROUTE	KILOMETER POST TOTAL PROJECT	SHEET No.	TOTAL SHEETS
07	LA	5	42.8/47.3	147	1073

REGISTERED CIVIL ENGINEER 12-17-08 DATE

6-8-09
PLANS APPROVAL DATE

REGISTERED PROFESSIONAL ENGINEER BALDEV K. BHALLA No. 34350 Exp. 9/30/09 CIVIL STATE OF CALIFORNIA

THE STATE OF CALIFORNIA OR ITS OFFICERS OR AGENTS SHALL NOT BE RESPONSIBLE FOR THE ACCURACY OR COMPLETENESS OF ELECTRONIC COPIES OF THIS PLAN SHEET.

Caltrans Metric

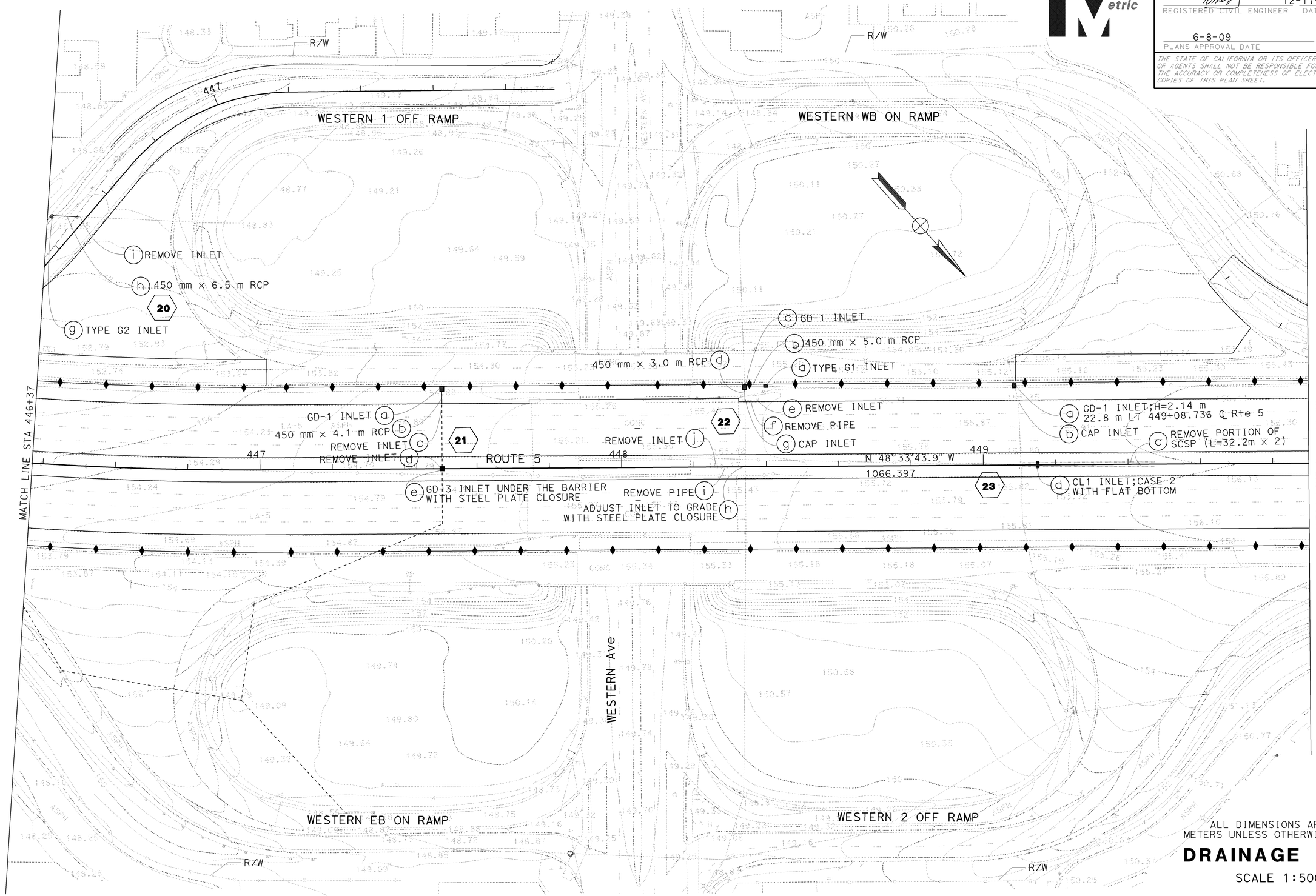

ALL DIMENSIONS ARE IN METERS UNLESS OTHERWISE SHOWN

DRAINAGE PLAN

SCALE 1:500

D-7

THIS PLAN ACCURATE FOR DRAINAGE WORK ONLY

STATE OF CALIFORNIA - DEPARTMENT OF TRANSPORTATION
Caltrans
HYDRAULICS

FUNCTIONAL SUPERVISOR: DAVE BHALLA
CALCULATED-DESIGNED BY: C.P.NGUYEN
CHECKED BY: S.THAI
REVISED BY / DATE REVISED

LAST REVISION 00-00-00
DATE PLOTTED => 12-JUN-2009
TIME PLOTTED => 13:05

BORDER LAST REVISED 3/1/2007
RELATIVE BORDER SCALE IS IN MILLIMETERS 0 20 40 60 80
USERNAME => trlim
DGN FILE => 712184ia007.dgn
CU 07314
EA 121841

Dist	COUNTY	ROUTE	KILOMETER POST TOTAL PROJECT	SHEET No.	TOTAL SHEETS
07	LA	5	42.8/47.3	148	1073

REGISTERED CIVIL ENGINEER 12-17-08 DATE

6-8-09
PLANS APPROVAL DATE

REGISTERED PROFESSIONAL ENGINEER BALDEV K. BHALLA No. 34350 Exp. 9/30/09 CIVIL STATE OF CALIFORNIA

THE STATE OF CALIFORNIA OR ITS OFFICERS OR AGENTS SHALL NOT BE RESPONSIBLE FOR THE ACCURACY OR COMPLETENESS OF ELECTRONIC COPIES OF THIS PLAN SHEET.

Caltrans Metric

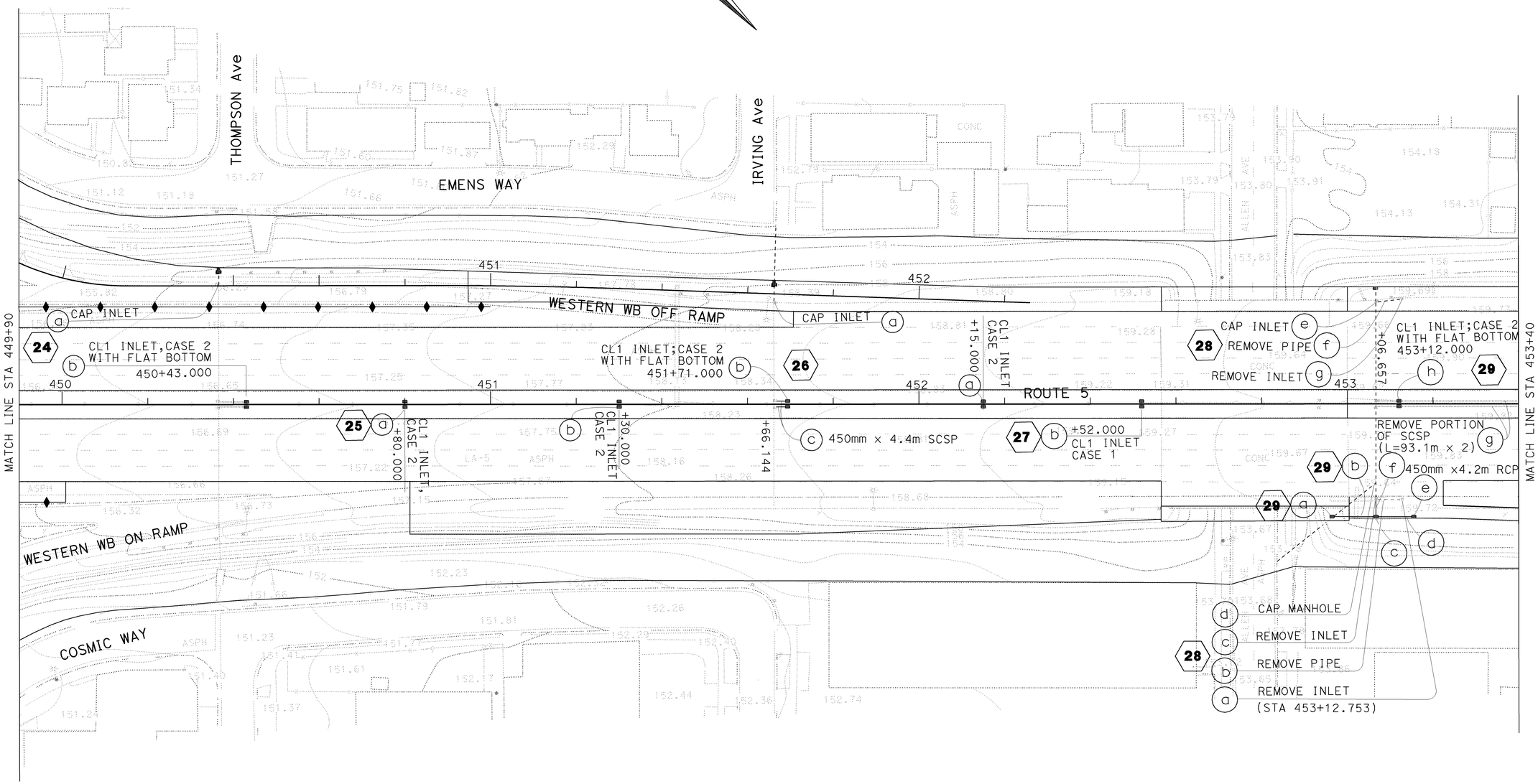

ALL DIMENSIONS ARE IN METERS UNLESS OTHERWISE SHOWN

DRAINAGE PLAN

SCALE 1:500

D-8

THIS PLAN ACCURATE FOR DRAINAGE WORK ONLY

STATE OF CALIFORNIA - DEPARTMENT OF TRANSPORTATION
Caltrans
HYDRAULICS

FUNCTIONAL SUPERVISOR: DAVE BHALLA
CALCULATED-DESIGNED BY: C.P.NGUYEN
CHECKED BY: S.THAI
REVISED BY: 9/07
DATE REVISED: 9/07

LAST REVISION 00-00-00
DATE PLOTTED => 12-JUN-2009
TIME PLOTTED => 13:05

Dist	COUNTY	ROUTE	KILOMETER POST TOTAL PROJECT	SHEET No.	TOTAL SHEETS
07	LA	5	42.8/47.3	149	1073

REGISTERED CIVIL ENGINEER 12-17-08 DATE

PLANS APPROVAL DATE 6-8-09

REGISTERED PROFESSIONAL ENGINEER BALDEV K. BHALLA No. 34350 Exp. 9/30/09 CIVIL STATE OF CALIFORNIA

THE STATE OF CALIFORNIA OR ITS OFFICERS OR AGENTS SHALL NOT BE RESPONSIBLE FOR THE ACCURACY OR COMPLETENESS OF ELECTRONIC COPIES OF THIS PLAN SHEET.

Caltrans Metric

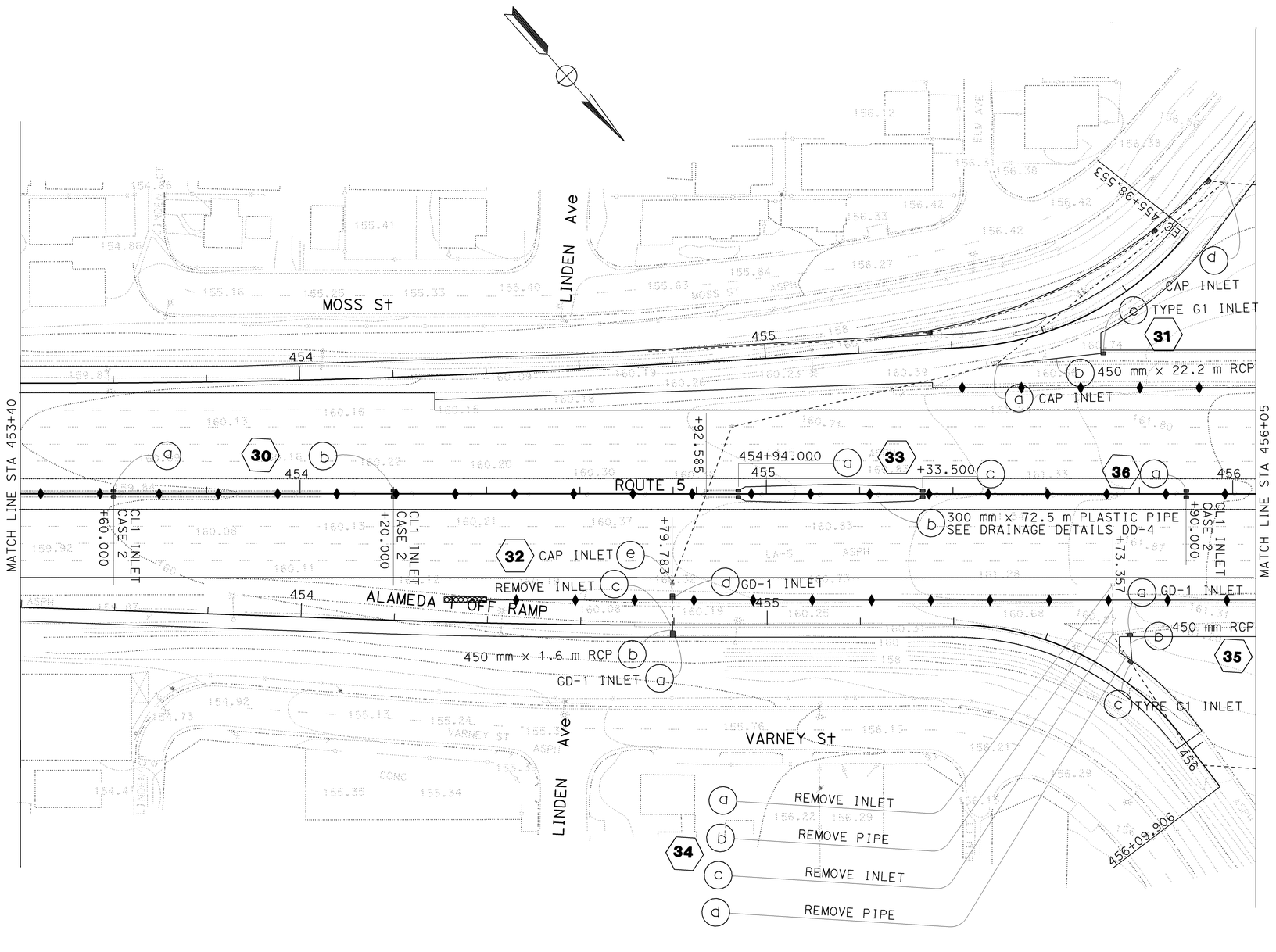

THIS PLAN ACCURATE FOR DRAINAGE WORK ONLY

ALL DIMENSIONS ARE IN METERS UNLESS OTHERWISE SHOWN

DRAINAGE PLAN

SCALE 1:500

D-9

REVISED BY	DATE REVISED

CALCULATED-DESIGNED BY	C.P.NGUYEN
CHECKED BY	S.THAI
FUNCTIONAL SUPERVISOR	DAVE BHALLA

STATE OF CALIFORNIA - DEPARTMENT OF TRANSPORTATION

Caltrans

HYDRAULICS

LAST REVISION 00-00-00 | DATE PLOTTED => 12-JUN-2009 | TIME PLOTTED => 13:05

Dist	COUNTY	ROUTE	KILOMETER POST TOTAL PROJECT	SHEET No.	TOTAL SHEETS
07	LA	5	42.8/47.3	150	1073

REGISTERED CIVIL ENGINEER 12-17-08 DATE

6-8-09
PLANS APPROVAL DATE

REGISTERED PROFESSIONAL ENGINEER BALDEV K. BHALLA No. 34350 Exp. 9/30/09 CIVIL STATE OF CALIFORNIA

THE STATE OF CALIFORNIA OR ITS OFFICERS OR AGENTS SHALL NOT BE RESPONSIBLE FOR THE ACCURACY OR COMPLETENESS OF ELECTRONIC COPIES OF THIS PLAN SHEET.

Caltrans Metric

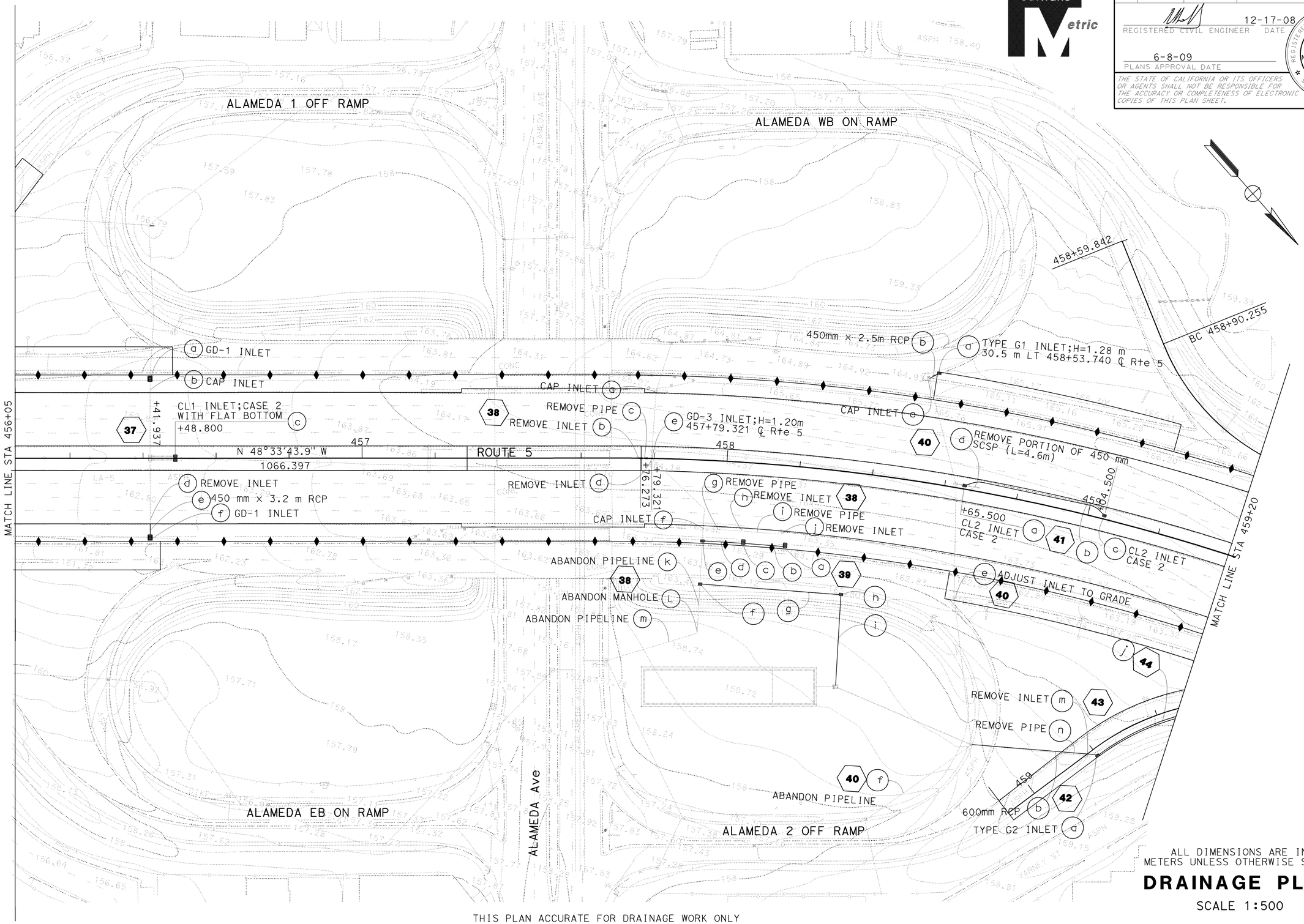

ALL DIMENSIONS ARE IN METERS UNLESS OTHERWISE SHOWN

DRAINAGE PLAN

SCALE 1:500

D-10

THIS PLAN ACCURATE FOR DRAINAGE WORK ONLY

STATE OF CALIFORNIA - DEPARTMENT OF TRANSPORTATION
Caltrans
HYDRAULICS

FUNCTIONAL SUPERVISOR: DAVE BHALLA
CALCULATED-DESIGNED BY: C.P.NGUYEN
CHECKED BY: S.THAI
REVISED BY / DATE REVISED

LAST REVISION 00-00-00 DATE PLOTTED => 12-JUN-2009 TIME PLOTTED => 13:05

Dist	COUNTY	ROUTE	KILOMETER POST TOTAL PROJECT	SHEET No.	TOTAL SHEETS
07	LA	5	42.8/47.3	151	1073

REGISTERED CIVIL ENGINEER 12-17-08 DATE

6-8-09
PLANS APPROVAL DATE

REGISTERED PROFESSIONAL ENGINEER BALDEV K. BHALLA No. 34350 Exp. 9/30/09 CIVIL STATE OF CALIFORNIA

THE STATE OF CALIFORNIA OR ITS OFFICERS OR AGENTS SHALL NOT BE RESPONSIBLE FOR THE ACCURACY OR COMPLETENESS OF ELECTRONIC COPIES OF THIS PLAN SHEET.

Caltrans Metric

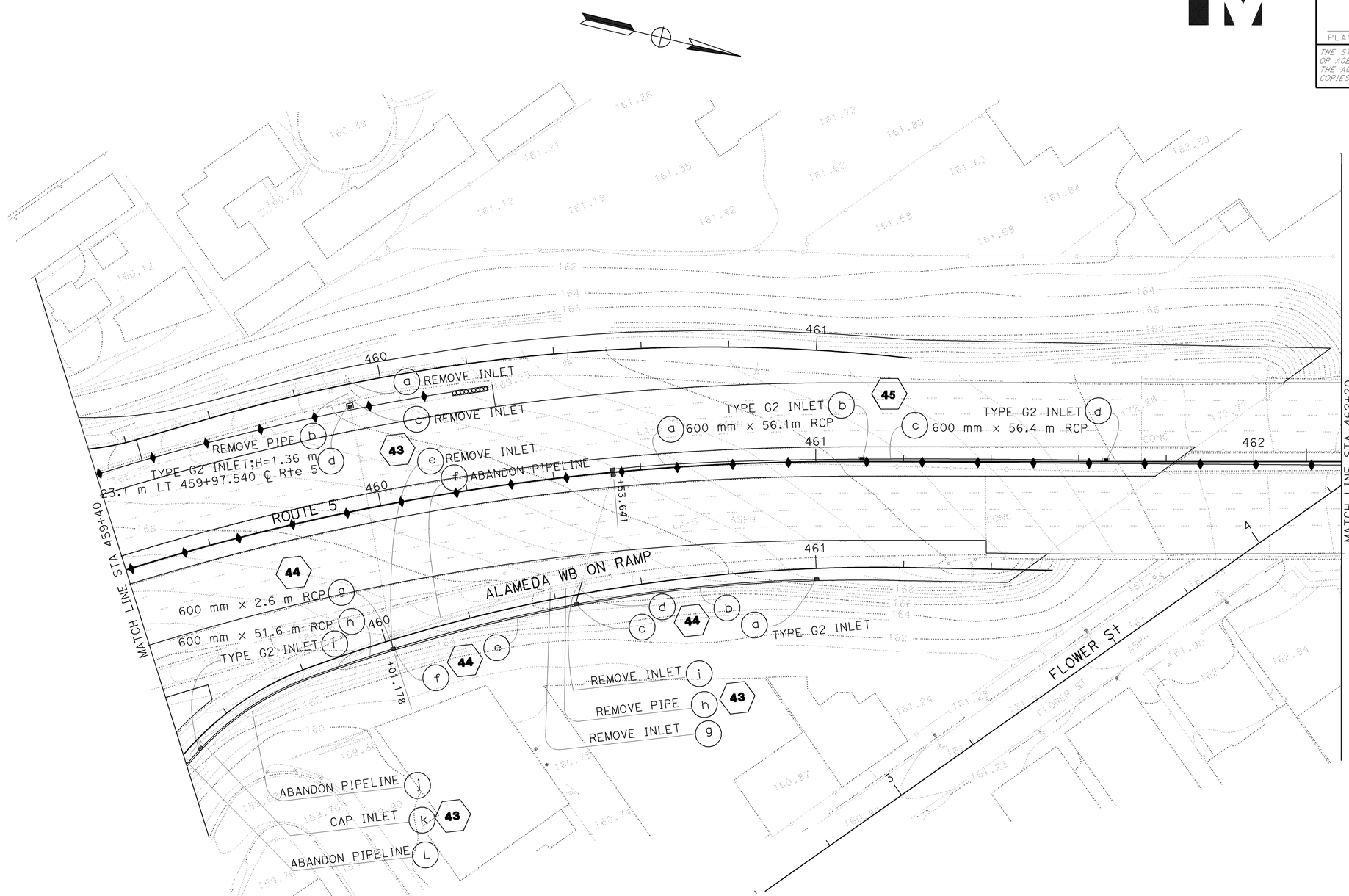

ALL DIMENSIONS ARE IN METERS UNLESS OTHERWISE SHOWN

DRAINAGE PLAN

SCALE 1:500

THIS PLAN ACCURATE FOR DRAINAGE WORK ONLY

D-11

STATE OF CALIFORNIA - DEPARTMENT OF TRANSPORTATION
Caltrans
HYDRAULICS

FUNCTIONAL SUPERVISOR: DAVE BHALLA
CALCULATED-DESIGNED BY: C.P.NGUYEN
CHECKED BY: S.THAI
REVISED BY
DATE REVISED

LAST REVISION 00-00-00
DATE PLOTTED => 12-JUN-2009
TIME PLOTTED => 08:07

Dist	COUNTY	ROUTE	KILOMETER POST TOTAL PROJECT	SHEET No.	TOTAL SHEETS
07	LA	5	42.8/47.3	152	1073

REGISTERED CIVIL ENGINEER 12-17-08 DATE

6-8-09
PLANS APPROVAL DATE

REGISTERED PROFESSIONAL ENGINEER BALDEV K. BHALLA No. 34350 Exp. 9/30/09 CIVIL STATE OF CALIFORNIA

THE STATE OF CALIFORNIA OR ITS OFFICERS OR AGENTS SHALL NOT BE RESPONSIBLE FOR THE ACCURACY OR COMPLETENESS OF ELECTRONIC COPIES OF THIS PLAN SHEET.

Caltrans Metric

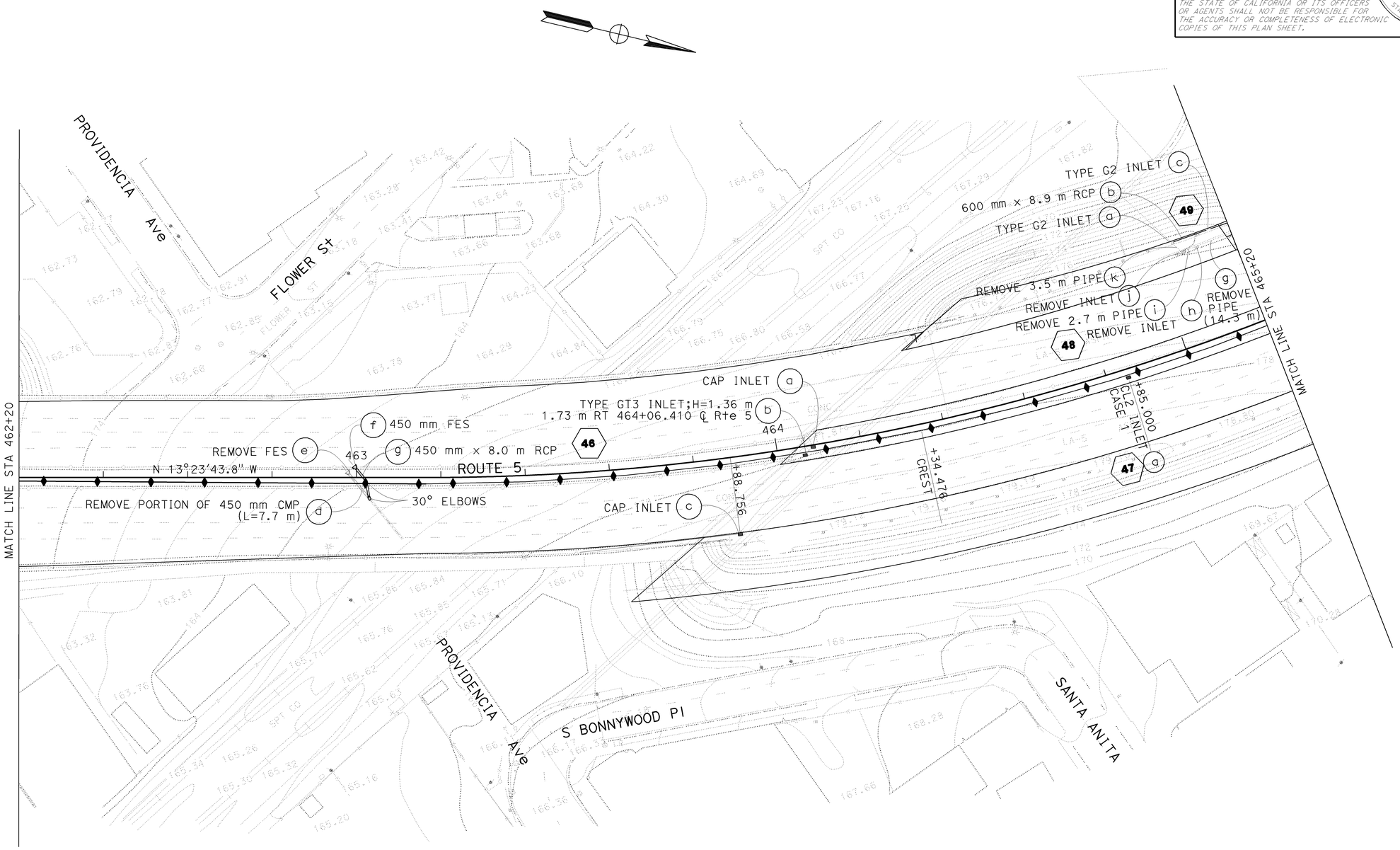

ALL DIMENSIONS ARE IN METERS UNLESS OTHERWISE SHOWN

DRAINAGE PLAN

SCALE 1:500

D-12

THIS PLAN ACCURATE FOR DRAINAGE WORK ONLY

STATE OF CALIFORNIA - DEPARTMENT OF TRANSPORTATION
Caltrans
HYDRAULICS

FUNCTIONAL SUPERVISOR: DAVE BHALLA

CALCULATED-DESIGNED BY: C.P.NGUYEN
CHECKED BY: S.THAI

REVISED BY | DATE REVISED

LAST REVISION 00-00-00 | DATE PLOTTED => 12-JUN-2009 | TIME PLOTTED => 08:07

BORDER LAST REVISED 3/1/2007

RELATIVE BORDER SCALE IS IN MILLIMETERS 0 20 40 60 80

USERNAME => trphils
DGN FILE => 712184ia012.dgn

CU 07314 | EA 121841

Dist	COUNTY	ROUTE	KILOMETER POST TOTAL PROJECT	SHEET No.	TOTAL SHEETS
07	LA	5	42.8/47.3	153	1073

REGISTERED CIVIL ENGINEER 12-17-08 DATE

6-8-09
PLANS APPROVAL DATE

REGISTERED PROFESSIONAL ENGINEER BALDEV K. BHALLA No. 34350 Exp. 9/30/09 CIVIL STATE OF CALIFORNIA

THE STATE OF CALIFORNIA OR ITS OFFICERS OR AGENTS SHALL NOT BE RESPONSIBLE FOR THE ACCURACY OR COMPLETENESS OF ELECTRONIC COPIES OF THIS PLAN SHEET.

Caltrans Metric

ALL DIMENSIONS ARE IN METERS UNLESS OTHERWISE SHOWN

DRAINAGE PLAN

SCALE 1:500

D-13

THIS PLAN ACCURATE FOR DRAINAGE WORK ONLY

STATE OF CALIFORNIA - DEPARTMENT OF TRANSPORTATION
Caltrans
HYDRAULICS

FUNCTIONAL SUPERVISOR: DAVE BHALLA
CALCULATED-DESIGNED BY: C.P.NGUYEN
CHECKED BY: S.THAI
REVISED BY / DATE REVISED

LAST REVISION 00-00-00 | DATE PLOTTED => 12-JUN-2009 | TIME PLOTTED => 08:07

BORDER LAST REVISED 3/1/2007 | RELATIVE BORDER SCALE IS IN MILLIMETERS 0 20 40 60 80 | USERNAME => trphils | DGN FILE => 712184ja013.dgn | CU 07314 | EA 121841

Dist	COUNTY	ROUTE	KILOMETER POST TOTAL PROJECT	SHEET No.	TOTAL SHEETS
07	LA	5	42.8/47.3	154	1073

REGISTERED CIVIL ENGINEER 12-17-08 DATE

6-8-09
PLANS APPROVAL DATE

REGISTERED PROFESSIONAL ENGINEER BALDEV K. BHALLA No. 34350 Exp. 9/30/09 CIVIL STATE OF CALIFORNIA

THE STATE OF CALIFORNIA OR ITS OFFICERS OR AGENTS SHALL NOT BE RESPONSIBLE FOR THE ACCURACY OR COMPLETENESS OF ELECTRONIC COPIES OF THIS PLAN SHEET.

Caltrans Metric

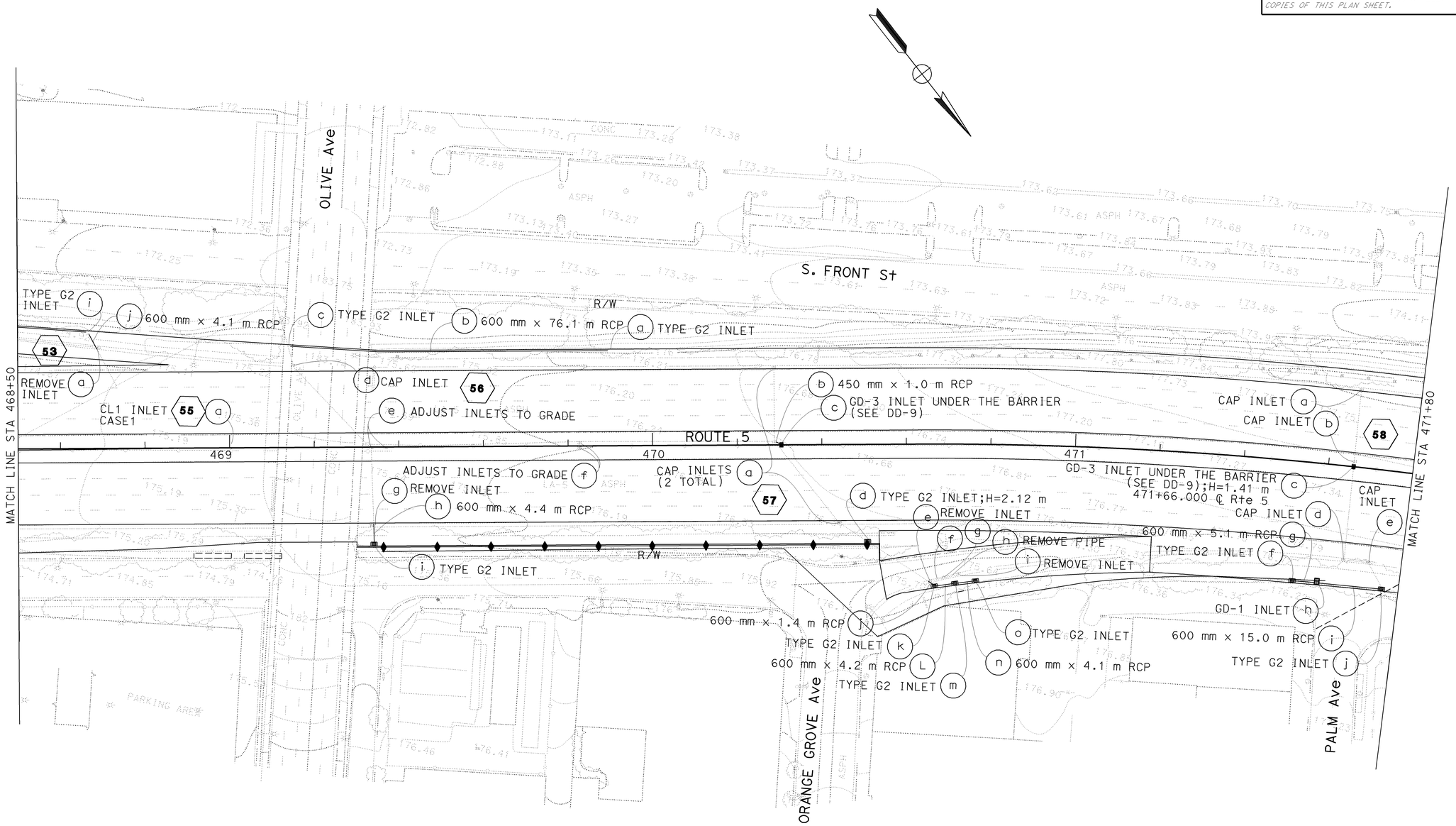

ALL DIMENSIONS ARE IN METERS UNLESS OTHERWISE SHOWN

DRAINAGE PLAN

SCALE 1:500

D-14

THIS PLAN ACCURATE FOR DRAINAGE WORK ONLY

REVISED BY	DATE REVISED

CALCULATED-DESIGNED BY	C.P.NGUYEN
CHECKED BY	S.THAI
FUNCTIONAL SUPERVISOR	DAVE BHALLA

STATE OF CALIFORNIA - DEPARTMENT OF TRANSPORTATION

Caltrans **HYDRAULICS**

LAST REVISION 00-00-00 | DATE PLOTTED => 12-JUN-2009 | TIME PLOTTED => 08:07

Dist	COUNTY	ROUTE	KILOMETER POST TOTAL PROJECT	SHEET No.	TOTAL SHEETS
07	LA	5	42.8/47.3	155	1073

REGISTERED CIVIL ENGINEER DATE 12-17-08

PLANS APPROVAL DATE 6-8-09

REGISTERED PROFESSIONAL ENGINEER BALDEV K. BHALLA No. 34350 Exp. 9/30/09 CIVIL STATE OF CALIFORNIA

THE STATE OF CALIFORNIA OR ITS OFFICERS OR AGENTS SHALL NOT BE RESPONSIBLE FOR THE ACCURACY OR COMPLETENESS OF ELECTRONIC COPIES OF THIS PLAN SHEET.

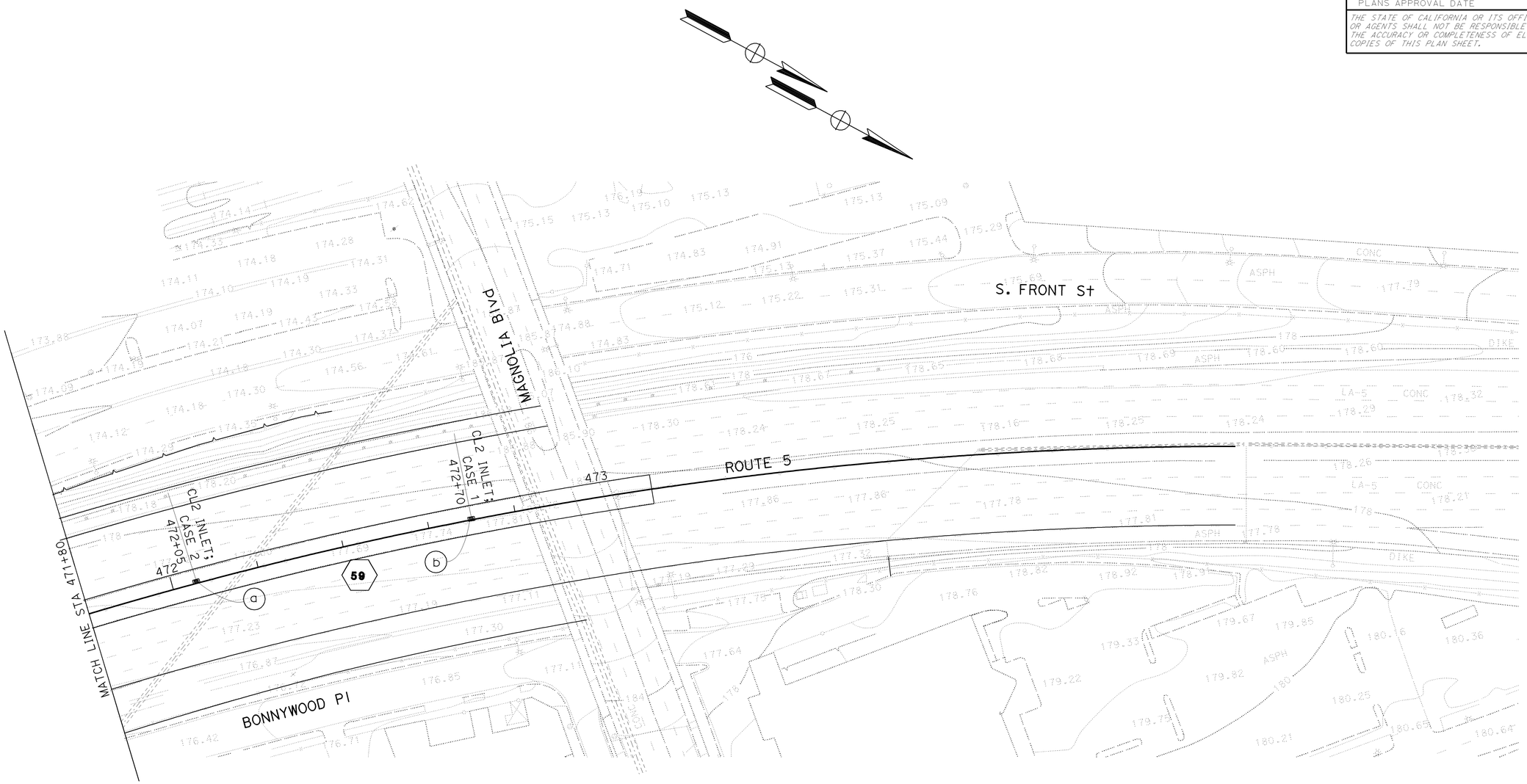

ALL DIMENSIONS ARE IN METERS UNLESS OTHERWISE SHOWN

DRAINAGE PLAN

SCALE 1:500

D-15

THIS PLAN ACCURATE FOR DRAINAGE WORK ONLY

STATE OF CALIFORNIA - DEPARTMENT OF TRANSPORTATION

Caltrans

HYDRAULICS

FUNCTIONAL SUPERVISOR: DAVE BHALLA

CALCULATED-DESIGNED BY: C.P. NGUYEN

CHECKED BY: S. THAI

REVISED BY / DATE REVISED

LAST REVISION 00-00-00 | DATE PLOTTED => 12-JUN-2009 | TIME PLOTTED => 08:08

Dist	COUNTY	ROUTE	KILOMETER POST TOTAL PROJECT	SHEET No.	TOTAL SHEETS
07	LA	5	42.8/47.3	156	1073

REGISTERED CIVIL ENGINEER 12-17-08 DATE

6-8-09
PLANS APPROVAL DATE

REGISTERED PROFESSIONAL ENGINEER BALDEV K. BHALLA No. 34350 Exp. 9/30/09 CIVIL STATE OF CALIFORNIA

THE STATE OF CALIFORNIA OR ITS OFFICERS OR AGENTS SHALL NOT BE RESPONSIBLE FOR THE ACCURACY OR COMPLETENESS OF ELECTRONIC COPIES OF THIS PLAN SHEET.

Caltrans Metric

NOTE: CONTRACTOR SHALL VERIFY ELEVATIONS OF EXISTING DRAINAGE SYSTEMS BEFORE COMMENCEMENT OF WORK.

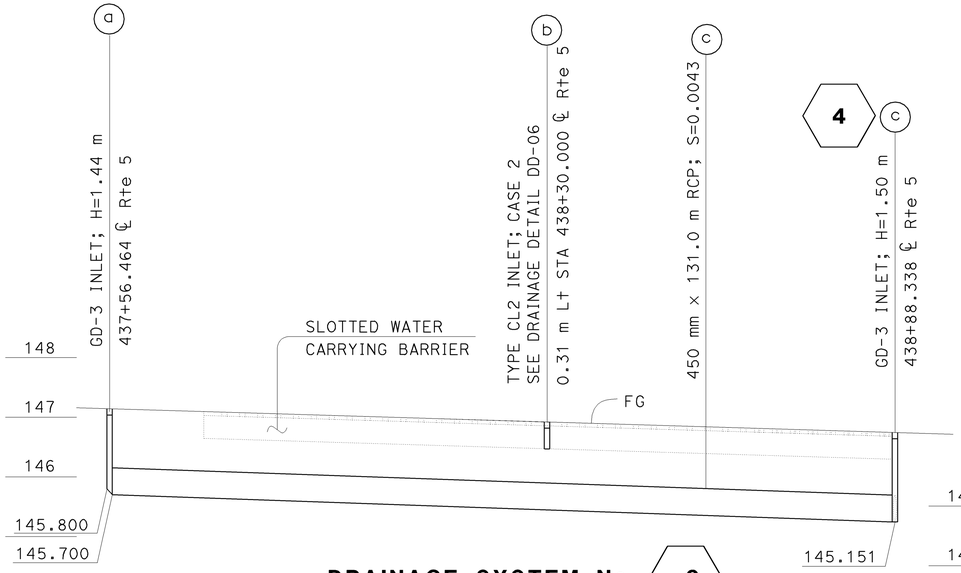

DRAINAGE SYSTEM No. 3

SCALE Horiz 1:500
Vert 1:50

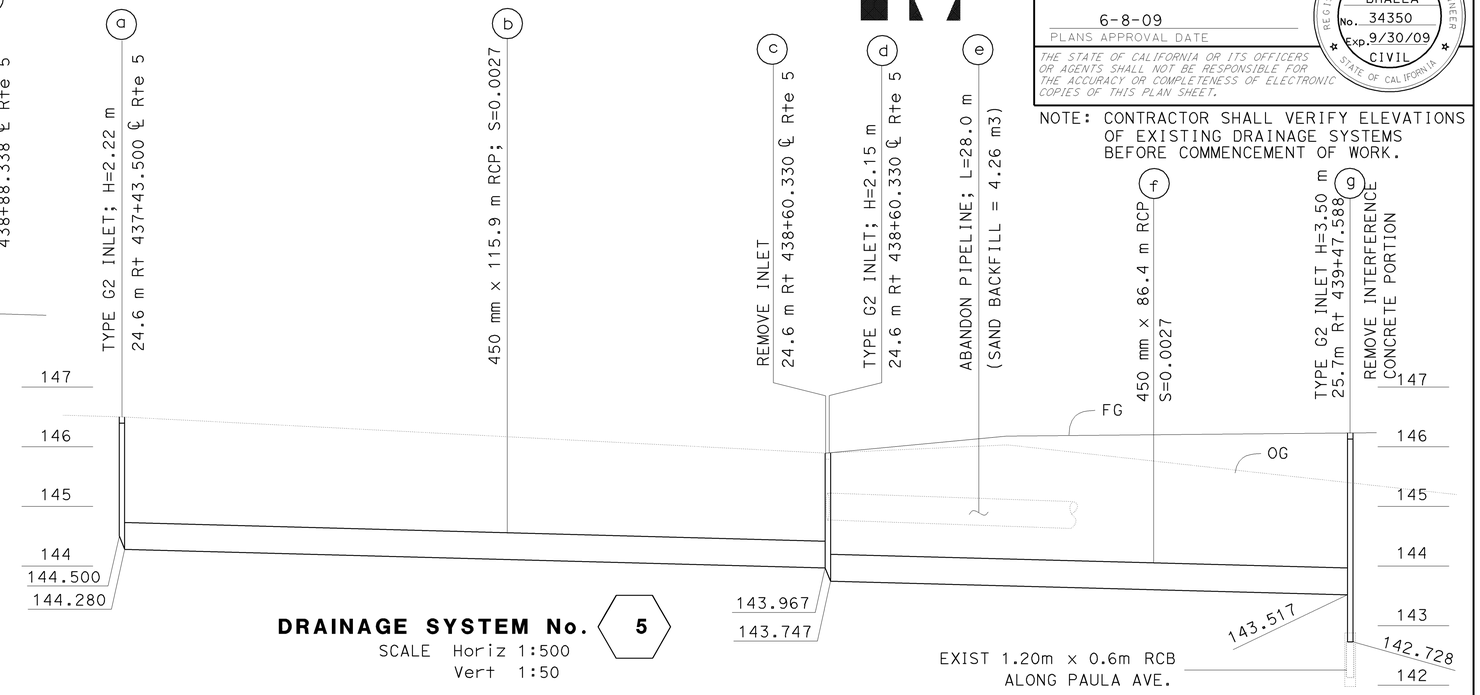

DRAINAGE SYSTEM No. 5

SCALE Horiz 1:500
Vert 1:50

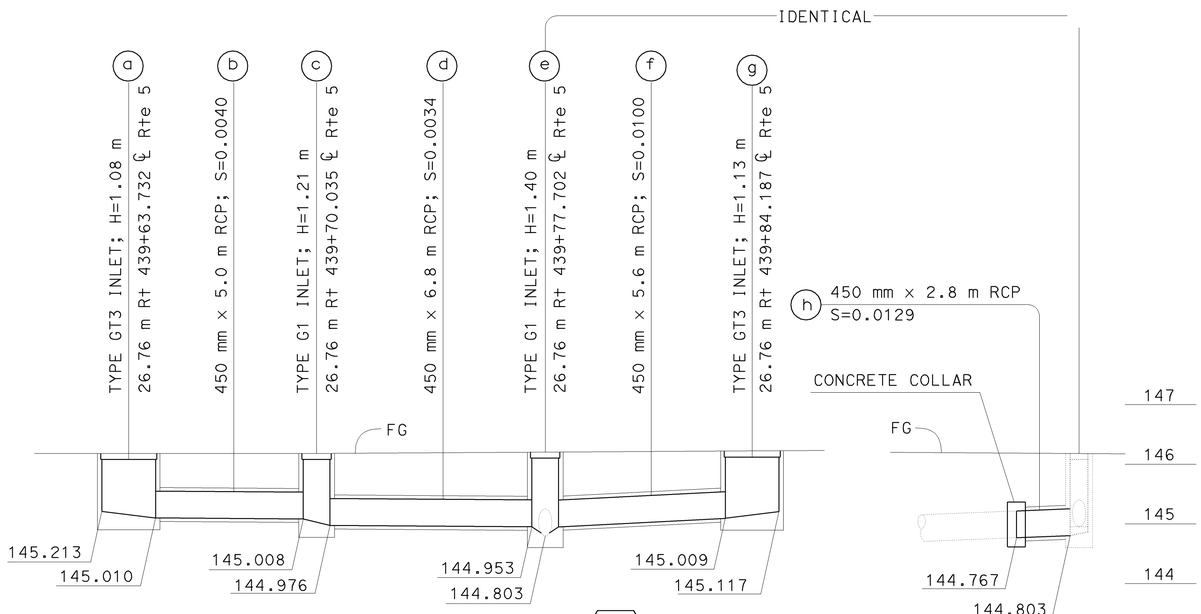

DRAINAGE SYSTEM No. 7

SCALE Horiz 1:100
Vert 1:50

THIS PLAN ACCURATE FOR DRAINAGE ONLY

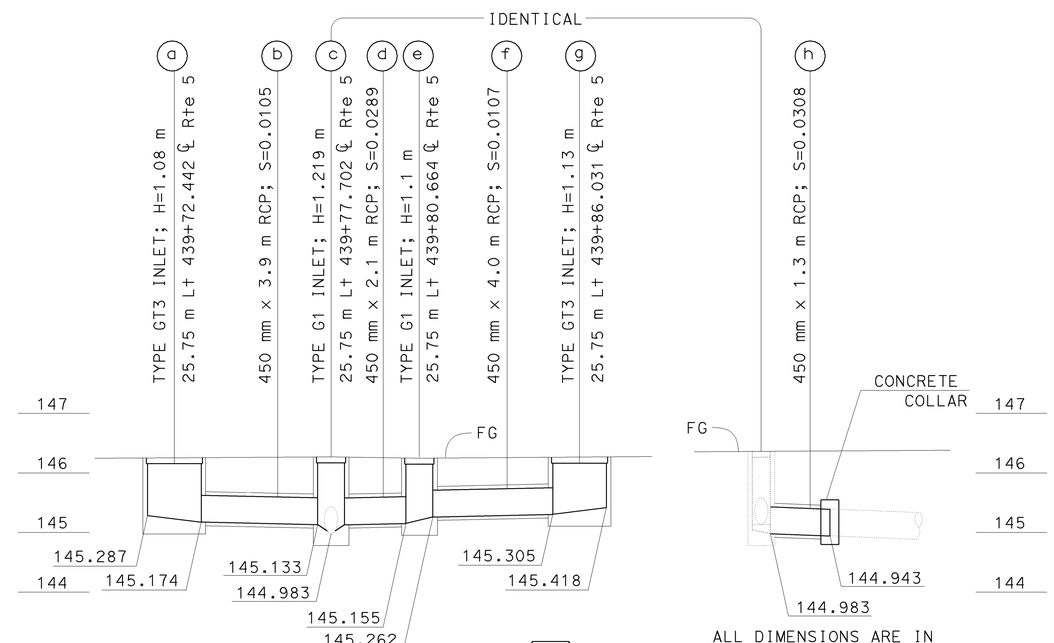

DRAINAGE SYSTEM No. 8

SCALE Horiz 1:100
Vert 1:50

ALL DIMENSIONS ARE IN METERS UNLESS OTHERWISE SHOWN

DRAINAGE PROFILE DP-1

REVISED BY	DATE REVISED
C.P.NGUYEN	S.THAI
CALCULATED-DESIGNED BY	CHECKED BY
FUNCTIONAL SUPERVISOR	DAVE BHALLA

STATE OF CALIFORNIA - DEPARTMENT OF TRANSPORTATION
Caltrans
HYDRAULICS

LAST REVISION 00-00-00 DATE PLOTTED => 12-JUN-2009 TIME PLOTTED => 08:08

Dist	COUNTY	ROUTE	KILOMETER POST TOTAL PROJECT	SHEET No.	TOTAL SHEETS
07	LA	5	42.8/47.3	157	1073

REGISTERED CIVIL ENGINEER 12-17-08 DATE

6-8-09
PLANS APPROVAL DATE

REGISTERED PROFESSIONAL ENGINEER BALDEV K. BHALLA No. 34350 Exp. 9/30/09 CIVIL STATE OF CALIFORNIA

THE STATE OF CALIFORNIA OR ITS OFFICERS OR AGENTS SHALL NOT BE RESPONSIBLE FOR THE ACCURACY OR COMPLETENESS OF ELECTRONIC COPIES OF THIS PLAN SHEET.

Caltrans Metric

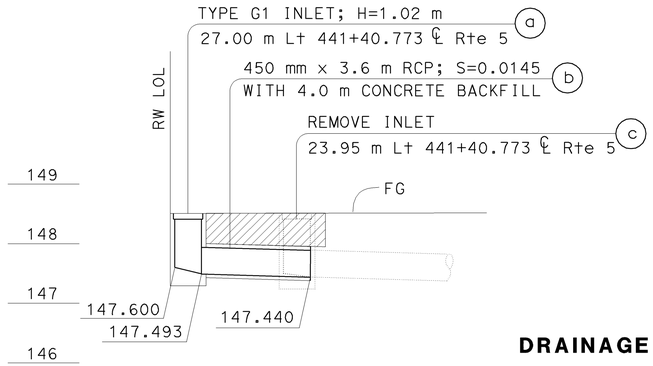

DRAINAGE SYSTEM No. 11

SCALE Horiz 1:100
Vert 1:50

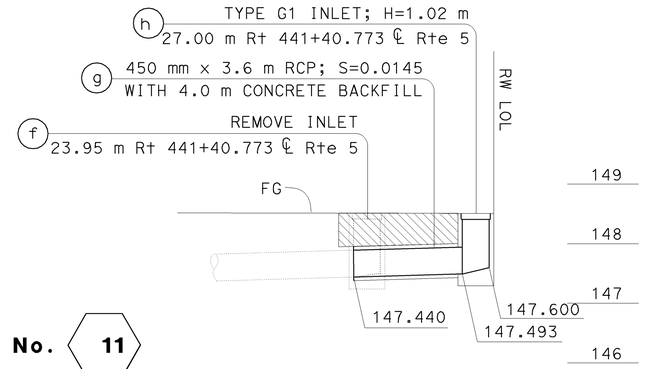

NOTE: CONTRACTOR SHALL VERIFY ELEVATIONS OF EXISTING DRAINAGE SYSTEMS BEFORE COMMENCEMENT OF WORK.

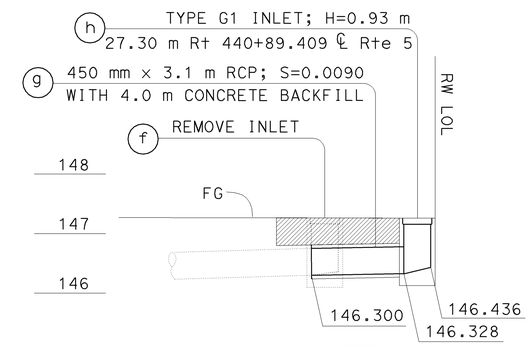

DRAINAGE SYSTEM No. 10

SCALE Horiz 1:100
Vert 1:50

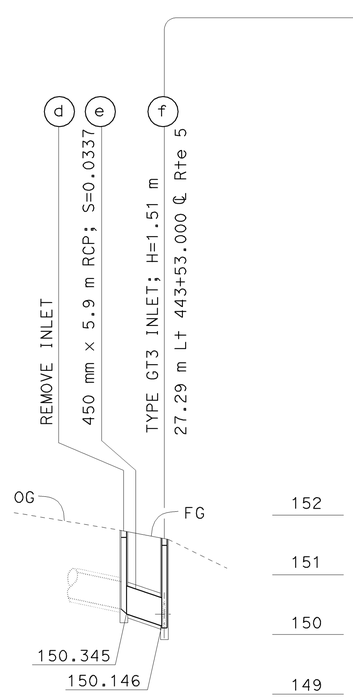

DRAINAGE SYSTEM No. 13

SCALE Horiz 1:500
Vert 1:50

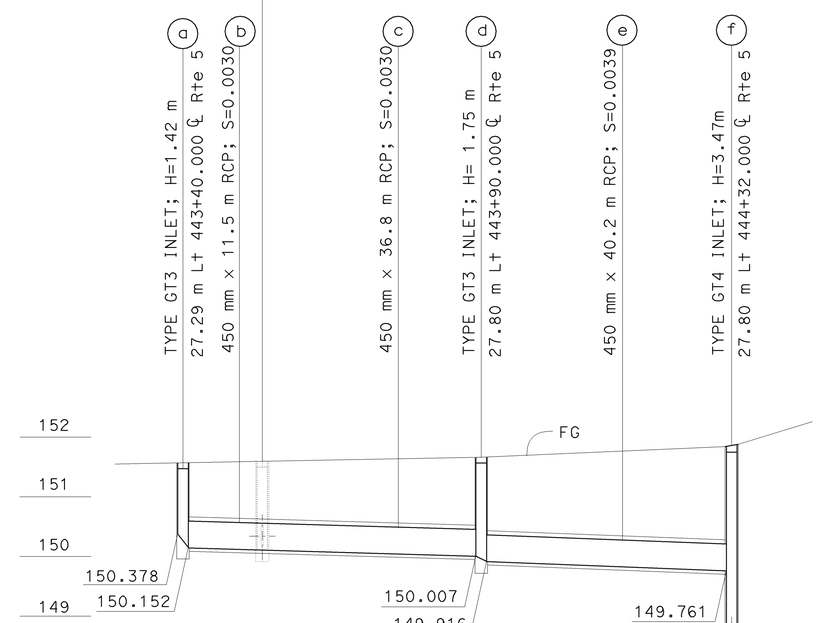

DRAINAGE SYSTEM No. 15

SCALE Horiz 1:500
Vert 1:50

THIS PLAN ACCURATE FOR DRAINAGE ONLY

ALL DIMENSIONS ARE IN METERS UNLESS OTHERWISE SHOWN

DRAINAGE PROFILE

DP-2

REVISED BY	DATE REVISED

CALCULATED-DESIGNED BY: C.P.NGUYEN
CHECKED BY: S.THAI

FUNCTIONAL SUPERVISOR: DAVE BHALLA

STATE OF CALIFORNIA - DEPARTMENT OF TRANSPORTATION
Caltrans
HYDRAULICS

LAST REVISION 00-00-00
DATE PLOTTED => 12-JUN-2009
TIME PLOTTED => 08:08

Dist	COUNTY	ROUTE	KILOMETER POST TOTAL PROJECT	SHEET No.	TOTAL SHEETS
07	LA	5	42.8/47.3	158	1073

REGISTERED CIVIL ENGINEER 12-17-08 DATE

6-8-09
PLANS APPROVAL DATE

REGISTERED PROFESSIONAL ENGINEER BALDEV K. BHALLA No. 34350 Exp. 9/30/09 CIVIL STATE OF CALIFORNIA

THE STATE OF CALIFORNIA OR ITS OFFICERS OR AGENTS SHALL NOT BE RESPONSIBLE FOR THE ACCURACY OR COMPLETENESS OF ELECTRONIC COPIES OF THIS PLAN SHEET.

Caltrans Metric

NOTE: CONTRACTOR SHALL VERIFY ELEVATIONS OF EXISTING DRAINAGE SYSTEMS BEFORE COMMENCEMENT OF WORK.

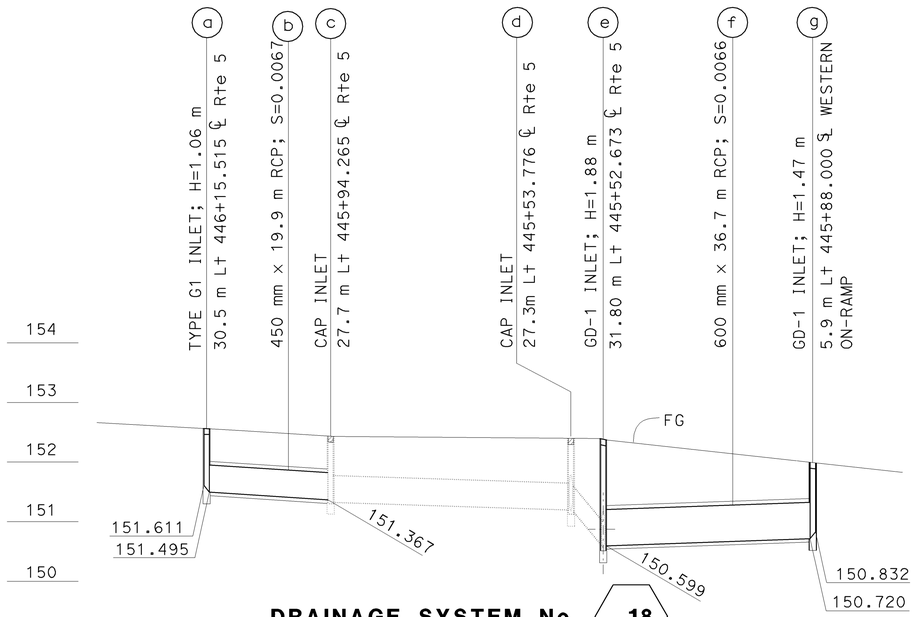

DRAINAGE SYSTEM No. 18

SCALE Horiz 1:500
Vert 1:50

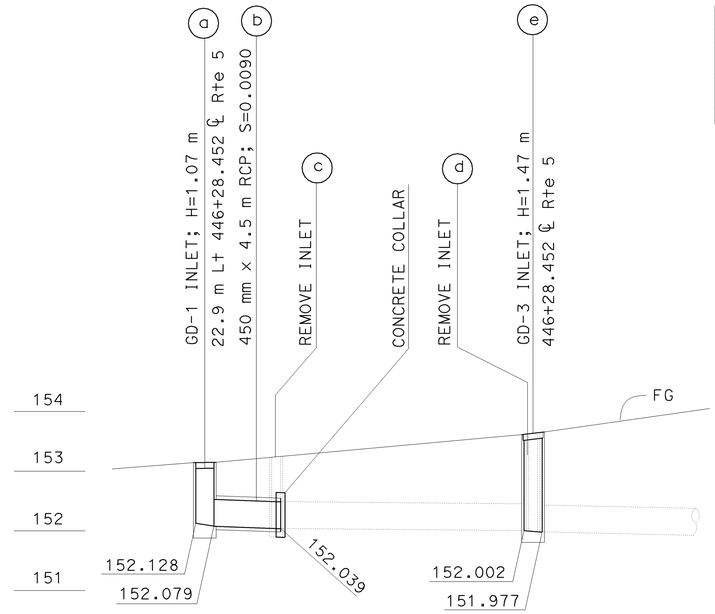

DRAINAGE SYSTEM No. 19

SCALE Horiz 1:200
Vert 1:50

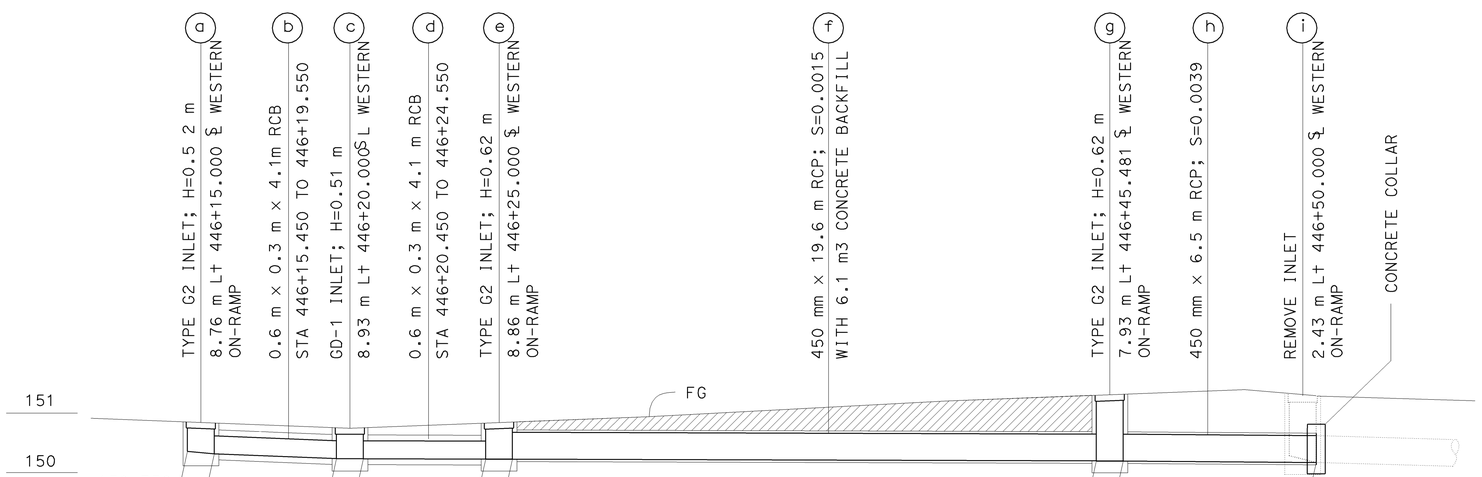

DRAINAGE SYSTEM No. 20

SCALE Horiz 1:100
Vert 1:50

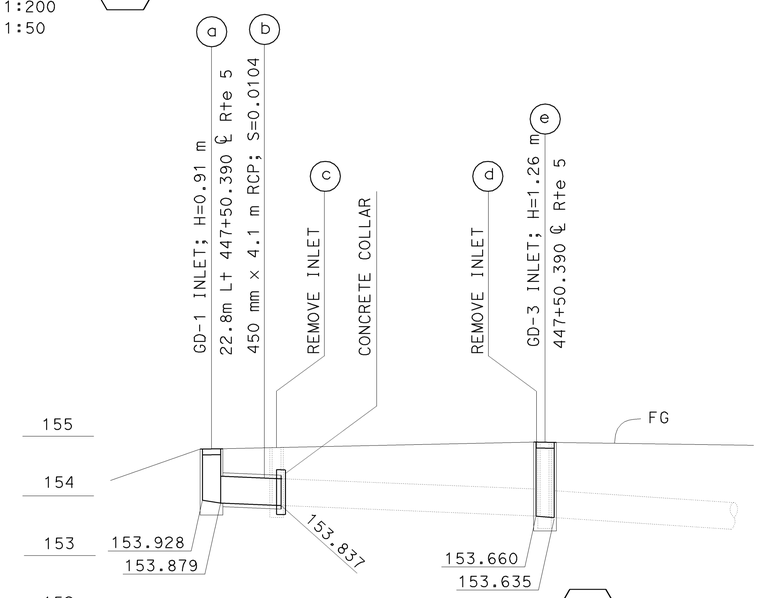

DRAINAGE SYSTEM No. 21

SCALE Horiz 1:200
Vert 1:50

ALL DIMENSIONS ARE IN METERS UNLESS OTHERWISE SHOWN

DRAINAGE PROFILE

DP-3

THIS PLAN ACCURATE FOR DRAINAGE ONLY

STATE OF CALIFORNIA - DEPARTMENT OF TRANSPORTATION
Caltrans
HYDRAULICS

FUNCTIONAL SUPERVISOR: DAVE BHALLA
CALCULATED-DESIGNED BY: C.P.NGUYEN
CHECKED BY: S.THAI
REVISED BY
DATE REVISED

LAST REVISION 00-00-00
DATE PLOTTED => 12-JUN-2009
TIME PLOTTED => 08:08

Dist	COUNTY	ROUTE	KILOMETER POST TOTAL PROJECT	SHEET No.	TOTAL SHEETS
07	LA	5	42.8/47.3	159	1073

REGISTERED CIVIL ENGINEER 12-17-08 DATE

6-8-09
PLANS APPROVAL DATE

REGISTERED PROFESSIONAL ENGINEER BALDEV K. BHALLA No. 34350 Exp. 9/30/09 CIVIL STATE OF CALIFORNIA

THE STATE OF CALIFORNIA OR ITS OFFICERS OR AGENTS SHALL NOT BE RESPONSIBLE FOR THE ACCURACY OR COMPLETENESS OF ELECTRONIC COPIES OF THIS PLAN SHEET.

Caltrans Metric

NOTE: CONTRACTOR SHALL VERIFY ELEVATIONS OF EXISTING DRAINAGE SYSTEMS BEFORE COMMENCEMENT OF WORK.

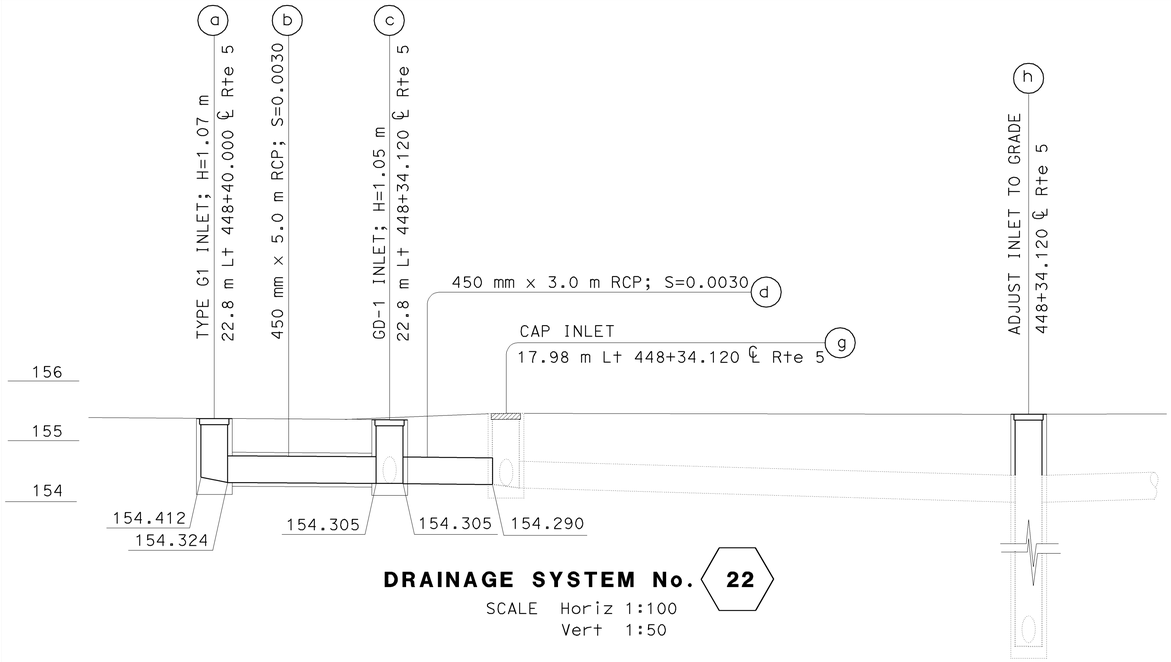

DRAINAGE SYSTEM No. 22
SCALE Horiz 1:100
Vert 1:50

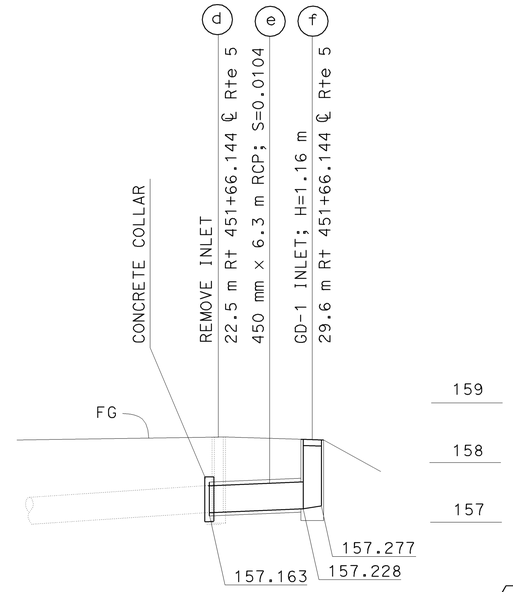

DRAINAGE SYSTEM No. 26
SCALE Horiz 1:200
Vert 1:50

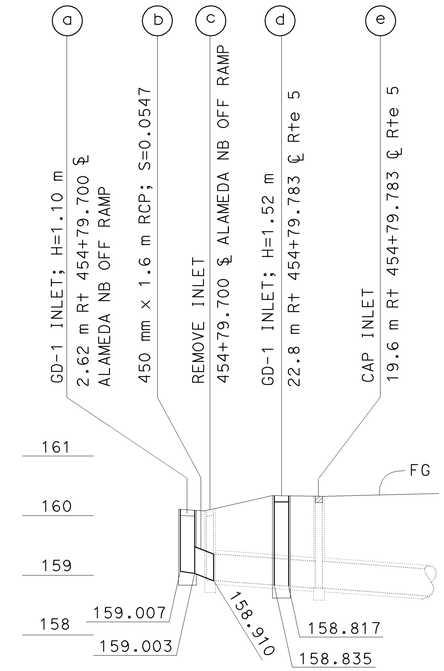

DRAINAGE SYSTEM No. 32
SCALE Horiz 1:250
Vert 1:50

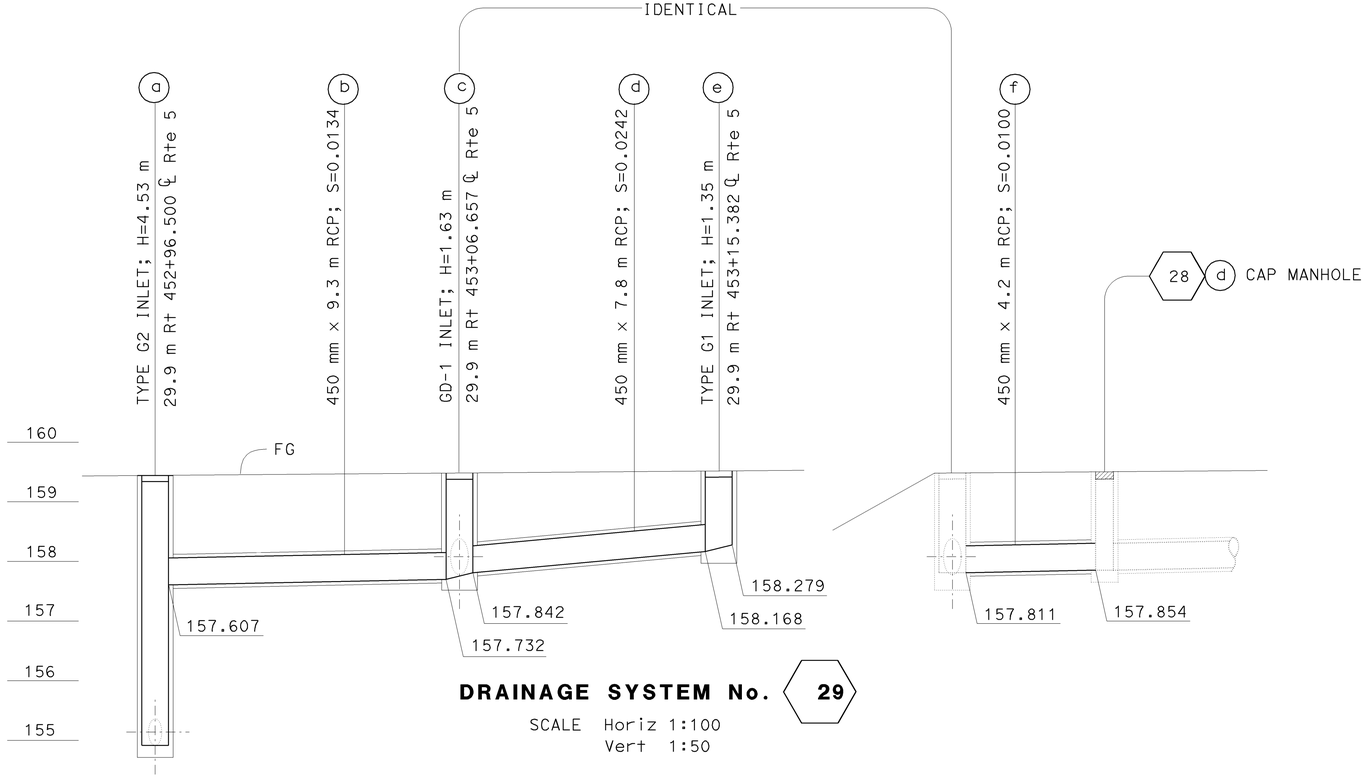

DRAINAGE SYSTEM No. 29
SCALE Horiz 1:100
Vert 1:50

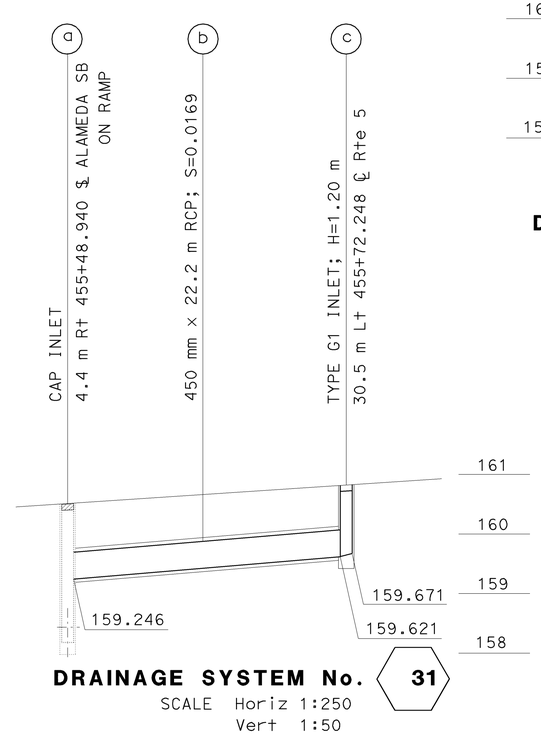

DRAINAGE SYSTEM No. 31
SCALE Horiz 1:250
Vert 1:50

THIS PLAN ACCURATE FOR DRAINAGE ONLY

ALL DIMENSIONS ARE IN METERS UNLESS OTHERWISE SHOWN

DRAINAGE PROFILE

DP-4

REVISED BY	DATE REVISED

CALCULATED-DESIGNED BY: C.P.NGUYEN
CHECKED BY: S.THAI
FUNCTIONAL SUPERVISOR: DAVE BHALLA

STATE OF CALIFORNIA - DEPARTMENT OF TRANSPORTATION
Caltrans
HYDRAULICS

LAST REVISION 00-00-00
DATE PLOTTED => 12-JUN-2009
TIME PLOTTED => 08:08

Dist	COUNTY	ROUTE	KILOMETER POST TOTAL PROJECT	SHEET No.	TOTAL SHEETS
07	LA	5	42.8/47.3	160	1073

REGISTERED CIVIL ENGINEER 12-17-08 DATE

6-8-09
PLANS APPROVAL DATE

REGISTERED PROFESSIONAL ENGINEER BALDEV K. BHALLA No. 34350 Exp. 9/30/09 CIVIL STATE OF CALIFORNIA

THE STATE OF CALIFORNIA OR ITS OFFICERS OR AGENTS SHALL NOT BE RESPONSIBLE FOR THE ACCURACY OR COMPLETENESS OF ELECTRONIC COPIES OF THIS PLAN SHEET.

Caltrans Metric

NOTE: CONTRACTOR SHALL VERIFY ELEVATIONS OF EXISTING DRAINAGE SYSTEMS BEFORE COMMENCEMENT OF WORK.

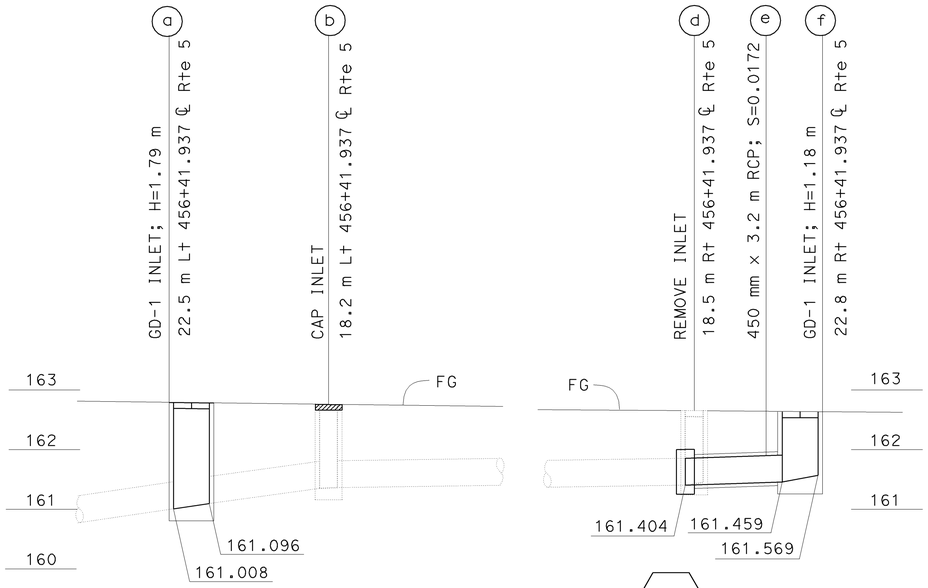

DRAINAGE SYSTEM No. 37
SCALE Horiz 1:100
Vert 1:50

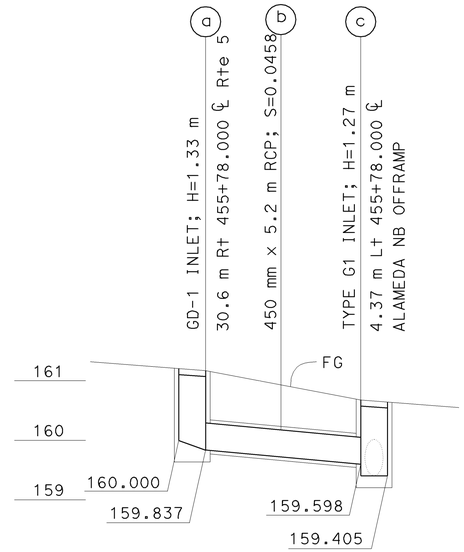

DRAINAGE SYSTEM No. 35
SCALE Horiz 1:100
Vert 1:50

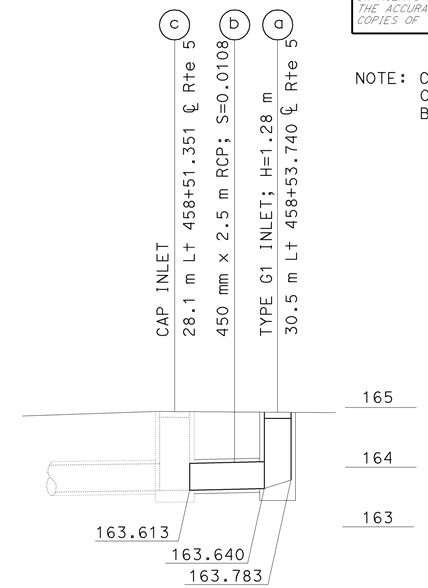

DRAINAGE SYSTEM No. 40
SCALE Horiz 1:100
Vert 1:50

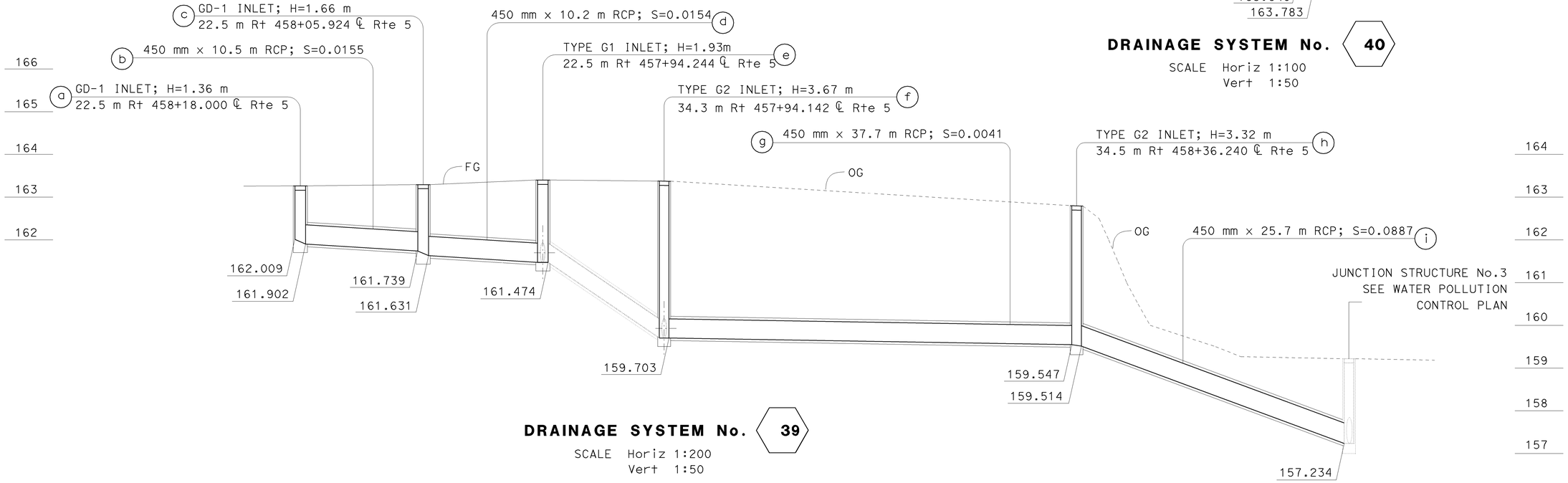

DRAINAGE SYSTEM No. 39
SCALE Horiz 1:200
Vert 1:50

ALL DIMENSIONS ARE IN METERS UNLESS OTHERWISE SHOWN

DRAINAGE PROFILE

DP-5

THIS PLAN ACCURATE FOR DRAINAGE ONLY

STATE OF CALIFORNIA - DEPARTMENT OF TRANSPORTATION
Caltrans
HYDRAULICS

FUNCTIONAL SUPERVISOR: DAVE BHALLA
CALCULATED-DESIGNED BY: C.P.NGUYEN
CHECKED BY: S.THAI
REVISED BY / DATE REVISED

LAST REVISION 00-00-00 | DATE PLOTTED => 12-JUN-2009 | TIME PLOTTED => 08:08

Dist	COUNTY	ROUTE	KILOMETER POST TOTAL PROJECT	SHEET No.	TOTAL SHEETS
07	LA	5	42.8/47.3	161	1073

REGISTERED CIVIL ENGINEER 12-17-08 DATE

6-8-09
PLANS APPROVAL DATE

REGISTERED PROFESSIONAL ENGINEER BALDEV K. BHALLA No. 34350 Exp. 9/30/09 CIVIL STATE OF CALIFORNIA

THE STATE OF CALIFORNIA OR ITS OFFICERS OR AGENTS SHALL NOT BE RESPONSIBLE FOR THE ACCURACY OR COMPLETENESS OF ELECTRONIC COPIES OF THIS PLAN SHEET.

NOTE: CONTRACTOR SHALL VERIFY ELEVATIONS OF EXISTING DRAINAGE SYSTEMS BEFORE COMMENCEMENT OF WORK.

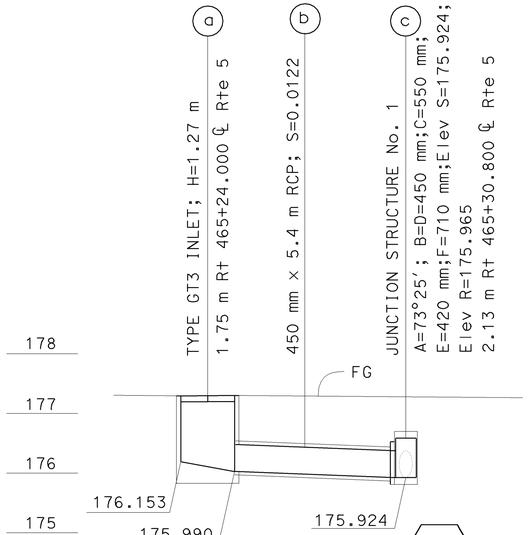

DRAINAGE SYSTEM No. 48
SCALE Horiz 1:100
Vert 1:50

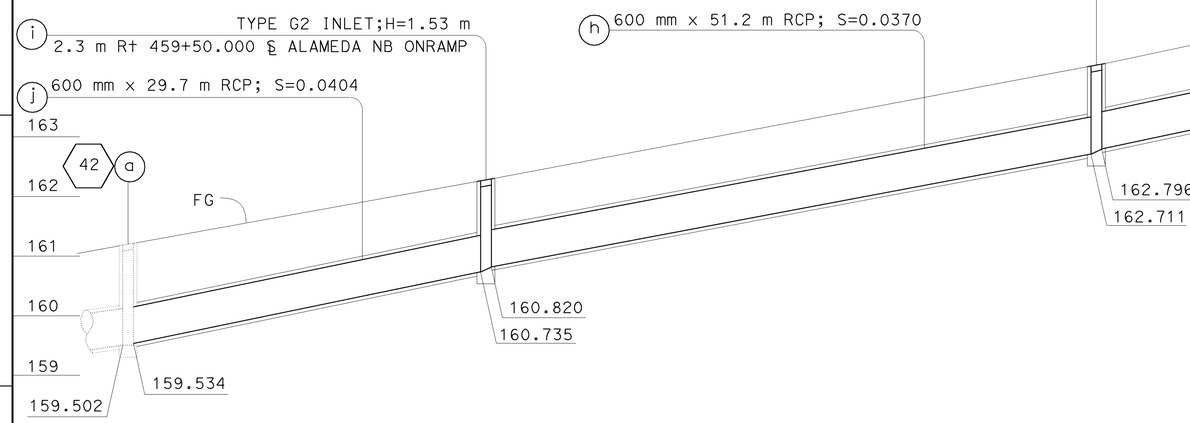

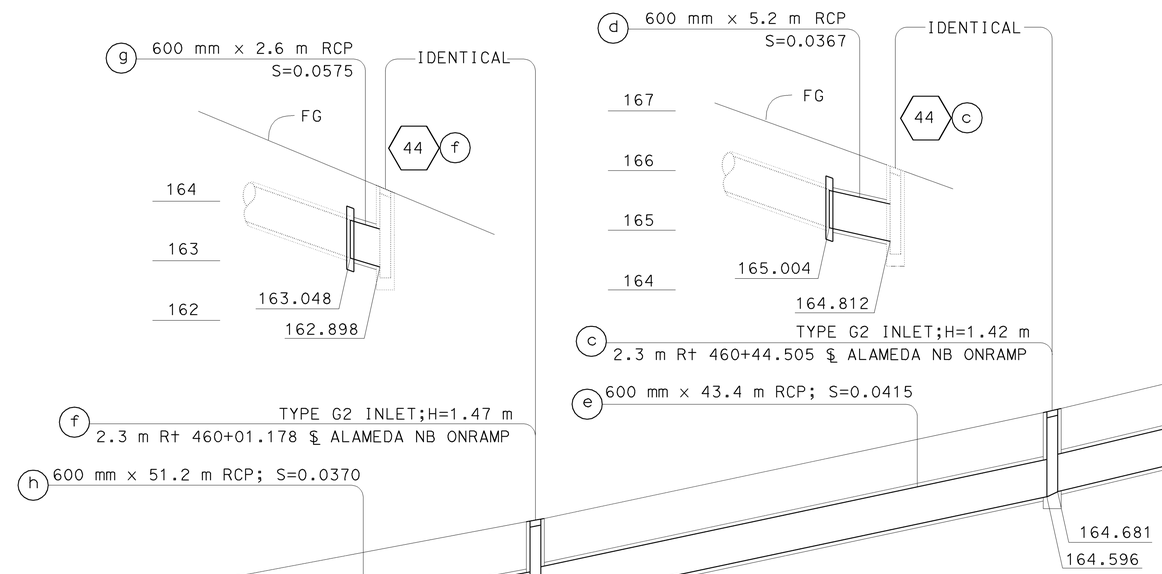

DRAINAGE SYSTEM No. 44
SCALE Horiz 1:250
Vert 1:50

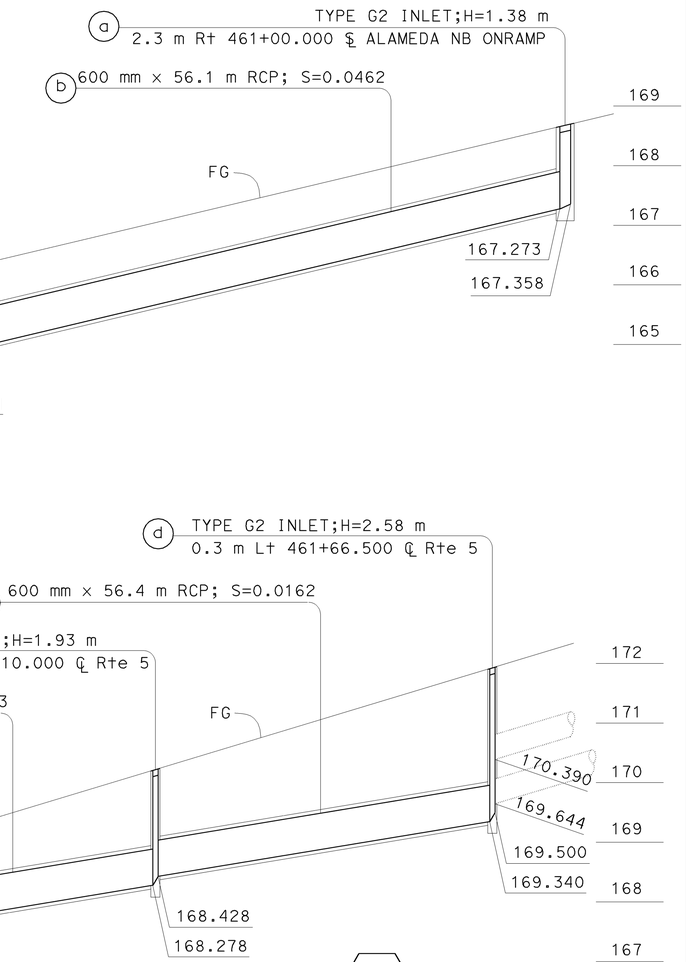

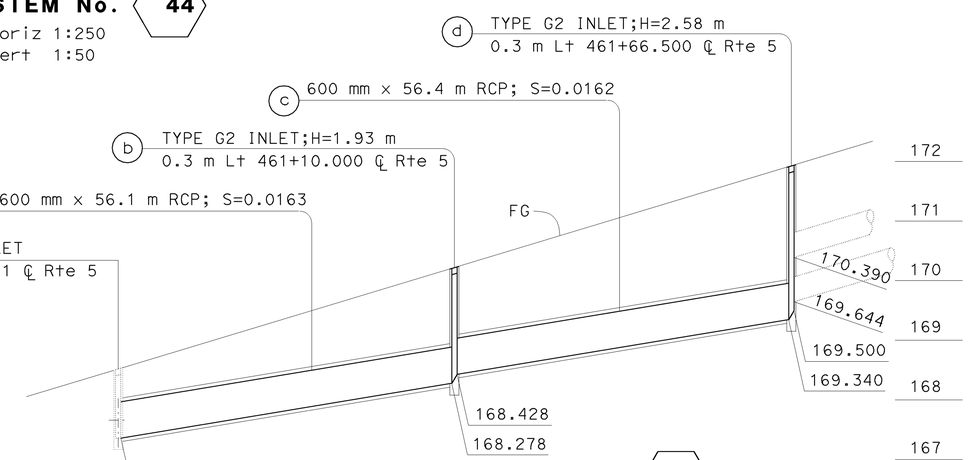

DRAINAGE SYSTEM No. 45
SCALE Horiz 1:500
Vert 1:50

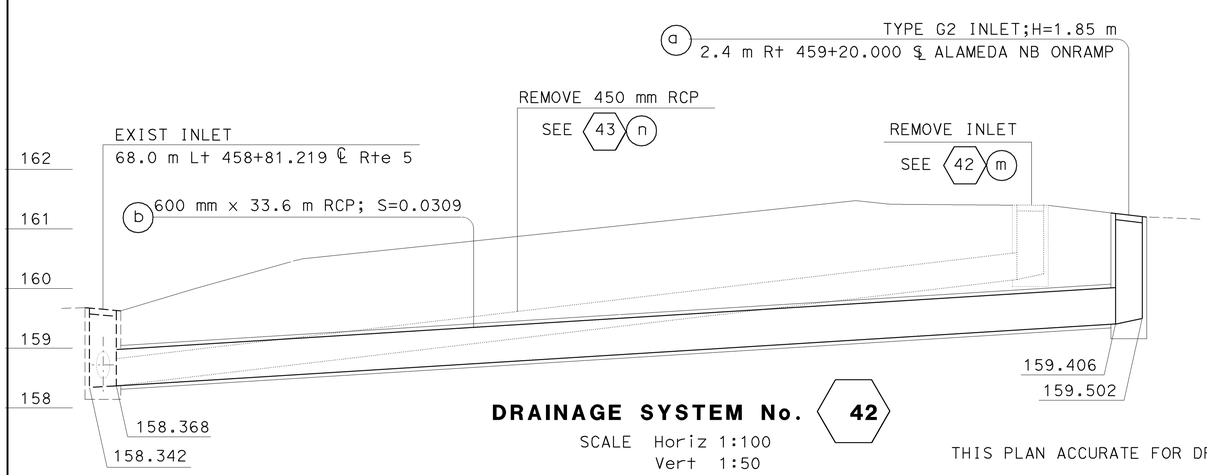

DRAINAGE SYSTEM No. 42
SCALE Horiz 1:100
Vert 1:50

THIS PLAN ACCURATE FOR DRAINAGE ONLY

ALL DIMENSIONS ARE IN METERS UNLESS OTHERWISE SHOWN

DRAINAGE PROFILE

DP-6

REVISED BY	DATE REVISED

CALCULATED-DESIGNED BY: C.P.NGUYEN
CHECKED BY: S.THAI
FUNCTIONAL SUPERVISOR: DAVE BHALLA

STATE OF CALIFORNIA - DEPARTMENT OF TRANSPORTATION
Caltrans
HYDRAULICS

LAST REVISION 00-00-00
DATE PLOTTED => 12-JUN-2009
TIME PLOTTED => 08:08

Dist	COUNTY	ROUTE	KILOMETER POST TOTAL PROJECT	SHEET No.	TOTAL SHEETS
07	LA	5	42.8/47.3	162	1073

REGISTERED CIVIL ENGINEER 12-17-08 DATE

6-8-09
PLANS APPROVAL DATE

REGISTERED PROFESSIONAL ENGINEER BALDEV K. BHALLA No. 34350 Exp. 9/30/09 CIVIL STATE OF CALIFORNIA

THE STATE OF CALIFORNIA OR ITS OFFICERS OR AGENTS SHALL NOT BE RESPONSIBLE FOR THE ACCURACY OR COMPLETENESS OF ELECTRONIC COPIES OF THIS PLAN SHEET.

Caltrans Metric

NOTE: CONTRACTOR SHALL VERIFY ELEVATIONS OF EXISTING DRAINAGE SYSTEMS BEFORE COMMENCEMENT OF WORK.

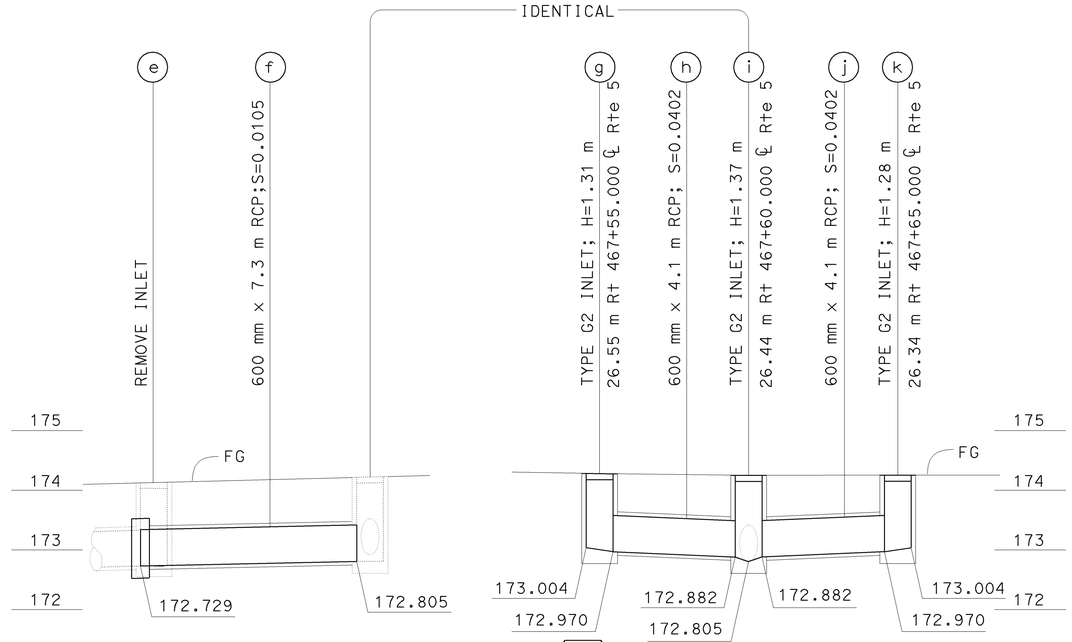

DRAINAGE SYSTEM No. 50

SCALE Horiz 1:100
Vert 1:50

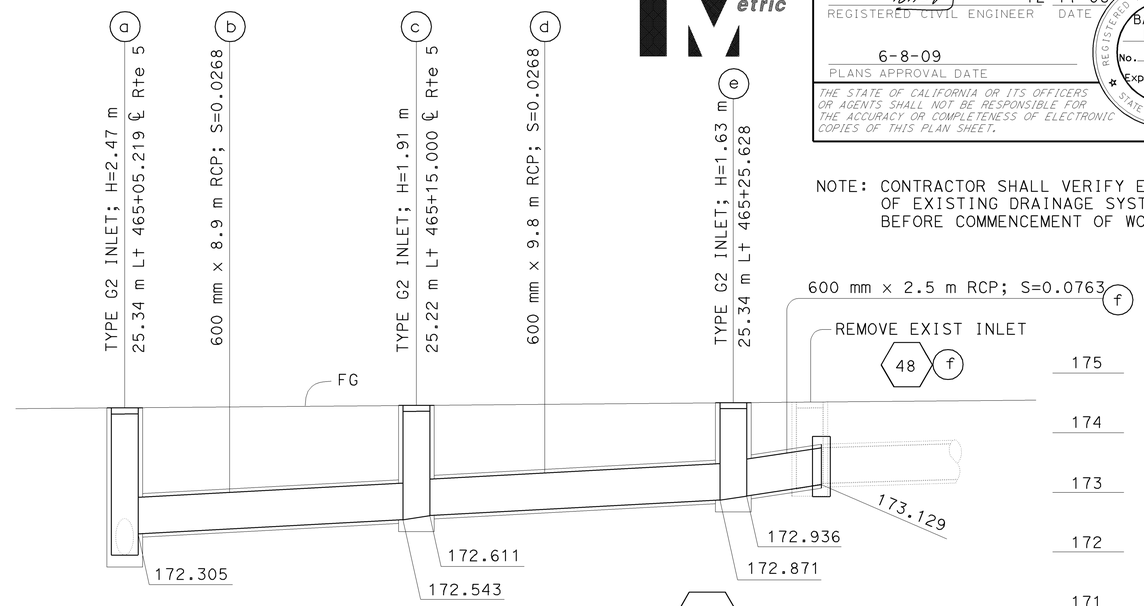

DRAINAGE SYSTEM No. 49

SCALE Horiz 1:100
Vert 1:50

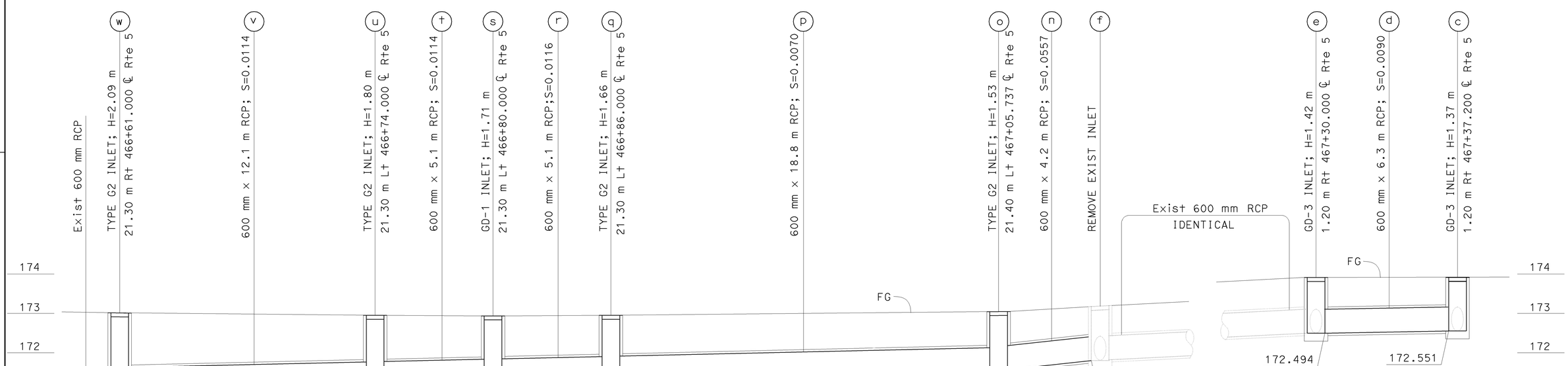

DRAINAGE SYSTEM No. 51

SCALE Horiz 1:100
Vert 1:50

THIS PLAN ACCURATE FOR DRAINAGE ONLY

ALL DIMENSIONS ARE IN METERS UNLESS OTHERWISE SHOWN

DRAINAGE PROFILE

DP-7

REVISED BY	DATE REVISED

CALCULATED-DESIGNED BY: C.P.NGUYEN
CHECKED BY: S.THAI
FUNCTIONAL SUPERVISOR: DAVE BHALLA

STATE OF CALIFORNIA - DEPARTMENT OF TRANSPORTATION
Caltrans
HYDRAULICS

LAST REVISION 00-00-00
DATE PLOTTED => 12-JUN-2009
TIME PLOTTED => 08:08

Dist	COUNTY	ROUTE	KILOMETER POST TOTAL PROJECT	SHEET No.	TOTAL SHEETS
07	LA	5	42.8/47.3	163	1073

REGISTERED CIVIL ENGINEER 12-17-08 DATE

6-8-09
PLANS APPROVAL DATE

REGISTERED PROFESSIONAL ENGINEER BALDEV K. BHALLA No. 34350 Exp. 9/30/09 CIVIL STATE OF CALIFORNIA

THE STATE OF CALIFORNIA OR ITS OFFICERS OR AGENTS SHALL NOT BE RESPONSIBLE FOR THE ACCURACY OR COMPLETENESS OF ELECTRONIC COPIES OF THIS PLAN SHEET.

Caltrans Metric

NOTE: CONTRACTOR SHALL VERIFY ELEVATIONS OF EXISTING DRAINAGE SYSTEMS BEFORE COMMENCEMENT OF WORK.

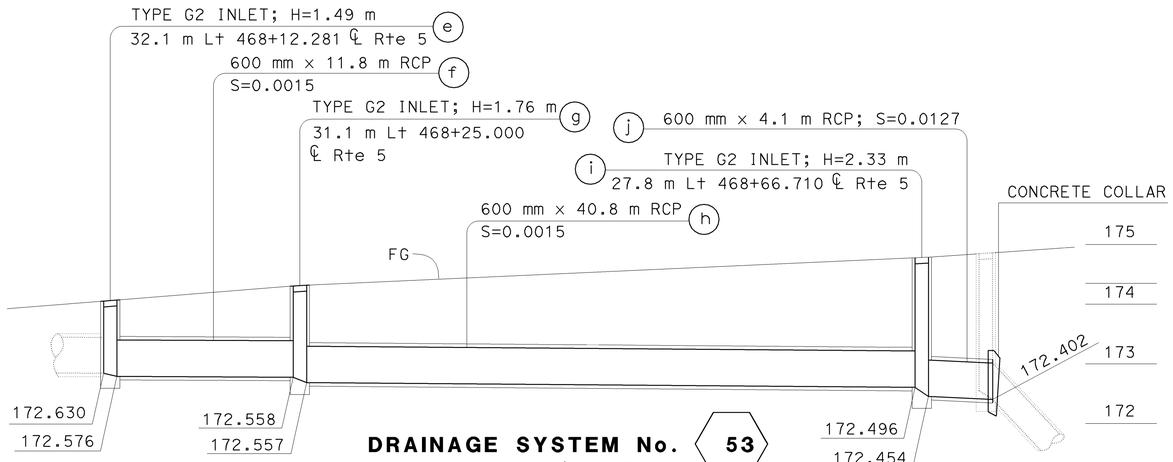

DRAINAGE SYSTEM No. 53
SCALE Horiz 1:200
Vert 1:50

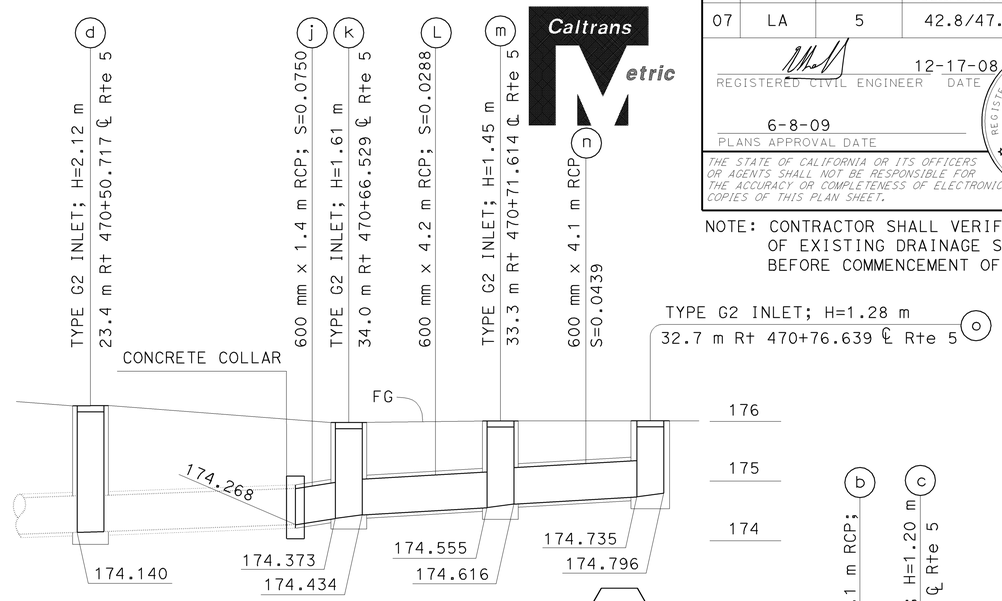

DRAINAGE SYSTEM No. 57
SCALE Horiz 1:100
Vert 1:50

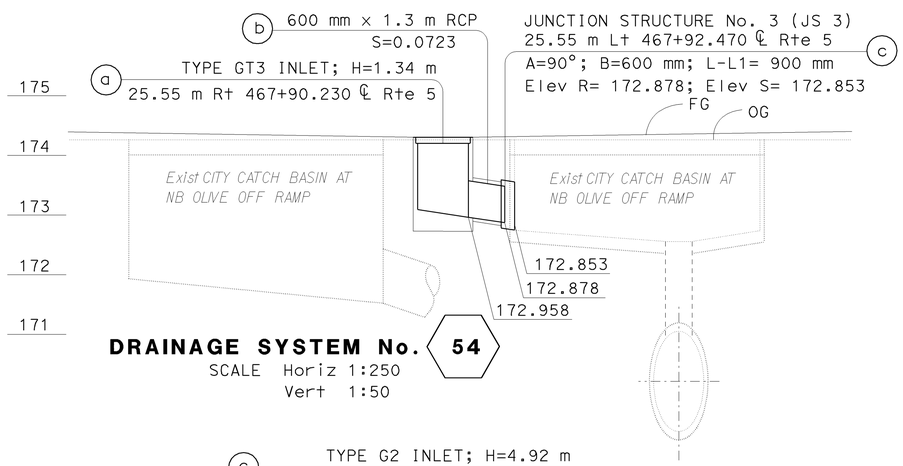

DRAINAGE SYSTEM No. 54
SCALE Horiz 1:250
Vert 1:50

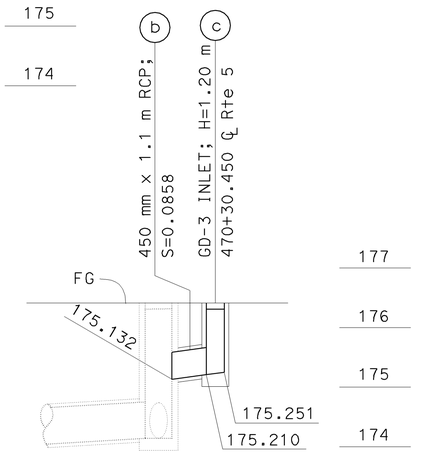

DRAINAGE SYSTEM No. 57
SCALE Horiz 1:100
Vert 1:50

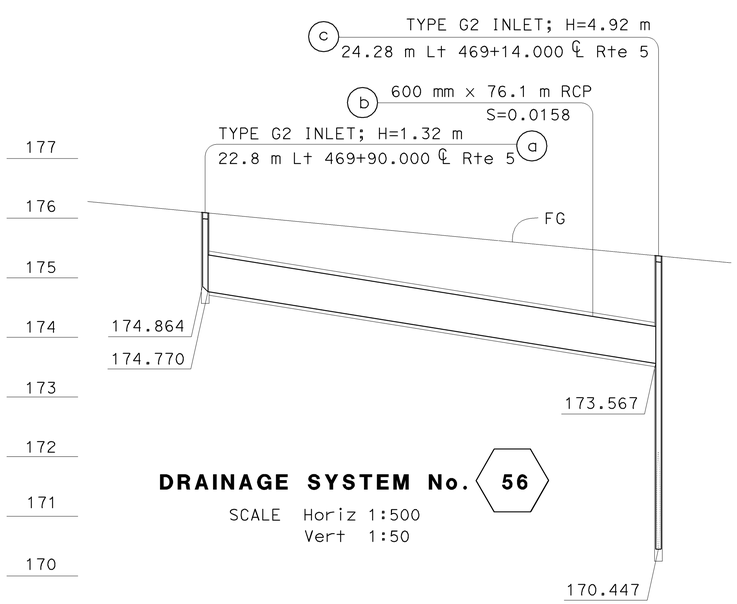

DRAINAGE SYSTEM No. 56
SCALE Horiz 1:500
Vert 1:50

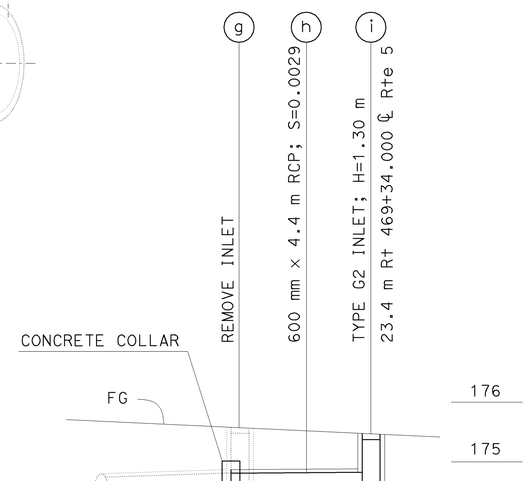

DRAINAGE SYSTEM No. 56
SCALE Horiz 1:100
Vert 1:50

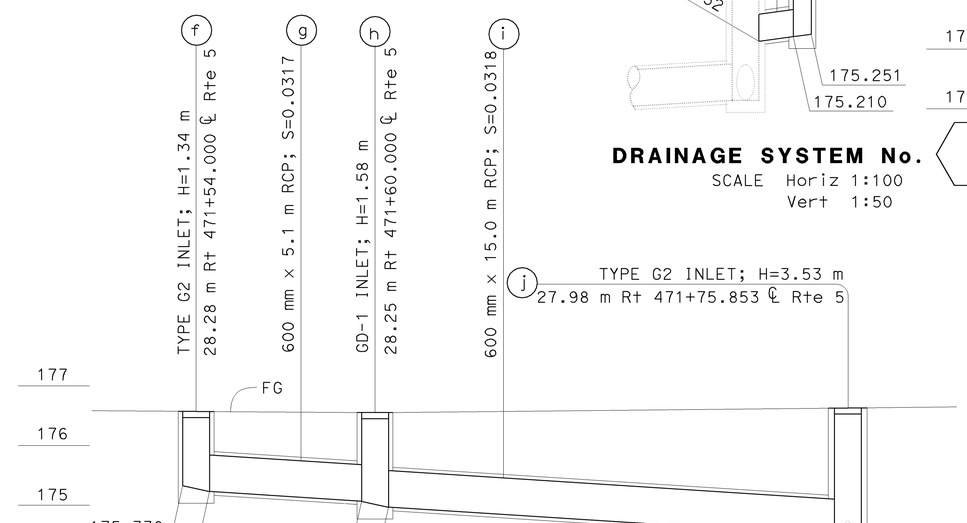

DRAINAGE SYSTEM No. 58
SCALE Horiz 1:100
Vert 1:50

ALL DIMENSIONS ARE IN METERS UNLESS OTHERWISE SHOWN

THIS PLAN ACCURATE FOR DRAINAGE ONLY

DRAINAGE PROFILE
DP-8

REVISED BY	DATE REVISED

CALCULATED-DESIGNED BY: C.P.NGUYEN
CHECKED BY: S.THAI
FUNCTIONAL SUPERVISOR: DAVE BHALLA

STATE OF CALIFORNIA - DEPARTMENT OF TRANSPORTATION
Caltrans
HYDRAULICS

LAST REVISION 00-00-00 | DATE PLOTTED => 12-JUN-2009 | TIME PLOTTED => 08:06

Dist	COUNTY	ROUTE	KILOMETER POST TOTAL PROJECT	SHEET No.	TOTAL SHEETS
07	LA	5	42.8/47.3	164	1073

REGISTERED CIVIL ENGINEER 12-17-08 DATE

6-8-09
PLANS APPROVAL DATE

REGISTERED PROFESSIONAL ENGINEER BALDEV K. BHALLA No. 34350 Exp. 9/30/09 CIVIL STATE OF CALIFORNIA

THE STATE OF CALIFORNIA OR ITS OFFICERS OR AGENTS SHALL NOT BE RESPONSIBLE FOR THE ACCURACY OR COMPLETENESS OF ELECTRONIC COPIES OF THIS PLAN SHEET.

Caltrans Metric

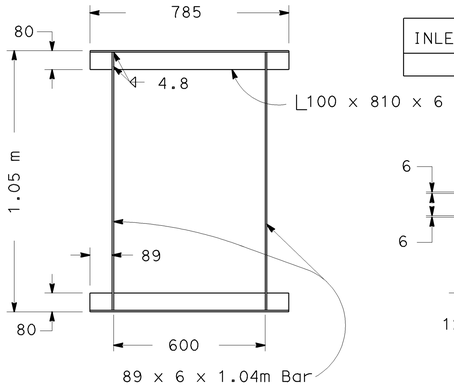

PLAN

INLET TYPE	GRATE TYPE	No. OF GRATES	MASS (KG)
G2	600-12	1	148

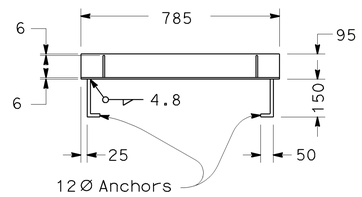

CROSS SECTION

FRAME DETAIL

General Notes: See Standard Plan D77A

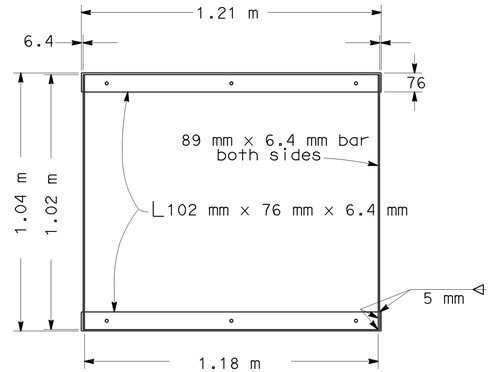

GRATE FRAME DETAIL

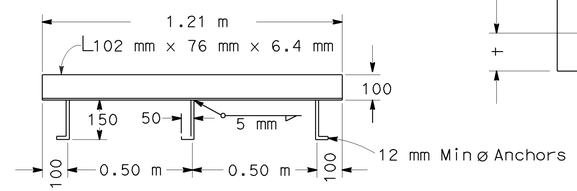

ANCHOR PLACEMENT DETAIL

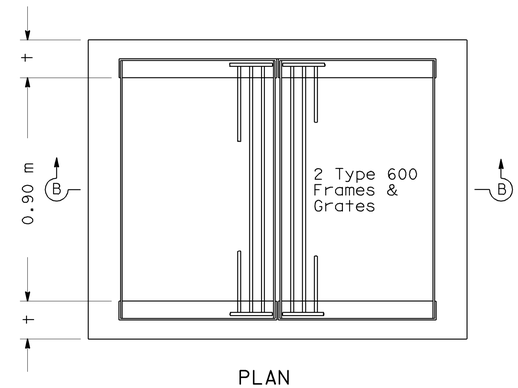

PLAN

For grate, frame and anchor placement details see Standard Plans RSP D77A and Standard Plan D77B

NOTES

1. 'H' is the difference in elevation between the outlet pipe flow line and the flow line of the grates
2. Steps - None required when 'H' is 1.07 m or less. Install one step 400 mm± above floor when 'H' is more than 1.07 m and less than 1.52 m Where 'H' is more than 1.52 m steps shall be evenly spaced @ 300 mm± intervals from 400 mm± above floor to within 300 mm± of the top of the box Place steps in wall without pipe openings. See Standard Plan D74C for step detail
3. Pipe(s) can be placed in any wall
4. Reinforcing steel not required in walls when H=1.81 m or less
5. Reinforcing steel in walls shall be #13 bars @ 450 mm± centers placed 40 mm clear to inside of box

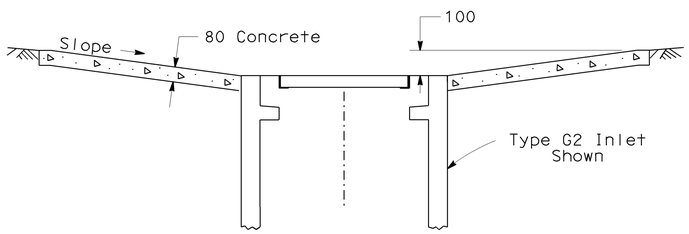

SECTION A-A

MISCELLANEOUS IRON & STEEL

Inlet Type	Grate Type	MASS(kg)
GD-1 & GD-2	600 - 12	288
	600 - 10C	172
	600 - 10S	197
	600 - 12X	206
	600 - 13	159
GD-3	600 - 12	296

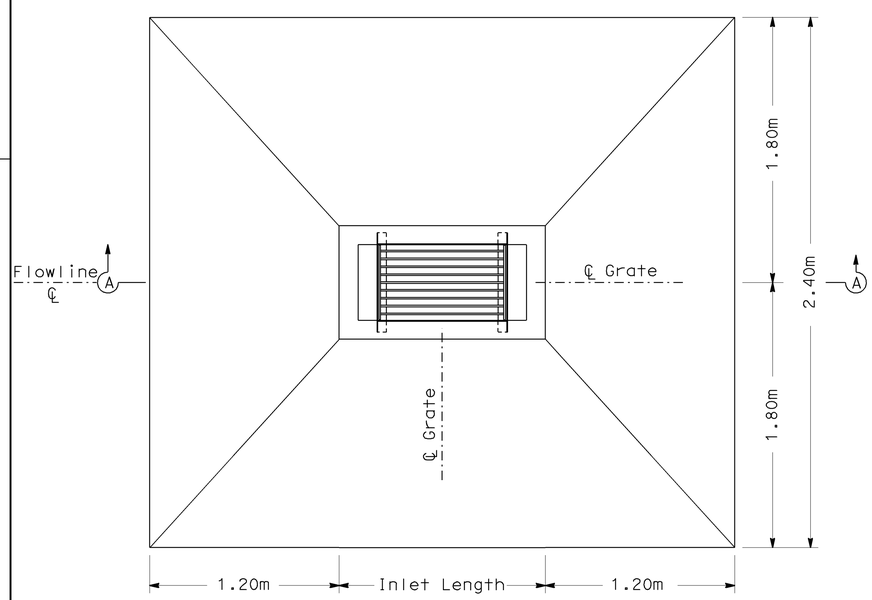

PLAN

DEPRESSED APRON DETAIL

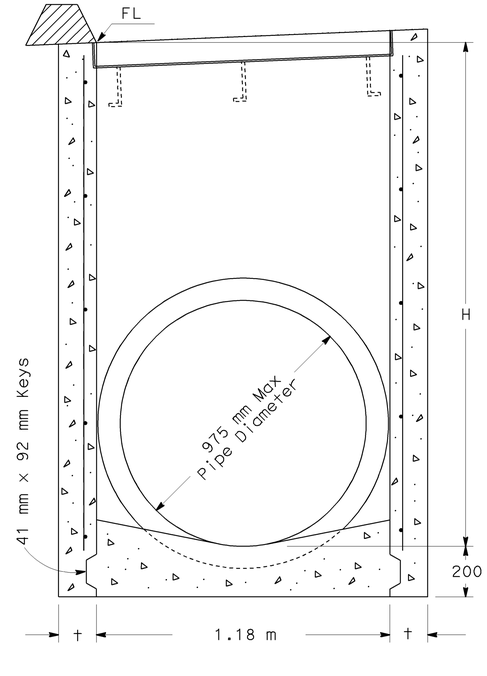

SECTION A-A

(For pipe diameters 975 mm or less)

GD-1

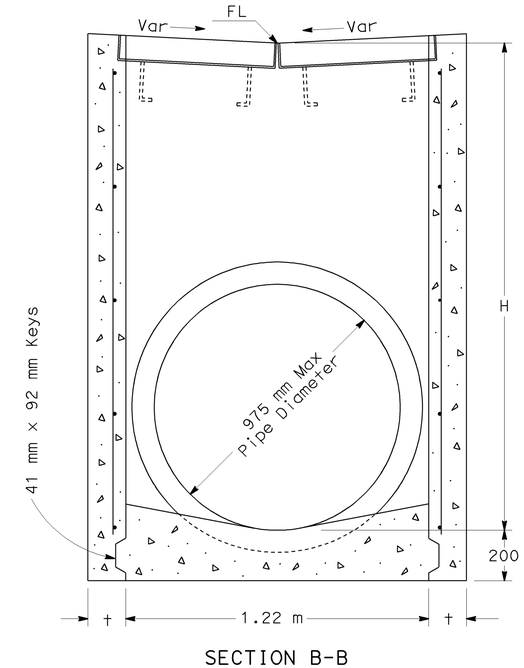

SECTION B-B

(For pipe diameters 975 mm or less)

GD-3

H	t
2.50 m or less	150 mm
2.51 m to 6.00 m	200 mm

DRAINAGE INLETS

THIS PLAN ACCURATE FOR DRAINAGE WORK ONLY

ALL DIMENSIONS ARE IN MILLIMETERS UNLESS OTHERWISE SHOWN

DRAINAGE DETAILS

NO SCALE

DD-1

STATE OF CALIFORNIA - DEPARTMENT OF TRANSPORTATION
Caltrans
HYDRAULICS
FUNCTIONAL SUPERVISOR DAVE BHALLA
CALCULATED-DESIGNED BY C.P.NGUYEN
CHECKED BY S.THAI
REVISED BY
DATE REVISED

LAST REVISION 00-00-00 DATE PLOTTED => 12-JUN-2009 TIME PLOTTED => 08:08

Dist	COUNTY	ROUTE	KILOMETER POST TOTAL PROJECT	SHEET No.	TOTAL SHEETS
07	LA	5	42.8/47.3	165	1073

REGISTERED CIVIL ENGINEER 12-17-08 DATE

6-8-09
PLANS APPROVAL DATE

REGISTERED PROFESSIONAL ENGINEER BALDEV K. BHALLA No. 34350 Exp. 9/30/09 CIVIL STATE OF CALIFORNIA

THE STATE OF CALIFORNIA OR ITS OFFICERS OR AGENTS SHALL NOT BE RESPONSIBLE FOR THE ACCURACY OR COMPLETENESS OF ELECTRONIC COPIES OF THIS PLAN SHEET.

Caltrans Metric

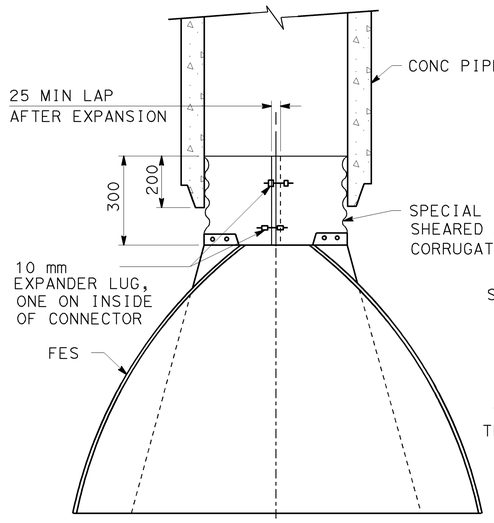

ALTERNATE NO 1

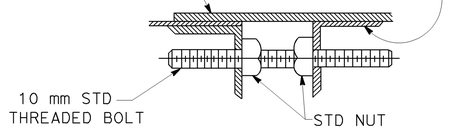

EXPANDER LUG DETAIL

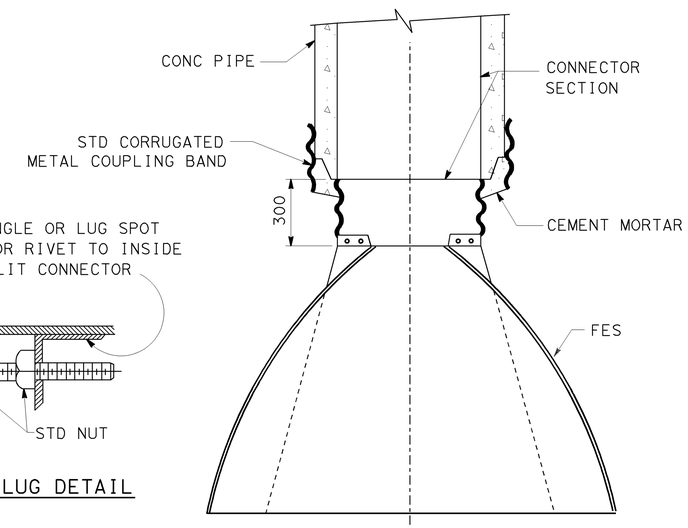

ALTERNATE NO 2

STEEL FES CONNECTION TO CONCRETE PIPE

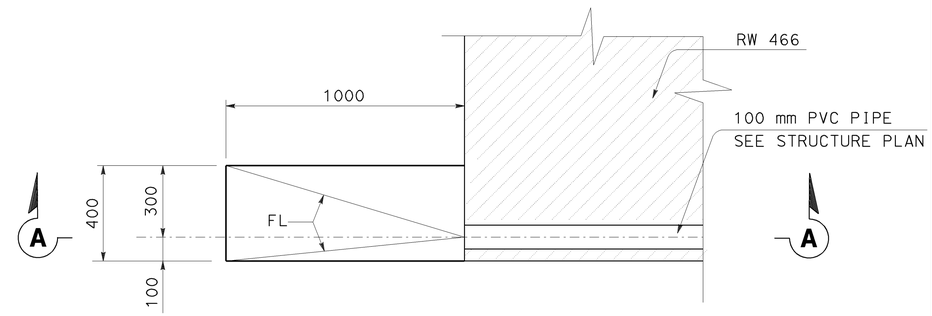

PLAN

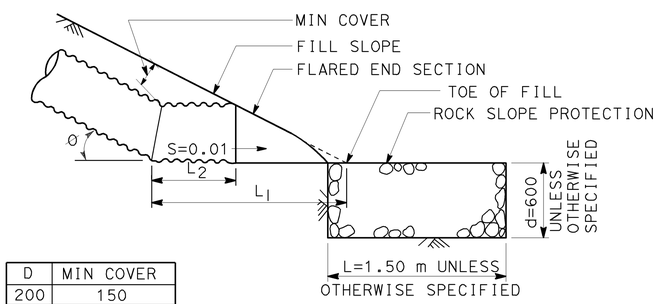

D	MIN COVER
200	150
300	150
450	300
600	300

PROFILE

PIPE SLOPE S - %	Ø	D=200	D=300		D=450		D=600	
		L_1 (m)	L_1 (m)	L_2 (m)	L_1 (m)	L_2 (m)	L_1 (m)	L_2 (m)
10-15	6°-9°	0.76	0.99	0.38	1.68	0.71	1.98	0.74
15-20	9°-11°	0.79	0.99	0.38	1.68	0.74	2.01	0.74
20-25	11°-14°	0.79	1.02	0.38	1.70	0.74	2.01	0.76
25-30	14°-17°	0.79	1.02	0.41	1.70	0.74	2.03	0.76
30-35	17°-19°	0.79	1.02	0.41	1.70	0.76	2.06	0.79
35-40	19°-22°	0.79	1.04	0.41	1.73	0.76	2.06	0.79
40-45	22°-24°	0.81	1.04	0.43	1.73	0.79	2.08	0.81
45-50	24°-26°	0.81	1.04	0.43	1.73	0.79	2.08	0.81

OUTLET DETAIL FOR CSP @ TOE OF SLOPE

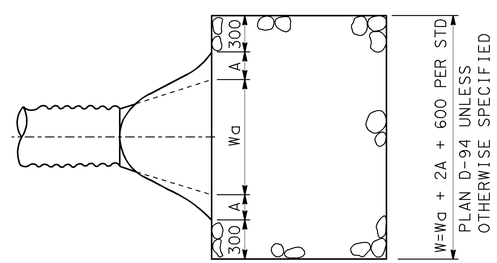

PLAN

ROCK SLOPE PROTECTION DETAIL

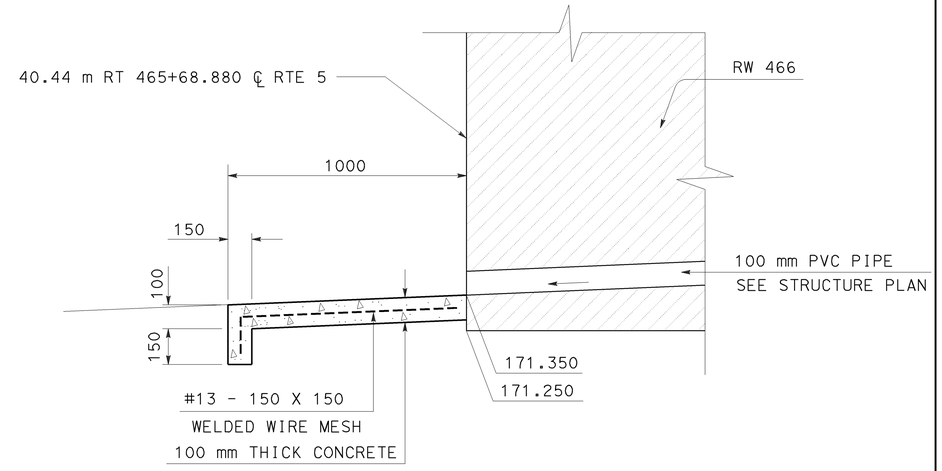

SECTION A-A

CONCRETE PAD

(AT RW 466 OUTLET)

ALL DIMENSIONS ARE IN
MILLIMETERS UNLESS OTHERWISE SHOWN

DRAINAGE DETAILS

NO SCALE

DD-2

THIS PLAN ACCURATE FOR DRAINAGE WORK ONLY

STATE OF CALIFORNIA - DEPARTMENT OF TRANSPORTATION
Caltrans
HYDRAULICS

FUNCTIONAL SUPERVISOR: DAVE BHALLA
CALCULATED-DESIGNED BY: C.P.NGUYEN
CHECKED BY: S.THAI
REVISED BY / DATE REVISED

LAST REVISION 00-00-00
DATE PLOTTED => 12-JUN-2009
TIME PLOTTED => 08:09

Dist	COUNTY	ROUTE	KILOMETER POST TOTAL PROJECT	SHEET No.	TOTAL SHEETS
07	LA	5	42.8/47.3	166	1073

REGISTERED CIVIL ENGINEER 12-17-08 DATE

6-8-09
PLANS APPROVAL DATE

REGISTERED PROFESSIONAL ENGINEER BALDEV K. BHALLA No. 34350 Exp. 9/30/09 CIVIL STATE OF CALIFORNIA

THE STATE OF CALIFORNIA OR ITS OFFICERS OR AGENTS SHALL NOT BE RESPONSIBLE FOR THE ACCURACY OR COMPLETENESS OF ELECTRONIC COPIES OF THIS PLAN SHEET.

Caltrans Metric

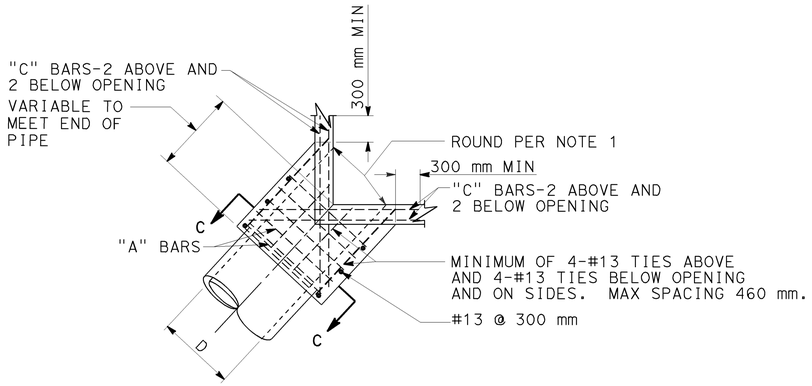

PLAN
CORNER CONNECTION

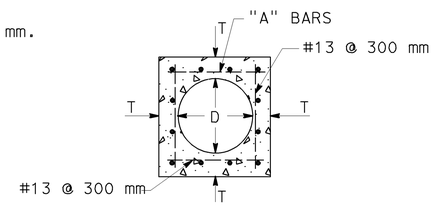

SECTION C-C

D	T	"A"	"B"-"C"
300 mm	115 mm	#13 @ 150 mm	#16
375 mm	115 mm		
450 mm	125 mm		
525 mm	140 mm		
600 mm	150 mm		
675 mm	165 mm		
750 mm	180 mm		
825 mm	180 mm		
900 mm	190 mm		
975 mm	200 mm		
1050 mm	200 mm		
1125 mm	200 mm	#16 @ 150 mm	#19
1200 mm	200 mm		
1275 mm	200 mm		
1350 mm	200 mm		
1425 mm	250 mm		
1500 mm	250 mm		
1575 mm	250 mm		
1650 mm	275 mm		
1725 mm	275 mm		
1800 mm	275 mm		

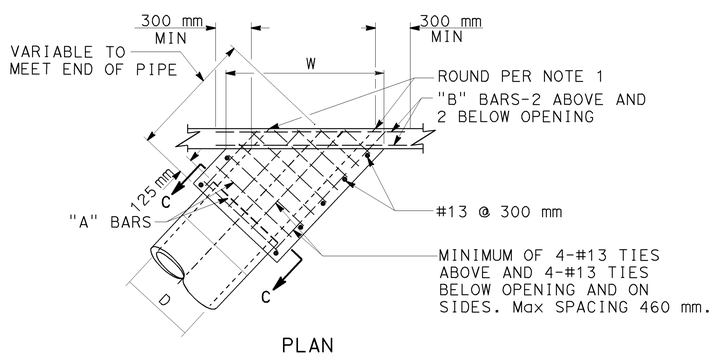

PLAN
SIDE CONNECTION

NOTES

1. ROUND EDGE OF OUTLET TO 75 mm RADIUS.
2. REINFORCEMENT SHALL BE 40 mm CLEAR FROM THE FACE OF CONCRETE.
3. IN CONNECTING TO AN EXISTING STRUCTURE BREAK OUT PORTIONS OF THE EXISTING STRUCTURE 150 mm OUTSIDE ITS INTERSECTION WITH THE NEW CONNECTION. BEND ENDS OF #13 BARS OVER CONNECTION OPENING AS REQUIRED.

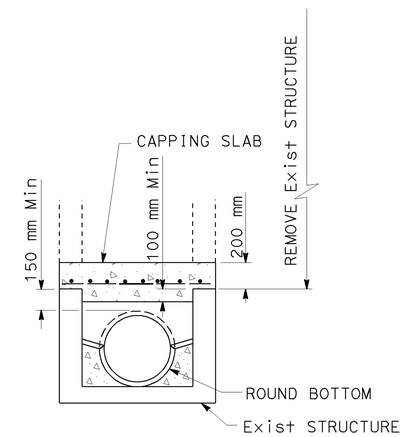

SECTION A-A

MONOLITHIC CONNECTION
FOR PIPES 300 mm TO 1800 mm INCLUSIVE

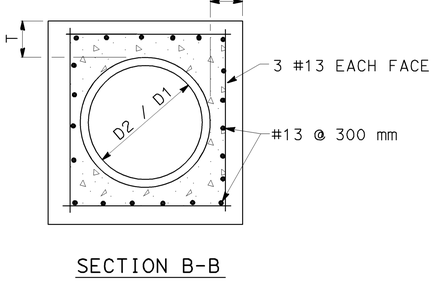

SECTION B-B

D (mm)	L (mm)	T (mm)
300	300	100
450	300	125
600	300	150
900	460	200
1200	460	250
1350	460	250
1500	530	275
1650	530	275
1800	600	300

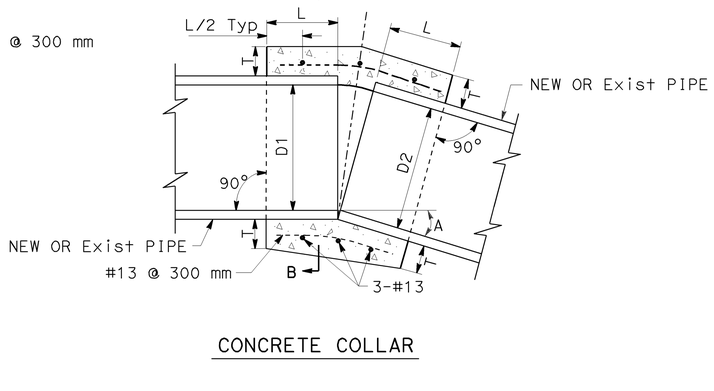

CONCRETE COLLAR

NOTES

1. WHERE PIPES OF DIFFERENT DIAMETERS ARE JOINED WITH A CONCRETE COLLAR, 'L' AND 'T' SHALL BE THOSE OF THE LARGER PIPE. D=D1 OR D2, WHICHEVER IS GREATER.
2. FOR PIPE SIZE NOT LISTED USE NEXT SIZE LARGER.
3. OMIT REINFORCING ON PIPES 600 mm AND LESS IN DIAMETER AND ON ALL PIPES WHERE ANGLE A IS LESS THAN 10°.
4. JOIN PIPES AT INVERTS.
5. REINFORCEMENT SHALL BE PLACED 40 mm CLEAR FROM OUTSIDE DIAMETER OF PIPE.

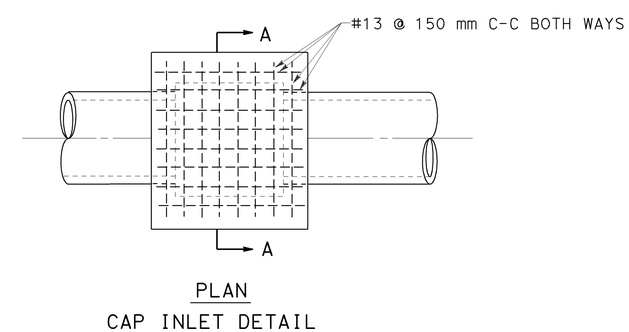

PLAN
CAP INLET DETAIL

ALL DIMENSIONS ARE IN MILLIMETERS UNLESS OTHERWISE SHOWN

DRAINAGE DETAILS

NO SCALE

DD-3

THIS PLAN ACCURATE FOR DRAINAGE WORK ONLY

STATE OF CALIFORNIA - DEPARTMENT OF TRANSPORTATION
Caltrans
HYDRAULICS
FUNCTIONAL SUPERVISOR: DAVE BHALLA
CALCULATED-DESIGNED BY: C.P.NGUYEN
CHECKED BY: S.THAI
REVISED BY
DATE REVISED

LAST REVISION 00-00-00
DATE PLOTTED => 12-JUN-2009
TIME PLOTTED => 08:09

NOTES:

1. FOR CONCRETE BARRIER END ANCHOR DETAIL REFER TO STANDARD PLAN A76H.
2. FOR DETAILS AND INFORMATION NOT SHOWN REFER TO TYPE G2 INLET ON STANDARD PLAN D73.

Dist	COUNTY	ROUTE	KILOMETER POST TOTAL PROJECT	SHEET No.	TOTAL SHEETS
07	LA	5	42.8/47.3	167	1073

REGISTERED CIVIL ENGINEER 12-17-08 DATE

6-8-09
PLANS APPROVAL DATE

REGISTERED PROFESSIONAL ENGINEER BALDEV K. BHALLA No. 34350 Exp. 9/30/09 CIVIL STATE OF CALIFORNIA

THE STATE OF CALIFORNIA OR ITS OFFICERS OR AGENTS SHALL NOT BE RESPONSIBLE FOR THE ACCURACY OR COMPLETENESS OF ELECTRONIC COPIES OF THIS PLAN SHEET.

Caltrans Metric

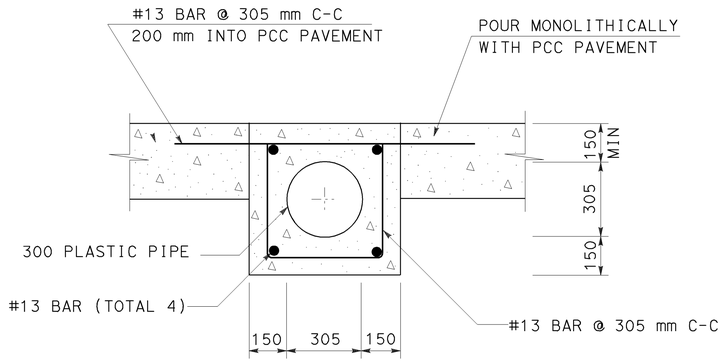

REINFORCED PIPE ENCASEMENT DETAIL

SECTION B-B

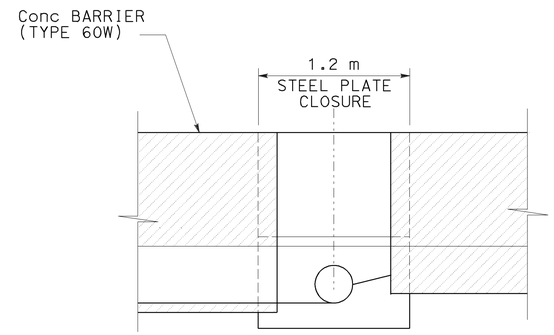

AT CLEANOUT

SECTION A-A

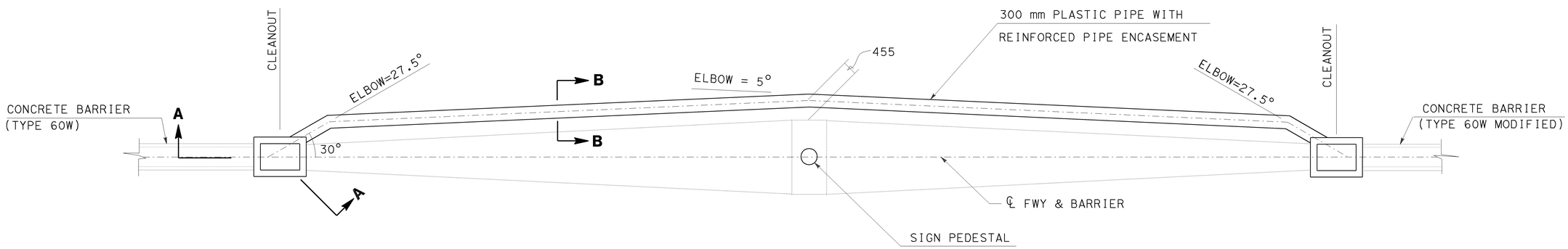

DRAINAGE SYSTEM DETAILS AT SIGN PEDESTAL

2
- L CL2 INLET/ CASE 2: STA 434+29.500
- m 300 mm x 40.0 m PLASTIC PIPE (ON SB ONLY)
- n CL2 INLET/ CASE 2: STA 434+70.500

11
- a CL1 INLET/ CASE 2: STA 441+51.500
- b 300 mm x 72.4 m PLASTIC PIPE (ON BOTH SIDES)
- c CL1 INLET/ CASE 2: STA 441+88.500

32
- a CL1 INLET/ CASE 2: STA 454+94.000
- b 300 mm x 72.5 m PLASTIC PIPE (ON BOTH SIDES)
- c CL1 INLET/ CASE 2: STA 455+33.500

40
- a CL2 INLET/ CASE 2: STA 458+65.500
- b 300 mm x 38.9 m PLASTIC PIPE (ON SB ONLY)
- c CL2 INLET/ CASE 2: STA 459+04.500

THIS PLAN ACCURATE FOR DRAINAGE ONLY

ALL DIMENSIONS ARE IN MILLIMETTERS UNLESS SHOWN OTHERWISE

DRAINAGE DETAILS

NO SCALE

DD-4

REVISED BY	DATE REVISED

CALCULATED-DESIGNED BY C.P.NGUYEN
CHECKED BY S.THAI
FUNCTIONAL SUPERVISOR DAVE BHALLA

STATE OF CALIFORNIA - DEPARTMENT OF TRANSPORTATION
Caltrans HYDRAULICS

LAST REVISION 00-00-00 DATE PLOTTED => 12-JUN-2009 TIME PLOTTED => 08:09

Dist	COUNTY	ROUTE	KILOMETER POST TOTAL PROJECT	SHEET No.	TOTAL SHEETS
07	LA	5	42.8/47.3	168	1073

REGISTERED CIVIL ENGINEER 12-17-08 DATE

6-8-09
PLANS APPROVAL DATE

REGISTERED PROFESSIONAL ENGINEER BALDEV K. BHALLA No. 34350 Exp. 9/30/09 CIVIL STATE OF CALIFORNIA

THE STATE OF CALIFORNIA OR ITS OFFICERS OR AGENTS SHALL NOT BE RESPONSIBLE FOR THE ACCURACY OR COMPLETENESS OF ELECTRONIC COPIES OF THIS PLAN SHEET.

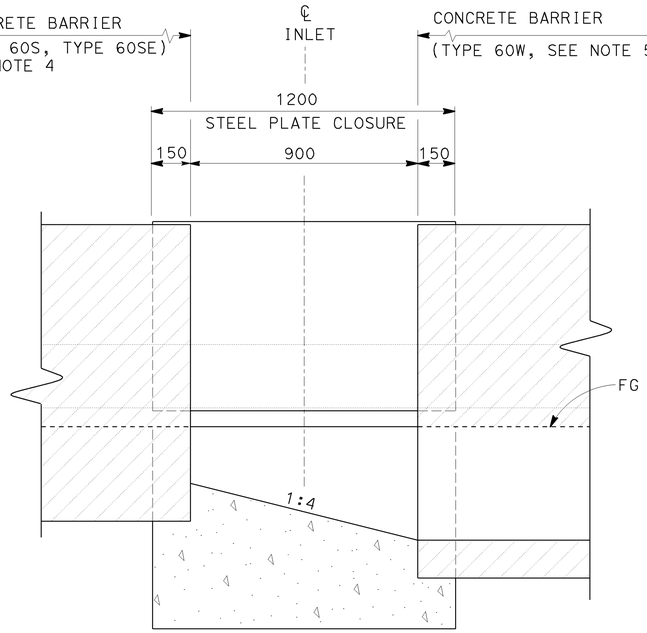

SECTION B-B

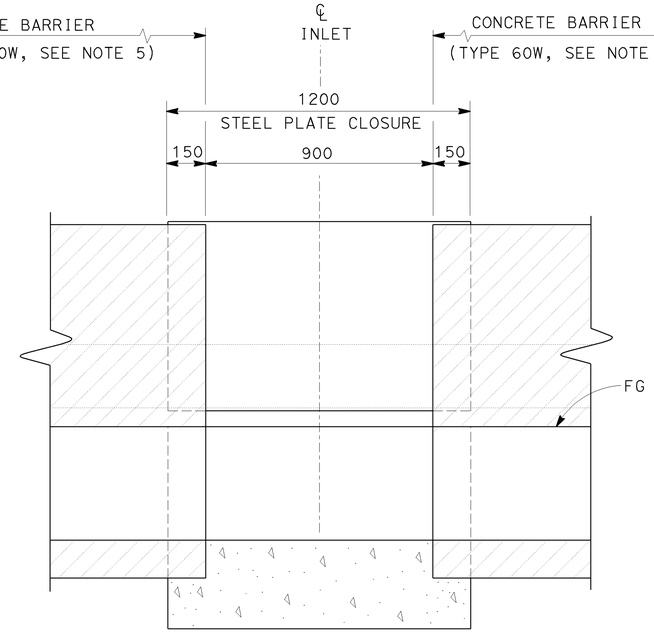

SECTION C-C

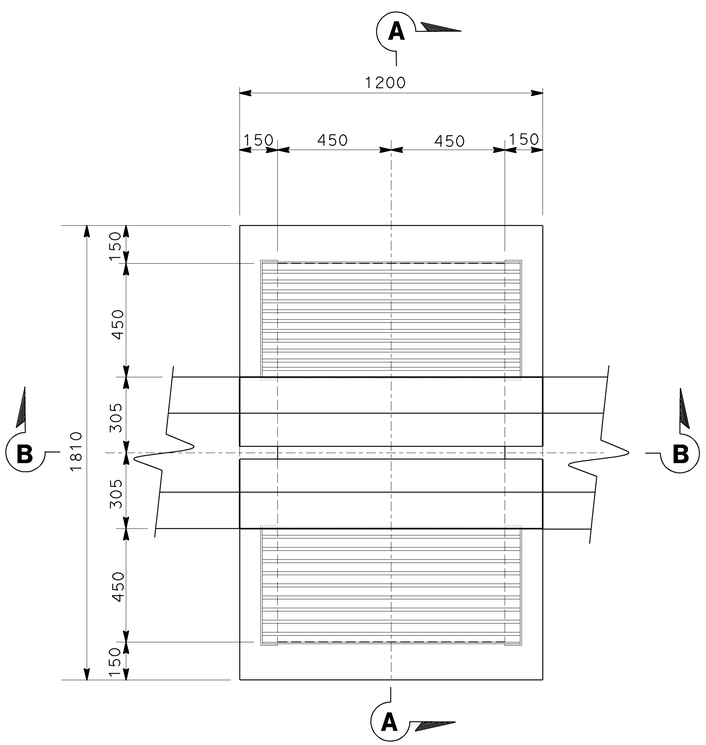

BEGINNING / ENDING CLEANOUT

CASE 1

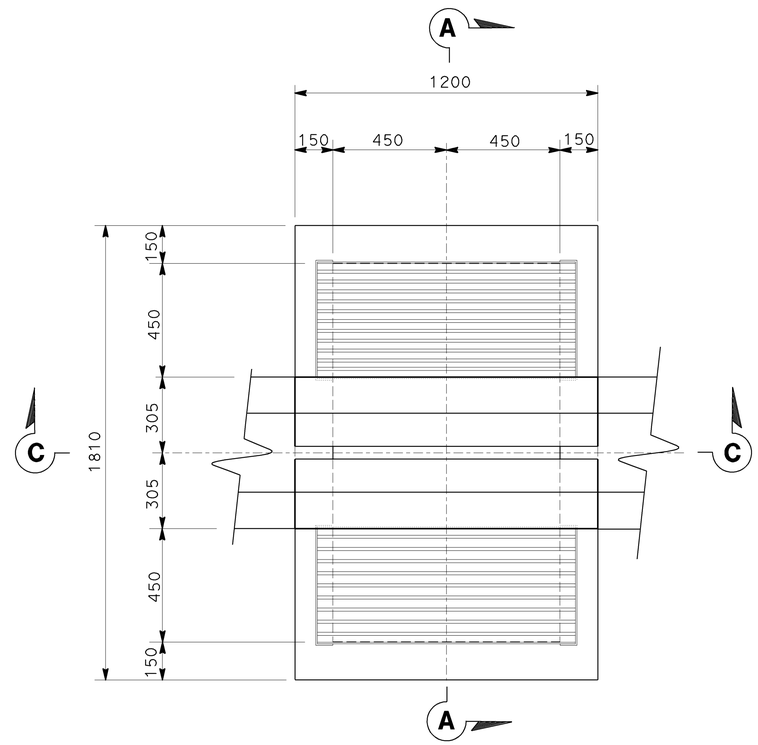

INTERMEDIATE CLEANOUT

CASE 2

PLAN

NOTES:

1. ELEVATIONS OF PAVEMENT ON OPPOSITE SIDES OF CONCRETE BARRIER MAY VARY.
2. FOR FRAME AND GRATE INSTALLATION, REFER TO GRATE DETAIL ON STANDARD PLAN D77A.
3. FOR CONCRETE BARRIER END ANCHOR DETAIL, REFER TO STANDARD PLAN A76H.
4. FOR CONCRETE BARRIER TYPE 60W DETAILS , REFER TO AND ON STANDARD PLANS A76C, A76E & A76H.
5. FOR DETAILS AND INFORMATION NOT SHOWN, REFER TO DRAINAGE INLETS ON STANDARD PLAN D73.

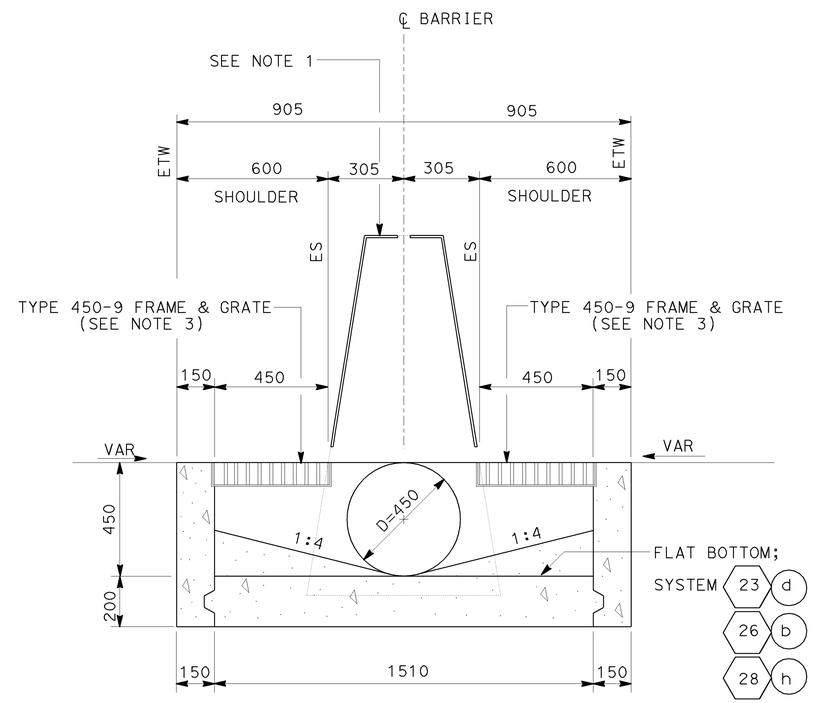

SECTION A-A

ALL DIMENSIONS ARE IN MILLIMETERS UNLESS OTHERWISE SHOWN

DRAINAGE DETAILS

CL1 INLET

NO SCALE

DD-5

THIS PLAN ACCURATE FOR DRAINAGE WORK ONLY

STATE OF CALIFORNIA - DEPARTMENT OF TRANSPORTATION
Caltrans
HYDRAULICS

FUNCTIONAL SUPERVISOR: DAVE BHALLA
CALCULATED-DESIGNED BY: C.P.NGUYEN
CHECKED BY: S.THAI
REVISED BY / DATE REVISED

LAST REVISION 00-00-00 DATE PLOTTED => 12-JUN-2009 TIME PLOTTED => 08:09

Dist	COUNTY	ROUTE	KILOMETER POST TOTAL PROJECT	SHEET No.	TOTAL SHEETS
07	LA	5	42.8/47.3	169	1073

REGISTERED CIVIL ENGINEER 12-17-08 DATE

6-8-09
PLANS APPROVAL DATE

REGISTERED PROFESSIONAL ENGINEER BALDEV K. BHALLA No. 34350 Exp. 9/30/09 CIVIL STATE OF CALIFORNIA

THE STATE OF CALIFORNIA OR ITS OFFICERS OR AGENTS SHALL NOT BE RESPONSIBLE FOR THE ACCURACY OR COMPLETENESS OF ELECTRONIC COPIES OF THIS PLAN SHEET.

Caltrans Metric

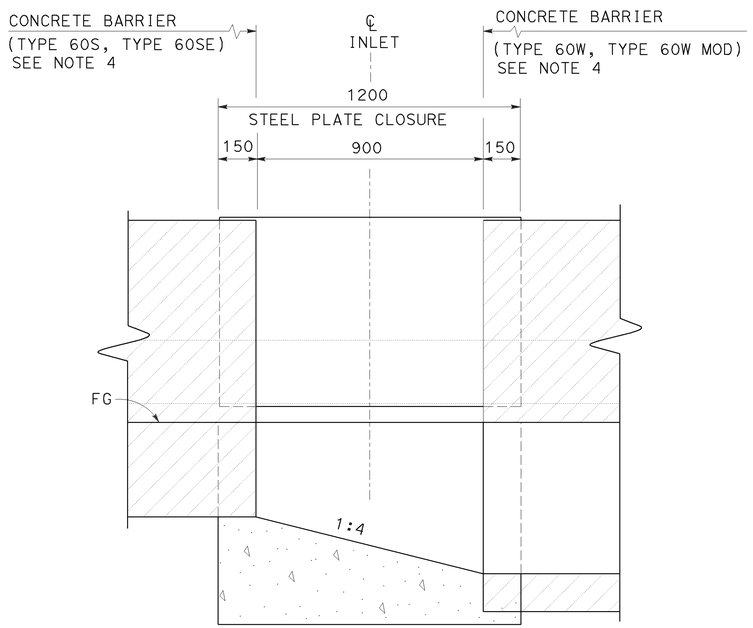

SECTION B-B

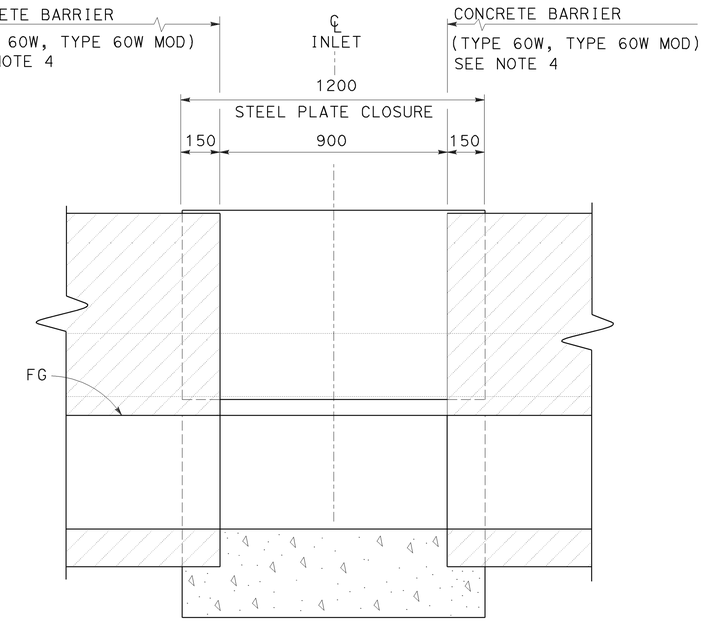

SECTION C-C

NOTES:

1. ELEVATIONS OF PAVEMENT ON OPPOSITE SIDES OF CONCRETE BARRIER MAY VARY.
2. FOR FRAME AND GRATE INSTALLATION, REFER TO TYPE GO INLET ON STANDARD PLAN D74B.
3. FOR CONCRETE BARRIER END ANCHOR DETAIL, REFER TO STANDARD PLAN A76H.
4. FOR DETAILS AND INFORMATION NOT SHOWN REFER TO TYPE G1 INLET ON STANDARD PLAN D73.

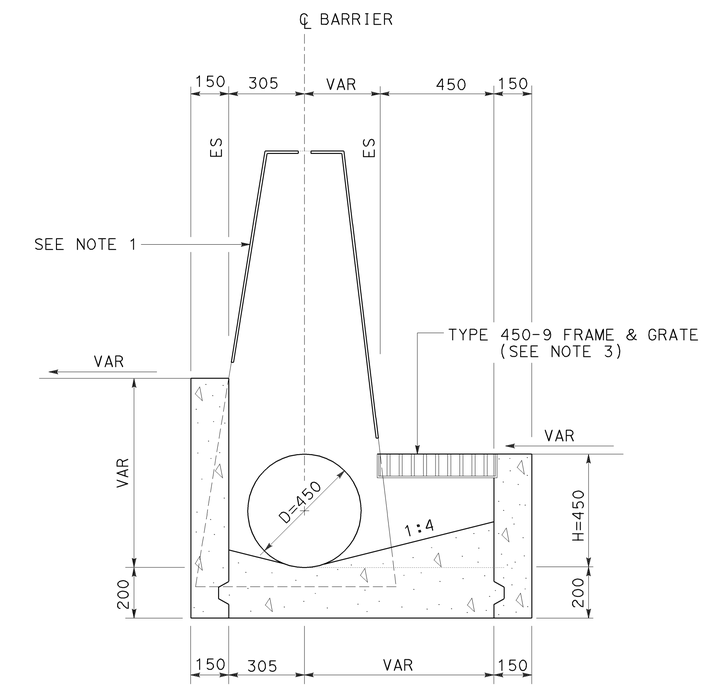

SECTION A-A

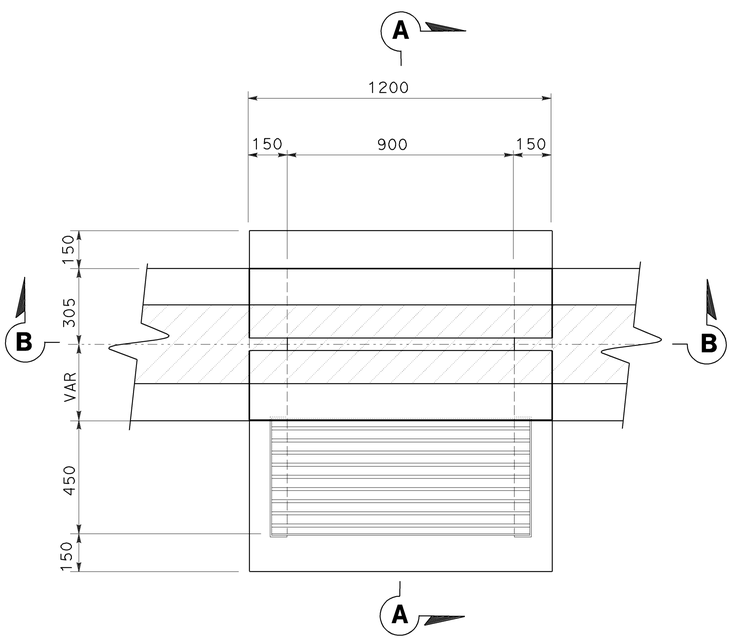

BEGINNING / ENDING CLEANOUT

CASE 1

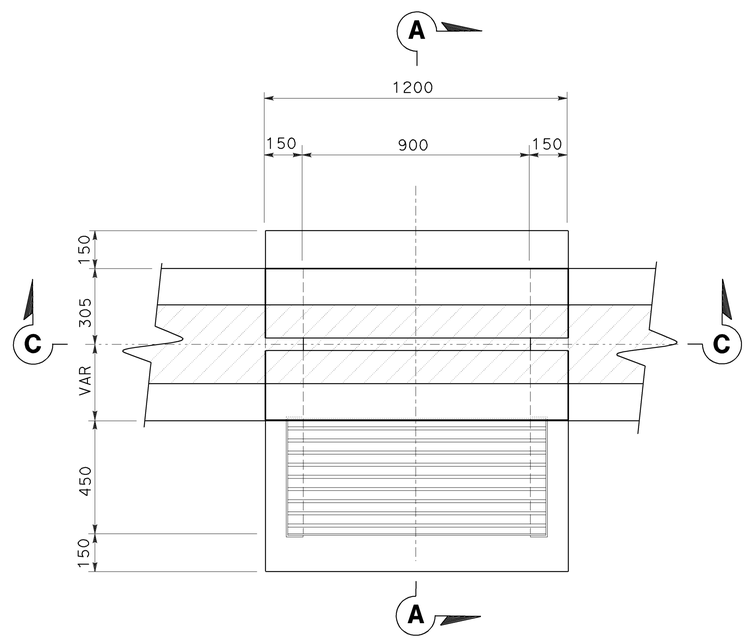

INTERMEDIATE CLEANOUT

CASE 2

PLAN

CL2 INLET

THIS PLAN ACCURATE FOR DRAINAGE ONLY

ALL DIMENSIONS ARE IN MILLIMETTERS UNLESS SHOWN OTHERWISE

DRAINAGE DETAILS

NO SCALE

DD-6

STATE OF CALIFORNIA - DEPARTMENT OF TRANSPORTATION
Caltrans
HYDRAULICS

FUNCTIONAL SUPERVISOR: DAVE BHALLA
CALCULATED-DESIGNED BY: C.P.NGUYEN
CHECKED BY: S.THAI
REVISED BY / DATE REVISED

LAST REVISION 00-00-00 | DATE PLOTTED => 12-JUN-2009 | TIME PLOTTED => 08:09

Dist	COUNTY	ROUTE	KILOMETER POST TOTAL PROJECT	SHEET No.	TOTAL SHEETS
07	LA	5	42.8/47.3	170	1073

REGISTERED CIVIL ENGINEER 12-17-08 DATE

6-8-09
PLANS APPROVAL DATE

REGISTERED PROFESSIONAL ENGINEER BALDEV K. BHALLA No. 34350 Exp. 9/30/09 CIVIL STATE OF CALIFORNIA

THE STATE OF CALIFORNIA OR ITS OFFICERS OR AGENTS SHALL NOT BE RESPONSIBLE FOR THE ACCURACY OR COMPLETENESS OF ELECTRONIC COPIES OF THIS PLAN SHEET.

Caltrans Metric

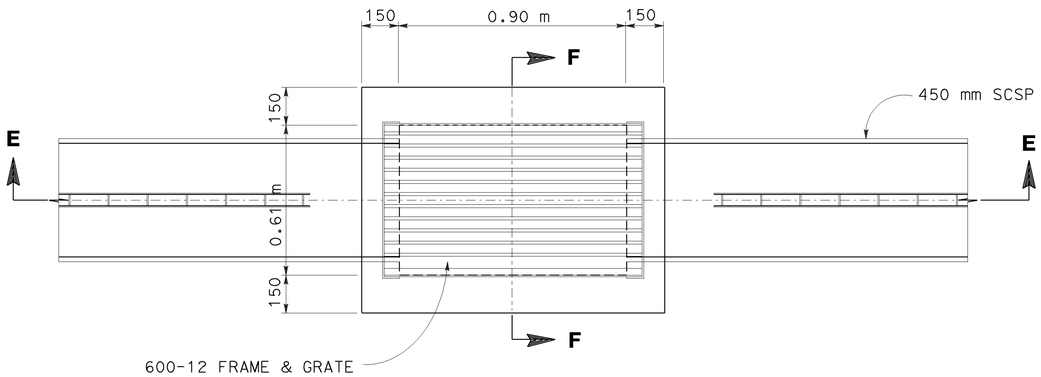

CL3 INLET

PLAN

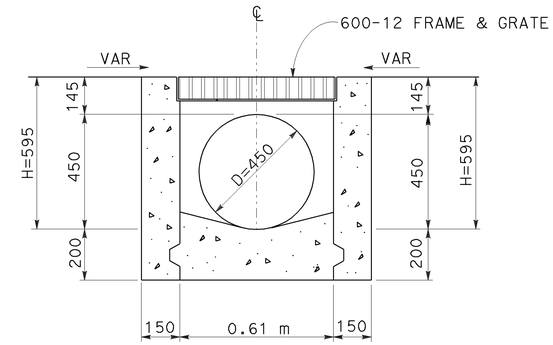

CL3 INLET

SECTION F-F

NOTES:

1. FOR INFORMATION AND DETAILS NOT SHOWN SEE STD PLANS D73, D77A, D98A AND D98B.
2. LENGTH OF CSP IS INCLUDED IN THE LENGTH OF SCSP INVOLVED SHOWN ON THE SUMMARY OF DRAINAGE QUANTITIES.

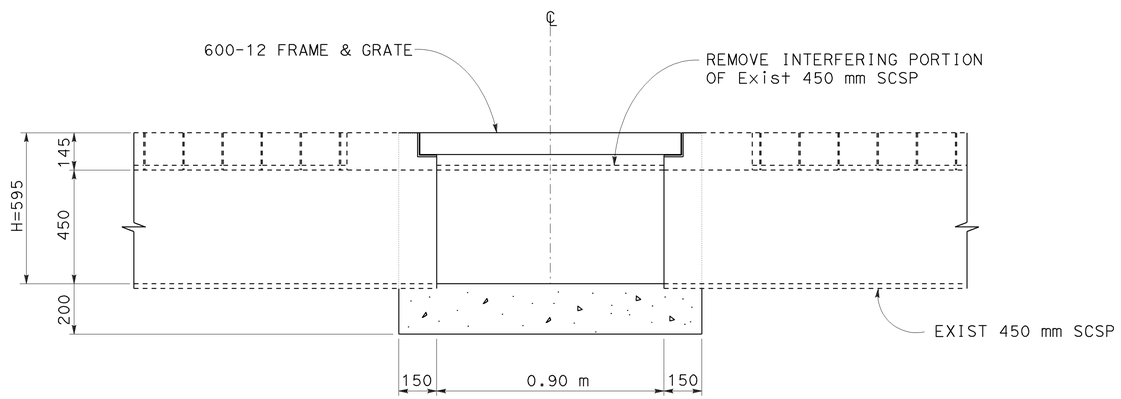

INTERMEDIATE CLEANOUT

CASE 2

SECTION E-E

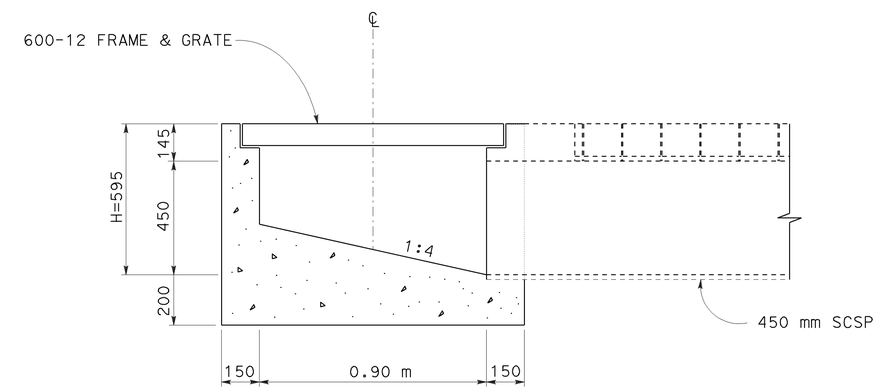

BEGINNING CLEANOUT

CASE 1

SECTION E-E

ALL DIMENSIONS ARE IN MILLIMETERS UNLESS SHOWN OTHERWISE

DRAINAGE DETAILS

CL3 INLET

NO SCALE

DD-7

STATE OF CALIFORNIA - DEPARTMENT OF TRANSPORTATION

Caltrans **HYDRAULICS**

FUNCTIONAL SUPERVISOR: DAVE BHALLA

CALCULATED-DESIGNED BY: C.P.NGUYEN

CHECKED BY: S.THAI

REVISED BY | DATE REVISED

LAST REVISION 00-00-00 | DATE PLOTTED => 12-JUN-2009 | TIME PLOTTED => 08:09

Dist	COUNTY	ROUTE	KILOMETER POST TOTAL PROJECT	SHEET No.	TOTAL SHEETS
07	LA	5	42.8/47.3	171	1073

REGISTERED CIVIL ENGINEER 12-17-08 DATE

6-8-09
PLANS APPROVAL DATE

REGISTERED PROFESSIONAL ENGINEER BALDEV K. BHALLA No. 34350 Exp. 9/30/09 CIVIL STATE OF CALIFORNIA

THE STATE OF CALIFORNIA OR ITS OFFICERS OR AGENTS SHALL NOT BE RESPONSIBLE FOR THE ACCURACY OR COMPLETENESS OF ELECTRONIC COPIES OF THIS PLAN SHEET.

Caltrans Metric

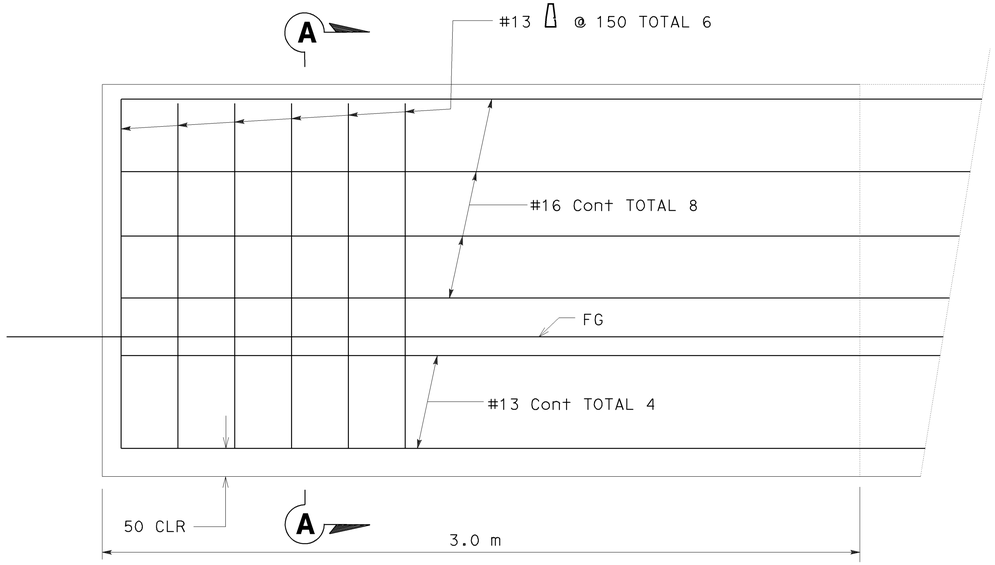

ELEVATION

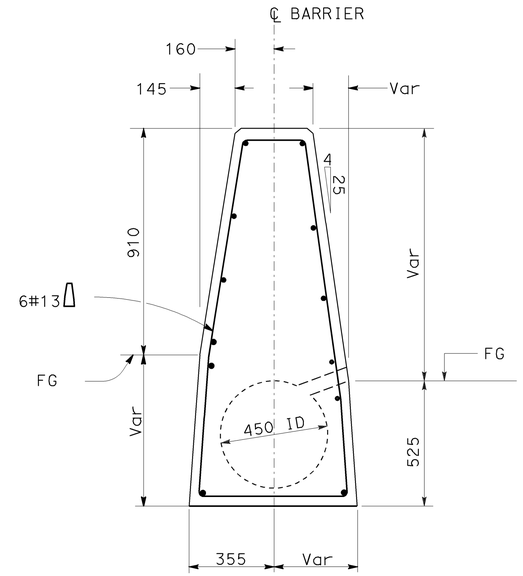

SECTION A-A

END ANCHOR FOR CONCRETE BARRIER (TYPE 60W)

NOTES:

1. END ANCHOR REQUIRED AT BARRIER ENDS AND AT INTERRUPTIONS IN BARRIER.
2. FOR BARRIER DETAILS AND INFORMATION NOT SHOWN, SEE STD PLANS A76A.
3. SINGLE SLOTTED TYPICAL SECTION SHOWN.
4. FOR OTHER TYPES OF END ANCHOR DETAILS, SEE STANDARD PLANS SHT A76B.

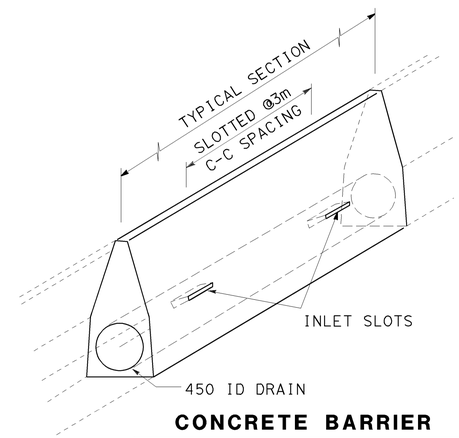

CONCRETE BARRIER

(TYPICAL TO ALL TYPES OF 60W)

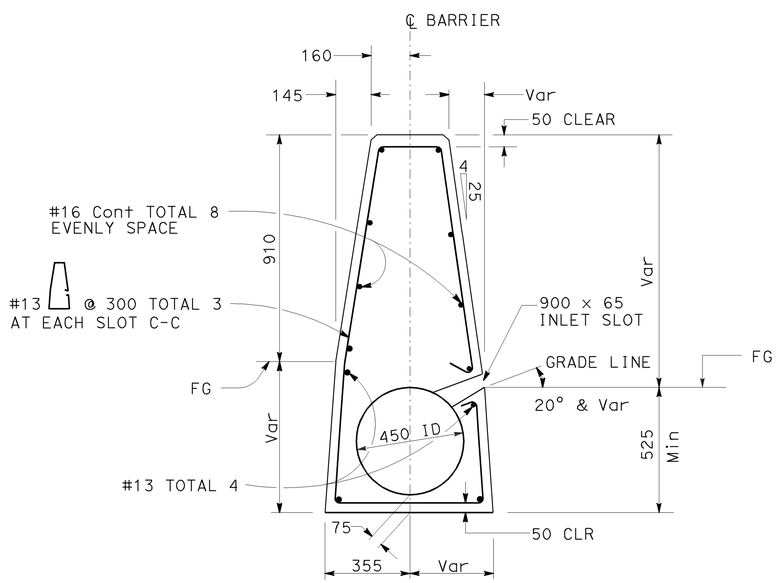

TYPICAL SECTION

CONCRETE BARRIER (TYPE 60W)

SINGLE SLOTTED SECTION CAST IN PLACE

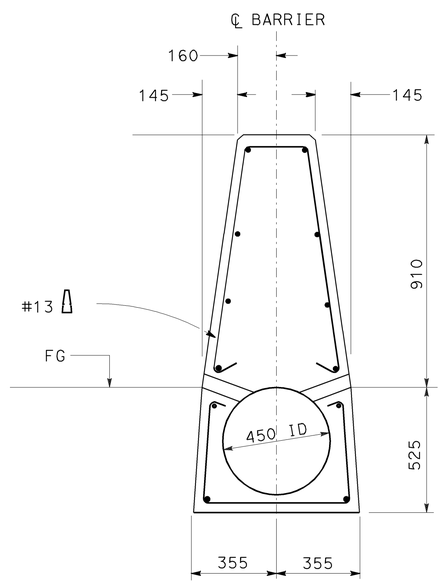

TYPICAL SECTION

MODIFY CONCRETE BARRIER (TYPE 60W)

DOUBLE SLOTTED SECTION CAST IN PLACE

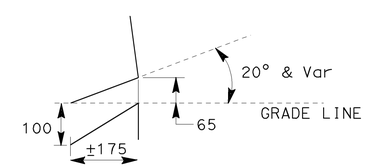

SCUPPER DETAIL

ALL DIMENSIONS ARE IN MILLIMETERS UNLESS OTHERWISE SHOWN

DRAINAGE DETAILS

NO SCALE

DD-8

STATE OF CALIFORNIA - DEPARTMENT OF TRANSPORTATION
Caltrans
HYDRAULICS

FUNCTIONAL SUPERVISOR: DAVE BHALLA
CALCULATED-DESIGNED BY: C.P.NGUYEN
CHECKED BY: S.THAI
REVISED BY
DATE REVISED

LAST REVISION 00-00-00
DATE PLOTTED => 12-JUN-2009
TIME PLOTTED => 08:51

Dist	COUNTY	ROUTE	KILOMETER POST TOTAL PROJECT	SHEET No.	TOTAL SHEETS
07	LA	5	42.8/47.3	172	1073

REGISTERED CIVIL ENGINEER 12-17-08 DATE

6-8-09
PLANS APPROVAL DATE

REGISTERED PROFESSIONAL ENGINEER BALDEV K. BHALLA No. 34350 Exp. 9/30/09 CIVIL STATE OF CALIFORNIA

THE STATE OF CALIFORNIA OR ITS OFFICERS OR AGENTS SHALL NOT BE RESPONSIBLE FOR THE ACCURACY OR COMPLETENESS OF ELECTRONIC COPIES OF THIS PLAN SHEET.

Caltrans Metric

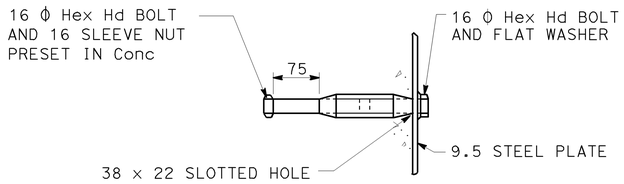

DETAIL "F"

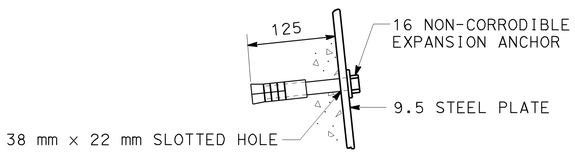

ALTERNATE DETAIL "F"

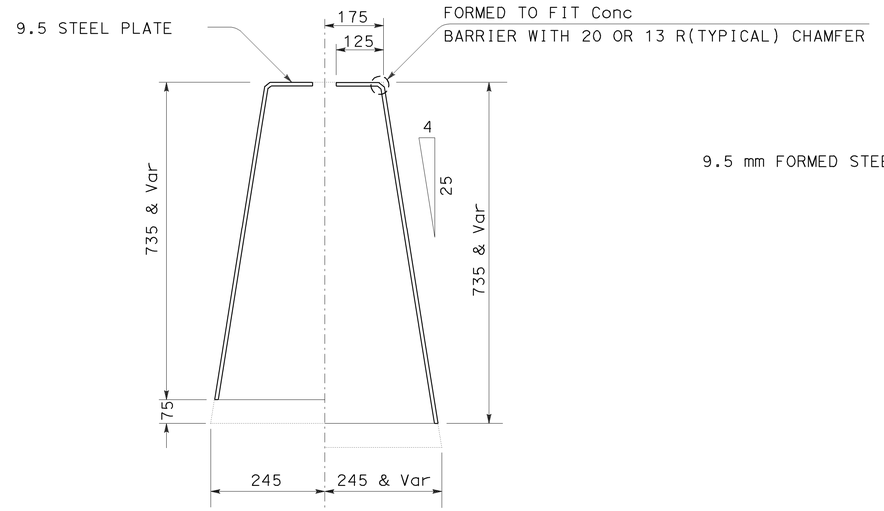

DETAIL "G"

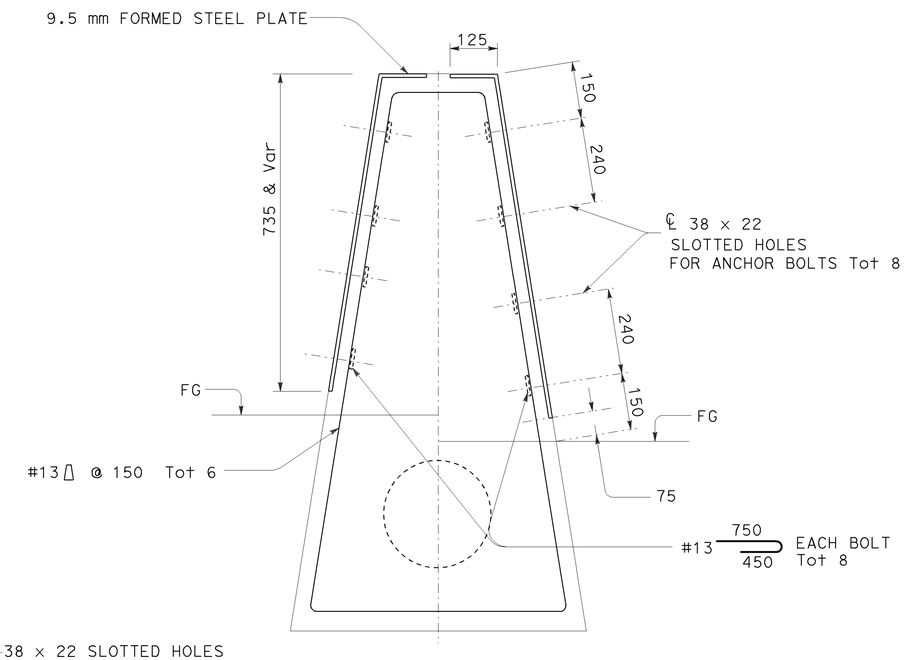

SECTION M-M

STEEL PLATE CLOSURE ANCHOR BOLT DETAILS

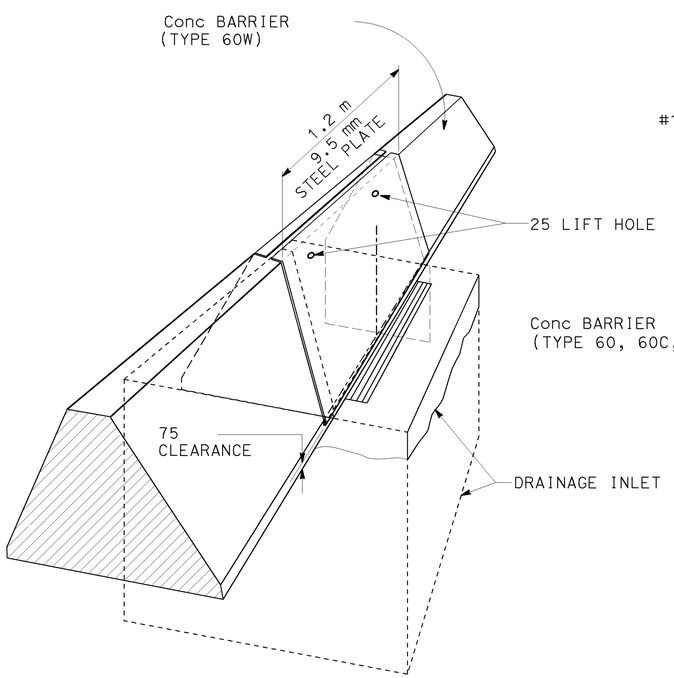

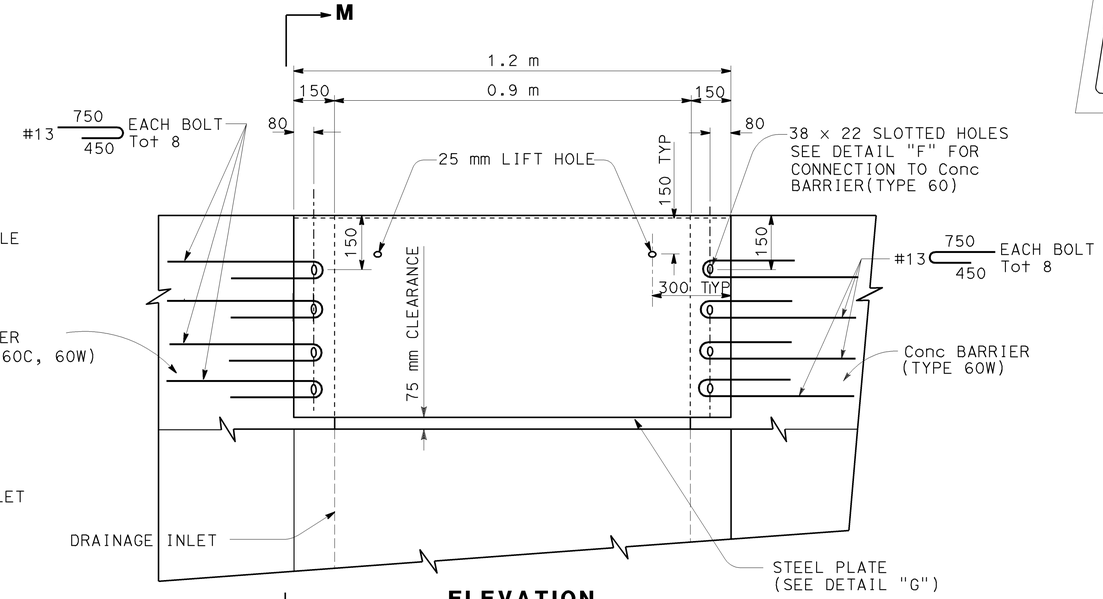

ELEVATION

STEEL PLATE CLOSURE DETAIL

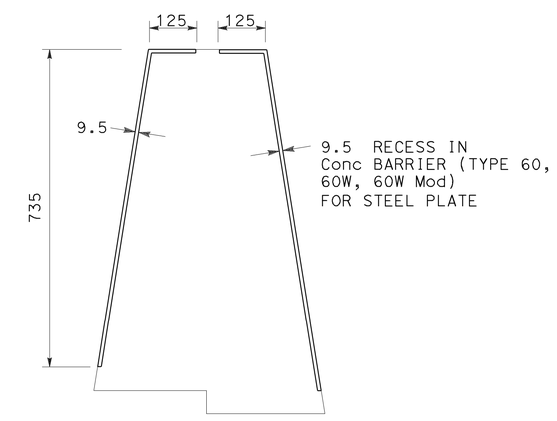

RECESS DETAIL

DETAILS OF Conc BARRIER (TYPE 60W) OVER INLET

ALL DIMENSIONS ARE IN MILLIMETERS UNLESS OTHERWISE SHOWN

NO SCALE

DRAINAGE DETAILS

DD-9

C.P.NGUYEN	REVISED BY
S.THAI	DATE REVISED
CALCULATED-DESIGNED BY	
CHECKED BY	
FUNCTIONAL SUPERVISOR	
DAVE BHALLA	

STATE OF CALIFORNIA - DEPARTMENT OF TRANSPORTATION
Caltrans
HYDRAULICS

LAST REVISION 00-00-00 | DATE PLOTTED => 12-JUN-2009 | TIME PLOTTED => 08:51

Dist	COUNTY	ROUTE	KILOMETER POST TOTAL PROJECT	SHEET No.	TOTAL SHEETS
07	LA	5	42.8/47.3	173	1073

REGISTERED CIVIL ENGINEER 12-17-08 DATE

6-8-09
PLANS APPROVAL DATE

REGISTERED PROFESSIONAL ENGINEER BALDEV K. BHALLA No. 34350 Exp. 9/30/09 CIVIL STATE OF CALIFORNIA

THE STATE OF CALIFORNIA OR ITS OFFICERS OR AGENTS SHALL NOT BE RESPONSIBLE FOR THE ACCURACY OR COMPLETENESS OF ELECTRONIC COPIES OF THIS PLAN SHEET.

Caltrans Metric

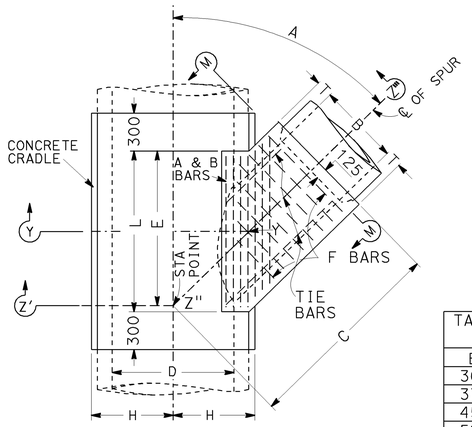

PLAN

TABLE OF VALUES FOR T	
B	T
300	100
375	107
450	115
525	125
600	132
675	140
750	150
825	157
900	165
975	180

MinIMUM DEPTH OF TOP AND BOTTOM SLABS SHALL BE D + 50 mm

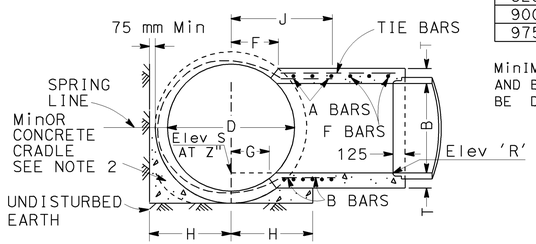

SECTION Z'-Z"-Z'''
PROJECTED ON Y-Y-Z"

NOTES

1. VALUES FOR 'A', 'B', 'C', 'D', 'E', 'F', 'G', 'L', Elev 'R' AND Elev 'S' SHOWN ON DRAINAGE PLANS.
2. PIPE SHALL BE CRADLED IN CONCRETE EXTENDING LONGITUDINALLY TO 300 mm BEYOND LIMITS OF 'L'. H=1/2 OUTSIDE DIAMETER OF PIPE PLUS 75 mm AS A MinIMUM. CRADLE MAY BE OMITTED ON SIDE OPPOSITE LATERAL INLET WHEN CONSTRUCTED IN CONNECTION WITH EXISTING PIPE STORM DRAIN.
3. A AND B BARS SHALL BE CARRIED TO A POINT NOT LESS THAN J DISTANCE FROM CENTER LINE. J= 7/12 D + 150 mm.
4. RECTANGULAR OPENING IN MAIN LINE PIPE SHALL BE CUT WITHIN LIMITS OF 'F', 'G', AND 'L' NORMAL TO PIPE SURFACE WITHOUT DAMAGING STEEL.
5. TRANSVERSE REINFORCEMENT IN PIPE SHALL BE CUT IN CENTER OF OPENING AND BENT TO UNIFORM DISTANCE FROM TOP AND BOTTOM OF JUNCTION STRUCTURE.
6. OPTIONAL CONSTRUCTION: WHEN JUNCTION STRUCTURE #1 IS SPECIFIED ON DRAINAGE PLAN, THE CONTRACTOR SHALL HAVE THE OPTION OF CONSTRUCTING JUNCTION STRUCTURE #2, IN WHICH CASE CONSTRUCTION DATA WILL BE FURNISHED BY THE ENGINEER.
7. REINFORCING STEEL SHALL BE 40 mm CLEAR FROM FACE OF CONCRETE UNLESS OTHERWISE SHOWN.
8. STEEL SCHEDULE: A AND B BARS - #16 @ 75 mm C-C
   F BARS - #13 @ 150 mm C-C
   TIE BARS - #10 @ 460 mm C-C
9. MONOLITHIC ARCH: WHEN JUNCTION STRUCTURE #1 IS SPECIFIED WITH REINFORCED MONOLITHIC ARCH STORM DRAIN, VALUE 'D' SHALL REFER TO THE CLEAR SPAN OF ARCH. REINFORCING STEEL SHALL BE CUT AND BENT INTO JUNCTION STRUCTURE THE SAME AS FOR PIPE. CONCRETE CRADLE UNDER REINFORCED MONOLITHIC ARCH IS NOT REQUIRED.
10. FLOOR OF STRUCTURE SHALL BE STEEL-TROWELED TO SPRING LINE.
11. ElevATION 'S' APPLIES AT CENTER OF MAIN LINE ON PROLONGATION OF INVERT SPUR.

JUNCTION STRUCTURE No. 1 (JS 1)

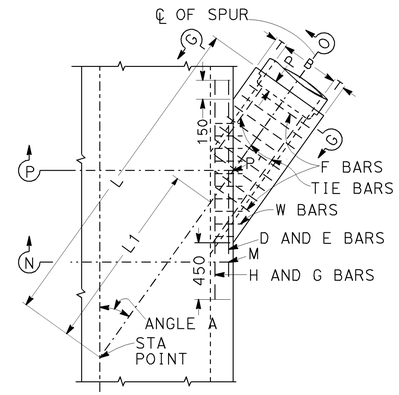

PLAN

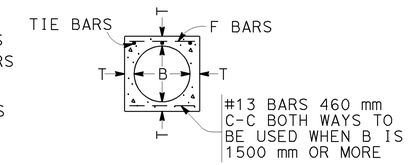

SECTION G-G

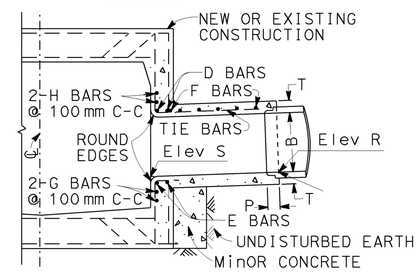

SECTION N-M-P'-O
PROJECTED ON P-P'-O

TABLE OF VALUES FOR T			
B (mm)	T (mm)	B (mm)	T (mm)
300	100	1575	250
375	107	1650	257
450	115	1725	272
525	125	1800	275
600	132	1950	297
675	140	2100	315
750	150	2250	332
825	157	2400	350
900	165	2550	390
975	180	2700	400
1050	190	2850	415
1125	195	3000	430
1200	200	3150	430
1275	215	3300	445
1350	230	3450	445
1425	235	3600	460
1500	240		

NOTES

1. VALUES FOR 'A', 'B', 'L', 'L1', 'Elev R' AND 'Elev S' ARE SHOWN ON DRAINAGE PLAN.
2. STATIONS SPECIFIED IN DRAINAGE PLAN APPLY AT INTERSECTION OF CENTERLINES OF MAIN LINE AND LATERAL.
3. EMBEDMENT 'P' SHALL BE 125 mm FOR PIPE DIAMETERS 300 mm TO 2400 mm AND 200 mm FOR PIPE DIAMETERS 2550 mm TO 3600 mm.
4. REINFORCING STEEL SHALL BE 40 mm CLEAR FROM FACE OF CONCRETE UNLESS OTHERWISE SHOWN. W BARS ARE OF SIZE AND SPACING SPECIFIED FOR WALL STEEL ON DRAINAGE PLAN, AND SHALL BE CUT IN CENTER OF OPENING AND BENT INTO TOP AND BOTTOM OF JUNCTION STRUCTURE. OMIT H BARS WHEN SOFFIT OF SPUR IS 300 mm OR LESS BELOW SOFFIT OF MAIN LINE, AND OMIT G BARS WHEN INVERT OF SPUR IS 300 mm OR LESS ABOVE FLOOR OF MAIN LINE.
5. STEEL SCHEDULE:

DIA B	D,E,H,G BARS	F BARS
300 TO 975	#16	#13 @ 150 mm C-C
1050 TO 2100	#19	#16 @ 150 mm C-C
2250 TO 3600	#22	#19 @ 150 mm C-C
TIE BARS - #10 @ 460 mm C-C		

6. JUNCTION STRUCTURE SHALL BE POURED MONOLITHIC WITH MAIN LINE STORM DRAIN OR MANHOLE.
7. FLOOR OF STRUCTURE SHALL BE STEEL-TROWELED.

JUNCTION STRUCTURE No. 3 (JS 3)

ALL DIMENSIONS ARE IN MILLIMETERS UNLESS OTHERWISE SHOWN

DRAINAGE DETAILS

NO SCALE

DD-10

STATE OF CALIFORNIA - DEPARTMENT OF TRANSPORTATION
Caltrans
HYDRAULICS

FUNCTIONAL SUPERVISOR: DAVE BHALLA
CALCULATED-DESIGNED BY: C.P.NGUYEN
CHECKED BY: S.THAI
REVISED BY / DATE REVISED

LAST REVISION 00-00-00 | DATE PLOTTED => 12-JUN-2009 | TIME PLOTTED => 08:51

Dist	COUNTY	ROUTE	KILOMETER POST TOTAL PROJECT	SHEET No.	TOTAL SHEETS
07	LA	5	42.8/47.3	174	1073

REGISTERED CIVIL ENGINEER 12-17-08 DATE

6-8-09
PLANS APPROVAL DATE

REGISTERED PROFESSIONAL ENGINEER BALDEV K. BHALLA No. 34350 Exp. 9/30/09 CIVIL STATE OF CALIFORNIA

THE STATE OF CALIFORNIA OR ITS OFFICERS OR AGENTS SHALL NOT BE RESPONSIBLE FOR THE ACCURACY OR COMPLETENESS OF ELECTRONIC COPIES OF THIS PLAN SHEET.

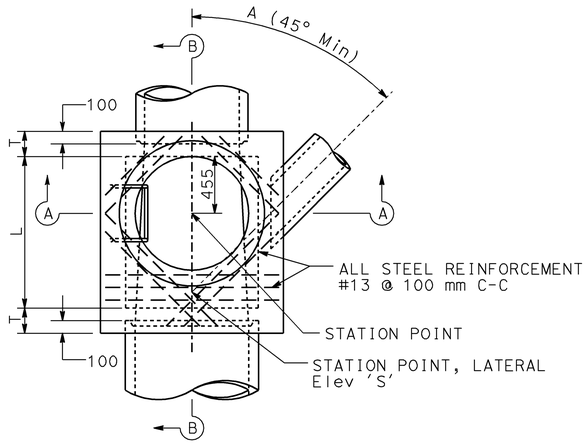

PLAN
(SHAFT NOT SHOWN)

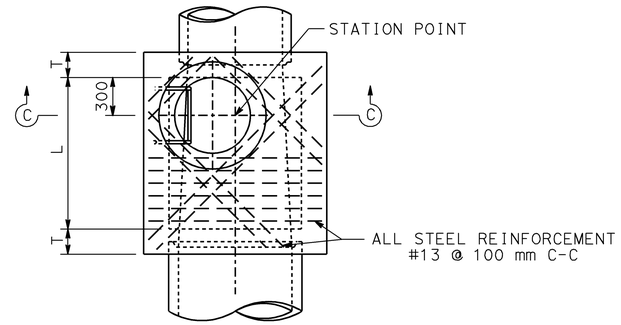

PLAN
DETAIL N
(SHAFT NOT SHOWN)

NOTES

1. HEIGHT "H" (IN Sec A-A AND Sec B-B) SHALL BE NOT LESS THAN 1.40 m, BUT MAY BE INCREASED PROVIDED THAT THE VALUE OF "M" SHALL NOT BE LESS THAN THE MINIMUM SPECIFIED AND THAT THE REDUCER SHALL BE USED. FOR "H" (IN Sec C-C) SEE NOTE 4.
2. LENGTH "L" SHALL BE 1.20 m UNLESS SHOWN OTHERWISE ON DRAINAGE PLAN.
3. SHAFT SHALL BE CONSTRUCTED AS PER SEC C-C AND DETAIL N WHEN DEPTH "M" FROM STREET GRADE TO TOP OF BOX IS LESS THAN 0.87 m FOR PAVED STREETS OR 1.05 m FOR UNPAVED STREETS.
4. DEPTH "P" MAY BE REDUCED TO AN ABSOLUTE LIMIT OF 150 mm WHEN LARGER VALUES OF "P" WOULD REDUCE "H" (IN SEC C-C) TO 1.05 m OR LESS.
5. "T" SHALL BE 200 mm FOR VALUES OF "H" UP TO AND INCLUDING 2.40 m. "T" SHALL BE 250 mm FOR VALUES OF "H" OVER 2.40 m.
6. UNLESS OTHERWISE SHOWN, STEPS SHALL BE PLACED ON 300 mm ON CENTERS. THE LOWEST STEP SHALL BE NOT MORE THAN 400 mm ABOVE THE LEDGE AT THE SIDE OF MANHOLE FLOOR.
7. BODY OF MANHOLE SHALL BE POURED IN ONE CONTINUOUS OPERATION, EXCEPT THAT THE CONTRACTOR SHALL HAVE THE OPTION OF PLACING AT THE SPRING LINE A CONSTRUCTION JOINT WITH A LONGITUDINAL KEYWAY.
8. REINFORCING STEEL SHALL BE 40 mm CLEAR FROM FACE OF CONCRETE.
9. FLOOR OF MANHOLE SHALL BE STEEL-TROWELED TO SPRING LINE.
10. RINGS, REDUCER, AND PIPE FOR ACCESS SHAFT SHALL BE SEATED IN 1:2 CEMENT MORTAR AND NEATLY POINTED OR WIPED INSIDE SHAFT.
11. MANHOLE FRAME AND COVER PER STANDARD PLAN B7-11 DETAIL U45.
12. STEP DETAIL PER STANDARD PLANS D74C AND D75A.

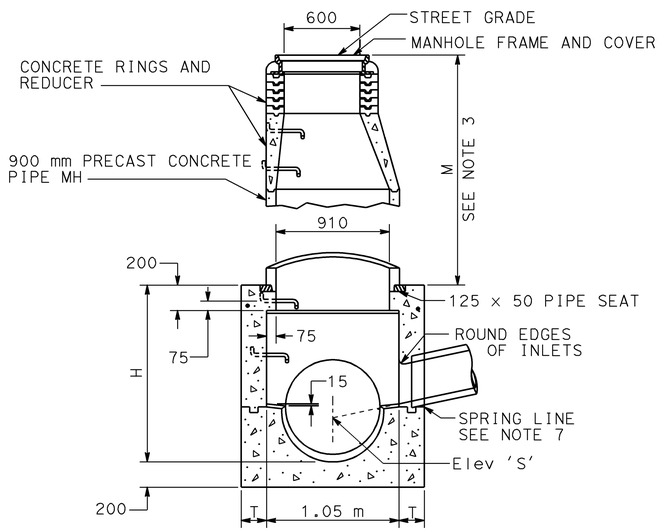

SECTION A-A

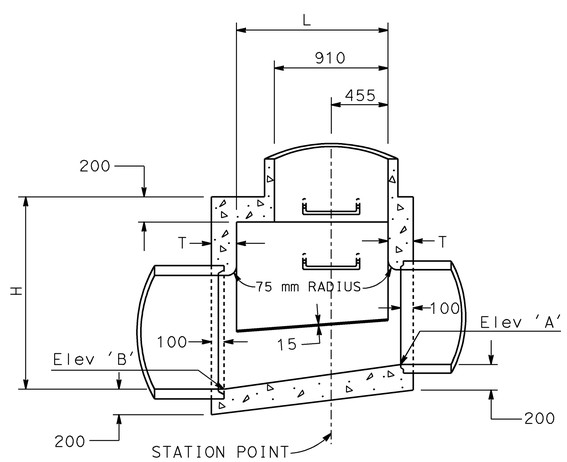

SECTION B-B

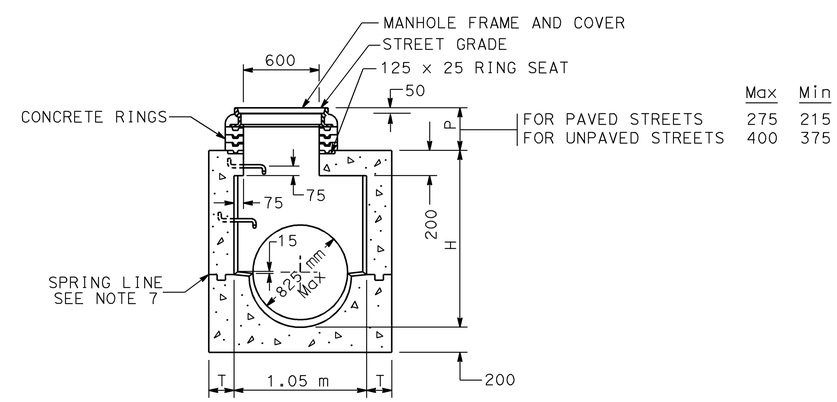

	Max	Min
FOR PAVED STREETS	275	215
FOR UNPAVED STREETS	400	375

SECTION C-C

MANHOLE No. 1 (MH No. 1)

ALL DIMENSIONS ARE IN MILLIMETERS UNLESS OTHERWISE SHOWN

DRAINAGE DETAILS

NO SCALE

DD-11

STATE OF CALIFORNIA - DEPARTMENT OF TRANSPORTATION
Caltrans
HYDRAULICS

FUNCTIONAL SUPERVISOR: DAVE BHALLA
CALCULATED-DESIGNED BY: C.P.NGUYEN
CHECKED BY: S.THAI
REVISED BY
DATE REVISED

LAST REVISION 00-00-00
DATE PLOTTED => 12-JUN-2009
TIME PLOTTED => 08:51

Dist	COUNTY	ROUTE	KILOMETER POST TOTAL PROJECT	SHEET No.	TOTAL SHEETS
07	LA	5	42.8/47.3	175	1073

REGISTERED CIVIL ENGINEER 12-17-08 DATE

6-8-09
PLANS APPROVAL DATE

REGISTERED PROFESSIONAL ENGINEER BALDEV K. BHALLA No. 34350 Exp. 9/30/09 CIVIL STATE OF CALIFORNIA

THE STATE OF CALIFORNIA OR ITS OFFICERS OR AGENTS SHALL NOT BE RESPONSIBLE FOR THE ACCURACY OR COMPLETENESS OF ELECTRONIC COPIES OF THIS PLAN SHEET.

Caltrans Metric

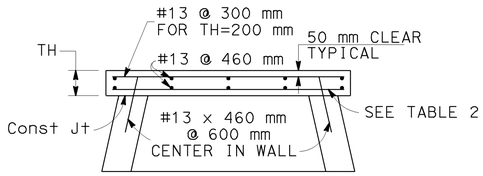

SECTION G-G

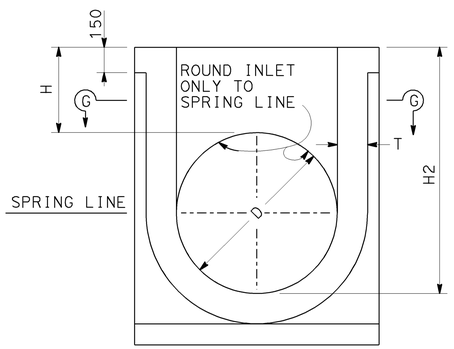

SECTION C-C

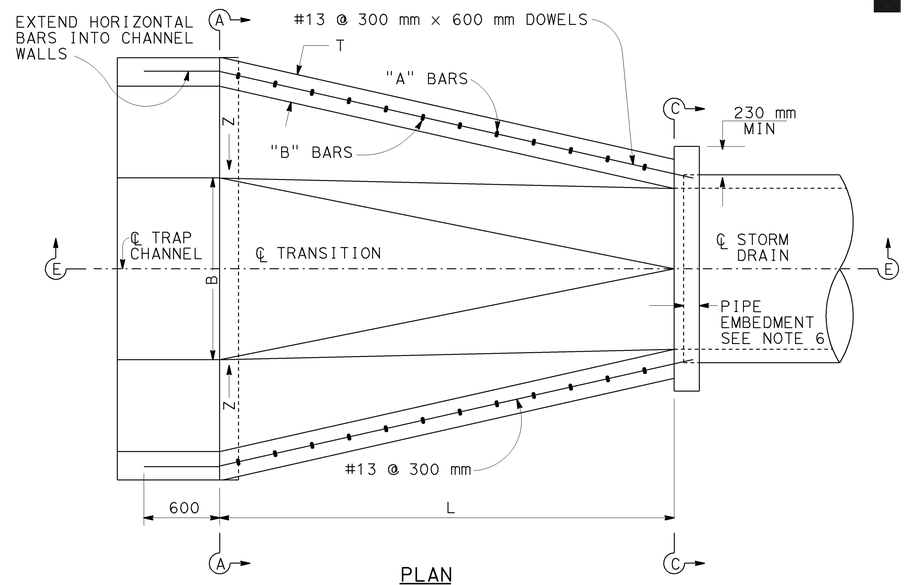

PLAN

TABLE 1

* DESIGN "H"	T (mm)	REINFORCEMENT
0 m - 1.22 m	150	#13 @ 300 mm BOTH WAYS CENTERED IN SLAB
1.22 m - 1.83 m	150	"A" BARS #16 @ 600 mm "B" BARS #16 @ 600 mm
1.83 m - 2.44 m	150	"A" BARS #16 @ 300 mm "B" BARS #16 @ 300 mm
GREATER THAN 2.44 m	250	"A" BARS #19 @ 150 mm "B" BARS #16 @ 300 mm

* DESIGN "H" VARIES THROUGHOUT LENGTH OF TRANSITION. USE LARGER "H" ON SHORT TRANSITIONS (L=4.6 m OR LESS). FOR LONGER TRANSITIONS, VARY REINFORCEMENT AS INDICATED ABOVE.

NOTES:

1. PROVIDE A CONSTRUCTION JOINT BETWEEN THE TRANSITION AND THE STORM DRAIN.
2. EXTEND THE LONGITUDINAL REINFORCING STEEL OF THE TRANSITIONAL 600 mm INTO THE TRAPEZOIDAL CHANNEL.
3. IN LIEU OF PLACING THE DOWELS BETWEEN THE TRANSITION AND THE RECTANGULAR STORM DRAIN, THE LONGITUDINAL REINFORCING STEEL OF THE TRANSITION STRUCTURE MAY BE EXTENDED 600 mm INTO THE STORM DRAIN.
4. 'H', 'H2', 'H', 'L', 'B', Elev 'A' AND Elev 'B', AND 'Z' SHALL BE SHOWN ON THE PLANS.
5. THIS STRUCTURAL DETAIL MAY BE APPLIED TO TRANSITIONS WITH CURVED BOTTOMS AND CURVED SIDE WALLS.
6. PIPE EMBEDMENT SHALL BE 125 mm FOR 2.44 m OR LESS AND 200 mm FOR OVER 2.44 m.

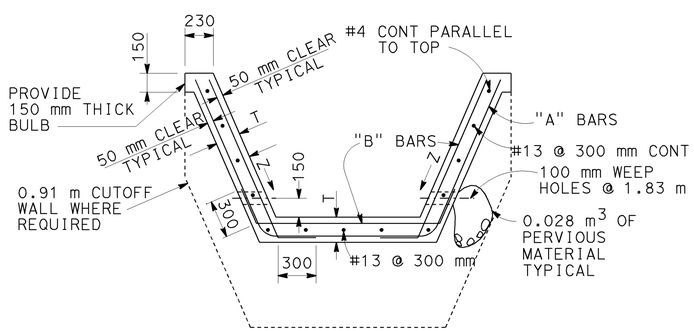

SECTION A-A
TYPICAL

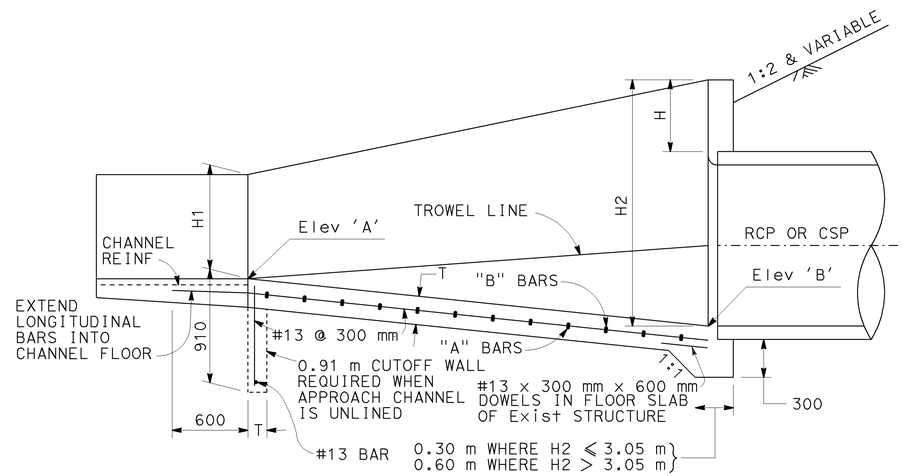

SECTION E-E

TABLE 2

S OR D	TH (mm)	REINFORCEMENT H=0.15 m TO 1.22 m	REINFORCEMENT H=1.50 m TO 2.44 m
0.46 m TO 1.67 m	150	#13 @ 300 mm	#13 @ 300 mm
1.83 m TO 3.05 m	150	#13 @ 200 mm	#16 @ 230 mm
3.66 m	200	#16 @ 230 mm	#16 @ 150 mm

TRANSITION STRUCTURE No. 4

ALL DIMENSIONS ARE IN MILLIMETERS UNLESS OTHERWISE SHOWN

DRAINAGE DETAILS

NO SCALE

DD-12

STATE OF CALIFORNIA - DEPARTMENT OF TRANSPORTATION
Caltrans
HYDRAULICS

FUNCTIONAL SUPERVISOR: DAVE BHALLA
CALCULATED-DESIGNED BY: C.P.NGUYEN
CHECKED BY: S.THAI
REVISED BY / DATE REVISED

LAST REVISION 00-00-00
DATE PLOTTED => 12-JUN-2009
TIME PLOTTED => 08:51

Dist	COUNTY	ROUTE	KILOMETER POST TOTAL PROJECT	SHEET No.	TOTAL SHEETS
07	LA	5	42.8/47.3	176	1073

REGISTERED CIVIL ENGINEER 12-17-08 DATE

6-8-09
PLANS APPROVAL DATE

REGISTERED PROFESSIONAL ENGINEER BALDEV K. BHALLA No. 34350 Exp. 9/30/09 CIVIL STATE OF CALIFORNIA

THE STATE OF CALIFORNIA OR ITS OFFICERS OR AGENTS SHALL NOT BE RESPONSIBLE FOR THE ACCURACY OR COMPLETENESS OF ELECTRONIC COPIES OF THIS PLAN SHEET.

Caltrans Metric

(N) NOT A SEPARATE PAY ITEM, FOR INFORMATION ONLY.

DRAINAGE SHEET No.	DRAINAGE SYSTEM No. ⬡	DRAINAGE UNIT No. ○	H OR V (m)	MINOR CONCRETE (MINOR STRUCTURE) (m^3)	MISCELLANEOUS IRON AND STEEL (kg)	MINOR CONCRETE (BACKFILL) (m^3)	CLASS 1 CONCRETE (BOX CULVERT) (m^3)	450 mm REINFORCED CONCRETE PIPE (m)	600 mm REINFORCED CONCRETE PIPE (m)	450 mm SLOTTED CORRUGATED STEEL PIPE (m)	SAND BACKFILL (m^3)	300 mm PLASTIC PIPE (m)	ABANDON PIPELINE (EA)	REMOVE PIPE (m)	REMOVE INLET (EA)	REMOVE FES (EA)	ADJUST INLET (EA)	ABANDON MANHOLE (EA)	CAP INLET (EA)	CAP MH (EA)	450 mm STEEL FES (EA)	(N) STEEL PLATE CLOSURE (EA)	(N) TYPE 450-9 FRAME AND GRATE (EA)	(N) TYPE 600-12 FRAME AND GRATE (EA)	MAXIMUM COVER (m)	DESCRIPTION	STATION	DRAINAGE SYSTEM No. ⬡	DRAINAGE UNIT No. ○
D-1	1	a													1											REMOVE INLET	428+86.323	1	a
		b	1.2	1.53	148																		2		TYPE GT3 INLET	0.31 m Rt 428+86.323 ℄ Rte 5		b
		c								22.5														1.2	450 mm SCSP			c
		d	0.45	0.42	148																1		1		CL3 INLET, CASE 1	0.31 m Rt 429+10.000 ℄ Rte 5		d
		e								50.0														0.45	450 mm SCSP			e
		f	0.45	0.39	148																1		1		CL3 INLET, CASE 2	0.31 m Rt 429+60.000 ℄ Rte 5		f
		g								50.0														0.45	450 mm SCSP			g
		h	0.45	0.39	148																1		1		CL3 INLET, CASE 2	0.31 m Rt 430+10.000 ℄ Rte 5		h
		i								54.0														0.45	450 mm SCSP			i
		j	0.45	0.42	148																1		1		CL3 INLET, CASE 1	0.31 m Rt 430+64.000 ℄ Rte 5		j
D-2	2	a												6.1											REMOVE PIPE		2	a
		b													1										REMOVE INLET			b
		c	1.42	1.19	148																		1		TYPE G1 INLET	0.31 m Lt 430+89.285 ℄ Rte 5		c
		d	0.45	0.63	113																1	1			CL2 INLET, CASE 2	0.31 m Lt 431+40.000 ℄ Rte 5		d
		e	0.45	0.63	113																1	1			CL2 INLET, CASE 2	0.31 m Lt 431+95.000 ℄ Rte 5		e
		f												6.1											REMOVE PIPE			f
		g													1										REMOVE INLET	0.31 m Lt 432+38.437 ℄ Rte 5		g
		h	1.10	0.80	148																		1		TYPE G1 INLET	0.31 m Lt 432+38.637 ℄ Rte 5		h
		i	0.45	0.63	113																1	1			CL2 INLET, CASE 2	0.31 m Lt 432+95.000 ℄ Rte 5		i
		j	0.45	0.63	113																1	1			CL2 INLET, CASE 2	0.31 m Lt 433+50.000 ℄ Rte 5		j
		k	0.45	0.63	113																1	1			CL2 INLET, CASE 2	0.31 m Lt 434+05.000 ℄ Rte 5		k
		L	0.45	0.63	113																1	1			CL2 INLET, CASE 2	0.31 m Lt 434+29.500 ℄ Rte 5		L
		m										40.0													300 mm x 40.0 m PLASTIC PIPE			m
		n	0.45	0.63	113																				CL2 INLET, CASE 2	0.31 m Lt 434+70.500 ℄ Rte 5		n
		o	0.45	0.68	113																				CL2 INLET, CASE 1	0.31 m Lt 434+99.000 ℄ Rte 5		o
SHEET TOTAL				10.23	1940					176.5		40.0		12.2	3						10	6	8					

DRAINAGE QUANTITIES DQ-1

STATE OF CALIFORNIA - DEPARTMENT OF TRANSPORTATION
Caltrans
HYDRAULICS

FUNCTIONAL SUPERVISOR: DAVE BHALLA
CALCULATED-DESIGNED BY: C.P.NGUYEN
CHECKED BY: S.THAI
REVISED BY / DATE REVISED

LAST REVISION 00-00-00 | DATE PLOTTED => 12-JUN-2009 | TIME PLOTTED => 08:51

Dist	COUNTY	ROUTE	KILOMETER POST TOTAL PROJECT	SHEET No.	TOTAL SHEETS
07	LA	5	42.8/47.3	177	1073

REGISTERED CIVIL ENGINEER 12-17-08 DATE

6-8-09
PLANS APPROVAL DATE

REGISTERED PROFESSIONAL ENGINEER BALDEV K. BHALLA No. 34350 Exp. 9/30/09 CIVIL STATE OF CALIFORNIA

THE STATE OF CALIFORNIA OR ITS OFFICERS OR AGENTS SHALL NOT BE RESPONSIBLE FOR THE ACCURACY OR COMPLETENESS OF ELECTRONIC COPIES OF THIS PLAN SHEET.

Caltrans Metric

(N) NOT A SEPARATE PAY ITEM, FOR INFORMATION ONLY.

DRAINAGE SHEET No.	DRAINAGE SYSTEM No. ⬡	DRAINAGE UNIT No. ○	H OR V (m)	MINOR CONCRETE (MINOR STRUCTURE) (m^3)	MISCELLANEOUS IRON AND STEEL (kg)	MINOR CONCRETE (BACKFILL) (m^3)	CLASS 1 CONCRETE (BOX CULVERT) (m^3)	450 mm REINFORCED CONCRETE PIPE (m)	600 mm REINFORCED CONCRETE PIPE (m)	450 mm SLOTTED CORRUGATED STEEL PIPE (m)	SAND BACKFILL (m^3)	300 mm PLASTIC PIPE (m)	ABANDON PIPELINE (EA)	REMOVE PIPE (m)	REMOVE INLET (EA)	REMOVE FES (EA)	ADJUST INLET (EA)	ABANDON MANHOLE (EA)	CAP INLET (EA)	CAP MH (EA)	450 mm STEEL FES (EA)	(N) STEEL PLATE CLOSURE (EA)	(N) TYPE 450-9 FRAME AND GRATE (EA)	(N) TYPE 600-12 FRAME AND GRATE (EA)	MAXIMUM COVER (m)	DESCRIPTION	STATION	DRAINAGE SYSTEM No. ⬡	DRAINAGE UNIT No. ○
D-4	3	a	1.44	1.43	296																	1		2		GD-3 INLET	437+56.464 ℄ Rte 5	3	a
		b	0.45	0.63	113																	1	1			CL2 INLET, CASE 2	0.31 m Lt 438+30.000 ℄ Rte 5		b
		c						131.0																	1.5	450 mm RCP			c
D-4	4	a												36.6												REMOVE PIPE		4	a
		b																	1							CAP INLET			b
		c	1.50	1.46	296																			2		GD-3 INLET	0.31 m Lt 438+88.338 ℄ Rte 5		c
D-4	5	a	2.22	2.15	148																			1		TYPE G2 INLET	24.6 m Rt 437+43.500 ℄ Rte 5	5	a
		b						115.9																	2.2	450 mm RCP			b
		c													1											REMOVE INLET	24.6 m Rt 438+60.330 ℄ Rte 5		c
		d	2.15	2.10	148																					TYPE G2 INLET	24.6 m Rt 438+60.330 ℄ Rte 5		d
		e									4.26		1													ABANDON PIPELINE			e
		f						86.4																	3.5	450 mm RCP			f
		g	3.50	4.46	148																					TYPE G2 INLET	25.7 m Rt 439+47.588 ℄ Rte 5		g
D-5	6	a												36.6												REMOVE PIPE		6	a
		b													2											REMOVE INLET			b
		c												24.4												REMOVE PIPE			c
		d													2											REMOVE INLET			d
		e													4											REMOVE INLET			e
		f												16.4												REMOVE PIPE			f
		g													3											REMOVE INLET			g
		h												9.6												REMOVE PIPE			h
		i	1.21	1.28	296																			2		GD-3 INLET	439+77.702 ℄ Rte 5		i
SHEET TOTAL				13.51	1445			333.3			4.26		1	123.6	12				1			2	1	7					

DRAINAGE QUANTITIES DQ-2

STATE OF CALIFORNIA - DEPARTMENT OF TRANSPORTATION
Caltrans HYDRAULICS

FUNCTIONAL SUPERVISOR: DAVE BHALLA
CALCULATED-DESIGNED BY: C.P.NGUYEN
CHECKED BY: S.THAI
REVISED BY / DATE REVISED

LAST REVISION 00-00-00 DATE PLOTTED => 12-JUN-2009 TIME PLOTTED => 08:51

Dist	COUNTY	ROUTE	KILOMETER POST TOTAL PROJECT	SHEET No.	TOTAL SHEETS
07	LA	5	42.8/47.3	178	1073

REGISTERED CIVIL ENGINEER 12-17-08 DATE

6-8-09
PLANS APPROVAL DATE

REGISTERED PROFESSIONAL ENGINEER BALDEV K. BHALLA No. 34350 Exp. 9/30/09 CIVIL STATE OF CALIFORNIA

THE STATE OF CALIFORNIA OR ITS OFFICERS OR AGENTS SHALL NOT BE RESPONSIBLE FOR THE ACCURACY OR COMPLETENESS OF ELECTRONIC COPIES OF THIS PLAN SHEET.

Caltrans Metric

(N) NOT A SEPARATE PAY ITEM, FOR INFORMATION ONLY.

DRAINAGE SHEET No.	DRAINAGE SYSTEM No. ⬡	DRAINAGE UNIT No. ○	H OR V (m)	MINOR CONCRETE (MINOR STRUCTURE) (m^3)	MISCELLANEOUS IRON AND STEEL (kg)	MINOR CONCRETE (BACKFILL) (m^3)	CLASS 1 CONCRETE (BOX CULVERT) (m^3)	450 mm REINFORCED CONCRETE PIPE (m)	600 mm REINFORCED CONCRETE PIPE (m)	450 mm SLOTTED CORRUGATED STEEL PIPE (m)	SAND BACKFILL (m^3)	300 mm PLASTIC PIPE (m)	ABANDON PIPELINE (EA)	REMOVE PIPE (m)	REMOVE INLET (EA)	REMOVE FES (EA)	ADJUST INLET (EA)	ABANDON MANHOLE (EA)	CAP INLET (EA)	CAP MH (EA)	450 mm STEEL FES (EA)	(N) STEEL PLATE CLOSURE (EA)	(N) TYPE 450-9 FRAME AND GRATE (EA)	(N) TYPE 600-12 FRAME AND GRATE (EA)	MAXIMUM COVER (m)	DESCRIPTION	STATION	DRAINAGE SYSTEM No. ⬡	DRAINAGE UNIT No. ○
D-5	7	a	1.08	1.43	296																			2		TYPE GT3 INLET	26.76 m Rt 439+63.732 ℄ Rte 5	7	a
		b						5.0																	1.2	450 mm RCP			b
		c	1.21	0.86	148																			1		TYPE G1 INLET	26.76 m Rt 439+70.035 ℄ Rte 5		c
		d						6.8																	1.4	450 mm RCP			d
		e	1.40	0.97	148																			1		TYPE G1 INLET	26.76 m Rt 439+77.702 ℄ Rte 5		e
		f						5.6																	1.1	450 mm RCP			f
		g	1.13	1.47	296																			2		TYPE GT3 INLET	26.76 m Rt 439+84.187 ℄ Rte 5		g
		h						2.8																	1.3	450 mm RCP			h
D-5	8	a	1.08	1.43	296																			2		TYPE GT3 INLET	25.75 m Lt 439+72.442 ℄ Rte 5	8	a
		b						3.9																	1.2	450 mm RCP			b
		c	1.21	0.86	148																			1		TYPE G1 INLET	25.75 m Lt 439+77.702 ℄ Rte 5		c
		d						2.1																	1.2	450 mm RCP			d
		e	1.10	0.80	148																			1		TYPE G1 INLET	25.75 m Lt 439+80.664 ℄ Rte 5		e
		f						4.0																	1.1	450 mm RCP			f
		g	1.13	1.47	296																			2		TYPE GT3 INLET	25.75 m Lt 439+86.031 ℄ Rte 5		g
		h						1.3																	1.1	450 mm RCP			h
D-5	9	a	0.45	0.90	226																1	2				CL1 INLET, CASE 2	0.31 m Lt 440+30.000 ℄ Rte 5	9	a
SHEET TOTAL				10.19	2002			31.5													1	2	12						

DRAINAGE QUANTITIES DQ-3

STATE OF CALIFORNIA - DEPARTMENT OF TRANSPORTATION
Caltrans HYDRAULICS

FUNCTIONAL SUPERVISOR: DAVE BHALLA
CALCULATED-DESIGNED BY: C.P.NGUYEN
CHECKED BY: S.THAI
REVISED BY
DATE REVISED

LAST REVISION 00-00-00
DATE PLOTTED => 12-JUN-2009
TIME PLOTTED => 08:51

Dist	COUNTY	ROUTE	KILOMETER POST TOTAL PROJECT	SHEET No.	TOTAL SHEETS
07	LA	5	42.8/47.3	179	1073

REGISTERED CIVIL ENGINEER 12-17-08 DATE

6-8-09
PLANS APPROVAL DATE

REGISTERED PROFESSIONAL ENGINEER BALDEV K. BHALLA No. 34350 Exp. 9/30/09 CIVIL STATE OF CALIFORNIA

THE STATE OF CALIFORNIA OR ITS OFFICERS OR AGENTS SHALL NOT BE RESPONSIBLE FOR THE ACCURACY OR COMPLETENESS OF ELECTRONIC COPIES OF THIS PLAN SHEET.

Caltrans Metric

(N) NOT A SEPARATE PAY ITEM, FOR INFORMATION ONLY.

DRAINAGE SHEET No.	DRAINAGE SYSTEM No. ⬡	DRAINAGE UNIT No. ○	H OR V m	MINOR CONCRETE (MINOR STRUCTURE) m^3	MISCELLANEOUS IRON AND STEEL kg	MINOR CONCRETE (BACKFILL) m^3	CLASS 1 CONCRETE (BOX CULVERT) m^3	450 mm REINFORCED CONCRETE PIPE m	600 mm REINFORCED CONCRETE PIPE m	450 mm SLOTTED CORRUGATED STEEL PIPE m	SAND BACKFILL m^3	300 mm PLASTIC PIPE m	ABANDON PIPELINE EA	REMOVE PIPE m	REMOVE INLET EA	REMOVE FES EA	ADJUST INLET EA	ABANDON MANHOLE EA	CAP INLET EA	CAP MH EA	450 mm STEEL FES EA	STEEL PLATE CLOSURE EA (N)	TYPE 450-9 FRAME AND GRATE EA (N)	TYPE 600-12 FRAME AND GRATE EA (N)	MAXIMUM COVER m	DESCRIPTION	STATION	DRAINAGE SYSTEM No. ⬡	DRAINAGE UNIT No. ○
D-5	10	a	2.27	1.64	148																			1		TYPE G1 INLET	26.7 m Lt 440+67.206 ℄ Rte 5	10	a
		b																	1							CAP INLET			b
		c												24.4												REMOVE PIPE			c
		d													2											REMOVE INLET			d
		e	1.14	1.23	296																	1		2		GD-3 INLET	440+78.200 ℄ Rte 5		e
		f													1											REMOVE INLET			f
		g						3.1																	1.0	450 mm RCP			g
		h	0.93	0.71	148																			1		TYPE G1 INLET	27.3 m Rt 440+89.409 ℄ Rte 5		h
D-5	11	a	1.02	0.76	148																			1		TYPE G1 INLET	27.0 m Lt 441+40.773 ℄ Rte 5	11	a
		b				4.3		3.6																	1.0	450 mm RCP WITH CONCRETE (BACKFILL)			b
		c													1											REMOVE INLET			c
		d												73.8												REMOVE PIPE			d
		e	1.13	1.21	296										1							1		2		REMOVE INLET. GD-3 INLET	441+40.773 ℄ Rte 5		e
		f													1											REMOVE INLET			f
		g				4.3		3.6																	1.0	450 mm RCP WITH CONCRETE (BACKFILL)			g
		h	1.02	0.76	148																			1		TYPE G1 INLET	27.0 m Rt 441+40.773 ℄ Rte 5		h
D-5	12	a	0.45	0.90	226																	1	2			CL1 INLET, CASE 2	441+51.500 ℄ Rte 5	12	a
		b				31.5						72.4														300 mm PLASTIC PIPE			b
		c	0.45	0.90	226																	1	2			CL1 INLET, CASE 2	441+88.500 ℄ Rte 5		c
		d	0.45	0.90	226																	1	2			CL1 INLET, CASE 2	442+40.000 ℄ Rte 5		d
		e	0.45	0.63	113																	1	1			CL2 INLET, CASE 2	0.31 m Rt 442+90.000 ℄ Rte 5		e
SHEET TOTAL				9.64	1975	40.1		10.3				72.4		98.2	6				1			6	7	8					

DRAINAGE QUANTITIES DQ-4

STATE OF CALIFORNIA - DEPARTMENT OF TRANSPORTATION
Caltrans HYDRAULICS

FUNCTIONAL SUPERVISOR: DAVE BHALLA
CALCULATED-DESIGNED BY: C.P.NGUYEN
CHECKED BY: S.THAI
REVISED BY / DATE REVISED

LAST REVISION 00-00-00 DATE PLOTTED => 12-JUN-2009 TIME PLOTTED => 08:51

Dist	COUNTY	ROUTE	KILOMETER POST TOTAL PROJECT	SHEET No.	TOTAL SHEETS
07	LA	5	42.8/47.3	180	1073

REGISTERED CIVIL ENGINEER 12-17-08 DATE

6-8-09
PLANS APPROVAL DATE

REGISTERED PROFESSIONAL ENGINEER BALDEV K. BHALLA No. 34350 Exp. 9/30/09 CIVIL STATE OF CALIFORNIA

THE STATE OF CALIFORNIA OR ITS OFFICERS OR AGENTS SHALL NOT BE RESPONSIBLE FOR THE ACCURACY OR COMPLETENESS OF ELECTRONIC COPIES OF THIS PLAN SHEET.

Caltrans Metric

(N) NOT A SEPARATE PAY ITEM, FOR INFORMATION ONLY.

DRAINAGE SHEET No.	DRAINAGE SYSTEM No. ⬡	DRAINAGE UNIT No. ○	H OR V (m)	MINOR CONCRETE (MINOR STRUCTURE) (m^3)	MISCELLANEOUS IRON AND STEEL (kg)	MINOR CONCRETE (BACKFILL) (m^3)	CLASS 1 CONCRETE (BOX CULVERT) (m^3)	450 mm REINFORCED CONCRETE PIPE (m)	600 mm REINFORCED CONCRETE PIPE (m)	450 mm SLOTTED CORRUGATED STEEL PIPE (m)	SAND BACKFILL (m^3)	300 mm PLASTIC PIPE (m)	ABANDON PIPELINE (EA)	REMOVE PIPE (m)	REMOVE INLET (EA)	REMOVE FES (EA)	ADJUST INLET (EA)	ABANDON MANHOLE (EA)	CAP INLET (EA)	CAP MH (EA)	450 mm STEEL FES (EA)	(N) STEEL PLATE CLOSURE (EA)	(N) TYPE 450-9 FRAME AND GRATE (EA)	(N) TYPE 600-12 FRAME AND GRATE (EA)	MAXIMUM COVER (m)	DESCRIPTION	STATION	DRAINAGE SYSTEM No. ⬡	DRAINAGE UNIT No. ○
D-6	13	a													1											REMOVE INLET		13	a
		b												7.3												REMOVE PIPE			b
		c															1					1				ADJUST INLET	443+46.634 ℄ Rte 5		c
		d													1											REMOVE INLET	21.6 m Lt 443+49.218 ℄ Rte 5		d
		e						5.9																	1.6	450 mm RCP			e
		f	1.51	1.88	296																			2		TYPE GT3 INLET			f
D-6	14	a	0.45	0.63	113																1	1				CL2 INLET, CASE 2	443+80.000 ℄ Rte 5	14	a
		b													1											REMOVE INLET	444+15.000 ℄ Rte 5		b
		c												30.5												REMOVE PIPE			c
		d	1.13	1.19	263																			2		GD-1 INLET	444+15.000 ℄ Rte 5		d
D-6	15	a	1.42	1.72	296																			2		TYPE GT3 INLET	27.92 m Lt 443+40.000 ℄ Rte 5	15	a
		b						11.5																	1.7	450 mm RCP			b
		c						36.8																	1.7	450 mm RCP			c
		d	1.75	2.01	296																			2		TYPE GT3 INLET	27.80 m Lt 443+90.000 ℄ Rte 5		d
		e						40.2																	3.5	450 mm RCP			e
		f	3.47	5.35	296																			2		TYPE GT3 INLET	27.80 m Lt 444+32.000 ℄ Rte 5		f
		g																	1							CAP INLET	23.0 m Lt 444+33.548 ℄ Rte 5		g
SHEET TOTAL				12.78	1856			94.4						37.8	3		1		1			2	1	10					

DRAINAGE QUANTITIES DQ-5

STATE OF CALIFORNIA - DEPARTMENT OF TRANSPORTATION
Caltrans
HYDRAULICS

FUNCTIONAL SUPERVISOR: DAVE BHALLA

CALCULATED-DESIGNED BY: C.P.NGUYEN
CHECKED BY: S.THAI

REVISED BY
DATE REVISED

LAST REVISION 00-00-00
DATE PLOTTED => 12-JUN-2009
TIME PLOTTED => 08:52

Dist	COUNTY	ROUTE	KILOMETER POST TOTAL PROJECT	SHEET No.	TOTAL SHEETS
07	LA	5	42.8/47.3	181	1073

REGISTERED CIVIL ENGINEER 12-17-08 DATE

6-8-09
PLANS APPROVAL DATE

REGISTERED PROFESSIONAL ENGINEER BALDEV K. BHALLA No. 34350 Exp. 9/30/09 CIVIL STATE OF CALIFORNIA

THE STATE OF CALIFORNIA OR ITS OFFICERS OR AGENTS SHALL NOT BE RESPONSIBLE FOR THE ACCURACY OR COMPLETENESS OF ELECTRONIC COPIES OF THIS PLAN SHEET.

Caltrans Metric

(N) NOT A SEPARATE PAY ITEM, FOR INFORMATION ONLY.

DRAINAGE SHEET No.	DRAINAGE SYSTEM No. ⬡	DRAINAGE UNIT No. ○	H OR V (m)	MINOR CONCRETE (MINOR STRUCTURE) (m^3)	MISCELLANEOUS IRON AND STEEL (kg)	MINOR CONCRETE (BACKFILL) (m^3)	CLASS 1 CONCRETE (BOX CULVERT) (m^3)	450 mm REINFORCED CONCRETE PIPE (m)	600 mm REINFORCED CONCRETE PIPE (m)	450 mm SLOTTED CORRUGATED STEEL PIPE (m)	SAND BACKFILL (m^3)	300 mm PLASTIC PIPE (m)	ABANDON PIPELINE (EA)	REMOVE PIPE (m)	REMOVE INLET (EA)	REMOVE FES (EA)	ADJUST INLET (EA)	ABANDON MANHOLE (EA)	CAP INLET (EA)	CAP MH (EA)	450 mm STEEL FES (EA)	(N) STEEL PLATE CLOSURE (EA)	(N) TYPE 450-9 FRAME AND GRATE (EA)	(N) TYPE 600-12 FRAME AND GRATE (EA)	MAXIMUM COVER (m)	DESCRIPTION	STATION	DRAINAGE SYSTEM No. ⬡	DRAINAGE UNIT No. ○
D-6	16	a	0.45	0.63	113																	1	1			CL2 INLET, CASE 2	0.31 m Rt 444+55.000 ℄ Rte 5	16	a
		b	0.45	0.63	113																	1	1			CL2 INLET, CASE 2	0.31 m Rt 444+90.000 ℄ Rte 5		b
D-6	17	a																	1							CAP INLET	18.4 m Rt 445+21.260 ℄ Rte 5	17	a
		b													1											REMOVE INLET			b
		c												6.1												REMOVE PIPE			c
		d	1.2	1.53	296																		2			TYPE GT3 INLET	0.31 m Rt 445+29.830 ℄ Rte 5		d
		e																	1							CAP INLET	17.9 m Lt 445+32.8800 ℄ Rte 5		e
		f															1									ADJUST INLET TO GRADE	21.6 m Lt 445+66.490 ℄ Rte 5		f
D-6	18	a	1.06	0.75	148																			1		TYPE G1 INLET	30.5 m Lt 446+15.515 ℄ Rte 5	18	a
		b						19.9																	1.8	450 mm RCP			b
		c																	1							CAP INLET	27.7 m Lt 445+94.265 ℄ Rte 5		c
		d																	1							CAP INLET	27.3 m Lt 445+53.776 ℄ Rte 5		d
		e	1.88	1.74	263																			2		GD-1 INLET	31.8 m Lt 445+52.673 ℄ Rte 5		e
		f							36.7																1.9	600 mm RCP			f
		g	1.28	1.30	263																			2		GD-1 INLET	5.90 m Lt 445+88.000 ℄ Rte 5		g
D-6	19	a	1.07	1.15	263																			2		GD-1 INLET	22.9m Lt 446+28.452 ℄ Rte 5	19	a
		b						4.5																	1.2	450 mm RCP			b
		c													1											REMOVE INLET			c
		d													1											REMOVE INLET			d
		e	1.47	1.45	296																	1		2		GD-3 INLET	446+28.452 ℄ Rte 5		e
SHEET TOTAL				9.18	1755			24.4	36.7					6.1	3		1		4			3	4	9					

DRAINAGE QUANTITIES DQ-6

STATE OF CALIFORNIA - DEPARTMENT OF TRANSPORTATION
Caltrans HYDRAULICS

FUNCTIONAL SUPERVISOR: DAVE BHALLA

CALCULATED-DESIGNED BY: C.P.NGUYEN
CHECKED BY: S.THAI

REVISED BY / DATE REVISED

LAST REVISION 00-00-00 DATE PLOTTED => 12-JUN-2009 TIME PLOTTED => 08:52

Dist	COUNTY	ROUTE	KILOMETER POST TOTAL PROJECT	SHEET No.	TOTAL SHEETS
07	LA	5	42.8/47.3	182	1073

REGISTERED CIVIL ENGINEER 12-17-08 DATE

6-8-09
PLANS APPROVAL DATE

REGISTERED PROFESSIONAL ENGINEER BALDEV K. BHALLA No. 34350 Exp. 9/30/09 CIVIL STATE OF CALIFORNIA

THE STATE OF CALIFORNIA OR ITS OFFICERS OR AGENTS SHALL NOT BE RESPONSIBLE FOR THE ACCURACY OR COMPLETENESS OF ELECTRONIC COPIES OF THIS PLAN SHEET.

Caltrans Metric

(N) NOT A SEPARATE PAY ITEM, FOR INFORMATION ONLY.

DRAINAGE SHEET No.	DRAINAGE SYSTEM No. ⬡	DRAINAGE UNIT No. ○	H OR V m	MINOR CONCRETE (MINOR STRUCTURE) m^3	MISCELLANEOUS IRON AND STEEL kg	MINOR CONCRETE (BACKFILL) m^3	CLASS 1 CONCRETE (BOX CULVERT) m^3	450 mm REINFORCED CONCRETE PIPE m	600 mm REINFORCED CONCRETE PIPE m	450 mm SLOTTED CORRUGATED STEEL PIPE m	SAND BACKFILL m^3	300 mm PLASTIC PIPE m	ABANDON PIPELINE EA	REMOVE PIPE m	REMOVE INLET EA	REMOVE FES EA	ADJUST INLET EA	ABANDON MANHOLE EA	CAP INLET EA	CAP MH EA	450 mm STEEL FES EA	STEEL PLATE CLOSURE EA (N)	TYPE 450-9 FRAME AND GRATE EA (N)	TYPE 600-12 FRAME AND GRATE EA (N)	MAXIMUM COVER m	DESCRIPTION	STATION	DRAINAGE SYSTEM No. ⬡	DRAINAGE UNIT No. ○
D-6	20	a	0.52	1.31	148																			1		TYPE G2 INLET	8.76 m Lt 446+15.000 ℄ WESTERN ONRAMP	20	a
		b			292		2.83																			600 mm x 300 mm RCB			b
		c	0.51	0.97	263																			2		GD-1 INLET	8.93 m Lt 446+20.000 ℄ WESTERN ONRAMP		c
		d			292		2.83																			600 mm x 300 mm RCB			d
		e	0.62	1.31	148																			1		TYPE G2 INLET	8.86 m Lt 446+25.000 ℄ WESTERN ONRAMP		e
		f				6.1		19.6																	0.6	450 mm RCP			f
		g	0.62	1.31	148																			1		TYPE G2 INLET	7.93 m Lt 446+45.481 ℄ WESTERN ONRAMP		g
		h						6.5																	0.6	450 mm RCP			h
		i													1											REMOVE INLET			i
D-7	21	a	0.91	1.03	263																			2		GD-1 INLET	22.8 m Lt 447+50.390 ℄ Rte 5	21	a
		b						4.1																	1.1	450 mm RCP			b
		c													1											REMOVE INLET			c
		d													1											REMOVE INLET			d
		e	1.26	1.71	296																	1		2		GD-3 INLET	447+50.390 ℄ Rte 5		e
D-7	22	a	1.07	0.78	148																			1		TYPE G1 INLET	22.8 m Lt 448+40.000 ℄ Rte 5	22	a
		b						5.0																	1.0	450 mm RCP			b
SHEET TOTAL				8.42	1998	6.1	5.66	35.2							3							1		10					

DRAINAGE QUANTITIES DQ-7

STATE OF CALIFORNIA - DEPARTMENT OF TRANSPORTATION
Caltrans HYDRAULICS

FUNCTIONAL SUPERVISOR: DAVE BHALLA

CALCULATED-DESIGNED BY: C.P.NGUYEN REVISED BY
CHECKED BY: S.THAI DATE REVISED

LAST REVISION 00-00-00 DATE PLOTTED => 12-JUN-2009 TIME PLOTTED => 08:52

Dist	COUNTY	ROUTE	KILOMETER POST TOTAL PROJECT	SHEET No.	TOTAL SHEETS
07	LA	5	42.8/47.3	183	1073

REGISTERED CIVIL ENGINEER 12-17-08 DATE

6-8-09
PLANS APPROVAL DATE

REGISTERED PROFESSIONAL ENGINEER BALDEV K. BHALLA No. 34350 Exp. 9/30/09 CIVIL STATE OF CALIFORNIA

THE STATE OF CALIFORNIA OR ITS OFFICERS OR AGENTS SHALL NOT BE RESPONSIBLE FOR THE ACCURACY OR COMPLETENESS OF ELECTRONIC COPIES OF THIS PLAN SHEET.

Caltrans Metric

(N) NOT A SEPARATE PAY ITEM, FOR INFORMATION ONLY.

DRAINAGE SHEET No.	DRAINAGE SYSTEM No. ⬡	DRAINAGE UNIT No. ○	H OR V	MINOR CONCRETE (MINOR STRUCTURE)	MISCELLANEOUS IRON AND STEEL	MINOR CONCRETE (BACKFILL)	CLASS 1 CONCRETE (BOX CULVERT)	450 mm REINFORCED CONCRETE PIPE	600 mm REINFORCED CONCRETE PIPE	450 mm SLOTTED CORRUGATED STEEL PIPE	SAND BACKFILL	300 mm PLASTIC PIPE	ABANDON PIPELINE	REMOVE PIPE	REMOVE INLET	REMOVE FES	ADJUST INLET	ABANDON MANHOLE	CAP INLET	CAP MH	450 mm STEEL FES	STEEL PLATE CLOSURE (N)	TYPE 450-9 FRAME AND GRATE (N)	TYPE 600-12 FRAME AND GRATE (N)	MAXIMUM COVER	DESCRIPTION	STATION	DRAINAGE SYSTEM No. ⬡	DRAINAGE UNIT No. ○
			m	m^3	kg	m^3	m^3	Ea	m	m	m^3	m	EA	m	EA	EA	EA	EA	EA	EA	EA	EA	EA	EA	m				
D-7	22	c	1.05	1.06	263																			2		GD-1INLET	22.8 m Lt 448+34.120 ℄ Rte 5	22	c
		d						5.1																	1.0	450 mm RCP			d
		e													1											REMOVE INLET			e
		f												2.5												REMOVE PIPE			f
		g																	1							CAP INLET	18.0 m Lt 448+34.120 ℄ Rte 5		g
		h															1					1				ADJUST INLET			h
		i												9.8												REMOVE PIPE			i
		j													1											REMOVE INLET			j
D-7	23	a	2.14	1.92	263																			2		GD-1 INLET	22.8 m Lt 449+08.736 ℄ Rte 5	23	a
		b																	1							CAP INLET			b
		c												64.4												REMOVE PIPE			c
		d	0.45	0.90	226																	1	2			CL1 INLET, CASE 2	449+15.000 ℄ Rte 5		d
SHEET TOTAL				3.88	752			5.1						76.7	2		1		2			2	2	4					

DRAINAGE QUANTITIES DQ-8

STATE OF CALIFORNIA - DEPARTMENT OF TRANSPORTATION
Caltrans HYDRAULICS

FUNCTIONAL SUPERVISOR: DAVE BHALLA

CALCULATED-DESIGNED BY: C.P.NGUYEN
CHECKED BY: S.THAI

REVISED BY
DATE REVISED

LAST REVISION 00-00-00
DATE PLOTTED => 12-JUN-2009
TIME PLOTTED => 08:52

Dist	COUNTY	ROUTE	KILOMETER POST TOTAL PROJECT	SHEET No.	TOTAL SHEETS
07	LA	5	42.8/47.3	184	1073

REGISTERED CIVIL ENGINEER 12-17-08 DATE

6-8-09
PLANS APPROVAL DATE

REGISTERED PROFESSIONAL ENGINEER BALDEV K. BHALLA No. 34350 Exp. 9/30/09 CIVIL STATE OF CALIFORNIA

THE STATE OF CALIFORNIA OR ITS OFFICERS OR AGENTS SHALL NOT BE RESPONSIBLE FOR THE ACCURACY OR COMPLETENESS OF ELECTRONIC COPIES OF THIS PLAN SHEET.

Caltrans Metric

(N) NOT A SEPARATE PAY ITEM, FOR INFORMATION ONLY.

DRAINAGE SHEET No.	DRAINAGE SYSTEM No. ⬡	DRAINAGE UNIT No. ○	H OR V (m)	MINOR CONCRETE (MINOR STRUCTURE) (m^3)	MISCELLANEOUS IRON AND STEEL (kg)	MINOR CONCRETE (BACKFILL) (m^3)	CLASS 1 CONCRETE (BOX CULVERT) (m^3)	450 mm REINFORCED CONCRETE PIPE (m)	600 mm REINFORCED CONCRETE PIPE (m)	450 mm SLOTTED CORRUGATED STEEL PIPE (m)	SAND BACKFILL (m^3)	300 mm PLASTIC PIPE (m)	ABANDON PIPELINE (EA)	REMOVE PIPE (m)	REMOVE INLET (EA)	REMOVE FES (EA)	ADJUST INLET (EA)	ABANDON MANHOLE (EA)	CAP INLET (EA)	CAP MH (EA)	450 mm STEEL FES (EA)	(N) STEEL PLATE CLOSURE (EA)	(N) TYPE 450-9 FRAME AND GRATE (EA)	(N) TYPE 600-12 FRAME AND GRATE (EA)	MAXIMUM COVER (m)	DESCRIPTION	STATION	DRAINAGE SYSTEM No. ⬡	DRAINAGE UNIT No. ○
D-8	24	a																	1							CAP INLET	441+40.773 ℄ WESTERN OFFRAMP	24	a
		b	0.45	0.90	226																	1	2			CL1 INLET, CASE 2 (FLAT BOTTOM)	450+43.000 ℄ Rte 5		b
D-8	25	a	0.45	0.90	226																	1	2			CL1 INLET, CASE 2	450+80.000 ℄ Rte 5	25	a
		b	0.45	0.90	226																	1	2			CL1 INLET, CASE 2	451+30.000 ℄ Rte 5		b
D-8	26	a																	1							CAP INLET		26	a
		b	0.45	0.90	226																	1	2			CL1 INLET, CASE 2 (FLAT BOTTOM)	451+71.000 ℄ Rte 5		b
		c								4.4																450 mm SCSP			c
		d													1											REMOVE INLET	22.5 m Rt 451+66.144 ℄ Rte 5		d
		e						6.3																		450 mm RCP			e
		f	1.16	1.21	263																		2			GD-1 INLET	29.6 m Rt 451+66.144 ℄ Rte 5		f
D-8	27	a	0.45	0.90	226																	1	2			CL1 INLET, CASE 2	452+15.000 ℄ Rte 5	27	a
		b	0.45	0.90	226																	1	2			CL1 INLET, CASE 1	452+60.000 ℄ Rte 5		b
SHEET TOTAL				6.61	1619			6.3		4.4					1				2			6	14						

DRAINAGE QUANTITIES DQ-9

STATE OF CALIFORNIA - DEPARTMENT OF TRANSPORTATION
Caltrans HYDRAULICS

FUNCTIONAL SUPERVISOR: DAVE BHALLA

CALCULATED-DESIGNED BY: C.P.NGUYEN
CHECKED BY: S.THAI

REVISED BY
DATE REVISED

LAST REVISION 00-00-00 DATE PLOTTED => 12-JUN-2009 TIME PLOTTED => 08:52

Dist	COUNTY	ROUTE	KILOMETER POST TOTAL PROJECT	SHEET No.	TOTAL SHEETS
07	LA	5	42.8/47.3	185	1073

REGISTERED CIVIL ENGINEER 12-17-08 DATE

6-8-09
PLANS APPROVAL DATE

REGISTERED PROFESSIONAL ENGINEER BALDEV K. BHALLA No. 34350 Exp. 9/30/09 CIVIL STATE OF CALIFORNIA

THE STATE OF CALIFORNIA OR ITS OFFICERS OR AGENTS SHALL NOT BE RESPONSIBLE FOR THE ACCURACY OR COMPLETENESS OF ELECTRONIC COPIES OF THIS PLAN SHEET.

Caltrans Metric

(N) NOT A SEPARATE PAY ITEM, FOR INFORMATION ONLY.

DRAINAGE SHEET No.	DRAINAGE SYSTEM No. ⬡	DRAINAGE UNIT No. ○	H OR V (m)	MINOR CONCRETE (MINOR STRUCTURE) (m^3)	MISCELLANEOUS IRON AND STEEL (kg)	MINOR CONCRETE (BACKFILL) (m^3)	CLASS 1 CONCRETE (BOX CULVERT) (m^3)	450 mm REINFORCED CONCRETE PIPE (m)	600 mm REINFORCED CONCRETE PIPE (m)	450 mm SLOTTED CORRUGATED STEEL PIPE (m)	SAND BACKFILL (m^3)	300 mm PLASTIC PIPE (m)	ABANDON PIPELINE (EA)	REMOVE PIPE (m)	REMOVE INLET (EA)	REMOVE FES (EA)	ADJUST INLET (EA)	ABANDON MANHOLE (EA)	CAP INLET (EA)	CAP MH (EA)	450 mm STEEL FES (EA)	(N) STEEL PLATE CLOSURE (EA)	(N) TYPE 450-9 FRAME AND GRATE (EA)	(N) TYPE 600-12 FRAME AND GRATE (EA)	MAXIMUM COVER (m)	DESCRIPTION	STATION	DRAINAGE SYSTEM No. ⬡	DRAINAGE UNIT No. ○
D-8	28	a													1											REMOVE INLET		28	a
		b												4.9												REMOVE PIPE			b
		c													1											REMOVE INLET			c
		d																		1						CAP MANHOLE			d
		e																	1							CAP INLET			e
		f												4.9												REMOVE PIPE			f
		g													1											REMOVE INLET			g
D-8	29	a	4.53	5.62	148																		1			TYPE G2 INLET	29.9 m Rt 452+96.500 ℄ Rte 5	29	a
		b						9.3																1.7		450 mm RCP			b
		c	1.63	1.56	263																		2			GD-1 INLET	29.9 m Rt 453+06.657 ℄ Rte 5		c
		d						7.8																1.7		450 mm RCP			d
		e	1.35	0.94	148																		1			TYPE G1 INLET	29.9 m Rt 453+15.382 ℄ Rte 5		e
		f						4.2																1.7		450 mm RCP			f
		g												186.2												REMOVE PIPE			g
		h	0.45	0.9	226																1	2				CL1 INLET, CASE 2 (FLAT BOTTOM)	453+12.000 ℄ Rte 5		h
D-9	30	a	0.45	0.90	226																1	2				CL1 INLET, CASE 2	453+60.000 ℄ Rte 5	30	a
		b	0.45	0.90	226																1	2				CL1 INLET, CASE 2	454+20.000 ℄ Rte 5		b
SHEET TOTAL				10.82	1237			21.3						196.0	3				1	1		3	6	4					

DRAINAGE QUANTITIES DQ-10

STATE OF CALIFORNIA - DEPARTMENT OF TRANSPORTATION
Caltrans
HYDRAULICS

FUNCTIONAL SUPERVISOR: DAVE BHALLA

CALCULATED-DESIGNED BY: C.P.NGUYEN
CHECKED BY: S.THAI

REVISED BY
DATE REVISED

LAST REVISION 00-00-00
DATE PLOTTED => 12-JUN-2009
TIME PLOTTED => 08:52

Dist	COUNTY	ROUTE	KILOMETER POST TOTAL PROJECT	SHEET No.	TOTAL SHEETS
07	LA	5	42.8/47.3	186	1073

REGISTERED CIVIL ENGINEER 12-17-08 DATE

6-8-09
PLANS APPROVAL DATE

REGISTERED PROFESSIONAL ENGINEER BALDEV K. BHALLA No. 34350 Exp. 9/30/09 CIVIL STATE OF CALIFORNIA

THE STATE OF CALIFORNIA OR ITS OFFICERS OR AGENTS SHALL NOT BE RESPONSIBLE FOR THE ACCURACY OR COMPLETENESS OF ELECTRONIC COPIES OF THIS PLAN SHEET.

Caltrans Metric

(N) NOT A SEPARATE PAY ITEM, FOR INFORMATION ONLY.

DRAINAGE SHEET No.	DRAINAGE SYSTEM No.	DRAINAGE UNIT No.	H OR V (m)	MINOR CONCRETE (MINOR STRUCTURE) (m^3)	MISCELLANEOUS IRON AND STEEL (kg)	MINOR CONCRETE (BACKFILL) (m^3)	CLASS 1 CONCRETE (BOX CULVERT) (m^3)	450 mm REINFORCED CONCRETE PIPE (m)	600 mm REINFORCED CONCRETE PIPE (m)	450 mm SLOTTED CORRUGATED STEEL PIPE (m)	SAND BACKFILL (m^3)	300 mm PLASTIC PIPE (m)	ABANDON PIPELINE (EA)	REMOVE PIPE (m)	REMOVE INLET (EA)	REMOVE FES (EA)	ADJUST INLET (EA)	ABANDON MANHOLE (EA)	CAP INLET (EA)	CAP MH (EA)	450 mm STEEL FES (EA)	(N) STEEL PLATE CLOSURE (EA)	(N) TYPE 450-9 FRAME AND GRATE (EA)	(N) TYPE 600-12 FRAME AND GRATE (EA)	MAXIMUM COVER (m)	DESCRIPTION	STATION	DRAINAGE SYSTEM No.	DRAINAGE UNIT No.
D-9	31	a																	1							CAP INLET	4.40 m Rt 455+48.940 ℄ ALAMEDA SB ONRAMP	31	a
		b						22.2																	1.2	450 mm RCP			b
		c	1.20	1.53	148																			1		TYPE G1 INLET	30.50 m Lt 455+72.248 ℄ Rte 5		c
		d																	1							CAP INLET			d
D-9	32	a	1.10	1.16	263																			2		GD-1 INLET	2.62 m Rt 454+79.700 ℄ ALAMEDA NB OFFRAMP	32	a
		b						1.6																		450 mm RCP			b
		c													1											REMOVE INLET	454+79.700 ℄ ALAMEDA NB OFFRAMP		c
		d	1.52	1.50	263																			2		GD-1 INLET	22.8 m Rt 454+79.783 ℄ Rte 5		d
																			1							CAP INLET	16.9 m Rt 454+79.783 ℄ Rte 5		e
SHEET TOTAL				4.19	674			23.8							1				3					5					

DRAINAGE QUANTITIES DQ-11

STATE OF CALIFORNIA - DEPARTMENT OF TRANSPORTATION
Caltrans HYDRAULICS

FUNCTIONAL SUPERVISOR: DAVE BHALLA

CALCULATED-DESIGNED BY: C.P.NGUYEN
CHECKED BY: S.THAI

REVISED BY
DATE REVISED

LAST REVISION 00-00-00
DATE PLOTTED => 12-JUN-2009
TIME PLOTTED => 08:52

Dist	COUNTY	ROUTE	KILOMETER POST TOTAL PROJECT	SHEET No.	TOTAL SHEETS
07	LA	5	42.8/47.3	187	1073

REGISTERED CIVIL ENGINEER 12-17-08 DATE

6-8-09
PLANS APPROVAL DATE

REGISTERED PROFESSIONAL ENGINEER BALDEV K. BHALLA No. 34350 Exp. 9/30/09 CIVIL STATE OF CALIFORNIA

THE STATE OF CALIFORNIA OR ITS OFFICERS OR AGENTS SHALL NOT BE RESPONSIBLE FOR THE ACCURACY OR COMPLETENESS OF ELECTRONIC COPIES OF THIS PLAN SHEET.

Caltrans Metric

(N) NOT A SEPARATE PAY ITEM, FOR INFORMATION ONLY.

DRAINAGE SHEET No.	DRAINAGE SYSTEM No. ⬡	DRAINAGE UNIT No. ○	H OR V (m)	MINOR CONCRETE (MINOR STRUCTURE) (m^3)	MISCELLANEOUS IRON AND STEEL (kg)	MINOR CONCRETE (BACKFILL) (m^3)	CLASS 1 CONCRETE (BOX CULVERT) (m^3)	450 mm REINFORCED CONCRETE PIPE (m)	600 mm REINFORCED CONCRETE PIPE (m)	450 mm SLOTTED CORRUGATED STEEL PIPE (m)	SAND BACKFILL (m^3)	300 mm PLASTIC PIPE (m)	ABANDON PIPELINE (EA)	REMOVE PIPE (m)	REMOVE INLET (EA)	REMOVE FES (EA)	ADJUST INLET (EA)	ABANDON MANHOLE (EA)	CAP INLET (EA)	CAP MH (EA)	450 mm STEEL FES (EA)	(N) STEEL PLATE CLOSURE (EA)	(N) TYPE 450-9 FRAME AND GRATE (EA)	(N) TYPE 600-12 FRAME AND GRATE (EA)	MAXIMUM COVER (m)	DESCRIPTION	STATION	DRAINAGE SYSTEM No. ⬡	DRAINAGE UNIT No. ○
D-9	33	a	0.45	0.90	226																	1	2			CL1 INLET, CASE 2	454+94.000 ℄ Rte 5	33	a
		b				30.7						72.5														300 mm PLASTIC PIPE W/ CONC. BACKFILL			b
		c	0.45	0.90	226																	1	2			CL1 INLET, CASE 2	455+33.500 ℄ Rte 5		c
D-9	34	a													1											REMOVE INLET		34	a
		b												14.7												REMOVE PIPE			b
		c													1											REMOVE INLET			c
		d												7.7												REMOVE PIPE			d
D-9	35	a	1.33	1.35	263																			2		GD-1 INLET	30.6 m Rt 455+80.000 ℄ Rte 5	35	a
		b						5.2																	1.3	450 mm RCP			b
		c	1.27	0.89	148																			1		TYPE G1 INLET	4.37 m Lt 455+78.000 ⅊ ALAMEDA OFFRAMP		c
D-10	36	a	0.45	0.90	226																	1	2			CL1 INLET, CASE 2	455+90.000 ℄ Rte 5	36	a
SHEET TOTAL				4.94	1089	30.7		5.2				72.5		22.4	2							3	6	3					

DRAINAGE QUANTITIES DQ-12

STATE OF CALIFORNIA - DEPARTMENT OF TRANSPORTATION
Caltrans
HYDRAULICS

FUNCTIONAL SUPERVISOR: DAVE BHALLA

CALCULATED-DESIGNED BY: C.P.NGUYEN
CHECKED BY: S.THAI

REVISED BY
DATE REVISED

LAST REVISION 00-00-00
DATE PLOTTED => 12-JUN-2009
TIME PLOTTED => 08:52

Dist	COUNTY	ROUTE	KILOMETER POST TOTAL PROJECT	SHEET No.	TOTAL SHEETS
07	LA	5	42.8/47.3	188	1073

REGISTERED CIVIL ENGINEER 12-17-08 DATE

6-8-09
PLANS APPROVAL DATE

REGISTERED PROFESSIONAL ENGINEER BALDEV K. BHALLA No. 34350 Exp. 9/30/09 CIVIL STATE OF CALIFORNIA

THE STATE OF CALIFORNIA OR ITS OFFICERS OR AGENTS SHALL NOT BE RESPONSIBLE FOR THE ACCURACY OR COMPLETENESS OF ELECTRONIC COPIES OF THIS PLAN SHEET.

Caltrans Metric

(N) NOT A SEPARATE PAY ITEM, FOR INFORMATION ONLY.

DRAINAGE SHEET No.	DRAINAGE SYSTEM No. ⬡	DRAINAGE UNIT No. ○	H OR V (m)	MINOR CONCRETE (MINOR STRUCTURE) (m^3)	MISCELLANEOUS IRON AND STEEL (kg)	MINOR CONCRETE (BACKFILL) (m^3)	CLASS 1 CONCRETE (BOX CULVERT) (m^3)	450 mm REINFORCED CONCRETE PIPE (m)	600 mm REINFORCED CONCRETE PIPE (m)	450 mm SLOTTED CORRUGATED STEEL PIPE (m)	SAND BACKFILL (m^3)	300 mm PLASTIC PIPE (m)	ABANDON PIPELINE (EA)	REMOVE PIPE (m)	REMOVE INLET (EA)	REMOVE FES (EA)	ADJUST INLET (EA)	ABANDON MANHOLE (EA)	CAP INLET (EA)	CAP MH (EA)	450 mm STEEL FES (EA)	(N) STEEL PLATE CLOSURE (EA)	(N) TYPE 450-9 FRAME AND GRATE (EA)	(N) TYPE 600-12 FRAME AND GRATE (EA)	MAXIMUM COVER (m)	DESCRIPTION	STATION	DRAINAGE SYSTEM No. ⬡	DRAINAGE UNIT No. ○
D-10	37	a	1.72	1.62	263																			2		GD-1 INLET	22.5 m Lt 456+41.937 ℄ Rte 5	37	a
		b																	1							CAP INLET			b
		c	0.45	0.9	226																	1	2			CL1, CASE 2 (FLAT BOTTOM)	465+48.800 ℄ Rte 5		c
		d													1											REMOVE INLET			d
		e						3.2																	1.2	450 mm RCP			e
		f	1.18	1.23	263																			2		GD-1 INLET	22.5 m Rt 456+41.937 ℄ Rte 5		f
D-10	38	a																	1							CAP INLET		38	a
		b													1											REMOVE INLET	457+76.273 ℄ Rte 5		b
		c												2.5												REMOVE PIPE			c
		d													1											REMOVE INLET	457+79.321 ℄ Rte 5		d
		e	1.20	1.25	296																	1		2		GD-3 INLET	457+79.321 ℄ Rte 5		e
		f																	1							CAP INLET			f
		g												9.8												REMOVE PIPE			g
		h													1											REMOVE INLET			h
		i												9.8												REMOVE PIPE			i
		j													1											REMOVE INLET			j
		k											1													ABANDON PIPE			k
		L																1								ABANDON MANHOLE			L
		m									4.26		1													ABANDON PIPE			m
SHEET TOTAL				5.00	1048			3.2			4.26		2	22.1	5			1	3			2	2	6					

DRAINAGE QUANTITIES DQ-13

STATE OF CALIFORNIA - DEPARTMENT OF TRANSPORTATION
Caltrans
HYDRAULICS

FUNCTIONAL SUPERVISOR: DAVE BHALLA
CALCULATED-DESIGNED BY: C.P.NGUYEN
CHECKED BY: S.THAI
REVISED BY
DATE REVISED

LAST REVISION 00-00-00
DATE PLOTTED => 12-JUN-2009
TIME PLOTTED => 08:52

Dist	COUNTY	ROUTE	KILOMETER POST TOTAL PROJECT	SHEET No.	TOTAL SHEETS
07	LA	5	42.8/47.3	189	1073

REGISTERED CIVIL ENGINEER 12-17-08 DATE

6-8-09
PLANS APPROVAL DATE

REGISTERED PROFESSIONAL ENGINEER BALDEV K. BHALLA No. 34350 Exp. 9/30/09 CIVIL STATE OF CALIFORNIA

THE STATE OF CALIFORNIA OR ITS OFFICERS OR AGENTS SHALL NOT BE RESPONSIBLE FOR THE ACCURACY OR COMPLETENESS OF ELECTRONIC COPIES OF THIS PLAN SHEET.

Caltrans Metric

(N) NOT A SEPARATE PAY ITEM, FOR INFORMATION ONLY.

DRAINAGE SHEET No.	DRAINAGE SYSTEM No. ⬡	DRAINAGE UNIT No. ○	H OR V m	MINOR CONCRETE (MINOR STRUCTURE) m^3	MISCELLANEOUS IRON AND STEEL kg	MINOR CONCRETE (BACKFILL) m^3	CLASS 1 CONCRETE (BOX CULVERT) m^3	450 mm REINFORCED CONCRETE PIPE m	600 mm REINFORCED CONCRETE PIPE m	450 mm SLOTTED CORRUGATED STEEL PIPE m	SAND BACKFILL m^3	300 mm PLASTIC PIPE m	ABANDON PIPELINE EA	REMOVE PIPE m	REMOVE INLET EA	REMOVE FES EA	ADJUST INLET EA	ABANDON MANHOLE EA	CAP INLET EA	CAP MH EA	450 mm STEEL FES EA	(N) STEEL PLATE CLOSURE EA	(N) TYPE 450-9 FRAME AND GRATE EA	(N) TYPE 600-12 FRAME AND GRATE EA	MAXIMUM COVER m	DESCRIPTION	STATION	DRAINAGE SYSTEM No. ⬡	DRAINAGE UNIT No. ○
D-10	39	a	1.36	1.37	263																			2		GD-1 INLET	22.5 m Rt 458+18.000 ℄ Rte 5	39	a
		b						10.5																	1.6	450 mm RCP			b
		c	1.66	1.59	263																			2		GD-1 INLET	22.5 m Rt 458+05.924 ℄ Rte 5		c
		d						10.2																	1.6	450 mm RCP			d
		e	1.93	1.45	148																			1		TYPE G1 INLET	22.5 m Rt 457+94.244 ℄ Rte 5		e
		f	3.67	4.64	148																			1		TYPE G2 INLET	34.3 m Rt 457+94.142 ℄ Rte 5		f
		g						37.7																	3.7	450 mm RCP			g
		h	3.32	4.24	148																			1		TYPE G2 INLET	34.5 m Rt 458+36.240 ℄ Rte 5		h
		i						25.7																	3.3	450 mm RCP			i
D-10	40	a	1.28	0.90	148																			1		TYPE G1 INLET	30.5 m Lt 458+53.740 ℄ Rte 5	40	a
		b						2.5																	1.3	450 mm RCP			b
		c																	1							CAP INLET	28.1 m Lt 458+51.351 ℄ Rte 5		c
		d												4.6												REMOVE PIPE			d
		e															1									ADJUST INLET TO GRADE			e
		f									5.43		1													ABANDON PIPELINE			f
SHEET TOTAL				14.19	1118			86.6			5.43		1	4.6			1		1					8					

DRAINAGE QUANTITIES DQ-14

STATE OF CALIFORNIA - DEPARTMENT OF TRANSPORTATION
Caltrans HYDRAULICS

FUNCTIONAL SUPERVISOR: DAVE BHALLA
CALCULATED-DESIGNED BY: C.P.NGUYEN
CHECKED BY: S.THAI
REVISED BY / DATE REVISED

LAST REVISION 00-00-00 DATE PLOTTED => 12-JUN-2009 TIME PLOTTED => 08:52

Dist	COUNTY	ROUTE	KILOMETER POST TOTAL PROJECT	SHEET No.	TOTAL SHEETS
07	LA	5	42.8/47.3	190	1073

REGISTERED CIVIL ENGINEER 12-17-08 DATE

6-8-09
PLANS APPROVAL DATE

REGISTERED PROFESSIONAL ENGINEER BALDEV K. BHALLA No. 34350 Exp. 9/30/09 CIVIL STATE OF CALIFORNIA

THE STATE OF CALIFORNIA OR ITS OFFICERS OR AGENTS SHALL NOT BE RESPONSIBLE FOR THE ACCURACY OR COMPLETENESS OF ELECTRONIC COPIES OF THIS PLAN SHEET.

Caltrans Metric

(N) NOT A SEPARATE PAY ITEM, FOR INFORMATION ONLY.

DRAINAGE SHEET No.	DRAINAGE SYSTEM No. ⬡	DRAINAGE UNIT No. ○	H OR V (m)	MINOR CONCRETE (MINOR STRUCTURE) (m^3)	MISCELLANEOUS IRON AND STEEL (kg)	MINOR CONCRETE (BACKFILL) (m^3)	CLASS 1 CONCRETE (BOX CULVERT) (m^3)	450 mm REINFORCED CONCRETE PIPE (m)	600 mm REINFORCED CONCRETE PIPE (m)	450 mm SLOTTED CORRUGATED STEEL PIPE (m)	SAND BACKFILL (m^3)	300 mm PLASTIC PIPE (m)	ABANDON PIPELINE (EA)	REMOVE PIPE (m)	REMOVE INLET (EA)	REMOVE FES (EA)	ADJUST INLET (EA)	ABANDON MANHOLE (EA)	CAP INLET (EA)	CAP MH (EA)	450 mm STEEL FES (EA)	(N) STEEL PLATE CLOSURE (EA)	(N) TYPE 450-9 FRAME AND GRATE (EA)	(N) TYPE 600-12 FRAME AND GRATE (EA)	MAXIMUM COVER (m)	DESCRIPTION	STATION	DRAINAGE SYSTEM No. ⬡	DRAINAGE UNIT No. ○
D-10	41	a	0.45	0.63	113																	1	1			CL2 INLET, CASE 2	0.31 m Lt 458+65.500 ℄ Rte 5	41	a
		b				11.3						38.9														300 mm PLASTIC PIPE			b
		c	0.45	0.63	113																	1	1			CL2 INLET, CASE 2	0.31 m Lt 459+04.500 ℄ Rte 5		c
D-10	42	a	1.85	2.67	148																			1		TYPE G2 INLET	2.4 m Rt 459+20.000 ⅊ ALAMEDA ONRAMP	42	a
		b							33.6																1.9	600 mm RCP			b
D-11	43	a													1											REMOVE INLET		43	a
		b												4.6												REMOVE PIPE			b
		c													1											REMOVE INLET			c
		d	1.36	1.77	148																			1		TYPE G2 INLET	23.1 m Lt 459+97.540 ℄ Rte 5		d
		e													1											REMOVE INLET			e
		f									5.87		1													ABANDON PIPELINE			f
SHEET TOTAL				5.70	522	11.3			33.6		5.87	38.9	1	4.6	3							2	2	2					

DRAINAGE QUANTITIES DQ-15

STATE OF CALIFORNIA - DEPARTMENT OF TRANSPORTATION
Caltrans HYDRAULICS

FUNCTIONAL SUPERVISOR: DAVE BHALLA
CALCULATED-DESIGNED BY: C.P.NGUYEN
CHECKED BY: S.THAI
REVISED BY
DATE REVISED

LAST REVISION 00-00-00
DATE PLOTTED => 12-JUN-2009
TIME PLOTTED => 08:53

Dist	COUNTY	ROUTE	KILOMETER POST TOTAL PROJECT	SHEET No.	TOTAL SHEETS
07	LA	5	42.8/47.3	191	1073

REGISTERED CIVIL ENGINEER 12-17-08 DATE

6-8-09
PLANS APPROVAL DATE

REGISTERED PROFESSIONAL ENGINEER BALDEV K. BHALLA No. 34350 Exp. 9/30/09 CIVIL STATE OF CALIFORNIA

THE STATE OF CALIFORNIA OR ITS OFFICERS OR AGENTS SHALL NOT BE RESPONSIBLE FOR THE ACCURACY OR COMPLETENESS OF ELECTRONIC COPIES OF THIS PLAN SHEET.

Caltrans Metric

(N) NOT A SEPARATE PAY ITEM, FOR INFORMATION ONLY.

DRAINAGE SHEET No.	DRAINAGE SYSTEM No. ⬡	DRAINAGE UNIT No. ○	H OR V (m)	MINOR CONCRETE (MINOR STRUCTURE) (m^3)	MISCELLANEOUS IRON AND STEEL (kg)	MINOR CONCRETE (BACKFILL) (m^3)	CLASS 1 CONCRETE (BOX CULVERT) (m^3)	450 mm REINFORCED CONCRETE PIPE (m)	600 mm REINFORCED CONCRETE PIPE (m)	450 mm SLOTTED CORRUGATED STEEL PIPE (m)	SAND BACKFILL (m^3)	300 mm PLASTIC PIPE (m)	ABANDON PIPELINE (EA)	REMOVE PIPE (m)	REMOVE INLET (EA)	REMOVE FES (EA)	ADJUST INLET (EA)	ABANDON MANHOLE (EA)	CAP INLET (EA)	CAP MH (EA)	450 mm STEEL FES (EA)	(N) STEEL PLATE CLOSURE (EA)	(N) TYPE 450-9 FRAME AND GRATE (EA)	(N) TYPE 600-12 FRAME AND GRATE (EA)	MAXIMUM COVER (m)	DESCRIPTION	STATION	DRAINAGE SYSTEM No. ⬡	DRAINAGE UNIT No. ○
D-11	43	g													1											REMOVE INLET		43	g
		h												7.2												REMOVE PIPE			h
		i													1											REMOVE INLET			i
		j									7.74		1													ABANDON PIPELINE			j
		k																	1							CAP INLET			k
		L									5.09		1													ABANDON PIPELINE			L
		m													1											REMOVE INLET			m
		n												31.8												REMOVE PIPE			n
D-11	44	a	1.38	1.79	148																			1		TYPE G2 INLET	2.3 m Rt 461+00.000 ℄ ALAMEDA ONRAMP	44	a
		b							56.1																1.4	600 mm RCP			b
		c	1.42	1.82	148																			1		TYPE G2 INLET	2.3 m Rt 460+44.505 ℄ ALAMEDA ONRAMP		c
		d							5.2																1.4	600 mm RCP			d
		e							43.4																1.5	600 mm RCP			e
		f	1.47	1.87	148																			1		TYPE G2 INLET	2.3 m Rt 460+01.178 ℄ ALAMEDA ONRAMP		f
		g							2.6																1.5	600 mm RCP			g
		h							51.6																1.5	600 mm RCP			h
		i	1.53	1.93	148																			1		TYPE G2 INLET	2.3 m Rt 459+50.000 ℄ ALAMEDA ONRAMP		i
		j							29.7																1.5	600 mm RCP			j
D-11	45	a							56.1																1.9	600 mm RCP		45	a
		b	1.93	1.45	148																	1				TYPE G2 INLET	0.3 m Lt 461+10.000 ℄ Rte 5		b
		c							56.4																2.6	600 mm RCP			c
		d	2.58	3.40	148																	1				TYPE G2 INLET	0.3 m Lt 461+66.500 ℄ Rte 5		d
SHEET TOTAL				12.26	888				301.1		12.83		2	39.0	3				1			2	4						

DRAINAGE QUANTITIES DQ-16

STATE OF CALIFORNIA - DEPARTMENT OF TRANSPORTATION
Caltrans
HYDRAULICS

FUNCTIONAL SUPERVISOR: DAVE BHALLA
CALCULATED-DESIGNED BY: C.P.NGUYEN
CHECKED BY: S.THAI
REVISED BY
DATE REVISED

LAST REVISION 00-00-00
DATE PLOTTED => 12-JUN-2009
TIME PLOTTED => 08:53

Dist	COUNTY	ROUTE	KILOMETER POST TOTAL PROJECT	SHEET No.	TOTAL SHEETS
07	LA	5	42.8/47.3	192	1073

REGISTERED CIVIL ENGINEER 12-17-08 DATE

6-8-09
PLANS APPROVAL DATE

REGISTERED PROFESSIONAL ENGINEER BALDEV K. BHALLA No. 34350 Exp. 9/30/09 CIVIL STATE OF CALIFORNIA

THE STATE OF CALIFORNIA OR ITS OFFICERS OR AGENTS SHALL NOT BE RESPONSIBLE FOR THE ACCURACY OR COMPLETENESS OF ELECTRONIC COPIES OF THIS PLAN SHEET.

Caltrans Metric

(N) NOT A SEPARATE PAY ITEM, FOR INFORMATION ONLY.

DRAINAGE SHEET No.	DRAINAGE SYSTEM No. ⬡	DRAINAGE UNIT No. ○	H OR V (m)	MINOR CONCRETE (MINOR STRUCTURE) (m^3)	MISCELLANEOUS IRON AND STEEL (kg)	MINOR CONCRETE (BACKFILL) (m^3)	CLASS 1 CONCRETE (BOX CULVERT) (m^3)	450 mm REINFORCED CONCRETE PIPE (m)	600 mm REINFORCED CONCRETE PIPE (m)	450 mm SLOTTED CORRUGATED STEEL PIPE (m)	SAND BACKFILL (m^3)	300 mm PLASTIC PIPE (m)	ABANDON PIPELINE (EA)	REMOVE PIPE (m)	REMOVE INLET (EA)	REMOVE FES (EA)	ADJUST INLET (EA)	ABANDON MANHOLE (EA)	CAP INLET (EA)	CAP MH (EA)	450 mm STEEL FES (EA)	(N) STEEL PLATE CLOSURE (EA)	(N) TYPE 450-9 FRAME AND GRATE (EA)	(N) TYPE 600-12 FRAME AND GRATE (EA)	MAXIMUM COVER (m)	DESCRIPTION	STATION	DRAINAGE SYSTEM No. ⬡	DRAINAGE UNIT No. ○
D-12	46	a																	1							CAP INLET		46	a
		b	1.36	1.36	296																			2		TYPE GT3 INLET	1.73m Rt 464+06.410 ℄ Rte 5		b
		c																	1							CAP INLET			c
		d												7.7												REMOVE PIPE	CALTRANS MAINTENANCE YARD, STREET LEVEL (FLOWER/ PROVIDENCIA Ave.)		d
		e														1										REMOVE FES	CALTRANS MAINTENANCE YARD, STREET LEVEL (FLOWER/ PROVIDENCIA Ave.)		e
		f																			1					450 mm STEEL FES	CALTRANS MAINTENANCE YARD, STREET LEVEL (FLOWER/ PROVIDENCIA Ave.)		f
		g						8.0																		450 mm RCP	CALTRANS MAINTENANCE YARD, STREET LEVEL (FLOWER/ PROVIDENCIA Ave.)		g
D-12	47	a	0.45	0.68	113																	1	1			CL2 INLET, CASE 1	464+85.000 ℄ Rte 5	47	a
D-13	48	a	1.27	1.30	296																			2		TYPE GT3 INLET	1.75 m Rt 465+24.000 ℄ Rte 5	48	a
		b						5.4																	1.3	450 mm RCP			b
		c		0.17																						JUNCTION STRUCTURE No. 1 (JS 1)	2.13 m Rt 465+30.800 ℄ Rte 5		c
		d													1											REMOVE INLET			d
		e												2.5												REMOVE PIPE			e
		f													1											REMOVE INLET			f
		g												14.3												REMOVE PIPE			g
		h													1											REMOVE INLET			h
		i												2.7												REMOVE PIPE			i
		j													1											REMOVE INLET			j
		k												3.5												REMOVE PIPE			k
SHEET TOTAL				3.51	705			13.4						30.7	4	1			2		1	1	1	4					

DRAINAGE QUANTITIES DQ-17

STATE OF CALIFORNIA - DEPARTMENT OF TRANSPORTATION
Caltrans HYDRAULICS

FUNCTIONAL SUPERVISOR: DAVE BHALLA
CALCULATED-DESIGNED BY: C.P.NGUYEN
CHECKED BY: S.THAI
REVISED BY / DATE REVISED

LAST REVISION 00-00-00 DATE PLOTTED => 12-JUN-2009 TIME PLOTTED => 08:53

Dist	COUNTY	ROUTE	KILOMETER POST TOTAL PROJECT	SHEET No.	TOTAL SHEETS
07	LA	5	42.8/47.3	193	1073

REGISTERED CIVIL ENGINEER 12-17-08 DATE

6-8-09
PLANS APPROVAL DATE

REGISTERED PROFESSIONAL ENGINEER BALDEV K. BHALLA No. 34350 Exp. 9/30/09 CIVIL STATE OF CALIFORNIA

THE STATE OF CALIFORNIA OR ITS OFFICERS OR AGENTS SHALL NOT BE RESPONSIBLE FOR THE ACCURACY OR COMPLETENESS OF ELECTRONIC COPIES OF THIS PLAN SHEET.

Caltrans Metric

(N) NOT A SEPARATE PAY ITEM, FOR INFORMATION ONLY.

DRAINAGE SHEET No.	DRAINAGE SYSTEM No. ⬡	DRAINAGE UNIT No. ○	H OR V m	MINOR CONCRETE (MINOR STRUCTURE) m^3	MISCELLANEOUS IRON AND STEEL kg	MINOR CONCRETE (BACKFILL) m^3	CLASS 1 CONCRETE (BOX CULVERT) m^3	450 mm REINFORCED CONCRETE PIPE m	600 mm REINFORCED CONCRETE PIPE m	450 mm SLOTTED CORRUGATED STEEL PIPE m	SAND BACKFILL m^3	300 mm PLASTIC PIPE m	ABANDON PIPELINE EA	REMOVE PIPE m	REMOVE INLET EA	REMOVE FES EA	ADJUST INLET EA	ABANDON MANHOLE EA	CAP INLET EA	CAP MH EA	450 mm STEEL FES EA	(N) STEEL PLATE CLOSURE EA	(N) TYPE 450-9 FRAME AND GRATE EA	(N) TYPE 600-12 FRAME AND GRATE EA	MAXIMUM COVER m	DESCRIPTION	STATION	DRAINAGE SYSTEM No. ⬡	DRAINAGE UNIT No. ○
D-13	49	a	2.47	3.28	148																			1		TYPE G2 INLET	25.34 m Lt 465+05.219 ℄ Rte 5	49	a
		b							8.9																2.5	600 mm RCP			b
		c	1.91	2.73	148																			1		TYPE G2 INLET	25.22 m Lt 465+15.000 ℄ Rte 5		c
		d							9.8																1.9	600 mm RCP			d
		e	1.63	2.03	148																			1		TYPE G2 INLET	25.34 m Lt 465+25.628 ℄ Rte 5		e
		f							2.5																1.6	600 mm RCP			f
D-13	49A	a		0.04																						0.10 m x 0.40 m x 1.00 m CONCRETE PAD	40.4 m Rt 465+68.880 ℄ Rte 5	49A	a
D-13	50	a													1											REMOVE INLET		50	a
		b												2.5												REMOVE PIPE			b
		c													1											REMOVE INLET			c
		d												2.5												REMOVE PIPE			d
		e													1											REMOVE INLET			e
		f							7.3																1.4	600 mm RCP			f
		g	1.31	1.72	148																			1		TYPE G2 INLET	26.55 m Rt 467+55.000 ℄ Rte 5		g
		h							4.1																1.4	600 mm RCP			h
		i	1.37	1.78	148																			1		TYPE G2 INLET	26.44 m Rt 467+60.000 ℄ Rte 5		i
		j							4.1																1.4	600 mm RCP			j
		k	1.28	1.69	148																			1		TYPE G2 INLET	26.34 m Rt 467+65.000 ℄ Rte 5		k
SHEET TOTAL				13.27	888				36.7					5.0	3									6					

DRAINAGE QUANTITIES DQ-18

STATE OF CALIFORNIA - DEPARTMENT OF TRANSPORTATION
Caltrans HYDRAULICS

FUNCTIONAL SUPERVISOR: DAVE BHALLA

CALCULATED-DESIGNED BY: C.P.NGUYEN
CHECKED BY: S.THAI

REVISED BY / DATE REVISED

LAST REVISION 00-00-00 DATE PLOTTED => 12-JUN-2009 TIME PLOTTED => 08:53

Dist	COUNTY	ROUTE	KILOMETER POST TOTAL PROJECT	SHEET No.	TOTAL SHEETS
07	LA	5	42.8/47.3	194	1073

REGISTERED CIVIL ENGINEER 12-17-08 DATE

6-8-09
PLANS APPROVAL DATE

REGISTERED PROFESSIONAL ENGINEER BALDEV K. BHALLA No. 34350 Exp. 9/30/09 CIVIL STATE OF CALIFORNIA

THE STATE OF CALIFORNIA OR ITS OFFICERS OR AGENTS SHALL NOT BE RESPONSIBLE FOR THE ACCURACY OR COMPLETENESS OF ELECTRONIC COPIES OF THIS PLAN SHEET.

Caltrans Metric

(N) NOT A SEPARATE PAY ITEM, FOR INFORMATION ONLY.

DRAINAGE SHEET No.	DRAINAGE SYSTEM No. ⬡	DRAINAGE UNIT No. ○	H OR V (m)	MINOR CONCRETE (MINOR STRUCTURE) (m^3)	MISCELLANEOUS IRON AND STEEL (kg)	MINOR CONCRETE (BACKFILL) (m^3)	CLASS 1 CONCRETE (BOX CULVERT) (m^3)	450 mm REINFORCED CONCRETE PIPE (m)	600 mm REINFORCED CONCRETE PIPE (m)	450 mm SLOTTED CORRUGATED STEEL PIPE (m)	SAND BACKFILL (m^3)	300 mm PLASTIC PIPE (m)	ABANDON PIPELINE (EA)	REMOVE PIPE (m)	REMOVE INLET (EA)	REMOVE FES (EA)	ADJUST INLET (EA)	ABANDON MANHOLE (EA)	CAP INLET (EA)	CAP MH (EA)	450 mm STEEL FES (EA)	(N) STEEL PLATE CLOSURE (EA)	(N) TYPE 450-9 FRAME AND GRATE (EA)	(N) TYPE 600-12 FRAME AND GRATE (EA)	MAXIMUM COVER (m)	DESCRIPTION	STATION	DRAINAGE SYSTEM No. ⬡	DRAINAGE UNIT No. ○
D-13	51	a													3											REMOVE INLET		51	a
		b												4.9												REMOVE PIPE			b
		c	1.37	1.37	296																			2		GD-3 INLET	1.20 m Rt 467+37.200 ℄ Rte 5		c
		d							6.3																1.4	600 mm RCP			d
		e	1.42	1.40	296																			2		GD-3 INLET	1.20 m Rt 467+30.000 ℄ Rte 5		e
		f													1											REMOVE INLET			f
		g												28.0												REMOVE PIPE			g
		h													1											REMOVE INLET			h
		i												2.5												REMOVE PIPE			i
		j													1											REMOVE INLET			j
		k												2.5												REMOVE PIPE			k
		L													1											REMOVE INLET			L
		m												11.8												REMOVE PIPE			m
		n							4.2																1.5	600 mm RCP			n
		o	1.53	1.93	148																			1		TYPE G2 INLET	21.40 m Lt 467+05.737 ℄ Rte 5		o
		p							18.8																1.5	600 mm RCP			p
		q	1.66	2.06	148																			1		TYPE G2 INLET	21.30 m Lt 466+86.000 ℄ Rte 5		q
		r							5.1																1.5	600 mm RCP			r
		s	1.71	1.61	263																			2		GD-1 INLET	21.30 m Lt 466+80.000 ℄ Rte 5		s
		t							5.1																1.8	600 mm RCP			t
		u	1.8	2.20	148																			1		TYPE G2 INLET	21.30 m Lt 466+74.000 ℄ Rte 5		u
SHEET TOTAL				10.57	1299				39.5					49.7	7									9					

DRAINAGE QUANTITIES DQ-19

STATE OF CALIFORNIA - DEPARTMENT OF TRANSPORTATION
Caltrans HYDRAULICS

FUNCTIONAL SUPERVISOR: DAVE BHALLA

CALCULATED-DESIGNED BY: C.P.NGUYEN
CHECKED BY: S.THAI

REVISED BY
DATE REVISED

LAST REVISION 00-00-00
DATE PLOTTED => 12-JUN-2009
TIME PLOTTED => 08:53

Dist	COUNTY	ROUTE	KILOMETER POST TOTAL PROJECT	SHEET No.	TOTAL SHEETS
07	LA	5	42.8/47.3	195	1073

REGISTERED CIVIL ENGINEER 12-17-08 DATE

6-8-09
PLANS APPROVAL DATE

REGISTERED PROFESSIONAL ENGINEER BALDEV K. BHALLA No. 34350 Exp. 9/30/09 CIVIL STATE OF CALIFORNIA

THE STATE OF CALIFORNIA OR ITS OFFICERS OR AGENTS SHALL NOT BE RESPONSIBLE FOR THE ACCURACY OR COMPLETENESS OF ELECTRONIC COPIES OF THIS PLAN SHEET.

Caltrans Metric

(N) NOT A SEPARATE PAY ITEM, FOR INFORMATION ONLY.

DRAINAGE SHEET No.	DRAINAGE SYSTEM No. ⬡	DRAINAGE UNIT No. ○	H OR V (m)	MINOR CONCRETE (MINOR STRUCTURE) (m^3)	MISCELLANEOUS IRON AND STEEL (kg)	MINOR CONCRETE (BACKFILL) (m^3)	CLASS 1 CONCRETE (BOX CULVERT) (m^3)	450 mm REINFORCED CONCRETE PIPE (m)	600 mm REINFORCED CONCRETE PIPE (m)	450 mm SLOTTED CORRUGATED STEEL PIPE (m)	SAND BACKFILL (m^3)	300 mm PLASTIC PIPE (m)	ABANDON PIPELINE (EA)	REMOVE PIPE (m)	REMOVE INLET (EA)	REMOVE FES (EA)	ADJUST INLET (EA)	ABANDON MANHOLE (EA)	CAP INLET (EA)	CAP MH (EA)	450 mm STEEL FES (EA)	(N) STEEL PLATE CLOSURE (EA)	(N) TYPE 450-9 FRAME AND GRATE (EA)	(N) TYPE 600-12 FRAME AND GRATE (EA)	MAXIMUM COVER (m)	DESCRIPTION	STATION	DRAINAGE SYSTEM No. ⬡	DRAINAGE UNIT No. ○
D-13	51	v							12.1																2.1	600 mm RCP		51	v
		w	2.09	2.49	148																			1		TYPE G2 INLET	21.30 m Lt 466+61.000 ℄ Rte 5		w
		x																	1							CAP INLET			x
D-13	52	a	0.45	0.9	226									6.7								1	2			CL1 INLET, CASE 2	467+90.000 ℄ Rte 5	52	a
		b	0.45	0.9	226																	1	2			CL1 INLET, CASE 2	468+50.000 ℄ Rte 5		b
D-13	53	a													1											REMOVE INLET		53	a
		b												44.5												REMOVE PIPE			b
		c													1											REMOVE INLET			c
		d												10.0												REMOVE PIPE			d
		e	1.49	1.81	148																			1		TYPE G2 INLET	32.10 m Lt 468+12.281 ℄ Rte 5		e
		f							11.8																1.8	600 mm RCP			f
		g	1.76	2.16	148																			1		TYPE G2 INLET	31.10 m Lt 468+25.000 ℄ Rte 5		g
		h							40.8																2.3	600 mm RCP			h
		i	2.33	3.14	148																			1		TYPE G2 INLET	27.80 m Lt 468+66.710 C Rte 5		i
		j							4.1																2.3	600 mm RCP			j
D-13	54	a	1.34	1.65	296																			2		TYPE GT3 INLET	25.55m Rt 467+90.230 C Rte 5	54	a
		b							1.3																1.6	600 mm RCP			b
		c		0.17																						JUNCTION STRUCTURE JS No. 3	25.55m Rt 467+92.470 C Rte 5		c
SHEET TOTAL				13.22	1340				70.1					61.2	2				1			2	4	6					

DRAINAGE QUANTITIES DQ-20

STATE OF CALIFORNIA - DEPARTMENT OF TRANSPORTATION
Caltrans HYDRAULICS

FUNCTIONAL SUPERVISOR: DAVE BHALLA
CALCULATED-DESIGNED BY: C.P.NGUYEN
CHECKED BY: S.THAI
REVISED BY / DATE REVISED

LAST REVISION 00-00-00 DATE PLOTTED => 12-JUN-2009 TIME PLOTTED => 08:53

Dist	COUNTY	ROUTE	KILOMETER POST TOTAL PROJECT	SHEET No.	TOTAL SHEETS
07	LA	5	42.8/47.3	196	1073

REGISTERED CIVIL ENGINEER 12-17-08 DATE

6-8-09
PLANS APPROVAL DATE

REGISTERED PROFESSIONAL ENGINEER BALDEV K. BHALLA No. 34350 Exp. 9/30/09 CIVIL STATE OF CALIFORNIA

THE STATE OF CALIFORNIA OR ITS OFFICERS OR AGENTS SHALL NOT BE RESPONSIBLE FOR THE ACCURACY OR COMPLETENESS OF ELECTRONIC COPIES OF THIS PLAN SHEET.

Caltrans Metric

(N) NOT A SEPARATE PAY ITEM, FOR INFORMATION ONLY.

DRAINAGE SHEET No.	DRAINAGE SYSTEM No. ⬡	DRAINAGE UNIT No. ○	H OR V (m)	MINOR CONCRETE (MINOR STRUCTURE) (m^3)	MISCELLANEOUS IRON AND STEEL (kg)	MINOR CONCRETE (BACKFILL) (m^3)	CLASS 1 CONCRETE (BOX CULVERT) (m^3)	450 mm REINFORCED CONCRETE PIPE (m)	600 mm REINFORCED CONCRETE PIPE (m)	450 mm SLOTTED CORRUGATED STEEL PIPE (m)	SAND BACKFILL (m^3)	300 mm PLASTIC PIPE (m)	ABANDON PIPELINE (EA)	REMOVE PIPE (m)	REMOVE INLET (EA)	REMOVE FES (EA)	ADJUST INLET (EA)	ABANDON MANHOLE (EA)	CAP INLET (EA)	CAP MH (EA)	450 mm STEEL FES (EA)	(N) STEEL PLATE CLOSURE (EA)	(N) TYPE 450-9 FRAME AND GRATE (EA)	(N) TYPE 600-12 FRAME AND GRATE (EA)	MAXIMUM COVER (m)	DESCRIPTION	STATION	DRAINAGE SYSTEM No. ⬡	DRAINAGE UNIT No. ○
D-14	55	a	0.45	0.90	226																	1	2			CL1 INLET, CASE 1	469+00.000 ℄ Rte 5	55	a
D-14	56	a	1.32	1.73	148																			1		TYPE G2 INLET	22.80 m Lt 469+90.000 ℄ Rte 5	56	a
		b							76.1																1.9	600 mm RCP			b
		c	4.92	5.29	148																			1		TYPE G2 INLET	24.28 m Lt 469+14.000 ℄ Rte 5		c
		d																	1							CAP INLET			d
		e															2					1				ADJUST INLETS TO GRADE			e
		f															2					1				ADJUST INLETS TO GRADE			f
		g													1											REMOVE INLET			g
		h							4.4																	600 mm RCP			h
		i	1.30	1.71	148																			1		TYPE G2 INLET	23.40 m Lt 469+34.000 ℄ Rte 5		i
D-14	57	a																	2							CAP INLET	18.30 m Lt 470+28.812 ℄ Rte 5 18.30 m Rt 470+34.041 ℄ Rte 5	57	a
		b						1.0																	1.4	450 mm RCP			b
		c	1.20	1.25	296																	1		2		GD-3 INLET	470+30.450 ℄ Rte 5		c
		d	2.12	2.94	148																			1		TYPE G2 INLET	23.40 m Lt 470+50.717 ℄ Rte 5		d
		e													1											REMOVE INLET			e
		f												2.5												REMOVE PIPE			f
		g													1											REMOVE INLET			g
		h												2.5												REMOVE PIPE			h
		i													1											REMOVE INLET			i
SHEET TOTAL				13.82	1114			1.0	80.5					5.0	4		4		3			4	2	6					

DRAINAGE QUANTITIES DQ-21

STATE OF CALIFORNIA - DEPARTMENT OF TRANSPORTATION
Caltrans HYDRAULICS

FUNCTIONAL SUPERVISOR: DAVE BHALLA

CALCULATED-DESIGNED BY: C.P.NGUYEN
CHECKED BY: S.THAI

REVISED BY
DATE REVISED

LAST REVISION 00-00-00
DATE PLOTTED => 12-JUN-2009
TIME PLOTTED => 08:53

(*) : FOR ADDITIONAL QUANTITIES OF DUPLICATE ITEMS, REFER TO WQ-4 SHEET

DRAINAGE SHEET No.	DRAINAGE SYSTEM No. (⬡)	DRAINAGE UNIT No. (○)	H OR V	MINOR CONCRETE (MINOR STRUCTURE) *	MISCELLANEOUS IRON AND STEEL *	MINOR CONCRETE (BACKFILL)	CLASS 1 CONCRETE (BOX CULVERT)	450 mm REINFORCED CONCRETE PIPE *	600 mm REINFORCED CONCRETE PIPE *	450 mm SLOTTED CORRUGATED STEEL PIPE	SAND BACKFILL *	300 mm PLASTIC PIPE	ABANDON PIPELINE *	REMOVE PIPE *	REMOVE INLET	REMOVE FES	ADJUST INLET	ABANDON MANHOLE	CAP INLET	CAP MH	450 mm STEEL FES	STEEL PLATE CLOSURE (N)	TYPE 450-9 FRAME AND GRATE (N)	TYPE 600-12 FRAME AND GRATE (N)	MAXIMUM COVER	DESCRIPTION	STATION	DRAINAGE SYSTEM No. (⬡)	DRAINAGE UNIT No. (○)
			m	m^3	kg	m^3	m^3	m	m	m	m^3	m	EA	m	EA	EA	EA	EA	EA	EA	EA	EA	EA	EA	m				
D-14	57	j							1.4																	600 mm RCP		57	j
		k	1.61	2.01	148																			1		TYPE G2 INLET	34.0 m Rt 470+66.529 ℄ Rte 5		k
		L							4.2																	600 mm RCP			L
		m	1.45	1.85	148																			1		TYPE G2 INLET	33.3 m Rt 470+71.614 ℄ Rte 5		m
		n							4.1																	600 mm RCP			n
		o	1.28	1.69	148																			1		TYPE G2 INLET	32.7 m Rt 470+76.639 ℄ Rte 5		o
D-14	58	a																	1							CAP INLET		58	a
		b																	1							CAP INLET			b
		c	1.41	1.81	148																			1		TYPE G2 INLET	0.31m Lt 471+66.000 ℄ Rte 5		c
		d																	1							CAP INLET			d
		e																	1							CAP INLET			e
		f	1.34	1.75	148																			1		TYPE G2 INLET	28.8 m Lt 471+54.000 ℄ Rte 5		f
		g							5.1																1.6	600 mm RCP			g
		h	1.58	1.52	263																			2		GD-1 INLET	28.7 m Lt 471+60.000 ℄ Rte 5		h
		i							15.0																3.5	600 mm RCP			i
		j	3.53	3.91	148																			1		TYPE G2 INLET	28.5 m Lt 471+75.853 ℄ Rte 5		j
D-15	59	a	0.45	0.63	113																1	1				CL2 INLET, CASE 2	472+05.000 C Rte 5	59	a
		b	0.45	0.68	113																1	1				CL2 INLET, CASE 1	472+70.000 C Rte 5		b
SHEET TOTAL				15.85	1377				29.8										4			2	2	8					
GRAND TOTAL				211.78	28641	88.2	5.66	695.0	628.0	180.9	32.65	223.8	7	794.9	70	1	8	1	30	1	1	52	64	139					

(N) NOT A SEPARATE PAY ITEM, FOR INFORMATION ONLY.

Caltrans Metric

Dist	COUNTY	ROUTE	KILOMETER POST TOTAL PROJECT	SHEET No.	TOTAL SHEETS
07	LA	5	42.8/47.3	197	1073

REGISTERED CIVIL ENGINEER 12-17-08 DATE

6-8-09
PLANS APPROVAL DATE

REGISTERED PROFESSIONAL ENGINEER BALDEV K. BHALLA No. 34350 Exp. 9/30/09 CIVIL STATE OF CALIFORNIA

THE STATE OF CALIFORNIA OR ITS OFFICERS OR AGENTS SHALL NOT BE RESPONSIBLE FOR THE ACCURACY OR COMPLETENESS OF ELECTRONIC COPIES OF THIS PLAN SHEET.

REVISED BY | DATE REVISED

C.P.NGUYEN | S.THAI

CALCULATED-DESIGNED BY | CHECKED BY

FUNCTIONAL SUPERVISOR: DAVE BHALLA

STATE OF CALIFORNIA - DEPARTMENT OF TRANSPORTATION
Caltrans
HYDRAULICS

DRAINAGE QUANTITIES DQ-22

LAST REVISION 00-00-00 | DATE PLOTTED => 23-JUN-2009 | TIME PLOTTED => 06:17

Dist	COUNTY	ROUTE	KILOMETER POST TOTAL PROJECT	SHEET No.	TOTAL SHEETS
07	LA	5	42.8/47.3	198	1073

B. U. Anakwenze 2-03-09
REGISTERED CIVIL ENGINEER DATE

6-8-09
PLANS APPROVAL DATE

REGISTERED PROFESSIONAL ENGINEER UGO ANAKWENZE No. C41703 Exp. 3/31/10 CIVIL STATE OF CALIFORNIA

THE STATE OF CALIFORNIA OR ITS OFFICERS OR AGENTS SHALL NOT BE RESPONSIBLE FOR THE ACCURACY OR COMPLETENESS OF ELECTRONIC COPIES OF THIS PLAN SHEET.

Caltrans Metric

NOTES:

1. LOCATIONS OF UTILITY FACILITIES SHOWN ON THESE PLANS ARE APPROXIMATE AND SHALL BE VERIFIED BY THE CONTRACTOR PRIOR TO CONSTRUCTION
2. UTILITY OWNERSHIP ON THIS PROJECT:

   GAS -SOUTHERN CALIFORNIA GAS (SO CAL GAS)

   WATER -DEPARTMENT OF WATER & POWER (DWP)
   -LOS ANGELES DEPARTMENT OF WATER & POWER (LADWP)
   -LOS ANGELES FLOOD CONTROL DISTRICT (LAFCD)
   -LOS ANGELES WATER & POWER (LAWP)
   -LOS ANGELES BUREAU OF WATER & SUPPLY (LAW&P)
   -METROPOLITAN WATER DISTRICT (MWD)

   ELECTRIC -PACIFIC LIGHT CORPORATION (PAC LT CORP)
   -BURBANK POWER

   TELEPHONE -AMERICAN TELEPHONE AND TELEGRAPH, Inc. (AT&T)

   PETROLEUM -PACIFIC PIPELINE OIL

   FIBER OPTICS -AT&T, MCI, SPRINT, QWEST

   SEWER -BURBANK SEWER (BRB)

   CABLE -TIME WARNER CABLE

ABBREVIATIONS:

Abnd - ABANDONED
BU - BURIED
CA - CABLE
CB - CATCH BASIN
CCP - CORRUGATED CONCRETE PIPE
CHC - CALIFORNIA HIGHWAY COMMISSION
CL - CEMENT LINED
CONC CYL - CONCRETE CYLINDER
COP - COPPER
CP - CONCRETE PIPE
CP Swr - CONCRETE PIPE SEWER
CSG - CASING
DP - DIAMETER OF PIPE
DU - DUCTS
EE - EAST OF EAST
EW - EAST OF WEST
FC - FIBER CONDUIT
G - GATE
GEN PET - GENERAL PETROLEUM
GIP - GALVANIZED IRON PIPE
GLND MUNI - GLENDALE MUNICIPAL
HP - HIGH PRESSURE GAS/HIGH RISK
LAC - LOS ANGELES CITY
MTD - MULTIPLE TILE DUCT
MTR - METER
MUNI - MUNICIPAL
RCC - REINFORCED CONCRETE CEMENT
RSP - RIVETED STEEL PIPE
SAN Swr - SANITARY SEWER
SE - SOUTH EAST
SN - SOUTH OF NORTH
SS - STANDARD SCREW
STL - STEEL
TRK - TRUCK
WE - WEST OF EAST
WI - WIRE
WTR - WATER

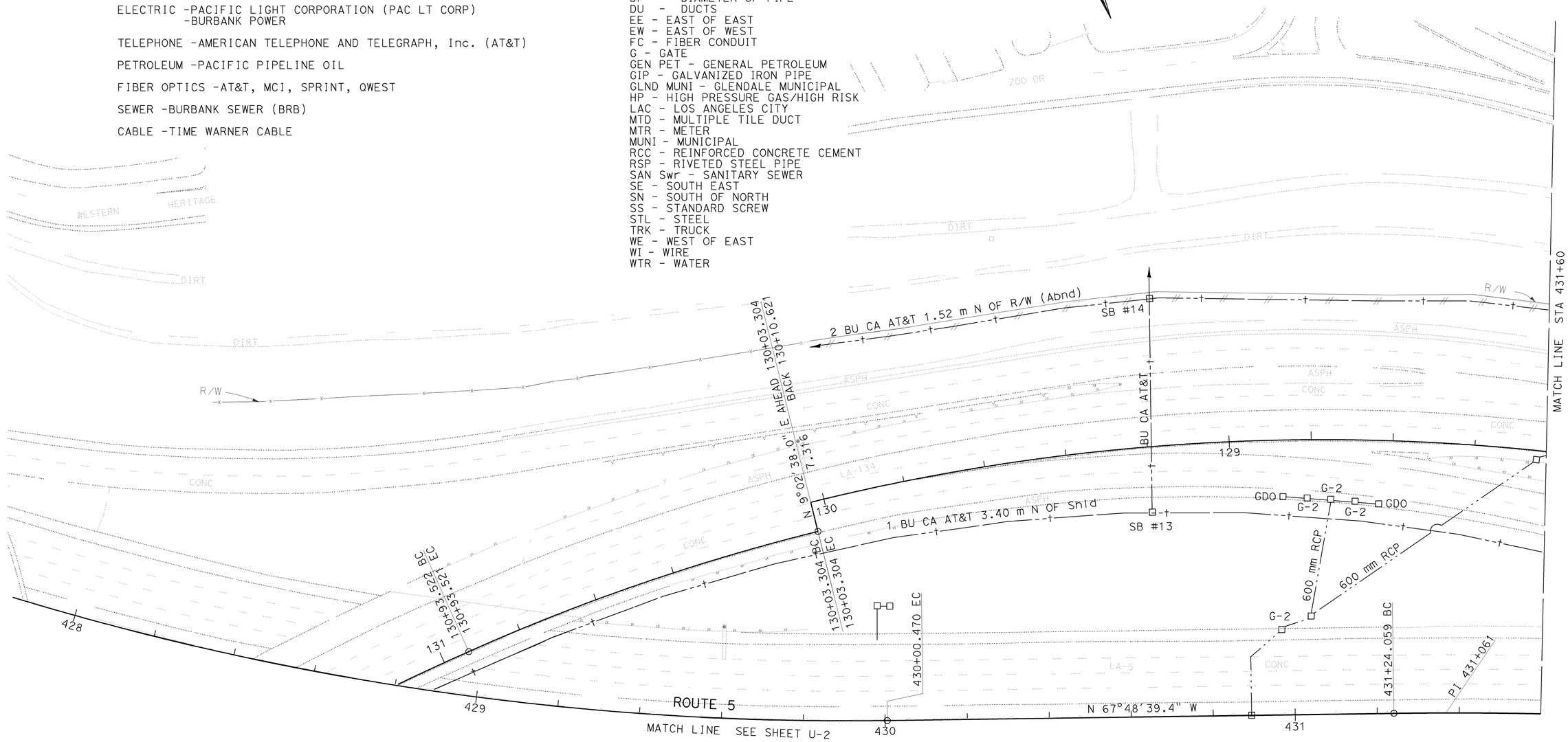

ALL DIMENSIONS ARE IN METERS
UNLESS OTHERWISE SHOWN

UTILITY PLAN
SCALE 1:500

THIS PLAN ACCURATE FOR EXISTING UTILITIES ONLY.

U-1

STATE OF CALIFORNIA - DEPARTMENT OF TRANSPORTATION
Caltrans ENGINEERING SERVICES

FUNCTIONAL SUPERVISOR: UGO ANAKWENZE
CALCULATED-DESIGNED BY: EZEDIN MUSELLEM
CHECKED BY: DAWIT WORKU
REVISED BY / DATE REVISED

LAST REVISION 12-26-07
DATE PLOTTED => 15-JUN-2009
TIME PLOTTED => 10:56

Dist	COUNTY	ROUTE	KILOMETER POST TOTAL PROJECT	SHEET No.	TOTAL SHEETS
07	LA	5	42.8/47.3	199	1073

B. U. Anakwenze 2-03-09
REGISTERED CIVIL ENGINEER DATE

6-8-09
PLANS APPROVAL DATE

REGISTERED PROFESSIONAL ENGINEER UGO ANAKWENZE No. C41703 Exp. 3/31/10 CIVIL STATE OF CALIFORNIA

THE STATE OF CALIFORNIA OR ITS OFFICERS OR AGENTS SHALL NOT BE RESPONSIBLE FOR THE ACCURACY OR COMPLETENESS OF ELECTRONIC COPIES OF THIS PLAN SHEET.

Caltrans Metric

NOTE:

LOCATIONS OF UTILITY FACILITIES SHOWN ON THESE PLANS ARE APPROXIMATE AND SHALL BE VERIFIED BY THE CONTRACTOR PRIOR TO CONSTRUCTION.

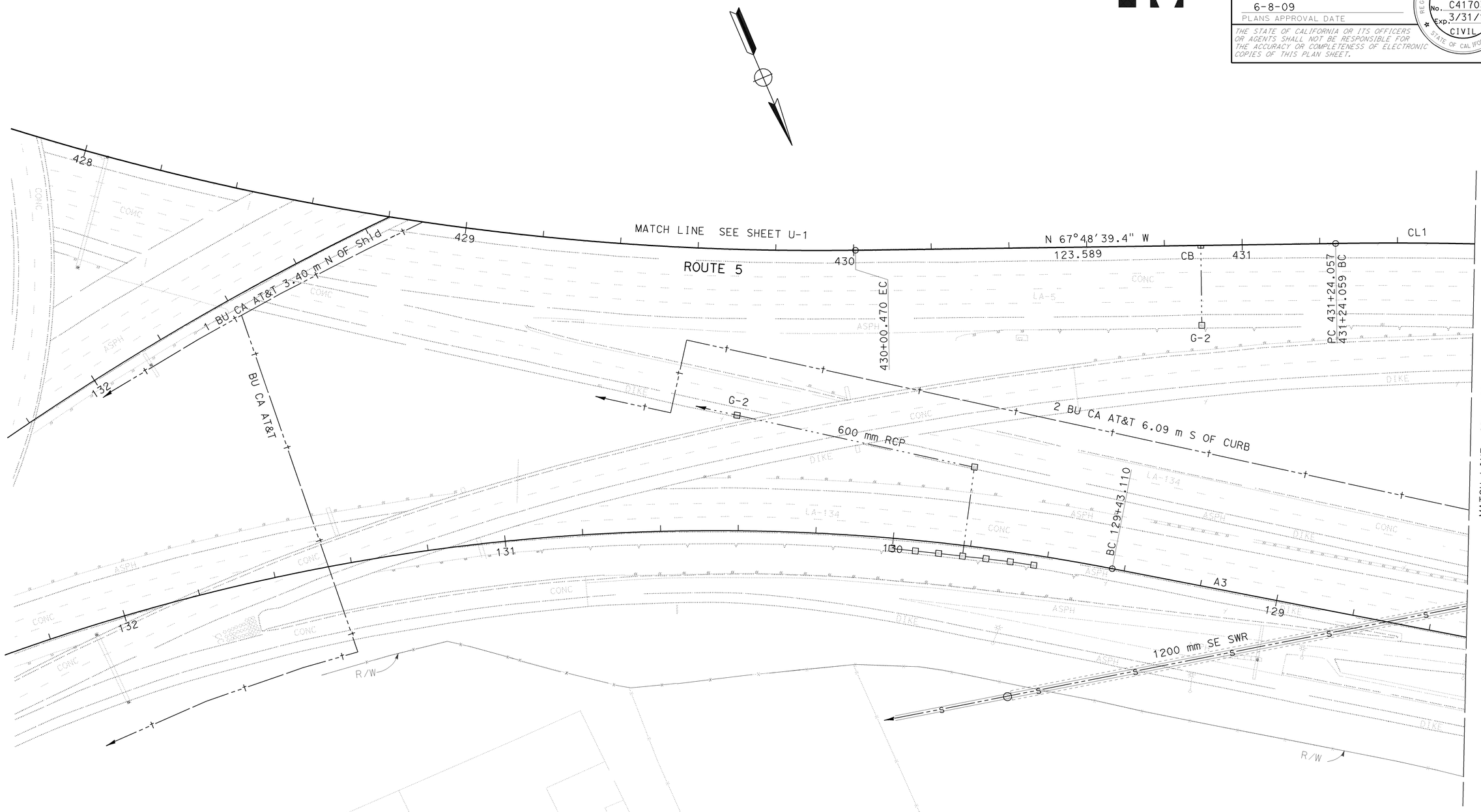

ALL DIMENSIONS ARE IN METERS
UNLESS OTHERWISE SHOWN

UTILITY PLAN

SCALE 1:500

THIS PLAN ACCURATE FOR EXISTING UTILITIES ONLY.

U-2

STATE OF CALIFORNIA - DEPARTMENT OF TRANSPORTATION
Caltrans ENGINEERING SERVICES

FUNCTIONAL SUPERVISOR: UGO ANAKWENZE
CALCULATED-DESIGNED BY: EZEDIN MUSELLEM
CHECKED BY: DAWIT WORKU
REVISED BY
DATE REVISED

LAST REVISION 12-26-07
DATE PLOTTED => 12-JUN-2009
TIME PLOTTED => 08:53

Dist	COUNTY	ROUTE	KILOMETER POST TOTAL PROJECT	SHEET No.	TOTAL SHEETS
07	LA	5	42.8/47.3	200	1073

B. U. Anakwenze 2-03-09
REGISTERED CIVIL ENGINEER DATE

6-8-09
PLANS APPROVAL DATE

REGISTERED PROFESSIONAL ENGINEER UGO ANAKWENZE No. C41703 Exp. 3/31/10 CIVIL STATE OF CALIFORNIA

THE STATE OF CALIFORNIA OR ITS OFFICERS OR AGENTS SHALL NOT BE RESPONSIBLE FOR THE ACCURACY OR COMPLETENESS OF ELECTRONIC COPIES OF THIS PLAN SHEET.

Caltrans Metric

NOTE:

LOCATIONS OF UTILITY FACILITIES SHOWN ON THESE PLANS ARE APPROXIMATE AND SHALL BE VERIFIED BY THE CONTRACTOR PRIOR TO CONSTRUCTION.

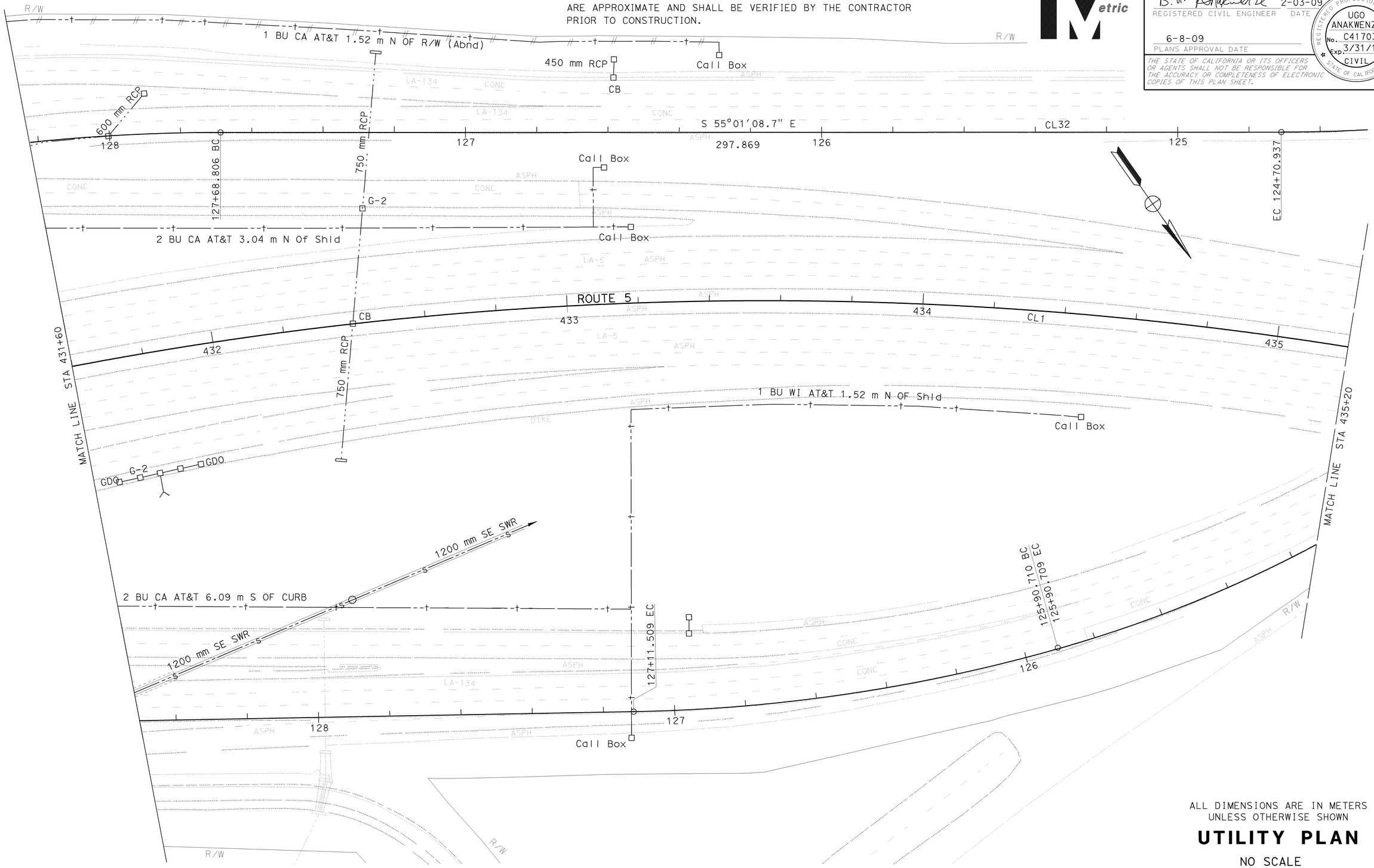

ALL DIMENSIONS ARE IN METERS UNLESS OTHERWISE SHOWN

UTILITY PLAN

NO SCALE

U-3

THIS PLAN ACCURATE FOR EXISTING UTILITIES ONLY.

STATE OF CALIFORNIA - DEPARTMENT OF TRANSPORTATION
Caltrans ENGINEERING SERVICES

FUNCTIONAL SUPERVISOR: UGO ANAKWENZE
CALCULATED-DESIGNED BY: EZEDIN MUSELLEM
CHECKED BY: DAWIT WORKU
REVISED BY / DATE REVISED

LAST REVISION 12-26-07
DATE PLOTTED => 12-JUN-2009
TIME PLOTTED => 08:53