NOTE:
1. For "SECTION A-A", "SECTION B-B", "DETAIL C" and "DETAIL D" see "ARCHITECTURAL DETAILS NO. 2" sheet.

DIST	COUNTY	ROUTE	POST MILES TOTAL PROJECT	SHEET No.	TOTAL SHEETS
07	LA	10	37.2/42.4	2101	2313

REGISTERED CIVIL ENGINEER 10-1-14 DATE

6-1-15
PLANS APPROVAL DATE

REGISTERED PROFESSIONAL ENGINEER
Gabriel J. Galo
No. 52288
Exp. 12-31-14
CIVIL
STATE OF CALIFORNIA

The State of California or its officers or agents shall not be responsible for the accuracy or completeness of scanned copies of this plan sheet.

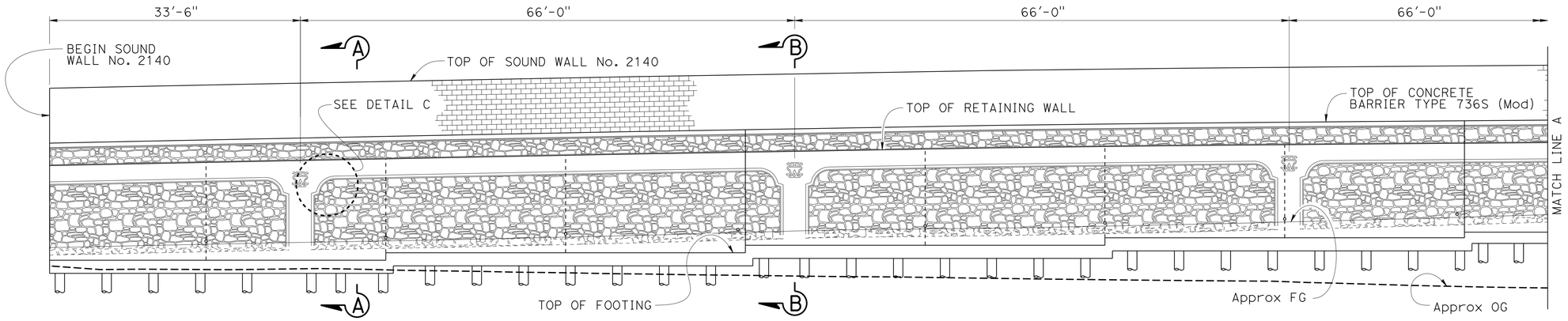

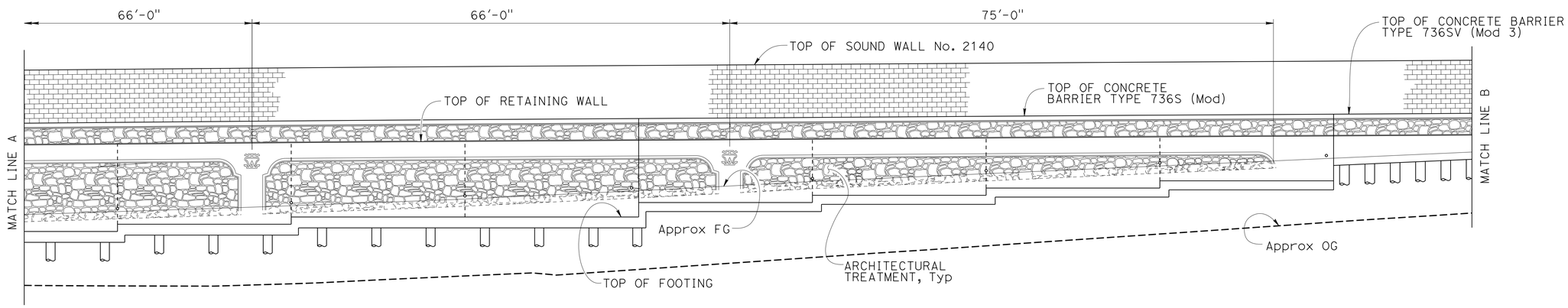

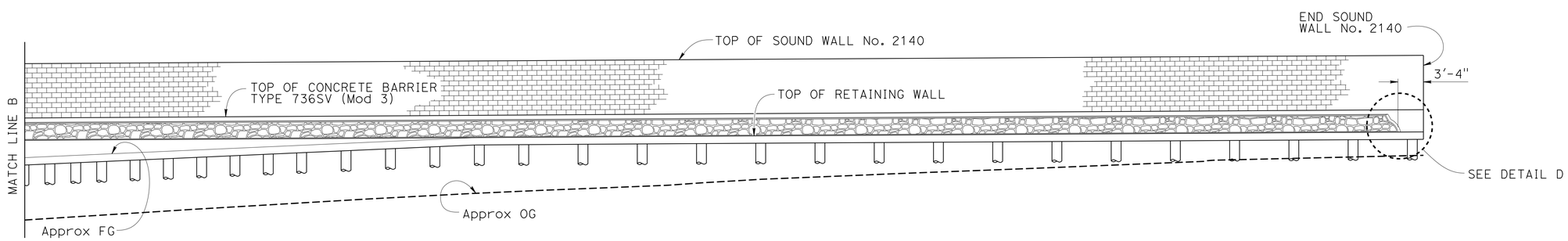

DEVELOPED MIRRORED ELEVATION

1/8" = 1'-0"

	BY	CHECKED
DESIGN	V. Moore	Gabriel Galo
DETAILS	Herman Mauroschadt	Gabriel Galo
QUANTITIES	C. Chan/T. Ha	Gabriel Galo

STATE OF CALIFORNIA
DEPARTMENT OF TRANSPORTATION

DIVISION OF ENGINEERING SERVICES
STRUCTURE DESIGN
DESIGN BRANCH 15

BRIDGE NO. 53E0312
POST MILE 40.48

RETAINING WALL NO. 2140
ARCHITECTURAL DETAILS NO. 1

STRUCTURES DESIGN DETAIL SHEET (ENGLISH) (REV. 09-01-10)

ORIGINAL SCALE IN INCHES FOR REDUCED PLANS 0 1 2 3

UNIT: 3604
PROJECT NUMBER & PHASE: 0713000007
CONTRACT NO.: 07-1193U1

DISREGARD PRINTS BEARING EARLIER REVISION DATES

REVISION DATES 1-9-14 5-23-14

SHEET 8 OF 18

FILE => 53e0312-h-archdet01.dgn

USERNAME => s125624 DATE PLOTTED => 18-MAY-2015 TIME PLOTTED => 16:26

DIST	COUNTY	ROUTE	POST MILES TOTAL PROJECT	SHEET No.	TOTAL SHEETS
07	LA	10	37.2/42.4	2102	2313

REGISTERED CIVIL ENGINEER 10-1-14 DATE

6-1-15
PLANS APPROVAL DATE

REGISTERED PROFESSIONAL ENGINEER Gabriel J. Galo No. 52288 Exp. 12-31-14 CIVIL STATE OF CALIFORNIA

The State of California or its officers or agents shall not be responsible for the accuracy or completeness of scanned copies of this plan sheet.

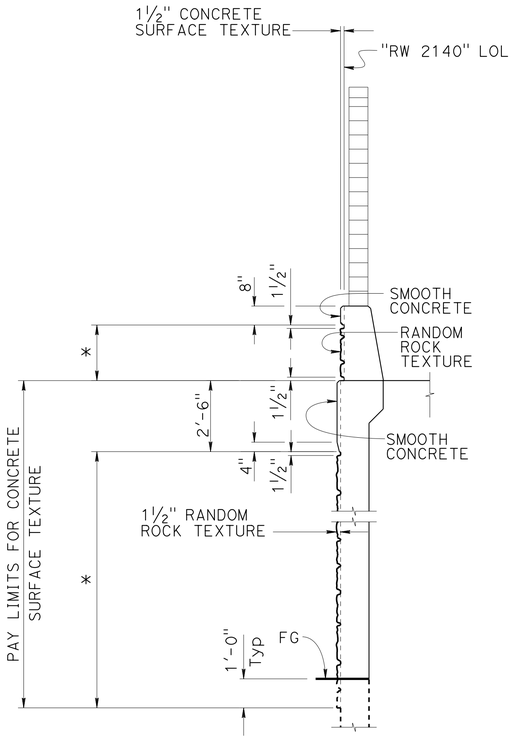

SECTION A-A
NO SCALE

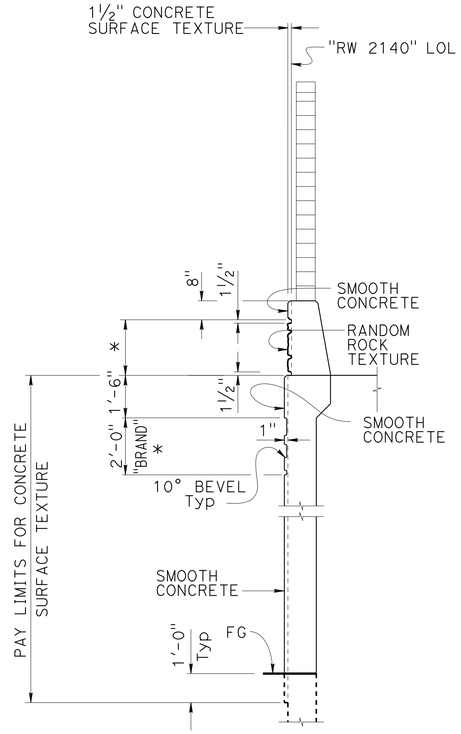

SECTION B-B
NO SCALE

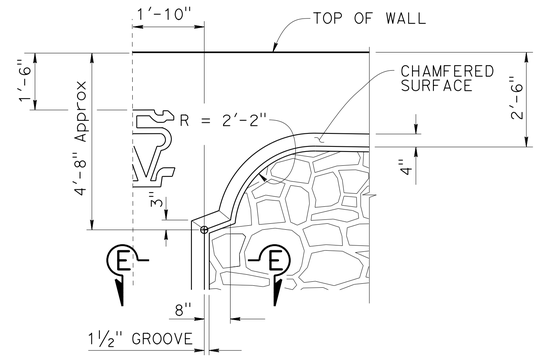

DETAIL C
NO SCALE

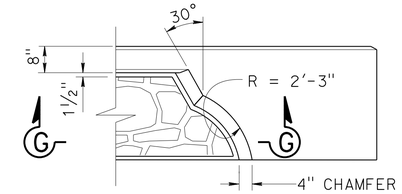

DETAIL D
NO SCALE

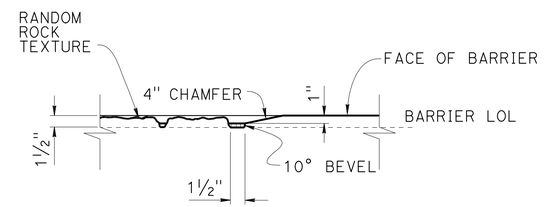

SECTION G-G
NO SCALE

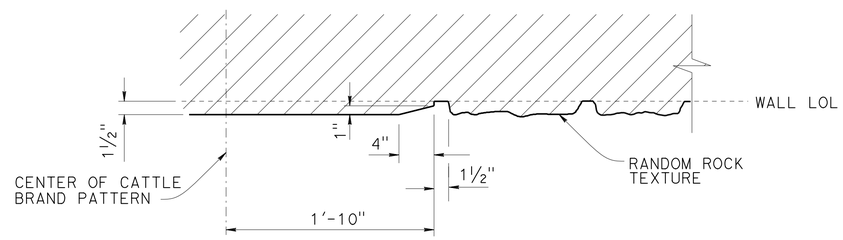

SECTION E-E
NO SCALE

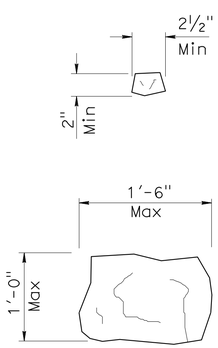

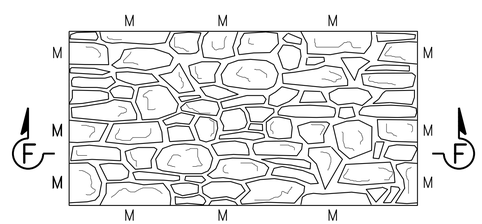

RANDOM ROCK TEXTURE
NO SCALE

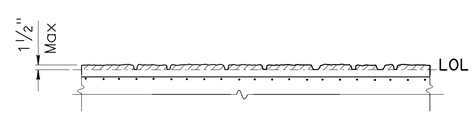

SECTION F-F
NO SCALE

NOTE:
Seamless random rock pattern to have a minimum of 2 to maximum of 4 match points for each matchline, top, bottom, and side to side.

Finish stain random rock texture with Federal Standard #'s 33578, 30372, 30257, 30117 and 30099

LEGEND:

* Indicates Pay Limits for Prepare and Stain Concrete.

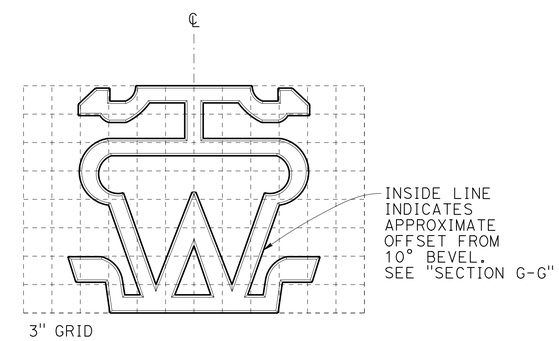

ARCHITECTURAL SURFACE TREATMENT (CATTLE BRAND PATTERN)
NO SCALE

NOTE:
1. Stain Federal color 30117

NOTE:
THE CONTRACTOR SHALL VERIFY ALL CONTROLLING FIELD DIMENSIONS BEFORE ORDERING OR FABRICATING ANY MATERIAL.

	BY	CHECKED
DESIGN	V. Moore	Gabriel Galo
DETAILS	Herman Mauroschadt	Gabriel Galo
QUANTITIES	C. Chan/T. Ha	Gabriel Galo

STATE OF CALIFORNIA
DEPARTMENT OF TRANSPORTATION

DIVISION OF ENGINEERING SERVICES
STRUCTURE DESIGN
DESIGN BRANCH 15

BRIDGE NO. 53E0312
POST MILE 40.48

RETAINING WALL NO. 2140
ARCHITECTURAL DETAILS NO. 2

STRUCTURES DESIGN DETAIL SHEET (ENGLISH) (REV. 09-01-10)

ORIGINAL SCALE IN INCHES FOR REDUCED PLANS 0 1 2 3

UNIT: 3604
PROJECT NUMBER & PHASE: 0713000007
CONTRACT NO.: 07-1193U1

DISREGARD PRINTS BEARING EARLIER REVISION DATES

REVISION DATES 1-16-14 2-27-14 5-23-14

SHEET 9 OF 18

FILE => 53e0312-h-archdet02.dgn

USERNAME => s125624 DATE PLOTTED => 18-MAY-2015 TIME PLOTTED => 16:26

DIST	COUNTY	ROUTE	POST MILES TOTAL PROJECT	SHEET No.	TOTAL SHEETS
07	LA	10	37.2/42.4	2103	2313

REGISTERED CIVIL ENGINEER 10-1-14 DATE

6-1-15
PLANS APPROVAL DATE

REGISTERED PROFESSIONAL ENGINEER Gabriel J. Galo No. 52288 Exp. 12-31-14 CIVIL STATE OF CALIFORNIA

The State of California or its officers or agents shall not be responsible for the accuracy or completeness of electronic copies of this plan sheet.

TABLE 1: TABLE OF REINFORCING STEEL DIMENSIONS AND DATA

DESIGN H	6′	8′	10′	12′	14′	16′	18′	20′	22′	24′	26′	28′	30′	32′
W	8′- 3"	8′- 6"	9′- 0"	9′- 6"	10′- 0"	10′- 9"	11′- 3"	12′- 0"	13′- 3"	14′- 3"	15′- 9"	16′- 9"	18′- 0"	19′- 9"
C	2′- 9"	2′- 9"	3′- 0"	3′- 3"	3′- 4"	3′- 6"	3′- 9"	4′- 0"	4′- 3"	4′- 9"	5′- 3"	5′- 6"	5′- 9"	6′- 7"
B	5′- 6"	5′- 9"	6′- 0"	6′- 3"	6′- 8"	7′- 3"	7′- 6"	8′- 0"	9′- 0"	9′- 6"	10′- 6"	11′- 3"	12′- 3"	13′- 2"
F PILE FOOTING	1′- 6"	1′- 6"	1′- 6"	1′- 6"	1′- 9"	2′- 0"	2′- 0"	2′- 6"	2′- 9"	2′- 9"	3′- 0"	3′- 3"	3′- 9"	4′- 0"
M	1′- 3"	1′- 6"	1′- 6"	1′- 9"	1′- 10"	2′- 0"	2′- 3"	2′- 6"	2′- 9"	3′- 3"	3′- 9"	4′- 0"	4′- 3"	5′- 1"
N	4′- 0"	4′- 3"	4′- 6"	4′- 9"	5′- 2"	5′- 9"	6′- 0"	6′- 6"	7′- 6"	8′-0"	9′-0"	9′- 9"	10′- 9"	11′- 8"
ROW 1 SPACING	12′- 3"	10′- 3"	8′- 9"	7′- 6"	6′- 3"	5′- 3"	4′- 9"	4′- 0"	3′- 9"	3′- 9"	4′-0"	3′- 9"	3′- 9"	3′- 9"
ROW 2 SPACING	14′- 0"	12′- 9"	11′- 6"	10′- 3"	9′- 3"	8′- 3"	7′- 9"	6′- 6"	7′- 6"	6′- 0"	4′- 0"	4′- 0"	3′- 9"	3′-9"
ROW 3 SPACING									6′- 0"	5′- 3"	5′-0"	4′- 0"	6′- 0"	4′- 0"
ROW 4 SPACING													3′- 9"	3′-9"
STEM WITH HAUNCH, BATTER	0	½:12	½:12	½:12	½:12	½:12	½:12	½:12	½:12	⅝:12	¾:12	⅞:12	1:12	1:12
STEM WITHOUT HAUNCH, BATTER	0	0	0	0	0	0	0	0	¼:12	¼:12	½:12	¾:12	¾:12	¾:12
ⓐ BARS						#7 @ 15	#7 @ 12	#7 @ 12	#8 @ 12	#6 @ 6	#6 @ 6	#6 @ 6	#8 @ 9	#9 @ 9
ⓑ BARS	#8 @ 12	#7 @ 9	#7 @ 6	#7 @ 6	#7 @ 6	#9 @ 7.5	#9 @ 6	#10 @ 6	#10 @ 6	#8 @ 6ϋ	#8 @ 6ϋ	#8 @ 6ϋ	#10 @ 9ϋ	#11 @ 9ϋ
ha			5′- 0"	6′- 0"	7′- 0"	7′ - 0"	6′- 0"	7′- 0"	7′- 0"	7′- 6"	8′- 6"	9′- 3"	15′- 0"	11′- 3"
hb						11′ - 6"	12′- 0"	13′- 3"	16′- 0"	15′- 6"	17′- 6"	18′- 9"	21′- 0"	20′- 9"
ⓒ BARS	#6 @ 12	#6 @ 9	#6 @ 6	#6 @ 6	#6 @ 6	#8 @ 7.5	#8 @ 6	#9 @ 6	#9 @ 6	#10 @ 6	#10 @ 6	#11 @ 6	#10 @ 9ϋ	#10 @ 9ϋ
ⓓ BARS	#5 @ 12	#5 @ 9	#5 @ 12	#5 @ 12	#5 @ 12	#6 @ 15	#5 @ 12	#5 @ 12	#6 @ 12	#6 @ 12	#6 @ 12	#7 @ 12	#6 @ 9	#9 @ 9
ⓔ BARS	10-#7 @ 6	8-#7 @ 7	10-#6 @ 6	8-#6 @ 6	6-#6 @ 12	6-#5 @ 12	6-#5 @ 12	6-#5 @ 15	#5 @ 18	#5 @ 18	#5 @ 18	#5 @ 18	#5 @ 18	#5 @ 18
ⓕ BARS	10-#8 @ 7	10-#8 @ 6	10-#7 @ 8	12-#6 @ 7	8-#7 @ 11	7-#6 @ 13	8-#6 @ 12	8-#5 @ 15	#5 @ 18	#5 @ 18	#5 @ 18	#5 @ 18	#5 @ 18	#5 @ 18

NOTES:

1. All piles are class 90 concrete piles.
2. Pile batter shown are 1:3.
3. ① The distance from the side of any pile to the nearest edge of the pile cap shall not be less than 9 inches or half the pile diameter.
4. Lateral resistance of each pile:
   30 kip for strength limit states.
   40 kip for extreme limit states.
5. Maximum spacing between piles is shown in the table. Reduce to suit the length of footing.
6. ① Minimum distance between center to center pile spacing should not be less than 3′-0".
7. ① For sound wall and retaining wall architectural treatment, see details elsewhere in Project Plans.
8. For details not shown and drainage notes, see RSP B3-5
9. ① Footing cover, 2′-0" minimum.
10. For sound wall and Barrier reinforcements see "SOUND WALL - MASONRY BLOCK WITH BARRIER ON RETAINING WALL" sheets.
11. For H=6′ through 14′, extend ⓑ bars into Barrier for stem with haunch.
12. For H≥16′, extend ⓐ bars into Barrier for stem with haunch.

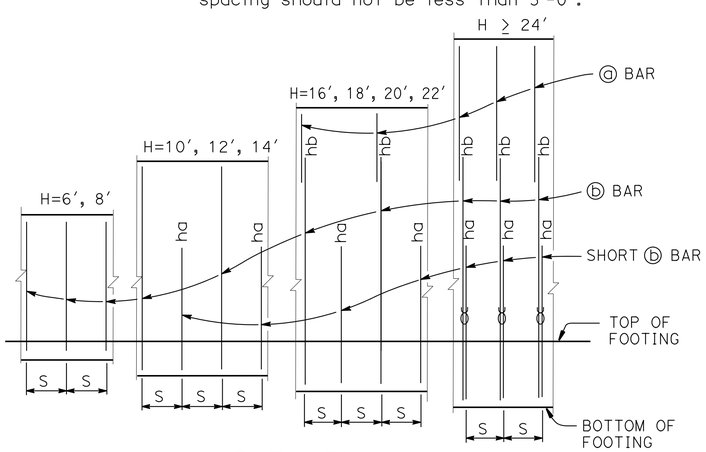

ELEVATION
No Scale

NOTE:
"ha" and "hb" above ⓑ bars indicate distance from top of footing to upper end of ⓑ bars, see table.
"S" is ⓑ bar spacing, see table.
ϋ : 2 bar bundle

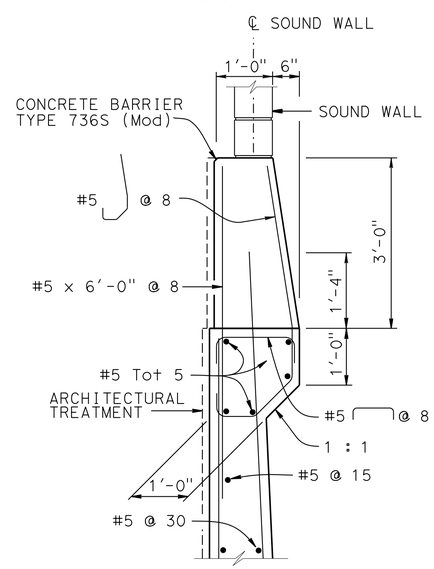

② DETAIL A
¾ = 1′-0"

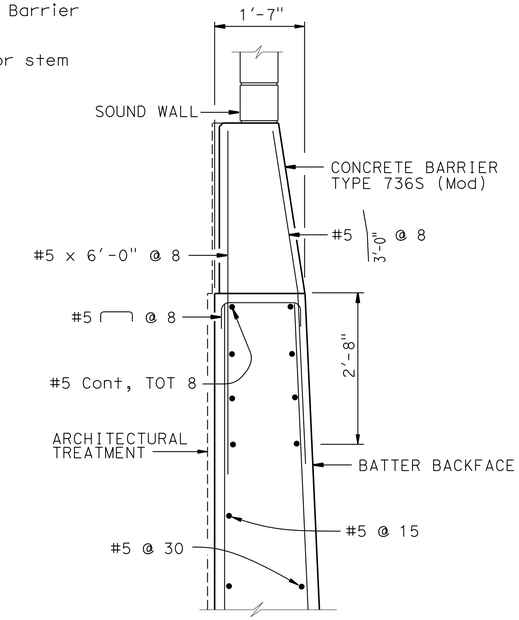

② OPTIONAL DETAIL A
¾ = 1′-0"

For Details not shown, see "DETAIL A"

NOTE:
Total ⓔ bars and ⓕ bars shown are total number of top and bottom bars combined.

LEGEND:
ϋ : 2 bar bundle

DESIGN DATA

Design: AASHTO LRFD Bridge Design Specifications 4th edition with California Amendments

WS: 33 psf on Sound Wall and Barrier

LS: Varied surcharge on level ground surface

CT: 54 kip maximum traffic impact loading evenly distributed over 10 feet at top of the barrier and 1:1 distribution down and outward

EQE: Mononabe-Okabe Method
K_h = 0.3
K_v = 0.0

Soil: Ø = 34°
γ = 120 pcf

Reinforced Concrete: f′c = 3600 psi
fy = 60,000 psi

Load Combinations and Limit States

Service I	Q=1.00DC+1.00EV+1.00EH+1.00LS+0.30WS
Service II	Q=1.00DC+1.00EV+1.00EH+1.00WS
Strength I	Q=αDC+βEV+1.50EH+1.75LS Q=1.25DC + 1.35EV + 0.90EH +1.75LS (for piles at heel)
Strength III	Q=αDC+βEV+1.50EH+1.40WS
Strength V	Q=αDC+βEV+1.50EH+1.35LS+0.40WS
Extreme I	Q=1.00DC+1.00EV+1.00EH+1.00EQD+1.00EQE
Extreme II	Q=1.00DC+1.00EV+1.00EH+1.00CT

Where:

Q: Force Effects
α: 1.25 or 0.90, Which ever Controls Design
β: 1.35 or 1.00, which ever Controls Design
DC: Dead Load of Structure Components
EV: Vertical Earth Fill Pressure
LS: Live Load Surcharge
EQE: Seismic Earth Pressure
EQD: Soil and Structure Components Inertia. Soil inertia ignored for stem design
WS: Wind Load on Sound Wall and Barrier
CT: Vehicular Collision Force

SPECIAL DETAILS

REVISED STANDARD DRAWING
FILE NO. xs14-320-1
APPROVAL DATE July 2011

① Modified Note
② Modified Detail

STATE OF CALIFORNIA
DEPARTMENT OF TRANSPORTATION

DIVISION OF ENGINEERING SERVICES

BRIDGE NO. 53E0312
POST MILE 40.48

RETAINING WALL NO. 2140

RETAINING WALL TYPE 1SWBP-DETAILS NO. 1

DS OSD 2147A (ENGLISH STANDARD DRAWING "XS" BORDER REV. (02-02-11)

ORIGINAL SCALE IN INCHES FOR REDUCED PLANS 0 1 2 3

UNIT: 3604
PROJECT NUMBER & PHASE: 0713000007
CONTRACT NO.: 07-1193U1

DISREGARD PRINTS BEARING EARLIER REVISION DATES

REVISION DATES 10-11-13 5-23-14 2-2-14 2-23-14

SHEET 10 OF 18

FILE => 53e0312-xs14-320-1.dgn

USERNAME => s125824 DATE PLOTTED => 18-MAY-2015 TIME PLOTTED => 16:26

DIST	COUNTY	ROUTE	POST MILES TOTAL PROJECT	SHEET No.	TOTAL SHEETS
07	LA	10	37.2/42.4	2104	2313

REGISTERED CIVIL ENGINEER 10-1-14 DATE

6-1-15
PLANS APPROVAL DATE

REGISTERED PROFESSIONAL ENGINEER
Gabriel J. Galo
No. 52288
Exp. 12-31-14
CIVIL
STATE OF CALIFORNIA

The State of California or its officers or agents shall not be responsible for the accuracy or completeness of electronic copies of this plan sheet.

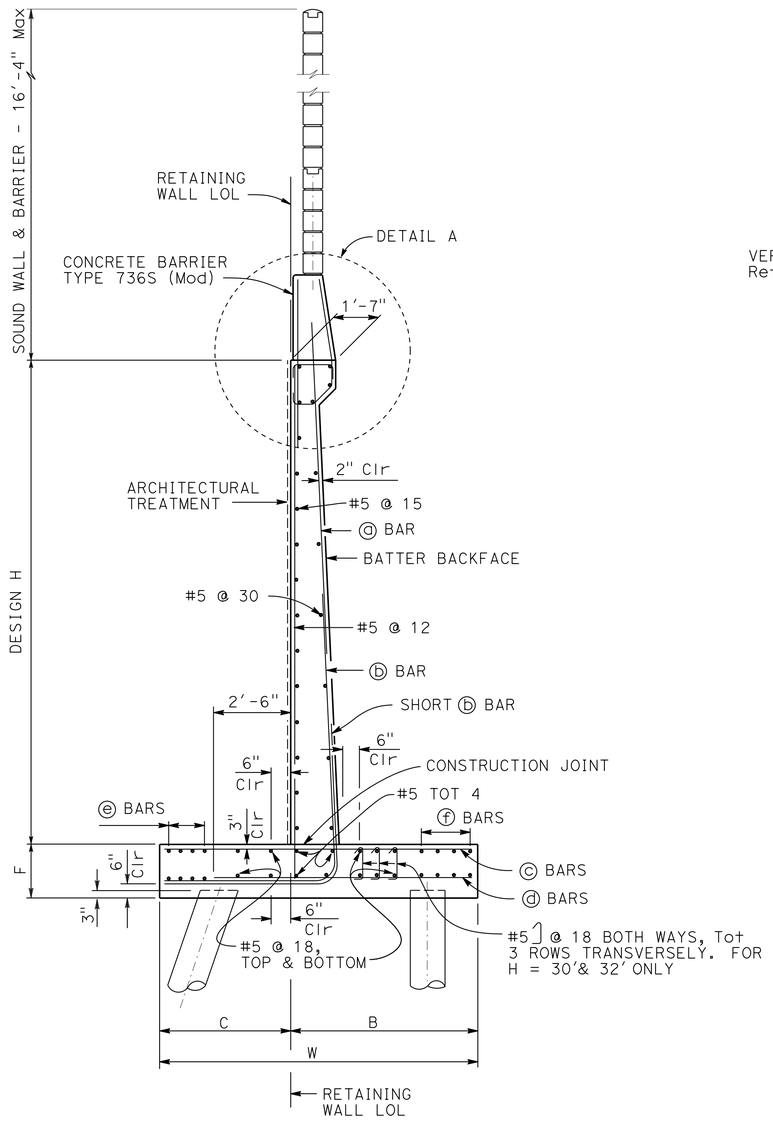

① PILE FOOTING SECTION

No scale
All piles not shown

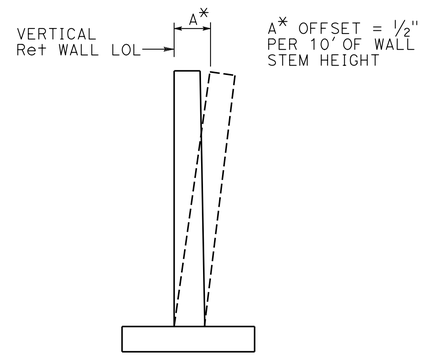

WALL OFFSET

No scale
Values for offsetting forms to be determined by the engineer

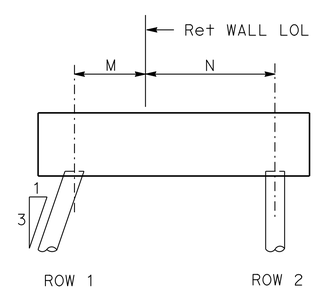

H = 6' THROUGH 20'

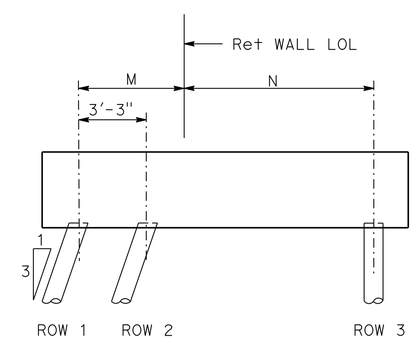

H = 22' THROUGH 28'

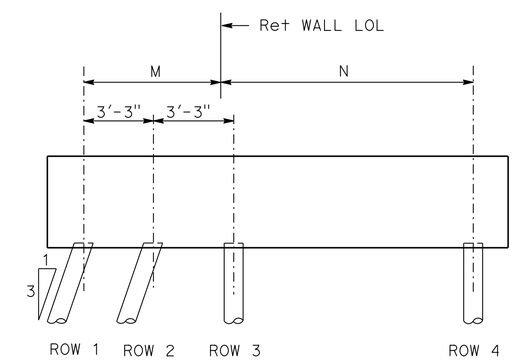

H = 30' AND 32'

PILE PATTERN

No scale

SPECIAL DETAILS

REVISED STANDARD DRAWING

FILE NO. xs14-320-2

APPROVAL DATE July 2011

① Modified Detail

STATE OF CALIFORNIA
DEPARTMENT OF TRANSPORTATION

DIVISION OF ENGINEERING SERVICES

BRIDGE NO. 53E0312
POST MILE 40.48

RETAINING WALL NO. 2140

RETAINING WALL TYPE 1SWBP-DETAILS NO. 2

DS OSD 2147A (ENGLISH STANDARD DRAWING "XS" BORDER REV. (02-02-11)

ORIGINAL SCALE IN INCHES FOR REDUCED PLANS 0 1 2 3

UNIT: 3604
PROJECT NUMBER & PHASE: 0713000007
CONTRACT NO.: 07-1193U1

DISREGARD PRINTS BEARING EARLIER REVISION DATES

REVISION DATES 10-7-13 12-27-13 6-12-14 5-29-14

SHEET 11 OF 18

FILE => 53e0312-xs14-320-2.dgn

USERNAME => s125624 DATE PLOTTED => 18-MAY-2015 TIME PLOTTED => 16:26

DIST	COUNTY	ROUTE	POST MILES TOTAL PROJECT	SHEET No.	TOTAL SHEETS
07	LA	10	37.2/42.4	2105	2313

REGISTERED CIVIL ENGINEER 10-1-14 DATE

6-1-15
PLANS APPROVAL DATE

REGISTERED PROFESSIONAL ENGINEER Gabriel J. Galo No. 52288 Exp. 12-31-14 CIVIL STATE OF CALIFORNIA

The State of California or its officers or agents shall not be responsible for the accuracy or completeness of electronic copies of this plan sheet.

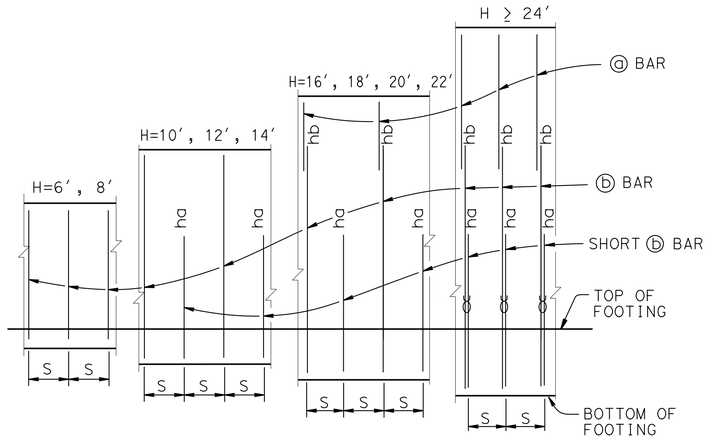

ELEVATION

No Scale

NOTES:

"ha" and "hb" above ⓑ bars indicate distance from top of footing to upper end of ⓑ bars, see table.
"S" is ⓑ bar spacing, see table.
℧ : 2 bar bundle

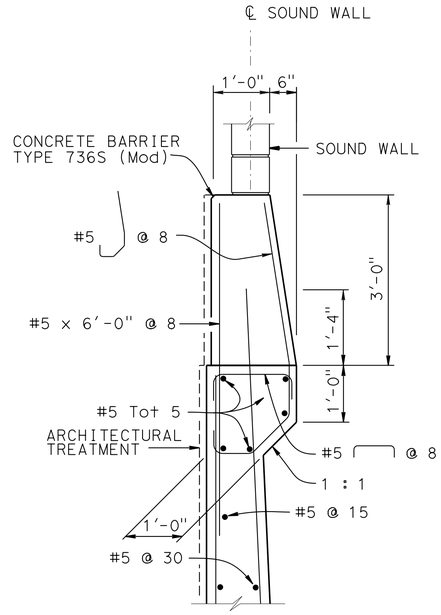

① DETAIL A

¾ = 1'-0"

DESIGN DATA

Design: AASHTO LRFD Bridge Design Specifications, 4th edition with California Amendments

WS: 33 psf on Sound Wall and Barrier

LS: Varied surcharge on level ground surface

CT: 54 kip maximum traffic impact loading evenly distributed over 10 feet at top of the barrier and 1:1 distribution down and outward

EQE: Mononabe-Okabe Method
K_h = 0.3
K_v = 0.0

Soil: Ø = 34°
γ = 120 pcf

Reinforced Concrete: f'c = 3600 psi
fy = 60,000 psi

Load Combinations and Limit States

Service I	Q=1.00DC+1.00EV+1.00EH+1.00LS+0.30WS
Service II	Q=1.00DC+1.00EV+1.00EH+1.00WS
Strength I	Q=aDC+βEV+1.50EH+1.75LS
Strength III	Q=aDC+βEV+1.50EH+1.40WS
Strength V	Q=aDC+βEV+1.50EH+1.35LS+0.40WS
Extreme I	Q=1.00DC+1.00EV+1.00EH+1.00EQD+1.00EQE
Extreme II	Q=1.00DC+1.00EV+1.00EH+1.00CT

Where:
Q: Force Effects
a: 1.25 or 0.90, Which ever Controls Design
β: 1.35 or 1.00, which ever Controls Design
DC: Dead Load of Structure Components
EV: Vertical Earth Fill Pressure
LS: Live Load Surcharge
EQE: Seismic Earth Pressure
EQD: Soil and Structure Components Inertia. Soil inertia ignored for stem design
WS: Wind Load on Sound Wall and Barrier
CT: Vehicular Collision Force

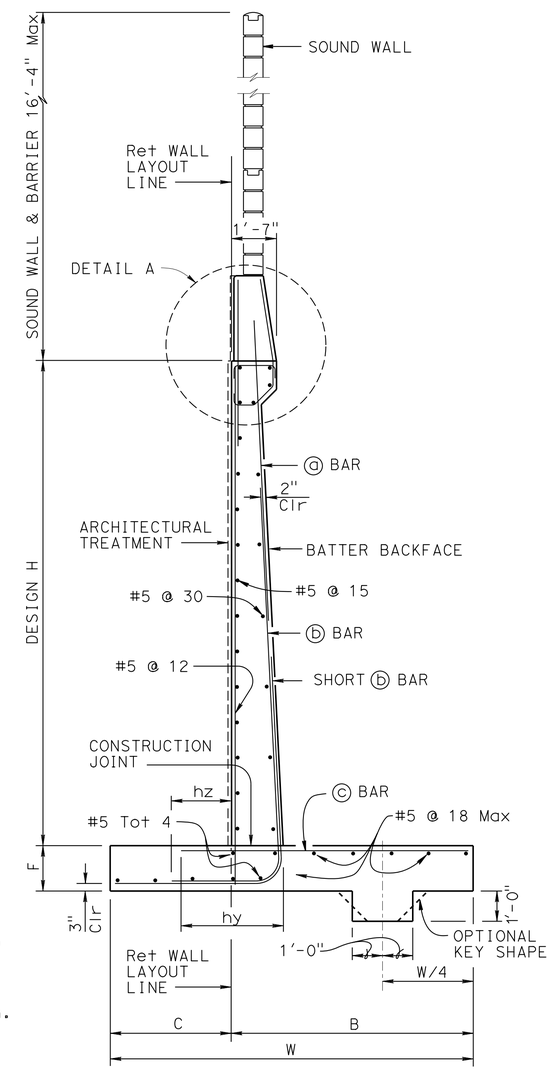

SPREAD FOOTING SECTION ①

No Scale

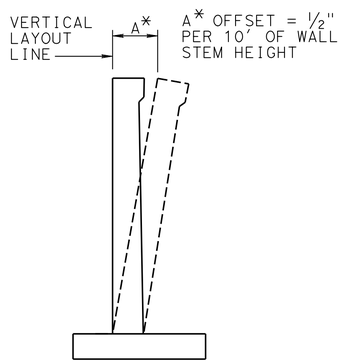

WALL OFFSET

No Scale

Values for offsetting forms to be determined by the Engineer

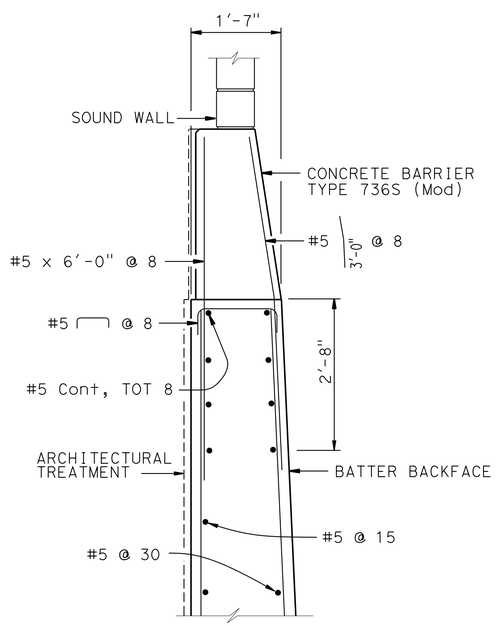

① OPTIONAL DETAIL A

¾ = 1'-0"

For Details not shown, see "DETAIL A"

NOTES:

② 1. For sound wall and retaining wall Architectural treatment see details elsewhere in Project Plans

② 2. For details not shown and drainage notes see RSP B3-5

② 3. Footing cover, 2'-0" minimum.

② 4. For sound wall and barrier reinforcement details, see "MASONRY BLOCK SOUND WALL WITH BARRIER ON RETAINING WALL DETAILS No. 1" and "MASONRY BLOCK SOUND WALL WITH BARRIER ON RETAINING WALL DETAILS No. 2" sheets.

5. For H ≧ 6' through 14', extend ⓑ bars into Barrier for stem with haunch.

6. For H > 16', extend ⓐ bars into Barrier for stem with haunch.

SPECIAL DETAILS

REVISED STANDARD DRAWING

FILE NO. xs14-220-1

APPROVAL DATE July 2011

① Modified Detail
② Modified Note

STATE OF CALIFORNIA DEPARTMENT OF TRANSPORTATION

DIVISION OF ENGINEERING SERVICES

BRIDGE NO. 53E0312
POST MILE 40.48

RETAINING WALL NO. 2140

RETAINING WALL TYPE 1SWB-DETAILS NO. 1

DS OSD 2147A (ENGLISH STANDARD DRAWING "XS" BORDER REV. (02-02-11)

ORIGINAL SCALE IN INCHES FOR REDUCED PLANS 0 1 2 3

UNIT: 3604
PROJECT NUMBER & PHASE: 0713000007
CONTRACT NO.: 07-1193U1

DISREGARD PRINTS BEARING EARLIER REVISION DATES

REVISION DATES 6-26-13 2-27-14 5-23-14 2-2-14

SHEET 12 OF 18

FILE => 53e0312-y-xs14-220-1.dgn

USERNAME => s128624 DATE PLOTTED => 18-MAY-2015 TIME PLOTTED => 16:26

DIST	COUNTY	ROUTE	POST MILES TOTAL PROJECT	SHEET No.	TOTAL SHEETS
07	LA	10	37.2/42.4	2106	2313

REGISTERED CIVIL ENGINEER 10-1-14 DATE

6-1-15
PLANS APPROVAL DATE

REGISTERED PROFESSIONAL ENGINEER Gabriel J. Galo No. 52288 Exp. 12-31-14 CIVIL STATE OF CALIFORNIA

The State of California or its officers or agents shall not be responsible for the accuracy or completeness of electronic copies of this plan sheet.

TABLE OF REINFORCING STEEL DIMENSIONS AND DATA

DESIGN H	6′	8′	10′	12′	14′	16′	18′	20′	22′	24′	26′	28′	30′	32′
W	6′-9″	7′-3″	8′-0″	8′-9″	10′-0″	11′-6″	12′-9″	14′-0″	15′-9″	18′-0″	19′-9″	21′-9″	23′-3″	25′-3″
C	2′-3″	2′-5″	2′-8″	2′-11″	3′-4″	3′-10″	4′-3″	4′-8″	5′-3″	6′-0″	6′-7″	7′-3″	7′-9″	8′-5″
B	4′-6″	4′-10″	5′-4″	5′-10″	6′-8″	7′-8″	8′-6″	9′-4″	10′-6″	12′-0″	13′-2″	14′-6″	15′-6″	16′-10″
F SPREAD FOOTING	1′-3″	1′-3″	1′-3″	1′-3″	1′-6″	1′-9″	1′-9″	2′-3″	2′-6″	2′-6″	2′-9″	3′-0″	3′-6″	3′-9″
STEM WITH HAUNCH, BATTER	0	½:12	½:12	½:12	½:12	½:12	½:12	½:12	½:12	⅝:12	¾:12	⅞:12	1:12	1:12
STEM WITHOUT HAUNCH, BATTER	0	0	0	0	0	0	0	0	¼:12	¼:12	½:12	¾:12	¾:12	¾:12
ⓐ BARS						#7 @ 15	#7 @ 12	#7 @ 12	#8 @ 12	#6 @ 6	#6 @ 6	#6 @ 6	#8 @ 9	#9 @ 9
ⓑ BARS	#8 @ 12	#8 @ 12	#7 @ 6	#7 @ 6	#7 @ 6	#9 @ 7.5	#9 @ 6	#10 @ 6	#10 @ 6	#8 @ 6ϒ	#8 @ 6ϒ	#8 @ 6ϒ	#10 @ 9ϒ	#11 @ 9ϒ
ha			5′-0″	6′-0″	7′-0″	7′-0″	6′-0″	7′-0″	7′-6″	7′-6″	8′-6″	9′-3″	15′-0″	11′-3″
hb						11′-6″	12′-0″	13′-3″	16′-0″	15′-6″	17′-6″	18′-9″	21′-0″	20′-9″
hy	2′-0″	2′-4″	1′-8″	2′-0″	2′-4″	2′-10″	2′-10″	3′-7″	3′-7″	4′-6″	5′-6″	2′-10″	4′-6″	5′-6″
hz			0	0	3′-1″	3′-7″	4′-0″	4′-5″	5′-0″	3′-0″	3′-0″	3′-6″	5′-6″	3′-0″
ⓒ BARS	#6 @ 12	#7 @ 12	#5 @ 6	#6 @ 6	#7 @ 6	#8 @ 7.5	#8 @ 6	#9 @ 6	#9 @ 6	#10 @ 6	#11 @ 6	#8 @ 6ϒ	#10 @ 9ϒ	#11 @ 9ϒ
SER I: B′(ft), q_0'(ksf)	5.9, 1.2	6.0, 1.4	6.5, 1.6	7.0, 1.8	8.1, 1.9	9.7, 2.0	11.0, 2.1	12.1, 2.3	13.8, 2.4	16.6, 2.4	18.5, 2.6	20.7, 2.7	22.1, 2.9	24.3, 3.0
STR Ia: B′(ft), q_0(ksf)	6.3, 1.9	6.3, 2.3	6.7, 2.5	7.0, 2.9	8.1, 3.1	9.5, 3.2	10.8, 3.4	11.8, 3.7	13.4, 4.0	16.2, 4.0	18.0, 4.2	20.2, 4.4	21.5, 5.0	23.7, 5.0
STR, Ib: B′(ft), q_0(ksf)	4.3, 1.6	4.1, 2.0	4.3, 2.4	4.5, 2.8	5.5, 2.9	6.9, 2.9	8.2, 3.0	9.0, 3.4	10.4, 3.5	13.2, 3.4	14.8, 3.5	16.9, 3.6	18.0, 3.9	20.1, 4.1
STR, IIIa: B′(ft), q_0(ksf)	4.3, 2.1	4.8, 2.4	5.5, 2.5	6.2, 2.8	7.4, 2.9	9.1, 3.0	10.4, 3.2	11.5, 3.7	13.3, 3.7	16.1, 3.8	18.0, 4.0	20.3, 4.2	21.6, 4.6	23.8, 4.9
STR, IIIb: B′(ft), q_0(ksf)	3.2, 2.1	3.6, 2.3	4.2, 2.4	4.7, 2.6	5.9, 2.7	7.4, 2.7	8.6, 2.8	9.5, 3.1	11.2, 3.0	14.0, 3.2	15.8, 3.3	17.9, 3.4	19.1, 3.7	21.2, 3.9
STR, Va: B′(ft), q_0(ksf)	5.9, 2.0	5.9, 2.3	6.4, 2.6	6.8, 2.9	7.9, 3.1	9.4, 3.2	10.6, 3.4	11.7, 3.9	13.4, 3.9	16.1, 4.0	18.0, 4.2	20.2, 4.5	21.5 4.9	23.7, 5.1
STR, Vb: B′(ft), q_0(ksf)	3.8, 1.7	3.8, 2.1	4.2, 2.5	4.4, 2.8	5.5, 2.9	7.0, 2.9	8.2, 3.0	9.0, 3.3	10.5, 3.4	13.3, 3.3	15.0, 3.5	17.1, 3.6	18.2 3.9	20.3, 4.0
Ext I: B′(ft), q_0(ksf)	2.5, 2.8	2.0, 4.3	1.7, 6.4	1.2, 10.9	1.3, 13.3	1.7, 12.4	1.9, 13.2	1.9 17.6	2.5, 15.0	4.5, 10.2	5.3, 10.0	6.6, 9.6	6.8, 10.8	8.1, 10.5
Ext II: B′(ft), q_0(ksf)	1.4, 4.9	2.5, 3.5	3.8, 2.8	4.9, 2.7	6.6, 2.5	8.6, 2.5	10.1, 2.5	11.5, 2.6	13.5, 2.8	16.4, 2.8	18.4, 2.9	20.7, 3.1	22.1, 3.3	24.4, 3.5

LEGEND:
SER: service limit state
STR: strength limit state
EXT: extreme event limit state
B′ : effective footing width (ft)
q_0' : net bearing stress (ksf)

q_0 : gross uniform bearing stress (ksf)

ϒ : 2 bar bundle

STANDARD DRAWING
FILE NO. xs14-220-2
APPROVAL DATE December 2012

STATE OF CALIFORNIA DEPARTMENT OF TRANSPORTATION

DIVISION OF ENGINEERING SERVICES

BRIDGE NO. 53E0312
POST MILE 40.48

RETAINING WALL NO. 2140
RETAINING WALL TYPE 1SWB-DETAILS NO. 2

DS OSD 2147A (ENGLISH STANDARD DRAWING "XS" BORDER REV. (02-02-11)

ORIGINAL SCALE IN INCHES FOR REDUCED PLANS 0 1 2 3

UNIT: 3604
PROJECT NUMBER & PHASE: 0713000007
CONTRACT NO.: 07-1193U1

DISREGARD PRINTS BEARING EARLIER REVISION DATES

REVISION DATES 10-31-13 12-05-13

SHEET 13 OF 18

FILE => 53e0312-y-xs14-220-2.dgn

USERNAME => s125624 DATE PLOTTED => 18-MAY-2015 TIME PLOTTED => 16:26

DIST	COUNTY	ROUTE	POST MILES TOTAL PROJECT	SHEET No.	TOTAL SHEETS
07	LA	10	37.2/42.4	2107	2313

REGISTERED CIVIL ENGINEER 10-1-14 DATE

6-1-15
PLANS APPROVAL DATE

REGISTERED PROFESSIONAL ENGINEER Gabriel J. Galo No. 52288 Exp. 12-31-14 CIVIL STATE OF CALIFORNIA

The State of California or its officers or agents shall not be responsible for the accuracy or completeness of electronic copies of this plan sheet.

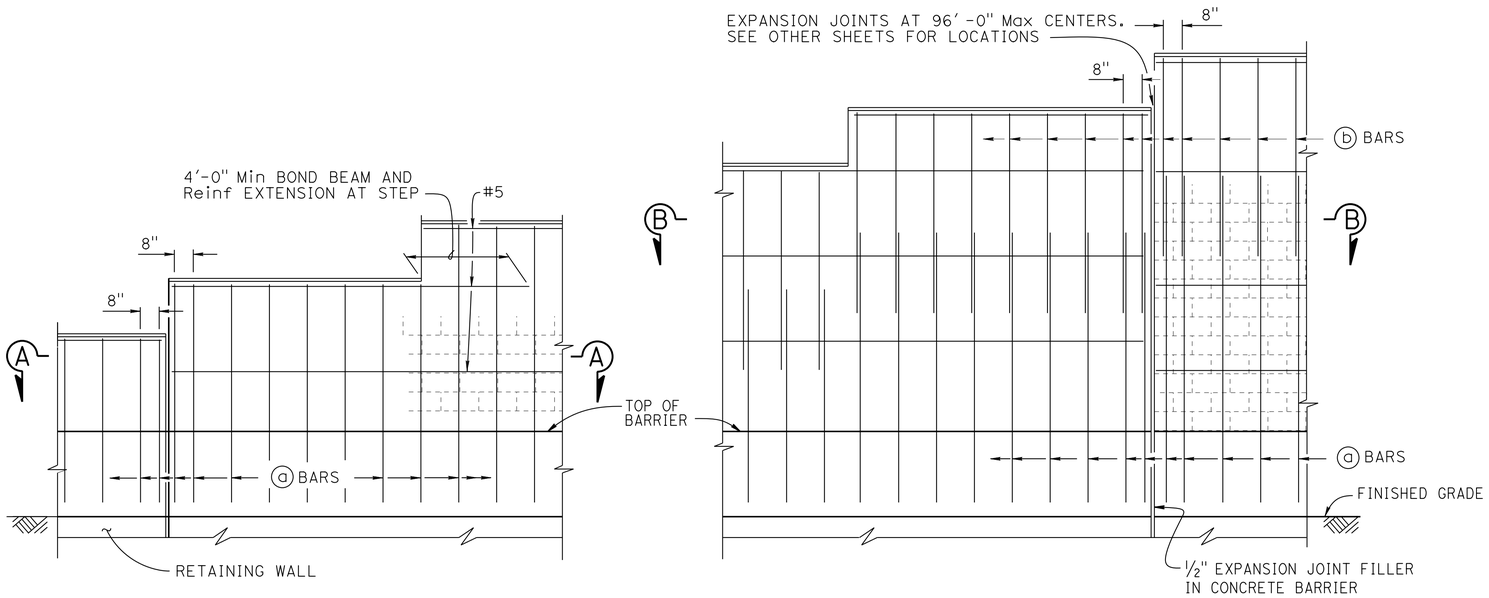

H=6'-4" THRU H=10'-4"

H=12'-4" THRU H=16'-4"

PART ELEVATION

SOUND WALL REINFORCEMENT TABLE						
MAXIMUM "H"	ⓐ BARS @ 1'-4" Max	ⓑ BARS @ 1'-4" Max	"Y"	f'm (psi)	COMPRESSIVE STRENGTH OF CMU (psi)	MAXIMUM "H"
6'-4"	#4	———	———	1500	1900	6'-4"
8'-4"	#4	———	———	1500	1900	8'-4"
10'-4"	#4	———	———	1500	1900	10'-4"
12'-4"	#5	#4	5'-0"	1500	1900	12'-4"
14'-4"	#6	#4	7'-0"	1500	1900	14'-4"
16'-4"	#6	#4	9'-0"	2500	3700	16'-4"

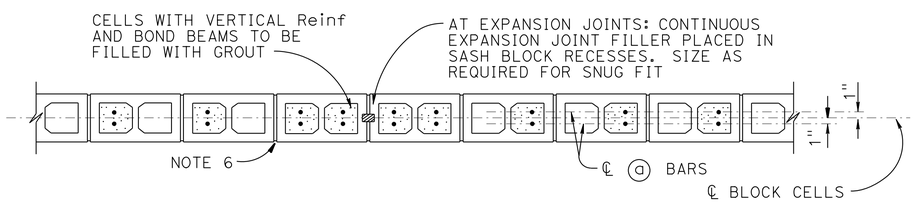

SECTION A-A

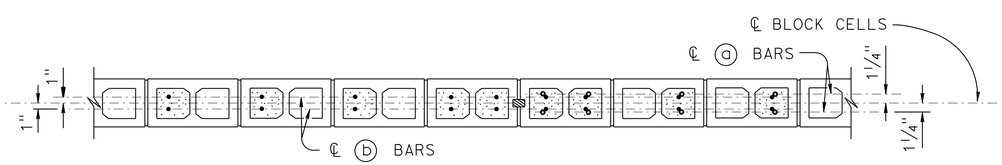

SECTION B-B

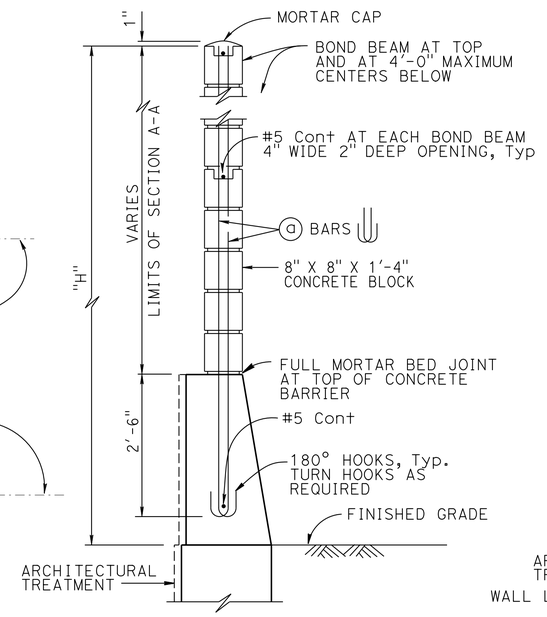

1 H=6'-4" THRU H=10'-4"

For details not shown, see H=12'-4" thru H=16'-4"

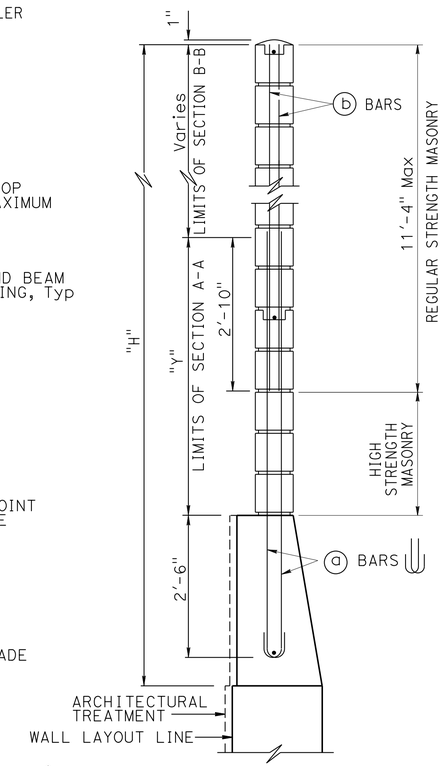

1 H=12'-4" THRU H=16'-4"

For details not shown, see H=6'-4" thru H=10'-4"

TYPICAL SECTION

NOTES:

1. For details not shown, see "SOUND WALL - MASONRY BLOCK WITH BARRIER ON RETAINING WALL - DETAILS NO. 2" sheet
2. Slope ground at traffic side of barrier to drain. Maximum slope ±10%
3. 2 See STANDARD PLAN B15-9 for other details
4. For type of block and joint finish, see other sheets
5. When blocks are laid in stacked bond, ladder type, galvanized joint reinforcement shall be provided. A minimum of 2-9 gauge wire continuous at 4'-0" maximum to be used. Locate reinforcement in joints that are at the approximate midpoint between bond beams
6. Horizontal joints shall be tooled concave or may be weathered. Vertical joints shall be tooled concave or may be raked
7. For intermediate wall heights that are between the "H's" given, use the tabular information for the next higher "H"
8. Masonry strengths are listed in "SOUND WALL REINFORCEMENT TABLE"
9. Concrete to be used for the barrier shall contain not less than 590 pounds of cementitious material per cubic yard

NO SCALE

SPECIAL DETAILS

RETAINING WALL NO. 2140

MASONRY BLOCK SOUND WALL WITH BARRIER ON RETAINING WALL

DETAILS NO. 1

REVISED STANDARD DRAWING

FILE NO. xs15-130-1

APPROVAL DATE July 2012

1 Modified Detail
2 Modified Note

STATE OF CALIFORNIA DEPARTMENT OF TRANSPORTATION

DIVISION OF ENGINEERING SERVICES

BRIDGE NO. 53E0312

POST MILE 40.48

DS OSD 2147A (ENGLISH STANDARD DRAWING "XS" BORDER REV. (02-02-11)

ORIGINAL SCALE IN INCHES FOR REDUCED PLANS 0 1 2 3

UNIT: 3604
PROJECT NUMBER & PHASE: 0713000007 CONTRACT NO.: 07-1193U1

DISREGARD PRINTS BEARING EARLIER REVISION DATES

REVISION DATES 5-24-13 10-24-13 5-23-14 2-2-14

SHEET 14 OF 18

FILE => 53e0312-z-a-xs15-130-1.dgn

USERNAME => s125624 DATE PLOTTED => 18-MAY-2015 TIME PLOTTED => 16:26

DIST	COUNTY	ROUTE	POST MILES TOTAL PROJECT	SHEET No.	TOTAL SHEETS
07	LA	10	37.2/42.4	2108	2313

REGISTERED CIVIL ENGINEER 10-1-14 DATE

6-1-15
PLANS APPROVAL DATE

REGISTERED PROFESSIONAL ENGINEER Gabriel J. Galo No. 52288 Exp. 12-31-14 CIVIL STATE OF CALIFORNIA

The State of California or its officers or agents shall not be responsible for the accuracy or completeness of electronic copies of this plan sheet.

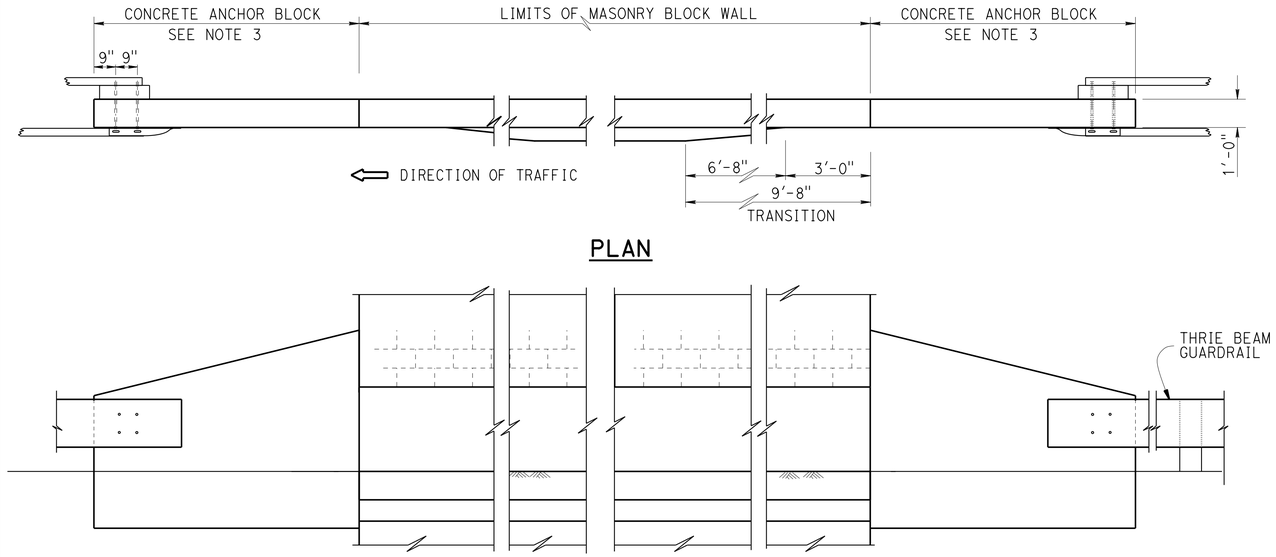

PLAN

ELEVATION

METAL BEAM GUARDRAIL ANCHORAGE

For details not shown, see STANDARD PLAN B11-56

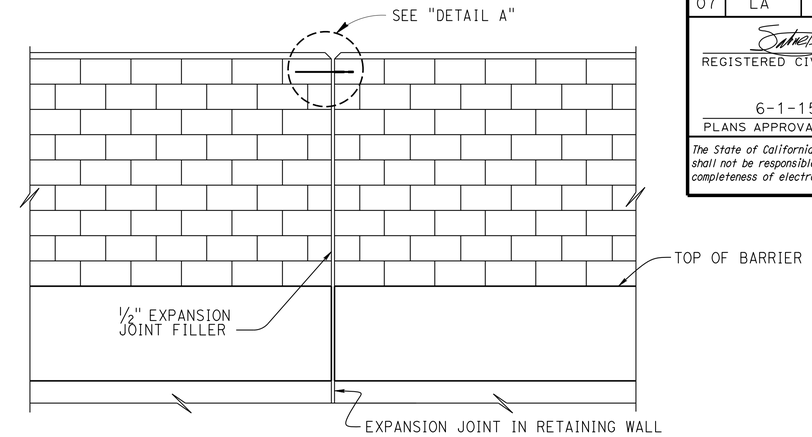

ALIGNMENT KEY DETAIL

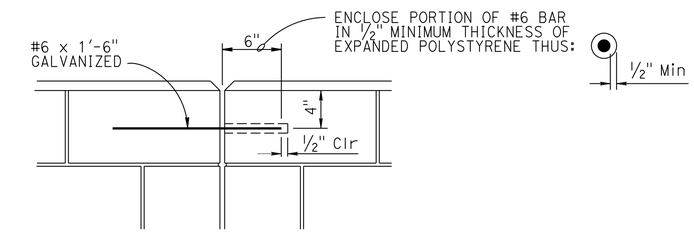

DETAIL A

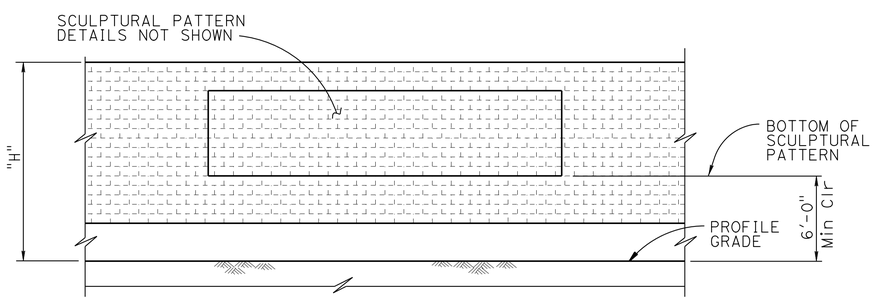

CLEARANCE DETAIL

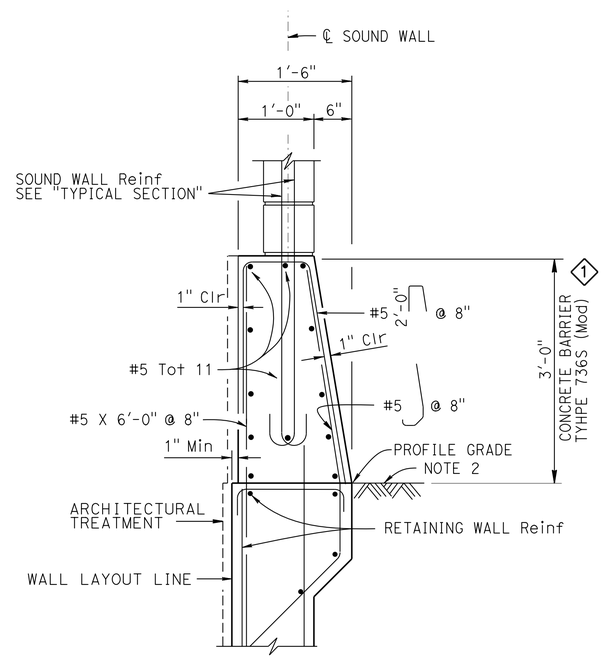

1 BARRIER SECTION

DESIGN NOTES

DESIGN
Uniform Building Code, 1997 Edition and the Bridge Design Specifications

DESIGN WIND LOAD
33 psf

DESIGN SEISMIC LOAD
0.57 Dead load

CONCRETE MASONRY

REINFORCED CONCRETE	REGULAR STRENGTH	HIGH STRENGTH	
f'c = 3600 psi	f'm = 1500 psi	f'm = 2000 psi	f'm = 2500 psi
fy = 60 ksi	fb = 495 psi	fb = 660 psi	fb = 830 psi
	fs = 24,000 psi	fs = 24,000 psi	fs = 24,000 psi
	n = 25.8	n = 19.3	n = 15.5

NOTES:

2 1. For details not shown, see REVISED STANDARD PLAN B15-6

2 2. Slope ground at traffic side of barrier to drain. Maximum slope ±10% See REVISED STANDARD PLAN B11-56, Note 3

3. For Concrete Anchor Block and connection details, see "CONNNECTION DETAIL DD" on STANDARD PLAN A77J3

SPECIAL DETAILS
NO SCALE

RETAINING WALL NO. 2140

MASONRY BLOCK SOUND WALL WITH BARRIER ON RETAINING WALL

DETAILS NO. 2

REVISED STANDARD DRAWING
FILE NO. xs15-130-2
APPROVAL DATE July 2011

1 Modified Detail
2 Modified Note

STATE OF CALIFORNIA
DEPARTMENT OF TRANSPORTATION

DIVISION OF ENGINEERING SERVICES

BRIDGE NO. 53E0312
POST MILE 40.48

DS OSD 2147A (ENGLISH STANDARD DRAWING "XS" BORDER REV. (02-02-11)

ORIGINAL SCALE IN INCHES FOR REDUCED PLANS 0 1 2 3

UNIT: 3604
PROJECT NUMBER & PHASE: 0713000007
CONTRACT NO.: 07-1193U1

DISREGARD PRINTS BEARING EARLIER REVISION DATES

REVISION DATES 5-23-13 5-23-14 10-25-13 2-23-14

SHEET 15 OF 18

FILE => 53e0312-z-a-xs15-130-2.dgn

USERNAME => s125624 DATE PLOTTED => 18-MAY-2015 TIME PLOTTED => 16:26

DIST	COUNTY	ROUTE	POST MILES TOTAL PROJECT	SHEET No.	TOTAL SHEETS
07	LA	10	37.2/42.4	2109	2313

CERTIFIED ENGINEERING GEOLOGIST 2-28-14 DATE

6-1-15
PLANS APPROVAL DATE

PROFESSIONAL GEOLOGIST Michael A. Salisbury No. 2462 Exp. 2-28-15 CERTIFIED ENGINEERING GEOLOGIST STATE OF CALIFORNIA

The State of California or its officers or agents shall not be responsible for the accuracy or completeness of electronic copies of this plan sheet.

This LOTB sheet was prepared in accordance with the Caltrans Soil & Rock Logging, Classification, & Presentation Manual (2010 Edition).

See 2010 Standard Plans A10F and A10G for Soil Legend, and A10H for Rock Legend.

BENCH MARK

PRHV 4028 Elev 939.611′
Fd Pk in Gore, 73.08′ Lt
Sta 2143+19.92 "B" Line
NAVD 88

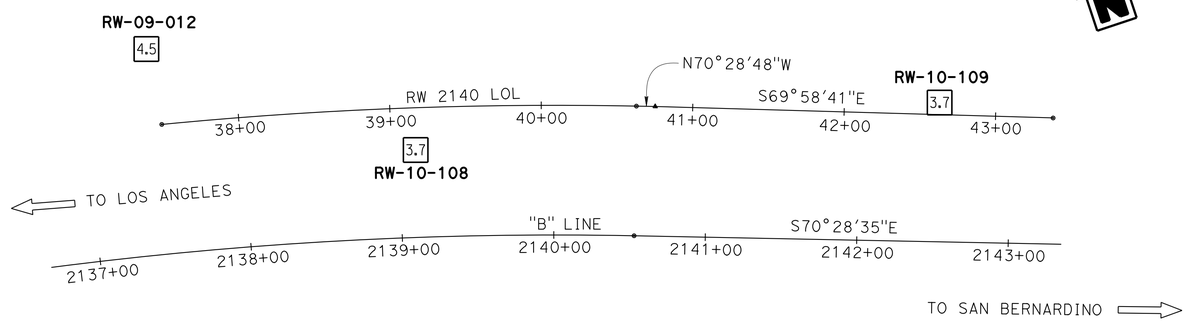

PLAN

1" = 50′

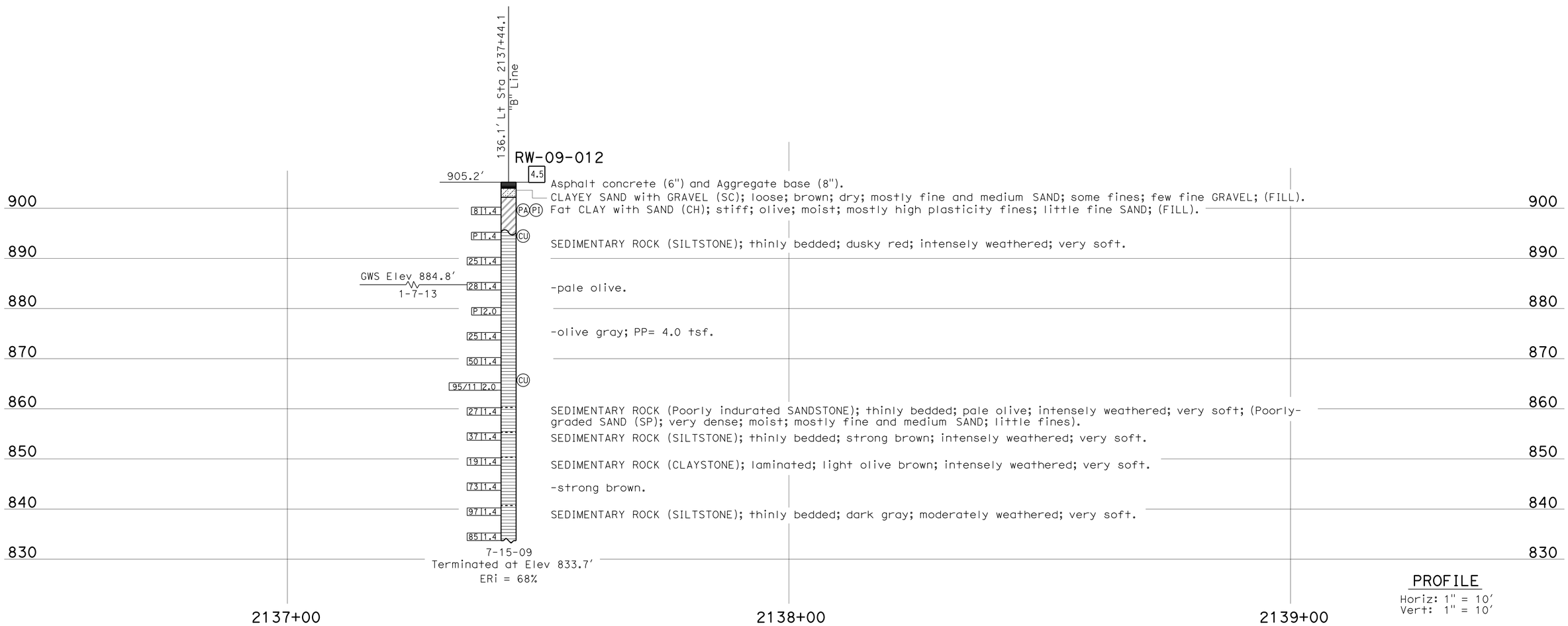

PROFILE

Horiz: 1" = 10′
Vert: 1" = 10′

ENGINEERING SERVICES	GEOTECHNICAL SERVICES	STATE OF CALIFORNIA DEPARTMENT OF TRANSPORTATION	DIVISION OF ENGINEERING SERVICES STRUCTURE DESIGN DESIGN BRANCH 15	BRIDGE NO. 53E0312 POST MILE 40.5/40.7	RETAINING WALL NO. 2140 LOG OF TEST BORINGS 1 OF 3
FUNCTIONAL SUPERVISOR NAME: D. Jang	DRAWN BY: I.G-Remmen CHECKED BY: H. Liu	FIELD INVESTIGATION BY: Y. Choi, M. Salisbury			

OGS CIVIL LOG OF TEST BORINGS SHEET

ORIGINAL SCALE IN INCHES FOR REDUCED PLANS 0 1 2 3

UNIT: 3643
PROJECT NUMBER & PHASE: 07130000071 CONTRACT NO.: 07-1193U1

DISREGARD PRINTS BEARING EARLIER REVISION DATES → REVISION DATES 11-21-13 01-14-14 2-28-14

SHEET 16 OF 18

FILE => 53e0312-z-lotb01.dgn

USERNAME => s125624 DATE PLOTTED => 18-MAY-2015 TIME PLOTTED => 16:26

DIST	COUNTY	ROUTE	POST MILES TOTAL PROJECT	SHEET No.	TOTAL SHEETS
07	LA	10	37.2/42.4	2110	2313

CERTIFIED ENGINEERING GEOLOGIST 2-28-14 DATE

6-1-15
PLANS APPROVAL DATE

PROFESSIONAL GEOLOGIST Michael A. Salisbury No. 2462 Exp. 2-28-15 CERTIFIED ENGINEERING GEOLOGIST STATE OF CALIFORNIA

The State of California or its officers or agents shall not be responsible for the accuracy or completeness of electronic copies of this plan sheet.

This LOTB sheet was prepared in accordance with the Caltrans Soil & Rock Logging, Classification, & Presentation Manual (2010 Edition).

See 2010 Standard Plans A10F and A10G for Soil Legend, and A10H for Rock Legend.

FOR PLAN VIEW, SEE
"LOG OF TEST BORINGS 1 OF 3"

Note: Groundwater was not measured in borings RW-10-108 and RW-10-109.

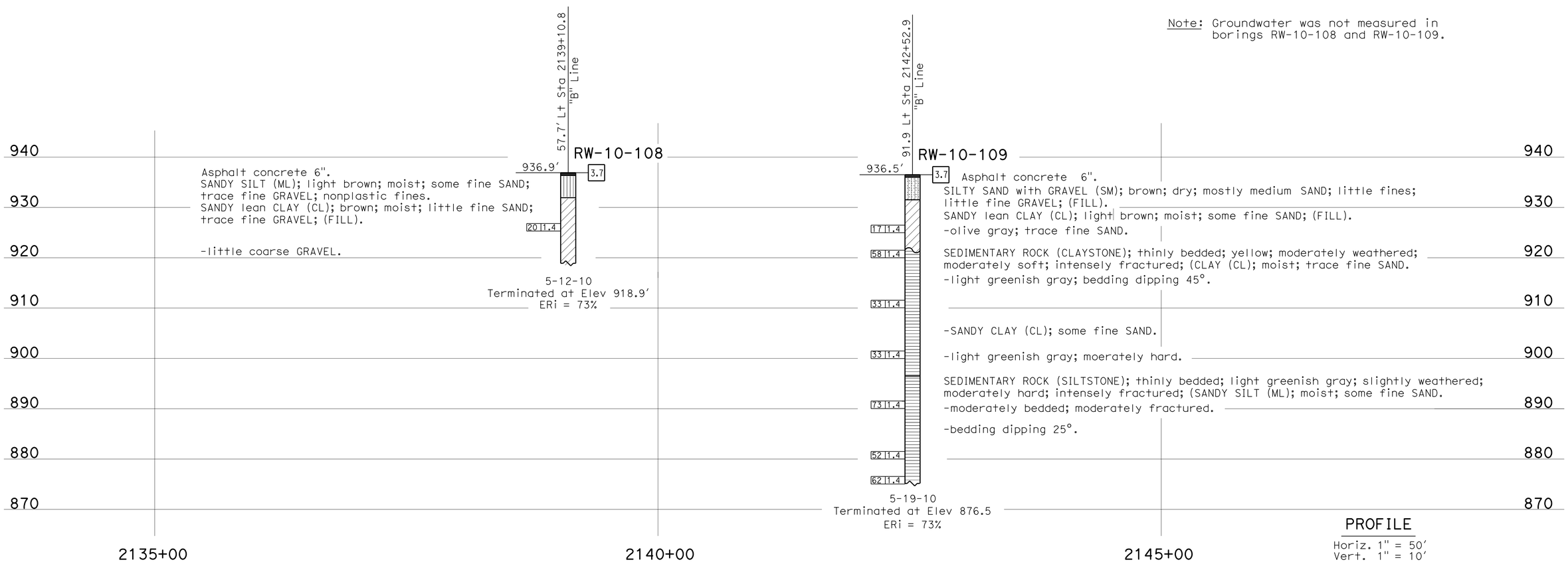

PROFILE
Horiz. 1" = 50'
Vert. 1" = 10'

ENGINEERING SERVICES		GEOTECHNICAL SERVICES	STATE OF CALIFORNIA DEPARTMENT OF TRANSPORTATION	DIVISION OF ENGINEERING SERVICES STRUCTURE DESIGN DESIGN BRANCH 15	BRIDGE NO. 53E0312 POST MILE 40.5/40.7	RETAINING WALL NO. 2140 LOG OF TEST BORINGS 2 OF 3
FUNCTIONAL SUPERVISOR NAME: D. Jang	DRAWN BY: F. Nguyen 5/11 CHECKED BY: H. Liu	FIELD INVESTIGATION BY: Y. Choi, M. Salisbury				

OGS CIVIL LOG OF TEST BORINGS SHEET

ORIGINAL SCALE IN INCHES FOR REDUCED PLANS 0 1 2 3

UNIT: 3643
PROJECT NUMBER & PHASE: 07130000071 CONTRACT NO.: 07-1193U1

DISREGARD PRINTS BEARING EARLIER REVISION DATES → REVISION DATES 11-24-13 01-15-14 2-28-14

SHEET 17 OF 18

FILE => 53e0312-z-lotb02.dgn

USERNAME => s125624 DATE PLOTTED => 18-MAY-2015 TIME PLOTTED => 16:26

DIST.	COUNTY	ROUTE	POST MILES TOTAL PROJECT	SHEET NO.	TC SHI
07	LA	10	37.2/42.4		

W. Cain
CERTIFIED ENGINEERING GEOLOGIST

REGISTERED GEOLOGIST — W.C. CAIN — No 732 — Exp 6-30-94 — CERTIFIED ENGINEERING GEOLOGIST — STATE OF CALIFORNIA

PLANS APPROVAL DATE

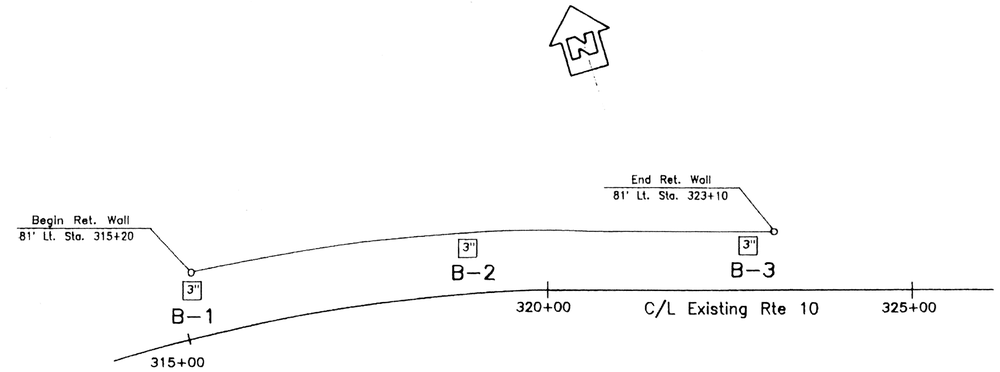

PLAN
1"= 100'

BENCH MARK

TBM: Fd. painted "+" at Lt. Sta. 315+20 Elev.927.2
TBM: Fd. painted "+" at Lt. Sta. 319+00 Elev. 932.5
TBM: Fd. painted "+" at Lt. Sta. 323+00 Elev. 936.2
Survey West Bound Rte 10 by J.F. Davidson Assoc.
4-15-93 page 9 of 16.

NOTE:
NO GROUND WATER ENCOUNTERED
DURING FIELD INVESTIGATION.

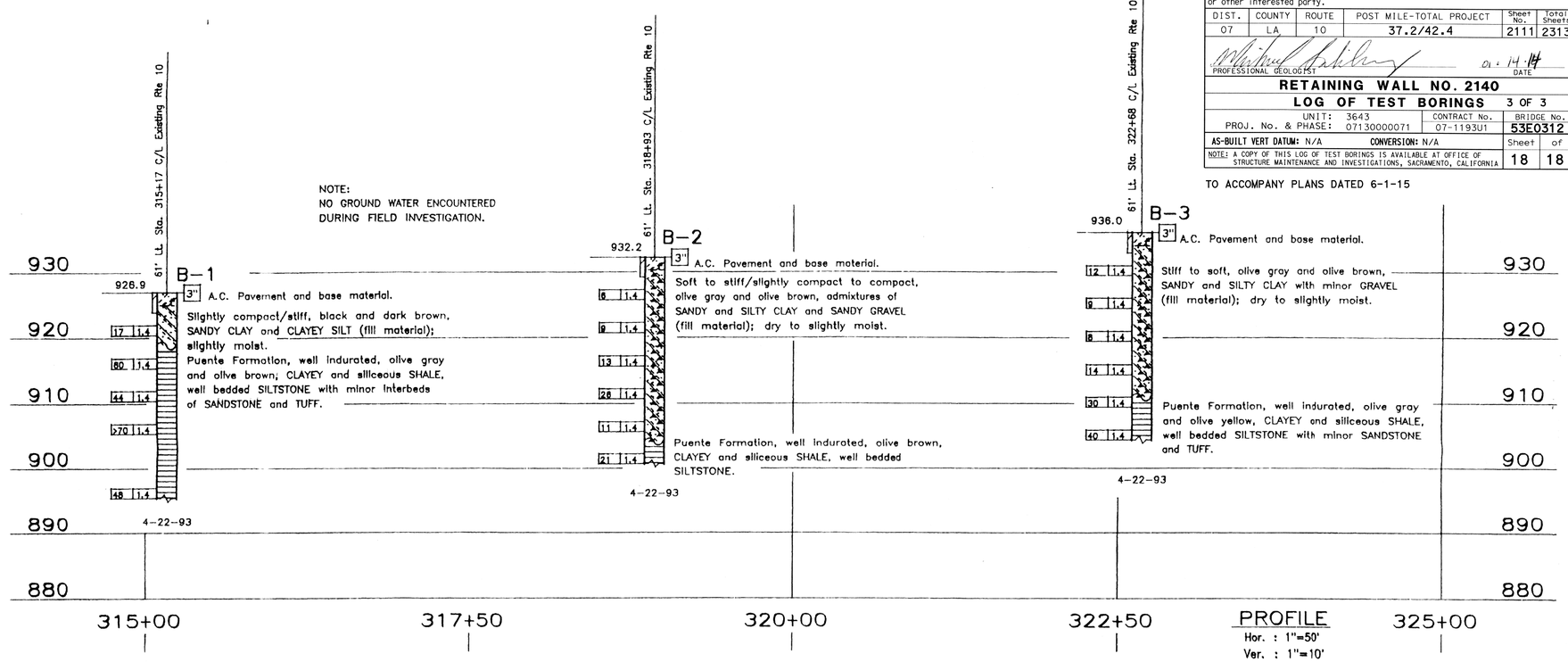

PROFILE
Hor. : 1"=50'
Ver. : 1"=10'

DIVISION OF ENGINEERING SERVICES - MATERIALS AND GEOTECHNICAL SERVICES
As-Built Log of Test Borings sheet is considered an informational document only. As such, the State of California registration seal with signature, license number and registration certificate expiration date confirm that this is a true and accurate copy of the original document. It does not attest to the accuracy or validity of the information contained in the original document. This drawing is available and presented only for the convenience of any bidder, contractor or other interested party.

DIST.	COUNTY	ROUTE	POST MILE-TOTAL PROJECT	Sheet No.	Total Sheets
07	LA	10	37.2/42.4	2111	2313

PROFESSIONAL GEOLOGIST — DATE 01-14-14

PROFESSIONAL GEOLOGIST — Michael A. Salisbury — No. 2462 — Exp. 2-28-15 — CERTIFIED ENGINEERING GEOLOGIST — STATE OF CALIFORNIA

RETAINING WALL NO. 2140
LOG OF TEST BORINGS 3 OF 3

UNIT: 3643	CONTRACT No.	BRIDGE No.
PROJ. No. & PHASE: 07130000071	07-1193U1	53E0312

AS-BUILT VERT DATUM: N/A CONVERSION: N/A — Sheet 18 of 18

NOTE: A COPY OF THIS LOG OF TEST BORINGS IS AVAILABLE AT OFFICE OF STRUCTURE MAINTENANCE AND INVESTIGATIONS, SACRAMENTO, CALIFORNIA

TO ACCOMPANY PLANS DATED 6-1-15

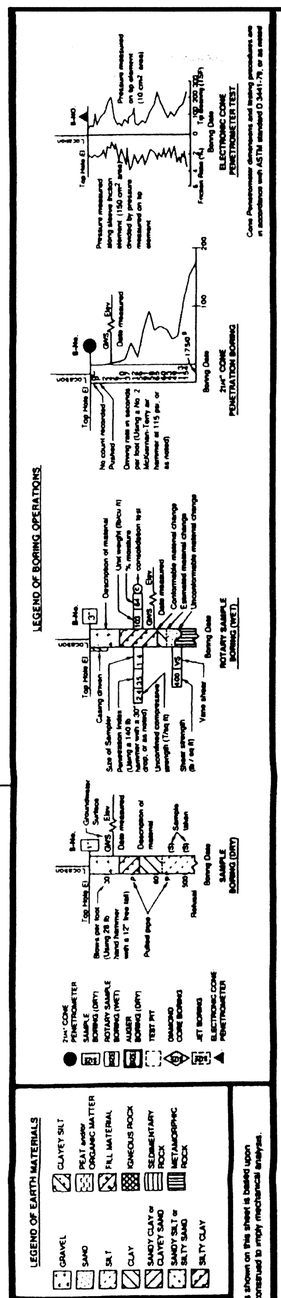

NOTE: Classification of earth material as shown on this sheet is based upon field inspection and is not to be construed to imply mechanical analysis.

DIVISION OF NEW TECHNOLOGY, MATERIALS AND RESEARCH	OFFICE OF ENGINEERING GEOLOGY	FIELD INVESTIGATION BY:	State of CALIFORNIA DEPARTMENT OF TRANSPORTATION	DIVISION OF STRUCTURES STRUCTURE DESIGN	BRIDGE NO.	RETAINING WALL NO. 319
DRAWN BY: FD FONG 5-93		F. GERAMI			POST MILE 37.5/42.4	LOG OF TEST BORINGS
CHECKED BY: Paramarz Gerami 8-93						SEP 23 1993

ORIGINAL SCALE IN INCHES FOR REDUCED PLANS 0 1 2 3

CU 07234
EA 11934K

DISREGARD PRINTS BEARING EARLIER REVISION DATES

REVISION DATES (PRELIMINARY STAGE ONLY) SHEET OF

DIST	COUNTY	ROUTE	POST MILES TOTAL PROJECT	SHEET No.	TOTAL SHEETS
07	LA	10	37.2/42.4	2112	2313

REGISTERED CIVIL ENGINEER 10/01/14 DATE

6-1-15
PLANS APPROVAL DATE

REGISTERED PROFESSIONAL ENGINEER RICHARD E. SCHENDEL No. C64259 Exp. 6-30-15 CIVIL STATE OF CALIFORNIA

The State of California or its officers or agents shall not be responsible for the accuracy or completeness of scanned copies of this plan sheet.

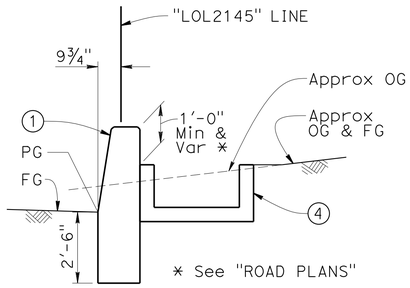

TYPE 736B MODIFIED

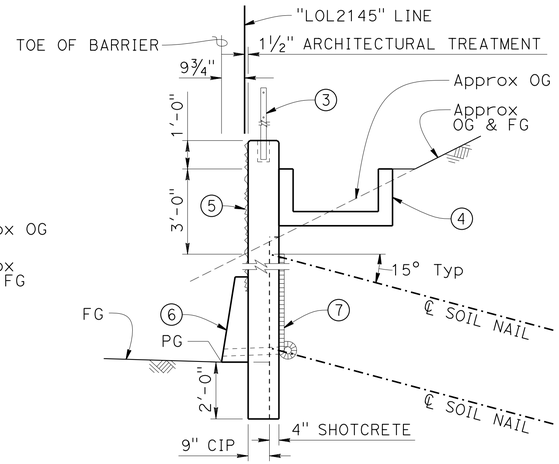

SOIL NAIL WALL

TYPICAL SECTIONS

3/8" = 1'-0"

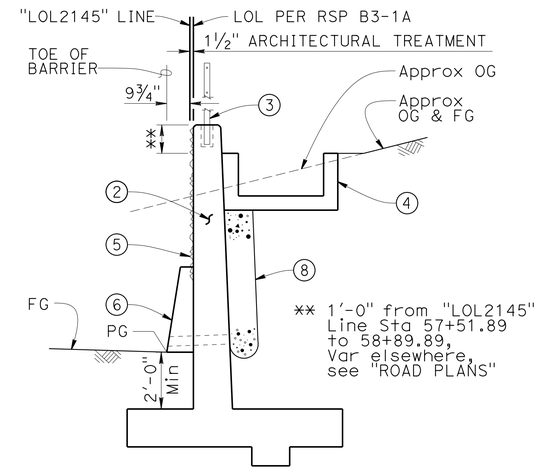

TYPE 1 WALL (CASE 1)

NOTES:

1. Concrete Barrier Type 736B Mod, RSP (B11-56)
2. RW Type 1 (Case 1), RSP (B3-1A)
3. Cable Railing, "LOL2145" Line Sta 44+88.17 to 58+89.89 RSP (B11-47)
4. Concrete Channel, see "ROAD PLANS"
5. Architectural Treatment
6. Concrete Barrier Type 60D Mod (A76A)
7. Geocomposite Drain
8. Pervious Backfill Drain (B0-3)

LEGEND:

STANDARD PLAN SHEET No.

DETAIL No.

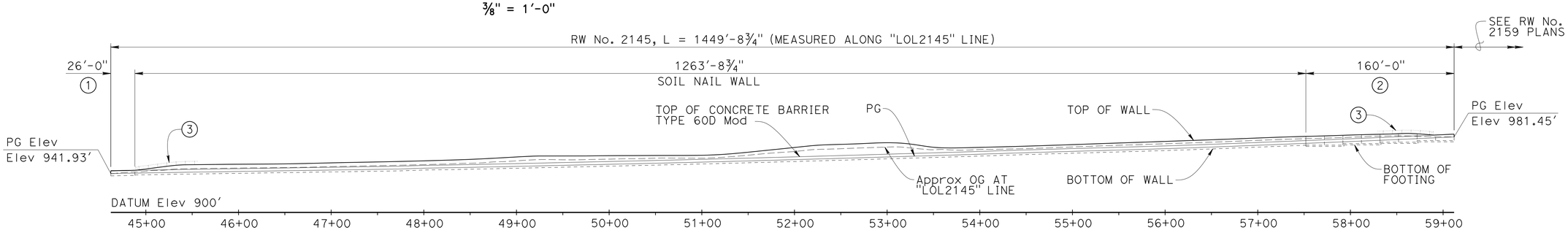

DEVELOPED MIRRORED ELEVATION

1" = 60'

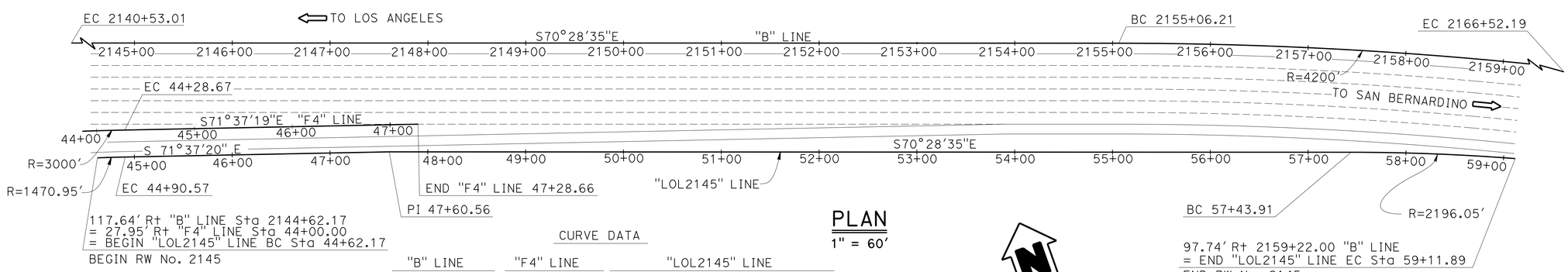

PLAN

1" = 60'

CURVE DATA

"B" LINE	"F4" LINE	"LOL2145" LINE	
R = 4200'	R = 3000'	R = 1470.95'	R = 2196.05'
Δ = 15°38'00"	Δ = 04°36'35"	Δ = 01°06'23"	Δ = 04°22'57"
T = 576.57'	T = 120.74'	T = 14.20'	T = 84.03'
L = 1145.98'	L = 241.36'	L = 28.40'	L = 167.98'

NOTE:
For "INDEX TO PLANS", "GENERAL NOTES", "STANDARD PLANS", AND "QUANTITIES", see "INDEX TO PLANS" sheet.

MICHAEL POPE
DESIGN ENGINEER

	BY	CHECKED
DESIGN	Z. Yan / R. Schendel	Mike Pope
DETAILS	Z. Yan / R. Schendel	Mike Pope
QUANTITIES	Richard Schendel	Mike Pope

LOAD & RESISTANCE FACTOR DESIGN — LIVE LOADING: HL93 W/"LOW-BOY"; PERMIT DESIGN VEHICLE

LAYOUT — BY Z. Yan / R. Schendel — CHECKED Mike Pope
SPECIFICATIONS — BY Xiaodong Chen — PLANS AND SPECS COMPARED Xiaodong Chen

STATE OF CALIFORNIA
DEPARTMENT OF TRANSPORTATION

DIVISION OF ENGINEERING SERVICES
STRUCTURE DESIGN
DESIGN BRANCH 18

BRIDGE NO. 53E0308
POST MILE 40.62

RETAINING WALL NO. 2145
GENERAL PLAN

ORIGINAL SCALE IN INCHES FOR REDUCED PLANS 0 1 2 3

UNIT: 3603
PROJECT NUMBER & PHASE: 07 1300 0007 1 CONTRACT NO.: 07-1193U1

DISREGARD PRINTS BEARING EARLIER REVISION DATES → 10/29/13 11/26/13 01/24/14 03/04/14

SHEET 1 OF 23

STRUCTURES DESIGN GENERAL PLAN SHEET (ENGLISH) (REV.09-01-10)

FILE => 53e0308-a-gp01.dgn

USERNAME => s125624 DATE PLOTTED => 18-MAY-2015 TIME PLOTTED => 16:26

DIST	COUNTY	ROUTE	POST MILES TOTAL PROJECT	SHEET No.	TOTAL SHEETS
07	LA	10	37.2/42.4	2113	2313

REGISTERED CIVIL ENGINEER — DATE 10/01/14

6-1-15
PLANS APPROVAL DATE

REGISTERED PROFESSIONAL ENGINEER — RICHARD E. SCHENDEL — No. C64259 — Exp. 6-30-15 — CIVIL — STATE OF CALIFORNIA

The State of California or its officers or agents shall not be responsible for the accuracy or completeness of scanned copies of this plan sheet.

GENERAL NOTES

DESIGN:
Federal Highway Administration Publication
Geotechnical Engineering Circular No. 7
Soil Nail Walls, Publication FHWA-IF-03-017

AASHTO LRFD Bridge Design Specifications,
4th edition and the Caltrans Amendments,
preface dated November 2011

LIVE LOADING:
No Live Loading

REINFORCED CONCRETE AND SHOTCRETE:
f_y = 60 ksi (Yield Strength of Reinforcement)
f'_c = 3.6 ksi (Compressive Strength at 28 days)

BEARING PLATES:
ASTM Designation: A36/A 36M, Grade 36, Fy = 36 ksi

SOIL NAILS:
ASTM Designation: A 615/A 615M, Grade 75, f_y = 75 ksi

CONCRETE ANCHORS ON BEARING PLATES:
AWS Designation: D1.5, Fy = 36 ksi Min

STANDARD PLANS DATED 2010

SHEET NO.	TITLE
A10A	ABBREVIATIONS (SHEET 1 OF 2)
RSP A10B	ABBREVIATIONS (SHEET 2 OF 2)
A10C	LINES AND SYMBOLS (SHEET 1 OF 3)
A10D	LINES AND SYMBOLS (SHEET 2 OF 3)
A10E	LINES AND SYMBOLS (SHEET 3 OF 3)
A10F	LEGEND - SOIL (SHEET 1 OF 2)
A10G	LEGEND - SOIL (SHEET 2 OF 2)
A10H	LEGEND - ROCK
A62B	LIMITS OF PAYMENT FOR EXCAVATION AND BACKFILL - BRIDGE SURCHARGE AND WALL
A76A	CONCRETE BARRIER TYPE 60
B0-3	BRIDGE DETAILS
RSP B3-1A	RETAINING WALL TYPE 1 (CASE 1)
RSP B3-5	RETAINING WALL DETAILS NO. 1
RSP B11-47	CABLE RAILING
RSP B11-56	CONCRETE BARRIER TYPE 736

SOIL NAIL WALL OFFSET DETAIL

NO SCALE

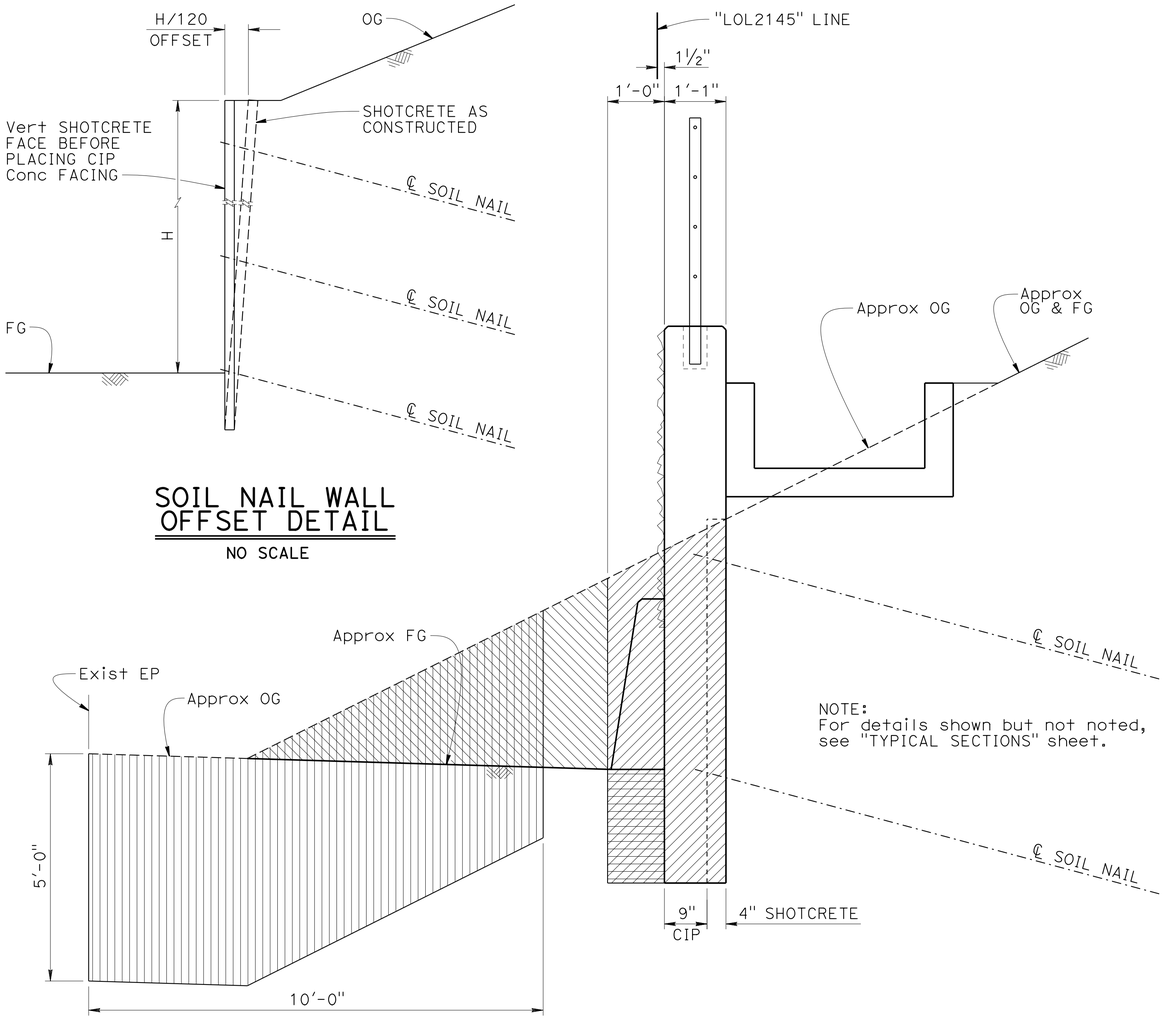

NOTE:
For details shown but not noted, see "TYPICAL SECTIONS" sheet.

QUANTITIES

STRUCTURE EXCAVATION (RETAINING WALL)	380 CY
STRUCTURE EXCAVATION (SOIL NAIL WALL)	546 CY
STRUCTURE EXCAVATION (TYPE Y-1) (AERIALLY DEPOSITED LEAD)	185 CY
STRUCTURE BACKFILL (RETAINING WALL)	221 CY
STRUCTURE BACKFILL (SOIL NAIL WALL)	94 CY
PERVIOUS BACKFILL MATERIAL (RETAINING WALL)	18 CY
SOIL NAIL	6,220 LF
STRUCTURAL CONCRETE, RETAINING WALL	559 CY
CONCRETE SURFACE TEXTURE	8,583 SQFT
BAR REINFORCING STEEL (RETAINING WALL)	82,339 LB
STRUCTURAL SHOTCRETE	124 CY
PREPARE AND STAIN CONCRETE	8,229 SQFT
CABLE RAILING	1,402 LF
CONCRETE BARRIER (TYPE 60D)	1,424 LF
CONCRETE BARRIER (TYPE 736B MODIFIED)	26 LF

SOIL NAIL DESIGN TABLE

Wall Zone	"B" Line Station	Max Wall Height (ft)	Min Nail Embedment Length (ft)	Max Vert Nail Spacing (ft)	Max Horiz Nail Spacing (ft)	Qd (lbs/ft)	Rebar Grade (ksi)	Rebar Diameter (in)	Min Allowable Facing Resistance (kips) Static	Min Allowable Facing Resistance (kips) Seismic
1	2144+88.16 to 2154+90.10	14.5	10	5	5	2,720	75	1.0	30	38
	2154+90.10 to 2157+58.21			4	4					

NOTE:
Wall height is a vertical distance from the finished grade of roadway to the top of gutter.

Denotes Structure Excavation (Soil Nail Wall) UON below

Denotes Structure Backfill (Soil Nail Wall)

Denotes Roadway Excavation, see "ROAD PLANS"

NOTE:
Any Structure Excavation (Soil Nail Wall) indicated above by shall be considered as Structure Excavation (Type Y-1) (Aerially Deposited Lead) when it is located within the zone designated by .

SOIL NAIL TYPICAL SECTION PAY LIMITS FOR STRUCTURE EXCAVATION AND BACKFILL

NO SCALE

INDEX TO PLANS

SHEET NO.	TITLE
1	GENERAL PLAN
2	INDEX TO PLANS
3	FOUNDATION PLAN NO. 1
4	FOUNDATION PLAN NO. 2
5	FOUNDATION PLAN NO. 3
6	STRUCTURE PLAN NO. 1
7	STRUCTURE PLAN NO. 2
8	STRUCTURE PLAN NO. 3
9	TYPICAL SECTIONS
10	MISCELLANEOUS DETAILS
11	SOIL NAIL ASSEMBLY
12	DRAINAGE DETAILS
13	ARCHITECTURAL DETAILS NO. 1
14	ARCHITECTURAL DETAILS NO. 2
15	ARCHITECTURAL DETAILS NO. 3
16	ARCHITECTURAL DETAILS NO. 4
17	ARCHITECTURAL DETAILS NO. 5
18	ARCHITECTURAL DETAILS NO. 6
19	ARCHITECTURAL DETAILS NO. 7
20	LOG OF TEST BORINGS SHEET 1 OF 2
21	LOG OF TEST BORINGS SHEET 2 OF 2
22	LOG OF TEST BORINGS 1 OF 2
23	LOG OF TEST BORINGS 2 OF 2

	BY	CHECKED
DESIGN	Richard Schendel	Mike Pope
DETAILS	Richard Schendel	Mike Pope
QUANTITIES	Richard Schendel	Mike Pope

STATE OF CALIFORNIA
DEPARTMENT OF TRANSPORTATION

DIVISION OF ENGINEERING SERVICES
STRUCTURE DESIGN
DESIGN BRANCH 18

BRIDGE NO. 53E0308
POST MILE 40.62

RETAINING WALL NO. 2145
INDEX TO PLANS

STRUCTURES DESIGN DETAIL SHEET (ENGLISH) (REV. 09-01-10)

ORIGINAL SCALE IN INCHES FOR REDUCED PLANS 0 1 2 3

UNIT: 3603
PROJECT NUMBER & PHASE: 07 1300 0007 1 CONTRACT NO.: 07-1193U1

DISREGARD PRINTS BEARING EARLIER REVISION DATES

REVISION DATES: 09/10/14 02/13/15 03/04/15

SHEET 2 OF 23

FILE => 53e0308-a-itp.dgn

USERNAME => s125624 DATE PLOTTED => 18-MAY-2015 TIME PLOTTED => 16:26

DIST	COUNTY	ROUTE	POST MILES TOTAL PROJECT	SHEET No.	TOTAL SHEETS
07	LA	10	37.2/42.4	2114	2313

REGISTERED CIVIL ENGINEER — DATE 10/01/14

6-1-15
PLANS APPROVAL DATE

REGISTERED PROFESSIONAL ENGINEER — RICHARD E. SCHENDEL — No. C64259 — Exp. 6-30-15 — CIVIL — STATE OF CALIFORNIA

The State of California or its officers or agents shall not be responsible for the accuracy or completeness of electronic copies of this plan sheet.

CURVE DATA

No.	R	Δ	T	L
Ⓐ	1470.95	01°06′23″	14.20	28.40

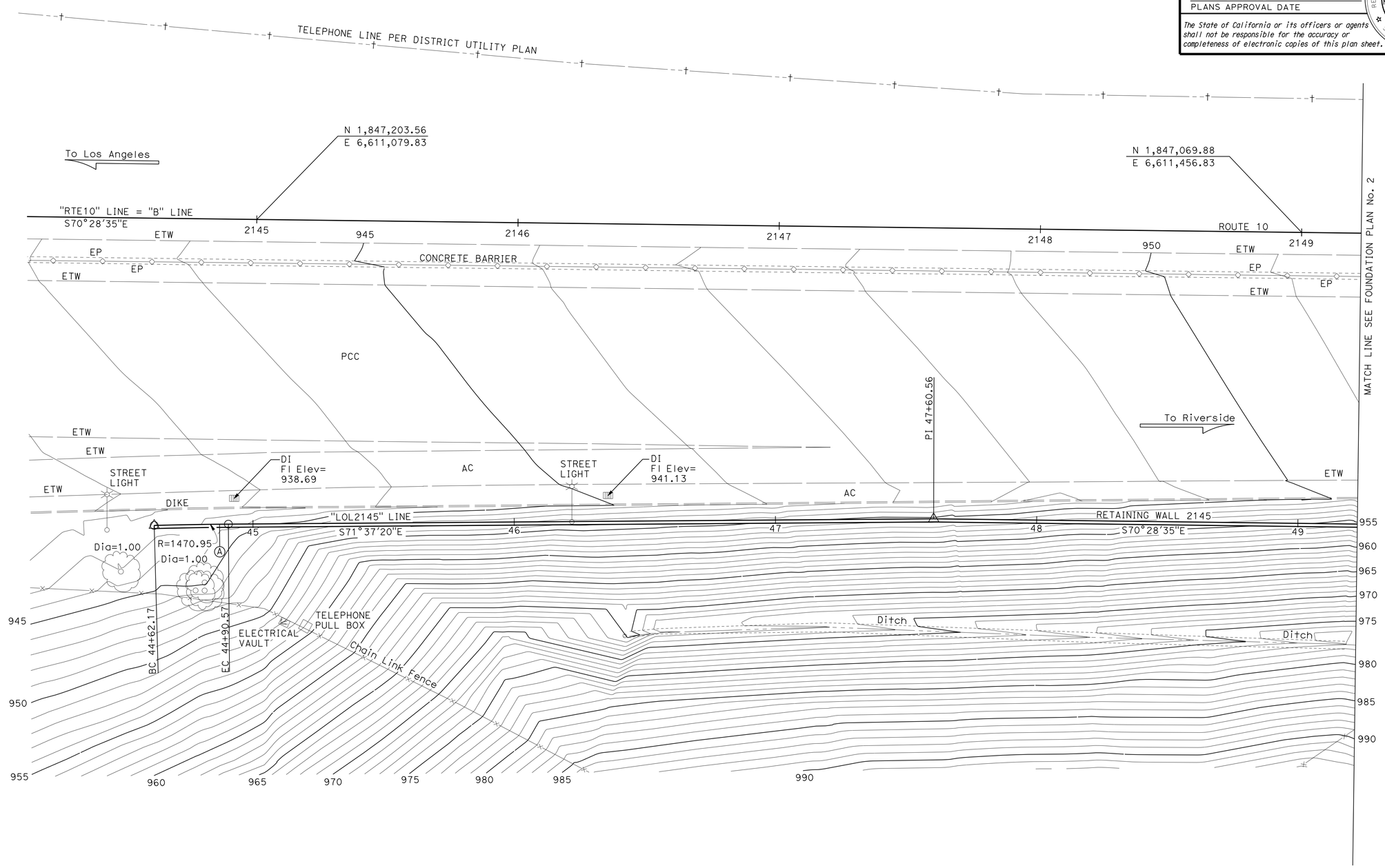

SURVEY CONTROL

PRHV 1526 (NOT SHOWN ON PLAN)
Fnd SET PK IN AC
220.19 Ft Rt Rte 10
Sta 2223+44.31
N 1,845,473.91
E 6,618,604.71
Elev = 738.25

PRHV 1527 (NOT SHOWN ON PLAN)
Fnd L&T IN TC
170.05 Ft Lt Rte 10
Sta 2223+76.72
N 1,845,865.25
E 6,618,590.63
Elev = 748.86

PRELIMINARY INVESTIGATION SECTION

SCALE 1"=20′	VERT.DATUM NAVD88	PHOTOGRAMMETRY AS OF: 02/2008			
	HORZ.DATUM NAD83	SURVEYED	BY District 04/2008	CHECKED	BY C.Fassett 06/2011
ALIGNMENT TIES Dist. Traverse Sheet		DRAFTED	BY Zolnikov/Fassett 06/2011	CHECKED	BY T.Schmalz 06/2011

DESIGN	BY Richard Schendel	CHECKED Mike Pope
DETAILS	BY Richard Schendel	CHECKED Mike Pope
QUANTITIES	BY Richard Schendel	CHECKED Mike Pope

STATE OF CALIFORNIA
DEPARTMENT OF TRANSPORTATION

DIVISION OF ENGINEERING SERVICES
STRUCTURE DESIGN
DESIGN BRANCH 18

BRIDGE NO. 53E0308
POST MILE 40.62

RETAINING WALL NO. 2145
FOUNDATION PLAN NO. 1

STRUCTURES FOUNDATION PLAN SHEET (ENGLISH) (REV. 09-01-10)

ORIGINAL SCALE IN INCHES FOR REDUCED PLANS 0 1 2 3

UNIT: 3646
PROJECT NUMBER & PHASE: 0713000007 1
CONTRACT NO.: 07-1193U

DISREGARD PRINTS BEARING EARLIER REVISION DATES

REVISION DATES: 06/03/11 01/29/14 01/21/14

SHEET 3 OF 23

FILE => 53e0308-c-fp101.dgn

USERNAME => s125624 DATE PLOTTED => 18-MAY-2015 TIME PLOTTED => 16:26

DIST	COUNTY	ROUTE	POST MILES TOTAL PROJECT	SHEET No.	TOTAL SHEETS
07	LA	10	37.2/42.4	2115	2313

REGISTERED CIVIL ENGINEER — DATE 10/01/14

6-1-15
PLANS APPROVAL DATE

REGISTERED PROFESSIONAL ENGINEER — RICHARD E. SCHENDEL — No. C64259 — Exp. 6-30-15 — CIVIL — STATE OF CALIFORNIA

The State of California or its officers or agents shall not be responsible for the accuracy or completeness of electronic copies of this plan sheet.

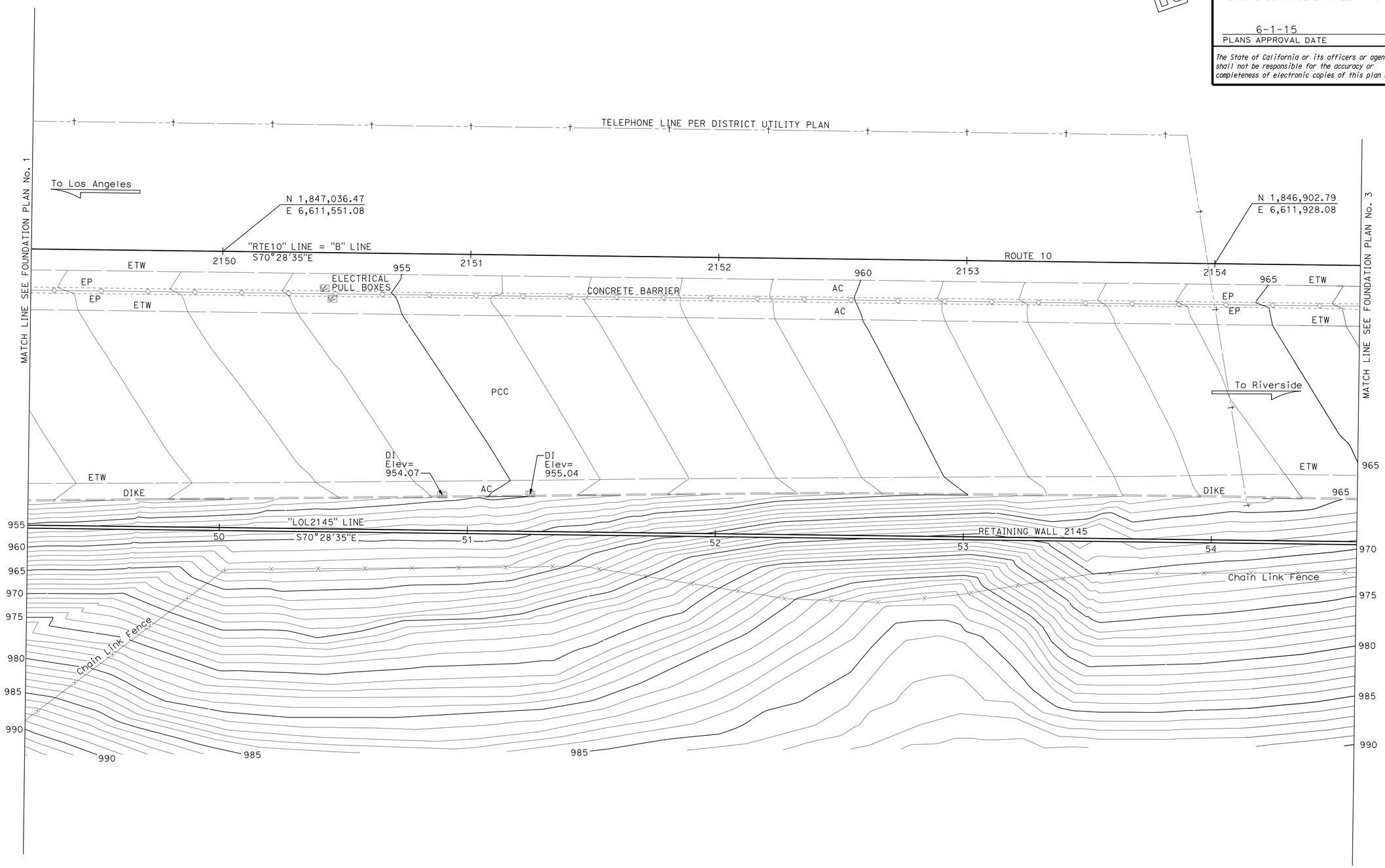

PRELIMINARY INVESTIGATION SECTION					
SCALE 1"=20'	VERT.DATUM NAVD88	PHOTOGRAMMETRY AS OF: 02/2008			
	HORZ.DATUM NAD83	SURVEYED	BY District 04/2008	CHECKED	BY C.Fassett 06/2011
ALIGNMENT TIES Dist. Traverse Sheet		DRAFTED	BY Zolnikov/Fassett 06/2011	CHECKED	BY T.Schmalz 06/2011

DESIGN	BY Richard Schendel	CHECKED Mike Pope
DETAILS	BY Richard Schendel	CHECKED Mike Pope
QUANTITIES	BY Richard Schendel	CHECKED Mike Pope

STATE OF CALIFORNIA
DEPARTMENT OF TRANSPORTATION

DIVISION OF ENGINEERING SERVICES
STRUCTURE DESIGN
DESIGN BRANCH 18

BRIDGE NO. 53E0308
POST MILE 40.62

RETAINING WALL NO. 2145
FOUNDATION PLAN NO. 2

STRUCTURES FOUNDATION PLAN SHEET (ENGLISH) (REV. 09-01-10)

ORIGINAL SCALE IN INCHES FOR REDUCED PLANS 0 1 2 3

UNIT: 3646
PROJECT NUMBER & PHASE: 0713000007 1
CONTRACT NO.: 07-1193U

DISREGARD PRINTS BEARING EARLIER REVISION DATES

REVISION DATES: 06/05/11 01/21/14 01/21/14

SHEET 4 OF 23

FILE => 53e0308-c-fp102.dgn

USERNAME => s125624 DATE PLOTTED => 18-MAY-2015 TIME PLOTTED => 16:26

DIST	COUNTY	ROUTE	POST MILES TOTAL PROJECT	SHEET No.	TOTAL SHEETS
07	LA	10	37.2/42.4	2116	2313

REGISTERED CIVIL ENGINEER 10/01/14 DATE

6-1-15
PLANS APPROVAL DATE

REGISTERED PROFESSIONAL ENGINEER RICHARD E. SCHENDEL No. C64259 Exp. 6-30-15 CIVIL STATE OF CALIFORNIA

The State of California or its officers or agents shall not be responsible for the accuracy or completeness of electronic copies of this plan sheet.

CURVE DATA

No.	R	Δ	T	L
Ⓑ	4200.00	15°38′00″	576.57	1145.98
Ⓒ	2196.05	04°22′57″	84.03	167.98
Ⓓ	2195.38	02°58′58″	57.16	114.30

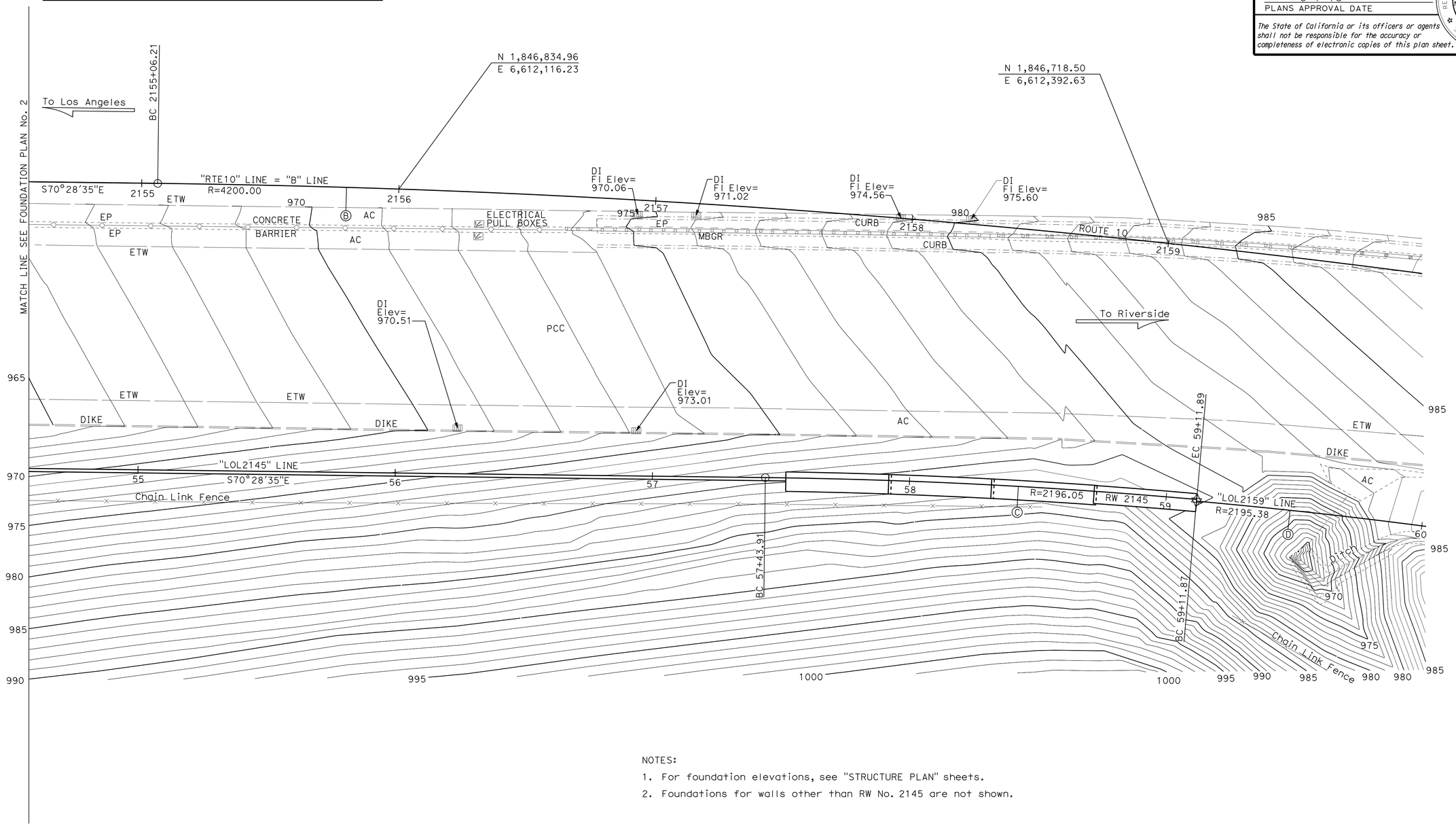

NOTES:

1. For foundation elevations, see "STRUCTURE PLAN" sheets.
2. Foundations for walls other than RW No. 2145 are not shown.

PRELIMINARY INVESTIGATION SECTION

SCALE 1"=20′	VERT.DATUM NAVD88	PHOTOGRAMMETRY AS OF: 02/2008			
	HORZ.DATUM NAD83	SURVEYED	BY District 04/2008	CHECKED	BY C.Fassett 06/2011
ALIGNMENT TIES Dist. Traverse Sheet		DRAFTED	BY Zolnikov/Fassett 06/2011	CHECKED	BY T.Schmalz 06/2011

DESIGN	BY Richard Schendel	CHECKED Mike Pope
DETAILS	BY Richard Schendel	CHECKED Mike Pope
QUANTITIES	BY Richard Schendel	CHECKED Mike Pope

STATE OF CALIFORNIA
DEPARTMENT OF TRANSPORTATION

DIVISION OF ENGINEERING SERVICES
STRUCTURE DESIGN
DESIGN BRANCH 18

BRIDGE NO. 53E0308
POST MILE 40.62

RETAINING WALL NO. 2145
FOUNDATION PLAN NO. 3

STRUCTURES FOUNDATION PLAN SHEET (ENGLISH) (REV. 09-01-10)

ORIGINAL SCALE IN INCHES FOR REDUCED PLANS 0 1 2 3

UNIT: 3646
PROJECT NUMBER & PHASE: 0713000007 1
CONTRACT NO.: 07-1193U

DISREGARD PRINTS BEARING EARLIER REVISION DATES

REVISION DATES 06/03/11 01/28/14 01/21/14

SHEET 5 OF 23

FILE => 53e0308-c-fp103.dgn

USERNAME => s125624 DATE PLOTTED => 18-MAY-2015 TIME PLOTTED => 16:26

DIST	COUNTY	ROUTE	POST MILES TOTAL PROJECT	SHEET No.	TOTAL SHEETS
07	LA	10	37.2/42.4	2117	2313

REGISTERED CIVIL ENGINEER 10/01/14 DATE

6-1-15
PLANS APPROVAL DATE

REGISTERED PROFESSIONAL ENGINEER RICHARD E. SCHENDEL No. C64259 Exp. 6-30-15 CIVIL STATE OF CALIFORNIA

The State of California or its officers or agents shall not be responsible for the accuracy or completeness of scanned copies of this plan sheet.

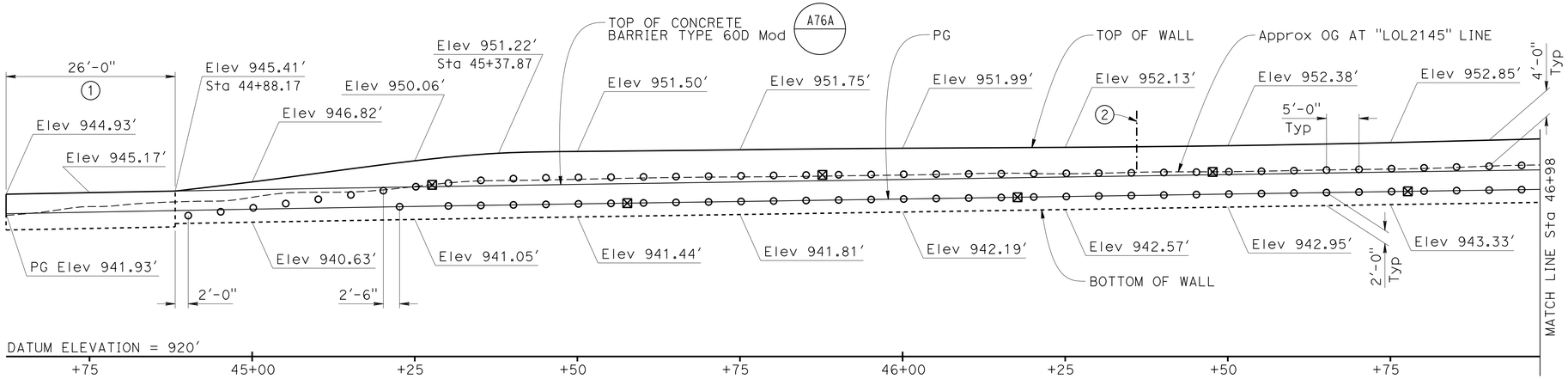

DEVELOPED MIRRORED ELEVATION

1" = 10'

NOTES:

1. Top of wall must be a smooth curve between control points as shown.
2. Unless otherwise shown, wall elevations are shown at even 25 ft stations along "LOL2145" Line.
3. All horizontal dimensions are measured along "LOL2145" Line.
4. Cable railing and weep holes not shown.
5. The exact location of the test nails are to be determined by the Engineer.
6. For Soil Nail Assembly details, see "SOIL NAIL ASSEMBLY" sheet.
7. Adjust nail locations as necessary to clear down drains by 6" minimum.

LEGEND:

- ○ Location of Soil Nail Assembly, Tot 177 this sheet (locate as shown)
- ⊠ Location of Test Soil Nail Assembly, Tot 15 this sheet (locate as shown)
- (1) Concrete Barrier Type 736B Mod, RSP B11-56 see "TYPICAL SECTIONS" sheet.
- (2) Approximate ℄ Down Drain, see "ROAD PLANS" and Note 7.

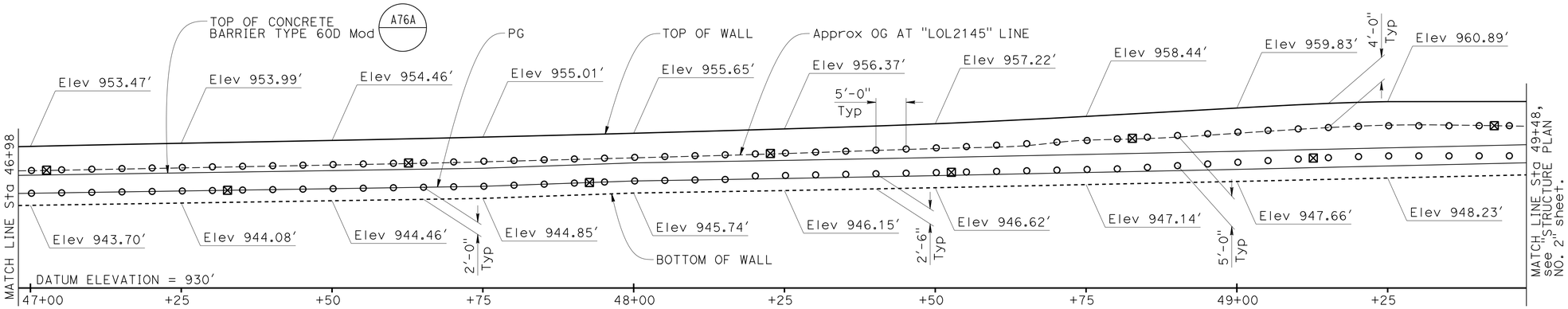

DEVELOPED MIRRORED ELEVATION

1" = 10'

DESIGN	BY Richard Schendel	CHECKED Mike Pope	
DETAILS	BY Richard Schendel	CHECKED Mike Pope	
QUANTITIES	BY Richard Schendel	CHECKED Mike Pope	

STATE OF CALIFORNIA
DEPARTMENT OF TRANSPORTATION

DIVISION OF ENGINEERING SERVICES
STRUCTURE DESIGN
DESIGN BRANCH 18

BRIDGE NO. 53E0308
POST MILE 40.62

RETAINING WALL NO. 2145
STRUCTURE PLAN NO. 1

STRUCTURES DESIGN DETAIL SHEET (ENGLISH) (REV. 09-01-10)

ORIGINAL SCALE IN INCHES FOR REDUCED PLANS 0 1 2 3

UNIT: 3603
PROJECT NUMBER & PHASE: 07 1300 0007 1 CONTRACT NO.: 07-1193U1

DISREGARD PRINTS BEARING EARLIER REVISION DATES

REVISION DATES 10/29/13 01/29/14 03/04/14 05/16/14

SHEET 6 OF 23

FILE => 53e0308-e-sp01.dgn

USERNAME => s125624 DATE PLOTTED => 18-MAY-2015 TIME PLOTTED => 16:26

DIST	COUNTY	ROUTE	POST MILES TOTAL PROJECT	SHEET No.	TOTAL SHEETS
07	LA	10	37.2/42.4	2118	2313

REGISTERED CIVIL ENGINEER 10/01/14 DATE

6-1-15
PLANS APPROVAL DATE

REGISTERED PROFESSIONAL ENGINEER RICHARD E. SCHENDEL No. C64259 Exp. 6-30-15 CIVIL STATE OF CALIFORNIA

The State of California or its officers or agents shall not be responsible for the accuracy or completeness of scanned copies of this plan sheet.

NOTES:

1. Top of wall must be a smooth curve between control points as shown.
2. Unless otherwise shown, wall elevations are shown at even 25 ft stations along "LOL2145" Line.
3. All horizontal dimensions are measured along "LOL2145" Line.
4. Cable railing and weep holes not shown.
5. The exact location of the test nails are to be determined by the Engineer.
6. For Soil Nail Assembly details, see "SOIL NAIL ASSEMBLY" sheet.
7. Adjust nail locations as necessary to clear down drains by 6" minimum.

LEGEND:

- ○ Location of Soil Nail Assembly, Tot 233 this sheet (locate as shown)
- ⊠ Location of Test Soil Nail Assembly, Tot 19 this sheet (locate as shown)
- (1) Approximate ℄ Down Drain, see "ROAD PLANS" and Note 7.

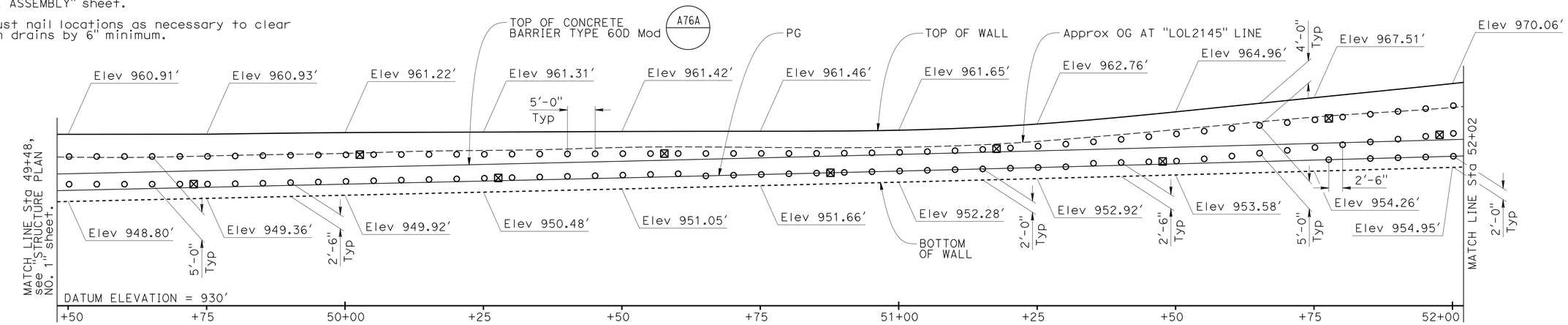

DEVELOPED MIRRORED ELEVATION

1" = 10′

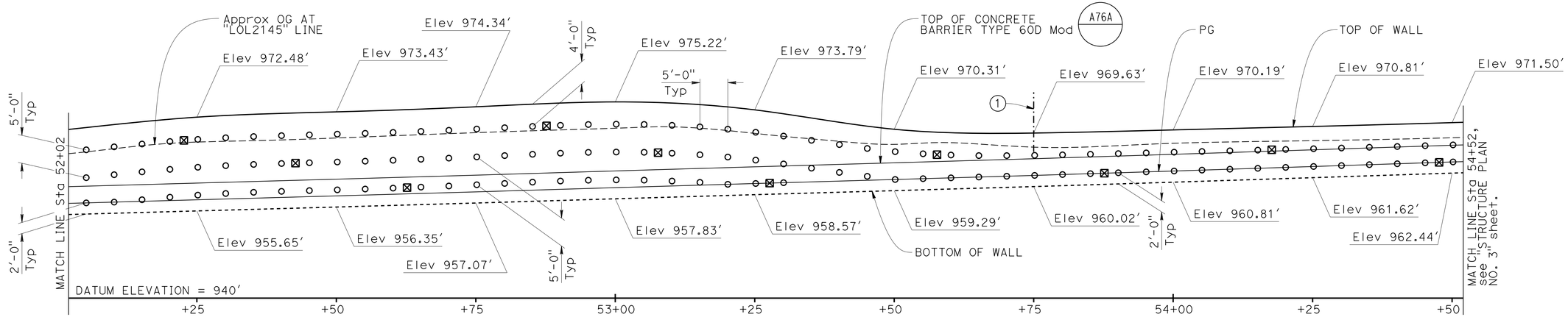

DEVELOPED MIRRORED ELEVATION

1" = 10′

DESIGN	BY Richard Schendel	CHECKED Mike Pope	
DETAILS	BY Richard Schendel	CHECKED Mike Pope	
QUANTITIES	BY Richard Schendel	CHECKED Mike Pope	

STATE OF CALIFORNIA
DEPARTMENT OF TRANSPORTATION

DIVISION OF ENGINEERING SERVICES
STRUCTURE DESIGN
DESIGN BRANCH 18

BRIDGE NO. 53E0308
POST MILE 40.62

RETAINING WALL NO. 2145
STRUCTURE PLAN NO. 2

STRUCTURES DESIGN DETAIL SHEET (ENGLISH) (REV. 09-01-10)

ORIGINAL SCALE IN INCHES FOR REDUCED PLANS 0 1 2 3

UNIT: 3603
PROJECT NUMBER & PHASE: 07 1300 0007 1 CONTRACT NO.: 07-1193U1

DISREGARD PRINTS BEARING EARLIER REVISION DATES

REVISION DATES: 10/29/13 01/24/14 03/04/14 05/16/14

SHEET 7 OF 23

FILE => 53e0308-e-sp02.dgn

USERNAME => s125624 DATE PLOTTED => 18-MAY-2015 TIME PLOTTED => 16:26

DIST	COUNTY	ROUTE	POST MILES TOTAL PROJECT	SHEET No.	TOTAL SHEETS
07	LA	10	37.2/42.4	2119	2313

REGISTERED CIVIL ENGINEER 10/01/14 DATE

6-1-15
PLANS APPROVAL DATE

REGISTERED PROFESSIONAL ENGINEER RICHARD E. SCHENDEL No. C64259 Exp. 6-30-15 CIVIL STATE OF CALIFORNIA

The State of California or its officers or agents shall not be responsible for the accuracy or completeness of scanned copies of this plan sheet.

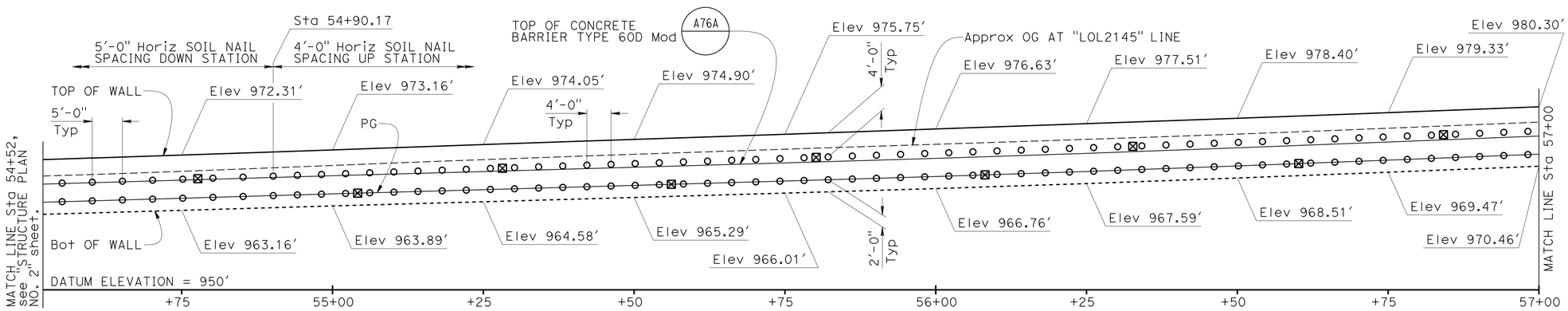

DEVELOPED MIRRORED ELEVATION

1" = 10'

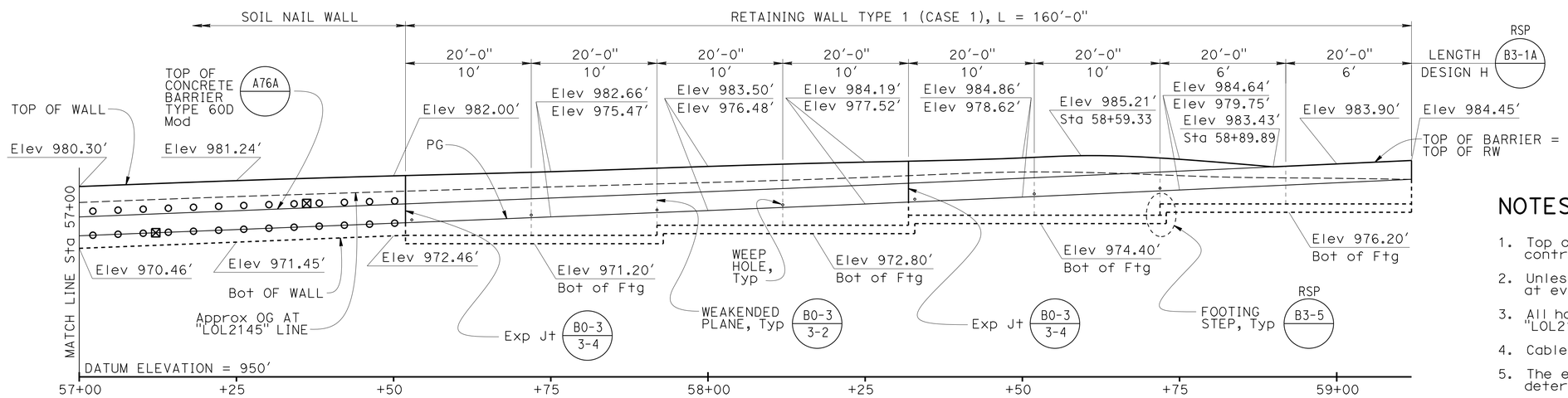

NOTE:
For soil nail layout dimensions, see "DEVELOPED MIRRORED ELEVATION" above.

DEVELOPED MIRRORED ELEVATION

1" = 10'

B0-3 | RSP B3-1A | RSP B3-5

NOTES:

1. Top of wall must be a smooth curve between control points as shown.
2. Unless otherwise shown, wall elevations are shown at even 25 ft stations along "LOL2145" Line.
3. All horizontal dimensions are measured along "LOL2145" Line.
4. Cable railing and weep holes not shown.
5. The exact location of the test nails are to be determined by the Engineer.
6. For Soil Nail Assembly details, see "SOIL NAIL ASSEMBLY" sheet.

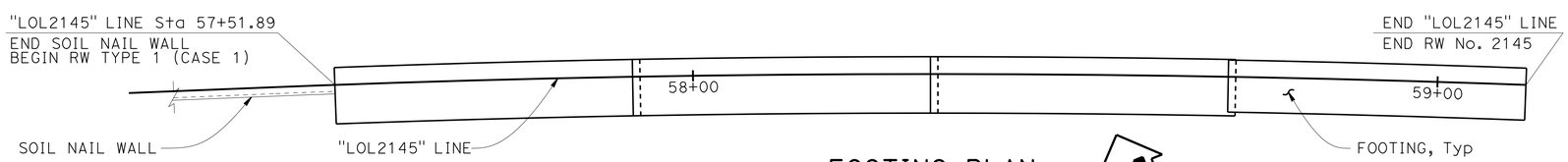

FOOTING PLAN

1" = 10'

LEGEND:

- ○ Location of Soil Nail Assembly, Tot 146 this sheet (locate as shown)
- ⊠ Location of Test Soil Nail Assembly, Tot 11 this sheet (locate as shown)
- Elev xxx.xx — Top of Wall Elevation
- Elev xxx.xx — PG Elevation

	BY	CHECKED
DESIGN	Richard Schendel	Mike Pope
DETAILS	Richard Schendel	Mike Pope
QUANTITIES	Richard Schendel	Mike Pope

STATE OF CALIFORNIA
DEPARTMENT OF TRANSPORTATION

DIVISION OF ENGINEERING SERVICES
STRUCTURE DESIGN
DESIGN BRANCH 18

BRIDGE NO. 53E0308
POST MILE 40.62

RETAINING WALL NO. 2145
STRUCTURE PLAN NO. 3

STRUCTURES DESIGN DETAIL SHEET (ENGLISH) (REV. 09-01-10)

ORIGINAL SCALE IN INCHES FOR REDUCED PLANS 0 1 2 3

UNIT: 3603
PROJECT NUMBER & PHASE: 07 1300 0007 1 CONTRACT NO.: 07-1193U1

DISREGARD PRINTS BEARING EARLIER REVISION DATES

REVISION DATES 05/13/14 02/04/14 03/04/14

SHEET 8 OF 23

FILE => 53e0308-e-sp03.dgn

USERNAME => s125624 DATE PLOTTED => 18-MAY-2015 TIME PLOTTED => 16:26

DIST	COUNTY	ROUTE	POST MILES TOTAL PROJECT	SHEET No.	TOTAL SHEETS
07	LA	10	37.2/42.4	2120	2313

REGISTERED CIVIL ENGINEER 10/01/14 DATE

6-1-15
PLANS APPROVAL DATE

REGISTERED PROFESSIONAL ENGINEER RICHARD E. SCHENDEL No. C64259 Exp. 6-30-15 CIVIL STATE OF CALIFORNIA

The State of California or its officers or agents shall not be responsible for the accuracy or completeness of scanned copies of this plan sheet.

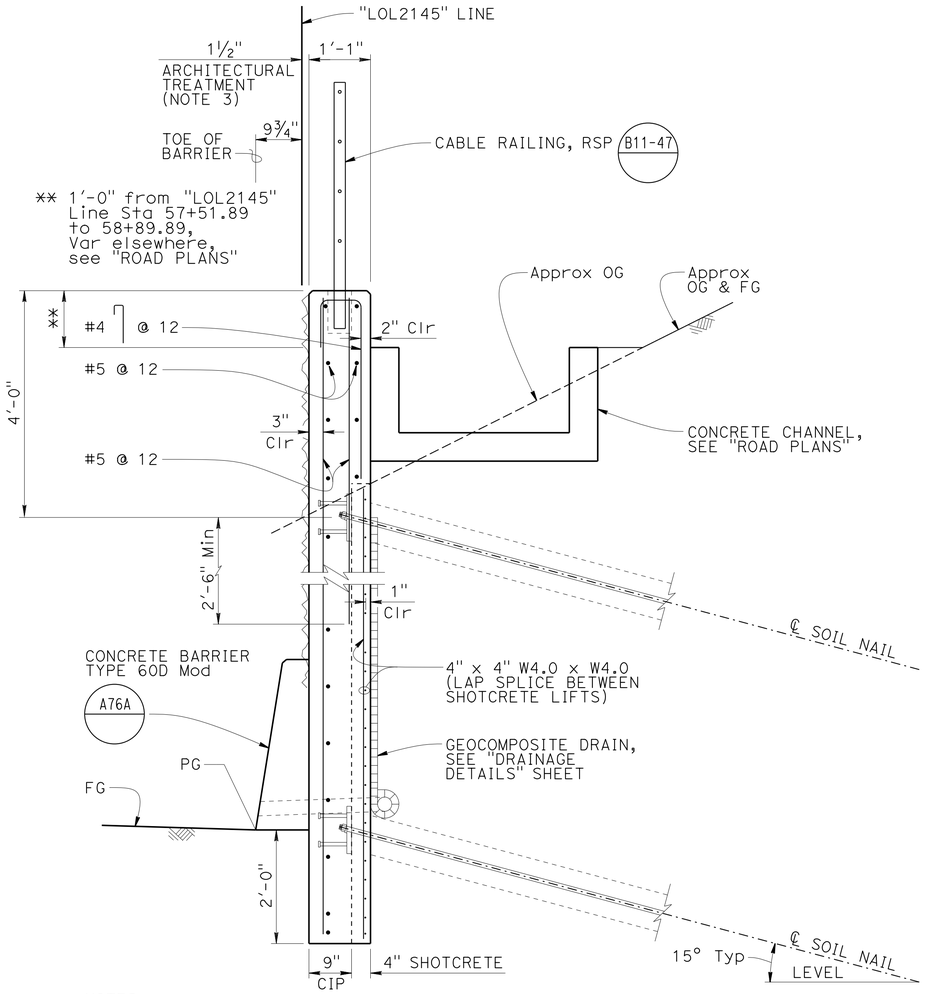

NOTES:

1. For additional Reinf not shown, see "SOIL NAIL ASSEMBLY" sheet.
2. For soil nail details not shown and for soil nail details shown but not noted, see "SOIL NAIL ASSEMBLY" sheet.
3. For Architectural Treatment, see "ARCHITECTURAL DETAILS" sheets.

SOIL NAIL WALL

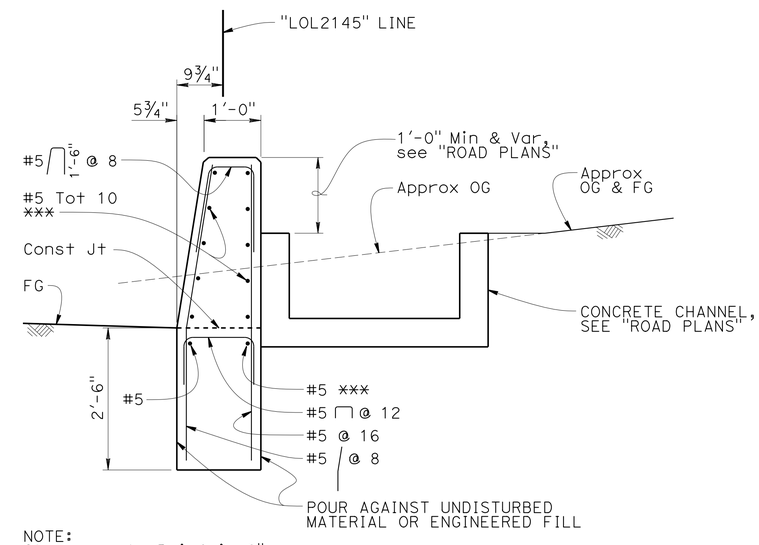

NOTE:
Clearance to Reinf is 2".

*** Extend 3'-0" Min into adjacent Type 60D Mod Barrier or Soil Nail Wall.

TYPE 736B MODIFIED

RSP B11-56

TYPICAL SECTIONS

¾" = 1'-0"

DESIGN	BY Richard Schendel	CHECKED Mike Pope	
DETAILS	BY Richard Schendel	CHECKED Mike Pope	
QUANTITIES	BY Richard Schendel	CHECKED Mike Pope	

STATE OF CALIFORNIA DEPARTMENT OF TRANSPORTATION

DIVISION OF ENGINEERING SERVICES STRUCTURE DESIGN DESIGN BRANCH 18

BRIDGE NO. 53E0308
POST MILE 40.62

RETAINING WALL NO. 2145
TYPICAL SECTIONS

STRUCTURES DESIGN DETAIL SHEET (ENGLISH) (REV. 09-01-10)

ORIGINAL SCALE IN INCHES FOR REDUCED PLANS 0 1 2 3

UNIT: 3603
PROJECT NUMBER & PHASE: 07 1300 0007 1 CONTRACT NO.: 07-1193U1

DISREGARD PRINTS BEARING EARLIER REVISION DATES

REVISION DATES 10/30/13 12/02/13 07/21/14 03/04/15

SHEET 9 OF 23

FILE => 53e0308-g-ts01.dgn

USERNAME => s125624 DATE PLOTTED => 18-MAR-2015 TIME PLOTTED => 16:26

DIST	COUNTY	ROUTE	POST MILES TOTAL PROJECT	SHEET No.	TOTAL SHEETS
07	LA	10	37.2/42.4	2121	2313

REGISTERED CIVIL ENGINEER 10/01/14 DATE

6-1-15
PLANS APPROVAL DATE

REGISTERED PROFESSIONAL ENGINEER
RICHARD E. SCHENDEL
No. C64259
Exp. 6-30-15
CIVIL
STATE OF CALIFORNIA

The State of California or its officers or agents shall not be responsible for the accuracy or completeness of scanned copies of this plan sheet.

NOTE:

The Contractor shall verify the location of the 24" CSP before beginning soil nail wall construction.

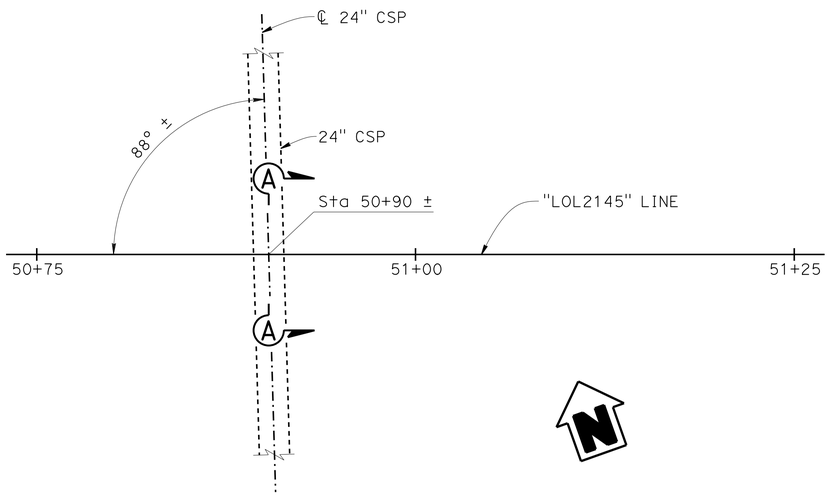

PLAN

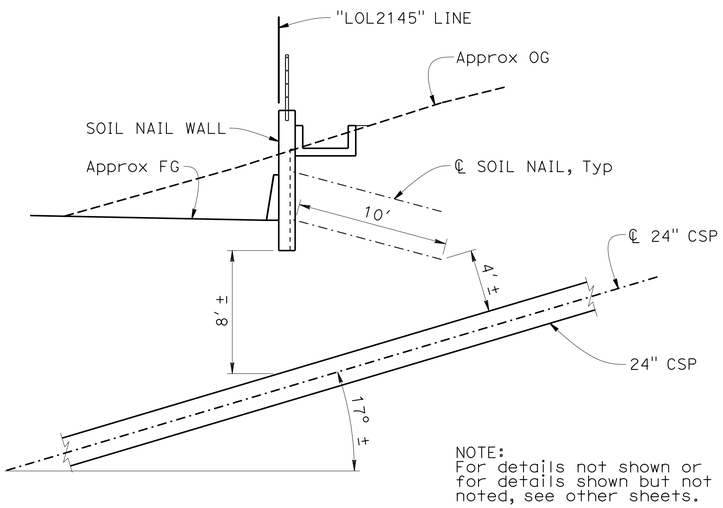

NOTE:
For details not shown or for details shown but not noted, see other sheets.

SECTION A-A

EXISTING 24" CSP DETAIL

1" = 5'

DESIGN	BY Richard Schendel	CHECKED Jeffrey Duffin	
DETAILS	BY Richard Schendel	CHECKED Mike Pope	
QUANTITIES	BY Richard Schendel	CHECKED Mike Pope	

STATE OF CALIFORNIA
DEPARTMENT OF TRANSPORTATION

DIVISION OF ENGINEERING SERVICES
STRUCTURE DESIGN
DESIGN BRANCH 18

BRIDGE NO. 53E0308
POST MILE 40.62

RETAINING WALL NO. 2145
MISCELLANEOUS DETAILS

STRUCTURES DESIGN DETAIL SHEET (ENGLISH) (REV. 09-01-10)

ORIGINAL SCALE IN INCHES FOR REDUCED PLANS 0 1 2 3

UNIT: 3603
PROJECT NUMBER & PHASE: 07 1300 0007 1 CONTRACT NO.: 07-1193U1

DISREGARD PRINTS BEARING EARLIER REVISION DATES

REVISION DATES: 10/29/13 01/21/14

SHEET 10 OF 23

FILE => 53e0308-h-miscdt01.dgn

USERNAME => s125624 DATE PLOTTED => 18-MAY-2015 TIME PLOTTED => 16:26

DIST	COUNTY	ROUTE	POST MILES TOTAL PROJECT	SHEET No.	TOTAL SHEETS
07	LA	10	37.2/42.4	2122	2313

REGISTERED CIVIL ENGINEER — DATE 10/01/14

6-1-15
PLANS APPROVAL DATE

REGISTERED PROFESSIONAL ENGINEER — RICHARD E. SCHENDEL — No. C64259 — Exp. 6-30-15 — CIVIL — STATE OF CALIFORNIA

The State of California or its officers or agents shall not be responsible for the accuracy or completeness of scanned copies of this plan sheet.

NOTES:

1. The test nail embedment length, L_{eT}, shall be 12'-0" for test nails between stations 44+88.17 and 54+90.17. The test nail embedment length, L_{eT}, shall be 10'-0" for test nails between stations 54+90.17 and 57+51.89.
2. The total length of the test nail assembly equals the embedment length plus the length required for jacking equipment.
3. For location of proof test nails, see "STRUCTURE PLAN" sheets. Additional proof test nails shall be installed and tested per special provisions.
4. Contractor to determine drilled hole diameter.
5. Finished grout surface to be normal to the bar.
6. For test nails with L_{eT} = 10'-0", the bonded length L_B must be 8'-0".
7. Soil nail and test soil nail assemblies must not extend past the R/W line.

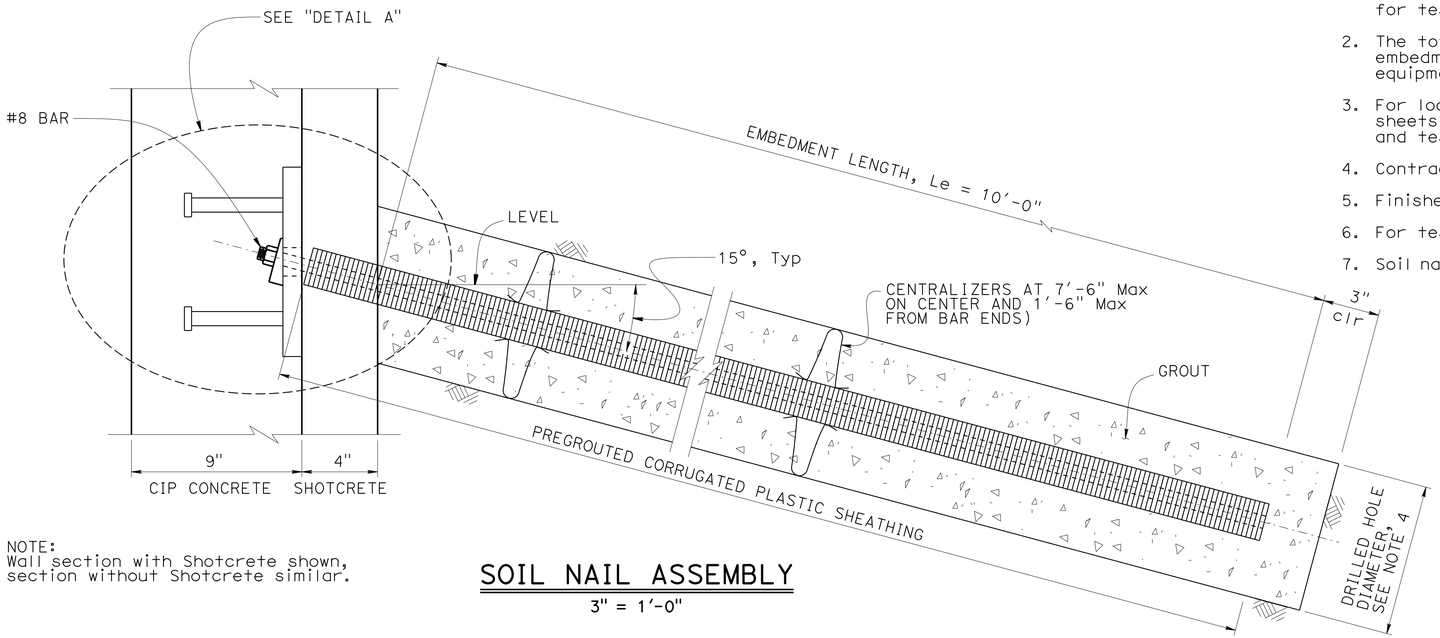

NOTE:
Wall section with Shotcrete shown, section without Shotcrete similar.

SOIL NAIL ASSEMBLY

3" = 1'-0"

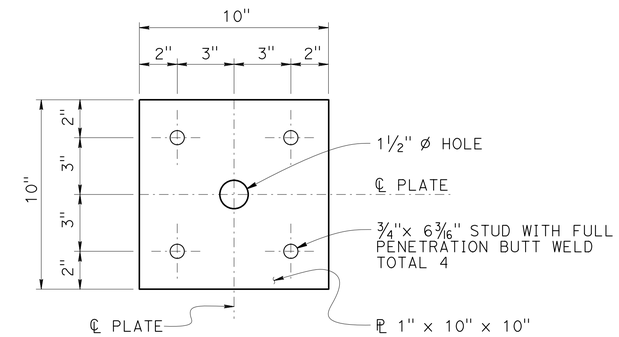

BEARING PLATE DETAIL

3" = 1'-0"

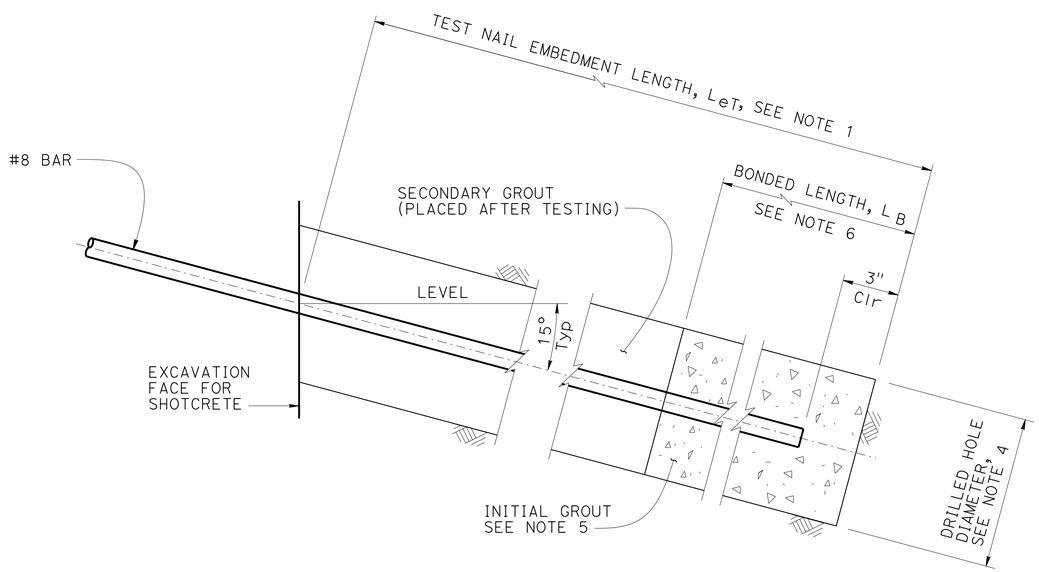

TEST NAIL DETAIL

3" = 1'-0"

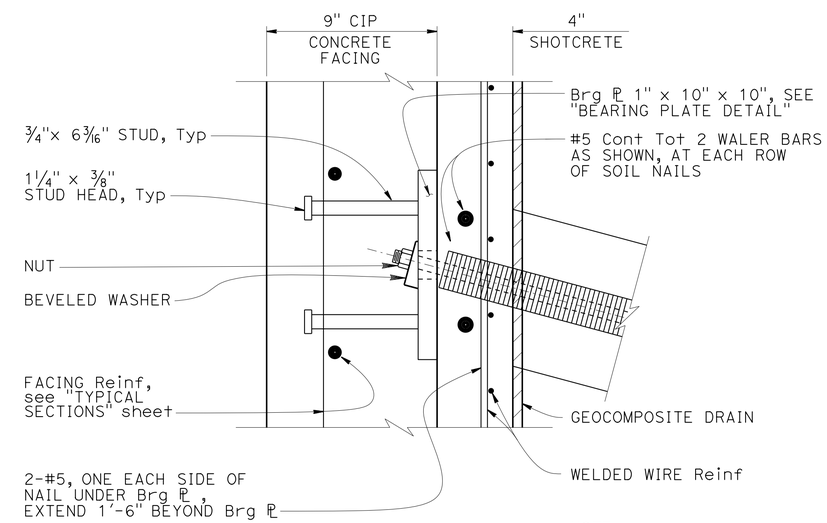

NOTE:
Wall section with Shotcrete shown, section without Shotcrete similar.

DETAIL A

3" = 1'-0"

	BY	CHECKED
DESIGN	Richard Schendel	Mike Pope
DETAILS	Richard Schendel	Mike Pope
QUANTITIES	Richard Schendel	Mike Pope

STATE OF CALIFORNIA
DEPARTMENT OF TRANSPORTATION

DIVISION OF ENGINEERING SERVICES
STRUCTURE DESIGN
DESIGN BRANCH 18

BRIDGE NO. 53E0308
POST MILE 40.62

RETAINING WALL NO. 2145
SOIL NAIL ASSEMBLY

STRUCTURES DESIGN DETAIL SHEET (ENGLISH) (REV. 09-01-10)

ORIGINAL SCALE IN INCHES FOR REDUCED PLANS 0 1 2 3

UNIT: 3603
PROJECT NUMBER & PHASE: 07 1300 0007 1 CONTRACT NO.: 07-1193U1

DISREGARD PRINTS BEARING EARLIER REVISION DATES

REVISION DATES: 10/29/13 12/02/13 12/22/13 05/13/14

SHEET 11 OF 23

FILE => 53e0308-i-sndet01.dgn

USERNAME => s125624 DATE PLOTTED => 18-MAY-2015 TIME PLOTTED => 16:26

DIST	COUNTY	ROUTE	POST MILES TOTAL PROJECT	SHEET No.	TOTAL SHEETS
07	LA	10	37.2/42.4	2123	2313

REGISTERED CIVIL ENGINEER 10/01/14 DATE

6-1-15
PLANS APPROVAL DATE

REGISTERED PROFESSIONAL ENGINEER RICHARD E. SCHENDEL No. C64259 Exp. 6-30-15 CIVIL STATE OF CALIFORNIA

The State of California or its officers or agents shall not be responsible for the accuracy or completeness of scanned copies of this plan sheet.

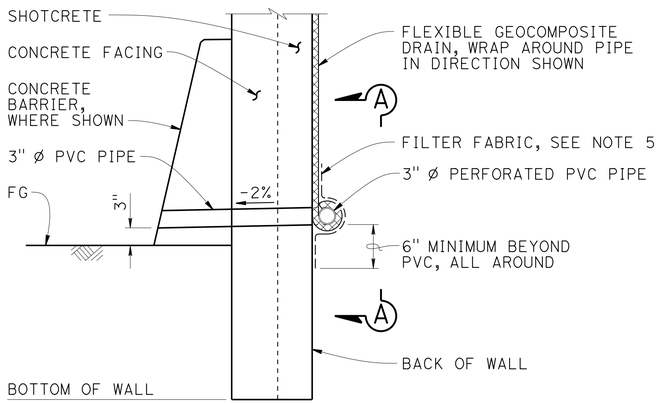

WALL DRAIN DETAIL AT WEEP HOLE - OPTION A

NO SCALE

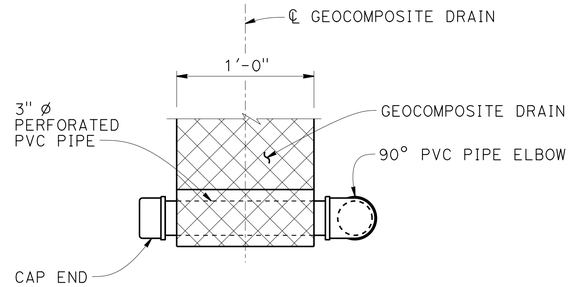

VIEW A-A

NO SCALE

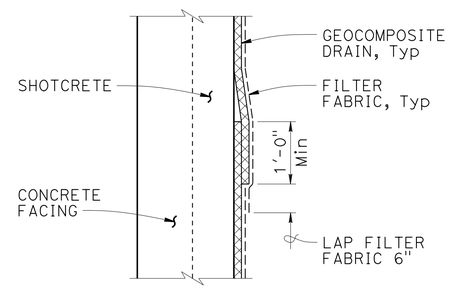

DRAIN SPLICE

NO SCALE

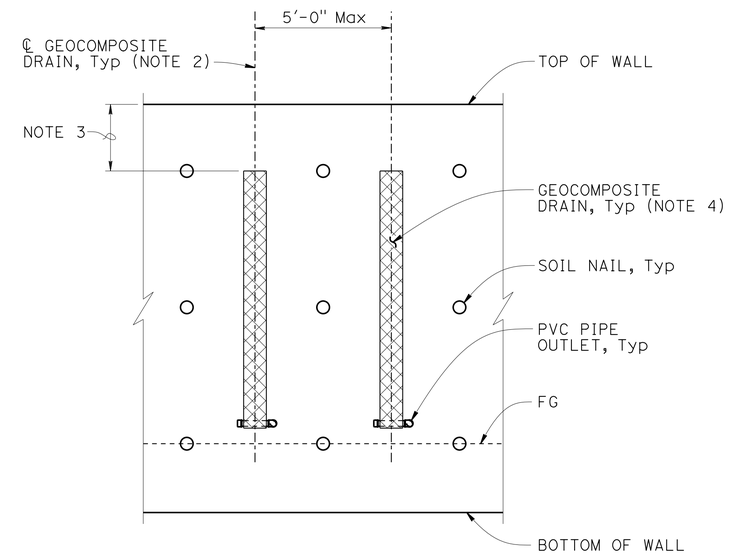

WALL PART ELEVATION

NO SCALE

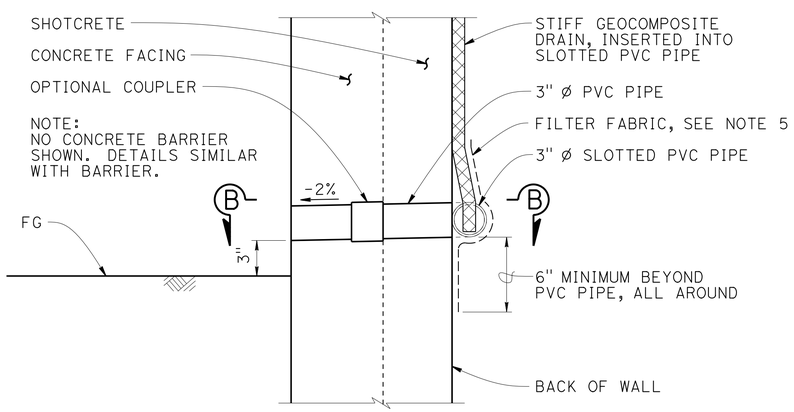

WALL DRAIN DETAIL AT WEEP HOLE - OPTION B

NO SCALE

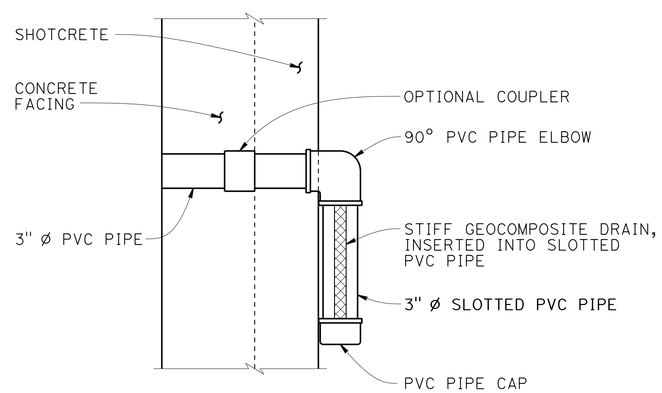

SECTION B-B

NO SCALE

NOTES:

1. Geocomposite Drain is per Section 88 Geosynthetics of the Standard Specifications.
2. Center Geocomposite Drains between soil nail columns.
3. Begin Geocomposite Drain at top soil nail row.
4. Geocomposite Drains must have filter fabric on soil side and wrapped around top and side edges.
5. Provide filter fabric where necessary to prevent soil from entering drain.
6. Alternative drain outlet details may be submitted for Engineer's approval.

	BY	CHECKED
DESIGN	Richard Schendel	Mike Pope
DETAILS	Richard Schendel	Mike Pope
QUANTITIES	Richard Schendel	Mike Pope

STATE OF CALIFORNIA
DEPARTMENT OF TRANSPORTATION

DIVISION OF ENGINEERING SERVICES
STRUCTURE DESIGN
DESIGN BRANCH 18

BRIDGE NO. 53E0308
POST MILE 40.62

RETAINING WALL NO. 2145
DRAINAGE DETAILS

STRUCTURES DESIGN DETAIL SHEET (ENGLISH) (REV. 09-01-10)

ORIGINAL SCALE IN INCHES FOR REDUCED PLANS 0 1 2 3

UNIT: 3603
PROJECT NUMBER & PHASE: 07 1300 0007 1 CONTRACT NO.: 07-1193U1

DISREGARD PRINTS BEARING EARLIER REVISION DATES

REVISION DATES 10/29/13 11/14/13

SHEET 12 OF 23

FILE => 53e0308-r-ddet01.dgn

USERNAME => s125624 DATE PLOTTED => 18-MAY-2015 TIME PLOTTED => 16:26

DIST	COUNTY	ROUTE	POST MILES TOTAL PROJECT	SHEET No.	TOTAL SHEETS
07	LA	10	37.2/42.4	2124	2313

REGISTERED CIVIL ENGINEER — DATE 10/01/14

6-1-15
PLANS APPROVAL DATE

REGISTERED PROFESSIONAL ENGINEER — RICHARD E. SCHENDEL — No. C64259 — Exp. 6-30-15 — CIVIL — STATE OF CALIFORNIA

The State of California or its officers or agents shall not be responsible for the accuracy or completeness of scanned copies of this plan sheet.

NOTES:

1. Entire cable railing not shown for clarity.
2. For "TYPICAL SECTION C-C", see "ARCHITECTURAL DETAILS NO. 4" sheet.
3. For Random Rock Texture, see "ARCHITECTURAL DETAILS NO. 5" sheet.

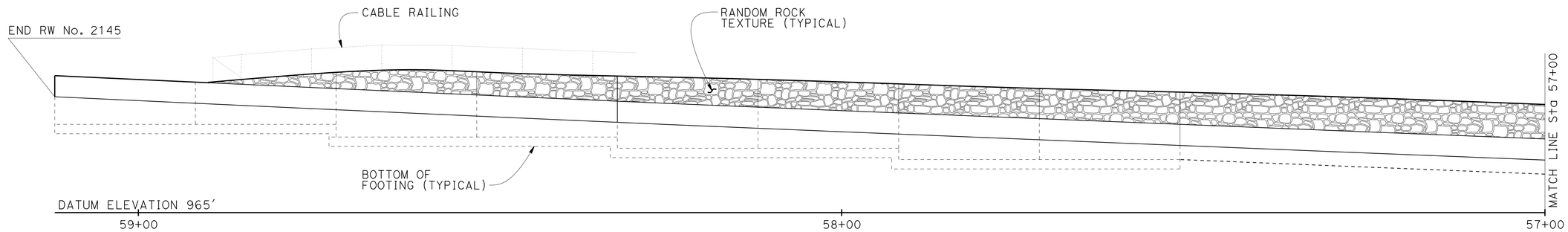

DEVELOPED ELEVATION

NO SCALE

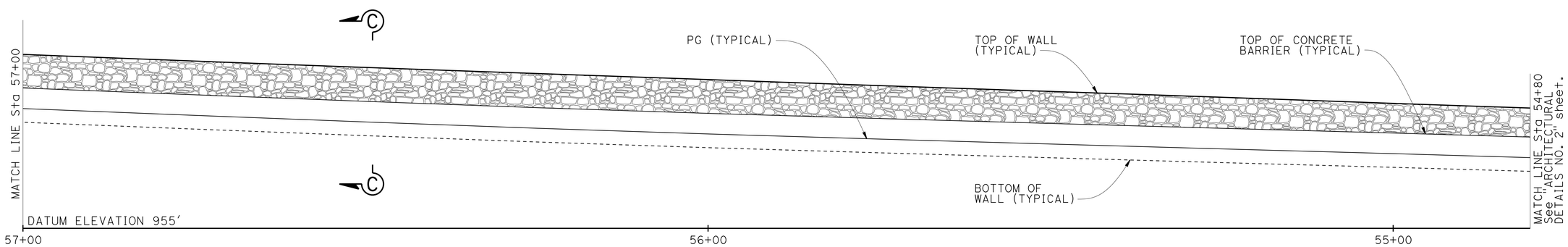

DEVELOPED ELEVATION

NO SCALE

DESIGN	BY Valerie Moore	CHECKED Richard Schendel	
DETAILS	BY Farideh Hosseinioun	CHECKED Richard Schendel	
QUANTITIES	BY Richard Schendel	CHECKED Mike Pope	

STATE OF CALIFORNIA
DEPARTMENT OF TRANSPORTATION

DIVISION OF ENGINEERING SERVICES
STRUCTURE DESIGN
DESIGN BRANCH 18

BRIDGE NO. 53E0308
POST MILE 40.62

RETAINING WALL NO. 2145
ARCHITECTURAL DETAILS NO. 1

STRUCTURES DESIGN DETAIL SHEET (ENGLISH) (REV. 09-01-10)

ORIGINAL SCALE IN INCHES FOR REDUCED PLANS 0 1 2 3

UNIT: 3603
PROJECT NUMBER & PHASE: 07 1300 0007 1 CONTRACT NO.: 07-1193U1

DISREGARD PRINTS BEARING EARLIER REVISION DATES

REVISION DATES: 01/09/14

SHEET 13 OF 23

FILE => 53e0308-u-archdt01.dgn

USERNAME => s125624 DATE PLOTTED => 18-MAY-2015 TIME PLOTTED => 16:26

DIST	COUNTY	ROUTE	POST MILES TOTAL PROJECT	SHEET No.	TOTAL SHEETS
07	LA	10	37.2/42.4	2125	2313

REGISTERED CIVIL ENGINEER 10/01/14 DATE

6-1-15
PLANS APPROVAL DATE

REGISTERED PROFESSIONAL ENGINEER RICHARD E. SCHENDEL No. C64259 Exp. 6-30-15 CIVIL STATE OF CALIFORNIA

The State of California or its officers or agents shall not be responsible for the accuracy or completeness of scanned copies of this plan sheet.

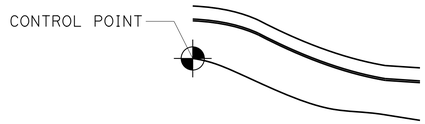

PATTERN MODULE P12

NOTE:
Begin layout of pattern modules at control point for P12 and continue to place plumb each module at corresponding match lines for limits of pattern modules.

NOTES:

1. Cable railing not shown for clarity.
2. For TYPICAL SECTIONS "A-A", "B-B", and "C-C", see "ARCHITECTURAL DETAILS NO. 4" sheet.
3. For Fractured Rib, Fractured Granite, and Random Rock Textures, see "ARCHITECTURAL DETAILS NO. 5" sheet.
4. For Pattern Modules, see "ARCHITECTURAL DETAILS NO. 6 & NO. 7" sheets.

PATTERN MODULE LAYOUT DETAIL

NO SCALE

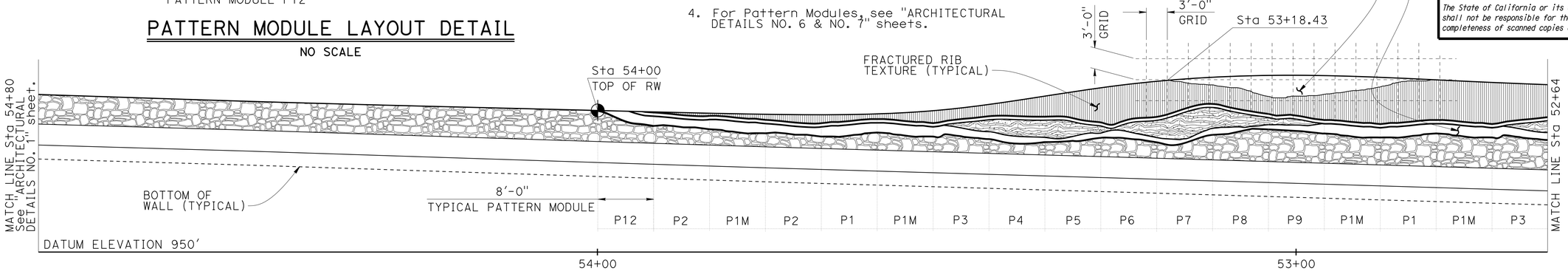

DEVELOPED ELEVATION

NO SCALE

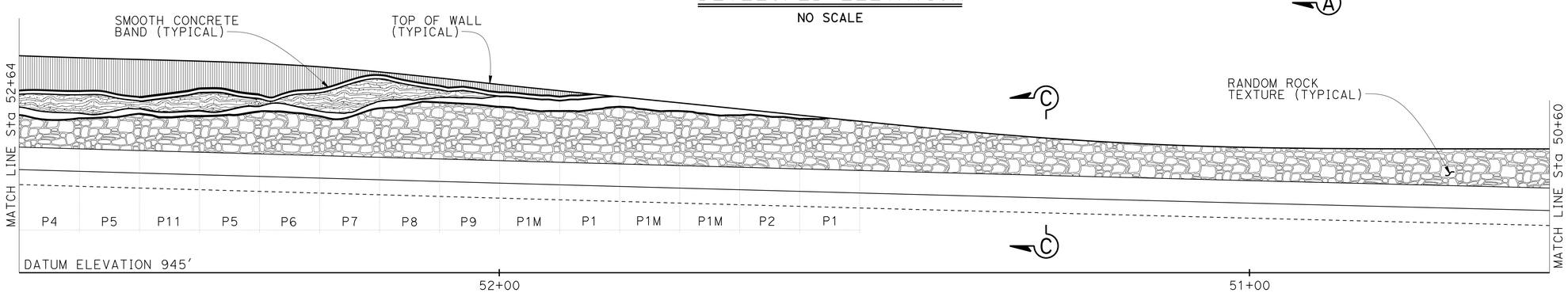

DEVELOPED ELEVATION

NO SCALE

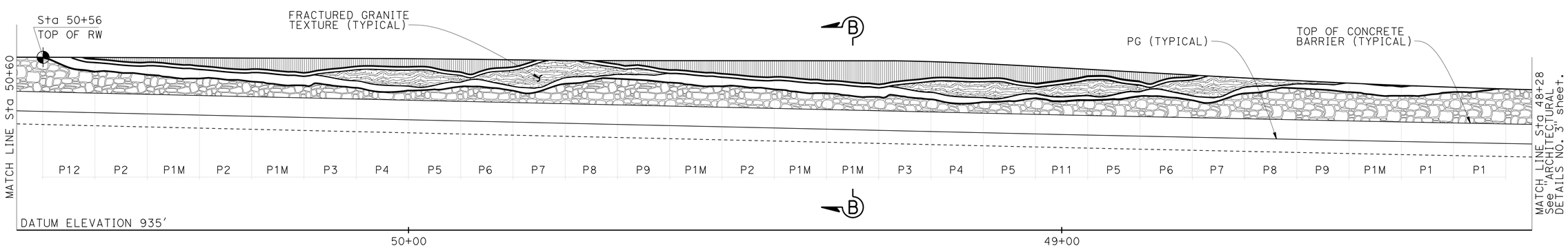

DEVELOPED ELEVATION

NO SCALE

DESIGN	BY Valerie Moore	CHECKED Richard Schendel	
DETAILS	BY Farideh Hosseinioun	CHECKED Richard Schendel	
QUANTITIES	BY Richard Schendel	CHECKED Mike Pope	

STATE OF CALIFORNIA
DEPARTMENT OF TRANSPORTATION

DIVISION OF ENGINEERING SERVICES
STRUCTURE DESIGN
DESIGN BRANCH 18

BRIDGE NO. 53E0308
POST MILE 40.62

RETAINING WALL NO. 2145
ARCHITECTURAL DETAILS NO. 2

STRUCTURES DESIGN DETAIL SHEET (ENGLISH) (REV. 09-01-10)

ORIGINAL SCALE IN INCHES FOR REDUCED PLANS 0 1 2 3

UNIT: 3603
PROJECT NUMBER & PHASE: 07 1300 0007 1 CONTRACT NO.: 07-1193U1

DISREGARD PRINTS BEARING EARLIER REVISION DATES

REVISION DATES 01/09/14

SHEET 14 OF 23

FILE => 53e0308-u-archdt02.dgn

USERNAME => s125624 DATE PLOTTED => 18-MAY-2015 TIME PLOTTED => 16:26

DIST	COUNTY	ROUTE	POST MILES TOTAL PROJECT	SHEET No.	TOTAL SHEETS
07	LA	10	37.2/42.4	2126	2313

REGISTERED CIVIL ENGINEER 10/01/14 DATE

6-1-15
PLANS APPROVAL DATE

REGISTERED PROFESSIONAL ENGINEER
RICHARD E. SCHENDEL
No. C64259
Exp. 6-30-15
CIVIL
STATE OF CALIFORNIA

The State of California or its officers or agents shall not be responsible for the accuracy or completeness of scanned copies of this plan sheet.

NOTES:

1. Entire cable railing not shown for clarity.
2. For "TYPICAL SECTION C-C", see "ARCHITECTURAL DETAILS NO. 4" sheet.
3. For Random Rock Texture, see "ARCHITECTURAL DETAILS NO. 5" sheet.

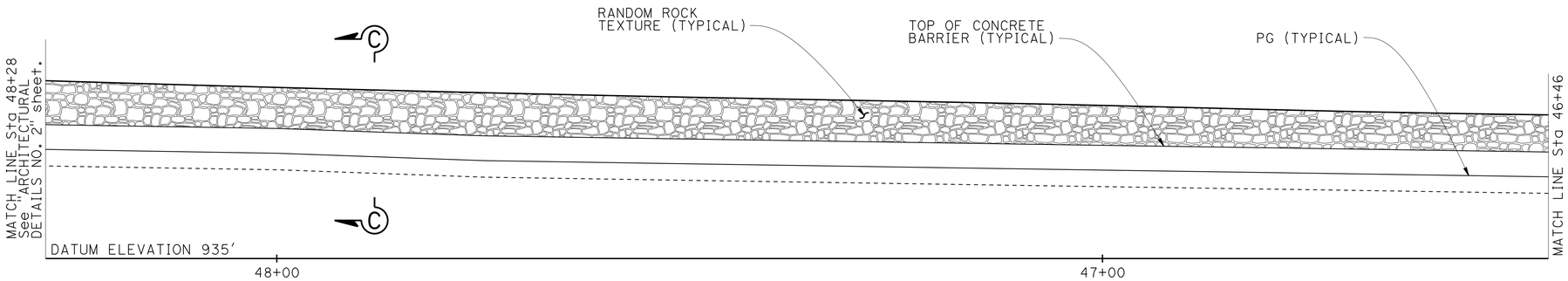

DEVELOPED ELEVATION

NO SCALE

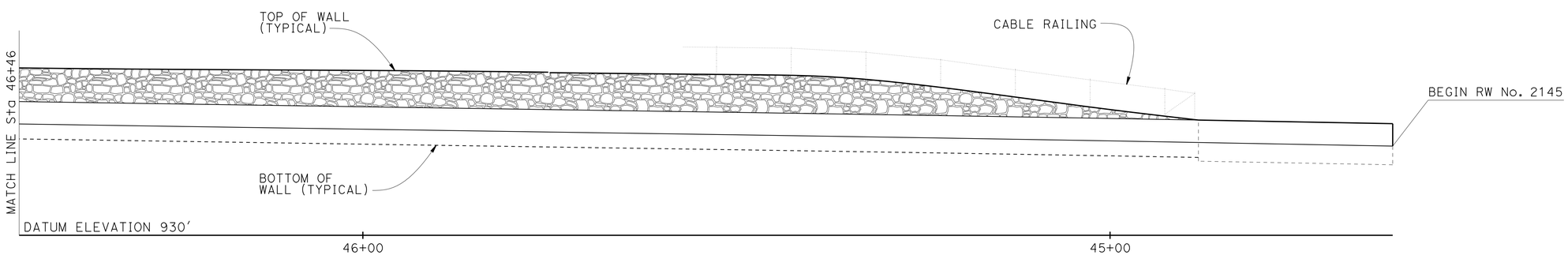

DEVELOPED ELEVATION

NO SCALE

DESIGN	BY Valerie Moore	CHECKED Richard Schendel	
DETAILS	BY Farideh Hosseinioun	CHECKED Richard Schendel	
QUANTITIES	BY Richard Schendel	CHECKED Mike Pope	

STATE OF CALIFORNIA
DEPARTMENT OF TRANSPORTATION

DIVISION OF ENGINEERING SERVICES
STRUCTURE DESIGN
DESIGN BRANCH 18

BRIDGE NO. 53E0308
POST MILE 40.62

RETAINING WALL NO. 2145
ARCHITECTURAL DETAILS NO. 3

STRUCTURES DESIGN DETAIL SHEET (ENGLISH) (REV. 09-01-10)

ORIGINAL SCALE IN INCHES FOR REDUCED PLANS 0 1 2 3

UNIT: 3603
PROJECT NUMBER & PHASE: 07 1300 0007 1 CONTRACT NO.: 07-1193U1

DISREGARD PRINTS BEARING EARLIER REVISION DATES

REVISION DATES 01/09/14

SHEET 15 OF 23

FILE => 53e0308-u-archdt03.dgn

USERNAME => s125624 DATE PLOTTED => 18-MAY-2015 TIME PLOTTED => 16:26

DIST	COUNTY	ROUTE	POST MILES TOTAL PROJECT	SHEET No.	TOTAL SHEETS
07	LA	10	37.2/42.4	2127	2313

REGISTERED CIVIL ENGINEER — DATE 10/01/14

6-1-15
PLANS APPROVAL DATE

REGISTERED PROFESSIONAL ENGINEER — RICHARD E. SCHENDEL — No. C64259 — Exp. 6-30-15 — CIVIL — STATE OF CALIFORNIA

The State of California or its officers or agents shall not be responsible for the accuracy or completeness of scanned copies of this plan sheet.

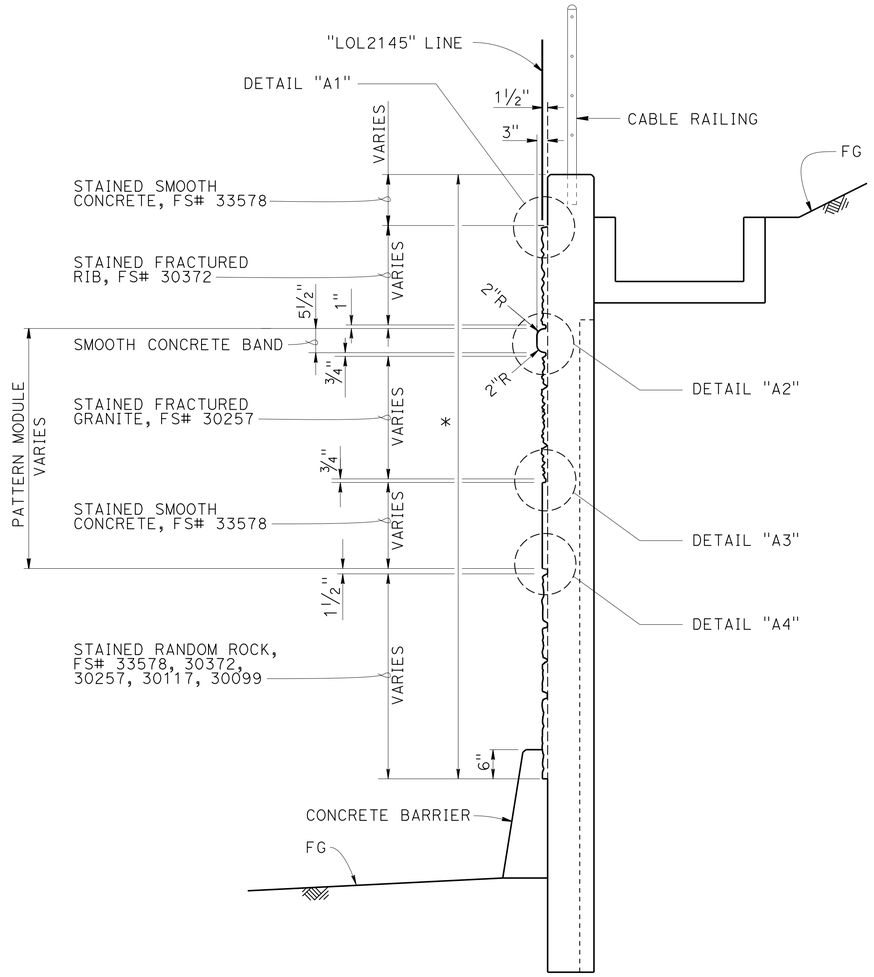

TYPICAL SECTION A-A

NO SCALE

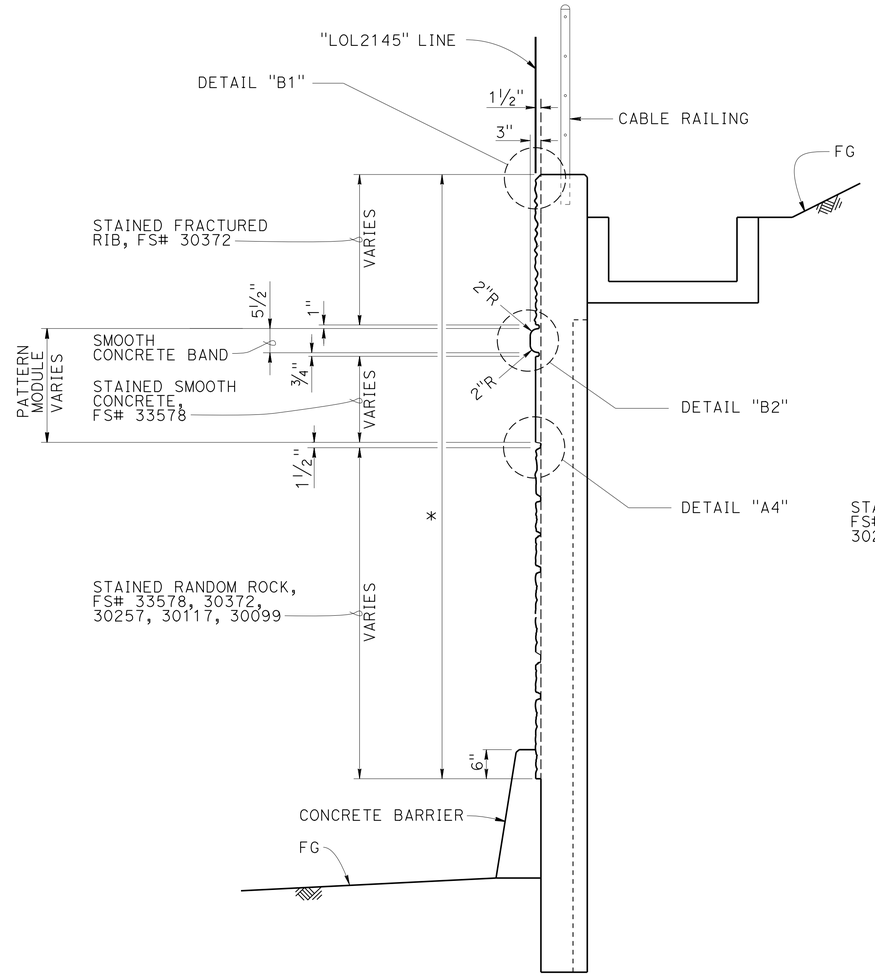

TYPICAL SECTION B-B

NO SCALE

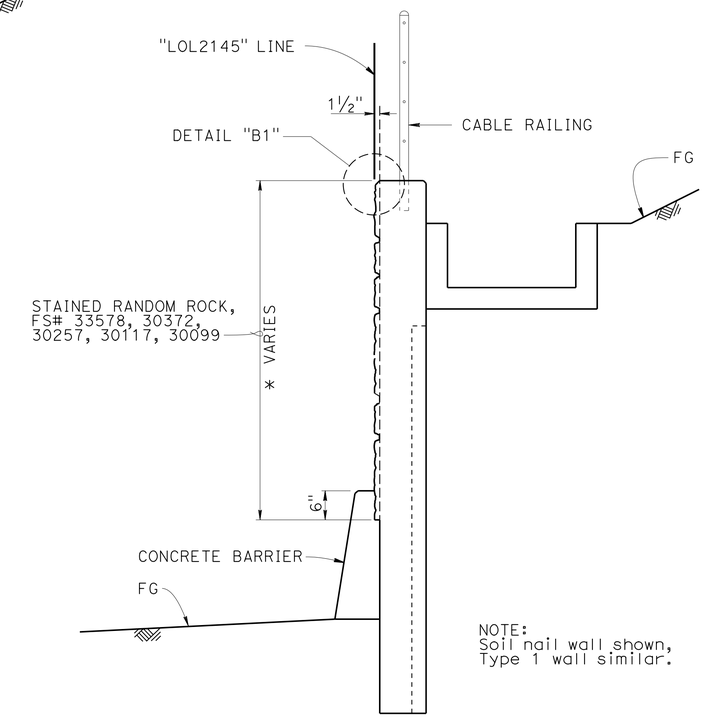

NOTE:
Soil nail wall shown, Type 1 wall similar.

TYPICAL SECTION C-C

NO SCALE

* Pay limits of Concrete Surface Texture

NOTES:

1. For DETAILS "A1", "A2", "A3", "A4", "B1", and "B2", see "ARCHITECTURAL DETAILS NO. 5" sheet.
2. Soil Nails not shown.
3. "FS#" is Federal Standard Color Number.

	BY	CHECKED
DESIGN	Valerie Moore	Richard Schendel
DETAILS	Farideh Hosseinioun	Richard Schendel
QUANTITIES	Richard Schendel	Mike Pope

STATE OF CALIFORNIA
DEPARTMENT OF TRANSPORTATION

DIVISION OF ENGINEERING SERVICES
STRUCTURE DESIGN
DESIGN BRANCH 18

BRIDGE NO. 53E0308
POST MILE 40.62

RETAINING WALL NO. 2145
ARCHITECTURAL DETAILS NO. 4

STRUCTURES DESIGN DETAIL SHEET (ENGLISH) (REV. 09-01-10)

ORIGINAL SCALE IN INCHES FOR REDUCED PLANS 0 1 2 3

UNIT: 3603
PROJECT NUMBER & PHASE: 07 1300 0007 1 CONTRACT NO.: 07-1193U1

DISREGARD PRINTS BEARING EARLIER REVISION DATES

REVISION DATES: 01/09/14 01/31/14 03/04/14

SHEET 16 OF 23

FILE => 53e0308-u-archdt04.dgn

USERNAME => s125824 DATE PLOTTED => 18-MAY-2015 TIME PLOTTED => 16:26

DIST	COUNTY	ROUTE	POST MILES TOTAL PROJECT	SHEET No.	TOTAL SHEETS
07	LA	10	37.2/42.4	2128	2313

REGISTERED CIVIL ENGINEER — DATE 10/01/14

6-1-15
PLANS APPROVAL DATE

REGISTERED PROFESSIONAL ENGINEER — RICHARD E. SCHENDEL — No. C64259 — Exp. 6-30-15 — CIVIL — STATE OF CALIFORNIA

The State of California or its officers or agents shall not be responsible for the accuracy or completeness of scanned copies of this plan sheet.

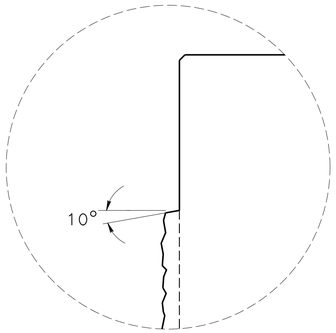

DETAIL A1
NO SCALE

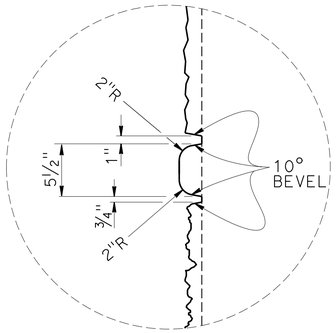

DETAIL A2
NO SCALE

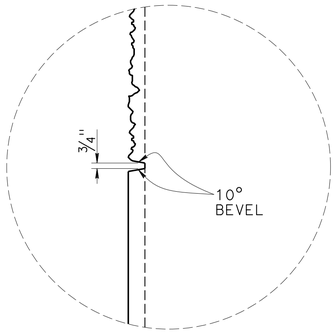

DETAIL A3
NO SCALE

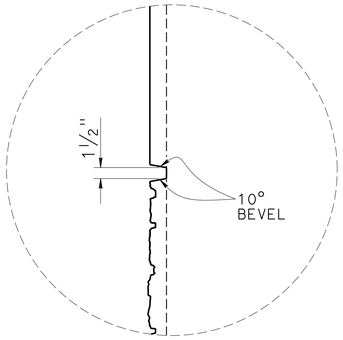

DETAIL A4
NO SCALE

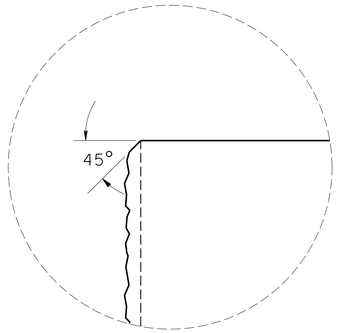

DETAIL B1
NO SCALE

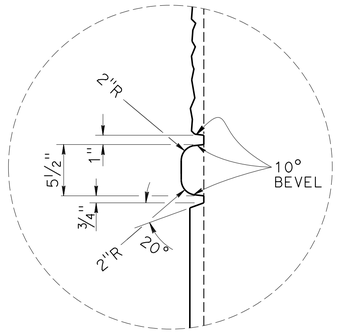

DETAIL B2
NO SCALE

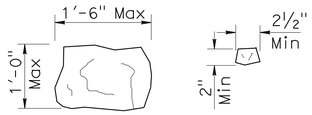

ROCK SIZE

NOTE:
Seamless Random Rock pattern to have a minimum of 2 to a maximum of 4 match points (denoted by "M") for each side (top to bottom and side to side).

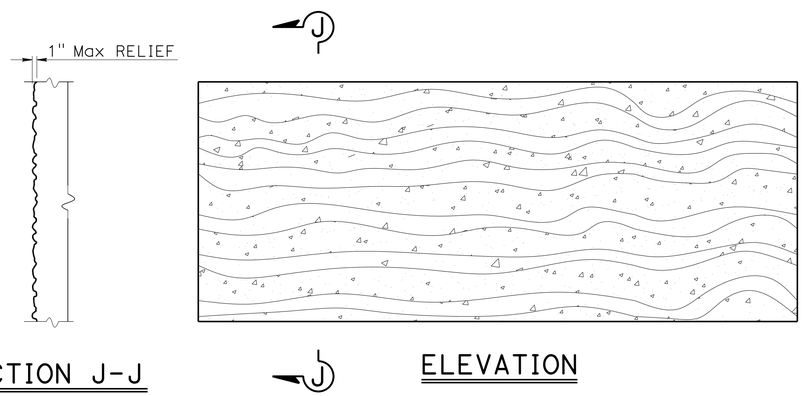

SECTION J-J

ELEVATION

FRACTURED GRANITE TEXTURE
NO SCALE

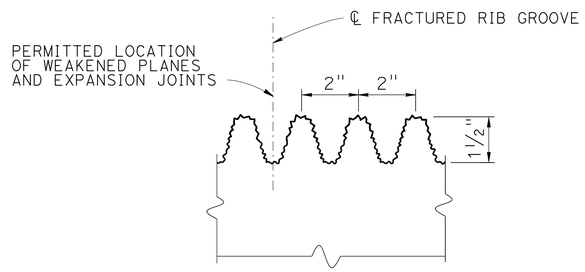

FRACTURED RIB TEXTURE - SECTION
NO SCALE

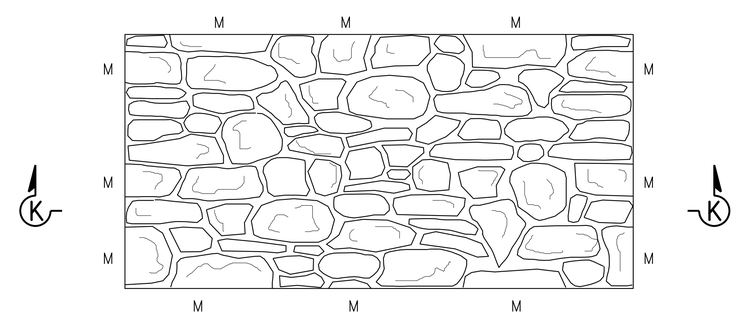

ELEVATION

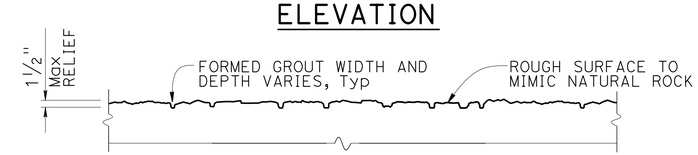

SECTION K-K

RANDOM ROCK TEXTURE
NO SCALE

	BY	CHECKED
DESIGN	Valerie Moore	Richard Schendel
DETAILS	Farideh Hosseinioun	Richard Schendel
QUANTITIES	Richard Schendel	Mike Pope

STATE OF CALIFORNIA
DEPARTMENT OF TRANSPORTATION

DIVISION OF ENGINEERING SERVICES
STRUCTURE DESIGN
DESIGN BRANCH 18

BRIDGE NO. 53E0308
POST MILE 40.62

RETAINING WALL NO. 2145
ARCHITECTURAL DETAILS NO. 5

STRUCTURES DESIGN DETAIL SHEET (ENGLISH) (REV. 09-01-10)

ORIGINAL SCALE IN INCHES FOR REDUCED PLANS 0 1 2 3

UNIT: 3603
PROJECT NUMBER & PHASE: 07 1300 0007 1 CONTRACT NO.: 07-1193U1

DISREGARD PRINTS BEARING EARLIER REVISION DATES

REVISION DATES 01/06/14

SHEET 17 OF 23

FILE => 53e0308-u-archdt05.dgn

USERNAME => s125624 DATE PLOTTED => 18-MAY-2015 TIME PLOTTED => 16:26

DIST	COUNTY	ROUTE	POST MILES TOTAL PROJECT	SHEET No.	TOTAL SHEETS
07	LA	10	37.2/42.4	2129	2313

REGISTERED CIVIL ENGINEER — DATE 10/01/14

6-1-15
PLANS APPROVAL DATE

REGISTERED PROFESSIONAL ENGINEER — RICHARD E. SCHENDEL — No. C64259 — Exp. 6-30-15 — CIVIL — STATE OF CALIFORNIA

The State of California or its officers or agents shall not be responsible for the accuracy or completeness of scanned copies of this plan sheet.

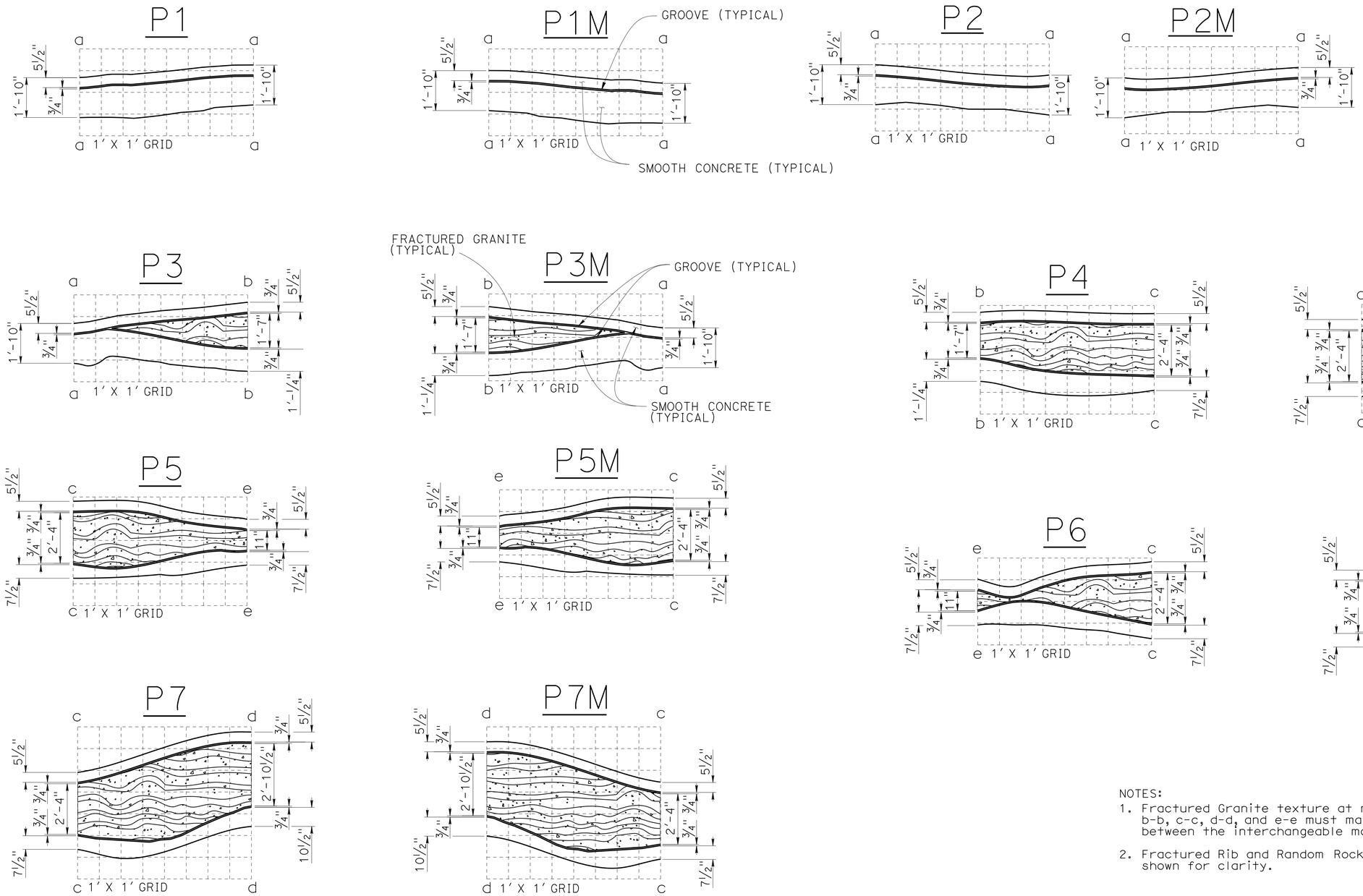

NOTES:

1. Fractured Granite texture at match lines a-a, b-b, c-c, d-d, and e-e must match seamlessly between the interchangeable modules.
2. Fractured Rib and Random Rock Textures not shown for clarity.

INTERCHANGEABLE PATTERN MOTIF MODULES

NO SCALE

	BY	CHECKED
DESIGN	Valerie Moore	Richard Schendel
DETAILS	Farideh Hosseinioun	Richard Schendel
QUANTITIES	Richard Schendel	Mike Pope

STATE OF CALIFORNIA
DEPARTMENT OF TRANSPORTATION

DIVISION OF ENGINEERING SERVICES
STRUCTURE DESIGN
DESIGN BRANCH 18

BRIDGE NO. 53E0308
POST MILE 40.62

RETAINING WALL NO. 2145
ARCHITECTURAL DETAILS NO. 6

STRUCTURES DESIGN DETAIL SHEET (ENGLISH) (REV. 09-01-10)

ORIGINAL SCALE IN INCHES FOR REDUCED PLANS 0 1 2 3

UNIT: 3603
PROJECT NUMBER & PHASE: 07 1300 0007 1 CONTRACT NO.: 07-1193U1

DISREGARD PRINTS BEARING EARLIER REVISION DATES

REVISION DATES 12/23/13 03/04/14

SHEET 18 OF 23

FILE => 53e0308-u-archdt06.dgn

USERNAME => s125624 DATE PLOTTED => 18-MAY-2015 TIME PLOTTED => 16:26

DIST	COUNTY	ROUTE	POST MILES TOTAL PROJECT	SHEET No.	TOTAL SHEETS
07	LA	10	37.2/42.4	2130	2313

REGISTERED CIVIL ENGINEER — DATE 10/01/14

6-1-15
PLANS APPROVAL DATE

REGISTERED PROFESSIONAL ENGINEER — RICHARD E. SCHENDEL — No. C64259 — Exp. 6-30-15 — CIVIL — STATE OF CALIFORNIA

The State of California or its officers or agents shall not be responsible for the accuracy or completeness of scanned copies of this plan sheet.

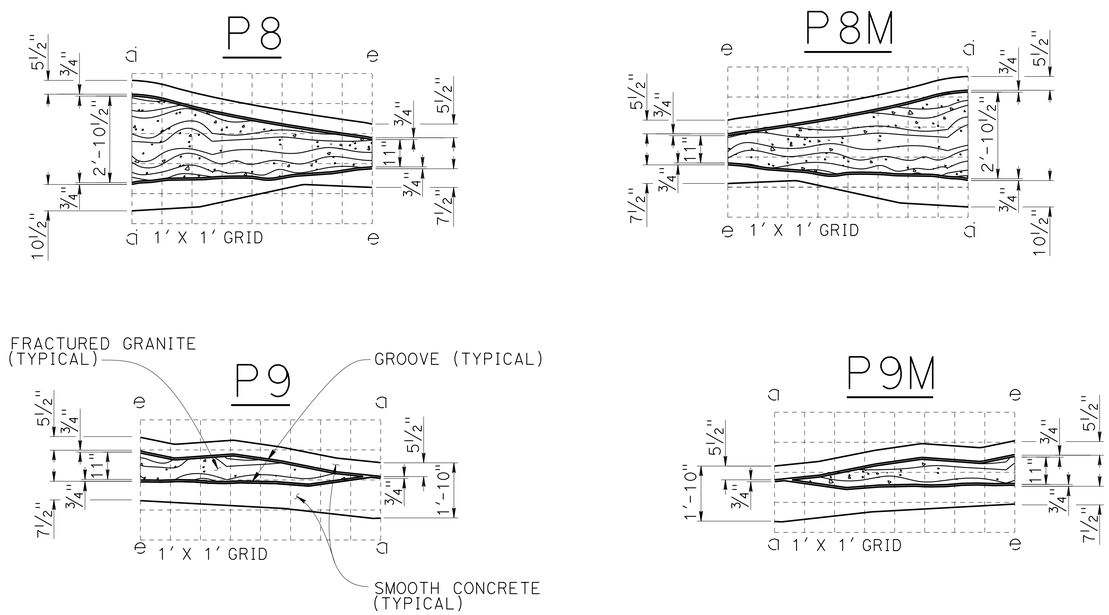

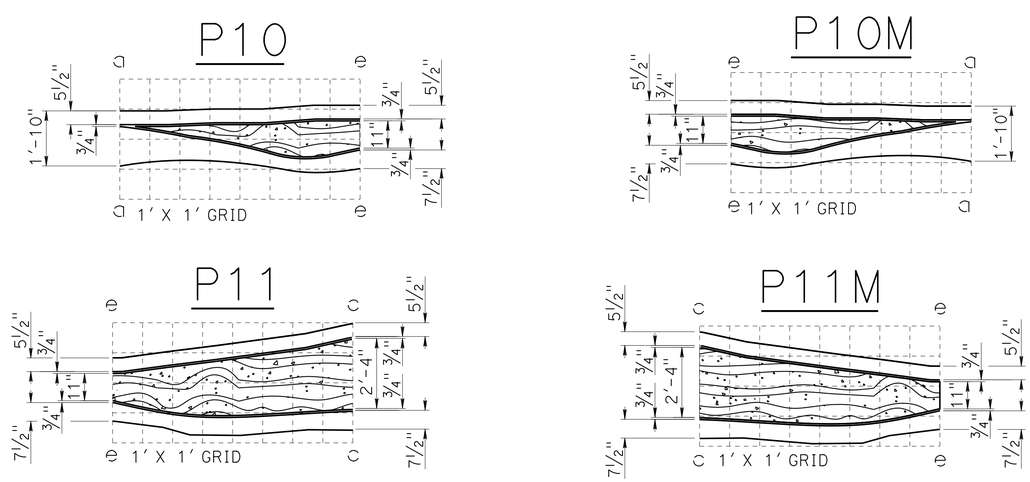

NOTES:

1. Fractured Granite texture at match lines a-a, b-b, c-c, d-d, and e-e must match seamlessly between the interchangeable modules.
2. Fractured Rib and Random Rock Textures not shown for clarity.

INTERCHANGEABLE PATTERN MOTIF MODULES

NO SCALE

DESIGN	BY Valerie Moore	CHECKED Richard Schendel	
DETAILS	BY Farideh Hosseinioun	CHECKED Richard Schendel	
QUANTITIES	BY Richard Schendel	CHECKED Mike Pope	

STATE OF CALIFORNIA
DEPARTMENT OF TRANSPORTATION

DIVISION OF ENGINEERING SERVICES
STRUCTURE DESIGN
DESIGN BRANCH 18

BRIDGE NO. 53E0308
POST MILE 40.62

RETAINING WALL NO. 2145
ARCHITECTURAL DETAILS NO. 7

STRUCTURES DESIGN DETAIL SHEET (ENGLISH) (REV. 09-01-10)

ORIGINAL SCALE IN INCHES FOR REDUCED PLANS 0 1 2 3

UNIT: 3603
PROJECT NUMBER & PHASE: 07 1300 0007 1 CONTRACT NO.: 07-1193U1

DISREGARD PRINTS BEARING EARLIER REVISION DATES

REVISION DATES 12/27/13 03/04/14

SHEET 19 OF 23

FILE => 53e0308-u-archdt07.dgn

USERNAME => s125624 DATE PLOTTED => 18-MAY-2015 TIME PLOTTED => 16:26

DIST	COUNTY	ROUTE	POST MILES TOTAL PROJECT	SHEET No.	TOTAL SHEETS
07	LA	10	37.2/42.4	2131	2313

REGISTERED CIVIL ENGINEER 06/2013 DATE

6-1-15
PLANS APPROVAL DATE

URS Corporation
2020 E. First St., Santa Ana, CA 92705
The State of California or its officers or agents shall not be responsible for the accuracy or completeness of electronic copies of this plan sheet.

REGISTERED PROFESSIONAL ENGINEER
MICHAEL G. SMITH
No. 2229
Exp. 3-31-2014
GEOTECHNICAL
STATE OF CALIFORNIA

This LOTB sheet was prepared in accordance with the Caltrans Soil & Rock Logging, Classification, & Presentation Manual (2010 Edition).

BENCH MARK

BM No.3003 SUHV
ELEVATION 841.790 FT
Fd Bt Spk&W E/B I-10 Shldr
"B" Line Sta. 2118+49.10
Rt 76.00'
HORIZONTAL DATUM NAD83
VERTICAL DATUM NAVD88.

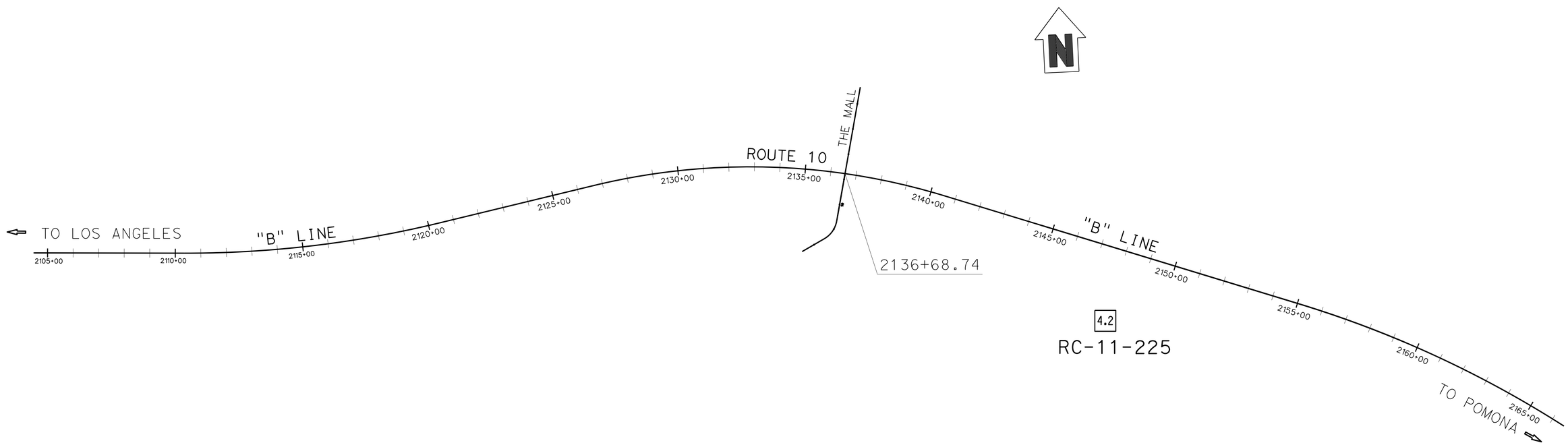

ENGINEERING SERVICES		MATERIALS AND GEOTECHNICAL SERVICES	STATE OF CALIFORNIA DEPARTMENT OF TRANSPORTATION	DIVISION OF ENGINEERING SERVICES STRUCTURE DESIGN DESIGN BRANCH	BRIDGE NO. 53E0308	RETAINING WALL NO. 2145
FUNCTIONAL SUPERVISOR	DRAWN BY: P.QUACH/T.PANAH	FIELD INVESTIGATION BY:			POST MILE 40.62	LOG OF TEST BORINGS SHEET 1 OF 2
NAME: H.YANG	CHECKED BY: D.ORRIS	T.PANAH				

OGS CIVIL LOG OF TEST BORINGS SHEET

ORIGINAL SCALE IN INCHES FOR REDUCED PLANS 0 1 2 3

UNIT:
PROJECT NUMBER & PHASE: 07130000071 CONTRACT NO.: EA1193U1

DISREGARD PRINTS BEARING EARLIER REVISION DATES

REVISION DATES | SHEET 20 OF 23

FILE => 53e0308-y-1tbs1of2.dgn

USERNAME => s125624 DATE PLOTTED => 18-MAY-2015 TIME PLOTTED => 16:26

DIST	COUNTY	ROUTE	POST MILES TOTAL PROJECT	SHEET No.	TOTAL SHEETS
07	LA	10	37.2/42.4	2132	2313

REGISTERED CIVIL ENGINEER 06/2013 DATE

6-1-15
PLANS APPROVAL DATE

REGISTERED PROFESSIONAL ENGINEER MICHAEL G. SMITH No. 2229 Exp. 3-31-2014 GEOTECHNICAL STATE OF CALIFORNIA

URS Corporation
2020 E. First St., Santa Ana, CA 92705
The State of California or its officers or agents shall not be responsible for the accuracy or completeness of electronic copies of this plan sheet.

This LOTB sheet was prepared in accordance with the Caltrans Soil & Rock Logging, Classification, & Presentation Manual (2010 Edition).

FOR PLAN VIEW, SEE
"LOG OF TEST BORINGS" 1 OF 2

284.54' Rt
Sta 2148+00.54
"B" LINE

RC-11-225

1010.0'

- 4.2 — SILTY CLAY with SAND (CL-ML); dark greenish gray; slightly moist; little fine SAND; trace fine subrounded GRAVEL.
- CR, 6 1.4 — SANDY SILT (ML); very stiff; dark greenish gray; moist; some fine SAND; PP=2.75 tsf.
- DS, 2.5 — SANDY lean CLAY (CL); hard; mottled yellowish red and dark greenish gray; moist; some fine SAND; PP=4 tsf.
- 9 1.4 — SILT with SAND (ML); stiff; dark greenish gray; moist; little fine SAND; PP=1.75 tsf.
- DS, 2.5 — SANDY SILT (ML); hard; dark greenish gray; moist; some fine SAND; PP=4.5 tsf.
- 2.5 — SEDIMENTARY ROCK (SILTSTONE); very thickly bedded; grayish gray; intensely weathered; very soft; intensely fractured; (SANDY SILT (ML); soft; moist; some fine SAND).
- CR, 7 1.4 — SEDIMENTARY ROCK (CLAYSTONE); thinly bedded; brown; intensely weathered; very soft; intensely fractured; (SANDY SILTY CLAY (CL-ML); medium stiff; moist; some fine SAND; PP=0.75 tsf).
- SEDIMENTARY ROCK (SILTSTONE); laminated; grayish gray; moderately weathered; soft; intensely fractured.
- DS, 2.5 — SEDIMENTARY ROCK (CLAYSTONE); thinly bedded; dark grayish gray; moderately weathered; very soft; intensely fractured.
- 2 1.4
- 2.5 — SEDIMENTARY ROCK (SANDSTONE); fine to coarse grained; light gray to pale yellowish brown; intensely weathered; very soft; very intensely to intensely fractured; (Poorly-graded SAND (SP); moist; mostly from fine to coarse SAND; trace fines).
- REC=80% RQD*=0%
- CR, 50+1.4 — SEDIMENTARY ROCK (CONGLOMERATIC SANDSTONE); coarse-grained; light gray to pale yellowish brown; intensely weathered; very soft; intensely fractured; (Poorly-graded SAND with GRAVEL (SP); very dense; moist; mostly medium and coarse SAND; little fine and coarse GRAVEL).
- REC=64% RQD*=0%
- 50+1.4
- REC=76% RQD*=0%
- REC=95% RQD*=20% — SEDIMENTARY ROCK (SILTSTONE); moderately bedded; dark gray; slightly weathered; very hard; moderately fractured.
- REC=100% RQD*=70% — SEDIMENTARY ROCK (SANDSTONE) with interbed of SILTSTONE and CLAYSTONE; moderately bedded; dark greenish gray to yellowish gray; intensely to moderately weathered; very soft; moderately fractured.
- REC=90% RQD*=45% — SEDIMENTARY ROCK (SANDSTONE); fine-grained; moderately bedded; dark greenish gray; intensely to moderately weathered; very soft; intensely to moderately fractured; (Poorly-graded SAND (SP); moist; mostly medium and fine SAND; trace fines).
- REC=100% RQD*=72%
- REC=27% RQD*=20%
- REC=40% RQD*=17% — SEDIMENTARY ROCK (SILTSTONE); moderately bedded; pale yellowish brown; slightly weathered; hard; intensely to moderately fractured.
- REC=23% RQD*=0% — SEDIMENTARY ROCK (SANDSTONE); fine-grained; thinly bedded; dark greenish gray; intensely to moderately weathered; very soft; intensely to moderately fractured; (Poorly-graded SAND (SP); moist; mostly medium and fine SAND; trace fines).
- REC=85% RQD*=70%
- REC=100% RQD*=25%

06-15-11
Terminated at Elev 910.0 ft
ERi = 68%

1010 1000 990 980 970 960 950 940 930 920 910 900 890

2147+00 2148+00 2149+00 2150+00 2151+00 2152+00

PROFILE VIEW
VERTICAL SCALE 1"=10'
HORIZONTAL SCALE 1"=20'

ENGINEERING SERVICES	MATERIALS AND GEOTECHNICAL SERVICES	STATE OF CALIFORNIA DEPARTMENT OF TRANSPORTATION	DIVISION OF ENGINEERING SERVICES STRUCTURE DESIGN DESIGN BRANCH	BRIDGE NO. 53E0308 POST MILE 40.62	RETAINING WALL NO. 2145
FUNCTIONAL SUPERVISOR NAME: H.YANG	DRAWN BY: P.QUACH/T.PANAH CHECKED BY: D.ORRIS	FIELD INVESTIGATION BY: T.PANAH			LOG OF TEST BORINGS SHEET 2 OF 2

OGS CIVIL LOG OF TEST BORINGS SHEET

ORIGINAL SCALE IN INCHES FOR REDUCED PLANS 0 1 2 3

UNIT:
PROJECT NUMBER & PHASE: 07130000071 CONTRACT NO.: EA1193U1

DISREGARD PRINTS BEARING EARLIER REVISION DATES

REVISION DATES

SHEET 21 OF 23

FILE => 53e0308-y-1tbs2of2.dgn

USERNAME => s125624 DATE PLOTTED => 18-MAY-2015 TIME PLOTTED => 16:26

DIST	COUNTY	ROUTE	POST MILES TOTAL PROJECT	SHEET No.	TOTAL SHEETS
07	LA	10	37.2/42.4	2133	2313

CERTIFIED ENGINEERING GEOLOGIST 1-15-14 DATE

6-1-15
PLANS APPROVAL DATE

PROFESSIONAL GEOLOGIST Michael A. Salisbury No. 2462 Exp. 2-28-15 CERTIFIED ENGINEERING GEOLOGIST STATE OF CALIFORNIA

The State of California or its officers or agents shall not be responsible for the accuracy or completeness of electronic copies of this plan sheet.

This LOTB sheet was prepared in accordance with the Caltrans Soil & Rock Logging; Classification; & Presentation Manual (2010 Edition).

See 2010 Standard Plans A10F and A10G for Soil Legend; and A10H for Rock Legend.

BENCH MARK

SUHV 4040 Elev 940.757
Fnd. Pk N. in E/B Via Verde On Rmp.
Sta 2143+72.93; 100.58′ Rt "B" Line.

SUHV 3005 Elev 977.923
Fnd. Bt Spk&W E/B I-10 Shldr E. Via Verde
Sta 2158+46.30; 75.31′ Rt "B" Line.

NAVD88

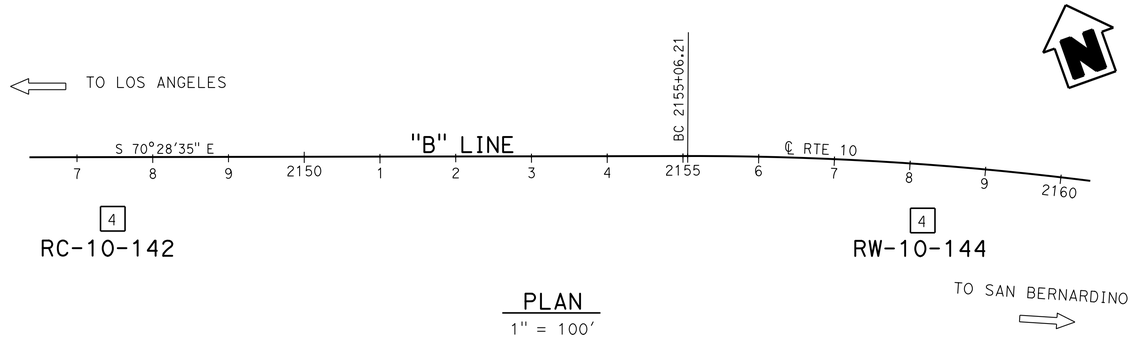

PLAN
1" = 100′

NOTES:

1. Ground water not encountered during field investigation.
2. RQD with an "*" indicates unsound rock.

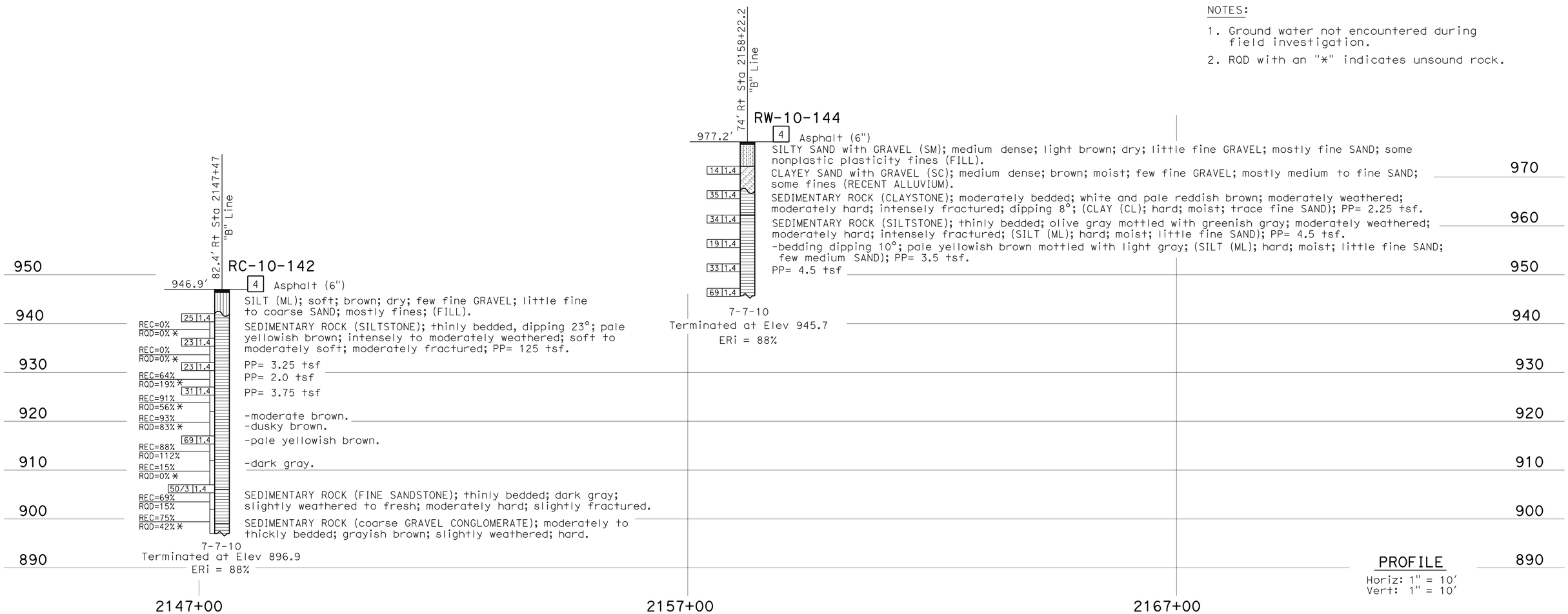

PROFILE
Horiz: 1" = 10′
Vert: 1" = 10′

ENGINEERING SERVICES	MATERIALS AND GEOTECHNICAL SERVICES	STATE OF CALIFORNIA DEPARTMENT OF TRANSPORTATION	DIVISION OF ENGINEERING SERVICES STRUCTURE DESIGN DESIGN BRANCH 18	BRIDGE NO. 53E0308 POST MILE 40.62	RETAINING WALL NO. 2145 LOG OF TEST BORINGS 1 OF 2
FUNCTIONAL SUPERVISOR NAME: D. Jang	DRAWN BY: I. G-Remmen CHECKED BY: H. Liu	FIELD INVESTIGATION BY: M. Salisbury			

OGS CIVIL LOG OF TEST BORINGS SHEET

ORIGINAL SCALE IN INCHES FOR REDUCED PLANS 0 1 2 3

UNIT: 3643
PROJECT NUMBER & PHASE: 07130000071 CONTRACT NO.: 07-1193U1

DISREGARD PRINTS BEARING EARLIER REVISION DATES

REVISION DATES 11-21-13 01-14-14 SHEET 22 OF 23

FILE => 53e0308-z-ltb1of2.dgn

USERNAME => s125624 DATE PLOTTED => 18-MAY-2015 TIME PLOTTED => 16:26

DIST.	COUNTY	ROUTE	POST MILES TOTAL PROJECT	SHEET NO.	TOTAL SHEETS
07	LA	10			

W. Cain
CERTIFIED ENGINEERING GEOLOGIST

REGISTERED GEOLOGIST — W.C. CAIN No. 732 Exp. 6-30-94 CERTIFIED ENGINEERING GEOLOGIST — STATE OF CALIFORNIA

PLANS APPROVAL DATE

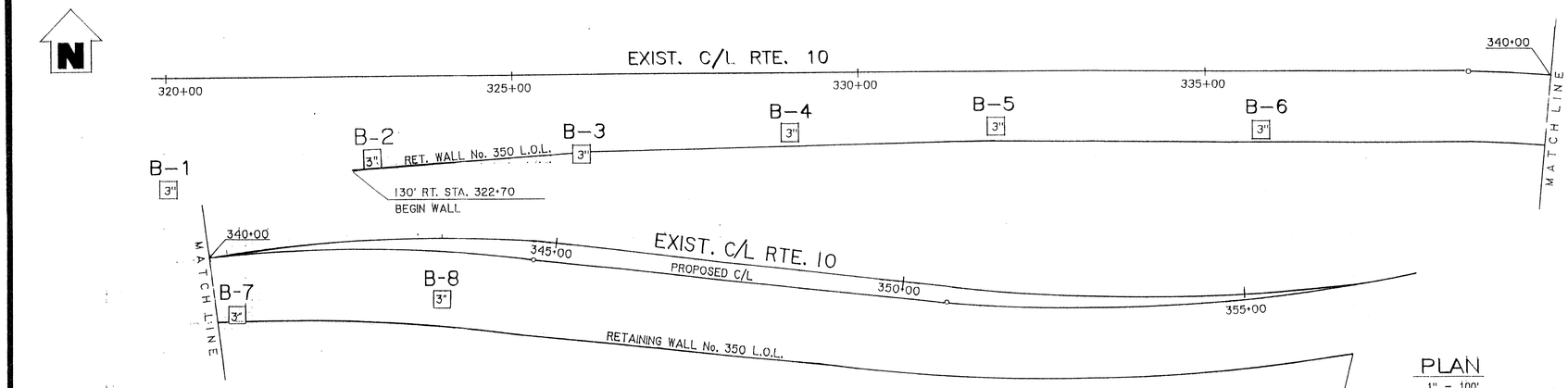

PLAN
1" = 100'

BENCH MARK

TBM @ STA. 322+70 Elev. 930.60
FD. PAINTED "+" @ RT. STA. 322+70

TBM @ STA. 326+00 Elev. 939.40
FD. PAINTED "+" @ RT. STA. 326+00

TBM @ STA. 329+00 Elev. 944.40
FD. PAINTED "+" @ RT. STA. 329+00

TBM @ STA. 332+00 Elev. 959.60
FD. PAINTED "+" @ RT. STA. 332+00

TBM @ STA. 336+00 Elev. 962.40
FD. PAINTED "+" @ RT. STA. 336+00

TBM @ STA. 340+00 Elev. 975.90
FD. PAINTED "+" @ RT. STA. 340+00

TBM @ STA. 343+00 Elev. 986.70
FD. PAINTED "+" @ RT. STA. 343+00

TBM @ STA. 323+00 Elev. 932.0
FD. PAINTED "+" @ RT. STA. 323+00
SURVEY EAST BOUND RTE. 10 BY J.F. DAVIDSON ASSOC. 4-9-93 PAGE 15 OF 16

NOTE: NO GROUND WATER ENCOUNTERED DURING FIELD INVESTIGATION

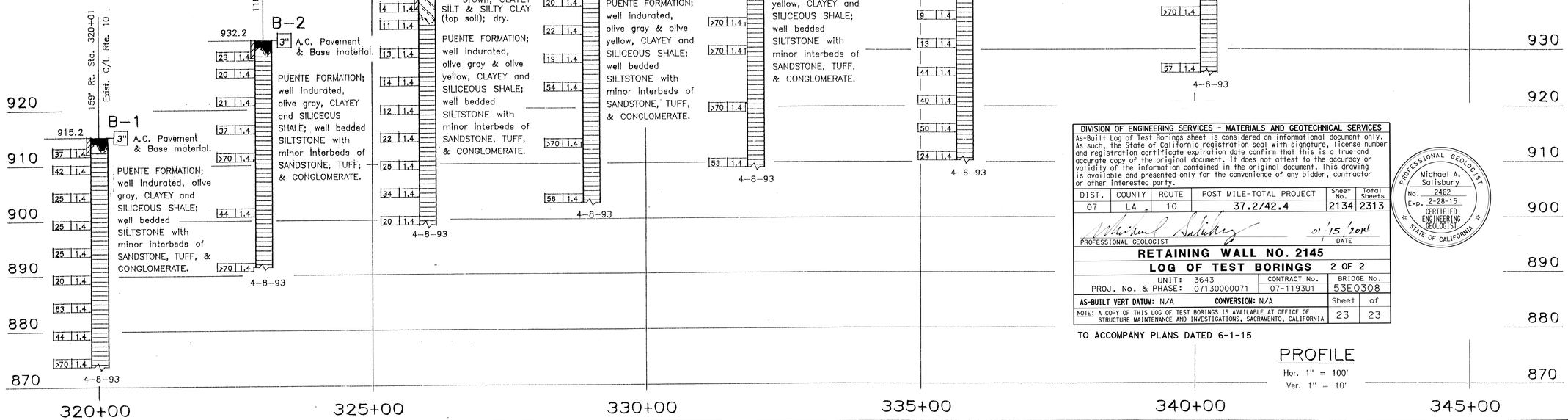

PROFILE
Hor. 1" = 100'
Ver. 1" = 10'

DIVISION OF ENGINEERING SERVICES - MATERIALS AND GEOTECHNICAL SERVICES					
As-Built Log of Test Borings sheet is considered an informational document only. As such, the State of California registration seal with signature, license number and registration certificate expiration date confirm that this is a true and accurate copy of the original document. It does not attest to the accuracy or validity of the information contained in the original document. This drawing is available and presented only for the convenience of any bidder, contractor or other interested party.					
DIST.	COUNTY	ROUTE	POST MILE-TOTAL PROJECT	Sheet No.	Total Sheets
07	LA	10	37.2/42.4	2134	2313
PROFESSIONAL GEOLOGIST			DATE 01 '15 '2015		
RETAINING WALL NO. 2145					
LOG OF TEST BORINGS 2 OF 2					
UNIT: 3643			CONTRACT No.	BRIDGE No.	
PROJ. No. & PHASE: 07130000071			07-1193U1	53E0308	
AS-BUILT VERT DATUM: N/A		CONVERSION: N/A		Sheet	of
NOTE: A COPY OF THIS LOG OF TEST BORINGS IS AVAILABLE AT OFFICE OF STRUCTURE MAINTENANCE AND INVESTIGATIONS, SACRAMENTO, CALIFORNIA				23	23

PROFESSIONAL GEOLOGIST — Michael A. Salisbury No. 2462 Exp. 2-28-15 CERTIFIED ENGINEERING GEOLOGIST — STATE OF CALIFORNIA

TO ACCOMPANY PLANS DATED 6-1-15

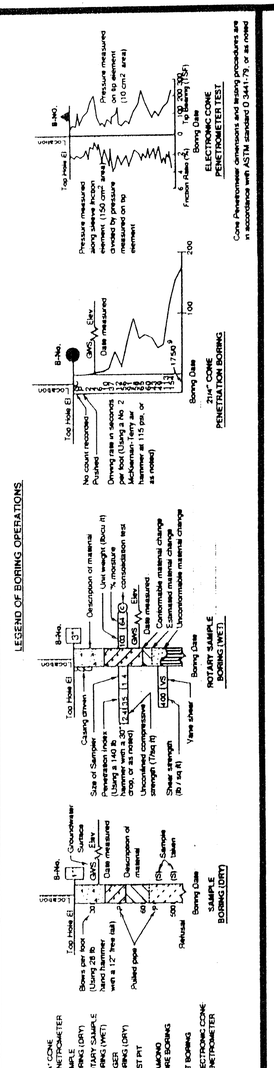

DIVISION OF NEW TECHNOLOGY, MATERIALS AND RESEARCH	OFFICE OF ENGINEERING GEOLOGY
DRAWN BY I. GAMARRA 5/93	
CHECKED BY Faramarz Gerami 8-93	

FIELD INVESTIGATION BY: F. GERAMI

State of CALIFORNIA DEPARTMENT OF TRANSPORTATION

DIVISION OF STRUCTURES STRUCTURE DESIGN

BRIDGE NO.
POST MILE 37.5/42.4

RETAINING WALL NO. 350

SEP 23 1993

LOG OF TEST BORINGS

ORIGINAL SCALE IN INCHES FOR REDUCED PLANS 0 1 2 3

CU 07234
EA 11934K

DISREGARD PRINTS BEARING EARLIER REVISION DATES

REVISION DATES (PRELIMINARY STAGE ONLY) SHEET OF

TL 6051 REV. 2/92

DIST	COUNTY	ROUTE	POST MILES TOTAL PROJECT	SHEET No.	TOTAL SHEETS
07	LA	10	37.2/42.4	2135	2313

REGISTERED CIVIL ENGINEER 10-1-14 DATE

6-1-15
PLANS APPROVAL DATE

REGISTERED PROFESSIONAL ENGINEER Gabriel J. Galo No. 52288 Exp. 12-31-14 CIVIL STATE OF CALIFORNIA

The State of California or its officers or agents shall not be responsible for the accuracy or completeness of scanned copies of this plan sheet.

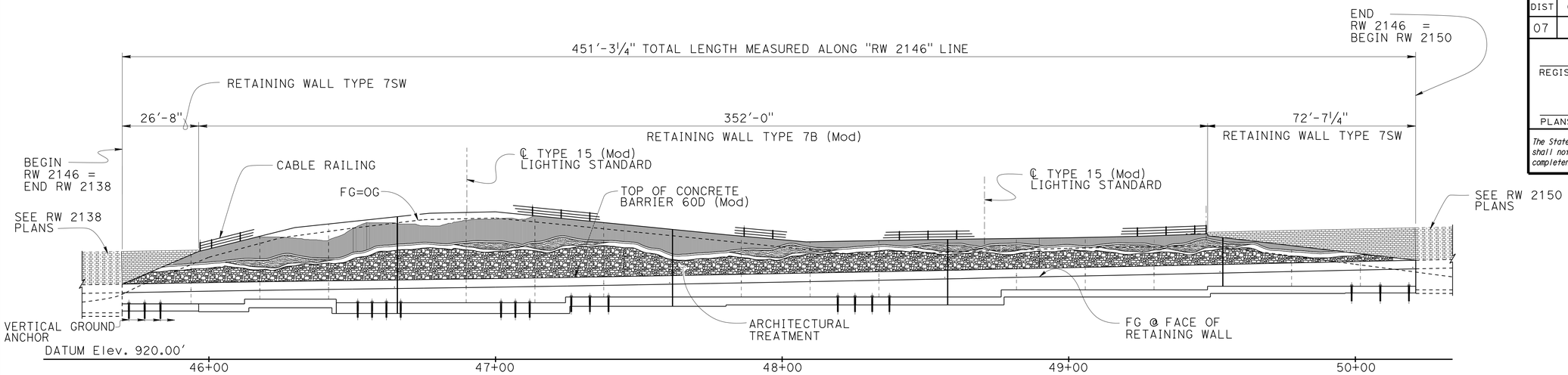

ELEVATION

1" = 20'-0"

Notes:

1. For "TYPICAL SECTION" , see "GENERAL PLAN NO. 2" sheet.
2. For Structure Excavation and Backfill, see "INDEX TO PLANS" sheet.
3. For Retaining Wall details, see "STRUCTURE PLAN NO. 1", "STRUCTURE PLAN NO. 2" and "STRUCTURE PLAN NO. 3" sheets.

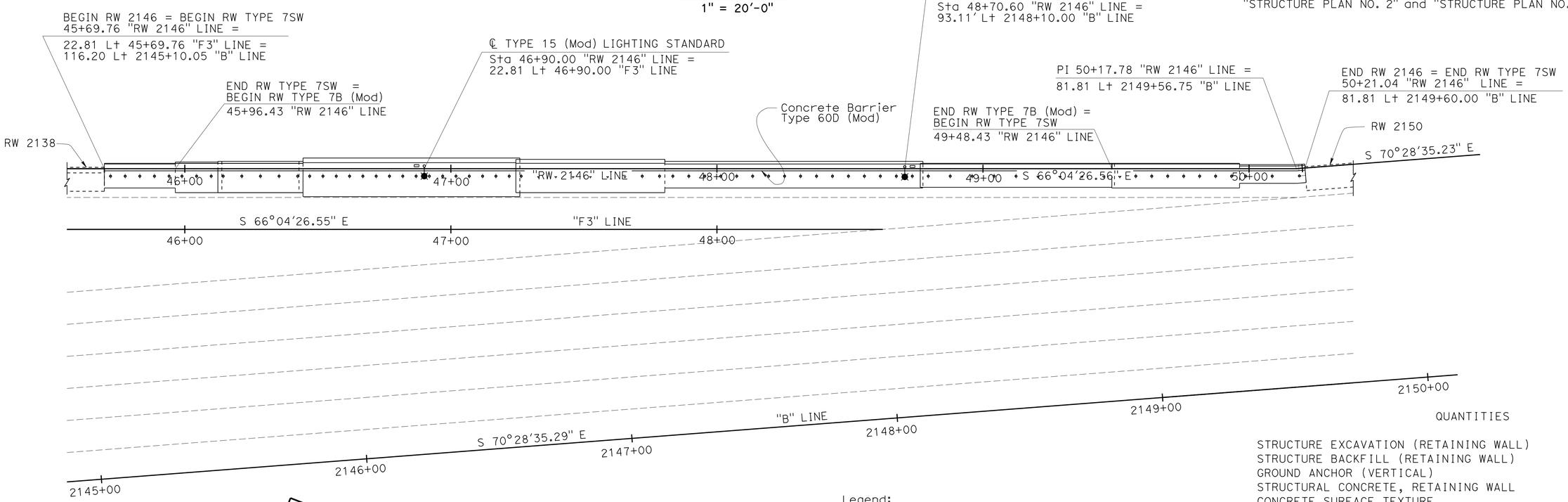

PLAN

1" = 20'-0"

Legend:

- Indicates electrolier on RW . For Details, see "Roadway Plans".
- Indicates Pullbox, see "Roadway Plans".

NOTE:
THE CONTRACTOR SHALL VERIFY ALL CONTROLLING FIELD DIMENSIONS BEFORE ORDERING OR FABRICATING ANY MATERIAL.

QUANTITIES

STRUCTURE EXCAVATION (RETAINING WALL)	4,773	CY
STRUCTURE BACKFILL (RETAINING WALL)	772	CY
GROUND ANCHOR (VERTICAL)	74	EA
STRUCTURAL CONCRETE, RETAINING WALL	1,346	CY
CONCRETE SURFACE TEXTURE	5,872	SQFT
BAR REINFORCING STEEL (RETAINING WALL)	146,479	LB
SOUND WALL (MASONRY BLOCK)	591	SQFT
PREPARE AND STAIN CONCRETE	5,597	SQFT
CABLE RAILING	351	LF
CONCRETE BARRIER (TYPE 60D)	451	LF

Traci Menard
DESIGN ENGINEER

	BY	CHECKED			
DESIGN	C. Chan	J. Higareda\G. Galo	LOAD & RESISTANCE FACTOR DESIGN	LIVE LOADING: HL93 W/"LOW-BOY": PERMIT DESIGN VEHICLE	
DETAILS	S. Cholda	J. Higareda\G. Galo	LAYOUT	G. Galo	R. Novik
QUANTITIES	C. Chan	H. Mauroschadt	SPECIFICATIONS	X. Chen	X. Chen

ORIGINAL SCALE IN INCHES FOR REDUCED PLANS 0 1 2 3

STATE OF CALIFORNIA
DEPARTMENT OF TRANSPORTATION

DIVISION OF ENGINEERING SERVICES
STRUCTURE DESIGN
DESIGN BRANCH 15

BRIDGE NO. 53E0313
POST MILE 40.63

RETAINING WALL NO. 2146
GENERAL PLAN NO. 1

UNIT: 3604
PROJECT NUMBER & PHASE: 0713000007
CONTRACT NO.: 07-1193U1

DISREGARD PRINTS BEARING EARLIER REVISION DATES

REVISION DATES: 03-07-13 06-06-14 07-30-14 02-07-14

SHEET 1 OF 23

USERNAME => s125624 DATE PLOTTED => 18-MAY-2015 TIME PLOTTED => 16:26

STRUCTURES DESIGN GENERAL PLAN SHEET (ENGLISH) (REV.09-01-10)

FILE => 53e0313-a-gp01.dgn

DIST	COUNTY	ROUTE	POST MILES TOTAL PROJECT	SHEET No.	TOTAL SHEETS
07	LA	10	37.2/42.4	2136	2313

REGISTERED CIVIL ENGINEER 10-1-14 DATE

6-1-15
PLANS APPROVAL DATE

REGISTERED PROFESSIONAL ENGINEER Gabriel J. Galo No. 52288 Exp. 12-31-14 CIVIL STATE OF CALIFORNIA

The State of California or its officers or agents shall not be responsible for the accuracy or completeness of scanned copies of this plan sheet.

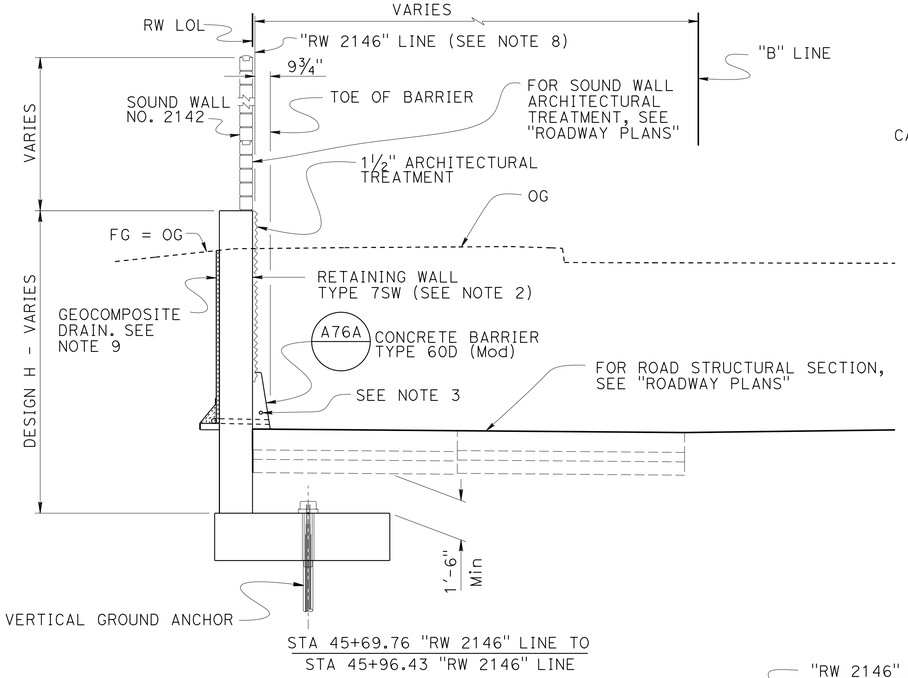

STA 45+69.76 "RW 2146" LINE TO
STA 45+96.43 "RW 2146" LINE

TYPICAL SECTION

¼" = 1'-0"

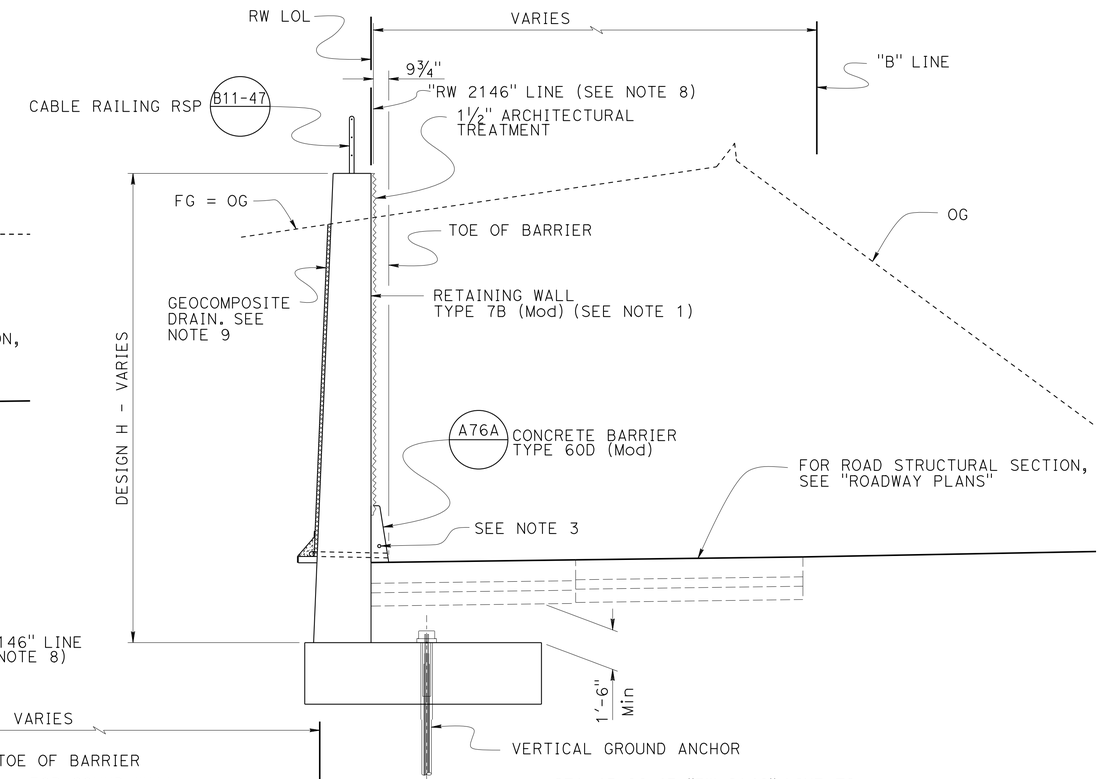

STA 45+96.43 "RW 2146" LINE TO
STA 49+48.43 "RW 2146" LINE

TYPICAL SECTION

¼" = 1'-0"

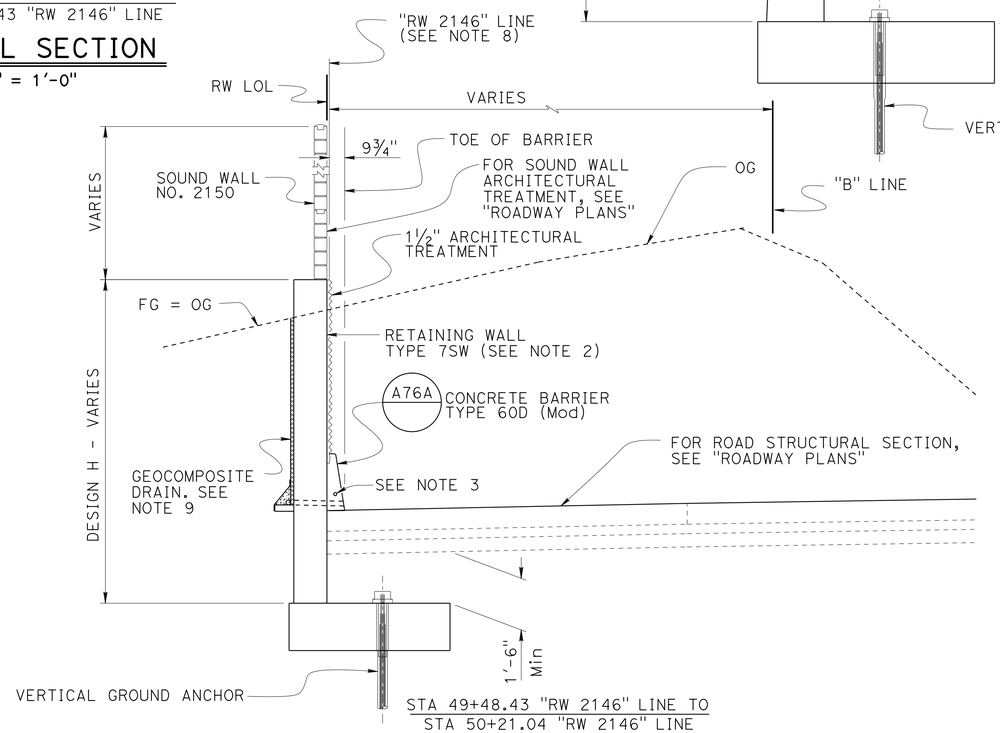

STA 49+48.43 "RW 2146" LINE TO
STA 50+21.04 "RW 2146" LINE

TYPICAL SECTION

¼" = 1'-0"

Notes:

1. For Details, see "RETAINING WALL TYPE 7B (Mod) - DETAILS NO. 1" and "RETAINING WALL TYPE 7B (Mod) - DETAILS NO. 2" sheets.
2. For Details, see "RETAINING WALL TYPE 7SW - DETAILS NO. 1" and "RETAINING WALL TYPE 7SW - DETAILS NO. 2" sheets.
3. Install 2"ø Conduit in Concrete Barrier. For details, see "Roadway Plans".
4. For Structural Details, see "STRUCTURE PLAN NO. 1", "STRUCTURE PLAN NO. 2", and "STRUCTURE PLAN NO. 3" sheets.
5. For Sound Wall and Expansion Joint details, see "MASONRY BLOCK SOUND WALL ON RETAINING WALL-DETAILS NO.1" and "MASONRY BLOCK SOUND WALL ON RETAINING WALL-DETAILS NO. 2" sheets.
6. For Architectural Treatment, see "ARCHITECTURAL DETAILS NO. 1" through "ARCHITECTURAL DETAILS NO. 5" sheet.
7. For Lighting Standard Attachment, see "LIGHTING STANDARD SUPPORT DETAILS" sheet.
8. "RW 2146" LINE is located at front face of Architectural Texture.
9. For Geocomposite Drain details, see "WEEP HOLE AND GEOCOMPOSITE DRAIN" detail on "INDEX TO PLANS" sheet.

NOTE:
THE CONTRACTOR SHALL VERIFY ALL CONTROLLING FIELD DIMENSIONS BEFORE ORDERING OR FABRICATING ANY MATERIAL.

Traci Menard
DESIGN ENGINEER

	BY	CHECKED
DESIGN	C. Chan	J. Higareda\G. Galo
DETAILS	S. Cholda	J. Higareda\G. Galo
QUANTITIES	C. Chan	H. Mauroschadt

LOAD & RESISTANCE FACTOR DESIGN — LIVE LOADING: HL93 W/"LOW-BOY"; PERMIT DESIGN VEHICLE

	BY	CHECKED
LAYOUT	G. Galo	R. Novik
SPECIFICATIONS	X. Chen	PLANS AND SPECS COMPARED X. Chen

ORIGINAL SCALE IN INCHES FOR REDUCED PLANS 0 1 2 3

STATE OF CALIFORNIA
DEPARTMENT OF TRANSPORTATION

DIVISION OF ENGINEERING SERVICES
STRUCTURE DESIGN
DESIGN BRANCH 15

BRIDGE NO. 53E0313
POST MILE 40.63

RETAINING WALL NO. 2146
GENERAL PLAN NO. 2

UNIT: 3604
PROJECT NUMBER & PHASE: 0713000007
CONTRACT NO.: 07-1193U1

DISREGARD PRINTS BEARING EARLIER REVISION DATES

REVISION DATES 04-18-13 03-05-14 06-06-14 2-18-14

SHEET 2 OF 23

USERNAME => s125624 DATE PLOTTED => 18-MAY-2015 TIME PLOTTED => 16:27

STRUCTURES DESIGN GENERAL PLAN SHEET (ENGLISH) (REV.09-01-10)

FILE => 53e0313-a-gp02.dgn

DIST	COUNTY	ROUTE	POST MILES TOTAL PROJECT	SHEET No.	TOTAL SHEETS
07	LA	10	37.2/42.4	2137	2313

REGISTERED CIVIL ENGINEER 10-1-14 DATE

6-1-15
PLANS APPROVAL DATE

REGISTERED PROFESSIONAL ENGINEER Gabriel J. Galo No. 52288 Exp. 12-31-14 CIVIL STATE OF CALIFORNIA

The State of California or its officers or agents shall not be responsible for the accuracy or completeness of scanned copies of this plan sheet.

INDEX TO PLANS

SHEET NO.	TITLE
1.	GENERAL PLAN NO. 1
2.	GENERAL PLAN NO. 2
3.	INDEX TO PLANS
4.	STRUCTURE PLAN NO. 1
5.	STRUCTURE PLAN NO. 2
6.	STRUCTURE PLAN NO. 3
7.	FOUNDATION PLAN
8.	ARCHITECTURAL DETAILS NO. 1
9.	ARCHITECTURAL DETAILS NO. 2
10.	ARCHITECTURAL DETAILS NO. 3
11.	ARCHITECTURAL DETAILS NO. 4
12.	ARCHITECTURAL DETAILS NO. 5
13.	LIGHTING STANDARD SUPPORT DETAILS
14.	VERTICAL GROUND ANCHOR DETAILS NO. 2
15.	VERTICAL GROUND ANCHOR DETAILS NO. 1
16.	RETAINING WALL TYPE 7SW - DETAILS NO. 1
17.	RETAINING WALL TYPE 7SW - DETAILS NO. 2
18.	RETAINING WALL TYPE 7B (Mod) - DETAILS NO. 1
19.	RETAINING WALL TYPE 7B (Mod) - DETAILS NO. 2
20.	MASONRY BLOCK SOUND WALL ON RETAINING WALL - DETAILS NO. 1
21.	MASONRY BLOCK SOUND WALL ON RETAINING WALL - DETAILS NO. 2
22.	LOG OF TEST BORINGS 1 OF 2
23.	LOG OF TEST BORINGS 2 OF 2

STANDARD PLANS 2010

	A10A	ABBREVIATIONS (SHEET 1 OF 2)
RSP	A10B	ABBREVIATIONS (SHEET 2 OF 2)
	A10C	LINES AND SYMBOLS (SHEET 1 OF 3)
	A10D	LINES AND SYMBOLS (SHEET 2 OF 3)
	A10E	LINES AND SYMBOLS (SHEET 3 OF 3)
	A10F	LEGEND-SOIL (SHEET 1 OF 2)
	A10G	LEGEND-SOIL (SHEET 2 OF 2)
	A10H	LEGEND - ROCK
	A76A	CONCRETE BARRIER TYPE 60
	B0-3	BRIDGE DETAILS
RSP	B3-5	RETAINING WALL DETAILS NO. 1
RSP	B11-47	CABLE RAILING
	B15-9	SOUND WALL MASONRY BLOCK MISCELLANEOUS DETAILS
	ES-6B	ELECTRICAL SYSTEMS (ELECTROLIER ANCHORAGE AND GROUTING FOR TYPE 15 AND TYPE 21 BARRIER RAIL MOUNTED)

STANDARD PLAN SHEET No.

DETAIL No.

Legend:

Indicates Structure Excavation (Retaining Wall) Limits

Indicates Structure Backfill (Retaining Wall) Limits

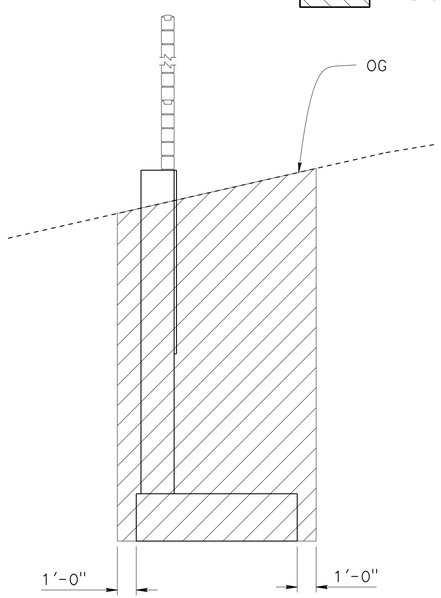

EXCAVATION

NO SCALE

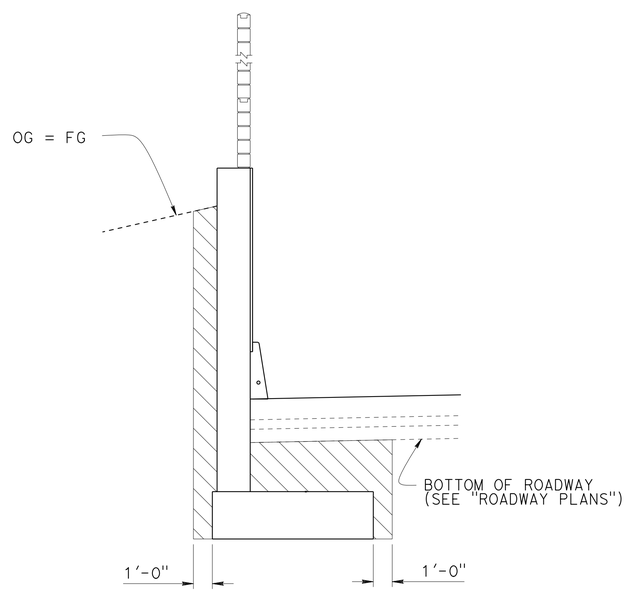

BACKFILL

NO SCALE

STRUCTURE EXCAVATION & BACKFILL

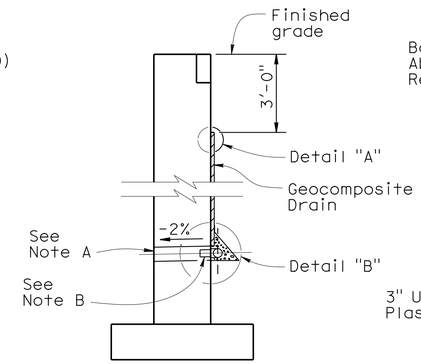

WALL SECTION

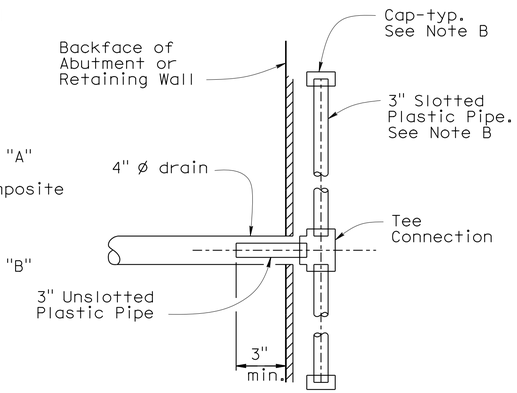

SECTION A-A

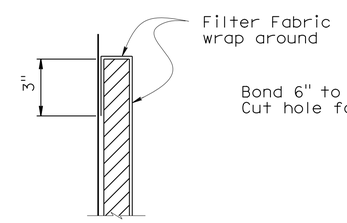

DETAIL "A"

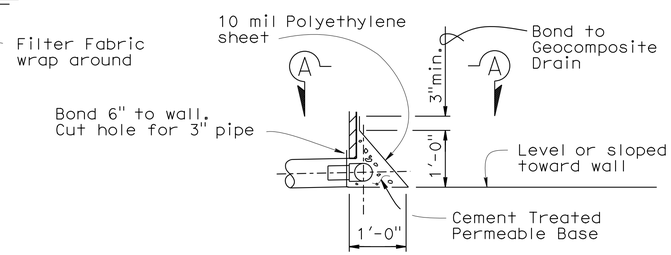

DETAIL "B"

WEEP HOLE AND GEOCOMPOSITE DRAIN

ALTERNATIVE TO BRIDGE DETAIL (B0-3 / 3-1)

Notes:

A. 4" ø drains at intermediate sag points and at 25' max center to center (9' c-c for Type 3 and 9'-3" c-c for Type 4 retaining walls).
For walls adjacent to sidewalks or curbs, provide 4" cast iron or asbestos cement pipe under the sidewalk to discharge through curb face.
Exposed wall drains must be located 3"± above finished grade.

B. Geocomposite drain, cement treated permeable base, and 3"ø slotted plastic pipe continuous behind retaining wall or abutment. Cap ends of pipe. Provide "Tee" connection at each 4" ø drain.

C. Connect the low end of plastic pipe to the main outlet pipe as applicable.

	BY	CHECKED
DESIGN	C. Chan	J. Higareda\G. Galo
DETAILS	S. Cholda	J. Higareda\G. Galo
QUANTITIES	C. Chan	H. Mauroschadt

STATE OF CALIFORNIA
DEPARTMENT OF TRANSPORTATION

DIVISION OF ENGINEERING SERVICES
STRUCTURE DESIGN
DESIGN BRANCH 15

BRIDGE NO. 53E0313
POST MILE 40.63

RETAINING WALL NO. 2146
INDEX TO PLANS

STRUCTURES DESIGN DETAIL SHEET (ENGLISH) (REV. 09-01-10)

ORIGINAL SCALE IN INCHES FOR REDUCED PLANS 0 1 2 3

UNIT: 3604
PROJECT NUMBER & PHASE: 0713000007
CONTRACT NO.: 07-1193U1

DISREGARD PRINTS BEARING EARLIER REVISION DATES

REVISION DATES 04-04-13 06-06-14 3-25-14 02-18-14

SHEET 3 OF 23

FILE => 53e0313-a-itp.dgn

USERNAME => s125624 DATE PLOTTED => 18-MAY-2015 TIME PLOTTED => 16:27

DIST	COUNTY	ROUTE	POST MILES TOTAL PROJECT	SHEET No.	TOTAL SHEETS
07	LA	10	37.2/42.4	2138	2313

REGISTERED CIVIL ENGINEER — DATE 10-1-14

6-1-15
PLANS APPROVAL DATE

REGISTERED PROFESSIONAL ENGINEER — Gabriel J. Galo — No. 52288 — Exp. 12-31-14 — CIVIL — STATE OF CALIFORNIA

The State of California or its officers or agents shall not be responsible for the accuracy or completeness of scanned copies of this plan sheet.

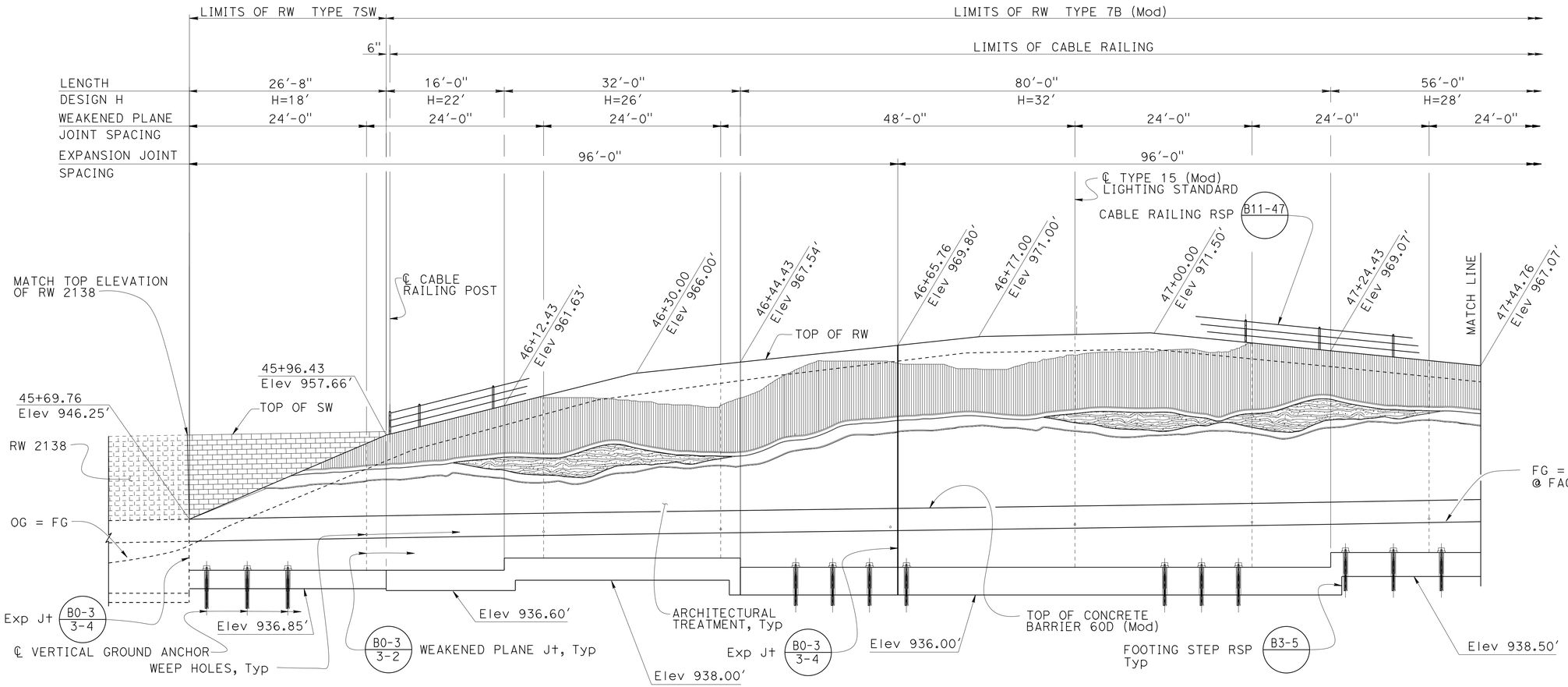

ELEVATION

1/8" = 1'-0"

ANCHOR DESIGN NOTES:

1. Anchor Lockoff Load, To, is equal to Anchor Design Load, Td
2. Anchor Factored Test Load, Tp, is equal to 1.33 x Td.

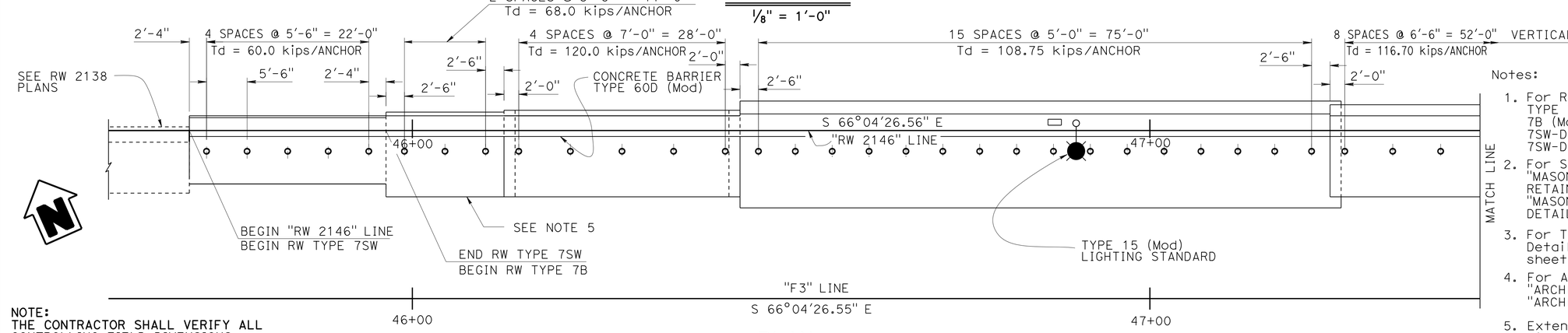

PLAN

1/8" = 1'-0"

Notes:

1. For Retaining Wall details, see "RETAINING WALL TYPE 7B (Mod)-DETAILS NO.1", "RETAINING WALL TYPE 7B (Mod)-DETAILS NO. 2", "RETAINING WALL TYPE 7SW-DETAILS NO.1" AND "RETAINING WALL TYPE 7SW-DETAILS NO.2" sheets.
2. For Sound Wall and Expansion Joint details, see "MASONRY BLOCK SOUND WALL ON RETAINING WALL-DETAILS NO. 1" and "MASONRY BLOCK SOUND WALL ON RETAINING WALL-DETAILS NO. 2" sheets.
3. For Type 15 (Mod) Lighting Standard Support Details, see "LIGHTING STANDARD SUPPORT DETAILS" sheet.
4. For Architectural Treatment details see "ARCHITECTURAL DETAILS NO. 1" through "ARCHITECTURAL DETAILS NO. 5" sheets.
5. Extend footing to match face of RW footing with bottom Elev = 938.00'. Extend footing steel as required.

NOTE:
THE CONTRACTOR SHALL VERIFY ALL CONTROLLING FIELD DIMENSIONS BEFORE ORDERING OR FABRICATING ANY MATERIAL.

	BY	CHECKED
DESIGN	C. Chan	J. Higareda\G. Galo
DETAILS	S. Cholda	J. Higareda\G. Galo
QUANTITIES	C Chan	H. Mauroschadt

STATE OF CALIFORNIA
DEPARTMENT OF TRANSPORTATION

DIVISION OF ENGINEERING SERVICES
STRUCTURE DESIGN
DESIGN BRANCH 15

BRIDGE NO. 53E0313
POST MILE 40.63

RETAINING WALL NO. 2146
STRUCTURE PLAN NO. 1

STRUCTURES DESIGN DETAIL SHEET (ENGLISH) (REV. 09-01-10)

ORIGINAL SCALE IN INCHES FOR REDUCED PLANS 0 1 2 3

UNIT: 3604
PROJECT NUMBER & PHASE: 0713000007
CONTRACT NO.: 07-1193U1

DISREGARD PRINTS BEARING EARLIER REVISION DATES
REVISION DATES 03-19-13 03-05-14 06-06-14 07-30-14

SHEET 4 OF 23

FILE => 53e0313-b-sp01.dgn

USERNAME => s125624 DATE PLOTTED => 18-MAY-2015 TIME PLOTTED => 16:27

DIST	COUNTY	ROUTE	POST MILES TOTAL PROJECT	SHEET No.	TOTAL SHEETS
07	LA	10	37.3/42.4	2139	2313

REGISTERED CIVIL ENGINEER 10-1-14 DATE

6-1-15
PLANS APPROVAL DATE

REGISTERED PROFESSIONAL ENGINEER Gabriel J. Galo No. 52288 Exp. 12-31-14 CIVIL STATE OF CALIFORNIA

The State of California or its officers or agents shall not be responsible for the accuracy or completeness of scanned copies of this plan sheet.

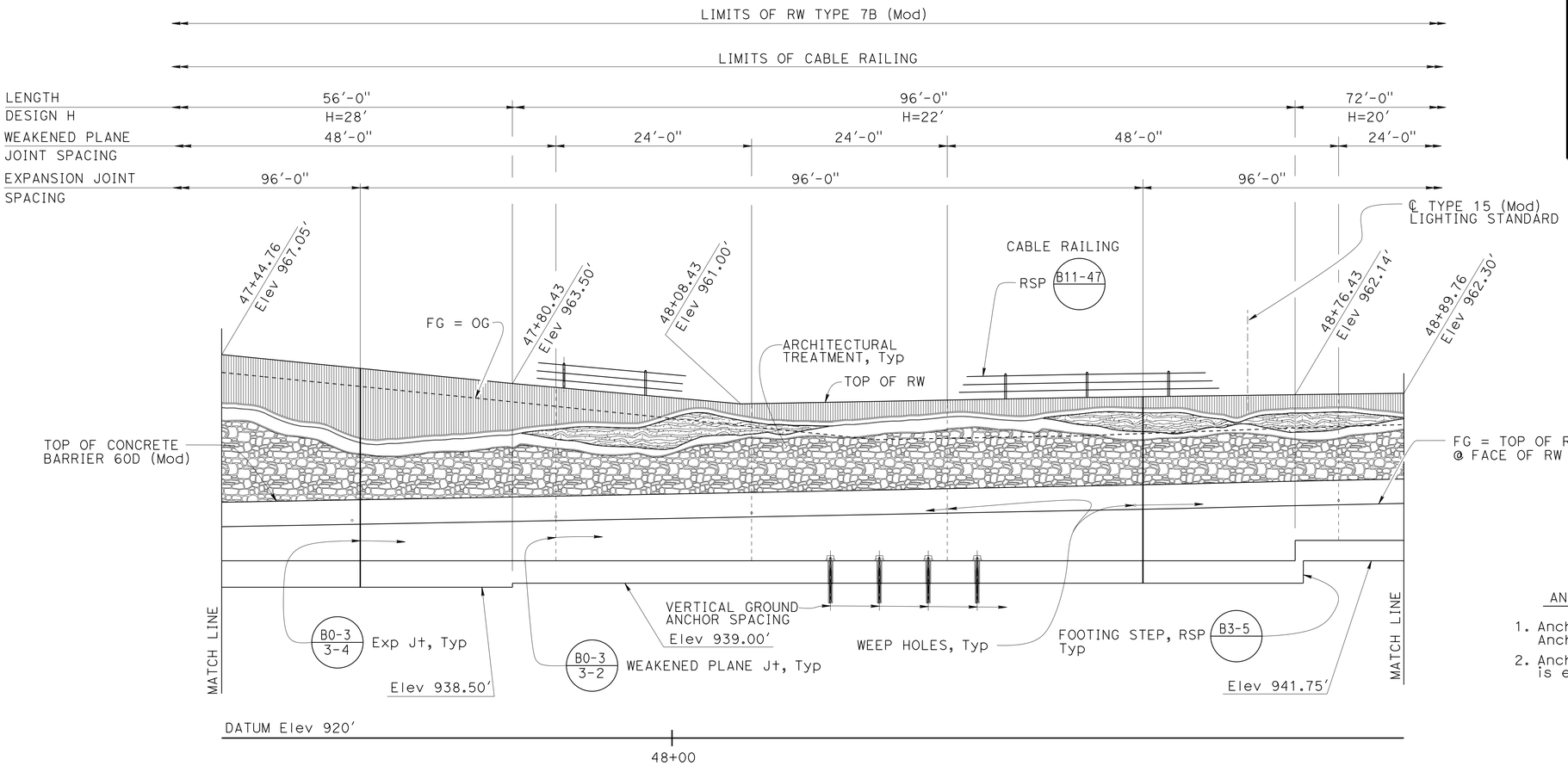

ELEVATION

1/8" = 1'-0"

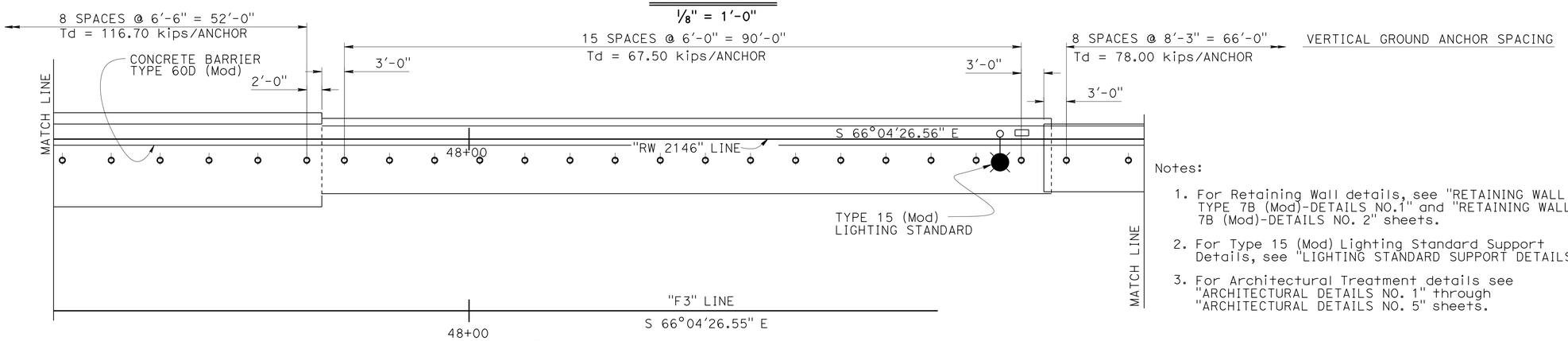

PLAN

1/8" = 1'-0"

ANCHOR DESIGN NOTES:

1. Anchor Lockoff Load, To, is equal to Anchor Design Load, Td
2. Anchor Factored Test Load, Tp, is equal to 1.33 x Td.

Notes:

1. For Retaining Wall details, see "RETAINING WALL TYPE 7B (Mod)-DETAILS NO.1" and "RETAINING WALL TYPE 7B (Mod)-DETAILS NO. 2" sheets.
2. For Type 15 (Mod) Lighting Standard Support Details, see "LIGHTING STANDARD SUPPORT DETAILS" sheet.
3. For Architectural Treatment details see "ARCHITECTURAL DETAILS NO. 1" through "ARCHITECTURAL DETAILS NO. 5" sheets.

NOTE:
THE CONTRACTOR SHALL VERIFY ALL CONTROLLING FIELD DIMENSIONS BEFORE ORDERING OR FABRICATING ANY MATERIAL.

	BY	CHECKED
DESIGN	C. Chan	J. Higareda\G. Galo
DETAILS	S. Cholda	J. Higareda\G. Galo
QUANTITIES	C. Chan	H. Mauroschadt

STATE OF CALIFORNIA
DEPARTMENT OF TRANSPORTATION

DIVISION OF ENGINEERING SERVICES
STRUCTURE DESIGN
DESIGN BRANCH 15

BRIDGE NO. 53E0313
POST MILE 40.63

RETAINING WALL NO. 2146
STRUCTURE PLAN NO. 2

STRUCTURES DESIGN DETAIL SHEET (ENGLISH) (REV. 09-01-10)

ORIGINAL SCALE IN INCHES FOR REDUCED PLANS 0 1 2 3

UNIT: 3604
PROJECT NUMBER & PHASE: 0713000007
CONTRACT NO.: 07-1193U1

DISREGARD PRINTS BEARING EARLIER REVISION DATES

REVISION DATES 03-20-13 2-18-14 03-04-14 06-06-14

SHEET 5 OF 23

FILE => 53e0313-b-sp02.dgn

USERNAME => s125624 DATE PLOTTED => 18-MAY-2015 TIME PLOTTED => 16:27

DIST	COUNTY	ROUTE	POST MILES TOTAL PROJECT	SHEET No.	TOTAL SHEETS
07	LA	10	37.2/42.4	2140	2313

REGISTERED CIVIL ENGINEER 10-1-14 DATE

6-1-15
PLANS APPROVAL DATE

REGISTERED PROFESSIONAL ENGINEER Gabriel J. Galo No. 52288 Exp. 12-31-14 CIVIL STATE OF CALIFORNIA

The State of California or its officers or agents shall not be responsible for the accuracy or completeness of scanned copies of this plan sheet.

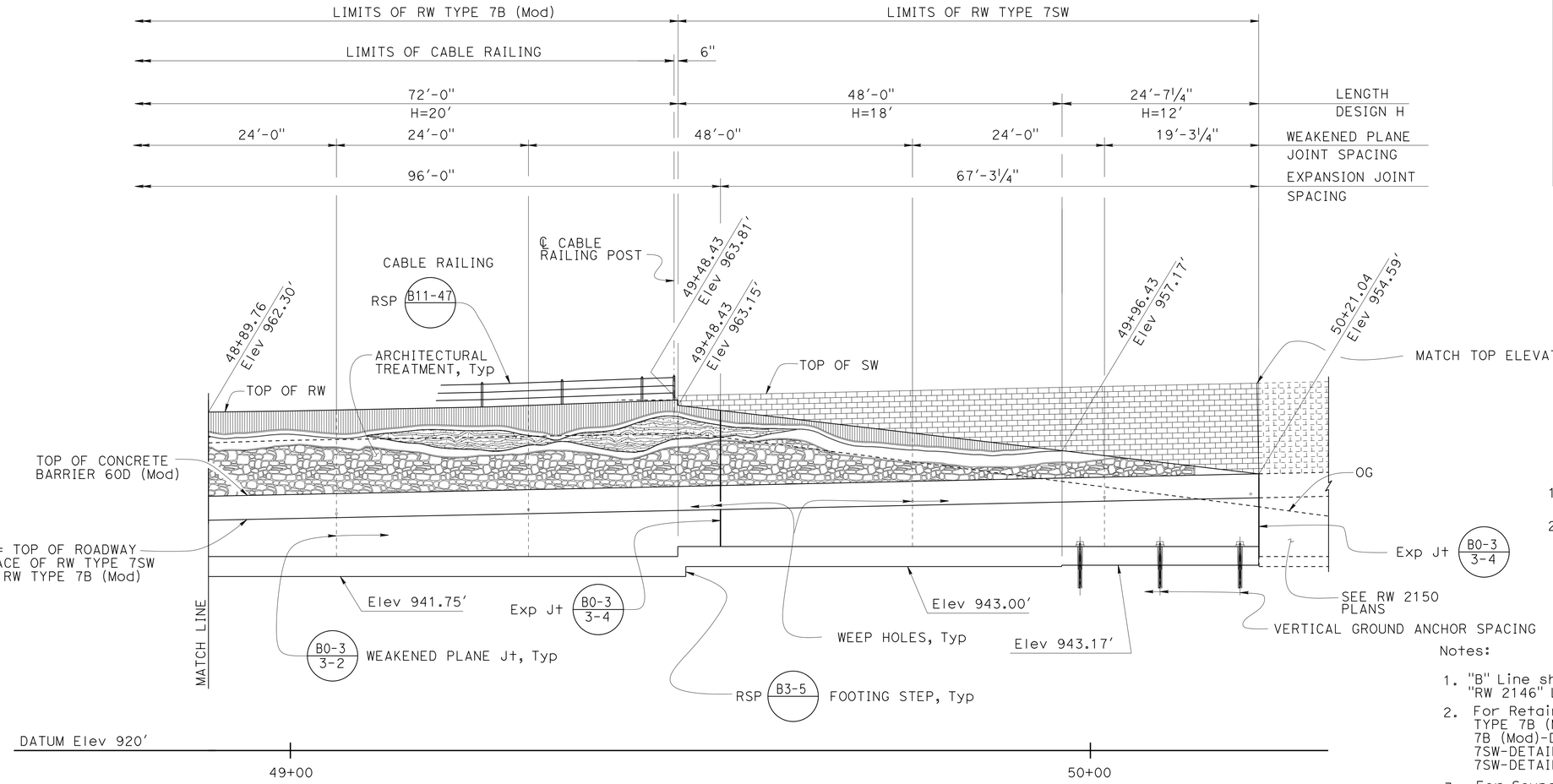

ELEVATION
1/8" = 1'-0"

ANCHOR DESIGN NOTES:

1. Anchor Lockoff Load, To, is equal to Anchor Design Load, Td
2. Anchor Factored Test Load, Tp, is equal to 1.33 x Td.

Notes:

1. "B" Line shown for reference only, offset to "RW 2146" Line not to scale.
2. For Retaining Wall details, see "RETAINING WALL TYPE 7B (Mod)-DETAILS NO.1", "RETAINING WALL TYPE 7B (Mod)-DETAILS NO. 2", "RETAINING WALL TYPE 7SW-DETAILS NO.1" and "RETAINING WALL TYPE 7SW-DETAILS NO.2" sheets.
3. For Sound Wall and Expansion Joint details, see "MASONRY BLOCK SOUND WALL ON RETAINING WALL-DETAILS NO. 1" and "MASONRY BLOCK SOUND WALL ON RETAINING WALL-DETAILS NO. 2" sheets.
4. For Architectural Treatment details see "ARCHITECTURAL DETAILS NO. 1" through "ARCHITECTURAL DETAILS NO. 5" sheets.

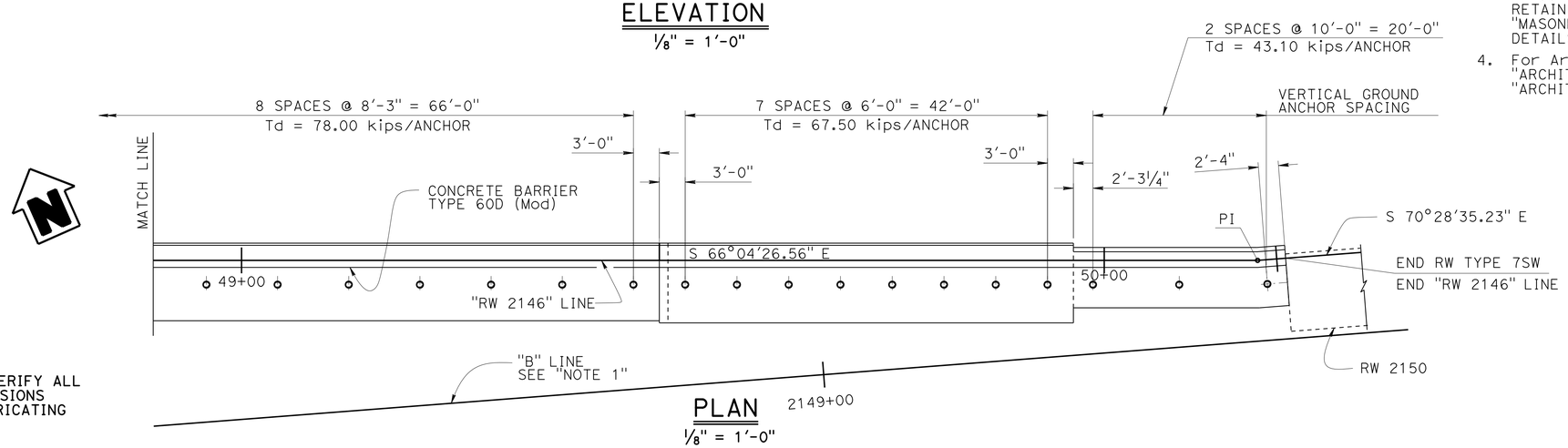

PLAN
1/8" = 1'-0"

NOTE:
THE CONTRACTOR SHALL VERIFY ALL CONTROLLING FIELD DIMENSIONS BEFORE ORDERING OR FABRICATING ANY MATERIAL.

	BY	CHECKED
DESIGN	C. Chan	J. Higareda\G. Galo
DETAILS	S. Cholda	J. Higareda\G. Galo
QUANTITIES	C. Chan	H. Mauroschadt

STATE OF CALIFORNIA
DEPARTMENT OF TRANSPORTATION

DIVISION OF ENGINEERING SERVICES
STRUCTURE DESIGN
DESIGN BRANCH 15

BRIDGE NO. 53E0313
POST MILE 40.63

RETAINING WALL NO. 2146
STRUCTURE PLAN NO. 3

STRUCTURES DESIGN DETAIL SHEET (ENGLISH) (REV. 09-01-10)

ORIGINAL SCALE IN INCHES FOR REDUCED PLANS 0 1 2 3

UNIT: 3604
PROJECT NUMBER & PHASE: 0713000007
CONTRACT NO.: 07-1193U1

DISREGARD PRINTS BEARING EARLIER REVISION DATES

REVISION DATES: 03-22-13 3-06-14 06-06-14 03-04-14

SHEET 6 OF 23

FILE => 53e0313-b-sp03.dgn

USERNAME => s125624 DATE PLOTTED => 18-MAY-2015 TIME PLOTTED => 16:27

DIST	COUNTY	ROUTE	POST MILES TOTAL PROJECT	SHEET No.	TOTAL SHEETS
07	LA	10	37.2/42.4	2141	2313

REGISTERED CIVIL ENGINEER 10-1-14 DATE

6-1-15
PLANS APPROVAL DATE

REGISTERED PROFESSIONAL ENGINEER
Gabriel Galo
No. 52288
Exp. 12-31-14
CIVIL
STATE OF CALIFORNIA

The State of California or its officers or agents shall not be responsible for the accuracy or completeness of electronic copies of this plan sheet.

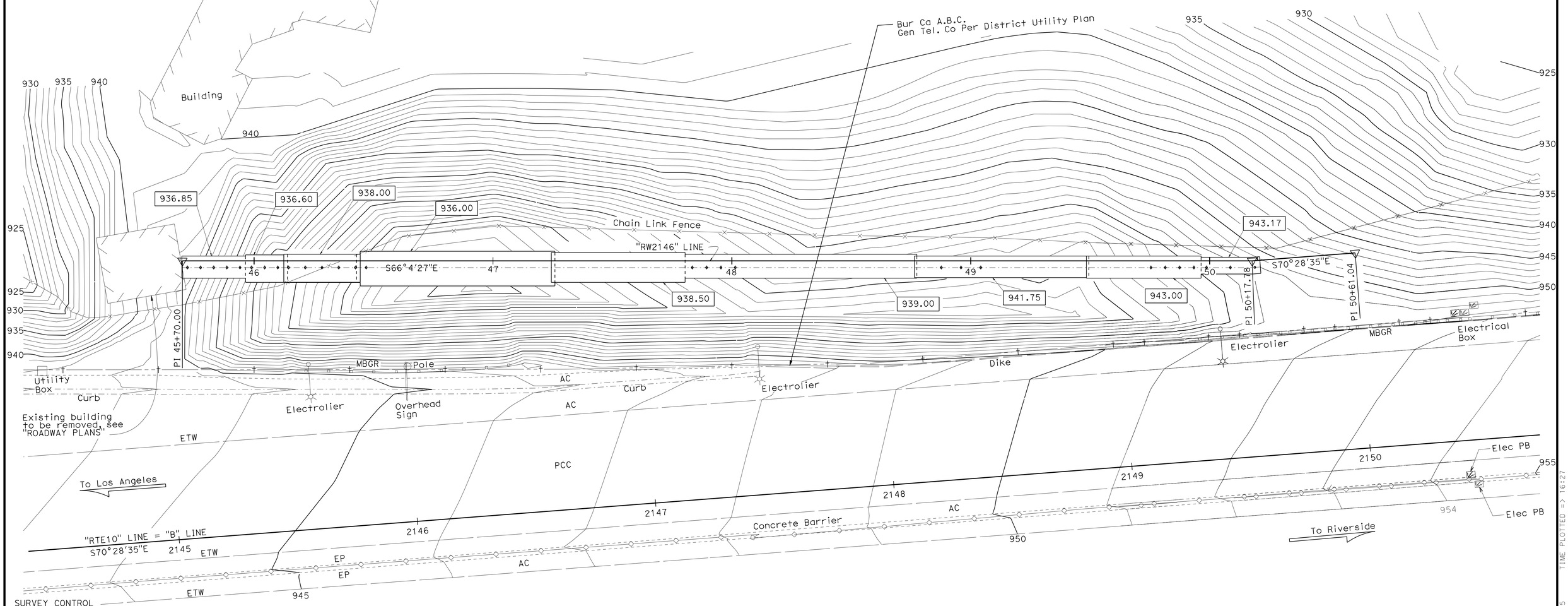

SURVEY CONTROL

PRHV 4029
Fnd 1"IP w/ CT Plug
70.28 FT Lt Rte 10
Sta 2130+799.53
N 1,847,539.18
E 6,610,211.48
Elev = 930.99

PRHV 10
Fnd L&T w/LA Co Eng Washr
169.30 FT Rt Rte 10
Sta 2136+50.57
N 1,847,291.22
E 6,610,239.06
Elev = 914.10

Legend:

XXX.XX Denotes bottom of Footing Elevation

PRELIMINARY INVESTIGATION SECTION

SCALE 1"=20'	VERT.DATUM X	PHOTOGRAMMETRY AS OF: X			
	HORZ.DATUM X	SURVEYED	BY DISTRICT 04/2008	CHECKED	BY C. FASSETT 01/2011
ALIGNMENT TIES Dist TRAVERSE SHEET		DRAFTED	BY J. MARTINEZ 01/2011	CHECKED	BY T. SCHMALZ 01/2011

DESIGN	BY C. Chan	CHECKED J. Higareda/G. Galo
DETAILS	BY S. Cholda	CHECKED J. Higareda/G. Galo
QUANTITIES	BY C. Chan	CHECKED H. Mauroschadt

STATE OF CALIFORNIA
DEPARTMENT OF TRANSPORTATION

DIVISION OF ENGINEERING SERVICES
STRUCTURE DESIGN
DESIGN BRANCH 15

BRIDGE NO. 53E0313
POST MILE 40.63

RETAINING WALL NO. 2146
FOUNDATION PLAN

STRUCTURES FOUNDATION PLAN SHEET (ENGLISH) (REV. 09-01-10)

ORIGINAL SCALE IN INCHES FOR REDUCED PLANS 0 1 2 3

UNIT: 3646
PROJECT NUMBER & PHASE: 0713000007
CONTRACT NO.: 07-1993U1

DISREGARD PRINTS BEARING EARLIER REVISION DATES

REVISION DATES: 01-26-11 01-28-14 2-18-14 07-30-14

SHEET 7 OF 23

FILE => 53e0313-c-fpl_11934u.dgn

USERNAME => s125624 DATE PLOTTED => 18-MAY-2015 TIME PLOTTED => 16:27

DIST	COUNTY	ROUTE	POST MILES TOTAL PROJECT	SHEET No.	TOTAL SHEETS
07	LA	10	37.2/42.4	2142	2313

REGISTERED CIVIL ENGINEER 10-1-14 DATE

6-1-15
PLANS APPROVAL DATE

REGISTERED PROFESSIONAL ENGINEER
Gabriel J. Galo
No. 52288
Exp. 12-31-14
CIVIL
STATE OF CALIFORNIA

The State of California or its officers or agents shall not be responsible for the accuracy or completeness of scanned copies of this plan sheet.

NOTES:

1. Entire cable railing not shown for clarity.
2. For "SECTION A-A", "SECTION B-B", and "SECTION C-C", see "ARCHITECTURAL DETAILS NO. 2" sheet.
3. For Fractured Rib, Fractured Granite, and Random Rock Textures, see "ARCHITECTURAL DETAILS NO. 3" sheet.
4. For Pattern Modules, see "ARCHITECTURAL DETAILS NO. 4" and "ARCHITECTURAL DETAILS NO. 5" sheets.

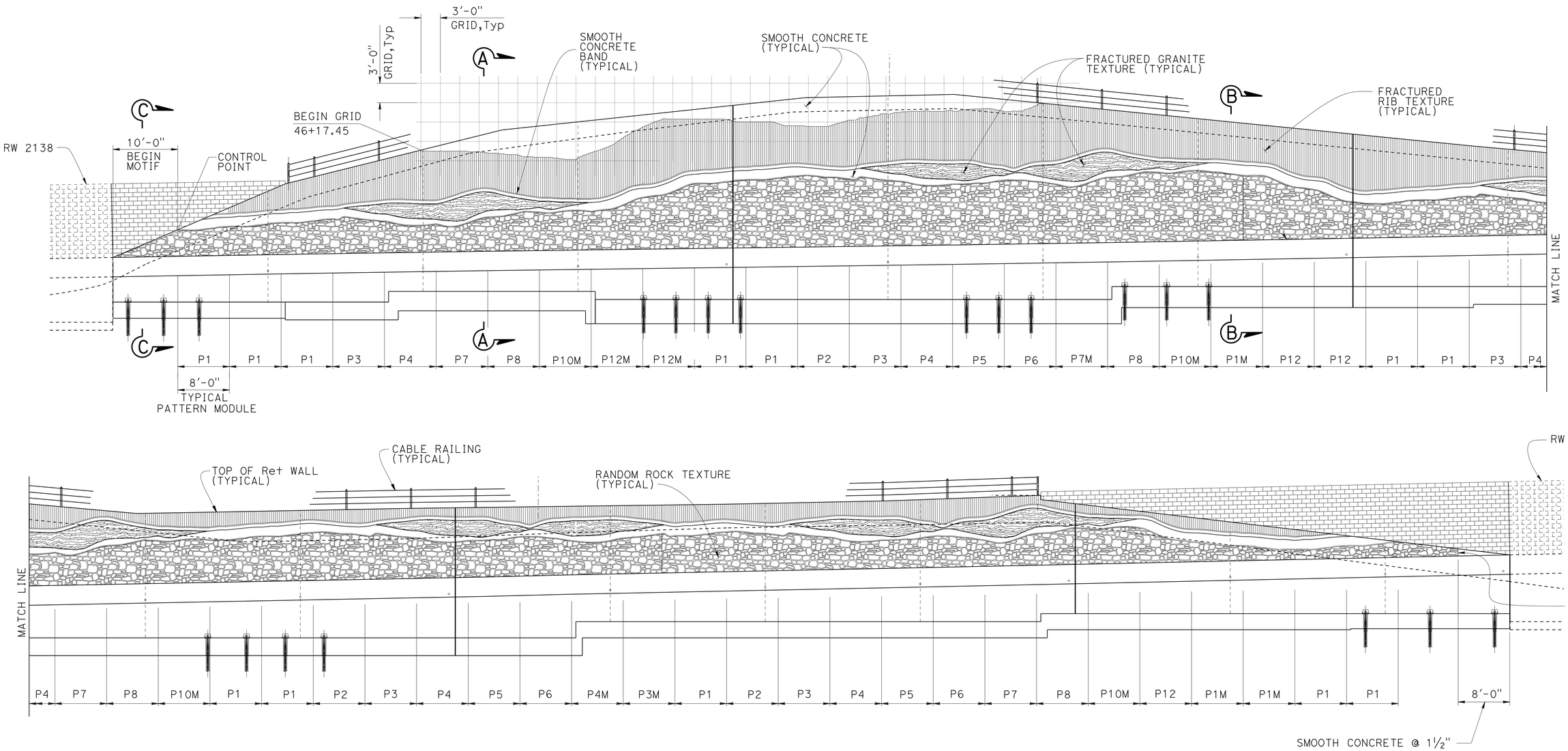

ELEVATION

⅛" = 1'-0"

DESIGN	BY V. Moore	CHECKED J. Higareda/G. Galo	
DETAILS	BY S. Cholda	CHECKED J. Higareda/G. Galo	
QUANTITIES	BY G. Galo	CHECKED H. Mauroschadt	

STATE OF CALIFORNIA
DEPARTMENT OF TRANSPORTATION

DIVISION OF ENGINEERING SERVICES
STRUCTURE DESIGN
DESIGN BRANCH 15

BRIDGE NO. 53E0313
POST MILE 40.63

RETAINING WALL NO. 2146
ARCHITECTURAL DETAILS NO. 1

STRUCTURES DESIGN DETAIL SHEET (ENGLISH) (REV. 09-01-10)

ORIGINAL SCALE IN INCHES FOR REDUCED PLANS 0 1 2 3

UNIT: 3604
PROJECT NUMBER & PHASE: 0713000007
CONTRACT NO.: 07-1193U1

DISREGARD PRINTS BEARING EARLIER REVISION DATES

REVISION DATES 1-12-14 03-05-14 07-29-14 02-18-14

SHEET 8 OF 23

FILE => 53e0313-d-archdet01.dgn

USERNAME => s125624 DATE PLOTTED => 18-MAY-2015 TIME PLOTTED => 16:27

DIST	COUNTY	ROUTE	POST MILES TOTAL PROJECT	SHEET No.	TOTAL SHEETS
07	LA	10	37.2/42.4	2143	2313

REGISTERED CIVIL ENGINEER — DATE 10-1-14

6-1-15
PLANS APPROVAL DATE

REGISTERED PROFESSIONAL ENGINEER — Gabriel J. Galo No. 52288 Exp. 12-31-14 CIVIL — STATE OF CALIFORNIA

The State of California or its officers or agents shall not be responsible for the accuracy or completeness of scanned copies of this plan sheet.

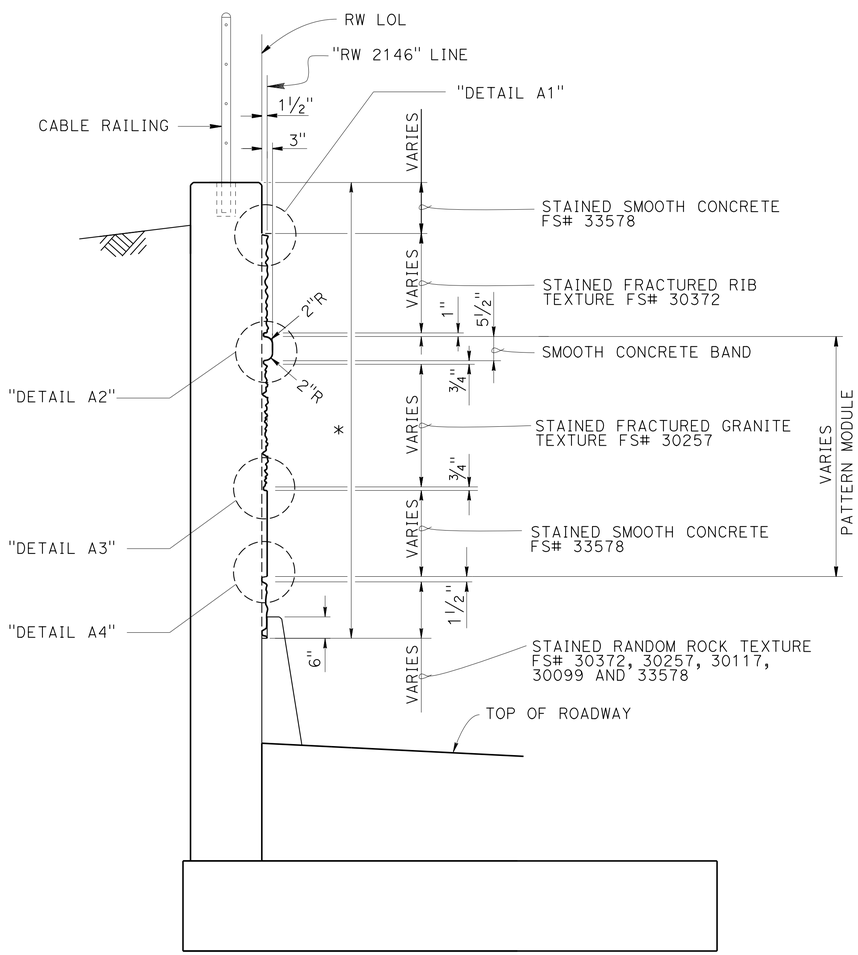

SECTION A-A

NO SCALE

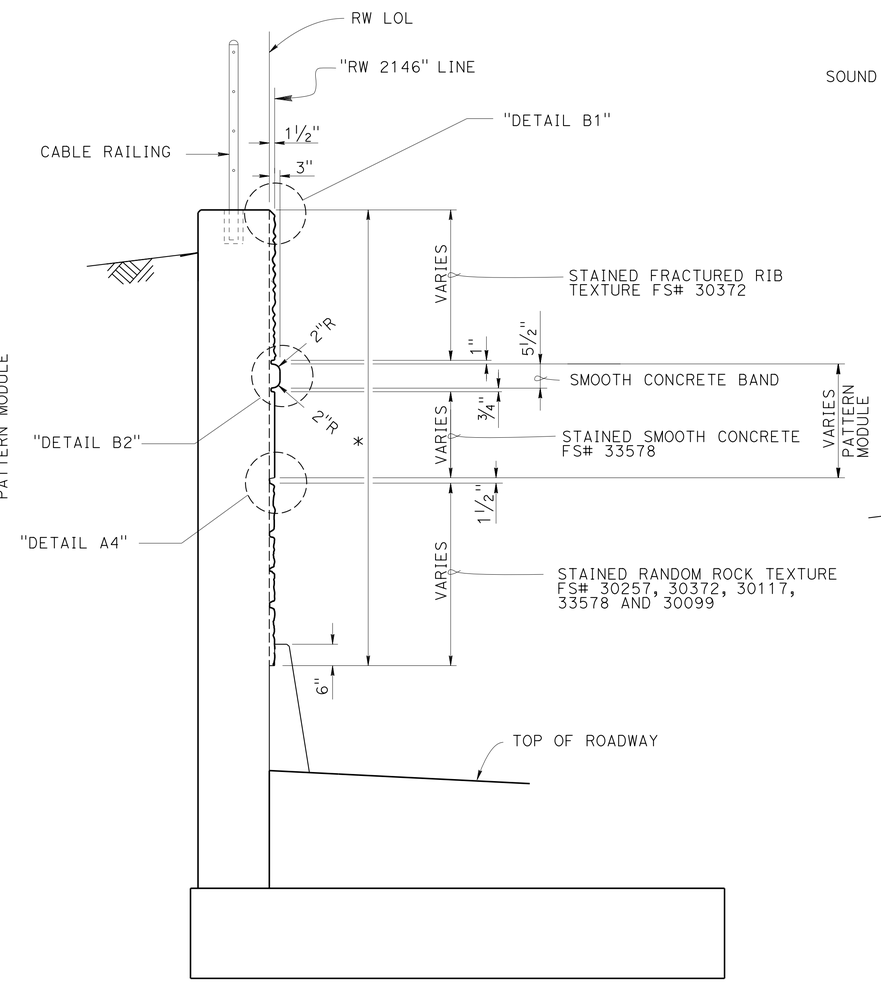

SECTION B-B

NO SCALE

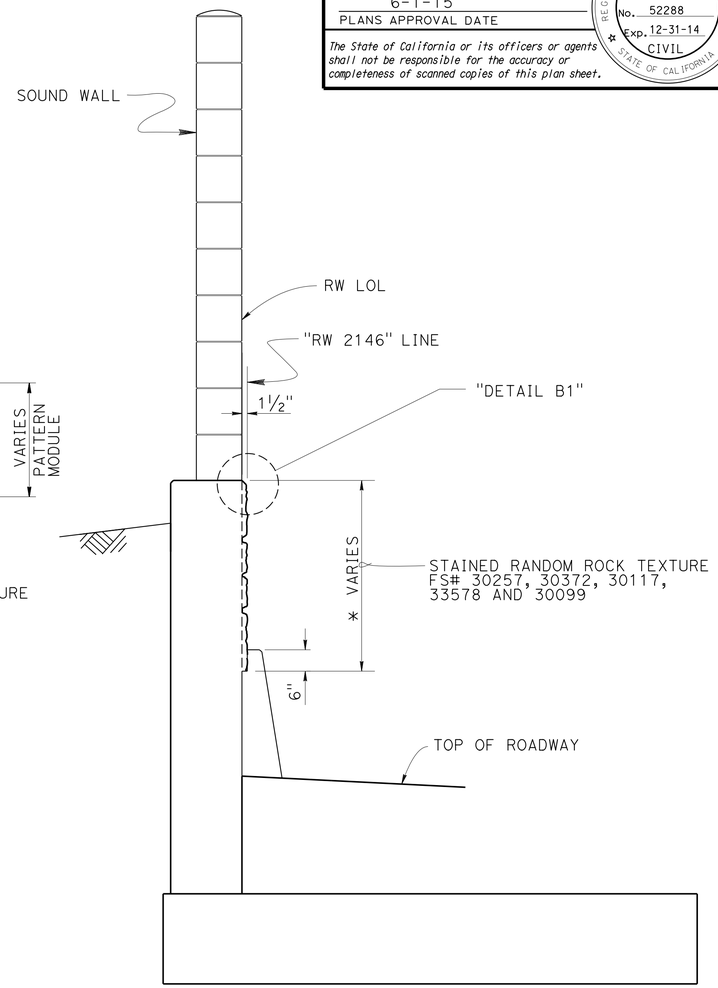

SECTION C-C

NO SCALE

* Pay limits for Concrete Surface Texture

NOTES:

1. For "DETAIL A1", "DETAIL A2", "DETAIL A3", "DETAIL A4", "DETAIL B1" and "DETAIL B2", see "ARCHITECTURAL DETAILS NO. 3" sheet.
2. "FS#" is Federal Standard Color Number.

	BY	CHECKED
DESIGN	V. Moore	J. Higareda/G. Galo
DETAILS	S. Cholda	J. Higareda/G. Galo
QUANTITIES	G. Galo	H. Mauroschadt

STATE OF CALIFORNIA
DEPARTMENT OF TRANSPORTATION

DIVISION OF ENGINEERING SERVICES
STRUCTURE DESIGN
DESIGN BRANCH 15

BRIDGE NO. 53E0313
POST MILE 40.63

RETAINING WALL NO. 2146
ARCHITECTURAL DETAILS NO. 2

STRUCTURES DESIGN DETAIL SHEET (ENGLISH) (REV. 09-01-10)

ORIGINAL SCALE IN INCHES FOR REDUCED PLANS 0 1 2 3

UNIT: 3604
PROJECT NUMBER & PHASE: 0713000007
CONTRACT NO.: 07-1193U1

DISREGARD PRINTS BEARING EARLIER REVISION DATES

REVISION DATES: 2-14-14 2-18-14 3-05-14 6-6-14

SHEET 9 OF 23

FILE => 53e0313-d-archdet02.dgn

USERNAME => s125624 DATE PLOTTED => 18-MAY-2015 TIME PLOTTED => 16:27

DIST	COUNTY	ROUTE	POST MILES TOTAL PROJECT	SHEET No.	TOTAL SHEETS
07	LA	10	37.2/42.4	2144	2313

REGISTERED CIVIL ENGINEER 10-1-14 DATE

6-1-15
PLANS APPROVAL DATE

REGISTERED PROFESSIONAL ENGINEER
Gabriel J. Galo
No. 52288
Exp. 12-31-14
CIVIL
STATE OF CALIFORNIA

The State of California or its officers or agents shall not be responsible for the accuracy or completeness of scanned copies of this plan sheet.

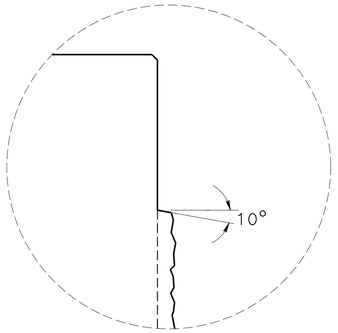

DETAIL A1
NO SCALE

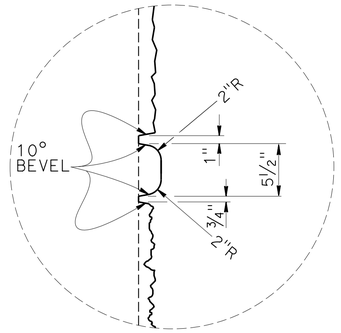

DETAIL A2
NO SCALE

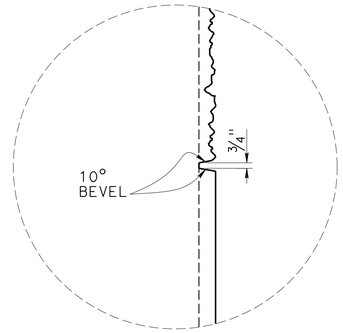

DETAIL A3
NO SCALE

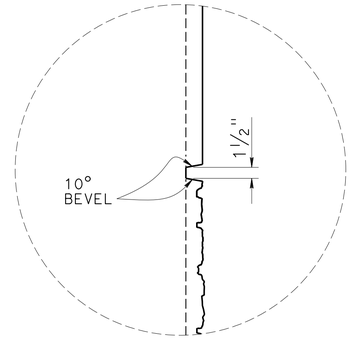

DETAIL A4
NO SCALE

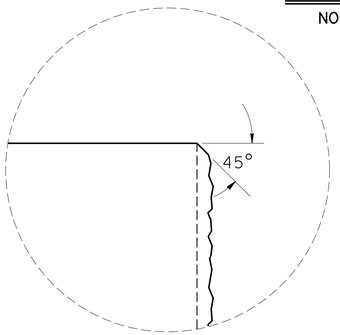

DETAIL B1
NO SCALE

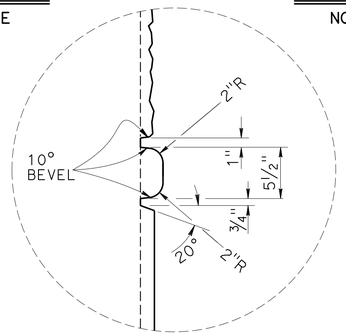

DETAIL B2
NO SCALE

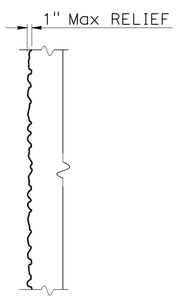

SECTION J-J

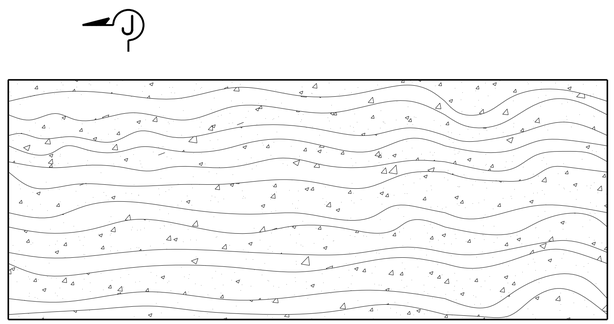

ELEVATION

FRACTURED GRANITE TEXTURE
NO SCALE

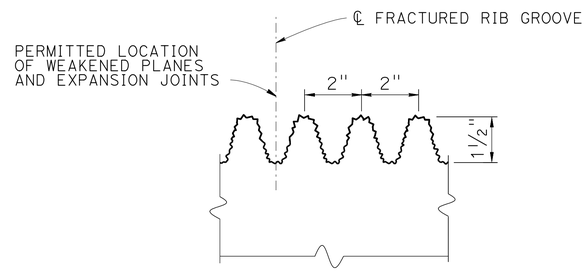

FRACTURED RIB TEXTURE - SECTION
NO SCALE

NOTE:
Seamless Random Rock pattern to have a minimum of 2 to a maximum of 4 match points (denoted by "M") for each side (top to bottom and side to side).

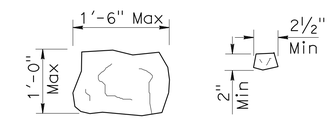

ROCK SIZE

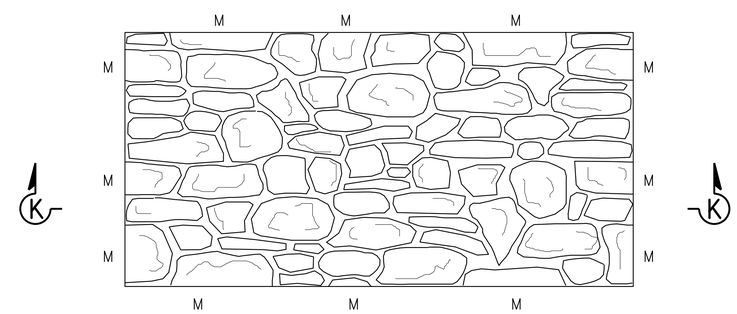

ELEVATION

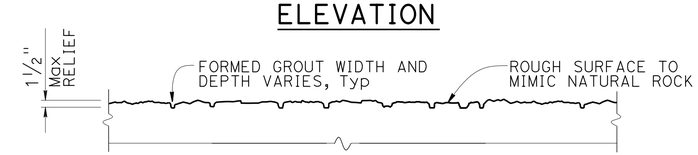

SECTION K-K

RANDOM ROCK TEXTURE
NO SCALE

DESIGN	BY V. Moore	CHECKED J. Higareda/G. Galo	
DETAILS	BY S. Cholda	CHECKED J. Higareda/G. Galo	
QUANTITIES	BY G. Galo	CHECKED H. Mauroschadt	

STATE OF CALIFORNIA
DEPARTMENT OF TRANSPORTATION

DIVISION OF ENGINEERING SERVICES
STRUCTURE DESIGN
DESIGN BRANCH 15

BRIDGE NO. 53E0313
POST MILE 40.63

RETAINING WALL NO. 2146
ARCHITECTURAL DETAILS NO. 3

STRUCTURES DESIGN DETAIL SHEET (ENGLISH) (REV. 09-01-10)

ORIGINAL SCALE IN INCHES FOR REDUCED PLANS 0 1 2 3

UNIT: 3604
PROJECT NUMBER & PHASE: 0713000007
CONTRACT NO.: 07-1193U1

DISREGARD PRINTS BEARING EARLIER REVISION DATES

REVISION DATES: 2-14-14 3-05-14

SHEET 10 OF 23

FILE => 53e0313-d-archdet03.dgn

USERNAME => s125624 DATE PLOTTED => 18-MAY-2015 TIME PLOTTED => 16:27

DIST	COUNTY	ROUTE	POST MILES TOTAL PROJECT	SHEET No.	TOTAL SHEETS
07	LA	10	37.2/42.4	2145	2313

REGISTERED CIVIL ENGINEER 10-1-14 DATE

6-1-15
PLANS APPROVAL DATE

REGISTERED PROFESSIONAL ENGINEER Gabriel J. Galo No. 52288 Exp. 12-31-14 CIVIL STATE OF CALIFORNIA

The State of California or its officers or agents shall not be responsible for the accuracy or completeness of scanned copies of this plan sheet.

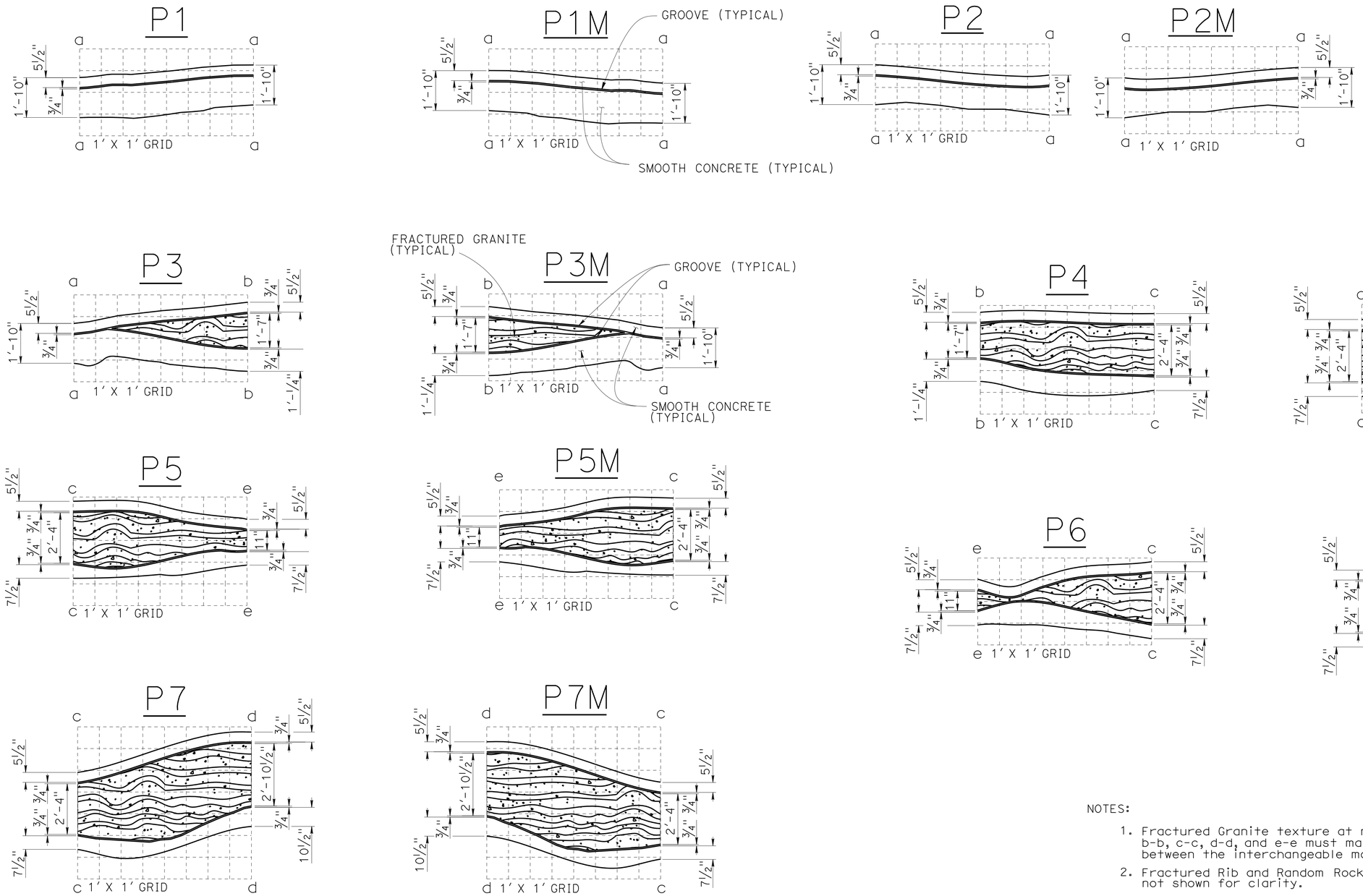

NOTES:

1. Fractured Granite texture at match lines a-a, b-b, c-c, d-d, and e-e must match seamlessly between the interchangeable modules.
2. Fractured Rib and Random Rock Textures not shown for clarity.

INTERCHANGEABLE PATTERN MOTIF MODULES

NO SCALE

	BY	CHECKED
DESIGN	V. Moore	J. Higareda/G. Galo
DETAILS	S. Cholda	J. Higareda/G. Galo
QUANTITIES	G. Galo	H. Mauroschadt

STATE OF CALIFORNIA DEPARTMENT OF TRANSPORTATION

DIVISION OF ENGINEERING SERVICES STRUCTURE DESIGN DESIGN BRANCH 15

BRIDGE NO. 53E0313
POST MILE 40.63

RETAINING WALL NO. 2146
ARCHITECTURAL DETAILS NO. 4

STRUCTURES DESIGN DETAIL SHEET (ENGLISH) (REV. 09-01-10)

ORIGINAL SCALE IN INCHES FOR REDUCED PLANS 0 1 2 3

UNIT: 3604
PROJECT NUMBER & PHASE: 0713000007
CONTRACT NO.: 07-1193U1

DISREGARD PRINTS BEARING EARLIER REVISION DATES

REVISION DATES 2-11-14

SHEET 11 OF 23

FILE => 53e0313-d-archdet04.dgn

USERNAME => s125624 DATE PLOTTED => 18-MAY-2015 TIME PLOTTED => 16:27

DIST	COUNTY	ROUTE	POST MILES TOTAL PROJECT	SHEET No.	TOTAL SHEETS
07	LA	10	37.2/42.4	2146	2313

REGISTERED CIVIL ENGINEER 10-1-14 DATE

6-1-15
PLANS APPROVAL DATE

REGISTERED PROFESSIONAL ENGINEER
Gabriel J. Galo
No. 52288
Exp. 12-31-14
CIVIL
STATE OF CALIFORNIA

The State of California or its officers or agents shall not be responsible for the accuracy or completeness of scanned copies of this plan sheet.

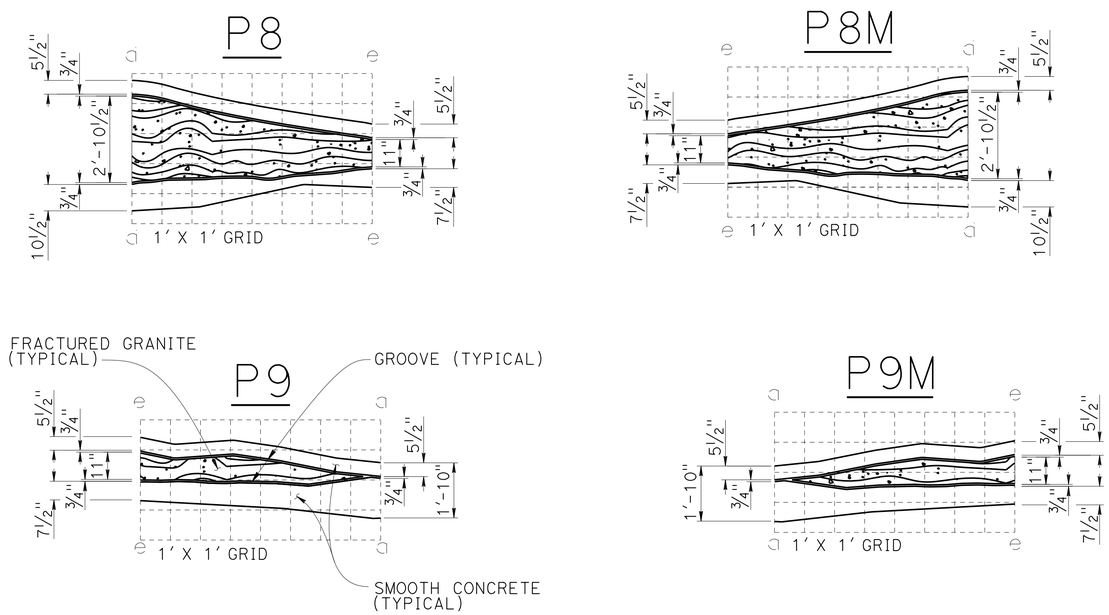

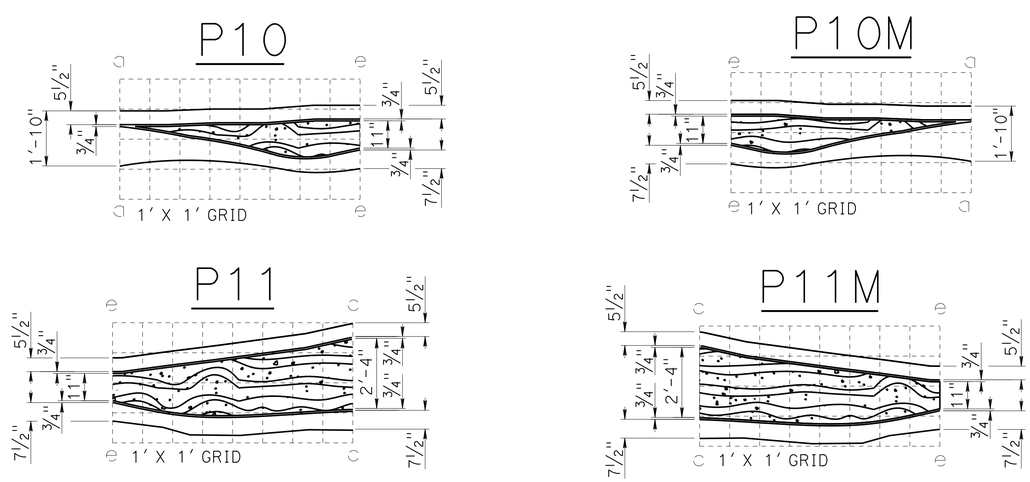

NOTES:

1. Fractured Granite texture at match lines a-a, b-b, c-c, d-d, and e-e must match seamlessly between the interchangeable modules.
2. Fractured Rib and Random Rock Textures not shown for clarity.

INTERCHANGEABLE PATTERN MOTIF MODULES

NO SCALE

DESIGN	BY V. Moore	CHECKED J. Higareda/G. Galo	
DETAILS	BY S. Cholda	CHECKED J. Higareda/G. Galo	
QUANTITIES	BY G. Galo	CHECKED H. Mauroschadt	

STATE OF CALIFORNIA
DEPARTMENT OF TRANSPORTATION

DIVISION OF ENGINEERING SERVICES
STRUCTURE DESIGN
DESIGN BRANCH 15

BRIDGE NO. 53E0313
POST MILE 40.63

RETAINING WALL NO. 2146
ARCHITECTURAL DETAILS NO. 5

STRUCTURES DESIGN DETAIL SHEET (ENGLISH) (REV. 09-01-10)

ORIGINAL SCALE IN INCHES FOR REDUCED PLANS 0 1 2 3

UNIT: 3604
PROJECT NUMBER & PHASE: 0713000007
CONTRACT NO.: 07-1193U1

DISREGARD PRINTS BEARING EARLIER REVISION DATES

REVISION DATES 2-14-14 3-04-14

SHEET 12 OF 23

FILE => 53e0313-d-archdet05.dgn

USERNAME => s125624 DATE PLOTTED => 18-MAY-2015 TIME PLOTTED => 16:27

DIST	COUNTY	ROUTE	POST MILES TOTAL PROJECT	SHEET No.	TOTAL SHEETS
07	LA	10	37.2/42.4	2147	2313

REGISTERED CIVIL ENGINEER 10-1-14 DATE

6-1-15
PLANS APPROVAL DATE

REGISTERED PROFESSIONAL ENGINEER
Gabriel J. Galo
No. 52288
Exp. 12-31-14
CIVIL
STATE OF CALIFORNIA

The State of California or its officers or agents shall not be responsible for the accuracy or completeness of scanned copies of this plan sheet.

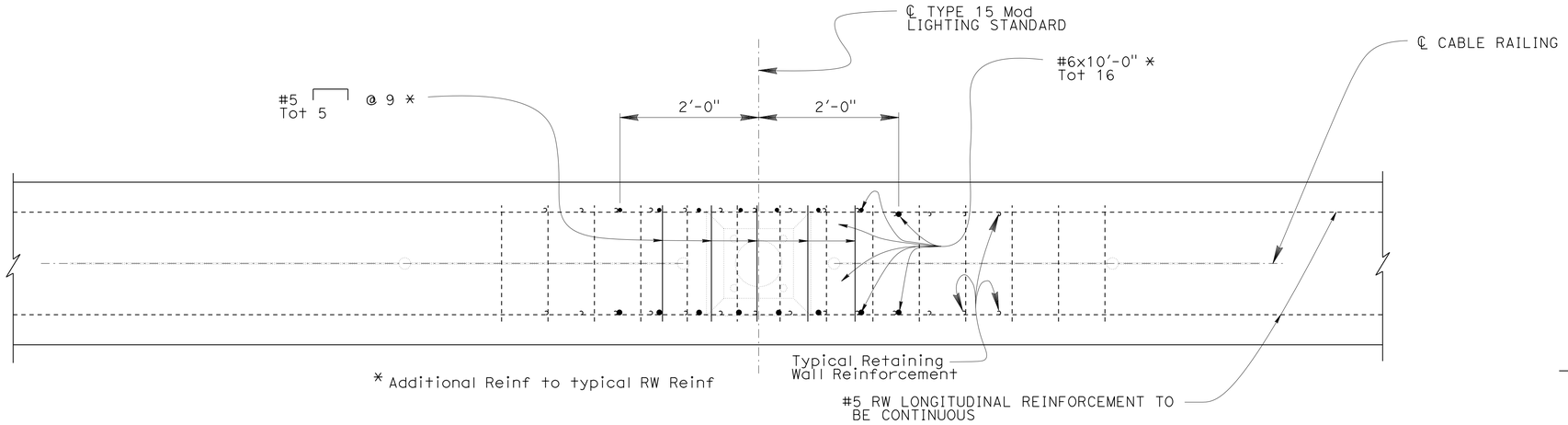

SECTION A-A
½" = 1'-0"

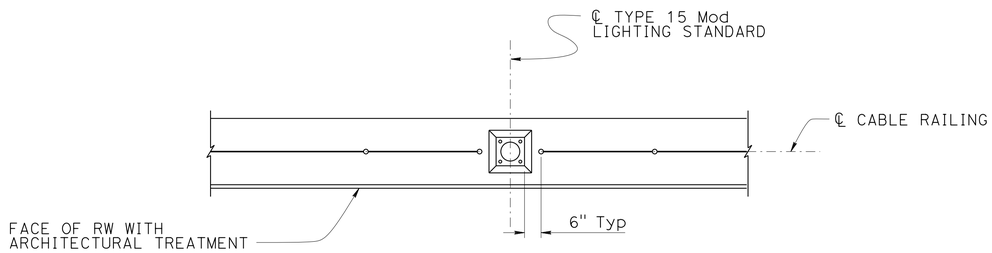

PLAN
⅜" = 1'-0"

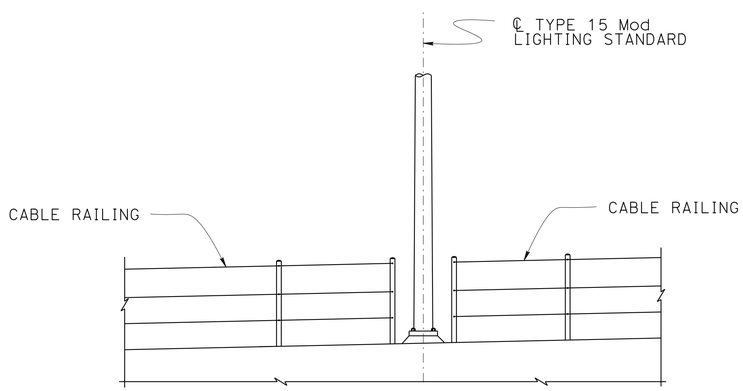

ELEVATION
⅛" = 1'-0"

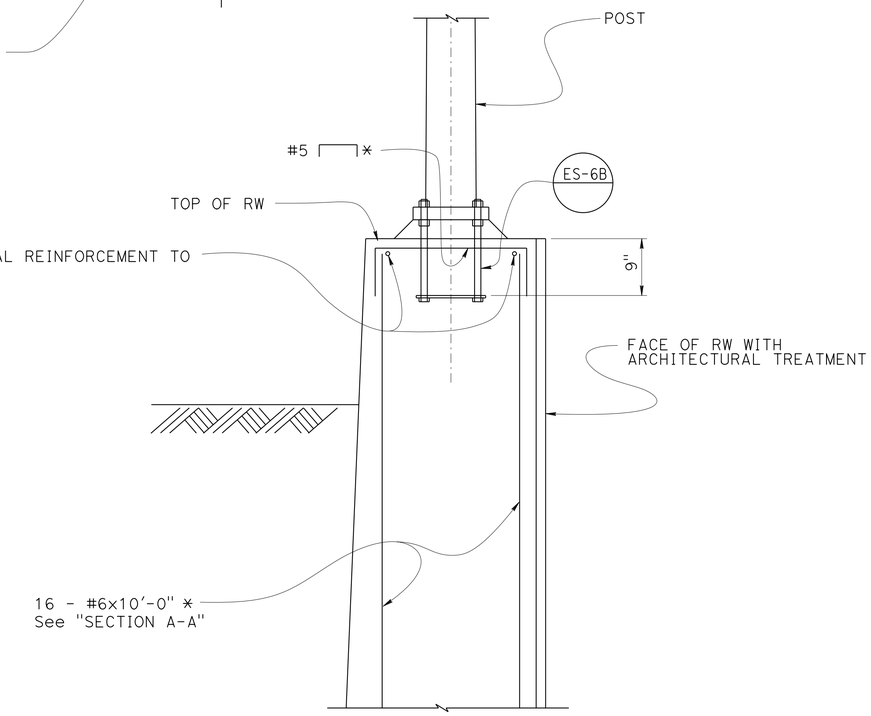

* Additional Reinf to typical RW Reinf

SECTION B-B
1" = 1'-0"

Note:

1. Lighting Standard Support details at Sta 46+90.00 "RW 2146" LINE shown, Lighting Standard Support details at Sta 48+70.60 "RW 2146" LINE similar.
1. For Lighting Standard and electrical details, see "ROADWAY PLANS".

	BY	CHECKED
DESIGN	G. Galo	J. Higareda
DETAILS	S. Cholda	J. Higareda
QUANTITIES	G. Galo	H. Mauroschadt

STATE OF CALIFORNIA
DEPARTMENT OF TRANSPORTATION

DIVISION OF ENGINEERING SERVICES
STRUCTURE DESIGN
DESIGN BRANCH 15

BRIDGE NO. 53E0313
POST MILE 40.63

RETAINING WALL NO. 2146
LIGHTING STANDARD SUPPORT DETAILS

STRUCTURES DESIGN DETAIL SHEET (ENGLISH) (REV. 09-01-10)

ORIGINAL SCALE IN INCHES FOR REDUCED PLANS 0 1 2 3

UNIT: 3604
PROJECT NUMBER & PHASE: 0713000007
CONTRACT NO.: 07-1193U1

DISREGARD PRINTS BEARING EARLIER REVISION DATES

REVISION DATES 02-05-14 3-07-14 06-06-14 03-24-14

SHEET 13 OF 23

FILE => 53e0313-g-lpdet01.dgn

USERNAME => s125624 DATE PLOTTED => 18-MAY-2015 TIME PLOTTED => 16:27

DIST	COUNTY	ROUTE	POST MILES TOTAL PROJECT	SHEET No.	TOTAL SHEETS
07	LA	10	37.2/42.4	2148	2313

REGISTERED CIVIL ENGINEER 10-1-14 DATE

6-1-15
PLANS APPROVAL DATE

REGISTERED PROFESSIONAL ENGINEER Gabriel J. Galo No. 52288 Exp. 12-31-14 CIVIL STATE OF CALIFORNIA

The State of California or its officers or agents shall not be responsible for the accuracy or completeness of electronic copies of this plan sheet.

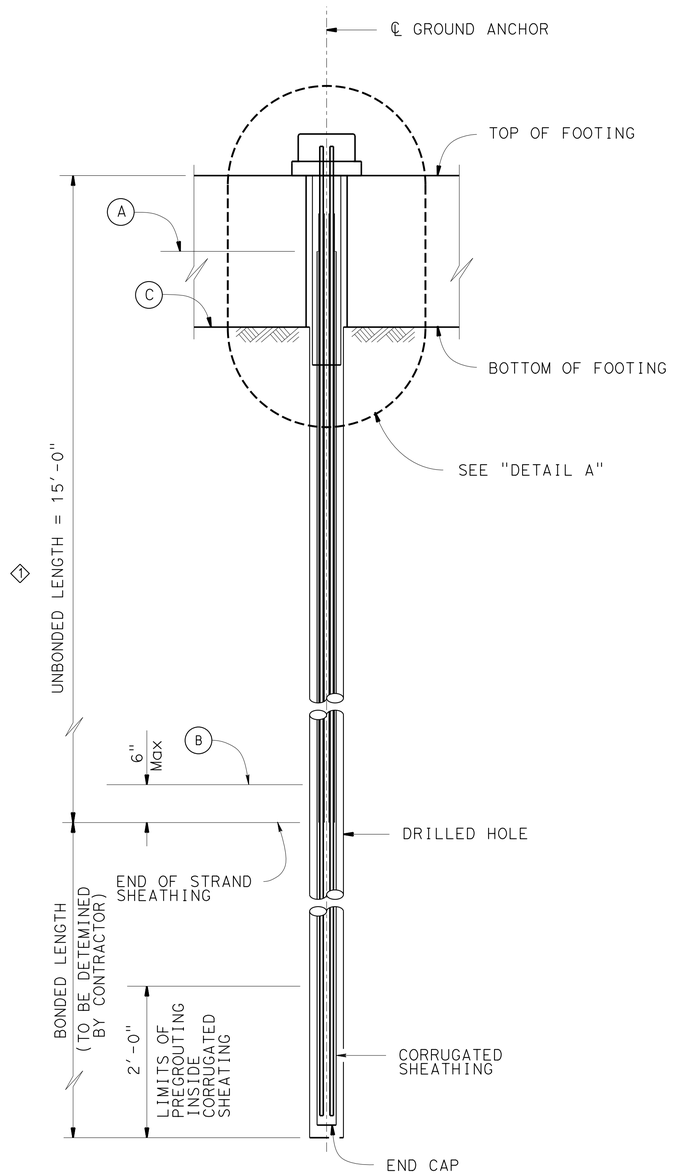

GROUND ANCHOR TENDON DETAILS (STRANDS)

1"= 1'-0"

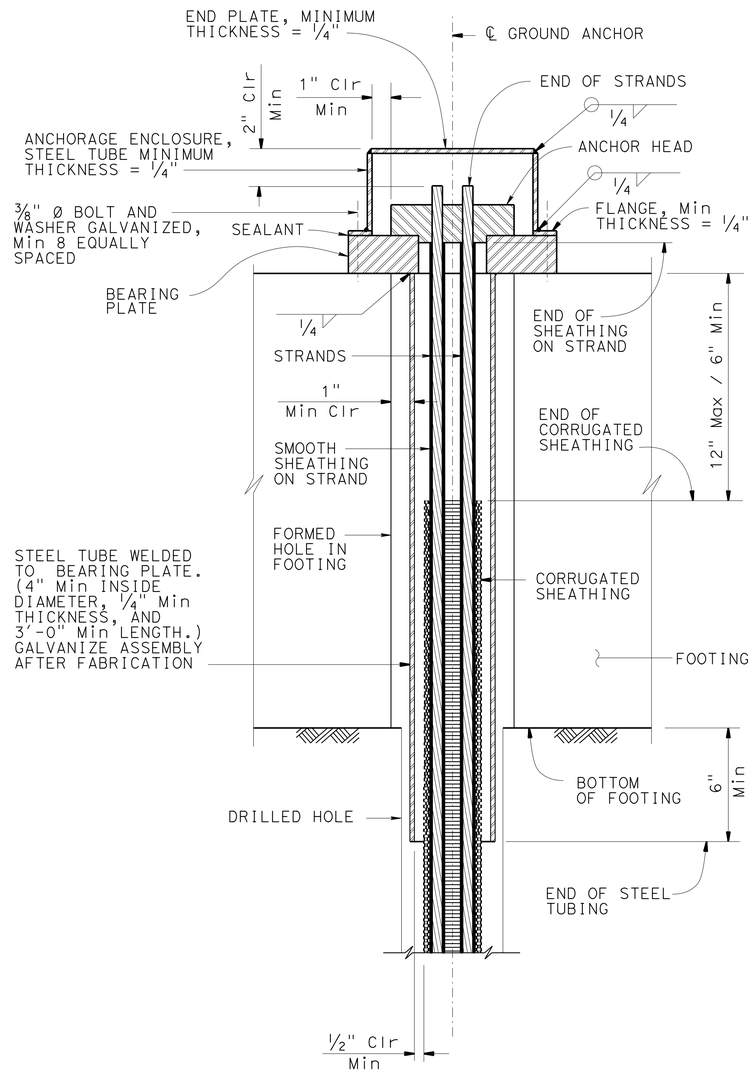

DETAIL A

3" = 1'-0"

GENERAL NOTES

DESIGN: AASHTO LRFD Bridge Design Specifications, 4th edition with California Amendments.

PRESTRESSING STEEL (GROUND ANCHORS):

STRANDS - ASTM Designation: A416
Tp = Factored test load per tendon (Kips)
fpu = Minimum tensile strength of prestressing steel (ksi)

As = Minimum cross sectional area of prestressing steel in tendon (square inches)

$$As\ (Min) = \frac{1.0\ Tp}{0.75\ fpu} \quad \text{(Strand)}$$

NOTES:

1. Anchorage enclosure shall have provisions to allow injecting grout at low end and venting at high end. Galvanize enclosure after fabrication.

2. Alternative anchor enclosure shown on sheet "VERTICAL GROUND ANCHOR DETAILS No. 2" sheet

(A) Level of initial grouting inside corrugated sheathing

(B) Level of initial grouting in drilled hole

(C) Level of secondary grouting in drilled hole

SPECIAL DETAILS

REVISED STANDARD DRAWING

FILE NO. xs12-030-1

APPROVAL DATE July 2011

1 Noted unbonded length

STATE OF CALIFORNIA DEPARTMENT OF TRANSPORTATION

DIVISION OF ENGINEERING SERVICES

BRIDGE NO. 53E0313

POST MILE 40.63

RETAINING WALL NO. 2146

VERTICAL GROUND ANCHOR DETAILS NO. 1

DS OSD 2147A (ENGLISH STANDARD DRAWING "XS" BORDER REV. (02-02-11)

ORIGINAL SCALE IN INCHES FOR REDUCED PLANS 0 1 2 3

UNIT: 3604
PROJECT NUMBER & PHASE: 0713000007
CONTRACT NO.: 07-1193U1

DISREGARD PRINTS BEARING EARLIER REVISION DATES

REVISION DATES 01-08-14 03-04-14

SHEET 14 OF 23

FILE => 53e0313-x-xs12-030-1.dgn

USERNAME => s125624 DATE PLOTTED => 18-MAY-2015 TIME PLOTTED => 16:27

DIST	COUNTY	ROUTE	POST MILES TOTAL PROJECT	SHEET No.	TOTAL SHEETS
07	LA	10	37.2/42.4	2149	2313

REGISTERED CIVIL ENGINEER 10-1-14 DATE

6-1-15
PLANS APPROVAL DATE

REGISTERED PROFESSIONAL ENGINEER Gabriel J. Galo No. 52288 Exp. 12-31-14 CIVIL STATE OF CALIFORNIA

The State of California or its officers or agents shall not be responsible for the accuracy or completeness of electronic copies of this plan sheet.

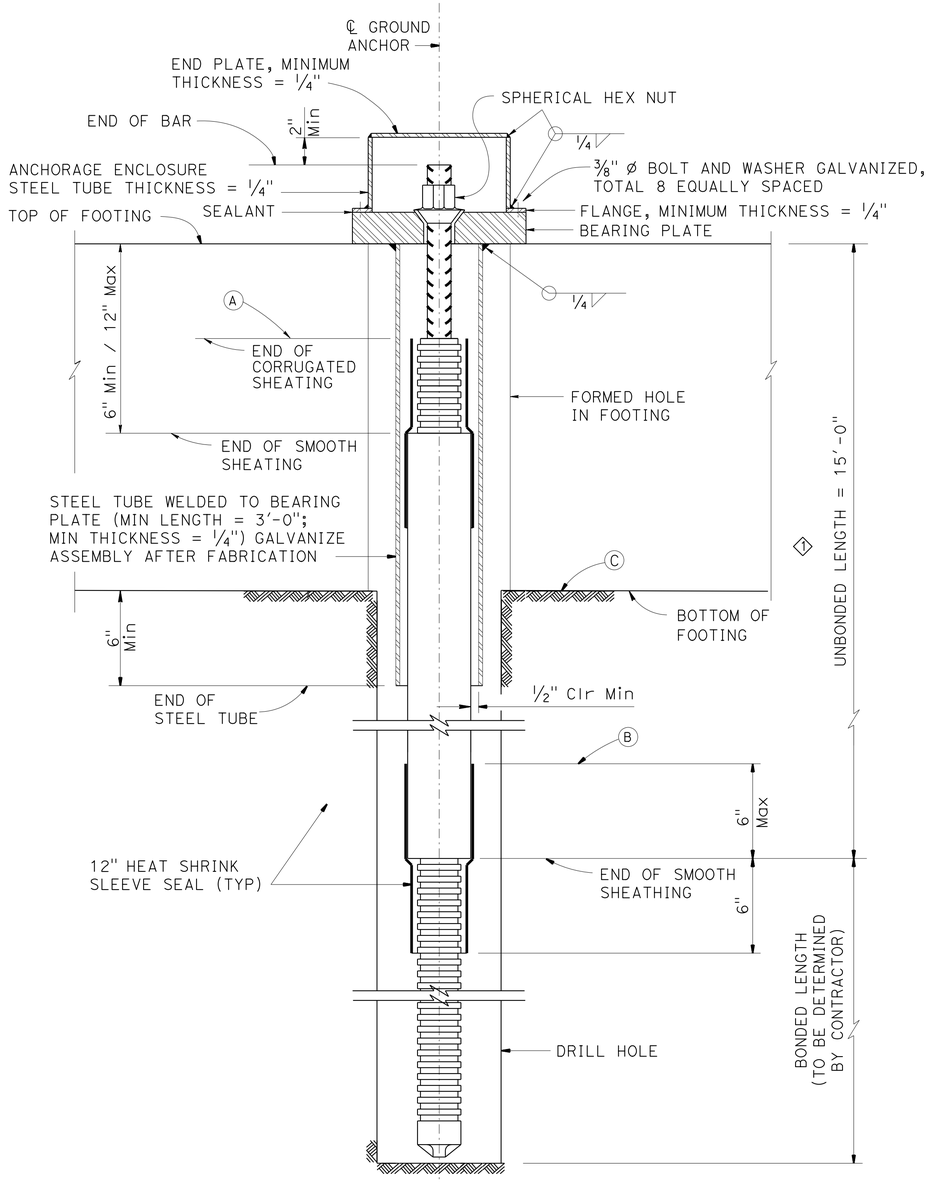

GROUND ANCHOR TENDON DETAILS (BAR)

3" = 1'-0"

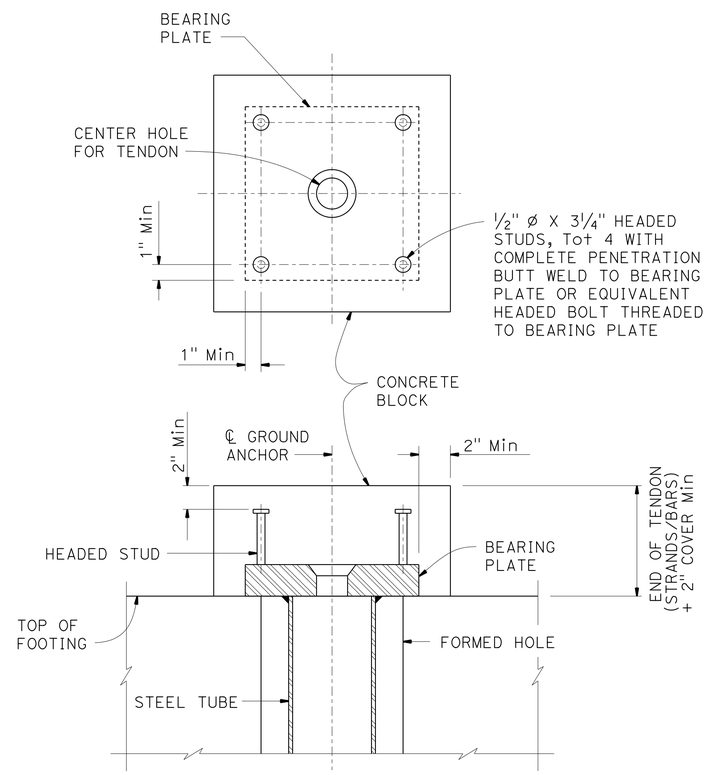

ANCHOR ENCLOSURE (ALTERNATIVE)

3" = 1'-0"

GENERAL NOTES

DESIGN: AASHTO LRFD Bridge Design Specifications, 4th edition with California Amendments.

PRESTRESSING STEEL (GROUND ANCHORS):

BARS - ASTM Designation: A722 Type II
Tp = Factored test load per tendon (Kips)
fpu = Minimum tensile strength of prestressing steel (ksi)

As = Minimum cross sectional area of prestressing steel in tendon (square inches)

$$As\ (Min) = \frac{1.0\ Tp}{0.75\ fpu} \quad (Bar)$$

NOTES:

Anchorage enclosure shall have provision to allow injecting grout at low end and venting at high end. Galvanize enclosure after fabrication.

(A) Level of initial grouting inside corrugated sheathing

(B) Level of initial grouting in drilled hole

(C) Level of secondary grouting in drilled hole

SPECIAL DETAILS

REVISED STANDARD DRAWING

FILE NO. xs12-030-2

APPROVAL DATE November 2011

1 Noted unbonded length

STATE OF CALIFORNIA DEPARTMENT OF TRANSPORTATION

DIVISION OF ENGINEERING SERVICES

BRIDGE NO. 53E0313

POST MILE 40.63

RETAINING WALL NO. 2146

VERTICAL GROUND ANCHOR DETAILS NO. 2

DS OSD 2147A (ENGLISH STANDARD DRAWING "XS" BORDER REV. (02-02-11)

ORIGINAL SCALE IN INCHES FOR REDUCED PLANS 0 1 2 3

UNIT: 3604
PROJECT NUMBER & PHASE: 0713000007
CONTRACT NO.: 07-1193U1

DISREGARD PRINTS BEARING EARLIER REVISION DATES

REVISION DATES 01-09-14 03-04-14

SHEET 15 OF 23

FILE => 53e0313-x-xs12-030-2.dgn

USERNAME => s125624 DATE PLOTTED => 18-MAY-2015 TIME PLOTTED => 16:27

DIST	COUNTY	ROUTE	POST MILES TOTAL PROJECT	SHEET No.	TOTAL SHEETS
07	LA	10	37.2/42.4	2150	2313

REGISTERED CIVIL ENGINEER — DATE 10-1-14

PLANS APPROVAL DATE 6-1-15

REGISTERED PROFESSIONAL ENGINEER — Gabriel J. Galo No. 52288 Exp. 12-31-14 CIVIL — STATE OF CALIFORNIA

The State of California or its officers or agents shall not be responsible for the accuracy or completeness of electronic copies of this plan sheet.

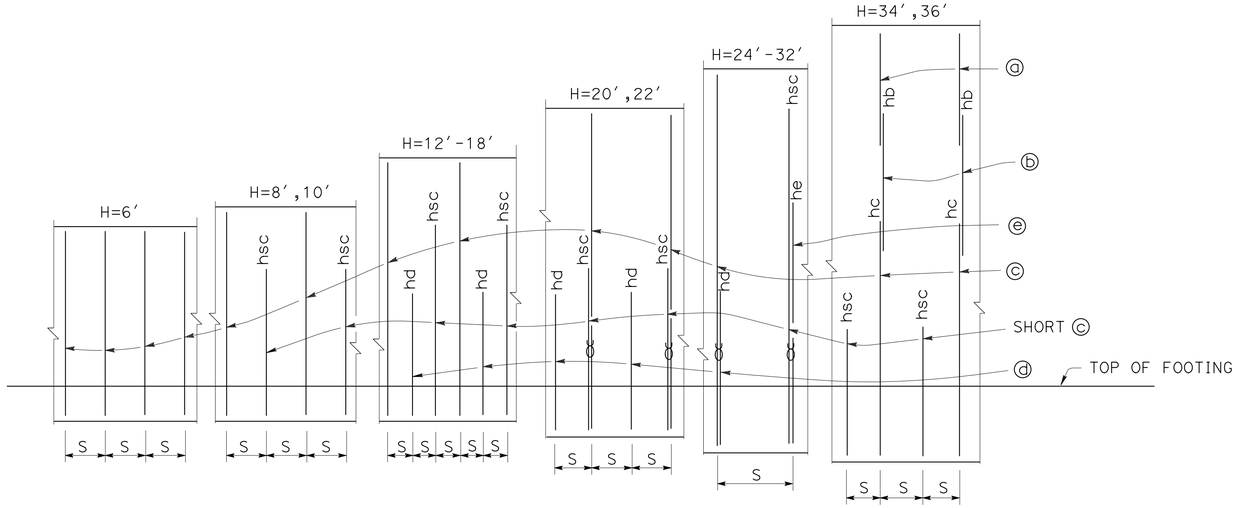

ELEVATION

No Scale

NOTE:

"hb", "hsc", "hc", "hd" and "he" above bars indicate distance from top of footing to upper end of the bars, see table.

DESIGN DATA

Design: AASHTO LRFD Bridge Design Specifications, 4th edition with California Amendments

LS: Varied surcharge on level ground surface

CT: 54 kip maximum traffic impact loading evenly distributed over 10 feet at top of the barrier and 1:1 distribution down and outward

EQE: Mononabe-Okabe Method
K_h = 0.2
K_v = 0.0

Soil: $\emptyset$ = 34°
γ = 120 pcf

Reinforced Concrete: f′c = 3600 psi
fy = 60,000 psi

Load Combinations and Limit States

Service I Q=1.00DC+1.00EV+1.00EH+1.00LS+Td

Strength I Q=aDC+βEV+1.50EH+1.75LS+Td

Extreme I Q=1.00DC+1.00EV+1.00EH+1.00EQD+1.00EQE+Td

Extreme II Q=1.00DC+1.00EV+1.00EH+1.00CT+Td

Where:
- Q: Force Effects
- a: 1.25 or 0.90, Which ever Controls Design
- β: 1.35 or 1.00, which ever Controls Design
- DC: Dead Load of Structure Components
- EV: Vertical Earth Fill Pressure
- LS: Live Load Surcharge
- EQE: Seismic Earth Pressure
- EQD: Soil and Structure Components Inertia. Soil inertia ignored for stem design
- CT: Vehicular Collision Force
- Td: Anchor Design Load

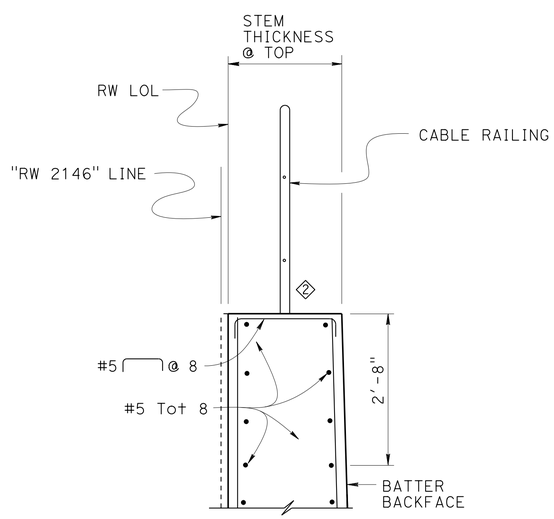

② DETAIL A - WITHOUT HAUNCH

¾ = 1′-0"

NOTES:

⑤ 1. For Retaining wall Architectural treatment see Details elsewhere in Project Plans

2. For Details not shown and Drainage Notes see RSP (B3-5)

3. Footing cover, 2′-0" minimum.

4. For H=6′ through 10′, extend ⓑ bars into Barrier for stem with haunch.

5. Shift ⓒ bars, ⓓ bars and ⓔ bars as required to clear formed hole for ground anchor.

6. Dimensions may vary with roadway cross slope and with certain thickness of surfacing. See Project Plans.

7. Footing is designed to resist 1.33 Td assuming the maximum anchor spacing shown in the table.

④ 8. Concrete Barrier Type 60D (Mod) not shown for clarity. See details elsewhere in Project Plans.

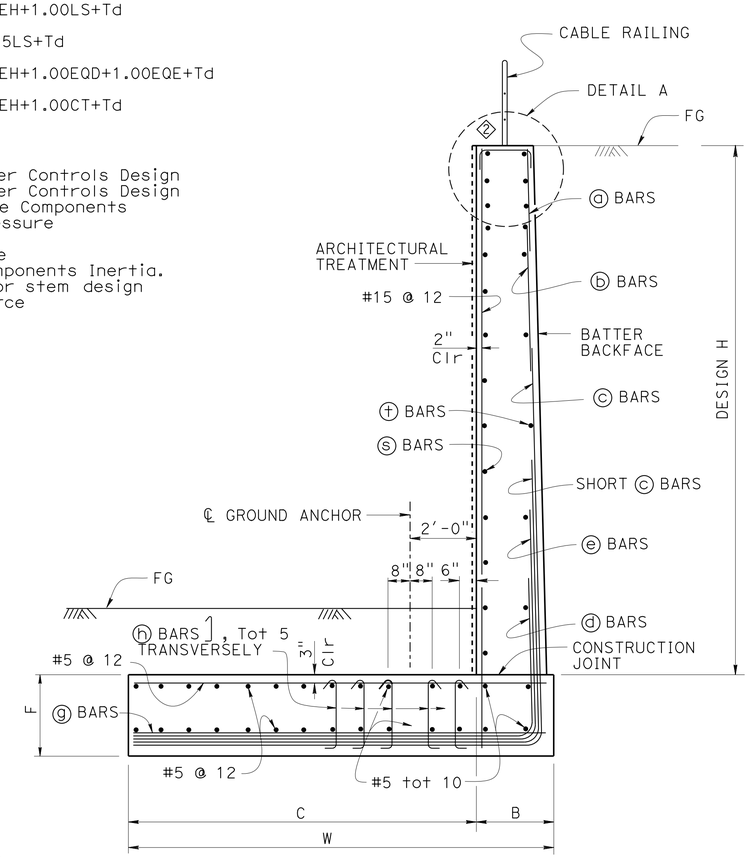

② SPREAD FOOTING SECTION

No Scale

SPECIAL DETAILS ③

REVISED STANDARD DRAWING		
FILE NO. xs14-375-1	APPROVAL DATE July 2011	① Deleted Detail ② Modified Detail ③ Changed Drawing Title ④ Added Note ⑤ Modified Note

STATE OF CALIFORNIA DEPARTMENT OF TRANSPORTATION

DIVISION OF ENGINEERING SERVICES

BRIDGE NO. 53E0313

POST MILE 40.63

RETAINING WALL NO. 2146

RETAINING WALL TYPE 7B (MOD) - DETAILS NO. 1

DS OSD 2147A (ENGLISH STANDARD DRAWING "XS" BORDER REV. (02-02-11)

ORIGINAL SCALE IN INCHES FOR REDUCED PLANS 0 1 2 3

UNIT: 3604
PROJECT NUMBER & PHASE: 0713000007
CONTRACT NO.: 07-1193U1

DISREGARD PRINTS BEARING EARLIER REVISION DATES

REVISION DATES: 10-30-13 03-05-14 06-06-14 03-04-14

SHEET 16 OF 23

FILE => 53e0313-x-xs14-375-1.dgn

USERNAME => s125624 DATE PLOTTED => 18-MAY-2015 TIME PLOTTED => 16:27

DIST	COUNTY	ROUTE	POST MILES TOTAL PROJECT	SHEET No.	TOTAL SHEETS
07	LA	10	37.2/42.4	2151	2313

REGISTERED CIVIL ENGINEER 10-1-14 DATE

6-1-15
PLANS APPROVAL DATE

REGISTERED PROFESSIONAL ENGINEER
Gabriel J. Galo
No. 52288
Exp. 12-31-14
CIVIL
STATE OF CALIFORNIA

The State of California or its officers or agents shall not be responsible for the accuracy or completeness of electronic copies of this plan sheet.

TABLE OF WALL DIMENSIONS, REINFORCING STEEL AND BEARING STRESS DATA

DESIGN H	STEM WITH HAUNCH			STEM WITHOUT HAUNCH												
	6′	8′	10′	12′	14′	16′	18′	20′	22′	24′	26′	28′	30′	32′	34′	36′
W	8′-3″	8′-3″	8′-3″	8′-3″	10′-0″	8′-3″	8′-6″	9′-0″	10′-0″	10′-9″	11′-9″	12′-6″	13′-6″	14′-6″	15′-6″	16′-0″
C	7′-0″	7′-0″	6′-9″	6′-6″	8′-3″	6′-6″	6′-6″	6′-9″	7′-6″	8′-0″	9′-0″	9′-0″	9′-9″	10′-6″	11′-6″	11′-9″
B	1′-3″	1′-3″	1′-6″	1′-9″	1′-9″	1′-9″	2′-0″	2′-0″	2′-6″	2′-9″	2′-9″	3′-6″	3′-9″	4′-0″	4′-0″	4′-3″
F	1′-9″	1′-9″	1′-9″	1′-9″	2′-0″	2′-4″	2′-6″	2′-6″	2′-9″	2′-9″	3′-0″	3′-3″	3′-6″	3′-9″	3′-9″	4′-0″
STEM THICKNESS AT TOP				1′-7″	1′-7″	1′-7″	1′-9″	1′-9″	1′-9″	2′-0″	2′-0″	2′-0″	2′-3″	2′-3″	2′-3″	2′-6″
STEM THICKNESS AT HAUNCH	1′-0″	1′-0″	1′-3″													
BATTER	0	0	0	0	0	0	0	0	¼:12	¼:12	¼:12	½:12	½:12	½:12	½:12	½:12
S	0′-8″	0′-8″	0′-7″	0′-6″	0′-5 2/3″	0′-5″	0′-4 1/3″	0′-8″	0′-7½″	0′-9″	0′-7½″	0′-8″	0′-7″	0′-6″	0′-6″	0′-5½″
ⓐ BARS															#5	#5
ⓑ BARS															#8	#7
hb															28′-3″	29′-0″
ⓒ BARS	#5	#5	#5	#5	#5	#5	#5	#5 ℧	#5 ℧	#5	#5	#5	#5	#5	#11	#11
hsc		7′-10″	9′-10″	11′-10″	13′-10″	13′-6″	11′-6″	17′-3″	16′-3″	20′-0″	18′-9″	20′-6″	21′-6″	23′-0″	17′-0″	17′-9″
hc															22′-0″	25′-0″
ⓓ BARS				#5	#7	#7	#7	#10	#10	#7	#7	#7	#7	#7		
hd				3′-3″	5′-6″	6′-0″	6′-6″	11′-3″	12′-0″	13′-0″	16′-6″	16′-0″	17′-0″	19′-3″		
ⓔ BARS										#10	#10	#11	#11	#11		
he										12′-9″	13′-6″	14′-0″	12′-3″	16′-6″		
ⓖ BARS						#5 @ 15	#5 @ 13	#5 @ 16	#6 @ 15	#7 @ 18	#5 @ 15	#8 @ 16	#7 @ 14	#7 @ 12	#5 @ 6	#5 @ 5½
BARS BUNDLED WITH ⓖ in ftg						SHORT ⓒ	SHORT ⓒ	ⓓ	ⓓ	SHORT ⓒ & ⓔ	SHORT ⓒ & ⓔ	SHORT ⓒ & ⓔ	SHORT ⓒ & ⓔ	SHORT ⓒ & ⓔ	ⓒ & SHORT ⓒ	ⓒ & SHORT ⓒ
ⓗ BARS															#5 @ 24	#5 @ 11
ⓢ BARS	#4 @ 12	#4 @ 12	#5 @ 15	#5 @ 12	#5 @ 12	#5 @ 12	#5 @ 12	#5 @ 12	#6 @ 12	#6 @ 12	#6 @ 12	#6 @ 12	#7 @ 12	#7 @ 12	#7 @ 12	#7 @ 12
ⓣ BARS	#4 @ 18	#4 @ 18	#4 @ 18	#4 @ 12	#4 @ 12	#4 @ 12	#4 @ 12	#4 @ 12	#4 @ 12	#4 @ 12	#5 @ 12	#5 @ 12	#5 @ 12	#5 @ 12	#5 @ 12	#5 @ 12
Td (KIPS/FT)	0	0	0	0	0	3	6.75	9.75	11.25	12.75	13.5	18.75	19.5	21.75	21.75	26.25
To (KIPS/FT)	0	0	0	0	0	*	*	*	*	*	*	*	*	*	*	*
Tp = Larger of 1.33 Td & 1.25 To (KIPS/FT)	0	0	0	0	0	*	*	*	*	*	*	*	*	*	*	*
MAX. ANCHOR SPACING						10′-6″	10′-6″	8′-3″	6′-3″	7′-9″	7′-3″	7′-0″	6′-9″	6′-0″	6′-0″	5′-0″
SER I: B′(ft), q'_o (ksf)	8.6, 0.3	8.1, 0.4	7.6, 0.5	7.1, 0.8	8.9, 0.7	5.8, 1.9	6.1, 2.7	6.5, 3.3	7.1, 3.5	7.8, 3.7	8.7, 3.6	9.1, 4.5	10.0, 4.5	10.7, 4.6	11.6, 4.5	12.1, 5.0
STR Ia: B′(ft), q_o(ksf)	8.3, 1.0	7.6, 1.2	7.0, 1.4	6.2, 1.8	8.0, 1.8	4.7, 3.8	4.9, 4.9	5.2, 5.7	5.8, 6.3	6.2, 6.4	6.7, 6.4	7.3, 7.6	8.1, 7.6	8.6, 7.9	9.4, 7.7	9.8, 8.6
STR, Ib: B′(ft), q_o(ksf)	7.8, 0.8	6.9, 1.0	6.0, 1.3	5.0, 1.8	6.6, 1.7	3.4, 4.4	3.8, 5.4	4.1, 6.1	4.6, 6.4	5.0, 6.9	5.2, 7.1	5.9, 8.2	6.6, 8.1	7.0, 8.5	7.6, 8.3	8.0, 9.1
Ext I: B′(ft), q_o(ksf)	7.9, 0.8	7.1, 0.9	6.2, 1.2	5.0, 1.7	6.3, 1.8	2.8, 5.2	2.9, 7.1	3.2, 8.3	3.5, 9.3	3.6, 9.6	4.6, 11.3	4.3, 11.5	4.6, 11.7	4.9, 12.4	5.2, 12.2	5.3, 13.8
Ext II: B′(ft), q_o(ksf)	2.8, 2.0	2.9, 2.3	3.2, 2.4	3.3, 2.7	6.0, 1.7	3.8, 3.6	4.7, 4.1	5.6, 4.5	6.5, 4.5	7.4, 4.5	8.8, 5.1	9.0, 5.1	10.1, 5.1	10.9, 5.2	11.9, 4.9	12.4, 5.4

NOTE:

2 ⓗ Bar spacing shown is along the length of the retaining wall.
* see "STRUCTURE PLAN NO. 1" through "STRUCTURE PLAN NO. 3" sheets for Anchor Loads.

LEGEND:

SER: service limit state
STR: strength limit state
EXT: extreme event limit state
B′: effective footing width (ft)
q'_o: net bearing stress (ksf)
q_o: gross uniform bearing stress (ksf)
℧: 2 bar bundle
To: Anchor Lockoff Load
Tp: Anchor Factored Test Load

SPECIAL DETAILS 1

REVISED STANDARD DRAWING

FILE NO. xs14-375-2

APPROVAL DATE July 2011

1 Changed Drawing Title
2 Revised Note

STATE OF CALIFORNIA
DEPARTMENT OF TRANSPORTATION

DIVISION OF ENGINEERING SERVICES

BRIDGE NO. 53E0313
POST MILE 40.63

RETAINING WALL NO. 2146
RETAINING WALL TYPE 7B (MOD) - DETAILS NO. 2

DS OSD 2147A (ENGLISH STANDARD DRAWING "XS" BORDER REV. (02-02-11)

ORIGINAL SCALE IN INCHES FOR REDUCED PLANS 0 1 2 3

UNIT: 3604
PROJECT NUMBER & PHASE: 0713000007
CONTRACT NO.: 07-1193U1

DISREGARD PRINTS BEARING EARLIER REVISION DATES

REVISION DATES 10-11-13 12-13-13 03-03-14 06-12-14

SHEET 17 OF 23

FILE => 53e0313-x-xs14-375-2.dgn

USERNAME => s125624 DATE PLOTTED => 18-MAY-2015 TIME PLOTTED => 16:27

DIST	COUNTY	ROUTE	POST MILES TOTAL PROJECT	SHEET No.	TOTAL SHEETS
07	LA	10	37.2/42.4	2152	2313

REGISTERED CIVIL ENGINEER 10-1-14 DATE

6-1-15
PLANS APPROVAL DATE

The State of California or its officers or agents shall not be responsible for the accuracy or completeness of electronic copies of this plan sheet.

REGISTERED PROFESSIONAL ENGINEER Gabriel J. Galo No. 52288 Exp. 12-31-14 CIVIL STATE OF CALIFORNIA

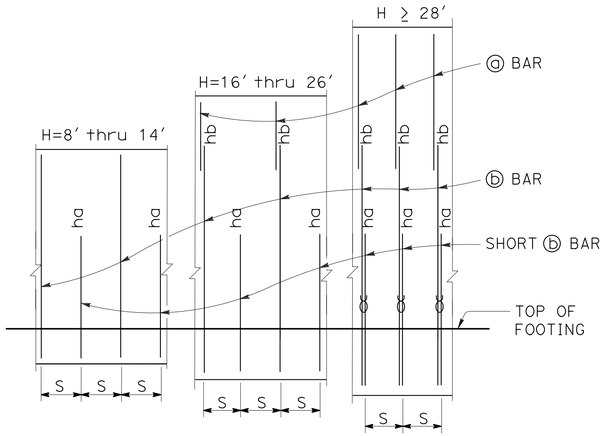

ELEVATION
No Scale

NOTES:
"ha", "hb" above ⓑ bars indicate distance from top of footing to upper end of ⓑ bars, see table.
"S" is ⓑ bar spacing, see table.

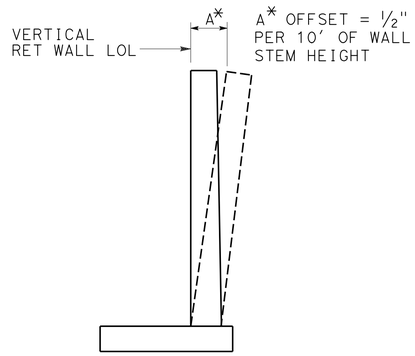

WALL OFFSET
No Scale

Values for offsetting forms to be determined by the Engineer

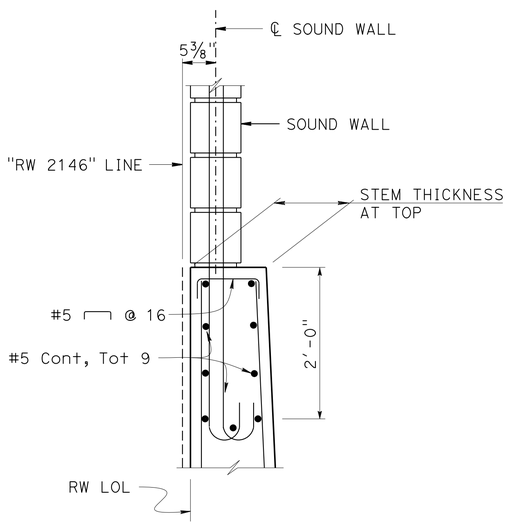

① DETAIL A
1" = 1′-0"

DESIGN DATA

Design: AASHTO LRFD Bridge Design Specifications, 4th edition with California Amendments

WS: 33 psf on Sound wall

LS: Varied surcharge on level ground surface

EQE: Mononabe-Okabe Method
K_h = 0.3
K_v = 0.0

Soil: ϕ = 34°
γ = 120 pcf

Reinforced Concrete: f′c = 3600 psi
fy = 60,000 psi

Load Combinations and Limit States

Service I	Q=1.00DC+1.00EV+1.00EH+1.00LS+0.30WS+Td
Service II	Q=1.00DC+1.00EV+1.00EH+1.00WS+Td
Strength I	Q=aDC+βEV+1.50EH+1.75LS+Td
Strength III	Q=aDC+βEV+1.50EH+1.40WS+Td
Strength V	Q=aDC+βEV+1.50EH+1.35LS+0.40WS+Td
Extreme I	Q=1.00DC+1.00EV+1.00EH+1.00EQD+1.00EQE+Td

Where:
Q: Force Effects
a: 1.25 or 0.90, Which ever Controls Design
β: 1.35 or 1.00, which ever Controls Design
DC: Dead Load of Structure Components
EV: Vertical Earth Fill Pressure
LS: Live Load Surcharge
EQE: Seismic Earth Pressure
EQD: Soil and Structure Components Inertia
Soil inertia ignored for stem design
WS: Wind Load on Sound wall
Td: Anchor Design Load

NOTES:

2 1. For Sound wall and Retaining wall Architectural treatment see Details elsewhere in Project Plans

2 2. For Details not shown and Drainage Notes see RSP B3-5

3. Footing cover, 2′-0" minimum.

2 4. For Sound wall reinforcement details, see "MASONRY BLOCK SOUNDWALL - ON RETAINING WALL DETAILS NO. 1" and "MASONRY BLOCK SOUNDWALL - ON RETAINING WALL DETAILS NO. 2" sheets.

5. Shift ⓑ bars and ⓓ bars as required to clear formed hole for ground anchor.

6. Footing is designed to resist 1.33 Td assuming the maximum anchor spacing shown in the table.

3 7. Concrete Barrier Type 60D (Mod) not shown for clarity. See details elsewhere in Project Plans.

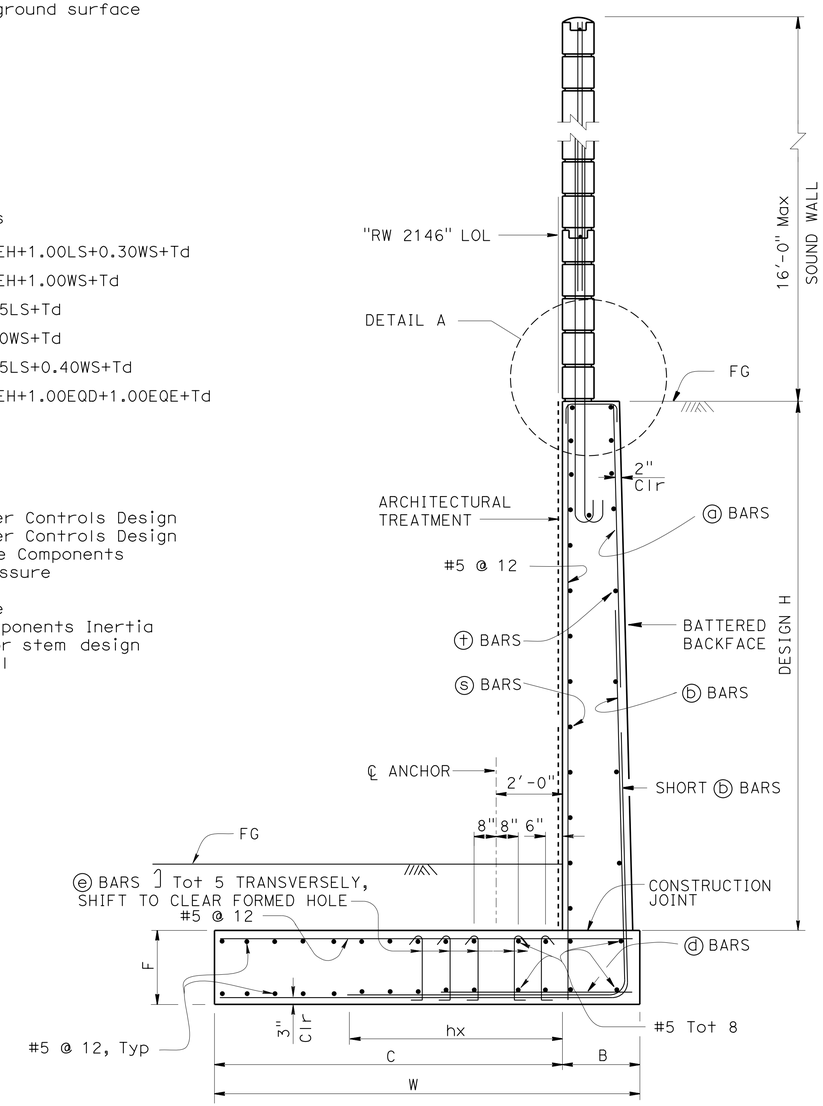

① SPREAD FOOTING SECTION
No Scale

SPECIAL DETAILS

REVISED STANDARD DRAWING

FILE NO. xs14-380-1

APPROVAL DATE July 2011

1 Modified Detail
2 Modified Note
3 Added Note

STATE OF CALIFORNIA DEPARTMENT OF TRANSPORTATION

DIVISION OF ENGINEERING SERVICES

BRIDGE NO. 53E0313
POST MILE 40.63

RETAINING WALL NO. 2146
RETAINING WALL TYPE 7SW - DETAILS NO.1

DS OSD 2147A (ENGLISH STANDARD DRAWING "XS" BORDER REV. (02-02-11)

ORIGINAL SCALE IN INCHES FOR REDUCED PLANS 0 1 2 3

UNIT: 3604
PROJECT NUMBER & PHASE: 0713000007
CONTRACT NO.: 07-1193U1

DISREGARD PRINTS BEARING EARLIER REVISION DATES

REVISION DATES: 05-01-13 06-06-14 03-05-14 12-13-13

SHEET 18 OF 23

FILE => 53e0313-x-xs14-380-1.dgn

USERNAME => s125624 DATE PLOTTED => 18-MAY-2015 TIME PLOTTED => 16:27

DIST	COUNTY	ROUTE	POST MILES TOTAL PROJECT	SHEET No.	TOTAL SHEETS
07	LA	10	37.2/42.4	2153	2313

REGISTERED CIVIL ENGINEER 10-1-14 DATE

6-1-15
PLANS APPROVAL DATE

REGISTERED PROFESSIONAL ENGINEER
Gabriel J. Galo
No. 52288
Exp. 12-31-14
CIVIL
STATE OF CALIFORNIA

The State of California or its officers or agents shall not be responsible for the accuracy or completeness of electronic copies of this plan sheet.

TABLE OF WALL DIMENSIONS, REINFORCING STEEL, AND BEARING STRESS

DESIGN H	8′	10′	12′	14′	16′	18′	20′	22′	24′	26′	28′	30′	32′
W	6′-9"	7′-6"	7′-0"	7′-6"	8′-6"	9′-3"	10′-3"	11′-3"	12′-3"	13′-0"	14′-3"	15′-3"	16′-3"
C	5′-6"	6′-3"	5′-6"	6′-0"	6′-9"	7′-3"	8′-0"	8′-6"	9′-6"	10′-0"	10′-10"	11′-6"	12′-5"
B	1′-3"	1′-3"	1′-6"	1′-6"	1′-9"	2′-0"	2′-3"	2′-9"	2′-9"	3′-0"	3′-5"	3′-9"	3′-10"
F	1′-6"	2′-0"	2′-4"	2′-4"	2′-6"	2′-6"	2′-9"	2′-9"	3′-0"	3′-3"	3′-6"	3′-9"	4′-0"
STEM THICKNESS AT TOP	1′-0"	1′-0"	1′-3"	1′-3"	1′-7"	1′-9"	2′-0"	2′-0"	2′-0"	2′-0"	2′-0"	2′-3"	2′-3"
BATTER	0	0	0	0	0	0	0	1/4:12	1/4:12	1/4:12	1/2:12	1/2:12	1/2:12
ⓐ BARS					#5 @ 14	#6 @ 13	#6 @ 13	#6 @ 13	#6 @ 11	#7 @ 12	#7 @ 11	#7 @ 10	#8 @ 11
ⓑ BARS	#5 @ 6	#5 @ 5.5	#6 @ 5	#6 @ 5	#8 @ 7	#8 @ 6.5	#9 @ 6.5	#9 @ 6.5	#9 @ 5.5	#10 @ 6	#10 @ 11 Ȣ	#10 @ 10 Ȣ	#11 @ 11 Ȣ
ha	7′-10"	9′-10"	5′-3"	6′-0"	6′-9"	7′-6"	7′-3"	9′-0"	9′-9"	9′-3"	11′-3"	13′-0"	13′-0"
hb					13′-0"	13′-0"	13′-0"	14′-6"	15′-6"	18′-6"	20′-6"	21′-6"	23′-0"
hx	5′-3"	6′-0"	5′-3"	5′-9"	6′-6"	7′-0"	7′-9"	7′-6"	8′-3"	9′-9"	10′-0"	11′-0"	12′-2"
ⓓ BARS	#5 @ 12	#5 @ 11	#5 @ 10	#5 @ 10	#5 @ 14	#5 @ 13	#5 @ 13	#5 @ 13	#5 @ 11	#5 @ 12	#5 @ 11	#5 @ 10	#5 @ 11
ⓓ BAR LENGTH	3′-6"	3′-6"	3′-6"	3′-6"	4′-6"	7′-0"	7′-6"	10′-9"	11′-9"	12′-6"	13′-9"	14′-9"	15′-9"
ⓔ BARS								#4 @ 13	#4 @ 11	#4 @ 12	#4 @ 11	#4 @ 10	#4 @ 11
ⓢ Bars	#4 @ 12	#4 @ 12	#5 @ 15	#5 @ 15	#5 @ 12	#5 @ 12	#6 @ 12	#6 @ 12	#6 @ 12	#6 @ 12	#6 @ 12	#7 @ 12	#7 @ 12
ⓣ Bars	#4 @ 18	#4 @ 18	#4 @ 18	#4 @ 18	#4 @ 12	#4 @ 12	#4 @ 12	#4 @ 12	#4 @ 12	#5 @ 12	#5 @ 12	#5 @ 12	#5 @ 12
Td (KIPS/FT)	0	0	5.25	7.5	9.0	11.25	12.75	15.0	16.5	21.0	21.75	24.75	27.75
To (KIPS/FT)	0	0	*	*	*	*	*	*	*	*	*	*	*
Tp = Larger of 1.33 Td & 1.25 To (KIPS/FT)	0	0	*	*	*	*	*	*	*	*	*	*	*
Max ANCHOR SPACING			10′-6"	9′-6"	7′-9"	6′-3"	7′-9"	6′-6"	8′-0"	6′-3"	6′-0"	5′-3"	4′-9"
SER I: B′(ft), q'_0 (ksf)	6.3, 0.6	6.9, 0.7	5.7, 2.1	6.1, 2.4	7.4, 2.4	8.1, 2.7	9.1, 2.8	9.8, 3.0	10.9, 3.0	11.4, 3.5	12.6, 3.5	13.6, 3.7	14.7, 3.8
STR Ia: B′(ft), q_0(ksf)	6.5, 1.3	6.7, 1.6	5.4, 3.3	5.7, 3.7	6.7, 3.8	7.4, 4.2	8.2, 4.3	8.9, 4.8	9.8, 4.9	10.1, 5.5	11.2, 5.6	12.1, 5.9	12.8, 6.2
STR, Ib: B′(ft), q_0(ksf)	5.7, 1.2	5.7, 1.5	4.6, 3.3	5.0, 3.7	5.9, 3.8	6.6, 4.0	7.3, 4.2	7.9, 4.6	8.7, 4.7	9.1, 5.3	10.0, 5.4	10.8, 5.7	11.5, 6.0
STR, IIIa: B′(ft), q_0(ksf)	5.0, 1.9	5.7, 2.6	4.9, 4.0	5.4, 4.4	6.4, 4.0	7.2, 4.5	8.2, 4.6	9.0, 4.9	10.0, 4.9	10.4, 5.4	11.6, 5.4	12.6, 5.7	13.4, 5.8
STR, IIIb: B′(ft), q_0(ksf)	3.7, 2.3	4.2, 2.8	4.0, 4.2	4.5, 4.5	5.6, 4.2	6.3, 4.5	7.2, 4.5	8.0, 4.8	8.9, 4.7	9.4, 5.3	10.4, 5.3	11.3, 5.3	12.1, 5.6
STR, Va: B′(ft), q_0(ksf)	6.0, 1.4	6.4, 1.7	5.2, 3.4	5.5, 3.8	6.6, 3.9	7.3, 4.3	8.2, 4.5	8.8, 4.8	9.8, 4.9	10.2, 5.6	11.2, 5.5	12.2, 5.9	12.9, 6.1
STR, Vb: B′(ft), q_0(ksf)	5.0, 1.3	5.2, 1.6	4.4, 3.4	4.8, 3.8	5.7, 3.8	6.4, 4.2	7.2, 4.4	7.8, 4.7	8.7, 4.8	9.1, 5.5	10.0, 5.4	10.9, 5.8	11.6, 6.0
Ext I: B′(ft), q_0(ksf)	3.4, 2.0	3.1, 3.6	2.4, 6.5	2.6, 8.1	3.0, 7.7	3.3, 9.0	3.5, 9.4	3.9, 10.1	4.3, 10.4	4.4, 11.9	4.9, 11.9	5.3, 12.7	5.5, 13.4

NOTE:

1 ⓗ Bar spacing shown is along the length of the retaining wall.
* see "STRUCTURE PLAN NO. 1" through "STRUCTURE PLAN NO. 3" sheets for Anchor Loads.

SYMBOLS:

SER: service limit state
STR: strength limit state
EXT: extreme event limit state
B′: effective footing width (ft)
q'_0: net bearing stress (ksf)
q_0: gross uniform bearing stress (ksf)
Ȣ: 2 bar bundle
To: Anchor Lockoff Load
Tp: Anchor Factored Test Load

SPECIAL DETAILS

REVISED STANDARD DRAWING

FILE NO. xs14-380-2

APPROVAL DATE July 2011

1 Revised Note

STATE OF CALIFORNIA
DEPARTMENT OF TRANSPORTATION

DIVISION OF ENGINEERING SERVICES

BRIDGE NO. 53E0313
POST MILE 40.63

RETAINING WALL NO. 2146

RETAINING WALL TYPE 7SW - DETAILS NO.2

DS OSD 2147A (ENGLISH STANDARD DRAWING "XS" BORDER REV. (02-02-11)

ORIGINAL SCALE IN INCHES FOR REDUCED PLANS 0 1 2 3

UNIT: 3604
PROJECT NUMBER & PHASE: 0713000007
CONTRACT NO.: 07-1193U1

DISREGARD PRINTS BEARING EARLIER REVISION DATES

REVISION DATES: 05-06-13 03-04-14 07-12-13 06-12-14

SHEET 19 OF 23

FILE => 53e0313-x-xs14-380-2.dgn

USERNAME => s125624 DATE PLOTTED => 18-MAY-2015 TIME PLOTTED => 16:27

DIST	COUNTY	ROUTE	POST MILES TOTAL PROJECT	SHEET No.	TOTAL SHEETS
07	LA	10	37.2/42.4	2154	2313

REGISTERED CIVIL ENGINEER — DATE 10-1-14

6-1-15
PLANS APPROVAL DATE

REGISTERED PROFESSIONAL ENGINEER — Gabriel J. Galo — No. 52288 — Exp. 12-31-14 — CIVIL — STATE OF CALIFORNIA

The State of California or its officers or agents shall not be responsible for the accuracy or completeness of electronic copies of this plan sheet.

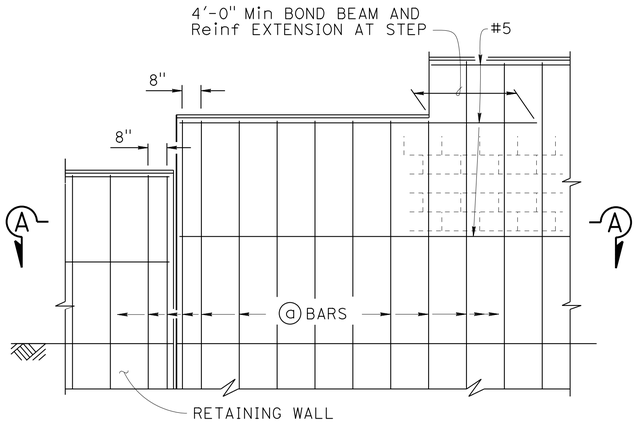

H=6'-0" THRU H=10'-0"

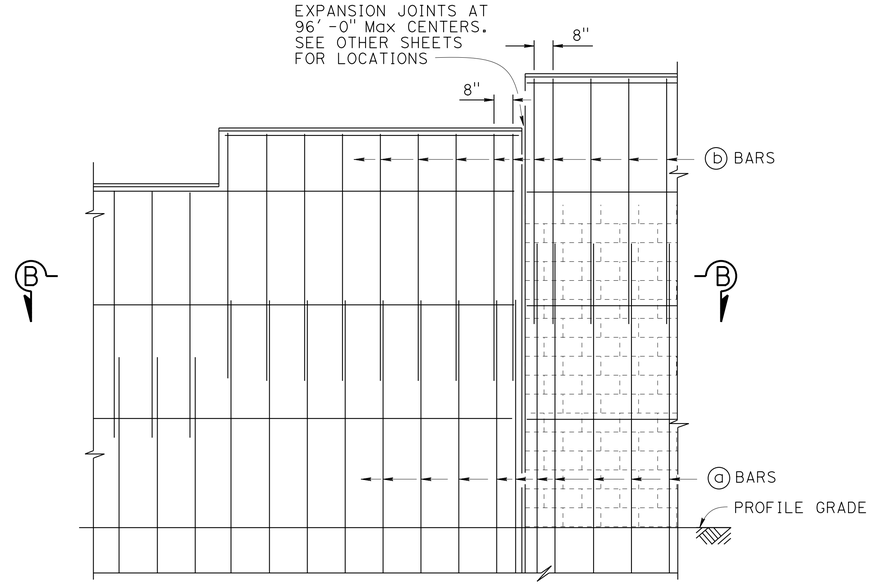

H=12'-0" THRU H=16'-0"

PART ELEVATION

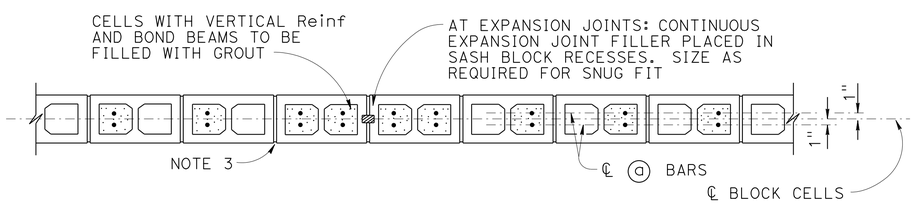

SECTION A-A

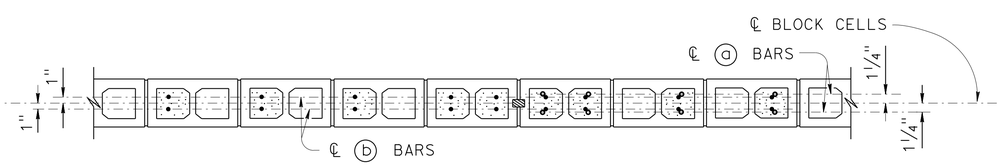

SECTION B-B

SOUND WALL REINFORCEMENT TABLE						
MAXIMUM "H"	ⓐ BARS @ 1'-4" Max	ⓑ BARS @ 1'-4" Max	"Y"	f'm (psi)	COMPRESSIVE STRENGTH OF CMU (psi)	MAXIMUM "H"
6'-0"	#4	——	——	1500	1900	6'-0"
8'-0"	#4	——	——	1500	1900	8'-0"
10'-0"	#4	——	——	1500	1900	10'-0"
12'-0"	#5	#4	6'-0"	2000	2800	12'-0"
14'-0"	#6	#4	8'-0"	2500	3750	14'-0"
16'-0"	#6	#4	10'-0"	2500	3750	16'-0"

DESIGN NOTES

DESIGN
Uniform Building Code, 1997 Edition and the Bridge Design Specifications

DESIGN WIND LOAD
33 psf

DESIGN SEISMIC LOAD
0.57 Dead load

REINFORCED CONCRETE
f'c = 3600 ksi
fy = 60 ksi

CONCRETE MASONRY

REGULAR STRENGTH	HIGH STRENGTH	
f'm = 1500 psi	f'm = 2000 psi	f'm = 2500 psi
fb = 495 psi	fb = 660 psi	fb = 830 psi
fs = 24,000 psi	fs = 24,000 psi	fs = 24,000 psi
n = 25.8	n = 19.3	n = 15.5

NOTES:

1. For type of block and joint finish, see other sheets
2. When blocks are laid in stacked bond, ladder type, galvanized joint reinforcement shall be provided. A minimum of 2 - 9 gauge wires continuous at 4'-0" maximum to be used. Locate reinforcement in joints that are at the approximate midpoint between bond beams
3. Horizontal joints shall be tooled concave or may be weathered
   Vertical joints shall be tooled concave or may be raked
4. For intermediate wall heights that are between the "H's" given, use the tabular information for the next higher "H"
5. See STANDARD PLAN B15-9 for other details

NO SCALE

RETAINING WALL NO. 2146

MASONRY BLOCK SOUND WALL ON RETAINING WALL

DETAILS NO. 1

STANDARD DRAWING
FILE NO. xs15-120-1
APPROVAL DATE July 2011

STATE OF CALIFORNIA
DEPARTMENT OF TRANSPORTATION

DIVISION OF ENGINEERING SERVICES

BRIDGE NO. 53E0313
POST MILE 40.63

DS OSD 2147A (ENGLISH STANDARD DRAWING "XS" BORDER REV. (02-02-11)

ORIGINAL SCALE IN INCHES FOR REDUCED PLANS 0 1 2 3

UNIT: 3604
PROJECT NUMBER & PHASE: 0713000007
CONTRACT NO.: 07-1193U1

DISREGARD PRINTS BEARING EARLIER REVISION DATES

REVISION DATES: 05-01-13 07-16-13 07-12-13 12-13-13

SHEET 20 OF 23

FILE => 53e0313-x-xs15-120-1.dgn

USERNAME => s125624 DATE PLOTTED => 18-MAY-2015 TIME PLOTTED => 16:27

DIST	COUNTY	ROUTE	POST MILES TOTAL PROJECT	SHEET No.	TOTAL SHEETS
07	LA	10	37.2/42.4	2155	2313

REGISTERED CIVIL ENGINEER 10-1-14 DATE

6-1-15
PLANS APPROVAL DATE

REGISTERED PROFESSIONAL ENGINEER Gabriel J. Galo No. 52288 Exp. 12-31-14 CIVIL STATE OF CALIFORNIA

The State of California or its officers or agents shall not be responsible for the accuracy or completeness of electronic copies of this plan sheet.

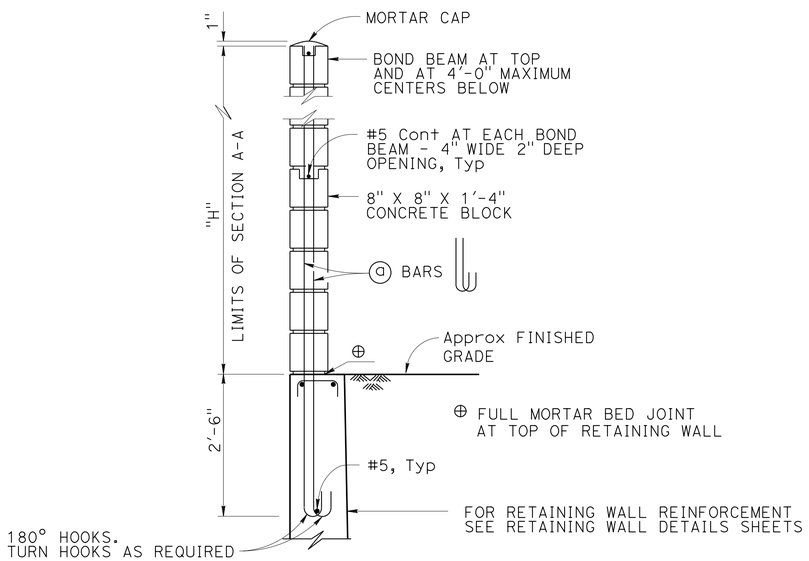

NOTE:
For details not shown, see H=12'-0" thru H=16'-0"

① H=6'-0" THRU H=10'-0"

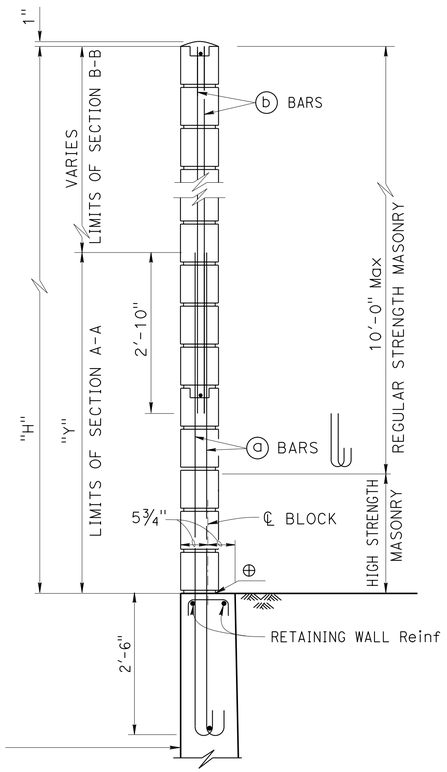

NOTE:
For details not shown, see H=6'-0" thru H=10'-0"

① H=12'-0" THRU H=16'-0"

TYPICAL SECTION

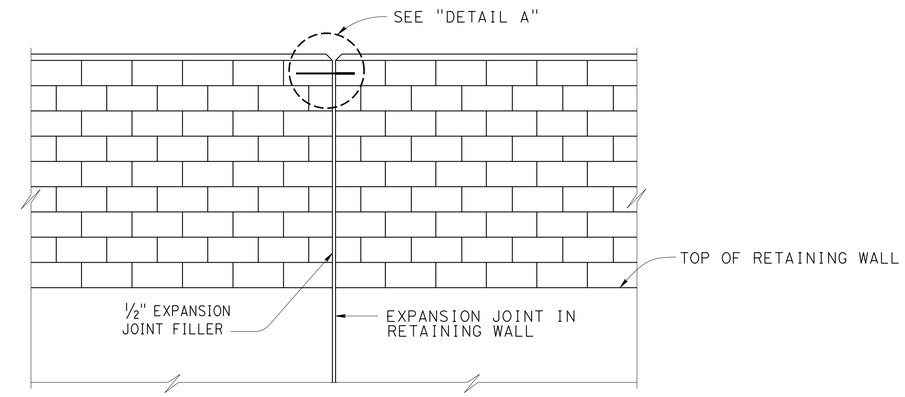

ALIGNMENT KEY DETAIL

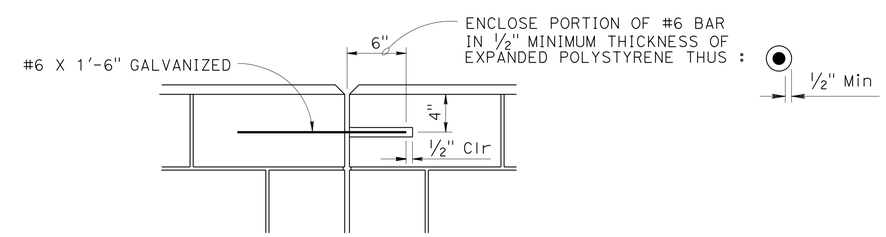

DETAIL A

SPECIAL DETAILS

NO SCALE

RETAINING WALL NO. 2146

MASONRY BLOCK SOUND WALL ON RETAINING WALL

DETAILS NO. 2

REVISED STANDARD DRAWING

FILE NO. xs15-120-2

APPROVAL DATE July 2012

① Modified Detail

STATE OF CALIFORNIA DEPARTMENT OF TRANSPORTATION

DIVISION OF ENGINEERING SERVICES

BRIDGE NO. 53E0313

POST MILE 40.63

DS OSD 2147A (ENGLISH STANDARD DRAWING "XS" BORDER REV. (02-02-11)

ORIGINAL SCALE IN INCHES FOR REDUCED PLANS 0 1 2 3

UNIT: 3604
PROJECT NUMBER & PHASE: 0713000007

CONTRACT NO.: 07-1193U1

DISREGARD PRINTS BEARING EARLIER REVISION DATES

REVISION DATES 05-06-13 07-18-13 07-12-13 12-13-13

SHEET 21 OF 23

FILE => 53e0313-x-xs15-120-2.dgn

USERNAME => s125624 DATE PLOTTED => 18-MAY-2015 TIME PLOTTED => 16:27

DIST	COUNTY	ROUTE	POST MILES TOTAL PROJECT	SHEET No.	TOTAL SHEETS
07	LA	10	37.2/42.4	2156	2313

REGISTERED CIVIL ENGINEER 3-04-14 DATE

6-1-15
PLANS APPROVAL DATE

PROFESSIONAL GEOLOGIST Michael A. Salisbury No. 2462 Exp. 2-28-15 CERTIFIED ENGINEERING GEOLOGIST STATE OF CALIFORNIA

The State of California or its officers or agents shall not be responsible for the accuracy or completeness of electronic copies of this plan sheet.

This LOTB sheet was prepared in accordance with the Caltrans Soil & Rock Logging, Classification, & Presentation Manual (2010 Edition).

See 2010 Standard Plans A10F and A10G for Soil Legend, and A10H for Rock Legend.

BENCH MARK

SUHV 4034 Elev 951.329
Fd. PK N. in AC Shldr
"B" Line 63.41′ Lt Sta 2149+63.58
NAVD 88

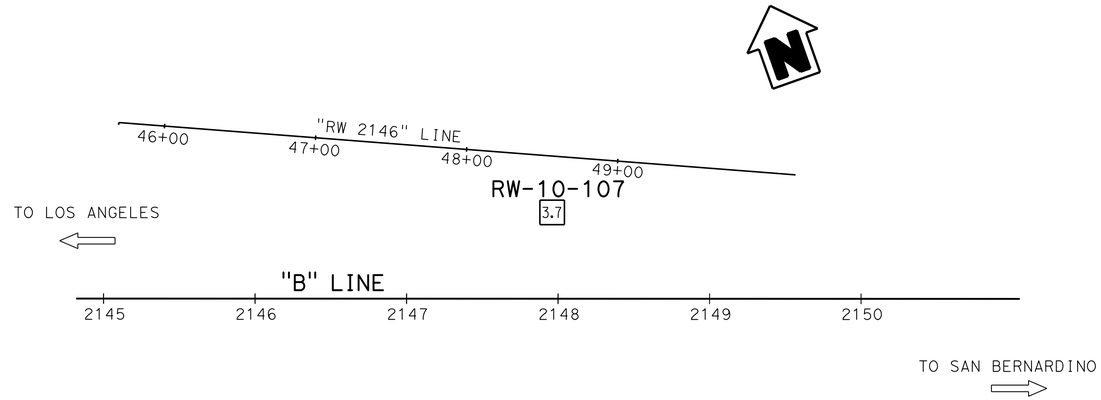

PLAN
1" = 50′

Note: Ground water was not measured during field investigation.

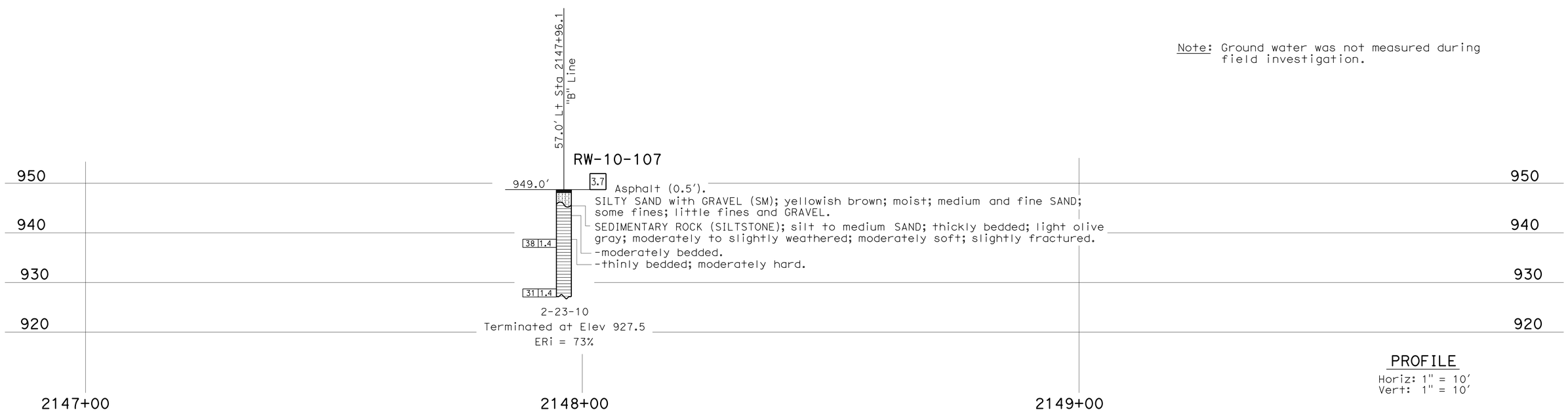

PROFILE
Horiz: 1" = 10′
Vert: 1" = 10′

ENGINEERING SERVICES	MATERIALS AND GEOTECHNICAL SERVICES	STATE OF CALIFORNIA DEPARTMENT OF TRANSPORTATION	DIVISION OF ENGINEERING SERVICES STRUCTURE DESIGN DESIGN BRANCH 15	BRIDGE NO. 53E0313 POST MILE 40.6/40.7	RETAINING WALL NO. 2146 LOG OF TEST BORINGS 1 OF 2
FUNCTIONAL SUPERVISOR NAME: D. Jang	DRAWN BY: I. G-Remmen CHECKED BY: H. Liu	FIELD INVESTIGATION BY: M. Salisbury			

OGS CIVIL LOG OF TEST BORINGS SHEET

ORIGINAL SCALE IN INCHES FOR REDUCED PLANS 0 1 2 3

UNIT: 3643
PROJECT NUMBER & PHASE: 07130000071 CONTRACT NO.: 07-1193U1

DISREGARD PRINTS BEARING EARLIER REVISION DATES

REVISION DATES 11-21-13 03-04-14 01-16-14 03-03-14 SHEET 22 OF 23

FILE => 53e0313-z-1tb01.dgn

USERNAME => s125624 DATE PLOTTED => 18-MAY-2015 TIME PLOTTED => 16:27

DIST.	COUNTY	ROUTE	POST MILES TOTAL PROJECT	SHEET NO	TOTAL SHEETS
07	LA	10			

W. Cain
CERTIFIED ENGINEERING GEOLOGIST

REGISTERED GEOLOGIST — W.C. CAIN — No. 732 — Exp. 6-30-94 — CERTIFIED ENGINEERING GEOLOGIST — STATE OF CALIFORNIA

PLANS APPROVAL DATE

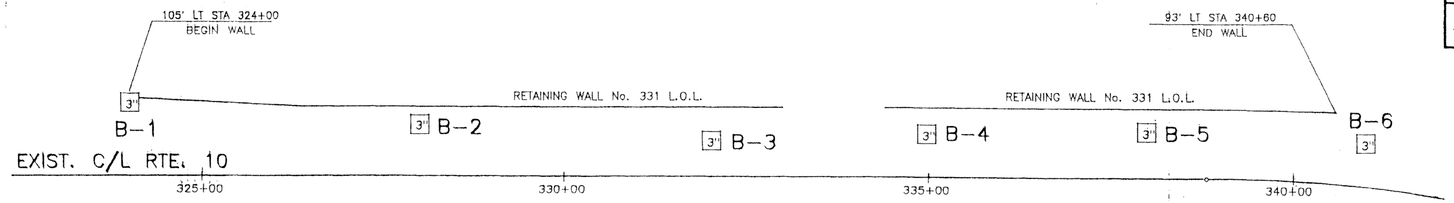

PLAN
1" = 100'

DIVISION OF ENGINEERING SERVICES - MATERIALS AND GEOTECHNICAL SERVICES

As-Built Log of Test Borings sheet is considered an informational document only. As such, the State of California registration seal with signature, license number and registration certificate expiration date confirm that this is a true and accurate copy of the original document. It does not attest to the accuracy or validity of the information contained in the original document. This drawing is available and presented only for the convenience of any bidder, contractor or other interested party.

DIST.	COUNTY	ROUTE	POST MILE-TOTAL PROJECT	Sheet No.	Total Sheets
07	LA	10	37.2/42.4	2157	2313

PROFESSIONAL GEOLOGIST — DATE 01/14/2014

PROFESSIONAL GEOLOGIST — Michael A. Salisbury — No. 2462 — Exp. 2-28-15 — CERTIFIED ENGINEERING GEOLOGIST — STATE OF CALIFORNIA

RETAINING WALL NO. 2146

LOG OF TEST BORINGS 2 OF 2

UNIT: 3643	CONTRACT No.	BRIDGE No.
PROJ. No. & PHASE: 07130000071	07-1193U1	53E0313

AS-BUILT VERT DATUM: N/A CONVERSION: N/A — Sheet ___ of ___

NOTE: A COPY OF THIS LOG OF TEST BORINGS IS AVAILABLE AT OFFICE OF STRUCTURE MAINTENANCE AND INVESTIGATIONS, SACRAMENTO, CALIFORNIA — Sheet 23 of 23

TO ACCOMPANY PLANS DATED 6-1-15

BENCH MARK

TBM AT STA. 324+00 Elev. 934.3
FD. PAINTED "+" AT LT. STA. 324+00

TBM AT STA. 327+00 Elev. 942.0
FD. PAINTED "+" AT LT. STA. 327+00

TBM AT STA. 332+00 Elev. 950.5
FD. PAINTED "+" AT LT. STA. 332+00

TBM AT STA. 335+00 Elev. 959.1
FD. PAINTED "+" AT LT. STA. 335+00

TBM AT STA. 338+00 Elev. 970.9
FD. PAINTED "+" AT LT. STA. 338+00

TBM AT STA. 341+00 Elev. 986.3
FD. PAINTED "+" AT LT. STA. 341+00
SURVEY WEST BOUND RTE. 10 BY J.F. DAVIDSON ASSOC 4-12-93 PG 8 OF 16

NOTE: NO GROUND WATER ENCOUNTERED DURING FIELD INVESTIGATION

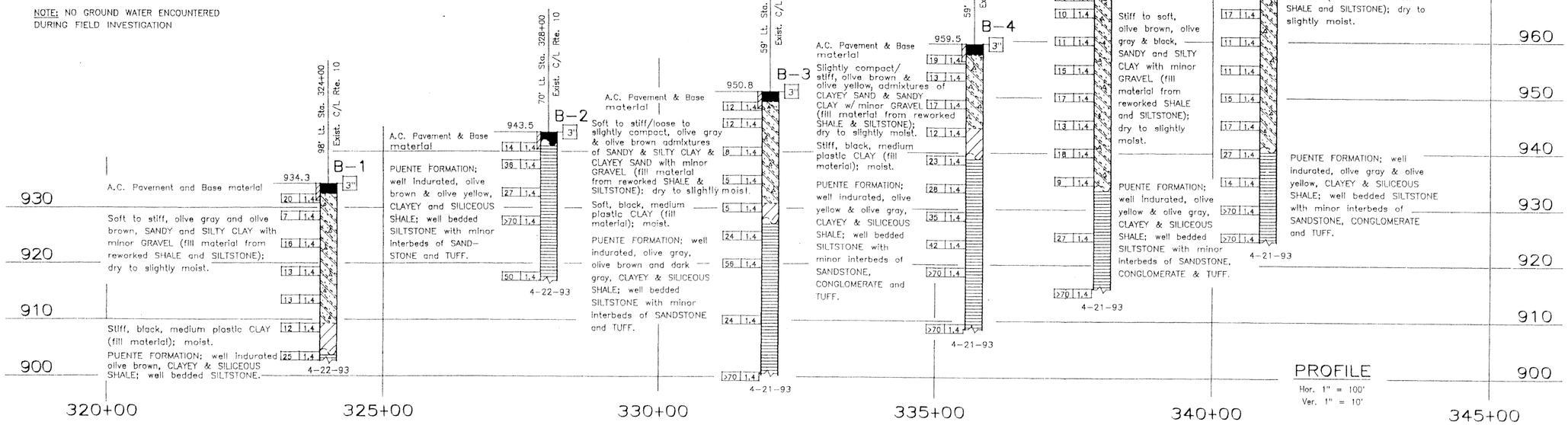

PROFILE
Hor. 1" = 100'
Ver. 1" = 10'

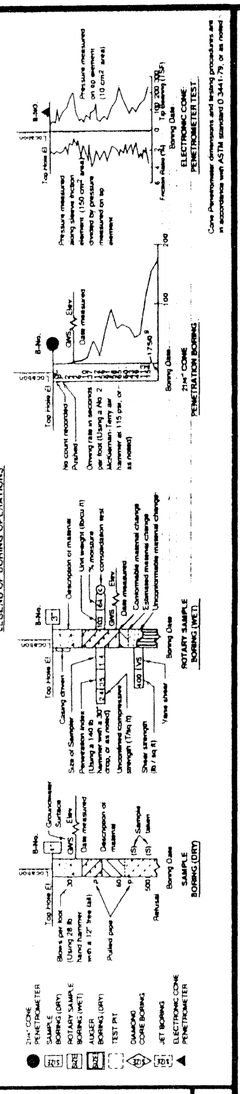

CONSISTENCY CLASSIFICATION FOR SOILS
According to the Standard Penetration Test

Penetration Index (Blows / Ft)	Granular	Cohesive
0-4	Very loose	Very soft
5-9	Loose	Soft
10-19	Slightly compact	Stiff
20-34	Compact	Very stiff
35-69	Dense	Hard
>70	Very dense	Very hard

NOTE: Classification of earth material as shown on this sheet is based upon field inspection and is not to be construed to imply mechanical analysis.

DIVISION OF NEW TECHNOLOGY, MATERIALS AND RESEARCH	OFFICE OF ENGINEERING GEOLOGY	FIELD INVESTIGATION BY:	State of CALIFORNIA DEPARTMENT OF TRANSPORTATION	DIVISION OF STRUCTURES STRUCTURE DESIGN	BRIDGE NO.	RETAINING WALL NO. 331
DRAWN BY I. GAMARRA 5/93		F. GERAMI			POST MILE 37.5/42.4	LOG OF TEST BORINGS
CHECKED BY Farahnaz Gerami 8-93						

SEP 23 1993

ORIGINAL SCALE IN INCHES FOR REDUCED PLANS 0 1 2 3

CU 07234
EA 11934K

DISREGARD PRINTS BEARING EARLIER REVISION DATES

REVISION DATES (PRELIMINARY STAGE ONLY) SHEET OF

TL 6051 REV 2/92

DIST	COUNTY	ROUTE	POST MILES TOTAL PROJECT	SHEET No.	TOTAL SHEETS
07	LA	10	37.2/42.4	2158	2313

REGISTERED CIVIL ENGINEER 10-1-14 DATE

6-1-15
PLANS APPROVAL DATE

REGISTERED PROFESSIONAL ENGINEER Gabriel J. Galo No. 52288 Exp. 12-31-14 CIVIL STATE OF CALIFORNIA

The State of California or its officers or agents shall not be responsible for the accuracy or completeness of scanned copies of this plan sheet.

NOTES:

1. For "TYPICAL SECTION" see "GENERAL PLAN NO. 2" sheet.
2. For Geocomposite Drain see "RETAINING WALL DETAILS" sheet.
3. For Retaining Wall Details see "STRUCTURE PLAN NO. 1" thru "STRUCTURE PLAN NO. 7" sheets.
4. For Structure Excavation and Backfill see "INDEX TO PLANS" sheet.
5. For OG, not shown in "DEVELOPED MIRRORED ELEVATION" view for clarity, see "INDEX TO PLANS" and "STRUCTURE PLAN NO. 1" thru "STRUCTURE PLAN NO. 7" sheets.

LEGEND:

▭ Indicates Pullbox, see "ROADWAY PLANS"

QUANTITIES

STRUCTURE EXCAVATION (RETAINING WALL)	7,485	CY
STRUCTURE EXCAVATION (TYPE Y-1) (AERIALLY DEPOSITED LEAD)	157	CY
STRUCTURE BACKFILL (RETAINING WALL)	10,192	CY
STRUCTURAL CONCRETE, RETAINING WALL	2,608	CY
CONCRETE SURFACE TEXTURE	17,616	SQFT
BAR REINFORCING STEEL (RETAINING WALL)	426,522	LB
SOUND WALL (MASONRY BLOCK)	17,611	SQFT
PREPARE AND STAIN CONCRETE	17,616	SQFT
CONCRETE BARRIER (TYPE 736S MODIFIED)	1,601	LF

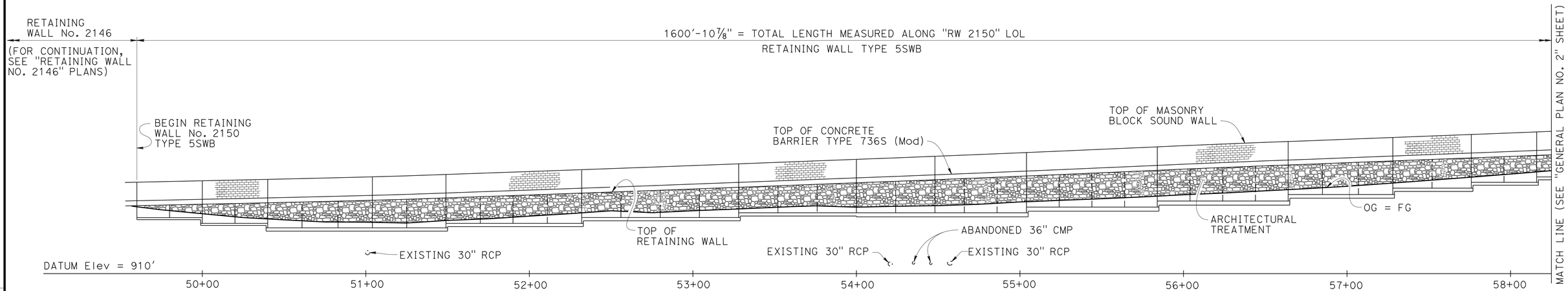

DEVELOPED MIRRORED ELEVATION

1" = 30'-0"

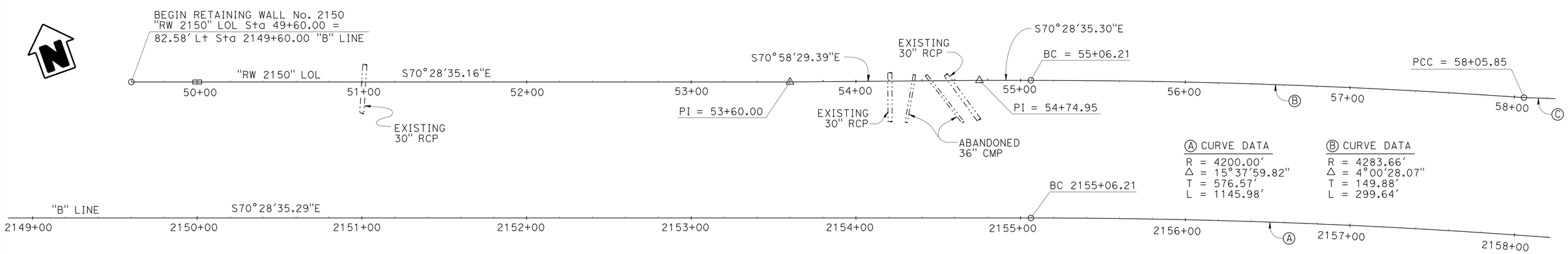

PLAN

1" = 30'-0"

NOTE:
THE CONTRACTOR SHALL VERIFY ALL CONTROLLING FIELD DIMENSIONS BEFORE ORDERING OR FABRICATING ANY MATERIAL.

Traci Menard, DESIGN ENGINEER	DESIGN	BY Sara Yip/Gabriel Galo	CHECKED Suzan Moradi	LOAD & RESISTANCE FACTOR DESIGN	LIVE LOADING: HL93 W/"LOW-BOY": PERMIT DESIGN VEHICLE
	DETAILS	BY Herman Mauroschadt	CHECKED Suzan Moradi	LAYOUT: BY Sara Yip/Gabriel Galo	CHECKED Suzan Moradi
	QUANTITIES	BY Gabriel Galo	CHECKED Ruslan Novik	SPECIFICATIONS: BY X. Chen	PLANS AND SPECS COMPARED X. Chen

ORIGINAL SCALE IN INCHES FOR REDUCED PLANS 0 1 2 3

STATE OF CALIFORNIA
DEPARTMENT OF TRANSPORTATION

DIVISION OF ENGINEERING SERVICES
STRUCTURE DESIGN
DESIGN BRANCH 15

BRIDGE NO. 53E0314
POST MILE 40.71

RETAINING WALL NO. 2150
GENERAL PLAN NO. 1

UNIT: 3604
PROJECT NUMBER & PHASE: 0713000007
CONTRACT NO.: 07-1193U1

DISREGARD PRINTS BEARING EARLIER REVISION DATES → 3-15-13 5-23-14 02-13-15 12-3-15

SHEET 1 OF 23

USERNAME => s125624 DATE PLOTTED => 18-MAY-2015 TIME PLOTTED => 16:27

DIST	COUNTY	ROUTE	POST MILES TOTAL PROJECT	SHEET No.	TOTAL SHEETS
07	LA	10	37.2/42.4	2159	2313

REGISTERED CIVIL ENGINEER 10-1-14 DATE

6-1-15
PLANS APPROVAL DATE

REGISTERED PROFESSIONAL ENGINEER Gabriel J. Galo No. 52288 Exp. 12-31-14 CIVIL STATE OF CALIFORNIA

The State of California or its officers or agents shall not be responsible for the accuracy or completeness of scanned copies of this plan sheet.

NOTES:

1. Install 2"Ø Conduit in Concrete Barrier, for details see "ROADWAY PLANS".
2. For Sound Wall and Expansion Joint Details, see "MASONRY BLOCK SOUND WALL ON RETAINING WALL DETAILS NO. 1" and "MASONRY BLOCK SOUND WALL ON RETAINING WALL DETAILS NO. 2" sheets.
3. For Geocomposite Drain see "RETAINING WALL DETAILS" sheet.
4. For Retaining Wall Details see "STRUCTURE PLAN NO. 1" thru "STRUCTURE PLAN NO. 7" sheets.
5. For Structure Excavation and Backfill see "INDEX TO PLANS" sheet.
6. For OG, not shown in "DEVELOPED MIRRORED ELEVATION" view for clarity, see "INDEX TO PLANS" and "STRUCTURE PLAN NO. 1" thru "STRUCTURE PLAN NO. 7" sheets.

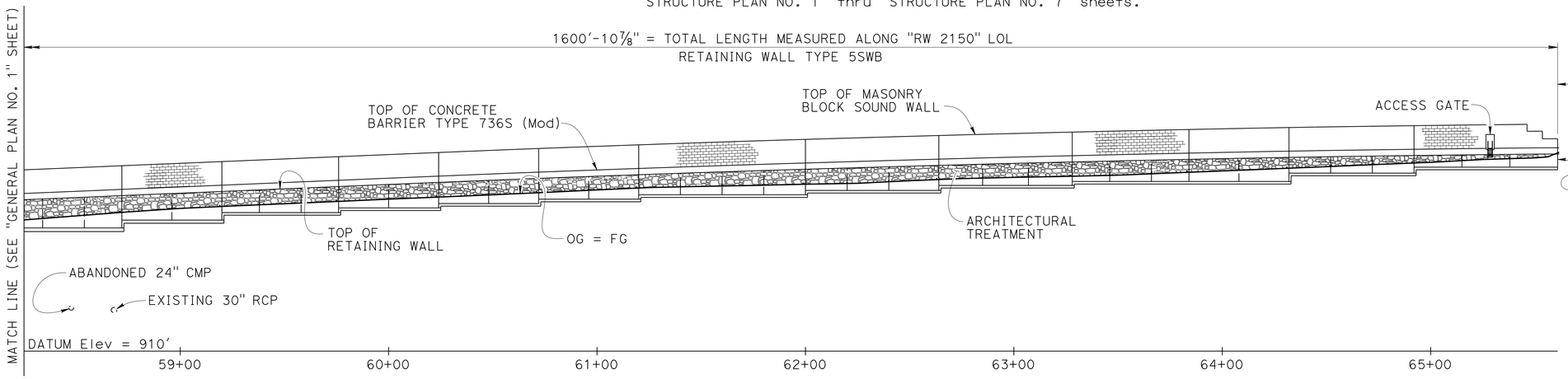

DEVELOPED MIRRORED ELEVATION

1" = 30'-0"

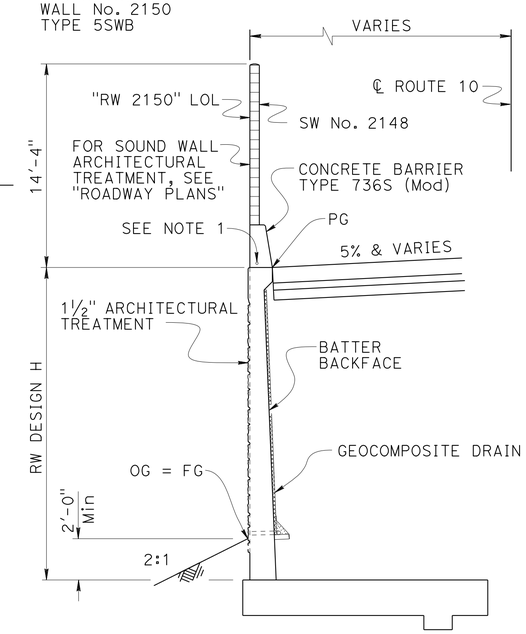

TYPICAL SECTION

3/16" = 1'-0"

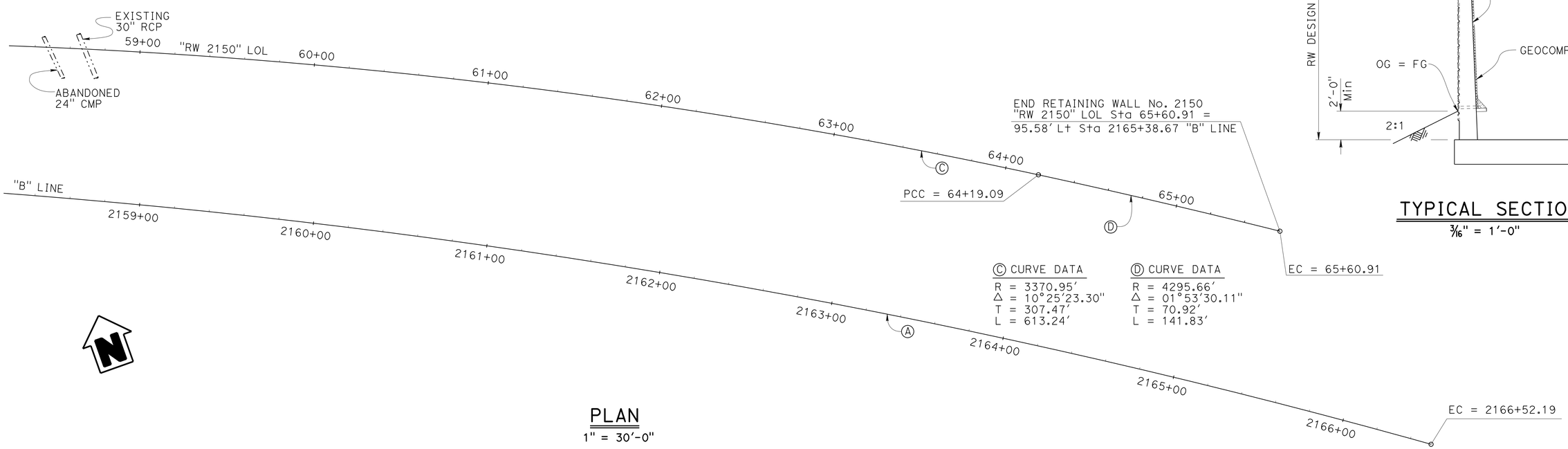

PLAN

1" = 30'-0"

Traci Menard DESIGN ENGINEER	DESIGN	BY Sara Yip/Gabriel Galo	CHECKED Suzan Moradi	LOAD & RESISTANCE FACTOR DESIGN	LIVE LOADING: HL93 W/"LOW-BOY": PERMIT DESIGN VEHICLE	
	DETAILS	BY Herman Mauroschadt	CHECKED Suzan Moradi	LAYOUT	BY Sara Yip/Gabriel Galo	CHECKED Suzan Moradi
	QUANTITIES	BY Gabriel Galo	CHECKED Ruslan Novik	SPECIFICATIONS	BY X. Chen	PLANS AND SPECS COMPARED X. Chen

ORIGINAL SCALE IN INCHES FOR REDUCED PLANS 0 1 2 3

STATE OF CALIFORNIA
DEPARTMENT OF TRANSPORTATION

DIVISION OF ENGINEERING SERVICES
STRUCTURE DESIGN
DESIGN BRANCH 15

BRIDGE NO. 53E0314
POST MILE 40.71

RETAINING WALL NO. 2150
GENERAL PLAN NO. 2

UNIT: 3604
PROJECT NUMBER & PHASE: 0713000007
CONTRACT NO.: 07-1193U1

DISREGARD PRINTS BEARING EARLIER REVISION DATES

REVISION DATES 3-15-13 5-23-14 2-13-14 12-15-13

SHEET 2 OF 23

USERNAME => s125624 DATE PLOTTED => 18-MAY-2015 TIME PLOTTED => 16:27

STRUCTURES DESIGN GENERAL PLAN SHEET (ENGLISH) (REV.09-01-10)

FILE => 53e0314-b-gp02.dgn

DIST	COUNTY	ROUTE	POST MILES TOTAL PROJECT	SHEET No.	TOTAL SHEETS
07	LA	10	37.2/42.4	2160	2313

REGISTERED CIVIL ENGINEER 10-1-14 DATE

6-1-15
PLANS APPROVAL DATE

REGISTERED PROFESSIONAL ENGINEER Gabriel J. Galo No. 52288 Exp. 12-31-14 CIVIL STATE OF CALIFORNIA

The State of California or its officers or agents shall not be responsible for the accuracy or completeness of scanned copies of this plan sheet.

INDEX TO PLANS

SHEET NO.	TITLE
1.	GENERAL PLAN NO. 1
2.	GENERAL PLAN NO. 2
3.	INDEX TO PLANS
4.	STRUCTURE PLAN NO. 1
5.	STRUCTURE PLAN NO. 2
6.	STRUCTURE PLAN NO. 3
7.	STRUCTURE PLAN NO. 4
8.	STRUCTURE PLAN NO. 5
9.	STRUCTURE PLAN NO. 6
10.	STRUCTURE PLAN NO. 7
11.	FOUNDATION PLAN NO. 1
12.	FOUNDATION PLAN NO. 2
13.	FOUNDATION PLAN NO. 3
14.	RETAINING WALL DETAILS
15.	ARCHITECTURAL DETAILS NO. 1
16.	ARCHITECTURAL DETAILS NO. 2
17.	RETAINING WALL TYPE 5SWB-DETAILS NO. 1
18.	RETAINING WALL TYPE 5SWB-DETAILS NO. 2
19.	MASONRY BLOCK SOUND WALL WITH BARRIER ON RETAINING WALL - DETAILS NO. 1
20.	MASONRY BLOCK SOUND WALL WITH BARRIER ON RETAINING WALL - DETAILS NO. 2
21.	LOG OF TEST BORINGS 1 OF 3
22.	LOG OF TEST BORINGS 2 OF 3
23.	LOG OF TEST BORINGS 3 OF 3

STANDARD PLANS DATED 2010

	A10A	ABBREVIATIONS (SHEET 1 OF 2)
RSP	A10B	ABBREVIATIONS (SHEET 2 OF 2)
	A10C	LINES AND SYMBOLS (SHEET 1 OF 3)
	A10D	LINES AND SYMBOLS (SHEET 2 OF 3)
	A10E	LINES AND SYMBOLS (SHEET 3 OF 3)
	A10H	LEGEND - ROCK
	B0-3	BRIDGE DETAILS
RSP	B3-5	RETAINING WALL DETAILS NO. 1
RSP	B11-56	CONCRETE BARRIER TYPE 736
	B15-12	SOUND WALL MASONRY BLOCK ON BARRIER 5'-0" ACCESS GATE DETAILS (1)
	B15-13	SOUND WALL MASONRY BLOCK ON BARRIER 5'-0" ACCESS GATE DETAILS (2)

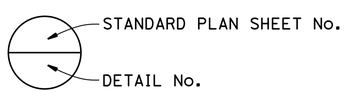

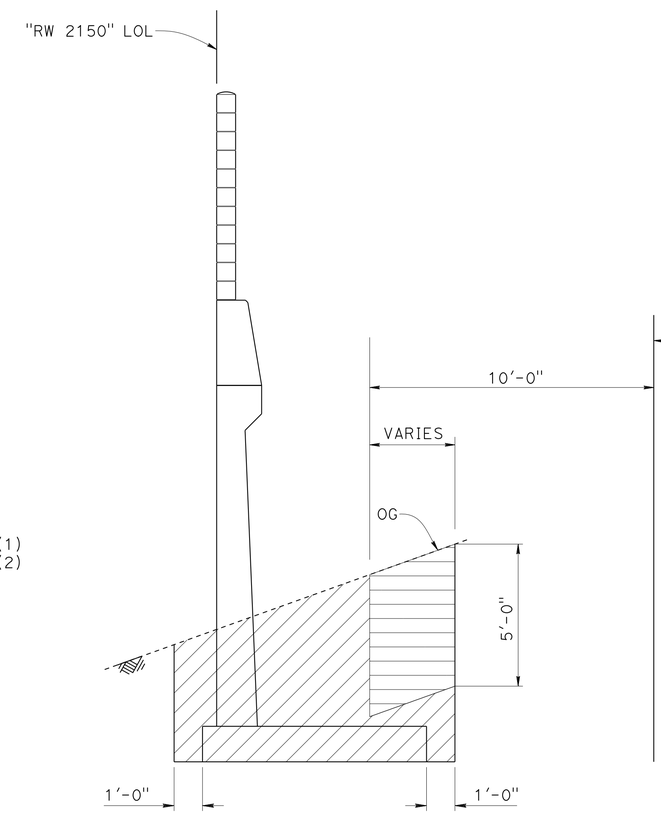

EXCAVATION

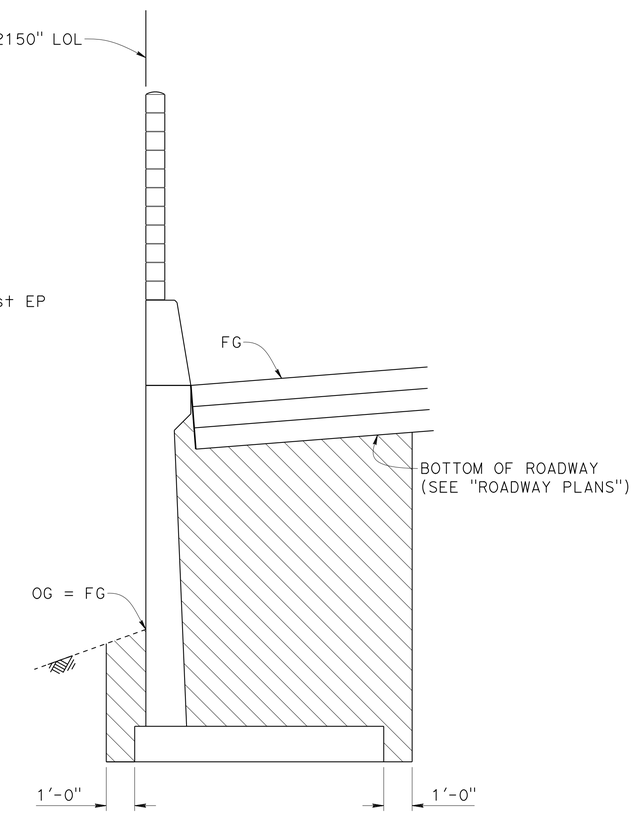

BACKFILL

LEGEND:

- Indicates Structure Excavation (Retaining Wall) Limits
- Indicates Structure Backfill (Retaining Wall) Limits
- Indicates Structure Excavation (Type Y-1) (Aerially Deposited Lead) Limits

STRUCTURE EXCAVATION AND BACKFILL

NO SCALE

NOTE:
THE CONTRACTOR SHALL VERIFY ALL CONTROLLING FIELD DIMENSIONS BEFORE ORDERING OR FABRICATING ANY MATERIAL.

	BY	CHECKED
DESIGN	Sara Yip/Gabriel Galo	Suzan Moradi
DETAILS	Herman Mauroschadt	Suzan Moradi
QUANTITIES	Gabriel Galo	Ruslan Novik

STATE OF CALIFORNIA
DEPARTMENT OF TRANSPORTATION

DIVISION OF ENGINEERING SERVICES
STRUCTURE DESIGN
DESIGN BRANCH 15

BRIDGE NO. 53E0314
POST MILE 40.71

RETAINING WALL NO. 2150
INDEX TO PLANS

STRUCTURES DESIGN DETAIL SHEET (ENGLISH) (REV. 09-01-10)

ORIGINAL SCALE IN INCHES FOR REDUCED PLANS 0 1 2 3

UNIT: 3604
PROJECT NUMBER & PHASE: 0713000007
CONTRACT NO.: 07-1193U1

DISREGARD PRINTS BEARING EARLIER REVISION DATES

REVISION DATES: 10-11-13 02-06-15 02-10-15 6-30-14

SHEET 3 OF 23

FILE => 53e0314-c-itp01.dgn

USERNAME => s125624 DATE PLOTTED => 18-MAY-2015 TIME PLOTTED => 16:27

DIST	COUNTY	ROUTE	POST MILES TOTAL PROJECT	SHEET No.	TOTAL SHEETS
07	LA	10	37.2/42.4	2161	2313

REGISTERED CIVIL ENGINEER 10-1-14 DATE

6-1-15
PLANS APPROVAL DATE

REGISTERED PROFESSIONAL ENGINEER Gabriel J. Galo No. 52288 Exp. 12-31-14 CIVIL STATE OF CALIFORNIA

The State of California or its officers or agents shall not be responsible for the accuracy or completeness of scanned copies of this plan sheet.

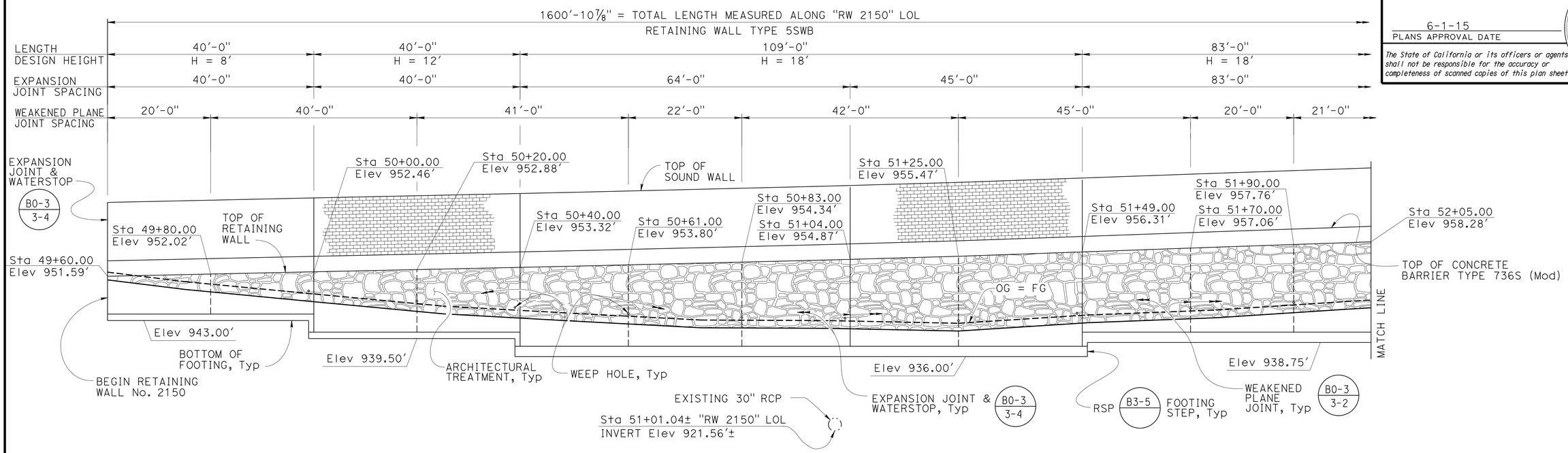

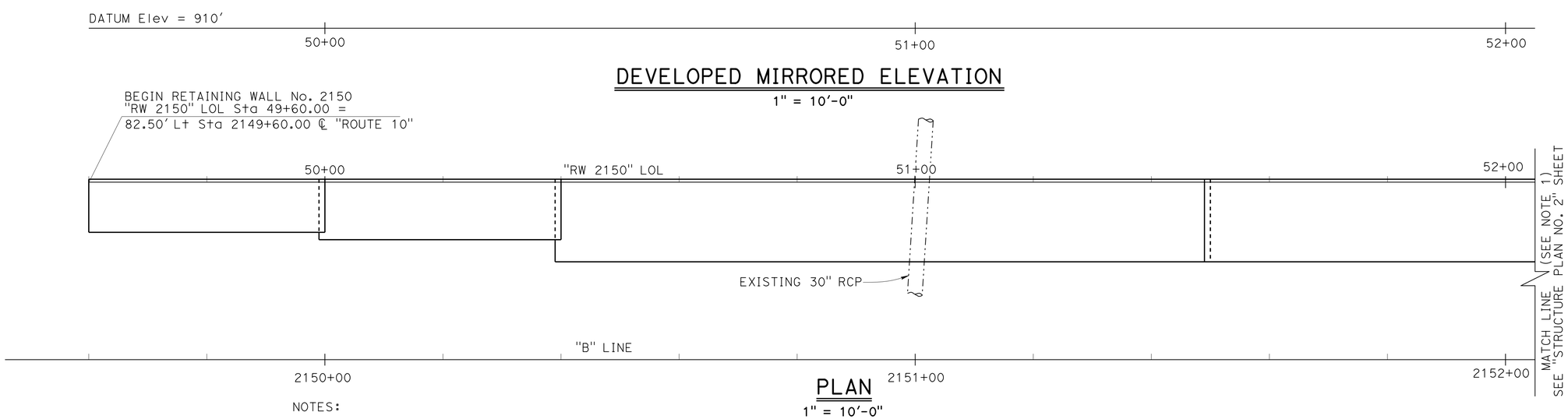

NOTES:

1. "B" Line shown only for reference, offset to "RW 2150" Layout Line not to scale.
2. For Retaining Wall Details, see "RETAINING WALL TYPE 5SWB - DETAILS NO. 1" and "RETAINING WALL TYPE 5SWB - DETAILS NO. 2" sheets.
3. See "GENERAL PLAN NO. 1" and "GENERAL PLAN NO. 2" sheets for LOL Alignment information.
4. For Sound Wall Barrier Details and Expansion Joint Details, see "MASONRY BLOCK SOUND WALL WITH BARRIER ON RETAINING WALL DETAILS NO. 1" and "MASONRY BLOCK SOUND WALL WITH BARRIER ON RETAINING WALL DETAILS NO. 2" sheets.
5. For Weep Hole Details see"RETAINING WALL DETAILS" sheet.
6. For Architectural Treatment details, see "ARCHITECTURAL DETAILS NO. 1" and "ARCHITECTURAL DETAILS NO. 2" sheets.

NOTE:
THE CONTRACTOR SHALL VERIFY ALL CONTROLLING FIELD DIMENSIONS BEFORE ORDERING OR FABRICATING ANY MATERIAL.

	BY	CHECKED
DESIGN	Sara Yip/Gabriel Galo	Suzan Moradi
DETAILS	Herman Mauroschadt	Suzan Moradi
QUANTITIES	Gabriel Galo	Ruslan Novik

STATE OF CALIFORNIA
DEPARTMENT OF TRANSPORTATION

DIVISION OF ENGINEERING SERVICES
STRUCTURE DESIGN
DESIGN BRANCH 15

BRIDGE NO. 53E0314
POST MILE 40.71

RETAINING WALL NO. 2150
STRUCTURE PLAN NO. 1

STRUCTURES DESIGN DETAIL SHEET (ENGLISH) (REV. 09-01-10)

ORIGINAL SCALE IN INCHES FOR REDUCED PLANS 0 1 2 3

UNIT: 3604
PROJECT NUMBER & PHASE: 0713000007
CONTRACT NO.: 07-1193U1

DISREGARD PRINTS BEARING EARLIER REVISION DATES

REVISION DATES 4-15-13 2-13-14 12-13-13 5-23-14

SHEET 4 OF 23

FILE => 53e0314-d-sp01.dgn

USERNAME => s125624 DATE PLOTTED => 18-MAY-2015 TIME PLOTTED => 16:27

DIST	COUNTY	ROUTE	POST MILES TOTAL PROJECT	SHEET No.	TOTAL SHEETS
07	LA	10	37.2/42.4	2162	2313

REGISTERED CIVIL ENGINEER — DATE 10-1-14

6-1-15
PLANS APPROVAL DATE

REGISTERED PROFESSIONAL ENGINEER — Gabriel J. Galo — No. 52288 — Exp. 12-31-14 — CIVIL — STATE OF CALIFORNIA

The State of California or its officers or agents shall not be responsible for the accuracy or completeness of scanned copies of this plan sheet.

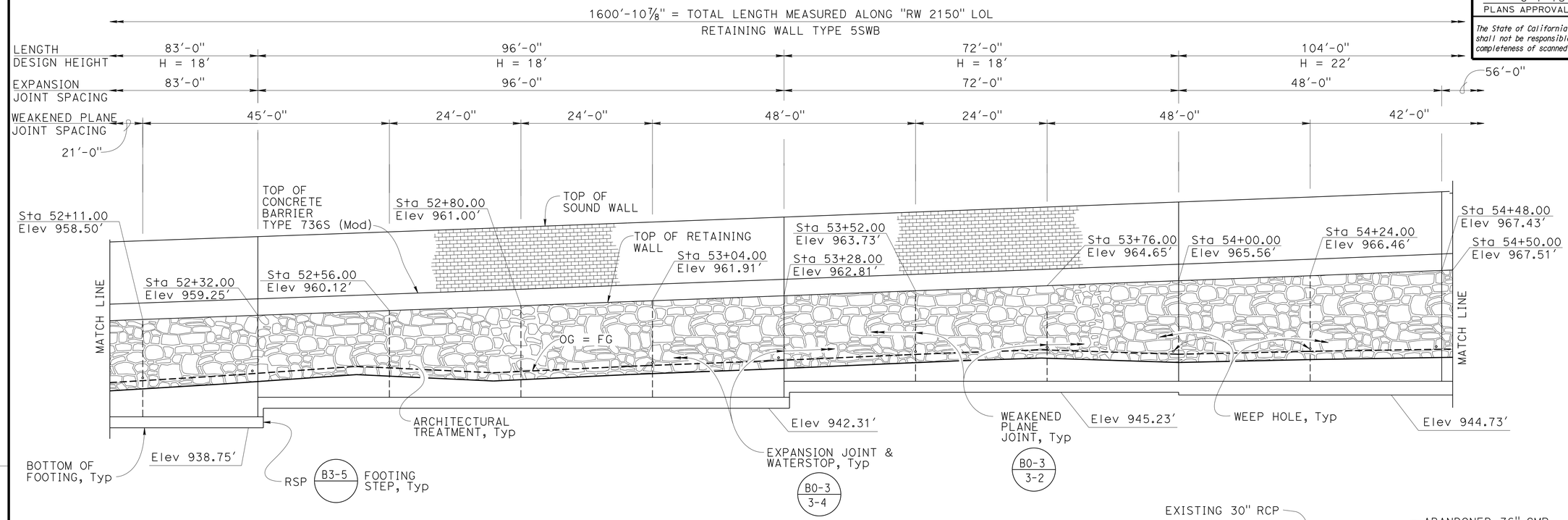

DEVELOPED MIRRORED ELEVATION

1" = 10'-0"

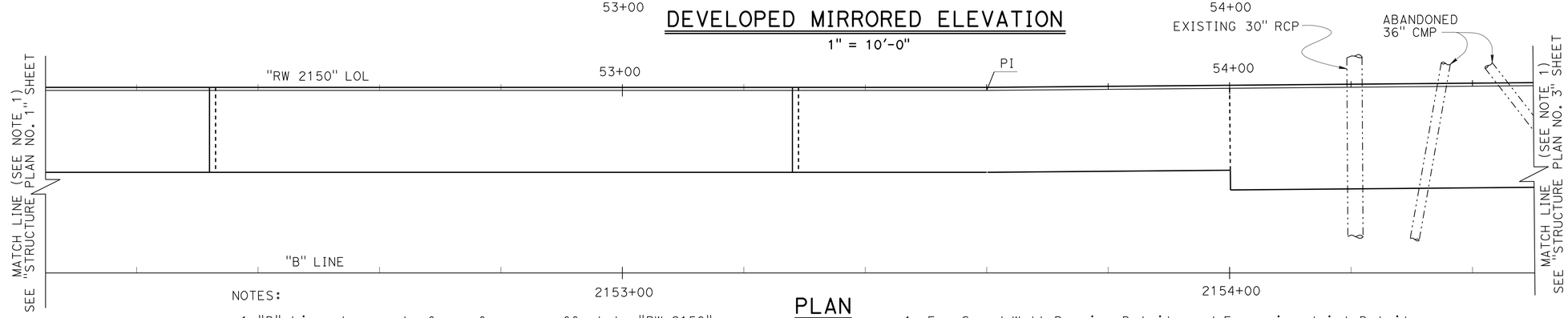

PLAN

1" = 10'-0"

NOTES:

1. "B" Line shown only for reference, offset to "RW 2150" Layout Line not to scale.
2. For Retaining Wall Details, see "RETAINING WALL TYPE 5SWB - DETAILS NO. 1" and "RETAINING WALL TYPE 5SWB - DETAILS NO. 2" sheets.
3. See "GENERAL PLAN NO. 1" and "GENERAL PLAN NO. 2" sheets for LOL Alignment information.
4. For Sound Wall Barrier Details and Expansion Joint Details, see "MASONRY BLOCK SOUND WALL WITH BARRIER ON RETAINING WALL DETAILS NO. 1" and "MASONRY BLOCK SOUND WALL WITH BARRIER ON RETAINING WALL DETAILS NO. 2" sheets.
5. For Weep Hole Details see"RETAINING WALL DETAILS" sheet.
6. For Architectural Treatment details, see "ARCHITECTURAL DETAILS NO. 1" and "ARCHITECTURAL DETAILS NO. 2" sheets.

NOTE:
THE CONTRACTOR SHALL VERIFY ALL CONTROLLING FIELD DIMENSIONS BEFORE ORDERING OR FABRICATING ANY MATERIAL.

	BY	CHECKED
DESIGN	Sara Yip/Gabriel Galo	Suzan Moradi
DETAILS	Herman Mauroschadt	Suzan Moradi
QUANTITIES	Gabriel Galo	Ruslan Novik

STATE OF CALIFORNIA
DEPARTMENT OF TRANSPORTATION

DIVISION OF ENGINEERING SERVICES
STRUCTURE DESIGN
DESIGN BRANCH 15

BRIDGE NO. 53E0314
POST MILE 40.71

RETAINING WALL NO. 2150
STRUCTURE PLAN NO. 2

STRUCTURES DESIGN DETAIL SHEET (ENGLISH) (REV. 09-01-10)

ORIGINAL SCALE IN INCHES FOR REDUCED PLANS 0 1 2 3

UNIT: 3604
PROJECT NUMBER & PHASE: 0713000007
CONTRACT NO.: 07-1193U1

DISREGARD PRINTS BEARING EARLIER REVISION DATES

REVISION DATES: 4-15-13 2-18-14 12-18-13 5-23-14

SHEET 5 OF 23

FILE => 53e0314-d-sp02.dgn

USERNAME => s125624 DATE PLOTTED => 18-MAY-2015 TIME PLOTTED => 16:27

DIST	COUNTY	ROUTE	POST MILES TOTAL PROJECT	SHEET No.	TOTAL SHEETS
07	LA	10	37.2/42.4	2163	2313

REGISTERED CIVIL ENGINEER 10-1-14 DATE

6-1-15
PLANS APPROVAL DATE

REGISTERED PROFESSIONAL ENGINEER Gabriel J. Galo No. 52288 Exp. 12-31-14 CIVIL STATE OF CALIFORNIA

The State of California or its officers or agents shall not be responsible for the accuracy or completeness of scanned copies of this plan sheet.

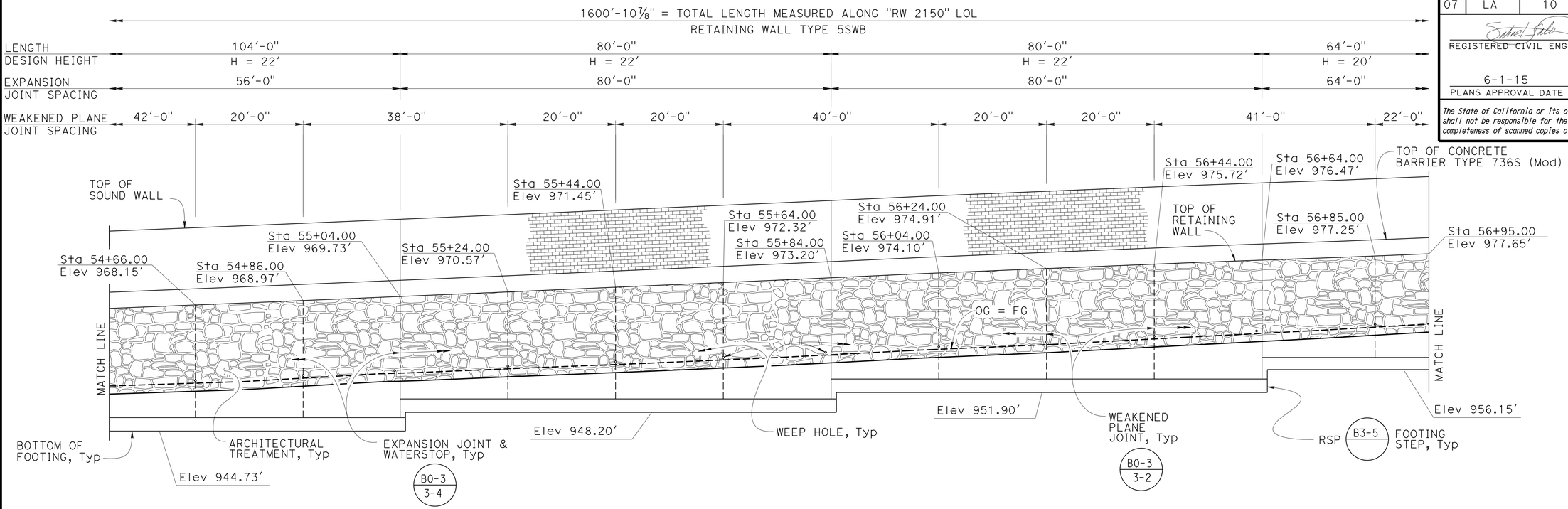

DEVELOPED MIRRORED ELEVATION

1" = 10'-0"

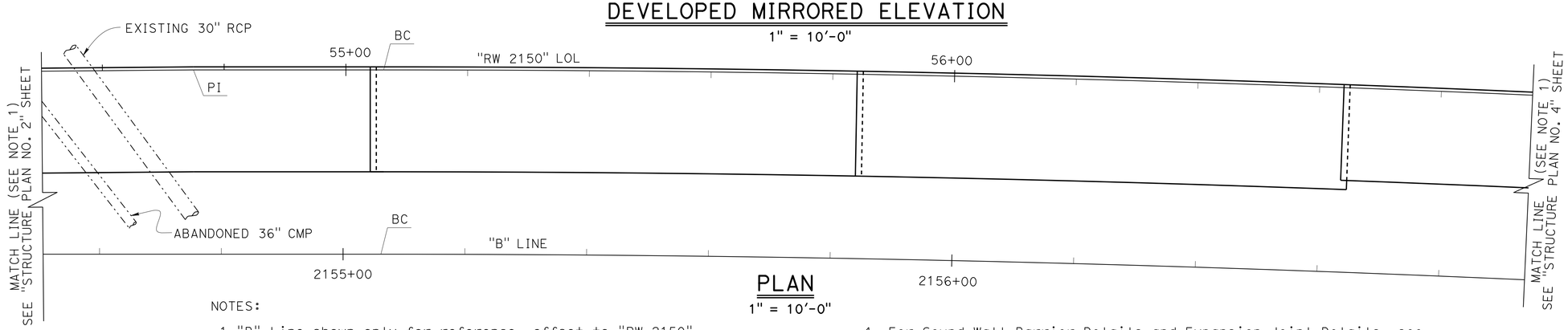

PLAN

1" = 10'-0"

NOTES:

1. "B" Line shown only for reference, offset to "RW 2150" Layout Line not to scale.
2. For Retaining Wall Details, see "RETAINING WALL TYPE 5SWB - DETAILS NO. 1" and "RETAINING WALL TYPE 5SWB - DETAILS NO. 2" sheets.
3. See "GENERAL PLAN NO. 1" and "GENERAL PLAN NO. 2" sheets for LOL Alignment information.
4. For Sound Wall Barrier Details and Expansion Joint Details, see "MASONRY BLOCK SOUND WALL WITH BARRIER ON RETAINING WALL DETAILS NO. 1" and "MASONRY BLOCK SOUND WALL WITH BARRIER ON RETAINING WALL DETAILS NO. 2" sheets.
5. For Weep Hole Details see"RETAINING WALL DETAILS" sheet.
6. For Architectural Treatment details, see "ARCHITECTURAL DETAILS NO. 1" and "ARCHITECTURAL DETAILS NO. 2" sheets.

NOTE:
THE CONTRACTOR SHALL VERIFY ALL CONTROLLING FIELD DIMENSIONS BEFORE ORDERING OR FABRICATING ANY MATERIAL.

	BY	CHECKED
DESIGN	Sara Yip/Gabriel Galo	Suzan Moradi
DETAILS	Herman Mauroschadt	Suzan Moradi
QUANTITIES	Gabriel Galo	Ruslan Novik

STATE OF CALIFORNIA
DEPARTMENT OF TRANSPORTATION

DIVISION OF ENGINEERING SERVICES
STRUCTURE DESIGN
DESIGN BRANCH 15

BRIDGE NO. 53E0314
POST MILE 40.71

RETAINING WALL NO. 2150
STRUCTURE PLAN NO. 3

STRUCTURES DESIGN DETAIL SHEET (ENGLISH) (REV. 09-01-10)

ORIGINAL SCALE IN INCHES FOR REDUCED PLANS 0 1 2 3

UNIT: 3604
PROJECT NUMBER & PHASE: 0713000007
CONTRACT NO.: 07-1193U1

DISREGARD PRINTS BEARING EARLIER REVISION DATES

REVISION DATES 10-11-13 5-23-14 12-12-13 2-18-14

SHEET 6 OF 23

FILE => 53e0314-d-sp03.dgn

USERNAME => s125624 DATE PLOTTED => 18-MAY-2015 TIME PLOTTED => 16:27

DIST	COUNTY	ROUTE	POST MILES TOTAL PROJECT	SHEET No.	TOTAL SHEETS
07	LA	10	37.2/42.4	2164	2313

REGISTERED CIVIL ENGINEER 10-1-14 DATE

6-1-15
PLANS APPROVAL DATE

REGISTERED PROFESSIONAL ENGINEER Gabriel J. Galo No. 52288 Exp. 12-31-14 CIVIL STATE OF CALIFORNIA

The State of California or its officers or agents shall not be responsible for the accuracy or completeness of scanned copies of this plan sheet.

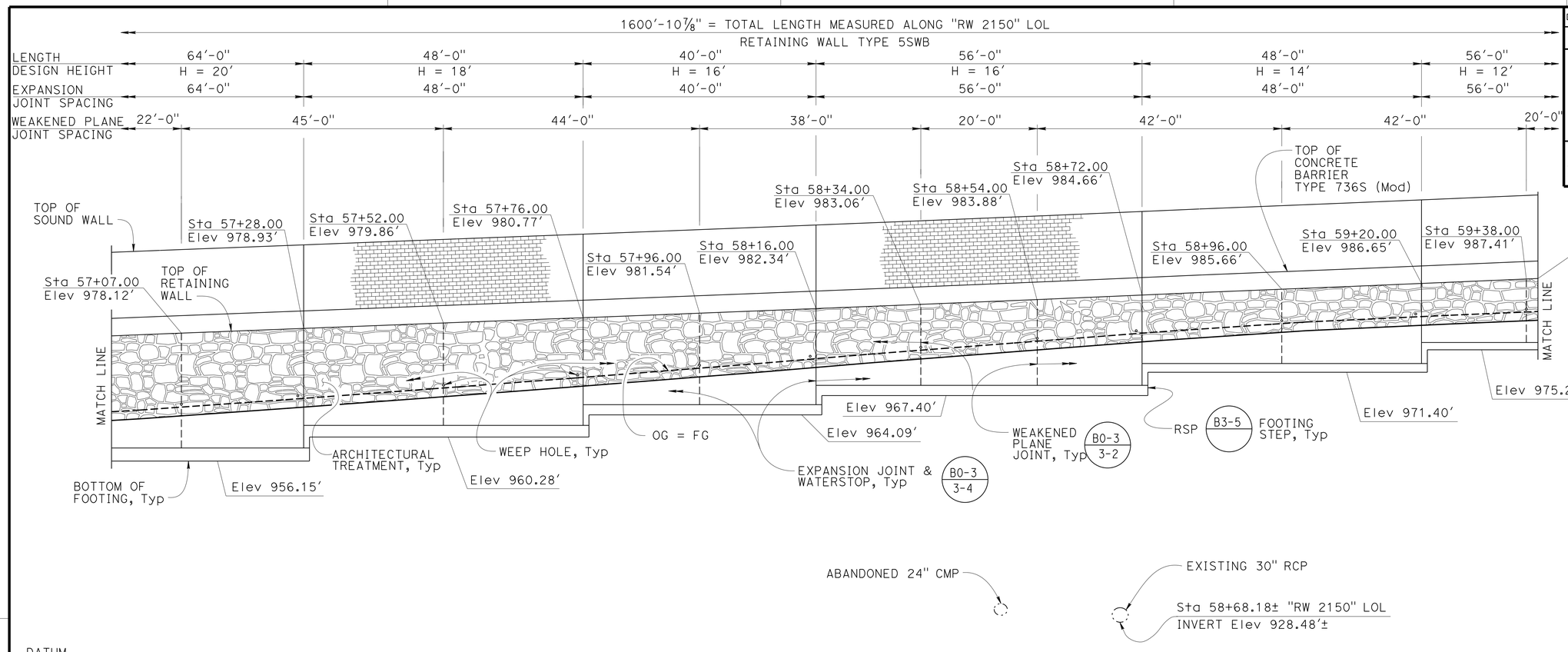

DEVELOPED MIRRORED ELEVATION

1" = 10'-0"

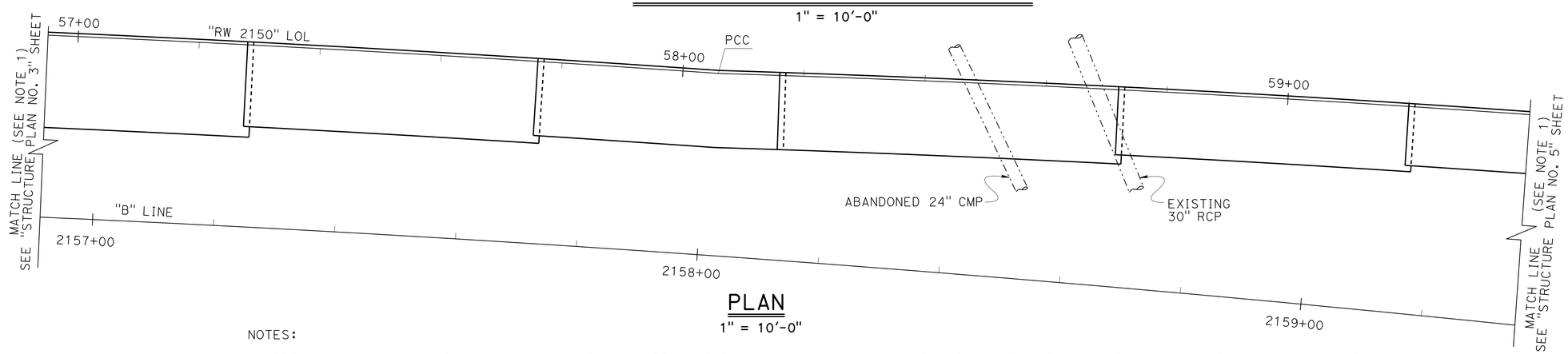

PLAN

1" = 10'-0"

NOTES:

1. "B" Line shown only for reference, offset to "RW 2150" Layout Line not to scale.
2. For Retaining Wall Details, see "RETAINING WALL TYPE 5SWB - DETAILS NO. 1" and "RETAINING WALL TYPE 5SWB - DETAILS NO. 2" sheets.
3. See "GENERAL PLAN NO. 1" and "GENERAL PLAN NO. 2" sheets for LOL Alignment information.
4. For Sound Wall Barrier Details and Expansion Joint Details, see "MASONRY BLOCK SOUND WALL WITH BARRIER ON RETAINING WALL DETAILS NO. 1" and "MASONRY BLOCK SOUND WALL WITH BARRIER ON RETAINING WALL DETAILS NO. 2" sheets.
5. For Weep Hole Details see"RETAINING WALL DETAILS" sheet.
6. For Architectural Treatment details, see "ARCHITECTURAL DETAILS NO. 1" and "ARCHITECTURAL DETAILS NO. 2" sheets.

NOTE:
THE CONTRACTOR SHALL VERIFY ALL CONTROLLING FIELD DIMENSIONS BEFORE ORDERING OR FABRICATING ANY MATERIAL.

	BY	CHECKED
DESIGN	Sara Yip/Gabriel Galo	Suzan Moradi
DETAILS	Herman Mauroschadt	Suzan Moradi
QUANTITIES	Gabriel Galo	Ruslan Novik

STATE OF CALIFORNIA
DEPARTMENT OF TRANSPORTATION

DIVISION OF ENGINEERING SERVICES
STRUCTURE DESIGN
DESIGN BRANCH 15

BRIDGE NO. 53E0314
POST MILE 40.71

RETAINING WALL NO. 2150
STRUCTURE PLAN NO. 4

STRUCTURES DESIGN DETAIL SHEET (ENGLISH) (REV. 09-01-10)

ORIGINAL SCALE IN INCHES FOR REDUCED PLANS 0 1 2 3

UNIT: 3604
PROJECT NUMBER & PHASE: 0713000007
CONTRACT NO.: 07-1193U1

DISREGARD PRINTS BEARING EARLIER REVISION DATES

REVISION DATES 4-30-13 2-18-14 5-23-14 12-4-14

SHEET 7 OF 23

FILE => 53e0314-d-sp04.dgn

USERNAME => s125624 DATE PLOTTED => 18-MAY-2015 TIME PLOTTED => 16:27

DIST	COUNTY	ROUTE	POST MILES TOTAL PROJECT	SHEET No.	TOTAL SHEETS
07	LA	10	37.2/42.4	2165	2313

REGISTERED CIVIL ENGINEER 10-1-14 DATE

6-1-15
PLANS APPROVAL DATE

REGISTERED PROFESSIONAL ENGINEER Gabriel J. Galo No. 52288 Exp. 12-31-14 CIVIL STATE OF CALIFORNIA

The State of California or its officers or agents shall not be responsible for the accuracy or completeness of scanned copies of this plan sheet.

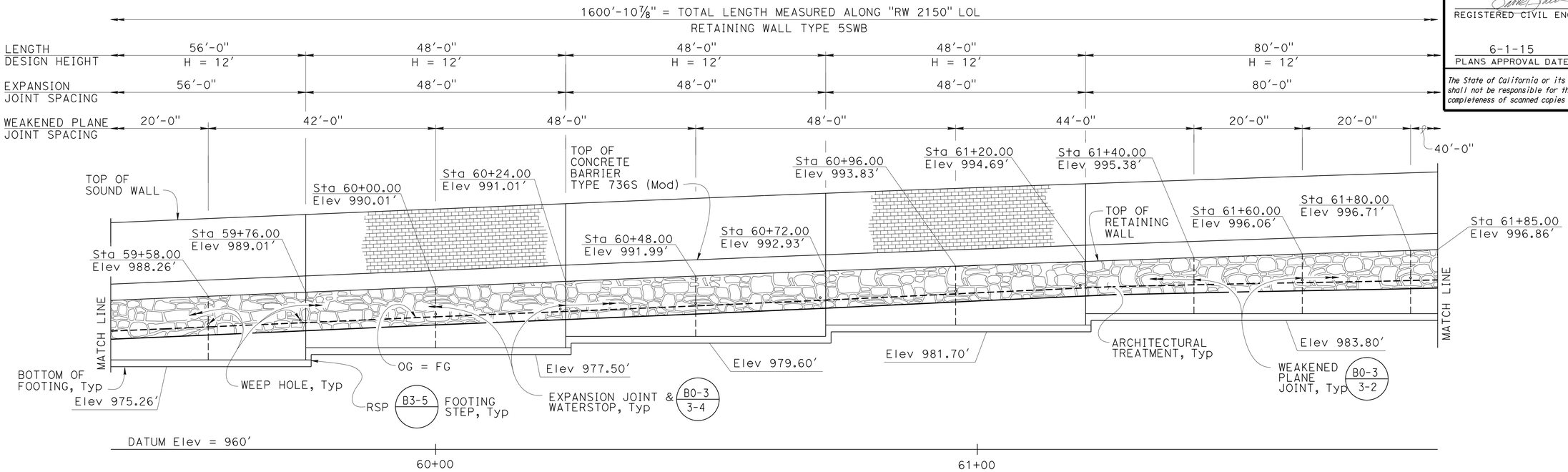

DEVELOPED MIRRORED ELEVATION

1" = 10'-0"

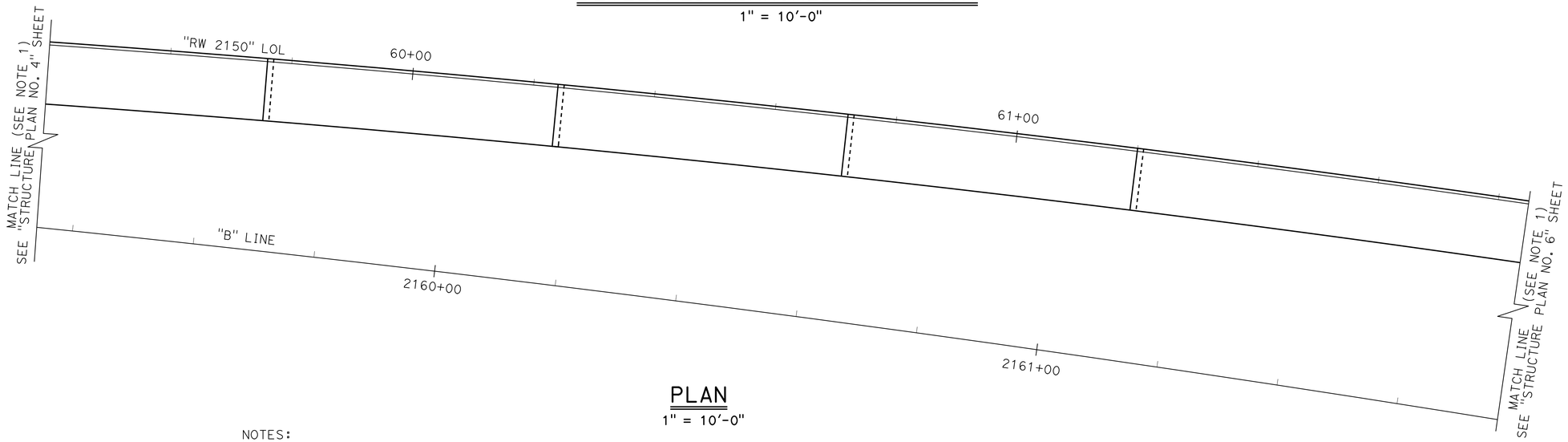

PLAN

1" = 10'-0"

NOTES:

1. "B" Line shown only for reference, offset to "RW 2150" Layout Line not to scale.
2. For Retaining Wall Details, see "RETAINING WALL TYPE 5SWB - DETAILS NO. 1" and "RETAINING WALL TYPE 5SWB - DETAILS NO. 2" sheets.
3. See "GENERAL PLAN NO. 1" and "GENERAL PLAN NO. 2" sheets for LOL Alignment information.
4. For Sound Wall Barrier Details and Expansion Joint Details, see "MASONRY BLOCK SOUND WALL WITH BARRIER ON RETAINING WALL DETAILS NO. 1" and "MASONRY BLOCK SOUND WALL WITH BARRIER ON RETAINING WALL DETAILS NO. 2" sheets.
5. For Weep Hole Details see"RETAINING WALL DETAILS" sheet.
6. For Architectural Treatment details, see "ARCHITECTURAL DETAILS NO. 1" and "ARCHITECTURAL DETAILS NO. 2" sheets.

NOTE:
THE CONTRACTOR SHALL VERIFY ALL CONTROLLING FIELD DIMENSIONS BEFORE ORDERING OR FABRICATING ANY MATERIAL.

	BY	CHECKED
DESIGN	Sara Yip/Gabriel Galo	Suzan Moradi
DETAILS	Herman Mauroschadt	Suzan Moradi
QUANTITIES	Gabriel Galo	Ruslan Novik

STATE OF CALIFORNIA
DEPARTMENT OF TRANSPORTATION

DIVISION OF ENGINEERING SERVICES
STRUCTURE DESIGN
DESIGN BRANCH 15

BRIDGE NO. 53E0314
POST MILE 40.71

RETAINING WALL NO. 2150
STRUCTURE PLAN NO. 5

STRUCTURES DESIGN DETAIL SHEET (ENGLISH) (REV. 09-01-10)

ORIGINAL SCALE IN INCHES FOR REDUCED PLANS 0 1 2 3

UNIT: 3604
PROJECT NUMBER & PHASE: 0713000007
CONTRACT NO.: 07-1193U1

DISREGARD PRINTS BEARING EARLIER REVISION DATES

REVISION DATES: 4-16-13 2-18-14 5-27-14 12-24-13

SHEET 8 OF 23

FILE => 53e0314-d-sp05.dgn

USERNAME => s125624 DATE PLOTTED => 18-MAY-2015 TIME PLOTTED => 16:27

DIST	COUNTY	ROUTE	POST MILES TOTAL PROJECT	SHEET No.	TOTAL SHEETS
07	LA	10	37.2/42.4	2166	2313

REGISTERED CIVIL ENGINEER 10-1-14 DATE

6-1-15
PLANS APPROVAL DATE

REGISTERED PROFESSIONAL ENGINEER Gabriel J. Galo No. 52288 Exp. 12-31-14 CIVIL STATE OF CALIFORNIA

The State of California or its officers or agents shall not be responsible for the accuracy or completeness of scanned copies of this plan sheet.

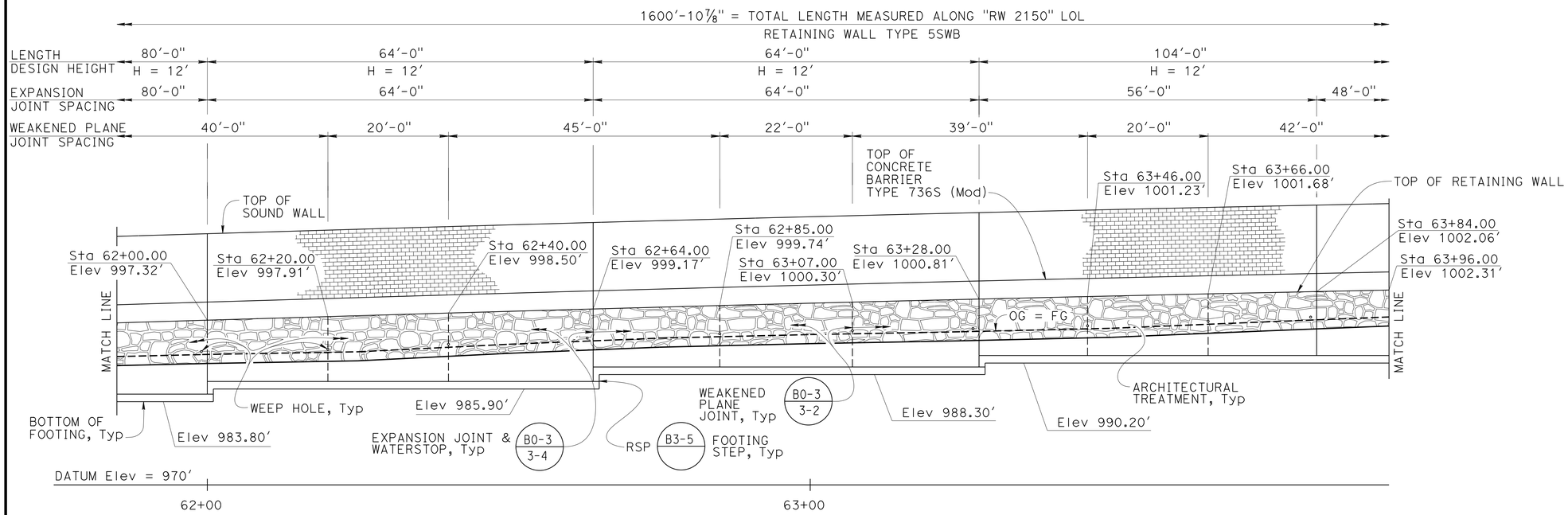

DEVELOPED MIRRORED ELEVATION

1" = 10'-0"

NOTES:

1. "B" Line shown only for reference, offset to "RW 2150" Layout Line not to scale.
2. For Retaining Wall Details, see "RETAINING WALL TYPE 5SWB - DETAILS NO. 1" and "RETAINING WALL TYPE 5SWB - DETAILS NO. 2" sheets.
3. See "GENERAL PLAN NO. 1" and "GENERAL PLAN NO. 2" sheets for LOL Alignment information.
4. For Sound Wall Barrier Details and Expansion Joint Details, see "MASONRY BLOCK SOUND WALL WITH BARRIER ON RETAINING WALL DETAILS NO. 1" and "MASONRY BLOCK SOUND WALL WITH BARRIER ON RETAINING WALL DETAILS NO. 2" sheets.
5. For Weep Hole Details see"RETAINING WALL DETAILS" sheet.
6. For Architectural Treatment details, see "ARCHITECTURAL DETAILS NO. 1" and "ARCHITECTURAL DETAILS NO. 2" sheets.

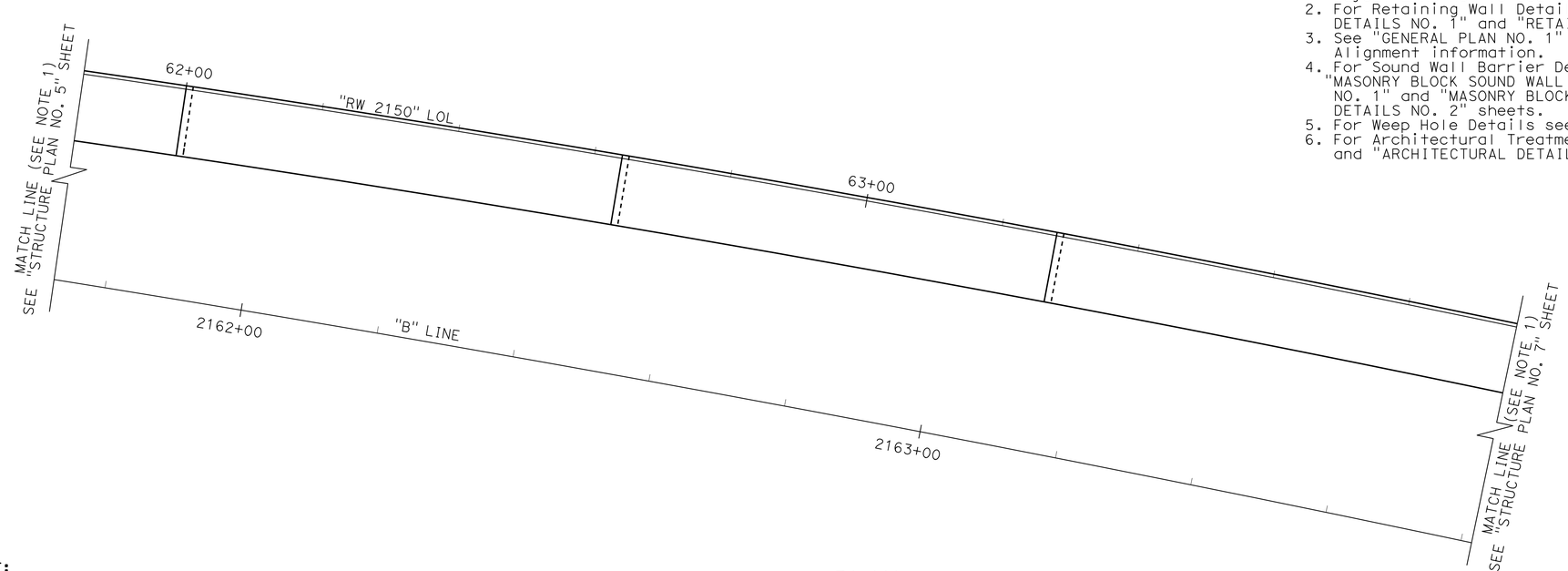

PLAN

1" = 10'-0"

NOTE:
THE CONTRACTOR SHALL VERIFY ALL CONTROLLING FIELD DIMENSIONS BEFORE ORDERING OR FABRICATING ANY MATERIAL.

	BY	CHECKED
DESIGN	Sara Yip/Gabriel Galo	Suzan Moradi
DETAILS	Herman Mauroschadt	Suzan Moradi
QUANTITIES	Gabriel Galo	Ruslan Novik

STATE OF CALIFORNIA
DEPARTMENT OF TRANSPORTATION

DIVISION OF ENGINEERING SERVICES
STRUCTURE DESIGN
DESIGN BRANCH 15

BRIDGE NO. 53E0314
POST MILE 40.71

RETAINING WALL NO. 2150
STRUCTURE PLAN NO. 6

STRUCTURES DESIGN DETAIL SHEET (ENGLISH) (REV. 09-01-10)

ORIGINAL SCALE IN INCHES FOR REDUCED PLANS 0 1 2 3

UNIT: 3604
PROJECT NUMBER & PHASE: 0713000007
CONTRACT NO.: 07-1193U1

DISREGARD PRINTS BEARING EARLIER REVISION DATES

REVISION DATES: 4-16-13 2-18-14 5-27-14 12-16-13

SHEET 9 OF 23

FILE => 53e0314-d-sp06.dgn

USERNAME => s125624 DATE PLOTTED => 18-MAY-2015 TIME PLOTTED => 16:27

DIST	COUNTY	ROUTE	POST MILES TOTAL PROJECT	SHEET No.	TOTAL SHEETS
07	LA	10	37.2/42.4	2167	2313

REGISTERED CIVIL ENGINEER 10-1-14 DATE

6-1-15
PLANS APPROVAL DATE

REGISTERED PROFESSIONAL ENGINEER Gabriel J. Galo No. 52288 Exp. 12-31-14 CIVIL STATE OF CALIFORNIA

The State of California or its officers or agents shall not be responsible for the accuracy or completeness of scanned copies of this plan sheet.

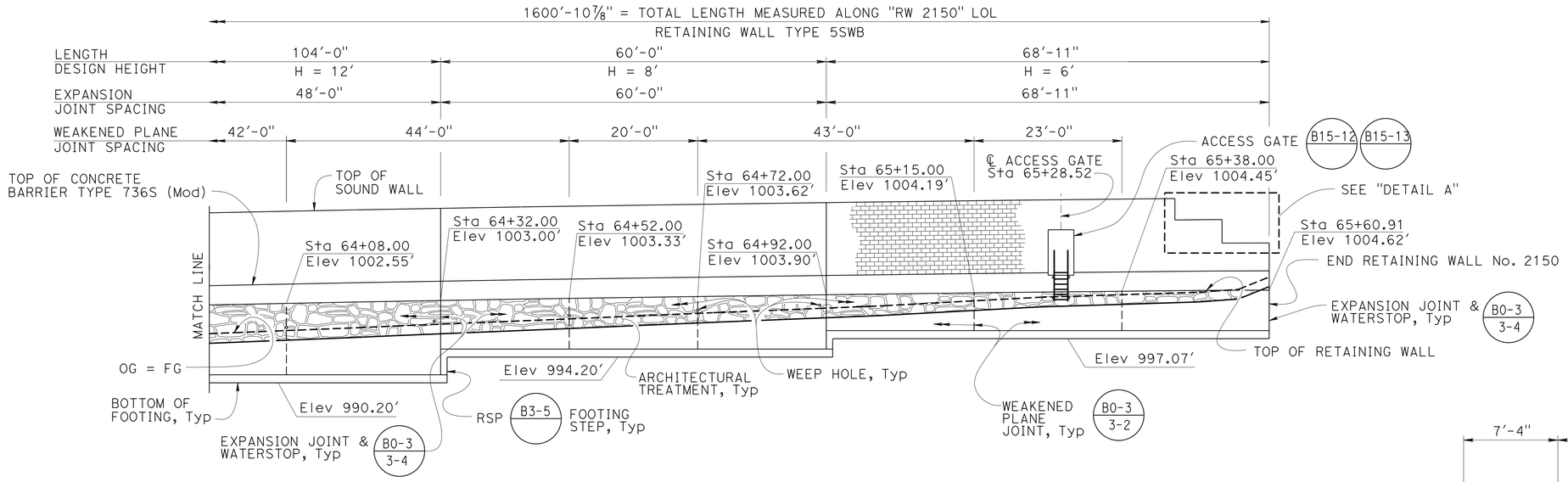

DEVELOPED MIRRORED ELEVATION

1" = 10'-0"

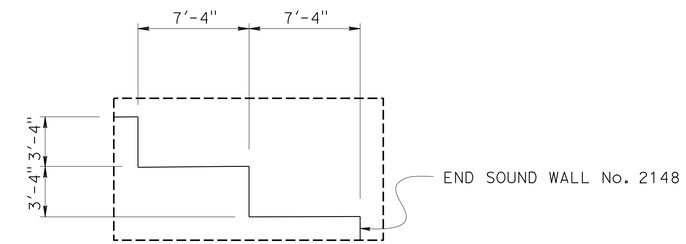

DETAIL A

1" = 5'-0"

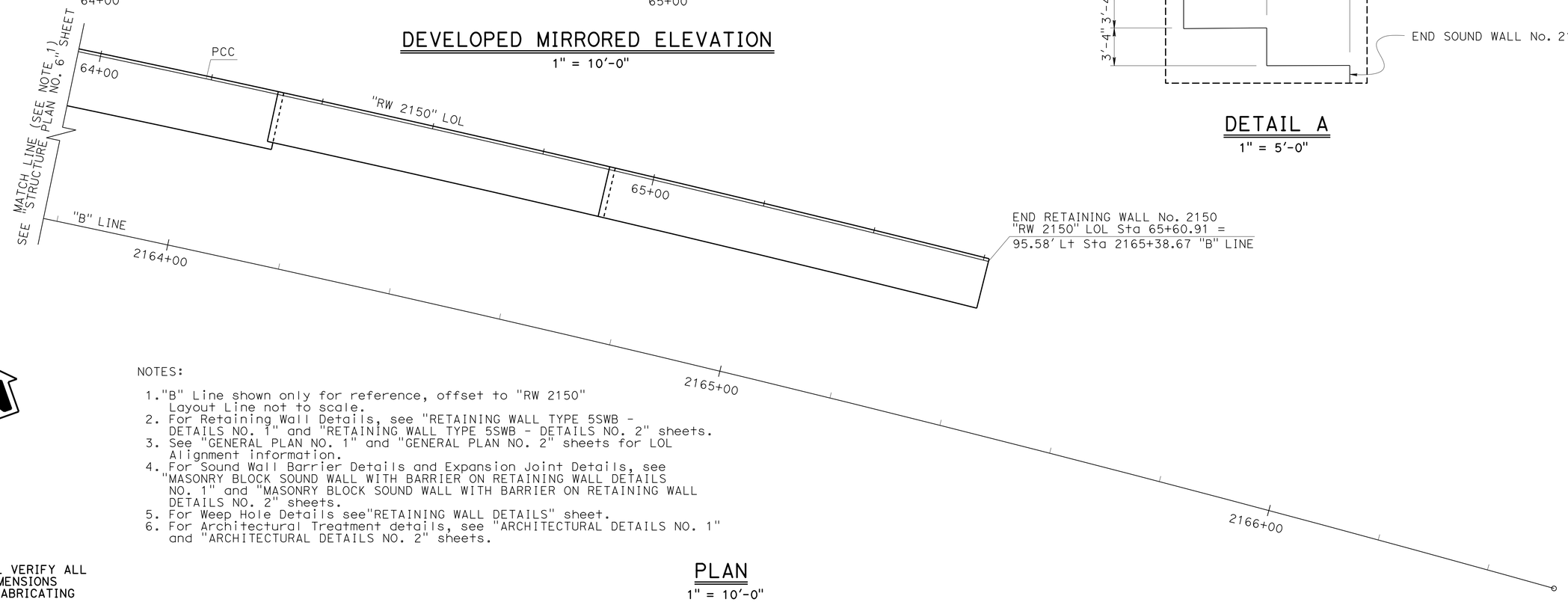

NOTES:

1. "B" Line shown only for reference, offset to "RW 2150" Layout Line not to scale.
2. For Retaining Wall Details, see "RETAINING WALL TYPE 5SWB - DETAILS NO. 1" and "RETAINING WALL TYPE 5SWB - DETAILS NO. 2" sheets.
3. See "GENERAL PLAN NO. 1" and "GENERAL PLAN NO. 2" sheets for LOL Alignment information.
4. For Sound Wall Barrier Details and Expansion Joint Details, see "MASONRY BLOCK SOUND WALL WITH BARRIER ON RETAINING WALL DETAILS NO. 1" and "MASONRY BLOCK SOUND WALL WITH BARRIER ON RETAINING WALL DETAILS NO. 2" sheets.
5. For Weep Hole Details see"RETAINING WALL DETAILS" sheet.
6. For Architectural Treatment details, see "ARCHITECTURAL DETAILS NO. 1" and "ARCHITECTURAL DETAILS NO. 2" sheets.

PLAN

1" = 10'-0"

NOTE:
THE CONTRACTOR SHALL VERIFY ALL CONTROLLING FIELD DIMENSIONS BEFORE ORDERING OR FABRICATING ANY MATERIAL.

	BY	CHECKED
DESIGN	Sara Yip/Gabriel Galo	Suzan Moradi
DETAILS	Herman Mauroschadt	Suzan Moradi
QUANTITIES	Gabriel Galo	Ruslan Novik

STATE OF CALIFORNIA
DEPARTMENT OF TRANSPORTATION

DIVISION OF ENGINEERING SERVICES
STRUCTURE DESIGN
DESIGN BRANCH 15

BRIDGE NO. 53E0314
POST MILE 40.71

RETAINING WALL NO. 2150
STRUCTURE PLAN NO. 7

STRUCTURES DESIGN DETAIL SHEET (ENGLISH) (REV. 09-01-10)

ORIGINAL SCALE IN INCHES FOR REDUCED PLANS 0 1 2 3

UNIT: 3604
PROJECT NUMBER & PHASE: 0713000007
CONTRACT NO.: 07-1193U1

DISREGARD PRINTS BEARING EARLIER REVISION DATES

REVISION DATES 4-24-13 5-27-14 2-23-14 12-24-13

SHEET 10 OF 23

FILE => 53e0314-d-sp07.dgn

USERNAME => s125624 DATE PLOTTED => 18-MAY-2015 TIME PLOTTED => 16:27

DIST	COUNTY	ROUTE	POST MILES TOTAL PROJECT	SHEET No.	TOTAL SHEETS
07	LA	10	37.2/42.4	2168	2313

REGISTERED CIVIL ENGINEER — DATE 10-1-14

6-1-15
PLANS APPROVAL DATE

REGISTERED PROFESSIONAL ENGINEER — Gabriel J. Galo — No. 52288 — Exp. 12-31-14 — CIVIL — STATE OF CALIFORNIA

The State of California or its officers or agents shall not be responsible for the accuracy or completeness of electronic copies of this plan sheet.

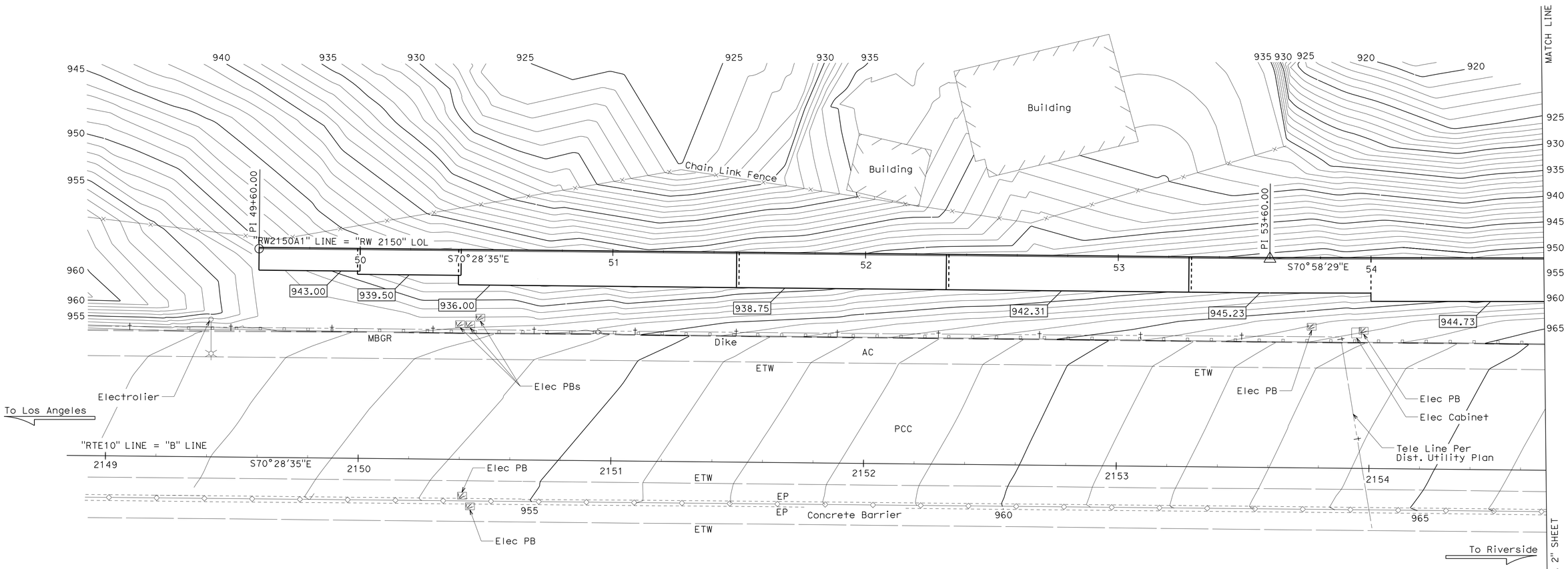

SURVEY CONTROL

PRHV 4027 (Not Shown On Plan)
Fnd: PK Nail in AC
80.26 Ft Rt "A" Line, Rte 10
Sta 2140+93.68
N 1,847,251.93
E 6,610,653.87
Elev= 936.35

PRHV 4028 (Not Shown On Plan)
Fnd: PK Nail in Gore
73.08 Ft Lt "A" Line, Rte 10
Sta 2143+19.92
N 1,847,320.86
E 6,610,918.34
Elev= 939.68

LEGEND:

XXX.XX — Denotes Bottom of Footing Elevation

PRELIMINARY INVESTIGATION SECTION

SCALE	VERT.DATUM NAVD88	PHOTOGRAMMETRY AS OF: X			
1"=20'	HORZ.DATUM NAD83	SURVEYED	BY District 04/2008	CHECKED	BY C.Fassett 01/2011
ALIGNMENT TIES Dist. Traverse Sheet		DRAFTED	BY J.Martinez 01/2011	CHECKED	BY T.Schmalz 01/2011

DESIGN	BY Sara Yip/ Gabriel Galo	CHECKED Suzan Moradi
DETAILS	BY Herman Mauroschadt	CHECKED Suzan Moradi
QUANTITIES	BY Gabriel Galo	CHECKED Ruslan Novik

STATE OF CALIFORNIA
DEPARTMENT OF TRANSPORTATION

DIVISION OF ENGINEERING SERVICES
STRUCTURE DESIGN
DESIGN BRANCH 15

BRIDGE NO. 53E0314
POST MILE 40.71

RETAINING WALL NO. 2150
FOUNDATION PLAN NO. 1

STRUCTURES FOUNDATION PLAN SHEET (ENGLISH) (REV. 09-01-10)

ORIGINAL SCALE IN INCHES FOR REDUCED PLANS 0 1 2 3

UNIT: 3604
PROJECT NUMBER & PHASE: 0713000007
CONTRACT NO.: 07-1193U1

DISREGARD PRINTS BEARING EARLIER REVISION DATES

REVISION DATES 01/26/11 01/21/14

SHEET 11 OF 23

FILE => 53e0314-e-fp01.dgn

USERNAME => s125624 DATE PLOTTED => 18-MAY-2015 TIME PLOTTED => 16:27

DIST	COUNTY	ROUTE	POST MILES TOTAL PROJECT	SHEET No.	TOTAL SHEETS
07	LA	10	37.2/42.4	2169	2313

REGISTERED CIVIL ENGINEER 10-1-14 DATE

6-1-15
PLANS APPROVAL DATE

REGISTERED PROFESSIONAL ENGINEER Gabriel J. Galo No. 52288 Exp. 12-31-14 CIVIL STATE OF CALIFORNIA

The State of California or its officers or agents shall not be responsible for the accuracy or completeness of electronic copies of this plan sheet.

CURVE DATA

No.	R	Δ	T	L
Ⓐ	4200.00	15°37′59.8″	576.57	1145.98
Ⓑ	4283.66	04°00′28″	149.88	299.64
Ⓒ	3370.95	10°25′23.3″	307.47	613.24

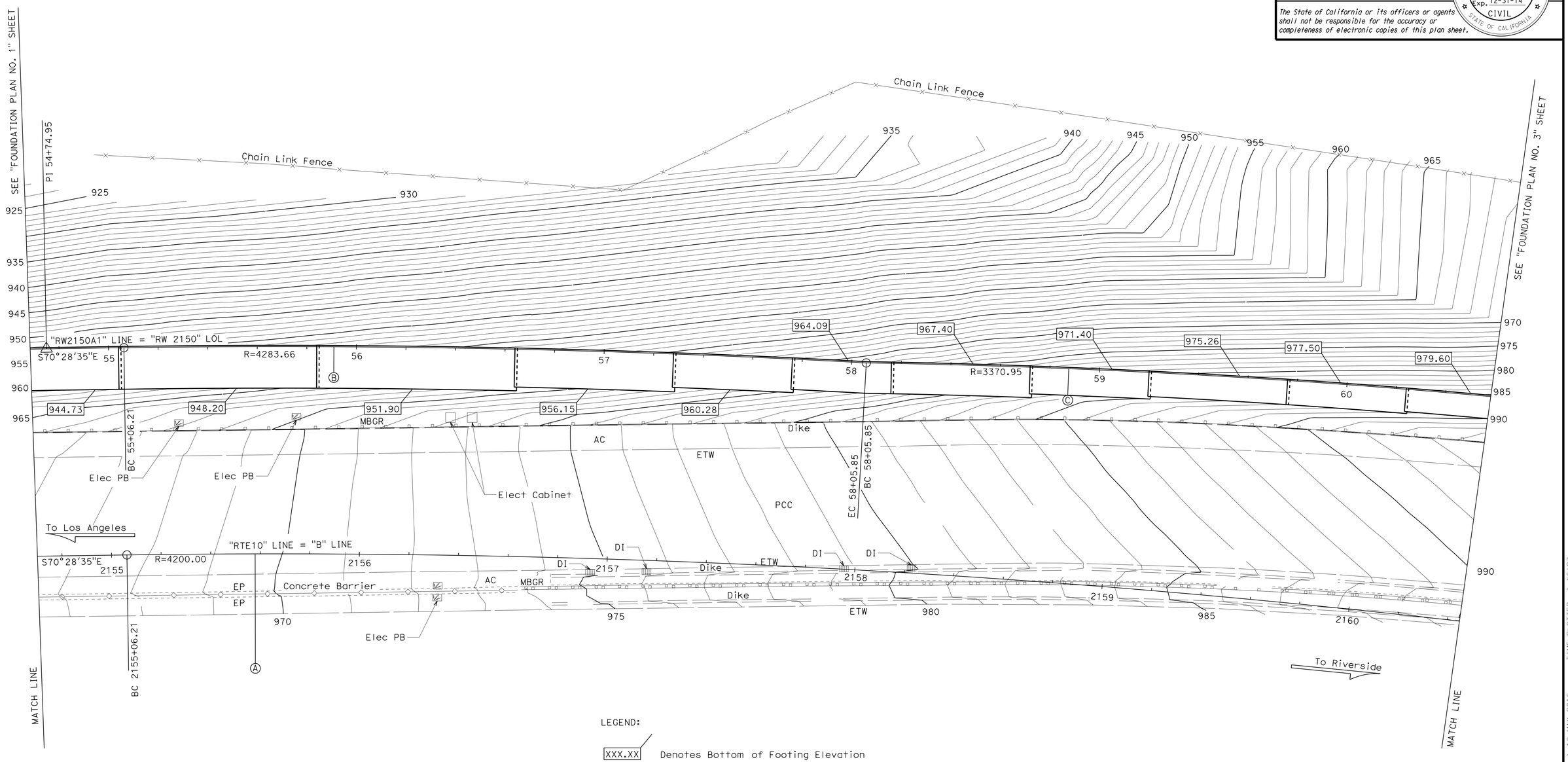

LEGEND:

XXX.XX Denotes Bottom of Footing Elevation

For District Controls See Foundation Plan No.1

PRELIMINARY INVESTIGATION SECTION							
SCALE 1"=20′	VERT.DATUM NAVD88	PHOTOGRAMMETRY AS OF: X					
	HORZ.DATUM NAD83	SURVEYED	BY District	04/2008	CHECKED	BY C.Fassett	01/2011
ALIGNMENT TIES Dist. Traverse Sheet		DRAFTED	BY J.Martinez	01/2011	CHECKED	BY T.Schmalz	01/2011

DESIGN	BY Sara Yip/ Gabriel Galo	CHECKED Suzan Moradi
DETAILS	BY Herman Mauroschadt	CHECKED Suzan Moradi
QUANTITIES	BY Gabriel Galo	CHECKED Ruslan Novik

STATE OF CALIFORNIA
DEPARTMENT OF TRANSPORTATION

DIVISION OF ENGINEERING SERVICES
STRUCTURE DESIGN
DESIGN BRANCH 15

BRIDGE NO. 53E0314
POST MILE 40.71

RETAINING WALL NO. 2150
FOUNDATION PLAN NO. 2

STRUCTURES FOUNDATION PLAN SHEET (ENGLISH) (REV. 09-01-10)

ORIGINAL SCALE IN INCHES FOR REDUCED PLANS 0 1 2 3

UNIT: 3604
PROJECT NUMBER & PHASE: 0713000007
CONTRACT NO.: 07-1193U1

DISREGARD PRINTS BEARING EARLIER REVISION DATES

REVISION DATES: ~~01/28/11~~ 01/21/14

SHEET 12 OF 23

FILE => 53e0314-e-fp02.dgn

USERNAME => s125624 DATE PLOTTED => 18-MAY-2015 TIME PLOTTED => 16:27

DIST	COUNTY	ROUTE	POST MILES TOTAL PROJECT	SHEET No.	TOTAL SHEETS
07	LA	10	37.2/42.4	2170	2313

REGISTERED CIVIL ENGINEER 10-1-14 DATE

6-1-15
PLANS APPROVAL DATE

REGISTERED PROFESSIONAL ENGINEER Gabriel J. Galo No. 52288 Exp. 12-31-14 CIVIL STATE OF CALIFORNIA

The State of California or its officers or agents shall not be responsible for the accuracy or completeness of electronic copies of this plan sheet.

CURVE DATA

No.	R	Δ	T	L
Ⓓ	4295.66	01°53'30"	70.92	141.83

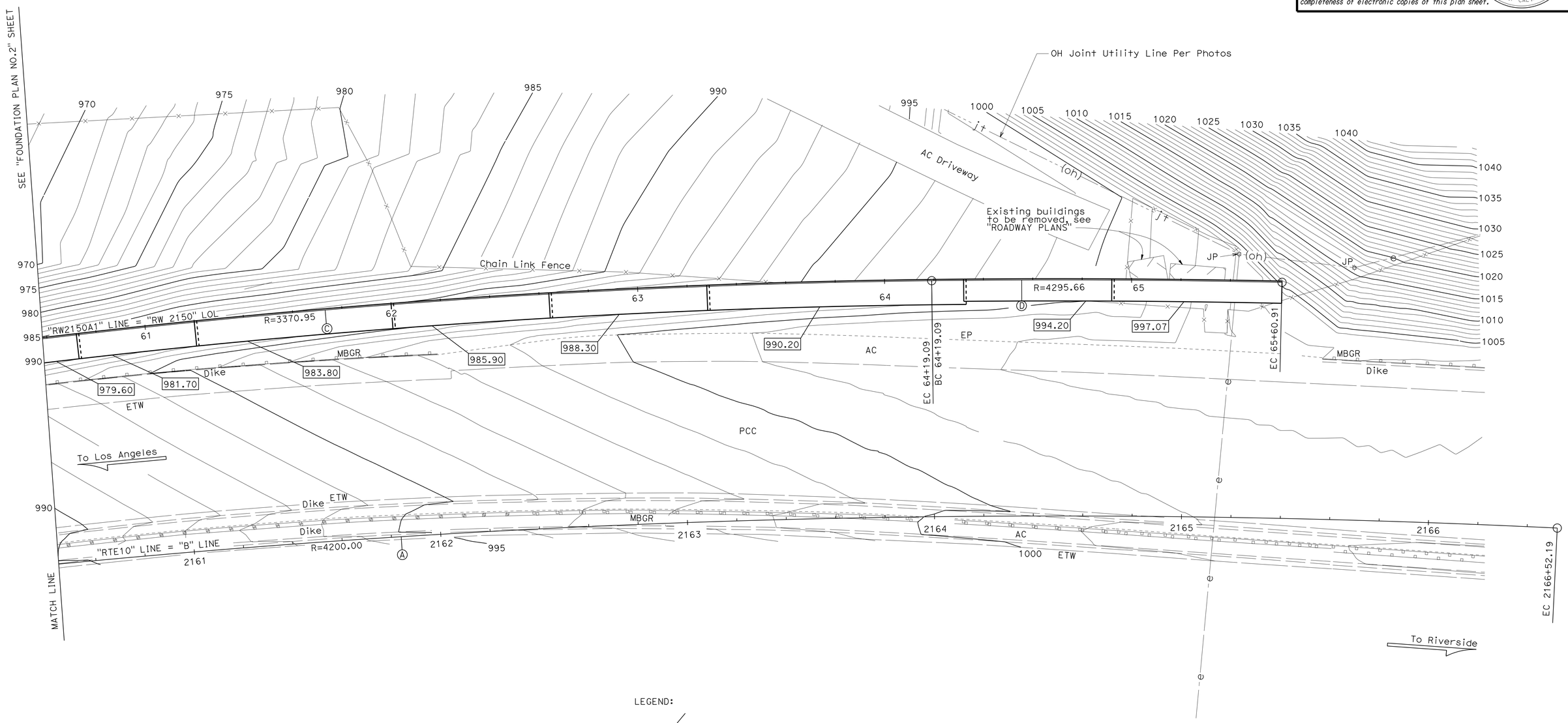

LEGEND:

XXX.XX Denotes Bottom of Footing Elevation

For District Controls See Foundation Plan No.1

PRELIMINARY INVESTIGATION SECTION						
SCALE 1"=20'	VERT.DATUM NAVD88	PHOTOGRAMMETRY AS OF: X				
	HORZ.DATUM NAD83	SURVEYED	BY District	04/2008	CHECKED	BY C.Fassett 01/2011
ALIGNMENT TIES Dist. Traverse Sheet		DRAFTED	BY J.Martinez	01/2011	CHECKED	BY T.Schmalz 01/2011

DESIGN	BY Sara Yip/ Gabriel Galo	CHECKED Suzan Moradi
DETAILS	BY Herman Mauroschadt	CHECKED Suzan Moradi
QUANTITIES	BY Gabriel Galo	CHECKED Ruslan Novik

STATE OF CALIFORNIA
DEPARTMENT OF TRANSPORTATION

DIVISION OF ENGINEERING SERVICES
STRUCTURE DESIGN
DESIGN BRANCH 15

BRIDGE NO. 53E0314
POST MILE 40.71

RETAINING WALL NO. 2150
FOUNDATION PLAN NO. 3

STRUCTURES FOUNDATION PLAN SHEET (ENGLISH) (REV. 09-01-10)

ORIGINAL SCALE IN INCHES FOR REDUCED PLANS 0 1 2 3

UNIT: 3604
PROJECT NUMBER & PHASE: 0713000007
CONTRACT NO.: 07-1193U1

DISREGARD PRINTS BEARING EARLIER REVISION DATES

REVISION DATES 01/26/11 01/21/14

SHEET 13 OF 23

FILE => 53e0314-e-fp03.dgn

USERNAME => s125624 DATE PLOTTED => 18-MAY-2015 TIME PLOTTED => 16:27

DIST	COUNTY	ROUTE	POST MILES TOTAL PROJECT	SHEET No.	TOTAL SHEETS
07	LA	10	37.2/42.4	2171	2313

REGISTERED CIVIL ENGINEER 10-1-14 DATE

6-1-15
PLANS APPROVAL DATE

REGISTERED PROFESSIONAL ENGINEER
Gabriel J. Galo
No. 52288
Exp. 12-31-14
CIVIL
STATE OF CALIFORNIA

The State of California or its officers or agents shall not be responsible for the accuracy or completeness of scanned copies of this plan sheet.

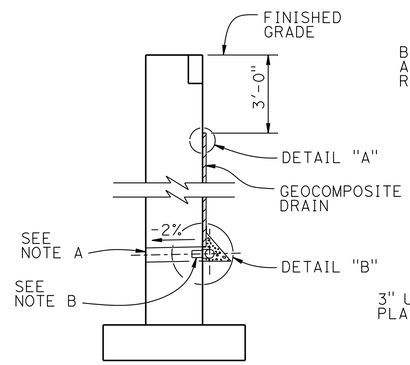

WALL

SECTION

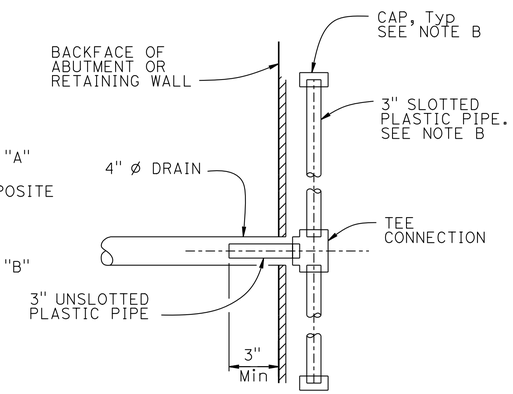

SECTION A-A

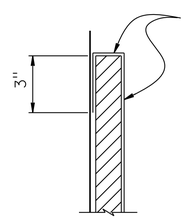

DETAIL "A"

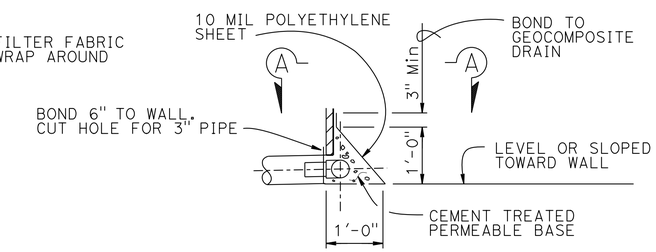

DETAIL "B"

WEEP HOLE AND GEOCOMPOSITE DRAIN

ALTERNATIVE TO BRIDGE DETAIL BO-3 / 3-1

NOTES:

A. 4" Ø drains at intermediate sag points and at 25' max center to center (9'c-c for Type 3 and 9'-3" c-c for Type 4 retaining walls).
For walls adjacent to sidewalks or curbs, provide 4" cast iron or asbestos cement pipe under the sidewalk to discharge through curb face.
Exposed wall drains must be located 3"± above finished grade.

B. Geocomposite drain, cement treated permeable base, and 3"Ø slotted plastic pipe continuous behind retaining wall or abutment. Cap ends of pipe. Provide "Tee" connection at each 4" Ø drain.

C. Connect the low end of plastic pipe to the main outlet pipe as applicable.

	BY	CHECKED
DESIGN	Sara Yip/ Gabriel Galo	Suzan Moradi
DETAILS	Herman Mauroschadt	Suzan Moradi
QUANTITIES	Gabriel Galo	Ruslan Novik

STATE OF CALIFORNIA
DEPARTMENT OF TRANSPORTATION

DIVISION OF ENGINEERING SERVICES
STRUCTURE DESIGN
DESIGN BRANCH 15

BRIDGE NO. 53E0314
POST MILE 40.71

RETAINING WALL NO. 2150
RETAINING WALL DETAILS

STRUCTURES DESIGN DETAIL SHEET (ENGLISH) (REV. 09-01-10)

ORIGINAL SCALE IN INCHES FOR REDUCED PLANS 0 1 2 3

UNIT: 3604
PROJECT NUMBER & PHASE: 0713000007
CONTRACT NO.: 07-1193U1

DISREGARD PRINTS BEARING EARLIER REVISION DATES

REVISION DATES 1-29-14 2-5-14 5-27-14

SHEET 14 OF 23

FILE => 53e0314-f-rwdet01.dgn

USERNAME => s125624 DATE PLOTTED => 18-MAY-2015 TIME PLOTTED => 16:27

DIST	COUNTY	ROUTE	POST MILES TOTAL PROJECT	SHEET No.	TOTAL SHEETS
07	LA	10	37.2/42.4	2172	2313

REGISTERED CIVIL ENGINEER 10-1-14 DATE

6-1-15
PLANS APPROVAL DATE

REGISTERED PROFESSIONAL ENGINEER
Gabriel J. Galo
No. 52288
Exp. 12-31-14
CIVIL
STATE OF CALIFORNIA

The State of California or its officers or agents shall not be responsible for the accuracy or completeness of scanned copies of this plan sheet.

NOTE:
1. For "SECTION A-A" see "ARCHITECTURAL DETAILS NO. 2" sheet.

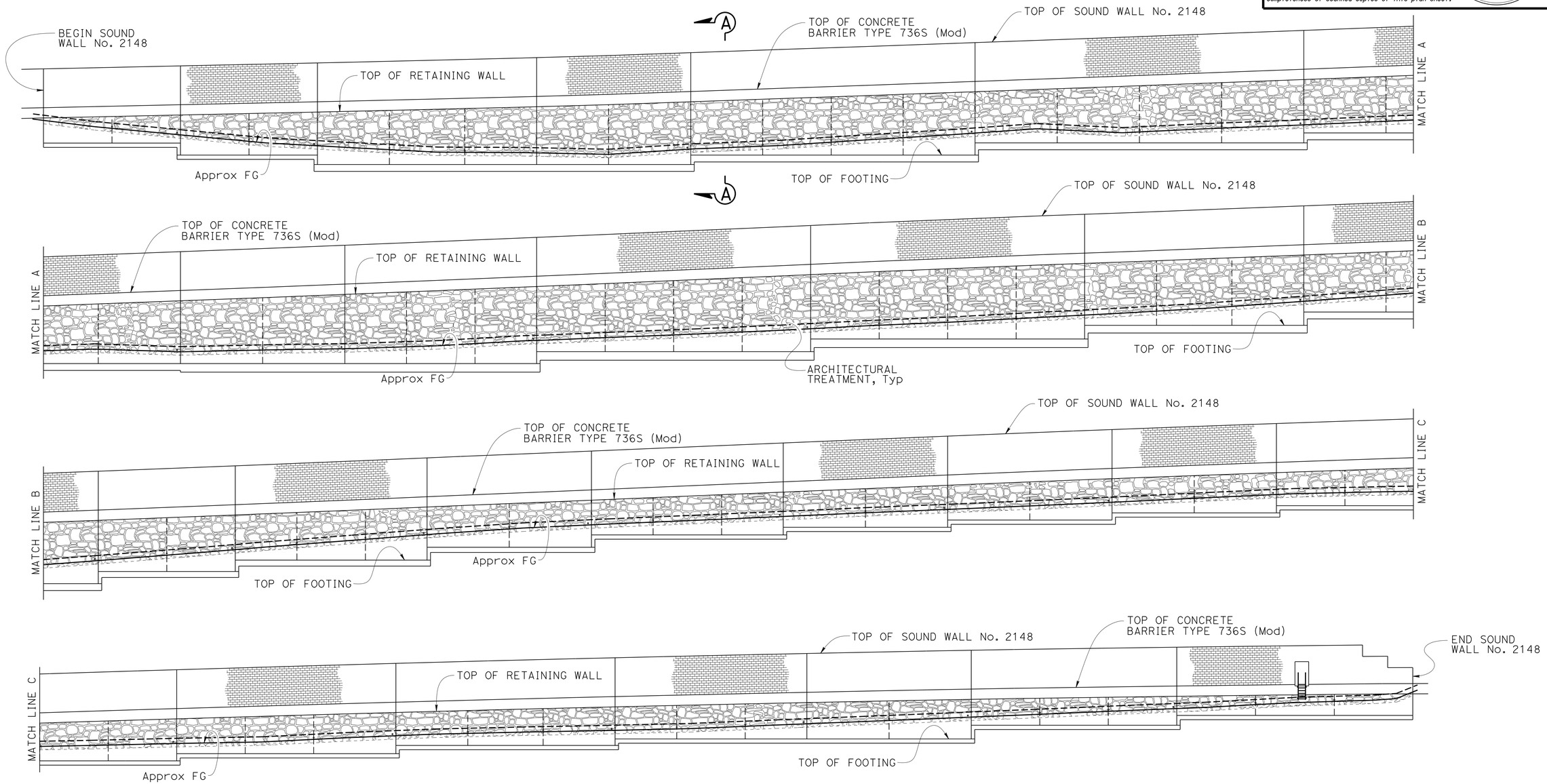

DEVELOPED MIRRORED ELEVATION

NO SCALE

	BY	CHECKED
DESIGN	V. Moore	Suzan Moradi
DETAILS	Herman Mauroschadt	Suzan Moradi
QUANTITIES	Gabriel Galo	Ruslan Novik

STATE OF CALIFORNIA
DEPARTMENT OF TRANSPORTATION

DIVISION OF ENGINEERING SERVICES
STRUCTURE DESIGN
DESIGN BRANCH 15

BRIDGE NO. 53E0314
POST MILE 40.71

RETAINING WALL NO. 2150
ARCHITECTURAL DETAILS NO. 1

STRUCTURES DESIGN DETAIL SHEET (ENGLISH) (REV. 09-01-10)

ORIGINAL SCALE IN INCHES FOR REDUCED PLANS 0 1 2 3

UNIT: 3604
PROJECT NUMBER & PHASE: 0713000007
CONTRACT NO.: 07-1193U1

DISREGARD PRINTS BEARING EARLIER REVISION DATES

REVISION DATES 1-1-14 2-28-14 5-27-14

SHEET 15 OF 23

FILE => 53e0314-g-archdet01.dgn

USERNAME => s125624 DATE PLOTTED => 18-MAY-2015 TIME PLOTTED => 16:27

DIST	COUNTY	ROUTE	POST MILES TOTAL PROJECT	SHEET No.	TOTAL SHEETS
07	LA	10	37.2/42.4	2173	2313

REGISTERED CIVIL ENGINEER 10-1-14 DATE

6-1-15
PLANS APPROVAL DATE

REGISTERED PROFESSIONAL ENGINEER
Gabriel J. Galo
No. 52288
Exp. 12-31-14
CIVIL
STATE OF CALIFORNIA

The State of California or its officers or agents shall not be responsible for the accuracy or completeness of scanned copies of this plan sheet.

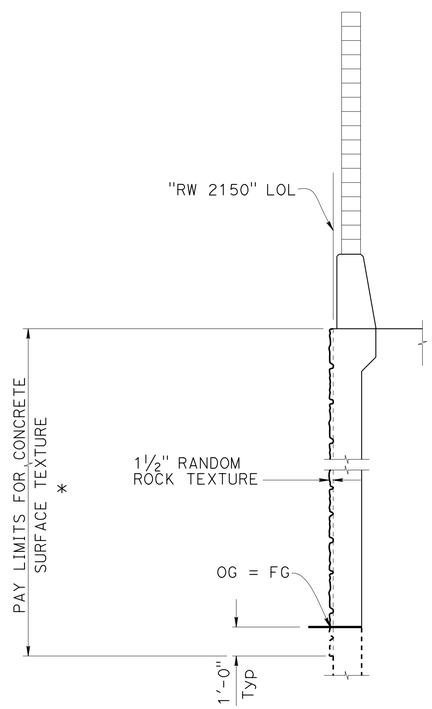

SECTION A-A
NO SCALE

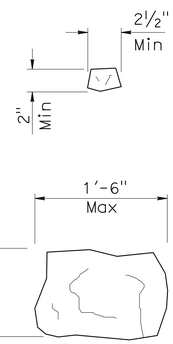

NOTE:
Seamless random rock pattern to have a minimum of 2 to maximum of 4 match points for each matchline, top, bottom, and side to side.

Finish stain random rock texture with Federal Standard #'s 30372, 30257, 30117, 30099 and 33578.

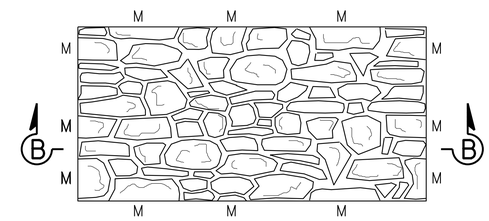

RANDOM ROCK TEXTURE
NO SCALE

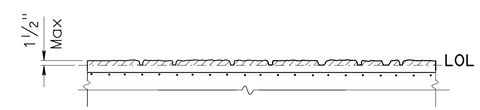

SECTION B-B
NO SCALE

LEGEND:

* Indicates Pay Limits for Prepare and Stain Concrete.

NOTE:
THE CONTRACTOR SHALL VERIFY ALL CONTROLLING FIELD DIMENSIONS BEFORE ORDERING OR FABRICATING ANY MATERIAL.

	BY	CHECKED
DESIGN	V. Moore	Suzan Moradi
DETAILS	Herman Mauroschadt	Suzan Moradi
QUANTITIES	Gabriel Galo	Ruslan Novik

STATE OF CALIFORNIA
DEPARTMENT OF TRANSPORTATION

DIVISION OF ENGINEERING SERVICES
STRUCTURE DESIGN
DESIGN BRANCH 15

BRIDGE NO. 53E0314
POST MILE 40.71

RETAINING WALL NO. 2150
ARCHITECTURAL DETAILS NO. 2

STRUCTURES DESIGN DETAIL SHEET (ENGLISH) (REV. 09-01-10)

ORIGINAL SCALE IN INCHES FOR REDUCED PLANS 0 1 2 3

UNIT: 3604
PROJECT NUMBER & PHASE: 0713000007
CONTRACT NO.: 07-1193U1

DISREGARD PRINTS BEARING EARLIER REVISION DATES

REVISION DATES 1-14-14 2-13-14 2-28-14 5-27-14

SHEET 16 OF 23

FILE => 53e0314-g-archdet02.dgn

USERNAME => s125624 DATE PLOTTED => 18-MAY-2015 TIME PLOTTED => 16:27

DIST	COUNTY	ROUTE	POST MILES TOTAL PROJECT	SHEET No.	TOTAL SHEETS
07	LA	10	37.2/42.4	2174	2313

REGISTERED CIVIL ENGINEER — DATE 10-1-14

6-1-15
PLANS APPROVAL DATE

REGISTERED PROFESSIONAL ENGINEER — Gabriel J. Galo — No. 52288 — Exp. 12-31-14 — CIVIL — STATE OF CALIFORNIA

The State of California or its officers or agents shall not be responsible for the accuracy or completeness of electronic copies of this plan sheet.

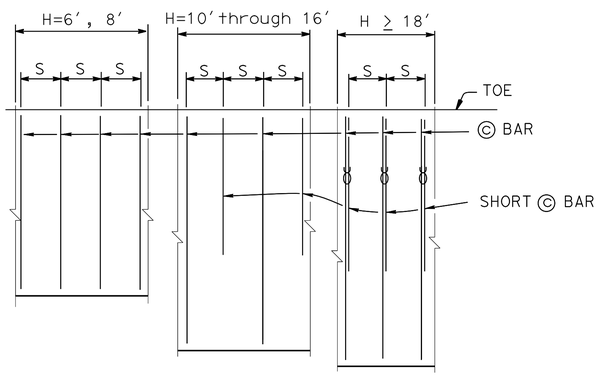

PLAN
NO SCALE

NOTES:
Only ⓒ bars shown
"S" is ⓒ bar spacing, see table
ϒ : 2 bar bundle

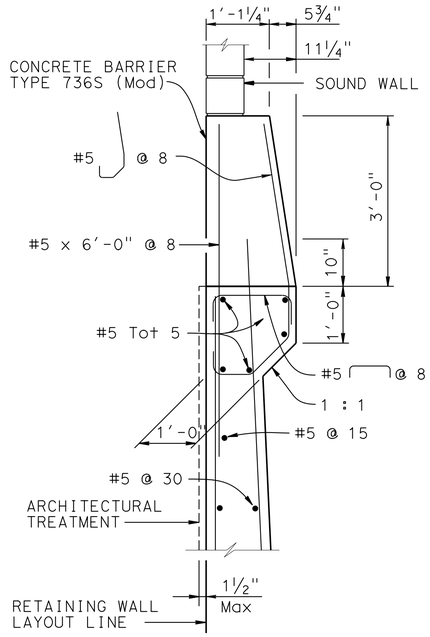

DETAIL A ◇1
¾" = 1′-0"

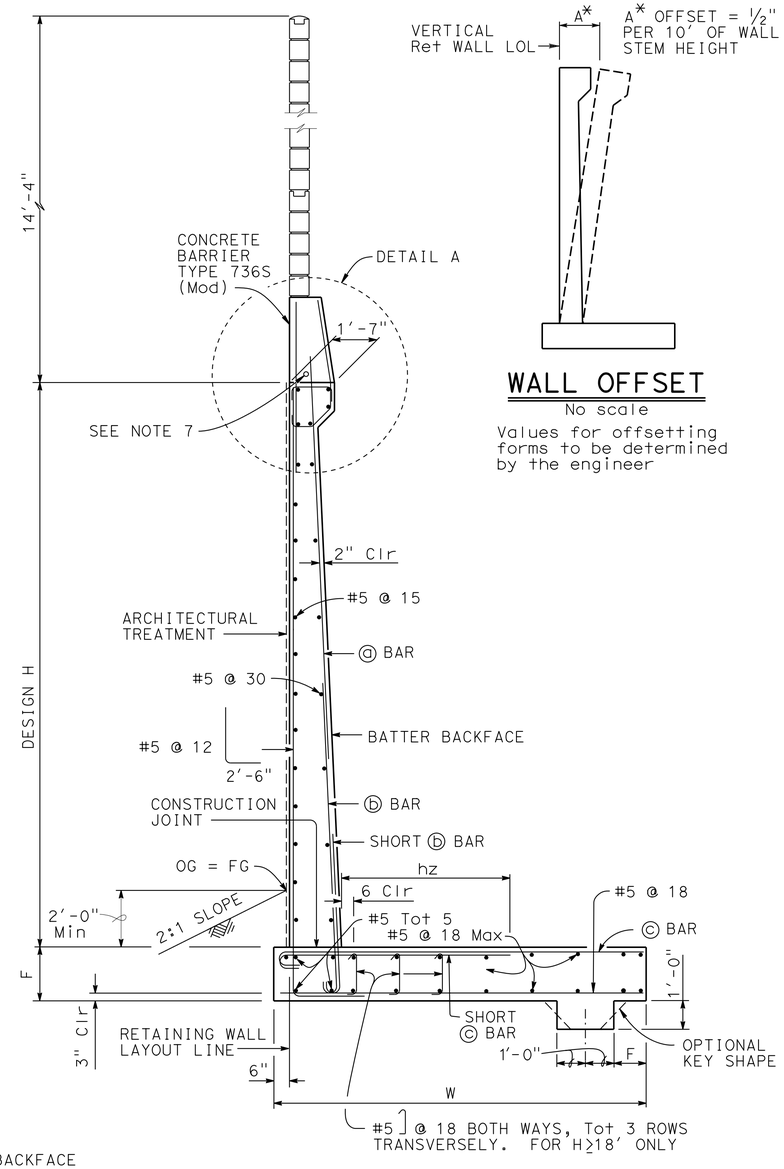

SPREAD FOOTING SECTION ◇1
⅜" = 1′-0"

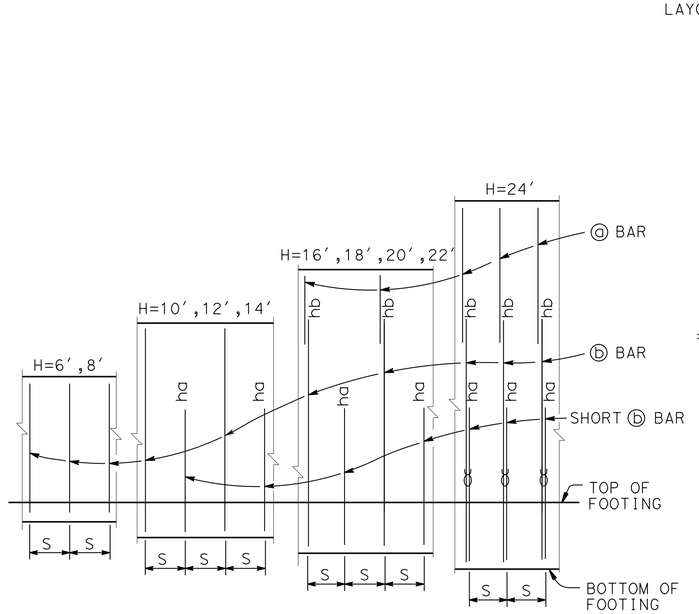

ELEVATION
No scale

NOTES:
"ha" and "hb" above ⓑ bars indicate distance from top of footing to upper end of ⓑ bars, see table.
"S" is ⓑ bar spacing, see table.
ϒ : 2 bar bundle

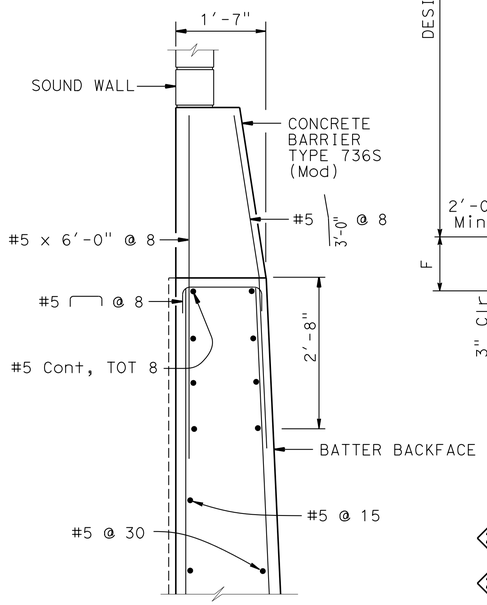

OPTIONAL DETAIL A ◇1
¾" = 1′-0"

For Details not shown, see "DETAIL A"

WALL OFFSET
No scale

Values for offsetting forms to be determined by the engineer

DESIGN DATA

Design: AASHTO LRFD Bridge Design Specifications 4th edition with California Amendments

WS: 33 psf on Sound Wall and Barrier

LS: Varied surcharge on level ground surface

CT: 54 kip maximum traffic impact loading evenly distributed over 10 feet at top of the barrier and 1:1 distribution down and outward

EQE: Mononabe-Okabe Method
K_h = 0.3
K_v = 0.0

Soil: Ø = 34°
γ = 120 pcf

Reinforced Concrete: f′c = 3600 psi
fy = 60,000 psi

Load Combinations and Limit States

Service I	Q=1.00DC+1.00EV+1.00EH+1.00LS+0.30WS
Service II	Q=1.00DC+1.00EV+1.00EH+1.00WS
Strength I	Q=αDC+βEV+1.50EH+1.75LS
Strength III	Q=αDC+βEV+1.50EH+1.40WS
Strength V	Q=αDC+βEV+1.50EH+1.35LS+0.40WS
Extreme I	Q=1.00DC+1.00EV+1.00EH+1.00EQD+1.00EQE
Extreme II	Q=1.00DC+1.00EV+1.00EH+1.00CT

Where:

Q: Force Effects
α: 1.25 or 0.90, Which ever Controls Design
β: 1.35 or 1.00, which ever Controls Design
DC: Dead Load of Structure Components
EV: Vertical Earth Fill Pressure
LS: Live Load Surcharge
EQE: Seismic Earth Pressure
EQD: Soil and Structure Components Inertia. Soil inertia ignored for stem design
WS: Wind Load on Sound Wall and Barrier
CT: Vehicular Collision Force

NOTES:
◇2 1. For sound wall and retaining wall Architectural Treatment see Details elsewhere in Project Plans
◇2 2. For Details not shown and Drainage Notes see RSP B3-5
◇2 3. Footing cover, 2′-0" minimum.
◇2 4. For sound wall and barrier reinforcement details, see "MASONRY BLOCK SOUND WALL WITH BARRIER ON RETAINING WALL-DETAILS NO. 1" and "MASONRY BLOCK SOUND WALL WITH BARRIER ON RETAINING WALL-DETAILS NO. 2" sheets.
5. For H=6′ through 14′, extend ⓑ bars into Barrier for stem with haunch.
6. For H>16′, extend ⓐ bars into Barrier for stem with haunch.
◇3 7. Install 2"Ø Conduit in Concrete Barrier. For Details, see "ROADWAY PLANS".

SPECIAL DETAILS

REVISED STANDARD DRAWING
FILE NO. xs14-350-1
APPROVAL DATE July 2011

◇1 Modified Detail ◇3 Added Note
◇2 Modified Note

STATE OF CALIFORNIA
DEPARTMENT OF TRANSPORTATION

DIVISION OF ENGINEERING SERVICES

BRIDGE NO. 53E0314
POST MILE 40.71

RETAINING WALL NO. 2150
RETAINING WALL TYPE 5SWB-DETAILS NO. 1

DS OSD 2147A (ENGLISH STANDARD DRAWING "XS" BORDER REV. (02-02-11)

ORIGINAL SCALE IN INCHES FOR REDUCED PLANS 0 1 2 3

UNIT: 3604
PROJECT NUMBER & PHASE: 0713000007
CONTRACT NO.: 07-1193U1

DISREGARD PRINTS BEARING EARLIER REVISION DATES
REVISION DATES 10-17-13 12-19-13 2-7-14 5-27-14
SHEET 17 OF 23

FILE => 53e0314-xs14-350-1.dgn

USERNAME => s125624 DATE PLOTTED => 18-MAY-2015 TIME PLOTTED => 16:27

DIST	COUNTY	ROUTE	POST MILES TOTAL PROJECT	SHEET No.	TOTAL SHEETS
07	LA	10	37.2/42.4	2175	2313

REGISTERED CIVIL ENGINEER 10-1-14 DATE

6-1-15
PLANS APPROVAL DATE

REGISTERED PROFESSIONAL ENGINEER Gabriel J. Galo No. 52288 Exp. 12-31-14 CIVIL STATE OF CALIFORNIA

The State of California or its officers or agents shall not be responsible for the accuracy or completeness of electronic copies of this plan sheet.

TABLE OF REINFORCING STEEL DIMENSIONS AND DATA

DESIGN H	6′	8′	10′	12′	14′	16′	18′	20′	22′	24′
W	9′-0"	9′-0"	9′-6"	10′-3"	11′-3"	12′-9"	14′-0"	15′-9"	17′-3"	18′-9"
F SPREAD FOOTING	1′-3"	1′-3"	1′-3"	1′-3"	1′-6"	1′-9"	2′-0"	2′-3"	2′-6"	2′-6"
STEM WITH HAUNCH, BATTER	0	1/2:12	1/2:12	1/2:12	1/2:12	1/2:12	1/2:12	1/2:12	1/2:12	5/8:12
STEM WITHOUT HAUNCH, BATTER	0	0	0	0	0	0	0	0	1/4:12	1/4:12
ⓐBARS						#7 @ 15	#7 @ 12	#7 @ 12	#8 @ 12	#6 @ 6
ⓑBARS	#8 @ 12	#8 @ 12	#7 @ 6	#7 @ 6	#7 @ 6	#9 @ 7.5	#9 @ 6	#10 @ 6	#10 @ 6	#8 @ 6 ℧
ha			5′-0"	6′-0"	7′-0"	7′-0"	6′-0"	7′-0"	6′-9"	7′-6"
hb						11′-6"	12′-0"	13′-3"	16′-0"	15′-6"
ⓒBARS	#7 @ 12	#8 @ 12	#7 @ 6	#9 @ 6	#9 @ 6	#11@ 7.5	#8 @ 6℧	#9 @ 6℧	#9 @ 6℧	#10 @ 6℧
hz			3′-6"	4′-0"	4′-9"	7′-0"	5′-9"	6′-9"	7′-6"	9′-0"
SER I: B′(ft), q_0'(ksf)	7.5, 1.5	7.1, 1.9	7.2, 2.2	7.6, 2.5	8.3, 2.8	9.6, 3.0	10.6, 3.3	12.1, 3.6	13.3, 3.9	14.6, 4.1
STR, Ia: B′(ft), q_0(ksf)	7.9, 2.9	7.4, 3.3	7.4, 3.7	7.8, 4.1	8.3, 4.5	9.5, 4.8	10.5, 5.0	11.9, 5.6	13.1, 6.0	14.3, 6.4
STR, Ib: B′(ft), q_0(ksf)	6.0, 2.0	5.5, 2.5	5.6, 2.9	5.9, 3.3	6.4, 3.7	7.6, 3.9	8.7, 4.1	9.9, 4.5	11.0, 4.9	12.1, 5.2
STR, IIIa: B′(ft), q_0(ksf)	6.0, 2.7	6.0, 3.0	6.4, 3.4	7.0, 3.7	7.8, 4.1	9.1, 4.4	10.2, 4.6	11.7, 5.1	12.9, 5.4	14.2, 5.7
STR, IIIb: B′(ft), q_0(ksf)	5.3, 2.5	5.2, 2.8	5.5, 3.1	6.0, 3.3	6.7, 3.7	8.0, 3.9	8.9, 4.0	10.4, 4.4	11.5, 4.7	12.7, 5.0
STR, Va: B′(ft), q_0(ksf)	7.5, 2.8	7.1, 3.2	7.2, 3.5	7.6, 3.9	8.2, 4.3	9.4, 4.6	10.4, 4.9	11.8, 5.3	13.0, 5.8	14.3, 6.1
STR, Vb: B′(ft), q_0(ksf)	5.7, 2.2	5.3, 2.6	5.4, 3.0	5.8, 3.4	6.4, 3.8	7.7, 3.9	8.7, 4.0	10.0, 4.5	11.1, 4.9	12.2, 5.1
Ext I: B′(ft), q_0(ksf)	4.0, 3.4	3.0, 4.7	2.5, 6.5	2.1, 9.2	1.8, 13.3	2.1, 14.4	2.3, 16.9	2.6, 17.2	2.9, 18.4	3.3, 19.3
Ext II: B′(ft), q_0(ksf)	3.9, 3.3	4.3, 3.5	5.1, 3.5	6.0, 3.6	7.1, 3.7	8.7, 3.7	9.9, 3.8	11.9, 3.8	13.0, 4.3	14.4, 4.5

LEGEND:

SER: service limit state
STR: strength limit state
EXT: extreme event limit state
B′: effective footing width (ft)
q_0': net bearing stress (ksf)
q_0: gross uniform bearing stress (ksf)

℧ : 2 bar bundle

STANDARD DRAWING
FILE NO. xs14-350-2
APPROVAL DATE July 2011

STATE OF CALIFORNIA
DEPARTMENT OF TRANSPORTATION

DIVISION OF ENGINEERING SERVICES

BRIDGE NO. 53E0314
POST MILE 40.71

RETAINING WALL NO. 2150

RETAINING WALL TYPE 5SWB-DETAILS NO. 2

DS OSD 2147A (ENGLISH STANDARD DRAWING "XS" BORDER REV. (02-02-11)

ORIGINAL SCALE IN INCHES FOR REDUCED PLANS 0 1 2 3

UNIT: 3604
PROJECT NUMBER & PHASE: 0713000007
CONTRACT NO.: 07-1193U1

DISREGARD PRINTS BEARING EARLIER REVISION DATES

REVISION DATES 10-11-13 12-10-13

SHEET 18 OF 23

FILE => 53e0314-xs14-350-2.dgn

USERNAME => s125624 DATE PLOTTED => 18-MAY-2015 TIME PLOTTED => 16:27

DIST	COUNTY	ROUTE	POST MILES TOTAL PROJECT	SHEET No.	TOTAL SHEETS
07	LA	10	37.2/42.4	2176	2313

REGISTERED CIVIL ENGINEER 10-1-14 DATE

6-1-15
PLANS APPROVAL DATE

REGISTERED PROFESSIONAL ENGINEER Gabriel J. Galo No. 52288 Exp. 12-31-14 CIVIL STATE OF CALIFORNIA

The State of California or its officers or agents shall not be responsible for the accuracy or completeness of electronic copies of this plan sheet.

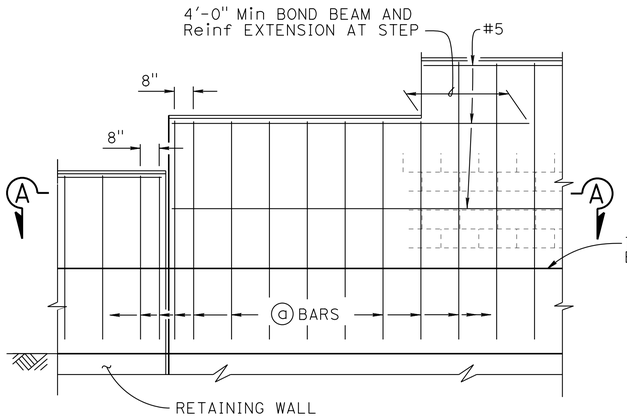

H=6'-4" THRU H=10'-4"

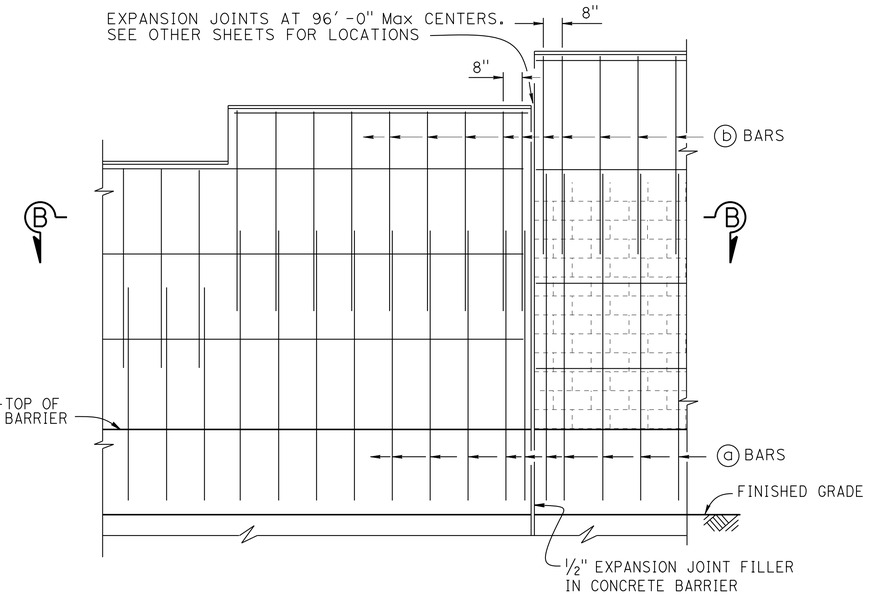

H=12'-4" THRU H=16'-4"

PART ELEVATION

NO SCALE

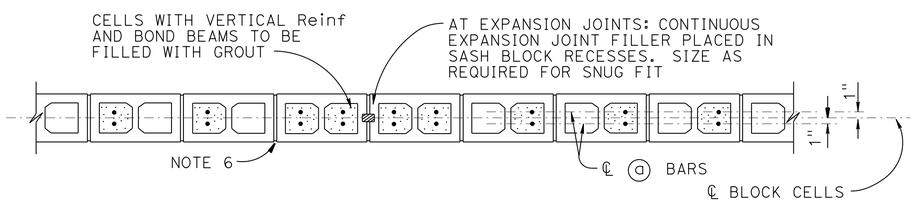

SECTION A-A

NO SCALE

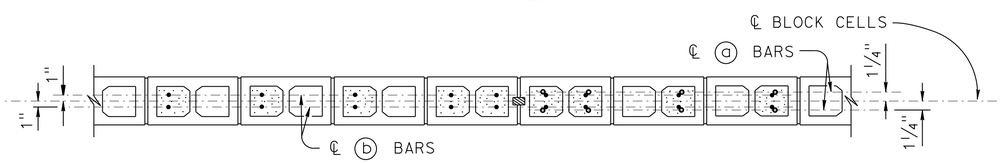

SECTION B-B

NO SCALE

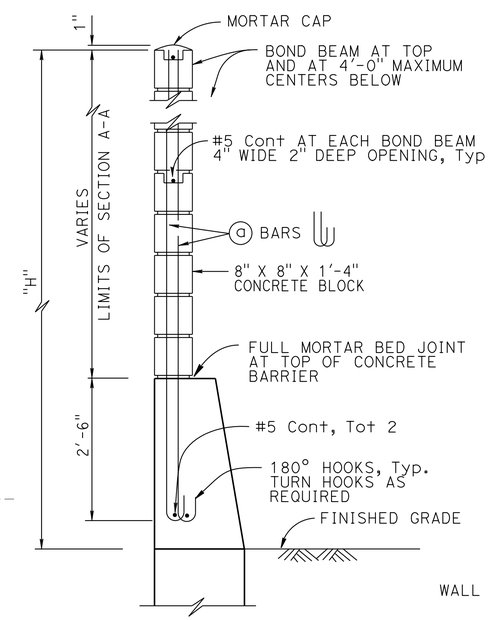

H=6'-4" THRU H=10'-4" ◇1

For details not shown, see H=12'-4" thru H=16'-4"

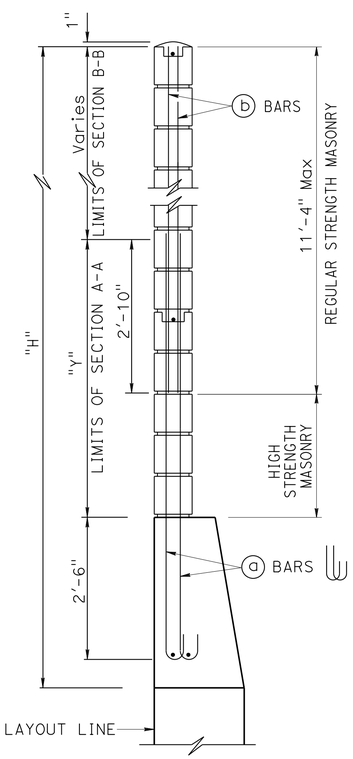

H=12'-4" THRU H=16'-4" ◇1

For details not shown, see H=6'-4" thru H=10'-4"

TYPICAL SECTION

NO SCALE

SOUND WALL REINFORCEMENT TABLE

MAXIMUM "H"	ⓐ BARS @ 1'-4" Max	ⓑ BARS @ 1'-4" Max	"Y"	f'm (psi)	COMPRESSIVE STRENGTH OF CMU (psi)	MAXIMUM "H"
6'-4"	#4	———	———	1500	1900	6'-4"
8'-4"	#4	———	———	1500	1900	8'-4"
10'-4"	#4	———	———	1500	1900	10'-4"
12'-4"	#5	#4	5'-0"	1500	1900	12'-4"
14'-4"	#6	#4	7'-0"	1500	1900	14'-4"
16'-4"	#6	#4	9'-0"	2500	3700	16'-4"

NOTES:

◇2 1. For details not shown, see "MASONRY BLOCK SOUND WALL WITH BARRIER ON RETAINING WALL - DETAILS NO. 2" sheet

2. Slope ground at traffic side of barrier to drain. Maximum slope ±10%

◇2 3. See STANDARD PLAN B15-9 for other details

4. For type of block and joint finish, see other sheets

5. When blocks are laid in stacked bond, ladder type, galvanized joint reinforcement shall be provided. A minimum of 2-9 gauge wire continuous at 4'-0" maximum to be used. Locate reinforcement in joints that are at the approximate midpoint between bond beams

6. Horizontal joints shall be tooled concave or may be weathered. Vertical joints shall be tooled concave or may be raked

7. For intermediate wall heights that are between the "H's" given, use the tabular information for the next higher "H"

8. Masonry strengths are listed in "SOUND WALL REINFORCEMENT TABLE"

9. Concrete to be used for the barrier shall contain not less than 590 pounds of cementitious material per cubic yard

SPECIAL DETAILS

RETAINING WALL NO. 2150

MASONRY BLOCK SOUND WALL WITH BARRIER ON RETAINING WALL

DETAILS NO. 1

REVISED STANDARD DRAWING

FILE NO. xs15-130-1

APPROVAL DATE July 2012

◇1 Modified Detail
◇2 Modified Note

STATE OF CALIFORNIA DEPARTMENT OF TRANSPORTATION

DIVISION OF ENGINEERING SERVICES

BRIDGE NO. 53E0314

POST MILE 40.71

DS OSD 2147A (ENGLISH STANDARD DRAWING "XS" BORDER REV. (02-02-11)

ORIGINAL SCALE IN INCHES FOR REDUCED PLANS 0 1 2 3

UNIT: 3604
PROJECT NUMBER & PHASE: 0713000007
CONTRACT NO.: 07-1193U1

DISREGARD PRINTS BEARING EARLIER REVISION DATES

REVISION DATES 11-8-13 12-6-13 5-27-14

SHEET 19 OF 23

FILE => 53e0314-xs15-130-1.dgn

USERNAME => s125624 DATE PLOTTED => 18-MAY-2015 TIME PLOTTED => 16:27

DIST	COUNTY	ROUTE	POST MILES TOTAL PROJECT	SHEET No.	TOTAL SHEETS
07	LA	10	37.2/42.4	2177	2313

REGISTERED CIVIL ENGINEER 10-1-14 DATE

6-1-15
PLANS APPROVAL DATE

REGISTERED PROFESSIONAL ENGINEER Gabriel J. Galo No. 52288 Exp. 12-31-14 CIVIL STATE OF CALIFORNIA

The State of California or its officers or agents shall not be responsible for the accuracy or completeness of electronic copies of this plan sheet.

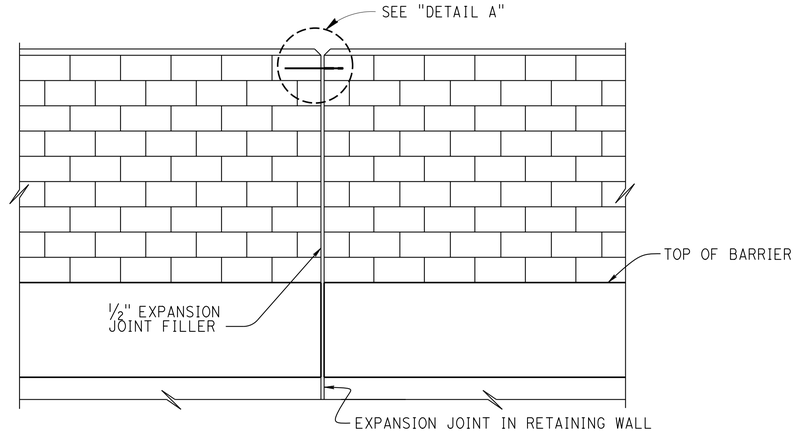

ALIGNMENT KEY DETAIL

NO SCALE

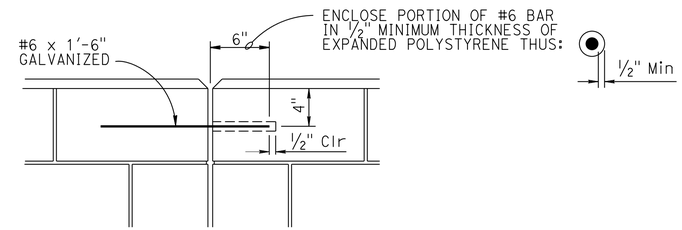

DETAIL A

NO SCALE

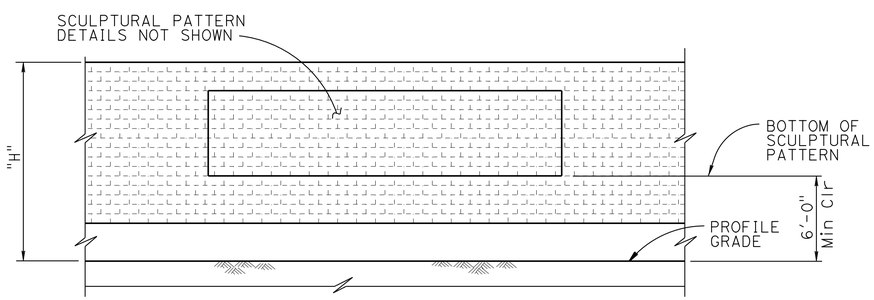

CLEARANCE DETAIL

NO SCALE

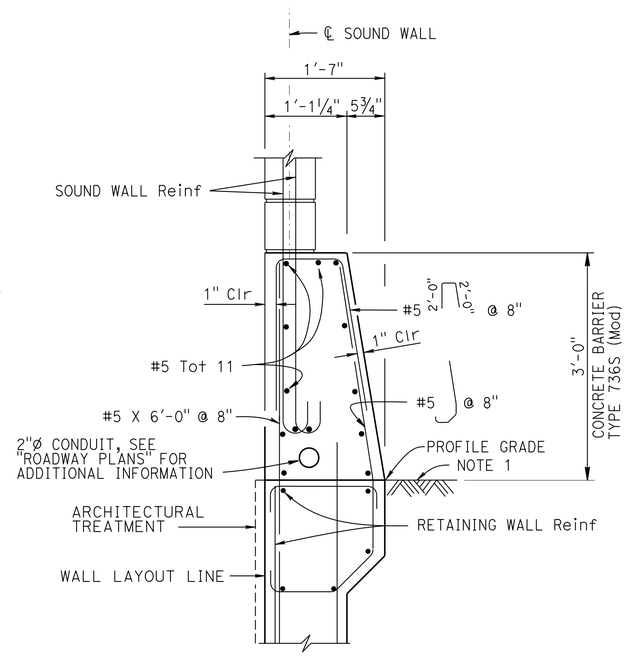

BARRIER SECTION ⟨1⟩

NO SCALE

DESIGN NOTES

DESIGN

Uniform Building Code, 1997 Edition and the Bridge Design Specifications

DESIGN WIND LOAD

33 psf

DESIGN SEISMIC LOAD

0.57 Dead load

CONCRETE MASONRY

REINFORCED CONCRETE

f'c = 3600 psi
fy = 60 ksi

REGULAR STRENGTH	HIGH STRENGTH	
f'm = 1500 psi	f'm = 2000 psi	f'm = 2500 psi
fb = 495 psi	fb = 660 psi	fb = 830 psi
fs = 24,000 psi	fs = 24,000 psi	fs = 24,000 psi
n = 25.8	n = 19.3	n = 15.5

NOTE:

⟨2⟩ 1. Slope ground at traffic side of barrier to drain. Maximum slope ±10% See REVISED STANDARD PLAN B11-56, Note 3

SPECIAL DETAILS

RETAINING WALL NO. 2150

MASONRY BLOCK SOUND WALL WITH BARRIER ON RETAINING WALL

DETAILS NO. 2

REVISED STANDARD DRAWING

FILE NO. xs15-130-2

APPROVAL DATE July 2011

⟨1⟩ Modified Detail ⟨3⟩ Deleted Detail
⟨2⟩ Modified Notes

STATE OF CALIFORNIA DEPARTMENT OF TRANSPORTATION

DIVISION OF ENGINEERING SERVICES

BRIDGE NO. 53E0314
POST MILE 40.71

DS OSD 2147A (ENGLISH STANDARD DRAWING "XS" BORDER REV. (02-02-11)

ORIGINAL SCALE IN INCHES FOR REDUCED PLANS 0 1 2 3

UNIT: 3604
PROJECT NUMBER & PHASE: 0713000007
CONTRACT NO.:07-1193U1

DISREGARD PRINTS BEARING EARLIER REVISION DATES

REVISION DATES 10-14-13 12-16-13 6-12-14 5-22-14

SHEET 20 OF 23

FILE => 53e0314-xs15-130-2.dgn

USERNAME => s128624 DATE PLOTTED => 18-MAY-2015 TIME PLOTTED => 16:27

DIST	COUNTY	ROUTE	POST MILES TOTAL PROJECT	SHEET No.	TOTAL SHEETS
07	LA	10	37.2/42.4	2178	2313

CERTIFIED ENGINEERING GEOLOGIST 3-3-14 DATE

6-1-15
PLANS APPROVAL DATE

PROFESSIONAL GEOLOGIST Michael A. Salisbury No. 2462 Exp. 2-28-15 CERTIFIED ENGINEERING GEOLOGIST STATE OF CALIFORNIA

The State of California or its officers or agents shall not be responsible for the accuracy or completeness of electronic copies of this plan sheet.

This LOTB sheet was prepared in accordance with the Caltrans Soil & Rock Logging, Classification, & Presentation Manual (2010 Edition).

See 2010 Standard Plans A10F and A10G for Soil Legend, and A10H for Rock Legend.

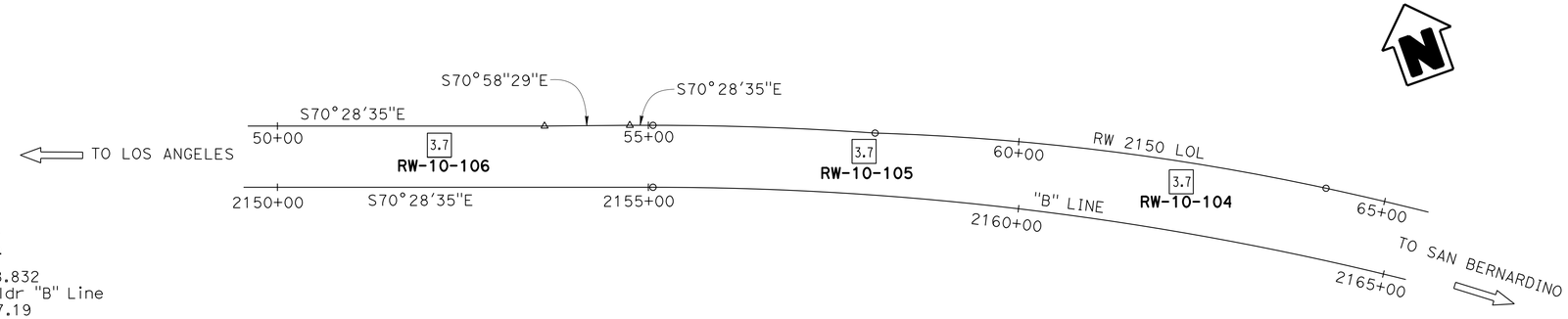

BENCH MARK

SUHV 1610 Elev 988.832
Fd PK N. W/B i-10 Shldr "B" Line
67.37' Lt Sta 2159+67.19

SUHV 4035 Elev 965.370
Fd 60d N. Spk in Shldr W/B I-10
"B" Line 69.99' Lt Sta 2154+91.68

NADV 88

PLAN

1" = 100'

Note: No ground water encountered during field investigation.

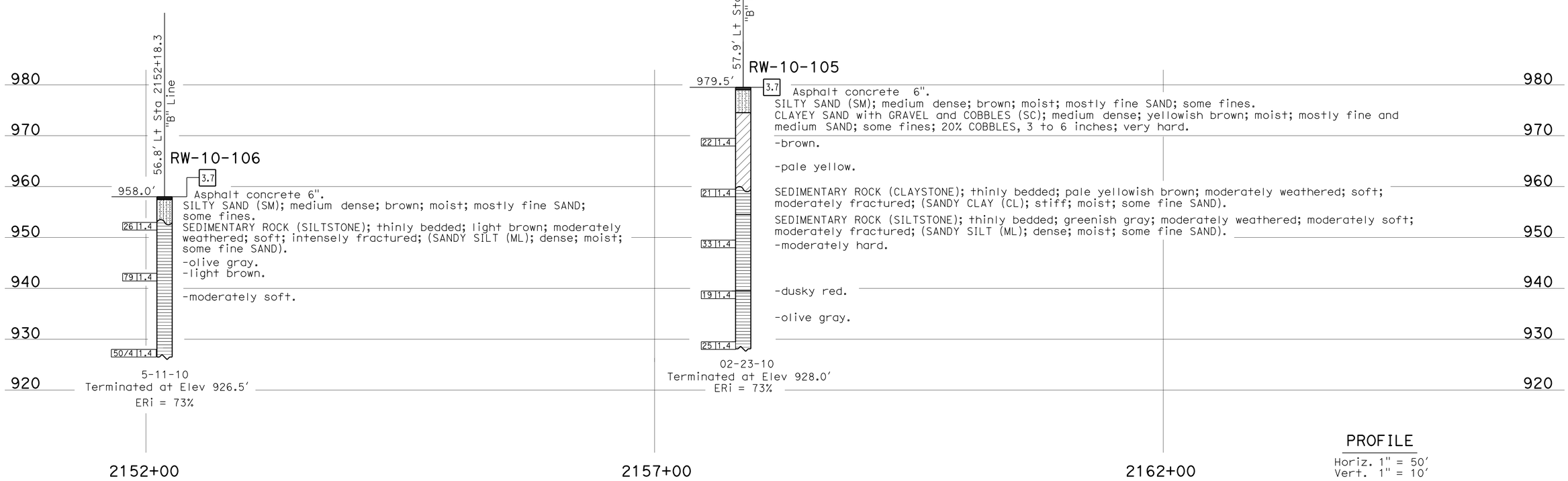

PROFILE

Horiz. 1" = 50'
Vert. 1" = 10'

ENGINEERING SERVICES	GEOTECHNICAL SERVICES	STATE OF CALIFORNIA DEPARTMENT OF TRANSPORTATION	DIVISION OF ENGINEERING SERVICES STRUCTURE DESIGN DESIGN BRANCH 15	BRIDGE NO. 53E0314 POST MILE 40.7/41.0	RETAINING WALL NO. 2150 LOG OF TEST BORINGS 1 OF 3
FUNCTIONAL SUPERVISOR NAME: D. Jang	DRAWN BY: F. Nguyen CHECKED BY: H. Liu	FIELD INVESTIGATION BY: M. Salisbury/H. P. yang			

OGS CIVIL LOG OF TEST BORINGS SHEET

ORIGINAL SCALE IN INCHES FOR REDUCED PLANS 0 1 2 3

UNIT: 3643
PROJECT NUMBER & PHASE: 07130000071 CONTRACT NO.: 07-1193U1

DISREGARD PRINTS BEARING EARLIER REVISION DATES

REVISION DATES: 03-20-13 11-21-13 01-14-14 3-3-14

SHEET 21 OF 23

FILE => 53e0314-y-lotb01.dgn

USERNAME => s125624 DATE PLOTTED => 18-MAY-2015 TIME PLOTTED => 16:27

DIST	COUNTY	ROUTE	POST MILES TOTAL PROJECT	SHEET No.	TOTAL SHEETS
07	LA	10	37.2/42.4	2179	2313

CERTIFIED ENGINEERING GEOLOGIST 1-15-14 DATE

6-1-15
PLANS APPROVAL DATE

PROFESSIONAL GEOLOGIST
Michael A. Salisbury
No. 2462
Exp. 2-28-15
CERTIFIED ENGINEERING GEOLOGIST
STATE OF CALIFORNIA

The State of California or its officers or agents shall not be responsible for the accuracy or completeness of electronic copies of this plan sheet.

This LOTB sheet was prepared in accordance with the Caltrans Soil & Rock Logging, Classification, & Presentation Manual (2010 Edition).

See 2010 Standard Plans A10F and A10G for Soil Legend, and A10H for Rock Legend.

FOR PLAN VIEW, SEE
"LOG OF TEST BORINGS 1 OF 3"

Note: No ground water encountered during field investigation.

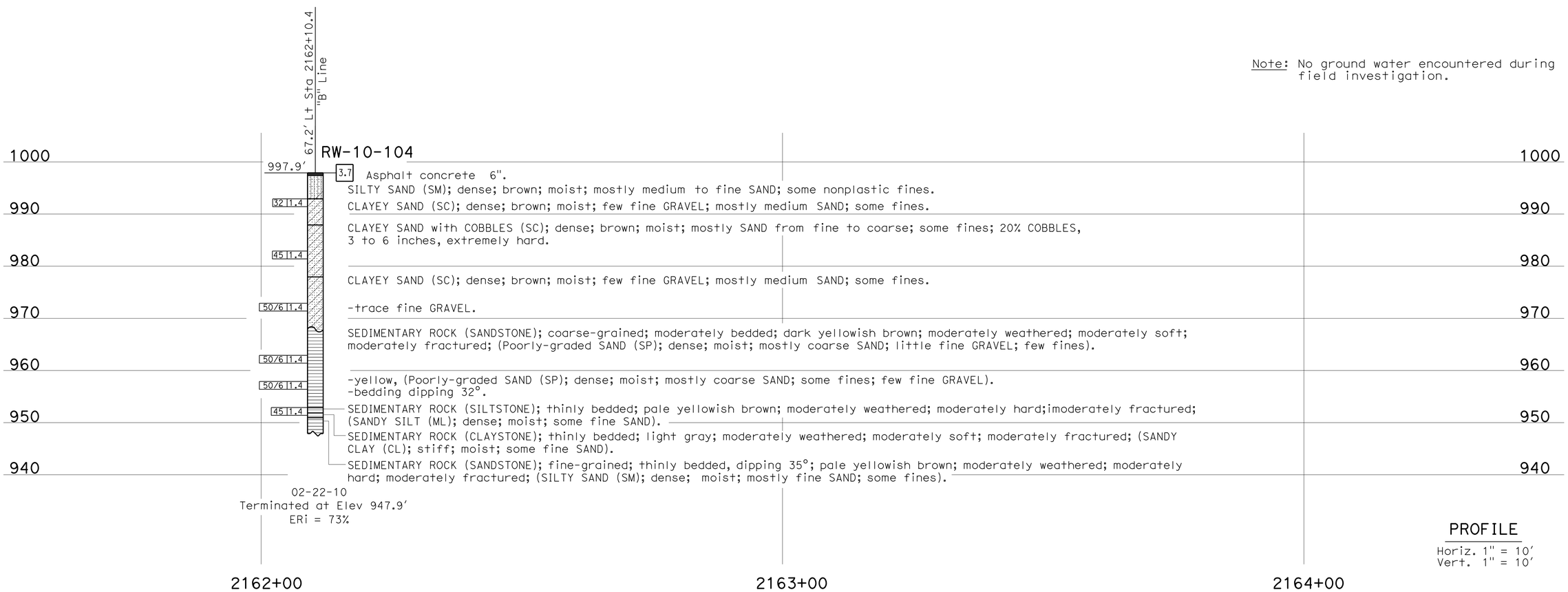

PROFILE
Horiz. 1" = 10'
Vert. 1" = 10'

ENGINEERING SERVICES	GEOTECHNICAL SERVICES	STATE OF CALIFORNIA DEPARTMENT OF TRANSPORTATION	DIVISION OF ENGINEERING SERVICES STRUCTURE DESIGN DESIGN BRANCH 15	BRIDGE NO. 53E0314 POST MILE 40.7/41.0	RETAINING WALL NO. 2150 LOG OF TEST BORINGS 2 OF 3
FUNCTIONAL SUPERVISOR NAME: D. Jang	DRAWN BY: F. Nguyen CHECKED BY: H. Liu	FIELD INVESTIGATION BY: M. Salisbury/H. P. Yang			

OGS CIVIL LOG OF TEST BORINGS SHEET

ORIGINAL SCALE IN INCHES FOR REDUCED PLANS 0 1 2 3

UNIT: 3643
PROJECT NUMBER & PHASE: 07130000071 CONTRACT NO.: 07-1193U1

DISREGARD PRINTS BEARING EARLIER REVISION DATES

REVISION DATES: 03-26-13 11-21-13 01-14-14

SHEET 22 OF 23

FILE => 53e0314-y-lotb02.dgn

USERNAME => s125624 DATE PLOTTED => 18-MAY-2015 TIME PLOTTED => 16:27

DIST.	COUNTY	ROUTE	POST MILES TOTAL PROJECT	SHEET NO.	TOTAL SHEETS
07	LA	10			

W. Cain
CERTIFIED ENGINEERING GEOLOGIST

REGISTERED GEOLOGIST — W. C. CAIN — No. 732 — Exp. 6-30-94 — CERTIFIED ENGINEERING GEOLOGIST — STATE OF CALIFORNIA

PLANS APPROVAL DATE

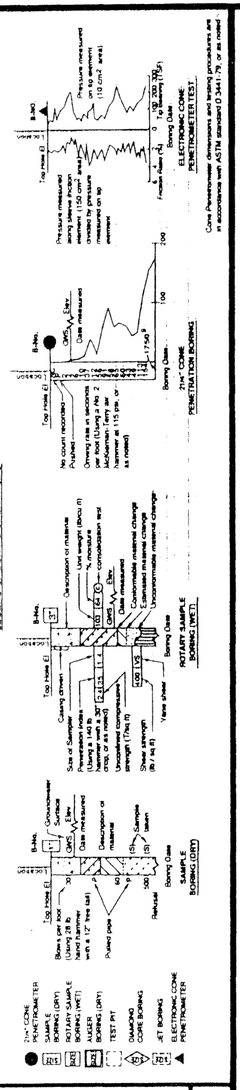

NOTE: Classification of earth material as shown on this sheet is based upon field inspection and is not to be construed to imply mechanical analysis.

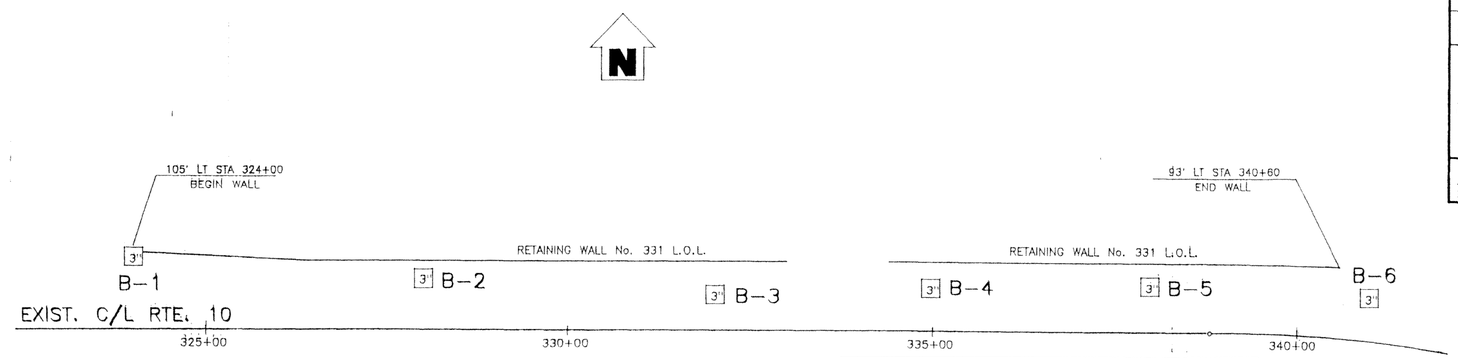

BENCH MARK

TBM AT STA. 324+00 Elev. 934.3
FD. PAINTED "+" AT LT. STA. 324+00

TBM AT STA. 327+00 Elev. 942.0
FD. PAINTED "+" AT LT. STA. 327+00

TBM AT STA. 332+00 Elev. 950.5
FD. PAINTED "+" AT LT. STA. 332+00

TBM AT STA. 335+00 Elev. 959.1
FD. PAINTED "+" AT LT. STA. 335+00

TBM AT STA. 338+00 Elev. 970.9
FD. PAINTED "+" AT LT. STA. 338+00

TBM AT STA. 341+00 Elev. 986.3
FD. PAINTED "+" AT LT. STA. 341+00
SURVEY WEST BOUND RTE. 10 BY J.F. DAVIDSON ASSOC 4-12-93 PG 8 OF 16

NOTE: NO GROUND WATER ENCOUNTERED DURING FIELD INVESTIGATION

DIVISION OF ENGINEERING SERVICES - MATERIALS AND GEOTECHNICAL SERVICES

As-Built Log of Test Borings sheet is considered an informational document only. As such, the State of California registration seal with signature, license number and registration certificate expiration date confirm that this is a true and accurate copy of the original document. It does not attest to the accuracy or validity of the information contained in the original document. This drawing is available and presented only for the convenience of any bidder, contractor or other interested party.

DIST.	COUNTY	ROUTE	POST MILE-TOTAL PROJECT	Sheet No.	Total Sheets
07	LA	10	37.2/42.4	2180	2313

Michael Salisbury
PROFESSIONAL GEOLOGIST — DATE 01/14/2014

PROFESSIONAL GEOLOGIST — Michael A. Salisbury — No. 2462 — Exp. 2-28-15 — CERTIFIED ENGINEERING GEOLOGIST — STATE OF CALIFORNIA

RETAINING WALL NO. 2150

LOG OF TEST BORINGS 3 OF 3

UNIT: 3643	CONTRACT No.	BRIDGE No.
PROJ. No. & PHASE: 0713000071	07-1193U1	53E0314

AS-BUILT VERT DATUM: N/A CONVERSION: N/A — Sheet 23 of 23

NOTE: A COPY OF THIS LOG OF TEST BORINGS IS AVAILABLE AT OFFICE OF STRUCTURE MAINTENANCE AND INVESTIGATIONS, SACRAMENTO, CALIFORNIA

TO ACCOMPANY PLANS DATED 6-1-15

PLAN
1" = 100'

PROFILE
Hor. 1" = 100'
Ver. 1" = 10'

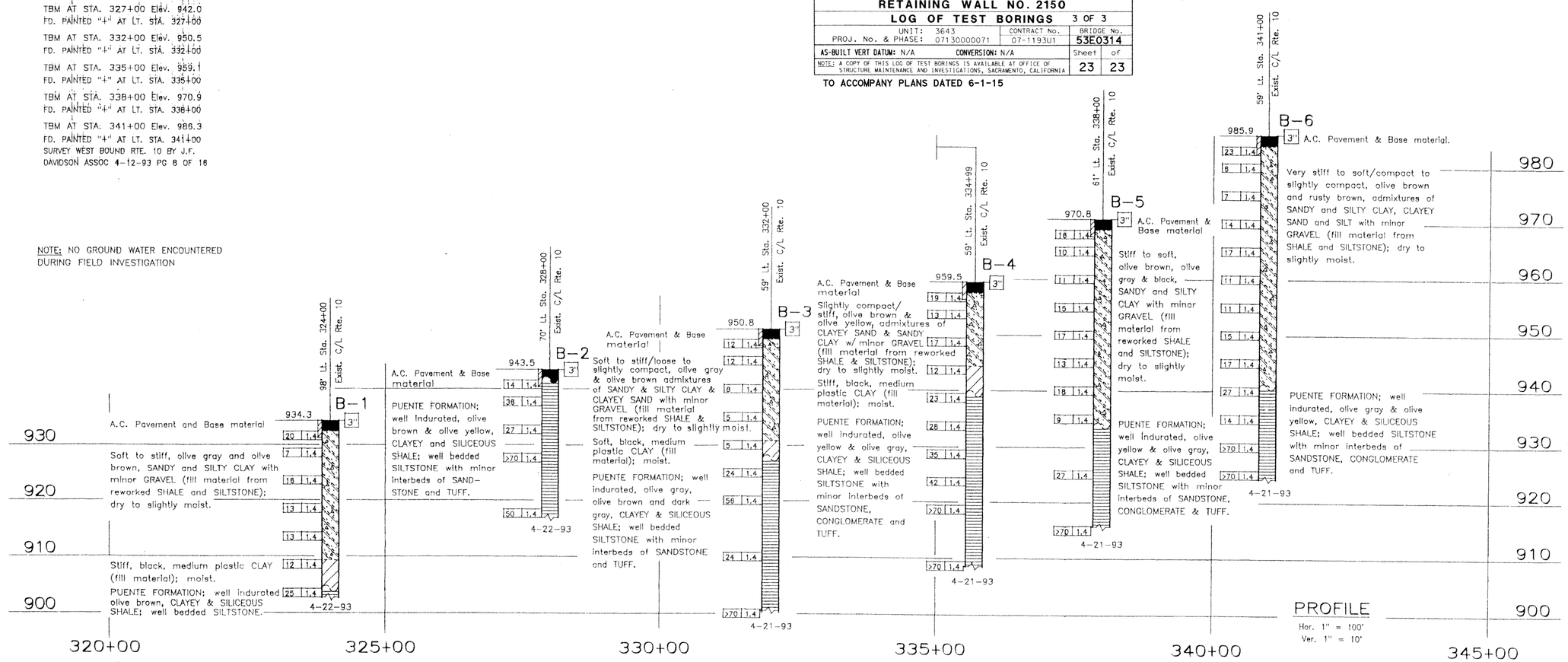

DIVISION OF NEW TECHNOLOGY, MATERIALS AND RESEARCH	OFFICE OF ENGINEERING GEOLOGY	FIELD INVESTIGATION BY:	State of CALIFORNIA DEPARTMENT OF TRANSPORTATION	DIVISION OF STRUCTURES STRUCTURE DESIGN	BRIDGE NO.	RETAINING WALL NO. 331
DRAWN BY I. GAMARRA 5/93		F. GERAMI			POST MILE 37.5/42.4	LOG OF TEST BORINGS
CHECKED BY Farahnaz Gerami 8-93						

SEP 23 1993

ORIGINAL SCALE IN INCHES FOR REDUCED PLANS 0 1 2 3

CU 07234
EA 11934K

DISREGARD PRINTS BEARING EARLIER REVISION DATES

REVISION DATES (PRELIMINARY STAGE ONLY) SHEET OF

TL 6051 REV. 2/92

DIST	COUNTY	ROUTE	POST MILES TOTAL PROJECT	SHEET No.	TOTAL SHEETS
07	LA	10	37.2/42.4	2181	2313

REGISTERED CIVIL ENGINEER — DATE 10/01/14

6-1-15
PLANS APPROVAL DATE

REGISTERED PROFESSIONAL ENGINEER — RICHARD E. SCHENDEL — No. C64259 — Exp. 6-30-15 — CIVIL — STATE OF CALIFORNIA

The State of California or its officers or agents shall not be responsible for the accuracy or completeness of scanned copies of this plan sheet.

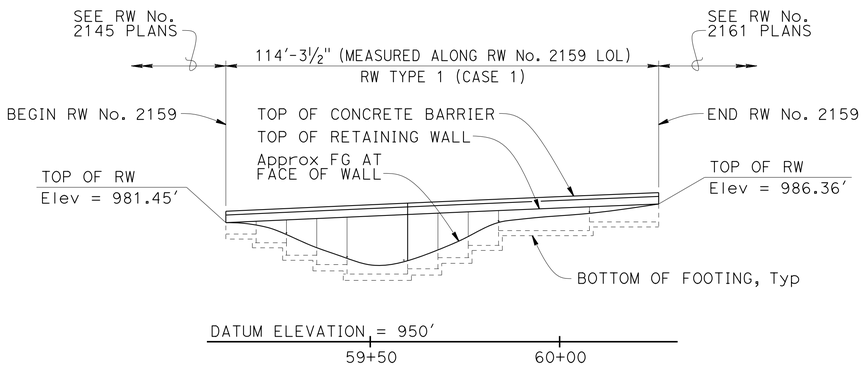

DEVELOPED ELEVATION

1" = 20'

STANDARD PLANS DATED 2010

SHEET NO.	TITLE
A10A	ABBREVIATIONS (SHEET 1 OF 2)
RSP A10B	ABBREVIATIONS (SHEET 2 OF 2)
A10C	LINES AND SYMBOLS (SHEET 1 OF 3)
A10D	LINES AND SYMBOLS (SHEET 2 OF 3)
A10E	LINES AND SYMBOLS (SHEET 3 OF 3)
A10F	LEGEND - SOIL (SHEET 1 OF 2)
A10G	LEGEND - SOIL (SHEET 2 OF 2)
A10H	LEGEND - ROCK
A62B	LIMITS OF PAYMENT FOR EXCAVATION AND BACKFILL - BRIDGE SURCHARGE AND WALL
B0-3	BRIDGE DETAILS
RSP B3-1A	RETAINING WALL TYPE 1 (CASE 1)
RSP B3-5	RETAINING WALL DETAILS NO. 1
RSP B11-56	CONCRETE BARRIER TYPE 736

STANDARD PLAN SHEET No.

DETAIL No.

QUANTITIES

STRUCTURE EXCAVATION (RETAINING WALL)	276 CY
STRUCTURE BACKFILL (RETAINING WALL)	228 CY
PERVIOUS BACKFILL MATERIAL (RETAINING WALL)	14 CY
STRUCTURAL CONCRETE, RETAINING WALL	111 CY
CONCRETE SURFACE TEXTURE	723 SQFT
BAR REINFORCING STEEL (RETAINING WALL)	16,274 LB
PREPARE AND STAIN CONCRETE	723 SQFT
CONCRETE BARRIER (TYPE 736)	115 LF

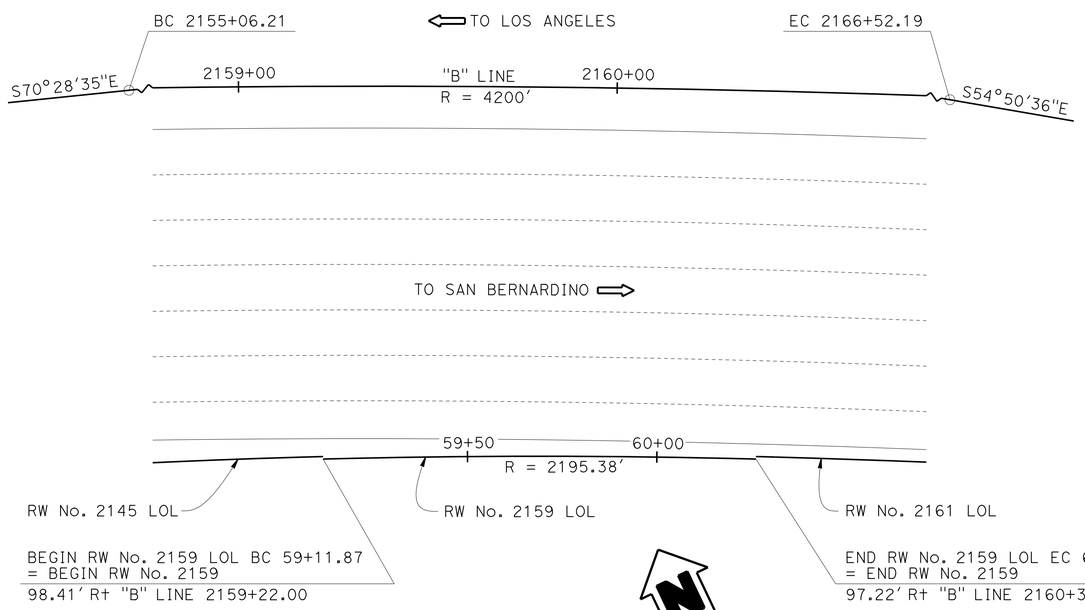

PLAN

1" = 20'

CURVE DATA "B" LINE	CURVE DATA RW No. 2159 LOL
R = 4200'	R = 2195.38'
Δ = 15°38'00"	Δ = 02°58'58"
T = 576.57'	T = 57.16'
L = 1145.98'	L = 114.30'

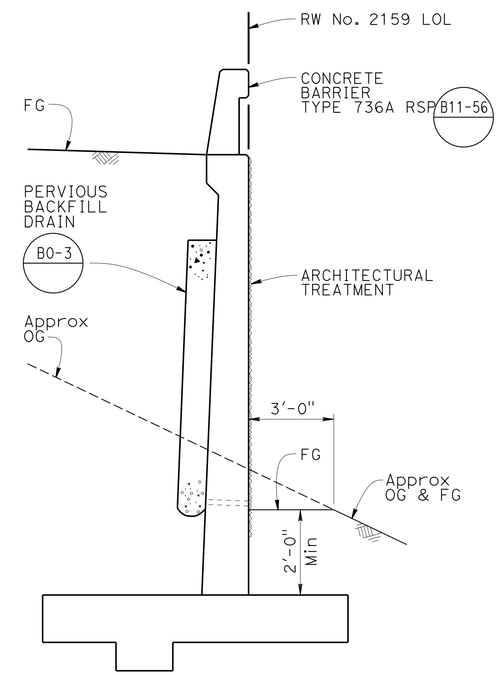

TYPICAL SECTION

⅜" = 1'-0"

RSP B3-1A

INDEX TO PLANS

SHEET NO.	TITLE
1	GENERAL PLAN
2	FOUNDATION PLAN
3	STRUCTURE PLAN
4	ARCHITECTURAL DETAILS
5	LOG OF TEST BORINGS

MICHAEL POPE
DESIGN ENGINEER

	BY	CHECKED
DESIGN	Richard Schendel	Prem Rimal
DETAILS	Richard Schendel	Prem Rimal
QUANTITIES	Richard Schendel	Prem Rimal

LOAD & RESISTANCE FACTOR DESIGN — LIVE LOADING: HL93 W/"LOW-BOY": PERMIT DESIGN VEHICLE

	BY	CHECKED
LAYOUT	Richard Schendel	Prem Rimal
SPECIFICATIONS	Xiaodong Chen	PLANS AND SPECS COMPARED Xiaodong Chen

ORIGINAL SCALE IN INCHES FOR REDUCED PLANS 0 1 2 3

STATE OF CALIFORNIA
DEPARTMENT OF TRANSPORTATION

DIVISION OF ENGINEERING SERVICES
STRUCTURE DESIGN
DESIGN BRANCH 18

BRIDGE NO. N/A
POST MILE 40.89

RETAINING WALL NO. 2159
GENERAL PLAN

UNIT: 3603
PROJECT NUMBER & PHASE: 07 1300 0007 1 CONTRACT NO.: 07-1193U1

DISREGARD PRINTS BEARING EARLIER REVISION DATES

REVISION DATES: 10/30/13 11/14/13 07/22/14 03/06/18

SHEET 1 OF 5

STRUCTURES DESIGN GENERAL PLAN SHEET (ENGLISH) (REV.09-01-10)

FILE => 53e-rw2159-a-gp01.dgn

USERNAME => s125624 DATE PLOTTED => 18-MAY-2015 TIME PLOTTED => 16:27

DIST	COUNTY	ROUTE	POST MILES TOTAL PROJECT	SHEET No.	TOTAL SHEETS
07	LA	10	37.2/42.4	2182	2313

REGISTERED CIVIL ENGINEER 10/01/14 DATE

6-1-15
PLANS APPROVAL DATE

REGISTERED PROFESSIONAL ENGINEER RICHARD E. SCHENDEL No. C64259 Exp. 6-30-15 CIVIL STATE OF CALIFORNIA

The State of California or its officers or agents shall not be responsible for the accuracy or completeness of electronic copies of this plan sheet.

SURVEY CONTROL

PRHV1526 (Not Shown On Plan)
Fnd Set PK in AC
220.19 FT Rt "Rte10" Line, Rte 10
Sta. 2223+44.31
N 1,845,473.91
E 6,618,604.71
Elev = 738.25

PRHV1527 (Not Shown On Plan)
Fnd L&T in TC
170.05 FT Lt "Rte10" Line, Rte 10
Sta. 2223+76.72
N 1,845,865.25
E 6,618,590.63
Elev = 748.86

CURVE DATA

No.	R	Δ	T	L
A	4200.00	15°38'00"	576.57	1145.98
B	2196.05	04°22'57"	84.03	167.98
C	2195.38	02°58'58"	57.16	114.30
D	2196.05	00°08'11"	2.61	5.22
E	3858.60	05°31'58"	186.45	372.60

NOTES:

1. For foundation elevations, see "STRUCTURE PLAN" sheet.
2. Foundations for walls other than RW No. 2159 are not shown.

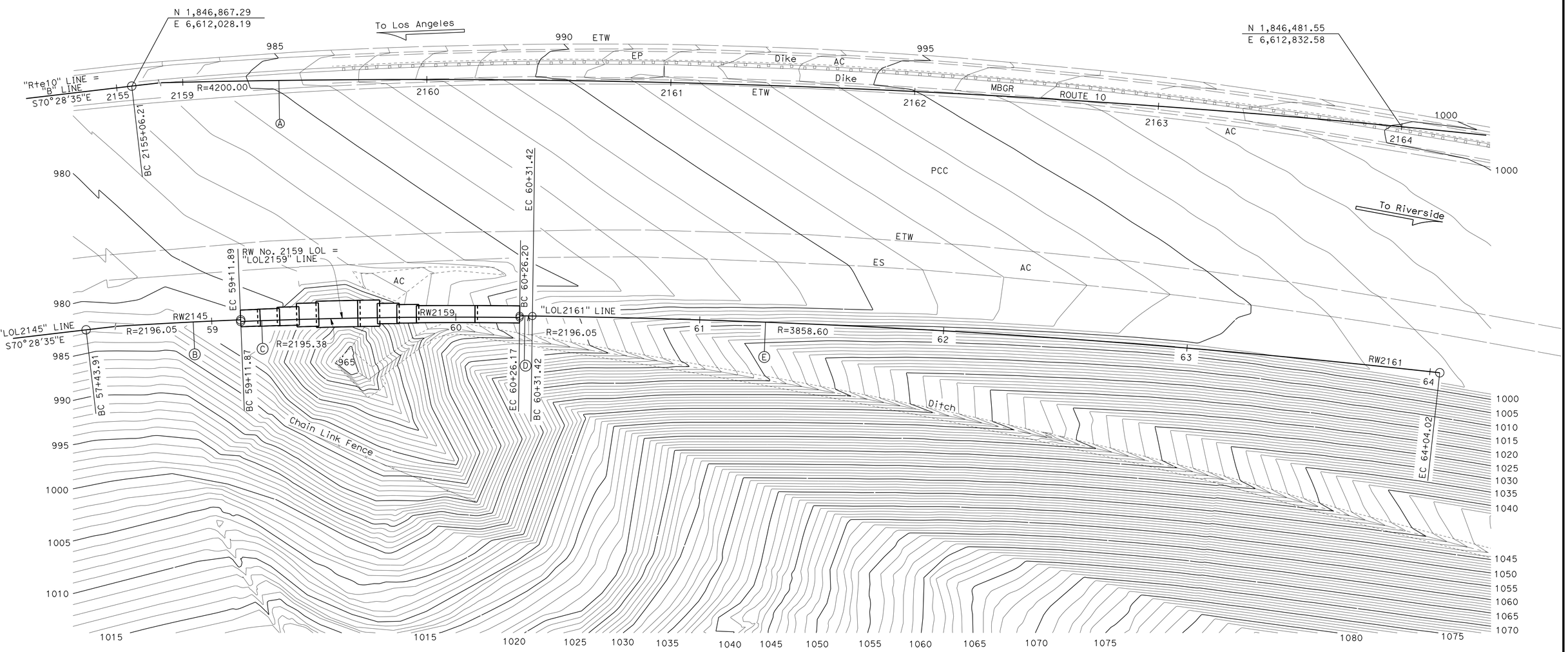

PRELIMINARY INVESTIGATION SECTION							
SCALE 1"=20'	VERT.DATUM NAVD88	PHOTOGRAMMETRY AS OF: 02/2008					
	HORZ.DATUM NAD83	SURVEYED	BY District 04/2008	CHECKED	BY C.Fassett 06/2011		
ALIGNMENT TIES Dist. Traverse Sheet		DRAFTED	BY Zolnikov/Fassett 06/2011	CHECKED	BY T.Schmalz 06/2011		

DESIGN	BY Richard Schendel	CHECKED Prem Rimal
DETAILS	BY Richard Schendel	CHECKED Prem Rimal
QUANTITIES	BY Richard Schendel	CHECKED Prem Rimal

STATE OF CALIFORNIA
DEPARTMENT OF TRANSPORTATION

DIVISION OF ENGINEERING SERVICES
STRUCTURE DESIGN
DESIGN BRANCH 18

BRIDGE NO. N/A
POST MILE 40.89

RETAINING WALL NO. 2159
FOUNDATION PLAN

STRUCTURES FOUNDATION PLAN SHEET (ENGLISH) (REV. 09-01-10)

ORIGINAL SCALE IN INCHES FOR REDUCED PLANS 0 1 2 3

UNIT: 3646
PROJECT NUMBER & PHASE: 0713000007 1 CONTRACT NO.: 1193U

DISREGARD PRINTS BEARING EARLIER REVISION DATES

REVISION DATES 06/03/11 7/14/14 01/22/14

SHEET 2 OF 5

FILE => 53e-rw2159-c-fp101.dgn

DIST	COUNTY	ROUTE	POST MILES TOTAL PROJECT	SHEET No.	TOTAL SHEETS
07	LA	10	37.2/42.4	2183	2313

REGISTERED CIVIL ENGINEER 10/01/14 DATE

6-1-15
PLANS APPROVAL DATE

REGISTERED PROFESSIONAL ENGINEER RICHARD E. SCHENDEL No. C64259 Exp. 6-30-15 CIVIL STATE OF CALIFORNIA

The State of California or its officers or agents shall not be responsible for the accuracy or completeness of scanned copies of this plan sheet.

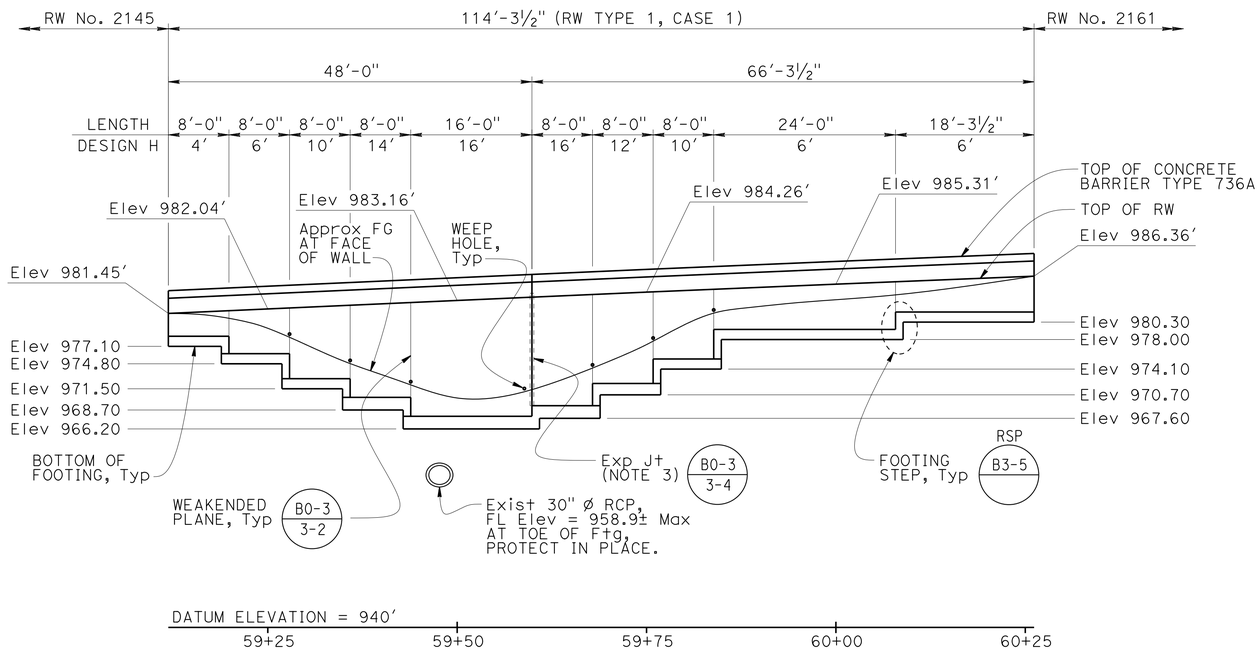

DEVELOPED ELEVATION

1" = 10'

B0-3 | RSP B3-1A | RSP B3-5 | RSP B11-56

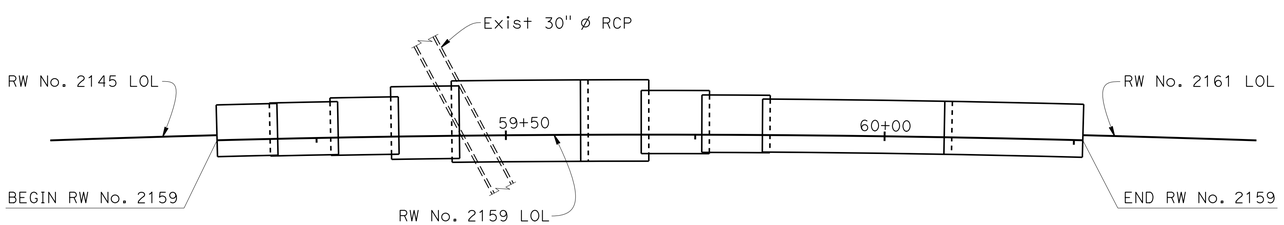

FOOTING PLAN

1" = 10'

RSP B3-1A | RSP B3-5

NOTES:

1. Unless otherwise shown, top of wall elevations are shown at even 25 ft stations along RW No. 2159 LOL.
2. All dimensions are measured along RW No. 2159 LOL.
3. Extend waterstop 6" minimum into concrete barrier.

	BY	CHECKED
DESIGN	Richard Schendel	Prem Rimal
DETAILS	Richard Schendel	Prem Rimal
QUANTITIES	Richard Schendel	Prem Rimal

STATE OF CALIFORNIA
DEPARTMENT OF TRANSPORTATION

DIVISION OF ENGINEERING SERVICES
STRUCTURE DESIGN
DESIGN BRANCH 18

BRIDGE NO. N/A
POST MILE 40.89

RETAINING WALL NO. 2159
STRUCTURE PLAN

STRUCTURES DESIGN DETAIL SHEET (ENGLISH) (REV. 09-01-10)

ORIGINAL SCALE IN INCHES FOR REDUCED PLANS 0 1 2 3

UNIT: 3603
PROJECT NUMBER & PHASE: 07 1300 0007 1 CONTRACT NO.: 07-1193U1

DISREGARD PRINTS BEARING EARLIER REVISION DATES

REVISION DATES 10/27/13 03/06/14 05/27/14

SHEET 3 OF 5

FILE => 53e-rw2159-e-sp01.dgn

USERNAME => s125624 DATE PLOTTED => 18-MAY-2015 TIME PLOTTED => 16:27

DIST	COUNTY	ROUTE	POST MILES TOTAL PROJECT	SHEET No.	TOTAL SHEETS
07	LA	10	37.2/42.4	2184	2313

REGISTERED CIVIL ENGINEER 10/01/14 DATE

6-1-15
PLANS APPROVAL DATE

REGISTERED PROFESSIONAL ENGINEER RICHARD E. SCHENDEL No. C64259 Exp. 6-30-15 CIVIL STATE OF CALIFORNIA

The State of California or its officers or agents shall not be responsible for the accuracy or completeness of scanned copies of this plan sheet.

NOTE:
Concrete Barrier not shown.

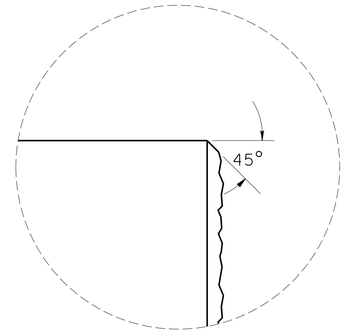

DETAIL B1
NO SCALE

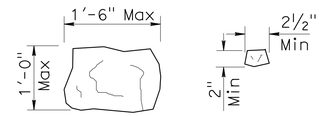

ROCK SIZE

NOTE:
Seamless Random Rock pattern to have a minimum of 2 to a maximum of 4 match points (denoted by "M") for each side (top to bottom and side to side).

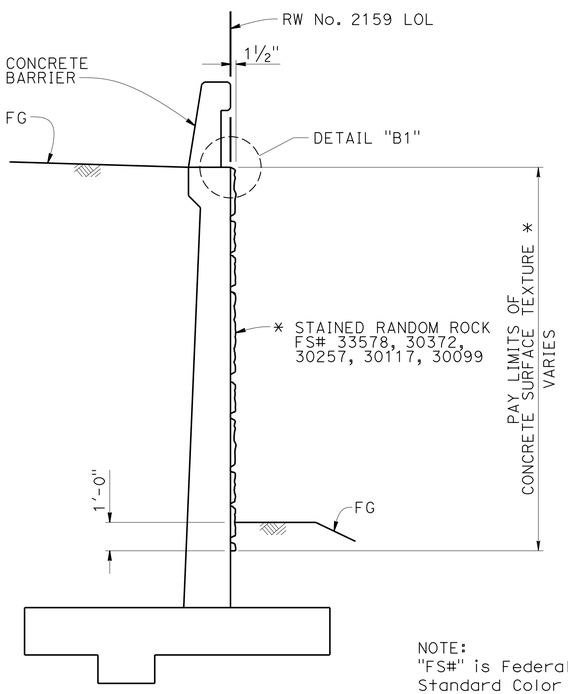

NOTE:
"FS#" is Federal Standard Color Number.

TYPICAL SECTION
NO SCALE

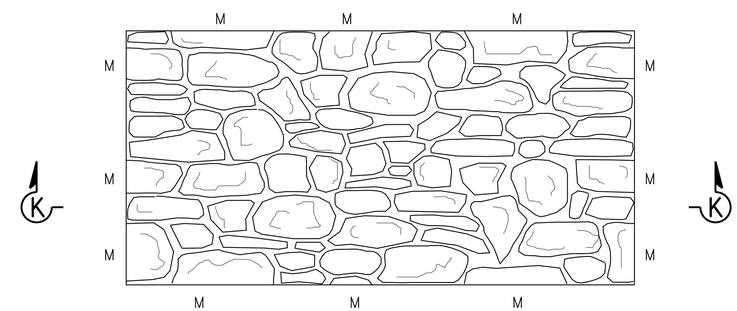

ELEVATION

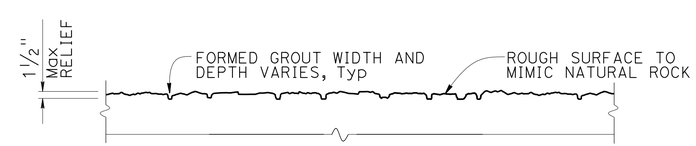

SECTION K-K

RANDOM ROCK TEXTURE
NO SCALE

DESIGN	BY Valerie Moore	CHECKED Richard Schendel	
DETAILS	BY Farideh Hosseinioun	CHECKED Richard Schendel	
QUANTITIES	BY Richard Schendel	CHECKED Prem Rimal	

STATE OF CALIFORNIA
DEPARTMENT OF TRANSPORTATION

DIVISION OF ENGINEERING SERVICES
STRUCTURE DESIGN
DESIGN BRANCH 18

BRIDGE NO. N/A
POST MILE 40.89

RETAINING WALL NO. 2159
ARCHITECTURAL DETAILS

STRUCTURES DESIGN DETAIL SHEET (ENGLISH) (REV. 09-01-10)

ORIGINAL SCALE IN INCHES FOR REDUCED PLANS 0 1 2 3

UNIT: 3603
PROJECT NUMBER & PHASE: 07 1300 0007 1 CONTRACT NO.: 07-1193U1

DISREGARD PRINTS BEARING EARLIER REVISION DATES

REVISION DATES 01/06/14 01/31/14 03/04/14

SHEET 4 OF 5

FILE => 53e-rw2159-u-archdt01.dgn

USERNAME => s125624 DATE PLOTTED => 18-MAY-2015 TIME PLOTTED => 16:27

DIST.	COUNTY	ROUTE	POST MILES TOTAL PROJECT	SHEET NO.	TOTAL SHEETS
07	LA	10			

W. Cain
CERTIFIED ENGINEERING GEOLOGIST

REGISTERED GEOLOGIST — W.C. CAIN No. 732 Exp. 6-30-94 CERTIFIED ENGINEERING GEOLOGIST — STATE OF CALIFORNIA

PLANS APPROVAL DATE

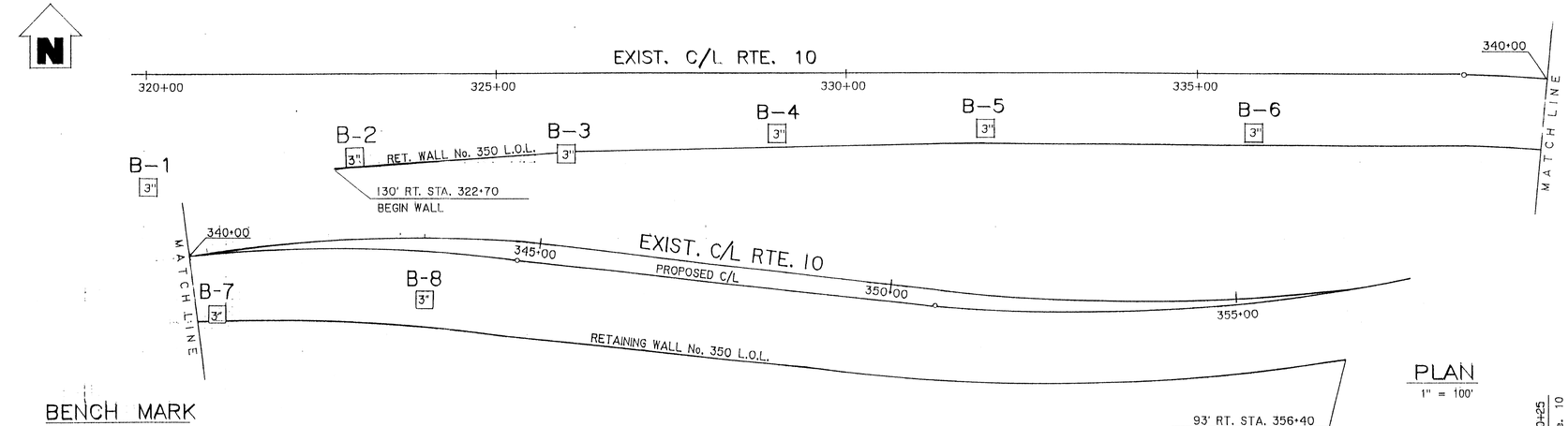

PLAN
1" = 100'

BENCH MARK

TBM @ STA. 322+70 Elev. 930.60
FD. PAINTED "+" @ RT. STA. 322+70

TBM @ STA. 326+00 Elev. 939.40
FD. PAINTED "+" @ RT. STA. 326+00

TBM @ STA. 329+00 Elev. 944.40
FD. PAINTED "+" @ RT. STA. 329+00

TBM @ STA. 332+00 Elev. 959.60
FD. PAINTED "+" @ RT. STA. 332+00

TBM @ STA. 336+00 Elev. 962.40
FD. PAINTED "+" @ RT. STA. 336+00

TBM @ STA. 340+00 Elev. 975.90
FD. PAINTED "+" @ RT. STA. 340+00

TBM @ STA. 343+00 Elev. 986.70
FD. PAINTED "+" @ RT. STA. 343+00

TBM @ STA. 323+00 Elev. 932.0
FD. PAINTED "+" @ RT. STA. 323+00
SURVEY EAST BOUND RTE. 10 BY J.F. DAVIDSON ASSOC. 4-9-93 PAGE 15 OF 16

NOTE: NO GROUND WATER ENCOUNTERED DURING FIELD INVESTIGATION

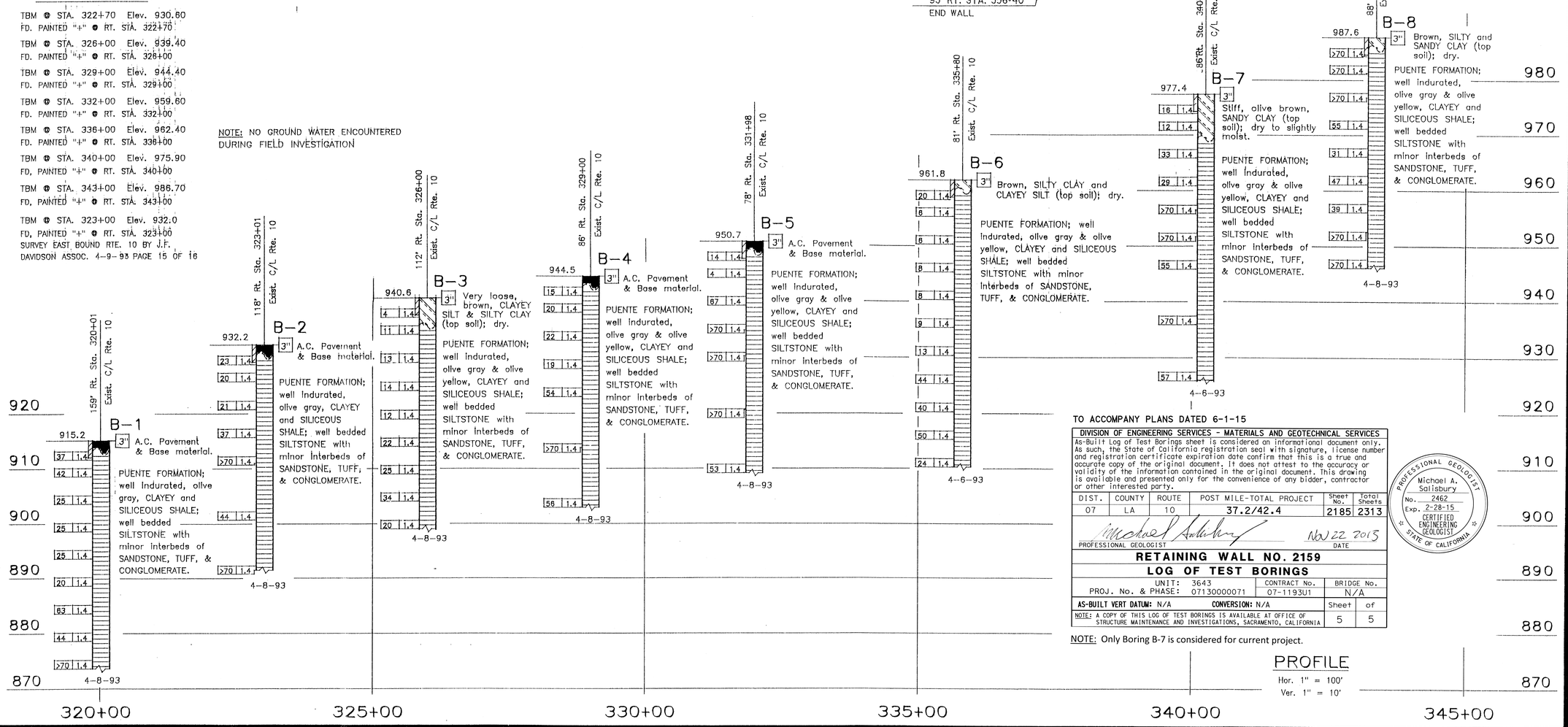

TO ACCOMPANY PLANS DATED 6-1-15

DIVISION OF ENGINEERING SERVICES - MATERIALS AND GEOTECHNICAL SERVICES
As-Built Log of Test Borings sheet is considered an informational document only. As such, the State of California registration seal with signature, license number and registration certificate expiration date confirm that this is a true and accurate copy of the original document. It does not attest to the accuracy or validity of the information contained in the original document. This drawing is available and presented only for the convenience of any bidder, contractor or other interested party.

DIST.	COUNTY	ROUTE	POST MILE-TOTAL PROJECT	Sheet No.	Total Sheets
07	LA	10	37.2/42.4	2185	2313

Michael A. Salisbury — PROFESSIONAL GEOLOGIST — DATE Nov 22 2013

PROFESSIONAL GEOLOGIST — Michael A. Salisbury No. 2462 Exp. 2-28-15 CERTIFIED ENGINEERING GEOLOGIST — STATE OF CALIFORNIA

RETAINING WALL NO. 2159
LOG OF TEST BORINGS

UNIT: 3643	CONTRACT No.	BRIDGE No.
PROJ. No. & PHASE: 07130000071	07-1193U1	N/A

AS-BUILT VERT DATUM: N/A CONVERSION: N/A — Sheet 5 of 5

NOTE: A COPY OF THIS LOG OF TEST BORINGS IS AVAILABLE AT OFFICE OF STRUCTURE MAINTENANCE AND INVESTIGATIONS, SACRAMENTO, CALIFORNIA

NOTE: Only Boring B-7 is considered for current project.

PROFILE
Hor. 1" = 100'
Ver. 1" = 10'

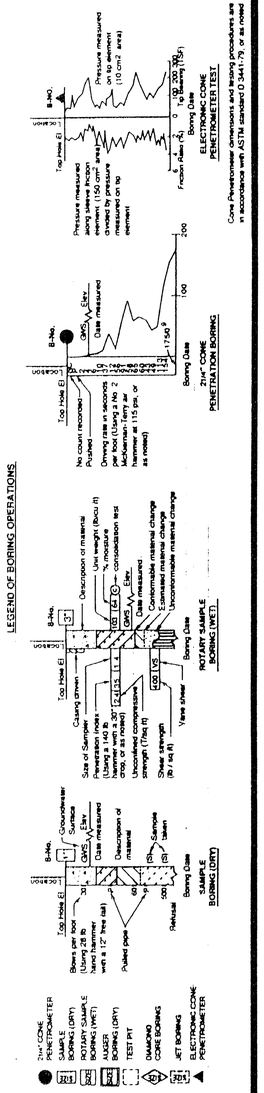

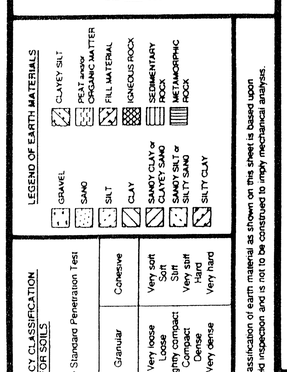

CONSISTENCY CLASSIFICATION FOR SOILS
According to the Standard Penetration Test

Penetration Index (Blows / Ft)	Granular	Cohesive
0-4	Very loose	Very soft
5-9	Loose	Soft
10-19	Slightly compact	Stiff
20-34	Compact	Very stiff
35-69	Dense	Hard
>70	Very dense	Very hard

NOTE: Classification of earth material as shown on this sheet is based upon field inspection and is not to be construed to imply mechanical analysis.

DIVISION OF NEW TECHNOLOGY, MATERIALS AND RESEARCH	OFFICE OF ENGINEERING GEOLOGY
DRAWN BY I. GAMARRA 5/93	
CHECKED BY Faramarz Gerami 8-93	

FIELD INVESTIGATION BY: F. GERAMI

State of CALIFORNIA DEPARTMENT OF TRANSPORTATION

DIVISION OF STRUCTURES STRUCTURE DESIGN

BRIDGE NO.
POST MILE 37.5/42.4

RETAINING WALL NO. 350
LOG OF TEST BORINGS

SEP 23 1993

ORIGINAL SCALE IN INCHES FOR REDUCED PLANS 0 1 2 3

CU 07234
EA 11934K

DISREGARD PRINTS BEARING EARLIER REVISION DATES

REVISION DATES (PRELIMINARY STAGE ONLY) SHEET OF

TL 6051 REV 2/92

DIST	COUNTY	ROUTE	POST MILES TOTAL PROJECT	SHEET No.	TOTAL SHEETS
07	LA	10	37.2/42.4	2186	2313

REGISTERED CIVIL ENGINEER — DATE 10/01/14

6-1-15
PLANS APPROVAL DATE

REGISTERED PROFESSIONAL ENGINEER — RICHARD E. SCHENDEL — No. C64259 — Exp. 6-30-15 — CIVIL — STATE OF CALIFORNIA

The State of California or its officers or agents shall not be responsible for the accuracy or completeness of scanned copies of this plan sheet.

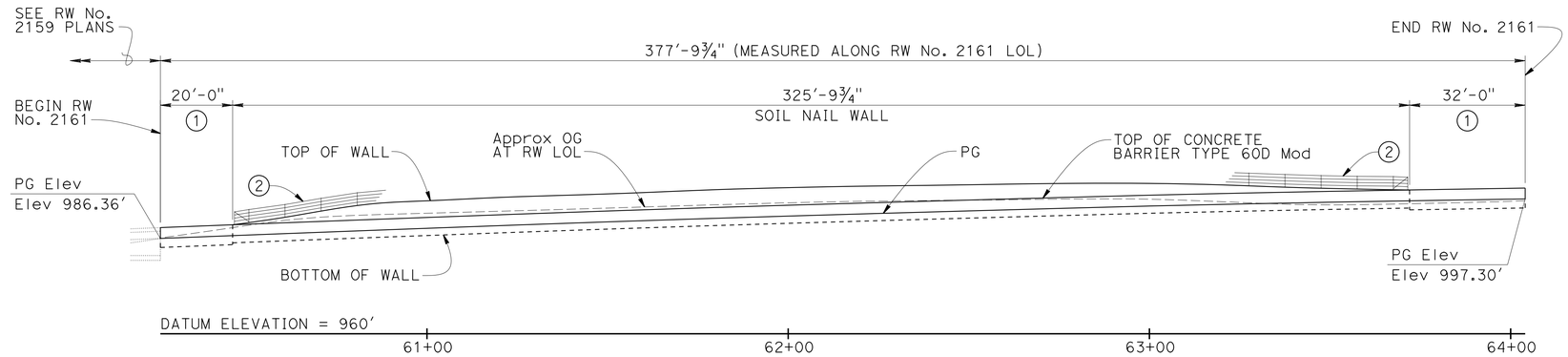

DEVELOPED MIRRORED ELEVATION

1" = 20′

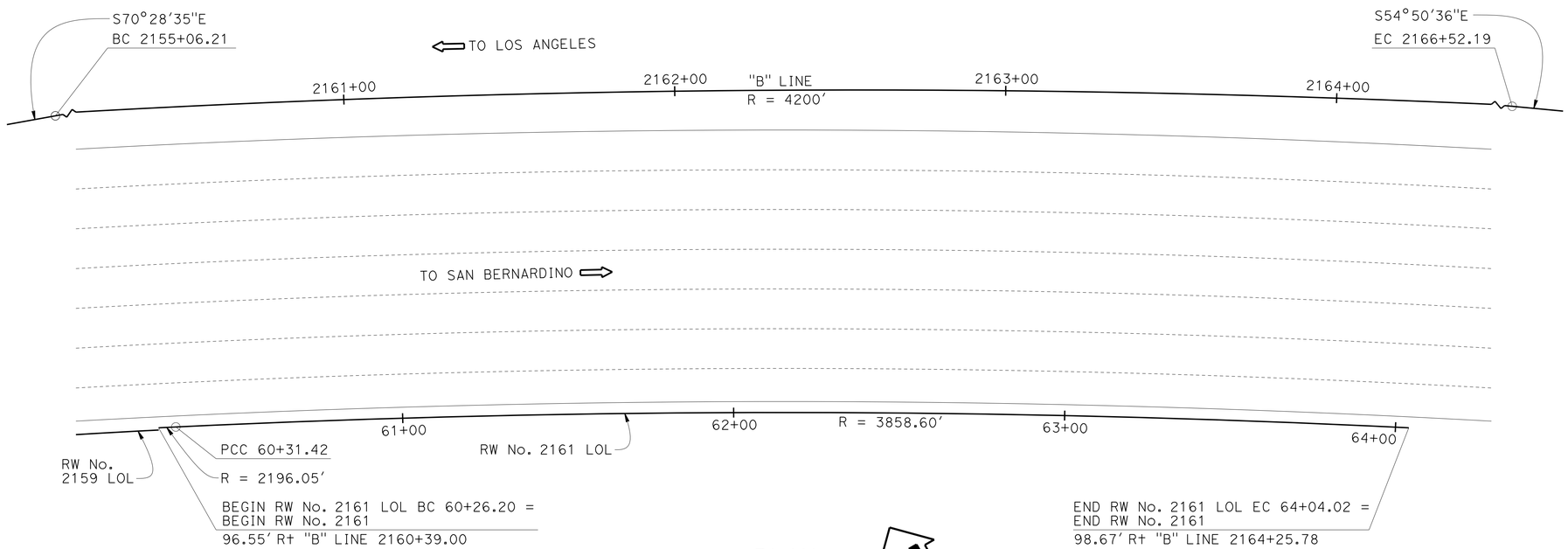

PLAN

1" = 20′

CURVE DATA "B" LINE	CURVE DATA RW No. 2161 LOL	
R = 4200′	R = 2196.05′	R = 3858.60′
Δ = 15°38′00"	Δ = 00°08′11"	Δ = 05°31′58"
T = 576.57′	T = 2.61′	T = 186.45′
L = 1145.98′	L = 5.22′	L = 372.60′

LEGEND:

STANDARD PLAN SHEET No.

DETAIL No.

NOTES:

1. Concrete Barrier Type 736B Mod, RSP (B11-56)
2. Cable Railing, RSP (B11-47)
3. Gutter, see "ROAD PLANS" (B3-6)
4. Architectural Treatment
5. Concrete Barrier Type 60D Mod (A76A)
6. Geocomposite Drain

NOTE:
For "INDEX TO PLANS", "GENERAL NOTES", "STANDARD PLANS", AND "QUANTITIES", SEE "INDEX TO PLANS" sheet.

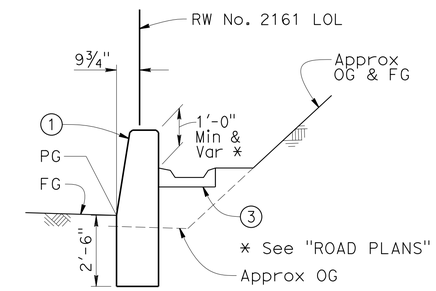

TYPE 736B MODIFIED

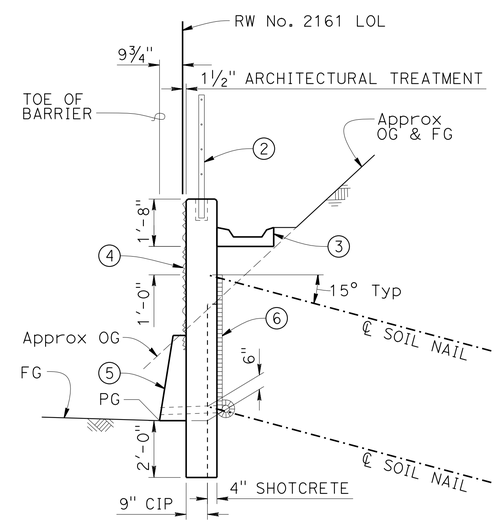

SOIL NAIL WALL

TYPICAL SECTION

⅜" = 1′-0"

MICHAEL POPE — DESIGN ENGINEER	DESIGN	BY Richard Schendel	CHECKED Matthew Schott	LOAD & RESISTANCE FACTOR DESIGN	LIVE LOADING: HL93 W/"LOW-BOY": PERMIT DESIGN VEHICLE
	DETAILS	BY Richard Schendel	CHECKED Matthew Schott	LAYOUT	BY Richard Schendel — CHECKED Matthew Schott
	QUANTITIES	BY Richard Schendel	CHECKED Matthew Schott	SPECIFICATIONS	BY Xiaodong Chen — PLANS AND SPECS COMPARED Xiaodong Chen

ORIGINAL SCALE IN INCHES FOR REDUCED PLANS 0 1 2 3

STATE OF CALIFORNIA
DEPARTMENT OF TRANSPORTATION

DIVISION OF ENGINEERING SERVICES
STRUCTURE DESIGN
DESIGN BRANCH 18

BRIDGE NO. 53E0309
POST MILE 40.92

RETAINING WALL NO. 2161
GENERAL PLAN

UNIT: 3603
PROJECT NUMBER & PHASE: 07 1300 0007 1 CONTRACT NO.: 07-1193U1

DISREGARD PRINTS BEARING EARLIER REVISION DATES

REVISION DATES: 10/30/13 11/26/13 01/22/14 03/04/14

SHEET 1 OF 12

STRUCTURES DESIGN GENERAL PLAN SHEET (ENGLISH) (REV.09-01-10)

FILE => 53e0309-a-gp01.dgn

USERNAME => s125624 DATE PLOTTED => 18-MAY-2015 TIME PLOTTED => 16:28

DIST	COUNTY	ROUTE	POST MILES TOTAL PROJECT	SHEET No.	TOTAL SHEETS
07	LA	10	37.2/42.4	2187	2313

REGISTERED CIVIL ENGINEER 10/01/14 DATE

6-1-15
PLANS APPROVAL DATE

REGISTERED PROFESSIONAL ENGINEER RICHARD E. SCHENDEL No. C64259 Exp. 6-30-15 CIVIL STATE OF CALIFORNIA

The State of California or its officers or agents shall not be responsible for the accuracy or completeness of scanned copies of this plan sheet.

GENERAL NOTES

DESIGN:
Federal Highway Administration Publication
Geotechnical Engineering Circular No. 7
Soil Nail Walls, Publication FHWA-IF-03-017

AASHTO LRFD Bridge Design Specifications,
4th edition and the Caltrans Amendments,
preface dated November 2011

LIVE LOADING:
No Live Loading

REINFORCED CONCRETE AND SHOTCRETE:
f_y = 60 ksi (Yield Strength of Reinforcement)
f'_c = 3.6 ksi (Compressive Strength at 28 days)

BEARING PLATES:
ASTM Designation: A36/A 36M, Grade 36, Fy = 36 ksi

SOIL NAILS:
ASTM Designation: A 615/A 615M, Grade 75, f_y = 75 ksi

CONCRETE ANCHORS ON BEARING PLATES:
AWS Designation: D1.5, Fy = 36 ksi Min

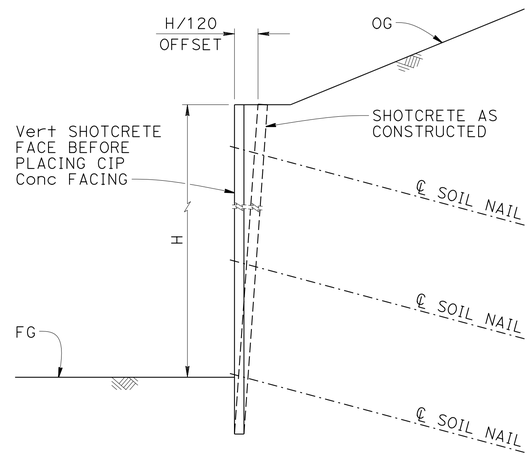

SOIL NAIL WALL OFFSET DETAIL

NO SCALE

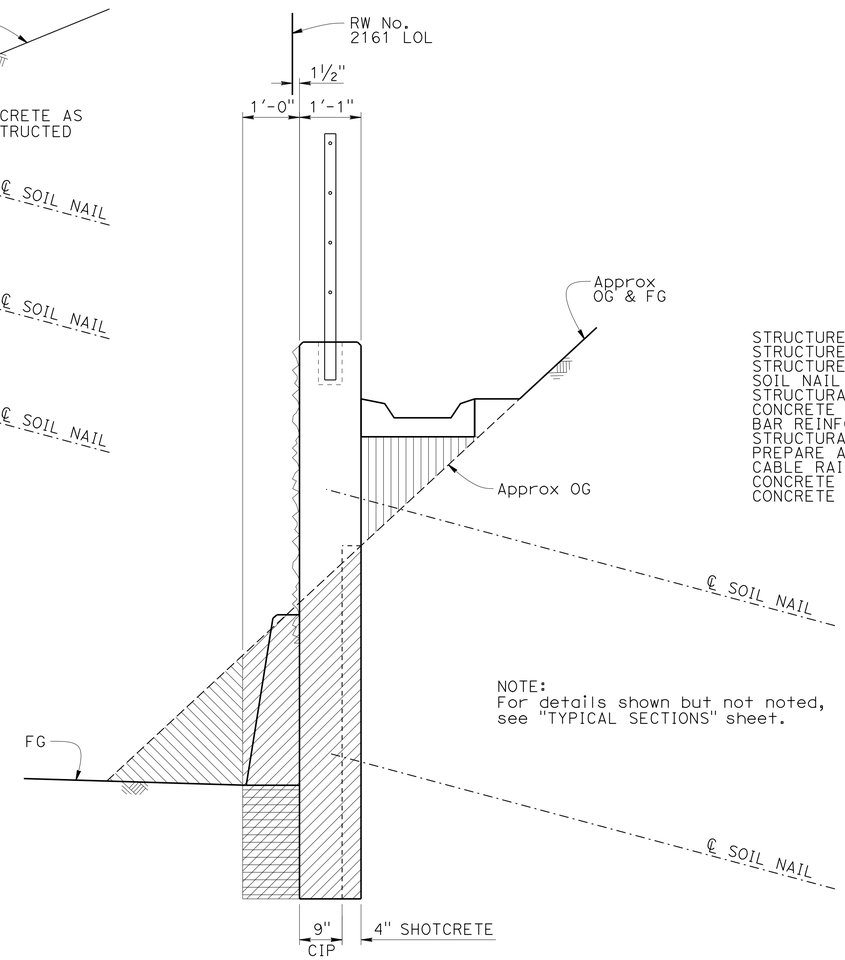

NOTE:
For details shown but not noted,
see "TYPICAL SECTIONS" sheet.

Denotes Structure Excavation (Soil Nail wall)
Denotes Structure Backfill (Soil Nail wall)
Denotes Slurry Cement Backfill
Denotes Roadway Excavation, see "ROAD PLANS"

TYPICAL SECTION PAY LIMITS FOR STRUCTURE EXCAVATION AND BACKFILL & SLURRY CEMENT BACKFILL

NO SCALE

QUANTITIES

STRUCTURE EXCAVATION (SOIL NAIL WALL)	119 CY
STRUCTURE BACKFILL (SLURRY CEMENT)	19 CY
STRUCTURE BACKFILL (SOIL NAIL WALL)	24 CY
SOIL NAIL	1,336 LF
STRUCTURAL CONCRETE, RETAINING WALL	90 CY
CONCRETE SURFACE TEXTURE	1,336 SQFT
BAR REINFORCING STEEL (RETAINING WALL)	14,357 LB
STRUCTURAL SHOTCRETE	23 CY
PREPARE AND STAIN CONCRETE	1,336 SQFT
CABLE RAILING	326 LF
CONCRETE BARRIER (TYPE 60D)	326 LF
CONCRETE BARRIER (TYPE 736B MODIFIED)	52 LF

STANDARD PLANS DATED 2010

SHEET NO.	TITLE
A10A	ABBREVIATIONS (SHEET 1 OF 2)
RSP A10B	ABBREVIATIONS (SHEET 2 OF 2)
A10C	LINES AND SYMBOLS (SHEET 1 OF 3)
A10D	LINES AND SYMBOLS (SHEET 2 OF 3)
A10E	LINES AND SYMBOLS (SHEET 3 OF 3)
A10F	LEGEND - SOIL (SHEET 1 OF 2)
A10G	LEGEND - SOIL (SHEET 2 OF 2)
A10H	LEGEND - ROCK
A76A	CONCRETE BARRIER TYPE 60
RSP B3-6	RETAINING WALL DETAILS NO. 2
RSP B11-47	CABLE RAILING
RSP B11-56	CONCRETE BARRIER TYPE 736

SOIL NAIL DESIGN TABLE

Wall Zone	"B" Line Station	Max Wall Height (ft)	Min Nail Embedment Length (ft)	Max Vert Nail Spacing (ft)	Max Horiz Nail Spacing (ft)	Qd (lbs/ft)	Rebar		Min Allowable Facing Resistance (kips)	
							Grade (ksi)	Diameter (in)	Static	Seismic
1	2160+59.47 to 2163+93.02	7.0	10	5	5	2,720	75	1.0	30	38

NOTE:
Wall height is a vertical distance from the finished grade of roadway to the top of gutter.

INDEX TO PLANS

SHEET NO.	TITLE
1	GENERAL PLAN
2	INDEX TO PLANS
3	FOUNDATION PLAN
4	STRUCTURE PLAN
5	TYPICAL SECTIONS
6	SOIL NAIL ASSEMBLY
7	DRAINAGE DETAILS
8	ARCHITECTURAL DETAILS
9	LOG OF TEST BORINGS SHEET 1 OF 2
10	LOG OF TEST BORINGS SHEET 2 OF 2
11	LOG OF TEST BORINGS 1 OF 2
12	LOG OF TEST BORINGS 2 OF 2

	BY	CHECKED
DESIGN	Richard Schendel	Matthew Schott
DETAILS	Richard Schendel	Matthew Schott
QUANTITIES	Richard Schendel	Matthew Schott

STATE OF CALIFORNIA
DEPARTMENT OF TRANSPORTATION

DIVISION OF ENGINEERING SERVICES
STRUCTURE DESIGN
DESIGN BRANCH 18

BRIDGE NO. 53E0309
POST MILE 40.92

RETAINING WALL NO. 2161
INDEX TO PLANS

STRUCTURES DESIGN DETAIL SHEET (ENGLISH) (REV. 09-01-10)

ORIGINAL SCALE IN INCHES FOR REDUCED PLANS 0 1 2 3

UNIT: 3603
PROJECT NUMBER & PHASE: 07 1300 0007 1 CONTRACT NO.: 07-1193U1

DISREGARD PRINTS BEARING EARLIER REVISION DATES

REVISION DATES 09/10/14 12/24/13 03/04/14 SHEET 2 OF 12

FILE => 53e0309-a-itp.dgn

USERNAME => s125624 DATE PLOTTED => 18-MAY-2015 TIME PLOTTED => 16:28

DIST	COUNTY	ROUTE	POST MILES TOTAL PROJECT	SHEET No.	TOTAL SHEETS
07	LA	10	37.2/42.4	2188	2313

REGISTERED CIVIL ENGINEER 10/01/14 DATE

6-1-15
PLANS APPROVAL DATE

REGISTERED PROFESSIONAL ENGINEER RICHARD E. SCHENDEL No. C64259 Exp. 6-30-15 CIVIL STATE OF CALIFORNIA

The State of California or its officers or agents shall not be responsible for the accuracy or completeness of electronic copies of this plan sheet.

SURVEY CONTROL

PRHV1526 (Not Shown On Plan)
Fnd Set PK in AC
220.19 FT Rt "Rte10" Line, Rte 10
Sta. 2223+44.31
N 1,845,473.91
E 6,618,604.71
Elev = 738.25

PRHV1527 (Not Shown On Plan)
Fnd L&T in TC
170.05 FT Lt "Rte10" Line, Rte 10
Sta. 2223+76.72
N 1,845,865.25
E 6,618,590.63
Elev = 748.86

CURVE DATA

No. (#)	R	Δ	T	L
(A)	4200.00	15°38'00"	576.57	1145.98
(B)	2196.05	04°22'57"	84.03	167.98
(C)	2195.38	02°58'58"	57.16	114.30
(D)	2196.05	00°08'11"	2.61	5.22
(E)	3858.60	05°31'58"	186.45	372.60

NOTE:
Foundations for walls other than RW No. 2161 are not shown.

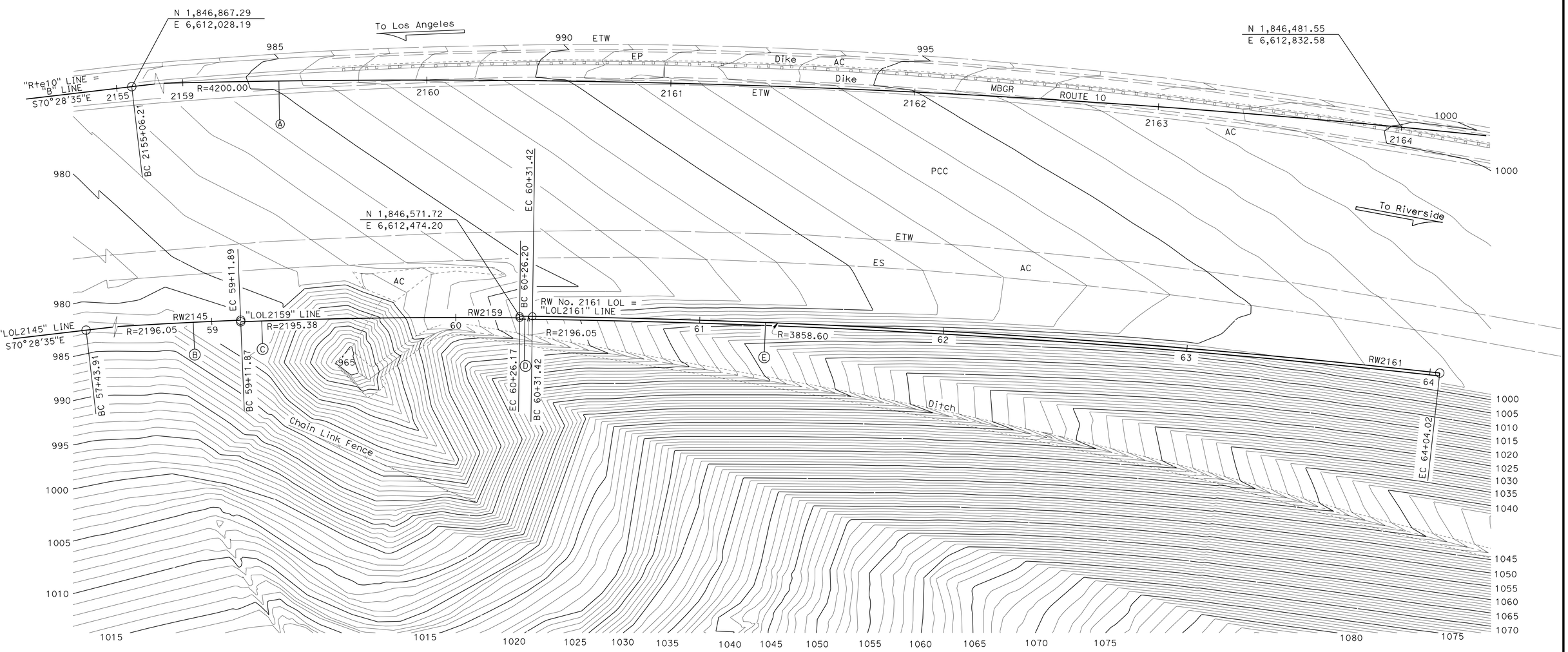

PRELIMINARY INVESTIGATION SECTION							
SCALE 1"=20'	VERT.DATUM NAVD88	PHOTOGRAMMETRY AS OF: 02/2008					
	HORZ.DATUM NAD83	SURVEYED	BY District 04/2008	CHECKED	BY C.Fassett 06/2011		
ALIGNMENT TIES Dist. Traverse Sheet		DRAFTED	BY Zolnikov/Fassett 06/2011	CHECKED	BY T.Schmalz 06/2011		

	BY	CHECKED
DESIGN	Richard Schendel	Matthew Schott
DETAILS	Richard Schendel	Matthew Schott
QUANTITIES	Richard Schendel	Matthew Schott

STATE OF CALIFORNIA
DEPARTMENT OF TRANSPORTATION

DIVISION OF ENGINEERING SERVICES
STRUCTURE DESIGN
DESIGN BRANCH 18

BRIDGE NO. 53E0309
POST MILE 40.92

RETAINING WALL NO. 2161
FOUNDATION PLAN

STRUCTURES FOUNDATION PLAN SHEET (ENGLISH) (REV. 09-01-10)

ORIGINAL SCALE IN INCHES FOR REDUCED PLANS 0 1 2 3

UNIT: 3646
PROJECT NUMBER & PHASE: 0713000007 1 CONTRACT NO.: 1193U

DISREGARD PRINTS BEARING EARLIER REVISION DATES

REVISION DATES 06/03/11 12/14/14 01/22/14

SHEET 3 OF 12

FILE => 53e0309-c-fp101.dgn

DIST	COUNTY	ROUTE	POST MILES TOTAL PROJECT	SHEET No.	TOTAL SHEETS
07	LA	10	37.2/42.4	2189	2313

REGISTERED CIVIL ENGINEER 10/01/14 DATE

6-1-15
PLANS APPROVAL DATE

REGISTERED PROFESSIONAL ENGINEER RICHARD E. SCHENDEL No. C64259 Exp. 6-30-15 CIVIL STATE OF CALIFORNIA

The State of California or its officers or agents shall not be responsible for the accuracy or completeness of scanned copies of this plan sheet.

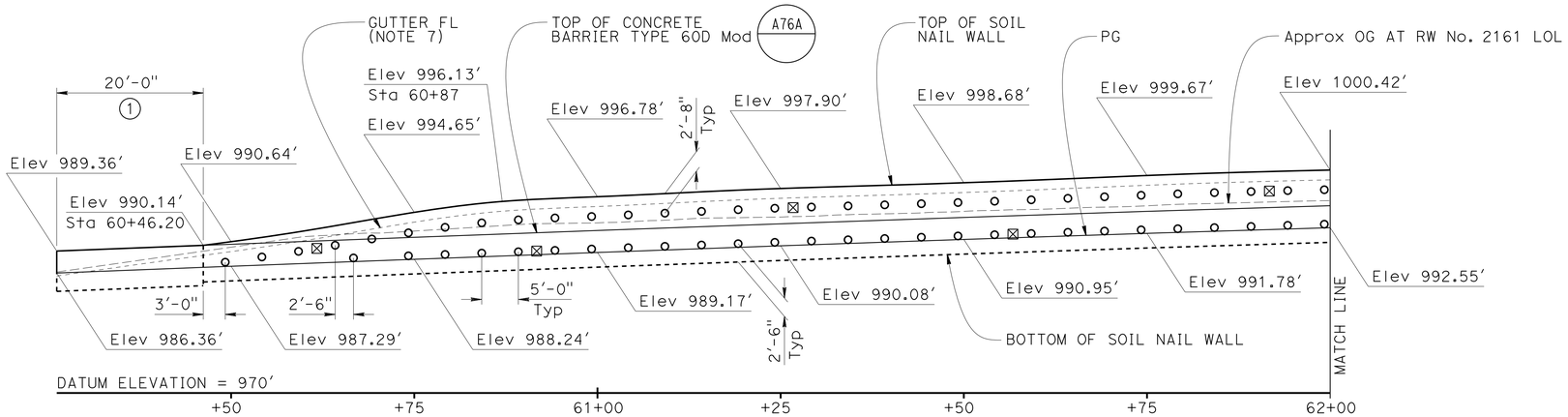

DEVELOPED MIRRORED ELEVATION

1" = 10'

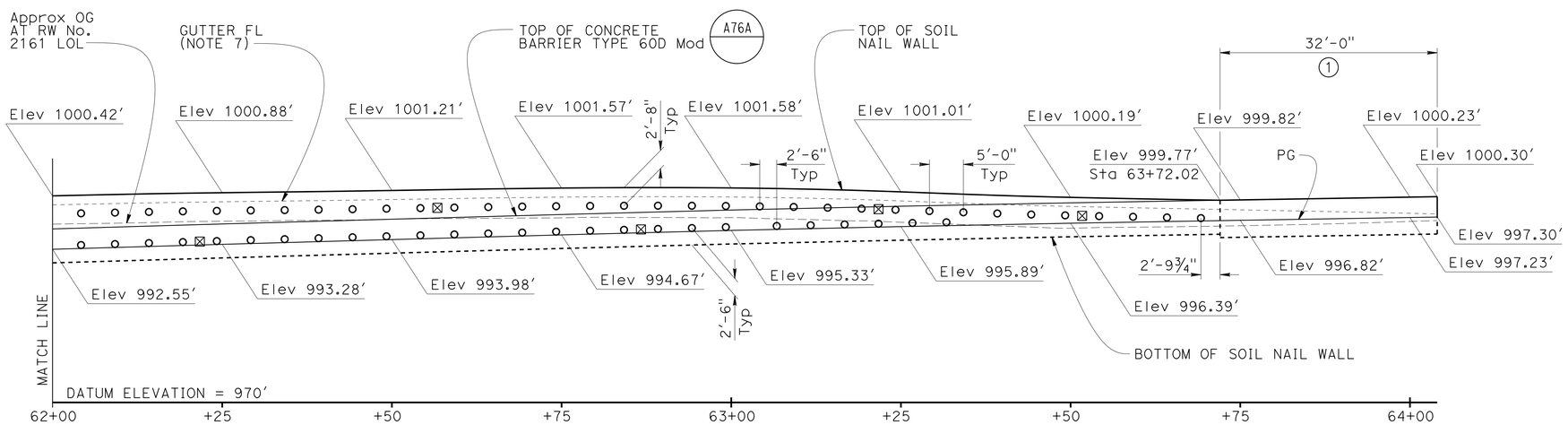

DEVELOPED MIRRORED ELEVATION

1" = 10'

NOTES:

1. Top of wall must be a smooth curve between control points as shown.
2. Unless otherwise shown, top of wall and PG elevations are shown at even 25 ft stations along RW No. 2161 LOL.
3. All horizontal dimensions are measured along RW No. 2161 LOL.
4. Cable railing and weep holes not shown.
5. The exact location of the test nails are to be determined by the Engineer.
6. For Soil Nail Assembly details, see "SOIL NAIL ASSEMBLY" sheet.
7. For Gutter FL elevations behind Concrete Barrier Type 736B Modified, see "ROAD PLANS."

LEGEND:

- ○ Location of Soil Nail Assembly, Tot 118
- ⊠ Location of Test Soil Nail Assembly, Tot 10
- (1) Concrete Barrier Type 736B Mod, RSP (B11-56) See "TYPICAL SECTIONS" sheet.

DESIGN	BY Richard Schendel	CHECKED Matthew Schott	
DETAILS	BY Richard Schendel	CHECKED Matthew Schott	
QUANTITIES	BY Richard Schendel	CHECKED Matthew Schott	

STATE OF CALIFORNIA
DEPARTMENT OF TRANSPORTATION

DIVISION OF ENGINEERING SERVICES
STRUCTURE DESIGN
DESIGN BRANCH 18

BRIDGE NO. 53E0309
POST MILE 40.92

RETAINING WALL NO. 2161
STRUCTURE PLAN

STRUCTURES DESIGN DETAIL SHEET (ENGLISH) (REV. 09-01-10)

ORIGINAL SCALE IN INCHES FOR REDUCED PLANS 0 1 2 3

UNIT: 3603
PROJECT NUMBER & PHASE: 07 1300 0007 1 CONTRACT NO.: 07-1193U1

DISREGARD PRINTS BEARING EARLIER REVISION DATES

REVISION DATES 10/30/13 11/22/13 03/04/14 05/13/14

SHEET 4 OF 12

FILE => 53e0309-e-sp01.dgn

USERNAME => s125624 DATE PLOTTED => 18-MAY-2015 TIME PLOTTED => 16:28

DIST	COUNTY	ROUTE	POST MILES TOTAL PROJECT	SHEET No.	TOTAL SHEETS
07	LA	10	37.2/42.4	2190	2313

REGISTERED CIVIL ENGINEER 10/01/14 DATE

6-1-15
PLANS APPROVAL DATE

REGISTERED PROFESSIONAL ENGINEER RICHARD E. SCHENDEL No. C64259 Exp. 6-30-15 CIVIL STATE OF CALIFORNIA

The State of California or its officers or agents shall not be responsible for the accuracy or completeness of scanned copies of this plan sheet.

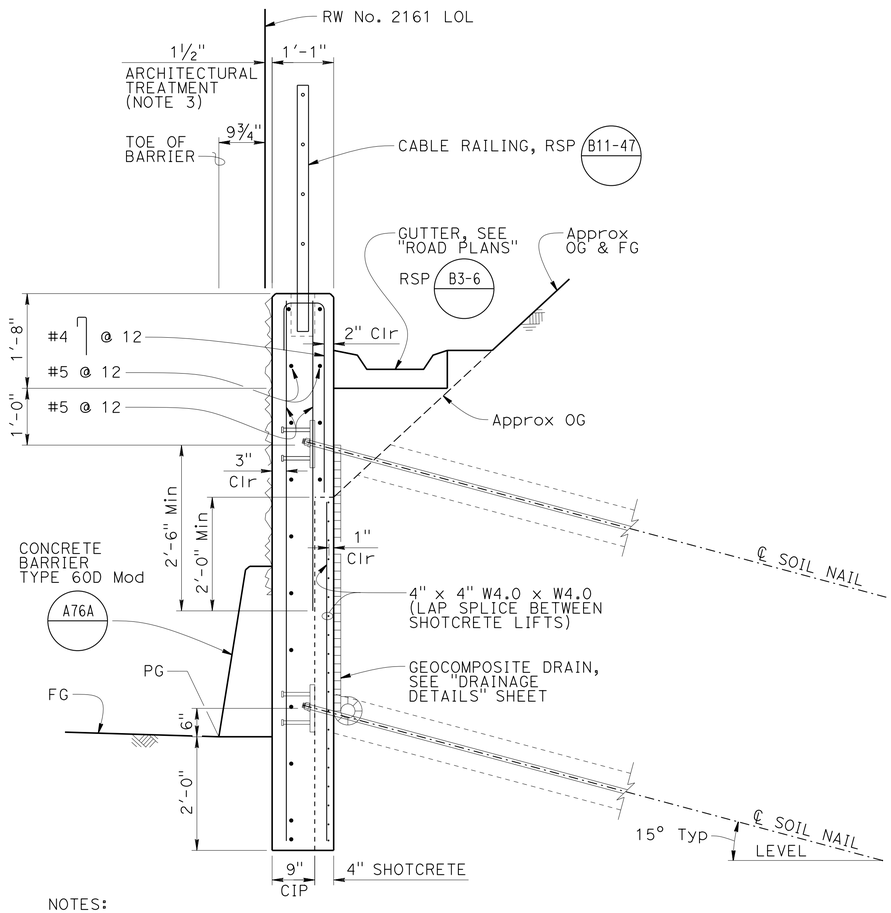

NOTES:

1. For additional Reinf not shown, see "SOIL NAIL ASSEMBLY" sheet.
2. For soil nail details not shown and for soil nail details shown but not noted, see "SOIL NAIL ASSEMBLY" sheet.
3. For Architectural Treatment, see "ARCHITECTURAL DETAILS" sheets.
4. Weep hole not shown for clarity, see "DRAINAGE DETAILS" sheet.

SOIL NAIL WALL

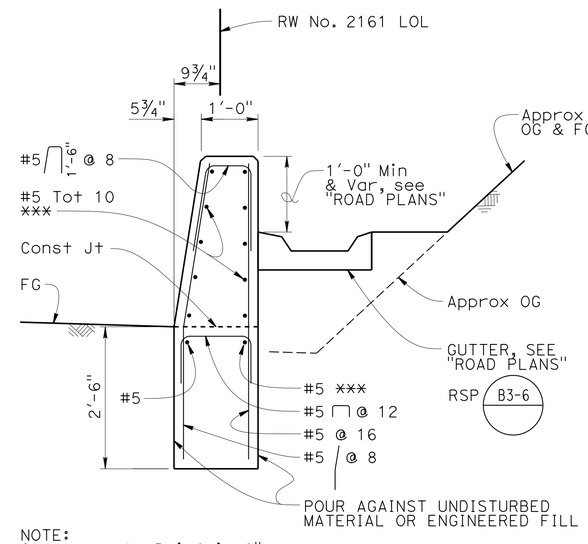

NOTE:
Clearance to Reinf is 2".

*** Extend 3'-0" Min into adjacent Type 60D Mod Barrier or Soil Nail Wall.

TYPE 736B MODIFIED

RSP B11-56

TYPICAL SECTIONS

¾" = 1'-0"

	BY	CHECKED
DESIGN	Richard Schendel	Matthew Schott
DETAILS	Richard Schendel	Matthew Schott
QUANTITIES	Richard Schendel	Matthew Schott

STATE OF CALIFORNIA
DEPARTMENT OF TRANSPORTATION

DIVISION OF ENGINEERING SERVICES
STRUCTURE DESIGN
DESIGN BRANCH 18

BRIDGE NO. 53E0309
POST MILE 40.92

RETAINING WALL NO. 2161
TYPICAL SECTIONS

STRUCTURES DESIGN DETAIL SHEET (ENGLISH) (REV. 09-01-10)

ORIGINAL SCALE IN INCHES FOR REDUCED PLANS 0 1 2 3

UNIT: 3603
PROJECT NUMBER & PHASE: 07 1300 0007 1 CONTRACT NO.: 07-1193U1

DISREGARD PRINTS BEARING EARLIER REVISION DATES

REVISION DATES 10/30/13 11/26/13 12/02/13 03/04/14

SHEET 5 OF 12

FILE => 53e0309-g-ts01.dgn

USERNAME => s125624 DATE PLOTTED => 18-MAY-2015 TIME PLOTTED => 16:28

DIST	COUNTY	ROUTE	POST MILES TOTAL PROJECT	SHEET No.	TOTAL SHEETS
07	LA	10	37.2/42.4	2191	2313

REGISTERED CIVIL ENGINEER — DATE 10/01/14

6-1-15
PLANS APPROVAL DATE

REGISTERED PROFESSIONAL ENGINEER — RICHARD E. SCHENDEL — No. C64259 — Exp. 6-30-15 — CIVIL — STATE OF CALIFORNIA

The State of California or its officers or agents shall not be responsible for the accuracy or completeness of scanned copies of this plan sheet.

NOTES:

1. The test nail embedment length L_{eT}, must be equal to 2/3 of the embedment length, Le, of adjacent production soil nail assemblies, but not less than 12'-0".
2. The total length of the test nail assembly equals the embedment length plus the length required for jacking equipment.
3. For location of proof test nails, see "STRUCTURE PLAN" sheet. Additional proof test nails must be installed and tested per special provisions.
4. Contractor to determine drilled hole diameter.
5. Finished grout surface to be normal to the bar.

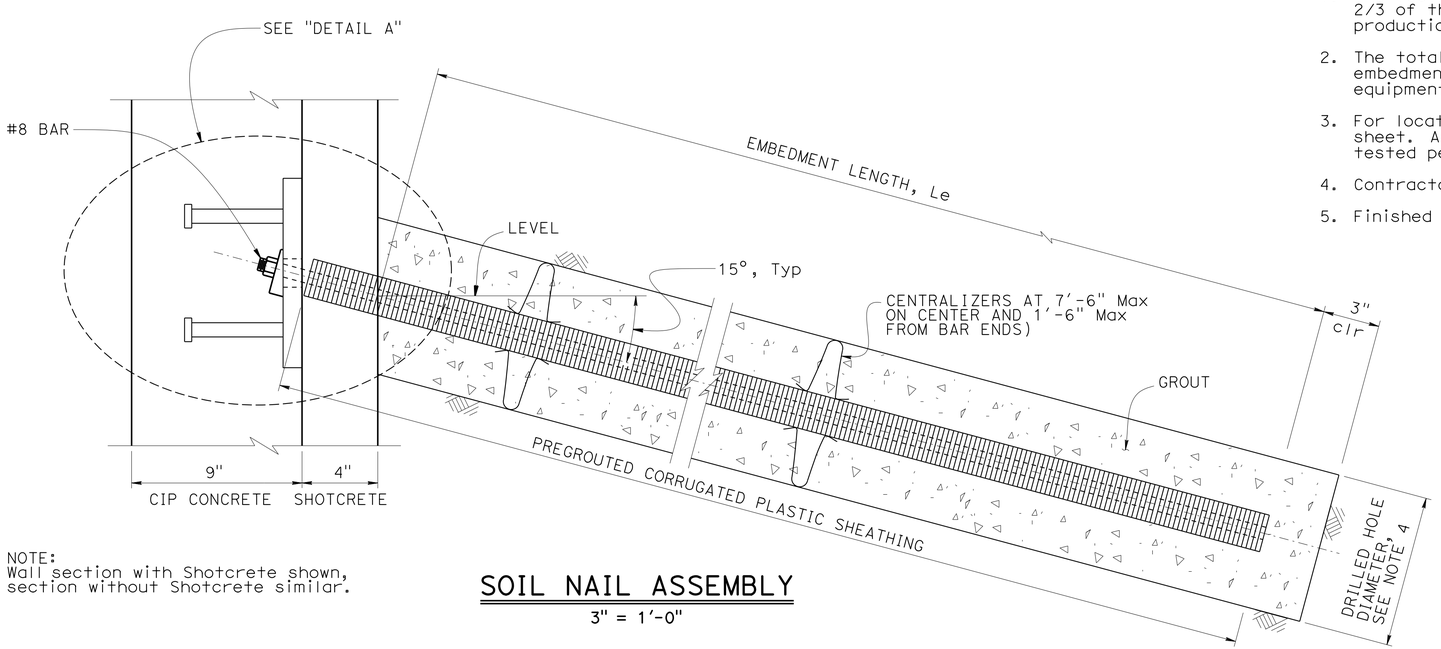

NOTE:
Wall section with Shotcrete shown, section without Shotcrete similar.

SOIL NAIL ASSEMBLY

3" = 1'-0"

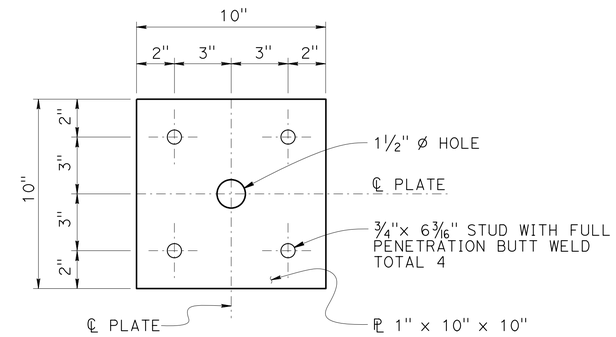

BEARING PLATE DETAIL

3" = 1'-0"

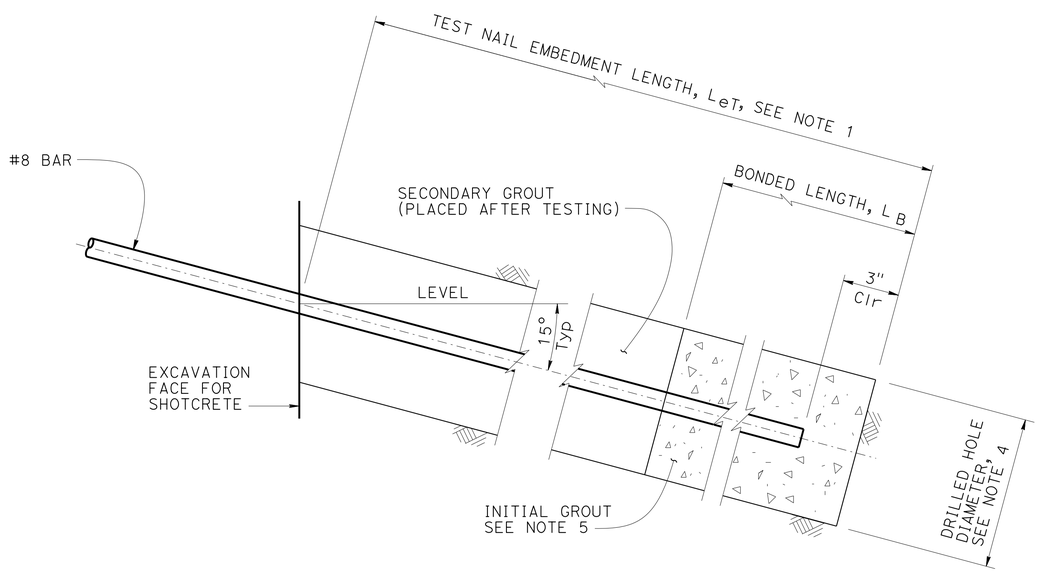

TEST NAIL DETAIL

3" = 1'-0"

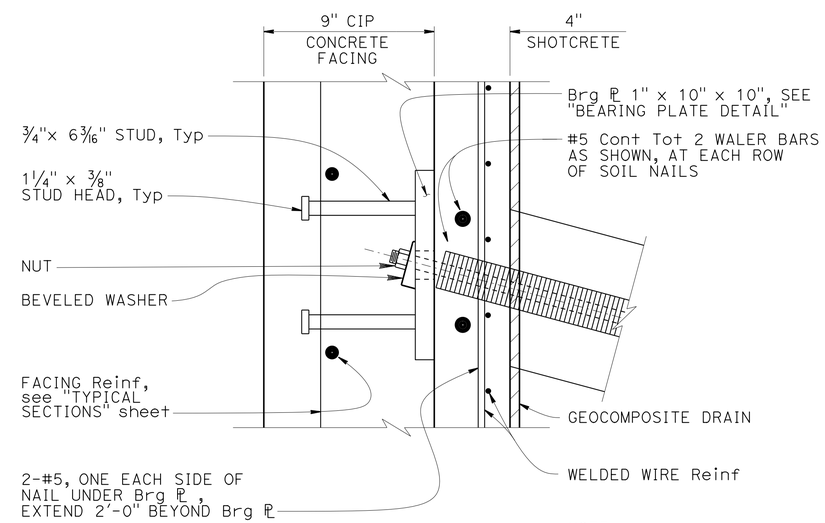

NOTE:
Wall section with Shotcrete shown, section without Shotcrete similar.

DETAIL A

3" = 1'-0"

DESIGN	BY Richard Schendel	CHECKED Matthew Schott	
DETAILS	BY Richard Schendel	CHECKED Matthew Schott	
QUANTITIES	BY Richard Schendel	CHECKED Matthew Schott	

STATE OF CALIFORNIA
DEPARTMENT OF TRANSPORTATION

DIVISION OF ENGINEERING SERVICES
STRUCTURE DESIGN
DESIGN BRANCH 18

BRIDGE NO. 53E0309
POST MILE 40.92

RETAINING WALL NO. 2161
SOIL NAIL ASSEMBLY

STRUCTURES DESIGN DETAIL SHEET (ENGLISH) (REV. 09-01-10)

ORIGINAL SCALE IN INCHES FOR REDUCED PLANS 0 1 2 3

UNIT: 3603
PROJECT NUMBER & PHASE: 07 1300 0007 1 CONTRACT NO.: 07-1193U1

DISREGARD PRINTS BEARING EARLIER REVISION DATES

REVISION DATES: 10/02/13 11/26/13 12/02/13 05/13/14

SHEET 6 OF 12

FILE => 53e0309-i-sndet01.dgn

USERNAME => s125624 DATE PLOTTED => 18-MAY-2015 TIME PLOTTED => 16:28

DIST	COUNTY	ROUTE	POST MILES TOTAL PROJECT	SHEET No.	TOTAL SHEETS
07	LA	10	37.2/42.4	2192	2313

REGISTERED CIVIL ENGINEER — DATE 10/01/14

6-1-15
PLANS APPROVAL DATE

REGISTERED PROFESSIONAL ENGINEER — RICHARD E. SCHENDEL — No. C64259 — Exp. 6-30-15 — CIVIL — STATE OF CALIFORNIA

The State of California or its officers or agents shall not be responsible for the accuracy or completeness of scanned copies of this plan sheet.

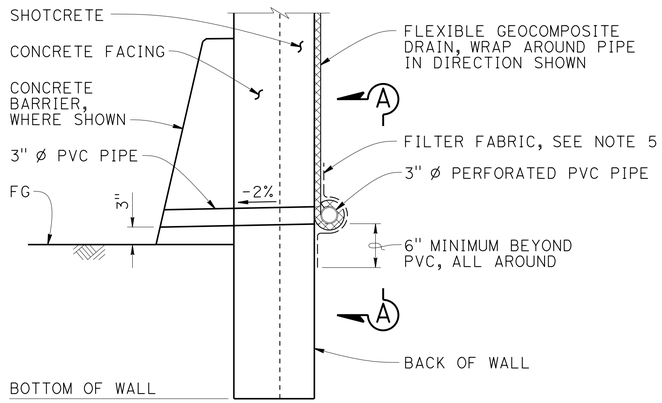

WALL DRAIN DETAIL AT WEEP HOLE - OPTION A

NO SCALE

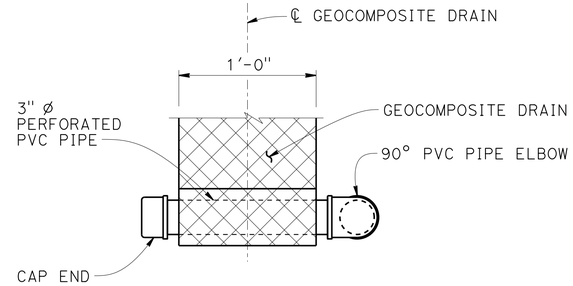

VIEW A-A

NO SCALE

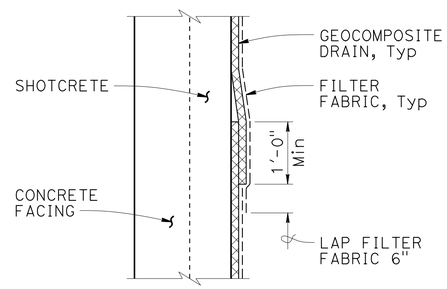

DRAIN SPLICE

NO SCALE

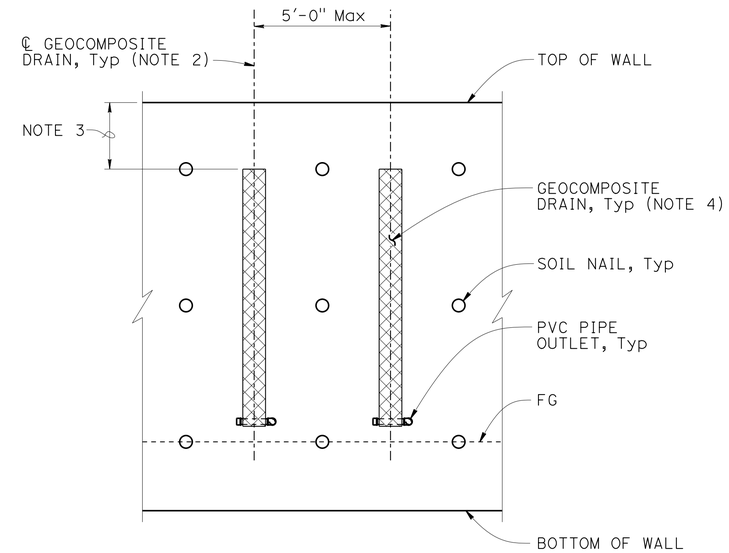

WALL PART ELEVATION

NO SCALE

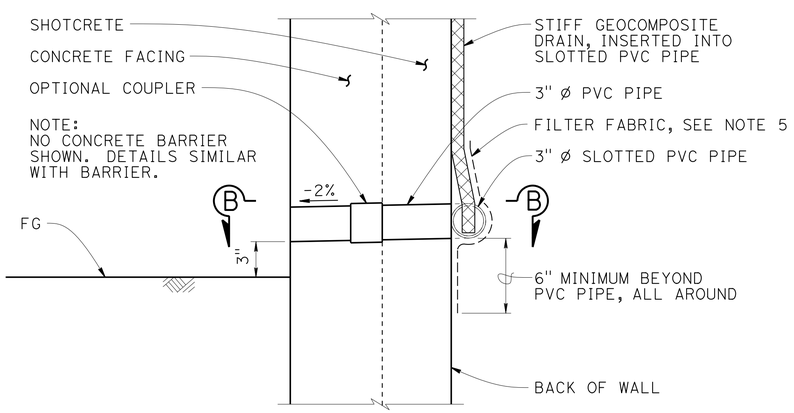

WALL DRAIN DETAIL AT WEEP HOLE - OPTION B

NO SCALE

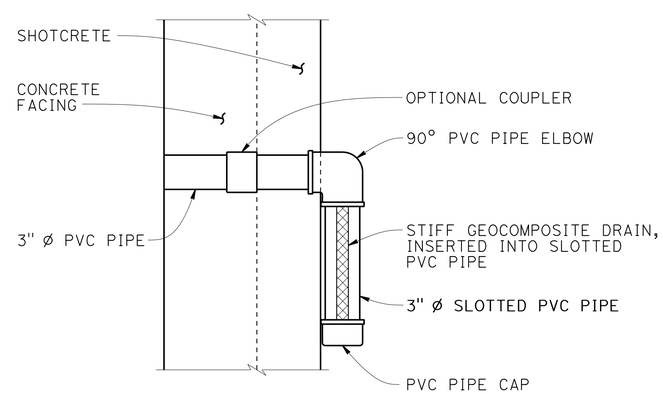

SECTION B-B

NO SCALE

NOTES:

1. Geocomposite Drain is per Section 88 Geosynthetics of the Standard Specifications.
2. Center Geocomposite Drains between soil nail columns.
3. Begin Geocomposite Drain at top soil nail row.
4. Geocomposite Drains must have filter fabric on soil side and wrapped around top and side edges.
5. Provide filter fabric where necessary to prevent soil from entering drain.
6. Alternative drain outlet details may be submitted for Engineer's approval.

	BY	CHECKED
DESIGN	Richard Schendel	Matthew Schott
DETAILS	Richard Schendel	Matthew Schott
QUANTITIES	Richard Schendel	Matthew Schott

STATE OF CALIFORNIA
DEPARTMENT OF TRANSPORTATION

DIVISION OF ENGINEERING SERVICES
STRUCTURE DESIGN
DESIGN BRANCH 18

BRIDGE NO. 53E0309
POST MILE 40.92

RETAINING WALL NO. 2161
DRAINAGE DETAILS

STRUCTURES DESIGN DETAIL SHEET (ENGLISH) (REV. 09-01-10)

ORIGINAL SCALE IN INCHES FOR REDUCED PLANS 0 1 2 3

UNIT: 3603
PROJECT NUMBER & PHASE: 07 1300 0007 1 CONTRACT NO.: 07-1193U1

DISREGARD PRINTS BEARING EARLIER REVISION DATES

REVISION DATES: 10/16/13 11/14/13

SHEET 7 OF 12

USERNAME => s125624 DATE PLOTTED => 18-MAY-2015 TIME PLOTTED => 16:28

FILE => 53e0309-r-ddet01.dgn

DIST	COUNTY	ROUTE	POST MILES TOTAL PROJECT	SHEET No.	TOTAL SHEETS
07	LA	10	37.2/42.4	2193	2313

REGISTERED CIVIL ENGINEER — DATE 10/01/14

6-1-15
PLANS APPROVAL DATE

REGISTERED PROFESSIONAL ENGINEER — RICHARD E. SCHENDEL — No. C64259 — Exp. 6-30-15 — CIVIL — STATE OF CALIFORNIA

The State of California or its officers or agents shall not be responsible for the accuracy or completeness of scanned copies of this plan sheet.

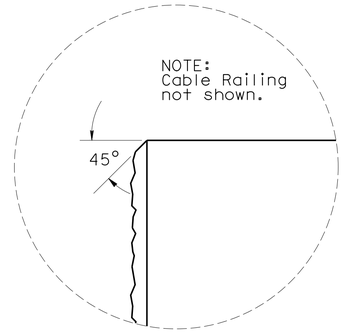

DETAIL B1

NO SCALE

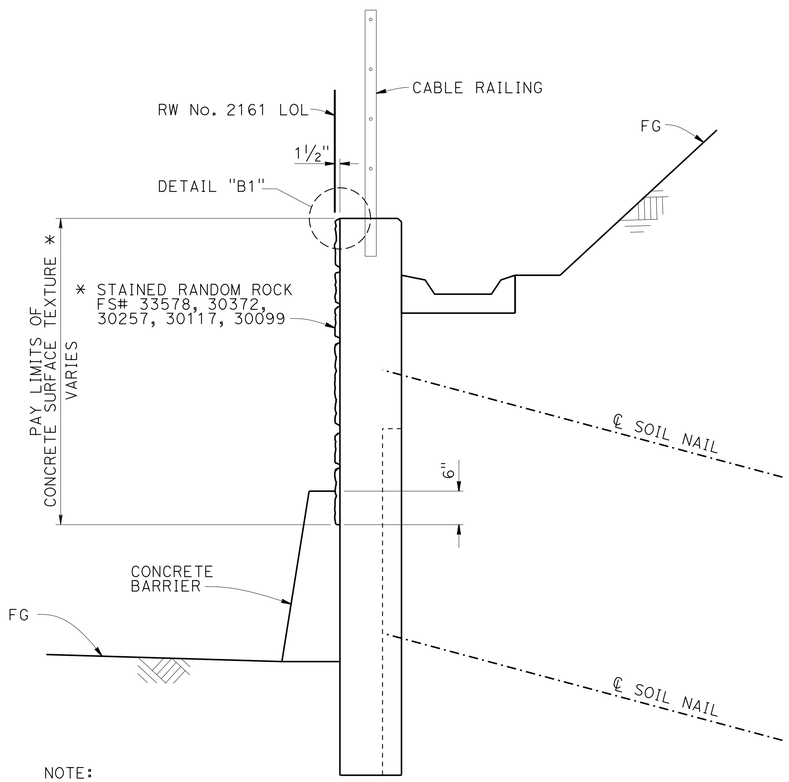

NOTE:
"FS#" is Federal
Standard Color Number.

TYPICAL SECTION

NO SCALE

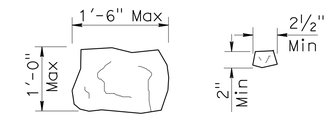

ROCK SIZE

NOTE:
Seamless Random Rock pattern to have a minimum of 2 to a maximum of 4 match points (denoted by "M") for each side (top to bottom and side to side).

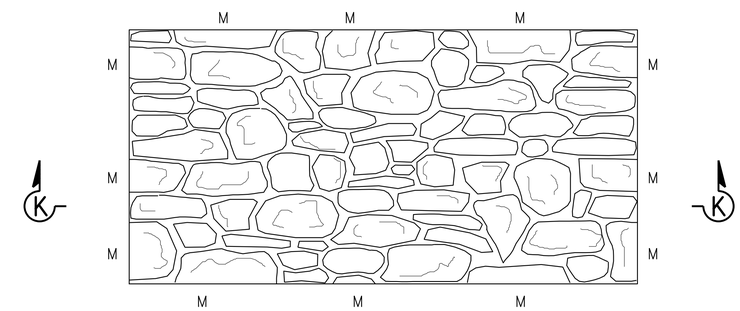

ELEVATION

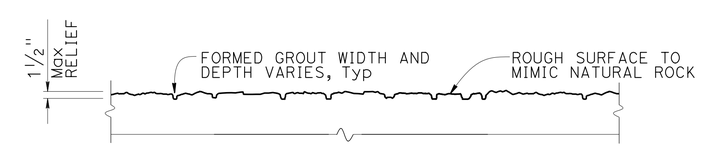

SECTION K-K

RANDOM ROCK TEXTURE

NO SCALE

DESIGN	BY Valerie Moore	CHECKED Richard Schendel	
DETAILS	BY Farideh Hosseinioun	CHECKED Richard Schendel	
QUANTITIES	BY Richard Schendel	CHECKED Matthew Schott	

STATE OF CALIFORNIA
DEPARTMENT OF TRANSPORTATION

DIVISION OF ENGINEERING SERVICES
STRUCTURE DESIGN
DESIGN BRANCH 18

BRIDGE NO. 53E0309
POST MILE 40.92

RETAINING WALL NO. 2161
ARCHITECTURAL DETAILS

STRUCTURES DESIGN DETAIL SHEET (ENGLISH) (REV. 09-01-10)

ORIGINAL SCALE IN INCHES FOR REDUCED PLANS 0 1 2 3

UNIT: 3603
PROJECT NUMBER & PHASE: 07 1300 0007 1 CONTRACT NO.: 07-1193U1

DISREGARD PRINTS BEARING EARLIER REVISION DATES

REVISION DATES: 01/06/14 01/31/14 03/04/14

SHEET 8 OF 12

FILE => 53e0309-u-archdt01.dgn

USERNAME => s125624 DATE PLOTTED => 18-MAY-2015 TIME PLOTTED => 16:28

DIST	COUNTY	ROUTE	POST MILES TOTAL PROJECT	SHEET No.	TOTAL SHEETS
07	LA	10	37.2/42.4	2194	2313

REGISTERED CIVIL ENGINEER 06/2013 DATE

6-1-15
PLANS APPROVAL DATE

URS Corporation
2020 E. First St., Santa Ana, CA 92705
The State of California or its officers or agents shall not be responsible for the accuracy or completeness of electronic copies of this plan sheet.

REGISTERED PROFESSIONAL ENGINEER
MICHAEL G. SMITH
No. 2229
Exp. 3-31-2014
GEOTECHNICAL
STATE OF CALIFORNIA

This LOTB sheet was prepared in accordance with the Caltrans Soil & Rock Logging, Classification, & Presentation Manual (2010 Edition).

BENCH MARK

BM No.3003 SUHV
ELEVATION 841.790 FT
Fd Bt Spk&W E/B I-10 Shldr
"B" Line Sta. 2118+49.10
Rt 76.00'
HORIZONTAL DATUM NAD83
VERTICAL DATUM NAVD88.

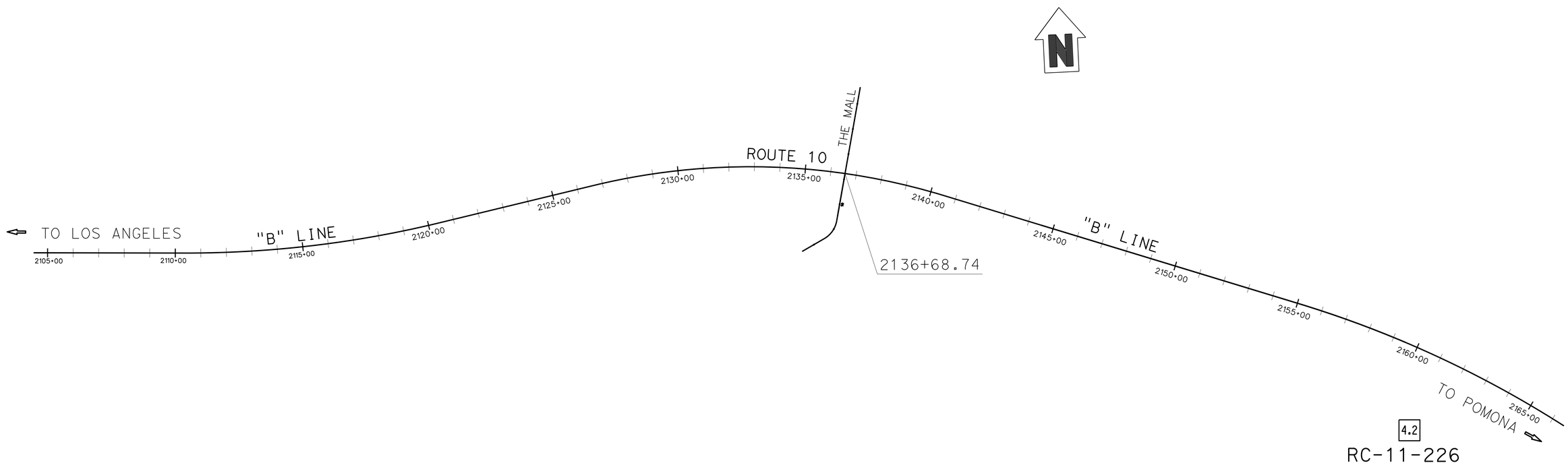

ENGINEERING SERVICES	MATERIALS AND GEOTECHNICAL SERVICES	STATE OF CALIFORNIA DEPARTMENT OF TRANSPORTATION	DIVISION OF ENGINEERING SERVICES STRUCTURE DESIGN DESIGN BRANCH	BRIDGE NO. 53E0309 POST MILE 40.92	RETAINING WALL NO. 2161 LOG OF TEST BORINGS SHEET 1 OF 2
FUNCTIONAL SUPERVISOR NAME: H.YANG	DRAWN BY: P.QUACH/T.PANAH CHECKED BY: D.ORRIS	FIELD INVESTIGATION BY: T.PANAH			

OGS CIVIL LOG OF TEST BORINGS SHEET

ORIGINAL SCALE IN INCHES FOR REDUCED PLANS 0 1 2 3

UNIT:
PROJECT NUMBER & PHASE: 07130000071 CONTRACT NO.: EA1193U1

DISREGARD PRINTS BEARING EARLIER REVISION DATES

REVISION DATES | SHEET 9 OF 12

FILE => 53e0309-y-1tb01.dgn

USERNAME => s125624 DATE PLOTTED => 18-MAY-2015 TIME PLOTTED => 16:28

DIST	COUNTY	ROUTE	POST MILES TOTAL PROJECT	SHEET No.	TOTAL SHEETS
07	LA	10	37.2/42.4	2195	2313

REGISTERED CIVIL ENGINEER 06/2013 DATE

6-1-15
PLANS APPROVAL DATE

REGISTERED PROFESSIONAL ENGINEER MICHAEL G. SMITH No. 2229 Exp. 3-31-2014 GEOTECHNICAL STATE OF CALIFORNIA

URS Corporation
2020 E. First St., Santa Ana, CA 92705
The State of California or its officers or agents shall not be responsible for the accuracy or completeness of electronic copies of this plan sheet.

This LOTB sheet was prepared in accordance with the Caltrans Soil & Rock Logging, Classification, & Presentation Manual (2010 Edition).

FOR PLAN VIEW, SEE
"LOG OF TEST BORINGS" 1 OF 2

ENGINEERING SERVICES	MATERIALS AND GEOTECHNICAL SERVICES	STATE OF CALIFORNIA DEPARTMENT OF TRANSPORTATION	DIVISION OF ENGINEERING SERVICES STRUCTURE DESIGN DESIGN BRANCH	BRIDGE NO. 53E0309 POST MILE 40.92	RETAINING WALL NO. 2161
FUNCTIONAL SUPERVISOR NAME: H.YANG	DRAWN BY: P.Quach/T.PANAH CHECKED BY: D.ORRIS	FIELD INVESTIGATION BY: T.PANAH			LOG OF TEST BORINGS SHEET 2 OF 2

OGS CIVIL LOG OF TEST BORINGS SHEET

ORIGINAL SCALE IN INCHES FOR REDUCED PLANS 0 1 2 3

UNIT:
PROJECT NUMBER & PHASE: 07130000071 CONTRACT NO.: EA1193U1

DISREGARD PRINTS BEARING EARLIER REVISION DATES

REVISION DATES

SHEET 10 OF 12

FILE => 53e0309-y-1tb02.dgn

USERNAME => s125624 DATE PLOTTED => 18-MAY-2015 TIME PLOTTED => 16:28

DIST	COUNTY	ROUTE	POST MILES TOTAL PROJECT	SHEET No	TOTAL SHEETS
07	LA	10	37.2/42.4	2196	2313

CERTIFIED ENGINEERING GEOLOGIST 1-10-14

6-1-15
PLANS APPROVAL DATE

PROFESSIONAL GEOLOGIST Michael A. Salisbury No. 2462 Exp. 2-28-15 CERTIFIED ENGINEERING GEOLOGIST STATE OF CALIFORNIA

The State of California or its officers or agents shall not be responsible for the accuracy or completeness of electronic copies of this plan sheet.

This LOTB sheet was prepared in accordance with the Caltrans Soil & Rock Logging, Classification, & Presentation Manual (2010 Edition).

See 2010 Standard Plans A10F and A10G for Soil Legend, and A10H for Rock Legend.

BENCH MARKS

SUHV 3005 Elev 977.757
Bt Spk & W E/B I-10 shldr
75.31′ Rt Sta 2158+46.30 "B" Line
NAVD 88

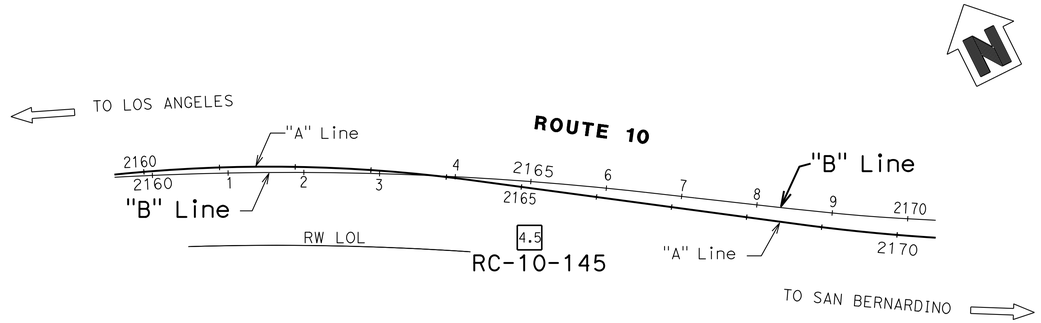

PLAN
1" = 100′

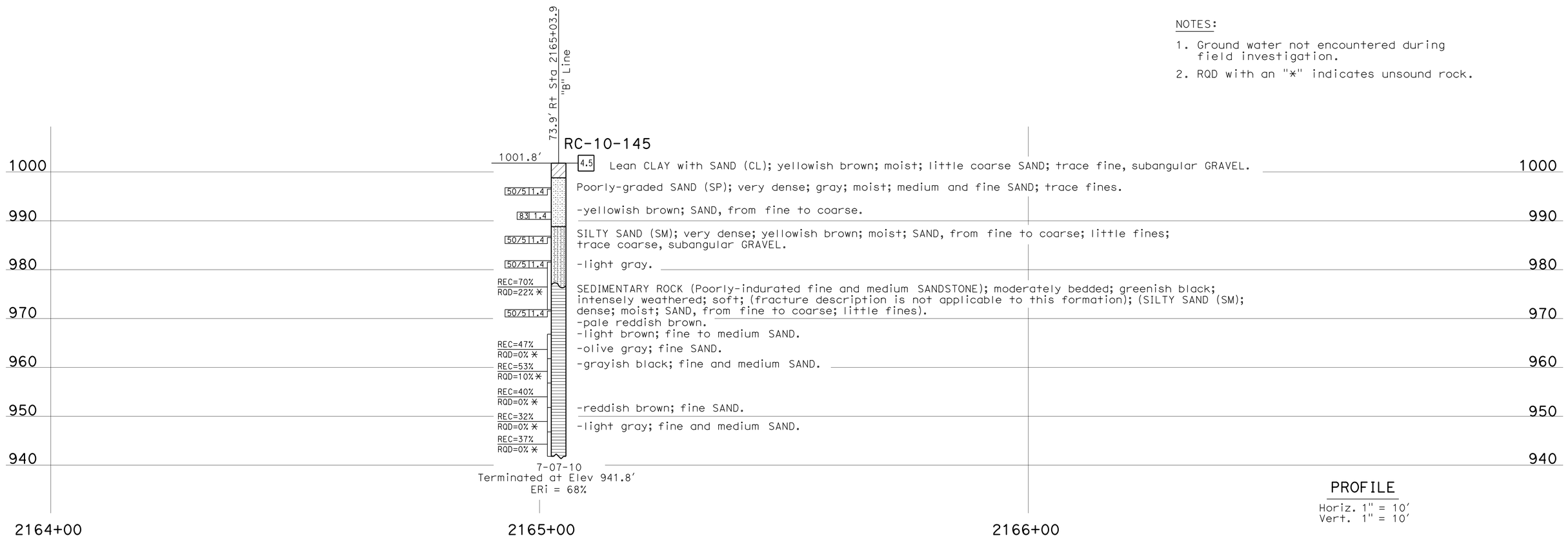

PROFILE
Horiz. 1" = 10′
Vert. 1" = 10′

NOTES:

1. Ground water not encountered during field investigation.
2. RQD with an "*" indicates unsound rock.

ENGINEERING SERVICES	MATERIALS AND GEOTECHNICAL SERVICES	STATE OF CALIFORNIA DEPARTMENT OF TRANSPORTATION	DIVISION OF ENGINEERING SERVICES STRUCTURE DESIGN DESIGN BRANCH 18	BRIDGE NO. 53E0309 POST MILE 40.92	RETAINING WALL NO. 2161 LOG OF TEST BORINGS 1 OF 2
FUNCTIONAL SUPERVISOR NAME: D-J. Jang	DRAWN BY: F. Nguyen 5/11 CHECKED BY: H. Liu	FIELD INVESTIGATION BY: M. Salisbury, H. P. Yang			

OGS CIVIL LOG OF TEST BORINGS SHEET

ORIGINAL SCALE IN INCHES FOR REDUCED PLANS 0 1 2 3

UNIT: 3643
PROJECT NUMBER & PHASE: 07130000071 CONTRACT NO.: 07-1193U1

DISREGARD PRINTS BEARING EARLIER REVISION DATES

REVISION DATES: 07-08-11 07-19-12 11-21-13 01-09-14 SHEET 11 OF 12

FILE => 53e0309-y-lltb03.dgn

USERNAME => s125624 DATE PLOTTED => 18-MAY-2015 TIME PLOTTED => 16:28

DIST.	COUNTY	ROUTE	POST MILES TOTAL PROJECT	SHEET NO.	TOTAL SHEETS
07	LA	10			

W. Cain
CERTIFIED ENGINEERING GEOLOGIST

REGISTERED GEOLOGIST — W.C. CAIN No. 732 Exp. 6-30-94 CERTIFIED ENGINEERING GEOLOGIST — STATE OF CALIFORNIA

PLANS APPROVAL DATE

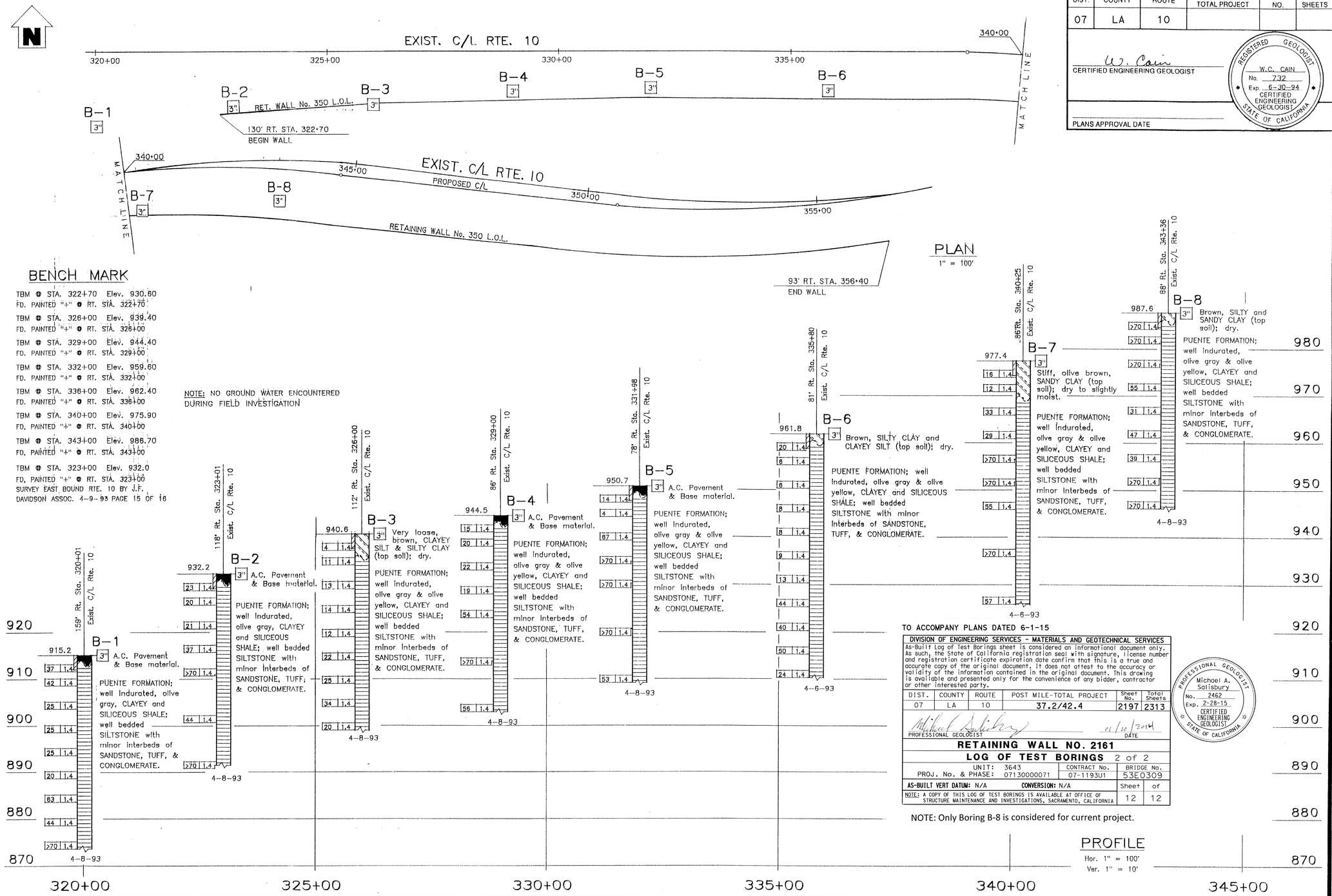

BENCH MARK

TBM @ STA. 322+70 Elev. 930.60
FD. PAINTED "+" @ RT. STA. 322+70

TBM @ STA. 326+00 Elev. 939.40
FD. PAINTED "+" @ RT. STA. 326+00

TBM @ STA. 329+00 Elev. 944.40
FD. PAINTED "+" @ RT. STA. 329+00

TBM @ STA. 332+00 Elev. 959.60
FD. PAINTED "+" @ RT. STA. 332+00

TBM @ STA. 336+00 Elev. 962.40
FD. PAINTED "+" @ RT. STA. 336+00

TBM @ STA. 340+00 Elev. 975.90
FD, PAINTED "+" @ RT. STA. 340+00

TBM @ STA. 343+00 Elev. 986.70
FD, PAINTED "+" @ RT. STA. 343+00

TBM @ STA. 323+00 Elev. 932.0
FD, PAINTED "+" @ RT. STA. 323+00
SURVEY EAST BOUND RTE. 10 BY J.F. DAVIDSON ASSOC. 4-9-93 PAGE 15 OF 16

NOTE: NO GROUND WATER ENCOUNTERED DURING FIELD INVESTIGATION

TO ACCOMPANY PLANS DATED 6-1-15

DIVISION OF ENGINEERING SERVICES - MATERIALS AND GEOTECHNICAL SERVICES

As-Built Log of Test Borings sheet is considered an informational document only. As such, the State of California registration seal with signature, license number and registration certificate expiration date confirm that this is a true and accurate copy of the original document. It does not attest to the accuracy or validity of the information contained in the original document. This drawing is available and presented only for the convenience of any bidder, contractor or other interested party.

DIST.	COUNTY	ROUTE	POST MILE-TOTAL PROJECT	Sheet No.	Total Sheets
07	LA	10	37.2/42.4	2197	2313

Michael Salisbury — PROFESSIONAL GEOLOGIST — DATE 01/10/2014

PROFESSIONAL GEOLOGIST — Michael A. Salisbury No. 2462 Exp. 2-28-15 CERTIFIED ENGINEERING GEOLOGIST — STATE OF CALIFORNIA

RETAINING WALL NO. 2161

LOG OF TEST BORINGS 2 of 2

UNIT: 3643	CONTRACT No.	BRIDGE No.
PROJ. No. & PHASE: 07130000071	07-1193U1	53E0309

AS-BUILT VERT DATUM: N/A CONVERSION: N/A — Sheet 12 of 12

NOTE: A COPY OF THIS LOG OF TEST BORINGS IS AVAILABLE AT OFFICE OF STRUCTURE MAINTENANCE AND INVESTIGATIONS, SACRAMENTO, CALIFORNIA

NOTE: Only Boring B-8 is considered for current project.

PROFILE
Hor. 1" = 100'
Ver. 1" = 10'

LEGEND OF BORING OPERATIONS

LEGEND OF EARTH MATERIALS: GRAVEL, SAND, SILT, CLAY, SANDY CLAY or CLAYEY SAND, SANDY SILT or SILTY SAND, SILTY CLAY, CLAYEY SILT, PEAT and/or ORGANIC MATTER, FILL MATERIAL, IGNEOUS ROCK, SEDIMENTARY ROCK, METAMORPHIC ROCK

CONSISTENCY CLASSIFICATION FOR SOILS — According to the Standard Penetration Test

Penetration Index (Blows / Ft)	Granular	Cohesive
0-4	Very loose	Very soft
5-9	Loose	Soft
10-19	Slightly compact	Stiff
20-34	Compact	Very stiff
35-69	Dense	Hard
>70	Very dense	Very hard

NOTE: Classification of earth material as shown on this sheet is based upon field inspection and is not to be construed to imply mechanical analyses.

DIVISION OF NEW TECHNOLOGY, MATERIALS AND RESEARCH	OFFICE OF ENGINEERING GEOLOGY
DRAWN BY I. GAMARRA 5/93	
CHECKED BY Faramarz Gerami 8-93	

FIELD INVESTIGATION BY: F. GERAMI

State of CALIFORNIA DEPARTMENT OF TRANSPORTATION

DIVISION OF STRUCTURES STRUCTURE DESIGN

BRIDGE NO.

POST MILE 37.5/42.4

RETAINING WALL NO. 350

SEP 23 1993

LOG OF TEST BORINGS

ORIGINAL SCALE IN INCHES FOR REDUCED PLANS 0 1 2 3

CU 07234
EA 11934K

DISREGARD PRINTS BEARING EARLIER REVISION DATES

REVISION DATES (PRELIMINARY STAGE ONLY) SHEET OF

TL 5051 REV 2/92

DIST	COUNTY	ROUTE	POST MILES TOTAL PROJECT	SHEET No.	TOTAL SHEETS
07	LA	10	37.2/42.4	2198	2313

REGISTERED CIVIL ENGINEER 10-1-14 DATE

6-1-15
PLANS APPROVAL DATE

REGISTERED PROFESSIONAL ENGINEER Gabriel J. Galo No. 52288 Exp. 12-31-14 CIVIL STATE OF CALIFORNIA

The State of California or its officers or agents shall not be responsible for the accuracy or completeness of scanned copies of this plan sheet.

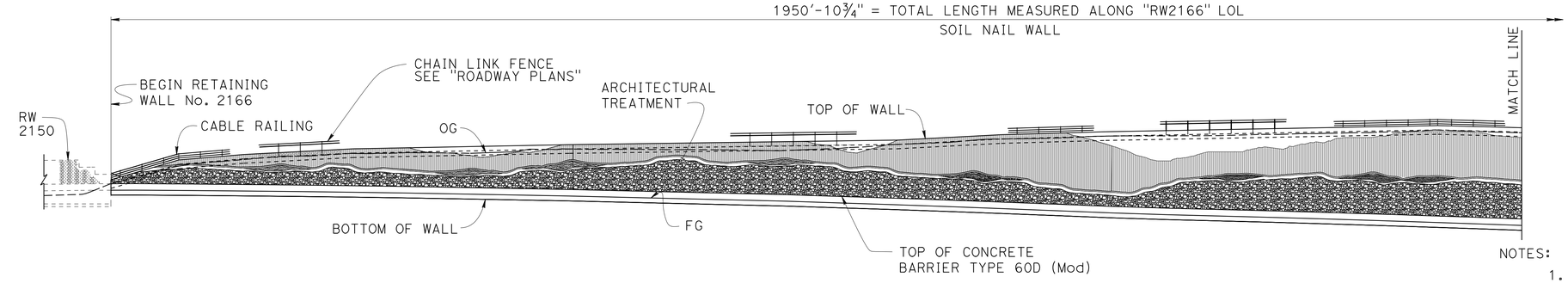

NOTES:

1. For additional details see "GENERAL PLAN NO. 2" and "GENERAL PLAN NO. 3" sheets.
2. For Concrete Channel see "ROADWAY PLANS".

DATUM Elev = 920'

66+00 67+00 68+00 69+00 70+00 71+00 72+00

DEVELOPED ELEVATION

1" = 30'-0"

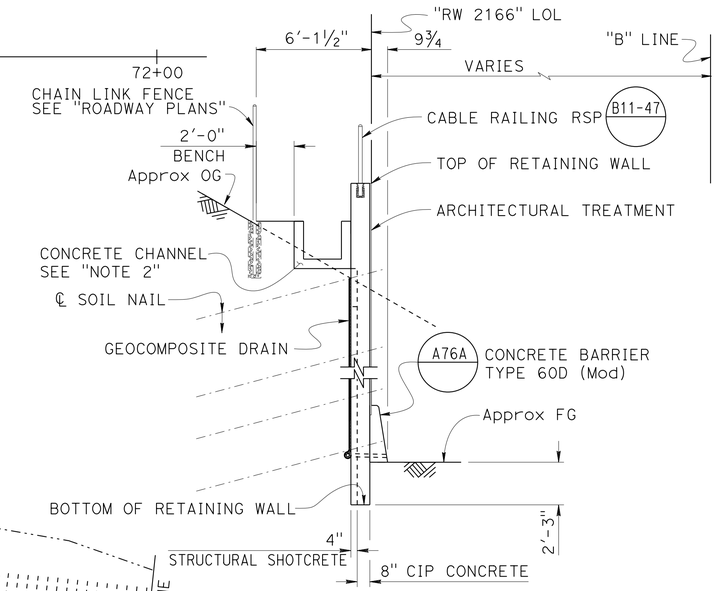

TYPICAL SECTION

¼" = 1'-0"

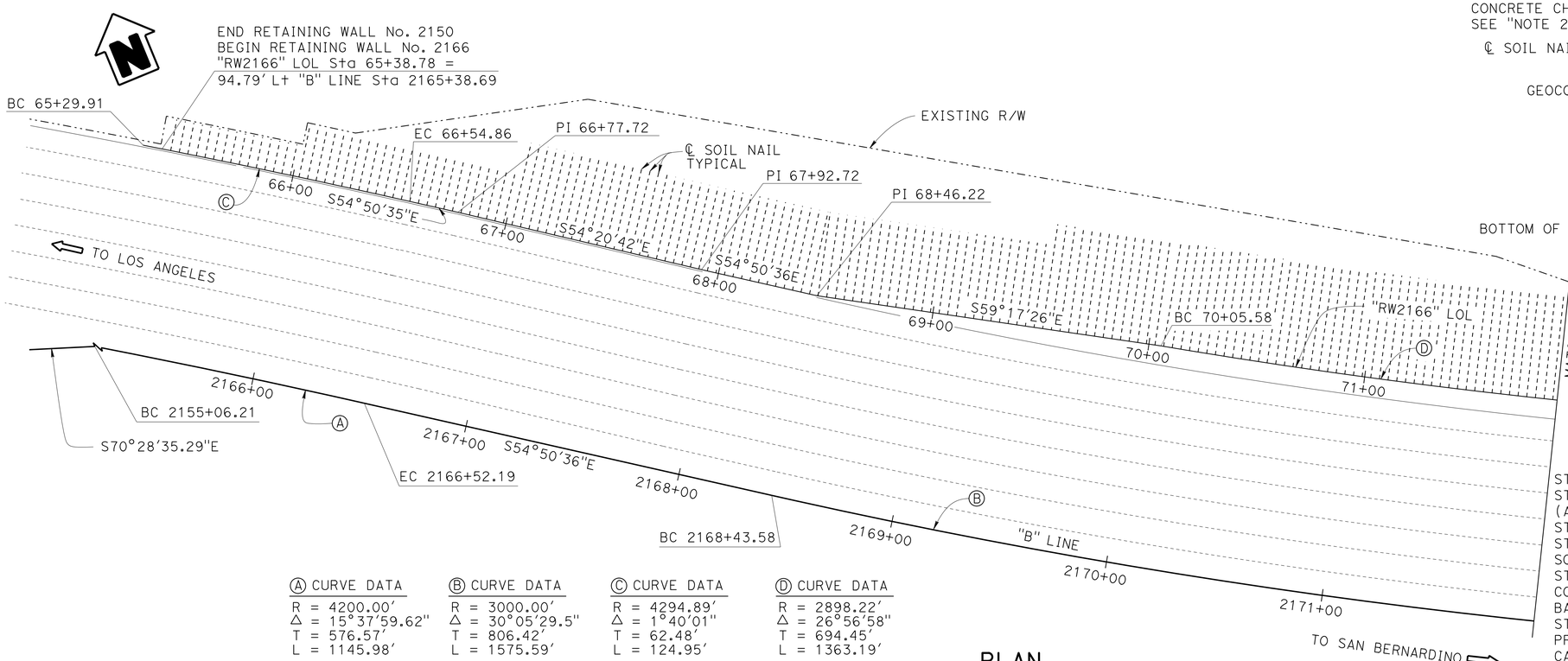

Ⓐ CURVE DATA	Ⓑ CURVE DATA	Ⓒ CURVE DATA	Ⓓ CURVE DATA
R = 4200.00'	R = 3000.00'	R = 4294.89'	R = 2898.22'
Δ = 15°37'59.62"	Δ = 30°05'29.5"	Δ = 1°40'01"	Δ = 26°56'58"
T = 576.57'	T = 806.42'	T = 62.48'	T = 694.45'
L = 1145.98'	L = 1575.59'	L = 124.95'	L = 1363.19'

PLAN

1" = 30'-0"

QUANTITIES

STRUCTURE EXCAVATION (SOIL NAIL WALL)	3,475	CY
STRUCTURE EXCAVATION (TYPE Y-1) (AERIALLY DEPOSITED LEAD)	71	CY
STRUCTURE BACKFILL (SLURRY CEMENT)	36	CY
STRUCTURE BACKFILL (SOIL NAIL WALL)	163	CY
SOIL NAIL	147,670	LF
STRUCTURAL CONCRETE, RETAINING WALL	1,554	CY
CONCRETE SURFACE TEXTURE	49,295	SQFT
BAR REINFORCING STEEL (RETAINING WALL)	283,818	LB
STRUCTURAL SHOTCRETE	615	CY
PREPARE AND STAIN CONCRETE	47,018	SQFT
CABLE RAILING	1,951	LF
CONCRETE BARRIER (TYPE 60D)	1,951	LF

Traci Menard
DESIGN ENGINEER

	BY	CHECKED
DESIGN	Fred Feng	R. Novik\J. Higareda
DETAILS	H. Mauroschadt\S. Cholda	R. Novik\J. Higareda
QUANTITIES	Fred Feng	Ruslan Novik

LOAD & RESISTANCE FACTOR DESIGN — LIVE LOADING: HL93 W/"LOW-BOY"; PERMIT DESIGN VEHICLE

	BY	CHECKED
LAYOUT	F. Feng	R. Novik
SPECIFICATIONS	X. Chen	PLANS AND SPECS COMPARED X. Chen

ORIGINAL SCALE IN INCHES FOR REDUCED PLANS 0 1 2 3

STATE OF CALIFORNIA
DEPARTMENT OF TRANSPORTATION

DIVISION OF ENGINEERING SERVICES
STRUCTURE DESIGN
DESIGN BRANCH 15

BRIDGE NO. 53E0315
POST MILE 41.01

RETAINING WALL NO. 2166
GENERAL PLAN NO. 1

UNIT: 3604
PROJECT NUMBER & PHASE: 0713000007
CONTRACT NO.: 07-1193U1

DISREGARD PRINTS BEARING EARLIER REVISION DATES

REVISION DATES: 01-18-13 02-13-15 ~~06-06-14~~ 9-16-14

SHEET 1 OF 44

FILE => 53e0315-a-gp01.dgn

USERNAME => s125624 DATE PLOTTED => 18-MAY-2015 TIME PLOTTED => 16:28

STRUCTURES DESIGN GENERAL PLAN SHEET (ENGLISH) (REV.09-01-10)

DIST	COUNTY	ROUTE	POST MILES TOTAL PROJECT	SHEET No.	TOTAL SHEETS
07	LA	10	37.2/42.4	2199	2313

REGISTERED CIVIL ENGINEER — DATE 10-1-14

6-1-15
PLANS APPROVAL DATE

REGISTERED PROFESSIONAL ENGINEER — Gabriel J. Galo — No. 52288 — Exp. 12-31-14 — CIVIL — STATE OF CALIFORNIA

The State of California or its officers or agents shall not be responsible for the accuracy or completeness of scanned copies of this plan sheet.

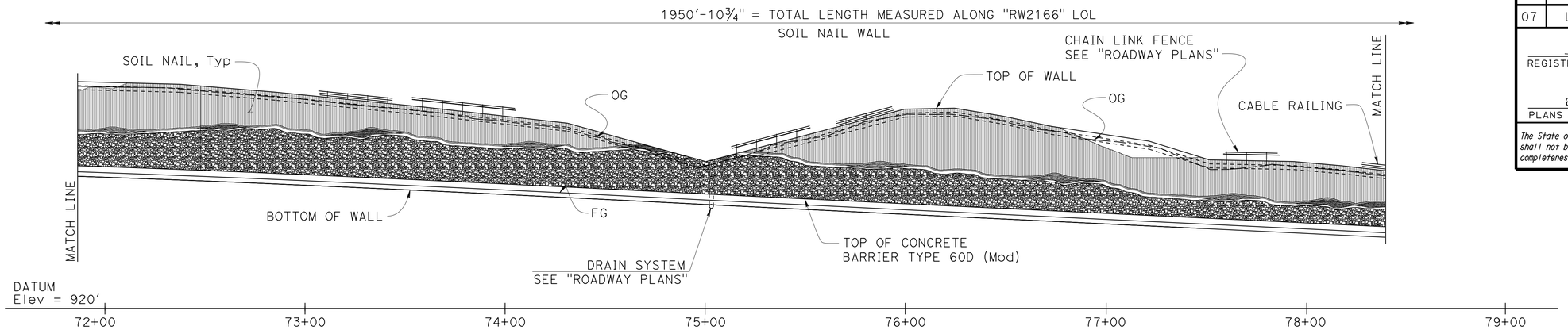

DEVELOPED ELEVATION

1" = 30'-0"

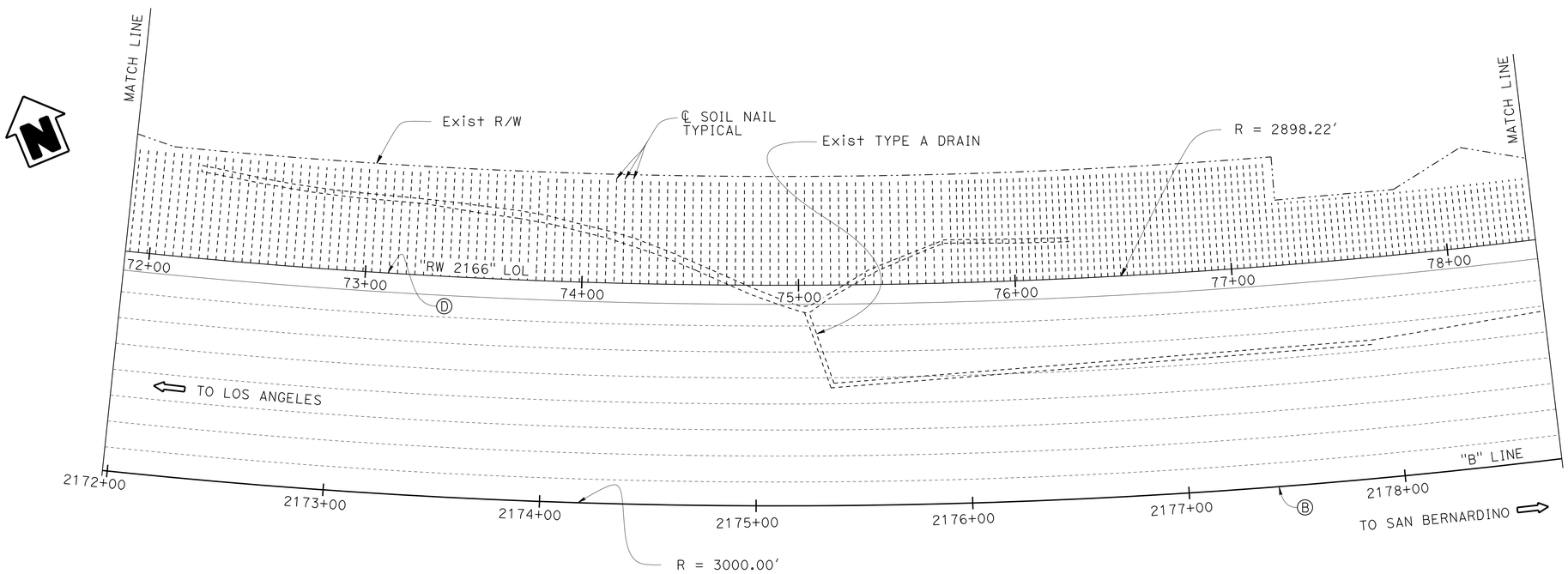

PLAN

1" = 30'-0"

DESIGN	BY Fred Feng	CHECKED R. Novik\J. Higareda	LOAD & RESISTANCE FACTOR DESIGN	LIVE LOADING: HL93 W/"LOW-BOY"; PERMIT DESIGN VEHICLE	
DETAILS	BY H. Mauroschadt\S. Cholda	CHECKED R. Novik\J. Higareda	LAYOUT	BY F. Feng	CHECKED R. Novik
QUANTITIES	BY Fred Feng	CHECKED Ruslan Novik	SPECIFICATIONS	BY X. Chen	PLANS AND SPECS COMPARED X. Chen

Traci Menard
DESIGN ENGINEER

ORIGINAL SCALE IN INCHES FOR REDUCED PLANS 0 1 2 3

STATE OF CALIFORNIA
DEPARTMENT OF TRANSPORTATION

DIVISION OF ENGINEERING SERVICES
STRUCTURE DESIGN
DESIGN BRANCH 15

BRIDGE NO. 53E0315
POST MILE 41.01

RETAINING WALL NO. 2166
GENERAL PLAN NO. 2

UNIT: 3604
PROJECT NUMBER & PHASE: 0713000007
CONTRACT NO.: 07-1193U1

DISREGARD PRINTS BEARING EARLIER REVISION DATES

REVISION DATES: 10-25-13 07-08-14 03-04-14 07-01-14

SHEET 2 OF 44

STRUCTURES DESIGN GENERAL PLAN SHEET (ENGLISH) (REV.09-01-10)

FILE => 53e0315-a-gp02.dgn

USERNAME => s125624 DATE PLOTTED => 18-MAY-2015 TIME PLOTTED => 16:28

DIST	COUNTY	ROUTE	POST MILES TOTAL PROJECT	SHEET No.	TOTAL SHEETS
07	LA	10	37.2/42.4	2200	2313

REGISTERED CIVIL ENGINEER — DATE 10-1-14

6-1-15
PLANS APPROVAL DATE

REGISTERED PROFESSIONAL ENGINEER — Gabriel J. Galo — No. 52288 — Exp. 12-31-14 — CIVIL — STATE OF CALIFORNIA

The State of California or its officers or agents shall not be responsible for the accuracy or completeness of scanned copies of this plan sheet.

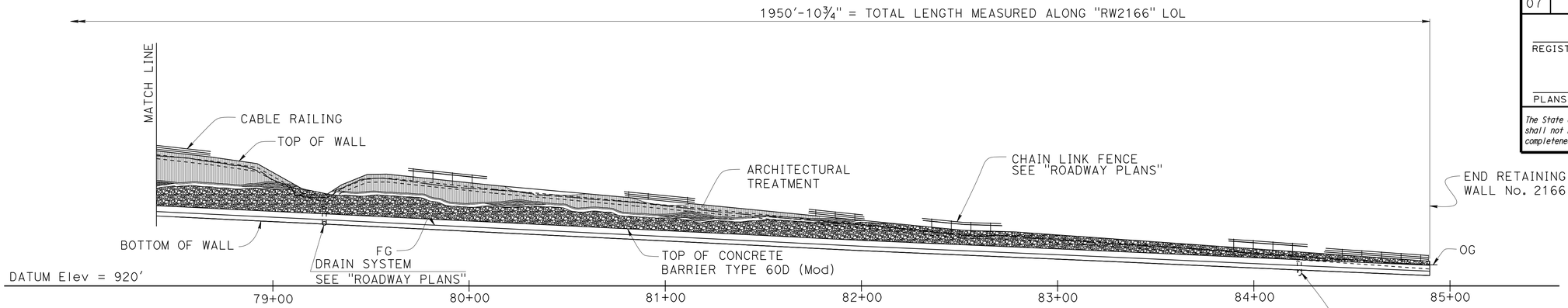

DEVELOPED ELEVATION

1" = 30'-0"

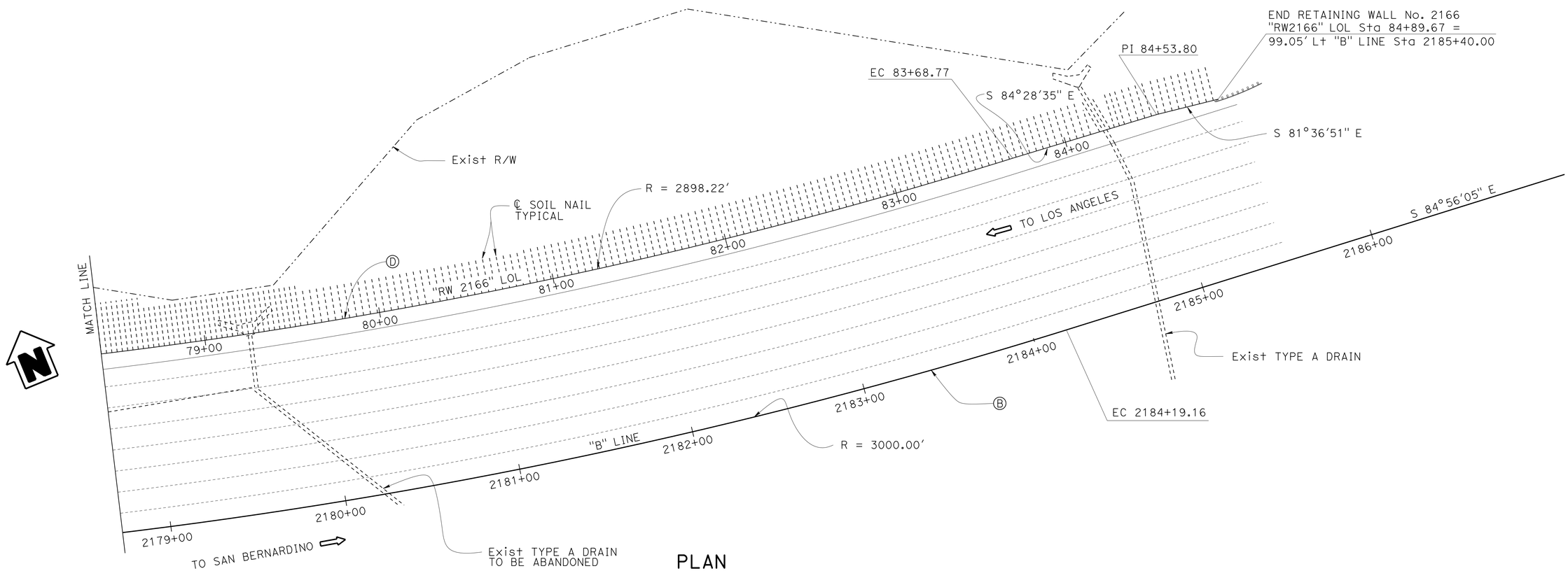

PLAN

1" = 30'-0"

DESIGN	BY Fred Feng	CHECKED R. Novik\J. Higareda	LOAD & RESISTANCE FACTOR DESIGN	LIVE LOADING: HL93 W/"LOW-BOY": PERMIT DESIGN VEHICLE	
DETAILS	BY H. Mauroschadt\S. Cholda	CHECKED R. Novik\J. Higareda	LAYOUT	BY F. Feng	CHECKED R. Novik
QUANTITIES	BY Fred Feng	CHECKED Ruslan Novik	SPECIFICATIONS	BY X. Chen	PLANS AND SPECS COMPARED X. Chen

Traci Menard
DESIGN ENGINEER

ORIGINAL SCALE IN INCHES FOR REDUCED PLANS 0 1 2 3

STATE OF CALIFORNIA
DEPARTMENT OF TRANSPORTATION

DIVISION OF ENGINEERING SERVICES
STRUCTURE DESIGN
DESIGN BRANCH 15

BRIDGE NO. 53E0315
POST MILE 41.01

RETAINING WALL NO. 2166
GENERAL PLAN NO. 3

UNIT: 3604
PROJECT NUMBER & PHASE: 0713000007
CONTRACT NO.: 07-1193U1

DISREGARD PRINTS BEARING EARLIER REVISION DATES

REVISION DATES: 10-25-13 07-08-14 06-06-14 07-07-14

SHEET 3 OF 44

USERNAME => s125624 DATE PLOTTED => 18-MAY-2015 TIME PLOTTED => 16:28