Dist	COUNTY	ROUTE	POST MILES TOTAL PROJECT	SHEET No.	TOTAL SHEETS
07	LA	10	37.2/42.4	1401	2313

REGISTERED ELECTRICAL ENGINEER 10/30/14 DATE

PLANS APPROVAL DATE 6-1-15

REGISTERED PROFESSIONAL ENGINEER CECILIO BURCIAGA No. E015302 Exp. 3-31-17 ELECTRICAL STATE OF CALIFORNIA

THE STATE OF CALIFORNIA OR ITS OFFICERS OR AGENTS SHALL NOT BE RESPONSIBLE FOR THE ACCURACY OR COMPLETENESS OF SCANNED COPIES OF THIS PLAN SHEET.

NOTES: (THIS SHEET ONLY)

1. FOR ACCURATE RIGHT OF WAY DATA, CONTACT RIGHT OF WAY ENGINEERING AT THE DISTRICT OFFICE.
2. AFTER THE END OF STAGE 5,
   - RC TYPE 3 CONDUIT.
   - RC TYPE 21 WITH 310 W HPS LUMINAIRE ON STEEL PLATE AND CONCRETE BLOCKS.

LEGEND: (THIS SHEET ONLY)

1. FOR REFERENCE ONLY. FOR INSTALLATION DETAILS IN THE DEFINED POLYGON SEE SHEET E-108.
2. INSTALL Temp TYPE 3 1½"C AT GROUND LEVEL AGAINST TYPE K Temp RAILING WITH 2#6 (Temp Ltg), 1#8 (G).
3. INSTALL Temp TYPE 3 1½"C, 2#6 (Temp Ltg), 1#8 (G).

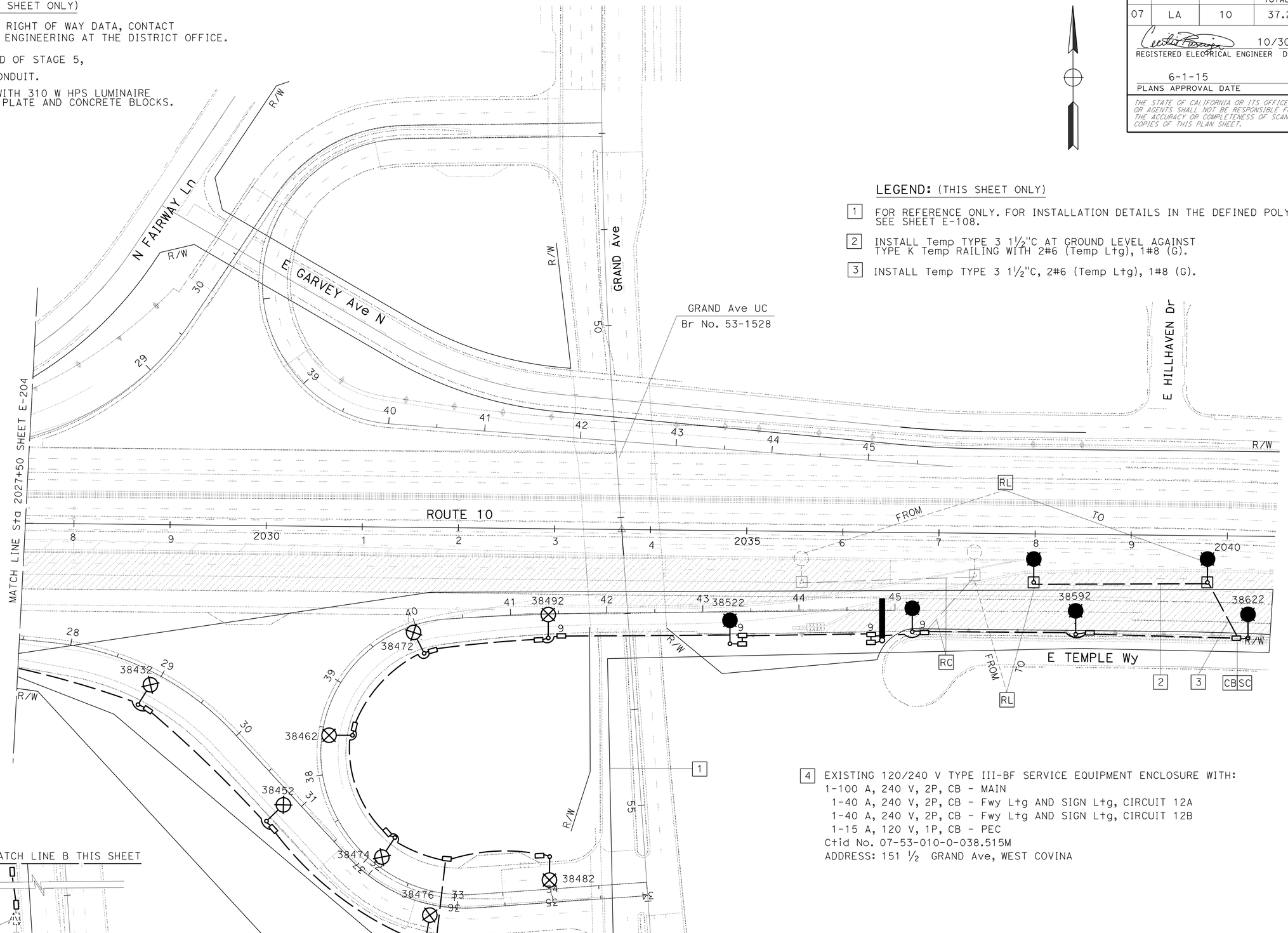

4 EXISTING 120/240 V TYPE III-BF SERVICE EQUIPMENT ENCLOSURE WITH:
1-100 A, 240 V, 2P, CB - MAIN
1-40 A, 240 V, 2P, CB - Fwy Ltg AND SIGN Ltg, CIRCUIT 12A
1-40 A, 240 V, 2P, CB - Fwy Ltg AND SIGN Ltg, CIRCUIT 12B
1-15 A, 120 V, 1P, CB - PEC
Ctid No. 07-53-010-0-038.515M
ADDRESS: 151 ½ GRAND Ave, WEST COVINA

(STAGE 5 PHASE 2)

APPROVED FOR ELECTRICAL WORK ONLY

MODIFY LIGHTING AND SIGN ILLUMINATION

SCALE: 1" = 50'

E-205

STATE OF CALIFORNIA - DEPARTMENT OF TRANSPORTATION
Caltrans® **TRAFFIC DESIGN**

FUNCTIONAL SUPERVISOR: YI TSAU
CALCULATED-DESIGNED BY: FARIDA MAHMOOD
CHECKED BY: CECILIO BURCIAGA
REVISED BY / DATE REVISED

LAST REVISION 01-09-15 | DATE PLOTTED => 12-MAY-2015 | TIME PLOTTED => 09:34

Dist	COUNTY	ROUTE	POST MILES TOTAL PROJECT	SHEET No.	TOTAL SHEETS
07	LA	10	37.2/42.4	1402	2313

REGISTERED ELECTRICAL ENGINEER 10/30/14 DATE

6-1-15
PLANS APPROVAL DATE

REGISTERED PROFESSIONAL ENGINEER CECILIO BURCIAGA No. E015302 Exp. 3-31-17 ELECTRICAL STATE OF CALIFORNIA

THE STATE OF CALIFORNIA OR ITS OFFICERS OR AGENTS SHALL NOT BE RESPONSIBLE FOR THE ACCURACY OR COMPLETENESS OF SCANNED COPIES OF THIS PLAN SHEET.

NOTES: (THIS SHEET ONLY)

1. FOR ACCURATE RIGHT OF WAY DATA, CONTACT RIGHT OF WAY ENGINEERING AT THE DISTRICT OFFICE.
2. AFTER THE END OF STAGE 5,

   RC TYPE 3 CONDUIT.

   RC TYPE 21 WITH 310 W HPS LUMINAIRE ON STEEL PLATE AND CONCRETE BLOCKS FOR Temp Ltg SYSTEM.

LEGEND: (THIS SHEET ONLY)

1. INSTALL Temp TYPE 3 1½"C AT GROUND LEVEL AGAINST TYPE K Temp RAILING WITH 2#6 (Temp Ltg), 1#8 (G).
2. REUSE TYPE 21 WITH 310 W HPS LUMINAIRE ON STEEL PLATE AND CONCRETE BLOCKS FROM STAGE 4 PHASE 1.
3. REUSE TYPE 21 WITH 310 W HPS LUMINAIRE ON STEEL PLATE AND CONCRETE BLOCKS FROM STAGE 5 PHASE 1.
4. FOR REFERENCE ONLY. FOR INSTALLATION DETAILS IN THE DEFINED POLYGON SEE SHEET E-109.

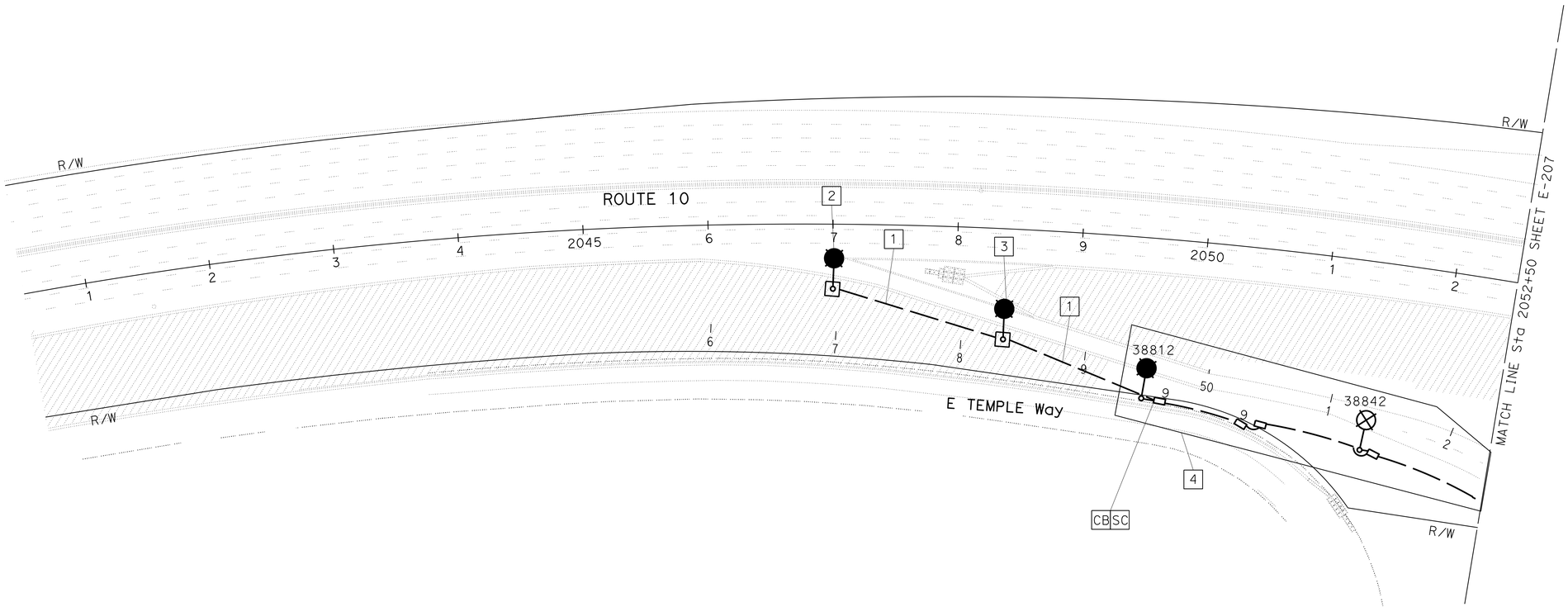

(STAGE 5 PHASE 2)

FOR SYMBOLS, SEE SHEET E-140

APPROVED FOR ELECTRICAL WORK ONLY

MODIFY LIGHTING AND SIGN ILLUMINATION

SCALE 1" = 50'

E-206

STATE OF CALIFORNIA - DEPARTMENT OF TRANSPORTATION

Caltrans® **TRAFFIC DESIGN**

FUNCTIONAL SUPERVISOR: YI TSAU

CALCULATED-DESIGNED BY: LUKE SUN

CHECKED BY: CECILIO BURCIAGA

REVISED BY

DATE REVISED

LAST REVISION 01-09-15 | DATE PLOTTED => 12-MAY-2015 | TIME PLOTTED => 09:34

Dist	COUNTY	ROUTE	POST MILES TOTAL PROJECT	SHEET No.	TOTAL SHEETS
07	LA	10	37.2/42.4	1403	2313

REGISTERED ELECTRICAL ENGINEER 10/30/14 DATE

PLANS APPROVAL DATE 6-1-15

REGISTERED PROFESSIONAL ENGINEER CECILIO BURCIAGA No. E015302 Exp. 3-31-17 ELECTRICAL STATE OF CALIFORNIA

THE STATE OF CALIFORNIA OR ITS OFFICERS OR AGENTS SHALL NOT BE RESPONSIBLE FOR THE ACCURACY OR COMPLETENESS OF SCANNED COPIES OF THIS PLAN SHEET.

NOTES: (THIS SHEET ONLY)

1. FOR ACCURATE RIGHT OF WAY DATA, CONTACT RIGHT OF WAY ENGINEERING AT THE DISTRICT OFFICE.
2. AFTER THE END OF STAGE 5,

   RC TYPE 3 CONDUIT.

   RC TYPE 21 WITH 310 W HPS LUMINAIRE ON STEEL PLATE AND CONCRETE BLOCKS FOR Temp Ltg SYSTEM.

4 REUSE TYPE 21 WITH 310 W HPS LUMINAIRE ON STEEL PLATE AND CONCRETE BLOCKS FROM STAGE 5 PHASE 1.

LEGEND: (THIS SHEET ONLY)

1 INSTALL Temp TYPE 3 1½"C AT GROUND LEVEL AGAINST TYPE K Temp RAILING WITH 2#6 (Temp Ltg), 1#8 (G).

2 FOR REFERENCE ONLY. FOR INSTALLATION DETAILS IN THE DEFINED POLYGON SEE SHEET E-111.

3 Exist 120/240 V TYPE III-BF SERVICE EQUIPMENT ENCLOSURE WITH:
1-100 A, 240 V, 2P, CB - MAIN
1-40 A, 240 V, 2P, CB - Fwy Ltg CIRCUIT 14A
1-40 A, 240 V, 2P, CB - Fwy Ltg CIRCUIT 14B
1-40 A, 240 V, 2P, CB - Fwy Ltg AND SIGN Ltg CIRCUIT 14C
1-15 A, 120 V, 1P, CB - PEC
Ctid No. 07-53-010-0-038.960M
ADDRESS: 3648 1/2 HOLT Ave, COVINA

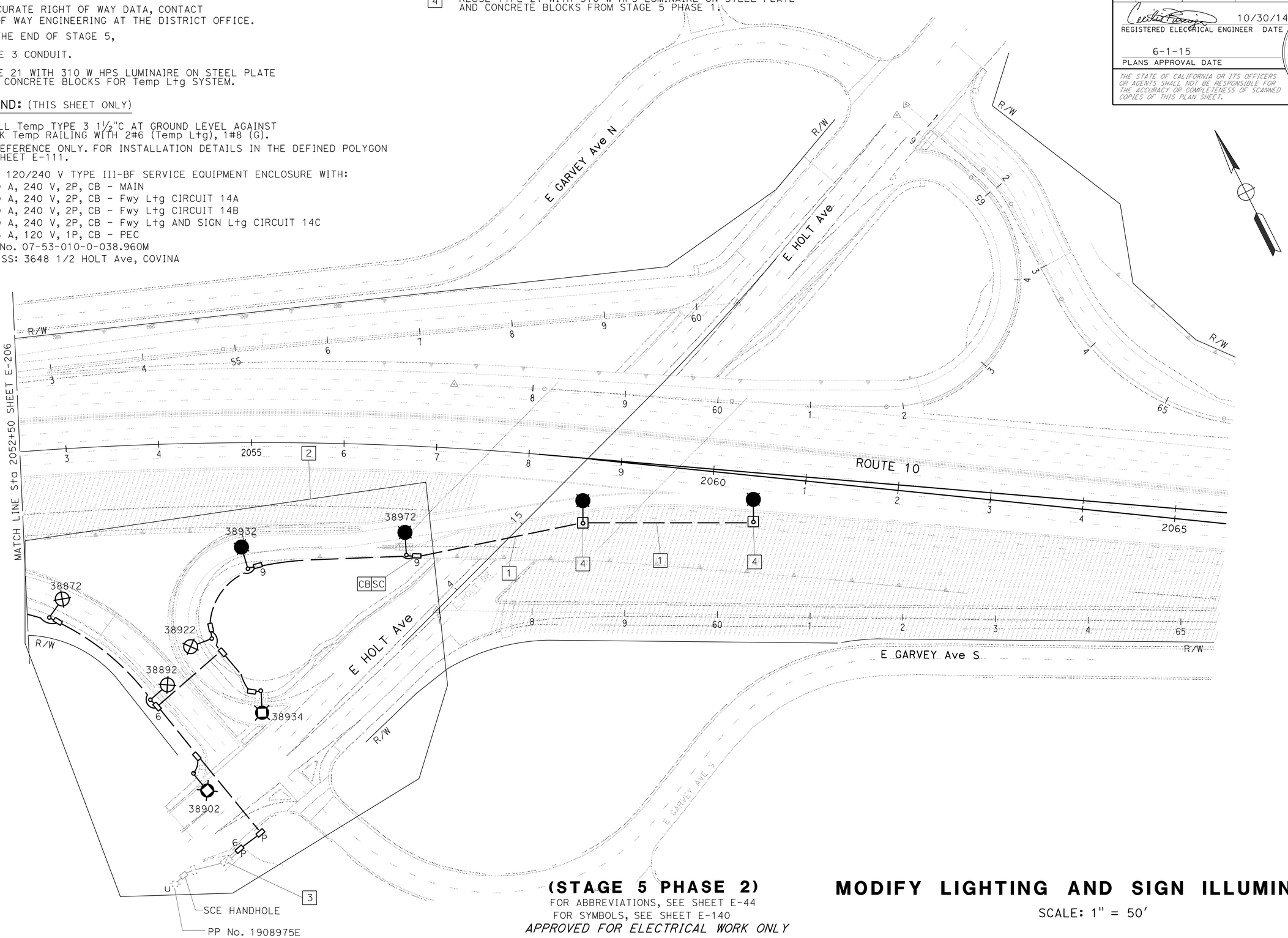

(STAGE 5 PHASE 2)

FOR ABBREVIATIONS, SEE SHEET E-44
FOR SYMBOLS, SEE SHEET E-140
APPROVED FOR ELECTRICAL WORK ONLY

MODIFY LIGHTING AND SIGN ILLUMINATION

SCALE: 1" = 50'

E-207

STATE OF CALIFORNIA - DEPARTMENT OF TRANSPORTATION
Caltrans® **TRAFFIC DESIGN**

FUNCTIONAL SUPERVISOR: YI TSAU
CALCULATED-DESIGNED BY: LUKE SUN
CHECKED BY: CECILIO BURCIAGA
REVISED BY / DATE REVISED

LAST REVISION 01-09-15 | DATE PLOTTED => 12-MAY-2015 | TIME PLOTTED => 09:34

BORDER LAST REVISED 7/2/2010 | USERNAME => s112049 | DGN FILE => 71193uua207.dgn | RELATIVE BORDER SCALE IS IN INCHES 0 1 2 3 | UNIT 1880 | PROJECT NUMBER & PHASE 07130000071

Dist	COUNTY	ROUTE	POST MILES TOTAL PROJECT	SHEET No.	TOTAL SHEETS
07	LA	10	37.2/42.4	1404	2313

REGISTERED ELECTRICAL ENGINEER 10/30/14 DATE

6-1-15
PLANS APPROVAL DATE

REGISTERED PROFESSIONAL ENGINEER
CECILIO BURCIAGA
No. E015302
Exp. 3-31-17
ELECTRICAL
STATE OF CALIFORNIA

THE STATE OF CALIFORNIA OR ITS OFFICERS OR AGENTS SHALL NOT BE RESPONSIBLE FOR THE ACCURACY OR COMPLETENESS OF SCANNED COPIES OF THIS PLAN SHEET.

NOTES: (THIS SHEET ONLY)

1. FOR ACCURATE RIGHT OF WAY DATA, CONTACT RIGHT OF WAY ENGINEERING AT THE DISTRICT OFFICE.
2. AFTER THE END OF STAGE 5,
   - RC TYPE 3 CONDUIT.
   - RC TYPE 21 WITH 310 W HPS LUMINAIRE ON STEEL PLATE AND CONCRETE BLOCKS.

LEGEND: (THIS SHEET ONLY)

1. INSTALL Temp TYPE 3 1½"C AT GROUND LEVEL AGAINST TYPE K Temp RAILING WITH 2#6 (Temp L+g), 1#8 (G).
2. FOR REFERENCE ONLY. FOR INSTALLATION DETAILS IN THE DEFINED POLYGON SEE SHEET E-116.

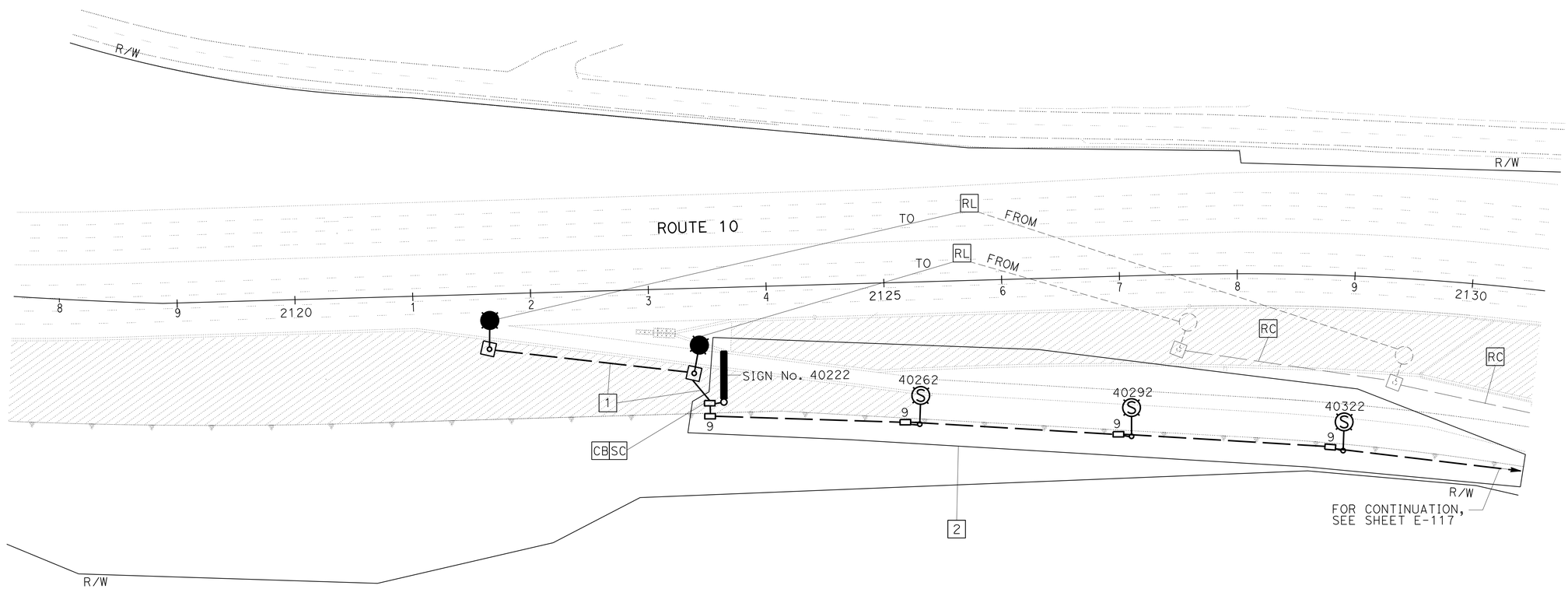

(STAGE 5 PHASE 2)

FOR SYMBOLS, SEE SHEET E-140

APPROVED FOR ELECTRICAL WORK ONLY

MODIFY LIGHTING AND SIGN ILLUMINATION

SCALE: 1" = 50'

E-208

STATE OF CALIFORNIA - DEPARTMENT OF TRANSPORTATION
Caltrans® TRAFFIC DESIGN

FUNCTIONAL SUPERVISOR: YI TSAU

CALCULATED-DESIGNED BY: LUKE SUN
CHECKED BY: CECILIO BURCIAGA

REVISED BY | DATE REVISED

LAST REVISION 01-09-15 | DATE PLOTTED => 12-MAY-2015 | TIME PLOTTED => 09:34

Dist	COUNTY	ROUTE	POST MILES TOTAL PROJECT	SHEET No.	TOTAL SHEETS
07	LA	10	37.2/42.4	1405	2313

REGISTERED ELECTRICAL ENGINEER 10/30/14 DATE

6-1-15
PLANS APPROVAL DATE

REGISTERED PROFESSIONAL ENGINEER CECILIO BURCIAGA No. E015302 Exp. 3-31-17 ELECTRICAL STATE OF CALIFORNIA

THE STATE OF CALIFORNIA OR ITS OFFICERS OR AGENTS SHALL NOT BE RESPONSIBLE FOR THE ACCURACY OR COMPLETENESS OF SCANNED COPIES OF THIS PLAN SHEET.

NOTES: (THIS SHEET ONLY)

1. FOR ACCURATE RIGHT OF WAY DATA, CONTACT RIGHT OF WAY ENGINEERING AT THE DISTRICT OFFICE.
2. AFTER THE END OF STAGE 5,
   RC TYPE 3 CONDUIT.
   RC TYPE 21 WITH 310 W HPS LUMINAIRE ON STEEL PLATE AND CONCRETE BLOCKS.

LEGEND: (THIS SHEET ONLY)

1 INSTALL Temp TYPE 3 1½"C AT GROUND LEVEL AGAINST TYPE K Temp RAILING WITH 2#2 (Temp Ltg), 1#6 (G).

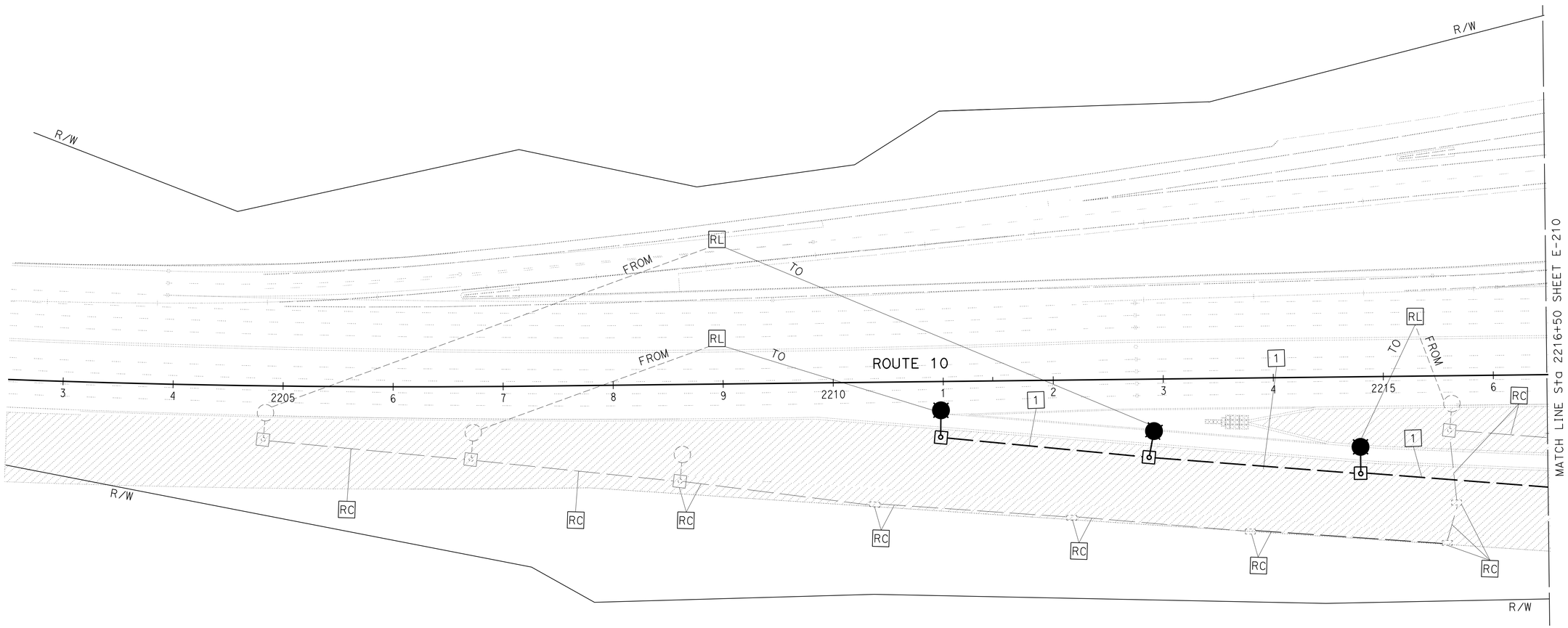

(STAGE 5 PHASE 2)
FOR SYMBOLS, SEE SHEET E-140
APPROVED FOR ELECTRICAL WORK ONLY

MODIFY LIGHTING AND SIGN ILLUMINATION

SCALE: 1" = 50'

E-209

STATE OF CALIFORNIA - DEPARTMENT OF TRANSPORTATION
Caltrans® **TRAFFIC DESIGN**

FUNCTIONAL SUPERVISOR: YI TSAU
CALCULATED-DESIGNED BY: LUKE SUN
CHECKED BY: CECILIO BURCIAGA
REVISED BY
DATE REVISED

LAST REVISION 01-09-15
DATE PLOTTED => 12-MAY-2015
TIME PLOTTED => 09:34

Dist	COUNTY	ROUTE	POST MILES TOTAL PROJECT	SHEET No.	TOTAL SHEETS
07	LA	10	37.2/42.4	1406	2313

REGISTERED ELECTRICAL ENGINEER 10/30/14 DATE

6-1-15
PLANS APPROVAL DATE

REGISTERED PROFESSIONAL ENGINEER CECILIO BURCIAGA No. E015302 Exp. 3-31-17 ELECTRICAL STATE OF CALIFORNIA

THE STATE OF CALIFORNIA OR ITS OFFICERS OR AGENTS SHALL NOT BE RESPONSIBLE FOR THE ACCURACY OR COMPLETENESS OF SCANNED COPIES OF THIS PLAN SHEET.

NOTES: (THIS SHEET ONLY)

1. FOR ACCURATE RIGHT OF WAY DATA, CONTACT RIGHT OF WAY ENGINEERING AT THE DISTRICT OFFICE.
2. AFTER THE END OF STAGE 5,
   RC TYPE 3 CONDUIT.
   RC TYPE 21 WITH 310 W HPS LUMINAIRE ON STEEL PLATE AND CONCRETE BLOCKS.

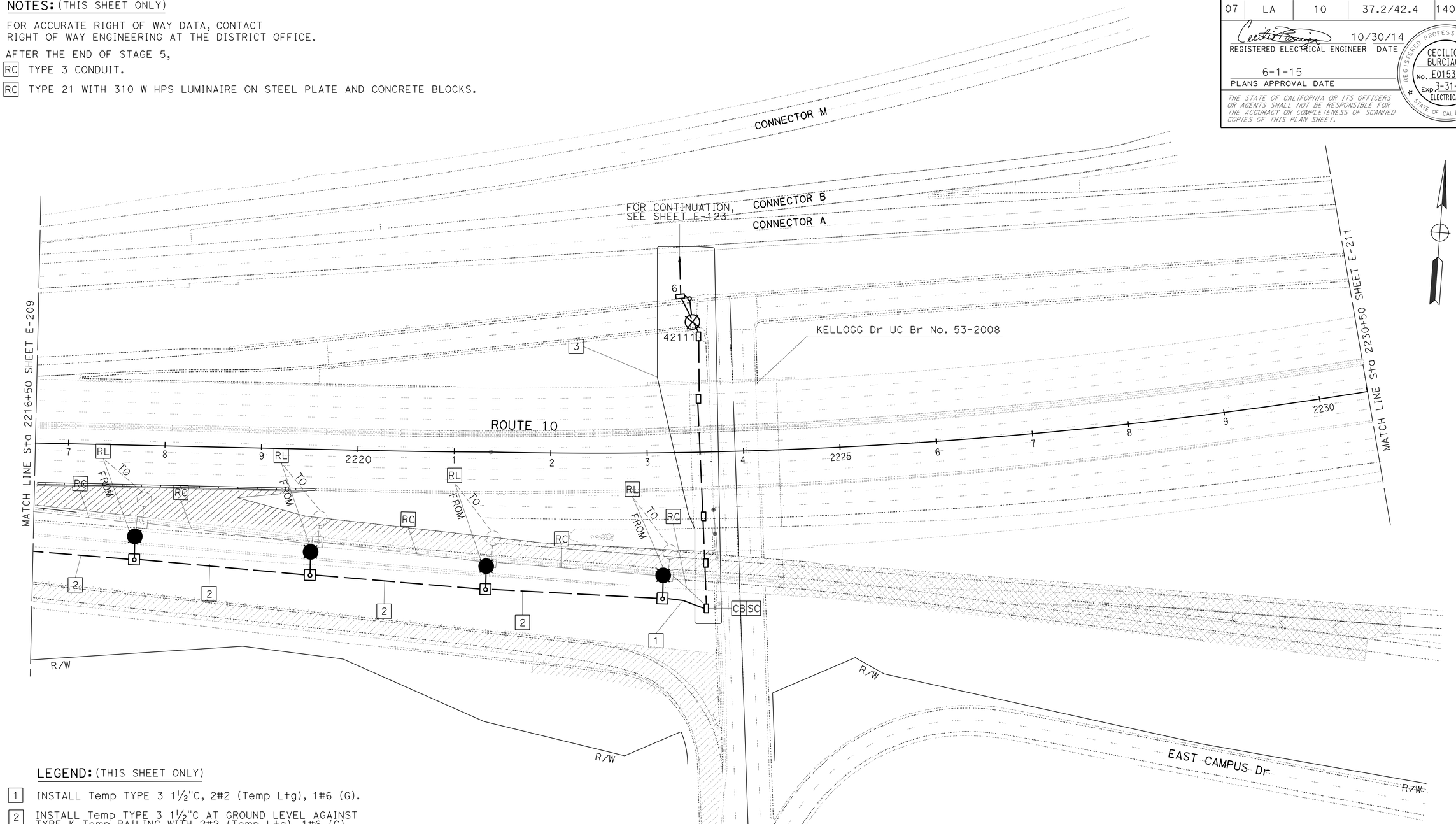

LEGEND: (THIS SHEET ONLY)

1. INSTALL Temp TYPE 3 1½"C, 2#2 (Temp Ltg), 1#6 (G).
2. INSTALL Temp TYPE 3 1½"C AT GROUND LEVEL AGAINST TYPE K Temp RAILING WITH 2#2 (Temp Ltg), 1#6 (G).
3. FOR REFERENCE ONLY. FOR INSTALLATION DETAILS IN THE DEFINED POLYGON SEE SHEET E-123.

(STAGE 5 PHASE 2)

FOR SYMBOLS, SEE SHEET E-140

APPROVED FOR ELECTRICAL WORK ONLY

MODIFY LIGHTING AND SIGN ILLUMINATION

SCALE: 1" = 50'

E-210

STATE OF CALIFORNIA - DEPARTMENT OF TRANSPORTATION
Caltrans® **TRAFFIC DESIGN**

FUNCTIONAL SUPERVISOR: YI TSAU
CALCULATED-DESIGNED BY: LUKE SUN
CHECKED BY: CECILIO BURCIAGA
REVISED BY
DATE REVISED

LAST REVISION 01-09-15 | DATE PLOTTED => 12-MAY-2015 | TIME PLOTTED => 09:34

Dist	COUNTY	ROUTE	POST MILES TOTAL PROJECT	SHEET No.	TOTAL SHEETS
07	LA	10	37.2/42.4	1407	2313

REGISTERED ELECTRICAL ENGINEER 10/30/14 DATE

PLANS APPROVAL DATE 6-1-15

REGISTERED PROFESSIONAL ENGINEER CECILIO BURCIAGA No. E015302 Exp. 3-31-17 ELECTRICAL STATE OF CALIFORNIA

THE STATE OF CALIFORNIA OR ITS OFFICERS OR AGENTS SHALL NOT BE RESPONSIBLE FOR THE ACCURACY OR COMPLETENESS OF SCANNED COPIES OF THIS PLAN SHEET.

NOTE: (THIS SHEET ONLY)

1. FOR ACCURATE RIGHT OF WAY DATA, CONTACT RIGHT OF WAY ENGINEERING AT THE DISTRICT OFFICE.
2. AFTER THE END OF STAGE 5,
   - RC TYPE 3 CONDUIT.
   - RC TYPE 21 WITH 310 W HPS LUMINAIRE ON STEEL PLATE AND CONCRETE BLOCKS FOR Temp Ltg SYSTEM.
   - RC SIGN ILLUMINATION EQUIPMENT.
   - AB CONDUIT.
   - RS ELECTROLIER.
   - RC PULL BOXES.

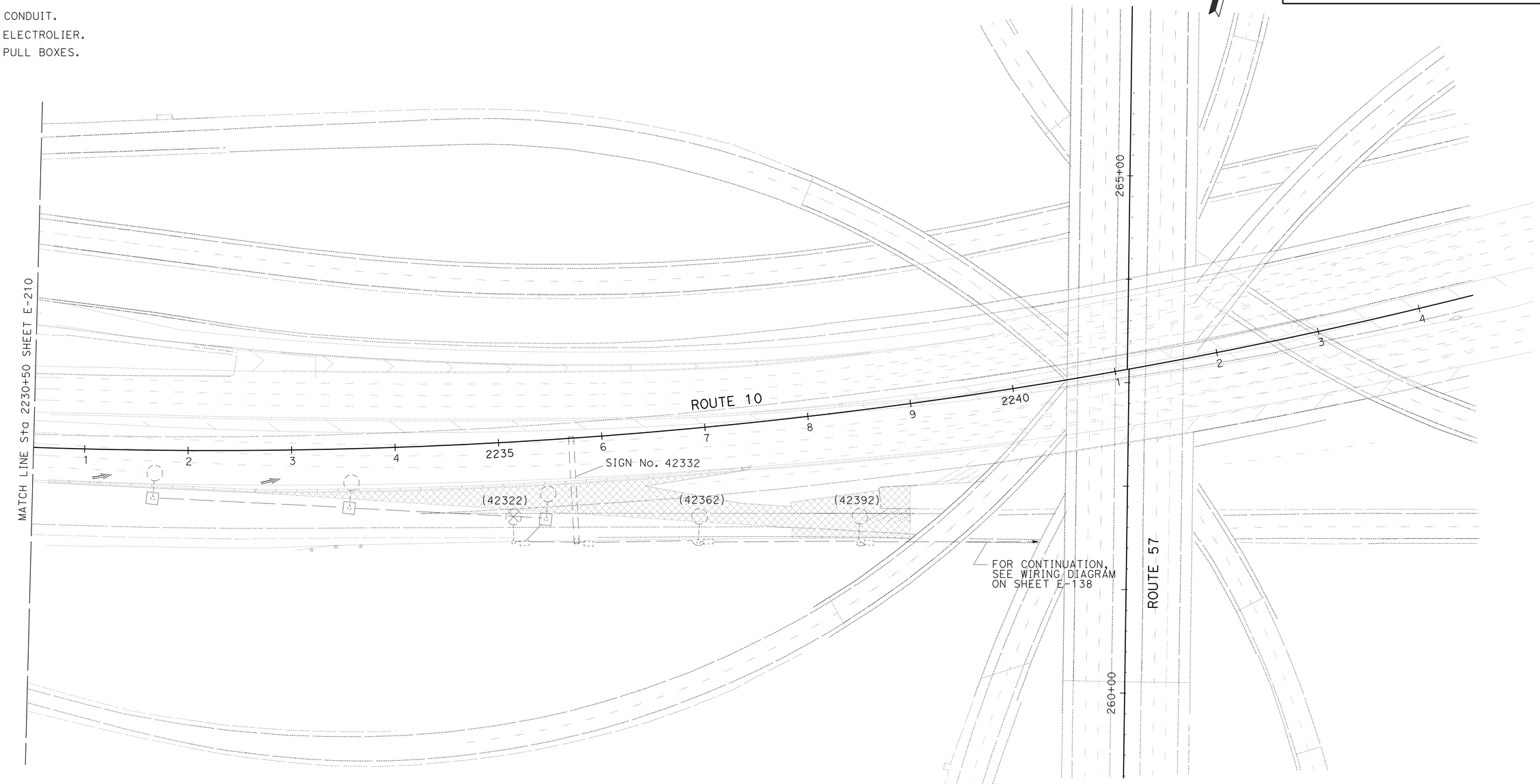

(STAGE 5 PHASE 2)

FOR SYMBOLS, SEE SHEET E-140

APPROVED FOR ELECTRICAL WORK ONLY

MODIFY LIGHTING AND SIGN ILLUMINATION

SCALE: 1" = 50'

E-211

STATE OF CALIFORNIA - DEPARTMENT OF TRANSPORTATION

Caltrans® **TRAFFIC DESIGN**

FUNCTIONAL SUPERVISOR: YI TSAU

CALCULATED-DESIGNED BY: LUKE SUN

CHECKED BY: CECILIO BURCIAGA

REVISED BY / DATE REVISED

LAST REVISION 01-09-15 | DATE PLOTTED => 12-MAY-2015 | TIME PLOTTED => 09:34

Dist	COUNTY	ROUTE	POST MILES TOTAL PROJECT	SHEET No.	TOTAL SHEETS
07	LA	10	37.2/42.4	1408	2313

REGISTERED ELECTRICAL ENGINEER 10/30/14 DATE

6-1-15
PLANS APPROVAL DATE

REGISTERED PROFESSIONAL ENGINEER CECILIO BURCIAGA No. E015302 Exp. 03-31-17 ELECTRICAL STATE OF CALIFORNIA

THE STATE OF CALIFORNIA OR ITS OFFICERS OR AGENTS SHALL NOT BE RESPONSIBLE FOR THE ACCURACY OR COMPLETENESS OF SCANNED COPIES OF THIS PLAN SHEET.

NOTE: (THIS SHEET ONLY)

1. FOR ACCURATE RIGHT OF WAY DATA, CONTACT RIGHT OF WAY ENGINEERING AT THE DISTRICT OFFICE.

LEGEND: (THIS SHEET ONLY)

1. COVER SIGNAL HEAD, PED HEAD, AND PPB.
2. INSTALL 2"C TYPE 3, 2#8 (Lum), 1#8 (G).
3. EXISTING MODEL 170 CONTROLLER ASSEMBLY. DISCONNECT DLC.
4. EXISTING 120/240 V METERED SERVICE EQUIPMENT ENCLOSURE ON CITRUS Ave AND Rte 10 WB ON (CITY OF WEST COVINA PAYING FOR UTILITY, Ct MAINTAIN)
   100 A, 240 V, 2P, CB-MAIN
   40 A, 120 V, 1P, CB-TRAFFIC SIGNAL
   30 A, 240 V, 2P, CB-Ltg
   15 A, 120 V, 1P, CB-PEC
5. EXISTING 2"C, 9#14, 1#10, 2#8 (Lum). ADD 1#8 (G).
6. EXISTING 2"C, 4#6 (Sig, Lum), 1 DLC, 1 SIC, 2#18 (Tel).
7. EXISTING 2-2"C, 2#6 (Sig), 2 DLC, 15#14, 1#10, 1 SIC. RC 2 DLC. ADD 1#8 (G).
8. EXISTING 2"C, 4#6 (Sig, Lum), 1 SIC, 2#18 (Tel).

EXISTING POLE AND EQUIPMENT SCHEDULE

No.	STANDARD Type	SMA	LMA	VEH SIG MTG Mast Arm	Pole	PED SIGNAL MTG	PPB Ø	ARROW	HPS LUMINAIRE
A	~~1-A~~	—	—	—	—	~~TP-1~~	~~2~~	~~X~~ ►	—
B	1-A	—	—	—	TV-1-T	—	—	—	—
C	19-2-100	30′	12′	~~MAS~~	~~SV-2-TA~~	~~SP-1~~	~~6~~	◄ ~~X~~	200 W
D	1-A	—	—	—	~~TV-2-T~~	—	—	—	—
E	26-3-100	40′	12′	~~MAS~~	~~SV-1-TA~~	~~SP-1~~	—	—	200 W
F	1-A	—	—	—	~~TV-1-T~~	—	~~2~~	~~X~~ ►	—

EXISTING PHASE DIAGRAM

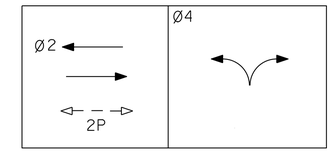

NEW PHASE DIAGRAM

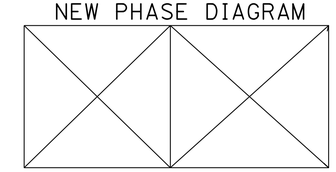

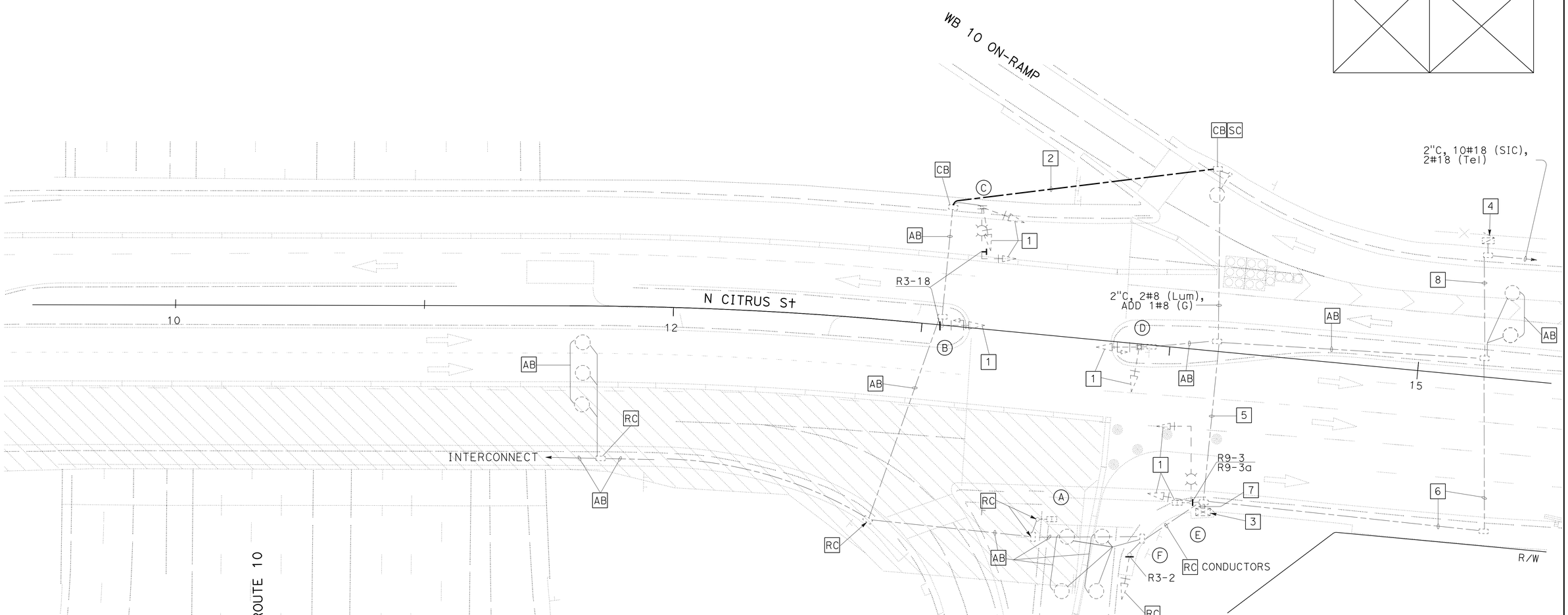

(STAGE 1 PHASE 2)
(LOCATION 1)
APPROVED FOR ELECTRICAL WORK ONLY

MODIFY SIGNAL AND LIGHTING

SCALE: 1" = 20′

E-212

STATE OF CALIFORNIA - DEPARTMENT OF TRANSPORTATION
Caltrans® TRAFFIC DESIGN

FUNCTIONAL SUPERVISOR: YI TSAU
CALCULATED-DESIGNED BY: QUINCIE TRAN
CHECKED BY: CECILIO BURCIAGA
REVISED BY / DATE REVISED

LAST REVISION 01-09-15
DATE PLOTTED => 12-MAY-2015
TIME PLOTTED => 09:34

Dist	COUNTY	ROUTE	POST MILES TOTAL PROJECT	SHEET No.	TOTAL SHEETS
07	LA	10	37.2/42.4	1409	2313

REGISTERED ELECTRICAL ENGINEER 10/30/14 DATE

6-1-15
PLANS APPROVAL DATE

REGISTERED PROFESSIONAL ENGINEER CECILIO BURCIAGA No. E015302 Exp. 03-31-17 ELECTRICAL STATE OF CALIFORNIA

THE STATE OF CALIFORNIA OR ITS OFFICERS OR AGENTS SHALL NOT BE RESPONSIBLE FOR THE ACCURACY OR COMPLETENESS OF SCANNED COPIES OF THIS PLAN SHEET.

NOTE: (THIS SHEET ONLY)

1. FOR ACCURATE RIGHT OF WAY DATA, CONTACT RIGHT OF WAY ENGINEERING AT THE DISTRICT OFFICE.

LEGEND: (THIS SHEET ONLY)

1 INSTALL 1½"C TYPE 3, 3#14, 1#10, 2#8 (Lum), 1#8 (G).
2 TO REMAIN COVERED.
3 EXISTING 2"C, 2#8 (Lum), 1#8 (G).
4 EXISTING 2"C, 9#14, 1#10, 2#8 (Lum), 1#8 (G).
5 INSTALL 2"C TYPE 3, 2#14, 1#10, 2 DLC, 2#8 (Lum), 1#8 (G).
6 FOR REFERENCE ONLY. FOR INSTALLATION DETAILS IN THE DEFINED POLYGON SEE SHEET E-214.
7 EXISTING 2"C. ADD 5#14, 1#10, 2 DLC, 2#8 (Lum), 1#8 (G).
8 EXISTING 2-2"C, 2#6 (Sig), 15#14, 1#10, 1 SIC, 1#8 (G). ADD 2 DLC.
9 AT END OF STAGE CONSTRUCTION OR WHEN NO LONGER NEEDED:
RC SERVICE, PULL BOX, SIGNAL POLE, SIGNAL HEADS, CONCRETE BLOCKS.
AB CONDUIT, LOOP DETECTOR.
RS CONTROLLER.
10 ADD 2 DLC.
11 RC CONDUCTORS AT END OF STAGE CONSTRUCTION.

EXISTING AND NEW POLE AND EQUIPMENT SCHEDULE

No.	STANDARD Type	SMA	LMA	VEH SIG MTG Mast Arm	Pole	PED SIGNAL MTG	PPB Ø	ARROW	HPS LUMINAIRE
(A)	~~1-A~~	—	—	—	~~TV-1-T~~	—	—		
(B)	19-2-100	30′	12′	MAS	SV-2-TA	~~SP-1~~	~~6~~	~~◄~~	200 W
(C)	19-1-100*	15′	12′	MAS	SV-1-TA	—	—	—	200 W
(D)	26-3-100	40′	12′	MAS	SV-1-TA	SP-1	—	—	200 W
(E)	1-A	—	—	—	TV-1-T	—	2	►	—
(F)	21TS	—	**12′**	—	SP-1-T	—	2	►	235 W
(G)	1-A	—	—	—	TP-1-T	—	2	◄	—
(H)	21TS	—	**12′**	—	SP-1-T	—	2	►	235 W

* INSTALL TEMPORARY POLE ON STEEL PLATE WITH CONCRETE BLOCKS. SEE STRUCTURE ELECTRICAL SPECIAL DESIGN SHEETS FOR DETAILS.

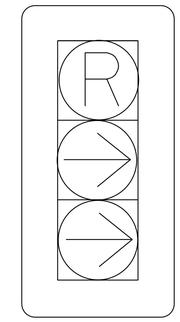

DETAIL A

EXISTING PHASE DIAGRAM

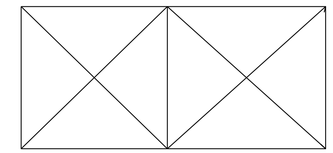

NEW PHASE DIAGRAM

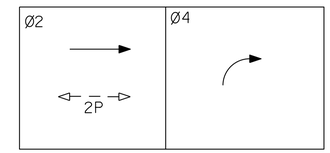

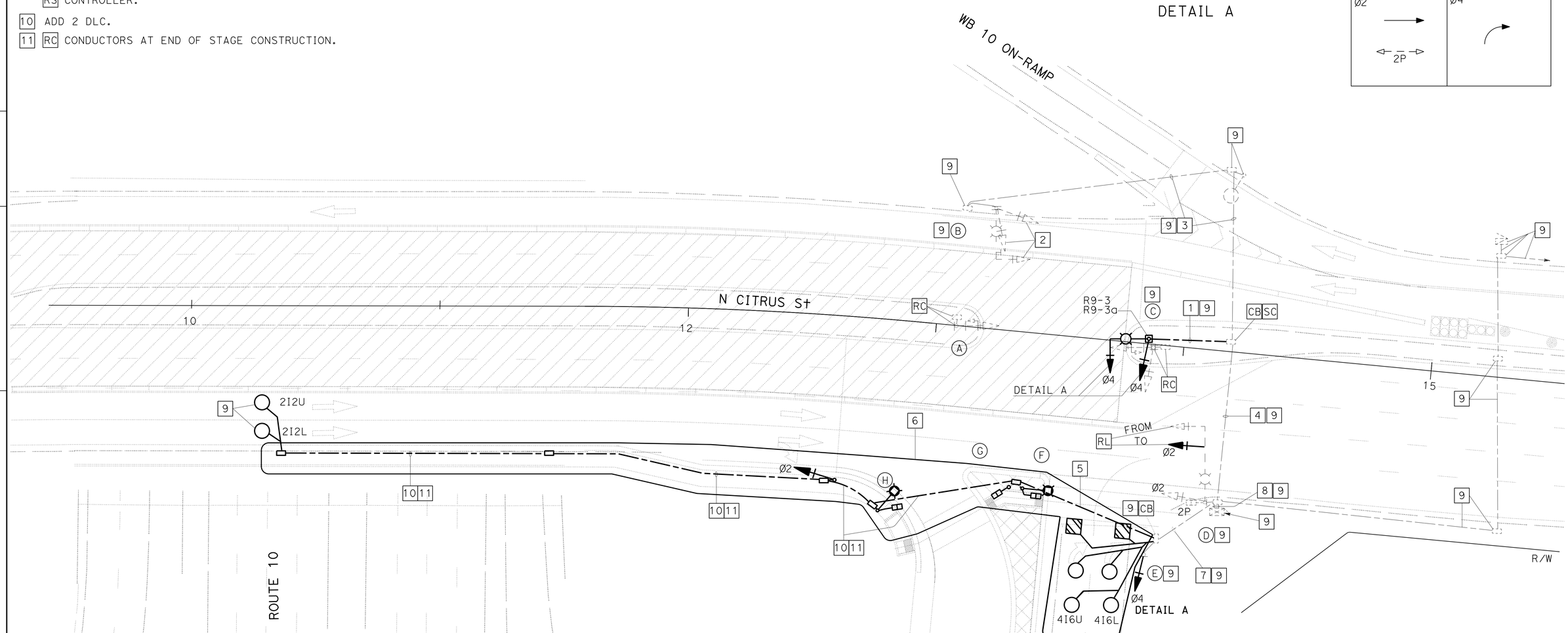

(STAGE 1 PHASE 3)
(LOCATION 1)
APPROVED FOR ELECTRICAL WORK ONLY

MODIFY SIGNAL AND LIGHTING

SCALE: 1" = 20′

E-213

STATE OF CALIFORNIA - DEPARTMENT OF TRANSPORTATION
Caltrans® **TRAFFIC DESIGN**

FUNCTIONAL SUPERVISOR: YI TSAU
CALCULATED-DESIGNED BY: QUINCIE TRAN
CHECKED BY: CECILIO BURCIAGA
REVISED BY
DATE REVISED

LAST REVISION 01-09-15
DATE PLOTTED => 12-MAY-2015
TIME PLOTTED => 09:34

Dist	COUNTY	ROUTE	POST MILES TOTAL PROJECT	SHEET No.	TOTAL SHEETS
07	LA	10	37.2/42.4	1410	2313

REGISTERED ELECTRICAL ENGINEER 10/30/14 DATE

6-1-15
PLANS APPROVAL DATE

REGISTERED PROFESSIONAL ENGINEER CECILIO BURCIAGA No. E015302 Exp. 3/31/17 ELECT STATE OF CALIFORNIA

THE STATE OF CALIFORNIA OR ITS OFFICERS OR AGENTS SHALL NOT BE RESPONSIBLE FOR THE ACCURACY OR COMPLETENESS OF SCANNED COPIES OF THIS PLAN SHEET.

NOTE: (THIS SHEET ONLY)

1. FOR ACCURATE RIGHT OF WAY DATA, CONTACT RIGHT OF WAY ENGINEERING AT THE DISTRICT OFFICE.
2. No. 5 AND No. 6 PULL BOXES MUST BE TRAFFIC TYPE WITH TEMPER RESISTANT COVER.

LEGEND: (THIS SHEET ONLY)

1. INSTALL DEPARTMENT-FURNISHED MODEL 2070 CONTROLLER ASSEMBLY WITH 2070-6G UNIVERSAL TIME BASE MODULE, MODEL 2070-6B MODEM, MODEL 332 CABINET AND MODEL 170E CONTROLLER. INSTALL BBS. INSTALL TRAFFIC SIGNAL INTERCONNECT SYSTEM, INSTALL WIRELESS DATA SERVICE AND GPS TIME BASE SYSTEMS, SEE E-224 FOR DETAILS.
2. INSTALL 120/240 V TYPE III-BF SERVICE EQUIPMENT ENCLOSURE WITH:
   100 A, 240 V, 2P, CB-MAIN
   50 A, 120 V, 1P, CB-TRAFFIC SIGNAL
   30 A, 240 V, 2P, CB-Ltg
   15 A, 120 V, 1P, CB-PEC
   20 A, 240 V, 2P, CB-IISNS
   Ctid No. 07-053-010-0-037.452M
   185 1/2 N CITRUS St, WEST COVINA
3. 3"C, PT, CONDUCTOR TO BE INSTALLED BY OTHERS.

PHASE DIAGRAM

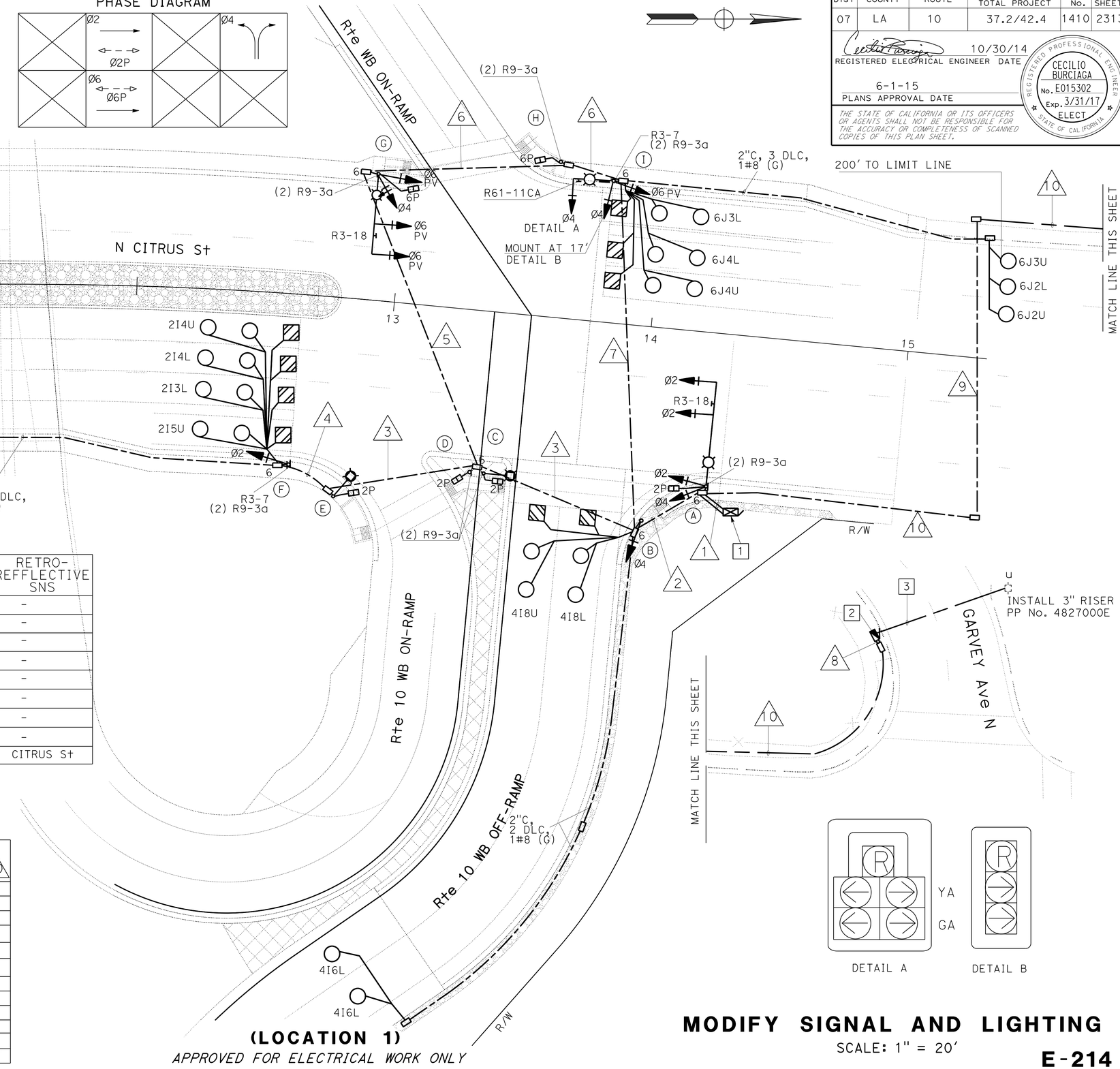

POLE AND EQUIPMENT SCHEDULE

No.	STANDARD Type	SMA	LMA	VEH SIG MTG Mast Arm	Pole	COUNTDOWN PED SIGNAL MTG	APS Ø	ARROW	LED LUMINAIRE	RETRO-REFFLECTIVE SNS
A	26A-3-100	40'	12'	2-MAS	SV-2-TA	SP-1-T	-	-	235 W	-
B	1-A	-	-	-	TV-1-T	-	2	→	-	-
C	21TS	-	12'	-	-	SP-1-T	2	→	235 W	-
D	1-A (7')	-	-	-	-	TP-1-T	2	←	-	-
E	21TS	-	12'	-	-	SP-1-T	2	→	235 W	-
F	1-A	-	-	-	TV-1-T	-	-	-	-	-
G	19A-4-100	30'	12'	2-MAS	SV-2-T	SP-1-T	6	←	235 W	-
H	1-A (7')	-	-	-	-	SP-1-T	6	←	-	-
I	17-3-100	15'	12'	MAS	SV-2-T	-	-	-	235 W	CITRUS St

CONDUIT AND CONDUCTOR SCHEDULE

CONDUCTOR	CONDUCTOR RUN	1	2	3	4	5	6	7	8	9	10
28CSC	C1	1	1	1	1	1	1	1			
	C2	1	1	1		1	1	1			
5CSC	APS		1								
#10	LUMINAIRE		2	2			2	2	2	2	2
	IISNS		2					2	2	2	2
#8	EGC	1	1	1	1	1	1	1	1	1	1
#6	SIGNAL SERVICE	2							2	2	2
DLC	Ø2	7	7	7	7						
	Ø4	4	4								
	Ø6	6	6					6			
	TOTAL	17	17	7	7			6			
CONDUIT		2-3"	3"	3"	3"	3"	3"	3"	2-3"	3"	2"

(LOCATION 1)

APPROVED FOR ELECTRICAL WORK ONLY

MODIFY SIGNAL AND LIGHTING

SCALE: 1" = 20'

E-214

STATE OF CALIFORNIA - DEPARTMENT OF TRANSPORTATION
Caltrans® TRAFFIC DESIGN

FUNCTIONAL SUPERVISOR: YI TSAU
QUINCIE TRAN | CECILIO BURCIAGA
CALCULATED-DESIGNED BY | CHECKED BY
REVISED BY | DATE REVISED

LAST REVISION 01-09-15 | DATE PLOTTED => 12-MAY-2015 | TIME PLOTTED => 09:34

Dist	COUNTY	ROUTE	POST MILES TOTAL PROJECT	SHEET No.	TOTAL SHEETS
07	LA	10	37.2/42.4	1411	2313

REGISTERED ELECTRICAL ENGINEER 10/30/14 DATE

PLANS APPROVAL DATE 6-1-15

REGISTERED PROFESSIONAL ENGINEER CECILIO BURCIAGA No. E015302 Exp. 03-31-17 ELECTRICAL STATE OF CALIFORNIA

THE STATE OF CALIFORNIA OR ITS OFFICERS OR AGENTS SHALL NOT BE RESPONSIBLE FOR THE ACCURACY OR COMPLETENESS OF SCANNED COPIES OF THIS PLAN SHEET.

NOTE:
FOR ACCURATE RIGHT OF WAY DATA, CONTACT RIGHT OF WAY ENGINEERING AT THE DISTRICT OFFICE.

LEGEND: (THIS SHEET)

1. RS SIGNAL HEAD. INSTALL SIGNAL HEAD PER DETAIL A THIS SHEET.
2. RS SIGNAL HEAD. INSTALL SIGNAL HEAD PER DETAIL B THIS SHEET.
3. RS SIGNAL HEAD. INSTALL SIGNAL HEAD PER DETAIL C THIS SHEET.
4. COVER SIGNAL HEAD.
5. COVER SIGN.
6. RS R73-3(CA). INSTALL R3-18.
7. EXISTING 120/240 V TYPE III-CF SERVICE EQUIPMENT ENCLOSURE.

METER 1:
1-100 A, 240 V, 2P CB MAIN
1- 50 A, 120 V, 1P CB SIGNAL
1- 30 A, 240 V, 2P CB LIGHTING
1- 15 A, 240 V, 2P CB IISNS
1- 15 A, 120 V, 1P CB VIDEO DETECTION CAMERA
ADDRESS: 123 1/4 N GRAND AVENUE, WEST COVINA
Ctid No. 07-53-10-0-038.300M

METER 2:
1-100 A, 240 V, 2P CB MAIN
1- 30 A, 120 V, 1P CB RAMP METERING
1- 20 A, 120 V, 1P CB IRRIGATION
1- 20 A, 120 V, 1P CB TELEPHONE DEMARCATION CABINET
ADDRESS: 123 1/2 N GRAND AVENUE, WEST COVINA
Ctid No. 07-53-10-0-038.302M

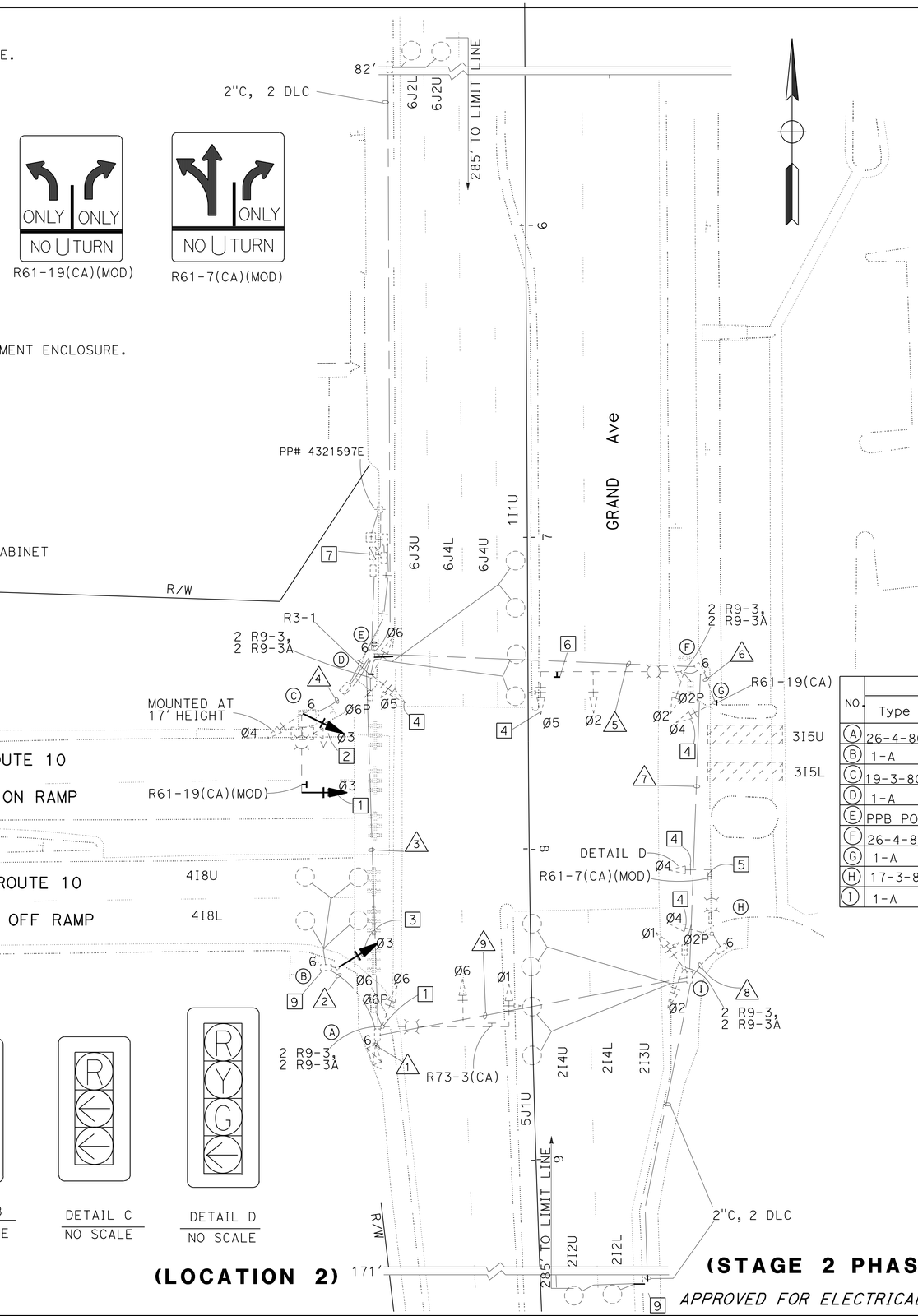

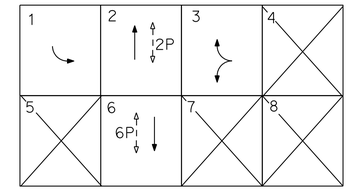

PHASE DIAGRAM

EXISTING CONDUCTOR AND CONDUIT SCHEDULE

AWG OR CABLE	CONDUCTOR RUN	1	2	3	4	5	6	7	8	9
DLC (N)	Ø1 DETECTOR	1		1						
	Ø2 DETECTOR	2								2
	Ø4 DETECTOR	2	2							
	Ø5 DETECTOR	1								1
	Ø6 DETECTOR	2		2						
	TOTAL DLC	8	2	3						3
#12	SERVICE CAMERA				2					
#10	IISNS					2		2	2	
	LUMINAIRES			2	2	2		2	2	
#8	G (N)	1	1	1	1	1	1	1	1	1
#6	SIGNAL SERVICE	2		2						
VIDEO DETECTION CABLE		1		1	1					
28-CONDUCTOR CABLE		4	2	2	2	2	2	2	1	2
TELEPHONE CABLE		1		1						
CONDUIT SIZE		2-3"	3"	3"	3"	3"	3"	3"	3"	3"

EXISTING POLE AND EQUIPMENT SCHEDULE

NO.	STANDARD Type	SMA	LMA	VEH SIG MTG Mast Arm	Pole	PED SIGNAL MTG	PPB Ø	ARROW	HPS LUMINAIRE	RETRO-REFLECTIVE SNS
A	26-4-80	45'	12'	2-MAS	SV-1-T	SP-1-T			200 W	
B	1-A				TV-1-T		6	→		
C	19-3-80	25'	12'	MAS	SV-1-T SV-1-T				200 W	
D	1-A				TV-2-T	SP-1-T				
E	PPB POST						6	←		
F	26-4-80	45'	12'	2-MAS	SV-1-T	SP-1-T			200 W	
G	1-A				TV-1-T		2	→		
H	17-3-80	20'	12'	MAS	SV-1-T		2	←	200 W	GRAND AVE
I	1-A				TV-1-T	SP-1-T				

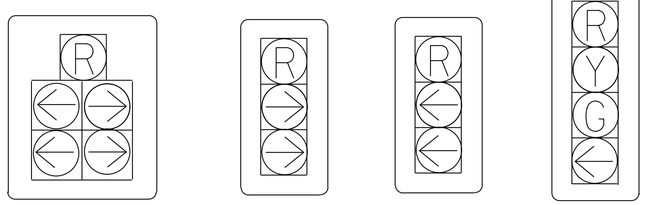

DETAIL A NO SCALE | DETAIL B NO SCALE | DETAIL C NO SCALE | DETAIL D NO SCALE

(LOCATION 2) **(STAGE 2 PHASE 3)**

APPROVED FOR ELECTRICAL WORK ONLY

MODIFY SIGNAL AND LIGHTING

SCALE: 1" = 20'

E-215

STATE OF CALIFORNIA - DEPARTMENT OF TRANSPORTATION
Caltrans® **TRAFFIC DESIGN**
FUNCTIONAL SUPERVISOR: YI TSAU
CALCULATED-DESIGNED BY: CECILIO BURCIAGA
CHECKED BY: YI TSAU
REVISED BY / DATE REVISED

LAST REVISION 01-09-15 | DATE PLOTTED => 12-MAY-2015 | TIME PLOTTED => 09:34

Dist	COUNTY	ROUTE	POST MILES TOTAL PROJECT	SHEET No.	TOTAL SHEETS
07	LA	10	37.2/42.4	1412	2313

REGISTERED ELECTRICAL ENGINEER 10/30/14 DATE

PLANS APPROVAL DATE 6-1-15

REGISTERED PROFESSIONAL ENGINEER CECILIO BURCIAGA No. E015302 Exp. 03-31-17 ELECTRICAL STATE OF CALIFORNIA

THE STATE OF CALIFORNIA OR ITS OFFICERS OR AGENTS SHALL NOT BE RESPONSIBLE FOR THE ACCURACY OR COMPLETENESS OF SCANNED COPIES OF THIS PLAN SHEET.

NOTE:
FOR ACCURATE RIGHT OF WAY DATA, CONTACT RIGHT OF WAY ENGINEERING AT THE DISTRICT OFFICE.

LEGEND: (THIS SHEET)

1. RS R61-19(CA) SIGN. INSTALL R61-5(CA)(MOD) AS PER DETAIL THIS SHEET.
2. EXISTING DETAIL A.
3. RS SIGNAL HEAD.
4. RS SIGNAL HEAD. INSTALL SIGNAL HEAD AS PER DETAIL A THIS SHEET.
5. EXISTING DETAIL B.
6. RS R3-18 SIGN. INSTALL R73-3(CA) SIGN.
7. EXISTING 120/240 V TYPE III-CF SERVICE EQUIPMENT ENCLOSURE.

METER 1:
1-100 A, 240 V, 2P CB MAIN
1- 50 A, 120 V, 1P CB SIGNAL
1- 30 A, 240 V, 2P CB LIGHTING
1- 15 A, 240 V, 2P CB IISNS
1- 15 A, 120 V, 1P CB VIDEO DETECTION CAMERA
ADDRESS: 123 1/4 N GRAND AVENUE, WEST COVINA
Ctid No. 07-53-10-0-038.300M

METER 2:
1-100 A, 240 V, 2P CB MAIN
1- 30 A, 120 V, 1P CB RAMP METERING
1- 20 A, 120 V, 1P CB IRRIGATION
1- 20 A, 120 V, 1P CB TELEPHONE DEMARCATION CABINET
ADDRESS: 123 1/2 N GRAND AVENUE, WEST COVINA
Ctid No. 07-53-10-0-038.302M

8. UNCOVER SIGNAL HEAD.
9. UNCOVER SIGN.

R61-5(CA)(MOD)

R61-7(CA)(MOD)

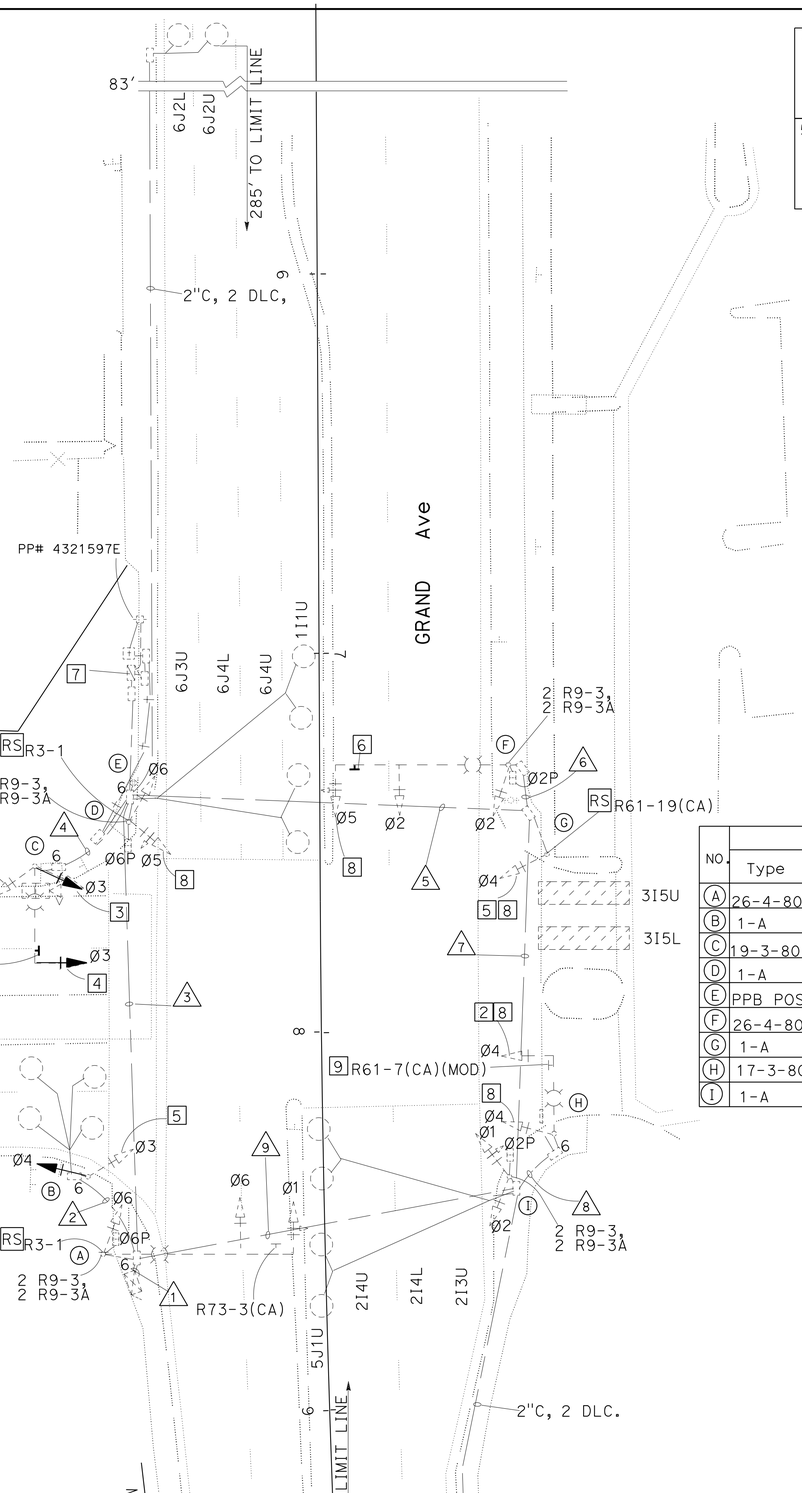

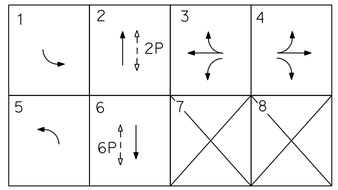

PHASE DIAGRAM

EXISTING CONDUCTOR AND CONDUIT SCHEDULE

AWG OR CABLE	CONDUCTOR RUN	1	2	3	4	5	6	7	8	9
DLC (N)	Ø1 DETECTOR	1		1						
	Ø2 DETECTOR	2								2
	Ø4 DETECTOR	2	2							
	Ø5 DETECTOR	1								1
	Ø6 DETECTOR	2		2						
	TOTAL DLC	8	2	3						3
#12	SERVICE CAMERA				2					
#10	IISNS					2		2	2	
	LUMINAIRES			2	2	2		2	2	
#8	G (N)	1	1	1	1	1	1	1	1	1
#6	SIGNAL SERVICE	2		2						
VIDEO DETECTION CABLE		1		1	1					
28-CONDUCTOR CABLE		4	2	2	2	2	2	2	1	2
TELEPHONE CABLE		1		1						
CONDUIT SIZE		2-3"	3"	3"	3"	3"	3"	3"	3"	3"

EXISTING POLE AND EQUIPMENT SCHEDULE

NO.	STANDARD Type	STANDARD SMA	STANDARD LMA	VEH SIG MTG Mast Arm	VEH SIG MTG Pole	PED SIGNAL MTG	PPB Ø	PPB ARROW	HPS LUMINAIRE	RETRO-REFLECTIVE SNS
A	26-4-80	45'	12'	2-MAS	SV-1-T	SP-1-T			200 W	
B	1-A				TV-1-T		6	→		
C	19-3-80	25'	12'	MAS	SV-1-T SV-1-T				200 W	
D	1-A				TV-2-T	SP-1-T				
E	PPB POST						6	←		
F	26-4-80	45'	12'	2-MAS	SV-1-T	SP-1-T			200 W	
G	1-A				TV-1-T		2	→		
H	17-3-80	20'	12'	MAS	SV-1-T		2	←	200 W	GRAND AVE
I	1-A				TV-1-T	SP-1-T				

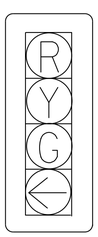

DETAIL A
NO SCALE

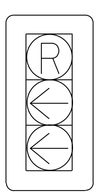

DETAIL B
NO SCALE

(LOCATION 2) **(STAGE 3 PHASE 1)**

APPROVED FOR ELECTRICAL WORK ONLY

MODIFY SIGNAL AND LIGHTING

SCALE: 1" = 20'

E-216

STATE OF CALIFORNIA - DEPARTMENT OF TRANSPORTATION
Caltrans TRAFFIC DESIGN

FUNCTIONAL SUPERVISOR: YI TSAU
CALCULATED-DESIGNED BY: CECILIO BURCIAGA
CHECKED BY: YI TSAU
REVISED BY / DATE REVISED

LAST REVISION 01-09-15 | DATE PLOTTED => 12-MAY-2015 | TIME PLOTTED => 09:35

Dist	COUNTY	ROUTE	POST MILES TOTAL PROJECT	SHEET No.	TOTAL SHEETS
07	LA	10	37.2/42.4	1413	2313

REGISTERED ELECTRICAL ENGINEER 10/30/14 DATE

6-1-15
PLANS APPROVAL DATE

REGISTERED PROFESSIONAL ENGINEER CECILIO BURCIAGA No. E015302 Exp. 03-31-17 ELECTRICAL STATE OF CALIFORNIA

THE STATE OF CALIFORNIA OR ITS OFFICERS OR AGENTS SHALL NOT BE RESPONSIBLE FOR THE ACCURACY OR COMPLETENESS OF SCANNED COPIES OF THIS PLAN SHEET.

NOTE:

FOR ACCURATE RIGHT OF WAY DATA, CONTACT RIGHT OF WAY ENGINEERING AT THE DISTRICT OFFICE.

LEGEND: (THIS SHEET)

1. RS R61-5(CA) SIGN. INSTALL R61-19(CA)(MOD) AS PER DETAIL THIS SHEET.
2. EXISTING DETAIL D.
3. RS SIGNAL HEAD. INSTALL SIGNAL HEAD AS PER DETAIL A THIS SHEET.
4. RS SIGNAL HEAD. INSTALL SIGNAL HEAD AS PER DETAIL B THIS SHEET.
5. EXISTING DETAIL C.
6. RS R73-3(CA) SIGN. INSTALL R3-18 SIGN.
7. EXISTING 120/240 V TYPE III-CF SERVICE EQUIPMENT ENCLOSURE.

METER 1:
1-100 A, 240 V, 2P CB MAIN
1- 50 A, 120 V, 1P CB SIGNAL
1- 30 A, 240 V, 2P CB LIGHTING
1- 15 A, 240 V, 2P CB IISNS
1- 15 A, 120 V, 1P CB VIDEO DETECTION CAMERA
ADDRESS: 123 1/4 N GRAND AVENUE, WEST COVINA
Ctid No. 07-53-10-0-038.300M

METER 2:
1-100 A, 240 V, 2P CB MAIN
1- 30 A, 120 V, 1P CB RAMP METERING
1- 20 A, 120 V, 1P CB IRRIGATION
1- 20 A, 120 V, 1P CB TELEPHONE DEMARCATION CABINET
ADDRESS: 123 1/2 N GRAND AVENUE, WEST COVINA
Ctid No. 07-53-10-0-038.302M

8. COVER SIGNAL HEAD.

R61-19(CA)(MOD)

R61-7(CA)(MOD)

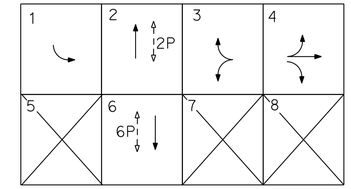

PHASE DIAGRAM

EXISTING CONDUCTOR AND CONDUIT SCHEDULE

AWG OR CABLE	CONDUCTOR RUN	1	2	3	4	5	6	7	8	9
DLC (N)	Ø1 DETECTOR	1		1						
	Ø2 DETECTOR	2								2
	Ø4 DETECTOR	2	2							
	Ø5 DETECTOR	1								1
	Ø6 DETECTOR	2		2						
	TOTAL DLC	8	2	3						3
#12	SERVICE CAMERA				2					
#10	IISNS					2		2	2	
	LUMINAIRES			2	2	2		2	2	
#8	G (N)	1	1	1	1	1	1	1	1	1
#6	SIGNAL SERVICE	2		2						
VIDEO DETECTION CABLE		1		1	1					
28-CONDUCTOR CABLE		4	2	2	2	2	2	2	1	2
TELEPHONE CABLE		1		1						
CONDUIT SIZE		2-3"	3"	3"	3"	3"	3"	3"	3"	3"

EXISTING POLE AND EQUIPMENT SCHEDULE

NO.	STANDARD Type	SMA	LMA	VEH SIG MTG Mast Arm	Pole	PED SIGNAL MTG	PPB Ø	PPB ARROW	HPS LUMINAIRE	RETRO-REFLECTIVE SNS
A	26-4-80	45'	12'	2-MAS	SV-1-T	SP-1-T			200 W	
B	1-A				TV-1-T		6	→		
C	19-3-80	25'	12'	MAS	SV-1-T SV-1-T				200 W	
D	1-A				TV-2-T	SP-1-T				
E	PPB POST						6	←		
F	26-4-80	45'	12'	2-MAS	SV-1-T	SP-1-T			200 W	
G	1-A				TV-1-T		2	→		
H	17-3-80	20'	12'	MAS	SV-1-T		2	←	200 W	GRAND AVE
I	1-A				TV-1-T	SP-1-T				

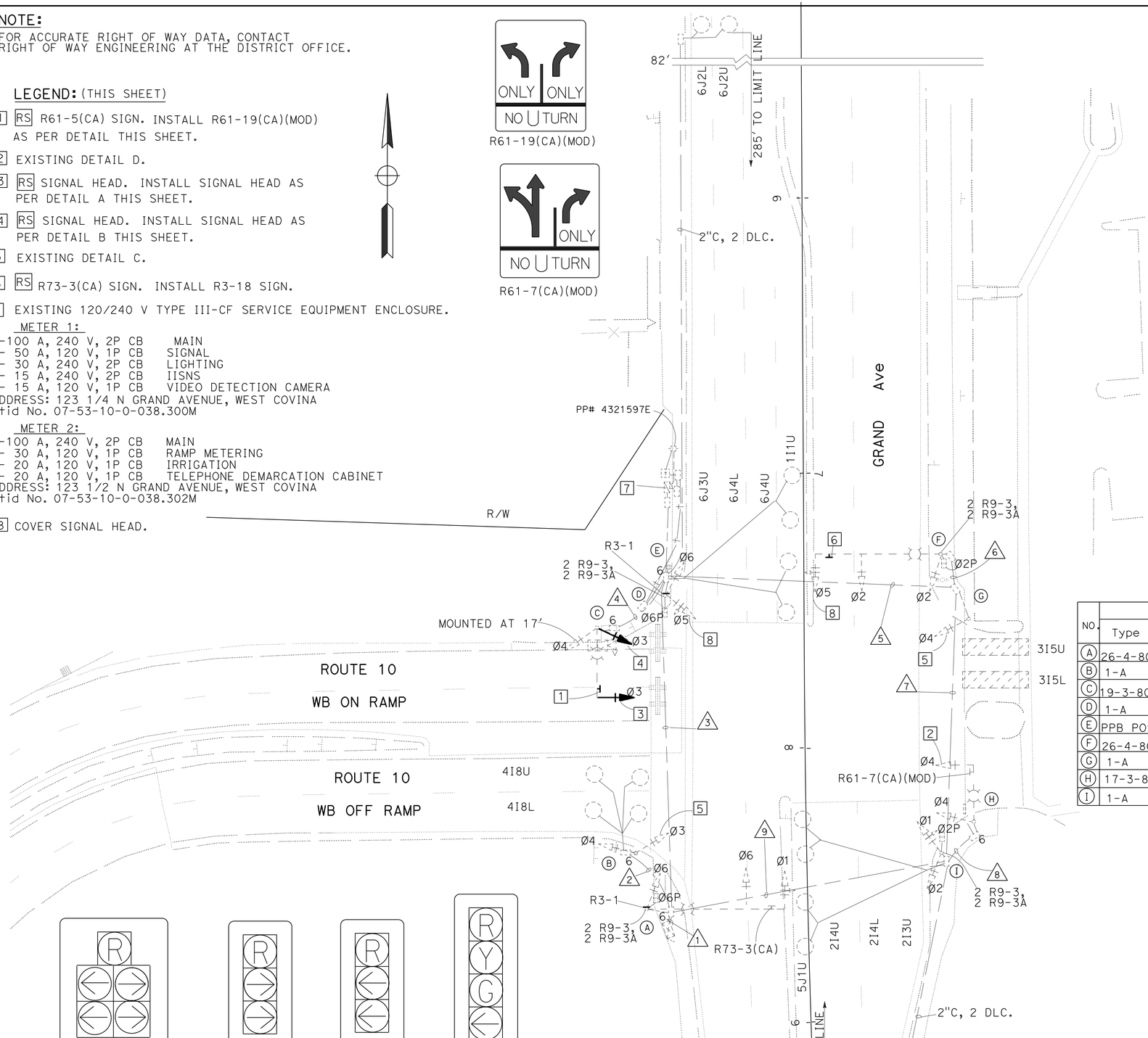

DETAIL A NO SCALE
DETAIL B NO SCALE
DETAIL C NO SCALE
DETAIL D NO SCALE

(LOCATION 2)

(STAGE 4 PHASE 2)

APPROVED FOR ELECTRICAL WORK ONLY

MODIFY SIGNAL AND LIGHTING

SCALE: 1" = 20'

E-217

STATE OF CALIFORNIA - DEPARTMENT OF TRANSPORTATION
Caltrans® **TRAFFIC DESIGN**
FUNCTIONAL SUPERVISOR: YI TSAU
CALCULATED-DESIGNED BY: CECILIO BURCIAGA
CHECKED BY: YI TSAU
REVISED BY / DATE REVISED

LAST REVISION 01-09-15 | DATE PLOTTED => 12-MAY-2015 | TIME PLOTTED => 09:35

Dist	COUNTY	ROUTE	POST MILES TOTAL PROJECT	SHEET No.	TOTAL SHEETS
07	LA	10	37.2/42.4	1414	2313

REGISTERED ELECTRICAL ENGINEER 10/30/14 DATE

6-1-15
PLANS APPROVAL DATE

REGISTERED PROFESSIONAL ENGINEER CECILIO BURCIAGA No. E015302 Exp. 03-31-17 ELECTRICAL STATE OF CALIFORNIA

THE STATE OF CALIFORNIA OR ITS OFFICERS OR AGENTS SHALL NOT BE RESPONSIBLE FOR THE ACCURACY OR COMPLETENESS OF SCANNED COPIES OF THIS PLAN SHEET.

NOTE:

FOR ACCURATE RIGHT OF WAY DATA, CONTACT RIGHT OF WAY ENGINEERING AT THE DISTRICT OFFICE.

LEGEND: (THIS SHEET)

1. RS TYPE 26-4-80 SIGNAL POLE AND EQUIPMENT.
2. RS TYPE 19-3-80 SIGNAL POLE AND EQUIPMENT.
3. RS TYPE 26-4-80 SIGNAL POLE AND EQUIPMENT.
4. RS TYPE 17-3-80 SIGNAL POLE AND EQUIPMENT.
5. 2"C, 12CSC CABLE, 2#10(IISNS), 2#10(L+g), 1#8 (G).
6. RC PULL BOX COVER. INSTALL TEMPER RESISTANT COVER.
7. RELOCATE VIDEO DETECTION CAMERA FROM EXISTING SIGNAL POLE.
8. EXISTING 120/240 V TYPE III-CF SERVICE EQUIPMENT ENCLOSURE.

METER 1:
1-100 A, 240 V, 2P CB MAIN
1- 50 A, 120 V, 1P CB SIGNAL
1- 30 A, 240 V, 2P CB LIGHTING
1- 15 A, 240 V, 2P CB IISNS
1- 15 A, 120 V, 1P CB VIDEO DETECTION CAMERA
ADDRESS: 123 1/4 N GRAND AVENUE, WEST COVINA
Ctid No. 07-53-10-0-038.300M

METER 2:
1-100 A, 240 V, 2P CB MAIN
1- 30 A, 120 V, 1P CB RAMP METERING
1- 20 A, 120 V, 1P CB IRRIGATION
1- 20 A, 120 V, 1P CB TELEPHONE DEMARCATION CABINET
ADDRESS: 123 1/2 N GRAND AVENUE, WEST COVINA
Ctid No. 07-53-10-0-038.302M

9. RC PPB ASSEMBLY. INSTALL APS.
10. RC PEDESTRIAN SIGNAL HEAD. INSTALL COUNTDOWN PEDESTRIAN SIGNAL HEAD.
11. RC PPB POST. INSTALL APS ON NEW PPB POST (SEE SHEET SES-17 FOR DETAILS).

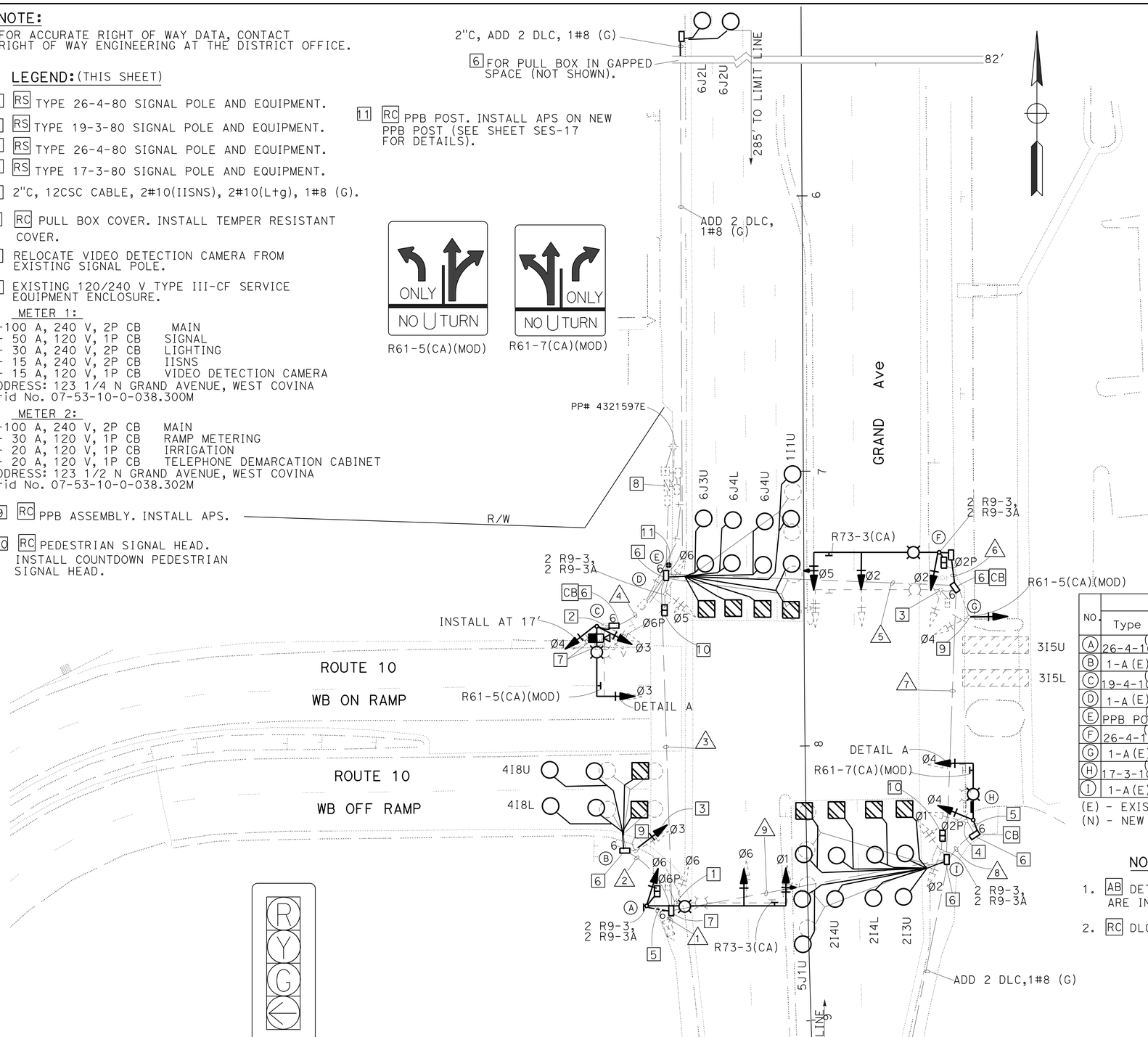

(LOCATION 2)

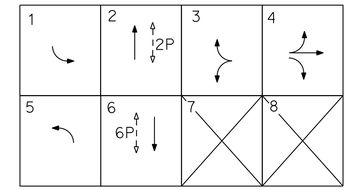

PHASE DIAGRAM

CONDUCTOR AND CONDUIT SCHEDULE

AWG OR CABLE	CONDUCTOR RUN	1	2	3	4	5	6	7	8	9
DLC (N)	Ø1 DETECTOR	1		1						
	Ø2 DETECTOR	5								5
	Ø4 DETECTOR	2	2							
	Ø5 DETECTOR	1								1
	Ø6 DETECTOR	5		5						
	TOTAL DLC	14	2	6						6
#12	SERVICE CAMERA				2					
#10	IISNS					2		2	2	
	LUMINAIRES			2	2	2	2	2	2	
#8	G (N)	1	1	1	1	1	1	1	1	1
#6	SIGNAL SERVICE	2		2						
VIDEO DETECTION CABLE		1*		1*	1*					
28-CONDUCTOR CABLE		4	2	2	2	2	2	2	1	2
5-CONDUCTOR CABLE (APS) (N)			1		1		1		1	
TELEPHONE CABLE										
CONDUIT SIZE		2-3"	3"	3"	3"	3"	3"	3"	3"	3"

(N) - NEW
* - RC

POLE AND EQUIPMENT SCHEDULE

NO.	STANDARD Type	STANDARD SMA	STANDARD LMA	VEH SIG MTG Mast Arm	VEH SIG MTG Pole	COUNTDOWN PED SIGNAL MTG	APS Ø	APS ARROW	LED LUMINAIRE	RETRO-REFLECTIVE SNS
A	(N) 26-4-100	45'	12'	2-MAS	SV-1-T	SP-1-T			165W	
B	1-A (E)				TV-1-T		6	→		
C	(N) 19-4-100	25'	12'	MAS	SV-1-T SV-1-T				165W	
D	1-A (E)				TV-2-T	SP-1-T				
E	(N) PPB POST						6	←		
F	(N) 26-4-100	40'	12'	2-MAS	SV-1-T	SP-1-T			165W	
G	1-A (E)				TV-2-T		2	→		
H	(N) 17-3-100	20'	12'	MAS	SV-1-T		2	←	165W	GRAND AVE
I	1-A (E)				TV-1-T	SP-1-T				

(E) - EXISTING POLE AND EQUIPMENT
(N) - NEW POLE AND EQUIPMENT

NOTES: (THIS SHEET)

1. AB DETECTOR LOOPS AFTER NEW DETECTOR LOOPS ARE INSTALLED AND FUNCTIONING.
2. RC DLC. INSTALL NEW DLC AS PER CONDUCTOR TABLE.

MODIFY SIGNAL AND LIGHTING

SCALE: 1" = 20'

APPROVED FOR ELECTRICAL WORK ONLY

E-218

STATE OF CALIFORNIA - DEPARTMENT OF TRANSPORTATION
Caltrans TRAFFIC DESIGN

FUNCTIONAL SUPERVISOR: YI TSAU
CALCULATED-DESIGNED BY: CECILIO BURCIAGA
CHECKED BY: YI TSAU
REVISED BY / DATE REVISED

LAST REVISION 01-09-15 | DATE PLOTTED => 12-MAY-2015 | TIME PLOTTED => 09:35

Dist	COUNTY	ROUTE	POST MILES TOTAL PROJECT	SHEET No.	TOTAL SHEETS
07	LA	10	37.2/42.4	1415	2313

REGISTERED ELECTRICAL ENGINEER 10/30/14 DATE

6-1-15
PLANS APPROVAL DATE

REGISTERED PROFESSIONAL ENGINEER CECILIO BURCIAGA No. E015302 Exp. 03-31-17 ELECTRICAL STATE OF CALIFORNIA

THE STATE OF CALIFORNIA OR ITS OFFICERS OR AGENTS SHALL NOT BE RESPONSIBLE FOR THE ACCURACY OR COMPLETENESS OF SCANNED COPIES OF THIS PLAN SHEET.

NOTE:

1. FOR ACCURATE RIGHT OF WAY DATA, CONTACT RIGHT OF WAY ENGINEERING AT THE DISTRICT OFFICE.

LEGEND: (FOR THIS SHEET ONLY)

1. RR R73-3 FOR STAGE 2 PHASE 3, INSTALL R3-18.
2. INSTALL R3-1.
3. INSTALL R9-3a.
4. COVER SIGNAL HEAD.

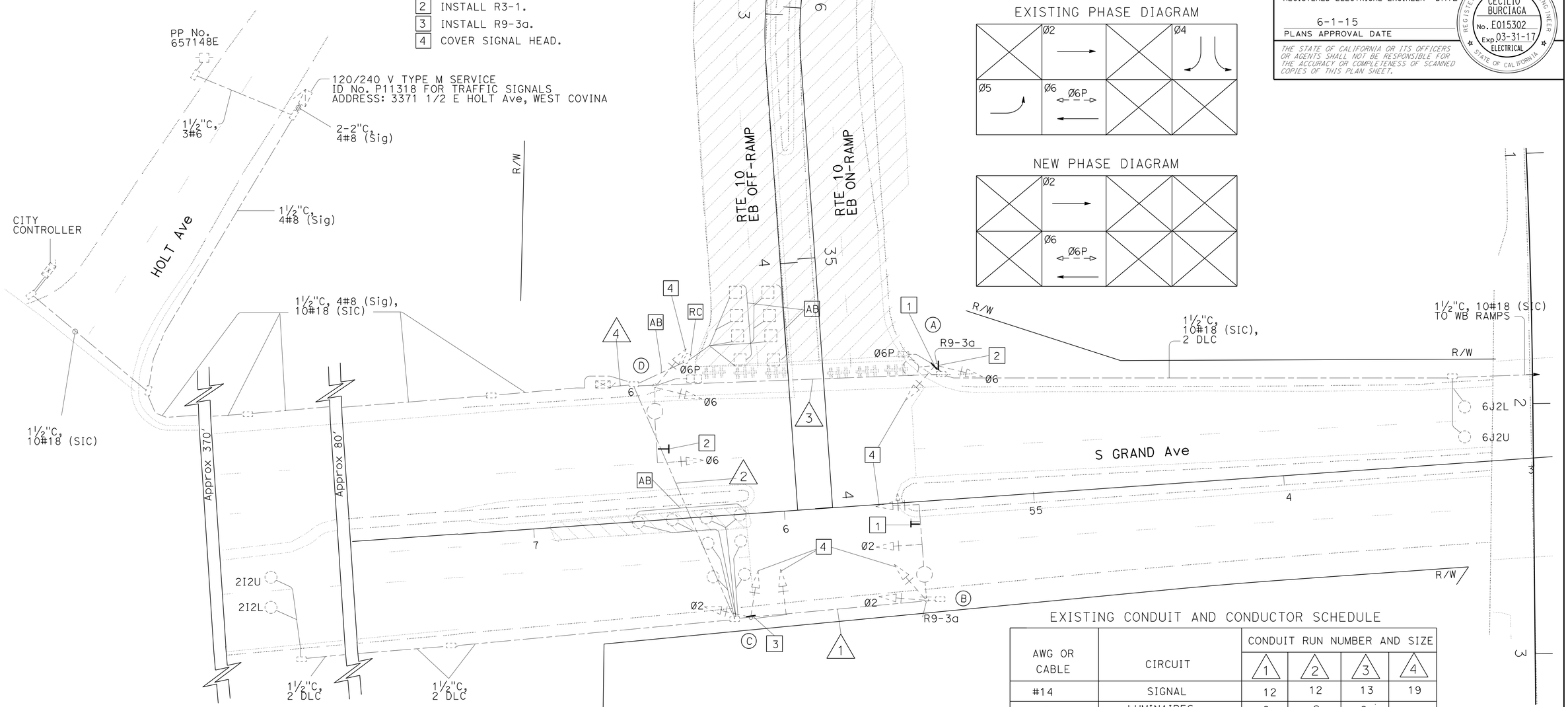

EXISTING PHASE DIAGRAM

NEW PHASE DIAGRAM

EXISTING POLE AND EQUIPMENT SCHEDULE

No.	STANDARD Type	STANDARD SMA	STANDARD LMA	VEH SIG MTG Mast Arm	VEH SIG MTG Pole	PED SIGNAL MTG	PPB Ø	PPB ARROW	HPS LUMINAIRE
A	15	—	12'	—	SV-2-TA	SP-1-T	6	→	200 W
B	24-3-70	35'	12'	2-MAS	SV-2-TA	—	—	—	200 W
C	19-2-70	25'	—	MAS	SV-2-TA	—	—	—	—
D	17-2-70	28'	12'	MAS	SV-2-TA	SP-1-T	6	←	200 W

EXISTING CONDUIT AND CONDUCTOR SCHEDULE

AWG OR CABLE	CIRCUIT	CONDUIT RUN NUMBER AND SIZE 1	2	3	4
#14	SIGNAL	12	12	13	19
#6	LUMINAIRES	2	2	2	–
#6	SIGNAL SERVICE	–	–	–	2
#8	G	1	1	1	1
DLC	Ø 2 DETECTORS	–	2	–	2
	Ø 4 DETECTORS	–	–	–	2
	Ø 5 DETECTORS	–	1	–	1
	Ø 6 DETECTORS	–	–	2	2
	TOTAL	–	3	2	7
10#18	SIC	–	–	1	2
	CONDUIT SIZE	2"	2"	2"	3"

(STAGE 2 PHASE 2)
(LOCATION 3)
APPROVED FOR ELECTRICAL WORK ONLY

MODIFY SIGNAL AND LIGHTING

SCALE: 1" = 20'

E-219

STATE OF CALIFORNIA - DEPARTMENT OF TRANSPORTATION
Caltrans® **TRAFFIC DESIGN**

FUNCTIONAL SUPERVISOR: YI TSAU
CALCULATED-DESIGNED BY: LUKE SUN
CHECKED BY: CECILIO BURCIAGA
REVISED BY / DATE REVISED

LAST REVISION: 01-09-15
DATE PLOTTED => 12-MAY-2015
TIME PLOTTED => 09:35

Dist	COUNTY	ROUTE	POST MILES TOTAL PROJECT	SHEET No.	TOTAL SHEETS
07	LA	10	37.2/42.4	1416	2313

REGISTERED ELECTRICAL ENGINEER 10/30/14 DATE

6-1-15
PLANS APPROVAL DATE

REGISTERED PROFESSIONAL ENGINEER CECILIO BURCIAGA No. E015302 Exp. 03-31-17 ELECTRICAL STATE OF CALIFORNIA

THE STATE OF CALIFORNIA OR ITS OFFICERS OR AGENTS SHALL NOT BE RESPONSIBLE FOR THE ACCURACY OR COMPLETENESS OF SCANNED COPIES OF THIS PLAN SHEET.

NOTE:

1. FOR ACCURATE RIGHT OF WAY DATA, CONTACT RIGHT OF WAY ENGINEERING AT THE DISTRICT OFFICE.

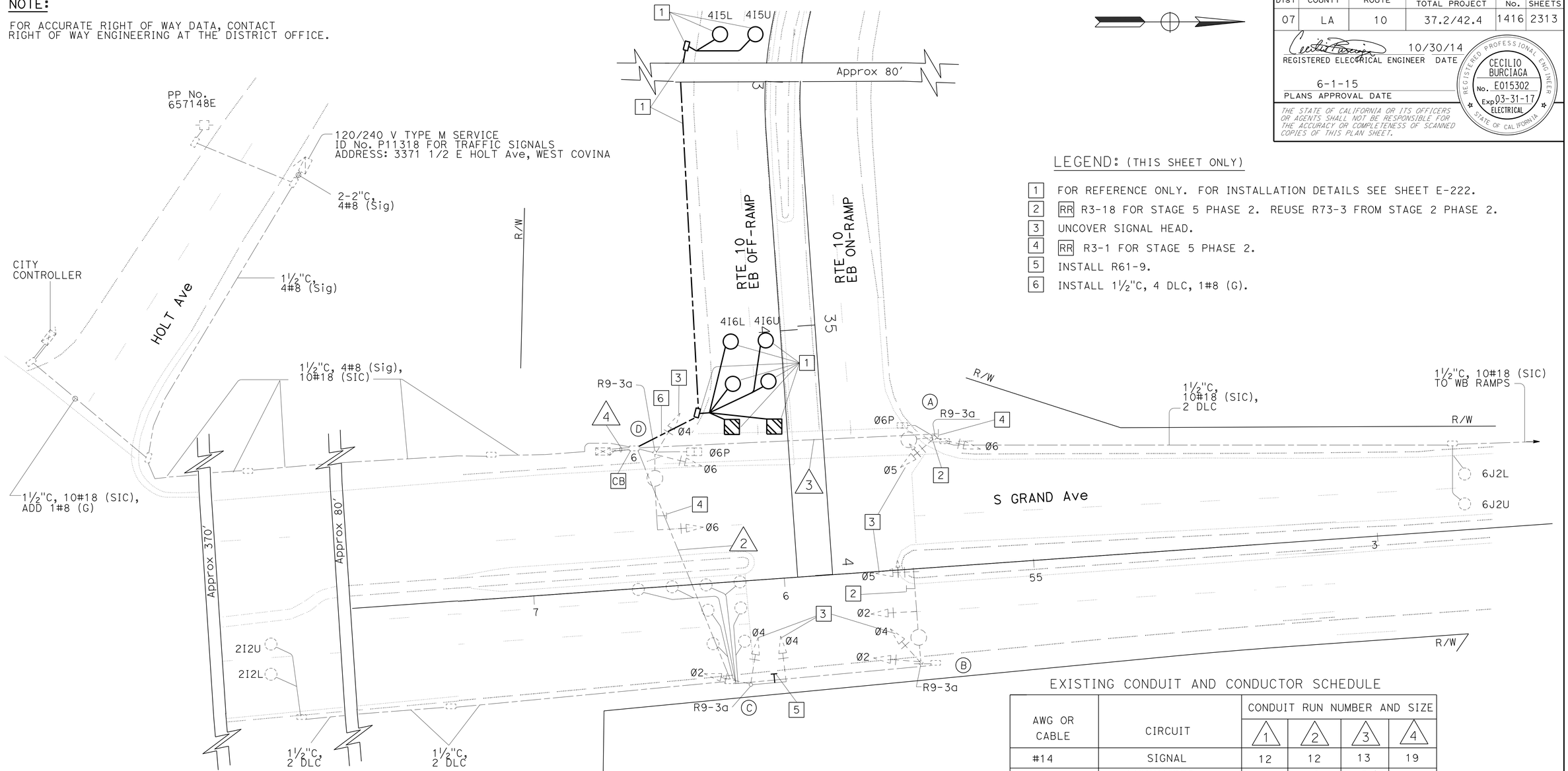

LEGEND: (THIS SHEET ONLY)

1. FOR REFERENCE ONLY. FOR INSTALLATION DETAILS SEE SHEET E-222.
2. RR R3-18 FOR STAGE 5 PHASE 2. REUSE R73-3 FROM STAGE 2 PHASE 2.
3. UNCOVER SIGNAL HEAD.
4. RR R3-1 FOR STAGE 5 PHASE 2.
5. INSTALL R61-9.
6. INSTALL 1½"C, 4 DLC, 1#8 (G).

PHASE DIAGRAM

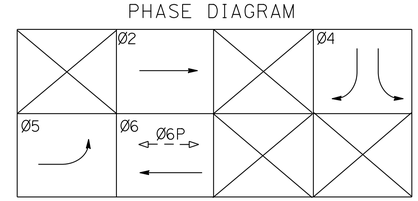

EXISTING POLE AND EQUIPMENT SCHEDULE

No.	STANDARD Type	STANDARD SMA	STANDARD LMA	VEH SIG MTG Mast Arm	VEH SIG MTG Pole	PED SIGNAL MTG	PPB Ø	PPB ARROW	HPS LUMINAIRE
A	15	—	12'	—	SV-2-TA	SP-1-T	6	→	200 W
B	24-3-70	35'	12'	2-MAS	SV-2-TA	—	—	—	200 W
C	19-2-70	25'	—	MAS	SV-2-TA	—	—	—	—
D	17-2-70	28'	12'	MAS	SV-2-TA	SP-1-T	6	←	200 W

EXISTING CONDUIT AND CONDUCTOR SCHEDULE

AWG OR CABLE	CIRCUIT	CONDUIT RUN NUMBER AND SIZE 1	2	3	4
#14	SIGNAL	12	12	13	19
#6	LUMINAIRES	2	2	2	–
#6	SIGNAL SERVICE	–	–	–	2
#8	G	1	1	1	1
DLC	Ø 2 DETECTORS	–	2	–	2
	Ø 4 DETECTORS	–	–	–	2*/4(N)
	Ø 5 DETECTORS	–	1	–	1
	Ø 6 DETECTORS	–	–	2	2
	TOTAL	–	3	2	7
10#18	SIC	–	–	1	2
	CONDUIT SIZE	2"	2"	2"	3"

(N) - NEW
* - RC

(STAGE 2 PHASE 3)
(LOCATION 3)
APPROVED FOR ELECTRICAL WORK ONLY

MODIFY SIGNAL AND LIGHTING

SCALE: 1" = 20'

E-220

STATE OF CALIFORNIA - DEPARTMENT OF TRANSPORTATION
Caltrans® **TRAFFIC DESIGN**
FUNCTIONAL SUPERVISOR: YI TSAU
CALCULATED-DESIGNED BY: LUKE SUN
CHECKED BY: CECILIO BURCIAGA
REVISED BY / DATE REVISED

LAST REVISION 01-09-15
DATE PLOTTED => 12-MAY-2015
TIME PLOTTED => 09:35

Dist	COUNTY	ROUTE	POST MILES TOTAL PROJECT	SHEET No.	TOTAL SHEETS
07	LA	10	37.2/42.4	1417	2313

REGISTERED ELECTRICAL ENGINEER 10/30/14 DATE

PLANS APPROVAL DATE 6-1-15

REGISTERED PROFESSIONAL ENGINEER CECILIO BURCIAGA No. E015302 Exp. 03-31-17 ELECTRICAL STATE OF CALIFORNIA

THE STATE OF CALIFORNIA OR ITS OFFICERS OR AGENTS SHALL NOT BE RESPONSIBLE FOR THE ACCURACY OR COMPLETENESS OF SCANNED COPIES OF THIS PLAN SHEET.

NOTE:

1. FOR ACCURATE RIGHT OF WAY DATA, CONTACT RIGHT OF WAY ENGINEERING AT THE DISTRICT OFFICE.

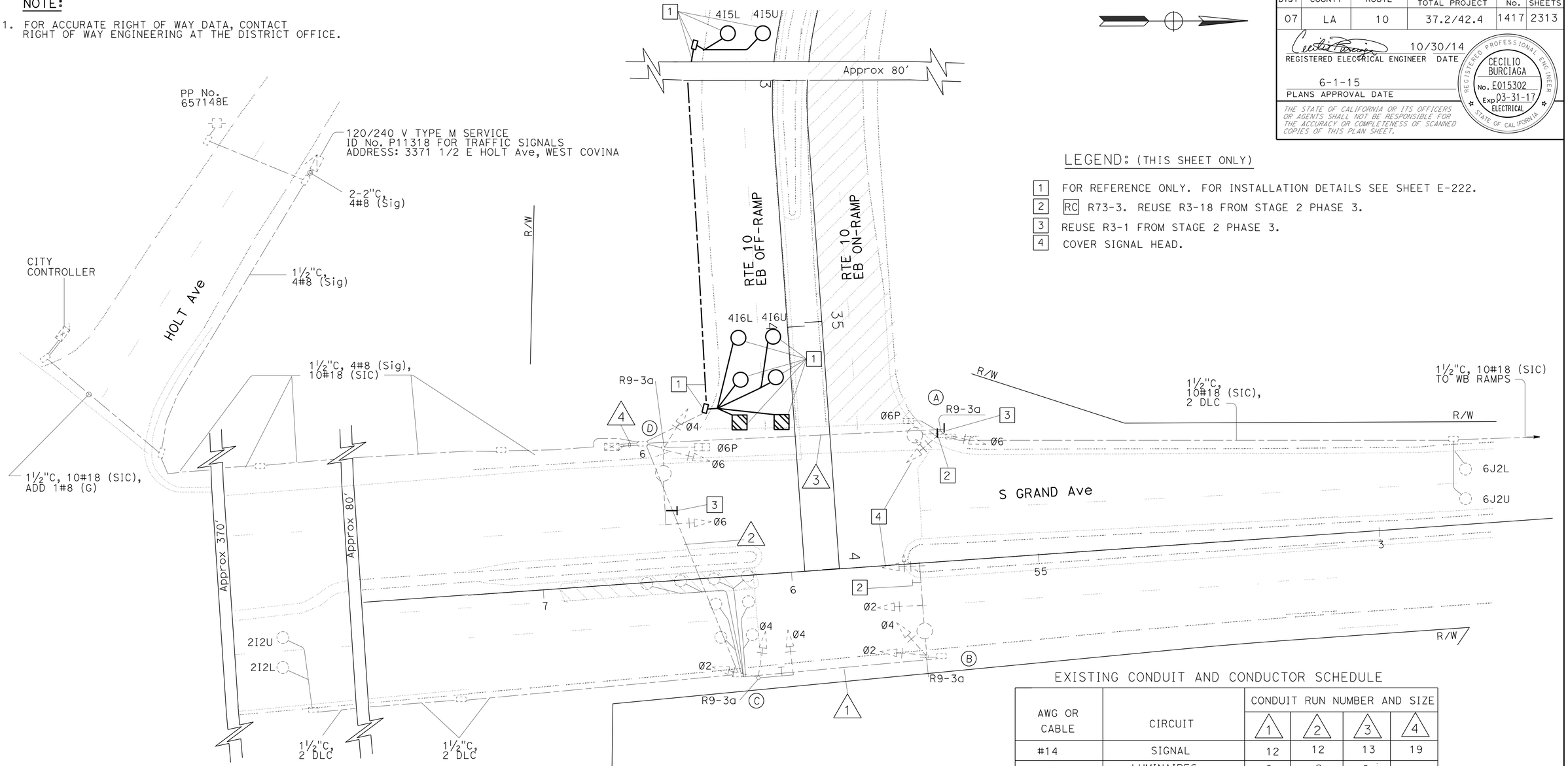

LEGEND: (THIS SHEET ONLY)

1. FOR REFERENCE ONLY. FOR INSTALLATION DETAILS SEE SHEET E-222.
2. RC R73-3. REUSE R3-18 FROM STAGE 2 PHASE 3.
3. REUSE R3-1 FROM STAGE 2 PHASE 3.
4. COVER SIGNAL HEAD.

PHASE DIAGRAM

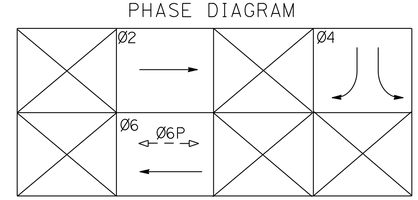

EXISTING POLE AND EQUIPMENT SCHEDULE

No.	STANDARD Type	SMA	LMA	VEH SIG MTG Mast Arm	Pole	PED SIGNAL MTG	PPB Ø	ARROW	HPS LUMINAIRE
A	15	—	12'	—	SV-2-TA	SP-1-T	6	→	200 W
B	24-3-70	35'	12'	2-MAS	SV-2-TA	—	—	—	200 W
C	19-2-70	25'	—	MAS	SV-2-TA	—	—	—	—
D	17-2-70	28'	12'	MAS	SV-2-TA	SP-1-T	6	←	200 W

EXISTING CONDUIT AND CONDUCTOR SCHEDULE

AWG OR CABLE	CIRCUIT	CONDUIT RUN NUMBER AND SIZE 1	2	3	4
#14	SIGNAL	12	12	13	19
#6	LUMINAIRES	2	2	2	–
#6	SIGNAL SERVICE	–	–	–	2
#8	G	1	1	1	1
DLC	Ø 2 DETECTORS	–	2	–	2
	Ø 4 DETECTORS	–	–	–	4
	Ø 5 DETECTORS	–	1	–	1
	Ø 6 DETECTORS	–	–	2	2
	TOTAL	–	3	2	7
10#18	SIC	–	–	1	2
	CONDUIT SIZE	2"	2"	2"	3"

(STAGE 5 PHASE 2)
(LOCATION 3)
APPROVED FOR ELECTRICAL WORK ONLY

MODIFY SIGNAL AND LIGHTING

SCALE: 1" = 20'

E-221

STATE OF CALIFORNIA - DEPARTMENT OF TRANSPORTATION
Caltrans® **TRAFFIC DESIGN**
FUNCTIONAL SUPERVISOR: YI TSAU
CALCULATED-DESIGNED BY: LUKE SUN
CHECKED BY: CECILIO BURCIAGA
REVISED BY / DATE REVISED

LAST REVISION 01-09-15 | DATE PLOTTED => 12-MAY-2015 | TIME PLOTTED => 09:35

Dist	COUNTY	ROUTE	POST MILES TOTAL PROJECT	SHEET No.	TOTAL SHEETS
07	LA	10	37.2/42.4	1418	2313

REGISTERED ELECTRICAL ENGINEER 10/30/14 DATE

6-1-15
PLANS APPROVAL DATE

REGISTERED PROFESSIONAL ENGINEER CECILIO BURCIAGA No. E015302 Exp. 03-31-17 ELECTRICAL STATE OF CALIFORNIA

THE STATE OF CALIFORNIA OR ITS OFFICERS OR AGENTS SHALL NOT BE RESPONSIBLE FOR THE ACCURACY OR COMPLETENESS OF SCANNED COPIES OF THIS PLAN SHEET.

NOTES: (THIS SHEET ONLY)

1. FOR ACCURATE RIGHT OF WAY DATA, CONTACT RIGHT OF WAY ENGINEERING AT THE DISTRICT OFFICE.
2. No. 5 AND No. 6 PULL BOXES MUST BE TRAFFIC TYPE WITH TEMPER RESISTANT COVER.
3. RC SIGNAL EQUIPMENT, 120/240 TYPE III-BF SERVICE EQUIPMENT ENCLOSURE AND AB CONDUIT FROM STAGING PLANS THAT ARE NOT USED IN THIS FINAL SIGNAL PLAN.

PHASE DIAGRAM

LEGEND: (THIS SHEET ONLY)

1. INSTALL DEPARTMENT-FURNISHED MODEL 2070 CONTROLLER ASSEMBLY WITH MODEL 2070-6B MODEM. INSTALL BBS BATTERIES AND EXTERNAL CABINET. INSTALL DEPARTMENT-FURNISHED BBS COMPONENTS. INSTALL GLOBAL POSITIONING SYSTEM TIME BASE SYSTEM EQUIPMENT AND WIRELESS DATA SERVICE EQUIPMENT. (FOR INSTALLATION OF TRAFFIC SIGNAL INTERCONNECT AND WIRELESS DATA SERVICE EQUIPMENT, SEE SHEET E-225 FOR DETAILS).
2. INSTALL 120/240 V METERED TYPE III-BF SERVICE EQUIPMENT ENCLOSURE WITH:
   1-100 A, 240 V, 2P, CB - MAIN
   1- 50 A, 120 V, 1P, CB - Sig SERVICE
   1- 30 A, 120 V, 1P, CB - Sig Ltg
   1- 15 A, 120 V, 1P, CB - PEU
   Ctid No. 07-53-010-0-038.517M
   ADDRESS: 151 1/4 N GRAND Ave, WEST COVINA
3. INSTALL 3"C, PT. SCE WILL INSTALL CONDUCTORS.
4. INSTALL 2-3"C, 4#6 (Sig), 1#8 (G).

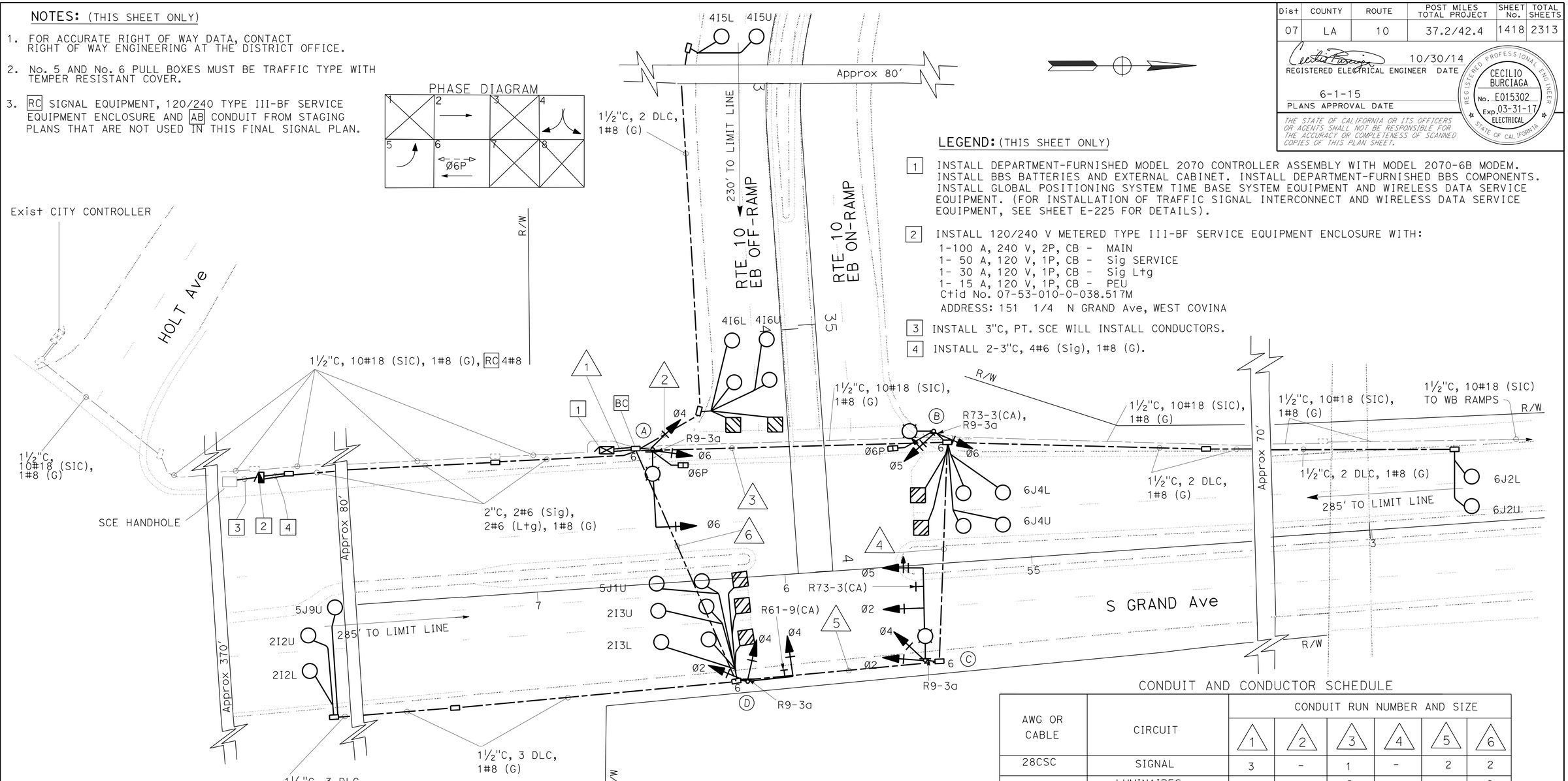

POLE AND EQUIPMENT SCHEDULE

STANDARD				VEH SIG MTG		COUNTDOWN PED SIGNAL	APS		LED LUMINAIRE	RETRO-REFLECTIVE SNS
No.	TYPE	SMA	LMA	MAST ARM	POLE	MTG	Ø	ARROW		
A	19-2-100	30'	12'	MAS	SV-2-TA	SP-1-T	6	→	165 W	-
B	15TS	-	12'	-	SV-2-TA	SP-1-T	6	←	165 W	-
C	24-3-100	35'	12'	2-MAS	SV-2-TA	-	-	-	165 W	-
D	17-2-100	20'	-	MAS	SV-2-TA	-	-	-	-	GRAND AVE

CONDUIT AND CONDUCTOR SCHEDULE

AWG OR CABLE	CIRCUIT	CONDUIT RUN NUMBER AND SIZE					
		1	2	3	4	5	6
28CSC	SIGNAL	3	-	1	-	2	2
#6	LUMINAIRES	-	-	2	-	2	2
#6	SIGNAL SERVICE	2	-	-	-	-	-
#8	G	1	1	1	-	1	1
DLC	Ø 2 DETECTORS	4	-	-	-	-	4
	Ø 4 DETECTORS	4	4	-	-	-	-
	Ø 5 DETECTORS	2	-	-	-	-	2
	Ø 6 DETECTORS	4	-	4	-	-	-
	TOTAL	14	4	4	-	-	6
10#18	SIC	2 (E)	-	-	-	-	-
	CONDUIT SIZE	2-3"	3"	3"	3", PT	3"	3"

(E) - EXISTING

(GRAND AVE & EB RAMP)
(LOCATION 3)
APPROVED FOR ELECTRICAL WORK ONLY

MODIFY SIGNAL AND LIGHTING

SCALE: 1" = 20'

E-222

STATE OF CALIFORNIA - DEPARTMENT OF TRANSPORTATION
Caltrans® TRAFFIC DESIGN

FUNCTIONAL SUPERVISOR: YI TSAU
CALCULATED-DESIGNED BY: LUKE SUN
CHECKED BY: CECILIO BURCIAGA
REVISED BY / DATE REVISED

LAST REVISION 01-09-15
DATE PLOTTED => 12-MAY-2015
TIME PLOTTED => 09:35

Dist	COUNTY	ROUTE	POST MILES TOTAL PROJECT	SHEET No.	TOTAL SHEETS
07	LA	10	37.2/42.4	1419	2313

REGISTERED ELECTRICAL ENGINEER 10/30/14 DATE

6-1-15
PLANS APPROVAL DATE

REGISTERED PROFESSIONAL ENGINEER
CECILIO BURCIAGA
No. E015302
Exp. 03-31-17
ELECTRICAL
STATE OF CALIFORNIA

THE STATE OF CALIFORNIA OR ITS OFFICERS OR AGENTS SHALL NOT BE RESPONSIBLE FOR THE ACCURACY OR COMPLETENESS OF SCANNED COPIES OF THIS PLAN SHEET.

NOTE: (THIS SHEET ONLY)

1. FOR ACCURATE RIGHT OF WAY DATA, CONTACT RIGHT OF WAY ENGINEERING AT THE DISTRICT OFFICE.
2. No. 5 PULL BOXES MUST BE TRAFFIC TYPE WITH TEMPER RESISTANT COVER.

LEGEND: (THIS SHEET ONLY)

1 INSTALL 2"C, 6PR#20 SIC, 1#8 (G).
2 EXISTING CITY CONTROLLER.
3 EXISTING CITY 2-2"C. ADD 6PR#22 SIC AND 1#8 (G).
4 FOR REFERENCE ONLY, SEE SHEET E-214 FOR INSTALLATION DETAILS.
5 INSTALL 3"C, 6PR#22 SIC, 1#8 (G).

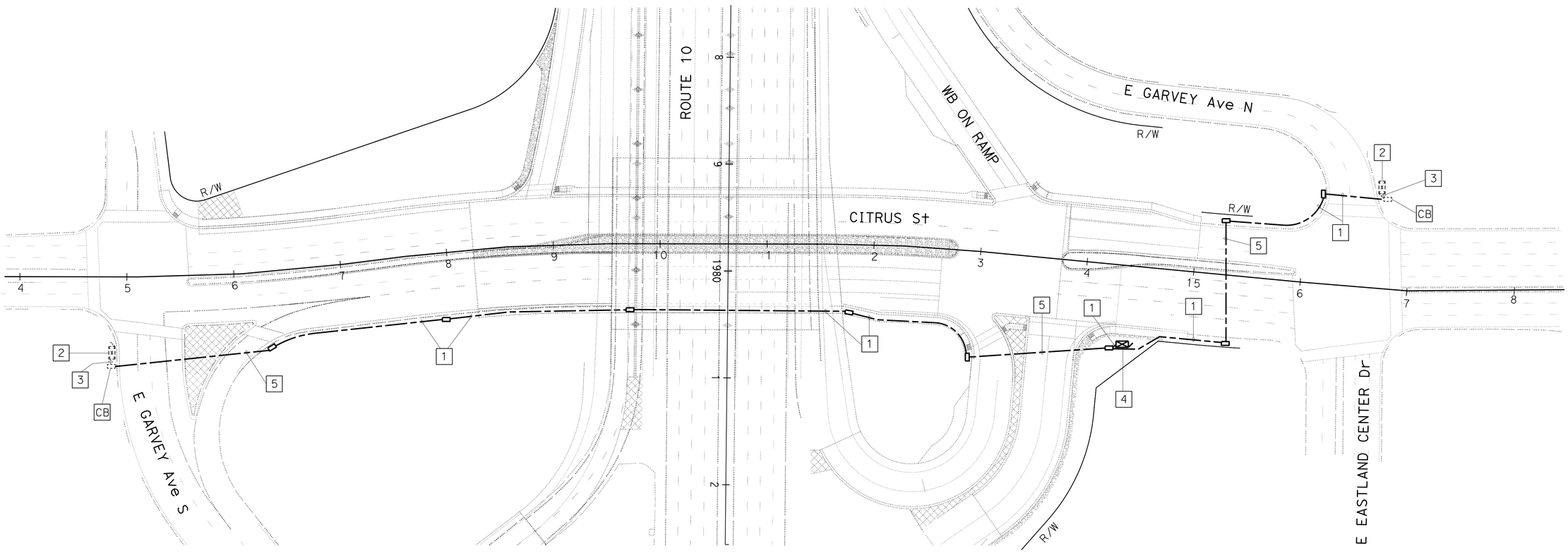

INTERCONNECTION CONDUIT AND CABLE

SCALE: 1" = 50'

APPROVED FOR ELECTRICAL WORK ONLY

E-223

REVISED BY | DATE REVISED
QUINCIE TRAN | CECILIO BURCIAGA
CALCULATED-DESIGNED BY | CHECKED BY
FUNCTIONAL SUPERVISOR: YI TSAU

STATE OF CALIFORNIA - DEPARTMENT OF TRANSPORTATION
Caltrans® **TRAFFIC DESIGN**

LAST REVISION 01-09-15 | DATE PLOTTED => 12-MAY-2015 | TIME PLOTTED => 09:35

Dist	COUNTY	ROUTE	POST MILES TOTAL PROJECT	SHEET No.	TOTAL SHEETS
07	LA	10	37.2/42.4	1420	2313

REGISTERED ELECTRICAL ENGINEER 10/30/14 DATE

6-1-15
PLANS APPROVAL DATE

REGISTERED PROFESSIONAL ENGINEER CECILIO BURCIAGA No. E015302 Exp. 3/31/17 ELECT STATE OF CALIFORNIA

THE STATE OF CALIFORNIA OR ITS OFFICERS OR AGENTS SHALL NOT BE RESPONSIBLE FOR THE ACCURACY OR COMPLETENESS OF SCANNED COPIES OF THIS PLAN SHEET.

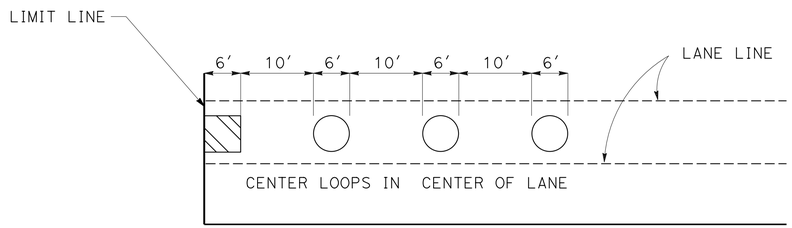

TYPICAL LOOP DETAIL

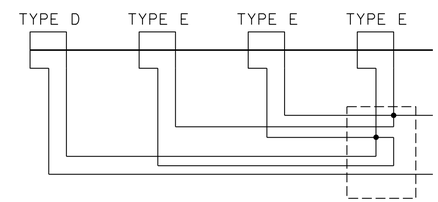

LOOP CONNECTION

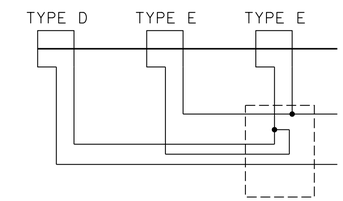

LOOP CONNECTION

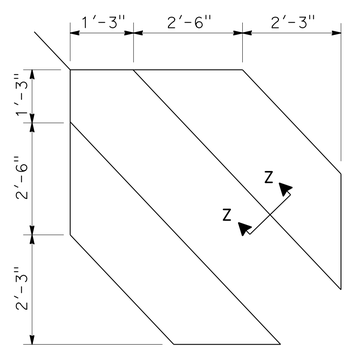

SAWCUT DETAIL

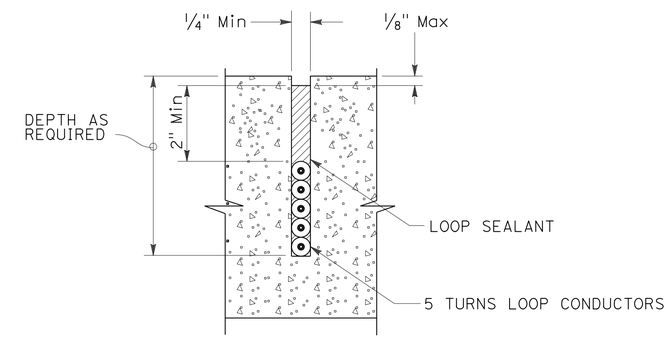

SECTION Z-Z (FOR TYPE D LOOP DETECTOR)

TYPE D LOOP DETECTOR CONFIGURATION

SLOT DETAILS - TYPE 2 LOOP CONDUCTOR

NOTE:

1. USE SECTION Z-Z INSTEAD OF A-A IN ES-5A FOR TYPE D LOOP DETECTOR.

ELECTRICAL DETAILS
NO SCALE

(BICYCLE LOOP DETECTOR DETAILS)

E-224

STATE OF CALIFORNIA - DEPARTMENT OF TRANSPORTATION
Caltrans® **TRAFFIC DESIGN**

FUNCTIONAL SUPERVISOR: YI TSAU
CALCULATED-DESIGNED BY: FARIDA MAHMOOD
CHECKED BY: CECILIO BURCIAGA
REVISED BY
DATE REVISED

LAST REVISION 01-09-15 | DATE PLOTTED => 12-MAY-2015 | TIME PLOTTED => 09:35

Dist	COUNTY	ROUTE	POST MILES TOTAL PROJECT	SHEET No.	TOTAL SHEETS
07	LA	10	37.2/42.4	1421	2313

REGISTERED ELECTRICAL ENGINEER 10/30/14 DATE

PLANS APPROVAL DATE 6-1-15

REGISTERED PROFESSIONAL ENGINEER CECILIO BURCIAGA No. E015302 Exp. 3/31/17 ELECT STATE OF CALIFORNIA

THE STATE OF CALIFORNIA OR ITS OFFICERS OR AGENTS SHALL NOT BE RESPONSIBLE FOR THE ACCURACY OR COMPLETENESS OF SCANNED COPIES OF THIS PLAN SHEET.

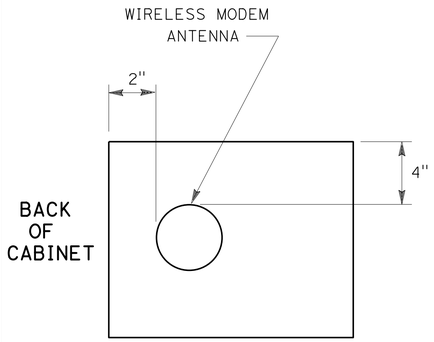

Top View
MODEL 332/334 CABINET

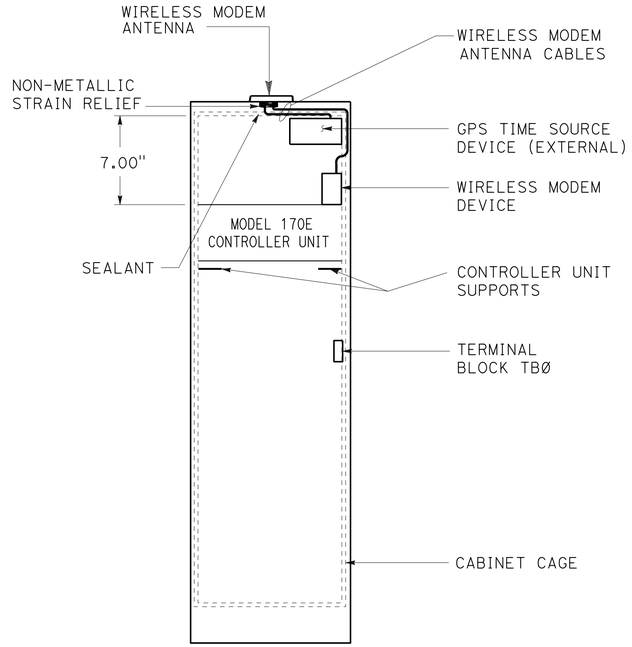

Back View
MODEL 332/334 CONTROLLER CABINET

WIRELESS MODEM DEVICE, GPS TIME SOURCE DEVICE, AND WIRELESS MODEM ANTENNA PLACEMENT DETAIL

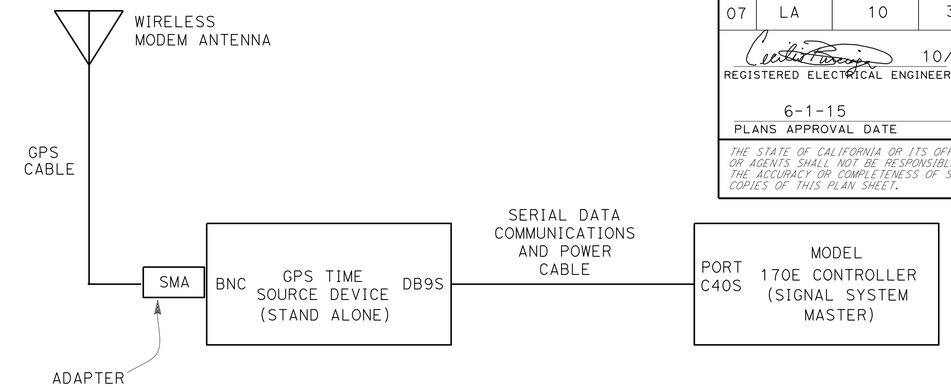

GPS TIME SOURCE DEVICE CONNECTION DETAIL

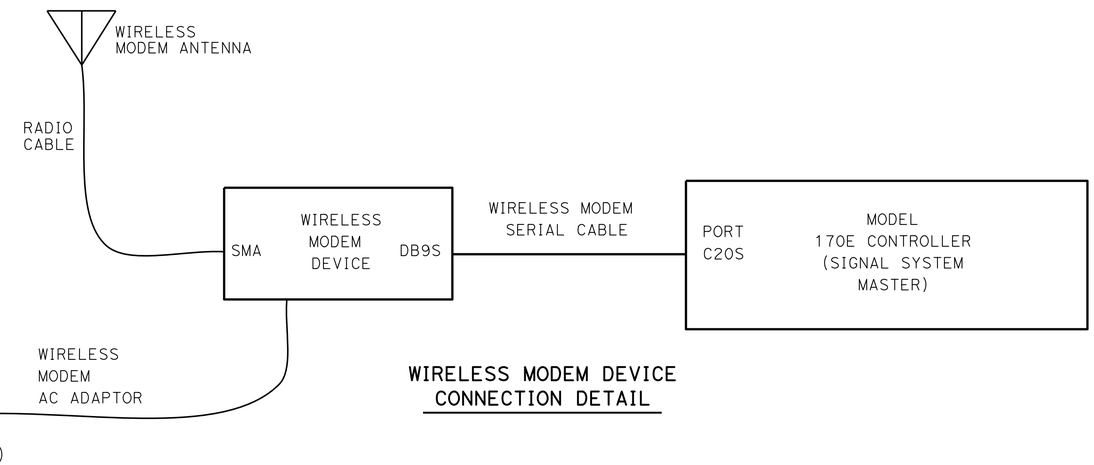

WIRELESS MODEM DEVICE CONNECTION DETAIL

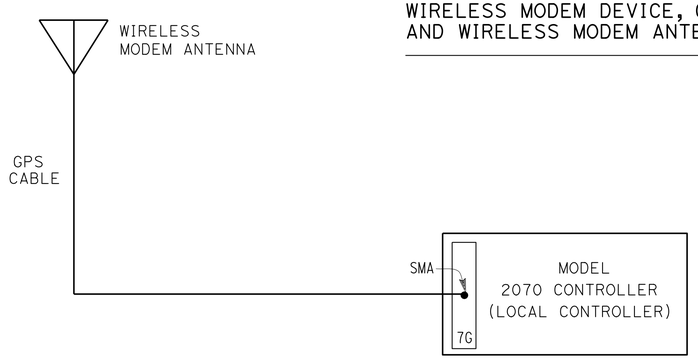

2070-7G MODULE CONNECTION DETAIL

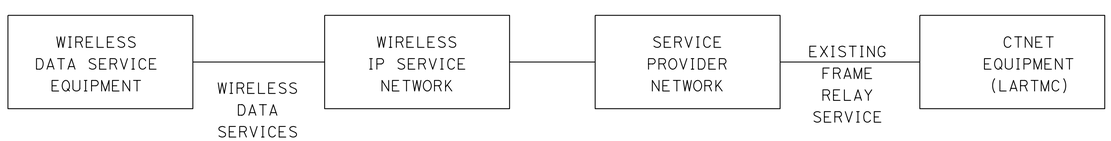

WIRELESS CONNECTIVITY DETAIL

LEGEND (THIS SHEET)

AC	ALTERNATING CURRENT
V(ac)	VOLTS ALTERNATING CURRENT
PDA	POWER DISTRIBUTION ASSEMBLY
CTNET	CALTRANS TRAFFIC SIGNAL NETWORK.
LARTMC	LOS ANGELES REGIONAL TRANSPORTATION MANAGEMENT CENTER
IP	INTERNET PROTOCOL
GPS	GLOBAL POSITIONING SYSTEM
DB9S	SERIES D SUBMINIATURE CONNECTOR, E SIZE SHELL, 9 PIN SOCKET
TNC	THREADED NEILL-CONCELMAN
SMA	SUBMINIATURE VERSION A
BNC	BAYONET NEILL-CONCELMAN

(WIRELESS DATA SERVICE AND GPS TIME BASE SYSTEMS)

ELECTRICAL DETAILS

NO SCALE

E-225

STATE OF CALIFORNIA - DEPARTMENT OF TRANSPORTATION
Caltrans TRAFFIC DESIGN

FUNCTIONAL SUPERVISOR: YI TSAU
CALCULATED-DESIGNED BY: FARIDA MAHMOOD
CHECKED BY: CECILIO BURCIAGA
REVISED BY / DATE REVISED

LAST REVISION 01-09-15
DATE PLOTTED => 12-MAY-2015
TIME PLOTTED => 09:35

Dist	COUNTY	ROUTE	POST MILES TOTAL PROJECT	SHEET No.	TOTAL SHEETS
07	LA	10	37.2/42.2	1422	2313

REGISTERED ELECTRICAL ENGINEER 10/30/14 DATE

PLANS APPROVAL DATE 6-1-15

REGISTERED PROFESSIONAL ENGINEER CECILIO BURCIAGA No. E015302 Exp. 3/31/17 ELECT STATE OF CALIFORNIA

THE STATE OF CALIFORNIA OR ITS OFFICERS OR AGENTS SHALL NOT BE RESPONSIBLE FOR THE ACCURACY OR COMPLETENESS OF SCANNED COPIES OF THIS PLAN SHEET.

WIRE USAGE IN MVDS CABLE

MS CONNECTOR PIN ID	WIRE NUMBER	PAIR NUMBER	FUNCTION
A	1	1	DETECTOR #1
B	2	1	DETECTOR #1 RETURN
C	3	2	DETECTOR #2
D	4	2	DETECTOR #2 RETURN
E	5	3	DETECTOR #3
F	6	3	DETECTOR #3 RETURN
G	7	4	DETECTOR #4
H	8	4	DETECTOR #4 RETURN
J	9	5	DETECTOR #5
K	10	5	DETECTOR #5 RETURN
L	11	6	DETECTOR #6
M	12	6	DETECTOR #6 RETURN
N	13	7	DETECTOR #7
P	14	7	DETECTOR #7 RETURN
R	15	8	DETECTOR #8
S	16	8	DETECTOR #8 RETURN
T	17	9	RS232 RX (RECEIVE)
U	18	9	RS232 G (RECEIVE GROUND)
V	19	10	RS232 TX (TRANSMIT)
W	20	10	RS232 G (TRANSMIT GROUND)
f	21	11	12-24 VOLTS AC/DC POWER
g	22	11	12-24 VOLTS AC/DC POWER

LEGEND: (THIS SHEET ONLY)

1 MOUNTING PLATE, ARTICULATING JOINT AND RADAR UNIT ASSEMBLY CONNECTIONS PER MANUFACTURER'S RECOMMENDATION.

2 SURGE PROTECTOR(S)

MTA = MVDS TERMINATION ASSEMBLY
PDA = POWER DISTRIBUTION ASSEMBLY

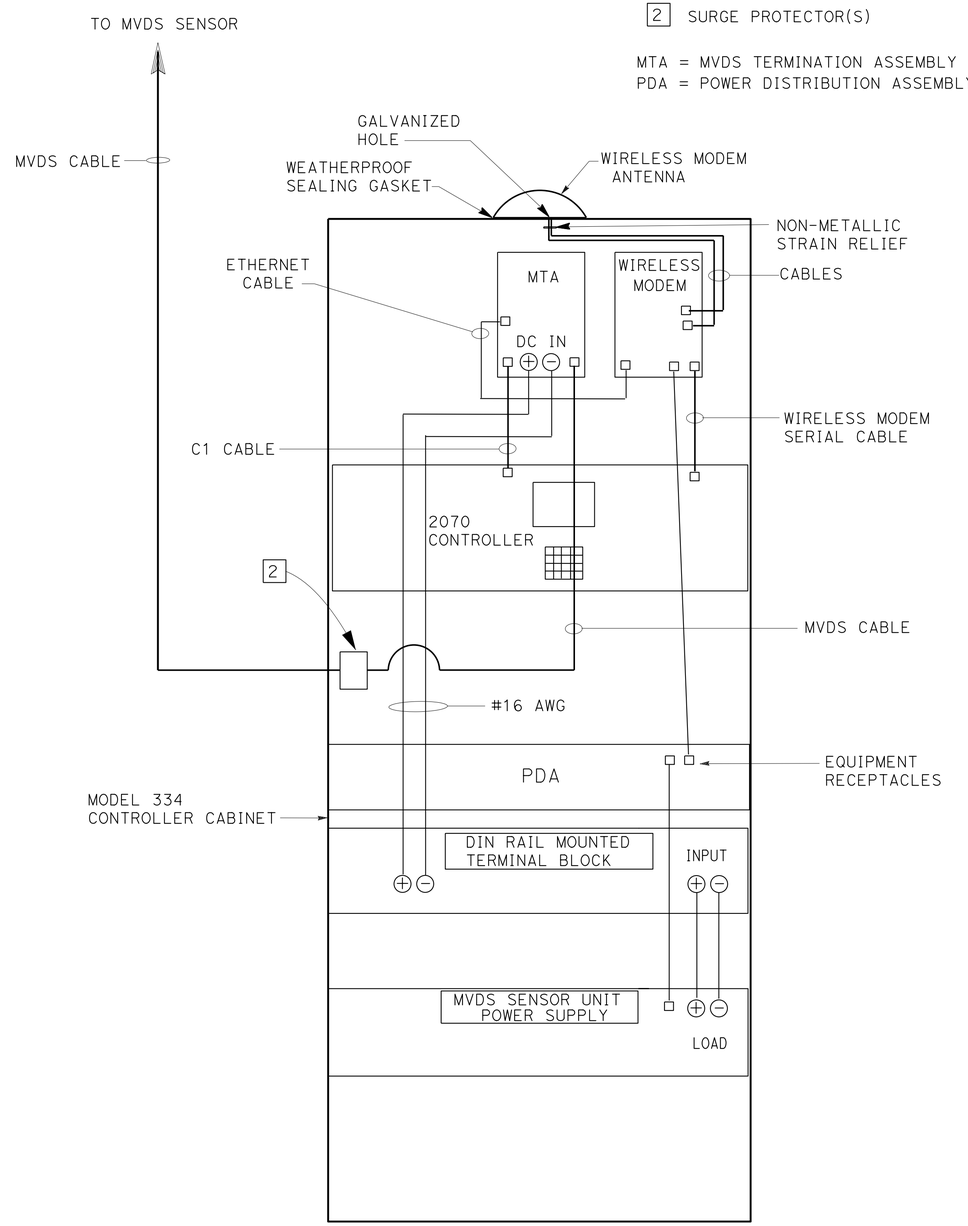

DETAIL 'A'

TYPICAL ENCLOSURE LAYOUT

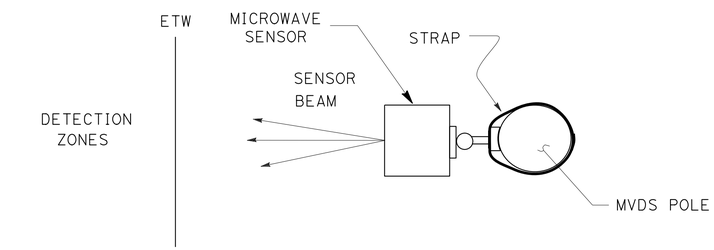

SECTION A-A

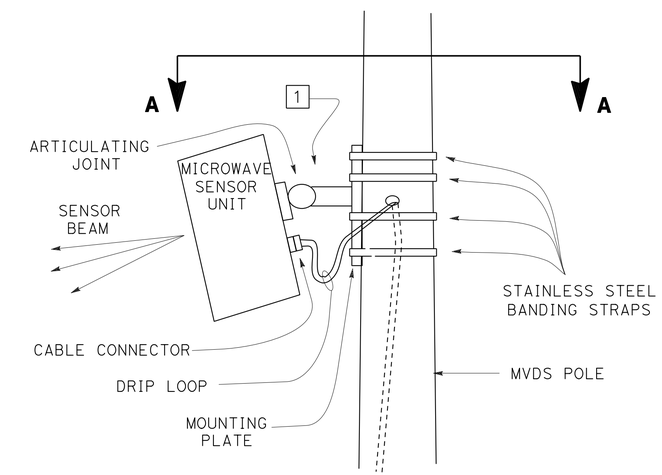

ELEVATION

DETAIL 'B'

MICROWAVE VEHICLE DETECTION SYSTEM (TEMPORARY)

ELECTRICAL DETAILS

NO SCALE

E-226

STATE OF CALIFORNIA - DEPARTMENT OF TRANSPORTATION
Caltrans TRAFFIC DESIGN

FUNCTIONAL SUPERVISOR: YI TSAU
CALCULATED-DESIGNED BY: FARIDA MAHMOOD
CHECKED BY: CECILIO BURCIAGA
REVISED BY
DATE REVISED

LAST REVISION 01-09-15 | DATE PLOTTED => 12-MAY-2015 | TIME PLOTTED => 09:35

Dist	COUNTY	ROUTE	POST MILES TOTAL PROJECT	SHEET No.	TOTAL SHEETS
07	LA	10	37.2/42.2	1423	2313

REGISTERED ELECTRICAL ENGINEER 10/30/14 DATE

6-1-15
PLANS APPROVAL DATE

REGISTERED PROFESSIONAL ENGINEER CECILIO BURCIAGA No. E015302 Exp. 3/31/17 ELECT STATE OF CALIFORNIA

THE STATE OF CALIFORNIA OR ITS OFFICERS OR AGENTS SHALL NOT BE RESPONSIBLE FOR THE ACCURACY OR COMPLETENESS OF SCANNED COPIES OF THIS PLAN SHEET.

WIRE USAGE IN MVDS CABLE

MS CONNECTOR PIN ID	WIRE NUMBER	PAIR NUMBER	FUNCTION
A	1	1	DETECTOR #1
B	2	1	DETECTOR #1 RETURN
C	3	2	DETECTOR #2
D	4	2	DETECTOR #2 RETURN
E	5	3	DETECTOR #3
F	6	3	DETECTOR #3 RETURN
G	7	4	DETECTOR #4
H	8	4	DETECTOR #4 RETURN
J	9	5	DETECTOR #5
K	10	5	DETECTOR #5 RETURN
L	11	6	DETECTOR #6
M	12	6	DETECTOR #6 RETURN
N	13	7	DETECTOR #7
P	14	7	DETECTOR #7 RETURN
R	15	8	DETECTOR #8
S	16	8	DETECTOR #8 RETURN
T	17	9	RS232 RX (RECEIVE)
U	18	9	RS232 G (RECEIVE GROUND)
V	19	10	RS232 TX (TRANSMIT)
W	20	10	RS232 G (TRANSMIT GROUND)
f	21	11	12-24 VOLTS AC/DC POWER
g	22	11	12-24 VOLTS AC/DC POWER

LEGEND: (THIS SHEET ONLY)

1. MOUNTING PLATE, ARTICULATING JOINT AND RADAR UNIT ASSEMBLY CONNECTIONS PER MANUFACTURER'S RECOMMENDATION.
2. SURGE PROTECTOR(S)

MTA = MVDS TERMINATION ASSEMBLY
PDA = POWER DISTRIBUTION ASSEMBLY

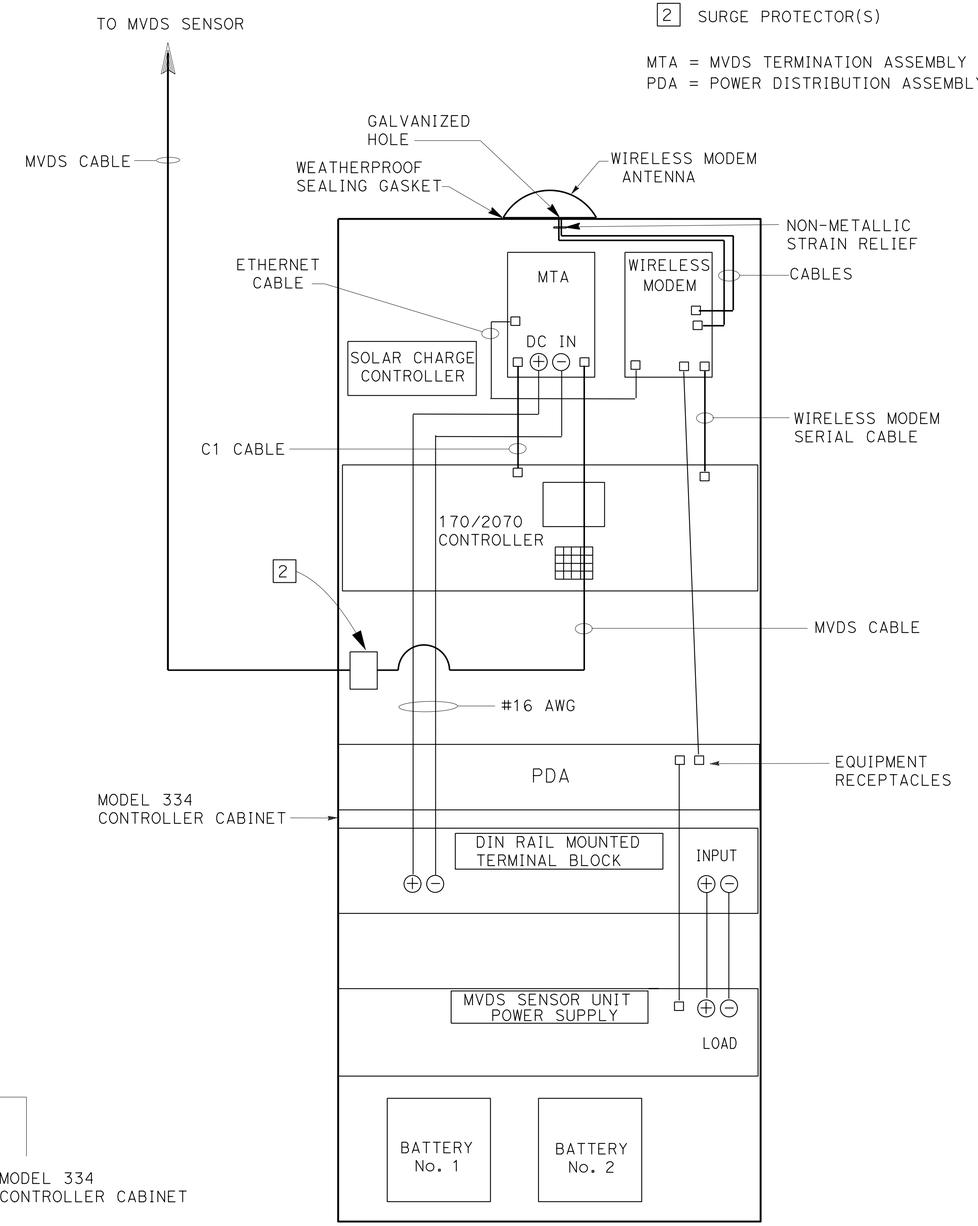

DETAIL 'A'

TYPICAL ENCLOSURE LAYOUT

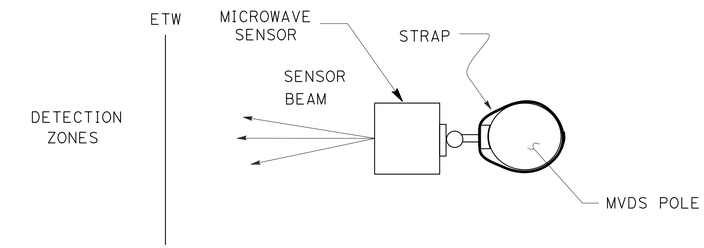

SECTION A-A

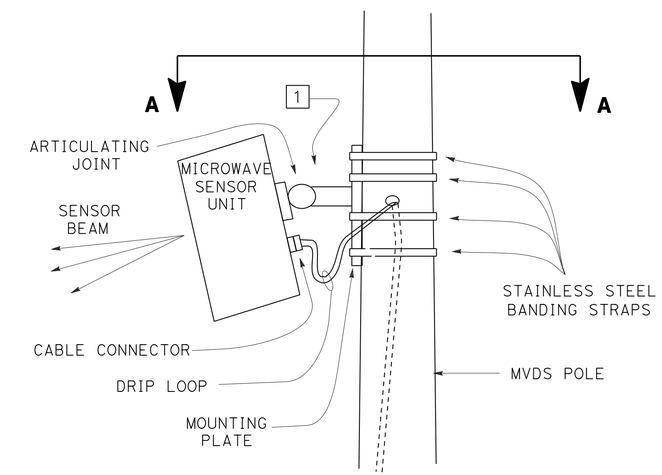

ELEVATION

DETAIL 'B'

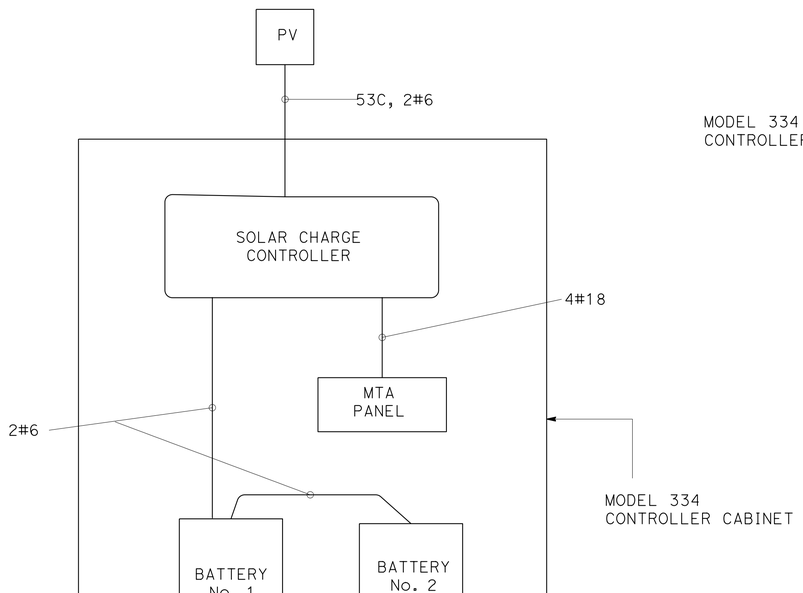

SOLAR POWER WIRING DIAGRAM
NO SCALE

MICROWAVE VEHICLE DETECTION SYSTEM (TEMPORARY)

ELECTRICAL DETAILS

NO SCALE

E-227

STATE OF CALIFORNIA - DEPARTMENT OF TRANSPORTATION
Caltrans® TRAFFIC DESIGN

FUNCTIONAL SUPERVISOR: YI TSAU
CALCULATED-DESIGNED BY: FARIDA MAHMOOD
CHECKED BY: CECILIO BURCIAGA
REVISED BY
DATE REVISED

LAST REVISION 01-09-15
DATE PLOTTED => 12-MAY-2015
TIME PLOTTED => 09:35

Dist	COUNTY	ROUTE	POST MILES TOTAL PROJECT	SHEET No.	TOTAL SHEETS
07	LA	10	37.2/42.4	1424	2313

REGISTERED CIVIL ENGINEER 9-8-14 DATE

6-1-15
PLANS APPROVAL DATE

REGISTERED PROFESSIONAL ENGINEER REFUGIO DOMINGUEZ No. 50820 Exp. 9-30-15 CIVIL STATE OF CALIFORNIA

THE STATE OF CALIFORNIA OR ITS OFFICERS OR AGENTS SHALL NOT BE RESPONSIBLE FOR THE ACCURACY OR COMPLETENESS OF SCANNED COPIES OF THIS PLAN SHEET.

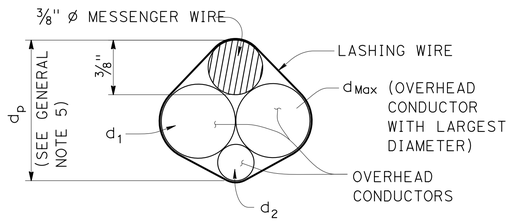

$d_p = 3/8" + d_{Max} + 0.30 * (d_1 + d_2 + ... d_n)$

PROJECTED DEPTH OF OVERHEAD BUNDLE, (d_p)

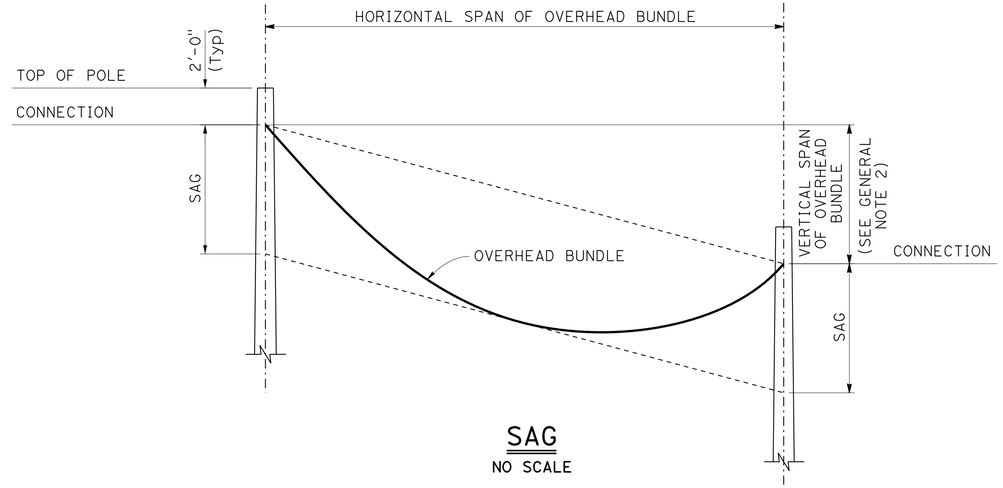

SAG

NO SCALE

Design: AASHTO Standard Specifications for Structural Supports for Highway Signs, Luminaires and Traffic Signals, Fifth Edition (LTS-5).

GROUP LOAD COMBINATIONS:

I Dead Load
II Dead Load + Wind Load
III Dead Load + 0.5 (Wind Load) + Ice Load
IV Fatigue: Not used

LOADING:

Wind Loading: 100 mph (3-second gust)
Wind Recurrence Interval: 10 years
Combined height, exposure, and elevated terrain factor = 1.05 (Exposure C, structure is not located on or over the top half of a ridge, hill, or escarpment)

Ice Loading: 3.0 psf on surfaces, 0.60 in radial thickness of ice at a unit weight of 60 pcf on overhead bundles

BASIC DESIGN VALUES:

Timber Poles: Fb = 1850 psi
Fv = 110 psi
Fcp = 230 psi
Fc = 950 psi
E = 1500 x 10^3 psi

DESIGN WIRE BREAKING STRENGTHS:

ASTM A475, Utilities Grade, 7 strand modified by termination efficiency factor of 0.8

FOUNDATION DESIGN NOTES:

1. Pole embedment depth design is based on Broms' approximate procedure as described in Article 13.6 of AASHTO LTS-5.

2. Embedment depth is calculated based on following soil parameters,
Cohesive Soil:
Shear strength of soil c = 1500 psf.
Cohesionless Soil:
Ø = 30 deg, γ = 120 pcf.
Soil assumed to be unsaturated.

3. An overload factor of 2.0 and an undercapacity factor of 0.7 were used for safety factor of 2.86.

4. Allowable vertical bearing pressure at the end bearing of poles is 3000 psf at 6 feet or more embedment.

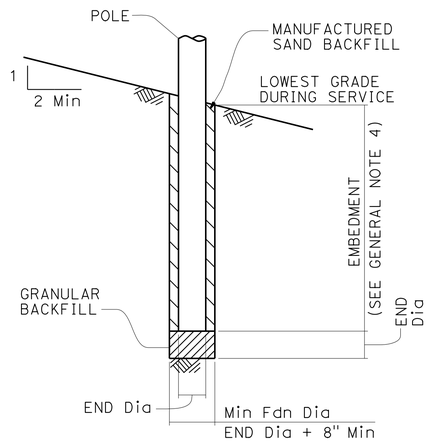

POLE FOUNDATION

GENERAL NOTES:

1. The messenger wire and any combination of overhead conductors must not exceed either a self weight of 3.0 lb/ft or the maximun d_p.

2. The maximum vertical span is between 4.6 to 5.4% of the horizontal span.

3. For poles with adjacent unbalanced horizontal spans, the shortest horizontal span must be at least 50% of the largest horizontal span.

4. Add 2'-0" for slopes above 1V:4H.

5. For a pole supporting multiple spans, calculate d_p for each span and use the largest value.

6. Do not exceed the attachments shown.

DIAMETERS AND SELF WEIGHT OF OVERHEAD CONDUCTORS

CONDUCTOR OR CABLE TYPE	DIAMETER d (in)	WEIGHT w (plf)
3 CONDUCTOR SIGNAL CABLE (3CSC)	0.400	0.0980
5 CONDUCTOR SIGNAL CABLE (5CSC)	0.500	0.1560
9 CONDUCTOR SIGNAL CABLE (9CSC)	0.650	0.2760
12 CONDUCTOR SIGNAL CABLE (12CSC)	0.800	0.3970
28 CONDUCTOR SIGNAL CABLE (28CSC)	0.900	0.6490
1-#14	0.166	0.0235
1-#12	0.185	0.0330
1-#10	0.210	0.0476
1-#8	0.271	0.0774
1-#6	0.310	0.1130
1-#4	0.359	0.1690
1-#3	0.388	0.2080
1-#2	0.420	0.2560
1-#1	0.498	0.3340
6-CONDUCTOR SIGNAL INTERCONNECT CABLE (SIC)	0.350	0.0860
12-CONDUCTOR SIGNAL INTERCONNECT CABLE (SIC)	0.500	0.1440
DETECTOR LEAD-IN CABLE (DLC)	0.310	0.0440
12 to 48-STRAND FIBER OPTIC CABLE (48FOC)	0.424	0.0600
72-STRAND FIBER OPTIC CABLE (72FOC)	0.484	0.0770
96-STRAND FIBER OPTIC CABLE (96FOC)	0.535	0.1050
144-STRAND FIBER OPTIC CABLE (144FOC)	0.670	0.1890
3/8" Ø MESSENGER WIRE	0.375	0.2730

TEMPORARY WOOD POLES GENERAL NOTES

ELECTRICAL DETAILS
NO SCALE

E-228

STATE OF CALIFORNIA - DEPARTMENT OF TRANSPORTATION
Caltrans TRAFFIC DESIGN
FUNCTIONAL SUPERVISOR: YI TSAU
CALCULATED-DESIGNED BY: CECILIO BURCIAGA
CHECKED BY: REFUGIO DOMINGUEZ
REVISED BY / DATE REVISED

LAST REVISION 01-09-15 | DATE PLOTTED => 12-MAY-2015 | TIME PLOTTED => 09:35

Dist	COUNTY	ROUTE	POST MILES TOTAL PROJECT	SHEET No.	TOTAL SHEETS
07	LA	10	37.2/42.4	1425	2313

REGISTERED CIVIL ENGINEER 9-8-14 DATE

6-1-15
PLANS APPROVAL DATE

REGISTERED PROFESSIONAL ENGINEER REFUGIO DOMINGUEZ No. 50820 Exp. 9-30-15 CIVIL STATE OF CALIFORNIA

THE STATE OF CALIFORNIA OR ITS OFFICERS OR AGENTS SHALL NOT BE RESPONSIBLE FOR THE ACCURACY OR COMPLETENESS OF SCANNED COPIES OF THIS PLAN SHEET.

LEGEND

- Wood Pole No Attachments
- A — Wood Pole with Attachments
- —OH— Overhead Bundle

POLE SELECTION TABLE

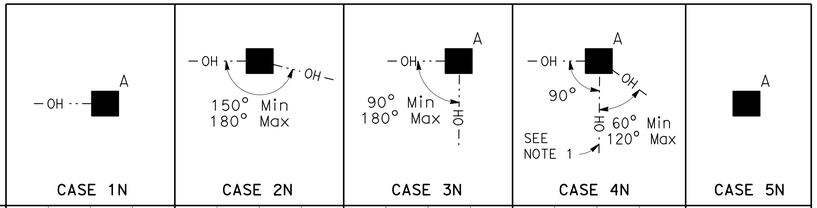

		CASE 1N				CASE 2N				CASE 3N				CASE 4N				CASE 5N
	MAXIMUM d_p	1"	1.5"	2.0"	2.5"	1"	1.5"	2.0"	2.5"	1.0"	1.5"	2.0"	2.5"	1"	1.5"	2.0"	2.5"	N/A
OVERHEAD BUNDLE HORIZONTAL SPAN (Max) 50′	MINIMUM POLE CLASS	H-1	H-2	H-2	H-2	4	3	2	1	H-2	H-2	H-3	H-3	H-4	H-4	H-4	H-5	CLASS 1 E = 10′
	POLE EMBEDMENT (E)	11′				10′				11′				12′				
100′	MINIMUM POLE CLASS	H-2	H-3	H-4	H-5	1	H-1	H-2	H-3	H-4	H-5	H-5	H-6	H-5	H-5	H-6		
	POLE EMBEDMENT (E)	12′				11′				12′				12′				
150′	MINIMUM POLE CLASS	H-4	H-5	H-6		H-1	H-2	H-3	H-5	H-6				H-6				
	POLE EMBEDMENT (E)	12′				12′				12′				12′				
200′	MINIMUM POLE CLASS	H-5	H-6			H-2	H-3	H-5										
	POLE EMBEDMENT (E)	12′				12′												

1. CCTV camera assembly or vehicle detection system
2. Overhead bundle consisting of a 3/8" Ø messenger wire and overhead conductors and lashing wire.
3. Luminaire with mast arm
4. Pedestrian pushbutton
5. Signal face with 3 indications or single sheet sign panel (10 SQFT Max)
6. Riser with weather head as required
7. Pull box as required
8. Grounding as required
9. Single section flashing beacon or single sheet sign panel (4 SQFT Max)
10. Single sheet sign panel (4′ x 4′ Max) or signal face with 3 indications
11. Flashing beacon control assembly
12. NEMA 3R enclosure, 26"(W) x 56"(H) x 12"(D) Max dimensions. Max weight including batteries, 450 lbs
13. 25′ SQFT Max total photovoltaic panels mounted as shown as required
14. 2-section 12" flashing beacon

NOTES:

1. In addition to other restrictions on maximum horizontal span, this horizontal span must not exceed 100′.
2. Cases 1N, 3N and 4N may substitute the attachments shown in Case 5N if the photovoltaic panel is not included.

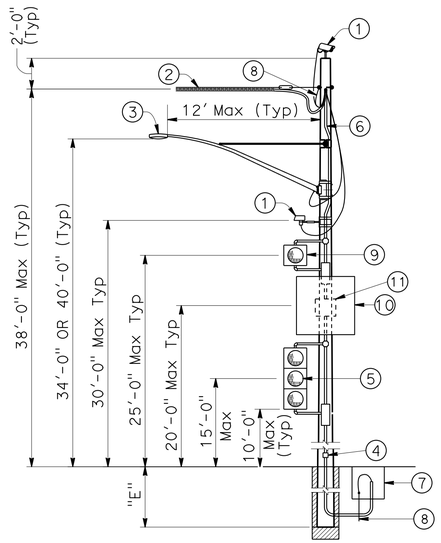

CASE 1N
POLE AT DEAD END WITH ATTACHMENTS
SEE NOTE 2

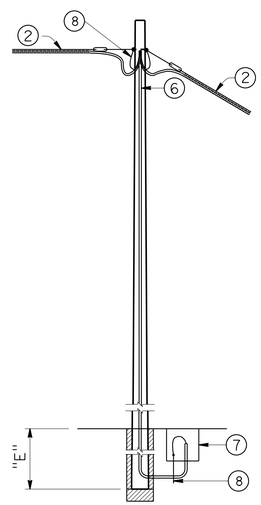

CASE 2N
POLE AT TANGENT WITHOUT ATTACHMENTS

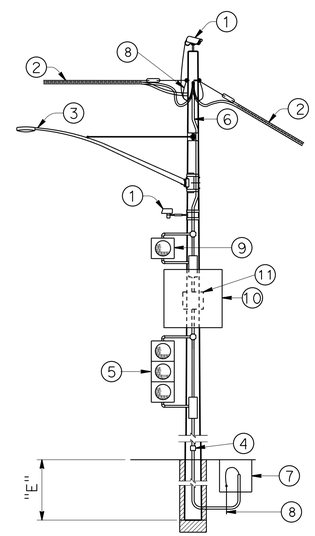

CASE 3N
POLE AT TANGENT OR CORNER WITH ATTACHMENTS
SEE NOTE 2

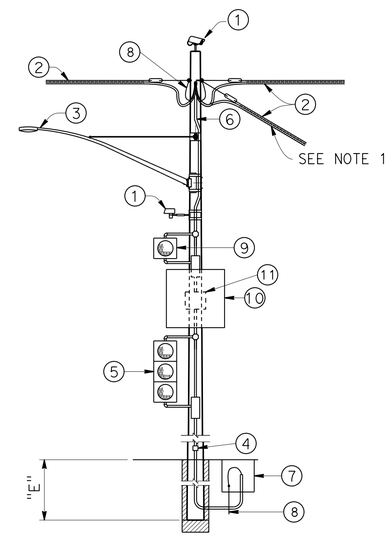

CASE 4N
POLE AT JUNCTION WITH ATTACHMENTS
SEE NOTE 2

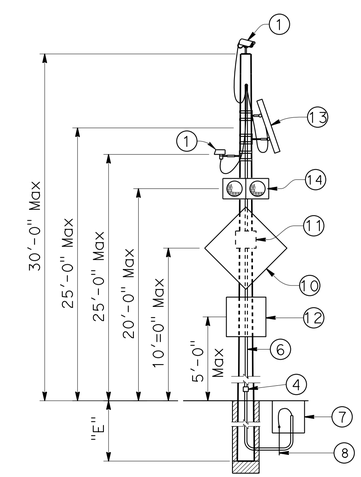

CASE 5N
POLE WITHOUT OVERHEAD BUNDLE WITH ATTACHMENTS
NO SCALE

TEMPORARY WOOD POLES
NON-GUYED - NO SIGNALS ON SPANS

ELECTRICAL DETAILS
NO SCALE

E-229

STATE OF CALIFORNIA - DEPARTMENT OF TRANSPORTATION
Caltrans® **TRAFFIC DESIGN**
FUNCTIONAL SUPERVISOR: YI TSAU
CALCULATED-DESIGNED BY: CECILIO BURCIAGA
CHECKED BY: REFUGIO DOMINGUEZ
REVISED BY / DATE REVISED

LAST REVISION 00-00-00 | DATE PLOTTED => 12-MAY-2015 | TIME PLOTTED => 09:35

BORDER LAST REVISED 7/2/2010 | USERNAME => s112049 | DGN FILE => 71193uua229.dgn | RELATIVE BORDER SCALE IS IN INCHES 0 1 2 3 | UNIT 1880 | PROJECT NUMBER & PHASE 07130000071

Dist	COUNTY	ROUTE	POST MILES TOTAL PROJECT	SHEET No.	TOTAL SHEETS
07	LA	10	37.2/42.4	1426	2313

REGISTERED CIVIL ENGINEER 9-8-14 DATE

6-1-15
PLANS APPROVAL DATE

REGISTERED PROFESSIONAL ENGINEER REFUGIO DOMINGUEZ No. 50820 Exp. 9-30-15 CIVIL STATE OF CALIFORNIA

THE STATE OF CALIFORNIA OR ITS OFFICERS OR AGENTS SHALL NOT BE RESPONSIBLE FOR THE ACCURACY OR COMPLETENESS OF SCANNED COPIES OF THIS PLAN SHEET.

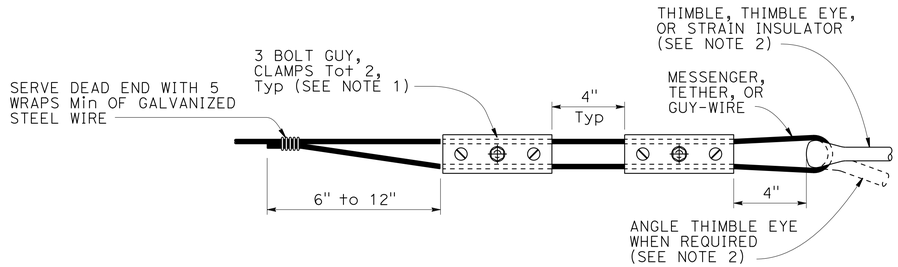

ALTERNATIVE TERMINATION OF MESSENGER WIRES USING GUY CLAMPS

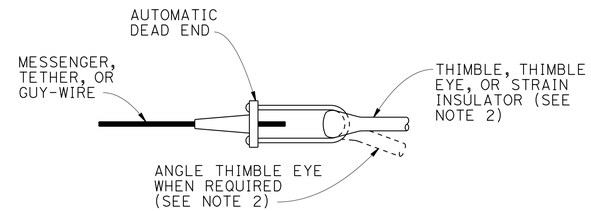

TERMINATION OF WIRES USING AUTOMATIC DEAD END

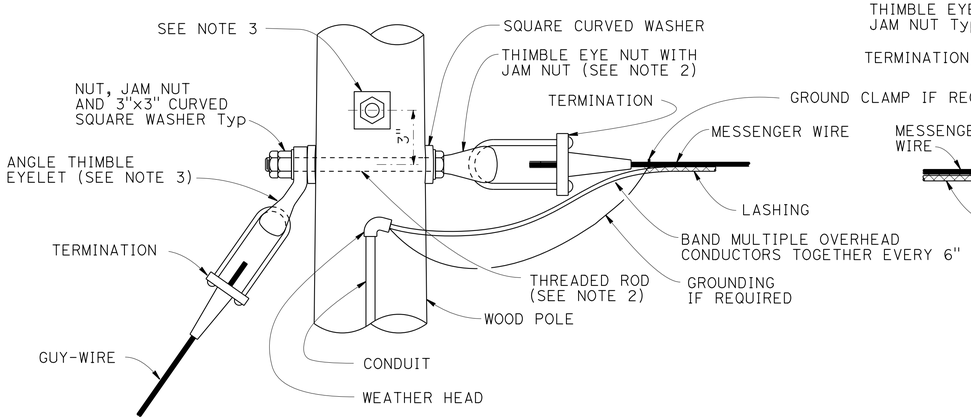

POLE AT DEAD END WITH GUY-WIRE CONNECTION

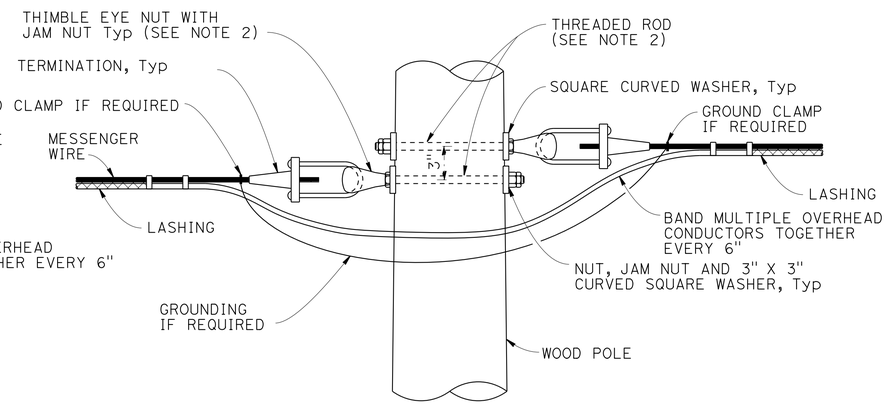

POLE AT TANGENT OR CORNER CONNECTION

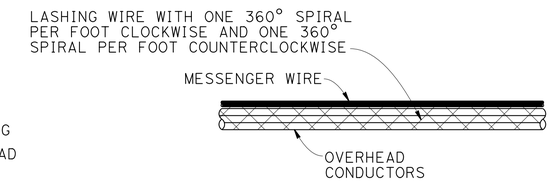

DOUBLE LASHING DETAIL

USE IF d_p IS GREATER THAN 1½"

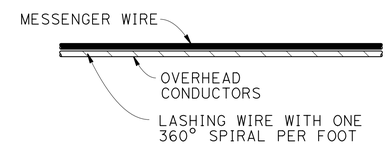

TYPICAL LASHING DETAIL

USE IF d_p IS 1½" OR LESS

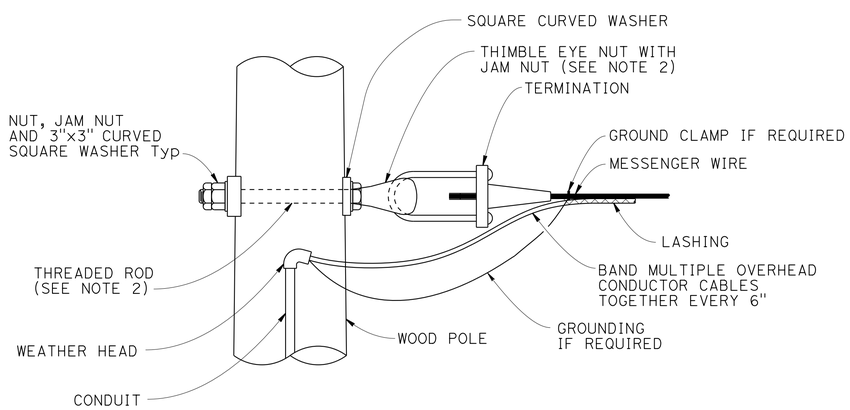

POLE AT DEAD END CONNECTION

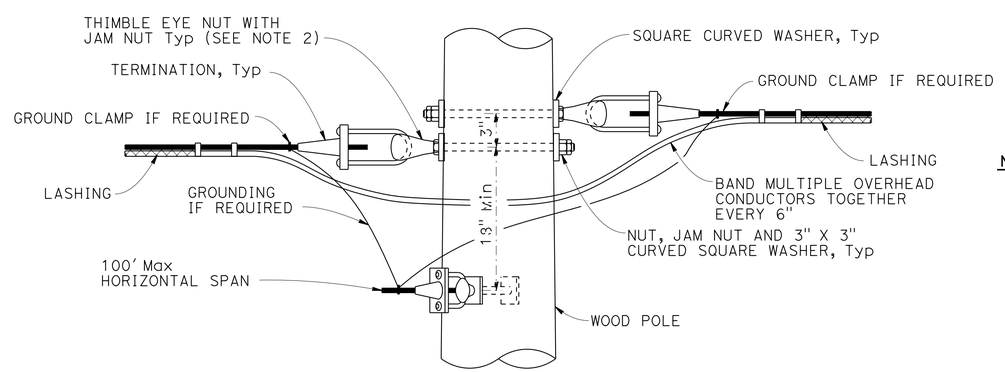

POLE AT JUNCTION CONNECTION

NOTES:

1. For guy wires use 3 clamps.
2. Use ⅝" ø except ¾" ø at guyed wires
3. Install additional angle thimble eyelet at poles with two guy wires.

TEMPORARY WOOD POLES DETAILS No. 1

ELECTRICAL DETAILS
NO SCALE

E-230

STATE OF CALIFORNIA - DEPARTMENT OF TRANSPORTATION
Caltrans® TRAFFIC DESIGN

FUNCTIONAL SUPERVISOR: YI TSAU
CALCULATED-DESIGNED BY: CECILIO BURCIAGA
CHECKED BY: REFUGIO DOMINGUEZ
REVISED BY / DATE REVISED

LAST REVISION 01-09-15 | DATE PLOTTED => 12-MAY-2015 | TIME PLOTTED => 09:35

Dist	COUNTY	ROUTE	POST MILES TOTAL PROJECT	SHEET No.	TOTAL SHEETS
07	LA	10	37.2/42.4	1427	2313

REGISTERED CIVIL ENGINEER 9-8-14 DATE

6-1-15
PLANS APPROVAL DATE

REGISTERED PROFESSIONAL ENGINEER REFUGIO DOMINGUEZ No. 50820 Exp. 9-30-15 CIVIL STATE OF CALIFORNIA

THE STATE OF CALIFORNIA OR ITS OFFICERS OR AGENTS SHALL NOT BE RESPONSIBLE FOR THE ACCURACY OR COMPLETENESS OF SCANNED COPIES OF THIS PLAN SHEET.

NOTES:

1. Minimum allowable tension capacity "Qa" = 8,900 lbs.
2. Minimum installation torque "T" = 1780 lbs-ft.
3. Helical anchor detail may be used in place of expanded steel anchors.

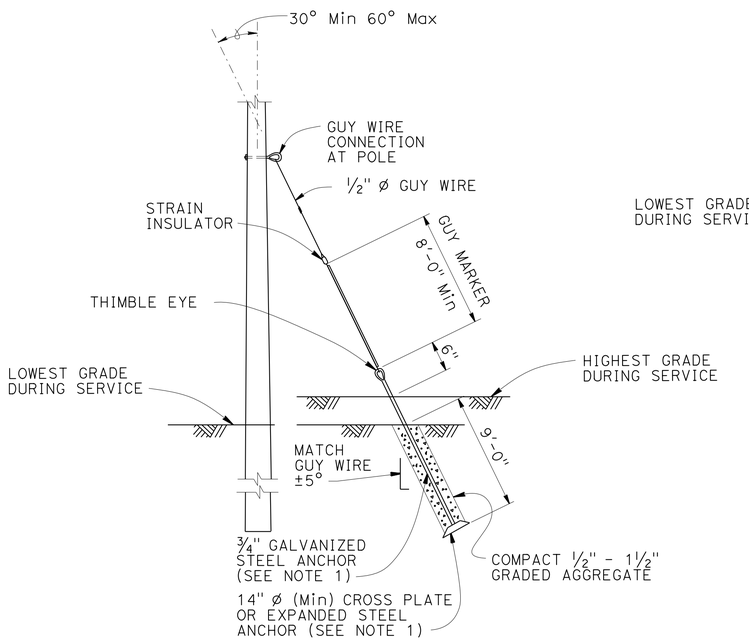

EXPANDED STEEL ANCHOR DETAIL

SEE NOTE 3

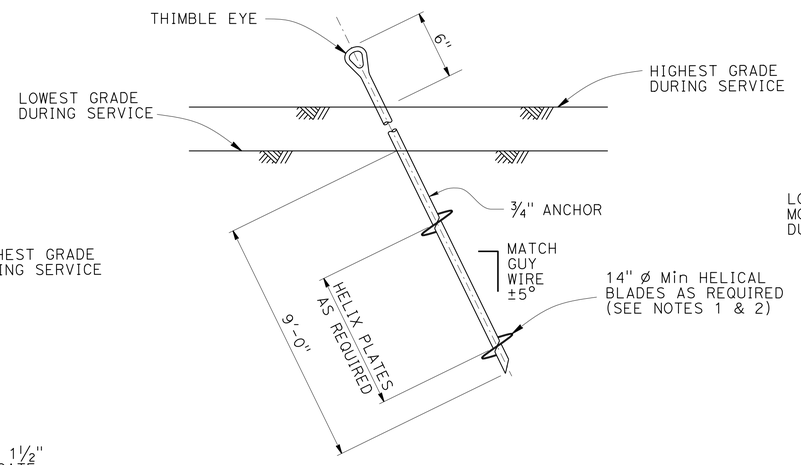

HELICAL ANCHOR DETAIL

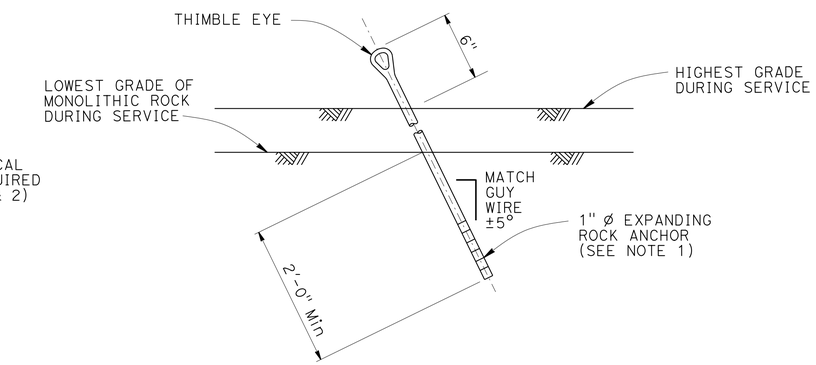

EXPANDING ROCK ANCHOR DETAIL

TEMPORARY WOOD POLES
DETAILS No. 2

ELECTRICAL DETAILS
NO SCALE

E-231

STATE OF CALIFORNIA - DEPARTMENT OF TRANSPORTATION
Caltrans® **TRAFFIC DESIGN**
FUNCTIONAL SUPERVISOR: YI TSAU
CALCULATED-DESIGNED BY: CECILIO BURCIAGA
CHECKED BY: REFUGIO DOMINGUEZ
REVISED BY
DATE REVISED

LAST REVISION 01-09-15
DATE PLOTTED => 12-MAY-2015
TIME PLOTTED => 09:35

Dist	COUNTY	ROUTE	POST MILES TOTAL PROJECT	SHEET No.	TOTAL SHEETS
07	LA	10	37.2/42.4	1428	2313

REGISTERED CIVIL ENGINEER 9-8-14 DATE

6-1-15
PLANS APPROVAL DATE

REGISTERED PROFESSIONAL ENGINEER REFUGIO DOMINGUEZ No. 50820 Exp. 9-30-15 CIVIL STATE OF CALIFORNIA

THE STATE OF CALIFORNIA OR ITS OFFICERS OR AGENTS SHALL NOT BE RESPONSIBLE FOR THE ACCURACY OR COMPLETENESS OF SCANNED COPIES OF THIS PLAN SHEET.

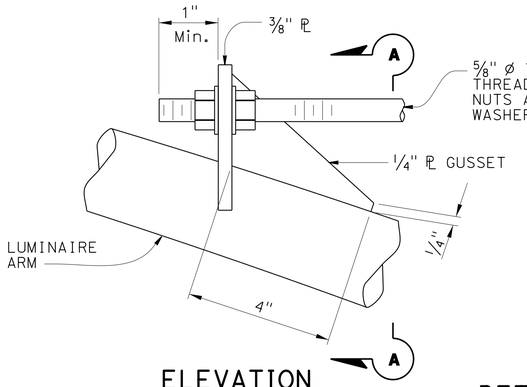

ELEVATION

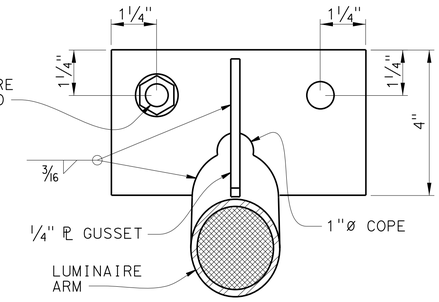

SECTION A-A

DETAIL A
TIE-ROD AT LUMINAIRE ARM
NO SCALE

NOTES:

1. Luminaire mast arms must be in compliance with Standard Plan ES-6D with noted modifications.
2. Verify pole dimensions at tie-rod attachment height. Fabricate 8" flat bar with "L" Dimension to maintain an open gap between flanges in finished installation.
3. Not all screw heads and bolt heads are shown for clarity.
4. Mast arm not shown for clarity.

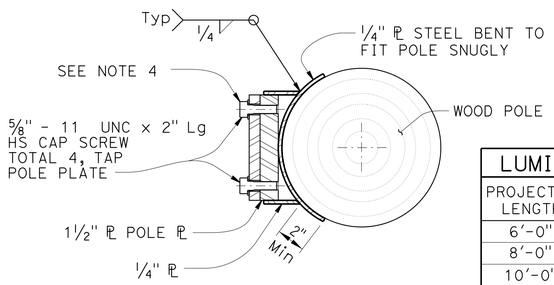

SECTION E-E

LUMINAIRE MAST ARM DATA			
PROJECTED LENGTH	N RISE	Min OD AT POLE	NOMINAL THICKNESS
6'-0"	2'-0"±	3 1/4"	0.1196"
8'-0"	2'-6"±	3 1/2"	
10'-0"	3'-3"±	3 7/8"	
12'-0"	4'-3"±		

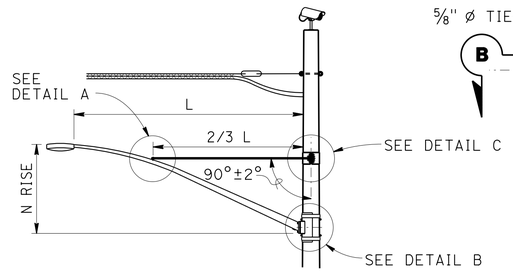

LUMINAIRE MAST ARM

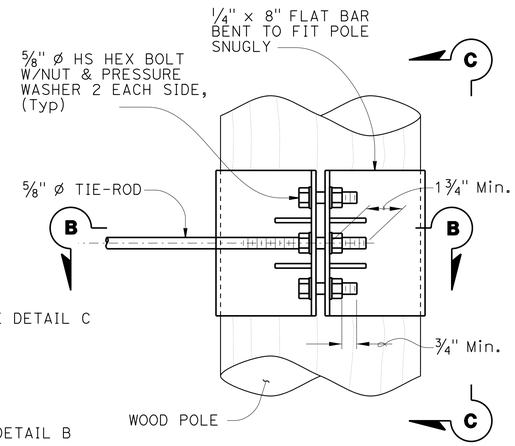

ELEVATION

NOTE:
Not all screw and bolt heads shown for clarity.

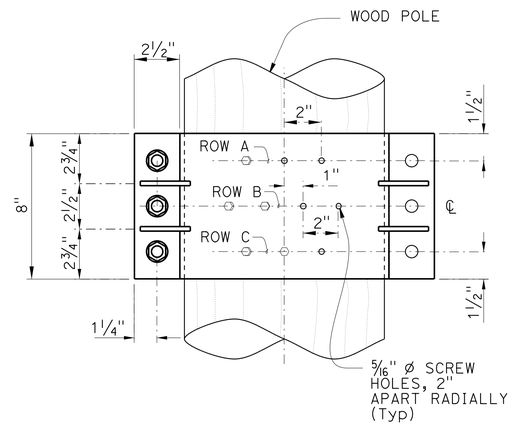

VIEW C-C

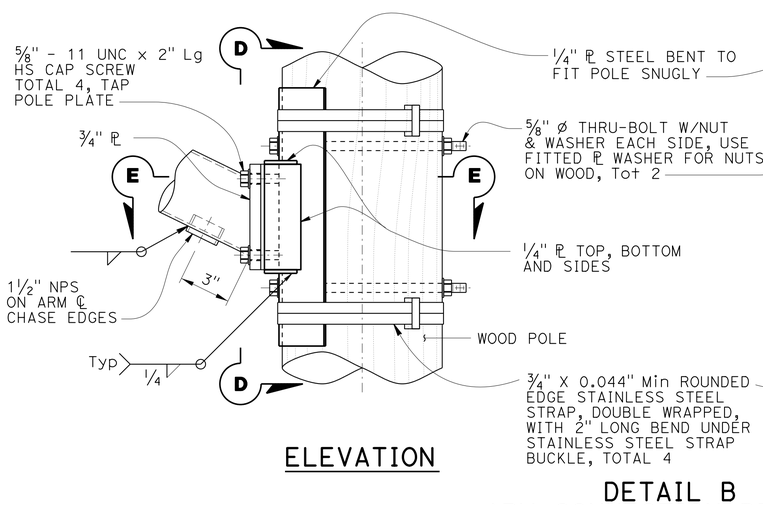

ELEVATION

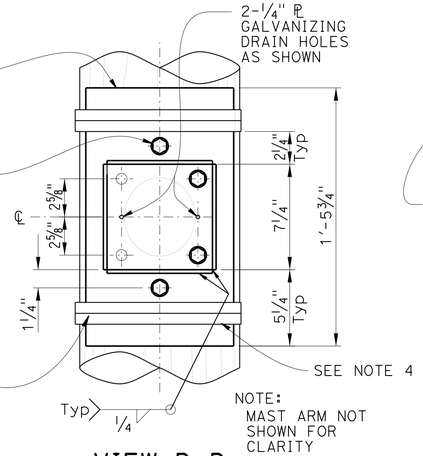

VIEW D-D

DETAIL B
ARM CONNECTION DETAILS
NO SCALE

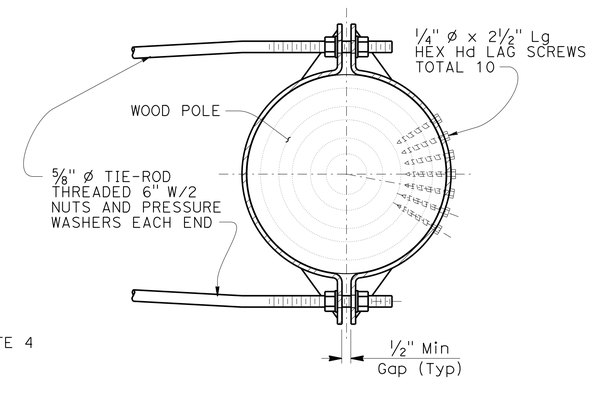

SECTION B-B

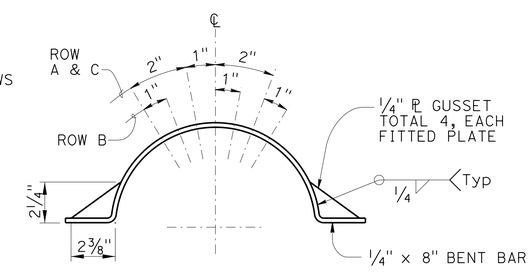

LAG SCREW AND
GUSSET PLATE LAYOUT

DETAIL C
TIE-ROD AT POLE
NO SCALE

TEMPORARY WOOD POLES
DETAILS No. 3

ELECTRICAL DETAILS
NO SCALE

E-232

STATE OF CALIFORNIA - DEPARTMENT OF TRANSPORTATION
Caltrans® **TRAFFIC DESIGN**

FUNCTIONAL SUPERVISOR: YI TSAU
CALCULATED-DESIGNED BY: CECILIO BURCIAGA
CHECKED BY: REFUGIO DOMINGUEZ
REVISED BY / DATE REVISED

LAST REVISION 01-09-15
DATE PLOTTED => 12-MAY-2015
TIME PLOTTED => 09:35

Dist	COUNTY	ROUTE	POST MILES TOTAL PROJECT	SHEET No.	TOTAL SHEETS
07	LA	10	37.2/42.4	1429	2313

REGISTERED ELECTRICAL ENGINEER 10/30/14 DATE

PLANS APPROVAL DATE 6-1-15

REGISTERED PROFESSIONAL ENGINEER CECILIO BURCIAGA No. E015302 Exp. 3-31-17 ELECTRICAL STATE OF CALIFORNIA

THE STATE OF CALIFORNIA OR ITS OFFICERS OR AGENTS SHALL NOT BE RESPONSIBLE FOR THE ACCURACY OR COMPLETENESS OF SCANNED COPIES OF THIS PLAN SHEET.

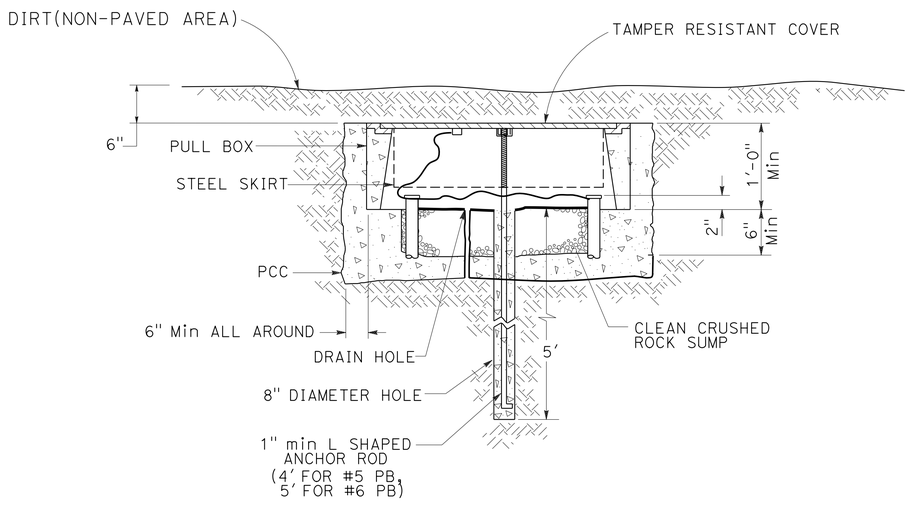

Pull Box Installation Details For Non-paved Areas

No Scale

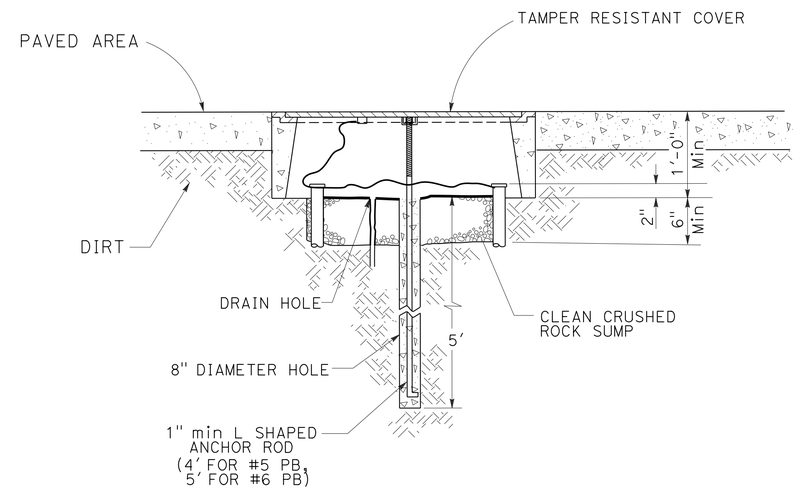

Pull Box Installation Details For Paved Areas

No Scale

(PULL BOX WITH TAMPER RESISTANT COVER INSTALLATION DETAILS)

ELECTRICAL DETAILS

NO SCALE

E-233

STATE OF CALIFORNIA - DEPARTMENT OF TRANSPORTATION

Caltrans® **TRAFFIC DESIGN**

FUNCTIONAL SUPERVISOR: Yi TSAU

CALCULATED-DESIGNED BY: LUKE SUN

CHECKED BY: CECILIO BURCIAGA

REVISED BY

DATE REVISED

LAST REVISION 01-09-15

DATE PLOTTED => 12-MAY-2015

TIME PLOTTED => 09:35

Dist	COUNTY	ROUTE	POST MILES TOTAL PROJECT	SHEET No.	TOTAL SHEETS
07	LA	10	37.2/42.4	1430	2313

REGISTERED ELECTRICAL ENGINEER 10/30/14 DATE

PLANS APPROVAL DATE 6-1-15

REGISTERED PROFESSIONAL ENGINEER CECILIO BURCIAGA No. E015302 Exp. 3/31/17 ELECT STATE OF CALIFORNIA

THE STATE OF CALIFORNIA OR ITS OFFICERS OR AGENTS SHALL NOT BE RESPONSIBLE FOR THE ACCURACY OR COMPLETENESS OF SCANNED COPIES OF THIS PLAN SHEET.

LEGEND: (THIS SHEET)

1 SEE PLANS FOR CONDUIT SIZES & TYPES OF PULL BOXES. SEE TYPICAL LOOP LEAD-IN DETAIL AT PAVEMENT JOINT ON THIS SHEET.

2 SEE ES-5D.

NOTE: (THIS SHEET)

1. THE CONTRACTOR MUST VERIFY ALL CONTROLLER FIELD DIMENSIONS BEFORE ORDERING OR FABRICATING MATERIAL.
2. FOR ADVANCED FLASHING BEACON INSTALLATION WITH DUAL FLASHING BEACON AND DUAL W3-7 SIGNS, SEE STRUCTURE ELECTRICAL SPECIAL DESIGN SHEET.

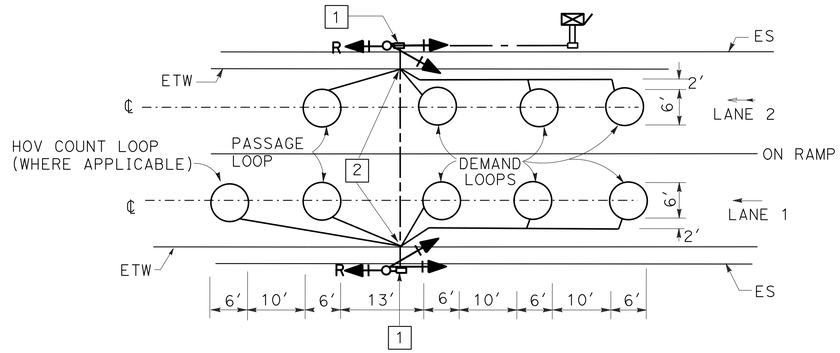

TYPICAL 2-LANE RAMP
METERING SYSTEM INSTALLATION

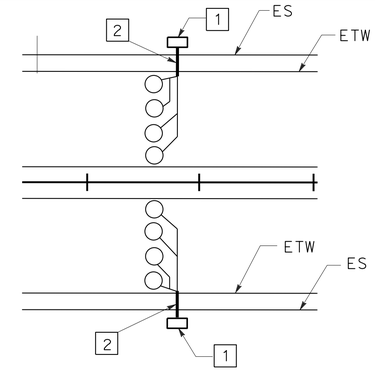

TYPICAL TRAFFIC
MONITORING LOOP CONFIGURATION

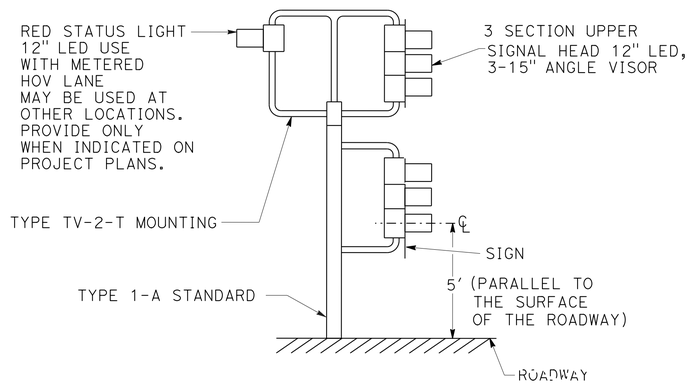

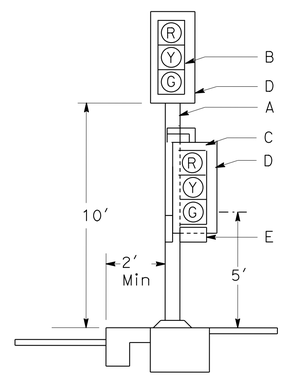

RAMP METER SIGNAL

A. TYPE 1-A SIGNAL STANDARD.

B. 3-SECTION 12" LED SIGNAL HEAD (RED, YELLOW, GREEN). 18" x 7⅞" ANGLED VISORS ARE REQUIRED WHERE SHOWN ON PLANS.

C. 3-SECTION 12" LED SIGNAL HEAD (RED, YELLOW, GREEN). 12" FULL CIRCLE VISORS TYPE SV-1-T BRACKET MOUNTING ON SIDE OF STANDARD, AWAY FROM TRAFFIC.

D. BACKPLATE.

E. R89(CA) OR R89-1(CA) MOUNT ON BACK PLATE AND CENTER BETWEEN GREEN SECTION AND BOTTOM OF BACK PLATES AND SIDES. ATTACH WITH ¼" x ¾" BOLTS, HEX NUTS, PLAIN AND LOCK WASHERS.

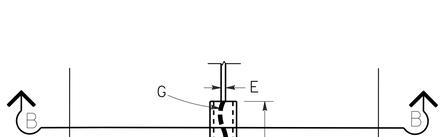

PLAN VIEW

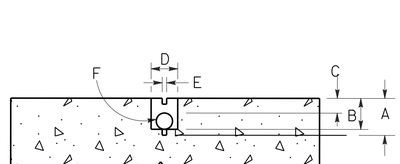

SECTION B-B

A. SAW-CUT DEPTH TO ACCOMMODATE SPECIFIED NUMBER OF CONDUCTORS WITH A MINIMUM OF ½" FROM TOP OF WIRE TO PAVEMENT SURFACE (3 ¼" Max).

B. SLOT SAW-CUT DEPTH TO ACCOMMODATE 1" TYPE 3 CONDUIT WITH ½" MINIMUM FROM TOP OF CONDUIT TO PAVEMENT SURFACE.

C. ½" MINIMUM BETWEEN TOP OF CONDUIT AND PAVEMENT SURFACE.

D. SAW-CUT WIDTH TO ACCOMMODATE 1" TYPE 3 CONDUIT WITH ½" CLEARANCE.

E. SAW-CUT 2/5" WIDE (Max).

F. 1" TYPE 3 CONDUIT, 6" LONG, PLUG BOTH ENDS WITH CAULKING COMPOUND TO KEEP OUT EPOXY.

G. CONDUCTORS WITH ½" MINIMUM SLACK INSIDE CONDUIT.

H. SAW-CUT LENGTH OF SLOT ⅛" LONGER THAN CONDUIT.

TYPICAL LOOP LEAD-IN
DETAIL AT PAVEMENT JOINT

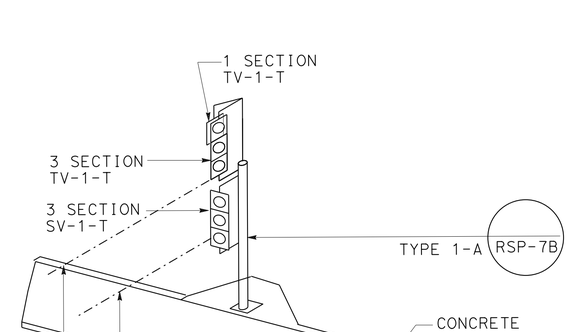

TYPICAL DETAIL FOR RAMP METER SIGNAL ON CONCRETE BARRIER

ELECTRICAL DETAILS

NO SCALE

E-234

STATE OF CALIFORNIA - DEPARTMENT OF TRANSPORTATION
Caltrans® TRAFFIC DESIGN

FUNCTIONAL SUPERVISOR: YI TSAU
CALCULATED-DESIGNED BY: FARIDA MAHMOOD
CHECKED BY: CECILIO BURCIAGA
REVISED BY
DATE REVISED

LAST REVISION 11-20-14
DATE PLOTTED => 12-MAY-2015
TIME PLOTTED => 09:35

Dist	COUNTY	ROUTE	POST MILES TOTAL PROJECT	SHEET No.	TOTAL SHEETS
07	LA	10	37.2/42.4	1431	2313

Jacqueline C Tan 10/30/14
REGISTERED ELECTRICAL ENGINEER DATE

6-1-15
PLANS APPROVAL DATE

REGISTERED PROFESSIONAL ENGINEER JACQUELINE C. TAN No. E015611 Exp. 12/31/15 ELECTRICAL STATE OF CALIFORNIA

THE STATE OF CALIFORNIA OR ITS OFFICERS OR AGENTS SHALL NOT BE RESPONSIBLE FOR THE ACCURACY OR COMPLETENESS OF SCANNED COPIES OF THIS PLAN SHEET.

NOTE:
ITEMS SHOWN IN TABLES ARE NOT A SEPARATE ITEM, FOR INFORMATION ONLY.

COMMUNICATION SYSTEM

SHEET No.	1-4"C TYPE 3	1-4"C TYPE 1	1-3½"C TYPE 1	1-3"C TYPE 3	1-3"C TYPE 1	1 SIZE 1" INNERDUCTS	1-48SMFO	1-72SMFO	12SMFO	COMMUNICATION PULL BOX	SPLICE VAULT	SPLICE ENCLOSURE	ETHERNET SWITCH TYPE 1	ETHERNET SWITCH TYPE 2	FDU
	LF	LF	LF	LF	LF	LF	LF	LF	LF	EA	EA	EA	EA	EA	EA
E-2	2,300	—	—	—	—	2,300	2,300	1150	—	1	—	—	—	—	—
E-3	2,600	200	700	600	400	6,200	2,600	1300	1,000	3	3	3	3	1	3
E-4	2,000	—	—	—	—	4,000	—	—	—	2	—	—	—	—	—
E-5	3,000	800	—	600	400	6,000	—	—	—	1	2	3	3	—	3
E-6	2,400	100	400	600	—	—	—	—	—	2	2	—	—	—	
E-7	2,600	400	400	—	400	5,400	2,600	1300	200	7	2	—	2	—	2
E-8	2,600	—	—	—	—	5,200	2,600	1300	—	1	—	—	—	—	—
E-9	2,000	400	800	800	800	5,600	2,800	1400	—	5	1	4	4	—	4
E-10	2,400	200	—	—	—	4,800	2,400	1200	—	2	—	1	—	—	—
E-11	2,600	—	—	—	400	5,200	2,600	1300	600	2	1	1	1	—	1
E-12	2,600	—	—	—	—	6,500	2,600	1300	—	2	1	3	1	—	1
E-13	2,600	—	—	—	—	5,200	—	—	—	2	—	—	—	—	—
E-14	2,800	—	—	—	—	5,600	—	—	—	2	—	—	—	—	—
E-15	2,600	400	400	—	400	5,800	2,600	1300	600	2	2	2	2	—	2
E-16	3,000	200	—	100	—	6,400	3,000	1500	400	2	1	1	1	—	1
E-17	3,000	—	—	—	400	6,000	3,000	1500	—	2	—	—	—	—	—
E-18	3,000	—	—	100	—	6,000	3,000	1500	—	1	1	1	1	—	1
E-19	2,800	100	—	50	—	5,600	2,800	1400	50	2	—	1	1	—	1
E-20	2,600	200	—	—	—	5,200	2,600	1300	—	1	—	—	—	—	—
E-21	2,400	600	400	500	—	5,600	2,800	1400	—	4	1	1	1	—	1
E-22	2,800	—	—	—	—	5,600	4,000	2000	—	1	—	—	—	1	1

ELECTRICAL QUANTITIES

FOR LEGEND, ABBREVIATIONS AND GENERAL NOTES SEE SHEET E-1.

E-235

STATE OF CALIFORNIA - DEPARTMENT OF TRANSPORTATION
Caltrans® OFFICE OF ITS
FUNCTIONAL SUPERVISOR: JACQUELINE C. TAN
CALCULATED-DESIGNED BY: HIEU LUU
CHECKED BY: JACQUELINE C. TAN
REVISED BY
DATE REVISED

LAST REVISION 01-09-15
DATE PLOTTED => 12-MAY-2015
TIME PLOTTED => 09:35

Dist	COUNTY	ROUTE	POST MILES TOTAL PROJECT	SHEET No.	TOTAL SHEETS
07	LA	10	37.2/42.4	1432	2313

REGISTERED ELECTRICAL ENGINEER DATE 10/30/14

PLANS APPROVAL DATE 6-1-15

REGISTERED PROFESSIONAL ENGINEER JACQUELINE C. TAN No. E015611 Exp. 12/31/15 ELECTRICAL STATE OF CALIFORNIA

THE STATE OF CALIFORNIA OR ITS OFFICERS OR AGENTS SHALL NOT BE RESPONSIBLE FOR THE ACCURACY OR COMPLETENESS OF SCANNED COPIES OF THIS PLAN SHEET.

NOTE:

ITEMS SHOWN IN TABLES ARE NOT A SEPARATE ITEM, FOR INFORMATION ONLY.

CLOSED CIRCUIT TELEVISION CAMERA

SHEET No.	CCTV CAMERA LOCATION	4"C TYPE 3	3"C TYPE 3	2"C TYPE 1	1 SIZE 1" INNERDUCT	12SMFO	(N) COMPOSITE VIDEO CABLE	COMMUNICATION PULL BOX	#5 PULL BOX	#4	#8	1#8 (G)	30 A CIRCUIT BREAKER	MODEL 334-TV CONTROLLER CABINET	CCTV POLE TYPE CCTV 45	CCTV CAMERA ASSEMBLY
			LF	LF	LF	LF	LF	EA	EA	LF	LF	LF	EA	EA	EA	EA
E-23	LOCATION SB375		300	300	100	200	120	1	2		500	250	1	1	1	1
E-24	LOCATION SB384		300	300	20	50	120	1	2		800	400	1	1	1	1
E-26	LOCATION SB405		200	30	400	200	200	2	2		800	400	1	1	1	1
E-27	LOCATION SB421	240		30	20	50	120	1	2	3600		1800	1	1	1	1

CHANGEABLE MESSAGE SIGN SYSTEM AND CLOSED CIRCUIT TELEVISION CAMERA SYSTEM (LOCATION SB395)

SHEET No.	3"C TYPE 3	3"C TYPE 1	1 SIZE 1" INNERDUCT	12SMFO	COMMUNICATION PULL BOX	#6(T) PULL BOX	#5 PULL BOX	#8	#4	1#8 (G)	30 A, 2P CIRCUIT BREAKER	30 A CIRCUIT BREAKER	MODEL 334-TV CONTROLLER CABINET	CCTV POLE TYPE CCTV 45	CCTV CAMERA ASSEMBLY	COMPOSITE VIDEO CABLE	DEPARTMENT-FURNISHED MODEL 170 CONTROLLER ASSEMBLY	DEPARTMENT-FURNISHED MODEL 500 CMS PANEL	DEPARTMENT-FURNISHED CONTROL CABLES (6P18, 24P18)
	LF	LF	LF	LF	EA	EA	EA	LF	LF	LF	EA	EA	EA	EA	EA	LF	EA	EA	EA
E-25	400	400	400	400	3	3	2	3000	2000	3000	1	3	1	1	1	120	1	1	1

INTERNET PROTOCOL NODE

SHEET No.	2"C TYPE 1	#5 PULL BOX	2#4	TYPE 3 SWITCH	1#8G	30 A CIRCUIT BREAKER	MODEL 334-TV CONTROLLER CABINET	FIBER DISTRIBUTION UNITS (72)
	LF	EA	LF	EA	LF	EA	EA	EA
E-28	1400	2	1400	1	1400	1	1	2

FOR LEGEND, ABBREVIATIONS AND GENERAL NOTES SEE SHEET E-1.

ELECTRICAL QUANTITIES

E-236

REVISED BY | DATE REVISED

HIEU LUU | JACQUELINE C. TAN

CALCULATED-DESIGNED BY | CHECKED BY

FUNCTIONAL SUPERVISOR: JACQUELINE C. TAN

STATE OF CALIFORNIA - DEPARTMENT OF TRANSPORTATION

Caltrans® OFFICE OF ITS

LAST REVISION 01-09-15 | DATE PLOTTED => 12-MAY-2015 | TIME PLOTTED => 09:35

Dist	COUNTY	ROUTE	POST MILES TOTAL PROJECT	SHEET No.	TOTAL SHEETS
07	LA	10	37.2/42.4	1433	2313

REGISTERED ELECTRICAL ENGINEER 10/30/14 DATE

PLANS APPROVAL DATE 6-1-15

REGISTERED PROFESSIONAL ENGINEER CECILIO BURCIAGA No. E015302 Exp. 3/31/17 ELECT STATE OF CALIFORNIA

THE STATE OF CALIFORNIA OR ITS OFFICERS OR AGENTS SHALL NOT BE RESPONSIBLE FOR THE ACCURACY OR COMPLETENESS OF SCANNED COPIES OF THIS PLAN SHEET.

NOTE:

1. ITEMS SHOWN IN TABLE ARE NOT A SEPARATE PAY ITEM, FOR INFORMATION ONLY.

MODIFY RAMP METERING SYSTEM

SHEET No.	MVDS (EA)	WOOD POLE (EA)	LOOP (EA)	PB-5 (EA)	1-A ON PLATE (EA)	Sig HEAD (EA)	FB ASSY (EA)	2"C TYPE 3 (LF)	1 1/2"C TYPE 3 (LF)	MVDS CABLE (LF)	DLC (LF)	5CSC (LF)	2"C RISER (EA)	AWG #2 (LF)	AWG #6 (LF)	AWG #8 (LF)	VIVDS (EA)	VIVDS CABLE (LF)
E-47	4	4	3	3	1	2	—	400	10	650	700	10	4	—	—	1000	—	—
E-48	2	5	—	3	—	—	—	360	70	380	—	—	4	—	2060	1280	—	—
E-49	2	1	—	1	—	—	—	50	—	140	—	—	1	—	—	70	—	—
E-50	2	8	—	—	—	—	—	180	—	380	—	—	6	—	540	740	—	—
E-51	1	1	—	—	—	—	—	30	—	90	—	—	1	—	—	40	—	—
E-52	1	1	—	—	—	—	—	30	—	320	—	—	1	—	—	30	—	—
E-53	1	1	—	—	—	—	—	50	—	60	—	—	1	—	—	60	—	—
E-54	2	2	—	—	—	—	—	220	—	240	—	—	2	—	—	240	—	—
E-55	1	1	—	—	—	—	—	50	—	250	—	—	1	—	—	60	—	—
E-56	—	2	4	—	1	2	—	60	—	—	620	20	2	800	420	240	—	—
E-57	—	—	—	—	2	2	1	40	30	340	—	160	—	—	840	270	1	340
E-60	—	—	—	—	—	—	—	—	20	250	—	20	—	—	—	20	—	—
E-61	—	—	—	—	—	—	—	—	30	60	—	—	—	—	—	50	—	—
E-62	—	—	—	—	—	—	—	60	—	310	2780	310	—	—	—	70	—	—
E-63	—	—	—	—	1	—	2	10	220	190	280	450	—	10	—	230	—	—
E-65	—	—	—	—	1	—	—	—	10	—	—	10	—	—	—	10	—	—

ELECTRICAL QUANTITIES

E-237

STATE OF CALIFORNIA - DEPARTMENT OF TRANSPORTATION

Caltrans TRAFFIC DESIGN

FUNCTIONAL SUPERVISOR: YI TSAU

CALCULATED-DESIGNED BY: FARIDA MAHMOOD

CHECKED BY: CECILIO BURCIAGA

REVISED BY

DATE REVISED

LAST REVISION 01-09-15

DATE PLOTTED => 12-MAY-2015

TIME PLOTTED => 09:35

Dist	COUNTY	ROUTE	POST MILES TOTAL PROJECT	SHEET No.	TOTAL SHEETS
07	LA	10	37.2/42.4	1434	2313

REGISTERED ELECTRICAL ENGINEER 10/30/14 DATE

6-1-15
PLANS APPROVAL DATE

REGISTERED PROFESSIONAL ENGINEER CECILIO BURCIAGA No. E015302 Exp. 3/31/17 ELECT STATE OF CALIFORNIA

THE STATE OF CALIFORNIA OR ITS OFFICERS OR AGENTS SHALL NOT BE RESPONSIBLE FOR THE ACCURACY OR COMPLETENESS OF SCANNED COPIES OF THIS PLAN SHEET.

NOTE:

1. ITEMS SHOWN IN TABLE ARE NOT A SEPARATE PAY ITEM, FOR INFORMATION ONLY.

MODIFY RAMP METERING SYSTEM

SHEET No.	WIRELESS MODEM (EA)	1-A POLE (EA)	Sig HEAD (EA)	FB ASSY (EA)	LOOP (EA)	PB-5 (EA)	PB-6 (EA)	PB-9 (EA)	2"C (LF)	3"C (LF)	3 1/2"C (LF)	AWG #4 (LF)	AWG #6 (LF)	AWG #8 (LF)	5CSC (LF)	9CSC (LF)	DLC (LF)	18-4-100 (MODIFIED) (EA)	28-5-100 (MODIFIED) (EA)	W3-7 (EA)
E-66	2	6	12	2	34	12	7	2	1475	360	—	—	2200	1865	200	330	6930	—	—	2
E-67	1	2	3	2	14	7	2	5	1360	110	—	—	660	1500	110	110	4060	—	—	2
E-68	2	5	12	3	34	8	5	4	910	480	—	—	1050	1400	120	850	5750	1	—	3
E-69	1	3	6	2	17	11	3	2	1470	90	—	—	1200	1570	40	130	2460	—	—	2
E-70	1	3	9	3	17	6	3	3	1120	190	—	—	930	1330	460	500	4350	—	1	3
E-71	1	2	3	2	14	10	2	—	1260	250	—	—	620	1520	120	310	4200	—	—	2
E-72	2	5	9	2	29	9	5	7	1510	720	—	—	1360	2250	110	1230	9900	—	—	2
E-73	2	4	6	2	26	10	2	10	1280	920	—	—	1250	2220	180	990	10330	—	—	2
E-74	2	8	12	4	36	17	5	5	2460	560	—	—	2320	3120	330	1240	12250	—	—	4
E-76	1	3	6	1	29	13	5	—	1600	240	140	2450	—	4000	250	190	8700	—	—	1

MODIFY TRAFFIC MONITORING STATION

SHEET No.	MVDS (EA)	WOOD POLE (EA)	2"C RISER (EA)	MVDS CABLE (LF)	2"C TYPE 3 (LF)	AWG #6 (LF)	AWG #8 (LF)
E-77	2	1	1	80	10	160	20
E-78	2	1	1	180	60	400	80
E-79	2	1	1	80	10	80	20
E-80	2	1	1	80	10	160	20
E-81	2	1	1	100	20	200	30

ELECTRICAL QUANTITIES

E-238

REVISED BY | DATE REVISED
FARIDA MAHMOOD | CECILIO BURCIAGA
CALCULATED-DESIGNED BY | CHECKED BY
FUNCTIONAL SUPERVISOR: YI TSAU

STATE OF CALIFORNIA - DEPARTMENT OF TRANSPORTATION
Caltrans® TRAFFIC DESIGN

LAST REVISION 00-00-00 | DATE PLOTTED => 12-MAY-2015 | TIME PLOTTED => 09:35

Dist	COUNTY	ROUTE	POST MILES TOTAL PROJECT	SHEET No.	TOTAL SHEETS
07	LA	10	37.2/42.4	1435	2313

REGISTERED ELECTRICAL ENGINEER 10/30/14 DATE

6-1-15
PLANS APPROVAL DATE

REGISTERED PROFESSIONAL ENGINEER CECILIO BURCIAGA No. E015302 Exp. 3/31/17 ELECT STATE OF CALIFORNIA

THE STATE OF CALIFORNIA OR ITS OFFICERS OR AGENTS SHALL NOT BE RESPONSIBLE FOR THE ACCURACY OR COMPLETENESS OF SCANNED COPIES OF THIS PLAN SHEET.

NOTE:

1. ITEMS SHOWN IN TABLE ARE NOT A SEPARATE PAY ITEM, FOR INFORMATION ONLY.

MODIFY TRAFFIC MONITORING STATION

SHEET No.	WIRELESS MODEM (EA)	LOOP (EA)	PB-5 (EA)	PB-6 (EA)	PB-9 (EA)	2"C (LF)	3"C (LF)	DLC (LF)	AWG #2 (LF)	AWG #6 (LF)	AWG #8 (LF)
E-82	1	11	—	1	1	—	230	1230	1800	900	200
E-83	1	11	—	1	5	670	210	1360	2740	520	190
E-84	1	11	—	1	—	—	40	1330	3680	500	30
E-85	1	11	—	1	1	10	240	1400	5030	40	220
E-86	1	12	5	1	1	1000	230	1380	2740	1020	210

ELECTRIC SERVICE (IRRIGATION)

SHEET No.	PB-5 (EA)	2"C (LF)	AWG #8 (LF)	AWG #10 (LF)
E-87	3	160	170	930
E-88	2	50	60	120
E-89	2	200	220	440
E-90	1	70	80	470
E-91	1	10	10	640

SPRINKLER CONTROL CONDUIT (BRIDGE)

SHEET No.	PB-9 (EA)	2"C (LF)	SCC PULL BOX (EA)
E-92	22	2400	20

LIGHTING (CITY STREET)

SHEET No.	100 W HPS LUMINAIRE (EA)	PB-5 (EA)	1 1/2" C (LF)	2"C (LF)	3"C (LF)	AWG #6 (LF)	AWG #8 (LF)	AWG #10 (LF)
E-93	4	2	250	220	—	—	1700	—
E-94	14	4	560	100	—	—	2800	—
E-95	4	5	200	280	—	1400	550	—
E-96	8	6	300	600	—	—	—	3000
E-97	—	11	—	1200	130	—	—	—

ELECTRICAL QUANTITIES

E-239

STATE OF CALIFORNIA - DEPARTMENT OF TRANSPORTATION
Caltrans TRAFFIC DESIGN

FUNCTIONAL SUPERVISOR: YI TSAU
CALCULATED-DESIGNED BY: FARIDA MAHMOOD
CHECKED BY: CECILIO BURCIAGA
REVISED BY
DATE REVISED

LAST REVISION 01-09-15
DATE PLOTTED => 12-MAY-2015
TIME PLOTTED => 09:35

Dist	COUNTY	ROUTE	POST MILES TOTAL PROJECT	SHEET No.	TOTAL SHEETS
07	LA	10	37.2/42.4	1436	2313

REGISTERED ELECTRICAL ENGINEER 10/30/14 DATE

PLANS APPROVAL DATE 6-1-15

REGISTERED PROFESSIONAL ENGINEER CECILIO BURCIAGA No. E015302 Exp. 3/31/17 ELECTRICAL STATE OF CALIFORNIA

THE STATE OF CALIFORNIA OR ITS OFFICERS OR AGENTS SHALL NOT BE RESPONSIBLE FOR THE ACCURACY OR COMPLETENESS OF SCANNED COPIES OF THIS PLAN SHEET.

NOTE:

1. ITEMS SHOWN IN TABLE ARE NOT A SEPARATE PAY ITEM, FOR INFORMATION ONLY.

MODIFY LIGHTING AND SIGN ILLUMINATION

SHEET No.	TYPE 21 (EA)	TYPE 21 STRUCTURE (EA)	TYPE 30 (EA)	TYPE 32 (EA)	PB-9 (EA)	PB-5 (EA)	PB-6 (EA)	2"C (LF)	3"C (LF)	AWG #8 (LF)	AWG #6 (LF)	AWG #4 (LF)	AWG #2 (LF)	ISL (EA)	SC2A (EA)	TIII-BF (EA)	TIII-CF (EA)	ADD BREAKER (EA)	LED LUMINAIRE (EA)	TYPE 15 STRUCTURE (EA)	TYPE 31 (EA)	TYPE 21D STRUCTURE (EA)	100 W HPS SOFFIT (EA)
E-100	—	4	2	—	6	3	—	950	—	960	1920	—	—	1	1	—	—	—	—	—	—	—	—
E-101	—	—	10	1	4	17	—	2420	—	2450	10520	—	—	1	1	—	—	—	—	—	—	—	—
E-102	4	3	5	—	8	12	2	1910	—	1940	4450	—	—	1	1	—	—	—	—	—	—	—	—
E-103	8	8	1	—	10	9	—	2650	—	2670	5340	—	—	3	2	—	—	—	—	—	—	—	—
E-104	8	1	2	1	4	15	1	2200	—	2220	4940	—	—	2	1	4	—	—	—	—	—	—	—
E-105	4	2	3	—	3	13	1	1620	—	1640	3880	—	—	2	1	2	—	—	—	—	—	—	—
E-106	—	11	2	—	14	3	—	2430	—	2440	4880	—	—	4	2	—	—	—	—	—	—	—	—
E-107	—	7	3	—	6	6	—	1850	—	2320	4940	—	—	2	1	—	—	—	3	—	—	—	—
E-108	—	4	8	—	6	13	—	2330	—	2350	5520	—	—	2	1	—	—	—	—	—	—	—	—
E-109	—	8	1	—	8	5	—	1540	—	1550	3100	—	—	3	2	—	—	—	—	—	—	—	—
E-110	3	4	4	2	9	18	—	2650	—	2670	5940	—	—	2	1	—	—	—	—	—	1	—	—
E-111	3	6	3	—	10	8	2	2370	15	2390	5040	—	—	—	—	—	—	—	—	—	—	—	—
E-112	—	4	—	2	11	2	—	1600	—	1610	3220	—	—	2	1	—	—	—	—	2	—	—	—
E-113	—	—	—	—	3	3	—	900	—	905	1810	—	—	—	—	—	—	3	—	—	—	—	—
E-114	—	—	—	—	4	3	—	600	200	—	2410	—	—	2	2	—	—	—	—	—	—	—	—
E-115	—	—	—	—	3	1	—	500	—	505	1010	—	—	2	1	—	—	—	—	—	—	—	—
E-116	—	—	—	—	12	1	—	2000	—	2010	4020	—	—	2	1	—	—	—	—	5	—	—	—
E-117	6	2	—	—	10	15	3	2800	600	3420	11940	—	—	—	—	—	—	1	—	—	—	1	—
E-118	2	—	—	—	3	7	—	1400	—	1410	2820	—	—	4	2	—	—	—	—	2	—	—	—
E-119	—	—	—	—	7	2	1	1425	230	1660	3320	—	—	6	2	1	—	—	—	—	—	—	—
E-120	—	—	—	—	6	3	—	1400	200	1605	3210	—	—	1	1	—	—	—	—	—	—	—	—
E-121	—	—	2	—	—	4	—	560	—	325	560	—	470	2	1	—	—	—	—	—	—	—	—
E-122	—	3	10	—	5	13	—	2720	—	—	2730	—	5460	3	1	—	—	—	—	—	—	—	—
E-123	3	—	12	—	—	41	3	5120	950	—	8000	2900	14200	9	2	—	—	—	—	—	—	—	5
E-124	—	—	11	—	—	17	—	2400	—	—	2420	1700	3640	4	2	—	—	—	1	—	—	—	—
E-125	—	—	1	—	—	4	1	—	950	—	2850	1900	9500	—	—	—	1	—	—	—	—	—	—

ELECTRICAL QUANTITIES

E-240

REVISED BY | DATE REVISED

FARIDA MAHMOOD | CECILIO BURCIAGA

CALCULATED-DESIGNED BY | CHECKED BY

FUNCTIONAL SUPERVISOR: YI TSAU

STATE OF CALIFORNIA - DEPARTMENT OF TRANSPORTATION

Caltrans® TRAFFIC DESIGN

LAST REVISION 00-00-00 | DATE PLOTTED => 12-MAY-2015 | TIME PLOTTED => 09:35

Dist	COUNTY	ROUTE	POST MILES TOTAL PROJECT	SHEET No.	TOTAL SHEETS
07	LA	10	37.2/42.4	1437	2313

REGISTERED ELECTRICAL ENGINEER 10/30/14 DATE

6-1-15
PLANS APPROVAL DATE

REGISTERED PROFESSIONAL ENGINEER CECILIO BURCIAGA No. E015302 Exp. 3/31/17 ELECT STATE OF CALIFORNIA

THE STATE OF CALIFORNIA OR ITS OFFICERS OR AGENTS SHALL NOT BE RESPONSIBLE FOR THE ACCURACY OR COMPLETENESS OF SCANNED COPIES OF THIS PLAN SHEET.

NOTE:

1. ITEMS SHOWN IN TABLE ARE NOT A SEPARATE PAY ITEM, FOR INFORMATION ONLY.

MODIFY LIGHTING AND SIGN ILLUMINATION

SHEET No.	T21 ON BLOCKS (EA)	WOOD POLE WITH LUMINAIRE (EA)	WOOD POLE (EA)	1½"C TYPE 3 (LF)	AWG #6 (LF)	AWG #8 (LF)	1½"C Riser (EA)	PB (EA)
E-140	4	—	2	650	1400	700	2	—
E-141	—	—	—	100	200	100	—	—
E-142	8	—	—	1430	2960	1480	—	—
E-143	1	—	2	1350	2520	1760	1	5
E-144	2	—	—	250	520	260	—	—
E-145	9	1	6	1630	4800	2400	5	—
E-146	5	—	—	620	1320	660	—	—
E-147	1	1	1	120	440	220	1	—
E-148	6	—	—	1000	2100	1050	—	—
E-149	5	4	3	660	3100	1600	3	1
E-150	—	—	—	860	1760	880	—	6
E-151	4	—	—	650	1700	850	—	—
E-152	—	—	2	70	900	450	1	—
E-153	—	2	—	—	520	260	—	—
E-154	—	2	—	200	800	400	1	—
E-155	4	—	—	1000	2100	1050	—	5
E-156	4	—	—	700	1460	730	—	—
E-157	1	—	—	180	280	190	—	—
E-158	—	—	—	220	460	230	—	—
E-159	—	—	—	600	1280	640	—	—
E-160	—	—	—	300	640	320	—	—
E-161	—	—	—	640	1340	670	—	—
E-162	—	—	—	150	300	150	—	1

MODIFY LIGHTING AND SIGN ILLUMINATION

SHEET No.	T21 ON BLOCKS (EA)	WOOD POLE WITH LUMINAIRE (EA)	WOOD POLE (EA)	1½"C TYPE 3 (LF)	AWG #6 (LF)	AWG #8 (LF)	1½"C Riser (EA)	PB (EA)
E-164	—	—	—	340	700	350	—	—
E-165	—	—	—	180	400	200	—	—
E-166	—	—	—	360	760	380	—	—
E-167	—	—	—	500	1060	530	—	—
E-168	—	—	—	220	460	230	—	—
E-169	—	—	—	650	1360	680	—	—
E-170	—	—	3	920	1340	1170	2	5
E-172	—	—	—	800	1700	850	—	—
E-173	2	1	2	1150	2400	1200	3	6
E-174	—	2	—	—	640	320	—	—
E-175	2	—	—	730	2960	1480	—	2
E-176	—	—	—	320	700	350	—	—
E-177	—	—	—	600	1260	630	—	—
E-178	—	—	—	230	480	240	—	—
E-179	—	—	—	170	340	170	—	—
E-180	—	—	—	200	420	210	—	—
E-181	—	—	—	80	180	90	—	—
E-183	—	—	—	210	460	230	—	—
E-184	2	—	—	280	600	300	—	—
E-185	—	—	—	500	1060	530	—	—
E-186	2	—	—	250	540	270	—	—
E-187	4	—	—	600	1280	640	—	—
E-188	—	—	—	360	740	370	—	—

ELECTRICAL QUANTITIES

E-241

REVISED BY | DATE REVISED

FARIDA MAHMOOD | CECILIO BURCIAGA

CALCULATED-DESIGNED BY | CHECKED BY

FUNCTIONAL SUPERVISOR: YI TSAU

STATE OF CALIFORNIA - DEPARTMENT OF TRANSPORTATION

Caltrans® TRAFFIC DESIGN

LAST REVISION 01-09-15 | DATE PLOTTED => 12-MAY-2015 | TIME PLOTTED => 09:35

Dist	COUNTY	ROUTE	POST MILES TOTAL PROJECT	SHEET No.	TOTAL SHEETS
07	LA	10	37.2/42.4	1438	2313

REGISTERED ELECTRICAL ENGINEER 10/30/14 DATE

6-1-15
PLANS APPROVAL DATE

REGISTERED PROFESSIONAL ENGINEER CECILIO BURCIAGA No. E015302 Exp. 3/31/17 ELECT STATE OF CALIFORNIA

THE STATE OF CALIFORNIA OR ITS OFFICERS OR AGENTS SHALL NOT BE RESPONSIBLE FOR THE ACCURACY OR COMPLETENESS OF SCANNED COPIES OF THIS PLAN SHEET.

NOTE:

1. ITEMS SHOWN IN TABLE ARE NOT A SEPARATE PAY ITEM, FOR INFORMATION ONLY.

MODIFY LIGHTING AND SIGN ILLUMINATION

SHEET No.	T21 ON BLOCKS (EA)	WOOD POLE WITH LUMINAIRE (EA)	WOOD POLE (EA)	1½"C TYPE 3 (LF)	AWG #6 (LF)	AWG #8 (LF)	1½"C Riser (EA)	PB (EA)
E-189	—	—	—	260	540	270	—	—
E-190	—	—	—	250	520	260	—	—
E-191	—	—	—	430	900	450	—	—
E-192	—	—	—	270	560	280	—	—
E-193	—	—	—	200	440	220	—	—
E-195	—	—	—	400	860	430	—	—
E-196	—	—	—	300	640	320	—	—
E-197	—	—	3	550	2240	1120	1	3
E-198	—	—	—	580	1200	600	—	—
E-199	—	—	—	730	1540	770	—	—
E-200	—	—	—	700	1480	740	—	—
E-201	—	—	—	400	860	430	—	—
E-202	—	—	—	50	120	60	—	—
E-203	—	—	—	270	560	280	—	—
E-204	—	—	—	230	480	240	—	—
E-205	—	—	—	250	520	260	—	—
E-206	—	—	—	280	600	300	—	—
E-207	—	—	—	460	960	480	—	—
E-208		—	—	200	440	220	—	—
E-209	—	—	—	550	1160	580	—	—
E-210	2	—	—	700	1480	740	—	—
E-211	4	—	—	460	960	480	—	—

ELECTRICAL QUANTITIES

E-242

STATE OF CALIFORNIA - DEPARTMENT OF TRANSPORTATION
Caltrans TRAFFIC DESIGN

FUNCTIONAL SUPERVISOR: YI TSAU
CALCULATED-DESIGNED BY: FARIDA MAHMOOD
CHECKED BY: CECILIO BURCIAGA
REVISED BY
DATE REVISED

LAST REVISION 01-09-15
DATE PLOTTED => 12-MAY-2015
TIME PLOTTED => 09:35

Dist	COUNTY	ROUTE	POST MILES TOTAL PROJECT	SHEET No.	TOTAL SHEETS
07	LA	10	37.2/42.4	1439	2313

REGISTERED ELECTRICAL ENGINEER 10/30/14 DATE

6-1-15
PLANS APPROVAL DATE

REGISTERED PROFESSIONAL ENGINEER CECILIO BURCIAGA No. E015302 Exp. 3/31/17 ELECT STATE OF CALIFORNIA

THE STATE OF CALIFORNIA OR ITS OFFICERS OR AGENTS SHALL NOT BE RESPONSIBLE FOR THE ACCURACY OR COMPLETENESS OF SCANNED COPIES OF THIS PLAN SHEET.

NOTE:

1. ITEMS SHOWN IN TABLE ARE NOT A SEPARATE PAY ITEM, FOR INFORMATION ONLY.

MODIFY SIGNAL AND LIGHTING

SHEET No.	WIRELESS MODEM (EA)	TYPE 1-A (EA)	TYPE 17 (EA)	TYPE 19 (EA)	TYPE 19A (EA)	TYPE 19 ON PLATE (EA)	TYPE 15TS (EA)	TYPE 21TS (EA)	TYPE 24 (EA)	TYPE 26 (EA)	TYPE 26A (EA)	2"C (LF)	2"C TYPE 3 (LF)	3"C (LF)	TYPE III-BF (EA)	BBS (EA)	PB-5 (EA)	PB-6 (EA)	LOOP D (EA)	LOOP E (EA)	SIGNAL HEAD	LUM HEAD (EA)	RETRO-REFLECTIVE SNS (EA)	APS (EA)	COUNT-DOWN PED HEAD (EA)	AWG #6 (LF)	AWG #8 (LF)	AWG #10 (LF)	AWG #14 (LF)	DLC (LF)	5CSC (LF)	9CSC (LF)	28CSC (LF)
E-212	—	—	—	—	—	—	—	—	—	—	—	—	110	—	—	—	—	—	—	—	—	—	—	—	—	—	440	—	—	—	—	—	—
E-213	—	—	—	—	—	1	—	—	—	—	—	—	100	—	—	—	—	—	—	2	3	1	—	—	—	—	400	140	900	830	—	—	—
E-214	1	4	1	—	1	—	—	2	—	—	1	1100	—	440	1	1	10	6	9	26	12	5	1	6	6	1370	2190	1000	1000	4750	—	—	900
E-215	—	—	—	—	—	—	—	—	—	—	—	—	—	—	—	—	—	—	—	—	3	—	—	—	—	—	—	—	—	—	—	—	—
E-218	—	—	1	1	—	—	—	—	—	2	—	20	—	20	—	—	2	6	10	26	13	4	1	4	4	—	1100	—	—	2600	—	—	—
E-222	1	—	1	1	—	—	1	—	1	—	—	115	—	440	—	1	8	4	7	21	12	3	1	2	2	1370	2190	—	—	3050	—	—	900

INTERCONNECTION CONDUIT AND CABLE

SHEET No.	PB-5 (EA)	2"C (LF)	3"C (LF)	AWG #8 (LF)	SIC 6PR#22 (LF)
E-222	9	950	400	1400	1400

ELECTRICAL QUANTITIES

E-243

REVISED BY | DATE REVISED
FARIDA MAHMOOD | CECILIO BURCIAGA
CALCULATED-DESIGNED BY | CHECKED BY
FUNCTIONAL SUPERVISOR
YI TSAU

STATE OF CALIFORNIA - DEPARTMENT OF TRANSPORTATION
Caltrans® TRAFFIC DESIGN

LAST REVISION 01-09-15 | DATE PLOTTED => 12-MAY-2015 | TIME PLOTTED => 09:35

DIST	COUNTY	ROUTE	POST MILES TOTAL PROJECT	SHEET No	TOTAL SHEETS
07	LA	10	37.2/42.4	1440	2313

REGISTERED CIVIL ENGINEER 7/18/14 DATE

6-1-15
PLANS APPROVAL DATE

REGISTERED PROFESSIONAL ENGINEER TAMARA S. MARCHENKO No. C76837 Exp. 12/31/15 CIVIL STATE OF CALIFORNIA

The State of California or its officers or agents shall not be responsible for the accuracy or completeness of electronic copies of this plan sheet.

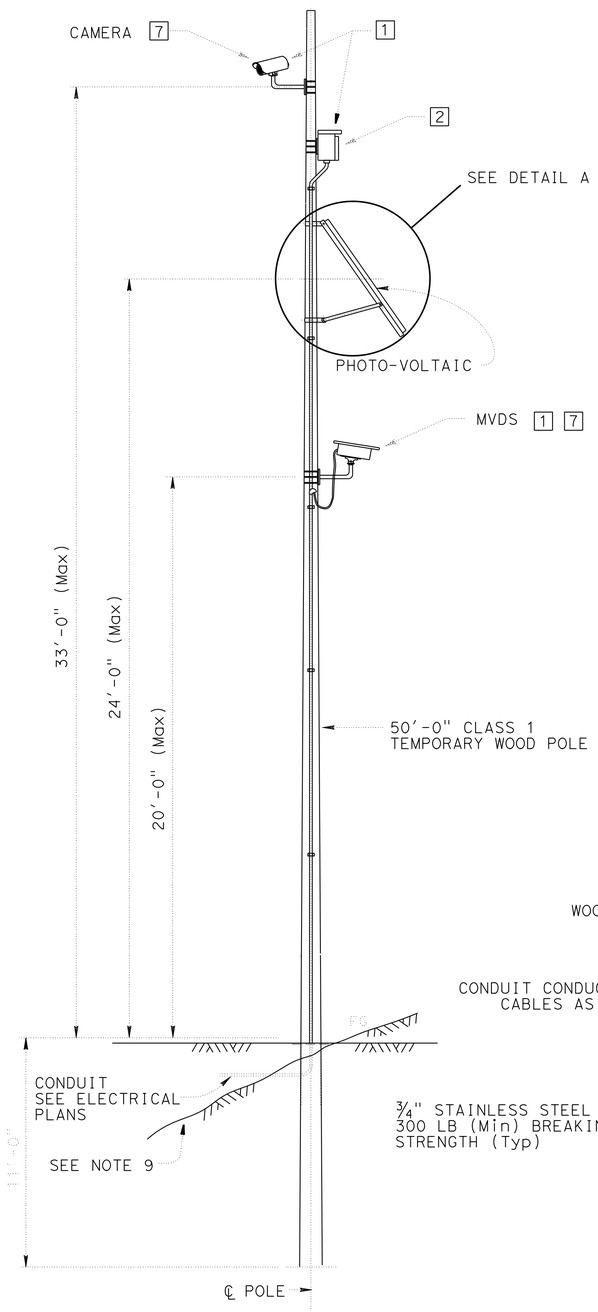

ELEVATION

THE CONTRACTOR SHALL VERIFY ALL CONTROLLING FIELD DIMENSIONS BEFORE ORDERING OR FABRICATING ANY MATERIAL.

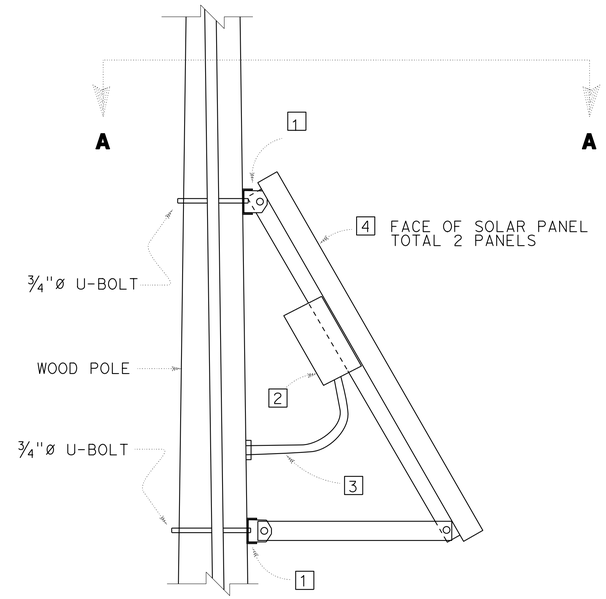

DETAIL A

NO SCALE

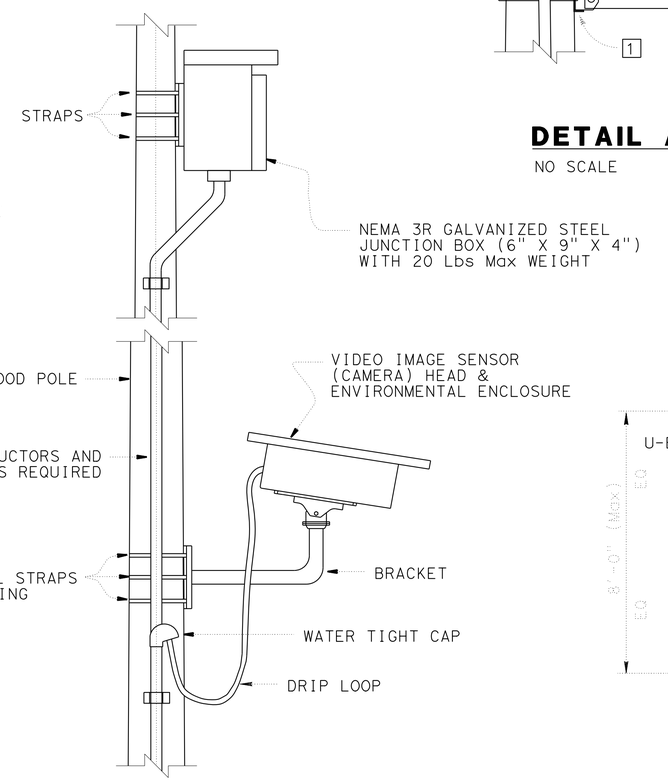

DETAIL B

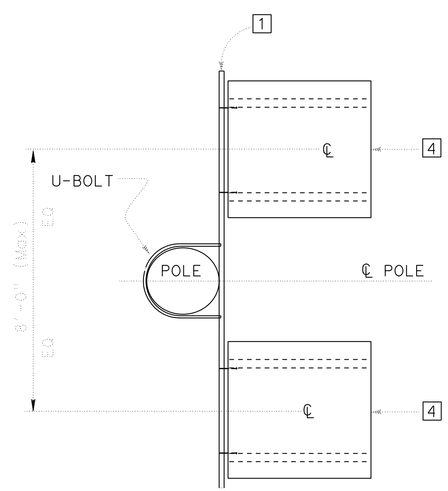

SECTION A-A

NOTES:

1. ALL MOUNTING HARDWARE MUST BE ASSEMBLED AND CONNECTED PER THE MANUFACTURERS RECOMMENDATIONS.
2. JUNCTION BOX.
3. CONDUIT.
4. WEIGHT OF PANEL AND HARDWARE MUST NOT EXCEED 60 Lbs AND 10 S.F FOR EPA.
5. ALL DEMENSIONS ARE APPROXIMATE.
6. FOR DETAILS NOT SHOWN SEE ELECTRICAL PLANS.
7. WEIGHT MUST NOT EXCEED 10 Lb AND 1 S.F. FOR EPA.
8. ALL HARDWARE MUST BE STAINLESS OR GALVANIZED.
9. IF POLE IS LOCATED ON A STEEP SLOPE 1V:4H THROUGH 1V:2H ADD 2 FEET EXTRA FOR EMBEDMENT.
10. POLE MUST BE PROTECTED FROM TRAFFIC BY MEANS ACCORDING TO CALIFORNIA DEPARTMENT OF TRANSPORTATION HIGHWAY DESIGN MANUAL AS REQUIRED.

ABBREVIATIONS:

MVDS = MICROWAVE VEHICLE DETECTION SYSTEM
EPA = EXPOSED PROJECTED AREA

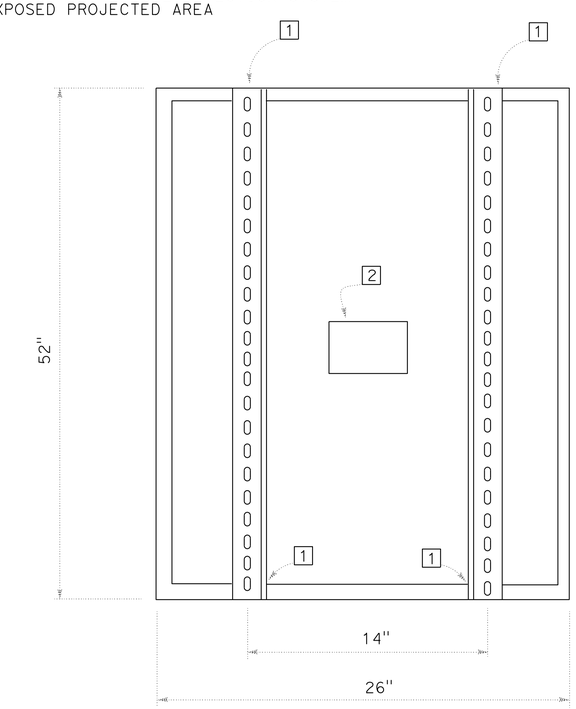

REAR VIEW OF PANEL

BRANCH CHIEF	DAVID NEUMANN	DESIGN	BY T MARCHENKO	CHECKED A MALAK
		DETAILS	BY H NGUYEN	CHECKED T MARCHENKO
		QUANTITIES	BY X	CHECKED X

STATE OF CALIFORNIA
DEPARTMENT OF TRANSPORTATION

DIVISION OF ENGINEERING SERVICES
DESIGN AND TECHNICAL SERVICES
SPECIAL DESIGNS BRANCH B

BRIDGE NO. N/A
POST MILE 37.2/42.4

RAMP METERING SYSTEM
TEMPORARY WOOD POLE

SES-1

(ENGLISH) SPECIAL DESIGNS BRANCH BORDER SHEET (REV. 7-1-09)

ORIGINAL SCALE IN INCHES FOR REDUCED PLANS 0 1 2 3

UNIT: 3620
PROJECT NUMBER & PHASE: 0713000007-1
CONTRACT NO.: 07-1193U1

DISREGARD PRINTS BEARING EARLIER REVISION DATES
REVISION DATES 4-16-13 7-18-14 3-03-15

SHEET 1 OF 18

FILE => spec_des_br_prj/2013sd/07-1193U1/71193uua244.dgn

USERNAME => s112049 DATE PLOTTED => 12-MAY-2015 TIME PLOTTED => 09:35

DIST	COUNTY	ROUTE	POST MILES TOTAL PROJECT	SHEET No.	TOTAL SHEETS
07	LA	10	37.2/42.4	1441	2313

Eliseo Lopez 9-05-13
REGISTERED CIVIL ENGINEER DATE

6-1-15
PLANS APPROVAL DATE

REGISTERED PROFESSIONAL ENGINEER ELISEO LOPEZ No. C72910 Exp. 12/31/16 CIVIL STATE OF CALIFORNIA

The State of California or its officers or agents shall not be responsible for the accuracy or completeness of electronic copies of this plan sheet.

TABLE A

POLE TYPE	POLE DATA				BASE PLATE DATA			
	A HEIGHT	Min OD BASE	Min OD TOP	THICKNESS	C	BC - BOLT CIRCLE	THICKNESS	ANCHOR BOLT SIZE
18-4-100 Modified	11'-0"	12⅛"	10½"	0.3125"	1'-7"	1'-5½"	3"	2"ø X 42"

TABLE B

SIGNAL ARM DATA - FOR DETAILS NOT SHOWN, SEE 2010 RSP ES-7F									
E PROJECTED LENGTH	H	Min OD AT POLE	THICKNESS	I BOLT CIRCLE	HS CAP SCREWS	J PLATE SIZE	K ARM PLATE THICKNESS	L POLE PLATE THICKNESS	ø
25'-0"	10'-0"	7⅜"	0.2391	12"	1¼" 7NC-3"	1'-0"	1¼"	1½"	23°

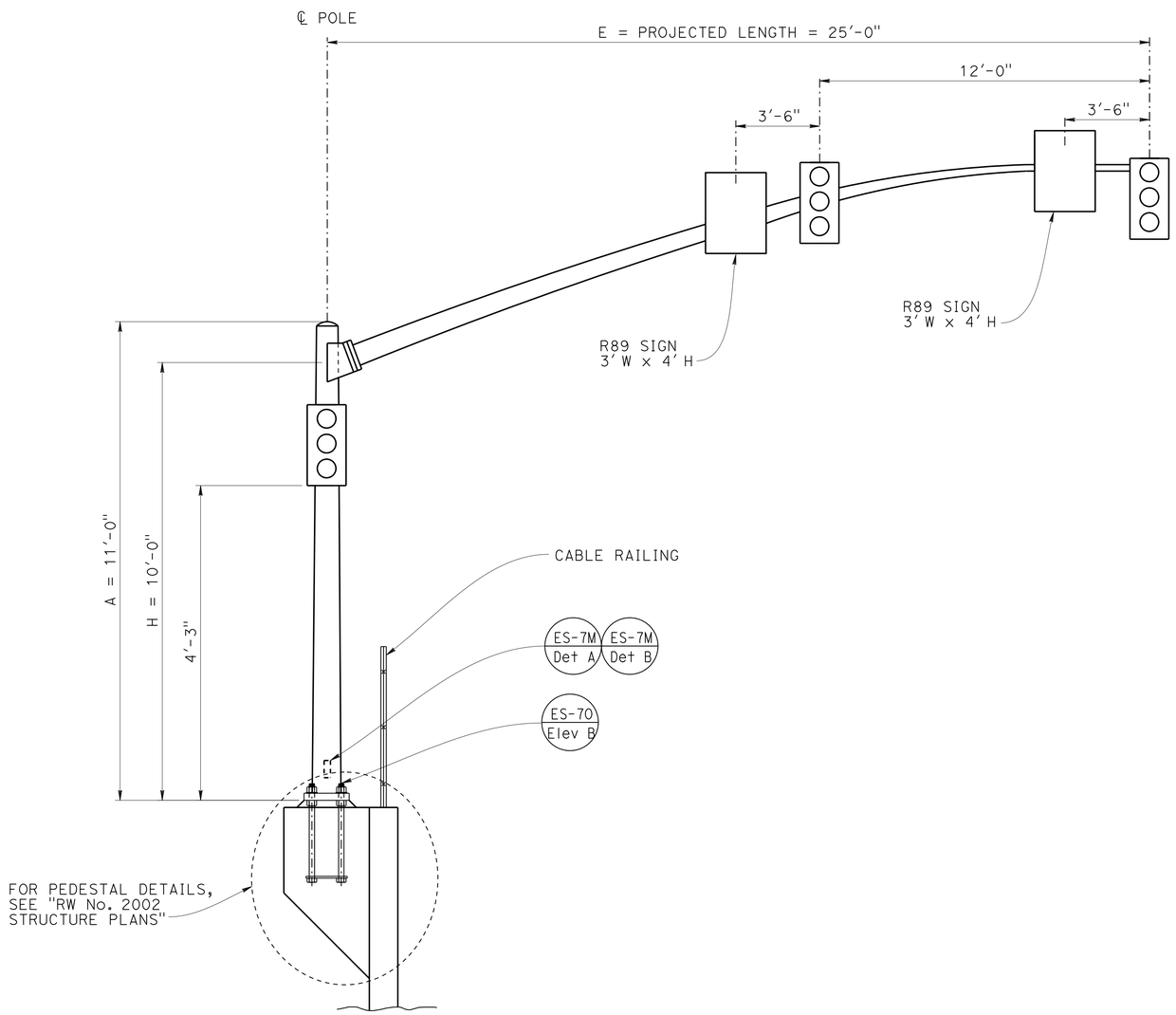

ELEVATION

TYPE 18-4-100 MODIFIED
RWLOL "RW 2002" LINE - Sta 3+00

GENERAL NOTES:

SPECIFICATIONS:

Design: AASHTO Standard Specifications for Structural Supports for Highway Signs, Luminaires and Traffic Signals, Fifth Edition.

LOADING:

Wind Loading: 100 MPH

UNIT STRESSES:

Structural steel: fy = 55,000 psi (Tapered steel tube and anchor bolts)
fy = 50,000 psi unless otherwise noted.

Reinforced concrete: f'c = 3,600 psi
fy = 60,000 psi

NOTES:

1. For pole locations, see "ELECTRICAL PLANS".
2. All steel shall be galvanized after fabrication.
3. During pole erection the pole stall be raked as necessary with the use of leveling nuts to provide a plumb pole axis.
4. For details not shown, see "2010 STANDARD PLANS" and "2010 RSP".
5. For retaining wall details see "RETAINING WALL No. 2002 STRUCTURE PLANS".

NO SCALE

BRANCH CHIEF JEFFREY B WOODY

	BY	CHECKED
DESIGN	ELISEO LOPEZ	MAHFOUD LICHA
DETAILS	SHUMEI JIANG	MAHFOUD LICHA
QUANTITIES		

STATE OF CALIFORNIA
DEPARTMENT OF TRANSPORTATION

DIVISION OF ENGINEERING SERVICES
STRUCTURE DESIGN
SPECIAL DESIGN BRANCH

BRIDGE NO. 53E0319
POST MILE 37.92/37.98

TYPE 18-4-100 MODIFIED
POLE DETAILS

SES-2

STRUCTURES DESIGN SPECIAL DESIGN SHEET (ENGLISH) (REV. 09-01-10)

ORIGINAL SCALE IN INCHES FOR REDUCED PLANS 0 1 2 3

UNIT: 3619
PROJECT NUMBER & PHASE: 0713000007-1
CONTRACT NO.: 07-1193U1

DISREGARD PRINTS BEARING EARLIER REVISION DATES

REVISION DATES 7-08-13 7-15-14 3-03-15

SHEET 2 OF 18

FILE => 71193uua245.dgn

USERNAME => s112049 DATE PLOTTED => 12-MAY-2015 TIME PLOTTED => 09:35

DIST	COUNTY	ROUTE	POST MILES TOTAL PROJECT	SHEET No.	TOTAL SHEETS
07	LA	10	37.2/42.4	1442	2313

REGISTERED CIVIL ENGINEER — DATE: 9-05-13

PLANS APPROVAL DATE: 6-1-15

REGISTERED PROFESSIONAL ENGINEER — ELISEO LOPEZ — No. C72910 — Exp. 12/31/16 — CIVIL — STATE OF CALIFORNIA

The State of California or its officers or agents shall not be responsible for the accuracy or completeness of electronic copies of this plan sheet.

TABLE A

POLE TYPE	POLE DATA				BASE PLATE DATA			
	A HEIGHT	Min OD BASE	Min OD TOP	THICKNESS	C	BC - BOLT CIRCLE	THICKNESS	ANCHOR BOLT SIZE
28-5-100 Modified	17'-0"	14"	11 9/16"	0.3125"	23"	21"	3"	2 1/2"ø X 42"

TABLE B

SIGNAL ARM DATA - FOR DETAILS NOT SHOWN, SEE 2010 RSP ES-7G										Q SECTION	
E PROJECTED LENGTH	H	Min OD AT POLE	THICKNESS	I BOLT CIRCLE	HS CAP SCREWS	J PLATE SIZE	K ARM PLATE THICKNESS	L POLE PLATE THICKNESS	ø	LENGTH	THICKNESS
50'-0"	16'-0"	11 7/16"	0.1793	16"	1 1/2"-6NC-3 1/4"	1'-4"	1 3/4"	1 3/4"	15°	18'-0"	0.2391"

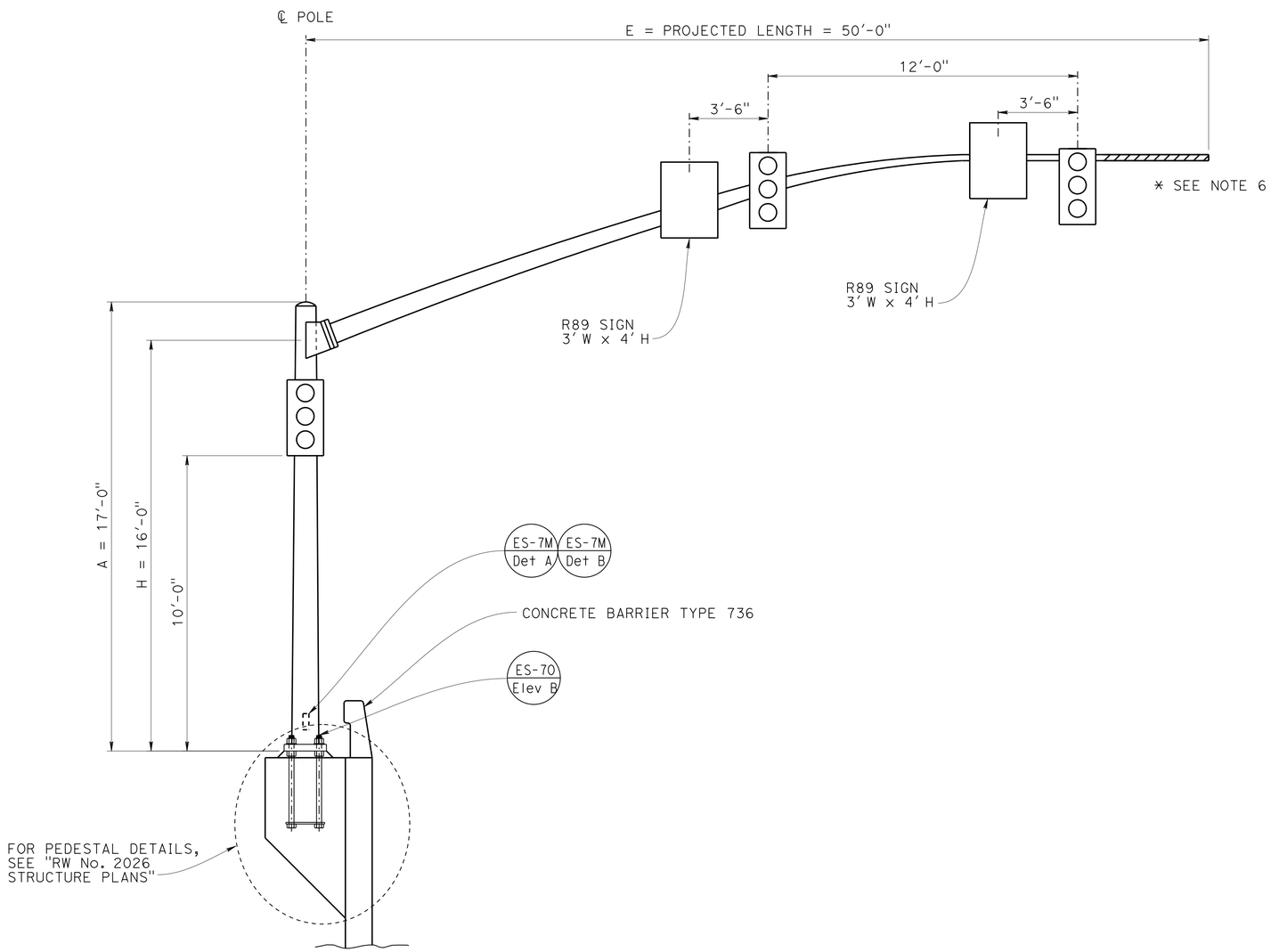

ELEVATION

TYPE 28-5-100 MODIFIED
RWLOL "RW 2026" LINE - Sta 27+60

GENERAL NOTES:

SPECIFICATIONS:

Design: AASHTO Standard Specifications for Structural Supports for Highway Signs, Luminaires and Traffic Signals, Fifth Edition.

LOADING:

Wind Loading: 100 MPH

UNIT STRESSES:

Structural steel: fy = 55,000 psi (Tapered steel tube and anchor bolts)
fy = 50,000 psi unless otherwise noted.

Reinforced concrete: f'c = 3,600 psi
fy = 60,000 psi

NOTES:

1. For pole locations, see "ELECTRICAL PLANS".
2. All steel shall be galvanized after fabrication.
3. During pole erection the pole stall be raked as necessary with the use of leveling nuts to provide a plumb pole axis.
4. For details not shown, see "2010 STANDARD PLANS" and "2010 RSP"
5. For retaining wall details see "RETAINING WALL No. 2026 STRUCTURE PLANS".
6. Use a 50' signal arm with the last 5' removed and a raintight cap installed at fabrication shop.

NO SCALE

BRANCH CHIEF: JEFFREY B WOODY

	BY	CHECKED
DESIGN	ELISEO LOPEZ	MAHFOUD LICHA
DETAILS	SHUMEI JIANG	MAHFOUD LICHA
QUANTITIES		

STATE OF CALIFORNIA
DEPARTMENT OF TRANSPORTATION

DIVISION OF ENGINEERING SERVICES
STRUCTURE DESIGN
SPECIAL DESIGN BRANCH

BRIDGE NO. 53E0318
POST MILE 38.37/38.43

TYPE 28-5-100 MODIFIED POLE DETAILS

SES-3

STRUCTURES DESIGN SPECIAL DESIGN SHEET (ENGLISH) (REV. 09-01-10)

ORIGINAL SCALE IN INCHES FOR REDUCED PLANS 0 1 2 3

UNIT: 3619
PROJECT NUMBER & PHASE: 0713000007-1
CONTRACT NO.: 07-1193U1

DISREGARD PRINTS BEARING EARLIER REVISION DATES

REVISION DATES: 7-25-13 7-15-14 3-03-15

SHEET 3 OF 18

FILE => 71193uua246.dgn

USERNAME => s112049 DATE PLOTTED => 12-MAY-2015 TIME PLOTTED => 09:35

DIST	COUNTY	ROUTE	POST MILES TOTAL PROJECT	SHEET No	TOTAL SHEETS
07	LA	10	37.2/42/4	1443	2313

Eliseo Lopez 11-15-13
REGISTERED CIVIL ENGINEER DATE

6-1-15
PLANS APPROVAL DATE

REGISTERED PROFESSIONAL ENGINEER ELISEO LOPEZ No. C72910 Exp. 12/31/16 CIVIL STATE OF CALIFORNIA

The State of California or its officers or agents shall not be responsible for the accuracy or completeness of electronic copies of this plan sheet.

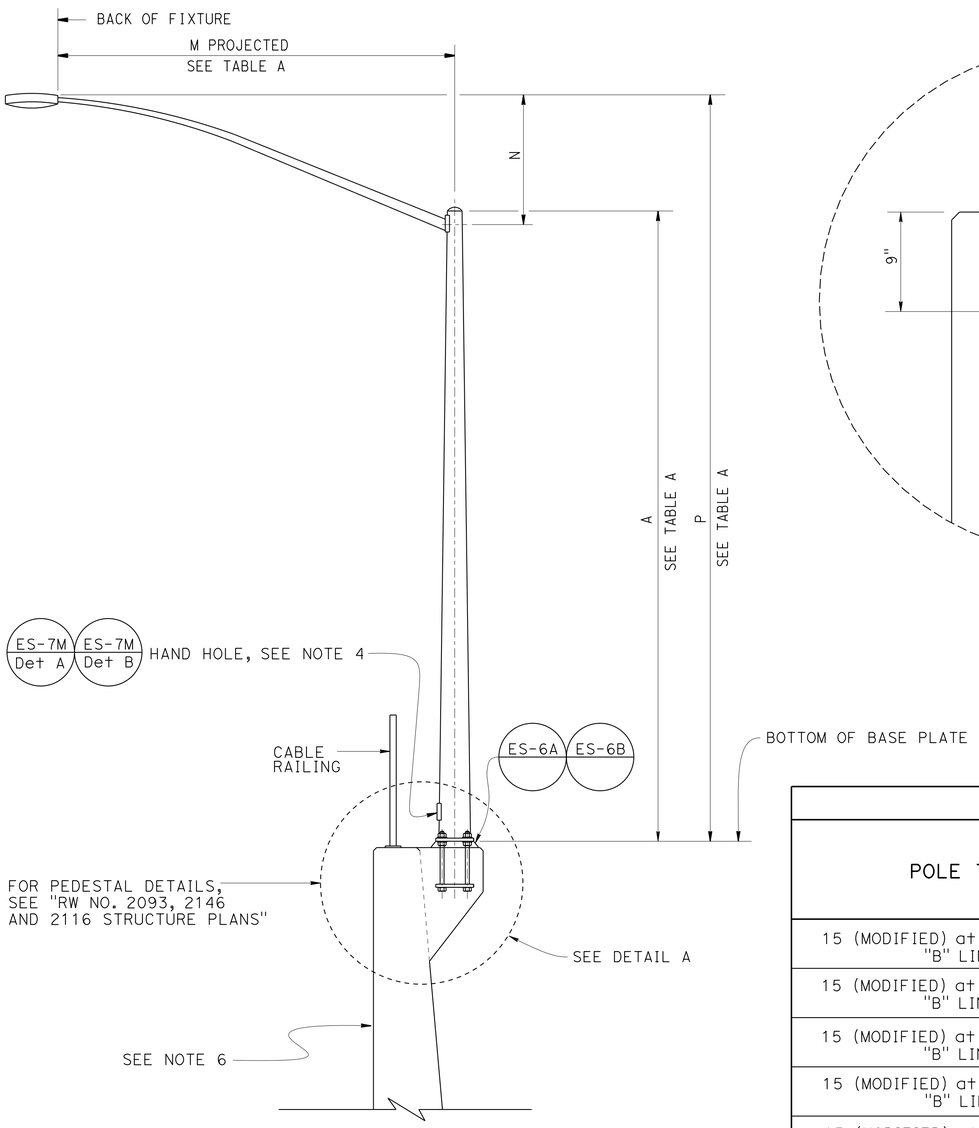

ELEVATION
TYPE 15 (MODIFIED)

NO SCALE

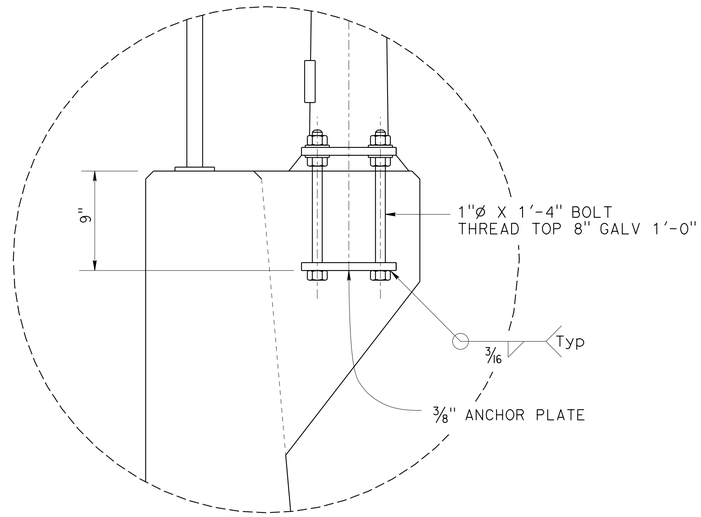

DETAIL A

GENERAL NOTES:

SPECIFICATIONS

Design: AASHTO Standard Specifications for Structural Supports for Highway Signs, Luminaires and Traffic Signals, Fifth Edition.

LOADING

Wind Loadings: 100 MPH

UNIT STRESSES

Structural Steel: fy = 55,000 psi tapered steel tube
fy = 50,000 psi unless otherwise noted.

Anchor bolts : fy = 55 ksi

Reinforced Concrete: f'c = 3,600 psi
fy = 60,000 psi

NOTES:

1. For pole locations, see "ELECTRICAL"Plans.
2. All steel shall be galvanized after fabrication.
3. During pole erection the post shall be raked as necessary with the use of leveling nuts to provide a plumb pole axis.
4. Hand hole shall be located on the down stream side of traffic.
5. For details not shown, see "2010 STANDARD PLANS" and "2010 REVISED STANDARD PLANS".
6. For Retaining Wall Details see "Retaining Wall No. 2093, 2146 and 2116 Structure Plans".

TABLE A

POLE TYPE	POLE No.	POLE DATA				BASE PLATE DATA				LUMINAIRE MAST ARM DATA				
		HEIGHT "A"	Min OD BASE	Min OD TOP	WALL THICKNESS	"C"	THICKNESS	ANCHOR BOLTS SIZE	ANCHOR BOLTS BC = BOLT CIRCLE	M PROJECTED	N RISE	Min OD AT POLE	NOMINAL THICKNESS	P
15 (MODIFIED) at Sta 2121+90 "B" LINE	40201	8'-0"	8"	6 7/8"	0.1196"	1'-0"	2"	1"	1'-0"	12'-0"	4'-3"	3 7/8"	0.1196"	11'-9"±
15 (MODIFIED) at Sta 2123+70 "B" LINE	40231	5'-0"	8"	7 5/16"	0.1196"	1'-0"	2"	1"	1'-0"	12'-0"	4'-3"	3 7/8"	0.1196"	8'-9"±
15 (MODIFIED) at Sta 2125+16 "B" LINE	40262	5'-0"	8"	7 5/16"	0.1196"	1'-0"	2"	1"	1'-0"	12'-0"	4'-3"	3 7/8"	0.1196"	8'-9"±
15 (MODIFIED) at Sta 2148+10 "B" LINE	40671	22'-0"	8"	4 7/8"	0.1196"	1'-0"	2"	1"	1'-0"	12'-0"	4'-3"	3 7/8"	0.1196"	25'-9"±
15 (MODIFIED) at Sta 27+00 "F1" LINE	40292	5'-0"	8"	7 5/16"	0.1196"	1'-0"	2"	1"	1'-0"	12'-0"	4'-3"	3 7/8"	0.1196"	8'-9"±
15 (MODIFIED) at Sta 28+80 "F1" LINE	40322	5'-0"	8"	7 5/16"	0.1196"	1'-0"	2"	1"	1'-0"	12'-0"	4'-3"	3 7/8"	0.1196"	8'-9"±
15 (MODIFIED) at Sta 46+90 "F3" LINE	40631	9'-0"	8"	6 3/4"	0.1196"	1'-0"	2"	1"	1'-0"	12'-0"	4'-3"	3 7/8"	0.1196"	12'-9"±
15 (MODIFIED) at Sta 72+10 "RAMP E6" LINE	39231	18'-0"	8"	5 1/2"	0.1196"	1'-0"	2"	1"	1'-0"	12'-0"	4'-3"	3 7/8"	0.1196"	21'-9"±
15 (MODIFIED) at Sta 2073+88 "B" LINE	39271	25'-0"	8"	4 1/2"	0.1196"	1'-0"	2"	1"	1'-0"	12'-0"	4'-3"	3 7/8"	0.1196"	28'-9"±

THE CONTRACTOR SHALL VERIFY ALL CONTROLLING FIELD DIMENSIONS BEFORE ORDERING OR FABRICATING ANY MATERIAL.

BRANCH CHIEF JEFFREY B WOODY

	BY	CHECKED
DESIGN	E. LOPEZ	M. LICHA
DETAILS	J. GUO/M. CLEVERLEY	M. LICHA
QUANTITIES		

STATE OF CALIFORNIA
DEPARTMENT OF TRANSPORTATION

DIVISION OF ENGINEERING SERVICES
DESIGN AND TECHNICAL SERVICES
SPECIAL DESIGNS BRANCH A

BRIDGE NO. N/A
POST MILE 37.2/42.4

TYPE 15 MODIFIED
POLE DETAILS

SES-4

(ENGLISH) SPECIAL DESIGNS BRANCH BORDER SHEET (REV. 7-1-09)

ORIGINAL SCALE IN INCHES FOR REDUCED PLANS 0 1 2 3

UNIT: 3619
PROJECT NUMBER & PHASE: 0713000007-1
CONTRACT NO.: 07-1193U1

DISREGARD PRINTS BEARING EARLIER REVISION DATES

REVISION DATES 10-28-13 3-03-15 7-17-14

SHEET 4 OF 18

FILE => spec_des_br_prj/2013sd/ 71193uua247.dgn

USERNAME => s112049 DATE PLOTTED => 12-MAY-2015 TIME PLOTTED => 09:35

DIST	COUNTY	ROUTE	POST MILES TOTAL PROJECT	SHEET No	TOTAL SHEETS
07	LA	10	37.2/42.4	1444	2313

Mahfoud A Licha 7/18/14
REGISTERED CIVIL ENGINEER DATE

6-1-15
PLANS APPROVAL DATE

REGISTERED PROFESSIONAL ENGINEER MAHFOUD A. LICHA No. C62816 Exp. 6/30/16 CIVIL STATE OF CALIFORNIA

The State of California or its officers or agents shall not be responsible for the accuracy or completeness of electronic copies of this plan sheet.

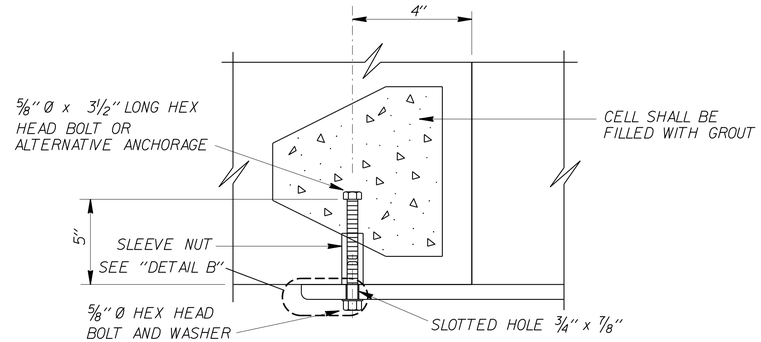

DETAIL A
FOR FRONT COVER PLATE

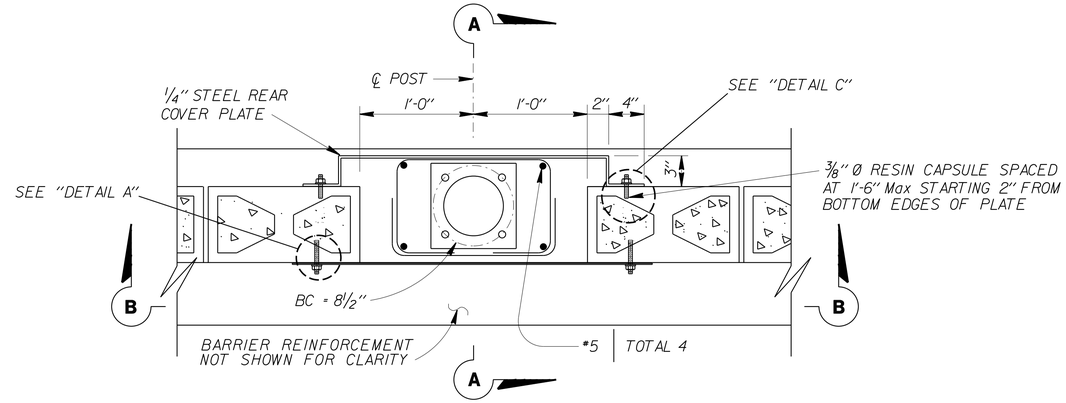

PLAN VIEW

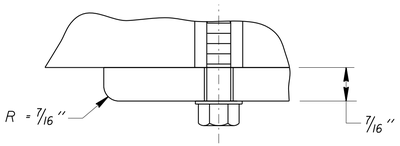

DETAIL B

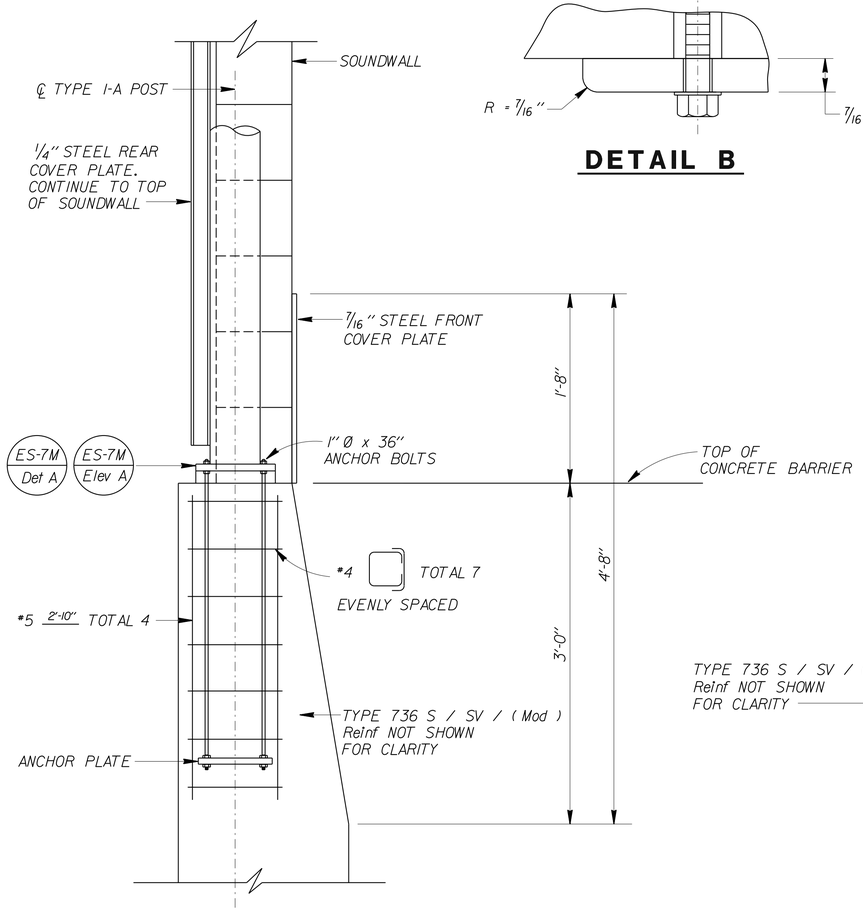

SECTION A-A

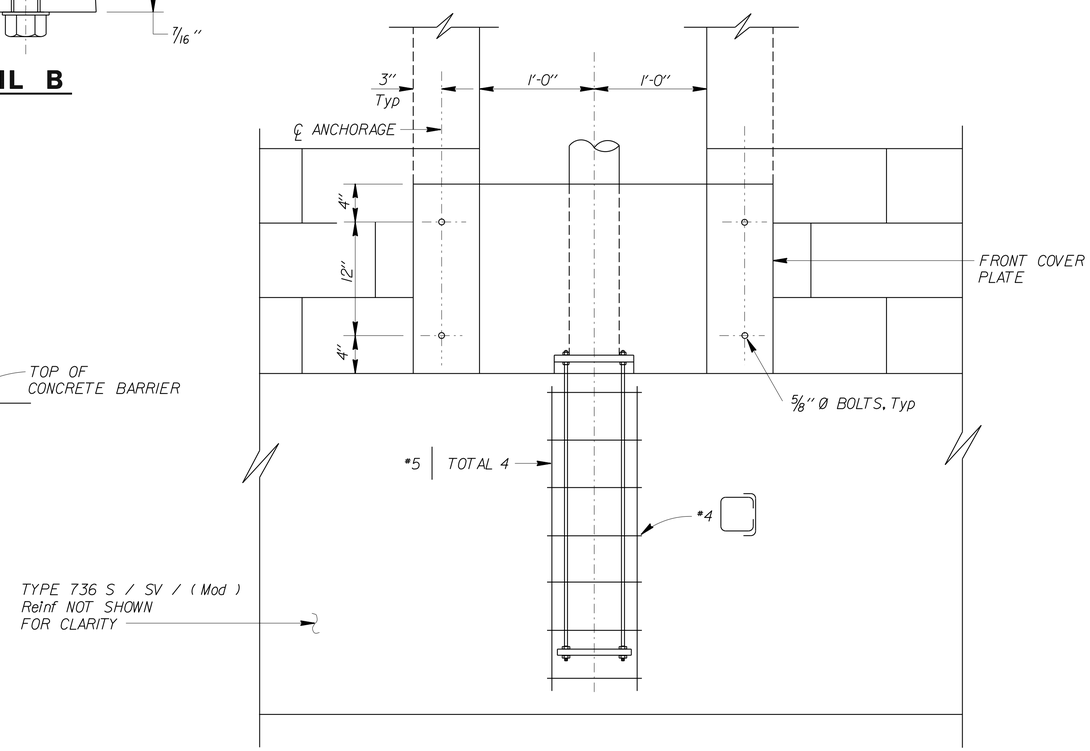

SECTION B-B

DESIGN NOTES:

SPECIFICATIONS

Design : AASHTO Standard Specifications for Structural Supports for Highway Signs, Luminaires and Traffic Signals, Fifth Edition.

LOADING

Wind Loading: 100 MPH (3 Second gust)

UNIT STRESSES

Structural steel: fy = 50,000 psi (Cover plate)
fy = 55,000 psi (Tapered steel tube)

Anchor bolts: fy = 55,000 psi

Reinforced concrete: f'c = 3,600 psi
fy = 60,000 psi

NOTES:

1. *Barrier and pedestal shall have minimum of 1" concrete cover over rebar.*
2. *For Type 1-A Standard and for anchorage details not shown, see 2010 Standard Plan sheet ES-7B.*
3. *See 2010 Standard Plan sheets ES-4C and ES-4D for for signal heads and mounting details.*
4. *All metal plates to be galvanized after fabrication. Hardware to be galvanized or non-corrosive.*
5. *For details not shown, see 2010 "STANDARD PLANS" and 2010 "REVISED STANDARD PLANS".*

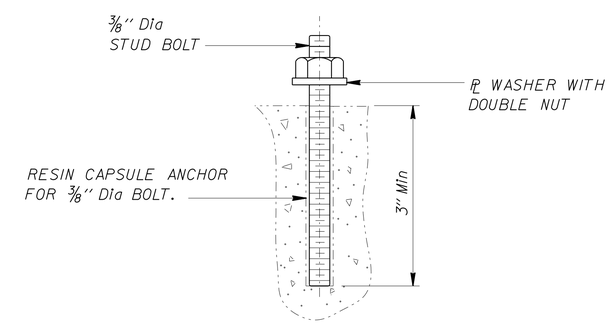

DETAIL C
RESIN CAPSULE BOLT ANCHORAGE
SEE NOTE 5
FOR REAR COVER PLATE

STANDARD PLAN SHEET No.
DETAIL No.

NOTE:
THE CONTRACTOR SHALL VERIFY ALL CONTROLLING FIELD DIMENSIONS BEFORE ORDERING OR FABRICATING ANY MATERIAL.

NO SCALE

BRANCH CHIEF	JEFF WOODY	DESIGN	BY MAHFOUD LICHA	CHECKED ELISEO LOPEZ
		DETAILS	BY R. YEE	CHECKED MAHFOUD LICHA
		QUANTITIES	BY	CHECKED

STATE OF CALIFORNIA
DEPARTMENT OF TRANSPORTATION

DIVISION OF ENGINEERING SERVICES
DESIGN AND TECHNICAL SERVICES
SPECIAL DESIGNS BRANCH **A**

BRIDGE NO.
POST MILE 33.2/37.2

RAMP METERING SYSTEM
TYPE 1-A STANDARD ON CONCRETE BARRIER TYPE 736 S/SV (MOD) WITH SOUNDWALL

SES-5

(ENGLISH) SPECIAL DESIGNS BRANCH BORDER SHEET (REV. 7-1-09)

ORIGINAL SCALE IN INCHES FOR REDUCED PLANS 0 1 2 3

UNIT: 3619
PROJECT ID & PHASE: 0713000007-1
CONTRACT No.: 07-1193U1

DISREGARD PRINTS BEARING EARLIER REVISION DATES
REVISION DATES 2/28/13 2/28/14 2/25/14 2/24/15

SHEET 5 OF 18

FILE => /2014sd/07-1193U1/SES-5

USERNAME => $USER DATE PLOTTED => $DATE TIME PLOTTED => $TIME

DIST	COUNTY	ROUTE	POST MILES TOTAL PROJECT	SHEET No	TOTAL SHEETS
07	LA	10	37.2/42.4	1445	2313

Mahfoud A. Licha 3-26-14
REGISTERED CIVIL ENGINEER DATE

6-1-15
PLANS APPROVAL DATE

REGISTERED PROFESSIONAL ENGINEER MAHFOUD A. LICHA No. C62816 Exp. 6/30/16 CIVIL STATE OF CALIFORNIA

The State of California or its officers or agents shall not be responsible for the accuracy or completeness of electronic copies of this plan sheet.

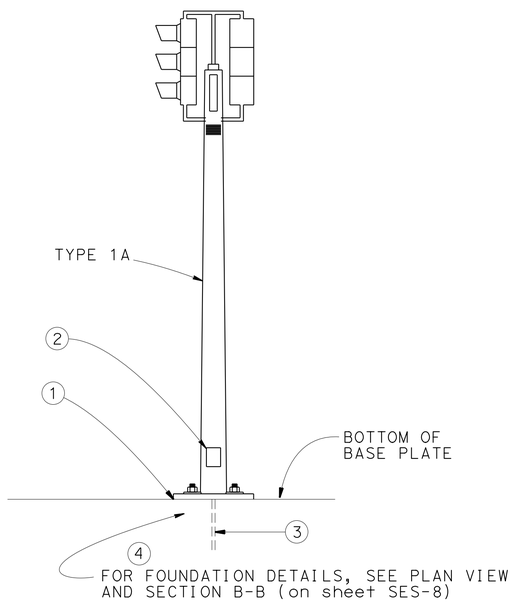

TYPE 1A

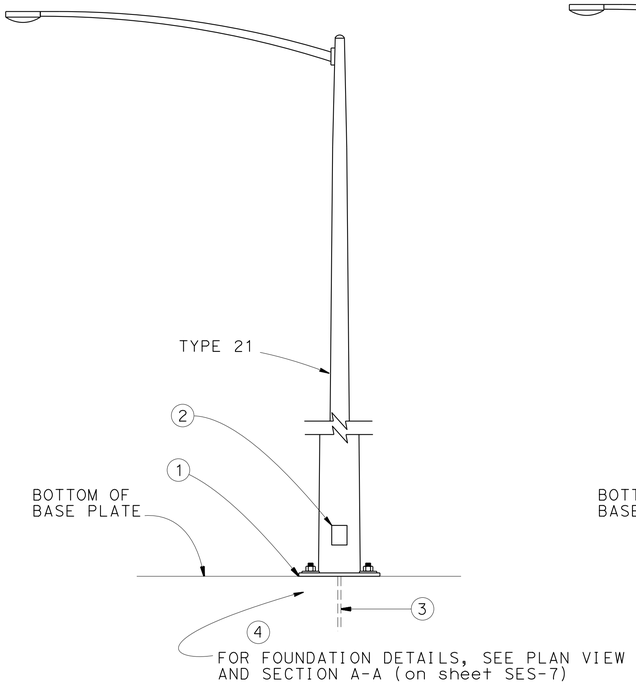

TYPE 21

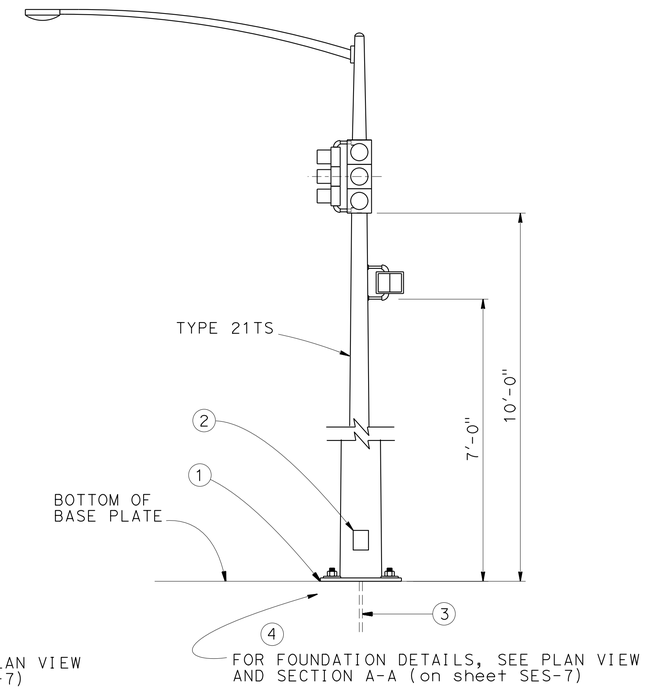

TYPE 21TS

GENERAL NOTES:

SPECIFICATIONS

Design: AASHTO Standard Specifications for Structural Supports for Highway Signs, Luminaires and Traffic Signals, Fifth Edition

LOADING

Wind Loadings: 100 MPH

UNIT STRESSES

Structural Steel: fy = 55,000 psi tapered steel tube
fy = 50,000 psi unless otherwise noted.

Threaded rod : fy = 55,000 psi

Anchor Bolts : fy = 55,000 psi

Reinforced Concrete: f'c = Minor Concrete
fy = 60,000 psi

NOTES:

1. No grout required.
2. For Handhole details, see 2010 Standard Plan ES-7M.
3. For wiring connection details, See Electrical Plans.
4. The foundation shall be on level ground compacted to at least 90 percent relative compaction.
5. Type 1A shall conform to ES-7B (foundation excluded). Type 21 shall conform to ES-6A (foundation excluded). Type 21TS shall conform to RSP ES-7A (foundation excluded). excluded).
6. For details not shown, see "2010 STANDARD PLANS" and "2010 REVISED STANDARD PLANS"
7. All steel shall be galvanized after fabrication.
8. During pole installation the post shall be raked as necessary with the use of leveling nuts to provide a plumb pole axis.

NOTE:
THE CONTRACTOR SHALL VERIFY ALL CONTROLLING FIELD DIMENSIONS BEFORE ORDERING OR FABRICATING ANY MATERIAL.

NO SCALE

BRANCH CHIEF JEFFREY B WOODY

	BY	CHECKED
DESIGN	M. LICHA	A. HOUGH
DETAILS	T. NGUYEN	M. LICHA
QUANTITIES		

STATE OF CALIFORNIA
DEPARTMENT OF TRANSPORTATION

DIVISION OF ENGINEERING SERVICES
DESIGN AND TECHNICAL SERVICES
SPECIAL DESIGNS BRANCH A

BRIDGE NO. N/A
POST MILE

ELECTRICAL SYSTEMS
MODIFIED SIGNAL AND LIGHTING TEMPORARY POLE DETAILS

SES-6

(ENGLISH) SPECIAL DESIGNS BRANCH BORDER SHEET (REV. 7-1-09)

ORIGINAL SCALE IN INCHES FOR REDUCED PLANS 0 1 2 3

UNIT: 3619
PROJECT NUMBER & PHASE: 0713000007-1
CONTRACT NO.: 07-1193u1

DISREGARD PRINTS BEARING EARLIER REVISION DATES

REVISION DATES: 2-24-14 3-28-14 7-11-14 3-03-15

SHEET 6 OF 18

FILE => spec_des_br_prj/2013sd/71193uua249.dgn

USERNAME => s112049 DATE PLOTTED => 12-MAY-2015 TIME PLOTTED => 09:35

DIST	COUNTY	ROUTE	POST MILES TOTAL PROJECT	SHEET No	TOTAL SHEETS
07	LA	10	37.2/42.4	1446	2313

Mahfoud A. Licha 3-26-14
REGISTERED CIVIL ENGINEER DATE

6-1-15
PLANS APPROVAL DATE

REGISTERED PROFESSIONAL ENGINEER MAHFOUD A. LICHA No. C62816 Exp. 6/30/16 CIVIL STATE OF CALIFORNIA

The State of California or its officers or agents shall not be responsible for the accuracy or completeness of electronic copies of this plan sheet.

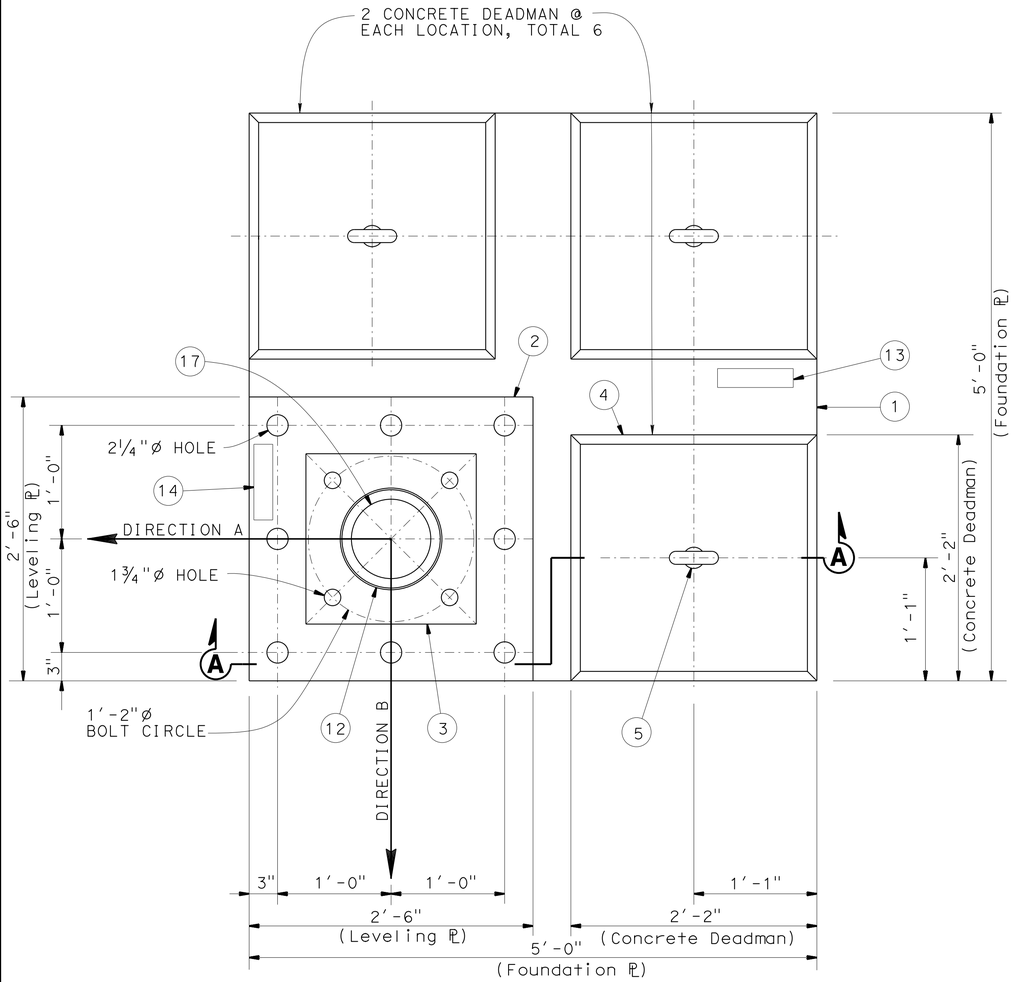

PLAN VIEW

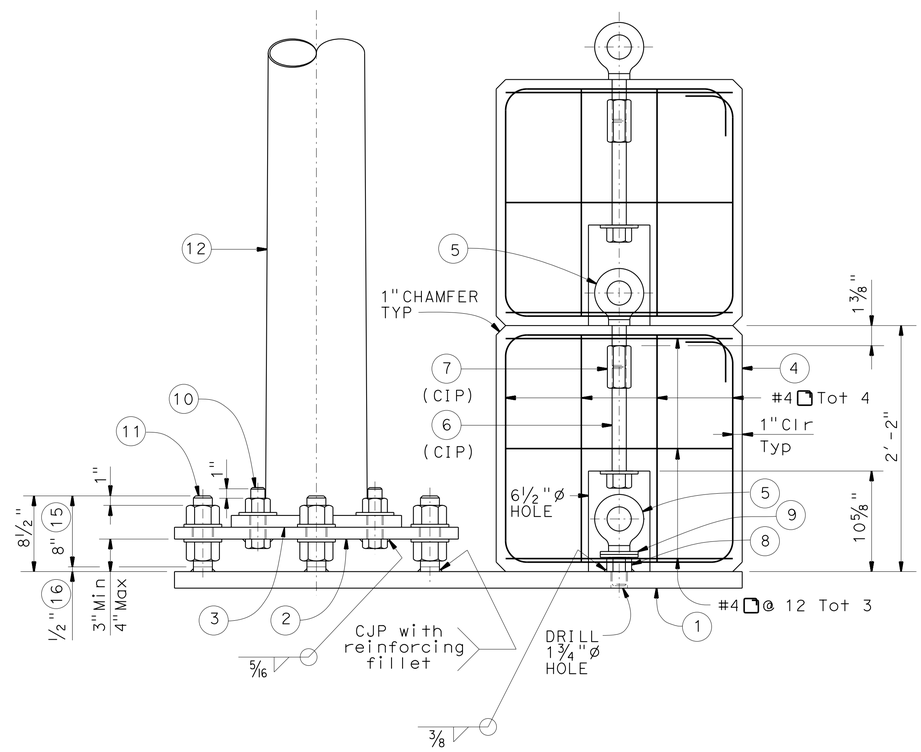

SECTION A-A

NOTES:

1. Foundation ℙ 1¾" X 5'-0" X 5'-0"
2. Leveling ℙ 1¼" X 2'-6" X 2'-6"
3. Base ℙ 2" X 1'-3 " X 1'-3 "
4. Concrete Deadman 2'-2" X 2'-2" X 2'-2"
5. 1½"Ø Forged eyebolt with 3⅝" shank
6. 1½"Ø X 12" Heavy hex bolt with 3"Ø X 5/16" thick washer (CIP)
7. 1½"Ø Hex coupling nut (CIP)
8. 1½"Ø Heavy hex nut
9. 1½"Ø X 5/16" thick washer total (2) each location.
10. 1½"Ø Heavy hex bolt with nut and 3"Ø X 5/16" thick washers
11. 2"Ø X 8½" Threaded rod with (2) heavy hex nuts and (2) 4"Ø X 5/16" thick washer
12. Type 21 Pole or Type 21TS Pole
13. Stamp Foundation ℙ with "Lift ℙ with minimum of (2) forged eyebolts".
14. Stamp Leveling ℙ with "ℙ for Type 21 Pole or Type 21TS Pole
15. Threaded rod
16. Non-Threaded Rod
17. Hole in Leveling ℙ to be same size as hole in Base ℙ.
18. Signal arm shall follow either Direction A or Direction B.

NO SCALE

NOTE:
THE CONTRACTOR SHALL VERIFY ALL CONTROLLING FIELD DIMENSIONS BEFORE ORDERING OR FABRICATING ANY MATERIAL.

BRANCH CHIEF	JEFFREY B WOODY		
DESIGN	BY M. LICHA	CHECKED A. HOUGH	
DETAILS	BY T. NGUYEN	CHECKED M. LICHA	
QUANTITIES	BY	CHECKED	

STATE OF CALIFORNIA
DEPARTMENT OF TRANSPORTATION

DIVISION OF ENGINEERING SERVICES
DESIGN AND TECHNICAL SERVICES
SPECIAL DESIGNS BRANCH A

BRIDGE NO. N/A
POST MILE

ELECTRICAL SYSTEMS
MODIFIED SIGNAL AND LIGHTING TEMPORARY POLE DETAILS

SES-7

(ENGLISH) SPECIAL DESIGNS BRANCH BORDER SHEET (REV. 7-1-09)

ORIGINAL SCALE IN INCHES FOR REDUCED PLANS 0 1 2 3

UNIT: 3619
PROJECT NUMBER & PHASE: 0713000007-1
CONTRACT NO.: 07-1193u1

DISREGARD PRINTS BEARING EARLIER REVISION DATES
REVISION DATES: 2-28-14 3-13-14 7-17-14 3-03-15

SHEET 7 OF 18

FILE => spec_des_br_prj/2013sd/71193uua250.dgn

USERNAME => s112049 DATE PLOTTED => 12-MAY-2015 TIME PLOTTED => 09:35

DIST	COUNTY	ROUTE	POST MILES TOTAL PROJECT	SHEET No	TOTAL SHEETS
07	LA	10	37.2/42.4	1447	2313

Mahfoud A. Licha 3-26-14
REGISTERED CIVIL ENGINEER DATE

6-1-15
PLANS APPROVAL DATE

REGISTERED PROFESSIONAL ENGINEER MAHFOUD A. LICHA No. C62816 Exp. 6/30/16 CIVIL STATE OF CALIFORNIA

The State of California or its officers or agents shall not be responsible for the accuracy or completeness of electronic copies of this plan sheet.

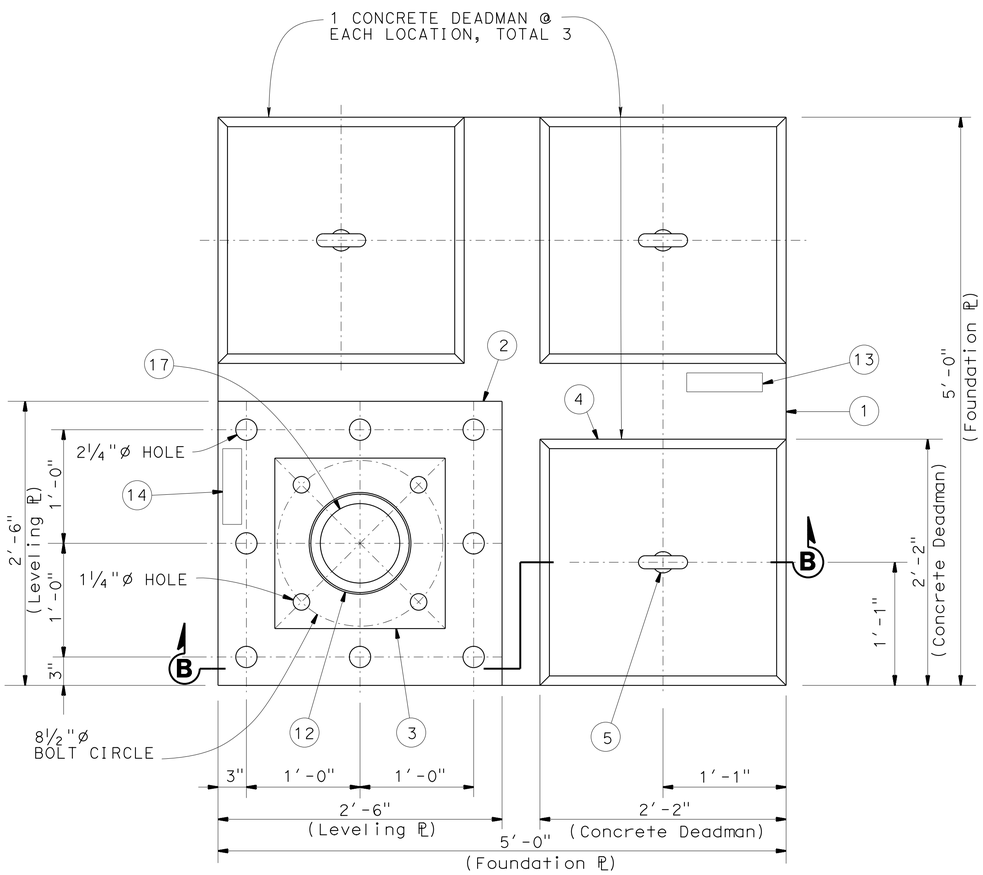

PLAN VIEW

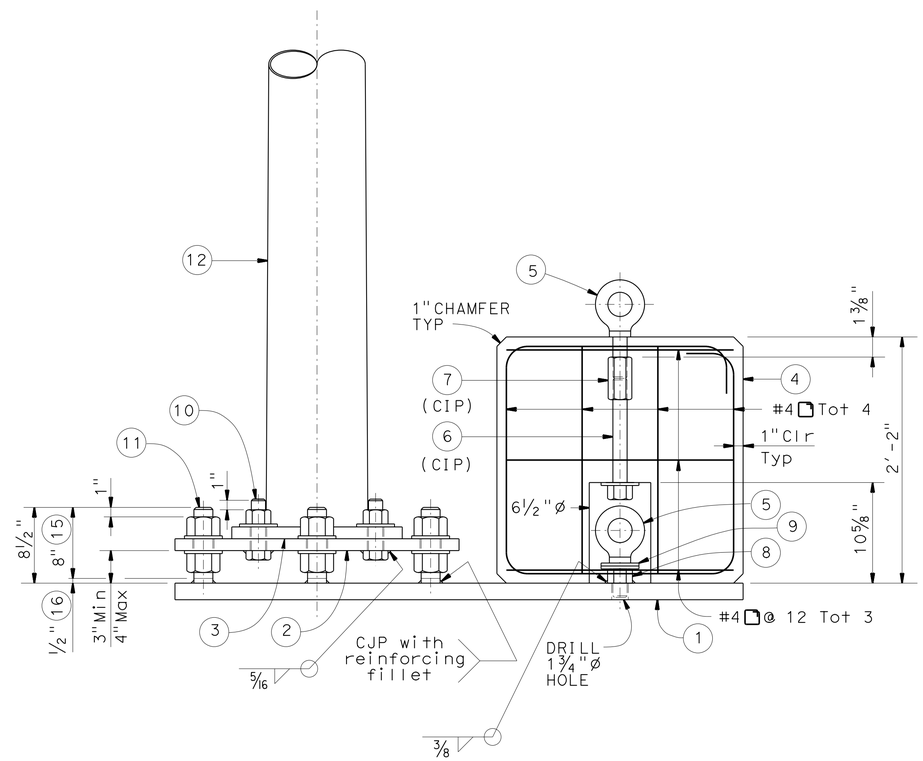

SECTION B-B

NOTES:

1. Foundation ℄ 1¾" X 5'-0" X 5'-0"
2. Leveling ℄ 1¼" X 2'-6" X 2'-6"
3. Base ℄ ¾" X 9½" X 9½"
4. Concrete Deadman 2'-2" X 2'-2" X 2'-2"
5. 1½"ø Forged eyebolt with 3⅝" shank
6. 1½"ø X 12" Heavy hex bolt with 3"ø X 5/16" thick washer (CIP)
7. 1½"ø Hex coupling nut (CIP)
8. 1½"ø Heavy hex nut
9. 1½"ø X 5/16" thick washer total (2) each location
10. 1"ø Heavy hex bolt with nut and 2½"ø X 5/16" thick washers
11. 2"ø X 8½" Threaded rod with (2) heavy hex nuts and (2) 4"ø X 5/16" thick washer
12. Type 1A Pole
13. Stamp Foundation ℄ with "Lift ℄ with minimum of (2) forged eyebolts".
14. Stamp Leveling ℄ with "℄ for Type 1A Pole".
15. Threaded rod
16. Non-Threaded Rod
17. Hole in Leveling ℄ to be same size as hole in Base ℄.

NOTE:
THE CONTRACTOR SHALL VERIFY ALL CONTROLLING FIELD DIMENSIONS BEFORE ORDERING OR FABRICATING ANY MATERIAL.

NO SCALE

BRANCH CHIEF	JEFFREY B WOODY	DESIGN	BY M. LICHA	CHECKED A. HOUGH
		DETAILS	BY T. NGUYEN	CHECKED M. LICHA
		QUANTITIES	BY	CHECKED

STATE OF CALIFORNIA
DEPARTMENT OF TRANSPORTATION

DIVISION OF ENGINEERING SERVICES
DESIGN AND TECHNICAL SERVICES
SPECIAL DESIGNS BRANCH A

BRIDGE NO. N/A
POST MILE

ELECTRICAL SYSTEMS
MODIFIED SIGNAL AND LIGHTING TEMPORARY POLE DETAILS

SES-8

(ENGLISH) SPECIAL DESIGNS BRANCH BORDER SHEET (REV. 7-1-09)

ORIGINAL SCALE IN INCHES FOR REDUCED PLANS 0 1 2 3

UNIT: 3619
PROJECT NUMBER & PHASE: 0713000007-1
CONTRACT NO.: 07-1193u1

DISREGARD PRINTS BEARING EARLIER REVISION DATES
REVISION DATES 2-28-14 3-13-14 7-17-14 3-03-15

SHEET 8 OF 18

FILE => spec_des_br_prj/2011sd/07-1218W1/71193uua251.dgn

USERNAME => s112049 DATE PLOTTED => 12-MAY-2015 TIME PLOTTED => 09:35

DIST	COUNTY	ROUTE	POST MILES TOTAL PROJECT	SHEET No	TOTAL SHEETS
07	LA	10	37.2/42.4	1448	2313

Mahfoud A. Licha 7/18/14
REGISTERED CIVIL ENGINEER DATE

6-1-15
PLANS APPROVAL DATE

REGISTERED PROFESSIONAL ENGINEER MAHFOUD A. LICHA No. C62816 Exp. 6/30/16 CIVIL STATE OF CALIFORNIA

The State of California or its officers or agents shall not be responsible for the accuracy or completeness of electronic copies of this plan sheet.

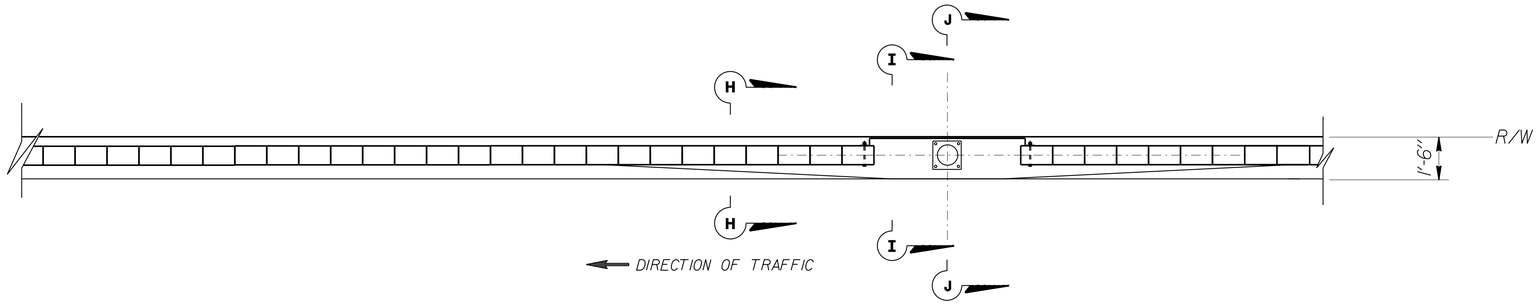

PART PLAN VIEW

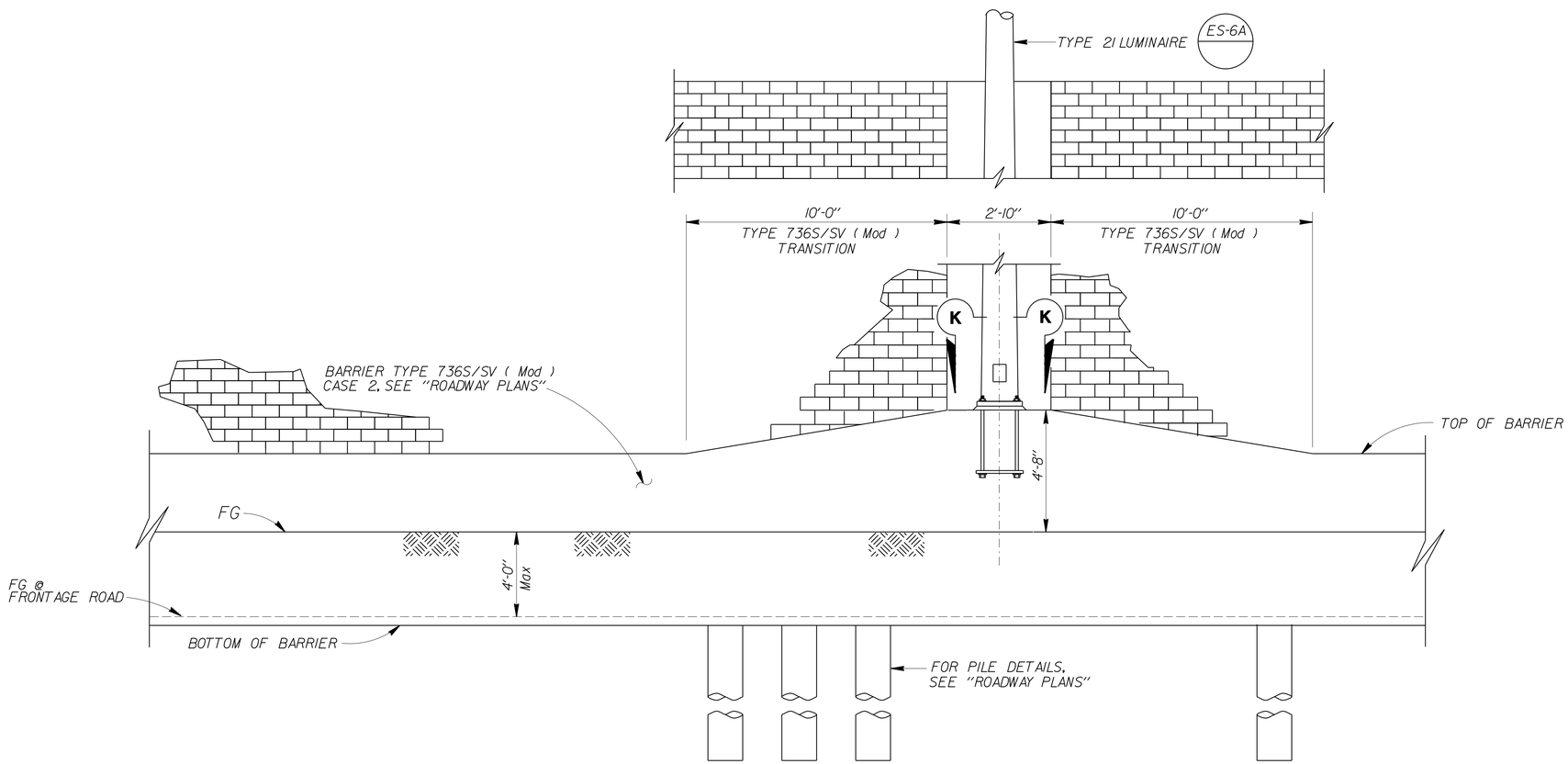

PART ELEVATION

NOTE: BOTH SIDES SIMILAR

NO SCALE

GENERAL NOTES:

SPECIFICATIONS

Design: AASHTO Standard Specifications for Structural Supports for Highway Signs, Luminaires and traffic Signals, Fifth Edition.

LOADING

Wind Loadings: 100 MPH (3 - Second gust)

UNIT STRESSES

Structural Steel: fy = 55,000 psi tapered steel tube
fy = 50,000 psi unless otherwise noted

Anchor bolts: fy = 55 ksi
Reinforced Concrete: f'c = 3,600 psi
fy = 60,000 psi

NOTES:

1. For "SECTION H-H", "SECTION I-I", "SECTION J-J", and "SECTION K-K", see SES-10.
2. For pole locations, see "ROADWAY PLANS".
3. All steel must be galvanized after fabrication.
4. During pole erection the post shall be raked as necessary with the use of leveling nuts to provide a plumb pole axis.
5. For details not shown, see "STANDARD PLANS 2010" and "REVISED STANDARD PLANS 2010".

STANDARD PLAN SHEET No.
DETAIL No.

NOTE:
THE CONTRACTOR SHALL VERIFY ALL CONTROLLING FIELD DIMENSIONS BEFORE ORDERING OR FABRICATING ANY MATERIAL.

TYPE 21 LUMINAIRE

TYPE 736S/SV BARRIER (MOD) W/SOUNDWALL

BARRIER TRANSITION

SES-9

BRANCH CHIEF JEFF WOODY

	BY	CHECKED
DESIGN	MAHFOUD LICHA	E. LOPEZ
DETAILS	R. YEE	MAHFOUD LICHA
QUANTITIES		

STATE OF CALIFORNIA
DEPARTMENT OF TRANSPORTATION

DIVISION OF ENGINEERING SERVICES
DESIGN AND TECHNICAL SERVICES
SPECIAL DESIGNS BRANCH A

BRIDGE NO. N/A
POST MILE VAR

(ENGLISH) SPECIAL DESIGNS BRANCH BORDER SHEET (REV. 7-1-09)

ORIGINAL SCALE IN INCHES FOR REDUCED PLANS 0 1 2 3

UNIT: 3619
PROJECT ID & PHASE: 0713000007-1
CONTRACT No.: 07-1193U1

DISREGARD PRINTS BEARING EARLIER REVISION DATES
REVISION DATES 5/14/14 7/18/14 2/24/15 5/8/14

SHEET 9 OF 18

FILE => /2014sd/07-1193U1/SES-9

USERNAME => $USER DATE PLOTTED => $DATE TIME PLOTTED => $TIME

DIST	COUNTY	ROUTE	POST MILES TOTAL PROJECT	SHEET No	TOTAL SHEETS
07	LA	10	37.2/42.4	1449	2313

Mahfoud A Licha 7/18/14
REGISTERED CIVIL ENGINEER DATE

6-1-15
PLANS APPROVAL DATE

REGISTERED PROFESSIONAL ENGINEER MAHFOUD A. LICHA No. C62816 Exp. 6/30/16 CIVIL STATE OF CALIFORNIA

The State of California or its officers or agents shall not be responsible for the accuracy or completeness of electronic copies of this plan sheet.

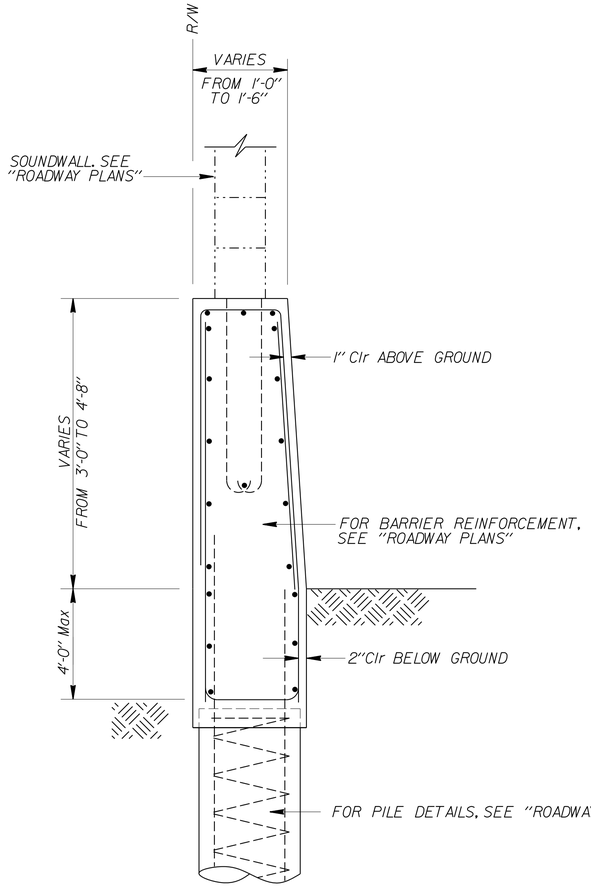

SECTION H-H

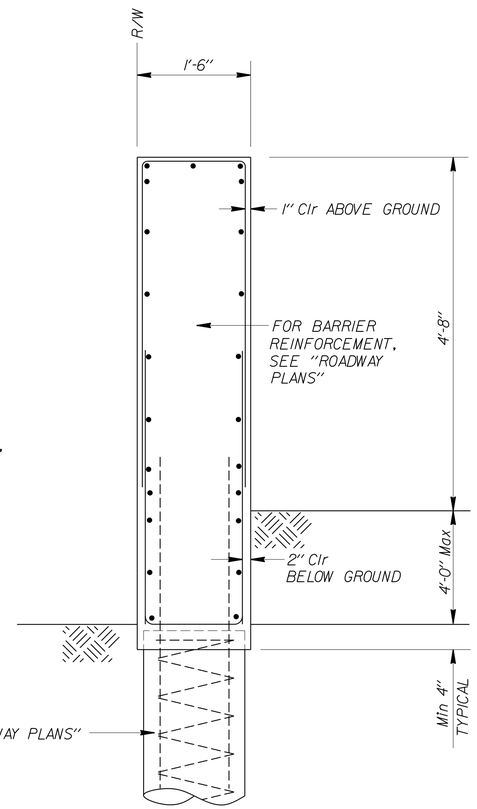

SECTION I-I

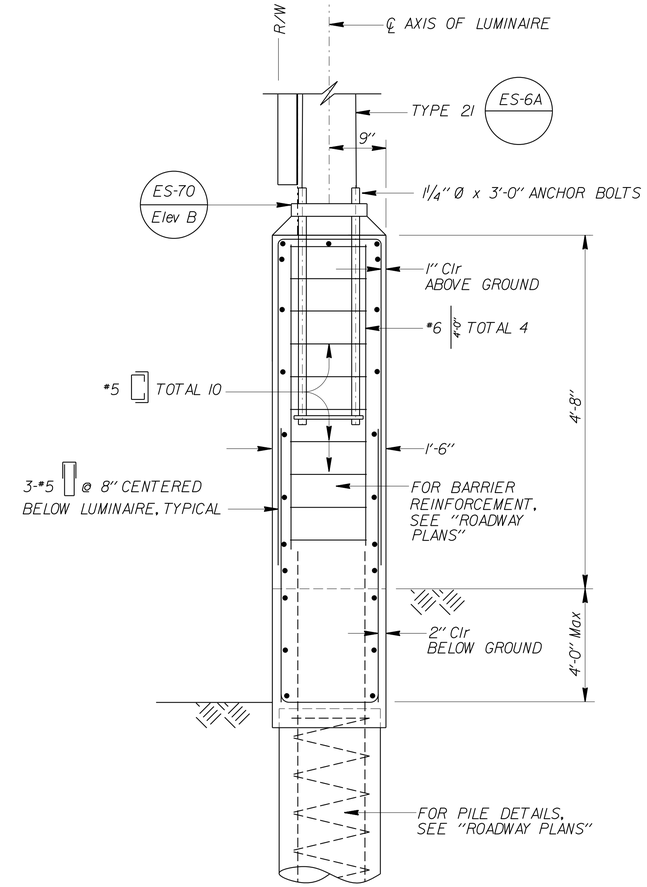

SECTION J-J

NOTES:

1. Bottom of cover plate to begin 6" above top of base plate. Top of cover plate to end at top of soundwall.
2. Bolts shall be placed through grouted cells.

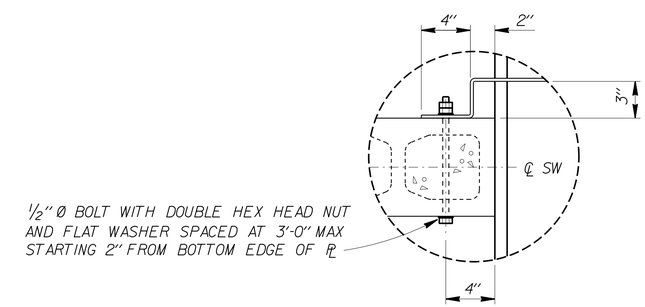

COVER PLATE ANCHORAGE DETAIL

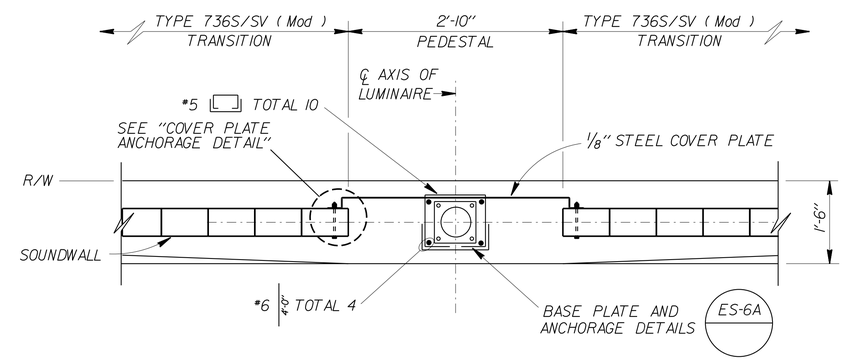

SECTION K-K

NOTE:
THE CONTRACTOR SHALL VERIFY ALL CONTROLLING FIELD DIMENSIONS BEFORE ORDERING OR FABRICATING ANY MATERIAL.

STANDARD PLAN SHEET No.
DETAIL No.

NO SCALE

TYPE 21 LUMINAIRE
TYPE 736S/SV BARRIER (MOD) W/SOUNDWALL
BARRIER TRANSITION DETAILS

SES-10

BRANCH CHIEF JEFF WOODY

	BY	CHECKED
DESIGN	MAHFOUD LICHA	E. LOPEZ
DETAILS	R. YEE	MAHFOUD LICHA
QUANTITIES		

STATE OF CALIFORNIA
DEPARTMENT OF TRANSPORTATION

DIVISION OF ENGINEERING SERVICES
DESIGN AND TECHNICAL SERVICES
SPECIAL DESIGNS BRANCH A

BRIDGE NO. N/A
POST MILE VAR

(ENGLISH) SPECIAL DESIGNS BRANCH BORDER SHEET (REV. 7-1-09)

ORIGINAL SCALE IN INCHES FOR REDUCED PLANS 0 1 2 3

UNIT: 3619
PROJECT ID & PHASE: 0713000007-1
CONTRACT No.: 07-1193U1

DISREGARD PRINTS BEARING EARLIER REVISION DATES
REVISION DATES 5/13/14 6/20/14 7/18/14 2/24/15

SHEET 10 OF 18

FILE => /2014sd/07-1193U1/ses-10.dgn

USERNAME => $USER DATE PLOTTED => $DATE TIME PLOTTED => $TIME

DIST	COUNTY	ROUTE	POST MILES TOTAL PROJECT	SHEET No	TOTAL SHEETS
07	LA	10	37.2/42.4	1450	2313

Mahfoud A Licha 7/18/14
REGISTERED CIVIL ENGINEER DATE

6-1-15
PLANS APPROVAL DATE

REGISTERED PROFESSIONAL ENGINEER MAHFOUD A. LICHA No. C62816 Exp. 6/30/16 CIVIL STATE OF CALIFORNIA

The State of California or its officers or agents shall not be responsible for the accuracy or completeness of electronic copies of this plan sheet.

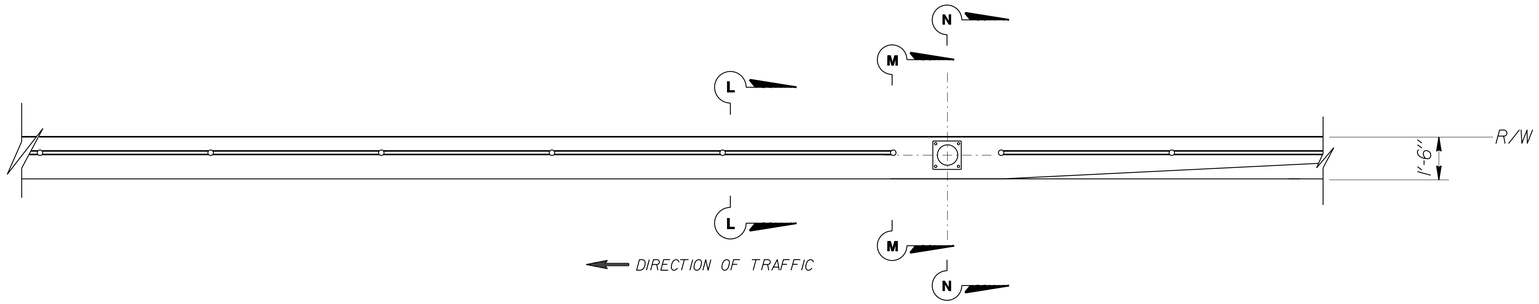

PART PLAN VIEW

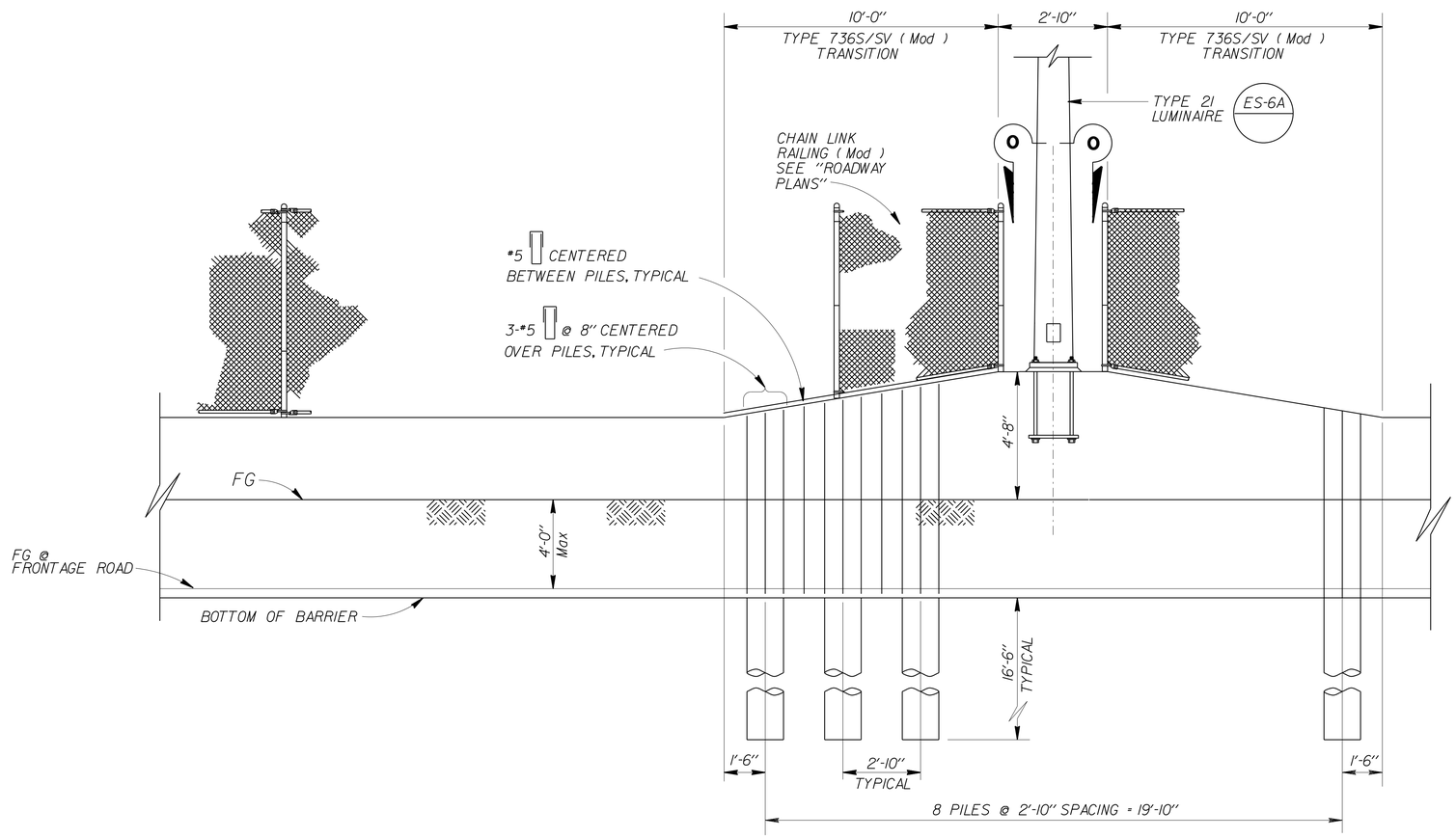

PART ELEVATION

NOTE: BOTH SIDES SIMILAR

NO SCALE

GENERAL NOTES:

SPECIFICATIONS

Design: AASHTO Standard Specifications for Structural Supports for Highway Signs, Luminaires and traffic Signals, Fifth Edition.

LOADING

Wind Loadings: 100 MPH (3 - Second gust)

UNIT STRESSES

Structural Steel: fy = 55,000 psi tapered steel tube
fy = 50,000 psi unless otherwise noted

Anchor bolts: fy = 55 ksi
Reinforced Concrete: f'c = 3,600 psi
fy = 60,000 psi

NOTES:

1. For "SECTION L-L", "SECTION M-M", "SECTION N-N", and "SECTION O-O", see SES-12.
2. For pole locations, see "ROADWAY PLANS".
3. All steel must be galvanized after fabrication.
4. During pole erection the post shall be raked as necessary with the use of leveling nuts to provide a plumb pole axis.
5. For details not shown, see "STANDARD PLANS 2010" and "REVISED STANDARD PLANS 2010".

STANDARD PLAN SHEET No.
DETAIL No.

NOTE:
THE CONTRACTOR SHALL VERIFY ALL CONTROLLING FIELD DIMENSIONS BEFORE ORDERING OR FABRICATING ANY MATERIAL.

TYPE 21 LUMINAIRE

TYPE 736S/SV BARRIER (MOD) W/CHAIN LINK FENCE

BARRIER TRANSITION

SES-11

BRANCH CHIEF JEFF WOODY

	BY	CHECKED
DESIGN	MAHFOUD LICHA	E. LOPEZ
DETAILS	R. YEE	MAHFOUD LICHA
QUANTITIES		

STATE OF CALIFORNIA
DEPARTMENT OF TRANSPORTATION

DIVISION OF ENGINEERING SERVICES
DESIGN AND TECHNICAL SERVICES
SPECIAL DESIGNS BRANCH A

BRIDGE NO. N/A
POST MILE VAR

(ENGLISH) SPECIAL DESIGNS BRANCH BORDER SHEET (REV. 7-1-09)

ORIGINAL SCALE IN INCHES FOR REDUCED PLANS 0 1 2 3

UNIT: 3619
PROJECT ID & PHASE: 0713000007-1
CONTRACT No.: 07-1193U1

DISREGARD PRINTS BEARING EARLIER REVISION DATES

REVISION DATES 6/6/14 6/30/14 7/18/14 2/24/15

SHEET 11 OF 18

FILE => /2014sd/07-1193U1/SES-9

USERNAME => $USER DATE PLOTTED => $DATE TIME PLOTTED => $TIME

DIST	COUNTY	ROUTE	POST MILES TOTAL PROJECT	SHEET No	TOTAL SHEETS
07	LA	10	37.2/42.4	1451	2313

Mahfoud A. Licha 7/18/14
REGISTERED CIVIL ENGINEER DATE

6-1-15
PLANS APPROVAL DATE

REGISTERED PROFESSIONAL ENGINEER MAHFOUD A. LICHA No. C62816 Exp. 6/30/16 CIVIL STATE OF CALIFORNIA

The State of California or its officers or agents shall not be responsible for the accuracy or completeness of electronic copies of this plan sheet.

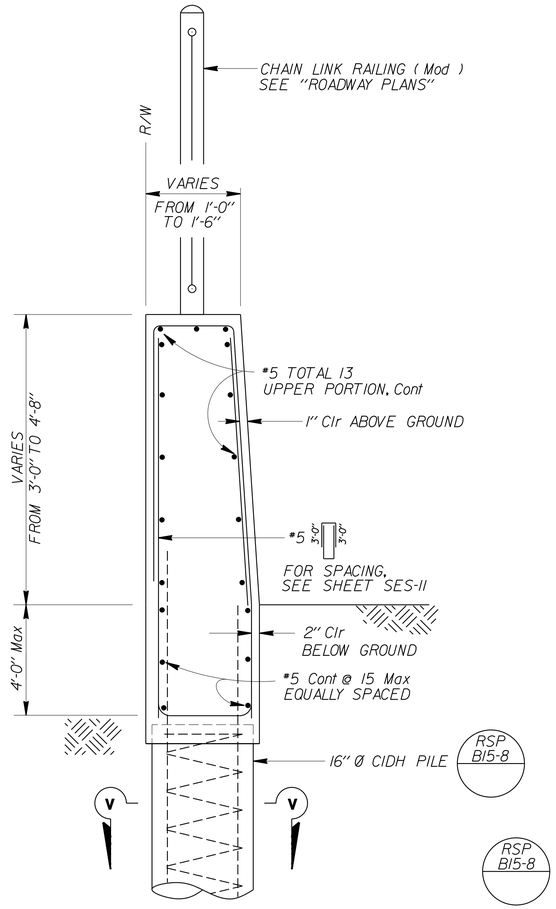

SECTION L-L

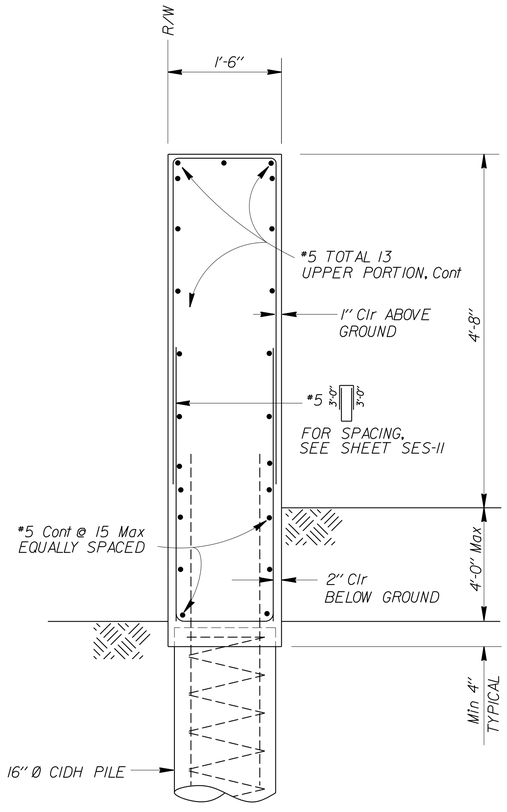

SECTION M-M

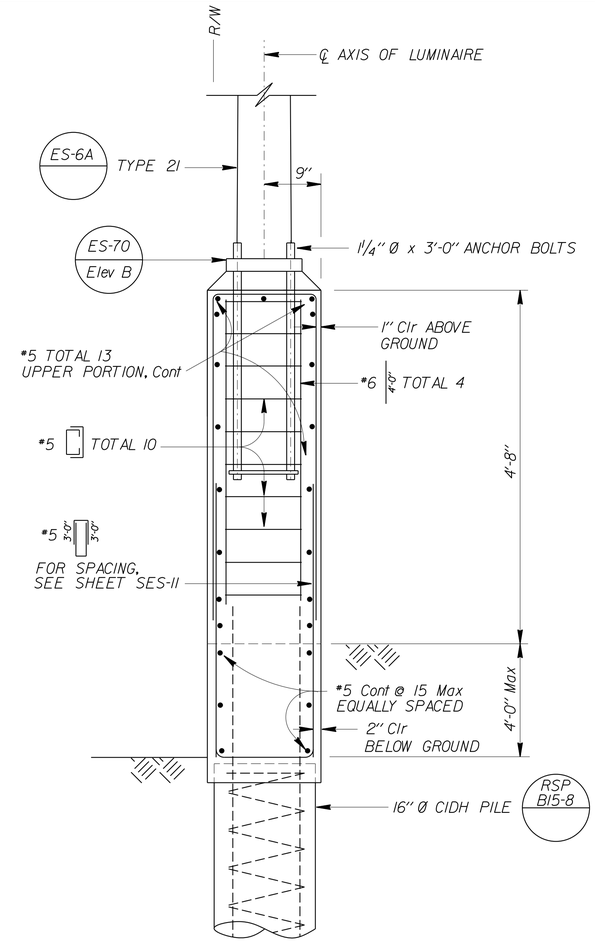

SECTION N-N

NOTE:

1. Lapped splices in spiral reinforcement shall be lapped at least 80 wire diameters. Spiral reinforcement at splices and at ends shall be terminated with a 135° hook with a 6" tail hooked around a longitudinal bar.

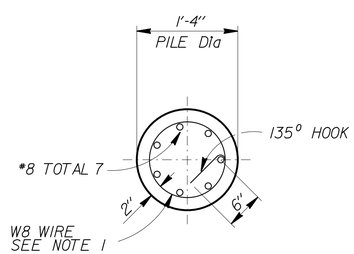

SECTION V-V

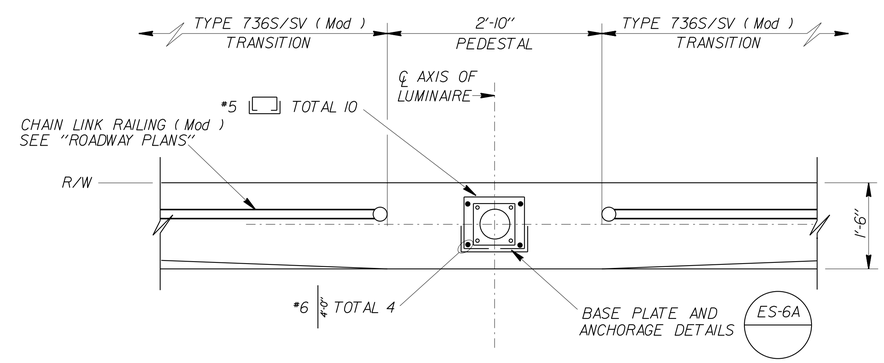

SECTION O-O

NOTE:
THE CONTRACTOR SHALL VERIFY ALL CONTROLLING FIELD DIMENSIONS BEFORE ORDERING OR FABRICATING ANY MATERIAL.

STANDARD PLAN SHEET No.
DETAIL No.

NO SCALE

TYPE 21 LUMINAIRE
TYPE 736S/SV BARRIER (MOD) W/CHAIN LINK FENCE
BARRIER TRANSITION DETAILS

SES-12

BRANCH CHIEF JEFF WOODY

	BY	CHECKED
DESIGN	MAHFOUD LICHA	E. LOPEZ
DETAILS	R. YEE	MAHFOUD LICHA
QUANTITIES		

STATE OF CALIFORNIA
DEPARTMENT OF TRANSPORTATION

DIVISION OF ENGINEERING SERVICES
DESIGN AND TECHNICAL SERVICES
SPECIAL DESIGNS BRANCH
A

BRIDGE NO. N/A
POST MILE VAR

(ENGLISH) SPECIAL DESIGNS BRANCH BORDER SHEET (REV. 7-1-09)

ORIGINAL SCALE IN INCHES FOR REDUCED PLANS 0 1 2 3

UNIT: 3619
PROJECT ID & PHASE: 0713000007-1
CONTRACT No.: 07-1193U1

DISREGARD PRINTS BEARING EARLIER REVISION DATES

REVISION DATES 6/6/14 6/20/14 7/18/14 2/24/15

SHEET 12 OF 18

FILE => /2014sd/07-1193U1/ses-12.dgn

USERNAME => $USER DATE PLOTTED => $DATE TIME PLOTTED => $TIME

DIST	COUNTY	ROUTE	POST MILES TOTAL PROJECT	SHEET No.	TOTAL SHEETS
07	LA	10	37.2/42.4	1452	2313

Mahfoud A. Licha 7-17-14
REGISTERED CIVIL ENGINEER DATE

6-1-15
PLANS APPROVAL DATE

The State of California or its officers or agents shall not be responsible for the accuracy or completeness of scanned copies of this plan sheet.

REGISTERED PROFESSIONAL ENGINEER MAHFOUD A. LICHA No. C62816 Exp. 6/30/16 CIVIL STATE OF CALIFORNIA

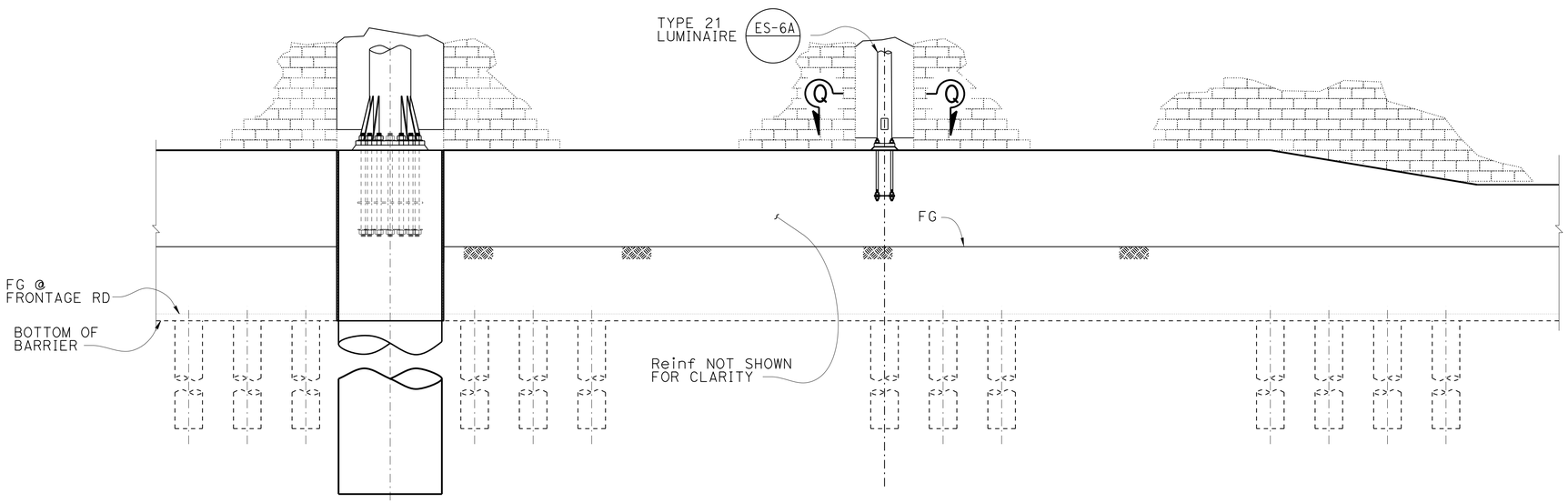

PART ELEVATION

NO SCALE

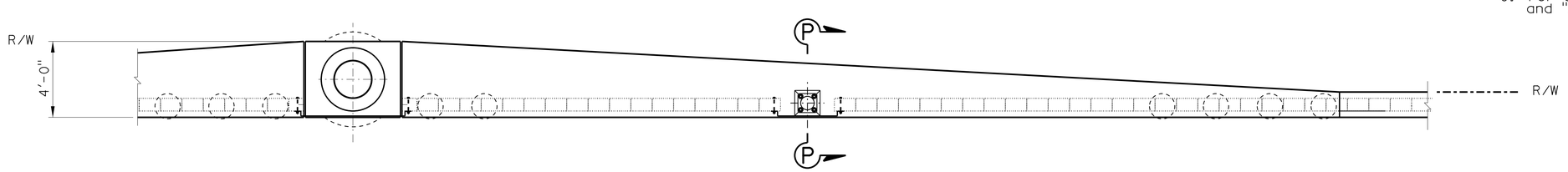

DIRECTION OF TRAFFIC

PART PLAN VIEW

NO SCALE

NOTE:
THE CONTRACTOR SHALL VERIFY ALL CONTROLLING FIELD DIMENSIONS BEFORE ORDERING OR FABRICATING ANY MATERIAL.

GENERAL NOTES:

SPECIFICATIONS:

Design: AASHTO Standard Specifications for Structural Supports for Highway Signs, Luminaires, and Traffic Signals, Fifth Edition

LOADING:

Wind loadings: 100 MPH

UNIT STRESSES:

Structural Steel: fy = 55,000 psi tapered steel tube
fy = 50,000 psi unless otherwise noted

Anchor Bolts: fy = 55 ksi

Reinforced Concrete: fy = 60,000 psi
f'c = 3600 psi

NOTES:

1. For SECTION P-P and Q-Q, see SDS-13.
2. Pole locations, see "ELECTRICAL PLANS".
3. All steel shall be galvanized after fabrication.
4. During pole erection the post shall be raked as neccessary with the use of leveling buts to provide a plumb pole axis.
5. For barrier and pile details not shown, see SDS-9.
6. For details not shown, see "2010 STANDARD PLANS" and "2010 REVISED STANDARD PLANS".

TYPE 21 LUMINAIRE AT STA 54 + 05.18

TYPE 736S/SV BARRIER (MOD) W/SOUNDWALL

BARRIER TRANSITION

SES-13

BRANCH CHIEF JEFF WOODY

	BY	CHECKED
DESIGN	MAHFOUD LICHA	ANDREW BUI
DETAILS	B EDWARDS	MAHFOUD LICHA
QUANTITIES		

STATE OF CALIFORNIA
DEPARTMENT OF TRANSPORTATION

DIVISION OF ENGINEERING SERVICES
STRUCTURE DESIGN
SPECIAL DESIGN BRANCH

BRIDGE NO. N/A
POST MILE VAR

STRUCTURES DESIGN SPECIAL DESIGN SHEET (ENGLISH) (REV. 09-01-10)

ORIGINAL SCALE IN INCHES FOR REDUCED PLANS 0 1 2 3

UNIT: 3619
PROJECT NUMBER & PHASE: 0713000007
CONTRACT NO.: 07-1193u1

DISREGARD PRINTS BEARING EARLIER REVISION DATES

REVISION DATES 3-03-15

SHEET 13 OF 18

FILE => 71193uua256.dgn

USERNAME => s112049 DATE PLOTTED => 12-MAY-2015 TIME PLOTTED => 09:35

DIST	COUNTY	ROUTE	POST MILES TOTAL PROJECT	SHEET No.	TOTAL SHEETS
07	LA	10	37.2/42.4	1453	2313

Mahfoud A. Licha 7-17-14
REGISTERED CIVIL ENGINEER DATE

6-1-15
PLANS APPROVAL DATE

REGISTERED PROFESSIONAL ENGINEER MAHFOUD A. LICHA No. C62816 Exp. 6/30/16 CIVIL STATE OF CALIFORNIA

The State of California or its officers or agents shall not be responsible for the accuracy or completeness of scanned copies of this plan sheet.

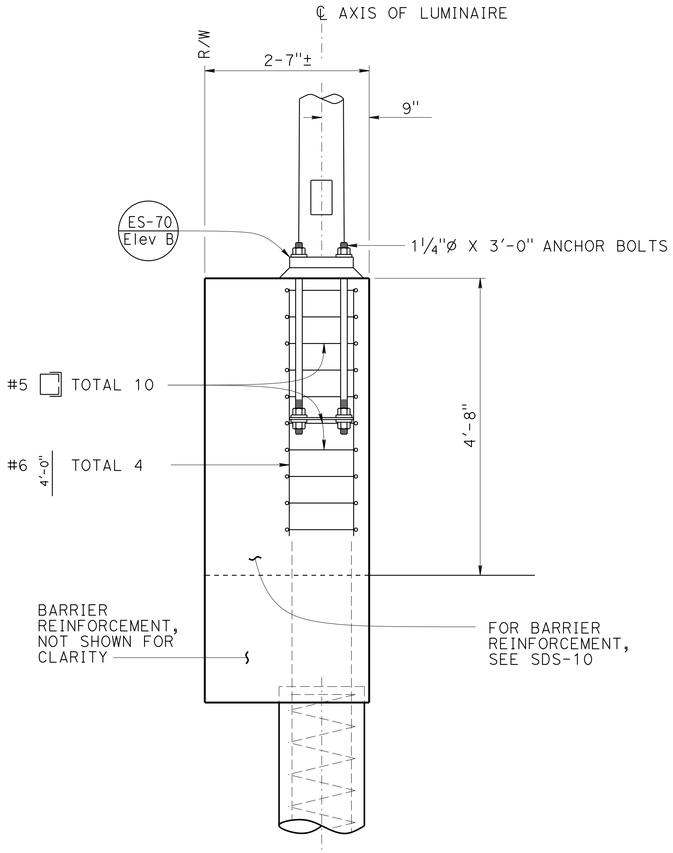

SECTION P-P
NO SCALE

NOTES:

1. Bottom of cover ℙ to begin 6" above top of base ℙ. Top of cover ℙ to end at top of soundwall.
2. Bolts shall be placed through grouted cells.

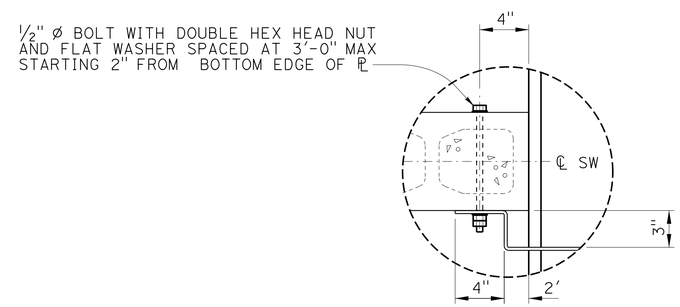

COVER ℙ ANCHORAGE DETAIL
NO SCALE

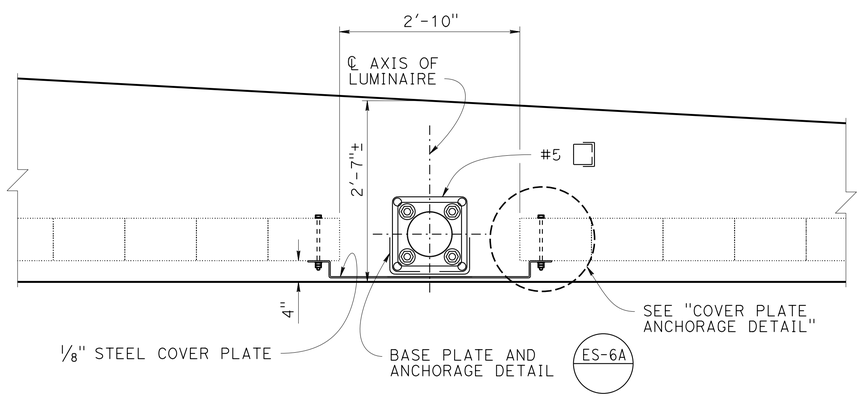

SECTION Q-Q
NO SCALE

STANDARD PLAN SHEET No.
DETAIL No.

NOTE:
THE CONTRACTOR SHALL VERIFY ALL CONTROLLING FIELD DIMENSIONS BEFORE ORDERING OR FABRICATING ANY MATERIAL.

TYPE 21 LUMINAIRE SIGN AT STA 54 + 05.18

TYPE 736S/SV BARRIER (MOD) W/SOUNDWALL

BARRIER TRANSITION DETAILS

SES-14

BRANCH CHIEF JEFF WOODY

	BY	CHECKED
DESIGN	M LICHA	A BUI
DETAILS	B EDWARDS	M LICHA
QUANTITIES	X	X

STATE OF CALIFORNIA
DEPARTMENT OF TRANSPORTATION

DIVISION OF ENGINEERING SERVICES
STRUCTURE DESIGN
SPECIAL DESIGN BRANCH

BRIDGE NO. N/A
POST MILE VAR

STRUCTURES DESIGN SPECIAL DESIGN SHEET (ENGLISH) (REV. 09-01-10)

ORIGINAL SCALE IN INCHES FOR REDUCED PLANS 0 1 2 3

UNIT: 3619
PROJECT NUMBER & PHASE: 0713000007
CONTRACT NO.: 07-1193u1

DISREGARD PRINTS BEARING EARLIER REVISION DATES
REVISION DATES 3-03-15

SHEET 14 OF 18

FILE => 71193uua257.dgn

USERNAME => s112049 DATE PLOTTED => 12-MAY-2015 TIME PLOTTED => 09:36

DIST	COUNTY	ROUTE	POST MILES TOTAL PROJECT	SHEET No	TOTAL SHEETS
07	LA	10	37.2/42.4	1454	2313

Mahfoud A. Licha 7/18/14
REGISTERED CIVIL ENGINEER DATE

6-1-15
PLANS APPROVAL DATE

REGISTERED PROFESSIONAL ENGINEER MAHFOUD A. LICHA No. C62816 Exp. 6/30/16 CIVIL STATE OF CALIFORNIA

The State of California or its officers or agents shall not be responsible for the accuracy or completeness of electronic copies of this plan sheet.

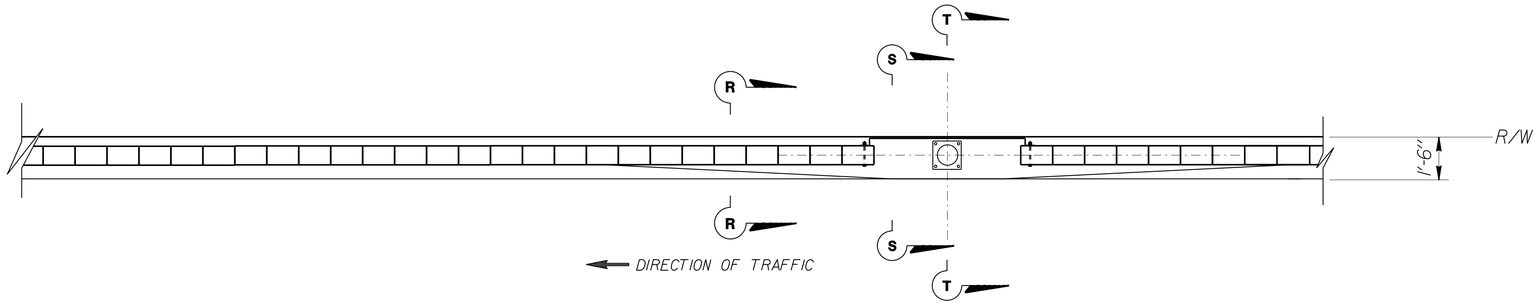

PART PLAN VIEW

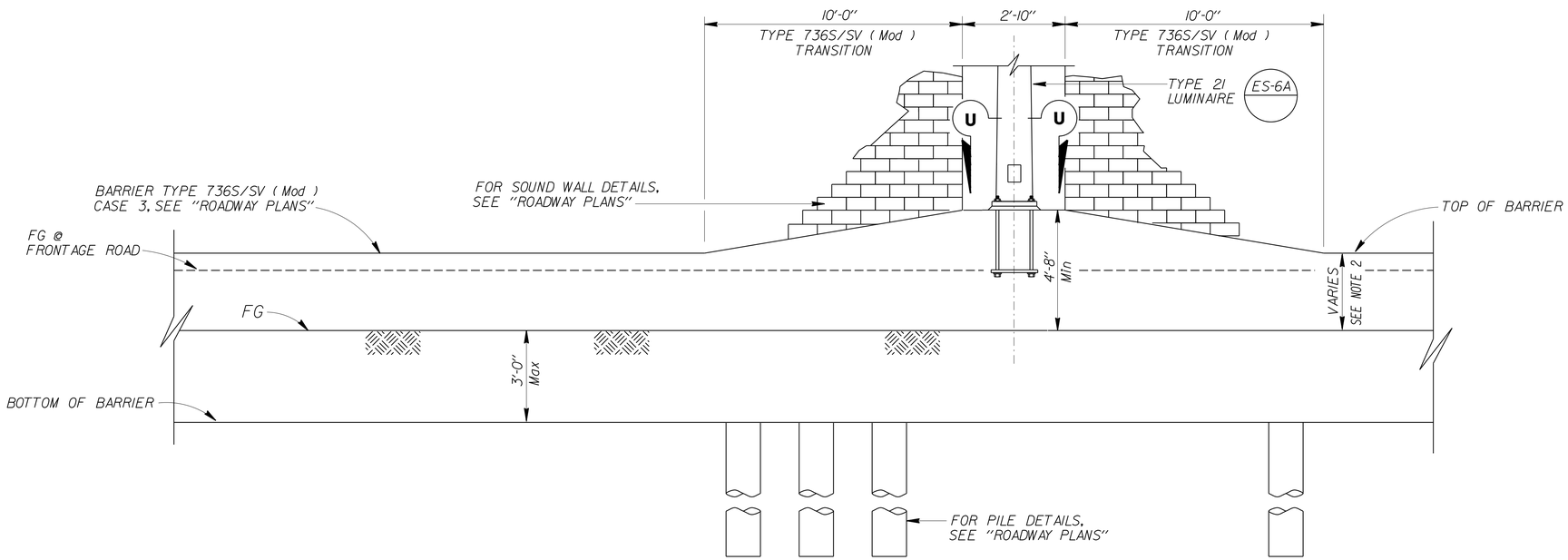

PART ELEVATION

NOTE: BOTH SIDES SIMILAR

GENERAL NOTES:

SPECIFICATIONS

Design: AASHTO Standard Specifications for Structural Supports for Highway Signs, Luminaires and traffic Signals, Fifth Edition.

LOADING

Wind Loadings: 100 MPH (3 - Second gust)

UNIT STRESSES

Structural Steel: fy = 55,000 psi tapered steel tube
fy = 50,000 psi unless otherwise noted

Anchor bolts: fy = 55 ksi
Reinforced Concrete: f'c = 3,600 psi
fy = 60,000 psi

NOTES:

1. For "SECTION R-R", "SECTION S-S", "SECTION T-T", and "SECTION U-U", see SES-16.
2. For pole locations, see "ROADWAY PLANS".
3. All steel must be galvanized after fabrication.
4. During pole erection the post shall be raked as necessary with the use of leveling nuts to provide a plumb pole axis.
5. Barrier height varies, see "ROADWAY PLANS". Barrier height must be 4'-8" minimum at Type 21 Luminaire locations.
6. For details not shown, see "STANDARD PLANS 2010" and "REVISED STANDARD PLANS 2010".

STANDARD PLAN SHEET No.
DETAIL No.

NOTE:
THE CONTRACTOR SHALL VERIFY ALL CONTROLLING FIELD DIMENSIONS BEFORE ORDERING OR FABRICATING ANY MATERIAL.

NO SCALE

TYPE 21 LUMINAIRE

TYPE 736S/SV BARRIER (MOD) CASE 3

BARRIER TRANSITION

SES-15

BRANCH CHIEF JEFF WOODY

	BY	CHECKED
DESIGN	MAHFOUD LICHA	E. LOPEZ
DETAILS	R. YEE	MAHFOUD LICHA
QUANTITIES		

STATE OF CALIFORNIA
DEPARTMENT OF TRANSPORTATION

DIVISION OF ENGINEERING SERVICES
DESIGN AND TECHNICAL SERVICES
SPECIAL DESIGNS BRANCH A

BRIDGE NO. N/A
POST MILE VAR

(ENGLISH) SPECIAL DESIGNS BRANCH BORDER SHEET (REV. 7-1-09)

ORIGINAL SCALE IN INCHES FOR REDUCED PLANS 0 1 2 3

UNIT: 3619
PROJECT ID & PHASE: 0713000007-1
CONTRACT No.: 07-1193U1

DISREGARD PRINTS BEARING EARLIER REVISION DATES
REVISION DATES 6/30/14 6/30/14 7/18/14 2/24/15

SHEET 15 OF 18

FILE => /2014sd/07-1193U1/SES-9

USERNAME => $USER DATE PLOTTED => $DATE TIME PLOTTED => $TIME

DIST	COUNTY	ROUTE	POST MILES TOTAL PROJECT	SHEET No	TOTAL SHEETS
07	LA	10	37.2/42.4	1455	2313

Mahfoud A. Licha 7/18/14
REGISTERED CIVIL ENGINEER DATE

6-1-15
PLANS APPROVAL DATE

REGISTERED PROFESSIONAL ENGINEER MAHFOUD A. LICHA No. C62816 Exp. 6/30/16 CIVIL STATE OF CALIFORNIA

The State of California or its officers or agents shall not be responsible for the accuracy or completeness of electronic copies of this plan sheet.

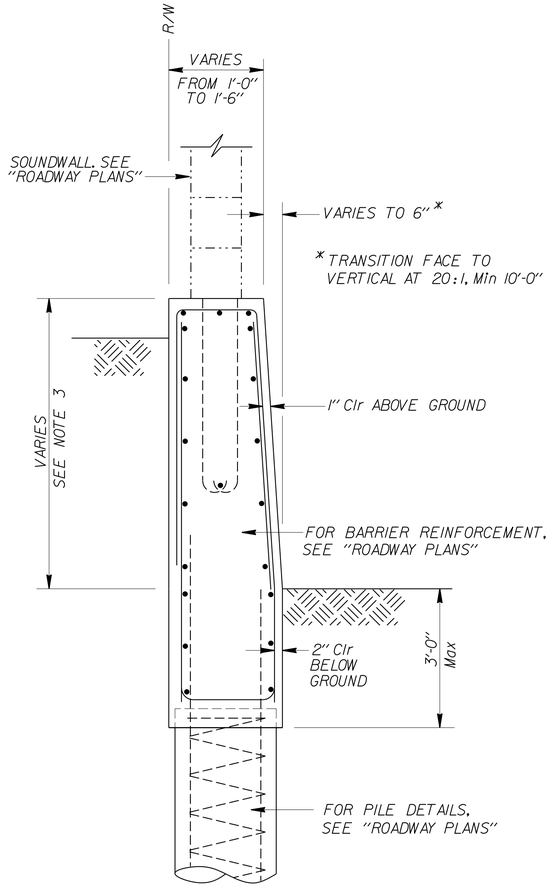

SECTION R-R

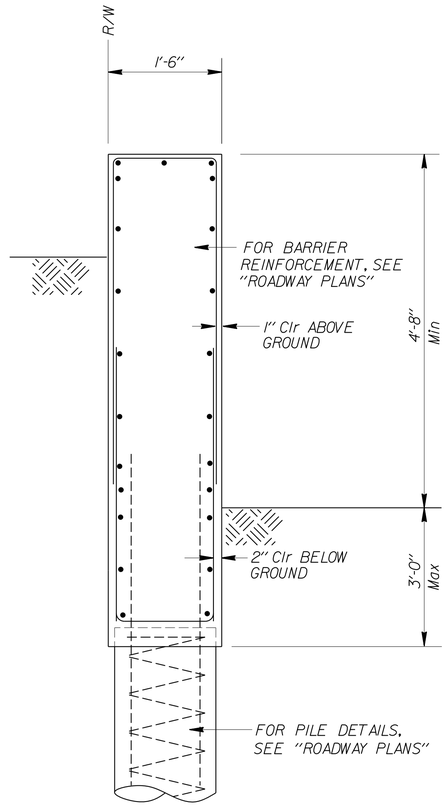

SECTION S-S

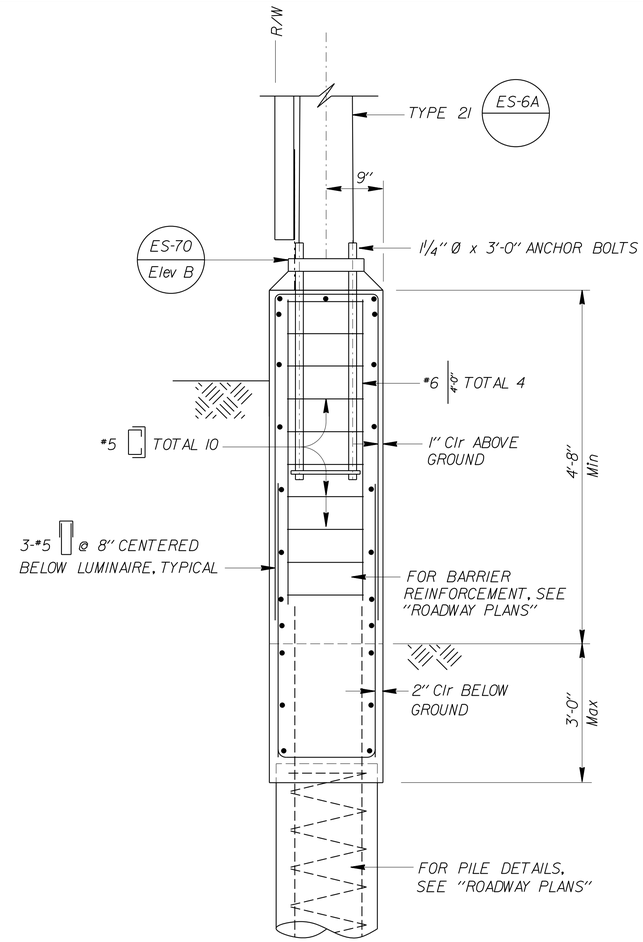

SECTION T-T

NOTES:

1. Bottom of cover plate to begin 6" above top of base plate. Top of cover plate to end at top of soundwall.
2. Bolts shall be placed through grouted cells.
3. Barrier height varies, see "ROADWAY PLANS". Barrier height must be 4'-8" minimum at Type 21 Luminaire locations. Front face of barrier must be transitioned to vertical at 20:1 at all Type 21 Luminaire locations.

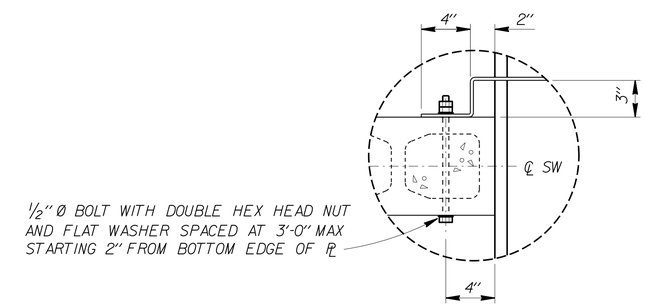

COVER PLATE ANCHORAGE DETAIL

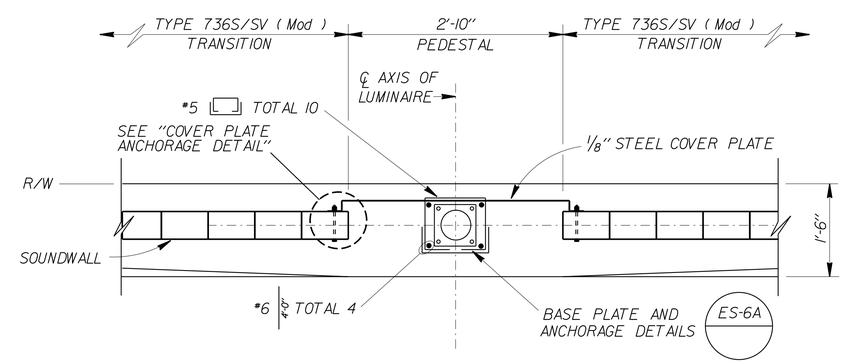

SECTION U-U

NOTE:
THE CONTRACTOR SHALL VERIFY ALL CONTROLLING FIELD DIMENSIONS BEFORE ORDERING OR FABRICATING ANY MATERIAL.

STANDARD PLAN SHEET No.
DETAIL No.

NO SCALE

TYPE 21 LUMINAIRE
TYPE 736S/SV BARRIER (MOD) CASE 3
BARRIER TRANSITION DETAILS

SES-16

BRANCH CHIEF JEFF WOODY

	BY	CHECKED
DESIGN	MAHFOUD LICHA	E. LOPEZ
DETAILS	R. YEE	MAHFOUD LICHA
QUANTITIES		

STATE OF CALIFORNIA
DEPARTMENT OF TRANSPORTATION

DIVISION OF ENGINEERING SERVICES
DESIGN AND TECHNICAL SERVICES
SPECIAL DESIGNS BRANCH A

BRIDGE NO. N/A
POST MILE VAR

(ENGLISH) SPECIAL DESIGNS BRANCH BORDER SHEET (REV. 7-1-09)

ORIGINAL SCALE IN INCHES FOR REDUCED PLANS 0 1 2 3

UNIT: 3619
PROJECT ID & PHASE: 0713000007-1
CONTRACT No.: 07-1193U1

DISREGARD PRINTS BEARING EARLIER REVISION DATES

REVISION DATES 6/30/14 6/30/14 7/18/14 2/24/15

SHEET 16 OF 18

FILE => /2014sd/07-1193U1/ses-16.dgn

USERNAME => $USER DATE PLOTTED => $DATE TIME PLOTTED => $TIME

DIST	COUNTY	ROUTE	POST MILES TOTAL PROJECT	SHEET No	TOTAL SHEETS
07	LA	10	37.2/42.4	1456	2313

Mahfoud A. Licha 10-14-14
REGISTERED CIVIL ENGINEER DATE

6-1-15
PLANS APPROVAL DATE

REGISTERED PROFESSIONAL ENGINEER MAHFOUD A. LICHA No. C62816 Exp. 6/30/16 CIVIL STATE OF CALIFORNIA

The State of California or its officers or agents shall not be responsible for the accuracy or completeness of electronic copies of this plan sheet.

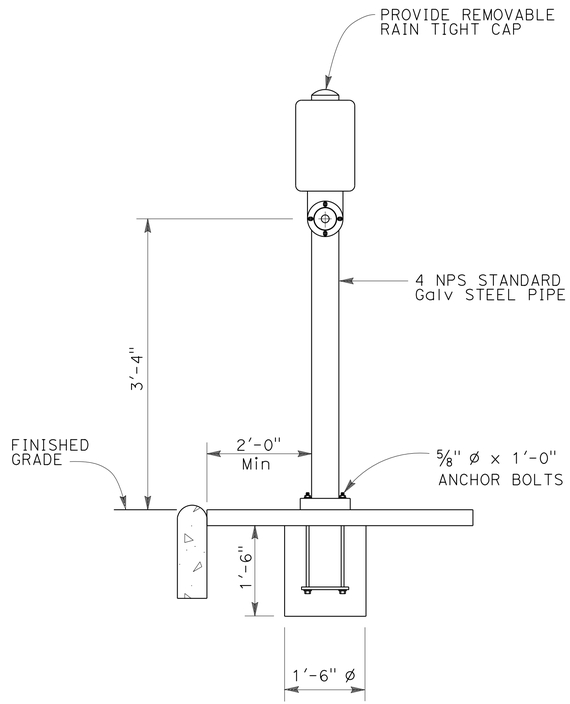

ELEVATION

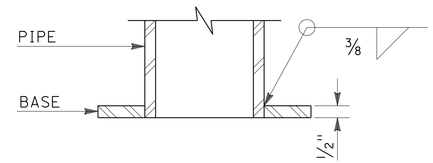

SECTION

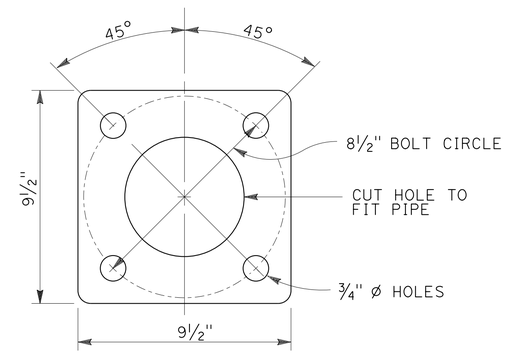

BASE PLATE
PBA POST

PUSH BUTTON ASSEMBLY POST (MOD)

GENERAL NOTES:

SPECIFICATIONS:
DESIGN:
AASHTO STANDARD SPECIFICATIONS FOR STRUCTURAL SUPPORTS FOR HIGHWAY SIGNS, LUMINARIES AND TRAFFIC SIGNALS, FIFTH EDITION.

LOADING:
WIND LOADING: 100 MPH

UNIT STRESSES:
STRUCTURAL STEEL: fy = 55,000 psi (ANCHOR BOLTS)
fy = 36,000 psi (NPS POST)
fy = 50,000 psi UNLESS OTHERWISE NOTED.

REINFORCED CONCRETE: f'c = 3,600 psi
fy = 60,000 psi

NOTES:

1. FOR POLE LOCATIONS, SEE "ELECTRICAL PLANS".
2. ALL STEEL SHALL BE GALVANIZED AFTER FABRICATION.
3. DURING POLE ERECTION THE POLE SHALL BE RAKED AS NECESSARY WITH THE USE OF LEVELING NUTS TO PROVIDE A PLUMB POLE AXIS.
4. FOUNDATION DESIGN IS BASED ON LTS-5 ARTICLE 13.6 BROMS' APPROXIMATE PROCEDURE ASSUMING A COHESIONLESS MATERIAL. THE ANGLE OF INTERNAL FRICTION USED IS 30 DEGREES AND UNIT WEIGHT OF SOIL USED IS 120 lbs/ft³.
5. FOR DETAILS NOT SHOWN, SEE "2010 STANDARD PLANS" AND "2010 RSP".

NOTE:
THE CONTRACTOR SHALL VERIFY ALL CONTROLLING FIELD DIMENSIONS BEFORE ORDERING OR FABRICATING ANY MATERIAL.

NO SCALE

BRANCH CHIEF JEFFREY B WOODY	DESIGN BY M. LICHA	CHECKED E. LOPEZ	STATE OF CALIFORNIA DEPARTMENT OF TRANSPORTATION
	DETAILS BY M. TOMAS	CHECKED M. LICHA	DIVISION OF ENGINEERING SERVICES DESIGN AND TECHNICAL SERVICES SPECIAL DESIGNS BRANCH A
	QUANTITIES BY	CHECKED	

BRIDGE NO. N/A
POST MILE

ELECTRICAL SYSTEMS
PEDESTRIAN PUSH BUTTON POST (MOD)

SES-17

(ENGLISH) SPECIAL DESIGNS BRANCH BORDER SHEET (REV. 7-1-09)

ORIGINAL SCALE IN INCHES FOR REDUCED PLANS 0 1 2 3

UNIT: 3619
PROJECT NUMBER & PHASE: 0713000007-1 CONTRACT NO.: 07-1193U1

DISREGARD PRINTS BEARING EARLIER REVISION DATES

REVISION DATES: 10-15-14 3-03-15

SHEET 17 OF 18

FILE => spec_des_br_prj/2013sd/71193uua260.dgn

USERNAME => s112049 DATE PLOTTED => 12-MAY-2015 TIME PLOTTED => 09:36

DIST	COUNTY	ROUTE	POST MILES TOTAL PROJECT	SHEET No	TOTAL SHEETS
07	LA	10	37.2/42.4	1457	2313

REGISTERED CIVIL ENGINEER 02-13-15 DATE

6-1-15
PLANS APPROVAL DATE

REGISTERED PROFESSIONAL ENGINEER MAHFOUD A. LICHA No. C62816 Exp. 6/30/14 CIVIL STATE OF CALIFORNIA

The State of California or its officers or agents shall not be responsible for the accuracy or completeness of electronic copies of this plan sheet.

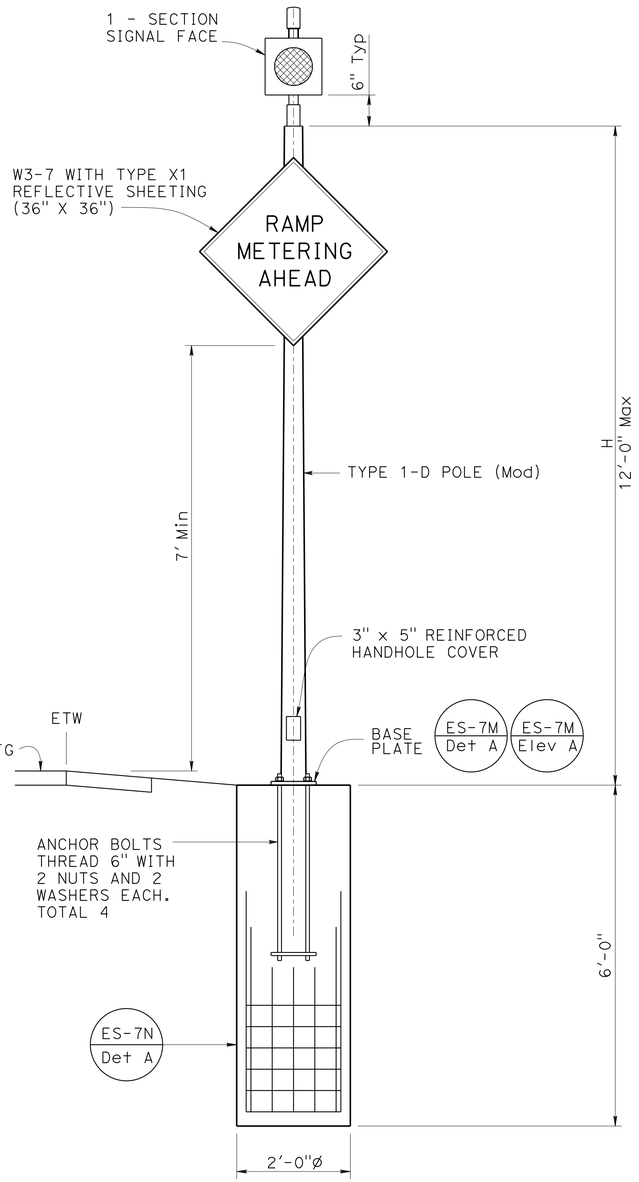

FRONT VIEW

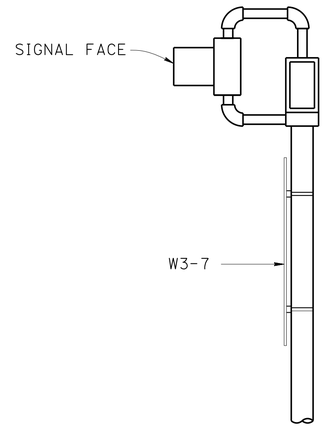

SIDE VIEW

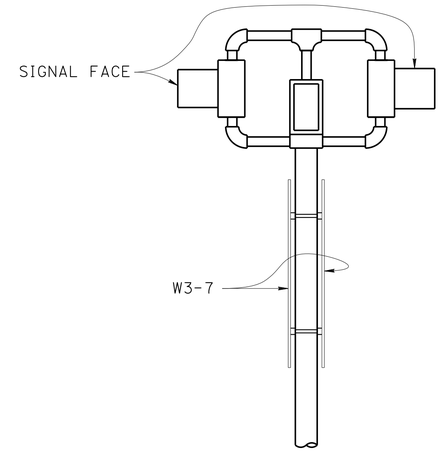

SIDE VIEW

TABLE A								
POLE TYPE	POLE DATA				BASE PLATE DATA			
	H HEIGHT	Min OD BASE	Min OD TOP	THICKNESS	C	BC = BOLT CIRCLE	THICKness	ANCHOR BOLTS SIZE
1-D (MODIFIED)	12'-0"	5¼"	3 13/16"	0.1196"	9½"	8½"	¾" Min	1" ø x 3'-0"

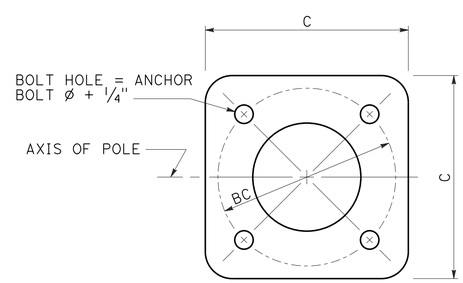

BASE PLATE

GENERAL NOTES:

SPECIFICATIONS

Design: AASHTO standard specifications for structural supports for highway signs, luminaires and traffic signals, sixth edition.

LOADING

Wind Loading: 100 mph (3-sec gust)

UNIT STRESSES

Structural Steel: fy = 55,000 PSI tapered steel tube
fy = 50,000 PSI unless otherwise noted.

Anchor Bolts: fy = 55,000 PSI

Reinforced Concrete: f'c = 3,600 PSI
fy = 60,000 PSI

NOTES:

1. For pole locations, see "Roadway Plans".
2. All steel must be galvanized after fabrication.
3. During pole erection the pole must be raked as necessary with the use of leveling nuts to provide a plumb pole axis.
4. The foundation must be treated as level ground condition if the slope inclination is flatter than 4H:1V.
5. Foundation design is based on AASHTO LTS-6 Article 13.6 Broms' approximate procedure assuming a cohesionless material. The angle of internal friction used is 30 degrees and unit weight of soil is 120 lb/ft^3.
6. W3-7 Sign, unless otherwise noted, must be mounted to pole with stainless steel straps or other method without drilling holes in pole.
7. For details not shown, see "2010 STANDARD PLANS" and "2010 REVISED STANDARD PLANS".
8. Handhole must be located on down side of traffic.

NOTE:
THE CONTRACTOR MUST VERIFY ALL CONTROLLING FIELD DIMENSIONS BEFORE ORDERING OR FABRICATING ANY MATERIAL.

STANDARD PLAN SHEET No.
DETAIL No.

NO SCALE

BRANCH CHIEF *JEFF WOODY*

	BY	CHECKED
DESIGN	MAHFOUD LICHA	EUSEO LOPEZ
DETAILS	T. NGUYEN	EUSEO LOPEZ
QUANTITIES		

STATE OF CALIFORNIA
DEPARTMENT OF TRANSPORTATION

DIVISION OF ENGINEERING SERVICES
DESIGN AND TECHNICAL SERVICES
SPECIAL DESIGNS BRANCH A

BRIDGE NO. N/A
POST MILE Var

RAMP METER FLASHING BEACON
POLE DETAILS

SES-18

(ENGLISH) SPECIAL DESIGNS BRANCH BORDER SHEET (REV. 4-1-14)

ORIGINAL SCALE IN INCHES FOR REDUCED PLANS 0 1 2 3

UNIT: 3619
PROJECT NUMBER & PHASE: 0713000007
CONTRACT NO.: 07-1193U1

DISREGARD PRINTS BEARING EARLIER REVISION DATES
REVISION DATES 12-12-14 2-12-15 0-03-15

SHEET 18 OF 18

FILE => /2014sd/07-1193U1/07-1193U1_ses-18

USERNAME => s112049 DATE PLOTTED => 12-MAY-2015 TIME PLOTTED => 09:36

M

Maint	MAINTENANCE
Max	MAXIMUM
MB	METAL BEAM
MBB	METAL BEAM BARRIER
MBGR	METAL BEAM GUARD RAILING
Med	MEDIAN
MGS	MIDWEST GUARDRAIL SYSTEM
MH	MANHOLE
Min	MINIMUM
Misc	MISCELLANEOUS
Misc I & S	MISCELLANEOUS IRON AND STEEL
Mkr	MARKER
Mod	MODIFIED,
	MODIFY
Mon	MONUMENT
MP	METAL PLATE
MPGR	METAL PLATE GUARD RAILING
MR	MOVEMENT RATING
MSE	MECHANICALLY STABILIZED EMBANKMENT
Mt	MOUNTAIN, MOUNT
Mtl	MATERIAL
MVP	MAINTENANCE VEHICLE PULLOUT

N

N	NORTH
NB	NORTHBOUND
No.	NUMBER (MUST HAVE PERIOD)
Nos.	NUMBERS (MUST HAVE PERIOD)
NPS	NOMINAL PIPE SIZE
NS	NEAR SIDE
NSP	NEW STANDARD PLAN
NTS	NOT TO SCALE

O

Oblr	OBLITERATE
OC	OVERCROSSING
OD	OUTSIDE DIAMETER
OF	OUTSIDE FACE
OG	ORIGINAL GROUND
OGAC	OPEN GRADED ASPHALT CONCRETE
OGFC	OPEN GRADED FRICTION COURSE
OH	OVERHEAD
OHWM	ORDINARY HIGH WATER MARK
O-O	OUT TO OUT
Opp	OPPOSITE
OSD	OVERSIDE DRAIN

P

P	PAGE
PAP	PERFORATED ALUMINUM PIPE
PB	PULL BOX
PC	POINT OF CURVATURE,
	PRECAST
PCC	POINT OF COMPOUND CURVE,
	PORTLAND CEMENT CONCRETE
PCMS	PORTABLE CHANGEABLE MESSAGE SIGN
PCP	PERFORATED CONCRETE PIPE,
	PRESTRESSED CONCRETE PIPE
PCVC	POINT OF COMPOUND VERTICAL CURVE
PEC	PERMIT TO ENTER AND CONSTRUCT
Ped	PEDESTRIAN
Ped OC	PEDESTRIAN OVERCROSSING
Ped UC	PEDESTRIAN UNDERCROSSING
Perm Mtl	PERMEABLE MATERIAL

P continued

PG	PROFILE GRADE
PI	POINT OF INTERSECTION
PJP	PARTIAL JOINT PENETRATION
Pkwy	PARKWAY
ℙ,PL	PLATE
P/L	PROPERTY LINE
PM	POST MILE,
	TIME FROM NOON TO MIDNIGHT
PN	PAVING NOTCH
POC	POINT OF HORIZONTAL CURVE
POT	POINT OF TANGENT
POVC	POINT OF VERTICAL CURVE
PP	PIPE PILE,
	PLASTIC PIPE,
	POWER POLE
PPL	PREFORMED PERMEABLE LINER
PPP	PERFORATED PLASTIC PIPE
PRC	POINT OF REVERSE CURVE
PRF	PAVEMENT REINFORCING FABRIC
PRVC	POINT OF REVERSE VERTICAL CURVE
PS&E	PLANS, SPECIFICATIONS AND ESTIMATES
PS, P/S	PRESTRESSED
PSP	PERFORATED STEEL PIPE
PT	POINT OF TANGENCY
PVC	POLYVINYL CHLORIDE
Pvmt	PAVEMENT

Q

Qty	QUANTITY

R

R	RADIUS
R & D	REMOVE AND DISPOSE
R & S	REMOVE AND SALVAGE
R/C	RATE OF CHANGE
RCA	REINFORCED CONCRETE ARCH
RCB	REINFORCED CONCRETE BOX
RCP	REINFORCED CONCRETE PIPE
RCPA	REINFORCED CONCRETE PIPE ARCH
Rd	ROAD
Reinf	REINFORCED,
	REINFORCEMENT,
	REINFORCING
Rel	RELOCATE
Repl	REPLACEMENT
Ret	RETAINING
Rev	REVISED, REVISION
Rdwy	ROADWAY
RHMA	RUBBERIZED HOT MIX ASPHALT
Riv	RIVER
RM	ROAD-MIXED
RP	RADIUS POINT,
	REFERENCE POINT
RR	RAILROAD
RSP	ROCK SLOPE PROTECTION,
	REVISED STANDARD PLAN
Rt	RIGHT
Rte	ROUTE
RW	REDWOOD,
	RETAINING WALL
R/W	RIGHT OF WAY
Rwy	RAILWAY

S

S	SOUTH,
	SUPPLEMENT
SAE	STRUCTURE APPROACH EMBANKMENT
Salv	SALVAGE
SAPP	STRUCTURAL ALUMINUM PLATE PIPE
SB	SOUTHBOUND
SC	SAND CUSHION
SCSP	SLOTTED CORRUGATED STEEL PIPE
SD	STORM DRAIN
Sec	SECOND,
	SECTION
Sep	SEPARATION
SG	SUBGRADE
Shld	SHOULDER
Sht	SHEET
Sim	SIMILAR
℄	STATION LINE
SM	SELECTED MATERIAL
Spec	SPECIAL,
	SPECIFICATIONS
SPP	SLOTTED PLASTIC PIPE
SS	SLOPE STAKE
SSBM	STRAP AND SADDLE BRACKET METHOD
SSD	STRUCTURAL SECTION DRAIN
SSPA	STRUCTURAL STEEL PLATE ARCH
SSPP	STRUCTURAL STEEL PLATE PIPE
SSPPA	STRUCTURAL STEEL PLATE PIPE ARCH
SSRP	STEEL SPIRAL RIB PIPE
St	STREET
Sta	STATION
STBB	SINGLE THRIE BEAM BARRIER
Std	STANDARD
Str	STRUCTURE
Surf	SURFACING
SW	SIDEWALK,
	SOUND WALL
Swr	SEWER
Sym	SYMMETRICAL
S4S	SURFACE 4 SIDES

T

T	SEMI-TANGENT
Tan	TANGENT
TBB	THRIE BEAM BARRIER
Tbr	TIMBER
TC	TOP OF CURB
TCB	TRAFFIC CONTROL BOX
TCE	TEMPORARY CONSTRUCTION EASEMENT
Tel	TELEPHONE
Temp	TEMPORARY
TG	TOP OF GRADE
Tot	TOTAL
TP	TELEPHONE POLE
TPB	TREATED PERMEABLE BASE
TPM	TREATED PERMEABLE MATERIAL
Trans	TRANSITION

T continued

TS	TRANSVERSE,
	TRAFFIC SIGNAL,
	TUBULAR STEEL
Typ	TYPICAL

U

UC	UNDERCROSSING
UD	UNDERDRAIN
UG	UNDERGROUND
UON	UNLESS OTHERWISE NOTED
UP	UNDERPASS

V

V	VALVE,
	DESIGN SPEED
Var	VARIABLE,
	VARIES
VC	VERTICAL CURVE
VCP	VITRIFIED CLAY PIPE
Vert	VERTICAL
Via	VIADUCT
Vol	VOLUME

W

W	WEST,
	WIDTH
WB	WESTBOUND
WH	WEEP HOLE
WM	WIRE MESH
WS	WATER SURFACE
WSP	WELDED STEEL PIPE
Wt	WEIGHT
WV	WATER VALVE
WW	WINGWALL
WWLOL	WINGWALL LAYOUT LINE

X

X Sec	CROSS SECTION
Xing	CROSSING

Y

Yr	YEAR
Yrs	YEARS

Dist	COUNTY	ROUTE	POST MILES TOTAL PROJECT	SHEET No.	TOTAL SHEETS
07	LA	10	37.2/42.4	1458	2313

Grace M. Tsushima
REGISTERED CIVIL ENGINEER

July 19, 2013
PLANS APPROVAL DATE

REGISTERED PROFESSIONAL ENGINEER
Grace M. Tsushima
No. C49814
Exp. 9-30-14
CIVIL
STATE OF CALIFORNIA

THE STATE OF CALIFORNIA OR ITS OFFICERS OR AGENTS SHALL NOT BE RESPONSIBLE FOR THE ACCURACY OR COMPLETENESS OF SCANNED COPIES OF THIS PLAN SHEET.

TO ACCOMPANY PLANS DATED 6-1-15

UNIT OF MEASUREMENT SYMBOLS:

Some of the symbols used in the project plan quantity tables and in the Bid Item List are:

TABLE A

SYMBOL USED	DEFINITIONS
ACRE	ACRE
CF	CUBIC FOOT
CY	CUBIC YARD
EA	EACH
GAL	GALLON
LB	POUND
LF	LINEAR FOOT
SQFT	SQUARE FOOT
SQYD	SQUARE YARD
STA	100 FEET
TAB	TABLET
TON	2,000 POUNDS

Some of the symbols used in the plans other than in the project plan quantity tables are:

TABLE B

SYMBOL USED	DEFINITIONS
ksi	KIPS PER SQUARE INCH
ksf	KIPS PER SQUARE FOOT
psi	POUNDS PER SQUARE INCH
psf	POUNDS PER SQUARE FOOT
lb/ft^3, pcf	POUNDS PER CUBIC FOOT
tsf	TONS PER SQUARE FOOT
mph, MPH *	MILES PER HOUR
ø	NOMINAL DIAMETER
oz	OUNCE
lb	POUND
kip	1,000 POUNDS
cal	CALORIE
ft	FOOT OR FEET
gal	GALLON

* For use on a sign panel only

STATE OF CALIFORNIA
DEPARTMENT OF TRANSPORTATION

ABBREVIATIONS (SHEET 2 OF 2)

NO SCALE

RSP A10B DATED JULY 19, 2013 SUPERSEDES STANDARD PLAN A10B DATED MAY 20, 2011 - PAGE 2 OF THE STANDARD PLANS BOOK DATED 2010.

REVISED STANDARD PLAN RSP A10B

2010 REVISED STANDARD PLAN RSP A10B

6-7-13

Dist	COUNTY	ROUTE	POST MILES TOTAL PROJECT	SHEET No.	TOTAL SHEETS
07	LA	10	37.2/42.4	1459	2313

REGISTERED CIVIL ENGINEER

July 19, 2013
PLANS APPROVAL DATE

REGISTERED PROFESSIONAL ENGINEER Roberta L. McLaughlin No. C40375 Exp. 3-31-15 CIVIL STATE OF CALIFORNIA

THE STATE OF CALIFORNIA OR ITS OFFICERS OR AGENTS SHALL NOT BE RESPONSIBLE FOR THE ACCURACY OR COMPLETENESS OF SCANNED COPIES OF THIS PLAN SHEET.

TO ACCOMPANY PLANS DATED 6-1-15

2010 REVISED STANDARD PLAN RSP A20C

EXIT RAMP NEUTRAL AREA (GORE) TREATMENT

DETAIL 36

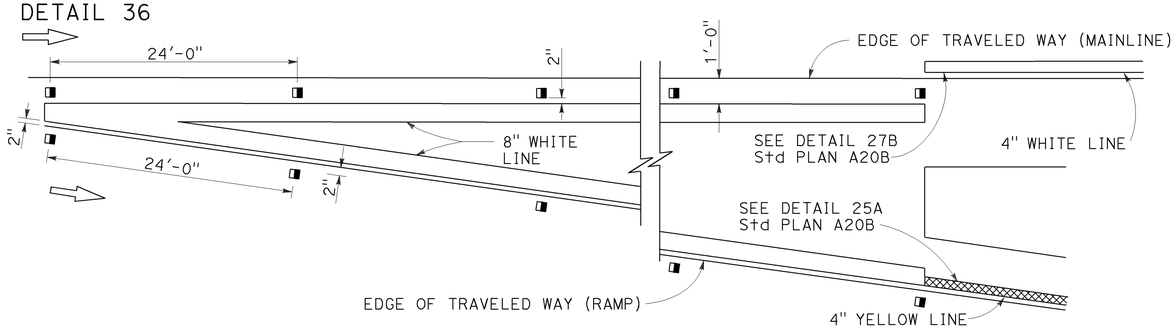

ENTRANCE RAMP NEUTRAL AREA (MERGE) TREATMENT

DETAIL 36A

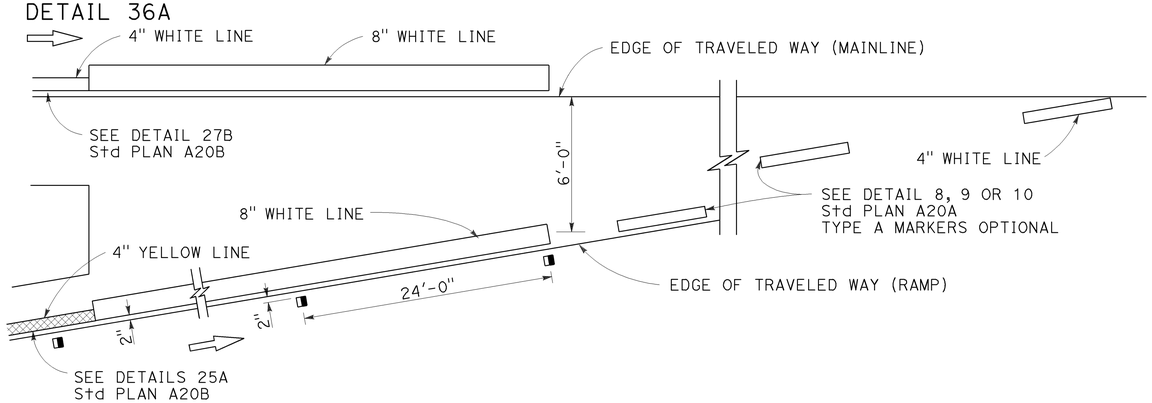

ENTRANCE RAMP NEUTRAL AREA (ACCELERATION LANE) TREATMENT

DETAIL 36B

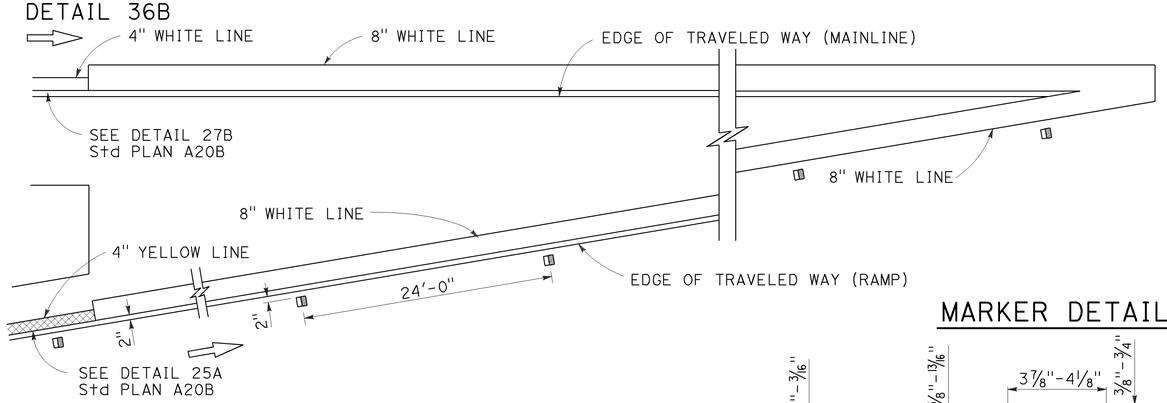

LANE DROP AT EXIT RAMPS

DETAIL 37

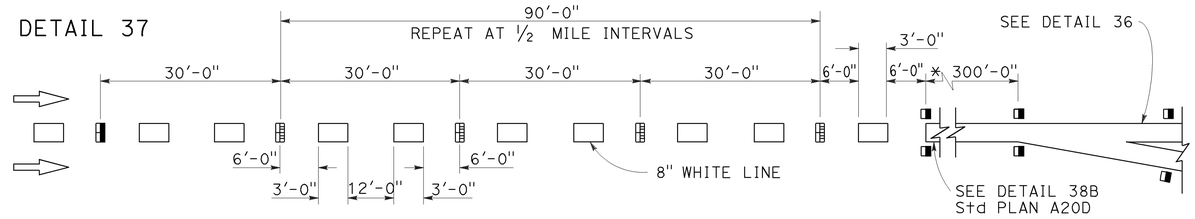

DETAIL 37A

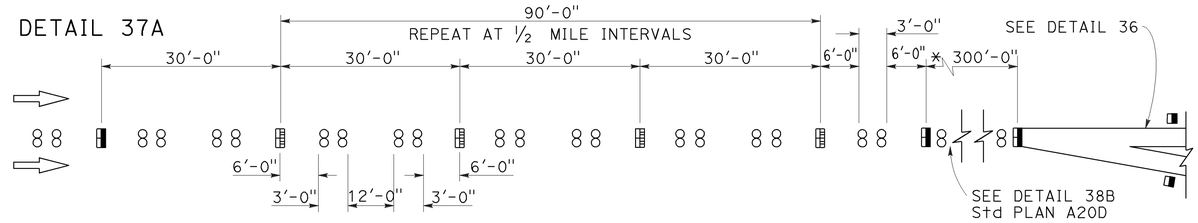

* The solid channelizing line shown may be omitted on short auxiliary lanes where weaving length is critical.

LANE DROP AT INTERSECTIONS

DETAIL 37B

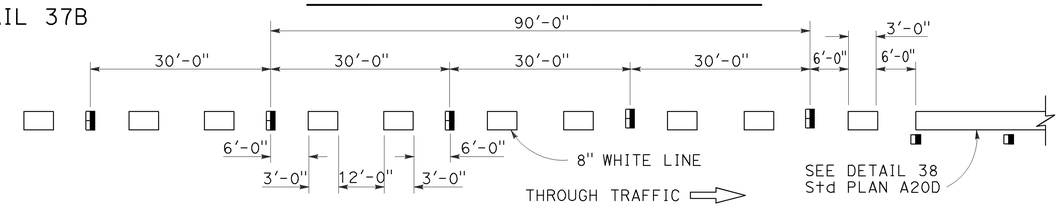

DETAIL 37C

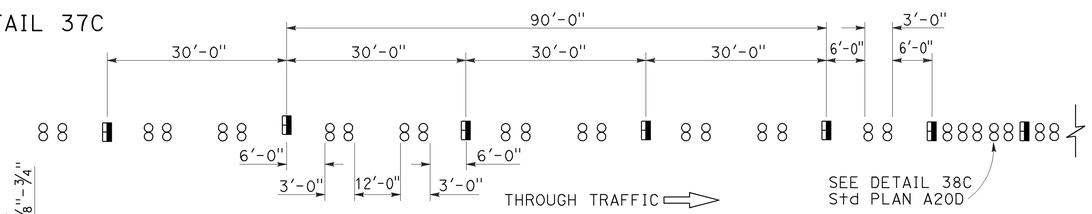

MARKER DETAILS

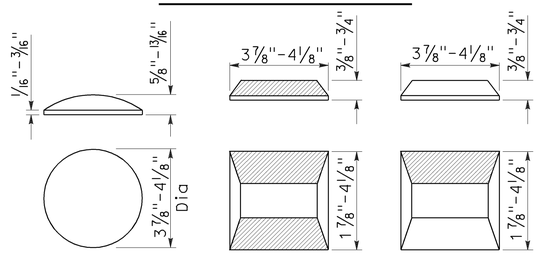

LEGEND:

MARKERS

- ○ TYPE A WHITE NON-REFLECTIVE
- ⊟ TYPE C RED-CLEAR RETROREFLECTIVE
- ◨ TYPE G ONE-WAY CLEAR RETROREFLECTIVE

STATE OF CALIFORNIA
DEPARTMENT OF TRANSPORTATION

PAVEMENT MARKERS AND TRAFFIC LINE TYPICAL DETAILS

NO SCALE

RSP A20C DATED JULY 19, 2013 SUPERSEDES STANDARD PLAN A20C DATED MAY 20, 2011 - PAGE 11 OF THE STANDARD PLANS BOOK DATED 2010.

REVISED STANDARD PLAN RSP A20C

4-29-13

Dist	COUNTY	ROUTE	POST MILES TOTAL PROJECT	SHEET No.	TOTAL SHEETS
07	LA	10	37.2/42.4	1460	2313

REGISTERED CIVIL ENGINEER

April 20, 2012
PLANS APPROVAL DATE

REGISTERED PROFESSIONAL ENGINEER
Roberta L. McLaughlin
No. C40375
Exp. 3-31-13
CIVIL
STATE OF CALIFORNIA

THE STATE OF CALIFORNIA OR ITS OFFICERS OR AGENTS SHALL NOT BE RESPONSIBLE FOR THE ACCURACY OR COMPLETENESS OF SCANNED COPIES OF THIS PLAN SHEET.

TO ACCOMPANY PLANS DATED 6-1-15

2010 REVISED STANDARD PLAN RSP A24A

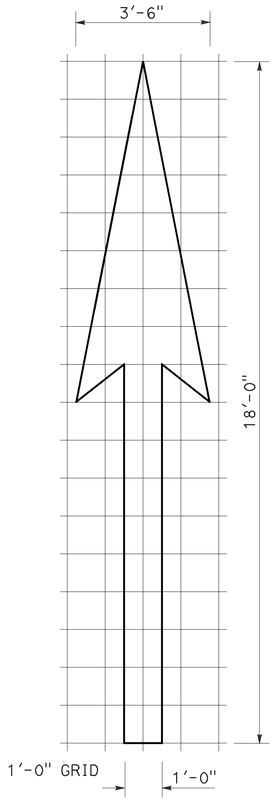

A=25 ft^2

TYPE I 18'-0" ARROW

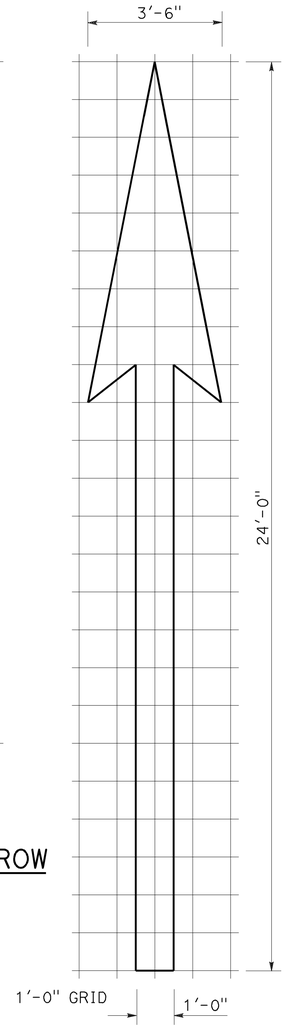

A=31 ft^2

TYPE I 24'-0" ARROW

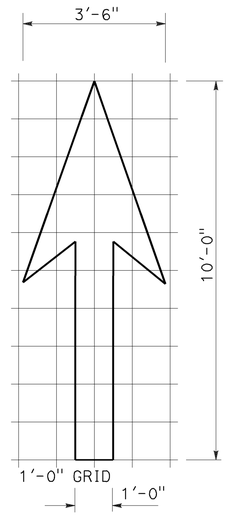

A=14 ft^2

TYPE I 10'-0" ARROW

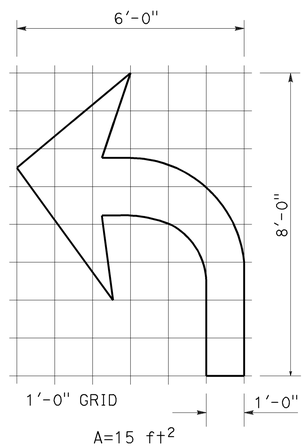

A=15 ft^2

TYPE IV (L) ARROW

(For Type IV (R) arrow, use mirror image)

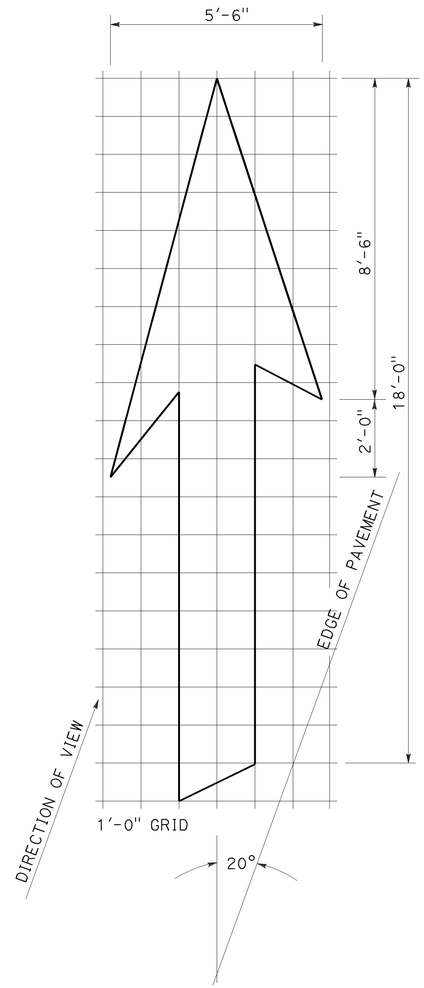

A=42 ft^2

TYPE VI ARROW

Right lane drop arrow
(For left lane, use mirror image)

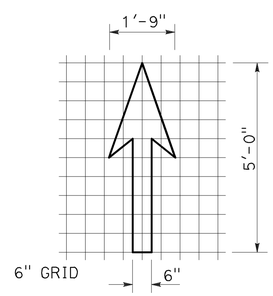

A=3.5 ft^2

BIKE LANE ARROW

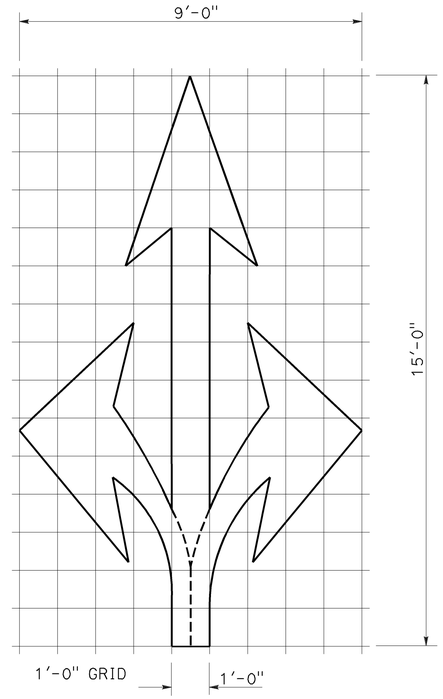

A=36 ft^2

TYPE VIII ARROW

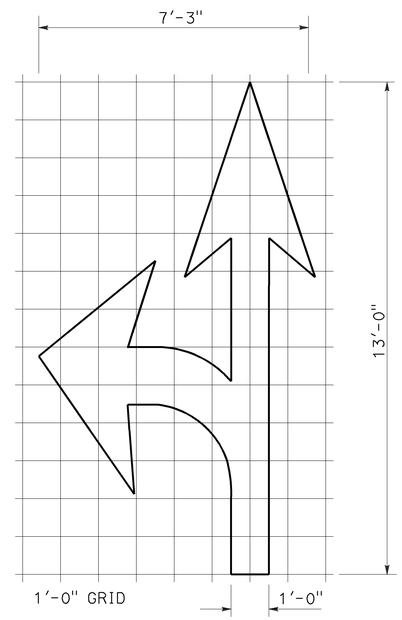

A=27 ft^2

TYPE VII (L) ARROW

(For Type VII (R) arrow, use mirror image)

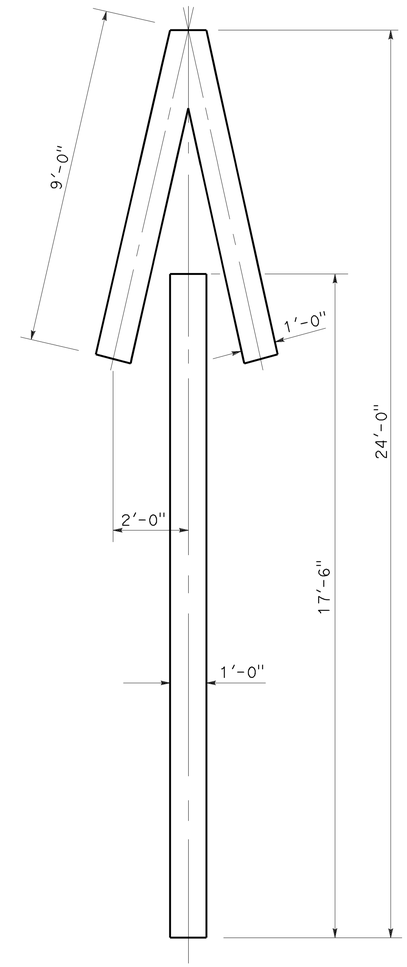

A=33 ft^2

TYPE V ARROW

NOTE:
Minor variations in dimensions may be accepted by the Engineer.

STATE OF CALIFORNIA
DEPARTMENT OF TRANSPORTATION

PAVEMENT MARKINGS ARROWS

NO SCALE

RSP A24A DATED APRIL 20, 2012 SUPERSEDES STANDARD PLAN A24A DATED MAY 20, 2011 - PAGE 13 OF THE STANDARD PLANS BOOK DATED 2010.

REVISED STANDARD PLAN RSP A24A

3-14-12

Dist	COUNTY	ROUTE	POST MILES TOTAL PROJECT	SHEET No.	TOTAL SHEETS
07	LA	10	37.2/42.4	1461	2313

REGISTERED CIVIL ENGINEER

October 19, 2012
PLANS APPROVAL DATE

REGISTERED PROFESSIONAL ENGINEER
Roberta L. McLaughlin
No. C40375
Exp. 3-31-13
CIVIL
STATE OF CALIFORNIA

THE STATE OF CALIFORNIA OR ITS OFFICERS OR AGENTS SHALL NOT BE RESPONSIBLE FOR THE ACCURACY OR COMPLETENESS OF SCANNED COPIES OF THIS PLAN SHEET.

NOTE: TO ACCOMPANY PLANS DATED 6-1-15

Minor variations in dimensions may be accepted by the Engineer.

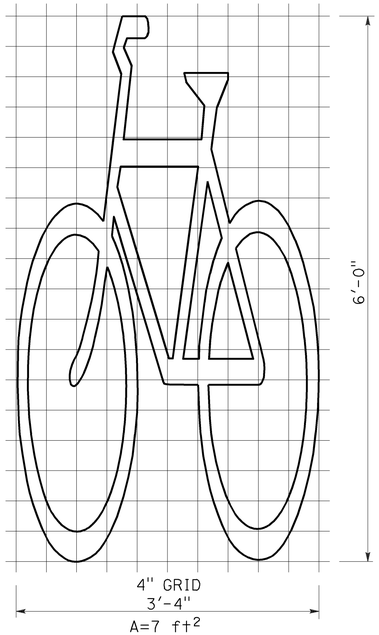

BIKE LANE SYMBOL WITHOUT PERSON

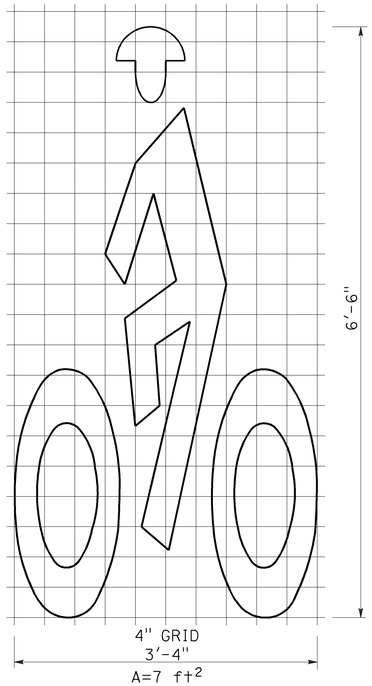

BIKE LANE SYMBOL WITH PERSON

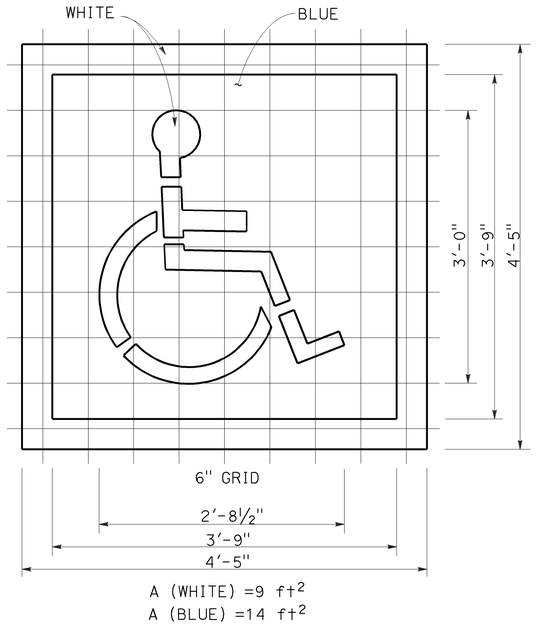

INTERNATIONAL SYMBOL OF ACCESSIBILITY (ISA) MARKING

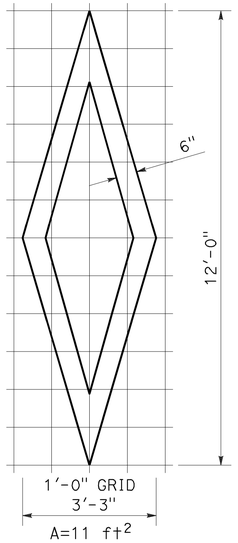

DIAMOND SYMBOL

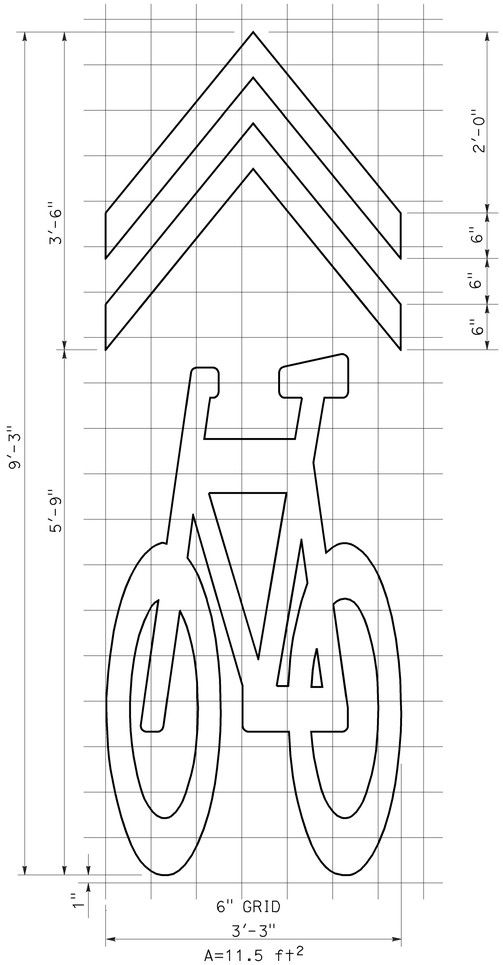

SHARED ROADWAY BICYCLE MARKING

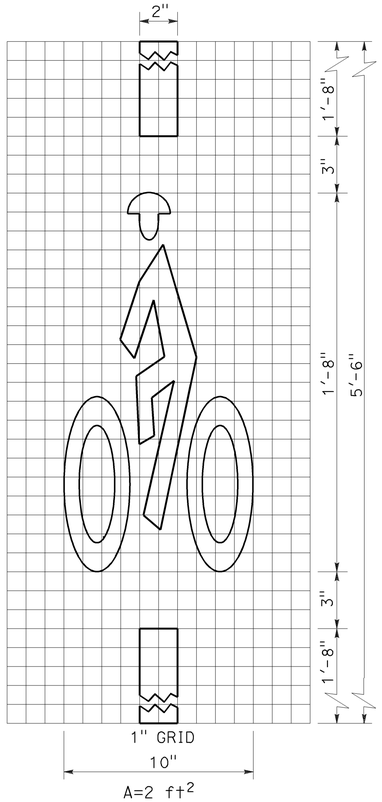

BICYCLE LOOP DETECTOR SYMBOL

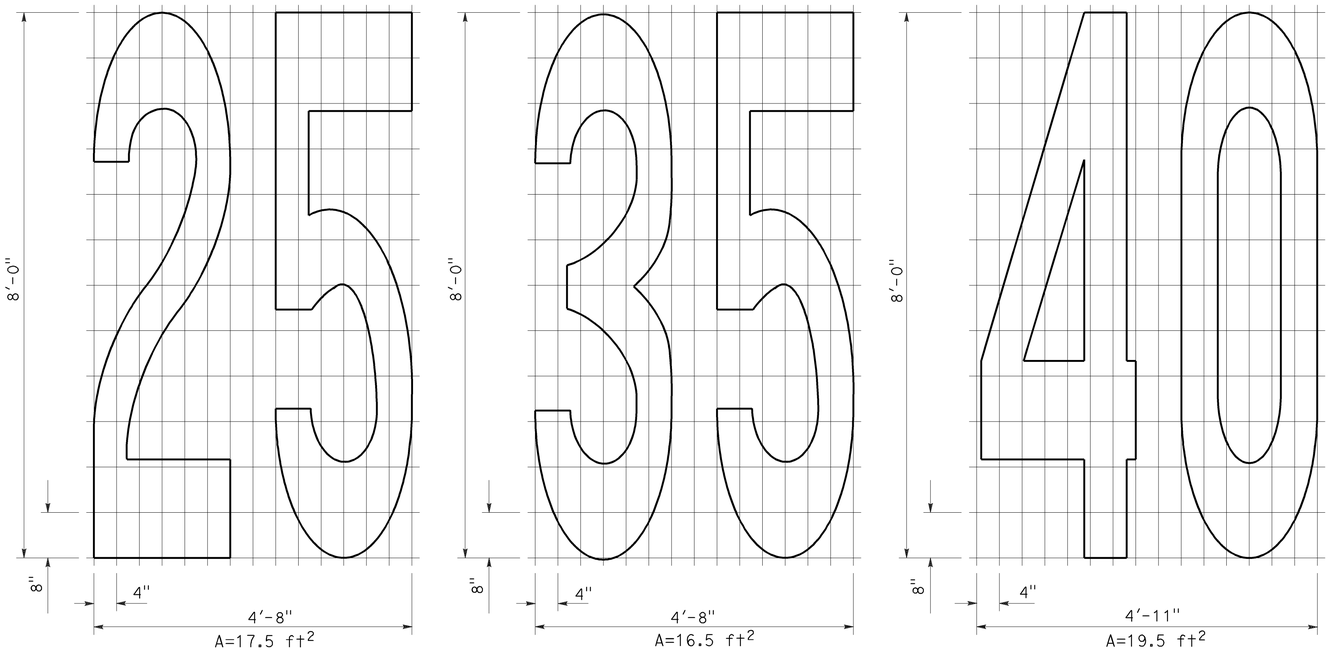

NUMERALS

STATE OF CALIFORNIA
DEPARTMENT OF TRANSPORTATION

PAVEMENT MARKINGS SYMBOLS AND NUMERALS

NO SCALE

RSP A24C DATED OCTOBER 19, 2012 SUPERSEDES STANDARD PLAN A24C DATED MAY 20, 2011 - PAGE 15 OF THE STANDARD PLANS BOOK DATED 2010.

REVISED STANDARD PLAN RSP A24C

2010 REVISED STANDARD PLAN RSP A24C

6-28-12

Dist	COUNTY	ROUTE	POST MILES TOTAL PROJECT	SHEET No.	TOTAL SHEETS
07	LA	10	37.2/42.4	1462	2313

REGISTERED CIVIL ENGINEER

July 20, 2012
PLANS APPROVAL DATE

REGISTERED PROFESSIONAL ENGINEER
Roberta L. McLaughlin
No. C40375
Exp. 3-31-13
CIVIL
STATE OF CALIFORNIA

THE STATE OF CALIFORNIA OR ITS OFFICERS OR AGENTS SHALL NOT BE RESPONSIBLE FOR THE ACCURACY OR COMPLETENESS OF SCANNED COPIES OF THIS PLAN SHEET.

TO ACCOMPANY PLANS DATED 6-1-15

2010 REVISED STANDARD PLAN RSP A24E

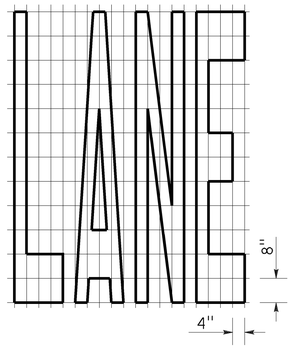

A=24 ft^2

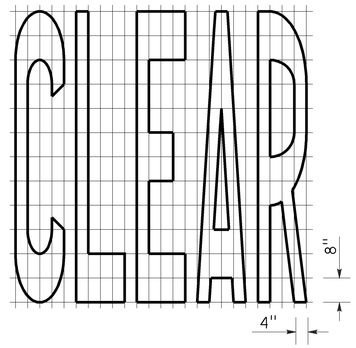

A=27 ft^2

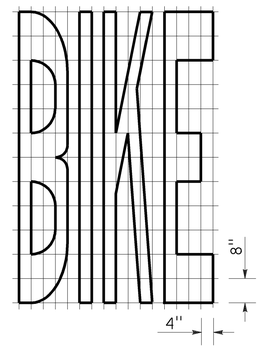

A=21 ft^2

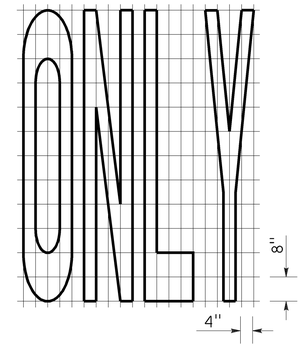

A=22 ft^2

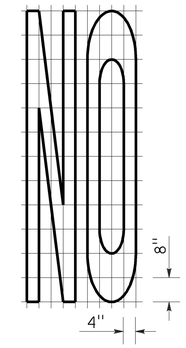

A=14 ft^2

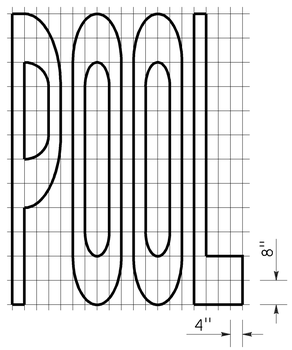

A=23 ft^2

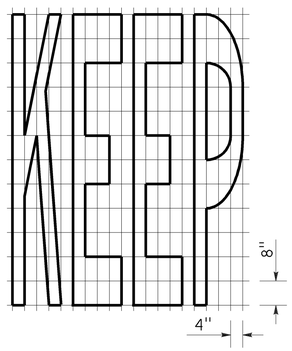

A=24 ft^2

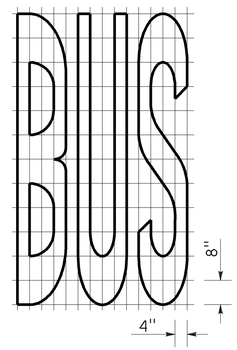

A=20 ft^2

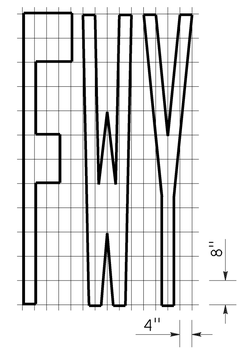

A=16 ft^2

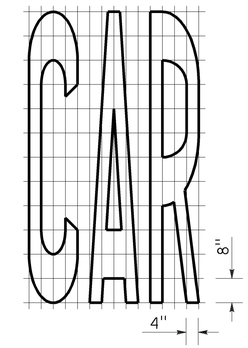

A=17 ft^2

WORD MARKINGS			
ITEM	ft^2	ITEM	ft^2
LANE	24	NO	14
POOL	23	BIKE	21
CAR	17	BUS	20
CLEAR	27	ONLY	22
KEEP	24	FWY	16

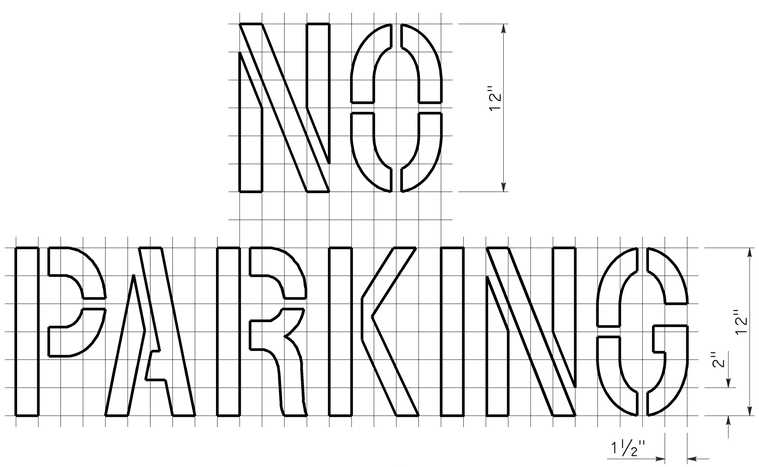

A=2 ft^2

See Notes 6 and 7

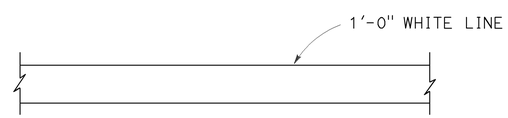

LIMIT LINE (STOP LINE)

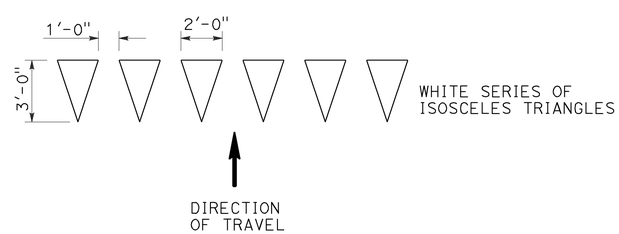

YIELD LINE

NOTES:

1. If a message consists of more than one word, it should read "UP", i.e., the first word should be nearest the driver.
2. The space between words should be at least four times the height of the characters for low speed roads, but not more than ten times the height of the characters. The space may be reduced appropriately where there is limited space because of local conditions.
3. Minor variations in dimensions may be accepted by the Engineer.
4. Portions of a letter, number or symbol may be separated by connecting segments not to exceed 2" in width.
5. The words "NO PARKING" pavement marking is to be used for parking facilities. For typical locations of markings, see Standard Plans A90A and A90B.
6. The words "NO PARKING", shall be painted in white letters no less than 1'-0" high on a contrasting background and located so that it is visible to traffic enforcement officials.

STATE OF CALIFORNIA
DEPARTMENT OF TRANSPORTATION

PAVEMENT MARKINGS WORDS, LIMIT AND YIELD LINES

NO SCALE

RSP A24E DATED JULY 20, 2012 SUPERSEDES STANDARD PLAN A24E
DATED MAY 20, 2011 - PAGE 17 OF THE STANDARD PLANS BOOK DATED 2010.

REVISED STANDARD PLAN RSP A24E

6-12-12

Dist	COUNTY	ROUTE	POST MILES TOTAL PROJECT	SHEET No.	TOTAL SHEETS
07	LA	10	37.2/42.4	1463	2313

REGISTERED CIVIL ENGINEER

July 20, 2012
PLANS APPROVAL DATE

REGISTERED PROFESSIONAL ENGINEER
Roberta L. McLaughlin
No. C40375
Exp. 3-31-13
CIVIL
STATE OF CALIFORNIA

THE STATE OF CALIFORNIA OR ITS OFFICERS OR AGENTS SHALL NOT BE RESPONSIBLE FOR THE ACCURACY OR COMPLETENESS OF SCANNED COPIES OF THIS PLAN SHEET.

TO ACCOMPANY PLANS DATED 6-1-15

2010 REVISED STANDARD PLAN RSP A24F

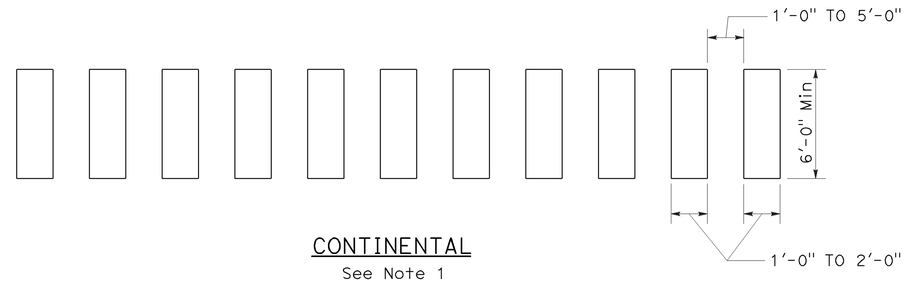

CONTINENTAL
See Note 1

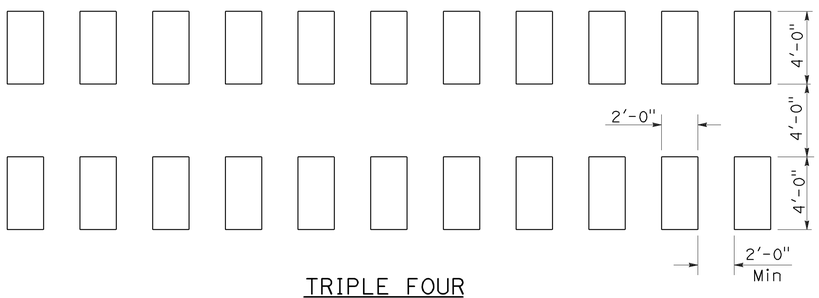

TRIPLE FOUR
See Note 1

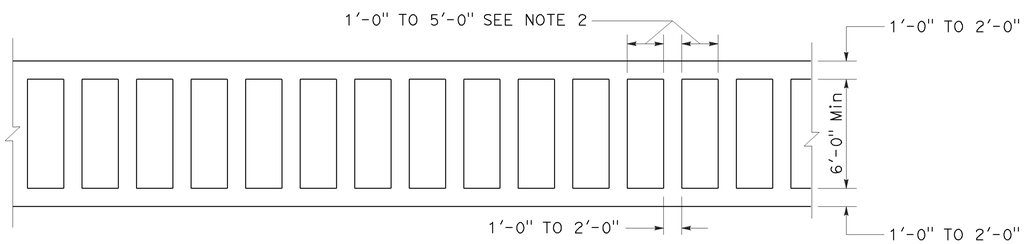

LADDER

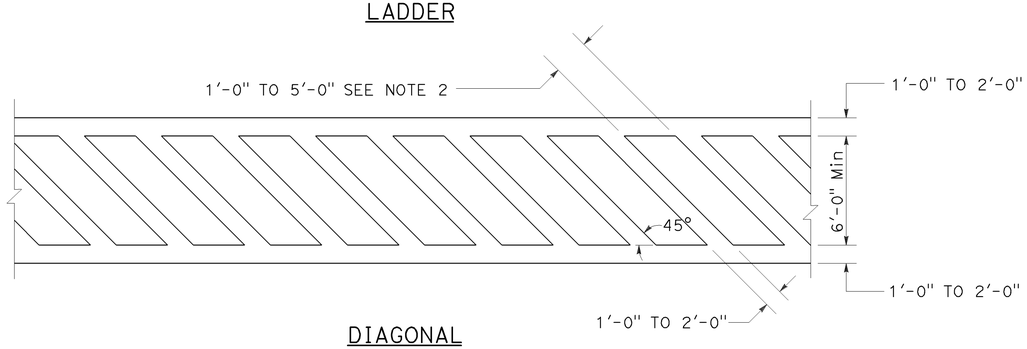

DIAGONAL

HIGHER VISIBILITY CROSSWALKS

NOTES:

1. Spaces between markings should be placed in wheel tracks of each lane.
2. Spacings not to exceed 2.5 times width of longitudinal line.
3. All crosswalk markings must be white except for those near schools must be yellow.

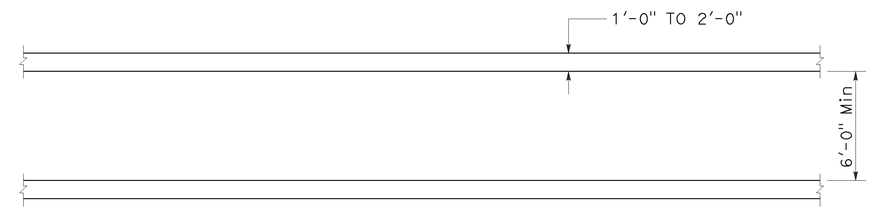

BASIC

STATE OF CALIFORNIA
DEPARTMENT OF TRANSPORTATION

PAVEMENT MARKINGS CROSSWALKS

NO SCALE

RSP A24F DATED JULY 20, 2012 SUPPLEMENTS THE STANDARD PLANS BOOK DATED 2010.

REVISED STANDARD PLAN RSP A24F

Dist	COUNTY	ROUTE	POST MILES TOTAL PROJECT	SHEET No.	TOTAL SHEETS
07	LA	10	37.2/42.4	1464	2313

REGISTERED CIVIL ENGINEER

July 18, 2014
PLANS APPROVAL DATE

REGISTERED PROFESSIONAL ENGINEER
Carl M. Duan
No. C59976
Exp. 6-30-16
CIVIL
STATE OF CALIFORNIA

THE STATE OF CALIFORNIA OR ITS OFFICERS OR AGENTS SHALL NOT BE RESPONSIBLE FOR THE ACCURACY OR COMPLETENESS OF SCANNED COPIES OF THIS PLAN SHEET.

TO ACCOMPANY PLANS DATED 6-1-15

DESIGN NOTES:

Design: AASHTO LRFD Bridge Design Specifications, 4th edition with California Amendments. ACPA DESIGN DATA 1, October 2007. INDIRECT DESIGN METHOD

Soil: w Fe = 162 pcf Installation Type 1
w Fe = 168 pcf Installation Types 2 & 3
w = Unit weight of soil (pcf)
Fe = Soil-structure interaction factor

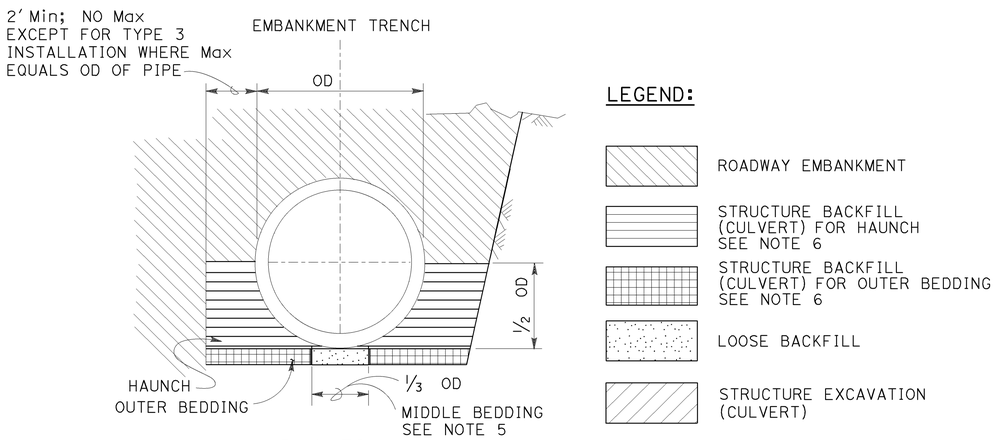

BACKFILL

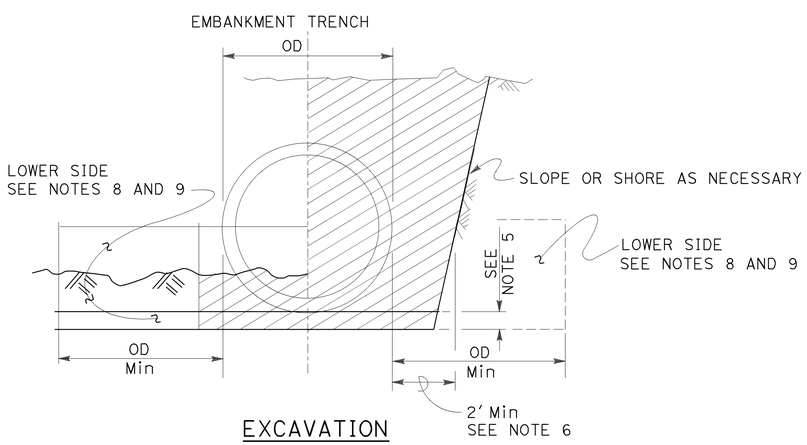

EXCAVATION

INSTALLATION TYPE 1:

The haunch and outer bedding shall be compacted to a minimum 90 percent relative compaction. In addition, the minimum sand equivalent in these areas shall be 30 and the maximum percentage passing the No. 200 sieve size shall be 12.

INSTALLATION TYPE 2:

The haunch and outer bedding shall be compacted to a minimum 90 percent relative compaction. In addition, the minimum sand equivalent in these areas shall be 25.

INSTALLATION TYPE 3:

The haunch and outer bedding shall be compacted to a minimum 85 percent relative compaction. 90 percent relative compaction will be required where the fill over the pipe is less than 4′-0″ or ½ OD. In addition, the minimum sand equivalent in these areas shall be 25 and the material shall not contain rocks, broken concrete, or other solid material exceeding 3″ in greatest dimension.

INSTALLATION TYPE 1

MINIMUM CLASS AND D-LOAD	COVER	
	60″ Dia AND SMALLER	OVER 60″ Dia TO 120″ Dia Max
CLASS II 1000D	14.9′	12.9′
CLASS III 1350D	15.0′ - 21.9′	13.0′ - 18.9′
CLASS III SPECIAL 1700D	22.0′ - 27.9′	19.0′ - 24.9′
CLASS IV 2000D	28.0′ - 32.9′	25.0′ - 29.9′
CLASS IV SPECIAL 2500D	33.0′ - 41.9′	30.0′ - 38.9′
CLASS V 3000D	42.0′ - 49.9′	39.0′ - 46.9′
CLASS V SPECIAL 3600D	50.0′ - 60.0′	47.0′ - 58.0′

INSTALLATION TYPE 2

MINIMUM CLASS AND D-LOAD	COVER	
	60″ Dia AND SMALLER	OVER 60″ Dia TO 120″ Dia Max
CLASS II 1000D	11.9′	9.9′
CLASS III 1350D	12.0′ - 15.9′	10.0′ - 14.9′
CLASS III SPECIAL 1700D	16.0′ - 20.9′	15.0′ - 19.9′
CLASS IV 2000D	21.0′ - 24.9′	20.0′ - 23.9′
CLASS IV SPECIAL 2500D	25.0′ - 31.9′	24.0′ - 30.9′
CLASS V 3000D	32.0′ - 37.9′	31.0′ - 37.9′
CLASS V SPECIAL 3600D	38.0′ - 46.0′	38.0′ - 46.0′

INSTALLATION TYPE 3

MINIMUM CLASS AND D-LOAD	COVER	
	60″ Dia AND SMALLER	OVER 60″ Dia TO 120″ Dia Max
CLASS II 1000D	8.9′	5.9′
CLASS III 1350D	9.0′ - 11.9′	6.0′ - 10.9′
CLASS III SPECIAL 1700D	12.0′ - 15.9′	11.0′ - 13.9′
CLASS IV 2000D	16.0′ - 18.9′	14.0′ - 17.9′
CLASS IV SPECIAL 2500D	19.0′ - 24.9′	18.0′ - 22.9′
CLASS V 3000D	25.0′ - 29.9′	23.0′ - 28.9′
CLASS V SPECIAL 3600D	30.0′ - 36.0′	29.0′ - 35.0′

NOTES:

1. Unless otherwise shown on the plans or specified in the special provision, the Contractor shall have the option of selecting the class of RCP and the type of installation to be used, provided the height of cover does not exceed the value shown for the RCP selected.
   Example: 24″ RCP culvert with maximum cover of 24′-0″ the options are:
   a) Class III Special or stronger with Installation Type 1.
   b) Class IV or stronger with Installation Type 2.
   c) Class IV Special or stronger with Installation Type 3.
   Cover is defined as the maximum vertical distance from top of the pipe to finished grade within the length of any given culvert.
2. The class of RCP and Installation Type selected shall be the same throughout the length of any given culvert.
3. The "length of any culvert" is defined as the culvert between:
   a) Successive drainage structure (inlets, junction boxes, headwalls, etc.).
   b) A drainage structure and the inlet or outlet end of the culvert.
   c) The inlet and outlet end of the culvert when there are no intervening drainage structures.
4. Oval and arch shaped RCP shall not be used.
5. Bedding depth: 1/25 OD Min, not less than 3″.
6. Slurry cement backfill may be substituted for backfill in the outer bedding and haunch areas. If slurry is used, the outer and middle beddings shall be omitted. Prior to installation, the soil under the middle ⅓ of the outside diameter of the pipe shall be softened by scarifying or other means to a minimum depth of 1/25 OD, but not less than 3″. Where slurry cement backfill is used, clear distance to trench wall may be reduced as set forth in the Standard Specifications.
7. Backfill shall be placed full width of excavation except where dimensions are shown for backfill width or thickness. Dimensions shown are minimum.
8. Lower side shall be suitable material as determined by the Engineer. Otherwise it shall be considered unsuitable as set forth in of the Standard Specifications. See Note 9.
9. Where the pipe is placed in a trench, if the trench walls are sloped at 5 vertical to 1 horizontal or steeper for at least 90 percent of the trench height or up to not less than 12″ from the grading plane, the firmness of the soil in the lower side need not be considered.
10. Non-reinforced precast concrete pipe sizes 3′-0″ or smaller may be placed under installation Types 1, 2 or 3.

STATE OF CALIFORNIA
DEPARTMENT OF TRANSPORTATION

EXCAVATION AND BACKFILL CONCRETE PIPE CULVERTS INDIRECT DESIGN METHOD

NO SCALE

RSP A62DA DATED JULY 18, 2014 SUPERSEDES STANDARD PLAN A62DA DATED MAY 20, 2011 - PAGE 24 OF THE STANDARD PLANS BOOK DATED 2010.

REVISED STANDARD PLAN RSP A62DA

2010 REVISED STANDARD PLAN RSP A62DA

5-13-14

Dist	COUNTY	ROUTE	POST MILES TOTAL PROJECT	SHEET No.	TOTAL SHEETS
07	LA	10	37.2/42.4	1465	2313

Randell D. Hiatt
REGISTERED CIVIL ENGINEER

July 19, 2013
PLANS APPROVAL DATE

REGISTERED PROFESSIONAL ENGINEER
Randell D. Hiatt
No. C50200
Exp. 6-30-15
CIVIL
STATE OF CALIFORNIA

THE STATE OF CALIFORNIA OR ITS OFFICERS OR AGENTS SHALL NOT BE RESPONSIBLE FOR THE ACCURACY OR COMPLETENESS OF SCANNED COPIES OF THIS PLAN SHEET.

TO ACCOMPANY PLANS DATED 6-1-15

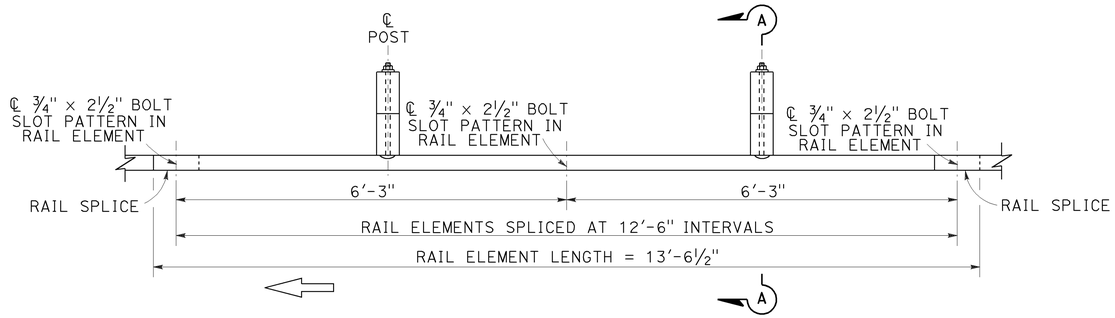

PLAN

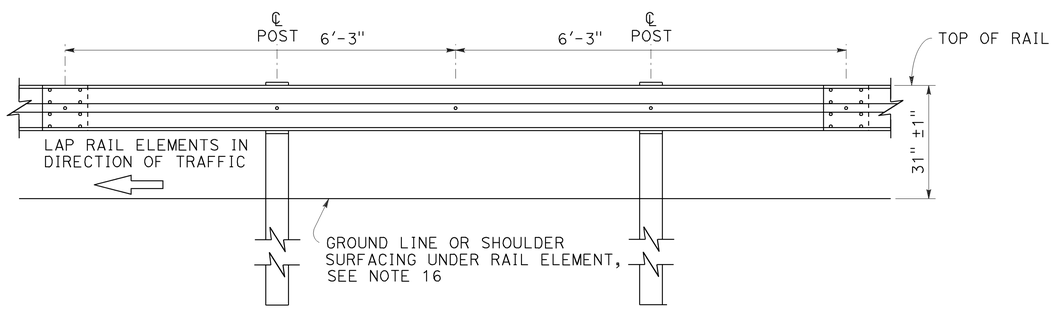

ELEVATION

MIDWEST GUARDRAIL SYSTEM WITH WOOD POST AND BLOCKS

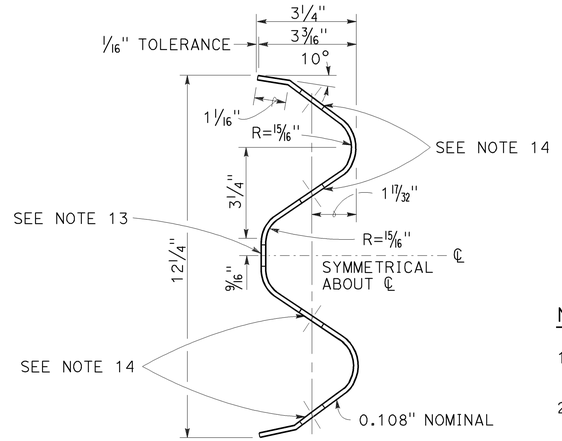

SECTION THRU RAIL ELEMENT

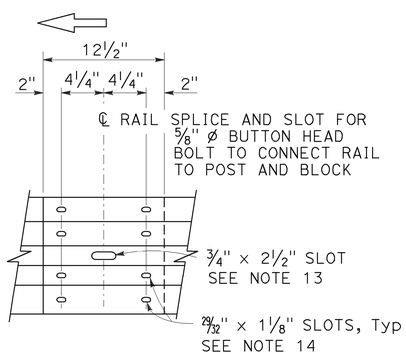

ELEVATION

RAIL ELEMENT SPLICE DETAIL

a) Connect the over lapped end of the rail elements with ⅝" ø × 1⅜" button head oval shoulder splice bolts inserted into the 29⁄32" × 1⅛" slots and bolted together with ⅝" ø recessed hex nuts. Recess of hex nut points toward rail element. A total of 8 bolts and nuts are to be used at each rail splice connection.

b) The ends of the rail elements are to be overlapped in the direction of traffic (see details).

c) Where end cap is to be attached to the end of a rail element, a total of 4 of the above described splice bolts and nuts are to be used.

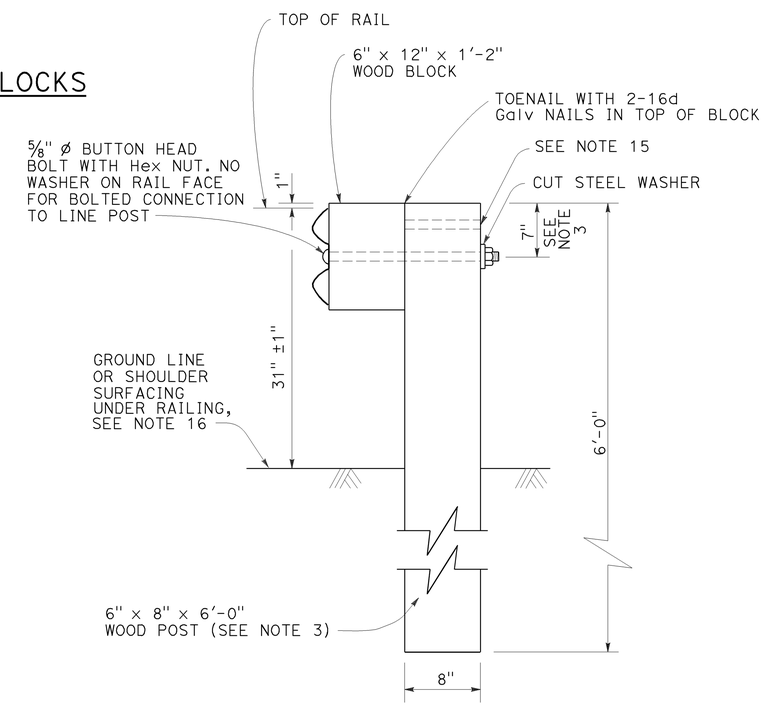

SECTION A-A

TYPICAL WOOD LINE POST INSTALLATION

See Note 4

NOTES:

1. For details of steel post installations, see Revised Standard Plan RSP A77L2.
2. For details of standard hardware used to construct MGS, see Revised Standard Plan RSP A77M1.
3. For details of wood posts and wood blocks used to construct MGS, see Revised Standard Plan RSP A77N1.
4. For additional installation details, see Revised Standard Plan RSP A77N3.
5. MGS post spacing to be 6'-3" center to center, except as otherwise noted.
6. For MGS typical layouts, see the A77P, A77Q and A77R Series of Standard Plans.
7. If railing is connected to terminal system end treatment, use 31" height terminal system end treatment.
8. For MGS end anchor details, see Revised Standard Plans RSP A77S1 and RSP A77T2.
9. For details of MGS transition to bridge railing, see Revised Standard Plan RSP A77U4.
10. For additional details of MSG connection to bridge railing, see Revised Standard Plans RSP A77U1, RSP A77U2 and RSP A77V1.
11. For MGS connection details to abutments and walls, see Revised Standard Plan RSP A77U3.
12. For typical MGS delineation and dike positioning details, see Revised Standard Plan RSP A77N4.
13. Slotted hole for bolted connection of rail element to block and post. See "Section Thru Rail Element".
14. Slotted holes for splice bolts to overlap ends of rail element. See "Section Thru Rail Element".
15. Additional hole in uppermost portion of line post is for potential future adjustments of railing height. See Revised Standard Plan RSP A77N1.
16. Install posts in soil.

STATE OF CALIFORNIA
DEPARTMENT OF TRANSPORTATION

MIDWEST GUARDRAIL SYSTEM STANDARD RAILING SECTION (WOOD POST WITH WOOD BLOCK)

NO SCALE

RSP A77L1 DATED JULY 19, 2013 SUPPLEMENTS STANDARD PLANS BOOK DATED 2010.

REVISED STANDARD PLAN RSP A77L1

2010 REVISED STANDARD PLAN RSP A77L1

Dist	COUNTY	ROUTE	POST MILES TOTAL PROJECT	SHEET No.	TOTAL SHEETS
07	LA	10	37.2/42.4	1466	2313

Randell D. Hiatt
REGISTERED CIVIL ENGINEER

July 19, 2013
PLANS APPROVAL DATE

REGISTERED PROFESSIONAL ENGINEER
Randell D. Hiatt
No. C50200
Exp. 6-30-15
CIVIL
STATE OF CALIFORNIA

THE STATE OF CALIFORNIA OR ITS OFFICERS OR AGENTS SHALL NOT BE RESPONSIBLE FOR THE ACCURACY OR COMPLETENESS OF SCANNED COPIES OF THIS PLAN SHEET.

TO ACCOMPANY PLANS DATED 6-1-15

2010 REVISED STANDARD PLAN RSP A77L3

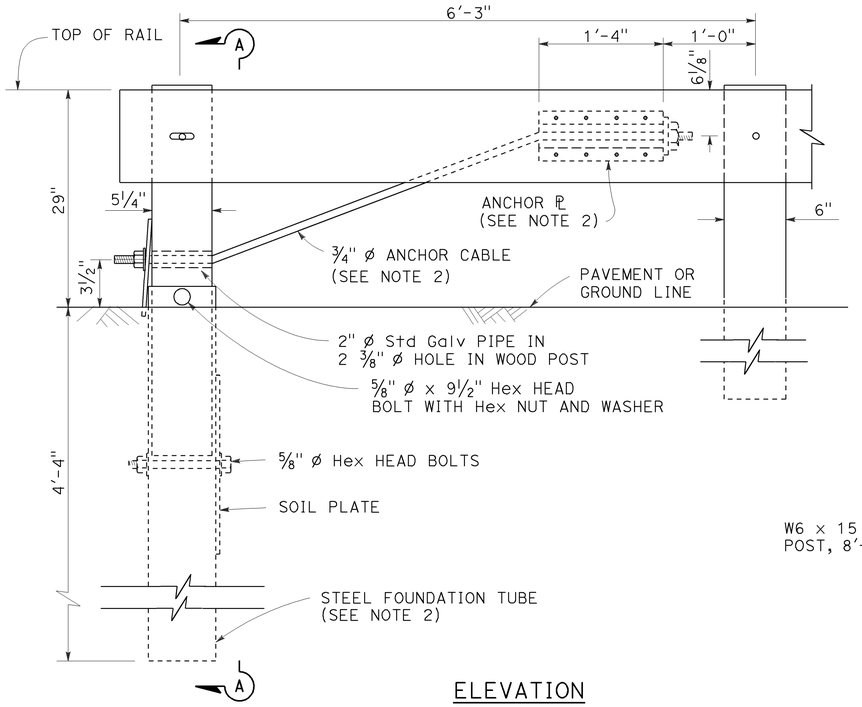

ELEVATION
END ANCHOR
ASSEMBLY (TYPE SFT)

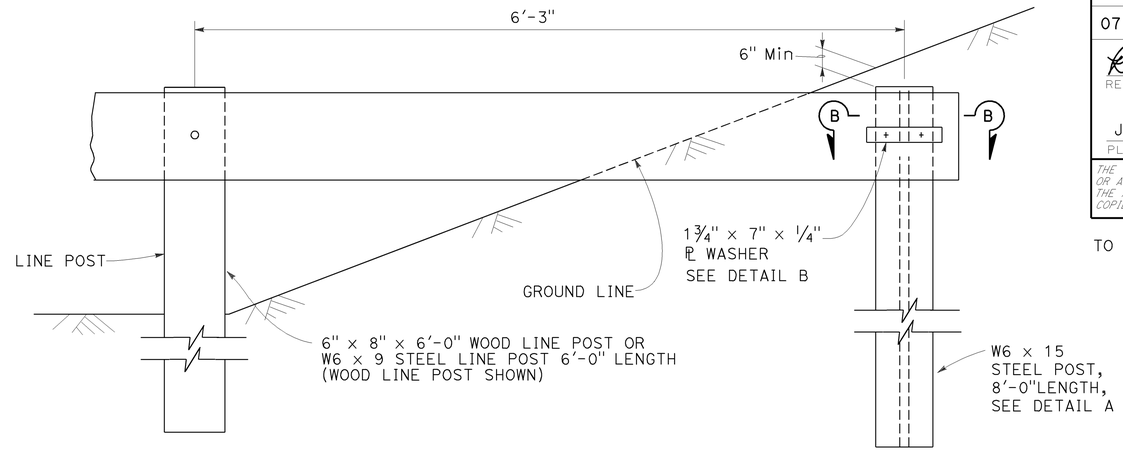

BURIED POST END ANCHOR

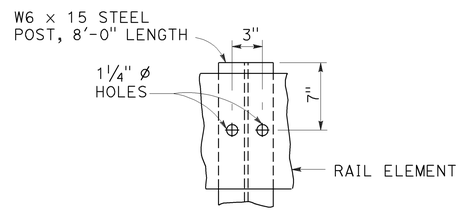

DETAIL A

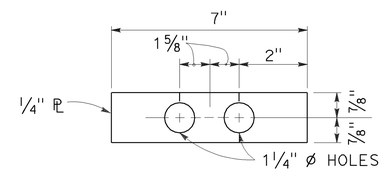

DETAIL B

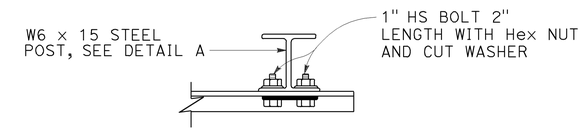

SECTION B-B

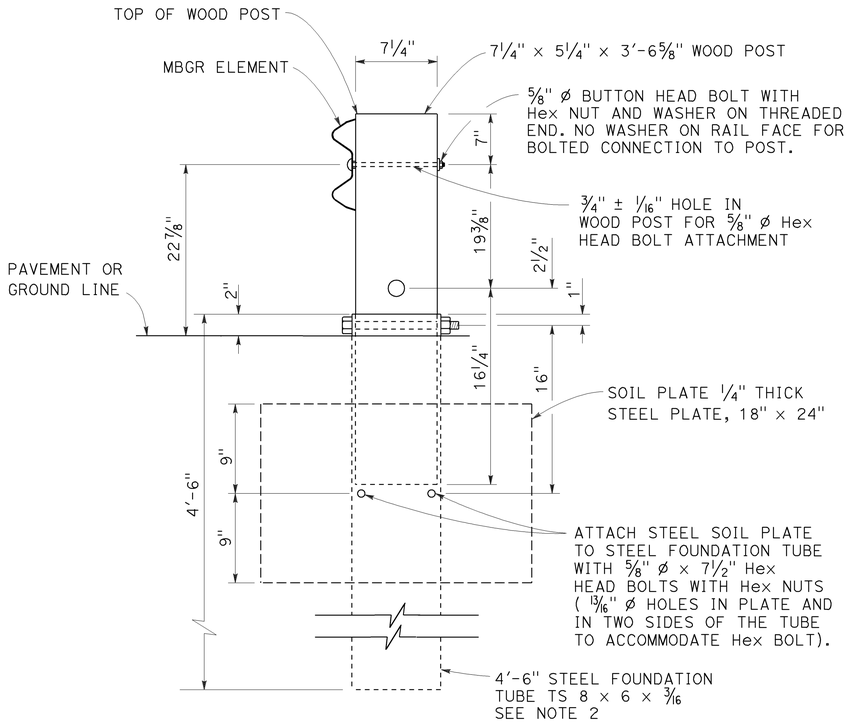

SECTION A-A

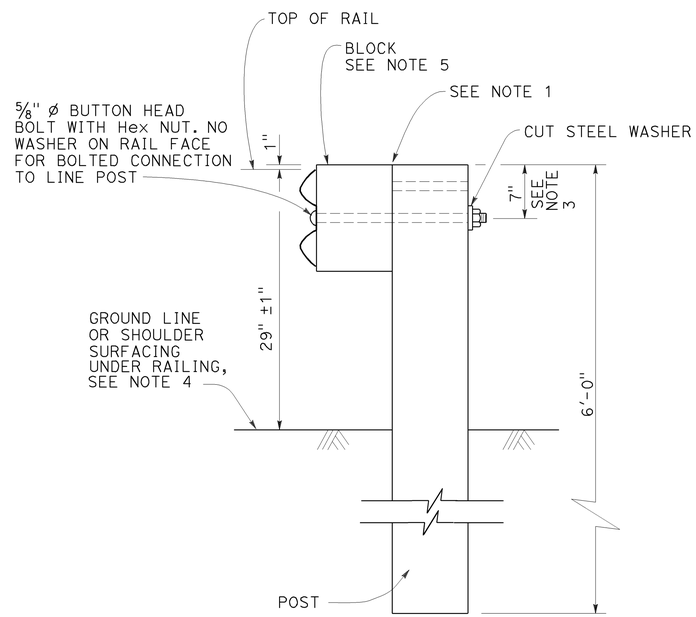

TYPICAL LINE
POST INSTALLATION

NOTES:

1. For wood post and wood block, toenail with 2-16d Galv nails in top of block. For steel post and notched wood or plastic block, notched face of block faces steel post.
2. A 6'-0" Length steel foundation tube, TS 8 x 6 x 3/16, without a soil plate, may be furnished and installed in place of the 4'-6" length steel foundation tube and soil plate shown, Minimum embadment of the 6'-0" length tube shall be 5'-9". A 5/8" ø Hex head bolt and nut shall be installed in the hole in the 6'-0" length tube to keep the wood post from dropping into the tube.
3. To connect railing to 27" terminal system end treatment, transition the top of railing height at a ratio of 120:1 to terminal system end treatment height plus one 12'-6" standard railing section at the transitioned height for a horizontal connection to the end treatment.
4. Install posts in soil.
5. See Revised Standard Plans RSP A77N1 and RSP A77N2 for details.
6. Holes excavation in the slope to construct the buried post end anchor shall be backfilled with selected earth, placed in layers approximately 1'-0" thick. Each layer shall be moistened and thoroughly compacted.

STATE OF CALIFORNIA
DEPARTMENT OF TRANSPORTATION

METAL BEAM GUARD RAILING RECONSTRUCT INSTALLATION

NO SCALE

RSP A77L3 DATED JULY 19, 2013 SUPPLEMENTS THE STANDARD PLANS BOOK DATED 2010.

REVISED STANDARD PLAN RSP A77L3

Dist	COUNTY	ROUTE	POST MILES TOTAL PROJECT	SHEET No.	TOTAL SHEETS
07	LA	10	37.2/42.4	1467	2313

Randell D. Hiatt
REGISTERED CIVIL ENGINEER

July 19, 2013
PLANS APPROVAL DATE

REGISTERED PROFESSIONAL ENGINEER
Randell D. Hiatt
No. C50200
Exp. 6-30-15
CIVIL
STATE OF CALIFORNIA

THE STATE OF CALIFORNIA OR ITS OFFICERS OR AGENTS SHALL NOT BE RESPONSIBLE FOR THE ACCURACY OR COMPLETENESS OF SCANNED COPIES OF THIS PLAN SHEET.

TO ACCOMPANY PLANS DATED 6-1-15

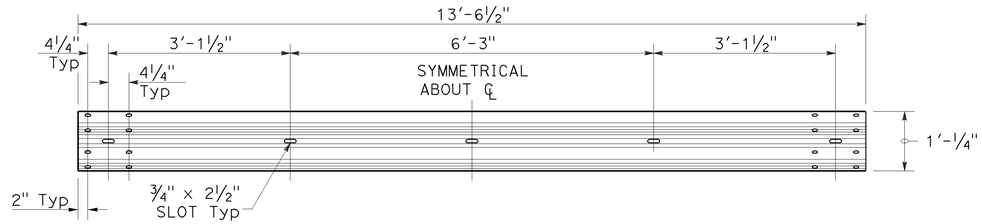

TYPICAL RAIL ELEMENT

NOTE:

1. Slotted holes for splice bolts to overlap ends of rail element.

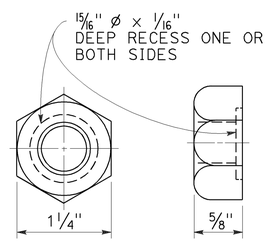

⅝" Ø RECESS NUT

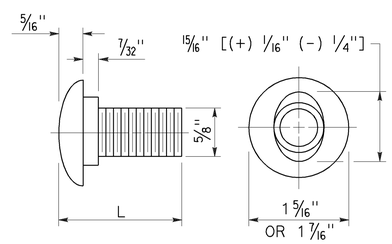

⅝" Ø BUTTON HEAD BOLT

BUTTON HEAD BOLT

L	THREAD LENGTH
1⅜"	FULL THREAD LENGTH
2"	FULL THREAD LENGTH
10"	4" Min THREAD LENGTH
18"	4" Min THREAD LENGTH
20"	4" Min THREAD LENGTH
22"	4" Min THREAD LENGTH
26"	4" Min THREAD LENGTH
36"	4" Min THREAD LENGTH
** 2¾"	2" Min THREAD LENGTH
** 19"	4" Min THREAD LENGTH

** For nested rail applications.

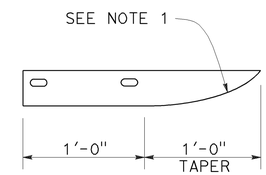

PLAN

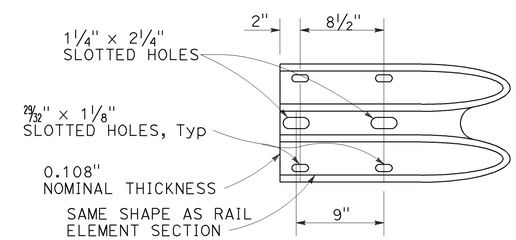

ELEVATION

END CAP
(TYPE A)

STATE OF CALIFORNIA
DEPARTMENT OF TRANSPORTATION

MIDWEST GUARDRAIL SYSTEM STANDARD HARDWARE

NO SCALE

RSP A77M1 DATED JULY 19, 2013 SUPPLEMENTS THE STANDARD PLANS BOOK DATED 2010.

REVISED STANDARD PLAN RSP A77M1

2010 REVISED STANDARD PLAN RSP A77M1

7-3-13

Dist	COUNTY	ROUTE	POST MILES TOTAL PROJECT	SHEET No.	TOTAL SHEETS
07	LA	10	37.2/42.4	1468	2313

Randell D. Hiatt
REGISTERED CIVIL ENGINEER

July 19, 2013
PLANS APPROVAL DATE

REGISTERED PROFESSIONAL ENGINEER
Randell D. Hiatt
No. C50200
Exp. 6-30-15
CIVIL
STATE OF CALIFORNIA

THE STATE OF CALIFORNIA OR ITS OFFICERS OR AGENTS SHALL NOT BE RESPONSIBLE FOR THE ACCURACY OR COMPLETENESS OF SCANNED COPIES OF THIS PLAN SHEET.

TO ACCOMPANY PLANS DATED 6-1-15

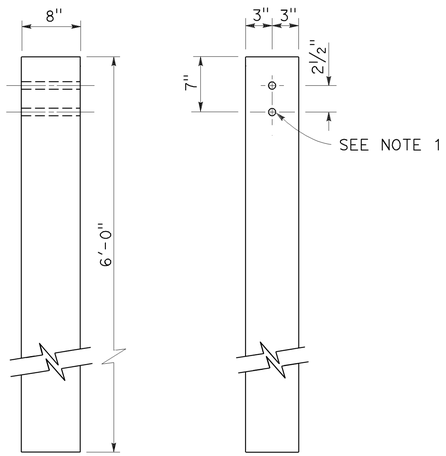

SIDE FRONT

6" x 8" WOOD POST
See Note 3

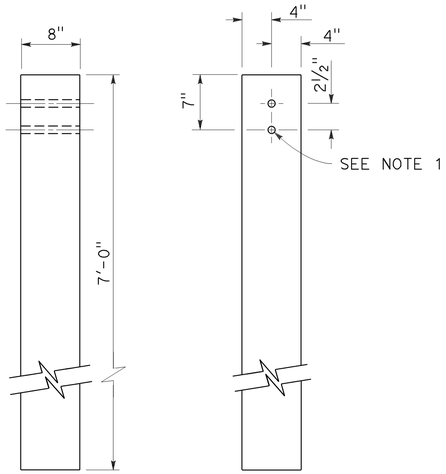

SIDE FRONT

8" x 8" WOOD POST
See Note 4

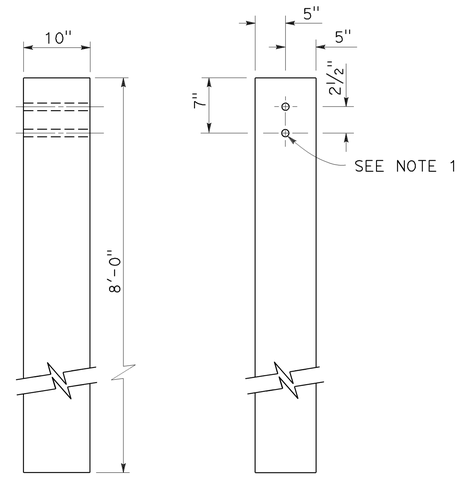

SIDE FRONT

10" x 10" WOOD POST
See Note 5

NOTES:

1. All holes in wood posts and blocks shall be ¾" Dia ± 1/16".
2. Dimensions shown for wood post are nominal.
3. This post and block combination used for standard line post sections of MGS.
4. This post and 8" x 12" block combination used for line post sections of MGS on narrow roadways.
5. This post and 8" x 12" block combination is typically used where strengthened line post sections of MGS are warranted to shield fixed objects.
6. See Revised Standard Plan RSP A77L3 for use of 6" x 8" and 8" x 8" wood blocks.

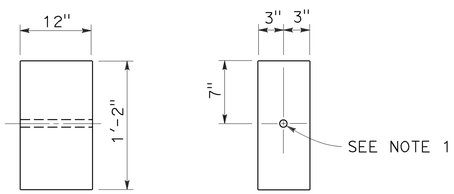

SIDE FRONT

6" x 12" WOOD BLOCK
See Note 3

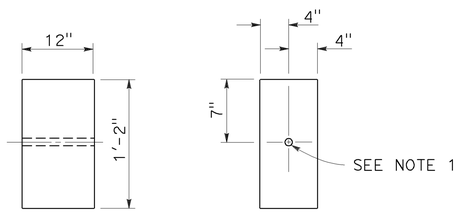

SIDE FRONT

8" x 12" WOOD BLOCK

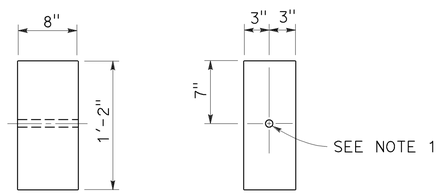

SIDE FRONT

6" x 8" WOOD BLOCK
Only for use with metal beam guard rail see Note 6

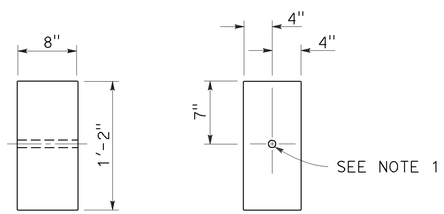

SIDE FRONT

8" x 8" WOOD BLOCK
Only for use with metal beam guard rail see Note 6

STATE OF CALIFORNIA
DEPARTMENT OF TRANSPORTATION

MIDWEST GUARDRAIL SYSTEM WOOD POST AND WOOD BLOCK DETAILS

NO SCALE

RSP A77N1 DATED JULY 19, 2013 SUPPLEMENTS THE STANDARD PLANS BOOK DATED 2010.

REVISED STANDARD PLAN RSP A77N1

2010 REVISED STANDARD PLAN RSP A77N1

7-3-13

Dist	COUNTY	ROUTE	POST MILES TOTAL PROJECT	SHEET No.	TOTAL SHEETS
07	LA	10	37.2/42.4	1469	2313

Randell D. Hiatt
REGISTERED CIVIL ENGINEER

November 15, 2013
PLANS APPROVAL DATE

REGISTERED PROFESSIONAL ENGINEER
Randell D. Hiatt
No. C50200
Exp. 6-30-15
CIVIL
STATE OF CALIFORNIA

THE STATE OF CALIFORNIA OR ITS OFFICERS OR AGENTS SHALL NOT BE RESPONSIBLE FOR THE ACCURACY OR COMPLETENESS OF SCANNED COPIES OF THIS PLAN SHEET.

TO ACCOMPANY PLANS DATED 6-1-15

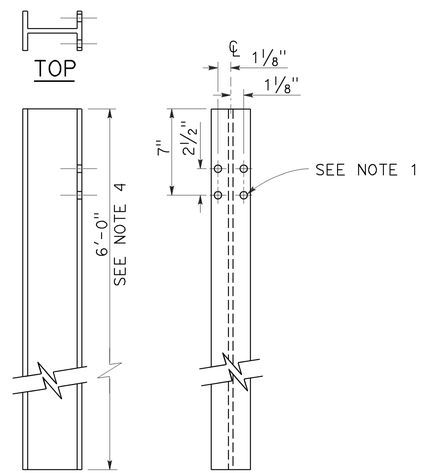

SIDE FRONT

W6 x 9 OR W6 x 8.5
STEEL POST
See Note 4

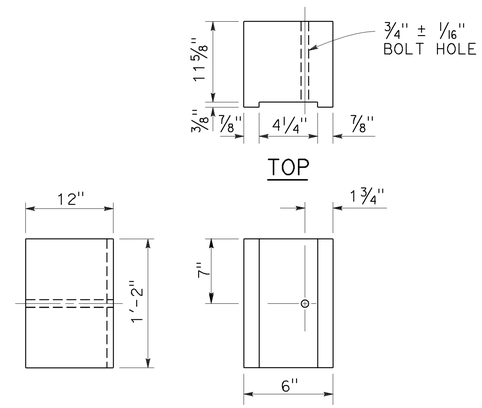

SIDE FRONT

6" x 12"
NOTCHED WOOD BLOCK
See Notes 2 and 3

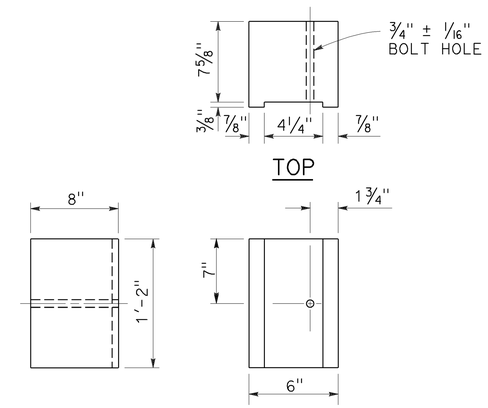

SIDE FRONT

6" x 8"
NOTCHED WOOD BLOCK
Only for use with metal beam guard railing. See Note 5

NOTES:

1. All holes in steel post shall be 13/16" Dia maximum.
2. Dimensions shown for wood block are nominal.
3. Notched face of block faces steel post.
4. 6'-0" length posts to be used for typical roadway installation. See Revised Standard Plan RSP A77N3.
5. See Revised Standard Plan RSP A77L3 for use of 6" x 8" and 8" x 8" notched wood blocks.
6. This post and 8" x 12" block combination to be used for line post sections of MGS on narrow roadways and where strengthened line post sections of MGS are warranted to shield fixed objects.

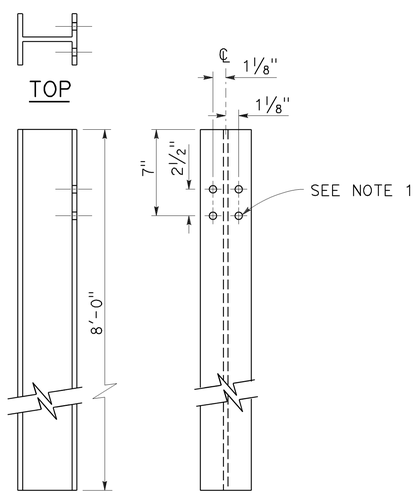

SIDE FRONT

W6 x 15
STEEL POST
See Note 6

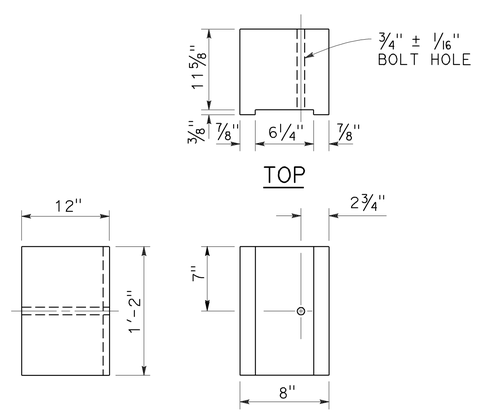

SIDE FRONT

8" x 12"
NOTCHED WOOD BLOCK
See Notes 2 and 3

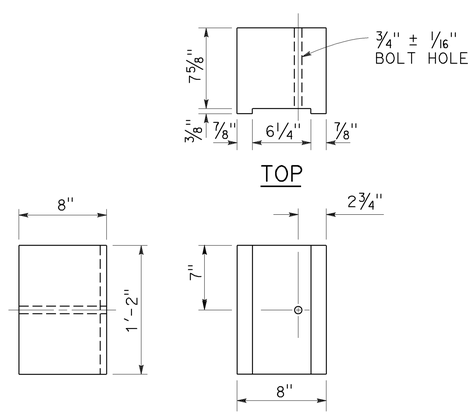

SIDE FRONT

8" x 8"
NOTCHED WOOD BLOCK
Only for use with metal beam guard railing. See Note 5

STATE OF CALIFORNIA
DEPARTMENT OF TRANSPORTATION

MIDWEST GUARDRAIL SYSTEM STEEL POST AND NOTCHED WOOD BLOCK DETAILS

NO SCALE

RSP A77N2 DATED NOVEMBER 15, 2013 SUPERSEDES RSP A77N2
DATED JULY 19, 2013 THAT SUPPLEMENTS THE STANDARD PLANS BOOK DATED 2010.

REVISED STANDARD PLAN RSP A77N2

2010 REVISED STANDARD PLAN RSP A77N2

10-29-13

Dist	COUNTY	ROUTE	POST MILES TOTAL PROJECT	SHEET No.	TOTAL SHEETS
07	LA	10	37.2/42.4	1470	2313

Randell D. Hiatt
REGISTERED CIVIL ENGINEER

November 15, 2013
PLANS APPROVAL DATE

REGISTERED PROFESSIONAL ENGINEER
Randell D. Hiatt
No. C50200
Exp. 6-30-15
CIVIL
STATE OF CALIFORNIA

THE STATE OF CALIFORNIA OR ITS OFFICERS OR AGENTS SHALL NOT BE RESPONSIBLE FOR THE ACCURACY OR COMPLETENESS OF SCANNED COPIES OF THIS PLAN SHEET.

TO ACCOMPANY PLANS DATED 6-1-15

2010 REVISED STANDARD PLAN RSP A77N3

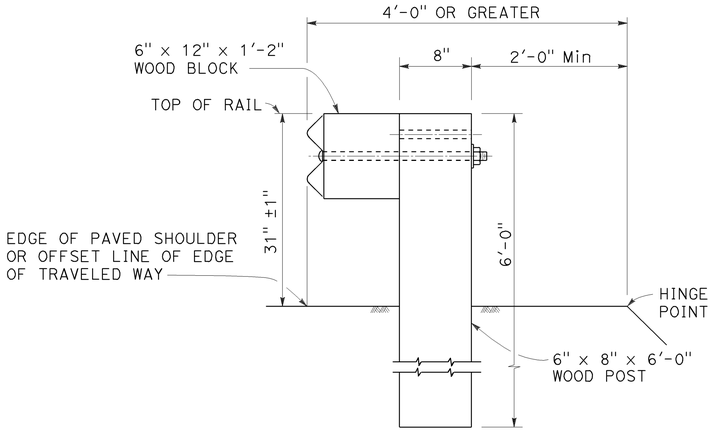

DETAIL A

TYPICAL ROADWAY INSTALLATION

See Note 1

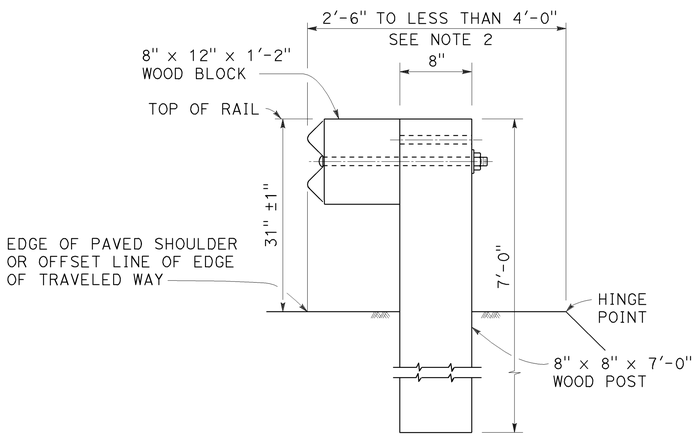

DETAIL B

NARROW ROADWAY INSTALLATION

See Note 1

POST EMBEDMENT

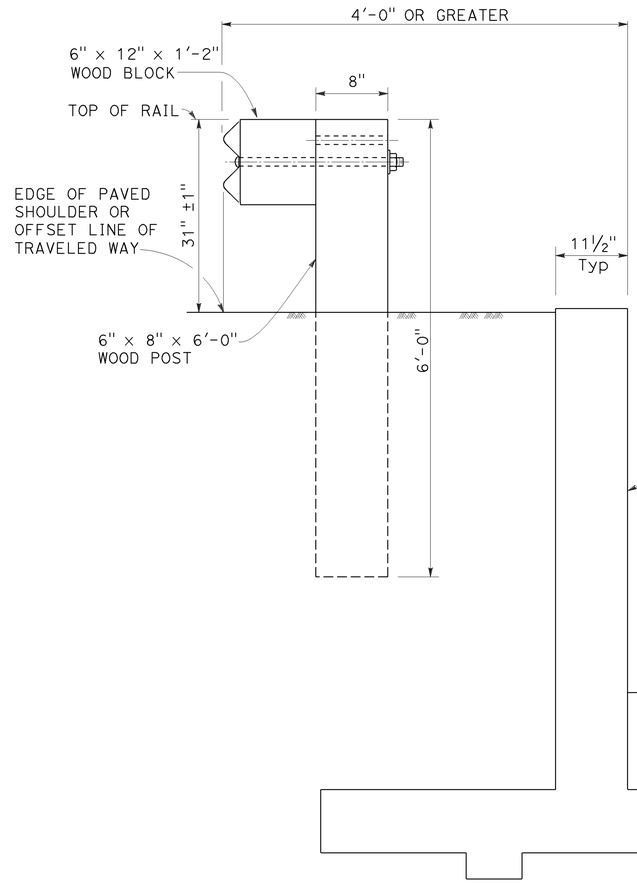

DETAIL C

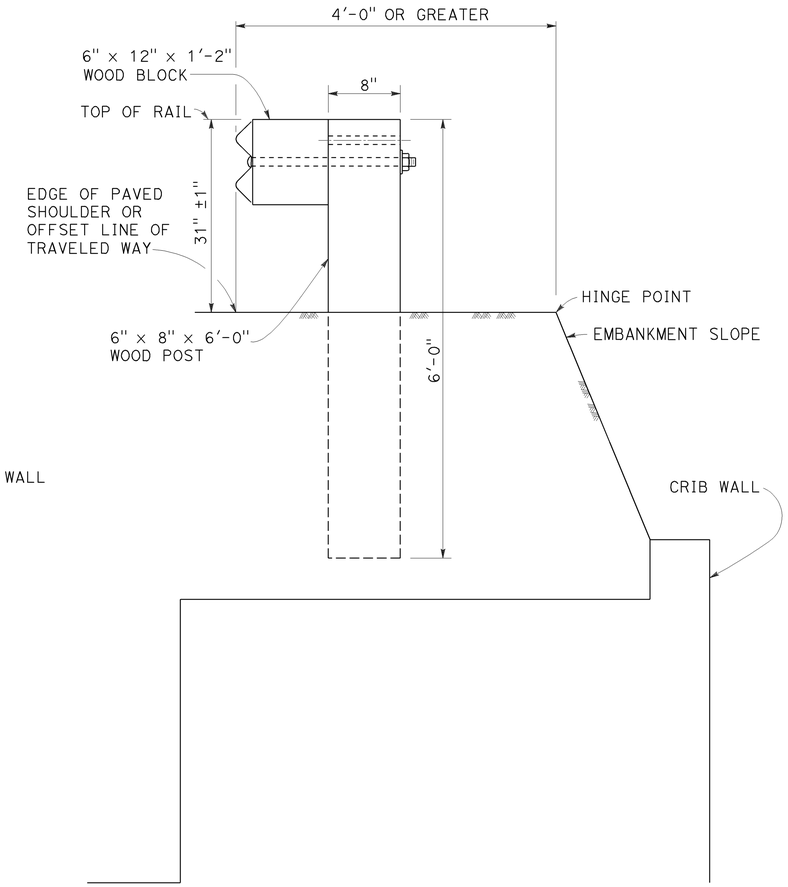

DETAIL D

INSTALLATION AT EARTH RETAINING WALLS

NOTES:

1. These installation details also applicable to steel line post installations. For Detail A, C, and D, where steel line post installations are constructed, W6 x 8.5 or W6 x 9 steel post, 6'-0" in length, with 6" x 12" x 1'-2" notched wood blocks or notched recycled plastic blocks are to be used in place of the size of wood post and wood block shown. For Detail B, where steel line post installations are constructed, W6 x 15 steel post, 8'-0" in length, with 8" x 12" x 1'-2" notched wood blocks or notched recycled plastic blocks are to be used in place of the size of wood post and wood block shown. For additional installation details, see Revised Standard Plan RSP A77L1 and RSP A77L2.
2. Where the distance between the face of the rail and the hinge point is less than 2'-6", see the Project Plans for special details.
3. For dike positioning with MGS installations, see Revised Standard Plan RSP A77N4.

STATE OF CALIFORNIA
DEPARTMENT OF TRANSPORTATION

MIDWEST GUARDRAIL SYSTEM TYPICAL LINE POST EMBEDMENT AND HINGE POINT OFFSET DETAILS

NO SCALE

RSP A77N3 DATED NOVEMBER 15, 2013 SUPERSEDES RSP A77N3
DATED JULY 19, 2013 THAT SUPPLEMENTS THE STANDARD PLANS BOOK DATED 2010.

REVISED STANDARD PLAN RSP A77N3

10-29-13

Dist	COUNTY	ROUTE	POST MILES TOTAL PROJECT	SHEET No.	TOTAL SHEETS
07	LA	10	37.2/42.4	1471	2313

Randell D. Hiatt
REGISTERED CIVIL ENGINEER

July 19, 2013
PLANS APPROVAL DATE

REGISTERED PROFESSIONAL ENGINEER
Randell D. Hiatt
No. C50200
Exp. 6-30-15
CIVIL
STATE OF CALIFORNIA

THE STATE OF CALIFORNIA OR ITS OFFICERS OR AGENTS SHALL NOT BE RESPONSIBLE FOR THE ACCURACY OR COMPLETENESS OF SCANNED COPIES OF THIS PLAN SHEET.

TO ACCOMPANY PLANS DATED 6-1-15

NOTES:

1. When necessary to place dike more than 7" in front of face of MGS, only Type C dike may be used. For dike details, see Revised Standard Plan RSP A87B.
2. For standard railing post embedment, see Revised Standard Plan RSP A77N3.
3. MGS delineation to be used where shown on the Project Plans.
4. When dike or curb is placed under MGS, the maximum height of the dike or curb shall be 6". Mountable dike should not be used. For dike and curb details, see Revised Standard Plans RSP A87A and RSP A87B.
5. For details of typical distance between the face of rail and hinge point, see Revised Standard Plan RSP A77N3.
6. For steel line posts, use 1/4 - 20 self-tapping screws in 0.22" diameter holes or 1/4" bolts in 9/32" diameter holes.

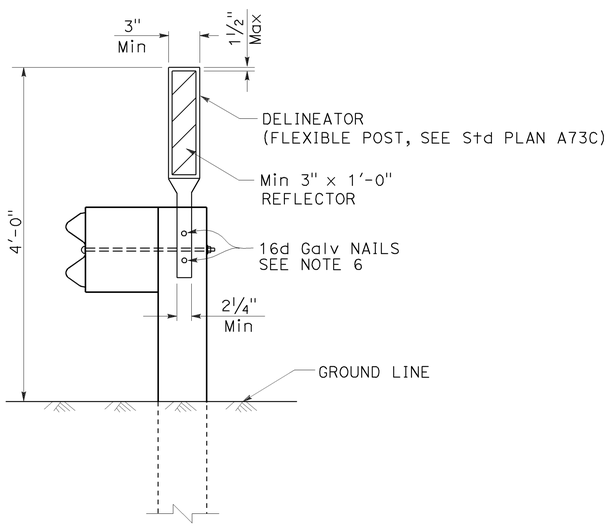

MGS DELINEATION

See Note 3

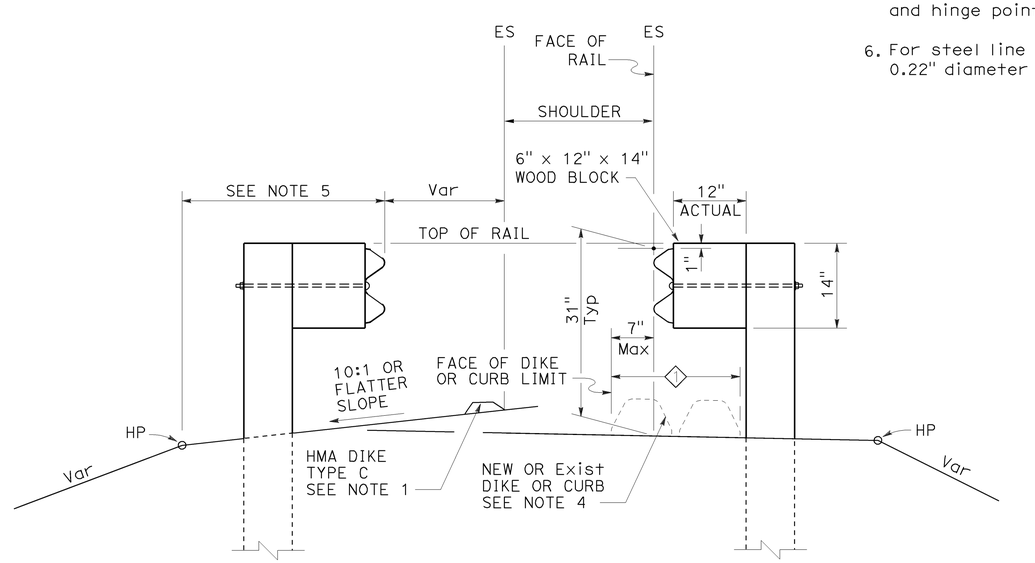

DIKE POSITIONING

See Note 1

1 PERMISSIBLE DIKE OR CURB PLACEMENT AREA

STATE OF CALIFORNIA
DEPARTMENT OF TRANSPORTATION

MIDWEST GUARDRAIL SYSTEM TYPICAL RAILING DELINEATION AND DIKE POSITIONING DETAILS

NO SCALE

RSP A77N4 DATED JULY 19, 2013 SUPPLEMENTS THE STANDARD PLANS BOOK DATED 2010.

REVISED STANDARD PLAN RSP A77N4

2010 REVISED STANDARD PLAN RSP A77N4

7-10-13

Dist	COUNTY	ROUTE	POST MILES TOTAL PROJECT	SHEET No.	TOTAL SHEETS
07	LA	10	37.2/42.4	1472	2313

Randell D. Hiatt
REGISTERED CIVIL ENGINEER

July 19, 2013
PLANS APPROVAL DATE

REGISTERED PROFESSIONAL ENGINEER
Randell D. Hiatt
No. C50200
Exp. 6-30-15
CIVIL
STATE OF CALIFORNIA

THE STATE OF CALIFORNIA OR ITS OFFICERS OR AGENTS SHALL NOT BE RESPONSIBLE FOR THE ACCURACY OR COMPLETENESS OF SCANNED COPIES OF THIS PLAN SHEET.

TO ACCOMPANY PLANS DATED 6-1-15

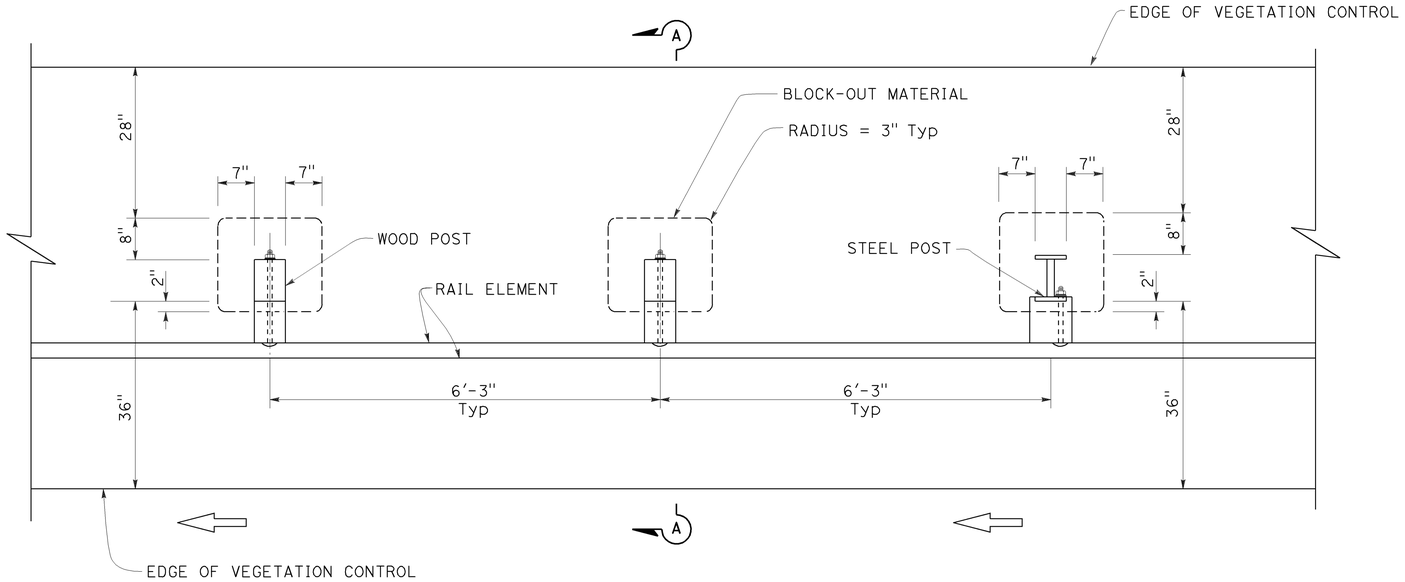

PLAN

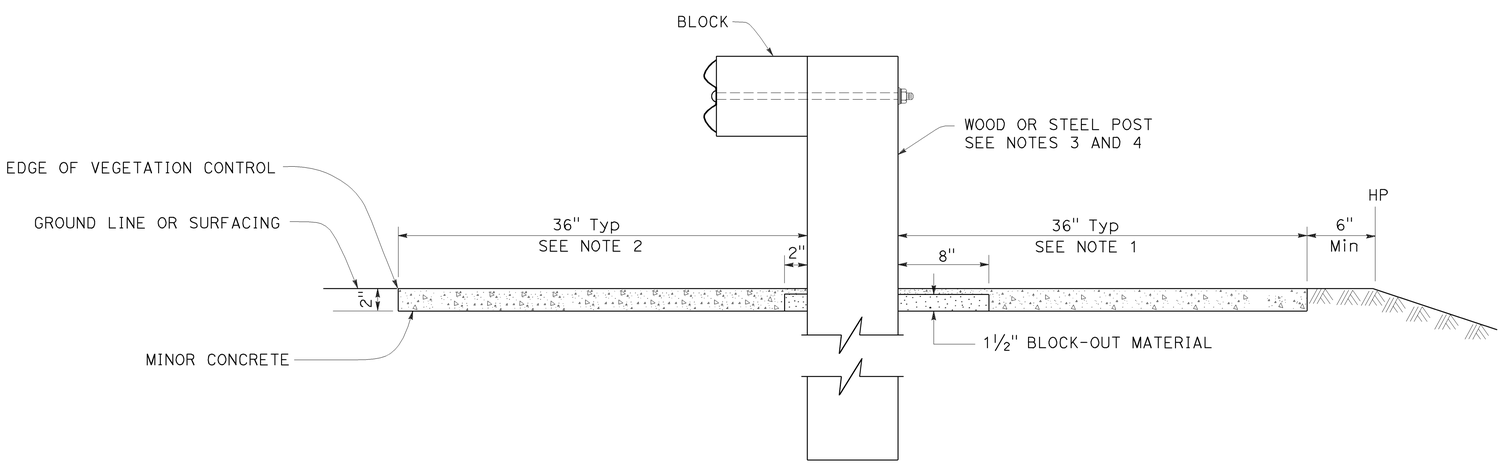

SECTION A-A

NOTES:

1. Where the distance between back of post and hinge point is less than 42", construct vegetation control to 6" from hinge point while maintaining the 8" block-out at back of post. If the 8" block-out at back of post can not be maintained, construct vegetation control flush with the back edge of post.
2. Where dike is constructed under railing, construct vegetation control to back edge of dike. Where paved shoulder is constructed within 36" in front of the post, construct vegetation control to the edge of paved shoulder.
3. For wood post sizes, see Revised Standard Plan RSP A77N1.
4. For steel post sizes, see Revised Standard Plan RSP A77N2.
5. For details not shown, see Revised Standard Plans RSP A77L1 and RSP A77L2.

STATE OF CALIFORNIA
DEPARTMENT OF TRANSPORTATION

MIDWEST GUARDRAIL SYSTEM TYPICAL VEGETATION CONTROL STANDARD RAILING SECTION

NO SCALE

RSP A77N5 DATED JULY 19, 2013 SUPPLEMENTS THE STANDARD PLANS BOOK DATED 2010.

REVISED STANDARD PLAN RSP A77N5

2010 REVISED STANDARD PLAN RSP A77N5

7-3-13

Dist	COUNTY	ROUTE	POST MILES TOTAL PROJECT	SHEET No.	TOTAL SHEETS
07	LA	10	37.2/42.4	1473	2313

Randell D. Hiatt
REGISTERED CIVIL ENGINEER

July 19, 2013
PLANS APPROVAL DATE

REGISTERED PROFESSIONAL ENGINEER
Randell D. Hiatt
No. C50200
Exp. 6-30-15
CIVIL
STATE OF CALIFORNIA

THE STATE OF CALIFORNIA OR ITS OFFICERS OR AGENTS SHALL NOT BE RESPONSIBLE FOR THE ACCURACY OR COMPLETENESS OF SCANNED COPIES OF THIS PLAN SHEET.

TO ACCOMPANY PLANS DATED 6-1-15

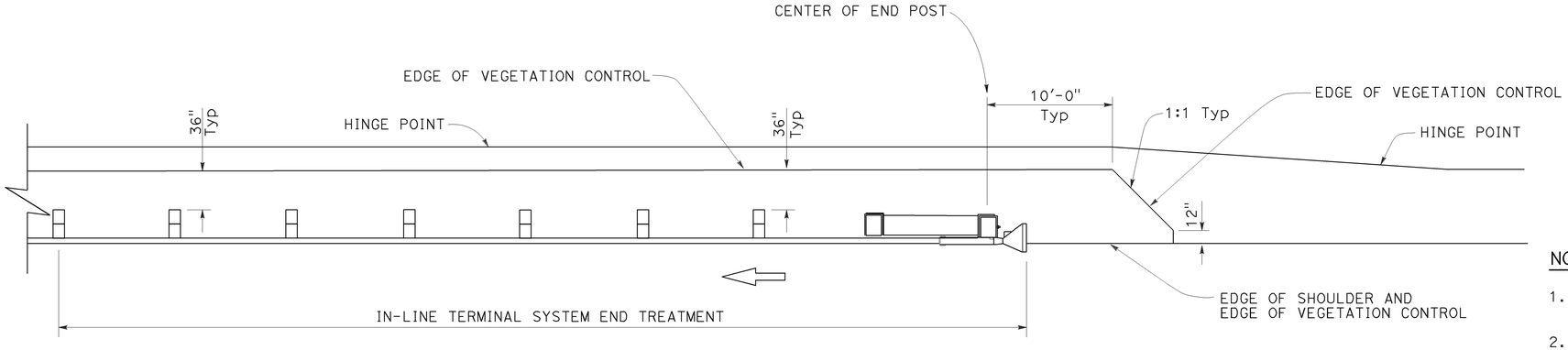

PLAN

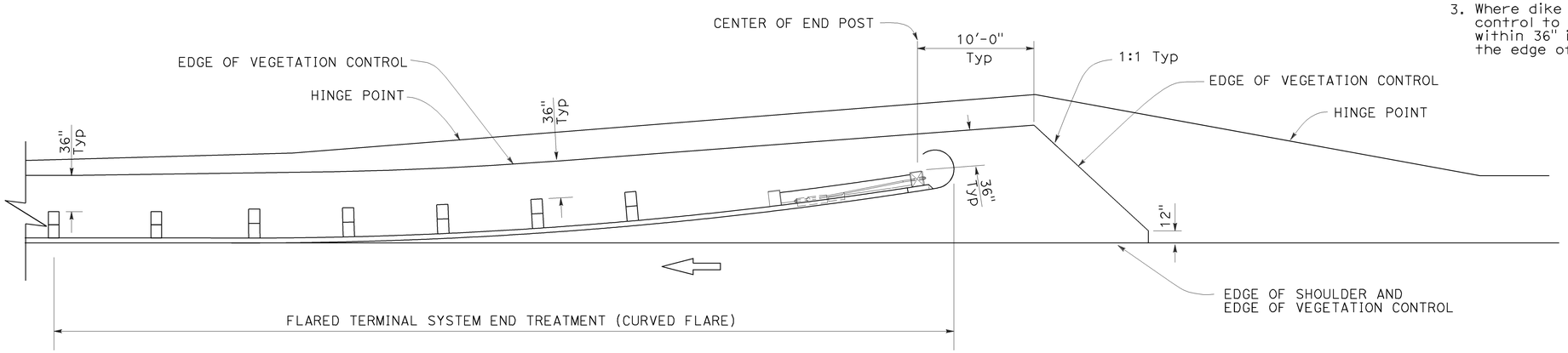

PLAN

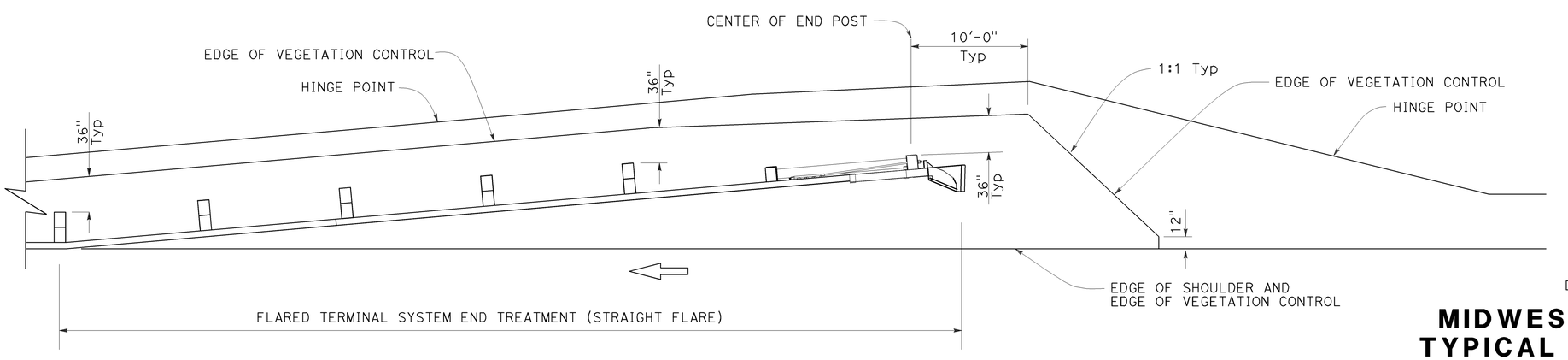

PLAN

NOTES:

1. See Revised Standard Plan RSP A77N5 for additional vegetation control details.
2. Where the distance between back of post and hinge point is less than 42", construct vegetation control to 6" from hinge point while maintaining the 8" block-out at back of post. If the 8" block-out at back of post can not be maintained, construct vegetation control flush with the back edge of post.
3. Where dike is constructed under railing, construct vegetation control to back edge of dike. Where paved shoulder is constructed within 36" in front of the post, construct vegetation control to the edge of paved shoulder.

STATE OF CALIFORNIA
DEPARTMENT OF TRANSPORTATION

MIDWEST GUARDRAIL SYSTEM TYPICAL VEGETATION CONTROL FOR TERMINAL SYSTEM END TREATMENTS

NO SCALE

RSP A77N6 DATED JULY 19, 2013 SUPPLEMENTS THE STANDARD PLANS BOOK DATED 2010.

REVISED STANDARD PLAN RSP A77N6

2010 REVISED STANDARD PLAN RSP A77N6

6-12-13

Dist	COUNTY	ROUTE	POST MILES TOTAL PROJECT	SHEET No.	TOTAL SHEETS
07	LA	10	37.2/42.4	1474	2313

Randell D. Hiatt
REGISTERED CIVIL ENGINEER

July 19, 2013
PLANS APPROVAL DATE

REGISTERED PROFESSIONAL ENGINEER
Randell D. Hiatt
No. C50200
Exp. 6-30-15
CIVIL
STATE OF CALIFORNIA

THE STATE OF CALIFORNIA OR ITS OFFICERS OR AGENTS SHALL NOT BE RESPONSIBLE FOR THE ACCURACY OR COMPLETENESS OF SCANNED COPIES OF THIS PLAN SHEET.

TO ACCOMPANY PLANS DATED 6-1-15

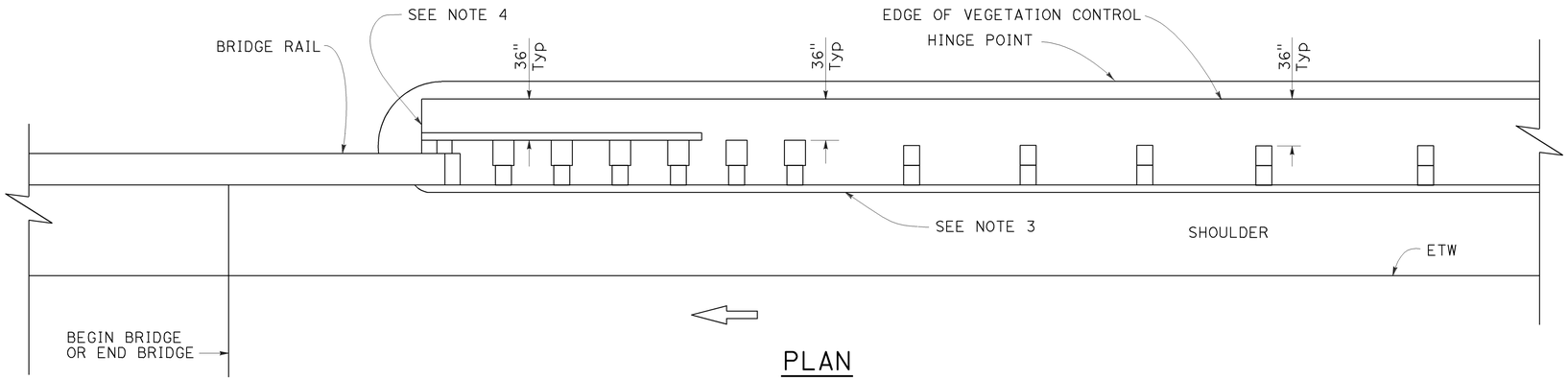

PLAN

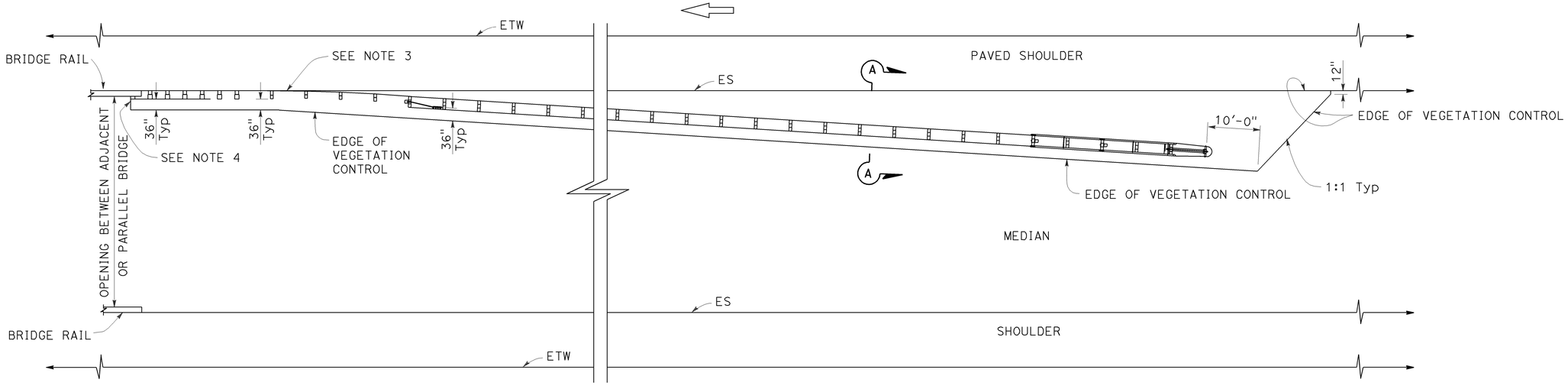

PLAN

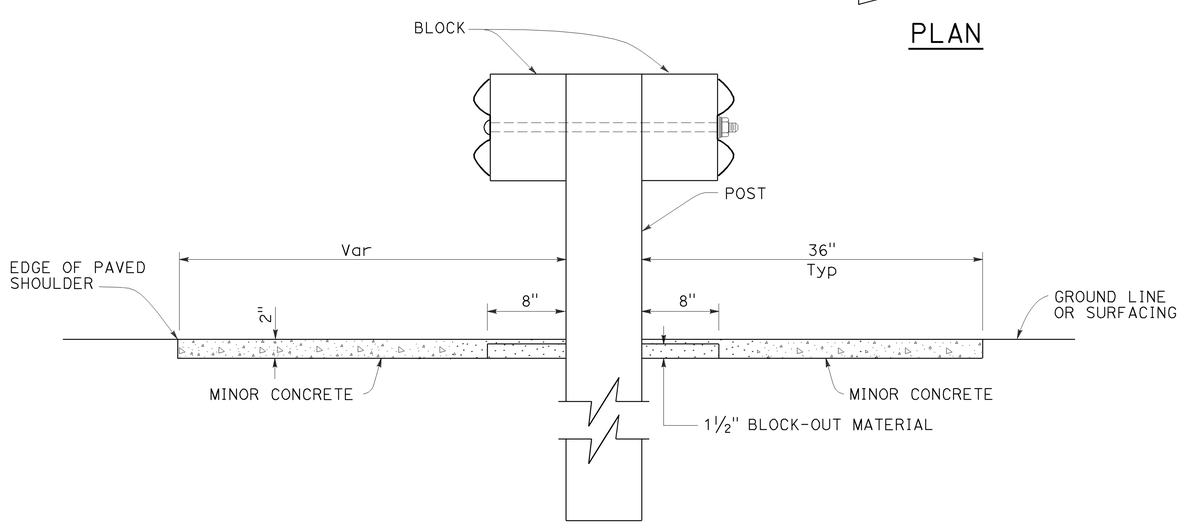

SECTION A-A

NOTES:

1. See Revised Standard Plan RSP A77N5 for additional vegetation control details.
2. Where the distance between back of post and hinge point is less than 42", construct vegetation control to 6" from hinge point while maintaining the 8" block-out at back of post. If the 8" block-out at back of post can not be maintained, construct vegetation control flush with the back edge of post.
3. Where dike is constructed under railing, construct vegetation control to back edge of dike. Where paved shoulder is constructed within 36" in front of the post, construct vegetation control to the edge of paved shoulder.
4. End vegetation control at end of backside rail element.

STATE OF CALIFORNIA
DEPARTMENT OF TRANSPORTATION

MIDWEST GUARDRAIL SYSTEM TYPICAL VEGETATION CONTROL AT STRUCTURE APPROACH

NO SCALE

RSP A77N7 DATED JULY 19, 2013 SUPPLEMENTS THE STANDARD PLANS BOOK DATED 2010.

REVISED STANDARD PLAN RSP A77N7

2010 REVISED STANDARD PLAN RSP A77N7

6-12-13

Dist	COUNTY	ROUTE	POST MILES TOTAL PROJECT	SHEET No.	TOTAL SHEETS
07	LA	10	37.2/42.4	1475	2313

Randell D. Hiatt
REGISTERED CIVIL ENGINEER

July 19, 2013
PLANS APPROVAL DATE

REGISTERED PROFESSIONAL ENGINEER
Randell D. Hiatt
No. C50200
Exp. 6-30-15
CIVIL
STATE OF CALIFORNIA

THE STATE OF CALIFORNIA OR ITS OFFICERS OR AGENTS SHALL NOT BE RESPONSIBLE FOR THE ACCURACY OR COMPLETENESS OF SCANNED COPIES OF THIS PLAN SHEET.

TO ACCOMPANY PLANS DATED 6-1-15

NOTES:

1. See Revised Standard Plan RSP A77N5 for additional vegetation control details.
2. Where the distance between back of post and hinge point is less than 42", construct vegetation control to 6" from hinge point while maintaining the 8" block-out at back of post. If the 8" block-out at back of post can not be maintained, construct vegetation control flush with the back edge of post.
3. Where dike is constructed under railing, construct vegetation control to back edge of dike. Where paved shoulder is constructed within 36" in front of the post, construct vegetation control to the edge of paved shoulder.

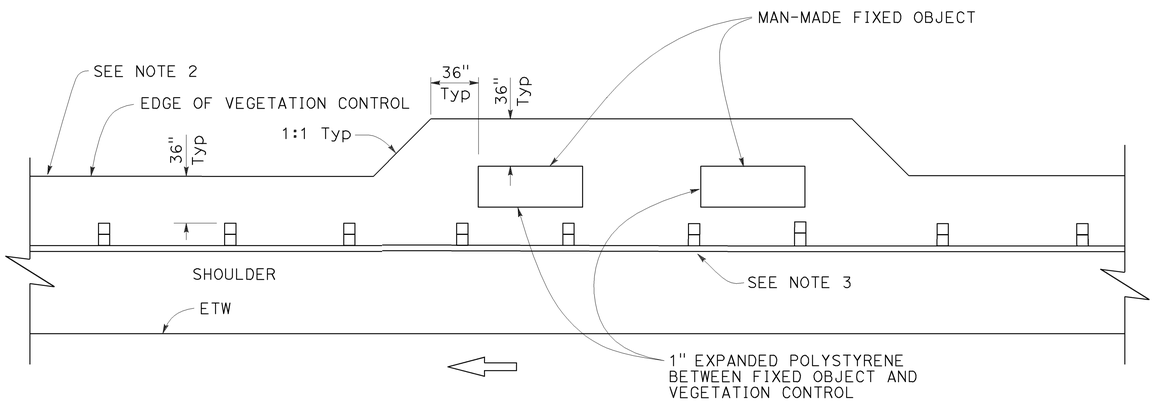

PLAN

Fixed object(s) on shoulder

STATE OF CALIFORNIA
DEPARTMENT OF TRANSPORTATION

MIDWEST GUARDRAIL SYSTEM TYPICAL VEGETATION CONTROL AT FIXED OBJECT

NO SCALE

RSP A77N8 DATED JULY 19, 2013 SUPPLEMENTS THE STANDARD PLANS BOOK DATED 2010.

REVISED STANDARD PLAN RSP A77N8

2010 REVISED STANDARD PLAN RSP A77N8

6-12-13

Dist	COUNTY	ROUTE	POST MILES TOTAL PROJECT	SHEET No.	TOTAL SHEETS
07	LA	10	37.2/42.4	1476	2313

Randell D. Hiatt
REGISTERED CIVIL ENGINEER

November 15, 2013
PLANS APPROVAL DATE

REGISTERED PROFESSIONAL ENGINEER
Randell D. Hiatt
No. C50200
Exp. 6-30-15
CIVIL
STATE OF CALIFORNIA

THE STATE OF CALIFORNIA OR ITS OFFICERS OR AGENTS SHALL NOT BE RESPONSIBLE FOR THE ACCURACY OR COMPLETENESS OF SCANNED COPIES OF THIS PLAN SHEET.

TO ACCOMPANY PLANS DATED 6-1-15

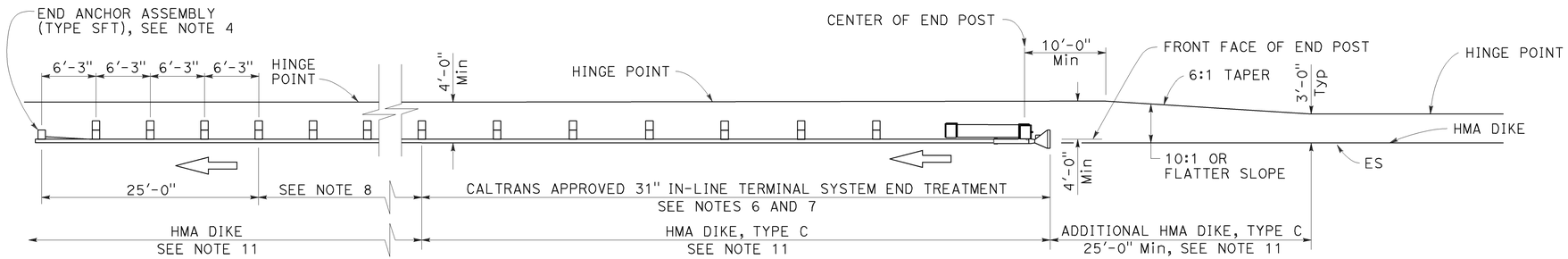

TYPE 11A LAYOUT

(Embankment MGS installation with 31" in-line end treatment at traffic approach end of railing) see Note 5

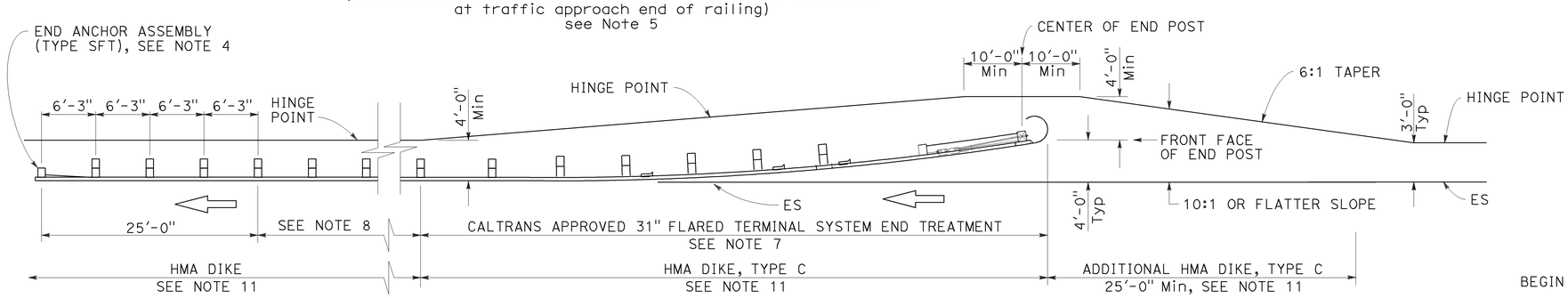

TYPE 11B LAYOUT

(Embankment MGS installation with 31" flared end treatment at traffic approach end of railing) see Note 5

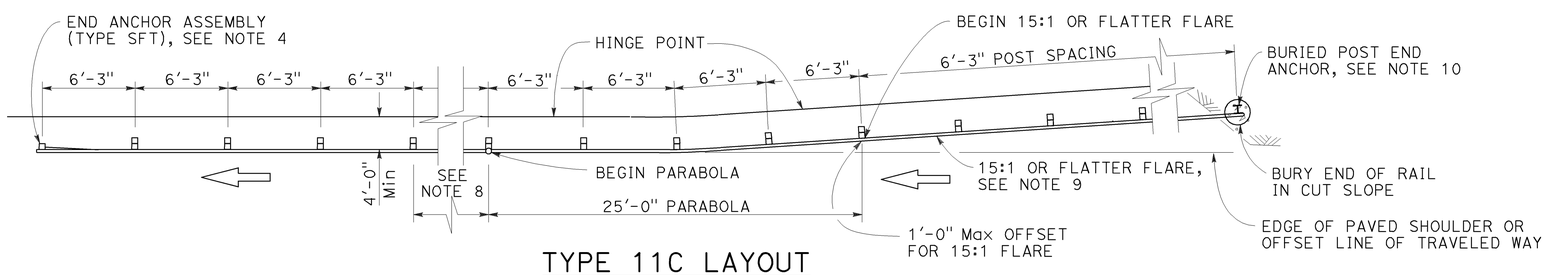

TYPE 11C LAYOUT

(Embankment MGS installation with buried end anchor treatment at traffic approach end of railing) see Notes 5 and 11

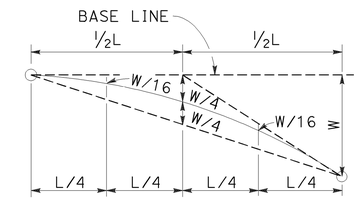

TYPICAL PARABOLIC LAYOUT

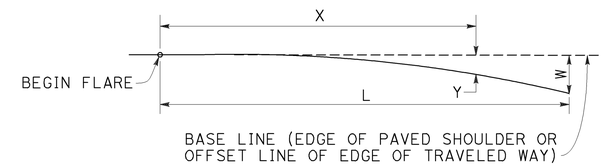

$$Y = \frac{WX^2}{L^2}$$

Y = OFFSET FROM BASE LINE
W = MAXIMUM OFFSET
X = DISTANCE ALONG BASE LINE
L = LENGTH OF FLARE

PARABOLIC FLARE OFFSETS

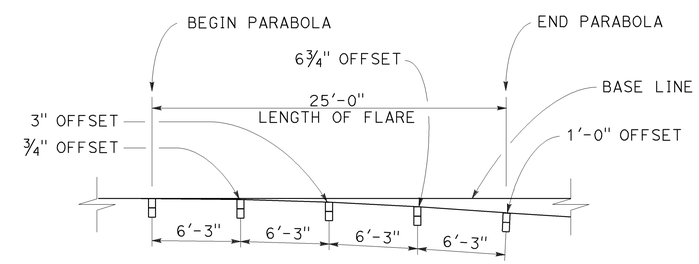

TYPICAL FLARE OFFSETS FOR 1 FOOT Max END OFFSET

NOTES:

1. Line post, blocks and hardware to be used are shown on Revised Standard Plans RSP A77L1, RSP A77L2, RSP A77M1, RSP A77N1 and RSP A77N2.
2. MGS post spacing to be 6'-3" center to center, except as otherwise noted.
3. Except as noted, line posts are 6" x 8" x 6'-0" wood with 6" x 12" x 1'-2" wood blocks. W6 x 8.5 or W6 x 9 steel posts, 6'-0" in length, with 6" x 12" x 1'-2" notched wood blocks or recycled plastic blocks may be used for 6" x 8" x 6'-0" wood post with 6" x 12" x 1'-2" wood blocks where applicable and when specified.
4. For End Anchor Assembly (Type SFT) details, see Revised Standard Plan RSP A77S1.
5. Layout Types 11A, 11B or 11C are typically used where MGS is recommended to shield embankment slopes and a crashworthy end treatment is required for only one direction of traffic.
6. 31" in-line terminal system end treatments are used where site conditions will not accommodate a flared end treatment.
7. The type of 31" terminal system end treatment to be used will be shown on the Project Plans.
8. Dependent on site conditions (embankment height and side slope), construction of additional MGS (length equal to multiples of 12'-6" with 6'-3" post spacing) may be advisable.
9. The 15:1 or flatter flare used with buried end anchors is based on the edge of the paved shoulder or offset line of edge of the traveled way. The length of MGS within the 15:1 or flatter flare is based on site conditions and should be a length equal to multiples of 12'-6".
10. For details of the buried post end anchor used with Type 11C Layout, see Revised Standard Plan RSP A77T2.
11. Where placement of dike is required with MGS installations, see Revised Standard Plan RSP A77N4 for dike positioning details.

STATE OF CALIFORNIA
DEPARTMENT OF TRANSPORTATION

MIDWEST GUARDRAIL SYSTEM TYPICAL LAYOUTS FOR EMBANKMENTS

NO SCALE

RSP A77P1 DATED NOVEMBER 15, 2013 SUPERSEDES RSP A77P1 DATED JULY 19, 2013 THAT SUPPLEMENTS THE STANDARD PLANS BOOK DATED 2010.

REVISED STANDARD PLAN RSP A77P1

2010 REVISED STANDARD PLAN RSP A77P1

10-4-13

Dist	COUNTY	ROUTE	POST MILES TOTAL PROJECT	SHEET No.	TOTAL SHEETS
07	LA	10	37.2/42.4	1477	2313

Randell D. Hiatt
REGISTERED CIVIL ENGINEER

July 19, 2013
PLANS APPROVAL DATE

REGISTERED PROFESSIONAL ENGINEER
Randell D. Hiatt
No. C50200
Exp. 6-30-15
CIVIL
STATE OF CALIFORNIA

THE STATE OF CALIFORNIA OR ITS OFFICERS OR AGENTS SHALL NOT BE RESPONSIBLE FOR THE ACCURACY OR COMPLETENESS OF SCANNED COPIES OF THIS PLAN SHEET.

TO ACCOMPANY PLANS DATED 6-1-15

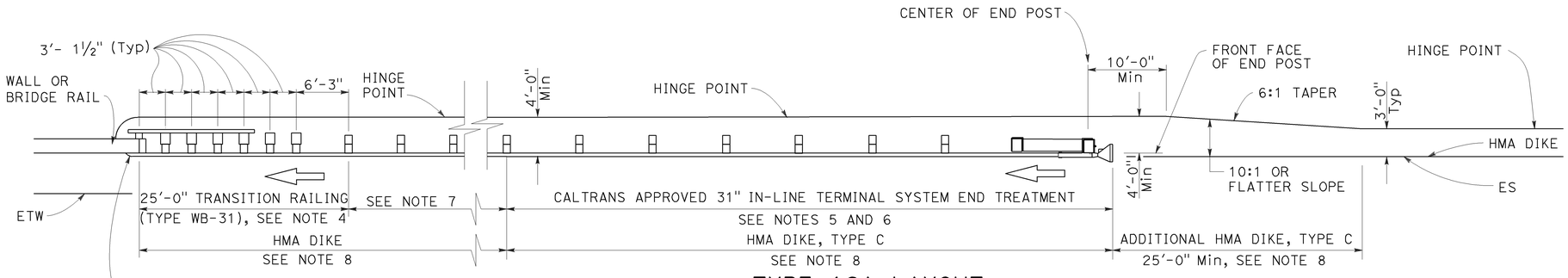

TYPE 12A LAYOUT

(MGS installation at structure approach with
31" In-line end treatment at traffic approach end of railing)
See Notes 9

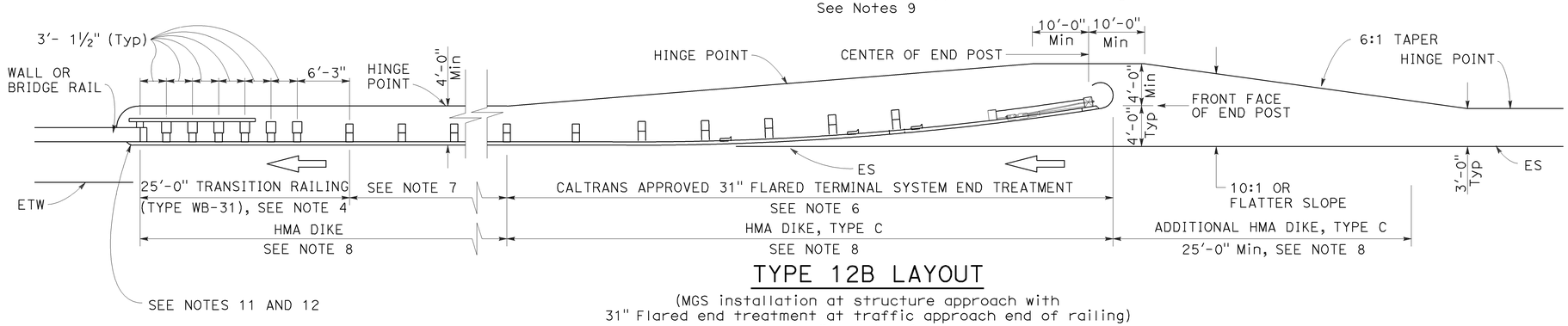

TYPE 12B LAYOUT

(MGS installation at structure approach with
31" Flared end treatment at traffic approach end of railing)
See Notes 9

NOTES:

1. Line post, blocks and hardware to be used are shown on Revised Standard Plans RSP A77L1, RSP A77L2, RSP A77M1, RSP A77N1 and RSP A77N2.
2. MGS post spacing to be 6'-3" center to center, except as otherwise noted.
3. Except as noted, line posts are 6" x 8" x 6'-0" wood with 6" x 12" x 1'-2" wood blocks. W6 x 8.5 or W6 x 9 steel posts, 6'-0" in length, with 6" x 12" x 1'-2" notched wood blocks or plastic blocks may be used for 6" x 8" x 6'-0" wood posts with 6" x 12" x 1'-2" wood blocks where applicable and when specified.
4. For Transition Railing (Type WB-31) details for Types 12A and 12B Layouts, see Revised Standard Plan RSP A77U4.
5. 31" in-line terminal system end treatments are used where site conditions will not accommodate a 31" flared end treatment.
6. The type 31" of terminal system end treatment to be used will be shown on the Project Plans.
7. Dependent on site conditions (embankment height, side slopes, or other fixed objects), it may be advisable to construct additional guard railing (a length equal to multiples of 12'-6" with 6'-3" post spacing) between the transition railing and end treatment. A 12.5 degree angle of departure can be drawn on the Project Plans from the edge of traveled way through the outer most point of the fixed object to determine the additional length of railing needed.
8. Where placement of dike is required with guard railing installations, see Revised Standard Plan RSP A77N4 for dike positioning details.
9. Type 12A or Type 12B Layouts are typically used:
   a. To the right of approaching traffic, at the end of a structure, on two-lane conventional highway where the roadbed width across the structure is less than 40 feet.
   b. To the left of approaching traffic, at the end of a structure, on two-lane conventional highway where the roadbed width across the structure is less than 40 feet.
   c. To the right of approaching traffic at the end of each structure on multilane freeways or expressways with separate adjacent or parallel bridges.
   d. To the right of approaching traffic at the end of the structure on multilane freeways or expressways with decked median on the bridge.
10. See Revised Standard Plan RSP A77Q3 for typical layout used left of approaching traffic at the ends of each structure on multilane freeways or expressways with separate adjacent or parallel bridges.
11. For additional details of typical connections to bridge rail, see Connection Detail AA on Revised Standard Plans RSP A77U1 and RSP A77U2 and Connection Detail FF on Revised Standard Plans RSP A77V1 and RSP A77V2.
12. For additional details of a typical connection to walls or abutments, see Revised Standard Plan RSP A77U3.

STATE OF CALIFORNIA
DEPARTMENT OF TRANSPORTATION

MIDWEST GUARDRAIL SYSTEM TYPICAL LAYOUTS FOR STRUCTURE APPROACH

NO SCALE

RSP A77Q1 DATED JULY 19, 2013 SUPPLEMENTS THE STANDARD PLANS BOOK DATED 2010.

REVISED STANDARD PLAN RSP A77Q1

2010 REVISED STANDARD PLAN RSP A77Q1

Dist	COUNTY	ROUTE	POST MILES TOTAL PROJECT	SHEET No.	TOTAL SHEETS
07	LA	10	37.2/42.4	1478	2313

Randell D. Hiatt
REGISTERED CIVIL ENGINEER

July 19, 2013
PLANS APPROVAL DATE

REGISTERED PROFESSIONAL ENGINEER
Randell D. Hiatt
No. C50200
Exp. 6-30-15
CIVIL
STATE OF CALIFORNIA

THE STATE OF CALIFORNIA OR ITS OFFICERS OR AGENTS SHALL NOT BE RESPONSIBLE FOR THE ACCURACY OR COMPLETENESS OF SCANNED COPIES OF THIS PLAN SHEET.

TO ACCOMPANY PLANS DATED 6-1-15

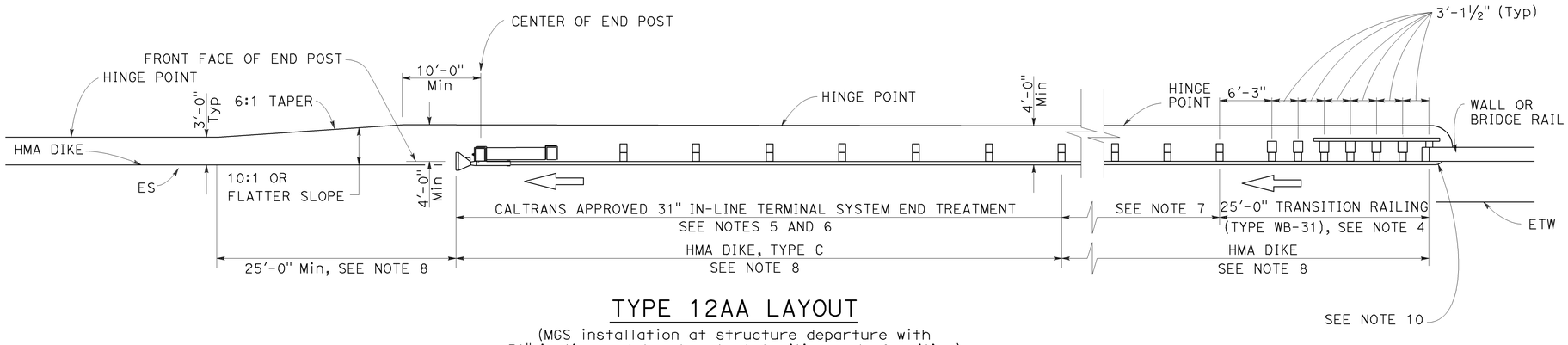

TYPE 12AA LAYOUT

(MGS installation at structure departure with
31" in-line end treatment at trailing end of railing)
See Notes 8 and 9

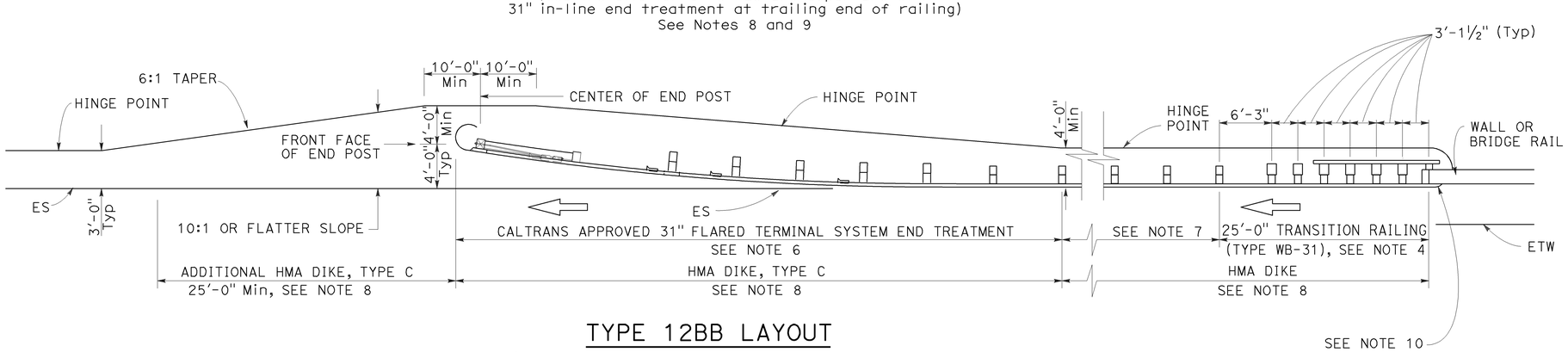

TYPE 12BB LAYOUT

(MGS installation at structure departure with
31" flared end treatment at trailing end of railing)
See Notes 8 and 9

NOTES:

1. Line post, blocks and hardware to be used are shown on Revised Standard Plans RSP A77L1, RSP A77L2, RSP A77M1, RSP A77N1 and RSP A77N2.
2. MGS post spacing to be 6'-3" center to center, except as otherwise noted.
3. Except as noted, line posts are 6" x 8" x 6'-0" wood with 6" x 12" x 1'-2" wood blocks. W6 x 8.5 or W6 x 9 steel posts, 6'-0" in length, with 6" x 12" x 1-2" notched wood blocks or notched recycled plastic blocks may be used for 6" x 8" x 6'-0" wood posts with 6" x 12" x 1'-2" wood blocks where applicable and when specified.
4. For Transition Railing (Type WB-31) details for Types 12AA and 12BB Layouts, see Revised Standard Plan RSP A77U4.
5. 31" in-line terminal system treatments are used where site conditions will not accommodate a 31" flared end treatment.
6. The type of 31" terminal system to be used will be shown on the Project Plans.
7. Dependent on site conditions (embankment height, side slopes, other fixed objects), it may be advisable to construct additional MGS (a length equal to multiples of 12'-6" with 6'-3" post spacing) between the transition railing and 31" end treatments.
8. Where placement of dike is required with MGS installations, see Revised Standard Plan RSP A77N4 for dike positioning details.
9. Type 12AA or Type 12BB Layouts are typically used to the right of traffic departing a structure on two-way conventional highways where the roadbed width across the structure is less than 40 feet.
10. For additional details of typical connections to bridge rail, see Connection Detail CC on Revised Standard Plan RSP A77U2 and Connection Detail HH on Revised Standard Plan RSP A77V2.

STATE OF CALIFORNIA
DEPARTMENT OF TRANSPORTATION

MIDWEST GUARDRAIL SYSTEM TYPICAL LAYOUTS FOR STRUCTURE DEPARTURE

NO SCALE

RSP A77Q4 DATED JULY 19, 2013 SUPPLEMENTS THE STANDARD PLANS BOOK DATED 2010.

REVISED STANDARD PLAN RSP A77Q4

2010 REVISED STANDARD PLAN RSP A77Q4

6-19-13

Dist	COUNTY	ROUTE	POST MILES TOTAL PROJECT	SHEET No.	TOTAL SHEETS
07	LA	10	37.2/42.4	1479	2313

Randell D. Hiatt
REGISTERED CIVIL ENGINEER

July 19, 2013
PLANS APPROVAL DATE

REGISTERED PROFESSIONAL ENGINEER
Randell D. Hiatt
No. C50200
Exp. 6-30-15
CIVIL
STATE OF CALIFORNIA

THE STATE OF CALIFORNIA OR ITS OFFICERS OR AGENTS SHALL NOT BE RESPONSIBLE FOR THE ACCURACY OR COMPLETENESS OF SCANNED COPIES OF THIS PLAN SHEET.

TO ACCOMPANY PLANS DATED 6-1-15

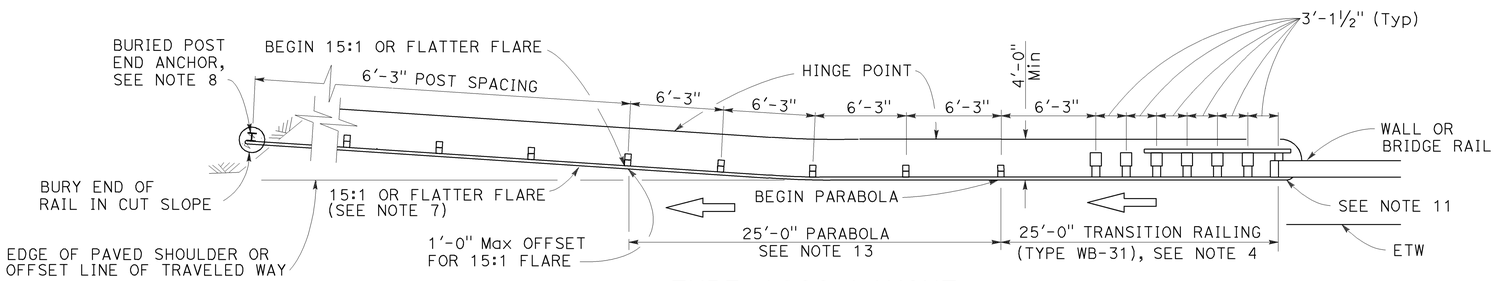

TYPE 12CC LAYOUT

(MGS installation at structure departure with a Buried end anchor treatment at trailing end of railing)
See Notes 9 and 10

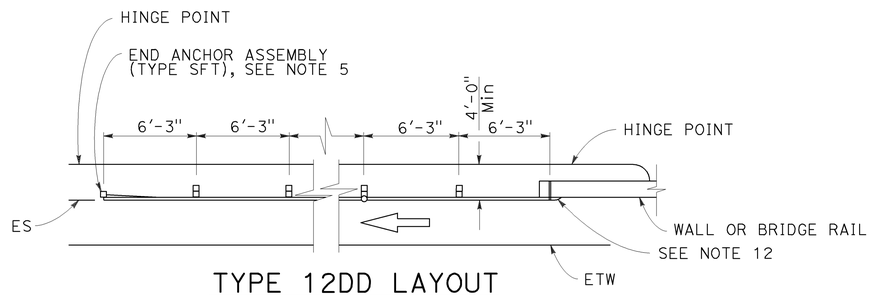

TYPE 12DD LAYOUT

(MGS installation at structure departure With end anchor assembly at trailing end of railing)
See Notes 6 and 9

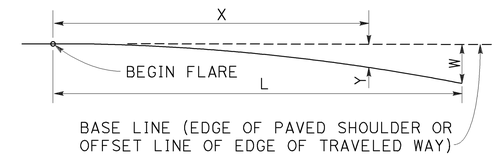

$$Y = \frac{WX^2}{L^2}$$

Y = OFFSET FROM BASE LINE
W = MAXIMUM OFFSET
X = DISTANCE ALONG BASE LINE
L = LENGTH OF FLARE

PARABOLIC FLARE OFFSETS

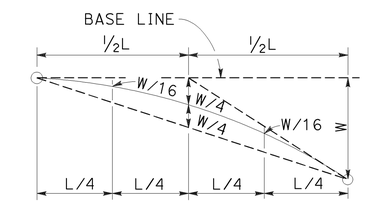

TYPICAL PARABOLIC LAYOUT

NOTES:

1. Line post, blocks and hardware to be used are shown on Revised Standard Plans RSP A77L1, RSP A77L2, RSP A77M1, RSP A77N1 and RSP A77N2.
2. MSG post spacing to be 6'-3" center to center, except as otherwise noted.
3. Except as noted, line posts are 6" x 8" x 6'-0" wood with 6" x 12" x 1'-2" wood blocks. W6 x 8.5 or W6 x 9 steel posts, 6'-0" in length, with 6" x 12" x 1'-2" notched wood blocks or notched recycled plastic blocks may be used for 6" x 8" x 6'-0" wood line posts with 6" x 12" x 1'-2" wood blocks where applicable and when specified.
4. For Transition Railing (Type WB-31) details for Type 12CC Layout, see Revised Standard Plan RSP A77U4.
5. For details of End Anchor Assembly (Type SFT) used with Type 12DD Layout, see Revised Standard Plan RSP A77S1.
6. Type 12DD layout is typically used to the right of traffic departing a structure on two-way conventional highways where the roadbed width across the structure is equal to or greater than 40 feet and MGS is recommended (embankment height, side slopes, other fixed objects). Length of railing to be equal to multiples of 12'-6". For MGS connection details to bridge rail, see Revised Standard Plans RSP A77U1 and RSP A77V1. For MGS connection details to wall, see Revised Standard Plan RSP A77U3.
7. The 15:1 or flatter flare for Type 12CC Layout is based on the edge of the paved shoulder or offset line of edge of the traveled way. The length of MGS within the 15:1 or flatter flare is based on site conditions and should be a length equal to multiples of 12'-6".
8. For details of the buried post end anchor used with Type 12CC Layout, see Revised Standard Plan RSP A77T2.
9. Where placement of dike is required with MGS installations, see Revised Standard Plan RSP A77N4 for dike positioning details.
10. Type 12CC Layout is typically used to the right of traffic departing a structure on two-way conventional highways where the roadbed width across the structure is less than 40 feet.
11. For additional details of a typical connection to bridge rail for Layout Type 12CC, see Connection Detail CC on Revised Standard Plan RSP A77U2 and Connection Detail HH on Revised Standard Plan RSP A77V2.
12. For additional details of a typical connection to bridge rail for Layout Type 12DD, see Connection Detail BB on Revised Standard Plan RSP A77U1 and Connection Detail GG on Revised Standard Plan RSP A77V1.
13. For typical flare offsets for 25'-0" length parabola with maximum offset of 1'-0", see Revised Standard Plan RSP A77P1.

STATE OF CALIFORNIA
DEPARTMENT OF TRANSPORTATION

MIDWEST GUARDRAIL SYSTEM TYPICAL LAYOUTS FOR STRUCTURE DEPARTURE

NO SCALE

RSP A77Q5 DATED JULY 19, 2013 SUPPLEMENTS THE STANDARD PLANS BOOK DATED 2010.

REVISED STANDARD PLAN RSP A77Q5

2010 REVISED STANDARD PLAN RSP A77Q5

6-20-13

Dist	COUNTY	ROUTE	POST MILES TOTAL PROJECT	SHEET No.	TOTAL SHEETS
07	LA	10	37.2/42.4	1480	2313

Randell D. Hiatt
REGISTERED CIVIL ENGINEER

July 19, 2013
PLANS APPROVAL DATE

REGISTERED PROFESSIONAL ENGINEER
Randell D. Hiatt
No. C50200
Exp. 6-30-15
CIVIL
STATE OF CALIFORNIA

THE STATE OF CALIFORNIA OR ITS OFFICERS OR AGENTS SHALL NOT BE RESPONSIBLE FOR THE ACCURACY OR COMPLETENESS OF SCANNED COPIES OF THIS PLAN SHEET.

TO ACCOMPANY PLANS DATED 6-1-15

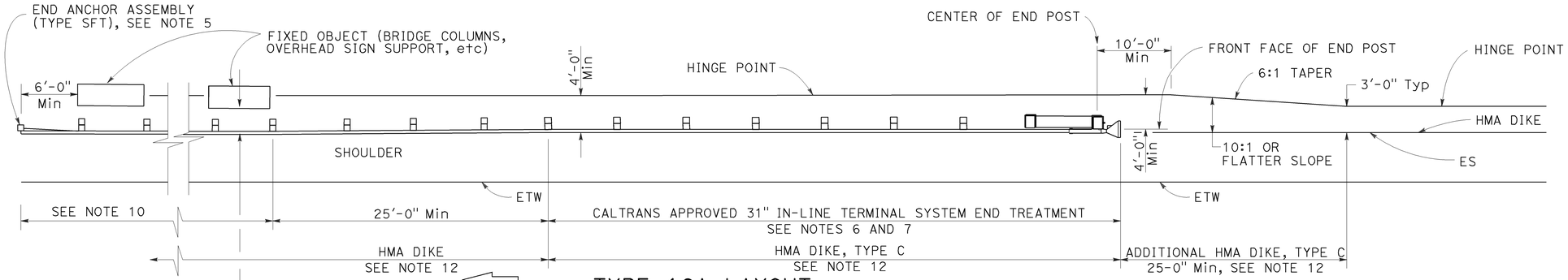

TYPE 16A LAYOUT

(MGS installation at roadside fixed object or objects with 31" in-line end treatment at traffic approach end of railing)
See Notes 11 and 12

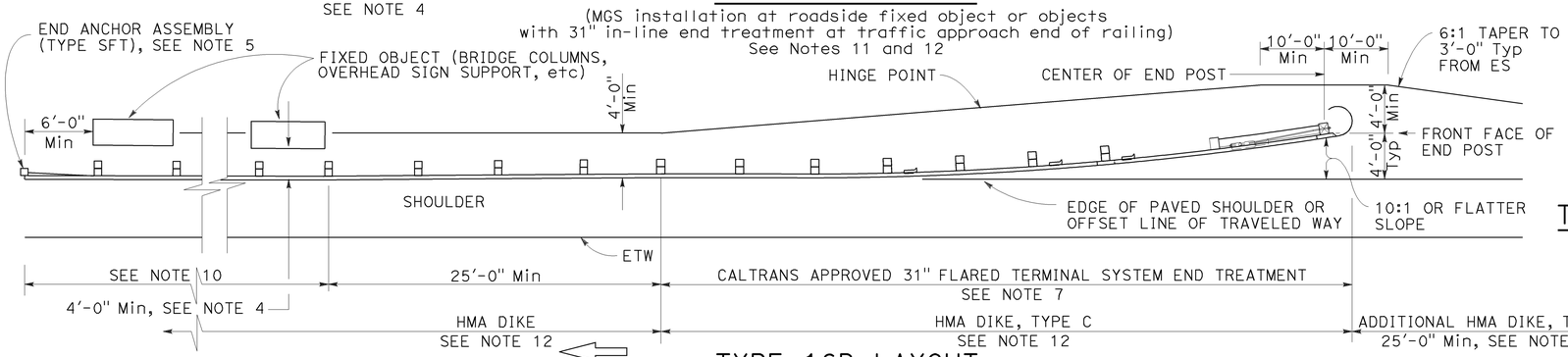

TYPE 16B LAYOUT

(MGS installation at roadside fixed object or objects with 31' flared end treatment at traffic approach end of railing)
See Notes 11 and 12

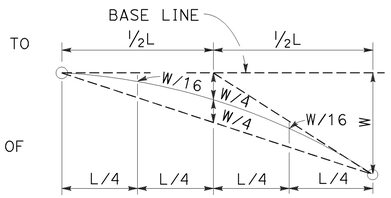

TYPIC AL PARABOLIC LAYOUT

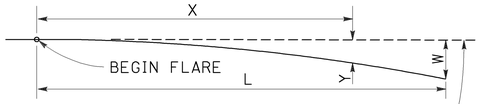

BASE LINE (EDGE OF PAVED SHOULDER OR OFFSET LINE OF EDGE OF TRAVELED WAY)

$$Y = \frac{WX^2}{L^2}$$

Y = OFFSET FROM BASE LINE
W = MAXIMUM OFFSET
X = DISTANCE ALONG BASE LINE
L = LENGTH OF FLARE

PARABOLIC FLARE OFFSETS

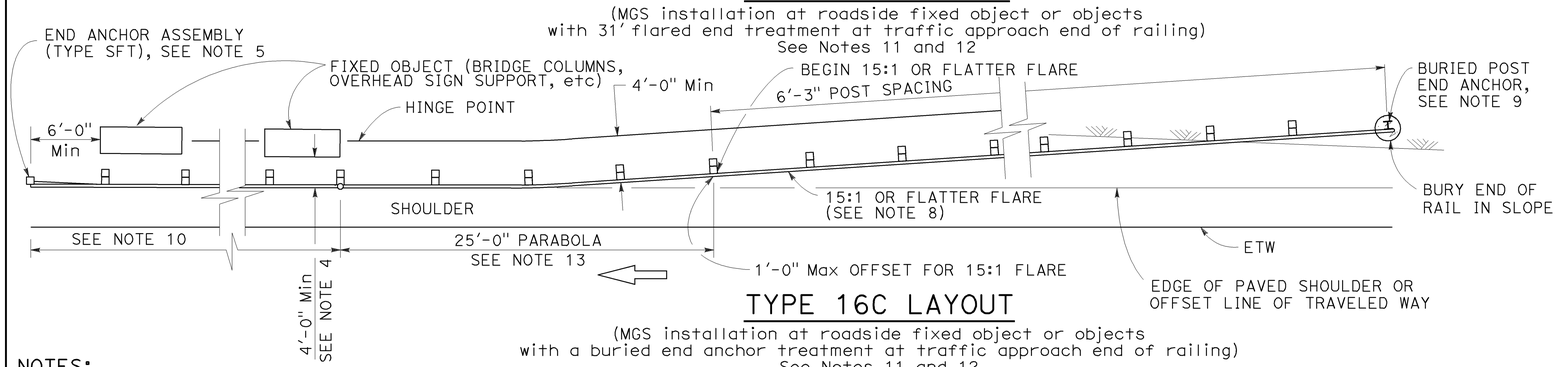

TYPE 16C LAYOUT

(MGS installation at roadside fixed object or objects with a buried end anchor treatment at traffic approach end of railing)
See Notes 11 and 12

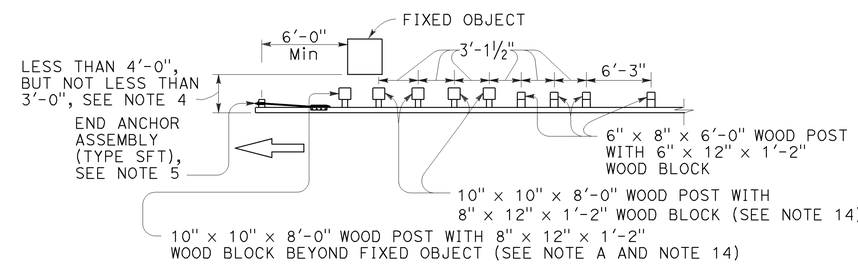

NOTE A: For a series of fixed objects (bridge columns, overhead sign supports, etc.) additional 10" x 10" x 8'-0" wood post with 8" x 12" x 1'-2" wood blocks at 3'-1½" center to center spacing are to be used between fixed objects.

STRENGTHENED MIDWEST GUARDRAIL SYSTEM SECTIONS FOR FIXED OBJECT

Use strengthened MGS sections with Types 16A, 16B or 16C layouts where minimum clearance between the face of the railing and fixed object(s) is less than 4'-0", but not less than 3'-0". See Note 4

NOTES:

1. Line post, blocks and hardware to be used are shown on Revised Standard Plans RSP A77L1, RSP A77L2, RSP A77M1, RSP A77N1 and RSP A77N2.
2. MGS post spacing to be 6'-3" center to center, except as otherwise noted.
3. Except as noted, line posts are 6" x 8" x 6'-0" wood with 6" x 12" x 1'-2" wood blocks. W6 x 8.5 or W6 x 9 steel posts, 6'-0" in length, with 6" x 12" x 1'-2" notched wood blocks or notched recycled plastic blocks may be used for 6" x 8" x 6'-0" wood line posts with 6" x 12" x 1'-2" wood blocks where applicable and when specified.
4. A 4'-0" minimum clearance is required between the face of the railing and the face of a fixed object located directly behind MGS sections with post spacing of 6'-3". Construct MGS as shown in the detail "Strengthened Midwest Guardrail System Sections for Fixed Object" on this plan, where the clearance between the face of the railing and the face of a fixed object is less than 4'-0", but not less than 3'-0". Where the clearance is less than 3'-0", a concrete wall or barrier should be constructed to shield the fixed object(s).
5. For End Anchor Assembly (Type SFT) details, see Revised Standard Plan RSP A77S1.
6. 31" in-line terminal system end treatments are used where site conditions will not accommodate a 31" flared end treatment.
7. The type of 31" terminal system to be used will be shown on the Project Plans.
8. The 15:1 or flatter flare used with Type 16C Layout is based on the edge of the paved shoulder or offset line of edge of the traveled way. The length of MGS within the 15:1 or flatter flare is based on site conditions and should be a length equal to multiples of 12'-6".
9. For details of the Buried Post End Anchor used with Type 16C Layout, see Revised Standard Plan RSP A77T2.
10. As site conditions dictate, construct additional MGS to shield fixed object(s). Additional MGS length equal to multiples of 12'-6". Post spacing at 6'-3" except as specified in Note 4.
11. Layout Types 16A, 16B or 16C are typically used where MGS is recommended to shield roadside fixed object(s) and a crashworthy 31" end treatment is required for only one direction of traffic.
12. Where placement of dike is required with MGS, see Revised Standard Plan RSP A77N4 for dike positioning details.
13. For typical flare offsets for 25'-0" length parabola with maximum offset of 1'-0", see Revised Standard Plan RSP A77P1.
14. W6 x 15 steel post, 8'-0" in length, with 8" x 12" x 1'-2" notched wood block or notched recycled plastic blocks may be used in place of the 10" x 10" x 8'-0" wood post with 8" x 12" x 1'-2" wood block shown in the detail "Strengthened Midwest Guardrail System Sections for Fixed Object".

STATE OF CALIFORNIA
DEPARTMENT OF TRANSPORTATION

MIDWEST GUARDRAIL SYSTEM TYPICAL LAYOUTS FOR ROADSIDE FIXED OBJECTS

NO SCALE

RSP A77R3 DATED JULY 19, 2013 SUPPLEMENTS THE STANDARD PLANS BOOK DATED 2010.

REVISED STANDARD PLAN RSP A77R3

2010 REVISED STANDARD PLAN RSP A77R3

6-20-13

Dist	COUNTY	ROUTE	POST MILES TOTAL PROJECT	SHEET No.	TOTAL SHEETS
07	LA	10	37.2/42.4	1481	2313

Randell D. Hiatt
REGISTERED CIVIL ENGINEER

July 19, 2013
PLANS APPROVAL DATE

REGISTERED PROFESSIONAL ENGINEER
Randell D. Hiatt
No. C50200
Exp. 6-30-15
CIVIL
STATE OF CALIFORNIA

THE STATE OF CALIFORNIA OR ITS OFFICERS OR AGENTS SHALL NOT BE RESPONSIBLE FOR THE ACCURACY OR COMPLETENESS OF SCANNED COPIES OF THIS PLAN SHEET.

TO ACCOMPANY PLANS DATED 6-1-15

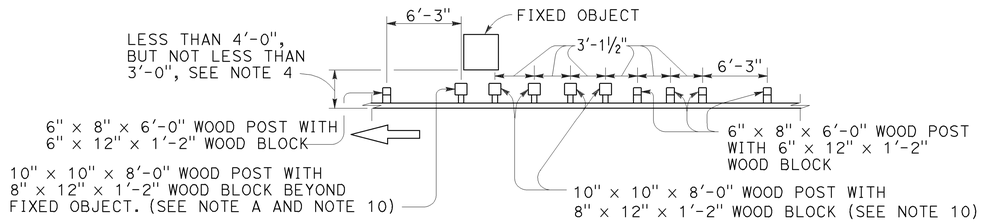

NOTE A: For a series of fixed objects (bridge columns, overhead sign supports, etc.) additional 10" x 10" x 8'-0" wood post with 8" x 12" x 1'-2" wood blocks at 3'-1½" center to center spacing are to be used between fixed object(s).

STRENGTHENED MIDWEST GUARDRAIL SYSTEM SECTIONS FOR FIXED OBJECT

Use strengthened MGS sections with layout Type 16H where minimum clearance between the face of the MGS and fixed object(s) is less than 4'-0", but not less than 3'-0". See Note 4.

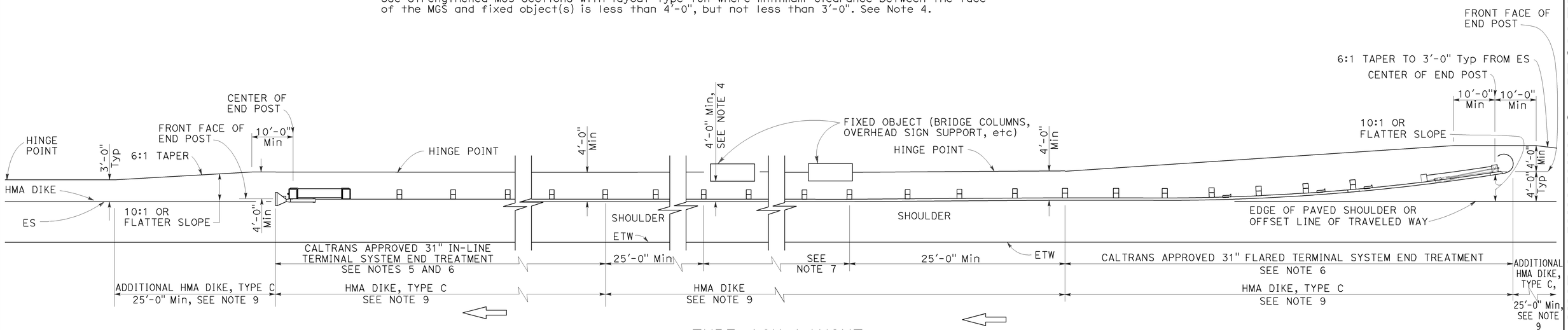

TYPE 16H LAYOUT

(MGS installation at roadside fixed object or objects with 31" flared end treatment and 31" in-line end treatment at the ends of railing)
See Note 8

NOTES:

1. Line post, blocks and hardware to be used are shown on Revised Standard Plans RSP A77L1, RSP A77L2, RSP A77M1, RSP A77N1 and RSP A77N2.
2. MGS post spacing to be 6'-3" center to center, except as otherwise noted.
3. Except as noted, line posts are 6" x 8" x 6'-0" wood with 6" x 12" x 1'-2" wood blocks. W6 x 8.5 or W6 x 9 steel posts, 6'-0" in length, with 6" x 12" x 1'-2" notched wood blocks or notched recycled plastic blocks may be used for 6" x 8" x 6'-0" wood posts with 6" x 12" x 1'-2" wood blocks where applicable and when specified.
4. A 4'-0" minimum clearance is required between the face of the railing and the face of a fixed object located directly behind MGS sections with post spacing at 6'-3". Construct MGS as shown in the detail "Strengthened Midwest Guardrail System Sections for Fixed Objects" on this plan, where the clearance between the face of the railing and the face of a fixed object is less than 4'-0", but not less than 3'-0". Where the clearance is less than 3'-0", a concrete wall or barrier should be constructed to shield the fixed object(s).
5. 31" in-line terminal system end treatments are used where site conditions will not accommodate a 31" flared end treatment.
6. The type of 31" terminal system to be used will be shown on the Project Plans.
7. As site conditions dictate, construct additional MGS to shield fixed object(s). Additional MGS length equal to multiples of 12'-6". Post spacing at 6'-3", except as specified in Note 4.
8. Layout Types 16D through 16L, shown on the A77R Series of Standard PLans, typically used where MGS is recommended to shield roadside fixed object(s) and a crashworthy 31" end treatment is required for both directions of traffic.
9. Where placement of dike is required with MGS, see Revised Standard Plan RSP A77N4 for dike positioning details.
10. W6 x 15 steel post, 8'-0" in length, with 8" x 12" x 1'-2" notched wood block or notched recycled plastic blocks may be used in place of the 10" x 10" x 8'-0" wood post with 8" x 12" x 1'-2" wood block shown in the detail "Strengthened Midwest Guardrail System Sections for Fixed Object".

STATE OF CALIFORNIA
DEPARTMENT OF TRANSPORTATION

MIDWEST GUARDRAIL SYSTEM TYPICAL LAYOUTS FOR ROADSIDE FIXED OBJECTS

NO SCALE

RSP A77R6 DATED JULY 19, 2013 SUPPLEMENTS THE STANDARD PLANS BOOK DATED 2010.

REVISED STANDARD PLAN RSP A77R6

2010 REVISED STANDARD PLAN RSP A77R6

6-19-13

Dist	COUNTY	ROUTE	POST MILES TOTAL PROJECT	SHEET No.	TOTAL SHEETS
07	LA	10	37.2/42.4	1482	2313

Randell D. Hiatt
REGISTERED CIVIL ENGINEER

November 15, 2013
PLANS APPROVAL DATE

REGISTERED PROFESSIONAL ENGINEER
Randell D. Hiatt
No. C50200
Exp. 6-30-15
CIVIL
STATE OF CALIFORNIA

THE STATE OF CALIFORNIA OR ITS OFFICERS OR AGENTS SHALL NOT BE RESPONSIBLE FOR THE ACCURACY OR COMPLETENESS OF SCANNED COPIES OF THIS PLAN SHEET.

TO ACCOMPANY PLANS DATED 6-1-15

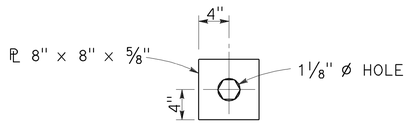

DETAIL "A"
CABLE CONNECTION
END PLATE

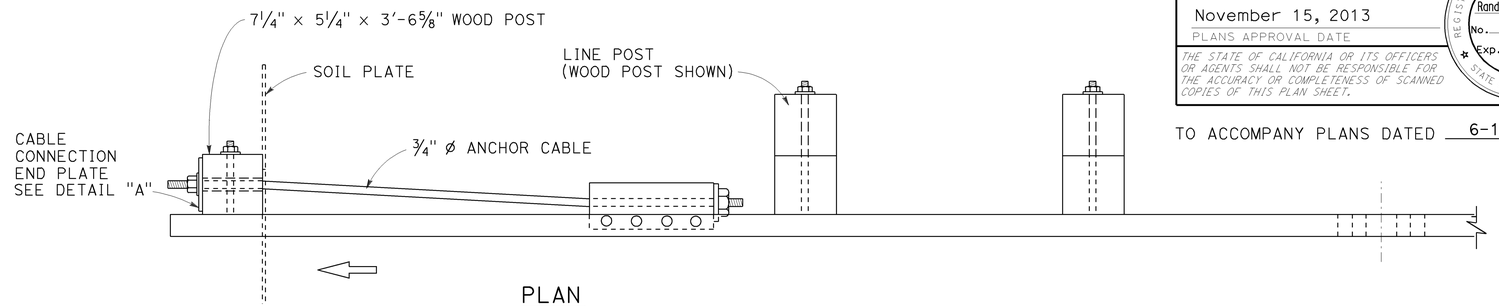

PLAN

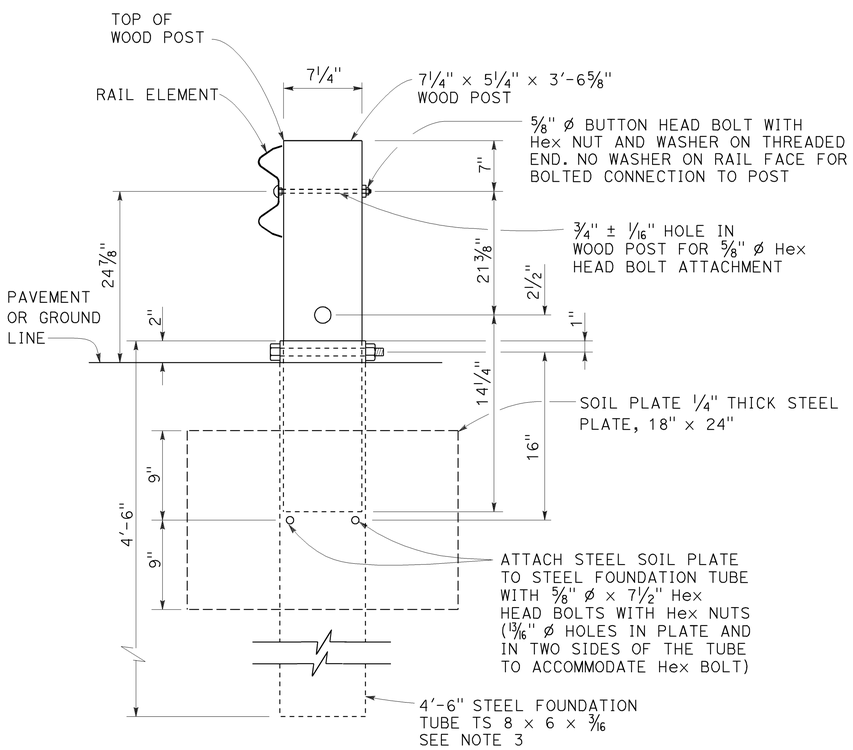

SECTION A-A

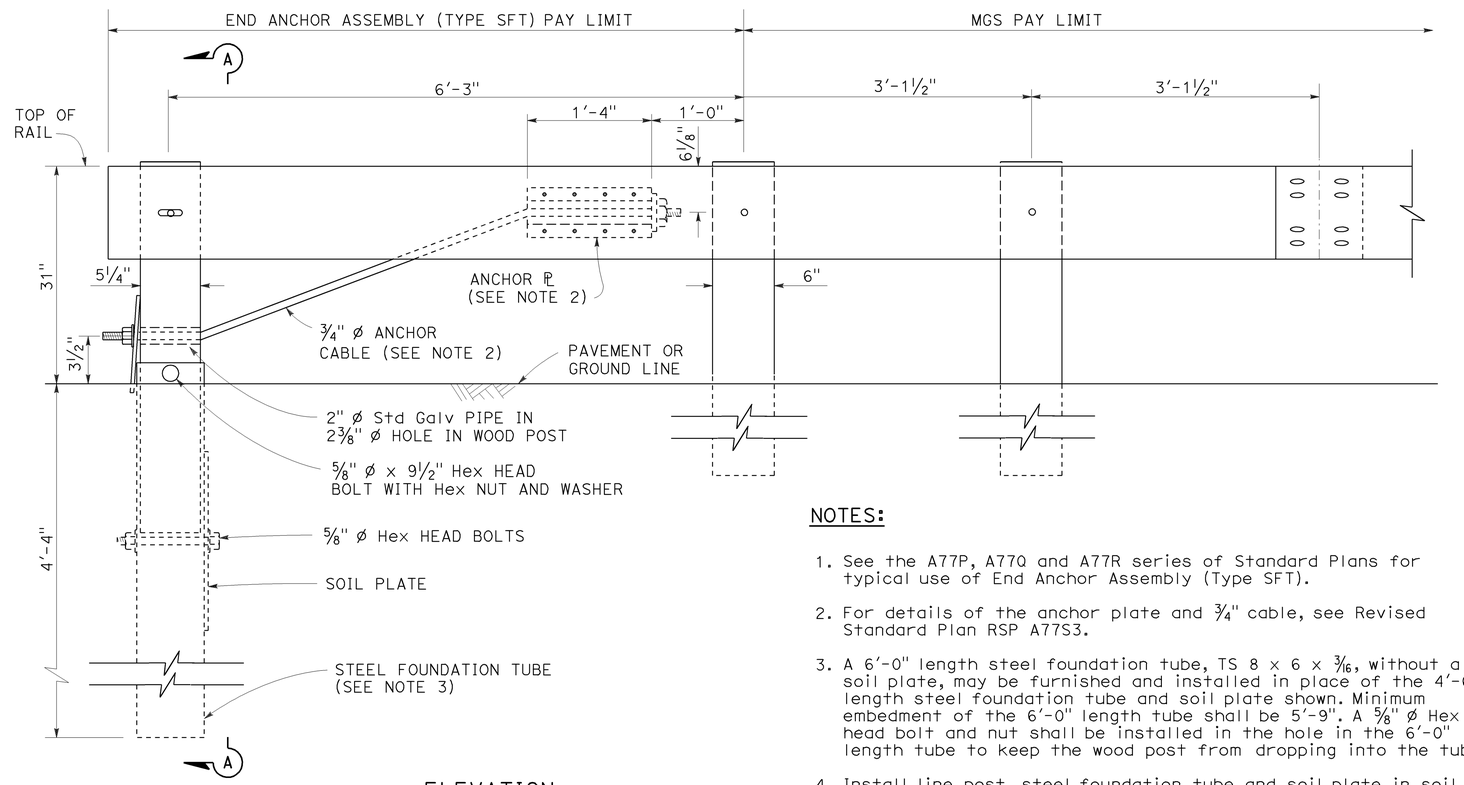

ELEVATION

END ANCHOR
ASSEMBLY (TYPE SFT)
See Note 1

NOTES:

1. See the A77P, A77Q and A77R series of Standard Plans for typical use of End Anchor Assembly (Type SFT).
2. For details of the anchor plate and 3/4" cable, see Revised Standard Plan RSP A77S3.
3. A 6'-0" length steel foundation tube, TS 8 x 6 x 3/16, without a soil plate, may be furnished and installed in place of the 4'-6" length steel foundation tube and soil plate shown. Minimum embedment of the 6'-0" length tube shall be 5'-9". A 5/8" ø Hex head bolt and nut shall be installed in the hole in the 6'-0" length tube to keep the wood post from dropping into the tube.
4. Install line post, steel foundation tube and soil plate in soil.

STATE OF CALIFORNIA
DEPARTMENT OF TRANSPORTATION

MIDWEST GUARDRAIL SYSTEM END ANCHOR ASSEMBLY (TYPE SFT)

NO SCALE

RSP A77S1 DATED NOVEMBER 15, 2013 SUPERSEDES RSP A77S1
DATED JULY 19, 2013 THAT SUPPLEMENTS THE STANDARD PLANS BOOK DATED 2010.

REVISED STANDARD PLAN RSP A77S1

2010 REVISED STANDARD PLAN RSP A77S1

10-4-13

Dist	COUNTY	ROUTE	POST MILES TOTAL PROJECT	SHEET No.	TOTAL SHEETS
07	LA	10	37.2/42.4	1483	2313

Randell D. Hiatt
REGISTERED CIVIL ENGINEER

November 15, 2013
PLANS APPROVAL DATE

REGISTERED PROFESSIONAL ENGINEER
Randell D. Hiatt
No. C50200
Exp. 6-30-15
CIVIL
STATE OF CALIFORNIA

THE STATE OF CALIFORNIA OR ITS OFFICERS OR AGENTS SHALL NOT BE RESPONSIBLE FOR THE ACCURACY OR COMPLETENESS OF SCANNED COPIES OF THIS PLAN SHEET.

TO ACCOMPANY PLANS DATED 6-1-15

2010 REVISED STANDARD PLAN RSP A77S3

NOTE:

See Revised Standard Plans RSP A77S1, RSP A77S2 and RSP A77T1 for typical use of anchor cable and anchor plate.

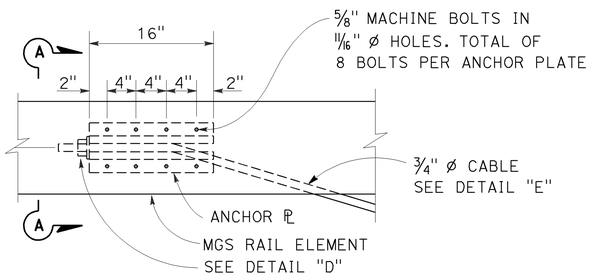

ANCHOR PLATE DETAIL
(MGS shown, TBB similar)

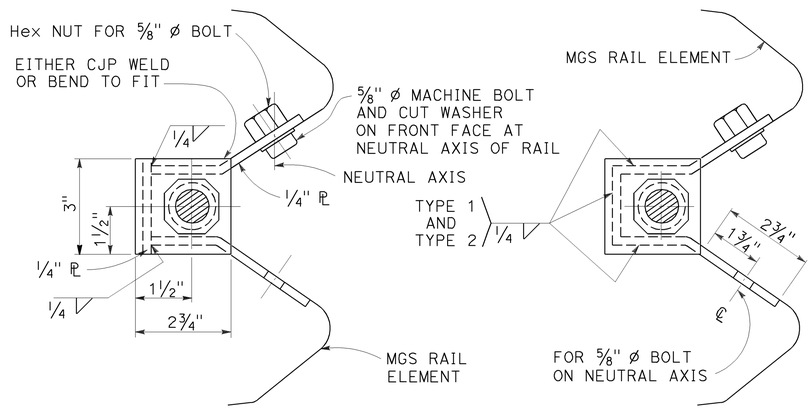

NOTE:
Dimensioning applies to both types.

SECTION A-A
(ALTERNATIVE TYPE 1)

SECTION A-A
(ALTERNATIVE TYPE 2)

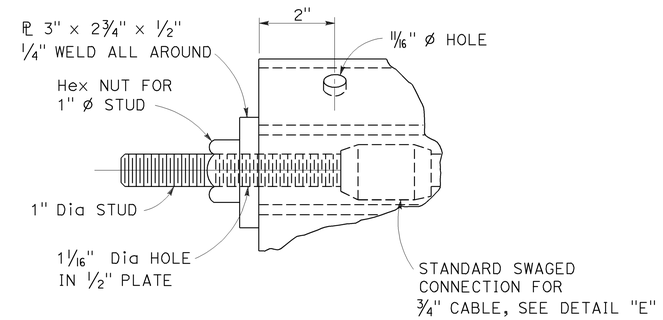

DETAIL "D"

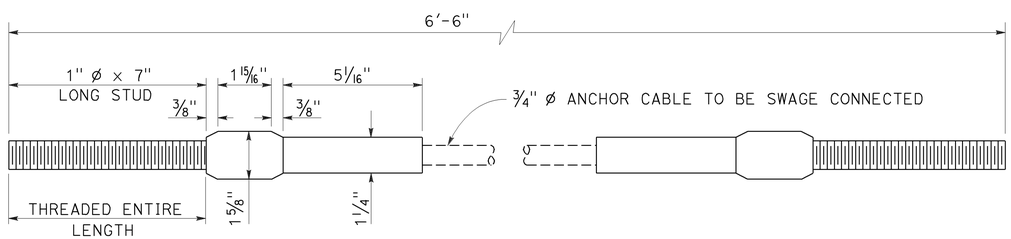

ANCHOR CABLE WITH
SWAGED FITTING AND STUD
DETAIL "E"

STATE OF CALIFORNIA
DEPARTMENT OF TRANSPORTATION

METAL RAILING ANCHOR CABLE AND ANCHOR PLATE DETAILS

NO SCALE

RSP A77S3 DATED NOVEMBER 15, 2013 SUPERSEDES RSP A77S3
DATED JULY 19, 2013 THAT SUPPLEMENTS THE STANDARD PLANS BOOK DATED 2010.

REVISED STANDARD PLAN RSP A77S3

10-4-13

Dist	COUNTY	ROUTE	POST MILES TOTAL PROJECT	SHEET No.	TOTAL SHEETS
07	LA	10	37.2/42.4	1484	2313

Randell D. Hiatt
REGISTERED CIVIL ENGINEER

July 19, 2013
PLANS APPROVAL DATE

REGISTERED PROFESSIONAL ENGINEER
Randell D. Hiatt
No. C50200
Exp. 6-30-15
CIVIL
STATE OF CALIFORNIA

THE STATE OF CALIFORNIA OR ITS OFFICERS OR AGENTS SHALL NOT BE RESPONSIBLE FOR THE ACCURACY OR COMPLETENESS OF SCANNED COPIES OF THIS PLAN SHEET.

TO ACCOMPANY PLANS DATED 6-1-15

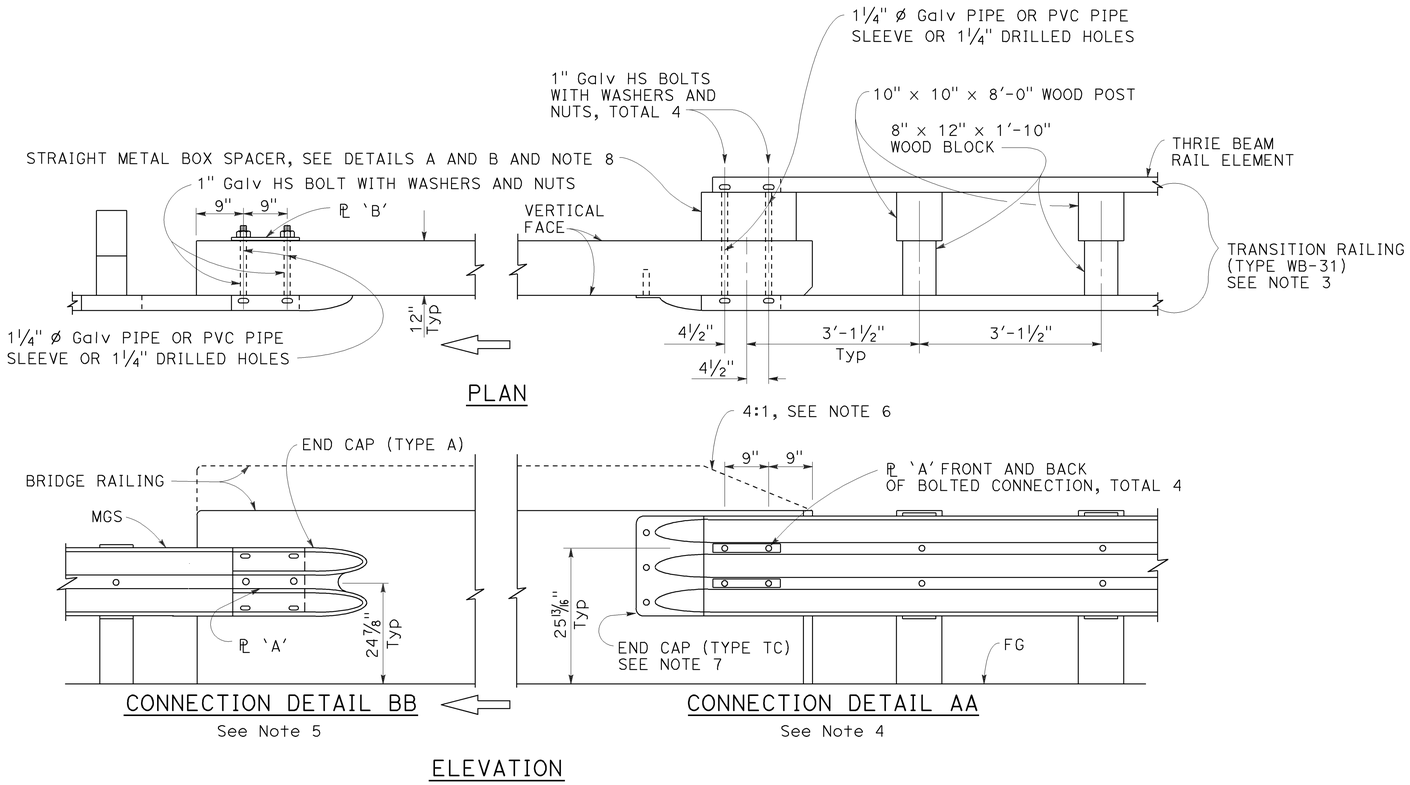

MIDWEST GUARDRAIL SYSTEM CONNECTION TO BRIDGE RAILING WITHOUT SIDEWALK

NOTES:

1. See Revised Standard Plan RSP A77U2 for additional connection details to bridges without sidewalks.
2. Additional details of posts, blocks and hardware are shown on Revised Standard Plans RSP A77M1, RSP A77N1 and RSP A77N2.
3. For additional details of Transition Railing (Type WB-31), see Revised Standard Plan RSP A77U4. Transition Railing (Type WB-31) transitions the 12 gauge MGS railing section to a heavier gage nested thrie beam railing section which is connected to the concrete bridge railing.
4. For typical use of Connection Detail AA, see Layout Types 12A and 12B on Revised Standard Plan RSP A77Q1, Layout Types 12C and 12D on Revised Standard Plan RSP A77Q2, and Layout Type 12E on Revised Standard Plan RSP A77Q3.
5. For typical use of Connection Detail BB, see Layout Type 12D (structure departure railing connection) on Revised Standard Plan RSP A77Q2 and Layout Type 12DD on Revised Standard Plan RSP A77Q5.
6. Where the height of the bridge railing exceeds the height of the thrie beam railing by more than 1" at Connection Detail AA, taper the top of the end of the bridge railing at 4:1 to match the top elevation of the thrie beam rail.
7. For details of End Cap (Type TC), see Revised Standard Plan RSP A77U4.
8. See Revised Standard Plan RSP A77U4 for additional details regarding depth dimension for straight metal box spacer.

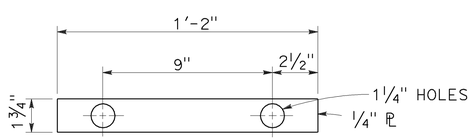

PLATE 'A'

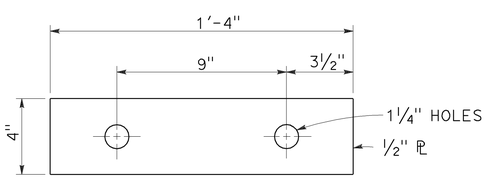

PLATE 'B'
(For backside of connection BB)

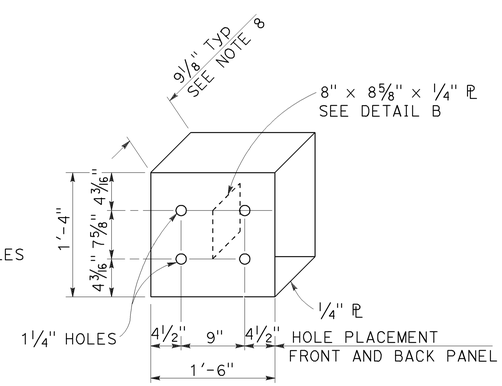

DETAIL A

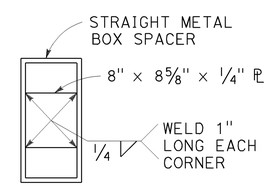

DETAIL B

STRAIGHT METAL BOX SPACER

STATE OF CALIFORNIA
DEPARTMENT OF TRANSPORTATION

MIDWEST GUARDRAIL SYSTEM CONNECTIONS TO BRIDGE RAILINGS WITHOUT SIDEWALKS DETAILS No. 1

NO SCALE

RSP A77U1 DATED JULY 19, 2013 SUPPLEMENTS THE STANDARD PLANS BOOK DATED 2010.

REVISED STANDARD PLAN RSP A77U1

2010 REVISED STANDARD PLAN RSP A77U1

7-8-13

Dist	COUNTY	ROUTE	POST MILES TOTAL PROJECT	SHEET No.	TOTAL SHEETS
07	LA	10	37.2/42.4	1485	2313

Randell D. Hiatt
REGISTERED CIVIL ENGINEER

July 19, 2013
PLANS APPROVAL DATE

REGISTERED PROFESSIONAL ENGINEER
Randell D. Hiatt
No. C50200
Exp. 6-30-15
CIVIL
STATE OF CALIFORNIA

THE STATE OF CALIFORNIA OR ITS OFFICERS OR AGENTS SHALL NOT BE RESPONSIBLE FOR THE ACCURACY OR COMPLETENESS OF SCANNED COPIES OF THIS PLAN SHEET.

TO ACCOMPANY PLANS DATED 6-1-15

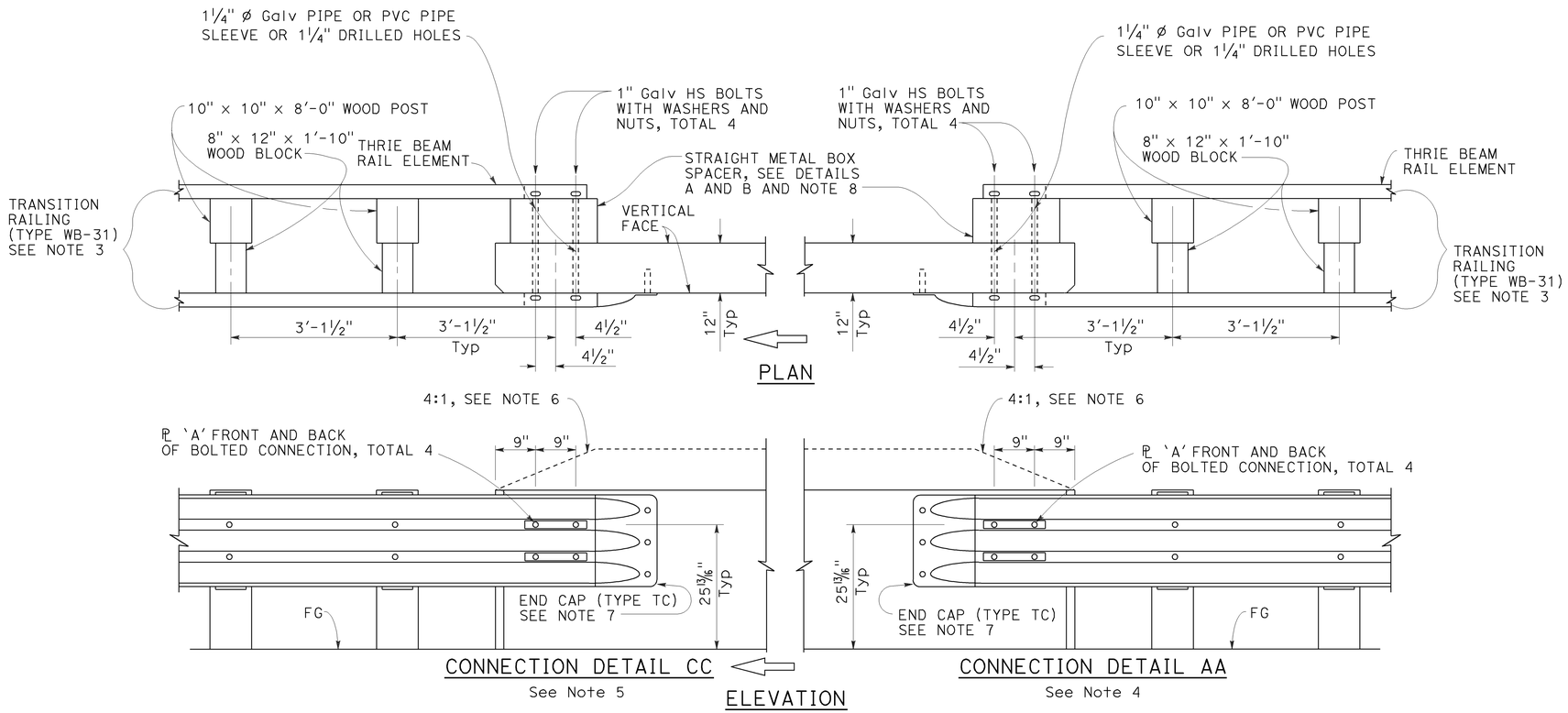

MIDWEST GUARDRAIL SYSTEM CONNECTION TO BRIDGE RAILING WITHOUT SIDEWALK

NOTES:

1. See Revised Standard Plan RSP A77U1 for additional connection details to bridges without sidewalks.
2. Additional details of posts, blocks and hardware are shown on Revised Standard Plans RSP A77M1, RSP A77N1 and RSP A77N2.
3. For additional details of Transition Railing (Type WB-31), see Revised Standard Plan RSP A77U4. Transition Railing (Type WB-31) transitions the 12 gauge MGS railing section to a heavier gage nested thrie beam railing section which is connected to the concrete bridge railing.
4. For typical use of Connection Detail AA, see Layout Types 12A and 12B on Revised Standard Plan RSP A77Q1, Layout Types 12C and 12D on Revised Standard Plan RSP A77Q2, and Layout Type 12E on Revised Standard Plan RSP A77Q3.
5. For typical use of Connection Detail CC, see Layout Types 12AA and 12BB on Revised Standard Plan RSP A77Q4 and Layout Type 12CC on Revised Standard Plan RSP A77Q5.
6. Where the height of the bridge railing exceeds the height of the thrie beam railing by more than 1" at Connection Detail AA and connection Detail CC, taper the top of the end of the bridge railing at 4:1 to match the top elevation of the thrie beam railing.
7. For details of End Cap (Type TC), see Revised Standard Plan RSP A77U4.
8. See Revised Standard Plan RSP A77U4 for additional details regarding depth dimension for straight metal box spacer.

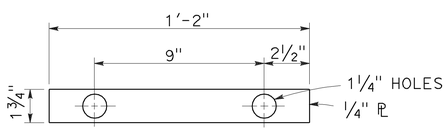

PLATE 'A'

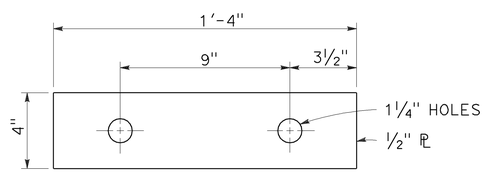

PLATE 'B'
(For backside of connection BB)

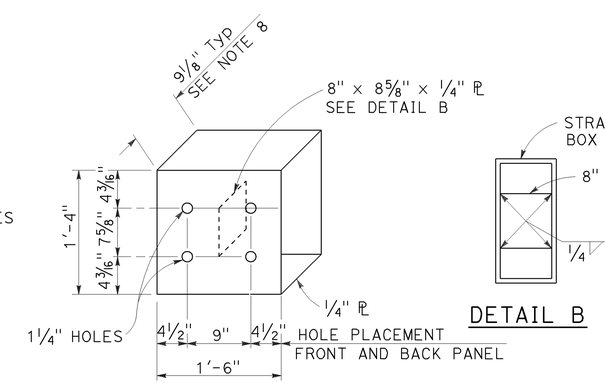

DETAIL A

STRAIGHT METAL BOX SPACER

STATE OF CALIFORNIA
DEPARTMENT OF TRANSPORTATION

MIDWEST GUARDRAIL SYSTEM CONNECTIONS TO BRIDGE RAILINGS WITHOUT SIDEWALKS DETAILS No. 2

NO SCALE

RSP A77U2 DATED JULY 19, 2013 SUPPLEMENTS THE STANDARD PLANS BOOK DATED 2010.

REVISED STANDARD PLAN RSP A77U2

2010 REVISED STANDARD PLAN RSP A77U2

6-20-13

Dist	COUNTY	ROUTE	POST MILES TOTAL PROJECT	SHEET No.	TOTAL SHEETS
07	LA	10	37.2/42.4	1486	2313

Randell D. Hiatt
REGISTERED CIVIL ENGINEER

November 15, 2013
PLANS APPROVAL DATE

REGISTERED PROFESSIONAL ENGINEER
Randell D. Hiatt
No. C50200
Exp. 6-30-15
CIVIL
STATE OF CALIFORNIA

THE STATE OF CALIFORNIA OR ITS OFFICERS OR AGENTS SHALL NOT BE RESPONSIBLE FOR THE ACCURACY OR COMPLETENESS OF SCANNED COPIES OF THIS PLAN SHEET.

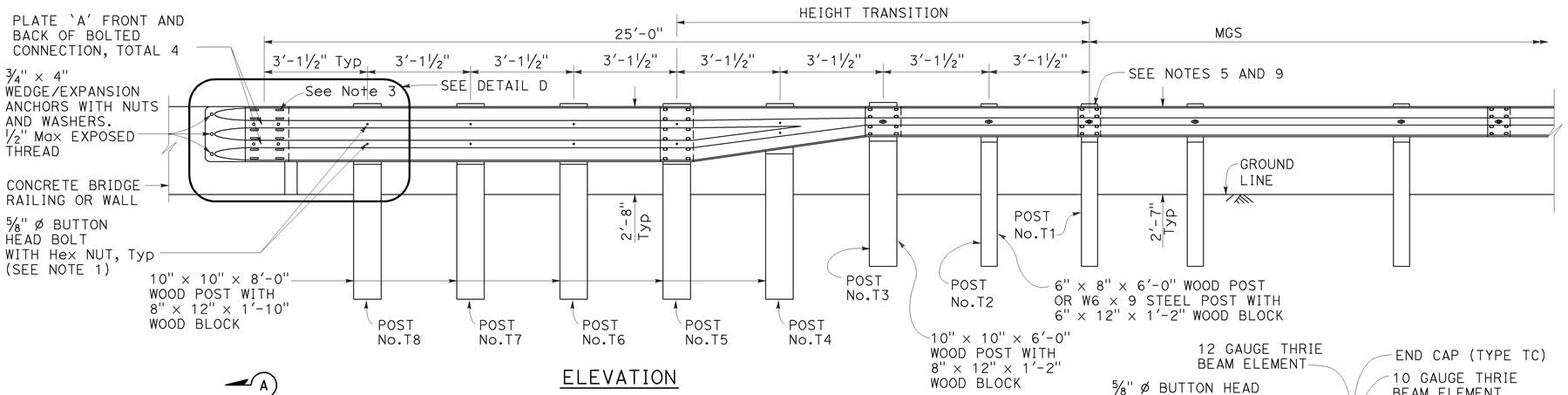

ELEVATION

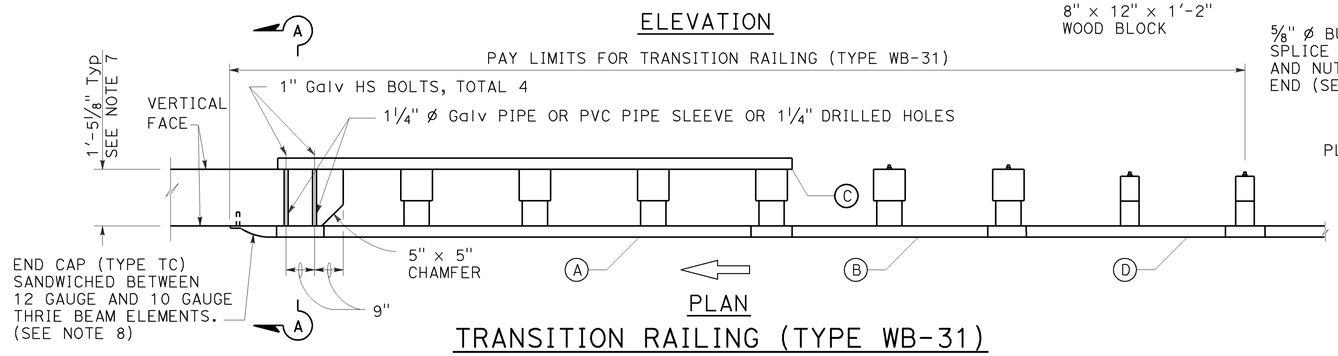

PLAN

TRANSITION RAILING (TYPE WB-31)

(No Blockout Attachment)

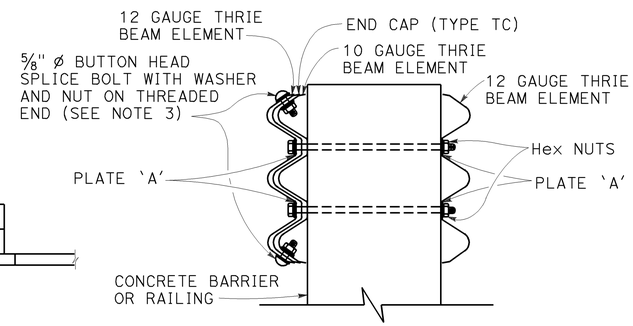

SECTION A-A

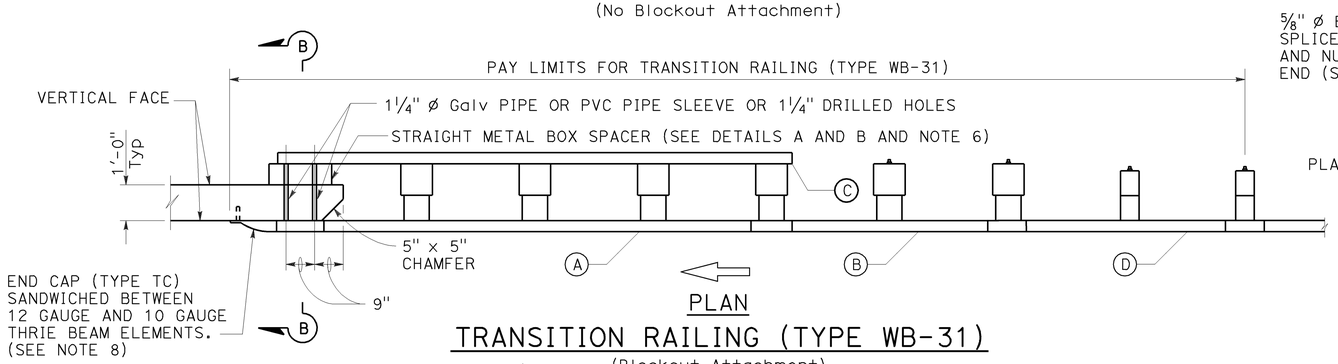

PLAN

TRANSITION RAILING (TYPE WB-31)

(Blockout Attachment)

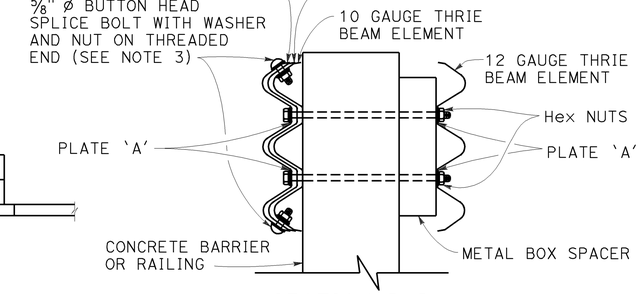

SECTION B-B

NOTES:

TO ACCOMPANY PLANS DATED 6-1-15

1. Use 5/8" ø Button head bolts and hex nuts for connections to posts. No washer on rail face for bolted connections to post.
2. The nested rail elements, end cap, and 'W' beam to thrie beam element may be spliced together prior to bolting the elements to the wood post and concrete barrier or railing.
3. Exterior splice bolt holes for rail element splices at Post No. T5 and the connection to the concrete barrier or railing shall be the standard 29/32" × 1 1/8" slot size. Interior splice bolt holes at these locations may be increased up to 1 1/4" ø. Only the top 4 and the bottom 4 splice bolts with washers and nuts are required for rail splices at Post No. T5 and the connection to the concrete barrier or railing.
4. The top elevation of Posts No. T2 through No. T7 shall not project more than 1" above the top elevation of the rail element.
5. Typically, the railing connected to Transition Railing (Type WB-31) will be either standard railing section of MGS with height transition ratio of 150:1 or a Caltrans approved 31" end treatment attached to Post No. T1.
6. The depth of the metal box spacer varies from the 9 1/8" to 1 1/2" and is dependent on the width of the concrete railing or wall. The combined dimension for the depth of the metal box spacer plus the width of railing or wall is typically 21 1/8". Where the space between the backside of the concrete railing or wall and the rear thrie beam element is less than 1 1/2", metal plates similar to Plate 'A' are to be used as spacers.
7. Where the width of the concrete railing or wall is greater than 17 1/8", wood blocks are to be used to fill the space created between the backside of Posts No. T5 through No. T8 and the rear thrie beam element. These wood blocks shall be 8" in width and 1'-2" in length. The dimension between the front thrie beam element and the rear thrie beam element is to match the width of the concrete railing or wall.
8. End cap may be installed over 12 gauge and 10 gauge thrie beam elements where transition railing is installed on the departure end of bridge railing.
9. Conform standard railing section height to 31" at Post No. T1 using height transition ratio of 150:1.

LEGEND:

(A) NESTED THRIE BEAM ELEMENTS (ONE 12 GAUGE ELEMENT NESTED OVER ONE 10 GAUGE ELEMENT).

(B) ONE ASYMMETRICAL 10 GAUGE "W" BEAM TO THRIE BEAM ELEMENT.

(C) ONE 12 GAUGE THRIE BEAM ELEMENT.

(D) ONE 10 GAUGE "W" BEAM RAIL ELEMENT (7'-3 1/2" LENGTH)

10 GAUGE = 0.138" THICK
12 GAUGE = 0.108" THICK

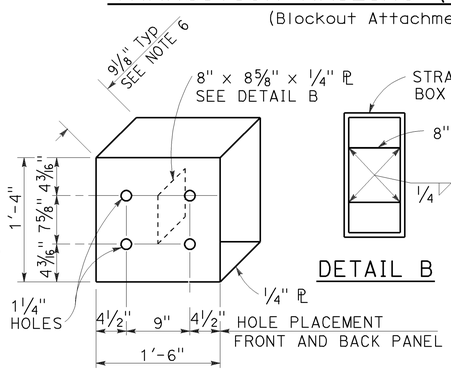

DETAIL A

STRAIGHT METAL BOX SPACER

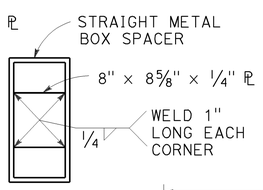

DETAIL B

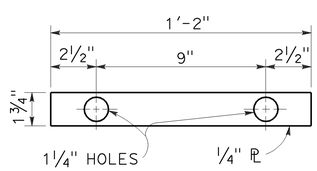

DETAIL C

PLATE 'A'

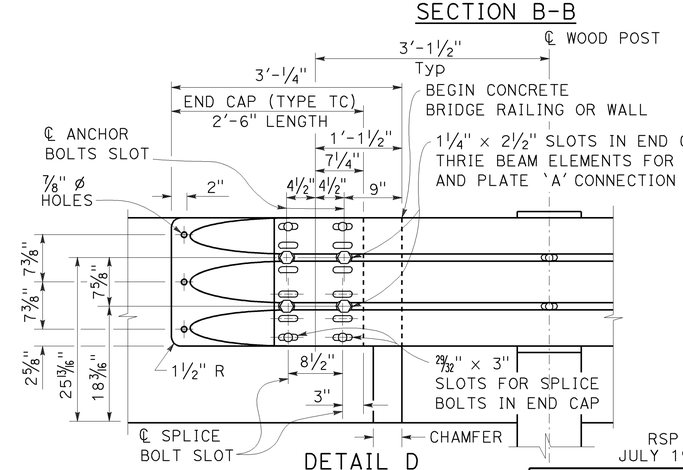

DETAIL D

STATE OF CALIFORNIA
DEPARTMENT OF TRANSPORTATION

MIDWEST GUARDRAIL SYSTEM TRANSITION RAILING (TYPE WB-31)

NO SCALE

RSP A77U4 DATED NOVEMBER 15, 2013 SUPERSEDES RSP A77U4 DATED JULY 19, 2013 THAT SUPPLEMENTS THE STANDARD PLANS BOOK DATED 2010.

REVISED STANDARD PLAN RSP A77U4

2010 REVISED STANDARD PLAN RSP A77U4

10-4-13

Dist	COUNTY	ROUTE	POST MILES TOTAL PROJECT	SHEET No.	TOTAL SHEETS
07	LA	10	37.2/42.4	1487	2313

Randell D. Hiatt
REGISTERED CIVIL ENGINEER

July 19, 2013
PLANS APPROVAL DATE

REGISTERED PROFESSIONAL ENGINEER
Randell D. Hiatt
No. C50200
Exp. 6-30-15
CIVIL
STATE OF CALIFORNIA

THE STATE OF CALIFORNIA OR ITS OFFICERS OR AGENTS SHALL NOT BE RESPONSIBLE FOR THE ACCURACY OR COMPLETENESS OF SCANNED COPIES OF THIS PLAN SHEET.

TO ACCOMPANY PLANS DATED 6-1-15

NOTES:

1. Refer to Revised Standard Plans RSP A77L1 and RSP A77L2 for component details for MGS not shown on this plan.
2. All posts for any standard barrier run shall be of the same type: Wood or Steel.
3. Install posts in soil.

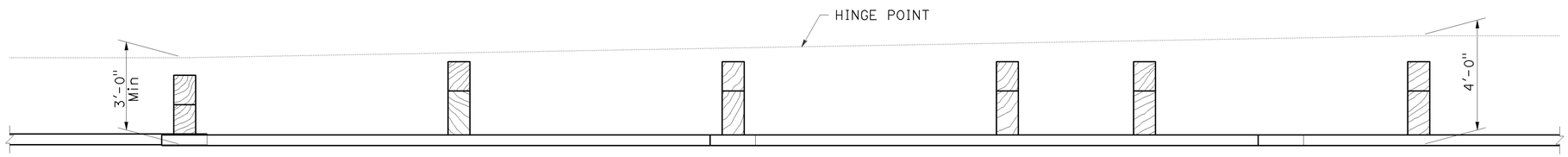

PLAN

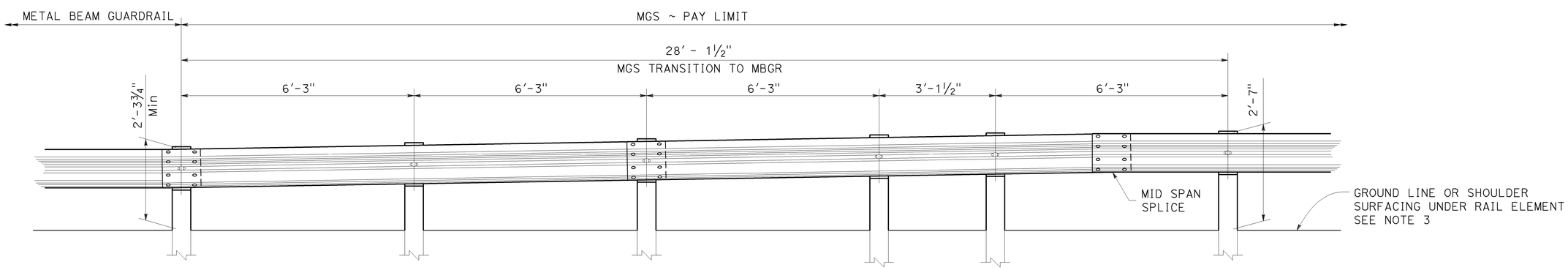

ELEVATION

STATE OF CALIFORNIA
DEPARTMENT OF TRANSPORTATION

MIDWEST GUARDRAIL SYSTEM TRANSITION TO METAL BEAM GUARDRAIL

NO SCALE

RSP A77U5 DATED JULY 19, 2013 SUPPLEMENTS THE STANDARD PLANS BOOK DATED 2010.

REVISED STANDARD PLAN RSP A77U5

2010 REVISED STANDARD PLAN RSP A77U5

Dist	COUNTY	ROUTE	POST MILES TOTAL PROJECT	SHEET No.	TOTAL SHEETS
07	LA	10	37.2/42.4	1488	2313

REGISTERED CIVIL ENGINEER

July 18, 2014
PLANS APPROVAL DATE

REGISTERED PROFESSIONAL ENGINEER Glenn DeCou No. C34547 Exp. 9-30-15 CIVIL STATE OF CALIFORNIA

THE STATE OF CALIFORNIA OR ITS OFFICERS OR AGENTS SHALL NOT BE RESPONSIBLE FOR THE ACCURACY OR COMPLETENESS OF SCANNED COPIES OF THIS PLAN SHEET.

TO ACCOMPANY PLANS DATED 6-1-15

2010 REVISED STANDARD PLAN RSP A85

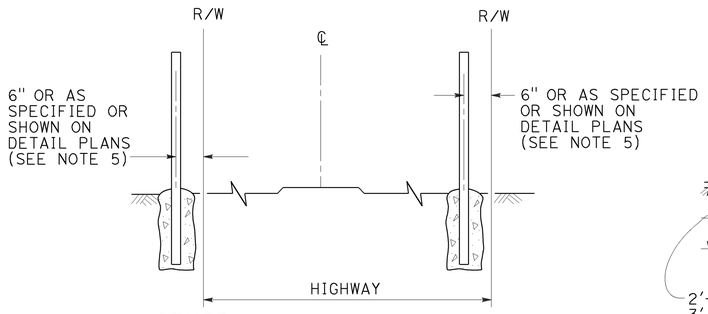

FENCE LOCATION

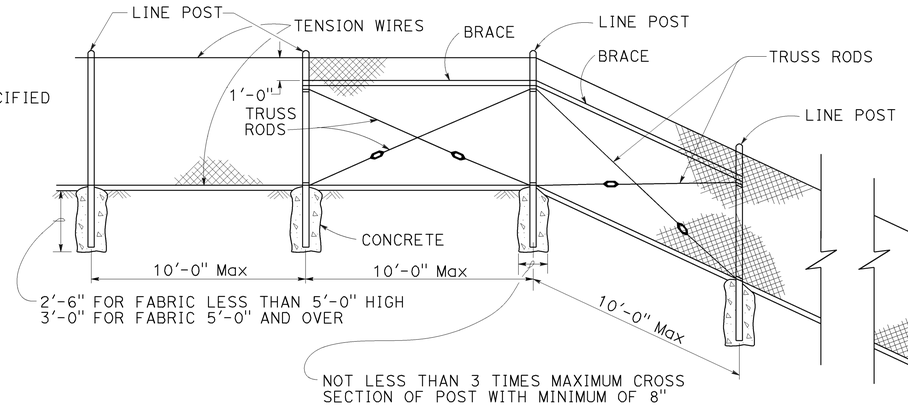

CHAIN LINK FENCE ON SHARP BREAK IN GRADE

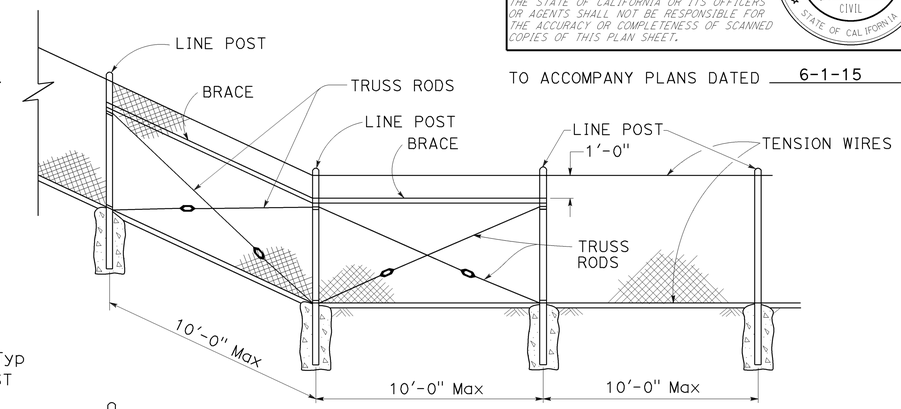

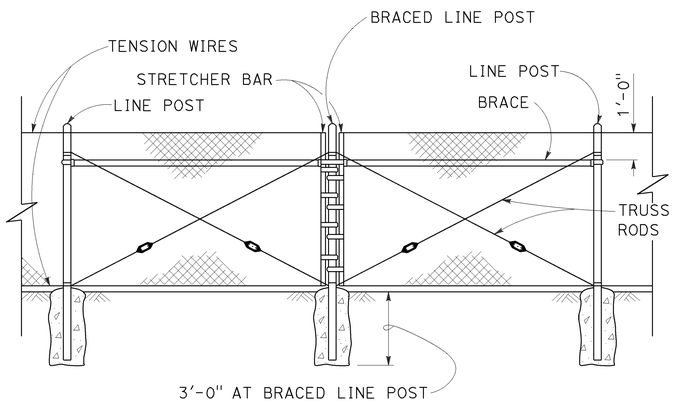

BRACED LINE POST INSTALLATION

Braced line post at intervals not exceeding 1000'

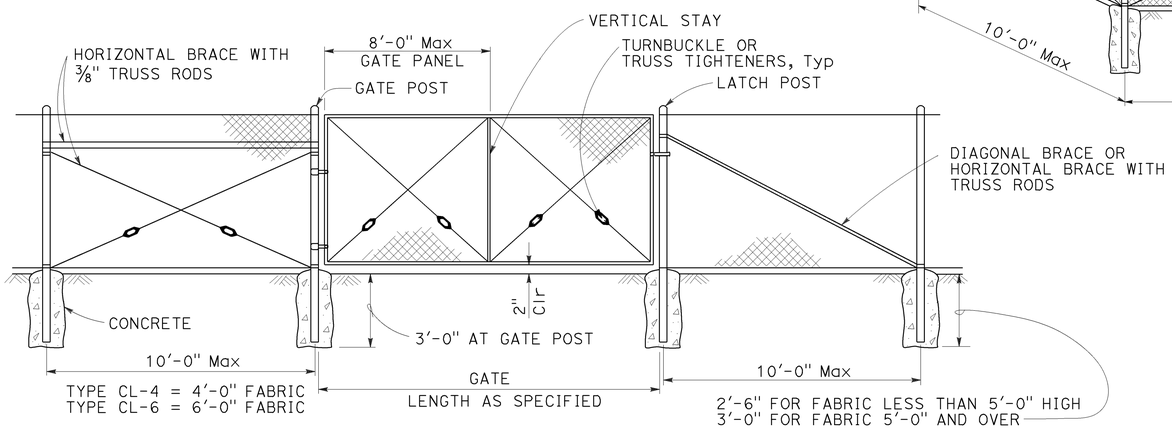

CHAIN LINK GATE INSTALLATION

GATE POST			
FENCE HEIGHT	GATE WIDTHS	ROUND OD PIPE	WEIGHT (lb/ft)
6'-0" AND LESS	UP THRU 6'-0"	2.875"	5.80
	OVER 6'-0" THRU 12'-0"	4.500"	10.80
	OVER 12'-0" THRU 18'-0"	5.563"	14.63
	OVER 18'-0" TO 24'-0" Max	6.625"	18.99
OVER 6'-0" TO 8'-0" Max	UP THRU 6'-0"	3.500"	7.58
	OVER 6'-0" THRU 12'-0"	5.563"	14.63
	OVER 12'-0" THRU 18'-0"	6.625"	18.99
	OVER 18'-0" TO 24'-0" Max	8.625"	28.58

Above post dimensions and weights are minimums. Larger sizes may be used upon approval.

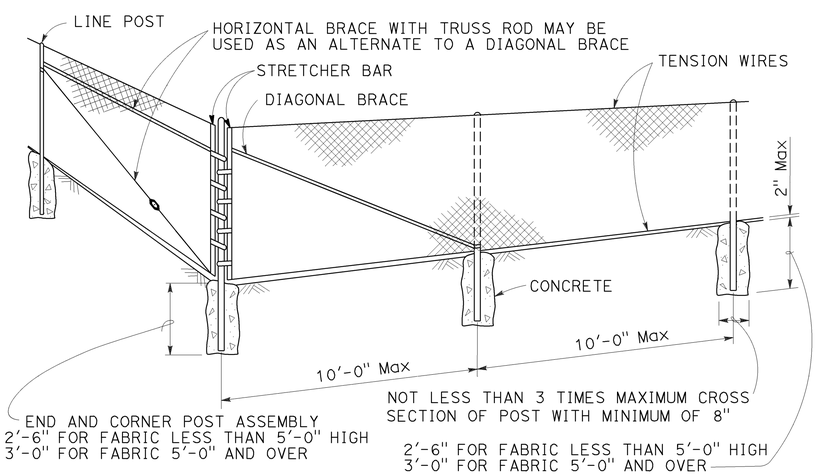

CORNER POST

NOTES:

1. The table below shows minimum sized posts and braces complying with the specifications. Larger or heavier post and brace sizes may be used upon approval.
2. Sections shown in the tables must also comply with the strength requirements and other provisions of the Specifications.
3. Other sections which comply with the strength requirements and other provisions of the Specifications may be used upon approval.
4. Options exercised shall be uniform on any one project.
5. Offset to be 2'-0" at monument locations, measured at right angles to R/W lines. Taper to achieve offset to be at least 20'-0" long.
6. See Revised Standard Plan RSP A85B for Brace, Stretcher Bar, and Truss Tightener Details.

TYPICAL MEMBER DIMENSIONS (See Notes)										
FENCE HEIGHT	LINE POSTS				END, LATCH AND CORNER POSTS		BRACES			
	ROUND OD PIPE	WEIGHT (lb/ft)	ROLL FORMED		ROUND OD PIPE	WEIGHT (lb/ft)	ROUND OD PIPE	WEIGHT (lb/ft)	ROLL FORMED	
			SECTION	WEIGHT (lb/ft)					SECTION	WEIGHT (lb/ft)
6'-0" AND LESS	1.900"	2.72	1.875" x 1.625"	1.85	2.375"	3.65	1.66"	2.27	1.625" x 1.25"	1.35
OVER 6'-0" TO 8'-0" Max	2.375"	3.65	2.25" x 1.70"	2.78	2.875"	5.80	1.66"	2.27	1.625" x 1.25"	1.35

STATE OF CALIFORNIA
DEPARTMENT OF TRANSPORTATION

CHAIN LINK FENCE

NO SCALE

RSP A85 DATED JULY 18, 2014 SUPERSEDES STANDARD PLAN A85 DATED MAY 20, 2011 - PAGE 112 OF THE STANDARD PLANS BOOK DATED 2010.

REVISED STANDARD PLAN RSP A85

7-1-14

Dist	COUNTY	ROUTE	POST MILES TOTAL PROJECT	SHEET No.	TOTAL SHEETS
07	LA	10	37.2/42.4	1489	2313

REGISTERED CIVIL ENGINEER

October 19, 2012
PLANS APPROVAL DATE

REGISTERED PROFESSIONAL ENGINEER Glenn DeCou No. C34547 Exp. 9-30-13 CIVIL STATE OF CALIFORNIA

THE STATE OF CALIFORNIA OR ITS OFFICERS OR AGENTS SHALL NOT BE RESPONSIBLE FOR THE ACCURACY OR COMPLETENESS OF SCANNED COPIES OF THIS PLAN SHEET.

TO ACCOMPANY PLANS DATED 6-1-15

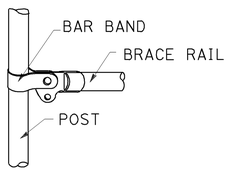

BRACE RAIL

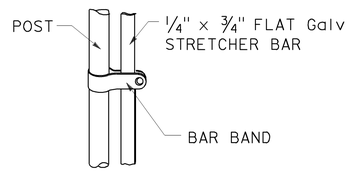

STRETCHER BAR

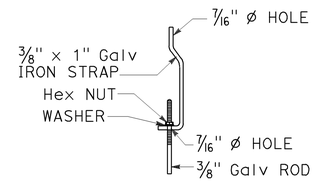

TRUSS TIGHTENER

NOTES:

1. All material for abutment connection to be galvanized.
2. The chain link fabric shall be replaced by barbed wire strands at 12" maximum centers between the double posts.
3. When the width of the culvert makes it necessary to anchor a post to the top of the culvert, a cast iron shoe or other device approved by the Engineer shall be used.
4. Fencing over stream and around headwall may also use Barbed Wire or Wire Mesh fencing with either wood post or steel post installation.
5. See Standard Plan A85 for Chain Link fence dimensions. See Standard Plan A86 for Barbed Wire and Wire Mesh fence dimensions and for wood post and steel post installation.

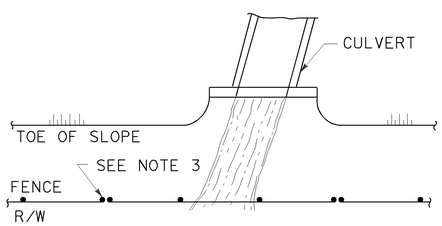

PLAN

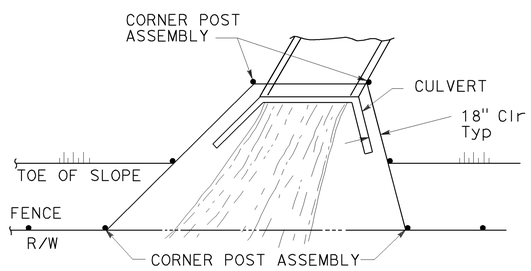

PLAN

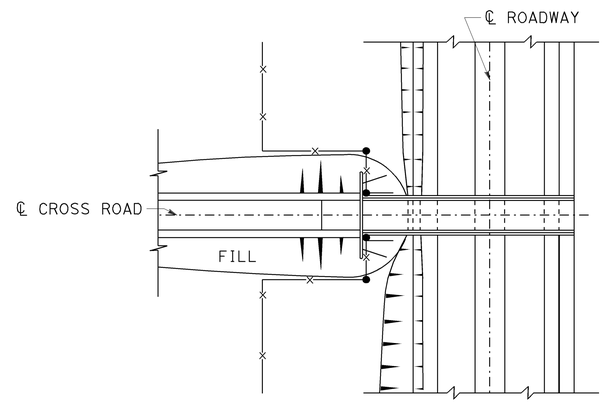

PLAN OF ROADWAY - OVERCROSSING

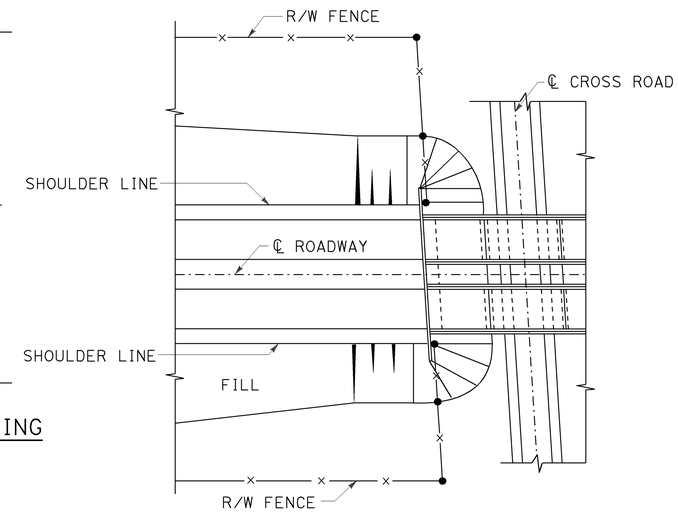

PLAN OF ROADWAY - UNDERCROSSING

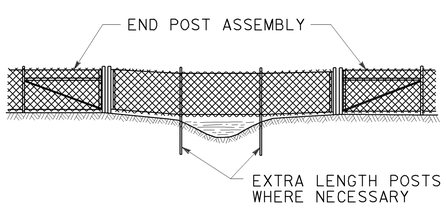

ELEVATION

INSTALLATION OVER STREAM

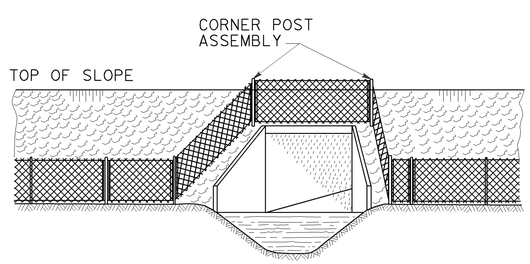

ELEVATION

INSTALLATION AROUND HEADWALL

See Note 4

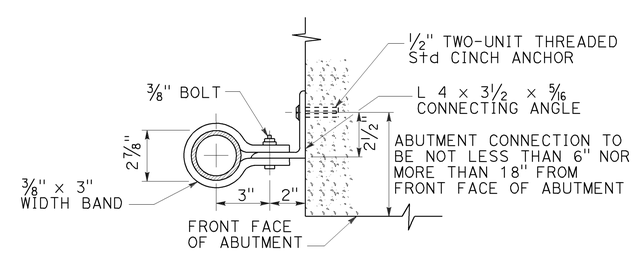

ABUTMENT CONNECTION

TYPICAL INSTALLATION AT BRIDGES

STATE OF CALIFORNIA
DEPARTMENT OF TRANSPORTATION

CHAIN LINK FENCE DETAILS

NO SCALE

RSP A85B DATED OCTOBER 19, 2012 SUPERSEDES STANDARD PLAN A85B DATED MAY 20, 2011 - PAGE 114 OF THE STANDARD PLANS BOOK DATED 2010.

REVISED STANDARD PLAN RSP A85B

2010 REVISED STANDARD PLAN RSP A85B

7-19-12

Dist	COUNTY	ROUTE	POST MILES TOTAL PROJECT	SHEET No.	TOTAL SHEETS
07	LA	10	37.2/42.4	1490	2313

REGISTERED CIVIL ENGINEER

July 19, 2013
PLANS APPROVAL DATE

REGISTERED PROFESSIONAL ENGINEER Michael Janzen No. 44788 Exp. 03-31-14 CIVIL STATE OF CALIFORNIA

THE STATE OF CALIFORNIA OR ITS OFFICERS OR AGENTS SHALL NOT BE RESPONSIBLE FOR THE ACCURACY OR COMPLETENESS OF SCANNED COPIES OF THIS PLAN SHEET.

TO ACCOMPANY PLANS DATED 6-1-15

2010 REVISED STANDARD PLAN RSP A87A

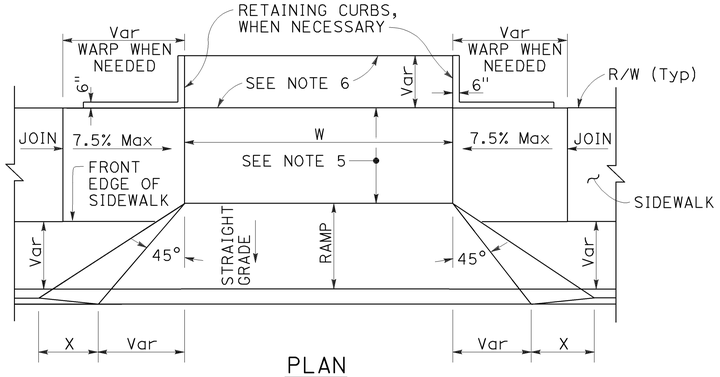

PLAN

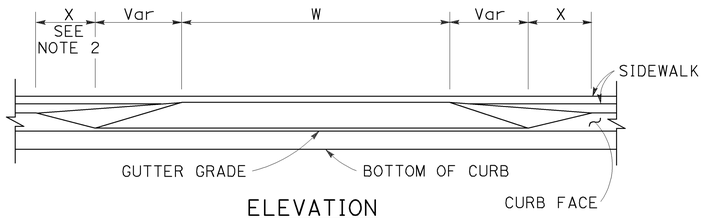

ELEVATION

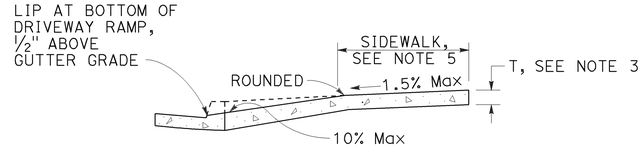

CASE A

Typical driveway, sidewalk not depressed

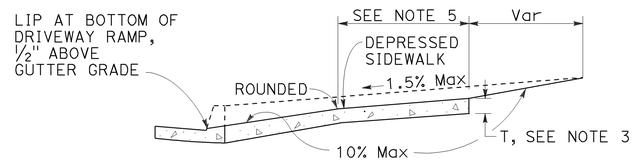

CASE B

Driveway with depressed sidewalk

SECTIONS

DRIVEWAYS

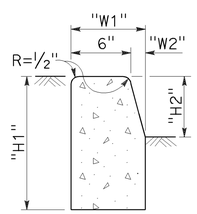

TYPE A1 CURBS

See Table A

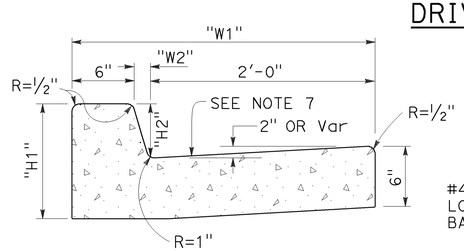

TYPE A2 CURBS

See Table A

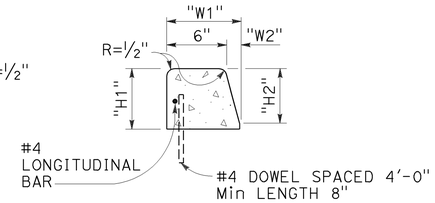

TYPE A3 CURBS

Superimposed on existing pavement
See Table A

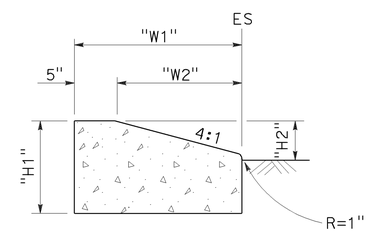

TYPE D CURBS

See Table A

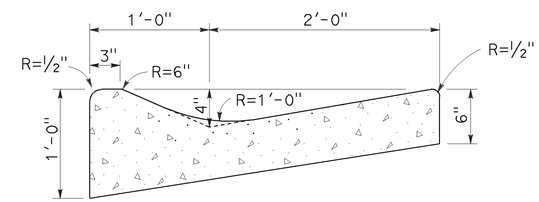

TYPE E CURB

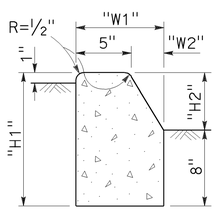

TYPE B1 CURBS

See Table A

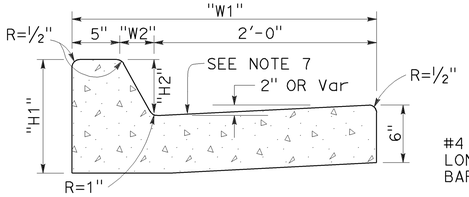

TYPE B2 CURBS

See Table A

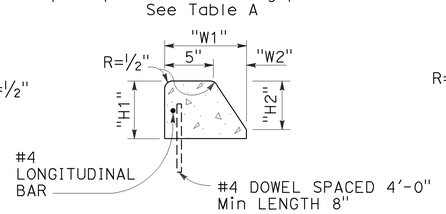

TYPE B3 CURBS

Superimposed on existing pavement
See Table A

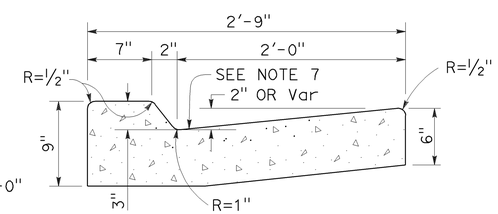

TYPE B4 CURBS

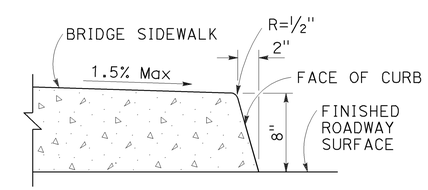

TYPE H CURB

On Bridges

CURBS

TABLE A

CURB TYPE	DIMENSIONS			
	"H1"	"H2"	"W1"	"W2"
A1-6	1'-2"	6"	7½"	1½"
A1-8	1'-4"	8"	8"	2"
A2-6	1'-0"	6"	2'-7½"	1½"
A2-8	1'-2"	8"	2'-8"	2"
A3-6	6"	5"	7¼"	1¼"
A3-8	8"	7"	7¾"	1¾"
B1-4	1'-0"	4"	7½"	2½"
B1-6	1'-2"	6"	9"	4"
B2-4	10"	4"	2'-7½"	2½"
B2-6	1'-0"	6"	2'-9"	4"
B3-4	4"	3"	7"	2"
B3-6	6"	5"	8½"	3½"
D-4	10"	4"	1'-6"	1'-1"
D-6	1'-0"	6"	2'-2"	1'-9"

CURB QUANTITIES

TYPE	CUBIC YARDS PER LINEAR FOOT
A1-6	0.02585
A1-8	0.03084
A2-6	0.05903
A2-8	0.06379
A3-6	0.01036
A3-8	0.01435
B1-4	0.02185
B1-6	0.02930
B2-4	0.05515
B2-6	0.06171
B3-4	0.00641
B3-6	0.01074
B4	0.05709
D-4	0.04083
D-6	0.06804
E	0.06661

NOTES:

1. Case A driveway section typically applies.
2. X=3'-0" except for curb heights over 10" where 4:1 slopes shall be used on curb slope.
3. Sidewalk and ramp thickness "T" at driveway shall be 4" for residental and 6" for commercial.
4. Difference in slope of the driveway ramp and the slope of a line between the gutter and a point on the roadway 5'-0" from gutter line shall not exceed 15%. Reduce driveway ramp slope, not gutter slope, where required.
5. Minimum width of clear passageway for sidewalk shall be 4'-2".
6. Retaining curbs and acquisition of construction easement may be necessary for narrow sidewalks or curb heights in excess of 6".
7. Across the pedestrian route at curb ramp locations, the gutter pan slope shall not exceed 1" of depth for each 2'-0" of width.

STATE OF CALIFORNIA
DEPARTMENT OF TRANSPORTATION

CURBS AND DRIVEWAYS

NO SCALE

RSP A87A DATED JULY 19, 2013 SUPERSEDES STANDARD PLAN A87A
DATED MAY 20, 2011 - PAGE 119 OF THE STANDARD PLANS BOOK DATED 2010.

REVISED STANDARD PLAN RSP A87A

Dist	COUNTY	ROUTE	POST MILES TOTAL PROJECT	SHEET No.	TOTAL SHEETS
07	LA	10	37.2/42.4	1491	2313

REGISTERED CIVIL ENGINEER

July 19, 2013
PLANS APPROVAL DATE

REGISTERED PROFESSIONAL ENGINEER
Michael Janzen
No. 44788
Exp. 03-31-14
CIVIL
STATE OF CALIFORNIA

THE STATE OF CALIFORNIA OR ITS OFFICERS OR AGENTS SHALL NOT BE RESPONSIBLE FOR THE ACCURACY OR COMPLETENESS OF SCANNED COPIES OF THIS PLAN SHEET.

TO ACCOMPANY PLANS DATED 6-1-15

2010 REVISED STANDARD PLAN RSP A87B

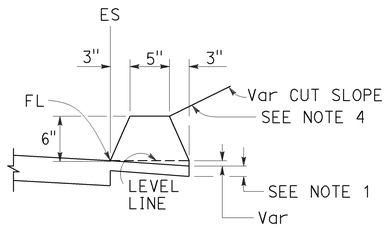

TYPE A
See Note 3

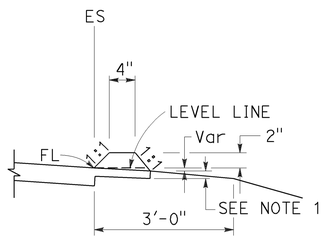

TYPE C

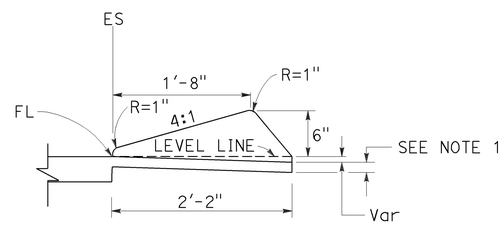

TYPE D

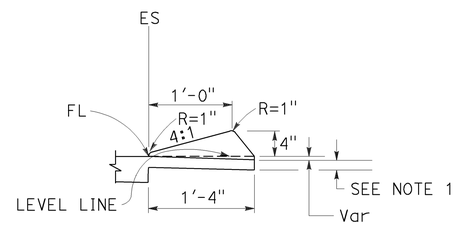

TYPE E

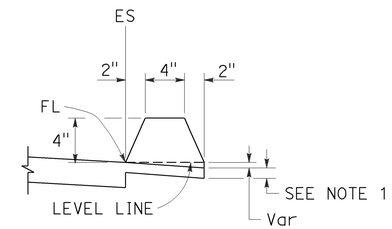

TYPE F
See Note 5

DIKES

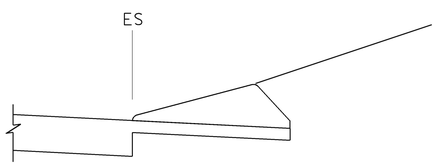

CASE C-1
Cut Slope

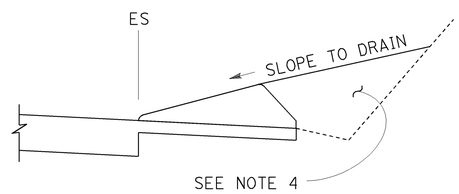

CASE C-2
Cut Slope

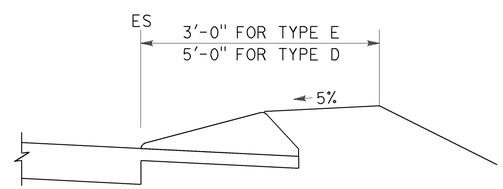

CASE F

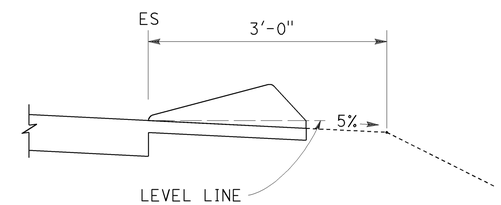

CASE R
See Note 2

TYPE D AND E BACKFILL DETAILS

NOTES:

1. For HMA shoulders only, extend top layer of HMA placed on the shoulder under dike with no joint at the ES. For projects with OGFC shoulders, do not extend OGFC under dike. See project plans for modified dike detail.
2. Case R applies to retrofit only projects where restrictive conditions do not provide enough width for Case F backfill.
3. Type A dike only to be used where restrictive slope conditions do not provide enough width to use Type D or Type E dike.
4. Fill and compact with excavated material to top of dike.
5. Use Type F dike, where dike is required with guard railing installations. See Revised Standard Plan RSP A77N4 for dike positioning details.

DIKE QUANTITIES

TYPE	CUBIC YARDS PER LINEAR FOOT
A	0.0135
C	0.0038
D	0.0293
E	0.0130
F	0.0066

Quantities based on 5% cross slope.

STATE OF CALIFORNIA
DEPARTMENT OF TRANSPORTATION

HOT MIX ASPHALT DIKES

NO SCALE

RSP A87B DATED JULY 19, 2013 SUPERSEDES STANDARD PLAN A87B DATED MAY 20, 2011 - PAGE 120 OF THE STANDARD PLANS BOOK DATED 2010.

REVISED STANDARD PLAN RSP A87B

Dist	COUNTY	ROUTE	POST MILES TOTAL PROJECT	SHEET No.	TOTAL SHEETS
07	LA	10	37.2/42.4	1492	2313

REGISTERED CIVIL ENGINEER

March 21, 2014
PLANS APPROVAL DATE

REGISTERED PROFESSIONAL ENGINEER Hector David Cordova No. C41957 Exp. 3-31-14 CIVIL STATE OF CALIFORNIA

THE STATE OF CALIFORNIA OR ITS OFFICERS OR AGENTS SHALL NOT BE RESPONSIBLE FOR THE ACCURACY OR COMPLETENESS OF SCANNED COPIES OF THIS PLAN SHEET.

TO ACCOMPANY PLANS DATED 6-1-15

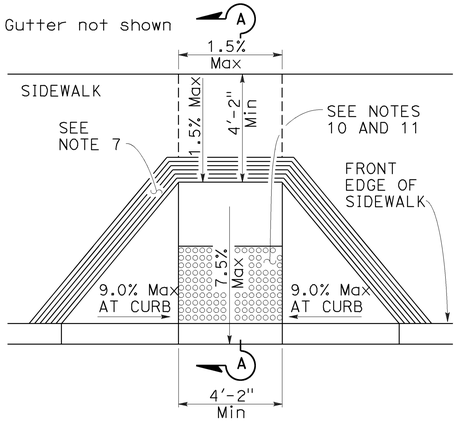

CASE A

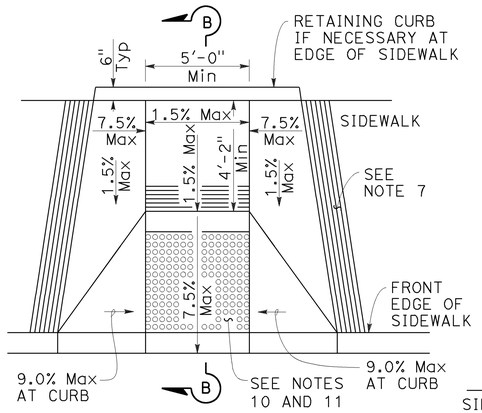

CASE B

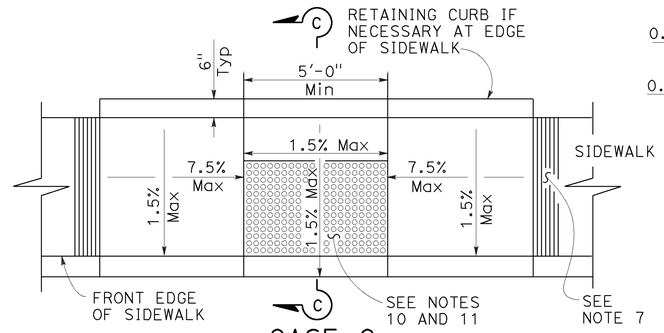

CASE C

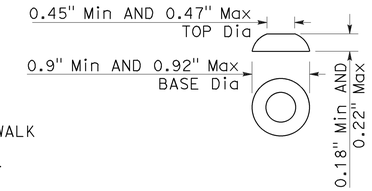

RAISED TRUNCATED DOME

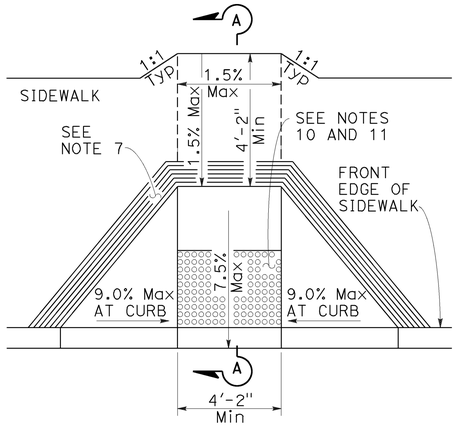

CASE D

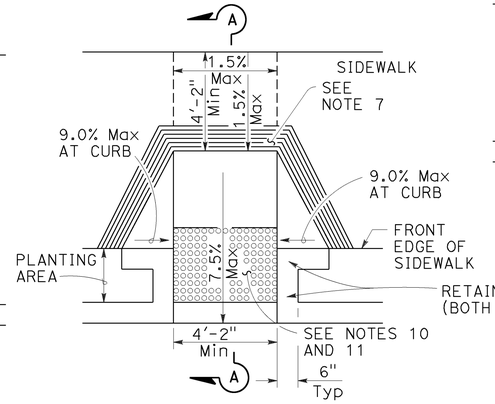

CASE E

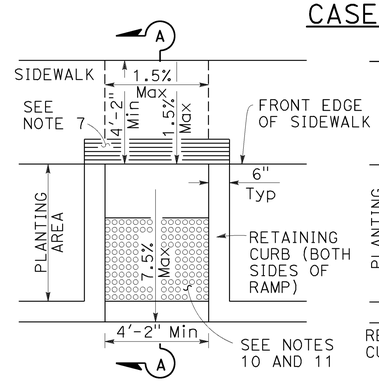

CASE F

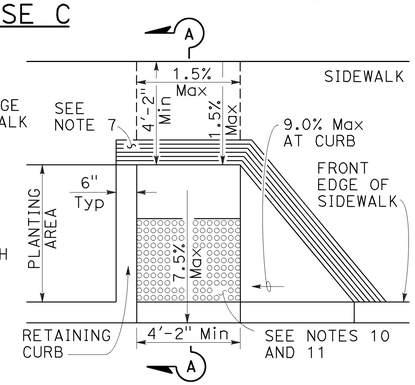

CASE G

See Note 4

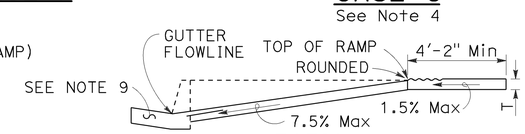

SECTION A-A

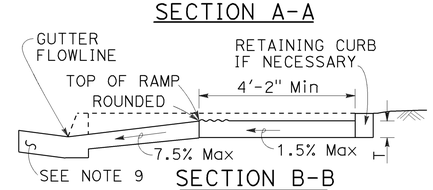

SECTION B-B

Depress entire sidewalk as required

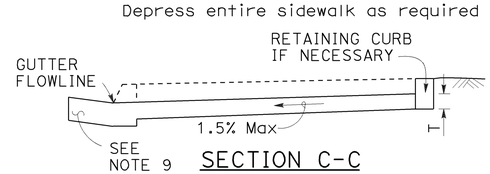

SECTION C-C

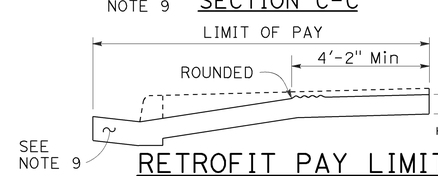

RETROFIT PAY LIMITS

Existing curb and sidewalk

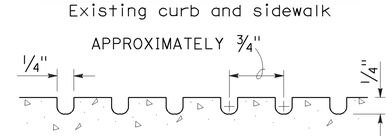

GROOVING DETAIL

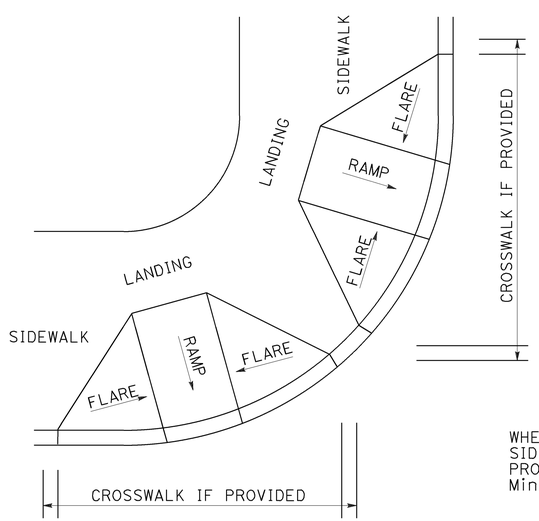

DETAIL A

TYPICAL TWO-RAMP CORNER INSTALLATION

See Note 1

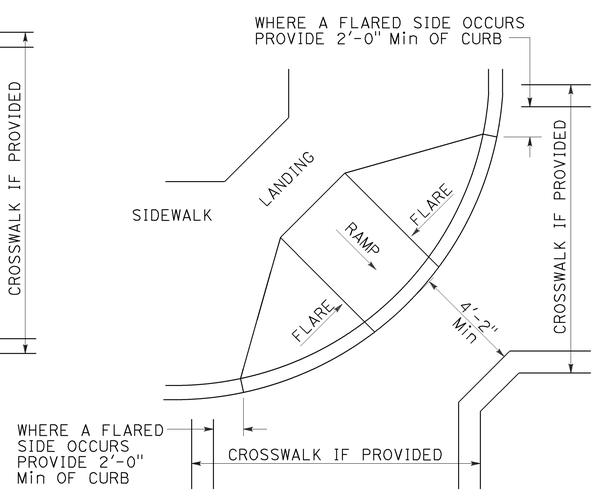

DETAIL B

TYPICAL ONE-RAMP CORNER INSTALLATION

See Notes 1 and 3

NOTES:

1. As site conditions dictate, Case A through Case G curb ramps may be used for corner installations similar to those shown in Detail A and Detail B. The case of curb ramps used in Detail A do not have to be the same. Case A through Case G curb ramps also may be used at mid block locations, as site conditions dictate.
2. If distance from curb to back of sidewalk is too short to accommodate ramp and 4'-2" platform (landing) as shown in Case A, the sidewalk may be depressed longitudinally as in Case B, or C or may be widened as in Case D.
3. When ramp is located in center of curb return, crosswalk configuration must be similar to that shown for Detail B.
4. As site conditions dictate, the retaining curb side and the flared side of the Case G ramp shall be constructed in reversed position.
5. If located on a curve, the sides of the ramp need not be parallel, but the minimum width of the ramp shall be 4'-2".
6. Side slope of ramp flares vary uniformly from a maximum of 9.0% at curb to conform with longitudinal sidewalk slope adjacent to top of the ramp, except in Case C and Case F.
7. The curb ramp shall be outlined, as shown, with a 1'-0" wide border with 1/4" grooves approximately 3/4" on center. See grooving detail.
8. Transitions from ramps and landing to walks, gutters or streets shall be flush (no lip) and free of abrupt changes.
9. Counter slopes of adjoining gutters and road surfaces immediately adjacent to and within 24 inches of the curb ramp shall not be steeper than 1:20 (5.0%). Gutter pan slope shall not exceed 1" of depth for each 2'-0" of width.
10. Curb ramps shall have a detectable warning surface that extends the full width and 3'-0" depth of the ramp. A 4'-0" wide detectable warning surface may be used on a 4'-2" wide curb ramp. Detectable Warning Surfaces shall conform to the requirements in the Standard Specifications.
11. The edge of the detectable warning surface nearest the street shall be between 6" and 8" from the gutter flowline.
12. Sidewalk and ramp thickness, "T", shall be 3 1/2" minimum.
13. Utility pull boxes, manholes, vaults and all other utility facilities within the boundaries of the curb ramp will be relocated or adjusted to grade by the owner prior to, or in conjunction with, curb ramp construction.
14. Detectable warning surface may have to be cut to allow removal of utility covers while maintaining full detectable warning width and depth.

RAISED TRUNCATED DOME PATTERN (IN-LINE)

DETECTABLE WARNING SURFACE

See Note 10

STATE OF CALIFORNIA
DEPARTMENT OF TRANSPORTATION

CURB RAMP DETAILS

NO SCALE

RSP A88A DATED MARCH 21, 2014 SUPERSEDES RSP A88A DATED JULY 19, 2013 AND STANDARD PLAN A88A DATED MAY 20, 2011 - PAGE 121 OF THE STANDARD PLANS BOOK DATED 2010.

REVISED STANDARD PLAN RSP A88A

2010 REVISED STANDARD PLAN RSP A88A

2-25-14

Dist	COUNTY	ROUTE	POST MILES TOTAL PROJECT	SHEET No.	TOTAL SHEETS
07	LA	10	37.2/42.4	1493	2313

REGISTERED CIVIL ENGINEER

March 21, 2014
PLANS APPROVAL DATE

REGISTERED PROFESSIONAL ENGINEER Hector David Cordova No. C41957 Exp. 3-31-14 CIVIL STATE OF CALIFORNIA

THE STATE OF CALIFORNIA OR ITS OFFICERS OR AGENTS SHALL NOT BE RESPONSIBLE FOR THE ACCURACY OR COMPLETENESS OF SCANNED COPIES OF THIS PLAN SHEET.

TO ACCOMPANY PLANS DATED 6-1-15

Gutter not shown

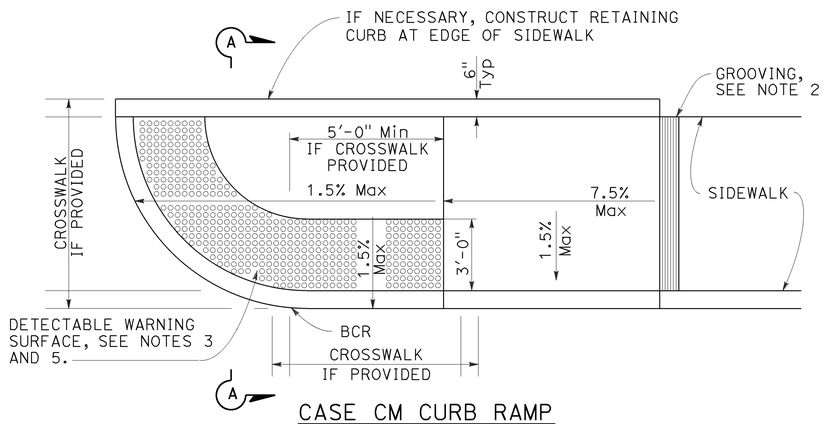

CASE CM CURB RAMP

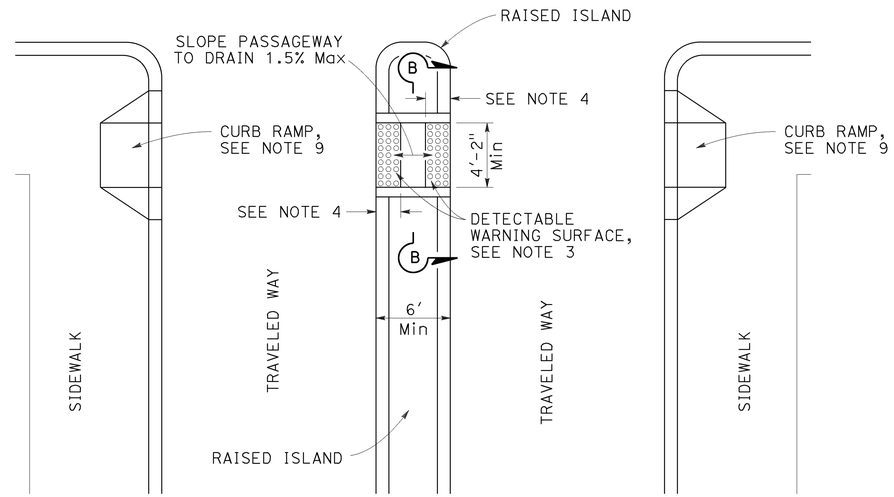

TYPE A PASSAGEWAY

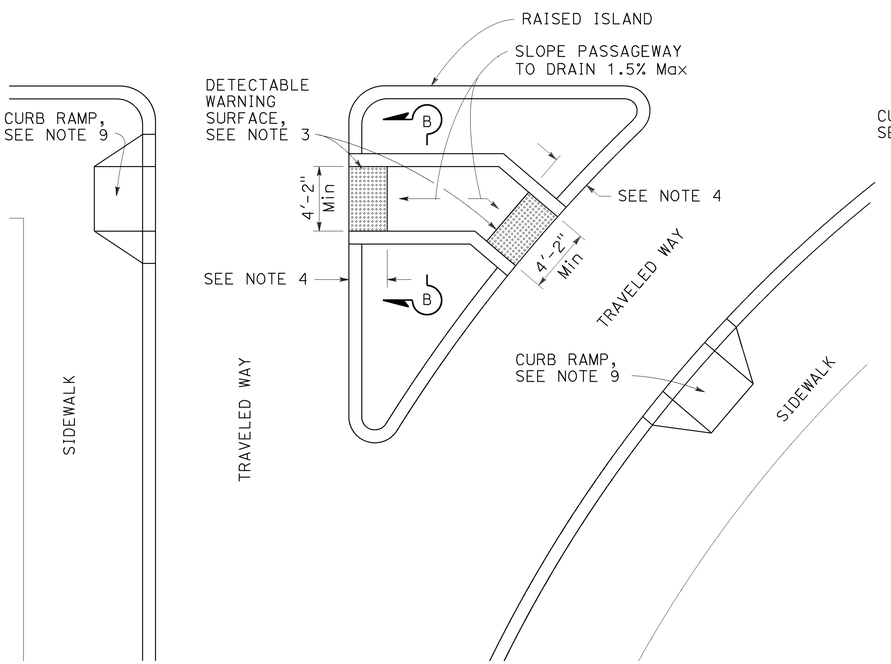

TYPE B PASSAGEWAY

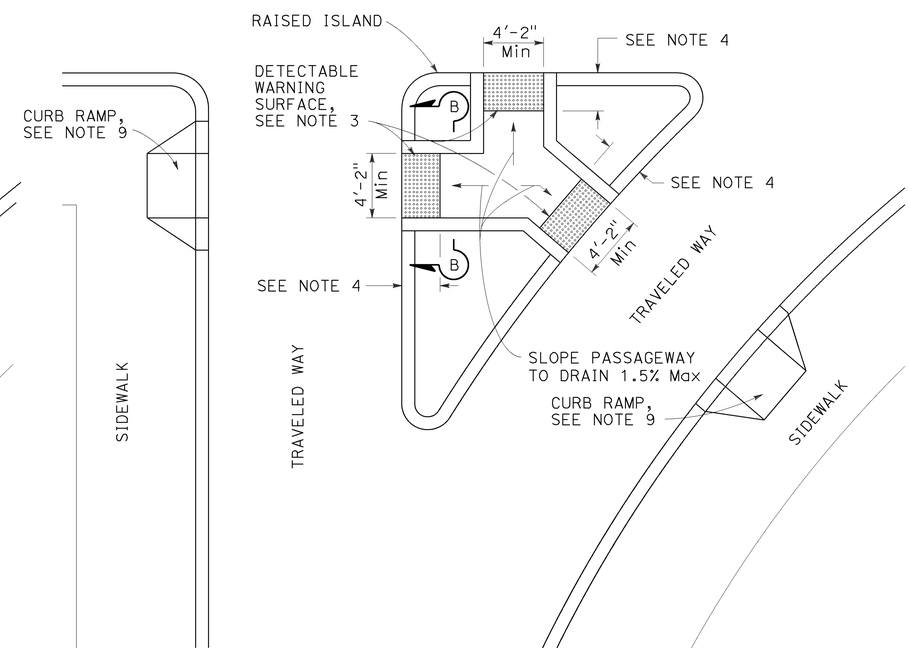

TYPE C PASSAGEWAY

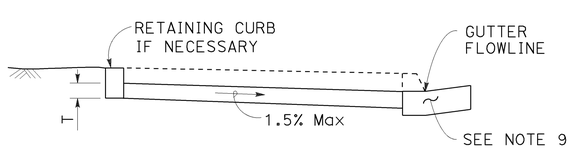

SECTION A-A

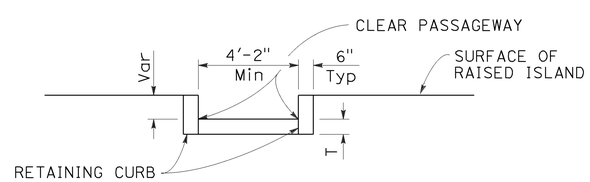

SECTION B-B

NOTES:

1. Sidewalk, ramp and passageway thickness, "T", shall be 3½" minimum.
2. For details of grooving used with Case CM curb ramp, see Revised Standard Plan RSP A88A.
3. For details of detectable warning surfaces, see Revised Standard Plan RSP A88A.
4. Where an island passageway length is greater than or equal to 6'-0", but less than 8'-0", each detectable warning surface shall extend the full width and 2'-0" depth of the passageway length. Where an island passageway length is greater than or equal to 8'-0", each detectable warning surface shall extend the full width and 3'-0" depth of the passageway length. A 4'-0" wide detectable warning surface may be used on a 4'-2" wide island passageway.
5. For Case CM curb ramp, the edge of the detectable warning surface nearest the street shall be between 6" and 8" from the gutter flowline.
6. Transitions from ramps to walks, gutters or streets shall be flush (no lip) and free of abrupt changes.
7. Utility pull boxes, manholes, vaults and all other utility facilities within the boundaries of the curb ramp will be relocated or adjusted to grade by the owner prior to, or in conjunction with, curb ramp construction.
8. Detectable warning surface may have to be cut to allow removal of utility covers while maintaining full detectable warning width and depth.
9. For additional curb ramp details, see Revised Standard Plan RSP A88A.

STATE OF CALIFORNIA
DEPARTMENT OF TRANSPORTATION

CURB RAMP AND ISLAND PASSAGEWAY DETAILS

NO SCALE

RSP A88B DATED MARCH 21, 2014 SUPERSEDES RSP A88B DATED JULY 19, 2013 AND STANDARD PLAN A88B DATED MAY 20, 2011 - PAGE 122 OF THE STANDARD PLANS BOOK DATED 2010.

REVISED STANDARD PLAN RSP A88B

2010 REVISED STANDARD PLAN RSP A88B

2-25-14

Dist	COUNTY	ROUTE	POST MILES TOTAL PROJECT	SHEET No.	TOTAL SHEETS
07	LA	10	37.2/42.4	1494	2313

William K. Farnbach
REGISTERED CIVIL ENGINEER

July 19, 2013
PLANS APPROVAL DATE

REGISTERED PROFESSIONAL ENGINEER
William K. Farnbach
No. C49042
Exp. 9-30-14
CIVIL
STATE OF CALIFORNIA

THE STATE OF CALIFORNIA OR ITS OFFICERS OR AGENTS SHALL NOT BE RESPONSIBLE FOR THE ACCURACY OR COMPLETENESS OF SCANNED COPIES OF THIS PLAN SHEET.

TO ACCOMPANY PLANS DATED 6-1-15

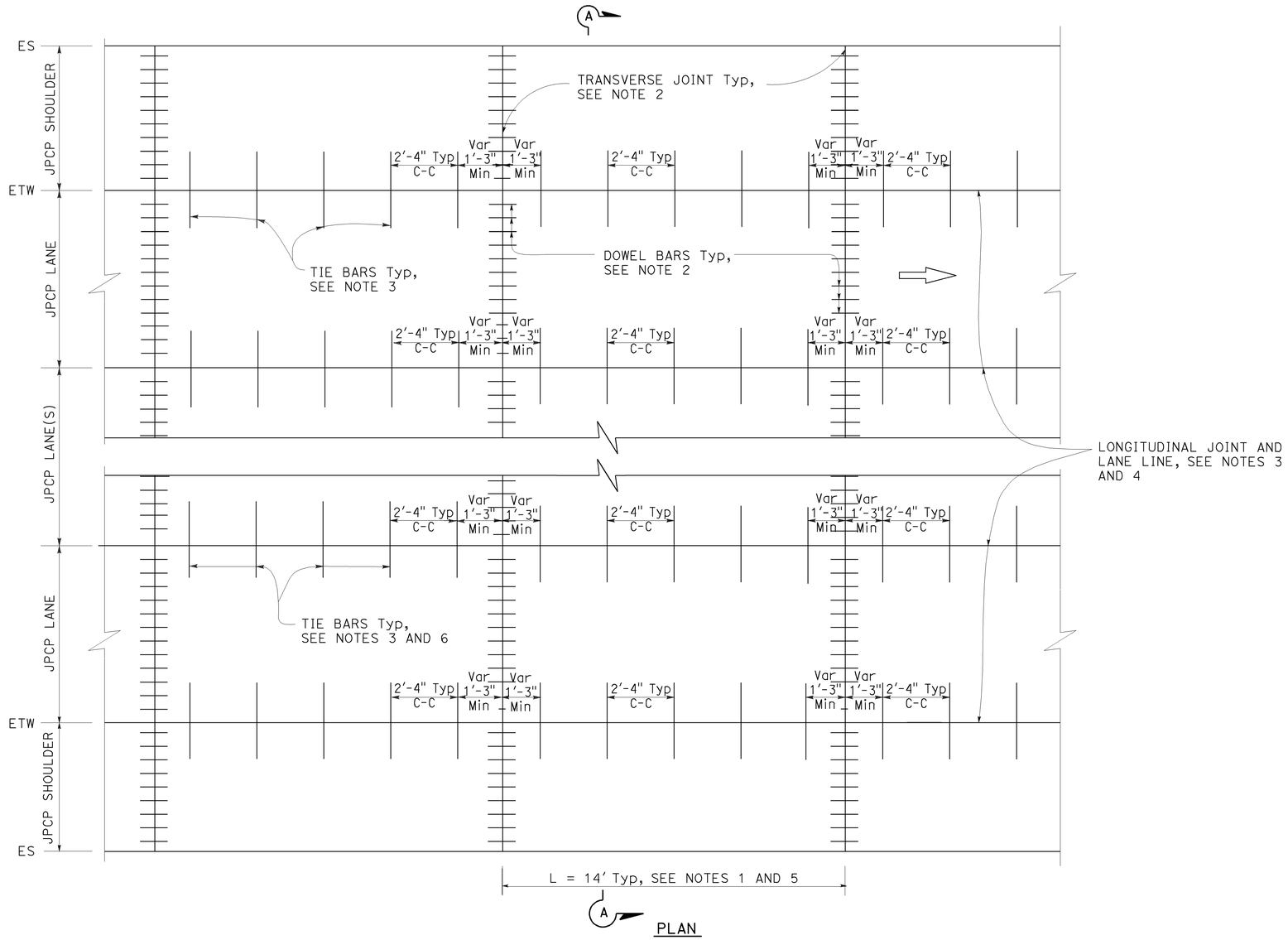

PLAN

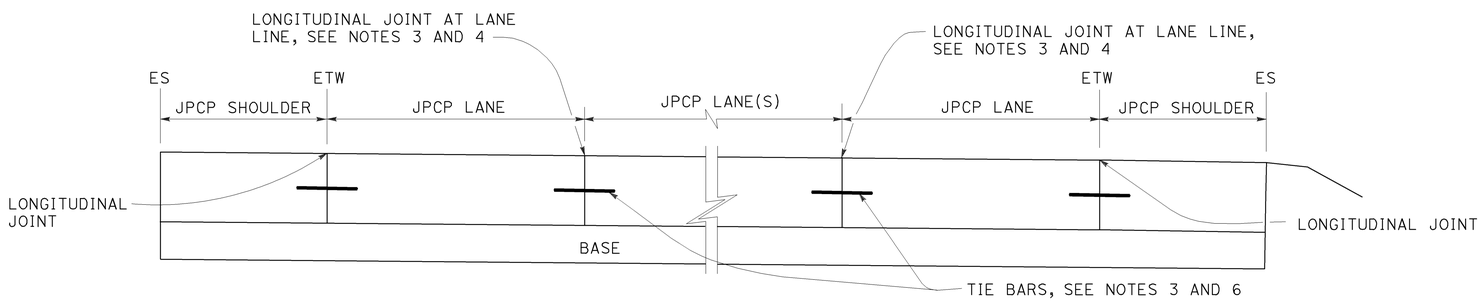

SECTION A-A

NOTES:

1. Transverse joint spacing may be adjusted to no less than 10' and no more than 14' to conform to bridges, change in pavement type, and hardened concrete pavement.
2. For transverse joint and dowel bar details not shown, see Revised Standard Plan RSP P10.
3. For longitudinal joint and tie bar details not shown, see Revised Standard Plan RSP P15.
4. For additional longitudinal joint layout details, see Revised Standard Plan RSP P18.
5. For joint layout at intersections, see Project Plans.
6. For dowel bars at longitudinal joint. see Revised Standard Plan RSP P18.

STATE OF CALIFORNIA
DEPARTMENT OF TRANSPORTATION

JOINTED PLAIN CONCRETE PAVEMENT NEW CONSTRUCTION

NO SCALE

RSP P1 DATED JULY 19, 2013 SUPERSEDES STANDARD PLAN P1
DATED MAY 20, 2011 - PAGE 125 OF THE STANDARD PLANS BOOK DATED 2010.

REVISED STANDARD PLAN RSP P1

2010 REVISED STANDARD PLAN RSP P1

5-31-13

Dist	COUNTY	ROUTE	POST MILES TOTAL PROJECT	SHEET No.	TOTAL SHEETS
07	LA	10	37.2/42.4	1495	2313

William K. Farnbach
REGISTERED CIVIL ENGINEER

July 19, 2013
PLANS APPROVAL DATE

REGISTERED PROFESSIONAL ENGINEER
William K. Farnbach
No. C49042
Exp. 9-30-14
CIVIL
STATE OF CALIFORNIA

THE STATE OF CALIFORNIA OR ITS OFFICERS OR AGENTS SHALL NOT BE RESPONSIBLE FOR THE ACCURACY OR COMPLETENESS OF SCANNED COPIES OF THIS PLAN SHEET.

TO ACCOMPANY PLANS DATED 6-1-15

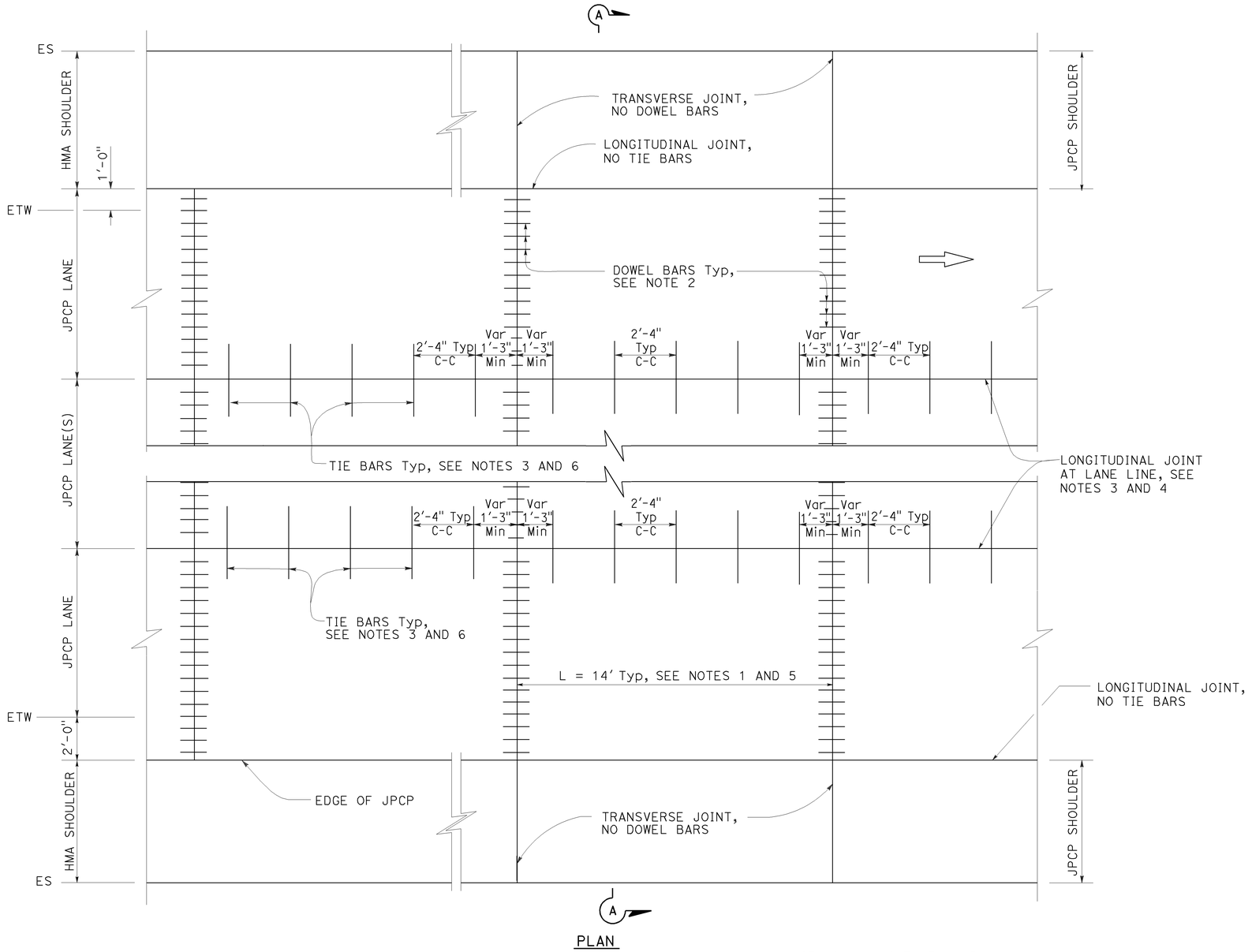

PLAN

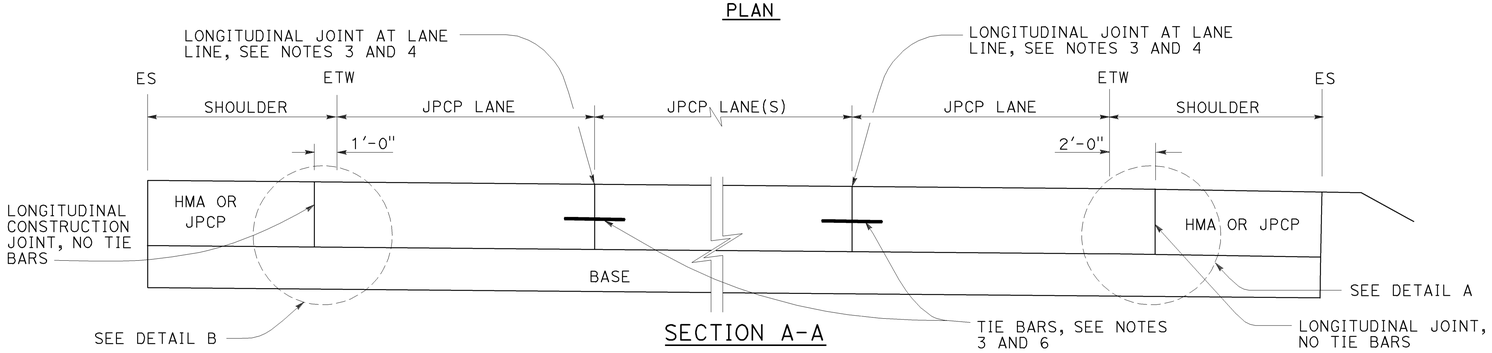

SECTION A-A

NOTES:

1. Transverse joint spacing may be adjusted to no less than 10' and no more than 14' to conform to bridges, change in pavement type, and hardened concrete pavement.
2. For transverse joint and dowel bar details not shown, see Revised Standard Plan RSP P10.
3. For longitudinal joint and tie bar details not shown, see Revised Standard Plan RSP P15.
4. For additional longitudinal joint layout details, see Revised Standard Plan RSP P18.
5. For joint layout at intersections, see Project Plans.
6. For dowel bars at longitudinal joint. see Revised Standard Plan RSP P18.
7. For limits of rumble strips, see Projects Plans.

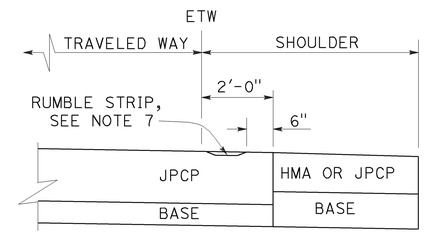

DETAIL A

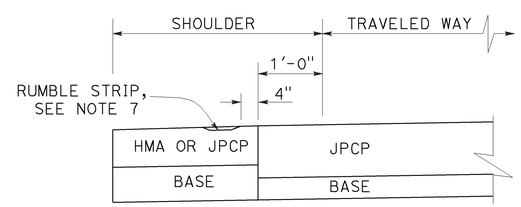

DETAIL B

STATE OF CALIFORNIA
DEPARTMENT OF TRANSPORTATION

JOINTED PLAIN CONCRETE PAVEMENT (WIDENED LANE) NEW CONSTRUCTION

NO SCALE

RSP P2 DATED JULY 19, 2013 SUPERSEDES STANDARD PLAN P2 DATED MAY 20, 2011 - PAGE 126 OF THE STANDARD PLANS BOOK DATED 2010.

REVISED STANDARD PLAN RSP P2

2010 REVISED STANDARD PLAN RSP P2

5-31-13

Dist	COUNTY	ROUTE	POST MILES TOTAL PROJECT	SHEET No.	TOTAL SHEETS
07	LA	10	37.2/42.4	1496	2313

William K. Farnbach
REGISTERED CIVIL ENGINEER

July 19, 2013
PLANS APPROVAL DATE

REGISTERED PROFESSIONAL ENGINEER
William K. Farnbach
No. C49042
Exp. 9-30-14
CIVIL
STATE OF CALIFORNIA

THE STATE OF CALIFORNIA OR ITS OFFICERS OR AGENTS SHALL NOT BE RESPONSIBLE FOR THE ACCURACY OR COMPLETENESS OF SCANNED COPIES OF THIS PLAN SHEET.

TO ACCOMPANY PLANS DATED 6-1-15

2010 REVISED STANDARD PLAN RSP P3A

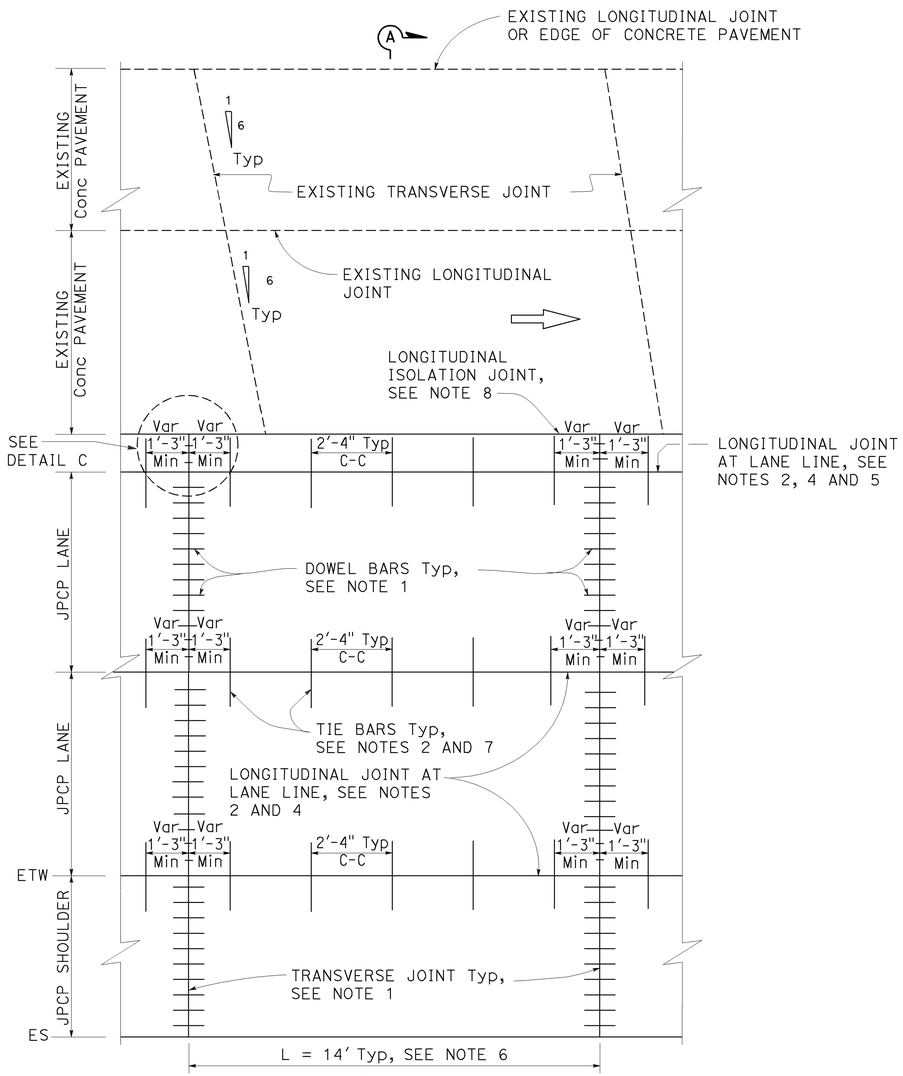

PLAN
ISOLATED
See Note 3

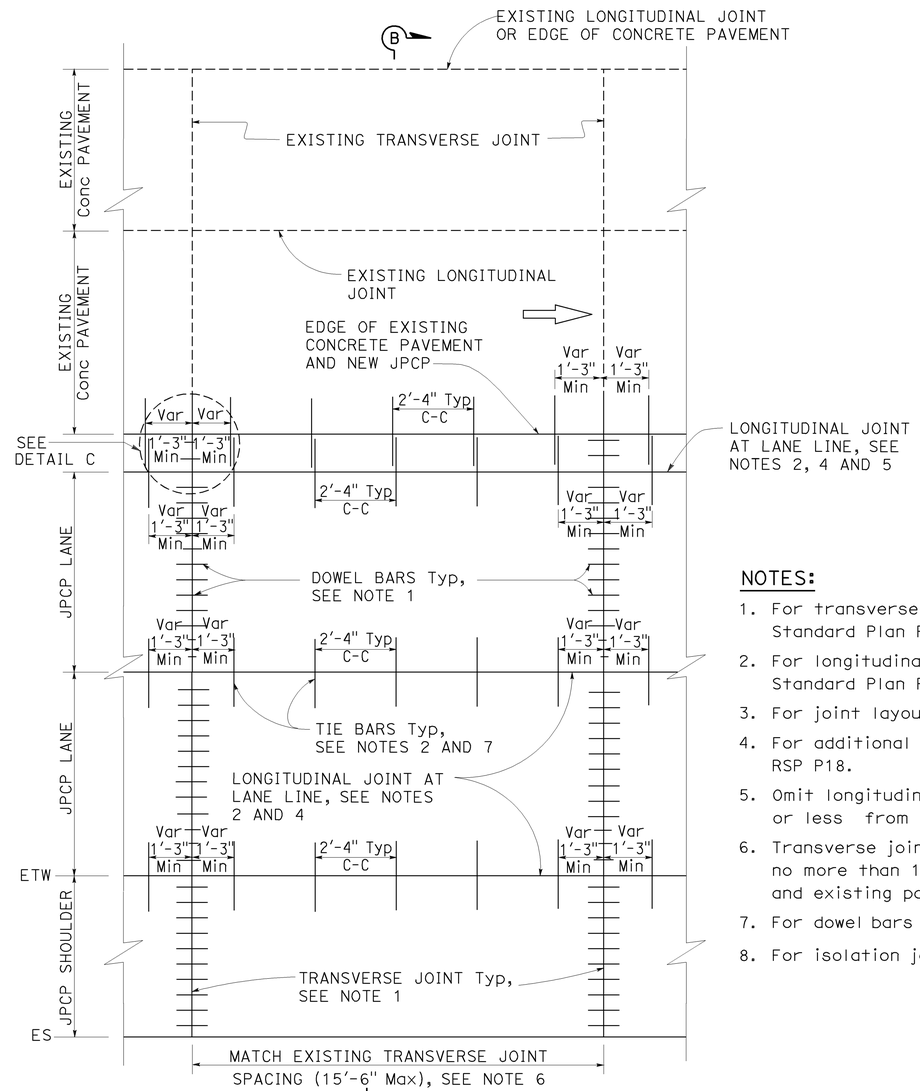

PLAN
TIED
See Note 3

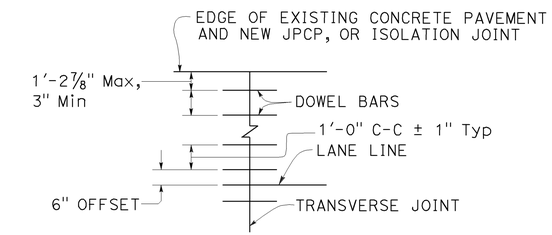

DETAIL C

NOTES:

1. For transverse joint and dowel bar details not shown, see Revised Standard Plan RSP P10.
2. For longitudinal joint and tie bar details not shown, see Revised Standard Plan RSP P15.
3. For joint layout at intersections, see Project Plans.
4. For additional longitudinal joint details, see Revised Standard Plan RSP P18.
5. Omit longitudinal joint when edge of new concrete pavement is 3'-3" or less from JPCP lane line.
6. Transverse joint spacing may be adjusted to no less than 10' and no more than 15'-6" to conform to bridges, change in pavement type and existing pavement.
7. For dowel bars at longitudinal joint. see Revised Standard Plan RSP P18.
8. For isolation joints, see Detail A on Revised Standard Plan RSP P18.

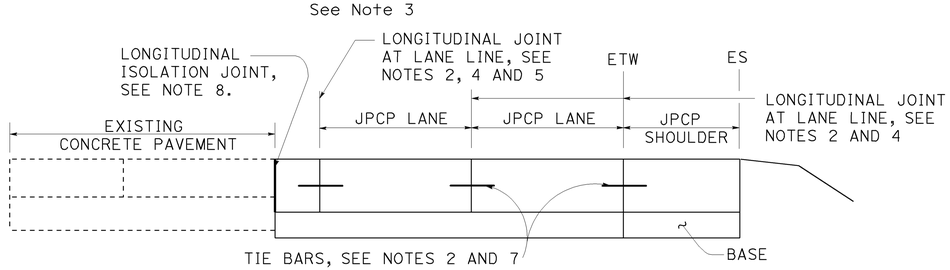

SECTION A-A

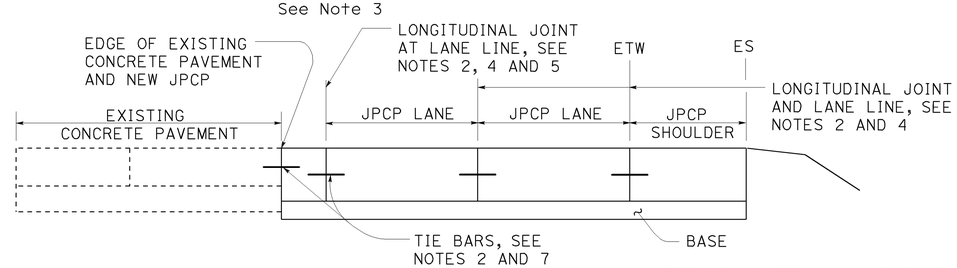

SECTION B-B

STATE OF CALIFORNIA
DEPARTMENT OF TRANSPORTATION

JOINTED PLAIN CONCRETE PAVEMENT LANE & SHOULDER ADDITION OR REPLACEMENT

NO SCALE

RSP P3A DATED JULY 19, 2013 SUPPLEMENTS THE STANDARD PLANS BOOK DATED 2010.

REVISED STANDARD PLAN RSP P3A

5-31-13

Dist	COUNTY	ROUTE	POST MILES TOTAL PROJECT	SHEET No.	TOTAL SHEETS
07	LA	10	37.2/42.4	1497	2313

REGISTERED CIVIL ENGINEER

July 19, 2013
PLANS APPROVAL DATE

REGISTERED PROFESSIONAL ENGINEER
William K. Farnbach
No. C49042
Exp. 9-30-14
CIVIL
STATE OF CALIFORNIA

THE STATE OF CALIFORNIA OR ITS OFFICERS OR AGENTS SHALL NOT BE RESPONSIBLE FOR THE ACCURACY OR COMPLETENESS OF SCANNED COPIES OF THIS PLAN SHEET.

TO ACCOMPANY PLANS DATED 6-1-15

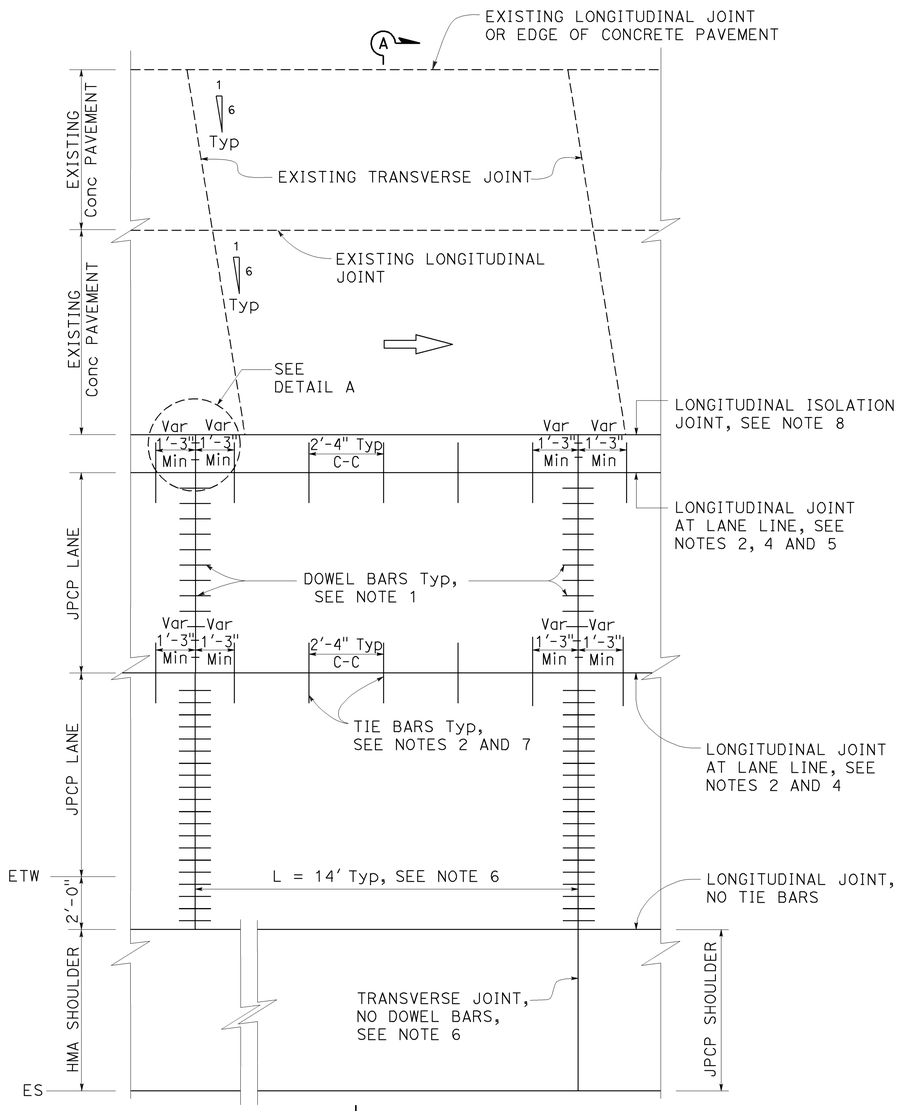

A PLAN
ISOLATED
See Note 3

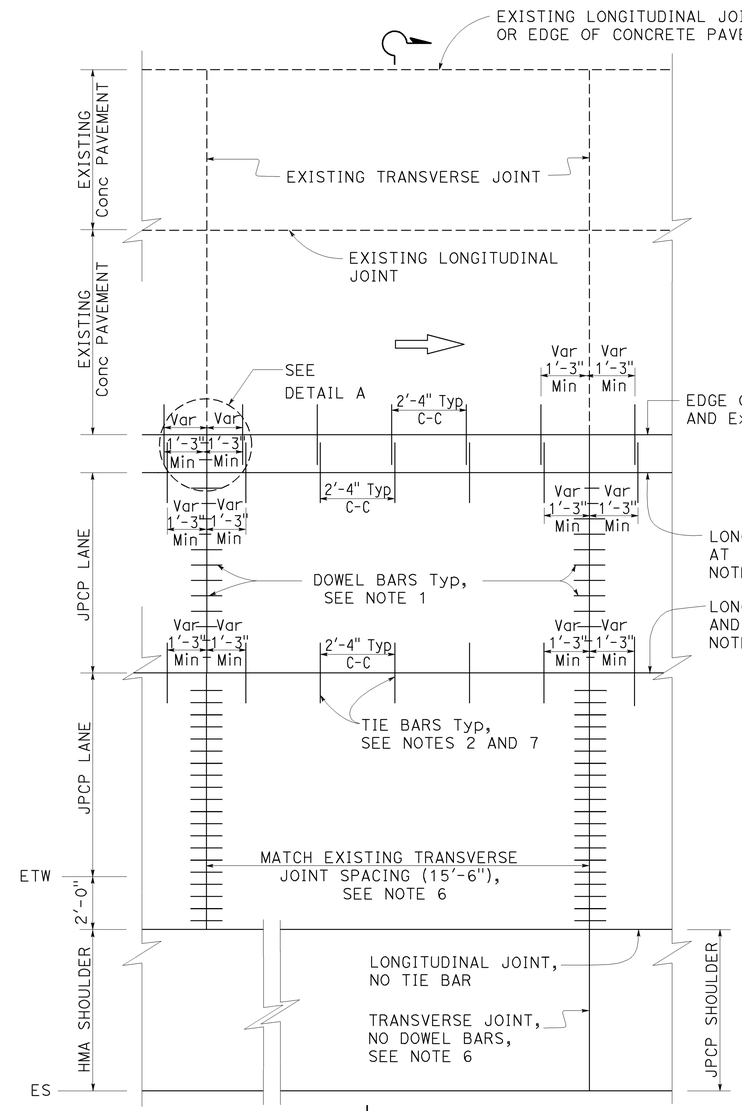

B PLAN
TIED
See Note 3

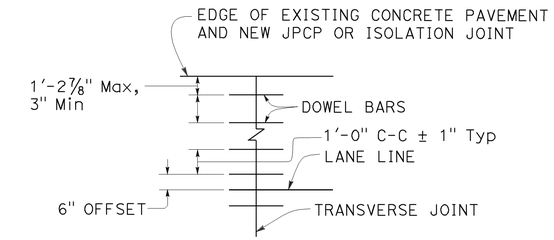

DETAIL A

NOTES:

1. For transverse joint and dowel bar details not shown, see Revised Standard Plan RSP P10.
2. For longitudinal joint and tie bar details not shown, see Revised Standard Plan RSP P15.
3. For joint layout at intersections, see Project Plans.
4. For additional longitudinal joint details, see Revised Standard Plan RSP P18.
5. Omit longitudinal joint when edge of new concrete pavement is 3'-3" or less from JPCP lane line.
6. Transverse joint spacing may be adjusted to no less than 10' and no more than 15'-6" to conform to bridges, change in pavement type and existing pavement.
7. For dowel bars at longitudinal joint. see Revised Standard Plan RSP P18.
8. For isolation joints, see Detail A on Revised Standard Plan RSP P18.

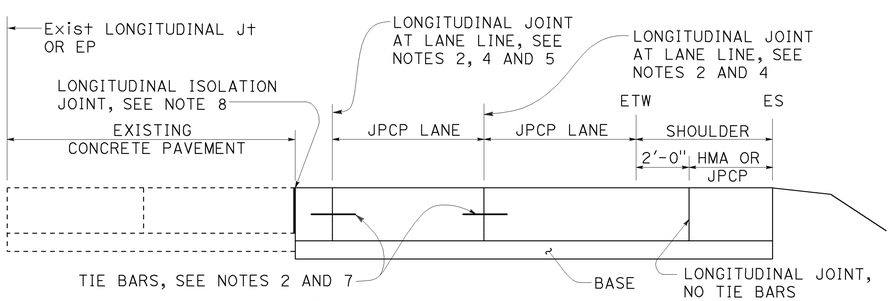

SECTION A-A

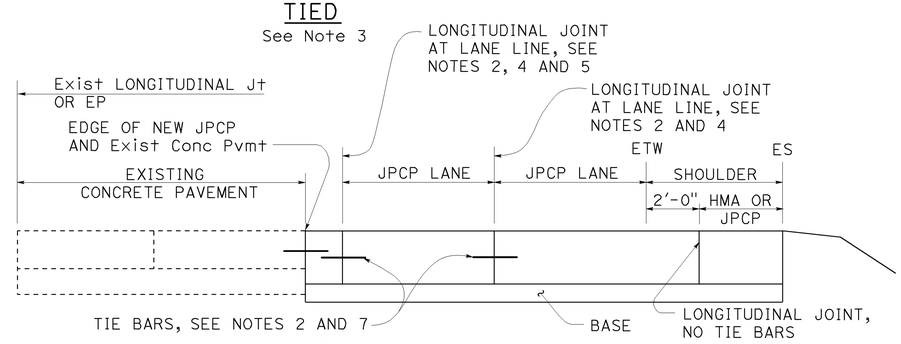

SECTION B-B

STATE OF CALIFORNIA
DEPARTMENT OF TRANSPORTATION

JOINTED PLAIN CONCRETE PAVEMENT (WIDENED LANE) LANE AND SHOULDER ADDITION OR REPLACEMENT

NO SCALE

RSP P3B DATED JULY 19, 2013 SUPPLEMENTS THE STANDARD PLANS BOOK DATED 2010.

REVISED STANDARD PLAN RSP P3B

2010 REVISED STANDARD PLAN RSP P3B

5-31-13

Dist	COUNTY	ROUTE	POST MILES TOTAL PROJECT	SHEET No.	TOTAL SHEETS
07	LA	10	37.2/42.4	1498	2313

William K. Farnbach
REGISTERED CIVIL ENGINEER

July 19, 2013
PLANS APPROVAL DATE

REGISTERED PROFESSIONAL ENGINEER William K. Farnbach No. C49042 Exp. 9-30-14 CIVIL STATE OF CALIFORNIA

THE STATE OF CALIFORNIA OR ITS OFFICERS OR AGENTS SHALL NOT BE RESPONSIBLE FOR THE ACCURACY OR COMPLETENESS OF SCANNED COPIES OF THIS PLAN SHEET.

TO ACCOMPANY PLANS DATED 6-1-15

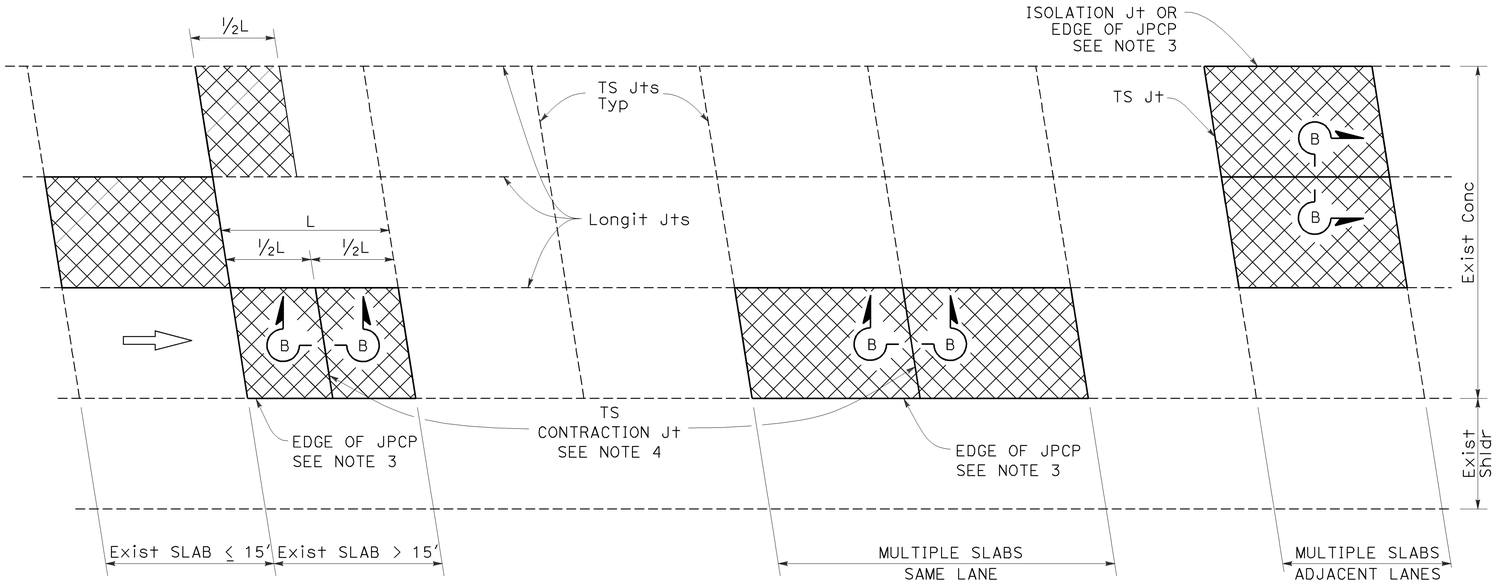

PLAN

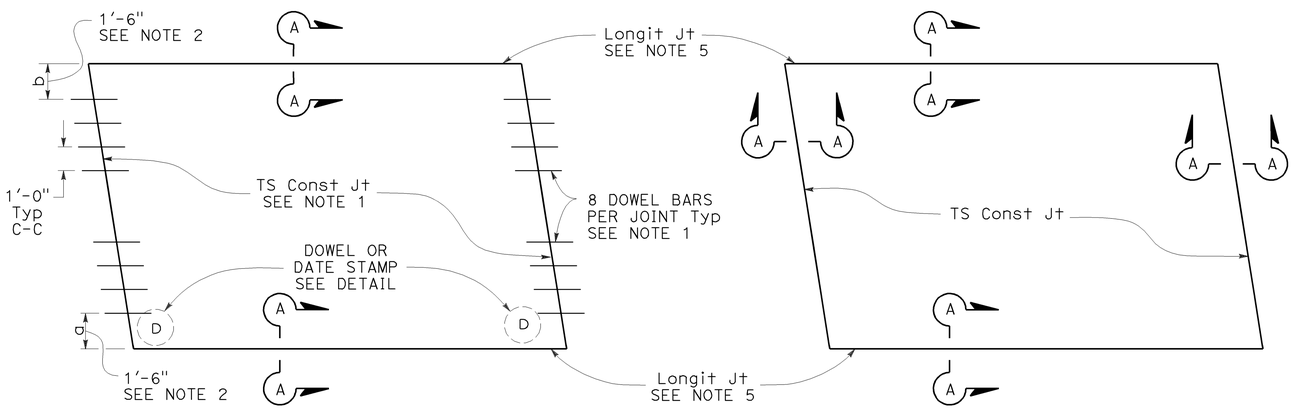

TYPE I
See Design Note 1

TYPE II
See Design Note 2

SLAB LAYOUT

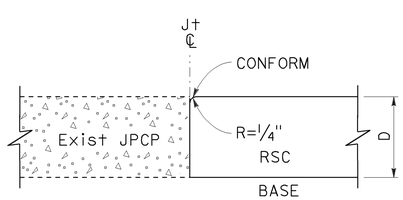

SECTION A-A

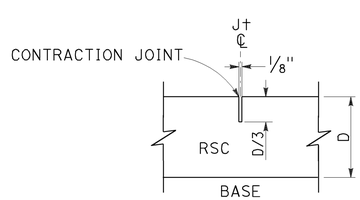

SECTION B-B

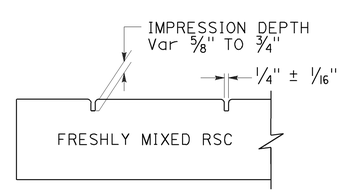

SECTION C-C

LEGEND:

RSC RAPID STRENGTH CONCRETE

INDIVIDUAL SLAB REPLACEMENT WITH RSC

NOTES:

1. For details not shown, see Revised Standard Plan RSP P10.
2. Where the existing outside shoulder is asphalt concrete pavement, "a" = 1'-0" and "b" = 2'-0".
3. Use side forms where edge of RSC pavement is adjacent to asphalt concrete.
4. Transverse contraction joint to match skew of existing joint. Omit dowel bars.
5. Do not place tie bars at longitudinal joints.

DESIGN NOTES:

1. For concrete slab repair with at least 5 years design life.
2. For short term repairs < 5 yrs design life or for slab replacements with cracking and seating.

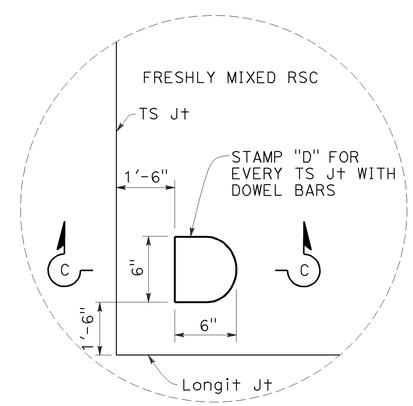

DOWEL STAMP DETAIL

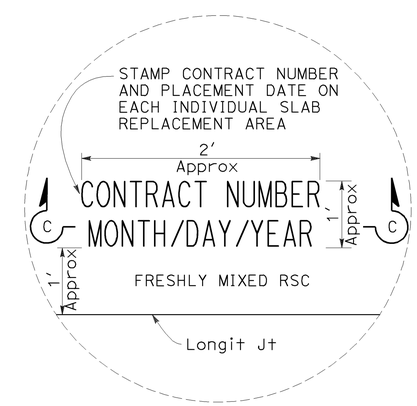

DATE STAMP DETAIL

STATE OF CALIFORNIA
DEPARTMENT OF TRANSPORTATION

INDIVIDUAL SLAB REPLACEMENT WITH RAPID STRENGTH CONCRETE

NO SCALE

RSP P8 DATED JULY 19, 2013 SUPERSEDES RSP P8 DATED APRIL 20, 2012 AND STANDARD PLAN P8 DATED MAY 20, 2011 - PAGE 130 OF THE STANDARD PLANS BOOK DATED 2010.

REVISED STANDARD PLAN RSP P8

2010 REVISED STANDARD PLAN RSP P8

5-31-13

Dist	COUNTY	ROUTE	POST MILES TOTAL PROJECT	SHEET No.	TOTAL SHEETS
07	LA	10	37.2/42.4	1499	2313

REGISTERED CIVIL ENGINEER

July 19, 2013
PLANS APPROVAL DATE

REGISTERED PROFESSIONAL ENGINEER William K. Farnbach No. C49042 Exp. 9-30-14 CIVIL STATE OF CALIFORNIA

THE STATE OF CALIFORNIA OR ITS OFFICERS OR AGENTS SHALL NOT BE RESPONSIBLE FOR THE ACCURACY OR COMPLETENESS OF SCANNED COPIES OF THIS PLAN SHEET.

TO ACCOMPANY PLANS DATED 6-1-15

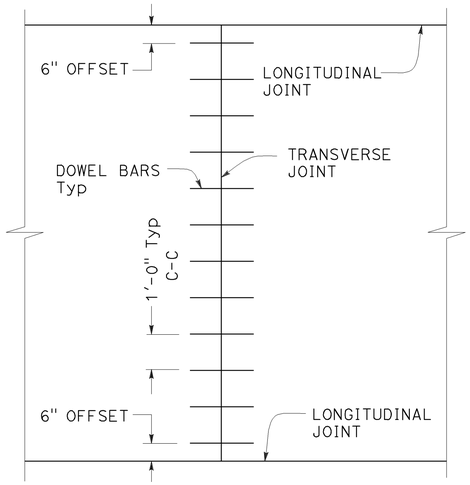

TRANSVERSE JOINT DOWEL BAR LAYOUT

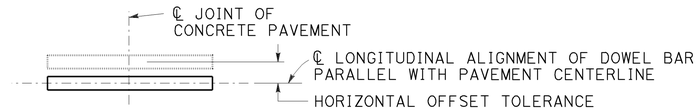

PLAN

HORIZONTAL OFFSET TOLERANCE

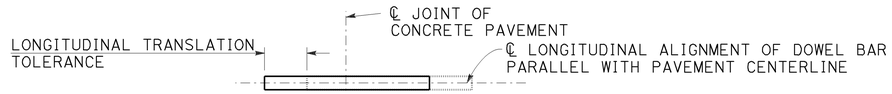

PLAN

LONGITUDINAL TRANSLATION TOLERANCE

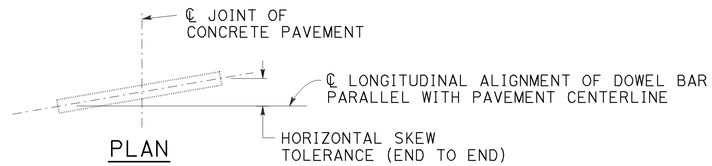

PLAN

HORIZONTAL SKEW TOLERANCE

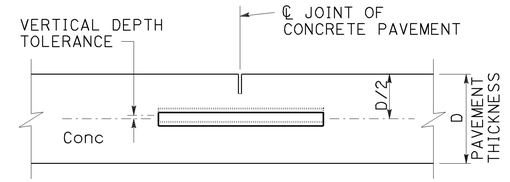

ELEVATION

VERTICAL DEPTH TOLERANCE

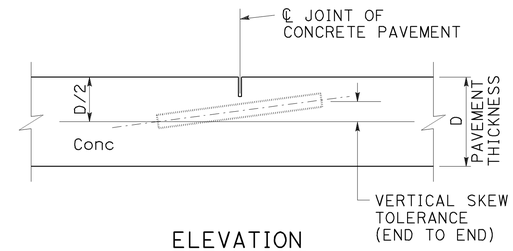

ELEVATION

VERTICAL SKEW TOLERANCE

NOTES:

1. See Revised Standard Plan RSP P1 for typical dowel bar placement and locations.
2. Where fresh concrete pavement is placed against new concrete or existing concrete pavement, rounding the corner of the existing concrete pavement is not required.
3. May also use ¾" Dia dowel bars 2'-4" ± ¼" in length. Center the length of dowel bars at the centerline of longitudinal joint.

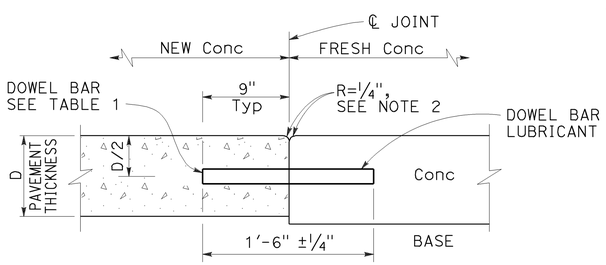

TRANSVERSE CONSTRUCTION JOINT DETAIL

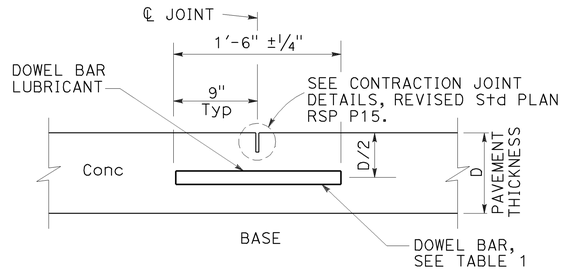

TRANSVERSE CONTRACTION JOINT

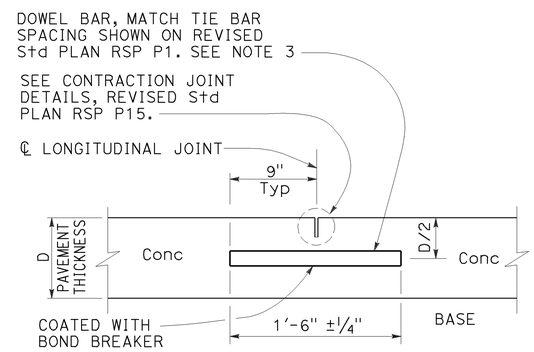

LONGITUDINAL CONTRACTION JOINT WITH DOWEL BARS

See Revised Std Plan RSP P18

TABLE 1

DOWEL BAR DIAMETER TABLE			
PAVEMENT THICKNESS	0.65'	> 0.65' - 0.85'	> 0.85'
MINIMUM DOWEL * BAR DIAMETER	1"	1¼"	1½"

* The drilled hole diameter must be ⅛" to 3/16" larger than the bar diameter.

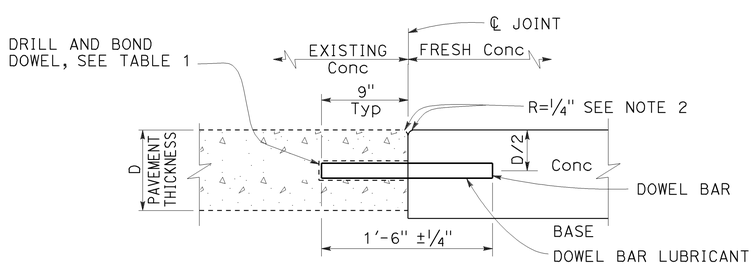

TRANSVERSE CONSTRUCTION JOINT FOR EXISTING CONCRETE PAVEMENT

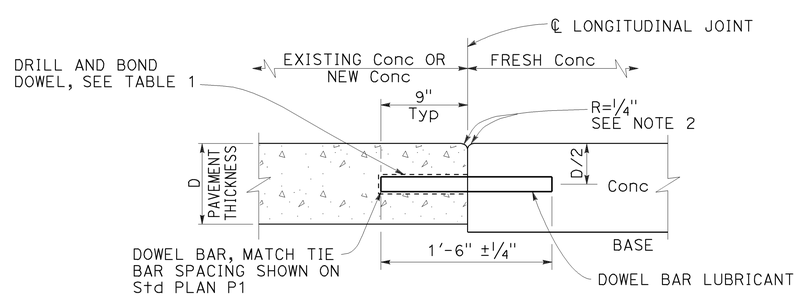

LONGITUDINAL CONSTRUCTION JOINT WITH DOWEL BARS

See Revised Std Plan RSP P18

STATE OF CALIFORNIA
DEPARTMENT OF TRANSPORTATION

CONCRETE PAVEMENT DOWEL BAR DETAILS

NO SCALE

RSP P10 DATED JULY 19, 2013 SUPERSEDES RSP P10 DATED APRIL 20, 2012 AND STANDARD PLAN P10 DATED MAY 20, 2011 - PAGE 131 OF THE STANDARD PLANS BOOK DATED 2010.

REVISED STANDARD PLAN RSP P10

2010 REVISED STANDARD PLAN RSP P10

5-31-13

Dist	COUNTY	ROUTE	POST MILES TOTAL PROJECT	SHEET No.	TOTAL SHEETS
07	LA	10	37.2/42.4	1500	2313

William K. Farnbach
REGISTERED CIVIL ENGINEER

July 19, 2013
PLANS APPROVAL DATE

REGISTERED PROFESSIONAL ENGINEER
William K. Farnbach
No. C49042
Exp. 9-30-14
CIVIL
STATE OF CALIFORNIA

THE STATE OF CALIFORNIA OR ITS OFFICERS OR AGENTS SHALL NOT BE RESPONSIBLE FOR THE ACCURACY OR COMPLETENESS OF SCANNED COPIES OF THIS PLAN SHEET.

TO ACCOMPANY PLANS DATED 6-1-15

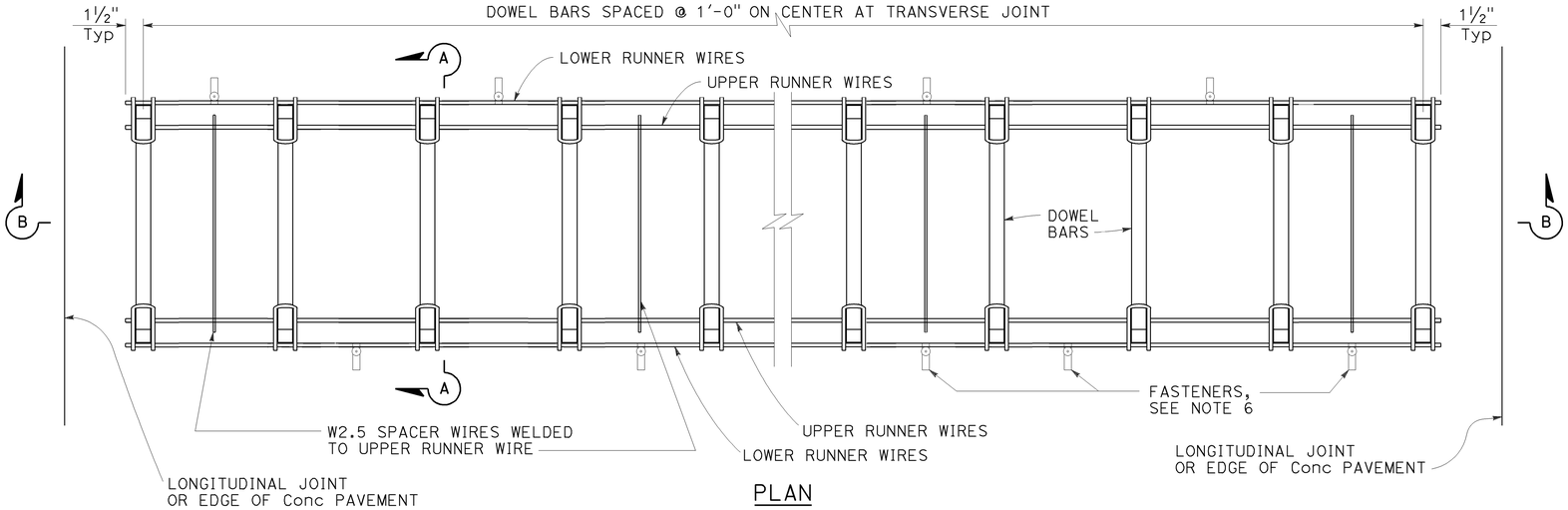

PLAN

DOWEL BAR BASKET (TRANSVERSE JOINT)

See Note 1

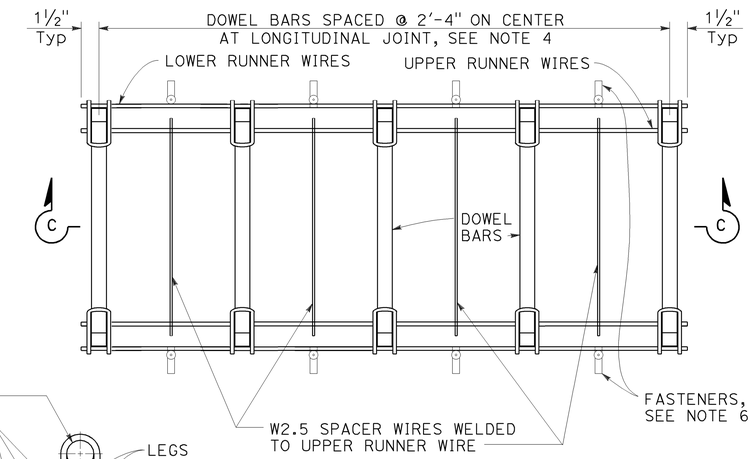

PLAN

DOWEL BAR BASKET (LONGITUDINAL JOINT)

See Note 1

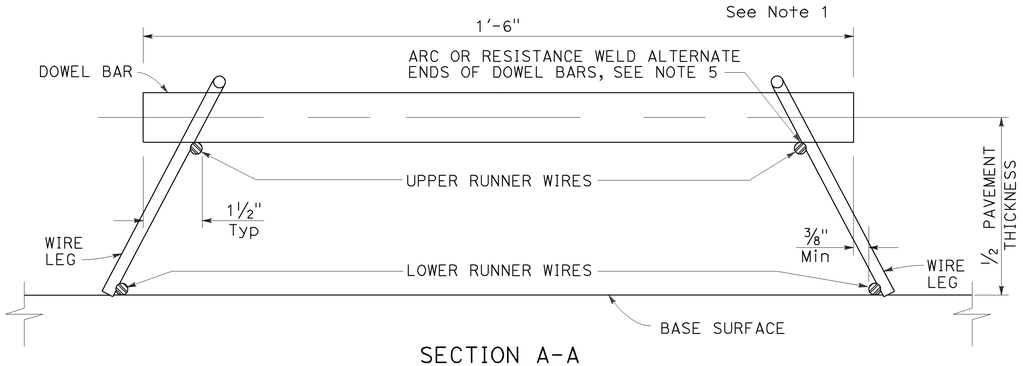

SECTION A-A

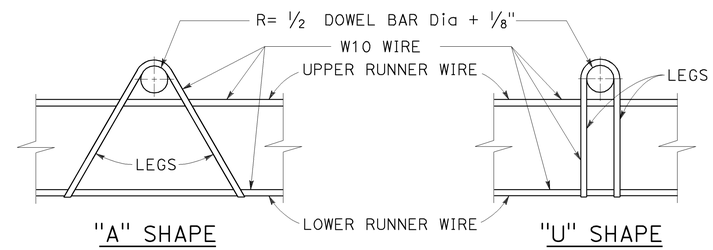

ASSEMBLY FRAME DETAILS

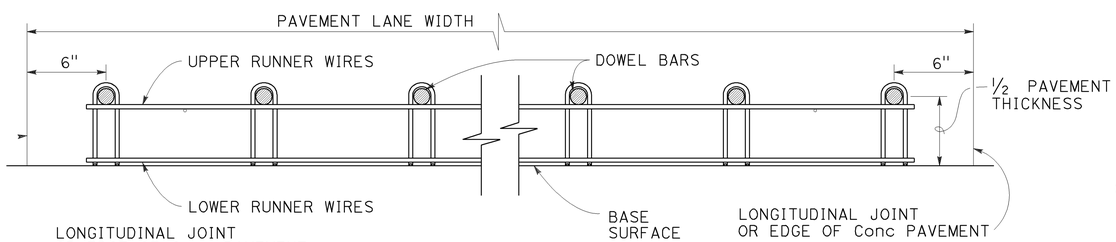

SECTION B-B

See Note 1

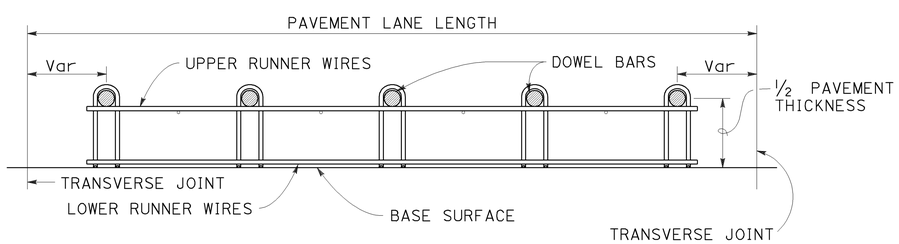

SECTION C-C

See Notes 1 and 4

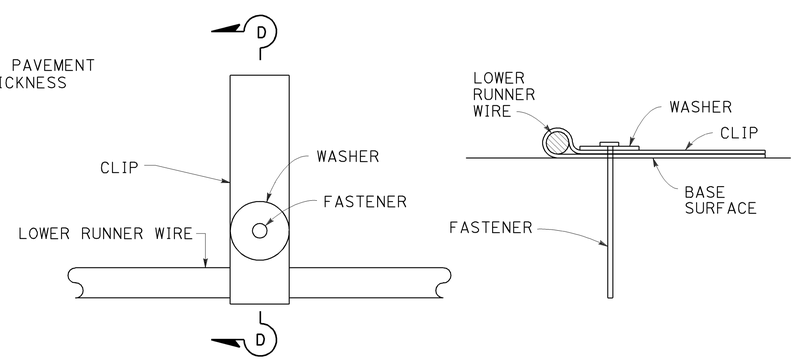

PLAN

SECTION D-D

FASTENER DETAIL

See Note 6

NOTES:

1. "U" frame shape assembly shown. Use either "U" frame shape or "A" frame shape.
2. Wire sizes shown are the minimum required.
3. All wire intersections must be resistance welded.
4. Use tie bar spacing for longitudinal dowel bar locations. See Revised Standard Plans RSP P1, RSP P2, RSP P3A, and RSP P3B for tie bar requirements.
5. Weld may be at the top or bottom of the dowel bar.
6. Use anchor pins where soil or granular base is used. See Revised Standard Plan RSP P17 for Anchor Pin Detail.

STATE OF CALIFORNIA
DEPARTMENT OF TRANSPORTATION

CONCRETE PAVEMENT DOWEL BAR BASKET DETAILS

NO SCALE

RSP P12 DATED JULY 19, 2013 SUPERSEDES STANDARD PLAN P12 DATED MAY 20, 2011 - PAGE 132 OF THE STANDARD PLANS BOOK DATED 2010.

REVISED STANDARD PLAN RSP P12

2010 REVISED STANDARD PLAN RSP P12

5-31-13