DIST	COUNTY	ROUTE	POST MILES TOTAL PROJECT	SHEET No.	TOTAL SHEETS
07	LA	10	37.2/42.4	1860	2313

REGISTERED CIVIL ENGINEER — DATE 10/01/14

6-1-15
PLANS APPROVAL DATE

REGISTERED PROFESSIONAL ENGINEER — RICHARD E. SCHENDEL — No. C64259 — Exp. 6-30-15 — CIVIL — STATE OF CALIFORNIA

The State of California or its officers or agents shall not be responsible for the accuracy or completeness of scanned copies of this plan sheet.

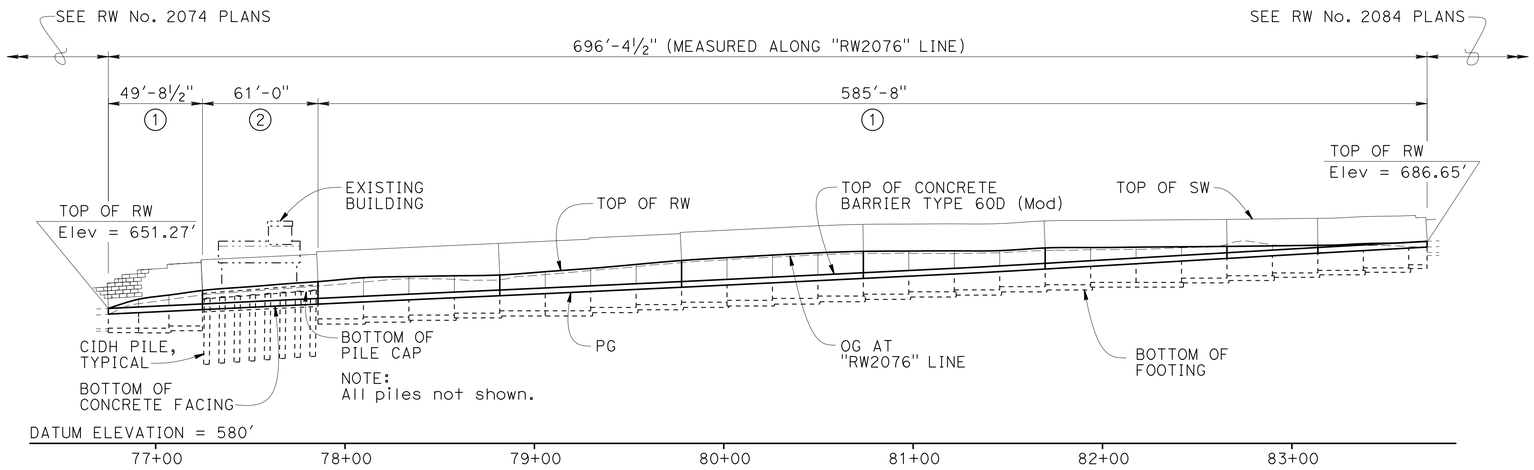

DEVELOPED ELEVATION

1" = 40'

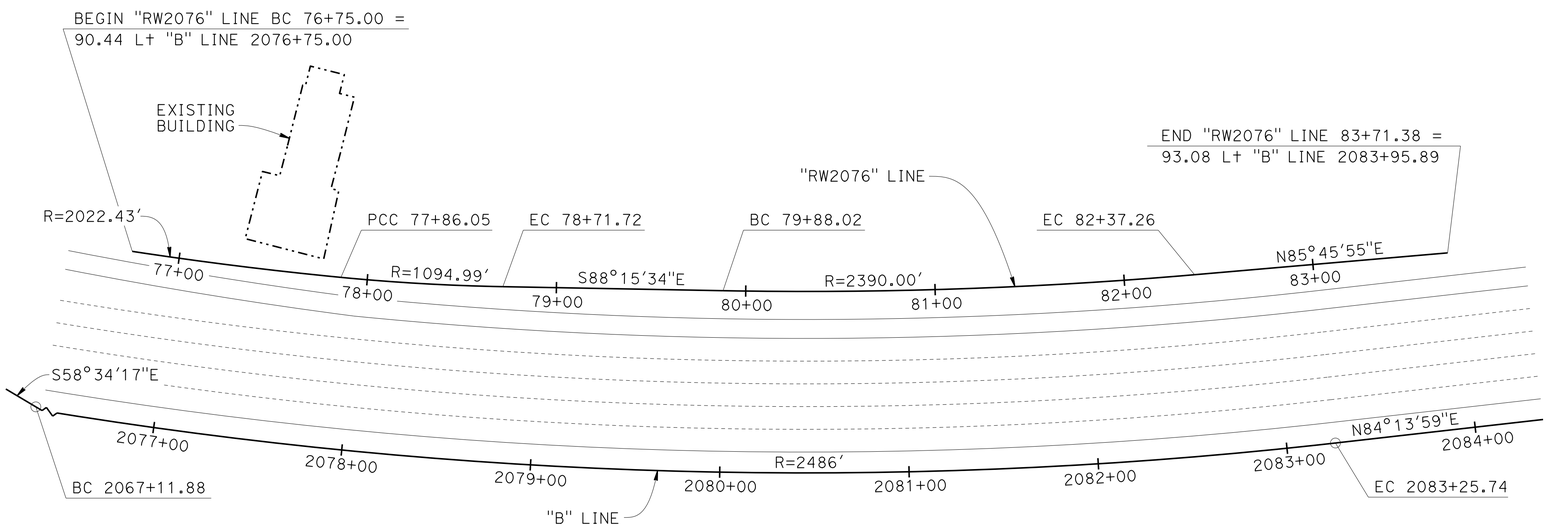

CURVE DATA "RW2076" LINE

R = 2022.43'	R = 1094.99'	R = 2390.00'
Δ = 03°08'46"	Δ = 04°28'59"	Δ = 05°58'31"
T = 55.54'	T = 42.86'	T = 124.74'
L = 111.05'	L = 85.68'	L = 249.24'

PLAN

1" = 40'

CURVE DATA "B" LINE

R = 2486'
Δ = 37°11'43"
T = 836.52'
L = 1613.86

NOTES:

1. Type 7SW Retaining Wall
2. 3'-0" Ø CIDH Pile Wall
3. Mansonry Soundwall, see "ROAD PLANS" for architectural details
4. Gutter, see "ROAD PLANS" (B3-6)
5. Concrete Barrier Type 60D (Mod) (A76A)
6. Concrete Facing with Architectural Texture
7. Approx OG = FG within limits of gutter
8. Approx OG = FG elsewhere
9. Geocomposite Drain
10. Pervious Backfill Drain (B0-3 / 3-1)
11. Pile Cap
12. ℄ Ground Anchor
13. 1½" Architectural Texture

For "INDEX TO PLANS", "STANDARD PLANS", "GENERAL NOTES", AND "QUANTITIES", see "INDEX TO PLANS" sheet.

For Architectural Treatment, see "ARCHITECTURAL DETAILS NO. 1 TO NO. 6" sheets.

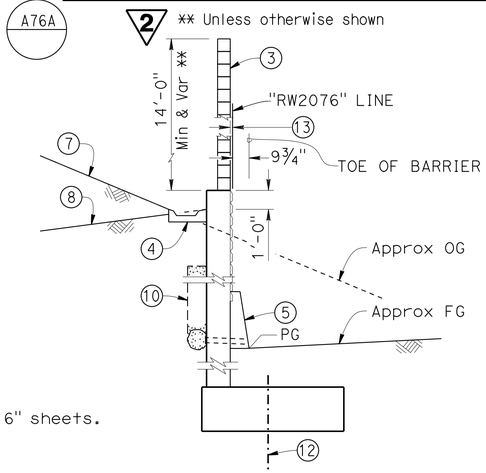

TYPE 7SW RET WALL

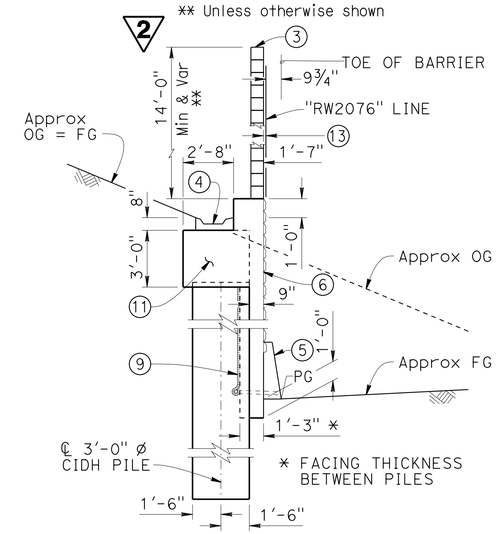

3'-0" Ø CIDH PILE WALL

TYPICAL SECTION

¼" = 1'-0"

2 REVISED PER ADDENDUM No. 2 DATED SEPTEMBER 24, 2015

MICHAEL POPE
DESIGN ENGINEER

	BY	CHECKED
DESIGN	Prem Rimal	R. Schendel/J. Duffin
DETAILS	Richard Schendel	Prem Rimal
QUANTITIES	Prem Rimal	Jeff Duffin/Minh Tran

LOAD & RESISTANCE FACTOR DESIGN — LIVE LOADING: HL93 W/"LOW-BOY": PERMIT DESIGN VEHICLE

	BY	CHECKED
LAYOUT	Prem Rimal	Jeff Duffin
SPECIFICATIONS	Xiaodong Chen	PLANS AND SPECS COMPARED: Xiaodong Chen

ORIGINAL SCALE IN INCHES FOR REDUCED PLANS 0 1 2 3

STATE OF CALIFORNIA
DEPARTMENT OF TRANSPORTATION

DIVISION OF ENGINEERING SERVICES
STRUCTURE DESIGN
DESIGN BRANCH 18

BRIDGE NO. 53E0299
POST MILE 39.33

RETAINING WALL NO. 2076
GENERAL PLAN

UNIT: 3603
PROJECT NUMBER & PHASE: 07 1300 0007 1 CONTRACT NO.: 07-1193U1

DISREGARD PRINTS BEARING EARLIER REVISION DATES

REVISION DATES: 05/29/14 02/09/15 11/28/13 01/23/14

SHEET 1 OF 23

USERNAME => s12562d DATE PLOTTED => 18-SEP-2015 TIME PLOTTED => 14:21

STRUCTURES DESIGN GENERAL PLAN SHEET (ENGLISH) (REV.09-01-10)

FILE => 53e0299-a-gpo1.add

DIST	COUNTY	ROUTE	POST MILES TOTAL PROJECT	SHEET No.	TOTAL SHEETS
07	LA	10	37.2/42.4	1864	2313

REGISTERED CIVIL ENGINEER — DATE 10/01/14

6-1-15
PLANS APPROVAL DATE

REGISTERED PROFESSIONAL ENGINEER — RICHARD E. SCHENDEL — No. C64259 — Exp. 6-30-15 — CIVIL — STATE OF CALIFORNIA

The State of California or its officers or agents shall not be responsible for the accuracy or completeness of electronic copies of this plan sheet.

NOTES:
1. Top of wall must be a smooth curve between control points as shown.
2. Unless otherwise shown, top of wall and PG elevations are shown at even 25 ft stations along "RW2076" Line.
3. All dimensions are measured along "RW2076" Line.

LEGEND:
TOP OF WALL Elev — Elev XXX.XX
PG Elev — Elev XXX.XX
S = EQUAL SPACES
VGAS = VERTICAL GROUND ANCHOR SPACING
+ = VERTICAL GROUND ANCHOR

SEE RW No. 2074 PLANS

2 REVISED PER ADDENDUM No. 2 DATED SEPTEMBER 24, 2015

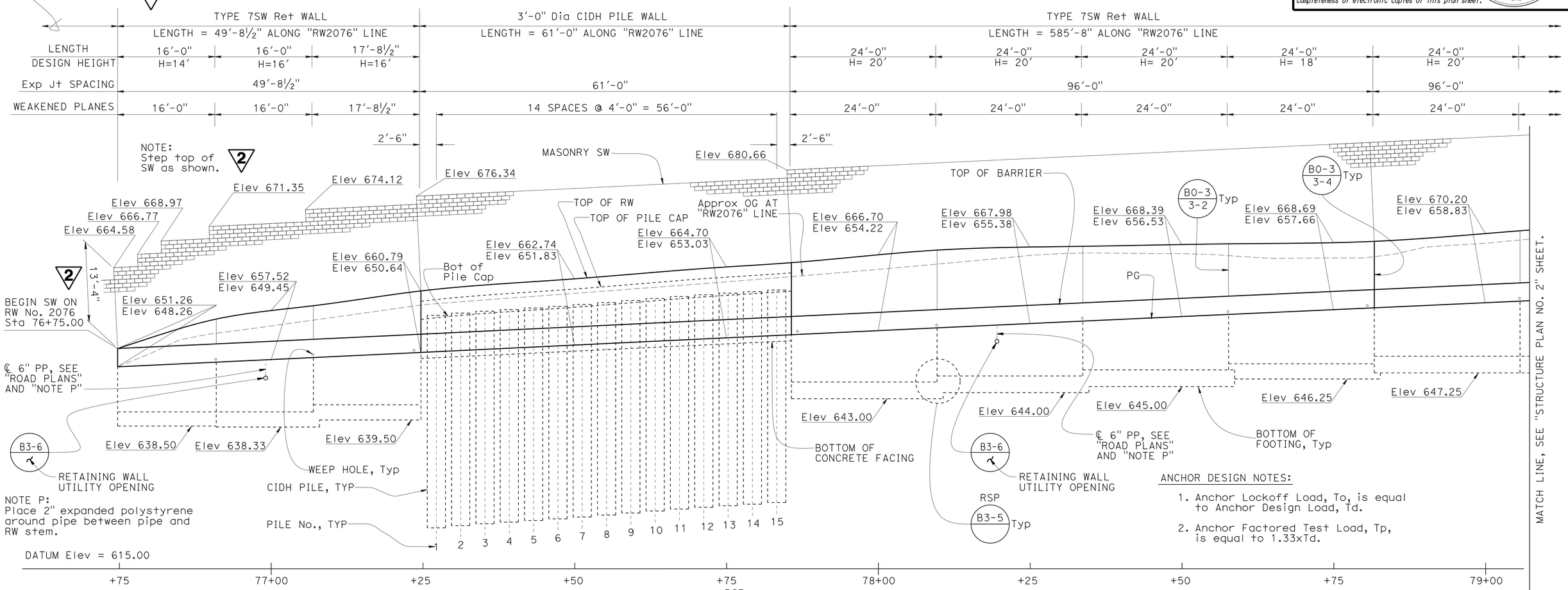

NOTE P:
Place 2" expanded polystyrene around pipe between pipe and RW stem.

ANCHOR DESIGN NOTES:
1. Anchor Lockoff Load, To, is equal to Anchor Design Load, Td.
2. Anchor Factored Test Load, Tp, is equal to 1.33xTd.

DEVELOPED ELEVATION
B0-3 B3-5 RSP
1/8" = 1'-0"

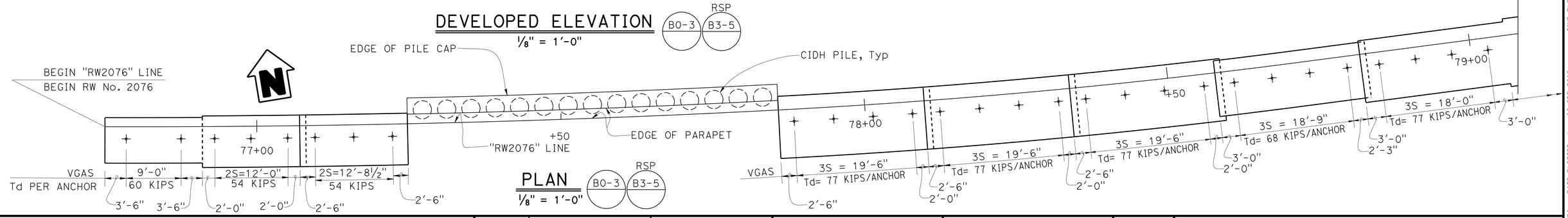

PLAN
B0-3 B3-5 RSP
1/8" = 1'-0"

	BY	CHECKED
DESIGN	Prem Rimal	R. Schendel/J. Duffin
DETAILS	Prem Rimal	R. Schendel/J. Duffin
QUANTITIES	Prem Rimal	Jeff Duffin/Minh Tran

STATE OF CALIFORNIA
DEPARTMENT OF TRANSPORTATION

DIVISION OF ENGINEERING SERVICES
STRUCTURE DESIGN
DESIGN BRANCH 18

BRIDGE NO. 53E0299
POST MILE 39.33

RETAINING WALL NO. 2076
STRUCTURE PLAN NO. 1

STRUCTURES DESIGN DETAIL SHEET (ENGLISH) (REV. 09-01-10)

ORIGINAL SCALE IN INCHES FOR REDUCED PLANS 0 1 2 3

UNIT: 3603
PROJECT NUMBER & PHASE: 07 1300 0007 1 CONTRACT NO.: 07-1193U1

DISREGARD PRINTS BEARING EARLIER REVISION DATES → 11/20/13 01/31/14 05/29/14 02/09/15

SHEET 5 OF 23

FILE => 53e0299-d-sp01.add

USERNAME => s125624 DATE PLOTTED => 18-SEP-2015 TIME PLOTTED => 14:21

NOTES:

1. Top of wall must be a smooth curve between control points as shown.
2. Unless otherwise shown, top of wall and PG elevations are shown at even 25 ft stations along "RW2076" Line.
3. All dimensions are measured along "RW2076" Line.

LEGEND:

TOP OF WALL Elev — Elev XXX.XX
PG Elev — Elev XXX.XX

S = EQUAL SPACES
VGAS = VERTICAL GROUND ANCHOR SPACING
+ = VERTICAL GROUND ANCHOR

2 ① Location where top of SW transitions from being Approx parallel with PG to being parallel with top of RW

DIST	COUNTY	ROUTE	POST MILES TOTAL PROJECT	SHEET No.	TOTAL SHEETS
07	LA	10	37.2/42.4	1865	2313

REGISTERED CIVIL ENGINEER — DATE 10/01/14

6-1-15
PLANS APPROVAL DATE

REGISTERED PROFESSIONAL ENGINEER — RICHARD E. SCHENDEL — No. C64259 — Exp. 6-30-15 — CIVIL — STATE OF CALIFORNIA

The State of California or its officers or agents shall not be responsible for the accuracy or completeness of electronic copies of this plan sheet.

2 **REVISED PER ADDENDUM No. 2 DATED SEPTEMBER 24, 2015**

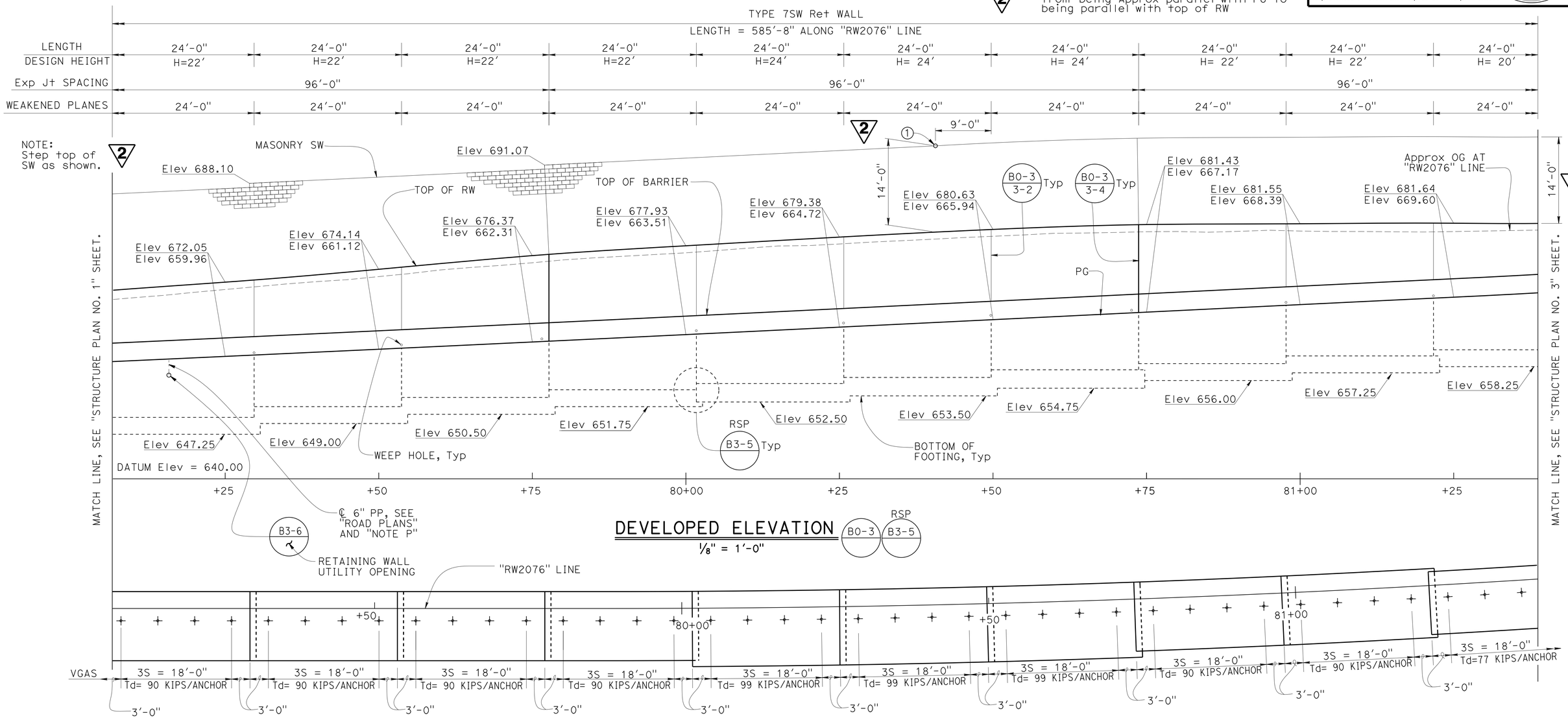

NOTE P:
Place 2" expanded polystyrene around pipe between pipe and RW stem.

ANCHOR DESIGN NOTES:

1. Anchor Lockoff Load, To, is equal to Anchor Design Load, Td.
2. Anchor Factored Test Load, Tp, is equal to 1.33xTd.

	BY	CHECKED
DESIGN	Prem Rimal	Jeff Duffin
DETAILS	Prem Rimal	Jeff Duffin
QUANTITIES	Prem Rimal	Jeff Duffin/Minh Tran

STATE OF CALIFORNIA
DEPARTMENT OF TRANSPORTATION

DIVISION OF ENGINEERING SERVICES
STRUCTURE DESIGN
DESIGN BRANCH 18

BRIDGE NO. 53E0299
POST MILE 39.33

RETAINING WALL NO. 2076
STRUCTURE PLAN NO. 2

STRUCTURES DESIGN DETAIL SHEET (ENGLISH) (REV. 09-01-10)

ORIGINAL SCALE IN INCHES FOR REDUCED PLANS 0 1 2 3

UNIT: 3603
PROJECT NUMBER & PHASE: 07 1300 0007 1 CONTRACT NO.: 07-1193U1

DISREGARD PRINTS BEARING EARLIER REVISION DATES

REVISION DATES: 11/20/13 07/31/14 05/28/14 02/09/15

SHEET 6 OF 23

FILE => 53e0299-d-sp02.dwg

USERNAME => s129624 DATE PLOTTED => 18-SEP-2015 TIME PLOTTED => 14:21

NOTES:

1. Top of wall must be a smooth curve between control points as shown.
2. Unless otherwise shown, top of wall and PG elevations are shown at even 25 ft stations along "RW2076" Line.
3. All dimensions are measured along "RW2076" Line.
4. See RW No. 2084 Plans.
5. Mound of soil located approximately between Sta 82+50 and Sta 83+00 must be graded to one foot below top of wall elevation within a distance of 10 ft from the back of wall.

LEGEND:

TOP OF WALL Elev — Elev XXX.XX
PG Elev — Elev XXX.XX

S = EQUAL SPACES
VGAS = VERTICAL GROUND ANCHOR SPACING
+ = VERTICAL GROUND ANCHOR

DIST	COUNTY	ROUTE	POST MILES TOTAL PROJECT	SHEET No.	TOTAL SHEETS
07	LA	10	37.2/42.4	1866	2313

REGISTERED CIVIL ENGINEER — 10/01/14 DATE

6-1-15
PLANS APPROVAL DATE

REGISTERED PROFESSIONAL ENGINEER — RICHARD E. SCHENDEL No. C64259 Exp. 6-30-15 CIVIL — STATE OF CALIFORNIA

The State of California or its officers or agents shall not be responsible for the accuracy or completeness of electronic copies of this plan sheet.

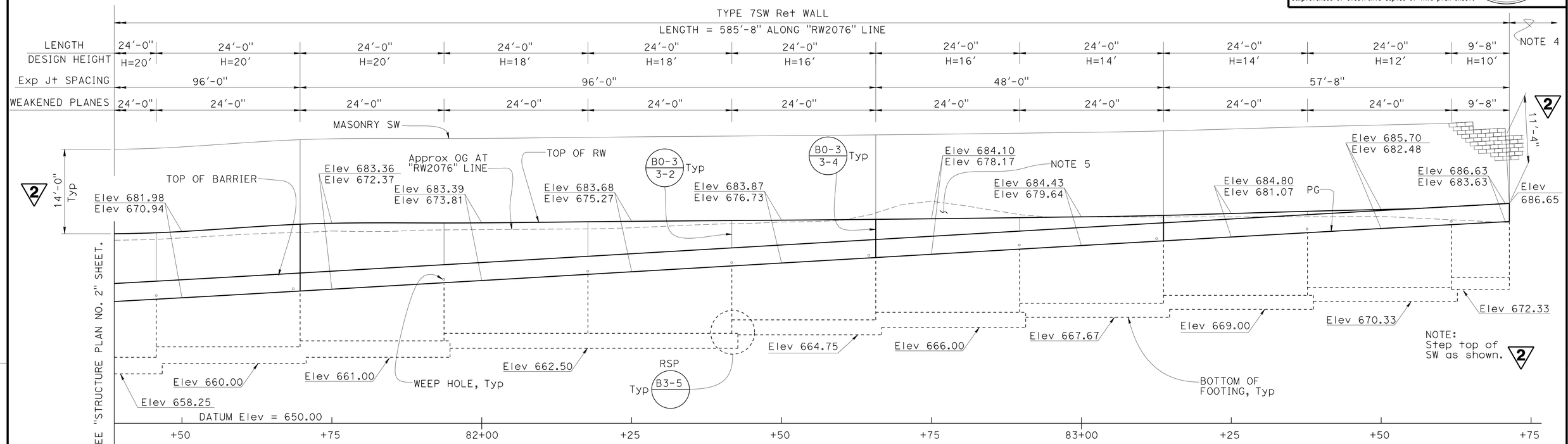

2 REVISED PER ADDENDUM No. 2 DATED SEPTEMBER 24, 2015

DEVELOPED ELEVATION

B0-3 RSP B3-5

1/8" = 1'-0"

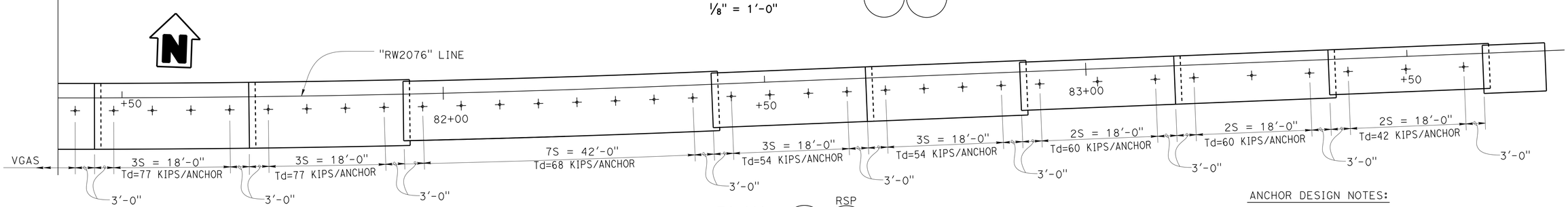

PLAN

B0-3 RSP B3-5

1/8" = 1'-0"

ANCHOR DESIGN NOTES:

1. Anchor Lockoff Load, To, is equal to Anchor Design Load, Td.
2. Anchor Factored Test Load, Tp, is equal to 1.33xTd.

	BY	CHECKED
DESIGN	Prem Rimal	Jeff Duffin
DETAILS	Prem Rimal	Jeff Duffin
QUANTITIES	Prem Rimal	Jeff Duffin/Minh Tran

STATE OF CALIFORNIA
DEPARTMENT OF TRANSPORTATION

DIVISION OF ENGINEERING SERVICES
STRUCTURE DESIGN
DESIGN BRANCH 18

BRIDGE NO. 53E0299
POST MILE 39.33

RETAINING WALL NO. 2076
STRUCTURE PLAN NO. 3

STRUCTURES DESIGN DETAIL SHEET (ENGLISH) (REV. 09-01-10)

ORIGINAL SCALE IN INCHES FOR REDUCED PLANS 0 1 2 3

UNIT: 3603
PROJECT NUMBER & PHASE: 07 1300 0007 1 CONTRACT NO.: 07-1193U1

DISREGARD PRINTS BEARING EARLIER REVISION DATES

REVISION DATES: 11/20/13 07/25/14 05/29/14

SHEET 7 OF 23

FILE => 53e0299-d-sp03.dgn

USERNAME => s125624 DATE PLOTTED => 21-SEP-2015 TIME PLOTTED => 08:38