Dist	COUNTY	ROUTE	POST MILES TOTAL PROJECT	SHEET No.	TOTAL SHEETS
07	LA	10	33.2/37.2	601	1475

Ahmed Gaber 5/30/12
REGISTERED CIVIL ENGINEER DATE

6-10-13
PLANS APPROVAL DATE

REGISTERED PROFESSIONAL ENGINEER AHMED GABER No. C 67044 Exp. 9/30/12 CIVIL STATE OF CALIFORNIA

THE STATE OF CALIFORNIA OR ITS OFFICERS OR AGENTS SHALL NOT BE RESPONSIBLE FOR THE ACCURACY OR COMPLETENESS OF SCANNED COPIES OF THIS PLAN SHEET.

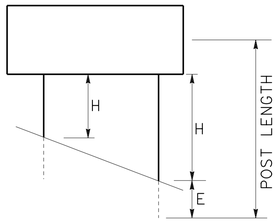

NOTES:

1) EXACT LOCATION AND POSITION OF ROADSIDE SIGNS WILL BE DETERMINED BY THE ENGINEER.

2) POST LENGTHS GIVEN ARE APPROXIMATE. EXACT LENGTH WILL BE DETERMINED BY THE ENGINEER.

ROADSIDE SIGNS

SHEET NUMBER	DIRECTION	SIGN No.	SIGN CODE	PANEL SIZE L x D	ROADSIDE SIGN ONE POST	ROADSIDE SIGN TWO POST	INSTALL SIGN (STRAP AND SADDLE BRACKET METHOD)	(N) POST DATA SIZE & LENGTH (Ft) 4" x 4"		4" x 6"		6" x 6"		6" x 8"		METAL (BARRIER MOUNTED SIGN)	REMOVE ROADSIDE SIGN	REMARKS
					EA	EA	EA	Lt	Rt	Lt	Rt	Lt	Rt	Lt	Rt	LB	EA	
S-5	FEBT	506	G85-8 (CA)	36" X 84"			1										1	CARPOOL SIGN
		507	G84-2 (CA)	54" X 48"	1							14					1	
		508a	G11-4.1 (CA)	44" X 18"	1			8									1	PUENTE Ave UC 53-0666
	FWBT	508b	G11-4.1 (CA)	44" X 18"	1			8									1	10 LA 033.35
		509	R93-2 (CA)	36" X 84"												248		CARPOOL SIGN
		510	M1-1 (SHIELD)	48" X 48"	1							15					1	
		511	M3-4 (INTERSTATE)	30" X 15"														WEST
		512	R84-1 (CA)	36" X 60"												235		CARPOOL SIGN
S-6	FEBT	601	SR50-2 (CA)	36" X 78"												244		CARPOOL SIGN
		602	W1-1R	48" X 48"	1							15					1	
		603	W13-1	30" X 30"													1	20 MPH
		604	G8-4 (CA)	156" X 42"		1						14	14				1	Pacific Ave WEST COVINA Pkwy
		605	W1-6R	48" X 24"													1	
		606	W4-3R	48" X 48"	1							15					1	
		607	R86-2 (CA)	36" X 66"												235		CARPOOL SIGN
		608	M1-1 (SHIELD)	48" X 48"	1							15					1	
		609	M3-2 (INTERSTATE)	30" X 15"														EAST
		620/a	M1-1 (SHIELD)	48" X 48"	2							15					2	
		621/a	M3-2 (INTERSTATE)	30" X 15"														EAST
		622/a	M6-2	21" X 15"														
		623/a	D13-3	48" X 30"														
		624	R5-1	48" X 48"	1							15					1	
		625	R5-1a	42" X 30"														
		626	R6-1R	54" X 18"														
		627	R5-1	48" X 48"	1							15					1	
		628	R5-1a	42" X 30"														
		629	R6-1R	54" X 18"														
		630	R61-5 (CA)	36" X 30"	1					14							1	
		631	W1-8L	36" X 48"	1					14							1	
		632	W1-8L	36" X 48"	1					14							1	
		633	W1-8L	36" X 48"	1					14							1	
		634	W1-8R	36" X 48"	1					14							1	
SUBTOTAL					16	1	1									962	20	

(N) NOT A SEPARATE PAY ITEM, FOR INFORMATION ONLY

SIGN QUANTITIES
SQ-5

STATE OF CALIFORNIA - DEPARTMENT OF TRANSPORTATION
Caltrans TRAFFIC DESIGN

FUNCTIONAL SUPERVISOR: MOHAMMED CHOWDHURY
CALCULATED-DESIGNED BY: SULIASTI SUTANTO
CHECKED BY: AHMED GABER
REVISED BY
DATE REVISED

LAST REVISION 00-00-00
DATE PLOTTED => 12-JUN-2013
TIME PLOTTED => 19:28

Dist	COUNTY	ROUTE	POST MILES TOTAL PROJECT	SHEET No.	TOTAL SHEETS
07	LA	10	33.2/37.2	602	1475

Ahmed Gaber 5/30/12
REGISTERED CIVIL ENGINEER DATE

6-10-13
PLANS APPROVAL DATE

REGISTERED PROFESSIONAL ENGINEER AHMED GABER No. C 67044 Exp. 9/30/12 CIVIL STATE OF CALIFORNIA

THE STATE OF CALIFORNIA OR ITS OFFICERS OR AGENTS SHALL NOT BE RESPONSIBLE FOR THE ACCURACY OR COMPLETENESS OF SCANNED COPIES OF THIS PLAN SHEET.

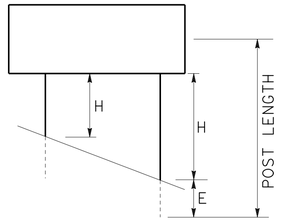

NOTES:

1) EXACT LOCATION AND POSITION OF ROADSIDE SIGNS WILL BE DETERMINED BY THE ENGINEER.

2) POST LENGTHS GIVEN ARE APPROXIMATE. EXACT LENGTH WILL BE DETERMINED BY THE ENGINEER.

ROADSIDE SIGNS

SHEET NUMBER	DIRECTION	SIGN No. ◯	SIGN CODE	PANEL SIZE L x D	ROADSIDE SIGN ONE POST	ROADSIDE SIGN TWO POST	INSTALL SIGN (STRAP AND SADDLE BRACKET METHOD)	(N) POST DATA SIZE & LENGTH (Ft) 4" x 4"		4" x 6"		6" x 6"		6" x 8"		METAL (BARRIER MOUNTED SIGN)	REMOVE ROADSIDE SIGN	REMARKS
					EA	EA	EA	Lt	Rt	Lt	Rt	Lt	Rt	Lt	Rt	LB	EA	
S-6	FEBT	635	W1-8R	36" X 48"	1					14							1	
		636	W1-8R	36" X 48"	1					14							1	
		610a	G11-4.1 (CA)	44" X 18"	1			8									1	W COVINA Pkwy UC 53-2372
	FWBT	610b	G11-4.1 (CA)	44" X 18"	1			8									1	10 LA 034.46
		611	W4-1R	48" X 48"	1							15					1	
		612	R84-1 (CA)	36" X 60"												244		CARPOOL SIGN
		613	W1-6R	48" X 24"	1					13							1	
		614	G84-2 (CA)	54" X 48"	1							14					1	
		615	W1-1R	48" X 48"	1							15					1	
		616	W3-3	48" X 48"			1										1	
		617	G85-8 (CA)	36" X 84"			1										1	CARPOOL SIGN
		618	W13-2	48" X 60"			1										1	20 MPH
		619	R18a (CA)	66" X 48"	1							14					1	
		637	R61-7 (CA)	36" X 30"													1	
		638a	M1-1 (SHIELD)	48" X 48"	2							15					2	
		639a	M3-4 (INTERSTATE)	30" X 15"														WEST
		640a	M6-2	21" X 15"														
		641a	D13-3	48" X 30"														
		642	R5-1	48" X 48"	1							15					1	
		643	R5-1a	42" X 30"														
		644	R6-1R	54" X 18"														
		645	R5-1	48" X 48"	1							15					1	
		646	R5-1a	42" X 30"														
		647	R6-1R	54" X 18"														
		647, 648, 649	W1-8R	36" X 48"	3					14								
S-7	FEBT	701	R93-2 (CA)	36" X 84"												248		CARPOOL SIGN
	FWBT	702	W73A (CA)	48" X 48"	1							15					1	
		703	G86-9 (CA)	36" X 90"												253		CARPOOL SIGN
S-8	FEBT	801	W74 (CA)	48" X 48"	1							15					1	LEFT
		802	R86-2 (CA)	36" X 66"												235		CARPOOL SIGN
	FWBT	803	G95F (CA)	96" X 60"		1						15	15				1	Metrolink NEXT EXIT
		804	W74 (CA)	48" X 48"	1							15					1	LEFT
		805	G84-2 (CA)	54" X 48"	1							14					1	
SUBTOTAL					20	1	3									980	22	

(N) NOT A SEPARATE PAY ITEM, FOR INFORMATION ONLY

SIGN QUANTITIES
SQ-6

STATE OF CALIFORNIA - DEPARTMENT OF TRANSPORTATION
Caltrans® TRAFFIC DESIGN

FUNCTIONAL SUPERVISOR: MOHAMMED CHOWDHURY
CALCULATED-DESIGNED BY: SULIASTI SUTANTO
CHECKED BY: AHMED GABER
REVISED BY
DATE REVISED

LAST REVISION 00-00-00
DATE PLOTTED => 12-JUN-2013
TIME PLOTTED => 19:28

Dist	COUNTY	ROUTE	POST MILES TOTAL PROJECT	SHEET No.	TOTAL SHEETS
07	LA	10	33.2/37.2	603	1475

Ahmed Gaber 5/30/12
REGISTERED CIVIL ENGINEER DATE

6-10-13
PLANS APPROVAL DATE

REGISTERED PROFESSIONAL ENGINEER AHMED GABER No. C 67044 Exp. 9/30/12 CIVIL STATE OF CALIFORNIA

THE STATE OF CALIFORNIA OR ITS OFFICERS OR AGENTS SHALL NOT BE RESPONSIBLE FOR THE ACCURACY OR COMPLETENESS OF SCANNED COPIES OF THIS PLAN SHEET.

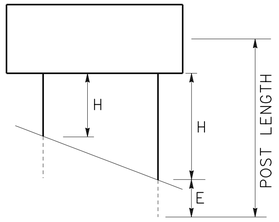

NOTES:

1) EXACT LOCATION AND POSITION OF ROADSIDE SIGNS WILL BE DETERMINED BY THE ENGINEER.

2) POST LENGTHS GIVEN ARE APPROXIMATE. EXACT LENGTH WILL BE DETERMINED BY THE ENGINEER.

ROADSIDE SIGNS

SHEET NUMBER	DIRECTION	SIGN No. ◯	SIGN CODE	PANEL SIZE L x D	ROADSIDE SIGN ONE POST	ROADSIDE SIGN TWO POST	INSTALL SIGN (STRAP AND SADDLE BRACKET METHOD)	(N) POST DATA SIZE & LENGTH (Ft) 4" x 4"		4" x 6"		6" x 6"		6" x 8"		METAL (BARRIER MOUNTED SIGN)	REMOVE ROADSIDE SIGN	REMARKS
					EA	EA	EA	Lt	Rt	Lt	Rt	Lt	Rt	Lt	Rt	LB	EA	
S-8	FWBT	806	R93-2 (CA)	36" X 84"												248		CARPOOL SIGN
		807	W13-2	48" X 60"			1										1	EXIT 20 MPH
		808/a	R5-1	48" X 48"	2							15					2	
		809/a	R5-1a	42" X 30"														
		810/a	R6-1R	54" X 18"														
S-9	FEBT	901	W73A (CA)	48" X 48"	1							15					1	
		902	R93-2 (CA)	36" X 84"												248		CARPOOL SIGN
		903	G84-2 (CA)	54" X 48"	1							14					1	
	FWBT	904	R86-2 (CA)	36" X 66"												235		CARPOOL SIGN
		905	M1-1 (SHIELD)	48" X 48"			1										1	
		906	M3-4 (INTERSTATE)	30" X 15"			1											
		907	W13-2	48" X 60"			1											EXIT 20 MPH
S-10	FEBT	1003	W4-1R	48" X 48"	1							15					1	
		1014	R61-19 (CA)	30" X 24"	1					14							1	
		1015	R5-1	48" X 48"	1							15					1	
		1016	R5-1a	42" X 30"														
		1017	R6-1R	54" X 18"														
		1018	R5-1	48" X 48"	1							15					1	
		1019	R5-1a	42" X 30"														
		1020	R6-1R	54" X 18"														
		1021/a	M1-1 (SHIELD)	48" X 48"	2							15					2	
		1022/a	M3-2 (INTERSTATE)	30" X 15"														EAST
		1023/a	M6-2	21" X 15"														
		1024/a	D13-3	48" X 30"														
		1025/a	M1-1 (SHIELD)	48" X 48"	2							15					2	
		1026/a	M3-2 (INTERSTATE)	30" X 15"														EAST
		1027/a	M6-2	21" X 15"														
		1028/a	D13-3	48" X 30"														
		1005a	G11-4.1 (CA)	44" X 18"	1			8									1	VINCENT Ave UC 53-1043
	FWBT	1005b	G11-4.1 (CA)	44" X 18"	1			8									1	10 LA 035.40
		1006	W4-1R	48" X 48"	1							15					1	
		1007	G8-13(Mod) (CA)	78" X 54"		1						15	15				1	
	FSBT	1007a	G8-1(Mod) (CA)	42" X 120"		1						15	15					
	FNBT	1007b	G8-1(Mod) (CA)	42" X 114"		1						15	15					
SUBTOTAL					15	3	4									731	18	

(N) NOT A SEPARATE PAY ITEM, FOR INFORMATION ONLY

SIGN QUANTITIES
SQ-7

STATE OF CALIFORNIA - DEPARTMENT OF TRANSPORTATION
Caltrans® TRAFFIC DESIGN

FUNCTIONAL SUPERVISOR: MOHAMMED CHOWDHURY
CALCULATED-DESIGNED BY: SULIASTI SUTANTO
CHECKED BY: AHMED GABER
REVISED BY
DATE REVISED

LAST REVISION 00-00-00
DATE PLOTTED => 12-JUN-2013
TIME PLOTTED => 19:28

Dist	COUNTY	ROUTE	POST MILES TOTAL PROJECT	SHEET No.	TOTAL SHEETS
07	LA	10	33.2/37.2	604	1475

Ahmed Gaber 5/30/12
REGISTERED CIVIL ENGINEER DATE

6-10-13
PLANS APPROVAL DATE

REGISTERED PROFESSIONAL ENGINEER AHMED GABER No. C 67044 Exp. 9/30/12 CIVIL STATE OF CALIFORNIA

THE STATE OF CALIFORNIA OR ITS OFFICERS OR AGENTS SHALL NOT BE RESPONSIBLE FOR THE ACCURACY OR COMPLETENESS OF SCANNED COPIES OF THIS PLAN SHEET.

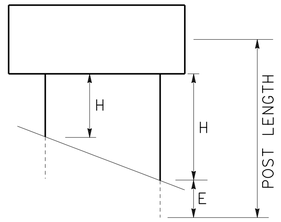

NOTES:

1) EXACT LOCATION AND POSITION OF ROADSIDE SIGNS WILL BE DETERMINED BY THE ENGINEER.

2) POST LENGTHS GIVEN ARE APPROXIMATE. EXACT LENGTH WILL BE DETERMINED BY THE ENGINEER.

ROADSIDE SIGNS

SHEET NUMBER	DIRECTION	SIGN No. ◯	SIGN CODE	PANEL SIZE L x D	ROADSIDE SIGN ONE POST	ROADSIDE SIGN TWO POST	INSTALL SIGN (STRAP AND SADDLE BRACKET METHOD)	(N) POST DATA SIZE & LENGTH (Ft) 4" x 4"		4" x 6"		6" x 6"		6" x 8"		METAL (BARRIER MOUNTED SIGN)	REMOVE ROADSIDE SIGN	REMARKS
					EA	EA	EA	Lt	Rt	Lt	Rt	Lt	Rt	Lt	Rt	LB	EA	
S-10	FWBT	1008	W4-1R	48" X 48"	1							15					1	
		1009	S32 (CA)	54" X 42"	1							14					1	
		1010	S32-4 (CA)	15" X 18"														
		1011	W1-1aR	48" X 48"	1							15					1	20 MPH
		1012	G84-2 (CA)	54" X 48"	1							14					1	
		1013	W8-5	48" X 48"			1										1	
		1029/a	M1-1 (SHIELD)	48" X 48"	2							15					2	
		1030/a	M3-4 (INTERSTATE)	30" X 15"														WEST
		1031/a	M6-2	21" X 15"														
		1032/a	D13-3	48" X 30"														
		1033	R5-1	48" X 48"	1							15					1	
		1034	R5-1a	42" X 30"														
		1035	R6-1R	54" X 18"														
		1036	R5-1	48" X 48"	1							15					1	
		1037	R5-1a	42" X 30"														
		1038	R6-1R	54" X 18"														
		1039/a	M1-1 (SHIELD)	48" X 48"	2							15					2	
		1040/a	M3-4 (INTERSTATE)	30" X 15"														WEST
		1041/a	M6-2	21" X 15"														
		1042/a	D13-3	48" X 30"														
		1043	R61-26 (CA)	48" X 30"	1							14					1	
		1044	R61-26 (CA)	48" X 30"	1							14					1	
		1045	W1-8R	36" X 48"	1					14							1	
		1046	W1-8R	36" X 48"	1					14							1	
		1047	W1-8R	36" X 48"	1					14							1	
S-11	FEBT	1101	W4-1R	48" X 48"	1							15					1	
		1102	R86-2 (CA)	36" X 66"												235		CARPOOL SIGN
		1103	M1-1 (SHIELD)	48" X 48"	1							15					1	
		1104	M3-2 (INTERSTATE)	30" X 15"														EAST
		1105	R93-2 (CA)	36" X 84"												248		CARPOOL SIGN
	FWBT	1106	R93-2 (CA)	36" X 84"												248		CARPOOL SIGN
		1107	R86-2 (CA)	36" X 66"												235		CARPOOL SIGN
		1108	W13-2	48" X 60"			1											EXIT 20 MPH
SUBTOTAL					17		2									966	18	

(N) NOT A SEPARATE PAY ITEM, FOR INFORMATION ONLY

SIGN QUANTITIES
SQ-8

STATE OF CALIFORNIA - DEPARTMENT OF TRANSPORTATION
Caltrans® TRAFFIC DESIGN

FUNCTIONAL SUPERVISOR: MOHAMMED CHOWDHURY
CALCULATED-DESIGNED BY: SULIASTI SUTANTO
CHECKED BY: AHMED GABER
REVISED BY
DATE REVISED

LAST REVISION 00-00-00 | DATE PLOTTED => 12-JUN-2013 | TIME PLOTTED => 19:28

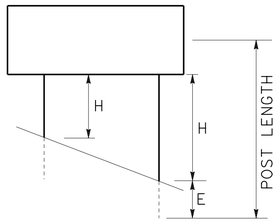

NOTES:

1) EXACT LOCATION AND POSITION OF ROADSIDE SIGNS WILL BE DETERMINED BY THE ENGINEER.

2) POST LENGTHS GIVEN ARE APPROXIMATE. EXACT LENGTH WILL BE DETERMINED BY THE ENGINEER.

Dist	COUNTY	ROUTE	POST MILES TOTAL PROJECT	SHEET No.	TOTAL SHEETS
07	LA	10	33.2/37.2	605	1475

Ahmed Gaber 5/30/12
REGISTERED CIVIL ENGINEER DATE

6-10-13
PLANS APPROVAL DATE

REGISTERED PROFESSIONAL ENGINEER AHMED GABER No. C 67044 Exp. 9/30/12 CIVIL STATE OF CALIFORNIA

THE STATE OF CALIFORNIA OR ITS OFFICERS OR AGENTS SHALL NOT BE RESPONSIBLE FOR THE ACCURACY OR COMPLETENESS OF SCANNED COPIES OF THIS PLAN SHEET.

ROADSIDE SIGNS

SHEET NUMBER	DIRECTION	SIGN No. ◯	SIGN CODE	PANEL SIZE L x D	ROADSIDE SIGN ONE POST	ROADSIDE SIGN TWO POST	INSTALL SIGN (STRAP AND SADDLE BRACKET METHOD)	(N) POST DATA SIZE & LENGTH (Ft) 4" x 4"		4" x 6"		6" x 6"		6" x 8"		METAL (BARRIER MOUNTED SIGN)	REMOVE ROADSIDE SIGN	REMARKS
					EA	EA	EA	Lt	Rt	Lt	Rt	Lt	Rt	Lt	Rt	LB	EA	
S-12	FEBT	1201	G87 (CA)	108" X 42"		1						15	15				1	Covina NEXT 5 EXITS
		1202	G86-8 (CA)	36" X 78"												244		CARPOOL SIGN
		1203	W74 (CA)	48" X 48"	1							15					1	LEFT
		1204a	G11-4.1 (CA)	44" X 18"	1			8									1	LARK ELLEN Ave UC 53-2270
	FWBT	1204b	G11-4.1 (CA)	44" X 18"	1			8									1	10 LA 035.97
		1205	W74 (CA)	48" X 48"	1							15					1	LEFT
S-13	FEBT	1301	G85-7 (CA)	36" X 72"												240		CARPOOL SIGN
	FWBT	1302	R93-2 (CA)	36" X 84"												248		CARPOOL SIGN
		1303	S32 (CA)	54" X 42"	1							14					1	
		1304	S32-4 (CA)	15" X 18"													1	
		1305	R86-2 (CA)	36" X 66"												235		CARPOOL SIGN
		1306	M1-1 (SHIELD)	48" X 48"	1							15					1	
		1307	M3-4 (INTERSTATE)	30" X 15"														WEST
		1308	W13-2	48" X 60"			1											EXIT 20 MPH
S-14		1401	R84-1 (CA)	36" X 60"												244		CARPOOL SIGN
		1402/a	R61-26 (CA)	48" X 30"	2					13							2	
		1403/a	R61-26 (CA)	48" X 30"	2					13							2	
		1404	W4-1R	48" X 48"	1							15					1	
		1405	R84-1 (CA)	36" X 60"												235		CARPOOL SIGN
		1406	W4-1R	48" X 48"	1							15					1	
	FSBT	1406a	G8-1(Mod) (CA)	42" X 120"		1						15	15				1	
	FNBT	1406b	G8-1(Mod) (CA)	42" X 114"		1						15	15				1	
	FEBT	1407	R93-2 (CA)	36" X 84"												248		CARPOOL SIGN
		1417/1420	R5-1	48" X 48"	2							15					2	
		1418/1421	R5-1a	42" X 30"														
		1419/1422	R6-1R	54" X 18"														
		1423/a	M1-1 (SHIELD)	48" X 48"	2							15					2	
		1424/a	M3-2 (INTERSTATE)	30" X 15"														
		1425/a	M6-2	21" X 15"														
		1426/a	D13-3	48" X 30"														
		1427/a	M1-1 (SHIELD)	48" X 48"	2							15					2	
		1428/a	M3-2 (INTERSTATE)	30" X 15"														EAST
		1429/a	M6-2	21" X 15"														
		1430/a	D13-3	48" X 30"														
SUBTOTAL					18	3	1									1694	20	

(N) NOT A SEPARATE PAY ITEM, FOR INFORMATION ONLY

SIGN QUANTITIES
SQ-9

STATE OF CALIFORNIA - DEPARTMENT OF TRANSPORTATION
Caltrans® TRAFFIC DESIGN

FUNCTIONAL SUPERVISOR: MOHAMMED CHOWDHURY
CALCULATED-DESIGNED BY: SULIASTI SUTANTO
CHECKED BY: AHMED GABER
REVISED BY
DATE REVISED

LAST REVISION 00-00-00
DATE PLOTTED => 12-JUN-2013
TIME PLOTTED => 19:28

Dist	COUNTY	ROUTE	POST MILES TOTAL PROJECT	SHEET No.	TOTAL SHEETS
07	LA	10	33.2/37.2	606	1475

Ahmed Gaber 5/30/12
REGISTERED CIVIL ENGINEER DATE

6-10-13
PLANS APPROVAL DATE

REGISTERED PROFESSIONAL ENGINEER AHMED GABER No. C 67044 Exp. 9/30/12 CIVIL STATE OF CALIFORNIA

THE STATE OF CALIFORNIA OR ITS OFFICERS OR AGENTS SHALL NOT BE RESPONSIBLE FOR THE ACCURACY OR COMPLETENESS OF SCANNED COPIES OF THIS PLAN SHEET.

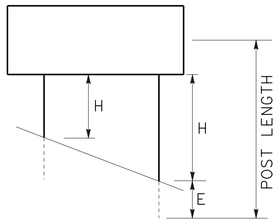

NOTES:

1) EXACT LOCATION AND POSITION OF ROADSIDE SIGNS WILL BE DETERMINED BY THE ENGINEER.

2) POST LENGTHS GIVEN ARE APPROXIMATE. EXACT LENGTH WILL BE DETERMINED BY THE ENGINEER.

ROADSIDE SIGNS

SHEET NUMBER	DIRECTION	SIGN No.	SIGN CODE	PANEL SIZE L x D	ROADSIDE SIGN ONE POST	ROADSIDE SIGN TWO POST	INSTALL SIGN (STRAP AND SADDLE BRACKET METHOD)	(N) POST DATA SIZE & LENGTH (Ft) 4" x 4"		4" x 6"		6" x 6"		6" x 8"		METAL (BARRIER MOUNTED SIGN)	REMOVE ROADSIDE SIGN	REMARKS
					EA	EA	EA	Lt	Rt	Lt	Rt	Lt	Rt	Lt	Rt	LB	EA	
S-14	FEBT	1408A	G11-4.1 (CA)	44" X 18"	1			8									1	Rte 10/39 Sep UC 53-0669
	FWBT	1408B	G11-4.1 (CA)	44" X 18"	1			8									1	10 LA 36.48
		1409	SR50-2 (CA)	36" X 78"												244		CARPOOL SIGN
		1410	W4-1R	48" X 48"	1							15					1	
		1411	W4-1R	48" X 48"	1							15					1	
		1412	G85-8 (CA)	36" X 84"			1										1	CARPOOL SIGN
		1413	W1-1aR (CA)	48" X 48"	1							15					1	25 MPH
		1414	W3-3	48" X 48"			1										1	
		1415	R93-2 (CA)	36" X 84"												248		CARPOOL SIGN
		1416	G84-2 (CA)	54" X 48"	1							14					1	
		1431/1434	R5-1	48" X 48"	2							15					2	
		1432/1435	R5-1a	42" X 30"														
		1433/1436	R6-1R	54" X 18"														
		1437/a	M1-1 (SHIELD)	48" X 48"	2							15					2	
		1438/a	M3-4 (INTERSTATE)	30" X 15"														WEST
		1439/a	M6-2	21" X 15"														
		1440/a	D13-3	48" X 30"														
		1441	R61-26 (CA)	48" X 30"	1													
		1442/1443/1444	W1-8R	36" X 48"	3					14							3	
		1445/a	M1-1 (SHIELD)	48" X 48"	2							15					2	
		1446/a	M3-4 (INTERSTATE)	30" X 15"														WEST
		1447/a	M6-2	21" X 15"														
		1448/a	D13-3	48" X 30"														
S-15		1506	M1-1 (SHIELD)	48" X 48"	1							15						
		1507	M3-2 (INTERSTATE)	30" X 15"			1											
	FEBT	1501	W74 (CA)	48" X 48"	1							15					1	
	FWBT	1502	W13-2	48" X 60"			1										1	25 MPH
		1503	R18A (CA)	66" X 48"			1										1	RIGHT
		1504	R86-2 (CA)	36" X 66"												235		CARPOOL SIGN
		1505	G86-9 (CA)	36" X 90"												253		CARPOOL SIGN
SUBTOTAL					18		5									980	20	

(N) NOT A SEPARATE PAY ITEM, FOR INFORMATION ONLY

SIGN QUANTITIES
SQ-10

STATE OF CALIFORNIA - DEPARTMENT OF TRANSPORTATION
Caltrans® TRAFFIC DESIGN

FUNCTIONAL SUPERVISOR: MOHAMMED CHOWDHURY
CALCULATED-DESIGNED BY: SULIASTI SUTANTO
CHECKED BY: AHMED GABER
REVISED BY
DATE REVISED

LAST REVISION 00-00-00
DATE PLOTTED => 12-JUN-2013
TIME PLOTTED => 19:28

Dist	COUNTY	ROUTE	POST MILES TOTAL PROJECT	SHEET No.	TOTAL SHEETS
07	LA	10	33.2/37.2	607	1475

Ahmed Gaber 5/30/12
REGISTERED CIVIL ENGINEER DATE

6-10-13
PLANS APPROVAL DATE

REGISTERED PROFESSIONAL ENGINEER AHMED GABER No. C 67044 Exp. 9/30/12 CIVIL STATE OF CALIFORNIA

THE STATE OF CALIFORNIA OR ITS OFFICERS OR AGENTS SHALL NOT BE RESPONSIBLE FOR THE ACCURACY OR COMPLETENESS OF SCANNED COPIES OF THIS PLAN SHEET.

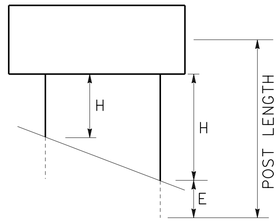

NOTES:

1) EXACT LOCATION AND POSITION OF ROADSIDE SIGNS WILL BE DETERMINED BY THE ENGINEER.

2) POST LENGTHS GIVEN ARE APPROXIMATE. EXACT LENGTH WILL BE DETERMINED BY THE ENGINEER.

ROADSIDE SIGNS

SHEET NUMBER	DIRECTION	SIGN No.	SIGN CODE	PANEL SIZE L x D	ROADSIDE SIGN ONE POST	ROADSIDE SIGN TWO POST	INSTALL SIGN (STRAP AND SADDLE BRACKET METHOD)	(N) POST DATA SIZE & LENGTH (Ft) 4" x 4"		4" x 6"		6" x 6"		6" x 8"		METAL (BARRIER MOUNTED SIGN)	REMOVE ROADSIDE SIGN	REMARKS
					EA	EA	EA	Lt	Rt	Lt	Rt	Lt	Rt	Lt	Rt	LB	EA	
S-16	FEBT	1601	G86-9 (CA)	36" X 90"												253		CARPOOL SIGN
		1602	R86-2 (CA)	36" X 66"												235		CARPOOL SIGN
		1603	W73 (CA)	48" X 48"	1							15					1	RIGHT
		1604	G86-1 (CA)	120" X 54"		1						15	15				1	HOSPITAL NEXT RIGHT
		1605	G95F (CA)	96" X 60"		1						15	15				1	Metrolink NEXT EXIT
		1606	R93-2 (CA)	36" X 84"												248		CARPOOL SIGN
		1607a	G11-4.1 (CA)	44" X 18"	1			8									1	HOLLENBECK St UC 53-2271
		1607b	G11-4.1 (CA)	44" X 18"	1			8									1	10 LA 036.98
	FWBT	1608	W74 (CA)	48" X 48"	1							15					1	LEFT
		1609	R93-2 (CA)	36" X 84"												248		CARPOOL SIGN
S-17	FNBT	1701	W12-2	36" X 36"	1					14								
		1702	W12-2														1	
	FSBT	1703	W12-2														1	
		1704	W12-2	36" X 36"	1					14								
S-18	FSBT	1801	W12-2														1	
		1802	W12-2	36" X 36"	1					14								
	FNBT	1803	W12-2														1	
		1804	W12-2	36" X 36"	1					15								
		1805	D1-1a	8' X 18"			1											W GARVEY Ave
		1806	D1-1a	8' X 18"			1											W GARVEY Ave
S-19	FSBT	1901	W12-2														1	
		1902	W12-2	36" X 36"			1											
	FNBT	1903	W12-2	36" X 36"			1											
		1904	W12-2														1	
S-20	FSBT	2001	W12-2														1	
		2002	W12-2	36" X 36"			1											
	FNBT	2003	W12-2														1	
		2004	W12-2	36" X 36"			1											
SUBTOTAL SQ-11					8	2	6									984	14	

(N) NOT A SEPARATE PAY ITEM, FOR INFORMATION ONLY

SIGN QUANTITIES
SQ-11

STATE OF CALIFORNIA - DEPARTMENT OF TRANSPORTATION
Caltrans TRAFFIC DESIGN

FUNCTIONAL SUPERVISOR: MOHAMMED CHOWDHURY
CALCULATED-DESIGNED BY: SULIASTI SUTANTO
CHECKED BY: AHMED GABER
REVISED BY
DATE REVISED

LAST REVISION 00-00-00
DATE PLOTTED => 12-JUN-2013
TIME PLOTTED => 19:28

Dist	COUNTY	ROUTE	POST MILES TOTAL PROJECT	SHEET No.	TOTAL SHEETS
07	LA	10	33.2/37.2	608	1475

Ahmed Gaber 5/30/12
REGISTERED CIVIL ENGINEER DATE

6-10-13
PLANS APPROVAL DATE

REGISTERED PROFESSIONAL ENGINEER AHMED GABER No. C 67044 Exp. 9/30/12 CIVIL STATE OF CALIFORNIA

THE STATE OF CALIFORNIA OR ITS OFFICERS OR AGENTS SHALL NOT BE RESPONSIBLE FOR THE ACCURACY OR COMPLETENESS OF SCANNED COPIES OF THIS PLAN SHEET.

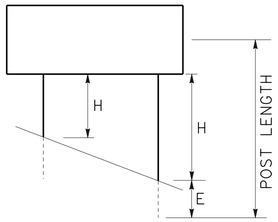

NOTES:

1) EXACT LOCATION AND POSITION OF ROADSIDE SIGNS WILL BE DETERMINED BY THE ENGINEER.
2) POST LENGTHS GIVEN ARE APPROXIMATE. EXACT LENGTH WILL BE DETERMINED BY THE ENGINEER.
3) FOR ADDITIONAL QUANTITIES OF TREATED WOOD WASTE, SEE SUMMARY OF QUANTITIES, Q-3.

ROADSIDE SIGNS

SHEET NUMBER	DIRECTION	SIGN No.	SIGN CODE	PANEL SIZE L x D	ROADSIDE SIGN ONE POST	ROADSIDE SIGN TWO POST	INSTALL SIGN (STRAP AND SADDLE BRACKET METHOD)	(N) POST DATA SIZE & LENGTH (Ft) 4" x 4"		4" x 6"		6" x 6"		6" x 8"		METAL (BARRIER MOUNTED SIGN)	REMOVE ROADSIDE SIGN	TREATED WOOD WASTE	REMARKS
					EA	EA	EA	Lt	Rt	Lt	Rt	Lt	Rt	Lt	Rt	LB	EA	LB	
SUBTOTAL SQ-3					22		6										26	1560	
SUBTOTAL SQ-4					10	5	6									1219	21	1260	
SUBTOTAL SQ-5					16	1	1									962	20	1200	
SUBTOTAL SQ-6					20	1	3									980	22	1320	
SUBTOTAL SQ-7					15	3	4									731	18	1080	
SUBTOTAL SQ-8					17		2									966	18	1080	
SUBTOTAL SQ-9					18	3	1									1694	20	1200	
SUBTOTAL SQ-10					18		5									980	20	1200	
SUBTOTAL SQ-11					8	2	6									984	14	840	
TOTAL					144	15	34									8516	179	10,740	

(N) NOT A SEPARATE PAY ITEM, FOR INFORMATION ONLY

SIGN QUANTITIES
SQ-12

REVISED BY | DATE REVISED
SULIASTI SUTANTO | AHMED GABER
CALCULATED-DESIGNED BY | CHECKED BY
FUNCTIONAL SUPERVISOR | MOHAMMED CHOWDHURY

STATE OF CALIFORNIA - DEPARTMENT OF TRANSPORTATION
Caltrans® TRAFFIC DESIGN

LAST REVISION 00-00-00 | DATE PLOTTED => 12-JUN-2013 | TIME PLOTTED => 19:28

Dist	COUNTY	ROUTE	POST MILES TOTAL PROJECT	SHEET No.	TOTAL SHEETS
07	LA	10	33.2/37.2	609	1475

Ahmed Gaber 5/30/12
REGISTERED CIVIL ENGINEER DATE

6-10-13
PLANS APPROVAL DATE

REGISTERED PROFESSIONAL ENGINEER AHMED GABER No. C 67044 Exp. 9/30/12 CIVIL STATE OF CALIFORNIA

THE STATE OF CALIFORNIA OR ITS OFFICERS OR AGENTS SHALL NOT BE RESPONSIBLE FOR THE ACCURACY OR COMPLETENESS OF SCANNED COPIES OF THIS PLAN SHEET.

NOTES:

1. SIGNS ARE CALIFORNIA MUTCD (MANUAL ON UNIFORM TRAFFIC CONTROL DEVICES, SEP 2006 EDITION) CODED EXCEPT AS NOTED.
2. (CA) DENOTES CALIFORNIA CODED SIGNS.
3. FOR SIGN SPECIFICATIONS SEE CALTRANS WEBSITE: http://www.dot.ca.gov/hq/traffops/signtech/signdel/specs.htm

LEGEND

L : LENGTH OF SIGN
D : DEPTH OF SIGN
RSPF: REMOVABLE SIGN PANEL FRAME

CONTRACTOR FURNISHED SIGN PANELS

MATERIAL SUMMARY

SIGN No.	SIGN QUANTITY (EA)	SIGN CODE	PANEL SIZE L x D	SIGN AREA (SQFT)	SINGLE FACED	BACKGROUND: SHEETING COLOR	BACKGROUND: RETROREFLECTIVE ASTM TYPE	BACKGROUND: NON-REFLECTIVE	LEGEND: SHEETING COLOR	LEGEND: RETROREFLECTIVE ASTM TYPE	LEGEND: NON-REFLECTIVE	SYMBOL: SHEETING COLOR	SYMBOL: RETROREFLECTIVE ASTM TYPE	SYMBOL: NON-REFLECTIVE	PREMIUM GRAFFITI FILM	ROADSIDE SINGLE - SHEET UNFRAMED ALUMINUM 0.063"	ROADSIDE SINGLE - SHEET UNFRAMED ALUMINUM 0.080"	ROADSIDE SINGLE - SHEET FRAMED ALUMINUM 0.063"	ROADSIDE SINGLE - SHEET FRAMED ALUMINUM 0.080"	OVERHEAD LAMINATED (1"-TYPE A)	OVERHEAD FORMED WITH RSPF	FURNISH SINGLE SHEET ALUMINUM SIGN (0.063"-UNFRAMED) (SQFT)	FURNISH SINGLE SHEET ALUMINUM SIGN (0.080"-UNFRAMED) (SQFT)	FURNISH SINGLE SHEET ALUMINUM SIGN (0.063"-FRAMED) (SQFT)	FURNISH SINGLE SHEET ALUMINUM SIGN (0.080"-FRAMED) (SQFT)	FURNISH LAMINATED PANEL SIGN (1"-TYPE A) (SQFT)	FURNISH FORMED PANEL SIGN (OVERHEAD) (SQFT)	REMARKS
1805, 1806	2	D1-1a	96" X 18"	12	●	G	IV		W	IV					●		●						24					
211	1	D12-2(Mod)	54" X 72"	27	●	BLU	III		W	III					●		●						27					
305	1	D(Spec)	54" X 72"	27	●	BLU	III		W	III					●		●						27					
229/a, 233/a, 623/a, 641/a, 1024/a, 1028/a, 1032/a, 1042, 1426/a, 1430/a, 1440/a, 1448/a	23	D13-3	48" X 30"	10	●	G	IV		W	IV					●	●						230						
604	1	G8-4 (CA)	156" X 42"	45.5	●	G	IV		W	IV					●				●						45.5			
1007	1	G8-13(Mod) (CA)	78" X 54"	29.3	●	G	IV		W	IV					●			●						29.3				
304	1	G9-5 (CA)	84" X 48"	24	●	G	IV		W	IV					●				●						24			
215a, 215b, 508a, 508b, 610a, 610b, 1005a, 1005b, 1204a, 1204b, 1408a, 1408b, 1607a, 1607b	14	G11-4.1 (CA)	44" X 18"	5.5	●	W		●	B			B			●	●						77						
204, 507, 614, 805, 903, 1012, 1416	7	G84-2 (CA)	54" X 48"	18	●	G	IV		W	IV					●		●						126					
1301	1	G85-7 (CA)	36" X 72"	18	●	G	IV		W	IV		W	IV		●	●						18						
506, 617, 1412	3	G85-8 (CA)	36" X 84"	21	●	G	IV		W	IV		W	IV		●	●						63						
1604	1	G86-1 (CA)	120" X 54"	45	●	G	IV		W	IV					●				●						45			
1202	1	G86-8 (CA)	36" X 78"	19.5	●	G	IV		W	IV		W	IV		●	●						19.5						
405, 703, 1505, 1601	4	G86-9 (CA)	36" X 90"	22.5	●	G	IV		W	IV		W	IV		●	●						90						
406, 503, 1201	3	G87 (CA)	108" X 42"	31.5	●	G	IV		W	IV					●				●						94.5			
401, 803, 1605	3	G95F (CA)	96" X 60"	40	●	G		●	W	IV		W	IV		●				●						120			
101, 103, 218, 226/a, 230/a, 301, 510, 608, 620/a, 638/a, 905, 1103, 1021/a, 1025/a, 1029/a, 1039/a, 1306, 1423/a, 1427/a, 1437/a, 1445/a, 1506	34	M1-1 (SHIELD)	48" X 48"	16	●	R,BLU	III		W	III		B			●		●						544					
102, 227/a, 302, 609, 621/a, 1022/a, 1026/a, 1424/a, 1428/a, 1507	16	M3-2(INTERSTATE)	30" X 15"	3.1	●	BLU	III		W	III					●	●						49.6						
104, 219, 231/a, 302, 511, 639/a, 906, 907, 1104, 1030/a, 1040/a, 1307, 1438/a, 1446/a	20	M3-4(INTERSTATE)	30" X 15"	3.1	●	BLU	III		W	III					●	●						62						
228/a, 232/a, 622/a, 640/a, 1023/a, 1027/a, 1031/a, 1041/a, 1425/a, 1429/a, 1439/a, 1447/a	24	M6-2	21" X 15"	2.2	●	BLU	III		W	III					●	●						52.8						
402	1	R2-1	48" X 60"	20	●	W	III		B						●		●						20					
																					SUBTOTAL	661.9	768	29.3	329			

SIGN QUANTITIES
SQ-13

THIS PLAN ACCURATE FOR SIGN WORK ONLY

STATE OF CALIFORNIA - DEPARTMENT OF TRANSPORTATION
Caltrans TRAFFIC DESIGN

FUNCTIONAL SUPERVISOR: MOHAMMED CHOWDHURY
CALCULATED-DESIGNED BY: AHMED GABER
CHECKED BY: SULIASTI SUTANTO
REVISED BY / DATE REVISED

LAST REVISION 00-00-00 | DATE PLOTTED => 12-JUN-2013 | TIME PLOTTED => 19:28

Dist	COUNTY	ROUTE	POST MILES TOTAL PROJECT	SHEET No.	TOTAL SHEETS
07	LA	10	33.2/37.2	610	1475

Ahmed Gaber 5/30/12
REGISTERED CIVIL ENGINEER DATE

6-10-13
PLANS APPROVAL DATE

REGISTERED PROFESSIONAL ENGINEER AHMED GABER No. C 67044 Exp. 9/30/12 CIVIL STATE OF CALIFORNIA

THE STATE OF CALIFORNIA OR ITS OFFICERS OR AGENTS SHALL NOT BE RESPONSIBLE FOR THE ACCURACY OR COMPLETENESS OF SCANNED COPIES OF THIS PLAN SHEET.

NOTES:

1. SIGNS ARE CALIFORNIA MUTCD (MANUAL ON UNIFORM TRAFFIC CONTROL DEVICES, SEP 2006 EDITION) CODED EXCEPT AS NOTED.
2. (CA) DENOTES CALIFORNIA CODED SIGNS.
3. FOR SIGN SPECIFICATIONS SEE CALTRANS WEBSITE: http://www.dot.ca.gov/hq/traffops/signtech/signdel/specs.htm

LEGEND

L : LENGTH OF SIGN
D : DEPTH OF SIGN
RSPF: REMOVABLE SIGN PANEL FRAME

CONTRACTOR FURNISHED SIGN PANELS

MATERIAL SUMMARY

SIGN No.	SIGN QUANTITY	SIGN CODE	PANEL SIZE L x D	SIGN AREA	SINGLE FACED	BACKGROUND			LEGEND			SYMBOL			PREMIUM GRAFFITI FILM	ROADSIDE SINGLE - SHEET UNFRAMED ALUMINUM		ROADSIDE SINGLE - SHEET FRAMED ALUMINUM		OVERHEAD		FURNISH SINGLE SHEET ALUMINUM SIGN (0.063"-UNFRAMED)	FURNISH SINGLE SHEET ALUMINUM SIGN (0.080"-UNFRAMED)	FURNISH SINGLE SHEET ALUMINUM SIGN (0.063"-FRAMED)	FURNISH SINGLE SHEET ALUMINUM SIGN (0.080"-FRAMED)	FURNISH LAMINATED PANEL SIGN (1"-TYPE A)	FURNISH FORMED PANEL SIGN (OVERHEAD)	REMARKS
	EA			SQFT		SHEETING COLOR	RETROREFLECTIVE ASTM TYPE	NON-REFLECTIVE	SHEETING COLOR	RETROREFLECTIVE ASTM TYPE	NON-REFLECTIVE	SHEETING COLOR	RETROREFLECTIVE ASTM TYPE	NON-REFLECTIVE		0.063"	0.080"	0.063"	0.080"	LAMINATED (1"-TYPE A)	FORMED WITH RSPF	SQFT	SQFT	SQFT	SQFT	SQFT	SQFT	
221/a, 235, 238, 624, 627, 642, 645, 808/a, 1015, 1018, 1033, 1036, 1417, 1420, 1431, 1434	18	R5-1	48" X 48"	16	●	W	II		W	II		R	II		●		●						288					
222/a, 236, 239, 625, 628, 643, 646, 809/a, 1016, 1019, 1034, 1037, 1418, 1421, 1432, 1435	18	R5-1a	42" X 30"	8.75	●	R	IV		W	IV					●	●						157.5						
212, 237, 240, 626, 629, 644, 647, 810/a, 1017, 1020, 1035, 1038, 1419, 1422, 1433, 1436	17	R6-1(L)/(R)	54" X 18"	6.8	●	B			B			W	III		●		●						114.8					
501	1	R6-3 (CA)	48" X 60"	20	●	W	III		B		●				●		●						20					
309, 505, 619, 1503	4	R18A	66" X 48"	22	●	W	III		B		●				●			●						88				
403, 502	2	R48-1 (CA)	48" X 24"	8	●	W	III		B		●				●		●						16					
234	1	R60B (CA)	54" X 48"	18	●	W	III		B			B			●		●						18					
213	1	R61-1 (CA)	30" X 30"	6.3	●	W	III		B			B			●	●						6.3						
630	1	R61-5 (CA)	36" X 30"	7.5	●	W	III		B			B			●	●						7.5						
637	1	R61-7 (CA)	36" X 30"	7.5	●	W	III		B			B			●	●						7.5						
1014	1	R61-19 (CA)	30" X 24"	5	●	W	III		B			B			●	●						5						
1043, 1044, 1402/a, 1403/a, 1441	7	R61-26 (CA)	48" X 30"	10	●	W	III		B			B			●		●						70					
203, 205	2	R61-32 (CA)	54" X 45"	16.9	●	W	III		B			B			●		●						33.8					
512, 612, 1401, 1405	4	R84-1 (CA)	36" X 60"	15	●	W	III		B		●	B		●	●	●						60						
303, 310, 607, 802, 904, 1102, 1107, 1305, 1504, 1602	10	R86-2 (CA)	36" X 66"	16.5	●	W	III		B		●	B		●	●	●						165						
306, 308, 509, 701, 806, 902, 1105, 1106, 1302, 1407, 1415, 1606, 1609	13	R93-2 (CA)	36" X 84"	21	●	W	III		B		●	B		●	●	●						273						
208, 209	2	R(Spec)	36" X 30"	7.5	●	W	III		B		●				●	●						15						
206, 216, 1009, 1303	4	S32 (CA)	54" X 42"	15.8	●	P	II		W	II					●		●						63.2					
217	1	S32-1 (CA)	15" X 18"	1.9	●	P	II					MULTI	II		●	●						1.9						
207, 1010, 1304	3	S32-4 (CA)	15" X 18"	1.9	●	P	II					MULTI	II		●	●						5.7						
601, 1409	2	SR50-2 (CA)	36" X 78"	19.5	●	W	III		B		●	B		●	●	●						39						
602, 615	2	W1-1R	48" X 48"	16	●	Y	III		B						●		●						32					
1011, 1413	2	W1-1aR	48" X 48"	16	●	Y	III					B			●		●						32					
																					SUBTOTAL	743.4	687.8	88				

SIGN QUANTITIES

SQ-14

REVISED BY | DATE REVISED
SULIASTI SUTANTO | AHMED GABER
CALCULATED-DESIGNED BY | CHECKED BY
FUNCTIONAL SUPERVISOR: MOHAMMED CHOWDHURY
STATE OF CALIFORNIA - DEPARTMENT OF TRANSPORTATION
Caltrans® TRAFFIC DESIGN

LAST REVISION 00-00-00 | DATE PLOTTED => 12-JUN-2013 | TIME PLOTTED => 19:28

Dist	COUNTY	ROUTE	POST MILES TOTAL PROJECT	SHEET No.	TOTAL SHEETS
07	LA	10	33.2/37.2	611	1475

Ahmed Gaber 5/30/12
REGISTERED CIVIL ENGINEER DATE

6-10-13
PLANS APPROVAL DATE

REGISTERED PROFESSIONAL ENGINEER AHMED GABER No. C 67044 Exp. 9/30/12 CIVIL STATE OF CALIFORNIA

THE STATE OF CALIFORNIA OR ITS OFFICERS OR AGENTS SHALL NOT BE RESPONSIBLE FOR THE ACCURACY OR COMPLETENESS OF SCANNED COPIES OF THIS PLAN SHEET.

NOTES:

1. SIGNS ARE CALIFORNIA MUTCD (MANUAL ON UNIFORM TRAFFIC CONTROL DEVICES, SEP 2006 EDITION) CODED EXCEPT AS NOTED.
2. (CA) DENOTES CALIFORNIA CODED SIGNS.
3. FOR SIGN SPECIFICATIONS SEE CALTRANS WEBSITE: http://www.dot.ca.gov/hq/traffops/signtech/signdel/specs.htm

LEGEND

L : LENGTH OF SIGN
D : DEPTH OF SIGN
RSPF: REMOVABLE SIGN PANEL FRAME

CONTRACTOR FURNISHED SIGN PANELS

MATERIAL SUMMARY

SIGN No.	SIGN QUANTITY (EA)	SIGN CODE	PANEL SIZE L x D	SIGN AREA (SQFT)	SINGLE FACED	BACKGROUND: SHEETING COLOR	BACKGROUND: RETROREFLECTIVE ASTM TYPE	BACKGROUND: NON-REFLECTIVE	LEGEND: SHEETING COLOR	LEGEND: RETROREFLECTIVE ASTM TYPE	LEGEND: NON-REFLECTIVE	SYMBOL: SHEETING COLOR	SYMBOL: RETROREFLECTIVE ASTM TYPE	SYMBOL: NON-REFLECTIVE	PREMIUM GRAFFITI FILM	ROADSIDE SINGLE - SHEET UNFRAMED ALUMINUM 0.063"	ROADSIDE SINGLE - SHEET UNFRAMED ALUMINUM 0.080"	ROADSIDE SINGLE - SHEET FRAMED ALUMINUM 0.063"	ROADSIDE SINGLE - SHEET FRAMED ALUMINUM 0.080"	OVERHEAD LAMINATED (1"-TYPE A)	OVERHEAD FORMED WITH RSPF	FURNISH SINGLE SHEET ALUMINUM SIGN (0.063"-UNFRAMED) (SQFT)	FURNISH SINGLE SHEET ALUMINUM SIGN (0.080"-UNFRAMED) (SQFT)	FURNISH SINGLE SHEET ALUMINUM SIGN (0.063"-FRAMED) (SQFT)	FURNISH SINGLE SHEET ALUMINUM SIGN (0.080"-FRAMED) (SQFT)	FURNISH LAMINATED PANEL SIGN (1"-TYPE A) (SQFT)	FURNISH FORMED PANEL SIGN (OVERHEAD) (SQFT)	REMARKS
605, 613	2	W1-6R	48" X 24"	8	●	Y	III		B						●		●						16					
214/a, 631, 632, 633, 634, 635, 636, 648, 649, 650, 1045, 1046, 1047, 1442, 1443, 1444	17	W1-8 (R)/(L)	36" X 48"	12	●	Y	III		B						●	●						204						
202, 616, 1414	3	W3-3	48" X 48"	16	●	Y	III					R,G	III		●		●						48					
220, 611, 1003, 1006, 1008, 1101, 1404, 1406, 1410, 1411	10	W4-1R	48" X 48"	16	●	Y	III					B			●		●						160					
210, 606	2	W4-3R	48" X 48"	16	●	Y	III		B						●		●						32					
1013	1	W8-5	48" X 48"	16	●	Y	III					B			●		●						16					
1701, 1704, 1802, 1804, 1902, 1903, 2002, 2004	8	W12-2	36" X 36"	9	●	Y	III		B			B			●	●						72						
603	1	W13-1	30" X 30"	6.3	●	Y	III		B						●	●						6.3						
201, 307, 504, 618, 807, 1108, 1308, 1502	8	W13-2	48" X 60"	20	●	Y	III		B						●		●						160					
1603	1	W73 (CA)	48" X 48"	16	●	Y	III		B		●				●			●						16				
702, 901	2	W73A (CA)	48" X 48"	16	●	Y	III		B		●				●			●						32				
404, 407, 801, 804, 1203, 1205, 1501, 1608	8	W74 (CA)	48" X 48"	16	●	Y	III		B		●				●			●						128				
																					SUBTOTAL	282.3	432	176				

SIGN QUANTITIES

SQ-15

STATE OF CALIFORNIA - DEPARTMENT OF TRANSPORTATION
Caltrans® TRAFFIC DESIGN

FUNCTIONAL SUPERVISOR: MOHAMMED CHOWDHURY
CALCULATED-DESIGNED BY: AHMED GABER
CHECKED BY: SULIASTI SUTANTO
REVISED BY
DATE REVISED

LAST REVISION 00-00-00 | DATE PLOTTED => 12-JUN-2013 | TIME PLOTTED => 19:28

Dist	COUNTY	ROUTE	POST MILES TOTAL PROJECT	SHEET No.	TOTAL SHEETS
07	LA	10	33.2/37.2	612	1475

Ahmed Gaber 5/30/12
REGISTERED CIVIL ENGINEER DATE

6-10-13
PLANS APPROVAL DATE

REGISTERED PROFESSIONAL ENGINEER AHMED GABER No. C 67044 Exp. 9/30/12 CIVIL STATE OF CALIFORNIA

THE STATE OF CALIFORNIA OR ITS OFFICERS OR AGENTS SHALL NOT BE RESPONSIBLE FOR THE ACCURACY OR COMPLETENESS OF SCANNED COPIES OF THIS PLAN SHEET.

NOTES:

1. SIGNS ARE CALIFORNIA MUTCD (MANUAL ON UNIFORM TRAFFIC CONTROL DEVICES, SEP 2006 EDITION) CODED EXCEPT AS NOTED.
2. (CA) DENOTES CALIFORNIA CODED SIGNS.
3. FOR SIGN SPECIFICATIONS SEE CALTRANS WEBSITE: http://www.dot.ca.gov/hq/traffops/signtech/signdel/specs.htm

LEGEND

L : LENGTH OF SIGN
D : DEPTH OF SIGN
RSPF: REMOVABLE SIGN PANEL FRAME

CONTRACTOR FURNISHED SIGN PANELS

MATERIAL SUMMARY

SIGN No.	SIGN CODE	PANEL SIZE L x D	SIGN AREA SQFT	SINGLE FACED	BACKGROUND SHEETING COLOR	BACKGROUND RETROREFLECTIVE ASTM TYPE	BACKGROUND NON-REFLECTIVE	LEGEND SHEETING COLOR	LEGEND RETROREFLECTIVE ASTM TYPE	LEGEND NON-REFLECTIVE	SYMBOL SHEETING COLOR	SYMBOL RETROREFLECTIVE ASTM TYPE	SYMBOL NON-REFLECTIVE	PREMIUM GRAFFITI FILM	ROADSIDE SINGLE SHEET UNFRAMED ALUMINUM 0.063"	ROADSIDE SINGLE SHEET UNFRAMED ALUMINUM 0.080"	ROADSIDE SINGLE SHEET FRAMED ALUMINUM 0.063"	ROADSIDE SINGLE SHEET FRAMED ALUMINUM 0.080"	OVERHEAD LAMINATED (1"-TYPE A)	OVERHEAD FORMED WITH RSPF	FURNISH SINGLE SHEET ALUMINUM SIGN (0.063"-UNFRAMED) SQFT	FURNISH SINGLE SHEET ALUMINUM SIGN (0.080"-UNFRAMED) SQFT	FURNISH SINGLE SHEET ALUMINUM SIGN (0.063"-FRAMED) SQFT	FURNISH SINGLE SHEET ALUMINUM SIGN (0.080"-FRAMED) SQFT	FURNISH LAMINATED PANEL SIGN (1"-TYPE A) SQFT	FURNISH FORMED PANEL SIGN (OVERHEAD) SQFT	REMARKS
2A - PANEL 1	G85-11(CA) Mod	14′ X 8.33′	117	●	G	IV		W	IV					●						●						117	OVERHEAD SIGN STRUCTURE
2A - PANEL 2	G83-5(CA) Mod	18′ X 8.33′	150	●	G	IV		W	IV					●						●						150	OVERHEAD SIGN STRUCTURE
2D	G23-1(CA) Mod	24′ X 8.33′	200	●	G	IV		W	IV					●						●						200	OVERHEAD SIGN STRUCTURE
3A	G23-6(CA)	22′ X 8.33′	183	●	G	IV		W	IV					●						●						183	OVERHEAD SIGN STRUCTURE
3B - PANEL 1	G85-11(CA) Mod	14′ X 8.33′	117	●	G	IV		W	IV					●						●						117	OVERHEAD SIGN STRUCTURE
3B - PANEL 2	G83-5(CA) Mod	20′ X 8.33′	167	●	G	IV		W	IV					●						●						167	OVERHEAD SIGN STRUCTURE
4A	G24-5(CA) Mod	22′ X 9.17′	202	●	G	IV		W	IV					●						●						202	OVERHEAD SIGN STRUCTURE
4C	G24-5(CA) Mod	16′ X 8.33′	133	●	G	IV		W	IV					●						●						133	OVERHEAD SIGN STRUCTURE
5A - PANEL 1	G85-11(CA) Mod	24′ X 9.17′	220	●	G	IV		W	IV					●						●						220	OVERHEAD SIGN STRUCTURE
5A - PANEL 2	G83-5(CA) Mod	16′ X 9.17′	147	●	G	IV		W	IV					●						●						147	OVERHEAD SIGN STRUCTURE
5C	R87-1(CA)	16′ X 8.33′	133	●	W	IV		B	IV					●						●						133	OVERHEAD SIGN STRUCTURE
6D - PANEL 1	G85-11(CA) Mod	24′ X 8.33′	200	●	G	IV		W	IV					●						●						200	OVERHEAD SIGN STRUCTURE
6D - PANEL 2	G83-5(CA)	16′ X 8.33′	133	●	G	IV		W	IV					●						●						133	OVERHEAD SIGN STRUCTURE
6C	R87-1(CA)	16′ X 8.33′	133	●	W	IV		B	IV					●						●						133	OVERHEAD SIGN STRUCTURE
6E	G23-3(CA)	20′ X 8.33′	167	●	G	IV		W	IV					●						●						167	OVERHEAD SIGN STRUCTURE
7B	G24-5(CA) Mod	16′ X 9.17′	147	●	G	IV		W	IV					●						●						147	OVERHEAD SIGN STRUCTURE
8A	G24-6(CA) Mod	20′ X 9.17′	184	●	G	IV		W	IV					●						●						184	OVERHEAD SIGN STRUCTURE
8B	G23-6(CA)	20′ X 8.33′	167	●	G	IV		W	IV					●						●						167	OVERHEAD SIGN STRUCTURE
8D - PANEL 1	G85-11(CA) Mod	18′ X 9.17′	165	●	G	IV		W	IV					●						●						165	OVERHEAD SIGN STRUCTURE
8D - PANEL 2	G83-5(CA) Mod	18′ X 9.17′	165	●	G	IV		W	IV					●						●						165	OVERHEAD SIGN STRUCTURE
9B	G85-11(CA) Mod	20′ X 9.17′	183	●	G	IV		W	IV					●						●						183	OVERHEAD SIGN STRUCTURE
10B	G23-1(CA)	20′ X 8.33′	167	●	G	IV		W	IV					●						●						167	OVERHEAD SIGN STRUCTURE
11B - PANEL 1	G85-11(CA) Mod	16′ X 8.33′	133	●	G	IV		W	IV					●						●						133	OVERHEAD SIGN STRUCTURE
11B - PANEL 2	G83-5(CA)	16′ X 8.33′	133	●	G	IV		W	IV					●						●						133	OVERHEAD SIGN STRUCTURE
11D	G23-2(CA)	20′ X 8.33′	167	●	G	IV		W	IV					●						●						167	OVERHEAD SIGN STRUCTURE
																									SUBTOTAL	4013	

SIGN QUANTITIES

SQ-16

STATE OF CALIFORNIA - DEPARTMENT OF TRANSPORTATION
Caltrans® TRAFFIC DESIGN

FUNCTIONAL SUPERVISOR: MOHAMMED CHOWDHURY
CALCULATED-DESIGNED BY: SULIASTI SUTANTO
CHECKED BY: AHMED GABER
REVISED BY
DATE REVISED

LAST REVISION 00-00-00
DATE PLOTTED => 12-JUN-2013
TIME PLOTTED => 19:28

Dist	COUNTY	ROUTE	POST MILES TOTAL PROJECT	SHEET No.	TOTAL SHEETS
07	LA	10	33.2/37.2	613	1475

REGISTERED CIVIL ENGINEER Ahmed Gaber DATE 5/30/12

PLANS APPROVAL DATE 6-10-13

REGISTERED PROFESSIONAL ENGINEER AHMED GABER No. C 67044 Exp. 9/30/12 CIVIL STATE OF CALIFORNIA

THE STATE OF CALIFORNIA OR ITS OFFICERS OR AGENTS SHALL NOT BE RESPONSIBLE FOR THE ACCURACY OR COMPLETENESS OF SCANNED COPIES OF THIS PLAN SHEET.

NOTES:

1. SIGNS ARE CALIFORNIA MUTCD (MANUAL ON UNIFORM TRAFFIC CONTROL DEVICES, SEP 2006 EDITION) CODED EXCEPT AS NOTED.
2. (CA) DENOTES CALIFORNIA CODED SIGNS.
3. FOR SIGN SPECIFICATIONS SEE CALTRANS WEBSITE: http://www.dot.ca.gov/hq/traffops/signtech/signdel/specs.htm

LEGEND

L : LENGTH OF SIGN
D : DEPTH OF SIGN
RSPF: REMOVABLE SIGN PANEL FRAME

CONTRACTOR FURNISHED SIGN PANELS

MATERIAL SUMMARY

SIGN No.	SIGN CODE	PANEL SIZE L x D	SIGN AREA (SQFT)	SINGLE FACED	BACKGROUND: SHEETING COLOR	BACKGROUND: RETROREFLECTIVE ASTM TYPE	BACKGROUND: NON-REFLECTIVE	LEGEND: SHEETING COLOR	LEGEND: RETROREFLECTIVE ASTM TYPE	LEGEND: NON-REFLECTIVE	SYMBOL: SHEETING COLOR	SYMBOL: RETROREFLECTIVE ASTM TYPE	SYMBOL: NON-REFLECTIVE	PREMIUM GRAFFITI FILM	ROADSIDE SINGLE SHEET UNFRAMED ALUMINUM 0.063"	ROADSIDE SINGLE SHEET UNFRAMED ALUMINUM 0.080"	ROADSIDE SINGLE SHEET FRAMED ALUMINUM 0.063"	ROADSIDE SINGLE SHEET FRAMED ALUMINUM 0.080"	OVERHEAD LAMINATED (1"-TYPE A)	OVERHEAD FORMED WITH RSPF	FURNISH SINGLE SHEET ALUMINUM SIGN (0.063"-UNFRAMED) (SQFT)	FURNISH SINGLE SHEET ALUMINUM SIGN (0.080"-UNFRAMED) (SQFT)	FURNISH SINGLE SHEET ALUMINUM SIGN (0.063"-FRAMED) (SQFT)	FURNISH SINGLE SHEET ALUMINUM SIGN (0.080"-FRAMED) (SQFT)	FURNISH LAMINATED PANEL SIGN (1"-TYPE A) (SQFT)	FURNISH FORMED PANEL SIGN (OVERHEAD) (SQFT)	REMARKS
12A	G24-5(CA) Mod	16′ X 8.33′	133	●	G	IV		W	IV					●						●						133	OVERHEAD SIGN STRUCTURE
12B	G24-5(CA) Mod	20′ X 8.33′	167	●	G	IV		W	IV					●						●						167	OVERHEAD SIGN STRUCTURE
13A	G23-1(CA)	18′ X 8.33′	150	●	G	IV		W	IV					●						●						150	OVERHEAD SIGN STRUCTURE
13B	G85-11(CA) Mod	20′ X 9.17′	183	●	G	IV		W	IV					●						●						183	OVERHEAD SIGN STRUCTURE
13E	R87-1(CA)	16′ X 8.33′	133	●	W	IV		B	IV					●						●						133	OVERHEAD SIGN STRUCTURE
14B	R87-1(CA)	16′ X 8.33′	133	●	W	IV		B	IV					●						●						133	OVERHEAD SIGN STRUCTURE
15B	G23-1(CA)	18′ X 8.33′	150	●	G	IV		W	IV					●						●						150	OVERHEAD SIGN STRUCTURE
15D	G85-11(CA) Mod	18′ X 8.33′	150	●	G	IV		W	IV					●						●						150	OVERHEAD SIGN STRUCTURE
16A	G24-5(CA) Mod	20′ X 8.33′	167	●	G	IV		W	IV					●						●						167	OVERHEAD SIGN STRUCTURE
SUBTOTAL SQ-17																										1366	
SUBTOTAL SQ-16																										4013	
SUBTOTAL SQ-13																					661.9	768	29.3	329			
SUBTOTAL SQ-14																					743.4	687.8	88				
SUBTOTAL SQ-15																					282.3	432	176				
TOTAL																					1687.6	1887.8	293.3	329		5379	

SIGN QUANTITIES

SQ-17

STATE OF CALIFORNIA - DEPARTMENT OF TRANSPORTATION
Caltrans TRAFFIC DESIGN

FUNCTIONAL SUPERVISOR: MOHAMMED CHOWDHURY
CALCULATED-DESIGNED BY: SULIASTI SUTANTO
CHECKED BY: AHMED GABER
REVISED BY
DATE REVISED

LAST REVISION 00-00-00 DATE PLOTTED => 12-JUN-2013 TIME PLOTTED => 19:28

Dist	COUNTY	ROUTE	POST MILES TOTAL PROJECT	SHEET No.	TOTAL SHEETS
07	LA	10	33.2/37.2	614	1475

REGISTERED CIVIL ENGINEER 5/30/12 DATE

6-10-13
PLANS APPROVAL DATE

REGISTERED PROFESSIONAL ENGINEER HEATHER LIANG No. C69374 Exp. 6/30/13 CIVIL STATE OF CALIFORNIA

THE STATE OF CALIFORNIA OR ITS OFFICERS OR AGENTS SHALL NOT BE RESPONSIBLE FOR THE ACCURACY OR COMPLETENESS OF SCANNED COPIES OF THIS PLAN SHEET.

CHANGEABLE MESSAGE SIGN QUANTITIES

SHEET No.	SIGN No.	LOCATION	SIGN CODE	X *	h	ELEVATION		CIDH CONCRETE PILE (SIGN FOUNDATION)	SIGN STRUCTURE (TRUSS)	
						Elev. A	Elev. B	60"	FURNISH	INSTALL
				LF	LF	ft	ft	LF	LBS	LBS
S-6	73	FWBT, STA 815+68	UNBALANCED BUTTERFLY	26	20	100	100	22	16,824	16,824
						SUBTOTAL		22	16,824	16,824

* Lt ETW from "W-4" LINE

SIGN QUANTITIES

SQ-18

STATE OF CALIFORNIA - DEPARTMENT OF TRANSPORTATION
Caltrans
OFFICE OF ITS

FUNCTIONAL SUPERVISOR: PETER LIN
CALCULATED-DESIGNED BY: HEATHER LIANG
CHECKED BY: PETER LIN
REVISED BY
DATE REVISED

LAST REVISION 00-00-00
DATE PLOTTED => 12-JUN-2013
TIME PLOTTED => 19:28

Dist	COUNTY	ROUTE	POST MILES TOTAL PROJECT	SHEET No.	TOTAL SHEETS
07	LA	10	33.2/37.2	615	1475

REGISTERED CIVIL ENGINEER 4-17-12 DATE

6-10-13
PLANS APPROVAL DATE

REGISTERED PROFESSIONAL ENGINEER MOHAMED GHANNOUM No. C72051 Exp. 6/30/14 CIVIL STATE OF CALIFORNIA

THE STATE OF CALIFORNIA OR ITS OFFICERS OR AGENTS SHALL NOT BE RESPONSIBLE FOR THE ACCURACY OR COMPLETENESS OF SCANNED COPIES OF THIS PLAN SHEET.

ROADWAY QUANTITIES

SHEET NUMBER	TEMPORARY FIBER ROLL	TEMPORARY SILT FENCE	TEMPORARY GRAVEL BAG BERM	TEMPORARY CONSTRUCTION ENTRANCE	TEMPORARY COVER	TEMPORARY DRAINAGE INLET PROTECTION	MOVE-IN/MOVE-OUT (TEMPORARY EROSION CONTROL)	TEMPORARY HYDRAULIC MULCH	CLASS 3 AGGREGATE BASE	TACK COAT	REPAIR UNDERLYING BASE	LEAN CONCRETE BASE	LEAN CONCRETE BASE RAPID SETTING	HOT MIX ASPHALT (TYPE A)	GEOSYNTHETIC PAVEMENT NTERLAYER (PAVING FABRIC)	JOINTED PLAIN CONCRETE PAVEMENT	JOINTED PLAIN CONCRETE PAVEMENT (RAPID STRENGTH CONCRETE)	CONCRETE PAVEMENT TRANSITION PANEL	SEAL PAVEMENT JOINT	SEAL ISOLATION JOINT	REPAIR SPALLED JOINTS, POLYESTER GROUT	INSTALL MEDIAN MILEAGE PANEL
	LF	LF	LF	EA	SQYD	EA	EA	SQFT	CY	TON	CY	CY	CY	TON	SQFT	CY	CY	CY	LF	LF	SQYD	EA
L-1	1824		114	4	156			3133	210.35			150.25				330.55			846.88	260.00		2
L-2	18950	7444	1184	8	2533	26		50735	5172.97	1.5		3355.01		2391.72	5438.16	4675.50		118.40	17889.75	2421.35		2
L-3	17548	5600	1097	4	1467	2		29280	3402.06			2331.52		0.26	1334.83	4542.02			12902.88	2800.00		2
L-4	17284	5612	1080	4	1467			29240	3125.26			2232.33				4911.12			11504.05	2800.00		4
L-5	17394	5606	1087	4	1689	18		33641	3424.85	0.6		2360.51		729.80	1441.58	4400.25			14359.97	2521.46		2
L-6	20818	9872	1301	8	3178	52		63631	6316.78	3.4		4071.42		4146.89	8160.37	4253.96		40.60	20759.35	2013.28		2
L-7	15982	5200	999	4	1378			27425	2876.74			2054.82				4520.60			10812.47	2600.00		2
L-8	18192	7428	1137	4	1689	4		33808	3470.60	0.65		2368.58		698.73	1495.92	4492.92		32.10	12075.26	2311.89		4
L-9	16816	5342	1051	4	1822	16	25	36454	3918.67	0.65	315	2110.24	614.30	764.51	1510.14	3768.53	1351.47	16.50	14611.73	2600.00	330	2
L-10	26890	13750	1681	8	4244	52		84896	9403.75	7.02		5669.27	277.69	6852.87	12772.50	4801.12	557.46	102.20	29038.75	2443.06		2
L-11	17228	5624	1077	4	1533	4		30668	3144.57			2246.12				4941.46			12391.08	2800.00		4
L-12	17220	5600	1076	4	1489			29789	2749.23			1963.74				4320.22			11526.34	2800.00		2
L-13	17372	5612	1086	4	1889	10		37706	4295.66	0.16		3010.60		490.98	969.84	6072.02		17.90	14809.55	2800.00		2
L-14	21316	9720	1332	8	4089	14		81596	7229.27	3.27		4743.72		4026.49	7898.39	5783.00		87.60	27870.91	2358.36		2
L-15	22266	5600	1392	4	1489			29921	3161.08			2257.91				4967.41			11907.89	2800.00		4
L-16	16568	5400	1036	4	1378	10		27444	2533.02			1809.30				3980.47			9462.84	2288.29		2
C-1									1634.84	1.51		908.24		1839.20								
C-6									1458.04	1.29		810.02		1640.30								
C-11										0.29												
C-21									2033.74	1.55		1129.86		2287.96								
DQ-35														2.50								
TOTAL	283668	103410	17730	80	31490	208	25	629367	69561.49	21.89	315	45583.48	891.99	25872.21	41021.73	70761.14	1908.93	415.30	232769.70	38617.69	330	40

SUMMARY OF QUANTITIES
Q-1

STATE OF CALIFORNIA - DEPARTMENT OF TRANSPORTATION
Caltrans® OFFICE OF DESIGN D

FUNCTIONAL SUPERVISOR: NADER GOBRAN
CALCULATED-DESIGNED BY: NEIL LIANG
CHECKED BY: MOHAMED GHANNOUM
REVISED BY
DATE REVISED

LAST REVISION 00-00-00
DATE PLOTTED => 12-JUN-2013
TIME PLOTTED => 19:28

Dist	COUNTY	ROUTE	POST MILES TOTAL PROJECT	SHEET No.	TOTAL SHEETS
07	LA	10	33.2/37.2	616	1475

REGISTERED CIVIL ENGINEER 4-17-12 DATE

6-10-13
PLANS APPROVAL DATE

REGISTERED PROFESSIONAL ENGINEER MOHAMED GHANNOUM No. C72051 Exp. 06/30/14 CIVIL STATE OF CALIFORNIA

THE STATE OF CALIFORNIA OR ITS OFFICERS OR AGENTS SHALL NOT BE RESPONSIBLE FOR THE ACCURACY OR COMPLETENESS OF SCANNED COPIES OF THIS PLAN SHEET.

NOTE:
FOR ADDITIONAL QUANTITIES, SEE SHEETS SW-72 AND R-50.

ROADWAY QUANTITIES

SHEET NUMBER	CHAIN LINK RAILING (MODIFIED)	CONCRETE BARRIER (TYPE 60)	CONCRETE BARRIER (TYPE 60 MODIFIED)	CONCRETE BARRIER (TYPE 60C)	CONCRETE BARRIER (TYPE 60D)	CONCRETE BARRIER (TYPE 60P MODIFIED)	CONCRETE BARRIER (TYPE 60G)	CONCRETE BARRIER (TYPE 60GC)	CONCRETE BARRIER (TYPE 736A MODIFIED)	CONCRETE BARRIER (TYPE 736B MODIFIED)	CONCRETE BARRIER (TYPE 736C MODIFIED)	CONCRETE BARRIER (TYPE 736SV MODIFIED)	CONCRETE BARRIER (TYPE 736SV-S MODIFIED)	16" CAST-IN-DRILLED HOLE CONCRETE PILING	MINOR CONCRETE (CURB) (TYPE A1-6)	MINOR CONCRETE (CURB) (TYPE A1-8)	MINOR CONCRETE (CURB AND GUTTER) (TYPE A2-6)	MINOR CONCRETE (CURB AND GUTTER) (TYPE A2-8)	MINOR CONCRETE (CURB) (TYPE B4)	MINOR CONCRETE (CURB AND GUTTER) (TYPE B2-6 Mod)	MINOR CONCRETE (SIDEWALK)	CRASH CUSHION (REACT 9CBB)	CRASH CUSHION (REACT 9SCBS)	CRASH CUSHION (ADIEM)	CHAIN LINK FENCE (TYPE CL-6)	4' CHAIN LINK GATE (TYPE CL-6)	HMA DIKE (TYPE C)	HMA DIKE (TYPE D)	HMA DIKE (TYPE E)	HMA DIKE (TYPE F)	ALTERNATIVE IN-LINE TERMINAL SYSTEM TYPE 11A LAYOUT	ALTERNATIVE FLARED TERMINAL SYSTEM TYPE 11B LAYOUT	TRANSITION RAILING (TYPE WB)	VEGETATION CONTROL (MINOR CONCRETE)	SLURRY SEAL
	LF	LF	LF	LF	LF	LF	LF	LF	LF	LF	LF	LF	LF		LF	LF	LF	LF	LF	LF	CY	EA	EA	EA	LF	EA	LF	LF	LF	LF	EA	EA	EA	SQYD	TON
L-1	130.00						130.00		75.00	185.00																										
L-2	946.73	261.04		271.92			431.99	778.69	436.73	577.46						242.34					68.35	2		6					217.36							
L-3	165.90					48	1352.00			276.84		85.00					1189.57												10.00							
L-4	171.00					12	1388.00		86.00			85.00					1400.00																			
L-5	951.30		85.00	438.18		36	1173.32		800.18	301.06	105.51						277.71						1								1		1			
L-6	948.81		45.00			24	580.05	347.50	828.94	1777.82						409.11		239.64			149.95			6			100.00		568.95	25.00	2	1	3	102	0.78
L-7	568.00					24	586.00	678.00	1368.00	500.00		85.00				1300.00	1006.04																			2.57
L-8	1308.59					24	1123.96			116.11		170.00	80	68		811.80	178.99				2.35										1		1	30	0.07
L-9	1300.00					24	1276.00		580.00	327.70						808.66	172.80							1												
L-10	929.03						1221.54		654.99	2991.33						298.82	296.00		208		296.29			5	64.18		696.07		298.07	75.00	3		3	90	
L-11	830.00					48	1352.00		830.00			170.00					1561.08																			
L-12						12	1182.16										481.17								295.58	1										
L-13			45.00			24	1331.00			6.00							648.39									1										
L-14	1020.20		45.00	782.70	117.13	48	1086.16			1538.80						262.48	712.40		207		106.53			6		2	411.73	715.54		50.00	2		2	60	
L-15	955.00					24	1376.00		925.63	384.55							2198.30																			
L-16	441.13					48	1096.16			441.13							1213.08																			
C-1																		2000.00			108.02															
C-2																65.00		230.73			12.00															
C-3																265.11		56.01			6.78															
C-4															55.06	196.11					17.41								109.60							
C-5																43.00		281.47			18.86															
C-6																		1261.78		1142.55	109.78															
C-7																126.39					117.29															
C-8																137.09		142.15			32.34															
C-9																		151.05			1.55															
C-10																		147.50			1.19							714.44								
C-11																		18.20		423.45																
C-12																171.58					8.65															
C-13																123.00					8.65															
C-14																					44.26															
C-15																48.47		520.56			35.53															
C-18																		778.81			55.59															
C-21																		351.97		896.90	22.83															
C-22																138.66					28.08															
C-24																		679.05			42.28															
C-27																		224.79			13.75															
C-28																123.82					8.65															
C-29																					24.07															
C-31																		384.58			27.50							167.92								
TOTAL	10665.69	261.04	220	1492.80	117.13	396	16686.34	1804.19	6585.47	9423.80	105.51	595.00	80	68	55.06	5571.44	11335.53	4206.51	415	2462.90	1368.53	2	1	24	359.76	4	1207.80	1597.90	1203.98	150.00	9	1	10	282	3.42

SUMMARY OF QUANTITIES

Q-2

STATE OF CALIFORNIA - DEPARTMENT OF TRANSPORTATION
Caltrans® OFFICE OF DESIGN D

FUNCTIONAL SUPERVISOR: NADER GOBRAN
CALCULATED-DESIGNED BY: NEIL LIANG
CHECKED BY: MOHAMED GHANNOUM
REVISED BY
DATE REVISED

LAST REVISION DATE PLOTTED => 12-JUN-2013
00-00-00 TIME PLOTTED => 19:42

Dist	COUNTY	ROUTE	POST MILES TOTAL PROJECT	SHEET No.	TOTAL SHEETS
07	LA	10	33.2/37.2	617	1475

4-17-12
REGISTERED CIVIL ENGINEER DATE

6-10-13
PLANS APPROVAL DATE

REGISTERED PROFESSIONAL ENGINEER
MOHAMED GHANNOUM
No. 72051
Exp. 06/30/14
CIVIL
STATE OF CALIFORNIA

THE STATE OF CALIFORNIA OR ITS OFFICERS OR AGENTS SHALL NOT BE RESPONSIBLE FOR THE ACCURACY OR COMPLETENESS OF SCANNED COPIES OF THIS PLAN SHEET.

ROADWAY (DEMOLITION) QUANTITIES

SHEET NUMBER	REMOVE MASONRY WALL	REMOVE CHAIN LINK FENCE	REMOVE ASPHALT CONCRETE DIKE	REMOVE RETAINING WALL	SALVAGE METAL BEAM GUARD RAILING	REMOVE CONCRETE BARRIER	ROADWAY EXCAVATION	REMOVE Conc (CURB AND GUTTER)	REMOVE Conc SIDEWALK	REMOVE BUS SHELTER	REMOVE CONCRETE ISLAND (PORTIONS)	SALVAGE METAL BRIDGE RAILING	TREATED WOOD WASTE	REMOVE Conc CURB	ROADWAY EXCAVATION (TYPE Y-1) (AERIALLY DEPOSITED LEAD)	ROADWAY EXCAVATION (TYPE Z-2) (AERIALLY DEPOSITED LEAD)	STRUCTURE EXCAVATION (TYPE Y-1) (AERIALLY DEPOSITED LEAD)	STRUCTURE EXCAVATION (TYPE Z-2) (AERIALLY DEPOSITED LEAD)	REMOVE ROCK BLANKET	SALVAGE CRASH CUSHION	REMOVE CONCRETE
	LF	LF	LF	LF	LF	LF	CY	LF	SQYD	EA	CY	LF	LB	LF	CY	CY	CY	CY	SQYD	EA	CY
L-17		130.00	130.00			130.00	1935.94								966.00	241.50	66.64	16.66			
L-18		644.43	126.27		664.70	1400.00	19413.57	1695.77	556.13	2			20222		4076.00	1019.00	725.28	181.32		1	3.5
L-19	1465.47	986.53	2226.04		966.90	1400.00	10564.81	2359.67					30096		6078.40	1519.60	582.08	145.52			
L-20	700.00	1316.75	2125.00		1505.80	1400.00	10268.70	1978.05					45002		6004.64	1501.16	739.44	184.86			
L-21	134.23	1114.31	1584.20	18.00	1159.70	1400.00	10546.01	814.95				45.61	36442		6131.44	1532.86	1215.92	303.98			
L-22	96.47	452.00	2638.32	237.49	558.60	1537.49	16872.80	2713.79	512.25				13660		1872.80	468.20	1314.88	328.72			
L-23		1300.00		1632.51		2600.00	9452.16	2305.79							3635.76	908.94	1666.88	416.72			
L-24		869.95		1300.00	52.80	2600.00	10690.66	1519.52					3722	200.67	3375.92	843.98	531.92	132.98			
L-25		1228.11	533.90	1221.89		2521.89	12157.25	1045.04						25.00	4796.32	1199.08	964.16	241.04			
L-26	739.02	1161.76	2749.85	502.46	366.65	1400.00	24484.90	7856.45	888.96			31.12	13284	118.34	2106.00	526.50	850.88	237.72			
L-27	902.27	20.00	20.53	1145.01	81.30	1400.00	10332.15	2381.88					3188		9330.08	2332.52	1207.36	301.84			
L-28	609.49	284.51			113.60	1400.00	9033.19	483.18				50.22	3346		5820.96	1455.24	485.60	121.40			
L-29	665.00		138.99		66.10	1400.00	13638.64	648.39					2813		10511.92	2627.98	675.52	168.88			
L-30		838.00	1693.63		340.60	1400.00	24282.36	5444.75	192.70	2		51.20	16501		2528.16	632.04	364.40	91.10			
L-31	1586.21	1128.25	2593.32			1400.00	10386.41	2097.20							5920.80	1480.20	945.60	236.40			
L-32	745.18	929.77	2105.82		126.20	1350.00	8322.79	1212.93					6880		5853.84	1463.46	454.88	113.72			
C-1								2000.00	1111.11												
C-6											2								573		
C-11											290										
C-21																			649		
SQ-12													10740								
TOTAL	7643.34	12404.37	18665.87	6057.36	6002.95	24739.38	202382.35	36557.36	3261.15	4	292	178.15	205896	344.01	79009.04	19752.26	12791.44	3222.86	1222	1	3.5

SUMMARY OF QUANTITIES
Q-3

STATE OF CALIFORNIA - DEPARTMENT OF TRANSPORTATION
Caltrans® OFFICE OF DESIGN D

FUNCTIONAL SUPERVISOR: NADER GOBRAN
CALCULATED-DESIGNED BY: NEIL LIANG
CHECKED BY: MOHAMED GHANNOUM
REVISED BY
DATE REVISED

LAST REVISION 00-00-00
DATE PLOTTED => 18-JUN-2013
TIME PLOTTED => 10:46

Dist	COUNTY	ROUTE	POST MILES TOTAL PROJECT	SHEET No.	TOTAL SHEETS
07	LA	10	33.2/37.2	618	1475

REGISTERED CIVIL ENGINEER 4-17-12 DATE

6-10-13
PLANS APPROVAL DATE

REGISTERED PROFESSIONAL ENGINEER MOHAMED GHANNOUM No. 72051 Exp 6/30/14 CIVIL STATE OF CALIFORNIA

THE STATE OF CALIFORNIA OR ITS OFFICERS OR AGENTS SHALL NOT BE RESPONSIBLE FOR THE ACCURACY OR COMPLETENESS OF SCANNED COPIES OF THIS PLAN SHEET.

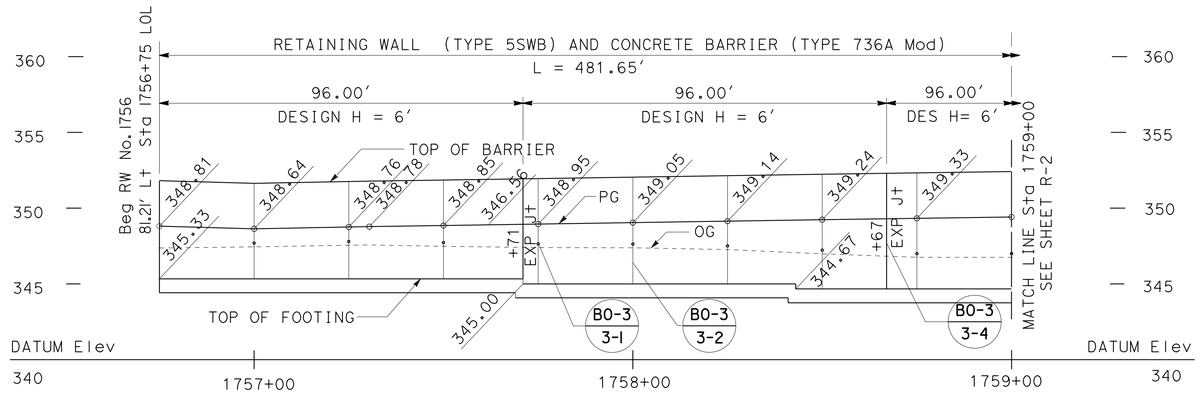

ELEVATION

SCALE: Horiz 1" = 20'
Vert 1" = 5'

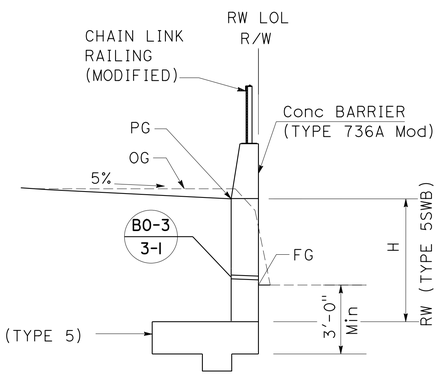

RW No. 1756 LOL, Sta 1756+75 TO 1761+56.65

TYPICAL SECTION

NO SCALE

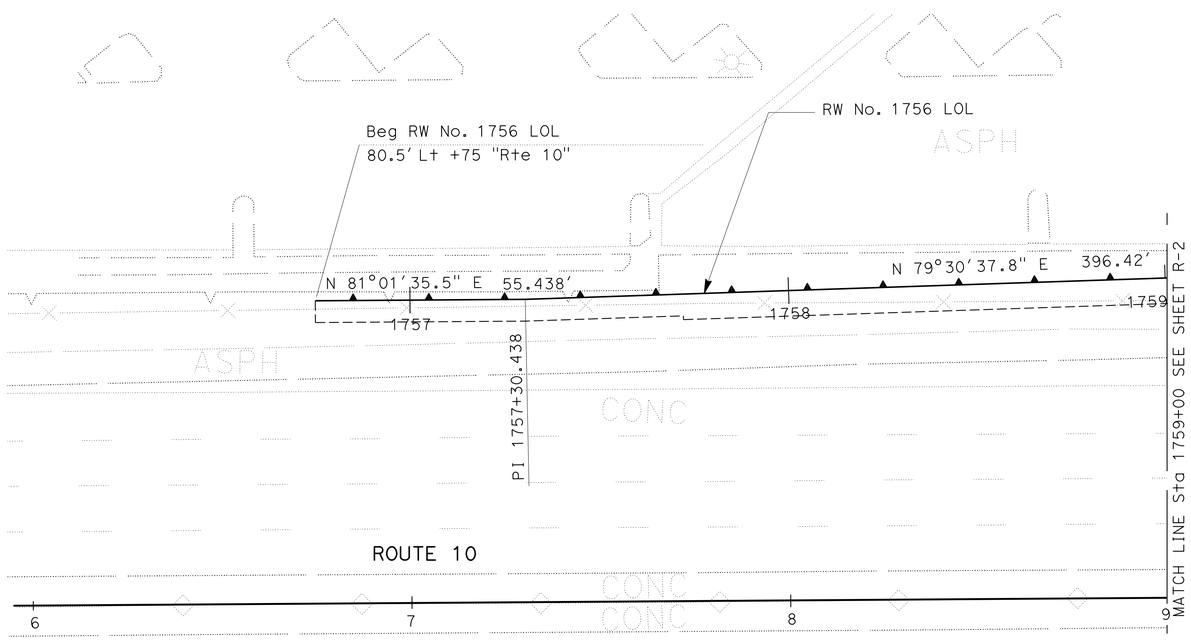

PLAN

SCALE: 1" = 20'

RETAINING WALL PLAN

RETAINING WALL No. 1756

SCALE AS SHOWN

R-1

APPROVED FOR RETAINING WALL WORK ONLY

STATE OF CALIFORNIA - DEPARTMENT OF TRANSPORTATION
Caltrans® OFFICE OF DESIGN D

FUNCTIONAL SUPERVISOR: NADER GOBRAN
CALCULATED-DESIGNED BY: ARTURO LAO
CHECKED BY: NEIL LIANG
REVISED BY
DATE REVISED

LAST REVISION 00-00-00
DATE PLOTTED => 12-JUN-2013
TIME PLOTTED => 19:28

Dist	COUNTY	ROUTE	POST MILES TOTAL PROJECT	SHEET No.	TOTAL SHEETS
07	LA	10	33.2/37.2	619	1475

4-17-12
REGISTERED CIVIL ENGINEER DATE

6-10-13
PLANS APPROVAL DATE

REGISTERED PROFESSIONAL ENGINEER
MOHAMED GHANNOUM
No. C72051
Exp. 06/30/14
CIVIL
STATE OF CALIFORNIA

THE STATE OF CALIFORNIA OR ITS OFFICERS OR AGENTS SHALL NOT BE RESPONSIBLE FOR THE ACCURACY OR COMPLETENESS OF SCANNED COPIES OF THIS PLAN SHEET.

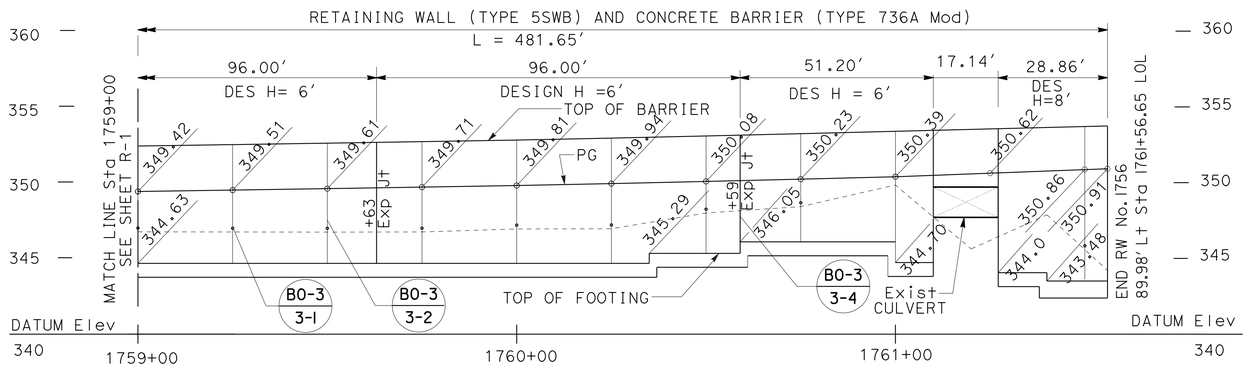

ELEVATION

SCALE: Horiz 1" = 20'
Vert 1" = 5'

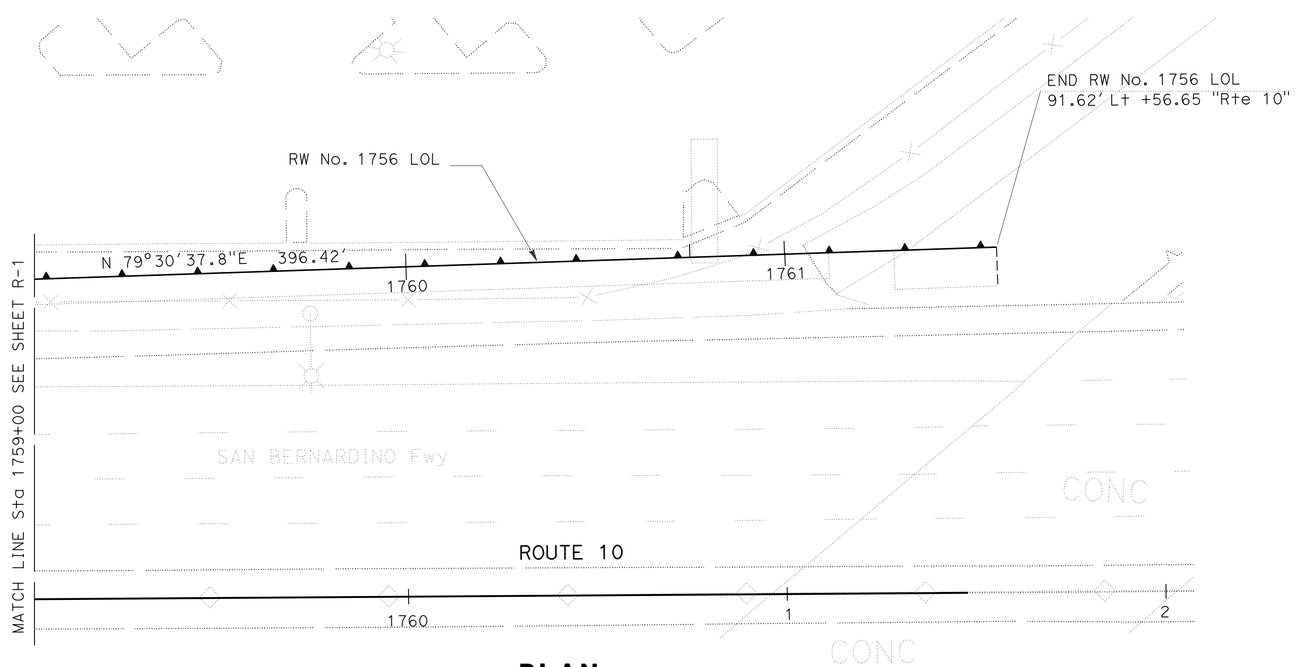

PLAN

SCALE: 1" = 20'

APPROVED FOR RETAINING WALL WORK ONLY

RETAINING WALL PLAN

RETAINING WALL No. 1756

SCALE AS SHOWN

R-2

STATE OF CALIFORNIA - DEPARTMENT OF TRANSPORTATION
Caltrans® OFFICE OF DESIGN D

FUNCTIONAL SUPERVISOR: NADER GOBRAN
CALCULATED-DESIGNED BY: JEROME ARABE
CHECKED BY:
REVISED BY:
DATE REVISED:
ARTURO LAO

LAST REVISION 00-00-00
DATE PLOTTED => 12-JUN-2013
TIME PLOTTED => 19:28

Dist	COUNTY	ROUTE	POST MILES TOTAL PROJECT	SHEET No.	TOTAL SHEETS
07	LA	10	33.2/37.2	620	1475

REGISTERED CIVIL ENGINEER 4-17-12 DATE

6-10-13
PLANS APPROVAL DATE

REGISTERED PROFESSIONAL ENGINEER MOHAMED GHANNOUM No. C72051 Exp. 6/30/14 CIVIL STATE OF CALIFORNIA

THE STATE OF CALIFORNIA OR ITS OFFICERS OR AGENTS SHALL NOT BE RESPONSIBLE FOR THE ACCURACY OR COMPLETENESS OF SCANNED COPIES OF THIS PLAN SHEET.

NOTES:

1. FOR DETAILS NOT SHOWN, SEE STANDARD PLAN B3-9.
2. FOR DETAILS NOT SHOWN, SEE STANDARD PLAN BO-3 (BRIDGE DETAIL 3-1)

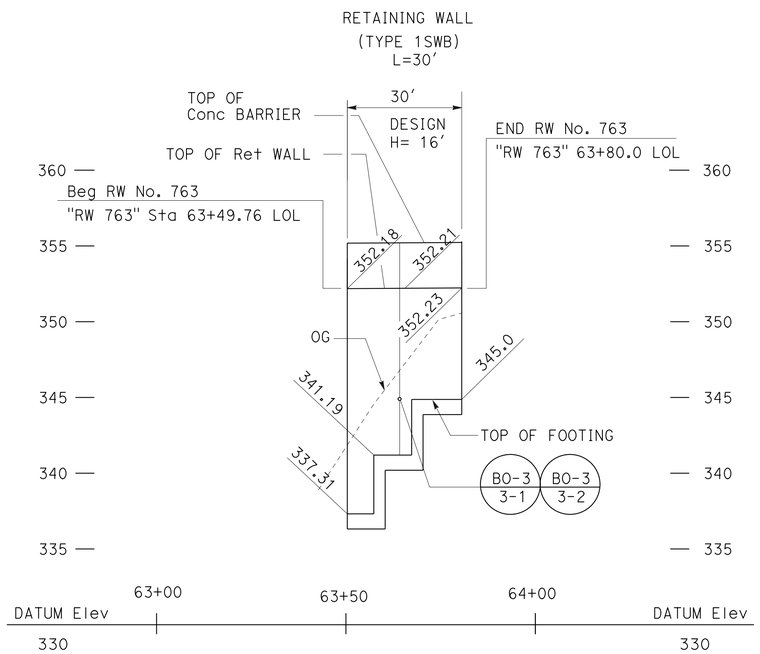

ELEVATION

SCALE: Horiz 1" = 20'
Vert 1" = 5'

INTERMEDIATE WALL DRAIN LOCATIONS

Sta 63+63.59

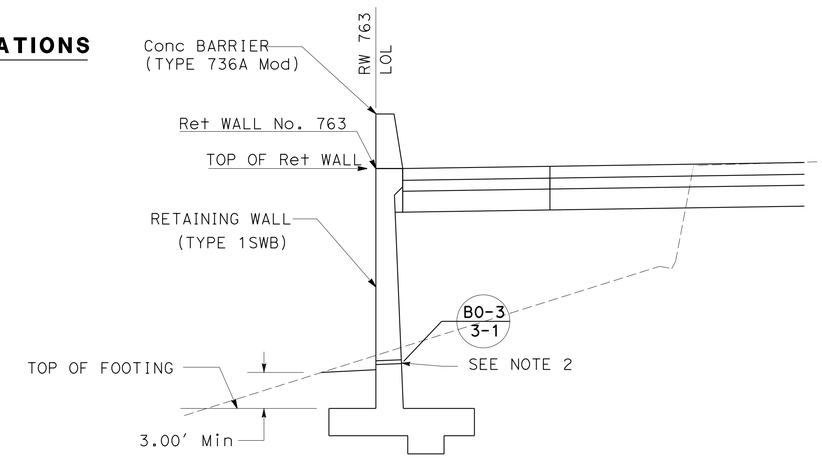

RW No. 763 LOL, Sta 63+49.76 TO 63+80

TYPICAL SECTION

NO SCALE

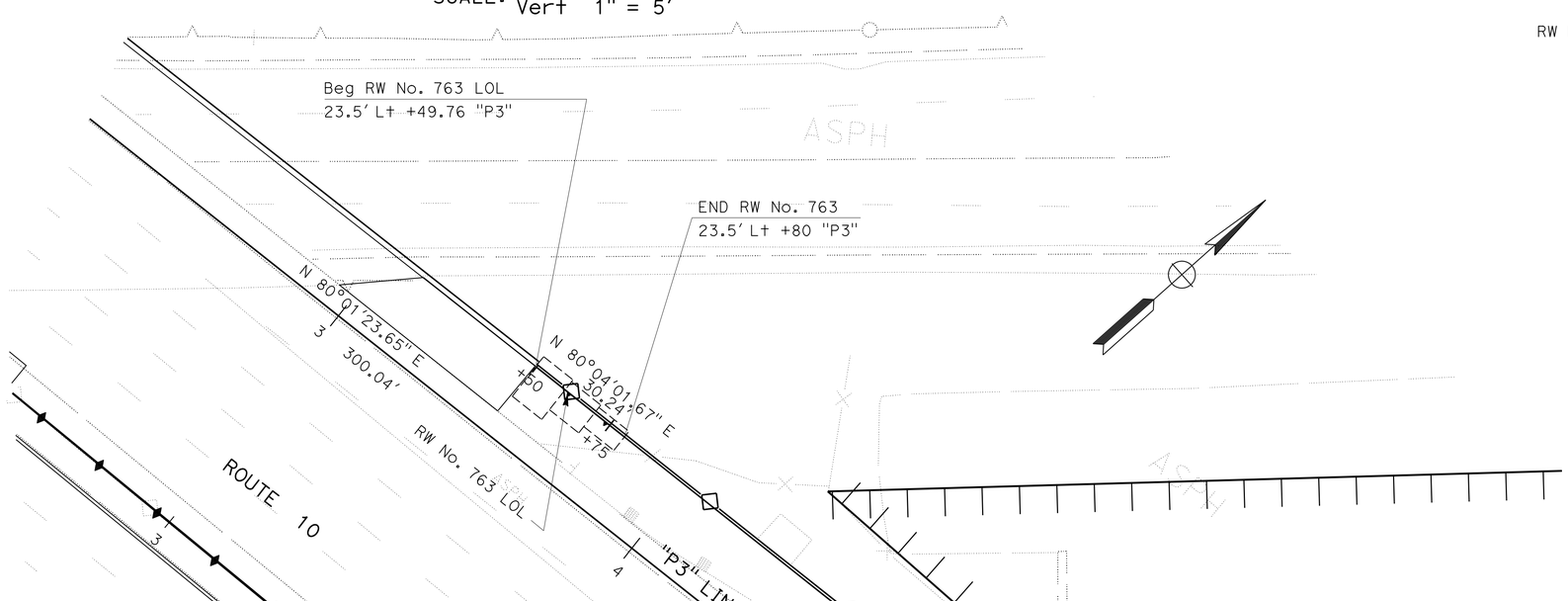

PLAN

SCALE: 1" = 20'

APPROVED FOR RETAINING WALL WORK ONLY

RETAINING WALL PLAN

RETAINING WALL No. 763

SCALE AS SHOWN

R-3

STATE OF CALIFORNIA - DEPARTMENT OF TRANSPORTATION
Caltrans® OFFICE OF DESIGN D

FUNCTIONAL SUPERVISOR: NADER GOBRAN
CALCULATED-DESIGNED BY: ARTURO LAO
CHECKED BY: MOHAMED GHANNOUM
REVISED BY
DATE REVISED

LAST REVISION 00-00-00
DATE PLOTTED => 12-JUN-2013
TIME PLOTTED => 19:28

Dist	COUNTY	ROUTE	POST MILES TOTAL PROJECT	SHEET No.	TOTAL SHEETS
07	LA	10	33.2/37.2	621	1475

4-17-12
REGISTERED CIVIL ENGINEER DATE

6-10-13
PLANS APPROVAL DATE

REGISTERED PROFESSIONAL ENGINEER
MOHAMED GHANNOUM
No. C72051
Exp. 6/30/14
CIVIL
STATE OF CALIFORNIA

THE STATE OF CALIFORNIA OR ITS OFFICERS OR AGENTS SHALL NOT BE RESPONSIBLE FOR THE ACCURACY OR COMPLETENESS OF SCANNED COPIES OF THIS PLAN SHEET.

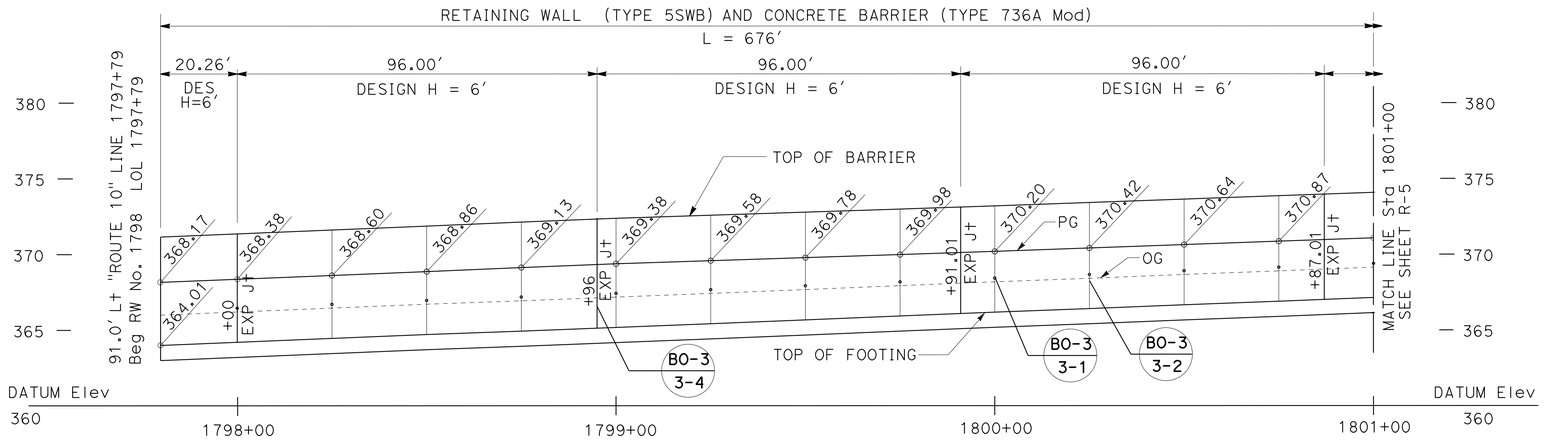

ELEVATION

SCALE: Horiz 1" = 20'
Vert 1" = 5'

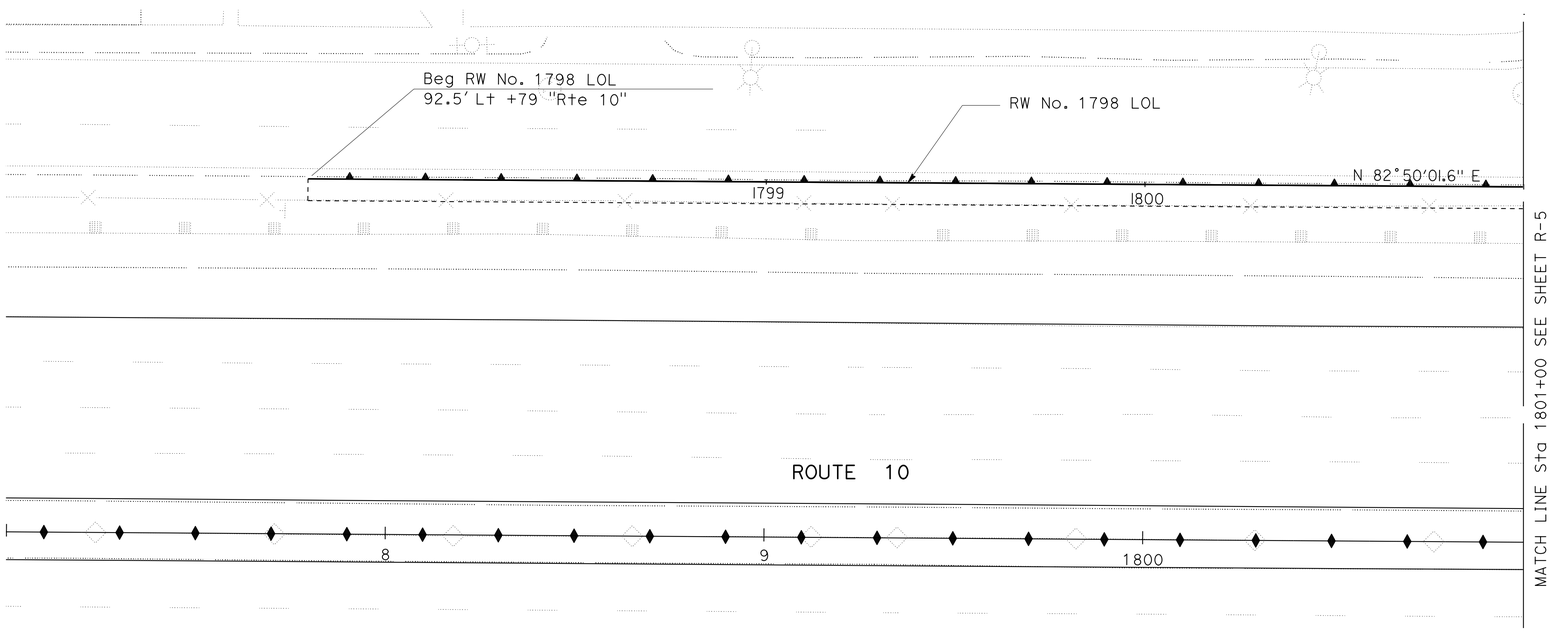

PLAN

SCALE: 1" = 20'

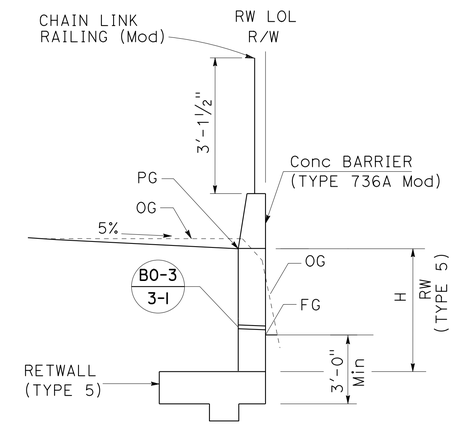

RW No. 1798 LOL, Sta 1797+79 TO 1804+55

TYPICAL SECTION

NO SCALE

RETAINING WALL PLAN

RETAINING WALL No. 1798

SCALE AS SHOWN

APPROVED FOR RETAINING WALL WORK ONLY

R-4

STATE OF CALIFORNIA - DEPARTMENT OF TRANSPORTATION
Caltrans OFFICE OF DESIGN D

FUNCTIONAL SUPERVISOR: NADER GOBRAN
CALCULATED-DESIGNED BY: ARTURO LAO
CHECKED BY: JEROME G. ARABE
REVISED BY
DATE REVISED

LAST REVISION 00-00-00
DATE PLOTTED => 27-JUN-2013
TIME PLOTTED => 12:31

Dist	COUNTY	ROUTE	POST MILES TOTAL PROJECT	SHEET No.	TOTAL SHEETS
07	LA	10	33.2/37.2	622	1475

4-17-12
REGISTERED CIVIL ENGINEER DATE

6-10-13
PLANS APPROVAL DATE

REGISTERED PROFESSIONAL ENGINEER
MOHAMED GHANNOUM
No. C72051
Exp. 6/30/14
CIVIL
STATE OF CALIFORNIA

THE STATE OF CALIFORNIA OR ITS OFFICERS OR AGENTS SHALL NOT BE RESPONSIBLE FOR THE ACCURACY OR COMPLETENESS OF SCANNED COPIES OF THIS PLAN SHEET.

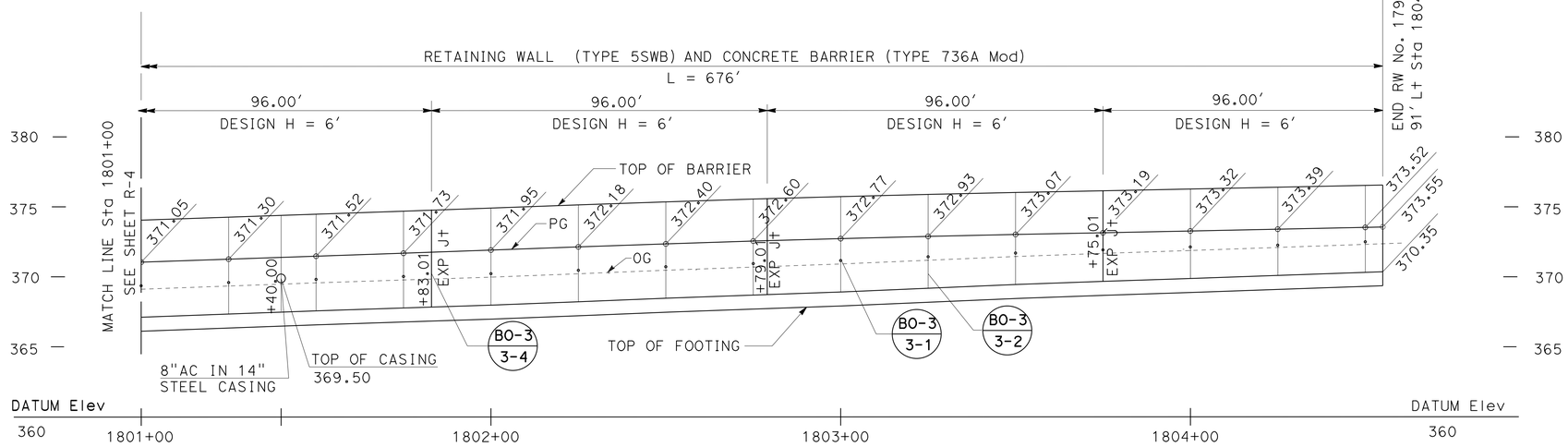

ELEVATION

SCALE: Horiz 1" = 20'
Vert 1" = 5'

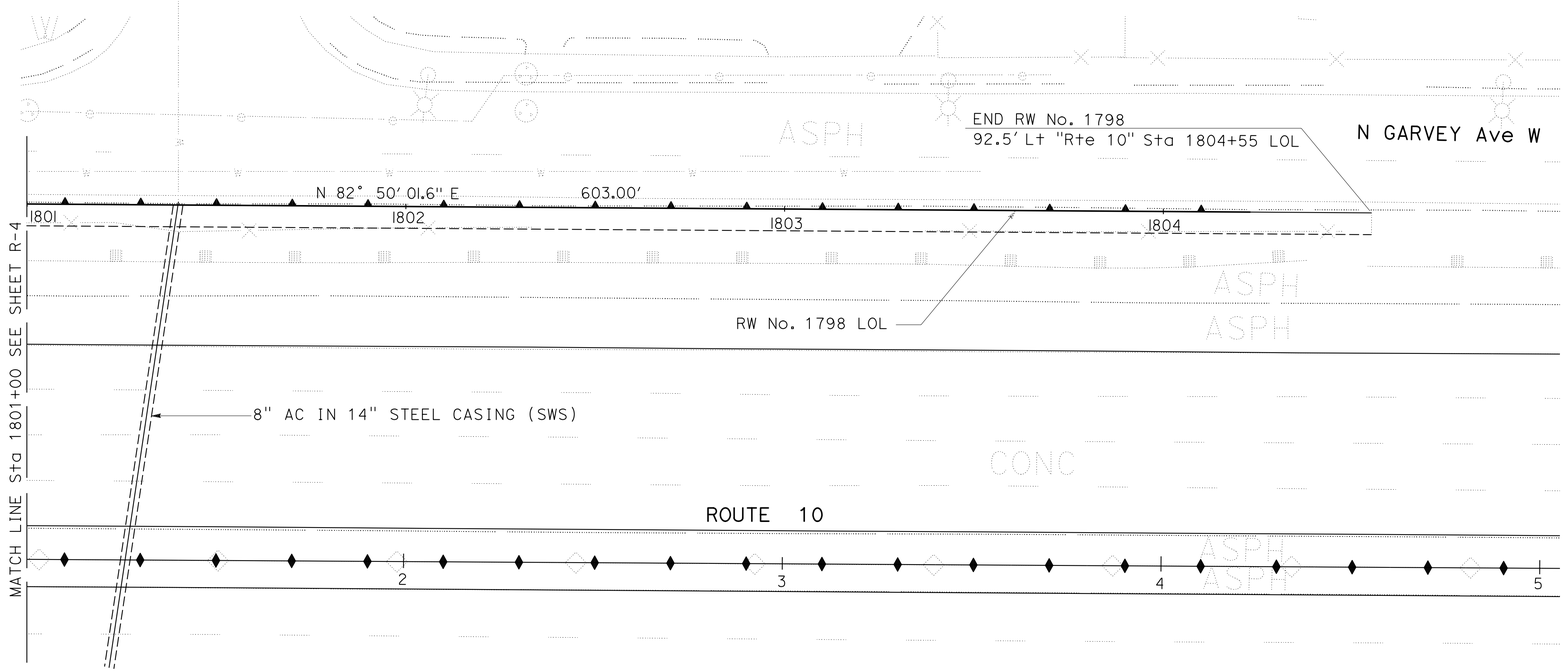

PLAN

SCALE: 1" = 20'

APPROVED FOR RETAINING WALL WORK ONLY

RETAINING WALL PLAN

RETAINING WALL No. 1798

SCALE AS SHOWN

R-5

STATE OF CALIFORNIA - DEPARTMENT OF TRANSPORTATION
Caltrans® OFFICE OF DESIGN D

FUNCTIONAL SUPERVISOR: NADER GOBRAN
CALCULATED-DESIGNED BY: ARTURO LAO
CHECKED BY: JEROME G. ARABE
REVISED BY
DATE REVISED

LAST REVISION 00-00-00
DATE PLOTTED => 12-JUN-2013
TIME PLOTTED => 19:36

Dist	COUNTY	ROUTE	POST MILES TOTAL PROJECT	SHEET No.	TOTAL SHEETS
07	LA	10	33.2/37.2	623	1475

REGISTERED CIVIL ENGINEER 4-17-12 DATE

6-10-13
PLANS APPROVAL DATE

REGISTERED PROFESSIONAL ENGINEER MOHAMED GHANNOUM No. C72051 Exp. 6/30/14 CIVIL STATE OF CALIFORNIA

THE STATE OF CALIFORNIA OR ITS OFFICERS OR AGENTS SHALL NOT BE RESPONSIBLE FOR THE ACCURACY OR COMPLETENESS OF SCANNED COPIES OF THIS PLAN SHEET.

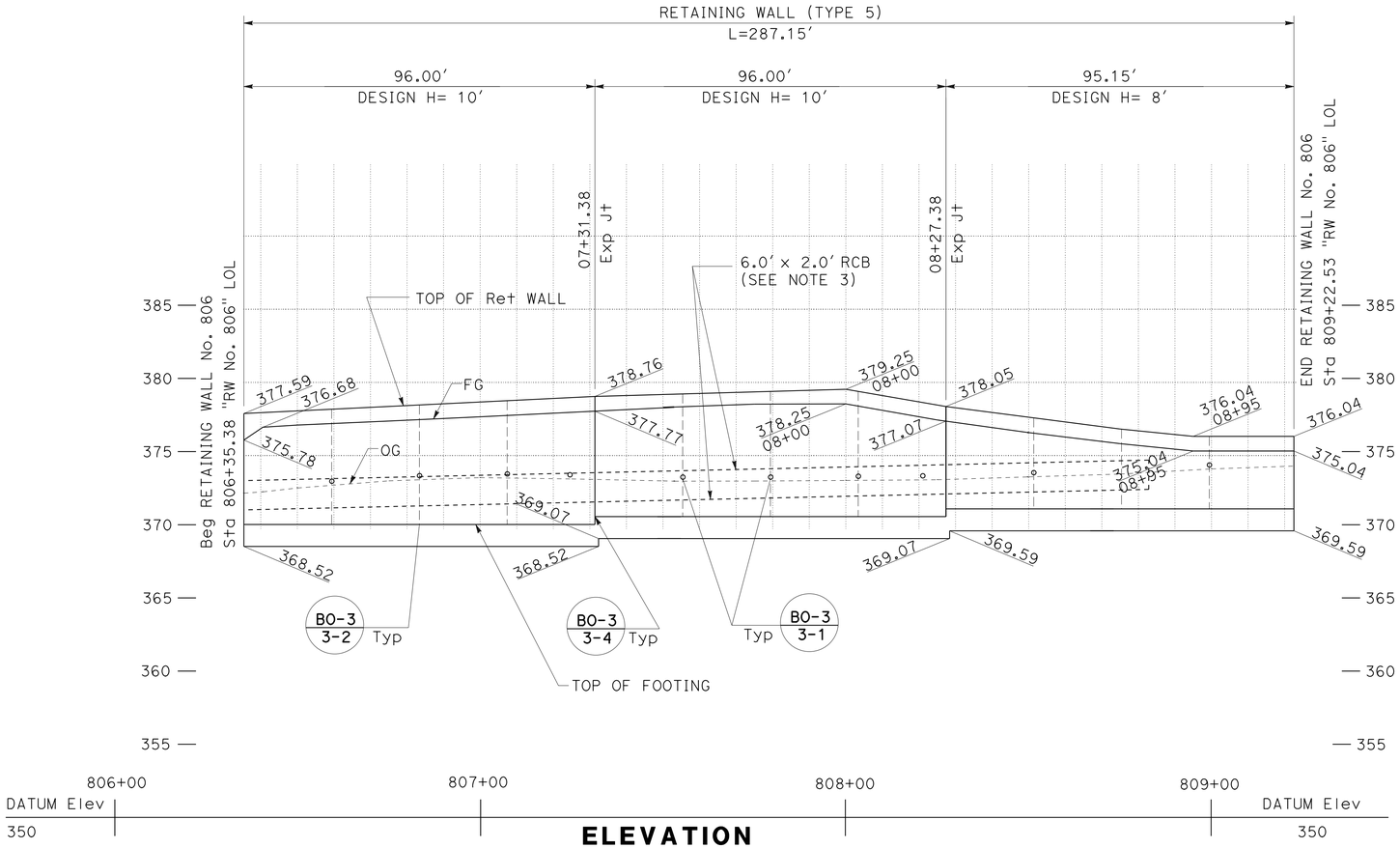

ELEVATION

SCALE: Horiz 1" = 20'
Vert 1" = 5'

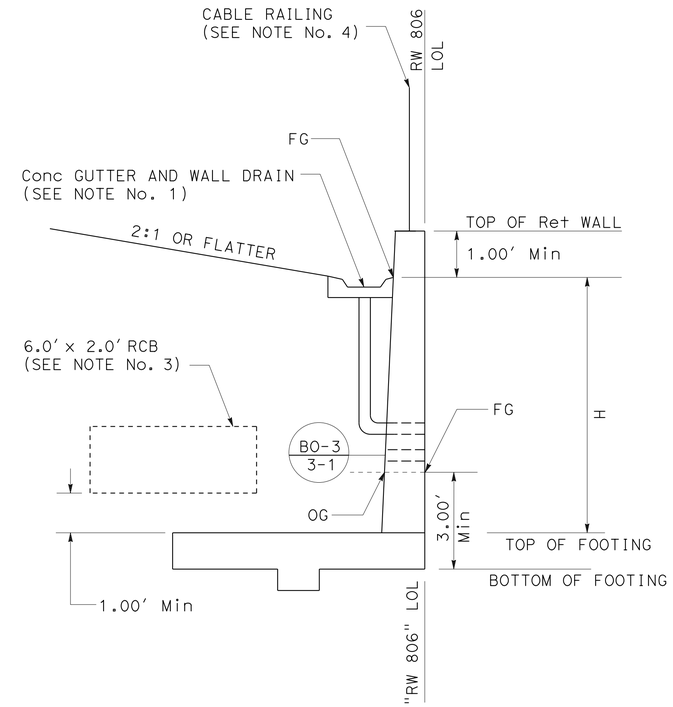

Sta 806+35.38 "RW 806" LOL TO 809+20.00

TYPICAL SECTION

NO SCALE

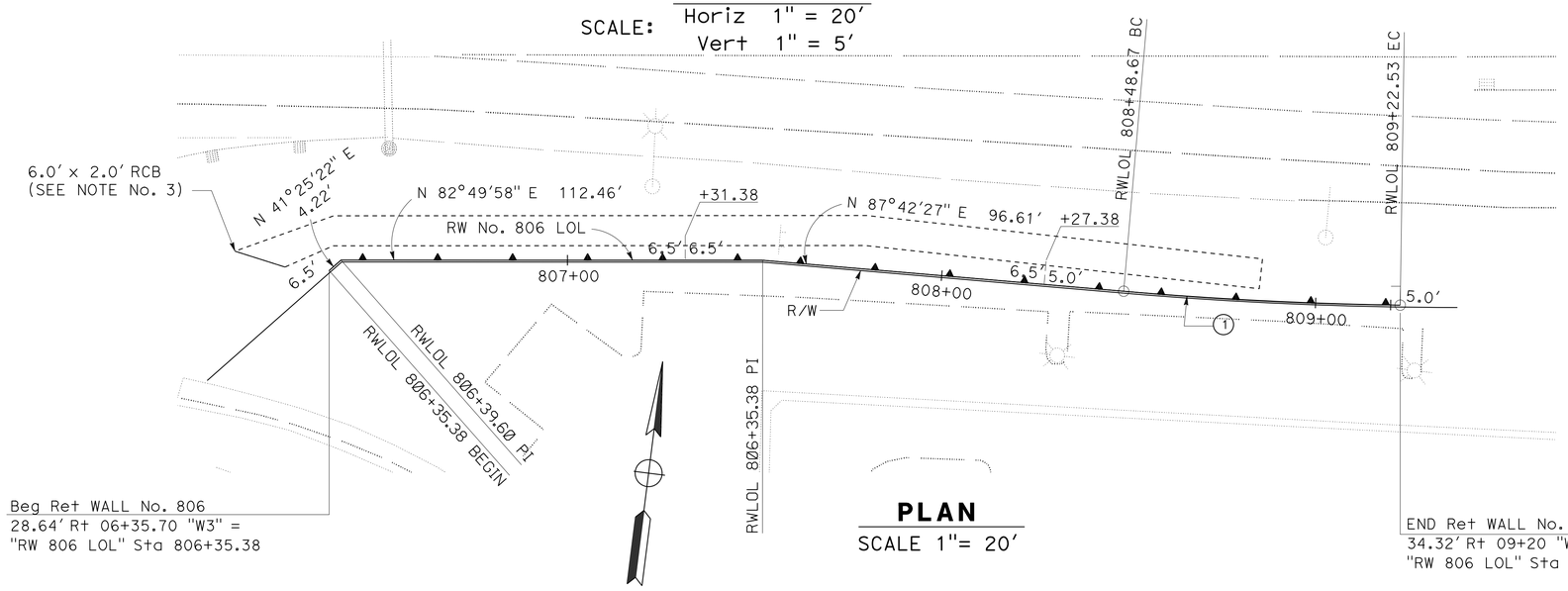

PLAN

SCALE 1"= 20'

NOTES:

1. FOR DETAILS NOT SHOWN, SEE STANDARD PLAN B3-9.
2. FOR DETAILS NOT SHOWN, SEE STANDARD PLAN BO-3 (BRIDGE DETAIL 3-1)
3. FOR DETAILS NOT SHOWN, SEE PLAN SHEETS D-4 AND DP-3.
4. FOR DETAILS NOT SHOWN, SEE STANDARD PLAN B11-47

CURVE DATA

No.	R	Δ	T	L
1	1047.10'	4°2'30"	36.95'	73.86'

RETAINING WALL PLAN

RETAINING WALL No. 806

SCALE AS SHOWN

R-6

APPROVED FOR RETAINING WALL WORK ONLY

STATE OF CALIFORNIA - DEPARTMENT OF TRANSPORTATION
Caltrans OFFICE OF DESIGN B

FUNCTIONAL SUPERVISOR: NADER GOBRAN
CALCULATED-DESIGNED BY: NEIL LIANG
CHECKED BY: NADER GOBRAN
REVISED BY
DATE REVISED

LAST REVISION 00-00-00
DATE PLOTTED => 12-JUN-2013
TIME PLOTTED => 19:36

Dist	COUNTY	ROUTE	POST MILES TOTAL PROJECT	SHEET No.	TOTAL SHEETS
07	LA	10	33.2/37.2	624	1475

REGISTERED CIVIL ENGINEER 4-17-12 DATE

6-10-13
PLANS APPROVAL DATE

REGISTERED PROFESSIONAL ENGINEER MOHAMED GHANNOUM No. C72051 Exp. 06/30/14 CIVIL STATE OF CALIFORNIA

THE STATE OF CALIFORNIA OR ITS OFFICERS OR AGENTS SHALL NOT BE RESPONSIBLE FOR THE ACCURACY OR COMPLETENESS OF SCANNED COPIES OF THIS PLAN SHEET.

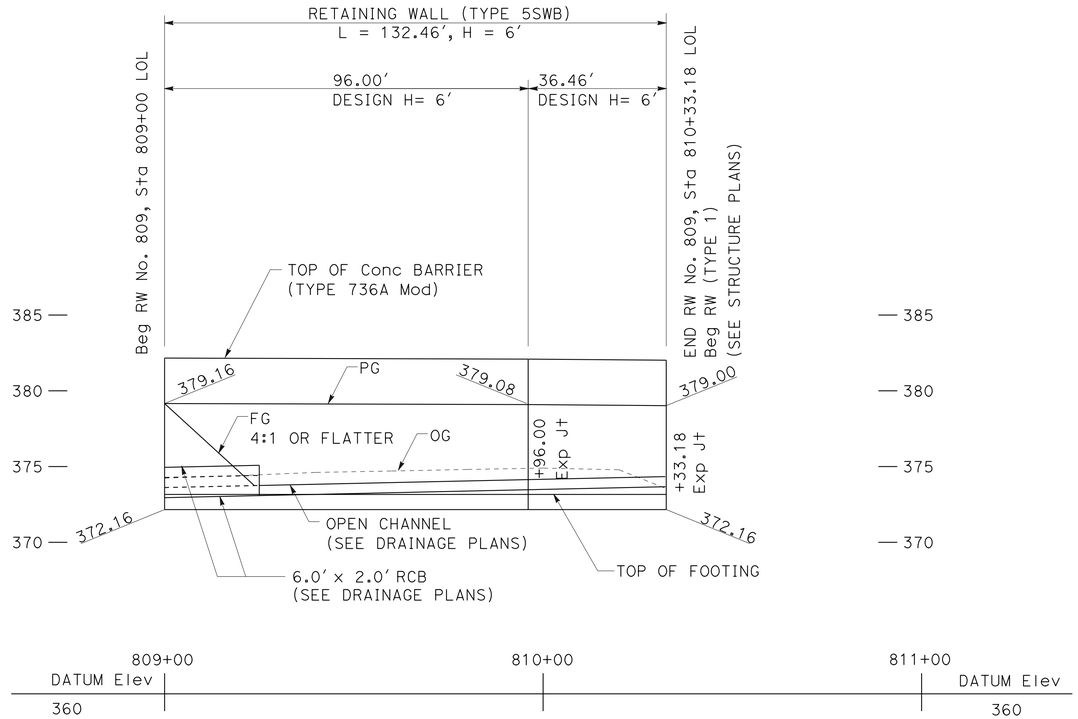

ELEVATION

SCALE: Horiz 1" = 20'
Vert 1" = 5'

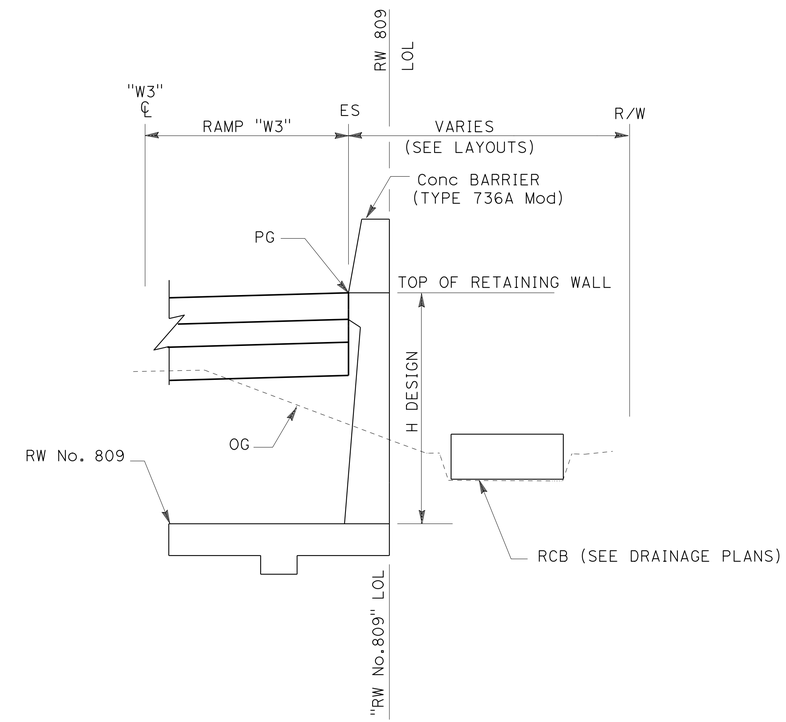

RW No. 809 LOL, Sta 809+00 TO 810+32.46

TYPICAL SECTION

NO SCALE

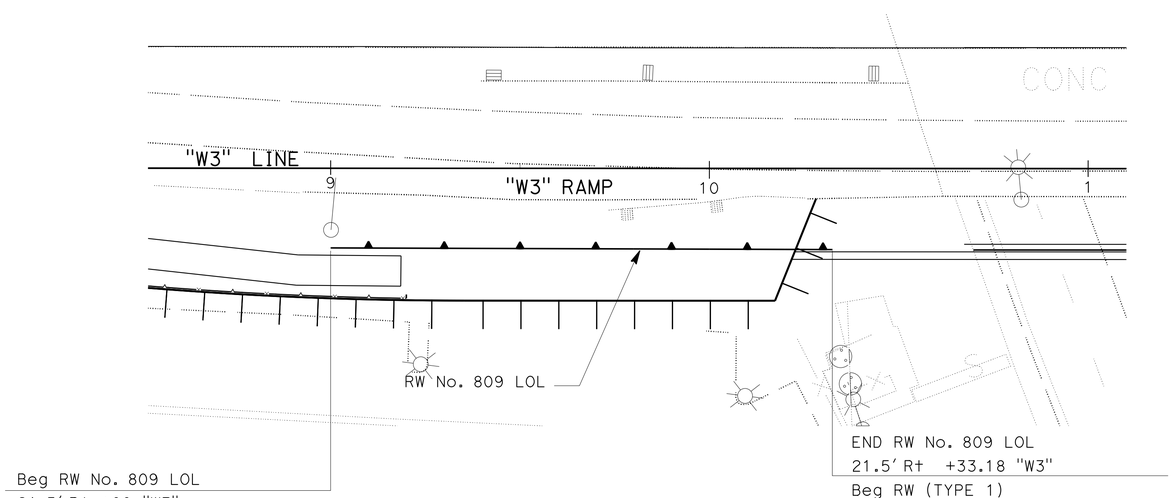

PLAN

SCALE: 1" = 20'

RETAINING WALL PLAN

RETAINING WALL No. 809

SCALE AS SHOWN

R-7

APPROVED FOR RETAINING WALL WORK ONLY

STATE OF CALIFORNIA - DEPARTMENT OF TRANSPORTATION
Caltrans® OFFICE OF DESIGN D

FUNCTIONAL SUPERVISOR: NADER GOBRAN
CALCULATED-DESIGNED BY: JEROME G. ARABE
CHECKED BY: JEROME G. ARABE
REVISED BY
DATE REVISED

LAST REVISION 00-00-00
DATE PLOTTED => 12-JUN-2013
TIME PLOTTED => 19:36

Dist	COUNTY	ROUTE	POST MILES TOTAL PROJECT	SHEET No.	TOTAL SHEETS
07	LA	10	33.2/37.2	625	1475

REGISTERED CIVIL ENGINEER 4-17-12 DATE

6-10-13
PLANS APPROVAL DATE

REGISTERED PROFESSIONAL ENGINEER
MOHAMED GHANNOUM
No. C72051
Exp. 06/30/14
CIVIL
STATE OF CALIFORNIA

THE STATE OF CALIFORNIA OR ITS OFFICERS OR AGENTS SHALL NOT BE RESPONSIBLE FOR THE ACCURACY OR COMPLETENESS OF SCANNED COPIES OF THIS PLAN SHEET.

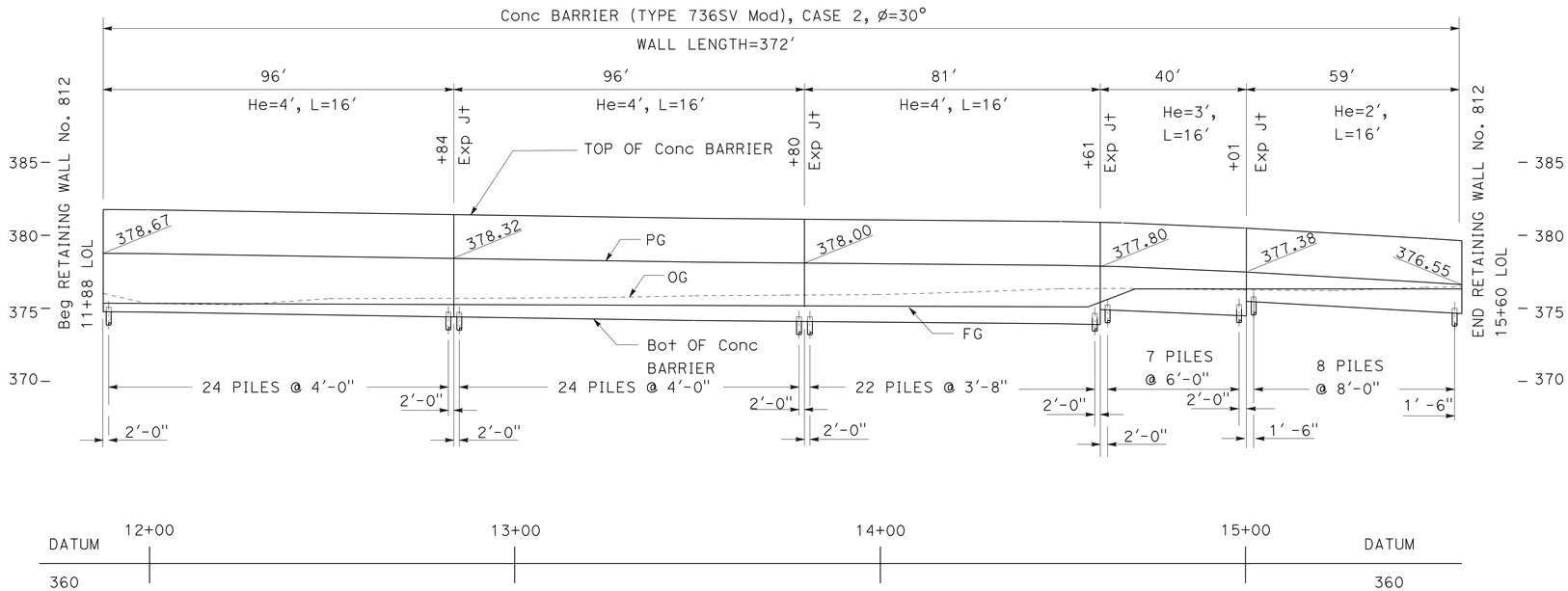

ELEVATION

SCALE: Horiz 1" = 20'
Vert 1" = 5'

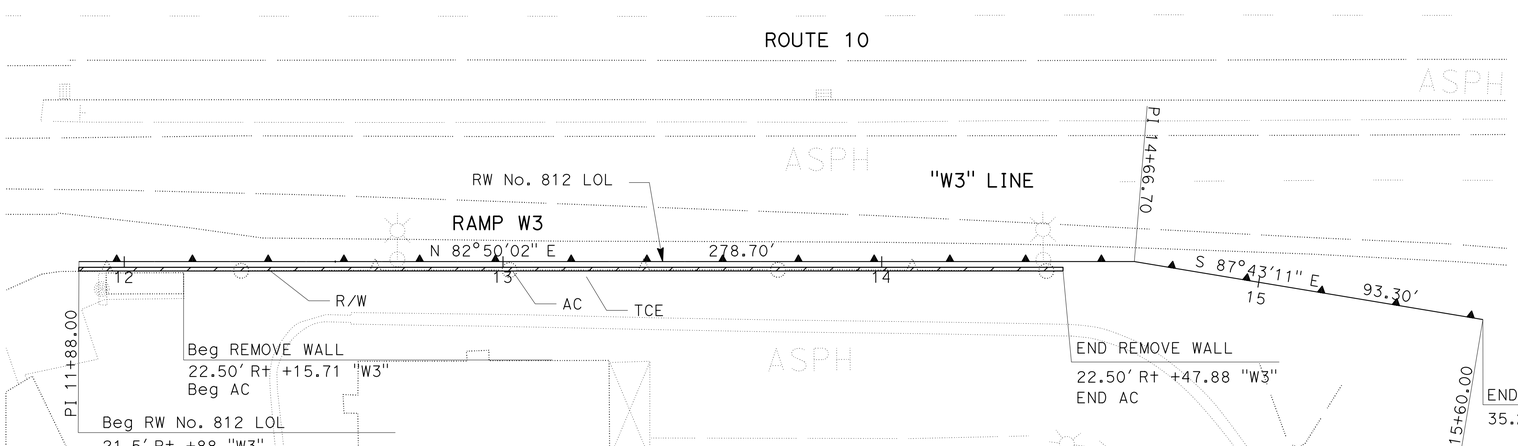

PLAN

SCALE: 1" = 20'

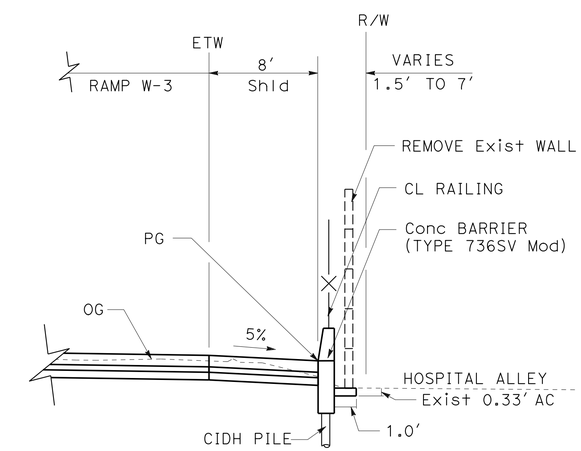

CONCRETE BARRIER (TYPE 736SV Mod) (CASE 2)

TYPICAL SECTION

NO SCALE

APPROVED FOR RETAINING WALL WORK ONLY

RETAINING WALL PLAN

RETAINING WALL No. 812

SCALE AS SHOWN

R-8

REVISED BY | DATE REVISED
JEROME G. ARABE | JEROME G. ARABE
CALCULATED-DESIGNED BY | CHECKED BY
FUNCTIONAL SUPERVISOR
NADER GOBRAN

STATE OF CALIFORNIA - DEPARTMENT OF TRANSPORTATION
Caltrans OFFICE OF DESIGN D

LAST REVISION 00-00-00 | DATE PLOTTED => 12-JUN-2013 | TIME PLOTTED => 19:36

Dist	COUNTY	ROUTE	POST MILES TOTAL PROJECT	SHEET No.	TOTAL SHEETS
07	LA	10	33.2/37.2	626	1475

REGISTERED CIVIL ENGINEER 4-17-12 DATE

6-10-13
PLANS APPROVAL DATE

REGISTERED PROFESSIONAL ENGINEER MOHAMED GHANNOUM No. 72051 Exp. 06/30/14 CIVIL STATE OF CALIFORNIA

THE STATE OF CALIFORNIA OR ITS OFFICERS OR AGENTS SHALL NOT BE RESPONSIBLE FOR THE ACCURACY OR COMPLETENESS OF SCANNED COPIES OF THIS PLAN SHEET.

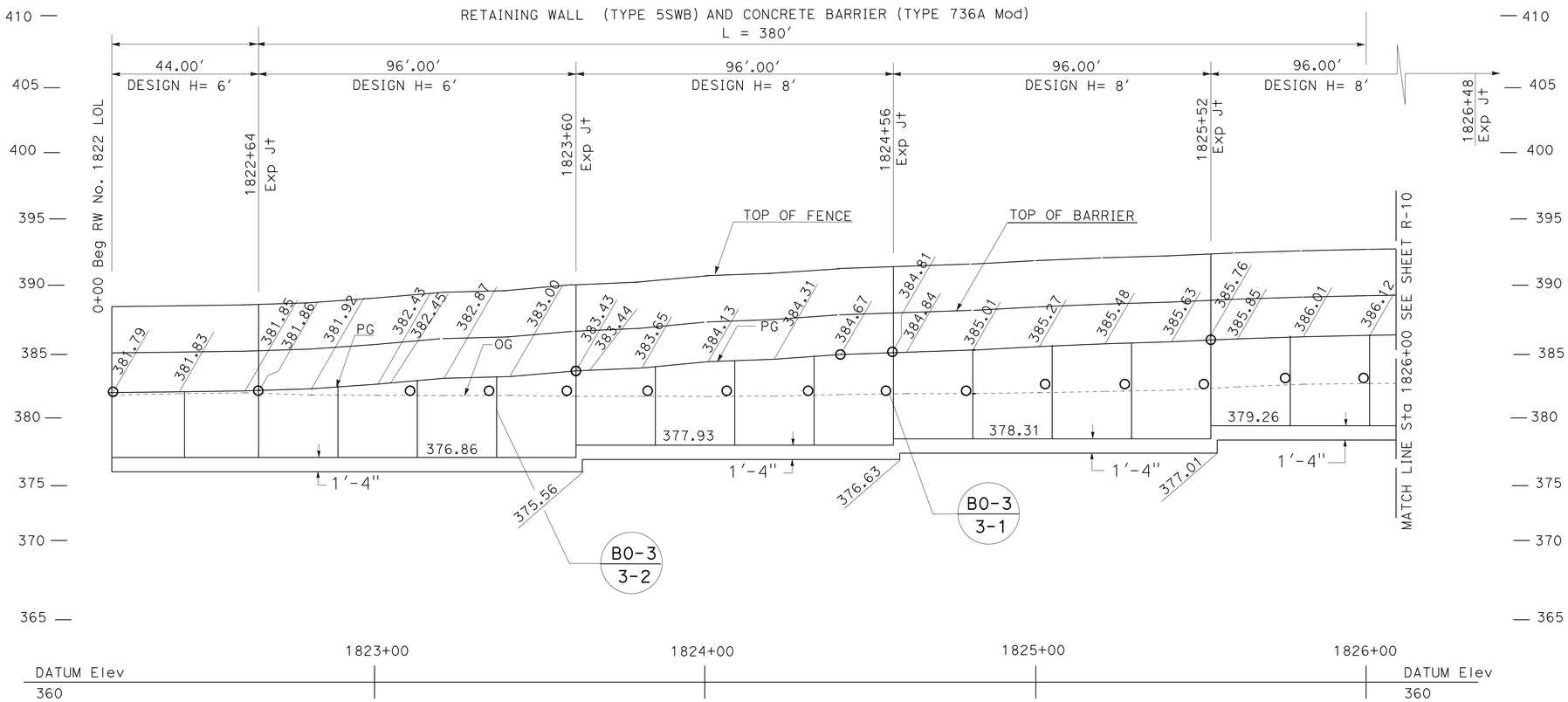

ELEVATION

SCALE: Horiz 1" = 20'
Vert 1" = 5'

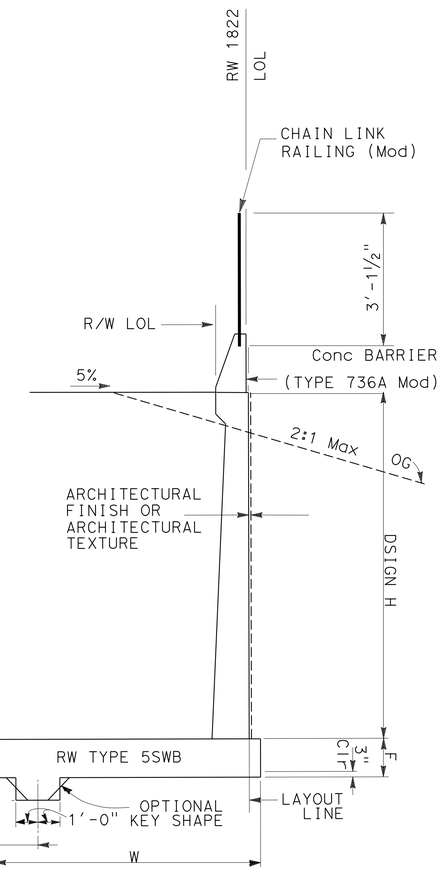

Sta 1822+20 TO 1832+17

TYPICAL SECTION

NO SCALE

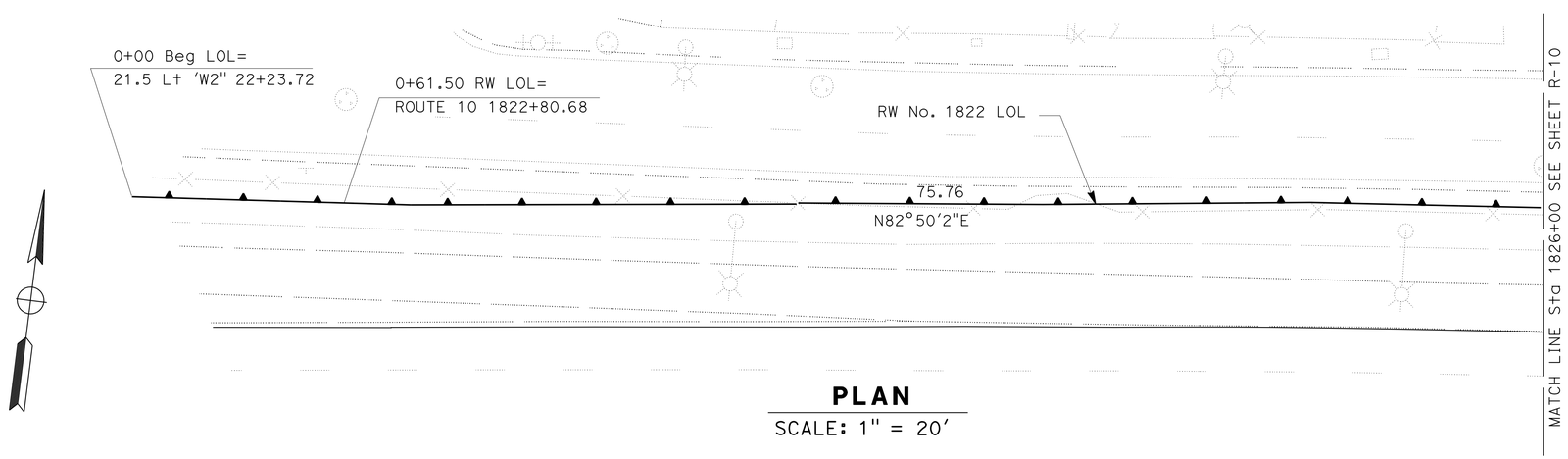

PLAN

SCALE: 1" = 20'

APPROVED FOR RETAINING WALL WORK ONLY

RETAINING WALL PLAN

RETAINING WALL No. 1822

SCALE AS SHOWN

R-9

STATE OF CALIFORNIA - DEPARTMENT OF TRANSPORTATION
Caltrans® OFFICE OF DESIGN D

FUNCTIONAL SUPERVISOR: NADER GOBRAM
CALCULATED-DESIGNED BY: MOHAMED GHANNOUM
CHECKED BY: NEIL LIANG
REVISED BY
DATE REVISED

LAST REVISION 00-00-00
DATE PLOTTED => 12-JUN-2013
TIME PLOTTED => 19:36

Dist	COUNTY	ROUTE	POST MILES TOTAL PROJECT	SHEET No.	TOTAL SHEETS
07	LA	10	33.2/37.2	627	1475

REGISTERED CIVIL ENGINEER 4-17-12 DATE

6-10-13
PLANS APPROVAL DATE

REGISTERED PROFESSIONAL ENGINEER MOHAMED GHANNOUM No. 72051 Exp. 6/30/14 CIVIL STATE OF CALIFORNIA

THE STATE OF CALIFORNIA OR ITS OFFICERS OR AGENTS SHALL NOT BE RESPONSIBLE FOR THE ACCURACY OR COMPLETENESS OF SCANNED COPIES OF THIS PLAN SHEET.

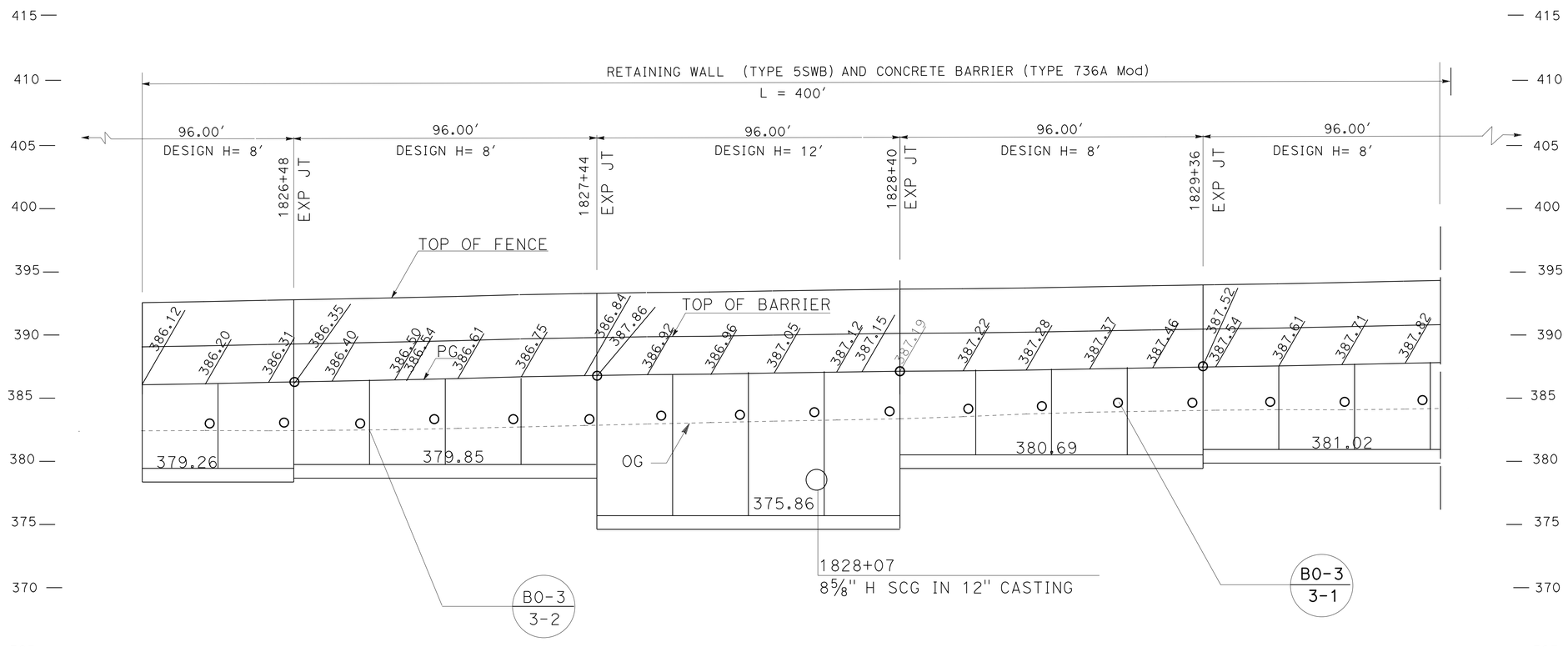

ELEVATION

SCALE: Horiz 1" = 20'
Vert 1" = 5'

NOTE:
RETAINING WALL OPENING B3-9

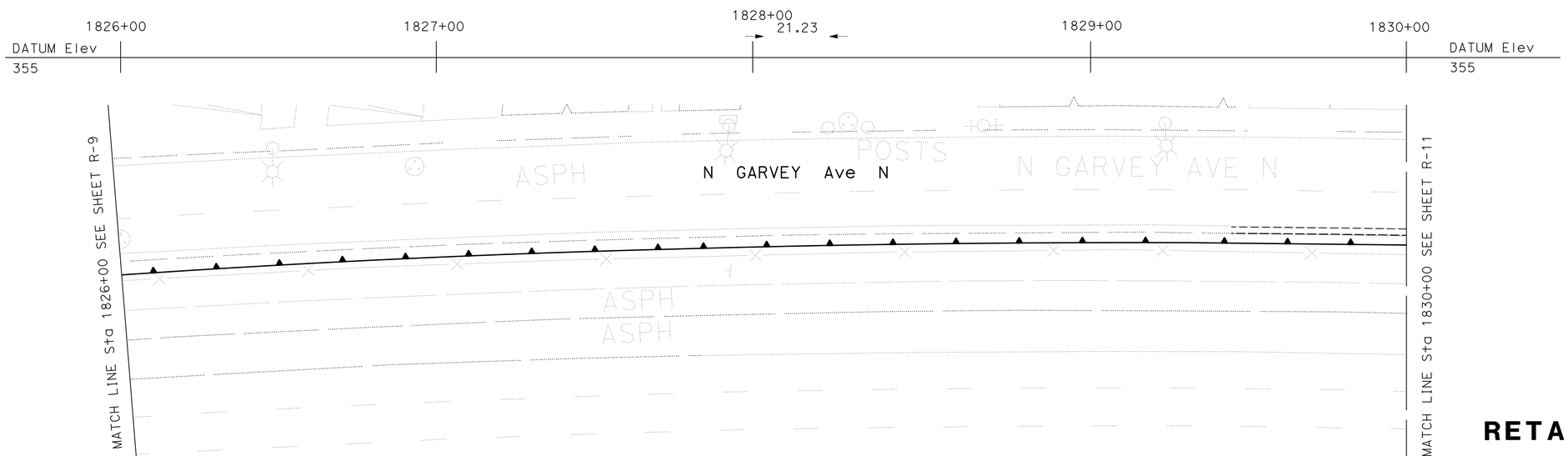

PLAN

SCALE: 1" = 20'

APPROVED FOR RETAINING WALL WORK ONLY

RETAINING WALL PLAN

RETAINING WALL No. 1822

SCALE AS SHOWN

R-10

REVISED BY	DATE REVISED

MAHINDA RAM
NEIL LIANG

CALCULATED-DESIGNED BY
CHECKED BY

FUNCTIONAL SUPERVISOR
NADER GOBRAN

STATE OF CALIFORNIA - DEPARTMENT OF TRANSPORTATION
Caltrans
OFFICE OFFICE DESIGN D

LAST REVISION 00-00-00
DATE PLOTTED => 12-JUN-2013
TIME PLOTTED => 19:36

Dist	COUNTY	ROUTE	POST MILES TOTAL PROJECT	SHEET No.	TOTAL SHEETS
07	LA	10	33.2/37.2	628	1475

REGISTERED CIVIL ENGINEER 4-17-12 DATE

6-10-13
PLANS APPROVAL DATE

REGISTERED PROFESSIONAL ENGINEER MOHAMED GHANNOUM No. 72051 Exp. 6/30/14 CIVIL STATE OF CALIFORNIA

THE STATE OF CALIFORNIA OR ITS OFFICERS OR AGENTS SHALL NOT BE RESPONSIBLE FOR THE ACCURACY OR COMPLETENESS OF SCANNED COPIES OF THIS PLAN SHEET.

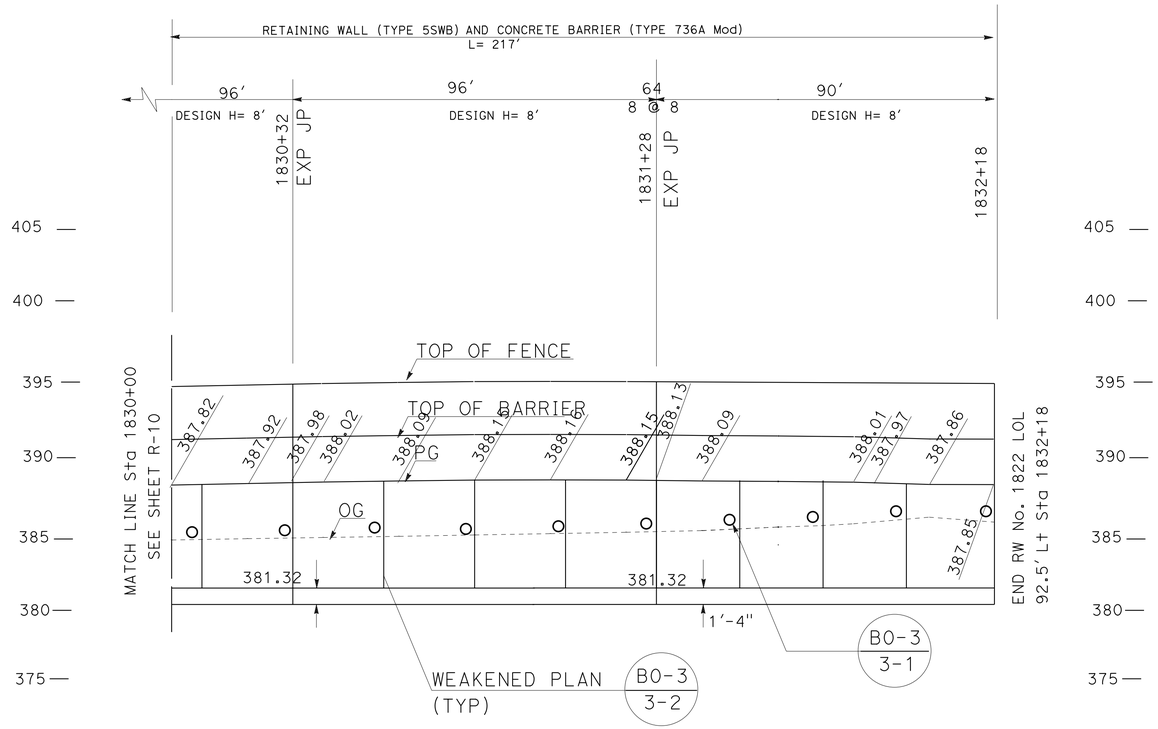

ELEVATION

SCALE: Horiz 1" = 20'
Vert 1" = 5'

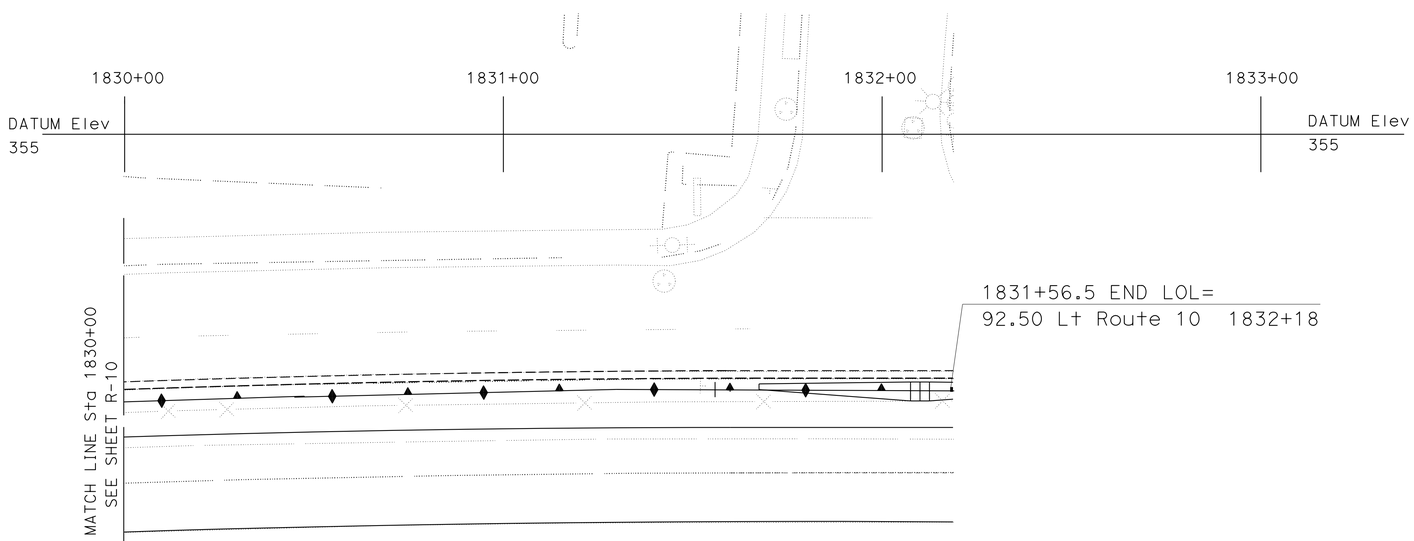

PLAN

SCALE: 1" = 20'

APPROVED FOR RETAINING WALL WORK ONLY

RETAINING WALL PLAN

RETAINING WALL No.1822

SCALE AS SHOWN **R-11**

STATE OF CALIFORNIA - DEPARTMENT OF TRANSPORTATION
Caltrans
OFFICE OF DESIGN D

FUNCTIONAL SUPERVISOR: NADER GOBRAN
CALCULATED-DESIGNED BY: MAHINDA RAM
CHECKED BY: NEIL LIANG
REVISED BY
DATE REVISED

LAST REVISION 00-00-00
DATE PLOTTED => 12-JUN-2013
TIME PLOTTED => 19:36

Dist	COUNTY	ROUTE	POST MILES TOTAL PROJECT	SHEET No.	TOTAL SHEETS
07	LA	10	33.2/37.2	629	1475

REGISTERED CIVIL ENGINEER 4-17-12 DATE

6-10-13
PLANS APPROVAL DATE

REGISTERED PROFESSIONAL ENGINEER MOHAMED GHANNOUM No. 72051 Exp 6/30/14 CIVIL STATE OF CALIFORNIA

THE STATE OF CALIFORNIA OR ITS OFFICERS OR AGENTS SHALL NOT BE RESPONSIBLE FOR THE ACCURACY OR COMPLETENESS OF SCANNED COPIES OF THIS PLAN SHEET.

NOTES:

1. FOR DETAILS NOT SHOWN, SEE STANDARD PLAN B3-9.
2. FOR DETAILS NOT SHOWN, SEE STANDARD PLAN BO-3 (BRIDGE DETAIL 3-1)
3. FOR DETAILS NOT SHOWN, SEE CONSTRUCTION DETAILS

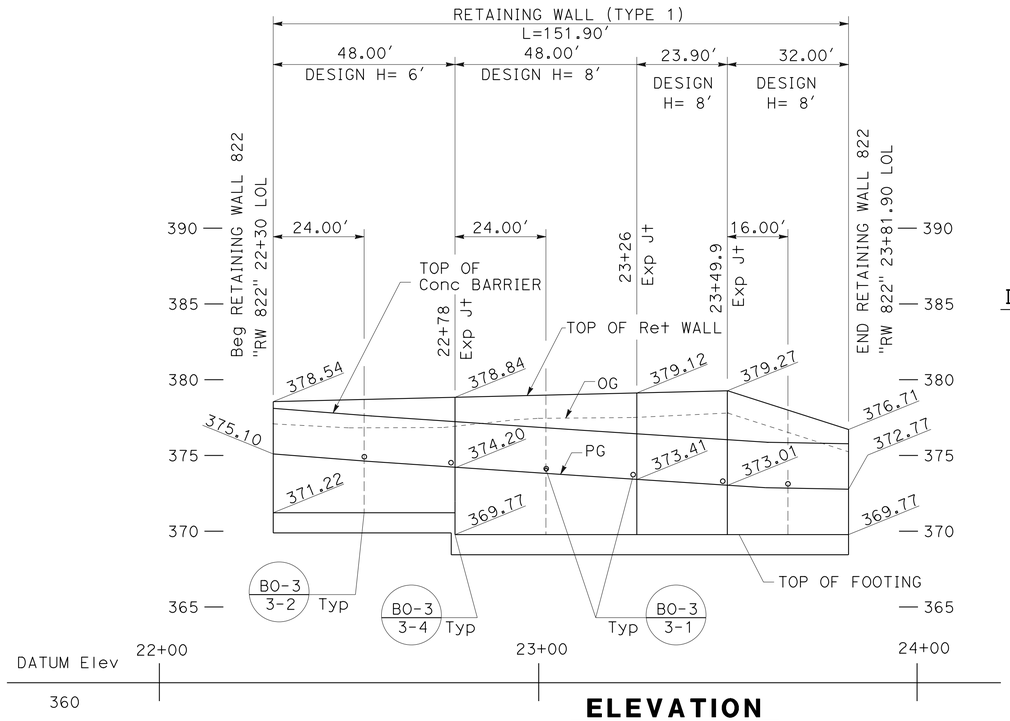

ELEVATION

SCALE: Horiz 1" = 20'
Vert 1" = 5'

INTERMEDIATE WALL DRAIN LOCATIONS

Sta 22+54
Sta 23+02

END WALL DRAIN LOCATIONS

Sta 22+31
Sta 23+80.90

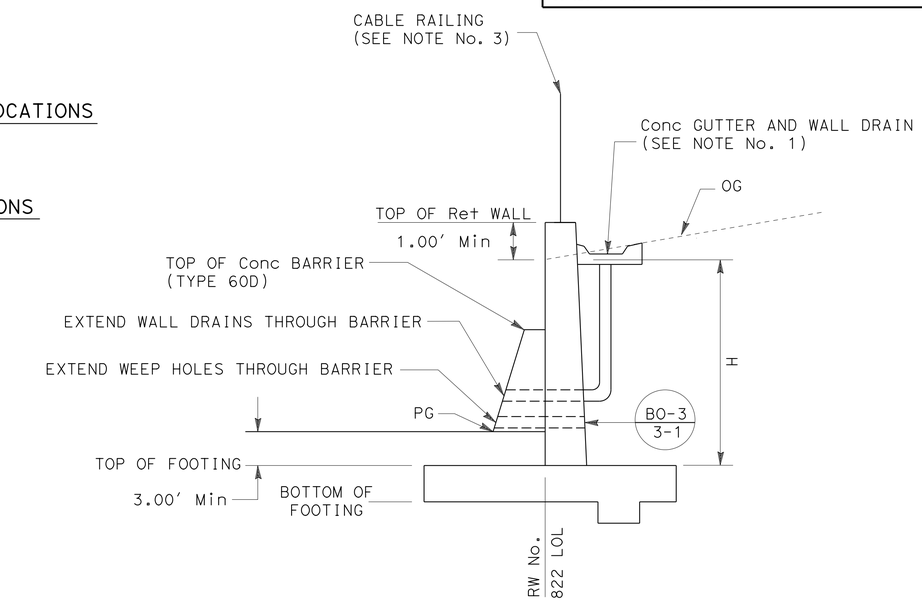

"RW 822 LOL" Sta 22+30 TO 23+81.90

TYPICAL SECTION

NO SCALE

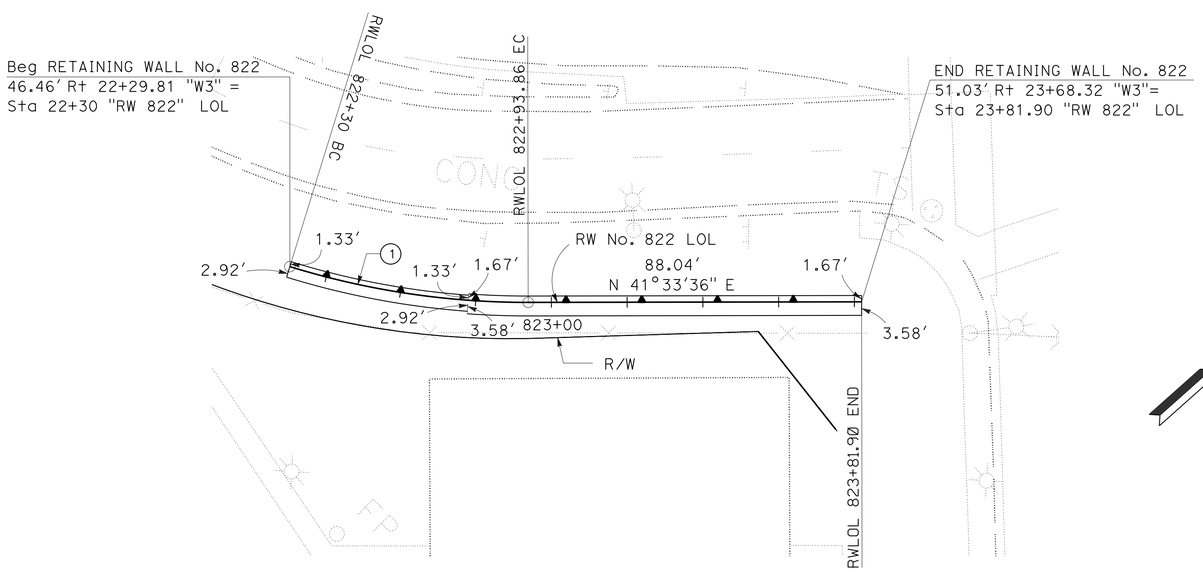

CURVE DATA

No.	R	Δ	T	L
1	212.00'	17°15'35"	32.18'	63.86'

PLAN

SCALE 1"= 20'

RETAINING WALL PLAN

RETAINING WALL No. 822

SCALE AS SHOWN

R-12

APPROVED FOR RETAINING WALL WORK ONLY

STATE OF CALIFORNIA - DEPARTMENT OF TRANSPORTATION
Caltrans OFFICE OF DESIGN D

FUNCTIONAL SUPERVISOR: NADER GOBRAN
CALCULATED-DESIGNED BY: NEIL LIANG
CHECKED BY: MOHAMED GHANNOUM
REVISED BY
DATE REVISED

LAST REVISION 00-00-00
DATE PLOTTED => 18-JUN-2013
TIME PLOTTED => 10:46

Dist	COUNTY	ROUTE	POST MILES TOTAL PROJECT	SHEET No.	TOTAL SHEETS
07	LA	10	33.2/37.2	630	1475

4-17-12
REGISTERED CIVIL ENGINEER DATE

6-10-13
PLANS APPROVAL DATE

REGISTERED PROFESSIONAL ENGINEER
MOHAMED GHANNOUM
No. C72051
Exp. 6/30/14
CIVIL
STATE OF CALIFORNIA

THE STATE OF CALIFORNIA OR ITS OFFICERS OR AGENTS SHALL NOT BE RESPONSIBLE FOR THE ACCURACY OR COMPLETENESS OF SCANNED COPIES OF THIS PLAN SHEET.

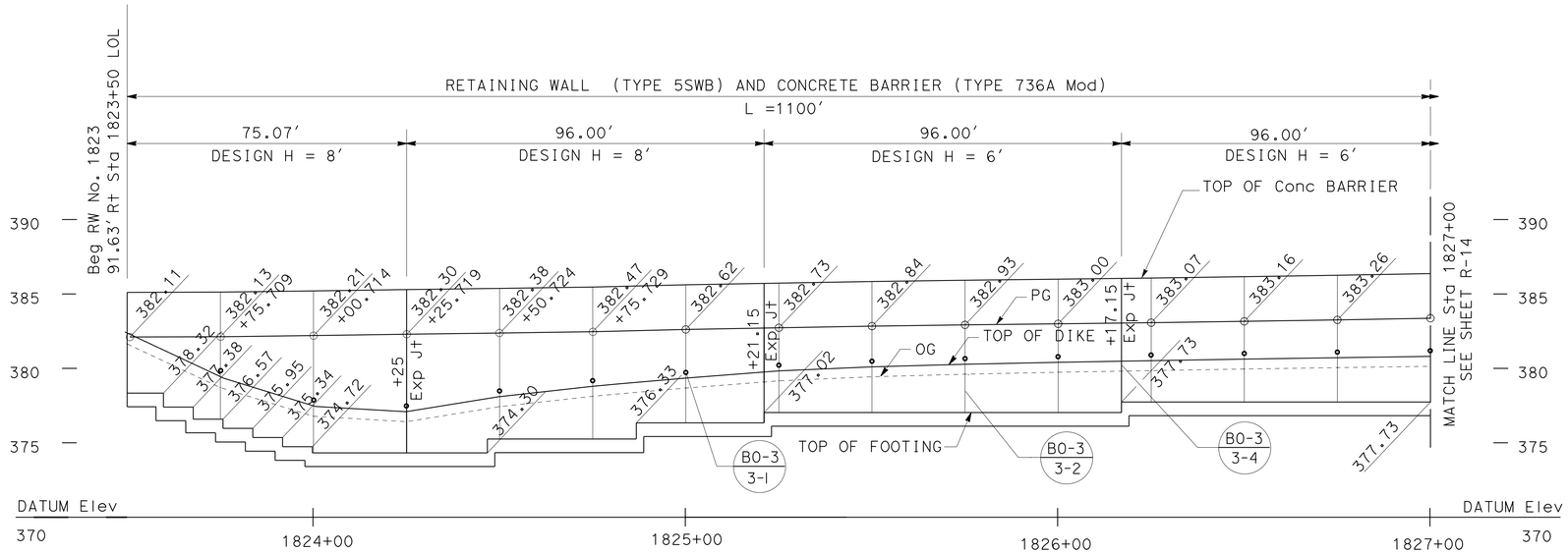

ELEVATION

SCALE: Horiz 1" = 20'
Vert 1" = 5'

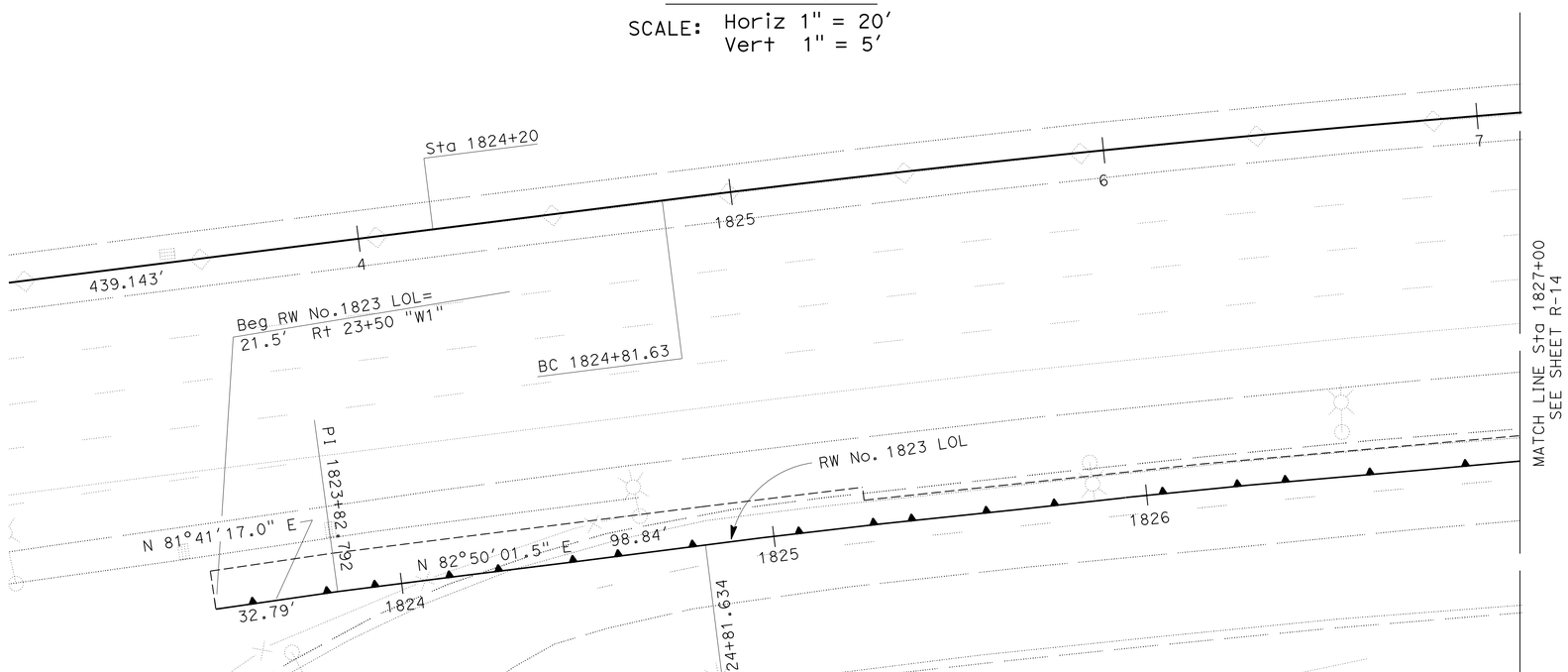

PLAN

SCALE: 1" = 20'

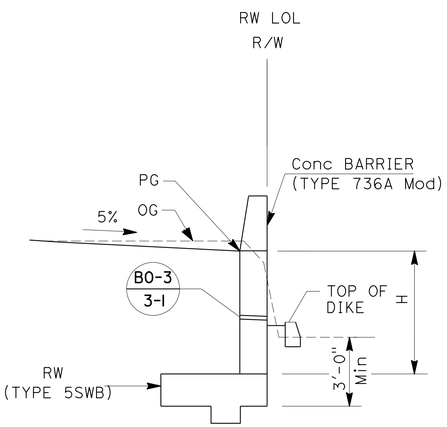

RW No. 1823 LOL, Sta 1823+50 TO Sta 1834+50

TYPICAL SECTION

NO SCALE

RETAINING WALL PLAN

RETAINING WALL No. 1823

SCALE AS SHOWN

R-13

APPROVED FOR RETAINING WALL WORK ONLY

STATE OF CALIFORNIA - DEPARTMENT OF TRANSPORTATION
Caltrans® OFFICE OF DESIGN D

FUNCTIONAL SUPERVISOR: NADER GOBRAN
CALCULATED-DESIGNED BY: ARTURO LAO
CHECKED BY: JEROME G. ARABE
REVISED BY / DATE REVISED

LAST REVISION 00-00-00
DATE PLOTTED => 12-JUN-2013
TIME PLOTTED => 19:36

Dist	COUNTY	ROUTE	POST MILES TOTAL PROJECT	SHEET No.	TOTAL SHEETS
07	LA	10	33.2/37.2	631	1475

4-17-12
REGISTERED CIVIL ENGINEER DATE

6-10-13
PLANS APPROVAL DATE

REGISTERED PROFESSIONAL ENGINEER
MOHAMED GHANNOUM
No. C72051
Exp. 06/30/14
CIVIL
STATE OF CALIFORNIA

THE STATE OF CALIFORNIA OR ITS OFFICERS OR AGENTS SHALL NOT BE RESPONSIBLE FOR THE ACCURACY OR COMPLETENESS OF SCANNED COPIES OF THIS PLAN SHEET.

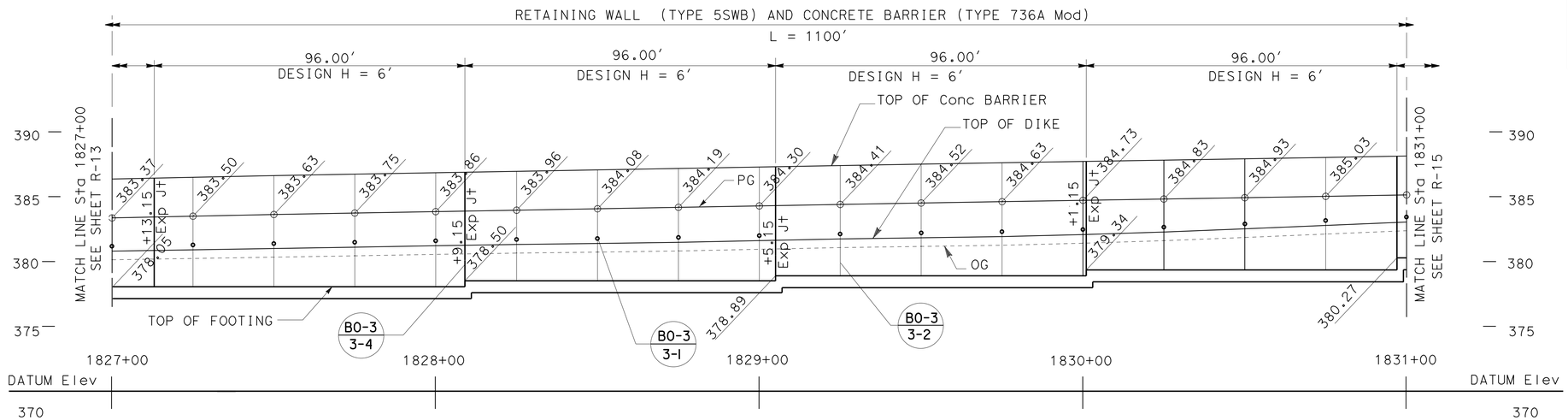

ELEVATION

SCALE: Horiz 1" = 20'
Vert 1" = 5'

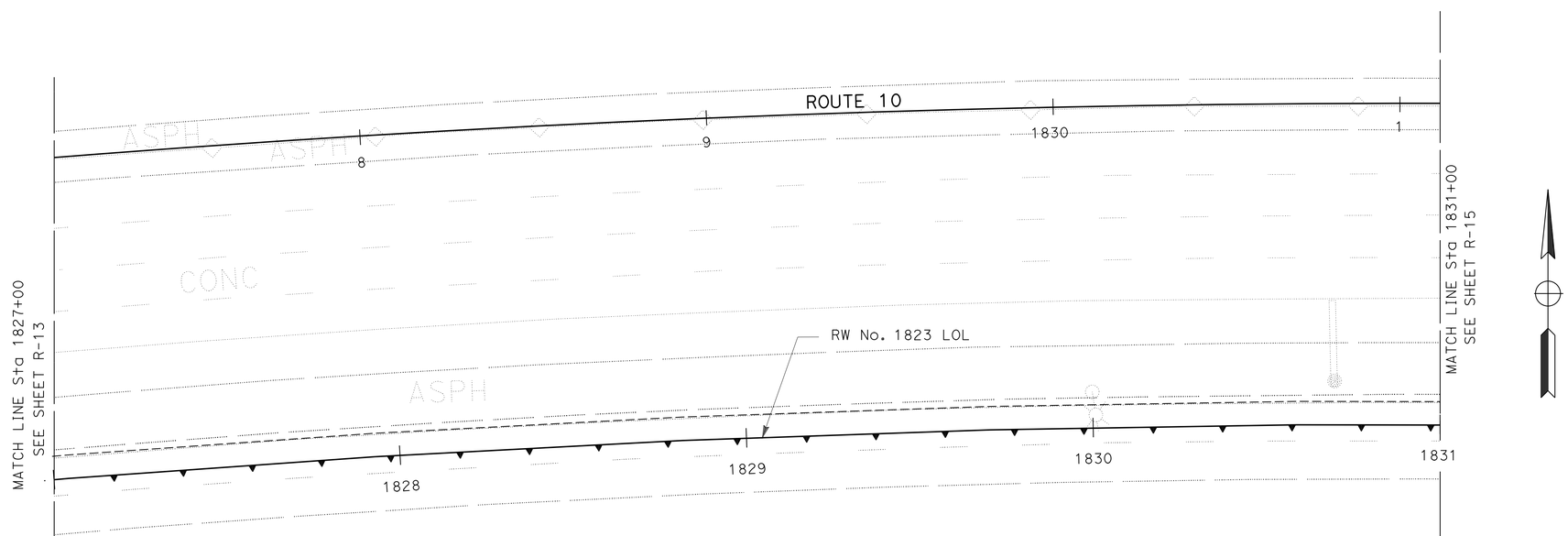

PLAN

SCALE 1"= 20'

RETAINING WALL PLAN

RETAINING WALL No. 1823

SCALE AS SHOWN

R-14

APPROVED FOR RETAINING WALL WORK ONLY

STATE OF CALIFORNIA - DEPARTMENT OF TRANSPORTATION
Caltrans® OFFICE OF DESIGN D

FUNCTIONAL SUPERVISOR: NADER GOBRAN
CALCULATED-DESIGNED BY: ARTURO LAO
CHECKED BY: JEROME G. ARABE
REVISED BY
DATE REVISED

LAST REVISION 00-00-00
DATE PLOTTED => 12-JUN-2013
TIME PLOTTED => 19:36

Dist	COUNTY	ROUTE	POST MILES TOTAL PROJECT	SHEET No.	TOTAL SHEETS
07	LA	10	33.2/37.2	632	1475

4-17-12
REGISTERED CIVIL ENGINEER DATE

6-10-13
PLANS APPROVAL DATE

REGISTERED PROFESSIONAL ENGINEER
MOHAMED GHANNOUM
No. C72051
Exp. 06/30/14
CIVIL
STATE OF CALIFORNIA

THE STATE OF CALIFORNIA OR ITS OFFICERS OR AGENTS SHALL NOT BE RESPONSIBLE FOR THE ACCURACY OR COMPLETENESS OF SCANNED COPIES OF THIS PLAN SHEET.

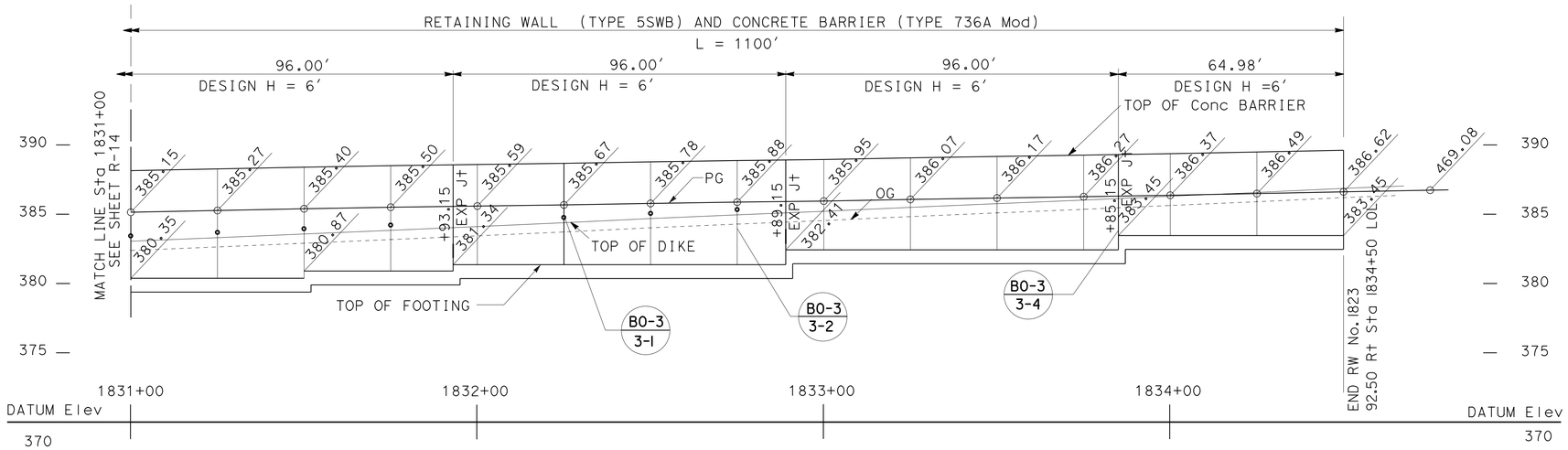

ELEVATION

SCALE: Horiz 1" = 20'
Vert 1" = 5'

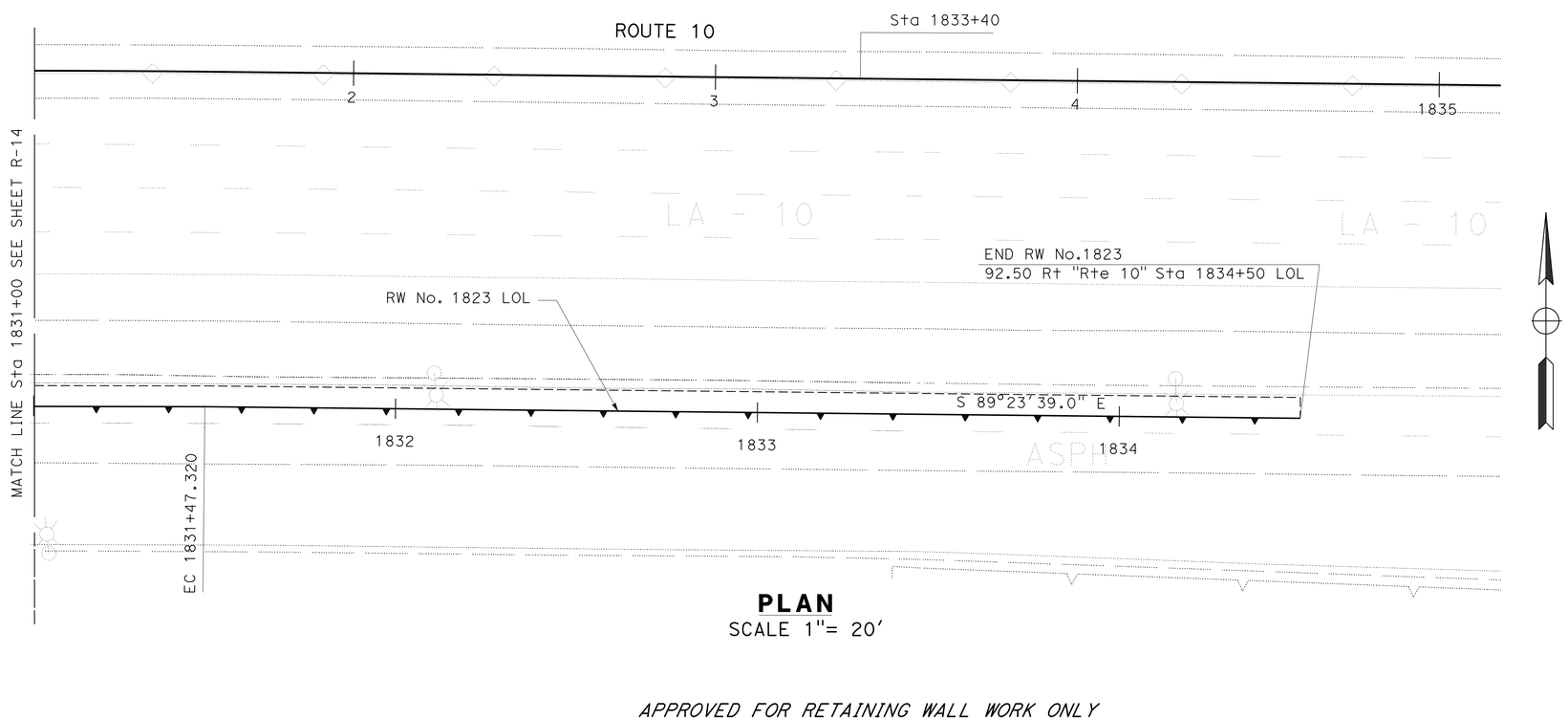

PLAN

SCALE 1"= 20'

RETAINING WALL PLAN

RETAINING WALL No. 1823

SCALE AS SHOWN

R-15

APPROVED FOR RETAINING WALL WORK ONLY

STATE OF CALIFORNIA - DEPARTMENT OF TRANSPORTATION
Caltrans® OFFICE OF DESIGN D

FUNCTIONAL SUPERVISOR: NADER GOBRAN
CALCULATED-DESIGNED BY: JEROME G. ARABE
CHECKED BY: ARTURO LAO
REVISED BY
DATE REVISED

LAST REVISION 00-00-00
DATE PLOTTED => 12-JUN-2013
TIME PLOTTED => 19:36

Dist	COUNTY	ROUTE	POST MILES TOTAL PROJECT	SHEET No.	TOTAL SHEETS
07	LA	10	33.2/37.2	633	1475

REGISTERED CIVIL ENGINEER 4-17-12 DATE

6-10-13
PLANS APPROVAL DATE

REGISTERED PROFESSIONAL ENGINEER MOHAMED GHANNOUM No. C72051 Exp. 6/30/14 CIVIL STATE OF CALIFORNIA

THE STATE OF CALIFORNIA OR ITS OFFICERS OR AGENTS SHALL NOT BE RESPONSIBLE FOR THE ACCURACY OR COMPLETENESS OF SCANNED COPIES OF THIS PLAN SHEET.

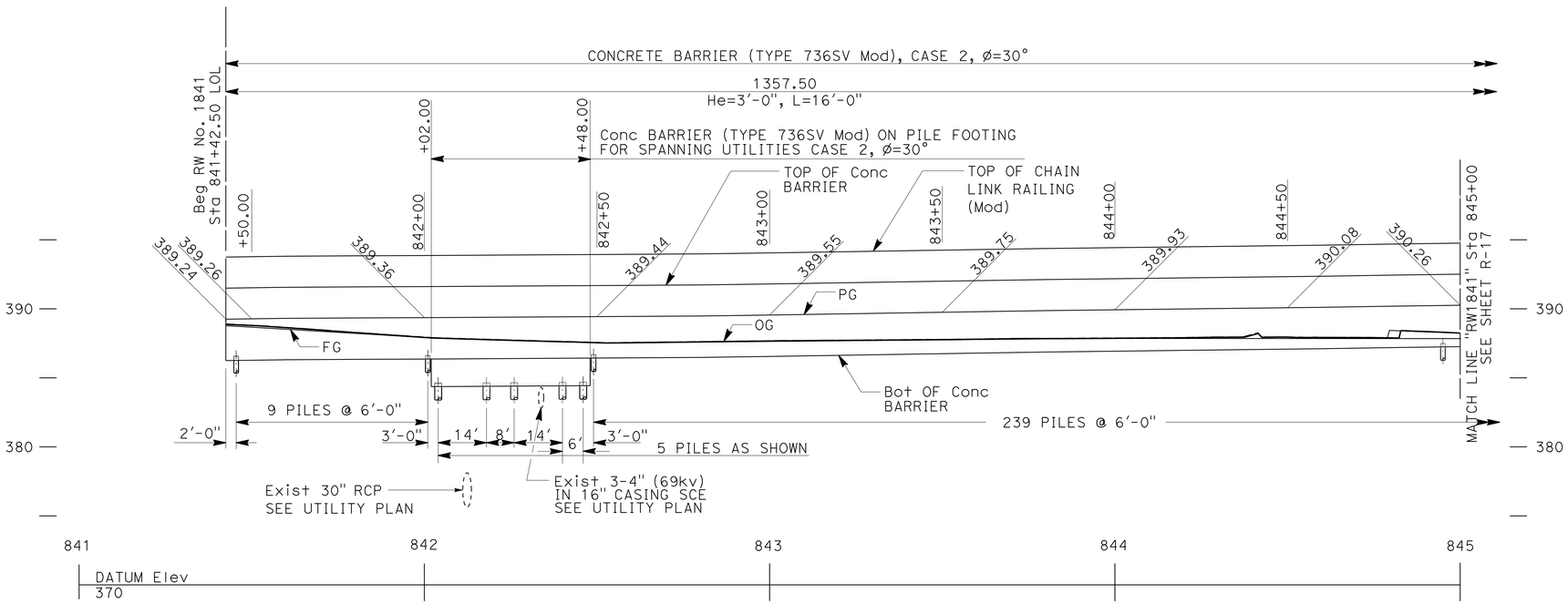

ELEVATION

SCALE: Horiz 1" = 20'
Vert 1" = 5'

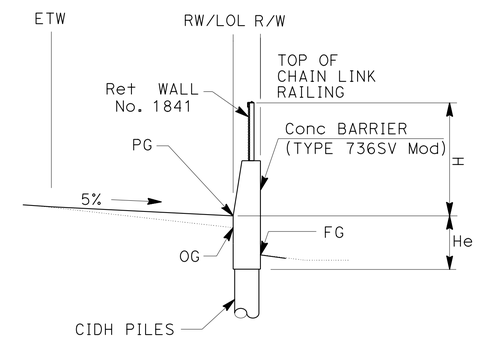

RW No. 1841 LOL, Sta 841+42.50 TO 856+80

TYPICAL SECTION

NO SCALE

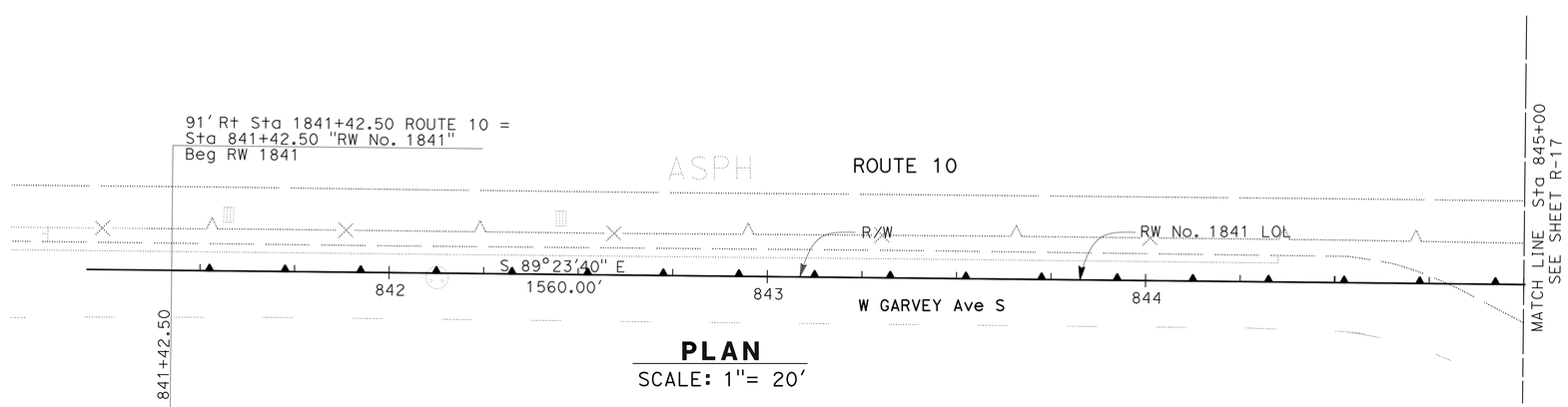

PLAN

SCALE: 1"= 20'

APPROVED FOR RETAINING WALL WORK ONLY

RETAINING WALL PLAN

RETAINING WALL 1841

SCALE AS SHOWN

R-16

STATE OF CALIFORNIA - DEPARTMENT OF TRANSPORTATION
Caltrans® OFFICE OF DESIGN D

FUNCTIONAL SUPERVISOR: NADER GOBRAN
CALCULATED-DESIGNED BY: MINH TU
CHECKED BY: JEROME G. ARABE
REVISED BY
DATE REVISED

LAST REVISION 00-00-00
DATE PLOTTED => 18-JUN-2013
TIME PLOTTED => 10:47

Dist	COUNTY	ROUTE	POST MILES TOTAL PROJECT	SHEET No.	TOTAL SHEETS
07	LA	10	33.2/37.2	634	1475

4-17-12
REGISTERED CIVIL ENGINEER DATE

6-10-13
PLANS APPROVAL DATE

REGISTERED PROFESSIONAL ENGINEER
MOHAMED GHANNOUM
No. C72051
Exp. 6/30/14
CIVIL
STATE OF CALIFORNIA

THE STATE OF CALIFORNIA OR ITS OFFICERS OR AGENTS SHALL NOT BE RESPONSIBLE FOR THE ACCURACY OR COMPLETENESS OF SCANNED COPIES OF THIS PLAN SHEET.

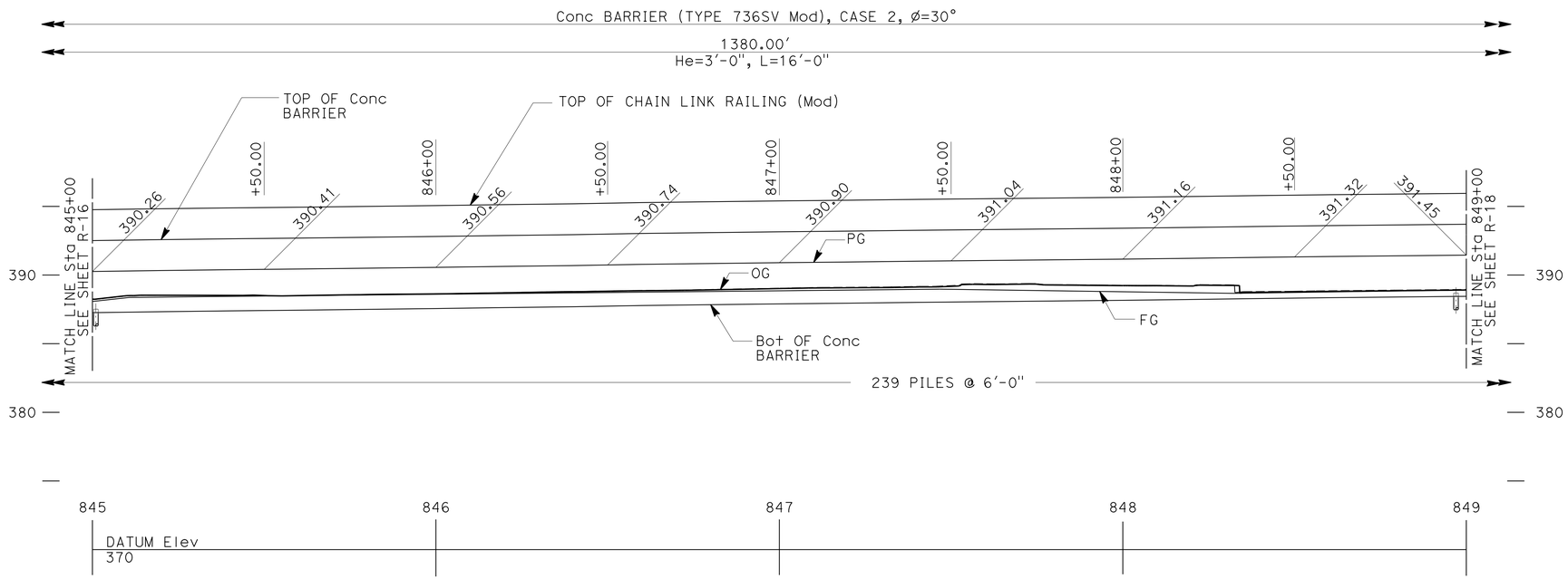

ELEVATION

SCALE: Horiz 1" = 20'
Vert 1" = 5'

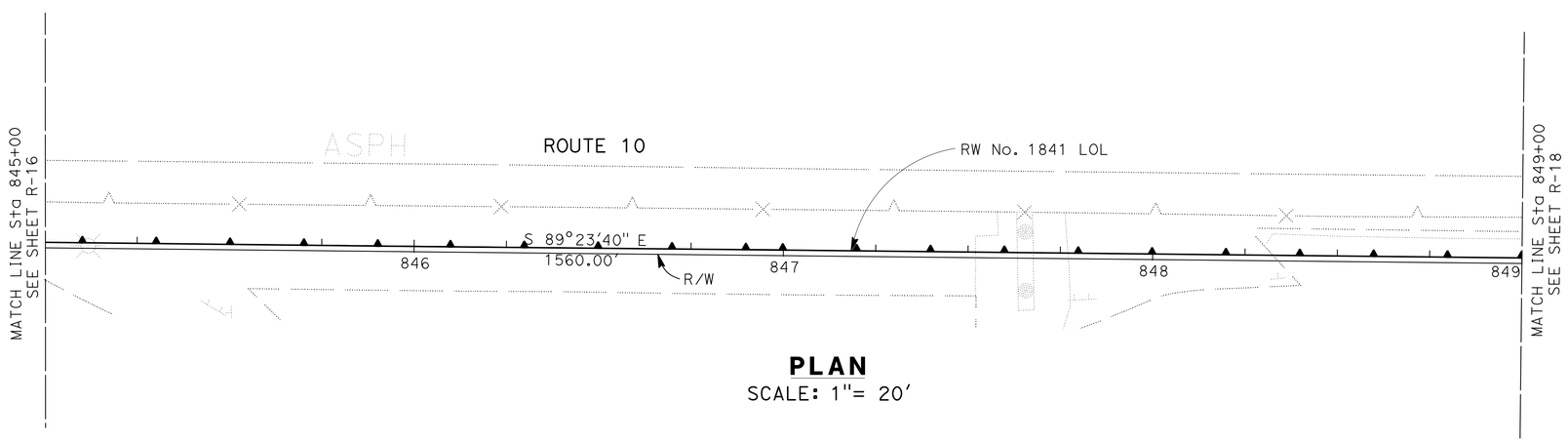

PLAN

SCALE: 1"= 20'

APPROVED FOR RETAINING WALL WORK ONLY

RETAINING WALL PLAN

RETAINING WALL 1841

SCALE AS SHOWN

R-17

REVISED BY | DATE REVISED
MINH TU | JEROME G. ARABE
CALCULATED-DESIGNED BY | CHECKED BY
FUNCTIONAL SUPERVISOR
NADER GOBRAN

STATE OF CALIFORNIA - DEPARTMENT OF TRANSPORTATION
Caltrans® OFFICE OF DESIGN D

LAST REVISION 00-00-00 | DATE PLOTTED => 12-JUN-2013 | TIME PLOTTED => 19:36

Dist	COUNTY	ROUTE	POST MILES TOTAL PROJECT	SHEET No.	TOTAL SHEETS
07	LA	10	33.2/37.2	635	1475

4-17-12
REGISTERED CIVIL ENGINEER DATE

6-10-13
PLANS APPROVAL DATE

REGISTERED PROFESSIONAL ENGINEER
MOHAMED GHANNOUM
No. C72051
Exp. 06/30/14
CIVIL
STATE OF CALIFORNIA

THE STATE OF CALIFORNIA OR ITS OFFICERS OR AGENTS SHALL NOT BE RESPONSIBLE FOR THE ACCURACY OR COMPLETENESS OF SCANNED COPIES OF THIS PLAN SHEET.

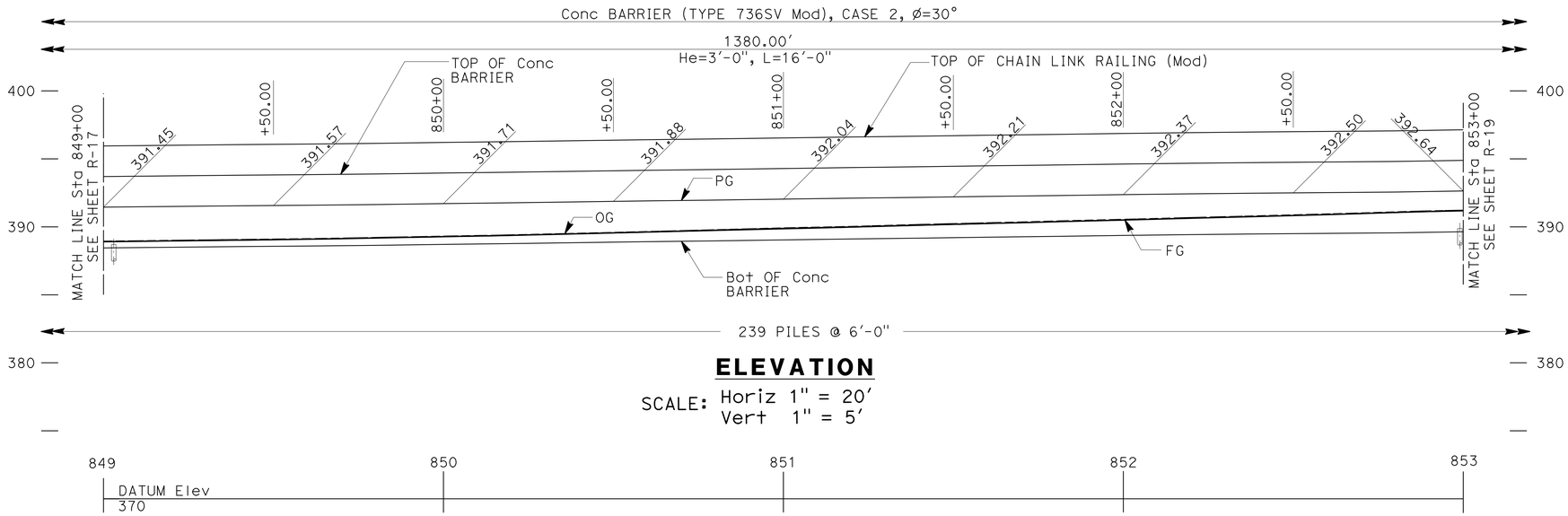

ELEVATION

SCALE: Horiz 1" = 20'
Vert 1" = 5'

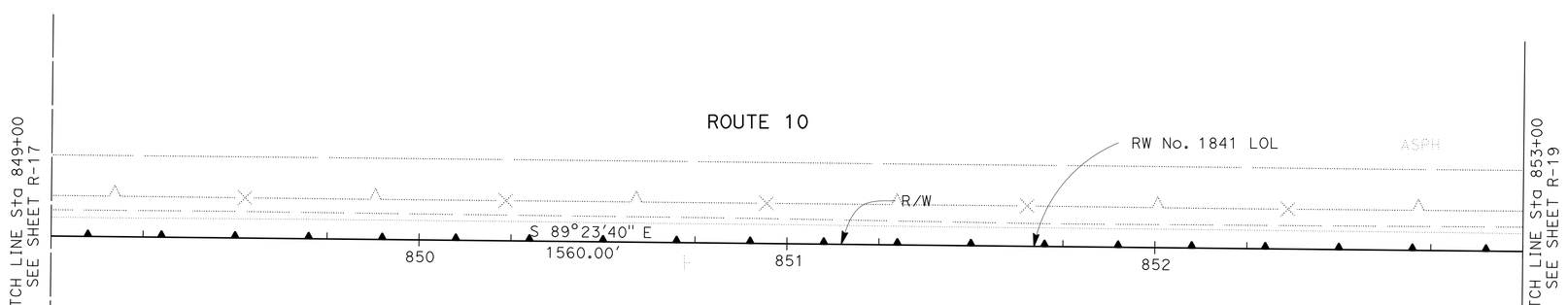

PLAN

SCALE: 1" = 20'

RETAINING WALL PLAN

RETAINING WALL 1841

SCALE AS SHOWN

R-18

APPROVED FOR RETAINING WALL WORK ONLY

STATE OF CALIFORNIA - DEPARTMENT OF TRANSPORTATION
Caltrans OFFICE OF DESIGN D

FUNCTIONAL SUPERVISOR: NADER GOBRAN
CALCULATED-DESIGNED BY: MINH TU
CHECKED BY: JEROME G. ARABE
REVISED BY
DATE REVISED

LAST REVISION 00-00-00
DATE PLOTTED => 12-JUN-2013
TIME PLOTTED => 19:36

Dist	COUNTY	ROUTE	POST MILES TOTAL PROJECT	SHEET No.	TOTAL SHEETS
07	LA	10	33.2/37.2	636	1475

4-17-12
REGISTERED CIVIL ENGINEER DATE

6-10-13
PLANS APPROVAL DATE

REGISTERED PROFESSIONAL ENGINEER
MOHAMED GHANNOUM
No. C72051
Exp. 6/30/14
CIVIL
STATE OF CALIFORNIA

THE STATE OF CALIFORNIA OR ITS OFFICERS OR AGENTS SHALL NOT BE RESPONSIBLE FOR THE ACCURACY OR COMPLETENESS OF SCANNED COPIES OF THIS PLAN SHEET.

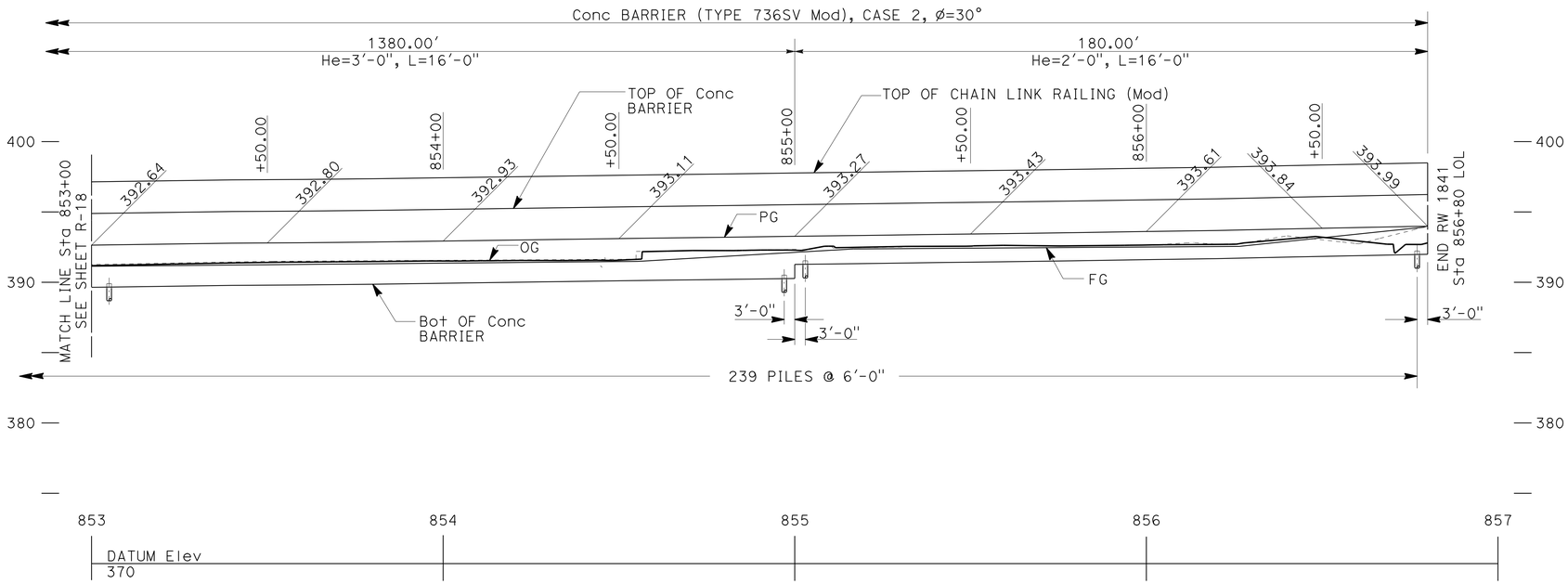

ELEVATION

SCALE: Horiz 1" = 20'
Vert 1" = 5'

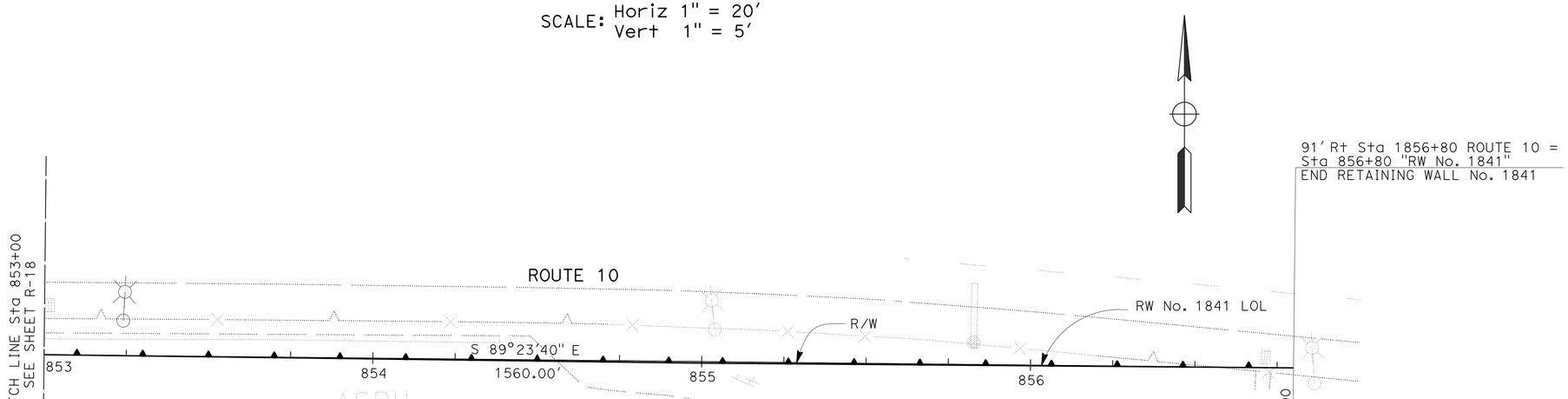

PLAN

SCALE: 1"= 20'

RETAINING WALL PLAN

RETAINING WALL 1841

SCALE AS SHOWN

R-19

APPROVED FOR RETAINING WALL WORK ONLY

STATE OF CALIFORNIA - DEPARTMENT OF TRANSPORTATION
Caltrans OFFICE OF DESIGN D

FUNCTIONAL SUPERVISOR: NADER GOBRAN
CALCULATED-DESIGNED BY: ARTURO LAO
CHECKED BY: JEROME G. ARABE
REVISED BY
DATE REVISED

LAST REVISION 00-00-00
DATE PLOTTED => 12-JUN-2013
TIME PLOTTED => 19:36

Dist	COUNTY	ROUTE	POST MILES TOTAL PROJECT	SHEET No.	TOTAL SHEETS
07	LA	10	33.2/37.2	637	1475

REGISTERED CIVIL ENGINEER 4-17-12 DATE

6-10-13
PLANS APPROVAL DATE

REGISTERED PROFESSIONAL ENGINEER MOHAMED GHANNOUM No. 72051 Exp. 6/30/14 CIVIL STATE OF CALIFORNIA

THE STATE OF CALIFORNIA OR ITS OFFICERS OR AGENTS SHALL NOT BE RESPONSIBLE FOR THE ACCURACY OR COMPLETENESS OF SCANNED COPIES OF THIS PLAN SHEET.

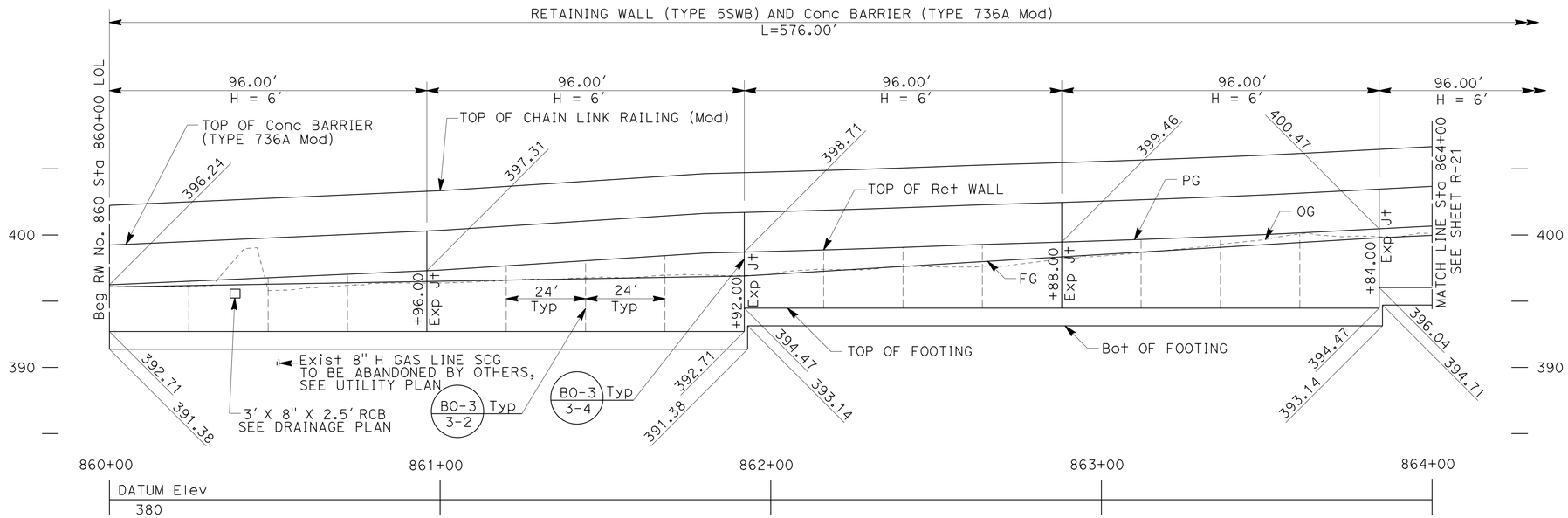

ELEVATION

SCALE: Horiz 1" = 20'
Vert 1" = 5'

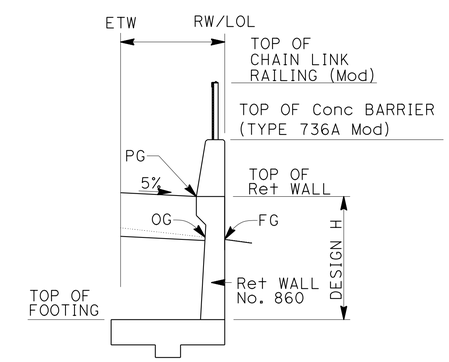

RW No. 860 LOL, Sta 860+00 TO Sta 865+76

TYPICAL SECTION

NO SCALE

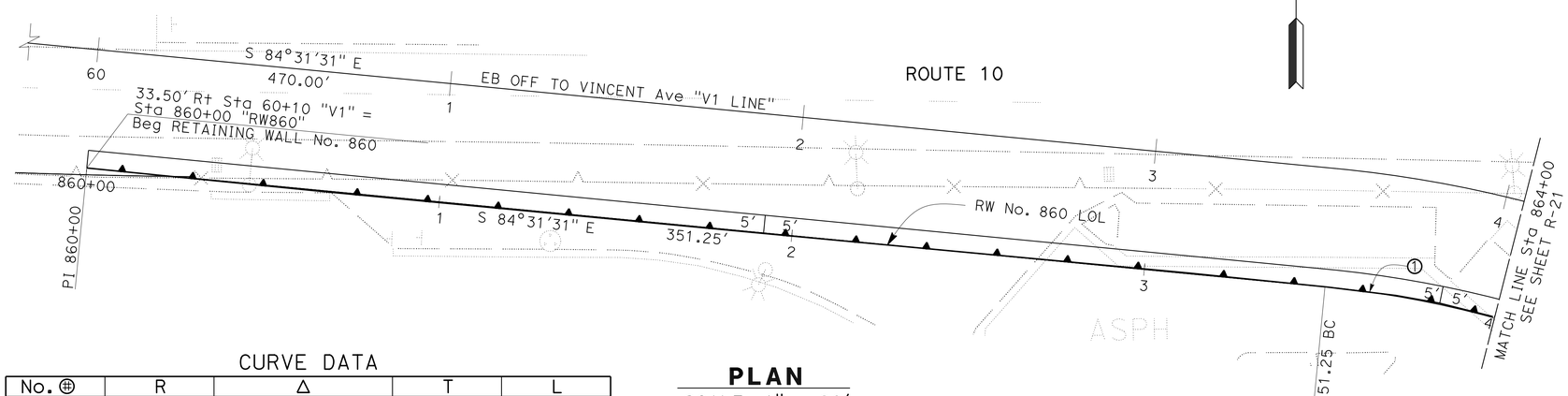

CURVE DATA

No. ⊕	R	Δ	T	L
1	316.50'	40°30'35"	116.79'	223.77'

PLAN

SCALE: 1" = 20'

APPROVED FOR RETAINING WALL WORK ONLY

RETAINING WALL PLAN

RETAINING WALL 860

SCALE AS SHOWN **R-20**

STATE OF CALIFORNIA - DEPARTMENT OF TRANSPORTATION
Caltrans® OFFICE OF DESIGN D

FUNCTIONAL SUPERVISOR: NADER GOBRAN
CALCULATED-DESIGNED BY: MINH TU
CHECKED BY: JEROME G. ARABE
REVISED BY / DATE REVISED

LAST REVISION 00-00-00
DATE PLOTTED => 13-JUN-2013
TIME PLOTTED => 10:11

Dist	COUNTY	ROUTE	POST MILES TOTAL PROJECT	SHEET No.	TOTAL SHEETS
07	LA	10	33.2/37.2	638	1475

4-17-12
REGISTERED CIVIL ENGINEER DATE

6-10-13
PLANS APPROVAL DATE

REGISTERED PROFESSIONAL ENGINEER
MOHAMED GHANNOUM
No. 72051
Exp. 6/30/14
CIVIL
STATE OF CALIFORNIA

THE STATE OF CALIFORNIA OR ITS OFFICERS OR AGENTS SHALL NOT BE RESPONSIBLE FOR THE ACCURACY OR COMPLETENESS OF SCANNED COPIES OF THIS PLAN SHEET.

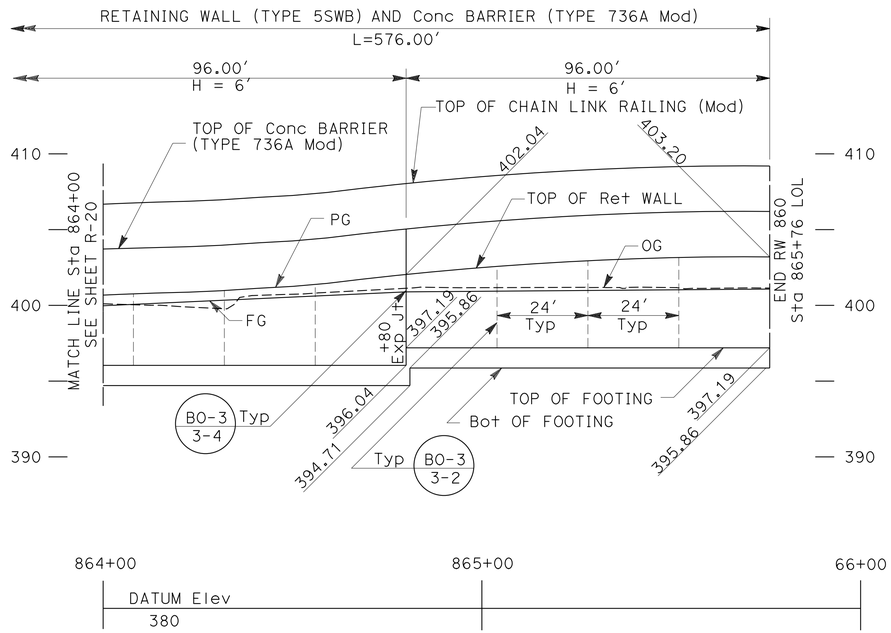

ELEVATION

SCALE: Horiz 1" = 20'
Vert 1" = 5'

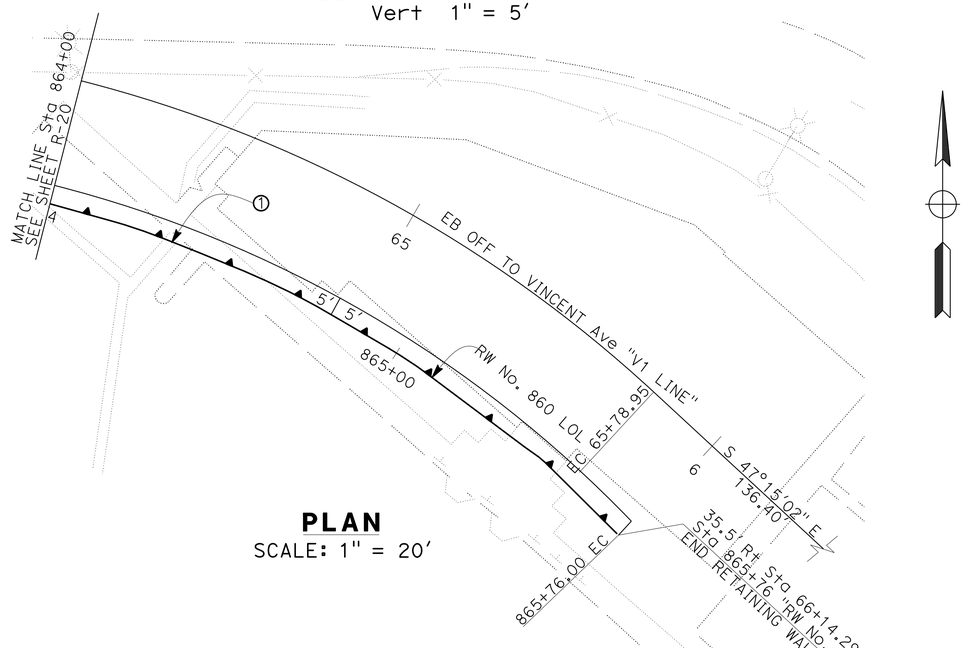

PLAN

SCALE: 1" = 20'

APPROVED FOR RETAINING WALL WORK ONLY

RETAINING WALL PLAN

RETAINING WALL 860

SCALE AS SHOWN

R-21

STATE OF CALIFORNIA - DEPARTMENT OF TRANSPORTATION
Caltrans® OFFICE OF DESIGN D

FUNCTIONAL SUPERVISOR: NADER GOBRAN
CALCULATED-DESIGNED BY: JEROME G. ARABE
CHECKED BY: MINH TU
REVISED BY
DATE REVISED

LAST REVISION 00-00-00
DATE PLOTTED => 12-JUN-2013
TIME PLOTTED => 19:36

Dist	COUNTY	ROUTE	POST MILES TOTAL PROJECT	SHEET No.	TOTAL SHEETS
07	LA	10	33.2/37.2	639	1475

4-17-12
REGISTERED CIVIL ENGINEER DATE

6-10-13
PLANS APPROVAL DATE

REGISTERED PROFESSIONAL ENGINEER
MOHAMED GHANNOUM
No. 72051
Exp. 6/30/14
CIVIL
STATE OF CALIFORNIA

THE STATE OF CALIFORNIA OR ITS OFFICERS OR AGENTS SHALL NOT BE RESPONSIBLE FOR THE ACCURACY OR COMPLETENESS OF SCANNED COPIES OF THIS PLAN SHEET.

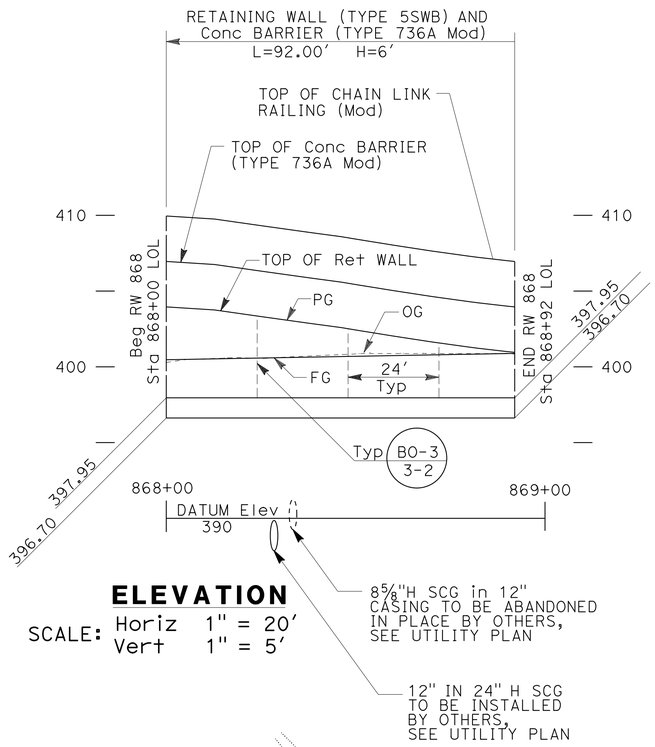

ELEVATION

SCALE: Horiz 1" = 20′
Vert 1" = 5′

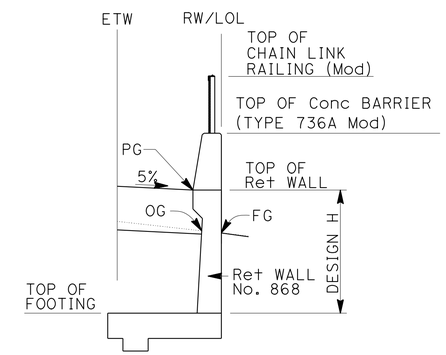

RW No. 868 LOL, Sta 868+00 TO Sta 868+92

TYPICAL SECTION

NO SCALE

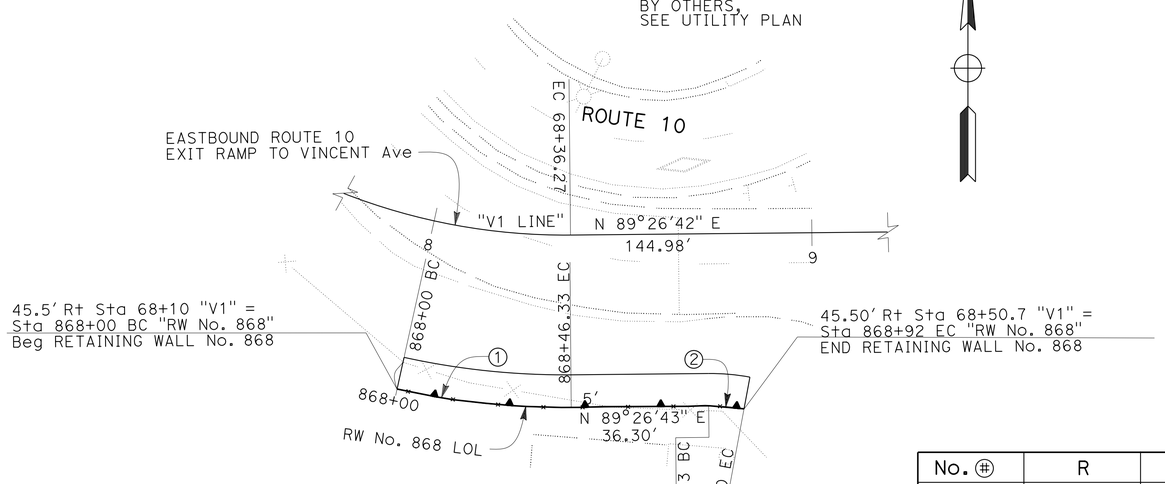

PLAN

SCALE: 1" = 20′

CURVE DATA

No. ⊕	R	Δ	T	L
1	205.50′	12°55′07"	23.27′	46.33′
2	48.50′	11°03′54"	4.70′	9.37′

APPROVED FOR RETAINING WALL WORK ONLY

RETAINING WALL PLAN

RETAINING WALL 868

SCALE AS SHOWN

R-22

STATE OF CALIFORNIA - DEPARTMENT OF TRANSPORTATION
Caltrans® OFFICE OF DESIGN D

FUNCTIONAL SUPERVISOR: NADER GOBRAN
CALCULATED-DESIGNED BY: MINH TU
CHECKED BY: JEROME G. ARABE
REVISED BY
DATE REVISED

LAST REVISION 00-00-00
DATE PLOTTED => 12-JUN-2013
TIME PLOTTED => 19:36

Dist	COUNTY	ROUTE	POST MILES TOTAL PROJECT	SHEET No.	TOTAL SHEETS
07	LA	10	33.2/37.2	640	1475

REGISTERED CIVIL ENGINEER 4-17-12 DATE

6-10-13
PLANS APPROVAL DATE

REGISTERED PROFESSIONAL ENGINEER MOHAMED GHANNOUM No. 72051 Exp. 6/30/14 CIVIL STATE OF CALIFORNIA

THE STATE OF CALIFORNIA OR ITS OFFICERS OR AGENTS SHALL NOT BE RESPONSIBLE FOR THE ACCURACY OR COMPLETENESS OF SCANNED COPIES OF THIS PLAN SHEET.

NOTES:

1. FOR DETAILS NOT SHOWN, SEE STANDARD PLAN B3-9.
2. FOR DETAILS NOT SHOWN, SEE STANDARD PLAN BO-3 (BRIDGE DETAIL 3-1)

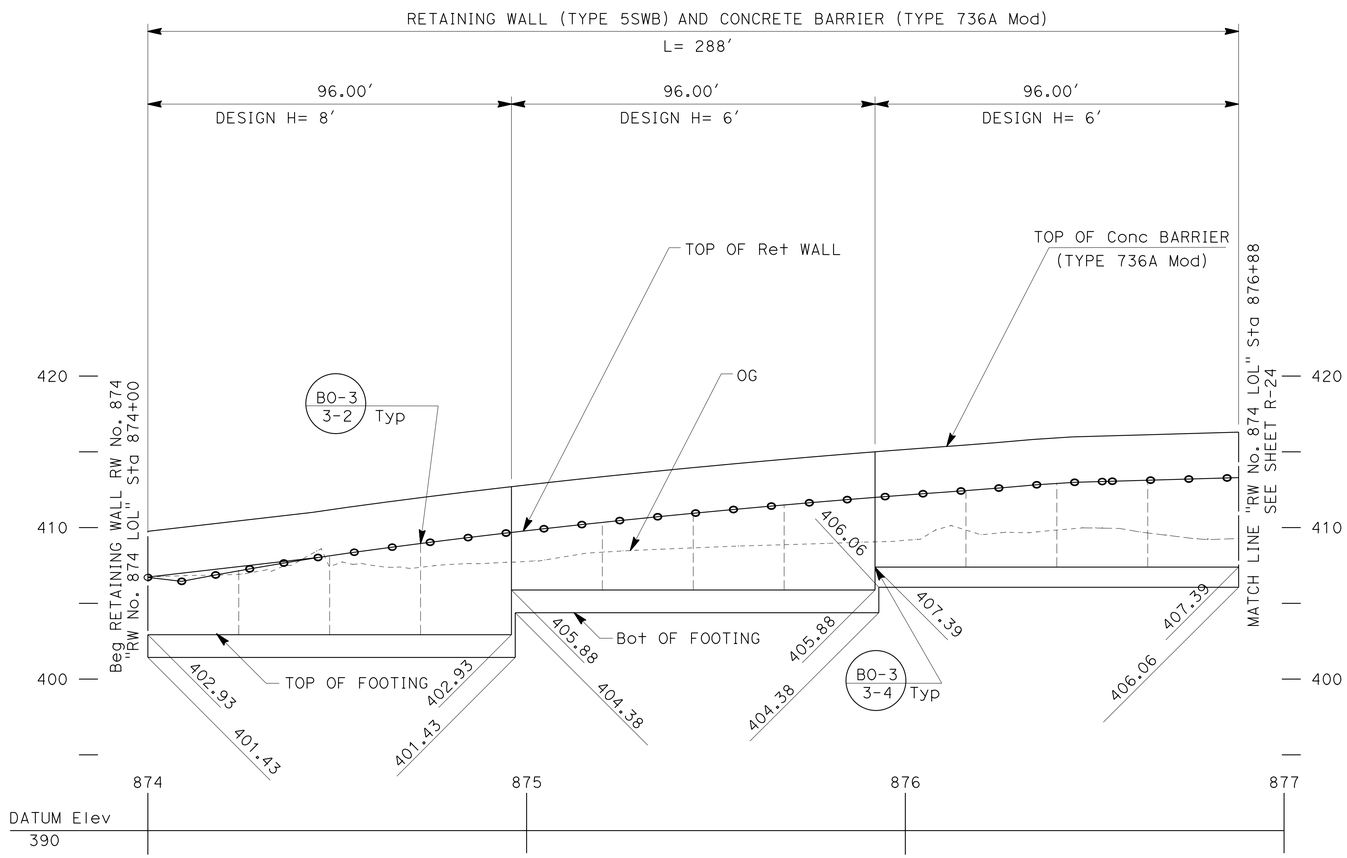

ELEVATION

SCALE: Horiz 1" = 20'
Vert 1" = 5'

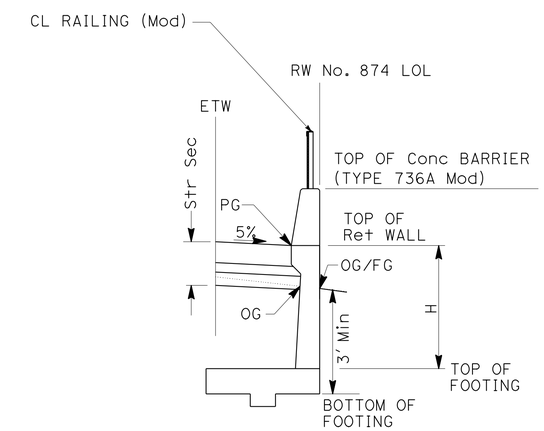

"RW No. 874 LOL" Sta 874+00 TO 883+14

TYPICAL SECTION

NO SCALE

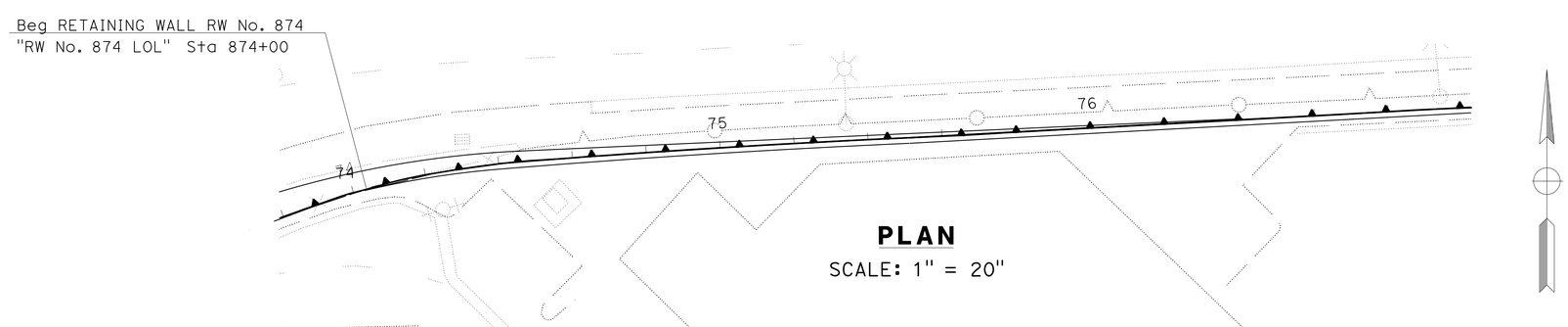

PLAN

SCALE: 1" = 20"

RETAINING WALL PLAN

RETAINING WALL No 874

SCALE AS SHOWN

R-23

STATE OF CALIFORNIA - DEPARTMENT OF TRANSPORTATION
Caltrans® OFFICE OF DESIGN D

FUNCTIONAL SUPERVISOR: NADER GOBRAN
CALCULATED-DESIGNED BY: MOHAMED GHANNOUM
CHECKED BY: NEIL LIANG
REVISED BY
DATE REVISED

LAST REVISION 00-00-00
DATE PLOTTED => 12-JUN-2013
TIME PLOTTED => 19:36

Dist	COUNTY	ROUTE	POST MILES TOTAL PROJECT	SHEET No.	TOTAL SHEETS
07	LA	10	33.2/37.2	641	1475

4-17-12
REGISTERED CIVIL ENGINEER DATE

6-10-13
PLANS APPROVAL DATE

REGISTERED PROFESSIONAL ENGINEER
MOHAMED GHANNOUM
No. 72051
Exp. 6/30/14
CIVIL
STATE OF CALIFORNIA

THE STATE OF CALIFORNIA OR ITS OFFICERS OR AGENTS SHALL NOT BE RESPONSIBLE FOR THE ACCURACY OR COMPLETENESS OF SCANNED COPIES OF THIS PLAN SHEET.

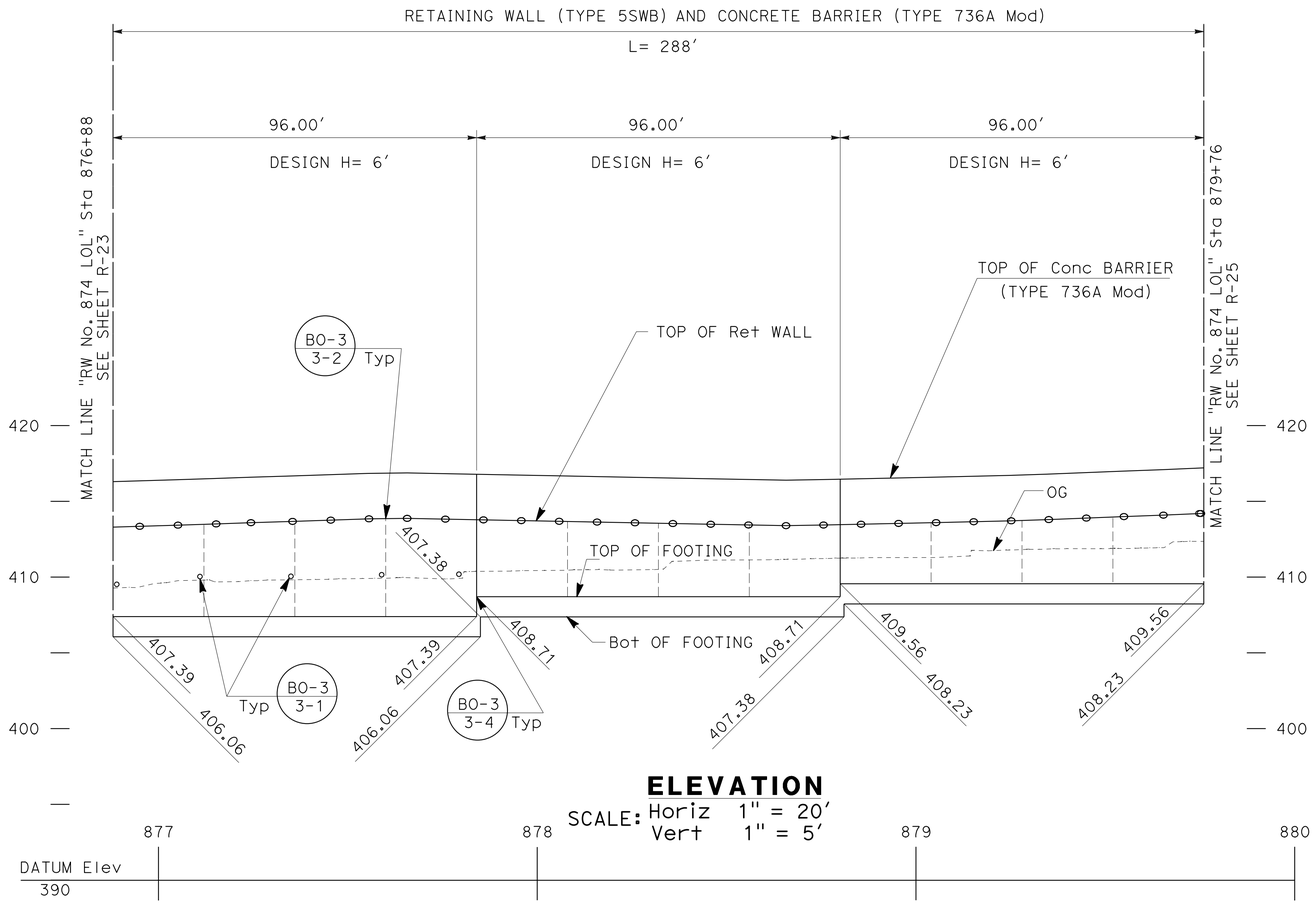

ELEVATION
SCALE: Horiz 1" = 20'
Vert 1" = 5'

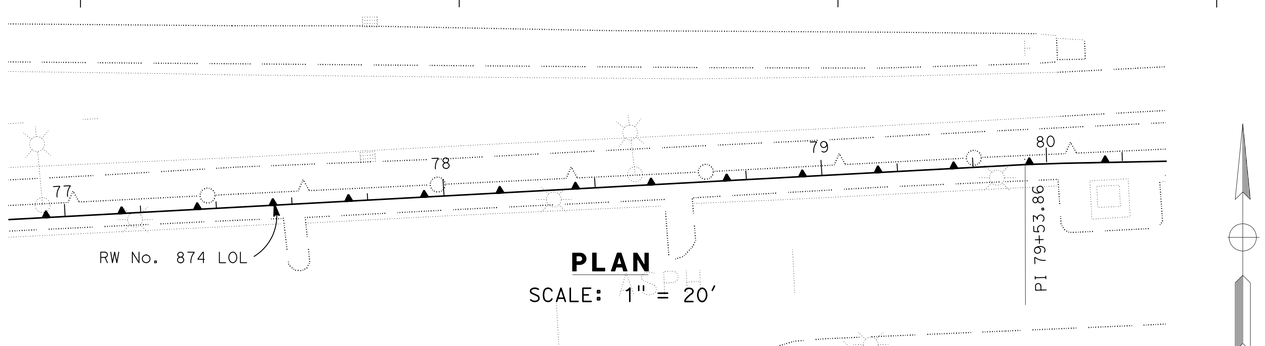

PLAN
SCALE: 1" = 20'

APPROVED FOR RETAINING WALL WORK ONLY

RETAINING WALL PLAN

RETAINING WALL No. 874

SCALE AS SHOWN

R-24

STATE OF CALIFORNIA - DEPARTMENT OF TRANSPORTATION
Caltrans® OFFICE OF DESIGN D

FUNCTIONAL SUPERVISOR: NADER GOBRAN
MOHAMED GHANNOUM
NEIL LIANG
CALCULATED-DESIGNED BY
CHECKED BY
REVISED BY
DATE REVISED

LAST REVISION 00-00-00
DATE PLOTTED => 12-JUN-2013
TIME PLOTTED => 20:05

Dist	COUNTY	ROUTE	POST MILES TOTAL PROJECT	SHEET No.	TOTAL SHEETS
07	LA	10	33.2/37.2	642	1475

REGISTERED CIVIL ENGINEER 4-17-12 DATE

6-10-13
PLANS APPROVAL DATE

REGISTERED PROFESSIONAL ENGINEER MOHAMED GHANNOUM No. 72051 Exp. 6/30/14 CIVIL STATE OF CALIFORNIA

THE STATE OF CALIFORNIA OR ITS OFFICERS OR AGENTS SHALL NOT BE RESPONSIBLE FOR THE ACCURACY OR COMPLETENESS OF SCANNED COPIES OF THIS PLAN SHEET.

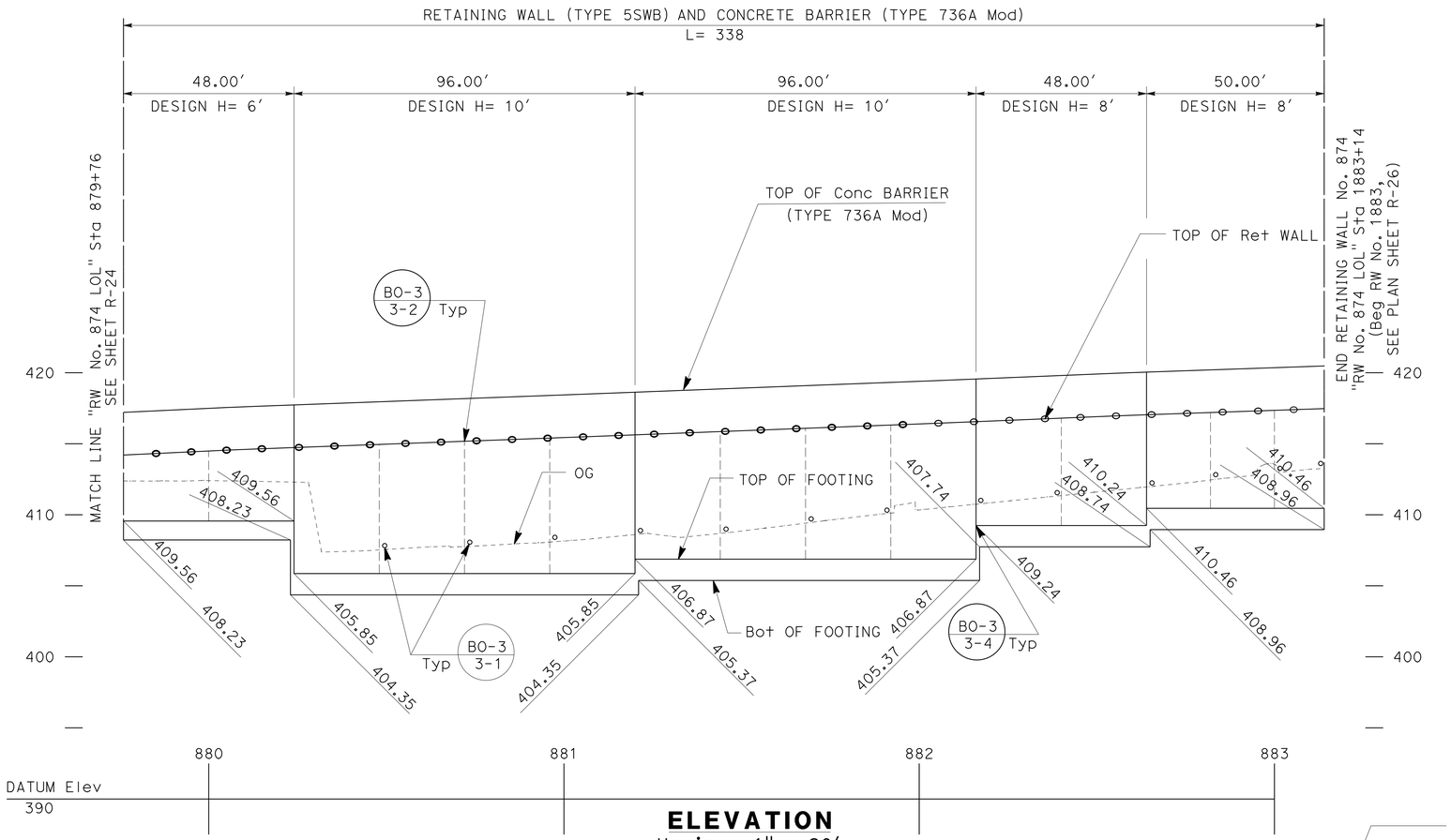

ELEVATION

SCALE: Horiz 1" = 20'
Vert 1" = 5'

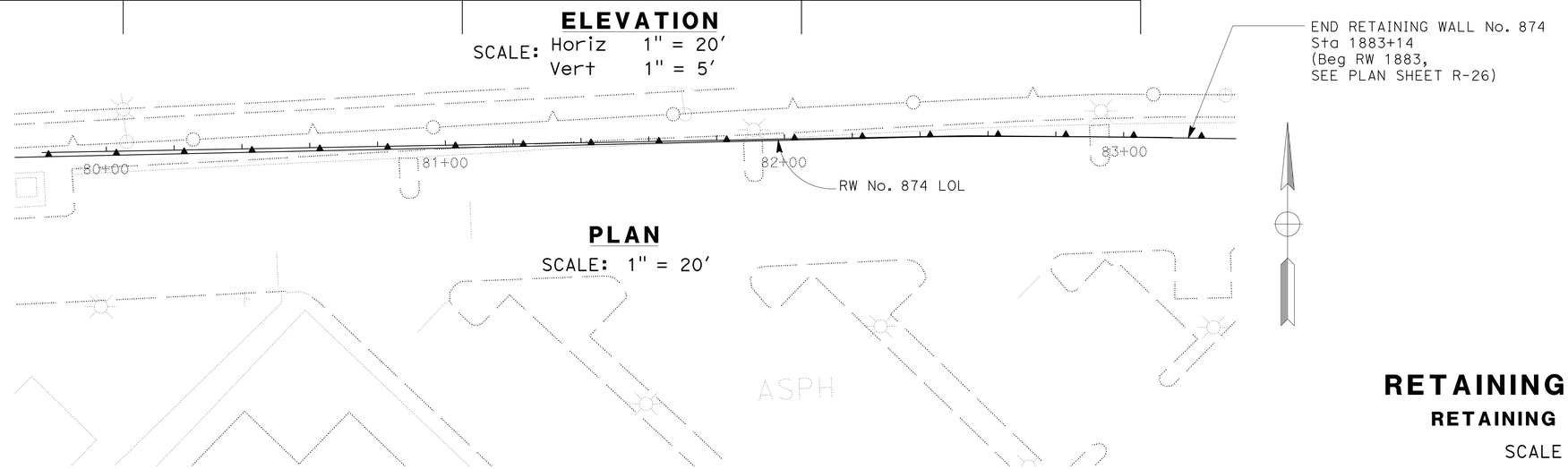

PLAN

SCALE: 1" = 20'

APPROVED FOR RETAINING WALL WORK ONLY

RETAINING WALL PLAN

RETAINING WALL No 874

SCALE AS SHOWN

R-25

STATE OF CALIFORNIA - DEPARTMENT OF TRANSPORTATION
Caltrans® OFFICE OF DESIGN D

FUNCTIONAL SUPERVISOR: NADER GOBRAN
CALCULATED-DESIGNED BY: MOHAMED GHANNOUM
CHECKED BY: NEIL LIANG
REVISED BY
DATE REVISED

LAST REVISION 00-00-00
DATE PLOTTED => 12-JUN-2013
TIME PLOTTED => 20:05

Dist	COUNTY	ROUTE	POST MILES TOTAL PROJECT	SHEET No.	TOTAL SHEETS
07	LA	10	33.2/37.2	643	1475

REGISTERED CIVIL ENGINEER 4-17-12 DATE

6-10-13
PLANS APPROVAL DATE

REGISTERED PROFESSIONAL ENGINEER MOHAMED GHANNOUM No. C72051 Exp. 06/30/14 CIVIL STATE OF CALIFORNIA

THE STATE OF CALIFORNIA OR ITS OFFICERS OR AGENTS SHALL NOT BE RESPONSIBLE FOR THE ACCURACY OR COMPLETENESS OF SCANNED COPIES OF THIS PLAN SHEET.

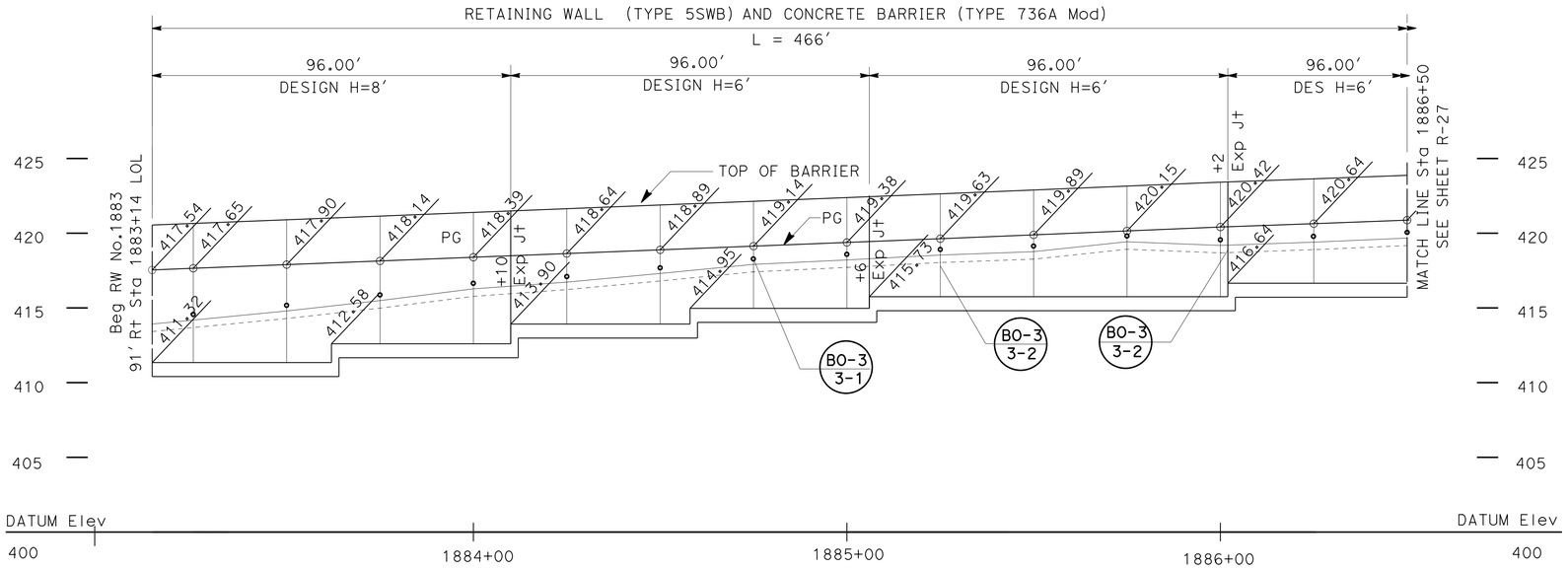

ELEVATION

SCALE: Horiz 1" = 20'
Vert 1" = 5'

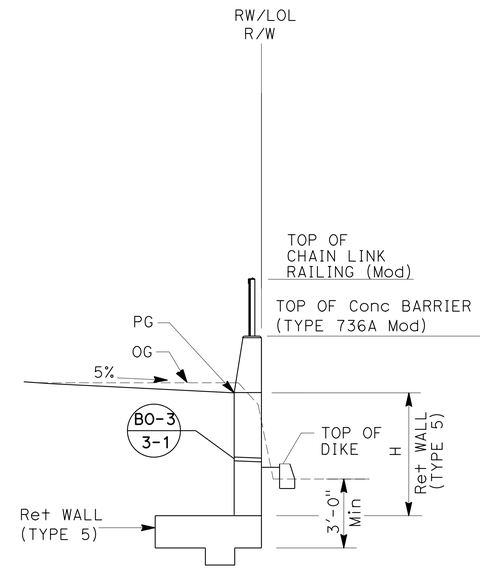

RW No. 1883 LOL, Sta 1883+14 TO Sta 1887+80

TYPICAL SECTION

NO SCALE

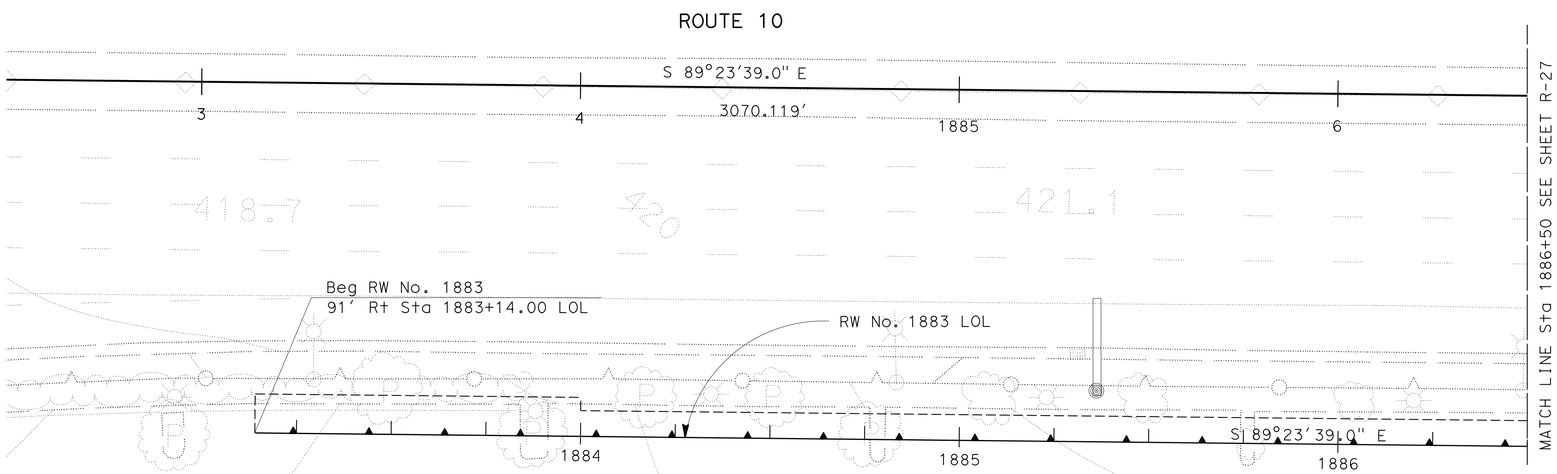

PLAN

SCALE: 1"= 20'

APPROVED FOR RETAINING WALL WORK ONLY

RETAINING WALL PLAN

RETAINING WALL No. 1883

SCALE AS SHOWN

R-26

STATE OF CALIFORNIA - DEPARTMENT OF TRANSPORTATION
Caltrans® OFFICE OF DESIGN D

FUNCTIONAL SUPERVISOR: NADER GOBRAN
CALCULATED-DESIGNED BY: JEROME G. ARABE
CHECKED BY: JEROME G. ARABE
REVISED BY
DATE REVISED

LAST REVISION 00-00-00 | DATE PLOTTED => 12-JUN-2013 | TIME PLOTTED => 20:05

Dist	COUNTY	ROUTE	POST MILES TOTAL PROJECT	SHEET No.	TOTAL SHEETS
07	LA	10	33.2/37.2	644	1475

4-17-12
REGISTERED CIVIL ENGINEER DATE

6-10-13
PLANS APPROVAL DATE

REGISTERED PROFESSIONAL ENGINEER
MOHAMED GHANNOUM
No. C72051
Exp. 6/30/14
CIVIL
STATE OF CALIFORNIA

THE STATE OF CALIFORNIA OR ITS OFFICERS OR AGENTS SHALL NOT BE RESPONSIBLE FOR THE ACCURACY OR COMPLETENESS OF SCANNED COPIES OF THIS PLAN SHEET.

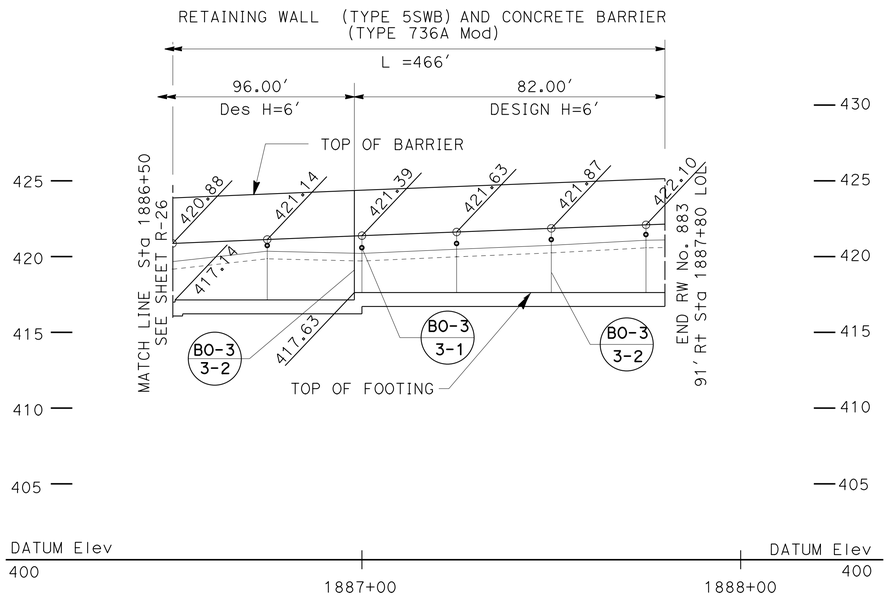

ELEVATION

SCALE: Horiz 1" = 20'
Vert 1" = 5'

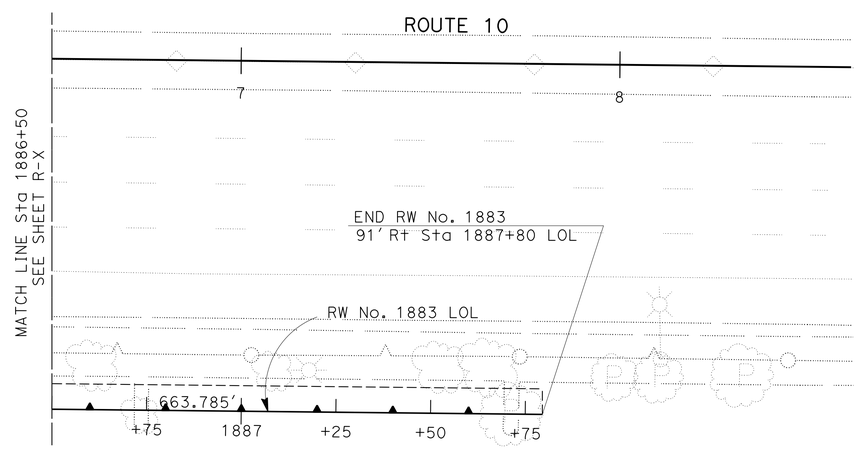

PLAN

SCALE: 1" = 20'

APPROVED FOR RETAINING WALL WORK ONLY

RETAINING WALL PLAN

RETAINING WALL No. 1883

SCALE AS SHOWN

R-27

STATE OF CALIFORNIA - DEPARTMENT OF TRANSPORTATION
Caltrans OFFICE OF DESIGN D

FUNCTIONAL SUPERVISOR: NADER GOBRAN
CALCULATED-DESIGNED BY: ARTURO LAO
CHECKED BY: JEROME G. ARABE
REVISED BY
DATE REVISED

LAST REVISION 00-00-00
DATE PLOTTED => 12-JUN-2013
TIME PLOTTED => 20:05

Dist	COUNTY	ROUTE	POST MILES TOTAL PROJECT	SHEET No.	TOTAL SHEETS
07	LA	10	33.2/37.2	645	1475

REGISTERED CIVIL ENGINEER 4-17-12 DATE

6-10-13
PLANS APPROVAL DATE

REGISTERED PROFESSIONAL ENGINEER MOHAMED GHANNOUM No. C72051 Exp. 6/30/14 CIVIL STATE OF CALIFORNIA

THE STATE OF CALIFORNIA OR ITS OFFICERS OR AGENTS SHALL NOT BE RESPONSIBLE FOR THE ACCURACY OR COMPLETENESS OF SCANNED COPIES OF THIS PLAN SHEET.

NOTES:

1. FOR DETAILS NOT SHOWN, SEE STANDARD PLAN B3-9.
2. FOR DETAILS NOT SHOWN, SEE STANDARD PLAN BO-3 (BRIDGE DETAIL 3-1).
3. FOR DETAILS NOT SHOWN, SEE RETAINING WALL TYPE 7B DETAILS NO.1 AND NO.2.
4. FOR DETAILS NOT SHOWN, SEE CONSTRUCTION DETAILS.

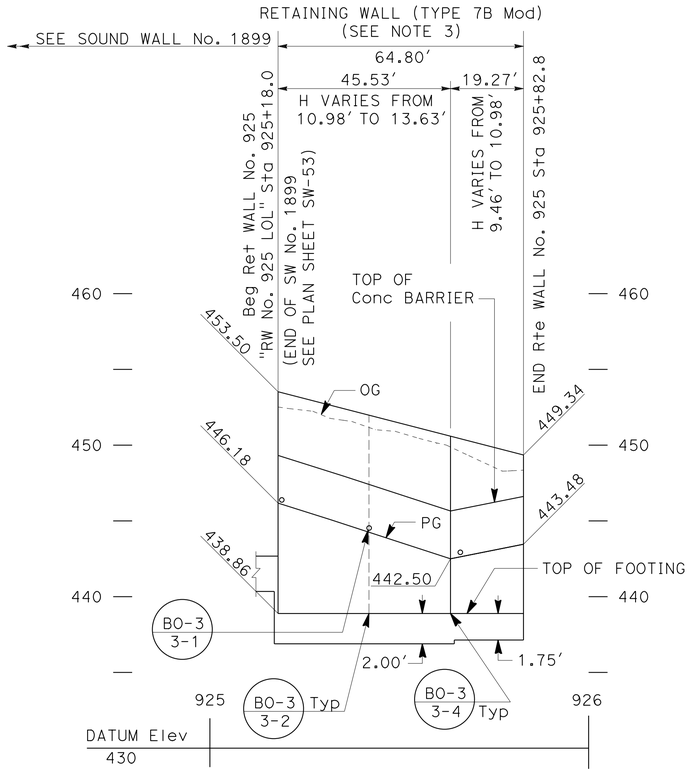

ELEVATION

SCALE: Horiz 1"= 20'
Vert 1"= 5'

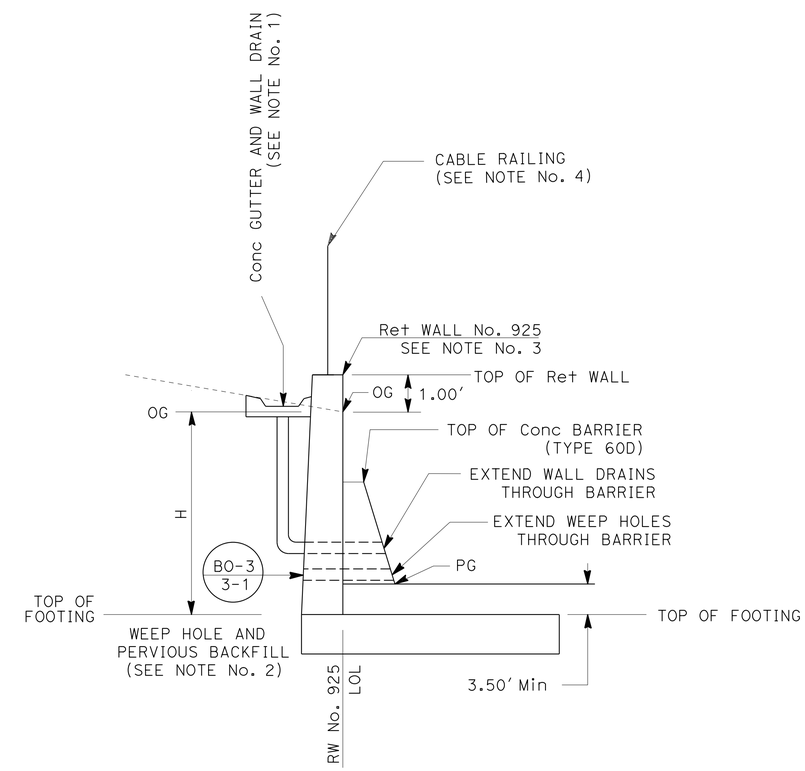

"RW 923 LOL" Sta 925+18.00 TO 925+82.8

TYPICAL SECTION

NO SCALE

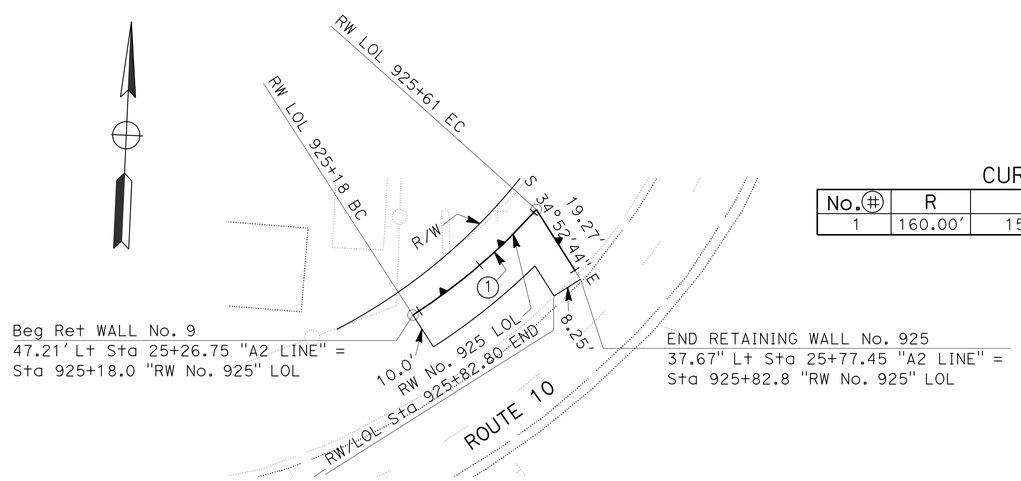

CURVE DATA

No. (#)	R	Δ	T	L
1	160.00'	15°24'02"	21.63'	43.01'

PLAN

SCALE 1"= 20'

APPROVED FOR RETAINING WALL WORK ONLY

RETAINING WALL PLAN

RETAINING WALL No. 925

SCALE AS SHOWN

R-28

STATE OF CALIFORNIA - DEPARTMENT OF TRANSPORTATION
Caltrans OFFICE OF DESIGN

FUNCTIONAL SUPERVISOR: NADER GOBRAN
CALCULATED-DESIGNED BY: NEIL LIANG
CHECKED BY: MOHAMED GHANNOUM
REVISED BY
DATE REVISED

LAST REVISION 00-00-00
DATE PLOTTED => 20-JUN-2013
TIME PLOTTED => 11:16

Dist	COUNTY	ROUTE	POST MILES TOTAL PROJECT	SHEET No.	TOTAL SHEETS
07	LA	10	33.2/37.2	646	1475

REGISTERED CIVIL ENGINEER 4-17-12 DATE

6-10-13
PLANS APPROVAL DATE

REGISTERED PROFESSIONAL ENGINEER MOHAMED GHANNOUM No. C72051 Exp. 6/30/14 CIVIL STATE OF CALIFORNIA

THE STATE OF CALIFORNIA OR ITS OFFICERS OR AGENTS SHALL NOT BE RESPONSIBLE FOR THE ACCURACY OR COMPLETENESS OF SCANNED COPIES OF THIS PLAN SHEET.

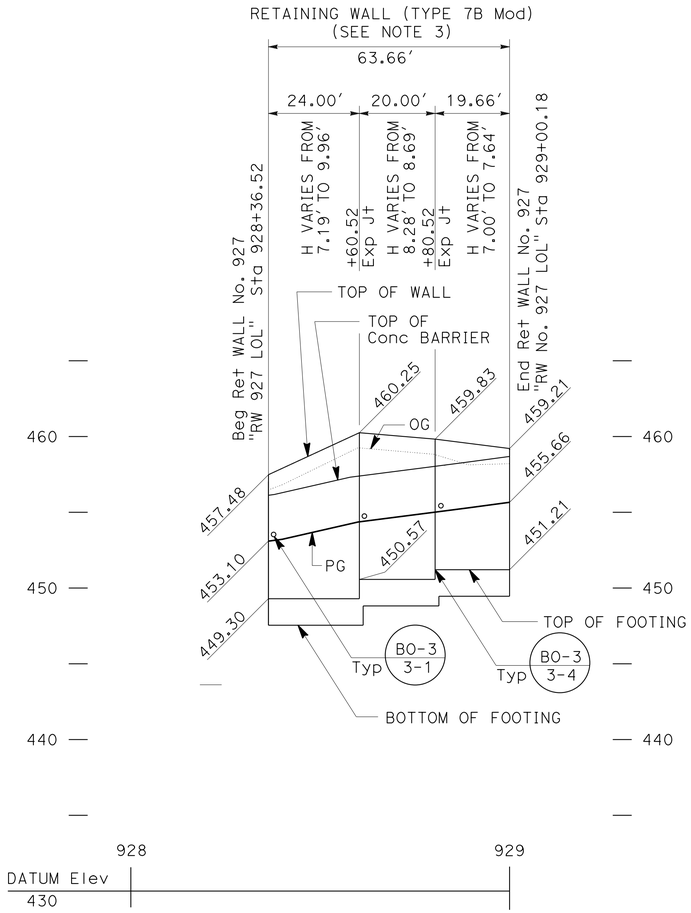

ELEVATION

SCALE: Horiz 1" = 20′
Vert 1" = 5′

NOTES:

1. FOR DETAILS NOT SHOWN, SEE STANDARD PLAN B3-9.
2. FOR DETAILS NOT SHOWN, SEE STANDARD PLAN BO-3 (BRIDGE DETAIL 3-1).
3. FOR DETAILS NOT SHOWN, SEE RETAINING WALL TYPE 7B DETAILS NO.1 AND NO.2.
4. FOR DETAILS NOT SHOWN, SEE CONSTRUCTION DETAILS.

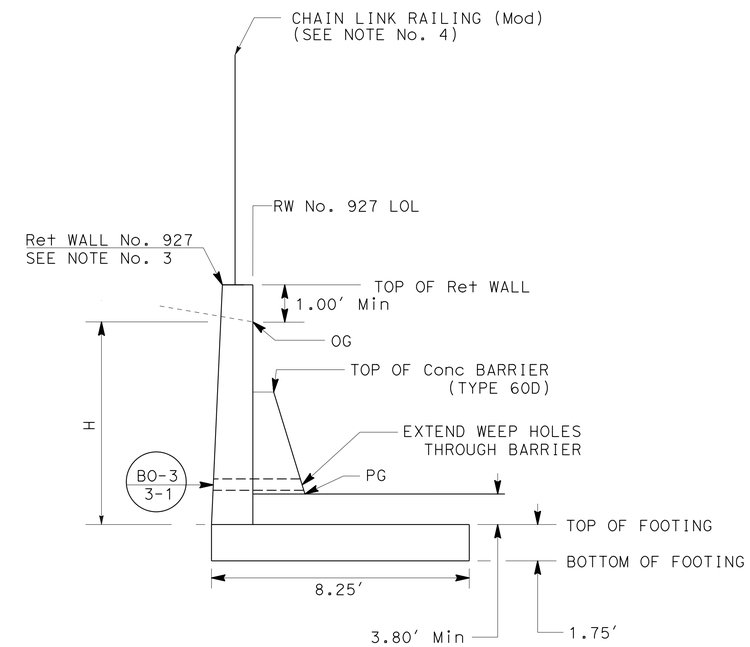

"RW No. 927 LOL" Sta 928+36.52 TO 929+00

TYPICAL SECTION

NO SCALE

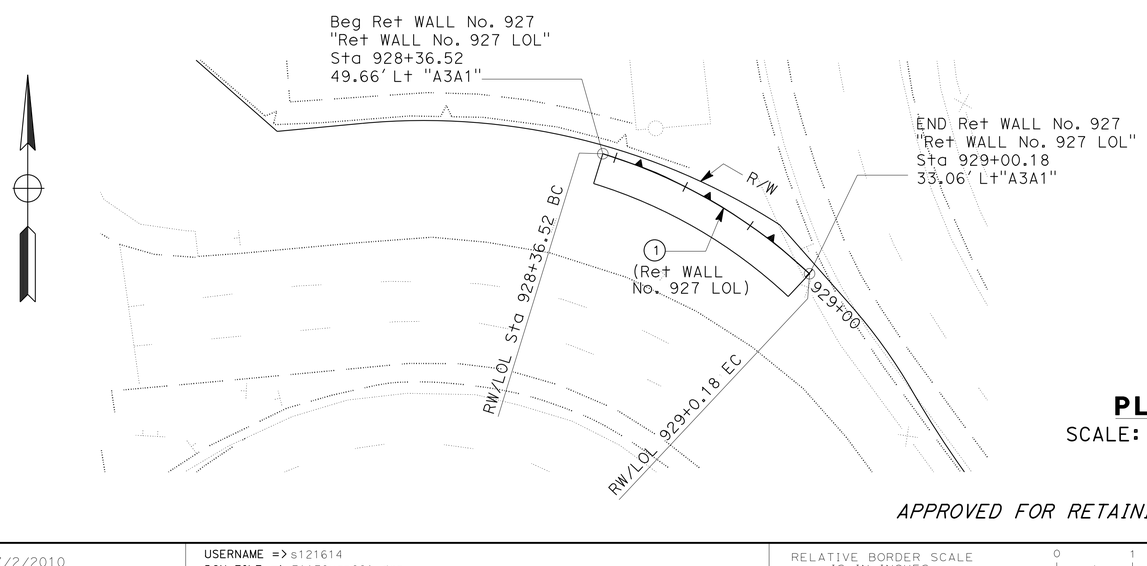

PLAN

SCALE: 1" = 20′

CURVE DATA

No. 1	R	Δ	T	L
1	140.00′	26°3′12"	32.39′	63.66′

APPROVED FOR RETAINING WALL WORK ONLY

RETAINING WALL PLAN

RETAINING WALL No. 927

SCALE AS SHOWN

R-29

STATE OF CALIFORNIA - DEPARTMENT OF TRANSPORTATION
Caltrans® OFFICE OF DESIGN D

FUNCTIONAL SUPERVISOR: NADER GOBRAN
CALCULATED-DESIGNED BY: NEIL LIANG
CHECKED BY: MOHAMED GHANNOUM
REVISED BY
DATE REVISED

LAST REVISION 00-00-00
DATE PLOTTED => 20-JUN-2013
TIME PLOTTED => 11:16

Dist	COUNTY	ROUTE	POST MILES TOTAL PROJECT	SHEET No.	TOTAL SHEETS
07	LA	10	33.2/37.2	647	1475

4-17-12
REGISTERED CIVIL ENGINEER DATE

6-10-13
PLANS APPROVAL DATE

REGISTERED PROFESSIONAL ENGINEER
MOHAMED GHANNOUM
No. C72051
Exp. 06/30/14
CIVIL
STATE OF CALIFORNIA

THE STATE OF CALIFORNIA OR ITS OFFICERS OR AGENTS SHALL NOT BE RESPONSIBLE FOR THE ACCURACY OR COMPLETENESS OF SCANNED COPIES OF THIS PLAN SHEET.

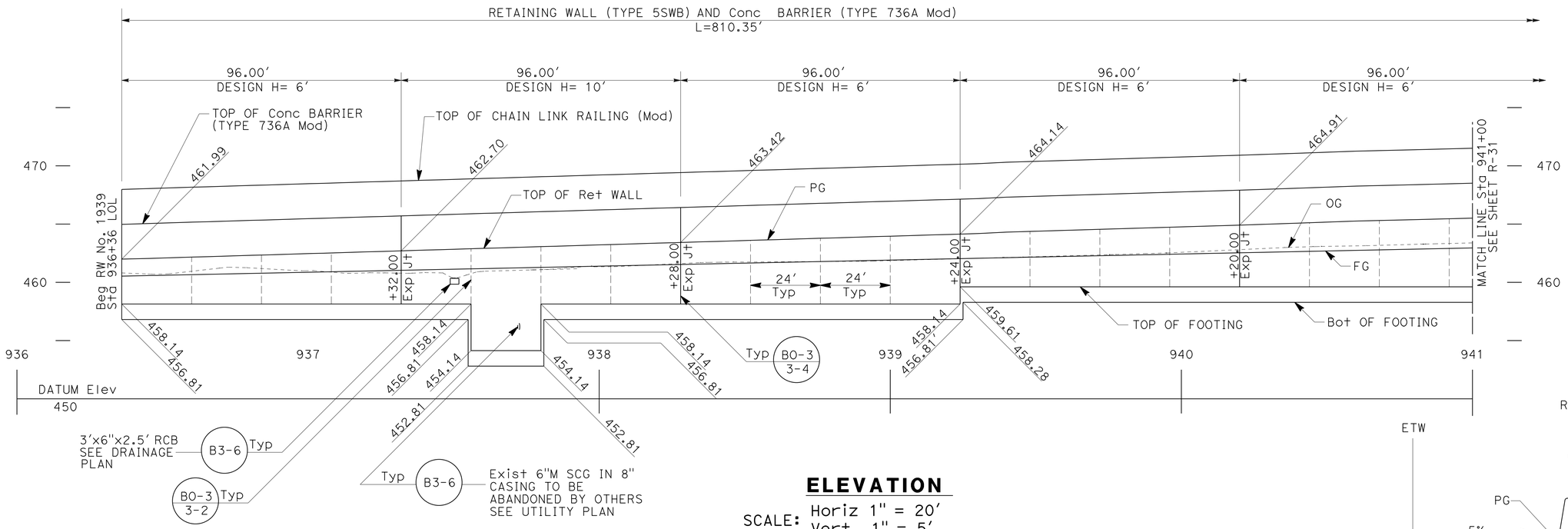

ELEVATION

SCALE: Horiz 1" = 20'
Vert 1" = 5'

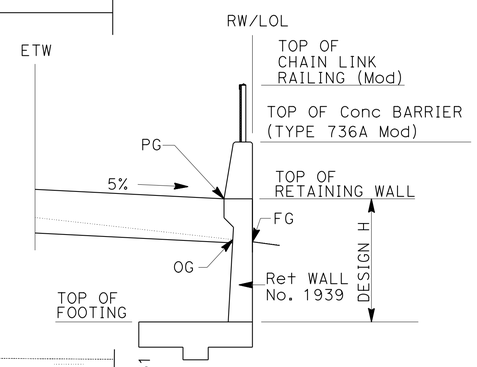

RW No. 1939 LOL, Sta 936+36 TO Sta 946+49

TYPICAL SECTION

NO SCALE

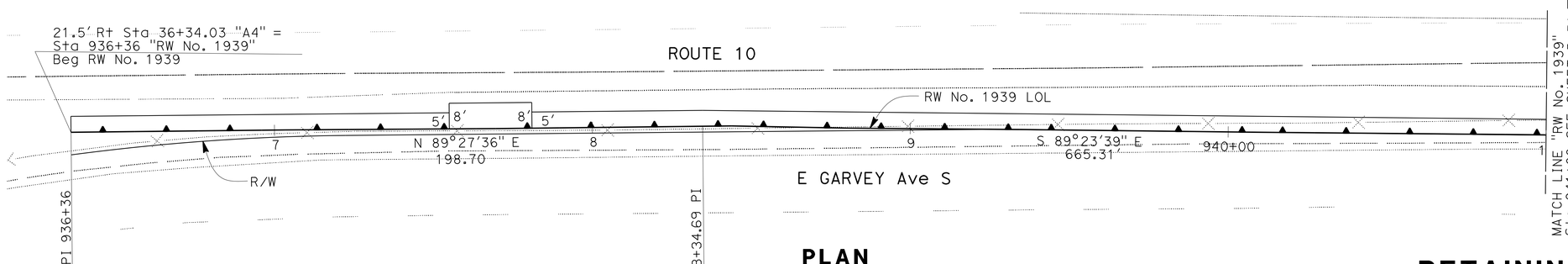

PLAN

SCALE: 1" = 20'

RETAINING WALL PLAN

RETAINING WALL 1939

SCALE AS SHOWN

R-30

APPROVED FOR RETAINING WALL WORK ONLY

MINH TU — REVISED BY
DATE REVISED
JEROME G. ARABE — CALCULATED-DESIGNED BY
CHECKED BY
NADER GOBRAN — FUNCTIONAL SUPERVISOR

STATE OF CALIFORNIA - DEPARTMENT OF TRANSPORTATION
Caltrans® OFFICE OF DESIGN D

LAST REVISION 00-00-00 | DATE PLOTTED => 12-JUN-2013 | TIME PLOTTED => 20:05

Dist	COUNTY	ROUTE	POST MILES TOTAL PROJECT	SHEET No.	TOTAL SHEETS
07	LA	10	33.2/37.2	648	1475

4-17-12
REGISTERED CIVIL ENGINEER DATE

6-10-13
PLANS APPROVAL DATE

REGISTERED PROFESSIONAL ENGINEER
MOHAMED GHANNOUM
No. C72051
Exp. 06/30/14
CIVIL
STATE OF CALIFORNIA

THE STATE OF CALIFORNIA OR ITS OFFICERS OR AGENTS SHALL NOT BE RESPONSIBLE FOR THE ACCURACY OR COMPLETENESS OF SCANNED COPIES OF THIS PLAN SHEET.

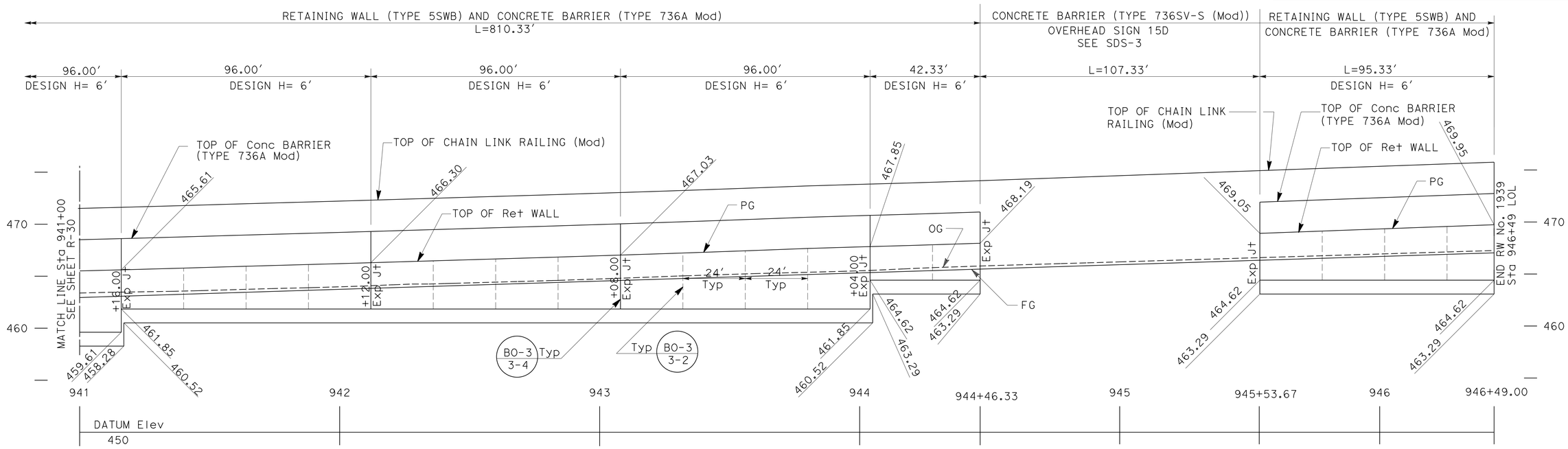

ELEVATION

SCALE: Horiz 1" = 20'
Vert 1" = 5'

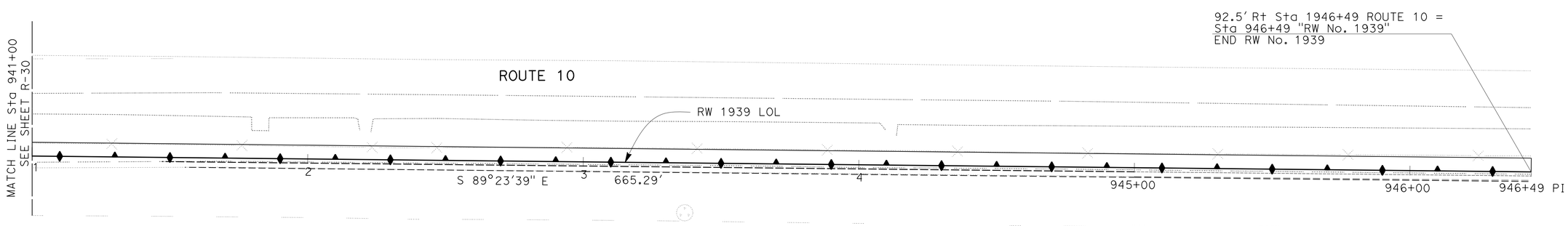

PLAN

SCALE: 1" = 20'

APPROVED FOR RETAINING WALL WORK ONLY

RETAINING WALL PLAN

RETAINING WALL 1939

SCALE AS SHOWN

R-31

REVISED BY | DATE REVISED
MINH TU | JEROME G. ARABE
CALCULATED-DESIGNED BY | CHECKED BY
FUNCTIONAL SUPERVISOR
NADER GOBRAN

STATE OF CALIFORNIA - DEPARTMENT OF TRANSPORTATION
Caltrans® OFFICE OF DESIGN D

LAST REVISION 00-00-00
DATE PLOTTED => 13-JUN-2013
TIME PLOTTED => 06:02

ARCHITECTURAL ABBREVIATIONS

&	AND
∟	ANGLE
℄	CENTER LINE
∅	DIAMETER OR ROUND
□	SQUARE
d	PENNY
°	DEGREE
AB	ANCHOR BOLT
ABUT	ABUTMENT
ABV	ABOVE
AC	ASPHALT CONCRETE
ACOUS	ACOUSTICAL
ADJ	ADJUSTABLE
ALT	ALTERNATE
ALUM	ALUMINUM
APA	AMERICAN PLYWOOD ASSOCIATION
ARCH	ARCHITECTURAL, ARCHITECT
ASPH	ASPHALT
BD	BOARD
BIT	BITUMINOUS
BLDG	BUILDING
BLK	BLOCK
BLKG	BLOCKING
BM	BEAM
BN	BOUNDARY NAILING
BOT	BOTTOM
BR	BRIDGE
BTM	BOTTOM
BTWN	BETWEEN
BUR	BUILT-UP-ROOFING
CJ	CONTROL JOINT
CL	CHAIN LINK
CAB	CABINET
CB	CATCH BASIN
CEM	CEMENT
CER	CERAMIC
CH	CLOTHES HOOK
CIDH	CAST IN DRILLED HOLE
CIP	CAST IN PLACE
CKBD	CHALKBOARD
CLG	CEILING
CMU	CONCRETE MASONRY UNIT
CLO	CLOSET
CLR	CLEAR
COL	COLUMN
CONC	CONCRETE
CONN	CONNECTION
CONST	CONSTRUCTION
CONT	CONTINUOUS
CORR	CORRIDOR
CPT	CARPET
CT	CERAMIC TILE
CTR	CENTER
CTSK	COUNTERSUNK
CY	CUBIC YARD
DBL	DOUBLE
DEPT	DEPARTMENT
DET	DETAIL
DF	DOUGLAS FIR
DIA	DIAMETER
DIM	DIMENSION
DN	DOWN
DP	DEEP
DR	DOOR
DS	DOWNSPOUT
DWG	DRAWING
DWR	DRAWER
(E)	EXISTING
E	EAST
EA	EACH
EF	EXHAUST FAN
EHD	ELECTRIC HAND DRYER
EJ	EXPANSION JOINT
EL	ELEVATION (HEIGHT)
ELEC	ELECTRICAL
ELEV	ELEVATION (VIEW)
ELVR	ELEVATOR
EMER	EMERGENCY
ENCL	ENCLOSURE
EP	EDGE OF PAVEMENT
EQ	EQUAL
EPB	ELECTRICAL PANELBOARD
EQUIP	EQUIPMENT
ESCL	ESCALATOR
ETW	EDGE OF TRAVEL WAY
EWC	ELECTRIC WATER COOLER
EXP	EXPANSION
EXPO	EXPOSED, EXPOSURE
EXT	EXTERIOR
FD	FLOOR DRAIN
FDN	FOUNDATION
FE	FIRE EXTINGUISHER
FEC	FIRE EXTINGUISHER CABINET
FF	FINISH FLOOR
FG	FINISH GRADE
FH	FIRE HYDRANT
FHC	FIRE HOSE CABINET
FHMS	FLATHEAD METAL SCREW
FHWS	FLATHEAD WOOD SCREW
FIN	FINISH
FJ	FLOOR JOIST
FLASH	FLASHING
FLR	FLOOR
FLUOR	FLUORESCENT
FOC	FACE OF CONCRETE
FOF	FACE OF FINISH
FOM	FACE OF MASONRY
FOS	FACE OF STUD
FRMG	FRAMING
FRPP	FIBERGLASS REINFORCED PLASTIC PANEL
FT	FEET, FOOT
FTG	FOOTING
FURR	FURRING
FWY	FREEWAY
GA	GAUGE
GAL	GALLON
GALV	GALVANIZED
GB	GRAB BAR
GI	GALVANIZED IRON
GL	GLASS
GLM	GLUE LAMINATED MEMBER
GLZ	GLAZING
GR	GRADE
GSM	GALVANIZED SHEET METAL
GYP	GYPSUM
GYP SHTG	GYPSUM SHEATHING
HB	HOSE BIB
HC	HOLLOW CORE
HD	HEAD, HOLD DOWN
HDR	HEADER
HDWD	HARDWOOD
HDWR	HARDWARE
HEX	HEXAGONAL
HF	HEMLOCK-FIR
HGR	HANGER
HM	HOLLOW METAL
HORIZ	HORIZONTAL
HP	HIGH POINT
HR	HOUR
HSB	HIGH STRENGTH BOLT
HT	HEIGHT
HVAC	HEATING, VENTILATING, AIR CONDITIONING
HWY	HIGHWAY
ID	INSIDE DIAMETER
IN	INCH
INFO	INFORMATION
INSUL	INSULATION
INT	INTERIOR
JAN	JANITOR
JB	JUNCTION BOX
JH	JOIST HANGER
JST	JOIST
JT	JOINT
KIT	KITCHEN
LAB	LABORATORY
LAV	LAVATORY
LBS	POUNDS
LF	LINEAR FEET
LKR	LOCKER
LLV	LONG LEG VERTICAL
LOL	LAYOUT LINE
LPG	LIQUIFIED PETROLEUM GAS
LS	LAG SCREW
M	METER
MAT	MATERIAL
MAX	MAXIMUM
MB	MACHINE BOLT
MBR	MEMBER
MECH	MECHANICAL
MEMB	MEMBRANE
MET	METAL
MFR	MANUFACTURER
MH	MAN HOLE
MIN	MINIMUM
MIR	MIRROR
MISC	MISCELLANEOUS
mm	MILLIMETER
MO	MASONRY OPENING
MOD	MODIFIED
MTD	MOUNTED
MUL	MULLION
N	NORTH
ND	NAPKIN DISPOSAL
NIC	NOT IN CONTRACT
NO	NUMBER
NOM	NOMINAL
NTS	NOT TO SCALE
OBSC	OBSCURE
OC	OVERCROSSING
OD	OUTSIDE DIAMETER
OFF	OFFICE
OFD	OVERFLOW DRAIN
OG	ORIGINAL GROUND
OH	OVERHEAD
OHWS	OVALHEAD WOOD SCREW
OP	OPERATIONS
OPNG	OPENING
OPP	OPPOSITE
OPT	OPTION, OPTIONAL
P	PITCH
PB	POST BASE
PC	POST CAP
PCC	PORTLAND CEMENT CONCRETE
PDF	POWDER DRIVEN FASTENERS
PH	PHILLIPS HEAD
PL	PLATE
PLAM	PLASTIC LAMINATE
PLAS	PLASTER
PLYWD	PLYWOOD
PMF	PRESSED METAL FRAME
PR	PAIR
PRTN	PARTITION
PT	POINT
PTD	PAPER TOWEL DISPENSER
PTD/R	PAPER TOWEL DISPENSER /RECEPTACLE
PVC	POLYVINYL CHLORIDE
PWB	PREFABRICATED WOOD I BEAM
QT	QUARRY TILE
(R)	RELOCATED
R	RADIUS, RISER
R/W	RIGHT OF WAY
RD	ROOF DRAIN
RDWD	REDWOOD
REF	REFERENCE
REFG	REFRIGERATOR
REINF	REINFORCED(ING)
REQ	REQUIRED
RFG	ROOFING
RFSWN	ROUGHSAWN
RH	ROUND HEAD
RHWS	ROUND HEAD WOOD SCREWS
RJ	ROOF JOIST
RM	ROOM
RO	ROUGH OPENING
RSWN	RESAWN
RTE	ROUTE
RW	RETAINING WALL
S	SOUTH
SC	SOLID CORE
SCHED	SCHEDULE
SD	SOAP DISPENSER
SDST	SELF DRILLING SELF TAPPING
SF	SQUARE FEET
SH	SHELF
SHWR	SHOWER
SHT	SHEET
SHTG	SHEATHING
SIM	SIMILAR
SL	SCORE LINE
SMS	SHEET METAL SCREW
SOHD	SECTIONAL OVERHEAD DOOR
SPEC	SPECIFICATION
SPS	STRUCTURAL PLYWOOD SHEATHING
SQ	SQUARE
SRRA	SAFETY ROADSIDE REST AREA
SS	SERVICE SINK
SST	STAINLESS STEEL
STA	STATION
STAG	STAGGER
STD	STANDARD
STL	STEEL
STOR	STORAGE
STRUC	STRUCTURAL
SUSP	SUSPENDED
T	TREAD
T&G	TONGUE & GROOVE
TB	TOLL BOOTH
TEL	TELEPHONE
TEMP	TEMPERED
TER	TERRAZZO
THK	THICK
THLD	THRESHOLD
TJ	TOOLED JOINT
TKBD	TACKBOARD
TN	TOE NAIL
TNVM	TAMPON/NAPKIN VENDING MACHINE
TOC	TOP OF CURB OR CONCRETE
TOP	TOP OF PAVEMENT
TOS	TOE OF SLOPE
TOT	TOTAL
TOW	TOP OF WALL
TS	TUBE STEEL
TSCD	TOILET SEAT COVER DISPENSER
TTD	TOILET TISSUE DISPENSER
TTY	TELETYPEWRITER
TYP	TYPICAL
UNF	UNFINISHED
UON	UNLESS OTHERWISE NOTED
UR	URINAL
VAR	VARIES
VCT	VINYL COMPOSITION TILE
VERT	VERTICAL
VEST	VESTIBULE
VR	VENT RISER
VTR	VENT THRU ROOF
W	WEST
W/	WITH
W/O	WITHOUT
WC	WATER CLOSET
WD	WOOD
WDW	WINDOW
WH	WATER HEATER
WP	WORKING POINT
WR	WATER RESISTANT
WSCT	WAINSCOT
WT	WEIGHT
WTPR	WATERPROOFING
WWF	WELDED WIRE FABRIC
YD	YARD

ARCHITECTURAL GENERAL NOTES

1. THE CONTRACTOR SHALL VERIFY ALL CONTROLLING DIMENSIONS AND FIELD CONDITIONS PRIOR TO ORDERING OR FABRICATING ANY MATERIALS OR ASSEMBLIES FOR CONSTRUCTION
2. THE CONTRACTOR SHALL NOTIFY THE ENGINEER IN WRITING OF ANY DISCREPANCIES BETWEEN THESE PLANS AND ACTUAL MEASUREMENTS OR FIELD CONDITIONS PRIOR TO ORDERING OR FABRICATING ANY MATERIALS OR ASSEMBLIES FOR CONSTRUCTION.

DIST	COUNTY	ROUTE	KILOMETER POST TOTAL PROJECT	SHEET No	TOTAL SHEETS
07	LA	10	33.2/37.2	649	1475

LICENSED ARCHITECT — DATE 03/14/12

6-10-13
PLANS APPROVAL DATE

LICENSED ARCHITECT H. Javier Chavez 14073 03-31-13 Renewal Date STATE OF CALIFORNIA

The State of California or its officers or agents shall not be responsible for the accuracy or completeness of electronic copies of this plan sheet.

SYMBOLS FOR ARCHITECTURAL SHEETS

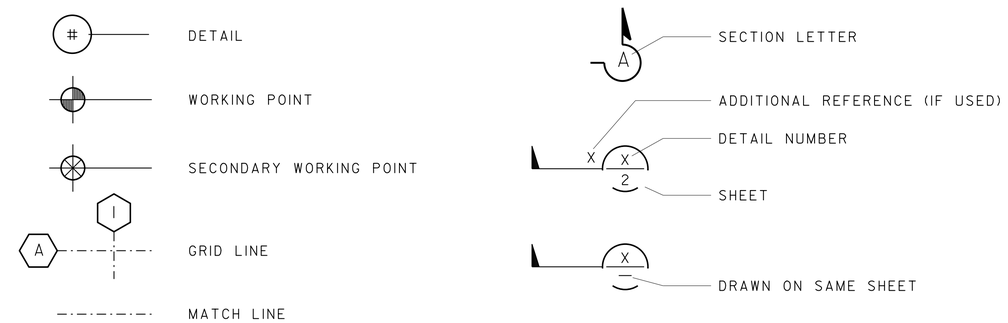

INDEX FOR ARCHITECTURAL SHEETS

A0 ARCHITECTURAL ABBREVIATIONS, SYMBOLS & INDEX
A1 RETAINING WALL 868 - ARCHITECTURAL TREATMENT
A2 RETAINING WALL 927 - ARCHITECTURAL TREATMENT
A3 RETAINING WALL 1822 - ARCHITECTURAL TREATMENT
A4 RETAINING WALL 1823 - ARCHITECTURAL TREATMENT
A5 RETAINING WALL 1823 - ARCHITECTURAL TREATMENT
A6 RETAINING WALL 1823 - ARCHITECTURAL TREATMENT
A7 RETAINING WALL 1823 - ARCHITECTURAL TREATMENT
A8 RETAINING WALL 1823 - ARCHITECTURAL TREATMENT
A9 RETAINING WALL 1823 - ARCHITECTURAL TREATMENT
A10 RETAINING WALL 1823 - ARCHITECTURAL TREATMENT
A11 RETAINING WALL 1823 - ARCHITECTURAL TREATMENT
A12 RETAINING WALL 1939 - ARCHITECTURAL TREATMENT

RETAINING WALL AESTHETIC PLAN

R-32

	BY	CHECKED
DESIGN	V. MOORE	I. TASABIA
DETAILS	V. MOORE	H. CHAVEZ
QUANTITIES	M. GHANNOUM	

STATE OF CALIFORNIA
DEPARTMENT OF TRANSPORTATION

DIVISION OF ENGINEERING SERVICES
BRIDGE ARCHITECTURE AND AESTHETICS

BRIDGE NO. X
POST MILE 33.2/37.2

I-10 HOV SEGMENT 2 - RETAINING WALLS
ARCHITECTURAL ABBREVIATIONS, SYMBOLS & INDEX

SHEET A0

STRUCTURES DESIGN DETAIL SHEET (ENGLISH) (REV. 09-01-10)

ORIGINAL SCALE IN INCHES FOR REDUCED PLANS 0 1 2 3

CU 07
PROJECT 07000000851
CONTRACT NO.: X

DISREGARD PRINTS BEARING EARLIER REVISION DATES 03/15/12

REVISION DATES | SHEET 1 | OF 13

FILE => 71170ugr001.dgn

USERNAME => s121614 DATE PLOTTED => 13-JUN-2013 TIME PLOTTED => 06:02

DIST	COUNTY	ROUTE	KILOMETER POST TOTAL PROJECT	SHEET No	TOTAL SHEETS
07	LA	10	33.2/37.2	650	1475

LICENSED ARCHITECT — DATE 03/14/12

PLANS APPROVAL DATE 6-10-13

LICENSED ARCHITECT H. Javier Chavez 14073 03-31-13 Renewal Date STATE OF CALIFORNIA

The State of California or its officers or agents shall not be responsible for the accuracy or completeness of electronic copies of this plan sheet.

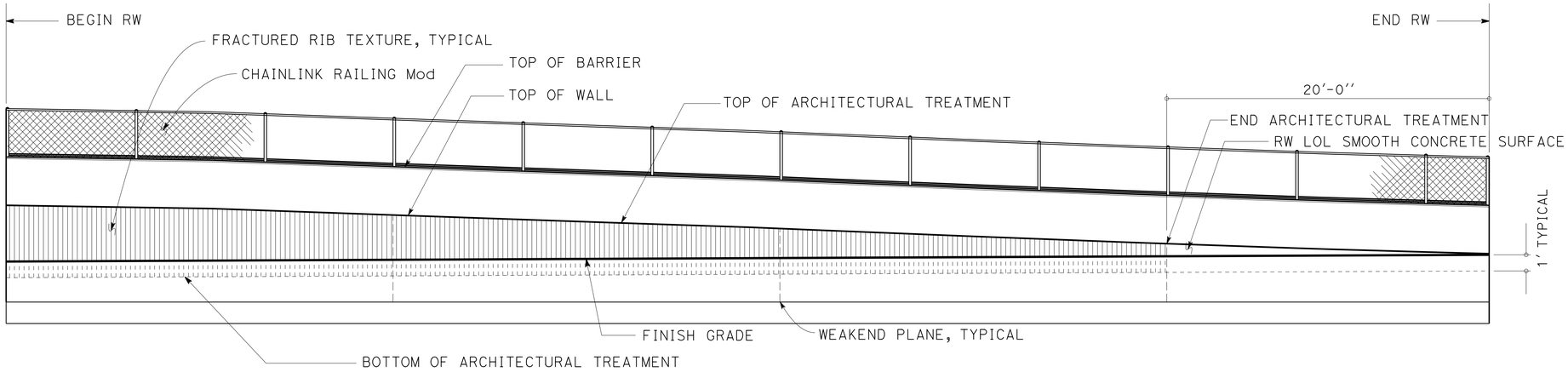

ELEVATION AT RETAIINING WALL 868

NO SCALE

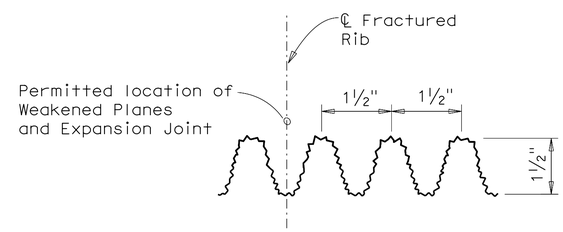

FRACTURED RIB TEXTURE DETAIL

NO SCALE

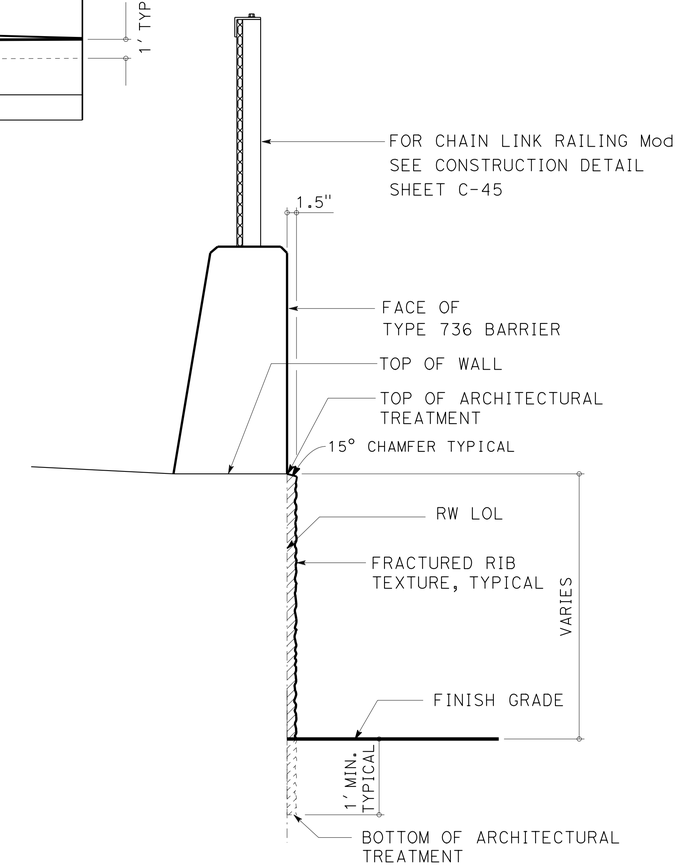

TYPICAL SECTION

NO SCALE

RETAINING WALL AESTHETIC PLAN
R-33

DESIGN	BY V. MOORE	CHECKED I. TASABIA	
DETAILS	BY V. MOORE	CHECKED H. CHAVEZ	
QUANTITIES	BY M. GHANNOUM	CHECKED	

STATE OF CALIFORNIA DEPARTMENT OF TRANSPORTATION

DIVISION OF ENGINEERING SERVICES BRIDGE ARCHITECTURE AND AESTHETICS

BRIDGE NO. X — POST MILE 33.2/37.2

I-10 HOV SEGMENT 2 - RETAINING WALLS

RETAINING WALL 868 - ARCHITECTURAL TREATMENT

SHEET A1

STRUCTURES DESIGN DETAIL SHEET (ENGLISH) (REV. 09-01-10)

ORIGINAL SCALE IN INCHES FOR REDUCED PLANS 0 1 2 3

CU 07 PROJECT 07000000851 CONTRACT NO.: X

DISREGARD PRINTS BEARING EARLIER REVISION DATES 03/15/12

REVISION DATES — SHEET 2 OF 13

FILE => 71170ugr002.dgn

USERNAME => s121614 DATE PLOTTED => 13-JUN-2013 TIME PLOTTED => 06:02

DIST	COUNTY	ROUTE	KILOMETER POST TOTAL PROJECT	SHEET No	TOTAL SHEETS
07	LA	10	33.2/37.2	651	1475

LICENSED ARCHITECT — DATE 03/14/12

6-10-13
PLANS APPROVAL DATE

LICENSED ARCHITECT H. Javier Chavez 14073 03-31-13 Renewal Date STATE OF CALIFORNIA

The State of California or its officers or agents shall not be responsible for the accuracy or completeness of electronic copies of this plan sheet.

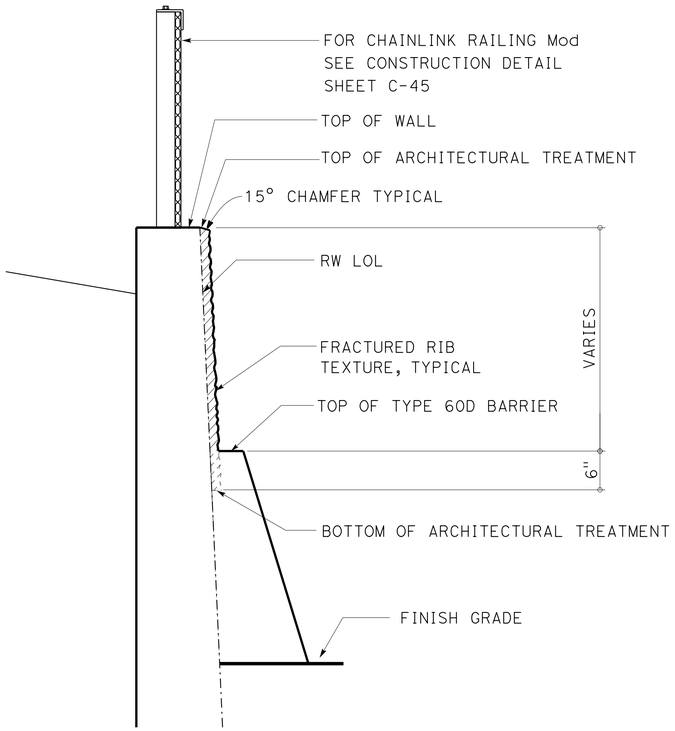

TYPICAL SECTION

NO SCALE

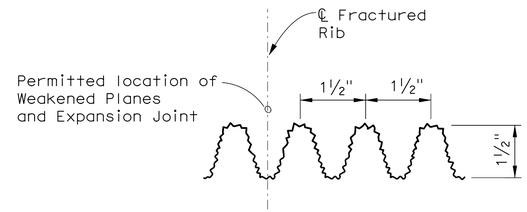

FRACTURED RIB TEXTURE DETAIL

NO SCALE

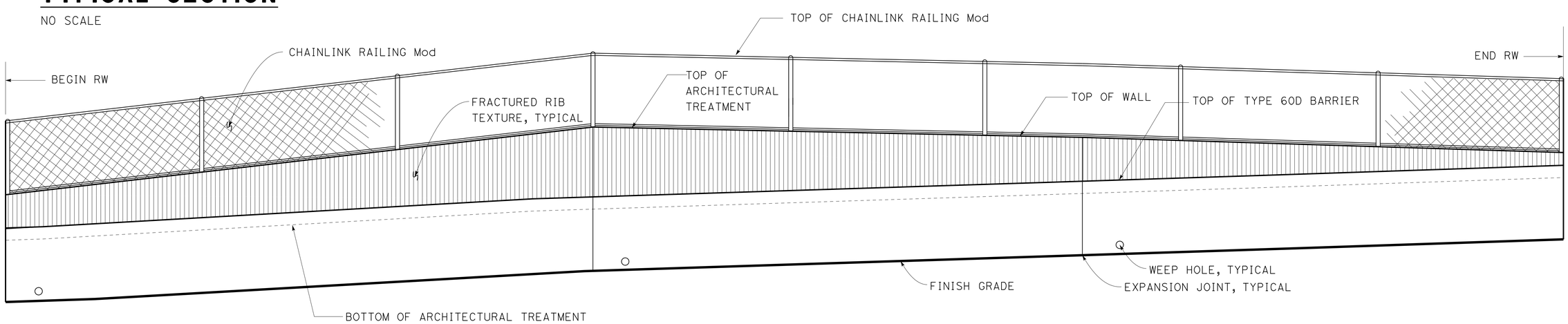

ELEVATION AT RETAINING WALL 927

NO SCALE

RETAINING WALL AESTHETIC PLAN
R-34

DESIGN	BY V. MOORE	CHECKED I. TASABIA	
DETAILS	BY V. MOORE	CHECKED H. CHAVEZ	
QUANTITIES	BY M. GHANNOUM	CHECKED	

STATE OF CALIFORNIA
DEPARTMENT OF TRANSPORTATION

DIVISION OF ENGINEERING SERVICES
BRIDGE ARCHITECTURE AND AESTHETICS

BRIDGE NO. X
POST MILE 33.2/37.2

I-10 HOV SEGMENT 2 - RETAINING WALLS
RETAINING WALL 927 - ARCHITECTURAL TREATMENT

SHEET A2

STRUCTURES DESIGN DETAIL SHEET (ENGLISH) (REV. 09-01-10)

ORIGINAL SCALE IN INCHES FOR REDUCED PLANS 0 1 2 3

CU 07
PROJECT 07000000851
CONTRACT NO.: X

DISREGARD PRINTS BEARING EARLIER REVISION DATES

REVISION DATES 03/15/12

SHEET 3 OF 13

FILE => 71170uqr003.dgn

USERNAME => s121614 DATE PLOTTED => 13-JUN-2013 TIME PLOTTED => 06:02

DIST	COUNTY	ROUTE	KILOMETER POST TOTAL PROJECT	SHEET No	TOTAL SHEETS
07	LA	10	33.2/37.2	652	1475

LICENSED ARCHITECT — DATE 03/14/12

PLANS APPROVAL DATE 6-10-13

LICENSED ARCHITECT H. Javier Chavez 14073 03-31-13 Renewal Date STATE OF CALIFORNIA

The State of California or its officers or agents shall not be responsible for the accuracy or completeness of electronic copies of this plan sheet.

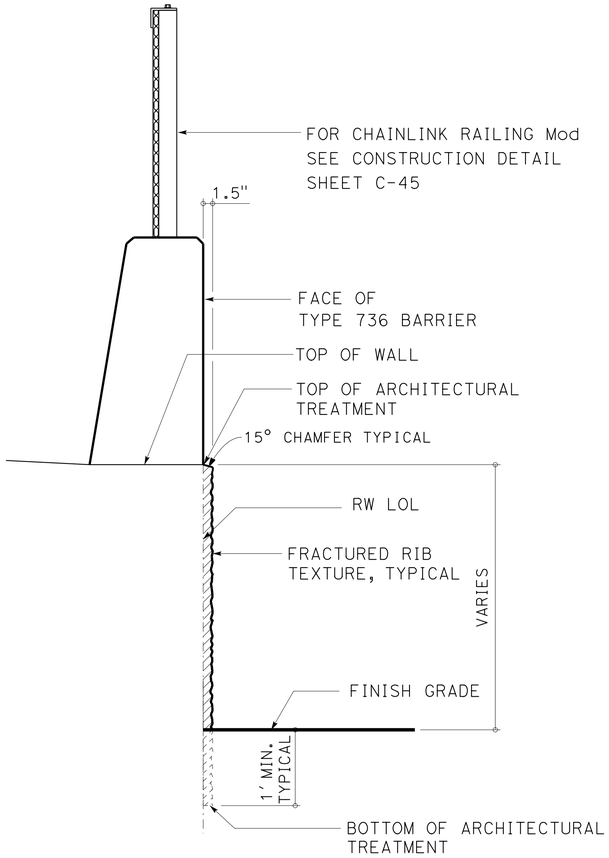

TYPICAL SECTION

NO SCALE

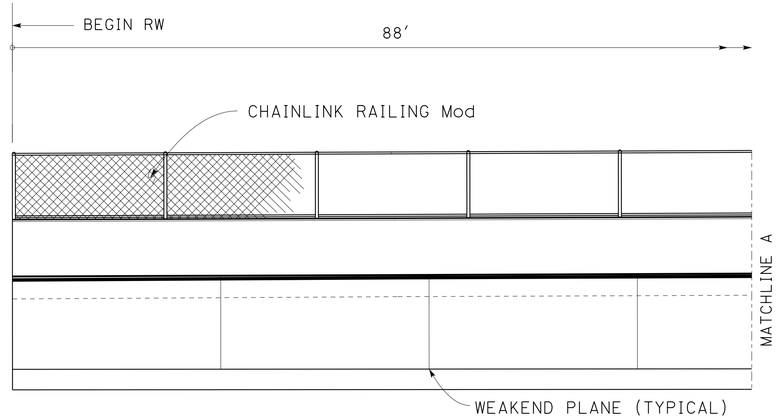

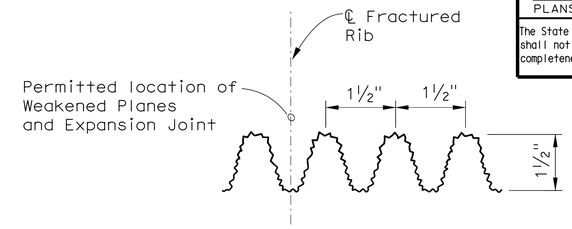

FRACTURED RIB TEXTURE DETAIL

NO SCALE

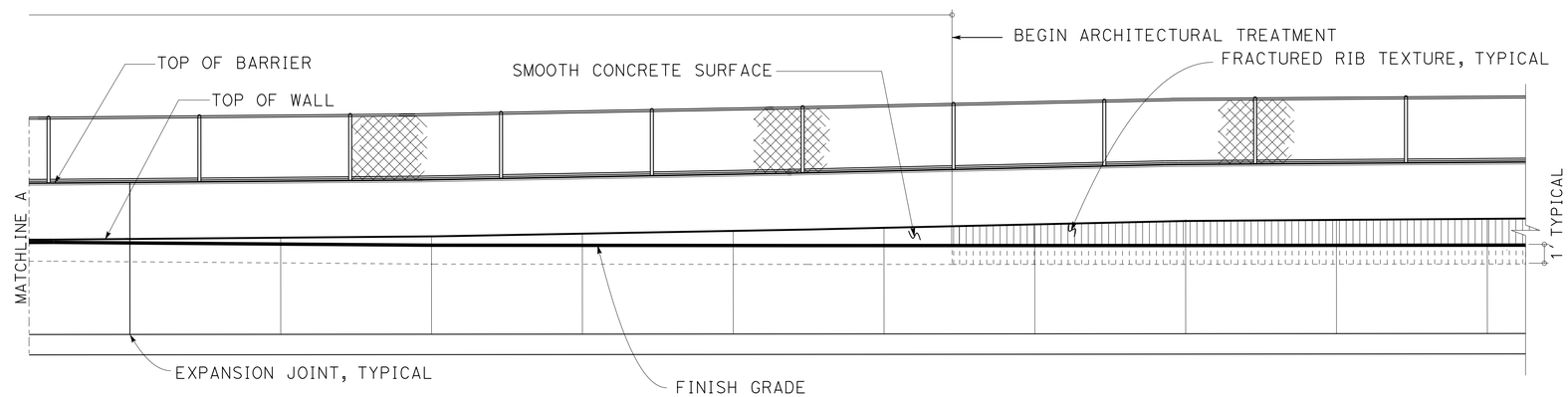

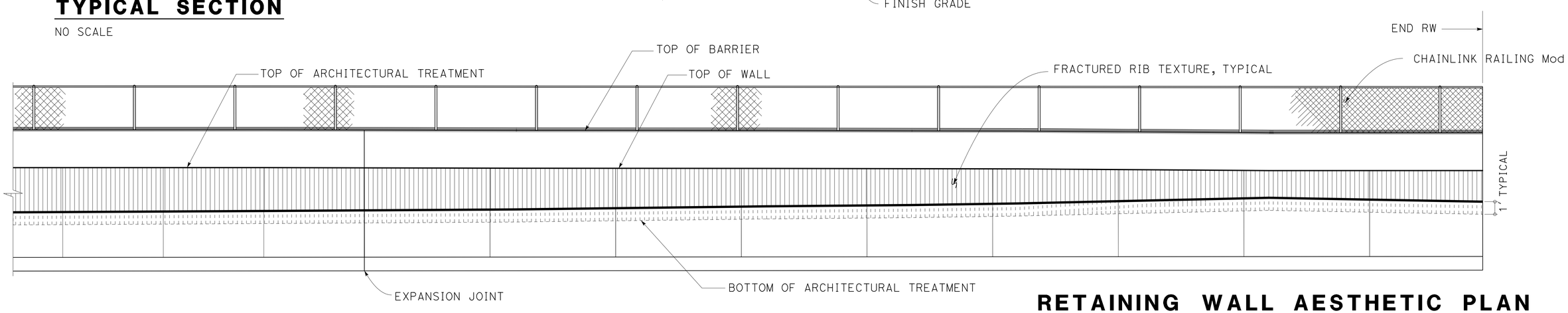

ELEVATION AT RETAINING WALL 1822

NO SCALE

RETAINING WALL AESTHETIC PLAN

R-35

DESIGN	BY V. MOORE	CHECKED I. TASABIA	
DETAILS	BY V. MOORE	CHECKED H. CHAVEZ	
QUANTITIES	BY M. GHANNOUM	CHECKED	

STATE OF CALIFORNIA DEPARTMENT OF TRANSPORTATION

DIVISION OF ENGINEERING SERVICES
BRIDGE ARCHITECTURE AND AESTHETICS

BRIDGE NO. X
POST MILE 33.2/37.2

I-10 HOV SEGMENT 2 - RETAINING WALLS

RETAINING WALL 1822 - ARCHITECTURAL TREATMENT

SHEET A3

STRUCTURES DESIGN DETAIL SHEET (ENGLISH) (REV. 09-01-10)

ORIGINAL SCALE IN INCHES FOR REDUCED PLANS 0 1 2 3

CU 07
PROJECT 07000000851
CONTRACT NO.: X

DISREGARD PRINTS BEARING EARLIER REVISION DATES

REVISION DATES 03/15/12

SHEET 4 OF 13

FILE => 71170uqr004.dgn

USERNAME => s121614 DATE PLOTTED => 13-JUN-2013 TIME PLOTTED => 06:02

DIST	COUNTY	ROUTE	KILOMETER POST TOTAL PROJECT	SHEET No	TOTAL SHEETS
07	LA	10	33.2/37.2	653	1475

LICENSED ARCHITECT — DATE 03/14/12

6-10-13
PLANS APPROVAL DATE

LICENSED ARCHITECT H. Javier Chavez 14073 03-31-13 Renewal Date STATE OF CALIFORNIA

The State of California or its officers or agents shall not be responsible for the accuracy or completeness of electronic copies of this plan sheet.

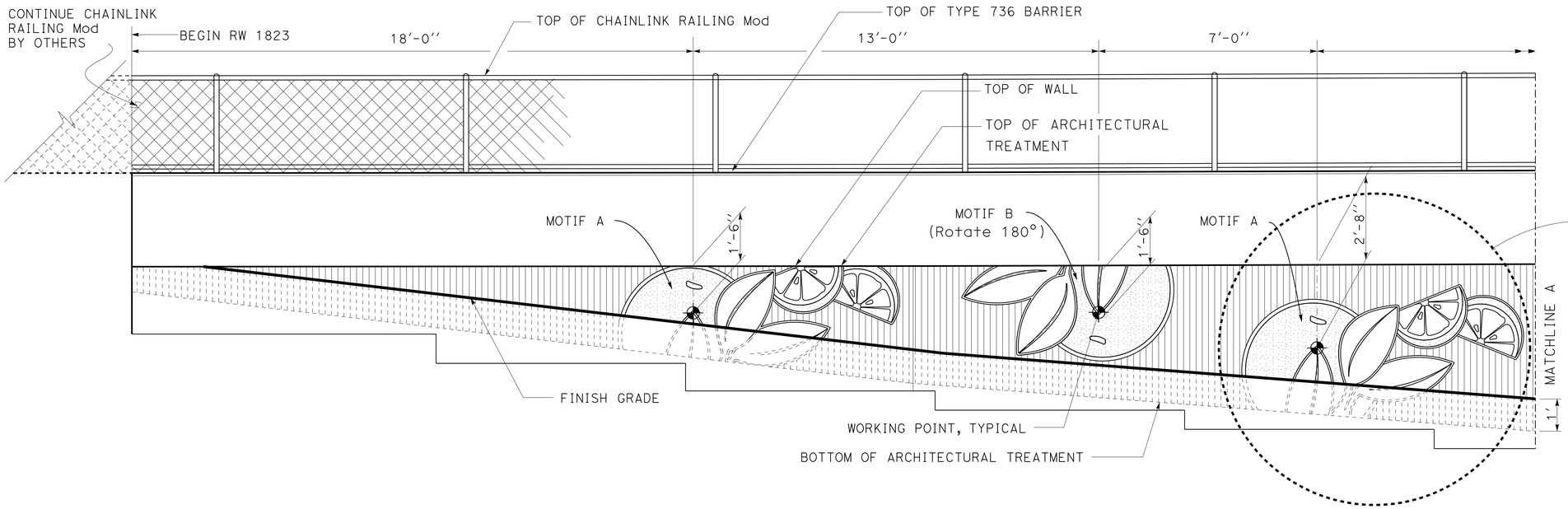

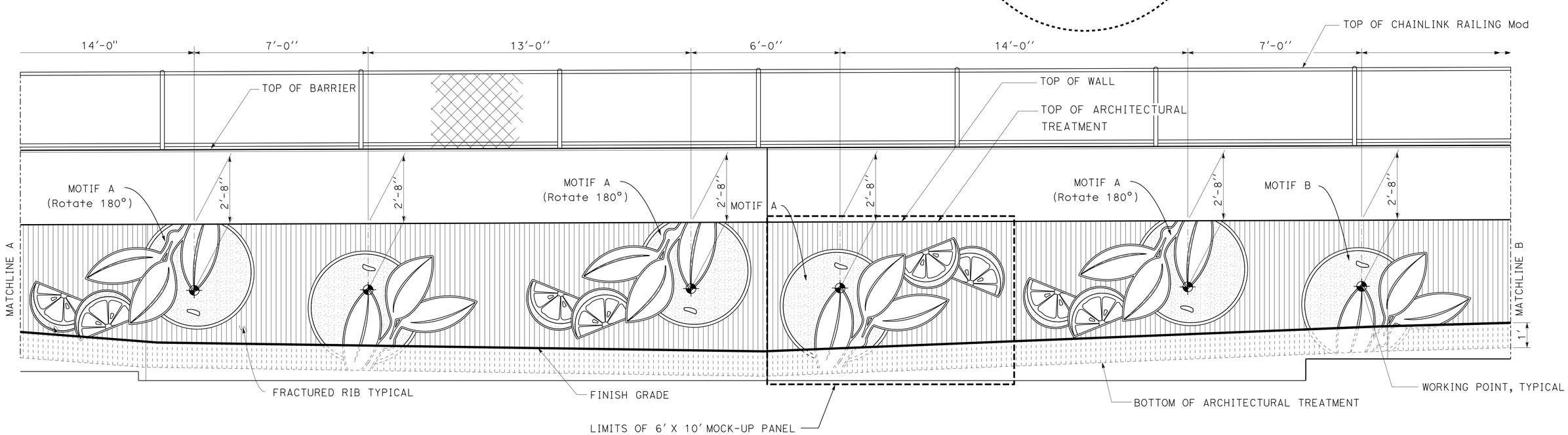

PARTIAL ELEVATION AT RETAINING WALL 1823

NO SCALE

RETAINING WALL AESTHETIC PLAN R-36

DESIGN	BY V. MOORE	CHECKED I. TASABIA	
DETAILS	BY V. MOORE	CHECKED H. CHAVEZ	
QUANTITIES	BY M. GHANNOUM	CHECKED	

STATE OF CALIFORNIA DEPARTMENT OF TRANSPORTATION

DIVISION OF ENGINEERING SERVICES BRIDGE ARCHITECTURE AND AESTHETICS

BRIDGE NO. X — POST MILE 33.2/37.2

I-10 HOV SEGMENT 2 - RETAINING WALLS

RETAINING WALL 1823 - ARCHITECTURAL TREATMENT

SHEET A4

STRUCTURES DESIGN DETAIL SHEET (ENGLISH) (REV. 09-01-10)

ORIGINAL SCALE IN INCHES FOR REDUCED PLANS 0 1 2 3

CU 07 PROJECT 07000000851 CONTRACT NO.: X

DISREGARD PRINTS BEARING EARLIER REVISION DATES

REVISION DATES 03/15/12

SHEET 5 OF 13

FILE => 71170ugr005.dgn

USERNAME => s121614 DATE PLOTTED => 13-JUN-2013 TIME PLOTTED => 06:02

DIST	COUNTY	ROUTE	KILOMETER POST TOTAL PROJECT	SHEET No	TOTAL SHEETS
07	LA	10	33.2/37.2	654	1475

LICENSED ARCHITECT — DATE 03/14/12

6-10-13
PLANS APPROVAL DATE

LICENSED ARCHITECT H. Javier Chavez 14073 03-31-13 Renewal Date STATE OF CALIFORNIA

The State of California or its officers or agents shall not be responsible for the accuracy or completeness of electronic copies of this plan sheet.

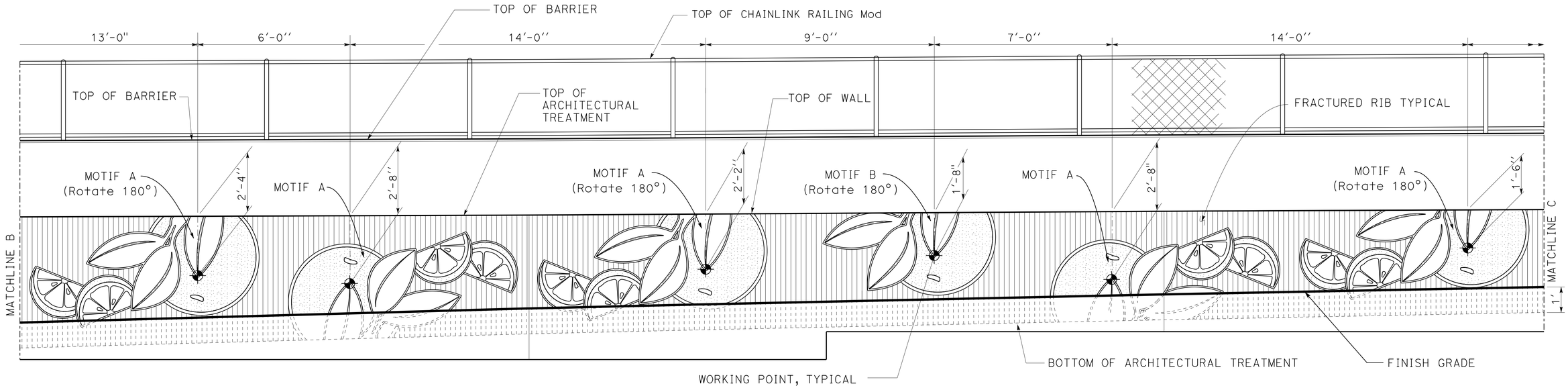

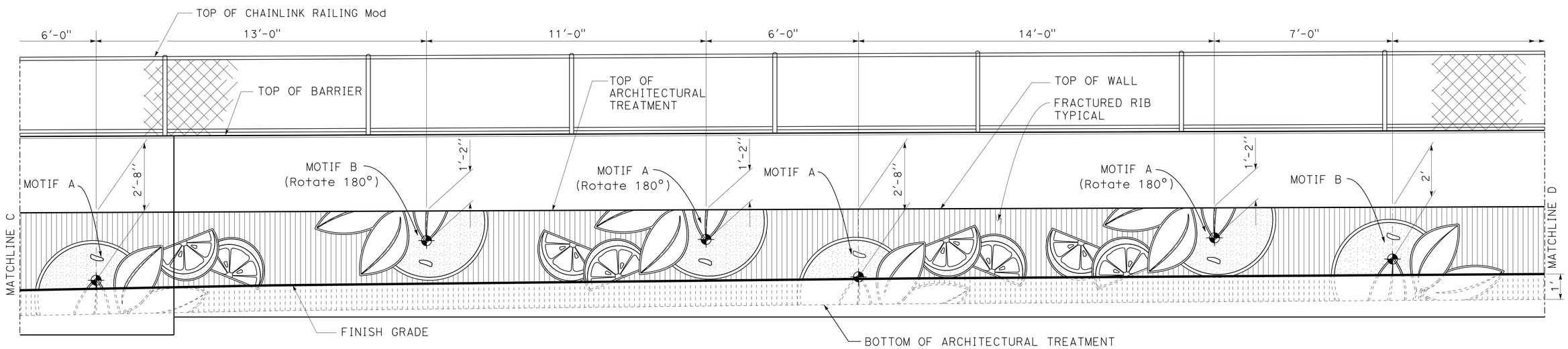

PARTIAL ELEVATION AT RETAINING WALL 1823

NO SCALE

RETAINING WALL AESTHETIC PLAN R-37

DESIGN	BY V. MOORE	CHECKED I. TASABIA	
DETAILS	BY V. MOORE	CHECKED H. CHAVEZ	
QUANTITIES	BY M. GHANNOUM	CHECKED	

STATE OF CALIFORNIA
DEPARTMENT OF TRANSPORTATION

DIVISION OF ENGINEERING SERVICES
BRIDGE ARCHITECTURE AND AESTHETICS

BRIDGE NO. X
POST MILE 33.2/37.2

I-10 HOV SEGMENT 2 - RETAINING WALLS
RETAINING WALL 1823 - ARCHITECTURAL TREATMENT

SHEET A5

STRUCTURES DESIGN DETAIL SHEET (ENGLISH) (REV. 09-01-10)

ORIGINAL SCALE IN INCHES FOR REDUCED PLANS 0 1 2 3

CU 07
PROJECT 07000000851
CONTRACT NO.: X

DISREGARD PRINTS BEARING EARLIER REVISION DATES

REVISION DATES 03/15/12

SHEET 6 OF 13

FILE => 71170uqr006.dgn

USERNAME => s121614 DATE PLOTTED => 13-JUN-2013 TIME PLOTTED => 06:02

DIST	COUNTY	ROUTE	KILOMETER POST TOTAL PROJECT	SHEET No	TOTAL SHEETS
07	LA	10	33.2/37.2	655	1475

LICENSED ARCHITECT — DATE 03/14/12

6-10-13
PLANS APPROVAL DATE

LICENSED ARCHITECT H. Javier Chavez 14073 03-31-13 Renewal Date STATE OF CALIFORNIA

The State of California or its officers or agents shall not be responsible for the accuracy or completeness of electronic copies of this plan sheet.

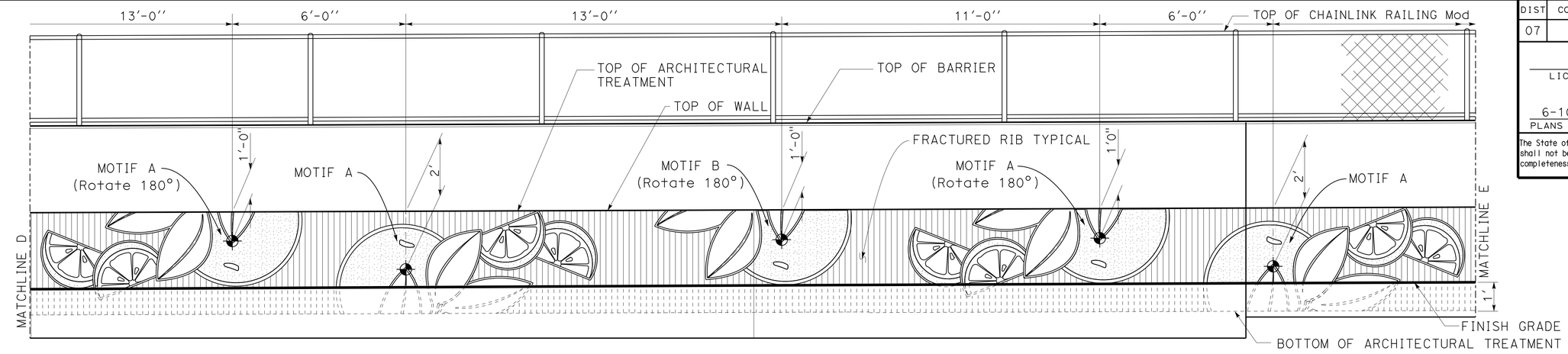

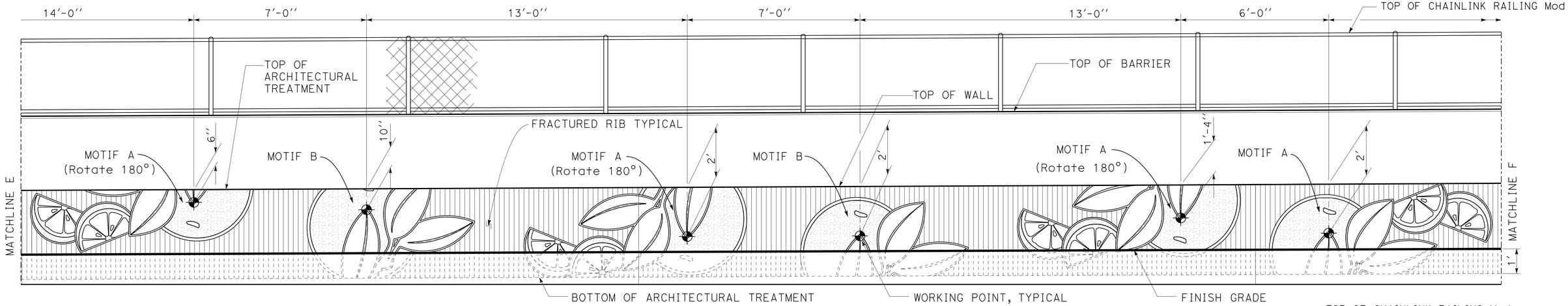

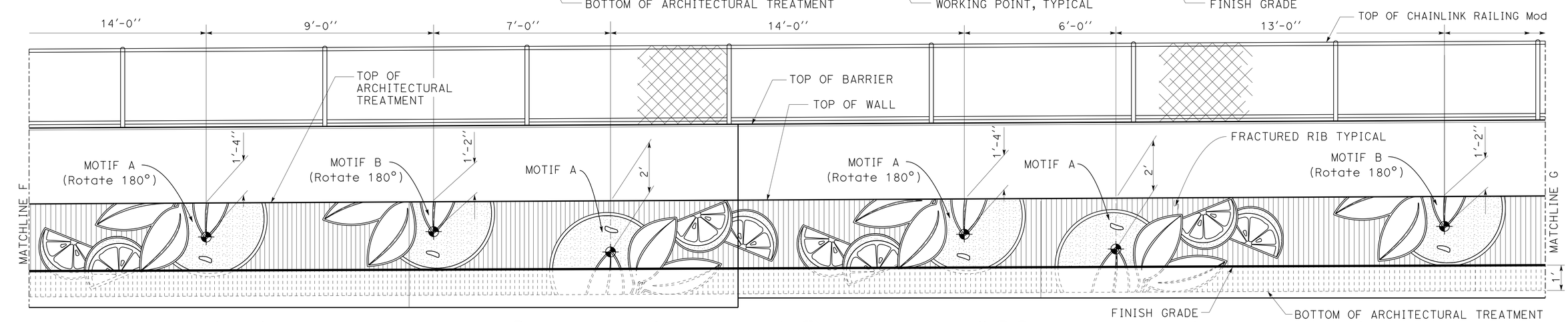

PARTIAL ELEVATION AT RETAINING WALL 1823

NO SCALE

RETAINING WALL AESTHETIC PLAN

R-38

	BY	CHECKED
DESIGN	V. MOORE	I. TASABIA
DETAILS	V. MOORE	H. CHAVEZ
QUANTITIES	M. GHANNOUM	

STATE OF CALIFORNIA
DEPARTMENT OF TRANSPORTATION

DIVISION OF ENGINEERING SERVICES
BRIDGE ARCHITECTURE AND AESTHETICS

BRIDGE NO. X
POST MILE 33.2/37.2

I-10 HOV SEGMENT 2 - RETAINING WALLS
RETAINING WALL 1823 - ARCHITECTURAL TREATMENT

SHEET A6

STRUCTURES DESIGN DETAIL SHEET (ENGLISH) (REV. 09-01-10)

ORIGINAL SCALE IN INCHES FOR REDUCED PLANS 0 1 2 3

CU 07
PROJECT 07000000851
CONTRACT NO.: X

DISREGARD PRINTS BEARING EARLIER REVISION DATES

REVISION DATES 03/15/12

SHEET 7 OF 13

FILE => 71170ugr007.dgn

USERNAME => s121614 DATE PLOTTED => 13-JUN-2013 TIME PLOTTED => 06:02

DIST	COUNTY	ROUTE	KILOMETER POST TOTAL PROJECT	SHEET No	TOTAL SHEETS
07	LA	10	33.2/37.2	656	1475

LICENSED ARCHITECT — DATE 03/14/12

6-10-13
PLANS APPROVAL DATE

LICENSED ARCHITECT H. Javier Chavez 14073 03-31-13 Renewal Date STATE OF CALIFORNIA

The State of California or its officers or agents shall not be responsible for the accuracy or completeness of electronic copies of this plan sheet.

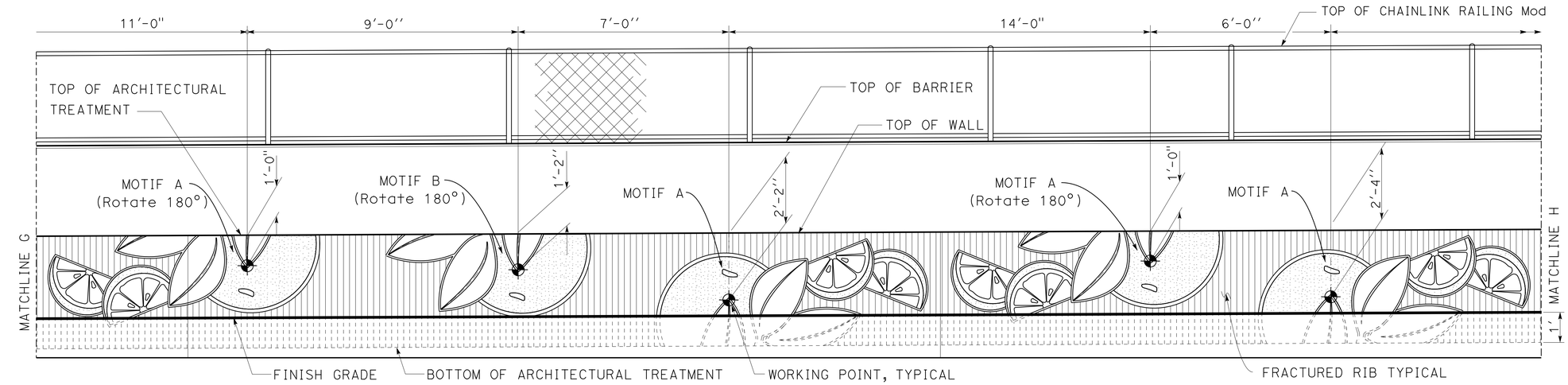

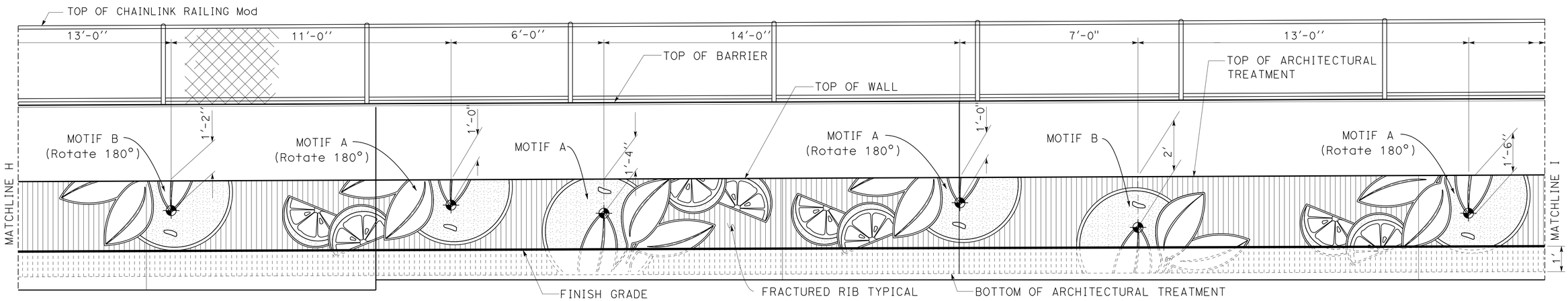

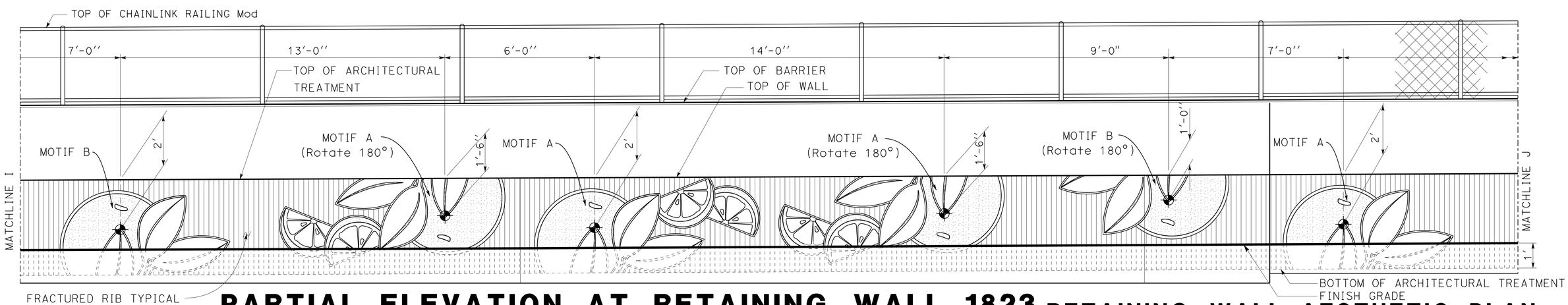

PARTIAL ELEVATION AT RETAINING WALL 1823

NO SCALE

RETAINING WALL AESTHETIC PLAN

R-39

DESIGN	BY V. MOORE	CHECKED I. TASABIA	
DETAILS	BY V. MOORE	CHECKED H. CHAVEZ	
QUANTITIES	BY M. GHANNOUM	CHECKED	

STATE OF CALIFORNIA
DEPARTMENT OF TRANSPORTATION

DIVISION OF ENGINEERING SERVICES
BRIDGE ARCHITECTURE AND AESTHETICS

BRIDGE NO. X
POST MILE 33.2/37.2

I-10 HOV SEGMENT 2 - RETAINING WALLS

RETAINING WALL 1823 - ARCHITECTURAL TREATMENT

SHEET A7

STRUCTURES DESIGN DETAIL SHEET (ENGLISH) (REV. 09-01-10)

ORIGINAL SCALE IN INCHES FOR REDUCED PLANS 0 1 2 3

CU 07
PROJECT 07000000851
CONTRACT NO.: X

DISREGARD PRINTS BEARING EARLIER REVISION DATES

REVISION DATES 03/15/12

SHEET 8 OF 13

FILE => 71170ugr008.dgn

USERNAME => s127614 DATE PLOTTED => 13-JUN-2013 TIME PLOTTED => 06:02

DIST	COUNTY	ROUTE	KILOMETER POST TOTAL PROJECT	SHEET No	TOTAL SHEETS
07	LA	10	33.2/37.2	657	1475

LICENSED ARCHITECT — DATE 03/14/12

6-10-13
PLANS APPROVAL DATE

LICENSED ARCHITECT H. Javier Chavez 14073 03-31-13 Renewal Date STATE OF CALIFORNIA

The State of California or its officers or agents shall not be responsible for the accuracy or completeness of electronic copies of this plan sheet.

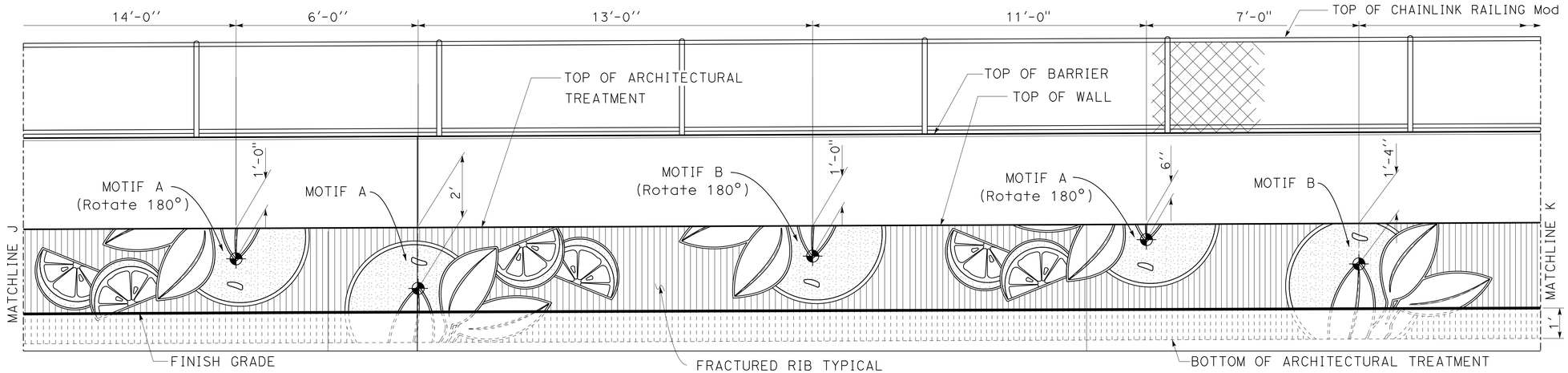

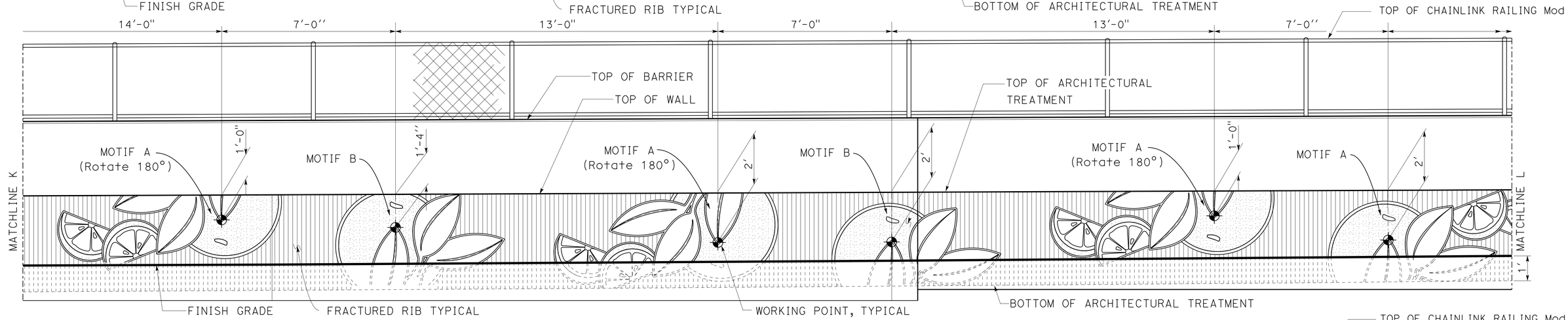

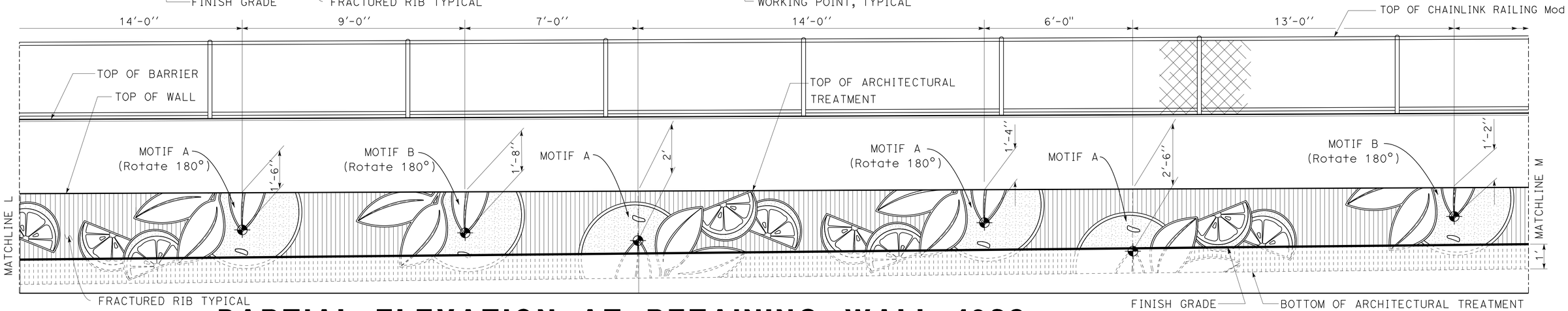

PARTIAL ELEVATION AT RETAINING WALL 1823

NO SCALE

RETAINING WALL AESTHETIC PLAN

R-40

DESIGN	BY V. MOORE	CHECKED I. TASABIA	
DETAILS	BY V. MOORE	CHECKED H. CHAVEZ	
QUANTITIES	BY M. GHANNOUM	CHECKED	

STATE OF CALIFORNIA
DEPARTMENT OF TRANSPORTATION

DIVISION OF ENGINEERING SERVICES
BRIDGE ARCHITECTURE AND AESTHETICS

BRIDGE NO. X
POST MILE 33.2/37.2

I-10 HOV SEGMENT 2 - RETAINING WALLS

RETAINING WALL 1823 - ARCHITECTURAL TREATMENT

SHEET A8

STRUCTURES DESIGN DETAIL SHEET (ENGLISH) (REV. 09-01-10)

ORIGINAL SCALE IN INCHES FOR REDUCED PLANS 0 1 2 3

CU 07
PROJECT 07000000851
CONTRACT NO.: X

DISREGARD PRINTS BEARING EARLIER REVISION DATES → 03/15/12

REVISION DATES | SHEET 9 OF 13

FILE => 71170ugr009.dgn

USERNAME => s121614 DATE PLOTTED => 13-JUN-2013 TIME PLOTTED => 06:02

DIST	COUNTY	ROUTE	KILOMETER POST TOTAL PROJECT	SHEET No	TOTAL SHEETS
07	LA	10	33.2/37.2	658	1475

LICENSED ARCHITECT — DATE 03/14/12

6-10-13
PLANS APPROVAL DATE

LICENSED ARCHITECT H. Javier Chavez 14073 03-31-13 Renewal Date STATE OF CALIFORNIA

The State of California or its officers or agents shall not be responsible for the accuracy or completeness of electronic copies of this plan sheet.

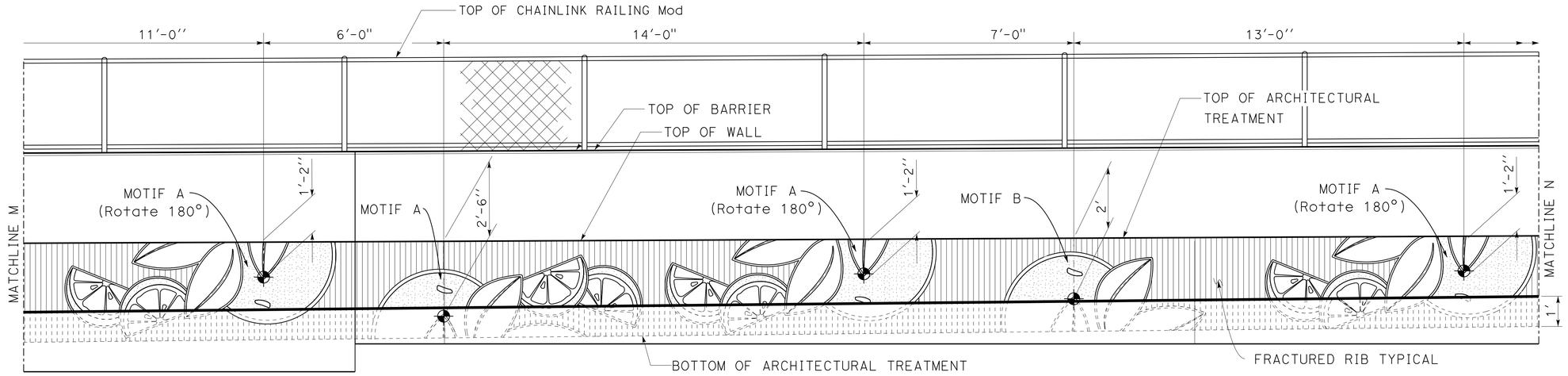

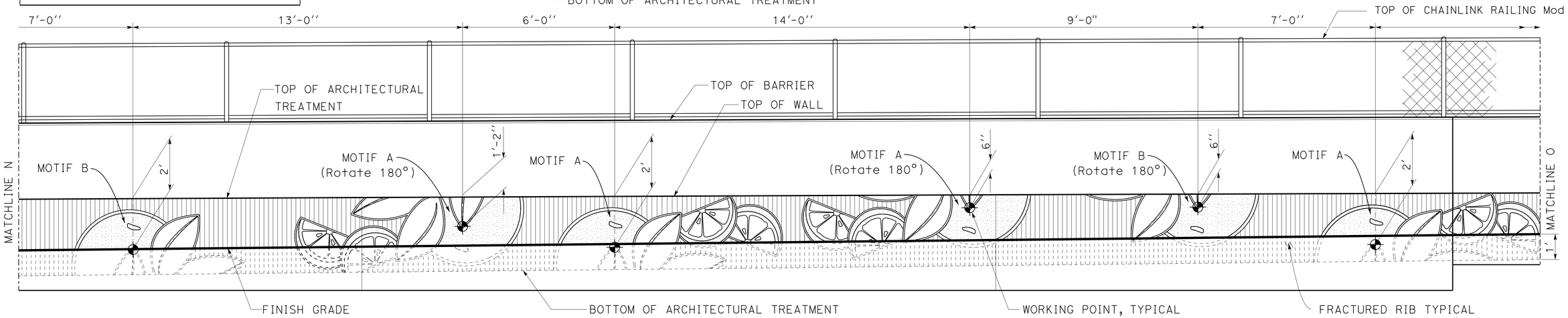

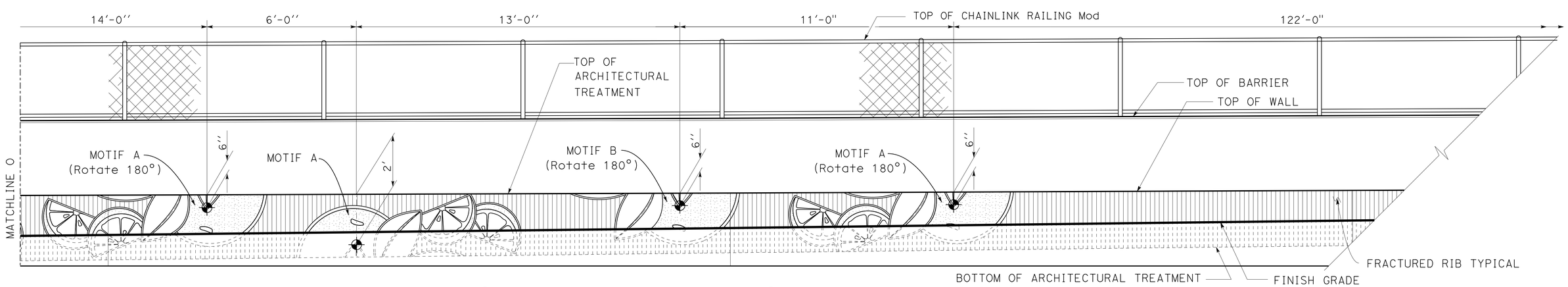

PARTIAL ELEVATION AT RETAINING WALL 1823

NO SCALE

RETAINING WALL AESTHETIC PLAN

R-41

DESIGN	BY V. MOORE	CHECKED I. TASABIA	
DETAILS	BY V. MOORE	CHECKED H. CHAVEZ	
QUANTITIES	BY M. GHANNOUM	CHECKED	

STATE OF CALIFORNIA
DEPARTMENT OF TRANSPORTATION

DIVISION OF ENGINEERING SERVICES
BRIDGE ARCHITECTURE AND AESTHETICS

BRIDGE NO. X
POST MILE 33.2/37.2

I-10 HOV SEGMENT 2 - RETAINING WALLS
RETAINING WALL 1823 - ARCHITECTURAL TREATMENT

SHEET A9

STRUCTURES DESIGN DETAIL SHEET (ENGLISH) (REV. 09-01-10)

ORIGINAL SCALE IN INCHES FOR REDUCED PLANS 0 1 2 3

CU 07
PROJECT 07000000851
CONTRACT NO.: X

DISREGARD PRINTS BEARING EARLIER REVISION DATES

REVISION DATES 03/15/12

SHEET 10 OF 13

FILE => 71170uqr010.dgn

USERNAME => s121614 DATE PLOTTED => 13-JUN-2013 TIME PLOTTED => 06:02

DIST	COUNTY	ROUTE	KILOMETER POST TOTAL PROJECT	SHEET No	TOTAL SHEETS
07	LA	10	33.2/37.2	659	1475

LICENSED ARCHITECT — DATE 03/14/12

6-10-13
PLANS APPROVAL DATE

LICENSED ARCHITECT H. Javier Chavez 14073 03-31-13 Renewal Date STATE OF CALIFORNIA

The State of California or its officers or agents shall not be responsible for the accuracy or completeness of electronic copies of this plan sheet.

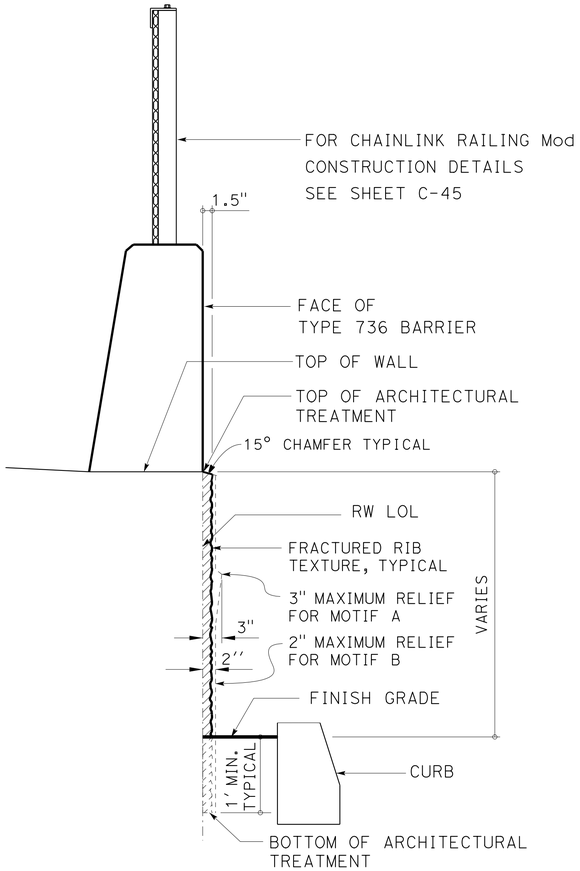

TYPICAL SECTION

NO SCALE

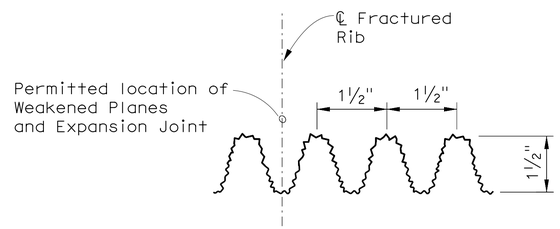

FRACTURED RIB TEXTURE DETAIL

NO SCALE

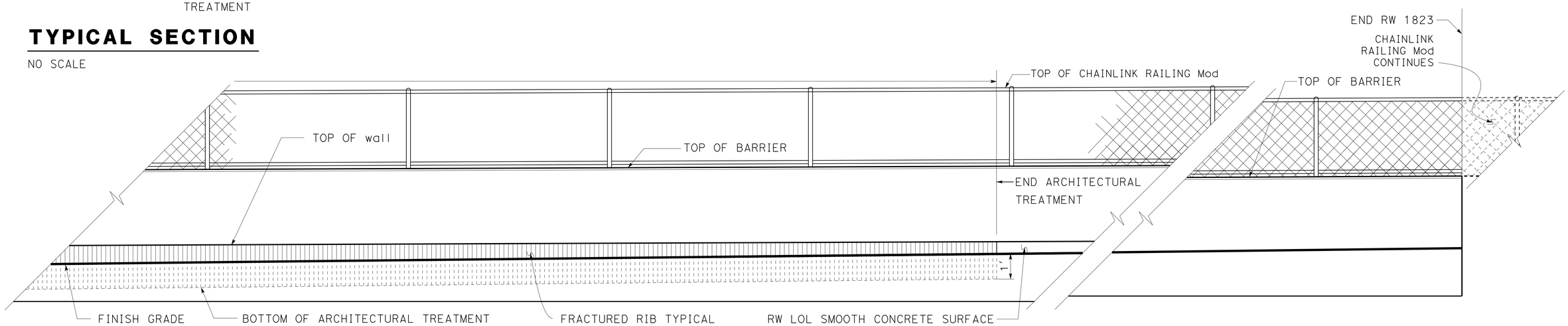

PARTIAL ELEVATION AT RETAINING WALL 1823

NO SCALE

RETAINING WALL AESTHETIC PLAN

R-42

DESIGN	BY V. MOORE	CHECKED I. TASABIA	
DETAILS	BY V. MOORE	CHECKED H. CHAVEZ	
QUANTITIES	BY M. GHANNOUM	CHECKED	

STATE OF CALIFORNIA
DEPARTMENT OF TRANSPORTATION

DIVISION OF ENGINEERING SERVICES
BRIDGE ARCHITECTURE AND AESTHETICS

BRIDGE NO. X
POST MILE 33.2/37.2

I-10 HOV SEGMENT 2 - RETAINING WALLS
RETAINING WALL 1823 - ARCHITECTURAL TREATMENT

SHEET A10

STRUCTURES DESIGN DETAIL SHEET (ENGLISH) (REV. 09-01-10)

ORIGINAL SCALE IN INCHES FOR REDUCED PLANS 0 1 2 3

CU 07
PROJECT 07000000851
CONTRACT NO.: X

DISREGARD PRINTS BEARING EARLIER REVISION DATES

REVISION DATES 03/15/12

SHEET 11 OF 13

FILE => 71170uqr011.dgn

USERNAME => s121614 DATE PLOTTED => 13-JUN-2013 TIME PLOTTED => 06:02

DIST	COUNTY	ROUTE	KILOMETER POST TOTAL PROJECT	SHEET No	TOTAL SHEETS
07	LA	10	33.2/37.2	660	1475

LICENSED ARCHITECT — DATE 03/14/12

6-10-13
PLANS APPROVAL DATE

LICENSED ARCHITECT H. Javier Chavez 14073 03-31-13 Renewal Date STATE OF CALIFORNIA

The State of California or its officers or agents shall not be responsible for the accuracy or completeness of electronic copies of this plan sheet.

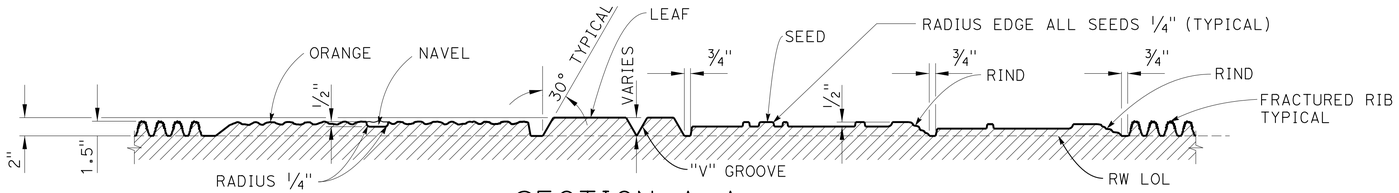

SECTION A-A
NO SCALE

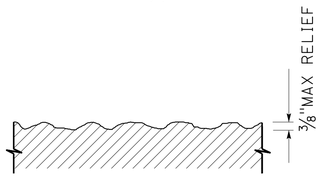

HEAVY SANDBLAST TEXTURE
NO SCALE

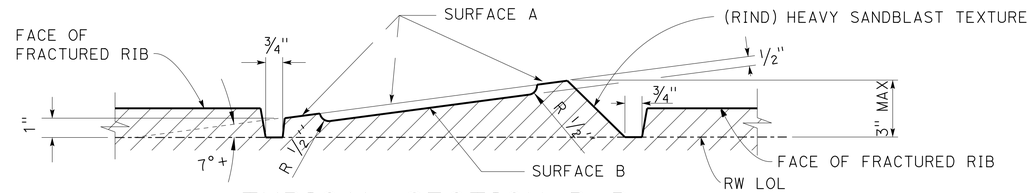

TYPICAL SECTION B-B
NO SCALE

NOTES:
1. MAXIMUM RELIEF FOR MOTIF A IS 3 INCHES.
2. MAXIMUM RELIEF FOR MOTIF B IS 2 INCHES.
3. SMOOTH CONCRETE SURFACES TO BE CLASS 1 FINISH

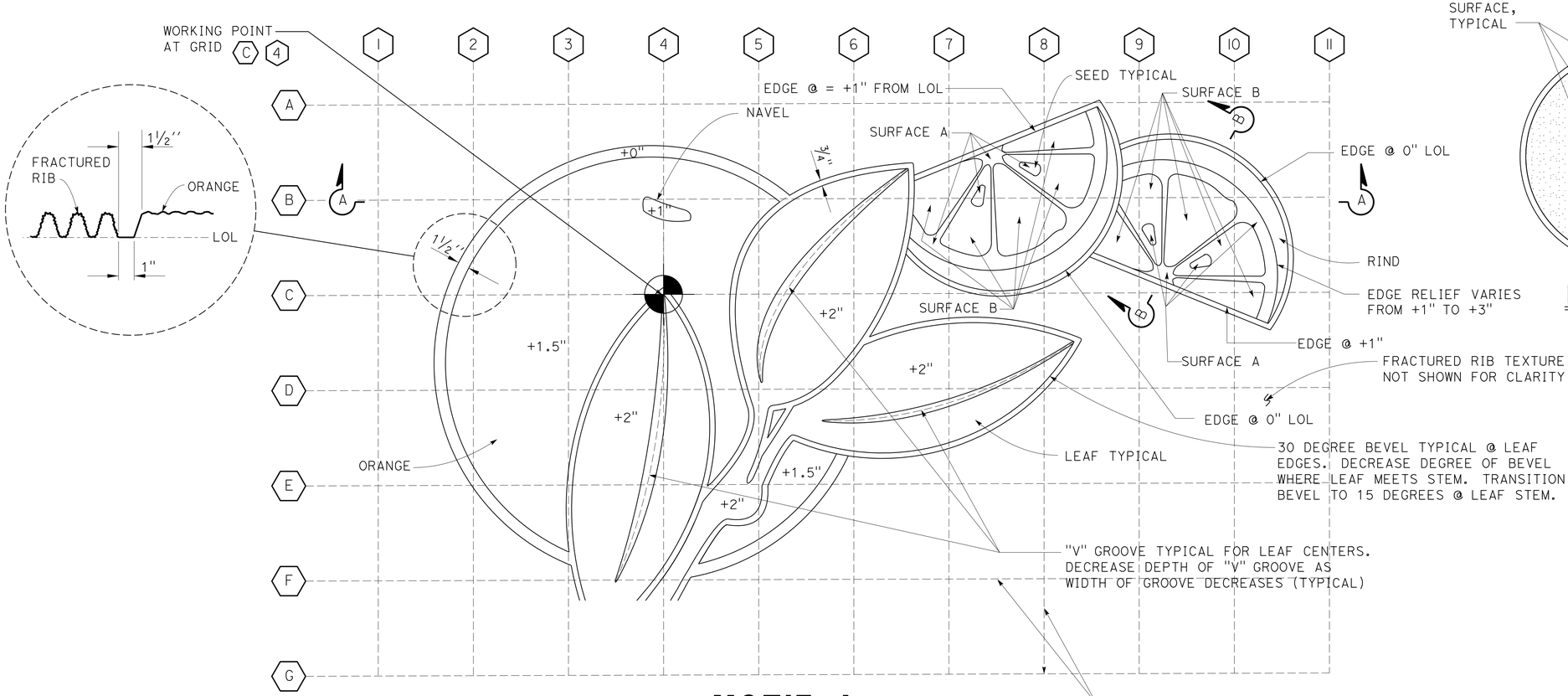

MOTIF A - MOTIF B SIMILAR
NO SCALE

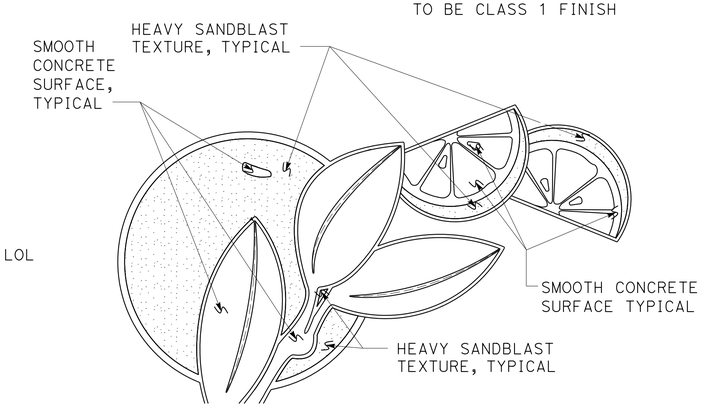

MOTIF A

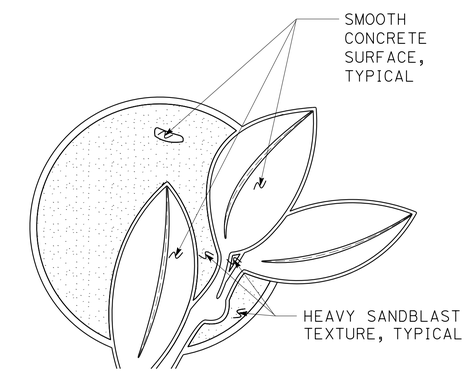

MOTIF B

ARCHITECTURAL MOTIF DETAILS AT RW 1823
NO SCALE

RETAINING WALL AESTHETIC PLAN
R-43

DESIGN	BY V. MOORE	CHECKED I. TASABIA	
DETAILS	BY V. MOORE	CHECKED H. CHAVEZ	
QUANTITIES	BY M. GHANNOUM	CHECKED	

STATE OF CALIFORNIA
DEPARTMENT OF TRANSPORTATION

DIVISION OF ENGINEERING SERVICES
BRIDGE ARCHITECTURE AND AESTHETICS

BRIDGE NO. X
POST MILE 33.2/37.2

I-10 HOV SEGMENT 2 - RETAINING WALLS
RETAINING WALL 1823 - ARCHITECTURAL TREATMENT

SHEET A11

STRUCTURES DESIGN DETAIL SHEET (ENGLISH) (REV. 09-01-10)

ORIGINAL SCALE IN INCHES FOR REDUCED PLANS 0 1 2 3

CU 07
PROJECT 07000000851
CONTRACT NO.: X

DISREGARD PRINTS BEARING EARLIER REVISION DATES
REVISION DATES 03/15/12

SHEET 12 OF 13

FILE => 71170uqr012.dgn

USERNAME => s12161d DATE PLOTTED => 13-JUN-2013 TIME PLOTTED => 06:03

DIST	COUNTY	ROUTE	KILOMETER POST TOTAL PROJECT	SHEET No	TOTAL SHEETS
07	LA	10	33.2/37.2	661	1475

LICENSED ARCHITECT — DATE 03/14/12

6-10-13
PLANS APPROVAL DATE

LICENSED ARCHITECT H. Javier Chavez 14073 03-31-13 Renewal Date STATE OF CALIFORNIA

The State of California or its officers or agents shall not be responsible for the accuracy or completeness of electronic copies of this plan sheet.

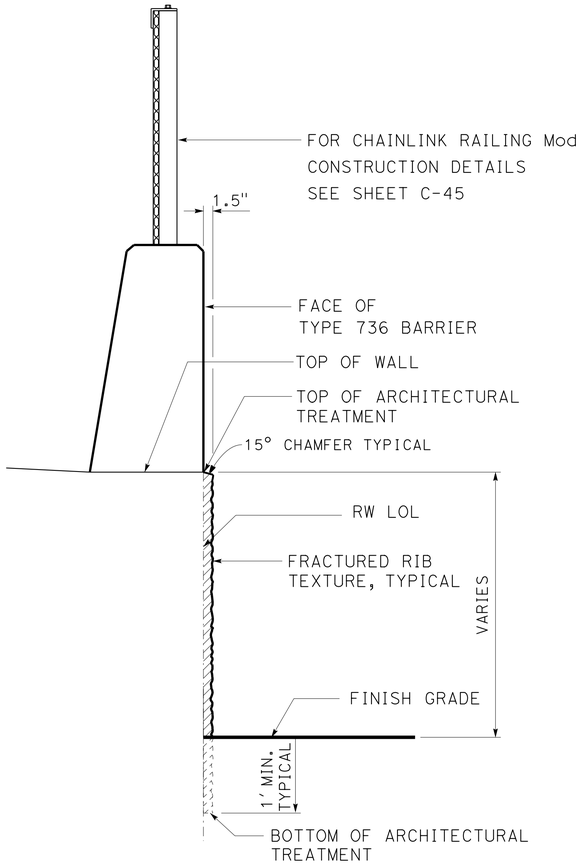

TYPICAL SECTION

NO SCALE

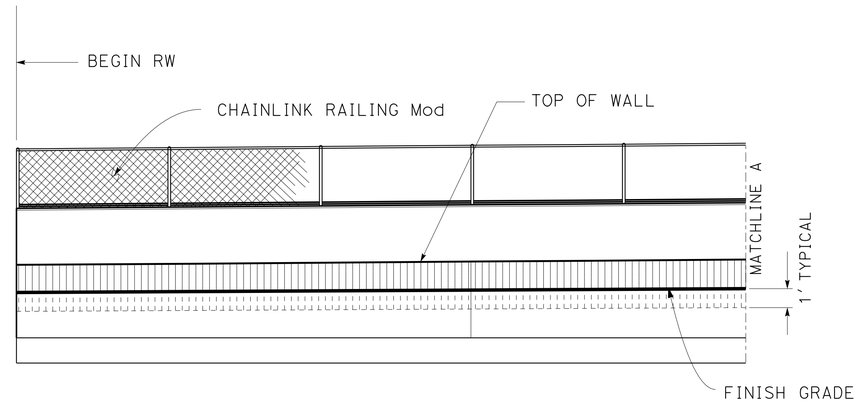

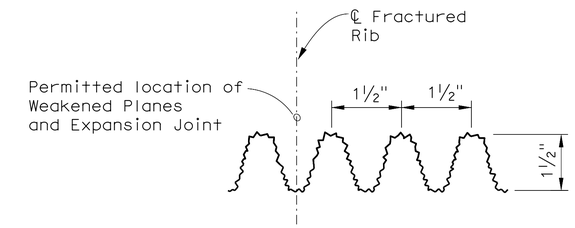

FRACTURED RIB TEXTURE DETAIL

NO SCALE

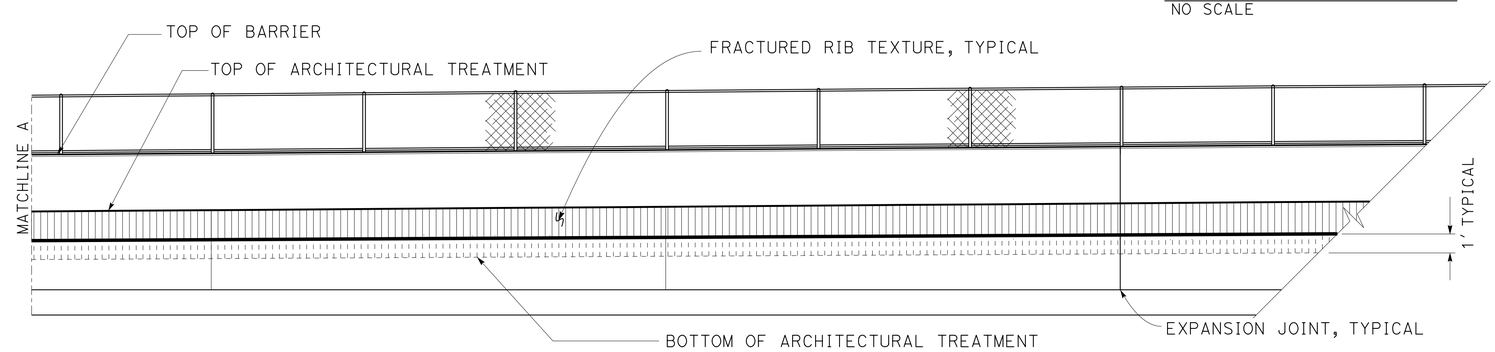

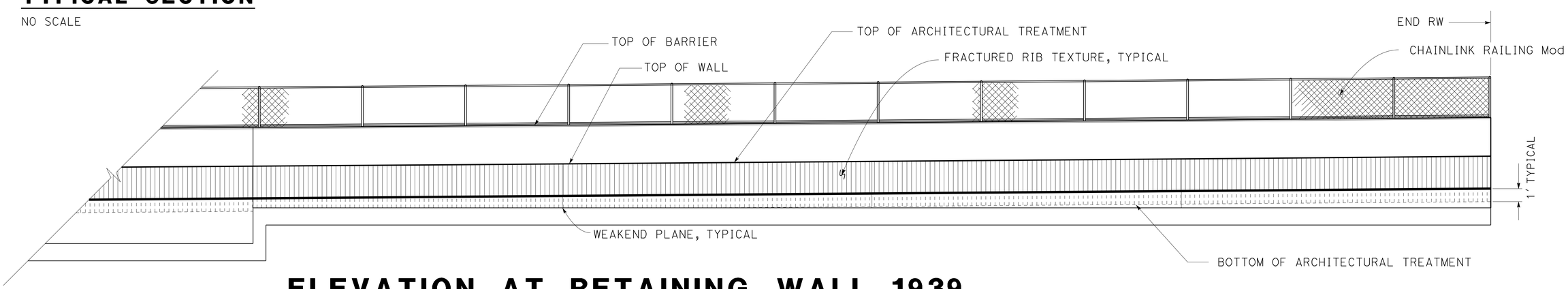

ELEVATION AT RETAINING WALL 1939

NO SCALE

RETAINING WALL AESTHETIC PLAN R-44

DESIGN	BY V. MOORE	CHECKED I. TASABIA	
DETAILS	BY V. MOORE	CHECKED H. CHAVEZ	
QUANTITIES	BY M. GHANNOUM	CHECKED	

STATE OF CALIFORNIA
DEPARTMENT OF TRANSPORTATION

DIVISION OF ENGINEERING SERVICES
BRIDGE ARCHITECTURE AND AESTHETICS

BRIDGE NO. X
POST MILE 33.2/37.2

I-10 HOV SEGMENT 2 - RETAINING WALLS
RETAINING WALL 1939 - ARCHITECTURAL TREATMENT

SHEET A12

STRUCTURES DESIGN DETAIL SHEET (ENGLISH) (REV. 09-01-10)

ORIGINAL SCALE IN INCHES FOR REDUCED PLANS 0 1 2 3

CU 07
PROJECT 07000000851
CONTRACT NO.: X

DISREGARD PRINTS BEARING EARLIER REVISION DATES

REVISION DATES 03/15/12

SHEET 13 OF 13

FILE => 71170uqr013.dgn

USERNAME => s121614 DATE PLOTTED => 13-JUN-2013 TIME PLOTTED => 06:03

DIST	COUNTY	ROUTE	POST MILES TOTAL PROJECT	SHEET No.	TOTAL SHEETS
07	LA	10	33.2/37.2	662	1475

REGISTERED CIVIL ENGINEER 4-17-12 DATE

6-10-13
PLANS APPROVAL DATE

REGISTERED PROFESSIONAL ENGINEER MOHAMED GHANNOUM No. 72051 Exp. 6/30/12 CIVIL STATE OF CALIFORNIA

The State of California or its officers or agents shall not be responsible for the accuracy or completeness of electronic copies of this plan sheet.

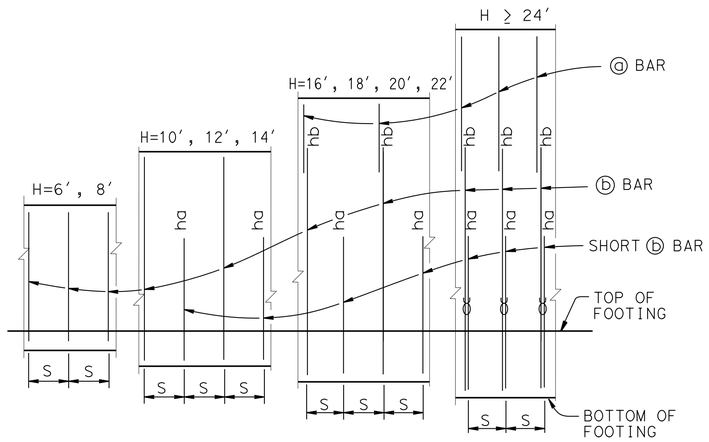

ELEVATION
No Scale

NOTES:
"ha" and "hb" above ⓑ bars indicate distance from top of footing to upper end of ⓑ bars, see table.
"S" is ⓑ bar spacing, see table.
℧ : 2 bar bundle

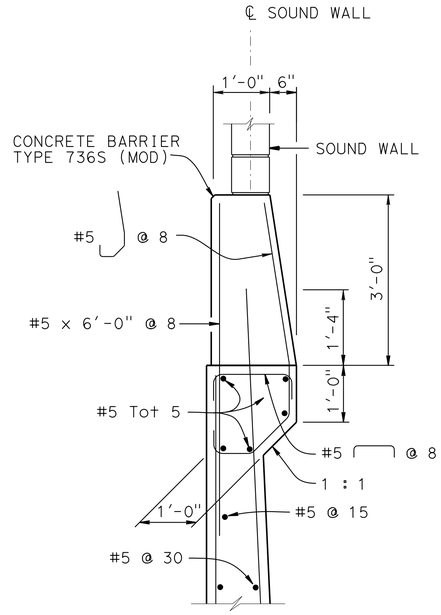

DETAIL A
¾ = 1′-0"

DESIGN DATA

Design: AASHTO LRFD Bridge Design Specifications, 4th edition with California Amendments

WS: 33 psf on Sound Wall and Barrier

LS: Varied surcharge on level ground surface

CT: 54 kip maximum traffic impact loading evenly distributed over 10 feet at top of the barrier and 1:1 distribution down and outward

EQE: Mononabe-Okabe Method
K_h = 0.3
K_v = 0.0

Soil: Ø = 34°
γ = 120 pcf

Reinforced Concrete: f′c = 3600 psi
fy = 60,000 psi

Load Combinations and Limit States

Service I	Q=1.00DC+1.00EV+1.00EH+1.00LS+0.30WS
Service II	Q=1.00DC+1.00EV+1.00EH+1.00WS
Strength I	Q=aDC+βEV+1.50EH+1.75LS
Strength III	Q=aDC+βEV+1.50EH+1.40WS
Strength V	Q=aDC+βEV+1.50EH+1.35LS+0.40WS
Extreme I	Q=1.00DC+1.00EV+1.00EH+1.00EQD+1.00EQE
Extreme II	Q=1.00DC+1.00EV+1.00EH+1.00CT

Where:
Q: Force Effects
a: 1.25 or 0.90, Which ever Controls Design
β: 1.35 or 1.00, which ever Controls Design
DC: Dead Load of Structure Components
EV: Vertical Earth Fill Pressure
LS: Live Load Surcharge
EQE: Seismic Earth Pressure
EQD: Soil and Structure Components Inertia. Soil inertia ignored for stem design
WS: Wind Load on Sound Wall and Barrier
CT: Vehicular Collision Force

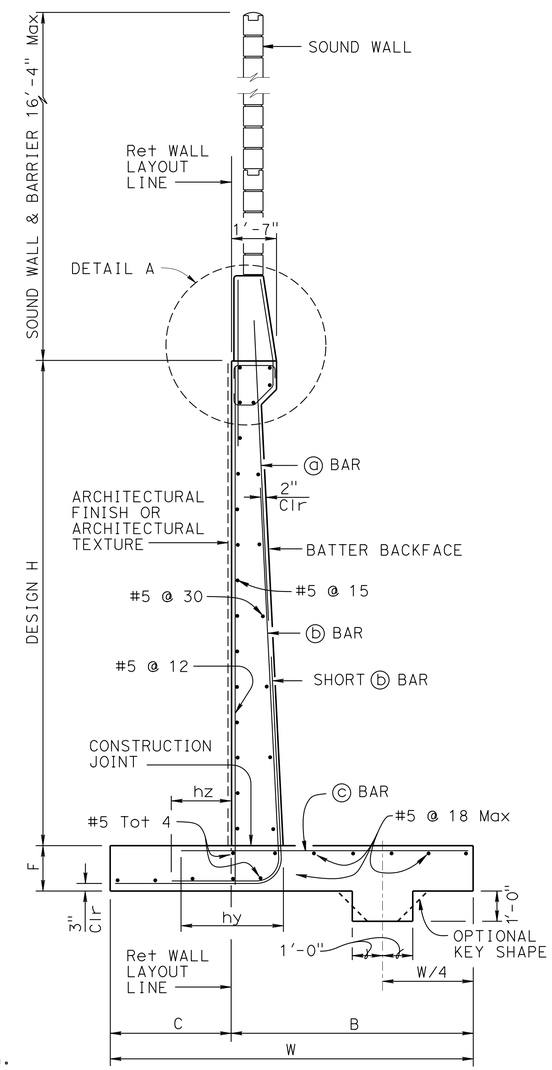

SPREAD FOOTING SECTION
No Scale

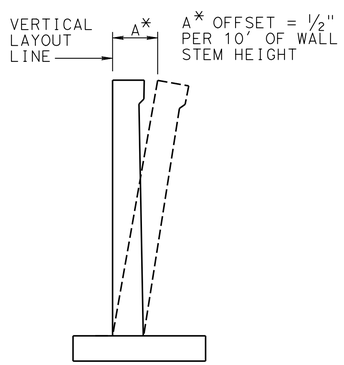

WALL OFFSET
No Scale

Values for offsetting forms to be determined by the Engineer

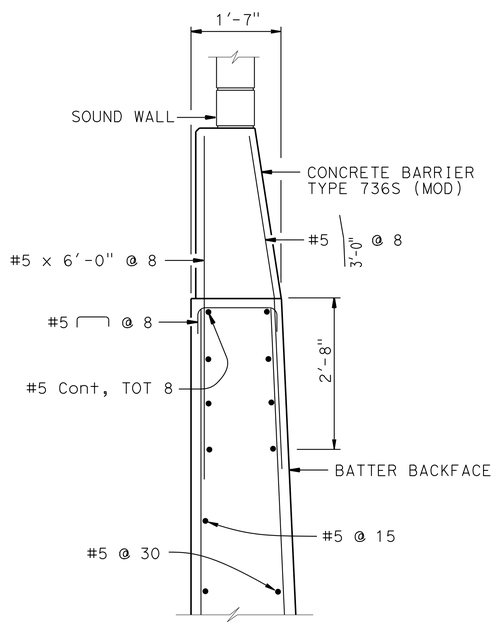

OPTIONAL DETAIL A
¾ = 1′-0"

For Details not shown, see "DETAIL A"

NOTES:
1. For sound wall and retaining wall Architectural finish or texture see details elsewhere in Project Plans
2. For details not shown and drainage notes see B3-5
3. Footing cover, 1′-6" minimum.
4. For sound wall and barrier reinforcement details, see "SOUND WALL - MASONRY BLOCK WITH BARRIER ON RETAINING WALL" sheet.
5. For H = 6′ through 14′, extend ⓑ bars into Barrier for stem with haunch.
6. For H ≥ 16′, extend ⓐ bars into Barrier for stem with haunch.

STANDARD DRAWING
FILE NO. xs14-220-1
APPROVAL DATE July 2011

STATE OF CALIFORNIA DEPARTMENT OF TRANSPORTATION

DIVISION OF ENGINEERING SERVICES

BRIDGE NO. X
POST MILE X

R-45

RETAINING WALL TYPE 1SWB-DETAILS NO. 1

DS OSD 2147A (ENGLISH STANDARD DRAWING "XS" BORDER REV. (02-02-11)

ORIGINAL SCALE IN INCHES FOR REDUCED PLANS 0 1 2 3

UNIT: X
PROJECT NUMBER & PHASE: X
CONTRACT NO.: X

DISREGARD PRINTS BEARING EARLIER REVISION DATES

REVISION DATES | SHEET X | OF X

FILE => 71170uqs001.dgn

USERNAME => s12161d DATE PLOTTED => 13-JUN-2013 TIME PLOTTED => 06:03

DIST	COUNTY	ROUTE	POST MILES TOTAL PROJECT	SHEET No.	TOTAL SHEETS
07	LA	10	33.2/37.2	663	1475

4-17-12
REGISTERED CIVIL ENGINEER DATE

6-10-13
PLANS APPROVAL DATE

REGISTERED PROFESSIONAL ENGINEER
MOHAMED GHANNOUM
No. 72051
Exp. 6/30/12
CIVIL
STATE OF CALIFORNIA

The State of California or its officers or agents shall not be responsible for the accuracy or completeness of electronic copies of this plan sheet.

TABLE OF REINFORCING STEEL DIMENSIONS AND DATA

DESIGN H	6′	8′	10′	12′	14′	16′	18′	20′	22′	24′	26′	28′	30′	32′
W	6′-9″	7′-3″	8′-0″	8′-9″	10′-0″	11′-6″	12′-9″	14′-0″	15′-9″	18′-0″	19′-9″	21′-9″	23′-3″	25′-3″
C	2′-3″	2′-5″	2′-8″	2′-11″	3′-4″	3′-10″	4′-3″	4′-8″	5′-3″	6′-0″	6′-7″	7′-3″	7′-9″	8′-5″
B	4′-6″	4′-10″	5′-4″	5′-10″	6′-8″	7′-8″	8′-6″	9′-4″	10′-6″	12′-0″	13′-2″	14′-6″	15′-6″	16′-10″
F SPREAD FOOTING	1′-3″	1′-3″	1′-3″	1′-3″	1′-6″	1′-9″	1′-9″	2′-3″	2′-6″	2′-6″	2′-9″	3′-0″	3′-6″	3′-9″
STEM WITH HAUNCH, BATTER	0	½:12	½:12	½:12	½:12	½:12	½:12	½:12	½:12	⅝:12	¾:12	⅞:12	1:12	1:12
STEM WITHOUT HAUNCH, BATTER	0	0	0	0	0	0	0	0	¼:12	¼:12	½:12	¾:12	¾:12	¾:12
ⓐ BARS						#7 @ 15	#7 @ 12	#7 @ 12	#8 @ 12	#6 @ 6	#6 @ 6	#6 @ 6	#8 @ 9	#9 @ 9
ⓑ BARS	#8 @ 12	#8 @ 12	#7 @ 6	#7 @ 6	#7 @ 6	#9 @ 7.5	#9 @ 6	#10 @ 6	#10 @ 6	#8 @ 6ȣ	#8 @ 6ȣ	#8 @ 6ȣ	#10 @ 9ȣ	#11 @ 9ȣ
ha			5′-0″	6′-0″	7′-0″	7′-0″	6′-0″	7′-0″	7′-6″	7′-6″	8′-6″	9′-3″	15′-0″	11′-3″
hb						11′-6″	12′-0″	13′-3″	16′-0″	15′-6″	17′-6″	18′-9″	21′-0″	20′-9″
hy	2′-0″	2′-4″	1′-8″	2′-0″	2′-4″	2′-10″	2′-10″	3′-7″	3′-7″	4′-6″	5′-6″	2′-10″	4′-6″	5′-6″
hz			0	0	3′-1″	3′-7″	4′-0″	4′-5″	5′-0″	3′-0″	3′-0″	3′-6″	5′-6″	3′-0″
ⓒ BARS	#6 @ 12	#7 @ 12	#5 @ 6	#6 @ 6	#7 @ 6	#8 @ 7.5	#8 @ 6	#9 @ 6	#9 @ 6	#10 @ 6	#11 @ 6	#8 @ 6ȣ	#10 @ 9ȣ	#11 @ 9ȣ
SER I: B′(ft), q_0'(ksf)	5.9, 1.2	6.0, 1.4	6.5, 1.6	7.0, 1.8	8.1, 1.9	9.7, 2.0	11.0, 2.1	12.1, 2.3	13.8, 2.4	16.6, 2.4	18.5, 2.6	20.7, 2.7	22.1, 2.9	24.3, 3.0
STR Ia: B′(ft), q_0(ksf)	6.3, 1.9	6.3, 2.3	6.7, 2.5	7.0, 2.9	8.1, 3.1	9.5, 3.2	10.8, 3.4	11.8, 3.7	13.4, 4.0	16.2, 4.0	18.0, 4.2	20.2, 4.4	21.5, 5.0	23.7, 5.0
STR, Ib: B′(ft), q_0(ksf)	4.3, 1.6	4.3, 2.0	4.3, 2.4	4.3, 2.8	4.3, 2.9	4.3, 2.9	4.3, 3.0	4.3, 3.4	4.3, 3.5	4.3, 3.4	4.3, 3.5	4.3, 3.6	4.3, 3.9	4.3, 4.1
STR, IIIa: B′(ft), q_0(ksf)	4.3, 2.1	4.3, 2.4	4.3, 2.5	4.3, 2.8	4.3, 2.9	4.3, 3.0	4.3, 3.2	4.3, 3.7	4.3, 3.7	4.3, 3.8	4.3, 4.0	4.3, 4.2	4.3, 4.6	4.3, 4.9
STR, IIIb: B′(ft), q_0(ksf)	3.2, 2.1	3.2, 2.3	3.2, 2.4	3.2, 2.6	3.2, 2.7	3.2, 2.7	3.2, 2.8	3.2, 3.1	3.2, 3.0	3.2, 3.2	3.2, 3.8	3.2, 3.4	3.2, 3.7	3.2, 3.9
STR, Va: B′(ft), q_0(ksf)	5.9, 2.0	5.9, 2.3	5.9, 2.6	5.9, 2.9	5.9, 3.1	5.9, 3.2	5.9, 3.4	5.9, 3.9	5.9, 3.9	5.9, 4.0	5.9, 4.2	5.9, 4.5	5.9, 4.9	5.9, 5.1
STR, Vb: B′(ft), q_0(ksf)	3.8, 1.7	3.8, 2.1	3.8, 2.5	3.8, 2.8	3.8, 2.9	3.8, 2.9	3.8, 3.0	3.8, 3.3	3.8, 3.4	3.8, 3.3	3.8, 3.5	3.8, 3.6	3.8, 3.9	3.8, 4.0
Ext I: B′(ft), q_0(ksf)	2.5, 2.8	2.5, 4.3	2.5, 6.4	2.5, 10.9	2.5, 13.3	2.5, 12.4	2.5, 13.2	2.5, 17.6	2.5, 15.0	2.5, 10.2	2.5, 10.0	2.5, 9.6	2.5, 10.8	2.5, 10.5
Ext II: B′(ft), q_0(ksf)	1.4, 4.9	1.4, 3.5	1.4, 2.8	1.4, 2.7	1.4, 2.5	1.4, 2.5	1.4, 2.5	1.4, 2.6	1.4, 2.8	1.4, 2.8	1.4, 2.9	1.4, 3.1	1.4, 3.3	1.4, 3.5

LEGEND:
SER: service limit state
STR: strength limit state
EXT: extreme event limit state
B′ : effective footing width (ft)
q_0' : net bearing stress (ksf)

q_0 : gross uniform bearing stress (ksf)

ȣ : 2 bar bundle

STANDARD DRAWING
FILE NO. xs14-220-2
APPROVAL DATE January 2012

STATE OF CALIFORNIA
DEPARTMENT OF TRANSPORTATION

DIVISION OF ENGINEERING SERVICES

BRIDGE NO. X
POST MILE X

R-46
RETAINING WALL TYPE 1 SWB-DETAILS NO. 2

DS OSD 2147A (ENGLISH STANDARD DRAWING "XS" BORDER REV. (02-02-11)

ORIGINAL SCALE IN INCHES FOR REDUCED PLANS 0 1 2 3

UNIT: X
PROJECT NUMBER & PHASE: X
CONTRACT NO.: X

DISREGARD PRINTS BEARING EARLIER REVISION DATES

REVISION DATES

SHEET X OF X

FILE => 71170uqs002.dgn

USERNAME => s121614 DATE PLOTTED => 13-JUN-2013 TIME PLOTTED => 06:03

DIST	COUNTY	ROUTE	POST MILES TOTAL PROJECT	SHEET No.	TOTAL SHEETS
07	LA	10	33.2/37.2	664	1475

REGISTERED CIVIL ENGINEER 4-17-12 DATE

6-10-13
PLANS APPROVAL DATE

REGISTERED PROFESSIONAL ENGINEER MOHAMED GHANNOUM No. 72051 Exp. 6/30/12 CIVIL STATE OF CALIFORNIA

The State of California or its officers or agents shall not be responsible for the accuracy or completeness of electronic copies of this plan sheet.

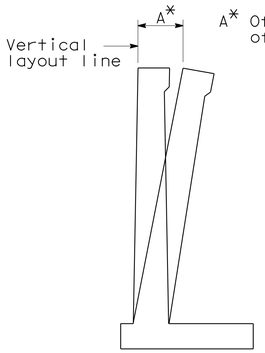

A* Offset = ½" per 10' of wall stem height

WALL OFFSET
NO SCALE
Values for offsetting forms to be determined by the engineer

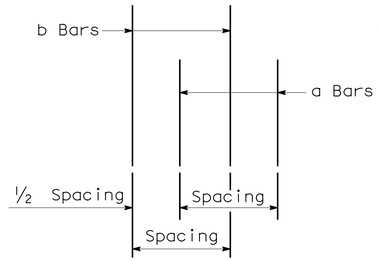

DETAIL A
NO SCALE

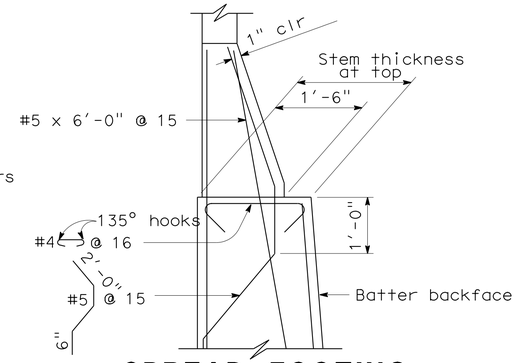

SPREAD FOOTING SECTION WITHOUT HAUNCH
NO SCALE

TABLE 1 : TABLE OF REINFORCING STEEL DIMENSION AND DATA

STEM WITH HAUNCH

DESIGN H	6'	8'	10'	12'	14'	16'	18'	20'	22'	24'	26'	28'	30'	32'
W	8'-6"	8'-6"	9'-3"	10'-0"	11'-3"	12'-3"	13'-3"	14'-6"	15'-9"	17'-0"	18'-6"	20'-0"	21'-3"	22'-9"
F SPREAD FTG.	1'-3"	1'-3"	1'-3"	1'-6"	1'-6"	1'-9"	2'-0"	2'-0"	2'-3"	2'-6"	3'-0"	3'-3"	3'-9"	4'-0"
BATTER	0	½:12	½:12	½:12	½:12	½:12	½:12	½:12	½:12	⅝:12	¾:12	⅞:12	1:12	1:12
STEM THICKNESS @ HAUNCH	1'-0"	1'-0"	1'-0"	1'-0"	1'-0"	1'-0"	1'-0"	1'-0"	1'-0"	1'-0"	1'-0"	1'-0"	1'-0"	1'-0"
a BARS				#6@18**	#7@18**	#8@18**	#9@18**	#10@18**	#8 @ 9*	#8 @ 9*	#7 @ 6*	#10@12**	#9 @ 9*	#11@12**
Y				8'-0"	6'-6"	7'-6"	8'-0"	9'-0"	9'-6"	11'-0"	11'-6"	13'-0"	14'-0"	15'-6"
b BARS	#5 @ 12	#5 @ 12	#5 @ 9	#6@18**	#7@18**	#8@18**	#9@18**	#10@18**	#8 @ 9*	#8 @ 9*	#7 @ 6*	#10@12**	#9 @ 9*	#11@12**
Y	CONT	CONT	CONT	CONT	10'-6"	13'-0"	15'-0"	17'-6"	19'-6"	21'-0"	18'-6"	19'-0"	25'-6"	23'-6"
c BARS					#6 @ 18	#6 @ 18	#6 @ 18	#6 @ 18	#6 @ 18	#6 @ 18	#6 @ 12	#7 @ 12	#7 @ 18	#7 @ 12
SHORTd BARS	#5 @ 12	#5 @ 9	#6 @ 9	#7@18**	#8@18**	#8@18**	#9@18**	#10@18**	#8 @ 9*	#8 @ 9*	#7 @ 6*	#10@12*	#9 @ 9*	#11@12**
X	CONT	CONT	CONT	5'-6"	6'-6"	7'-6"	8'-0"	8'-6"	9'-6"	10'-6"	11'-6"	12'-6"	13'-6"	15'-0"
d BARS				#7@18**	#8@18**	#8@18**	#9@18**	#10@18**	#8 @ 9*	#8 @ 9*	#7 @ 6*	#10@12*	#9 @ 9*	#11@12**
X				CONT	CONT	CONT	CONT	CONT	CONT	CONT	CONT	CONT	CONT	CONT
ULTIMATE BEARING CAPACITY REQUIRED k/sf	6.3	7.8	8.8	10.3	11.4	13.2	15	16.2	17.8	19.4	21.1	22.4	24.4	25.8

TABLE 2 : TABLE OF REINFORCING STEEL DIMENSION AND DATA

	STEM WITH HAUNCH							STEM WITHOUT HAUNCH						
DESIGN H	6'	8'	10'	12'	14'	16'	18'	20'	22'	24'	26'	28'	30'	32'
W		8'-6"	9'-0"	9'-9"	10'-6"	12'-6"	13'-3"	14'-3"	16'-3"	17'-0"	18'-9"	20'-3"	21'-3"	22'-6"
F SPREAD FTG.		1'-3"	1'-3"	1'-3"	1'-3"	1'-6"	1'-6"	1'-9"	2'-3"	2'-3"	2'-9"	3'-3"	3'-9"	3'-9"
BATTER		0	0	0	0	0	0	0	0	0	¼:12	½:12	½:12	½:12
STEM THICKNESS @ HAUNCH		1'-0"	1'-0"	1'-0"	1'-0"	1'-3"	1'-3"							
STEM THICKN @ TOP								1'-6"	2'-0"	2'-0"	2'-0"	2'-0"	2'-0"	2'-0"
a BARS				#6@12**	#5 @ 6*	#8@12**	#8 @ 9*	#9@12**	#9@12**	#7 @ 6*	#7 @ 6*	#7 @ 6*	#9 @ 9*	#11@12**
Y				5'-6"	5'-6"	6'-0"	6'-6"	8'-0"	8'-6"	9'-6"	11'-0"	12'-6"	13'-6"	14'-6"
b BARS		#5 @ 9	#6 @ 9	#6@12**	#5 @ 6*	#8@12**	#8 @ 9*	#9@12**	#9@12**	#7 @ 6*	#7 @ 6*	#7 @ 6*	#9 @ 9*	#11@12**
Y		CONT	CONT	CONT	CONT	8'-6"	11'-0"	11'-0"	11'-6"	17'-0"	19'-6"	21'-6"	24'-0"	24'-0"
c BARS						#6 @ 12	#7 @ 18	#7 @ 12	#7 @ 12	#6 @ 12	#6 @ 12	#6 @ 12	#7 @ 18	#7 @ 12
SHORTd BARS		#5 @ 9	#6 @ 9	#7@18**	#5 @ 6*	#8@12**	#8 @ 9*	#9@12**	#9@12**	#7 @ 6*	#9 @ 6*	#9 @ 6*	#9 @ 9*	#8 @ 6*
X		CONT	CONT	6'-0"	5'-6"	7'-0"	8'-6"	9'-0"	10'-0"	11'-0"	12'-0"	13'-0"	14'-0"	15'-0"
d BARS				#7@18**	#5 @ 6*	#9@18**	#8 @ 9*	#9@12**	#9@12**	#7 @ 6*	#9 @ 6*	#9 @ 6*	#9 @ 9*	#8 @ 6*
X				CONT	CONT	CONT	CONT	CONT	CONT	CONT	CONT	CONT	CONT	CONT
ULTIMATE BEARING CAPACITY REQUIRED k/sf		7.8	9	10.3	11.8	12.6	14.3	16.2	17.3	19.1	20.6	22.3	24.5	25.8

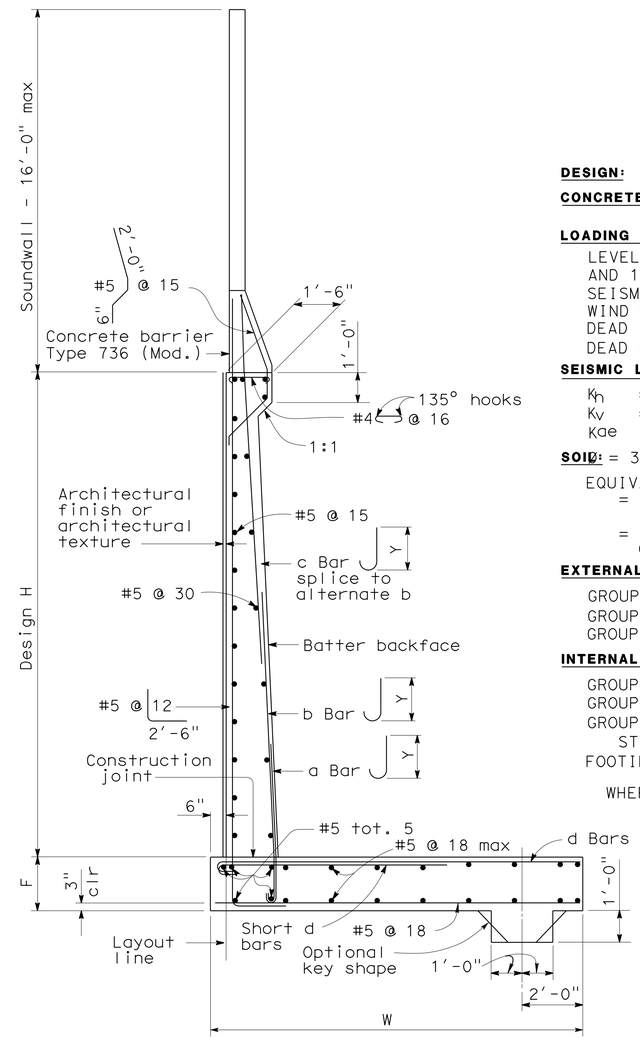

SPREAD FOOTING SECTION
NO SCALE

CONT = CONTINUOUS
* = a AND b [SHORT d & d] BARS ARE BUNDLED TOGETHER.
** = ALTERNATE a AND b BARS AS SHOWN IN DETAIL A.
= ALTERNATE SHORT d AND d BARS.

DESIGN DATA

DESIGN: LOAD FACTOR DESIGN (LFD)

CONCRETE: REINFORCED CONCRETE, fc = 3600 psi
fy = 60000 psi

LOADING CASE:

LEVEL GROUND WITH 240 psf SURCHARGE AND 16' SOUNDWALL.
SEISMIC LOAD = 0.3 DEAD LOAD
WIND LOAD = 30 psf
DEAD LOAD OF SOUNDWALL = 1414 lb/lf
DEAD LOAD OF BARRIER = 372 lb/lf

SEISMIC LOAD: SOIL

K_h = 0.3g
K_v = 0.0
K_{ae} : MONOBE-OKABE METHOD

SOIL: = 34° γ = 120 pcf

EQUIVALENT FLUID PRESSURE:
= 36 pcf MAX. FOR DETERMINATION OF TOE PRESSURE
= 27 pcf MAX. FOR DETERMINATION OF HEEL PRESSURE

EXTERNAL STABILITY:

GROUP 1 : D+E = SC
GROUP 2 : D+E+SC+W
GROUP 3 : D = PYM

INTERNAL STABILITY (LFD):

GROUP A : βD+1.7E+1.7SC
GROUP B : βD+1.7E+1.7SC+W
GROUP C :
STEM : 1.0D+1.0E+1.0EQD+1.0EQE
FOOTING : D+PYM

WHERE : β = 1.0 OR 1.3 WHICHEVER CONTROLS DESIGN
D = DEAD LOAD
E = LATERAL EARTH PRESSURE
SC = SURCHARGE
W = WIND LOAD
EQD = SEISMIC DEAD LOAD
EQE = SEISMIC LATERAL EARTH PRESSURE
PYM = PROBABLE YIELD MOMENT (1.3* NOMINAL YIELD MOMENT OF STEM)

GENERAL NOTES

1. FOR SOUNDWALL AND RETAINING WALL ARCHITECTURAL FINISH OR TEXTURE SEE DETAILS ELSEWHERE IN PROJECT PLANS.
2. FOR DETAILS NOT SHOWN AND DRAINAGE NOTES SEE B3-8
3. FOOTING COVER, 1'-6" MINIMUM.
4. FOR SOUNDWALL REINFORCEMENTS, SEE "SOUNDWALL MASONRY BLOCK" SHEETS IN STANDARD PLANS.

STANDARD DRAWING
FILE NO. xs14-350x
APPROVAL DATE July 2011

STATE OF CALIFORNIA
DEPARTMENT OF TRANSPORTATION

DIVISION OF ENGINEERING SERVICES

BRIDGE NO. X
POST MILE X

R-47
RETAINING WALL TYPE 5SWB

DS OSD 2147A (ENGLISH STANDARD DRAWING "XS" BORDER REV. (02-02-11)

ORIGINAL SCALE IN INCHES FOR REDUCED PLANS 0 1 2 3

UNIT: X
PROJECT NUMBER & PHASE: X
CONTRACT NO.: X

DISREGARD PRINTS BEARING EARLIER REVISION DATES

REVISION DATES | SHEET X | OF X

FILE => 71170uqs003.dgn

USERNAME => s121614 DATE PLOTTED => 13-JUN-2013 TIME PLOTTED => 06:03

DIST	COUNTY	ROUTE	POST MILES TOTAL PROJECT	SHEET No.	TOTAL SHEETS
07	LA	10	33.2/37.2	665	1475

REGISTERED CIVIL ENGINEER 4-17-12 DATE

6-10-13
PLANS APPROVAL DATE

REGISTERED PROFESSIONAL ENGINEER MOHAMED GHANNOUM No. 72051 Exp. 6/30/12 CIVIL STATE OF CALIFORNIA

The State of California or its officers or agents shall not be responsible for the accuracy or completeness of electronic copies of this plan sheet.

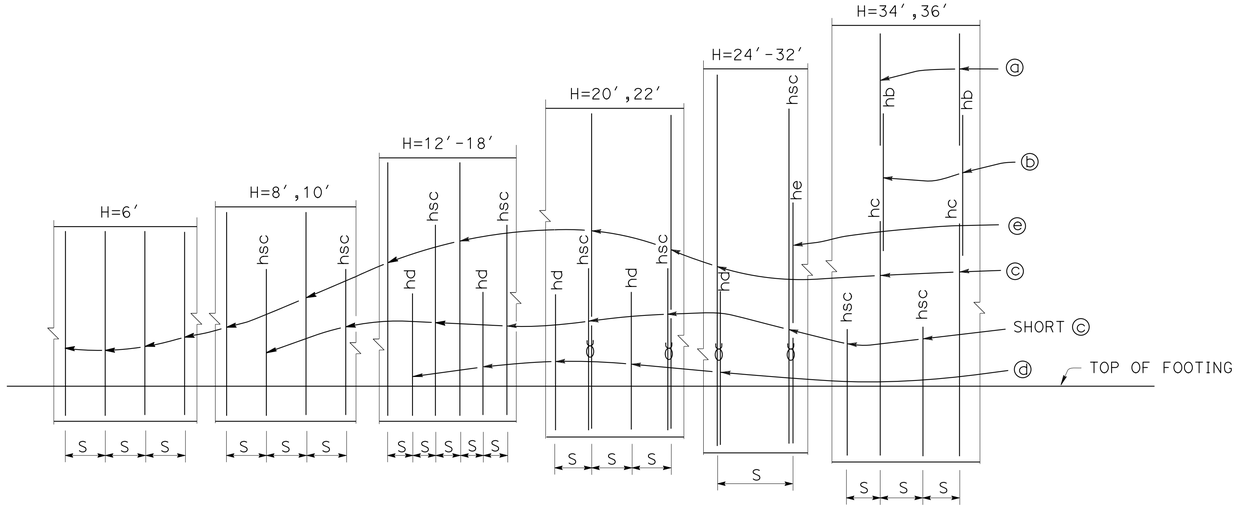

ELEVATION
No Scale

NOTE:

"hb", "hsc", "hc", "hd" and "he" above bars indicate distance from top of footing to upper end of the bars, see table.

DESIGN DATA

Design: AASHTO LRFD Bridge Design Specifications, 4th edition with California Amendments

LS: Varied surcharge on level ground surface

CT: 54 kip maximum traffic impact loading evenly distributed over 10 feet at top of the barrier and 1:1 distribution down and outward

EQE: Mononabe-Okabe Method
K_h = 0.2
K_v = 0.0

Soil: $\emptyset$ = 34°
γ = 120 pcf

Reinforced Concrete: f′c = 3600 psi
fy = 60,000 psi

Load Combinations and Limit States

Service I Q=1.00DC+1.00EV+1.00EH+1.00LS+Td

Strength I Q=aDC+βEV+1.50EH+1.75LS+Td

Extreme I Q=1.00DC+1.00EV+1.00EH+1.00EQD+1.00EQE+Td

Extreme II Q=1.00DC+1.00EV+1.00EH+1.00CT+Td

Where:
- Q: Force Effects
- a: 1.25 or 0.90, Which ever Controls Design
- β: 1.35 or 1.00, which ever Controls Design
- DC: Dead Load of Structure Components
- EV: Vertical Earth Fill Pressure
- LS: Live Load Surcharge
- EQE: Seismic Earth Pressure
- EQD: Soil and Structure Components Inertia. Soil inertia ignored for stem design
- CT: Vehicular Collision Force
- Td: Anchor Design Load

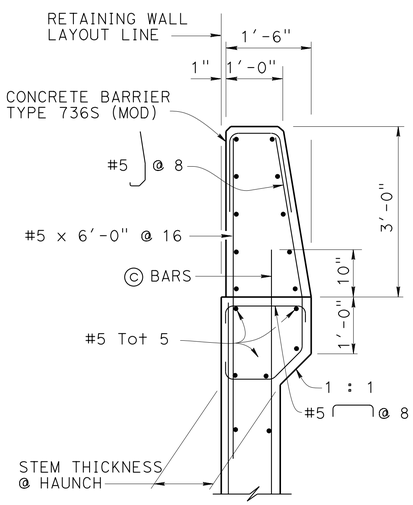

DETAIL A - WITH HAUNCH
¾ = 1′-0"

For Details not shown, see "DETAIL A - WITHOUT HAUNCH"

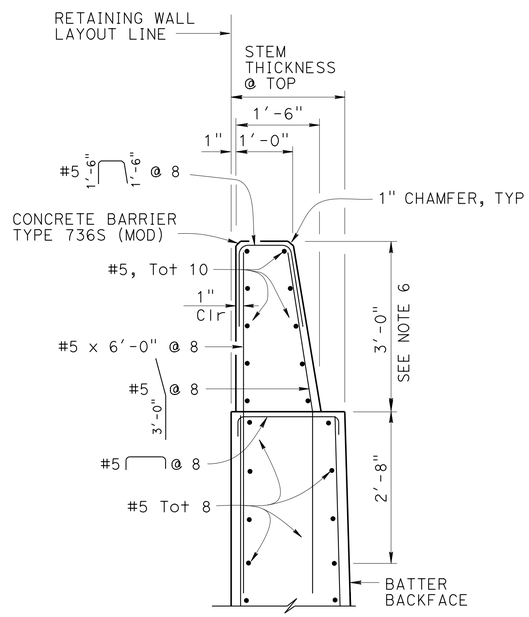

DETAIL A - WITHOUT HAUNCH
¾ = 1′-0"

NOTES:

1. For Retaining wall Architectural finish or texture see Details elsewhere in Project Plans
2. For Details not shown and Drainage Notes see (3-5)
3. Footing cover, 2′-0" minimum.
4. For H=6′ through 10′, extend ⓑ bars into Barrier for stem with haunch.
5. Shift ⓒ bars, ⓓ bars and ⓔ bars as required to clear formed hole for ground anchor.
6. Dimensions may vary with roadway cross slope and with certain thickness of surfacing. See Project Plans.
7. Footing is designed to resist 1.33 Td assuming the maximum anchor spacing shown in the table.

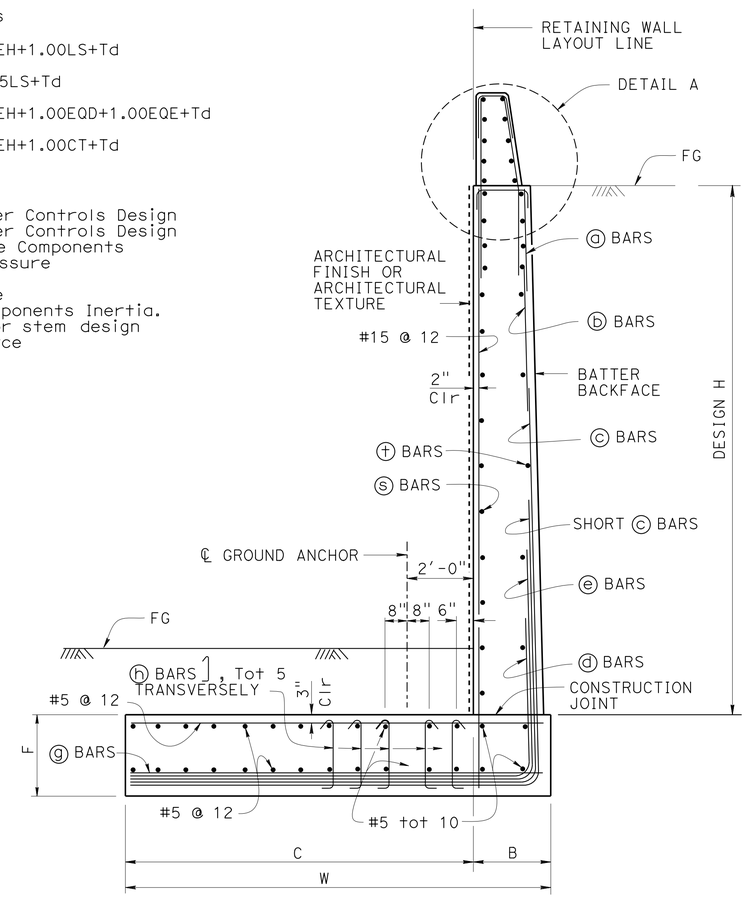

SPREAD FOOTING SECTION
No Scale

STANDARD DRAWING		STATE OF CALIFORNIA DEPARTMENT OF TRANSPORTATION	DIVISION OF ENGINEERING SERVICES	BRIDGE NO. X / POST MILE X	R-48 RETAINING WALL TYPE 7B - DETAILS NO. 1
FILE NO. xs14-375-1	APPROVAL DATE July 2011				

DS OSD 2147A (ENGLISH STANDARD DRAWING "XS" BORDER REV. (02-02-11)

ORIGINAL SCALE IN INCHES FOR REDUCED PLANS 0 1 2 3

UNIT: X
PROJECT NUMBER & PHASE: X
CONTRACT NO.: X

DISREGARD PRINTS BEARING EARLIER REVISION DATES

REVISION DATES | SHEET X | OF X

FILE => 71170uqs004.dgn

USERNAME => s121614 DATE PLOTTED => 13-JUN-2013 TIME PLOTTED => 06:03

DIST	COUNTY	ROUTE	POST MILES TOTAL PROJECT	SHEET No.	TOTAL SHEETS
07	LA	10	33.2/37.2	666	1475

4-17-12
REGISTERED CIVIL ENGINEER DATE

6-10-13
PLANS APPROVAL DATE

REGISTERED PROFESSIONAL ENGINEER
MOHAMED GHANNOUM
No. 72051
Exp. 6/30/12
CIVIL
STATE OF CALIFORNIA

The State of California or its officers or agents shall not be responsible for the accuracy or completeness of electronic copies of this plan sheet.

TABLE OF WALL DIMENSIONS, REINFORCING STEEL AND BEARING STRESS DATA

DESIGN H	STEM WITH HUANCH			STEM WITHOUT HUANCH												
	6′	8′	10′	12′	14′	16′	18′	20′	22′	24′	26′	28′	30′	32′	34′	36′
W	8′-3″	8′-3″	8′-3″	8′-3″	10′-0″	8′-3″	8′-6″	9′-0″	10′-0″	10′-9″	11′-9″	12′-6″	13′-6″	14′-6″	15′-6″	16′-0″
C	7′-0″	7′-0″	6′-9″	6′-6″	8′-3″	6′-6″	6′-6″	6′-9″	7′-6″	8′-0″	9′-0″	9′-0″	9′-9″	10′-6″	11′-6″	11′-9″
B	1′-3″	1′-3″	1′-6″	1′-9″	1′-9″	1′-9″	2′-0″	2′-0″	2′-6″	2′-9″	2′-9″	3′-6″	3′-9″	4′-0″	4′-0″	4′-3″
F	1′-9″	1′-9″	1′-9″	1′-9″	2′-0″	2′-4″	2′-6″	2′-6″	2′-9″	2′-9″	3′-0″	3′-3″	3′-6″	3′-9″	3′-9″	4′-0″
STEM THICKNESS AT TOP				1′-7″	1′-7″	1′-7″	1′-9″	1′-9″	1′-9″	2′-0″	2′-0″	2′-0″	2′-3″	2′-3″	2′-3″	2′-6″
STEM THICKNESS AT HAUNCH	1′-0″	1′-0″	1′-3″													
BATTER	0	0	0	0	0	0	0	0	¼:12	¼:12	¼:12	½:12	½:12	½:12	½:12	½:12
S	0′-8″	0′-8″	0′-7″	0′-6″	0′-5 2/3″	0′-5″	0′-4 1/3″	0′-8″	0′-7½″	0′-9″	0′-7½″	0′-8″	0′-7″	0′-6″	0′-6″	0′-5½″
ⓐ BARS															#5	#5
ⓑ BARS															#8	#7
hb															28′-3″	29′-0″
ⓒ BARS	#5	#5	#5	#5	#5	#5	#5	#5 ℧	#5 ℧	#5	#5	#5	#5	#5	#11	#11
hsc		7′-10″	9′-10″	11′-10″	13′-10″	13′-6″	11′-6″	17′-3″	16′-3″	20′-0″	18′-9″	20′-6″	21′-6″	23′-0″	17′-0″	17′-9″
hc															22′-0″	25′-0″
ⓓ BARS				#5	#7	#7	#7	#10	#10	#7	#7	#7	#7	#7		
hd				3′-3″	5′-6″	6′-0″	6′-6″	11′-3″	12′-0″	13′-0″	16′-6″	16′-0″	17′-0″	19′-3″		
ⓔ BARS										#10	#10	#11	#11	#11		
he										12′-9″	13′-6″	14′-0″	12′-3″	16′-6″		
ⓖ BARS						#5 @ 15	#5 @ 13	#5 @ 16	#6 @ 15	#7 @ 18	#5 @ 15	#8 @ 16	#7 @ 14	#7 @ 12	#5 @ 6	#5 @ 5½
BARS BUNDLED WITH ⓖ in ftg						SHORT ⓒ	SHORT ⓒ	ⓓ	ⓓ	SHORT ⓒ & ⓔ	SHORT ⓒ & ⓔ	SHORT ⓒ & ⓔ	SHORT ⓒ & ⓔ	SHORT ⓒ & ⓔ	ⓒ & SHORT ⓒ	ⓒ & SHORT ⓒ
ⓗ BARS															#5 @ 24	#5 @ 11
ⓢ BARS	#4 @ 12	#4 @ 12	#5 @ 15	#5 @ 12	#5 @ 12	#5 @ 12	#5 @ 12	#5 @ 12	#6 @ 12	#6 @ 12	#6 @ 12	#6 @ 12	#7 @ 12	#7 @ 12	#7 @ 12	#7 @ 12
ⓣ BARS	#4 @ 18	#4 @ 18	#4 @ 18	#4 @ 12	#4 @ 12	#4 @ 12	#4 @ 12	#4 @ 12	#4 @ 12	#4 @ 12	#5 @ 12	#5 @ 12	#5 @ 12	#5 @ 12	#5 @ 12	#5 @ 12
Td (KIPS/FT)	0	0	0	0	0	3	6.75	9.75	11.25	12.75	13.5	18.75	19.5	21.75	21.75	26.25
To (KIPS/FT)	0	0	0	0	0	*	*	*	*	*	*	*	*	*	*	*
Tp = Larger of 1.33 Td & 1.25 To (KIPS/FT)	0	0	0	0	0	*	*	*	*	*	*	*	*	*	*	*
MAX. ANCHOR SPACING						10′-6″	10′-6″	8′-3″	6′-3″	7′-9″	7′-3″	7′-0″	6′-9″	6′-0″	6′-0″	5′-0″
SER I: B′(ft), q_o' (ksf)	8.6, 0.3	8.1, 0.4	7.6, 0.5	7.1, 0.8	8.9, 0.7	5.8, 1.9	6.1, 2.7	6.5, 3.3	7.1, 3.5	7.8, 3.7	8.7, 3.6	9.1, 4.5	10.0, 4.5	10.7, 4.6	11.6, 4.5	12.1, 5.0
STR Ia: B′(ft), q_o(ksf)	8.3, 1.0	7.6, 1.2	7.0, 1.4	6.2, 1.8	8.0, 1.8	4.7, 3.8	4.9, 4.9	5.2, 5.7	5.8, 6.3	6.2, 6.4	6.7, 6.4	7.3, 7.6	8.1, 7.6	8.6, 7.9	9.4, 7.7	9.8, 8.6
STR, Ib: B′(ft), q_o(ksf)	7.8, 0.8	6.9, 1.0	6.0, 1.3	5.0, 1.8	6.6, 1.7	3.4, 4.4	3.8, 5.4	4.1, 6.1	4.6, 6.4	5.0, 6.9	5.2, 7.1	5.9, 8.2	6.6, 8.1	7.0, 8.5	7.6, 8.3	8.0, 9.1
Ext I: B′(ft), q_o(ksf)	7.9, 0.8	7.1, 0.9	6.2, 1.2	5.0, 1.7	6.3, 1.8	2.8, 5.2	2.9, 7.1	3.2, 8.3	3.5, 9.3	3.6, 9.6	4.6, 11.3	4.3, 11.5	4.6, 11.7	4.9, 12.4	5.2, 12.2	5.3, 13.8
Ext II: B′(ft), q_o(ksf)	2.8, 2.0	2.9, 2.3	3.2, 2.4	3.3, 2.7	6.0, 1.7	3.8, 3.6	4.7, 4.1	5.6, 4.5	6.5, 4.5	7.4, 4.5	8.8, 5.1	9.0, 5.1	10.1, 5.1	10.9, 5.2	11.9, 4.9	12.4, 5.4

NOTE:

ⓗ Bar spacing shown is along the length of the retaining wall.
* denotes values to be determined by designer, and this note is removed afterwards.

LEGEND:

SER: service limit state
STR: strength limit state
EXT: extreme event limit state
B′: effective footing width (ft)
q_o': net bearing stress (ksf)
q_o: gross uniform bearing stress (ksf)
℧: 2 bar bundle
To: Anchor Lockoff Load
Tp: Anchor Factored Test Load

STANDARD DRAWING
FILE NO. xs14-375-2
APPROVAL DATE July 2011

STATE OF CALIFORNIA
DEPARTMENT OF TRANSPORTATION

DIVISION OF ENGINEERING SERVICES

BRIDGE NO. X
POST MILE X

R-49
RETAINING WALL TYPE 7B - DETAILS NO. 2

DS OSD 2147A (ENGLISH STANDARD DRAWING "XS" BORDER REV. (02-02-11)

ORIGINAL SCALE IN INCHES FOR REDUCED PLANS 0 1 2 3

UNIT: X
PROJECT NUMBER & PHASE: X
CONTRACT NO.: X

DISREGARD PRINTS BEARING EARLIER REVISION DATES

REVISION DATES | SHEET X | OF X

FILE => 71170uqs005.dgn

USERNAME => s121614 DATE PLOTTED => 13-JUN-2013 TIME PLOTTED => 06:03

Dist	COUNTY	ROUTE	POST MILES TOTAL PROJECT	SHEET No.	TOTAL SHEETS
07	LA	10	33.2/37.2	667	1475

REGISTERED CIVIL ENGINEER 4-17-12 DATE

6-10-13
PLANS APPROVAL DATE

REGISTERED PROFESSIONAL ENGINEER MOHAMED GHANNOUM No. C72051 Exp. 6/30/14 CIVIL STATE OF CALIFORNIA

THE STATE OF CALIFORNIA OR ITS OFFICERS OR AGENTS SHALL NOT BE RESPONSIBLE FOR THE ACCURACY OR COMPLETENESS OF SCANNED COPIES OF THIS PLAN SHEET.

NOTES:

(*) - FOR ADDITIONAL QUANTITIES, SEE SOUNDWALL QUANTITIES SHEETS
(**) - FOR ADDITIONAL QUANTITIES, SEE DRAINAGE QUANTITIES SHEETS
(***) - FOR ADDITIONAL QUANTITIES, SEE SOUNDWALL QUANTITIES AND STRUCTURE PLANS
(#) - FOR ADDITIONAL QUANTITIES, SEE STRUCTURE PLANS

RETAINING WALL QUANTITIES

RETAINING WALL	BAR REINFORCING STEEL (RETAINING WALL) (***)	STRUCTURAL CONCRETE, RETAINING WALL (***)	16" CAST-IN-DRILLED-HOLE CONCRETE PILING (SOUND WALL)	PERVIOUS BACKFILL MATERIAL (RETAINING WALL) (*)	CONCRETE BARRIER (TYPE 736SV MODIFIED)	CONCRETE BARRIER (TYPE 736SV-S MODIFIED)	CONCRETE BARRIER (TYPE 736A-S MODIFIED)	MINOR CONCRETE (GUTTER) (*)	CABLE RAILING (**)	STRUCTURE EXCAVATION (RETAINING WALL) (#)	STRUCTURE BACKFILL (RETAINING WALL) (#)
	LB	CY	LF	CY	LF	LF	LF	CY	LF	CY	CY
RW 1756	33,137.52	343.58		17.84						58.44	17.20
RW 763	4761.30	45.53		11.11						26.10	5.37
RW 1798	46,508.80	482.21		25.04			80				18.52
RW 806	15,306.74	220.66		35.49				9.59		36.72	10.64
RW 809	9113.25	94.49		4.914							4.93
RW 812			1360		372.00						
RW 1822	79,980.62	829.80		82.96	85.00		80	33.34		166.30	19.41
RW 822	7005.88	634.14		9.47					151.90	351.69	
RW 1823	77,440.33	801.05		47.08						2.35	20.56
RW 1841			4048		1537.50						
RW 860	39,628.80	410.88		21.33						163.81	21.33
RW 868	6329.60	65.63		3.41							3.41
RW 874	96,821.50	716.25		62.37						45.28	21.33
RW 1883	33,046.72	341.59		20.81							17.26
RW 925	12,855.61	90.50		24.00				2.16	64.80	246.53	
RW 927	8465.37	67.56		9.43						129.54	
RW 1939	72,235.52	745.71		49.78		107.34				124.94	24.89
TOTAL	542,637.56	5889.58	5408.00	425.03	1994.50	107.34	160	45.09	216.70	1351.70	184.85

RETAINING WALL QUANTITIES
R-50

STATE OF CALIFORNIA - DEPARTMENT OF TRANSPORTATION
Caltrans® OFFICE OF DESIGN D

FUNCTIONAL SUPERVISOR: NADER GOBRAN
CALCULATED-DESIGNED BY: NEIL LIANG
CHECKED BY: MOHAMED GHANNOUM
REVISED BY
DATE REVISED

LAST REVISION 00-00-00
DATE PLOTTED => 13-JUN-2013
TIME PLOTTED => 06:03

DIST	COUNTY	ROUTE	POST MILES TOTAL PROJECT	SHEET No.	TOTAL SHEETS
07	LA	10	33.2/37.2	668	1475

REGISTERED CIVIL ENGINEER 7-26-12 DATE

6-10-13
PLANS APPROVAL DATE

REGISTERED PROFESSIONAL ENGINEER Sungro Cho No. C75151 Exp. 12-31-13 CIVIL STATE OF CALIFORNIA

The State of California or its officers or agents shall not be responsible for the accuracy or completeness of electronic copies of this plan sheet.

This LOTB sheet was prepared in accordance with the Caltrans Soil & Rock Logging, Classification, & Presentation Manual (2010 Edition).

BENCH MARK

BM #98-i-67 Elev 376.15′
Hilti Nail in the S. curb of Service Ave. across from the A Coving Branch of the LA County Public Library.
Vertical Datum: NAVD88

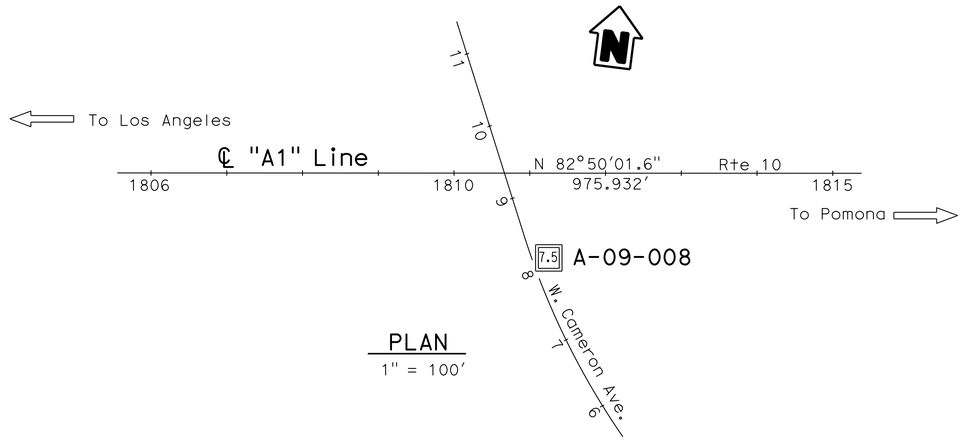

PLAN
1" = 100′

Note: No ground water encountered during field investigation.

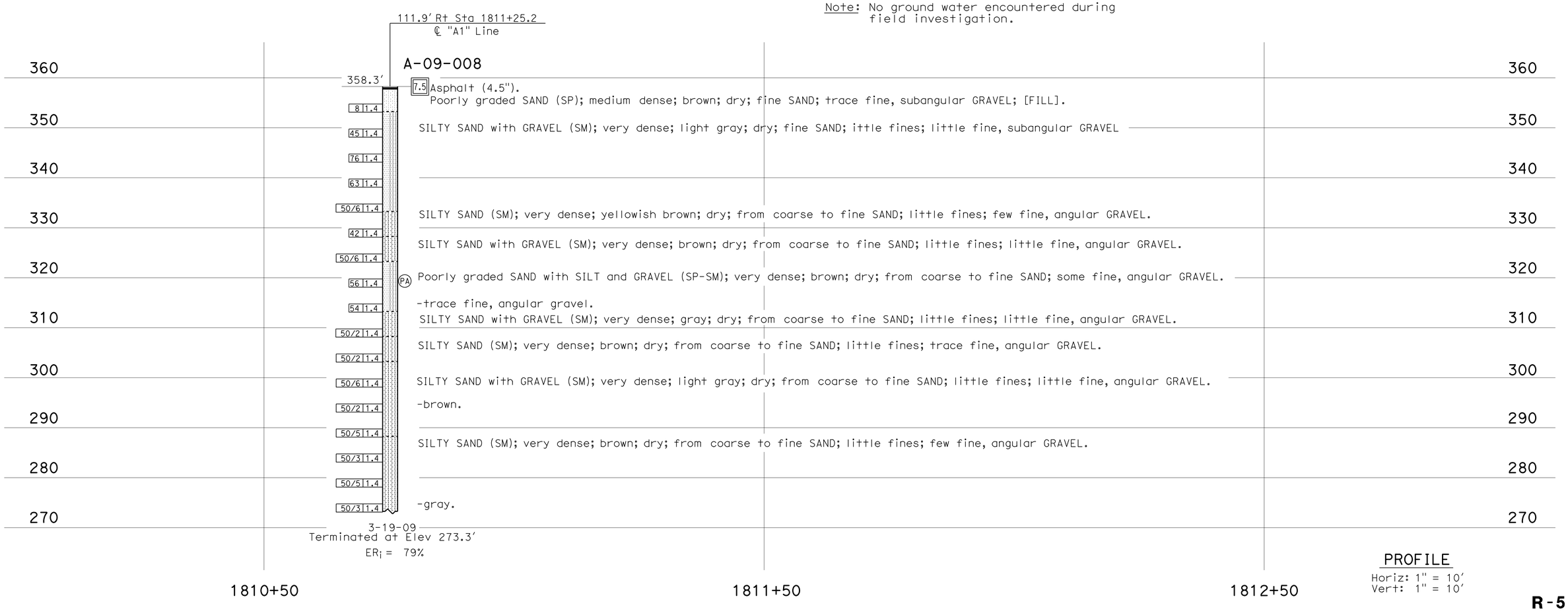

PROFILE
Horiz: 1" = 10′
Vert: 1" = 10′

R-51

ENGINEERING SERVICES	MATERIALS AND GEOTECHNICAL SERVICES	STATE OF CALIFORNIA DEPARTMENT OF TRANSPORTATION	DIVISION OF ENGINEERING SERVICES STRUCTURE DESIGN DESIGN BRANCH X	BRIDGE NO. RW 806 POST MILE 33.4/37.1	RETAINING WALL NO. 806 LOG OF TEST BORINGS 1 OF 3
FUNCTIONAL SUPERVISOR NAME: D. Jang	DRAWN BY: F. Nguyen CHECKED BY: H. Yang	FIELD INVESTIGATION BY: S. Cho			

OGS CIVIL LOG OF TEST BORINGS SHEET

ORIGINAL SCALE IN INCHES FOR REDUCED PLANS 0 1 2 3

UNIT: 3643
PROJECT NUMBER & PHASE: 07000000851 CONTRACT NO.: 07-1170U1

DISREGARD PRINTS BEARING EARLIER REVISION DATES

REVISION DATES 04-17-12 05-15-12 07-13-12 SHEET X OF X

FILE => 71170uqu001.dgn

USERNAME => s121614 DATE PLOTTED => 13-JUN-2013 TIME PLOTTED => 06:03

REFERENCE: CALTRANS SOIL & ROCK LOGGING, CLASSIFICATION, AND PRESENTATION MANUAL (2010)

DIST	COUNTY	ROUTE	POST MILES TOTAL PROJECT	SHEET No.	TOTAL SHEETS
07	LA	10	33.2/37.2	669	1475

REGISTERED CIVIL ENGINEER 7-26-12 DATE

6-10-13
PLANS APPROVAL DATE

REGISTERED PROFESSIONAL ENGINEER Sungro Cho No. C75151 Exp. 12-31-13 CIVIL STATE OF CALIFORNIA

The State of California or its officers or agents shall not be responsible for the accuracy or completeness of electronic copies of this plan sheet.

CEMENTATION

Description	Criteria
Weak	Crumbles or breaks with handling or little finger pressure.
Moderate	Crumbles or breaks with considerable finger pressure.
Strong	Will not crumble or break with finger pressure.

BOREHOLE IDENTIFICATION

Symbol	Hole Type	Description
Size	A	Auger Boring (hollow or solid stem bucket)
Size	R RW RC P	Rotary drilled boring (conventional) Rotary drilled with self-casing wire-line Rotary core with continuously-sampled, self-casing wire-line Rotary percussion boring (air)
Size	R RC	Rotary drilled diamond core Rotary drilled rock core
Size	HD HA	Hand driven (1-inch soil tube) Hand Auger
●	D	Dynamic Cone Penetration Boring
▲	CPT	Cone Penetration Test (ASTM D 5778)
⬚	O	Other (note on LOTB)

Note: Size in inches.

CONSISTENCY OF COHESIVE SOILS

Description	Shear Strength (tsf)	Pocket Penetrometer Measurement, PP, (tsf)	Torvane Measurement, TV, (tsf)	Vane Shear Measurement, VS, (tsf)
Very Soft	Less than 0.12	Less than 0.25	Less than 0.12	Less than 0.12
Soft	0.12 - 0.25	0.25 - 0.5	0.12 - 0.25	0.12 - 0.25
Medium Stiff	0.25 - 0.5	0.5 - 1	0.25 - 0.5	0.25 - 0.5
Stiff	0.5 - 1	1 - 2	0.5 - 1	0.5 - 1
Very Stiff	1 - 2	2 - 4	1 - 2	1 - 2
Hard	Greater than 2	Greater than 4	Greater than 2	Greater than 2

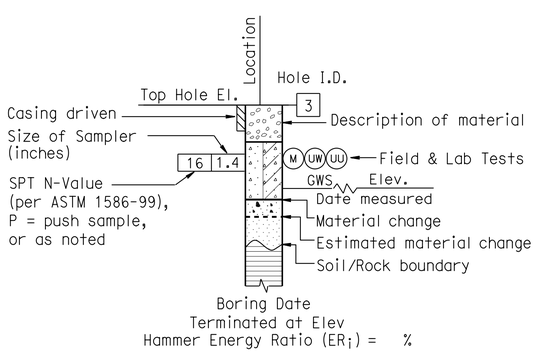

ROTARY BORING

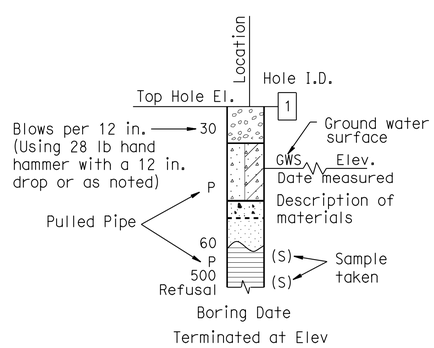

HAND BORING

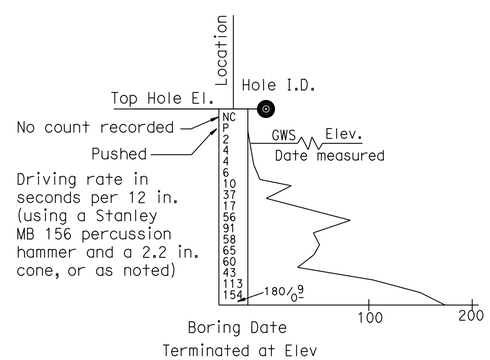

DYNAMIC CONE PENETRATION BORING

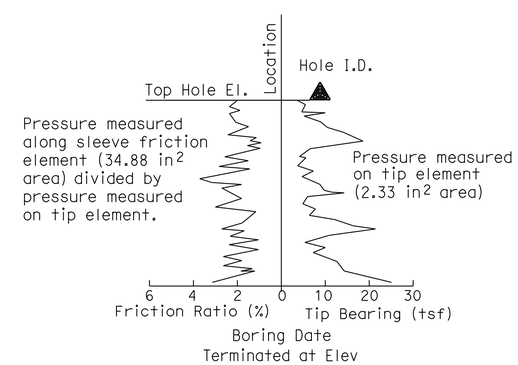

CONE PENETRATION TEST (CPT) BORING

R-52

ENGINEERING SERVICES	MATERIALS AND GEOTECHNICAL SERVICES	STATE OF CALIFORNIA DEPARTMENT OF TRANSPORTATION	DIVISION OF ENGINEERING SERVICES STRUCTURE DESIGN DESIGN BRANCH X	BRIDGE NO. RW 806 / POST MILE 33.4/37.1	RETAINING WALL NO. 806 LOG OF TEST BORINGS 2 OF 3
	PREPARED BY: F. Nguyen				

GS LOTB SOIL LEGEND

ORIGINAL SCALE IN INCHES FOR REDUCED PLANS 0 1 2 3

UNIT: 3643
PROJECT NUMBER & PHASE: 07000000851 CONTRACT NO.: 07-1170U1

DISREGARD PRINTS BEARING EARLIER REVISION DATES

REVISION DATES 05-15-12 | SHEET X | OF X

FILE => 71170uqu002.dgn

USERNAME => s12614 DATE PLOTTED => 13-JUN-2013 TIME PLOTTED => 06:03

REFERENCE: CALTRANS SOIL & ROCK LOGGING, CLASSIFICATION, AND PRESENTATION MANUAL (2010)

DIST	COUNTY	ROUTE	POST MILES TOTAL PROJECT	SHEET No.	TOTAL SHEETS
07	LA	10	33.2/37.2	670	1475

REGISTERED CIVIL ENGINEER 7-26-12 DATE

6-10-13
PLANS APPROVAL DATE

REGISTERED PROFESSIONAL ENGINEER Sungro Cho No. C75151 Exp. 12-31-13 CIVIL STATE OF CALIFORNIA

The State of California or its officers or agents shall not be responsible for the accuracy or completeness of electronic copies of this plan sheet.

GROUP SYMBOLS AND NAMES

Graphic/Symbol	Group Names	Graphic/Symbol	Group Names
GW	Well-graded GRAVEL Well-graded GRAVEL with SAND	CL	Lean CLAY Lean CLAY with SAND Lean CLAY with GRAVEL SANDY lean CLAY SANDY lean CLAY with GRAVEL GRAVELLY lean CLAY GRAVELLY lean CLAY with SAND
GP	Poorly-graded GRAVEL Poorly-graded GRAVEL with SAND		
GW-GM	Well-graded GRAVEL with SILT Well-graded GRAVEL with SILT and SAND	CL-ML	SILTY CLAY SILTY CLAY with SAND SILTY CLAY with GRAVEL SANDY SILTY CLAY SANDY SILTY CLAY with GRAVEL GRAVELLY SILTY CLAY GRAVELLY SILTY CLAY with SAND
GW-GC	Well-graded GRAVEL with CLAY (or SILTY CLAY) Well-graded GRAVEL with CLAY and SAND (or SILTY CLAY and SAND)		
GP-GM	Poorly-graded GRAVEL with SILT Poorly-graded GRAVEL with SILT and SAND	ML	SILT SILT with SAND SILT with GRAVEL SANDY SILT SANDY SILT with GRAVEL GRAVELLY SILT GRAVELLY SILT with SAND
GP-GC	Poorly-graded GRAVEL with CLAY (or SILTY CLAY) Poorly-graded GRAVEL with CLAY and SAND (or SILTY CLAY and SAND)		
GM	SILTY GRAVEL SILTY GRAVEL with SAND	OL	ORGANIC lean CLAY ORGANIC lean CLAY with SAND ORGANIC lean CLAY with GRAVEL SANDY ORGANIC lean CLAY SANDY ORGANIC lean CLAY with GRAVEL GRAVELLY ORGANIC lean CLAY GRAVELLY ORGANIC lean CLAY with SAND
GC	CLAYEY GRAVEL CLAYEY GRAVEL with SAND		
GC-GM	SILTY, CLAYEY GRAVEL SILTY, CLAYEY GRAVEL with SAND	OL	ORGANIC SILT ORGANIC SILT with SAND ORGANIC SILT with GRAVEL SANDY ORGANIC SILT SANDY ORGANIC SILT with GRAVEL GRAVELLY ORGANIC SILT GRAVELLY ORGANIC SILT with SAND
SW	Well-graded SAND Well-graded SAND with GRAVEL		
SP	Poorly-graded SAND Poorly-graded SAND with GRAVEL	CH	Fat CLAY Fat CLAY with SAND Fat CLAY with GRAVEL SANDY fat CLAY SANDY fat CLAY with GRAVEL GRAVELLY fat CLAY GRAVELLY fat CLAY with SAND
SW-SM	Well-graded SAND with SILT Well-graded SAND with SILT and GRAVEL		
SW-SC	Well-graded SAND with CLAY (or SILTY CLAY) Well-graded SAND with CLAY and GRAVEL (or SILTY CLAY and GRAVEL)	MH	Elastic SILT Elastic SILT with SAND Elastic SILT with GRAVEL SANDY elastic SILT SANDY elastic SILT with GRAVEL GRAVELLY elastic SILT GRAVELLY elastic SILT with SAND
SP-SM	Poorly-graded SAND with SILT Poorly-graded SAND with SILT and GRAVEL		
SP-SC	Poorly-graded SAND with CLAY (or SILTY CLAY) Poorly-graded SAND with CLAY and GRAVEL (or SILTY CLAY and GRAVEL)	OH	ORGANIC fat CLAY ORGANIC fat CLAY with SAND ORGANIC fat CLAY with GRAVEL SANDY ORGANIC fat CLAY SANDY ORGANIC fat CLAY with GRAVEL GRAVELLY ORGANIC fat CLAY GRAVELLY ORGANIC fat CLAY with SAND
SM	SILTY SAND SILTY SAND with GRAVEL		
SC	CLAYEY SAND CLAYEY SAND with GRAVEL	OH	ORGANIC elastic SILT ORGANIC elastic SILT with SAND ORGANIC elastic SILT with GRAVEL SANDY ORGANIC elastic SILT SANDY ORGANIC elastic SILT with GRAVEL GRAVELLY ORGANIC elastic SILT GRAVELLY ORGANIC elastic SILT with SAND
SC-SM	SILTY, CLAYEY SAND SILTY, CLAYEY SAND with GRAVEL		
PT	PEAT	OL/OH	ORGANIC SOIL ORGANIC SOIL with SAND ORGANIC SOIL with GRAVEL SANDY ORGANIC SOIL SANDY ORGANIC SOIL with GRAVEL GRAVELLY ORGANIC SOIL GRAVELLY ORGANIC SOIL with SAND
	COBBLES COBBLES and BOULDERS BOULDERS		

FIELD AND LABORATORY TESTING

- (C) Consolidation (ASTM D 2435)
- (CL) Collapse Potential (ASTM D 5333)
- (CP) Compaction Curve (CTM 216)
- (CR) Corrosivity Testing (CTM 643, CTM 422, CTM 417)
- (CU) Consolidated Undrained Triaxial (ASTM D 4767)
- (DS) Direct Shear (ASTM D 3080)
- (EI) Expansion Index (ASTM D 4829)
- (M) Moisture Content (ASTM D 2216)
- (OC) Organic Content-% (ASTM D 2974)
- (P) Permeability (CTM 220)
- (PA) Particle Size Analysis (ASTM D 422)
- (PI) Plasticity Index (AASHTO T 90) Liquid Limit (AASHTO T 89)
- (PL) Point Load Index (ASTM D 5731)
- (PM) Pressure Meter
- (R) R-Value (CTM 301)
- (SE) Sand Equivalent (CTM 217)
- (SG) Specific Gravity (AASHTO T 100)
- (SL) Shrinkage Limit (ASTM D 427)
- (SW) Swell Potential (ASTM D 4546)
- (UC) Unconfined Compression-Soil (ASTM D 2166) Unconfined Compression-Rock (ASTM D 2938)
- (UU) Unconsolidated Undrained Triaxial (ASTM D 2850)
- (UW) Unit Weight (ASTM D 4767)

APPARENT DENSITY OF COHESIONLESS SOILS

Description	SPT N_{60} (Blows / 12 in.)
Very Loose	0 - 5
Loose	5 - 10
Medium Dense	10 - 30
Dense	30 - 50
Very Dense	Greater than 50

MOISTURE

Description	Criteria
Dry	No discernable moisture
Moist	Moisture present, but no free water
Wet	Visible free water

PERCENT OR PROPORTION OF SOILS

Description	Criteria
Trace	Particles are present but estimated to be less than 5%
Few	5% - 10%
Little	15% - 25%
Some	30% - 45%
Mostly	50% - 100%

PARTICLE SIZE

Description		Size (in.)
Boulder		Greater than 12
Cobble		3 - 12
Gravel	Coarse	3/4 - 3
	Fine	1/5 - 3/4
Sand	Coarse	1/16 - 1/5
	Medium	1/64 - 1/16
	Fine	1/300 - 1/64
Silt and Clay		Less than 1/300

R-53

ENGINEERING SERVICES

MATERIALS AND GEOTECHNICAL SERVICES

PREPARED BY: F. Nguyen

STATE OF CALIFORNIA DEPARTMENT OF TRANSPORTATION

DIVISION OF ENGINEERING SERVICES STRUCTURE DESIGN DESIGN BRANCH X

BRIDGE NO. RW 806

POST MILE 33.4/37.1

RETAINING WALL NO. 806

LOG OF TEST BORINGS 3 OF 3

GS LOTB SOIL LEGEND

ORIGINAL SCALE IN INCHES FOR REDUCED PLANS 0 1 2 3

UNIT: 3643
PROJECT NUMBER & PHASE: 07000000851
CONTRACT NO.: 07-1170U1

DISREGARD PRINTS BEARING EARLIER REVISION DATES

REVISION DATES 05-15-12

SHEET X OF X

FILE => 71170uqu003.dgn

USERNAME => s121614 DATE PLOTTED => 13-JUN-2013 TIME PLOTTED => 06:03

DIST	COUNTY	ROUTE	POST MILES TOTAL PROJECT	SHEET No.	TOTAL SHEETS
07	LA	10	33.2/37.2	671	1475

REGISTERED CIVIL ENGINEER 7-26-12 DATE

6-10-13
PLANS APPROVAL DATE

REGISTERED PROFESSIONAL ENGINEER Sungro Cho No. C75151 Exp. 12-31-13 CIVIL STATE OF CALIFORNIA

The State of California or its officers or agents shall not be responsible for the accuracy or completeness of electronic copies of this plan sheet.

This LOTB sheet was prepared in accordance with the Caltrans Soil & Rock Logging, Classification, & Presentation Manual (2010 Edition).

BENCH MARK

BM #98-i-67 Elev 376.15′
Hilti Nail in the S. curb of Service Ave. across from the A Coving Branch of the LA County Public Library.
Vertical Datum: NAVD88

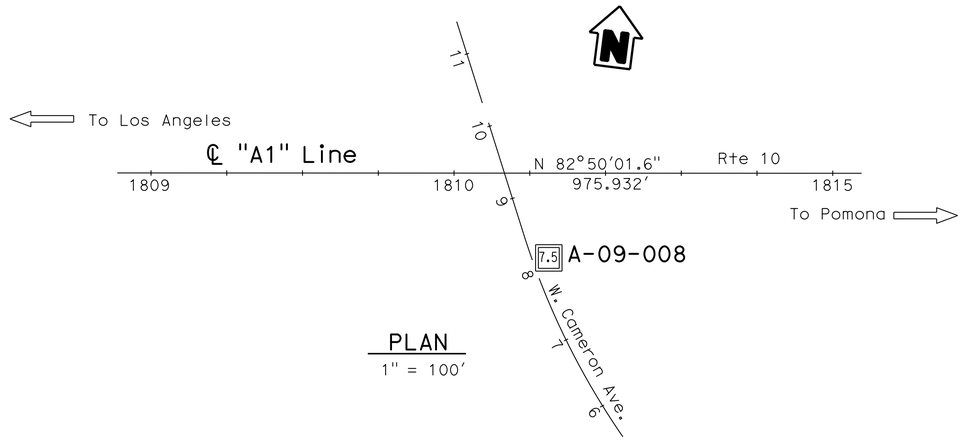

PLAN
1″ = 100′

Note: No ground water encountered during field investigation.

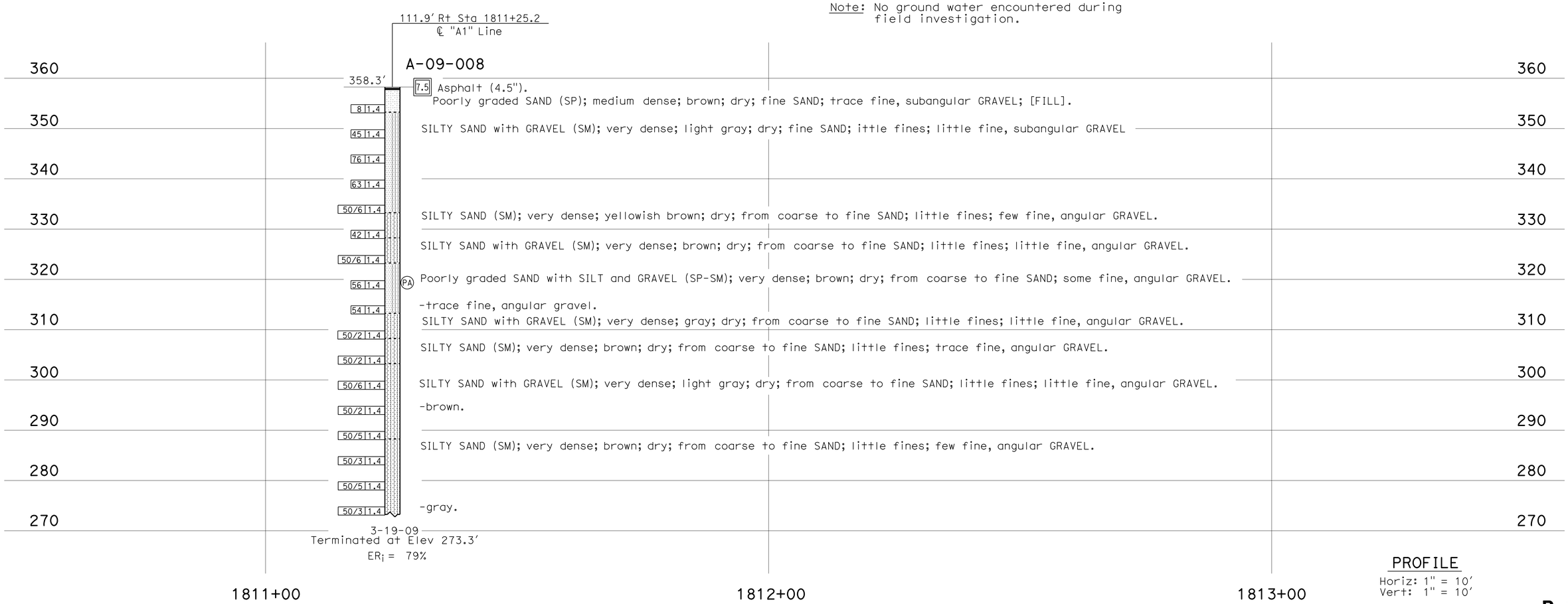

PROFILE
Horiz: 1″ = 10′
Vert: 1″ = 10′

R-54

ENGINEERING SERVICES	MATERIALS AND GEOTECHNICAL SERVICES	STATE OF CALIFORNIA DEPARTMENT OF TRANSPORTATION	DIVISION OF ENGINEERING SERVICES STRUCTURE DESIGN DESIGN BRANCH X	BRIDGE NO. RW 809 / POST MILE 33.4/37.1	RETAINING WALL NO. 809 LOG OF TEST BORINGS 1 OF 3
FUNCTIONAL SUPERVISOR NAME: D. Jang	DRAWN BY: F. Nguyen / CHECKED BY: H. Yang	FIELD INVESTIGATION BY: S. Cho			

OGS CIVIL LOG OF TEST BORINGS SHEET

ORIGINAL SCALE IN INCHES FOR REDUCED PLANS 0 1 2 3

UNIT: 3643
PROJECT NUMBER & PHASE: 07000000851 CONTRACT NO.: 07-1170U1

DISREGARD PRINTS BEARING EARLIER REVISION DATES

REVISION DATES 04-17-12 05-15-12 07-13-12 SHEET X OF X

FILE => 71170uqu004.dgn

USERNAME => s121614 DATE PLOTTED => 13-JUN-2013 TIME PLOTTED => 06:03

REFERENCE: CALTRANS SOIL & ROCK LOGGING, CLASSIFICATION, AND PRESENTATION MANUAL (2010)

DIST	COUNTY	ROUTE	POST MILES TOTAL PROJECT	SHEET No.	TOTAL SHEETS
07	LA	10	33.2/37.2	672	1475

REGISTERED CIVIL ENGINEER 7-26-12 DATE

6-10-13
PLANS APPROVAL DATE

REGISTERED PROFESSIONAL ENGINEER Sungro Cho No. C75151 Exp. 12-31-13 CIVIL STATE OF CALIFORNIA

The State of California or its officers or agents shall not be responsible for the accuracy or completeness of electronic copies of this plan sheet.

CEMENTATION

Description	Criteria
Weak	Crumbles or breaks with handling or little finger pressure.
Moderate	Crumbles or breaks with considerable finger pressure.
Strong	Will not crumble or break with finger pressure.

BOREHOLE IDENTIFICATION

Symbol	Hole Type	Description
Size	A	Auger Boring (hollow or solid stem bucket)
Size	R RW RC P	Rotary drilled boring (conventional) Rotary drilled with self-casing wire-line Rotary core with continuously-sampled, self-casing wire-line Rotary percussion boring (air)
Size	R RC	Rotary drilled diamond core Rotary drilled rock core
Size	HD HA	Hand driven (1-inch soil tube) Hand Auger
●	D	Dynamic Cone Penetration Boring
▲	CPT	Cone Penetration Test (ASTM D 5778)
⬚	O	Other (note on LOTB)

Note: Size in inches.

CONSISTENCY OF COHESIVE SOILS

Description	Shear Strength (tsf)	Pocket Penetrometer Measurement, PP, (tsf)	Torvane Measurement, TV, (tsf)	Vane Shear Measurement, VS, (tsf)
Very Soft	Less than 0.12	Less than 0.25	Less than 0.12	Less than 0.12
Soft	0.12 - 0.25	0.25 - 0.5	0.12 - 0.25	0.12 - 0.25
Medium Stiff	0.25 - 0.5	0.5 - 1	0.25 - 0.5	0.25 - 0.5
Stiff	0.5 - 1	1 - 2	0.5 - 1	0.5 - 1
Very Stiff	1 - 2	2 - 4	1 - 2	1 - 2
Hard	Greater than 2	Greater than 4	Greater than 2	Greater than 2

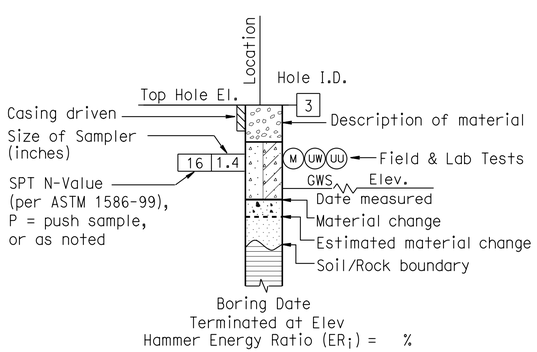

ROTARY BORING

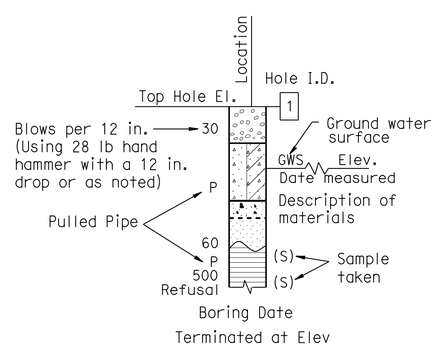

HAND BORING

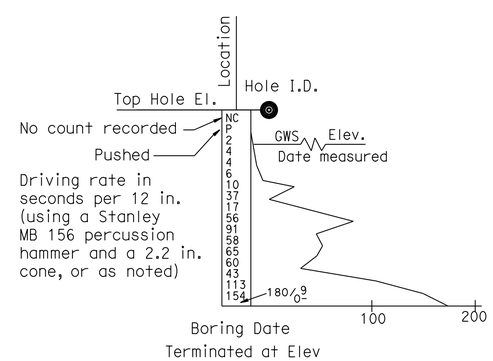

DYNAMIC CONE PENETRATION BORING

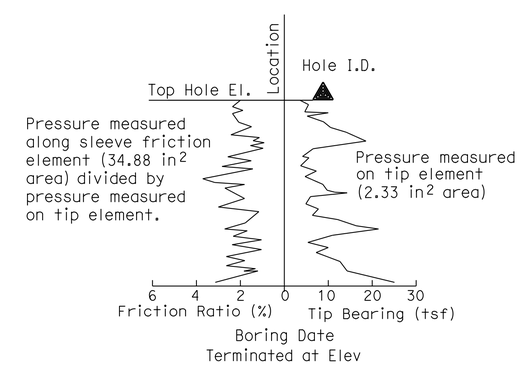

CONE PENETRATION TEST (CPT) BORING

R-55

ENGINEERING SERVICES	MATERIALS AND GEOTECHNICAL SERVICES	STATE OF CALIFORNIA DEPARTMENT OF TRANSPORTATION	DIVISION OF ENGINEERING SERVICES STRUCTURE DESIGN DESIGN BRANCH X	BRIDGE NO. RW 809 POST MILE 33.4/37.1	RETAINING WALL NO. 809 LOG OF TEST BORINGS 2 OF 3
	PREPARED BY: F. Nguyen				

GS LOTB SOIL LEGEND

ORIGINAL SCALE IN INCHES FOR REDUCED PLANS 0 1 2 3

UNIT: 3643
PROJECT NUMBER & PHASE: 07000000851 CONTRACT NO.: 07-1170U1

DISREGARD PRINTS BEARING EARLIER REVISION DATES

REVISION DATES 05-15-12 SHEET X OF X

FILE => 71170uqu005.dgn

USERNAME => s12614 DATE PLOTTED => 13-JUN-2013 TIME PLOTTED => 06:03

REFERENCE: CALTRANS SOIL & ROCK LOGGING, CLASSIFICATION, AND PRESENTATION MANUAL (2010)

DIST	COUNTY	ROUTE	POST MILES TOTAL PROJECT	SHEET No.	TOTAL SHEETS
07	LA	10	33.2/37.2	673	1475

REGISTERED CIVIL ENGINEER 7-26-12 DATE

6-10-13
PLANS APPROVAL DATE

REGISTERED PROFESSIONAL ENGINEER Sungro Cho No. C75151 Exp. 12-31-13 CIVIL STATE OF CALIFORNIA

The State of California or its officers or agents shall not be responsible for the accuracy or completeness of electronic copies of this plan sheet.

GROUP SYMBOLS AND NAMES

Graphic/Symbol	Group Names	Graphic/Symbol	Group Names
GW	Well-graded GRAVEL Well-graded GRAVEL with SAND	CL	Lean CLAY Lean CLAY with SAND Lean CLAY with GRAVEL SANDY lean CLAY SANDY lean CLAY with GRAVEL GRAVELLY lean CLAY GRAVELLY lean CLAY with SAND
GP	Poorly-graded GRAVEL Poorly-graded GRAVEL with SAND		
GW-GM	Well-graded GRAVEL with SILT Well-graded GRAVEL with SILT and SAND	CL-ML	SILTY CLAY SILTY CLAY with SAND SILTY CLAY with GRAVEL SANDY SILTY CLAY SANDY SILTY CLAY with GRAVEL GRAVELLY SILTY CLAY GRAVELLY SILTY CLAY with SAND
GW-GC	Well-graded GRAVEL with CLAY (or SILTY CLAY) Well-graded GRAVEL with CLAY and SAND (or SILTY CLAY and SAND)		
GP-GM	Poorly-graded GRAVEL with SILT Poorly-graded GRAVEL with SILT and SAND	ML	SILT SILT with SAND SILT with GRAVEL SANDY SILT SANDY SILT with GRAVEL GRAVELLY SILT GRAVELLY SILT with SAND
GP-GC	Poorly-graded GRAVEL with CLAY (or SILTY CLAY) Poorly-graded GRAVEL with CLAY and SAND (or SILTY CLAY and SAND)		
GM	SILTY GRAVEL SILTY GRAVEL with SAND	OL	ORGANIC lean CLAY ORGANIC lean CLAY with SAND ORGANIC lean CLAY with GRAVEL SANDY ORGANIC lean CLAY SANDY ORGANIC lean CLAY with GRAVEL GRAVELLY ORGANIC lean CLAY GRAVELLY ORGANIC lean CLAY with SAND
GC	CLAYEY GRAVEL CLAYEY GRAVEL with SAND		
GC-GM	SILTY, CLAYEY GRAVEL SILTY, CLAYEY GRAVEL with SAND	OL	ORGANIC SILT ORGANIC SILT with SAND ORGANIC SILT with GRAVEL SANDY ORGANIC SILT SANDY ORGANIC SILT with GRAVEL GRAVELLY ORGANIC SILT GRAVELLY ORGANIC SILT with SAND
SW	Well-graded SAND Well-graded SAND with GRAVEL		
SP	Poorly-graded SAND Poorly-graded SAND with GRAVEL	CH	Fat CLAY Fat CLAY with SAND Fat CLAY with GRAVEL SANDY fat CLAY SANDY fat CLAY with GRAVEL GRAVELLY fat CLAY GRAVELLY fat CLAY with SAND
SW-SM	Well-graded SAND with SILT Well-graded SAND with SILT and GRAVEL		
SW-SC	Well-graded SAND with CLAY (or SILTY CLAY) Well-graded SAND with CLAY and GRAVEL (or SILTY CLAY and GRAVEL)	MH	Elastic SILT Elastic SILT with SAND Elastic SILT with GRAVEL SANDY elastic SILT SANDY elastic SILT with GRAVEL GRAVELLY elastic SILT GRAVELLY elastic SILT with SAND
SP-SM	Poorly-graded SAND with SILT Poorly-graded SAND with SILT and GRAVEL		
SP-SC	Poorly-graded SAND with CLAY (or SILTY CLAY) Poorly-graded SAND with CLAY and GRAVEL (or SILTY CLAY and GRAVEL)	OH	ORGANIC fat CLAY ORGANIC fat CLAY with SAND ORGANIC fat CLAY with GRAVEL SANDY ORGANIC fat CLAY SANDY ORGANIC fat CLAY with GRAVEL GRAVELLY ORGANIC fat CLAY GRAVELLY ORGANIC fat CLAY with SAND
SM	SILTY SAND SILTY SAND with GRAVEL		
SC	CLAYEY SAND CLAYEY SAND with GRAVEL	OH	ORGANIC elastic SILT ORGANIC elastic SILT with SAND ORGANIC elastic SILT with GRAVEL SANDY ORGANIC elastic SILT SANDY ORGANIC elastic SILT with GRAVEL GRAVELLY ORGANIC elastic SILT GRAVELLY ORGANIC elastic SILT with SAND
SC-SM	SILTY, CLAYEY SAND SILTY, CLAYEY SAND with GRAVEL		
PT	PEAT	OL/OH	ORGANIC SOIL ORGANIC SOIL with SAND ORGANIC SOIL with GRAVEL SANDY ORGANIC SOIL SANDY ORGANIC SOIL with GRAVEL GRAVELLY ORGANIC SOIL GRAVELLY ORGANIC SOIL with SAND
	COBBLES COBBLES and BOULDERS BOULDERS		

FIELD AND LABORATORY TESTING

- (C) Consolidation (ASTM D 2435)
- (CL) Collapse Potential (ASTM D 5333)
- (CP) Compaction Curve (CTM 216)
- (CR) Corrosivity Testing (CTM 643, CTM 422, CTM 417)
- (CU) Consolidated Undrained Triaxial (ASTM D 4767)
- (DS) Direct Shear (ASTM D 3080)
- (EI) Expansion Index (ASTM D 4829)
- (M) Moisture Content (ASTM D 2216)
- (OC) Organic Content-% (ASTM D 2974)
- (P) Permeability (CTM 220)
- (PA) Particle Size Analysis (ASTM D 422)
- (PI) Plasticity Index (AASHTO T 90) Liquid Limit (AASHTO T 89)
- (PL) Point Load Index (ASTM D 5731)
- (PM) Pressure Meter
- (R) R-Value (CTM 301)
- (SE) Sand Equivalent (CTM 217)
- (SG) Specific Gravity (AASHTO T 100)
- (SL) Shrinkage Limit (ASTM D 427)
- (SW) Swell Potential (ASTM D 4546)
- (UC) Unconfined Compression-Soil (ASTM D 2166) Unconfined Compression-Rock (ASTM D 2938)
- (UU) Unconsolidated Undrained Triaxial (ASTM D 2850)
- (UW) Unit Weight (ASTM D 4767)

APPARENT DENSITY OF COHESIONLESS SOILS

Description	SPT N_{60} (Blows / 12 in.)
Very Loose	0 - 5
Loose	5 - 10
Medium Dense	10 - 30
Dense	30 - 50
Very Dense	Greater than 50

MOISTURE

Description	Criteria
Dry	No discernable moisture
Moist	Moisture present, but no free water
Wet	Visible free water

PERCENT OR PROPORTION OF SOILS

Description	Criteria
Trace	Particles are present but estimated to be less than 5%
Few	5% - 10%
Little	15% - 25%
Some	30% - 45%
Mostly	50% - 100%

PARTICLE SIZE

Description		Size (in.)
Boulder		Greater than 12
Cobble		3 - 12
Gravel	Coarse	3/4 - 3
	Fine	1/5 - 3/4
Sand	Coarse	1/16 - 1/5
	Medium	1/64 - 1/16
	Fine	1/300 - 1/64
Silt and Clay		Less than 1/300

R-56

ENGINEERING SERVICES

MATERIALS AND GEOTECHNICAL SERVICES
PREPARED BY: F. Nguyen

STATE OF CALIFORNIA DEPARTMENT OF TRANSPORTATION

DIVISION OF ENGINEERING SERVICES STRUCTURE DESIGN
DESIGN BRANCH X

BRIDGE NO. RW 809
POST MILE 33.4/37.1

RETAINING WALL NO. 809
LOG OF TEST BORINGS 3 OF 3

GS LOTB SOIL LEGEND

ORIGINAL SCALE IN INCHES FOR REDUCED PLANS 0 1 2 3

UNIT: 3643
PROJECT NUMBER & PHASE: 07000000851
CONTRACT NO.: 07-1170U1

DISREGARD PRINTS BEARING EARLIER REVISION DATES

REVISION DATES 05-15-12 | SHEET X | OF X

FILE => 71170uqu006.dgn

USERNAME => s124936 DATE PLOTTED => 13-JUN-2013 TIME PLOTTED => 05:44

DIST	COUNTY	ROUTE	POST MILES TOTAL PROJECT	SHEET No.	TOTAL SHEETS
07	LA	10	33.2/37.2	674	1475

REGISTERED CIVIL ENGINEER 7-26-12 DATE

6-10-13
PLANS APPROVAL DATE

REGISTERED PROFESSIONAL ENGINEER Sungro Cho No. C75151 Exp. 12-31-13 CIVIL STATE OF CALIFORNIA

The State of California or its officers or agents shall not be responsible for the accuracy or completeness of electronic copies of this plan sheet.

This LOTB sheet was prepared in accordance with the Caltrans Soil & Rock Logging, Classification, & Presentation Manual (2010 Edition).

BENCH MARK

BM #98-i-67 Elev 376.15′
Hilti Nail in the S. curb of Service Ave. across from the A Coving Branch of the LA County Public Library.
Vertical Datum: NAVD88

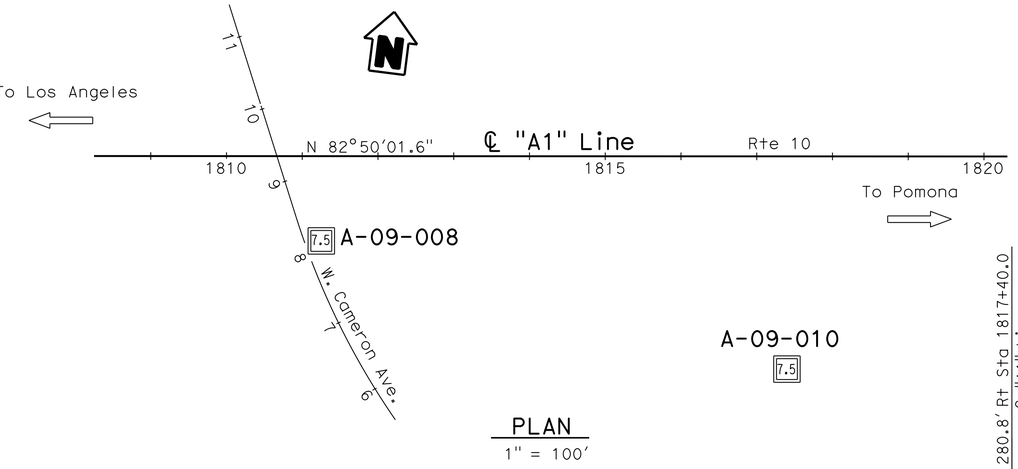

PLAN
1" = 100′

Note: No ground water encountered during field investigation.

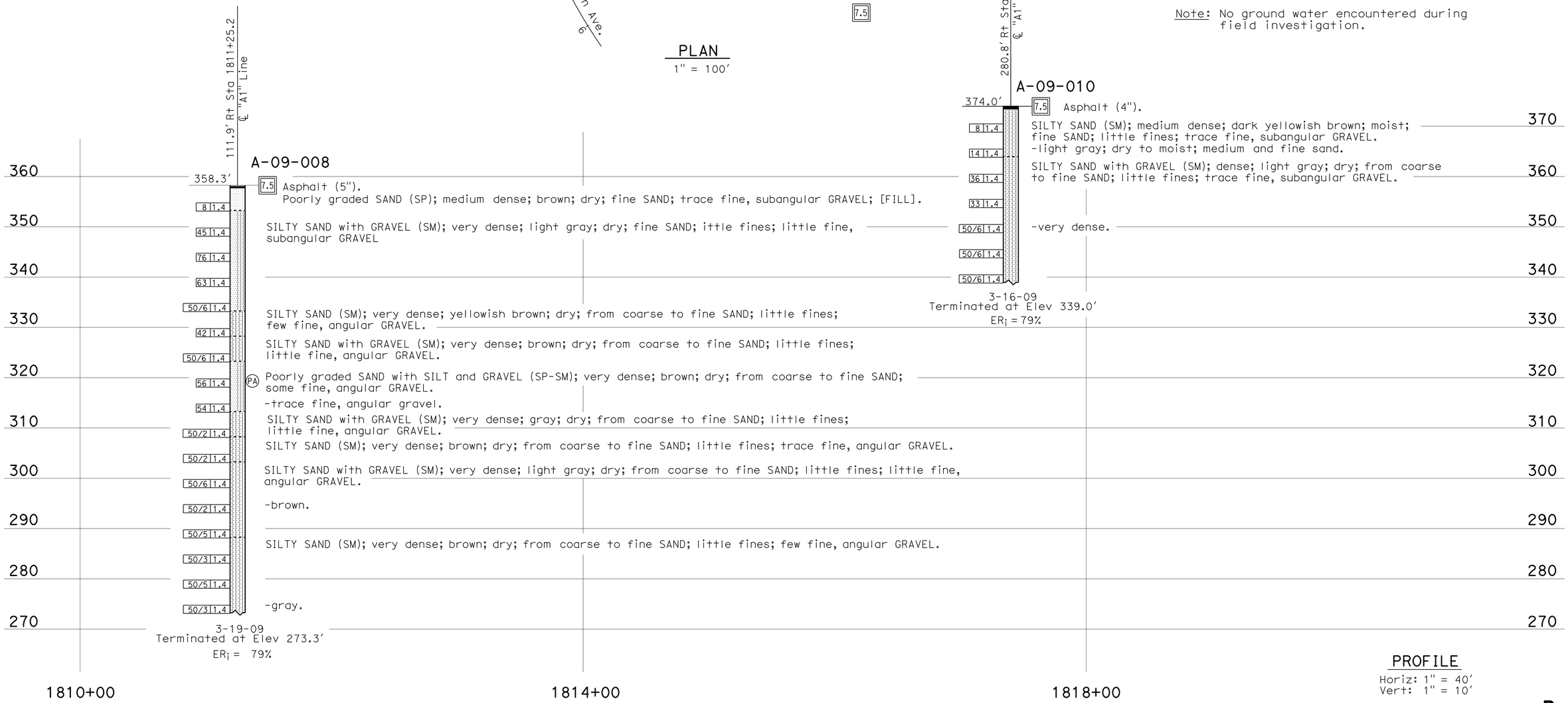

PROFILE
Horiz: 1" = 40′
Vert: 1" = 10′

R-57

ENGINEERING SERVICES	MATERIALS AND GEOTECHNICAL SERVICES	STATE OF CALIFORNIA DEPARTMENT OF TRANSPORTATION	DIVISION OF ENGINEERING SERVICES STRUCTURE DESIGN DESIGN BRANCH X	BRIDGE NO. RW 812 POST MILE 33.4/37.1	RETAINING WALL NO. 812 LOG OF TEST BORINGS 1 OF 3
FUNCTIONAL SUPERVISOR NAME: D. Jang	DRAWN BY: F. Nguyen CHECKED BY: H. Yang	FIELD INVESTIGATION BY: S. Cho			

OGS CIVIL LOG OF TEST BORINGS SHEET

ORIGINAL SCALE IN INCHES FOR REDUCED PLANS 0 1 2 3

UNIT: 3643
PROJECT NUMBER & PHASE: 07000000851 CONTRACT NO.: 07-1170U1

DISREGARD PRINTS BEARING EARLIER REVISION DATES

REVISION DATES 08-18-11 08-19-11 10-13-11 07-13-12 SHEET X OF X

FILE => 71170uqu007.dgn

USERNAME => s124496 DATE PLOTTED => 13-JUN-2013 TIME PLOTTED => 05:44

REFERENCE: CALTRANS SOIL & ROCK LOGGING, CLASSIFICATION, AND PRESENTATION MANUAL (2010)

DIST	COUNTY	ROUTE	POST MILES TOTAL PROJECT	SHEET No.	TOTAL SHEETS
07	LA	10	33.2/37.2	675	1475

REGISTERED CIVIL ENGINEER 7-26-12 DATE

6-10-13
PLANS APPROVAL DATE

REGISTERED PROFESSIONAL ENGINEER Sungro Cho No. C75151 Exp. 12-31-13 CIVIL STATE OF CALIFORNIA

The State of California or its officers or agents shall not be responsible for the accuracy or completeness of electronic copies of this plan sheet.

CEMENTATION

Description	Criteria
Weak	Crumbles or breaks with handling or little finger pressure.
Moderate	Crumbles or breaks with considerable finger pressure.
Strong	Will not crumble or break with finger pressure.

BOREHOLE IDENTIFICATION

Symbol	Hole Type	Description
Size	A	Auger Boring (hollow or solid stem bucket)
Size	R RW RC P	Rotary drilled boring (conventional) Rotary drilled with self-casing wire-line Rotary core with continuously-sampled, self-casing wire-line Rotary percussion boring (air)
Size	R RC	Rotary drilled diamond core Rotary drilled rock core
Size	HD HA	Hand driven (1-inch soil tube) Hand Auger
●	D	Dynamic Cone Penetration Boring
▲	CPT	Cone Penetration Test (ASTM D 5778)
⬚	O	Other (note on LOTB)

Note: Size in inches.

CONSISTENCY OF COHESIVE SOILS

Description	Shear Strength (tsf)	Pocket Penetrometer Measurement, PP, (tsf)	Torvane Measurement, TV, (tsf)	Vane Shear Measurement, VS, (tsf)
Very Soft	Less than 0.12	Less than 0.25	Less than 0.12	Less than 0.12
Soft	0.12 - 0.25	0.25 - 0.5	0.12 - 0.25	0.12 - 0.25
Medium Stiff	0.25 - 0.5	0.5 - 1	0.25 - 0.5	0.25 - 0.5
Stiff	0.5 - 1	1 - 2	0.5 - 1	0.5 - 1
Very Stiff	1 - 2	2 - 4	1 - 2	1 - 2
Hard	Greater than 2	Greater than 4	Greater than 2	Greater than 2

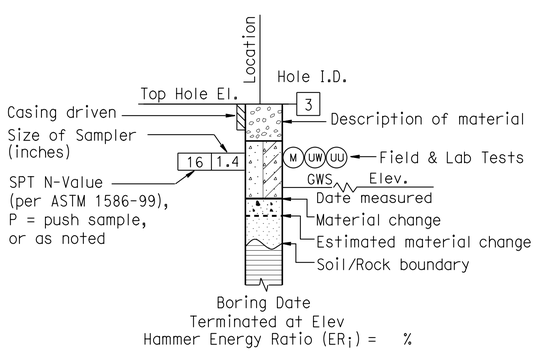

ROTARY BORING

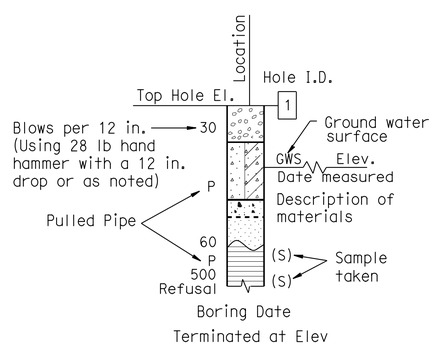

HAND BORING

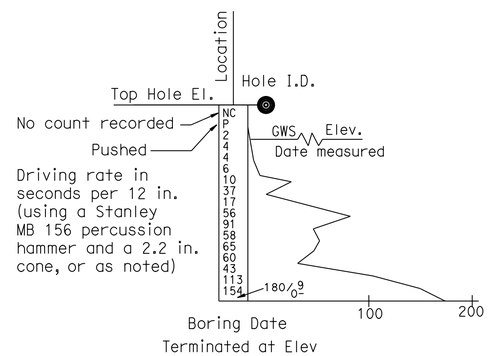

DYNAMIC CONE PENETRATION BORING

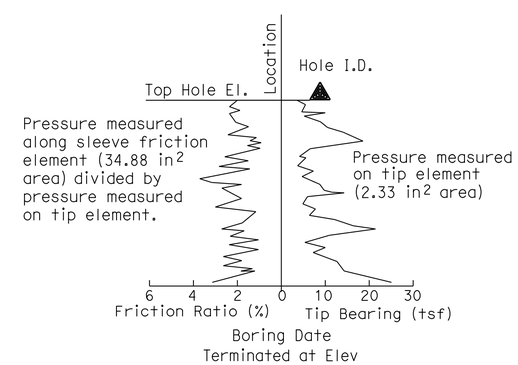

CONE PENETRATION TEST (CPT) BORING

R-58

ENGINEERING SERVICES	MATERIALS AND GEOTECHNICAL SERVICES	STATE OF CALIFORNIA DEPARTMENT OF TRANSPORTATION	DIVISION OF ENGINEERING SERVICES STRUCTURE DESIGN DESIGN BRANCH X	BRIDGE NO. RW 812 / POST MILE 33.4/37.1	RETAINING WALL NO. 812 LOG OF TEST BORINGS 2 OF 3
	PREPARED BY: F. Nguyen				

GS LOTB SOIL LEGEND

ORIGINAL SCALE IN INCHES FOR REDUCED PLANS 0 1 2 3

UNIT: 3643
PROJECT NUMBER & PHASE: 07000000851 CONTRACT NO.: 07-1170U1

DISREGARD PRINTS BEARING EARLIER REVISION DATES

REVISION DATES 10-13-11 | SHEET X | OF X

FILE => 71170uqu008.dgn

USERNAME => s124496 DATE PLOTTED => 13-JUN-2013 TIME PLOTTED => 05:44

REFERENCE: CALTRANS SOIL & ROCK LOGGING, CLASSIFICATION, AND PRESENTATION MANUAL (2010)

DIST	COUNTY	ROUTE	POST MILES TOTAL PROJECT	SHEET No.	TOTAL SHEETS
07	LA	10	33.2/37.2	676	1475

REGISTERED CIVIL ENGINEER 7-26-12 DATE

6-10-13
PLANS APPROVAL DATE

REGISTERED PROFESSIONAL ENGINEER Sungro Cho No. C75151 Exp. 12-31-13 CIVIL STATE OF CALIFORNIA

The State of California or its officers or agents shall not be responsible for the accuracy or completeness of electronic copies of this plan sheet.

GROUP SYMBOLS AND NAMES

Graphic/Symbol	Group Names	Graphic/Symbol	Group Names
GW	Well-graded GRAVEL Well-graded GRAVEL with SAND	CL	Lean CLAY Lean CLAY with SAND Lean CLAY with GRAVEL SANDY lean CLAY SANDY lean CLAY with GRAVEL GRAVELLY lean CLAY GRAVELLY lean CLAY with SAND
GP	Poorly-graded GRAVEL Poorly-graded GRAVEL with SAND		
GW-GM	Well-graded GRAVEL with SILT Well-graded GRAVEL with SILT and SAND	CL-ML	SILTY CLAY SILTY CLAY with SAND SILTY CLAY with GRAVEL SANDY SILTY CLAY SANDY SILTY CLAY with GRAVEL GRAVELLY SILTY CLAY GRAVELLY SILTY CLAY with SAND
GW-GC	Well-graded GRAVEL with CLAY (or SILTY CLAY) Well-graded GRAVEL with CLAY and SAND (or SILTY CLAY and SAND)		
GP-GM	Poorly-graded GRAVEL with SILT Poorly-graded GRAVEL with SILT and SAND	ML	SILT SILT with SAND SILT with GRAVEL SANDY SILT SANDY SILT with GRAVEL GRAVELLY SILT GRAVELLY SILT with SAND
GP-GC	Poorly-graded GRAVEL with CLAY (or SILTY CLAY) Poorly-graded GRAVEL with CLAY and SAND (or SILTY CLAY and SAND)		
GM	SILTY GRAVEL SILTY GRAVEL with SAND	OL	ORGANIC lean CLAY ORGANIC lean CLAY with SAND ORGANIC lean CLAY with GRAVEL SANDY ORGANIC lean CLAY SANDY ORGANIC lean CLAY with GRAVEL GRAVELLY ORGANIC lean CLAY GRAVELLY ORGANIC lean CLAY with SAND
GC	CLAYEY GRAVEL CLAYEY GRAVEL with SAND		
GC-GM	SILTY, CLAYEY GRAVEL SILTY, CLAYEY GRAVEL with SAND	OL	ORGANIC SILT ORGANIC SILT with SAND ORGANIC SILT with GRAVEL SANDY ORGANIC SILT SANDY ORGANIC SILT with GRAVEL GRAVELLY ORGANIC SILT GRAVELLY ORGANIC SILT with SAND
SW	Well-graded SAND Well-graded SAND with GRAVEL		
SP	Poorly-graded SAND Poorly-graded SAND with GRAVEL	CH	Fat CLAY Fat CLAY with SAND Fat CLAY with GRAVEL SANDY fat CLAY SANDY fat CLAY with GRAVEL GRAVELLY fat CLAY GRAVELLY fat CLAY with SAND
SW-SM	Well-graded SAND with SILT Well-graded SAND with SILT and GRAVEL		
SW-SC	Well-graded SAND with CLAY (or SILTY CLAY) Well-graded SAND with CLAY and GRAVEL (or SILTY CLAY and GRAVEL)	MH	Elastic SILT Elastic SILT with SAND Elastic SILT with GRAVEL SANDY elastic SILT SANDY elastic SILT with GRAVEL GRAVELLY elastic SILT GRAVELLY elastic SILT with SAND
SP-SM	Poorly-graded SAND with SILT Poorly-graded SAND with SILT and GRAVEL		
SP-SC	Poorly-graded SAND with CLAY (or SILTY CLAY) Poorly-graded SAND with CLAY and GRAVEL (or SILTY CLAY and GRAVEL)	OH	ORGANIC fat CLAY ORGANIC fat CLAY with SAND ORGANIC fat CLAY with GRAVEL SANDY ORGANIC fat CLAY SANDY ORGANIC fat CLAY with GRAVEL GRAVELLY ORGANIC fat CLAY GRAVELLY ORGANIC fat CLAY with SAND
SM	SILTY SAND SILTY SAND with GRAVEL		
SC	CLAYEY SAND CLAYEY SAND with GRAVEL	OH	ORGANIC elastic SILT ORGANIC elastic SILT with SAND ORGANIC elastic SILT with GRAVEL SANDY ORGANIC elastic SILT SANDY ORGANIC elastic SILT with GRAVEL GRAVELLY ORGANIC elastic SILT GRAVELLY ORGANIC elastic SILT with SAND
SC-SM	SILTY, CLAYEY SAND SILTY, CLAYEY SAND with GRAVEL		
PT	PEAT	OL/OH	ORGANIC SOIL ORGANIC SOIL with SAND ORGANIC SOIL with GRAVEL SANDY ORGANIC SOIL SANDY ORGANIC SOIL with GRAVEL GRAVELLY ORGANIC SOIL GRAVELLY ORGANIC SOIL with SAND
	COBBLES COBBLES and BOULDERS BOULDERS		

FIELD AND LABORATORY TESTING

- (C) Consolidation (ASTM D 2435)
- (CL) Collapse Potential (ASTM D 5333)
- (CP) Compaction Curve (CTM 216)
- (CR) Corrosivity Testing (CTM 643, CTM 422, CTM 417)
- (CU) Consolidated Undrained Triaxial (ASTM D 4767)
- (DS) Direct Shear (ASTM D 3080)
- (EI) Expansion Index (ASTM D 4829)
- (M) Moisture Content (ASTM D 2216)
- (OC) Organic Content-% (ASTM D 2974)
- (P) Permeability (CTM 220)
- (PA) Particle Size Analysis (ASTM D 422)
- (PI) Plasticity Index (AASHTO T 90) Liquid Limit (AASHTO T 89)
- (PL) Point Load Index (ASTM D 5731)
- (PM) Pressure Meter
- (R) R-Value (CTM 301)
- (SE) Sand Equivalent (CTM 217)
- (SG) Specific Gravity (AASHTO T 100)
- (SL) Shrinkage Limit (ASTM D 427)
- (SW) Swell Potential (ASTM D 4546)
- (UC) Unconfined Compression-Soil (ASTM D 2166) Unconfined Compression-Rock (ASTM D 2938)
- (UU) Unconsolidated Undrained Triaxial (ASTM D 2850)
- (UW) Unit Weight (ASTM D 4767)

APPARENT DENSITY OF COHESIONLESS SOILS

Description	SPT N_{60} (Blows / 12 in.)
Very Loose	0 - 5
Loose	5 - 10
Medium Dense	10 - 30
Dense	30 - 50
Very Dense	Greater than 50

MOISTURE

Description	Criteria
Dry	No discernable moisture
Moist	Moisture present, but no free water
Wet	Visible free water

PERCENT OR PROPORTION OF SOILS

Description	Criteria
Trace	Particles are present but estimated to be less than 5%
Few	5% - 10%
Little	15% - 25%
Some	30% - 45%
Mostly	50% - 100%

PARTICLE SIZE

Description		Size (in.)
Boulder		Greater than 12
Cobble		3 - 12
Gravel	Coarse	3/4 - 3
	Fine	1/5 - 3/4
Sand	Coarse	1/16 - 1/5
	Medium	1/64 - 1/16
	Fine	1/300 - 1/64
Silt and Clay		Less than 1/300

R-59

ENGINEERING SERVICES

MATERIALS AND GEOTECHNICAL SERVICES
PREPARED BY: F. Nguyen

STATE OF CALIFORNIA
DEPARTMENT OF TRANSPORTATION

DIVISION OF ENGINEERING SERVICES
STRUCTURE DESIGN
DESIGN BRANCH X

BRIDGE NO. RW 812
POST MILE 33.4/37.1

RETAINING WALL NO. 812
LOG OF TEST BORINGS 3 OF 3

GS LOTB SOIL LEGEND

ORIGINAL SCALE IN INCHES FOR REDUCED PLANS 0 1 2 3

UNIT: 3643
PROJECT NUMBER & PHASE: 07000000851
CONTRACT NO.: 07-1170U1

DISREGARD PRINTS BEARING EARLIER REVISION DATES

REVISION DATES 10-13-11 | SHEET X | OF X

FILE => 71170uqu009.dgn

USERNAME => s124496 DATE PLOTTED => 13-JUN-2013 TIME PLOTTED => 05:44

DIST	COUNTY	ROUTE	POST MILES TOTAL PROJECT	SHEET No.	TOTAL SHEETS
07	LA	10	33.2/37.2	677	1475

REGISTERED CIVIL ENGINEER 7-26-12 DATE

6-10-13
PLANS APPROVAL DATE

REGISTERED PROFESSIONAL ENGINEER Sungro Cho No. C75151 Exp. 12-31-13 CIVIL STATE OF CALIFORNIA

The State of California or its officers or agents shall not be responsible for the accuracy or completeness of electronic copies of this plan sheet.

This LOTB sheet was prepared in accordance with the Caltrans Soil & Rock Logging, Classification, & Presentation Manual (2010 Edition).

BENCH MARK

BM #22M-54 Elev 466.85′
Lead and nail 3 feet N. of driveway to Stands Restaurant on Hollenbeck St.
Vertical Datum: NAVD88

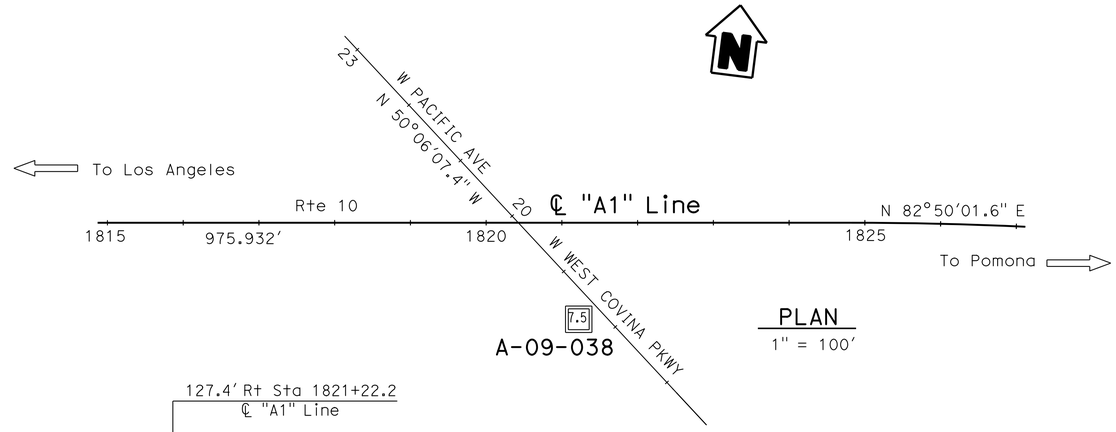

PLAN
1″ = 100′

Note: No ground water encountered during field investigation.

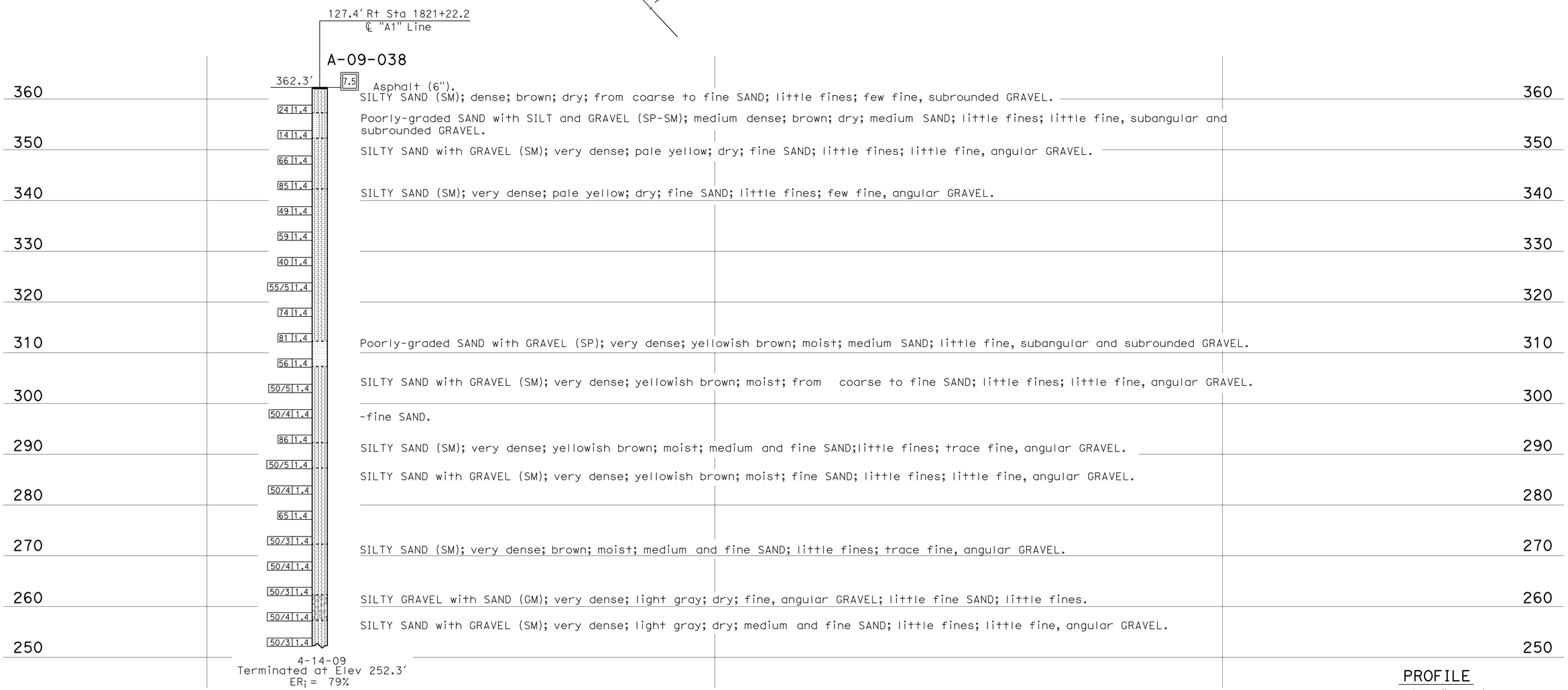

PROFILE
Horiz: 1″ = 10′
Vert: 1″ = 10′

R-60

ENGINEERING SERVICES	MATERIALS AND GEOTECHNICAL SERVICES	STATE OF CALIFORNIA DEPARTMENT OF TRANSPORTATION	DIVISION OF ENGINEERING SERVICES STRUCTURE DESIGN DESIGN BRANCH X	BRIDGE NO. RW 822 POST MILE 33.4/37.1	RETAINING WALL NO. 822 LOG OF TEST BORINGS 1 OF 3
FUNCTIONAL SUPERVISOR NAME: D. Jang	DRAWN BY: F. Nguyen CHECKED BY: H. Yang	FIELD INVESTIGATION BY: S. Cho			

OGS CIVIL LOG OF TEST BORINGS SHEET

ORIGINAL SCALE IN INCHES FOR REDUCED PLANS 0 1 2 3

UNIT: 3643
PROJECT NUMBER & PHASE: 07000000851
CONTRACT NO.: 07-1170U1

DISREGARD PRINTS BEARING EARLIER REVISION DATES

REVISION DATES: ~~04-12-12~~ 07-13-12 | SHEET X | OF X

FILE => 71170uqu010.dgn

USERNAME => s124496 DATE PLOTTED => 13-JUN-2013 TIME PLOTTED => 05:44

REFERENCE: CALTRANS SOIL & ROCK LOGGING, CLASSIFICATION, AND PRESENTATION MANUAL (2010)

DIST	COUNTY	ROUTE	POST MILES TOTAL PROJECT	SHEET No.	TOTAL SHEETS
07	LA	10	33.2/37.2	678	1475

REGISTERED CIVIL ENGINEER 7-26-12 DATE

6-10-13
PLANS APPROVAL DATE

REGISTERED PROFESSIONAL ENGINEER Sungro Cho No. C75151 Exp. 12-31-13 CIVIL STATE OF CALIFORNIA

The State of California or its officers or agents shall not be responsible for the accuracy or completeness of electronic copies of this plan sheet.

CEMENTATION

Description	Criteria
Weak	Crumbles or breaks with handling or little finger pressure.
Moderate	Crumbles or breaks with considerable finger pressure.
Strong	Will not crumble or break with finger pressure.

BOREHOLE IDENTIFICATION

Symbol	Hole Type	Description
Size	A	Auger Boring (hollow or solid stem bucket)
Size	R RW RC P	Rotary drilled boring (conventional) Rotary drilled with self-casing wire-line Rotary core with continuously-sampled, self-casing wire-line Rotary percussion boring (air)
Size	R RC	Rotary drilled diamond core Rotary drilled rock core
Size	HD HA	Hand driven (1-inch soil tube) Hand Auger
●	D	Dynamic Cone Penetration Boring
▲	CPT	Cone Penetration Test (ASTM D 5778)
⬚	O	Other (note on LOTB)

Note: Size in inches.

CONSISTENCY OF COHESIVE SOILS

Description	Shear Strength (tsf)	Pocket Penetrometer Measurement, PP, (tsf)	Torvane Measurement, TV, (tsf)	Vane Shear Measurement, VS, (tsf)
Very Soft	Less than 0.12	Less than 0.25	Less than 0.12	Less than 0.12
Soft	0.12 - 0.25	0.25 - 0.5	0.12 - 0.25	0.12 - 0.25
Medium Stiff	0.25 - 0.5	0.5 - 1	0.25 - 0.5	0.25 - 0.5
Stiff	0.5 - 1	1 - 2	0.5 - 1	0.5 - 1
Very Stiff	1 - 2	2 - 4	1 - 2	1 - 2
Hard	Greater than 2	Greater than 4	Greater than 2	Greater than 2

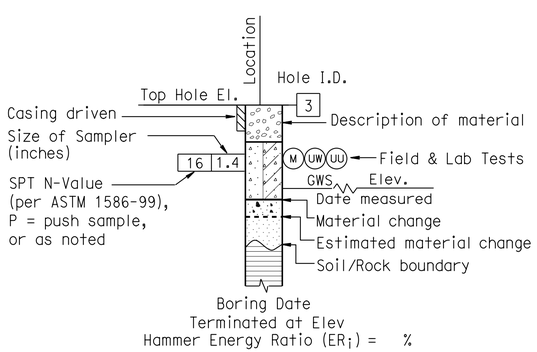

ROTARY BORING

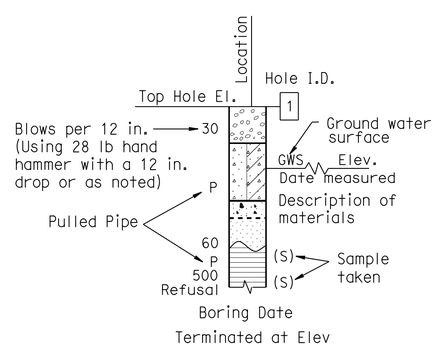

HAND BORING

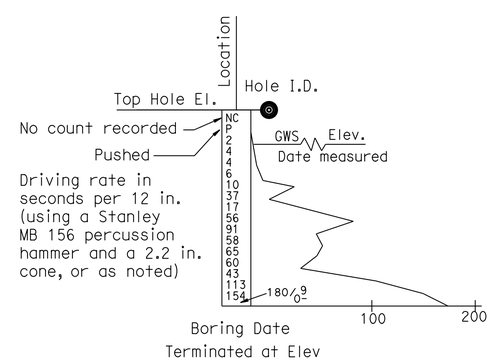

DYNAMIC CONE PENETRATION BORING

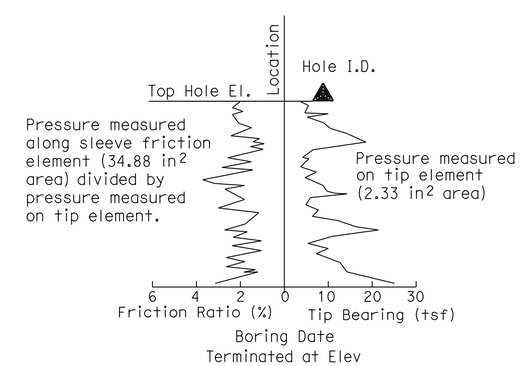

CONE PENETRATION TEST (CPT) BORING

R-61

ENGINEERING SERVICES	MATERIALS AND GEOTECHNICAL SERVICES	STATE OF CALIFORNIA DEPARTMENT OF TRANSPORTATION	DIVISION OF ENGINEERING SERVICES STRUCTURE DESIGN DESIGN BRANCH X	BRIDGE NO. RW 822 / POST MILE 33.4/37.1	RETAINING WALL NO. 822 LOG OF TEST BORINGS 2 OF 3
	PREPARED BY: F. Nguyen				

GS LOTB SOIL LEGEND

ORIGINAL SCALE IN INCHES FOR REDUCED PLANS 0 1 2 3

UNIT: 3643
PROJECT NUMBER & PHASE: 07000000851 CONTRACT NO.: 07-1170U1

DISREGARD PRINTS BEARING EARLIER REVISION DATES

REVISION DATES 10-13-11 | SHEET X | OF X

FILE => 71170uqu011.dgn

USERNAME => s124496 DATE PLOTTED => 13-JUN-2013 TIME PLOTTED => 05:44

REFERENCE: CALTRANS SOIL & ROCK LOGGING, CLASSIFICATION, AND PRESENTATION MANUAL (2010)

DIST	COUNTY	ROUTE	POST MILES TOTAL PROJECT	SHEET No.	TOTAL SHEETS
07	LA	10	33.2/37.2	679	1475

REGISTERED CIVIL ENGINEER 7-26-12 DATE

6-10-13
PLANS APPROVAL DATE

REGISTERED PROFESSIONAL ENGINEER Sungro Cho No. C75151 Exp. 12-31-13 CIVIL STATE OF CALIFORNIA

The State of California or its officers or agents shall not be responsible for the accuracy or completeness of electronic copies of this plan sheet.

GROUP SYMBOLS AND NAMES

Graphic/Symbol	Group Names	Graphic/Symbol	Group Names
GW	Well-graded GRAVEL Well-graded GRAVEL with SAND	CL	Lean CLAY Lean CLAY with SAND Lean CLAY with GRAVEL SANDY lean CLAY SANDY lean CLAY with GRAVEL GRAVELLY lean CLAY GRAVELLY lean CLAY with SAND
GP	Poorly-graded GRAVEL Poorly-graded GRAVEL with SAND		
GW-GM	Well-graded GRAVEL with SILT Well-graded GRAVEL with SILT and SAND	CL-ML	SILTY CLAY SILTY CLAY with SAND SILTY CLAY with GRAVEL SANDY SILTY CLAY SANDY SILTY CLAY with GRAVEL GRAVELLY SILTY CLAY GRAVELLY SILTY CLAY with SAND
GW-GC	Well-graded GRAVEL with CLAY (or SILTY CLAY) Well-graded GRAVEL with CLAY and SAND (or SILTY CLAY and SAND)		
GP-GM	Poorly-graded GRAVEL with SILT Poorly-graded GRAVEL with SILT and SAND	ML	SILT SILT with SAND SILT with GRAVEL SANDY SILT SANDY SILT with GRAVEL GRAVELLY SILT GRAVELLY SILT with SAND
GP-GC	Poorly-graded GRAVEL with CLAY (or SILTY CLAY) Poorly-graded GRAVEL with CLAY and SAND (or SILTY CLAY and SAND)		
GM	SILTY GRAVEL SILTY GRAVEL with SAND	OL	ORGANIC lean CLAY ORGANIC lean CLAY with SAND ORGANIC lean CLAY with GRAVEL SANDY ORGANIC lean CLAY SANDY ORGANIC lean CLAY with GRAVEL GRAVELLY ORGANIC lean CLAY GRAVELLY ORGANIC lean CLAY with SAND
GC	CLAYEY GRAVEL CLAYEY GRAVEL with SAND		
GC-GM	SILTY, CLAYEY GRAVEL SILTY, CLAYEY GRAVEL with SAND	OL	ORGANIC SILT ORGANIC SILT with SAND ORGANIC SILT with GRAVEL SANDY ORGANIC SILT SANDY ORGANIC SILT with GRAVEL GRAVELLY ORGANIC SILT GRAVELLY ORGANIC SILT with SAND
SW	Well-graded SAND Well-graded SAND with GRAVEL		
SP	Poorly-graded SAND Poorly-graded SAND with GRAVEL	CH	Fat CLAY Fat CLAY with SAND Fat CLAY with GRAVEL SANDY fat CLAY SANDY fat CLAY with GRAVEL GRAVELLY fat CLAY GRAVELLY fat CLAY with SAND
SW-SM	Well-graded SAND with SILT Well-graded SAND with SILT and GRAVEL		
SW-SC	Well-graded SAND with CLAY (or SILTY CLAY) Well-graded SAND with CLAY and GRAVEL (or SILTY CLAY and GRAVEL)	MH	Elastic SILT Elastic SILT with SAND Elastic SILT with GRAVEL SANDY elastic SILT SANDY elastic SILT with GRAVEL GRAVELLY elastic SILT GRAVELLY elastic SILT with SAND
SP-SM	Poorly-graded SAND with SILT Poorly-graded SAND with SILT and GRAVEL		
SP-SC	Poorly-graded SAND with CLAY (or SILTY CLAY) Poorly-graded SAND with CLAY and GRAVEL (or SILTY CLAY and GRAVEL)	OH	ORGANIC fat CLAY ORGANIC fat CLAY with SAND ORGANIC fat CLAY with GRAVEL SANDY ORGANIC fat CLAY SANDY ORGANIC fat CLAY with GRAVEL GRAVELLY ORGANIC fat CLAY GRAVELLY ORGANIC fat CLAY with SAND
SM	SILTY SAND SILTY SAND with GRAVEL		
SC	CLAYEY SAND CLAYEY SAND with GRAVEL	OH	ORGANIC elastic SILT ORGANIC elastic SILT with SAND ORGANIC elastic SILT with GRAVEL SANDY ORGANIC elastic SILT SANDY ORGANIC elastic SILT with GRAVEL GRAVELLY ORGANIC elastic SILT GRAVELLY ORGANIC elastic SILT with SAND
SC-SM	SILTY, CLAYEY SAND SILTY, CLAYEY SAND with GRAVEL		
PT	PEAT	OL/OH	ORGANIC SOIL ORGANIC SOIL with SAND ORGANIC SOIL with GRAVEL SANDY ORGANIC SOIL SANDY ORGANIC SOIL with GRAVEL GRAVELLY ORGANIC SOIL GRAVELLY ORGANIC SOIL with SAND
	COBBLES COBBLES and BOULDERS BOULDERS		

FIELD AND LABORATORY TESTING

- (C) Consolidation (ASTM D 2435)
- (CL) Collapse Potential (ASTM D 5333)
- (CP) Compaction Curve (CTM 216)
- (CR) Corrosivity Testing (CTM 643, CTM 422, CTM 417)
- (CU) Consolidated Undrained Triaxial (ASTM D 4767)
- (DS) Direct Shear (ASTM D 3080)
- (EI) Expansion Index (ASTM D 4829)
- (M) Moisture Content (ASTM D 2216)
- (OC) Organic Content-% (ASTM D 2974)
- (P) Permeability (CTM 220)
- (PA) Particle Size Analysis (ASTM D 422)
- (PI) Plasticity Index (AASHTO T 90) Liquid Limit (AASHTO T 89)
- (PL) Point Load Index (ASTM D 5731)
- (PM) Pressure Meter
- (R) R-Value (CTM 301)
- (SE) Sand Equivalent (CTM 217)
- (SG) Specific Gravity (AASHTO T 100)
- (SL) Shrinkage Limit (ASTM D 427)
- (SW) Swell Potential (ASTM D 4546)
- (UC) Unconfined Compression-Soil (ASTM D 2166) Unconfined Compression-Rock (ASTM D 2938)
- (UU) Unconsolidated Undrained Triaxial (ASTM D 2850)
- (UW) Unit Weight (ASTM D 4767)

APPARENT DENSITY OF COHESIONLESS SOILS

Description	SPT N_{60} (Blows / 12 in.)
Very Loose	0 - 5
Loose	5 - 10
Medium Dense	10 - 30
Dense	30 - 50
Very Dense	Greater than 50

MOISTURE

Description	Criteria
Dry	No discernable moisture
Moist	Moisture present, but no free water
Wet	Visible free water

PERCENT OR PROPORTION OF SOILS

Description	Criteria
Trace	Particles are present but estimated to be less than 5%
Few	5% - 10%
Little	15% - 25%
Some	30% - 45%
Mostly	50% - 100%

PARTICLE SIZE

Description		Size (in.)
Boulder		Greater than 12
Cobble		3 - 12
Gravel	Coarse	3/4 - 3
	Fine	1/5 - 3/4
Sand	Coarse	1/16 - 1/5
	Medium	1/64 - 1/16
	Fine	1/300 - 1/64
Silt and Clay		Less than 1/300

R-62

ENGINEERING SERVICES

MATERIALS AND GEOTECHNICAL SERVICES

PREPARED BY: F. Nguyen

STATE OF CALIFORNIA DEPARTMENT OF TRANSPORTATION

DIVISION OF ENGINEERING SERVICES STRUCTURE DESIGN DESIGN BRANCH X

BRIDGE NO. RW 822

POST MILE 33.4/37.1

RETAINING WALL NO. 822

LOG OF TEST BORINGS 3 OF 3

GS LOTB SOIL LEGEND

ORIGINAL SCALE IN INCHES FOR REDUCED PLANS 0 1 2 3

UNIT: 3643
PROJECT NUMBER & PHASE: 07000000851
CONTRACT NO.: 07-1170U1

DISREGARD PRINTS BEARING EARLIER REVISION DATES

REVISION DATES 10-13-11

SHEET X OF X

FILE => 71170uqu012.dgn

USERNAME => s124496 DATE PLOTTED => 13-JUN-2013 TIME PLOTTED => 05:44

DIST	COUNTY	ROUTE	POST MILES TOTAL PROJECT	SHEET No.	TOTAL SHEETS
07	LA	10	33.2/37.2	680	1475

REGISTERED CIVIL ENGINEER 7-26-12 DATE

6-10-13
PLANS APPROVAL DATE

REGISTERED PROFESSIONAL ENGINEER Sungro Cho No. C75151 Exp. 12-31-13 CIVIL STATE OF CALIFORNIA

The State of California or its officers or agents shall not be responsible for the accuracy or completeness of electronic copies of this plan sheet.

This LOTB sheet was prepared in accordance with the Caltrans Soil & Rock Logging, Classification, & Presentation Manual (2010 Edition).

BENCH MARK

BM #11-B-43 Elev 346.47′
Lead and conc nail in sidewalk of Auto Ct. cabin #825 on N. side Gavey Ave 200′± of Puente Ave, 71′ Lt Sta 181+30.5.

BM #12-B-43 Elev 352.54′
Lead and conc nail in W. end of p.c.c. porch step to frame house on N. side Gavey Ave, 91′ Lt Sta 193+81.

TBM Elev 341.93′
Chiseled knob on PCC wall, 33.4′ Rt Sta 168+35.

Vertical Datum: NAVD88

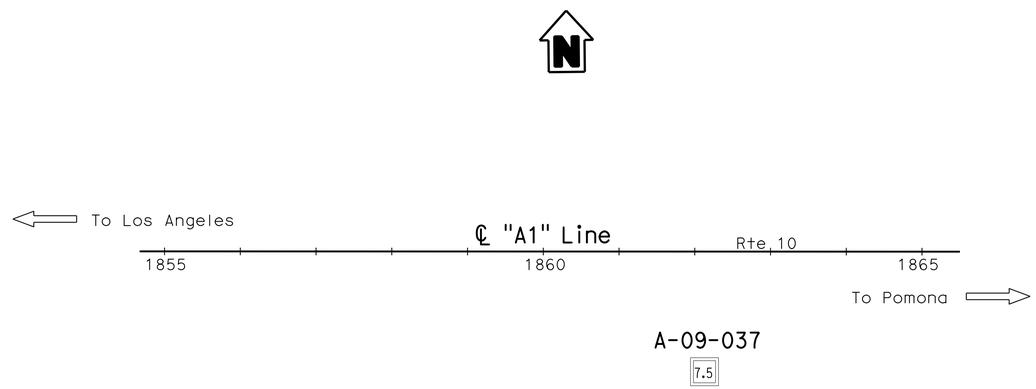

PLAN
1" = 100′

Note: No ground water encountered during field investigation.

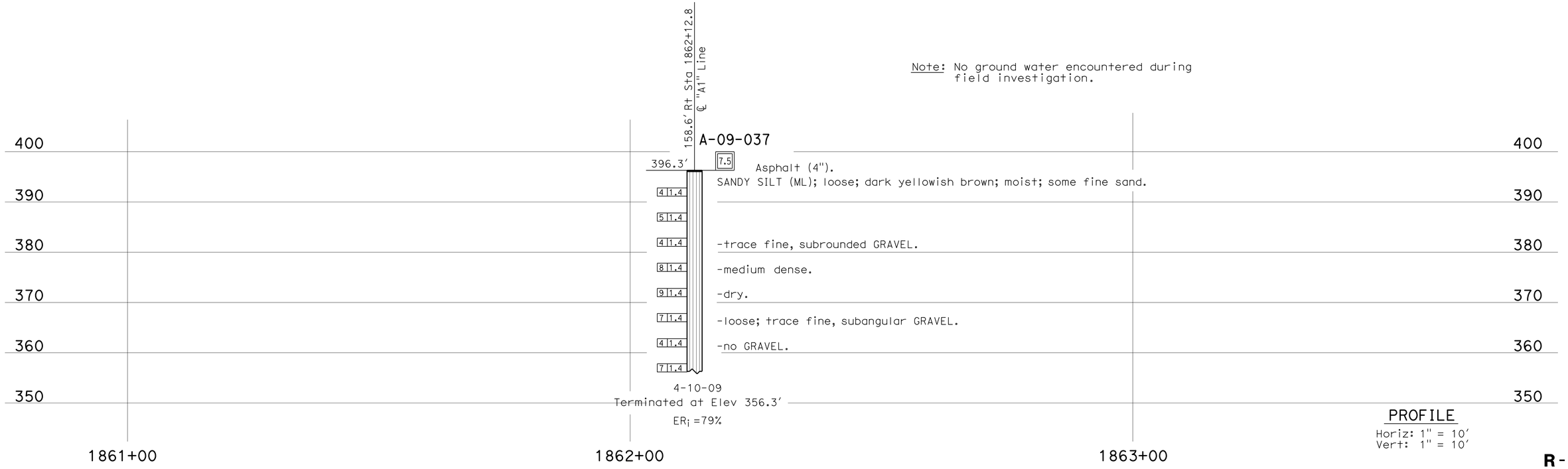

PROFILE
Horiz: 1" = 10′
Vert: 1" = 10′

R-63

ENGINEERING SERVICES	MATERIALS AND GEOTECHNICAL SERVICES	STATE OF CALIFORNIA DEPARTMENT OF TRANSPORTATION	DIVISION OF ENGINEERING SERVICES STRUCTURE DESIGN DESIGN BRANCH X	BRIDGE NO. RW 860 POST MILE 33.4/37.1	RETAINING WALL NO. 860 LOG OF TEST BORINGS 1 OF 3
FUNCTIONAL SUPERVISOR NAME: D. Jang	DRAWN BY: F. Nguyen CHECKED BY: S. Han	FIELD INVESTIGATION BY: S. Cho			

OGS CIVIL LOG OF TEST BORINGS SHEET

ORIGINAL SCALE IN INCHES FOR REDUCED PLANS 0 1 2 3

UNIT: 3643
PROJECT NUMBER & PHASE: 07000000851 CONTRACT NO.: 07-1170U1

DISREGARD PRINTS BEARING EARLIER REVISION DATES

REVISION DATES: 05-16-12 07-11-12 | SHEET X OF X

FILE => 71170uqu013.dgn

USERNAME => s124436 DATE PLOTTED => 13-JUN-2013 TIME PLOTTED => 05:44

REFERENCE: CALTRANS SOIL & ROCK LOGGING, CLASSIFICATION, AND PRESENTATION MANUAL (2010)

DIST	COUNTY	ROUTE	POST MILES TOTAL PROJECT	SHEET No.	TOTAL SHEETS
07	LA	10	33.2/37.2	681	1475

REGISTERED CIVIL ENGINEER 7-26-12 DATE

6-10-13
PLANS APPROVAL DATE

REGISTERED PROFESSIONAL ENGINEER Sungro Cho No. C75151 Exp. 12-31-13 CIVIL STATE OF CALIFORNIA

The State of California or its officers or agents shall not be responsible for the accuracy or completeness of electronic copies of this plan sheet.

CEMENTATION

Description	Criteria
Weak	Crumbles or breaks with handling or little finger pressure.
Moderate	Crumbles or breaks with considerable finger pressure.
Strong	Will not crumble or break with finger pressure.

BOREHOLE IDENTIFICATION

Symbol	Hole Type	Description
Size	A	Auger Boring (hollow or solid stem bucket)
Size	R RW RC P	Rotary drilled boring (conventional) Rotary drilled with self-casing wire-line Rotary core with continuously-sampled, self-casing wire-line Rotary percussion boring (air)
Size	R RC	Rotary drilled diamond core Rotary drilled rock core
Size	HD HA	Hand driven (1-inch soil tube) Hand Auger
●	D	Dynamic Cone Penetration Boring
▲	CPT	Cone Penetration Test (ASTM D 5778)
⬚	O	Other (note on LOTB)

Note: Size in inches.

CONSISTENCY OF COHESIVE SOILS

Description	Shear Strength (tsf)	Pocket Penetrometer Measurement, PP, (tsf)	Torvane Measurement, TV, (tsf)	Vane Shear Measurement, VS, (tsf)
Very Soft	Less than 0.12	Less than 0.25	Less than 0.12	Less than 0.12
Soft	0.12 - 0.25	0.25 - 0.5	0.12 - 0.25	0.12 - 0.25
Medium Stiff	0.25 - 0.5	0.5 - 1	0.25 - 0.5	0.25 - 0.5
Stiff	0.5 - 1	1 - 2	0.5 - 1	0.5 - 1
Very Stiff	1 - 2	2 - 4	1 - 2	1 - 2
Hard	Greater than 2	Greater than 4	Greater than 2	Greater than 2

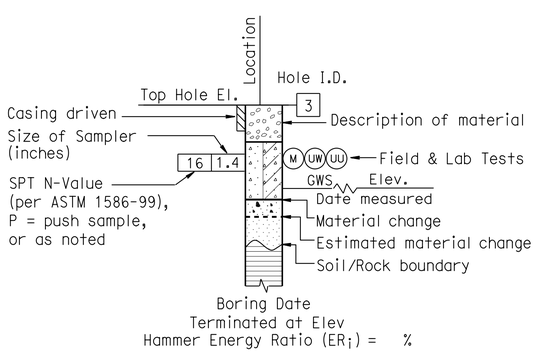

ROTARY BORING

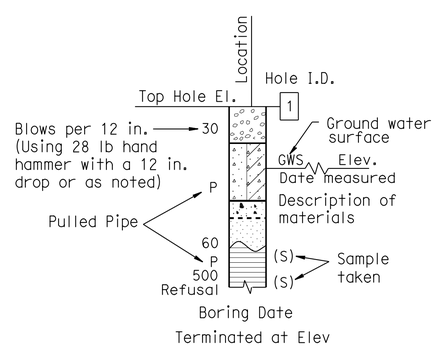

HAND BORING

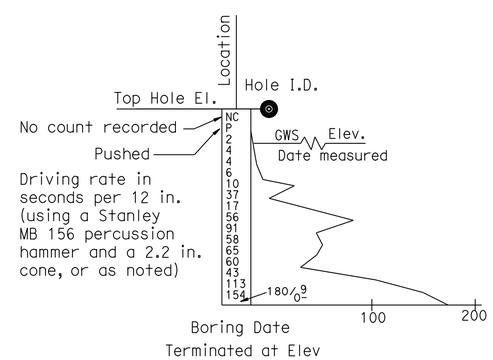

DYNAMIC CONE PENETRATION BORING

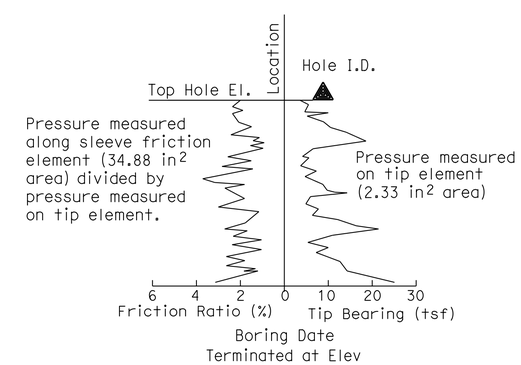

CONE PENETRATION TEST (CPT) BORING

R-64

ENGINEERING SERVICES	MATERIALS AND GEOTECHNICAL SERVICES	STATE OF CALIFORNIA DEPARTMENT OF TRANSPORTATION	DIVISION OF ENGINEERING SERVICES STRUCTURE DESIGN DESIGN BRANCH X	BRIDGE NO. RW 860 / POST MILE 33.4/37.1	RETAINING WALL NO. 860 LOG OF TEST BORINGS 2 OF 3
	PREPARED BY: F. Nguyen				

GS LOTB SOIL LEGEND

ORIGINAL SCALE IN INCHES FOR REDUCED PLANS 0 1 2 3

UNIT: 3643
PROJECT NUMBER & PHASE: 07000000851 CONTRACT NO.: 07-1170U1

DISREGARD PRINTS BEARING EARLIER REVISION DATES

REVISION DATES 04-17-12 | SHEET X | OF X

FILE => 71170uqu014.dgn

USERNAME => s124496 DATE PLOTTED => 13-JUN-2013 TIME PLOTTED => 05:44

REFERENCE: CALTRANS SOIL & ROCK LOGGING, CLASSIFICATION, AND PRESENTATION MANUAL (2010)

DIST	COUNTY	ROUTE	POST MILES TOTAL PROJECT	SHEET No.	TOTAL SHEETS
07	LA	10	33.2/37.2	682	1475

REGISTERED CIVIL ENGINEER 7-26-12 DATE

6-10-13
PLANS APPROVAL DATE

REGISTERED PROFESSIONAL ENGINEER Sungro Cho No. C75151 Exp. 12-31-13 CIVIL STATE OF CALIFORNIA

The State of California or its officers or agents shall not be responsible for the accuracy or completeness of electronic copies of this plan sheet.

GROUP SYMBOLS AND NAMES

Graphic/Symbol	Group Names	Graphic/Symbol	Group Names
GW	Well-graded GRAVEL Well-graded GRAVEL with SAND	CL	Lean CLAY Lean CLAY with SAND Lean CLAY with GRAVEL SANDY lean CLAY SANDY lean CLAY with GRAVEL GRAVELLY lean CLAY GRAVELLY lean CLAY with SAND
GP	Poorly-graded GRAVEL Poorly-graded GRAVEL with SAND		
GW-GM	Well-graded GRAVEL with SILT Well-graded GRAVEL with SILT and SAND	CL-ML	SILTY CLAY SILTY CLAY with SAND SILTY CLAY with GRAVEL SANDY SILTY CLAY SANDY SILTY CLAY with GRAVEL GRAVELLY SILTY CLAY GRAVELLY SILTY CLAY with SAND
GW-GC	Well-graded GRAVEL with CLAY (or SILTY CLAY) Well-graded GRAVEL with CLAY and SAND (or SILTY CLAY and SAND)		
GP-GM	Poorly-graded GRAVEL with SILT Poorly-graded GRAVEL with SILT and SAND	ML	SILT SILT with SAND SILT with GRAVEL SANDY SILT SANDY SILT with GRAVEL GRAVELLY SILT GRAVELLY SILT with SAND
GP-GC	Poorly-graded GRAVEL with CLAY (or SILTY CLAY) Poorly-graded GRAVEL with CLAY and SAND (or SILTY CLAY and SAND)		
GM	SILTY GRAVEL SILTY GRAVEL with SAND	OL	ORGANIC lean CLAY ORGANIC lean CLAY with SAND ORGANIC lean CLAY with GRAVEL SANDY ORGANIC lean CLAY SANDY ORGANIC lean CLAY with GRAVEL GRAVELLY ORGANIC lean CLAY GRAVELLY ORGANIC lean CLAY with SAND
GC	CLAYEY GRAVEL CLAYEY GRAVEL with SAND		
GC-GM	SILTY, CLAYEY GRAVEL SILTY, CLAYEY GRAVEL with SAND	OL	ORGANIC SILT ORGANIC SILT with SAND ORGANIC SILT with GRAVEL SANDY ORGANIC SILT SANDY ORGANIC SILT with GRAVEL GRAVELLY ORGANIC SILT GRAVELLY ORGANIC SILT with SAND
SW	Well-graded SAND Well-graded SAND with GRAVEL		
SP	Poorly-graded SAND Poorly-graded SAND with GRAVEL	CH	Fat CLAY Fat CLAY with SAND Fat CLAY with GRAVEL SANDY fat CLAY SANDY fat CLAY with GRAVEL GRAVELLY fat CLAY GRAVELLY fat CLAY with SAND
SW-SM	Well-graded SAND with SILT Well-graded SAND with SILT and GRAVEL		
SW-SC	Well-graded SAND with CLAY (or SILTY CLAY) Well-graded SAND with CLAY and GRAVEL (or SILTY CLAY and GRAVEL)	MH	Elastic SILT Elastic SILT with SAND Elastic SILT with GRAVEL SANDY elastic SILT SANDY elastic SILT with GRAVEL GRAVELLY elastic SILT GRAVELLY elastic SILT with SAND
SP-SM	Poorly-graded SAND with SILT Poorly-graded SAND with SILT and GRAVEL		
SP-SC	Poorly-graded SAND with CLAY (or SILTY CLAY) Poorly-graded SAND with CLAY and GRAVEL (or SILTY CLAY and GRAVEL)	OH	ORGANIC fat CLAY ORGANIC fat CLAY with SAND ORGANIC fat CLAY with GRAVEL SANDY ORGANIC fat CLAY SANDY ORGANIC fat CLAY with GRAVEL GRAVELLY ORGANIC fat CLAY GRAVELLY ORGANIC fat CLAY with SAND
SM	SILTY SAND SILTY SAND with GRAVEL		
SC	CLAYEY SAND CLAYEY SAND with GRAVEL	OH	ORGANIC elastic SILT ORGANIC elastic SILT with SAND ORGANIC elastic SILT with GRAVEL SANDY ORGANIC elastic SILT SANDY ORGANIC elastic SILT with GRAVEL GRAVELLY ORGANIC elastic SILT GRAVELLY ORGANIC elastic SILT with SAND
SC-SM	SILTY, CLAYEY SAND SILTY, CLAYEY SAND with GRAVEL		
PT	PEAT	OL/OH	ORGANIC SOIL ORGANIC SOIL with SAND ORGANIC SOIL with GRAVEL SANDY ORGANIC SOIL SANDY ORGANIC SOIL with GRAVEL GRAVELLY ORGANIC SOIL GRAVELLY ORGANIC SOIL with SAND
	COBBLES COBBLES and BOULDERS BOULDERS		

FIELD AND LABORATORY TESTING

- (C) Consolidation (ASTM D 2435)
- (CL) Collapse Potential (ASTM D 5333)
- (CP) Compaction Curve (CTM 216)
- (CR) Corrosivity Testing (CTM 643, CTM 422, CTM 417)
- (CU) Consolidated Undrained Triaxial (ASTM D 4767)
- (DS) Direct Shear (ASTM D 3080)
- (EI) Expansion Index (ASTM D 4829)
- (M) Moisture Content (ASTM D 2216)
- (OC) Organic Content-% (ASTM D 2974)
- (P) Permeability (CTM 220)
- (PA) Particle Size Analysis (ASTM D 422)
- (PI) Plasticity Index (AASHTO T 90) Liquid Limit (AASHTO T 89)
- (PL) Point Load Index (ASTM D 5731)
- (PM) Pressure Meter
- (R) R-Value (CTM 301)
- (SE) Sand Equivalent (CTM 217)
- (SG) Specific Gravity (AASHTO T 100)
- (SL) Shrinkage Limit (ASTM D 427)
- (SW) Swell Potential (ASTM D 4546)
- (UC) Unconfined Compression-Soil (ASTM D 2166) Unconfined Compression-Rock (ASTM D 2938)
- (UU) Unconsolidated Undrained Triaxial (ASTM D 2850)
- (UW) Unit Weight (ASTM D 4767)

APPARENT DENSITY OF COHESIONLESS SOILS

Description	SPT N_{60} (Blows / 12 in.)
Very Loose	0 - 5
Loose	5 - 10
Medium Dense	10 - 30
Dense	30 - 50
Very Dense	Greater than 50

MOISTURE

Description	Criteria
Dry	No discernable moisture
Moist	Moisture present, but no free water
Wet	Visible free water

PERCENT OR PROPORTION OF SOILS

Description	Criteria
Trace	Particles are present but estimated to be less than 5%
Few	5% - 10%
Little	15% - 25%
Some	30% - 45%
Mostly	50% - 100%

PARTICLE SIZE

Description		Size (in.)
Boulder		Greater than 12
Cobble		3 - 12
Gravel	Coarse	3/4 - 3
	Fine	1/5 - 3/4
Sand	Coarse	1/16 - 1/5
	Medium	1/64 - 1/16
	Fine	1/300 - 1/64
Silt and Clay		Less than 1/300

R-65

ENGINEERING SERVICES

MATERIALS AND GEOTECHNICAL SERVICES

PREPARED BY: F. Nguyen

STATE OF CALIFORNIA DEPARTMENT OF TRANSPORTATION

DIVISION OF ENGINEERING SERVICES STRUCTURE DESIGN DESIGN BRANCH X

BRIDGE NO. RW 860

POST MILE 33.4/37.1

RETAINING WALL NO. 860

LOG OF TEST BORINGS 3 OF 3

GS LOTB SOIL LEGEND

ORIGINAL SCALE IN INCHES FOR REDUCED PLANS 0 1 2 3

UNIT: 3643
PROJECT NUMBER & PHASE: 07000000851
CONTRACT NO.: 07-1170U1

DISREGARD PRINTS BEARING EARLIER REVISION DATES

REVISION DATES 04-17-12

SHEET X OF X

FILE => 71170uqu015.dgn

USERNAME => s124496 DATE PLOTTED => 13-JUN-2013 TIME PLOTTED => 05:44

DIST	COUNTY	ROUTE	POST MILES TOTAL PROJECT	SHEET No.	TOTAL SHEETS
07	LA	10	33.2/37.2	683	1475

REGISTERED CIVIL ENGINEER 7-26-12 DATE

6-10-13
PLANS APPROVAL DATE

REGISTERED PROFESSIONAL ENGINEER Sungro Cho No. C75151 Exp. 12-31-13 CIVIL STATE OF CALIFORNIA

The State of California or its officers or agents shall not be responsible for the accuracy or completeness of electronic copies of this plan sheet.

This LOTB sheet was prepared in accordance with the Caltrans Soil & Rock Logging, Classification, & Presentation Manual (2010 Edition).

BENCH MARK

BM #98-I-67 Elev 395.36′
Hilti Nail in the east curb of California Ave. 90 ft N of Center St. and 24 ft. E of California Ave., in front of 150 N California Ave.
Vertical Datum: NAVD88

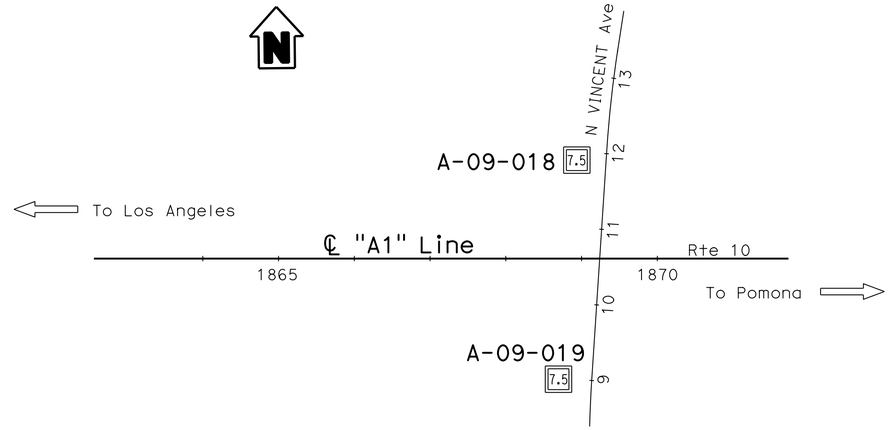

PLAN
1" = 100′

Note: No ground water encountered during field investigation.

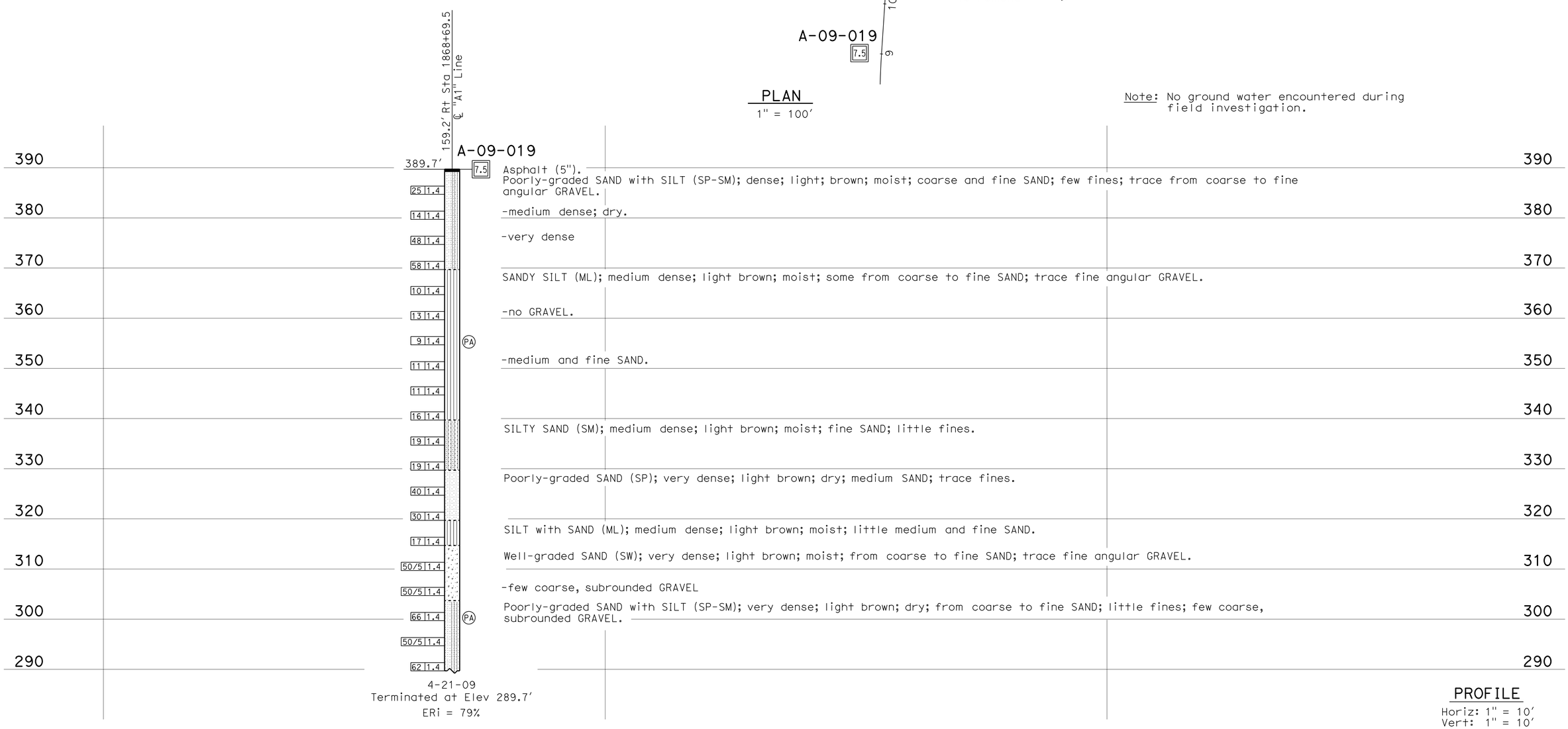

PROFILE
Horiz: 1" = 10′
Vert: 1" = 10′

R-66

ENGINEERING SERVICES	MATERIALS AND GEOTECHNICAL SERVICES	STATE OF CALIFORNIA DEPARTMENT OF TRANSPORTATION	DIVISION OF ENGINEERING SERVICES STRUCTURE DESIGN DESIGN BRANCH X	BRIDGE NO. RW 868 POST MILE 33.4/37.1	RETAINING WALL NO. 868 LOG OF TEST BORINGS 1 OF 3
FUNCTIONAL SUPERVISOR NAME: D. Jang	DRAWN BY: F. Nguyen CHECKED BY: H. Yang	FIELD INVESTIGATION BY: S. Cho			

OGS CIVIL LOG OF TEST BORINGS SHEET

ORIGINAL SCALE IN INCHES FOR REDUCED PLANS 0 1 2 3

UNIT: 3643
PROJECT NUMBER & PHASE: 07000000851 CONTRACT NO.: 07-1170U1

DISREGARD PRINTS BEARING EARLIER REVISION DATES

REVISION DATES 05-29-12 06-05-12 07-16-12 SHEET X OF X

FILE => 71170uqu016.dgn

USERNAME => s124496 DATE PLOTTED => 13-JUN-2013 TIME PLOTTED => 05:44

REFERENCE: CALTRANS SOIL & ROCK LOGGING, CLASSIFICATION, AND PRESENTATION MANUAL (2010)

DIST	COUNTY	ROUTE	POST MILES TOTAL PROJECT	SHEET No.	TOTAL SHEETS
07	LA	10	33.2/37.2	684	1475

REGISTERED CIVIL ENGINEER 7-26-12 DATE

6-10-13
PLANS APPROVAL DATE

REGISTERED PROFESSIONAL ENGINEER Sungro Cho No. C75151 Exp. 12-31-13 CIVIL STATE OF CALIFORNIA

The State of California or its officers or agents shall not be responsible for the accuracy or completeness of electronic copies of this plan sheet.

CEMENTATION

Description	Criteria
Weak	Crumbles or breaks with handling or little finger pressure.
Moderate	Crumbles or breaks with considerable finger pressure.
Strong	Will not crumble or break with finger pressure.

BOREHOLE IDENTIFICATION

Symbol	Hole Type	Description
Size	A	Auger Boring (hollow or solid stem bucket)
Size	R RW RC P	Rotary drilled boring (conventional) Rotary drilled with self-casing wire-line Rotary core with continuously-sampled, self-casing wire-line Rotary percussion boring (air)
Size	R RC	Rotary drilled diamond core Rotary drilled rock core
Size	HD HA	Hand driven (1-inch soil tube) Hand Auger
●	D	Dynamic Cone Penetration Boring
▲	CPT	Cone Penetration Test (ASTM D 5778)
⬚	O	Other (note on LOTB)

Note: Size in inches.

CONSISTENCY OF COHESIVE SOILS

Description	Shear Strength (tsf)	Pocket Penetrometer Measurement, PP, (tsf)	Torvane Measurement, TV, (tsf)	Vane Shear Measurement, VS, (tsf)
Very Soft	Less than 0.12	Less than 0.25	Less than 0.12	Less than 0.12
Soft	0.12 - 0.25	0.25 - 0.5	0.12 - 0.25	0.12 - 0.25
Medium Stiff	0.25 - 0.5	0.5 - 1	0.25 - 0.5	0.25 - 0.5
Stiff	0.5 - 1	1 - 2	0.5 - 1	0.5 - 1
Very Stiff	1 - 2	2 - 4	1 - 2	1 - 2
Hard	Greater than 2	Greater than 4	Greater than 2	Greater than 2

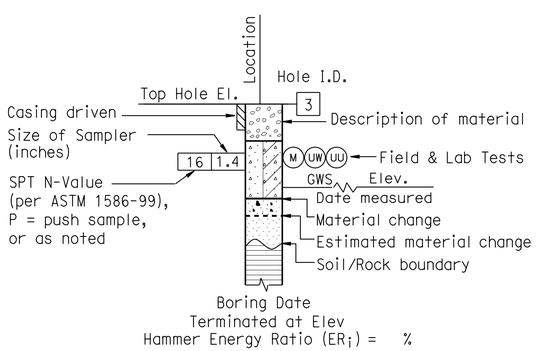

ROTARY BORING

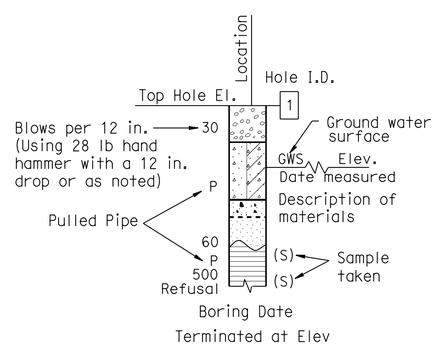

HAND BORING

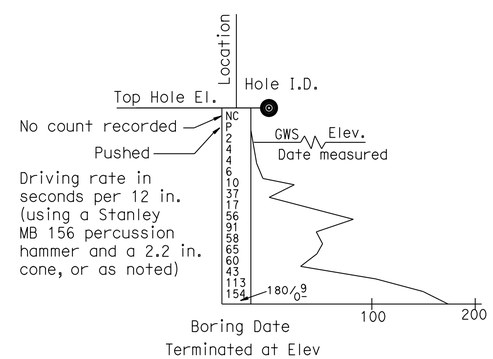

DYNAMIC CONE PENETRATION BORING

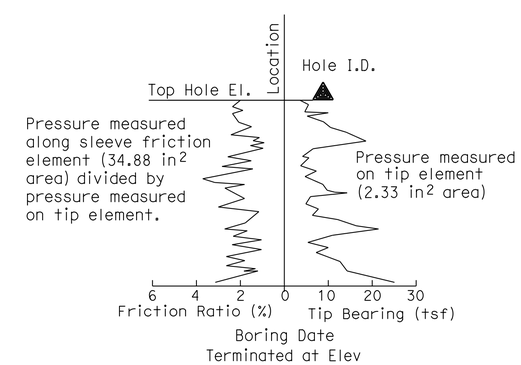

CONE PENETRATION TEST (CPT) BORING

R-67

ENGINEERING SERVICES	MATERIALS AND GEOTECHNICAL SERVICES	STATE OF CALIFORNIA DEPARTMENT OF TRANSPORTATION	DIVISION OF ENGINEERING SERVICES STRUCTURE DESIGN DESIGN BRANCH X	BRIDGE NO. RW 868 / POST MILE 33.4/37.1	RETAINING WALL NO. 868 LOG OF TEST BORINGS 2 OF 3
	PREPARED BY: F. Nguyen				

GS LOTB SOIL LEGEND

ORIGINAL SCALE IN INCHES FOR REDUCED PLANS 0 1 2 3

UNIT: 3643
PROJECT NUMBER & PHASE: 07000000851 CONTRACT NO.: 07-1170U1

DISREGARD PRINTS BEARING EARLIER REVISION DATES

REVISION DATES 04-17-12 | SHEET X | OF X

FILE => 71170uqu017.dgn

USERNAME => s124496 DATE PLOTTED => 13-JUN-2013 TIME PLOTTED => 05:44

REFERENCE: CALTRANS SOIL & ROCK LOGGING, CLASSIFICATION, AND PRESENTATION MANUAL (2010)

DIST	COUNTY	ROUTE	POST MILES TOTAL PROJECT	SHEET No.	TOTAL SHEETS
07	LA	10	33.2/37.2	685	1475

REGISTERED CIVIL ENGINEER 7-26-12 DATE

6-10-13
PLANS APPROVAL DATE

REGISTERED PROFESSIONAL ENGINEER Sungro Cho No. C75151 Exp. 12-31-13 CIVIL STATE OF CALIFORNIA

The State of California or its officers or agents shall not be responsible for the accuracy or completeness of electronic copies of this plan sheet.

GROUP SYMBOLS AND NAMES

Graphic/Symbol	Group Names
GW	Well-graded GRAVEL Well-graded GRAVEL with SAND
GP	Poorly-graded GRAVEL Poorly-graded GRAVEL with SAND
GW-GM	Well-graded GRAVEL with SILT Well-graded GRAVEL with SILT and SAND
GW-GC	Well-graded GRAVEL with CLAY (or SILTY CLAY) Well-graded GRAVEL with CLAY and SAND (or SILTY CLAY and SAND)
GP-GM	Poorly-graded GRAVEL with SILT Poorly-graded GRAVEL with SILT and SAND
GP-GC	Poorly-graded GRAVEL with CLAY (or SILTY CLAY) Poorly-graded GRAVEL with CLAY and SAND (or SILTY CLAY and SAND)
GM	SILTY GRAVEL SILTY GRAVEL with SAND
GC	CLAYEY GRAVEL CLAYEY GRAVEL with SAND
GC-GM	SILTY, CLAYEY GRAVEL SILTY, CLAYEY GRAVEL with SAND
SW	Well-graded SAND Well-graded SAND with GRAVEL
SP	Poorly-graded SAND Poorly-graded SAND with GRAVEL
SW-SM	Well-graded SAND with SILT Well-graded SAND with SILT and GRAVEL
SW-SC	Well-graded SAND with CLAY (or SILTY CLAY) Well-graded SAND with CLAY and GRAVEL (or SILTY CLAY and GRAVEL)
SP-SM	Poorly-graded SAND with SILT Poorly-graded SAND with SILT and GRAVEL
SP-SC	Poorly-graded SAND with CLAY (or SILTY CLAY) Poorly-graded SAND with CLAY and GRAVEL (or SILTY CLAY and GRAVEL)
SM	SILTY SAND SILTY SAND with GRAVEL
SC	CLAYEY SAND CLAYEY SAND with GRAVEL
SC-SM	SILTY, CLAYEY SAND SILTY, CLAYEY SAND with GRAVEL
PT	PEAT
	COBBLES COBBLES and BOULDERS BOULDERS

Graphic/Symbol	Group Names
CL	Lean CLAY Lean CLAY with SAND Lean CLAY with GRAVEL SANDY lean CLAY SANDY lean CLAY with GRAVEL GRAVELLY lean CLAY GRAVELLY lean CLAY with SAND
CL-ML	SILTY CLAY SILTY CLAY with SAND SILTY CLAY with GRAVEL SANDY SILTY CLAY SANDY SILTY CLAY with GRAVEL GRAVELLY SILTY CLAY GRAVELLY SILTY CLAY with SAND
ML	SILT SILT with SAND SILT with GRAVEL SANDY SILT SANDY SILT with GRAVEL GRAVELLY SILT GRAVELLY SILT with SAND
OL	ORGANIC lean CLAY ORGANIC lean CLAY with SAND ORGANIC lean CLAY with GRAVEL SANDY ORGANIC lean CLAY SANDY ORGANIC lean CLAY with GRAVEL GRAVELLY ORGANIC lean CLAY GRAVELLY ORGANIC lean CLAY with SAND
OL	ORGANIC SILT ORGANIC SILT with SAND ORGANIC SILT with GRAVEL SANDY ORGANIC SILT SANDY ORGANIC SILT with GRAVEL GRAVELLY ORGANIC SILT GRAVELLY ORGANIC SILT with SAND
CH	Fat CLAY Fat CLAY with SAND Fat CLAY with GRAVEL SANDY fat CLAY SANDY fat CLAY with GRAVEL GRAVELLY fat CLAY GRAVELLY fat CLAY with SAND
MH	Elastic SILT Elastic SILT with SAND Elastic SILT with GRAVEL SANDY elastic SILT SANDY elastic SILT with GRAVEL GRAVELLY elastic SILT GRAVELLY elastic SILT with SAND
OH	ORGANIC fat CLAY ORGANIC fat CLAY with SAND ORGANIC fat CLAY with GRAVEL SANDY ORGANIC fat CLAY SANDY ORGANIC fat CLAY with GRAVEL GRAVELLY ORGANIC fat CLAY GRAVELLY ORGANIC fat CLAY with SAND
OH	ORGANIC elastic SILT ORGANIC elastic SILT with SAND ORGANIC elastic SILT with GRAVEL SANDY ORGANIC elastic SILT SANDY ORGANIC elastic SILT with GRAVEL GRAVELLY ORGANIC elastic SILT GRAVELLY ORGANIC elastic SILT with SAND
OL/OH	ORGANIC SOIL ORGANIC SOIL with SAND ORGANIC SOIL with GRAVEL SANDY ORGANIC SOIL SANDY ORGANIC SOIL with GRAVEL GRAVELLY ORGANIC SOIL GRAVELLY ORGANIC SOIL with SAND

FIELD AND LABORATORY TESTING

- (C) Consolidation (ASTM D 2435)
- (CL) Collapse Potential (ASTM D 5333)
- (CP) Compaction Curve (CTM 216)
- (CR) Corrosivity Testing (CTM 643, CTM 422, CTM 417)
- (CU) Consolidated Undrained Triaxial (ASTM D 4767)
- (DS) Direct Shear (ASTM D 3080)
- (EI) Expansion Index (ASTM D 4829)
- (M) Moisture Content (ASTM D 2216)
- (OC) Organic Content-% (ASTM D 2974)
- (P) Permeability (CTM 220)
- (PA) Particle Size Analysis (ASTM D 422)
- (PI) Plasticity Index (AASHTO T 90) Liquid Limit (AASHTO T 89)
- (PL) Point Load Index (ASTM D 5731)
- (PM) Pressure Meter
- (R) R-Value (CTM 301)
- (SE) Sand Equivalent (CTM 217)
- (SG) Specific Gravity (AASHTO T 100)
- (SL) Shrinkage Limit (ASTM D 427)
- (SW) Swell Potential (ASTM D 4546)
- (UC) Unconfined Compression-Soil (ASTM D 2166) Unconfined Compression-Rock (ASTM D 2938)
- (UU) Unconsolidated Undrained Triaxial (ASTM D 2850)
- (UW) Unit Weight (ASTM D 4767)

APPARENT DENSITY OF COHESIONLESS SOILS

Description	SPT N_{60} (Blows / 12 in.)
Very Loose	0 - 5
Loose	5 - 10
Medium Dense	10 - 30
Dense	30 - 50
Very Dense	Greater than 50

MOISTURE

Description	Criteria
Dry	No discernable moisture
Moist	Moisture present, but no free water
Wet	Visible free water

PERCENT OR PROPORTION OF SOILS

Description	Criteria
Trace	Particles are present but estimated to be less than 5%
Few	5% - 10%
Little	15% - 25%
Some	30% - 45%
Mostly	50% - 100%

PARTICLE SIZE

Description		Size (in.)
Boulder		Greater than 12
Cobble		3 - 12
Gravel	Coarse	3/4 - 3
	Fine	1/5 - 3/4
Sand	Coarse	1/16 - 1/5
	Medium	1/64 - 1/16
	Fine	1/300 - 1/64
Silt and Clay		Less than 1/300

R-68

ENGINEERING SERVICES

MATERIALS AND GEOTECHNICAL SERVICES

PREPARED BY: F. Nguyen

STATE OF CALIFORNIA DEPARTMENT OF TRANSPORTATION

DIVISION OF ENGINEERING SERVICES STRUCTURE DESIGN DESIGN BRANCH X

BRIDGE NO. RW 860

POST MILE 33.4/37.1

RETAINING WALL NO. 868

LOG OF TEST BORINGS 3 OF 3

GS LOTB SOIL LEGEND

ORIGINAL SCALE IN INCHES FOR REDUCED PLANS 0 1 2 3

UNIT: 3643
PROJECT NUMBER & PHASE: 07000000851
CONTRACT NO.: 07-1170U1

DISREGARD PRINTS BEARING EARLIER REVISION DATES

REVISION DATES 04-17-12

SHEET X OF X

FILE => 71170uqu018.dgn

USERNAME => s124496 DATE PLOTTED => 13-JUN-2013 TIME PLOTTED => 05:44

DIST	COUNTY	ROUTE	POST MILES TOTAL PROJECT	SHEET No.	TOTAL SHEETS
07	LA	10	33.2/37.2	686	1475

REGISTERED CIVIL ENGINEER 7-26-12 DATE

6-10-13
PLANS APPROVAL DATE

REGISTERED PROFESSIONAL ENGINEER Sungro Cho No. C75151 Exp. 12-31-13 CIVIL STATE OF CALIFORNIA

The State of California or its officers or agents shall not be responsible for the accuracy or completeness of electronic copies of this plan sheet.

This LOTB sheet was prepared in accordance with the Caltrans Soil & Rock Logging, Classification, & Presentation Manual (2010 Edition).

BENCH MARK

BM #11-B-43 Elev 346.47′
Lead and conc nail in sidewalk of Auto Ct. cabin #825 on N. side Gavey Ave 200′± of Puente Ave, 71′ Lt Sta 181+30.5.

BM #12-B-43 Elev 352.54′
Lead and conc nail in W. end of p.c.c. porch step to frame house on N. side Gavey Ave, 91′ Lt Sta 193+81.

TBM Elev 341.93′
Chiseled knob on PCC wall, 33.4′ Rt Sta 168+35.

Vertical Datum: NAVD88

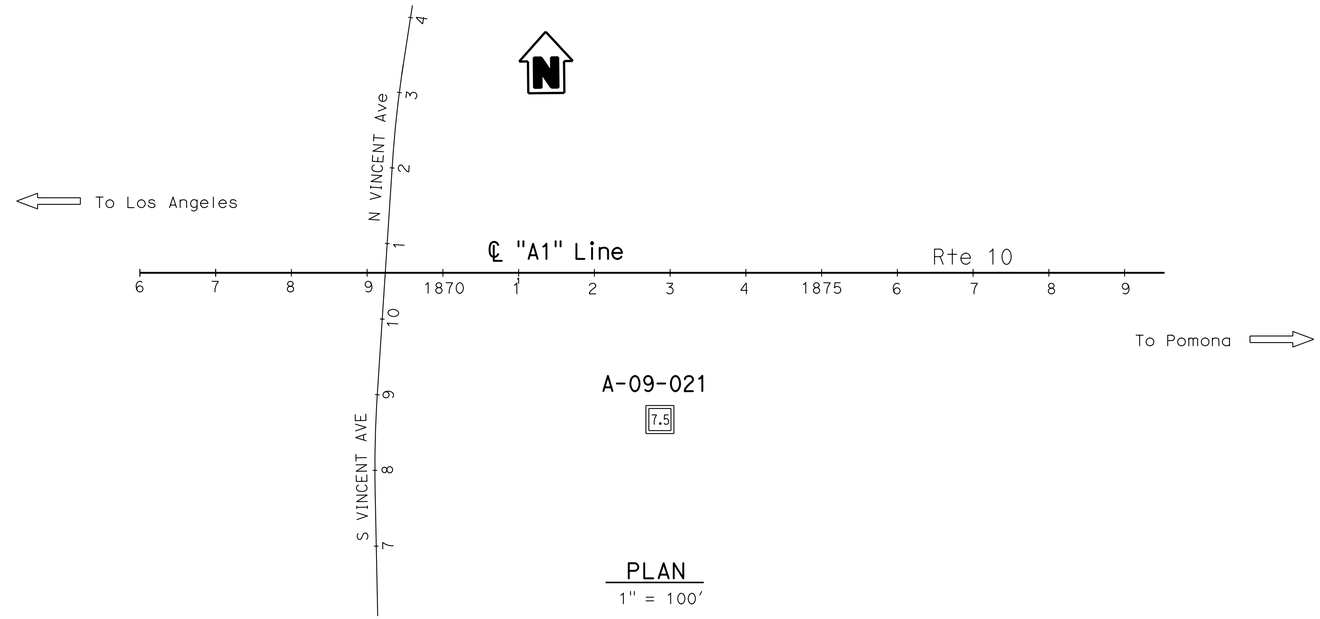

PLAN
1" = 100′

Note: No ground water encountered during field investigation.

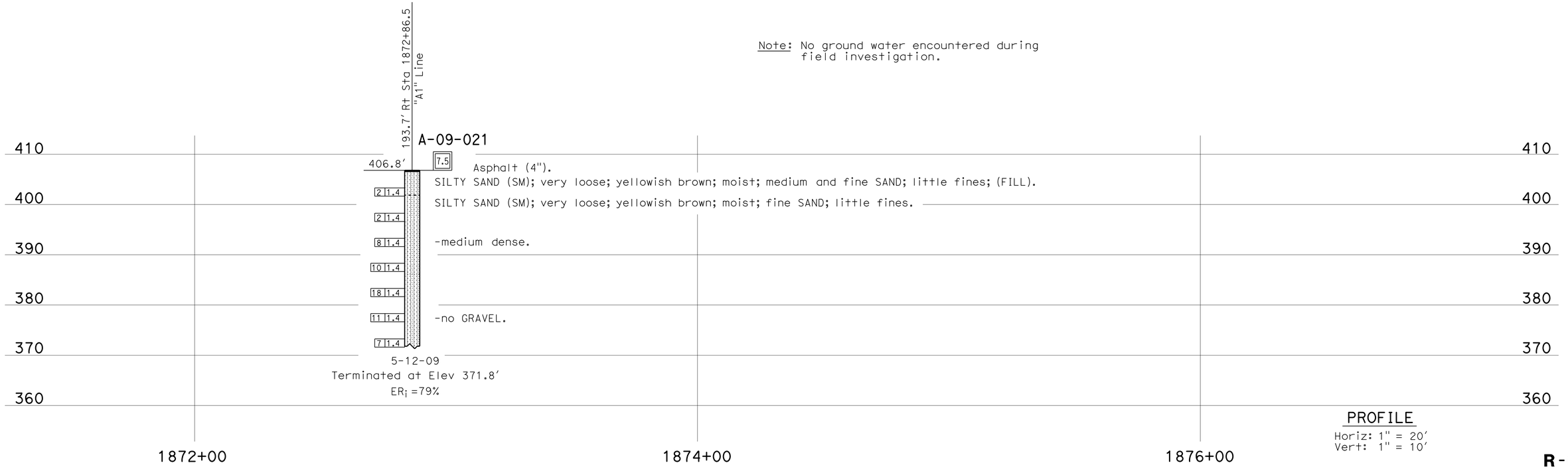

PROFILE
Horiz: 1" = 20′
Vert: 1" = 10′

R-69

ENGINEERING SERVICES	MATERIALS AND GEOTECHNICAL SERVICES	STATE OF CALIFORNIA DEPARTMENT OF TRANSPORTATION	DIVISION OF ENGINEERING SERVICES STRUCTURE DESIGN DESIGN BRANCH X	BRIDGE NO. RW 874 POST MILE 33.4/37.1	RETAINING WALL NO. 874 LOG OF TEST BORINGS 1 OF 3
FUNCTIONAL SUPERVISOR NAME: D. Jang	DRAWN BY: F. Nguyen CHECKED BY: S. Han	FIELD INVESTIGATION BY: S. Cho			

OGS CIVIL LOG OF TEST BORINGS SHEET

ORIGINAL SCALE IN INCHES FOR REDUCED PLANS 0 1 2 3

UNIT: 3643
PROJECT NUMBER & PHASE: 07000000851 CONTRACT NO.: 07-1170U1

DISREGARD PRINTS BEARING EARLIER REVISION DATES → REVISION DATES 05-14-12 05-15-12 SHEET X OF X

FILE => 71170uqu019.dgn

USERNAME => s124436 DATE PLOTTED => 13-JUN-2013 TIME PLOTTED => 05:44

REFERENCE: CALTRANS SOIL & ROCK LOGGING, CLASSIFICATION, AND PRESENTATION MANUAL (2010)

DIST	COUNTY	ROUTE	POST MILES TOTAL PROJECT	SHEET No.	TOTAL SHEETS
07	LA	10	33.2/37.2	687	1475

REGISTERED CIVIL ENGINEER 7-26-12 DATE

6-10-13
PLANS APPROVAL DATE

REGISTERED PROFESSIONAL ENGINEER Sungro Cho No. C75151 Exp. 12-31-13 CIVIL STATE OF CALIFORNIA

The State of California or its officers or agents shall not be responsible for the accuracy or completeness of electronic copies of this plan sheet.

CEMENTATION

Description	Criteria
Weak	Crumbles or breaks with handling or little finger pressure.
Moderate	Crumbles or breaks with considerable finger pressure.
Strong	Will not crumble or break with finger pressure.

BOREHOLE IDENTIFICATION

Symbol	Hole Type	Description
Size	A	Auger Boring (hollow or solid stem bucket)
Size	R RW RC P	Rotary drilled boring (conventional) Rotary drilled with self-casing wire-line Rotary core with continuously-sampled, self-casing wire-line Rotary percussion boring (air)
Size	R RC	Rotary drilled diamond core Rotary drilled rock core
Size	HD HA	Hand driven (1-inch soil tube) Hand Auger
●	D	Dynamic Cone Penetration Boring
▲	CPT	Cone Penetration Test (ASTM D 5778)
⬚	O	Other (note on LOTB)

Note: Size in inches.

CONSISTENCY OF COHESIVE SOILS

Description	Shear Strength (tsf)	Pocket Penetrometer Measurement, PP, (tsf)	Torvane Measurement, TV, (tsf)	Vane Shear Measurement, VS, (tsf)
Very Soft	Less than 0.12	Less than 0.25	Less than 0.12	Less than 0.12
Soft	0.12 - 0.25	0.25 - 0.5	0.12 - 0.25	0.12 - 0.25
Medium Stiff	0.25 - 0.5	0.5 - 1	0.25 - 0.5	0.25 - 0.5
Stiff	0.5 - 1	1 - 2	0.5 - 1	0.5 - 1
Very Stiff	1 - 2	2 - 4	1 - 2	1 - 2
Hard	Greater than 2	Greater than 4	Greater than 2	Greater than 2

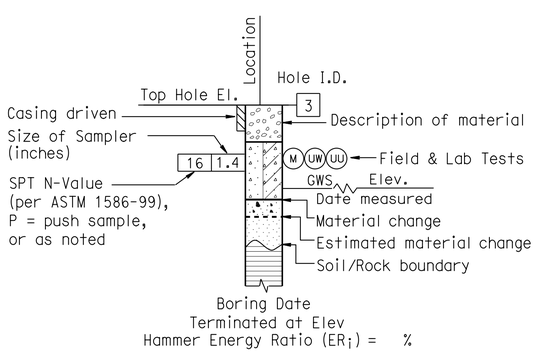

ROTARY BORING

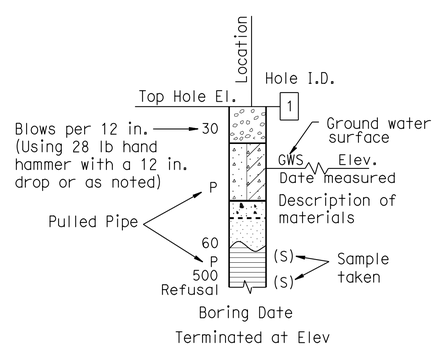

HAND BORING

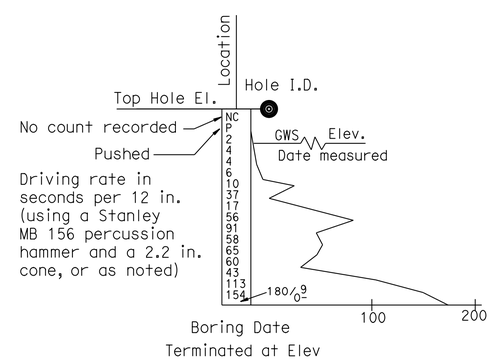

DYNAMIC CONE PENETRATION BORING

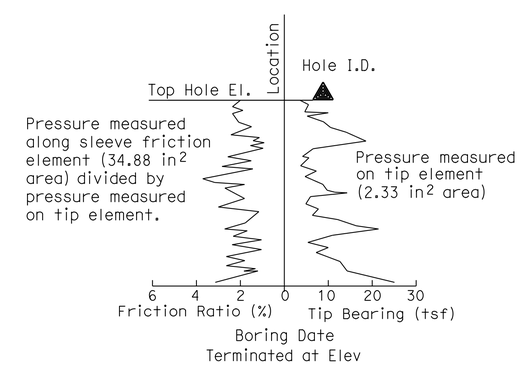

CONE PENETRATION TEST (CPT) BORING

R-70

ENGINEERING SERVICES	MATERIALS AND GEOTECHNICAL SERVICES	STATE OF CALIFORNIA DEPARTMENT OF TRANSPORTATION	DIVISION OF ENGINEERING SERVICES STRUCTURE DESIGN DESIGN BRANCH X	BRIDGE NO. RW 874 / POST MILE 33.4/37.1	RETAINING WALL NO. 874 LOG OF TEST BORINGS 2 OF 3
	PREPARED BY: F. Nguyen				

GS LOTB SOIL LEGEND

ORIGINAL SCALE IN INCHES FOR REDUCED PLANS 0 1 2 3

UNIT: 3643
PROJECT NUMBER & PHASE: 07000000851 CONTRACT NO.: 07-1170U1

DISREGARD PRINTS BEARING EARLIER REVISION DATES

REVISION DATES 04-17-12 | SHEET X | OF X

FILE => 71170uqu020.dgn

USERNAME => s124496 DATE PLOTTED => 13-JUN-2013 TIME PLOTTED => 05:44

REFERENCE: CALTRANS SOIL & ROCK LOGGING, CLASSIFICATION, AND PRESENTATION MANUAL (2010)

DIST	COUNTY	ROUTE	POST MILES TOTAL PROJECT	SHEET No.	TOTAL SHEETS
07	LA	10	33.2/37.2	688	1475

REGISTERED CIVIL ENGINEER 7-26-12 DATE

6-10-13
PLANS APPROVAL DATE

REGISTERED PROFESSIONAL ENGINEER Sungro Cho No. C75151 Exp. 12-31-13 CIVIL STATE OF CALIFORNIA

The State of California or its officers or agents shall not be responsible for the accuracy or completeness of electronic copies of this plan sheet.

GROUP SYMBOLS AND NAMES

Graphic/Symbol	Group Names	Graphic/Symbol	Group Names
GW	Well-graded GRAVEL Well-graded GRAVEL with SAND	CL	Lean CLAY Lean CLAY with SAND Lean CLAY with GRAVEL SANDY lean CLAY SANDY lean CLAY with GRAVEL GRAVELLY lean CLAY GRAVELLY lean CLAY with SAND
GP	Poorly-graded GRAVEL Poorly-graded GRAVEL with SAND		
GW-GM	Well-graded GRAVEL with SILT Well-graded GRAVEL with SILT and SAND	CL-ML	SILTY CLAY SILTY CLAY with SAND SILTY CLAY with GRAVEL SANDY SILTY CLAY SANDY SILTY CLAY with GRAVEL GRAVELLY SILTY CLAY GRAVELLY SILTY CLAY with SAND
GW-GC	Well-graded GRAVEL with CLAY (or SILTY CLAY) Well-graded GRAVEL with CLAY and SAND (or SILTY CLAY and SAND)		
GP-GM	Poorly-graded GRAVEL with SILT Poorly-graded GRAVEL with SILT and SAND	ML	SILT SILT with SAND SILT with GRAVEL SANDY SILT SANDY SILT with GRAVEL GRAVELLY SILT GRAVELLY SILT with SAND
GP-GC	Poorly-graded GRAVEL with CLAY (or SILTY CLAY) Poorly-graded GRAVEL with CLAY and SAND (or SILTY CLAY and SAND)		
GM	SILTY GRAVEL SILTY GRAVEL with SAND	OL	ORGANIC lean CLAY ORGANIC lean CLAY with SAND ORGANIC lean CLAY with GRAVEL SANDY ORGANIC lean CLAY SANDY ORGANIC lean CLAY with GRAVEL GRAVELLY ORGANIC lean CLAY GRAVELLY ORGANIC lean CLAY with SAND
GC	CLAYEY GRAVEL CLAYEY GRAVEL with SAND		
GC-GM	SILTY, CLAYEY GRAVEL SILTY, CLAYEY GRAVEL with SAND	OL	ORGANIC SILT ORGANIC SILT with SAND ORGANIC SILT with GRAVEL SANDY ORGANIC SILT SANDY ORGANIC SILT with GRAVEL GRAVELLY ORGANIC SILT GRAVELLY ORGANIC SILT with SAND
SW	Well-graded SAND Well-graded SAND with GRAVEL		
SP	Poorly-graded SAND Poorly-graded SAND with GRAVEL	CH	Fat CLAY Fat CLAY with SAND Fat CLAY with GRAVEL SANDY fat CLAY SANDY fat CLAY with GRAVEL GRAVELLY fat CLAY GRAVELLY fat CLAY with SAND
SW-SM	Well-graded SAND with SILT Well-graded SAND with SILT and GRAVEL		
SW-SC	Well-graded SAND with CLAY (or SILTY CLAY) Well-graded SAND with CLAY and GRAVEL (or SILTY CLAY and GRAVEL)	MH	Elastic SILT Elastic SILT with SAND Elastic SILT with GRAVEL SANDY elastic SILT SANDY elastic SILT with GRAVEL GRAVELLY elastic SILT GRAVELLY elastic SILT with SAND
SP-SM	Poorly-graded SAND with SILT Poorly-graded SAND with SILT and GRAVEL		
SP-SC	Poorly-graded SAND with CLAY (or SILTY CLAY) Poorly-graded SAND with CLAY and GRAVEL (or SILTY CLAY and GRAVEL)	OH	ORGANIC fat CLAY ORGANIC fat CLAY with SAND ORGANIC fat CLAY with GRAVEL SANDY ORGANIC fat CLAY SANDY ORGANIC fat CLAY with GRAVEL GRAVELLY ORGANIC fat CLAY GRAVELLY ORGANIC fat CLAY with SAND
SM	SILTY SAND SILTY SAND with GRAVEL		
SC	CLAYEY SAND CLAYEY SAND with GRAVEL	OH	ORGANIC elastic SILT ORGANIC elastic SILT with SAND ORGANIC elastic SILT with GRAVEL SANDY ORGANIC elastic SILT SANDY ORGANIC elastic SILT with GRAVEL GRAVELLY ORGANIC elastic SILT GRAVELLY ORGANIC elastic SILT with SAND
SC-SM	SILTY, CLAYEY SAND SILTY, CLAYEY SAND with GRAVEL		
PT	PEAT	OL/OH	ORGANIC SOIL ORGANIC SOIL with SAND ORGANIC SOIL with GRAVEL SANDY ORGANIC SOIL SANDY ORGANIC SOIL with GRAVEL GRAVELLY ORGANIC SOIL GRAVELLY ORGANIC SOIL with SAND
	COBBLES COBBLES and BOULDERS BOULDERS		

FIELD AND LABORATORY TESTING

- (C) Consolidation (ASTM D 2435)
- (CL) Collapse Potential (ASTM D 5333)
- (CP) Compaction Curve (CTM 216)
- (CR) Corrosivity Testing (CTM 643, CTM 422, CTM 417)
- (CU) Consolidated Undrained Triaxial (ASTM D 4767)
- (DS) Direct Shear (ASTM D 3080)
- (EI) Expansion Index (ASTM D 4829)
- (M) Moisture Content (ASTM D 2216)
- (OC) Organic Content-% (ASTM D 2974)
- (P) Permeability (CTM 220)
- (PA) Particle Size Analysis (ASTM D 422)
- (PI) Plasticity Index (AASHTO T 90) Liquid Limit (AASHTO T 89)
- (PL) Point Load Index (ASTM D 5731)
- (PM) Pressure Meter
- (R) R-Value (CTM 301)
- (SE) Sand Equivalent (CTM 217)
- (SG) Specific Gravity (AASHTO T 100)
- (SL) Shrinkage Limit (ASTM D 427)
- (SW) Swell Potential (ASTM D 4546)
- (UC) Unconfined Compression-Soil (ASTM D 2166) Unconfined Compression-Rock (ASTM D 2938)
- (UU) Unconsolidated Undrained Triaxial (ASTM D 2850)
- (UW) Unit Weight (ASTM D 4767)

APPARENT DENSITY OF COHESIONLESS SOILS

Description	SPT N_{60} (Blows / 12 in.)
Very Loose	0 - 5
Loose	5 - 10
Medium Dense	10 - 30
Dense	30 - 50
Very Dense	Greater than 50

MOISTURE

Description	Criteria
Dry	No discernable moisture
Moist	Moisture present, but no free water
Wet	Visible free water

PERCENT OR PROPORTION OF SOILS

Description	Criteria
Trace	Particles are present but estimated to be less than 5%
Few	5% - 10%
Little	15% - 25%
Some	30% - 45%
Mostly	50% - 100%

PARTICLE SIZE

Description		Size (in.)
Boulder		Greater than 12
Cobble		3 - 12
Gravel	Coarse	3/4 - 3
	Fine	1/5 - 3/4
Sand	Coarse	1/16 - 1/5
	Medium	1/64 - 1/16
	Fine	1/300 - 1/64
Silt and Clay		Less than 1/300

R-71

ENGINEERING SERVICES

MATERIALS AND GEOTECHNICAL SERVICES

PREPARED BY: F. Nguyen

STATE OF CALIFORNIA DEPARTMENT OF TRANSPORTATION

DIVISION OF ENGINEERING SERVICES STRUCTURE DESIGN DESIGN BRANCH X

BRIDGE NO. RW 874

POST MILE 33.4/37.1

RETAINING WALL NO. 874

LOG OF TEST BORINGS 3 OF 3

GS LOTB SOIL LEGEND

ORIGINAL SCALE IN INCHES FOR REDUCED PLANS 0 1 2 3

UNIT: 3643
PROJECT NUMBER & PHASE: 07000000851
CONTRACT NO.: 07-1170U1

DISREGARD PRINTS BEARING EARLIER REVISION DATES

REVISION DATES 04-17-12

SHEET X OF X

FILE => 71170uqu021.dgn

USERNAME => s124496 DATE PLOTTED => 13-JUN-2013 TIME PLOTTED => 05:44

DIST	COUNTY	ROUTE	POST MILES TOTAL PROJECT	SHEET No.	TOTAL SHEETS
07	LA	10	33.2/37.2	689	1475

REGISTERED CIVIL ENGINEER 7-26-12 DATE

6-10-13
PLANS APPROVAL DATE

REGISTERED PROFESSIONAL ENGINEER Sungro Cho No. C75151 Exp. 12-31-13 CIVIL STATE OF CALIFORNIA

The State of California or its officers or agents shall not be responsible for the accuracy or completeness of electronic copies of this plan sheet.

This LOTB sheet was prepared in accordance with the Caltrans Soil & Rock Logging, Classification, & Presentation Manual (2010 Edition).

BENCH MARK

BM #98-I-67 Elev 395.36
Hilti Nail in the east curb of California Ave. 90 ft N of Center St. and 24 ft. E of California Ave., in front of 150 N California Ave.
Vertical Datum: NAVD88

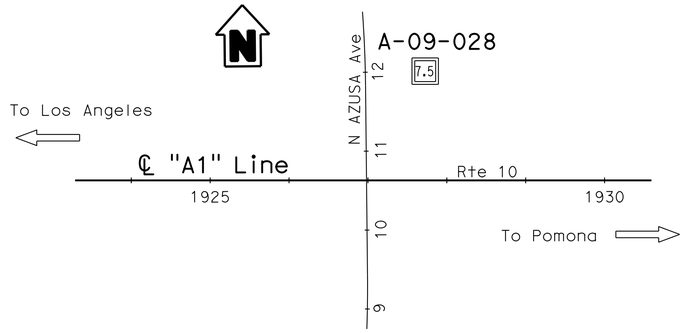

PLAN
1" = 100′

Note: No ground water encountered during field investigation.

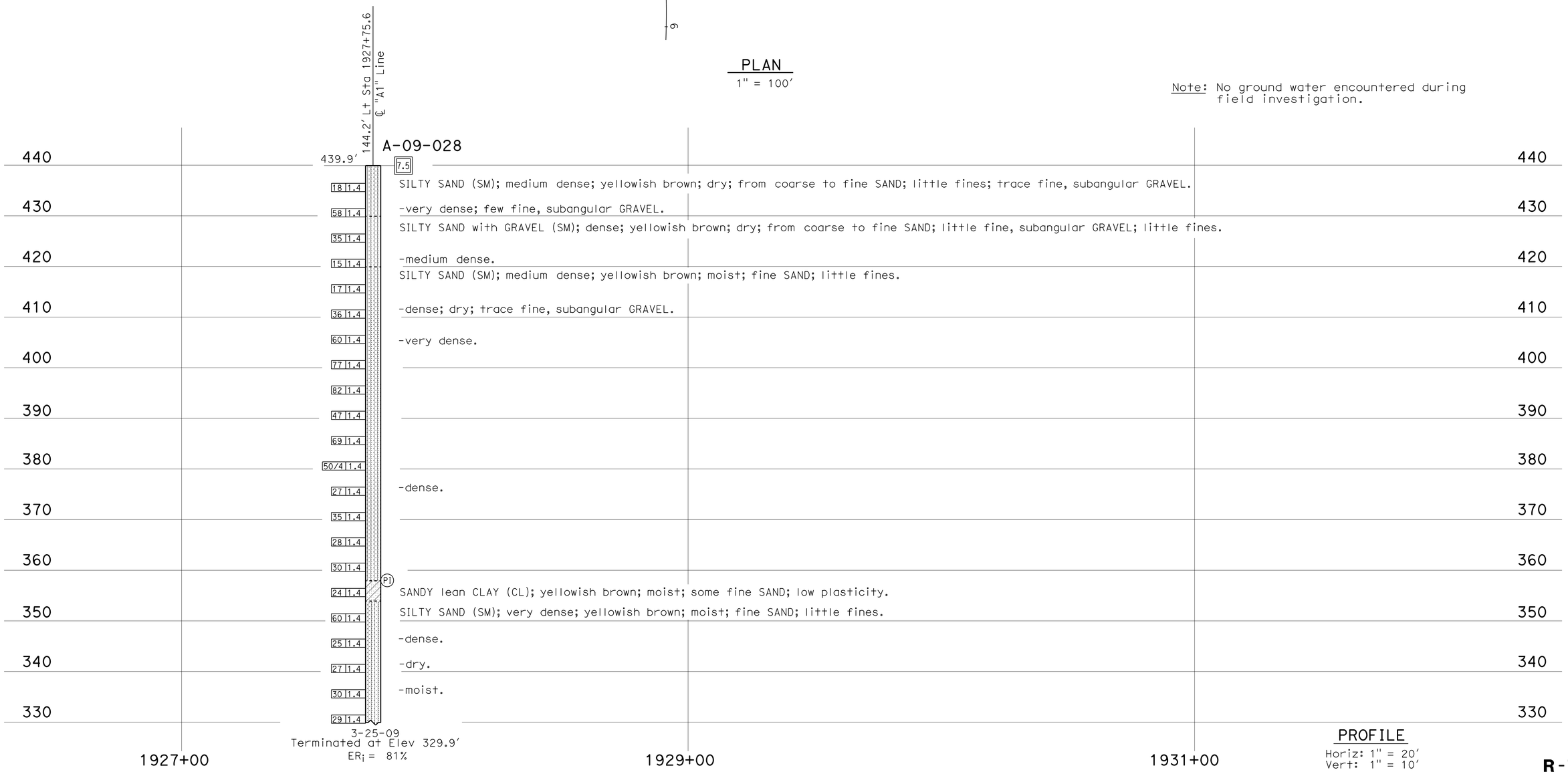

PROFILE
Horiz: 1" = 20′
Vert: 1" = 10′

R-72

ENGINEERING SERVICES	MATERIALS AND GEOTECHNICAL SERVICES	STATE OF CALIFORNIA DEPARTMENT OF TRANSPORTATION	DIVISION OF ENGINEERING SERVICES STRUCTURE DESIGN DESIGN BRANCH X	BRIDGE NO. RW 925 POST MILE 33.4/37.1	RETAINING WALL NO. 925 LOG OF TEST BORINGS 1 OF 3
FUNCTIONAL SUPERVISOR NAME: D. Jang	DRAWN BY: F. Nguyen CHECKED BY: H. Yang	FIELD INVESTIGATION BY: S. Cho			

OGS CIVIL LOG OF TEST BORINGS SHEET

ORIGINAL SCALE IN INCHES FOR REDUCED PLANS 0 1 2 3

UNIT: 3643
PROJECT NUMBER & PHASE: 07000000851 CONTRACT NO.: 07-1170U1

DISREGARD PRINTS BEARING EARLIER REVISION DATES

REVISION DATES 10-12-11 05-15-12 07-13-12 SHEET X OF X

FILE => 71170uqu022.dgn

USERNAME => s124496 DATE PLOTTED => 13-JUN-2013 TIME PLOTTED => 05:44

DIST	COUNTY	ROUTE	POST MILES TOTAL PROJECT	SHEET No.	TOTAL SHEETS
07	LA	10	33.2/37.2	690	1475

REGISTERED CIVIL ENGINEER 7-26-12 DATE

6-10-13
PLANS APPROVAL DATE

REGISTERED PROFESSIONAL ENGINEER Sungro Cho No. C75151 Exp. 12-31-13 CIVIL STATE OF CALIFORNIA

The State of California or its officers or agents shall not be responsible for the accuracy or completeness of electronic copies of this plan sheet.

REFERENCE: CALTRANS SOIL & ROCK LOGGING, CLASSIFICATION, AND PRESENTATION MANUAL (2010)

CEMENTATION

Description	Criteria
Weak	Crumbles or breaks with handling or little finger pressure.
Moderate	Crumbles or breaks with considerable finger pressure.
Strong	Will not crumble or break with finger pressure.

BOREHOLE IDENTIFICATION

Symbol	Hole Type	Description
Size	A	Auger Boring (hollow or solid stem bucket)
Size	R RW RC P	Rotary drilled boring (conventional) Rotary drilled with self-casing wire-line Rotary core with continuously-sampled, self-casing wire-line Rotary percussion boring (air)
Size	R RC	Rotary drilled diamond core Rotary drilled rock core
Size	HD HA	Hand driven (1-inch soil tube) Hand Auger
●	D	Dynamic Cone Penetration Boring
▲	CPT	Cone Penetration Test (ASTM D 5778)
⬚	O	Other (note on LOTB)

Note: Size in inches.

CONSISTENCY OF COHESIVE SOILS

Description	Shear Strength (tsf)	Pocket Penetrometer Measurement, PP, (tsf)	Torvane Measurement, TV, (tsf)	Vane Shear Measurement, VS, (tsf)
Very Soft	Less than 0.12	Less than 0.25	Less than 0.12	Less than 0.12
Soft	0.12 - 0.25	0.25 - 0.5	0.12 - 0.25	0.12 - 0.25
Medium Stiff	0.25 - 0.5	0.5 - 1	0.25 - 0.5	0.25 - 0.5
Stiff	0.5 - 1	1 - 2	0.5 - 1	0.5 - 1
Very Stiff	1 - 2	2 - 4	1 - 2	1 - 2
Hard	Greater than 2	Greater than 4	Greater than 2	Greater than 2

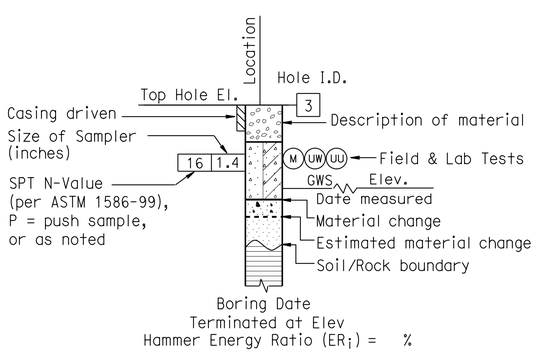

ROTARY BORING

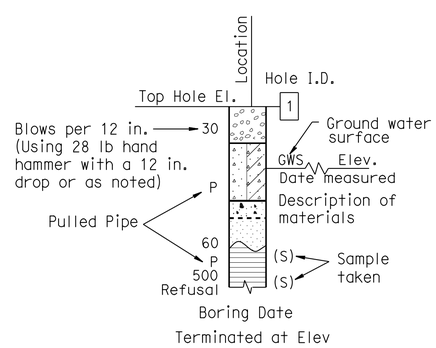

HAND BORING

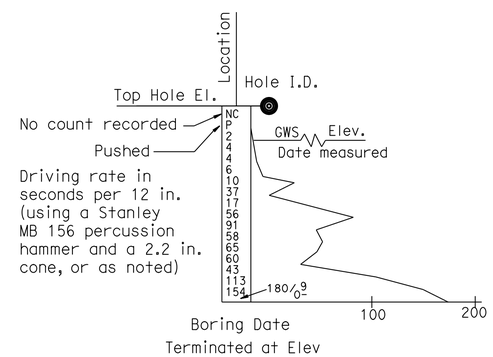

DYNAMIC CONE PENETRATION BORING

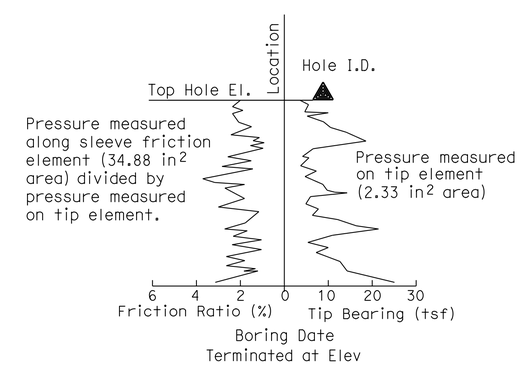

CONE PENETRATION TEST (CPT) BORING

R-73

ENGINEERING SERVICES	MATERIALS AND GEOTECHNICAL SERVICES	STATE OF CALIFORNIA DEPARTMENT OF TRANSPORTATION	DIVISION OF ENGINEERING SERVICES STRUCTURE DESIGN DESIGN BRANCH X	BRIDGE NO. RW 925 POST MILE 33.4/37.1	RETAINING WALL NO. 925 LOG OF TEST BORINGS 2 OF 3
	PREPARED BY: F. Nguyen				

GS LOTB SOIL LEGEND

ORIGINAL SCALE IN INCHES FOR REDUCED PLANS 0 1 2 3

UNIT: 3643
PROJECT NUMBER & PHASE: 07000000851 CONTRACT NO.: 07-1170U1

DISREGARD PRINTS BEARING EARLIER REVISION DATES

REVISION DATES 04-17-12 SHEET X OF X

FILE => 71170uqu023.dgn

USERNAME => s124496 DATE PLOTTED => 13-JUN-2013 TIME PLOTTED => 05:44

REFERENCE: CALTRANS SOIL & ROCK LOGGING, CLASSIFICATION, AND PRESENTATION MANUAL (2010)

DIST	COUNTY	ROUTE	POST MILES TOTAL PROJECT	SHEET No.	TOTAL SHEETS
07	LA	10	33.2/37.2	691	1475

REGISTERED CIVIL ENGINEER 7-26-12 DATE

6-10-13
PLANS APPROVAL DATE

REGISTERED PROFESSIONAL ENGINEER Sungro Cho No. C75151 Exp. 12-31-13 CIVIL STATE OF CALIFORNIA

The State of California or its officers or agents shall not be responsible for the accuracy or completeness of electronic copies of this plan sheet.

GROUP SYMBOLS AND NAMES

Graphic/Symbol	Group Names
GW	Well-graded GRAVEL Well-graded GRAVEL with SAND
GP	Poorly-graded GRAVEL Poorly-graded GRAVEL with SAND
GW-GM	Well-graded GRAVEL with SILT Well-graded GRAVEL with SILT and SAND
GW-GC	Well-graded GRAVEL with CLAY (or SILTY CLAY) Well-graded GRAVEL with CLAY and SAND (or SILTY CLAY and SAND)
GP-GM	Poorly-graded GRAVEL with SILT Poorly-graded GRAVEL with SILT and SAND
GP-GC	Poorly-graded GRAVEL with CLAY (or SILTY CLAY) Poorly-graded GRAVEL with CLAY and SAND (or SILTY CLAY and SAND)
GM	SILTY GRAVEL SILTY GRAVEL with SAND
GC	CLAYEY GRAVEL CLAYEY GRAVEL with SAND
GC-GM	SILTY, CLAYEY GRAVEL SILTY, CLAYEY GRAVEL with SAND
SW	Well-graded SAND Well-graded SAND with GRAVEL
SP	Poorly-graded SAND Poorly-graded SAND with GRAVEL
SW-SM	Well-graded SAND with SILT Well-graded SAND with SILT and GRAVEL
SW-SC	Well-graded SAND with CLAY (or SILTY CLAY) Well-graded SAND with CLAY and GRAVEL (or SILTY CLAY and GRAVEL)
SP-SM	Poorly-graded SAND with SILT Poorly-graded SAND with SILT and GRAVEL
SP-SC	Poorly-graded SAND with CLAY (or SILTY CLAY) Poorly-graded SAND with CLAY and GRAVEL (or SILTY CLAY and GRAVEL)
SM	SILTY SAND SILTY SAND with GRAVEL
SC	CLAYEY SAND CLAYEY SAND with GRAVEL
SC-SM	SILTY, CLAYEY SAND SILTY, CLAYEY SAND with GRAVEL
PT	PEAT
	COBBLES COBBLES and BOULDERS BOULDERS

Graphic/Symbol	Group Names
CL	Lean CLAY Lean CLAY with SAND Lean CLAY with GRAVEL SANDY lean CLAY SANDY lean CLAY with GRAVEL GRAVELLY lean CLAY GRAVELLY lean CLAY with SAND
CL-ML	SILTY CLAY SILTY CLAY with SAND SILTY CLAY with GRAVEL SANDY SILTY CLAY SANDY SILTY CLAY with GRAVEL GRAVELLY SILTY CLAY GRAVELLY SILTY CLAY with SAND
ML	SILT SILT with SAND SILT with GRAVEL SANDY SILT SANDY SILT with GRAVEL GRAVELLY SILT GRAVELLY SILT with SAND
OL	ORGANIC lean CLAY ORGANIC lean CLAY with SAND ORGANIC lean CLAY with GRAVEL SANDY ORGANIC lean CLAY SANDY ORGANIC lean CLAY with GRAVEL GRAVELLY ORGANIC lean CLAY GRAVELLY ORGANIC lean CLAY with SAND
OL	ORGANIC SILT ORGANIC SILT with SAND ORGANIC SILT with GRAVEL SANDY ORGANIC SILT SANDY ORGANIC SILT with GRAVEL GRAVELLY ORGANIC SILT GRAVELLY ORGANIC SILT with SAND
CH	Fat CLAY Fat CLAY with SAND Fat CLAY with GRAVEL SANDY fat CLAY SANDY fat CLAY with GRAVEL GRAVELLY fat CLAY GRAVELLY fat CLAY with SAND
MH	Elastic SILT Elastic SILT with SAND Elastic SILT with GRAVEL SANDY elastic SILT SANDY elastic SILT with GRAVEL GRAVELLY elastic SILT GRAVELLY elastic SILT with SAND
OH	ORGANIC fat CLAY ORGANIC fat CLAY with SAND ORGANIC fat CLAY with GRAVEL SANDY ORGANIC fat CLAY SANDY ORGANIC fat CLAY with GRAVEL GRAVELLY ORGANIC fat CLAY GRAVELLY ORGANIC fat CLAY with SAND
OH	ORGANIC elastic SILT ORGANIC elastic SILT with SAND ORGANIC elastic SILT with GRAVEL SANDY ORGANIC elastic SILT SANDY ORGANIC elastic SILT with GRAVEL GRAVELLY ORGANIC elastic SILT GRAVELLY ORGANIC elastic SILT with SAND
OL/OH	ORGANIC SOIL ORGANIC SOIL with SAND ORGANIC SOIL with GRAVEL SANDY ORGANIC SOIL SANDY ORGANIC SOIL with GRAVEL GRAVELLY ORGANIC SOIL GRAVELLY ORGANIC SOIL with SAND

FIELD AND LABORATORY TESTING

- (C) Consolidation (ASTM D 2435)
- (CL) Collapse Potential (ASTM D 5333)
- (CP) Compaction Curve (CTM 216)
- (CR) Corrosivity Testing (CTM 643, CTM 422, CTM 417)
- (CU) Consolidated Undrained Triaxial (ASTM D 4767)
- (DS) Direct Shear (ASTM D 3080)
- (EI) Expansion Index (ASTM D 4829)
- (M) Moisture Content (ASTM D 2216)
- (OC) Organic Content-% (ASTM D 2974)
- (P) Permeability (CTM 220)
- (PA) Particle Size Analysis (ASTM D 422)
- (PI) Plasticity Index (AASHTO T 90) Liquid Limit (AASHTO T 89)
- (PL) Point Load Index (ASTM D 5731)
- (PM) Pressure Meter
- (R) R-Value (CTM 301)
- (SE) Sand Equivalent (CTM 217)
- (SG) Specific Gravity (AASHTO T 100)
- (SL) Shrinkage Limit (ASTM D 427)
- (SW) Swell Potential (ASTM D 4546)
- (UC) Unconfined Compression-Soil (ASTM D 2166) Unconfined Compression-Rock (ASTM D 2938)
- (UU) Unconsolidated Undrained Triaxial (ASTM D 2850)
- (UW) Unit Weight (ASTM D 4767)

APPARENT DENSITY OF COHESIONLESS SOILS

Description	SPT N_{60} (Blows / 12 in.)
Very Loose	0 - 5
Loose	5 - 10
Medium Dense	10 - 30
Dense	30 - 50
Very Dense	Greater than 50

MOISTURE

Description	Criteria
Dry	No discernable moisture
Moist	Moisture present, but no free water
Wet	Visible free water

PERCENT OR PROPORTION OF SOILS

Description	Criteria
Trace	Particles are present but estimated to be less than 5%
Few	5% - 10%
Little	15% - 25%
Some	30% - 45%
Mostly	50% - 100%

PARTICLE SIZE

Description		Size (in.)
Boulder		Greater than 12
Cobble		3 - 12
Gravel	Coarse	3/4 - 3
	Fine	1/5 - 3/4
Sand	Coarse	1/16 - 1/5
	Medium	1/64 - 1/16
	Fine	1/300 - 1/64
Silt and Clay		Less than 1/300

R-74

ENGINEERING SERVICES

MATERIALS AND GEOTECHNICAL SERVICES

PREPARED BY: F. Nguyen

STATE OF CALIFORNIA DEPARTMENT OF TRANSPORTATION

DIVISION OF ENGINEERING SERVICES STRUCTURE DESIGN DESIGN BRANCH X

BRIDGE NO. RW 925

POST MILE 33.4/37.1

RETAINING WALL NO. 925

LOG OF TEST BORINGS 3 OF 3

GS LOTB SOIL LEGEND

ORIGINAL SCALE IN INCHES FOR REDUCED PLANS 0 1 2 3

UNIT: 3643
PROJECT NUMBER & PHASE: 07000000851
CONTRACT NO.: 07-1170U1

DISREGARD PRINTS BEARING EARLIER REVISION DATES

REVISION DATES 04-17-12

SHEET X OF X

FILE => 71170uqu024.dgn

USERNAME => s124496 DATE PLOTTED => 13-JUN-2013 TIME PLOTTED => 05:44

DIST	COUNTY	ROUTE	POST MILES TOTAL PROJECT	SHEET No.	TOTAL SHEETS
07	LA	10	33.2/37.2	692	1475

REGISTERED CIVIL ENGINEER 7-26-12 DATE

6-10-13
PLANS APPROVAL DATE

REGISTERED PROFESSIONAL ENGINEER Sungro Cho No. C75151 Exp. 12-31-13 CIVIL STATE OF CALIFORNIA

The State of California or its officers or agents shall not be responsible for the accuracy or completeness of electronic copies of this plan sheet.

This LOTB sheet was prepared in accordance with the Caltrans Soil & Rock Logging, Classification, & Presentation Manual (2010 Edition).

BENCH MARK

BM #98-I-67 Elev 395.36
Hilti Nail in the east curb of California Ave. 90 ft N of Center St. and 24 ft E of California Ave., in front of 150 N California Ave.
Vertical Datum: NAVD88

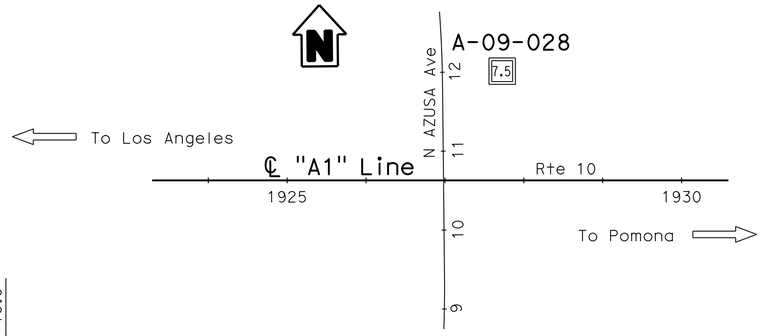

PLAN
1" = 100'

Note: No ground water encountered during field investigation.

PROFILE
Horiz: 1" = 20'
Vert: 1" = 10'

R-75

ENGINEERING SERVICES	MATERIALS AND GEOTECHNICAL SERVICES	STATE OF CALIFORNIA DEPARTMENT OF TRANSPORTATION	DIVISION OF ENGINEERING SERVICES STRUCTURE DESIGN DESIGN BRANCH X	BRIDGE NO. RW 927 POST MILE 33.4/37.1	RETAINING WALL NO. 927 LOG OF TEST BORINGS 1 OF 3
FUNCTIONAL SUPERVISOR NAME: D. Jang	DRAWN BY: F. Nguyen CHECKED BY: H. Yang	FIELD INVESTIGATION BY: S. Cho			

OGS CIVIL LOG OF TEST BORINGS SHEET

ORIGINAL SCALE IN INCHES FOR REDUCED PLANS 0 1 2 3

UNIT: 3643
PROJECT NUMBER & PHASE: 07000000851 CONTRACT NO.: 07-1170U1

DISREGARD PRINTS BEARING EARLIER REVISION DATES

REVISION DATES 10-12-11 05-15-12 07-13-12 SHEET X OF X

FILE => 71170uqu025.dgn

USERNAME => s124496 DATE PLOTTED => 13-JUN-2013 TIME PLOTTED => 05:44

REFERENCE: CALTRANS SOIL & ROCK LOGGING, CLASSIFICATION, AND PRESENTATION MANUAL (2010)

DIST	COUNTY	ROUTE	POST MILES TOTAL PROJECT	SHEET No.	TOTAL SHEETS
07	LA	10	33.2/37.2	693	1475

REGISTERED CIVIL ENGINEER 7-26-12 DATE

6-10-13
PLANS APPROVAL DATE

REGISTERED PROFESSIONAL ENGINEER Sungro Cho No. C75151 Exp. 12-31-13 CIVIL STATE OF CALIFORNIA

The State of California or its officers or agents shall not be responsible for the accuracy or completeness of electronic copies of this plan sheet.

CEMENTATION

Description	Criteria
Weak	Crumbles or breaks with handling or little finger pressure.
Moderate	Crumbles or breaks with considerable finger pressure.
Strong	Will not crumble or break with finger pressure.

BOREHOLE IDENTIFICATION

Symbol	Hole Type	Description
Size	A	Auger Boring (hollow or solid stem bucket)
Size	R RW RC P	Rotary drilled boring (conventional) Rotary drilled with self-casing wire-line Rotary core with continuously-sampled, self-casing wire-line Rotary percussion boring (air)
Size	R RC	Rotary drilled diamond core Rotary drilled rock core
Size	HD HA	Hand driven (1-inch soil tube) Hand Auger
●	D	Dynamic Cone Penetration Boring
▲	CPT	Cone Penetration Test (ASTM D 5778)
⬚	O	Other (note on LOTB)

Note: Size in inches.

CONSISTENCY OF COHESIVE SOILS

Description	Shear Strength (tsf)	Pocket Penetrometer Measurement, PP, (tsf)	Torvane Measurement, TV, (tsf)	Vane Shear Measurement, VS, (tsf)
Very Soft	Less than 0.12	Less than 0.25	Less than 0.12	Less than 0.12
Soft	0.12 - 0.25	0.25 - 0.5	0.12 - 0.25	0.12 - 0.25
Medium Stiff	0.25 - 0.5	0.5 - 1	0.25 - 0.5	0.25 - 0.5
Stiff	0.5 - 1	1 - 2	0.5 - 1	0.5 - 1
Very Stiff	1 - 2	2 - 4	1 - 2	1 - 2
Hard	Greater than 2	Greater than 4	Greater than 2	Greater than 2

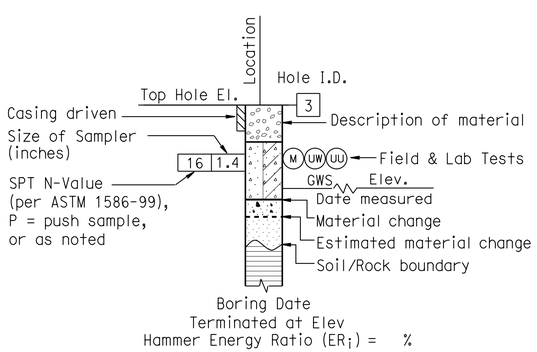

ROTARY BORING

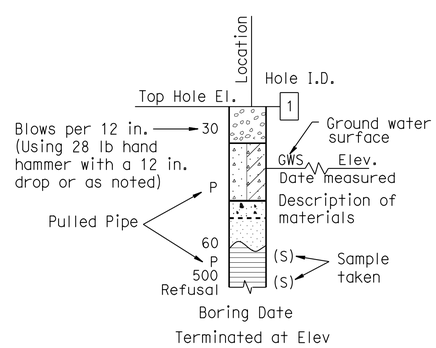

HAND BORING

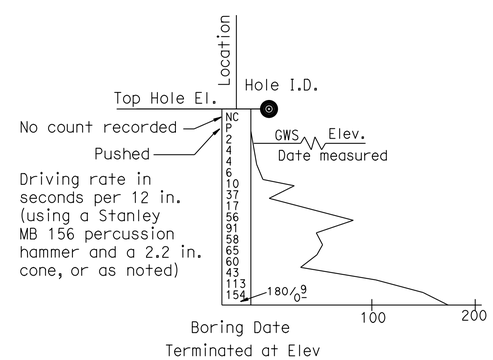

DYNAMIC CONE PENETRATION BORING

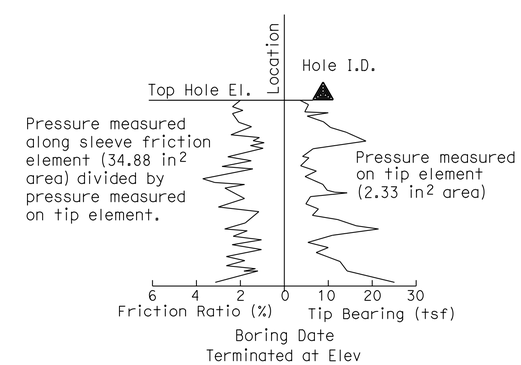

CONE PENETRATION TEST (CPT) BORING

R-76

ENGINEERING SERVICES	MATERIALS AND GEOTECHNICAL SERVICES	STATE OF CALIFORNIA DEPARTMENT OF TRANSPORTATION	DIVISION OF ENGINEERING SERVICES STRUCTURE DESIGN DESIGN BRANCH X	BRIDGE NO. RW 927 POST MILE 33.4/37.1	RETAINING WALL NO. 927 LOG OF TEST BORINGS 2 OF 3
	PREPARED BY: F. Nguyen				

GS LOTB SOIL LEGEND

ORIGINAL SCALE IN INCHES FOR REDUCED PLANS 0 1 2 3

UNIT: 3643
PROJECT NUMBER & PHASE: 07000000851 CONTRACT NO.: 07-1170U1

DISREGARD PRINTS BEARING EARLIER REVISION DATES

REVISION DATES 04-17-12 SHEET X OF X

FILE => 71170uqu026.dgn

USERNAME => s124496 DATE PLOTTED => 13-JUN-2013 TIME PLOTTED => 05:44

REFERENCE: CALTRANS SOIL & ROCK LOGGING, CLASSIFICATION, AND PRESENTATION MANUAL (2010)

DIST	COUNTY	ROUTE	POST MILES TOTAL PROJECT	SHEET No.	TOTAL SHEETS
07	LA	10	33.2/37.2	694	1475

REGISTERED CIVIL ENGINEER 7-26-12 DATE

6-10-13
PLANS APPROVAL DATE

REGISTERED PROFESSIONAL ENGINEER Sungro Cho No. C75151 Exp. 12-31-13 CIVIL STATE OF CALIFORNIA

The State of California or its officers or agents shall not be responsible for the accuracy or completeness of electronic copies of this plan sheet.

GROUP SYMBOLS AND NAMES

Graphic/Symbol	Group Names
GW	Well-graded GRAVEL Well-graded GRAVEL with SAND
GP	Poorly-graded GRAVEL Poorly-graded GRAVEL with SAND
GW-GM	Well-graded GRAVEL with SILT Well-graded GRAVEL with SILT and SAND
GW-GC	Well-graded GRAVEL with CLAY (or SILTY CLAY) Well-graded GRAVEL with CLAY and SAND (or SILTY CLAY and SAND)
GP-GM	Poorly-graded GRAVEL with SILT Poorly-graded GRAVEL with SILT and SAND
GP-GC	Poorly-graded GRAVEL with CLAY (or SILTY CLAY) Poorly-graded GRAVEL with CLAY and SAND (or SILTY CLAY and SAND)
GM	SILTY GRAVEL SILTY GRAVEL with SAND
GC	CLAYEY GRAVEL CLAYEY GRAVEL with SAND
GC-GM	SILTY, CLAYEY GRAVEL SILTY, CLAYEY GRAVEL with SAND
SW	Well-graded SAND Well-graded SAND with GRAVEL
SP	Poorly-graded SAND Poorly-graded SAND with GRAVEL
SW-SM	Well-graded SAND with SILT Well-graded SAND with SILT and GRAVEL
SW-SC	Well-graded SAND with CLAY (or SILTY CLAY) Well-graded SAND with CLAY and GRAVEL (or SILTY CLAY and GRAVEL)
SP-SM	Poorly-graded SAND with SILT Poorly-graded SAND with SILT and GRAVEL
SP-SC	Poorly-graded SAND with CLAY (or SILTY CLAY) Poorly-graded SAND with CLAY and GRAVEL (or SILTY CLAY and GRAVEL)
SM	SILTY SAND SILTY SAND with GRAVEL
SC	CLAYEY SAND CLAYEY SAND with GRAVEL
SC-SM	SILTY, CLAYEY SAND SILTY, CLAYEY SAND with GRAVEL
PT	PEAT
	COBBLES COBBLES and BOULDERS BOULDERS

Graphic/Symbol	Group Names
CL	Lean CLAY Lean CLAY with SAND Lean CLAY with GRAVEL SANDY lean CLAY SANDY lean CLAY with GRAVEL GRAVELLY lean CLAY GRAVELLY lean CLAY with SAND
CL-ML	SILTY CLAY SILTY CLAY with SAND SILTY CLAY with GRAVEL SANDY SILTY CLAY SANDY SILTY CLAY with GRAVEL GRAVELLY SILTY CLAY GRAVELLY SILTY CLAY with SAND
ML	SILT SILT with SAND SILT with GRAVEL SANDY SILT SANDY SILT with GRAVEL GRAVELLY SILT GRAVELLY SILT with SAND
OL	ORGANIC lean CLAY ORGANIC lean CLAY with SAND ORGANIC lean CLAY with GRAVEL SANDY ORGANIC lean CLAY SANDY ORGANIC lean CLAY with GRAVEL GRAVELLY ORGANIC lean CLAY GRAVELLY ORGANIC lean CLAY with SAND
OL	ORGANIC SILT ORGANIC SILT with SAND ORGANIC SILT with GRAVEL SANDY ORGANIC SILT SANDY ORGANIC SILT with GRAVEL GRAVELLY ORGANIC SILT GRAVELLY ORGANIC SILT with SAND
CH	Fat CLAY Fat CLAY with SAND Fat CLAY with GRAVEL SANDY fat CLAY SANDY fat CLAY with GRAVEL GRAVELLY fat CLAY GRAVELLY fat CLAY with SAND
MH	Elastic SILT Elastic SILT with SAND Elastic SILT with GRAVEL SANDY elastic SILT SANDY elastic SILT with GRAVEL GRAVELLY elastic SILT GRAVELLY elastic SILT with SAND
OH	ORGANIC fat CLAY ORGANIC fat CLAY with SAND ORGANIC fat CLAY with GRAVEL SANDY ORGANIC fat CLAY SANDY ORGANIC fat CLAY with GRAVEL GRAVELLY ORGANIC fat CLAY GRAVELLY ORGANIC fat CLAY with SAND
OH	ORGANIC elastic SILT ORGANIC elastic SILT with SAND ORGANIC elastic SILT with GRAVEL SANDY ORGANIC elastic SILT SANDY ORGANIC elastic SILT with GRAVEL GRAVELLY ORGANIC elastic SILT GRAVELLY ORGANIC elastic SILT with SAND
OL/OH	ORGANIC SOIL ORGANIC SOIL with SAND ORGANIC SOIL with GRAVEL SANDY ORGANIC SOIL SANDY ORGANIC SOIL with GRAVEL GRAVELLY ORGANIC SOIL GRAVELLY ORGANIC SOIL with SAND

FIELD AND LABORATORY TESTING

- (C) Consolidation (ASTM D 2435)
- (CL) Collapse Potential (ASTM D 5333)
- (CP) Compaction Curve (CTM 216)
- (CR) Corrosivity Testing (CTM 643, CTM 422, CTM 417)
- (CU) Consolidated Undrained Triaxial (ASTM D 4767)
- (DS) Direct Shear (ASTM D 3080)
- (EI) Expansion Index (ASTM D 4829)
- (M) Moisture Content (ASTM D 2216)
- (OC) Organic Content-% (ASTM D 2974)
- (P) Permeability (CTM 220)
- (PA) Particle Size Analysis (ASTM D 422)
- (PI) Plasticity Index (AASHTO T 90) Liquid Limit (AASHTO T 89)
- (PL) Point Load Index (ASTM D 5731)
- (PM) Pressure Meter
- (R) R-Value (CTM 301)
- (SE) Sand Equivalent (CTM 217)
- (SG) Specific Gravity (AASHTO T 100)
- (SL) Shrinkage Limit (ASTM D 427)
- (SW) Swell Potential (ASTM D 4546)
- (UC) Unconfined Compression-Soil (ASTM D 2166) Unconfined Compression-Rock (ASTM D 2938)
- (UU) Unconsolidated Undrained Triaxial (ASTM D 2850)
- (UW) Unit Weight (ASTM D 4767)

APPARENT DENSITY OF COHESIONLESS SOILS

Description	SPT N_{60} (Blows / 12 in.)
Very Loose	0 - 5
Loose	5 - 10
Medium Dense	10 - 30
Dense	30 - 50
Very Dense	Greater than 50

MOISTURE

Description	Criteria
Dry	No discernable moisture
Moist	Moisture present, but no free water
Wet	Visible free water

PERCENT OR PROPORTION OF SOILS

Description	Criteria
Trace	Particles are present but estimated to be less than 5%
Few	5% - 10%
Little	15% - 25%
Some	30% - 45%
Mostly	50% - 100%

PARTICLE SIZE

Description		Size (in.)
Boulder		Greater than 12
Cobble		3 - 12
Gravel	Coarse	3/4 - 3
	Fine	1/5 - 3/4
Sand	Coarse	1/16 - 1/5
	Medium	1/64 - 1/16
	Fine	1/300 - 1/64
Silt and Clay		Less than 1/300

R-77

ENGINEERING SERVICES

MATERIALS AND GEOTECHNICAL SERVICES

PREPARED BY: F. Nguyen

STATE OF CALIFORNIA DEPARTMENT OF TRANSPORTATION

DIVISION OF ENGINEERING SERVICES STRUCTURE DESIGN DESIGN BRANCH X

BRIDGE NO. RW 927

POST MILE 33.4/37.1

RETAINING WALL NO. 927

LOG OF TEST BORINGS 3 OF 3

GS LOTB SOIL LEGEND

ORIGINAL SCALE IN INCHES FOR REDUCED PLANS 0 1 2 3

UNIT: 3643
PROJECT NUMBER & PHASE: 07000000851
CONTRACT NO.: 07-1170U1

DISREGARD PRINTS BEARING EARLIER REVISION DATES

REVISION DATES 04-17-12

SHEET X OF X

FILE => 71170uqu027.dgn

USERNAME => s124496 DATE PLOTTED => 13-JUN-2013 TIME PLOTTED => 05:44

DIST	COUNTY	ROUTE	POST MILES TOTAL PROJECT	SHEET No.	TOTAL SHEETS
07	LA	10	33.2/37.2	695	1475

REGISTERED CIVIL ENGINEER 7-26-12 DATE

6-10-13
PLANS APPROVAL DATE

REGISTERED PROFESSIONAL ENGINEER Sungro Cho No. C75151 Exp. 12-31-13 CIVIL STATE OF CALIFORNIA

The State of California or its officers or agents shall not be responsible for the accuracy or completeness of electronic copies of this plan sheet.

This LOTB sheet was prepared in accordance with the Caltrans Soil & Rock Logging, Classification, & Presentation Manual (2010 Edition).

BENCH MARK

BM #11-B-43 Elev 346.47′
Lead and conc nail in sidewalk of Auto Ct. cabin #825 on N. side Gavey Ave 200′± of Puente Ave, 71′ Lt Sta 181+30.5.

BM #12-B-43 Elev 352.54′
Lead and conc nail in W. end of p.c.c. porch step to frame house on N. side Gavey Ave, 91′ Lt Sta 193+81.

TBM Elev 341.93′
Chiseled knob on p.c.c wall, 33.4/37.1′ Rt Sta 168+35.

Vertical Datum: NAVD88

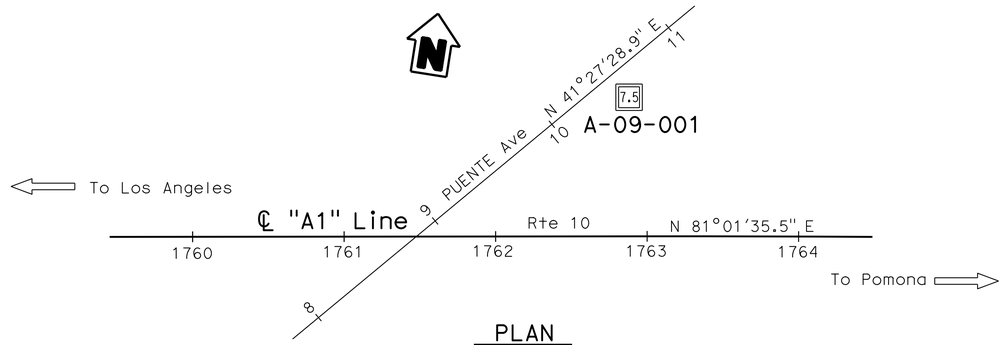

PLAN
1" = 50′

Note: No ground water encountered during field investigation.

PROFILE
Horiz: 1" = 20′
Vert: 1" = 10′

R-78

ENGINEERING SERVICES	MATERIALS AND GEOTECHNICAL SERVICES	STATE OF CALIFORNIA DEPARTMENT OF TRANSPORTATION	DIVISION OF ENGINEERING SERVICES STRUCTURE DESIGN DESIGN BRANCH X	BRIDGE NO. RW 1756 POST MILE 33.4/37.1	RETAINING WALL NO. 1756 LOG OF TEST BORINGS 1 OF 3
FUNCTIONAL SUPERVISOR NAME: D. Jang	DRAWN BY: B. Huddleston, I.G-Remmen, F. Nguyen CHECKED BY: H. Yang	FIELD INVESTIGATION BY: S. Cho			

OGS CIVIL LOG OF TEST BORINGS SHEET

ORIGINAL SCALE IN INCHES FOR REDUCED PLANS 0 1 2 3

UNIT: 3643
PROJECT NUMBER & PHASE: 07000000851 CONTRACT NO.: 07-1170U1

DISREGARD PRINTS BEARING EARLIER REVISION DATES

REVISION DATES: 04-11-12 05-11-12 07-13-12 SHEET X OF X

FILE => 71170uqu028.dgn

USERNAME => s124496 DATE PLOTTED => 13-JUN-2013 TIME PLOTTED => 05:44

REFERENCE: CALTRANS SOIL & ROCK LOGGING, CLASSIFICATION, AND PRESENTATION MANUAL (2010)

DIST	COUNTY	ROUTE	POST MILES TOTAL PROJECT	SHEET No.	TOTAL SHEETS
07	LA	10	33.2/37.2	696	1475

REGISTERED CIVIL ENGINEER 7-26-12 DATE

6-10-13
PLANS APPROVAL DATE

REGISTERED PROFESSIONAL ENGINEER Sungro Cho No. C75151 Exp. 12-31-13 CIVIL STATE OF CALIFORNIA

The State of California or its officers or agents shall not be responsible for the accuracy or completeness of electronic copies of this plan sheet.

CEMENTATION

Description	Criteria
Weak	Crumbles or breaks with handling or little finger pressure.
Moderate	Crumbles or breaks with considerable finger pressure.
Strong	Will not crumble or break with finger pressure.

BOREHOLE IDENTIFICATION

Symbol	Hole Type	Description
Size	A	Auger Boring (hollow or solid stem bucket)
Size	R RW RC P	Rotary drilled boring (conventional) Rotary drilled with self-casing wire-line Rotary core with continuously-sampled, self-casing wire-line Rotary percussion boring (air)
Size	R RC	Rotary drilled diamond core Rotary drilled rock core
Size	HD HA	Hand driven (1-inch soil tube) Hand Auger
●	D	Dynamic Cone Penetration Boring
▲	CPT	Cone Penetration Test (ASTM D 5778)
⬚	O	Other (note on LOTB)

Note: Size in inches.

CONSISTENCY OF COHESIVE SOILS

Description	Shear Strength (tsf)	Pocket Penetrometer Measurement, PP, (tsf)	Torvane Measurement, TV, (tsf)	Vane Shear Measurement, VS, (tsf)
Very Soft	Less than 0.12	Less than 0.25	Less than 0.12	Less than 0.12
Soft	0.12 - 0.25	0.25 - 0.5	0.12 - 0.25	0.12 - 0.25
Medium Stiff	0.25 - 0.5	0.5 - 1	0.25 - 0.5	0.25 - 0.5
Stiff	0.5 - 1	1 - 2	0.5 - 1	0.5 - 1
Very Stiff	1 - 2	2 - 4	1 - 2	1 - 2
Hard	Greater than 2	Greater than 4	Greater than 2	Greater than 2

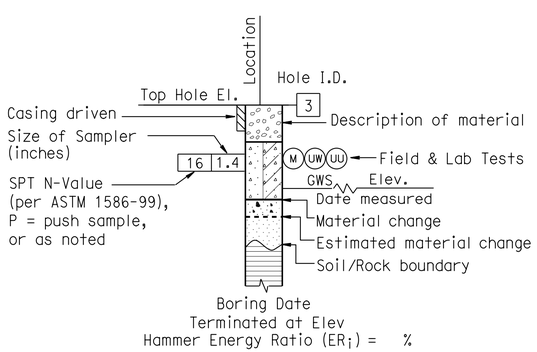

ROTARY BORING

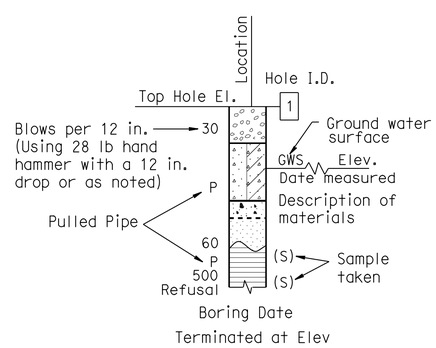

HAND BORING

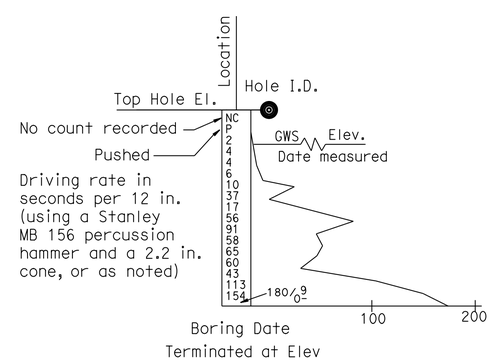

DYNAMIC CONE PENETRATION BORING

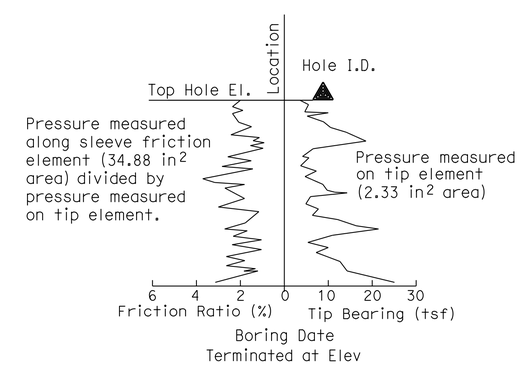

CONE PENETRATION TEST (CPT) BORING

R-79

ENGINEERING SERVICES	MATERIALS AND GEOTECHNICAL SERVICES	STATE OF CALIFORNIA DEPARTMENT OF TRANSPORTATION	DIVISION OF ENGINEERING SERVICES STRUCTURE DESIGN DESIGN BRANCH X	BRIDGE NO. RW 1756 POST MILE 33.4/37.1	RETAINING WALL NO. 1756 LOG OF TEST BORINGS 2 OF 3
	PREPARED BY: F. Nguyen				

GS LOTB SOIL LEGEND

ORIGINAL SCALE IN INCHES FOR REDUCED PLANS 0 1 2 3

UNIT: 3643
PROJECT NUMBER & PHASE: 07000000851 CONTRACT NO.: 07-1170U1

DISREGARD PRINTS BEARING EARLIER REVISION DATES

REVISION DATES 04-17-12 SHEET X OF X

FILE => 71170uqu029.dgn

USERNAME => s124496 DATE PLOTTED => 13-JUN-2013 TIME PLOTTED => 05:44

REFERENCE: CALTRANS SOIL & ROCK LOGGING, CLASSIFICATION, AND PRESENTATION MANUAL (2010)

DIST	COUNTY	ROUTE	POST MILES TOTAL PROJECT	SHEET No.	TOTAL SHEETS
07	LA	10	33.2/37.2	697	1475

REGISTERED CIVIL ENGINEER 7-26-12 DATE

6-10-13
PLANS APPROVAL DATE

REGISTERED PROFESSIONAL ENGINEER Sungro Cho No. C75151 Exp. 12-31-13 CIVIL STATE OF CALIFORNIA

The State of California or its officers or agents shall not be responsible for the accuracy or completeness of electronic copies of this plan sheet.

GROUP SYMBOLS AND NAMES

Graphic/Symbol	Group Names	Graphic/Symbol	Group Names
GW	Well-graded GRAVEL Well-graded GRAVEL with SAND	CL	Lean CLAY Lean CLAY with SAND Lean CLAY with GRAVEL SANDY lean CLAY SANDY lean CLAY with GRAVEL GRAVELLY lean CLAY GRAVELLY lean CLAY with SAND
GP	Poorly-graded GRAVEL Poorly-graded GRAVEL with SAND		
GW-GM	Well-graded GRAVEL with SILT Well-graded GRAVEL with SILT and SAND	CL-ML	SILTY CLAY SILTY CLAY with SAND SILTY CLAY with GRAVEL SANDY SILTY CLAY SANDY SILTY CLAY with GRAVEL GRAVELLY SILTY CLAY GRAVELLY SILTY CLAY with SAND
GW-GC	Well-graded GRAVEL with CLAY (or SILTY CLAY) Well-graded GRAVEL with CLAY and SAND (or SILTY CLAY and SAND)		
GP-GM	Poorly-graded GRAVEL with SILT Poorly-graded GRAVEL with SILT and SAND	ML	SILT SILT with SAND SILT with GRAVEL SANDY SILT SANDY SILT with GRAVEL GRAVELLY SILT GRAVELLY SILT with SAND
GP-GC	Poorly-graded GRAVEL with CLAY (or SILTY CLAY) Poorly-graded GRAVEL with CLAY and SAND (or SILTY CLAY and SAND)		
GM	SILTY GRAVEL SILTY GRAVEL with SAND	OL	ORGANIC lean CLAY ORGANIC lean CLAY with SAND ORGANIC lean CLAY with GRAVEL SANDY ORGANIC lean CLAY SANDY ORGANIC lean CLAY with GRAVEL GRAVELLY ORGANIC lean CLAY GRAVELLY ORGANIC lean CLAY with SAND
GC	CLAYEY GRAVEL CLAYEY GRAVEL with SAND		
GC-GM	SILTY, CLAYEY GRAVEL SILTY, CLAYEY GRAVEL with SAND	OL	ORGANIC SILT ORGANIC SILT with SAND ORGANIC SILT with GRAVEL SANDY ORGANIC SILT SANDY ORGANIC SILT with GRAVEL GRAVELLY ORGANIC SILT GRAVELLY ORGANIC SILT with SAND
SW	Well-graded SAND Well-graded SAND with GRAVEL		
SP	Poorly-graded SAND Poorly-graded SAND with GRAVEL	CH	Fat CLAY Fat CLAY with SAND Fat CLAY with GRAVEL SANDY fat CLAY SANDY fat CLAY with GRAVEL GRAVELLY fat CLAY GRAVELLY fat CLAY with SAND
SW-SM	Well-graded SAND with SILT Well-graded SAND with SILT and GRAVEL		
SW-SC	Well-graded SAND with CLAY (or SILTY CLAY) Well-graded SAND with CLAY and GRAVEL (or SILTY CLAY and GRAVEL)	MH	Elastic SILT Elastic SILT with SAND Elastic SILT with GRAVEL SANDY elastic SILT SANDY elastic SILT with GRAVEL GRAVELLY elastic SILT GRAVELLY elastic SILT with SAND
SP-SM	Poorly-graded SAND with SILT Poorly-graded SAND with SILT and GRAVEL		
SP-SC	Poorly-graded SAND with CLAY (or SILTY CLAY) Poorly-graded SAND with CLAY and GRAVEL (or SILTY CLAY and GRAVEL)	OH	ORGANIC fat CLAY ORGANIC fat CLAY with SAND ORGANIC fat CLAY with GRAVEL SANDY ORGANIC fat CLAY SANDY ORGANIC fat CLAY with GRAVEL GRAVELLY ORGANIC fat CLAY GRAVELLY ORGANIC fat CLAY with SAND
SM	SILTY SAND SILTY SAND with GRAVEL		
SC	CLAYEY SAND CLAYEY SAND with GRAVEL	OH	ORGANIC elastic SILT ORGANIC elastic SILT with SAND ORGANIC elastic SILT with GRAVEL SANDY ORGANIC elastic SILT SANDY ORGANIC elastic SILT with GRAVEL GRAVELLY ORGANIC elastic SILT GRAVELLY ORGANIC elastic SILT with SAND
SC-SM	SILTY, CLAYEY SAND SILTY, CLAYEY SAND with GRAVEL		
PT	PEAT	OL/OH	ORGANIC SOIL ORGANIC SOIL with SAND ORGANIC SOIL with GRAVEL SANDY ORGANIC SOIL SANDY ORGANIC SOIL with GRAVEL GRAVELLY ORGANIC SOIL GRAVELLY ORGANIC SOIL with SAND
	COBBLES COBBLES and BOULDERS BOULDERS		

FIELD AND LABORATORY TESTING

- (C) Consolidation (ASTM D 2435)
- (CL) Collapse Potential (ASTM D 5333)
- (CP) Compaction Curve (CTM 216)
- (CR) Corrosivity Testing (CTM 643, CTM 422, CTM 417)
- (CU) Consolidated Undrained Triaxial (ASTM D 4767)
- (DS) Direct Shear (ASTM D 3080)
- (EI) Expansion Index (ASTM D 4829)
- (M) Moisture Content (ASTM D 2216)
- (OC) Organic Content-% (ASTM D 2974)
- (P) Permeability (CTM 220)
- (PA) Particle Size Analysis (ASTM D 422)
- (PI) Plasticity Index (AASHTO T 90) Liquid Limit (AASHTO T 89)
- (PL) Point Load Index (ASTM D 5731)
- (PM) Pressure Meter
- (R) R-Value (CTM 301)
- (SE) Sand Equivalent (CTM 217)
- (SG) Specific Gravity (AASHTO T 100)
- (SL) Shrinkage Limit (ASTM D 427)
- (SW) Swell Potential (ASTM D 4546)
- (UC) Unconfined Compression-Soil (ASTM D 2166) Unconfined Compression-Rock (ASTM D 2938)
- (UU) Unconsolidated Undrained Triaxial (ASTM D 2850)
- (UW) Unit Weight (ASTM D 4767)

APPARENT DENSITY OF COHESIONLESS SOILS

Description	SPT N_{60} (Blows / 12 in.)
Very Loose	0 - 5
Loose	5 - 10
Medium Dense	10 - 30
Dense	30 - 50
Very Dense	Greater than 50

MOISTURE

Description	Criteria
Dry	No discernable moisture
Moist	Moisture present, but no free water
Wet	Visible free water

PERCENT OR PROPORTION OF SOILS

Description	Criteria
Trace	Particles are present but estimated to be less than 5%
Few	5% - 10%
Little	15% - 25%
Some	30% - 45%
Mostly	50% - 100%

PARTICLE SIZE

Description		Size (in.)
Boulder		Greater than 12
Cobble		3 - 12
Gravel	Coarse	3/4 - 3
	Fine	1/5 - 3/4
Sand	Coarse	1/16 - 1/5
	Medium	1/64 - 1/16
	Fine	1/300 - 1/64
Silt and Clay		Less than 1/300

R-80

ENGINEERING SERVICES

MATERIALS AND GEOTECHNICAL SERVICES
PREPARED BY: F. Nguyen

STATE OF CALIFORNIA
DEPARTMENT OF TRANSPORTATION

DIVISION OF ENGINEERING SERVICES
STRUCTURE DESIGN
DESIGN BRANCH X

BRIDGE NO. RW 1756
POST MILE 33.4/37.1

RETAINING WALL NO. 1756
LOG OF TEST BORINGS 3 OF 3

GS LOTB SOIL LEGEND

ORIGINAL SCALE IN INCHES FOR REDUCED PLANS 0 1 2 3

UNIT: 3643
PROJECT NUMBER & PHASE: 07000000851
CONTRACT NO.: 07-1170U1

DISREGARD PRINTS BEARING EARLIER REVISION DATES

REVISION DATES 04-17-12 | SHEET X | OF X

FILE => 71170uqu030.dgn

USERNAME => s124496 DATE PLOTTED => 13-JUN-2013 TIME PLOTTED => 05:45

DIST	COUNTY	ROUTE	POST MILES TOTAL PROJECT	SHEET No.	TOTAL SHEETS
07	LA	10	33.2/37.2	698	1475

REGISTERED CIVIL ENGINEER 7-26-12 DATE

6-10-13
PLANS APPROVAL DATE

REGISTERED PROFESSIONAL ENGINEER Sungro Cho No. C75151 Exp. 12-31-13 CIVIL STATE OF CALIFORNIA

The State of California or its officers or agents shall not be responsible for the accuracy or completeness of electronic copies of this plan sheet.

This LOTB sheet was prepared in accordance with the Caltrans Soil & Rock Logging, Classification, & Presentation Manual (2010 Edition).

BENCH MARK

BM #11-B-43 Elev 346.47′
Lead and conc nail in sidewalk of Auto Ct. cabin #825 on N. side Gavey Ave 200′± of Puente Ave, 71′ Lt Sta 181+30.5.

BM #12-B-43 Elev 352.54′
Lead and conc nail in W. end of p.c.c. porch step to frame house on N. side Gavey Ave, 91′ Lt Sta 193+81.

TBM Elev 341.93′
Chiseled knob on PCC wall, 33.4′ Rt Sta 168+35.

Vertical Datum: NAVD88

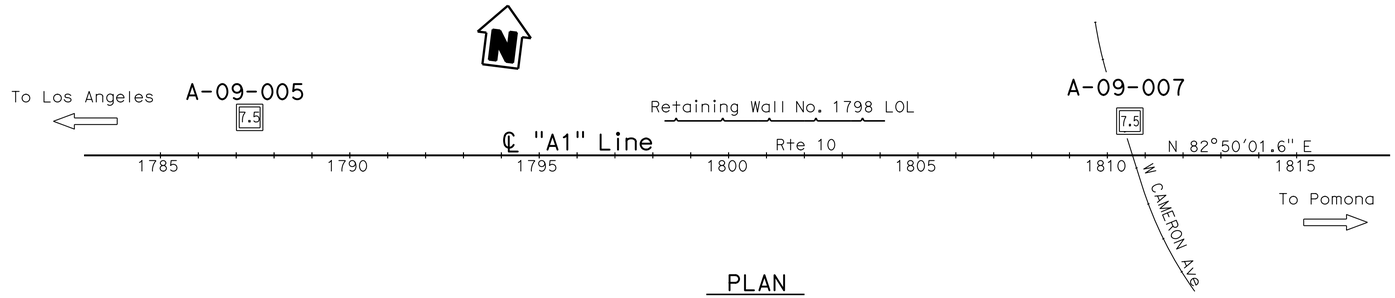

PLAN

1″ = 200′

Note: No ground water encountered during field investigation.

PROFILE

Horiz: 1″ = 100′
Vert: 1″ = 10′

R-81

ENGINEERING SERVICES	GEOTECHNICAL SERVICES	
FUNCTIONAL SUPERVISOR	DRAWN BY: C. Christian, I.G-Remmen, F. Nguyen	FIELD INVESTIGATION BY:
NAME: D. Jang	CHECKED BY: S. Han	S. Cho

STATE OF CALIFORNIA DEPARTMENT OF TRANSPORTATION

DIVISION OF ENGINEERING SERVICES STRUCTURE DESIGN
DESIGN BRANCH X

BRIDGE NO. RW 1798
POST MILE 33.4/37.1

RETAINING WALL NO. 1798
LOG OF TEST BORINGS 1 OF 3

OGS CIVIL LOG OF TEST BORINGS SHEET

ORIGINAL SCALE IN INCHES FOR REDUCED PLANS 0 1 2 3

UNIT: 3643
PROJECT NUMBER & PHASE: 07000000851 CONTRACT NO.: 07-1170U1

DISREGARD PRINTS BEARING EARLIER REVISION DATES

REVISION DATES: 04-11-12 05-15-12 07-13-12

SHEET X OF X

FILE => 71170uqu031.dgn

USERNAME => s124496 DATE PLOTTED => 13-JUN-2013 TIME PLOTTED => 05:45

REFERENCE: CALTRANS SOIL & ROCK LOGGING, CLASSIFICATION, AND PRESENTATION MANUAL (2010)

DIST	COUNTY	ROUTE	POST MILES TOTAL PROJECT	SHEET No.	TOTAL SHEETS
07	LA	10	33.2/37.2	699	1475

REGISTERED CIVIL ENGINEER 7-26-12 DATE

6-10-13
PLANS APPROVAL DATE

REGISTERED PROFESSIONAL ENGINEER Sungro Cho No. C75151 Exp. 12-31-13 CIVIL STATE OF CALIFORNIA

The State of California or its officers or agents shall not be responsible for the accuracy or completeness of electronic copies of this plan sheet.

CEMENTATION

Description	Criteria
Weak	Crumbles or breaks with handling or little finger pressure.
Moderate	Crumbles or breaks with considerable finger pressure.
Strong	Will not crumble or break with finger pressure.

BOREHOLE IDENTIFICATION

Symbol	Hole Type	Description
Size	A	Auger Boring (hollow or solid stem bucket)
Size	R RW RC P	Rotary drilled boring (conventional) Rotary drilled with self-casing wire-line Rotary core with continuously-sampled, self-casing wire-line Rotary percussion boring (air)
Size	R RC	Rotary drilled diamond core Rotary drilled rock core
Size	HD HA	Hand driven (1-inch soil tube) Hand Auger
●	D	Dynamic Cone Penetration Boring
▲	CPT	Cone Penetration Test (ASTM D 5778)
⬚	O	Other (note on LOTB)

Note: Size in inches.

CONSISTENCY OF COHESIVE SOILS

Description	Shear Strength (tsf)	Pocket Penetrometer Measurement, PP, (tsf)	Torvane Measurement, TV, (tsf)	Vane Shear Measurement, VS, (tsf)
Very Soft	Less than 0.12	Less than 0.25	Less than 0.12	Less than 0.12
Soft	0.12 - 0.25	0.25 - 0.5	0.12 - 0.25	0.12 - 0.25
Medium Stiff	0.25 - 0.5	0.5 - 1	0.25 - 0.5	0.25 - 0.5
Stiff	0.5 - 1	1 - 2	0.5 - 1	0.5 - 1
Very Stiff	1 - 2	2 - 4	1 - 2	1 - 2
Hard	Greater than 2	Greater than 4	Greater than 2	Greater than 2

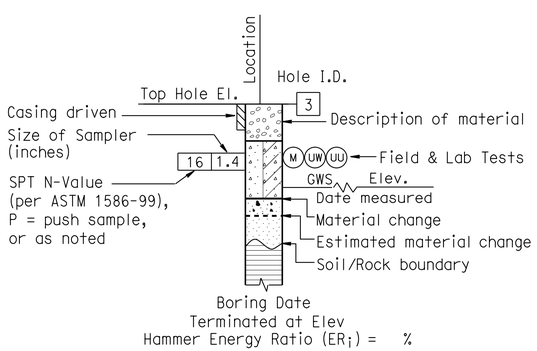

ROTARY BORING

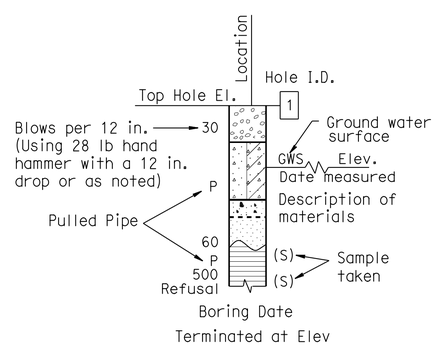

HAND BORING

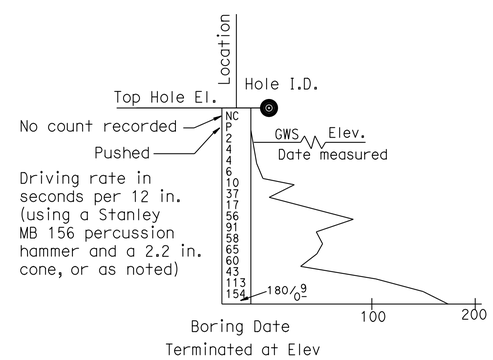

DYNAMIC CONE PENETRATION BORING

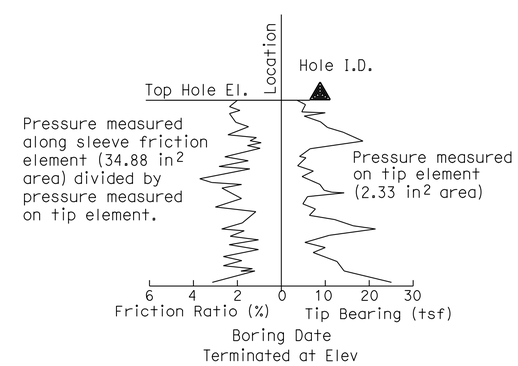

CONE PENETRATION TEST (CPT) BORING

R-82

ENGINEERING SERVICES	MATERIALS AND GEOTECHNICAL SERVICES	STATE OF CALIFORNIA DEPARTMENT OF TRANSPORTATION	DIVISION OF ENGINEERING SERVICES STRUCTURE DESIGN DESIGN BRANCH X	BRIDGE NO. RW 1798 POST MILE 33.4/37.1	RETAINING WALL NO. 1798 LOG OF TEST BORINGS 2 OF 3
	PREPARED BY: F. Nguyen				

GS LOTB SOIL LEGEND

ORIGINAL SCALE IN INCHES FOR REDUCED PLANS 0 1 2 3

UNIT: 3643
PROJECT NUMBER & PHASE: 07000000851 CONTRACT NO.: 07-1170U1

DISREGARD PRINTS BEARING EARLIER REVISION DATES

REVISION DATES 04-17-12 SHEET X OF X

FILE => 71170uqu032.dgn

USERNAME => s124496 DATE PLOTTED => 13-JUN-2013 TIME PLOTTED => 05:45

REFERENCE: CALTRANS SOIL & ROCK LOGGING, CLASSIFICATION, AND PRESENTATION MANUAL (2010)

DIST	COUNTY	ROUTE	POST MILES TOTAL PROJECT	SHEET No.	TOTAL SHEETS
07	LA	10	33.2/37.2	700	1475

REGISTERED CIVIL ENGINEER 7-26-12 DATE

6-10-13
PLANS APPROVAL DATE

REGISTERED PROFESSIONAL ENGINEER Sungro Cho No. C75151 Exp. 12-31-13 CIVIL STATE OF CALIFORNIA

The State of California or its officers or agents shall not be responsible for the accuracy or completeness of electronic copies of this plan sheet.

GROUP SYMBOLS AND NAMES

Graphic/Symbol	Group Names
GW	Well-graded GRAVEL Well-graded GRAVEL with SAND
GP	Poorly-graded GRAVEL Poorly-graded GRAVEL with SAND
GW-GM	Well-graded GRAVEL with SILT Well-graded GRAVEL with SILT and SAND
GW-GC	Well-graded GRAVEL with CLAY (or SILTY CLAY) Well-graded GRAVEL with CLAY and SAND (or SILTY CLAY and SAND)
GP-GM	Poorly-graded GRAVEL with SILT Poorly-graded GRAVEL with SILT and SAND
GP-GC	Poorly-graded GRAVEL with CLAY (or SILTY CLAY) Poorly-graded GRAVEL with CLAY and SAND (or SILTY CLAY and SAND)
GM	SILTY GRAVEL SILTY GRAVEL with SAND
GC	CLAYEY GRAVEL CLAYEY GRAVEL with SAND
GC-GM	SILTY, CLAYEY GRAVEL SILTY, CLAYEY GRAVEL with SAND
SW	Well-graded SAND Well-graded SAND with GRAVEL
SP	Poorly-graded SAND Poorly-graded SAND with GRAVEL
SW-SM	Well-graded SAND with SILT Well-graded SAND with SILT and GRAVEL
SW-SC	Well-graded SAND with CLAY (or SILTY CLAY) Well-graded SAND with CLAY and GRAVEL (or SILTY CLAY and GRAVEL)
SP-SM	Poorly-graded SAND with SILT Poorly-graded SAND with SILT and GRAVEL
SP-SC	Poorly-graded SAND with CLAY (or SILTY CLAY) Poorly-graded SAND with CLAY and GRAVEL (or SILTY CLAY and GRAVEL)
SM	SILTY SAND SILTY SAND with GRAVEL
SC	CLAYEY SAND CLAYEY SAND with GRAVEL
SC-SM	SILTY, CLAYEY SAND SILTY, CLAYEY SAND with GRAVEL
PT	PEAT
	COBBLES COBBLES and BOULDERS BOULDERS

Graphic/Symbol	Group Names
CL	Lean CLAY Lean CLAY with SAND Lean CLAY with GRAVEL SANDY lean CLAY SANDY lean CLAY with GRAVEL GRAVELLY lean CLAY GRAVELLY lean CLAY with SAND
CL-ML	SILTY CLAY SILTY CLAY with SAND SILTY CLAY with GRAVEL SANDY SILTY CLAY SANDY SILTY CLAY with GRAVEL GRAVELLY SILTY CLAY GRAVELLY SILTY CLAY with SAND
ML	SILT SILT with SAND SILT with GRAVEL SANDY SILT SANDY SILT with GRAVEL GRAVELLY SILT GRAVELLY SILT with SAND
OL	ORGANIC lean CLAY ORGANIC lean CLAY with SAND ORGANIC lean CLAY with GRAVEL SANDY ORGANIC lean CLAY SANDY ORGANIC lean CLAY with GRAVEL GRAVELLY ORGANIC lean CLAY GRAVELLY ORGANIC lean CLAY with SAND
OL	ORGANIC SILT ORGANIC SILT with SAND ORGANIC SILT with GRAVEL SANDY ORGANIC SILT SANDY ORGANIC SILT with GRAVEL GRAVELLY ORGANIC SILT GRAVELLY ORGANIC SILT with SAND
CH	Fat CLAY Fat CLAY with SAND Fat CLAY with GRAVEL SANDY fat CLAY SANDY fat CLAY with GRAVEL GRAVELLY fat CLAY GRAVELLY fat CLAY with SAND
MH	Elastic SILT Elastic SILT with SAND Elastic SILT with GRAVEL SANDY elastic SILT SANDY elastic SILT with GRAVEL GRAVELLY elastic SILT GRAVELLY elastic SILT with SAND
OH	ORGANIC fat CLAY ORGANIC fat CLAY with SAND ORGANIC fat CLAY with GRAVEL SANDY ORGANIC fat CLAY SANDY ORGANIC fat CLAY with GRAVEL GRAVELLY ORGANIC fat CLAY GRAVELLY ORGANIC fat CLAY with SAND
OH	ORGANIC elastic SILT ORGANIC elastic SILT with SAND ORGANIC elastic SILT with GRAVEL SANDY ORGANIC elastic SILT SANDY ORGANIC elastic SILT with GRAVEL GRAVELLY ORGANIC elastic SILT GRAVELLY ORGANIC elastic SILT with SAND
OL/OH	ORGANIC SOIL ORGANIC SOIL with SAND ORGANIC SOIL with GRAVEL SANDY ORGANIC SOIL SANDY ORGANIC SOIL with GRAVEL GRAVELLY ORGANIC SOIL GRAVELLY ORGANIC SOIL with SAND

FIELD AND LABORATORY TESTING

- (C) Consolidation (ASTM D 2435)
- (CL) Collapse Potential (ASTM D 5333)
- (CP) Compaction Curve (CTM 216)
- (CR) Corrosivity Testing (CTM 643, CTM 422, CTM 417)
- (CU) Consolidated Undrained Triaxial (ASTM D 4767)
- (DS) Direct Shear (ASTM D 3080)
- (EI) Expansion Index (ASTM D 4829)
- (M) Moisture Content (ASTM D 2216)
- (OC) Organic Content-% (ASTM D 2974)
- (P) Permeability (CTM 220)
- (PA) Particle Size Analysis (ASTM D 422)
- (PI) Plasticity Index (AASHTO T 90) Liquid Limit (AASHTO T 89)
- (PL) Point Load Index (ASTM D 5731)
- (PM) Pressure Meter
- (R) R-Value (CTM 301)
- (SE) Sand Equivalent (CTM 217)
- (SG) Specific Gravity (AASHTO T 100)
- (SL) Shrinkage Limit (ASTM D 427)
- (SW) Swell Potential (ASTM D 4546)
- (UC) Unconfined Compression-Soil (ASTM D 2166) Unconfined Compression-Rock (ASTM D 2938)
- (UU) Unconsolidated Undrained Triaxial (ASTM D 2850)
- (UW) Unit Weight (ASTM D 4767)

APPARENT DENSITY OF COHESIONLESS SOILS

Description	SPT N_{60} (Blows / 12 in.)
Very Loose	0 - 5
Loose	5 - 10
Medium Dense	10 - 30
Dense	30 - 50
Very Dense	Greater than 50

MOISTURE

Description	Criteria
Dry	No discernable moisture
Moist	Moisture present, but no free water
Wet	Visible free water

PERCENT OR PROPORTION OF SOILS

Description	Criteria
Trace	Particles are present but estimated to be less than 5%
Few	5% - 10%
Little	15% - 25%
Some	30% - 45%
Mostly	50% - 100%

PARTICLE SIZE

Description		Size (in.)
Boulder		Greater than 12
Cobble		3 - 12
Gravel	Coarse	3/4 - 3
	Fine	1/5 - 3/4
Sand	Coarse	1/16 - 1/5
	Medium	1/64 - 1/16
	Fine	1/300 - 1/64
Silt and Clay		Less than 1/300

R-83

ENGINEERING SERVICES

MATERIALS AND GEOTECHNICAL SERVICES
PREPARED BY: F. Nguyen

STATE OF CALIFORNIA
DEPARTMENT OF TRANSPORTATION

DIVISION OF ENGINEERING SERVICES
STRUCTURE DESIGN
DESIGN BRANCH X

BRIDGE NO. RW 1798
POST MILE 33.4/37.1

RETAINING WALL NO. 1798
LOG OF TEST BORINGS 3 OF 3

GS LOTB SOIL LEGEND

ORIGINAL SCALE IN INCHES FOR REDUCED PLANS 0 1 2 3

UNIT: 3643
PROJECT NUMBER & PHASE: 07000000851
CONTRACT NO.: 07-1170U1

DISREGARD PRINTS BEARING EARLIER REVISION DATES

REVISION DATES 04-17-12 | SHEET X | OF X

FILE => 71170uqu033.dgn

USERNAME => s124496 DATE PLOTTED => 13-JUN-2013 TIME PLOTTED => 05:57